*MM binder labels. 40 mm Full width Note! This page is generated **automatically**. using the **variable definitions** made in the **front page** file!!*

TBA/22 040V

0-Series

Issue 2000-06 Doc No. MM-82302-0104

TBA/22 040V

0-Series

Issue 2000-06 Doc No. MM-82302-0104

TBA/22 040V

0-Series

Issue 2000-06 Doc No. MM-82302-0104

TBA/22 040V

0-Series

Issue 2000-06 Doc No. MM-82302-0104

TBA/22 040V

0-Series

Issue 2000-06 Doc No. MM-82302-0104

TBA/22 040V

0-Series

Issue 2000-06 Doc No. MM-82302-0104

TBA/22 040V

0-Series

Issue 2000-06 Doc No. MM-82302-0104

TBA/22 040V

0-Series

Issue 2000-06 Doc No. MM-82302-0104

TBA/22 040V

0-Series

Issue 2000-06 Doc No. MM-82302-0104

TBA/22 040V

0-Series

Issue 2000-06 Doc No. MM-82302-0104

TBA/22 040V

0-Series

Issue 2000-06 Doc No. MM-82302-0104

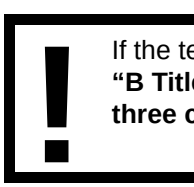

If the text does not fit; **change the font on "B TitleFull" to min 18 p, and the left indent to 0.5 cm** (**on all three components**). **Make "Update All"**



2.282302014lab.f

*MM binder labels. 30mm Halfwidth Note! This page is generated **automatically**. using the **variable definitions** made in the **front page** file!!*

TBA/22 040V
0-Series

Issue 2000-06 Doc No. MM-82302-0104

TBA/22 040V
0-Series

Issue 2000-06 Doc No. MM-82302-0104

TBA/22 040V

Issue 2000-06 Doc No. MM-82302-0104

TBA/22 040V
0-Series

Issue 2000-06 Doc No. MM-82302-0104

TBA/22 040V
0-Series

Issue 2000-06 Doc No. MM-82302-0104

TBA/22 040V
0-Series

Issue 2000-06 Doc No. MM-82302-0104

TBA/22 040V
0-Series

Issue 2000-06 Doc No. MM-82302-0104

TBA/22 040V
0-Series

Issue 2000-06 Doc No. MM-82302-0104

TBA/22 040V
0-Series

Issue 2000-06 Doc No. MM-82302-0104

TBA/22 040V
0-Series

Issue 2000-06 Doc No. MM-82302-0104

TBA/22 040V

Issue 2000-06 Doc No. MM-82302-0104

If the text does not fit; **change the font on “B TitleHalf” to min 18 p, and the left indent to 0.5 cm (on all three components)**. **Make “Update All”**

MM

Maintenance Manual

TBA/22 040V

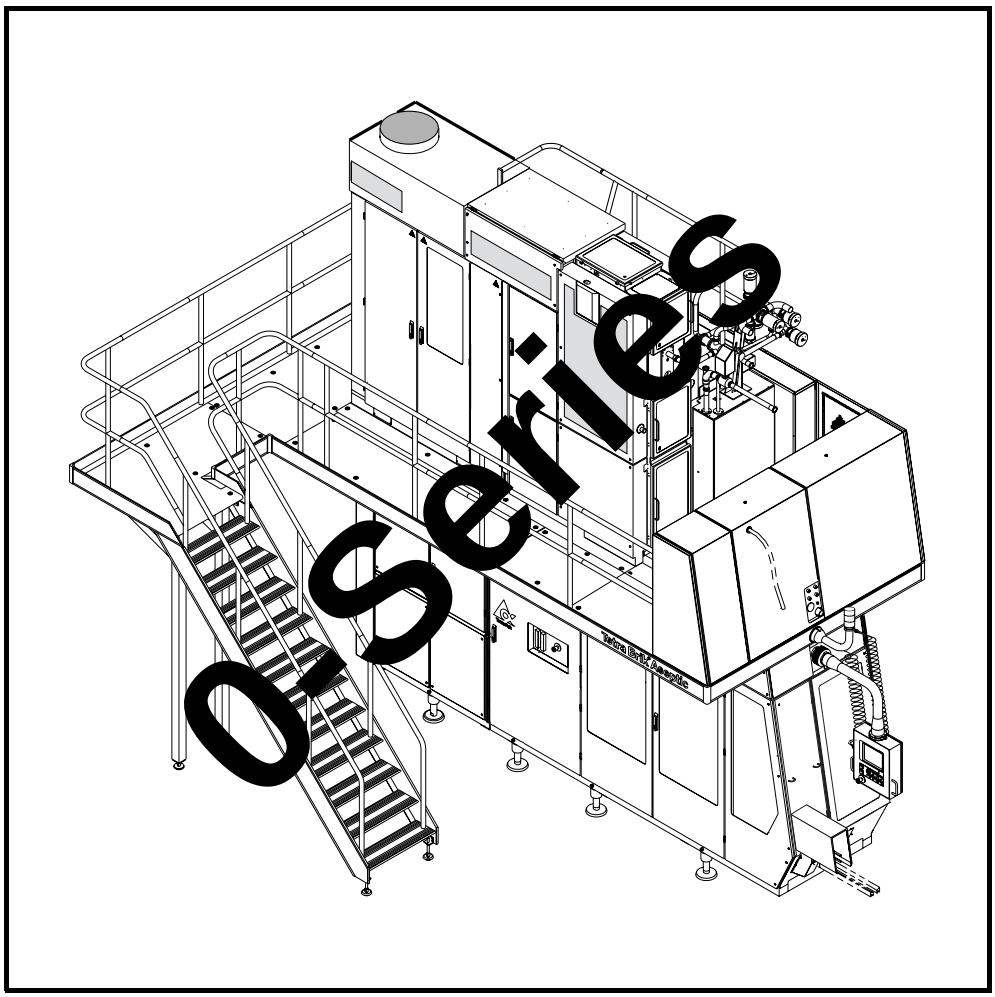

2.282302014fro.fm

Tetra Pak

Doc No. MM-82302-0104

This document is valid for:

Series No/ Machine No Sign.

Tetra Brik Aseptic
TBA/22 040V
648571-040V

Valid from machine series No.

20866

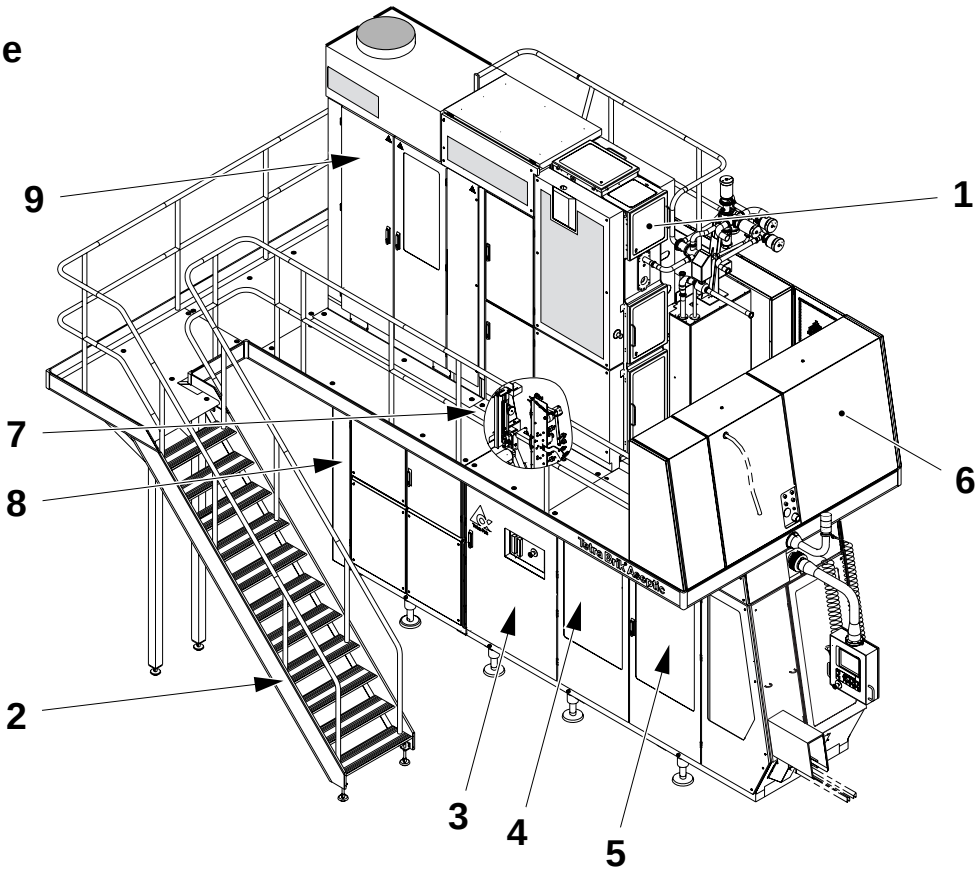

2.282302014fro.fm

1 Superstructure
2 Machine body
3 Drive unit
4 Jaw system
5 Final folder module
6 Service unit
7 Strip applicator
8 Automatic splicing unit
9 Electrical cabinet
10 General
11 Checklist overview

0-Series

Issue 2000-06

Doc No. MM-82302-0104

Tetra Pak

Tetra Brik Packaging Systems

Introduction

Equipment information 2
Document information 3
How to use this manual 4
Abbreviation used in this manual 6
Machine orientation 7
Stylistic conventions 8

Safety precautions

Hazard information 10
General 10
Mandatory signs 11
Danger and warning signs 12
Personnel 14
General safety precautions 15
Hygiene 15
High voltage 15
Electrical cabinet 16
Machine safety devices 17
Emergency stop buttons 17
Doors, covers and guards 18
Cooling system (electrical cabinet - service unit) . 19
Chemical products 20
Personal protective equipment 20
General emergency procedures 20
Hydrogen peroxide 21
Equipment for lifting and moving loads 23

1 Superstructure

1-1 Superstructure - description 26
1-2 Superstructure - setting sequence 27

2.282302014froTOC.fm

1.1 Aseptic chamber 28

1.1-1 Aseptic chamber - check forming ring rollers. . . . 28

1.1-2 Aseptic chamber - check bending rollers 29

1.1-3 Aseptic chamber - check overpressure 30

1.1-4 Aseptic chamber - leakage detection 32

1.1.1 Lower forming ring 37

1.1.1-1 Lower forming ring - set position 37

1.1.1-2 Lower forming ring - change bushings 40

1.1.1-3 Lower forming ring - set overlap 41

1.1.2 Tube support 43

1.1.2-1 Tube support - change bushings 43

1.1.3 Forming ring. 44

1.1.3-1 Forming ring - change bushings 44

1.1.4 Calender roller 45

1.1.4-1 Calender roller - check 45

1.1.4-2 Calender roller - set pressure 46

1.1.4-3 Calender roller - change bushings. 47

1.1.4-4 Calender roller - set proximity switch 49

1.1.4-5 Calender Roller-check pneumatic cylinder. 50

1.1.5 Drive unit 51

1.1.5-1 Drive unit - check 51

1.1.5-2 Drive unit - change roller bearings 52

1.1.6 Crank. 53

1.1.6-1 Crank - check chain 53

1.1.7 Pillar 54

1.1.7-1 Pillar - check gasket and seal 54

1.1.7-2 Pillar - change bearings 55

1.1.8 Spray system 56

1.1.8-1 Spray system - check 56

1.1.8-2 Spray system - clean peroxide filter 57

1.1.8-3 Spray system - set pressure 58

1.1.9 Bending rollers 59

1.1.9-1 Bending roller- change bearings 59

1.1.9-2 Bending roller - change bearings 60

2.282302014froTOC.fm

1.1.10 Paper guide 61
1.1.10-1 Paper guide - check bearings. 61
1.1.11 Seal 63
1.1.11-1 Seal - check 63
1.1.11-2 Seal - overhaul. 64
1.1.12 Pendulum roller 65
1.1.12-1 Pendulum roller-check 65
1.1.12-2 Pendulum roller - set pressure. 66
1.1.12-3 Pendulum Roller - change bearings 67
1.1.12-4 Pendulum Roller - set proximity switch 68
1.1.12-5 Pendulum Roller-check pneumatic cylinder 69
1.2 Sterile air system 70
1.2-1 Sterile Air System - check leakages 70
1.2.1 Air super heater 71
1.2.1-1 Air super heater - check 71
1.2.1-2 Air super heater - check heat exchanger 72
1.2.2 Compressor unit 76
1.2.2-1 Compressor unit - check pressure 76
1.2.2-2 Compressor unit - check for leaks and vibrations 77
1.2.2-3 Compressor - change seals 78
1.2.3 Valve heat exchanger 81
1.2.3-1 Valve heat exchanger - overhaul 81
1.2.3-2 Heat exchanger valve - set bypass position. 83
1.2.4 Valve reference point. 85
1.2.4-1 Valve reference point - check 85
1.2.5 Air preheating valve 86
1.2.5-1 Air preheating valve - overhaul. 86
1.2.5-2 Air preheating valve - set proximity switch 88
1.2.5-3 Air preheating valve - set bypass position 88
1.2.6 Scrubber 89
1.2.6-1 Scrubber - clean constant flow valve 89
1.2.6-2 Scrubber - clean filters 90
1.2.7 Separator 91
1.2.7-1 Separator - check pressure guard 91
1.2.7-2 Separator - clean filter and float 92

2.282302014froTOC.fm

1.2.7-3 Separator - overhaul 94
1.2.7-4 Separator - set float unit 95
1.2.8 Pipe line 96
1.2.8-1 Pipe line - clean spreader nozzle 96
1.2.9 Pressure regulator (60 Hz) 97
1.2.9-1 Pressure regulator (60 Hz) - set 97
1.3 Filling System 98
1.3-1 Filling system - description 98
1.3.2 Product valve group 99
1.3.2-1 Product valve group - remove pneumatic cylinders, AP-valve 99
1.3.2-2 Product valve group - change seals and membranes, AP-valve 101
1.3.2-3 Product valve group - change O-rings, AP-valve 105
1.3.2-4 Product valve group - set proximity switches . . 108
1.3.3 Flow regulator 109
1.3.3-1 Flow regulator - overhaul regulating valve 109
1.3.3-2 Flow regulator - set proximity switch 115
1.3.4 Fastening plate 116
1.3.4-1 Fastening plate - check 116
1.3.5 Filling pipe 120
1.3.5-2 Filling pipe - set position 120
1.3.5-3 Filling pipe - set pressure roller 132
1.3.5-4 Filling pipe - set level probe 133
1.3.7 CIP switch. 134
1.3.7-1 C.I.P. switch - set proximity switch 134
1.3.7-2 C.I.P. switch - change seal ring 134
1.3.8 Steam system. 135
1.3.8-1 Steam system - clean steam trap 135
1.3.8-2 Steam system - clean filter 136
1.4 Hydrogen Peroxide. 139
1.4.1 Water circulation 139
1.4.1-1 Water circulation - check 139
1.4.1-2 Water circulation - fill 140

2.282302014froTOC.fm

1.4.2 Bath 142
1.4.2-1 Bath - check roller 142
1.4.2-2 Bath - change heating element 143
1.4.2-3 Bath - change roller bearings 144

1.5 Frame section, upper 145
1.5.1 Bending roller 145
1.5.1-1 Bending roller - check 145
1.5.1-2 Bending roller - set position 146
1.5.1-3 Bending roller - check splice detector 147
1.5.1-4 Bending roller - set splice detector 148
1.5.1-5 Bending roller - set web guide position 150
1.5.1-6 Bending roller - check web guide 151

1.6 Connection box 152
1.6-1 Connection box - check pressure switch 152
1.6-2 Connection box - set pressure switch 152

2.282302014froTOC.fm

2 Machine body

2-1 Machine body - description 154

2.5 Hydrogen Peroxide 155
2.5-1 Hydrogen peroxide - check leakages 155
2.5-2 Hydrogen peroxide - check pump 156
2.5-3 Hydrogen peroxide - set pressure 157
2.5-4 Hydrogen peroxide - clean and passivate 158
2.5.1 Peroxide pipe 162
2.5.1-1 Peroxide pipe - check 162
2.5.1-2 Peroxide pipe - clean strainer 163
2.5.2 Dilution tank 164
2.5.2-1 Dilution tank - check 164
2.5.3 Cabinet 165
2.5.3-1 Cabinet - check 165
2.5.3-2 Cabinet - change gasket and non return valve . . 166
2.5.3-3 Cabinet - clean filter 167

2.5.4 Peroxide pump 168
2.5-4-1 Peroxide pump - change pump 168
2.5.4-2 Peroxide pump - overhaul pump 169
2.5.4-3 Peroxide pump - set impeller 172
2.5.5 Peroxide tank 173
2.5.5-1 Peroxide tank - check 173
2.6 Ext. cleaning pipework 174
2.6-1 Ext. cleaning pipework - check nozzles 174
2.7 Waste conveyor 175
2.7-1 Waste conveyor - check 175
2.7-2 Waste conveyor - change conveyor belt 176

3 Drive

3-1 Drive - description. 178
3.1 Drive jaw unit 179
3.1-1 Drive jaw unit - check connections. 179
3.1-2 Drive jaw unit - overhaul 180
3.2 Drive design correction 182
3.2-1 Drive design correction - overhaul 182
3.3 Volume adjustment. 185
3.3-1 Volume adjustment - stepper motor overhaul . . . 185
3.4 Drive final folder 191
3.4-1 Drive final folder - overhaul 191
3.5 Photocell unit 194
3.5-1 Photocell unit - check 194
3.5-2 Photocell unit - set 195

4 Jaw system

4-1 Jaw system - description 200
4-2 Jaw system - setting sequence. 201
4-3 Jaw system - disassembly and reassembly 202

2.282302014froTOC.fm

4-4 Jaw system - grease chains 205

4.1 Sealing link 206

4.1-1 Sealing link - check inserts 206
4.1-2 Sealing link - check volume flap dampers 207
4.1-3 Sealing link - check volume flap springs and bearings 208
4.1-4 Sealing link - check volume flap rollers 209
4.1-5 Sealing link - check cam followers 210
4.1-6 Sealing link - check flap folding 211
4.1-7 Sealing link - change inductor. 212
4.1-8 Sealing link - check carbon brushes 213
4.1-9 Sealing link - Clean TS rail. 214
4.1-10 Sealing link - overhaul 215

4.2 Pressure link 220

4.2-1 Pressure link - check volume flap dampers. 220
4.2-2 Pressure link - check volume flap springs. 221
4.2-3 Pressure link - check volume flap rollers 222
4.2-4 Pressure link - check cam followers 223
4.2-5 Pressure link - check pressure bar springs 224
4.2-6 Pressure link - change sealing dolly 225
4.2-7 Pressure link - overhaul. 226

4.3 Drive unit 229

4.3-1 Drive unit - check cutting belts 229
4.3-2 Drive unit - check angle encoder belt 230
4.3-3 Drive unit - set knives and cutting belt tension. . 231
4.3-4 Drive unit - set angle encoder belt 233
4.3-5 Drive unit - change knife. 234
4.3-6 Drive unit - remove knife holder. 234
4.3-7 Drive unit - change cutting dolly 235
4.3-8 Drive unit - remove cutting dolly holder. 235
4.3-9 Drive unit - set angle encoder 236
4.3-10 Drive unit overhaul - change bearing and seal ring, chain drive shaft, LH side 238
4.3-11 Drive unit overhaul - change bearing and seal ring, drums, LH side. 243

2.282302014froTOC.fm

4.3-12 Drive unit overhaul - change bearing and seal ring, chain drive shaft, RH side 245
4.3-13 Drive unit overhaul - change bearing and seal ring, drums, RH side 249
4.3-14 Drive unit - change drum gearwheel 254
4.3-15 Drive unit - change chain wheel 256
4.3-16 Drive unit - change bearings in belt tensioner . . 258

4.4 Volume adjustment 260

4.4-1 Volume adjustment - set 260
4.4-2 Volume adjustment - change cams 261

4.5 Design correction 262

4.5-1 Design correction - check belt tension 262
4.5-2 Design correction - change belt 263
4.5-3 Design correction - overhaul 265
4.5-4 Design correction - set 269

0-Series

5 Final folder module

5-1 Final folder module - description 274
5-2 Final folder module - synchronisation 275

5.1 Conveyor 279

5.1-1 Conveyor - check belt 279
5.1-2 Conveyor - Check bearings 280
5.1-3 Conveyor - change belt 281
5.1-4 Conveyor - check pneumatic cylinder 283
5.1-5 Conveyor - change pneumatic cylinder 284
5.1-6 Conveyor - set pneumatic cylinder 285
5.1-7 Conveyor - overhaul 286

5.2 Final folder 292

5.2.1 Station chain 292

5.2.1-1 Station chain - lubricate 292
5.2.1-2 Station chain - change 293
5.2.1-3 Station chain - overhaul 295

2.282302014froTOC.fm

5.2.2 Swing frame 296
5.2.2-1 Swing frame - check pulley. 296
5.2.3 Chain support 297
5.2.3-1 Chain support - check condition 297
5.2.3-2 Chain support - overhaul. 298
5.2.3-3 Chain support - change chain guides 302
5.2.4 Squeezer. 303
5.2.4-1 Squeezer - set position 303
5.2.4-2 Squeezer - change side pressure belts. 305
5.2.4-3 Squeezer - change top pressure belt 306
5.2.4-4 Squeezer - change side squeezer ball bearings . . 307
5.2.4-5 Squeezer - change top squeezer ball bearings. . . 309
5.2.4-6 Squeezer - check side squeezer clearances 310
5.2.4-7 Squeezer - check top squeezer clearances. 312
5.2.5 Flap sealing 314
5.2.5-1 Flap sealing - set nozzles. 314
5.2.5-2 Flap sealing - overhaul heater 315
5.3 Discharge unit. 316
5.3-2 Discharge unit - check bushings 316
5.3-3 Discharge unit - change ball bearing. 318
5.4 Final folder drive. 320
5.4-1 Couplings - check 320
5.4-2 Gearbox - check oil 320
5.5 Waste conveyor 321
5.5-1 Waste conveyor - check 321
5.5-2 Waste conveyor - change conveyor belt 322

6 Service unit

6-1 Service unit - description 324
6.1 Cooling water system 325
6.1-1 Cooling water system - check 325
6.1-2 Cooling water system - fill 326

2.282302014froTOC.fm

6.1.1 Compressor unit 327
6.1.1-1 Compressor unit - check sight glass 327
6.1.1-2 Compressor unit - check 328
6.1.2 Flowmeter 329
6.1.2-1 Flowmeter - change deionizer cartridge 329
6.1.2-2 Flowmeter - set flows 330
6.1.2-3 Flowmeter - change filter insert 331
6.2 Foam Cleaning Unit 332
6.2.1 Cleaning pump 332
6.2.1-1 Cleaning pump - check connections 332
6.2.1-2 Cleaning pump - set pressure 333
6.3 Water panel 334
6.3-1 Water panel - check pressure switch 334
6.3-2 Water panel - clean filters 335
6.3-3 Water panel - set tube flushing device 337
6.4 Supply System 338
6.4.1 Pneumatic unit 338
6.4.1-1 Pneumatic unit - check 338
6.4.1-2 Pneumatic unit - set pressure 339
6.4.1-3 Pneumatic unit - set pressure switch 339
6.4.1-4 Pneumatic unit - clean filter insert 340
6.5 Machine body 341
6.5.1 Chemical unit 341
6.5.1-1 Chemical unit - check 341

7 Strip applicator

7-1 Strip applicator - description 344
7.1 Strip magazine 345
7.1-1 Strip magazine - check rollers 345
7.1.1 Brake arm 346
7.1.1-1 Brake arm - check function 346
7.1.1-2 Brake arm - check 347

2.282302014froTOC.fm

7.1.1-3 Brake arm - set 348
7.1.2 Cutting table 349
7.1.2-1 Cutting table- check 349
7.1.2-2 Cutting table - set knife 350
7.1.3 Heating device 351
7.1.3-1 Heating device - check 351
7.1.3-3 Heating device - set position 352
7.1.3-4 Heating device - check teflon tape 355
7.1.4 Hub 356
7.1.4-1 Hub - check 356
7.1.5 Mounting sheet 357
7.1.5-1 Mounting sheet - set proximity switch 357
7.1.5-2 Mounting sheet - set rotation monitor proximity switch 358
7.1.5-3 Mounting sheet - set roller guides 359
7.1.5-4 Mounting sheet - set stop screws 360
7.1.5-5 Mounting sheet - set rollers position 361
7.2 Strip applicator 362
7.2-1 Strip applicator - set inductor position 362
7.2.1 Pressure roller 364
7.2.1-1 Pressure roller - check 364
7.2.1-2 Pressure roller - change rollers 365
7.2.1-3 Pressure roller - set spring force 366
7.2.2 Splice detector 367
7.2.2-1 Splice detector - check 367
7.2.2-2 Splice detector - set 368
7.2.3 Inductor 369
7.2.3-1 Inductor - check 369
7.2.4 Strip guide 370
7.2.4-1 Strip guide - check 370
7.2.4-2 Strip guide - set position 371

8 Automatic splicing unit

8-1 Automatic splicing unit - setting sequence 374

2.282302014froTOC.fm

8-2 Automatic splicing unit - description 375
8-3 Automatic splicing unit - check function 376
8-4 Automatic splicing unit - check bending rollers 380
8-5 Automatic splicing unit - check web guides 381

8.1 Machine body 382

8.1-1 Machine body - overhaul bending rollers 382
8.1-2 Machine body - set web guide 383
8.1-3 Machine body - set photocell position and sensitivity 384
8.1-4 Machine body - set proximity switches 387

8.1.1 Drive unit front 388

8.1.1-1 Drive unit front - check 388
8.1.1-2 Drive unit front - set gear wheel 389

8.1.2 Web magazine 390

8.1.2-1 Web magazine - overhaul dancer roller 390
8.1.2-2 Web magazine - set proximity switches 392

8.1.3 Bracket 393

8.1.3-1 Bracket - set proximity switch 393

8.1.4 Protective cover 394

8.1.4-1 Protective cover - check air filter 394
8.1.4-2 Protective cover - change air filter 395

8.3 Splicing device 396

8.3-1 Splicing device - set web guide 396

8.3.1 Pressure jaw 397

8.3.1-1 Pressure jaw - change knife 397
8.3.1-2 Pressure jaw - change cylinders 399

8.3.2 Drive unit rear 400

8.3.2-1 Drive unit rear - check 400
8.3.2-2 Drive unit rear - set gear wheel 401

8.3.3 Sealing unit 402

8.3.3-1 Sealing unit - check inductor 402

8.3.4 Bracket 403

8.3.4-1 Bracket - check roller and photocells 403
8.3.4-2 Bracket - set photocell sensitivity 404
8.3.4-3 Bracket - change photocell 405

2.282302014froTOC.fm

8.3.4-4 Bracket - set photocells position 407
8.3.4-5 Bracket - fitting bracket after photocell replacement 408
8.3.4-6 Bracket - set guide pin and guide plate 409

8.4 Material holder line 1 and line 2 410

8.4-1 Material holder line 1 and line 2 - check knife and guide 410
8.4-2 Material holder line 1 and line 2 - check 411
8.4-3 Material holder line1 and line 2 - set stop lug . . 412
8.4-4 Material holder line 1 and line 2 - set table/paper web parallelism 413
8.4-5 Material holder line 1 and line 2 - set stop position 414
8.4-6 Material holder line 1 and line 2 - set sealing parallelism 415
8.4-7 Material holder line 1 and line 2 - set sealing alignment 417
8.4-8 Material holder line 1 and line 2 - set overlap . . 418

8.5 Valve panel 419

8.5-1 Valve panel - set valve pressure 419

8.6 Reel trolley 420

8.6-1 Reel trolley - check 420
8.6-2 Reel trolley - change pump cylinder 421
8.6-3 Reel trolley - set regulating valve 423
8.6-4 Reel trolley - change sink valve 424
8.6-5 Reel trolley - overhaul lifting cylinder 425
8.6-6 Reel trolley - remove fork wheel 426
8.6-7 Reel trolley - remove guide wheel 427
8.6-8 Reel trolley - set brake 428

9 Electrical cabinet

This chapter has been moved to the EM 430

10 General

10-1 General - description 432

2.282302014froTOC.fm

10.1 Technical data 433

10.2 Templates and tools 435

10.3 Consumables 443

10.3-1 Lubricants 443

10.3-2 Cleaning compounds 446

11 Checklist overview

Checklist overview - description 448

TPMS - description 448

Checklist overview 449

Introduction

To ensure maximum safety, always read the *Safety precautions* section before doing any work on the equipment or making any adjustments.

Equipment information

Intended use

The purpose of this Tetra Pak equipment is to pack pumpable food products.

Manufacturer

This Tetra Pak equipment has been manufactured by:

Tetra Brik Packaging Systems AB
Ruben Rausings gata
221 86 LUND
Sweden

or by:

Tetra Brik Packaging Systems S.p.A.
Via Delfini 1
411 00 MODENA
Italy

Service

Contact the nearest Tetra Pak service station.

Identification

The figure shows an example of the equipment sign. The sign carries data needed when contacting Tetra Pak concerning this specific equipment.

CE marking

This equipment complies with the basic health and safety regulations of the European Economic Area (EEA).

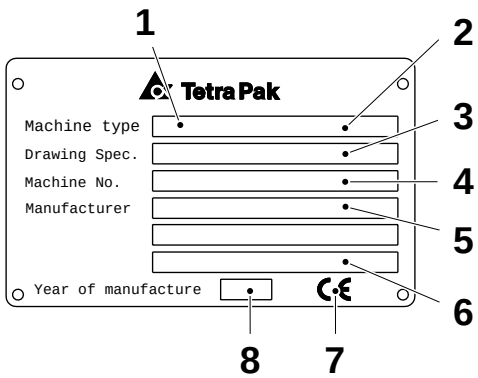

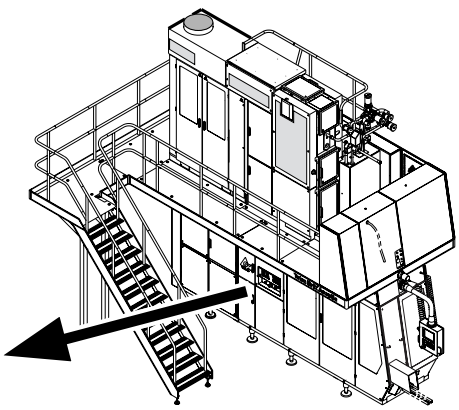

1 Machine type
2 Volume
3 Drawing specifications
4 Machine serial number
5 Manufacturer
6 Designer
7 CE mark
8 Year of manufacture

0-Series

2.282302014int.fm

Document information

Purpose of Maintenance Manual (MM)

The purpose of this Maintenance Manual is to provide the service technicians with:

- all **scheduled maintenance** procedures listed in the checklists
- information for **unscheduled maintenance** such as:
  - additional maintenance procedures
  - functional descriptions
  - system descriptions

The same **structure**, **codes** and **denominations** used in this MM, are used in the Spare Part Catalogue (SPC) and in the checklists.

It is important to:

- keep the manual for the life of the equipment
- pass the manual on to any subsequent holder or user of the equipment.

Design modifications

The directives in this document are in accordance with the design and construction of the equipment at the time it was delivered from the Tetra Pak production plant.

Technical publications

- Electrical Manual (EM)
- Installation Manual (IM)
- Maintenance Manual (MM)
- Operation Manual (OM)
- Spare Parts Catalogue (SPC)

Additional copies can be ordered from the nearest Tetra Pak service station.

When ordering technical publications, always quote the **document number** that can be found in the machine specification document.

(Cont'd)

2.282302014int.fm

(Cont'd)

Number of pages

This document contains a total of 454 pages.

Copyright © 2000
Tetra Brik Packaging Systems
All rights reserved. No part of this document may be reproduced or copied in any form or by any means without the written permission of Tetra Brik Packaging Systems .

How to use this manual

Page layout

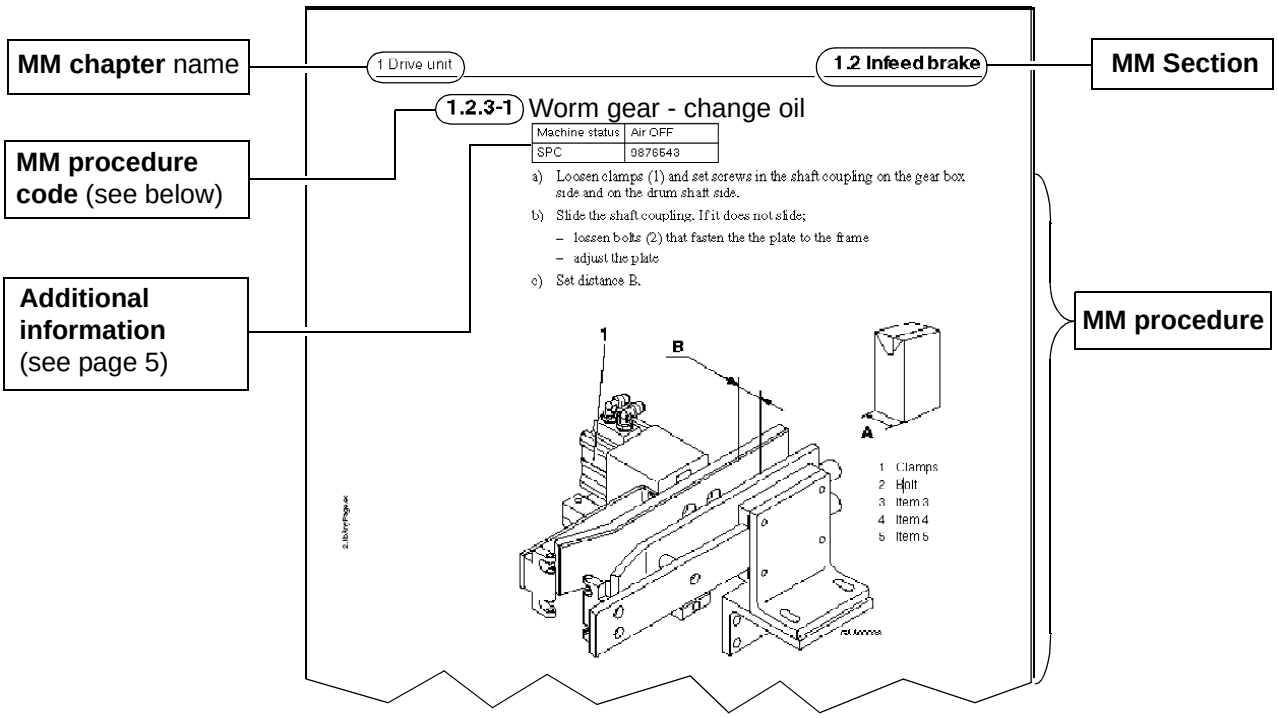

(Cont'd)

0-Series

2.282302014int.fm

(Cont'd)

MM procedure codes

The maintenance procedures are indicated as shown by the example below:

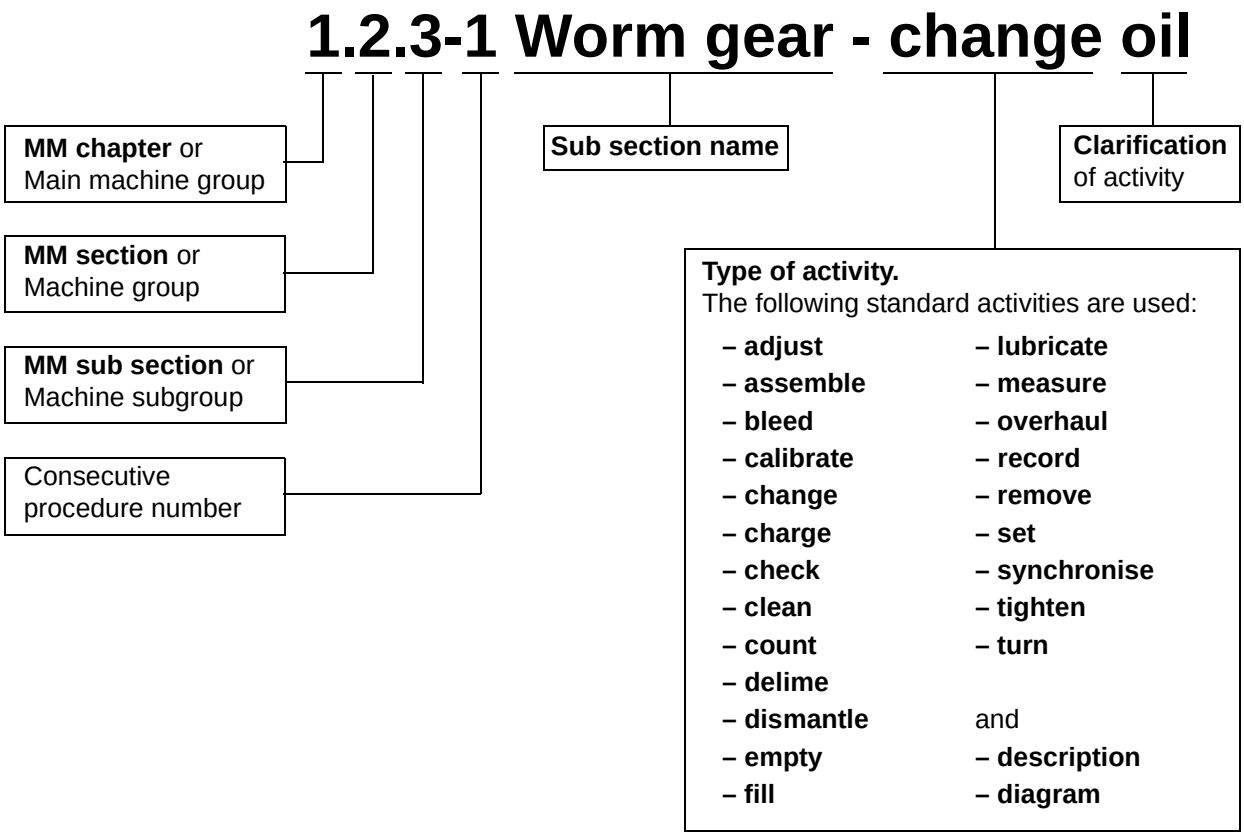

Additional information

The following additional information is included in each MM procedure as applicable.

2.282302014int.fm

1.2.3-1 Worm gear - change oil

Machine status
Machine status during the procedure.
If nothing is stated, all supplies are **Off**, and the packaging material and the strip have been removed.

Machine status	Power **On**
Consumables - lubricant	TP No. 92645-23
Tools - template	TP No. 123456-1
SPC reference	123456-010V

Consumables
Consumables are items which are needed in addition to replacement parts.

SPC reference
Reference to the Spare Parts Catalogue (SPC). The number is to be found in the SPC index.

Tools
Tools needed, that are **not** normally carried by a service technician (for example a template needed in a setting procedure).

Abbreviation used in this manual

approx.	approximately
AP	Aseptic Product
ASU	Automatic Splicing Unit
B	Baseline (package shape)
CIP	Cleaning In Place
EM	Electrical Manual
HF	High Frequency
IM	Installation Manual
LED	Light Emitting Diode
LH	Left Hand
LS	Longitudinal Seal(ing)
min	minimum
max	maximum
MM	Maintenance Manual
OE	Optional Equipment
OM	Operating Manual
p/h	packages per hour
PLC	Programmable Logic Controller
RH	Right Hand
S	Slimline (package shape)
SA	Strip Applicator
SPC	Spare Parts Catalogue
SP	Spare part
TMCC	Tetra Pak Multi-purpose Compact Controller
TP	Tetra Pak
TPIH	Tetra Pak Induction Heating
TPMS	Tetra Pak Maintenance System
TPOP	Tetra Pak Operator Panel
TS	Transversal Seal(ing)

2.282302014int.fm

Machine orientation

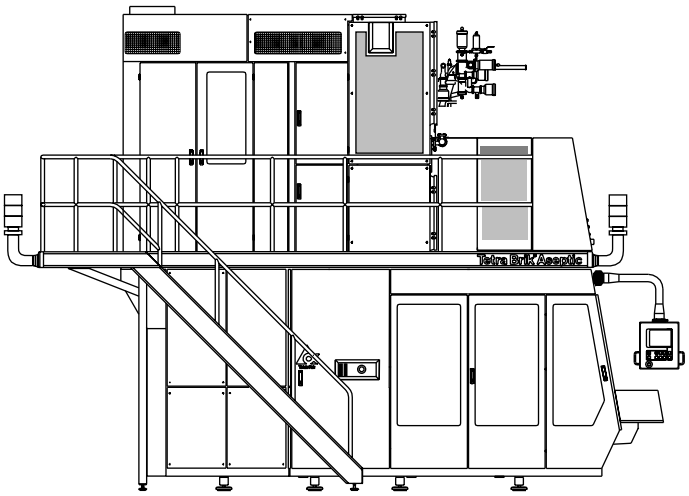

LH side

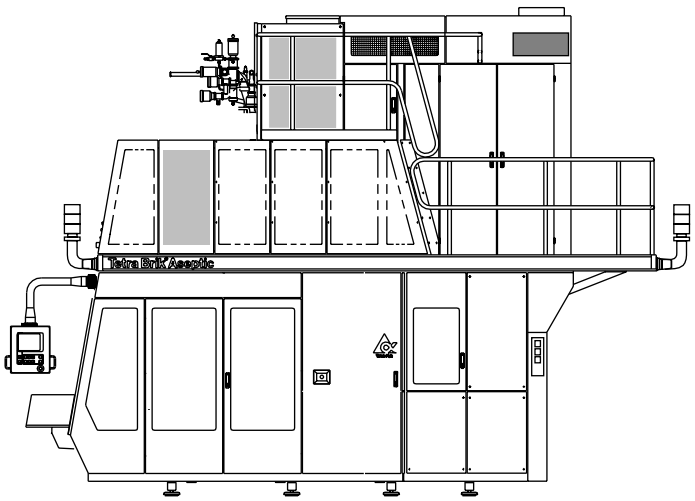

RH side

Stylistic conventions

All push buttons and program steps are given in **bold** style in this manual.

All references are given in *italic* style in this manual.

2.282302014int.fm

Safety precautions

To ensure maximum safety, always read this section carefully before doing any work on the equipment or making any adjustments.

Hazard information

General



Failure to observe information marked with “DANGER!” **puts your life in danger**.



Failure to observe information marked with “WARNING!” can result in **personal injury or serious damage to or destruction of equipment**.

Caution! Failure to observe information marked with “Caution!” can result in **damage to equipment**.

2.282302014sp.fm

Mandatory signs

 Wear eye protection	 Wear hearing protection
 Wear head protection	 Wear protective gloves
 Disinfect hands/gloves	

Danger and warning signs

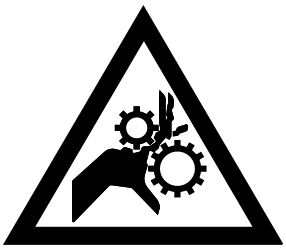 **Risk of entanglement!**	 **Risk of corrosion!**
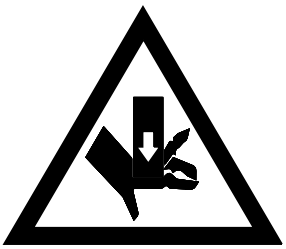 **Risk of crushing!**	 **Risk of cutting/amputation!**
 **Risk of burns!**	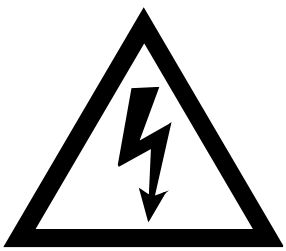 **Risk of electrocution!**

(Cont'd)

2.282302014sp.fm

(Cont'd)

 **Risk of crushing!**	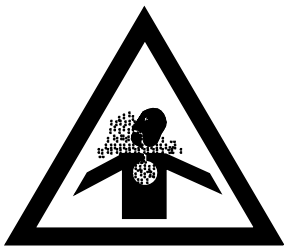 **Risk of intoxication!**
 **Risk of falling!**	

2.282302014sp.fm

Personnel

Only skilled or instructed persons are allowed to work on the equipment.

The manufacturer declines all responsibility for injury or damage if the instructions in this manual are not followed.

Personnel are responsible for:

- the equipment and the work area around the equipment
- all personnel in the vicinity of the equipment
- making sure that all safety devices are fully operational

Personnel must regard all electrical equipment as live. Before carrying out maintenance or repair work, switch the equipment off at the mains power and padlock the switch.

Electricians should be certified according to local regulations and have experience of similar types of installations, proven skills in reading and working from drawings and cable lists, and knowledge of local safety regulations regarding power and automation. Work with the electrical equipment must be performed only by skilled or instructed technicians. According to EN 60204.3,55 a skilled person is:

– *An individual with technical knowledge or sufficient experience to enable that individual to avoid hazards which electricity can create.*

2.282302014sp.fm



General safety precautions

Wear hearing protection while the equipment is running.

Hygiene

It is important to keep hands and/or gloves clean.

Disinfect hands and/or gloves before touching the packaging material, the strip(s) or any other equipment part that may come into contact with the product.

Clean the platforms, the ladder and the area around the equipment.

To avoid production faults, it is important that the packaging material and the strip(s) never touch the floor, the platform or the area around the equipment.

High voltage

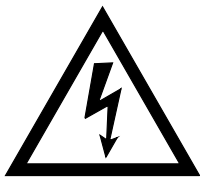

Work with parts marked with this symbol must be performed by **skilled or instructed** persons **only**.

Make sure that the mains power is disconnected before starting any work on electrical equipment marked with this symbol.

In case of accident, call for medical attention immediately.

2.282302014sp.fm

Electrical cabinet

WARNING!

There is high voltage in the electrical cabinet (up to 560 V). In case of accident call for medical attention immediately.

Work inside the electrical cabinet must be performed by skilled or instructed persons only.

Electrical cabinet doors locked with screws may be opened only by skilled or instructed persons.

LH side

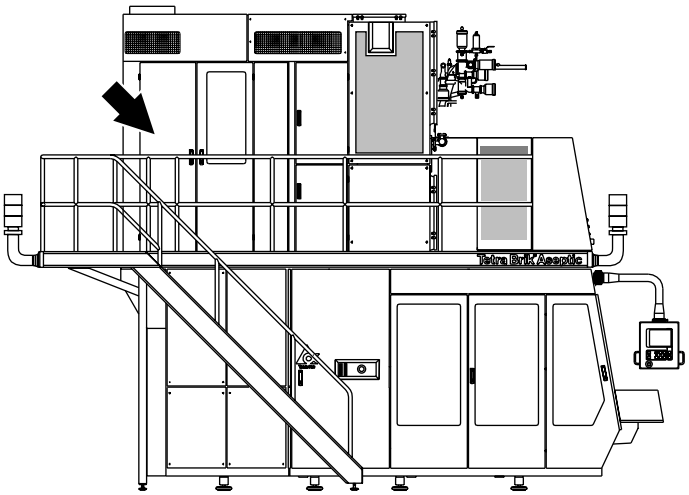

RH side

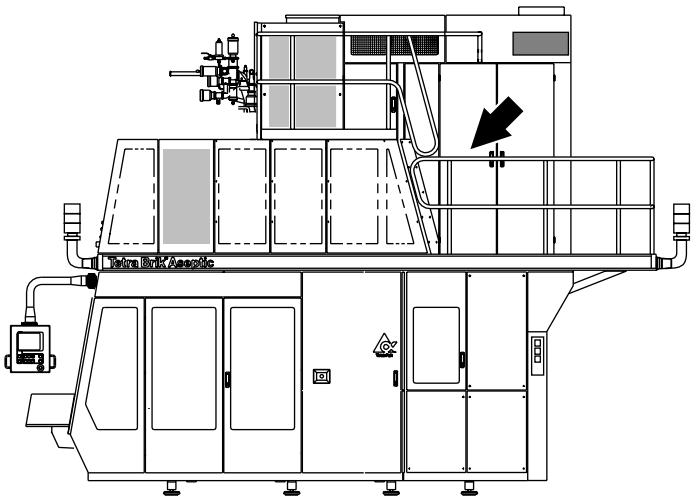

2.282302014sp.fm

TPIH generator

WARNING!

During operation the voltage in the TPIH generator can be up to 2000 V (400 V when not in operation). In case of accident call for medical attention immediately.

Never open the TPIH generator. Remove and return the unit to an authorised service centre for servicing and repair.

Machine safety devices

Emergency stop buttons

Learn the position of the **Emergency stop** buttons in order to stop the equipment immediately in case of danger to people or damage to the equipment.

The **Emergency stop** buttons do not switch off the power at the mains power switch.

Pushing the **Emergency stop** buttons will reset the equipment program to **Zero** position and deactivate all pneumatic cylinders.

LH side

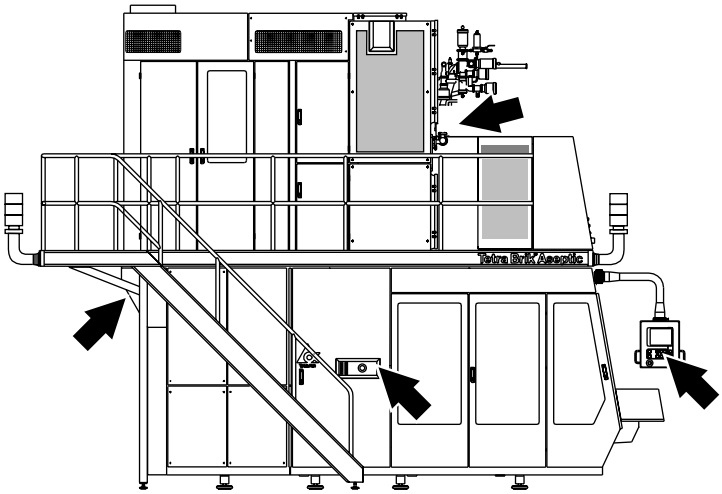

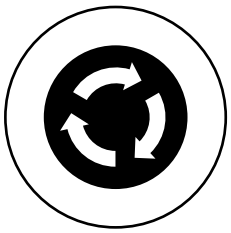

RH side

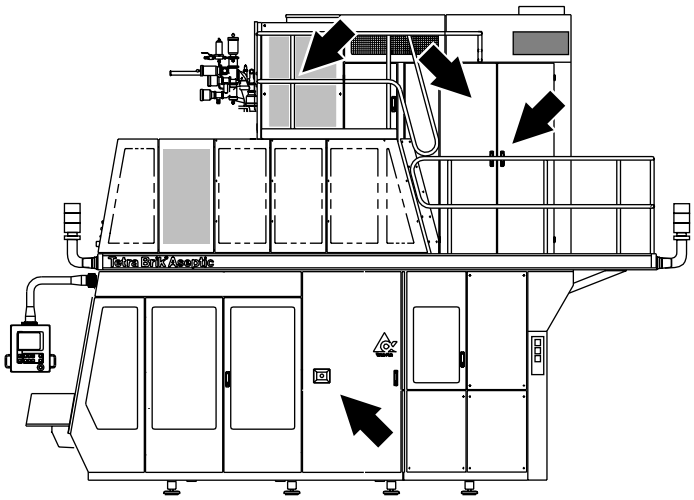

2.282302014sp.fm

Doors, covers and guards



WARNING!

Make sure that all doors, covers and guards are in place and functioning.

Never remove covers or guards while the equipment is operating.



WARNING!

Certain doors, covers and guards are fitted with safety switches. These switches are part of the safety system and must **never** be bridged, by-passed or otherwise made non-operational.

Never stop the equipment by opening a door or cover with a safety switch.

The equipment may perform a reciprocating movement during the first few seconds after a stop. Some equipment parts may also be hot.

In case of accident, call for medical attention.

LH side

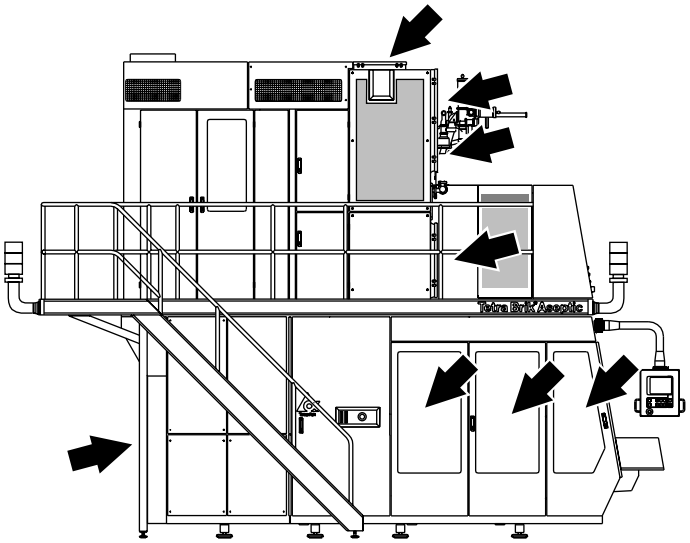

RH side

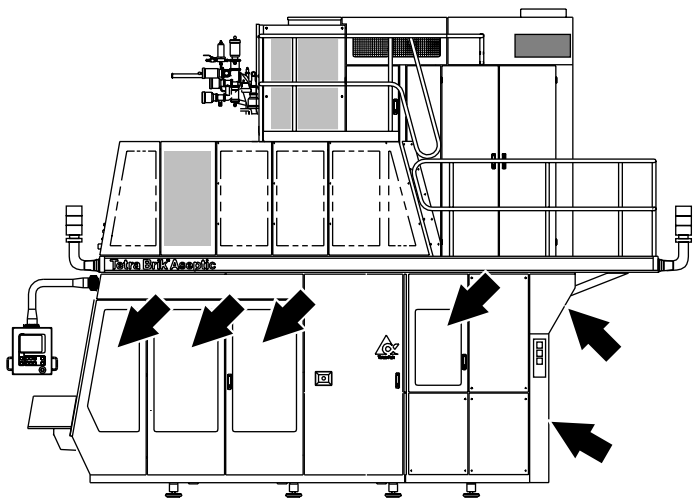

0-Series

2.282302014sp.fm

Cooling system (electrical cabinet - service unit)



WARNING!

Risk of personal injury!
Cooling media R134A.
Carefully follow the supplier's instructions for handling and disposal of the R134A (freon).

Cooling media R134A container

- Ensure good ventilation
- Keep the container well closed and in a cool and dry place away from sources of heat
- Avoid direct contact with the product
- Wear suitable protective clothing, gloves, goggles, and eye/face protection
- In case of contact with eyes, rinse immediately with plenty of water for 15 minutes and call for medical attention
- Inhalation of a high concentration can cause shortage of breath and unconsciousness
- In case of inhalation move to fresh air; if needed use oxygen gas or artificial respiration
- Very fast evaporation can cause freezing injuries

Caution! Only specially trained personnel is allowed to operate with the compressor unit in case of compressor leakages.

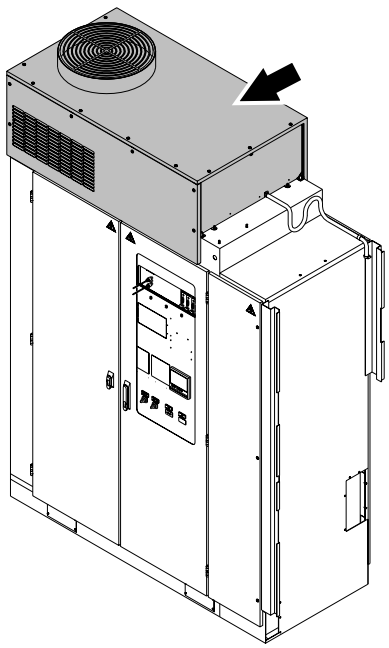

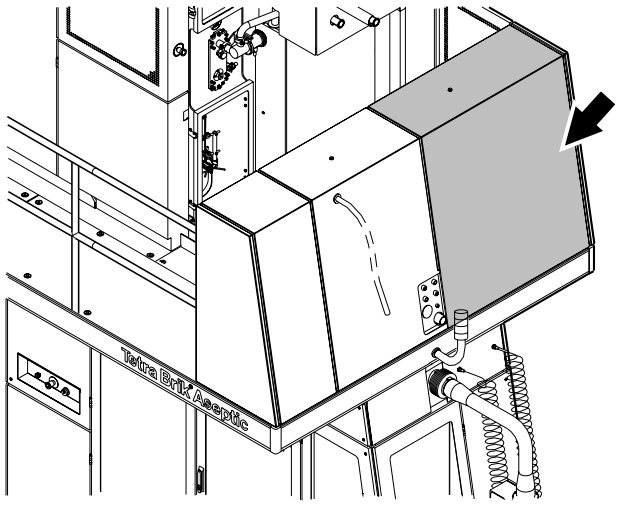

2.282302014sp.fm

Chemical products



Risk of personal injury!
Certain chemical products are toxic or inflammable, or both. Carefully follow the instructions on the container label.

Follow the supplier's instructions for handling and disposal of the chemical products.

Personal protective equipment

- **Safety goggles**, TP No. 779130-102
- **Apron**, TP No. 90303-5
- **Shoes** made of PVC, PE plastic or rubber
- **Protective gloves** made of neoprene, TP No. 90303-4

Before starting work with any chemical products, make sure that:

- the showers work
- a portable, TP No. 90303-6, or wall-mounted eyewash device is available at or near each machine site
- there are additional washing facilities



General emergency procedures

If you accidentally **shallow** chemical products, drink large amounts of lukewarm water.

If you get splashes or vapour from chemical products in your **eyes**, wash your eyes thoroughly with lukewarm water for 15 minutes (keeping eyelids wide apart).

If chemical products come into contact with **skin** or **clothes**:

- rinse immediately with plenty of water
- if skin burns appear, call for medical attention immediately
- thoroughly wash clothes before wearing them again

If you experience irritation or pain due to having **inhaled** chemical products vapour:

- leave the affected area and get some fresh air
- if the symptoms get worse, call for medical attention

2.282302014sp.fm

Hydrogen peroxide

The liquid used for sterilising the packaging material consist of 35% hydrogen peroxide (H_2O_2).



WARNING!

Hydrogen peroxide in liquid and gas form can cause irritation and injury if it comes into contact with the skin, mucous membranes, the eyes or clothes. Carefully follow the instructions on the can label.

Hydrogen peroxide container

When handling the hydrogen peroxide can, observe the following:

- 35% w/w Aqueous Solution UN No. 2014
- Corrosive
- Oxidizing
- Causes burns. Contact with combustible materials may cause fire
- Keep in a cool place away from sources of heat
- Avoid contamination
- Wear suitable protective clothing, gloves, and eye/face protection
- After contact with skin, wash immediately with plenty of water and call for medical attention
- In case of contact with eyes, rinse immediately with plenty of water and call for medical attention
- In case of spillage or fire, drench with water

Reference: TP document No. M 1751.80

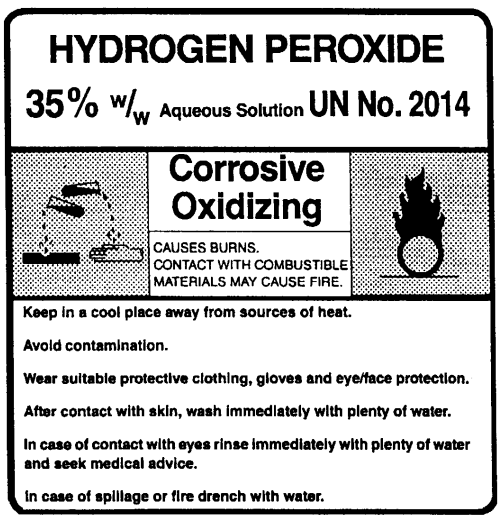

Example of can label

(Cont'd)

2.282302014sp.fm

(Cont'd)

Storage of hydrogen peroxide

Make sure that the area or room used for storage is:

- cool, clean and well ventilated
- shielded from direct sunlight
- free from combustible materials

Hydrogen peroxide must be stored only in its **original container** as delivered by the suppliers.

Keep the container upright and closed with a **proper ventilation cap** which allows oxygen to escape.

Pumps and other equipment used for hydrogen peroxide must be used **for this purpose only**.

Never put used hydrogen peroxide back into storage.

Disposal of hydrogen peroxide

Hydrogen peroxide should be sent for destruction by waste disposal specialists.



WARNING!

Risk of explosion!
Do not pour surplus hydrogen peroxide back into its original container. Hydrogen peroxide may decompose. In case of accident, call for medical attention immediately.

In some countries it is permitted to dilute hydrogen peroxide with water to a concentration below 1% and to dispose of it in the normal waste water drain. Hydrogen peroxide with a concentration below 1% is considered harmless.

2.282302014sp.fm

Equipment for lifting and moving loads

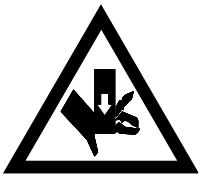

WARNING!

Make sure that the capacity of the lifting equipment is adequate and that the equipment itself is in good working order.

If lifting tackle has to be joined to make up the necessary lengths, make sure that the joins are secure and have the same lifting capacity as the rest of the tackle.

Always engage the safety clip on lifting hooks to prevent the tackle from slipping off.

Use ropes or poles to steady and manoeuvre loads. Do **not** use hands or feet.

Make sure that the route and the destination are free from obstacles before moving a suspended load. It must be possible to lower the load to the floor quickly and safely in an emergency.

When depositing loads, keep the lifting equipment in place until the stability of the load has been checked.

This page intentionally left blank

1 Superstructure

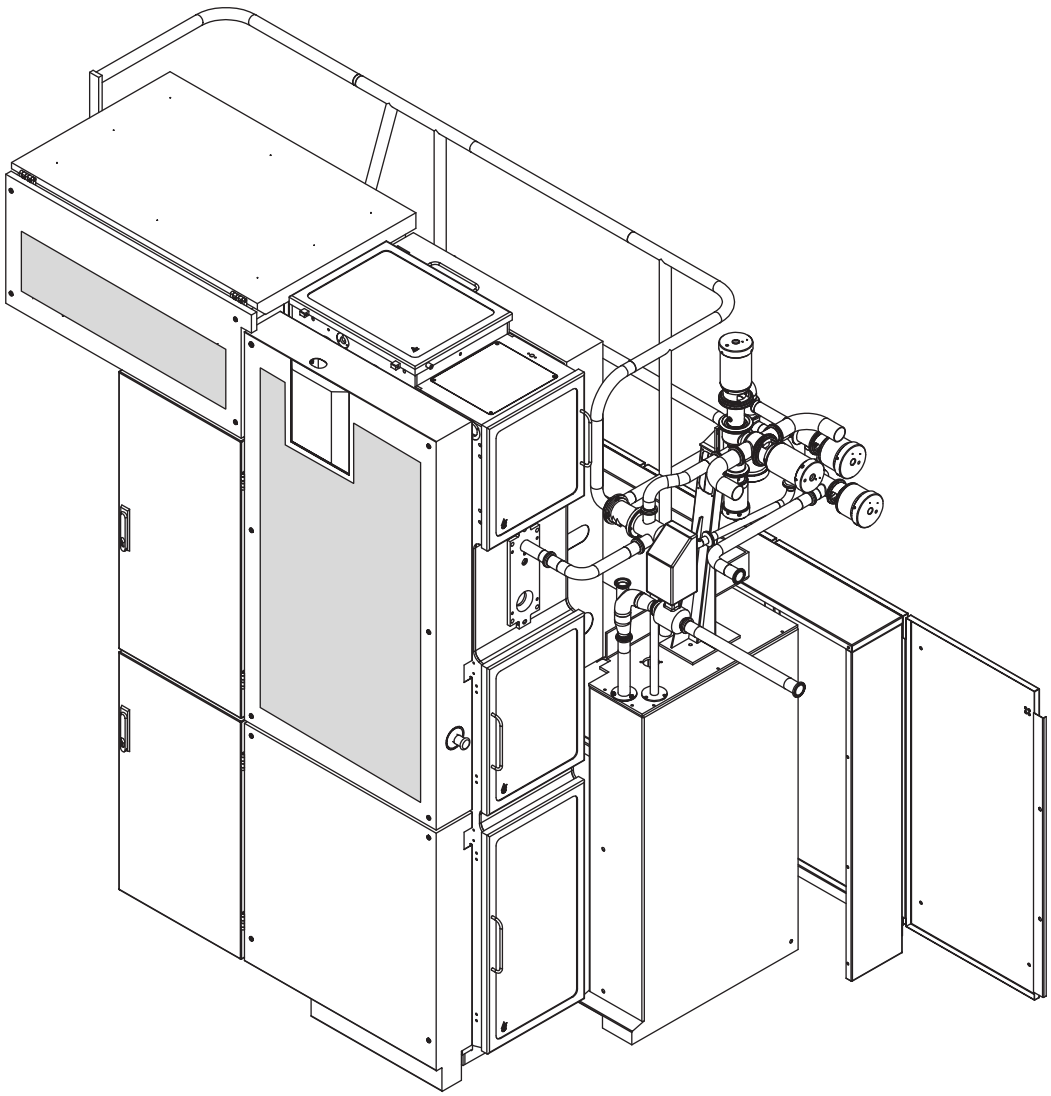

2.2B3024A01en.fm

0-Series

1-1 Superstructure - description

SPC reference	648521-0300

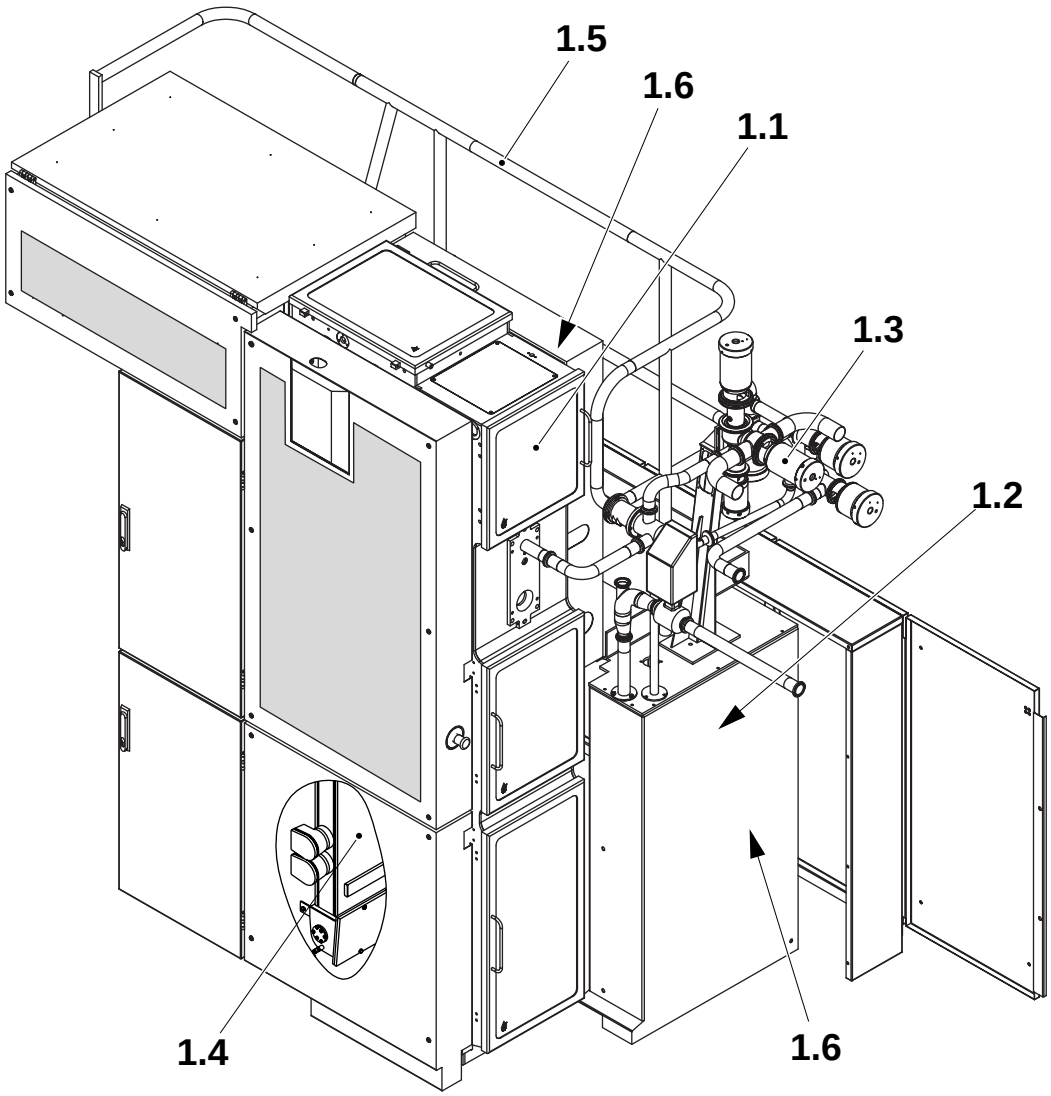

1.1 Aseptic chamber
1.2 Sterile air system
1.3 Filling System
1.4 Hydrogen Peroxide
1.5 Frame section, upper
1.6 Connection box

0-Series

2.2B3024A01en.fm

1-2 Superstructure - setting sequence

SPC reference	648521-0300

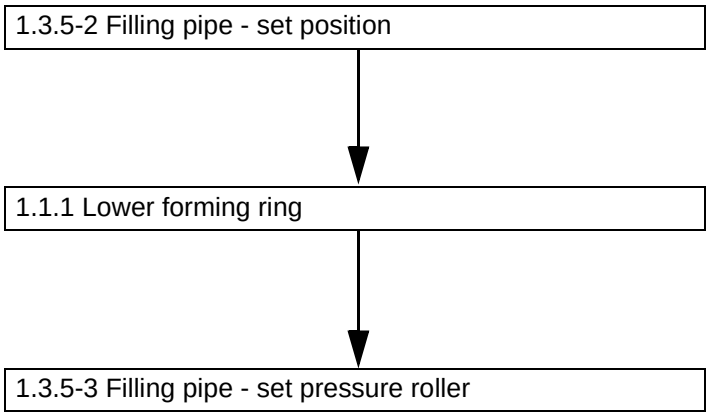

2.2B3024A01en.fm

1.1 Aseptic chamber

SPC reference	577102-0300

1.1-1 Aseptic chamber - check forming ring rollers

SPC reference	577102-0300

Check that all the rollers rotate freely. If any does not, remove the roller (8) and change the bushes (7) or the shaft (6), or both.

Clean the rollers (8) as required.

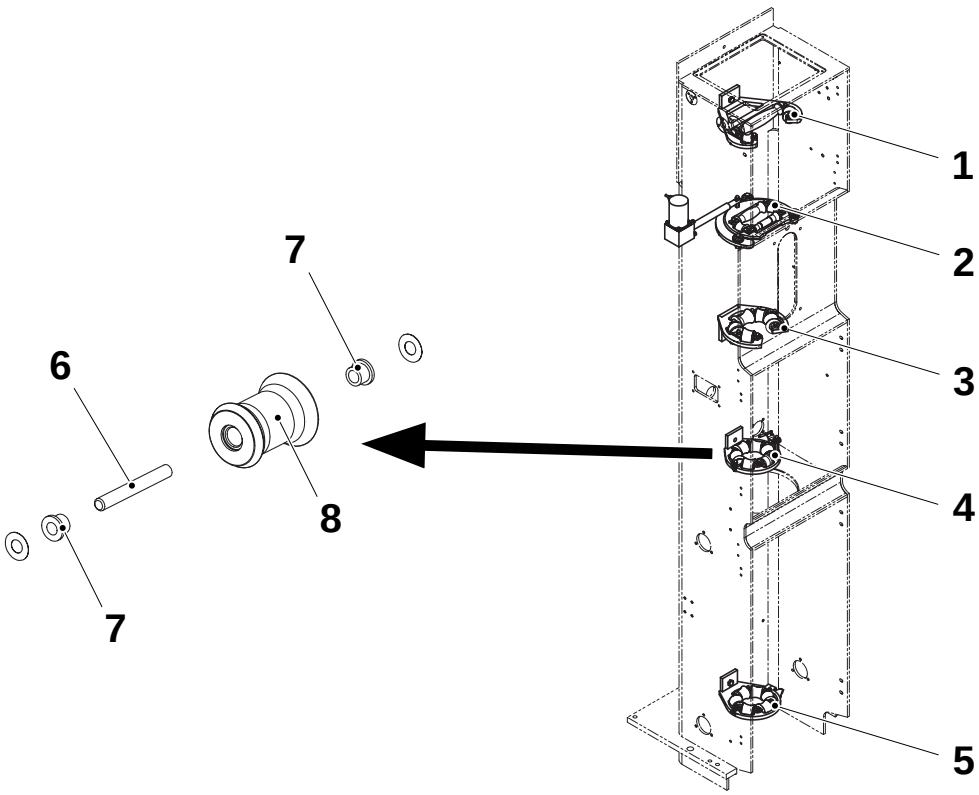

1 Upper forming ring
2 Movable forming ring
3 Forming ring
4 Lower forming ring
5 Tube support
6 Shaft
7 Bushing
8 Roller

2.2B3024A01en.fm

1.1-2 Aseptic chamber - check bending rollers

SPC reference	1195209-0200 1195183-0200 1195180-0100 1195173-0300 1347485-0100 1195166-0200 1334008-0200



WARNING!

Hydrogen peroxide!
Follow the Safety precautions.

Check the following for surface damage, and check they rotate freely in both directions:

- the roller (1), see *1.1.7-2 Pillar - change bearings.*
- the calender roller (2), see *1.1.4-1 Calender roller - check*
- the drive roller (3), see *1.1.5-1 Drive unit - check*
- the pendulum roller (4), see *1.1.12-1 Pendulum roller-check*
- the paper guide roller (5), see *1.1.10-1 Paper guide - check bearings*
- the bath roller (6), see *1.4.2-3 Bath - change roller bearings.*
- the bending roller (7), see *1.1.9-1 Bending roller- change bearings*
- the bending roller (8), see *1.1.9-2 Bending roller - change bearings*

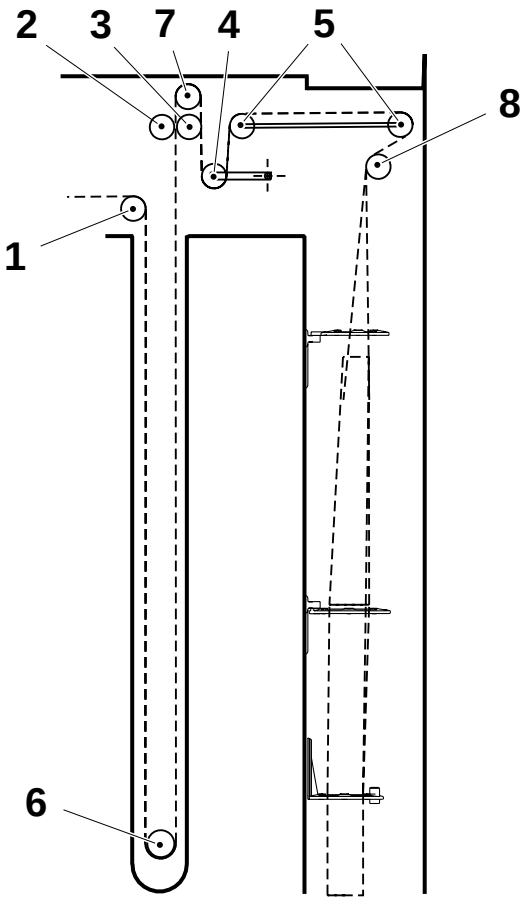

1 Roller (pillar)
2 Calender roller
3 Drive unit roller
4 Pendulum roller
5 Paper guide roller
6 Bath roller
7 Bending roller
8 Bending roller

2.2B3024A01en.fm

1.1-3 Aseptic chamber - check overpressure

Machine status	**Production**
Tools - pressure gauge	 TP No. 90243-137
SPC reference	577102-0300



WARNING!

Hydrogen peroxide!
Follow the Safety precautions.

Check the overpressure in the aseptic chamber every 1000 hours of operation.

a) Check the overlap, see *1.1.1-3 Lower forming ring - set overlap*.

b) Check the seals, see *1.1.11-1 Seal - check, 1.1.7-1 Pillar - check gasket and seal*.

c) Check the sterile air pressure, see *1.2.2-1 Compressor unit - check pressure*.

(Cont'd)

2.2B3024A01en.fm

(Cont'd)

d) Remove the screw (1) in the column and replace it with a 7 mm outside diameter rubber tube. Connect a pressure gauge (2) to the other end of the tube.

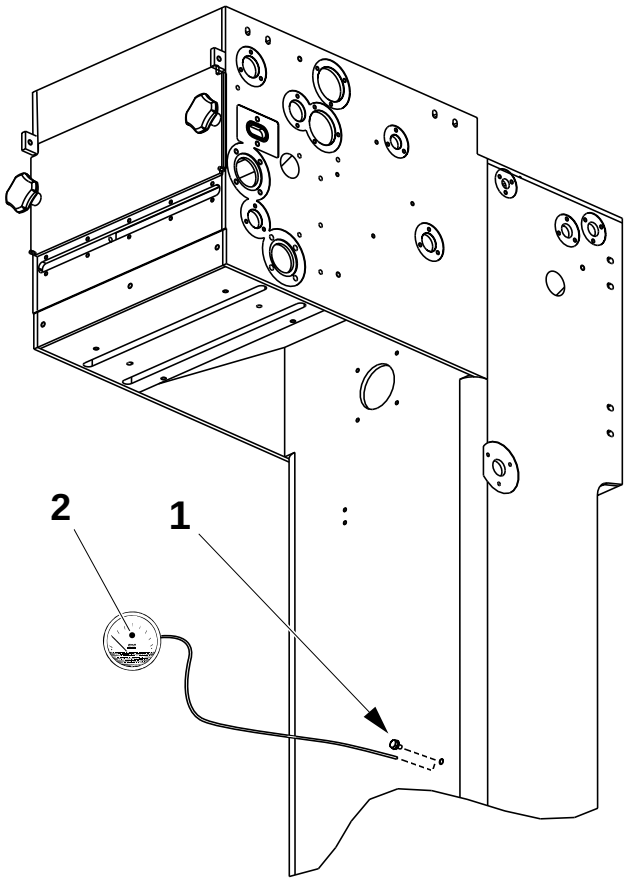

1 Screw
2 Pressure gauge

e) With the machine in **Production**, check that the gauge (2) is within **400 - 500 Pa** (40 - 50 mm WC).

f) With the machine in **Normal stop**, check that the gauge (2) is within **400 - 500 Pa** (40 - 50 mm WC).

g) To prevent the packaging material from vibrating and damaging the aluminium layer, the overpressure drops (by-pass period) after 4 minutes in **Normal stop**. Check that the gauge (2) indicates at least **200 Pa** (20 mm WC) when this is the case.

Note! If the gauges show an overpressure that is too low, check for leaks, see *1.1-4 Aseptic chamber - leakage detection*.

2.2B3024A01en.fm

1.1-4 Aseptic chamber - leakage detection

Machine status	Production
Tools - tracing leakage equipment - pressure gauge	 TP No. 533014-010V TP No. 90243-137
SPC reference	577102-0300



WARNING!

Hydrogen peroxide!
Follow the Safety precautions.

a) Operate the machine in **Production** and perform a **Normal Stop**.

b) Push **Program down to Zero** with the tube still filled.
If possible, let the machine cool down.

c) Check the overlap, see *1.1.1-3 Lower forming ring - set overlap*.

d) Remove the screw (1) in the column and replace it with a 7 mm outside diameter rubber tube. Connect the pressure gauge (2) to the other end of the tube.

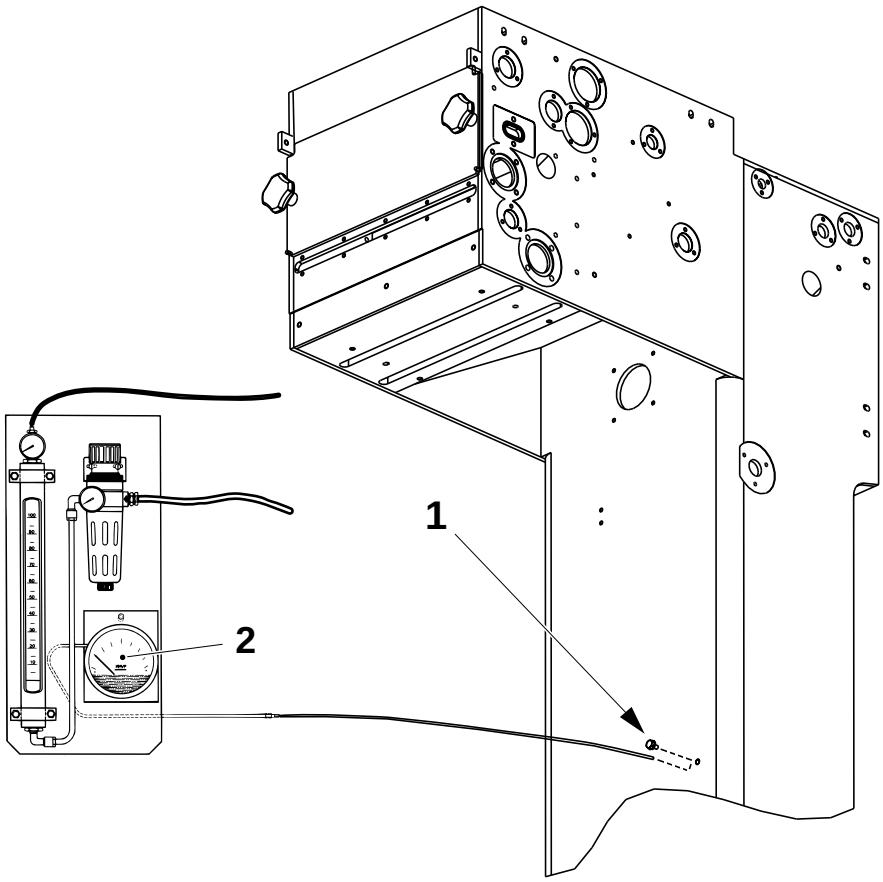

1 Screw
2 Pressure gauge

(Cont'd)

0-Series

2.2B3024A01en.fm

(Cont'd)

e) Remove the thermocouple connection (3).

f) Connect the hose from the equipment for tracing leakages (4) to a compressed air line.

g) Connect the flowmeter hose (5) to the thermocouple connection (3).

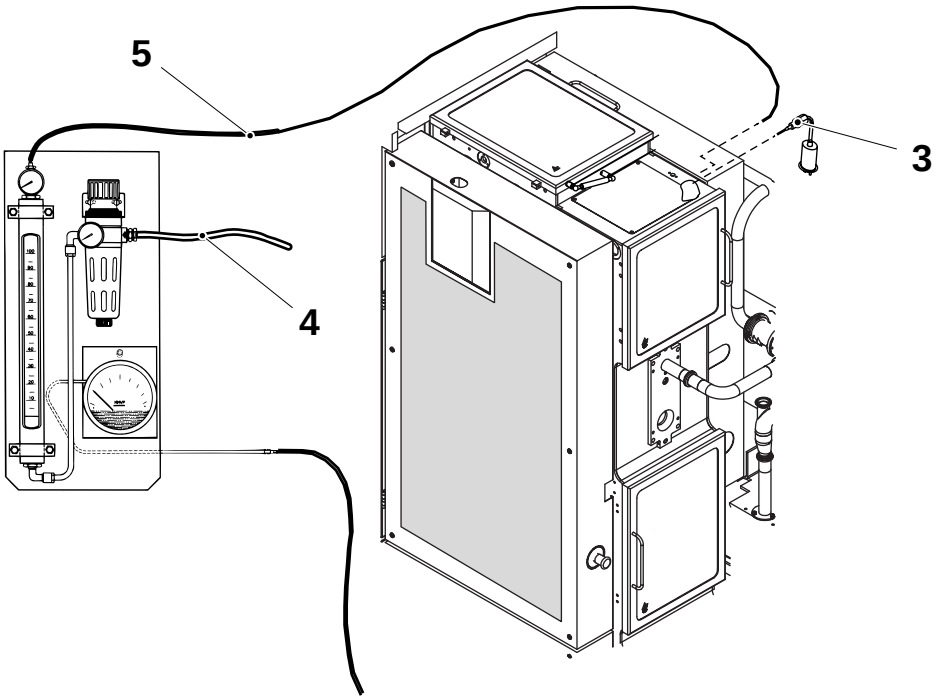

3 Thermocouple connection
4 Hose for tracing leakages
5 Flowmeter hose

2.2B3024A01en.fm

(Cont'd)

(Cont'd)

h) Check that all connections and screws in the aseptic chamber are tight.

i) Check the door locks, the door hinges and the micro switch, making sure there are no leaks.

j) Check the aseptic chamber seals.
See also *1.1.11-1 Seal - check*.

k) Turn off valve Y1112 (6).

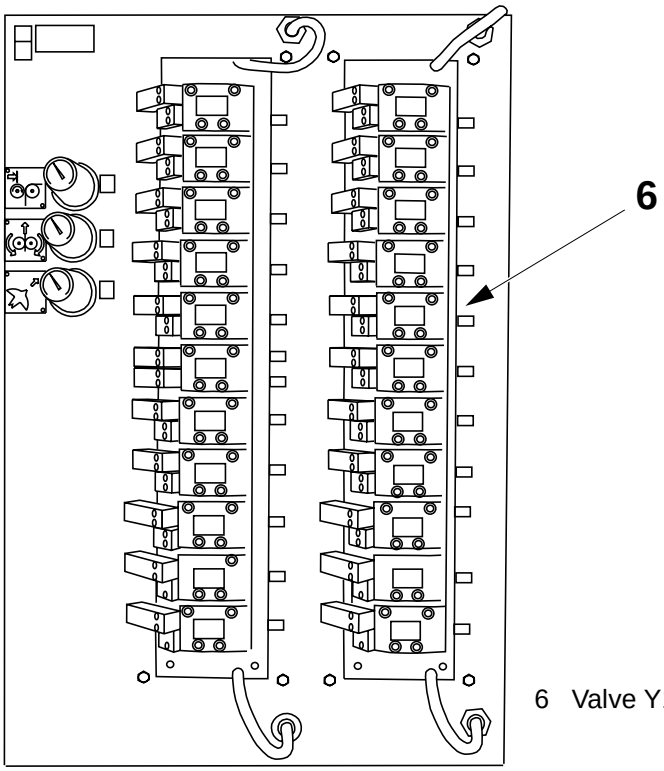

6 Valve Y1112

(Cont'd)

2.2B3024A01en.fm

(Cont'd)

l) Close the valves (7), (8) and (9) in the dilution tank.

m) Slowly open the pressure regulator (10) until the reading on the pressure gauge (11) is **200 Pa** (0.002 bar).

n) Read the flow **F%** on the flowmeter (12) and the pressure **P2** on the pressure gauge (13).

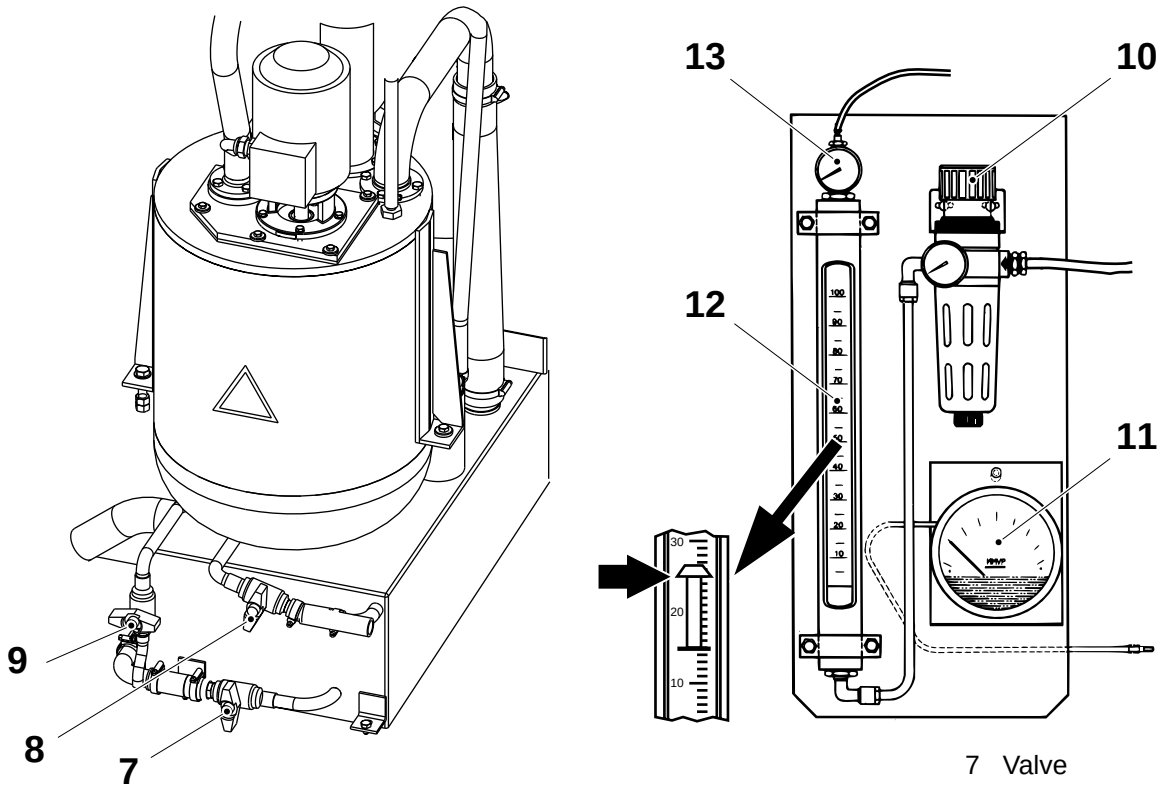

7 Valve
8 Valve
9 Valve
10 Pressure regulator
11 Pressure gauge
12 Flowmeter
13 Pressure gauge

(Cont'd)

2.2B3024A01en.fm

(Cont'd)

o) Enter the values on the diagram and read the leakage **Q**.
The maximum leakage allowed is 2 m^3/h.

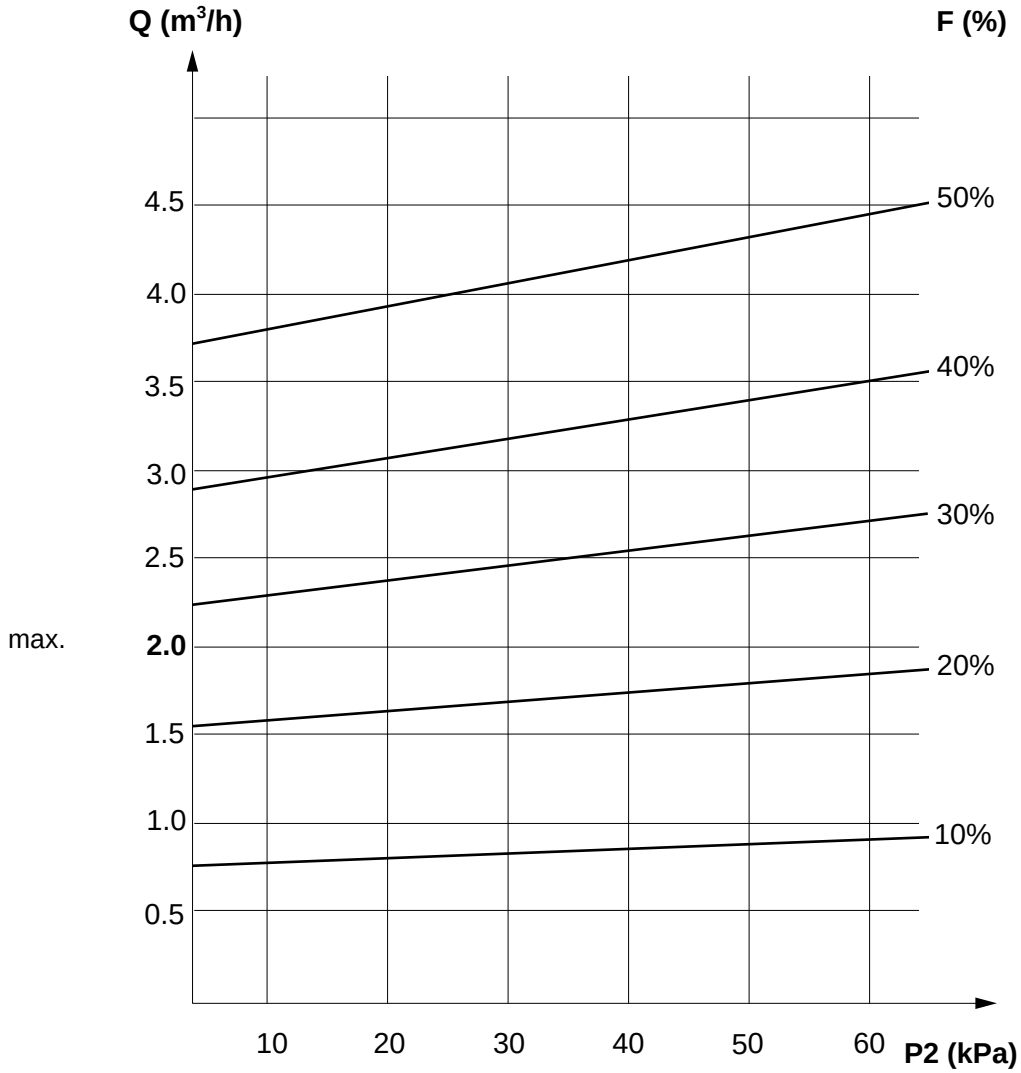

p) If the maximum allowed leakage is exceeded, check for leaks at:

- the safety lids in the hydrogen peroxide tank
- the door seals of the aseptic chamber
- the plug holes in the aseptic chamber
- the chain seals in the drier
- the aseptic chamber entry seal; change as required, see *1.1.7-1 Pillar - check gasket and seal*
- the seal in the pillar; see *1.1.11-1 Seal - check.*

q) If the maximum allowed leakage is not exceeded, disconnect the equipment for tracing leaks.

0-Series
2.2B3024A01en.fm

1.1.1 Lower forming ring

1.1.1-1 Lower forming ring - set position

Machine status	Air **On** Power **On**
Tool - template	 see table
SPC reference	1195162-0300

Setting the lower forming ring position

a) Close the main air supply valve (1) in the service unit.

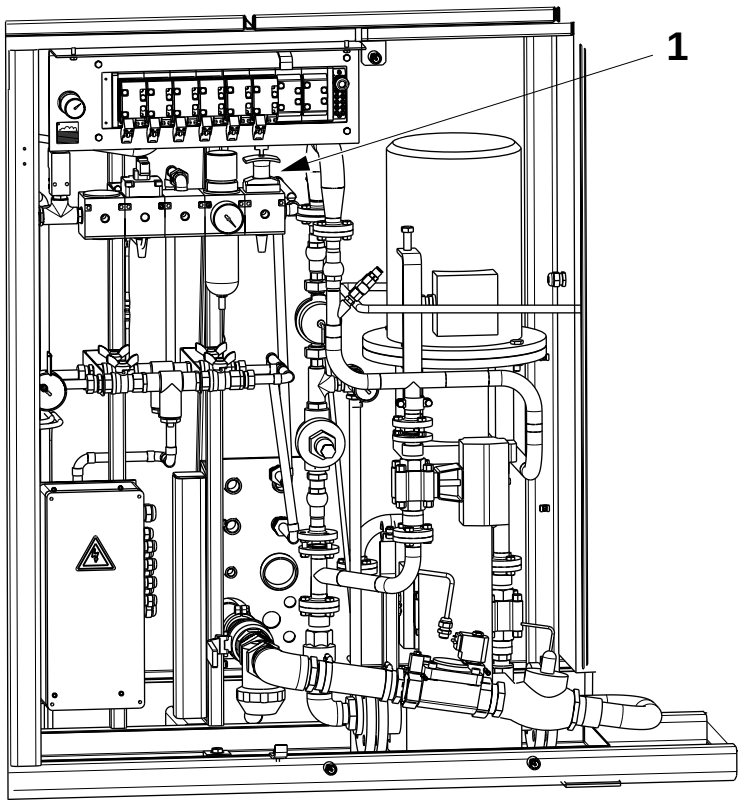

1 Main air supply valve

(Cont'd)

2.2B3024A01en.fm

(Cont'd)

b) Rotate the shaft (2) and plate (3) fully anti-clockwise so the short stop plate (4) is in the raised position

c) Remove the screws (5) and (6) and remove the front part of the lower forming ring (7).

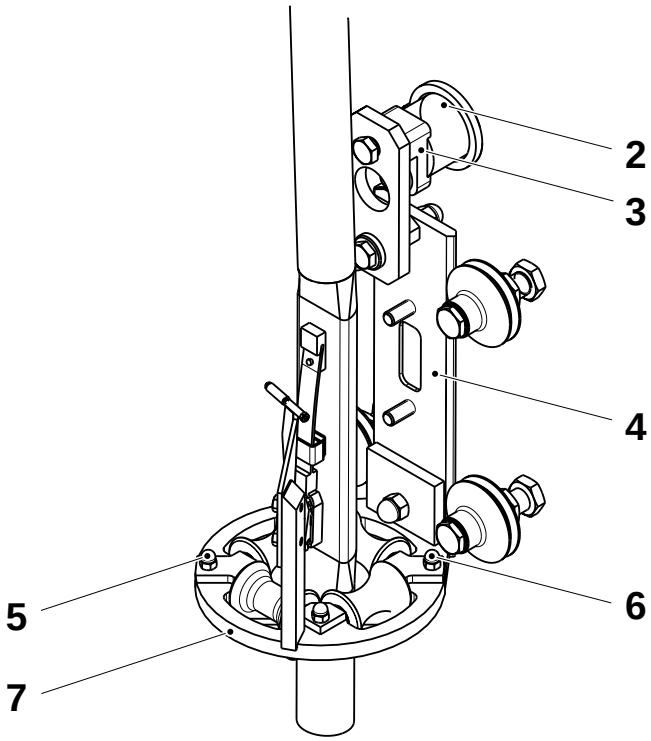

2 Shaft
3 Plate
4 Short stop plate
5 Screw
6 Screw
7 Lower forming ring

d) Fit the template (8), TP No. 1498687, and secure in position with the screws (5) and (6).

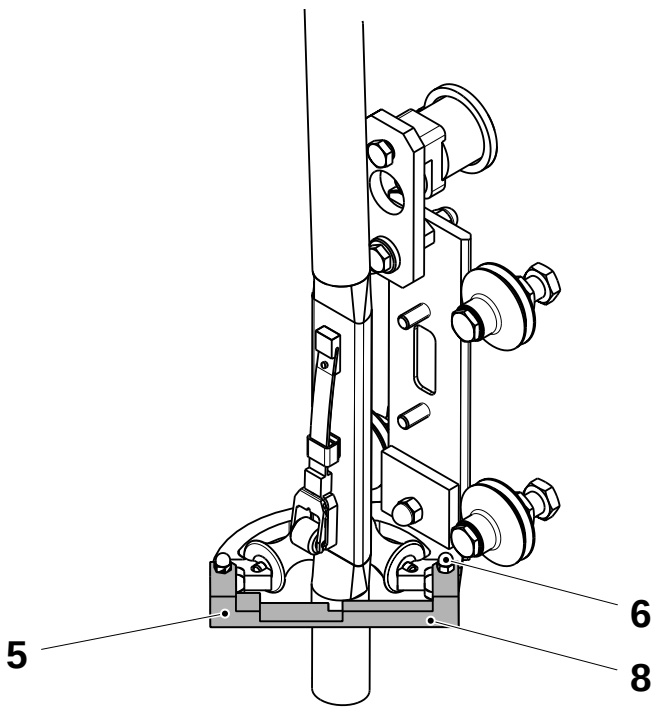

5 Screw
6 Screw
8 Template

(Cont'd)

2.2B3024A01en.fm

(Cont'd)

e) Loosen the screw (9) visible through the hole in the plate (10).

f) Rotate the shaft (2) and plate (3) fully clockwise so the short stop plate (4) is in the lowered position.

g) Lift the lower forming ring until the template (8) just touches the pressure roller (11) and tighten the screw (9).

h) Rotate the shaft (2) and plate (3) anti-clockwise so the short stop plate (4) is in the raised position and the pressure roller (11) is clear of the template (8).

i) Remove the template and fit the front half of the lower forming ring.

j) Open the main air supply valve in the service unit.

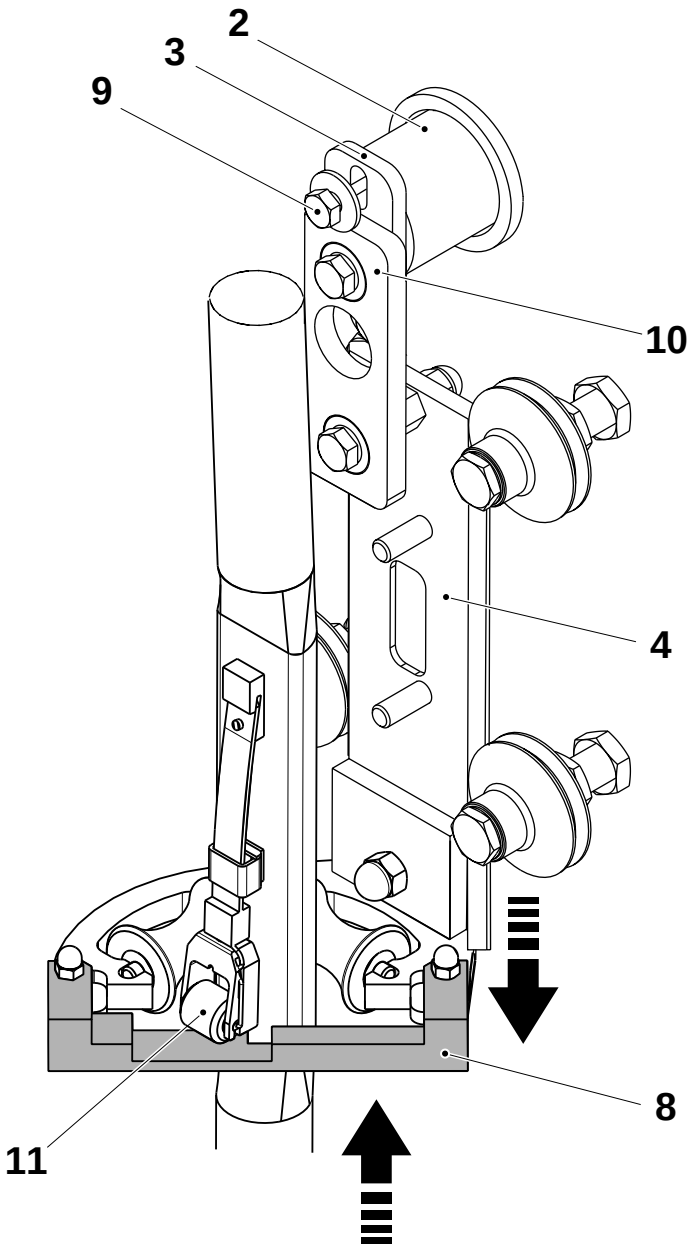

2 Shaft
3 Plate
4 Short stop plate
8 Template
9 Screw
10 Plate
11 Pressure roller

2.2B3024A01en.fm

1.1.1-2 Lower forming ring - change bushings

SPC reference	1195162-0300

a) Remove the nut (1), screw (2) and plate (3) at the side of the roller you want to remove.

b) Remove the nut (4), screw (5) and plate (6) at the side of the roller you want to remove.

c) Lift out the roller assembly (10).

d) Remove the washers (7).

e) Remove the shaft (8).

f) Push out the bushings (9).

g) Fit new bushings.

h) Assemble in reverse order.

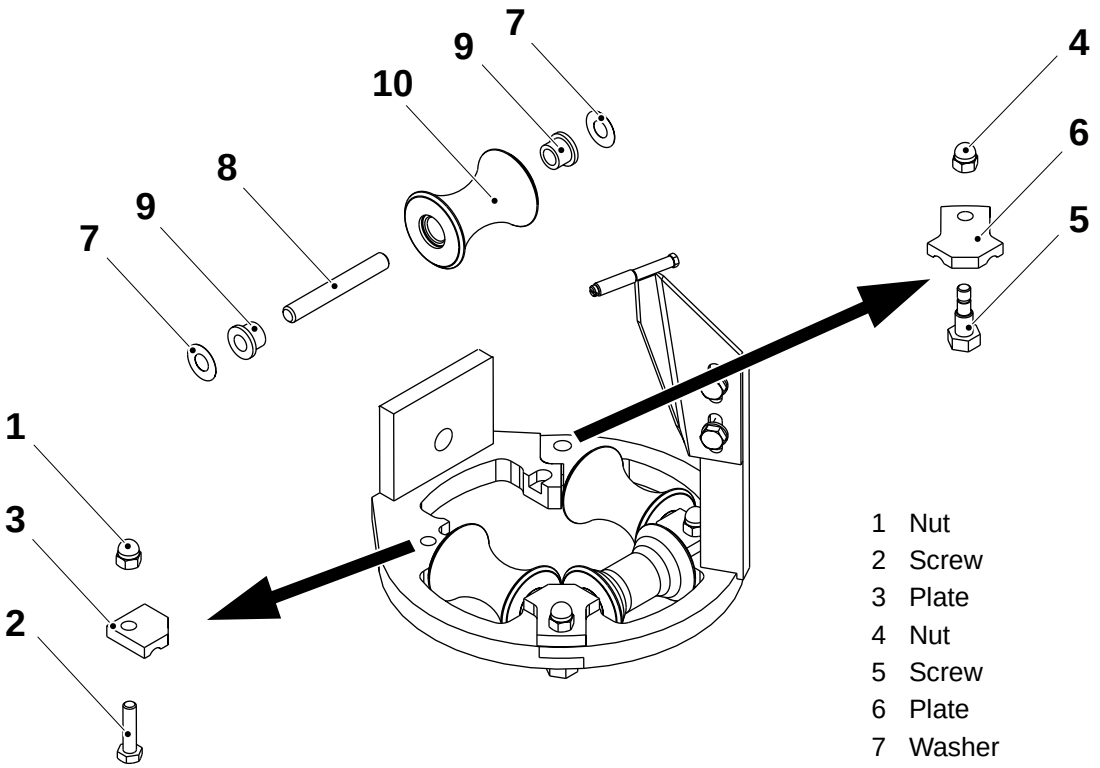

1 Nut
2 Screw
3 Plate
4 Nut
5 Screw
6 Plate
7 Washer
8 Shaft
9 Busing
10 Roller

2.2B3024A01en.fm

1.1.1-3 Lower forming ring - set overlap

SPC reference	1195162-0300

Set the overlap **A** as follows:

- to **increase** the overlap **A**, make the tube smaller by changing the standard rollers for **minus** trimming rollers. You can change up to three rollers depending on the amount of overlap needed.
- to **decrease** the overlap **A**, make the tube larger by changing the standard rollers for **plus** trimming rollers. You can change up to three rollers depending on the amount of overlap needed.

Material web width (mm)	Overlap A (mm)	Standard roller TP No.	Minus roller TP No.	Plus roller TP No.
190	7.0 - 9.0	751502	1490895	1490894

Note! **Always** fit trimming rollers symmetrically with respect to the pressure roller (4). **Never** fit Plus and Minus trimming rollers together.

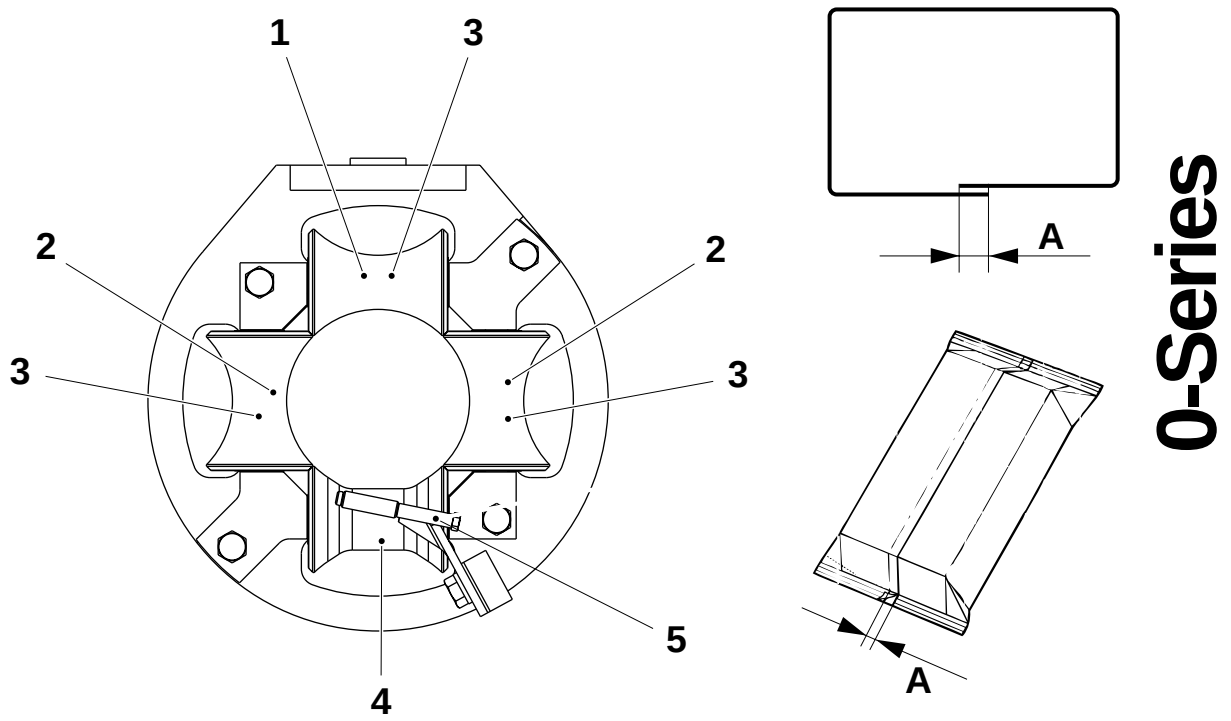

1 Where to put one trimming roller
2 Where to put two trimming rollers
3 Where to put three trimming rollers
4 Pressure roller
5 LS sealing finger

(Cont'd)

2.2B3024A01en.fm

(Cont'd)

i) Loosen the screws (6) and push the bracket (7) to its lowest position.

j) Tighten the screws (6).

k) Loosen the screw (8) and turn the support (9) until the gap **A** between the finger (10) and the surface of the inductor (11) is xxx mm.

l) Hold the support (9) to prevent movement and tighten the screw (8).

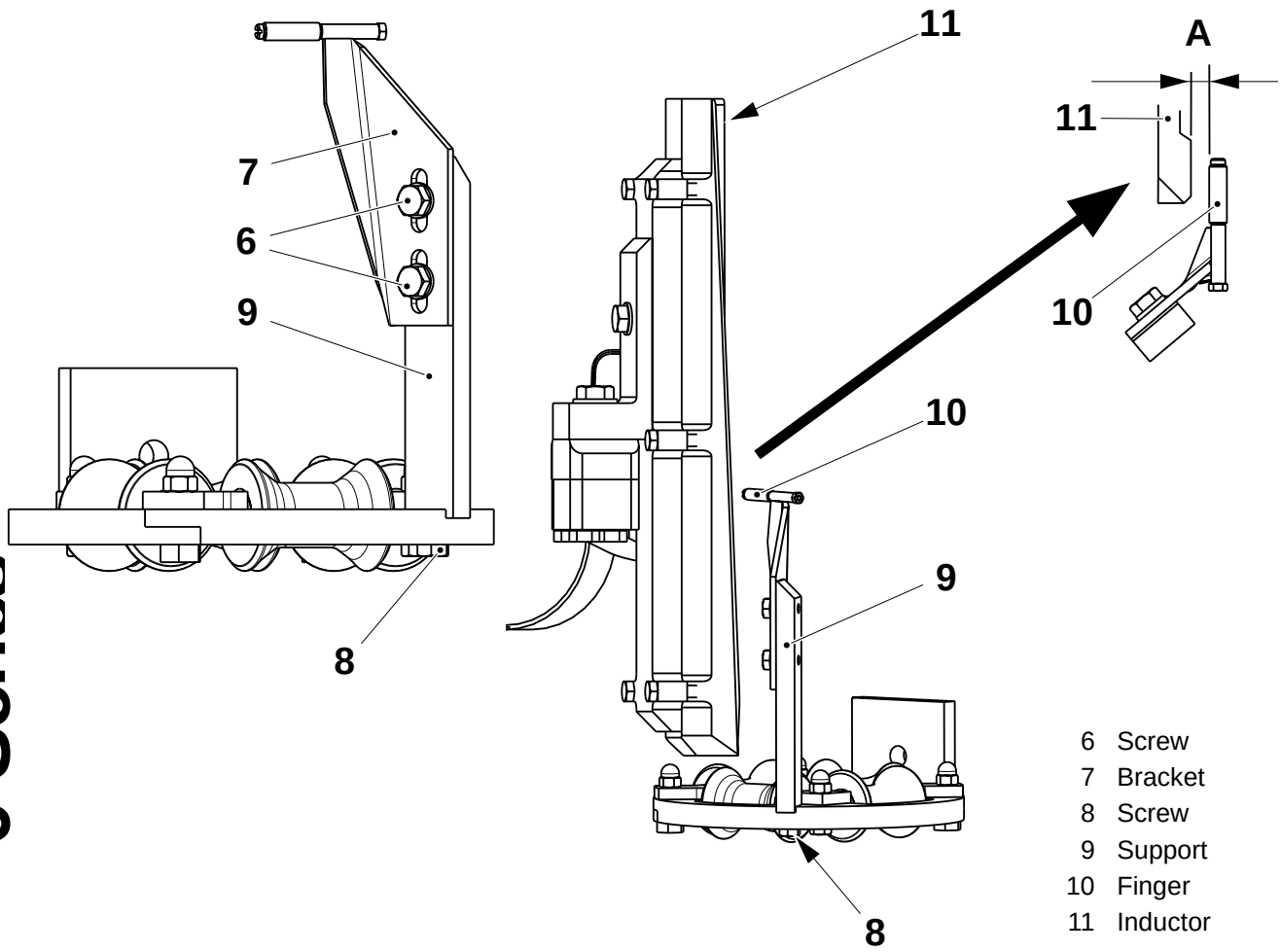

6 Screw
7 Bracket
8 Screw
9 Support
10 Finger
11 Inductor

2.2B3024A01en.fm

0-Series

1.1.2 Tube support

1.1.2-1 Tube support - change bushings

SPC reference	1348895-0100

a) For the centre rollers, remove the nut (1), screw (2) and plate (3) at both sides the roller you want to remove.

b) Lift out the roller assembly (7).

c) Remove the shaft (8).

d) Push out the bearings (9).

e) Fit new bushings.

f) Assemble in reverse order.

g) For the other rollers, remove the nut (1), screw (2) and plate (3) at one side of the roller you want to remove and then remove the screw (4) and plate (5) at the other.

h) Repeat steps b to f.

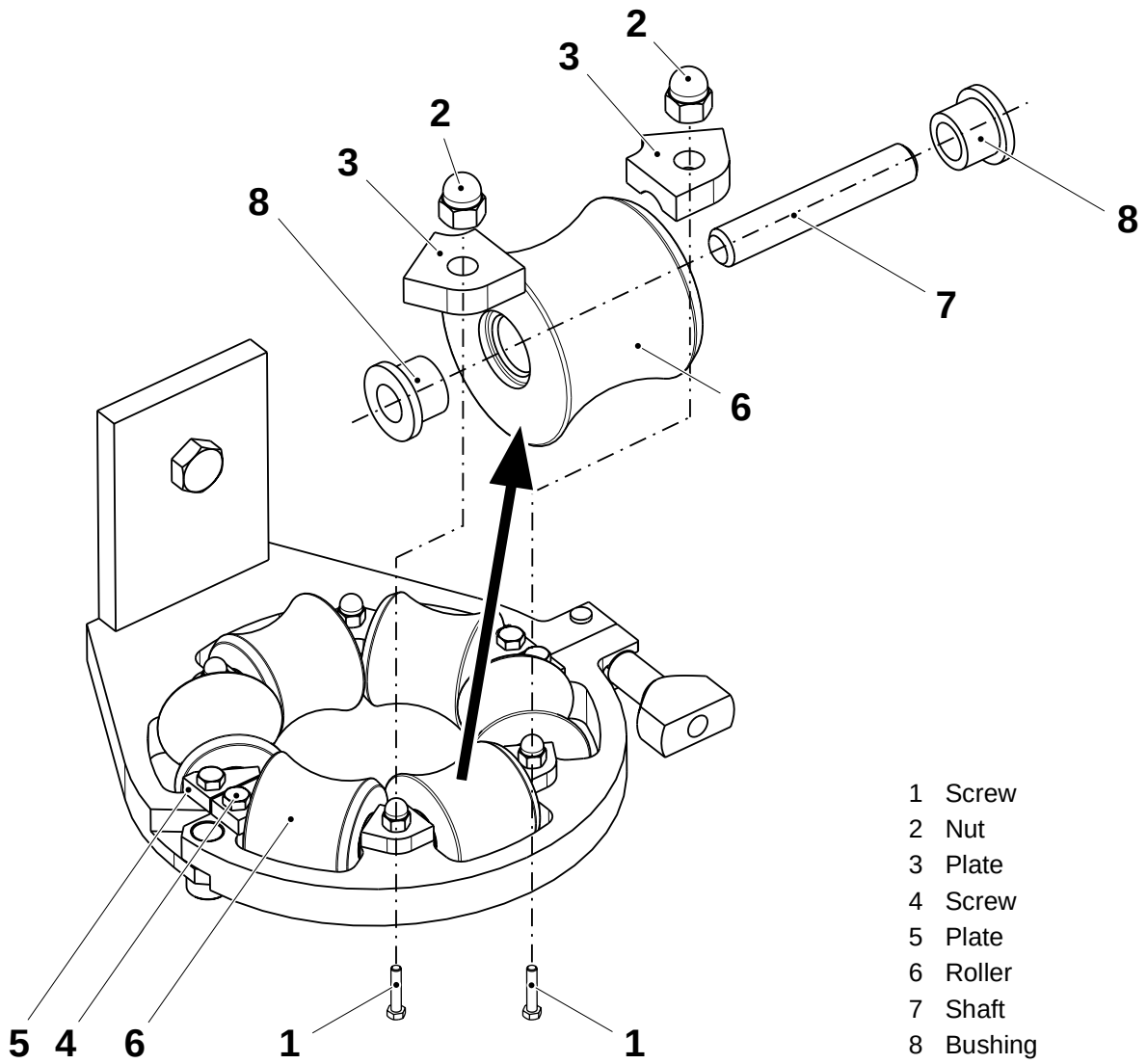

1 Screw
2 Nut
3 Plate
4 Screw
5 Plate
6 Roller
7 Shaft
8 Bushing

2.2B3024A01en.fm

0-Series

1.1.3 Forming ring

1.1.3-1 Forming ring - change bushings

SPC reference	1195164-0200

a) Remove the nut (1), screw (2) and plates (3) and (4) at the both sides of the roller you want to remove.

b) Lift out the roller assembly (5).

c) Remove the washers (6).

d) Remove the shaft (7).

e) Push out the bushings (8).

f) Fit new bushings.

g) Assemble in reverse order.

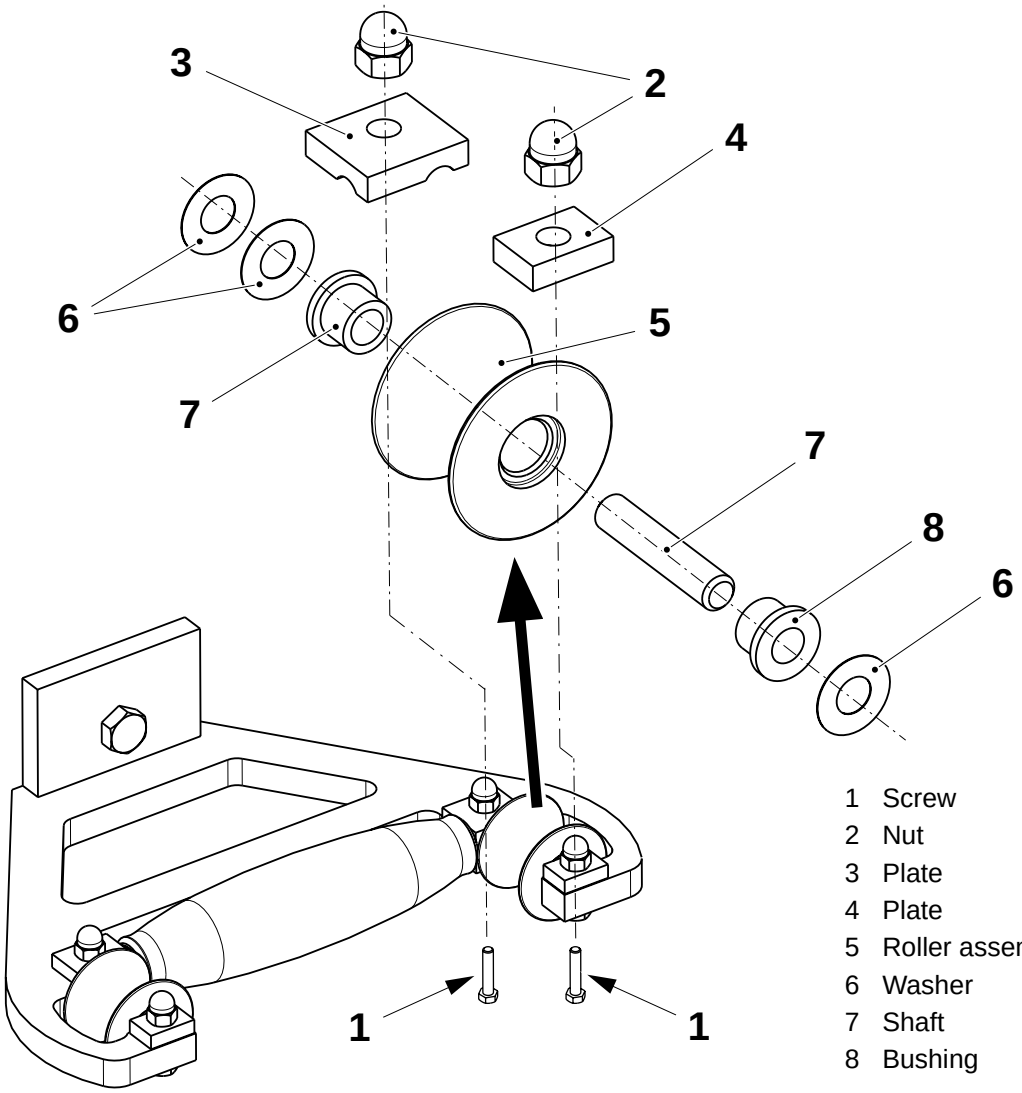

1 Screw
2 Nut
3 Plate
4 Plate
5 Roller assembly
6 Washer
7 Shaft
8 Bushing

0-Series

2.2B3024A01en.fm

1.1.4 Calender roller

1.1.4-1 Calender roller - check

Machine status	Air **Off**
SPC reference	1334008-0200

a) Check the surface of the roller (1) for wear or damage.

a) Check the roller rotates smoothly in both directions. Change bearings (2) as required.

b) Check that the pneumatic cylinder (3) is retracted.

c) Lift the roller (1) by hand and check the bearings (4) for wear or damage. Change as required.

d) Check the roller moves freely backwards and forwards.

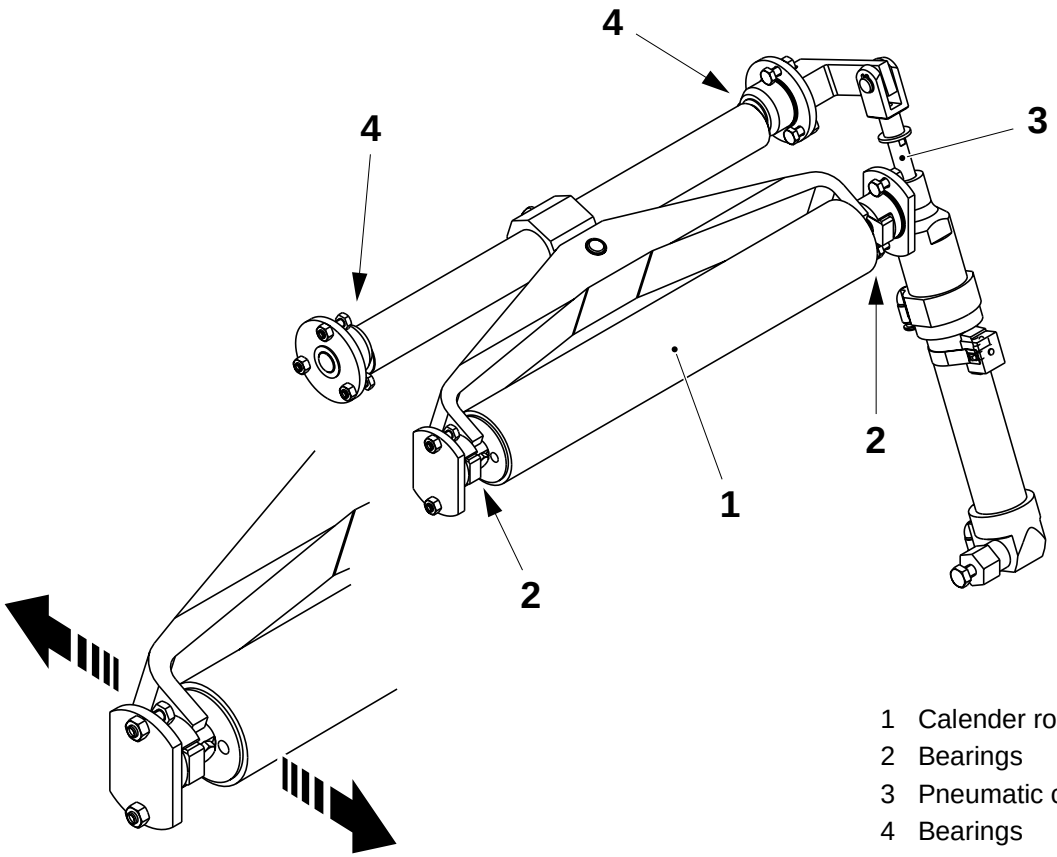

1 Calender roller
2 Bearings
3 Pneumatic cylinder
4 Bearings

2.2B3024A01en.fm

0-Series

1.1.4-2 Calender roller - set pressure

Machine status	Air **On**
SPC reference	1334008-0200

Set the air pressure for the calender roller (1) to the correct value, see *10.1 Technical data*, using the pressure regulator (2) on the superstructure pneumatic panel (3).

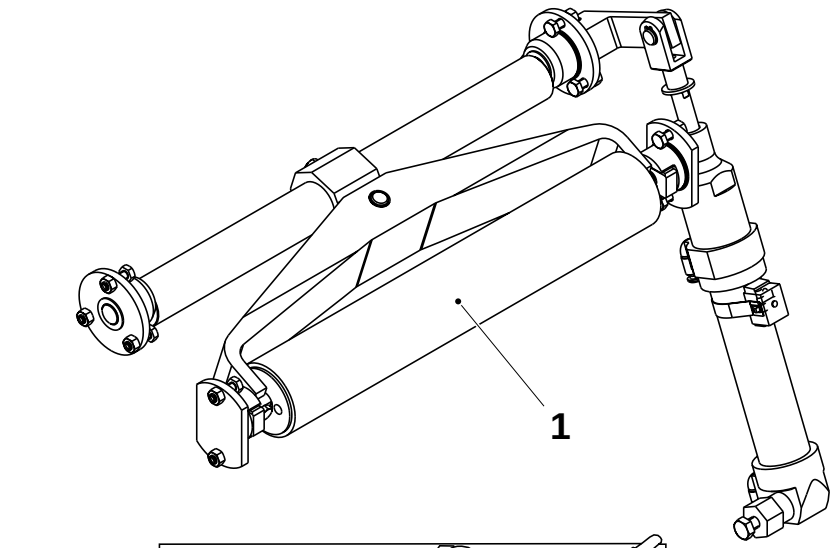

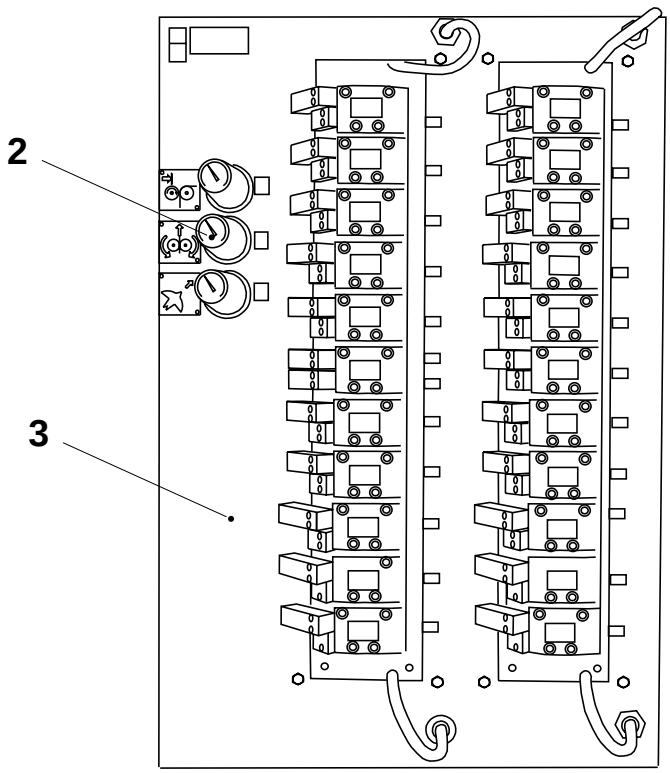

1 Calender roller
2 Pressure regulator
3 Pneumatic panel

2.2B3024A01en.fm

1.1.4-3 Calender roller - change bushings

SPC reference	1334008-0200

WARNING!

Hydrogen peroxide!
Follow the Safety precautions.

a) Loosen the screw (1) and remove the arm (2).

b) On each side, remove the screws and nuts (3), then remove the bearing covers (4). Retain the key (5) for later use.

c) On each side, check the sealing rings (6) and bushings (7) for wear or damage and change them as required.

d) On each side, remove the screws and nuts (8), then remove the lids (9) and lift out the calender roller assembly.

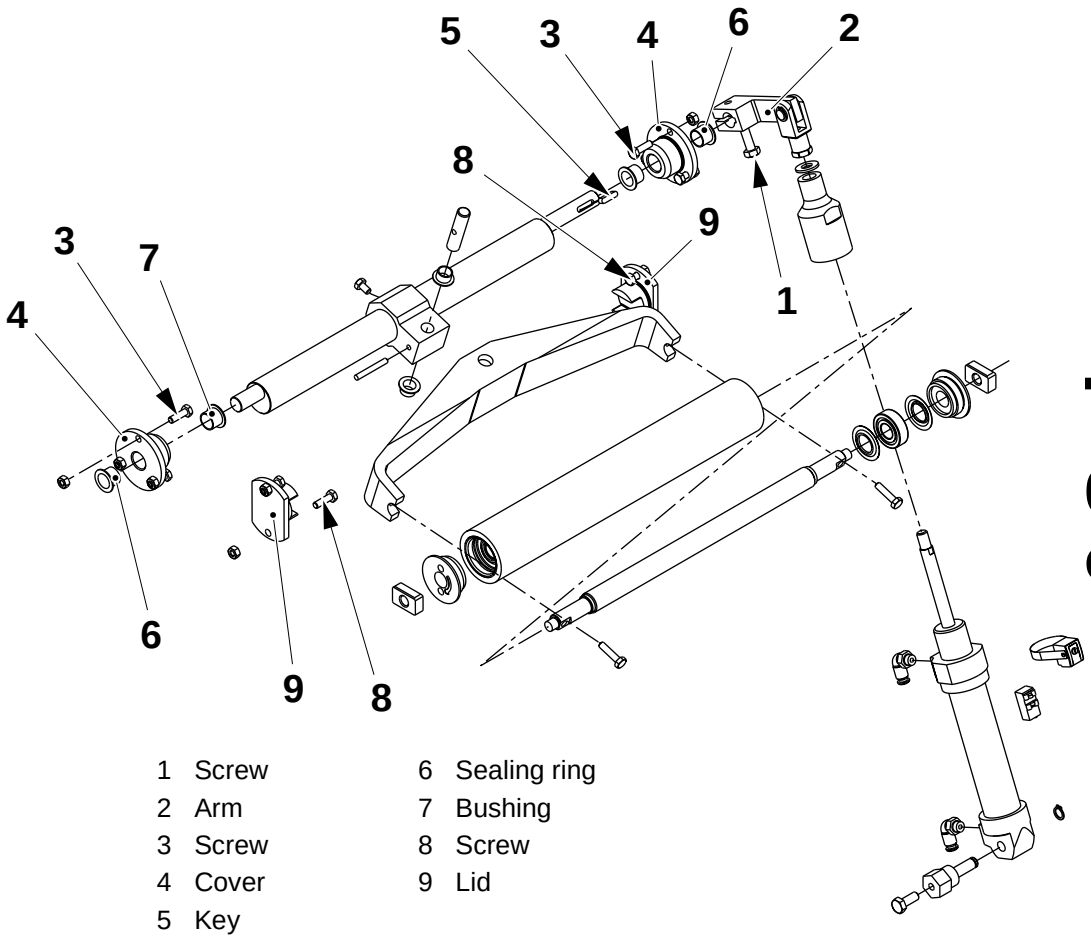

1 Screw
2 Arm
3 Screw
4 Cover
5 Key
6 Sealing ring
7 Bushing
8 Screw
9 Lid

(Cont'd)

2.2B3024A01en.fm

0-Series

(Cont'd)

Note! The cover (15) has a normal (right-handed) thread. The cover (12) has a left-handed thread.

e) On each side, remove the screws (10), then remove the block (11), cover (12 & 15), shims (13) and ball bearing (14).

f) Check the ball bearings (14) for wear or damage and change them if necessary.

g) Assemble in the reverse order.

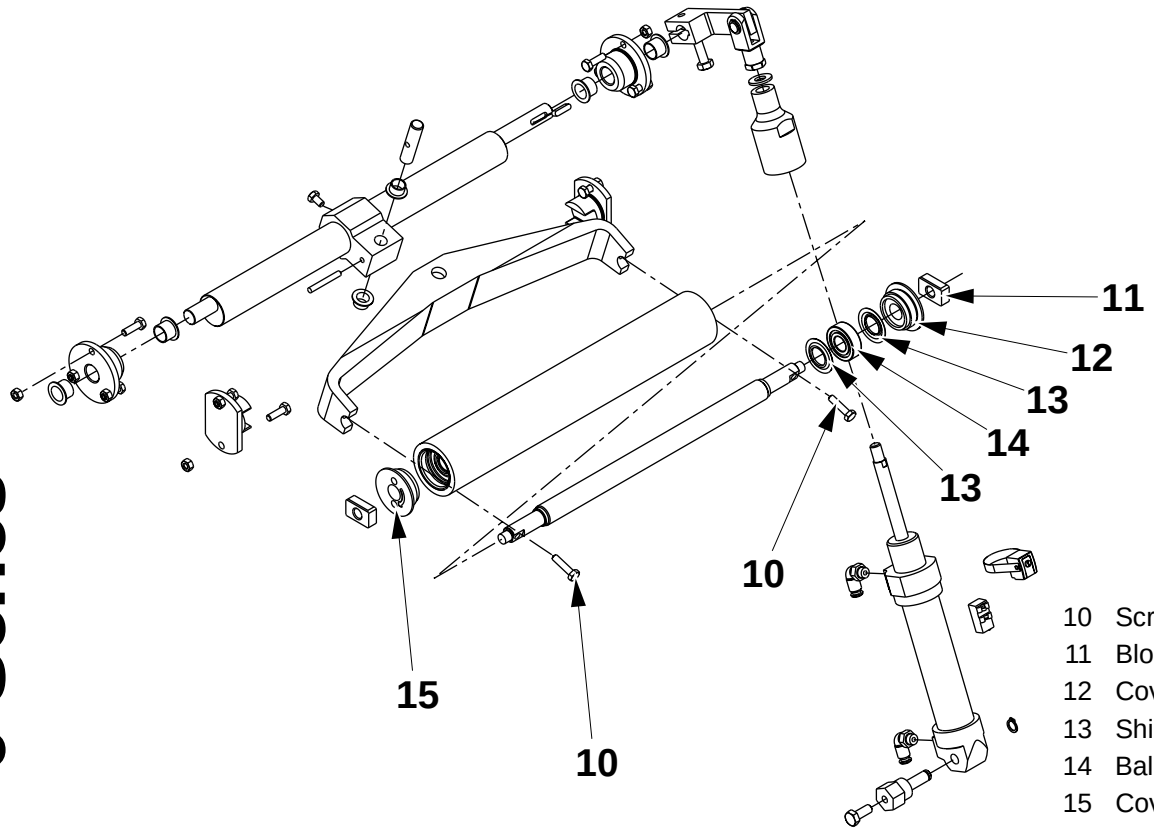

10 Screw
11 Block
12 Cover
13 Shim
14 Ball bearing
15 Cover

0-Series

2.2B3024A01en.fm

1.1.4-4 Calender roller - set proximity switch

Machine status	Air **On** Mains power **On**
SPC reference	1334008-0200

a) Activate valve Y1502. Check the pneumatic cylinder (1) is fully extended.

b) Loosen the screw (2). Slide the proximity switch (3) up the pneumatic cylinder until the proximity switch LED lights.

c) Tighten the screw (2).

d) Deactivate then reactivate valve Y1502 again to check that the proximity switch LED lights when the cylinder is fully extended.

e) Deactivate valve Y1502.

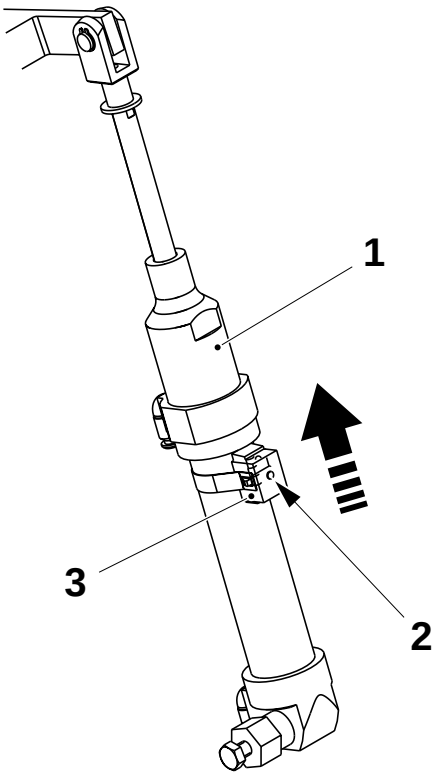

1 Pneumatic cylinder
2 Screw
3 Proximity switch

2.2B3024A01en.fm

1.1.4-5 Calender Roller-check pneumatic cylinder

SPC reference	1334008-0200

Check the rod (1) and seal (2) for wear. If defective:

a) Loosen screw (3) and remove proximity switch (4).
b) Label and disconnect the air lines (5) and (6).
c) Unscrew the joint (7).
d) Remove the screw (8).
e) Change the pneumatic cylinder (9).
f) Assemble in the reverse order, taking care to refit the air lines correctly.
g) Set the proximity switch, see *1.1.4-4 Calender roller - set proximity switch*.
h) Check for air leakages.

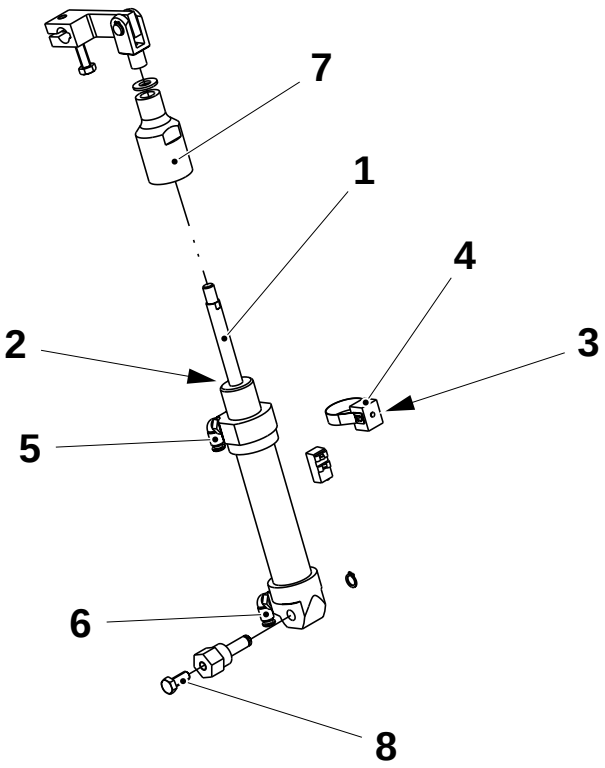

2.2B3024A01en.fm

1.1.5 Drive unit

1.1.5-1 Drive unit - check

SPC reference	1347485-0100

a) Check the drive motor (1) and gear (2) for abnormal noises. Change as required.

b) Check the surface of the roller (3) for any marks. Change as required.

c) Check the roller (3) rotates smoothly in both directions. If necessary change the bearings as described in para. *1.1.5-2 Drive unit - change roller bearings*.

Checking during Production

Check there are no drops of hydrogen peroxide on the rollers, after the packaging material web has passed through.

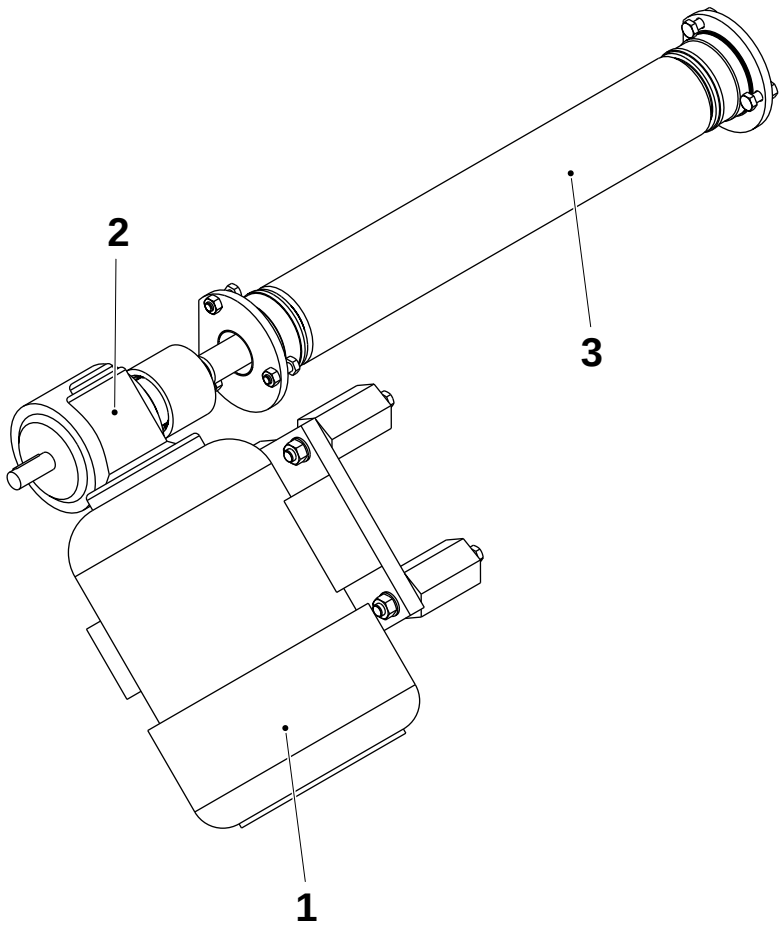

1 Drive motor
2 Gear motor
3 Roller

1 Handle
2 Cover
3 Nut
4 Shaft
5 Wheel
6 Seal

2.2B3024A01en.fm

0-Series

1.1.5-2 Drive unit - change roller bearings

SPC reference	1347485-0100

a) Remove the screw (1) from the shaft coupling (2).
b) Remove the nuts and washers (3) holding the motor (4) in position.
c) Separate the motor (4) from the coupling (2).
d) Retain the key (5) for the later use.
e) Open the top compartment hatch.
f) At both sides, remove the screws and nuts (6) from the bearing housing (7).
g) Pull out the bearing housing (7).
h) Remove the seal (8), bearing (9) and seal (10).
i) Fit new bearings (9) and seals (8 & 10).
j) Assemble in reverse order.

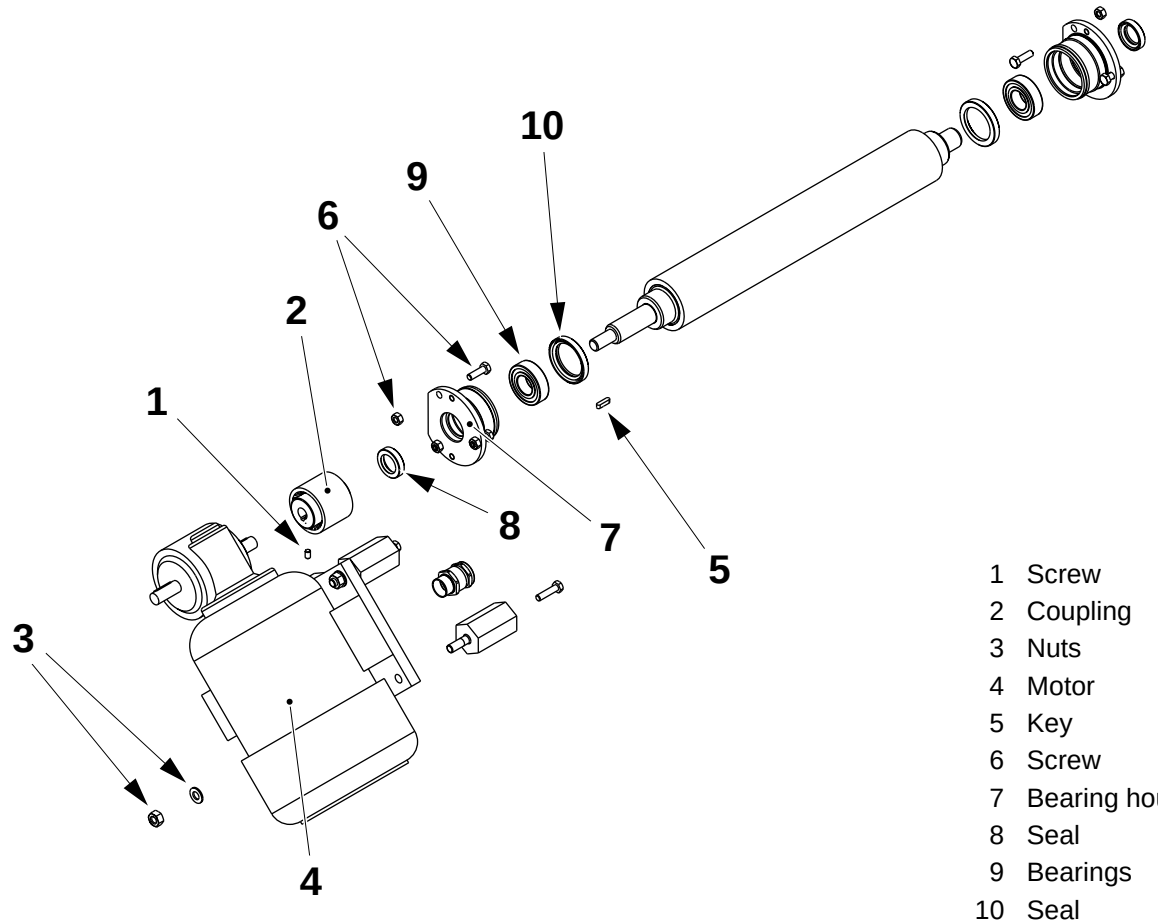

1 Screw
2 Coupling
3 Nuts
4 Motor
5 Key
6 Screw
7 Bearing housing
8 Seal
9 Bearings
10 Seal

0-Series

2.2B3024A01en.fm

1.1.6 Crank

1.1.6-1 Crank - check chain

SPC reference	996451-0100

WARNING!

Risk of injury due to pinching or crushing!

a) Crank the paper carrier (1) with the handle (2) until it reaches the highest position.

b) Crank the chain (3) and check that it moves freely, checking for wear or damage. Change as required.

c) Check that the teeth in the paper carrier (1) are not damaged, and change as required.

d) Check the radial play of the bushing (4), and check visually for wear or damage. Change as required.

e) Check the O-rings (5) and (6), and change as required.

f) Check the sprocket (7) for wear and change as required.

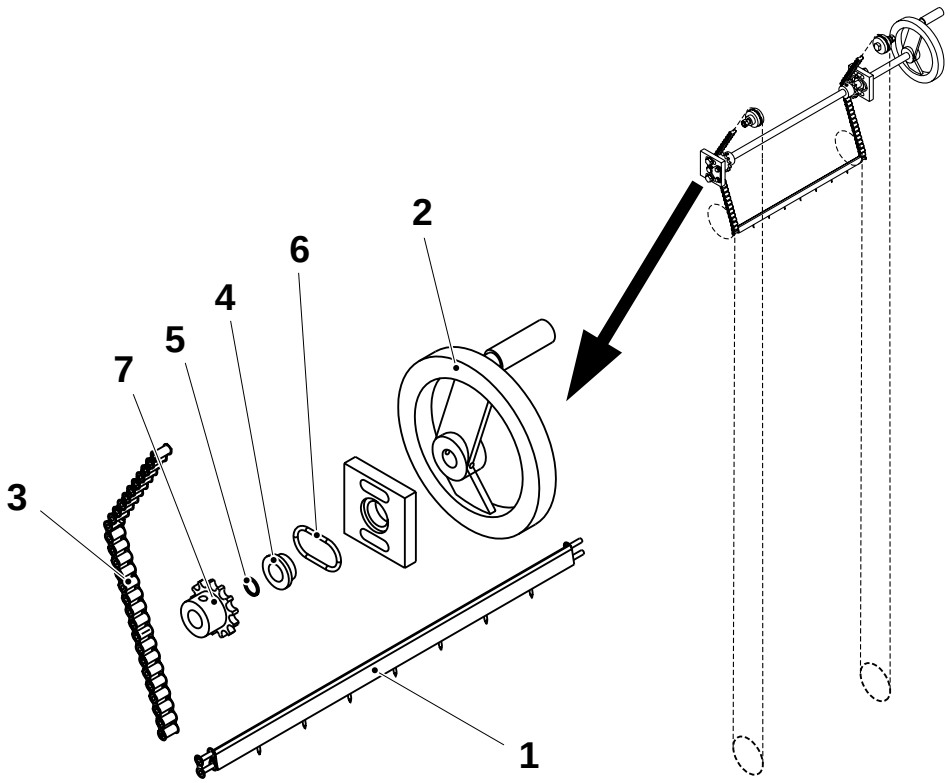

1 Carrier
2 Handle
3 Chain
4 Bushing
5 O-ring
6 O-ring
7 Sprocket

2.2B3024A01en.fm

1.1.7 Pillar

1.1.7-1 Pillar - check gasket and seal

SPC reference	1195163-0200



WARNING!

Hydrogen peroxide!
Follow the Safety precautions.

a) Unscrew the handles (1) and remove the cover (2).
b) Remove the gasket (3) and change it if necessary.
c) Remove the screws (4) and remove the lid (5).
d) Pull out the seal (6) and change it if necessary.
e) Remove any undesirable residue.
f) Assemble in reverse order.
g) Make sure the cover (2) fits properly against the column when tightened with the handles (1).

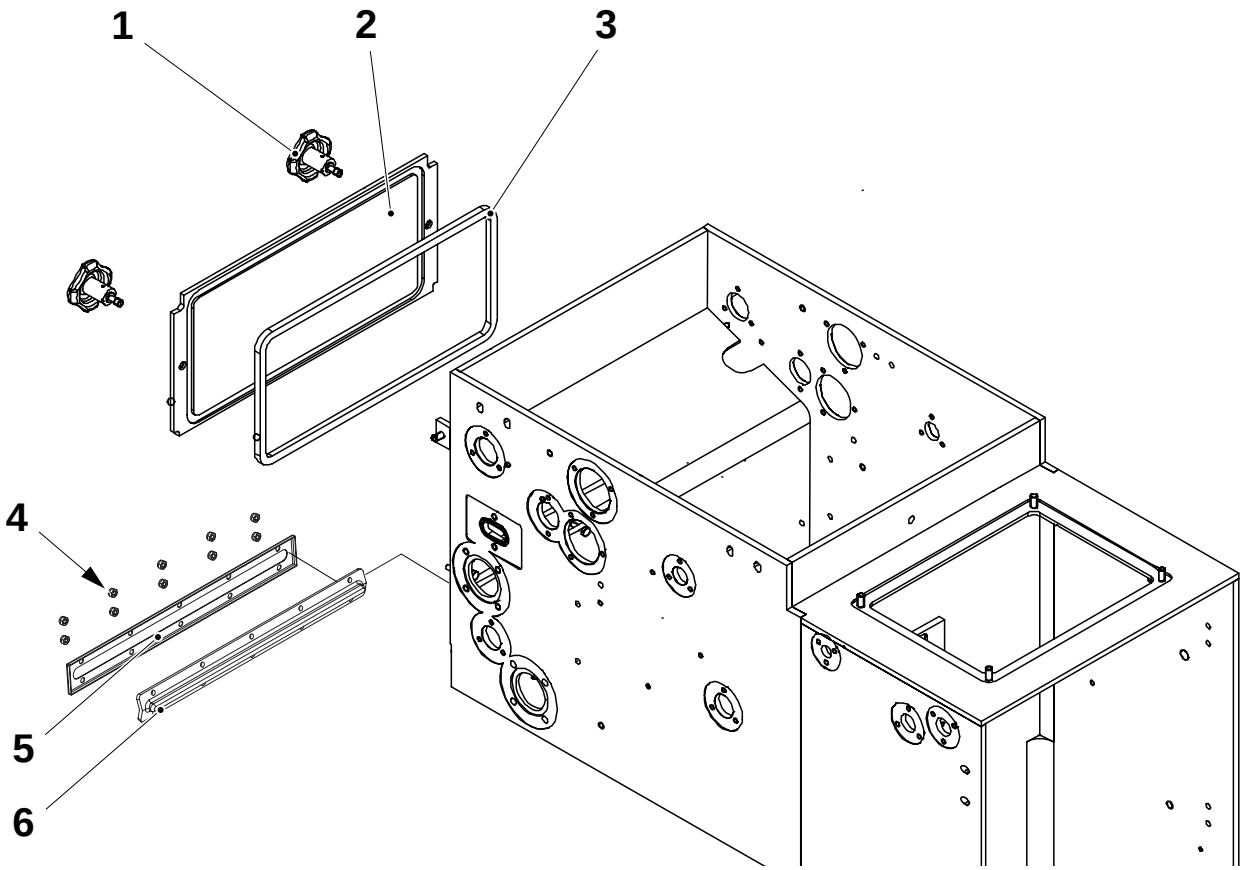

0-Series

2.2B3024A01en.fm

1.1.7-2 Pillar - change bearings

SPC reference	1195163-0200

WARNING!

Hydrogen peroxide!
Follow the Safety precautions.

a) Unscrew the handles (1) and remove the cover (2).

b) Loosen the nuts (3) and remove the lid (4).

Note! When removing the bending roller assembly, as described in step c, make sure that the wheel (8) does not drop into the aseptic bath.

c) Remove the complete roller assembly. This includes the wheels (5 & 8), bearings (6) and bending roller (7).

d) Change the bearings (6) as required.

e) Assemble in the reverse order.

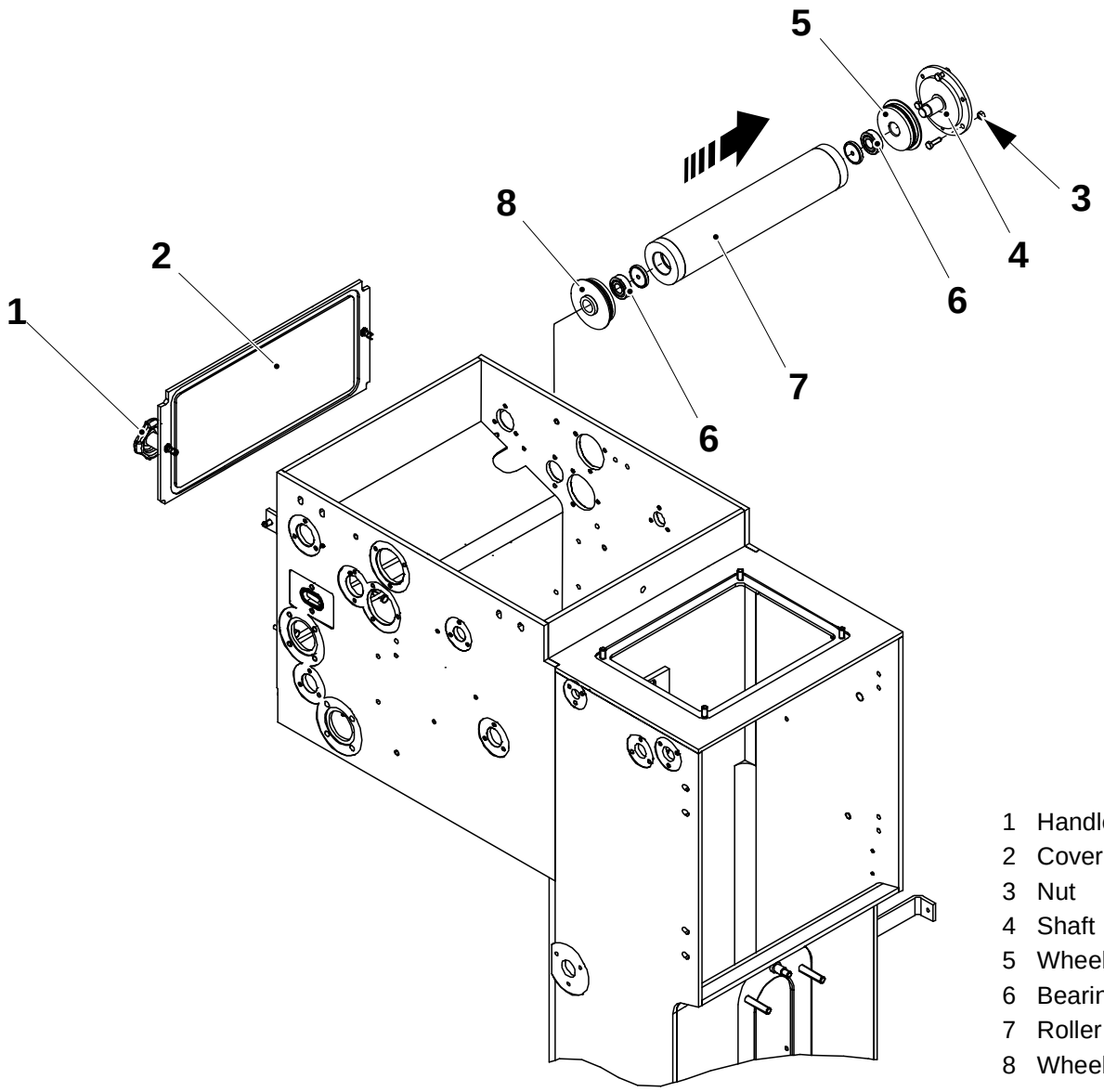

1 Handle
2 Cover
3 Nut
4 Shaft
5 Wheel
6 Bearing
7 Roller
8 Wheel

2.2B3024A01en.fm

0-Series

1.1.8 Spray system

1.1.8-1 Spray system - check

SPC reference	1095864-0100

WARNING!

Hydrogen peroxide!
Follow the Safety precautions.

Check for peroxide leakages in the complete spray unit.

Change the O-rings (1) if worn or damaged.

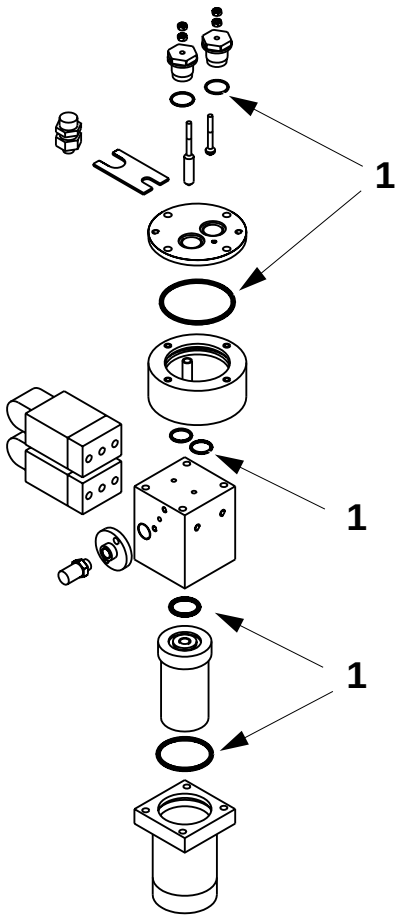

1 O-ring

0-Series

2.2B3024A01en.fm

1.1.8-2 Spray system - clean peroxide filter

SPC reference	1095864-0100



WARNING!

Hydrogen peroxide!
Follow the Safety precautions.

a) Unscrew the nuts (1) and remove the filter housing (2).
b) Pull out the peroxide filter (3) and clean it with compressed air.
c) If necessary, change the peroxide filter (3).
d) Refit the peroxide filter (3) and the filter housing (2).
e) Tighten the nuts (1).

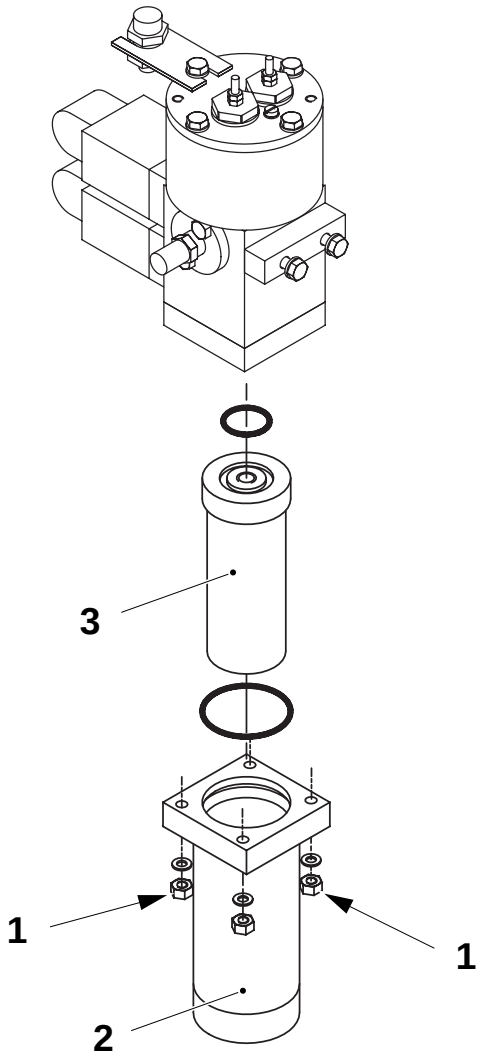

1 Nut
2 Filter housing
3 Peroxide filter

2.2B3024A01en.fm

0-Series

1.1.8-3 Spray system - set pressure

Machine status	**Heat sterilization**
SPC reference	1095864-0100

Using the pressure regulator (1) on the superstructure pneumatic panel (2), set the air pressure for the spray system to **400 kPa**.

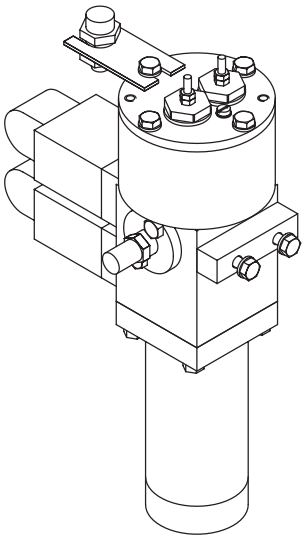

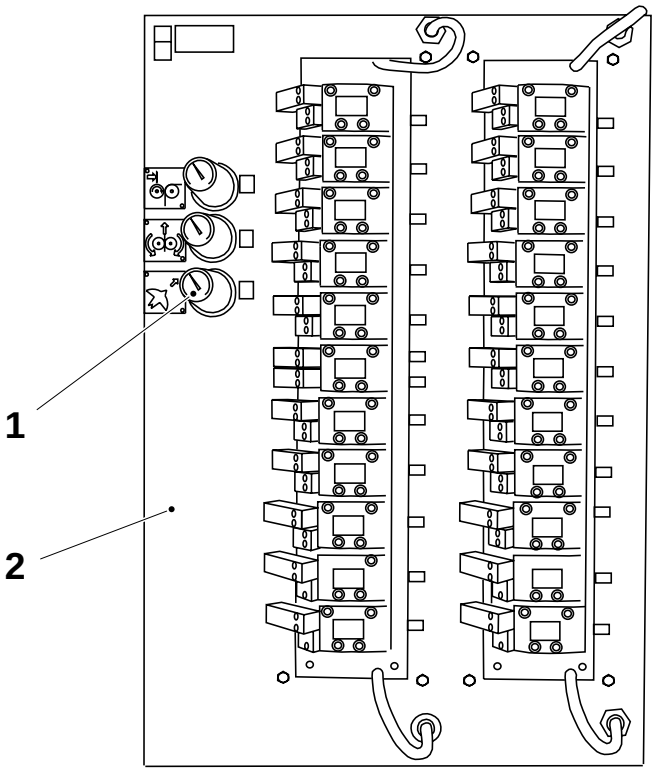

1 Pressure regulator
2 Pneumatic panel

0-Series

2.2B3024A01en.fm

1.1.9 Bending rollers

1.1.9-1 Bending roller- change bearings

SPC reference	1195209-0200



WARNING!

Hydrogen peroxide!
Follow the Safety precautions.

a) Check the surface of the roller (8), and check that it rotates freely in both directions. If not, continue below.

b) At both sides, loosen the nuts (1) pull out the shafts (2) and lift out the bending roller assembly.
If a shaft is difficult to move, insert M6 screws in the holes (3) and tighten sequentially to draw out the shaft.

c) Remove the retaining ring (4), washer (5), bearings (6), washer (7) and roller (8). Check for wear or damage and change as required.
If a bearing is difficult to extract, insert an M6 screw in the holes (3) and pull out the bearing.

d) Reassemble in the reverse order.

2.2B3024A01en.fm

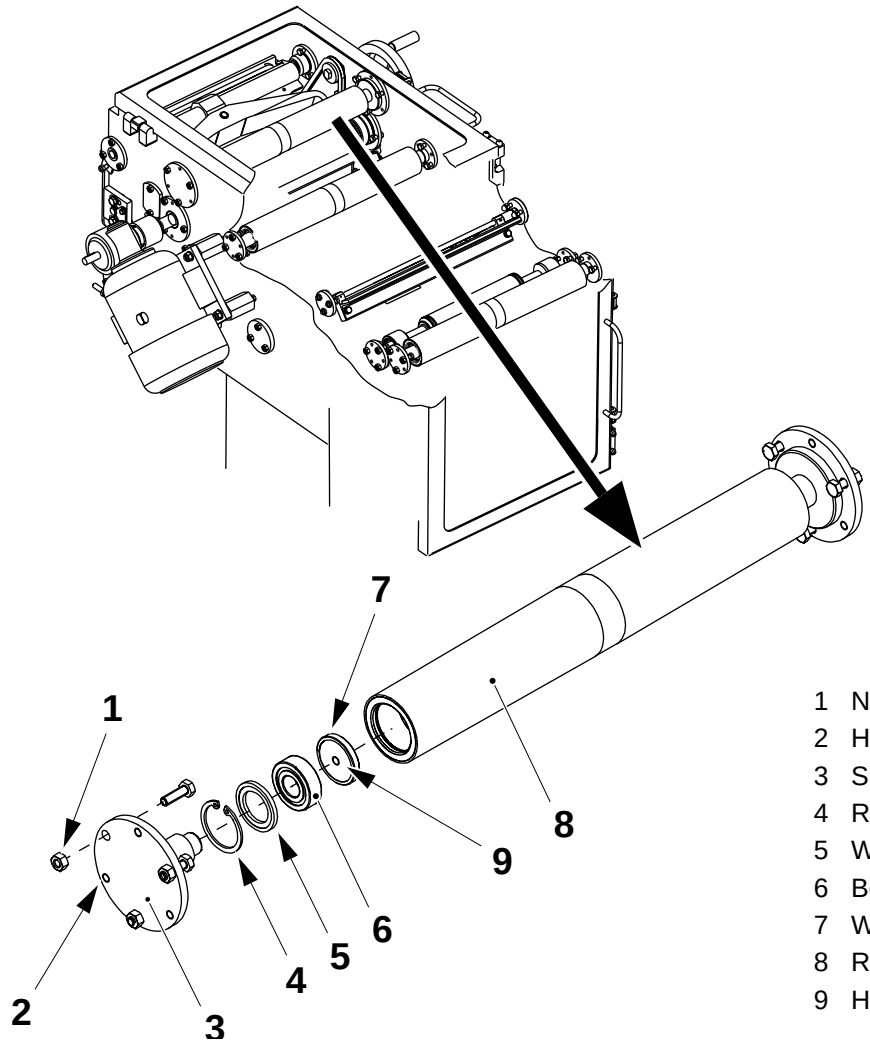

1 Nut
2 Holes
3 Shaft
4 Retaining ring
5 Washer
6 Bearing
7 Washer
8 Roller
9 Holes

1.1.9-2 Bending roller - change bearings

SPC reference	1195183-0300



WARNING!

Hydrogen peroxide!
Follow the Safety precautions.

a) Check the surface of the roller (8), and check that it rotates freely in both directions. If not, continue below.

b) At both sides, loosen the nuts (1) pull out the shafts (3) and lift out the bending roller assembly.
If a shaft is difficult to move, insert M6 screws in the holes (2) and tighten sequentially to draw out the shaft.

c) Remove the retaining ring (4), washer (5), bearings (6), washer (7) and roller (8). Check for wear or damage and change as required.
If a bearing is difficult to extract, insert an M6 screw in the holes (9) and pull out the bearing.

d) Reassemble in the reverse order.

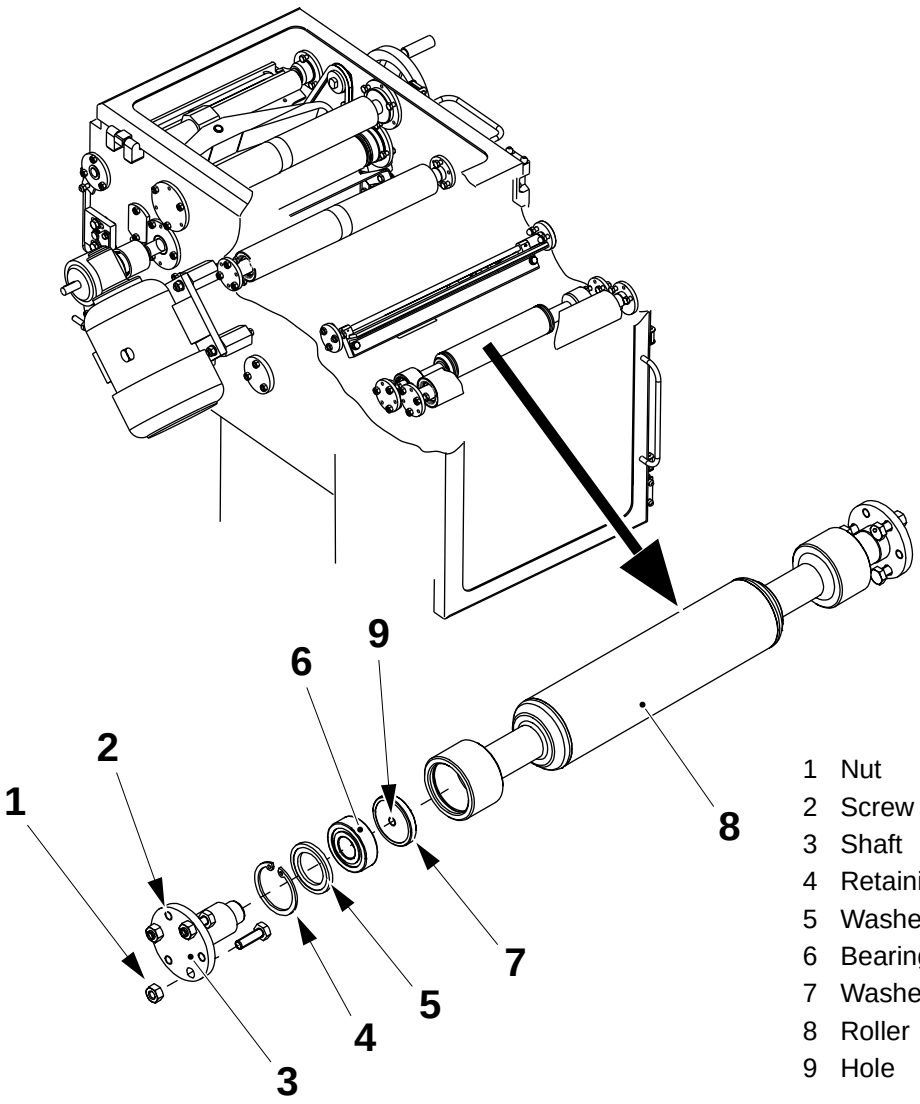

1 Nut
2 Screw
3 Shaft
4 Retaining ring
5 Washer
6 Bearing
7 Washer
8 Roller
9 Hole

0-Series

2.2B3024A01en.fm

1.1.10 Paper guide

1.1.10-1 Paper guide - check bearings

SPC reference	1195183-0200

WARNING!

Hydrogen peroxide!
Follow the Safety precautions.

a) Check the surface of the roller (1), and check that it rotates freely in both directions. If not, continue below.

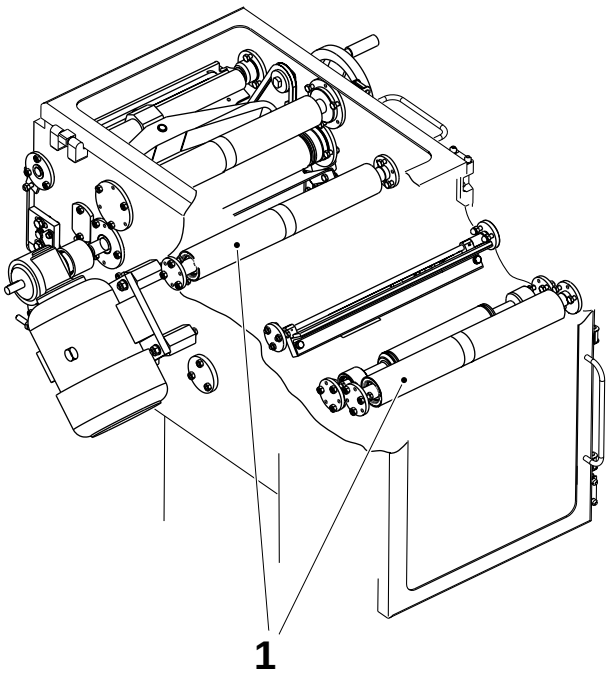

1 Roller

(Cont'd)

2.2B3024A01en.fm

(Cont'd)

b) Loosen the nuts (2) on both sides.

c) Remove the shaft (4) at both sides and lift out the bending roller assembly.
If a shaft is difficult to move, insert M6 screws in the holes (3) and tighten sequentially to draw out the shaft.

d) Remove the retaining ring (5), washer (6), bearings (7), washer (8) and roller (1). Check for wear or damage and change as required.
If a bearing is difficult to extract, insert an M6 screw in the hole (9) and pull out the bearing.

e) Reassemble in the reverse order.

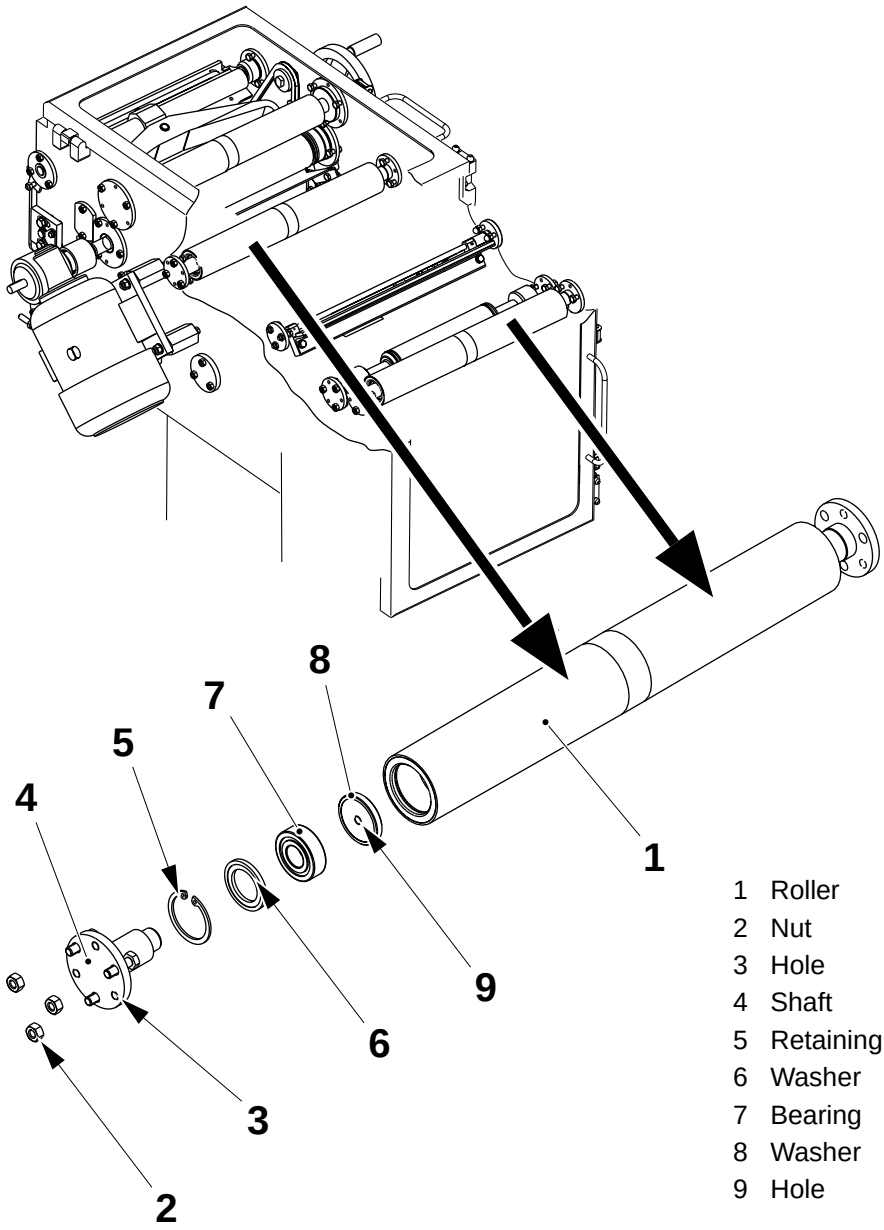

1 Roller
2 Nut
3 Hole
4 Shaft
5 Retaining ring
6 Washer
7 Bearing
8 Washer
9 Hole

2.2B3024A01en.fm

1.1.11 Seal

1.1.11-1 Seal - check

SPC reference	1195214-0100

Check the seal (1) is not worn or damaged. Change if the thickness is less than distance **A**.

Overhaul the seal unit as required, see *1.1.11-2 Seal - overhaul*.

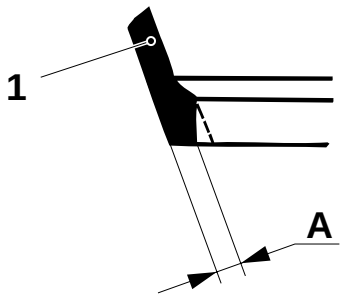

A = min. 1 mm

1 Seal

2.2B3024A01en.fm

1.1.11-2 Seal - overhaul

SPC reference	1195214-0100

a) Remove the screws (1) and washers (2).

b) Remove the seal unit (3) and change the seal (4).

c) Remove the screws (5) and change the O-ring (6).

Note! Make sure the seal (4) and O-ring (6) are correctly fitted in their seats.

d) Make sure the pins (7) are in place, then tighten the screws (5) crosswise.

e) Fit the seal unit (3), washers (2) and screws (1).

f) Tighten the screws (1).

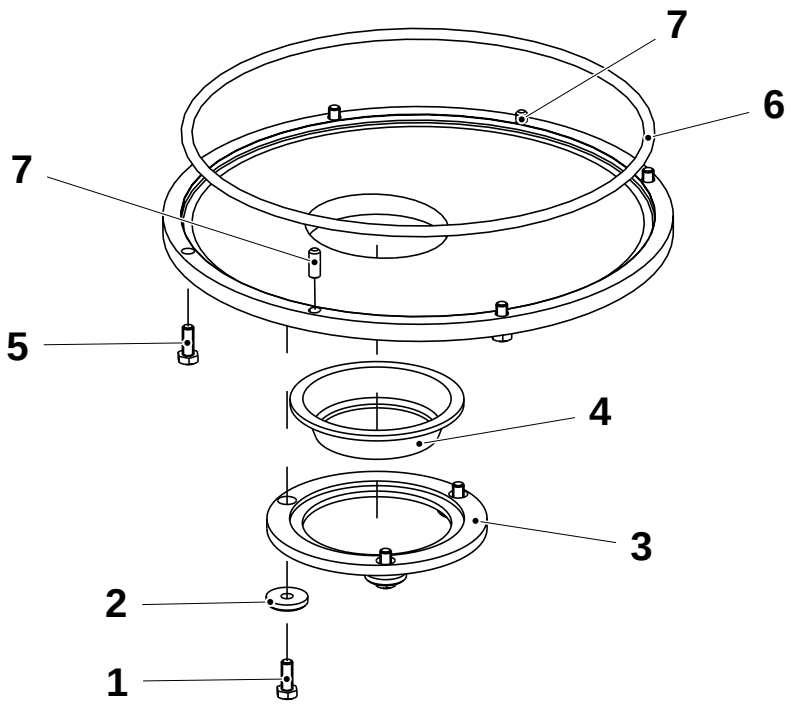

1 Screw
2 Washer
3 Seal unit
4 Seal
5 Screw
6 O-ring
7 Pin

2.2B3024A01en.fm

1.1.12 Pendulum roller

1.1.12-1 Pendulum roller-check

Machine status	Air **Off**
SPC reference	1195173-0300

a) Check the surface of the roller (1) for wear or damage.

b) Check the roller rotates smoothly in both directions. Change the bearings (2) as required.

c) Lift the roller arm and check for play in the bearings (3). Change the bearings as required.

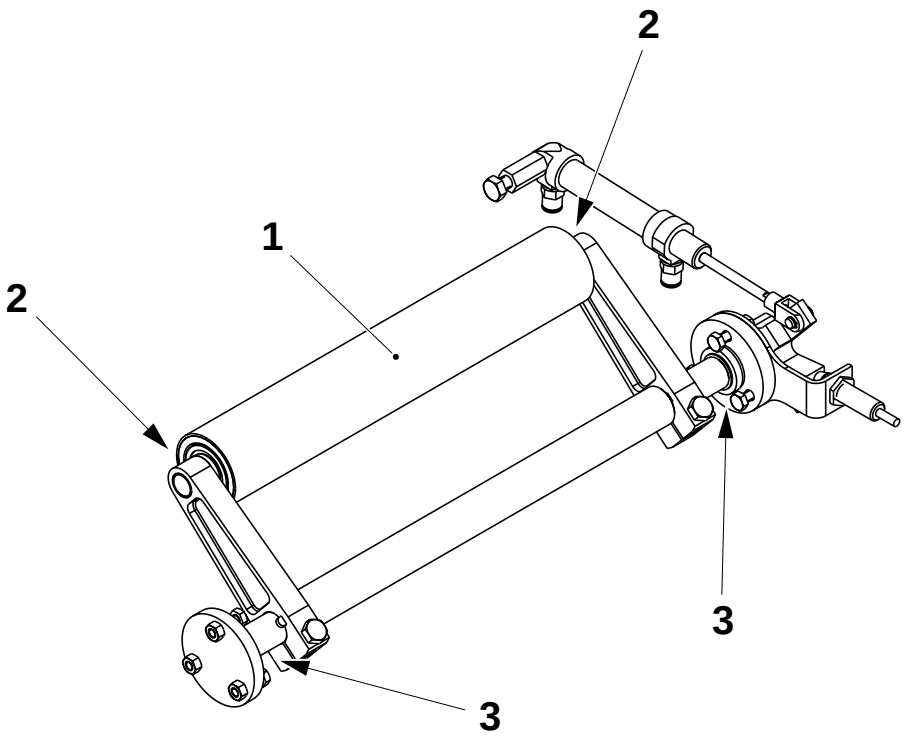

1 Pendulum roller
2 Bearings
3 Bearings

2.2B3024A01en.fm

0-Series

1.1.12-2 Pendulum roller - set pressure

Machine status	Air On Mains power **On**
SPC reference	1195173-0300

a) Using the pressure regulator (2) on the superstructure pneumatic panel (3), set the air pressure of the pendulum roller (1) to the correct value, see *10.1 Technical data*.

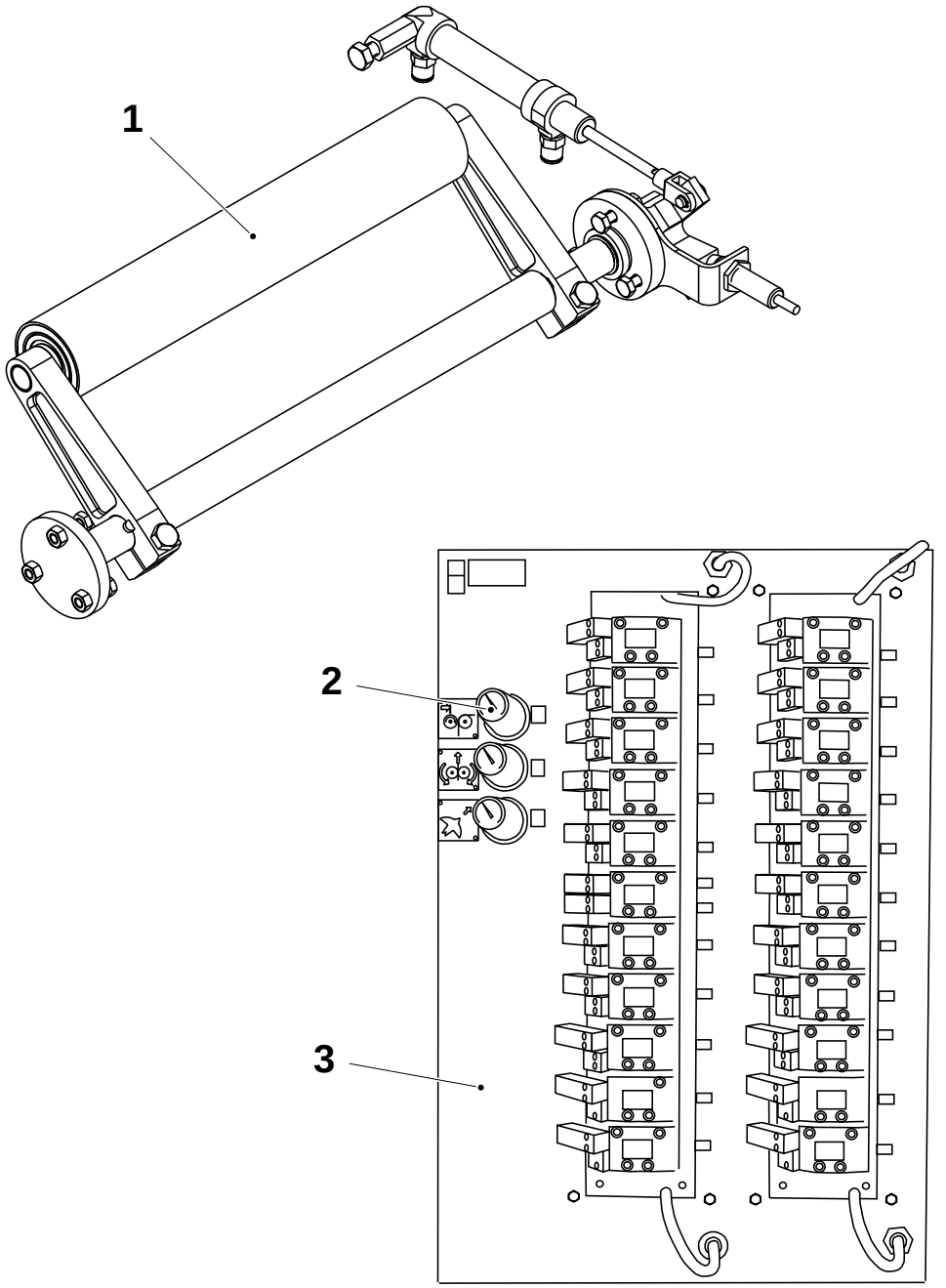

1 Pendulum roller
2 Pressure regulator
3 Pneumatic panel

0-Series

2.2B3024A01en.fm

1.1.12-3 Pendulum Roller - change bearings

SPC reference	1195173-0300



WARNING!

Hydrogen peroxide!
Follow the Safety precautions.

a) Remove the clip (1) and disconnect the pneumatic cylinder (2).

b) Loosen the screw (3) and remove the lever (4).

c) On each side, remove the three screws and nuts (5), then remove the bearing cover (6).

d) Check the sealing ring (7). On each side, check the bushings (8) for wear or damage and change them as required.

e) Remove the pendulum roller assembly.

f) Loosen the screw (9) and remove the pendulum arm (10). Retain the key (11) for later use.

g) Remove the roller (12). On each side of the roller, remove the shaft (13).

h) On each side of the roller, remove the retaining ring (14), washer (15), bearing (16) and washer (17).

i) Check the ball bearings (16) for wear or damage and change them as required.

j) Assemble in the reverse order.

2.2B3024A01en.fm

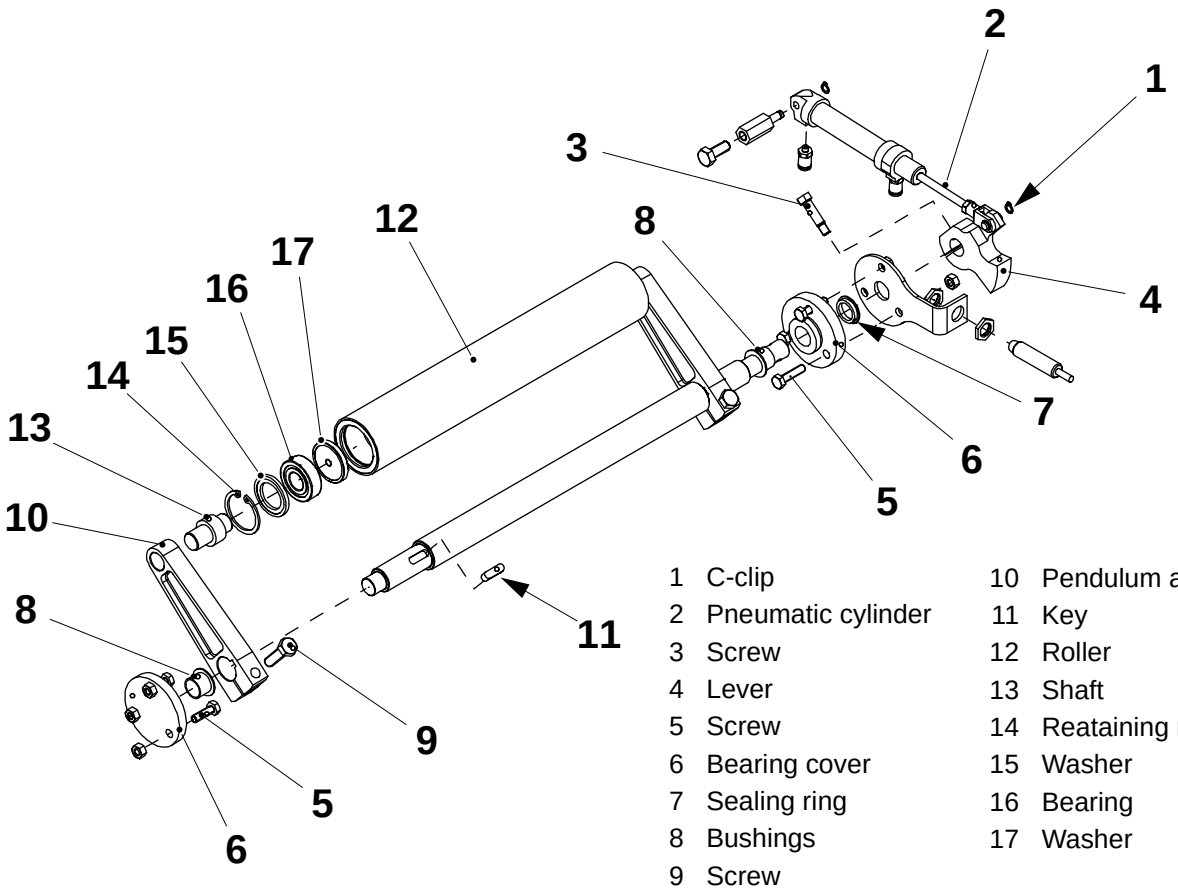

1	C-clip	10	Pendulum arm
2	Pneumatic cylinder	11	Key
3	Screw	12	Roller
4	Lever	13	Shaft
5	Screw	14	Reataining ring
6	Bearing cover	15	Washer
7	Sealing ring	16	Bearing
8	Bushings	17	Washer
9	Screw		

1.1.12-4 Pendulum Roller - set proximity switch

Machine status	Air **On** Mains power **On**
SPC reference	1195173-0300

a) Open the top cover of the aseptic chamber and move the pendulum roller by hand.

b) Check distance A. If incorrect, slacken the nuts (1) and adjust the proximity switch (2). Then tighten the nuts (1).

c) Loosen the nut (3) and adjust the connecting rod (4) until the LED in the proximity switch (2) lights.

d) Tighten the nut (3).

e) Close the top cover of the aseptic chamber.

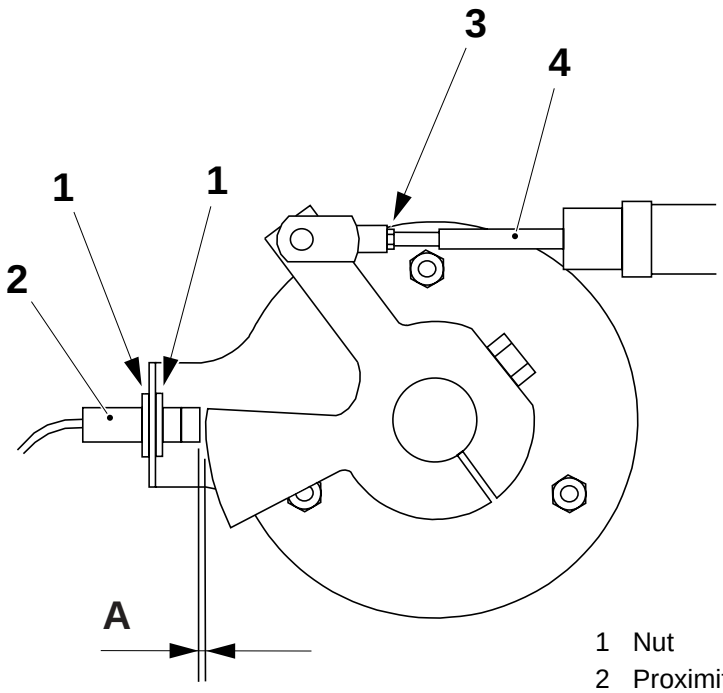

A = min. 1 mm

1 Nut
2 Proximity switch
3 Nut
4 Connecting rod

0-Series

2.2B3024A01en.fm

1.1.12-5 Pendulum Roller-check pneumatic cylinder

SPC reference	1195173-0300

Check the rod (1) and seal (2) for wear. If defective:

a) Remove the reating ring (3) and disconnect the joint (4).

b) Remove the retaining ring (5). Label and disconnect the air lines (6) and (7).

c) Change the pneumatic cylinder.

d) Assemble in the reverse order, taking care to refit the air lines correctly.

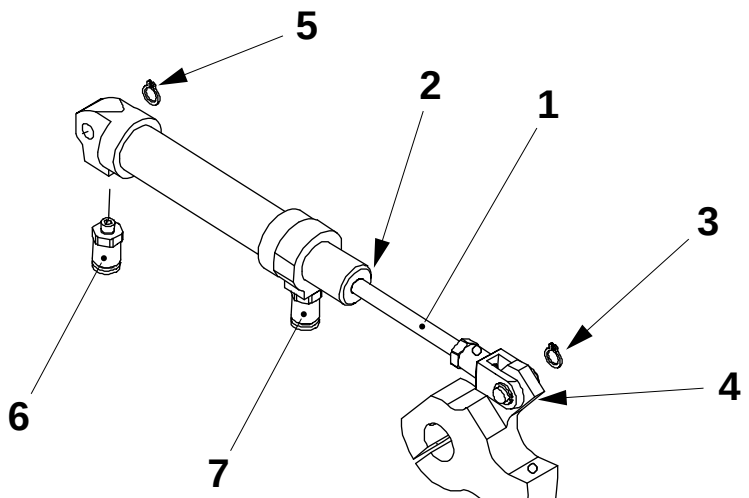

1 Rod
2 Seal
3 Retaining ring
4 Joint
5 Retaining ring
6 Air line
7 Air line

2.2B3024A01en.fm

1.2 Sterile air system

SPC reference	577104-0200

1.2-1 Sterile Air System - check leakages

SPC reference	577104-0200



WARNING!

Hydrogen peroxide!
Follow the Safety precautions.

Check the connections for air leakages at the following points:

- the valve heat exchanger (1)
- the heat exchanger (2)
- the compressor unit (3)
- the air valve (4)
- the pressure regulator (5)
- the scrubber (6)
- the separator (7)
- the valve reference point (8)
- the air superheater (9).

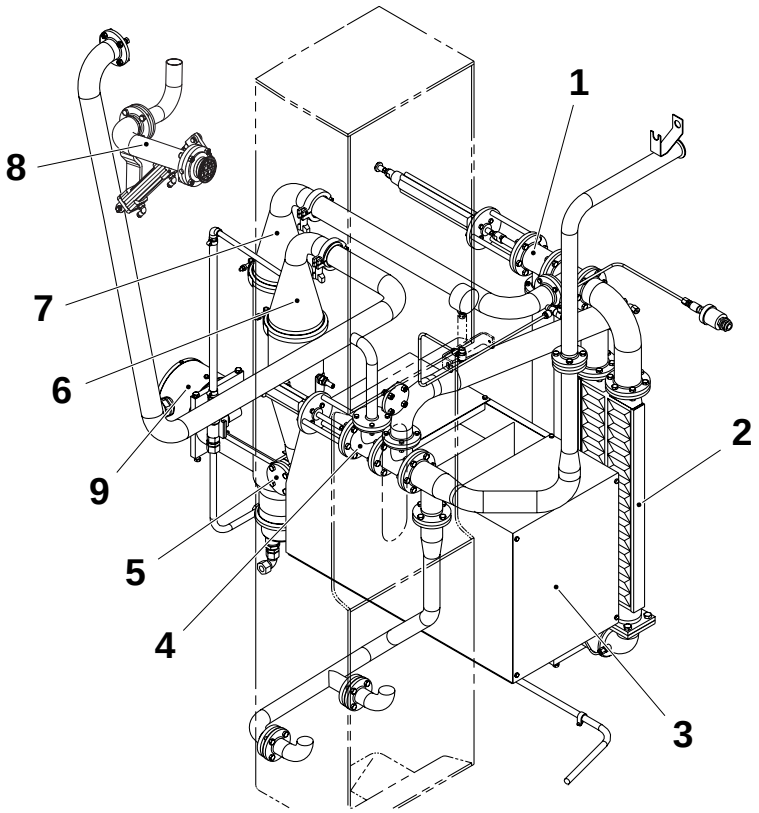

1 Valve heat exchanger
2 Heat exchanger
3 Compressor unit
4 Air valve
5 Pressure regulator
6 Scrubber
7 Separator
8 Valve reference point
9 Air superheater

0-Series

2.2B3024A01en.fm

1.2.1 Air super heater

1.2.1-1 Air super heater - check

Machine status	Heat sterilization
SPC reference	1347246-0100



WARNING!

Risk of burns!
Follow the Safety precautions.

Air super heater

Check that the air superheater (1) temperature reaches **360°C**.

Check the temperature on the TPOP panel and set it as required, see *1.6 Connection box*.

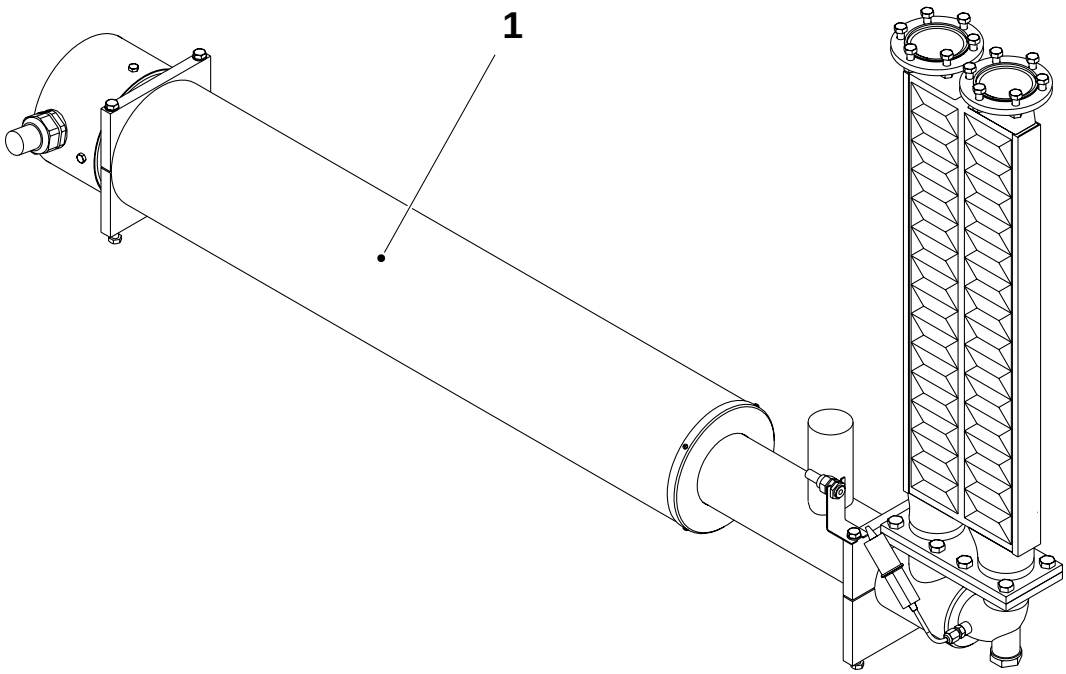

1 Air super heater

2.2B3024A01en.fm

0-Series

1.2.1-2 Air super heater - check heat exchanger

Consumables - deliming acid	 see list below
Tools - blank-off flange - hydrostatic test - flange	 TP No. 1348263 TP No. 565536 TP No. 979951
SPC reference	1347246-0100



WARNING!

a) Unscrew the screws (1) and remove the heat exchanger from the machine.

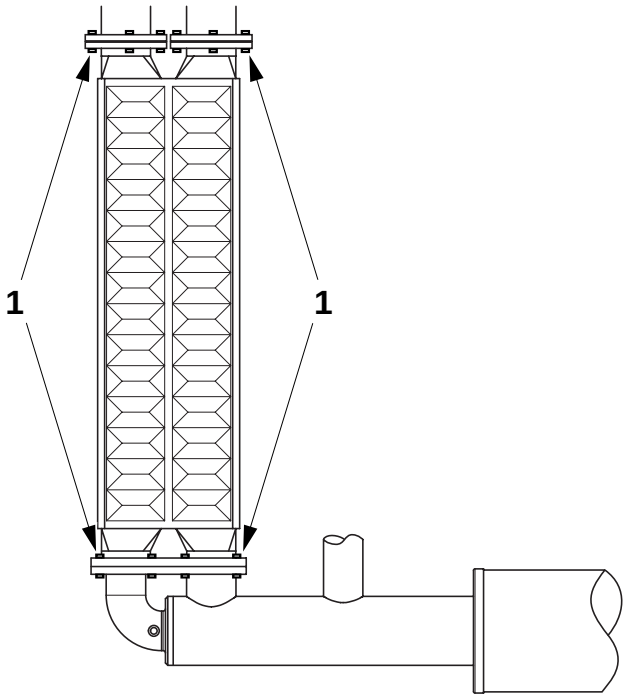

1 Screw

b) If the temperature of the aseptic chamber exceeds **100°C** during production, delime the heat exchanger with one of the following four acid solutions. All solutions must have a temperature of **50°- 60°C** during deliming.



WARNING!

Chemical products!
Acids. Follow the Safety precautions.

- acetic acid (CH_3COOH), 20%
- nitric acid (HNO_3), 5-10%
- citric acid ($C_6H_8O_7$), 20%
- phosphoric acid (H_3PO_4), 5-10%.

Caution! Do **not** use hydrochloric acid (HCl).

(Cont'd)

0-Series

2.2B3024A01en.fm

(Cont'd)

c) The heat exchanger has two coils, each running diagonally.
Connect the hydrostatic test equipment to one of the heat exchanger connections (2) using the flange (TP No. 979951).

d) Blank off the diagonally opposite heat exchanger connection (3) using the flange (TP No. 1348263).

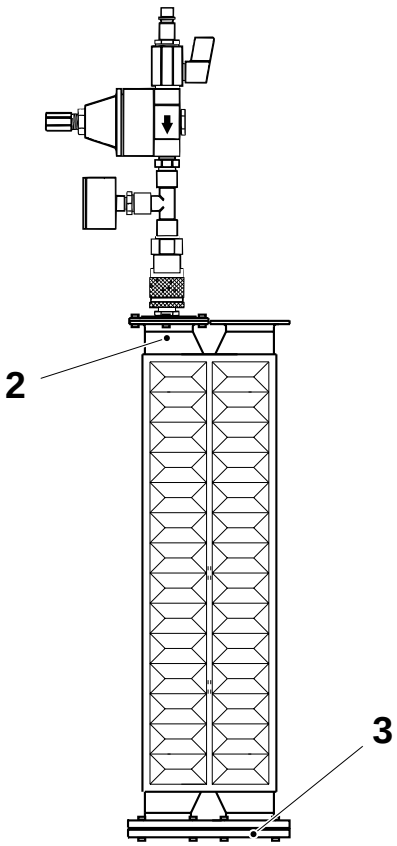

2 Heat exchanger connection
3 Flange

2.2B3024A01en.fm

(Cont'd)

(Cont'd)

Note! Make sure the equipment is connected in the correct direction. The flow must run **from** the valve (5) **to** the pressure gauge (8), in the direction of the arrow.

Caution! Before turning on the compressed air: turn the adjustment screw (7) anti-clockwise until the spring load is released, then close the valve (5).

e) Connect the compressed air connection (4).

f) Submerge the whole heat exchanger in water. Take care **not** to wet the pressure controller (6). Let the air bubbles disappear.

g) Open the valve (5). Adjust the pressure to **50 kPa** on the pressure gauge (8), using the adjustment screw (7). Air bubbles will immediately show any leaks in the heat exchanger.

h) Repeat the procedure on the other heat exchanger coil, using the other two diagonally-opposite connections.

i) If leakage is suspected, replace the heat exchanger.

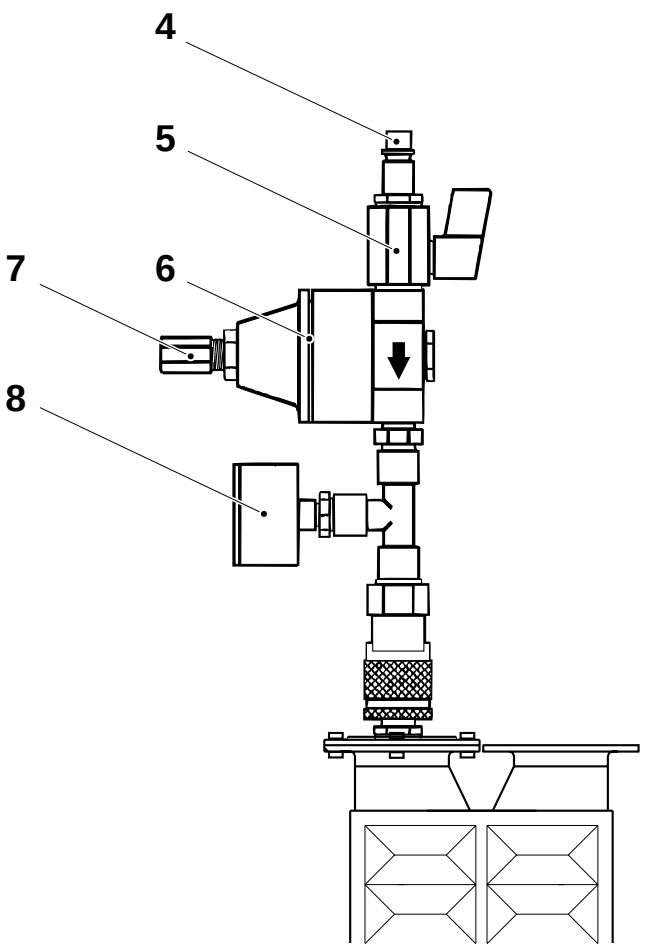

4 Compressed air connection
5 Valve
6 Pressure controller
7 Adjustment screw
8 Pressure gauge

(Cont'd)

2.2B3024A01en.fm

(Cont'd)

j) Change the joint gaskets.

k) Fit the heat exchanger on the machine. Make sure the numbers on the heat exchanger flanges correspond with those on the pipes.

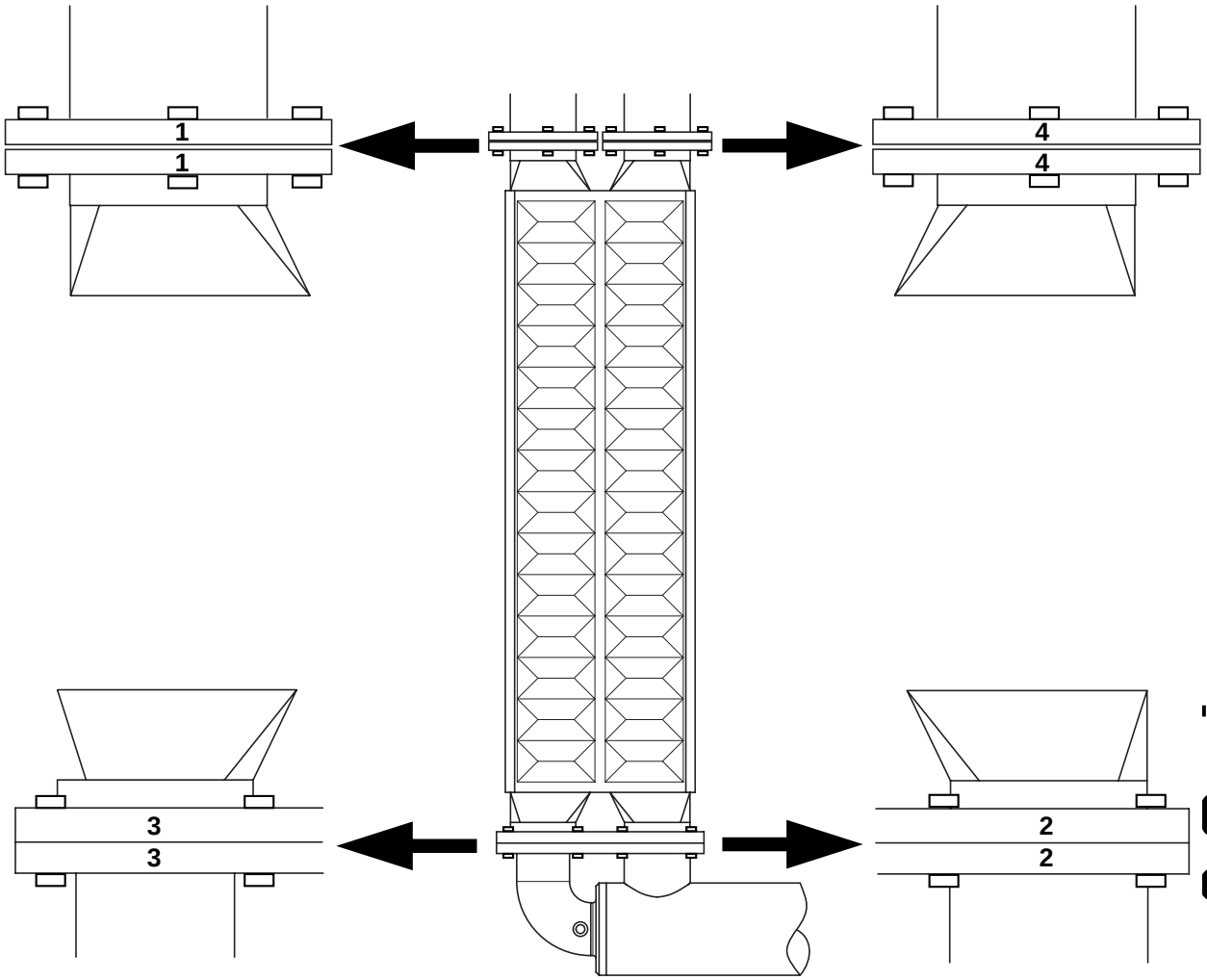

2.2B3024A01en.fm

0-Series

1.2.2 Compressor unit

1.2.2-1 Compressor unit - check pressure

Machine status	Air **On** Mains power **On**
SPC reference	996475-0200



WARNING!

Risk of burns!
Follow the Safety precautions.

a) Check that the water separator pressure gauge (1) shows **25 kPa.**
   - High pressure may be due to a blockage somewhere in the air system.
   - Low pressure may be due to a leak in the air system, a blocked filter in the suction pipes, or insufficient compressor capacity.

b) If the pressure cannot be reached, change the pressure gauge (1) or change the seals (2), see *1.2.2-3 Compressor - change seals*.

Note! Only for **60 Hz** machines.
The pressure is adjusted using a by-pass throttle.
See also *1.2.9-1 Pressure regulator (60 Hz) - set*.

0-Series

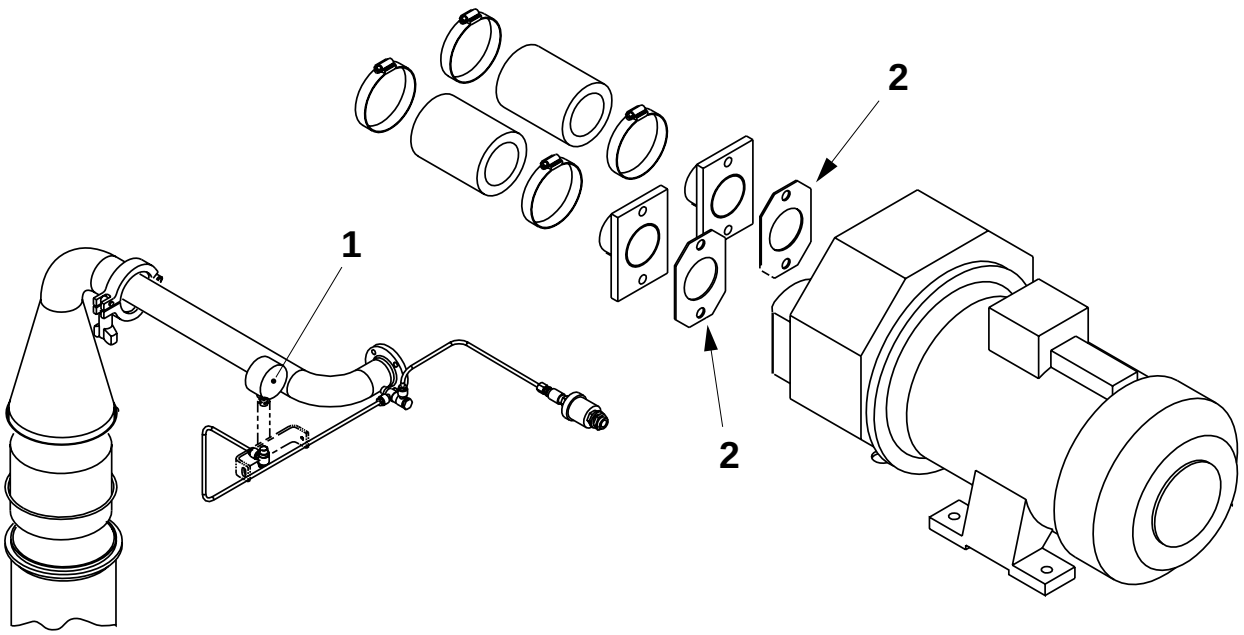

2.2B3024A01en.fm

1 Pressure gauge
2 Seal

1.2.2-2 Compressor unit - check for leaks and vibrations

Machine status	Heat sterilization
SPC reference	996475-0200

WARNING!

a) Remove the compressor cover.

b) Check the compressor is running without any abnormal noises. Abnormal noise may be caused by dirt. If required, step the machine down to **Zero**, remove the drain plug (2) and flush the compressor with water to clean it.

c) Step the machine down to **Zero**.

d) Check the gasket (3) for leaks. Change the axial seals as required, see *1.2.2-3 Compressor - change seals*.

e) Check the gasket (4) for leaks.
Remove the screws (1) and change the joint gasket as required.

f) Refit the compressor cover.

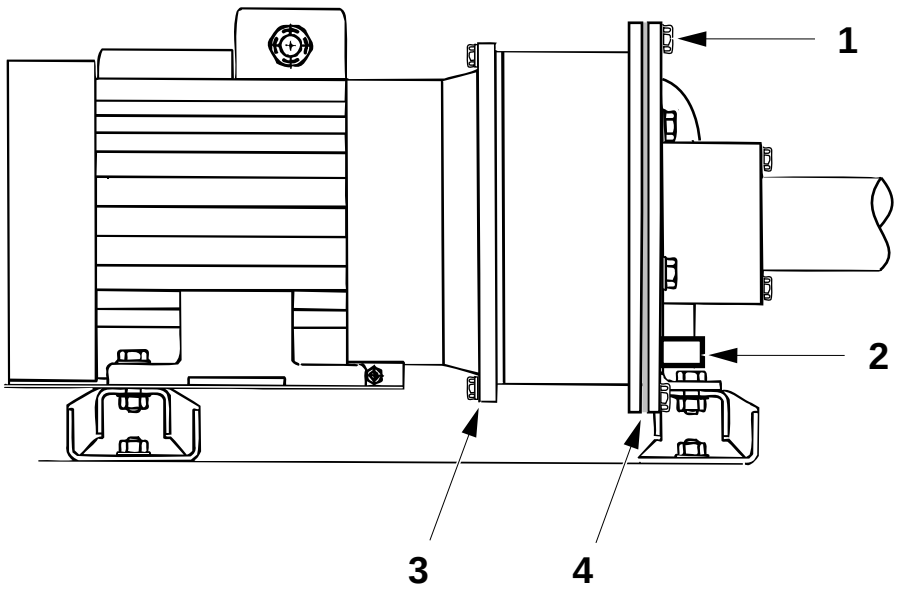

1 Screw
2 Plug
3 Gasket
4 Gasket

2.2B3024A01en.fm

1.2.2-3 Compressor - change seals

Tools - extractor	TP No. 74305-101
SPC reference	996475-0200



a) Remove the screws (2), the inlet and outlet flanges (3) and the gasket (4).

b) Remove the screws (5), the gasket (6) and the end cover (7).

c) Using an extractor (TP No.V3-74305-0101), remove the locking nut (8), the washer (9), and the rotor (10).

Note! There are two holes in the rotor for the extractor.

d) Remove the rotor key (11).

e) Remove the nuts (12) and separate the pump housing (13) from the motor (14). The mechanical shaft seal (15) will then come away with the pump housing (13) when it is detached. Take care not to damage the ceramic sealing surfaces when removing the pump housing (13).

f) Remove the fixed sealing section (16) from the pump housing (13) by applying even pressure from the motor side. Fit a new one using a thin film of oil on the rubber sleeve.

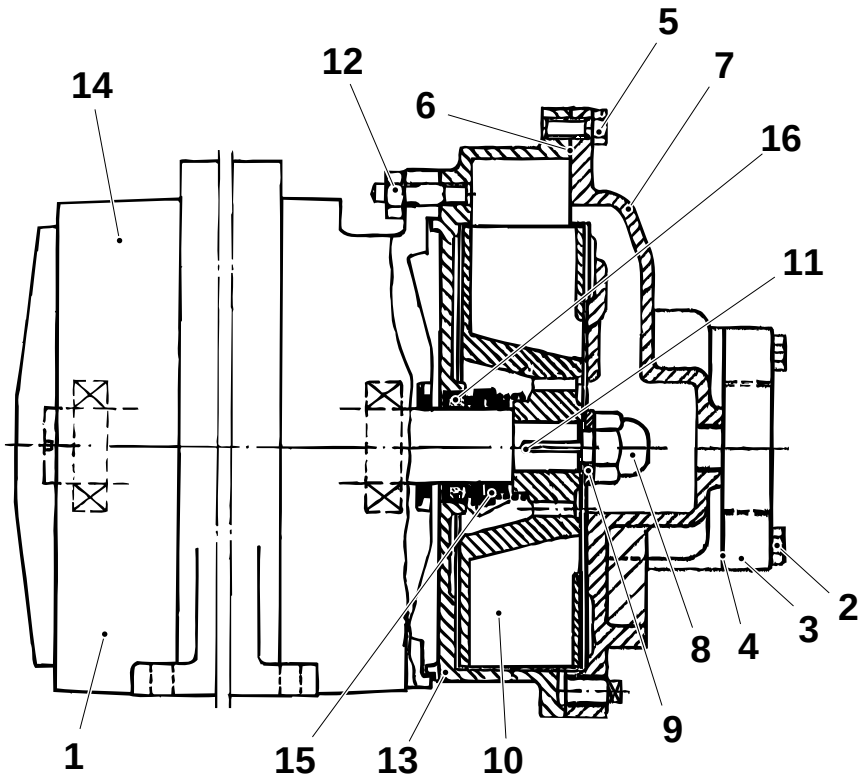

1 Compressor
2 Screw
3 Flange
4 Gasket
5 Screw
6 Gasket
7 End cover
8 Locking nut
9 Washer
10 Rotor
11 Rotor key
12 Nut
13 Pump housing
14 Motor
15 Shaft seal
16 Fixed seal

(Cont'd)

0-Series

2.2B3024A01en.fm

(Cont'd)

Caution! Do not put grease on the sealing surfaces.

g) Fit the water deflector ring (17) on the motor shaft (18).
h) Mount the pump housing (13) against the motor (14).
i) Fit the rotating seal (19) on the motor shaft (18). Fit the coil spring (20).
j) Place the key (11) in the shaft (18).
k) Fit the rotor (10).
l) Fit the washer (9) and locking nut (8) on the shaft and tighten properly.
m) Put the pump housing gasket (6) in place.
n) Fit the end cover (7) and tighten the screws (5).
o) Replace and the nuts (12).

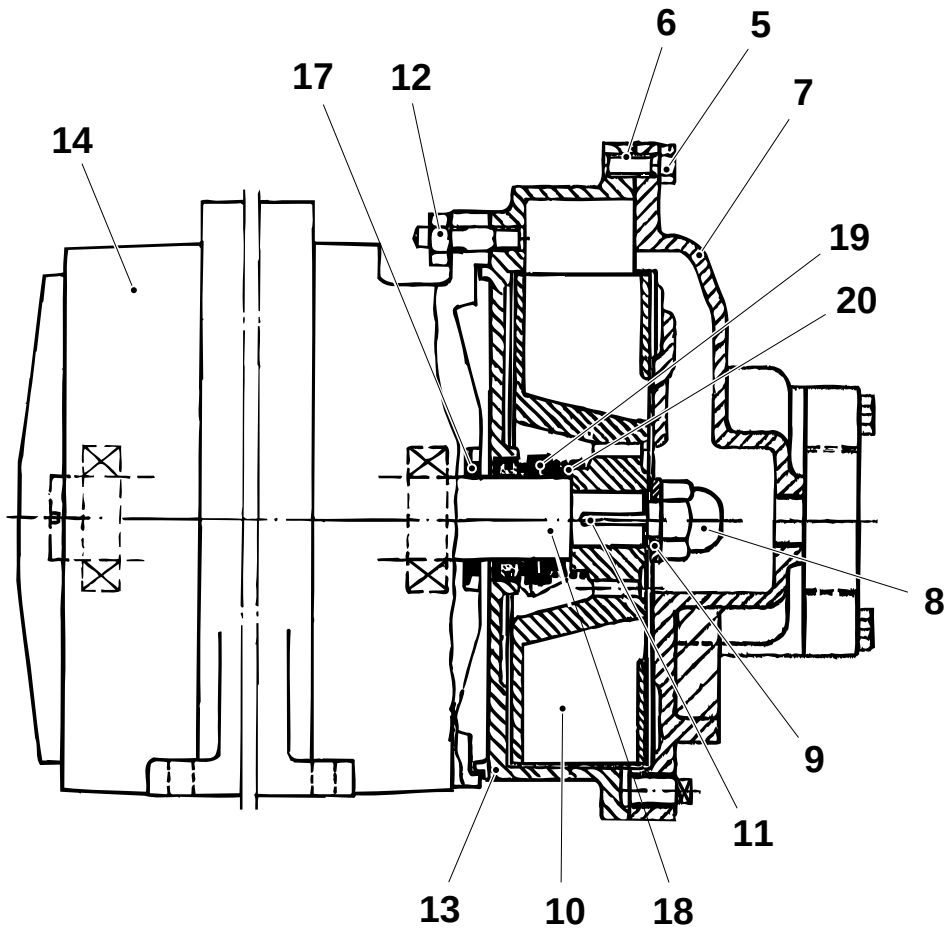

5 Screw
7 End cover
8 Locking nut
9 Washer
10 Rotor
11 Rotor key
12 Nut
13 Pump housing
14 Motor
17 Deflector ring
18 Shaft
19 Rotating seal
20 Coil spring

(Cont'd)

2.2B3024A01en.fm

(Cont'd)

p) Fit shims (21) at the screws (22). Shim thickness as follows:
Measure the gap **A** on the screws with the nuts (12) loosened.
Add **0.1 - 0.2 mm** to the average value of the gap **A**.

q) Tighten the nuts (12).

r) Check that the gap between the rotor (10) and the end cover (7) is approximately **0.1 mm** by inserting a feeler gauge through the inlet or outlet pipe.

s) Loosen the screws (5) again. Position the end cover (7) in the centre. Tighten the screws (5).

t) Using the motor fan, turn the rotor (10) and check that it rotates freely and does not touch the cover (7).

u) Fit the gasket (4) and the inlet and outlet flanges (3), then fit and tighten the screws (2).

v) Check once more that the rotor (10) rotates freely.

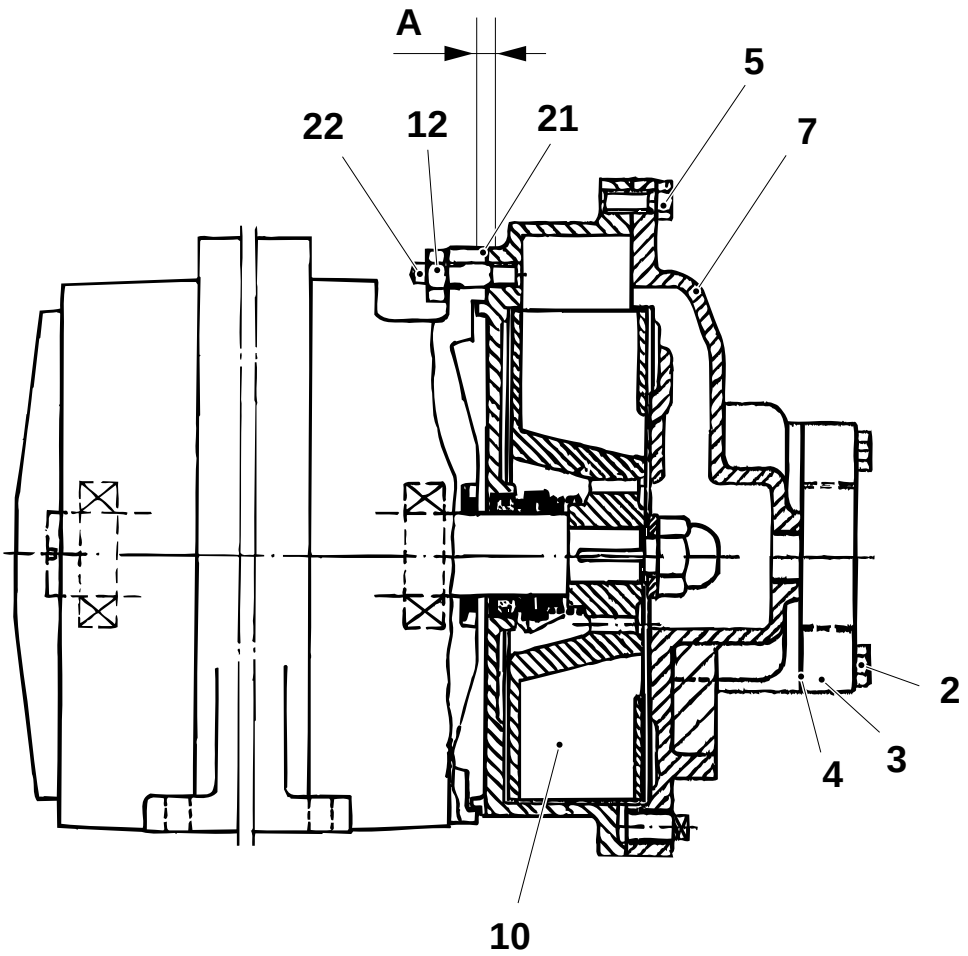

2 Screw
3 Flange
4 Gasket
5 Screw
7 End cover
10 Rotor
12 Nut
21 Shims
22 Screw

0-Series

2.2B3024A01en.fm

1.2.3 Valve heat exchanger

1.2.3-1 Valve heat exchanger - overhaul

Tools - torque wrench	 min. 50 Nm
SPC reference	1347141-0100



WARNING!

a) Remove the screws in the flanges (1), (2) and (3) and pull out the heat exchanger valve (4).

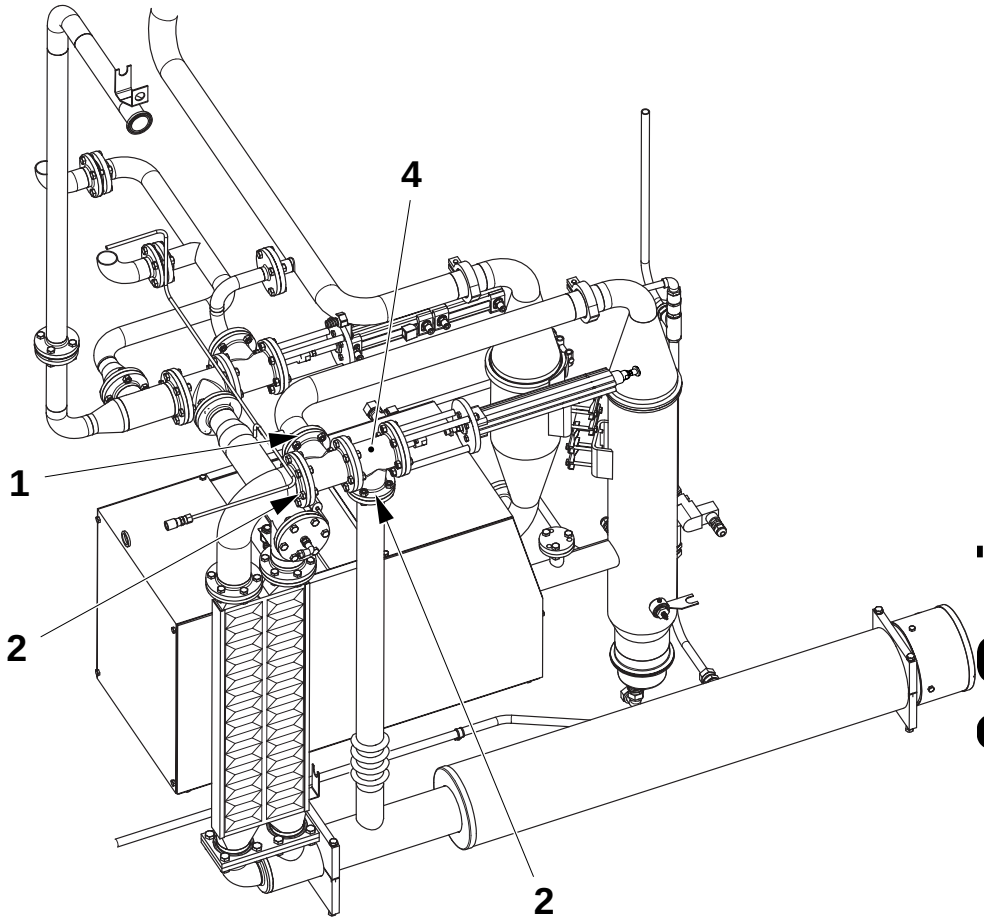

1 Flange
2 Flange
3 Flange
4 Valve

(Cont'd)

2.2B3024A01en.fm

0-Series

(Cont'd)

b) Change the gaskets (5), (6) and (7).
c) Remove the screws (8) and change the gasket (9).
d) Remove the valve cone (10) and change the seal rings (11) and (12).
e) Remove the screws (13) and change the gasket (14).
f) Disconnect the joint (15) and check that the shaft (16) is not damaged or bent. Change as required.
g) Change the bearings (17) and the O-rings (18).
h) Check that the cylinder (19) moves freely. Change as required.
i) Assemble in the reverse order.

Note! Using the torque wrench, tighten the valve cone (10) to **50 Nm**.

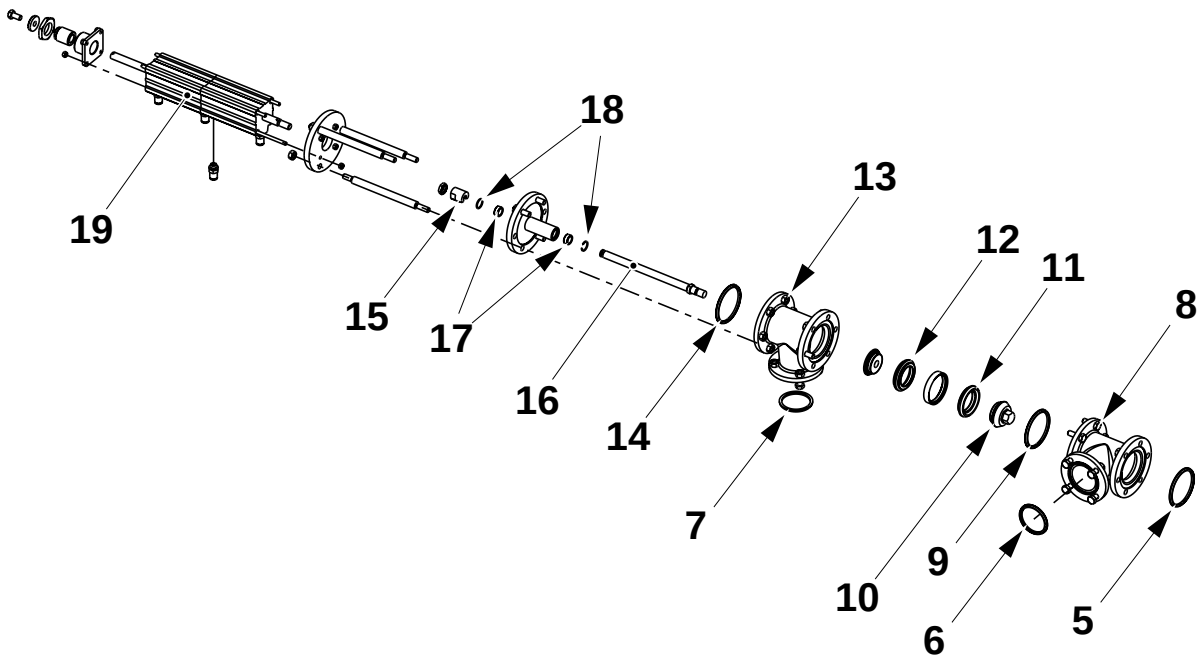

5	Gasket	12	Seal ring
6	Gasket	13	Screw
7	Gasket	14	Gasket
8	Screw	15	Joint
9	Gasket	16	Shaft
10	Valve cone	17	Bearing
11	Seal ring	18	O-ring
		19	Cylinder

0-Series

2.2B3024A01en.fm

1.2.3-2 Heat exchanger valve - set bypass position

SPC reference	1347141-0100

This setting ensures that the opening and closing of the heat exchanger valve remains sealed.

a) Close the main air (1).

b) Set the distance **A** between the stop screw (2) and the washer (3) by turning the stop screw (2).

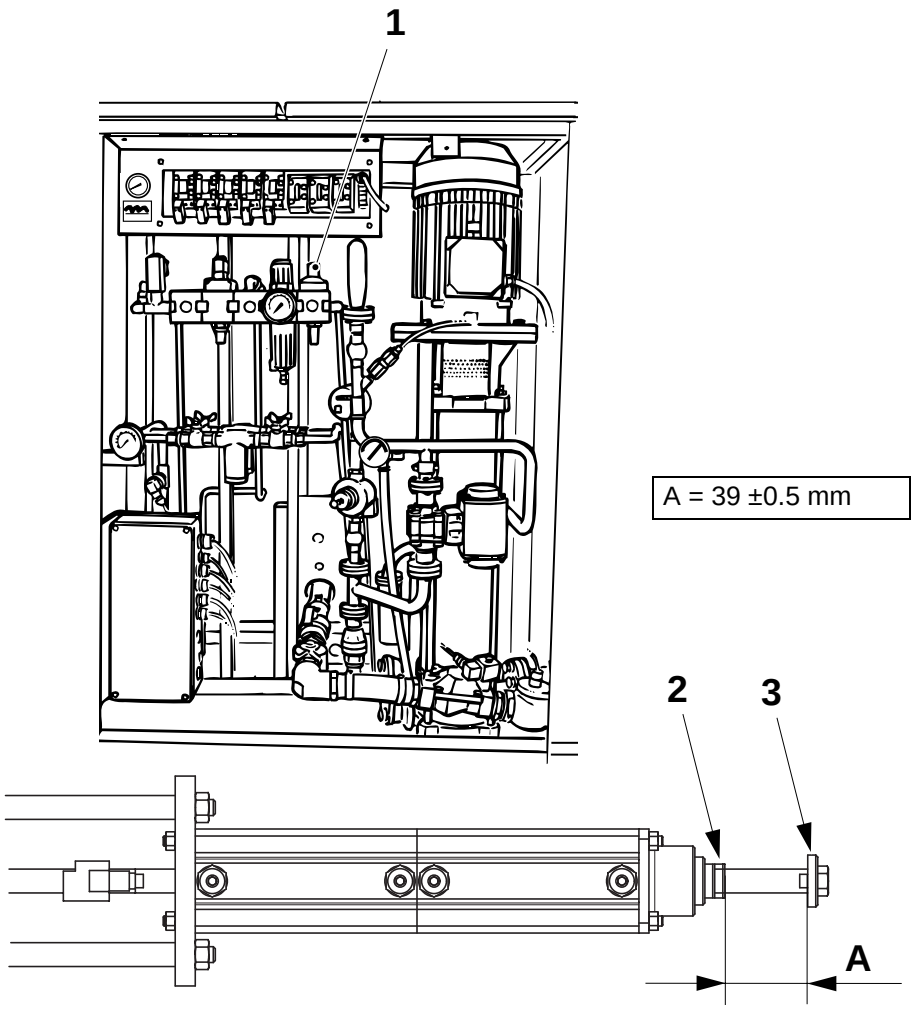

1 Shut off-valve
2 Stop screw
3 Washer

(Cont'd)

2.2B3024A01en.fm

(Cont'd)

c) Loosen the nut (7).

d) Unscrew and disconnect the shaft (5) from the pendulum suspension (6).

e) Push the shaft (4) all the way into the valve, position **A**.

f) Holding the shaft (4) in it's position, screw the piston rod (5) to the pendulum suspension (6) until the shaft (4) starts to move, then unscrew 1/2 a turn.

g) Tighteen the nut (7).

h) Push the shaft (4) all out, position **B**, and check that the valve hits the stop.

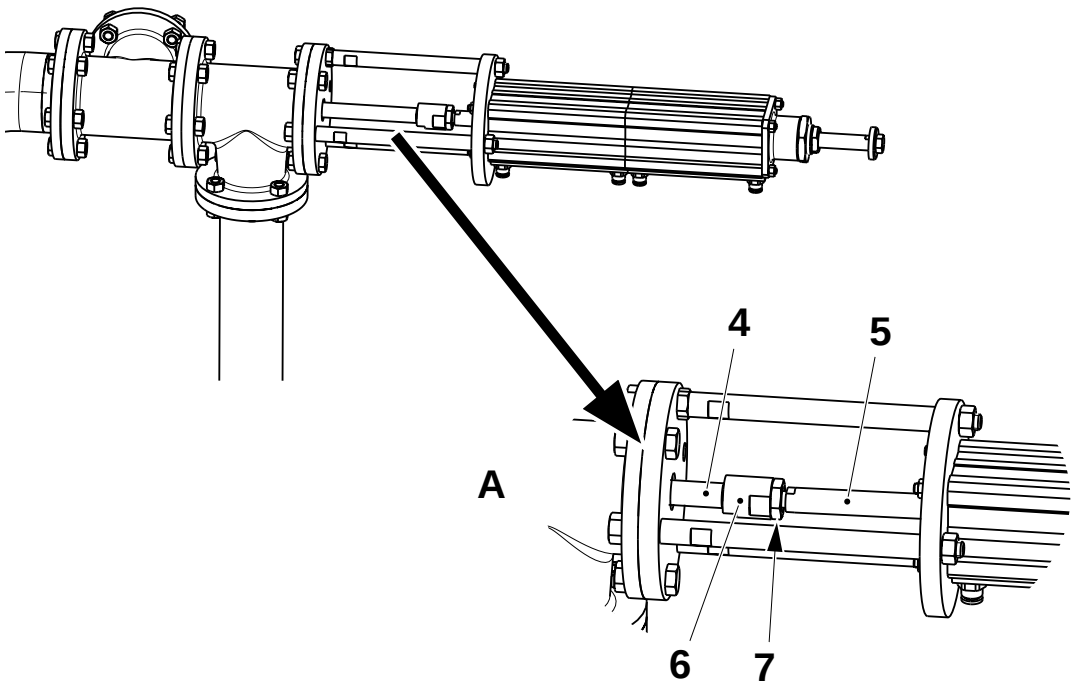

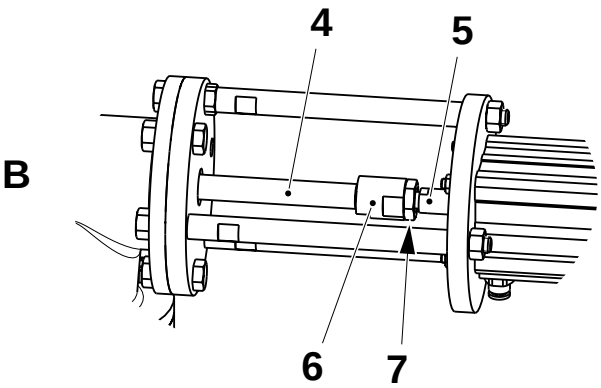

4 Shaft
5 Piston rod
6 Pendulum suspension
7 Nut

2.2B3024A01en.fm

1.2.4 Valve reference point

1.2.4-1 Valve reference point - check

Machine status	Air **On** Power **On**
SPC reference	996481-0200



WARNING!

a) Activate the valve Y1112 and check that the butterfly valve (2) is completely closed on the seal ring. If not, adjust the butterfly valve position using the link head (1).

b) Deactivate the valve Y1112.

c) Check that the seal ring is not damaged. Change as required by removing the nuts (3).

Note! An incorrect valve position can create peroxide residue in the system.

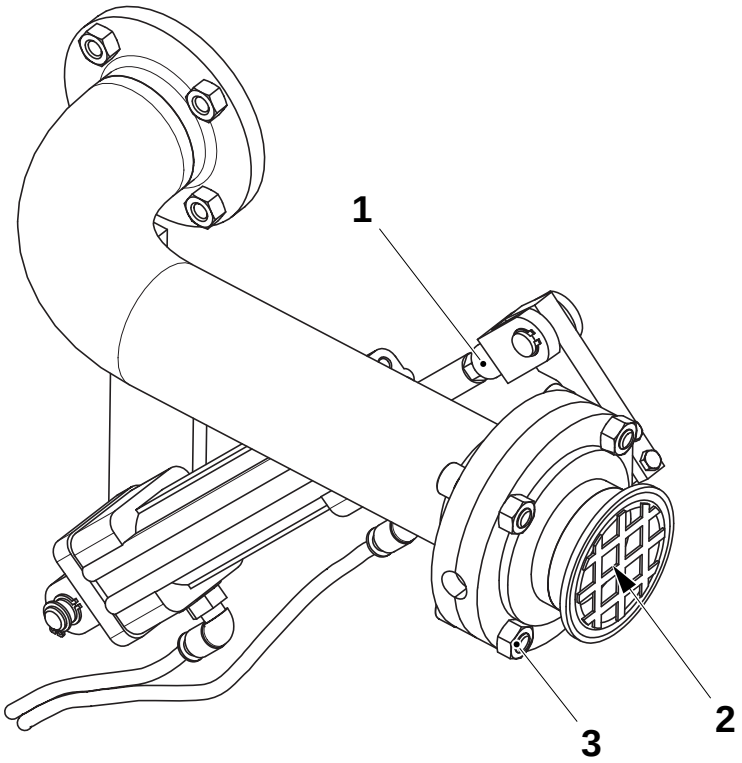

1 Link head
2 Butterfly valve
3 Nut

2.2B3024A01en.fm

0-Series

1.2.5 Air preheating valve

1.2.5-1 Air preheating valve - overhaul

SPC reference	1195285-0200



WARNING!

a) Remove the screws in the flanges (1), (2) and (3) and pull out the air preheating valve (4).

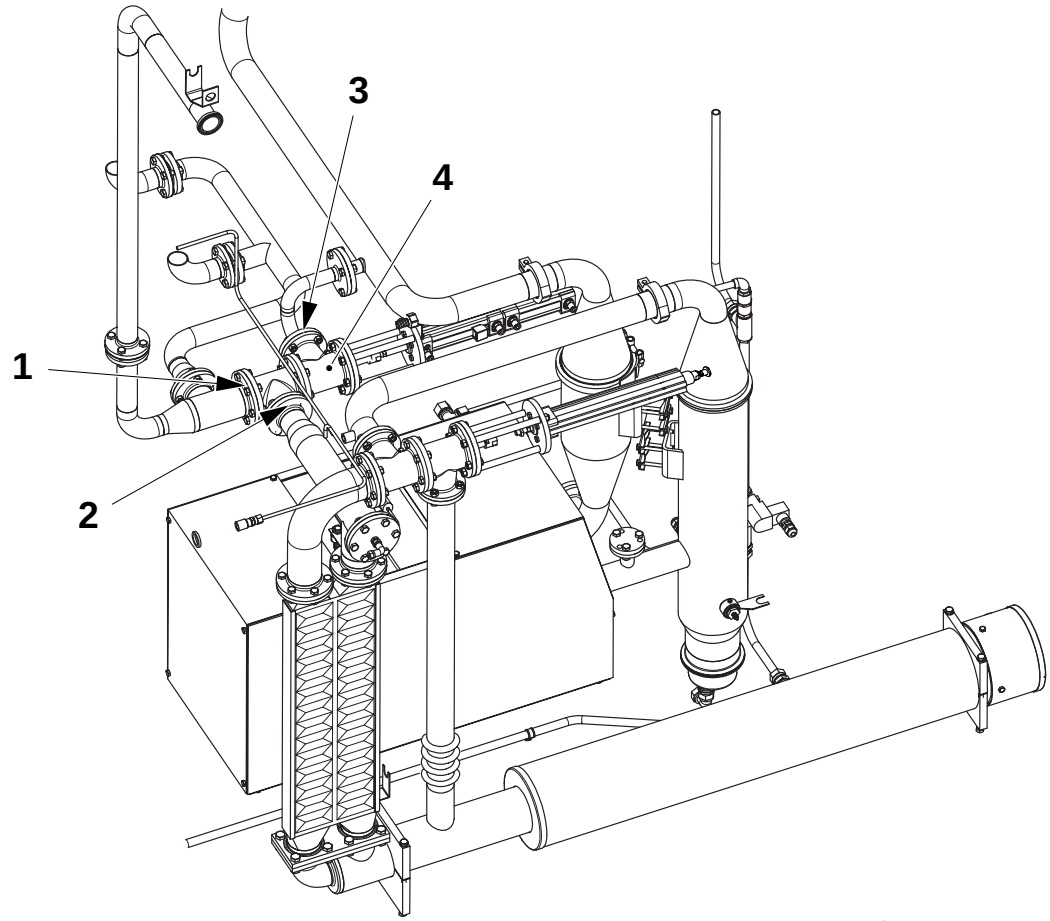

1 Flange
2 Flange
3 Flange
4 Valve

(Cont'd)

0-Series

2.2B3024A01en.fm

(Cont'd)

b) Change the gaskets (5), (6) and (7).

c) Remove the screws (8) and change the gasket (9).

d) Remove the valve cone (10) and change the seal rings (11) and (12).

e) Remove the screws (13) and change the gasket (14).

f) Disconnect the joint (15) and check that the shaft (16) is not damaged or bent. Change as required.

g) Change the bearings (17) and the O-rings (18).

h) Check that the cylinder (19) moves freely. Change as required.

i) Assemble in the reverse order.

Note! Using the torque wrench, tighten the valve cone (10) to **50 Nm**.

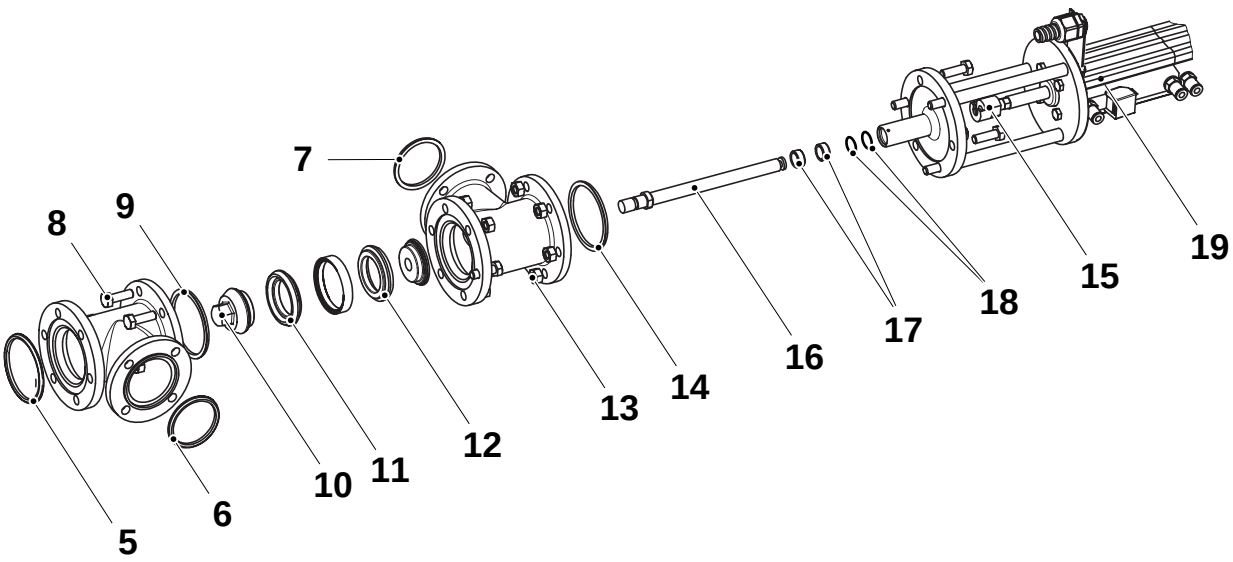

5	Gasket	12	Seal ring
6	Gasket	13	Screw
7	Gasket	14	Gasket
8	Screw	15	Joint
9	Gasket	16	Shaft
10	Valve cone	17	Bearing
11	Seal ring	18	O-ring
		19	Cylinder

2.2B3024A01en.fm

1.2.5-2 Air preheating valve - set proximity switch

Machine status	Power **On** Air **On**
SPC reference	1195285-0200



a) Activate the valve Y1111.

b) Set the proximity switch (1) as shown so that it is activated.

c) Deactivate the valve Y1111 and check that the proximity switch is deactivated.

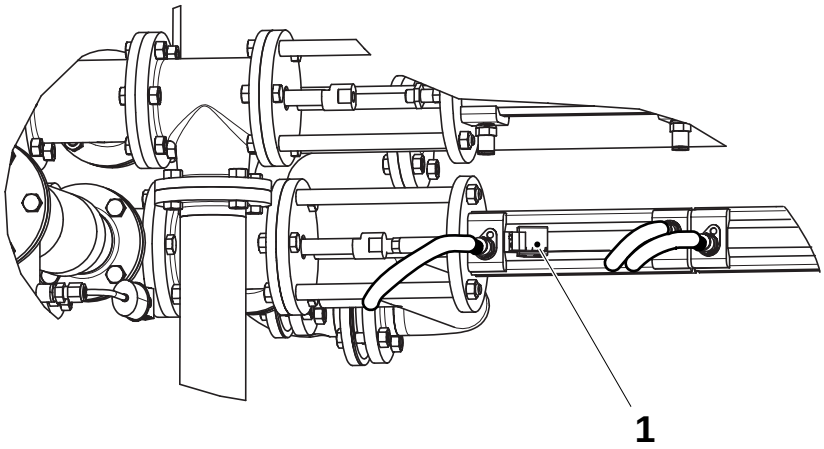

1 Proximity switch

2.2B3024A01en.fm

1.2.5-3 Air preheating valve - set bypass position

SPC reference	1195285-0200

Set the distance **A** between the stop screw (1) and the washer (2) by turning the stop screw (1).

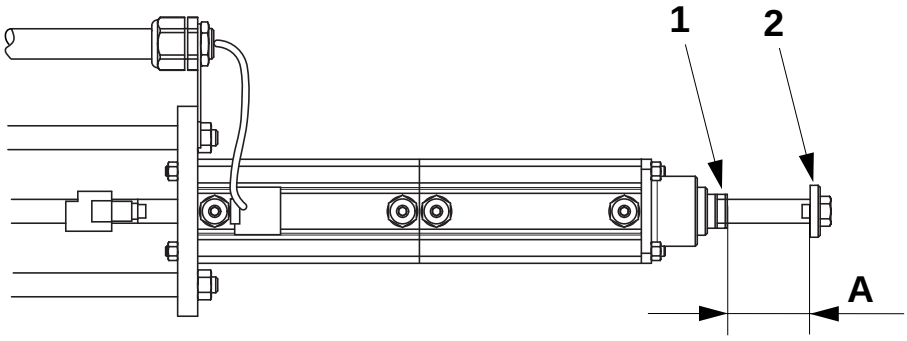

1 Stop screw
2 Washer

A = 39 ±0.5 mm

1.2.6 Scrubber

1.2.6-1 Scrubber - clean constant flow valve

SPC reference	1255979-0200

a) Remove the constant flow valve (2) from the line.
b) Clean the inside of the constant flow valve with a damp sponge.
c) Blow compressed air through the pipe (1) and check for blockages.
d) Check the seal rings (3) for damage. Change as required.
e) Refit the constant flow valve (2), taking care not to overtighten it.

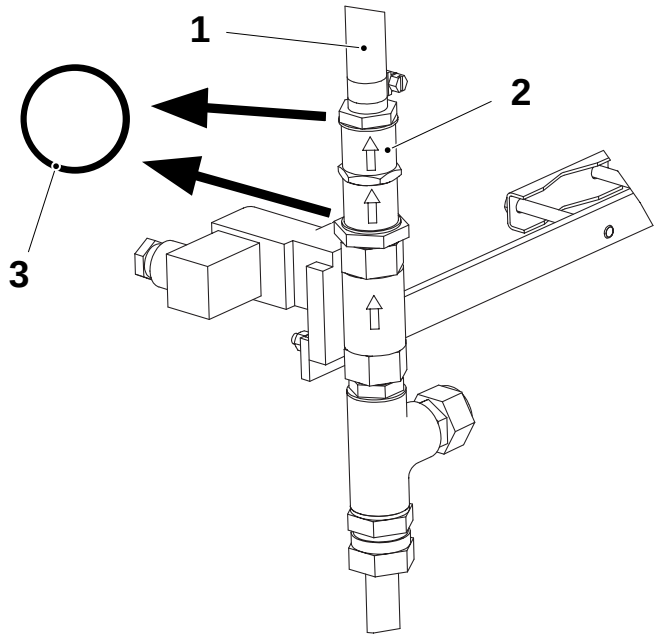

1 Pipe
2 Constant flow valve
3 Seal ring

2.2B3024A01en.fm

1.2.6-2 Scrubber - clean filters

Consumables - deliming acid	see list below
SPC reference	1255979-0200



WARNING!

Chemical products!
Acids. Follow the *Safety precautions*.

a) Loosen the clamp (1) and the holder (2) and remove the upper section (3).

b) Remove the nozzle (6) and clean it with compressed air. If necessary, use a needle.

Caution! Do **not** use hydrochloric acid (HCl).



c) Remove the filters (5) and delime them using one of the following four acid solutions. All solutions must be at **50°- 60°C** during deliming.
   - acetic acid (CH_3COOH), 20%
   - nitric acid (HNO_3), 5-10%
   - citric acid ($C_6H_8O_7$), 20%
   - phosphoric acid (H_3PO_4), 5-10%.

d) Flush the filters with water, and blow dry with compressed air.

e) Assemble in the reverse order and make sure that the upper filter (5) is in close contact with the upper section cover (3).

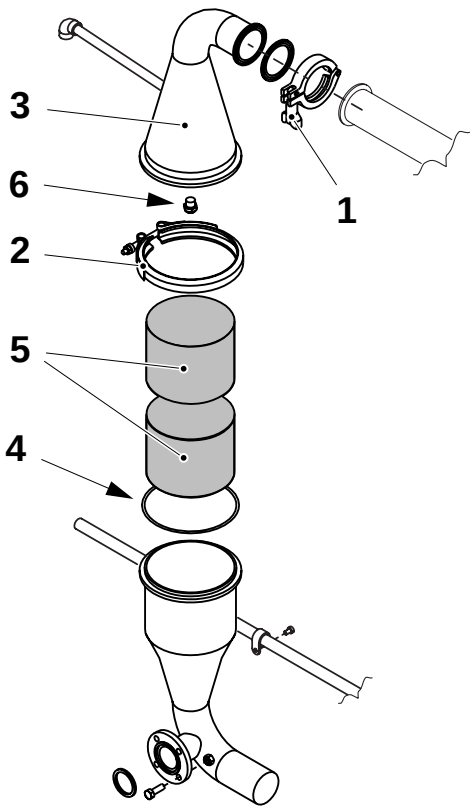

1 Clamp
2 Holder
3 Upper section cover
4 O-ring
5 Filter
6 Nozzle

0-Series

2.2B3024A01en.fm

1.2.7 Separator

1.2.7-1 Separator - check pressure guard

Machine status	**Heat sterilization**
SPC reference	1347142-0100

WARNING!

Risk of eye injury!
Follow the Safety precautions.

a) Slowly loosen the pipe connection (1) to the pressure switch (3).
b) When the water separator pressure gauge (2) drops to about **14 kPa**, **c**heck that the machine steps down to step two **(Tube sealing)**.
c) If not, change the pressure switch (3).
d) Tighten the pipe connection (1).

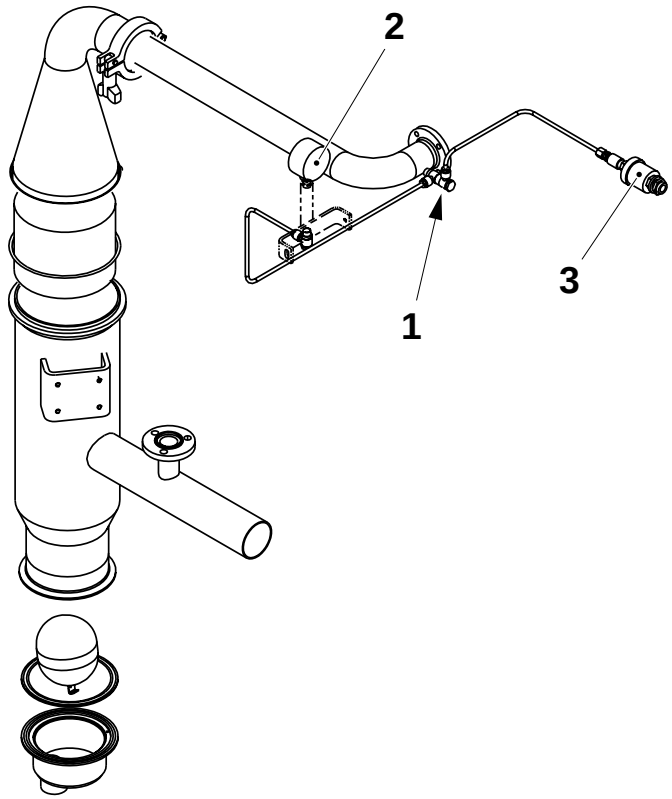

1 Pipe connection
2 Pressure gauge
3 Pressure switch

2.2B3024A01en.fm

0-Series

1.2.7-2 Separator - clean filter and float

Consumables - deliming acid	see list below
SPC reference	1347142-0100

WARNING!

Risk of eye injury!
Follow the Safety precautions.

a) Unscrew the pipe connection (1).

b) Loosen the clamp (2) and remove the draining bowl (4) and the float unit.

c) Remove the float (3) from its arm and clean it. Shake the float (3) to check that no liquid has leaked into it. Change the float (3) as required.

d) If the valve (6) or the valve seat (5) is defective, overhaul them as required, see *1.2.7-3 Separator - overhaul*.

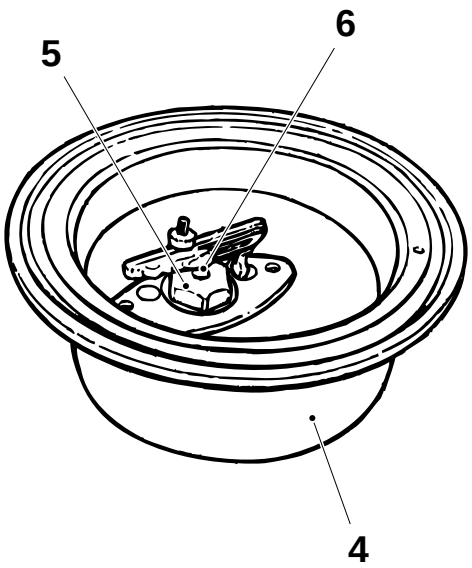

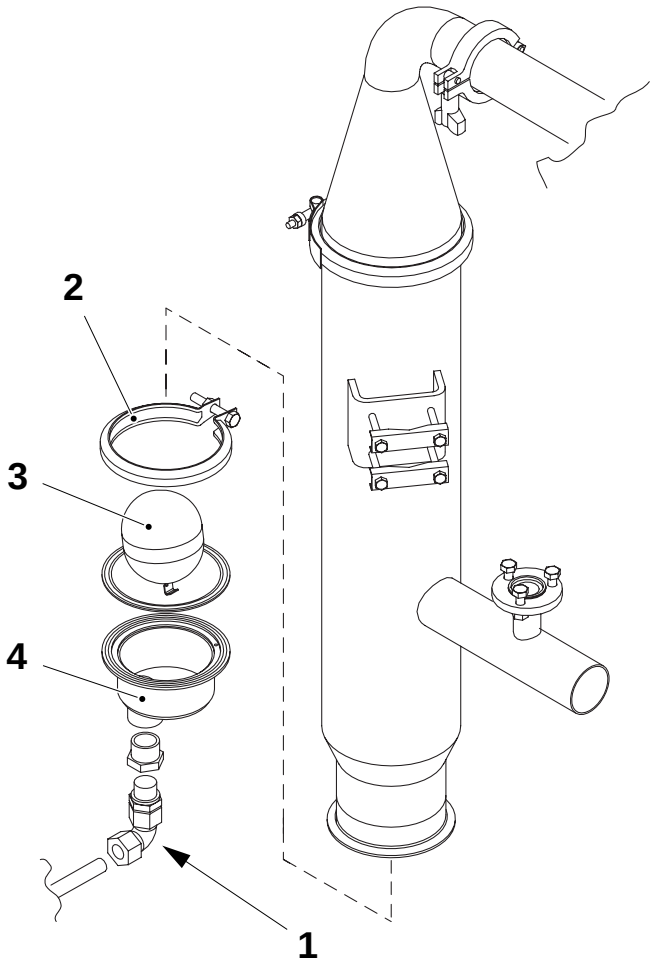

1 Pipe connection
2 Clamp
3 Float
4 Draining bowl
5 Valve seat
6 Valve

(Cont'd)

0-Series

2.2B3024A01en.fm

(Cont'd)

e) Clean the inside of the separator with a sponge and water. Blow dry with compressed air.

Note! Do not use detergents.

f) Undo the clamps (7) and (8).

g) Remove the upper section cover (9) and the O-ring (10).

WARNING!

Chemical products!
Acids. Follow the Safety precautions.

Caution! Do **not** use hydrochloric acid (HCl).

h) Delime the filter (11) with one of the following four acid solutions. All the solutions must have a temperature of **50°- 60°C** during deliming.
   - acetic acid (CH_3COOH), 20%
   - nitric acid (HNO_3), 5-10%
   - citric acid ($C_6H_8O_7$), 20%
   - phosphoric acid (H_3PO_4), 5-10%.

i) Flush with water and blow dry with compressed air.

j) Assemble in the reverse order and set the float unit, see *1.2.7-4 Separator - set float unit*.

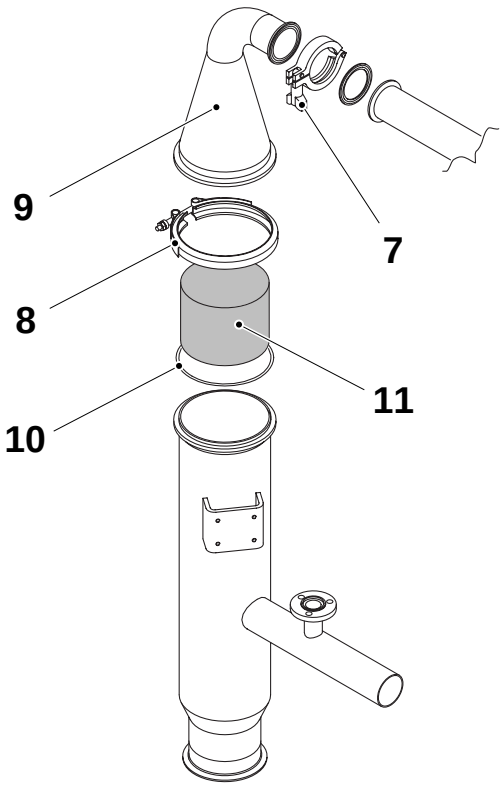

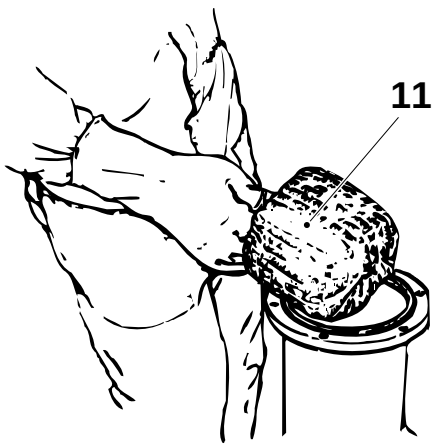

7 Clamp
8 Clamp
9 Cover
10 O-ring
11 Filter

2.2B3024A01en.fm

1.2.7-3 Separator - overhaul

SPC reference	1347142-0100

a) Remove the float unit (1), see *1.2.7-2 Separator - clean filter and float.*

b) Remove the nut (2) and lift off the valve lever (3).

c) Remove and change the valve (4) and the valve seat (5).

d) Assemble the float unit in the reverse order and set, see *1.2.7-4 Separator - set float unit.*

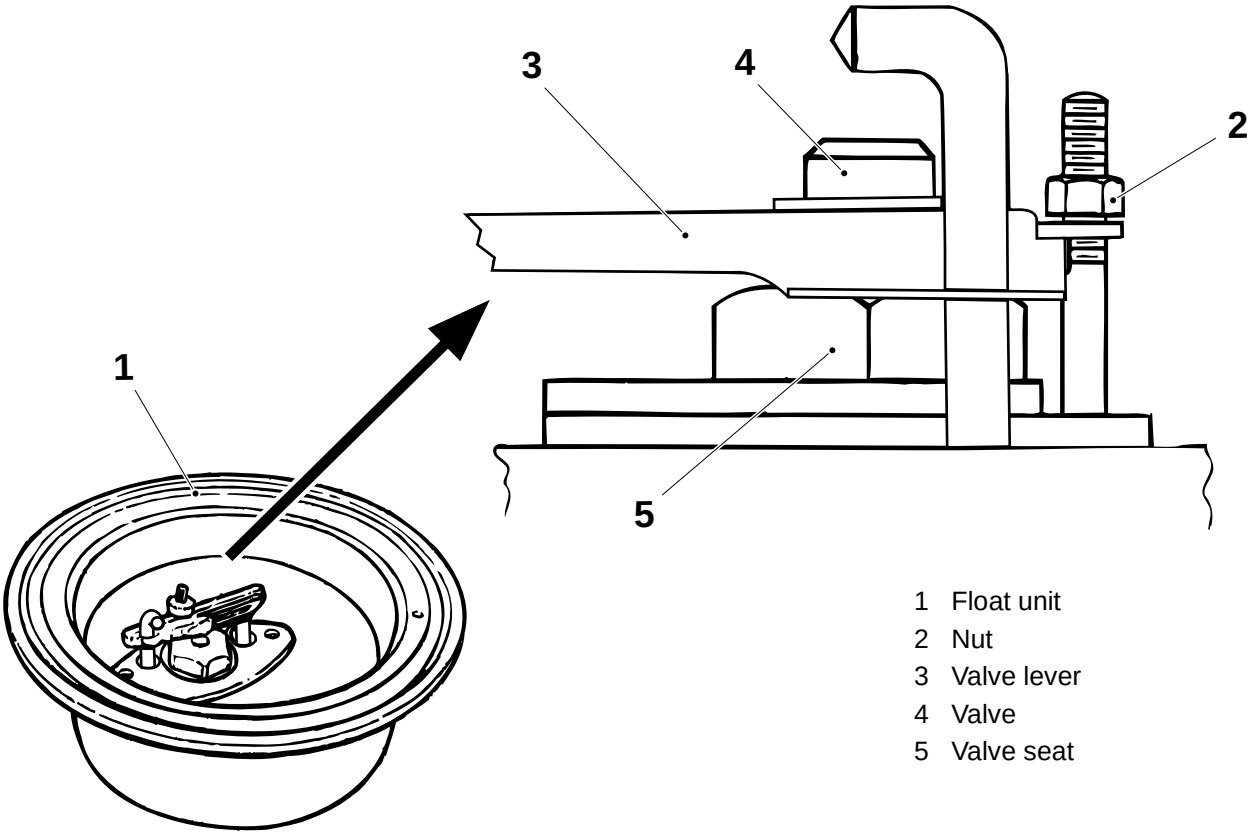

1 Float unit
2 Nut
3 Valve lever
4 Valve
5 Valve seat

2.2B3024A01en.fm

0-Series

1.2.7-4 Separator - set float unit

SPC reference	1347142-0100

a) On each side of the valve (1), press the valve lever (5) to make the fulcrum points (4) horizontal on the valve seat (3).

b) In this position, set distance **A** between the nut (2) and the valve lever (5).

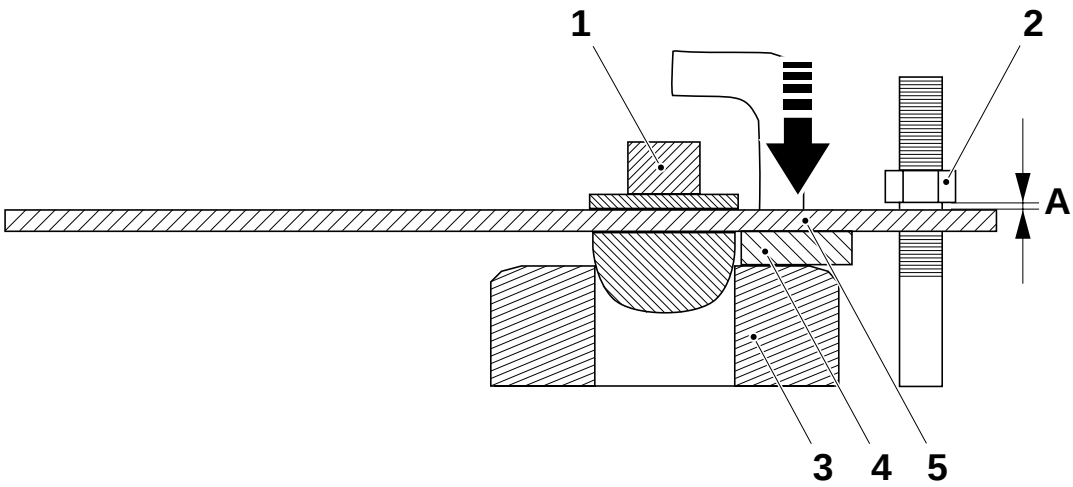

A = 0.4 ±0.1 mm

1 Valve
2 Nut
3 Valve seat
4 Fulcrum point
5 Valve lever

2.2B3024A01en.fm

0-Series

1.2.8 Pipe line

1.2.8-1 Pipe line - clean spreader nozzle

SPC reference	1195284-0200

a) Remove the screws (1) and the flange (2).

b) Unscrew and clean the nozzle (3) with compressed air.

c) Change the gasket (4) if damaged.

d) Assemble in the reverse order.

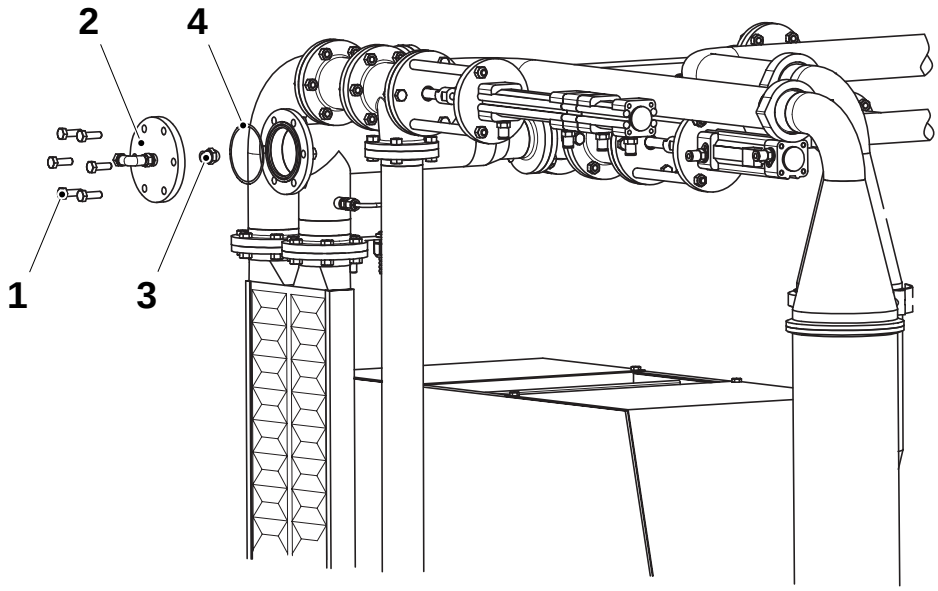

1 Screw
2 Flange
3 Nozzle
4 Gasket

0-Series

2.2B3024A01en.fm

6 Handle tool
7 Clamp ring
8 Gasket

1.2.9 Pressure regulator (60 Hz)

1.2.9-1 Pressure regulator (60 Hz) - set

Machine status	Production
SPC reference	1347142-0100



WARNING!

Risk of burns!
Follow the Safety precautions.

By-pass valve

Set the sterile air pressure as described below:

a) Check that the pressure gauge (1) of the water separator (2) indicates **25 kPa.**

b) High pressure may be due to a blockage somewhere in the air system.

c) Low pressure may be due to a leak in the air system, a blocked filter in the suction pipes, or insufficient compressor capacity.

d) Adjust the throttle screw (3) to obtain the correct pressure.

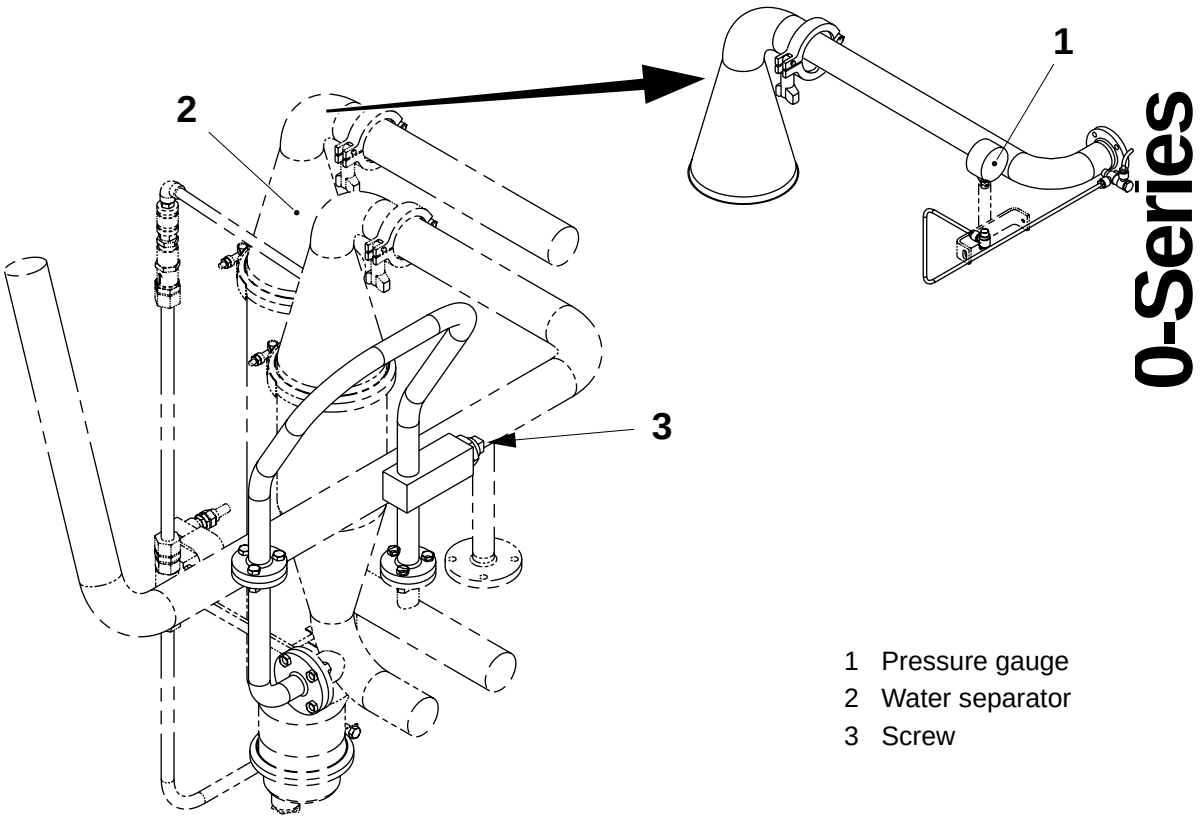

1 Pressure gauge
2 Water separator
3 Screw

2.2B3024A01en.fm

0-Series

1.3 Filling System

SPC reference	577103-0200

1.3-1 Filling system - description

SPC reference	577103-0200

The level probe (1) uses the conductivity of the product to determine the level inside the paper tube and transmit a signal to the PLC.

The electrical signal is converted to a compressed air signal in an IP transducer (2), which regulates the air pressure to the regulating valve (3), keeping the product flow constant even if the product viscosity changes.

A leakage detector (4) detects leaks in the membranes of the regulating valve. Change membranes if the alarm lights up.

See also *1.3.3-1 Flow regulator - overhaul regulating valve*.

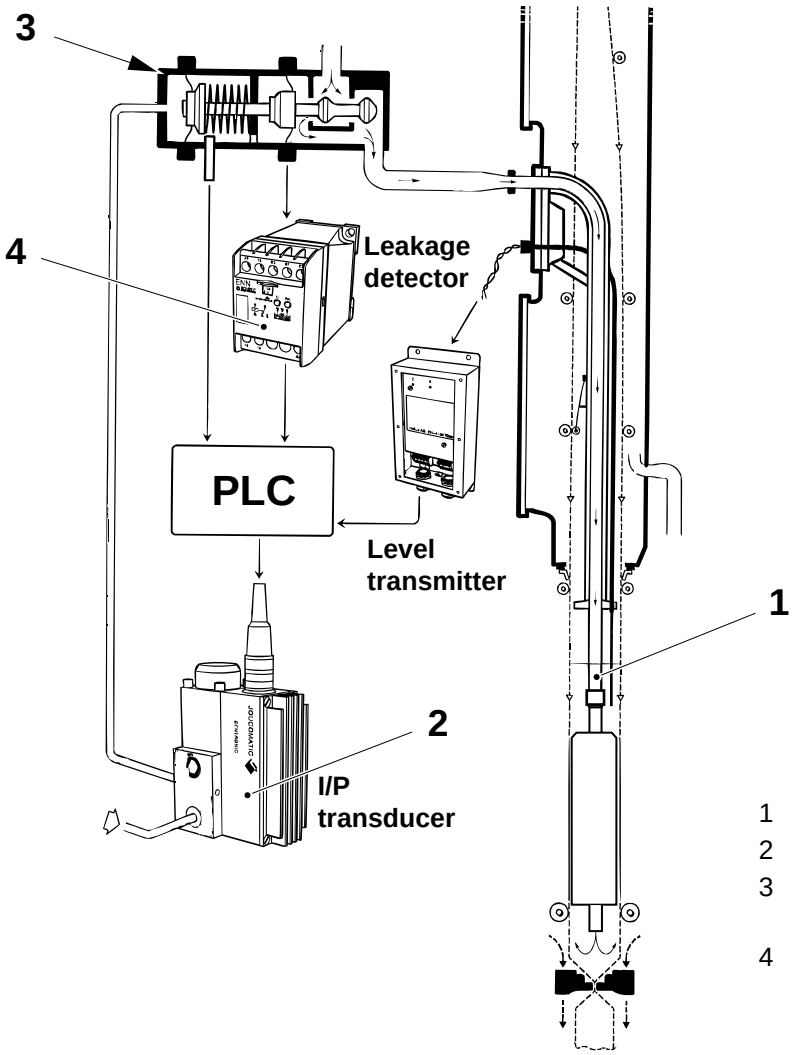

1 Level probe
2 IP transducer
3 Regulating valve
4 Leakage detector

2.2B3024A01en.fm

1.3.2 Product valve group

1.3.2-1 Product valve group - remove pneumatic cylinders, AP-valve

Consumables - silicon grease	code L
Tool - handle tool	TP No.449969-101
SPC reference	1255980-0200

WARNING!

Risk of personal injury!
If the valve is disassembled incorrectly, the spring in the pneumatic cylinder will eject forcefully.

Caution! Use the solenoid valve to operate the steam valve, to release any steam pressure remaining in the steam line.

a) Remove the air (1) and steam connections (2) from the cylinders.

b) Remove the screws (3) and proximity switch brackets (4).

c) Unscrew the sleeve (5) from the cylinder.

2.2B3024A01en.fm

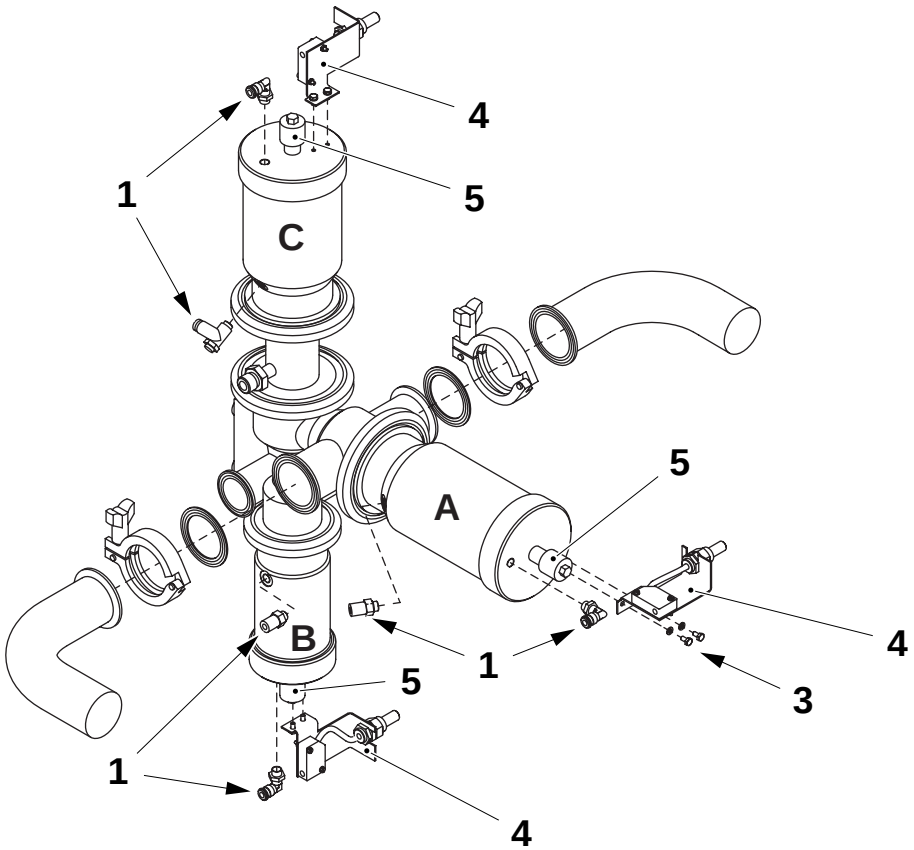

1 Air connection
2 Steam connection
3 Screw
4 Proximity switch bracket
5 Sleeve

(Cont'd)

(Cont'd)

d) Fit the tool (6) and turn the handle clockwise approximately 5 turns to release the piston pressure from the valve seat.

e) Remove the clamp rings (7) and the valve **A**.

f) Check the gasket (8) and change it as required.

g) Repeat the same procedure on the valves **B** and **C**.

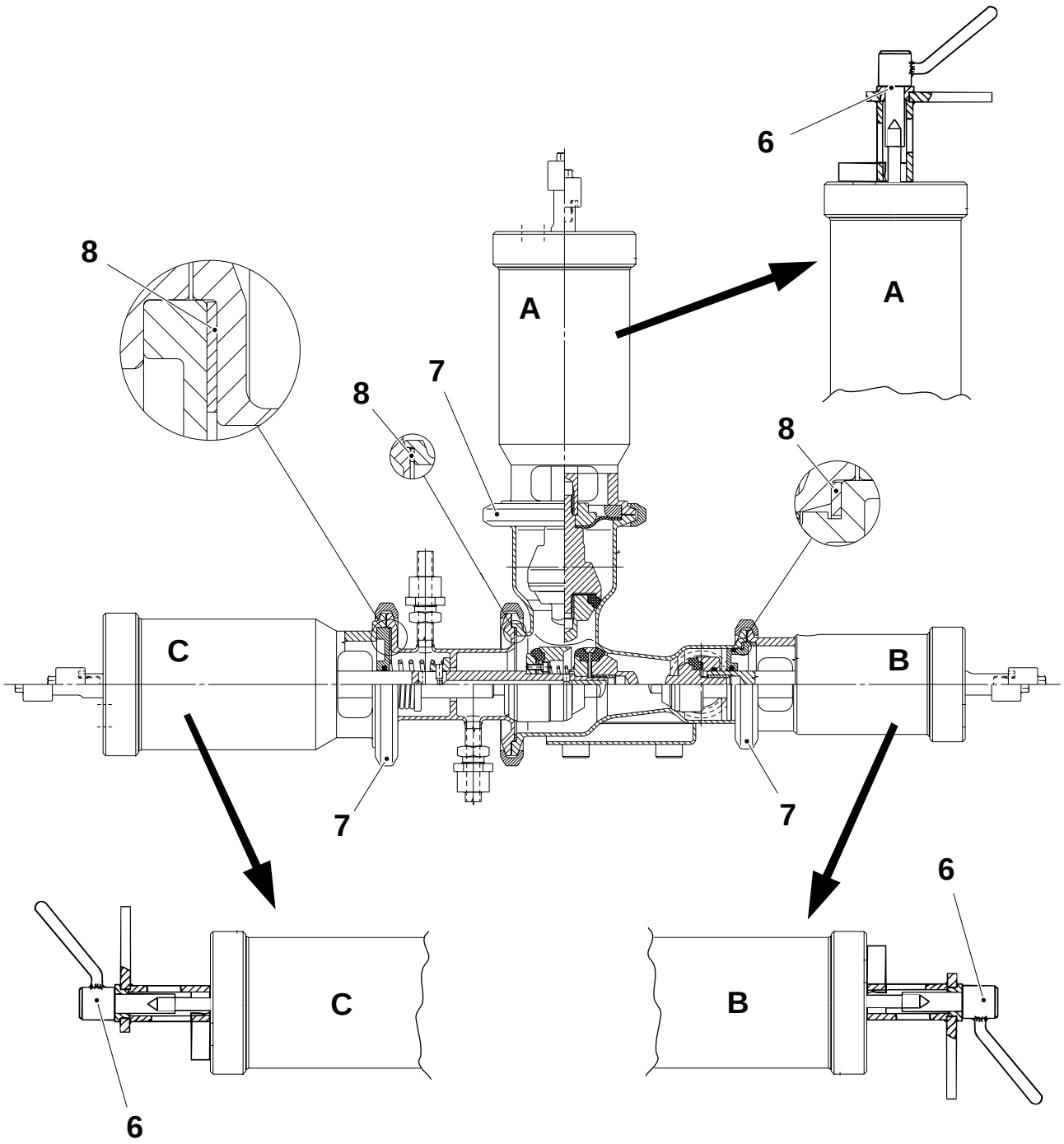

2.2B3024A01en.fm

1.3.2-2 Product valve group - change seals and membranes, AP-valve

Tools - torque wrench - handle tool	 min. 50 Nm TP No.449969-101
SPC reference	1255980-0200

Product valve (A)

a) Remove the valve, see on *1.3.2-1 Product valve group - remove pneumatic cylinders, AP-valve*.

b) Place the valve in a vice (use a soft metal jaws) and using the handle tool (1), release the cylinder spring completely.

c) Remove the valve cone (2) and change the seal ring (3).

d) Remove the seal ring holder (4), the membrane (5), the ring (6) and the washer (6). Check and change the membrane (5) as required.

e) Refit the ring (6) and the washer (7) in the cylinder housing with the grooves facing upwards.

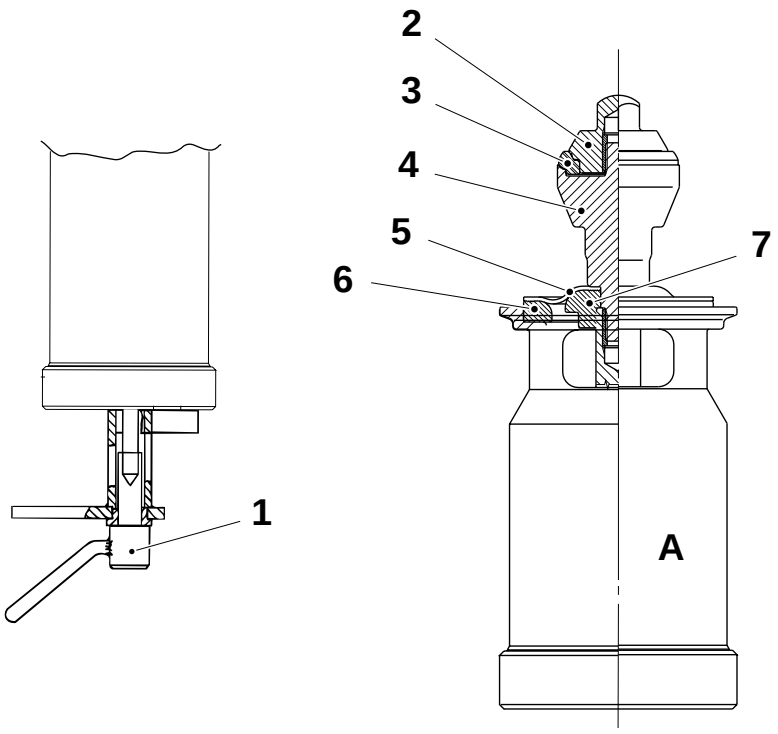

1 Handle tool
2 Valve cone
3 Seal ring
4 Seal ring holder
5 Membrane
6 Ring
7 Washer

(Cont'd)

2.2B3024A01en.fm

(Cont'd)

f) Fit the new membrane (5) and the complete seal ring holder (4) onto the piston rod.

WARNING!

Risk of serious production fault!
Fit the membrane (5) with the bulge facing away from the valve.

g) Tighten the seal ring holder (4) completely.

h) Fit the seal ring (3) and the valve cone (2).

Note! Slowly tighten the valve cone (2) with a torque wrench set to **50 Nm**. Repeat every 10-20 seconds, allowing the membrane to penetrate into the grooves of the parts.

i) Compress the cylinder spring completely using the handle tool (1).

j) Fit the cylinder and tighten the clamp ring (8).

k) Remove the handle tool (1) and screw the sleeve (9) onto the cylinder.

Refit the proximity switch bracket and the air connection.

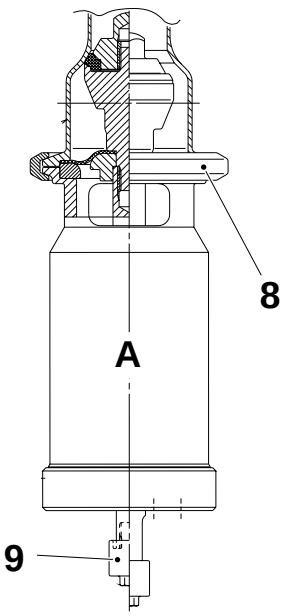

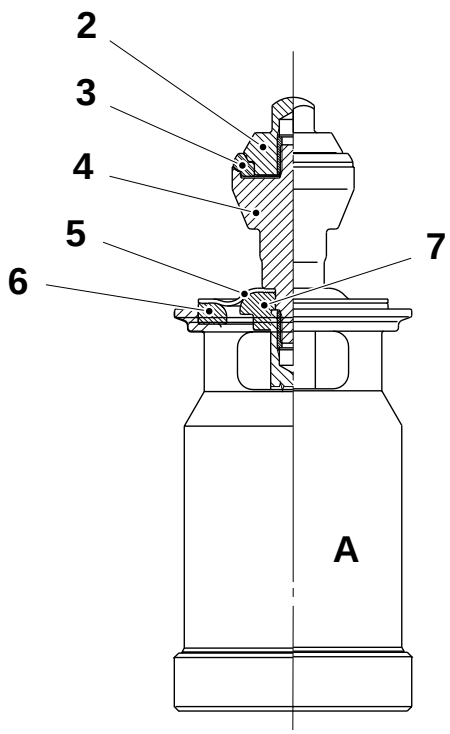

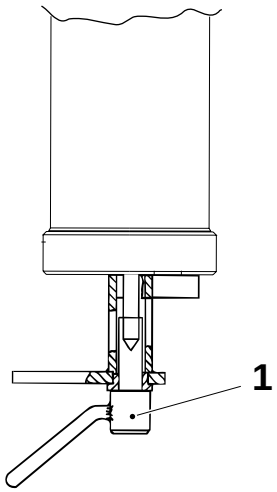

1 Handle tool
2 Valve cone
3 Seal ring
4 Seal ring holder
5 Membrane
6 Ring
7 Washer
8 Clamp ring
9 Sleeve

(Cont'd)

0-Series

2.2B3024A01en.fm

(Cont'd)

Sterile air valve (B)

a) Remove the valve, see *1.3.2-1 Product valve group - remove pneumatic cylinders, AP-valve*.

b) Place the valve in a vice (use a soft metal jaws) and using the handle tool (1), release the cylinder spring completely.

c) Change the O-ring (8)

d) Remove the valve cone (9) and change the seal ring (10).

e) Remove the washer (11) and change the O-ring (12).

f) Assemble in the reverse order.

g) Tighten the valve cone (9) with a torque wrench set to **50 Nm**.

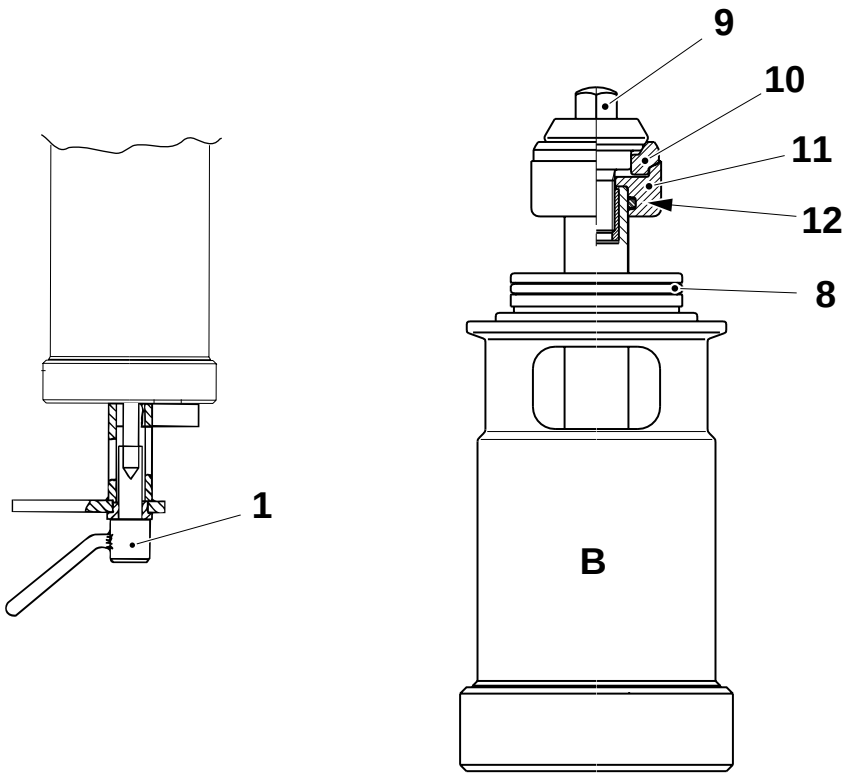

1 Handle tool
8 O-ring
9 Valve cone
10 Seal ring
11 Washer
12 O-ring

2.2B3024A01en.fm

(Cont'd)

(Cont'd)

Steam valve (C)

a) Remove the valve, see *1.3.2-1 Product valve group - remove pneumatic cylinders, AP-valve*.

b) Place the valve in a vice (use a soft metal jaws) and using the handle tool (1), release the cylinder spring completely.

c) Remove the valve cone (13) and change the seal rings (14).

d) Loosen the screws (15) and remove the holder (16).

e) Change the seal rings (17).

f) Assemble in the reverse order.

g) Tighten the valve cone (9) with a torque wrench set to **50 Nm**.

Note! If the product has a high viscosity, the steam valve C takes longer to close.

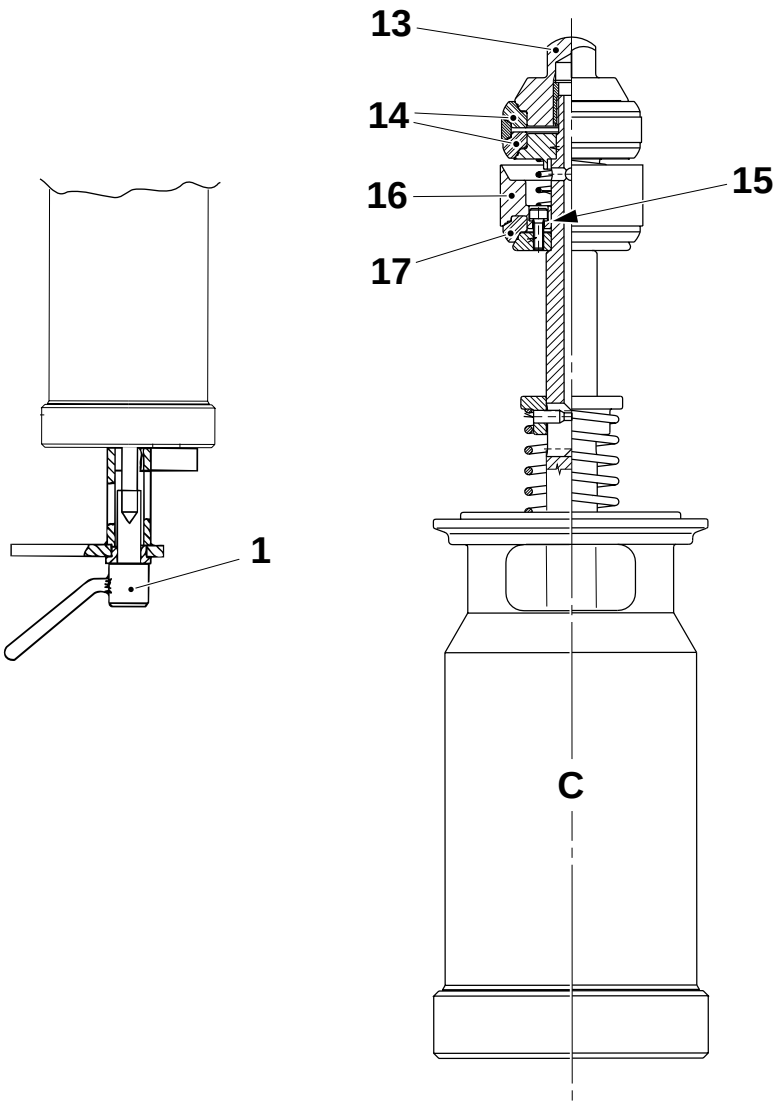

1 Handle tool
13 Valve cone
14 Seal ring
15 Screws
16 Holder
17 Seal ring

2.2B3024A01en.fm

1.3.2-3 Product valve group - change O-rings, AP-valve

Consumables - silicon grease	code L
Tools - torque wrench	min. 50 Nm
SPC reference	1255980-0200

WARNING!

Risk of personal injury!
Make sure the steam and compressed air have been switched **off**.
Make sure there is no product, steam or cleaning liquid in the line.
If the valve is disassembled incorrectly, the spring in the pneumatic cylinder will eject forcefully.
If an accident occurs, call for medical attention.

A-cylinder (product valve)

a) Remove the seal holder, see *1.3.2-2 Product valve group - change seals and membranes, AP-valve*.
b) Remove the lock screw (3). Turn the end section (2) anti-clockwise.
c) Unscrew the tool and remove the end section (2), the spring (6) and pull out the piston rod (7).
d) Remove the locking ring (8) and the piston (10).
e) Change the O-rings (11) and (4).
f) Check the seal rings (1), (5), (9) and (12) and change them as required.
g) Lubricate the threads of the piston rod with silicon grease (code L).
h) Assemble in the reverse order.

2.2B3024A01en.fm

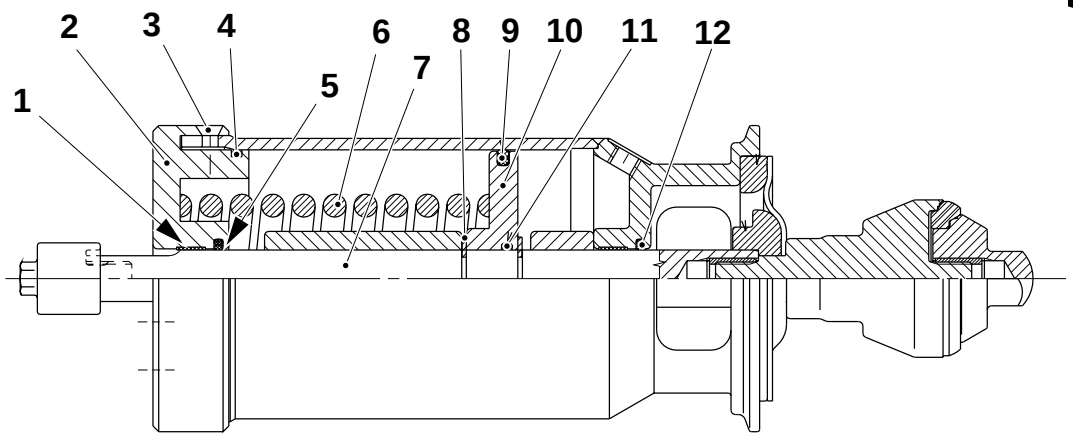

1	Seal ring	5	Seal ring	9	Seal ring
2	End section	6	Spring	10	Piston
3	Lock screw	7	Piston rod	11	O-ring
4	O-ring	8	Locking ring	12	Seal ring

(Cont'd)

(Cont'd)

B-cylinder (sterile valve)

a) Remove the seal holder by following the procedure in *1.3.2-2 Product valve group - change seals and membranes, AP-valve*.

b) Remove the lock screw (1) and turn the end section (2) anti-clockwise.

c) Unscrew the tool and remove the end section, the spring and the piston (4).

d) Remove the circled (3) and the piston (4).

e) Change the O-rings (5), (6) and (7).

f) Lubricate the threads of the piston rod with silicon grease (code L).

g) Assemble in the reverse order.

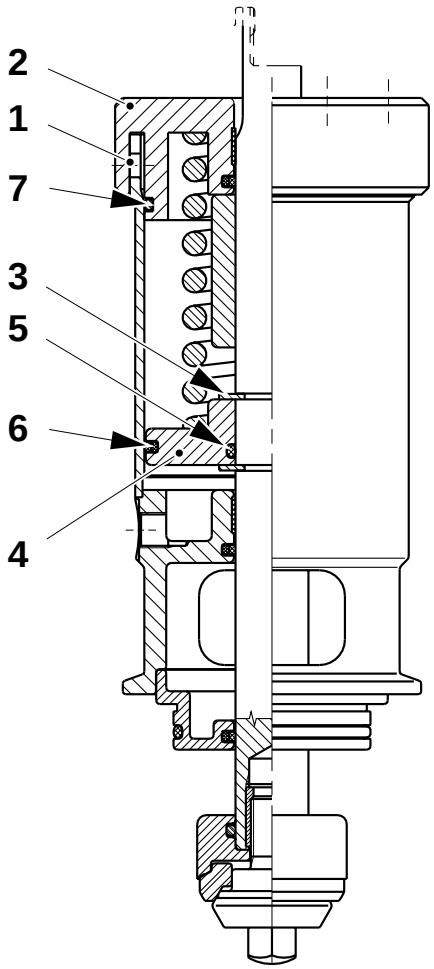

1 Lock screw
2 End section
3 Circlip
4 Piston
5 O-ring
6 O-ring
7 O-ring

(Cont'd)

2.2B3024A01en.fm

(Cont'd)

C-cylinder (steam valve)

a) Remove the seal holder by following the procedure in *1.3.2-2 Product valve group - change seals and membranes, AP-valve*.

b) Compress the spring (1) and remove the pin, the ring and the spring.

c) Remove the lock screw (2) and turn the end section (3) anti-clockwise.

d) Unscrew the tool and remove the end section, the spring and the piston rod with the piston (4).

e) Remove the retaining ring (5) and the piston (4).

f) Change the O-rings (6), (7) and (8).

g) Lubricate the threads of the piston rod with silicon grease (code L).

h) Assemble in the reverse order.

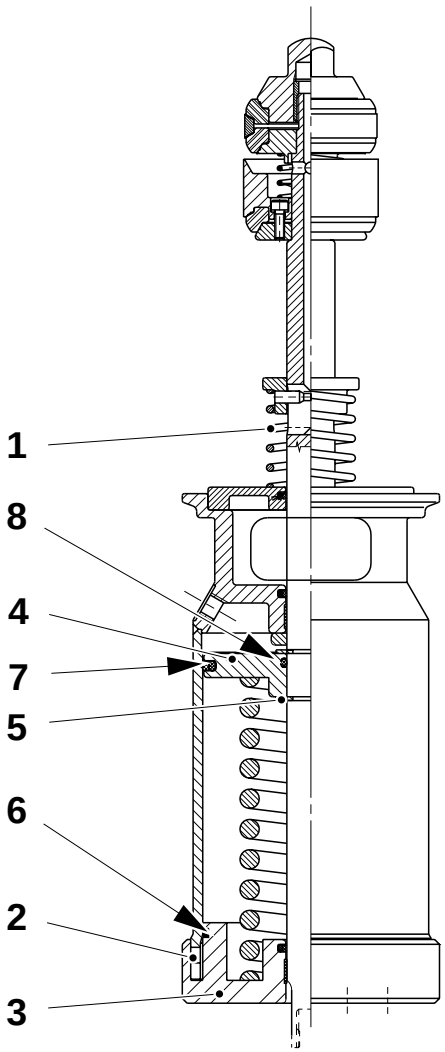

1 Spring
2 Lock screw
3 End section
4 Piston
5 Circlip
6 O-ring
7 O-ring
8 O-ring

2.2B3024A01en.fm

1.3.2-4 Product valve group - set proximity switches

Machine status	Mains power **On**
SPC reference	1255980-0200

a) Set the proximity switches (1) so they are activated when the cylinder sleeve (3) is in its highest position.

b) Adjust by moving either the proximity switch or the bracket (2).

c) Set distance **A** between the proximity switch (1) and the cylinder sleeve (3).

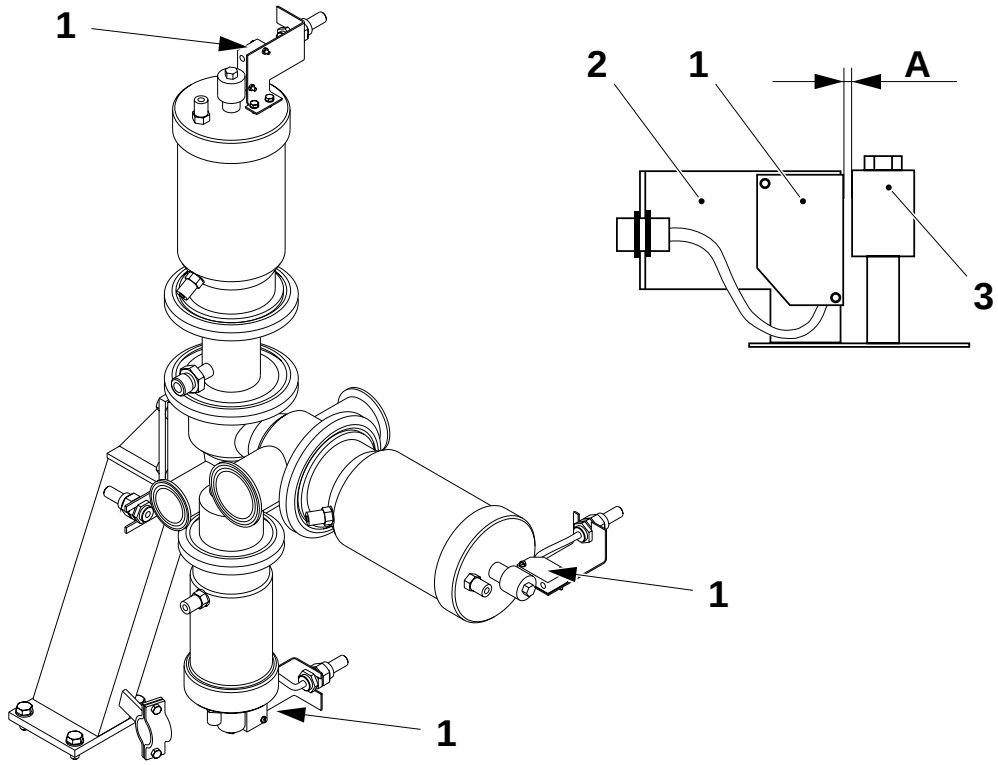

A = 2 ±0.5 mm

1 Proximity switch
2 Bracket
3 Cylinder sleeve

0-Series

2.2B3024A01en.fm

1.3.3 Flow regulator

1.3.3-1 Flow regulator - overhaul regulating valve

SPC reference	1255981-0200

WARNING!

Risk of personal injury!
Spring-loaded parts.

Remove

a) Remove the pneumatic hose (1).
b) Remove the screw (2) and remove the proximity switch (3).
c) Note the position of the wires and then disconnect them.
d) Unscrew couplings (5) and (6) and pull out the regulating valve.

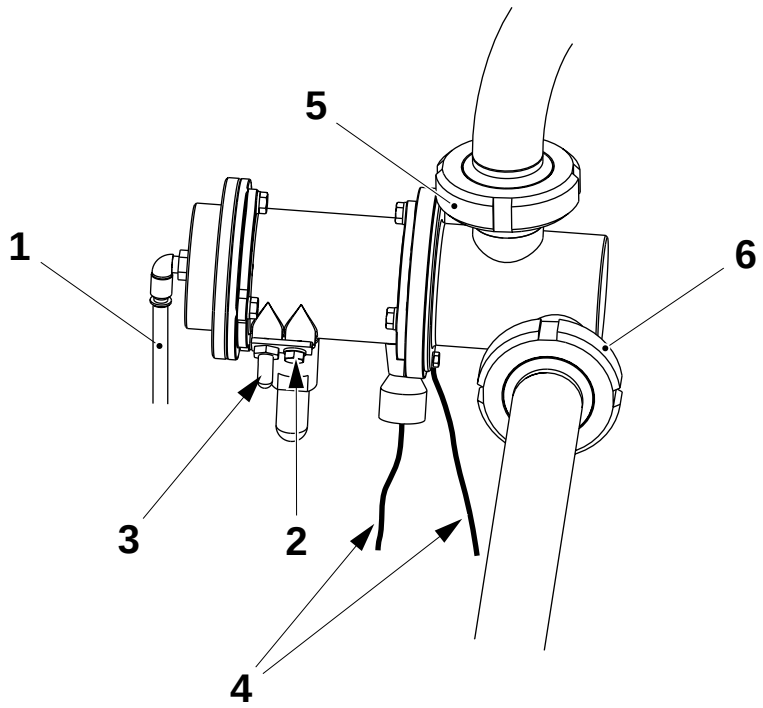

1 Pneumatic hose
2 Screw
3 Proximity switch
4 Wires
5 Coupling
6 Coupling

(Cont'd)

2.2B3024A01en.fm

(Cont'd)

e) Loosen the screws (10) and remove the cover (11) from the regulating valve.

f) Loosen the screws (12) crosswise in small steps. **Carefully** remove the regulator body (13) from the central body.

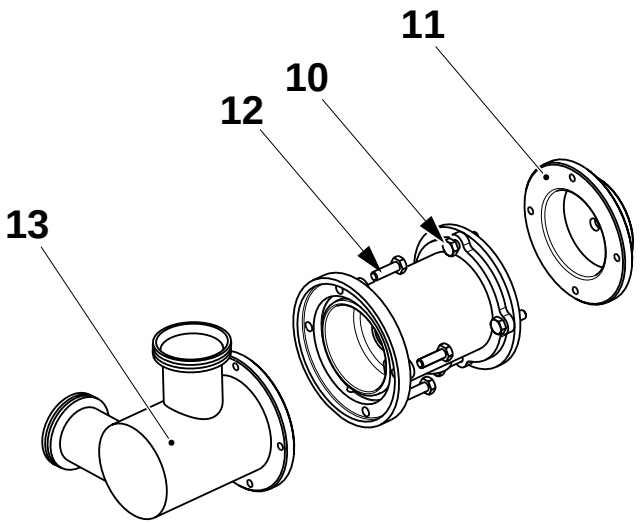

7 Screw
8 Cover
9 Screw
10 Regulator body

Caution! Take care not to damage the shutter.

g) Remove the locking screw (15) and turn the shutter (14). Then remove the shutter (14).

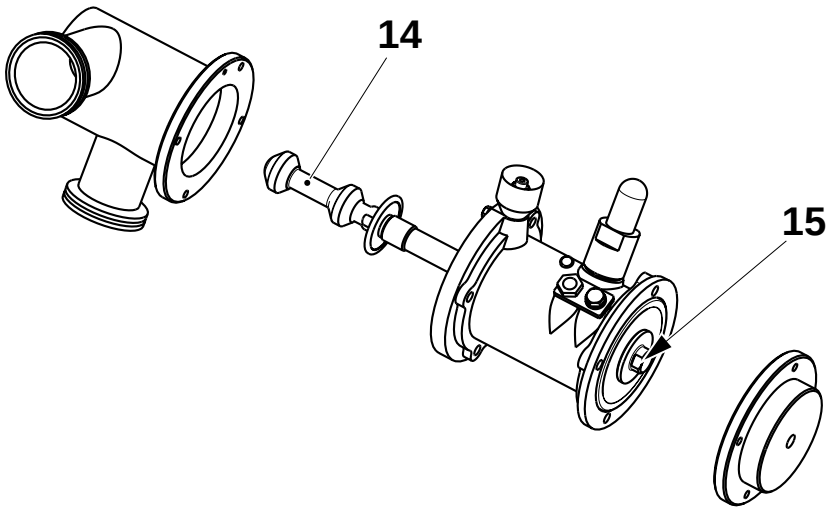

11 Shutter
12 Screw

(Cont'd)

2.2B3024A01en.fm

(Cont'd)

Remove the membrane (16), the spacer (17), the spring (18) and pull out the shutter (14).

Remove the shock absorber (19). Loosen the bushing (20) and remove the spacer (21) and the membrane (22).

Change the membranes (16) and (22), the bushing (20) and the shock absorber (19) as required.

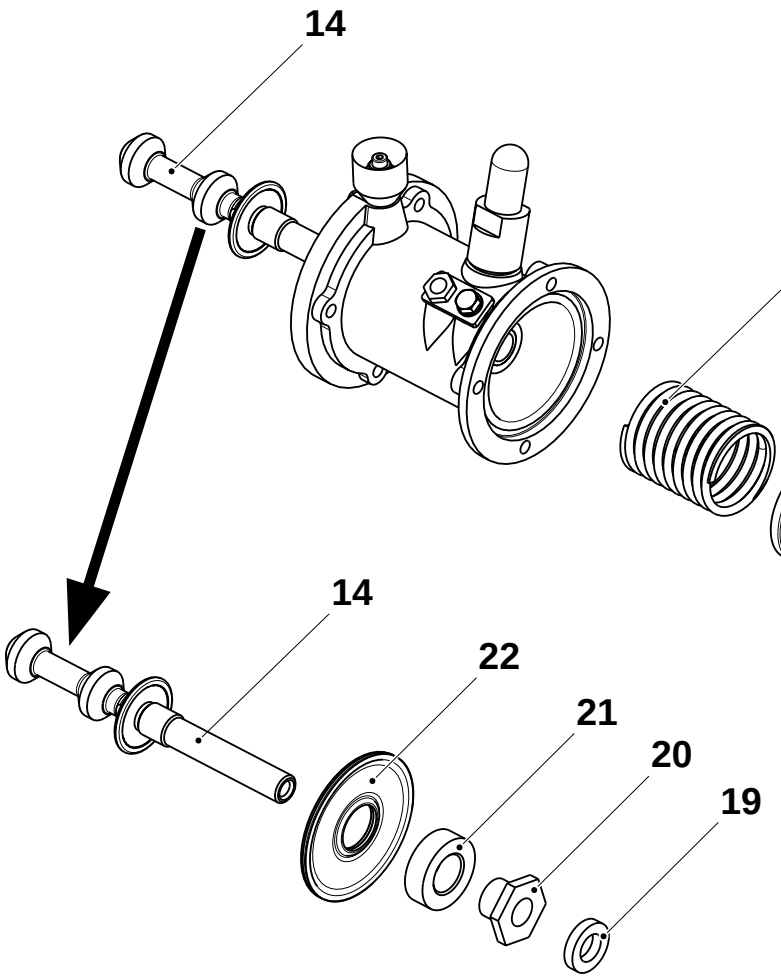

14 Shutter
13 Membrane
14 Spacer
15 Spring
16 Shock absorber
17 Bushing
18 Spacer
19 Membrane

U-Series

2.2B3024A01en.fm

(Cont'd)

(Cont'd)

Assemble

Caution! Make sure all parts are clean and dry. **Do not** lubricate.

Caution! Do not damage the membrane (22). Make sure the transparent side is facing the product side.

a) Assemble the membrane (22) and the spacer (21) on the shutter (14), then fit the bushing (20). Tighten until the bushing reaches its stop position.

b) Fit the shock absorber (19) on the shutter (14) and insert the shutter assembly in the central body (23).

Caution! Do not damage the membrane (22). Make sure the transparent side is facing the air side.

c) Fit the spring (18), the spacer (17), and the membrane (16) into the central body using the screw (15).

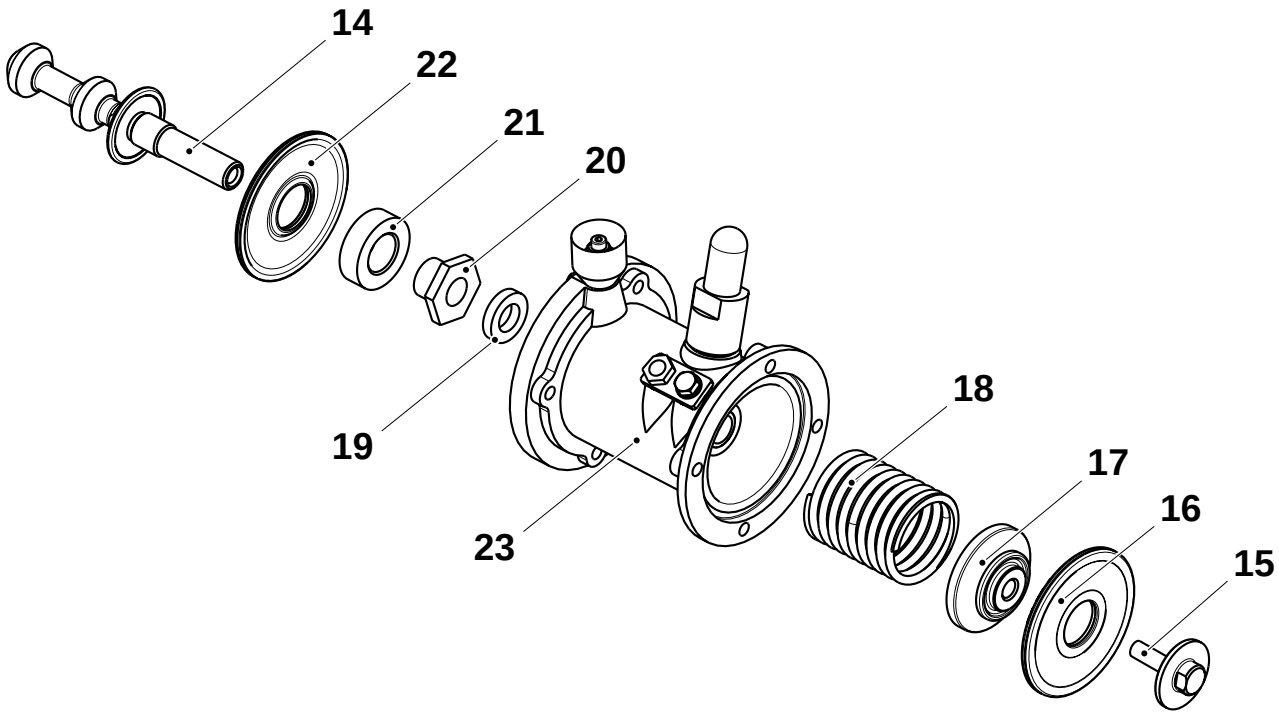

14 Shutter
15 Screw
16 Membrane
17 Spacer
18 Spring
19 Shock absorber
20 Bushing
21 Spacer
22 Membrane
20 Central body

(Cont'd)

0-Series

2.2B3024A01en.fm

(Cont'd)

Caution! **Do not** bend the shutter (14).

d) Fit the regulator body (13) into the central body (20). Tighten the screws (12) crosswise in small steps.

e) Push the screw (see arrow) with your finger and check that the shutter (14) **moves smoothly**. If it does not move smoothly, change the shutter (14).

f) Fit the gasket cover (11) to the central body (20). Tighten the screws (10) crosswise.

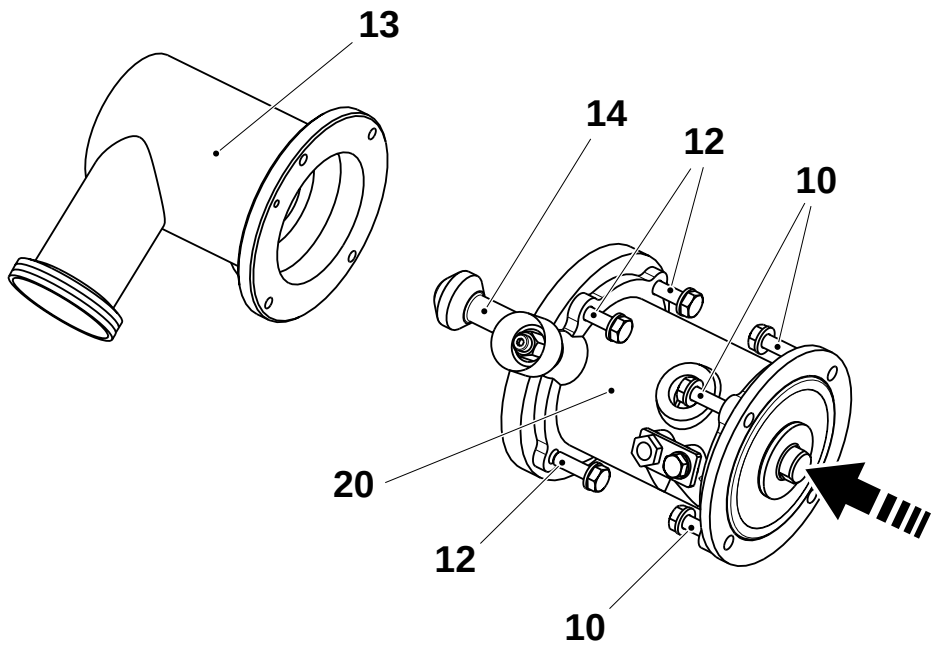

10 Screw
11 Cover
12 Screw
13 Regulator body
14 Shutter
20 Central body

2.2B3024A01en.fm

0-Series

(Cont'd)

(Cont'd)

g) Fit the regulating valve using the couplings (5) and (6).

h) Connect the wires (4) to the regulator.

i) Fit the proximity switch (3) and tighten the screw (2).

j) Set the proximity switch (3), see *1.3.3-2 Flow regulator - set proximity switch*.

k) Connect the pneumatic hose (1).

l) Check the horizontal levelling of the regulating valve using a spirit level.

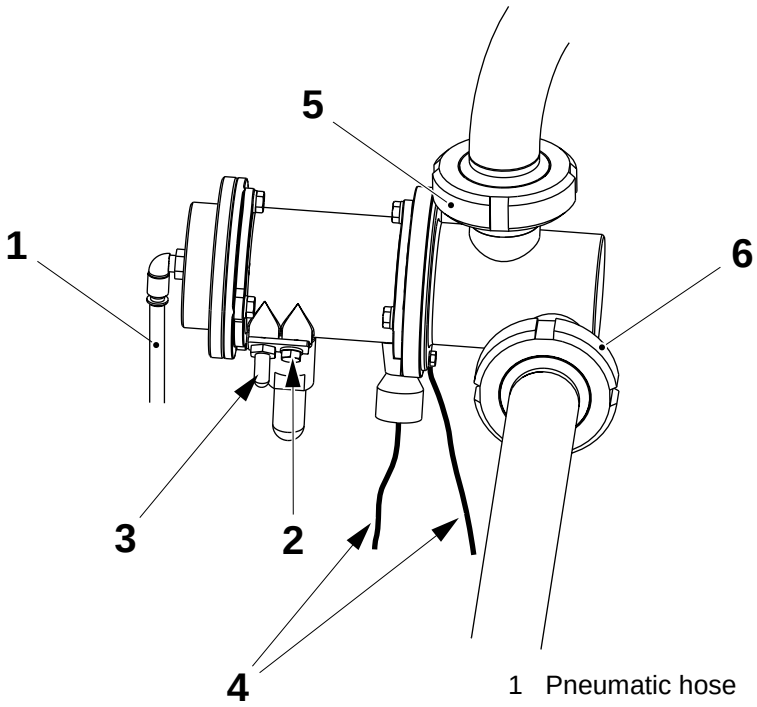

1 Pneumatic hose
2 Screw
3 Proximity switch
4 Coupling
5 Coupling

2.2B3024A01en.fm

1.3.3-2 Flow regulator - set proximity switch

Machine status	Power **On**
SPC reference	1255981-0200

a) Remove the hose (1) from the air connection and connect an external air supply. Switch **on** the external air supply.

b) Loosen the nut (3).

c) Screw the proximity switch (2) in fully without forcing it.

d) Make sure the proximity switch LED switches **on**.

e) Screw the proximity switch (2) out one half turn and tighten the nut (3).

f) Make sure the LED is still **on**.

g) Switch **off** the external air supply and check that the LED switches **off**.

h) Remove the external air supply and reconnect the hose (1).

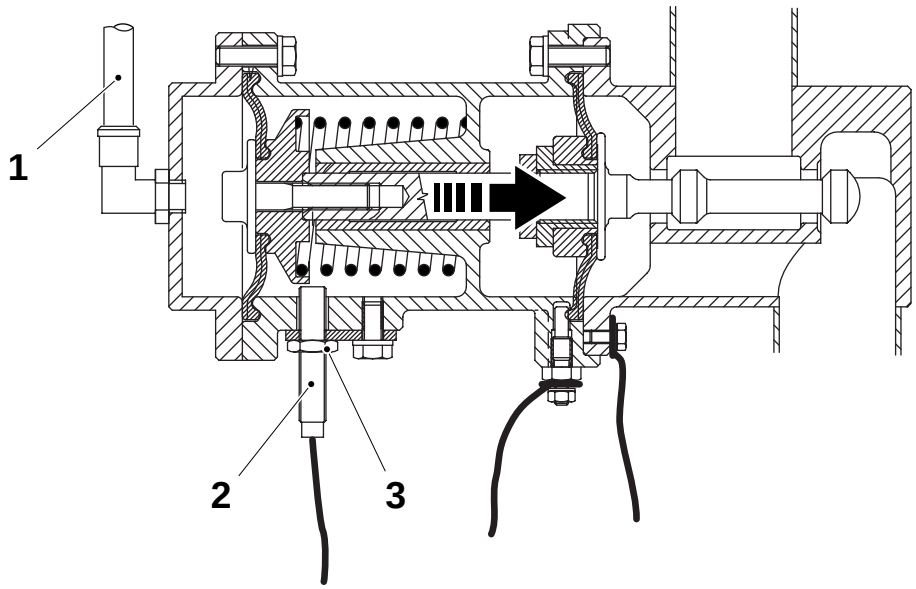

1 Hose
2 Proximity switch
3 Nut

2.2B3024A01en.fm

0-Series

1.3.4 Fastening plate

1.3.4-1 Fastening plate - check

SPC reference	1260053-0200

a) Remove the screws (1) and (2) and then remove the front part of the lower forming ring (3).

a) Remove the screws and washers (4) and then pull the holder (5), complete with inductor, off the short stop rail.

b) Place the assembly carefully in the left-hand side of the compartment.

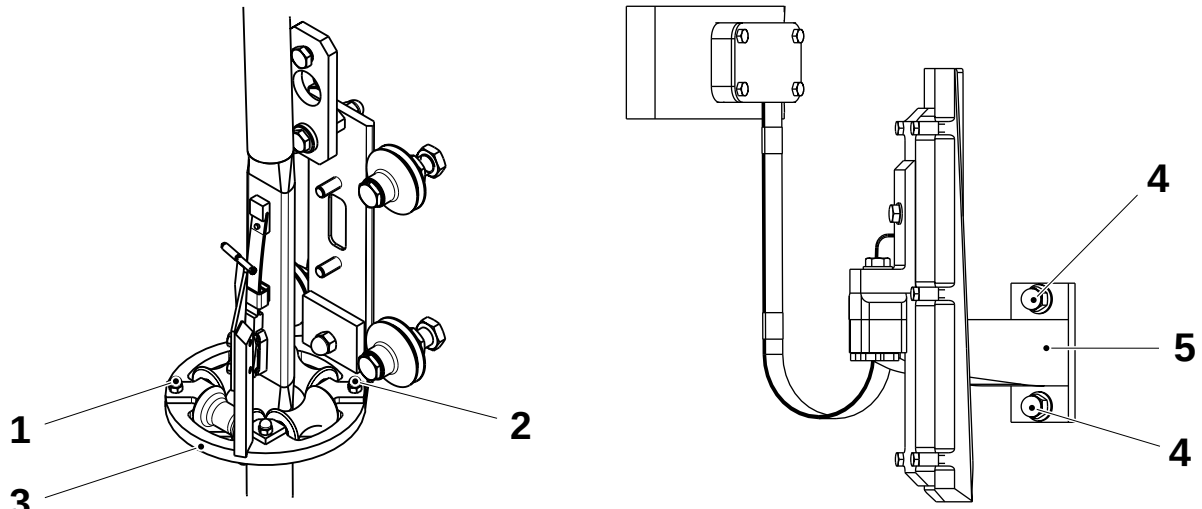

1 Screw
2 Screw
3 Forming ring front
4 Screw
5 Holder

2.2B3024A01en.fm

c) Remove the lower part of the filling pipe (6), taking care not to damage the level probe (7).

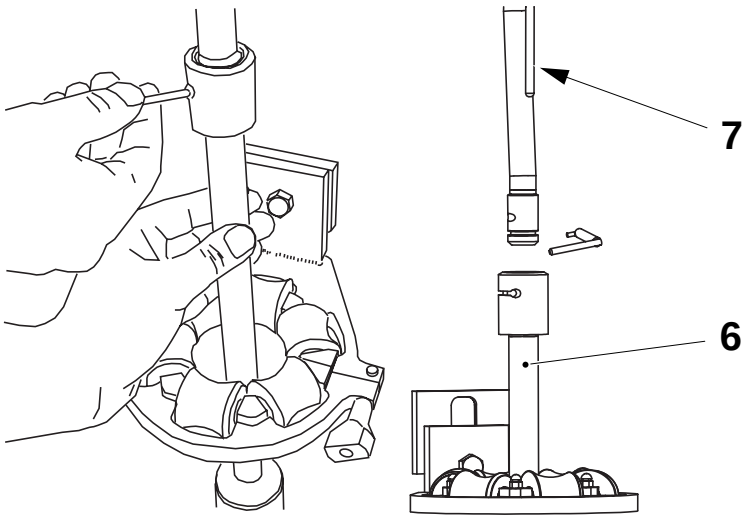

6 Lower filling pipe
7 Level probe

(Cont'd)

0-Series

(Cont'd)

d) Remove the pressure roller and spring (8) from the filling pipe.

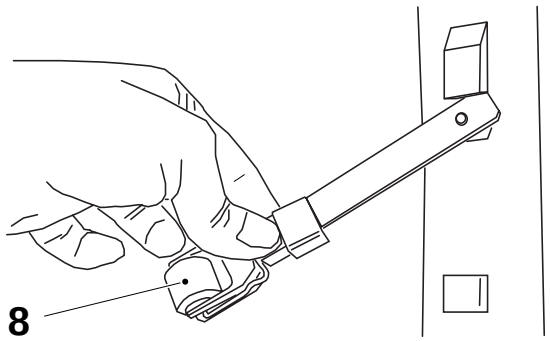

8 Pressure roller and spring

e) Remove the screws (9) and then remove the aseptic chamber seal (10) together with the O-ring (11).

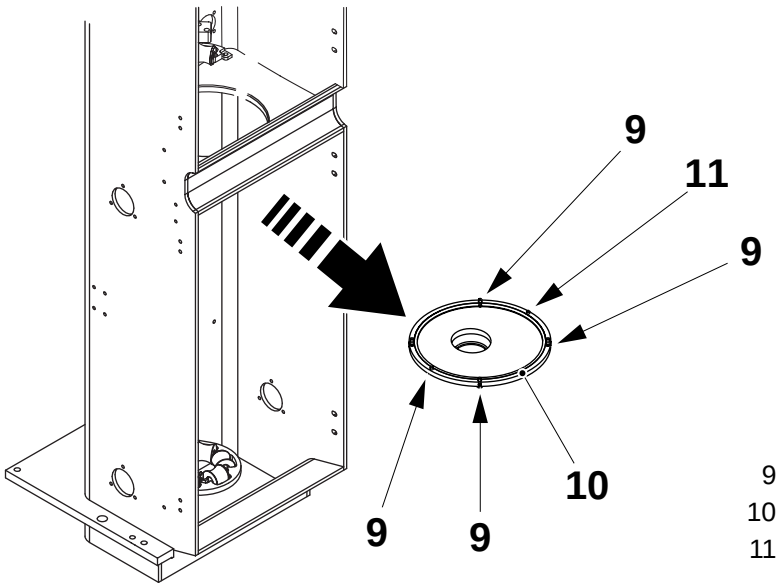

9 Screw
10 Seal
11 O-ring

(Cont'd)

2.2B3024A01en.fm

(Cont'd)

f) Unscrew the pipe connecting the product regulator valve to the fastening plate (12).

g) Disconnect the electrical connector on the level sensor probe.

h) With one hand firmly holding the filling pipe, undo the knob (13) on the fastening plate (12).

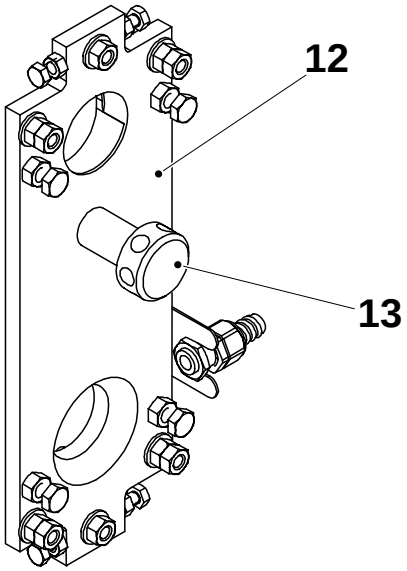

12 Fastening plate
13 Knob

i) Remove the filling pipe (14) to a safe place, taking care not to damage the level sensing probe.

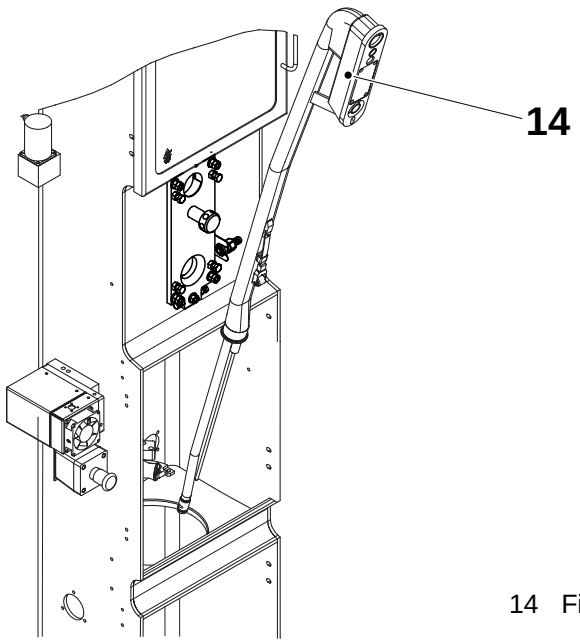

14 Filling pipe

(Cont'd)

2.2B3024A01en.fm

(Cont'd)

j) Remove the nuts (15) and fastening plate (12).

Note! If you remove the gaskets (16) make sure you clean the column thoroughly before fitting new gaskets.

k) Check the gaskets (16) and seal (17) for wear or damage and change as required.

l) Replace and tighten the nuts (15), making sure the seal (17), compressed between the column (118) and the fastening plate (12), is within the tolerances.

m) Align the filling pipe, see *1.3.5-2 Filling pipe - set position*.

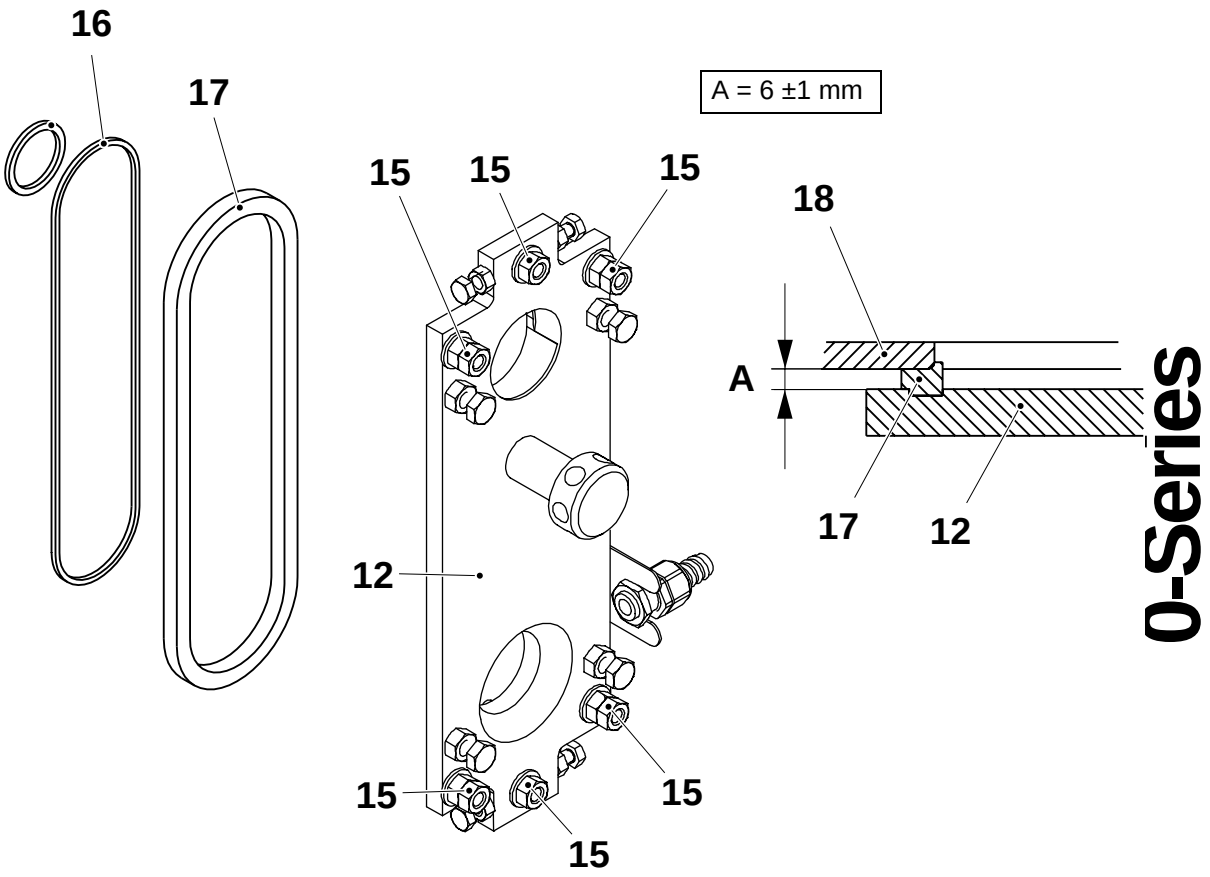

12 Fastening plate
15 Nut
16 Gaskets
17 Seal
18 Column

2.2B3024A01en.fm

0-Series

1.3.5 Filling pipe

1.3.5-2 Filling pipe - set position

Tools - template - template	 TP No. 1498676 TP No. 1317807
SPC reference	1260053-0200

Note! The items to be removed in steps a to d in the following procedure, may already be removed.

Fitting the filling pipe

a) Remove the screws and washers (1) and then pull the holder, complete with inductor, off the short stop rail.

b) Place the assembly carefully in the left-hand side of the compartment.

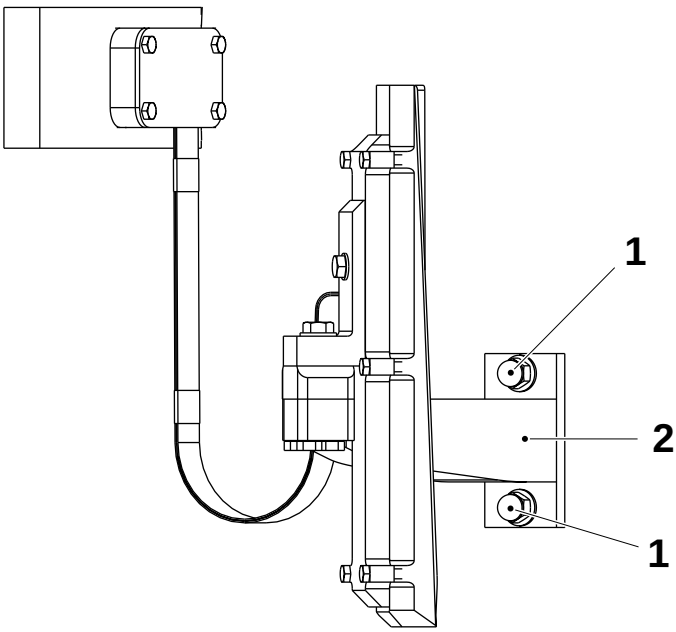

1 Screw
2 Holder

(Cont'd)

2.2B3024A01en.fm

(Cont'd)

c) Remove the screw (3) and then pull the forming ring (5) off the short stop rail. (6).

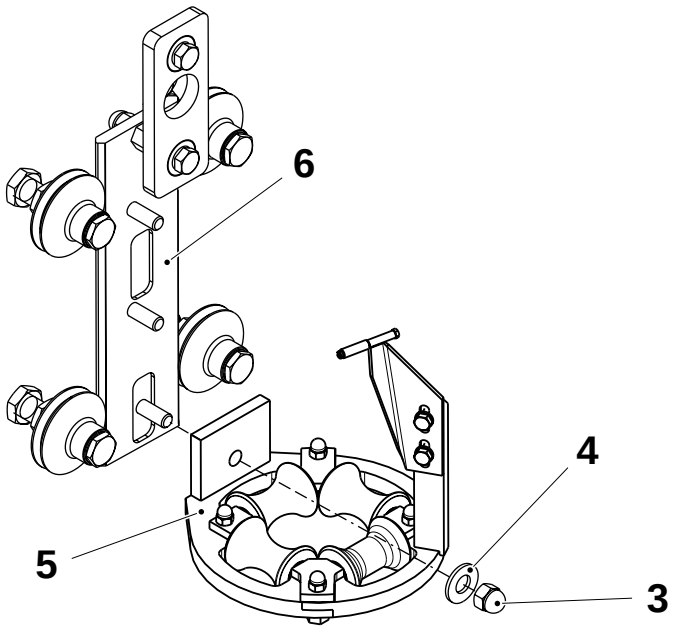

3 Screw
4 Washer
5 Lower forming ring
6 Short stop rail

d) Remove the screws (7) and then remove the aseptic chamber seal (8) together with the O-ring (9).

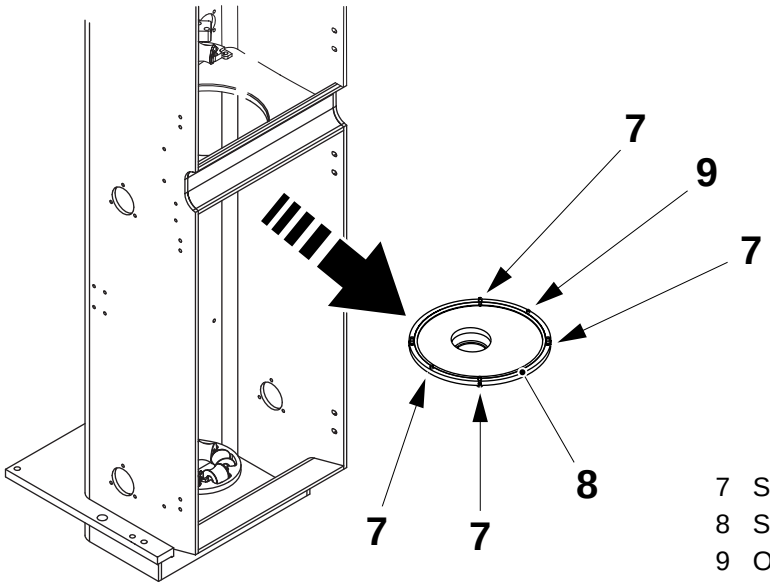

7 Screw
8 Seal
9 O-ring

(Cont'd)

2.2B3024A01en.fm

(Cont'd)

e) Fit the upper filling pipe template (10), TP No. 1498676, and secure with the screw (11).

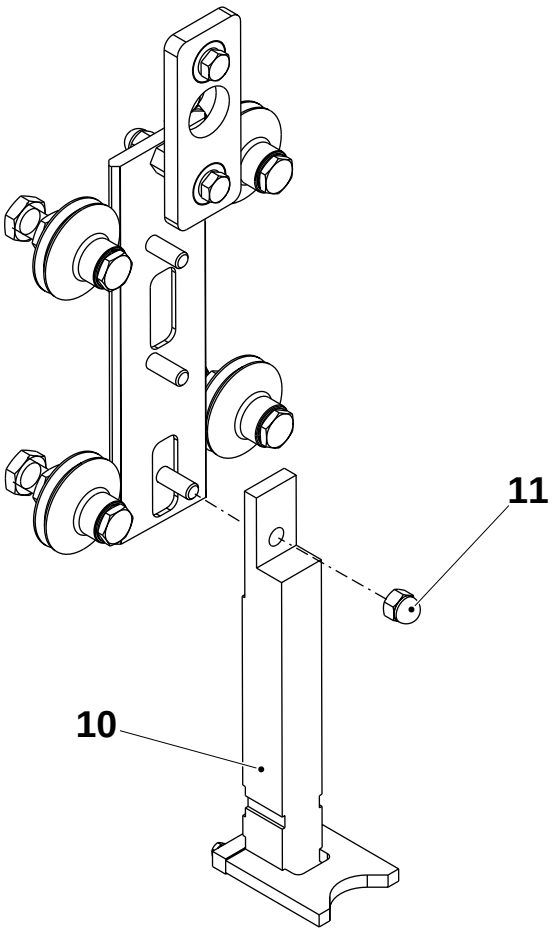

10 Upper template
11 Screw

(Cont'd)

2.2B3024A01en.fm

(Cont'd)

f) Remove the screw (12) and then remove the tube support ring (13).

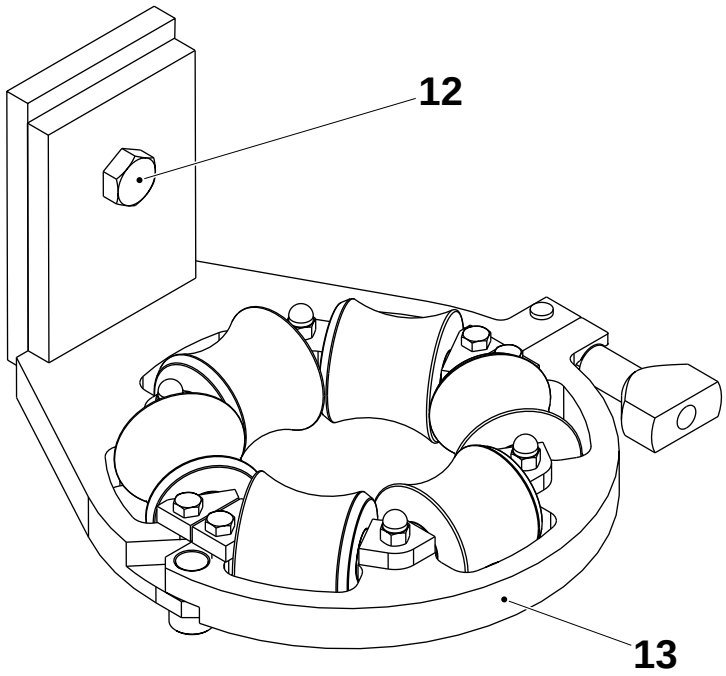

12 Screw
13 Tube support ring

g) Fit the template (14), TP No. 1317807, and secure with the screw (12).

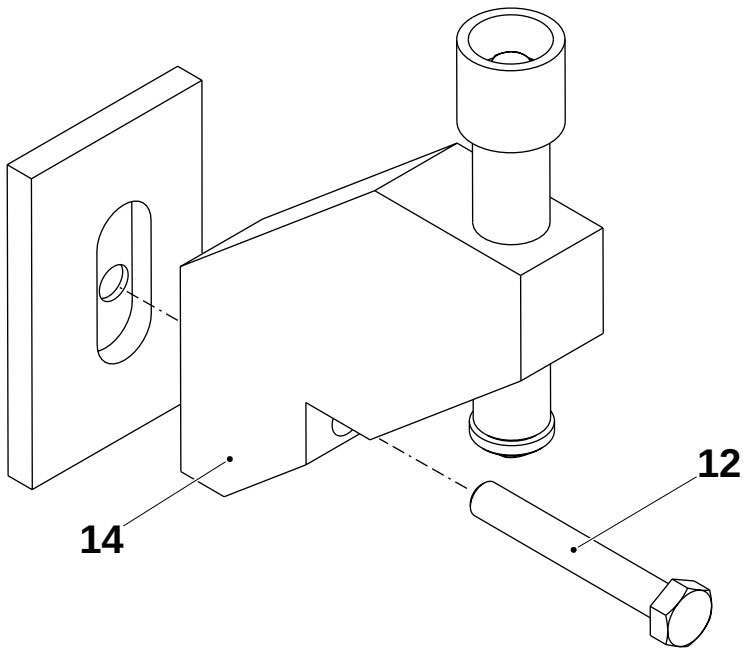

12 Screw
14 Tube support ring

(Cont'd)

2.2B3024A01en.fm

(Cont'd)

h) Remove the pressure roller and spring (15) from the filling pipe.

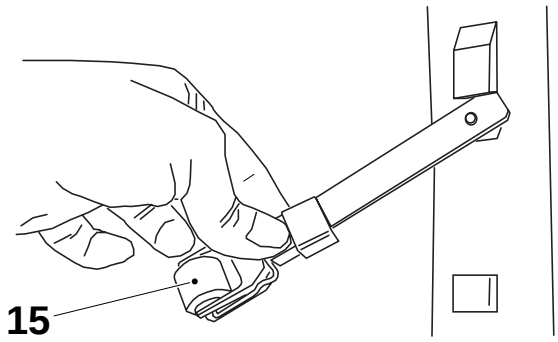

15 Pressure roller and spring

i) Insert the filling pipe (16) and attach it to the fastening plate (17) with the screw (18).

Note! When installing the pipe, make sure that the level probe does not touch the framework or anything in it.

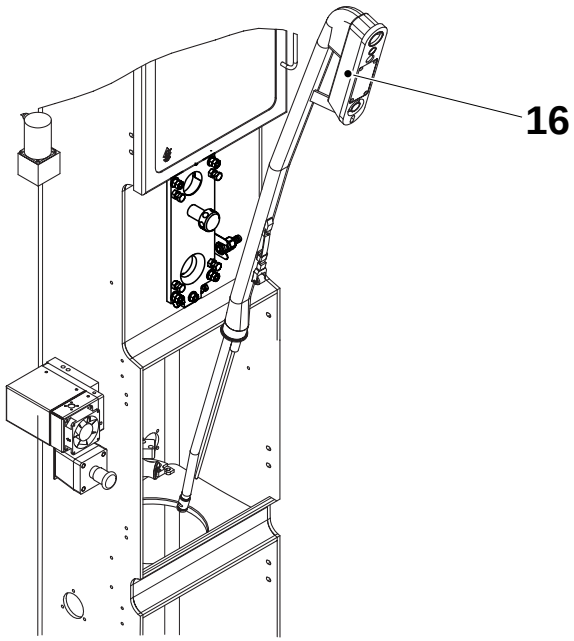

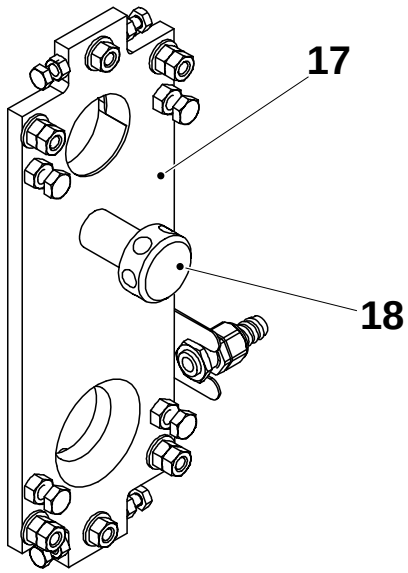

16 Filling pipe
17 Fastening plate
18 Screw

(Cont'd)

0-Series

2.2B3024A01en.fm

(Cont'd)

j) Rotate the plate and shaft (19) clockwise so that the short stop plate (20) is in the lowered position.

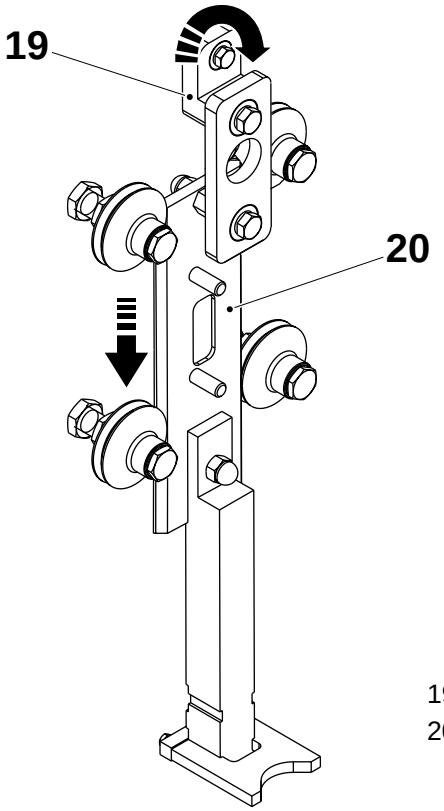

19 Plate and shaft
20 Short stop plate

2.2B3024A01en.fm

k) Check the position of the filling pipe by pushing the bottom part of the template (21) fully in the direction of the filling pipe. The part of the template, shown shaded, should just touch the flange on the pipe (22) when the pipe is correctly positioned. When this is not the case, go to step *m)*. When the pipe is positioned correctly, go to step *l)*.

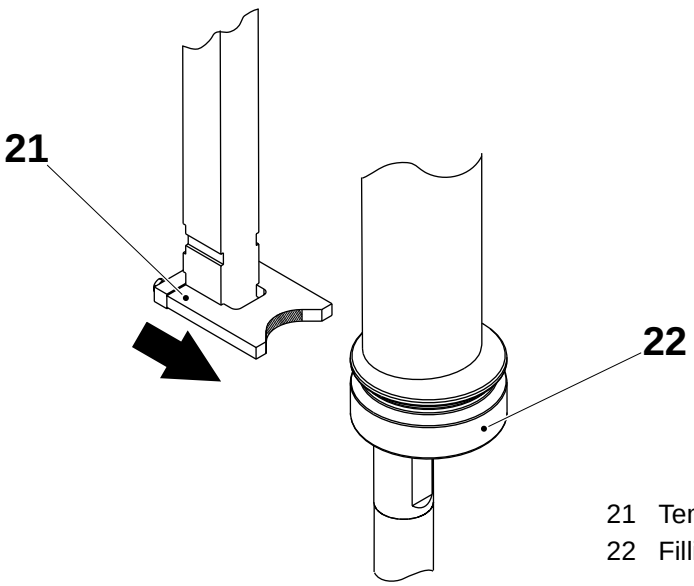

21 Template
22 Filling pipe flange

(Cont'd)

(Cont'd)

l) Check the verticality of the filling pipe by raising the movable part of the lower template (23). It should be a sliding fit over the end of the filling pipe (24). If this is not the case continue below. When the template slides easily over the end of the pipe there is no need to align the pipe, continue with step *o).*

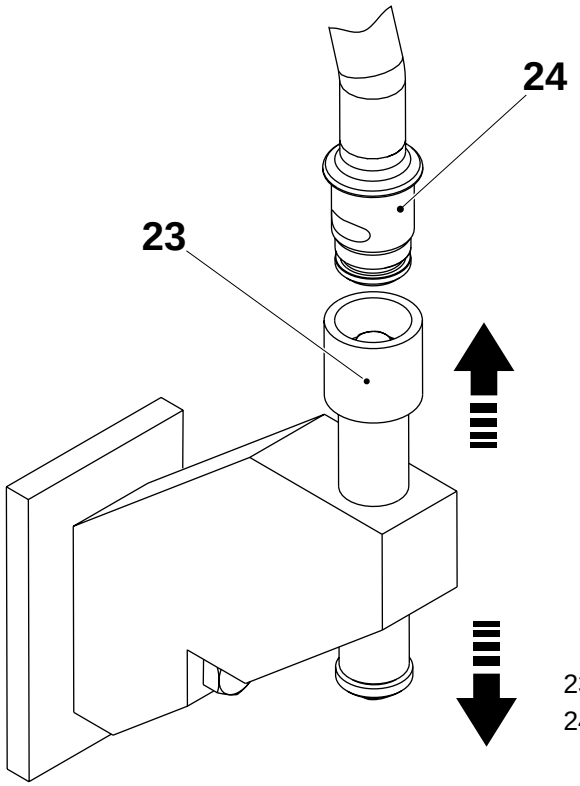

23 Movable part lower template
24 Filling pipe

m) On the fastening plate (17), loosen the locking nuts on the screws (25) and loosen the nuts (26). Loosen the screws (25) a few turns.

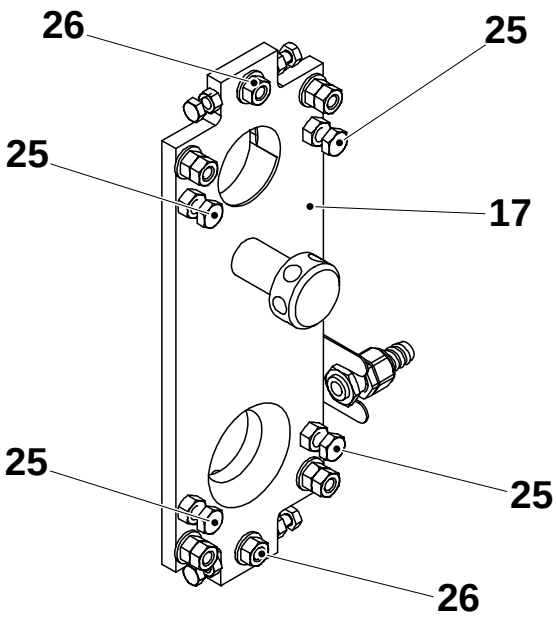

17 Fastening plate
25 Screws and locking nuts
26 Nuts

(Cont'd)

2.2B3024A01en.fm

(Cont'd)

n) Align and centre the filling pipe to the templates using the screws (27) and (28). Do not overtighten the screws (27).

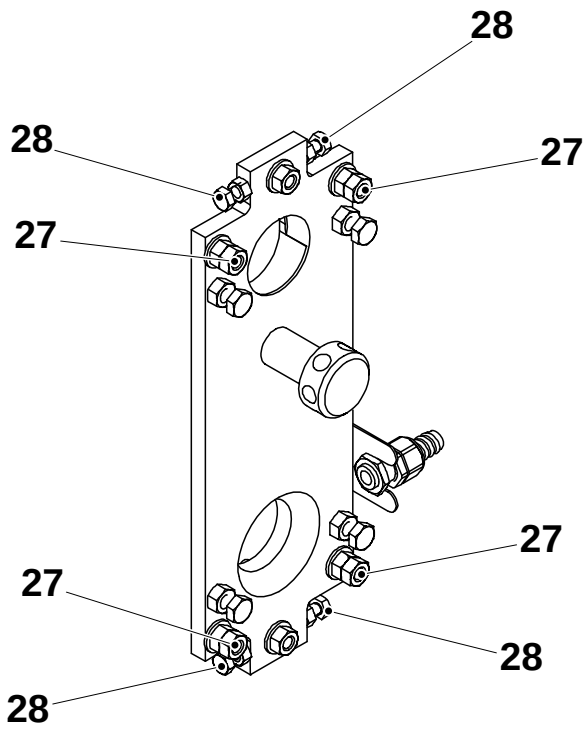

27 Screws
28 Screws

o) Check distance **A** of the seal (29) between the fastening plate (17) and the column (30).

p) Lock the fastening plate in position with the lock nuts on screws (27) and (28).

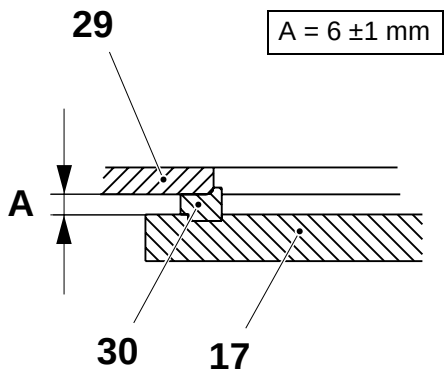

17 Fastening plate
29 Seal
30 Column

(Cont'd)

2.2B3024A01en.fm

(Cont'd)

q) Tighten the screws (25) on the fastening plate (17) until they just touch the bulkhead. Do not over tighten.
Lock the screws with the lock nuts.

r) Tighten the nuts (26). Do not over tighten.

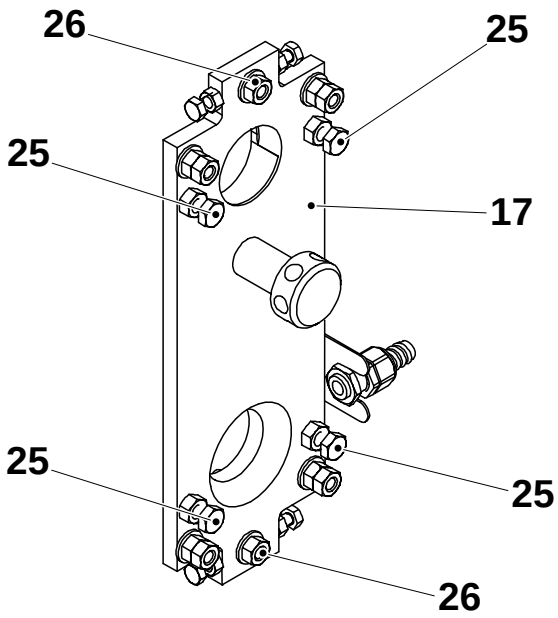

17 Fastening plate
25 Screws
26 Nuts

s) Check alignment with the templates. If the filling pipe is not correctly aligned, repeat from step *k)*. Once it is correctly aligned, remove the templates.

t) Slide the lower forming ring (5) over the filling pipe and secure it to the short stop plate (6) with screw (3) and washer (4).

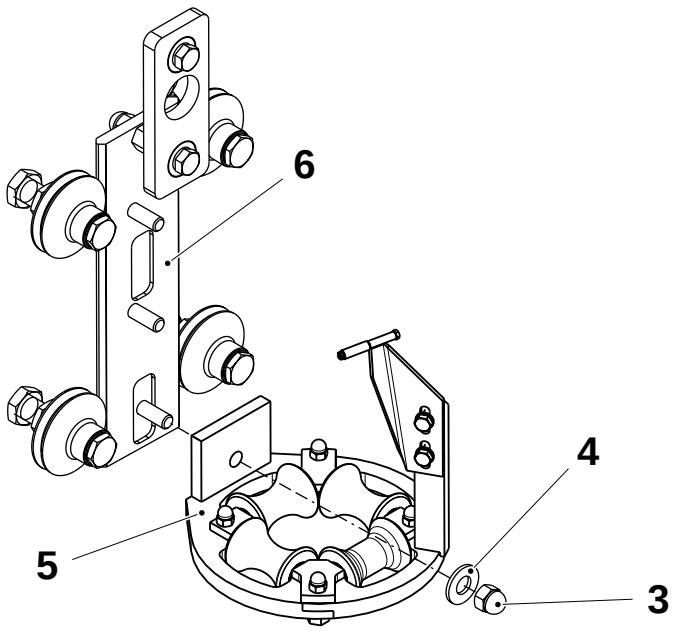

3 Screw
4 Washer
5 Lower forming ring
6 Short stop rail

(Cont'd)

2.2B3024A01en.fm

(Cont'd)

u) Install the aseptic chamber seal (8) together with the O-ring (9) and secure in position with the screws (7).

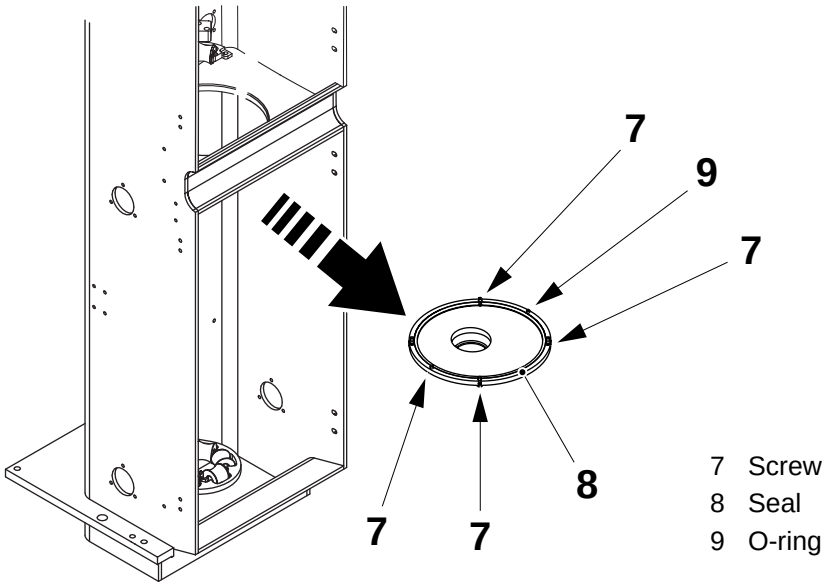

7 Screw
8 Seal
9 O-ring

v) Fit the pressure roller and spring (15) on the filling pipe.

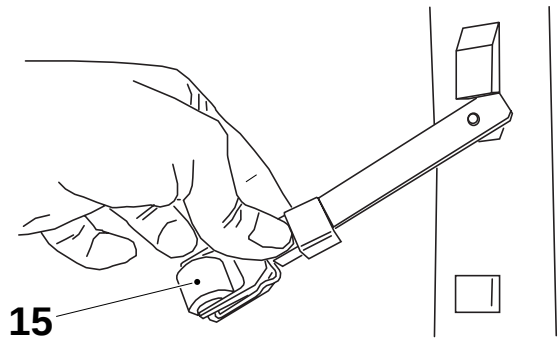

15 Pressure roller and spring

(Cont'd)

(Cont'd)

w) Place the inductor holder (2), complete with inductor, on the short stop rail and secure it in position with the screws and washers (1).

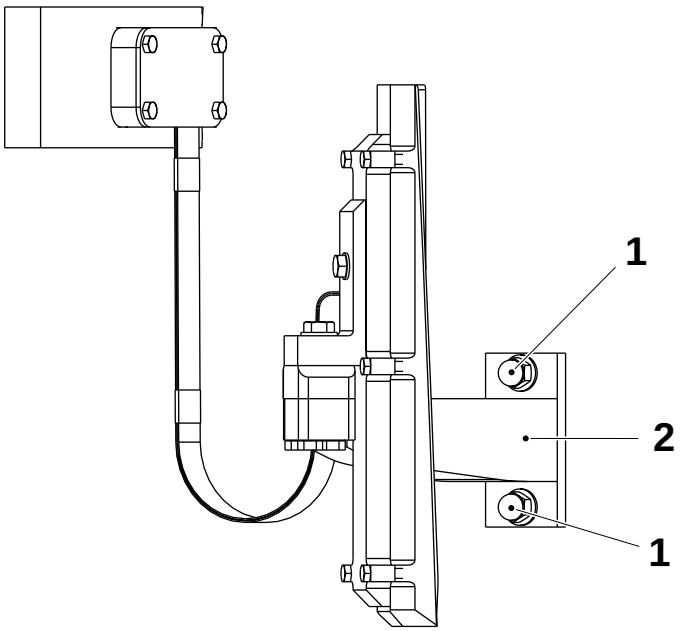

1 Screw and washer
2 Holder

x) Fit the tube support ring (13) and secure in position with the screw (12).

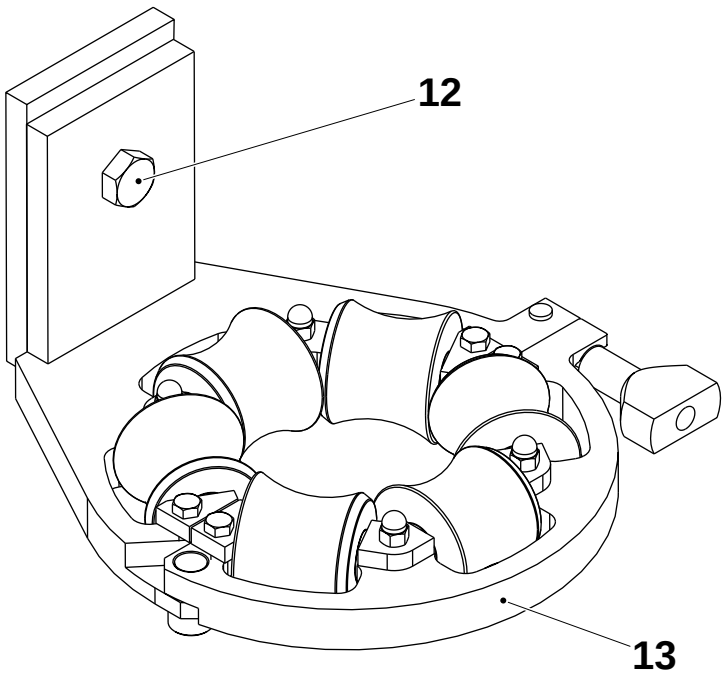

12 Screw
13 Tube support ring

(Cont'd)

2.2B3024A01en.fm

(Cont'd)

Fitting the lower part of the filling pipe

a) Open the tube support ring.

b) Fit the lower part of the filling pipe (31), taking care not to damage the level probe (32).

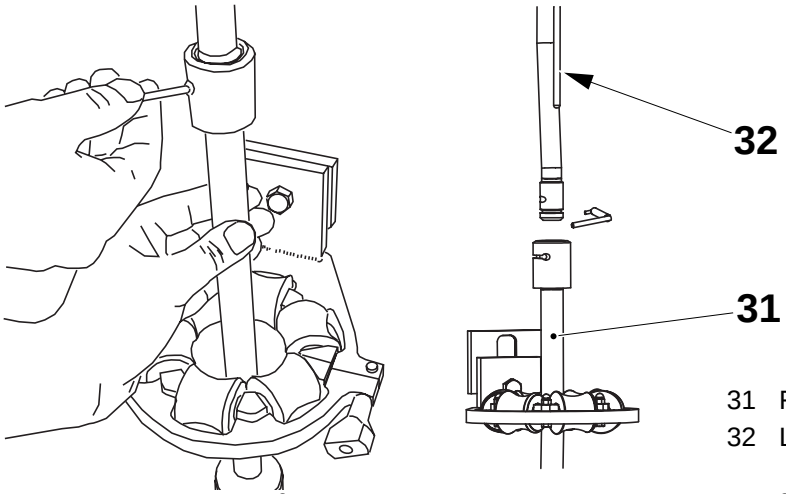

31 Filling pipe
32 Level probe

c) Set the lower forming ring position, see *1.1.1 Lower forming ring*.

1.3.5-3 Filling pipe - set pressure roller

Tools - dynamometer	 TP No. 74767-102
SPC reference	1255982-0100

a) Fold a double piece of packaging material (5) and place it between the pressure roller (1) and the counter roller (2).

b) Press the dynamometer (4) against the pressure roller spring (3) and take a reading when the packaging material slips down. This should be **30** to **40 Nm**.

c) Adjust by bending or changing the spring (3) until the correct force is obtained.

d) Check the filling pipe position, see *1.3.5-2 Filling pipe - set position*.

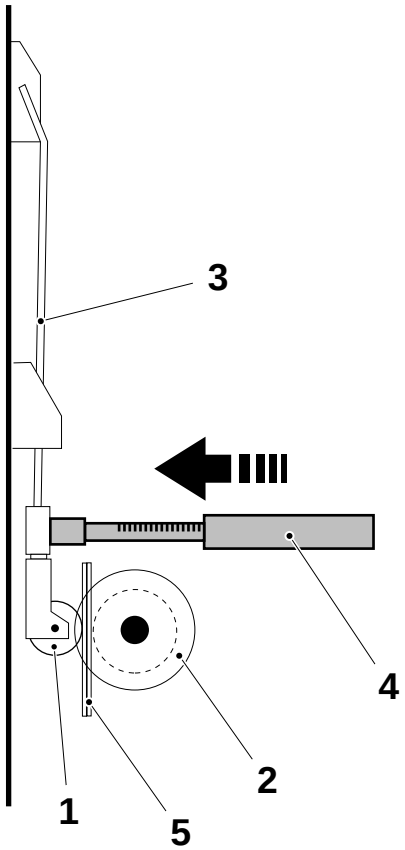

Force = 30 - 40 Nm

1 Pressure roller
2 Counter roller
3 Spring
4 Dynamometer
5 Packaging material

0-Series

2.2B3024A01en.fm

1.3.5-4 Filling pipe - set level probe

Machine status	Preparations
Tools - resistors - wires with crocodile clips	 2 x 1 Ohm 4 x 0.75 mm ø
SPC reference	1255982-0100

a) Connect the clip (6) of the resistor (5) to the machine ground. Connect the clip (4) at distance **A** from the bottom of the level probe (3).

b) Set the **zero** level on the TPOP using the Z potentiometer (1).

c) Connect the clip (9) of the resistor (8) to the machine ground. Connect the clip (7) at distance **B** from the top of the level probe.

d) Set the **maximum** level using the potentiometer (2).

e) Move the clip to the middle of the level probe and check the level on the TPOP is in the middle.

f) Repeat from step *a)* until the values are correct.

Note! Take care not to damage the level probe.

2.2B3024A01en.fm

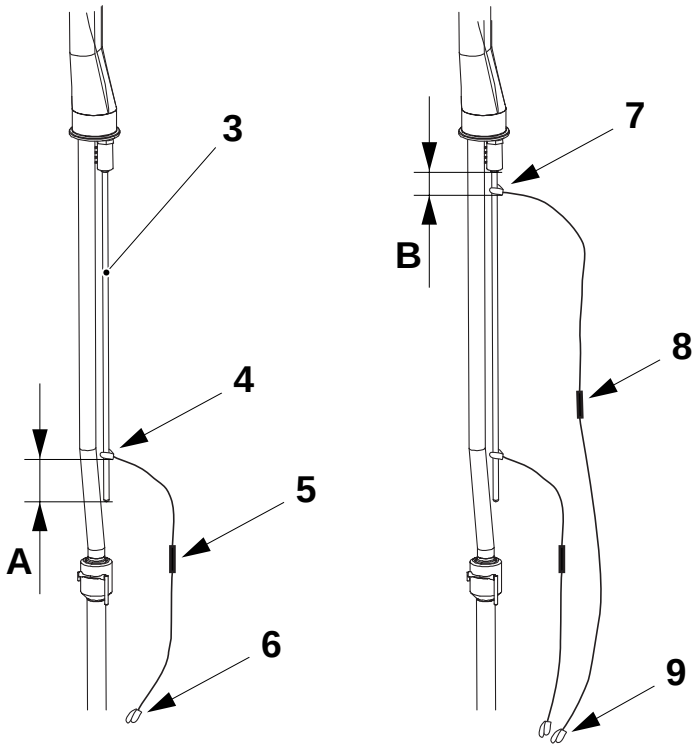

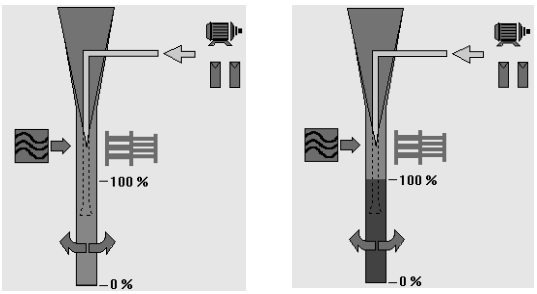

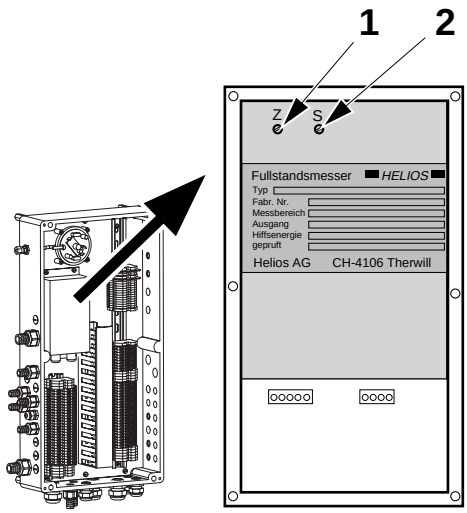

A = 20 mm
B = 10 mm

1 Z Potentiometer
2 S Potentiometer
3 Level Probe
4 Clip
5 Resistor
6 Clip
7 Clip
8 Resistor
9 Clip

0-Series

1.3.7 CIP switch

1.3.7-1 C.I.P. switch - set proximity switch

SPC reference	1260053-0200

Set distance **A** between the proximity switch (3) and the cylinder piston (1) by moving the proximity switch (3) and the sensor bracket (2).

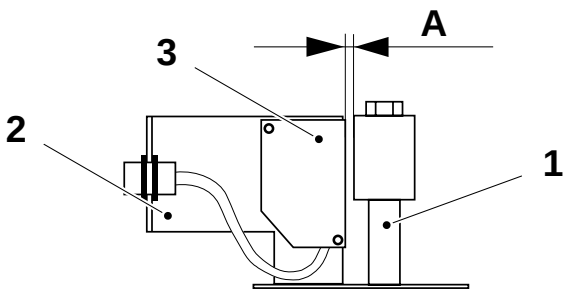

A = 1 ±0.2 mm

1 Cylinder piston
2 Sensor bracket
3 Proximity switch

1.3.7-2 C.I.P. switch - change seal ring

SPC reference	1035107-0102

a) Remove the valve cone (1).
b) Change the seal ring (2).
c) Pull out the seal ring holder (3).
d) Change the seal ring (4) and assemble in the reverse order.

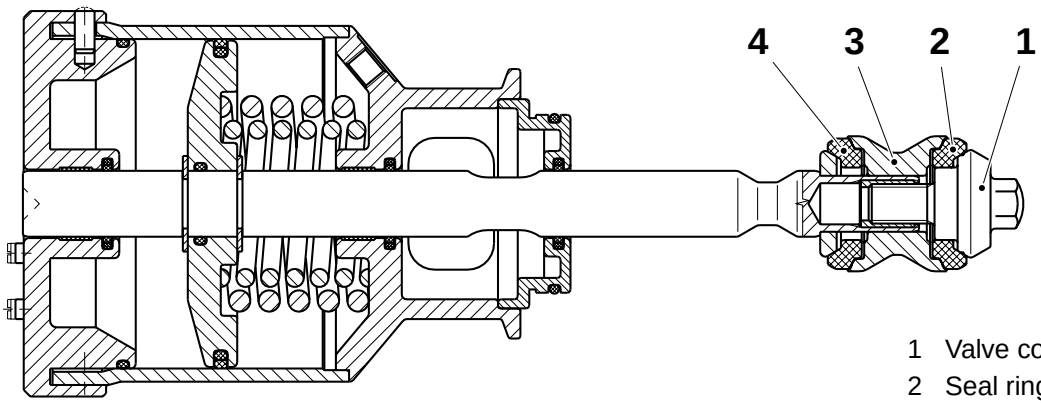

1 Valve cone
2 Seal ring
3 Seal ring holder
4 Seal ring

2.2B3024A01en.fm

1.3.8 Steam system

1.3.8-1 Steam system - clean steam trap

Consumables - lubricant	TP No. 90296-57
SPC reference	1347194-0100



WARNING!

Risk of personal injury!
Turn off the steam and the compressed air. Make sure that there is **no product, steam or cleaning liquid** in the line.



WARNING!

Risk of personal injury!
The steam system and adjacent components may be hot. If necessary wear heat-resistant protective gloves. If an accident occurs, call immediately for medical attention.

a) Remove the steam traps (1) from the line.

b) Unscrew the cap (2).

c) Remove the spacer (3), the spring (4) and the strainer (5). Clean the parts as required.

a) Assemble in the reverse order.

2.2B3024A01en.fm

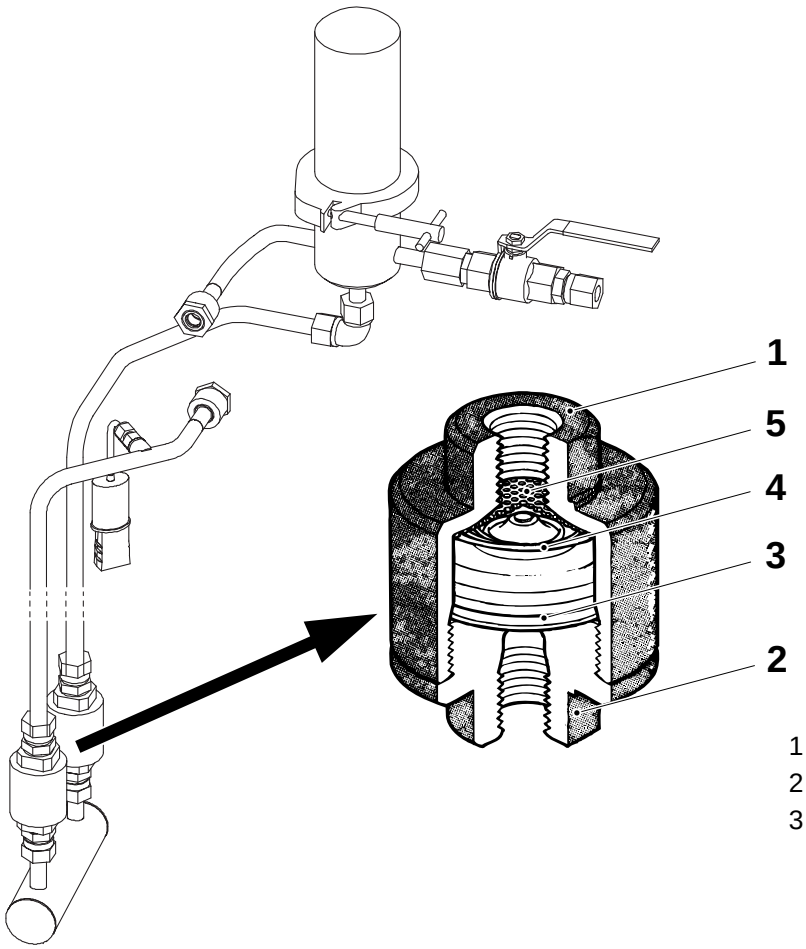

1 Cap
2 Steam trap
3 Disk

1.3.8-2 Steam system - clean filter

Tools - tank - filter - coalecher element - thermometer - pressure gauge	 50 litres Pall Profile 10µm Pall SU range
Consumables - nitric acid	 14 - 15% (w/w)
SPC reference	1347194-0100

Remove the O-ring (arrow) from the filter cartridge.

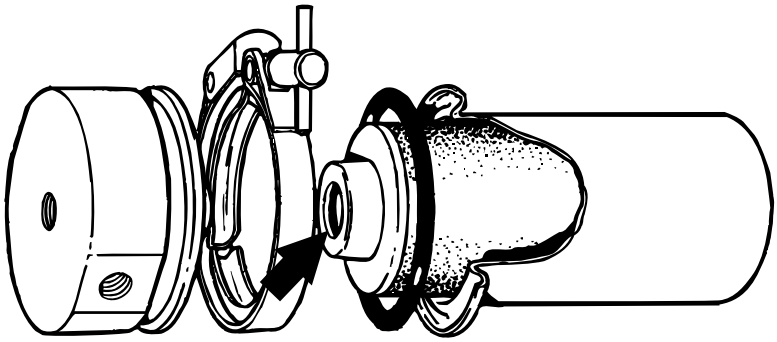

General information

To obtain optimum performance of the filter cartridge:

- Clean the filter cartridge thoroughly before reusing (or return to Pall for cleaning and testing).
- First remove the O-ring, then label and store used cartridges.

Clean with distilled **and** filtered water.

Rinse using a 50 litre tank designed to avoid “dead spaces”. Filter the incoming water (renewal rate 5 l/min.) with a 10µm Pall Profile.

Agitate the contents of the tank with compressed air, filtered through a Pall SU Coalecher element.

(Cont’d)

(Cont'd)



WARNING!

Cleaning with nitric acid

Risk of personal injury!
Follow the Safety precautions.
The cleaning procedure must not contravene any legal or local safety regulations.

Note! If the cartridge is highly contaminated or if the recommended temperature cannot be used, contact **Pall Scientific & Laboratory Services** for advice.

a) Immerse the filter cartridge **in 14 - 15%** (w/w) nitric acid at **60 - 70°C** for 10 - 20 minutes.

b) Rinse the cartridge in water for **at least** 10 minutes.

c) Empty the tank and refill with water. Check the **pH level** of the tank contents is **6 - 8**.

d) Rinse the cartridge again for at least two hours, or until the pH level of the tank contents is the same as that of the incoming water.

e) Flush the cartridge in the reverse direction with water.
If the water from the cartridge is discoloured or is visibly contaminated, repeat steps *a)* and *b)*.

(Cont'd)

2.2B3024A01en.fm

(Cont'd)

Reverse bubble point testing

Note! Do this **immediately after** the cleaning procedure.

a) Thoroughly soak the filter cartridge in water.

b) Plug one end of the cartridge and connect the other end to a compressed air line. The pressure should be **0 - 13 KPa**.

c) Submerge the filter cartridge in water. Keep the filter approximately **125 mm** below the surface.

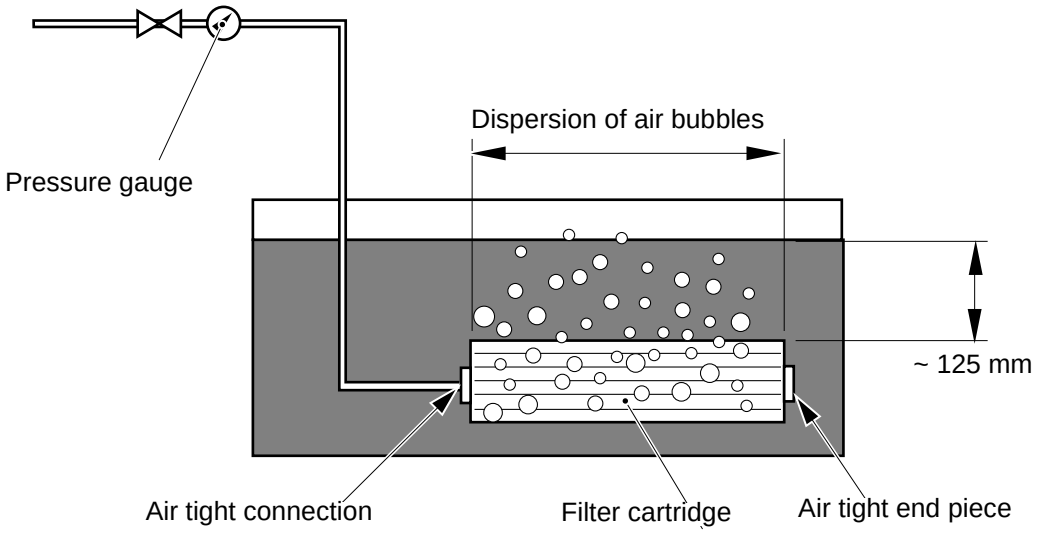

2.2B3024A01en.fm

d) Gradually increase the air pressure while slowly rotating the cartridge, until air bubbles emerge.
Record the air pressure at this point.

e) Carefully inspect the filter cartridge to ensure that the air bubbles emerge at a similar rate from the entire cartridge.

f) Lower the pressure to half the recorded pressure. If air bubbles emerge from an isolated area of the cartridge at this pressure, replace the filter.

Drying procedure

Dry the filter at **105 - 120°C** for 1 - 2 hours.

After drying, visually check the filter cartridge for damage or corrosion. Change the cartridge as required.

Fit a new O-ring before fitting the filter cartridge.

1.4 Hydrogen Peroxide

SPC reference	1347171-0100

1.4.1 Water circulation

1.4.1-1 Water circulation - check

Machine status	**Heat sterilization**
SPC reference	1347171-0100



WARNING!

Hydrogen peroxide!
Follow the Safety precautions.

Check the following for wear or damage:

- leaks in pipe connections;
  if necessary change the seals (see arrows)
- the pump (2) for noise or leaks
- the safety valve (3).

Note! The following checks must be done with a **cold machine**.

- turn on the air and water supply and check that the pressure in the liquid container (4) is between **50 to 150 kPa.** If not, set the pressure using the valve (5). Read the value on the pressure gauge (1).

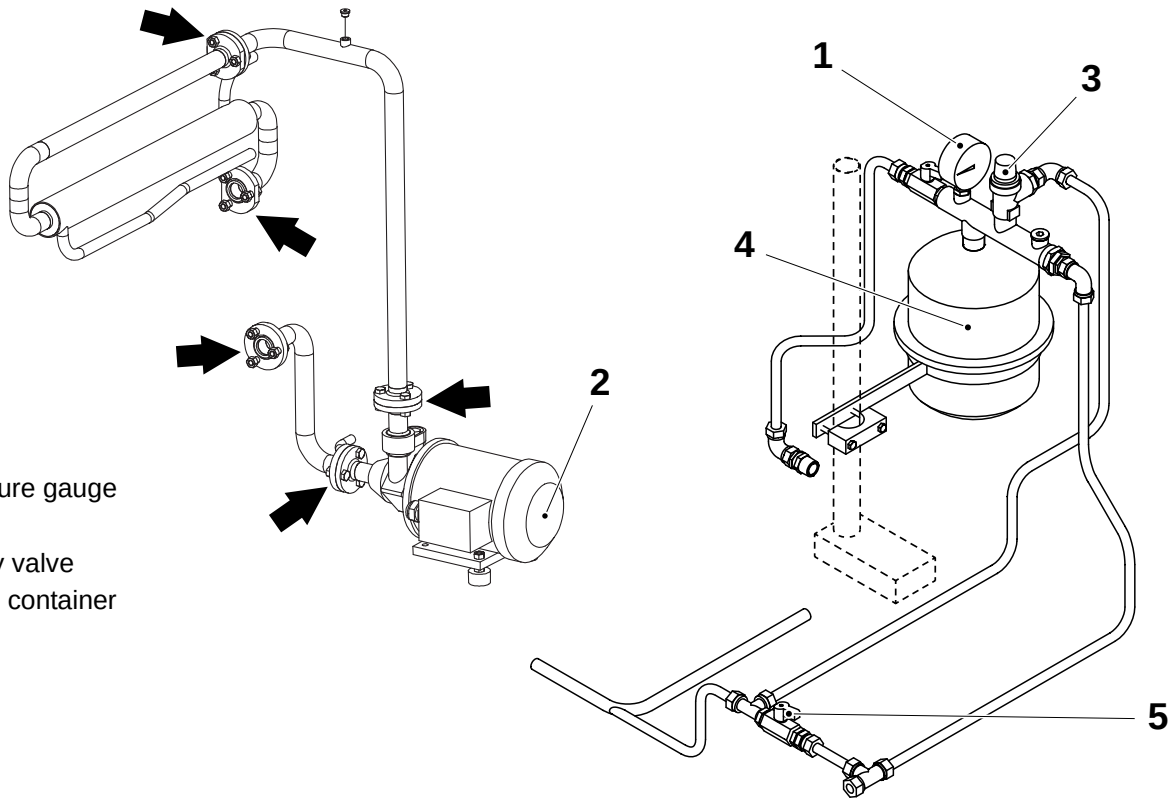

1 Pressure gauge
2 Pump
3 Safety valve
4 Liquid container
5 Valve

2.2B3024A01en.fm

U-Series

1.4.1-2 Water circulation - fill

Machine status	Water **On**
SPC reference	1347171-0100



WARNING!

Hydrogen peroxide!
Follow the Safety precautions.

a) Loosen the plugs (1) and (2).

b) Open the valve (3) to fill the circuit with water.

c) When water begins to seep from the plug (2) tighten the plug (2).

d) When water begins to seep from the plug (1) close the valve (3).

e) Tighten the plug (1).

f) Open the valve (3) until the pressure gauge (4) on top of the liquid container (5) indicates **50 kPa** to **150 kPa**.
If a value of **50 kPa** to **150 kPa** cannot be obtained, set the pressure using the valve (6) and then close the valve (3).

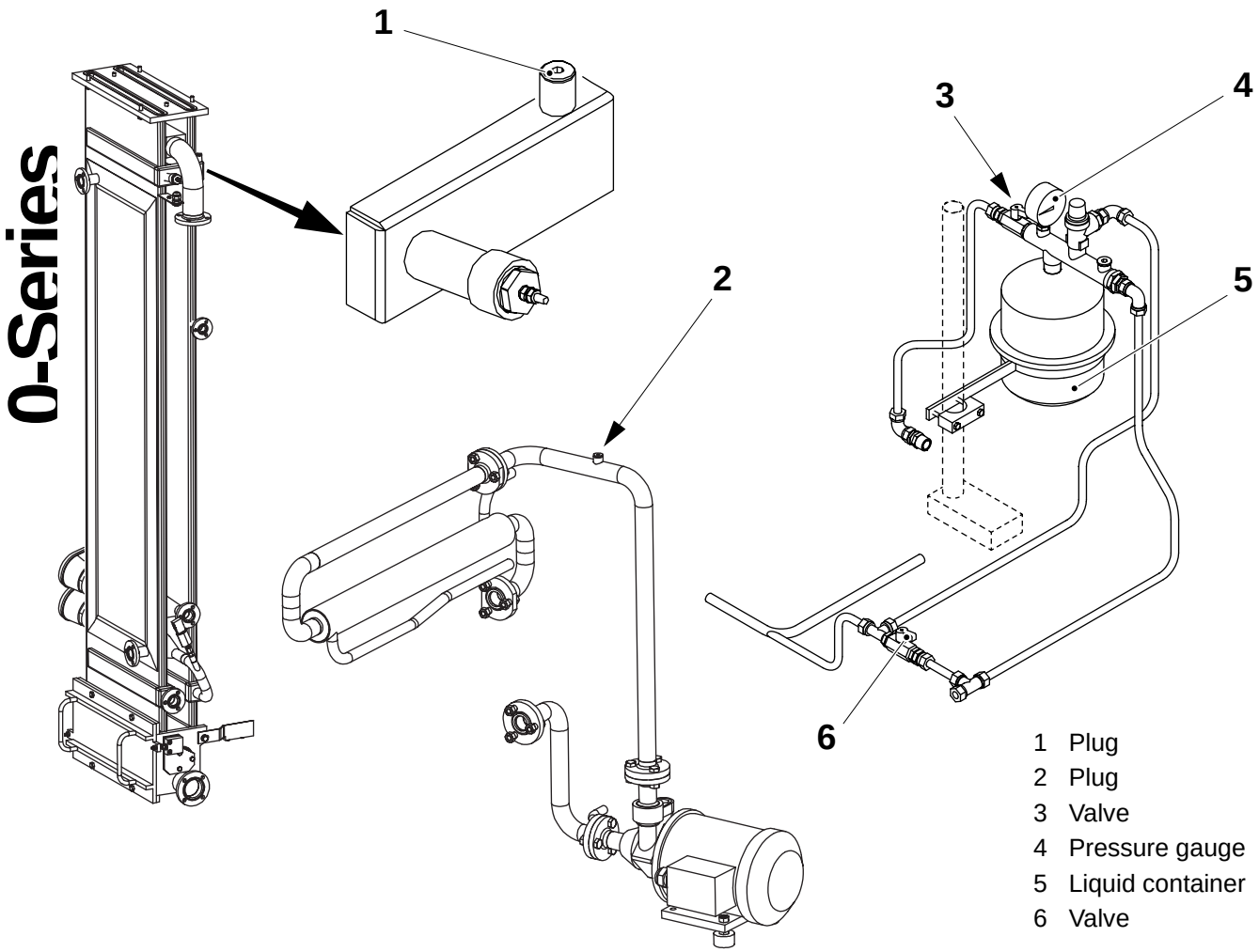

1 Plug
2 Plug
3 Valve
4 Pressure gauge
5 Liquid container
6 Valve

2.2B3024A01en.fm

(Cont'd)

(Cont'd)

g) Step up the machine to **Heat sterilization**.
h) Loosen the plugs (1) and (2).
i) Bleed air from the circuit until water comes out from plug (1) and (2).
j) Tighten the plugs (1) and (2).
k) Check that pressure gauge (4) indicates **50 kPa** to **150 kPa**.
l) If not, repeat step *f)*.
m) Repeat the sequence every four hours the machine has been working.

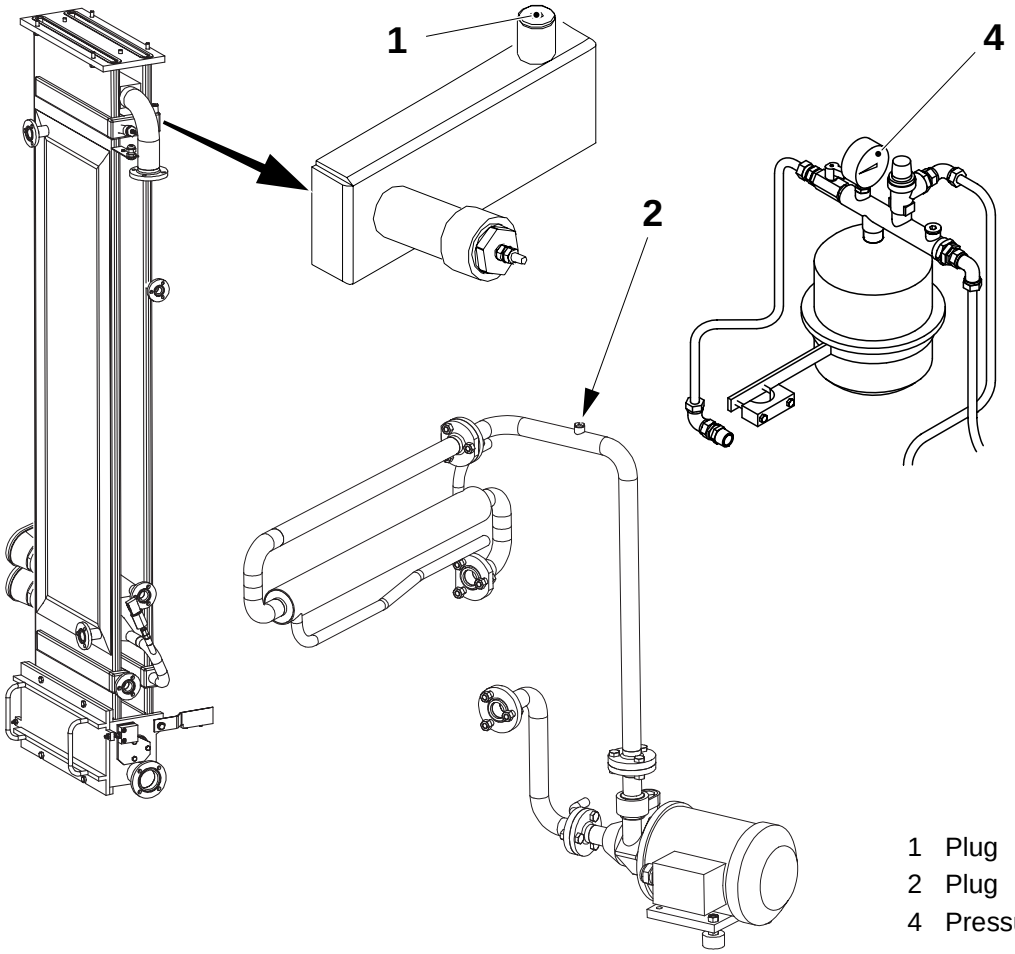

1 Plug
2 Plug
4 Pressure gauge

2.2B3024A01en.fm

1.4.2 Bath

1.4.2-1 Bath - check roller

Machine status	Mains power **On** Machine **cold**
SPC reference	1035008-0200



WARNING!

Hydrogen peroxide!
Follow the Safety precautions.

a) Loosen the screws (1) and remove the cover (2).

b) Check the gasket (3). If damaged, change it.

c) Clean any strip residue from the bath (4) and check the surface of the roller (5). Make sure the roller rotates freely.

d) Check the radial play of the bearings (6).
If excessive change them, see *1.4.2-3 Bath - change roller bearings*.

Note! Do not activate the microswitch (7) until the screws have been tightened. Check the alarm functions on the TPOP.

0-Series

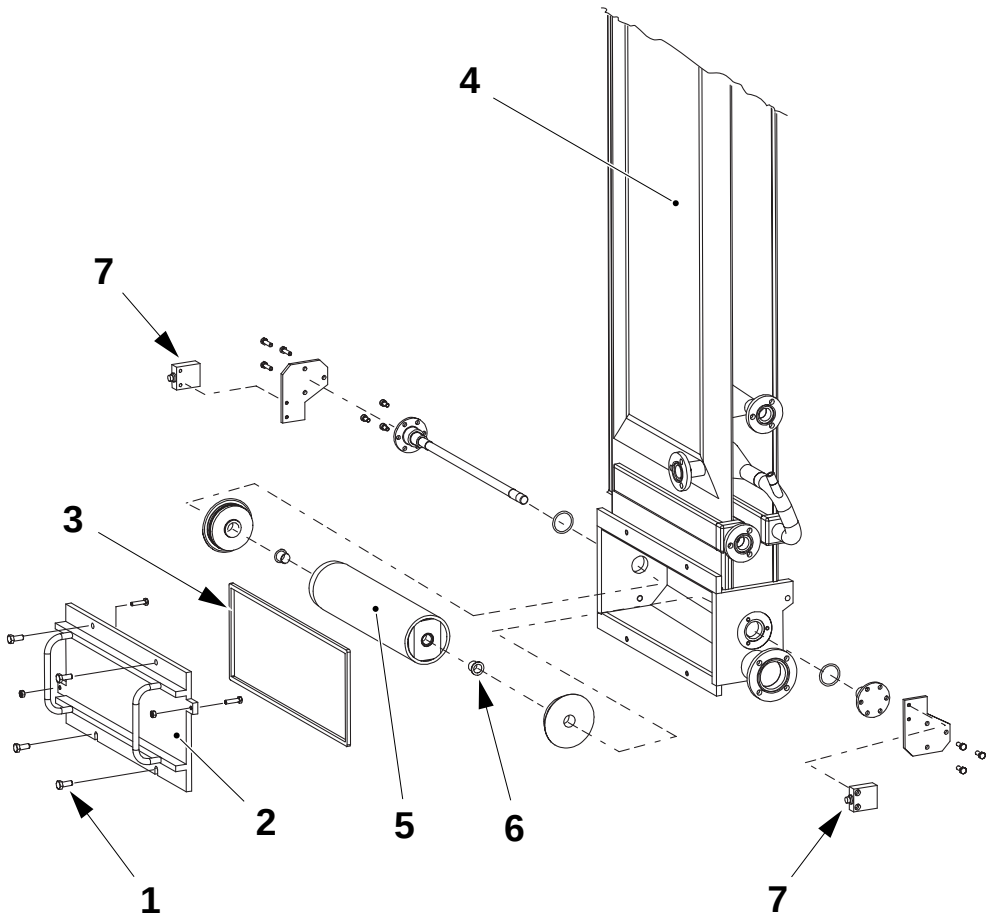

2.2B3024A01en.fm

1 Screw
2 Cover
3 Gasket
4 Bath
5 Roller
6 Bearing
7 Microswitch

1.4.2-2 Bath - change heating element

Tools - sleeve socket wrench	TP No. 90206-330
SPC reference	1035008-0200



WARNING!

Hydrogen peroxide!
Follow the Safety precautions.

a) Drain the water bath by opening valve (1).

b) Remove the connection box (2).

c) Mark and remove the electrical connections.

d) Remove the heating elements (3) with the aid of the sleeve socket wrench tool (4).

e) Change the heating elements (3) as required.

f) Assemble in the reverse order and refill the bath, see *1.4.1-2 Water circulation - fill*.

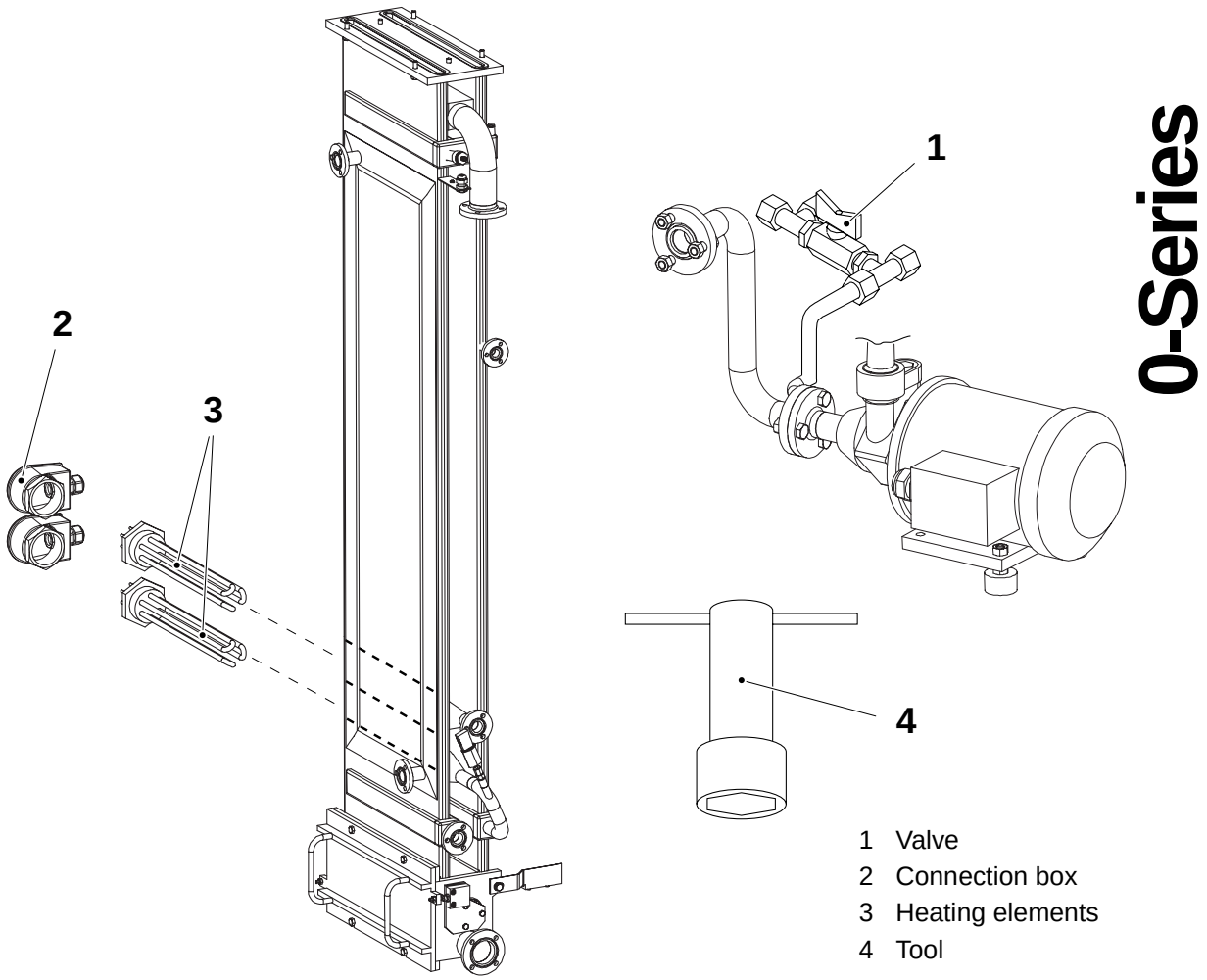

1 Valve
2 Connection box
3 Heating elements
4 Tool

2.2B3024A01en.fm

1.4.2-3 Bath - change roller bearings

SPC reference	1035008-0200



WARNING!

Hydrogen peroxide!
Follow the Safety precautions.

a) Loosen the screws (1) and (2) and remove the cover (3).
b) Remove the gasket (4) and change it as required.
c) Unscrew the screws (5) and remove the plates (6).
d) Unscrew the screws (7) and remove the shaft (8).
Change the shaft (8) as required.
e) Remove the O-rings (9) and change them as required.
f) Pull out the roller (10) from the bath (11) and change it as required.
g) Remove the bearings (12) and change them as required.
h) Assemble in the reverse order.

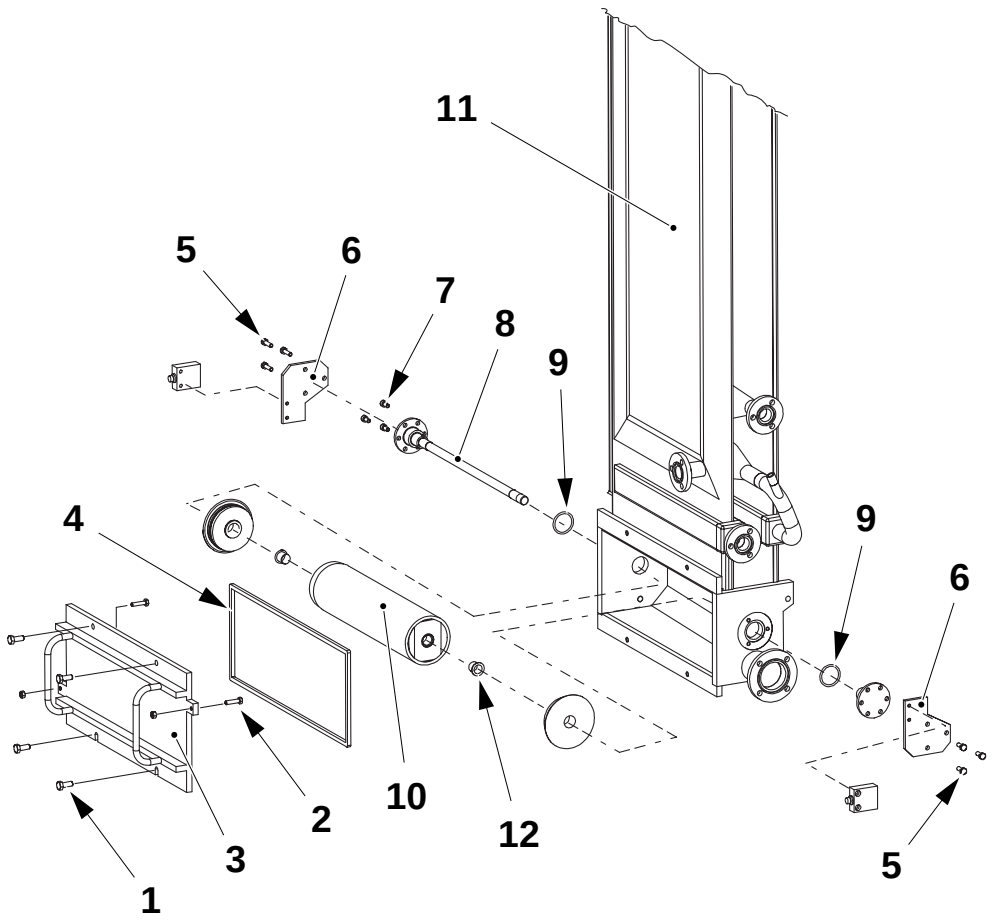

1 Screw
2 Screw
3 Cover
4 Gasket
5 Screw
6 Plate
7 Screw
8 Shaft
9 O-ring
10 Roller
11 Bath
12 Bearing

0-Series

2.2B3024A01en.fm

1.5 Frame section, upper

SPC reference	1279803-0100

1.5.1 Bending roller

1.5.1-1 Bending roller - check

SPC reference	1279803-0100

a) Check the roller (1) rotates freely in both directions. If not, remove the screws (2) on both sides and remove the roller.

b) Remove the grub screws (3) and remove the spacers (4).

c) Remove and change the ball bearings (5).

d) Assemble in the reverse order and set, see *1.5.1-2 Bending roller - set position* and *1.5.1-4 Bending roller - set splice detector*.

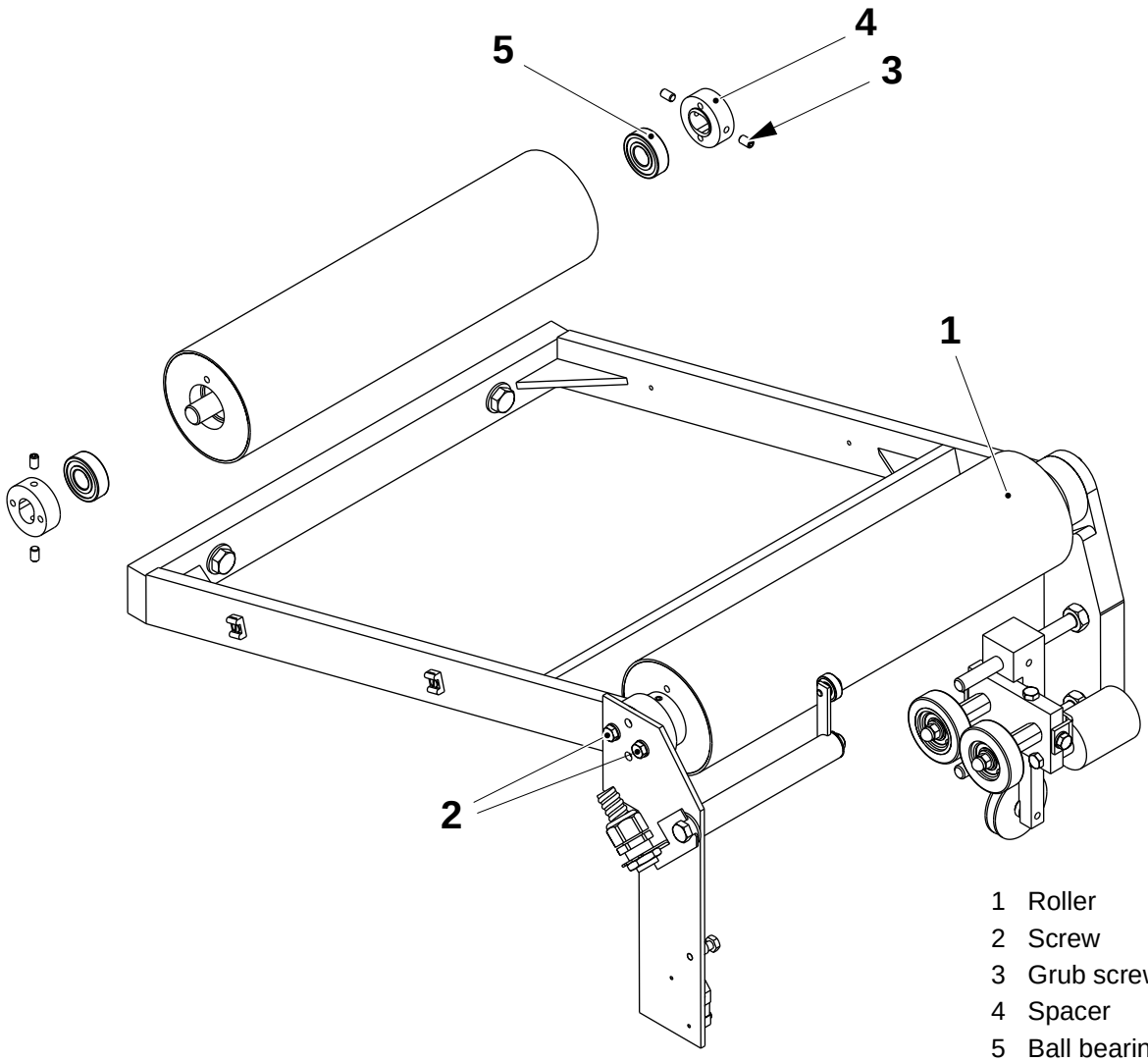

1 Roller
2 Screw
3 Grub screw
4 Spacer
5 Ball bearing

2.2B3024A01en.fm

1.5.1-2 Bending roller - set position

Machine status	Preparations
Tools - spirit level	
SPC reference	1279803-0100

a) Set the roller horizontal using the grub screws (1) and a spirit level.

b) Set the correct packaging material tracking using the grub screws (3).

c) Set the splice detector, see *1.5.1-4 Bending roller - set splice detector*.

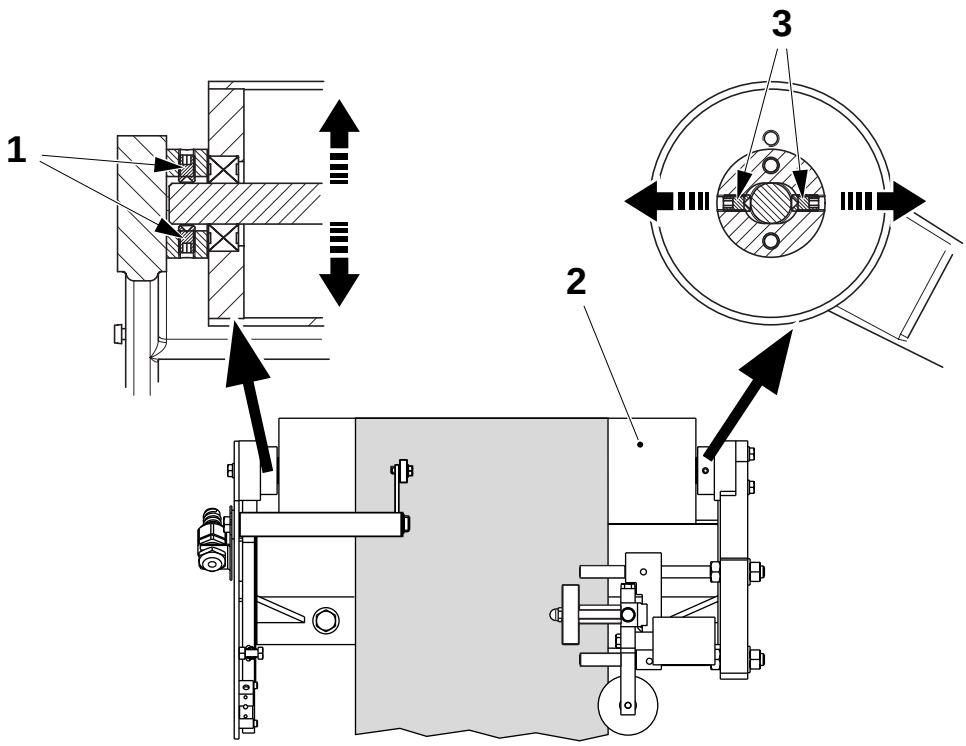

1 Grub screw
2 Roller
3 Grub screw

0-Series

2.2B3024A01en.fm

1.5.1-3 Bending roller - check splice detector

Machine status	Power On
SPC reference	1095806-100

a) Check the ball bearing (2) rotates easily. Change as required.

b) Check the spring (5) is intact. Change as required.

c) Check the bracket (3) is easy to turn. If not, remove the retaining ring (4), the spring (5) and remove the bracket. Change the bushings (1) and assemble in the reverse order.

d) Place a piece of packaging material under the ball bearing (2) and check the LED (6) in the proximity switch is **On**.

e) Place a piece of double packaging material underneath the ball bearing (2) and check the LED (6) switches **Off**. If not, set the splice detector, see *1.5.1-4 Bending roller - set splice detector*.

f) The machine ejects at least four packages; check that one of them has the taped splice.

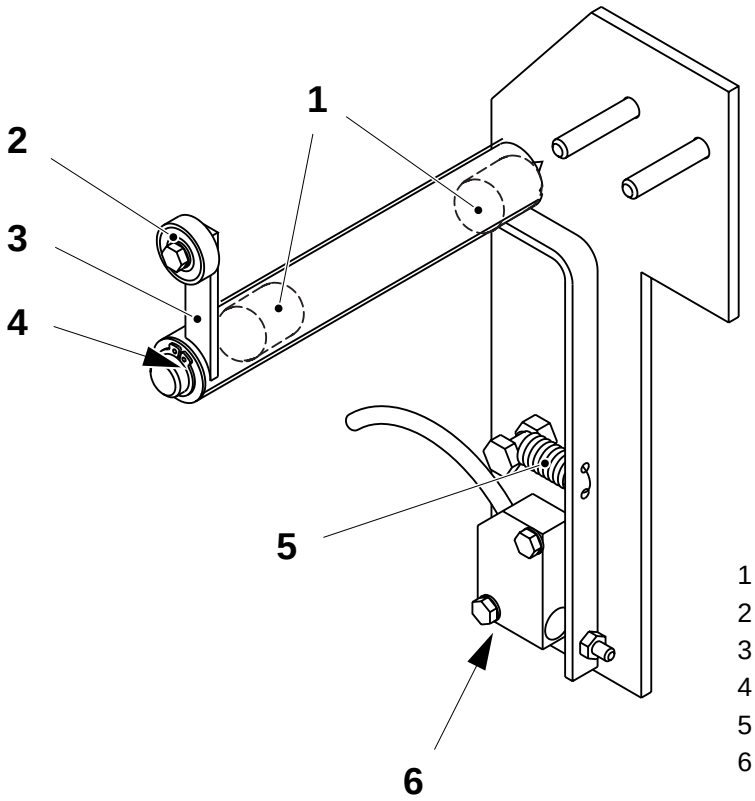

1 Bushing
2 Ball bearing
3 Bracket
4 Circlip
5 Spring
6 LED

2.2B3024A01en.fm

1.5.1-4 Bending roller - set splice detector

Machine status	Power **On**
SPC reference	1095806-100

a) Set the ball bearing (3) just in contact with the roller (2) and centred to the roller using the screws (1).

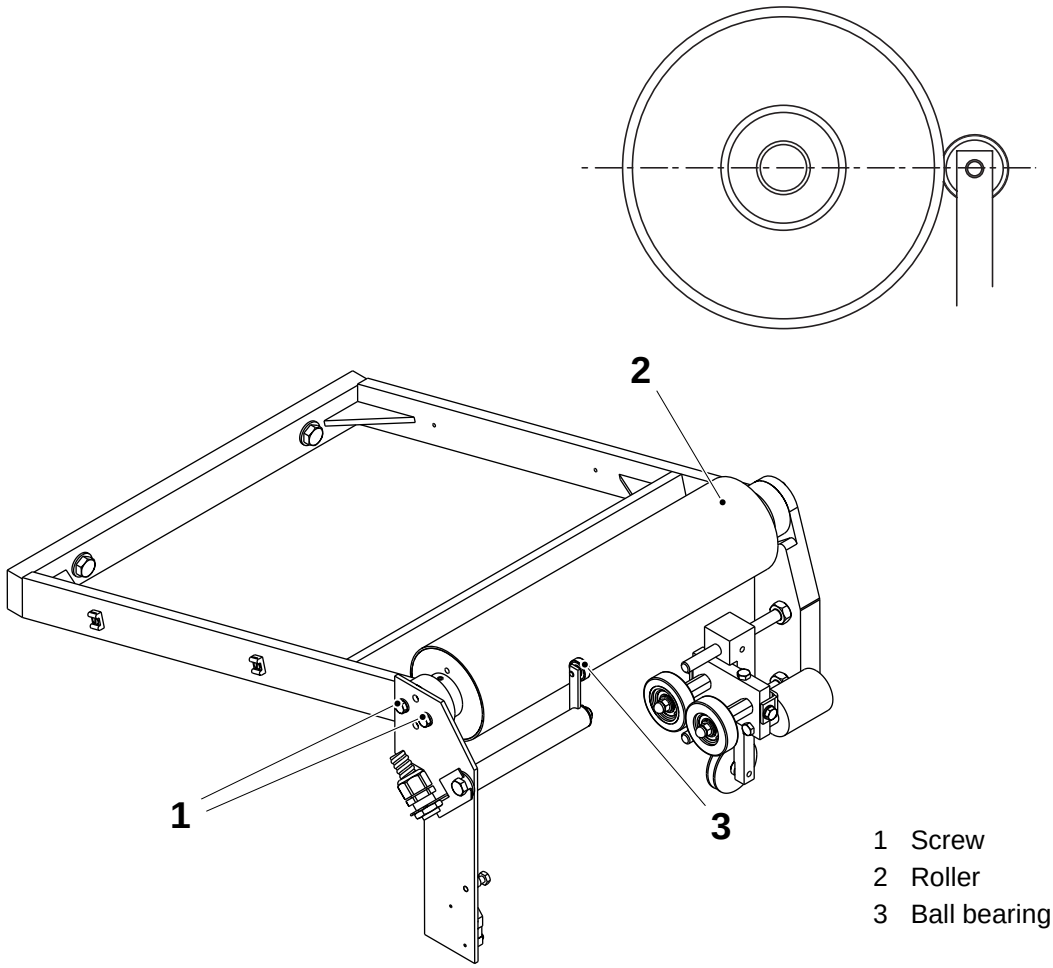

1 Screw
2 Roller
3 Ball bearing

(Cont'd)

2.2B3024A01en.fm

(Cont'd)

b) Set the screw (3) so that it touches the proximity switch and the LED (4) switches **On**.

c) Place a piece of double packaging material under the ball bearing (3).

d) Screw in the screw (5) until the LED (4) switches **Off**.

e) Check with a single piece of packaging material the LED switches **On**, and with a double piece of packaging material it switches **Off**.

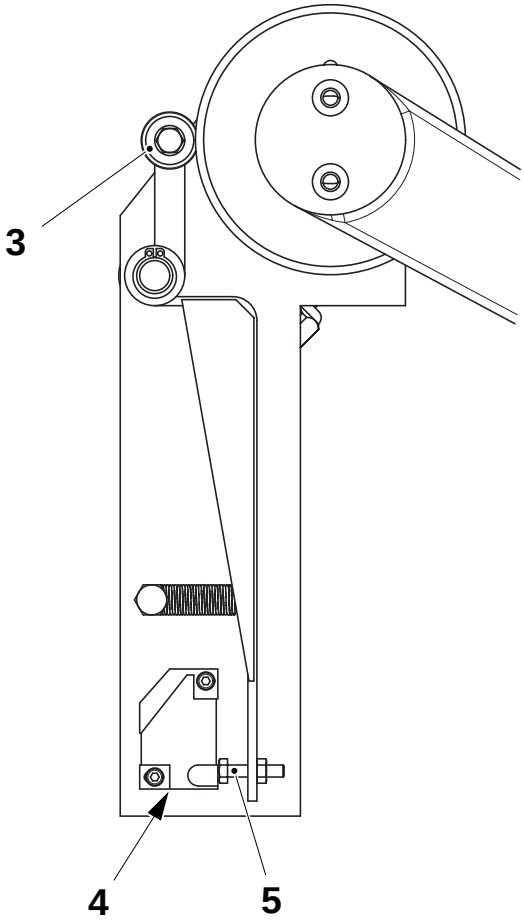

3 Ball bearing
4 LED
5 Screw

2.2B3024A01en.fm

1.5.1-5 Bending roller - set web guide position

SPC reference	1478133-100

Set distance **A** between the bracket (3) and the guide (2). Loosen the grub screws (1) and shift the web guide sideways. Tighten the grub screws.

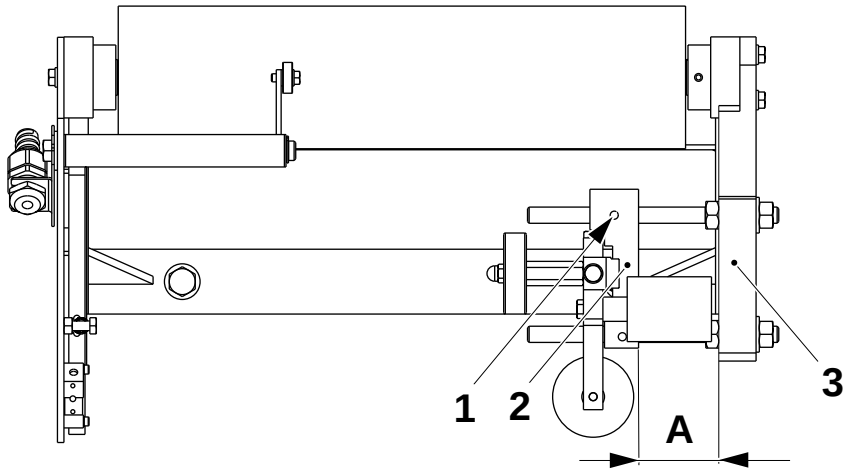

A = 50 ± 0.5 mm

1 Grub screw
2 Web guide
3 Bracket

2.2B3024A01en.fm

1.5.1-6 Bending roller - check web guide

SPC reference	1478133-0100

Check the roller surfaces are not damaged.

Check the rollers rotate freely.

If not:

a) Remove the nuts (1), the washers and the retaining rings (2).

b) Change the ball bearings (3), the rubber roller (5) or the steel roller (4) as necessary.

c) Check that the edge guide wheel (7) is clean. If not, remove the screw (6) and pull off and clean the guide wheel. If the wheel is worn or damaged, replace it.

Note! Fit the rubber roller on the printed side of the packaging material web.

d) Assemble in the reverse order.

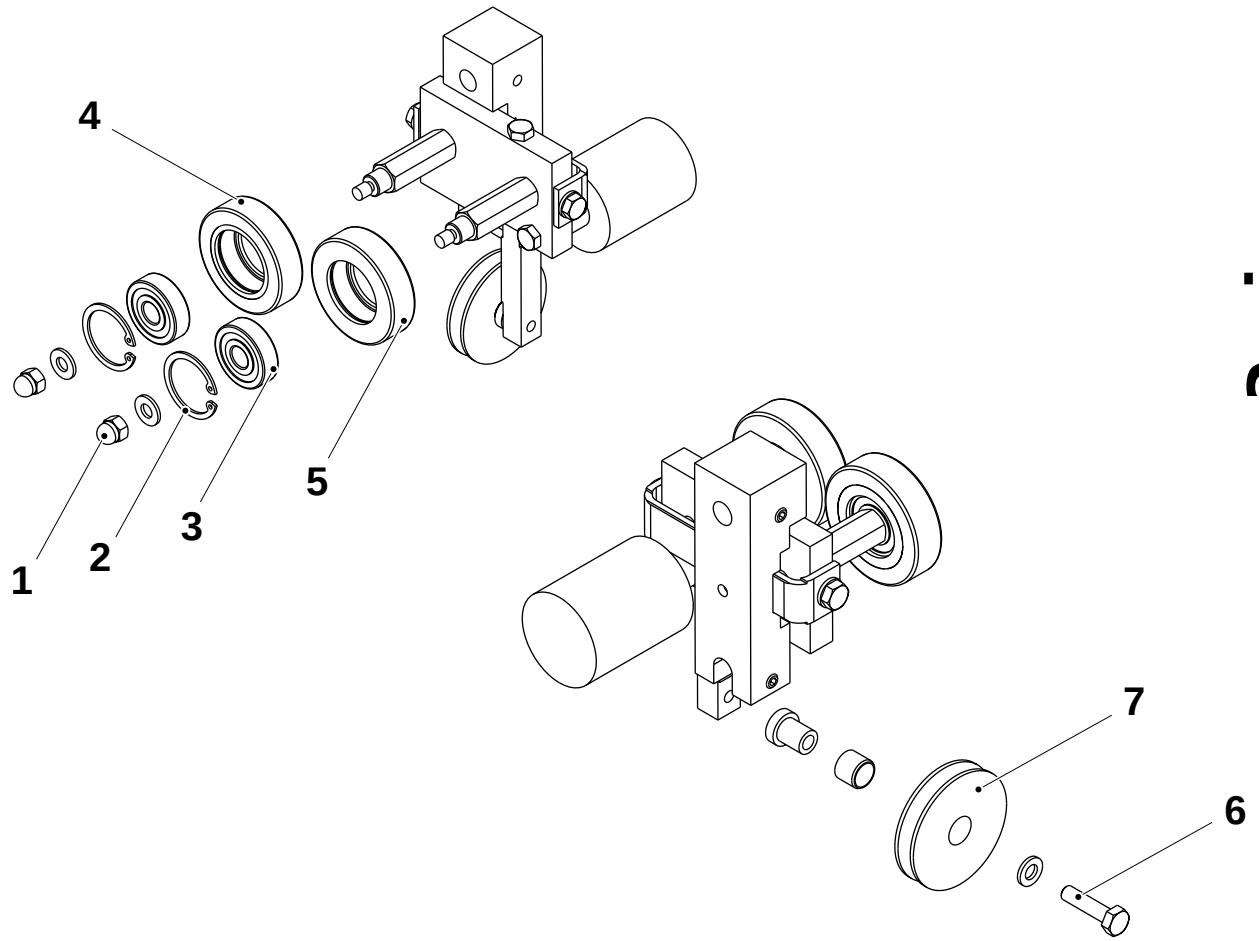

1 Nut
2 Retaning ring
3 Ball bearing
4 Rubber roller
5 Steel roller
6 Screw
7 Edge guide wheel

(Cont'd)

2.2B3024A01en.fm

1.6 Connection box

SPC reference	1296847-0200

1.6-1 Connection box - check pressure switch

Machine status	Ready for production
SPC reference	1296847-0200

a) Open a front window of the column.

b) Check the machine steps down to **Zero**. If it does not, change the pressure switch. Set the new switch, see *1.6-2 Connection box - set pressure switch*.

1.6-2 Connection box - set pressure switch

Machine status	Preparations
SPC reference	1296847-0200

a) Open the top front door of the aseptic chamber.

b) On the pressure switch (2), turn the screw (1) clockwise until the LED input **I135.06** on the PLC switches **On**.

c) Turn the screw (1) anti-clockwise until the LED input **I135.06** on the PLC switches **Off**.

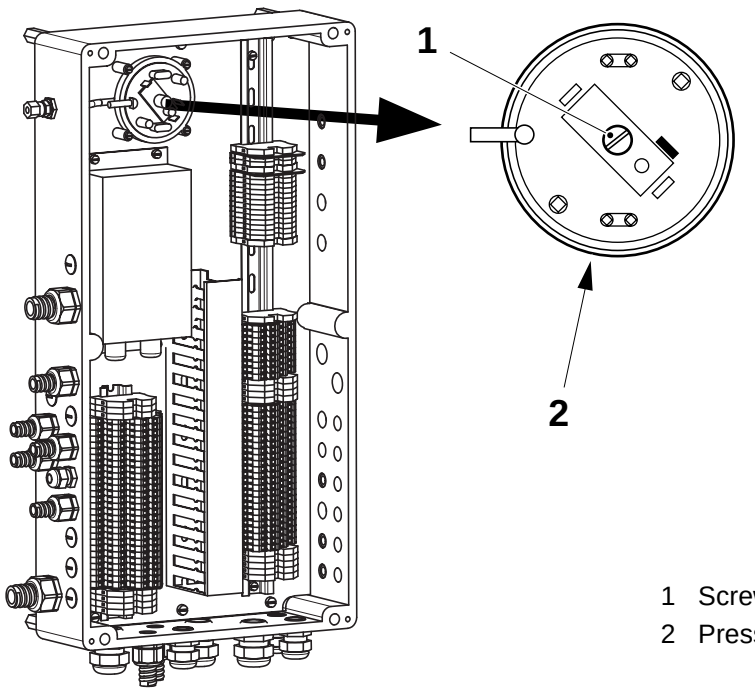

1 Screw
2 Pressure switch

0-Series
2.2B3024A01en.fm

2 Machine body

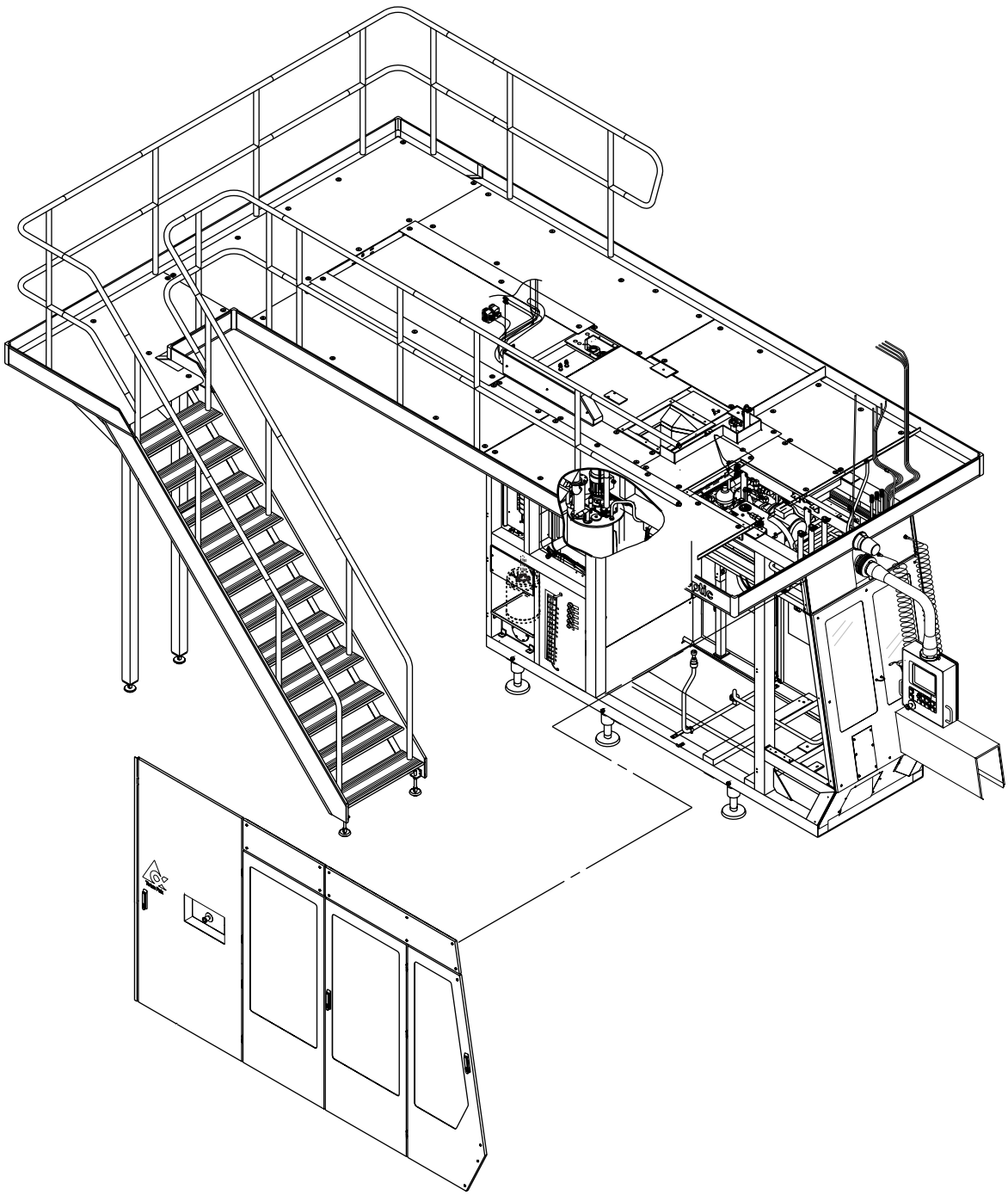

0-Series

2.2B3024B01en.fm

2-1 Machine body - description

SPC reference	648522-0300

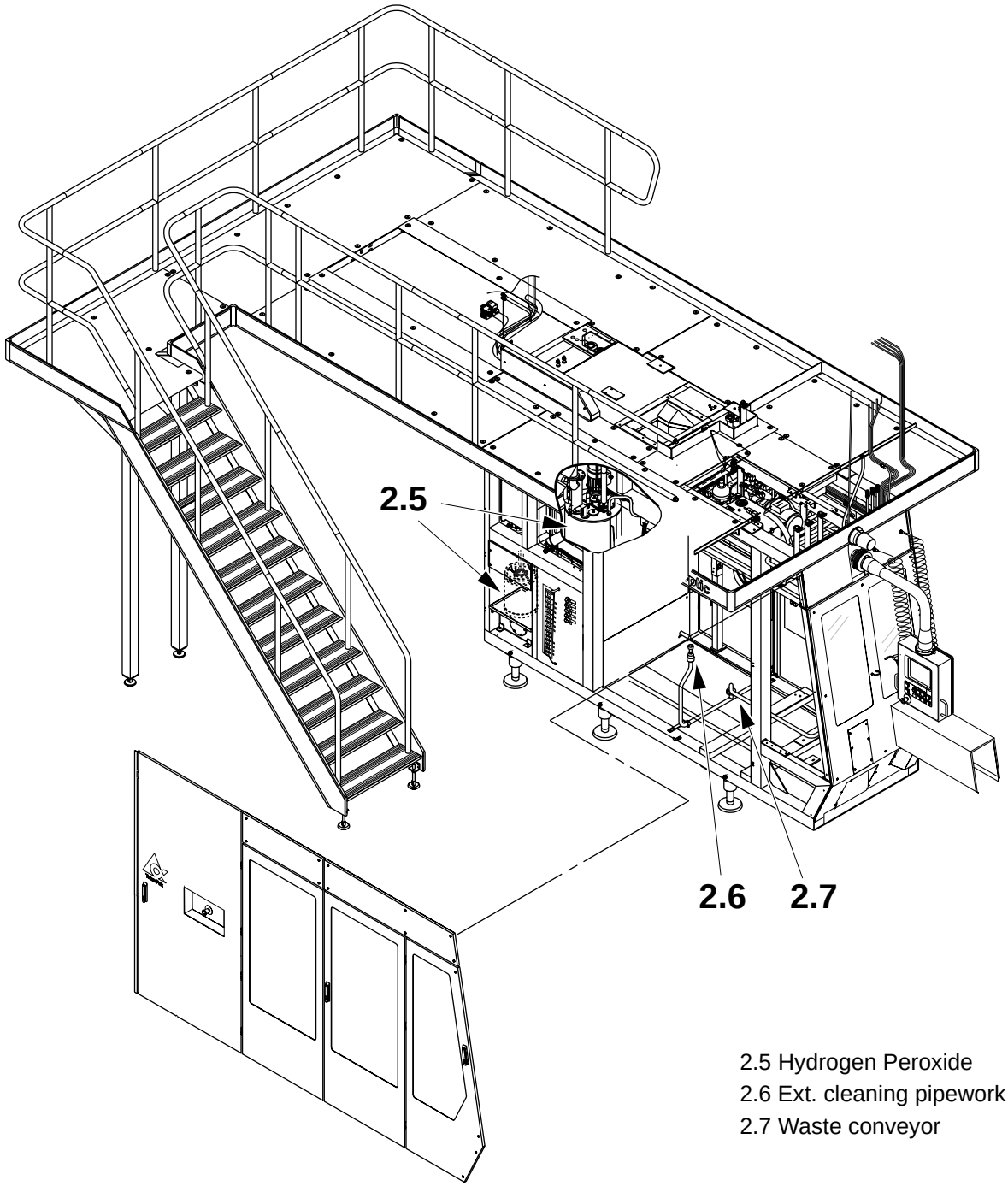

2.5 Hydrogen Peroxide
2.6 Ext. cleaning pipework
2.7 Waste conveyor

0-Series

2.2B3024B01en.fm

2.5 Hydrogen Peroxide

SPC reference	1317102-0100

2.5-1 Hydrogen peroxide - check leakages

SPC reference	1317102-0100



WARNING!

Hydrogen peroxide!
Follow the Safety precautions.

Check the connections for leakages at:

- the peroxide pipe (1)
- the dilution tank (2)
- the cabinet (3)
- the peroxide pump (4)
- the peroxide tank (5).

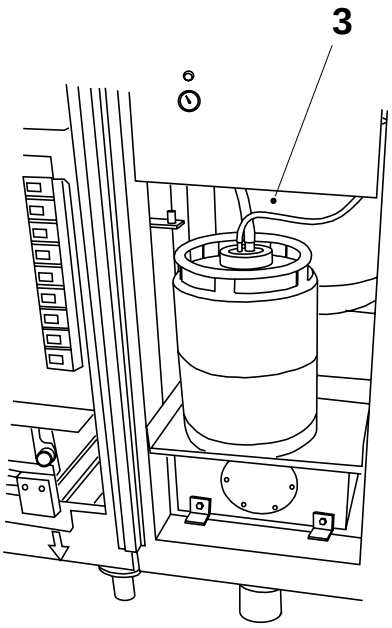

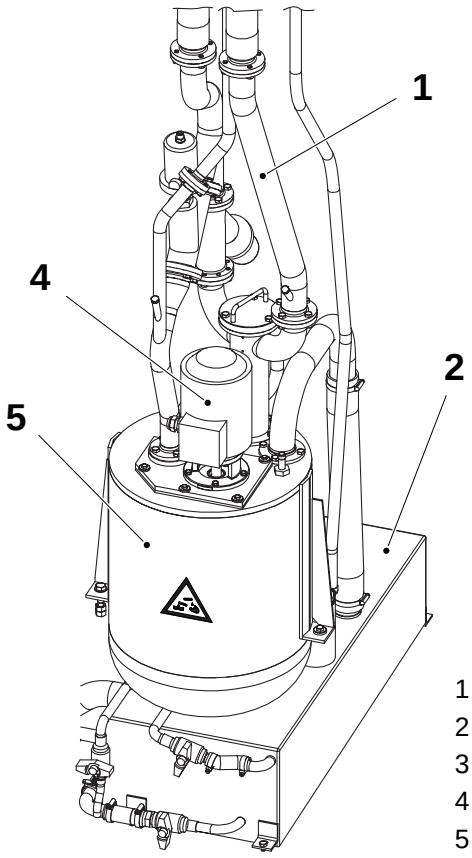

1 Peroxide pipe
2 Dilution tank
3 Cabinet
4 Peroxide pump
5 Peroxide tank

2.2B3024B01en.fm

0-Series

2.5-2 Hydrogen peroxide - check pump

Machine status	**Sterilization**
SPC reference	1317102-0100

Place a screwdriver in contact with the peroxide pump (1) and listen for strange noises or vibrations.

Change the pump as required, see *2.5-4-1 Peroxide pump - change pump*.

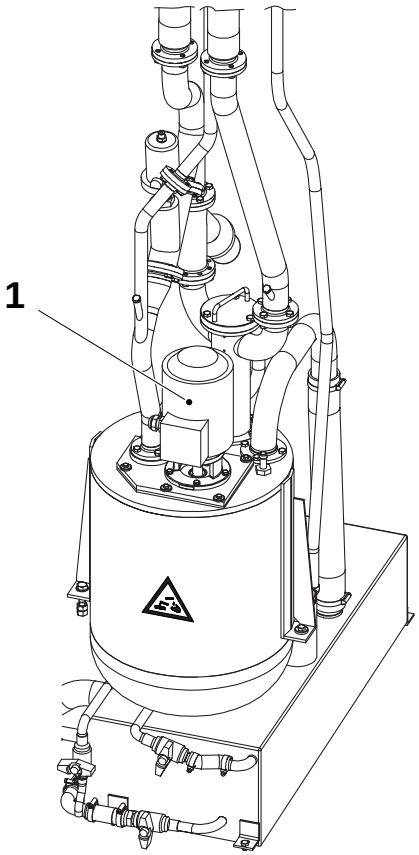

1 Peroxide pump

2.2B3024B01en.fm

2.5-3 Hydrogen peroxide - set pressure

Machine status	**Sterilization**
SPC reference	1317103-0100



WARNING!

Hydrogen peroxide!
Follow the Safety precautions.

Set the hydrogen peroxide tank filling pressure to **20 kPa** using the pressure regulator (1).

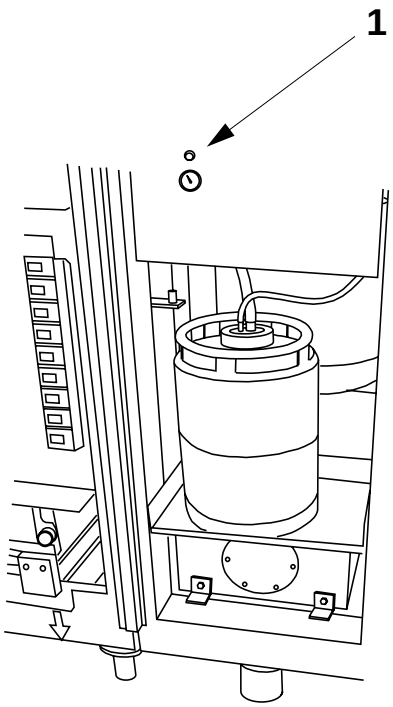

1 Pressure regulator

2.2B3024B01en.fm

0-Series

2.5-4 Hydrogen peroxide - clean and passivate

Machine status	Mains power **On**
Tools - AT compatible PC	
Consumables - distilled water - NaOH, 5% - HNO_3, 33%	 approx. 45 litres approx. 45 litres approx. 45 litres
SPC reference	1095831-030V



WARNING!

Hydrogen peroxide!
Follow the Safety precautions.

If the hydrogen peroxide system becomes polluted, all internal surfaces in contact with the hydrogen peroxide must be treated with nitric acid to produce a thin protective oxide film.

Passivate the hydrogen peroxide system whenever it is serviced.

Preparation

a) Cut off the material web. Remove it from the peroxide bath and drying chamber.

b) Remove any dirt on the calender roller (1), on the drive unit roller (2) and on the bending roller (3).
Clean any stabiliser deposits on the rollers (1), (2) and (3). If the rollers cannot be cleaned, change them.

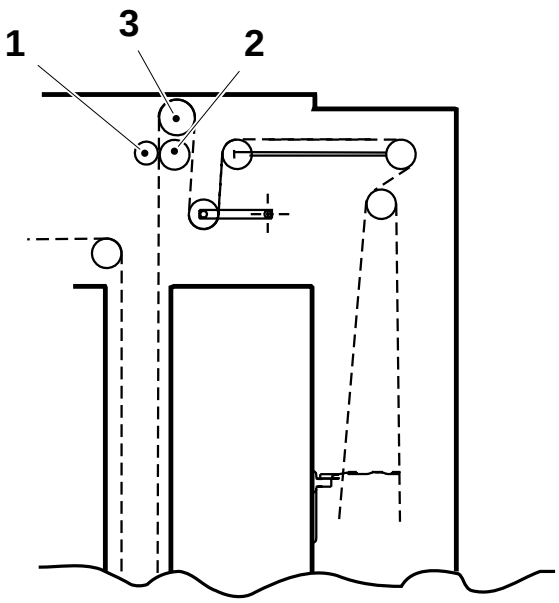

1 Calender roller
2 Drive unit roller
3 Bending roller

(Cont'd)

0-Series

2.2B3024B01en.fm

(Cont'd)

c) Empty the peroxide tank (**point A**) and fill it with water.

d) Close the draining valve (5).

e) Open the filling valve (6) and the peroxide bath top filling valve (7).

f) Run the peroxide pump for **10 minutes;** after **7 minutes**, close the filling valve (6) and the peroxide bath top filling valve (7).

g) Open the draining valve (5) to clean the peroxide filter (4).

h) Check the peroxide filter (4). If dirty, clean it and repeat the procedure from item *d)*.

i) Empty the peroxide tank (**point A**).

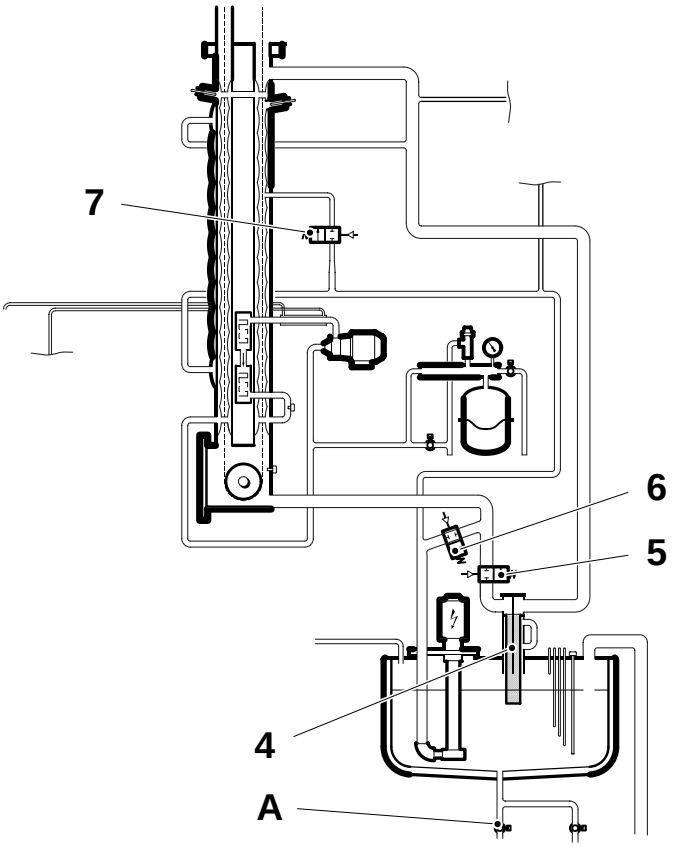

4 Peroxide filter
5 Draining valve
6 Filling valve
7 Peroxide bath top filling valve

(Cont'd)

(Cont'd)



WARNING!

Degreasing

Chemical products!
Alkali. Follow the Safety precautions.
When mixing alkali and water, always **add the alkali to the water**, never the other way around.

j) Degrease the hydrogen peroxide system using approx. **45 litres** of **5%** sodium hydroxide (NaOH) at room temperature.

k) The water in the water bath **must** be at room temperature.

l) Fill the tank with **5%** of sodium hydroxide (NaOH).

m) Run the pump for **2 hours**, switching it off for **1 minute** in every **15 minutes**.

n) After running the pump for **1 hour 30 minutes**, close the filling valve (6) and the peroxide bath top filling valve (7).

o) Open the draining valve (5) to rinse the peroxide filter (4), and check the peroxide filter (4).

p) Empty the peroxide tank (**point A**).

q) Fill the peroxide tank with drinking water and rinse continually for **5 minutes** until the pH-value of the water coming out is not more than **0.5 units higher** than that of the water coming in.

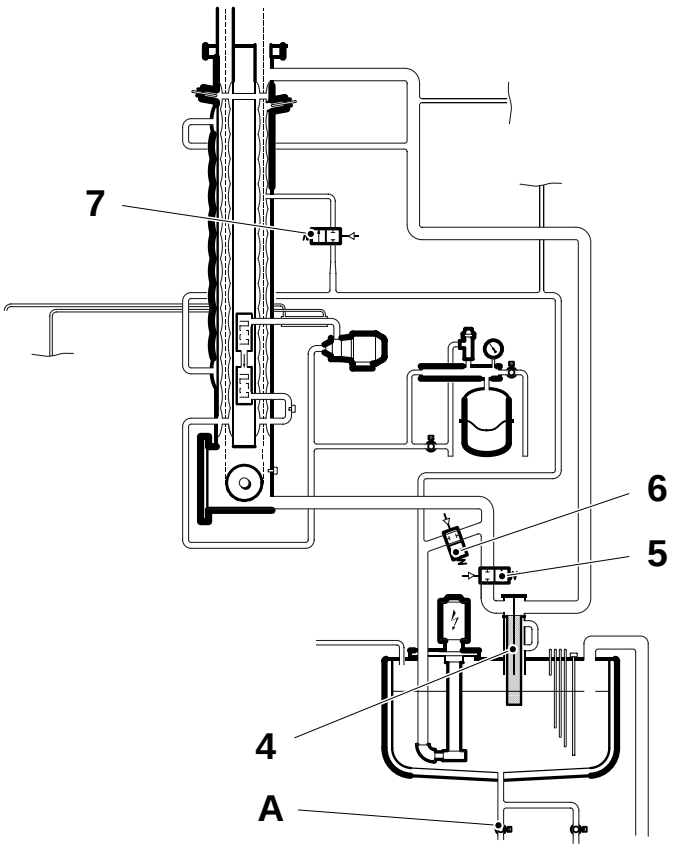

4 Peroxide filter
5 Draining valve
6 Filling valve
7 Peroxide bath top filling valve

(Cont'd)

2.2B3024B01en.fm

(Cont'd)



WARNING!

Passivation

Chemical products!
Acid. Follow the Safety precautions.

r) Passivate the hydrogen peroxide system using approx. **45 litres** of **33%** Nitric acid (HNO_3) at room temperature.

s) Fill the tank with **33%** of nitric acid (HNO3).

t) Run the pump for **2 hours**.

u) After running the pump for **1 hour 30 minutes**, close the filling valve (6) and the peroxide bath top filling valve (7).

v) Open draining valve (5) to rinse the peroxide filter (4) and check the peroxide filter (4).

w) Empty the peroxide tank (**point A**).

x) Fill the peroxide tank with drinking water and rinse continually for **5 minutes** until the pH-value of the water coming out is not more than **0.5 units lower** than that of the water coming in.

y) After the last water rinse, rinse **once more** by circulating distilled water for **five minutes**.

z) Fill the tank with hydrogen peroxide. Test-run the machine and check the hydrogen peroxide concentration, see the *Operation Manual*.

Note! During the first 24 hours after passivation, check the hydrogen peroxide concentration more frequently than normal.

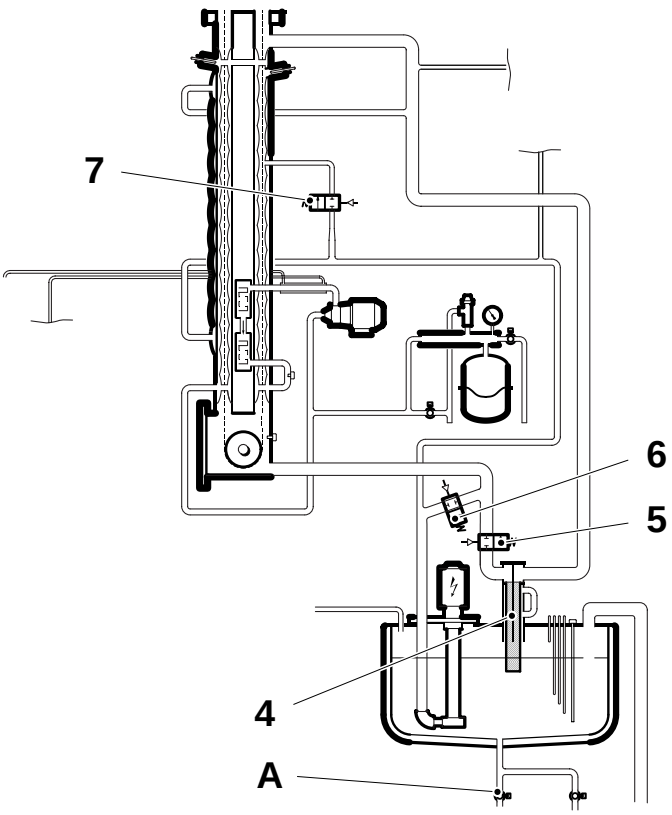

4 Peroxide filter
5 Draining valve
6 Filling valve
7 Peroxide bath top filling valve

2.5.1 Peroxide pipe

2.5.1-1 Peroxide pipe - check

SPC reference	1282895-0100



WARNING!

Hydrogen peroxide!
Follow the Safety precautions.

Check that the strainer (1) is not dirty.
Clean or change it as required, see *2.5.1-2 Peroxide pipe - clean strainer*.

Checking during Production

a) Turn the air and the mains power on.

b) Check the pipe connections for any peroxide leakages.
If there are leaks, change the gaskets as required (indicated by the arrows).

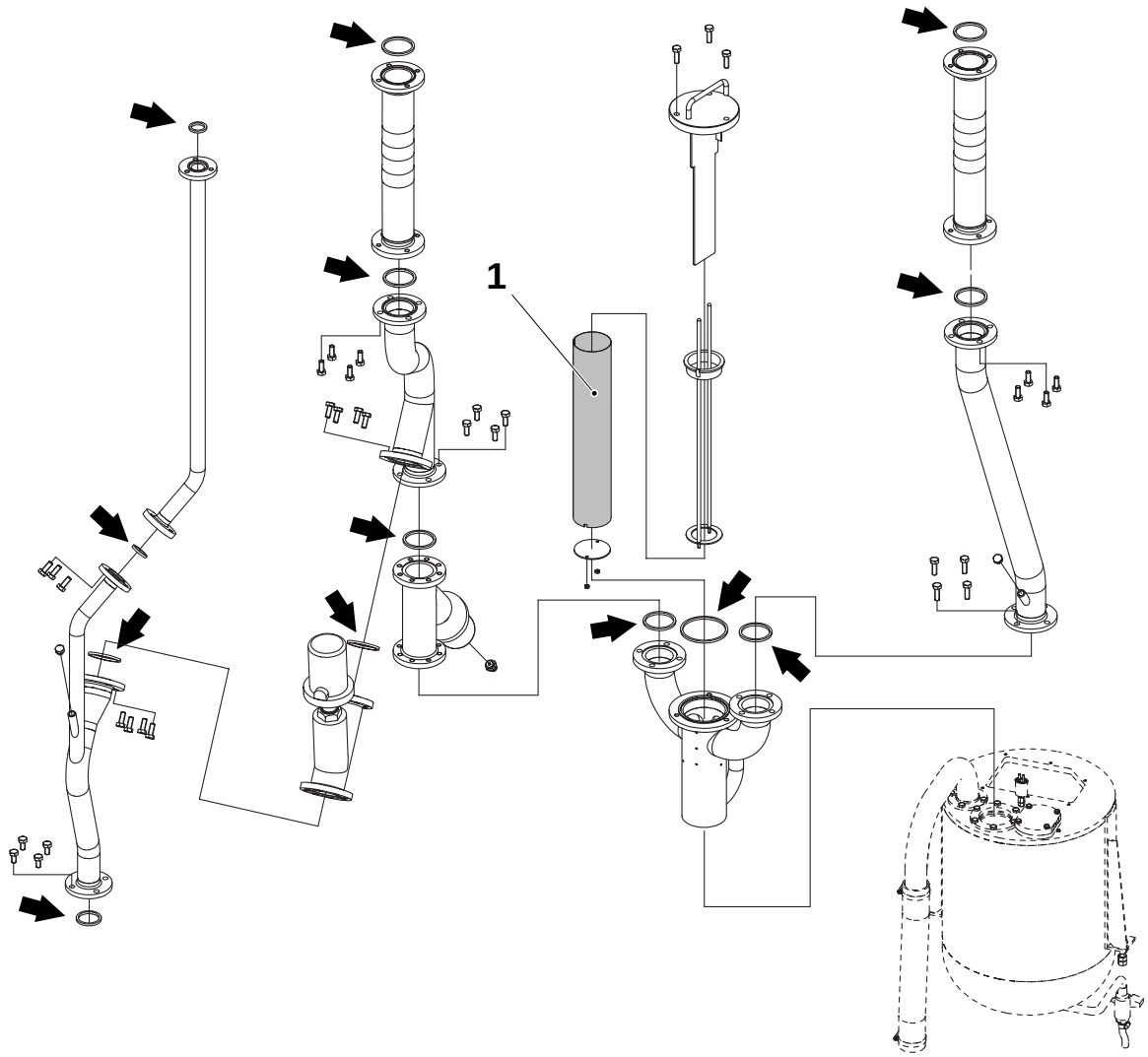

1 Strainer

0-Series

2.2B3024B01en.fm

2.5.1-2 Peroxide pipe - clean strainer

SPC reference	1282895-0100

WARNING!

Hydrogen peroxide!
Follow the Safety precautions.

a) Remove the screws (1).
b) Lift up the filter handle (2) and all the filter assembly.
c) Clean the filter completely in fresh water and, if needed, blow dry with compressed air.
d) Check the gasket (3) and change it as required.
e) Remove the nuts (4) and the lid (5).
f) Remove the strainer (6) from the bracket (7) and change it as required.
g) Assemble in the reverse order.

Note! Fold the lower edge of the strainer (4) under the bracket (7) when assembling the filter unit.

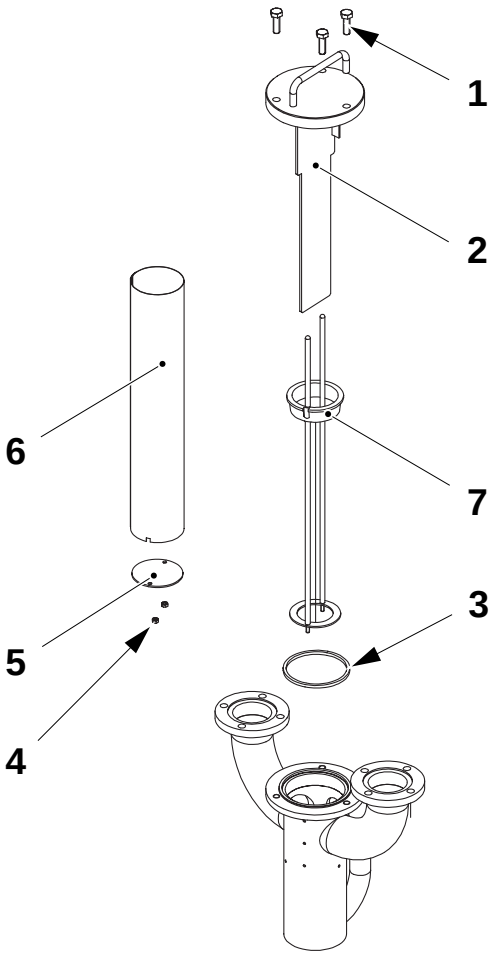

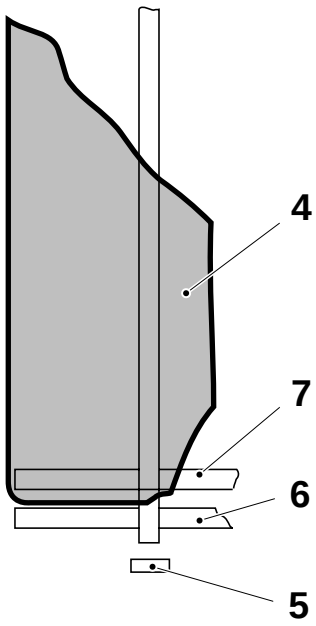

1 Screw
2 Handle
3 Gasket
4 Nuts
5 Lid
6 Strainer
7 Bracket

2.2B3024B01en.fm

0-Series

2.5.2 Dilution tank

2.5.2-1 Dilution tank - check

Machine status	**Production**
SPC reference	1282896-0100



WARNING!

Hydrogen peroxide!
Follow the Safety precautions.

Check that:

- The drain hole (1) is not clogged.
  If required, clean the hole using a proper tool bar.
- The outlet hoses (2) and (3) do not leak, see arrows.
- The cover (4) does not leak.
- The safety lid (5) is not stuck.
  Make sure that it moves freely, lifting by hand.
  If required, remove the safety lid (5) and clean it with water.

Note! To ensure the outlet concentration of peroxide is less than **1%**, run the machine for 24 hours in production before emptying the dilution tank.

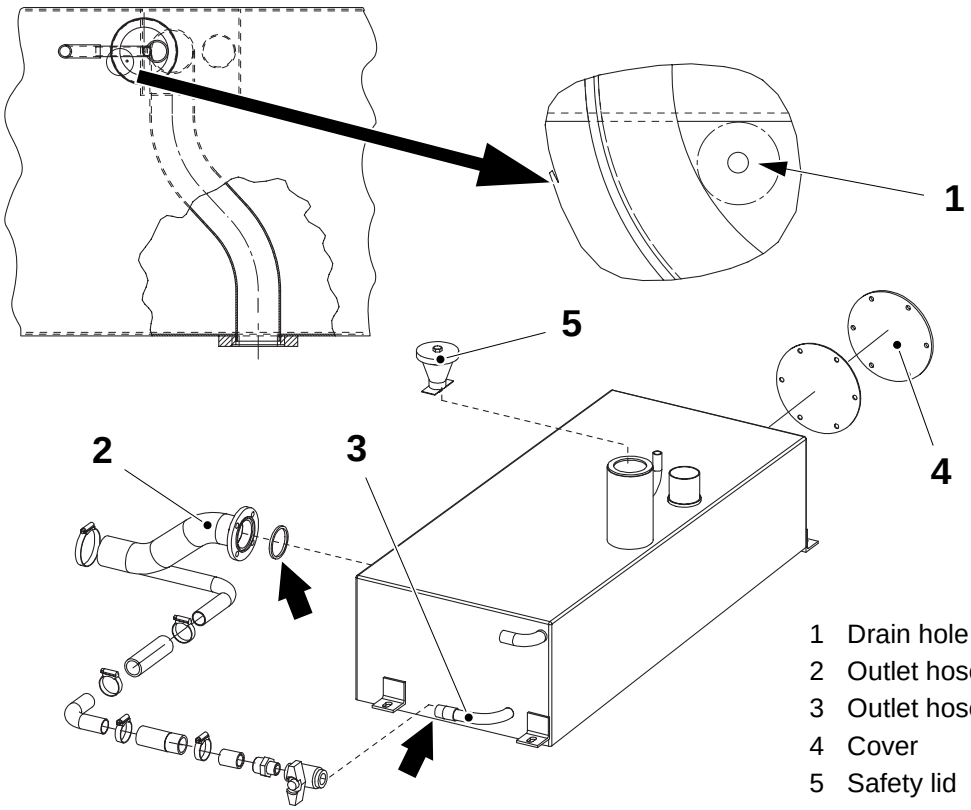

1 Drain hole
2 Outlet hose
3 Outlet hose
4 Cover
5 Safety lid

0-Series

2.2B3024B01en.fm

2.5.3 Cabinet

2.5.3-1 Cabinet - check

SPC reference	1317103-0100



WARNING!

Hydrogen peroxide!
Follow the Safety precautions.

Check that:

- The hoses (1), the non return valve (2) and the gasket (3) do not leak
  Change the non return valve (2) and the seal (3) as required, see *2.5.3-2 Cabinet - change gasket and non return valve*.
- The filter (4) is not dirty.
  Clean or change as required, see *2.5.3-3 Cabinet - clean filter*.

Checking during Production

Check that the weight (5) is properly installed on the peroxide container (6) and that it does not leak.

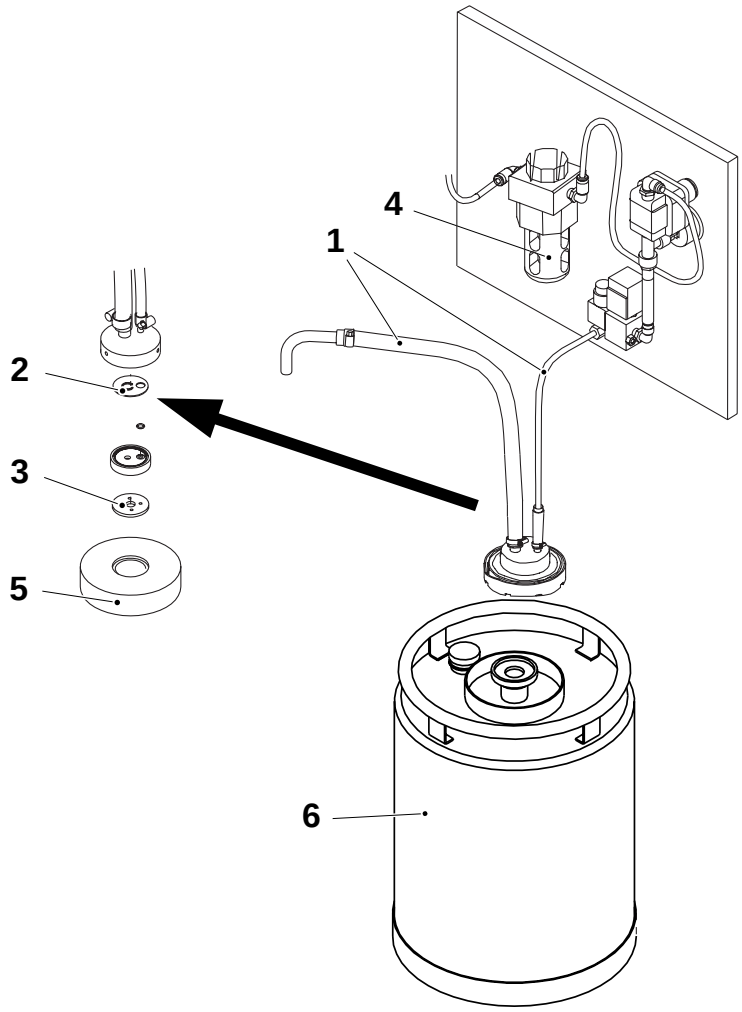

1 Hoses
2 Non return valve
3 Gasket
4 Filter
5 Weight
6 Peroxide container

2.2B3024B01en.fm

0-Series

2.5.3-2 Cabinet - change gasket and non return valve

SPC reference	1317103-0100



WARNING!

Hydrogen peroxide!
Follow the Safety precautions.

a) Unscrew the two screws (1).
b) Remove the weight (2).
c) Remove the gasket (3) and change it as required.
d) Remove the washer (4) from the weight (2).
e) Remove the non-return valve (5) from the attachment (6). Change the non-return valve as required.
f) Assemble in the reverse order.

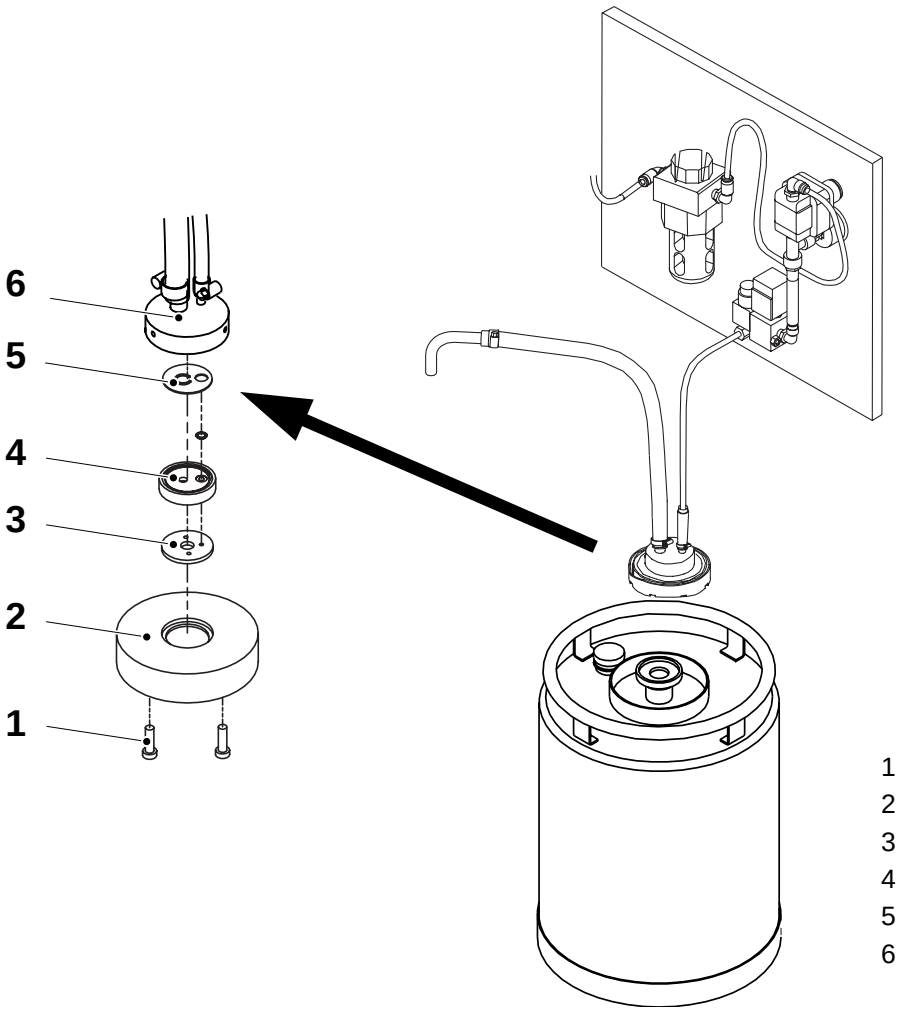

1 Screw
2 Weight
3 Gasket
4 Washer
5 Attachment
6 Non return valve

0-Series

2.2B3024B01en.fm

2.5.3-3 Cabinet - clean filter

Consumables - soap	
Tools - pliers	
SPC reference	1317103-0100



WARNING!

Hydrogen peroxide!
Follow the Safety precautions.

a) Remove the filter cover (1).
b) Remove the reservoir (2). Change the O-ring as required.
c) Clean the reservoir (2) with soapy water and rinse with plenty of water.
d) Using a pair of pliers, remove and clean the filter insert inside the reservoir (2). Change it as required.
e) Refit the reservoir (2), making sure the O-ring is fitted correctly.
f) Refit the filter cover (1).

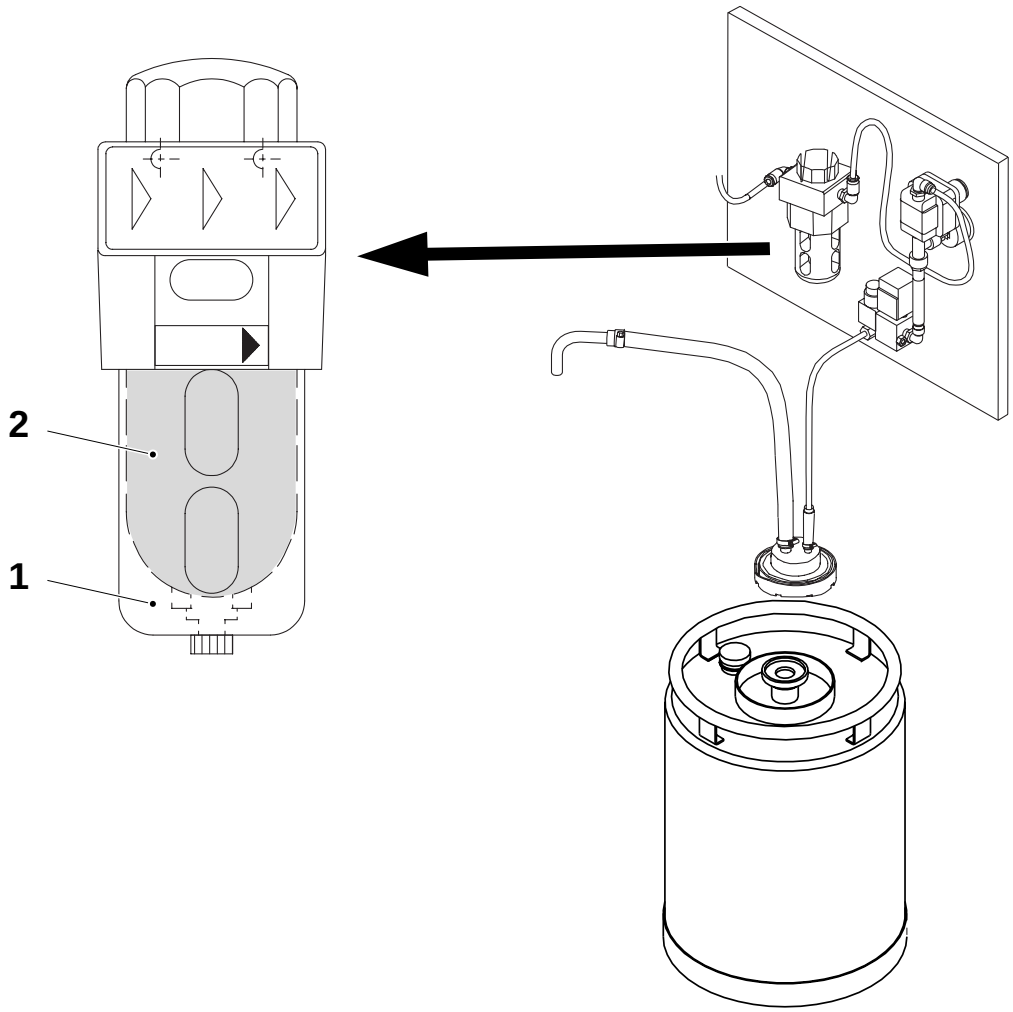

1 Cover
2 Reservoir

2.2B3024B01en.fm

0-Series

2.5.4 Peroxide pump

2.5-4-1 Peroxide pump - change pump

SPC reference	1317102-0100



WARNING!

Hydrogen peroxide!
Follow the Safety precautions.

a) Drain the hydrogen peroxide and rinse carefully with deionized water.
b) Label and disconnect the electrical connections to the motor (1).
c) Remove the screws (2) at the flanges.
d) Remove the pipe (3).
e) Remove the screws (4).
f) Lift and change the motor (1) with the pump.
g) Assemble in the reverse order.

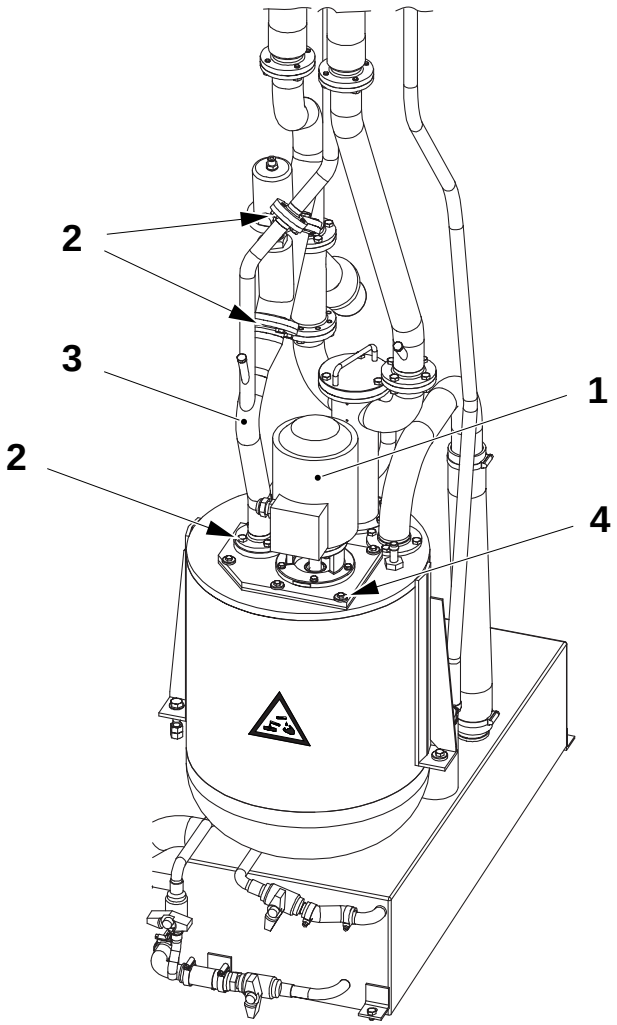

1 Motor
2 Screw
3 Pipe
4 Screw

0-Series

2.2B3024B01en.fm

2.5.4-2 Peroxide pump - overhaul pump

SPC reference	996388-0400

WARNING!

Hydrogen peroxide!
Follow the Safety precautions.

a) Remove the peroxide pump, see *2.5-4-1 Peroxide pump - change pump*.
b) Unscrew the screws (1) and remove the pipe (2).
c) Remove the O-rings (3) and (4) and change them as required.

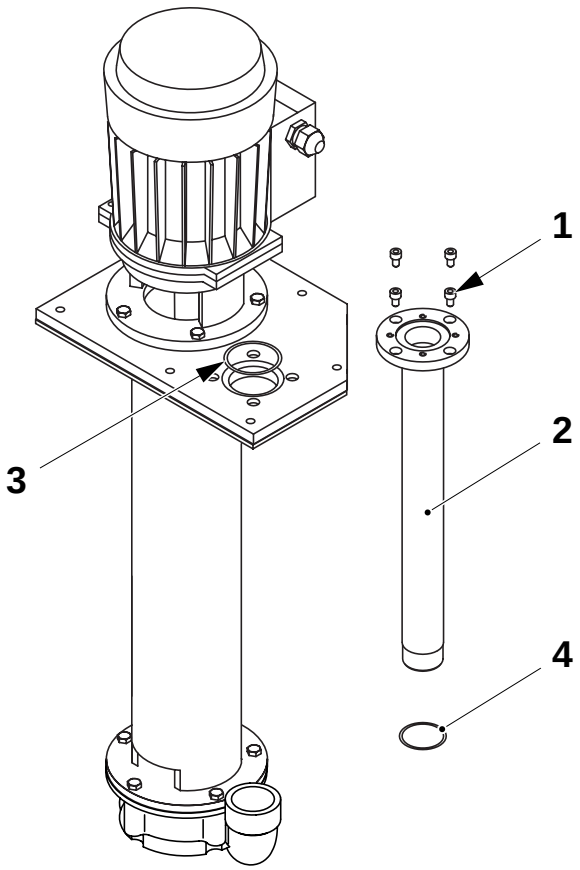

1 Screw
2 Pipe
3 O-ring
4 O-ring

(Cont'd)

2.2B3024B01en.fm

(Cont'd)

Note! Mark the position of the pump housing (5) on the extension pipe (6).

d) Remove the screws (7) and the nuts (8). Remove the pump housing (5).
e) Change the bushing (9).
f) Remove the screw (10) and the washer (11).
g) Pull out the sleeve (12) and change it as required.
h) Remove the impeller (13) and change it as required.

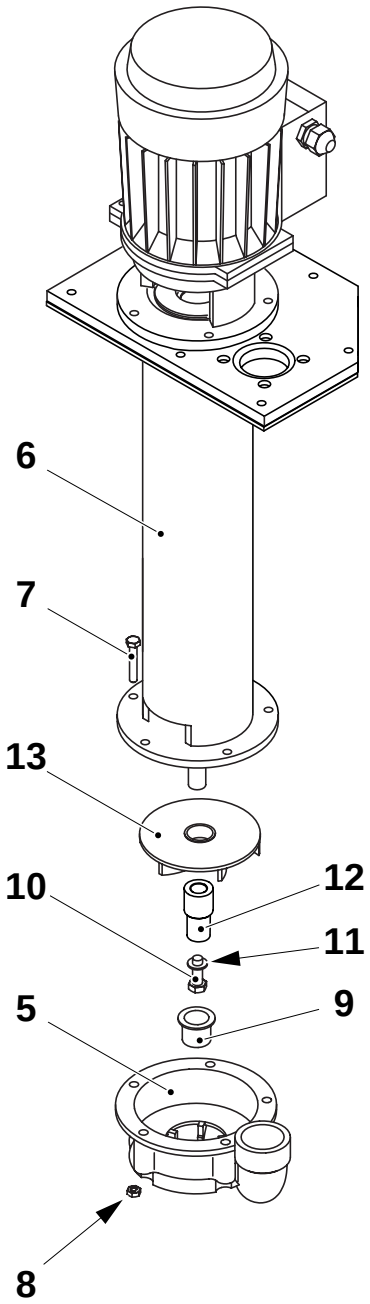

5 Pump housing
6 Extension pipe
7 Screws
8 Nuts
9 Bushing
10 Screw
11 Washer
12 Sleeve
13 Impeller

(Cont'd)

2.2B3024B01en.fm

(Cont'd)

Note! Mark the position of the motor (15) on the extension pipe (6).

i) Remove the screws (14) and pull out the motor (15) with the shaft (16).

j) Unscrew the screws (17) and remove the two clamps (18).

k) Check the shaft (16) for wear or damage. Change as required.

l) Unscrew the screws (19), remove the washers (20) and the flange (21).

m) Pull out and change the seal ring (22).

n) Set the impeller as required, see *2.5.4-3 Peroxide pump - set impeller*.

o) Assemble in the reverse order.

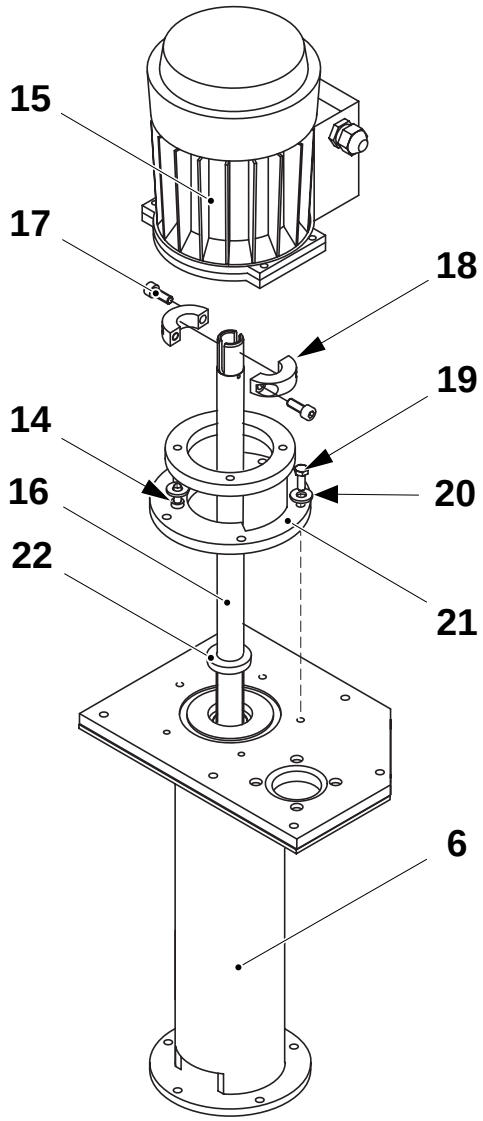

6 Extension pipe
14 Screw
15 Motor
16 Shaft
17 Screw
18 Clamp
19 Screw
20 Washer
21 Flange
22 Seal ring

2.2B3024B01en.fm

2.5.4-3 Peroxide pump - set impeller

SPC reference	996388-0400

WARNING!

Hydrogen peroxide!
Follow the Safety precautions.

a) Remove the screws (1), the nuts (2) and the pump housing (3).

b) Loosen the screws (4) in the clamp (5) so the shaft (6) moves freely.

c) Lower the shaft (6).

d) Set the distance **A** between the impeller (7) and the extension pipe (8) using a feeler gauge.

e) Place the clamp (5) on the motor (9) and tighten the screws (4).

f) Refit the pump housing (3), the screws (1) and nuts(2). Tighten the screws (1).

A = 1.0 ± 0.5 mm

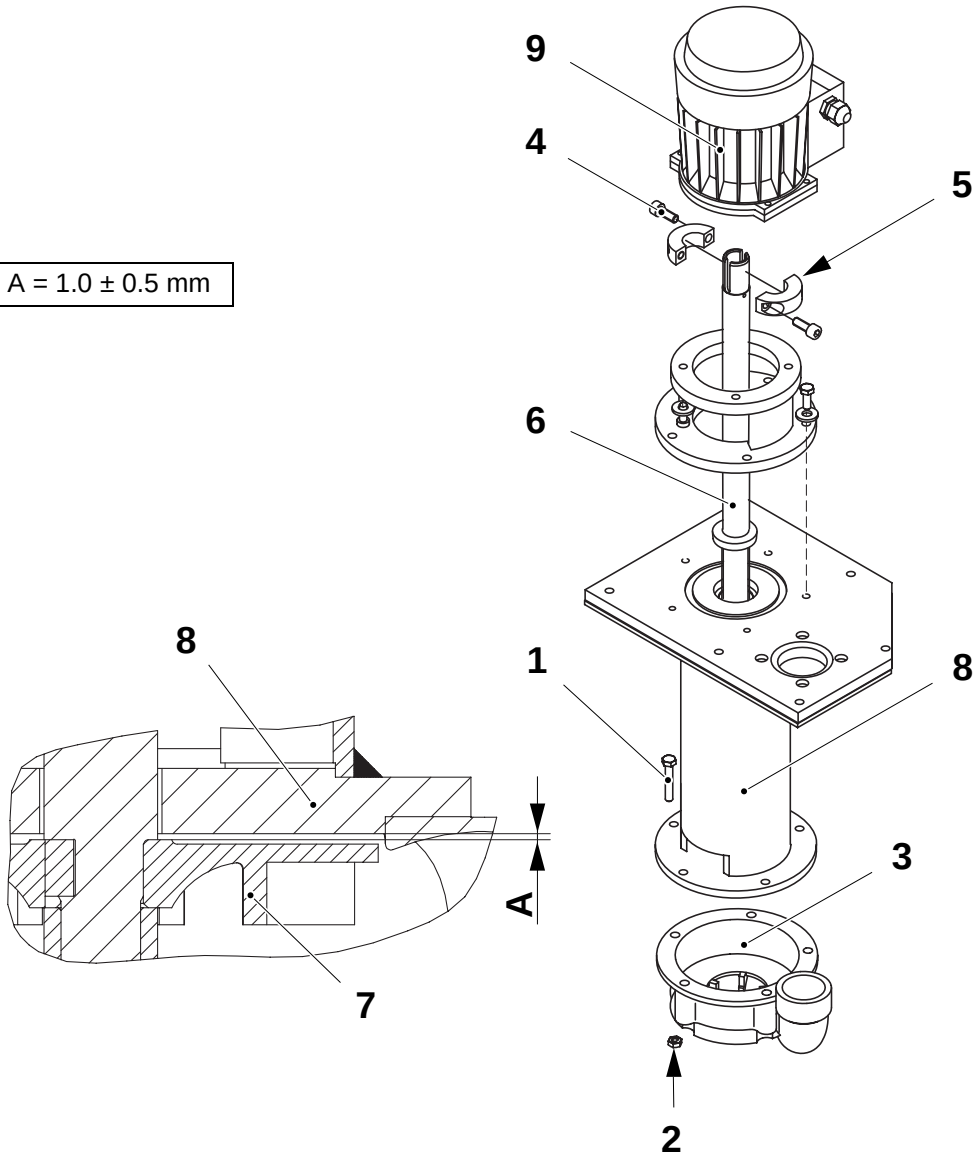

1 Screw
2 Nut
3 Pump housing
4 Screw
5 Clamp
6 Shaft
7 Impeller
8 Extension pipe
9 Motor

0-Series

2.2B3024B01en.fm

2.5.5 Peroxide tank

2.5.5-1 Peroxide tank - check

Tools - brass brush	
SPC reference	1282894-0100



WARNING!

Hydrogen peroxide!
Follow the Safety precautions.

Check that:

- The electrode (1) connections are not rusted.
  Clean the connections with a brass brush as required.
- There are no leaks at the connections (2) on the peroxide tank (2).

Change as required.

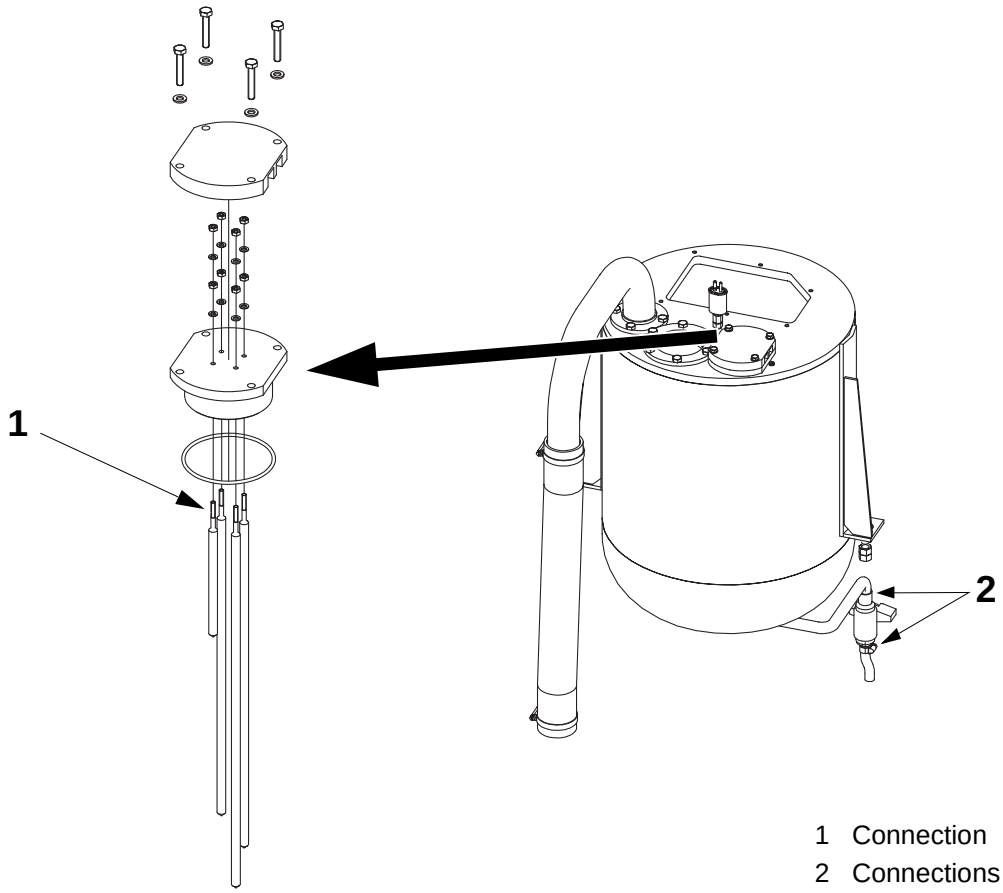

1 Connection
2 Connections

2.2B3024B01en.fm

0-Series

2.6 Ext. cleaning pipework

SPC reference	577122-0300

2.6-1 Ext. cleaning pipework - check nozzles

Machine status	**External Cleaning**
SPC reference	577122-0300

Check that all the nozzles, see arrows, rotate easily.

Check that all the nozzles are not clogged and are free from any cleaning solution deposit.
If required, remove the nozzles and clean or delime them.

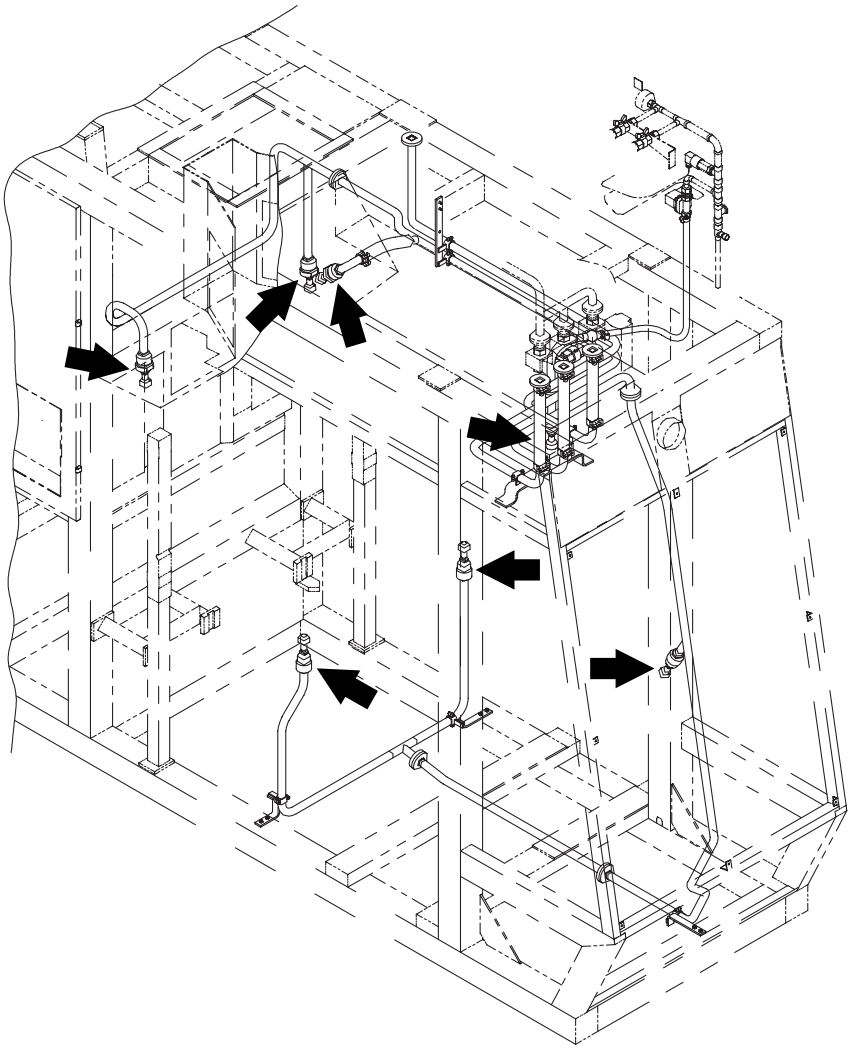

2.2B3024B01en.fm

2.7 Waste conveyor

SPC reference	577114-0300

2.7-1 Waste conveyor - check

Machine status	Mains power **On** Air **On**
SPC reference	577114-0300

a) Check the hatch (1) moves freely in both directions.

b) Check the guard plate (2) for wear on the teeth edge.

c) Check the conveyor belt (3) for damage. Change as required, see *2.7-2 Waste conveyor - change conveyor belt*.

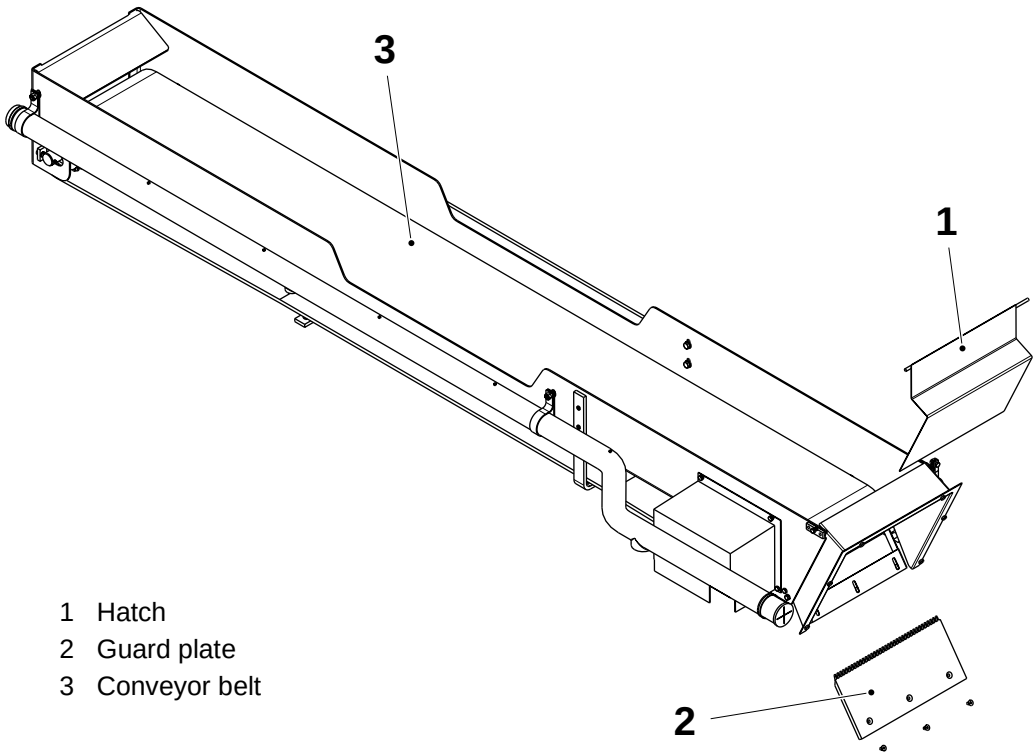

1 Hatch
2 Guard plate
3 Conveyor belt

2.2B3024B01en.fm

2.7-2 Waste conveyor - change conveyor belt

Tools - 4 mm drift	
SPC reference	577114-0300

a) Loosen the tensioning screws (1) on each side.

b) Release the tension of the conveyor belt (2).

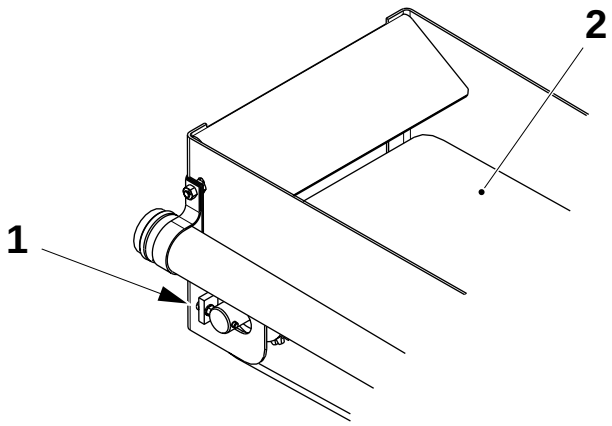

1 Screw
2 Conveyor belt

c) Using a 4 mm drift, push out one of the plastic connecting pins (3) in the conveyor belt.

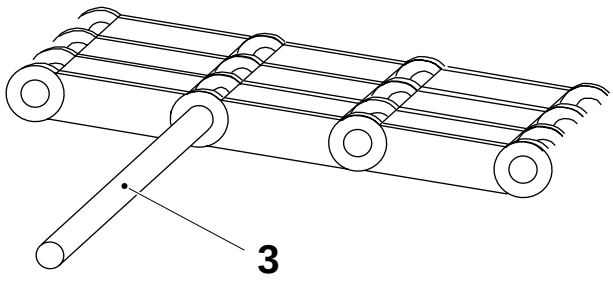

3 Pin

d) Remove the conveyor belt and change it as required.

e) Assemble in the reverse order.

2.2B3024B01en.fm

3 Drive

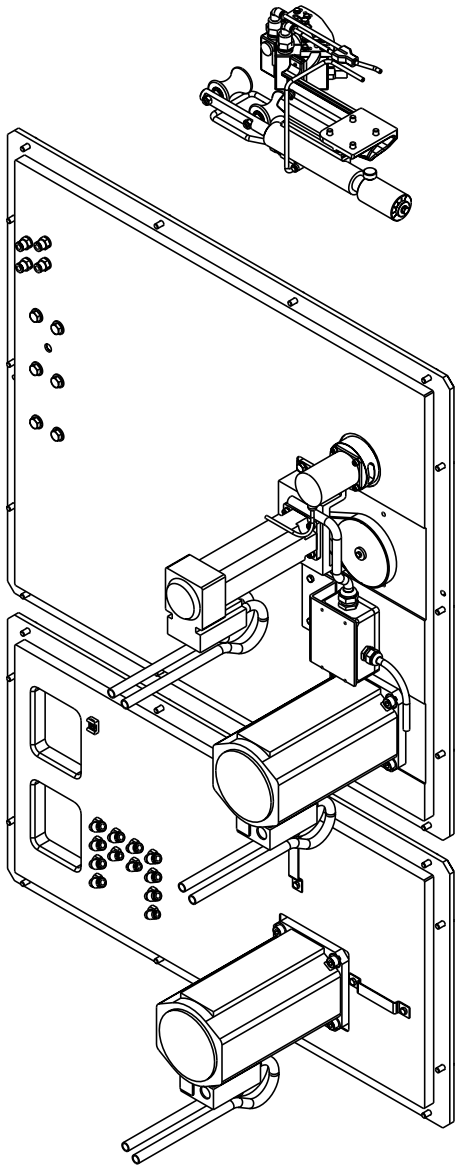

2.2B3024C01en.fm

0-Series

3-1 Drive - description

SPC reference	648523-0400

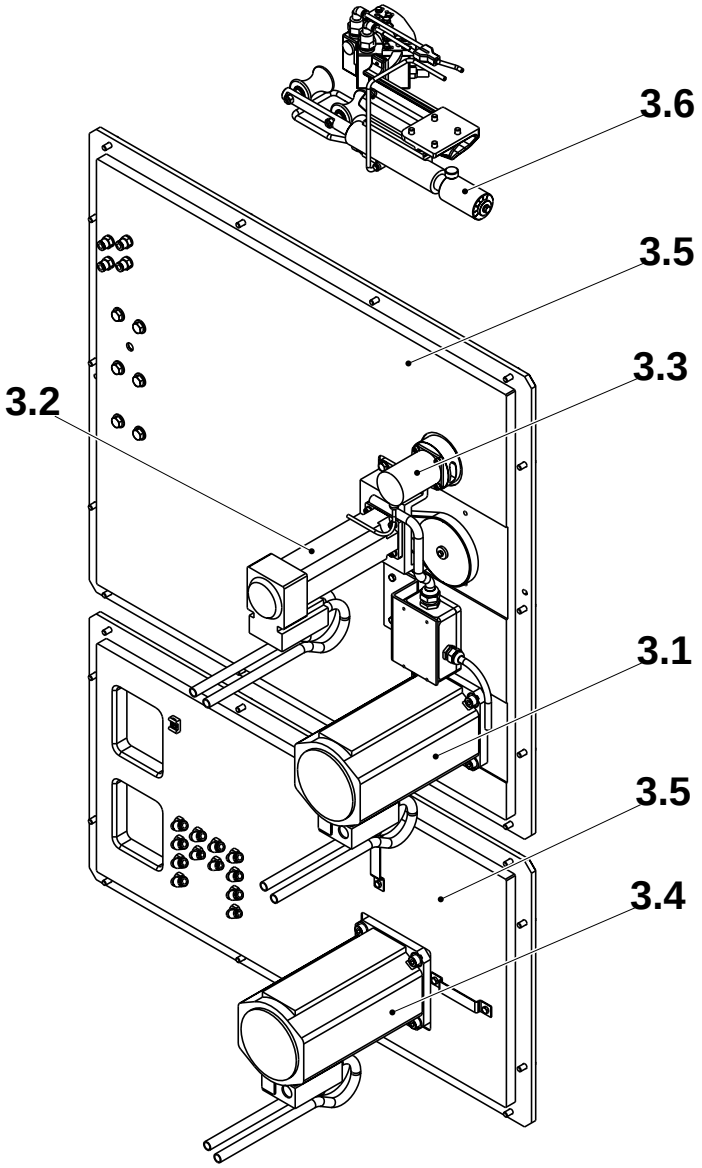

3.1 Drive jaw unit
3.2 Drive design correction
3.3 Volume adjustment
3.4 Drive final folder
3.5 Photocell unit

0-Series

2.2B3024C01en.fm

3.1 Drive jaw unit

SPC reference	1279000-0400

3.1-1 Drive jaw unit - check connections

SPC reference	1279000-0400

a) Check there is no play in the keyways on connections (1), (2), (3) and (4).

b) Check the springs are not broken on connections (2), (3) and (4). Replace as required.

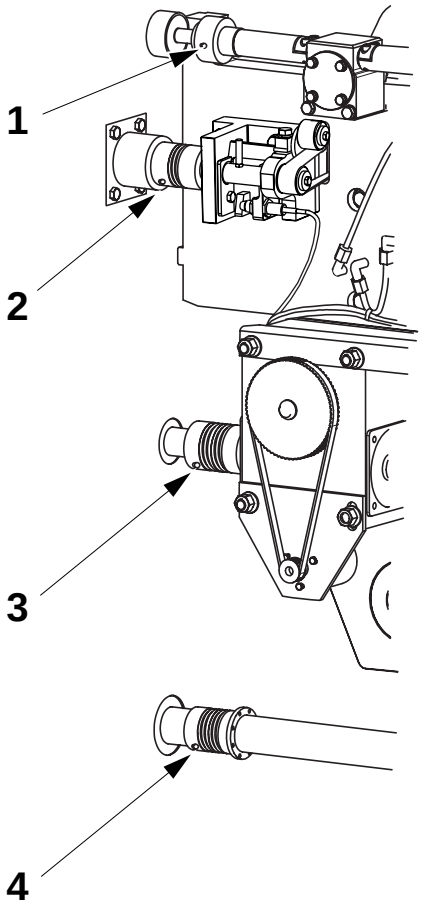

1 Connection
2 Connection
3 Connection
4 Connection

2.2B3024C01en.fm

3.1-2 Drive jaw unit - overhaul

SPC reference	1279000-0400

a) Loosen the screws (1) and then swing the jaw system open.

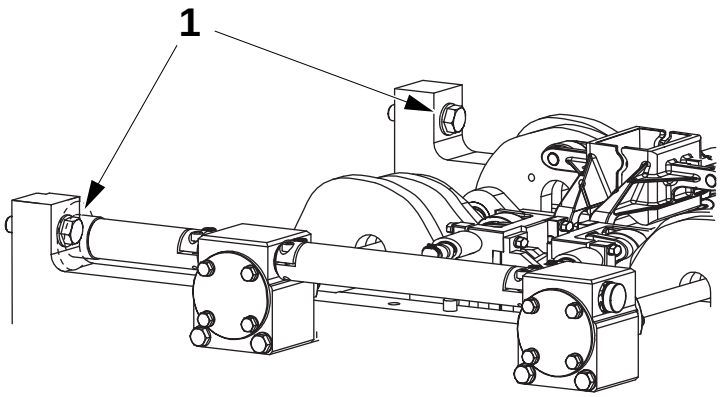

1 Screw

(Cont'd)

2.2B3024C01en.fm

(Cont'd)

b) Remove the connectors from the servo motor (4).

c) Remove the screws (2) and washers (3). Remove the servo motor (4) from the plate (5).

d) Check the servo motor (4) for wear or damage.

e) If the servo motor (4) is worn or damaged, unscrew the set screw (6) and remove the shaft (7) from the servo motor (4).

f) Fit the set screw (6) and shaft (7) on the replacement servo motor.

g) Change the sealing ring (8).

h) Fit the servo motor (4) onto the plate (5).

i) Fit the screws (2) and washers (3), and tighten the screws (2).

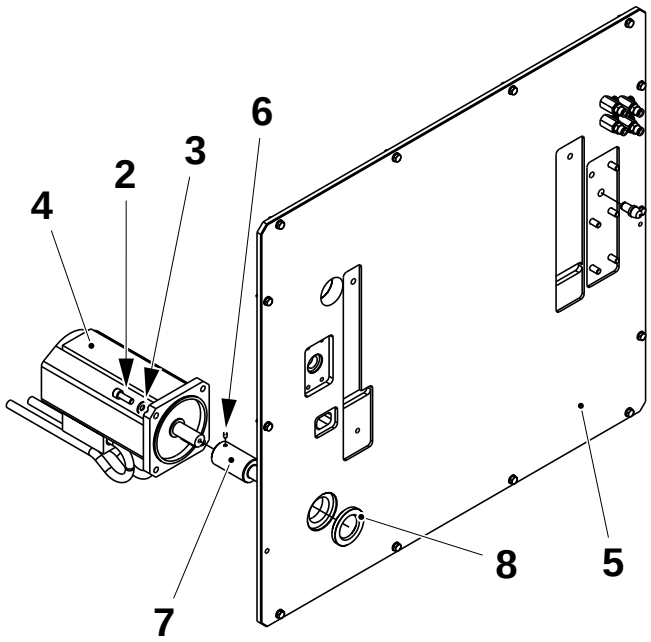

2 Screws
3 Washers
4 Servo motor
5 Plate
6 Set screw
7 Shaft
8 Sealing ring

j) Close the jaw system and tighten the screws (1).

2.2B3024C01en.fm

3.2 Drive design correction

SPC reference	577110-0100

3.2-1 Drive design correction - overhaul

SPC reference	577110-0100

a) Loosen the screws (1) and then swing the jaw system open.

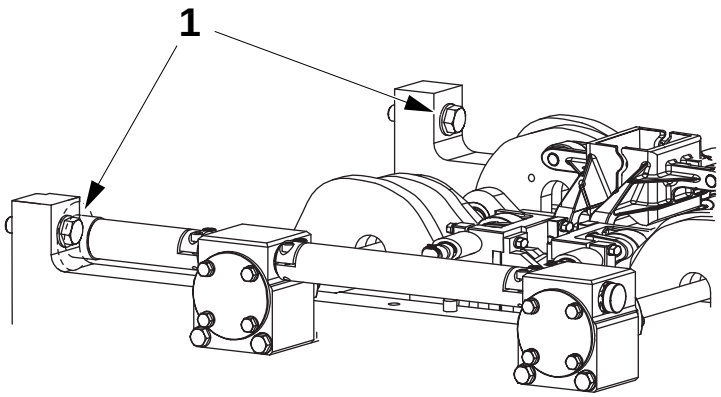

1 Screw

(Cont'd)

2.2B3024C01en.fm

(Cont'd)

b) Remove the connectors from the motor (5).

c) Remove the screws (2) and the cover (3).

d) Remove the screws (4) and the motor assembly (5) after first disconnecting it from the timing belt (10).

e) Remove the screw (6) and pulley (7), retain the key (8) for later use.

f) Remove the screws (9).

g) Check the motor (5) for wear or damage and replace if required.

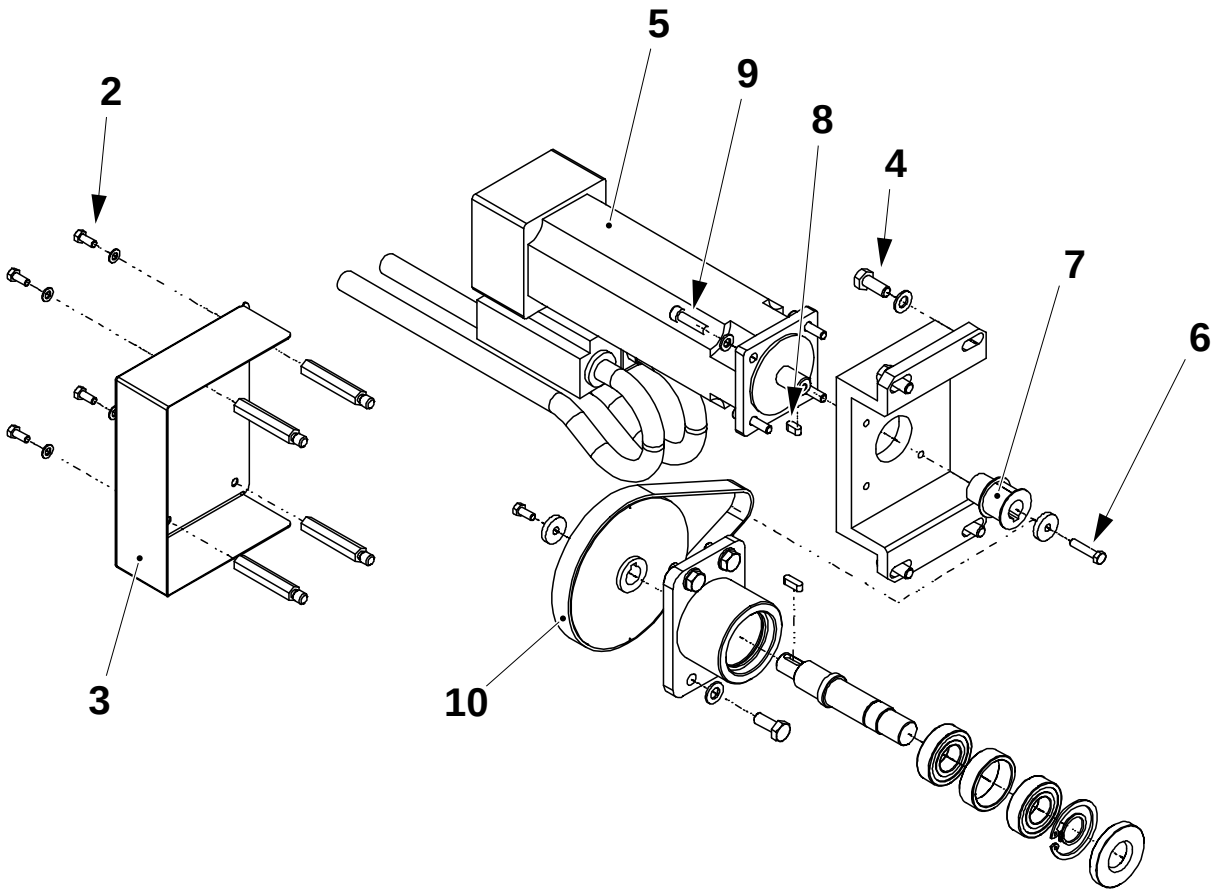

2.2B3024C01en.fm

2	Screw	7	Pulley
3	Cover	8	Key
4	Screw	9	Screw
5	Motor	10	Timing belt
6	Screw		

(Cont'd)

(Cont'd)

h) Change the timing belt (10).

i) Remove the screw (11) and the pulley (12) from the shaft (13).

Note! Retain the key for later use.

j) Remove the screws (15). Remove the housing (16) and place it in a soft-jawed vice.

k) Press out the shaft (13), then remove and change the sealing ring (17).

l) Remove the retaining rings (18) and circlip (19). Change the circlip.

m) Remove the ball bearings (20) and spacer (21). Check the ball bearings for wear or damage and replace as necessary.

n) Reassemble in the reverse order.

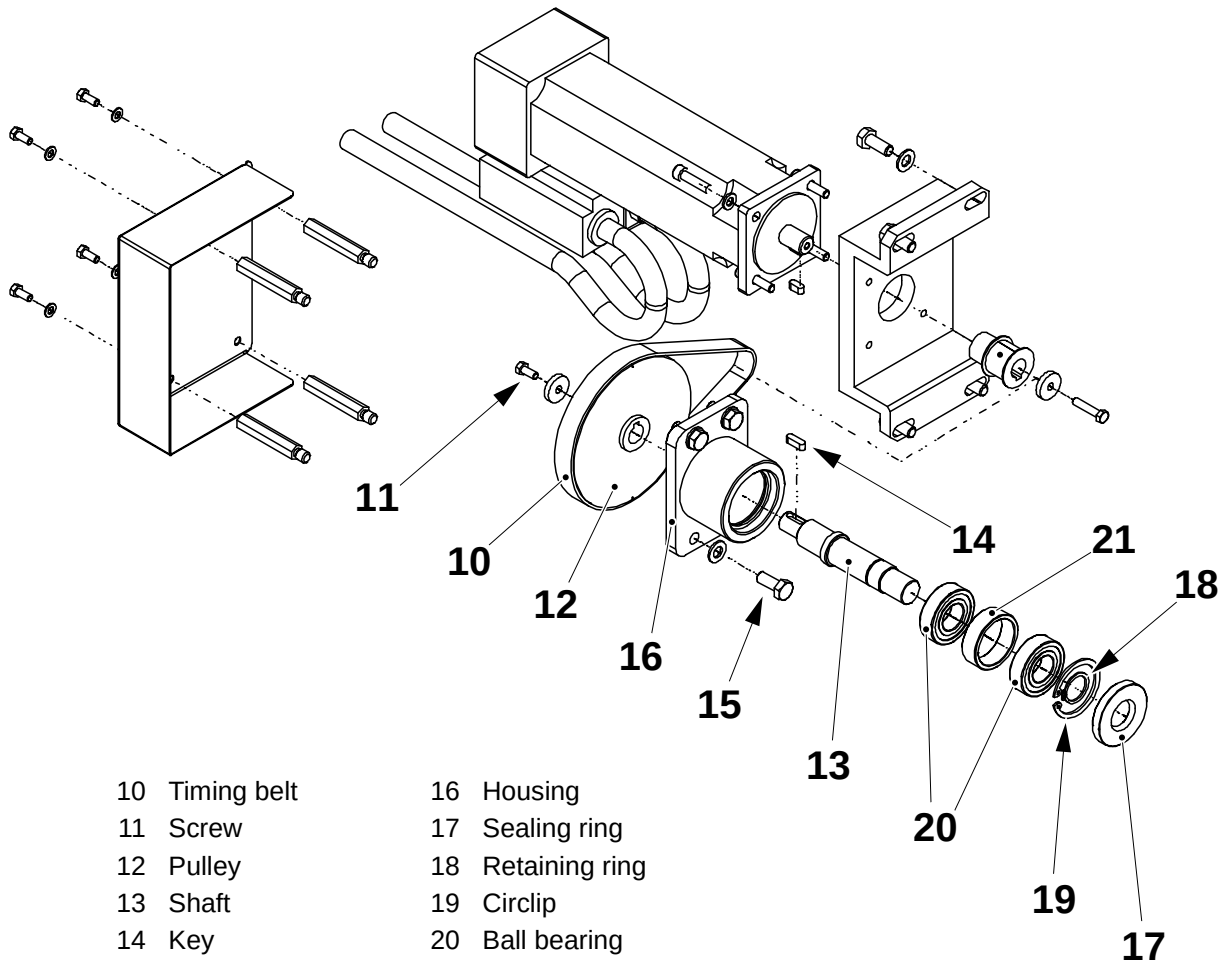

10	Timing belt	16	Housing
11	Screw	17	Sealing ring
12	Pulley	18	Retaining ring
13	Shaft	19	Circlip
14	Key	20	Ball bearing
15	Screw	21	Spacer

0-Series

2.2B3024C01en.fm

3.3 Volume adjustment

SPC reference	1260120-0100

3.3-1 Volume adjustment - stepper motor overhaul

SPC reference	1260120-0100

a) Loosen the screws (1) and then swing the jaw system open.

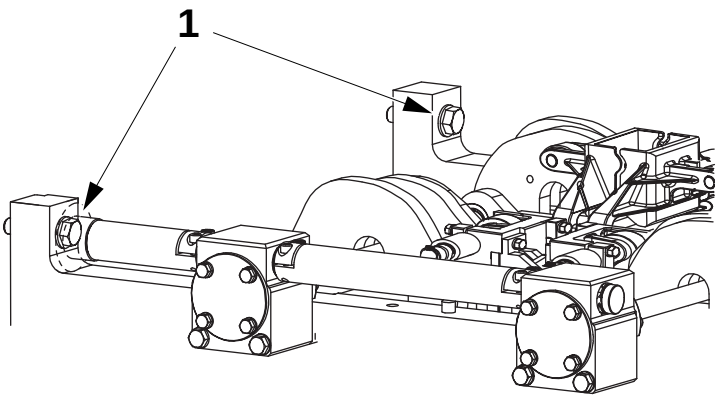

1 Screw

(Cont'd)

2.2B3024C01en.fm

(Cont'd)

b) Loosen screw (2) and then remove the coupling (3).

c) Cut the cable ties and disconnect the motor cable at the connector box end. Do not try to disconnect the cable at the motor end.

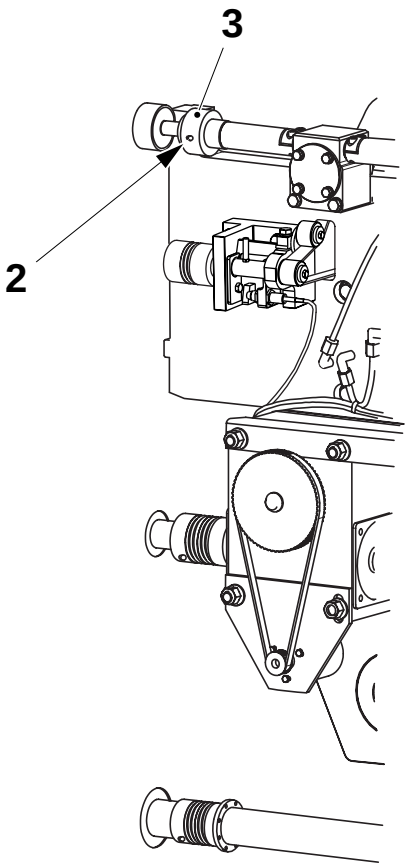

2 Screw
3 Coupling

(Cont'd)

2.2B3024C01en.fm

(Cont'd)

d) Remove the screws (4) and pull out the volume adjuster stepper motor (5) with its bushing (6) from the plate (7).

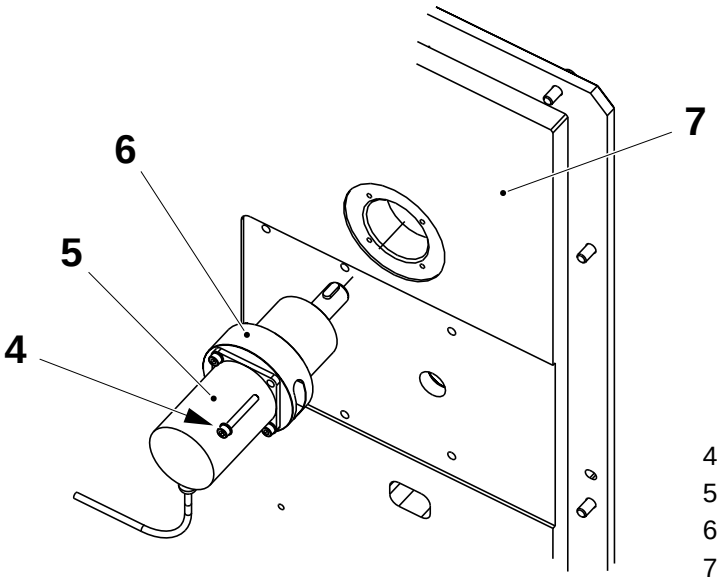

4 Screws
5 Stepper motor
6 Bushing
7 Plate

2.2B3024C01en.fm

(Cont'd)

0-Series

(Cont'd)

e) Remove the key (8) from the shaft (9).

f) Rotate the shaft (9) until the screws (10) are accessible through the slot (11).

g) Loosen the screws (10) and separate the stepper motor (5) from the bushing (6).

h) Place the bushing (6) in a soft-jawed vice with the larger end facing upwards.

i) Remove and change the circlip (12), then remove the shaft (9) upwards.

j) Change the circlip (13).

k) Push out the bearings (14) and spacer (15).

l) Change the sealing ring (16).

m) Change the bearings (14) and assemble them on the shaft with the spacer (15).

n) Refit the bearings (14) and shaft into the bushing (6), and refit the circlip (12).

o) Push the shaft (9) fully into the bushing (6), refit the stepper motor (5) and tighten the screws (10) through the slot (11).

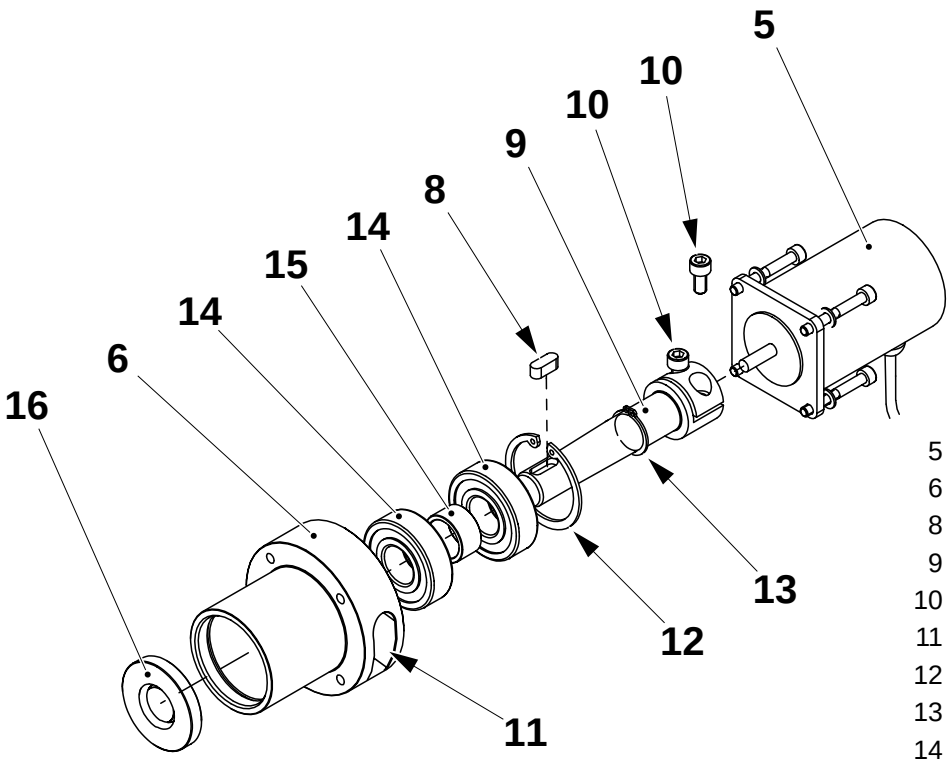

5 Stepper motor
6 Bushing
8 Key
9 Shaft
10 Screws
11 Slot
12 Circlip
13 Circlip
14 Bearings
15 Spacer
16 Sealing ring

2.2B3024C01en.fm

(Cont'd)

(Cont'd)

p) Refit the motor (5) and bushing (6) into the plate (7) and tighten the screws (4).

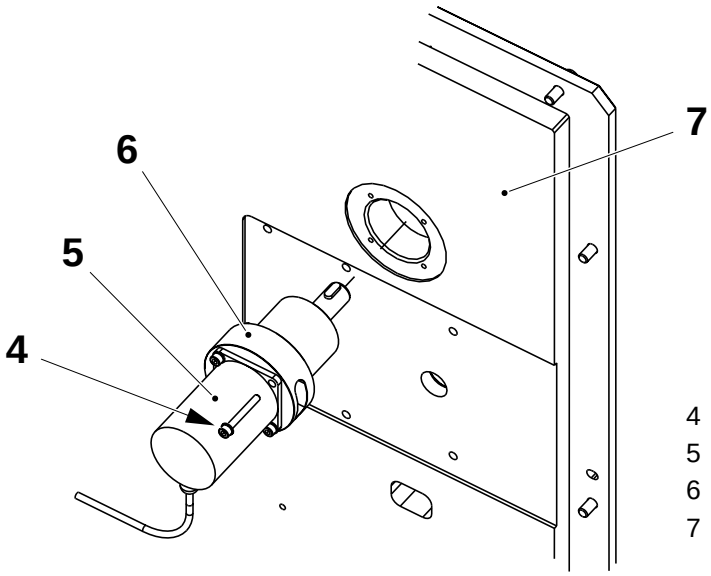

4 Screws
5 Stepper motor
6 Bushing
7 Plate

q) Refit the coupling (3) and tighten the screw (2).

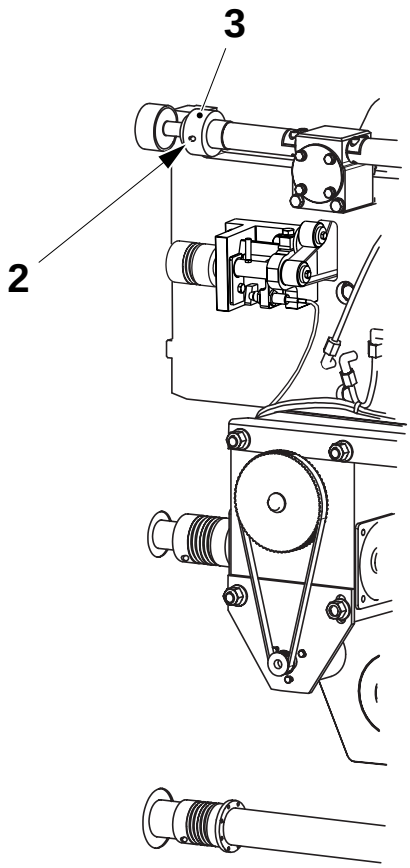

2 Screw
3 Coupling

(Cont'd)

2.2B3024C01en.fm

(Cont'd)

r) Swing the jaw system back into place.

s) Fit and tighten the screws (1).

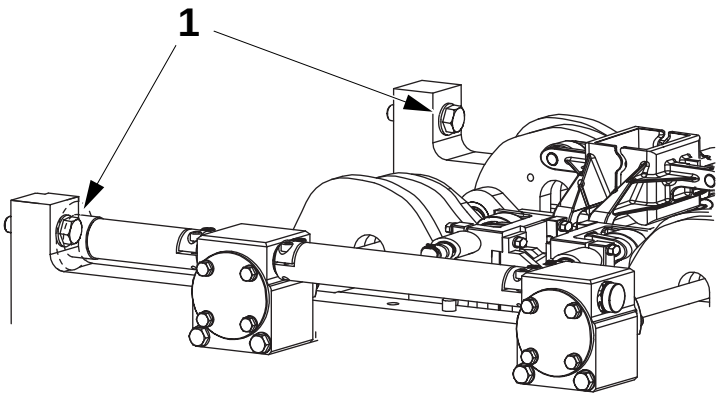

1 Screw

2.2B3024C01en.fm

3.4 Drive final folder

SPC reference	1279000-0400

3.4-1 Drive final folder - overhaul

SPC reference	1279000-0400

a) Loosen the screw (1) in the coupling (2).

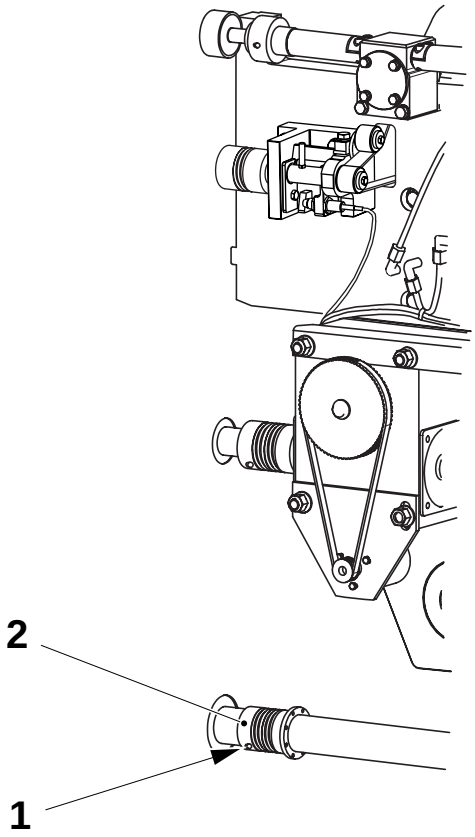

1 Screw
2 Coupling

2.2B3024C01en.fm

(Cont'd)

(Cont'd)

b) Remove the connectors from the servo motor (5).

c) Remove the screws (3) and washers (4). Remove the servo motor (5) from the plate (6).

d) Remove the connectors from the servo motor (5).

e) If the servo motor (5) is worn or damaged, unscrew the set screw (7) and remove the shaft (8) from the servo motor (5).

f) Fit the set screw (7) and shaft (8) on the replacement servo motor.

g) Replace the sealing ring (9).

h) Refit the servo motor (5) onto the plate (6).

i) Replace the screws (3) and washers (4), and tighten the screws (3).

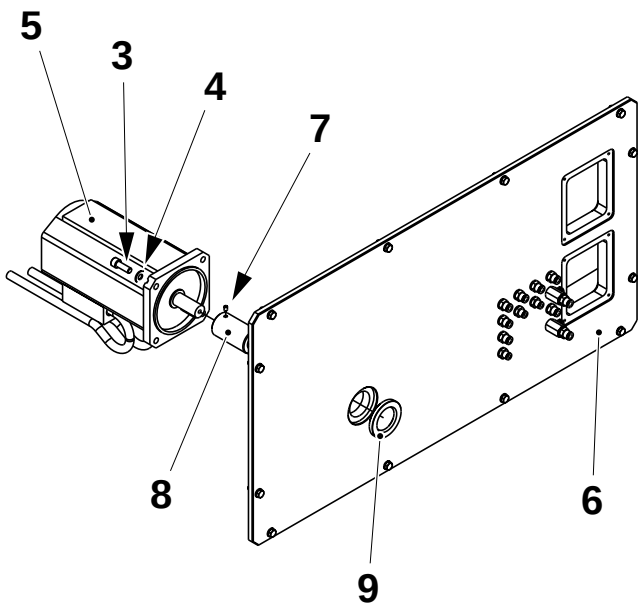

3 Screws
4 Washers
5 Stepper motor
6 Plate
7 Set screw
8 Shaft
9 Sealing ring

(Cont'd)

2.2B3024C01en.fm

(Cont'd)

j) Tighten the screw (1) in the coupling (2).

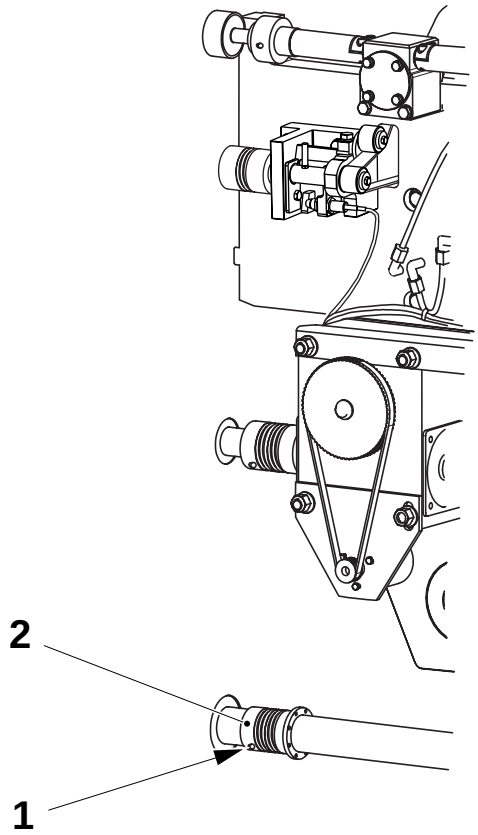

1 Screw
2 Coupling

2.2B3024C01en.fm

0-Series

3.5 Photocell unit

SPC reference	1347515-0200

3.5-1 Photocell unit - check

SPC reference	1347515-0200

Check:

- the filter (1) on the lower valve panel (2).
  If **red**, change it.
- the filter (3) on the lower valve panel (2).
  If **pink**, change it.
- the O-rings (4)
  Check for damage and air leaks. Change as required.
- the photocell lenses (5)
  Check for damage. Change as required.
  Clean the lenses with a clean cloth.

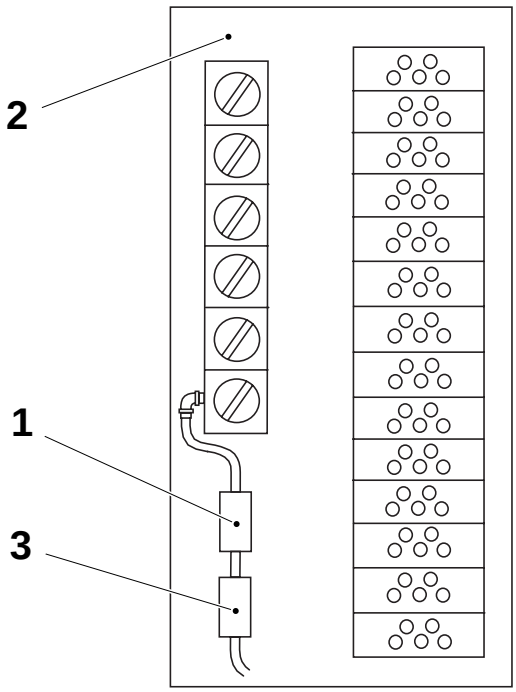

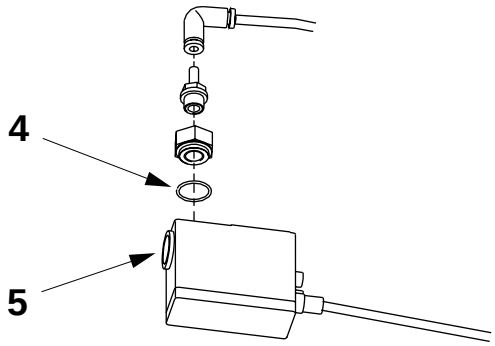

1 Filter
2 Lower valve panel
3 Filter
4 O-ring
5 Lens

0-Series

2.2B3024C01en.fm

3.5-2 Photocell unit - set

Machine status	Mains power **On** Air **On**
Tools - template - template - template	 TP No. 1317900 TP No. 1317899 TP No. 1317849
SPC reference	1347515-0200

Alignment with jaw system

a) Hold the template TP No. 317900 (1) so the label (2) is at the top and facing the pressure jaw (3).

b) Insert the template between two open jaws at the top of the jaw system.

c) Slowly crank the jaw system by hand until the jaws close onto the template.

d) Insert templates (4) TP No. 1317899 and (5) TP No. 1317849.

e) Align the rollers (6) to the template using the adjusting screw (7).

f) Remove the templates. Do not crank the jaw system to remove the template (1) TP No. 1317900.

g) Later when the machine is running, make fine adjustments with the screw (7).

2.2B3024C01en.fm

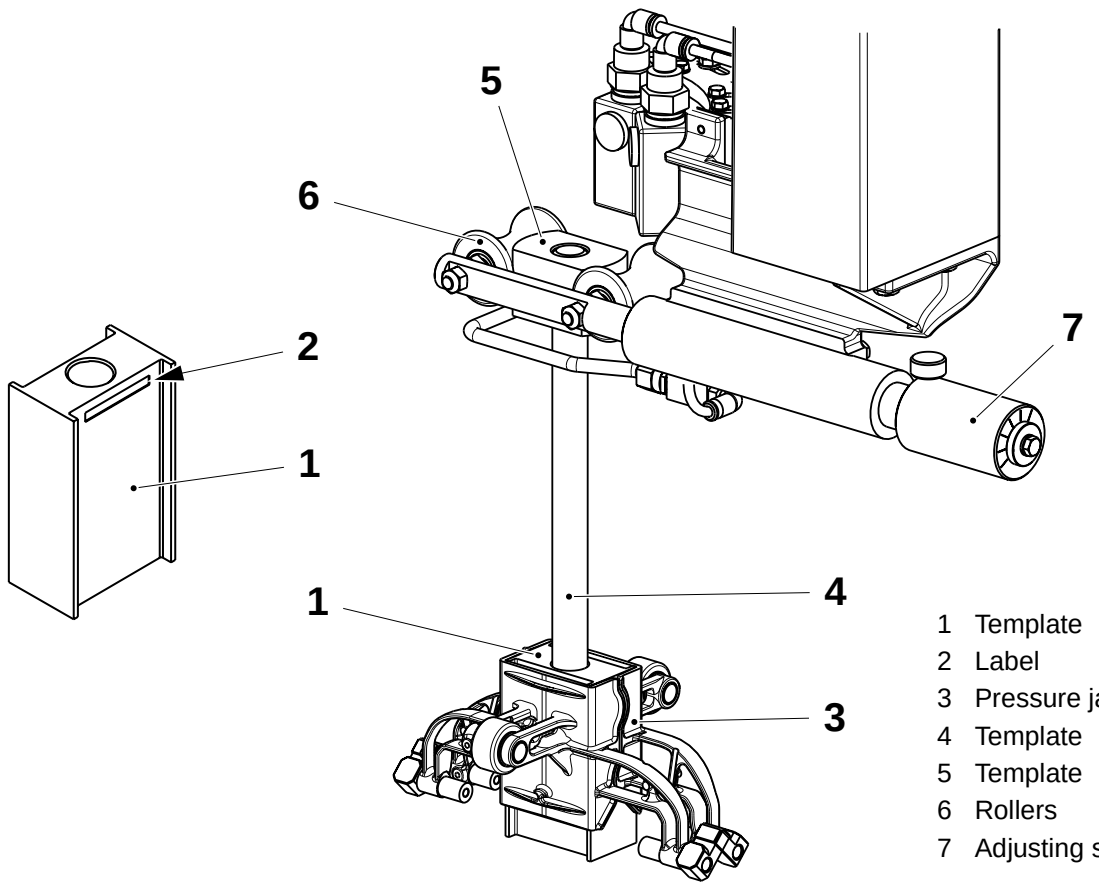

1 Template
2 Label
3 Pressure jaw
4 Template
5 Template
6 Rollers
7 Adjusting screw

(Cont'd)

(Cont'd)

Reading bar codes

h) Set the distance **A** between the photocells (1) and the sealed tube (2) using the screws (3).

i) Centre the light spots on the barcodes (4) using the screws (5).

Package	B ±1(mm)
200 B	9
250 B	9

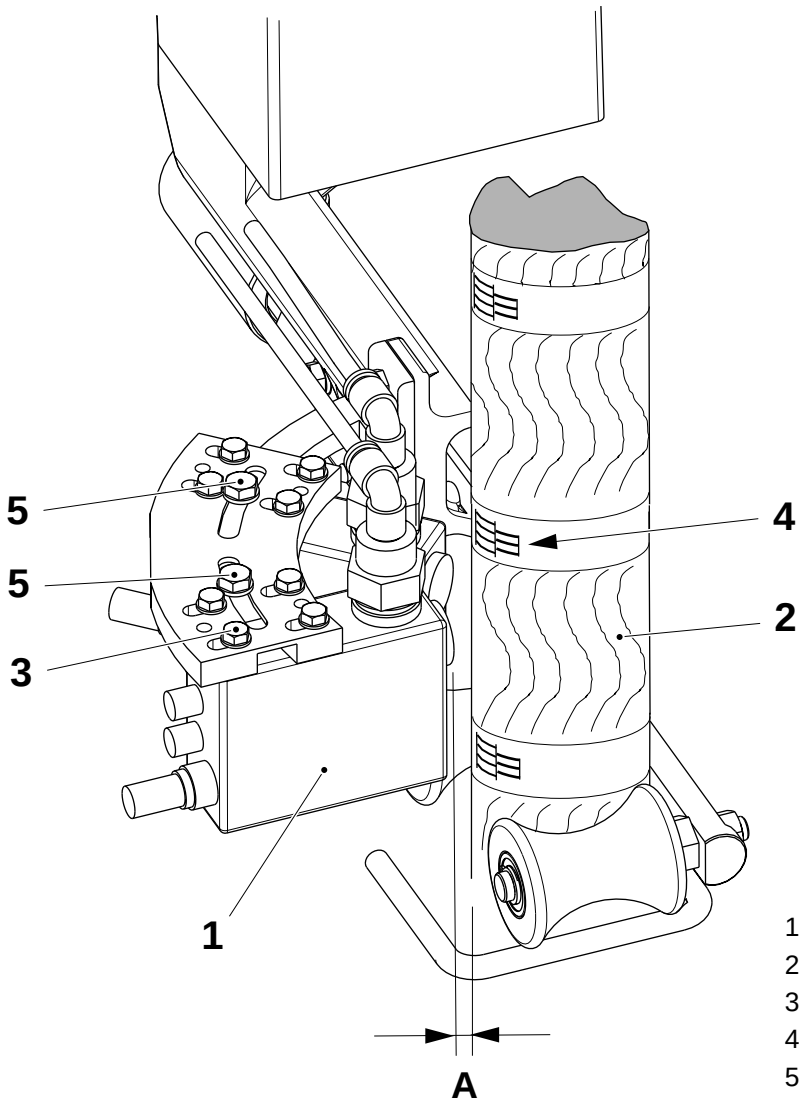

1 Photocell
2 Sealed tube
3 Screw
4 Bar code
5 Screw

(Cont'd)

2.2B3024C01en.fm

(Cont'd)

Photocell sensitivity

This calibration procedure is only necessary on new photocells. On each photocell:

a) Remove the plastic cover (1).

b) Set the selector (2) to the LH position. Each photocell has two light sources; when the first light source fails, set the selector (2) to the RH position.

c) Set the selector (3) to position "O".

d) Focus the photocell spot on the light part of the packaging material barcode.

e) Set the selector (3) to the working position **"J** ".

f) Focus the photocell spot on the dark part of the packaging material barcode.

g) If the LED (4) is **on**, turn the setting control (2) clockwise until the LED (4) is **off**.
If the LED (4) is **off**, turn the setting control (2) counter-clockwise until the LED (4) is **on**, and then clockwise until it is **off**.

h) Set the selector (3) to position "●".

i) Fit the plastic cover (1).

2.2B3024C01en.fm

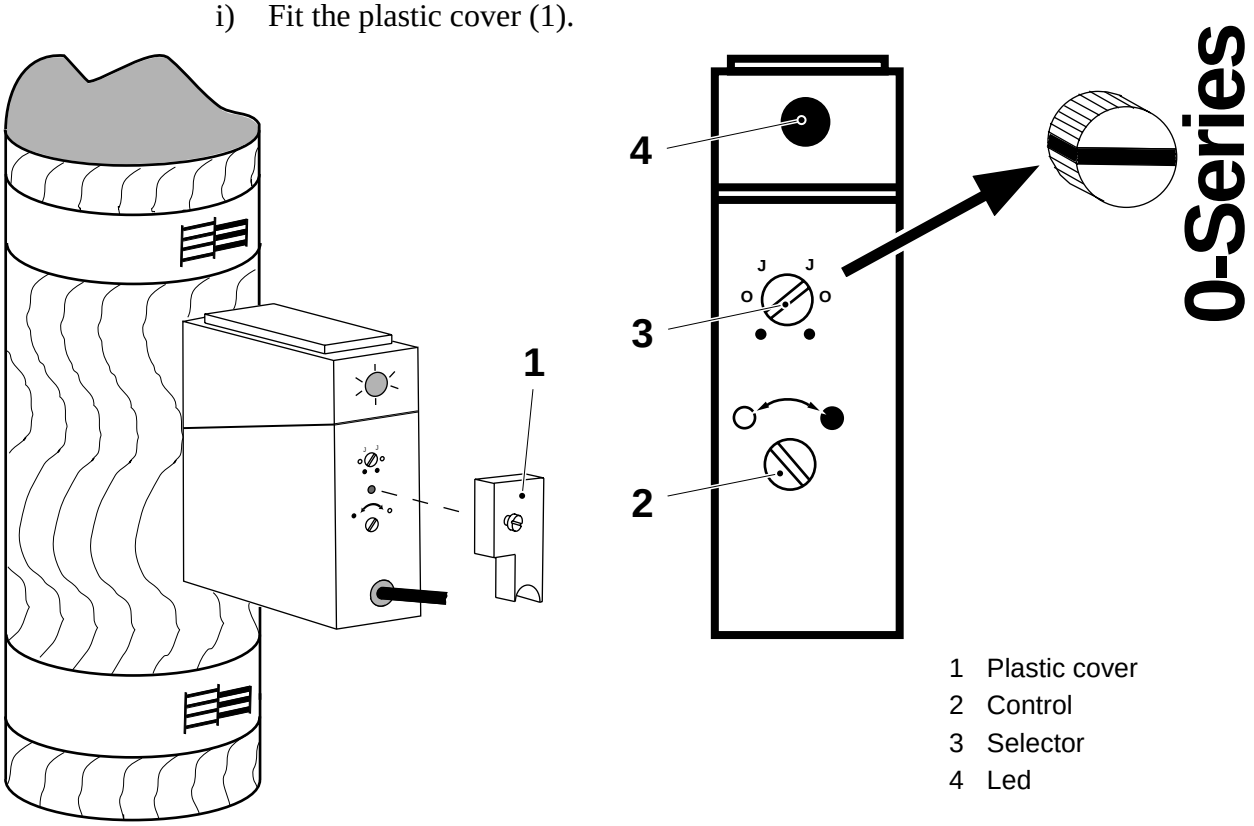

1 Plastic cover
2 Control
3 Selector
4 Led

(Cont'd)

(Cont'd)

Photocell air pressure sensitivity

Set the design correction photocell air pressure to 20 to 30 kPa (0.2 to 0.3 bar) using the pressure regulator (1) on the lower pneumatic panel.

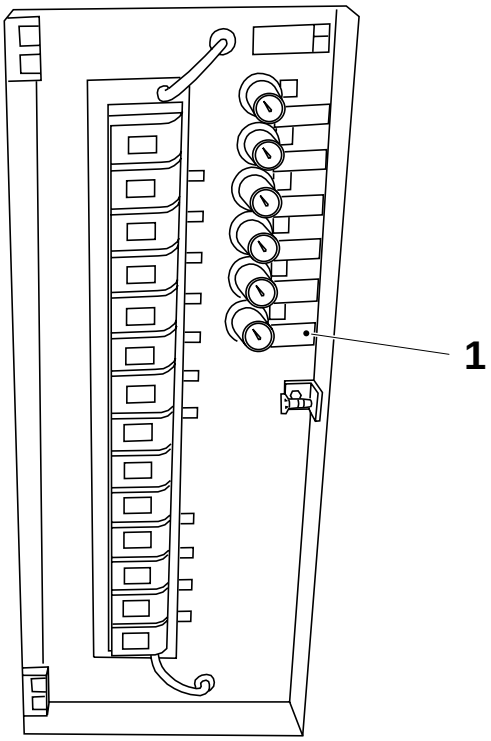

1 Pressure regulator

2.2B3024C01en.fm

4 Jaw system

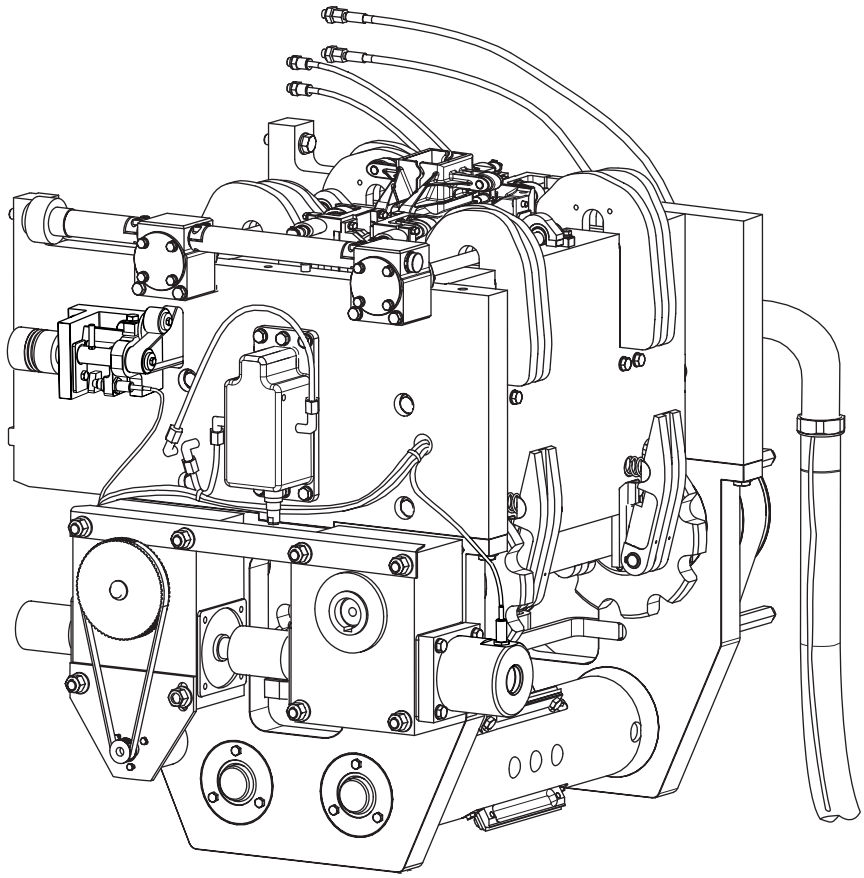

2.2B3024D01en.fm

0-Series

4-1 Jaw system - description

SPC reference	648524-0101

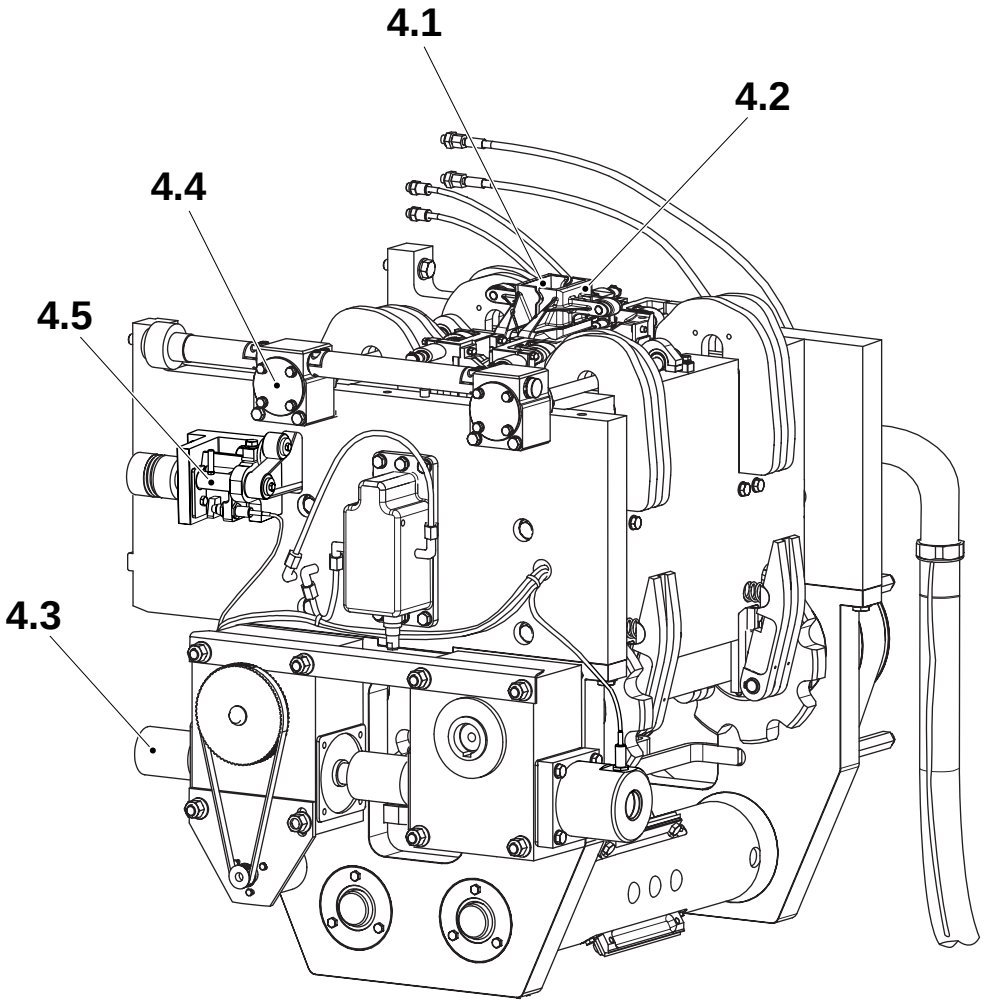

4.1 Sealing link
4.2 Pressure link
4.3 Drive unit
4.4 Volume adjustment
4.5 Design correction

2.2B3024D01en.fm

4-2 Jaw system - setting sequence

4.3-9 Drive unit - set angle encoder

4.3-3 Drive unit - set knives and cutting belt tension

4.5-4 Design correction - set

2.2B3024D01en.fm

4-3 Jaw system - disassembly and reassembly

SPC reference	648524-0101

a) Remove the two screws (1) holding the jaw system to the bulkhead. Then swing the jaw system away from the bulkhead.

b) Remove the knife holder and the cutting dolly holder, see *4.3-6 Drive unit - remove knife holder* and *4.3-8 Drive unit - remove cutting dolly holder*.

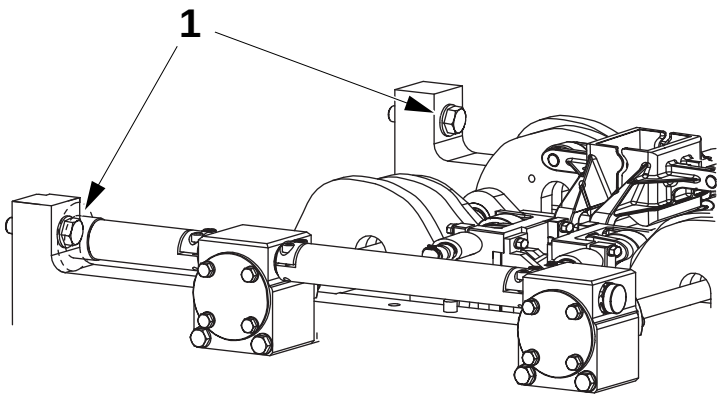

1 Screws

c) To release the chain tension, insert four M8 x 45 hexagonal socket head screws into the tensioner mechanism (2) and tighten them fully. Take care not to drop the bolts into the jaw mechanism.

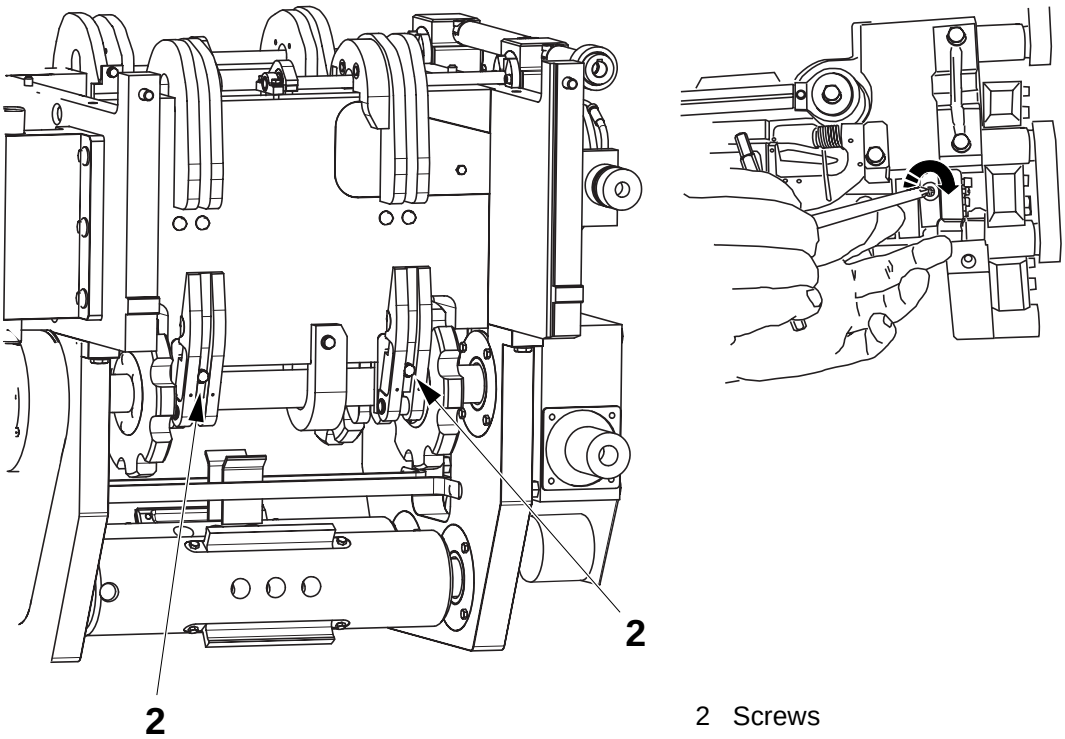

2 Screws

(Cont'd)

2.2B3024D01en.fm

(Cont'd)

d) Remove the four screws (3). Then remove the two package guides (4).

Note! To avoid having to re-time the knives, mark one pulley tooth and the chain link associated with it before removing the chain.

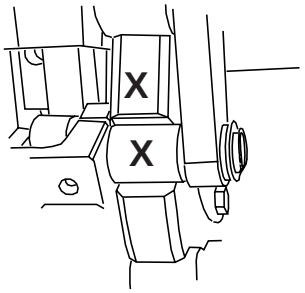

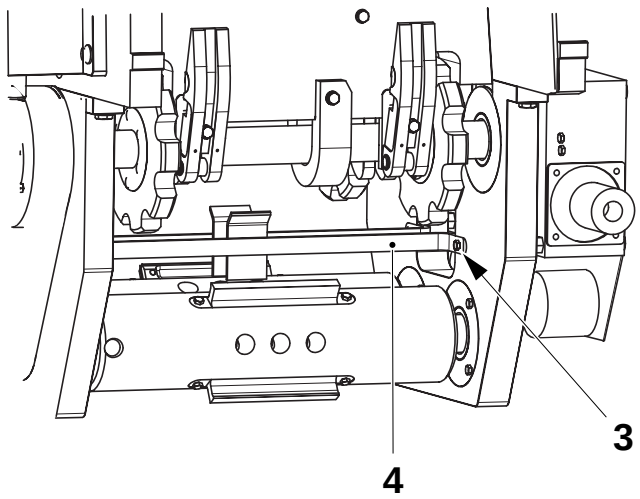

3 Screws
4 Guides

e) Separate the pressure link chain at the top and bottom.

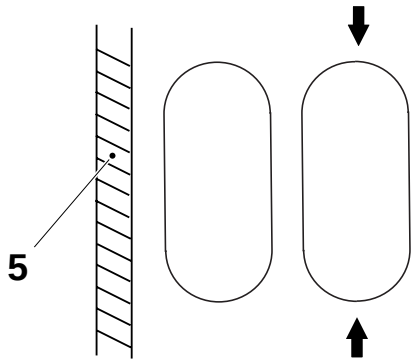

5 Bulkhead

(Cont'd)

2.2B3024D01en.fm

(Cont'd)

f) To separate the chain, remove the grease nipple, circlip and washer. Then remove the chain link.

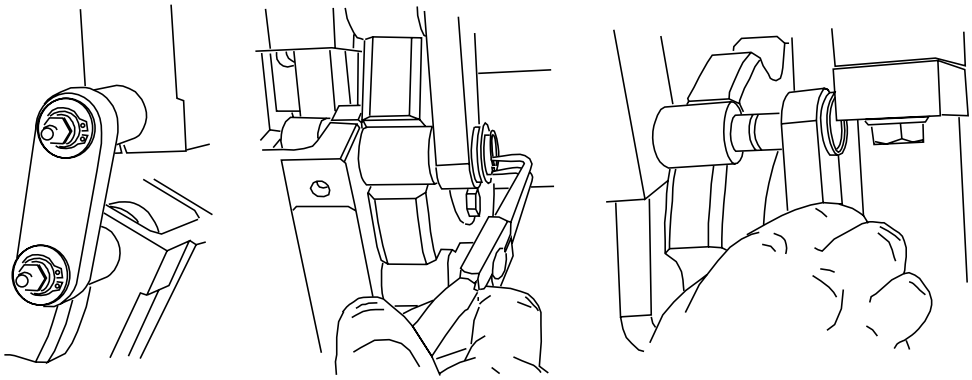

Risk of personal injury!
Be careful not to trap your fingers between the links.



WARNING!

g) Use two people to remove the outside section of the chain (6).

h) Use the hand crank to move the inside section of the chain (7) down through the jaw system. Use two people to hold the top of the chain and guide it through the jaw system. Use a third person to guide and remove the chain.

Note! Preferably remove, work, and re-install one chain at a time. If this is not possible, then the sealing jaw should be removed first.

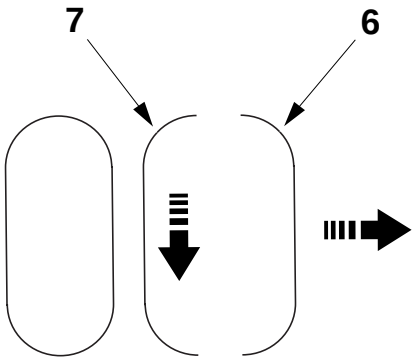

6 Chain - outside section
7 Chain - outside section

i) Repeat on the sealing link chain.

j) Reassemble in the reverse order, sealing the threads on the grease nipples with PTFE tape.

4-4 Jaw system - grease chains

Tools: - Spray gun	TP No. 1512559
SPC reference	648524-0101

Use food grade grease type 151/L.

Apply the grease to the grease nipples (1) on each side of the two chains every week using a grease gun.

Note! Apply grease until it comes out from the rollers (2).

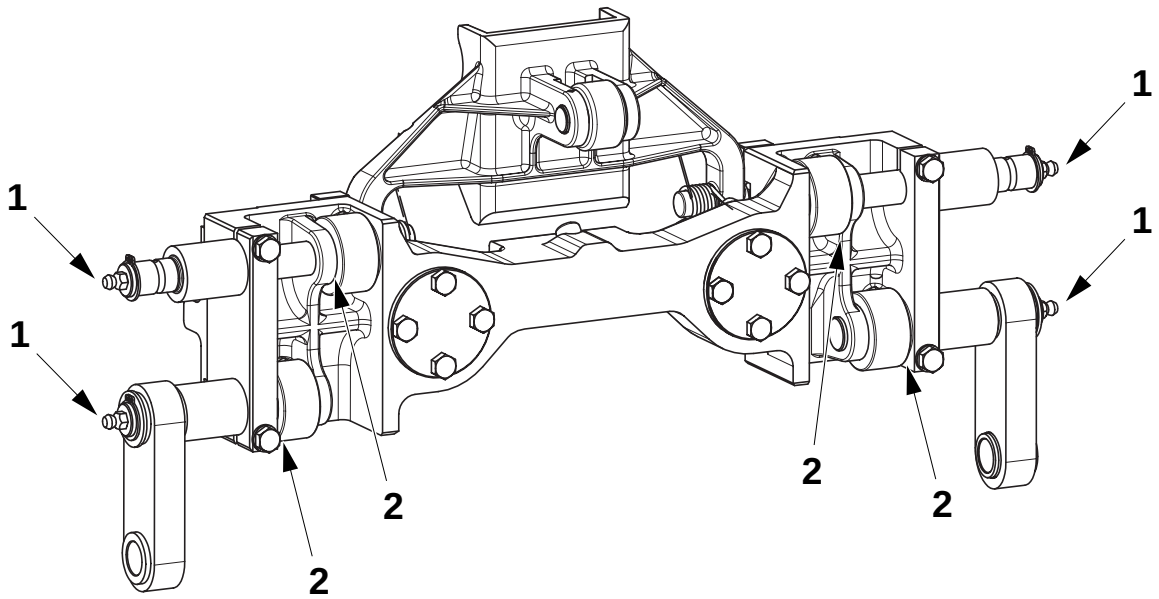

1 Grease nipple
2 Roller

2.2B3024D01en.fm

4.1 Sealing link

SPC reference	1195313-0101

4.1-1 Sealing link - check inserts

SPC reference	1195313-0101

Crank the jaw system and check that the inserts (1) are not damaged. Change the inserts as required.

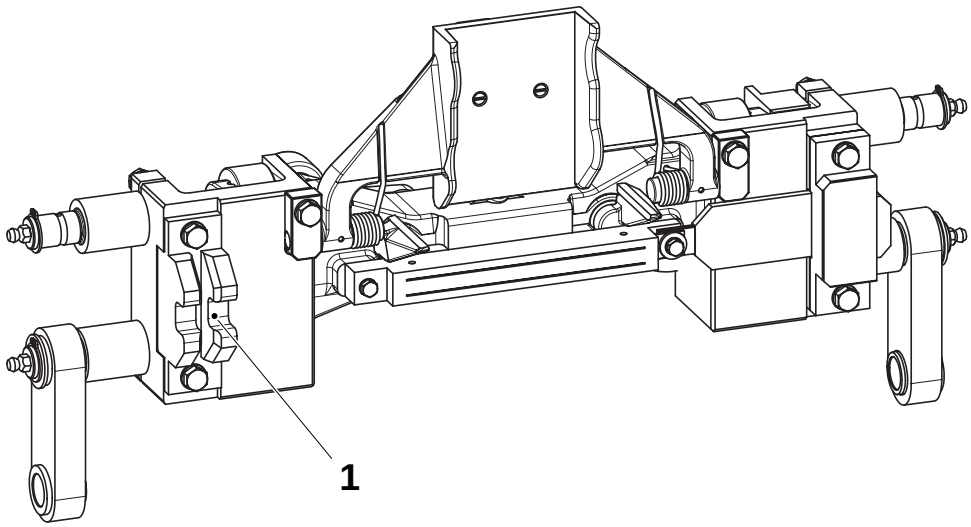

1 Insert

2.2B3024D01en.fm

4.1-2 Sealing link - check volume flap dampers

SPC reference	1195313-0101

Check the damper (1) for damage. Pull out and change the damper as required.

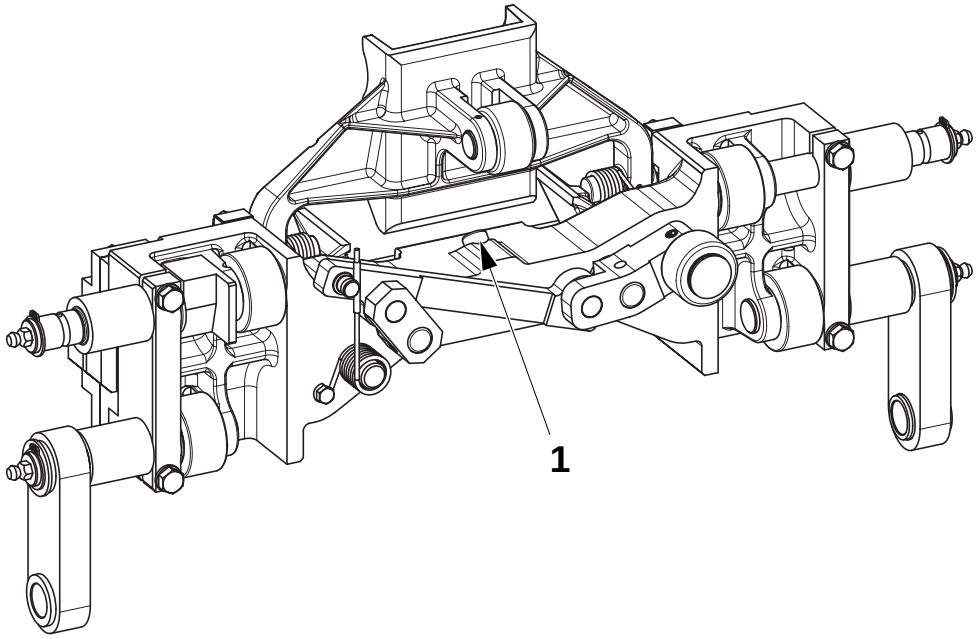

1 Damper

4.1-3 Sealing link - check volume flap springs and bearings

SPC reference	1195313-0101

a) Check the springs (1) for damage.

b) Check for excessive play in the volume flap bushings (2).

c) If the springs or are damaged or the volume flap bushings are worn, loosen the screws (3) and remove the volume flap (4).

d) Change the springs or bushings as required, then refit the volume flap.

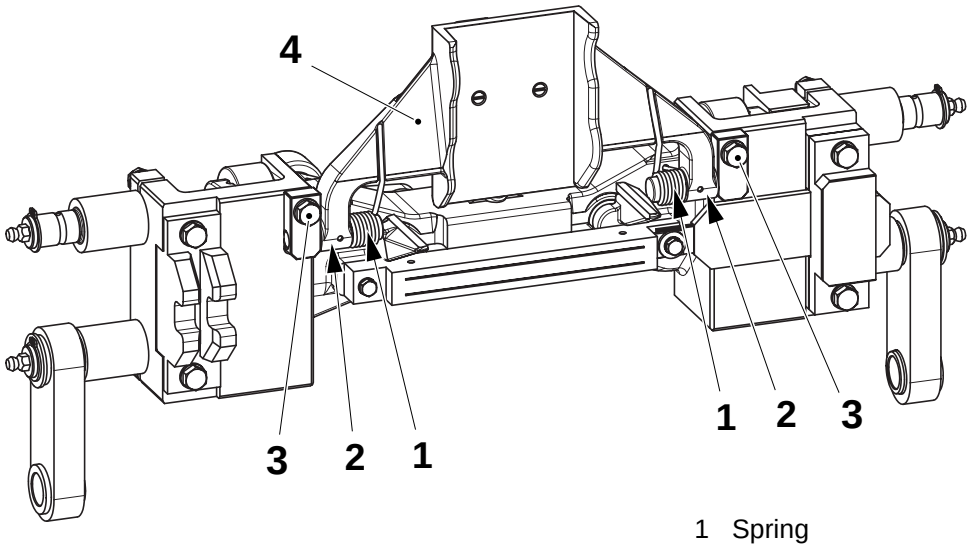

1 Spring
2 Bushing
3 Screw
4 Volume flap

2.2B3024D01en.fm

0-Series

4.1-4 Sealing link - check volume flap rollers

SPC reference	1195313-0101

Check the roller (1) rotates freely. Change the bushings as required:

a) Remove the pin (2) and press out the axle (3).
b) Pull out the roller (1) and change the bushings (4) and (5).
c) Assemble in the reverse order.

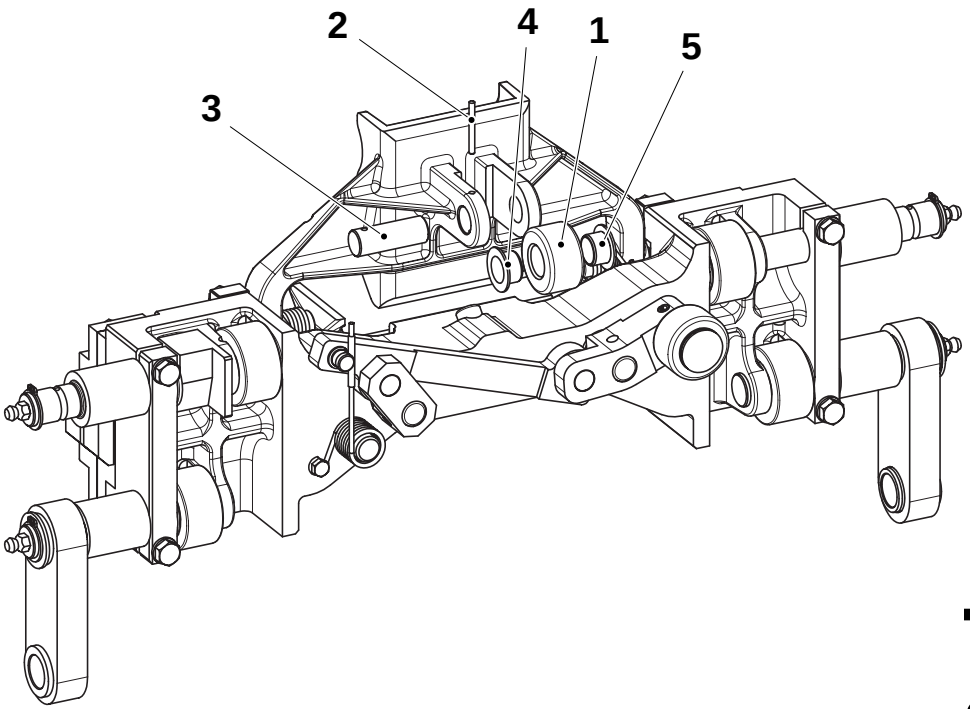

1 Roller
2 Pin
3 Axle
4 Bushing
5 Bushing

2.2B3024D01en.fm

4.1-5 Sealing link - check cam followers

SPC reference	1195313-0101

Check the cam follower rollers (1) for wear or damage and replace as necessary. See *4.1-10 Sealing link - overhaul*.

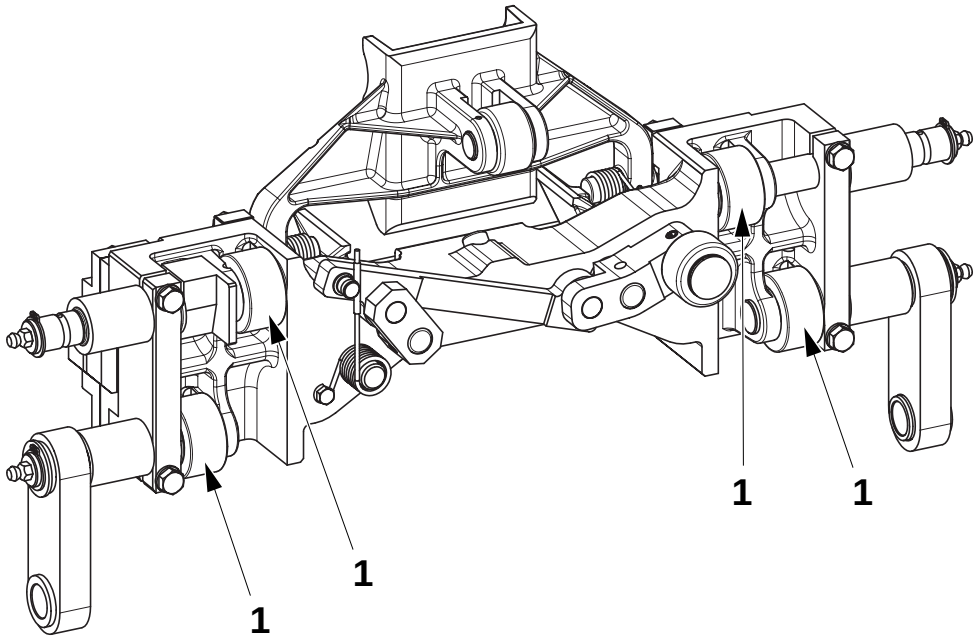

1 Roller

2.2B3024D01en.fm

0-Series

4.1-6 Sealing link - check flap folding

SPC reference	1195313-0101

a) Check the shafts (1), (2), (3) and (4) for wear or damage and replace as necessary. See *4.1-10 Sealing link - overhaul.*

b) Check the spring (6) for wear or damage and replace as necessary. See *4.1-10 Sealing link - overhaul.*

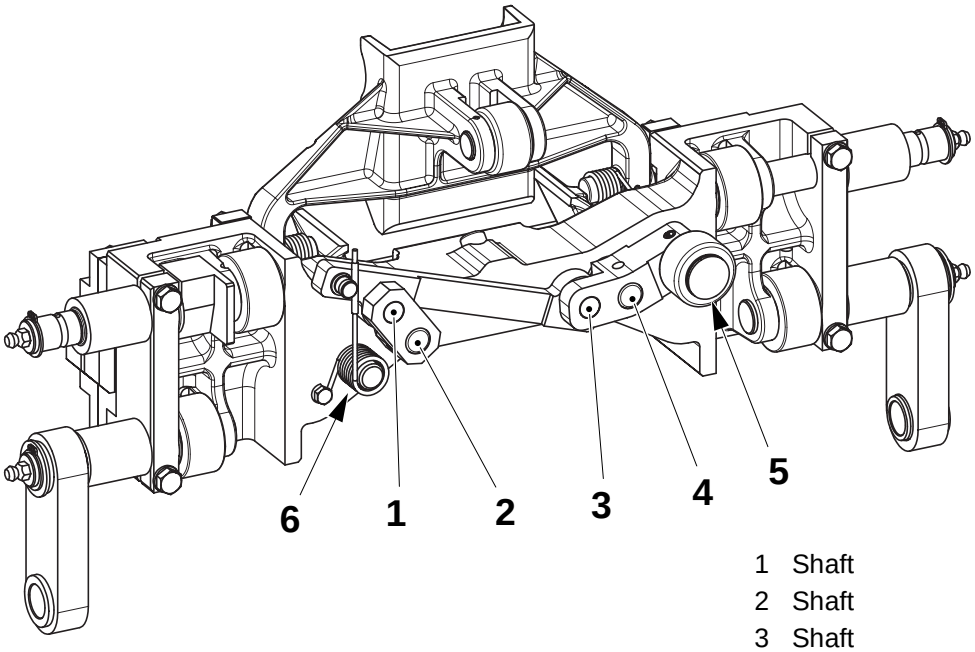

1 Shaft
2 Shaft
3 Shaft
4 Shaft
5 Shaft
6 Spring

2.2B3024D01en.fm

0-Series

4.1-7 Sealing link - change inductor

SPC reference	1195313-0101

Check the inductor (1) for damage and replace as necessary.
See *4.1-10 Sealing link - overhaul*.

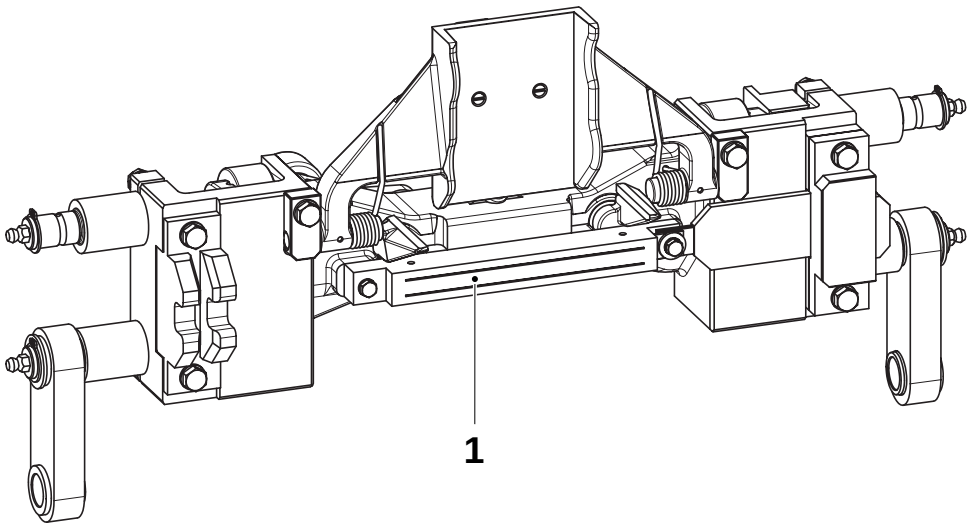

1 Inductor

0-Series

2.2B3024D01en.fm

4.1-8 Sealing link - check carbon brushes

SPC reference	1195313-0101

Check the carbon brushes (1) for damage and replace as necessary.
See *4.1-10 Sealing link - overhaul*.

If the carbon brushes are not damaged, clean them with 400-grade abrasive paper.

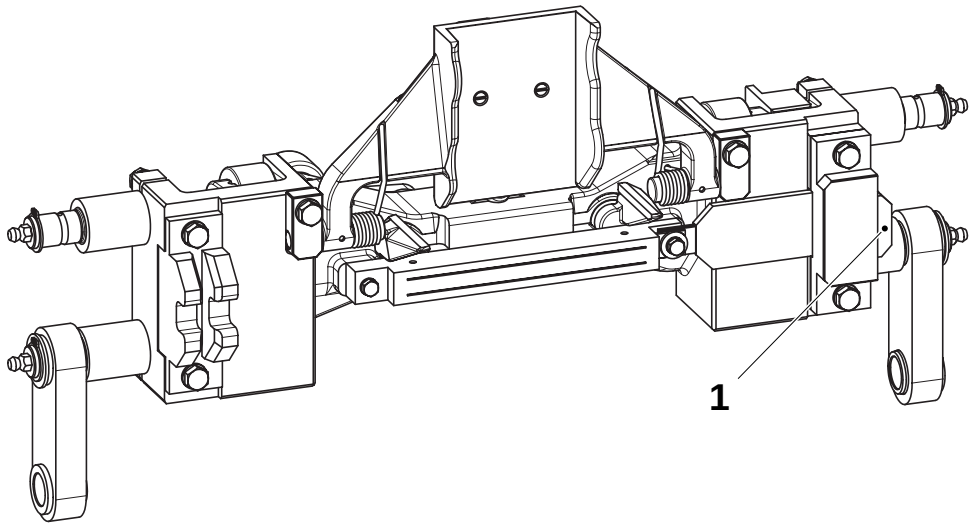

1 Carbon brushes

4.1-9 Sealing link - Clean TS rail

SPC reference	1195313-0101

a) From each side of the jaw unit, remove the screws (1) and remove the TS transformers (2).

b) Clean the copper rails (3) and their leading edges (4) using 400-grade abrasive paper. Do not damage the plastic insulation (5).

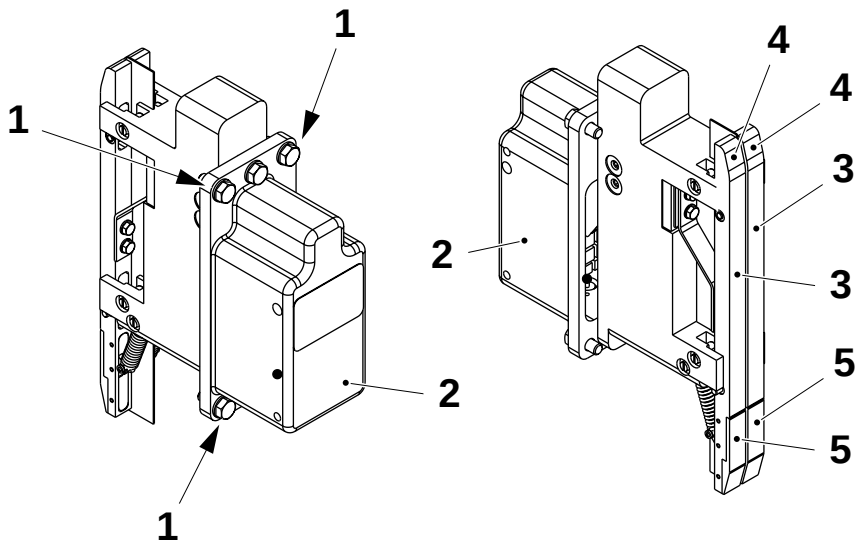

1 Screws
2 TS transformers
3 Copper rails
4 Leading edges
5 Plastic insulation

0-Series

2.2B3024D01en.fm

4.1-10 Sealing link - overhaul

Tools - axle extractor	 TP. No. 1487215
SPC reference	1195313-0101

a) Remove the chains, see *4-3 Jaw system - disassembly and reassembly*.

b) Remove the grease nipples and circlips (1), then change the links (2).

c) Loosen the screws (3) and remove the volume flap (4).

d) Change the springs (5).

e) Loosen the screws (6) and change the carbon brushes (7).

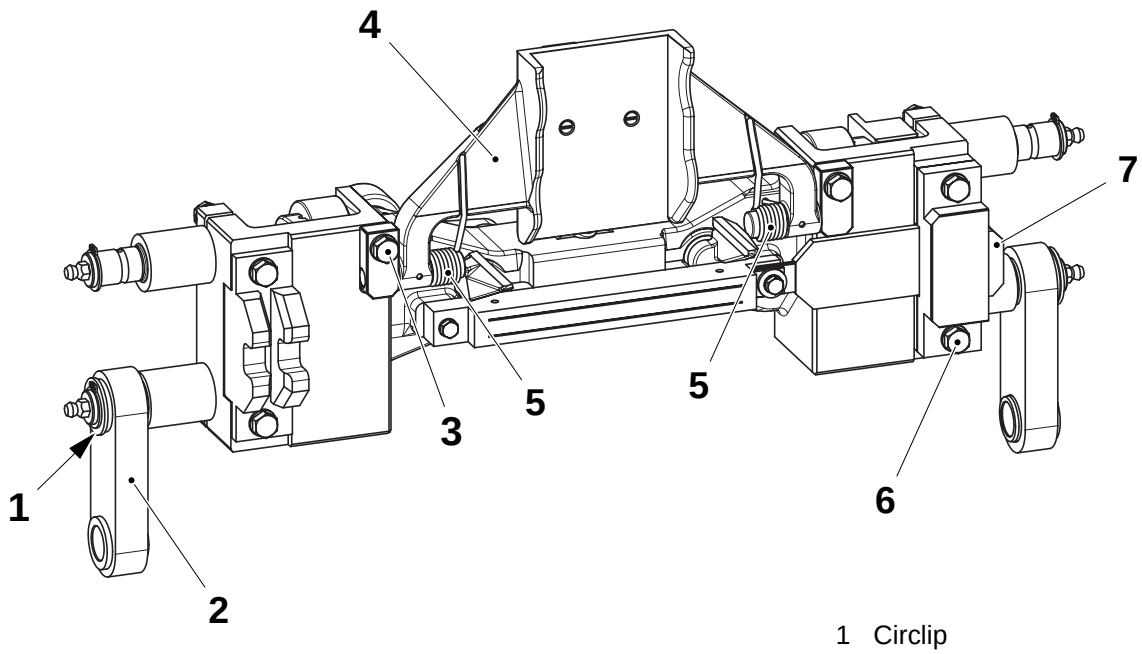

1 Circlip
2 Link
3 Screw
4 Volume flap
5 Spring
6 Screw
7 Carbon brush

2.2B3024D01en.fm

(Cont'd)

(Cont'd)

f) Loosen the screws (8).

g) Slide the tool (9), TP. No. 187215, over the axle (10) until it touches the link (11).

h) Screw the bolt (12) into the hole where the grease nipple is normally fitted (13).
Do not over tighten.

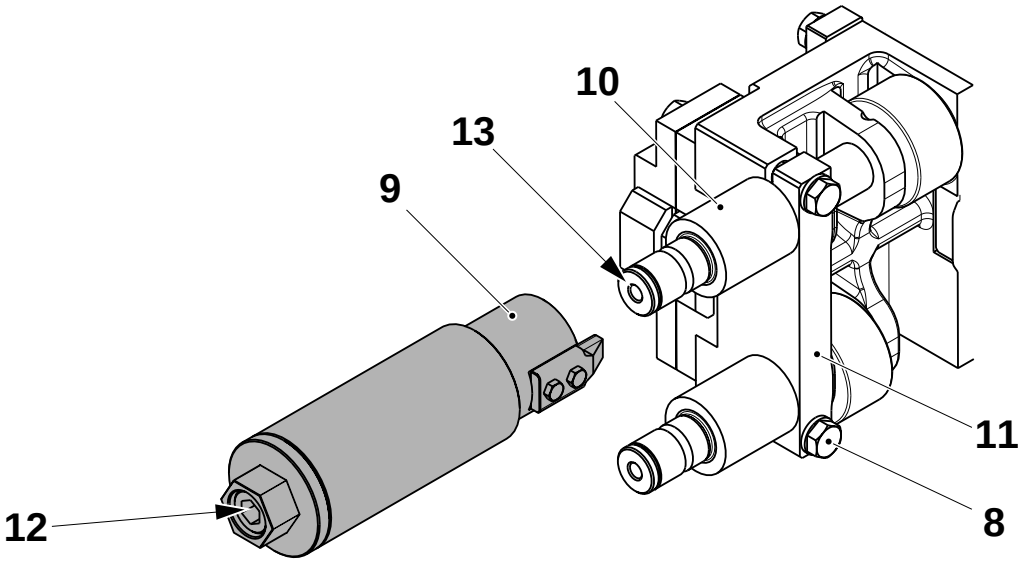

8 Screw
9 Axle tool
10 Axle
11 Link
12 Bolt
13 Hole

i) Turn the nurled part of the tool (14) clockwise to extract the axle.

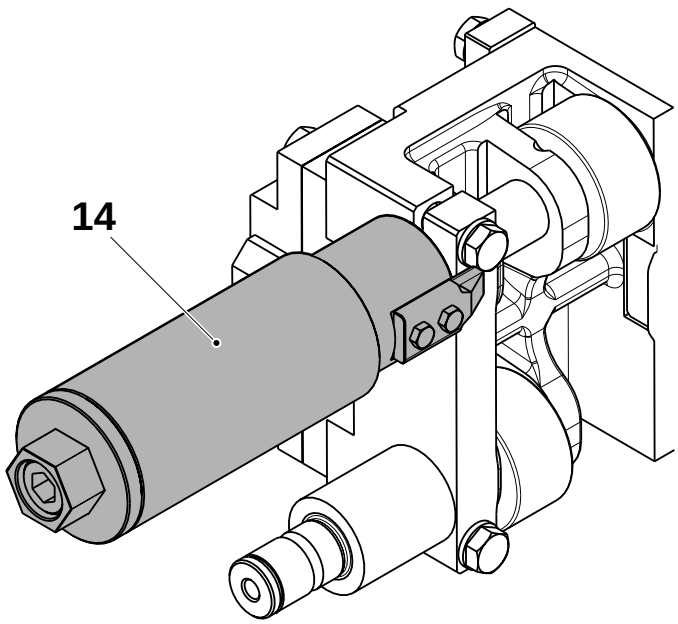

14 Nurled part

(Cont'd)

2.2B3024D01en.fm

(Cont'd)

j) Change the roller (15).

k) Remove the screw (16) and change the spring (17).

l) Pull out and change the damper (18).

m) Remove the pin (19) and press out the axle (20).

n) Change the roller (21) as required.

o) Change the bushings (22 and (23).

p) Remove the spring pins (24) and (25), and remove the design correction link (26).

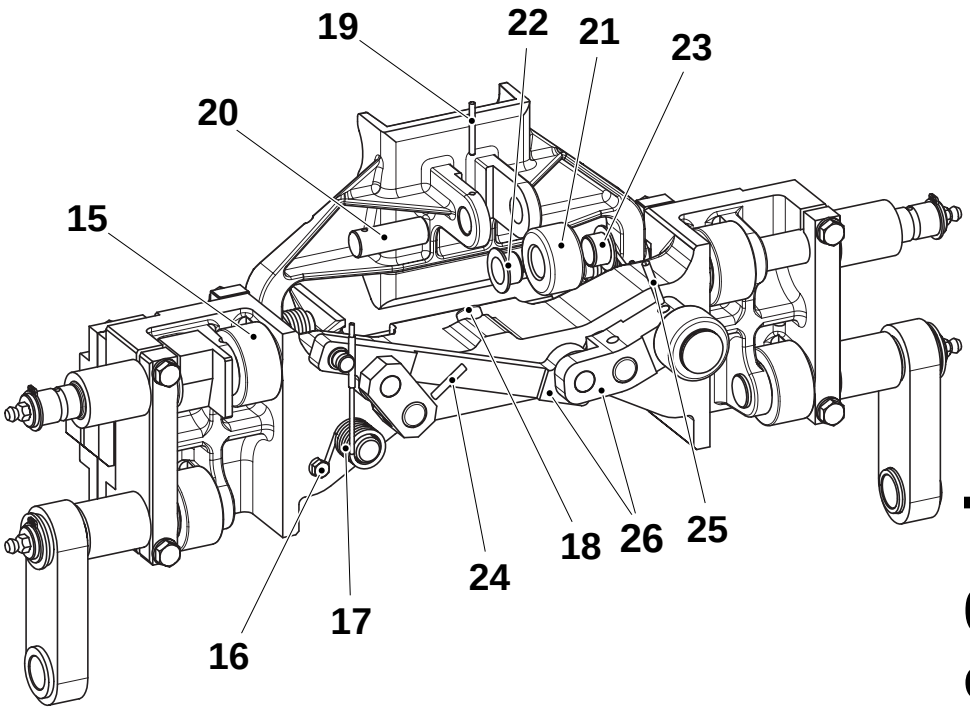

15	Roller	19	Pin	23	Bushing
16	Screw	20	Axle	24	Spring pin
17	Spring	21	Roller	25	Spring pin
18	Damper	22	Bushing	26	Design correction link

(Cont'd)

2.2B3024D01en.fm

0-Series

(Cont'd)

q) Remove the spring pin (27) and pull out the axle (28).

r) Change the bushing (29), roller (30) and bushing (31).

s) Remove the circlips (32), (33), (34) and change the bracket (35).

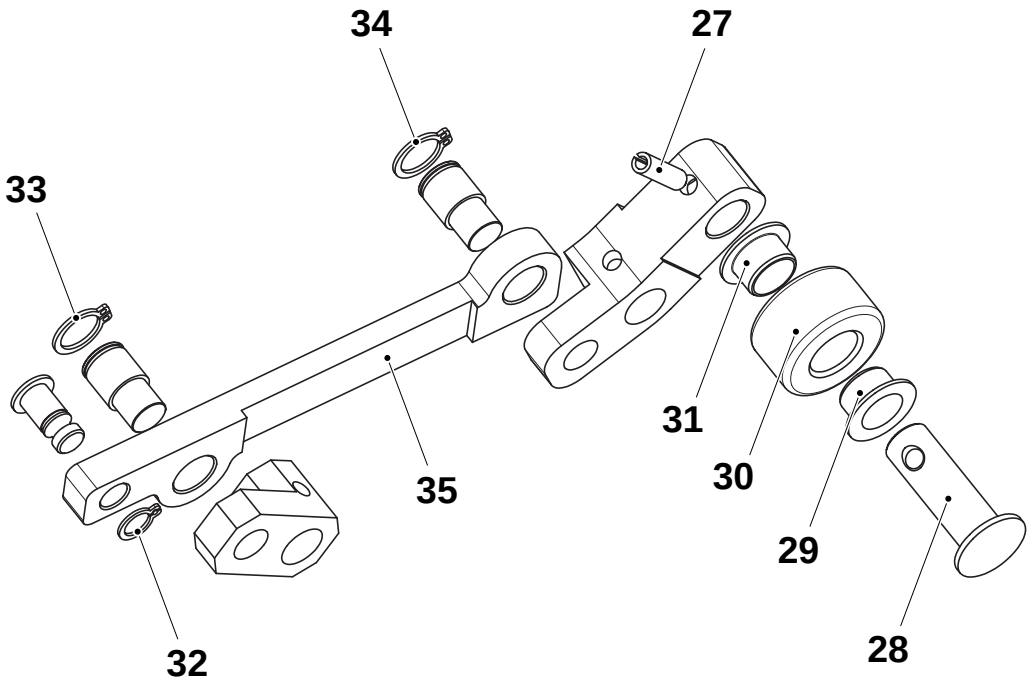

27 Spring pin
28 Axle
29 Bushing
30 Roller
31 Bushing
32 Circlip
33 Circlip
34 Circlip
35 Bracket

(Cont'd)

2.2B3024D01en.fm

(Cont'd)

t) Remove the screws (36) and the inductor (37).

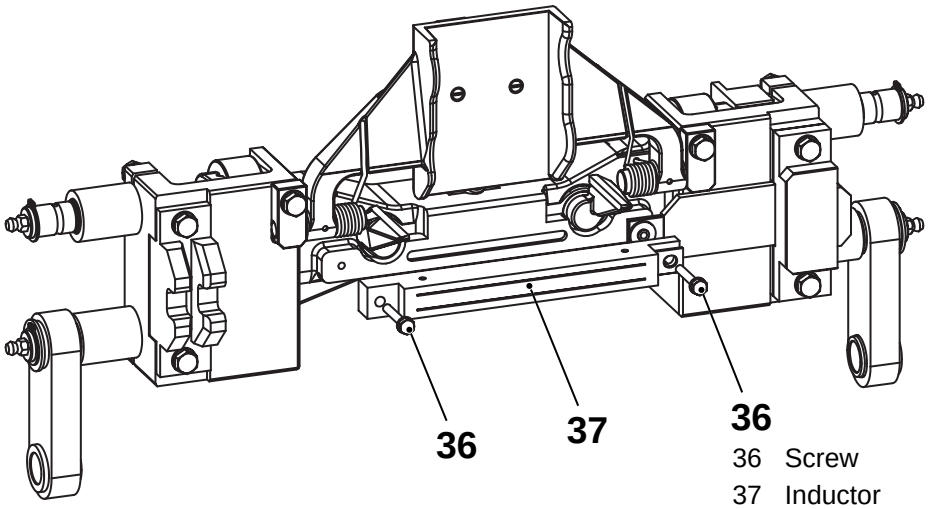

36 Screw
37 Inductor

u) Pull out the shafts (38) and change the bushings (39) and (40).

v) Assemble in the reverse order.

w) Fit the chains, see *4-3 Jaw system - disassembly and reassembly*.

x) Grease the jaw system.

2.2B3024D01en.fm

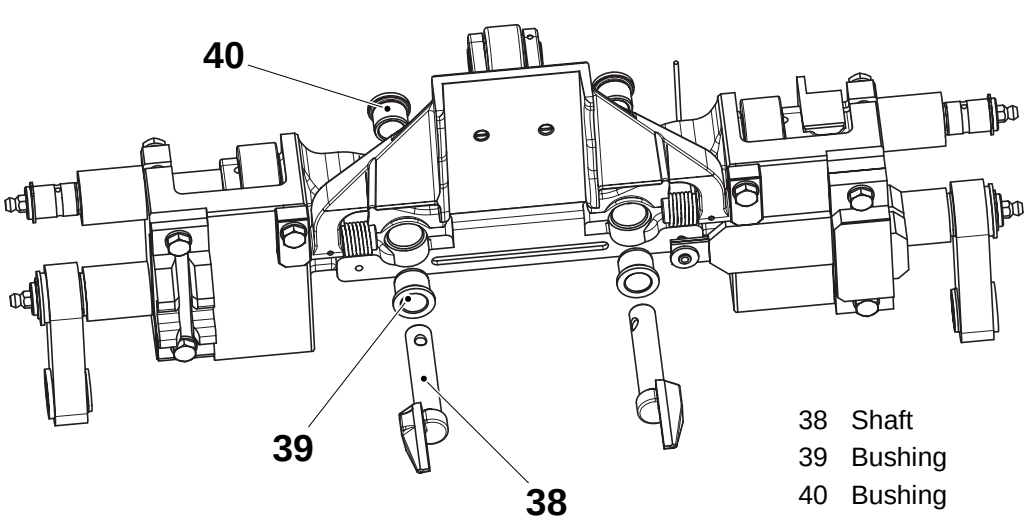

38 Shaft
39 Bushing
40 Bushing

0-Series

4.2 Pressure link

SPC reference	1195312-0101

4.2-1 Pressure link - check volume flap dampers

SPC reference	1195312-0101

Check the dampers (1) for damage. Pull out and change as required.

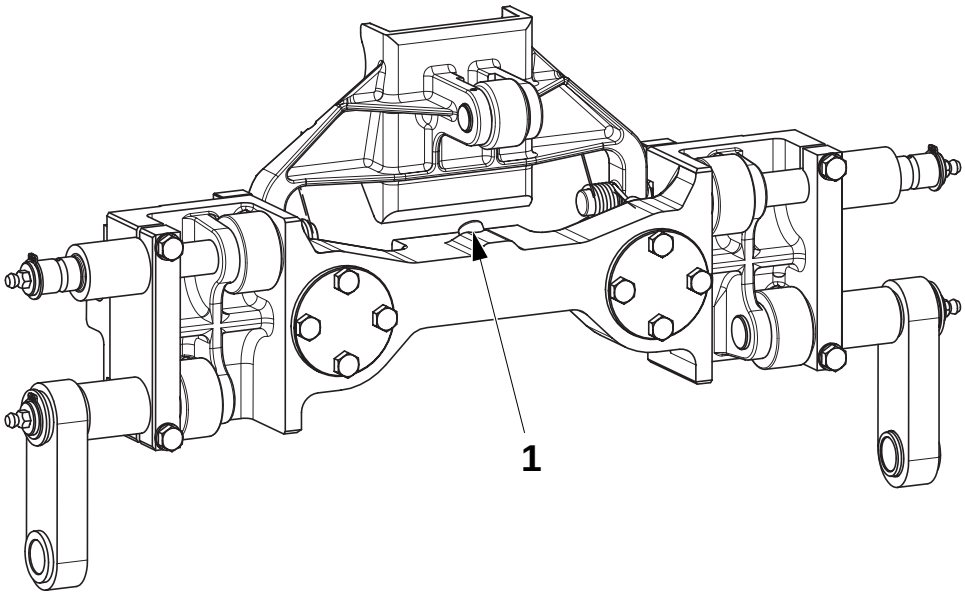

1 Damper

2.2B3024D01en.fm

0-Series

4.2-2 Pressure link - check volume flap springs

SPC reference	1195312-0101

a) Check the springs (1) for damage.

b) Check for excessive play in the volume flap bushings (2).

c) If the springs or are damaged or the volume flap bushings are worn, loosen the screws (3) and remove the volume flap (4).

d) Change the springs or bushings as required, then refit the volume flap.

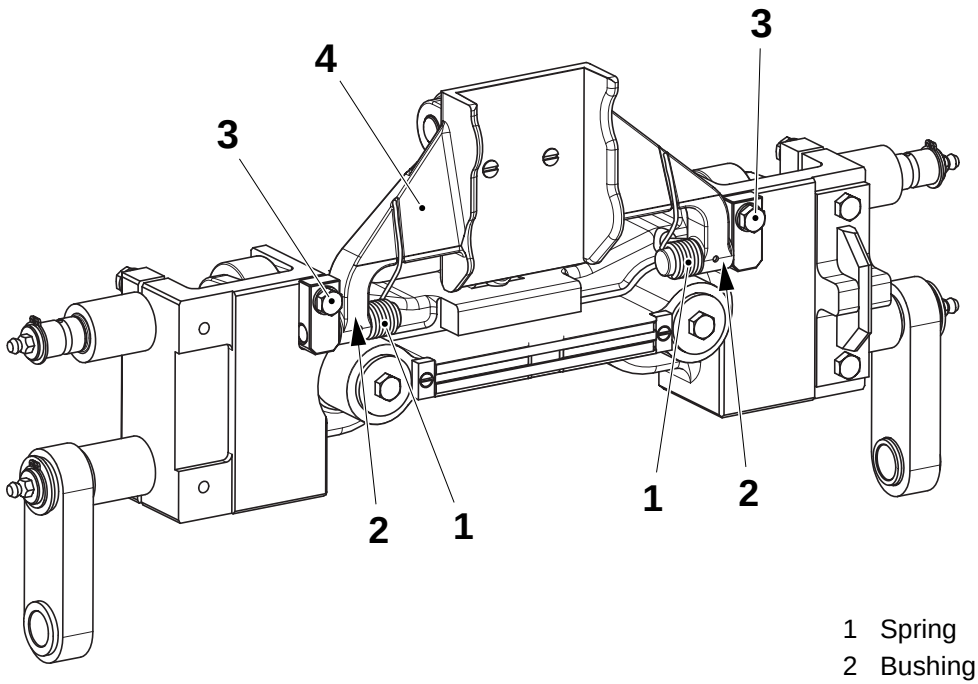

1 Spring
2 Bushing
3 Screw
4 Volume flap

2.2B3024D01en.fm

0-Series

4.2-3 Pressure link - check volume flap rollers

SPC reference	1195312-0101

Check that the roller (1) rotates freely. Change the bushings as required:

a) Remove the pin (2) and press out the axle (3).
b) Remove the roller (1) and change the bushings (4) and (5).
c) Assemble in the reverse order.

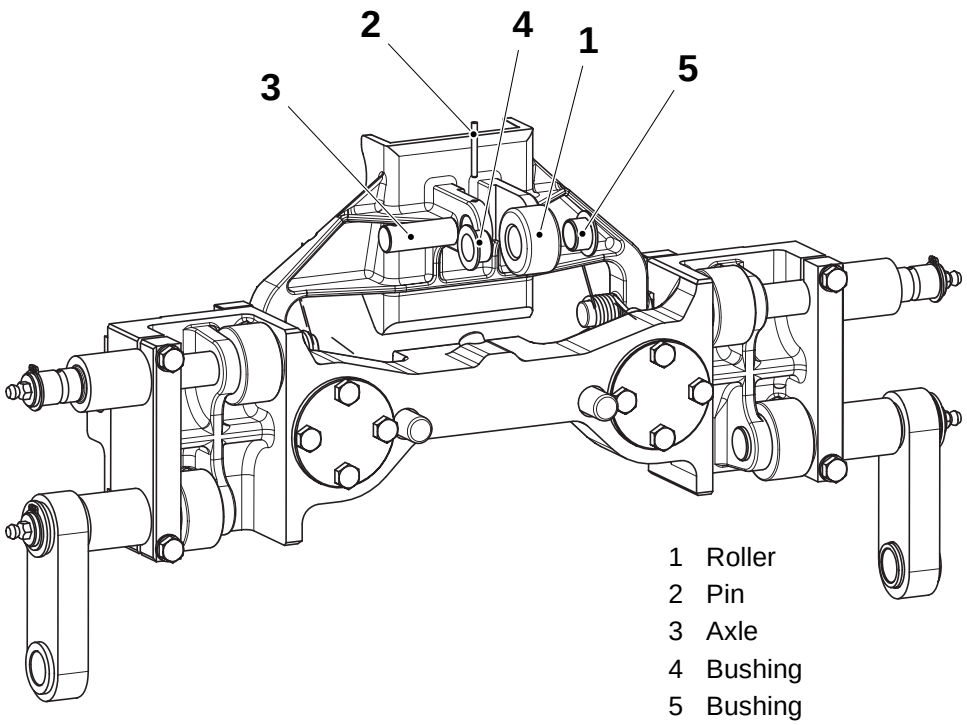

1 Roller
2 Pin
3 Axle
4 Bushing
5 Bushing

0-Series

2.2B3024D01en.fm

4.2-4 Pressure link - check cam followers

SPC reference	1195312-0101

Check the cam follower rollers (1) for wear or damage and replace as necessary. See *4.2-7 Pressure link - overhaul*.

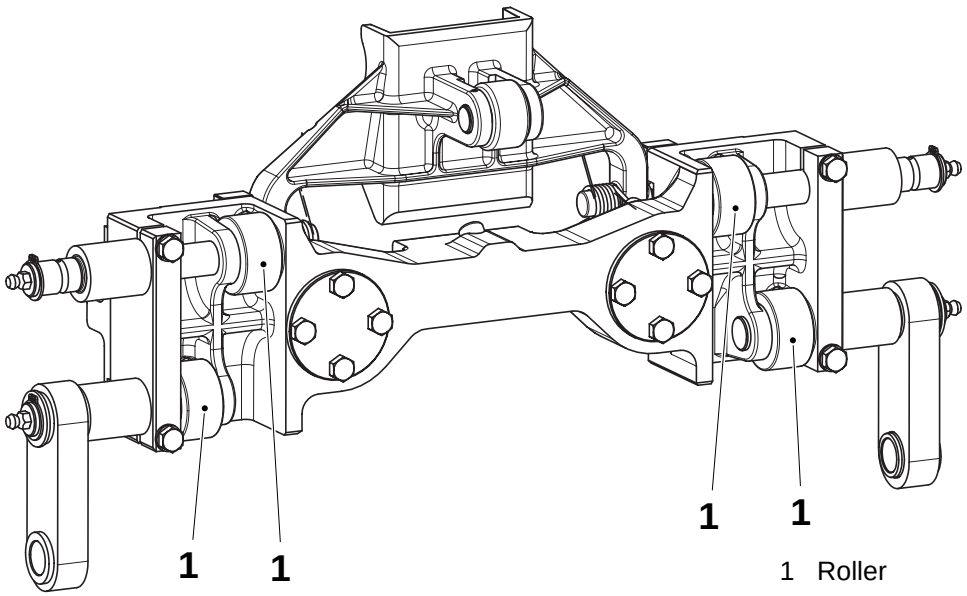

1 Roller

4.2-5 Pressure link - check pressure bar springs

SPC reference	1195312-0101

a) Remove the screws (1), the washer (2) and the pressure bar (3).

b) Remove the sleeve (4).

c) Pull out and check the springs (5) for damage. Change as required.

d) Assemble in the reverse order.

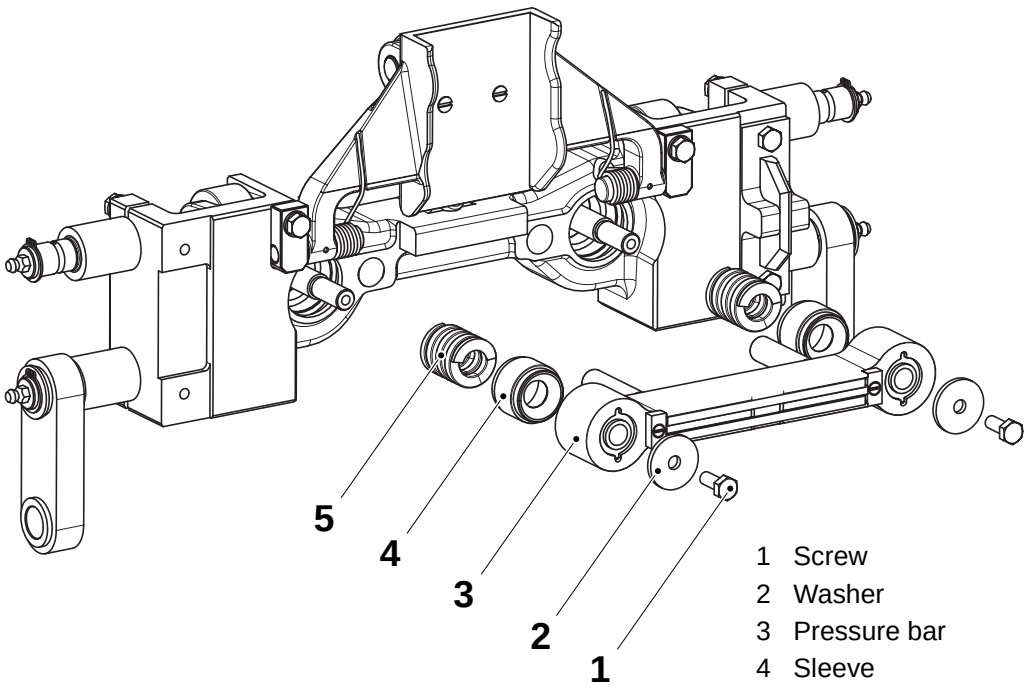

1 Screw
2 Washer
3 Pressure bar
4 Sleeve
5 Spring

2.2B3024D01en.fm

0-Series

4.2-6 Pressure link - change sealing dolly

SPC reference	1195312-0100

a) Check the condition of the dolly (1) and change it if it is hardened, worn or damaged.

b) To remove the dolly, pull it out from the pressure bar.

c) To replace the dolly, insert it in the correct direction, making sure it is seated properly.

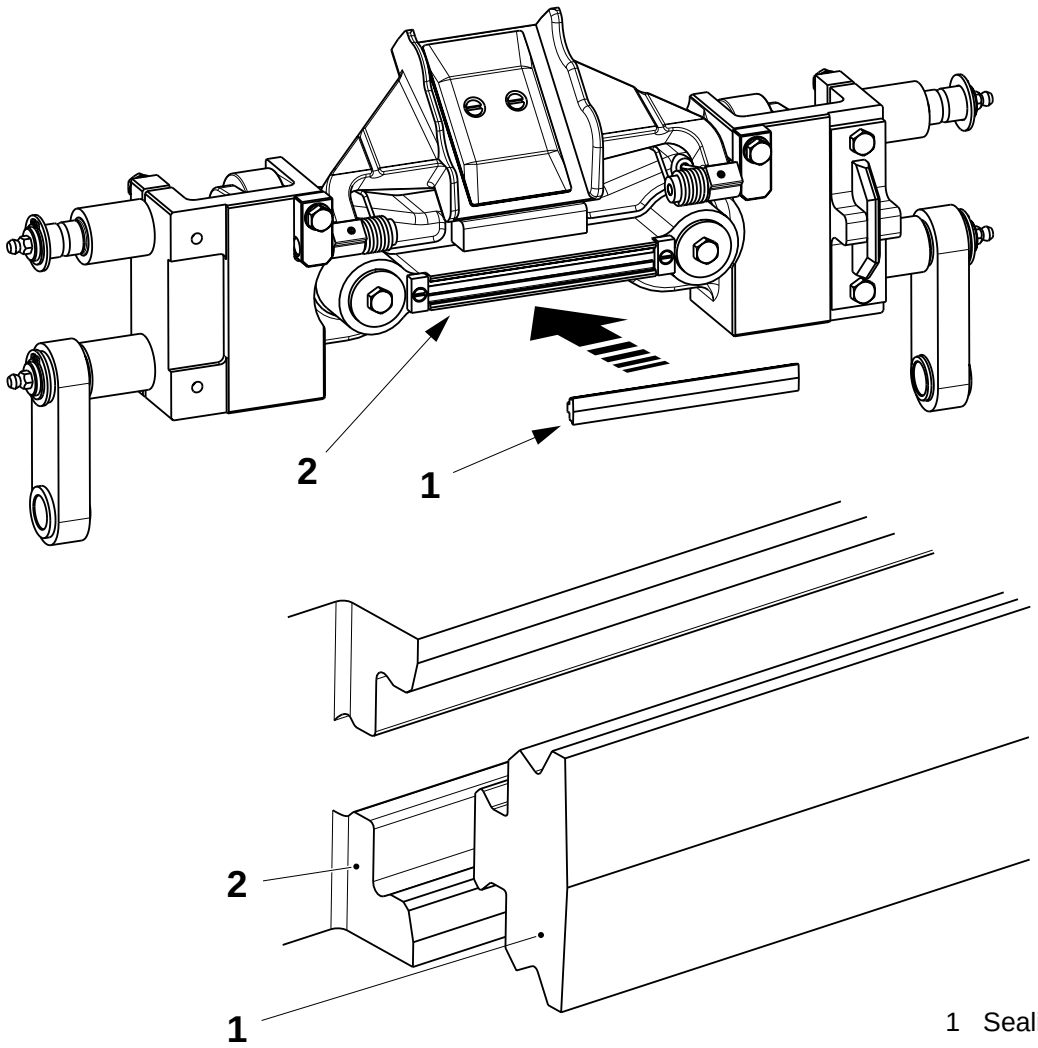

1 Sealing dolly
2 Pressure bar

2.2B3024D01en.fm

4.2-7 Pressure link - overhaul

SPC reference	1195312-0101

a) Remove the chains, see *4-3 Jaw system - disassembly and reassembly.*

b) Remove the screws (1), the washers (2) and the pressure bar (3).

c) Remove the sleeve (4).

d) Change the springs (5) and the seal rings (6).

e) Remove the grease nipples and circlips then change the links (7).

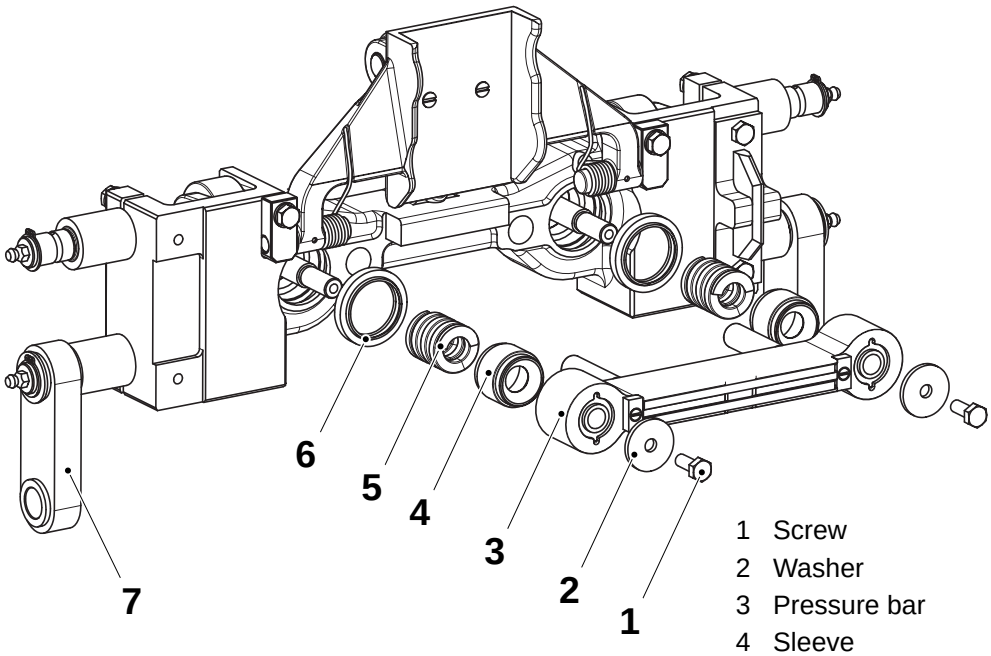

1 Screw
2 Washer
3 Pressure bar
4 Sleeve
5 Spring
6 Seal ring
7 Link

(Cont'd)

2.2B3024D01en.fm

(Cont'd)

f) Loosen the screws (8).

g) Slide the tool (9), TP. No. 187215, over the axle (10) until it touches the link (11).

h) Screw the bolt (12) into the hole where the grease nipple is normally fitted (13).
Do not over tighten.

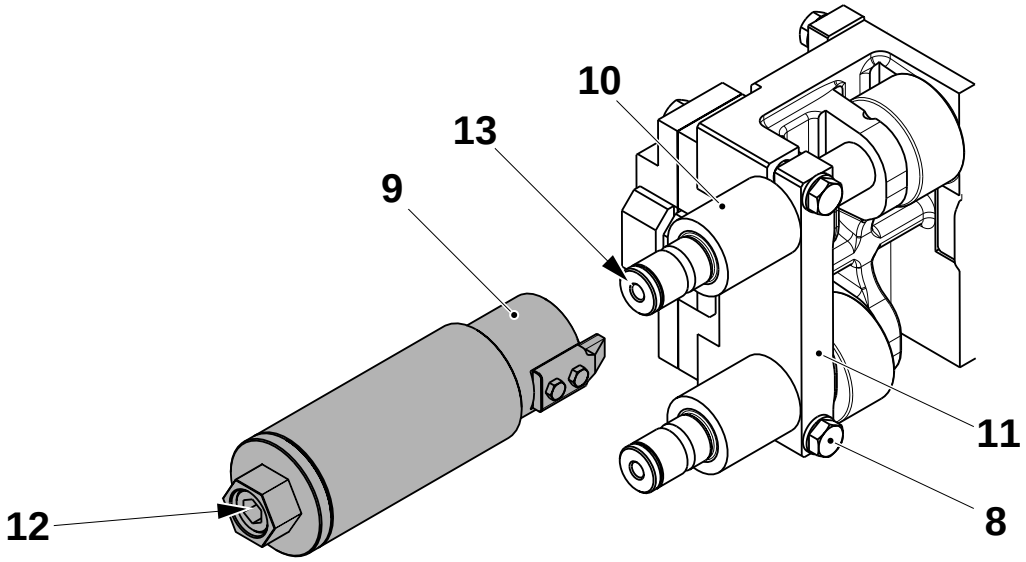

8	Screw	11	Link
9	Axle tool	12	Bolt
10	Axle	13	Hole

i) Turn the nurled part of the tool (14) clockwise to extract the axle.

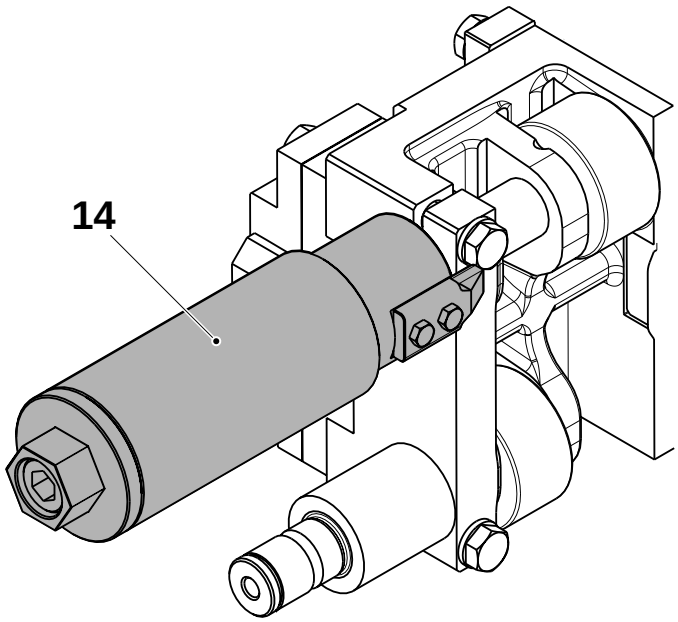

14 Nurled part

(Cont'd)

2.2B3024D01en.fm

(Cont'd)

j) Change the roller (15).
k) Remove the pin (16) and press out the axle (17).
l) Change the roller (18) as required.
m) Change the bushings (19) and (20).
n) Change the damper (21).
o) Assemble in the reverse order.
p) Fit the chains, see *4-3 Jaw system - disassembly and reassembly*.
q) Grease the jaw system.

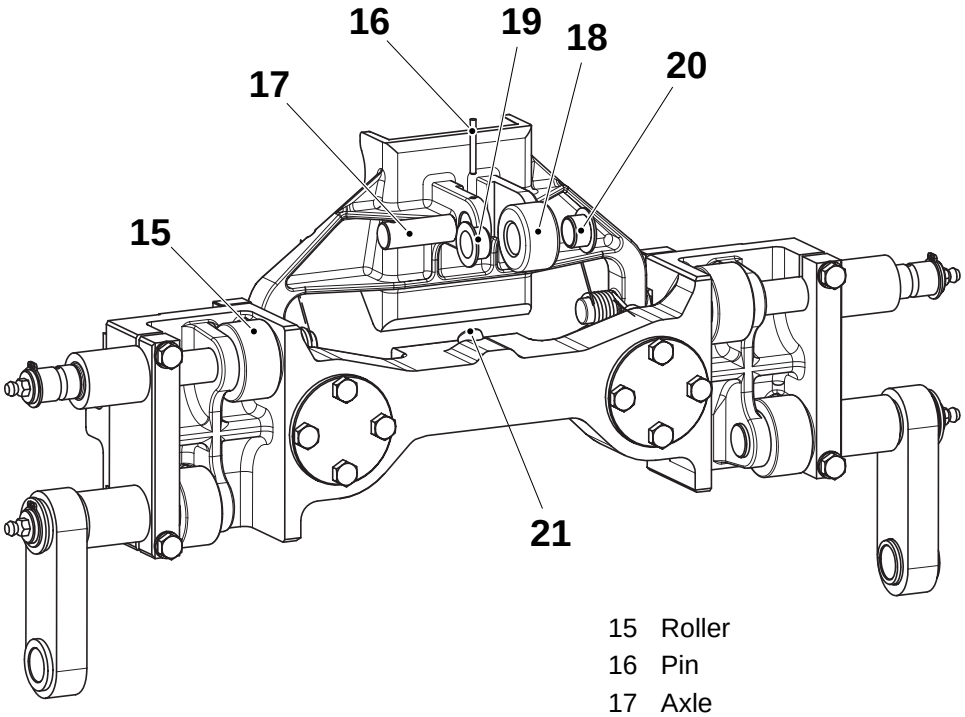

15 Roller
16 Pin
17 Axle
18 Roller
19 Bushing
20 Bushing
21 Damper

2.2B3024D01en.fm

0-Series

4.3 Drive unit

SPC reference	575238-0101

4.3-1 Drive unit - check cutting belts

SPC reference	575238-0101

a) On the RH side, check the belts (1) and (2) for wear or damage. Loosen the belt tension using the eccentric rollers (3) and (4).
Change the belts as required.

b) Set the belt tensions, see *4.3-3 Drive unit - set knives and cutting belt tension*.

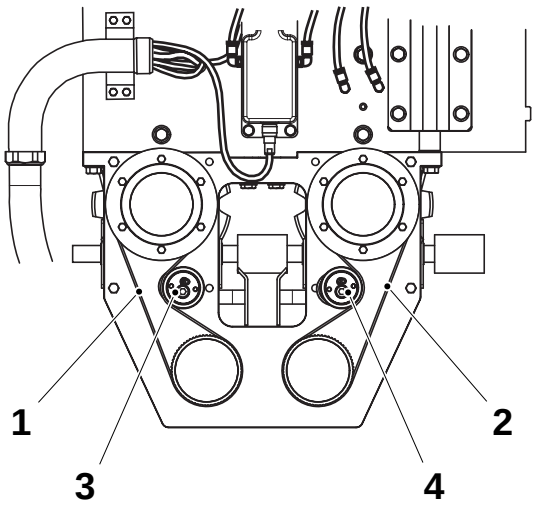

1 Belt
2 Belt
3 Roller
4 Roller

2.2B3024D01en.fm

4.3-2 Drive unit - check angle encoder belt

SPC reference	575238-0101

a) On the LH side, check the belt (1) for wear or damage. Loosen the screws (2) and change the belt as required.

b) Set the angle encoder, see *4.3-9 Drive unit - set angle encoder*.

c) Set the belt tension, see *4.3-4 Drive unit - set angle encoder belt*.

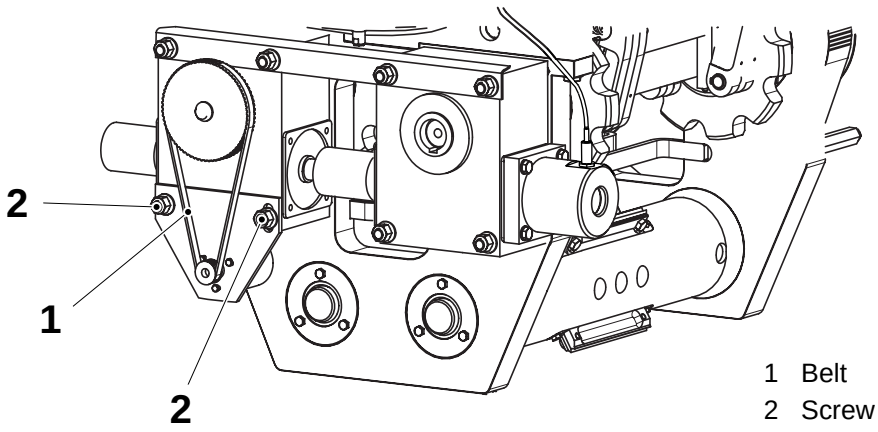

2.2B3024D01en.fm

4.3-3 Drive unit - set knives and cutting belt tension

Tools - dynamometer - prong key - template - torque wrench	 min 10 N TP No. 1317242 min 17 Nm
SPC reference	575238-0101

a) Crank the jaw system so you have access to the knife (2) next to the alignment hole (3).

b) Remove the screws (1) and pull out the knife (2) at the alignment hole (3).

c) Crank the jaw system to 300_8.

d) Fit the template (4) in the alignment holes (3).

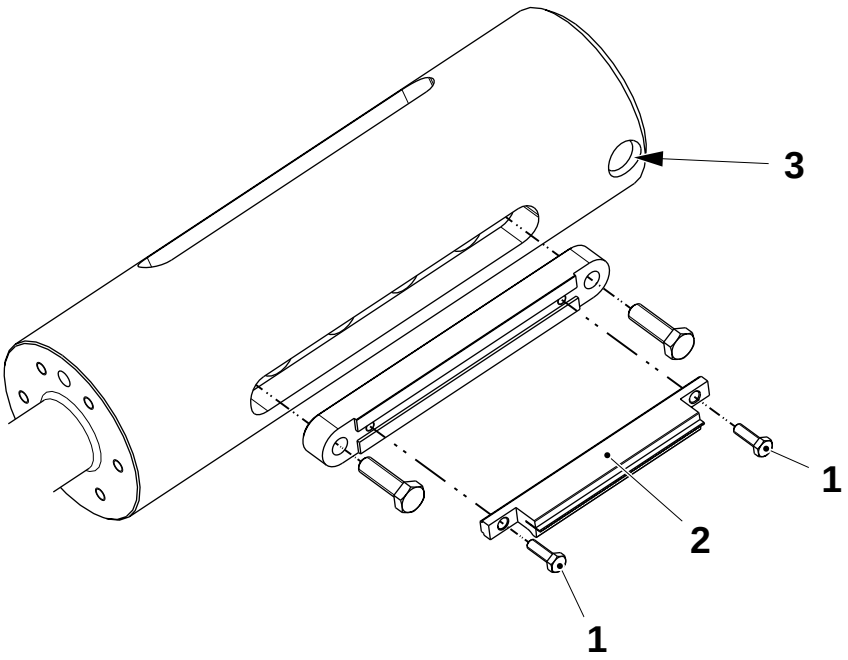

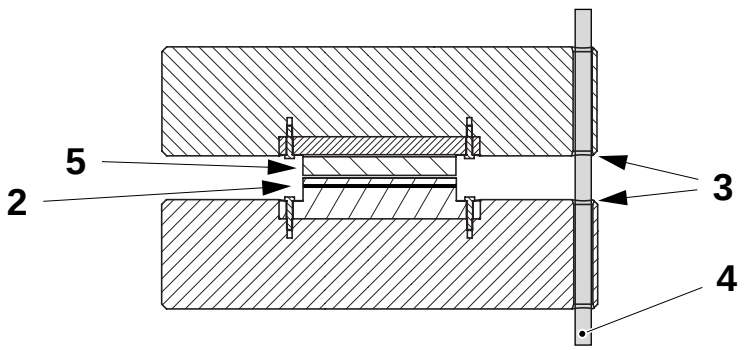

1 Screw
2 Knife
3 Alignment hole
4 Template
5 Cutting dolly

(Cont'd)

2.2B3024D01en.fm

(Cont'd)

e) Loosen the screws (6) in the clamping elements a couple of turns.

f) Put four screws into the puller holes (7). Tighten these screws cross-wise, in small steps, until the toothed pulley is free to rotate.

g) Loosen the screw (8).

h) Using the dynamometer (9), set the belt (10) tension to 50 N with a deflection of 5 mm. Using a prong key inserted in the holes (11), adjust the tension by turning the eccentric (12) in the direction of rotation of the belt.

i) Tighten the screw (8).

j) Remove the screws from the puller holes (7). Using the torque wrench, tighten the screws (6) to 17 Nm.

k) Repeat the process on the other belt (13).

l) Remove the template.

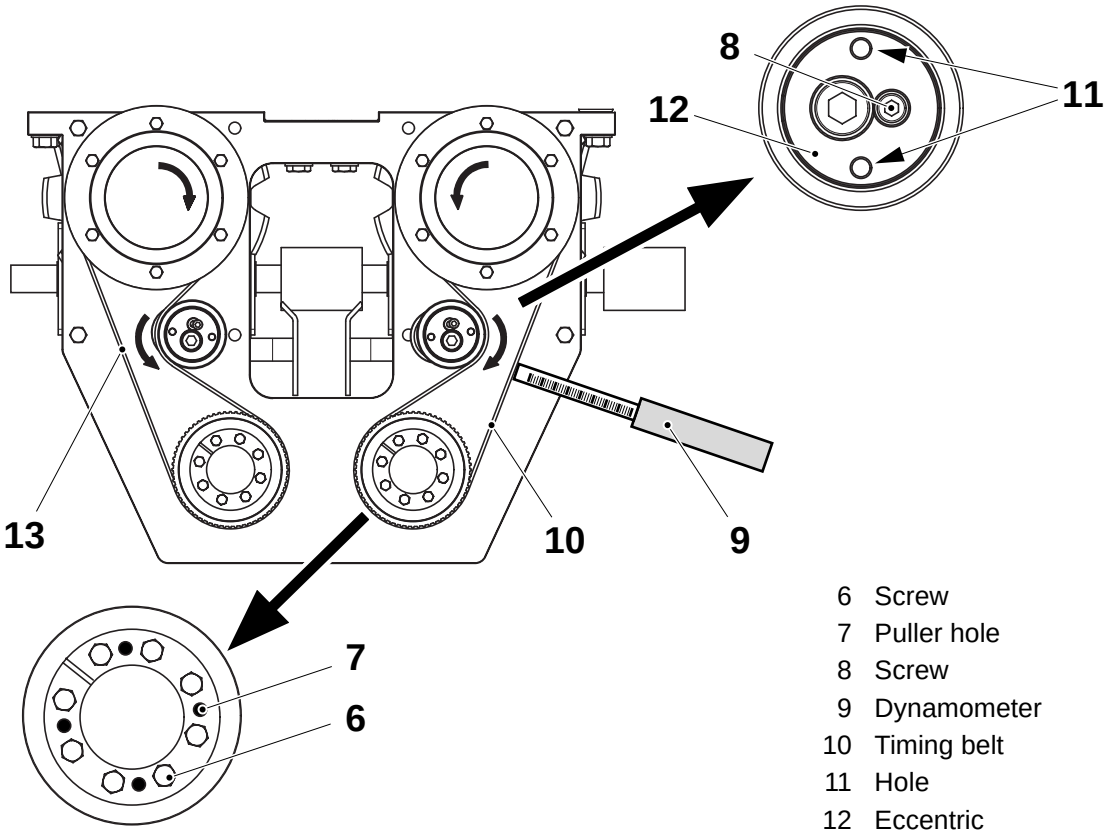

6 Screw
7 Puller hole
8 Screw
9 Dynamometer
10 Timing belt
11 Hole
12 Eccentric
13 Timing belt

(Cont'd)

2.2B3024D01en.fm

4.3-4 Drive unit - set angle encoder belt

SPC reference	575238-0101

a) Record the angle of the jaw system.

b) Loosen the screws (1).

c) Move the plate (2) until the maximum deflection at the mid-point of the belt (3) is 5 mm at 20 N.

d) Tighten the screws (1).

e) If required, set the angle encoder to the previously recorded value by loosening the three screws (4) and turning the angle encoder (5). Tighten the screws (4).

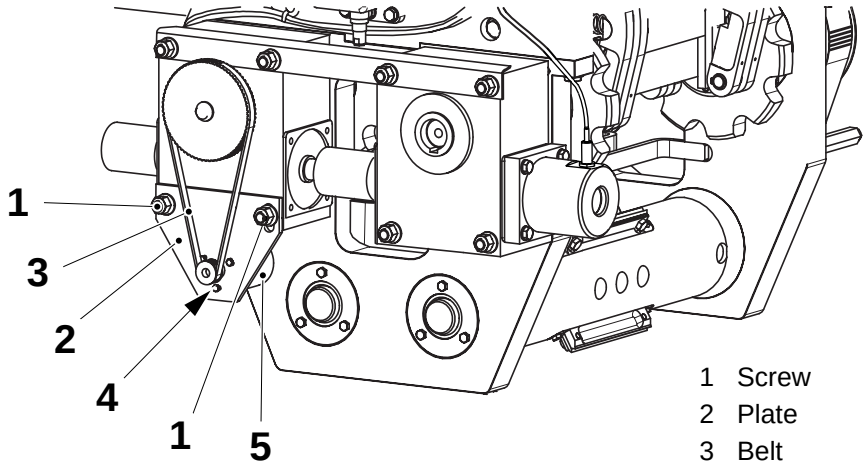

1 Screw
2 Plate
3 Belt
4 Plate
5 Screw
6 Angle encoder

2.2B3024D01en.fm

4.3-5 Drive unit - change knife

SPC reference	575238-0400



a) Remove the screws (1), change the knife (2), and refit the screws (1).

b) Repeat the process on the other knives.

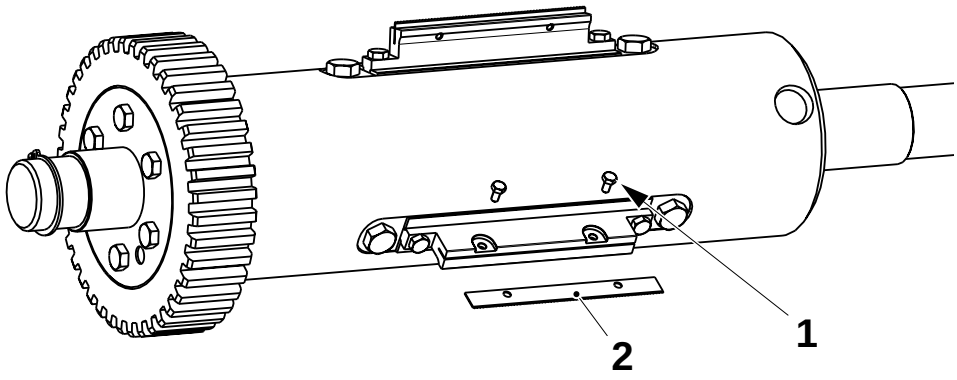

1 Screw
2 Knife

4.3-6 Drive unit - remove knife holder

SPC reference	575238-0400



a) Remove the screws (1).

b) Remove the knife holder (2).

c) Assemble when necessary in the reverse order.

d) Repeat the process on the other knives.

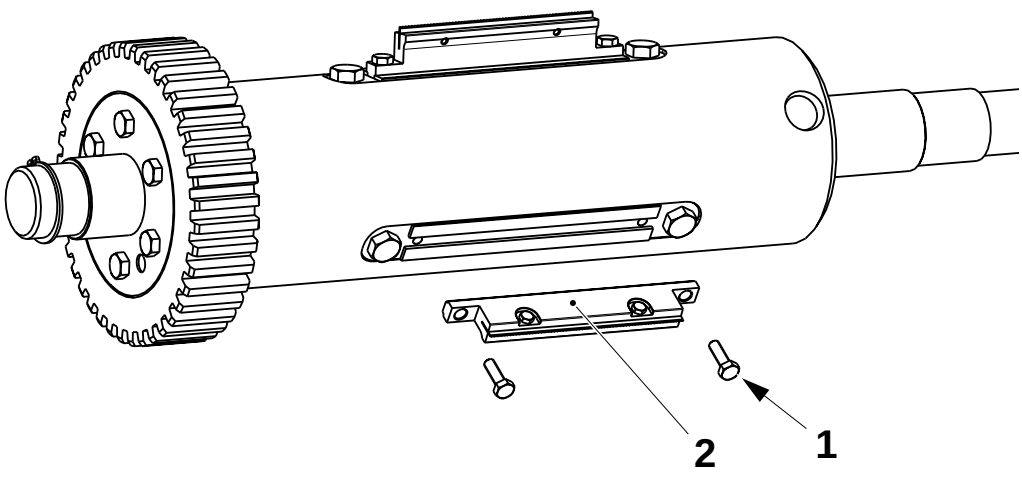

1 Screw
2 Knife holder

0-Series

2.2B3024D01en.fm

4.3-7 Drive unit - change cutting dolly

SPC reference	575238-0400

a) Pull the dolly (1) out from the holder (2).
b) Insert the new dolly (1) it in the holder, making sure it is seated properly.
c) Repeat the process on the other cutting dollies.

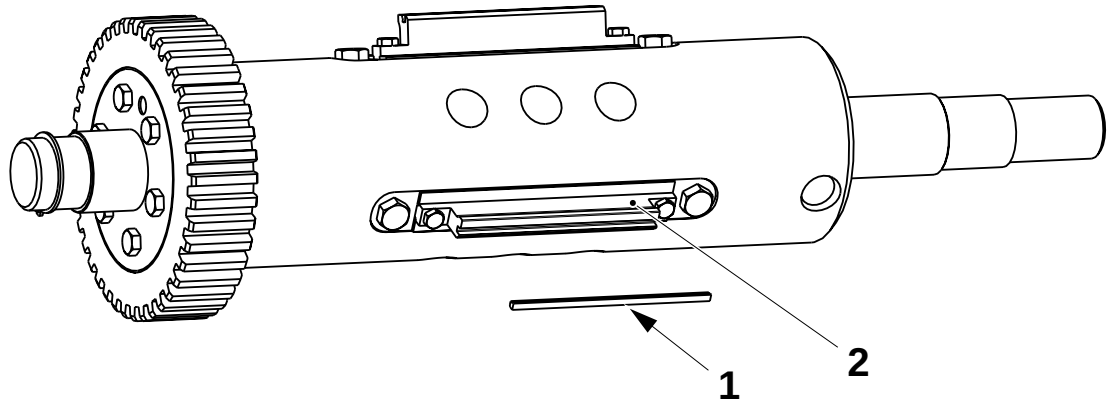

1 Cutting dolly
2 Holder

2.2B3024D01en.fm

4.3-8 Drive unit - remove cutting dolly holder

SPC reference	575238-0400

a) Remove the screws (1).
b) Remove the dolly holder (2).
c) Assemble when necessary in the reverse order.
d) Repeat the process on the other cutting dollies.

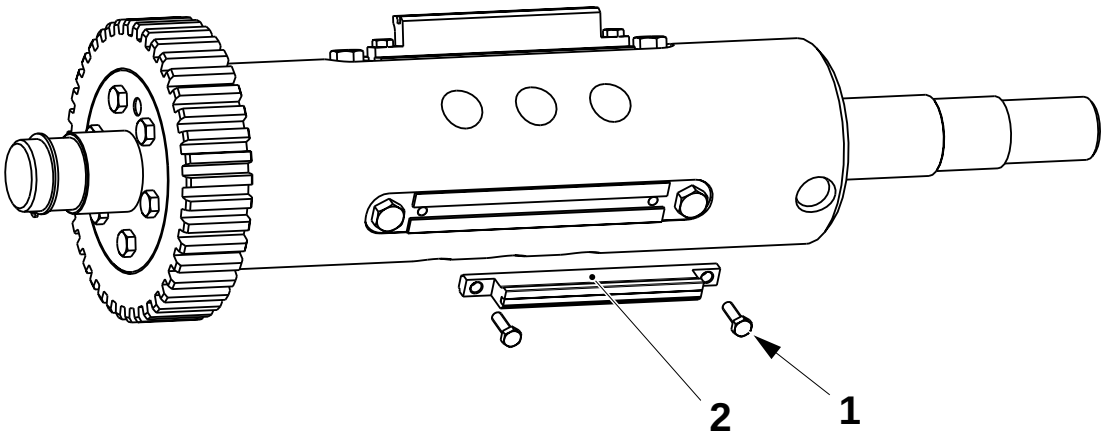

1 Screw
2 Dolly holder

4.3-9 Drive unit - set angle encoder

Machine status	Power **On**
Tools - template	 TP No. 1317243
SPC reference	575238-0101

a) Crank the jaw system until the inductive switch (2) is just activated by the flag (1) of pressure link No. 10.

b) To set the distance **A** between the inductive switch (2) and the flag (1), move the inductive switch and check that the LED switches **On**.

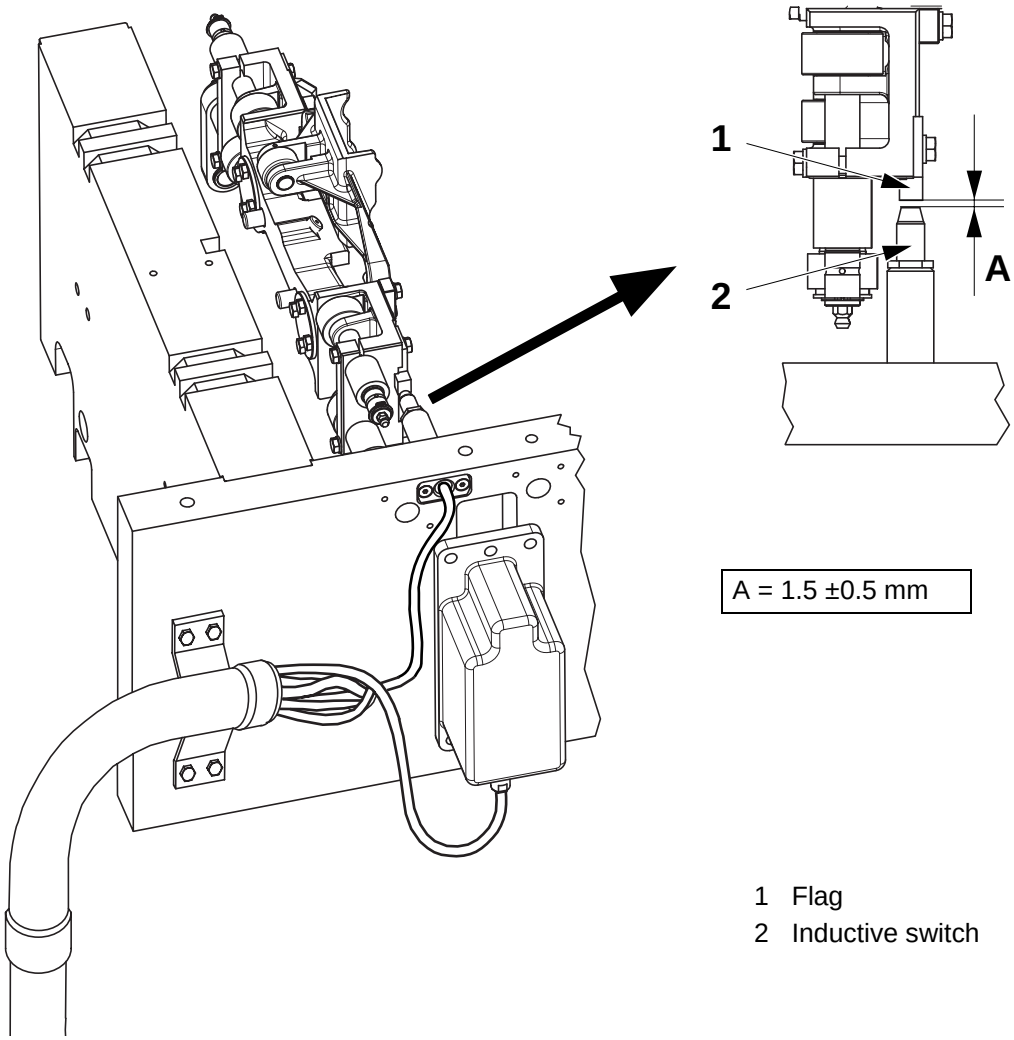

A = 1.5 ±0.5 mm

1 Flag
2 Inductive switch

(Cont'd)

0-Series

2.2B3024D01en.fm

(Cont'd)

c) Loosen the nuts (3), move the plate (8) and remove the belt (4).

d) Turn the toothed wheel (5) until the angle display shows $200_{8.}$

Note! Do not move the toothed wheel (5) when assembling and setting the belt (4).

e) Fit the belt (4) then set the tension, see *4.3-4 Drive unit - set angle encoder belt*.

f) Fine-set the angle encoder by loosening the screws (6) and turning the angle encoder (7) as required to $200_{8.}$

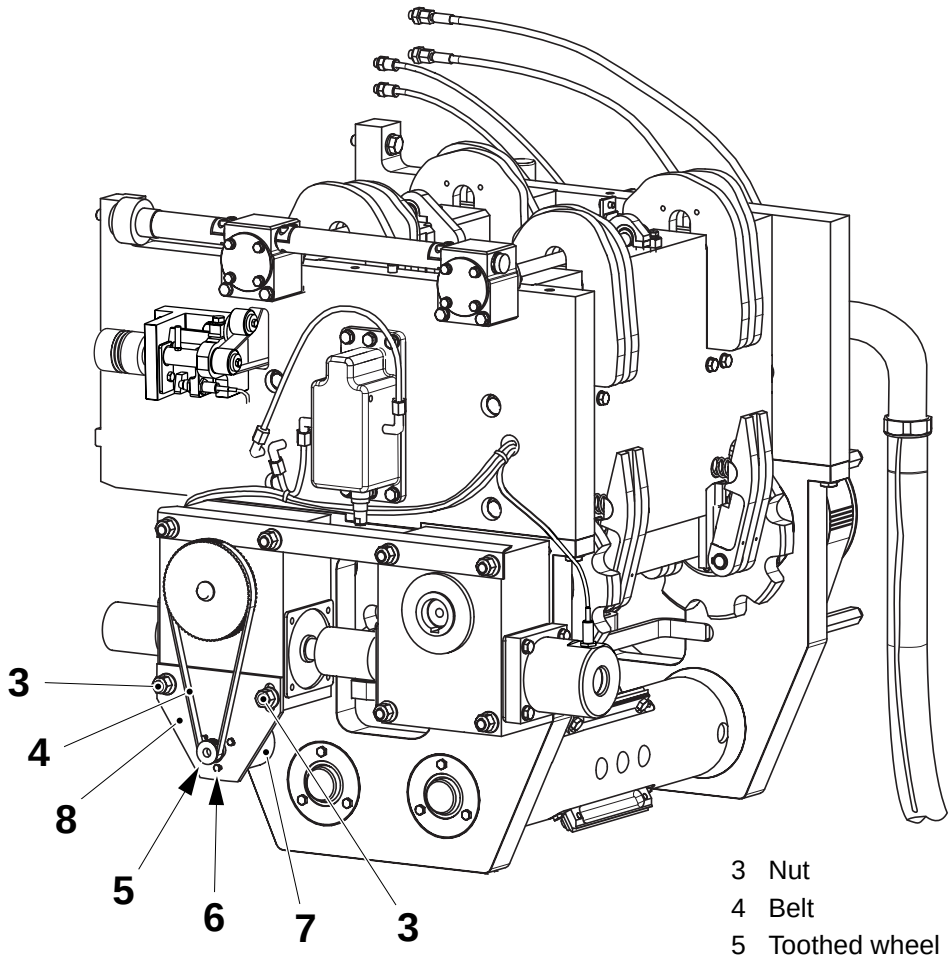

3 Nut
4 Belt
5 Toothed wheel
6 Screw
7 Angle encoder
8 Plate

2.2B3024D01en.fm

4.3-10 Drive unit overhaul - change bearing and seal ring, chain drive shaft, LH side

SPC reference	575238-0101

Note! In the following illustrations the chains and knives are not shown. This has been done for clarity.

a) Remove the screws (1) and the cover (2).

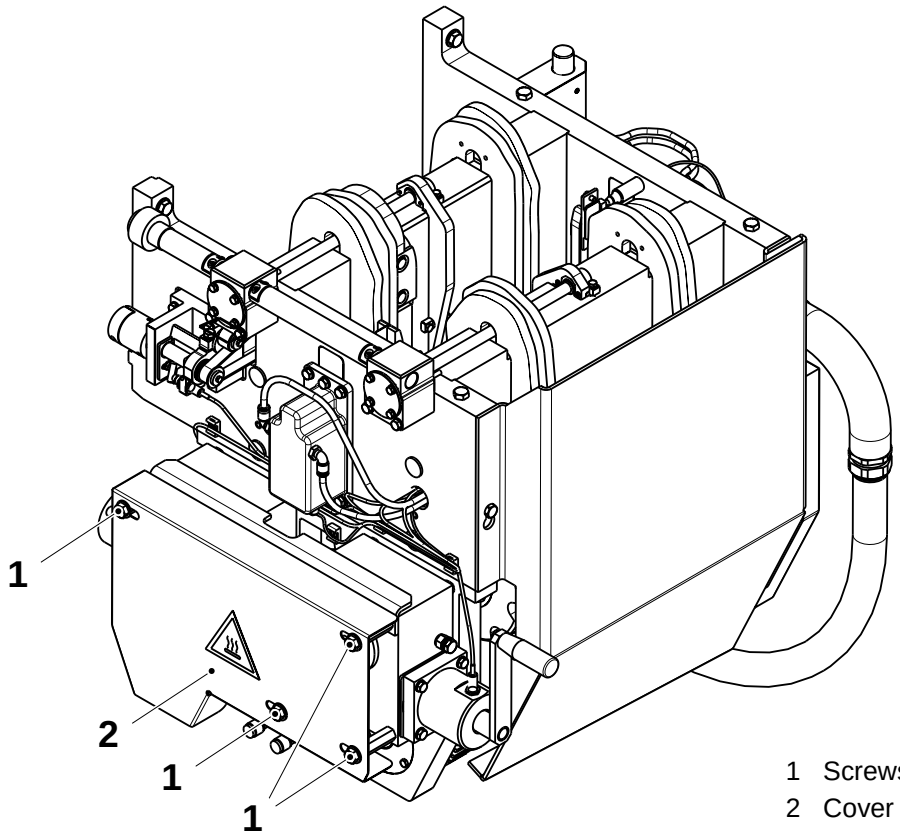

1 Screws
2 Cover

(Cont'd)

2.2B3024D01en.fm

(Cont'd)

Note! Do not try to disconnect the cable from the angle encoder (6).

b) Remove the nuts (3), the belt (4) and the plate (5) together with the angle encoder (6).

c) Unscrew the nut (7) and remove the crank handle sensor (8).

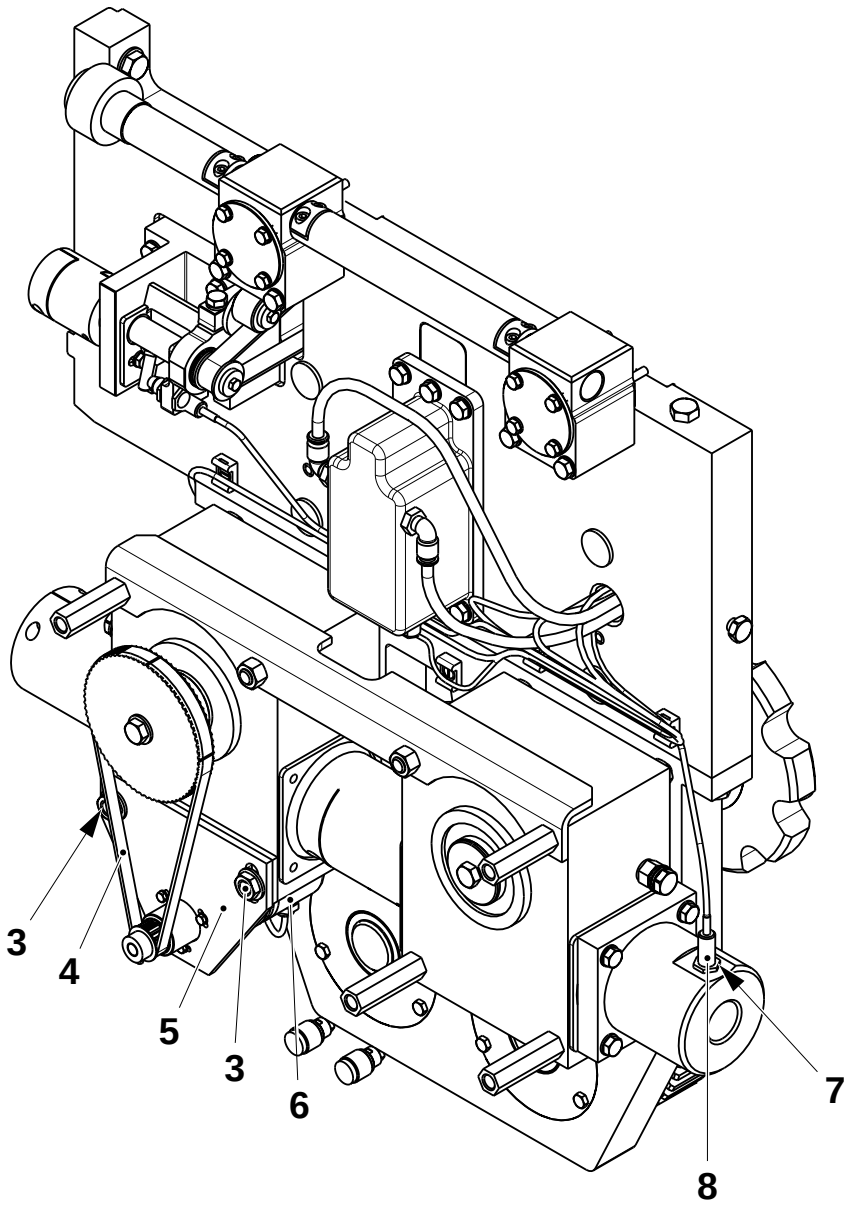

3 Nuts
4 Belt
5 PLate
6 Encoder
7 Nut
8 Sensor

(Cont'd)

2.2B3024D01en.fm

(Cont'd)

d) Remove the screw and washer (9) and pulley (10).

e) Remove the screw (11) and washer (12).

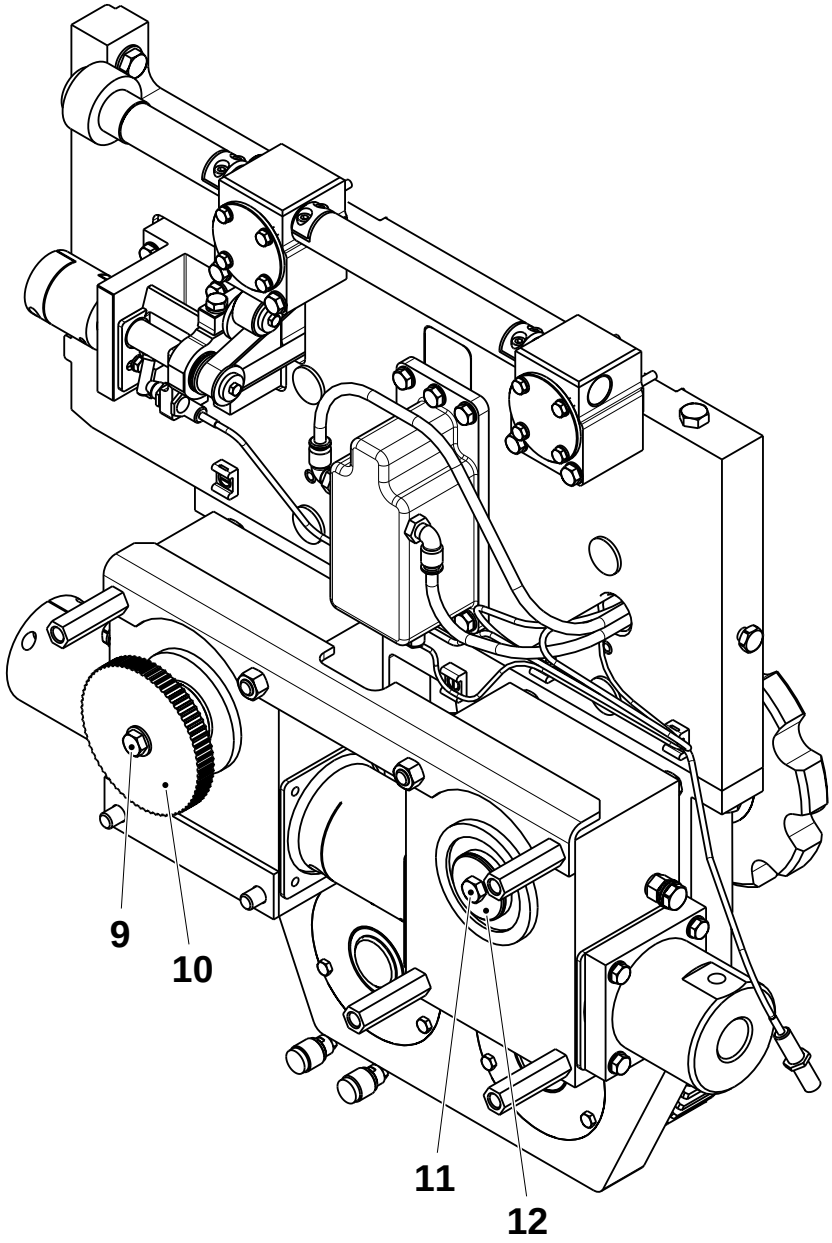

9 Screw & Washer
10 Pulley
11 Screw
12 Washer

(Cont'd)

2.2B3024D01en.fm

(Cont'd)

f) Remove the gearboxes (13) and (14), crank holder (15) and couplings (16) and (17) as one unit.

g) Remove the keys (not shown) and drive pin (18) from the keyway in the chain drive shafts.

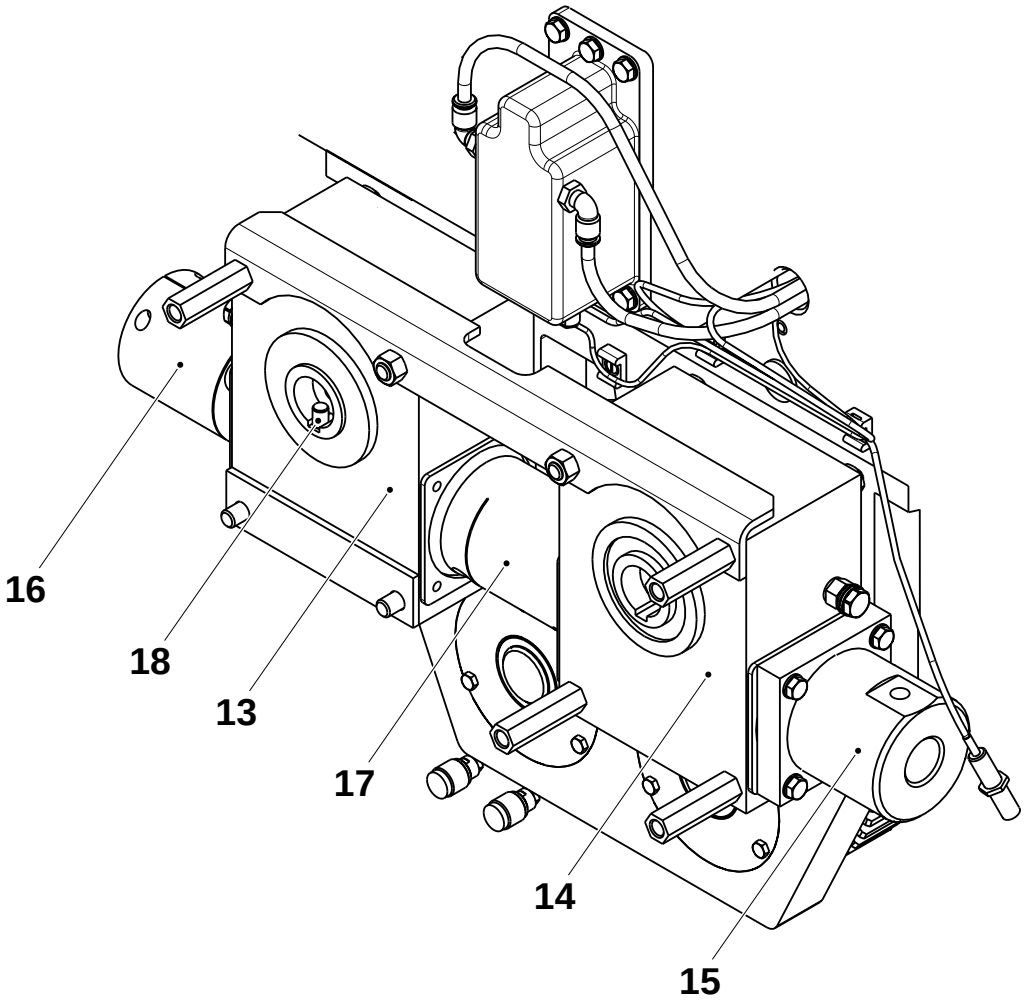

13 Gearbox
14 Gearbox
15 Crank holder
16 Coupling
17 Coupling
18 Drive pin

(Cont'd)

2.2B3024D01en.fm

(Cont'd)

h) Remove screws (19) and the covers (20).
i) Remove and change the sealing rings (21).
j) Remove the retaining rings (22).
k) Remove and change the bearings (23).
l) Remove the housings (24).
m) Remove and change the sealing rings (25).
n) Assemble in reverse order.

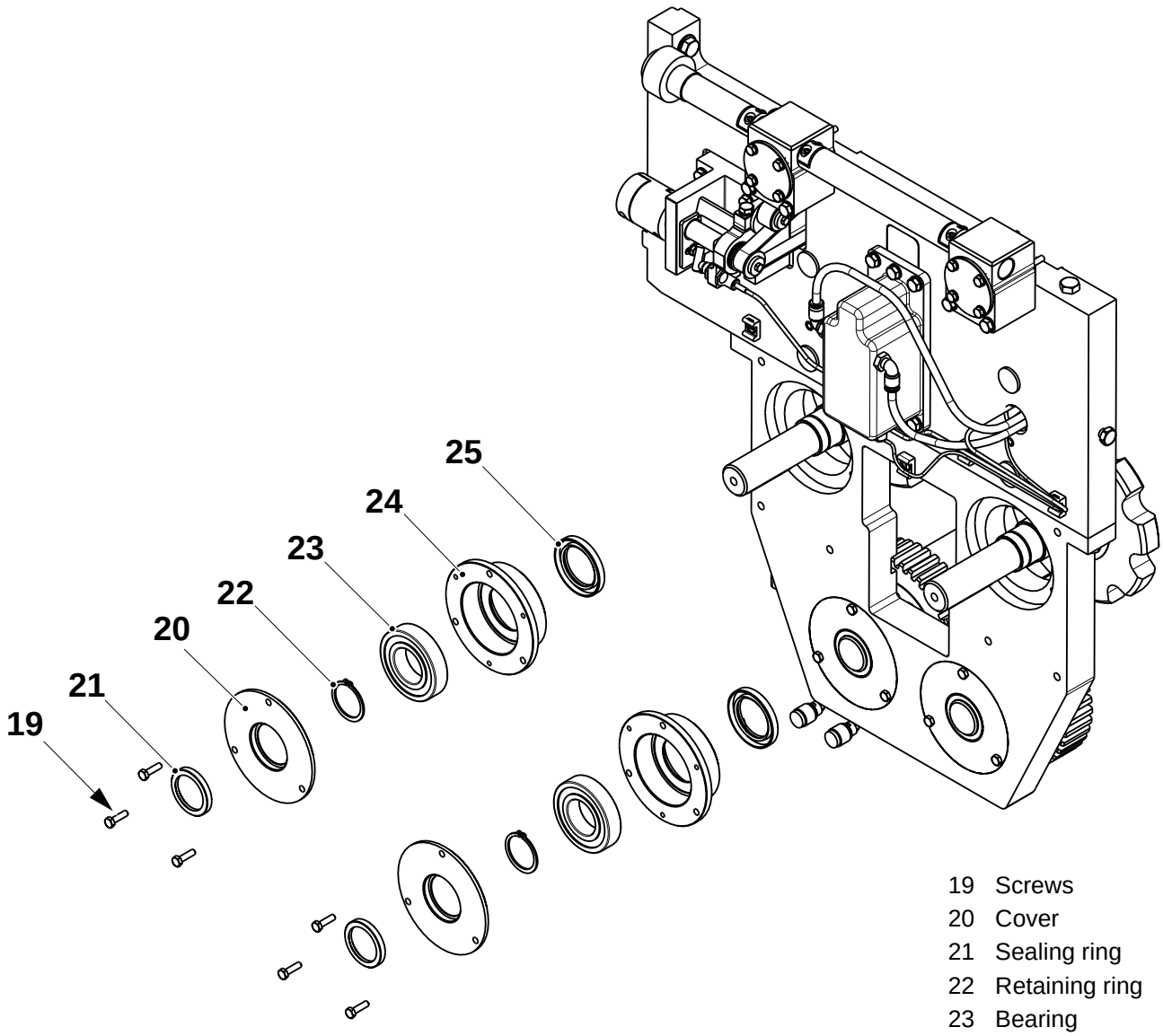

19 Screws
20 Cover
21 Sealing ring
22 Retaining ring
23 Bearing
24 Housing
25 Sealing ring

o) Set the angle encoder, see *4.3-9 Drive unit - set angle encoder*.
p) Set the cutting belt tensions, see *4.3-4 Drive unit - set angle encoder belt*.

0-Series
2.2B3024D01en.fm

4.3-11 Drive unit overhaul - change bearing and seal ring, drums, LH side

Tools - forklift - pallet - torque wrench	 min 17 Nm
SPC reference	575238-0101

Note! In the following illustrations the chains and knives are not shown. This has been done for clarity.

a) Remove the screws (1) and the cover (2).

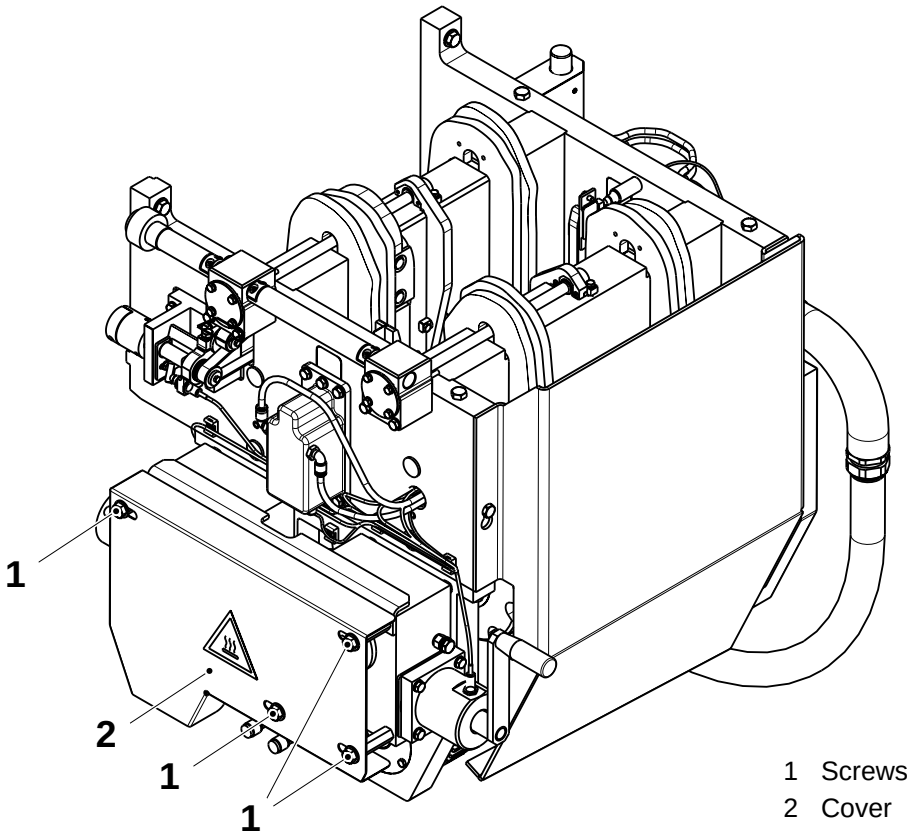

1 Screws
2 Cover

(Cont'd)

2.2B3024D01en.fm

(Cont'd)

Note! There is no need to remove the gearboxes from the chain drive shafts when working on the drums.
The illustration below shows the gearboxes omitted, this has been done for clarity.

b) Remove screws (3) and the covers (4).

c) Remove and change the sealing rings (5).

d) Remove the retaining rings (6).

e) Remove and change the bearings (7).

f) Remove the housings (8).

g) Remove and change the sealing rings (9).

h) Assemble in reverse order.

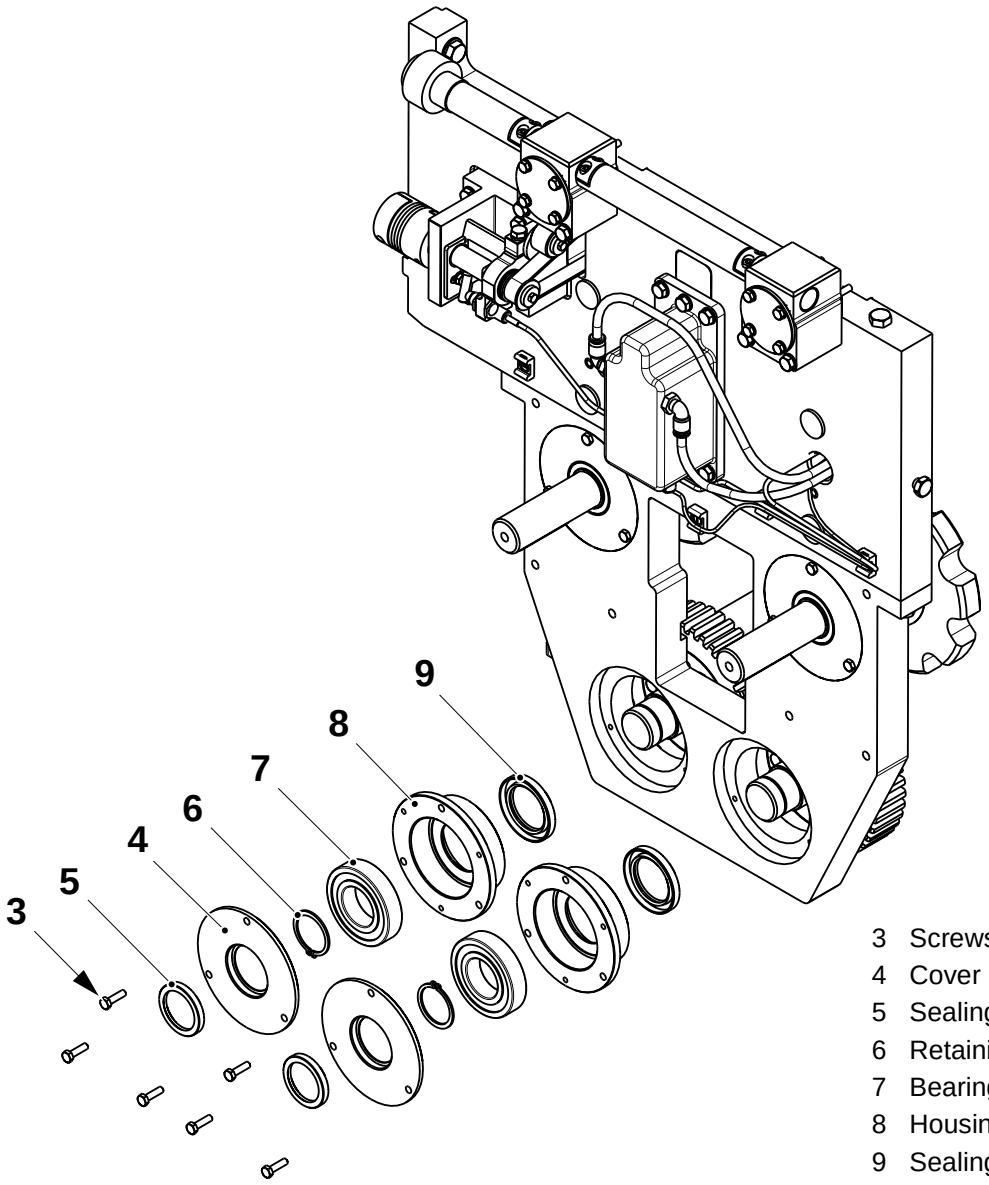

3 Screws
4 Cover
5 Sealing ring
6 Retaining ring
7 Bearing
8 Housing
9 Sealing ring

0-Series

2.2B3024D01en.fm

4.3-12 Drive unit overhaul - change bearing and seal ring, chain drive shaft, RH side

SPC reference	575238-0101

Note! In the following illustrations the chains and knives are not shown. This has been done for clarity.

a) Remove the four screws (1) and the cover (2).

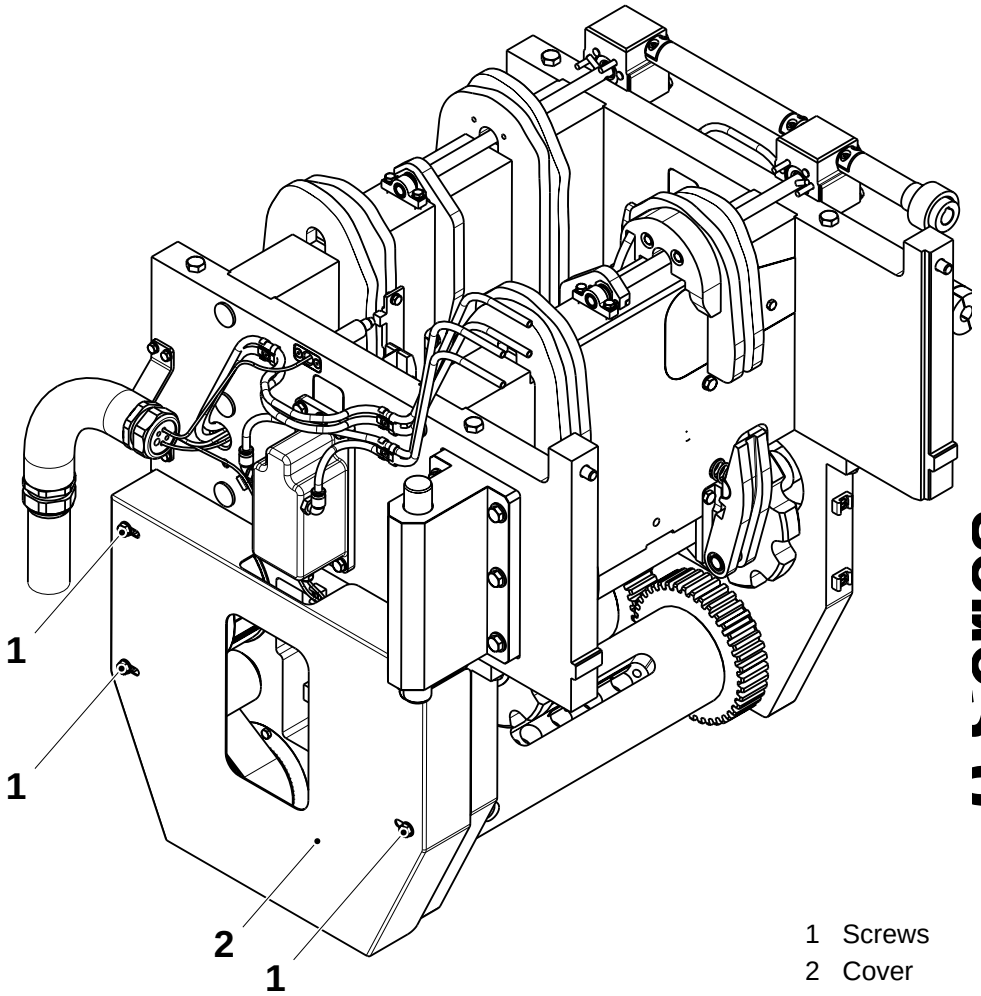

1 Screws
2 Cover

(Cont'd)

2.2B3024D01en.fm

(Cont'd)

b) Loosen the smaller of the screws (3) in a belt tensioner (4).

c) Insert a prong key in the holes (5) and turn it to minimise the belt tension.

d) Repeat at the other belt tensioner.

e) Remove the belts (6).

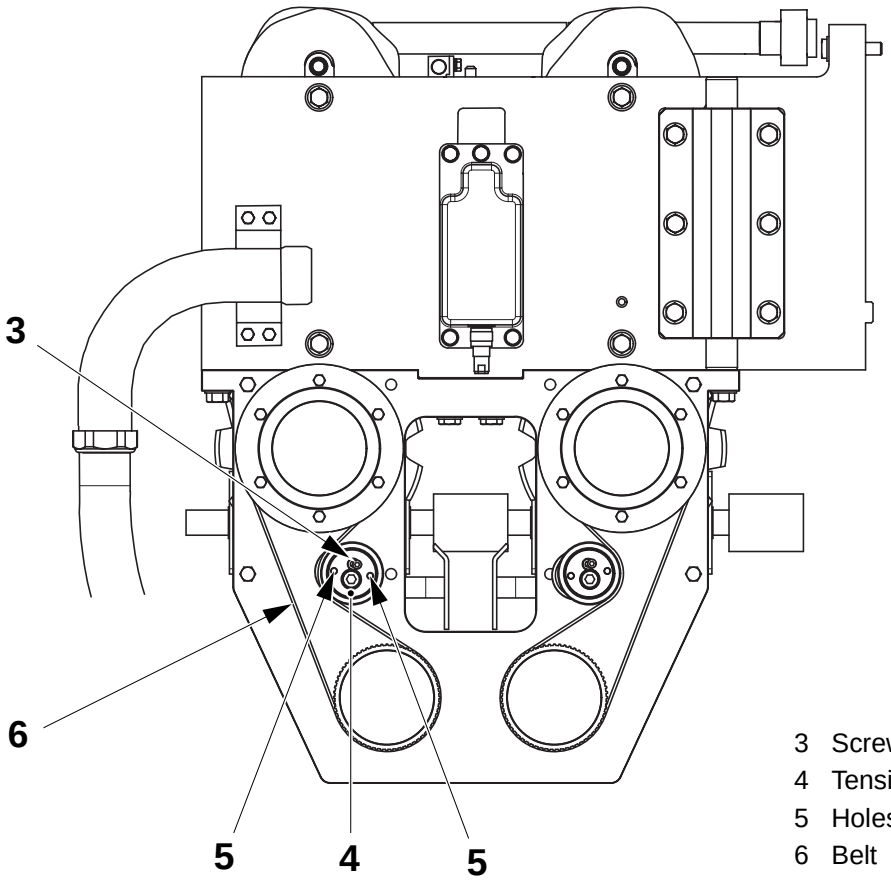

3 Screws
4 Tensioner
5 Holes
6 Belt

2.2B3024D01en.fm

(Cont'd)

(Cont'd)

f) Remove the screws (7), covers (8), gaskets (9), the clamping elements (10) and the pulleys (11).

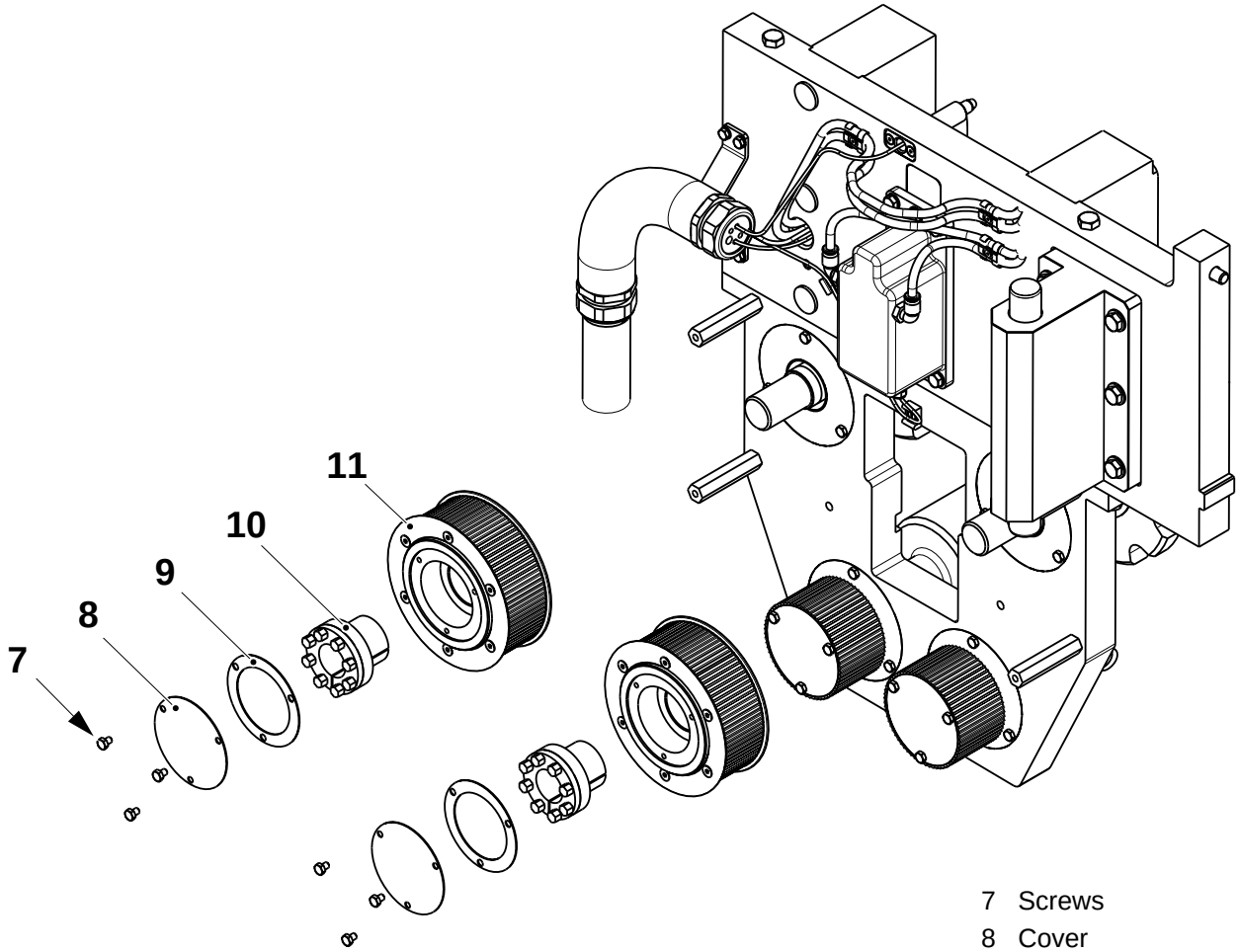

2.2B3024D01en.fm

7 Screws
8 Cover
9 Gasket
10 Clamping element
11 Pulleys

0-Series

(Cont'd)

(Cont'd)

g) Remove the screws (12) and covers (13).

h) Remove and change the sealing rings (14).

i) Remove and change the bearings (15).

j) Remove the housing (16).

k) Remove and change the sealing ring (17).

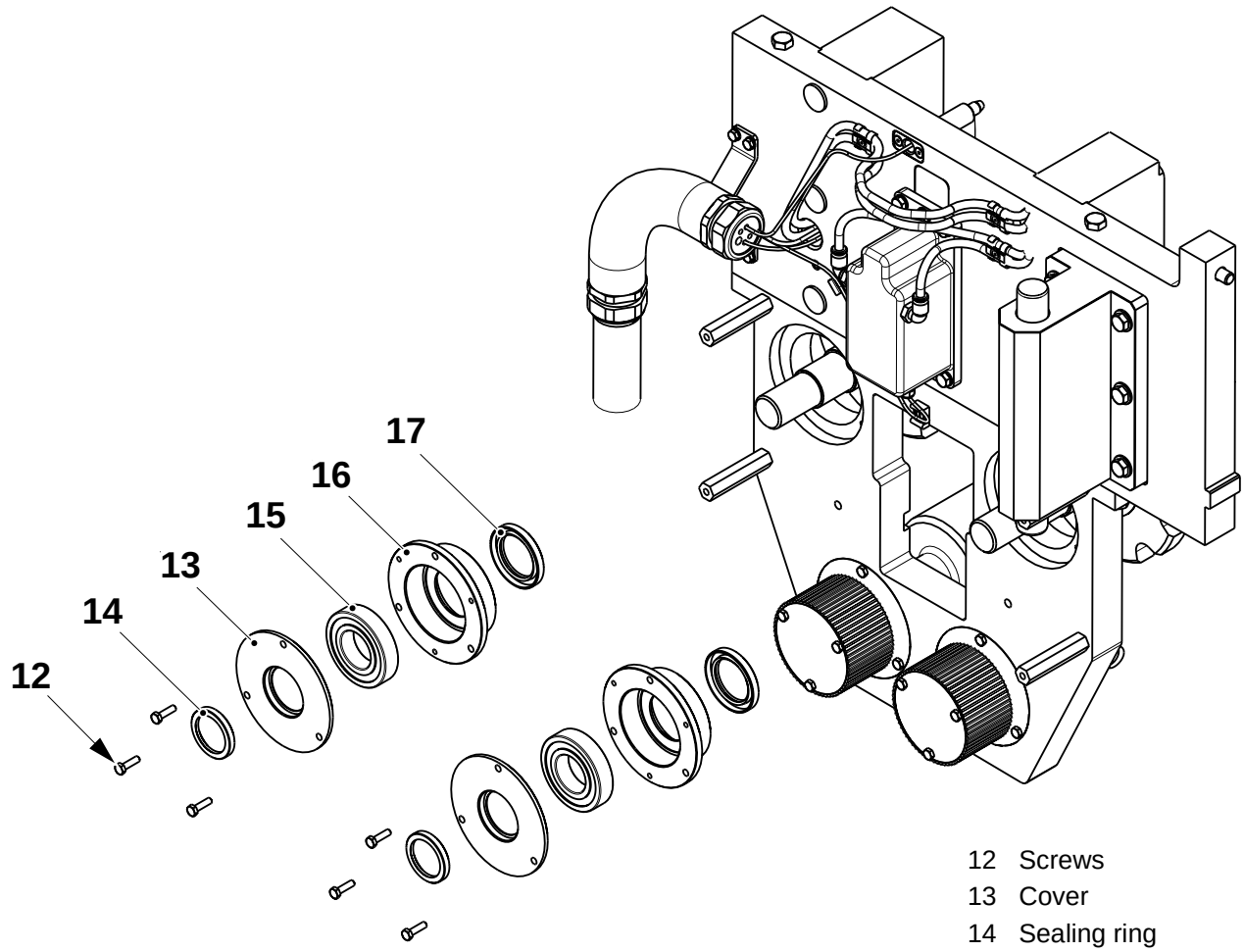

12 Screws
13 Cover
14 Sealing ring
15 Bearing
16 Housing
17 Sealing ring

Note! Do not tighten the clamping elements and do not fit the protection covers while assembling the belt drives.

l) Assemble in reverse order.

m) Adjust the belt tension and knives, see *4.3-3 Drive unit - set knives and cutting belt tension*.

n) Fit the screws, gaskets and covers on the tensioners.

o) Fit the screws and main cover.

0-Series
2.2B3024D01en.fm

4.3-13 Drive unit overhaul - change bearing and seal ring, drums, RH side

SPC reference	575238-0101

Note! In the following illustrations the chains and knives are not shown. This has been done for clarity.

a) Remove the screws (1) and the cover (2).

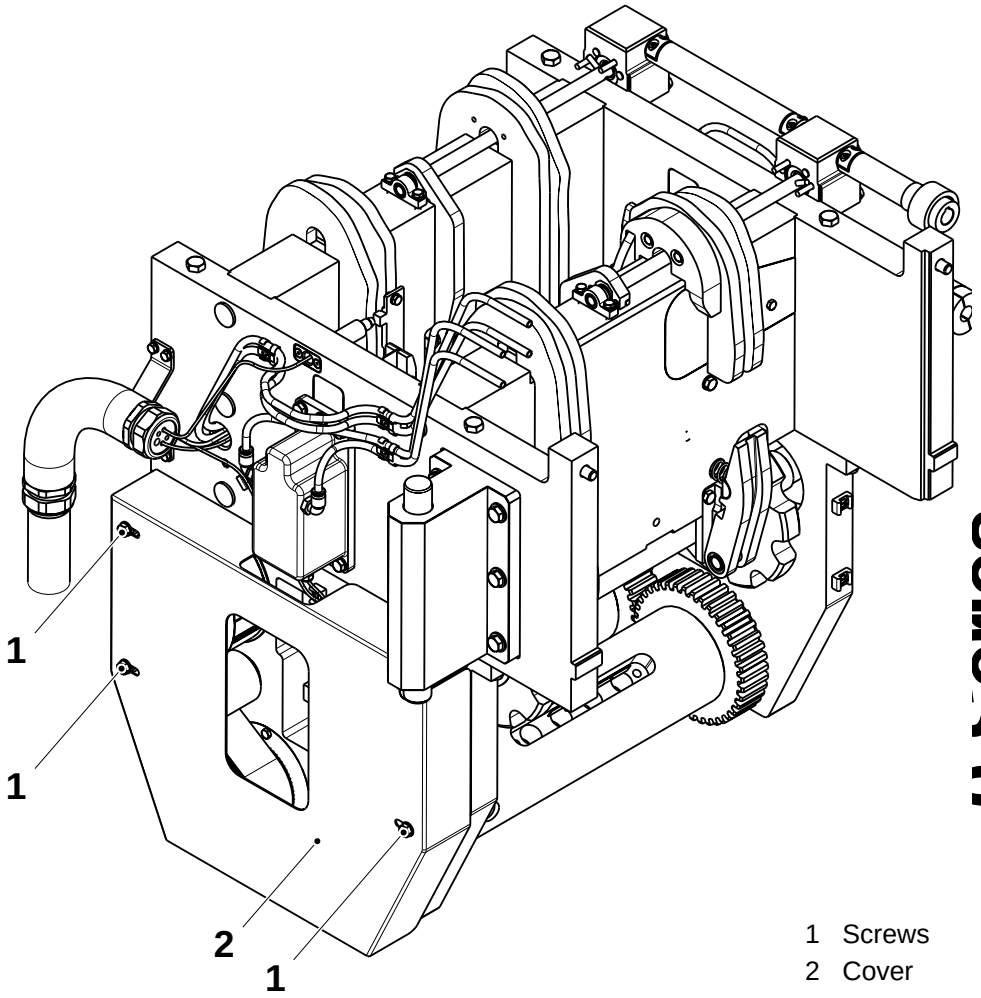

1 Screws
2 Cover

(Cont'd)

2.2B3024D01en.fm

U-Series

(Cont'd)

b) Loosen the smaller of the screws (3) in a belt tensioner (4).

c) Insert a prong key in the holes (5) and turn it to minimise the belt tension.

d) Repeat at the other belt tensioner.

e) Remove the belts (6).

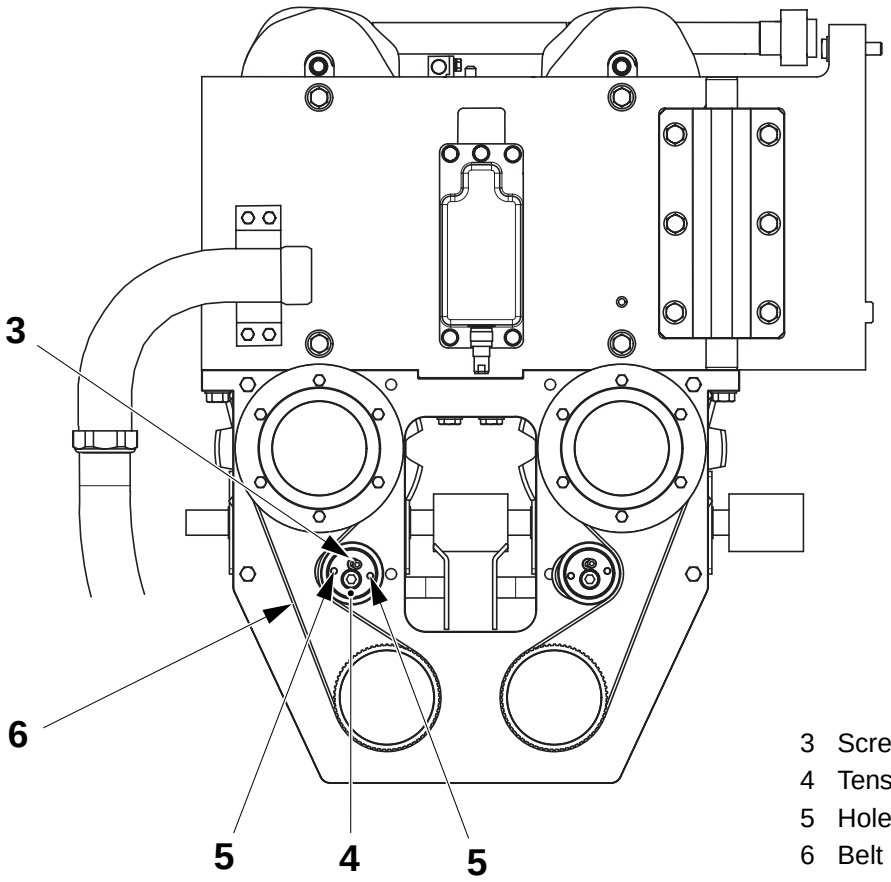

3 Screws
4 Tensioner
5 Holes
6 Belt

(Cont'd)

2.2B3024D01en.fm

(Cont'd)

f) Remove the screws (7), covers (8), gaskets (9), the clamping elements (10) and the pulleys (11).

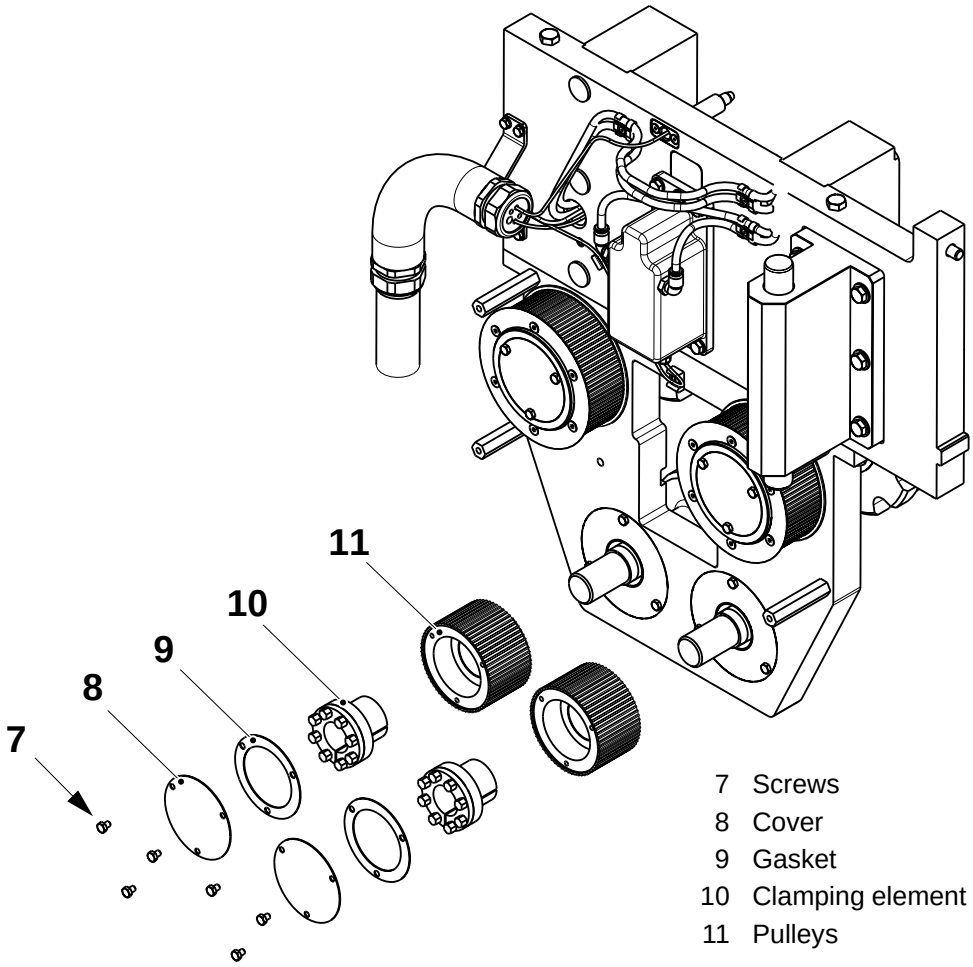

7 Screws
8 Cover
9 Gasket
10 Clamping element
11 Pulleys

(Cont'd)

2.2B3024D01en.fm

(Cont'd)

g) Remove the screws (12) and covers (13).
h) Remove and change the sealing rings (14).
i) Remove and change the bearings (15).
j) Remove the housing (16).
k) Remove and change the sealing ring (17).

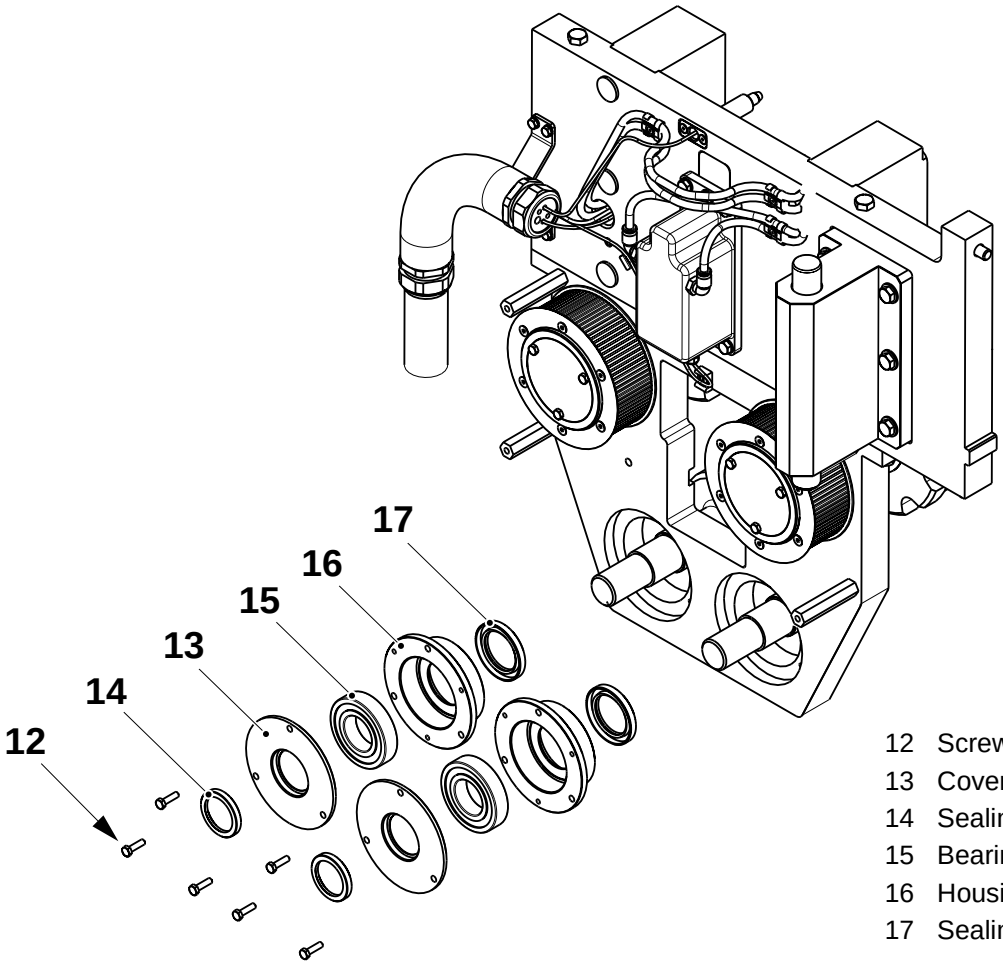

12 Screws
13 Cover
14 Sealing ring
15 Bearing
16 Housing
17 Sealing ring

(Cont'd)

2.2B3024D01en.fm

(Cont'd)

Note! Do not tighten the clamping elements and do not fit the protection covers while assembling the belt drives.

l) Assemble in reverse order.

m) Adjust the belt tension and knives, see *4.3-3 Drive unit - set knives and cutting belt tension*.

n) Fit the screws, gaskets and covers on the tensioners.

o) Fit the screws and main cover.

2.2B3024D01en.fm

4.3-14 Drive unit - change drum gearwheel

Tools: - froklift - pallet	
SPC reference	575238-0101

a) Swing out the jaw system.

b) Remove the knives, see *4.3-6 Drive unit - remove knife holder*

c) Remove the cutting dollies, *4.3-8 Drive unit - remove cutting dolly holder*

d) Remove the chains, see *4-3 Jaw system - disassembly and reassembly.*

e) At the LH side, remove the bearings, see *4.3-11 Drive unit overhaul - change bearing and seal ring, drums, LH side.*

f) At the RH side, remove the bearings, see *4.3-13 Drive unit overhaul - change bearing and seal ring, drums, RH side*

Note! Before removing the drums, note the orientation.

g) Manoeuvre the drums (1) out of the jaw unit.

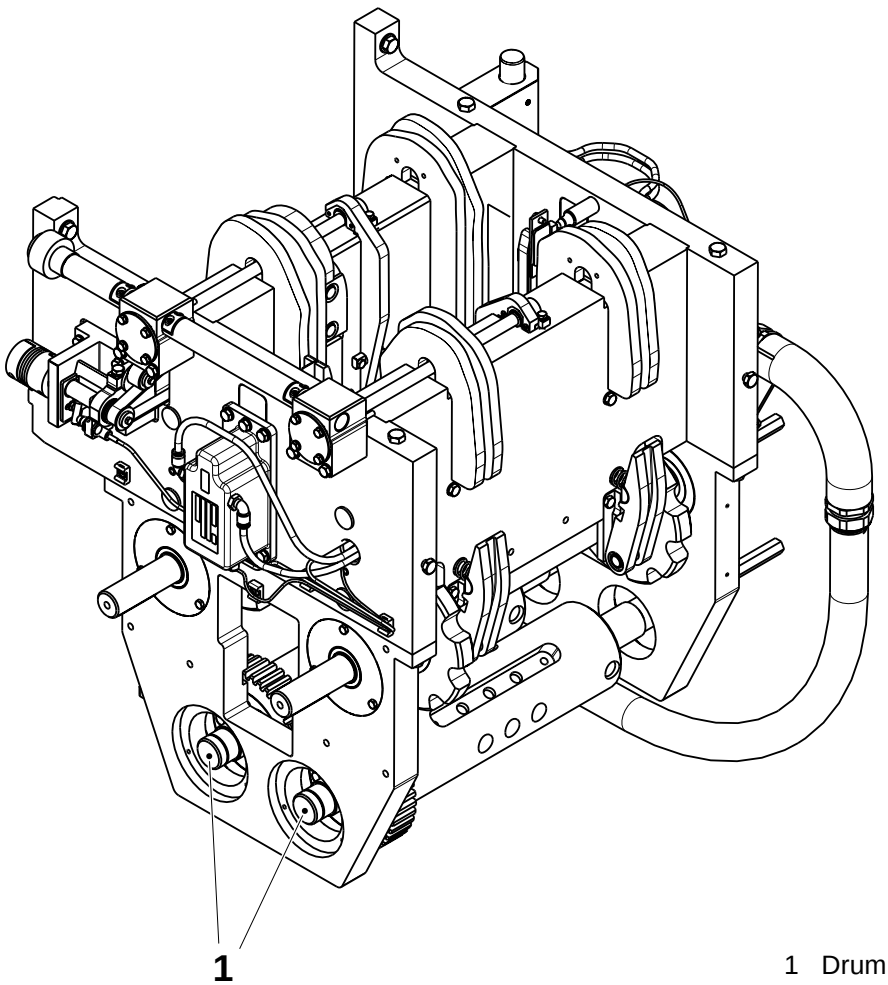

1 Drum

(Cont'd)

2.2B3024D01en.fm

(Cont'd)

h) Remove the screws (2) and plate (3).

i) Remove and change the gearwheel (4).

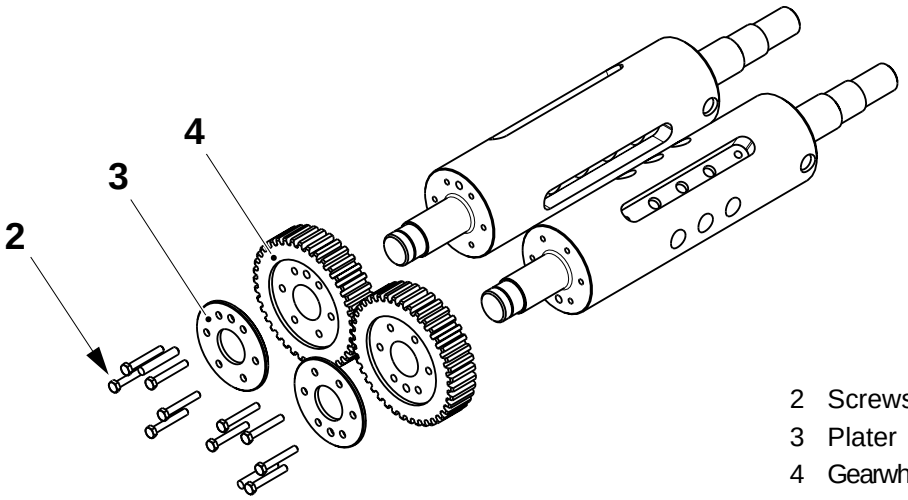

2 Screws
3 Plater
4 Gearwheel

j) Assemble in reverse order.

4.3-15 Drive unit - change chain wheel

Tools: - froklift - pallet	
SPC reference	575238-0101

a) Swing out the jaw system.

b) Remove the knives, see *4.3-6 Drive unit - remove knife holder*

c) Remove the cutting dollies, *4.3-8 Drive unit - remove cutting dolly holder*

d) Remove the chains, see *4-3 Jaw system - disassembly and reassembly.*

e) Remove the cam (1).

f) Remove the screws (2) and guides (3).

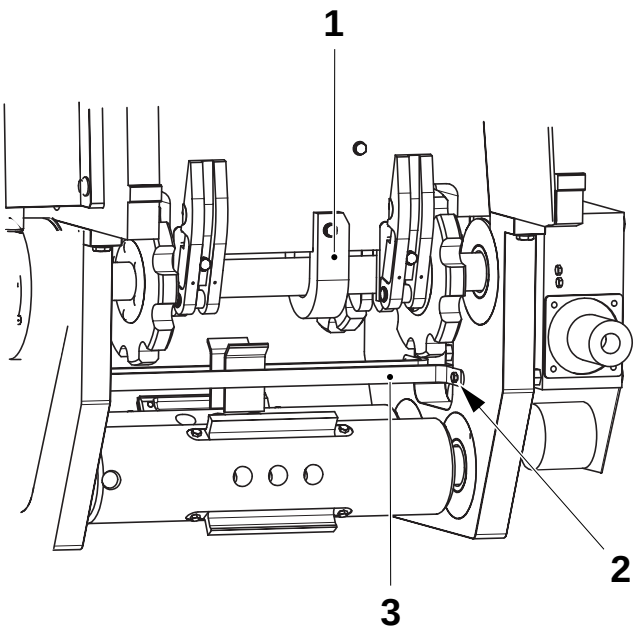

1 Cam
2 Screw
3 Guide

g) Remove the drums, see *4.3-14 Drive unit - change drum gearwheel*.

h) Support the jaw system from beneath.

(Cont'd)

2.2B3024D01en.fm

(Cont'd)

i) Remove the bearings from the chain drive shaft, see *4.3-10 Drive unit overhaul - change bearing and seal ring, chain drive shaft, LH side* and *4.3-12 Drive unit overhaul - change bearing and seal ring, chain drive shaft, RH side*.

j) Remove the screws (4) and lower the bottom half of the jaw unit.

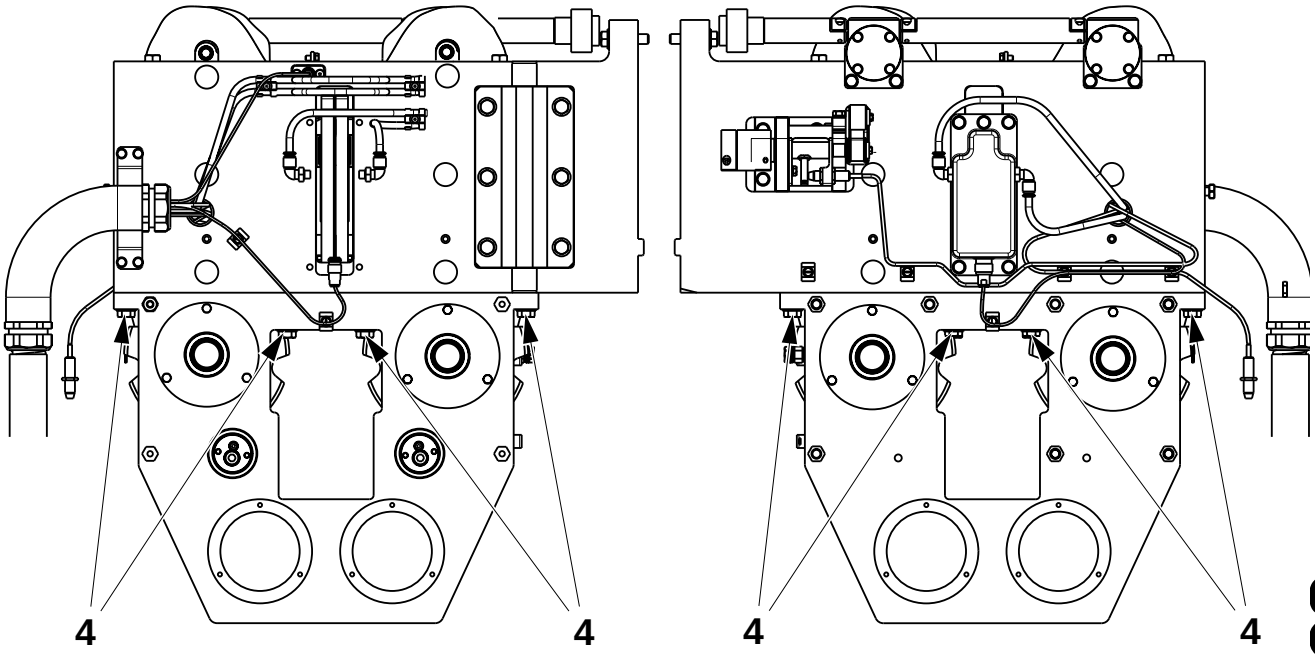

4 Screw

2.2B3024D01en.fm

Note! Before removing the drive shafts, note the orientation.

k) Separate the frame and remove the chain drive shafts.

l) Remove the screws (6), lids (7) and change the wheels (8).

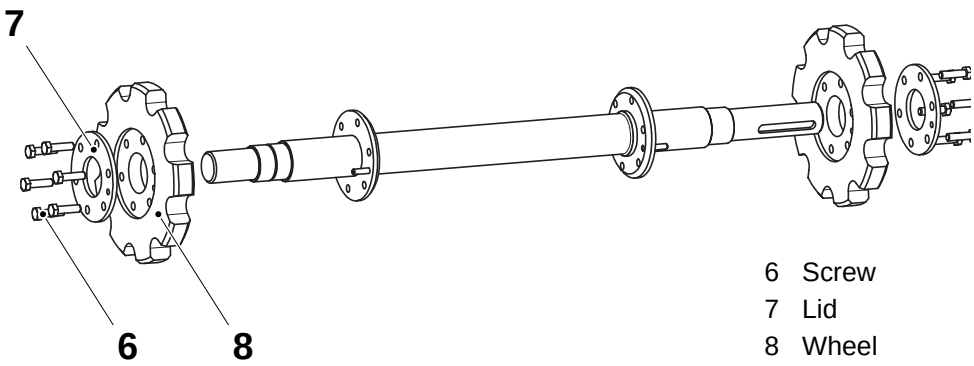

6 Screw
7 Lid
8 Wheel

m) Assemble in the reverse order.

n) Set the angle encoder, see *4.3-9 Drive unit - set angle encoder*.

o) Set the cutting belt tensions, see *4.3-4 Drive unit - set angle encoder belt*

p) Adjust the belt tension and knives, see *4.3-3 Drive unit - set knives and cutting belt tension*.

4.3-16 Drive unit - change bearings in belt tensioner

SPC reference	575238-0101

a) Remove the four screws (1) and the cover (2).

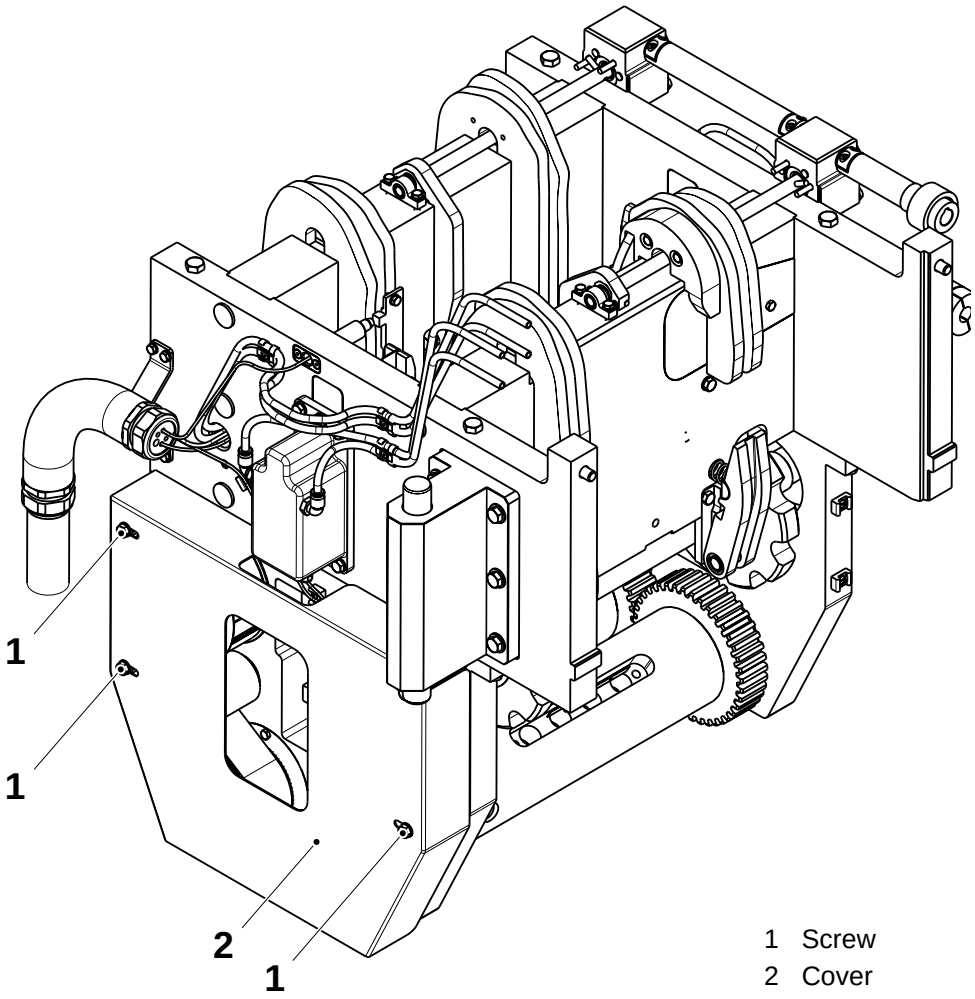

1 Screw
2 Cover

2.2B3024D01en.fm

(Cont'd)

(Cont'd)

b) Remove the larger of the screws (3) in the belt tensioner (4) and remove the belt tensioner.

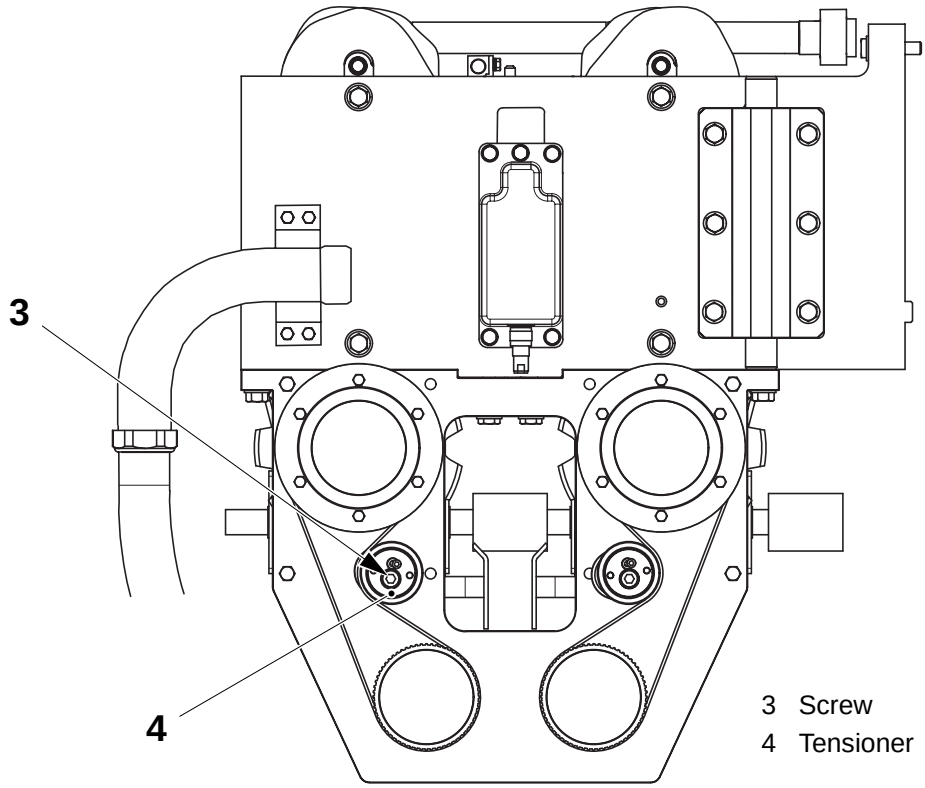

3 Screw
4 Tensioner

c) Remove the screw (5), the eccentrics (6) and (7), the retaining rings (8) and (9) and change the bearings (10) and (11).

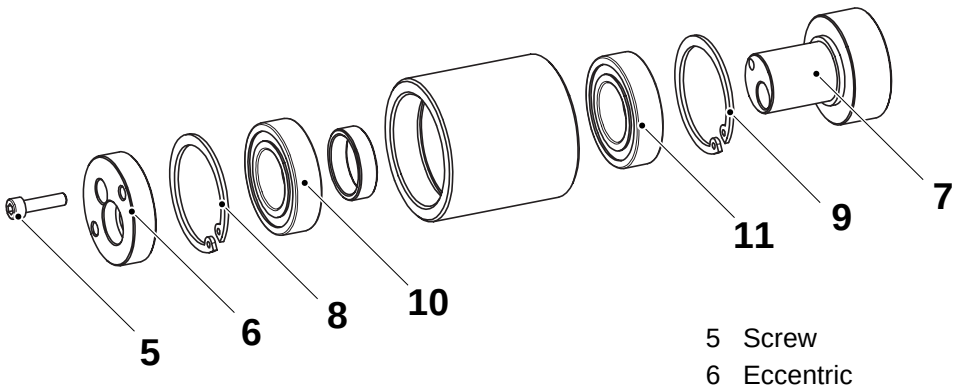

5 Screw
6 Eccentric
7 Eccentric
8 Retaining ring
9 Retaining ring
10 Bearing
11 Bearing

d) Assemble in the reverse order.

e) Adjust the belt tension and knives, see *4.3-3 Drive unit - set knives and cutting belt tension*.

2.2B3024D01en.fm

4.4 Volume adjustment

SPC reference	575241-0101

4.4-1 Volume adjustment - set

SPC reference	575241-0101

a) Loosen the screws (2).
b) Turn the shaft (3) until the pin (4) reaches the outside stop as shown.
c) Turn the shaft (1) until the pin (5) reaches the outside stop as shown.
d) Tighten the screws (2).

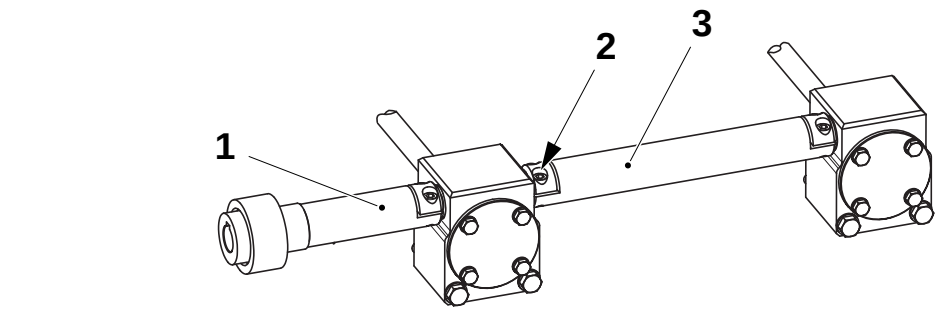

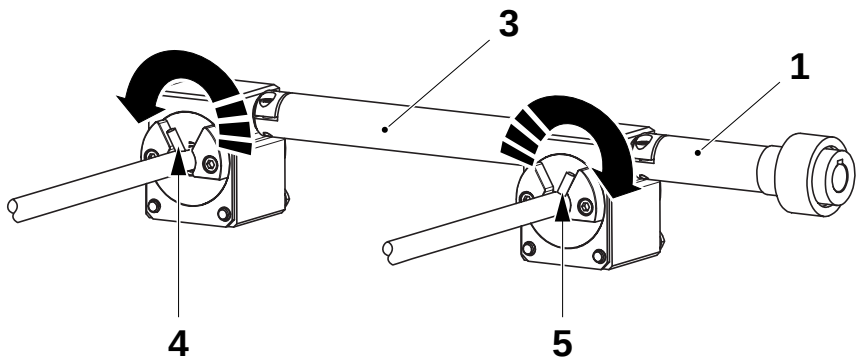

1 Shaft
2 Screw
3 Shaft
4 Stop pin
5 Stop pin

0-Series

2.2B3024D01en.fm

4.4-2 Volume adjustment - change cams

SPC reference	575241-0101

a) Remove the chains, see *4-3 Jaw system - disassembly and reassembly*.

b) Remove the screws (1) and pull out the cams (2).

c) Remove the screws (3), supports (4) and axles (5).

d) Change the cams (2) and assemble in the reverse order.

e) Fit the chains, see *4-3 Jaw system - disassembly and reassembly*.

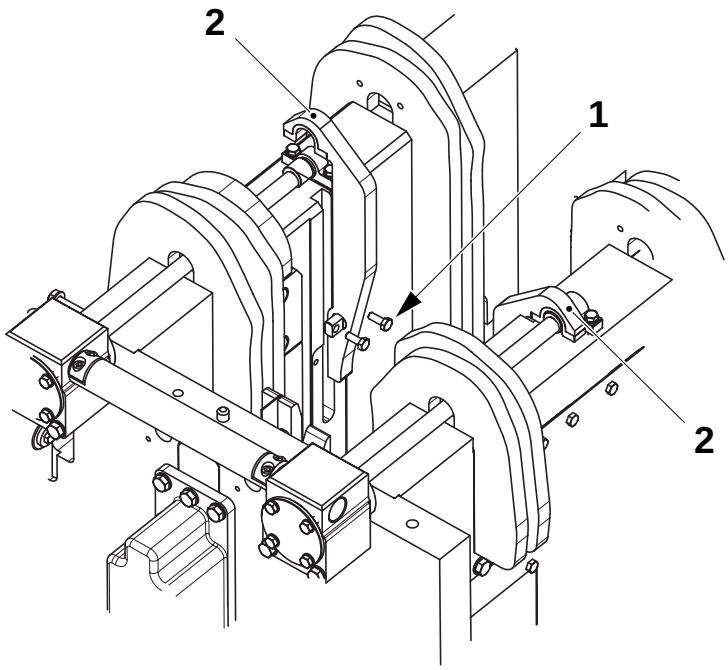

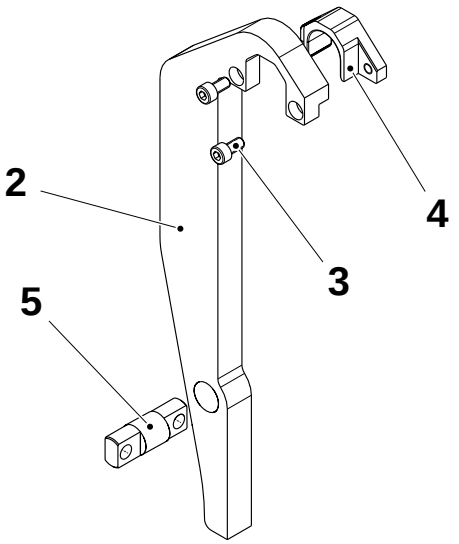

1 Screw
2 Cam
3 Screw
4 Support
5 Axle

2.2B3024D01en.fm

0-Series

4.5 Design correction

SPC reference	575240-0101

4.5-1 Design correction - check belt tension

SPC reference	575240-0101

The belt deflection at the its point (A) should be 5 mm. To adjust:

a) Loosen the screw (1).
b) With one hand press the roller (2) fully down.
c) Tighten the screw (1).
d) Check the belt tension.

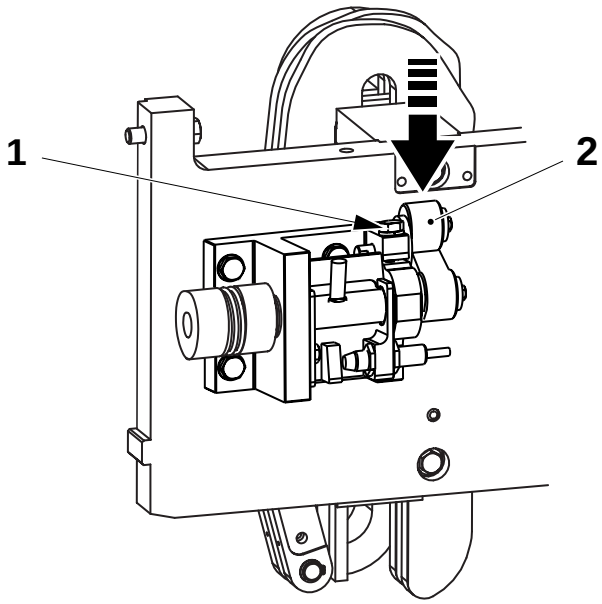

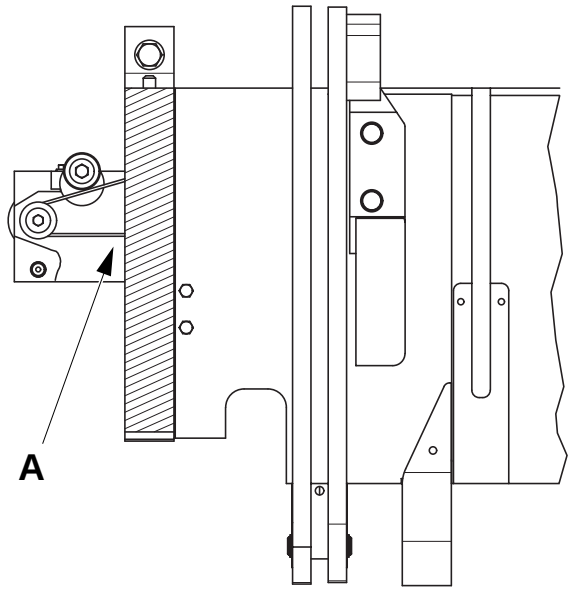

A = 5 mm

1 Screw
2 Roller

0-Series

2.2B3024D01en.fm

4.5-2 Design correction - change belt

SPC reference	575240-0101

For 250 B

a) Remove the chains, see *4-3 Jaw system - disassembly and reassembly*.

b) Remove the screws (1) and the cams (2).

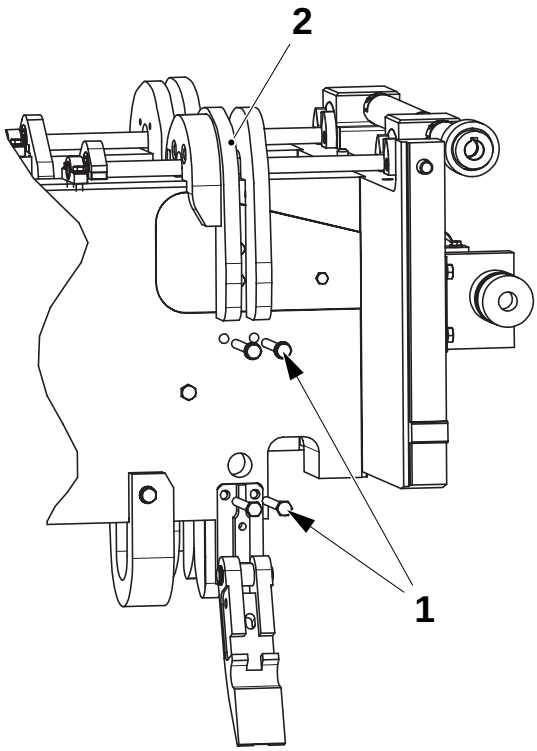

1 Screw
2 Cam

For 200 B

c) Remove the chains, see *4-3 Jaw system - disassembly and reassembly*.

d) Remove the screws (3) and the cover (4).

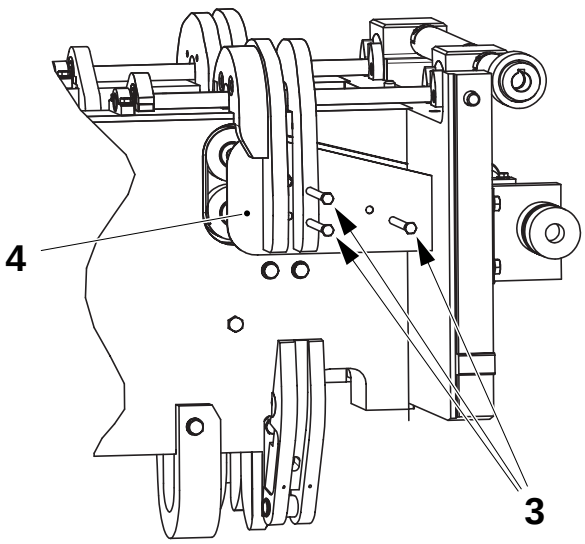

3 Screw
4 Cover

(Cont'd)

2.2B3024D01en.fm

(Cont'd)

For all volumes

e) Loosen the screw (5), release the roller (6) and change the belt (7).

f) Set the design correction, see *4.5-4 Design correction - set*.

g) Assemble in the reverse order.

h) Tension the belt, see *4.5-1 Design correction - check belt tension*.

i) Fit the chains, see *4-3 Jaw system - disassembly and reassembly*.

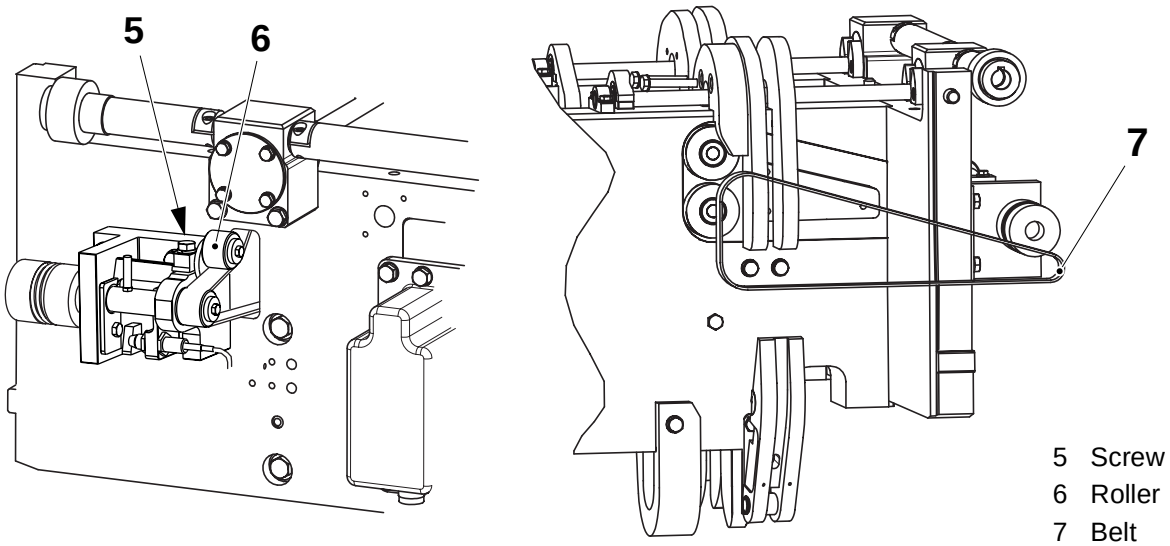

5 Screw
6 Roller
7 Belt

2.2B3024D01en.fm

4.5-3 Design correction - overhaul

SPC reference	575240-0101

For 250 B

a) Remove the chains, see *4-3 Jaw system - disassembly and reassembly*.

b) Remove the screws (1) and the cams (2).

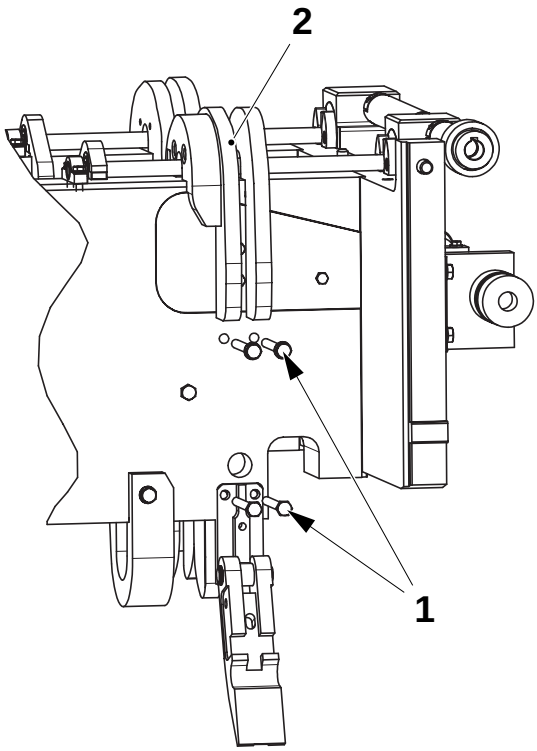

1 Screw
2 Cam

For 200 B

c) Remove the screws (3) and the cover (4).

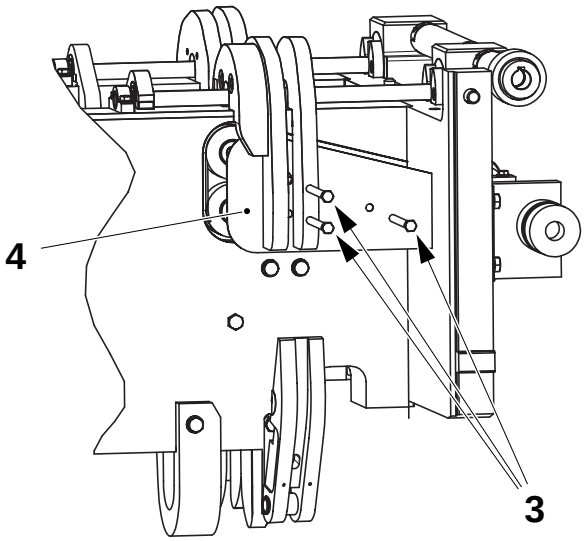

3 Screw
4 Cover

(Cont'd)

2.2B3024D01en.fm

(Cont'd)

For all volumes

d) Loosen the screw (5) and release the roller (6).

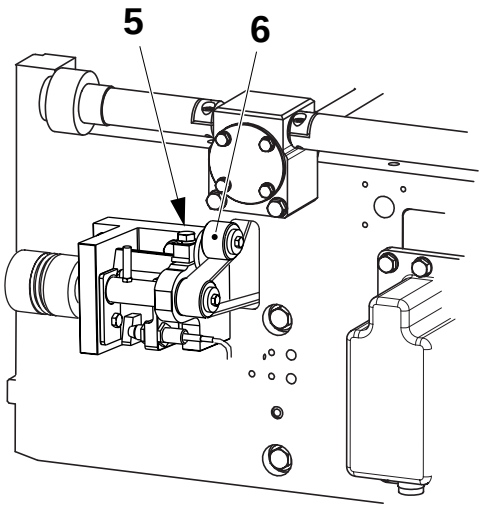

5 Screw
6 Roller

e) Remove and change the belt (7).

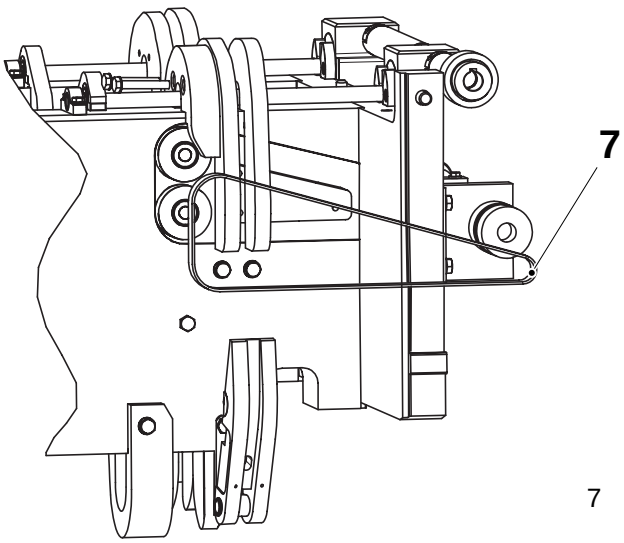

7 Belt

(Cont'd)

2.2B3024D01en.fm

(Cont'd)

f) Remove the screws (8) and the plastic cam (9).

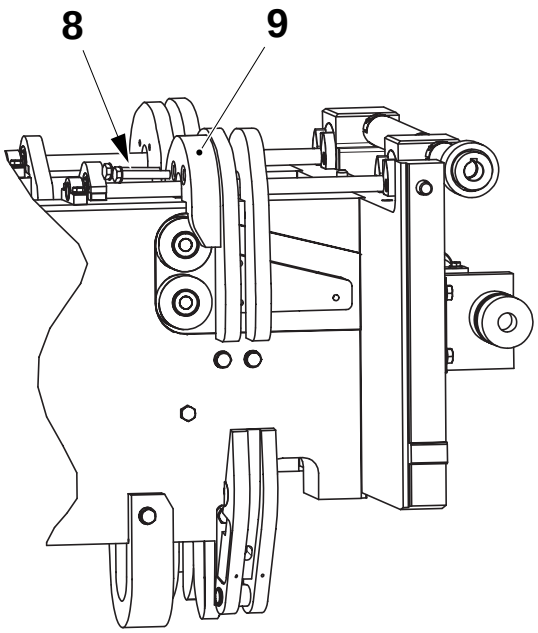

8 Screw
9 Cam

g) Remove the screws and washers (10). Remove the rollers (11) and change the bushings (12). Remove the screw (13).

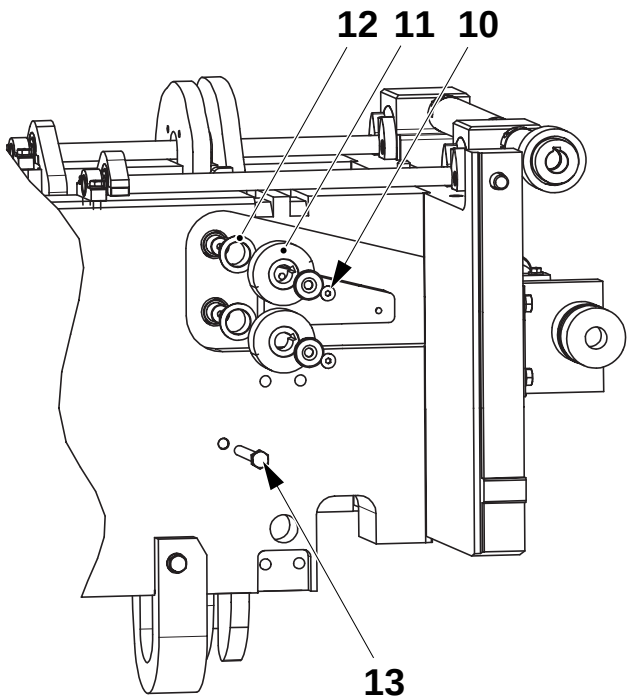

10 Screw
11 Roller
12 Bushing
13 Screw

(Cont'd)

(Cont'd)

h) Remove the cam (14). Change the cam (15).

i) Remove the eccentrics (16) and change the bushings (17).

j) Assemble in the reverse order.

k) Set the design correction, see *4.5-4 Design correction - set*.

l) Fit the chains, see *4-3 Jaw system - disassembly and reassembly*.

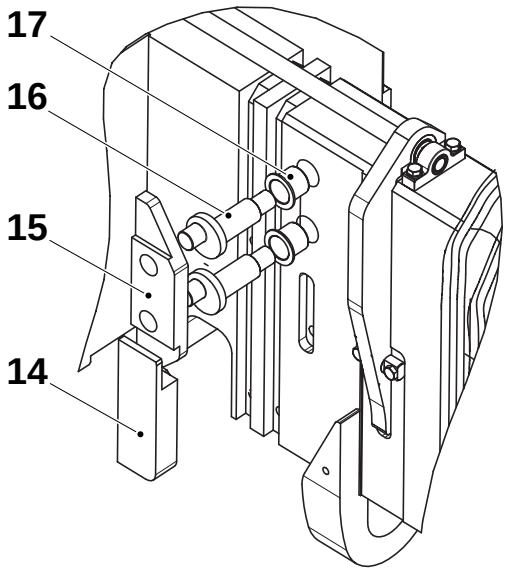

14 Cam
15 Cam
16 Eccentric
17 Bushing

0-Series

2.2B3024D01en.fm

4.5-4 Design correction - set

SPC reference	575240-0101

a) Loosen the screw (1) and release the roller (2).

b) Loosen the screw (3) and move the stop (4) on the adjuster fully against the support (5).

c) Rotate the design correction coupling (6) by hand so the shaft (7) is fully against the stop (4).

d) Pull the top of the belt (8) to fully retract the cam (9).

e) Tension the belt by hand by pressing the roller (2) fully down. Check if the shaft (7) still touches the stop (4).

f) If the shaft (7) still touches the stop (4), pull the top of the belt (8) and move it one tooth on the pulley (10).

g) Repeat steps *e)* and *f)* until the shaft (7) is one belt tooth away from the stop (4).

h) Set the belt tension, see *4.5-1 Design correction - check belt tension.*

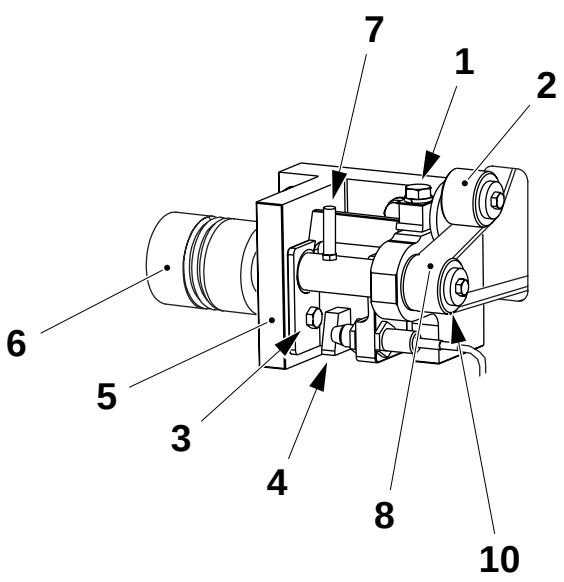

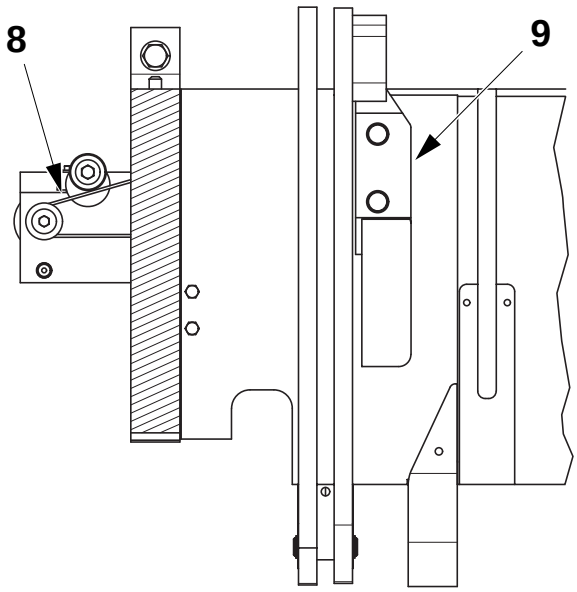

1 Screw
2 Roller
3 Screw
4 Stop
5 Support
6 Coupling
7 Shaft
8 Belt
9 Cam
10 Pulley

(Cont'd)

2.2B3024D01en.fm

0-Series

(Cont'd)

i) Rotate the design correction coupling (6) by hand so the shaft (7) is fully against the opposite stop (11).

j) Insert a 0.5 mm feeler gauge in four points: between the folding flaps (12) and the inductor (13), and between the folding flaps and pressure rail (14). The minimum distance must be no less than 0.5 mm.

k) Tighten the screw (3) and check the folding flaps with a feeler gauge again.

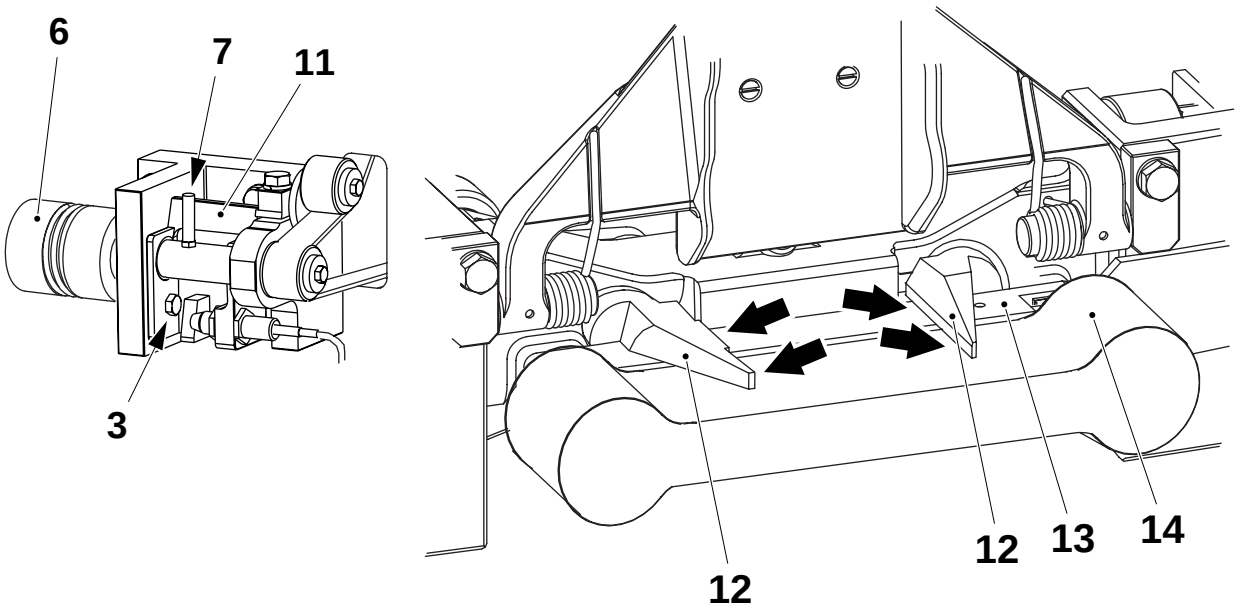

3	Cam	12	Folding flaps
6	Cam	13	Inductor
7	Eccentric	14	Pressure rail
11	Stop		

2.2B3024D01en.fm

0-Series

Fine tuning the Design Correction

a) Touch the **Manoeuvre System** button on the TPOP.



b) Touch the **Superstructure Settings** button.

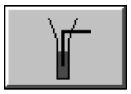

c) Touch the **Design correction** button.

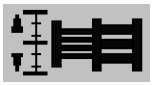

d) Set the **Design Correction Offset** (1) to **0** using the buttons (2) for coarse tuning and (3) for fine tuning.

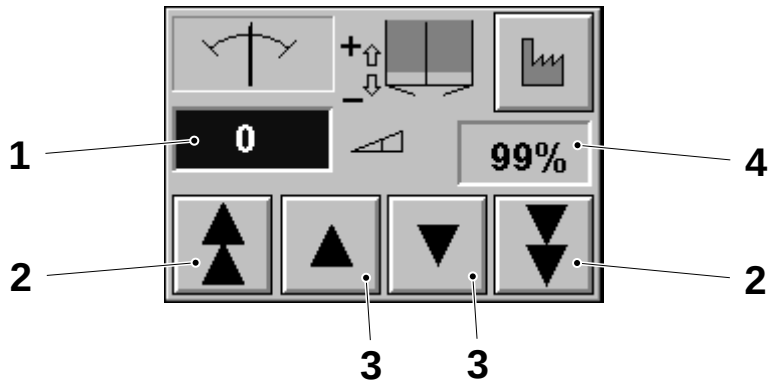

e) Adjust the **Design Correction Offset** while the machine is running until the **Alignment Percentage** (4) shows the highest possible value.

f) Check the bottom creases are correctly positioned on the packages.

g) Touch the **Exit** button.



This page intentionally left blank

2.2B3024D01en.fm

5 Final folder module

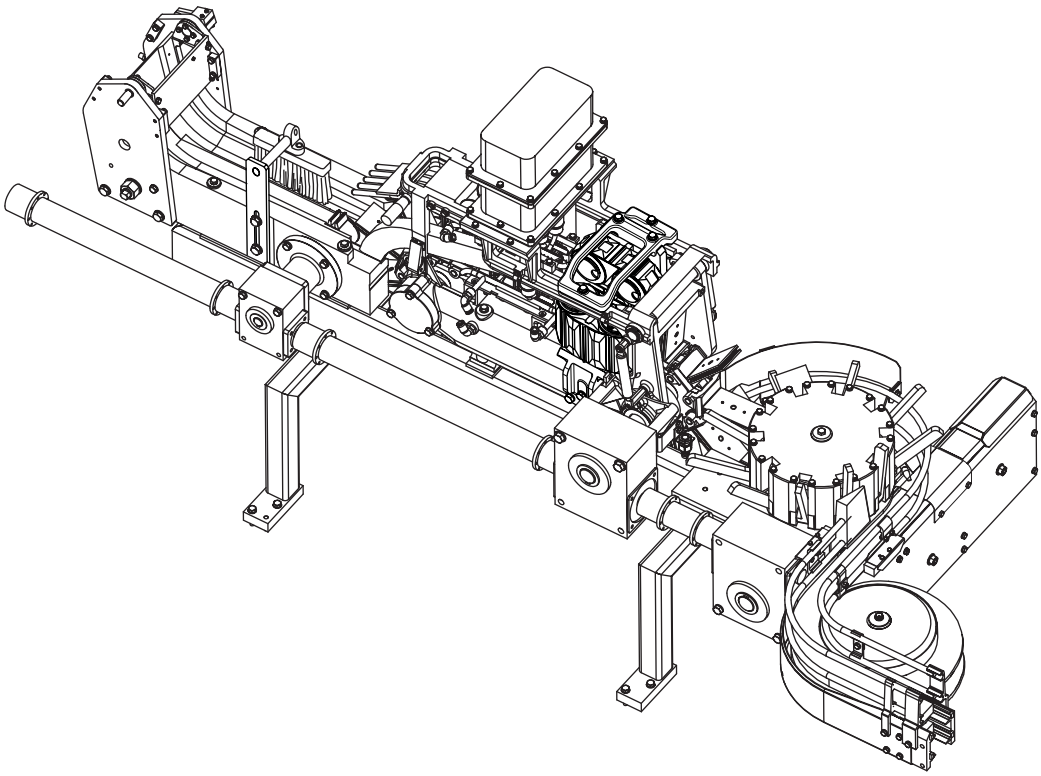

2.2B3024E01en.fm

0-Series

5-1 Final folder module - description

SPC reference	648525-0200

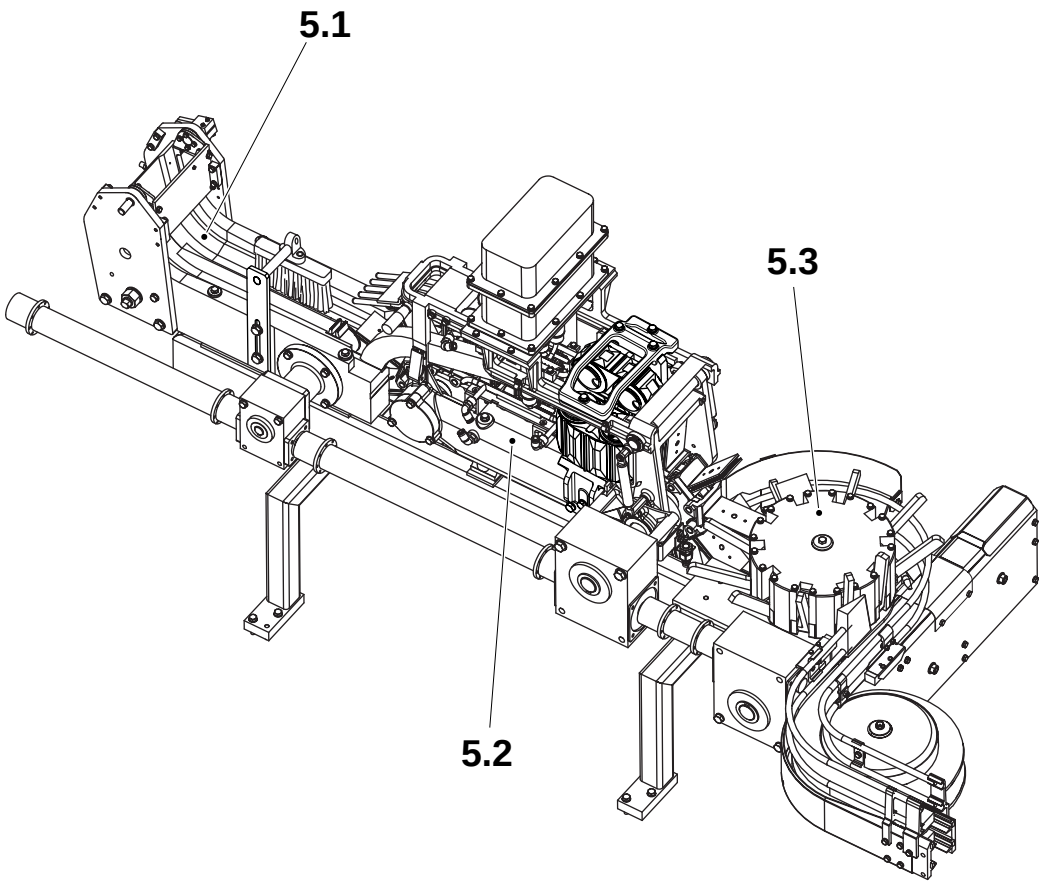

5.1 Conveyor
5.2 Final folder
5.3 Discharge unit
5.4 Drive
5.5 Waste conveyor

0-Series

2.2B3024E01en.fm

5-2 Final folder module - synchronisation

Machine status	Normal stop
Tools - template	 TP No. 1350716
SPC reference	648525-0200

a) Loosen the screw (1) in the shaft connection.

b) Insert the template (2) in the hole in the plate.

c) Using the shaft (3), turn the discharger unit clockwise until one carrier (4) touches the template (2).

d) Turn the shaft (5) to align one link of the station chain with the mark (6) on the conveyor.

e) Tighten the screws (1) and remove the template (2).

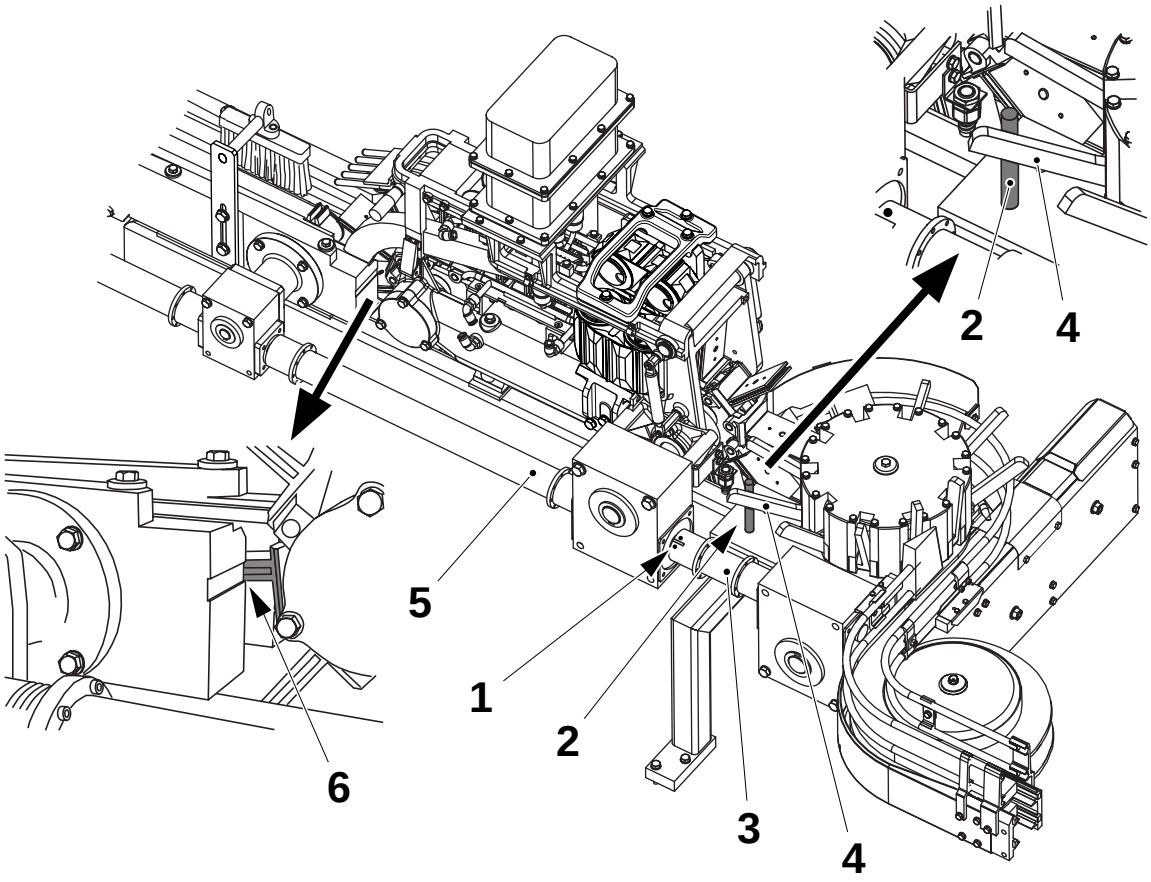

1 Screw
2 Template
3 Shaft
4 Carrier
5 Shaft
6 Mark

(Cont'd)

2.2B3024E01en.fm

(Cont'd)

f) Loosen the screw (7) in the shaft connection.

g) Turn the shaft (8) to align one link (9) of the station chain with the mark (10) on the conveyor.

h) While holding the shaft (8) from moving, turn the shaft (11) to align the first tooth (12) on the belt with the marks (13) on the conveyor.

i) Tighten the screw (7).

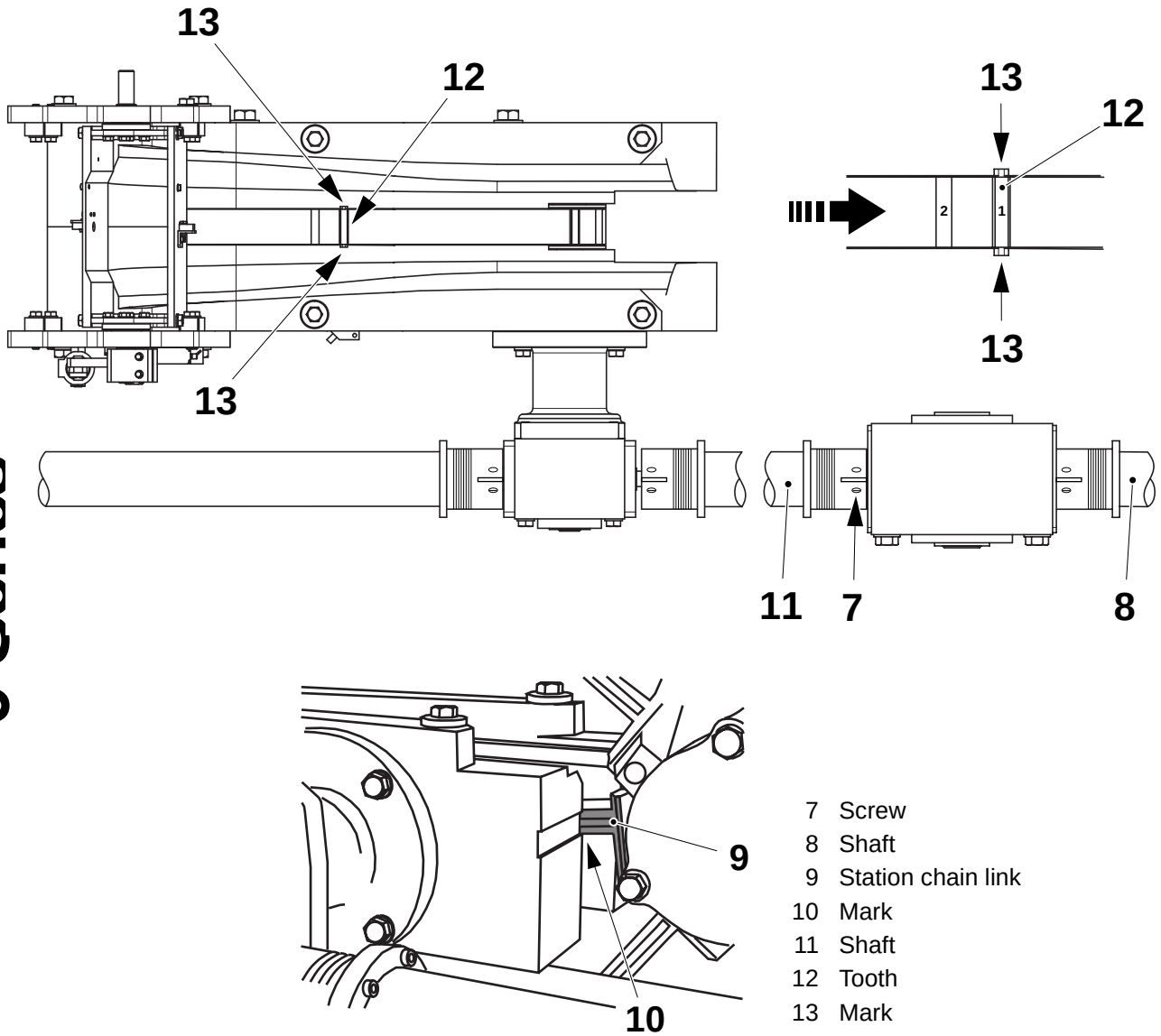

7 Screw
8 Shaft
9 Station chain link
10 Mark
11 Shaft
12 Tooth
13 Mark

(Cont'd)

2.2B3024E01en.fm

(Cont'd)

j) Step up the machine to **Preparation**.

k) On the TPOP:

- press the **Package monitoring** button (14),
- press the **Home position check** button (15),

l) Press and hold the **Final folder inching** button (16) until the final folder stops moving.

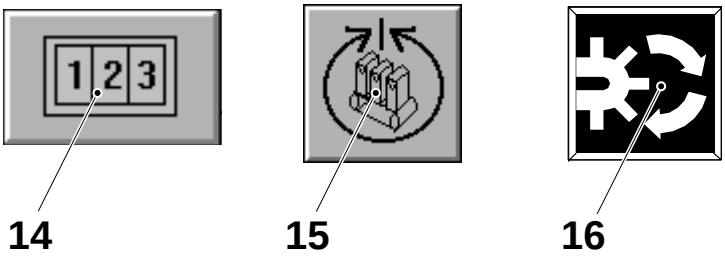

14 Package monitoring
15 Homeposition check
16 Final folder inching

m) Check the distance (A) between the first tooth and the end of the conveyor body.

2.2B3024E01en.fm

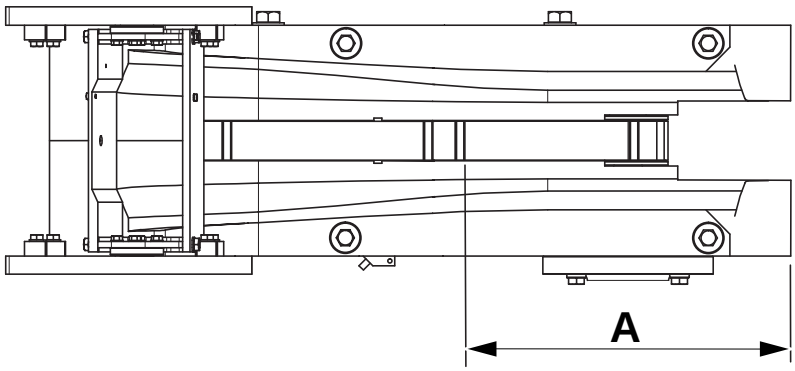

Package	A (mm)
200B	200
250B	220

(Cont'd)

(Cont'd)

n) If the distance is wrong:
On the TPOP, touch the **Final folder settings** button.

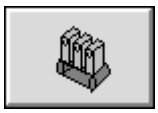

o) Then touch the **Final folder synchronisation** icon.

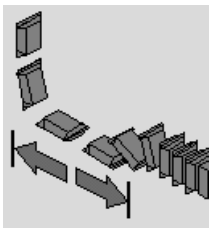

p) Change the setting depending on the position of the tooth: values of ±500 move the tooth by ±50 mm.

q) Repeat from step *j)*.

5.1 Conveyor

SPC reference	577111-0100

5.1-1 Conveyor - check belt

SPC reference	577111-0100

Check the belt and its teeth for wear or damage.

Change the belt as required, see *5.1-2 Conveyor - Check bearings*.

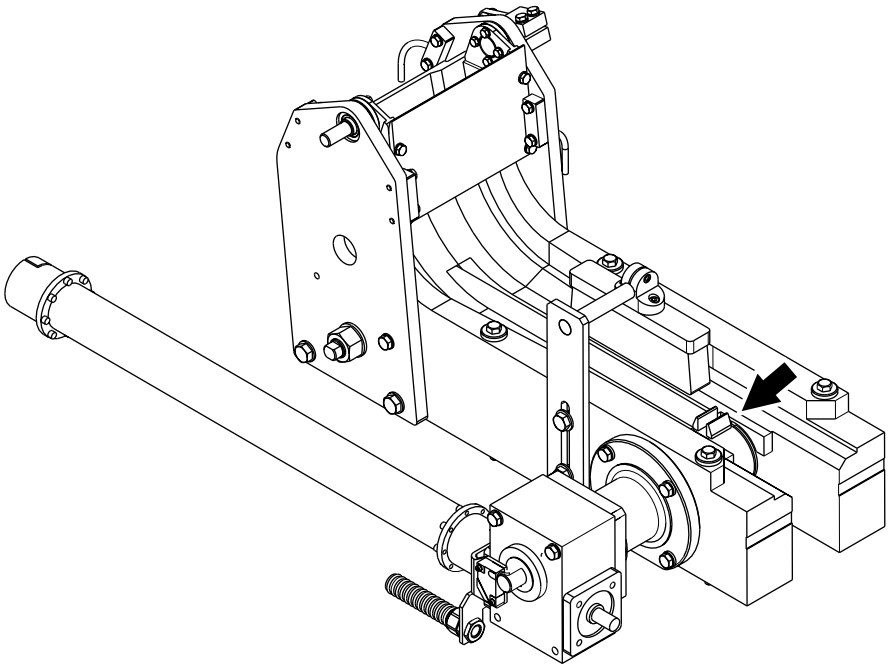

2.2B3024E01en.fm

0-Series

5.1-2 Conveyor - Check bearings

SPC reference	577111-0100

a) Loosen the belt tension: loosen the nut (1), then turn the eccentric shaft anticlockwise.

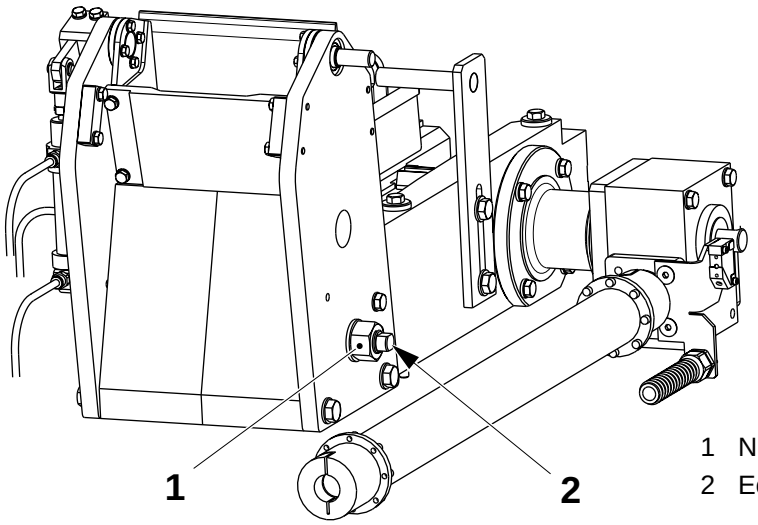

1 Nut
2 Eccentric shaft

b) Check the bearings (3) and (4) rotate smoothly in both directions.

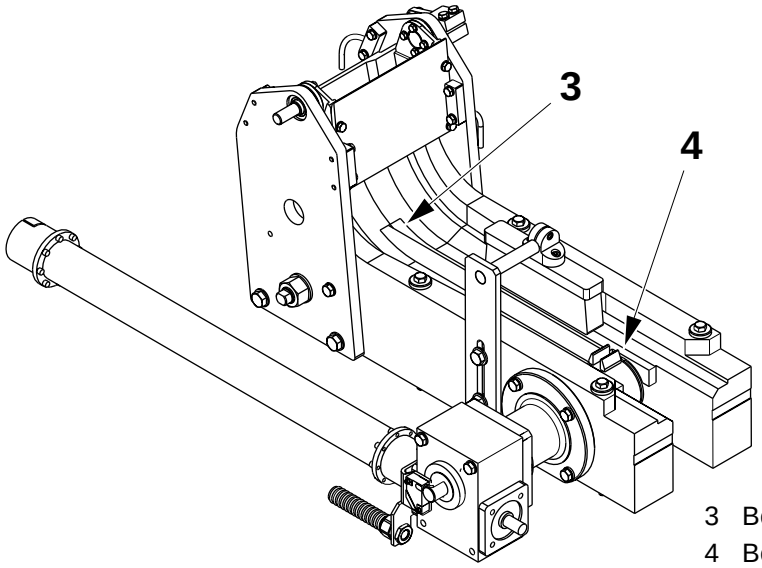

3 Bearing
4 Bearing

c) Set the belt tension, see *5.1-7 Conveyor - overhaul*, from step *q)*.

d) Synchronise the conveyor, see *5-2 Final folder module - synchronisation*.

0-Series

2.2B3024E01en.fm

5.1-3 Conveyor - change belt

Tools - torque wrench	 min 25 Nm
SPC reference	577111-0100

a) On the cleaning pipe, remove the clamp (1), loosen the screws (2) and (3), then rotate the cleaning pipe towards the jaw mechanism.

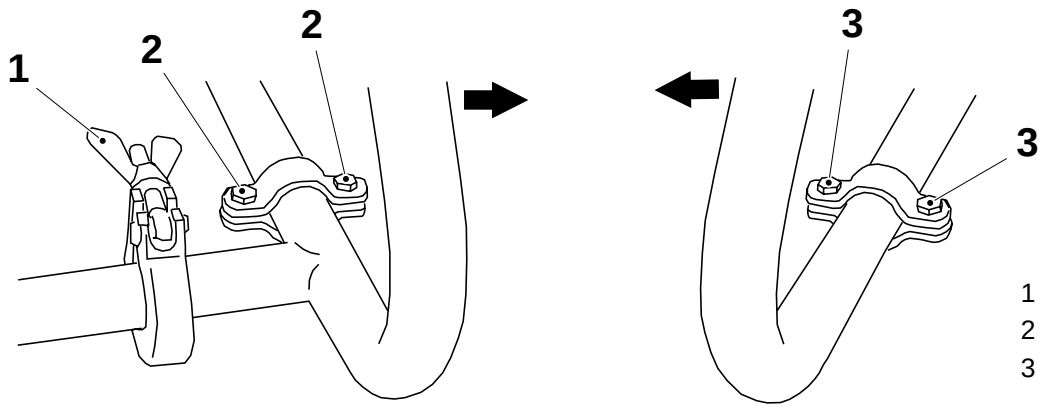

1 Clamp
2 Screw
3 Screw

b) Label and remove the air lines (4) and (5). Label and remove the water line (6). This avoids confusion during reassembly.

c) Remove screws (7) and (8), then remove the side plate (9).

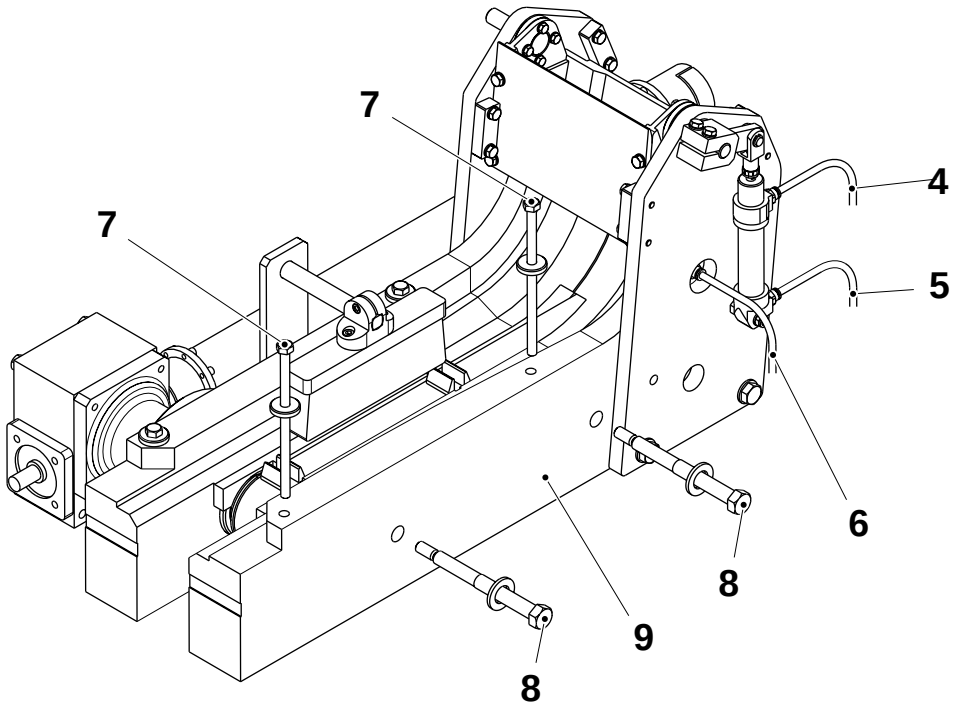

4 Air line
5 Air line
6 Water line
7 Screw
8 Screw
9 Side plate

(Cont'd)

2.2B3024E01en.fm

0-Series

(Cont'd)

d) Reduce the belt tension by loosening the nut (10) and turning the eccentric shaft (11) counter clockwise.

e) Remove and change the belt (12). Align the tooth (13) with the notch (14).

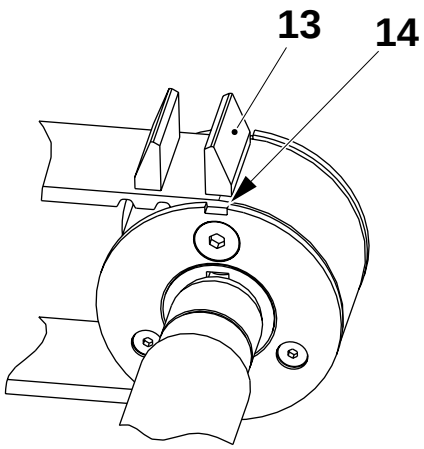

13 Nut
14 Shaft

f) To set the belt tension, torque the eccentric shaft (11) counterclockwise to 25 Nm.

g) Tighten the nut (10) and assemble in the reverse order.

h) Synchronise the conveyor, see *5-2 Final folder module - synchronisation*, from step *f)*.

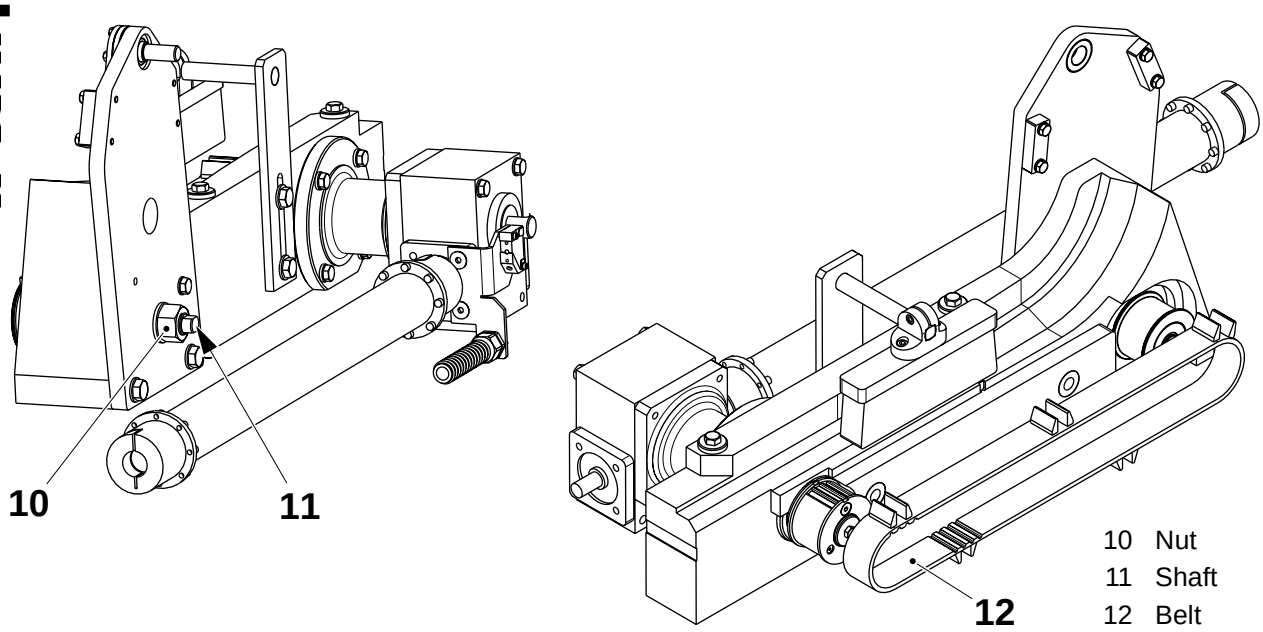

10 Nut
11 Shaft
12 Belt

5.1-4 Conveyor - check pneumatic cylinder

SPC reference	577111-0100

a) Check the rod (1) and seal (2) for wear. If defective, replace the pneumatic cylinder. See *5.1-5 Conveyor - change pneumatic cylinder*.

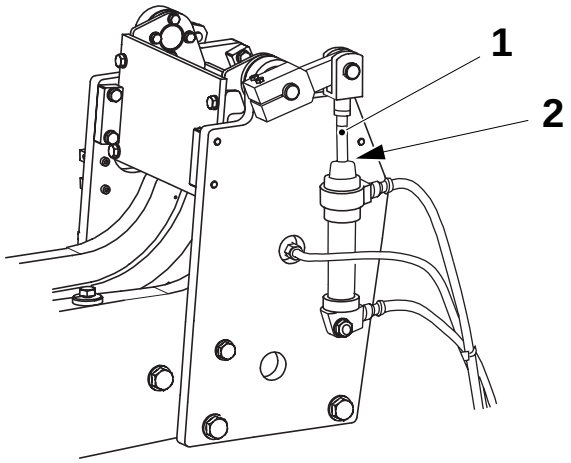

10 Rod
11 Seal

2.2B3024E01en.fm

5.1-5 Conveyor - change pneumatic cylinder

SPC reference	577111-0100

a) Label and remove the air lines (1) and (2).

b) Loosen the screws (3), and remove the nut and washer (4).

c) Remove the arm (5) from the shaft (6).

d) Replace the pneumatic cylinder and assemble in the reverse order, taking care to refit the air lines correctly.

e) Set the pneumatic cylinder, see *5.1-6 Conveyor - set pneumatic cylinder*.

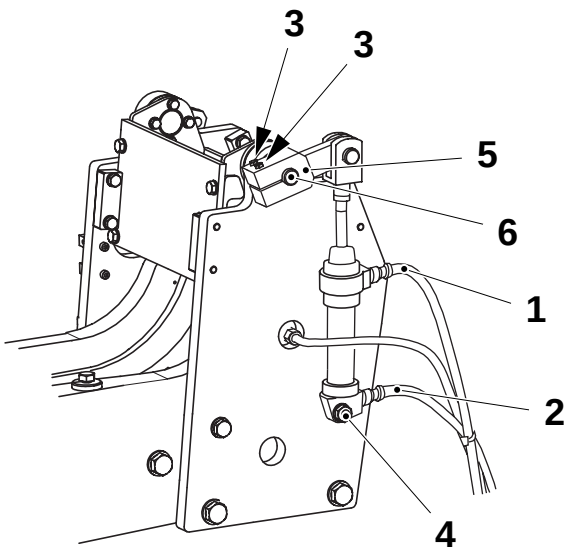

1 Air line
2 Air line
3 Screws
4 Nut and washer
5 Arm
6 Shaft

2.2B3024E01en.fm

0-Series

5.1-6 Conveyor - set pneumatic cylinder

SPC reference	577111-0100

a) When the pneumatic cylinder is in its fully-retracted position, check that the shoulder on the rod is distance A from the seal. Set the position using locknut (1).

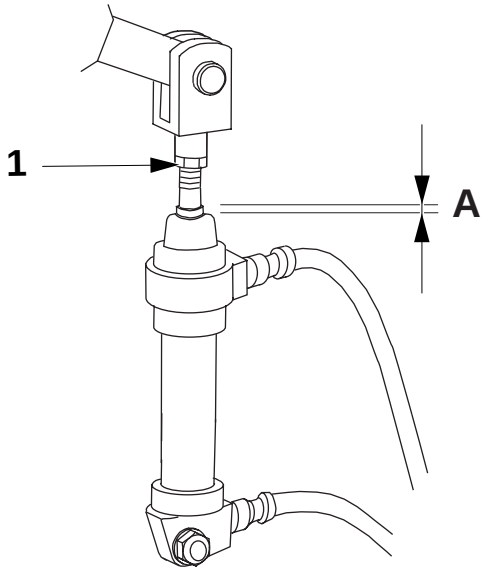

A = 1.5 ±0.5 mm

1 Locknut

2.2B3024E01en.fm

5.1-7 Conveyor - overhaul

Tools - torque wrench	 min 25 Nm
SPC reference	577111-0100

a) On the cleaning pipe, remove clamp (1), loosen screws (2) and (3), then rotate the cleaning pipe towards the jaw mechanism.

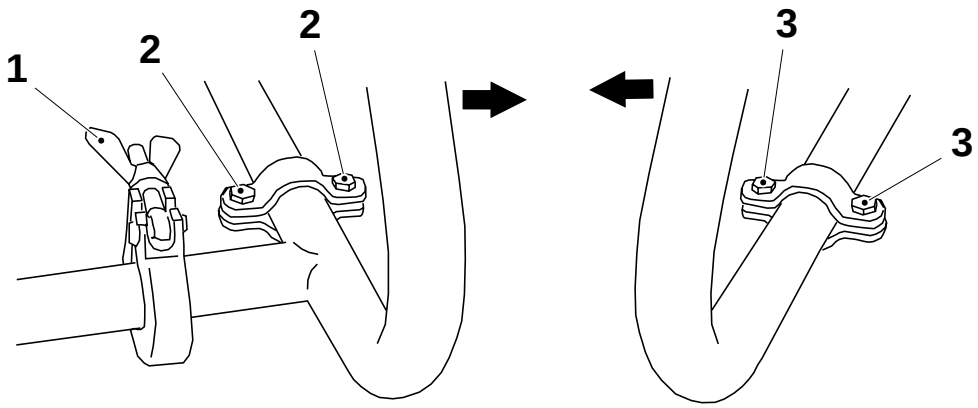

1 Clamp
2 Screw
3 Screw

b) Label and remove air lines (4) and (5). Label and remove water line (6).

c) Remove screws (7) and (8), then remove the side plate (9).

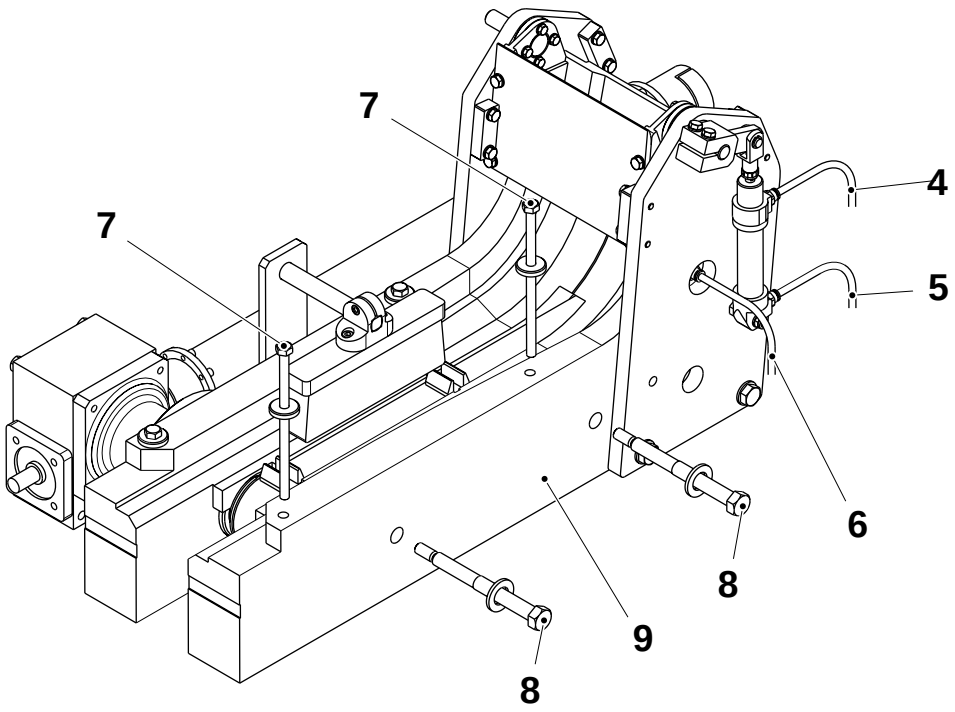

4 Air line
5 Air line
6 Water line
7 Screw
8 Screw
9 Side plate

(Cont'd)

0-Series

2.2B3024E01en.fm

(Cont'd)

d) Mark the belt and rollers to help alignment on reassembly.

e) Remove the nut (10) and washer. Remove the belt (11) and pull out the roller (12) on the eccentric shaft.

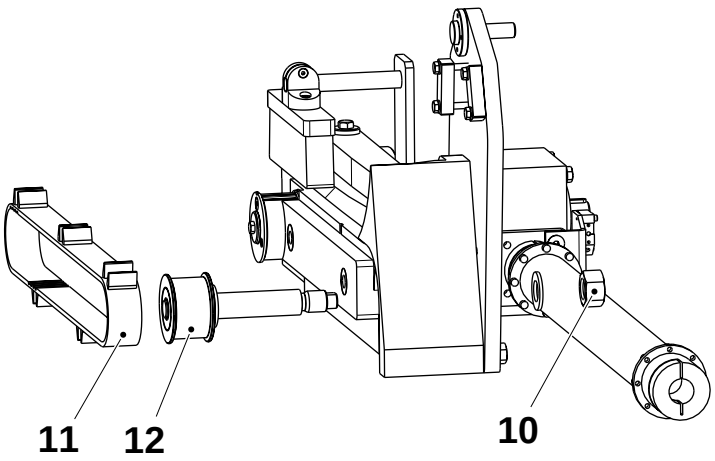

10 Nut
11 Belt
12 Roller

f) Pull out and change the seal ring (13).

g) Remove the retaining ring (14) and the roller (15).

h) Change the ball bearings (16) and the seal ring (17).

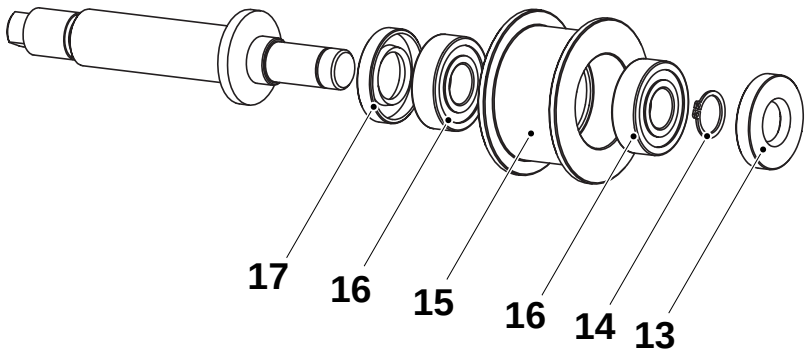

13 Seal ring
14 Retaing ring
15 Roller
16 Ball bearing
17 Seal ring

(Cont'd)

2.2B3024E01en.fm

(Cont'd)

i) Remove the screw (18) and the washer, the roller (19), the key (20), the seal ring (21) and the outer retaining ring (22).

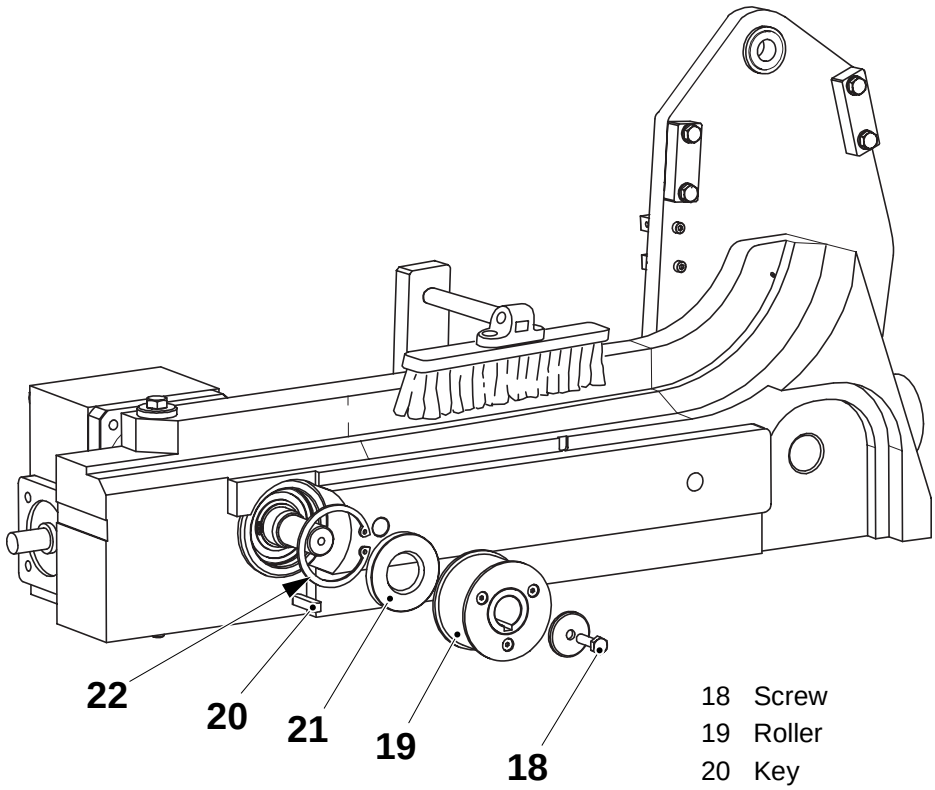

18 Screw
19 Roller
20 Key
21 Seal ring
22 Retaining

2.2B3024E01en.fm

(Cont'd)

(Cont'd)

j) Remove the screws (23) on the flanges of both shafts.

k) Remove the screws (24), then remove the gear box (25).

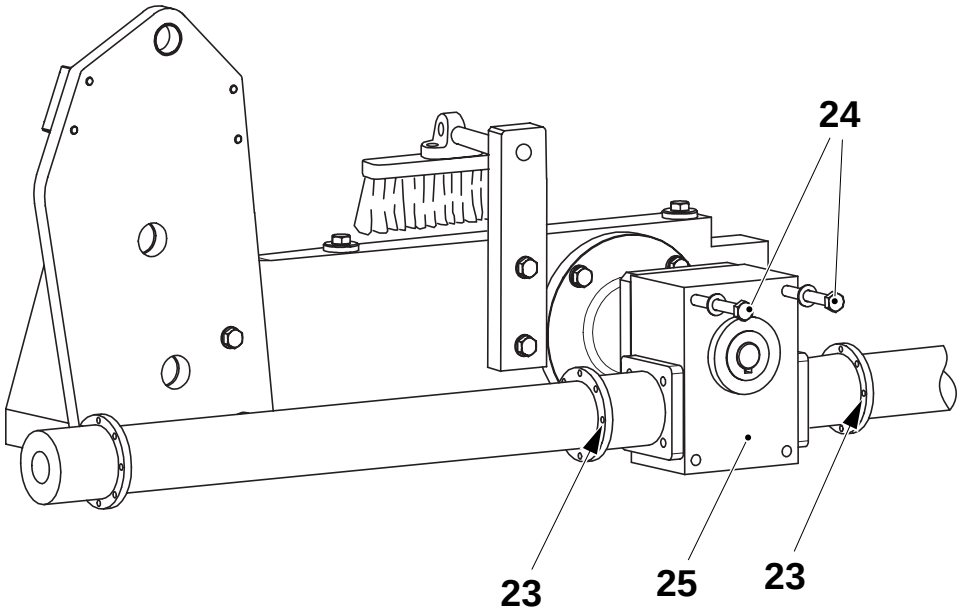

23 Screw
24 Screw
25 Gear box

l) Remove the keys (26) and change the seal ring (27).

m) Remove the retaining rings (28) and (29) and push out the shaft (30).

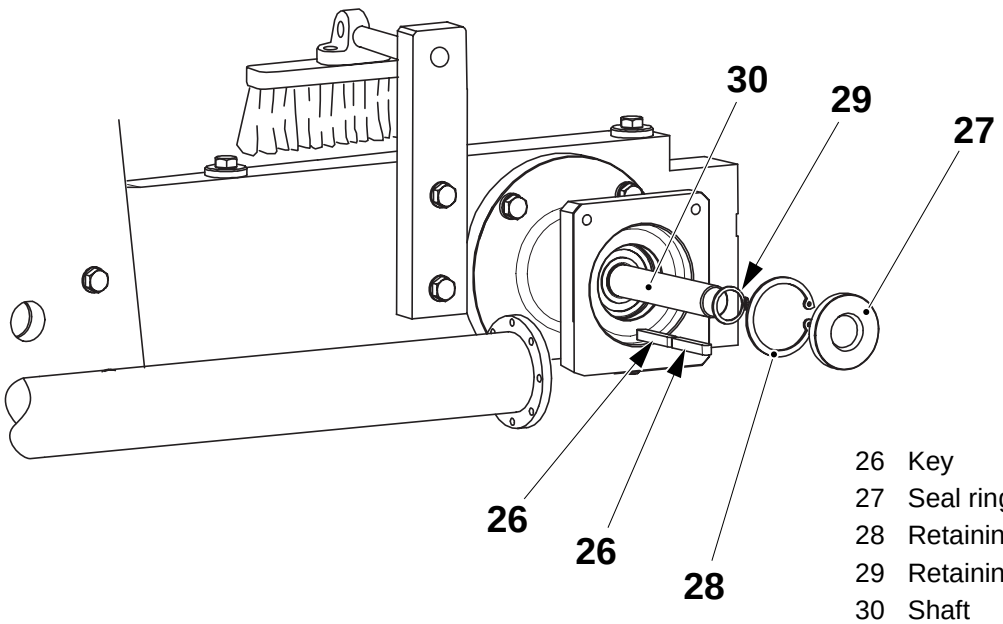

26 Key
27 Seal ring
28 Retaining ring
29 Retaining ring
30 Shaft

(Cont'd)

2.2B3024E01en.fm

(Cont'd)

n) Pull out and change the ball bearing (31).

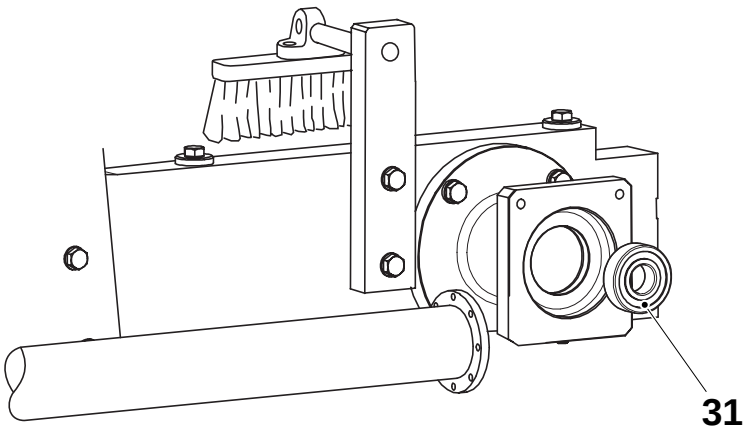

31 Ball bearing

o) Remove the retaining ring (32) and change the ball bearing (33).

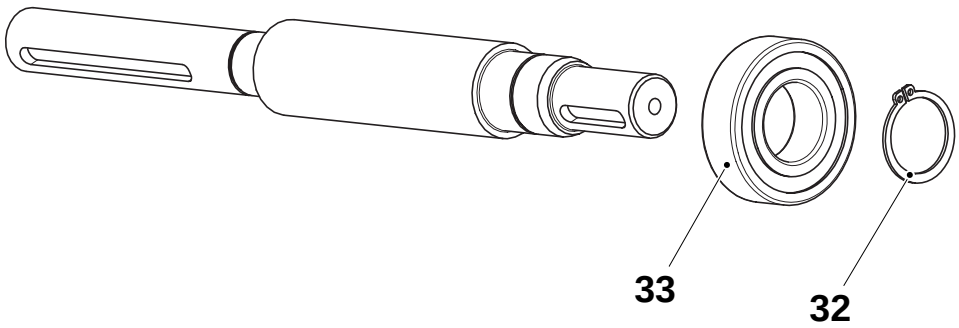

32 Retaining ring
33 Ball bearing

(Cont'd)

2.2B3024E01en.fm

(Cont'd)

p) Assemble in the reverse order. When fitting the belt, align the tooth (34) with the notch (35).

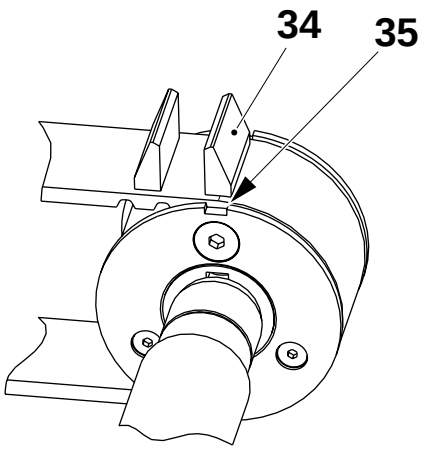

34 Nut
35 Shaft

q) Set the belt tension: loosen the nut (36), then turn the eccentric shaft (37) clockwise with a torque of 25 Nm.

r) Tighten the nut (36).

s) Synchronise the conveyor, see *5-2 Final folder module - synchronisation*, from step *f)*.

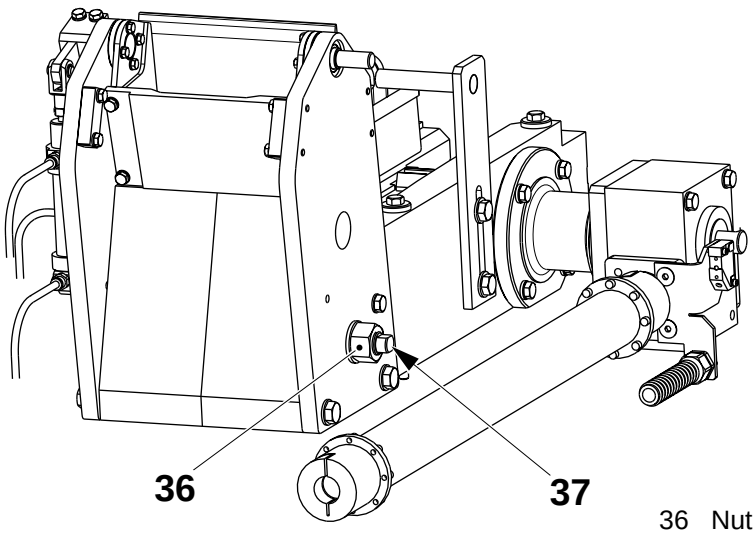

36 Nut
37 Eccentric shaft

(Cont'd)

2.2B3024E01en.fm

5.2 Final folder

SPC reference	577112-0200

5.2.1 Station chain

5.2.1-1 Station chain - lubricate

Tools: - pneumatic grease gun	TP No. 1512559
Consumable: - food grade grease 151/L	90458-0134
SPC reference	1195203-0100

a) The final folder has a grease nipple on the RH side.
Using a grease gun on the grease nipple (1), apply grease until it appears on the brush (2).

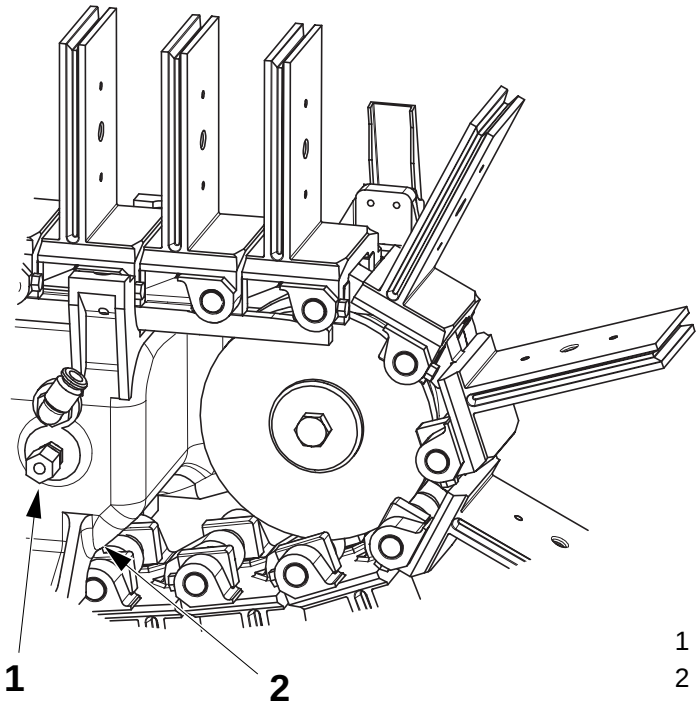

1 Grease nipple
2 Brush

0-Series

2.2B3024E01en.fm

5.2.1-2 Station chain - change

SPC reference	1195203-0100

a) Lift the swing frame.

b) Remove the screws (1) and the side squeezer (2).

c) Disconnect the water hoses and remove the screws (3) and the flap guide (4).

d) Remove the screws (5) and change the plastic chain guide (6).

e) Repeat on the other side.

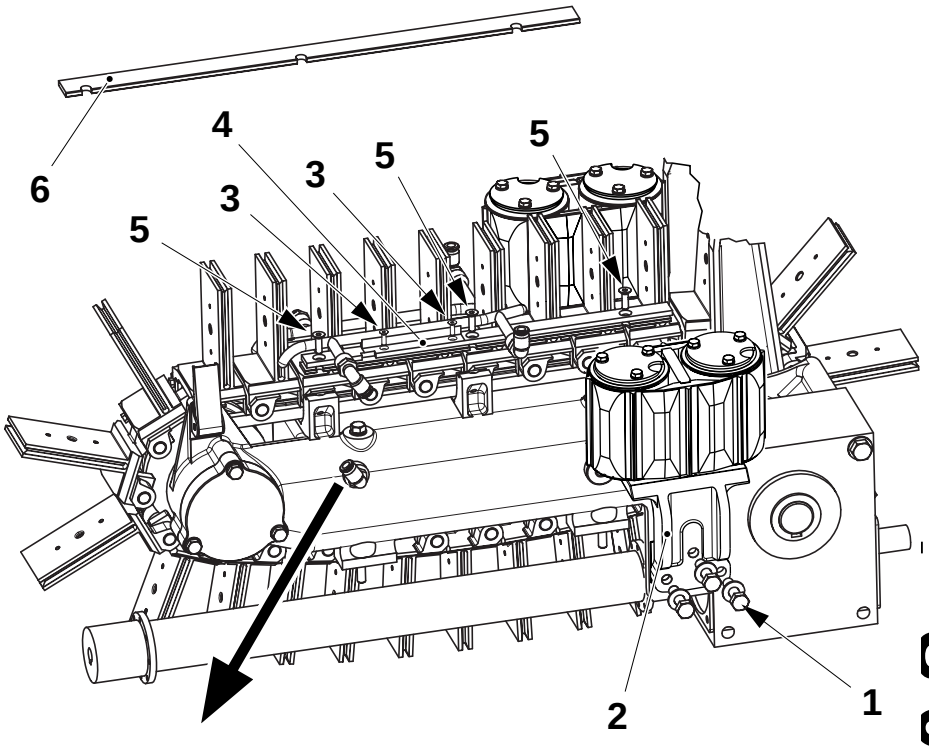

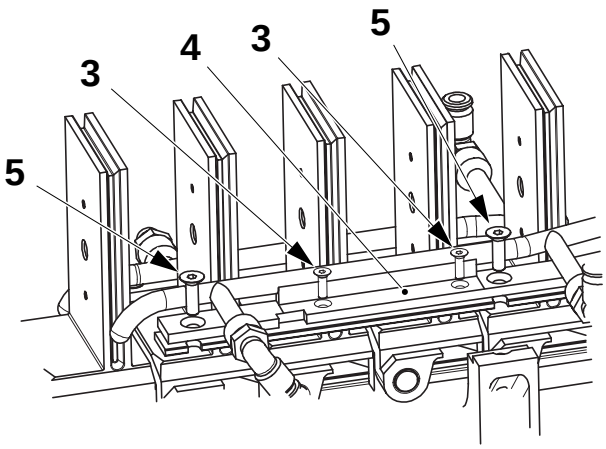

1 Screw
2 Side squeezer
3 Screw
4 Flap guide
5 Screw
6 Chain guide

(Cont'd)

2.2B3024E01en.fm

0-Series

(Cont'd)

f) Remove the screw (7) and pull out the axle (8).

g) Remove and change the station chain.

h) Assemble in the reverse order.

i) Set the squeezer position, see *5.2.4-1 Squeezer - set position.*

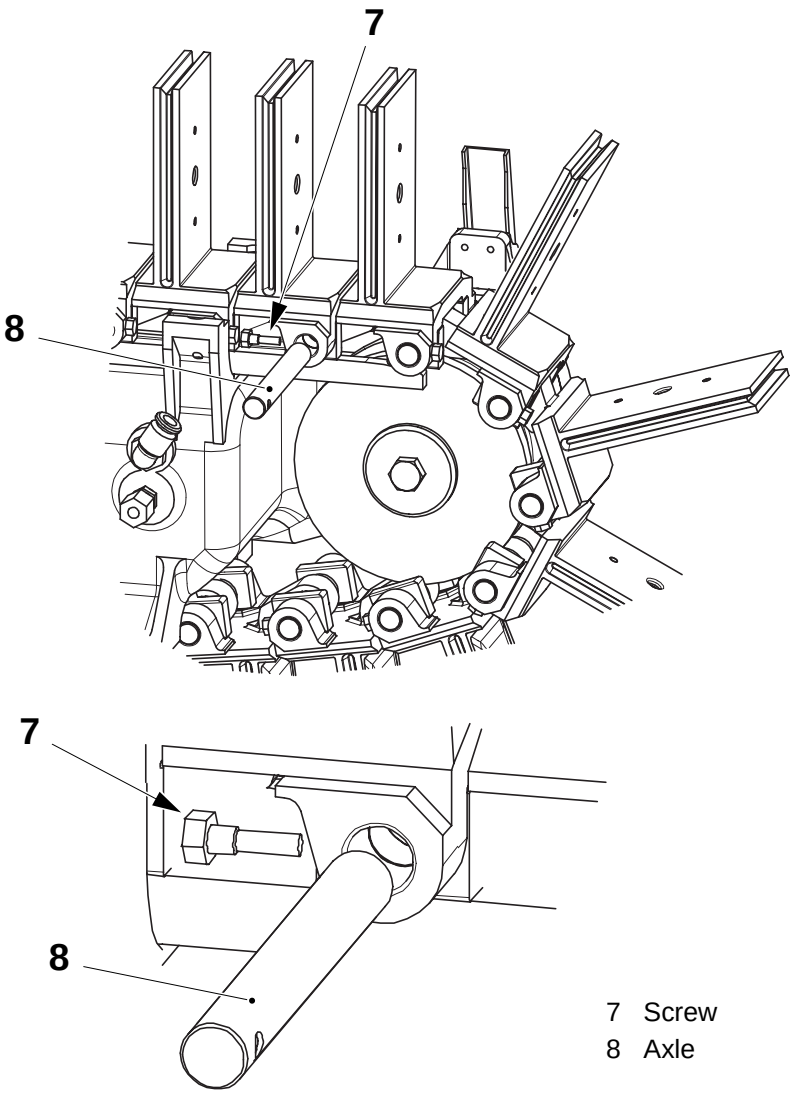

7 Screw
8 Axle

2.2B3024E01en.fm

5.2.1-3 Station chain - overhaul

SPC reference	1195203-0200

a) Remove the chain, see *5.1-2 Conveyor - Check bearings*.

b) Remove the screw (1).

c) Pull out the axle (2) and change the sliders (3), the bushings (4) and the bushing (5).

d) Assemble in the reverse order.

e) Repeat on the other links.

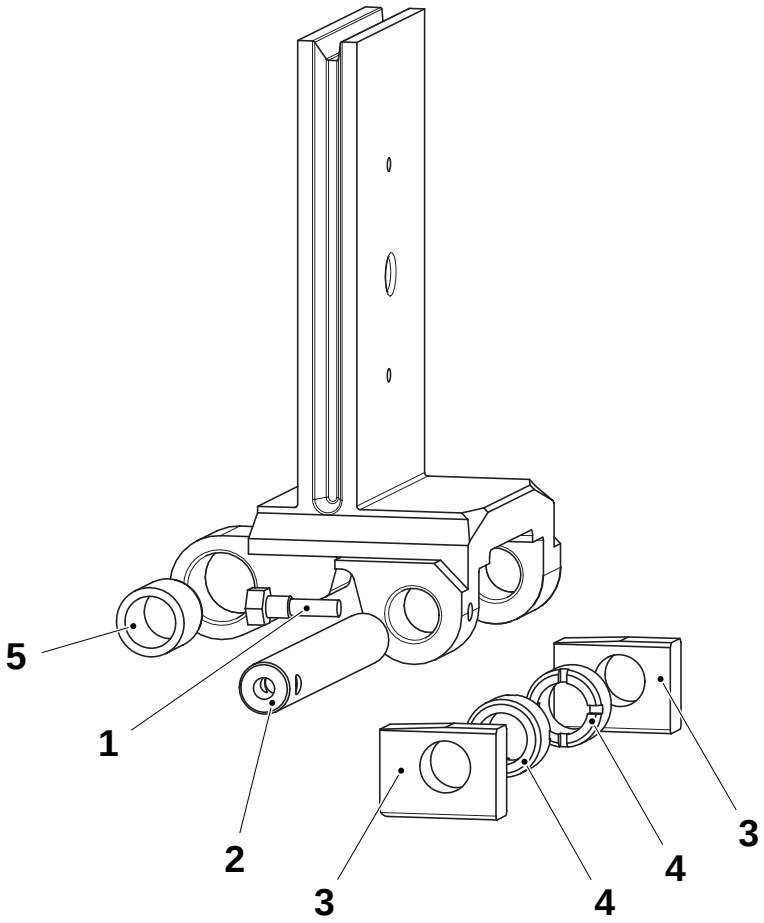

1 Screw
2 Shaft
3 Slider
4 Bushing
5 Bushing

2.2B3024E01en.fm

5.2.2 Swing frame

5.2.2-1 Swing frame - check pulley

SPC reference	1195206-0200

Check that the pulley (1) rotates freely. If not:

a) Remove the screw (2) and pull out the shaft (3).
b) Change the bushings (4) and the pulley (1) as required.
c) Assemble in the reverse order.

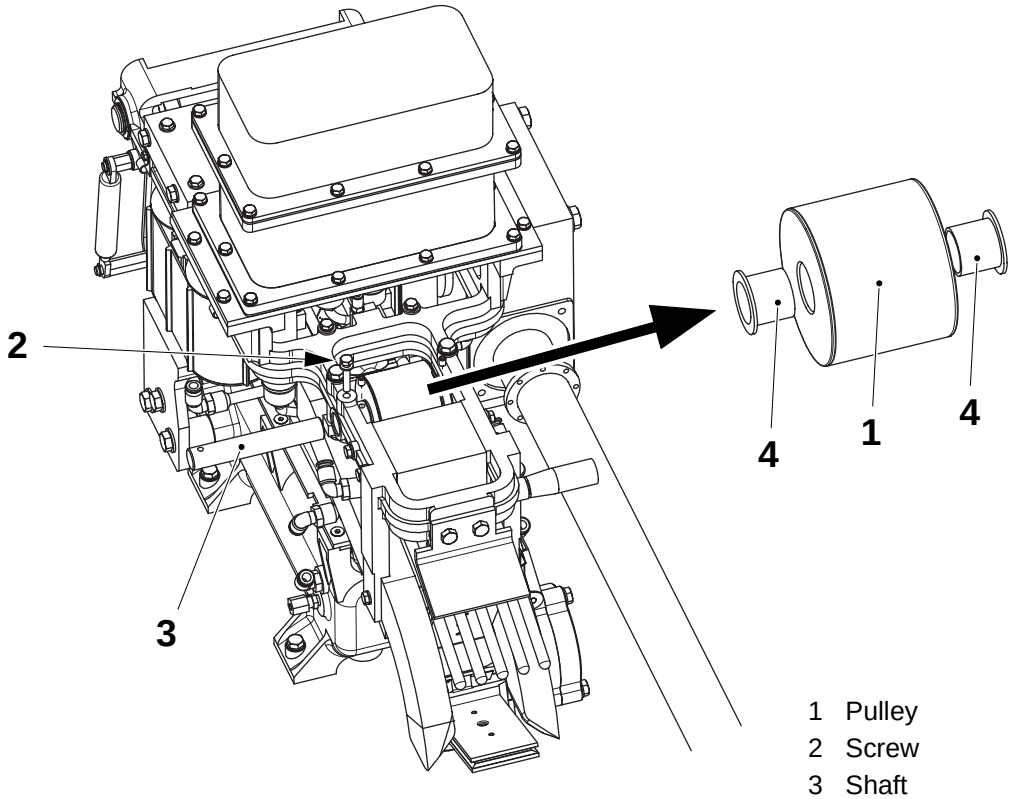

1 Pulley
2 Screw
3 Shaft
4 Bushing

0-Series

2.2B3024E01en.fm

5.2.3 Chain support

5.2.3-1 Chain support - check condition

SPC reference	1195176-0200

Inspect the chain supports (1) visually for damage or wear. Change as required. See *5.2.3-2 Chain support - overhaul*.

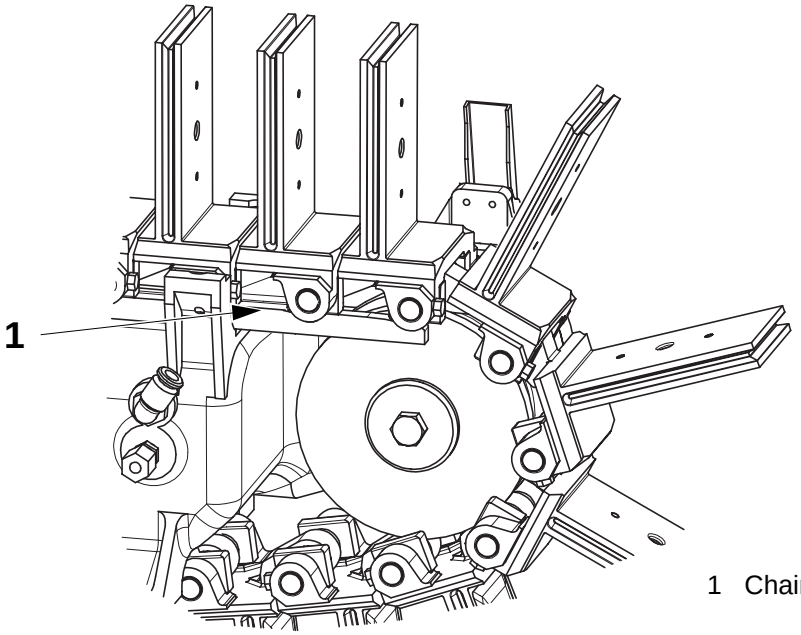

1 Chain support

2.2B3024E01en.fm

5.2.3-2 Chain support - overhaul

SPC reference	1195176-0200

a) Remove the station chain, see *5.1-2 Conveyor - Check bearings*.

b) Remove the screws (1) and the guides (2).

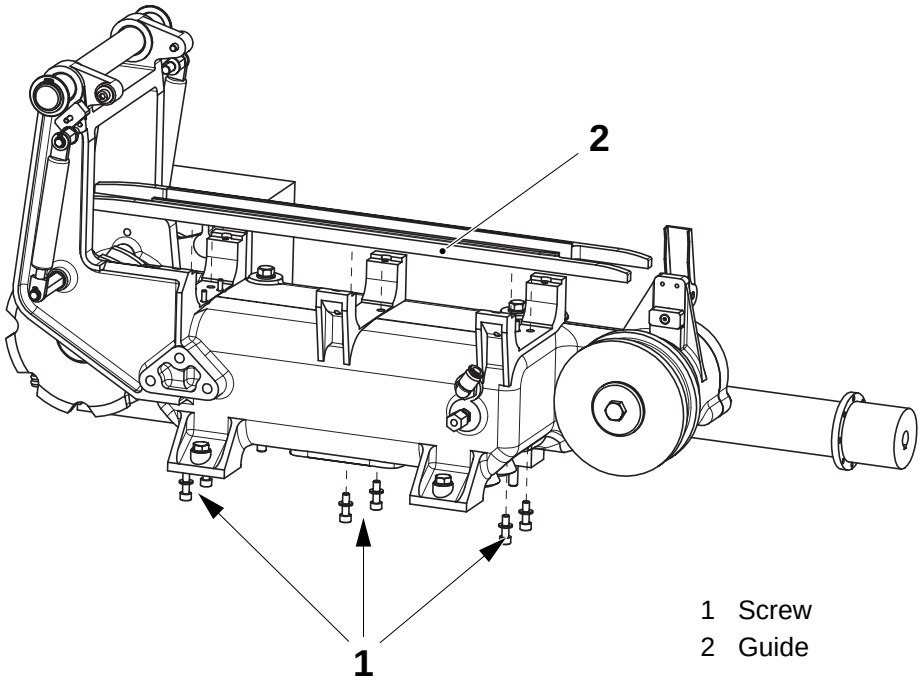

1 Screw
2 Guide

(Cont'd)

0-Series

2.2B3024E01en.fm

(Cont'd)

c) Remove the screw (3), the washer (4) and the wheel (5).

d) Remove the screws (6) and the cover (7). Change the O-ring (8).

e) Pull out the shaft (9) and change the seal ring (10).

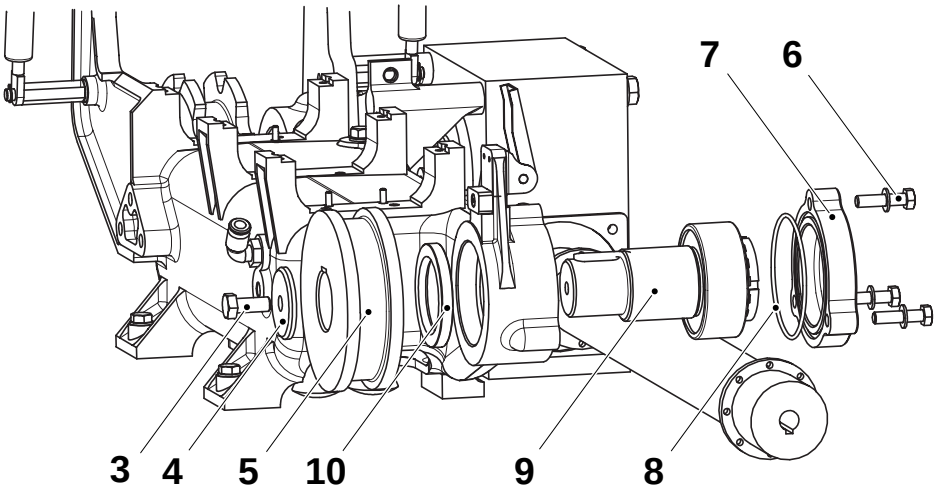

3	Screw	7	Cover
4	Washer	8	O-ring
5	Wheel	9	Shaft
6	Screw	10	Seal ring

f) Remove the round nut (11), the lock washer (12) and change the ball bearing (13).

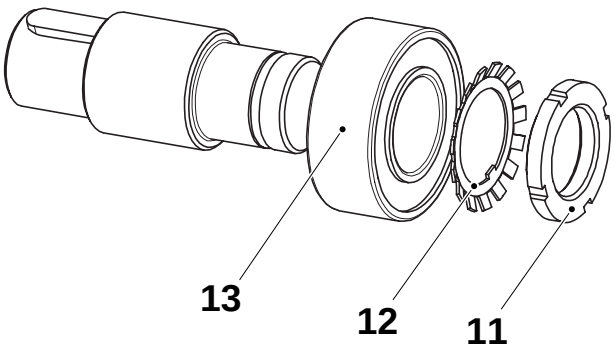

11	Round nut
12	Lock washer
13	Ball bearing

(Cont'd)

(Cont'd)

g) Disconnect the flanges (14) and (15).

h) Remove the screws (16) and the gear box (17).

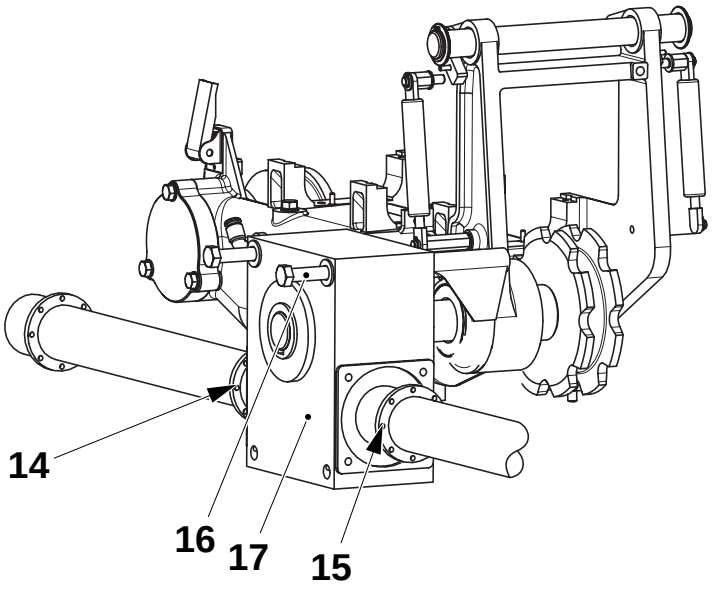

14 Flange
15 Flange
16 Screw
17 Gear box

i) Remove the keys (18), the screws (19), the cover (20) and change the seal ring (21).

2.2B3024E01en.fm

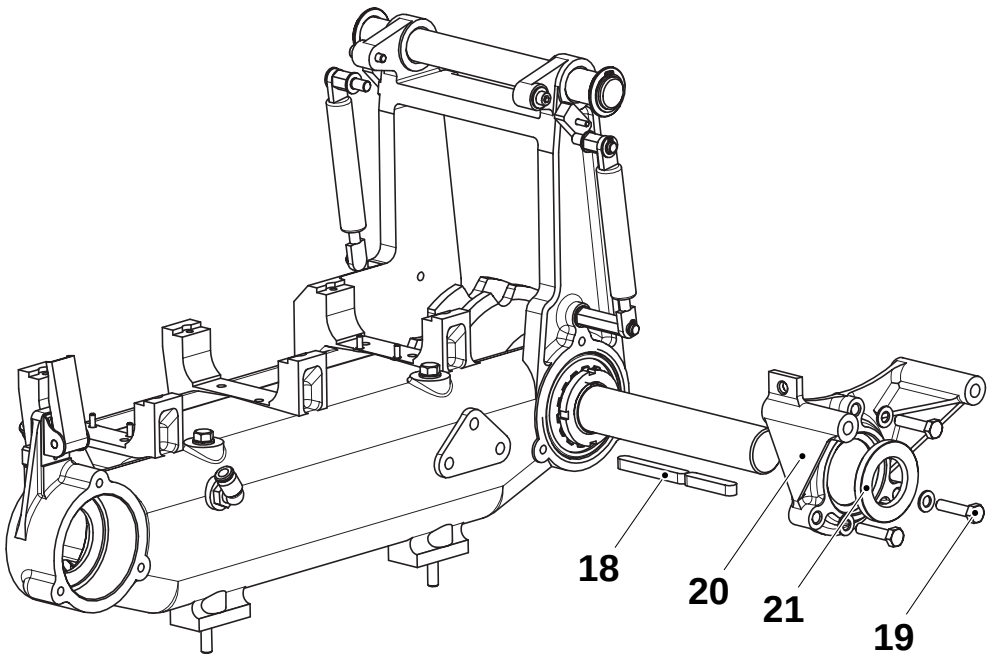

18 Key
19 Screw
20 Cover
21 Seal ring

(Cont'd)

(Cont'd)

j) Remove the screw (22), the washer (23), the wheel (24) and the shaft (25). Change the seal ring (26).

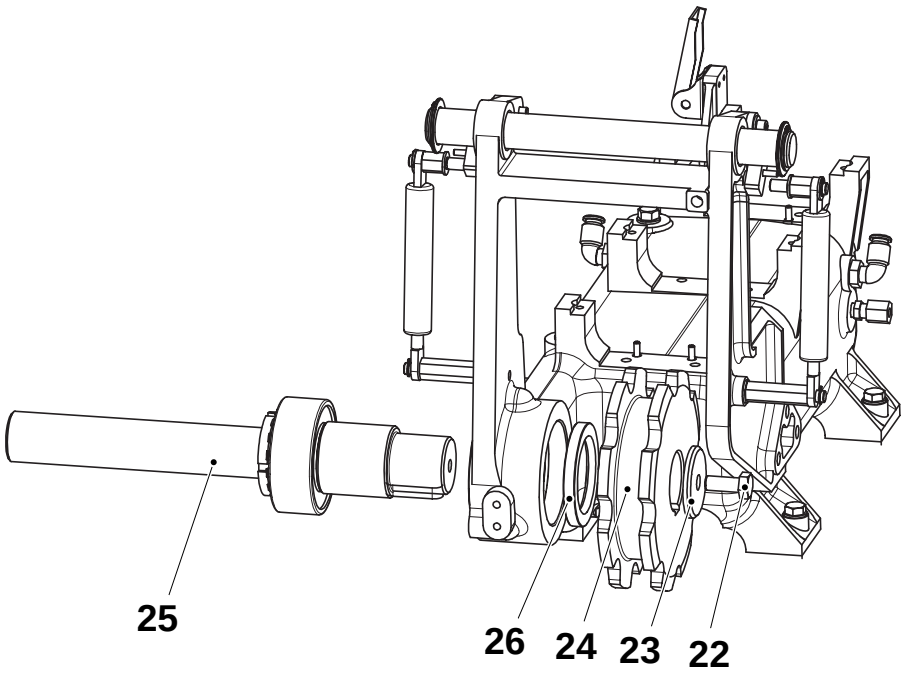

22 Screw
23 Washer
24 Wheel
25 Shaft
26 Seal ring

k) Remove the round nut (27), the lock washer (28) and change the ball bearing (29).

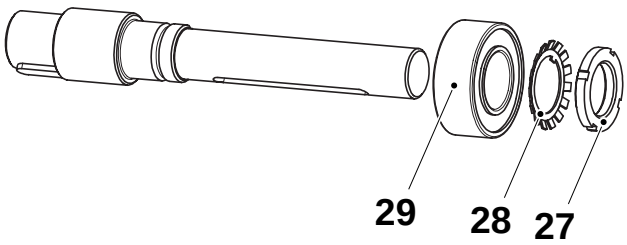

27 Round nut
28 Lock washer
29 Ball bearing

l) Assemble in the reverse order.

m) Set the squeezer position, see *5.2.4-1 Squeezer - set position*.

n) Synchronise the final folder, see *5.1-4 Conveyor - check pneumatic cylinder* and *5-2 Final folder module - synchronisation*.

5.2.3-3 Chain support - change chain guides

SPC reference	1195176-0200

a) Lift the swing frame.
b) Remove the screws (1) and the side squeezer (2).
c) Remove the screws (3) and the flap guide (4).
d) Remove the screws (5) and change the plastic chain guide (6).
e) Assemble in the reverse order and repeat on the other side.
f) Set the squeezer position, see *5.2.4-1 Squeezer - set position.*

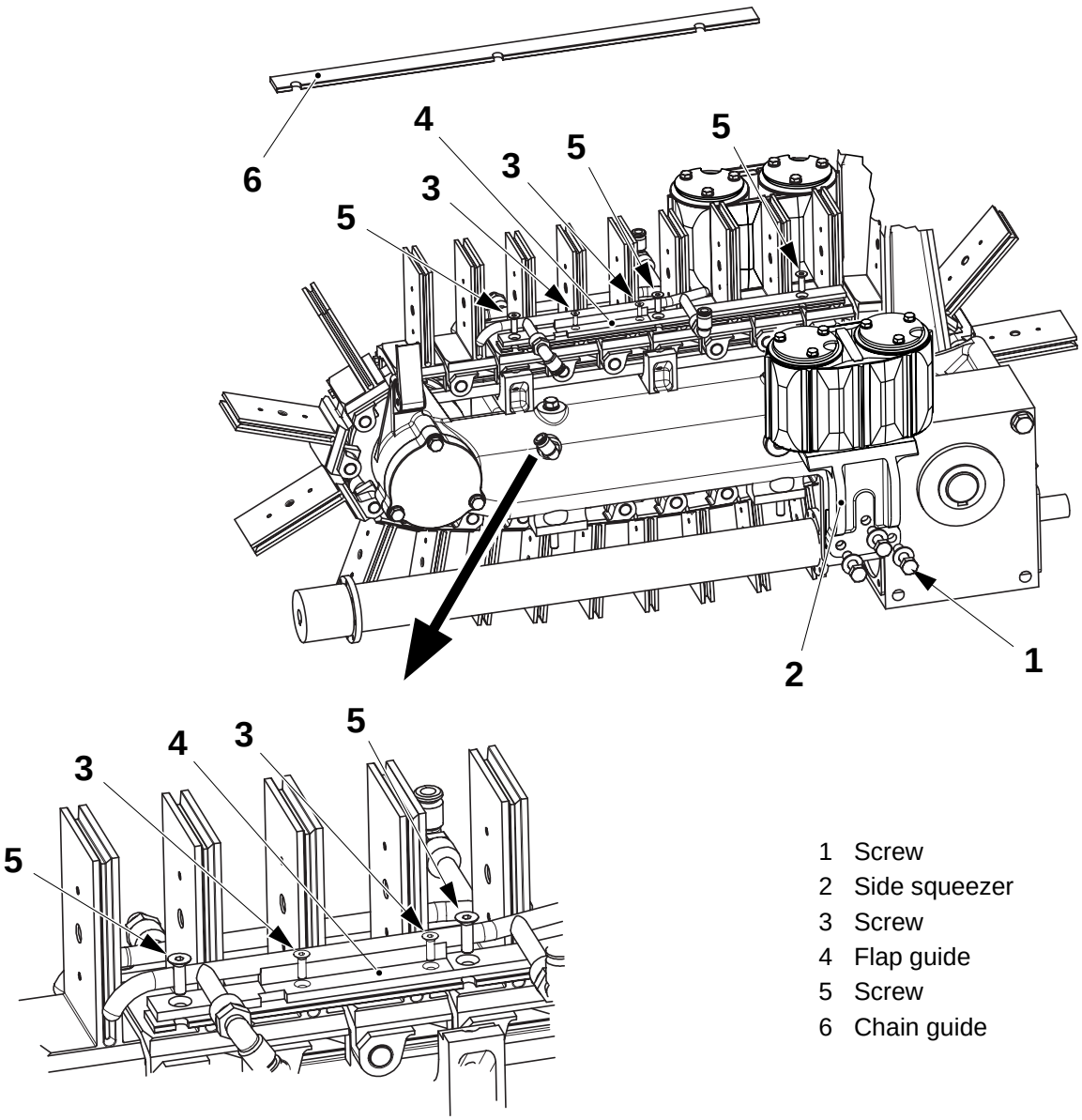

1 Screw
2 Side squeezer
3 Screw
4 Flap guide
5 Screw
6 Chain guide

0-Series

2.2B3024E01en.fm

5.2.4 Squeezer

5.2.4-1 Squeezer - set position

SPC reference	1350080-0100

a) Lift the swing frame.

b) Check that the teeth (1) in the side belts fit the side slots in the station chain.
If not, loosen the screws (2) and turn the side belt until the teeth are aligned with the side slots in the station chain. Tighten the screws (2).

Caution! If the teeth in the side belts are not properly aligned with the slots in the station chain, damage to the packages will result.

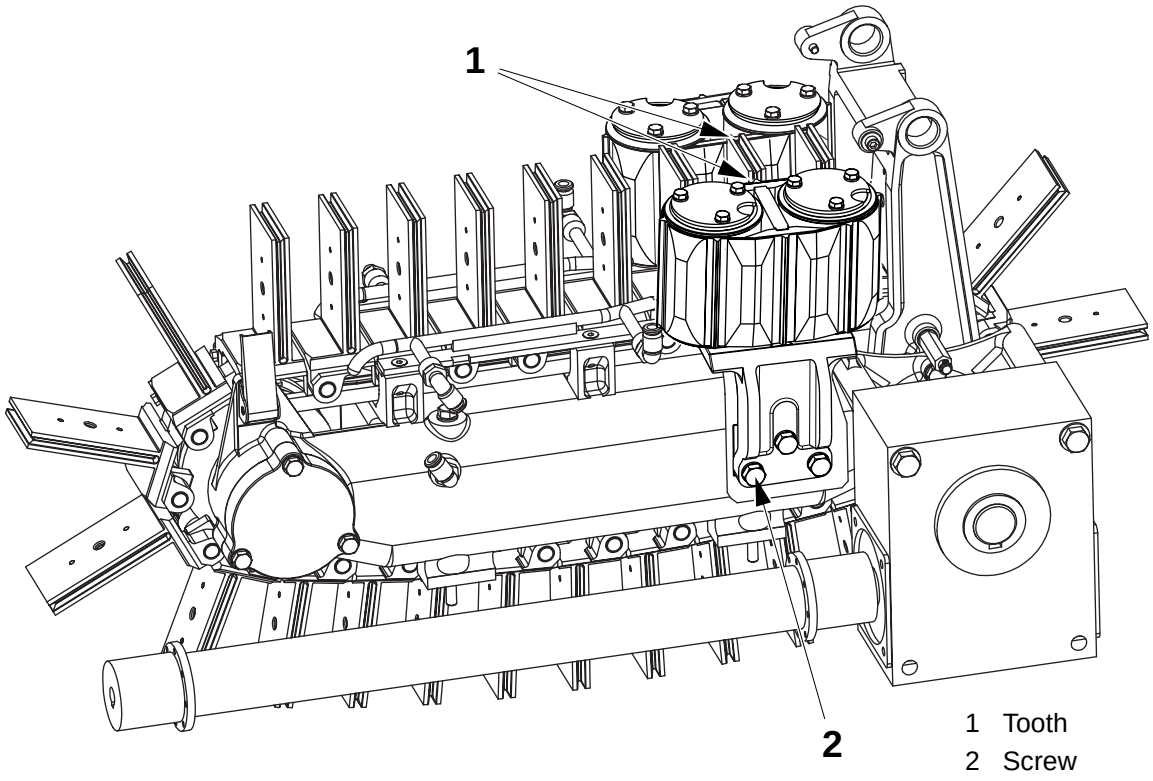

1 Tooth
2 Screw

(Cont'd)

2.2B3024E01en.fm

(Cont'd)

Caution! Carefully align the teeth in the top belt with the slots in the station chain, otherwise packages will be damaged.

c) Lower the swing frame close to the station chain. Turn the drive shaft (3) to align a slot (4) in the station chain with a tooth (5) on the top squeezer belt.

d) Lower and lock the swing frame and check that the teeth (5) in the belt fit the slots (4) in the station chain.

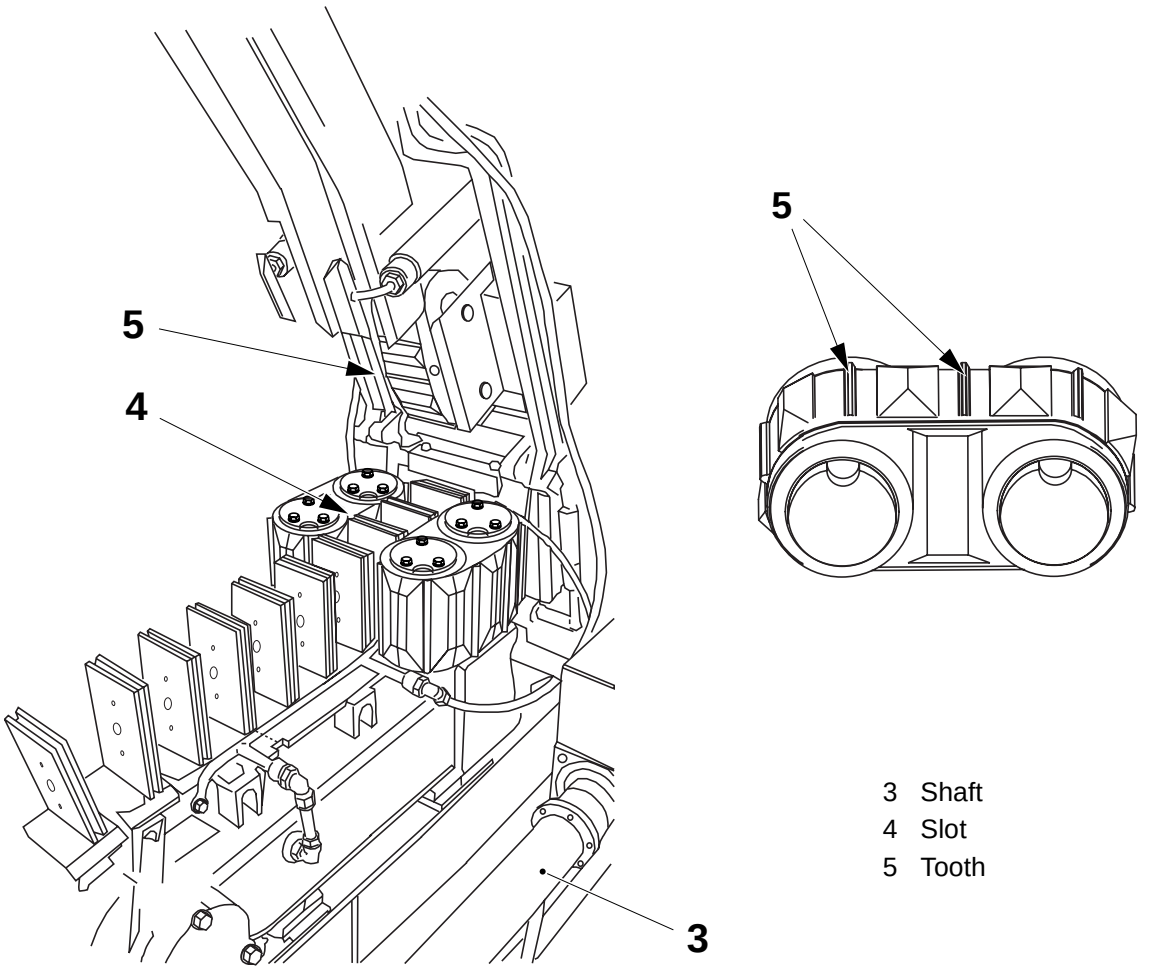

3 Shaft
4 Slot
5 Tooth

2.2B3024E01en.fm

5.2.4-2 Squeezer - change side pressure belts

SPC reference	1350080-0100

Check the side pressure belts (5) for damage. If damaged, change them:

a) Lift the swing frame.

b) On both sides remove the screws (1) and the side squeezer (2).

c) Remove the locking rings (3) and change them.

d) Remove the retaining rings (4) and change the belt (5).

e) Assemble in the reverse order and set the squeezer position, see *5.2.4-1 Squeezer - set position*.

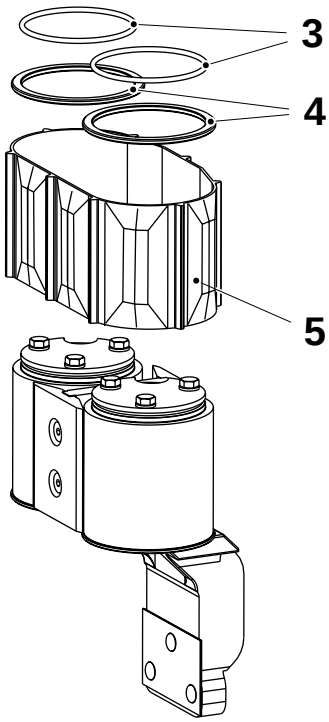

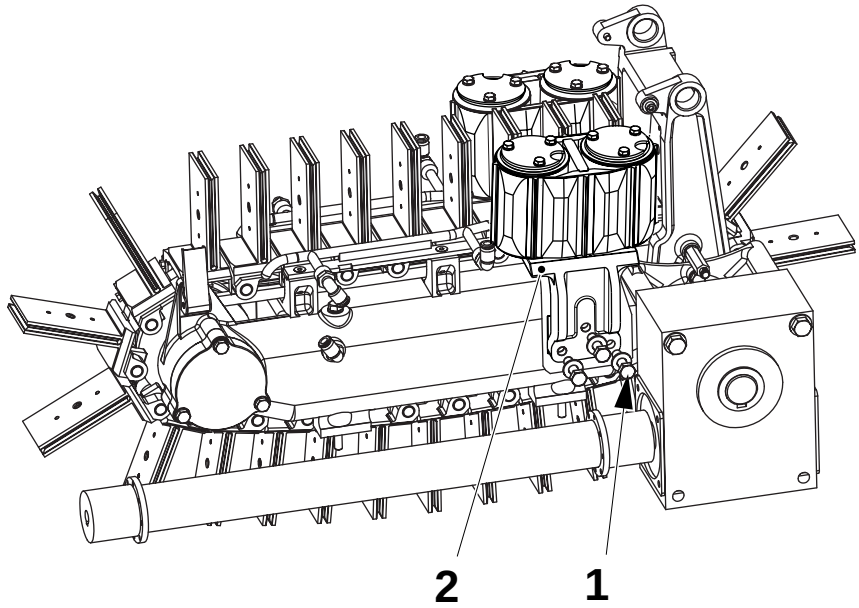

1 Screw
2 Squeezer
3 Retaining ring
4 Locking ring
5 Belt

2.2B3024E01en.fm

0-Series

5.2.4-3 Squeezer - change top pressure belt

SPC reference	1350080-0100

Check the top pressure belt (3) for damage. If damaged, change it:

a) Lift the swing frame.

b) Remove the locking rings (1) and change them.

c) Remove the retaining rings (2) and change the belt (3).

d) Assemble in the reverse order and set the squeezer position, see *5.2.4-1 Squeezer - set position.*

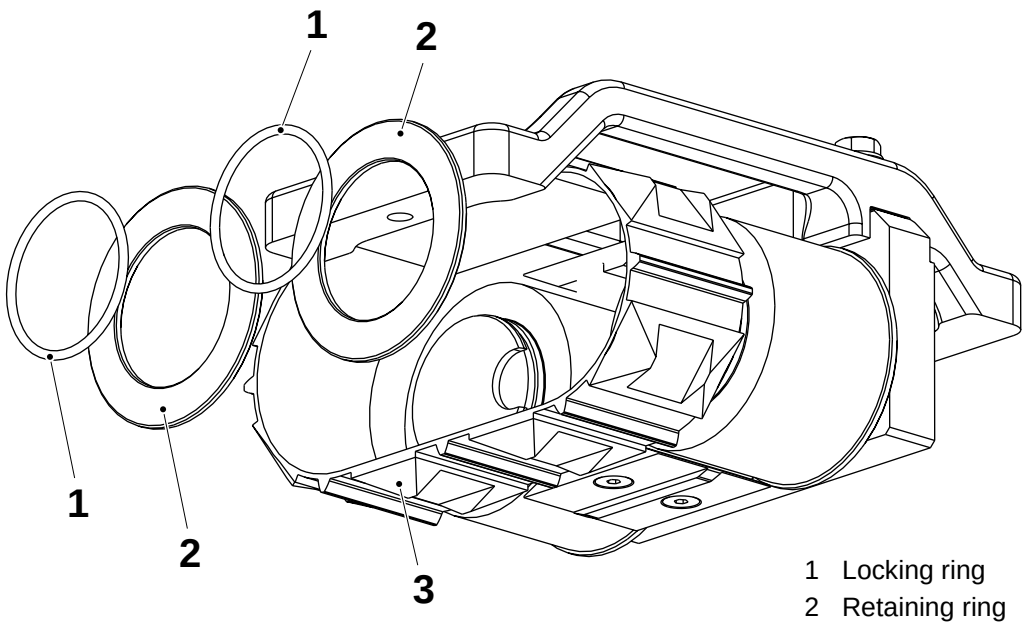

1 Locking ring
2 Retaining ring
3 Belt

2.2B3024E01en.fm

0-Series

5.2.4-4 Squeezer - change side squeezer ball bearings

SPC reference	1350080-0100

a) Lift the swing frame.

b) On both sides remove the screws (1) and the side squeezer (2).

c) Remove the locking rings (3) and change them.

d) Remove the retaining rings (4) and remove the belt (5).

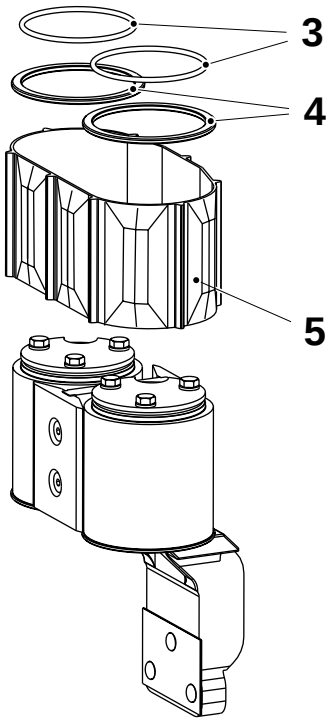

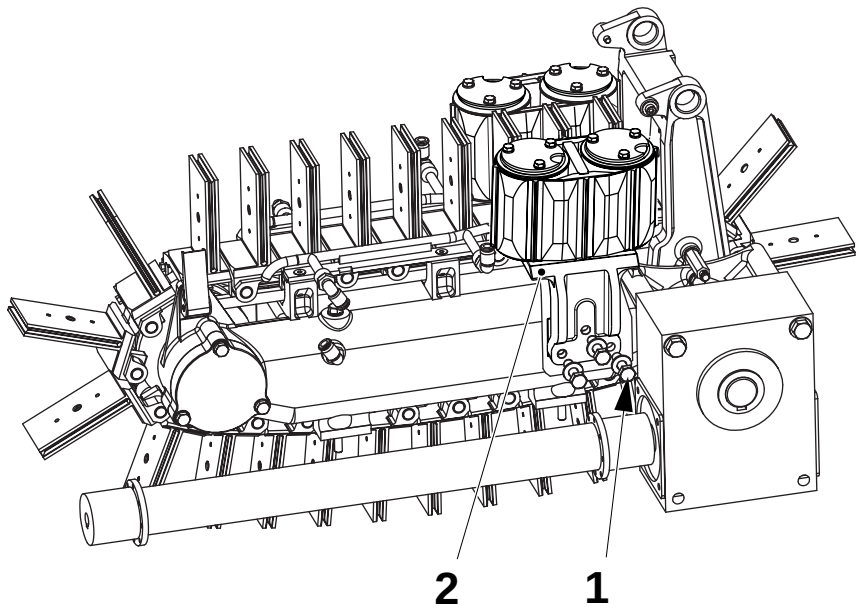

2.2B3024E01en.fm

0-Series

1 Screw
2 Squeezer
3 Locking ring
4 Retaining ring
5 Belt

(Cont'd)

(Cont'd)

e) Remove the screws (6) and washers (7).
f) Remove the cover (8) and replace the o-ring (9).
g) Unscrew the shaft (10) and remove the roller assembly.
h) Remove the seal (11), and retaining rings (12) and (13).
i) Push the shaft (10) out of the roller in the direction shown by the arrow.
j) Pull the ball bearings (14) and (15) and the spacer (16) off the shaft (10).
k) Change the ball bearings and assemble in the reverse order.
l) Repeat on the other roller.
m) Set the squeezer position, see *5.2.4-1 Squeezer - set position*.

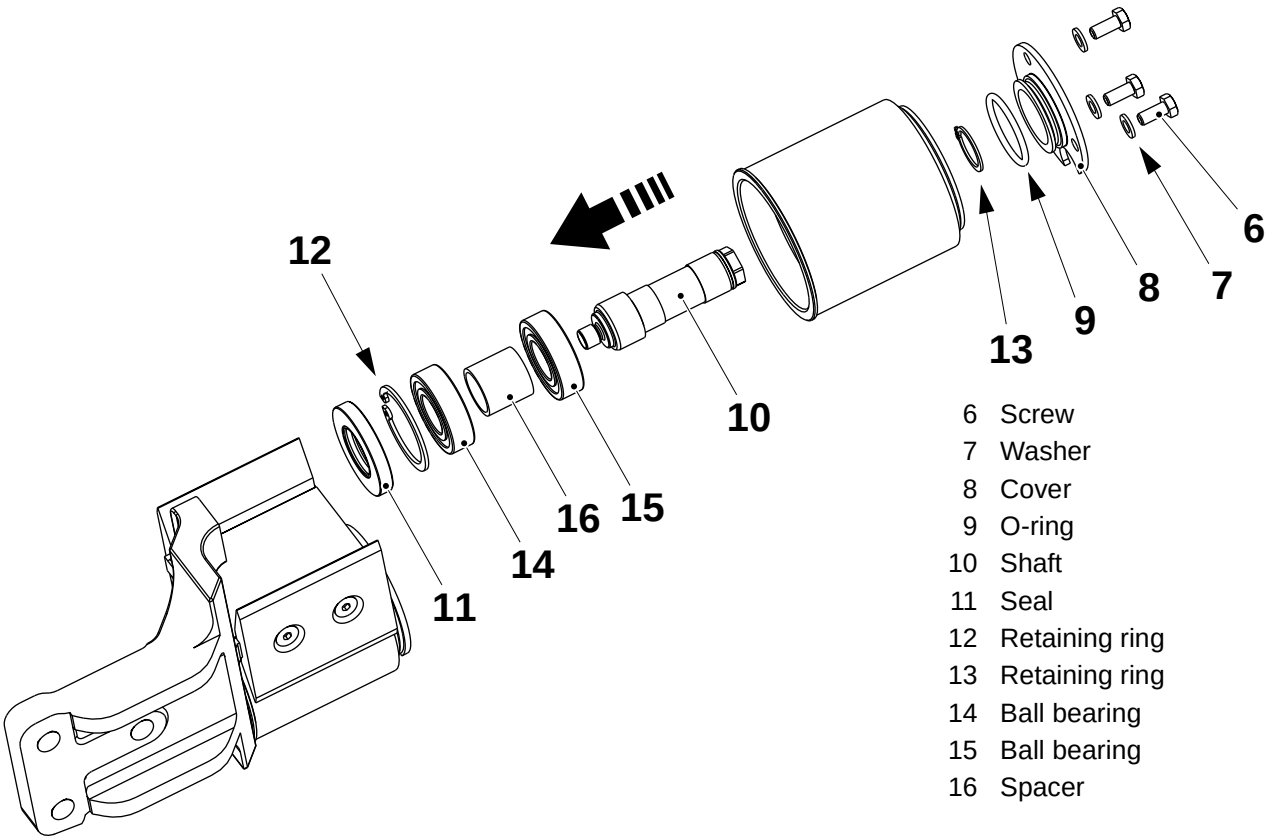

6 Screw
7 Washer
8 Cover
9 O-ring
10 Shaft
11 Seal
12 Retaining ring
13 Retaining ring
14 Ball bearing
15 Ball bearing
16 Spacer

2.2B3024E01en.fm

0-Series

5.2.4-5 Squeezer - change top squeezer ball bearings

SPC reference	1350080-0100

a) Remove the screws (1) and washers (2), then lift the swing frame and remove the top squeezer assembly.

b) Remove the locking rings (3) and change them.

c) Remove the retaining rings (4) and remove the belt (5).

d) Remove the screw (6) and washer (7), and remove the roller assembly.

e) Remove the seal (8), and retaining ring (9).

f) Push the shaft (10) out of the roller in the direction shown by the arrow.

g) remove the retaining ring (11) and pull the ball bearings (12) and (13) and the spacer (14) off the shaft (10).

h) Change the ball bearings and assemble in the reverse order.

i) Repeat on the other roller.

j) Set the squeezer position, see *5.2.4-1 Squeezer - set position*.

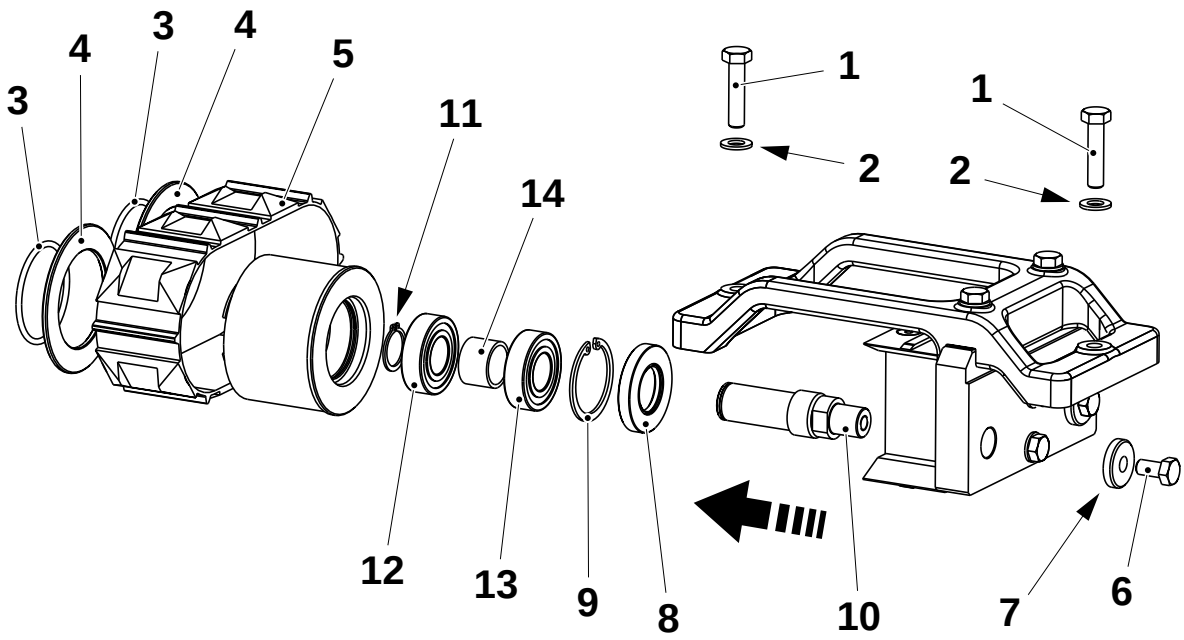

1	Screw	8	Seal
2	Washer	9	Retaining ring
3	Locking ring	10	Shaft
4	Retaining ring	11	Retaining ring
5	Belt	12	Ball bearing
6	Screw	13	Ball bearing
7	Washer	14	Spacer

2.2B3024E01en.fm

0-Series

5.2.4-6 Squeezer - check side squeezer clearances

SPC reference	1350080-0100

a) Lift the swing frame.

b) Rotate the final folder driveshaft by hand until one of the links of the station chain is in line with the centre of the side squeezers.

c) On each side, using two 0.5 mm feeler gauges (1), check the clearance between the station chain and the side squeezer.

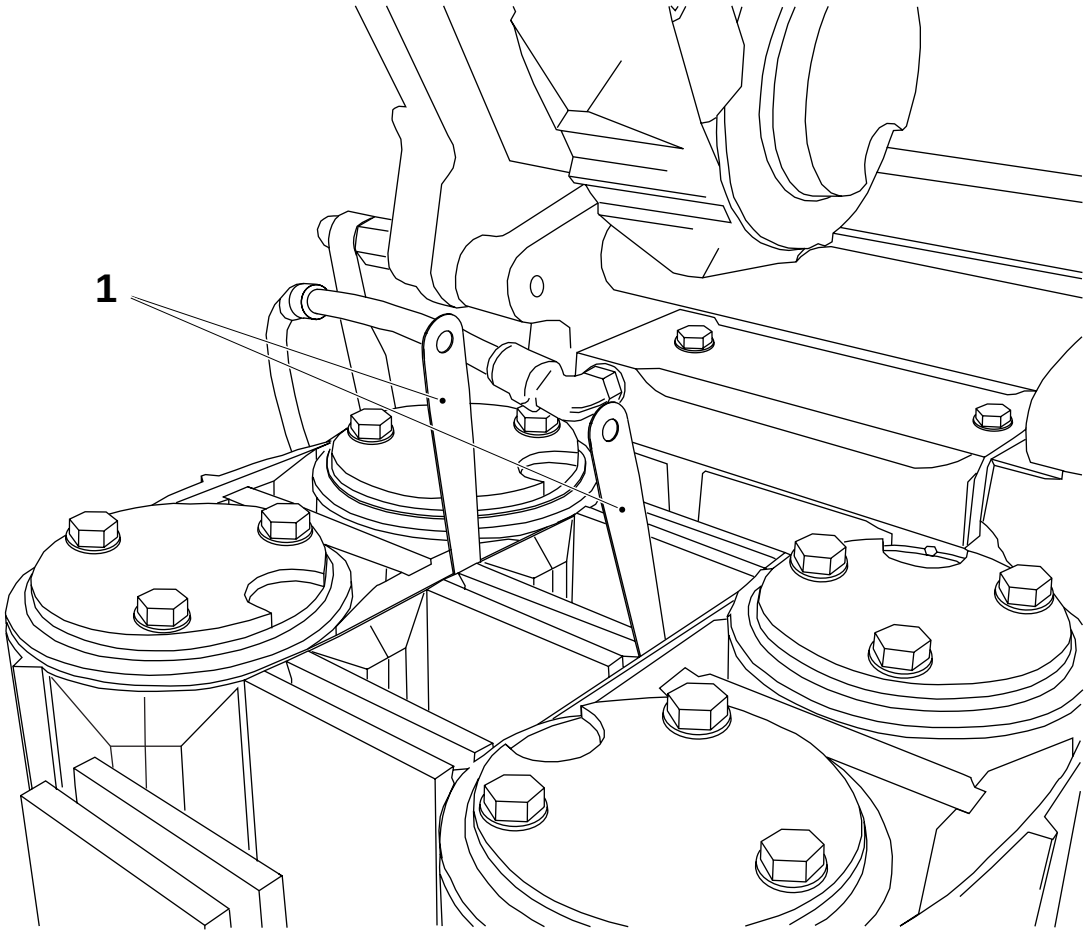

1 Feeler gauges

(Cont'd)

2.2B3024E01en.fm

(Cont'd)

d) To adjust the clearance: remove the screws (2), remove both side squeezers (3), change the spacers (4), then refit the side squeezers and screws.

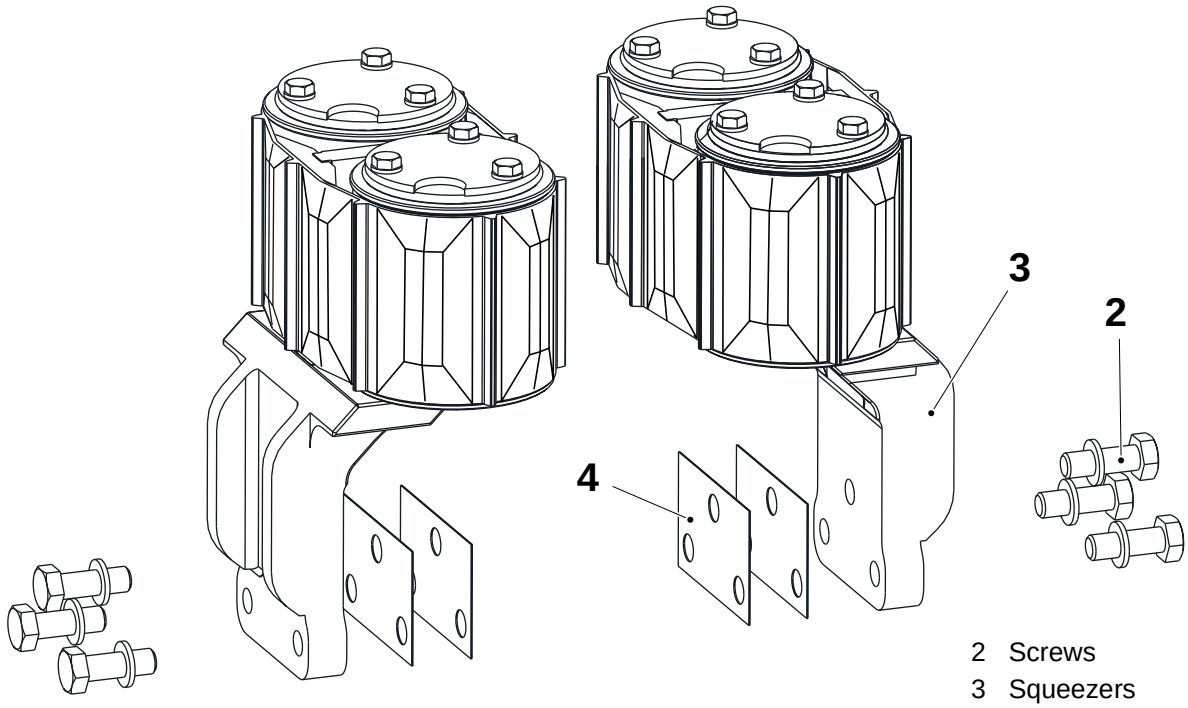

2 Screws
3 Squeezers
4 Spacers

2.2B3024E01en.fm

0-Series

5.2.4-7 Squeezer - check top squeezer clearances

SPC reference	1350080-0100

a) Rotate the final folder driveshaft by hand until one of the links of the station chain is directly below the centre of one of the top squeezer rollers.

b) Remove the locking ring (1) and retaining ring (2).

c) Check the clearance between the station chain and the top squeezer is 0.5 mm.

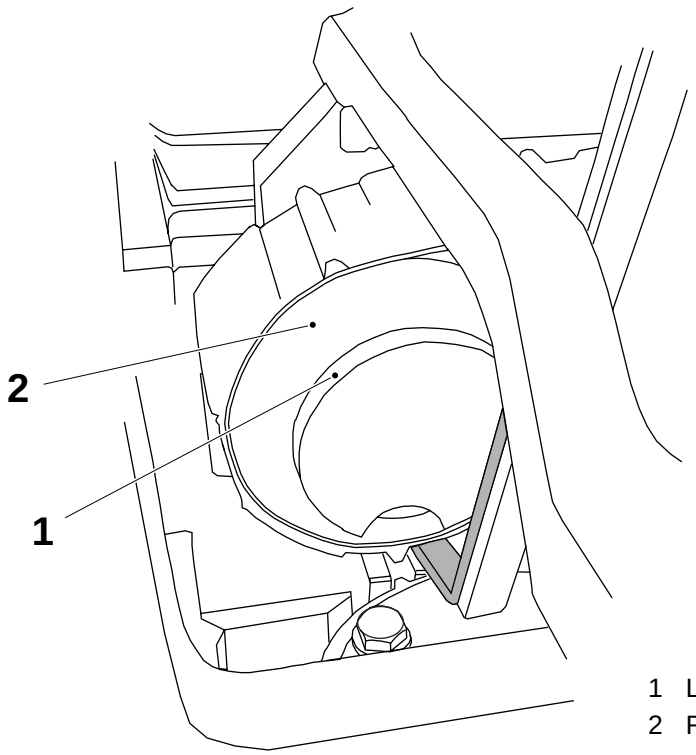

1 Locking ring
2 Retaining ring

(Cont'd)

2.2B3024E01en.fm

(Cont'd)

d) To adjust the cleance, loosen the screws (1).

e) Remove the screws (2) and lift out the top squeezer assembly.

f) Remove the screws (1) and change the spacers (3).

g) Refit the screws (1), refit the top squeezer assembly then refit the screws (2).

h) Tighten the screws (1) and (2).

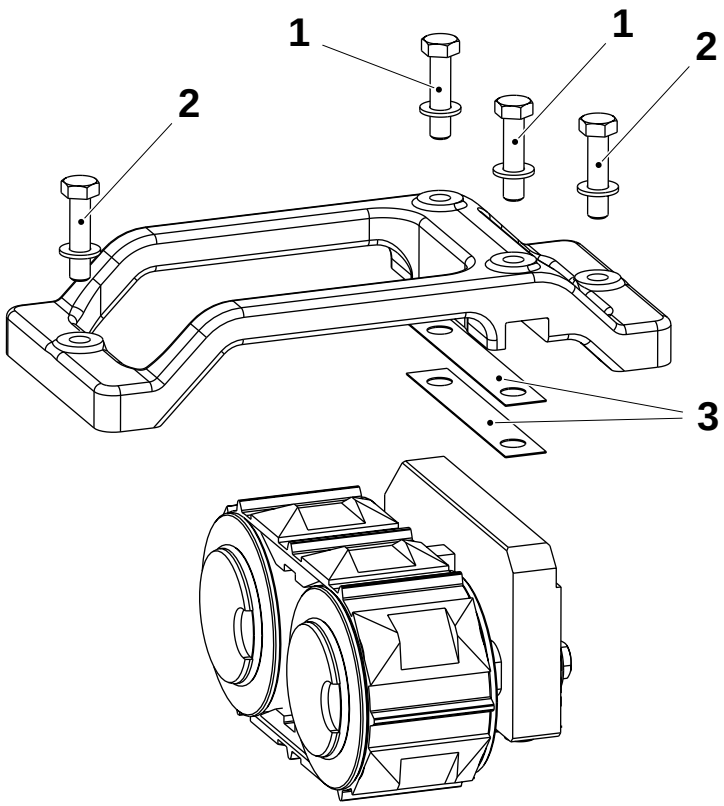

1 Screw
2 Screw
3 Spacer

2.2B3024E01en.fm

5.2.5 Flap sealing

5.2.5-1 Flap sealing - set nozzles

Tools - template	 TP No. 1296806
SPC reference	1195178-0100

a) Remove the screws (1) and lift out the top squeezer (2).

b) Lift the swing frame (3) and loosen the nozzles (4).

c) Fit the template (5) in the station chain, positioning the template below the nozzles.

d) Carefully lower the swing frame and turn the drive shaft (6) until the template is below the nozzles.

e) Set the nozzles so that they lightly touch the template.

f) Tighten the nozzles and remove the template.

g) Replace the top squeezer and set its position, see *5.2.4-1 Squeezer - set position*.

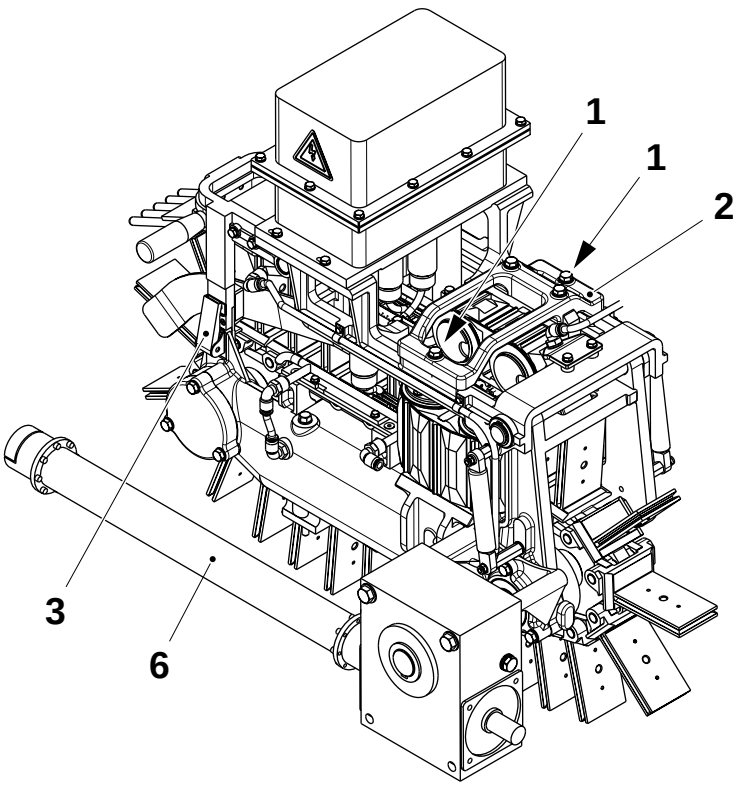

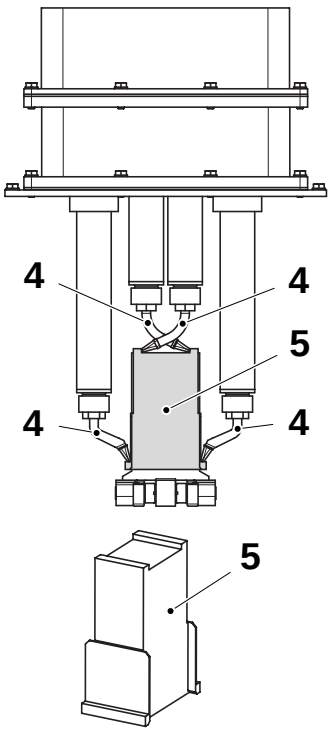

1 Screw
2 Squeezer
3 Swing frame
4 Nozzle
5 Template
6 Drive shaft

0-Series

2.2B3024E01en.fm

5.2.5-2 Flap sealing - overhaul heater

SPC reference	1195178-0100

a) Unscrew and remove the nozzles (1). Inspect them for damage and change as required.

b) Remove the screws (2) and lift off the top cover (3).

c) Remove the air line (4).

d) Loosen the cable gland (5) and push the cable in.

e) Remove the screws (6) and lift off the cover (7), pushing the cable through the gland as required. Do not pull the cables, to avoid damage to the connections.

f) Remove the screws (8) and lift out the heater element (9). Change as required.

g) Remove the thermocouple (10) and change as required.

h) Assemble in the reverse order.

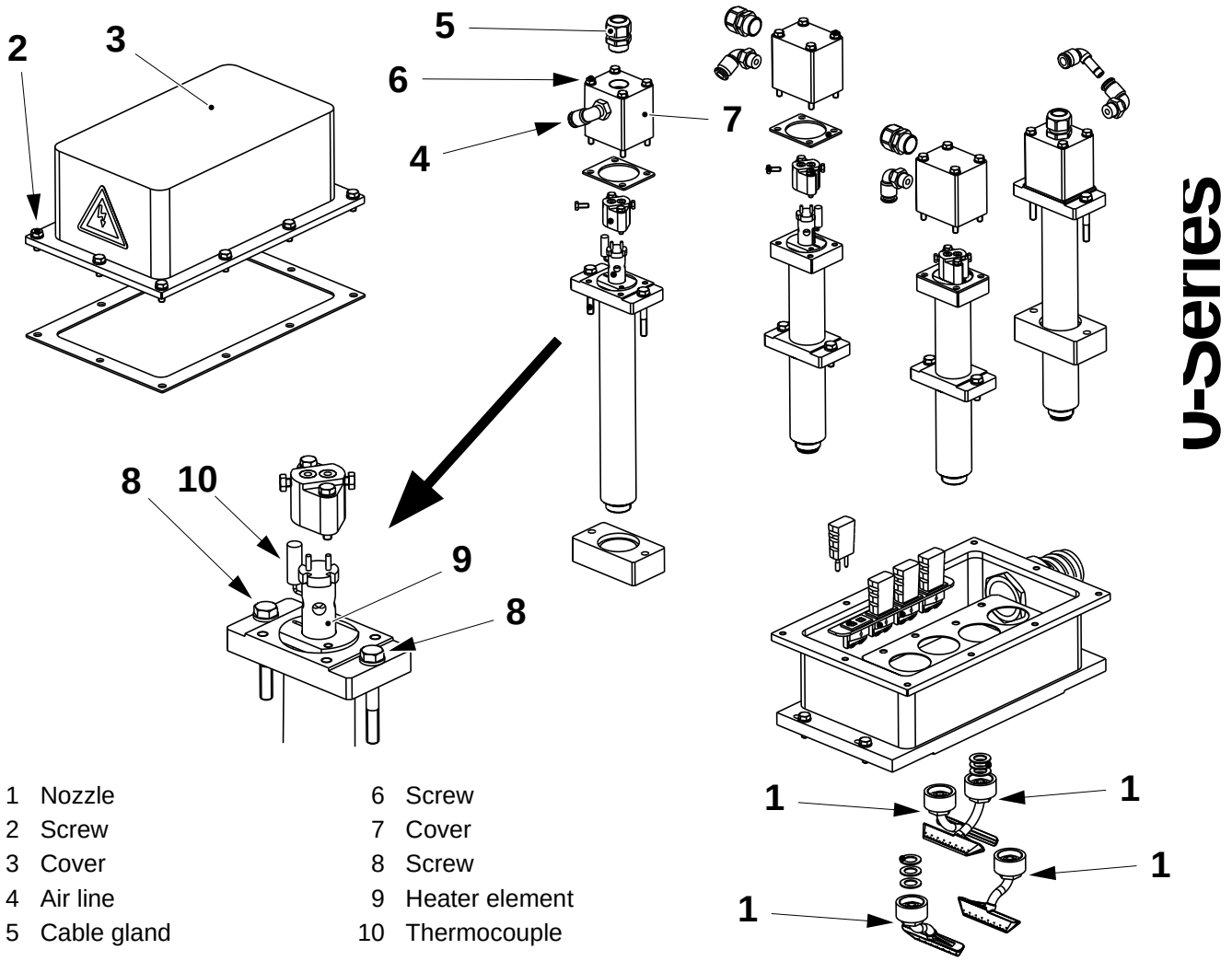

1 Nozzle
2 Screw
3 Cover
4 Air line
5 Cable gland
6 Screw
7 Cover
8 Screw
9 Heater element
10 Thermocouple

2.2B3024E01en.fm

U-Series

5.3 Discharge unit

SPC reference	577113-0100

5.3-2 Discharge unit - check bushings

SPC reference	577113-0100

Check that each carrier moves freely with no play in its bushings. If you find a defective carrier:

a) Turn the shaft (1) until the carrier is in the position shown in the picture.

b) Remove the screws (2) and remove the carrier (3).

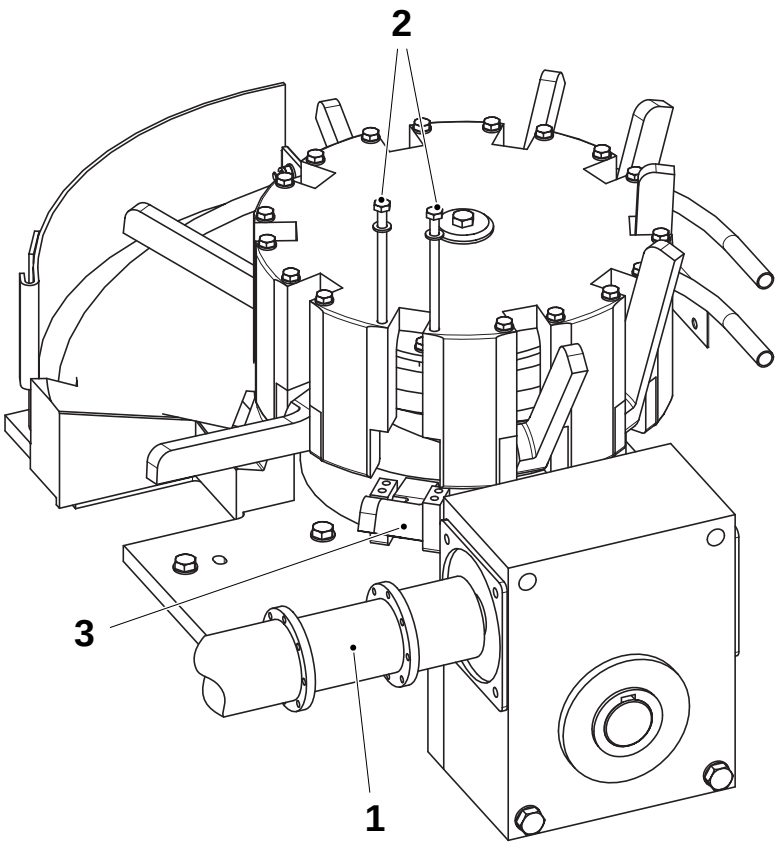

1 Shaft
2 Screw
3 Carrier

(Cont'd)

2.2B3024E01en.fm

(Cont'd)

c) Remove the blocks (4) and change the bushings (5) as required.

d) Push out the pin (6), remove the axle (7) and change the bushing (8) as required.

e) Assemble in the reverse order.

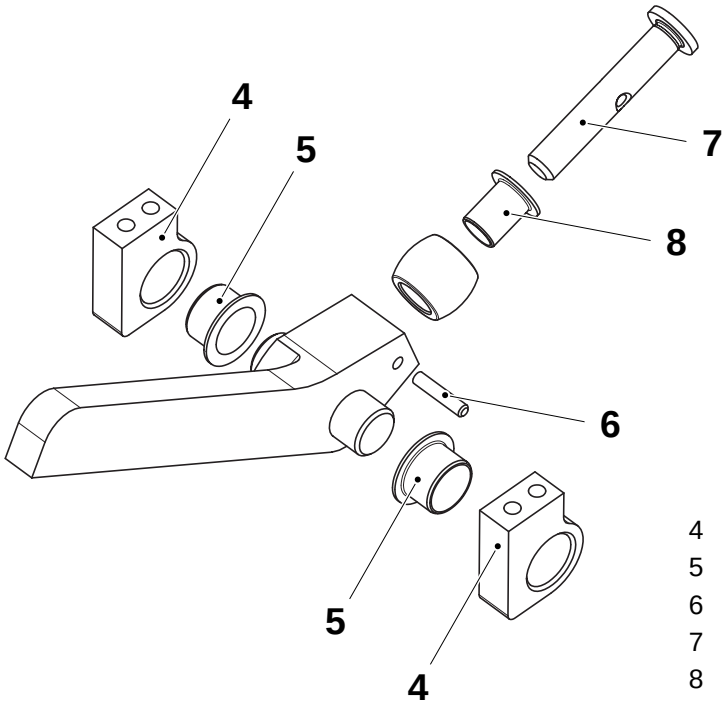

4 Block
5 Bushing
6 Pin
7 Axle
8 Bushing

2.2B3024E01en.fm

5.3-3 Discharge unit - change ball bearing

SPC reference	577113-0100

a) Remove the screws (1) and pull out the carrier (2).

b) Using the shaft (3), turn the outfeed and remove all the carriers.

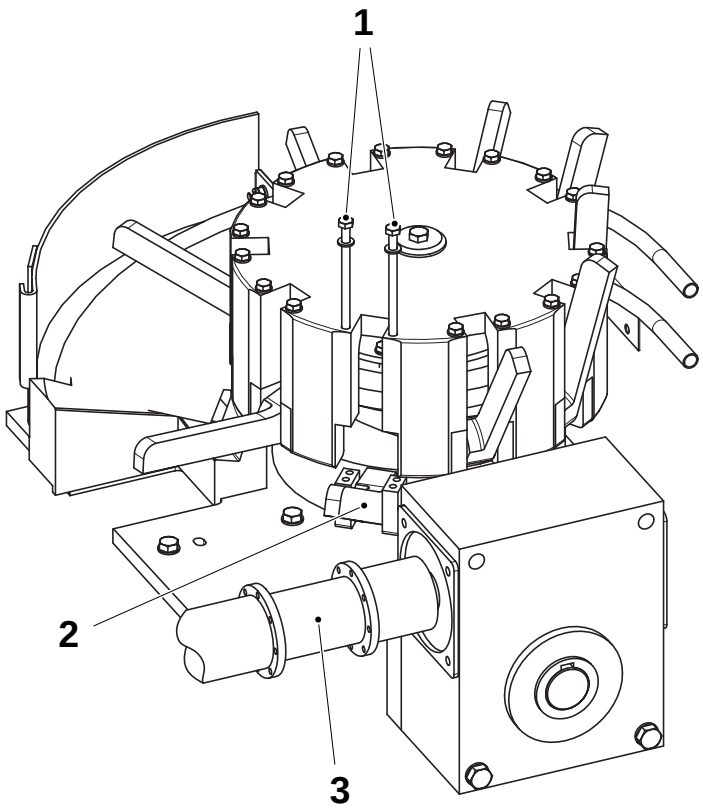

1 Screw
2 Carrier
3 Shaft

c) Remove the screw (4), the washer (5) and the cover (6).

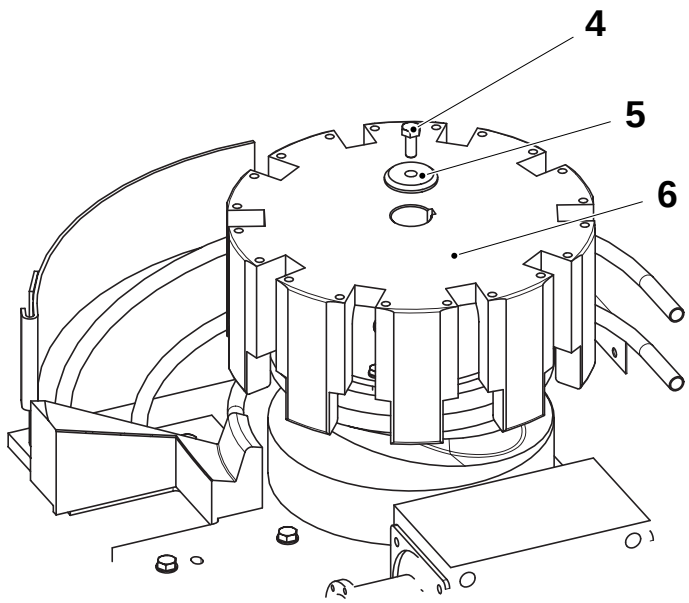

4 Screw
5 Washer
6 Cover

(Cont'd)

2.2B3024E01en.fm

(Cont'd)

d) Remove the screws (7) and the lid (8).

e) Change the seal ring (9) and the ball bearing (10).

f) Assemble in the reverse order.

g) Using the shaft (3), turn the outfeed one full circle and check that all the carriers move correctly.

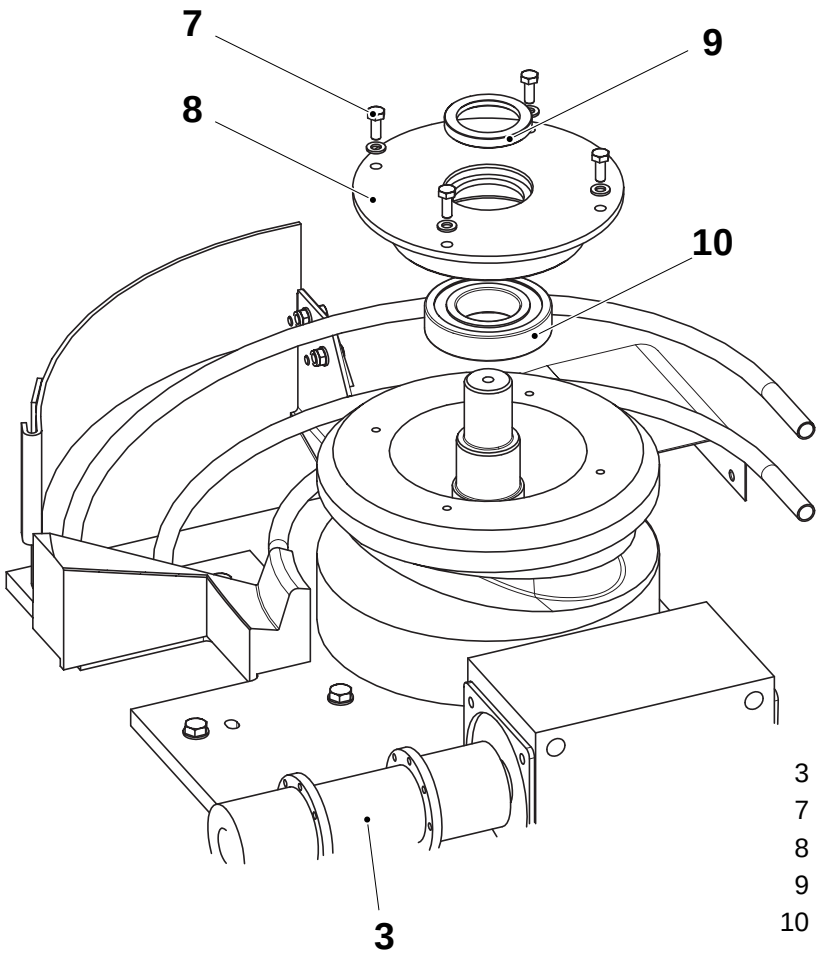

3 Shaft
7 Screw
8 Lid
9 Seal ring
10 Ball bearing

2.2B3024E01en.fm

5.4 Final folder drive

SPC reference	577114-0101

5.4-1 Couplings - check

SPC reference	577114-0101

Check the drive couplings (1), (2), (3), (4), (5) and (6) for damage and replace as required.

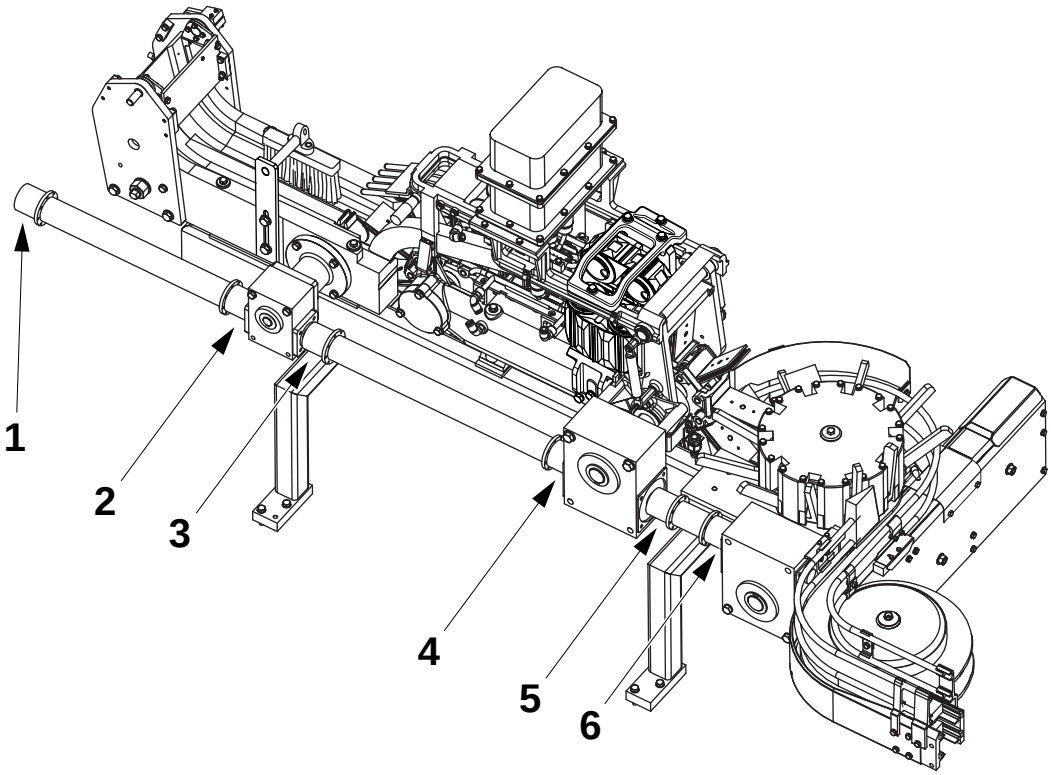

1 Coupling
2 Coupling
3 Coupling
4 Coupling
5 Coupling
6 Coupling

5.4-2 Gearbox - check oil

SPC reference	577114-0101

On each gearbox, remove the screw (1). Using a torch, check the oil level reaches the hole for the screw. If the oil level is low, add lubricant code H, see *10.3 Consumables*.

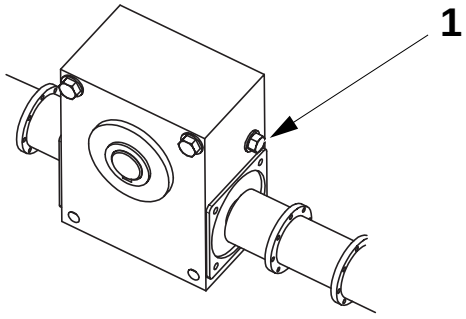

1 Screw

0-Series
2.2B3024E01en.fm

5.5 Waste conveyor

SPC reference	-0200

5.5-1 Waste conveyor - check

Machine status	Mains power **On** Air **On**
SPC reference	577114-0300

a) Check the hatch (1) moves freely in both directions.

b) Check the guard plate (2) for wear on the teeth edge.

c) Check the conveyor belt (3) for damage. Change as required, see *5.5-2 Waste conveyor - change conveyor belt*.

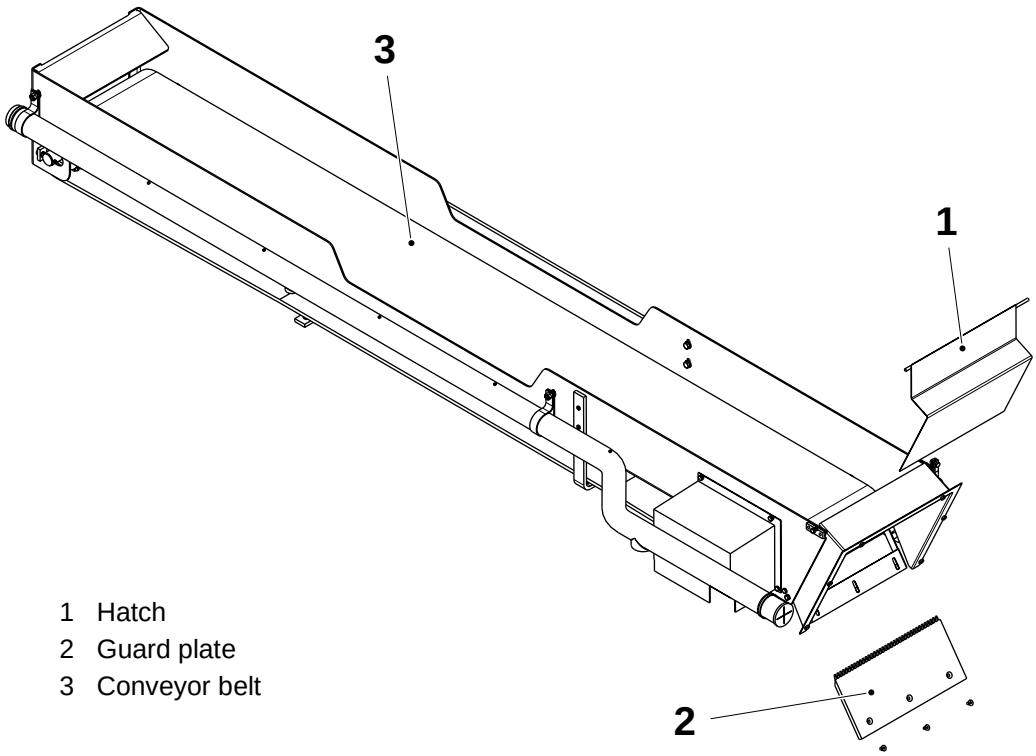

1 Hatch
2 Guard plate
3 Conveyor belt

2.2B3024E01en.fm

5.5-2 Waste conveyor - change conveyor belt

Tools - 4 mm drift	
SPC reference	577114-0300

a) Loosen the tensioning screws (1) on each side.

b) Release the tension of the conveyor belt (2).

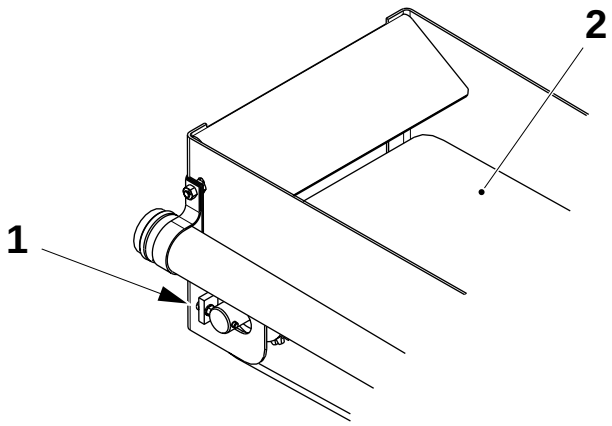

1 Screw
2 Conveyor belt

c) Using a 4 mm drift, push out one of the plastic connecting pins (3) in the conveyor belt.

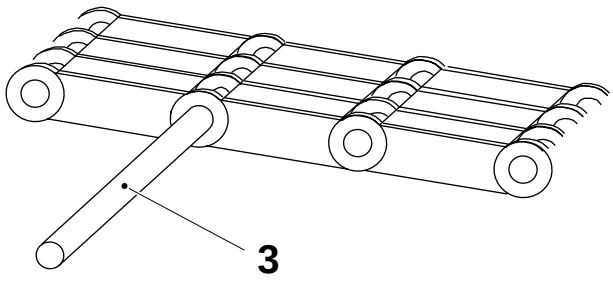

3 Pin

d) Remove the conveyor belt and change it as required.

e) Assemble in the reverse order.

2.2B3024E01en.fm

6 Service unit

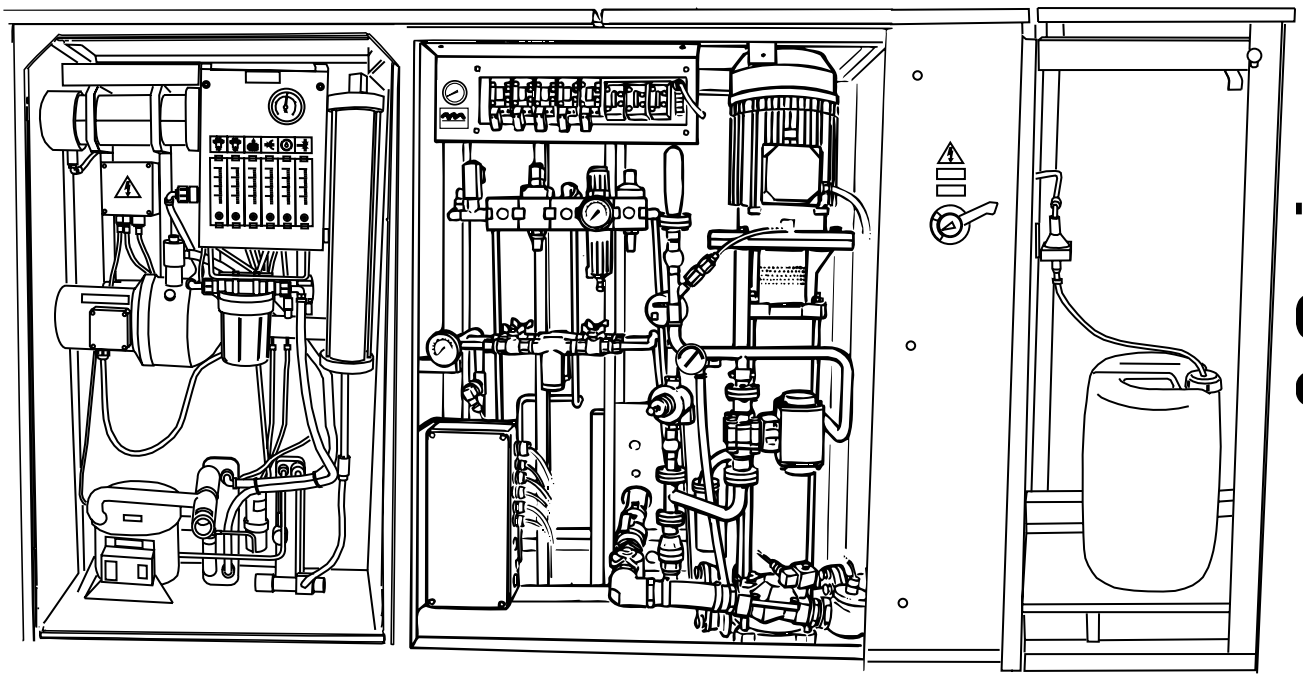

6-1 Service unit - description

SPC reference	648506-030V

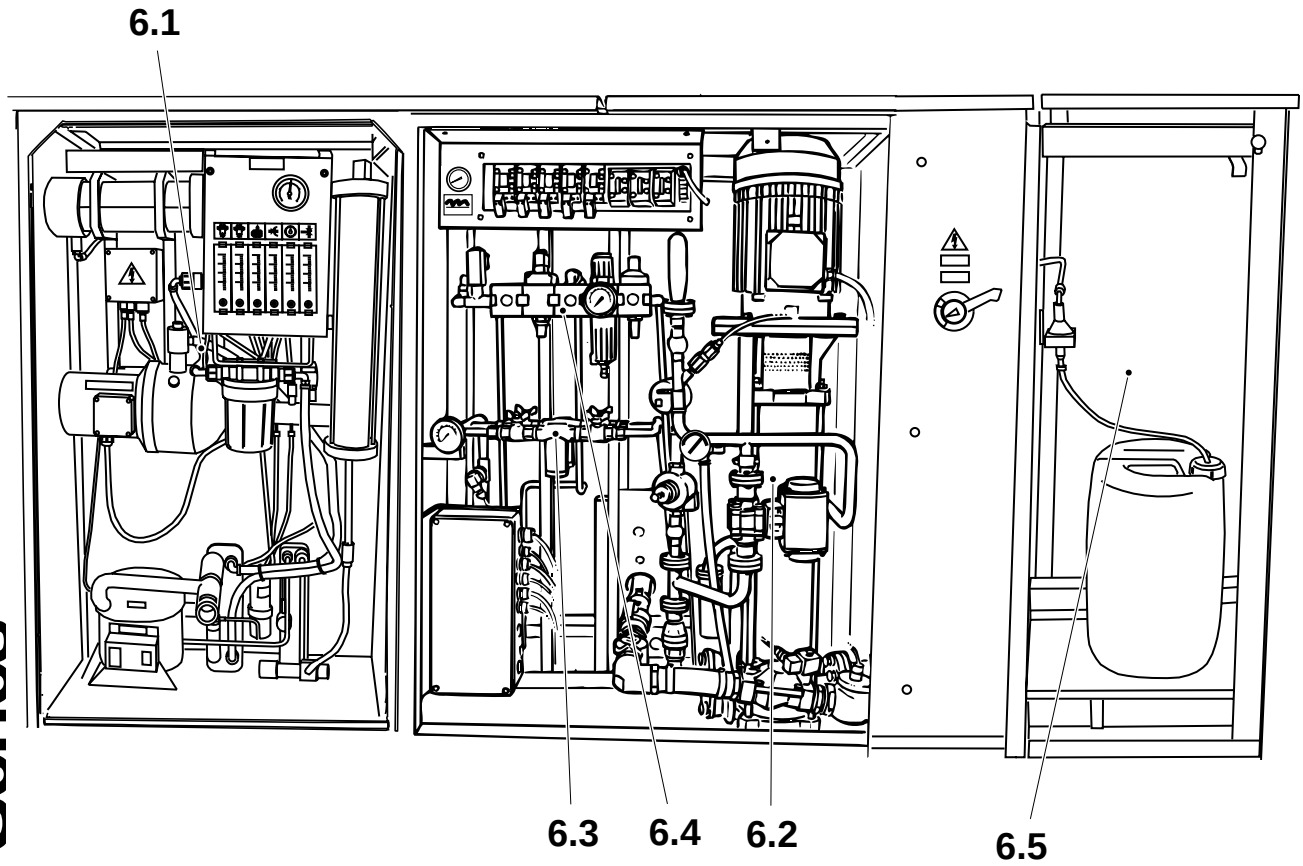

6.1 Cooling water system
6.2 Foam Cleaning Unit
6.3 Water panel
6.4 Supply System
6.5 Machine body

0-Series

2.2B3024F01en.fm

6.1 Cooling water system

SPC reference	1095612-020V

6.1-1 Cooling water system - check

Machine status	**Production**
SPC reference	1095612-020V

WARNING!

Cooling media R134A.
Follow the Safety precautions.

Check:

- There are no water leaks at the connections.
- The expansion vessel (1) is half full, filling it as required. See *6.1-2 Cooling water system - fill*.
- The pump (2) runs smoothly without excessive noise or vibration.
- The pressure gauge (4) shows **200 KPa**.
- The flowmeter (3) values, setting them as required. See *6.1.2-2 Flowmeter - set flows*.

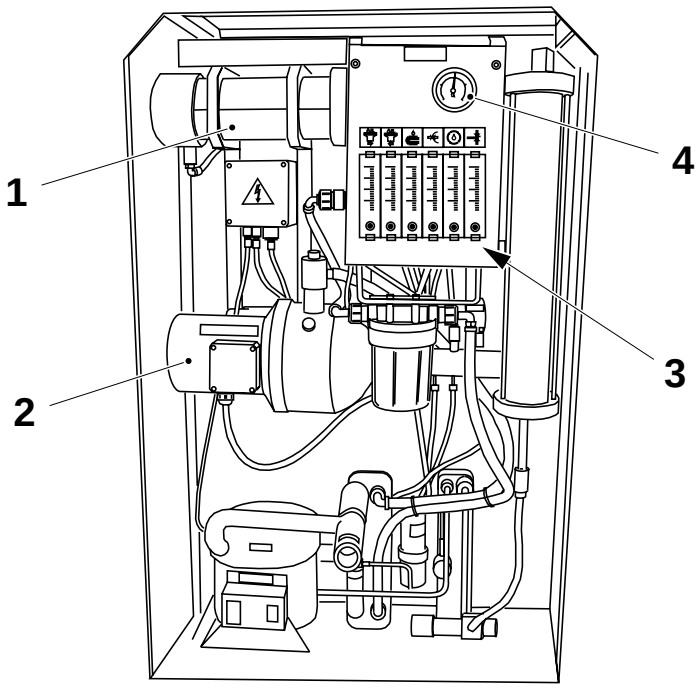

2.2B3024F01en.fm

6.1-2 Cooling water system - fill

Machine status	Mains power **On** Water **On** Air **On**
SPC reference	1095612-020V

WARNING!

Cooling media R134A.
Follow the Safety precautions.

a) Open valve (3) to fill the expansion vessel (1) with water. At the same time, bleed the air out of the system using valve (2).

b) Leave the pump (4) running for approximately one minute, then repeat item *a)*.

c) When the water pressure gauge (5) reaches **200 KPa (2 bar)**, close valve (3).

d) Check the expansion vessel (1) is approximately half full.

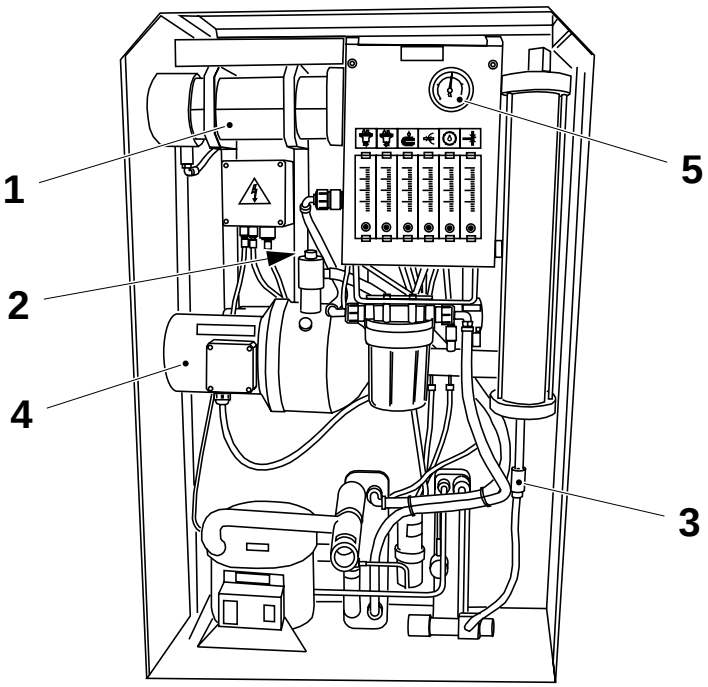

1 Expansion vessel
2 Valve
3 Valve
4 Pump
5 Pressure gauge

0-Series

2.2B3024F01en.fm

6.1.1 Compressor unit

6.1.1-1 Compressor unit - check sight glass

Machine status	Mains power **On** Water **On** Air **On**
SPC reference	1095710-020V

WARNING!

Cooling media R134A.
Follow the Safety precautions.

Check there are no gas bubbles in the sight glass (1). If air bubbles are present, call the local Tetra Pak Service.

Check the pin inside the sight glass (1) is **green**. If it is **yellow** call the local Tetra Pak Service.

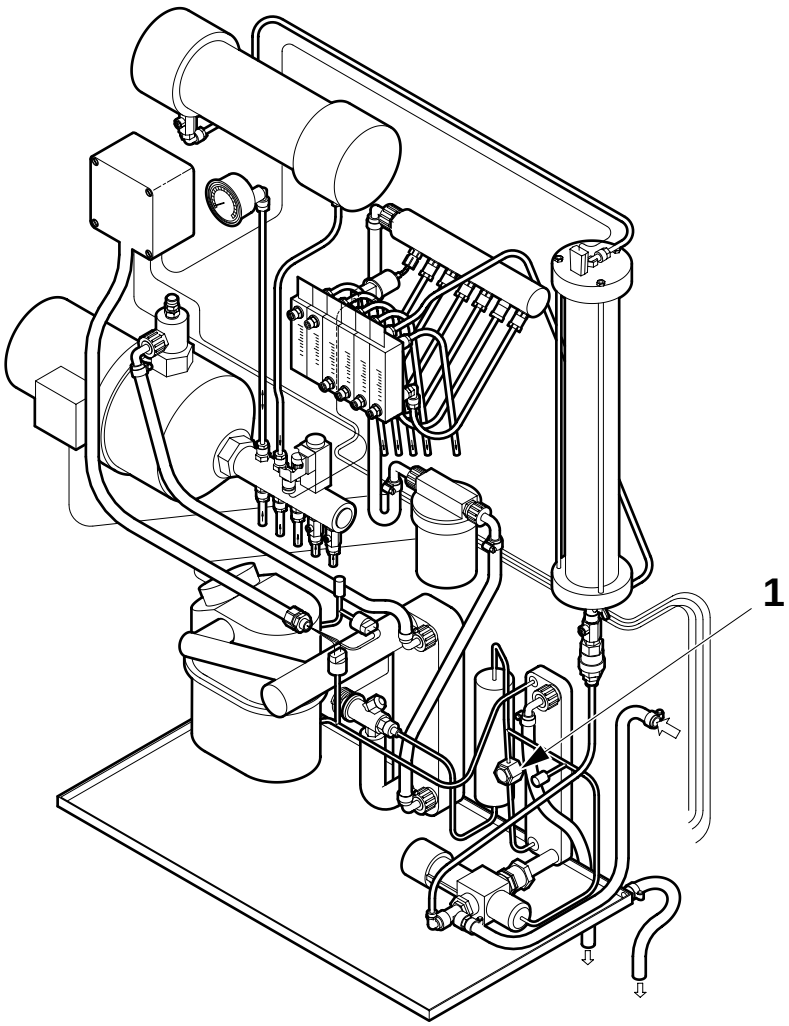

1 Sight glass

2.2B3024F01en.fm

6.1.1-2 Compressor unit - check

Machine status	**Production**
Tools - thermometer	 min. 40°C
SPC reference	1095710-020V

WARNING!

Cooling media R134A.
Follow the Safety precautions.

Make sure the compressor is running. Using a thermometer, check that the temperature of the water from the hose (1) is between **30°C** and **35°C**.

If not, call the local Tetra Pak Service.

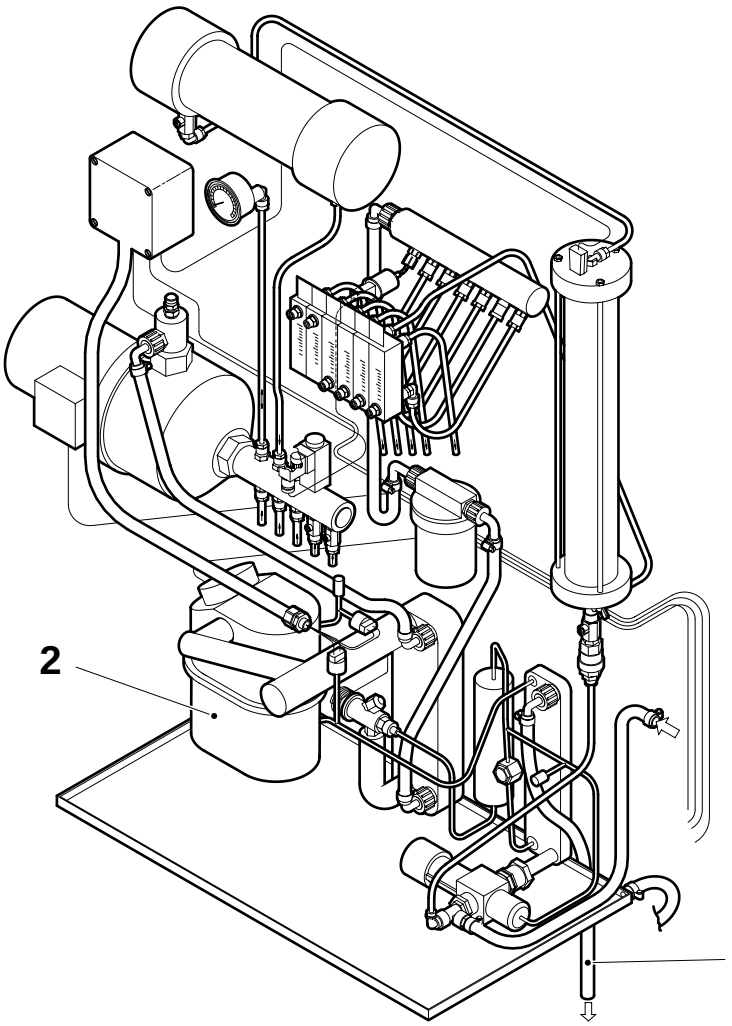

1 Hose
2 Compressor

0-Series

2.2B3024F01en.fm

6.1.2 Flowmeter

6.1.2-1 Flowmeter - change deionizer cartridge

SPC reference	1095705-020V

WARNING!

Cooling media R134A.
Follow the Safety precautions.

a) Close the DI-circuit flowmeter (1) using the screw (2).
b) Close the valve (3) using a screwdriver.
c) Remove the wing nuts (4) and lower the flange (5) so the deionizer cartridge (6) can be removed.
d) Change the deionizer cartridge (6). Position the rubber seals on the top and bottom flanges correctly.
e) Change the rubber seals if damaged.
f) Refit the flange (5) and tighten the wing nuts (4).
g) Open the valve (3).
h) Open the deionizer circuit flowmeter (1) using the screw (2).

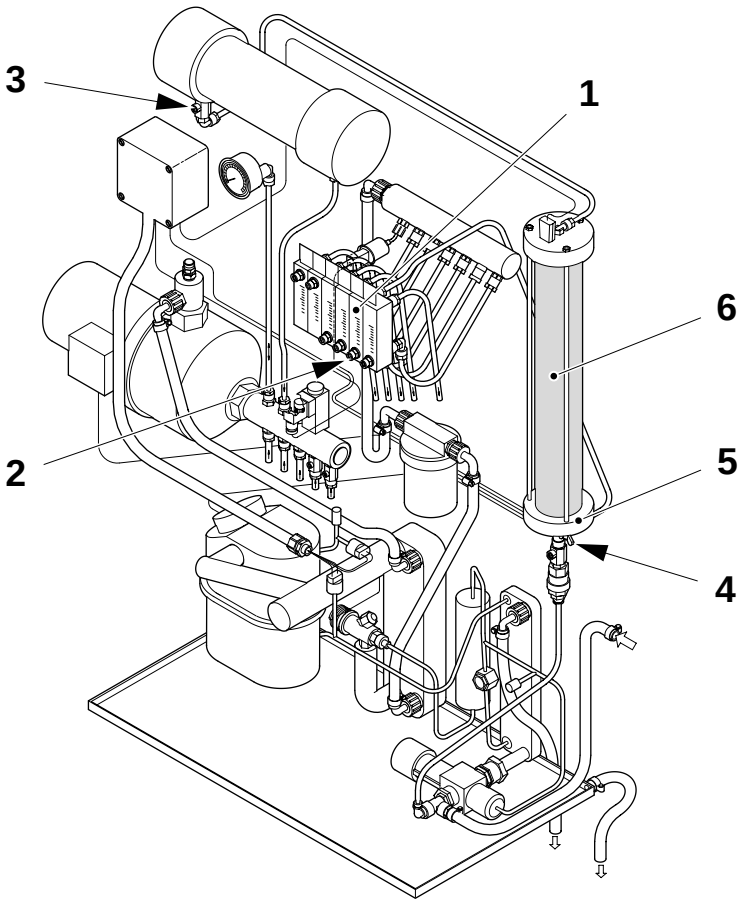

1 Flowmeter
2 Screw
3 Valve
4 Wing nut
5 Flange
6 Cartridge

2.2B3024F01en.fm

6.1.2-2 Flowmeter - set flows

Machine status	**Production**
SPC reference	1095705-020V

Set the flows by turning the setting screws (7) for the flowmeters (1), (2), (3), (4) (5) and (6) as indicated on the following table:

Flowmeter	**(l/min.)**
Transverse seal transformer(LH/RH)	see *10.1 Technical data*
Final folder	see *10.1 Technical data*
LS sealing	see *10.1 Technical data*
DI circuit	see *10.1 Technical data*
Strip applicator	see *10.1 Technical data*

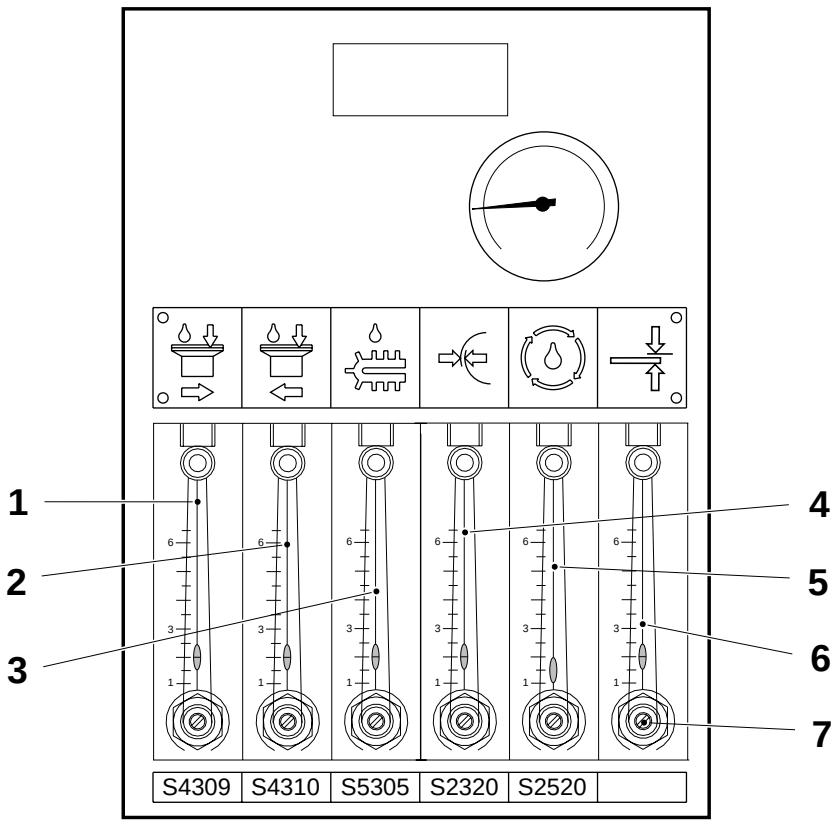

1 Flowmeter (LH transverse seal transformer)
2 Flowmeter (RH transverse seal transformer)
3 Flowmeter (final folder)
4 Flowmeter (longitudinal sealing)
5 Flowmeter (DI circuit)
6 Flowmeter (strip applicator)
7 Setting screw

2.2B3024F01en.fm

6.1.2-3 Flowmeter - change filter insert

SPC reference	1095705-020V

WARNING!

Cooling media R134A.
Follow the Safety precautions.

a) Open the valve (1) to release the system pressure. Approximately one litre of water must be discarded.

b) When the pressure gauge (2) shows **0 KPa**, close the valve (1).

c) Unscrew out the plug (3) and pull out the filter insert (5).
Clean the filter insert with compressed air or change as required.

d) Check the O-ring (4) for damage. Change as required.

e) Fit the filter insert (5), the O-ring (4) and the plug (3).

f) Fill the system, see *6.1-2 Cooling water system - fill*.

Note! Check during **Production** that the new filter does not leak.

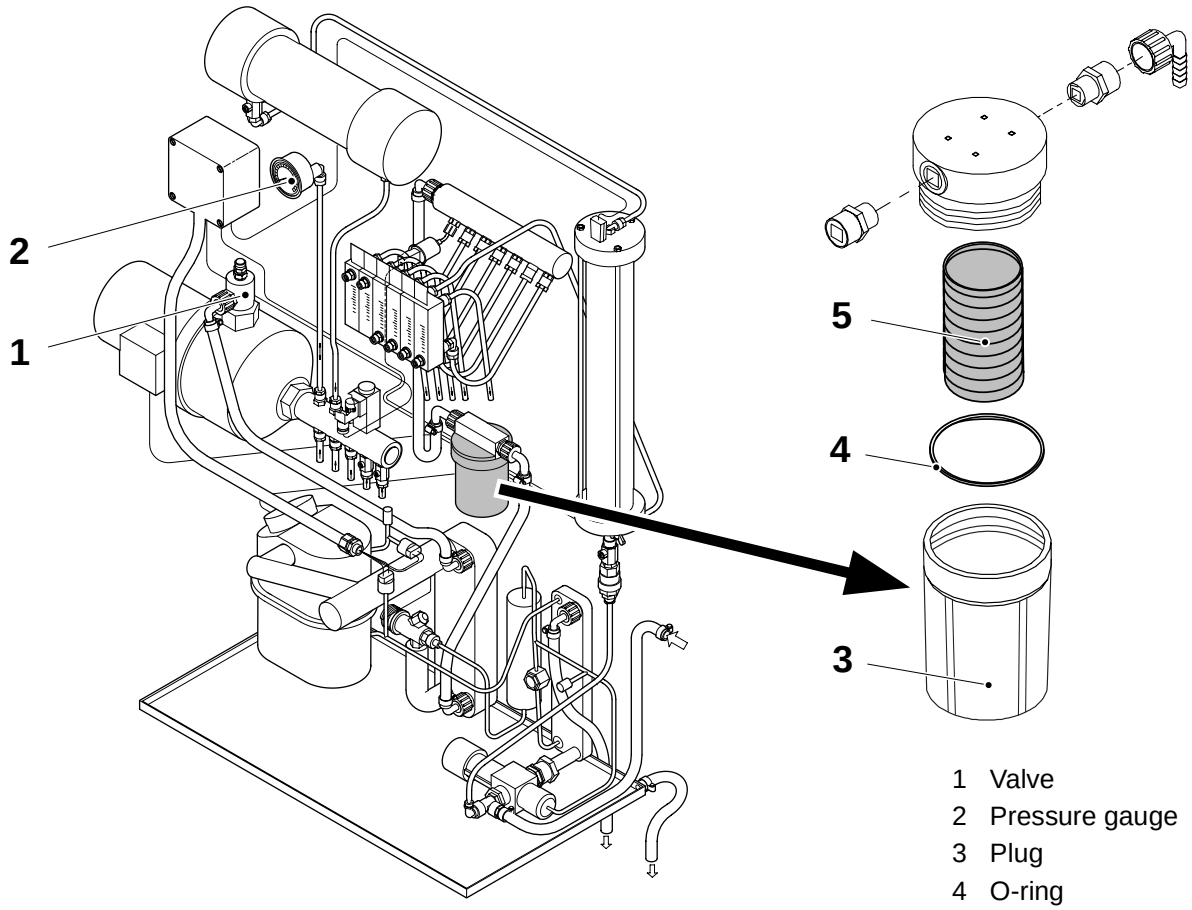

1 Valve
2 Pressure gauge
3 Plug
4 O-ring
5 Filter insert

2.2B3024F01en.fm

6.2 Foam Cleaning Unit

SPC reference	1095627-020V

6.2.1 Cleaning pump

6.2.1-1 Cleaning pump - check connections

Machine status	Air **On**
SPC reference	1095676-020V

a) Check for leakages in the cleaning pump connections and in the pipe connections, see arrows.

b) Change the seals as required.

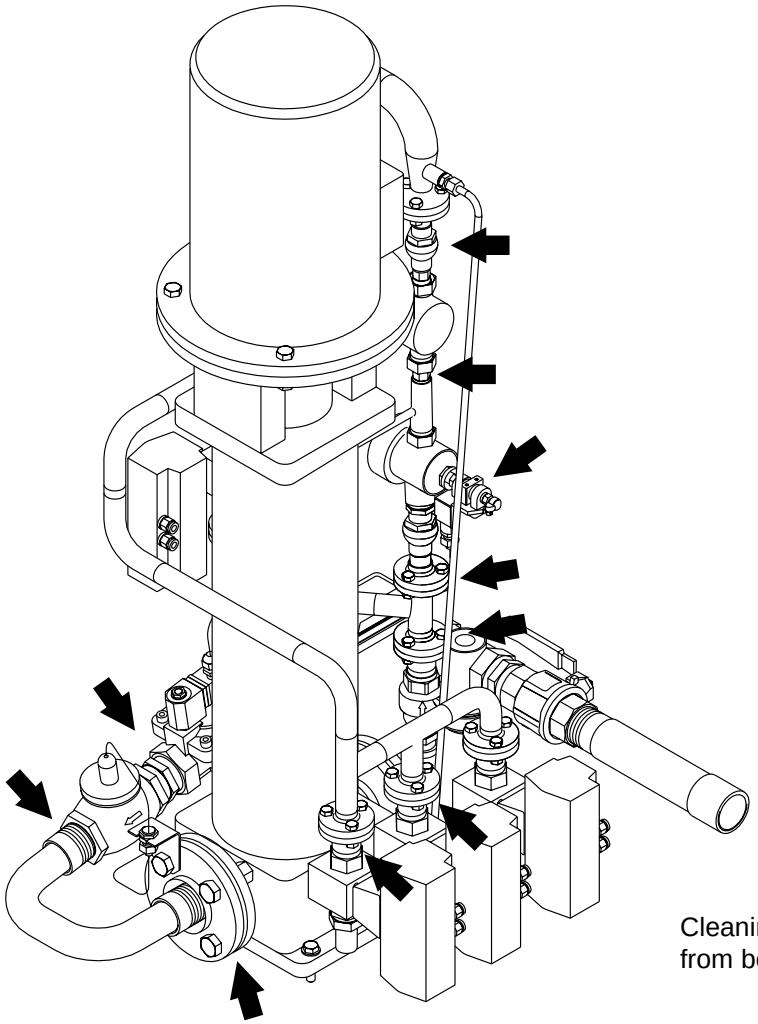

Cleaning pump viewed from behind

0-Series

2.2B3024F01en.fm

6.2.1-2 Cleaning pump - set pressure

Tool - pressure gauge	TP No.90043-86
SPC reference	1095676-020V

a) Remove the plug from the T-connection and replace it with the pressure gauge (1).

b) Step up the machine to **External cleaning**.

c) Set the cleaning pressure to **400 KPa** using the adjustment screw (2).

Foam pressure

Set the foam pressure to **500 KPa** using the pressure regulator (3).

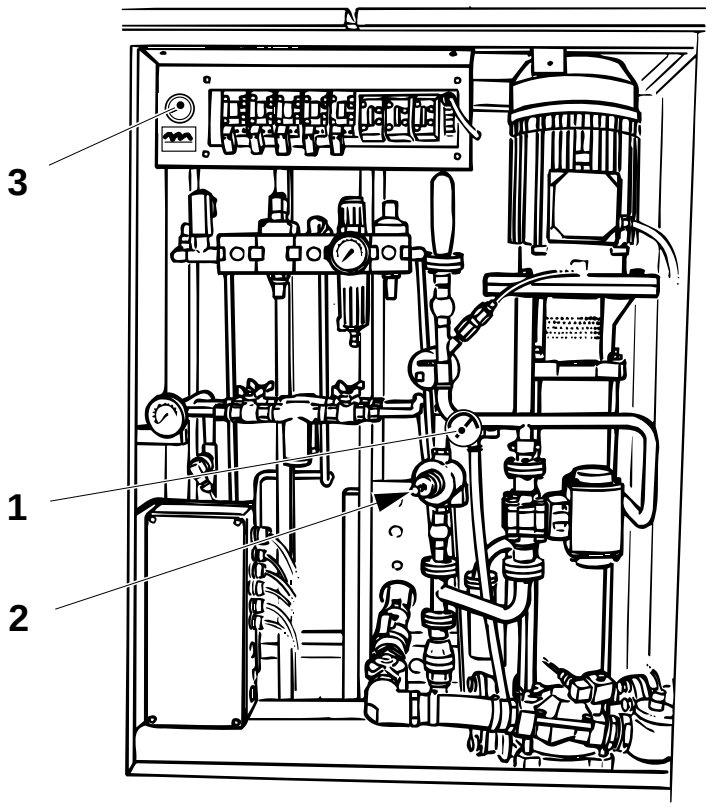

1 Pressure gauge
2 Adjustment screw
3 Pressure regulator

2.2B3024F01en.fm

6.3 Water panel

SPC reference	1095608-010V

6.3-1 Water panel - check pressure switch

Machine status	Air **On** Water **On** Mains power **On**
SPC reference	1095608-010V

a) Slowly close the valve (1) in the open line and check that the **water supply** alarm on the TPOP panel lights up when the pressure gauge (2) drops below **200 KPa**.

b) If not, change the pressure switch (3).

c) Open the valve (1).

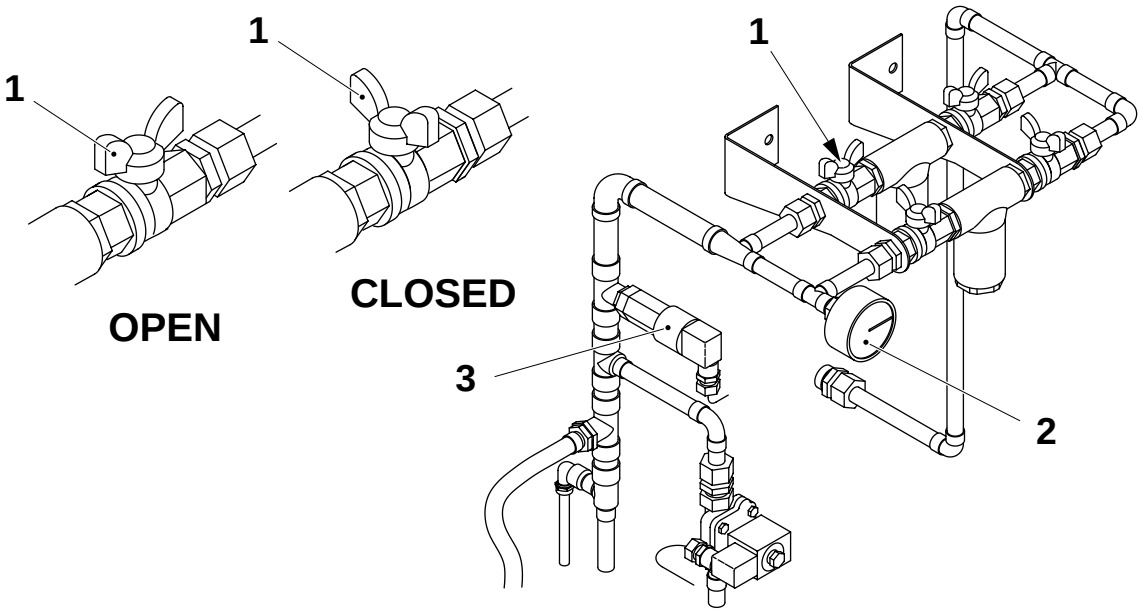

1 Valve
2 Pressure gauge
3 Pressure switch

2.2B3024F01en.fm

6.3-2 Water panel - clean filters

SPC reference	1095608-010V

Cold water

Note! During **Production** only one filtering line should be open at a time.

a) Close all the valves.

b) Remove the plug (1) and pull out the filter insert (2). Clean the filter insert with compressed air or change as required.

c) Check the O-ring (3) for damage. Change as required.

d) Fit the filter insert (2), the O-ring (3) and the plug (1).

e) Repeat on the other filter.

f) Open two valves in one filtering line (4). Make sure the other line (5) is closed.

g) Check during **Production** that there are no leakages in the plugs (1).

Production

a) Clean the filter in the closed line.

b) Then open that line and close the other one.

c) Clean the other filter.

2.2B3024F01en.fm

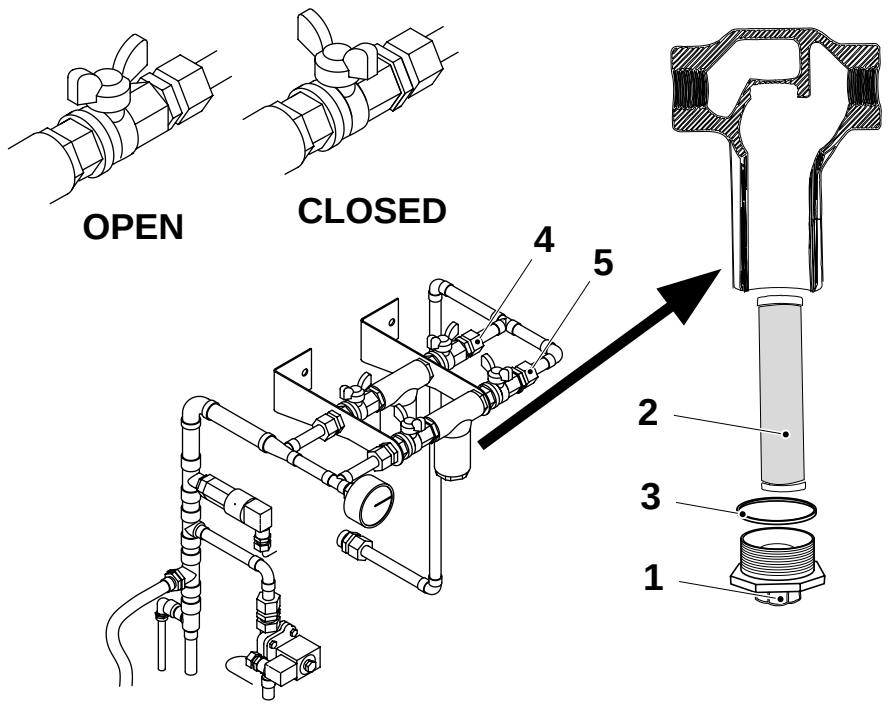

1 Plug
2 Filter insert
3 O-ring
4 Open line
5 Closed line

(Cont'd)

(Cont'd)

Hot water

a) Close the valve (1).

b) Remove the plug (2) and pull out the filter insert (3). Clean the filter insert with compressed air or change as required.

c) Check the O-ring (4) for damage. Change as required.

d) Fit the filter insert (3), the O-ring (4) and the plug (2).

e) Open the valve (1).

f) Check during **Production** that there are no leakages in the plug (2).

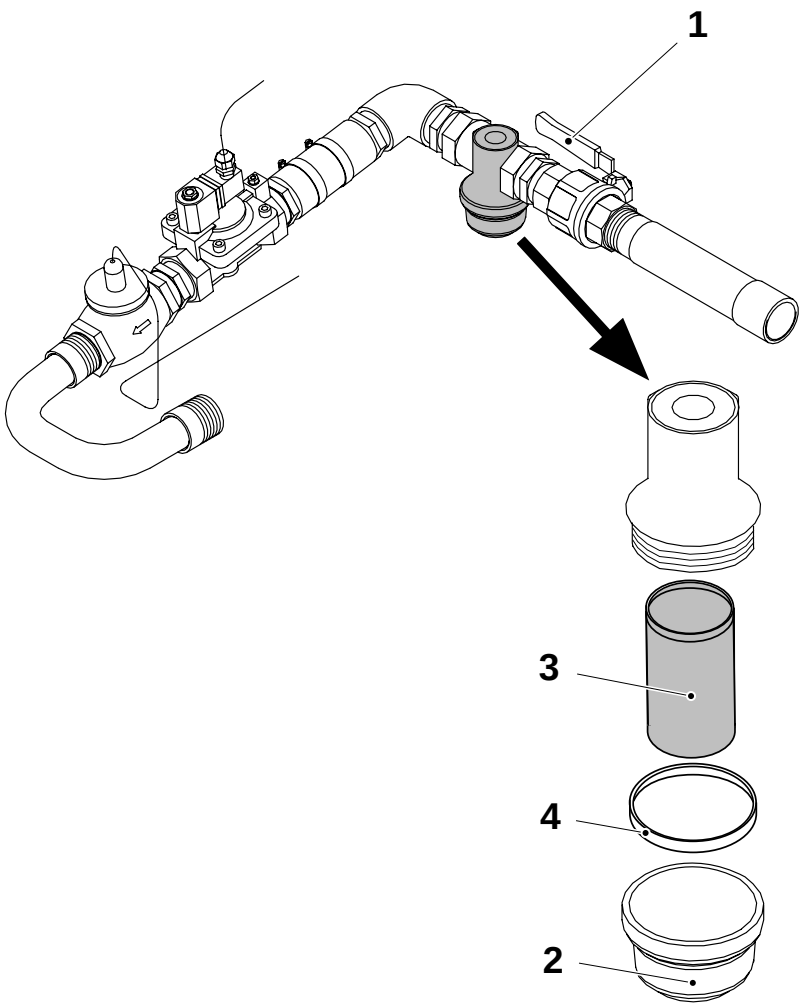

1 Valve
2 Plug
3 Filter insert
4 O-ring

2.2B3024F01en.fm

6.3-3 Water panel - set tube flushing device

Machine status	**Production**
SPC reference	1095608-010V

g) Using a screwdriver, adjust the valve (1) on the process panel to set the tube flushing water flow, see *10.1 Technical data* section for the correct value.
Make sure that the nozzle sprays water onto the tube without splashing. If not adjsust the flow.

h) Using a screwdriver, adjust the valve (2) on the process panel to set the infeed conveyor water flow, see *10.1 Technical data* section for the correct value.

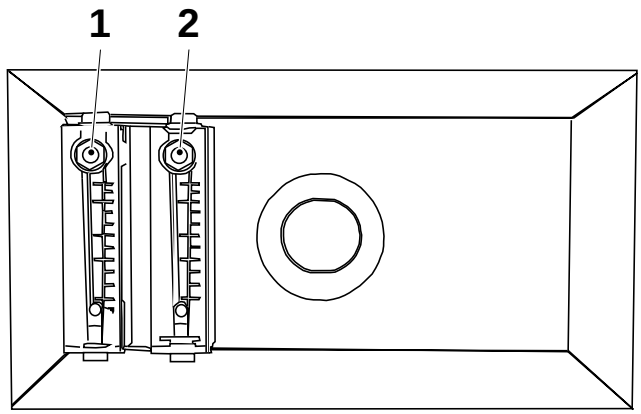

1 Valve
2 Valve

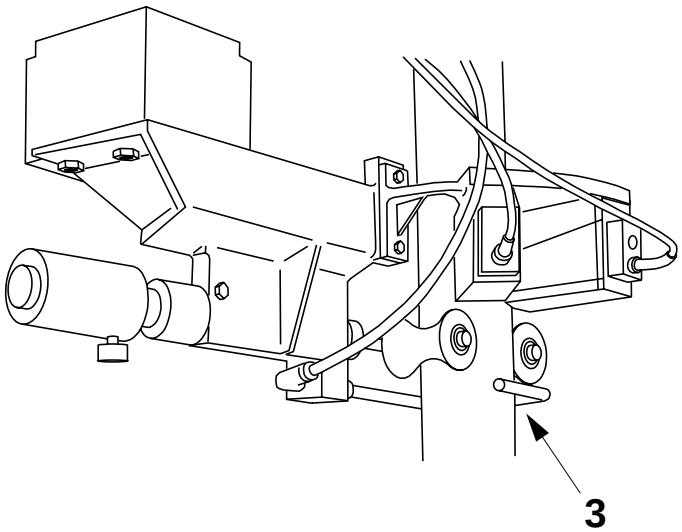

3 Nozzle

2.2B3024F01en.fm

0-Series

6.4 Supply System

SPC reference	1095714-020V

6.4.1 Pneumatic unit

6.4.1-1 Pneumatic unit - check

Machine status	Air **On** Mains power **On**
SPC reference	1095609-020V

a) Check for leakages in the pneumatic unit.

b) Record the pressure on the pressure gauge (1). Drop the pressure to **450 KPa** using the pressure regulator (2) and check that the air supply alarm starts flashing on the TPOP. If not, set the pressure switch (3): see *6.4.1-3 Pneumatic unit - set pressure switch*. Set the pressure to the previously-recorded value.

c) Close the shut-off valve (4) and check that the pressure gauge (1) shows zero. If not, change the shut-off valve (4).

d) Open the shut-off valve (4).

e) Check the filter insert (5). If the pressure is too low, clean or change it: see *6.4.1-4 Pneumatic unit - clean filter insert*.

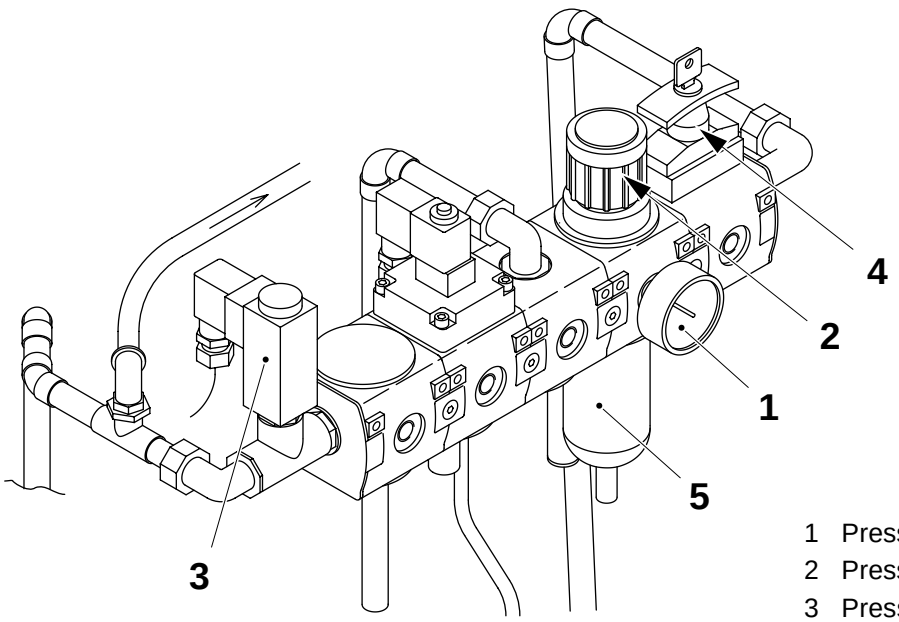

1 Pressure guage
2 Pressure regulator
3 Pressure switch
4 Shut-off valve
5 Filter insert

2.2B3024F01en.fm

0-Series

6.4.1-2 Pneumatic unit - set pressure

Machine status	Air **On** Mains power **On**
SPC reference	1095609-020V

a) Set the pressure regulator (1) so the pressure gauge (2) shows the air pressure shown in *10.1 Technical data*.

6.4.1-3 Pneumatic unit - set pressure switch

Machine status	Air **On** Mains power **On**
SPC reference	1095609-020V

a) Turn the adjuster screw (3) on the top of the pressure switch (4) fully anti-clockwise.

b) Using the pressure regulator (1), set the main input air pressure so the pressure gauge (2) shows the value shown in *10.1 Technical data*.

c) Slowly turn the adjuster screw (3) clockwise until the filling machine main air supply alarm starts flashing on the TPOP panel.

d) Using the pressure regulator (1), reset the main input air pressure so the pressure gauge (2) shows the value shown in *10.1 Technical data*.

2.2B3024F01en.fm

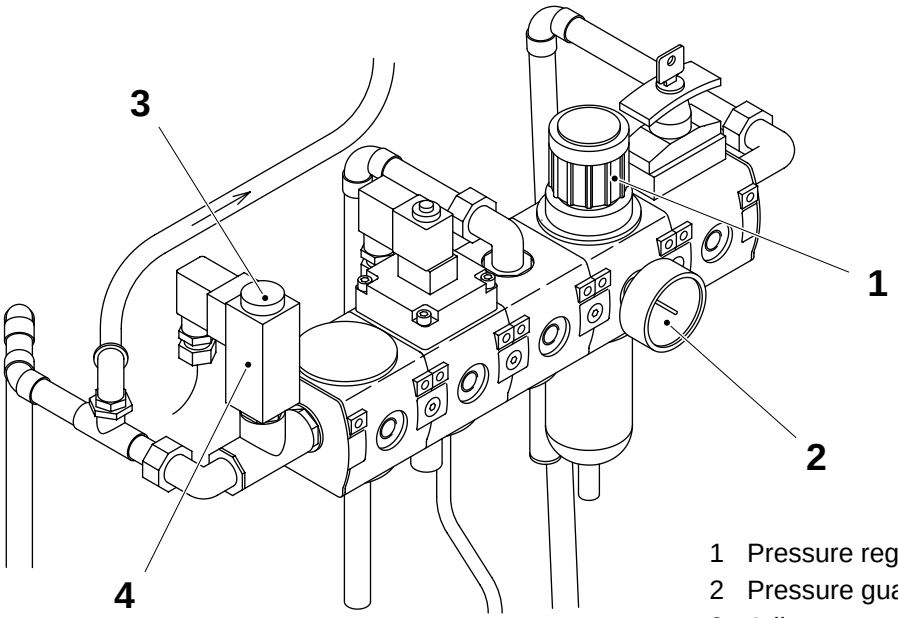

1 Pressure regulator
2 Pressure guage
3 Adjustment screw
4 Pressure switch

0-Series

6.4.1-4 Pneumatic unit - clean filter insert

Machine status	Air **On** Mains power **On**
Consumables - soap	
SPC reference	1095609-020V

a) Close the main air supply shut-off valve (1).

b) Remove the reservoir (2) and change the O-ring (3) as required.

c) Clean the reservoir (2) with soapy water and rinse with plenty of water.

d) Remove and clean the filter insert (4). Change as required.

e) Refit the reservoir and make sure the O-ring is correctly fitted.

f) Open the main air supply shut-off valve (1) and check for leakages in the reservoir.

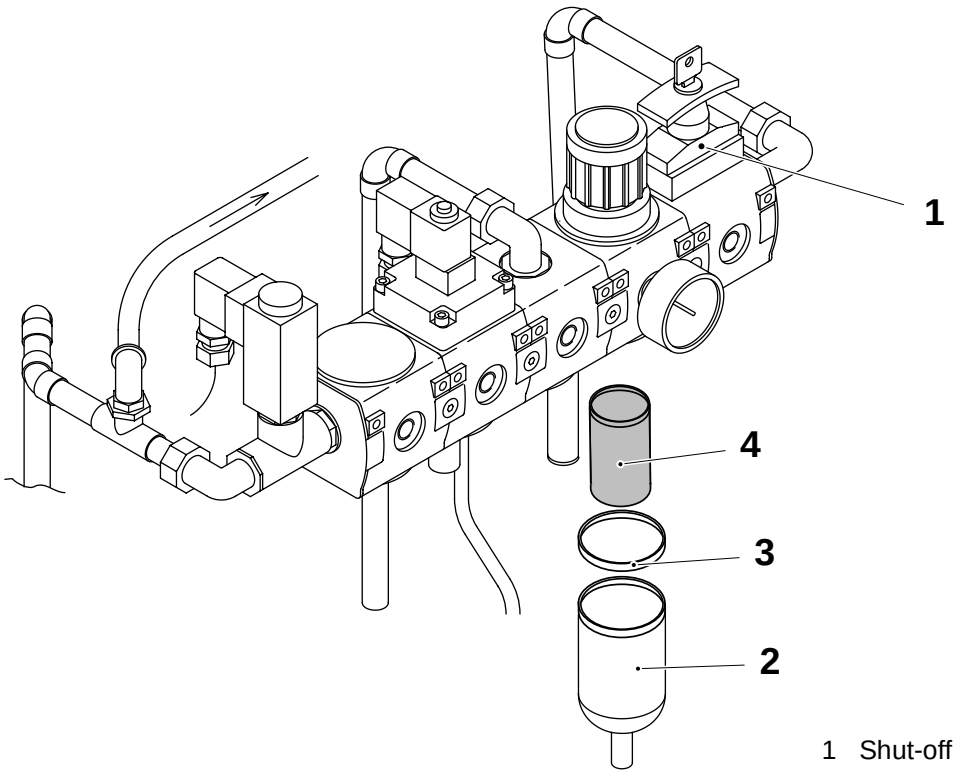

1 Shut-off valve
2 Reservoir
3 O-ring
4 Filter

0-Series

2.2B3024F01en.fm

6.5 Machine body

SPC reference	1095606-0200

6.5.1 Chemical unit

6.5.1-1 Chemical unit - check

Machine status	Air **On** Mains power **On**
SPC reference	1478943-0100

WARNING!

Risk of skin irritation!
Before handling Cleaning solutions, read the Safety precautions.

Check the following for wear or damage:

- The pump (1).
- The connections for detergent residue. Clean as required.
- The pipe connections. Check for leaks.
- The filter (2). Clean with compressed air or change as required.

Consumption of detergent

a) Mark the detergent level on the container with a piece of tape.

b) Run the detergent program.

c) Measure the distance between the detergent level and the tape: see *10.1 Technical data* for the correct consumption.

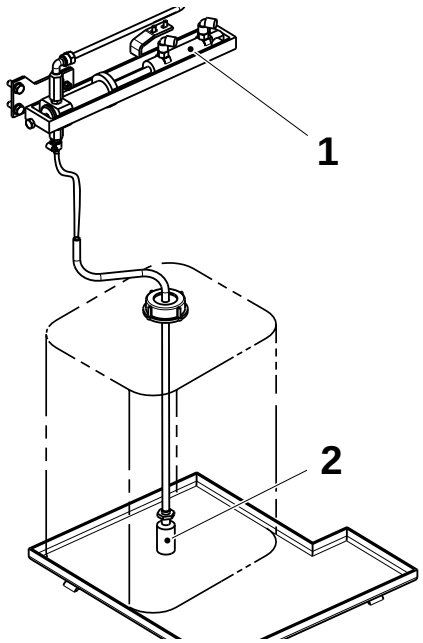

1 Pump
2 Filter

2.2B3024F01en.fm

This page is intentionally left blank

2.2B3024F01en.fm

7 Strip applicator

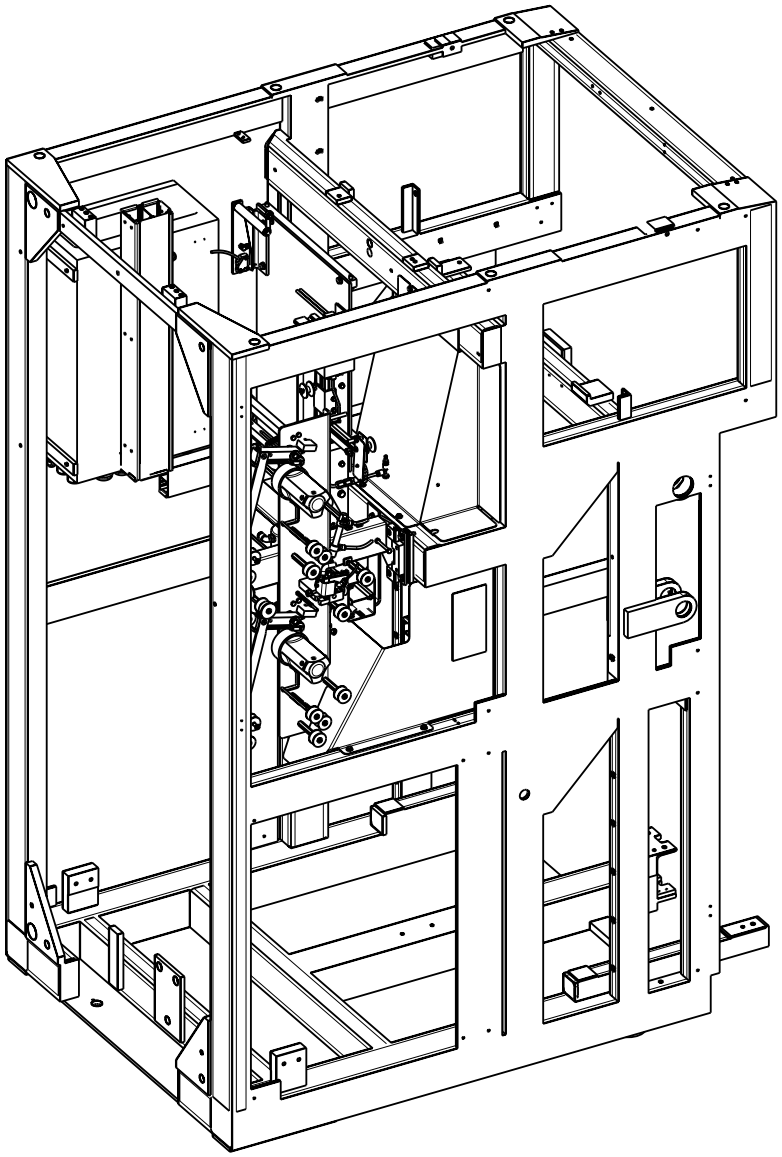

2.2B3024G01en.fm

0-Series

7-1 Strip applicator - description

SPC reference	648507-0400

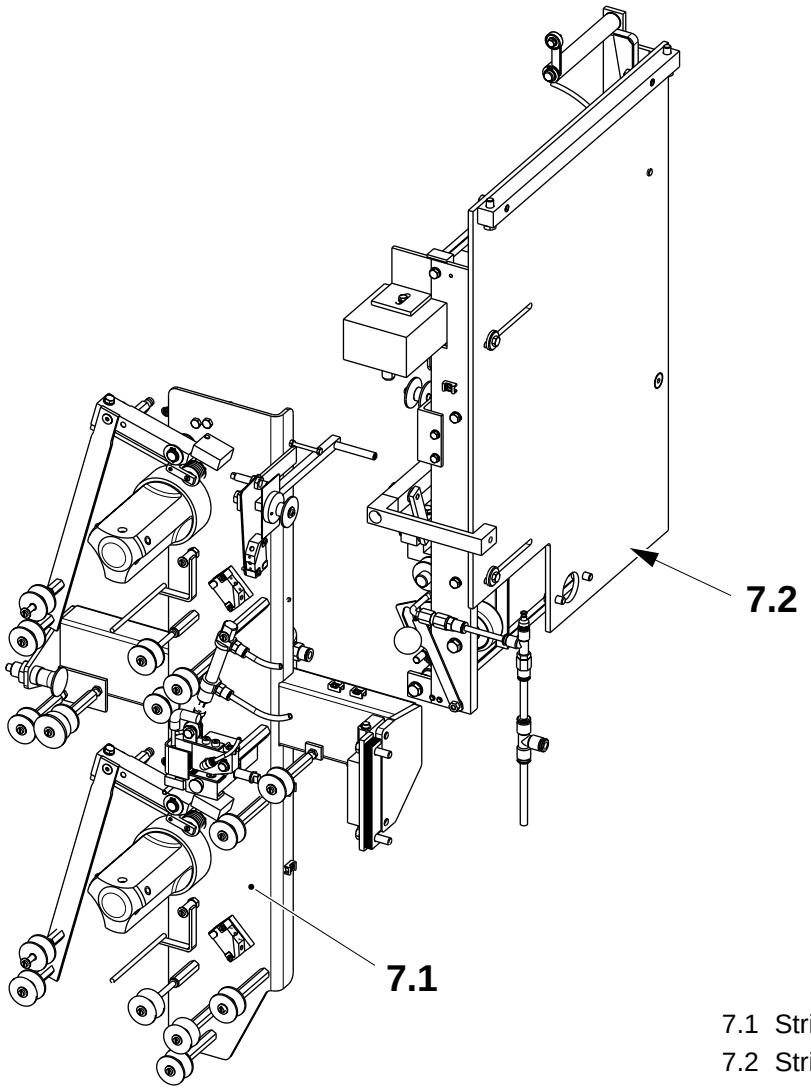

7.1 Strip magazine
7.2 Strip applicator

2.2B3024G01en.fm

7.1 Strip magazine

SPC reference	1195500-0100

7.1-1 Strip magazine - check rollers

SPC reference	1195500-0200

Make sure that:

- all rollers are intact
- the rollers (1), (3), (4) and (5) rotate freely
- the rollers (2) rotate and slide freely
- the shafts for the rollers (3), (4) and (5) are perpendicular to the mounting plate (6) and are not bent.

Clean or change all the rollers as required.

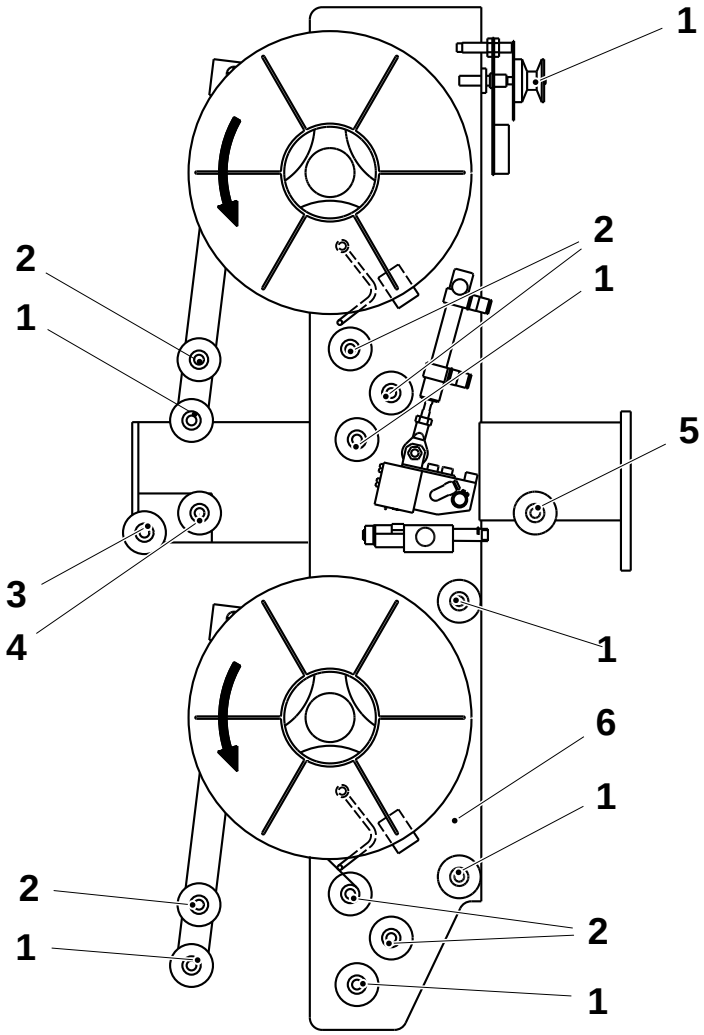

1 Roller
2 Roller
3 Roller
4 Roller
5 Roller
6 Mounting plate

2.2B3024G01en.fm

0-Series

7.1.1 Brake arm

7.1.1-1 Brake arm - check function

SPC reference	1095816-0100

On both the brake arms check that:

- the O-rings (1) prevent the hub (2) from rotating when the arm is lowered.
- the arm follows the strip tension.

If not, see *7.1.1-2 Brake arm - check* and *7.1.1-3 Brake arm - set*.

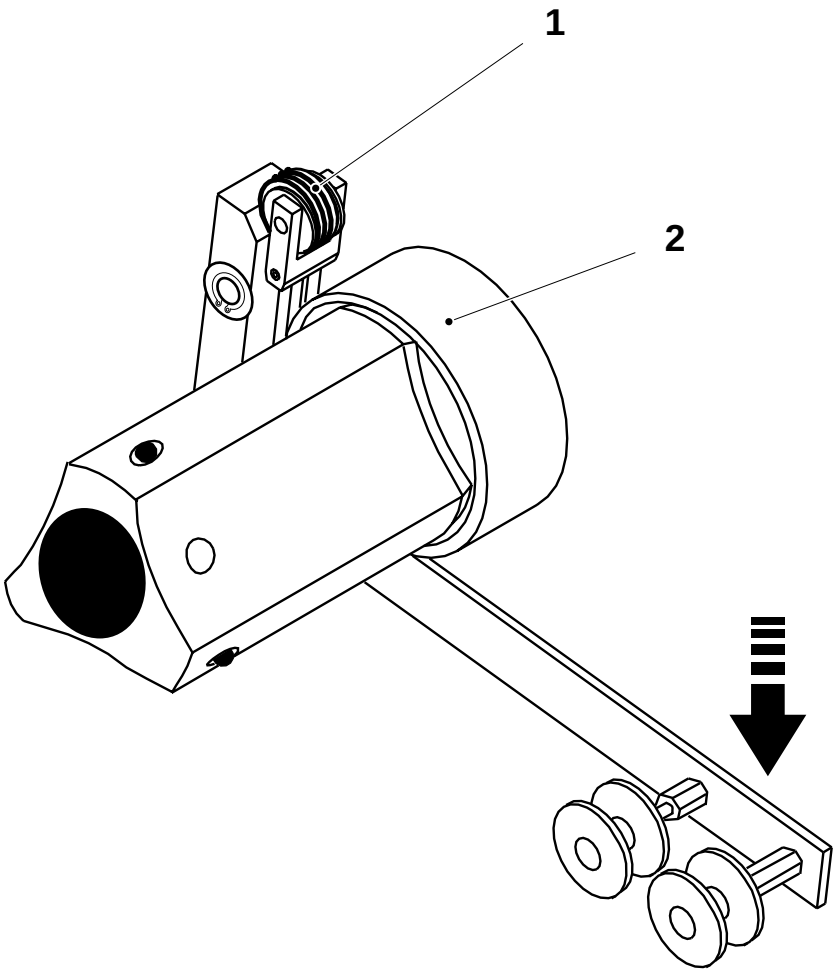

1 O-ring
2 Hub

2.2B3024G01en.fm

7.1.1-2 Brake arm - check

SPC reference	1095816-0100

On both the brake arms check that:

- the O-ring (1) is intact
- the roller (3) is intact, rotates and slides freely
- the roller (4) is intact and rotates freely

Change or clean as required.

Check that the brake arm is easy to turn. If not, remove the retaining ring (2) and the washer. Remove the arm and press out the bushing from the arm. Change the arm and assemble in the reverse order.

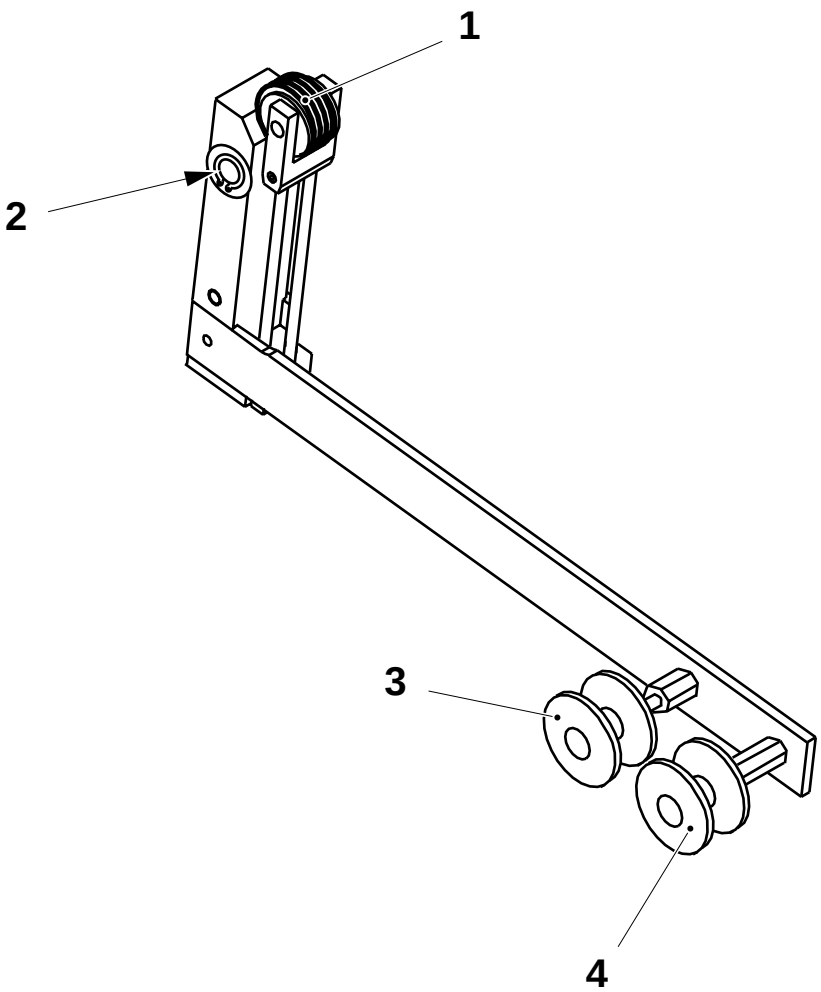

1 O-ring
2 retaining ring
3 Roller

2.2B3024G01en.fm

7.1.1-3 Brake arm - set

SPC reference	1095816-0100

a) Loosen the screw (2).

b) Move the roller and arm (3) to coorrect position. See dimetion **A** below.

c) Tighten the screw (2).

d) Set the distances **B** by means of the screws (1). Repeat on the other arm.

e) Place the arm (6) parallel to the machine body and adjust the screw (7) in contact with the roller (3). Repeat on the other arm.

f) Check during the path and the splice that the strip is slightly tensioned.

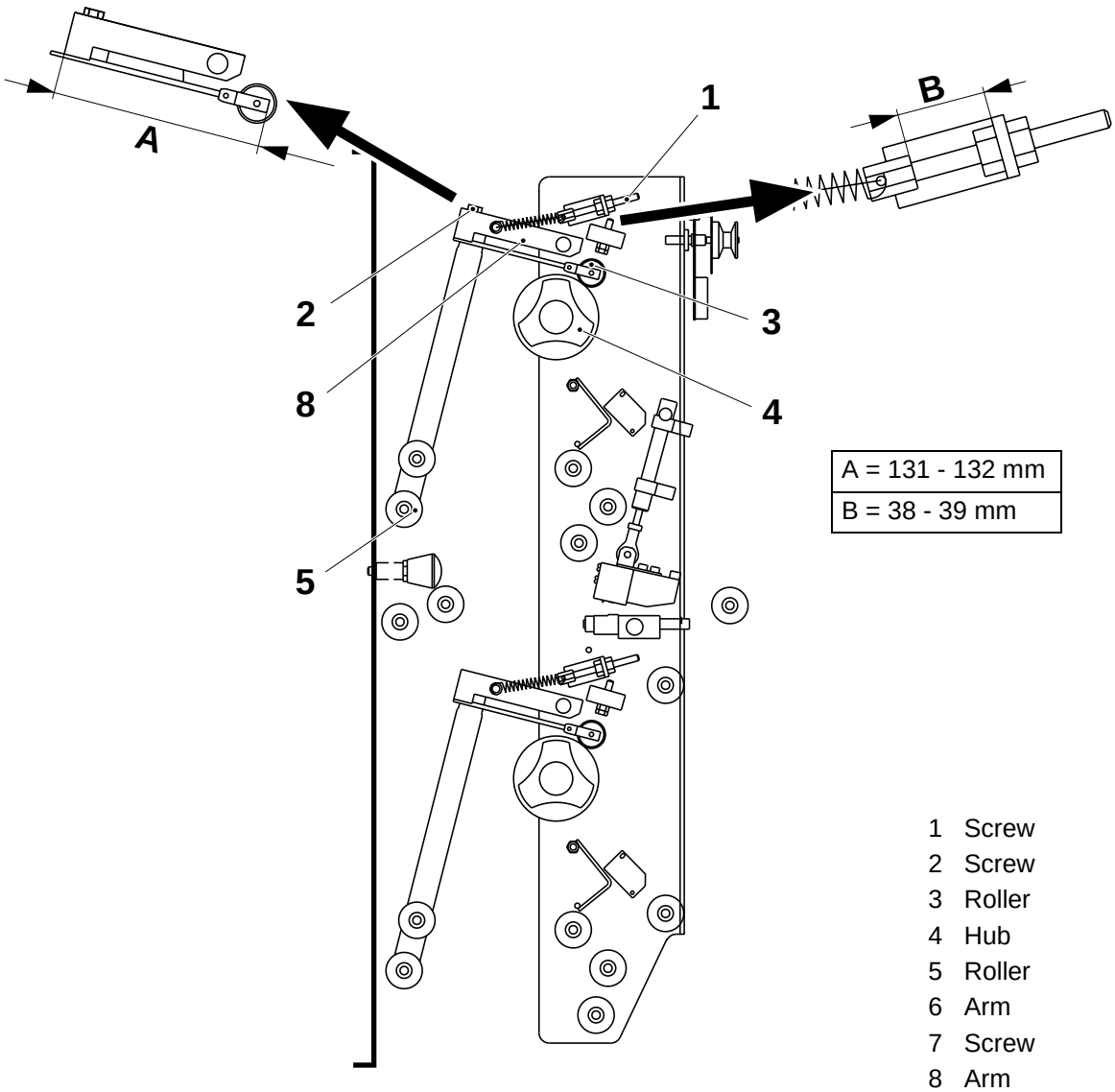

A = 131 - 132 mm
B = 38 - 39 mm

1 Screw
2 Screw
3 Roller
4 Hub
5 Roller
6 Arm
7 Screw
8 Arm

0-Series

2.2B3024G01en.fm

7.1.2 Cutting table

7.1.2-1 Cutting table- check

SPC reference	1347260-0100

a) Check that the slide (1) move freely on the shaft (2) and on the splicing table (3). Clean as required.

b) Check that the pad (4) is not damaged. Change as required by means of the screws (5).

c) Check that the dented knife (6) is not damaged. Change as required by means of the screws (7).

d) Check that when the slide (1) is matching the pad (4) the spring loaded screw (8) locks correctly the slide (1). If not, adjust the spring force by turning the screw (8).

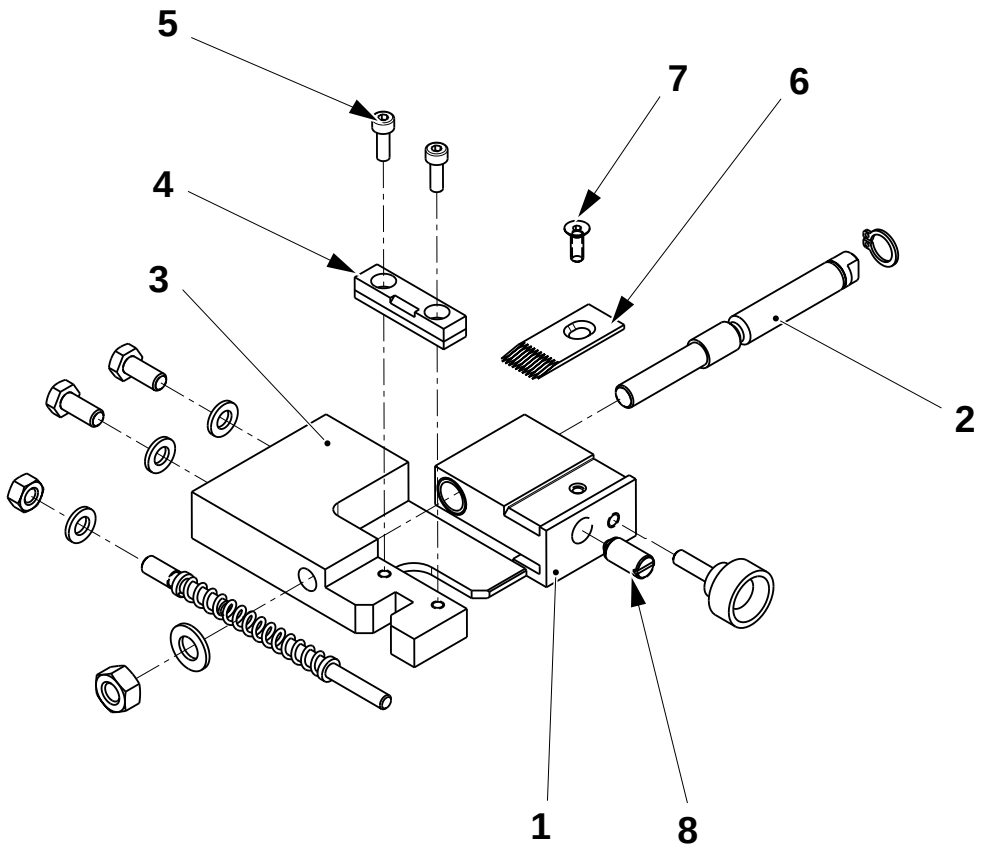

1 Slide
2 Shaft
3 Splicing table
4 Pad
5 Screw
6 Knife
7 Screw
8 Screw

2.2B3024G01en.fm

7.1.2-2 Cutting table - set knife

SPC reference	1347260-0100

a) Loosen the screw (1).

b) Set the distance A between the knife (2) and the slide (3) by means of the slot in the knife (2).

c) Tighten the screw (1).

Note! After making the setting, place a piece of strip between the knife (2) and the pad (4). Move the slide (3) against the pad (4). Make sure that the piece of strip stays in position and is not completely cut.

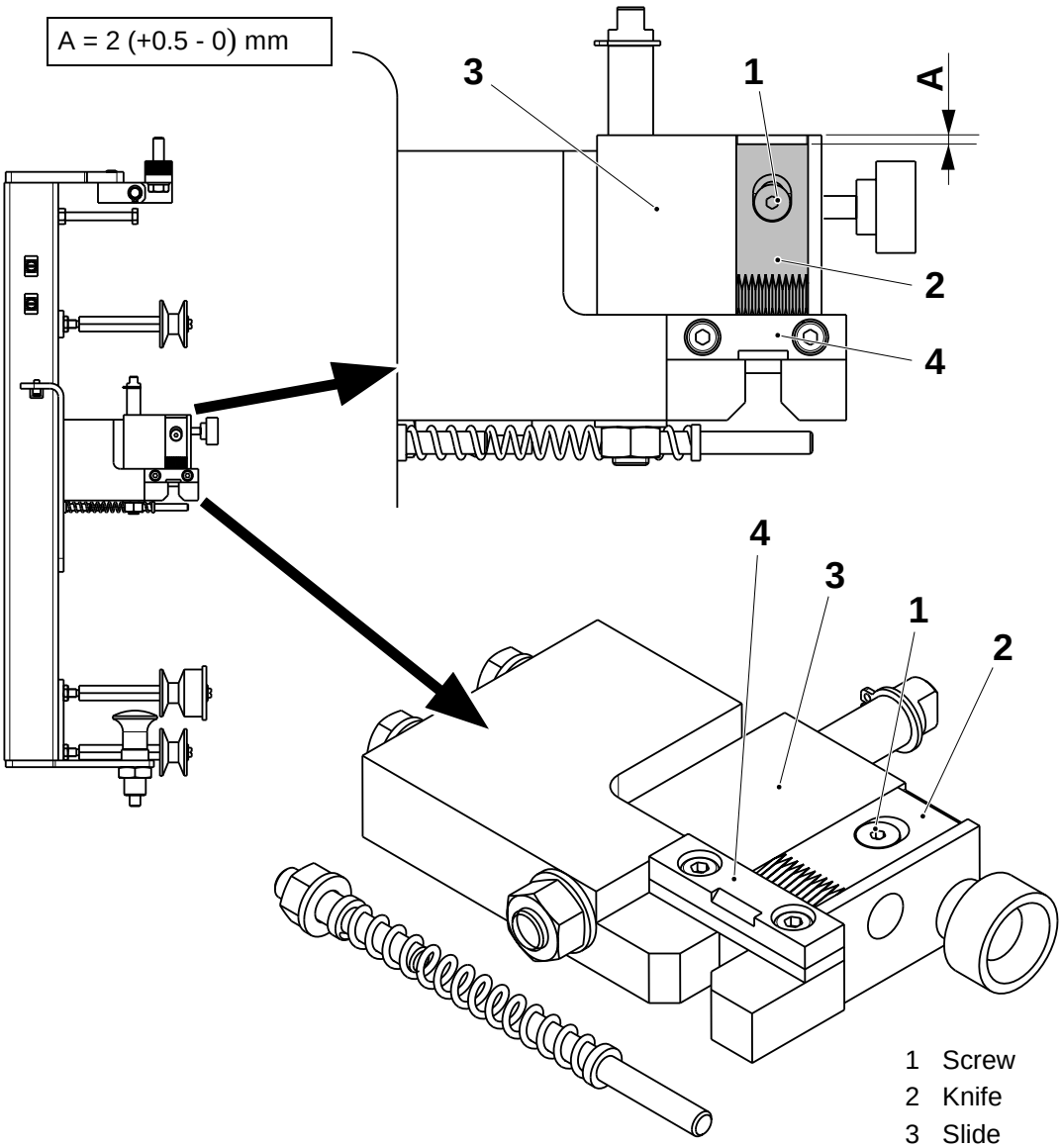

1 Screw
2 Knife
3 Slide
4 Pad

0-Series

2.2B3024G01en.fm

7.1.3 Heating device

7.1.3-1 Heating device - check

SPC reference	1490806-0100

a) Check that the sealing block (1) is intact. Remove the screws (2) and change the sealing block (1) as required, see *7.1.3-3 Heating device - set position*.

Note! When fitting the sealing block (1) make sure that is correctly positioned, see *7.1.3-3 Heating device - set position.*

b) Check that the cylinder piston (3) moves freely and smoothly.

c) Check that there are no air leaks in the air connections (4).

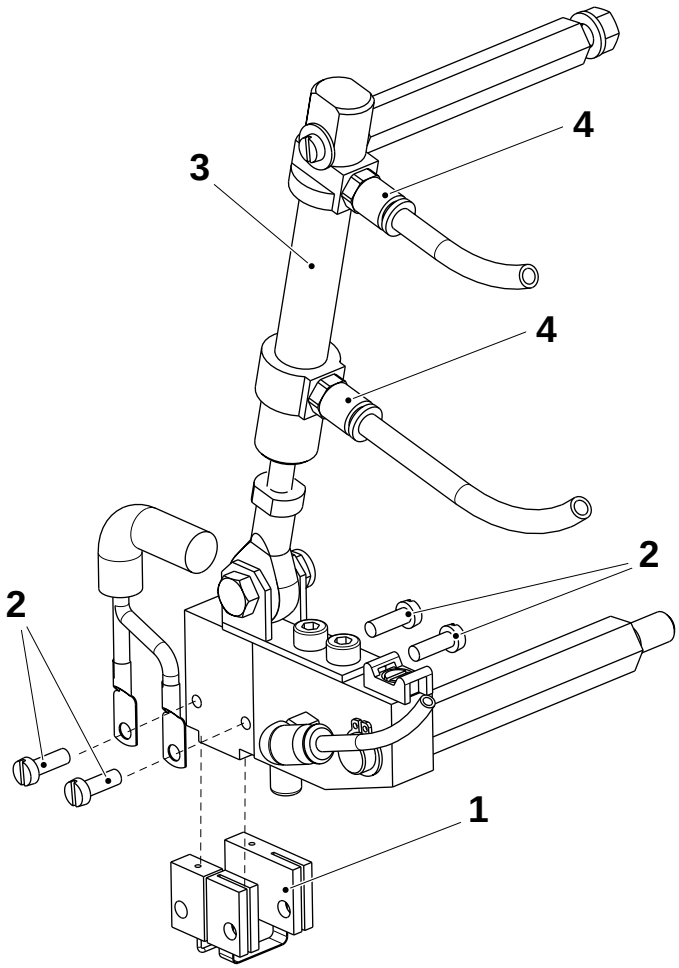

1 Sealing block
2 Screw
3 Cylinder piston
4 Air connection

2.2B3024G01en.fm

7.1.3-3 Heating device - set position

SPC reference	1490806-0100

WARNING!

a) To position the sealing sealing strip (1), loosen the screw (2) at the front of the holder (3).

b) Push the sealing strip (1) up and then to the left so that the right hand side of the sealing strip (1) lines up with edge of the holder (3), see below.

c) Tighten the screw (2).

d) Make sure that the connector block (4) does not touch the connector block (5). If it does, loosen the screw (6) and move the connector block (4) to the left until there is a gap between them.

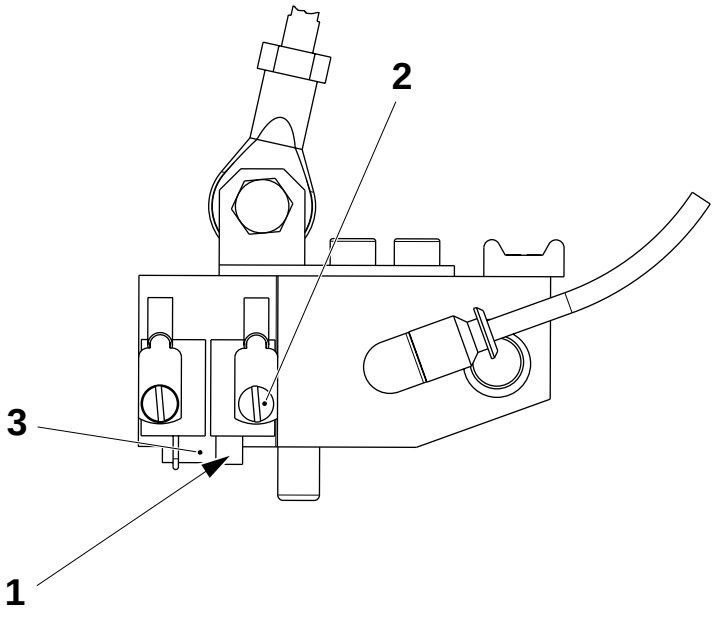

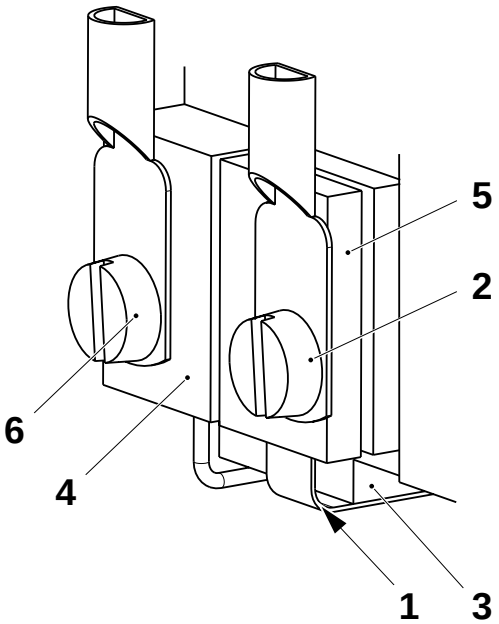

(Cont'd)

0-Series

2.2B3024G01en.fm

(Cont'd)

e) Turn off the system air.

f) Set the parallelism between the holder (3) and the pad (4) by means of the screws (5) at the rear of the plate (6).

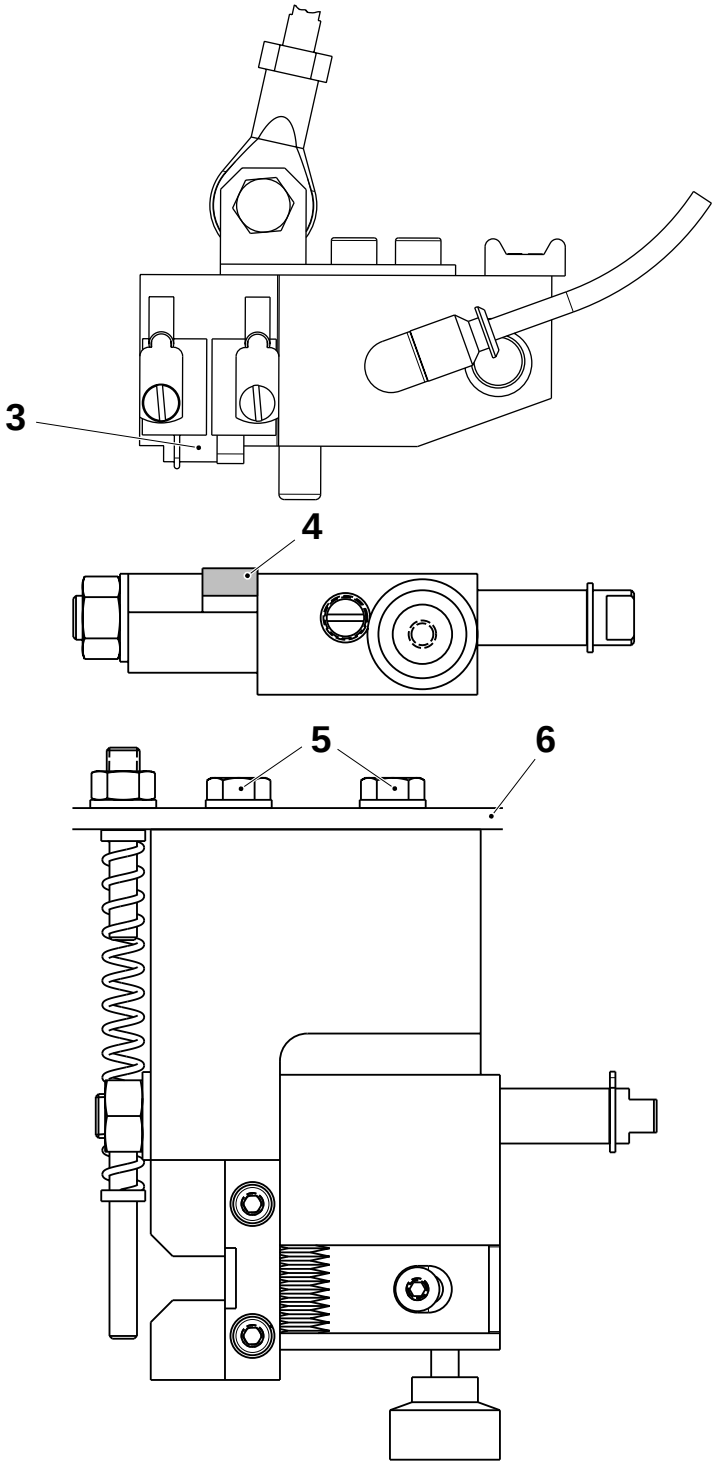

3 Holder
4 Pad
5 Screws
6 Plate

(Cont'd)

(Cont'd)

g) Move the piston of the cylinder (7) by hand until it is fully in.

h) Loosen the nut (8).

i) Set the distance **B** between the plunger (10) and the knife (11) by turning the shaft (9).

j) Tighten the nut (8).

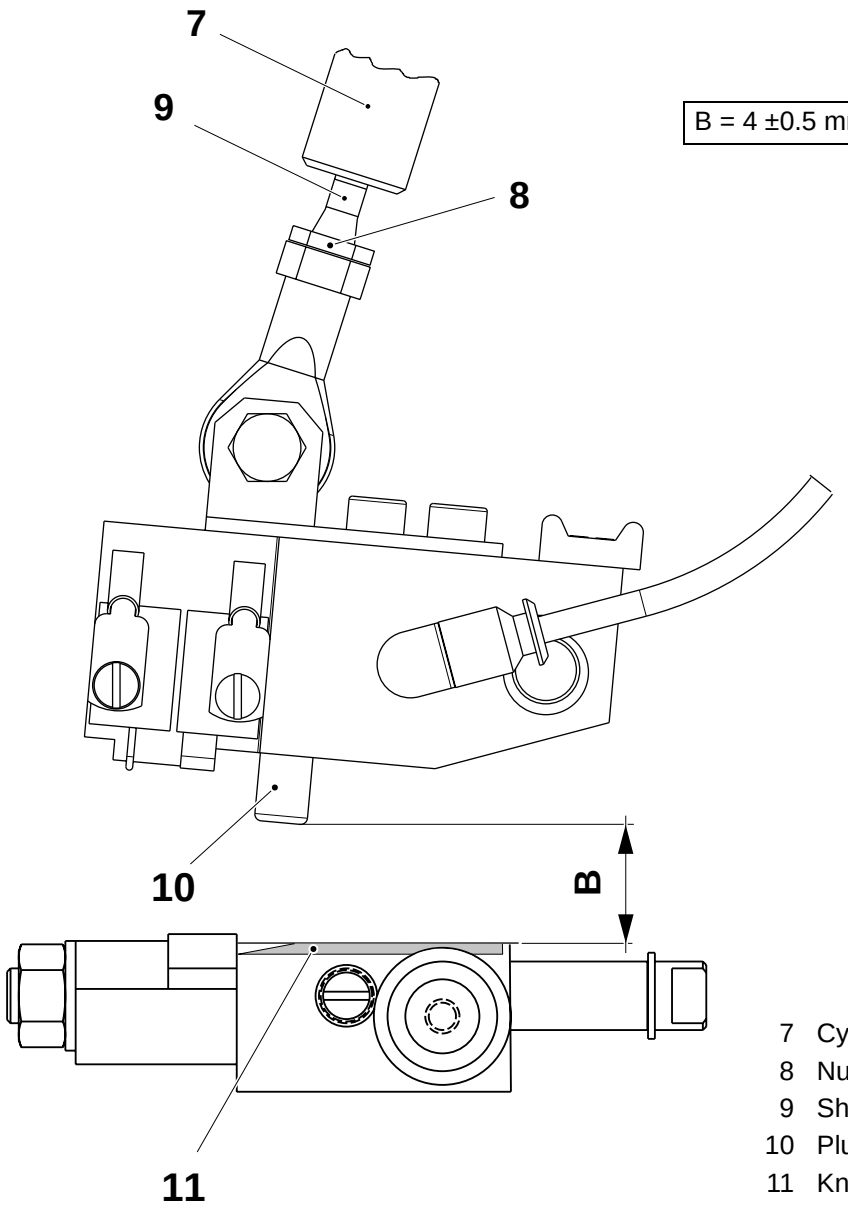

7 Cylinder
8 Nut
9 Shaft
10 Plunger
11 Knife

2.2B3024G01en.fm

7.1.3-4 Heating device - check teflon tape

Consumable - teflon tape	
SPC reference	1490806-0100

WARNING!

a) Check the teflon tape sticked on to the bar (3) for wear.
If required change as follow.

b) Remove the screws (1) and remove the sealing block (2).

c) Prepare a strip of teflon tape of 15 x 15 mm.
   – Material specification: Self adhering teflon impregnated fabric glass qual 421, type 42107.
   – Suppl: Habia Knivsta.

d) Apply the tape around the bar (3) making sure that the edges of the tape remain locked between the bar (3) and the holder (4).

e) Push the sealing block (2) against the block (4) while fitting the screws (1).

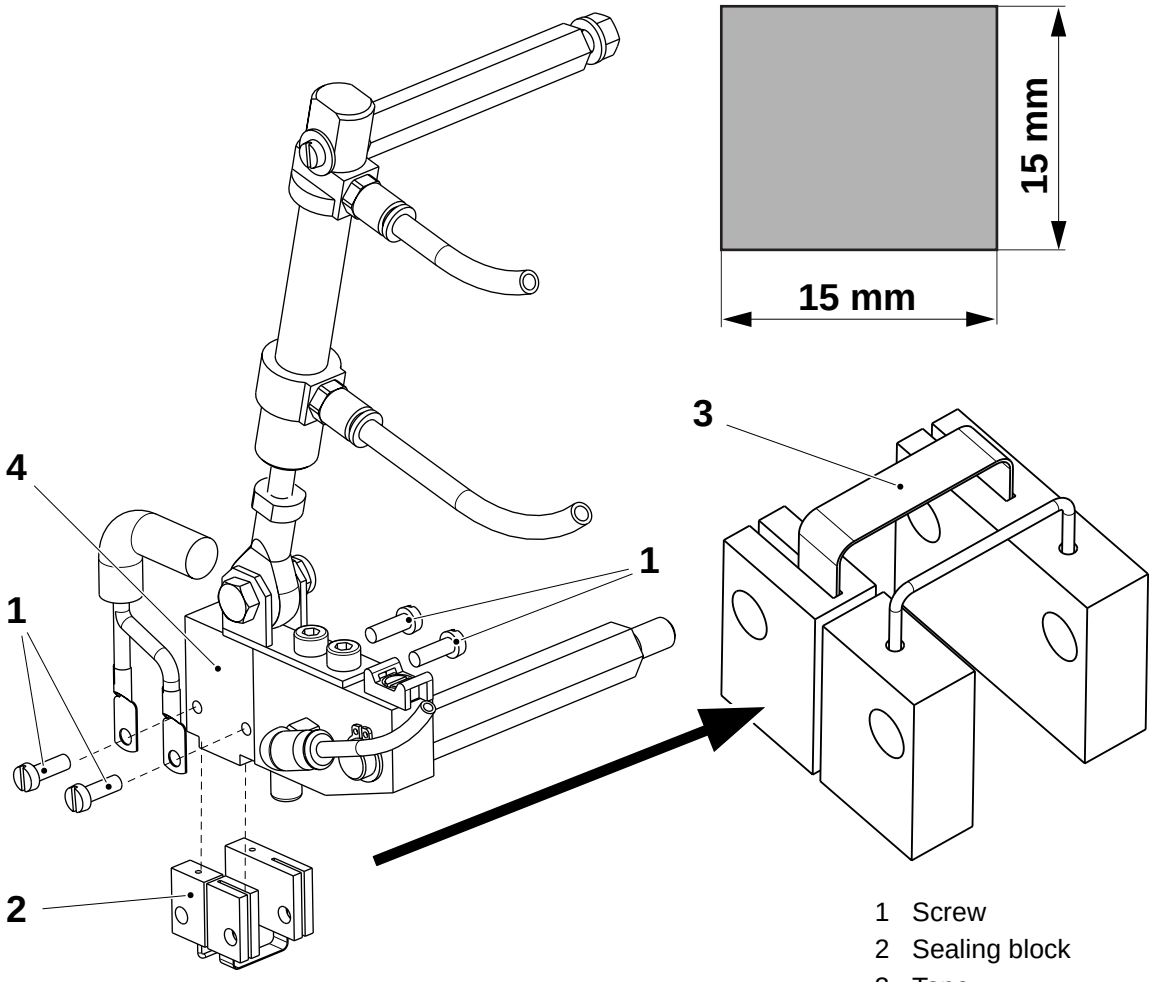

1 Screw
2 Sealing block
3 Tape
4 Holder

2.2B3024G01en.fm

7.1.4 Hub

7.1.4-1 Hub - check

SPC reference	1095815-0100

Release the paper brake arm and check that the hubs (1) rotate freely.

Check that the play in the ball bearings must not exceed **0.5 mm**.
If required change the ball bearings as follow:

a) Remove the rubber plug (1).
b) Remove the retaining ring (2).
c) Remove the hub (3).
d) Press out and change the ball bearings (4) from the hub.

Assemble in the reverse order.

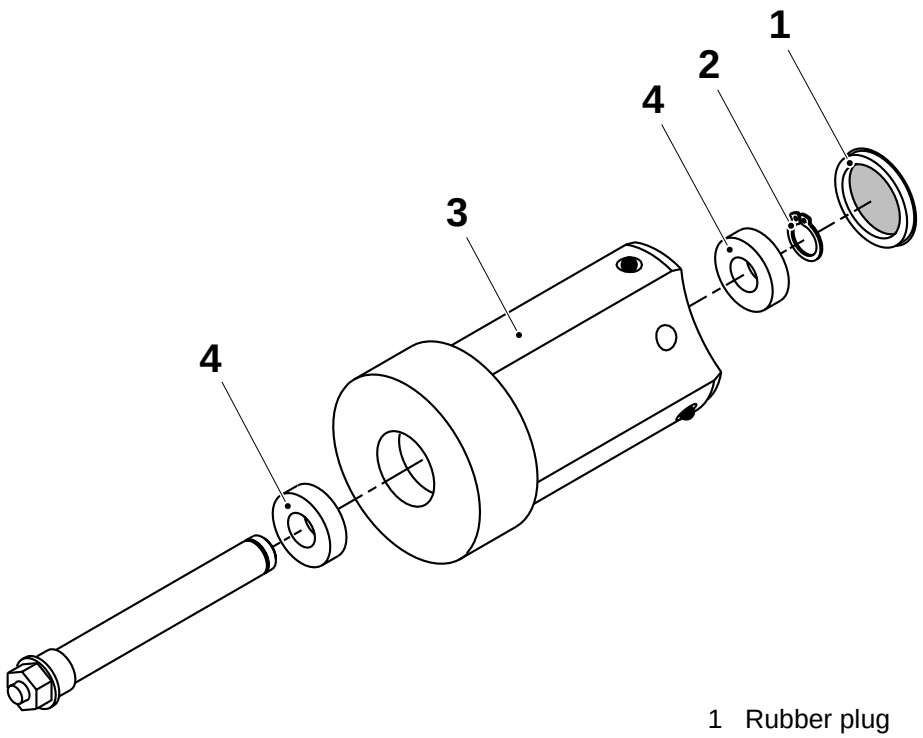

1 Rubber plug
2 Retaining ring
3 Hub
4 Ball bearing

2.2B3024G01en.fm

0-Series

7.1.5 Mounting sheet

7.1.5-1 Mounting sheet - set proximity switch

Machine status	Mains power **On**
SPC reference	1195501-0200

Set the proximity switch (1) so that the LED lights up when there is an angle of **85**° between the proximity switch (1) and the bracket (2), see angle **A** on the figure below.

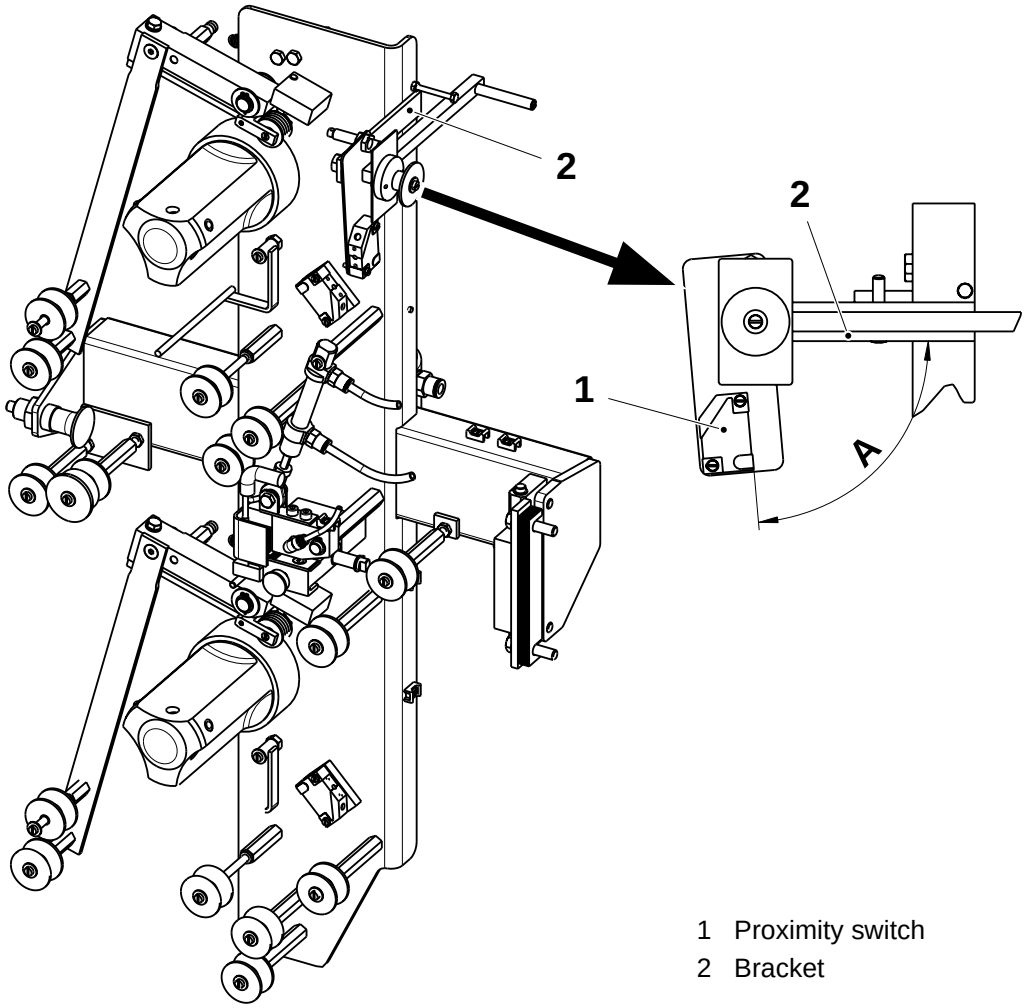

1 Proximity switch
2 Bracket

2.2B3024G01en.fm

7.1.5-2 Mounting sheet - set rotation monitor proximity switch

Machine status	Mains power **On**
SPC reference	1195501-0200

a) Loosen the nuts (1).

b) Set the distance **A** between the head of the proximity switch (2) and the flag (3) by shifting the proximity switch (2).

c) Tighten the nut (1).

Note! Make sure that the LED on the proximity switch (2) is still lit when manually moving sideways the roller (4).

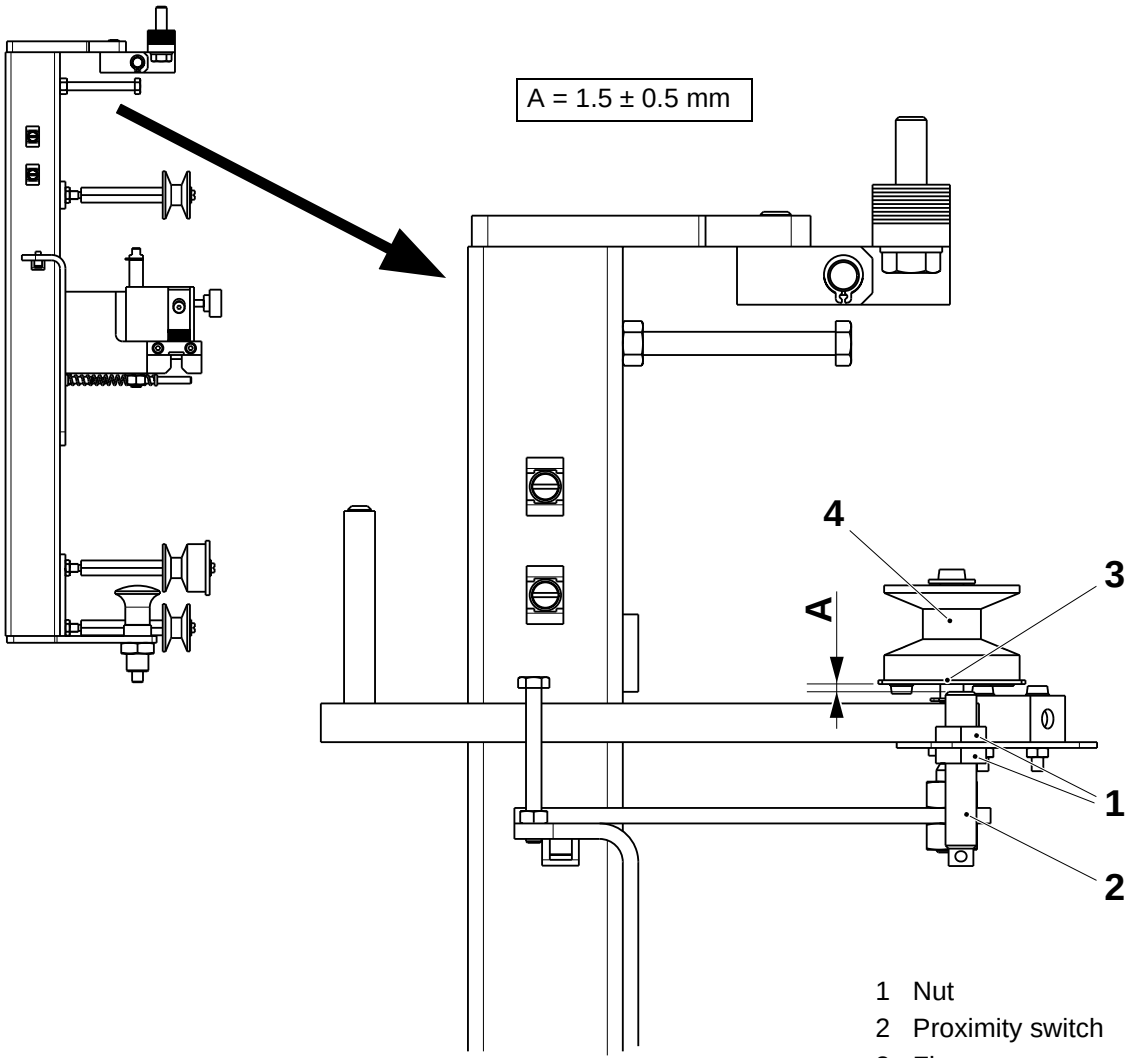

1 Nut
2 Proximity switch
3 Flag
4 Roller

2.2B3024G01en.fm

0-Series

7.1.5-3 Mounting sheet - set roller guides

SPC reference	1195501-0200

a) Set the roller guides (1) and (2) so that they are on the same line.

b) Adjust the roller guide (1) by means of the setting nuts (3).

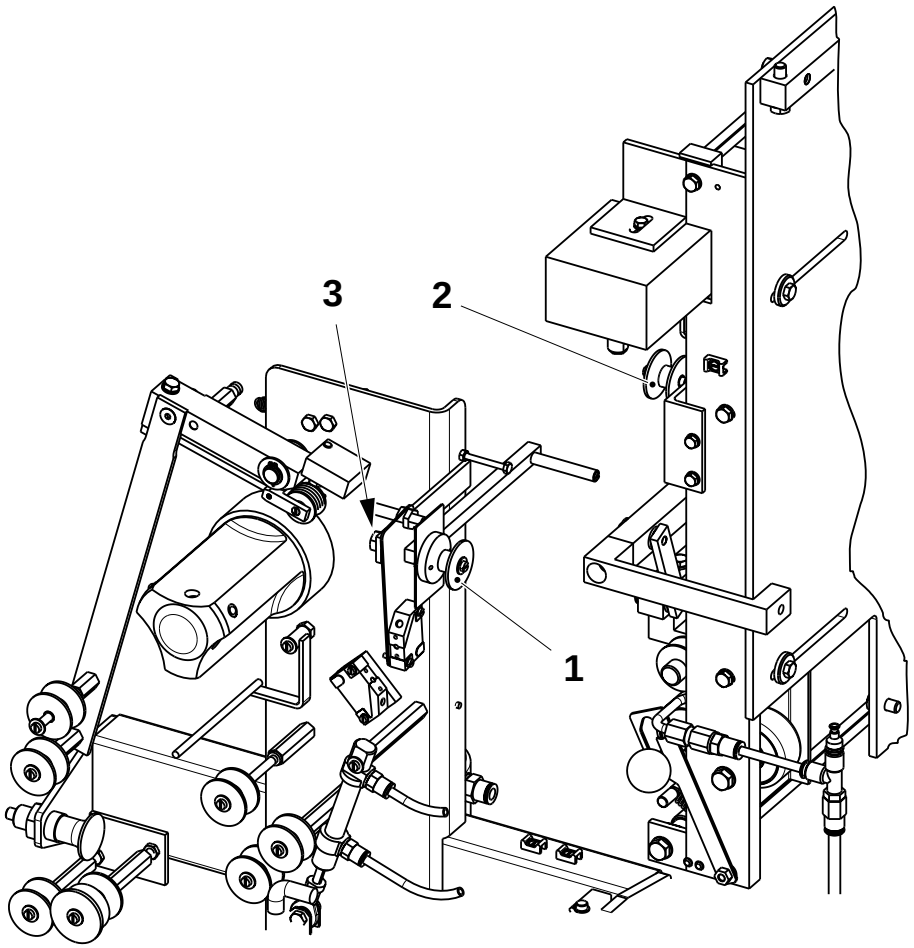

1 Roller guide
2 Roller guide
3 Setting nut

2.2B3024G01en.fm

7.1.5-4 Mounting sheet - set stop screws

SPC reference	1195501-0200

a) Loosen the nut (1).

b) Set the distance A between the head of the screw (2) and the mounting plate (3).

c) Tighten the nut (1).

d) Loosen the nut (4).

e) Set the distance B between the head of the screw (5) and the mounting plate (3)

f) Tighten the nut (4).

Note! Make sure that when the mounting sheet is in open position the screw (5) avoid the roller (6) to crash against the ASU frame.

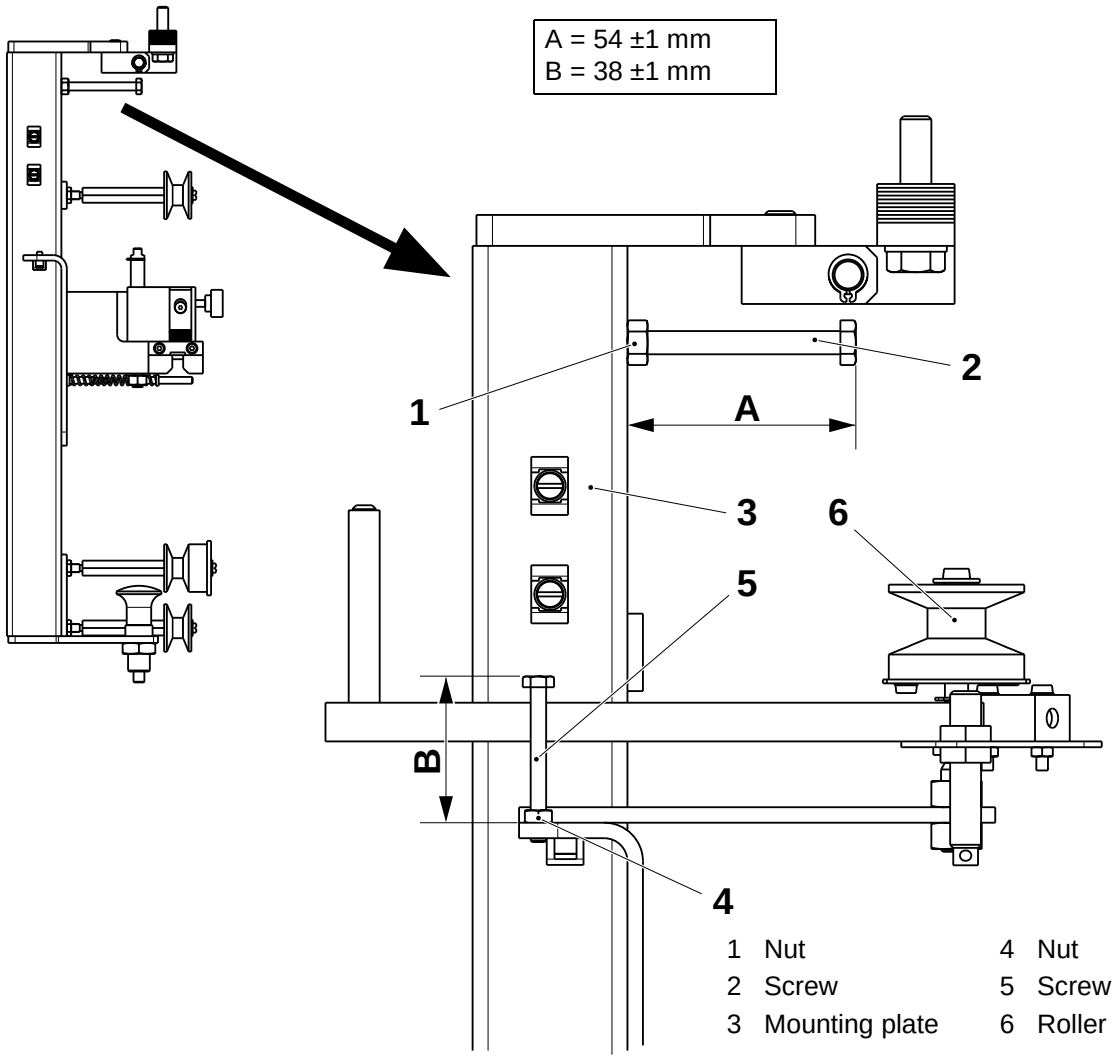

2.2B3024G01en.fm

7.1.5-5 Mounting sheet - set rollers position

SPC reference	1195501-0200

a) Loosen the nut (1).

b) Set the distance **A** between the roller (2) and the flat bar (3), welded on the mounting sheet, by means of the shaft (4).

c) Tighten the nut (1)

d) Repeat the items *a), b)* and *c)* for the rollers (5) and (6).

e) With the aid of a steel ruler check that the rollers (2), (5) and (6) are aligned with the slot (7) on the cutting table (8).

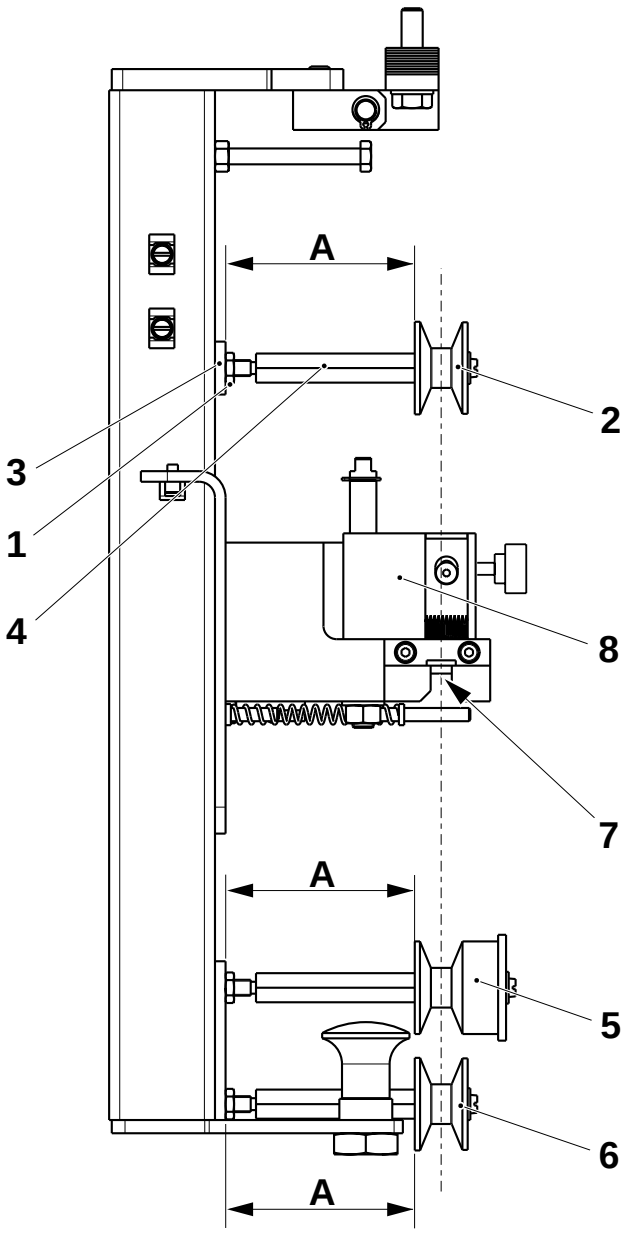

1 Nut
2 Roller
3 Flat bar
4 Shaft
5 Roller
6 Roller
7 Slot
8 Cutting table

2.2B3024G01en.fm

7.2 Strip applicator

SPC reference	1195505-0100

7.2-1 Strip applicator - set inductor position

Machine status	Packaging material **threaded**
SPC reference	1195505-0200

a) Check the distance **A**, see table below, between the edge of the fastening bracket (1) and the edge of the bottom panel (2).

b) If required, set the distance **A** by means of the screws (3), located in the bottom panel (2).

Package	**A (mm)**
200 B 250 B	59 ±0.5

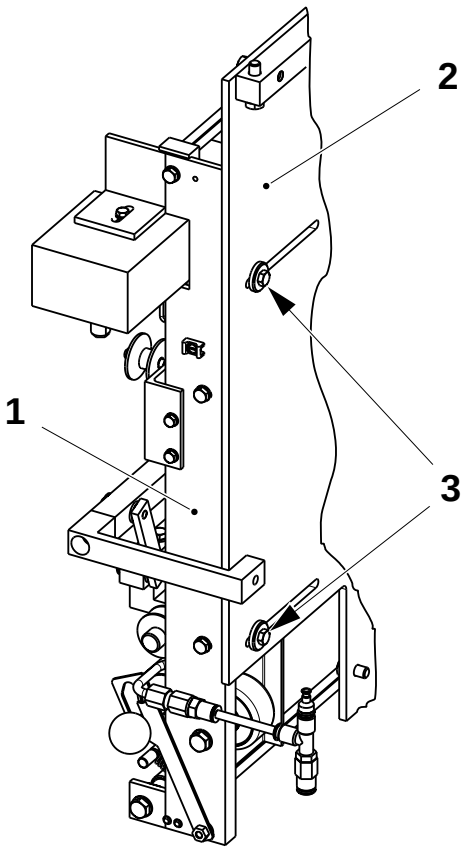

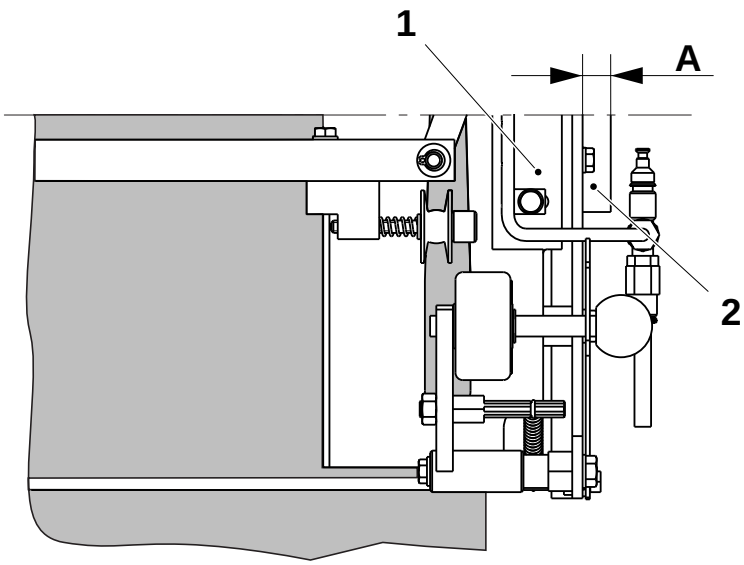

1 Fastening bracket
2 Bottom panel
3 Screw

(Cont'd)

0-Series

2.2B3024G01en.fm

(Cont'd)

c) Lift and lock the roller (10).

d) Align the packaging material web (5) edge with the mark (9) on the inductor (4) by means of the screws (6).

e) Set the inductor (4) by means of the screws (8) so that the packaging material web (5) is approximately in the middle of the two inductor alifoils (7).

f) Release the roller (10).

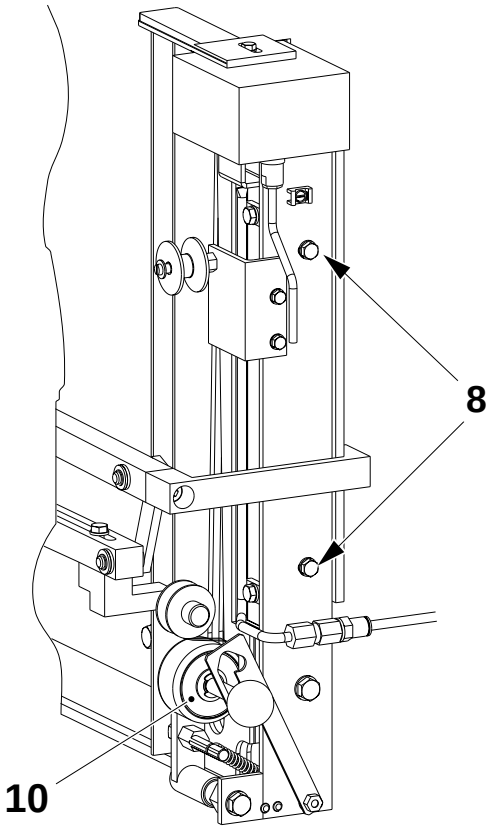

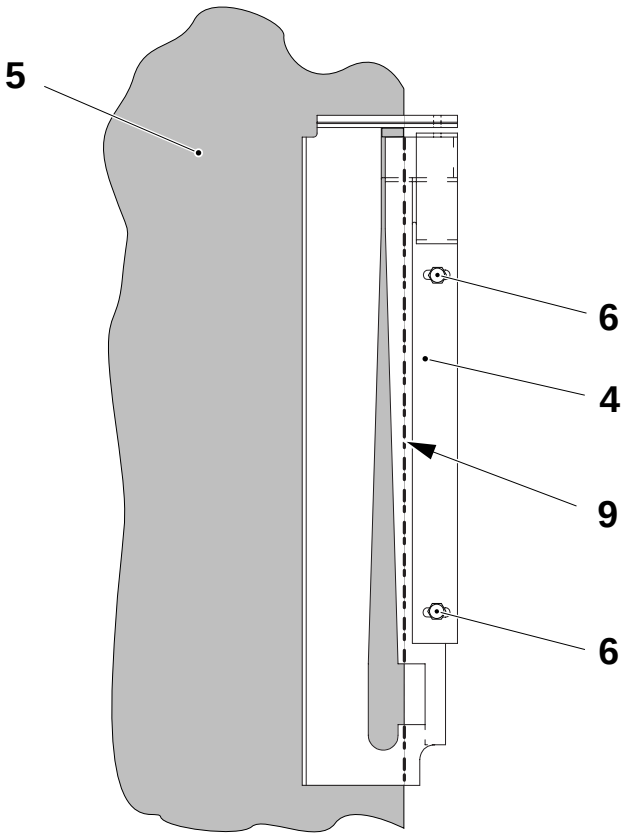

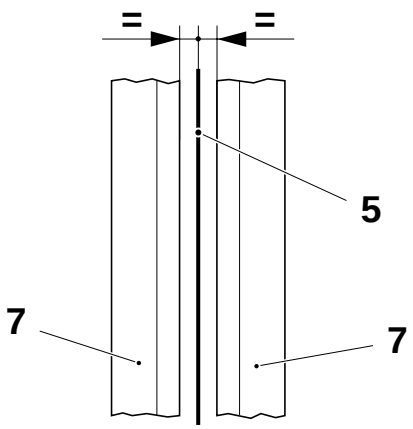

4 Inductor
5 Packaging material
6 Screw
7 Alifoil
8 Screw
9 Mark
10 Roller

2.2B3024G01en.fm

7.2.1 Pressure roller

7.2.1-1 Pressure roller - check

SPC reference	1255305-0200

a) Check that the wheel (1) rotates and slides freely.

b) Check that the surface of the wheel (1) is intact.

c) Check the rollers (2) and (3) for excessive wear. Maximum allowable radial play is **0.3 mm**.

d) Check that the rollers (2) and (3) rotate freely and are intact and also that the teflon layer on the roller surface is intact. Change the rollers as required, see *7.2.1-2 Pressure roller - change rollers*.

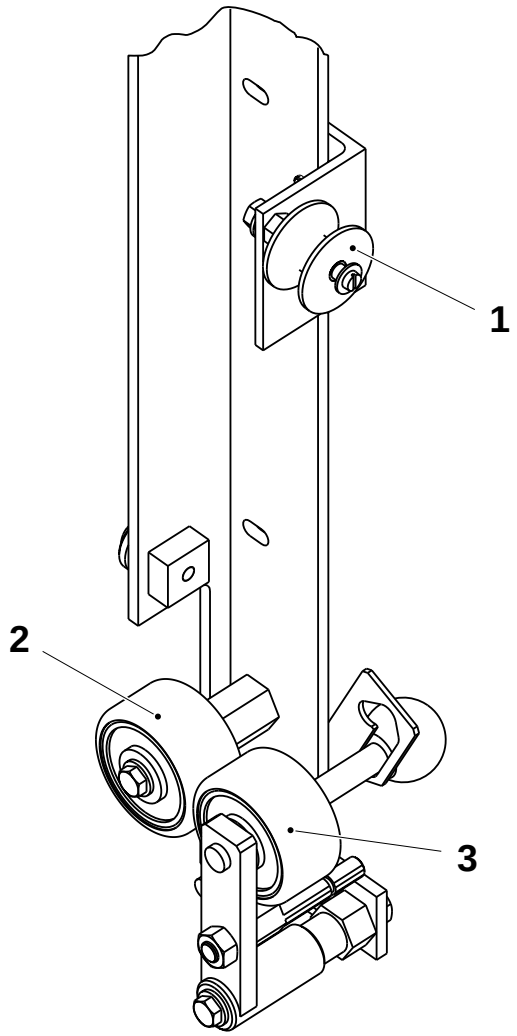

1 Wheel
2 Roller
3 Roller

2.2B3024G01en.fm

7.2.1-2 Pressure roller - change rollers

SPC reference	1255305-0200

Note! The roller (5) must be fitted with the magnetic side (6) facing towards the machine inside.

a) Remove the handle ball (1), the retaining ring (2)
b) Remove the nut (8), the catch (7) and the roller (3).
c) Change the roller (3) as required.
d) Remove the screw (4), the washer and the roller (5).
e) Change the roller (5) as required.
f) Assemble in the reverse order.

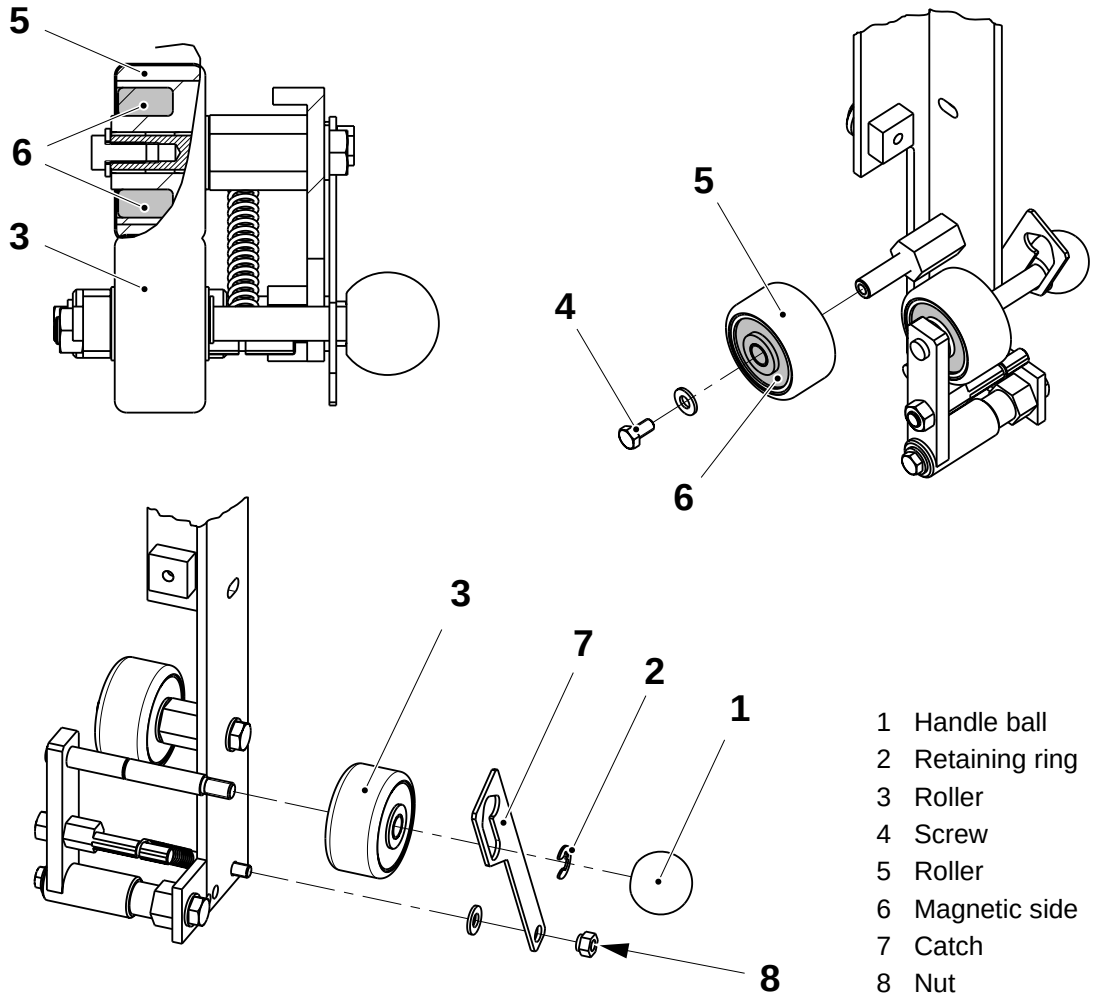

1 Handle ball
2 Retaining ring
3 Roller
4 Screw
5 Roller
6 Magnetic side
7 Catch
8 Nut

2.2B3024G01en.fm

7.2.1-3 Pressure roller - set spring force

Tools - dynamometer	 TP N.74767-102
SPC reference	1255305-0200

a) Attach a dynamometer to the holder (1) and measure the spring force.

b) Spring force must be measured when the roller (2) raises from the counter roller (3) and it must be between **20 and 22 N**.

c) If required, set the spring force by loosening the nut (4) and turning the eccentric (5).

d) Tighten the nut (4) when the correct spring force value is obtained.

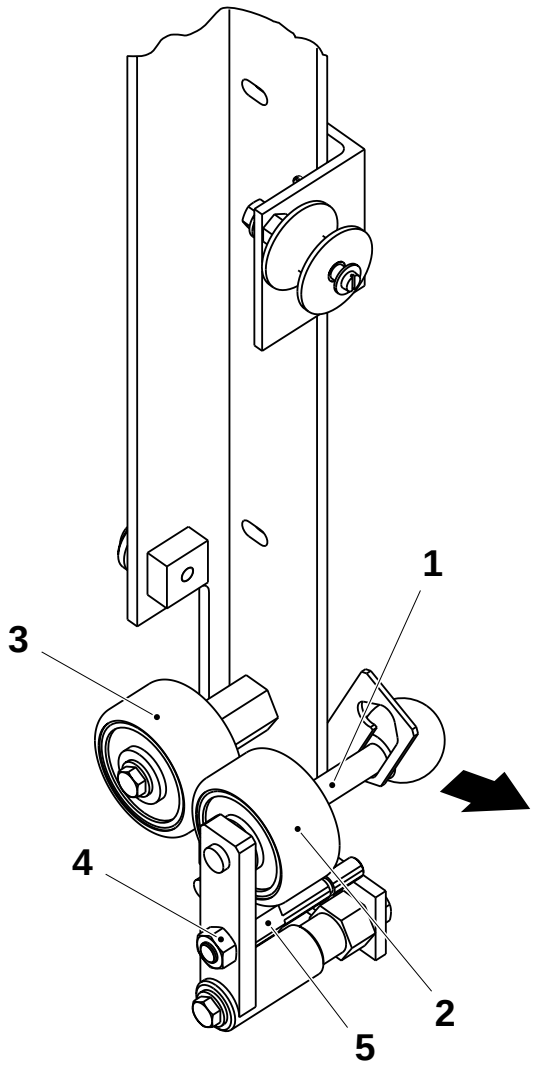

1 Holder
2 Roller
3 Counter roller
4 Nut
5 Eccentric

2.2B3024G01en.fm

7.2.2 Splice detector

7.2.2-1 Splice detector - check

Machine status	Mains power **On**
SPC reference	1095798-0100

a) Check that the ball bearing (2) rotates easily. Change as required.

b) Check that the spring (5) is intact. Change as required.

c) Check that the bracket (3) is easy to turn. If not, remove the retaining ring (4), the spring (5) and pull out the bracket. Clean the bushings (1) and assemble in the reverse order.

d) Place a piece of packaging material under the ball bearing (2) and check that the LED (6) in the proximity switch is **On**.

e) Place a piece of double packaging material underneath the ball bearing (2) and check that the LED (6) goes out. If not, set the splice detector, see *7.2.2-2 Splice detector - set*.

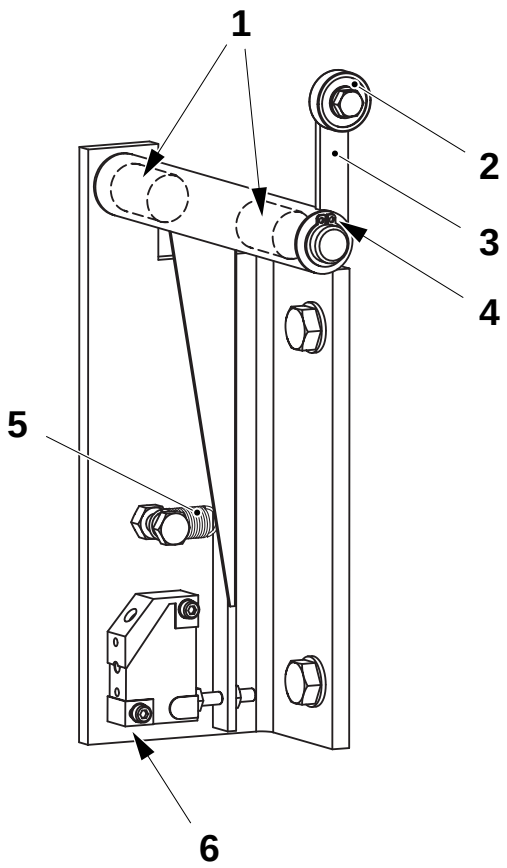

1 Bushing
2 Ball bearing
3 Bracket
4 Retaining ring
5 Spring
6 LED

2.2B3024G01en.fm

7.2.2-2 Splice detector - set

Machine status	Mains power **On**
SPC reference	1095798-0100

a) Set the screw (3) so that it touches the proximity switch and the LED (2) lights up.

b) Place a piece of double packaging material under the ball bearing (1).

c) Screw in the screw (3) until the LED (2) goes out.

d) Check with a single piece of packaging material that the LED lights up and with a double piece of packaging material it goes out.

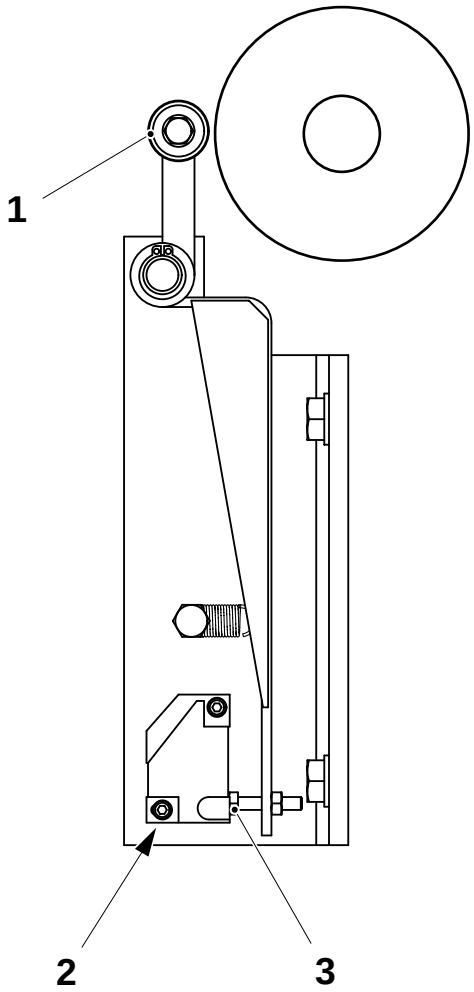

1 Ball bearing
2 LED
3 Screw

2.2B3024G01en.fm

7.2.3 Inductor

7.2.3-1 Inductor - check

SPC reference	1195506-0200

a) Check for visual wear and/or damage on the inductor (1).
b) If required, clean the inductor (1) from plastic residue.
c) Change the inductor (1) as required.

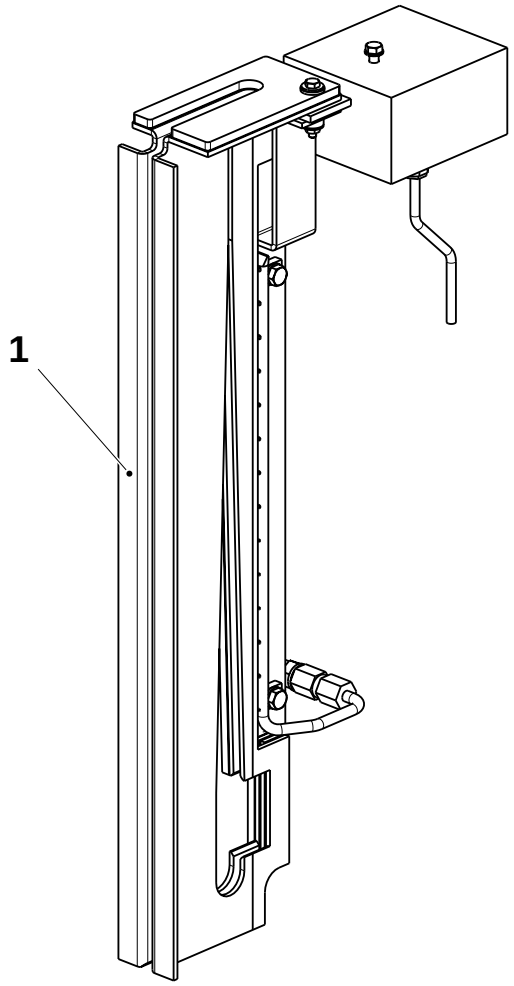

1 Inductor

2.2B3024G01en.fm

7.2.4 Strip guide

7.2.4-1 Strip guide - check

SPC reference	1334220-0200

a) Check that the guide wheels (1) and (2) rotate freely.
The guide wheel (2) must have maximum **1.0 mm** radial play and maximum **0.5 mm** axial play. Change as required.

b) Check that the surface of the guide wheels (1) and (2) are intact.

c) Check during **Production** that the strip (4) is positioned symmetrically over the edge of the packaging material (5). Adjust the strip position by means of the adjusting screw (3) as required.

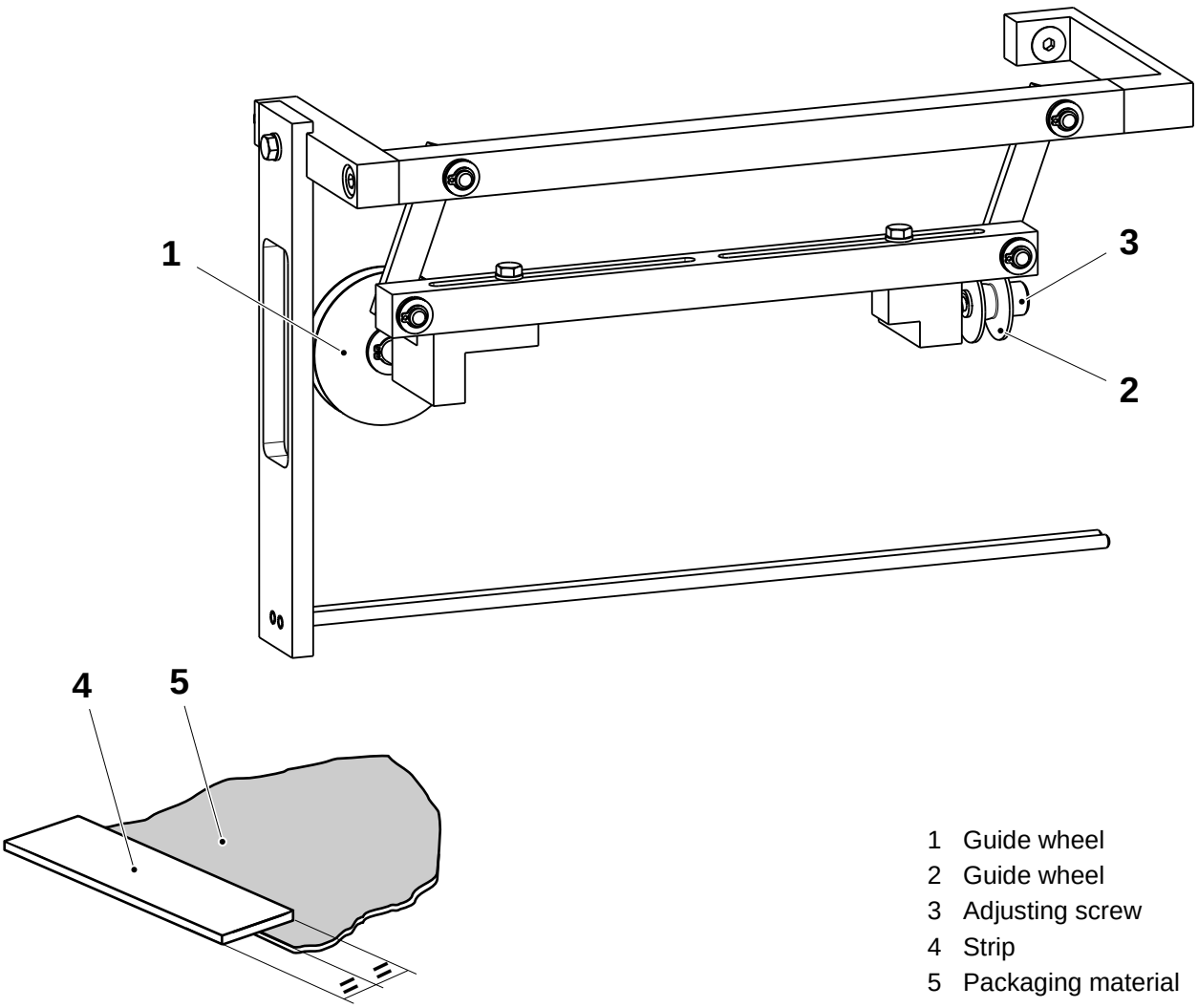

1 Guide wheel
2 Guide wheel
3 Adjusting screw
4 Strip
5 Packaging material

2.2B3024G01en.fm

0-Series

7.2.4-2 Strip guide - set position

Machine status	Packaging material **threaded**
SPC reference	1334220-0200

a) Loosen the screws (1) and (3).

b) Set the distance **A** between the bracket (2) and the lower rod (6) by shifting the bracket (2).

c) Set the distance **B** between the bracket (2) and the bracket (4) by shifting the bracket (4).

d) Tighten the screws (1) and (3).

e) Shift the lower rod (6) until the packaging material side fits completely into the guide wheel (7) groove.

f) Set the distance **C** between the bracket (4) and the guide wheel (8) by means of the adjusting screw (5).

g) During **Production** adjust the strip position by means of the adjusting screw (5) as required.

Package	A ±0.5 (mm)	B ±0.5 (mm)	C ±0.5 (mm)
200 B 250 B	52,2	214	34,9

2.2B3024G01en.fm

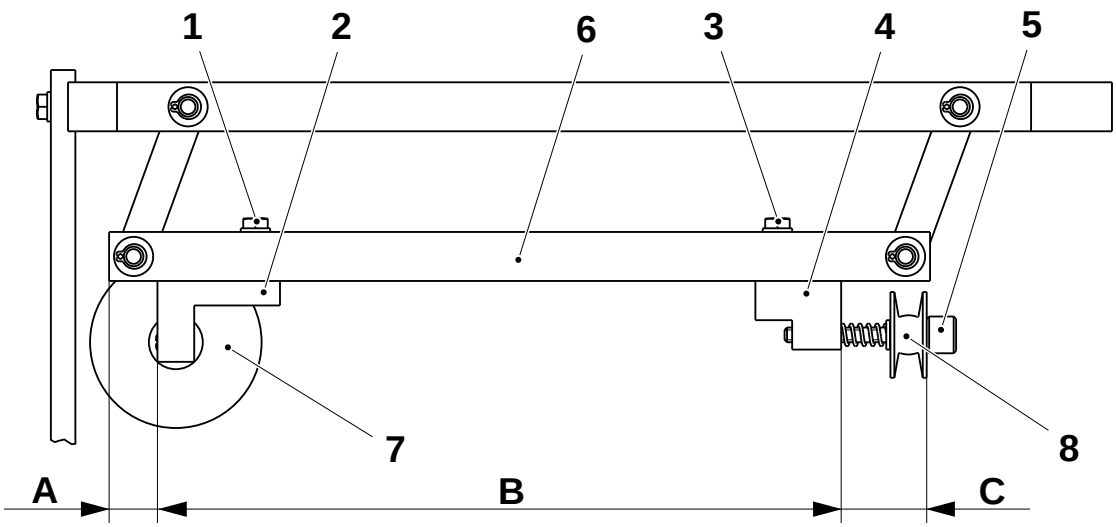

1 Screw
2 Bracket
3 Screw
4 Bracket
5 Adjusting screw
6 Lower rod
7 Guide wheel
8 Guide wheel

This page intentionally left blank

8 Automatic splicing unit

2.2B3024H01en.fm

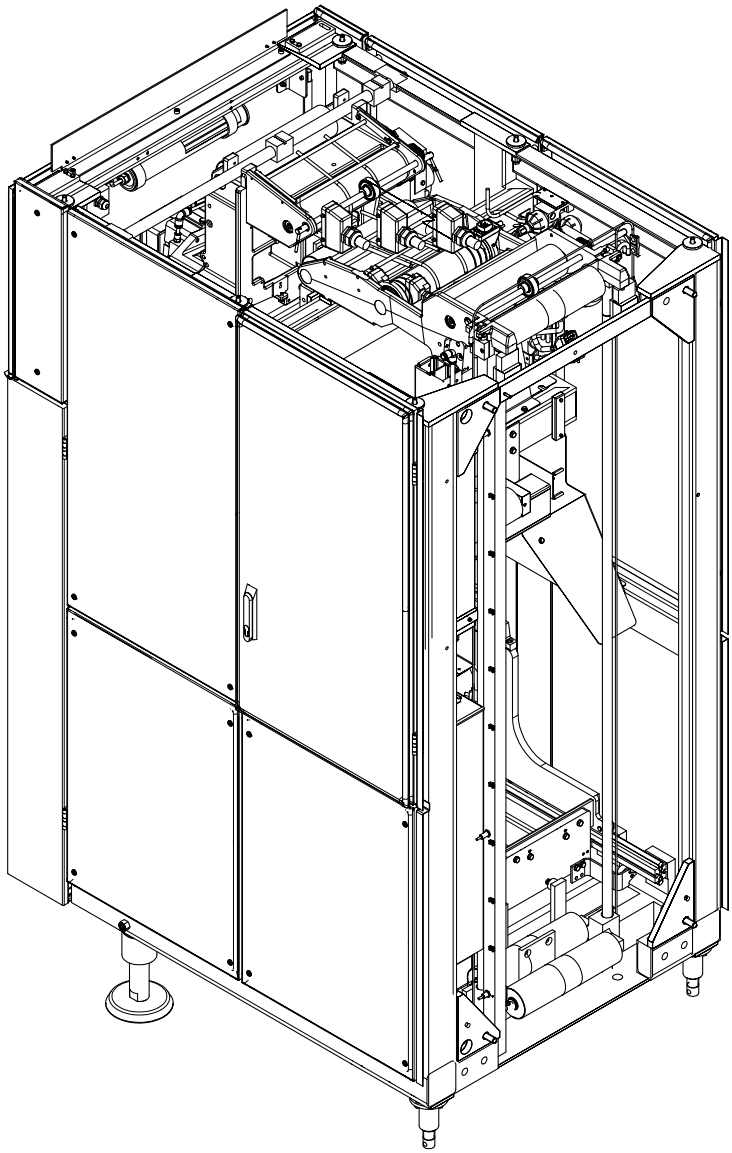

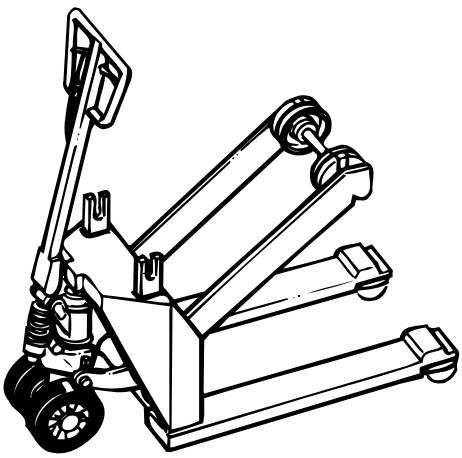

0-Series

8-1 Automatic splicing unit - setting sequence

SPC reference	648513-0400

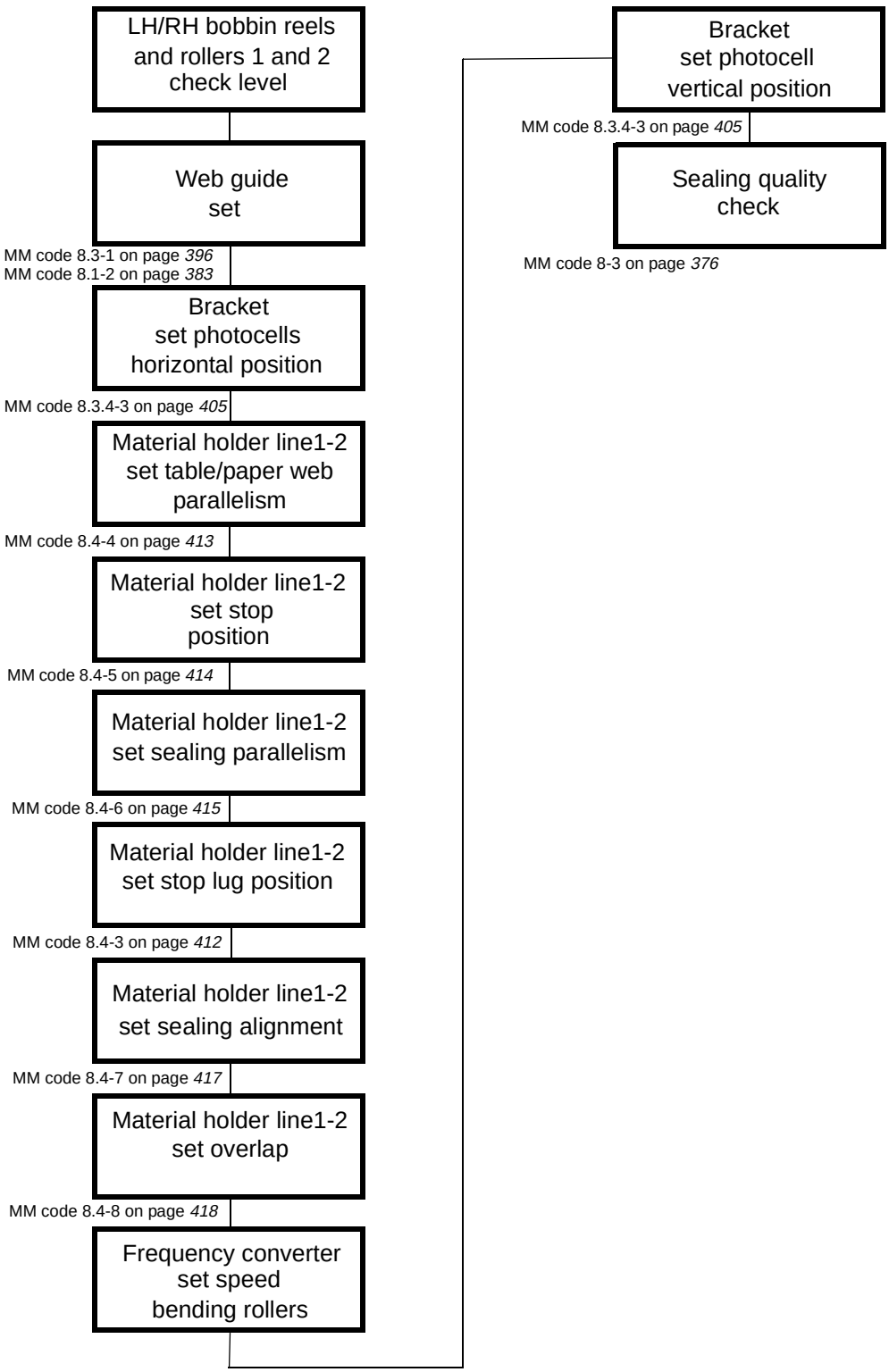

0-Series

2.2B3024H01en.fm

8-2 Automatic splicing unit - description

SPC reference	648513-0400

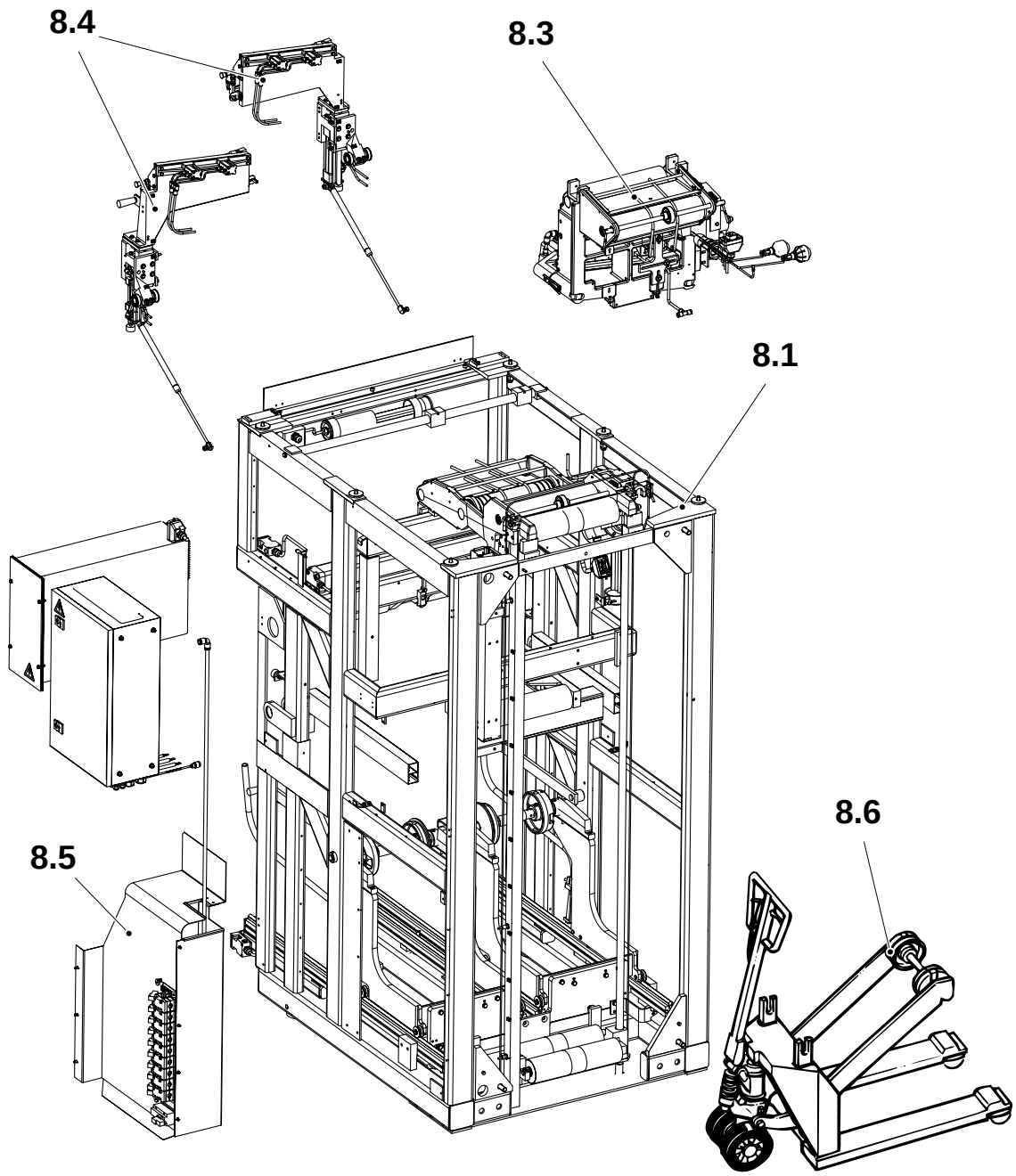

8.1 Machine body
8.3 Splicing device
8.4 Material holder line 1 and line 2
8.5 Valve panel
8.6 Reel trolley

2.2B3024H01en.fm

8-3 Automatic splicing unit - check function

Machine status	Preparation
SPC reference	648513-0400

Lower the empty material holder and thread the packaging material through the cutting table. Push the **Material locking** button and check that the packaging material is correctly locked.
If not, see *8.4-2 Material holder line 1 and line 2 - check.*

Perform a manual splice for each reel of packaging material and check the following items:

- Sealing parallelism
- Sealing alignment
- Overlap
- Spliced package length
- Cutting
- Sealing

Sealing parallelism (angle alignment)

Check the parallelism, distance **A**, between the new and the old packaging material web.

With the aid of a straight edge (1) check that the **new** packaging material web diverges the distance **A** in **1 meter** from the splice (2).

Set the sealing parallelism as required, see *8.4-6 Material holder line 1 and line 2 - set sealing parallelism.*

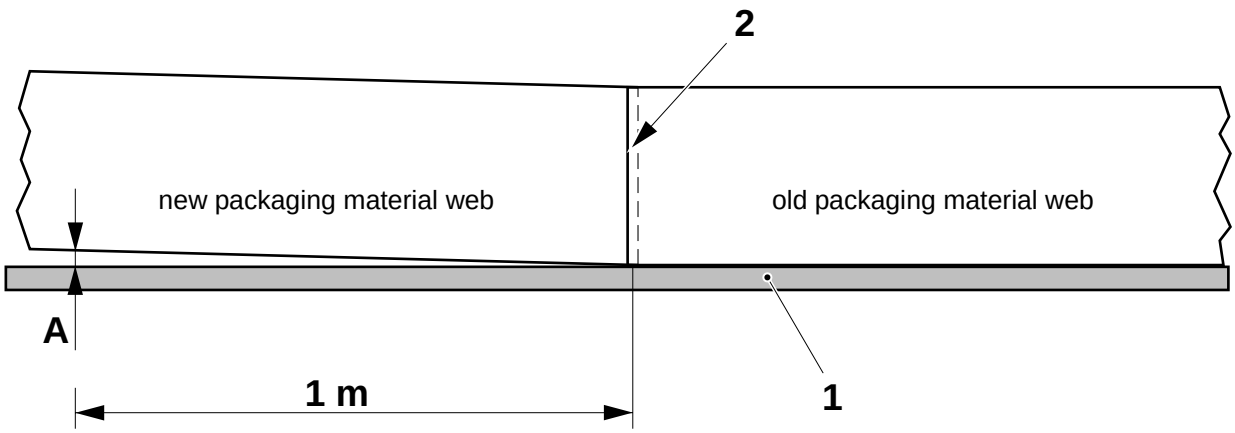

A = max. 1 mm

1 Edge
2 Splice

(Cont'd)

0-Series

2.2B3024H01en.fm

(Cont'd)

Sealing alignment (sideways alignment)

Check the alignment, distance **B**, between the new and the old packaging material webs spliced on the two packages.

Set the sealing alignment as required, see:

- *8.3-1 Splicing device - set web guide*
- *8.4-7 Material holder line 1 and line 2 - set sealing alignment*

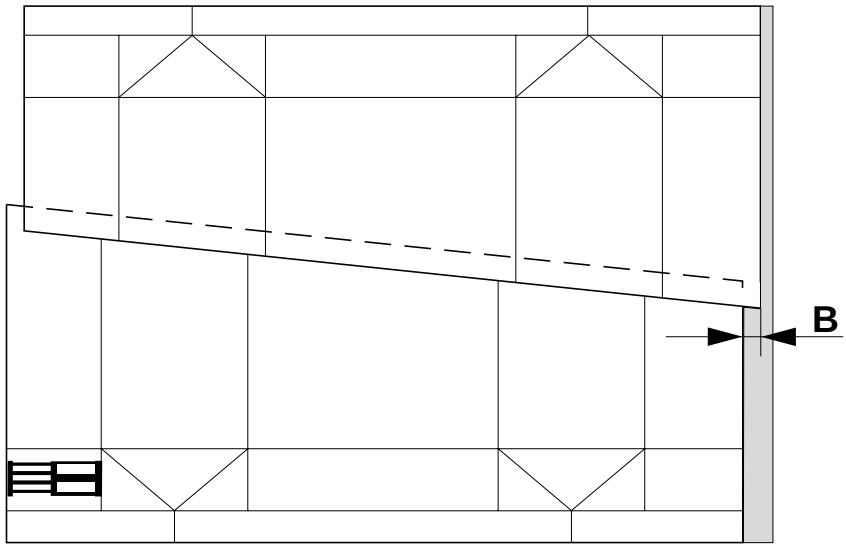

B = 0 ±0.5 mm

Overlap

Check the overlap, distance **C**, between the manual cutting (3) and the splicing device cutting (4). Set the material holder position as required, see *8.4-8 Material holder line 1 and line 2 - set overlap.*

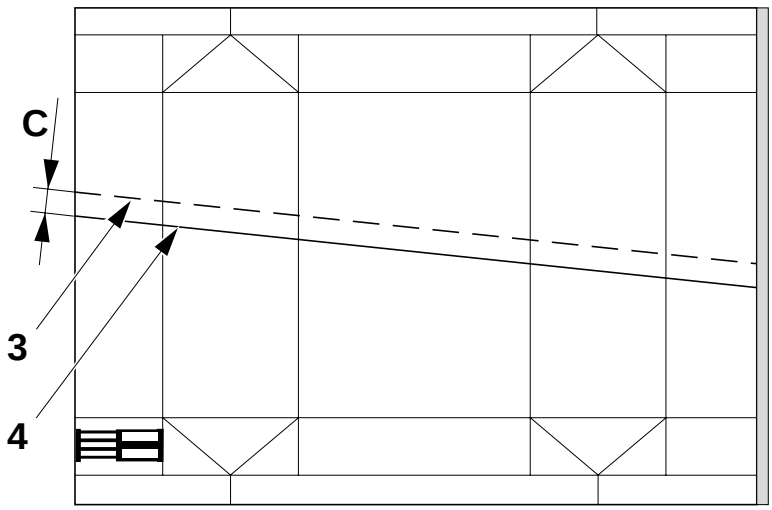

C = 11 ±1.0 mm

3 Manual cutting
4 Splicing device

(Cont'd)

2.2B3024H01en.fm

(Cont'd)

Spliced package length

Measure the distance **D**, between the top and the bottom creases of the package spliced by the ASU. If the distance **D** diverges by **0.5 mm** from the normal package length, set the photocells, see *8.3.4-3 Bracket - change photocell*.

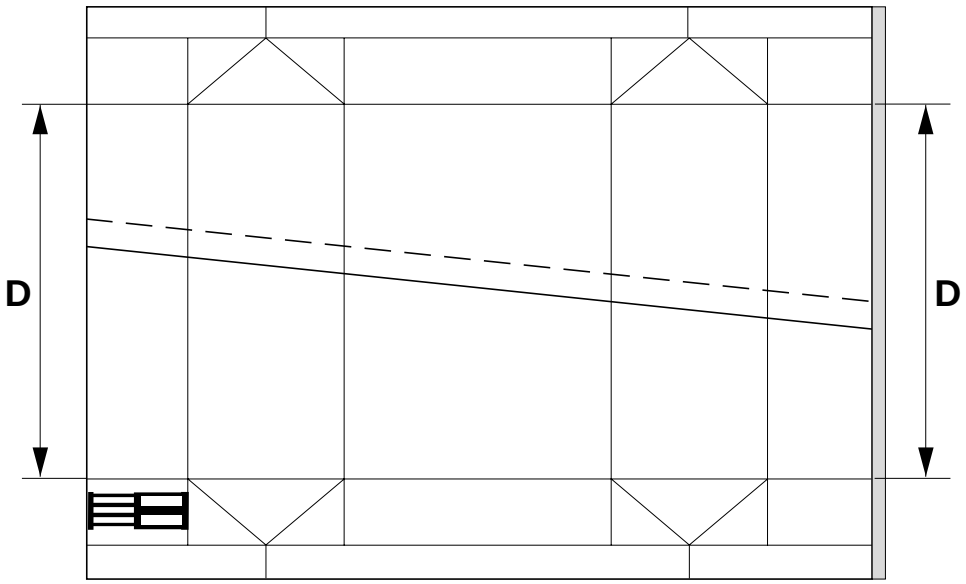

Cutting

Check that the manual cutting is straight. If not, change the material holder knife, see *8.4-1 Material holder line 1 and line 2 - check knife and guide*.

Check that the splicing device cutting is straight. If not, change the splicing device knife, see *8.3.1-1 Pressure jaw - change knife*.

(Cont'd)

2.2B3024H01en.fm

(Cont'd)

Sealing

Pull apart and examine the sealing (5).

The sealing is acceptable if remains intact but:

- a delamination between the two inner coating takes place
- a rupture takes place in the printed paper board layer.

The sealing is defective if:

- the seal is so weak that the two plastic layers separate without rupturing.

If the seal is defective, check the inductor, see *8.3.3-1 Sealing unit - check inductor*, and/or set the TS power.

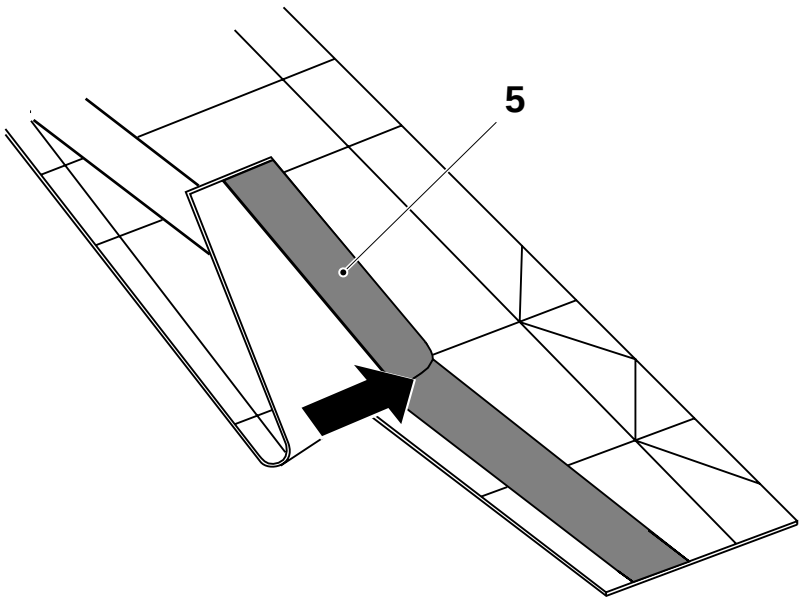

5 Sealing

2.2B3024H01en.fm

8-4 Automatic splicing unit - check bending rollers

SPC reference	648513-0400

Check that the roller surfaces are intact and clean.

Check that the rollers are not damaged and rotate freely.
Change as required, see:

- *8.3 Splicing device*
- *8.1-1 Machine body - overhaul bending rollers*
- *8.1.2-1 Web magazine - overhaul dancer roller*

2.2B3024H01en.fm

8-5 Automatic splicing unit - check web guides

SPC reference	648513-0400

Check that the roller surfaces are not damaged.

Check that the rollers rotate freely.

If not:

a) Remove the nuts (1), the washers and the retaining rings (2).

b) Change the ball bearings (3) and/or the rollers (4) as required.

c) Check that the guide (5) is clean, pull out and clean the guide as required.

Note! The rubber roller must be fitted on the printed side of the packaging material web.

d) Assemble in the reverse order.

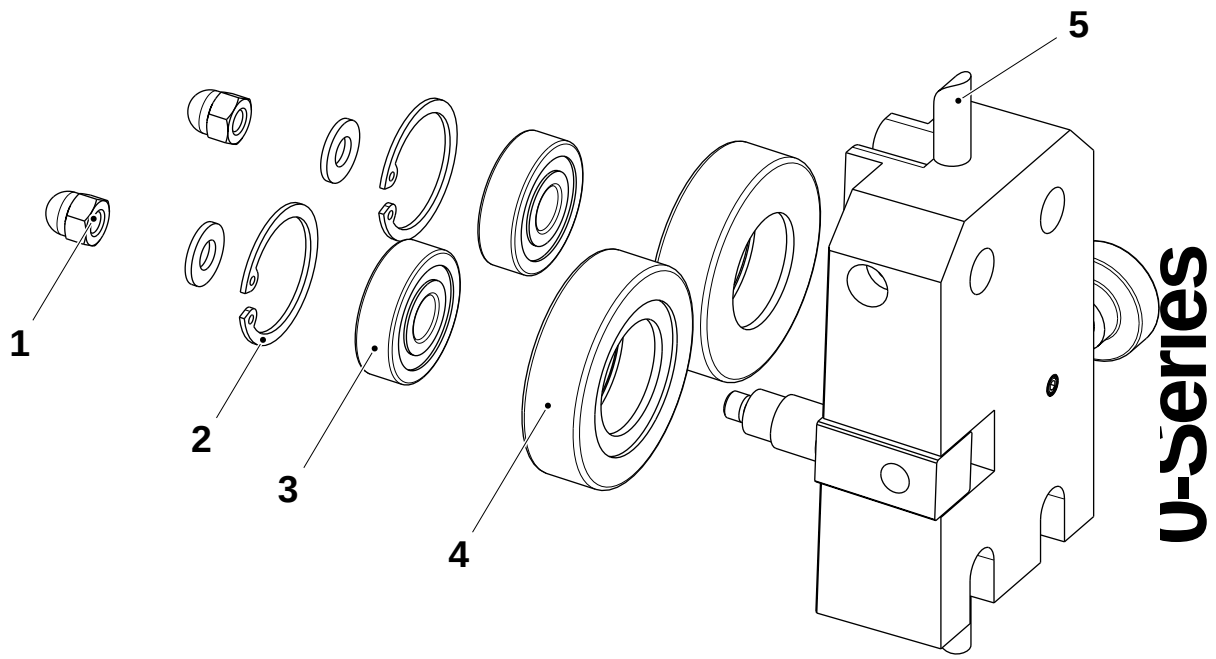

1 Nut
2 Retaining ring
3 Ball bearing
4 Roller
5 Guide

2.2B3024H01en.fm

8.1 Machine body

SPC reference	590490-0200

8.1-1 Machine body - overhaul bending rollers

SPC reference	590490-0200

a) Remove the stop screws (1).
b) Push the roller (4) group completely sideways.
c) Pull out the axles (2).
d) Change the ball bearings (3) and/or the roller (4) as required.
e) Assemble in the reverse order.

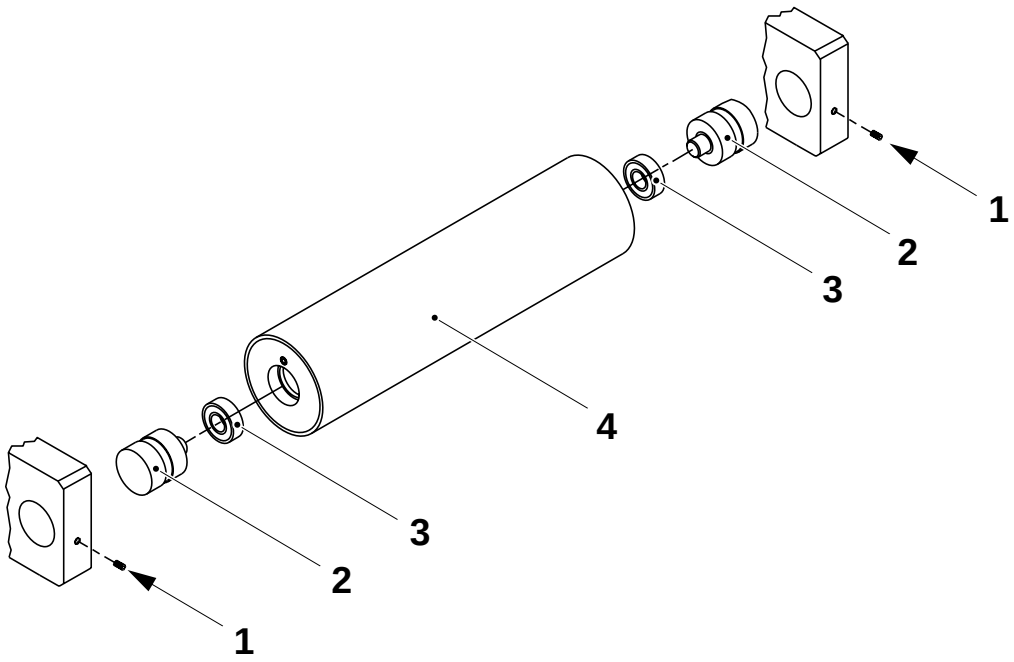

1 Stop screw
2 Axle
3 Ball bearing
4 Roller

2.2B3024H01en.fm

8.1-2 Machine body - set web guide

SPC reference	590490-0200

Note! The rubber roller (1) must be mounted on the printed web side.

a) Loosen the stop screw (2).

b) Set the distance **A** between the web guide (3) and the bracket (4) by shifting the web guide (3), see table below.

c) Tighten the stop screw (2).

Package	Web width (mm)	A ± 0.5 (mm)
200 B	214	57.5
250 B	214	57.5

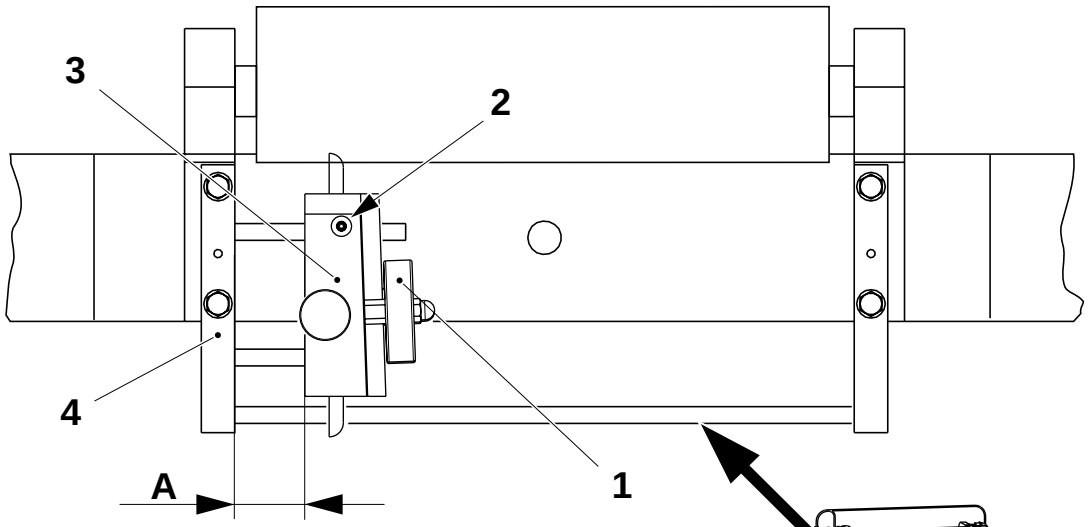

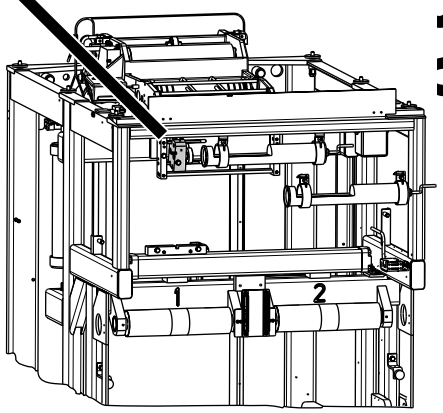

1 Roller
2 Stop screw
3 Web guide
4 Bracket

(Cont'd)

2.2B3024H01en.fm

8.1-3 Machine body - set photocell position and sensitivity

Machine status	Mains power **On**
SPC reference	590490-0200

There are two types of photocells. Those with transmitters and receivers working in pairs (1) with (2), (3) with (4), and those with a transmitter-receiver (5) that work in conjunction with a reflector (6).

Set position

a) Make sure there is no packaging material between transmitters and receivers.

b) Adjust the brackets on which the photocells are mounted so that the lenses of the photocells are pointing toward each other, and that the transmitter-receivers (5) point toward the reflectors (6).

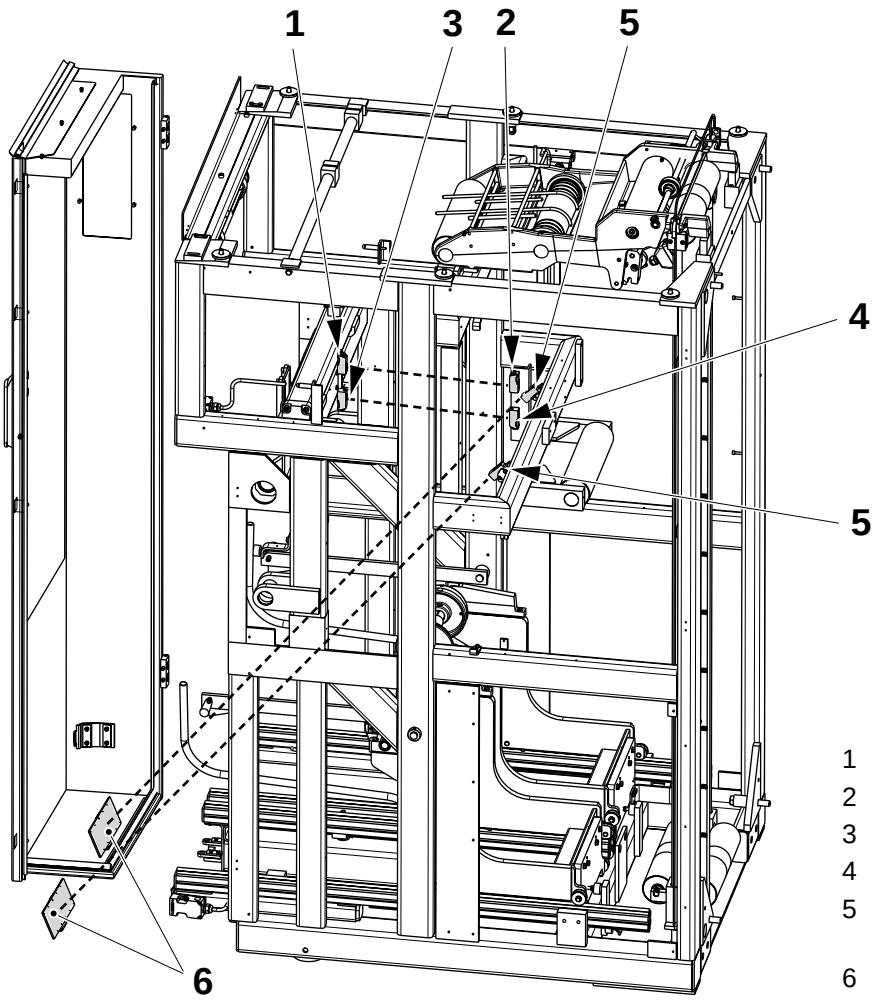

1 Transmitter
2 Receiver
3 Transmitter
4 Receiver
5 Transmitter-receiver
6 Reflector

(Cont'd)

2.2B3024H01en.fm

(Cont'd)

Note! The ASU doors must be closed.

c) Check that with only the power supply turned on, the green LEDs (7) of the receiver (2), (4), (5) photocells are **on**.

d) Check that the red LEDs (8) of the receiver (2), (4), (5) photocells are **on** indicating that the photocells are correctly aligned, if not continue with step *a)* in the following section. If the red LEDs are **on**, continue with step *g)* in the following section.

Set sensitivity

a) Open the cover on the receiver photocells (2), (4), and (5).

b) For the receiver photocell (4) make sure that is set to **PNP** and **L-ON**, see figure.

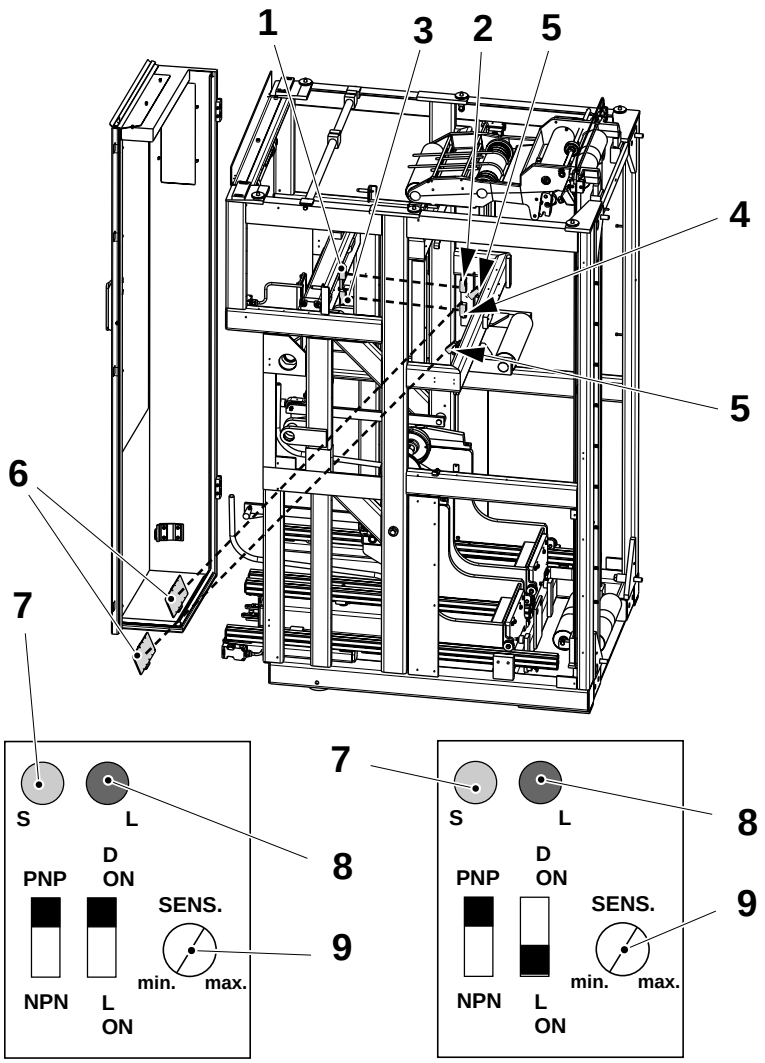

1 Transmitter
2 Receiver
3 Transmitter
4 Receiver
5 Transmitter-receiver
6 Reflector
7 Green LED
8 Red LED
9 Potentiometer

(Cont'd)

2.2B3024H01en.fm

(Cont'd)

c) For the receiver photocell (2) make sure that is set to **PNP** and **D-ON**, see figure.

d) For the transmitter-receivers (5) make sure that is set to **PNP** and **L-ON**, see figure.

e) Then turn the potentiometers (9) fully clockwise (towards **max.**), on the receiver photocells (2), (4), and (5), then turn it backward about 60° degrees.

f) Close the cover on the receiver photocells (2), (4), and (5).

g) Thread packaging material through the automatic splicing unit and check that the red LEDs (8) on all receiver photocells are **off**.

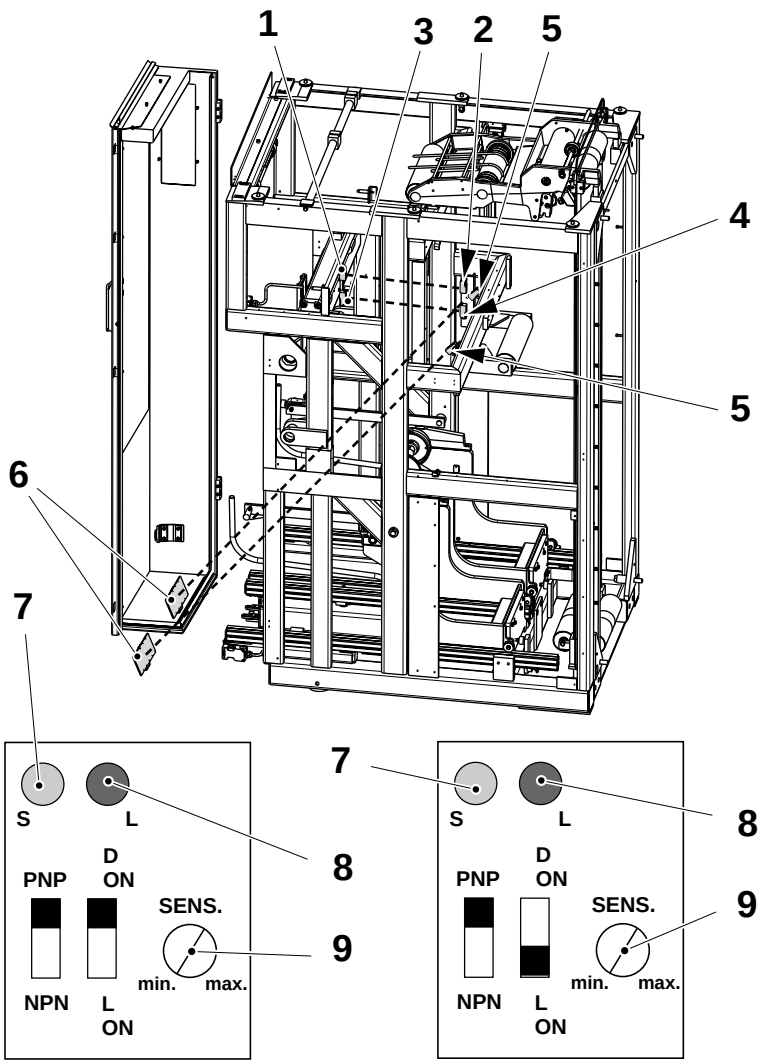

1 Transmitter
2 Receiver
3 Transmitter
4 Receiver
5 Transmitter-receiver
6 Reflector
7 Green LED
8 Red LED
9 Potentiometer

2.2B3024H01en.fm

8.1-4 Machine body - set proximity switches

Machine status	Mains power **On**
SPC reference	590490-0200

a) Loosen the nuts (1) on the proximity switch (2).

b) Set the distance **A** between the proximity switch (2) head and the splicing device bracket (3) by turning the proximity switch (2).

c) Tighten the nuts (1) on the proximity switch (2).

d) Perform a manual splice and check that the proximity switch LED (4) is **on**.

e) Repeat the same sequence for the proximity switch on the other side of the ASU frame.

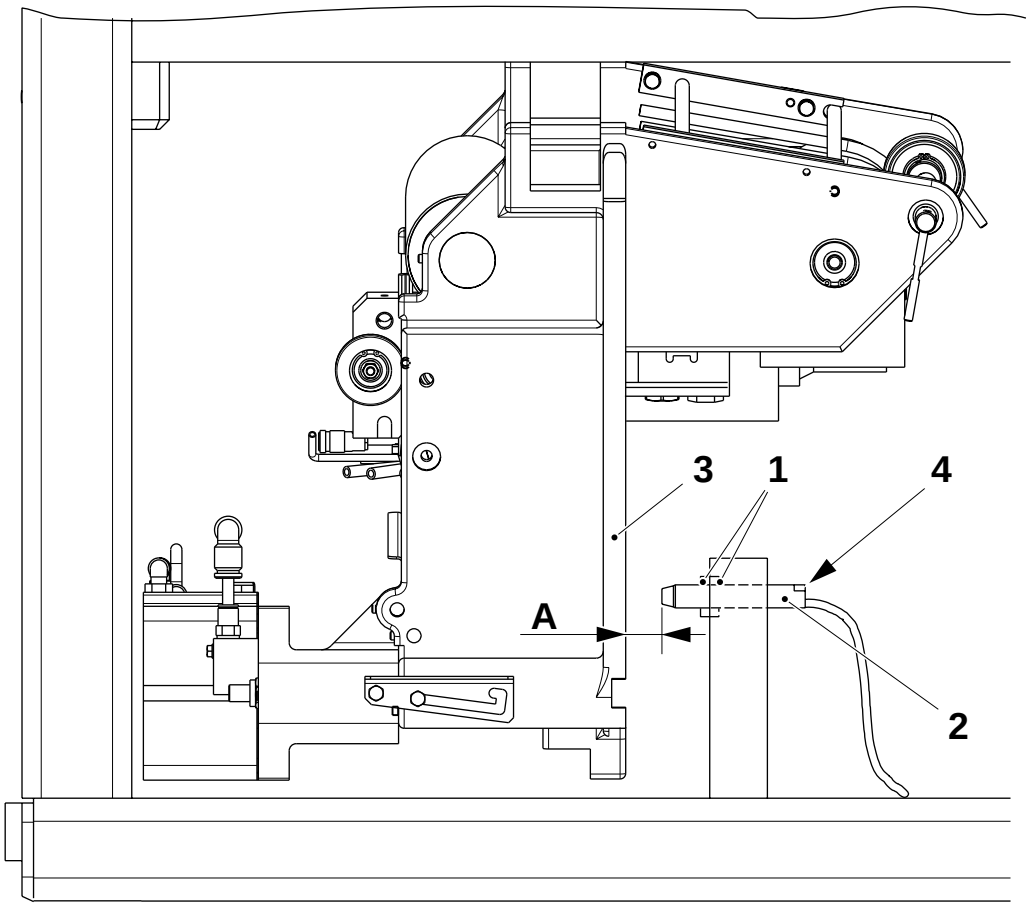

A = 1 +0.5 mm

1 Nut
2 Proximity switch
3 Bracket
4 LED

2.2B3024H01en.fm

8.1.1 Drive unit front

8.1.1-1 Drive unit front - check

SPC reference	1347553-0100

Check the following parts for visual wear and/or damage:

- the roller (1) and counter roller (6)
  Check also that they rotate freely.
- the electrical motor (5)
- the gear wheels (3) and (4)
  Check especially for cracks in the teeth.
- the ball bearings (2) and (7)
  Check also for excessive radial play.

Note! The eccentric bushing in the ball bearing (7) must be mounted with the eccentricity upwards.

Change as required.

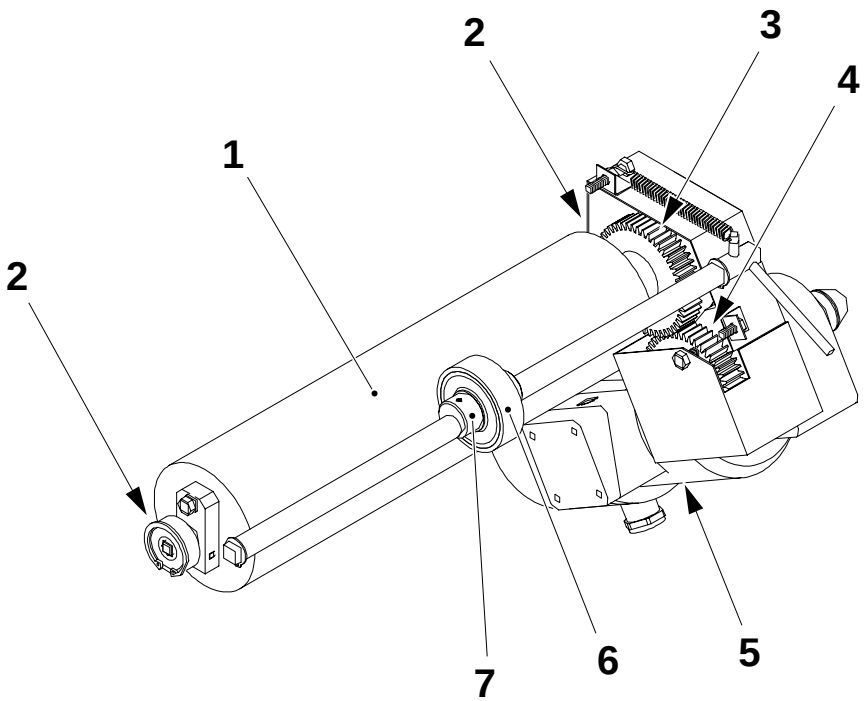

1 Bending roller
2 Ball bearing
3 Gear wheel (plastic)
4 Gear wheel (steel)
5 Electric motor
6 Counter roller
7 Ball bearing

0-Series

2.2B3024H01en.fm

8.1.1-2 Drive unit front - set gear wheel

SPC reference	1347553-0100

Set the radial play (**+0.3** / **+0.5 mm**) between the gear wheels (1) and (2) by adding or removing shims (3) under the motor bracket (4).

Note! It is very important to have radial play all around the full turn of the roller.

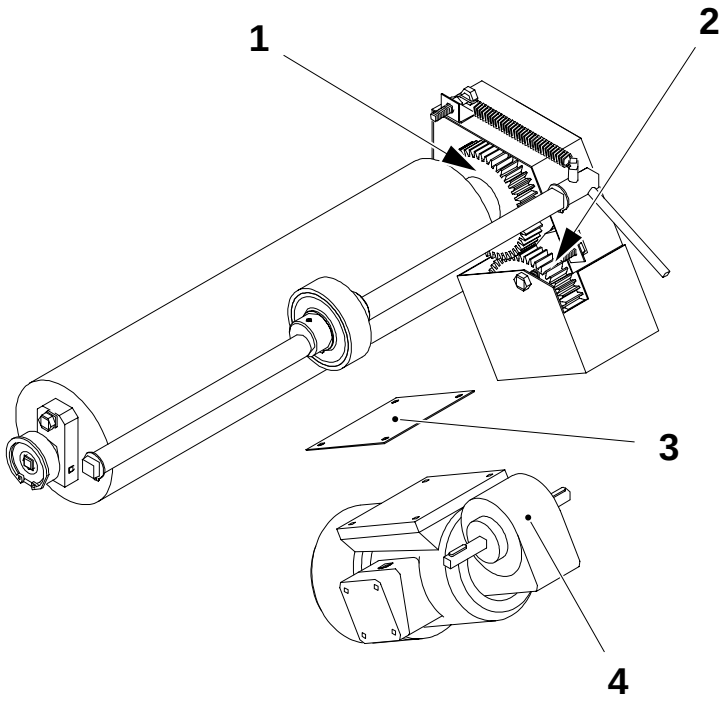

1 Gear wheel (steel)
2 Gear wheel (plastic)
3 Shim
4 Motor bracket

2.2B3024H01en.fm

0-Series

8.1.2 Web magazine

8.1.2-1 Web magazine - overhaul dancer roller

SPC reference	1347738-0100

a) Remove the screws (1) and the nut (2) on both rollers (4).

b) Pull out the dancer roller (4) assembly from the sliders (3).

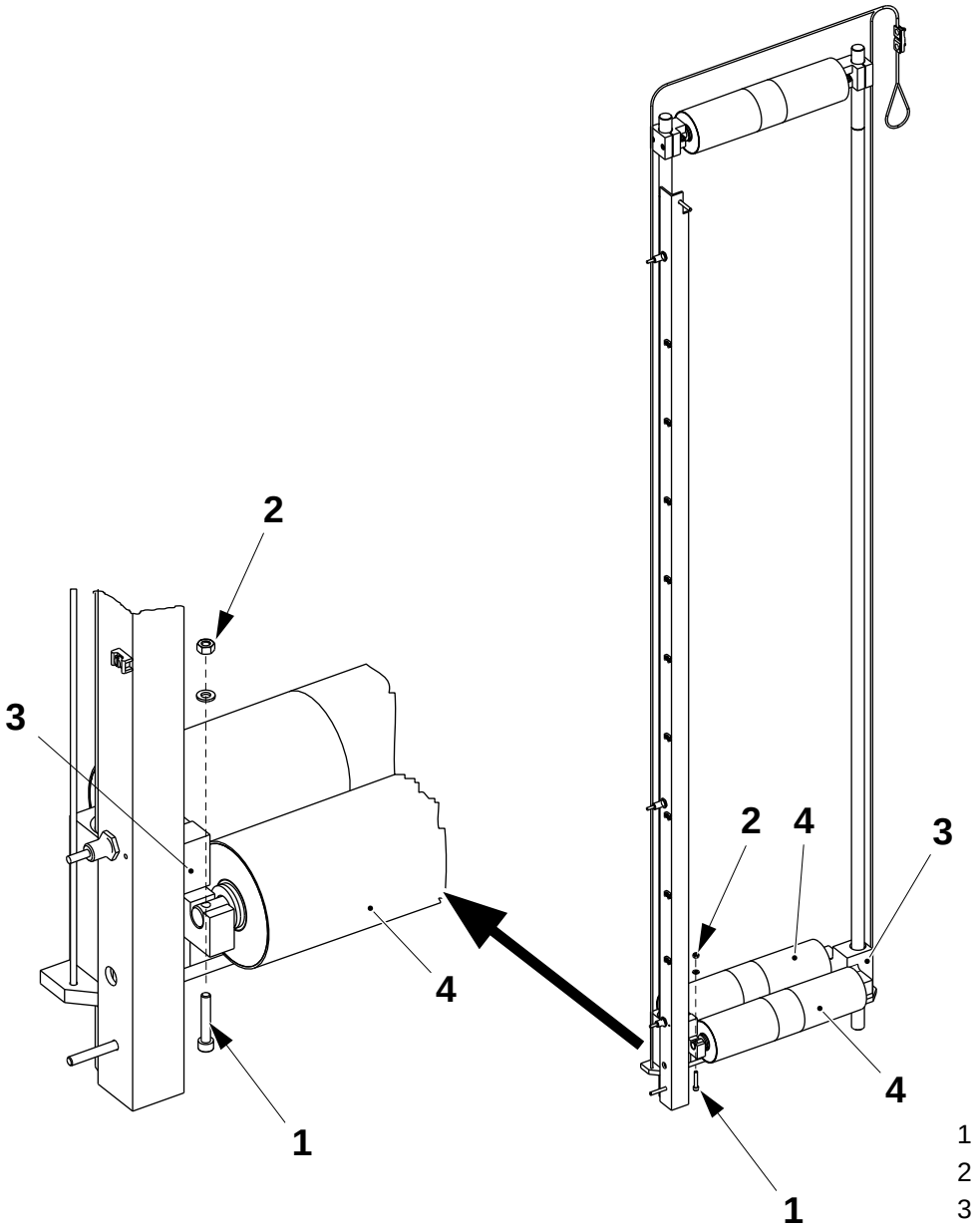

1 Screw
2 Nut
3 Slider
4 Dancer roller

(Cont'd)

2.2B3024H01en.fm

(Cont'd)

c) Change the dancer roller (4) as required.

d) Remove and change the ball bearings (5) as required.

e) Assemble in the reverse order.

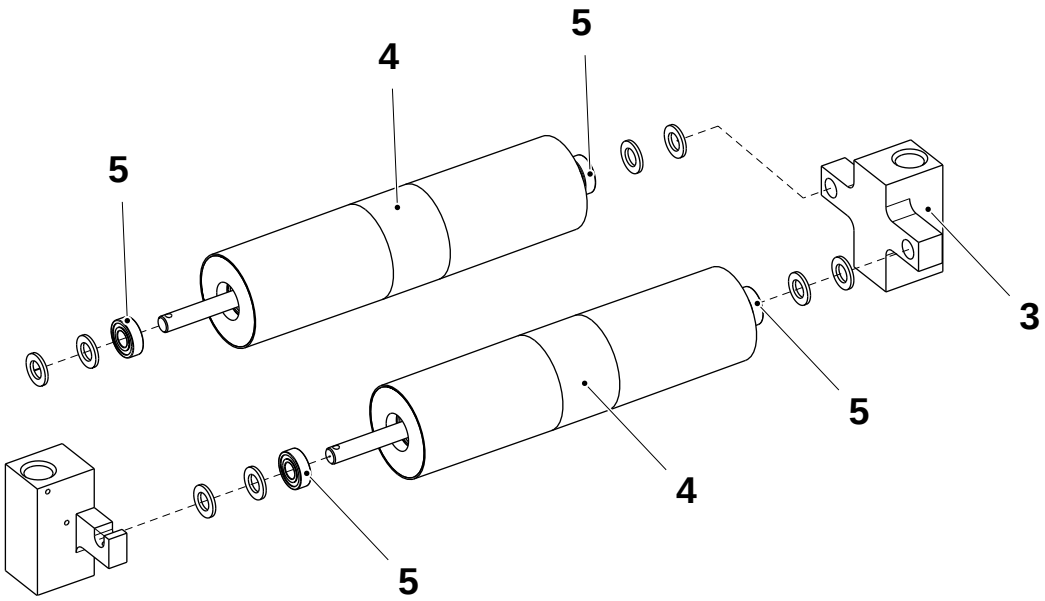

3 Slider
4 Dancer roller
5 Ball bearing

2.2B3024H01en.fm

0-Series

8.1.2-2 Web magazine - set proximity switches

Machine status	Mains power **On**
SPC reference	1347738-0100

a) Loosen the nuts (1) on the proximity switches (2).

b) Set the distance **A** between the proximity switches (2) head and the block (3) by turning the proximity switch (2).

c) Tighten the nuts (1) on the proximity switches (2).

d) Position the dancer roller (4) in front of each proximity switch (2) and check that the proximity switch LED (5) is **on**.

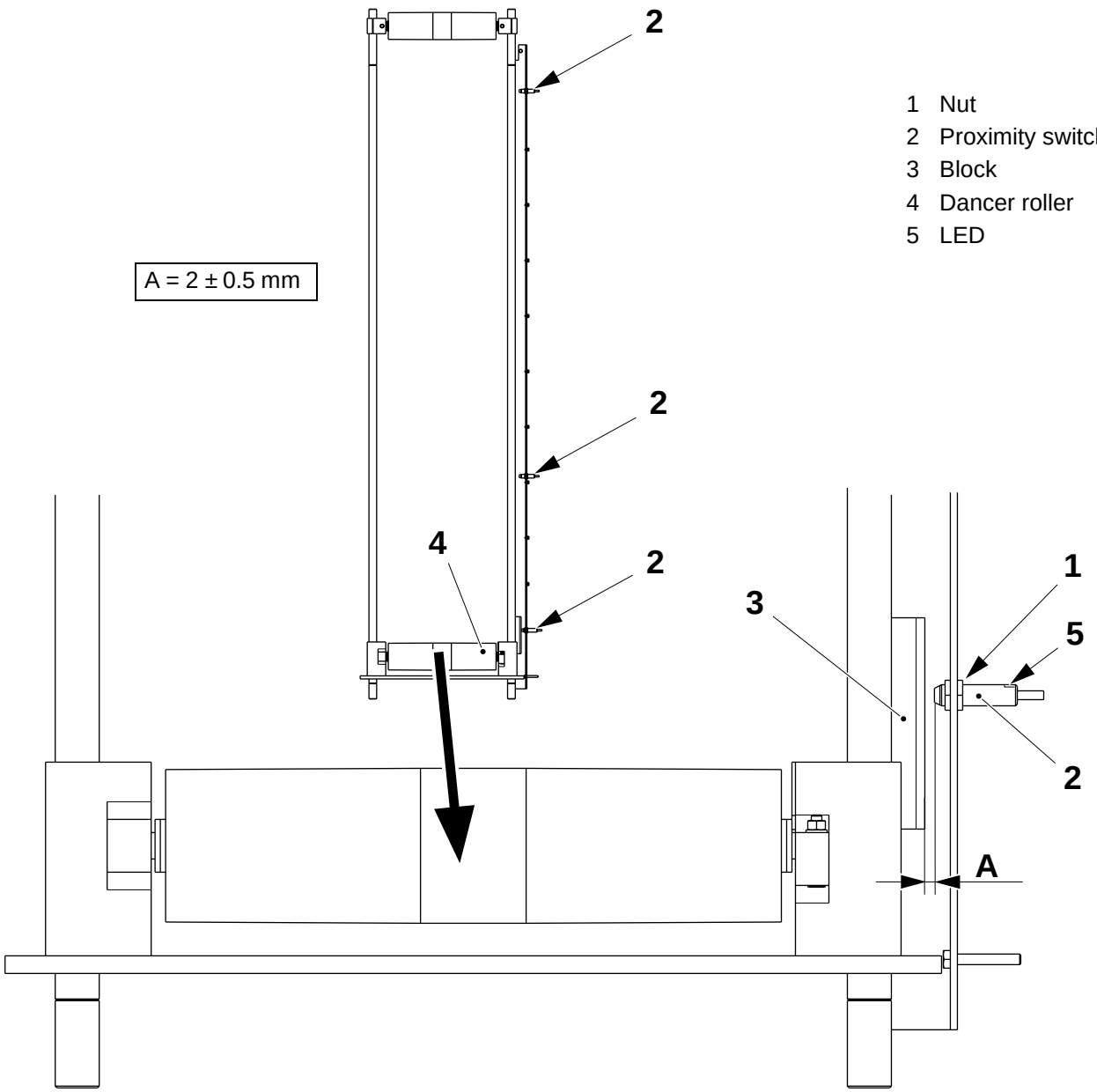

0-Series

2.2B3024H01en.fm

8.1.3 Bracket

8.1.3-1 Bracket - set proximity switch

SPC reference	1348437-0100

a) Loosen the grub screw (1).

b) Set the distance **A** between the proximity switch (3) and the bending roller (2) by turning the proximity switch (3).

c) Tighten the grub screw (1).

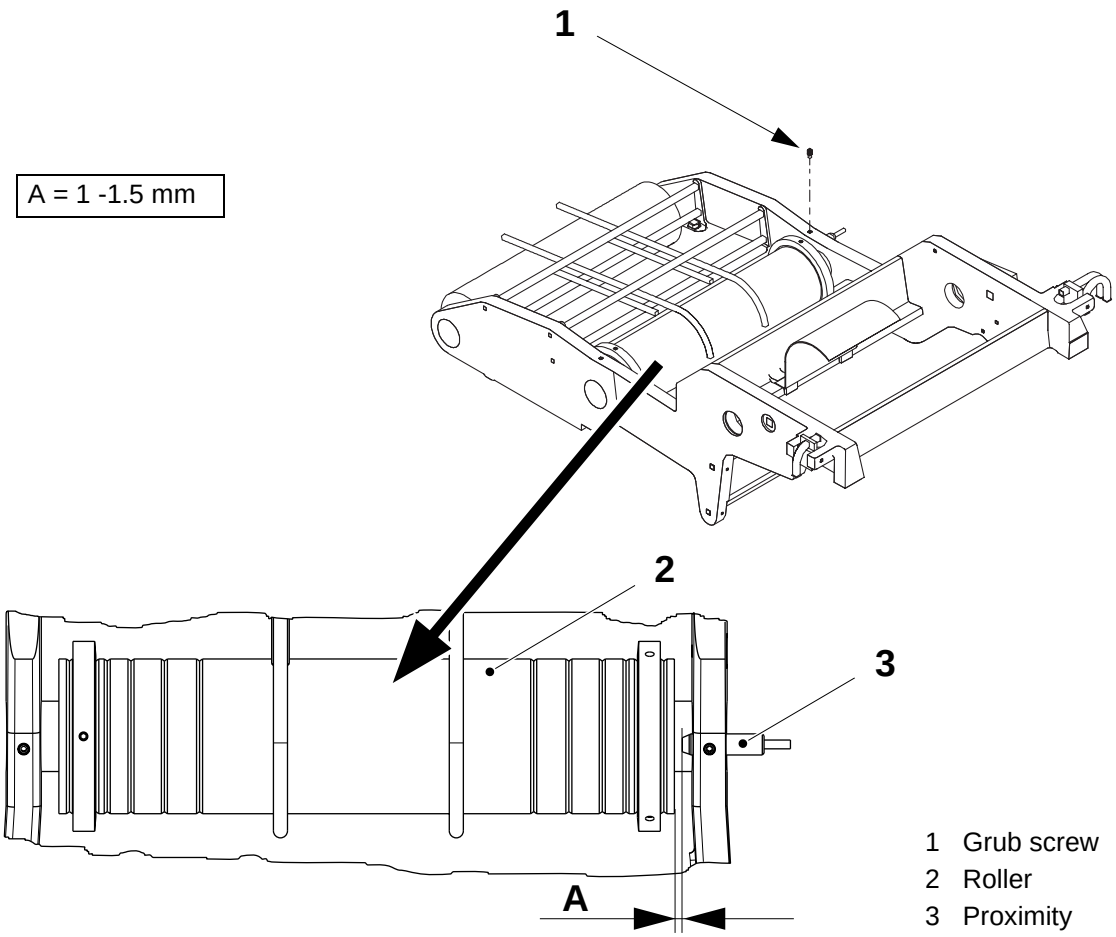

1 Grub screw
2 Roller
3 Proximity switch

2.2B3024H01en.fm

8.1.4 Protective cover

8.1.4-1 Protective cover - check air filter

SPC reference	1255304-0200

a) Check the level of the condensate in the filter reservoir (1).

b) If necessary, unscrew the plug (2) and drain off the water.

c) Check the filter cartridge (3) and change it as required, see *8.1.4-2 Protective cover - change air filter*.

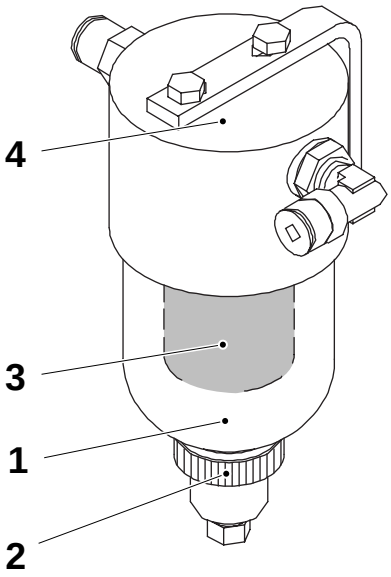

1 Reservoir
2 Plug
3 Cartridge

2.2B3024H01en.fm

8.1.4-2 Protective cover - change air filter

SPC reference	1255304-0200

a) Remove the screw cap (2).

b) Remove the reservoir (1).

c) Remove the filter cartridge (3) and change it.

d) Assemble in the reverse order.

Note! Check that the flow of the air is in accordance to the arrows on the cap (4).

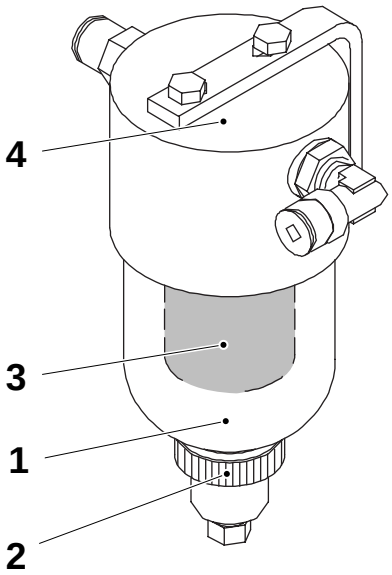

1 Reservoir
2 Screw cap
3 Cartridge
4 Cap

2.2B3024H01en.fm

8.3 Splicing device

SPC reference	1348436-0100

8.3-1 Splicing device - set web guide

SPC reference	1348436-0100

Note! The rubber roller (5) must be mounted on the printed web side.

a) Loosen the stop screw (2) on the rear of the web guide.

b) Using a calliper (4), set the distance **A** between the web guide (3) and the machined surface in the setting hole (1) by moving the web guide.

c) Tighten the stop screw (2).

Package	Web width (mm)	A ±0.5 (mm)
200 B	214	84
250 B	214	84

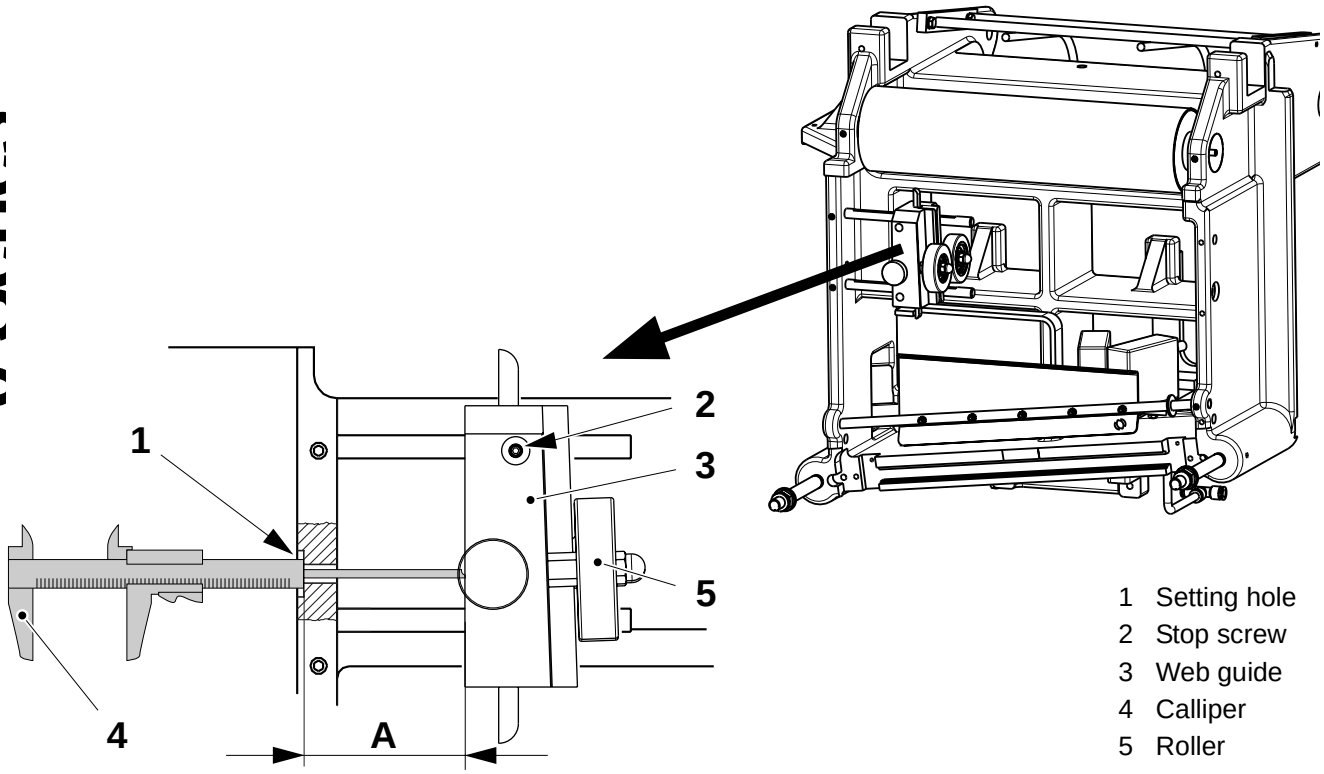

1 Setting hole
2 Stop screw
3 Web guide
4 Calliper
5 Roller

0-Series

2.2B3024H01en.fm

8.3.1 Pressure jaw

8.3.1-1 Pressure jaw - change knife

SPC reference	1095761-0100



WARNING!

a) Loosen the nuts (1) and remove the screws (2).

b) Open the pressure jaw (3) and lock it in that position with the catch (4).

c) Remove all pneumatic hoses from the cylinders.

d) Remove the screws (5).

e) Pull the screw (7) out and hold the nut (8) with a spanner. Remove the screw (7) and rail (9).

f) To remove the spring (10) hold the nut (11) and undo the screw (7). Remove the spring (10).

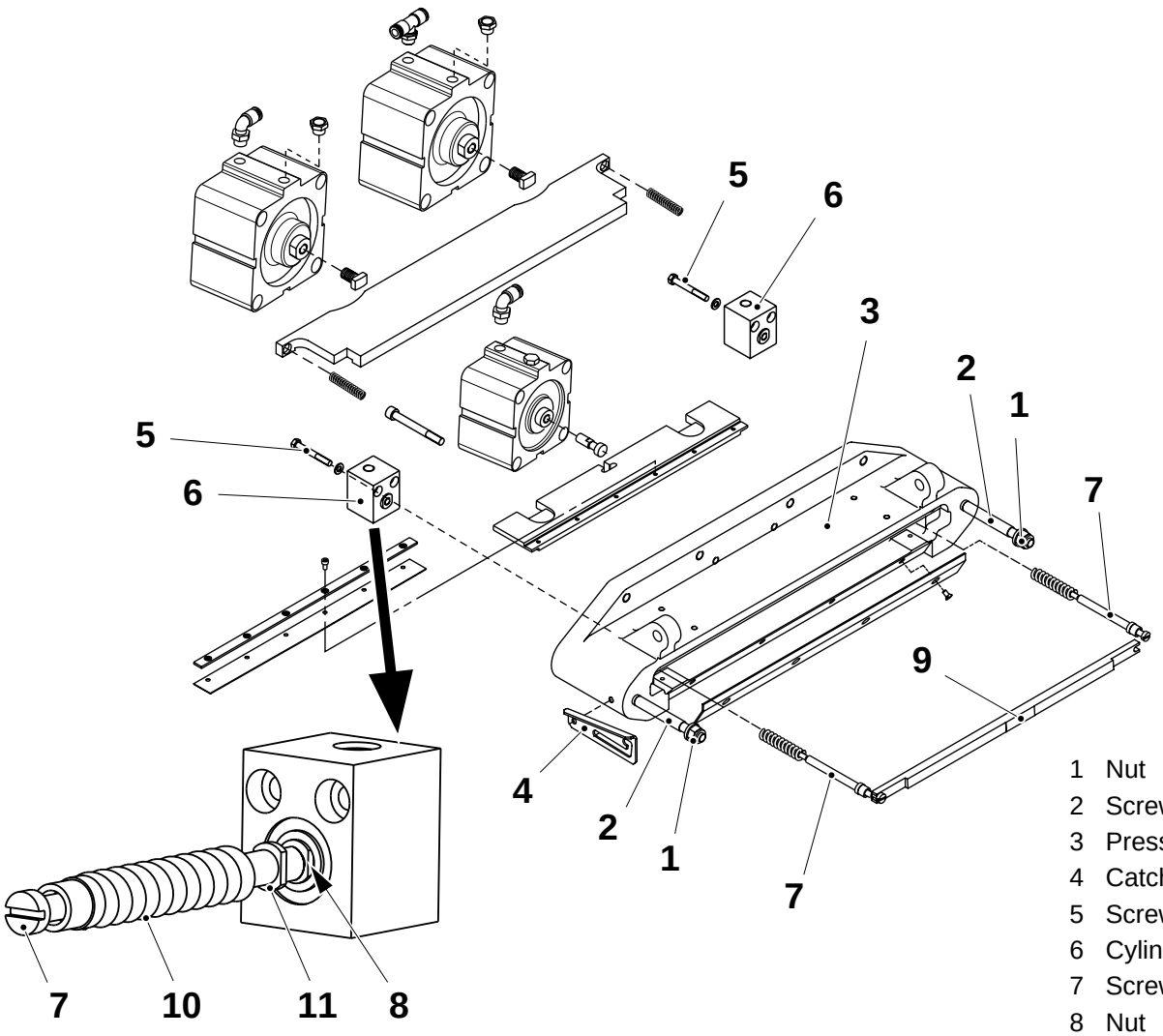

1 Nut
2 Screw
3 Pressure jaw
4 Catch
5 Screw
6 Cylinder
7 Screw
8 Nut
9 Rail
10 Spring
11 Nut

(Cont'd)

2.2B3024H01en.fm

0-Series

(Cont'd)

g) Remove the screws (12) and the pneumatic cylinders (13).

h) Pull out the knife holder (14) together with the pressure rail (15).

i) Remove the screws (16), pull out and change the knife (17).

j) Assemble in the reverse order.

Note! When assembling, make sure that the rail (9) is mounted with the inclined plane facing outwards, see figure.

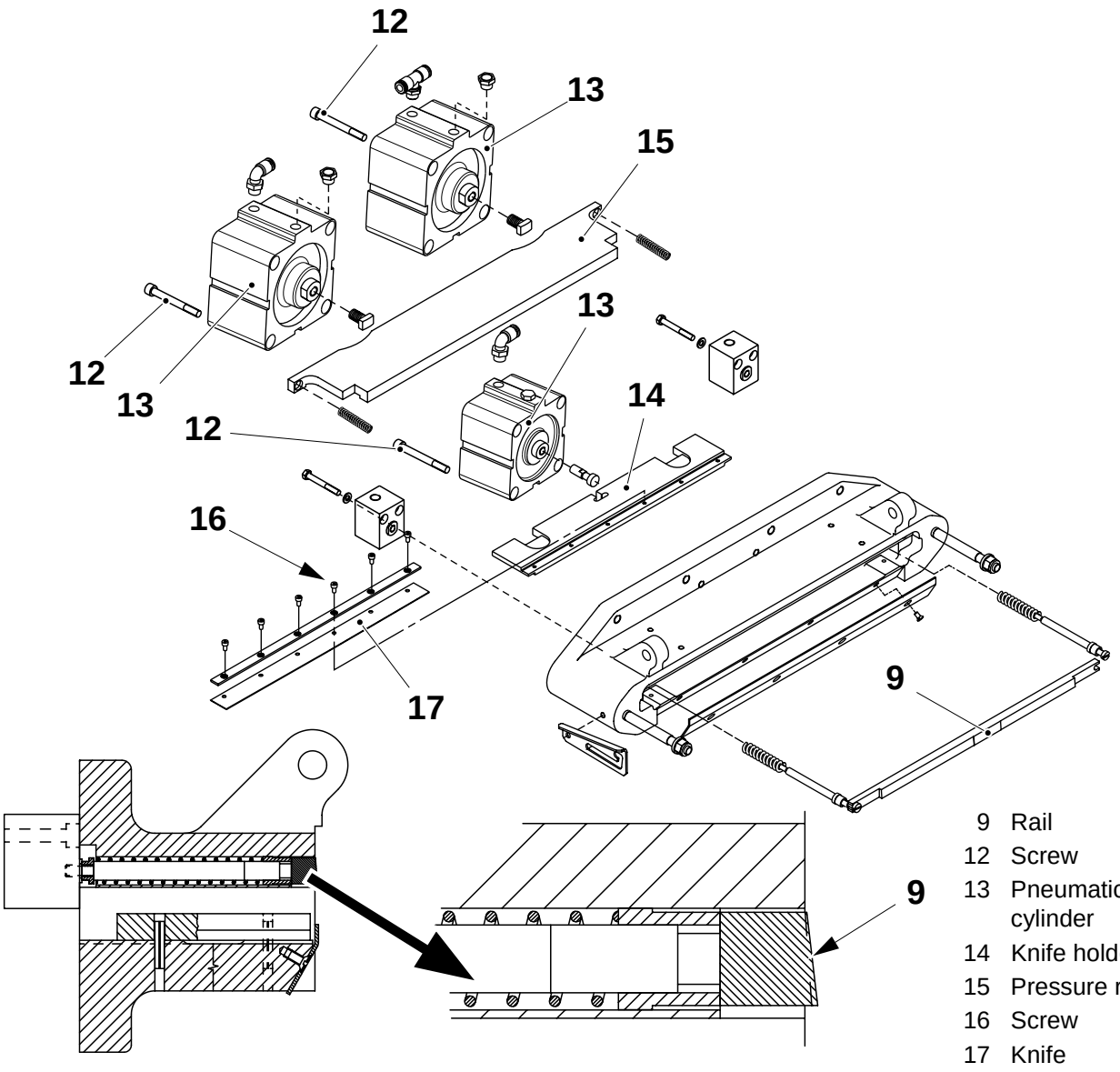

9 Rail
12 Screw
13 Pneumatic cylinder
14 Knife holder
15 Pressure rail
16 Screw
17 Knife

2.2B3024H01en.fm

8.3.1-2 Pressure jaw - change cylinders

Consumables - locking fluid	TP No. 90157-16
SPC reference	1095761-0100



WARNING!

a) Disconnect the air hoses from the cylinders.
b) Remove the screws (1) and change the pressure cylinders (2) and (4).
c) Unhook and change the cutting cylinder (3).
d) Set the distance **A** on the pressure cylinders by turning the screw (5).
e) Set the distance **B** on the cutting cylinder by turning the screw (6).
f) Apply locking fluid to the screws (5) and (6) and tighten them.
g) Assemble in the reverse order.

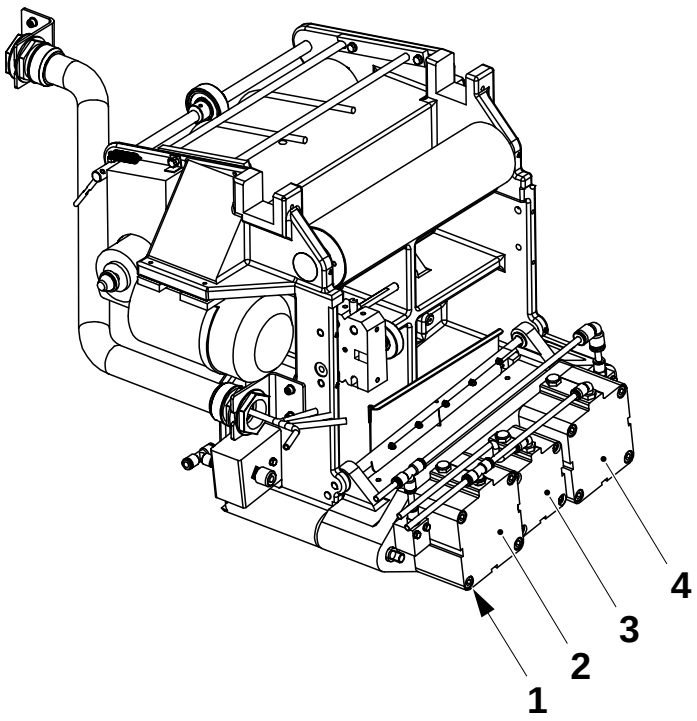

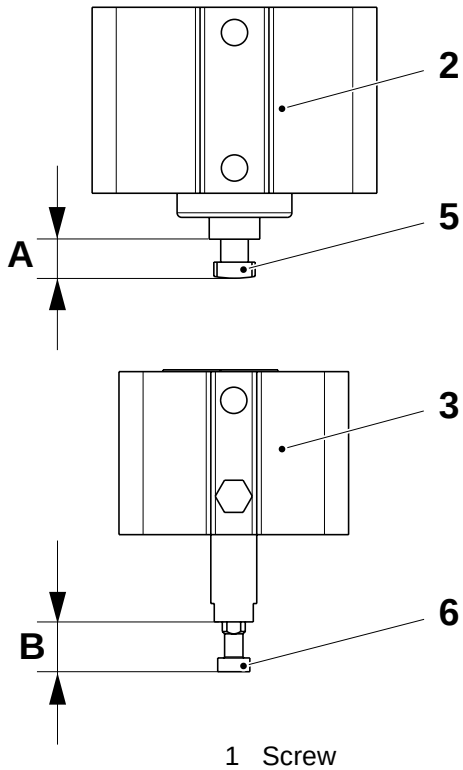

A = 17.0 ±0.5 mm B = 21.7 ±0.1 mm

1 Screw
2 Pressure cylinder
3 Cutting cylinder
4 Pressure cylinder
5 Screw
6 Screw

2.2B3024H01en.fm

0-Series

8.3.2 Drive unit rear

8.3.2-1 Drive unit rear - check

SPC reference	1348431-0100

Check the following parts for visual wear and/or damage:

- the gear wheels (1) and (2)
  Check especially for cracks in the teeth.
- the roller (4) and the counter roller (6)
  Check also that they rotate freely.
- the electrical motor (7)
- the ball bearings (5) and the eccentric bushing (3), Check also for excessive radial play

Note! The eccentric bushing (3) must be mounted with the eccentricity upwards.

Change as required.

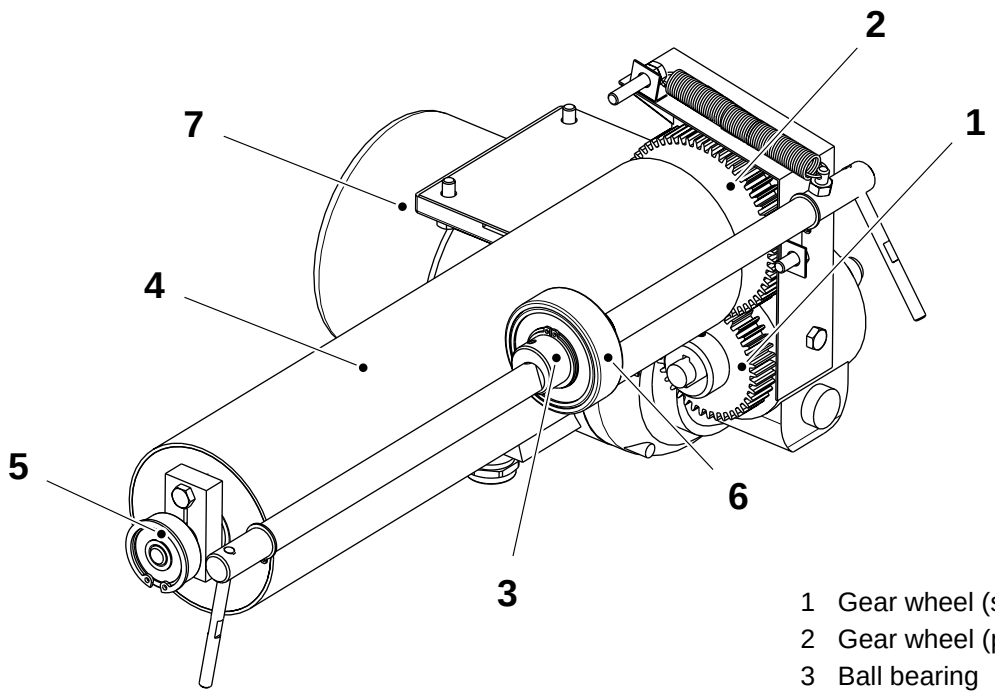

1 Gear wheel (steel)
2 Gear wheel (plastic)
3 Ball bearing
4 Bending roller
5 Ball bearing
6 Counter roller
7 Electrical motor

0-Series
2.2B3024H01en.fm

8.3.2-2 Drive unit rear - set gear wheel

SPC reference	1348431-0100

Set the radial play (**+0.3 / +0.5 mm**) between the gear wheels (1) and (2) by adding or removing shims (3) under the motor bracket (4).

Note! It is very important to have radial play all around the full turn of the roller.

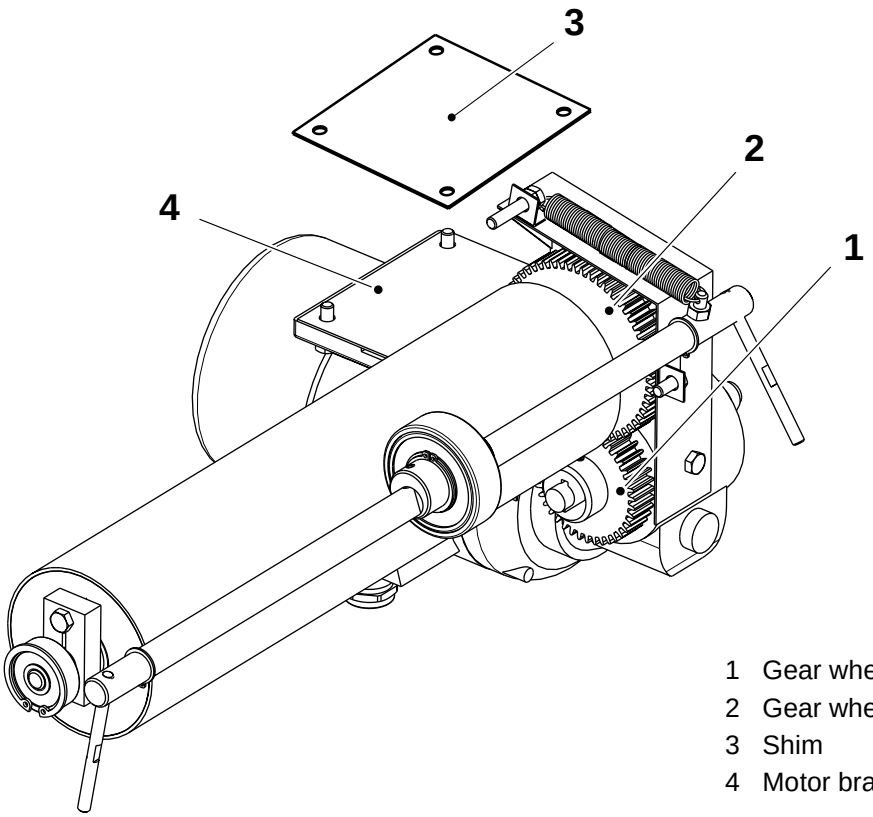

1 Gear wheel (steel)
2 Gear wheel (plastic)
3 Shim
4 Motor bracket

2.2B3024H01en.fm

8.3.3 Sealing unit

8.3.3-1 Sealing unit - check inductor

SPC reference	1095763-0100

a) Loosen the nuts (1) and remove the screws (2).
b) Open the pressure jaw (3) and lock it in that position with the catch (4).
c) Disconnect the bus bar (5).
d) Remove the screws (6) and pull out the inductor (7).
e) Check the inductor (7) for wear and/or damage.
f) Change the inductor (7) as required.
g) Assemble in the reverse order.

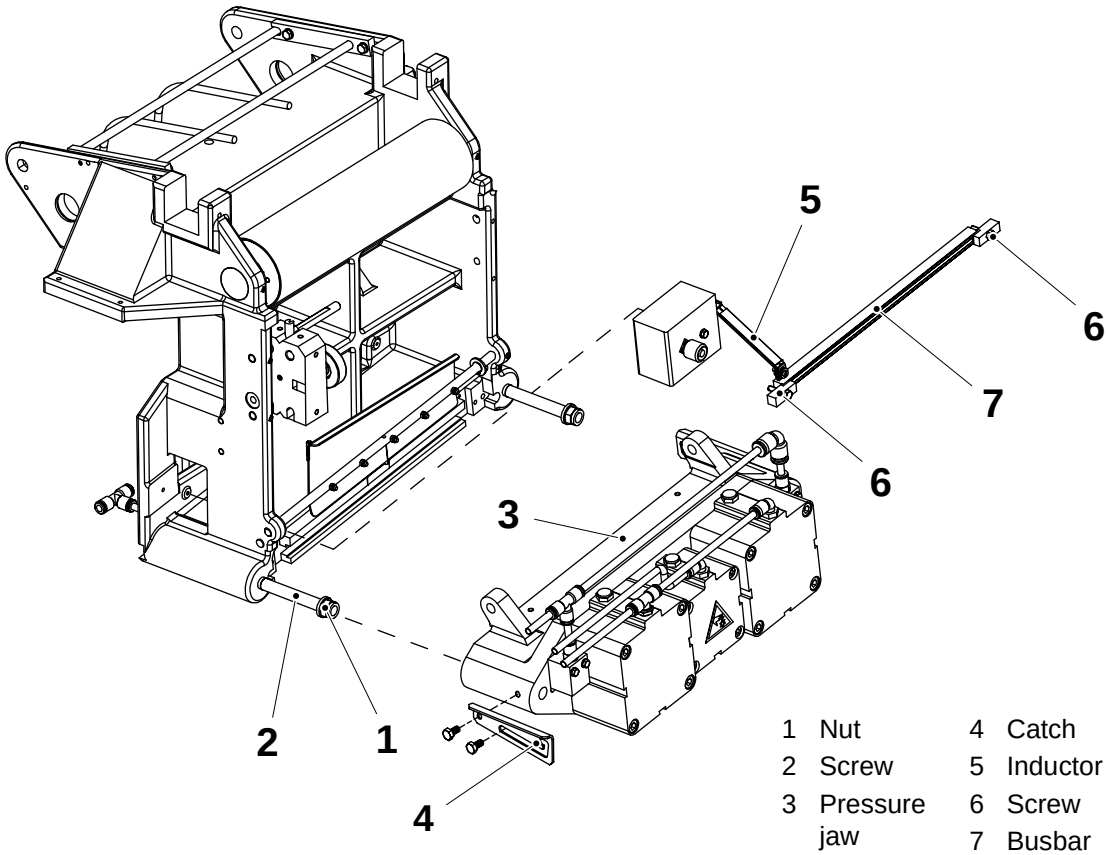

1	Nut	4	Catch
2	Screw	5	Inductor
3	Pressure jaw	6	Screw
		7	Busbar

2.2B3024H01en.fm

8.3.4 Bracket

8.3.4-1 Bracket - check roller and photocells

Consumables - cleaning solution	
SPC reference	1095765-0200

Check that:

- the roller (1) rotates easily and freely
- the radial play of the ball bearings (2) is not excessive
  If excessive, change them, see *8.1-1 Machine body - overhaul bending rollers*.
- the photocells are clean and intact.
  Clean the lenses with a clean dry cloth.

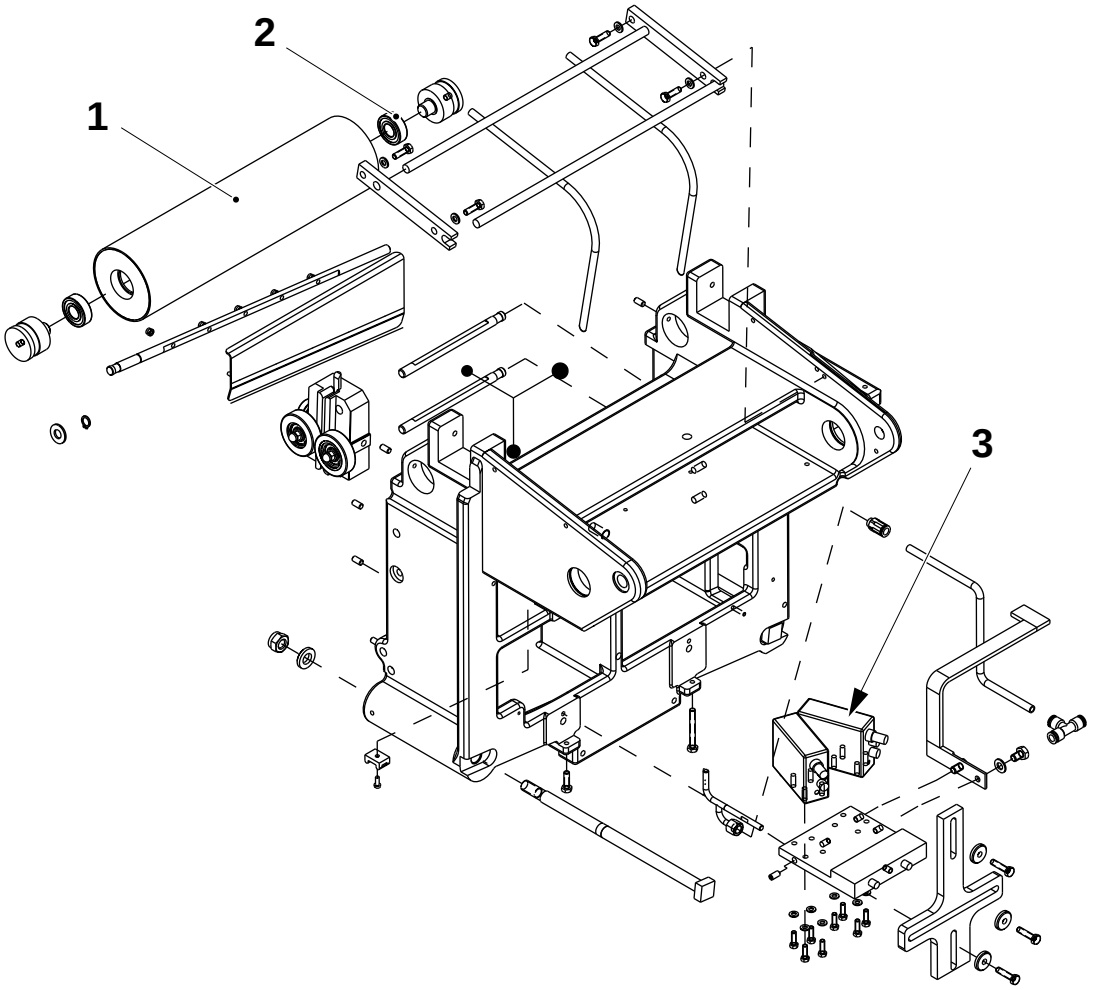

1 Roller
2 Bearing
3 Photocell

2.2B3024H01en.fm

8.3.4-2 Bracket - set photocell sensitivity

Machine status	Mains power **On**
SPC reference	1095765-0200

Photocell sensitivity

This calibration procedure is only necessary on new photocells. On each photocell:

a) Remove the plastic cover (1).

b) Set the selector (2) to the LH position. Each photocell has two light sources; when the first light source fails, set the selector (2) to the RH position.

c) Set the selector (3) to position "O".

d) Focus the photocell spot on the light part of the packaging material barcode.

e) Set the selector (3) to the working position **"J** ".

f) Focus the photocell spot on the dark part of the packaging material barcode.

g) If the LED (4) is **on**, turn the setting control (2) clockwise until the LED (4) is **off**.
If the LED (4) is **off**, turn the setting control (2) counter-clockwise until the LED (4) is **on**, and then clockwise until it is **off**.

h) Set the selector (3) to position "●".

i) Fit the plastic cover (1).

2.2B3024H01en.fm

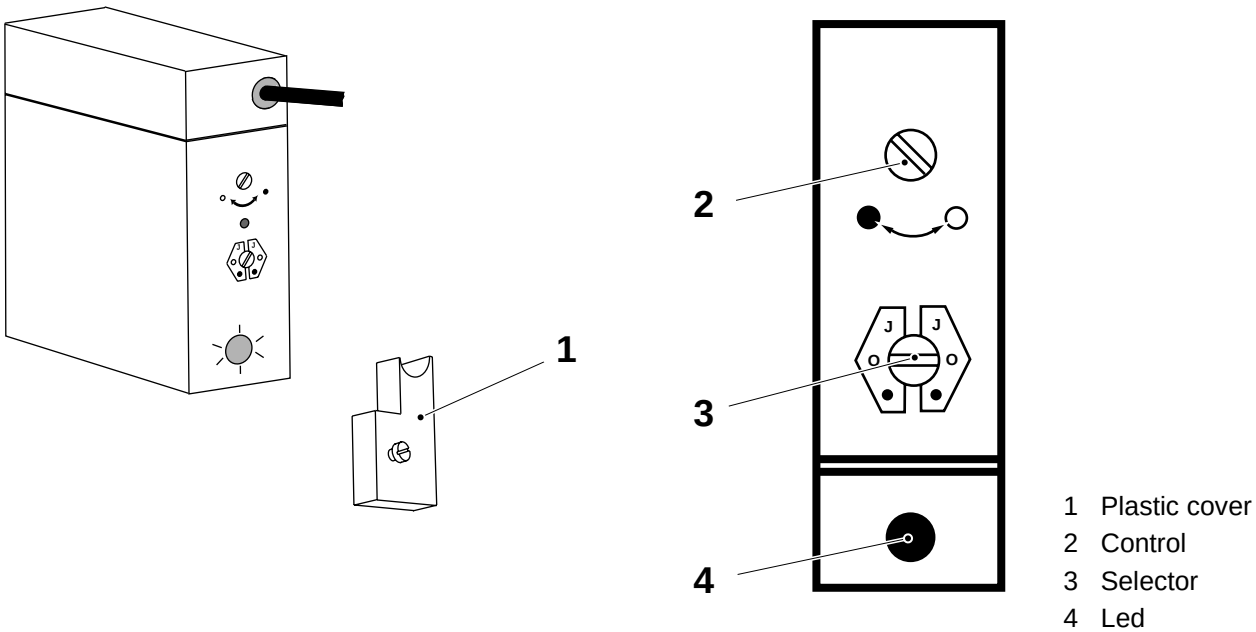

1 Plastic cover
2 Control
3 Selector
4 Led

8.3.4-3 Bracket - change photocell

Machine status	Mains power **On**
SPC reference	1095765-0200

To change a photocell do the following:

Note! Do not loosen the screws (1 and 2) or the factory setting of the bracket will be lost.

a) Remove the screws (3) and remove the cross shaped bracket (4) complete with the photocell bracket (5).

Note! Do not touch the screws holding the good photocell in position. This photocell will be used as a reference when aligning and focusing the new photocell.

b) Remove the screws (6) securing the defective photocell (7) to the bracket (5).

Note! The cable cannot be removed from the photocell, they are supplied as a single item.

c) Remove the photocell and cable. The cable is connected directly to the electrical cabinet. See the EM for the exact details.

d) Attach the new photocell (7) to the photocell bracket (5) with the screws (6). Do not tighten the screws.

2.2B3024H01en.fm

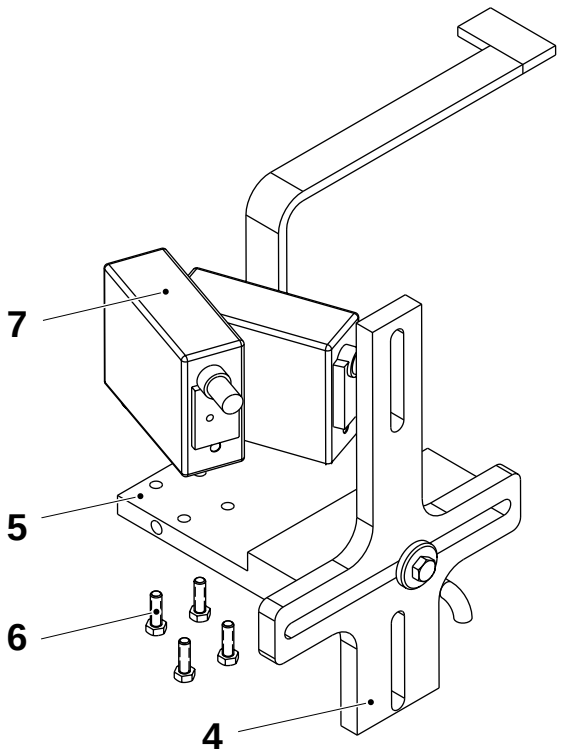

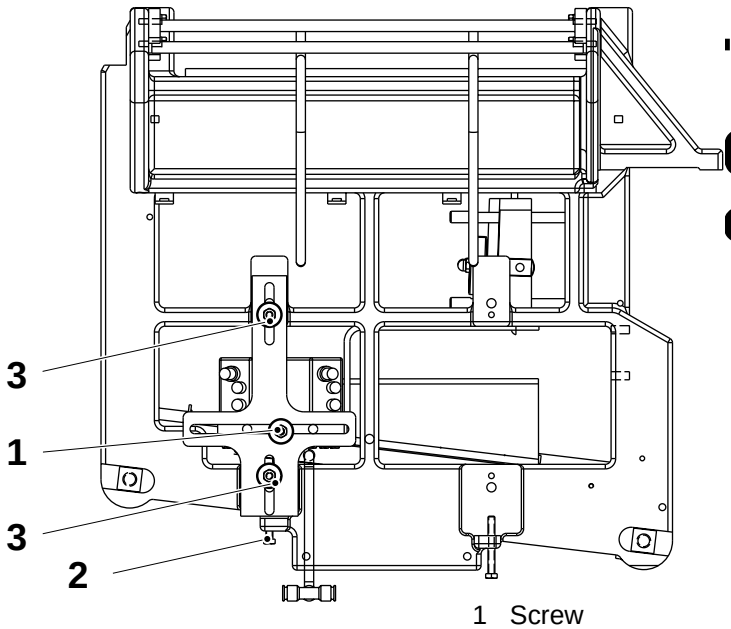

1 Screw
2 Screw
3 Screw
4 Bracket
5 Bracket
6 Screw
7 Photocell

(Cont'd)

(Cont'd)

e) Adjust the position of the new photocell (A) or (B) so that the corners of the photocells touch each other.
This adjustment also focuses the photocell.

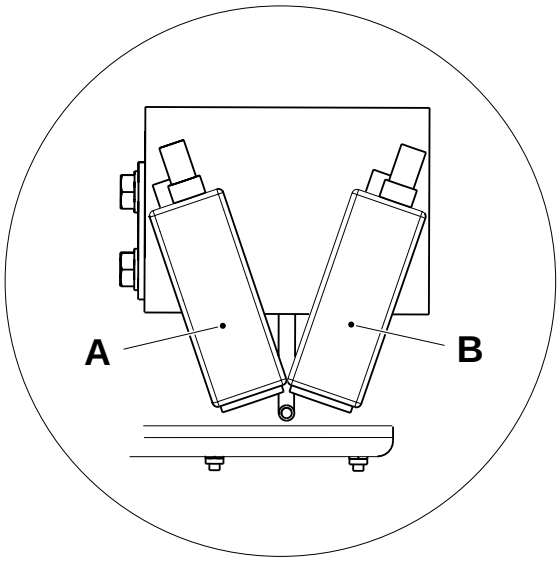

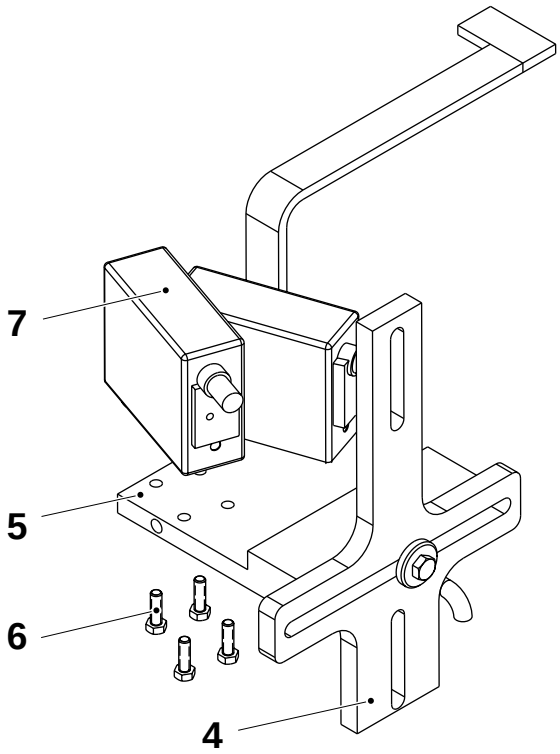

1 Screw
2 Screw
3 Screw
4 Bracket
5 Bracket
6 Screw
7 Photocell

f) Tighten the screws (6).

g) Fit the bracket (4) and align it as described in para. *8.3.4-5 Bracket - fitting bracket after photocell replacement*.

h) Conect the cable to the terminals in the electrical cabinet.

2.2B3024H01en.fm

8.3.4-4 Bracket - set photocells position

SPC reference	1095765-0200

Note! The position of the photocell bracket is set in the factory using the following procedure. If the bracket has to be removed to change a photocell, fit it again using the procedure described in para.

a) Loosen the screws (1) and set the distance **A** using the screw (2). Tighten the screws (1).

b) Loosen the screw (3) and move the cross shaped bracket (4) sideways until the guide (5) touches the web guide (6).

c) Tighten the screw (3).

Package	A (mm)
200 B	1.93
250B	1.93

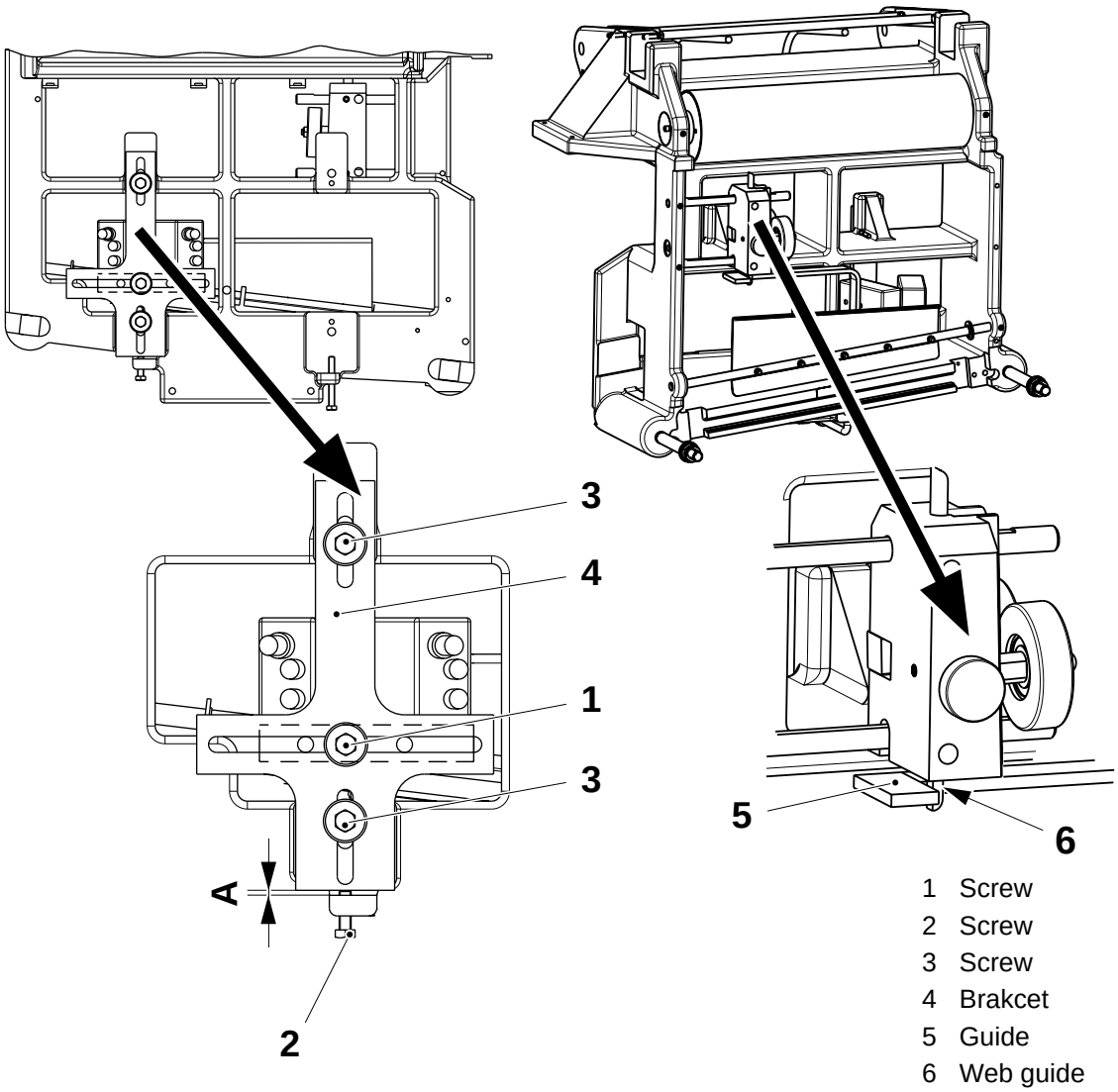

1 Screw
2 Screw
3 Screw
4 Brakcet
5 Guide
6 Web guide

8.3.4-5 Bracket - fitting bracket after photocell replacement

SPC reference	1095765-0200

Note! Do not loosen the screws (1 and 2) or the factory setting of the bracket will be lost.

a) Hold the bracket (4) in position and insert the screws (3). Do not tighten.

b) Move the photocell bracket (4) until the positioning guide (5) touches the web guide (6).

c) Tighten the screw (3).

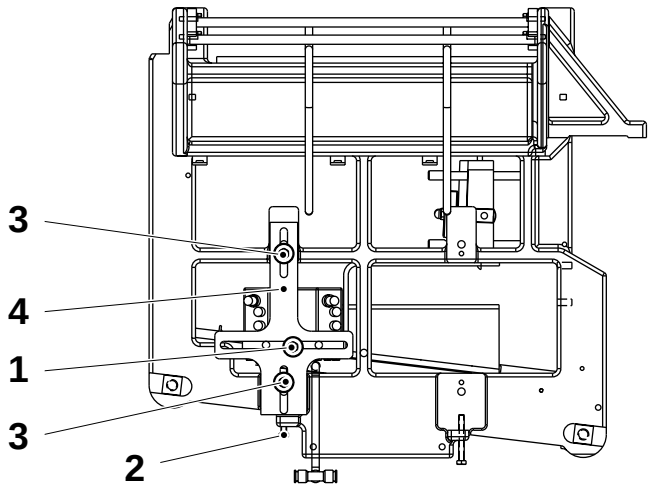

Rear side of the photocells bracket

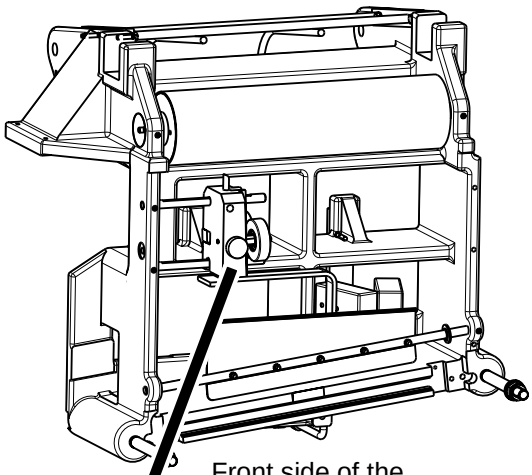

Front side of the photocells bracket

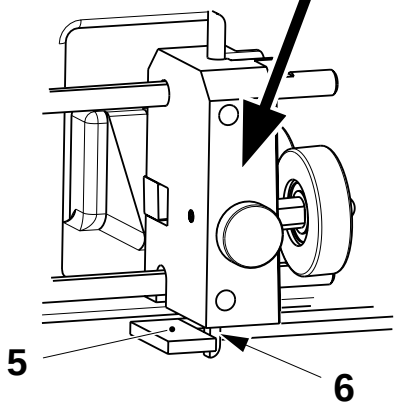

1 Screw
2 Screw
3 Screw
4 Bracket
5 Guide
6 Web guide

0-Series

2.2B3024H01en.fm

8.3.4-6 Bracket - set guide pin and guide plate

SPC reference	1095765-0200

Note! Do not loosen the screws (1 and 2) or the factory bracket setting will be lost.

a) Remove the screws (3) and pull out the cross shaped bracket (4) to gain access to the grub screw (5) in the photocell bracket (6).

b) Loosen the grub screw (5).

c) Pull the guide pin (7) out a little.

Note! The gap between the plate and bracket in the following step should be wide enough to allow a spliced web to pass (0.8 ± 0.1 mm)

d) Hold a 2 mm feeler gauge, or an object of that thickness, between the guide pin (7) and the plate (8).

e) Hold the cross shaped bracket (4) in position.
This will push the guide pin (7) back into the bracket (6).

f) Tighten the grub screw (5).

g) Align the cross shaped bracket (4) as described in para. *8.3.4-5 Bracket - fitting bracket after photocell replacement*.

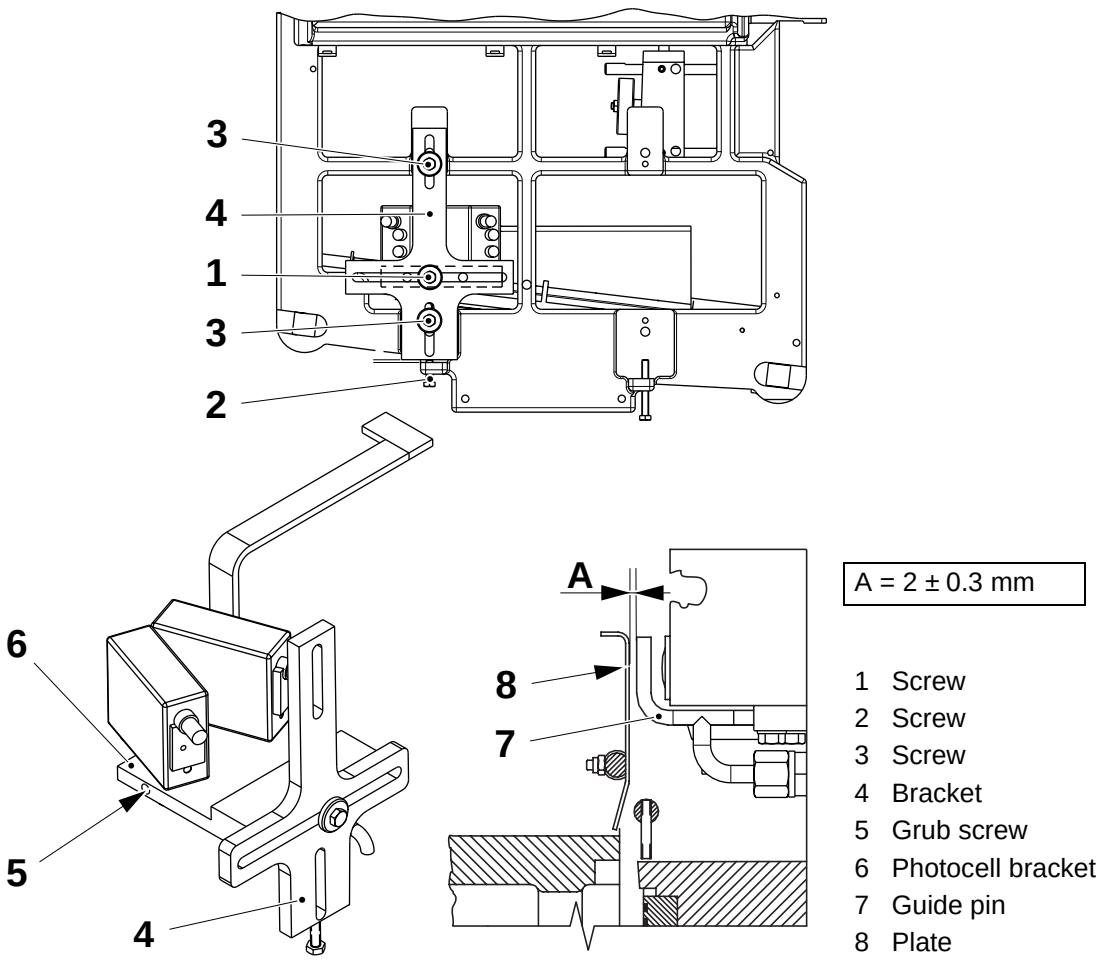

2.2B3024H01en.fm

0-Series

8.4 Material holder line 1 and line 2

SPC reference	1255867-0100 1255869-0100

8.4-1 Material holder line 1 and line 2 - check knife and guide

SPC reference	1255867-0100 1255869-0100



WARNING!

Check the cutting of the knife (2). Change the knife as required.

Check that the guide (1) slides easily. Clean the guide and the shafts as required.

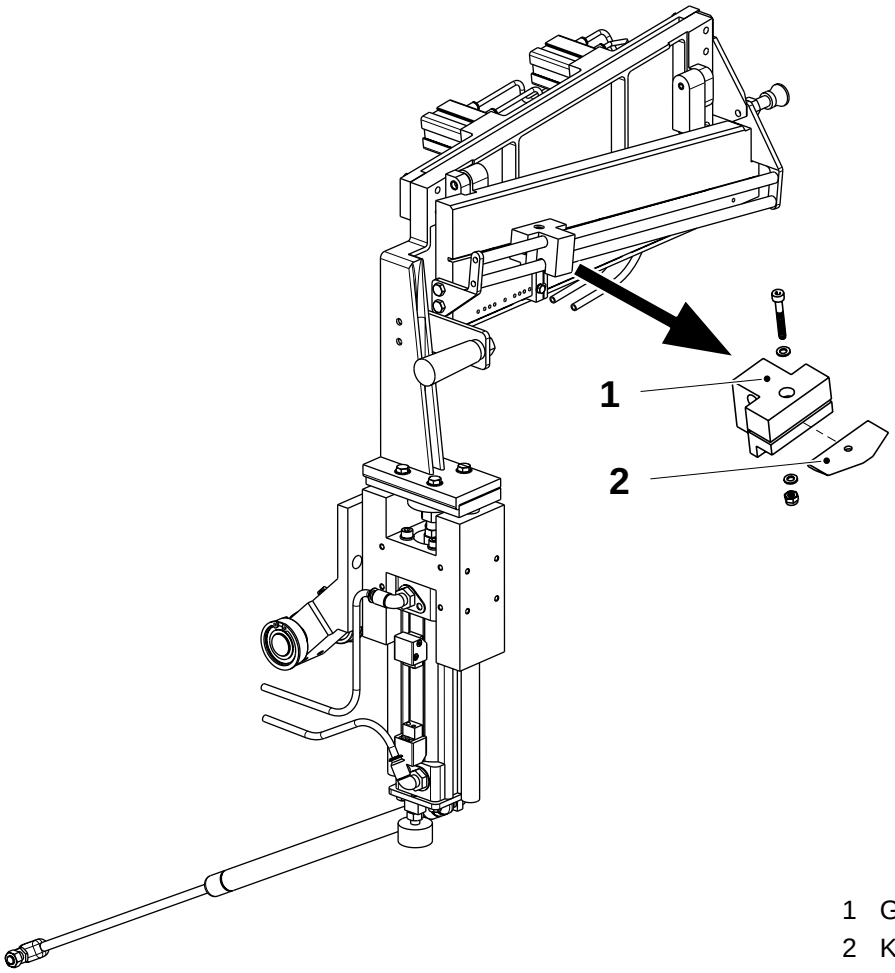

1 Guide
2 Knife

0-Series

2.2B3024H01en.fm

8.4-2 Material holder line 1 and line 2 - check

SPC reference	1255867-0100 1255869-0100

a) Remove the screws (1).

b) Check that the cylinder (2) piston slides freely.

c) Check that the springs (4) are not damaged.

d) Check that the lock studs (5) are not damaged.

e) Change as required and assemble in the reverse order.

f) Set the distance **A** between the lock stud (5) and the cylinder (2) by means of the nut (3).

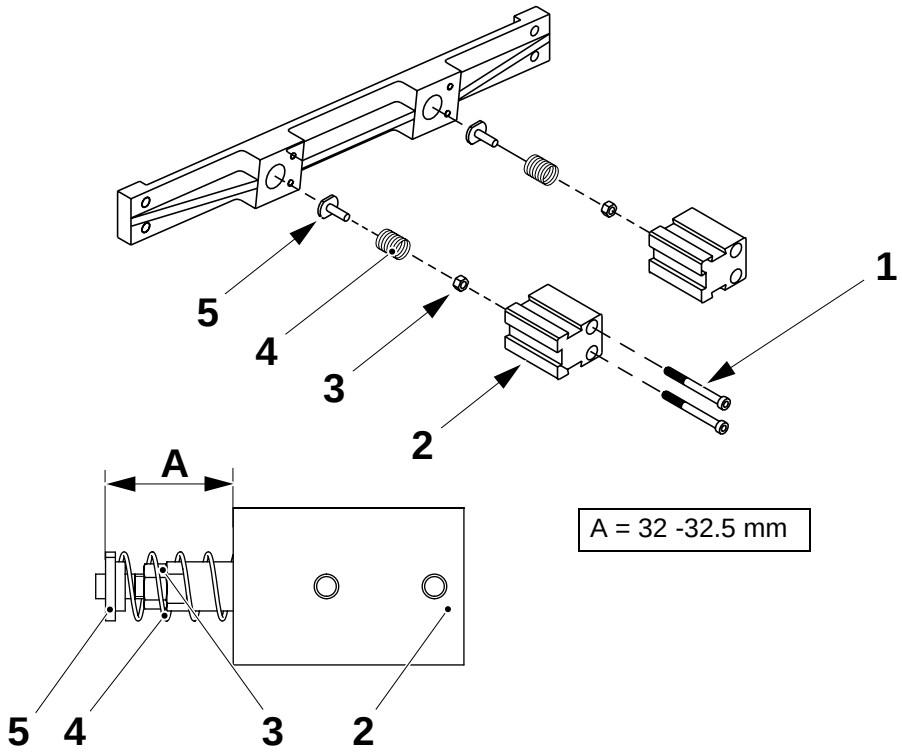

1 Screw
2 Cylinder
3 Nut
4 Spring
5 Lock stud

2.2B3024H01en.fm

0-Series

8.4-3 Material holder line1 and line 2 - set stop lug

SPC reference	1255867-0100 1255869-0100

On the two material holders, put the stop lug (1) in the correct position for the package volume to be produced. See the table below

Package	Stop lug (1) position
200 B	A
250 B	A

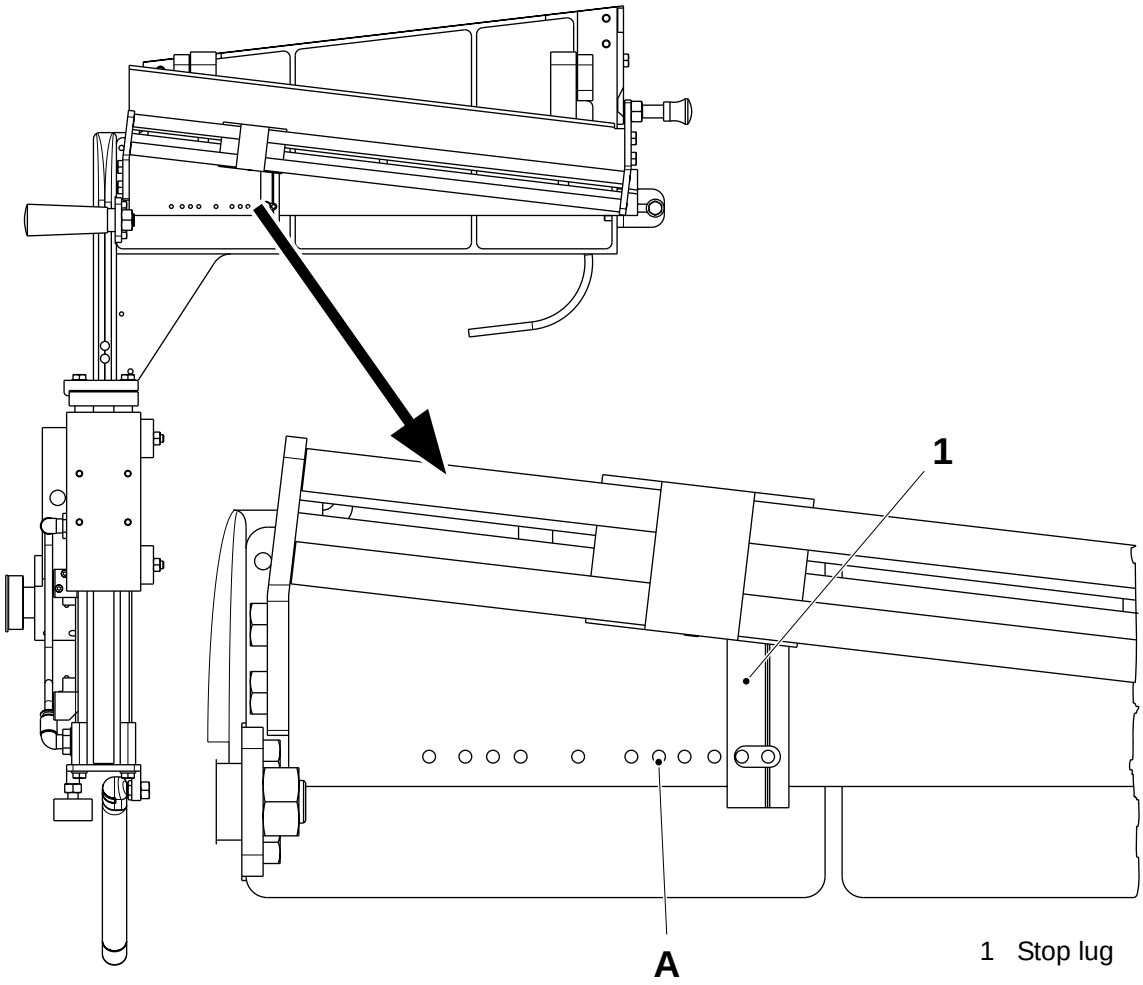

1 Stop lug

0-Series

2.2B3024H01en.fm

8.4-4 Material holder line 1 and line 2 - set table/ paper web parallelism

SPC reference	1255867-0100 1255869-0100

a) Set the splicing table (2) parallel to the bending roller (1) by loosening the screws (3) and turning the splicing table (2).

b) Tighten the screws (3).

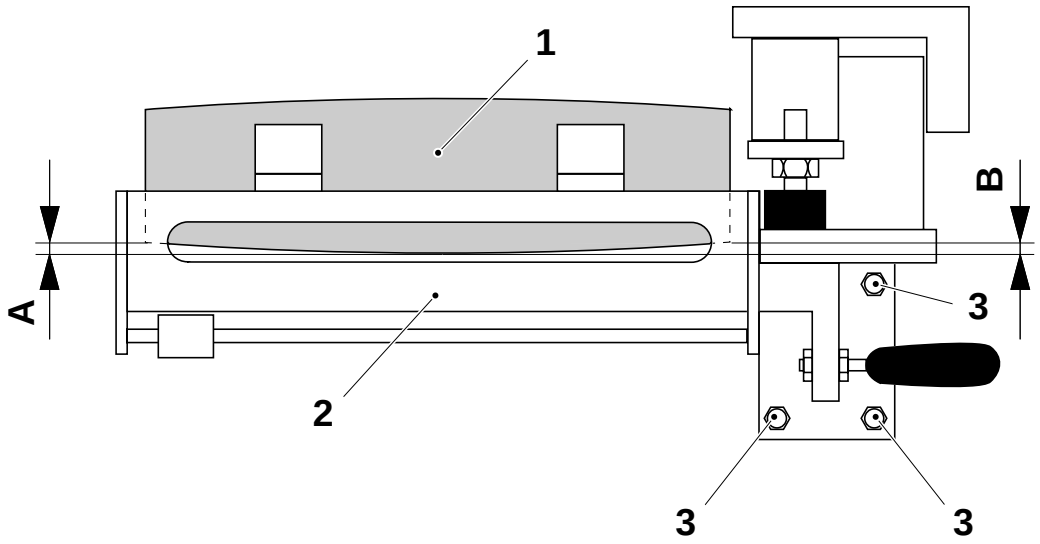

A = B

View from the top

1 Bending roller
2 Splicing table
3 Screw

2.2B3024H01en.fm

0-Series

8.4-5 Material holder line 1 and line 2 - set stop position

SPC reference	1255867-0100 1255869-0100

a) Set the material holder splicing table, see *8.4-4 Material holder line 1 and line 2 - set table/paper web parallelism*.

b) Set the distance **A** between the material holder slot (1) and the bending roller (2) by means of the dumper (3).

Note! Measure **A** must be performed approximately in middle of the roller (2).

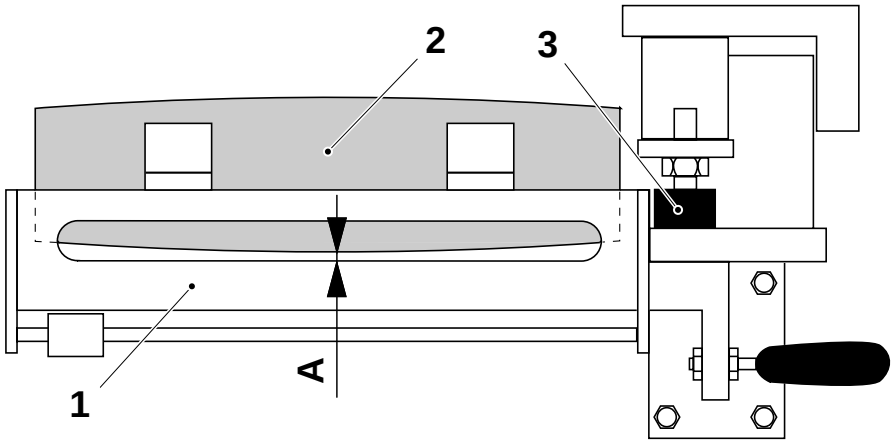

View from the top

A = 3 ±1 mm

1 Material holder slot
2 Bending roller
3 Dumper

2.2B3024H01en.fm

0-Series

8.4-6 Material holder line 1 and line 2 - set sealing parallelism

Machine status	Packaging material **threaded**
SPC reference	1255867-0100 1255869-0100

a) Perform a manual splice.

b) Cut the packaging material web approx. one meter before and one meter after the splice.

c) With the aid of a straight edge (1) check that the **new** packaging material web (2) diverges distance **A** in **1 meter** from the splice (3), see figure.

d) Lower the material holder and loosen the screws (4) and the nuts (7). Set the splicing table (5) by means of the screws (6) as required.

e) Tighten the screws (4) and repeat from item *a).*

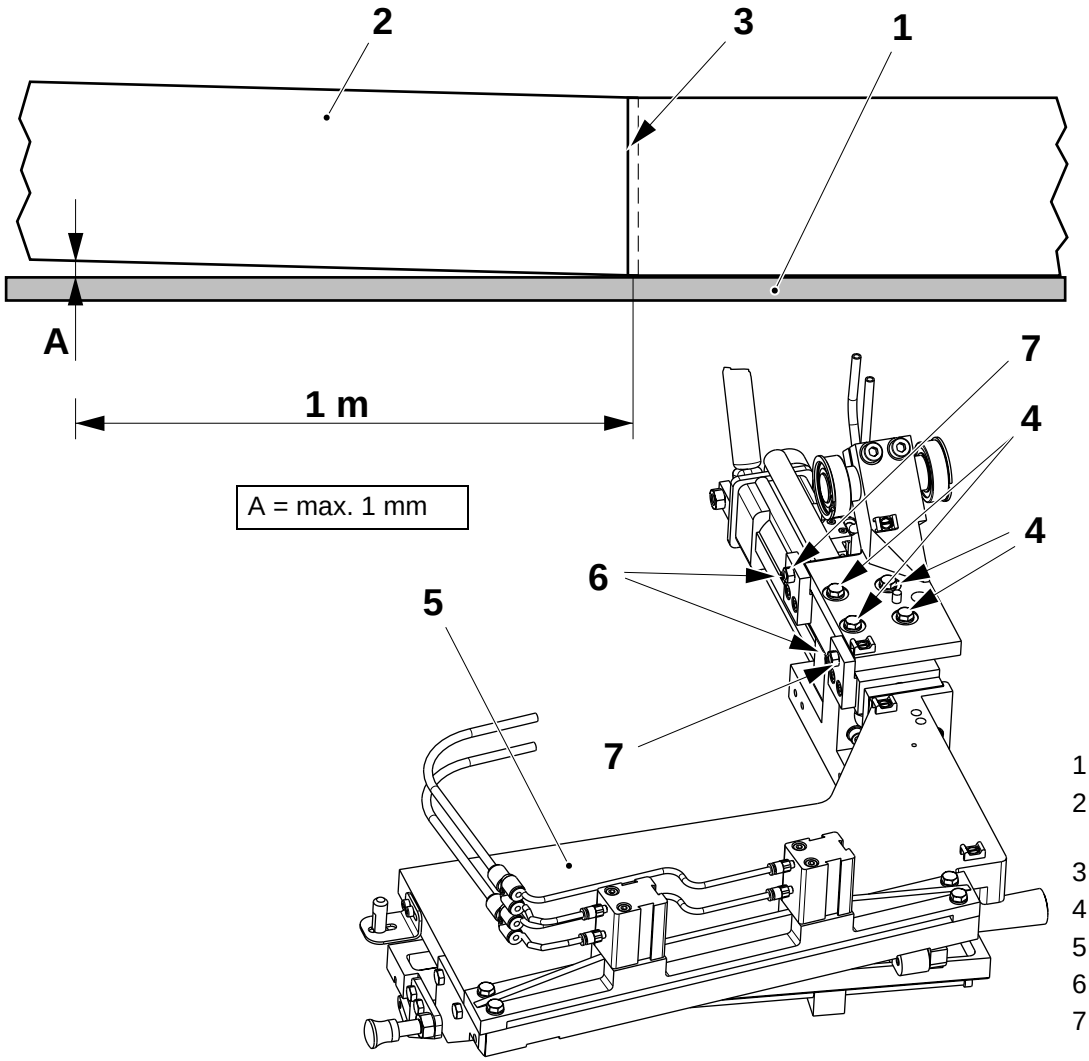

1 Edge
2 New packaging material
3 Splice
4 Screw
5 Splicing table
6 Screw
7 Nut

(Cont'd)

2.2B3024H01en.fm

(Cont'd)

f) Check that the pin (8) on the splicing table is moving freely, and is not touching the guide (9) at the top and at the bottom.

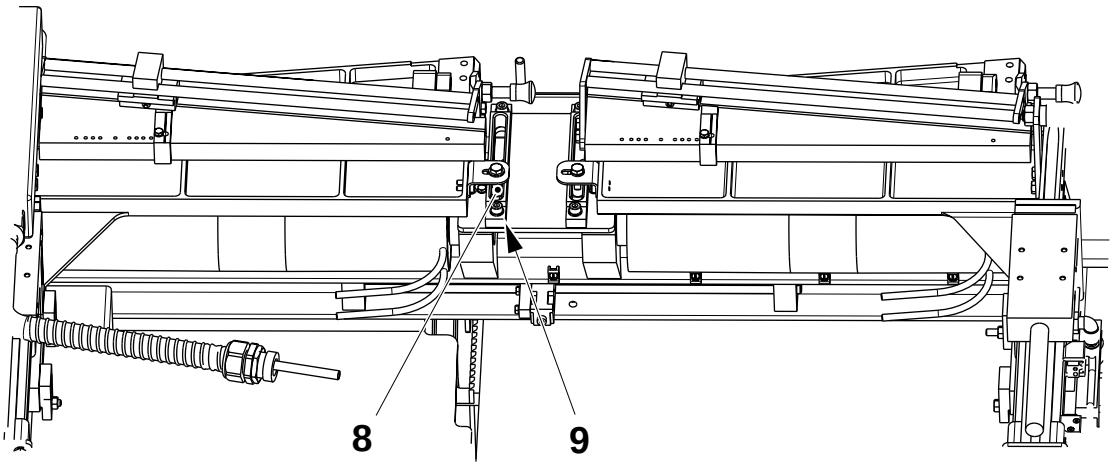

8 Pin
9 Guide

8.4-7 Material holder line 1 and line 2 - set sealing alignment

Tools - template	 TP No. 1260622
SPC reference	1255867-0100 1255869-0100

a) Set the parallelism on the material holders, see *8.4-6 Material holder line 1 and line 2 - set sealing parallelism*.

b) Set the web guide position, see *8.3-1 Splicing device - set web guide.*

c) Fit the stop lug according to the running volume, see *8.4-3 Material holder line1 and line 2 - set stop lug*.

d) Perform a manual splice and adjust the stop lug (1) position until the distance **A** is obtained.

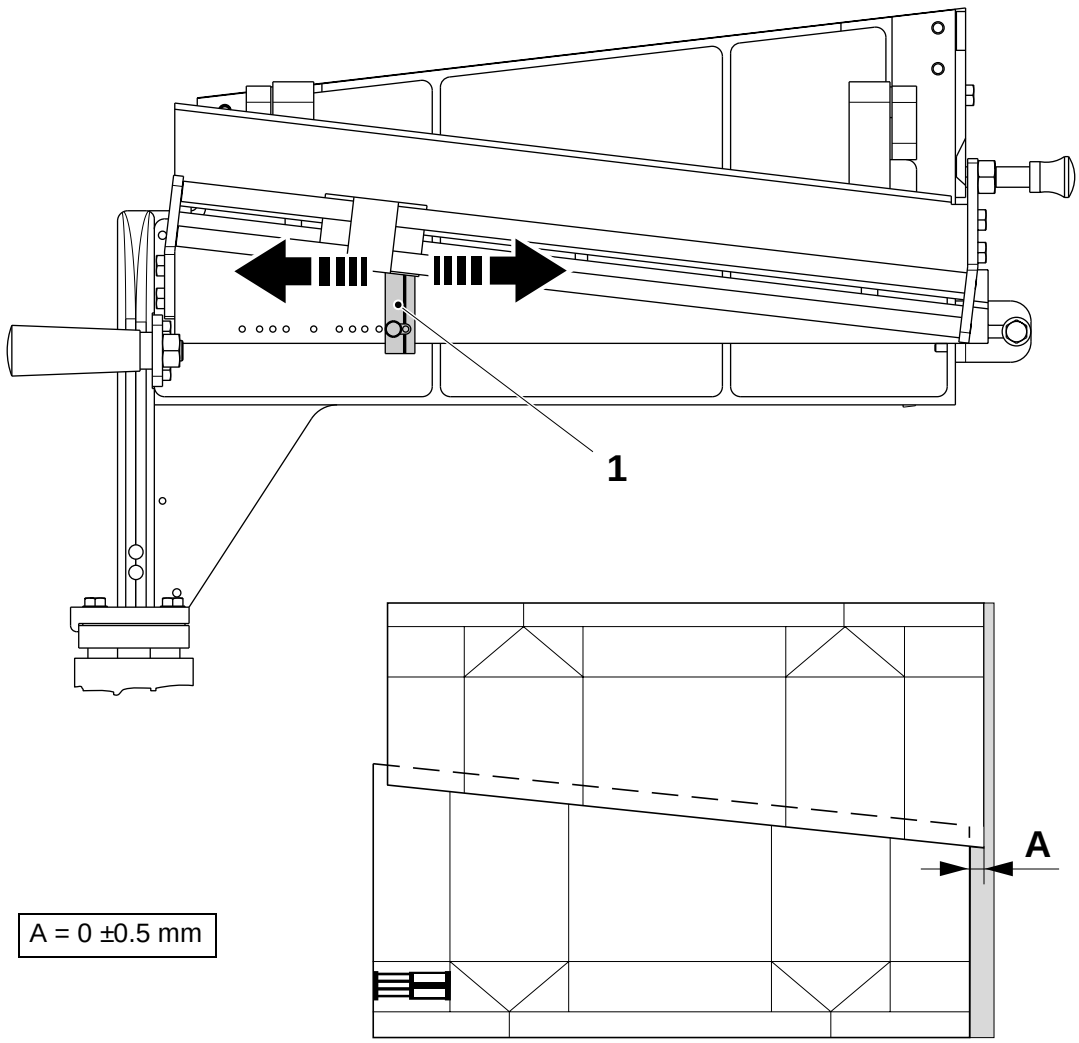

A = 0 ±0.5 mm

1 Stop lug

2.2B3024H01en.fm

0-Series

8.4-8 Material holder line 1 and line 2 - set overlap

Machine status	Packaging material **threaded**
SPC reference	1255867-0100 1255869-0100

a) Set the photocell position according to *8.3.4-3 Bracket - change photocell.*

b) Perform a manual splice.

c) Set the distance **A** between the manual cutting (1) and the splicing device cutting (2) by loosening the nut (3) and turning the piston rod (4). Tighten the nut (3).

Note! To increase the distance **A** move the material holder upwards.
One turn of the piston rod increase of **1.25 mm** the distance **A**.

d) Repeat on the other material holder (5).

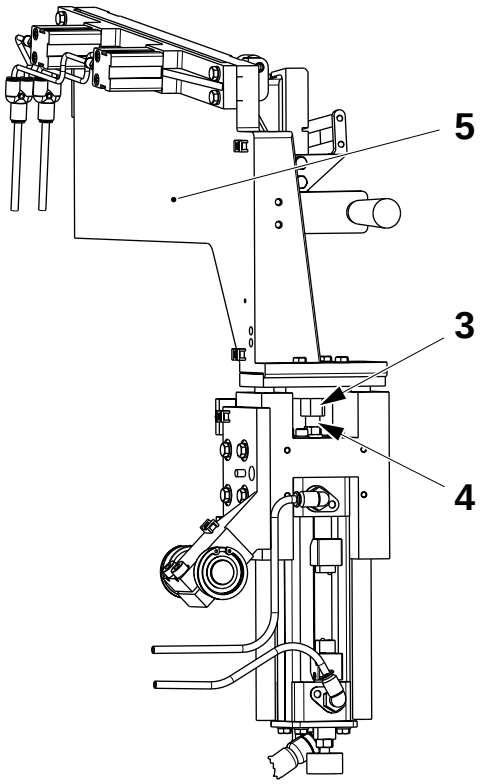

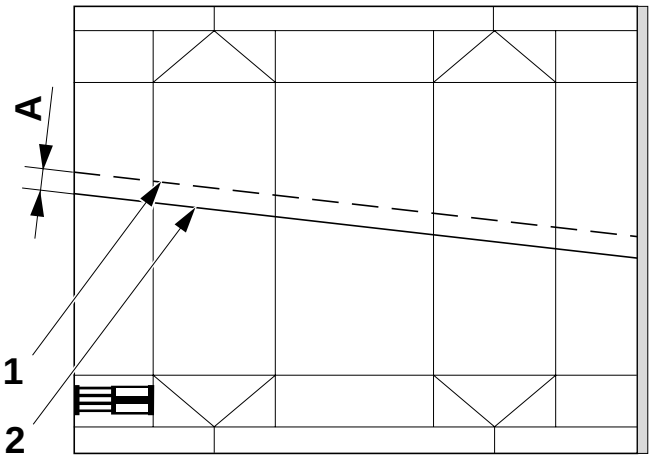

A = 11 ±1 mm

1 Manual cutting
2 Splicing device cutting
3 Nut
4 Piston rod
5 Material holder

2.2B3024H01en.fm

0-Series

8.5 Valve panel

SPC reference	1260235-0200

8.5-1 Valve panel - set valve pressure

SPC reference	1260235-0200

a) Remove the nut (1) from the screw (2).

b) Loosen or tighten the screw (2) to obtain the distance **A** between the end of the screw thread and the valve support (3).

c) Fit back the nut (1) on the screw (2).

Note! By tightening the screw (2) you delay the pressurizing time of the ASU.

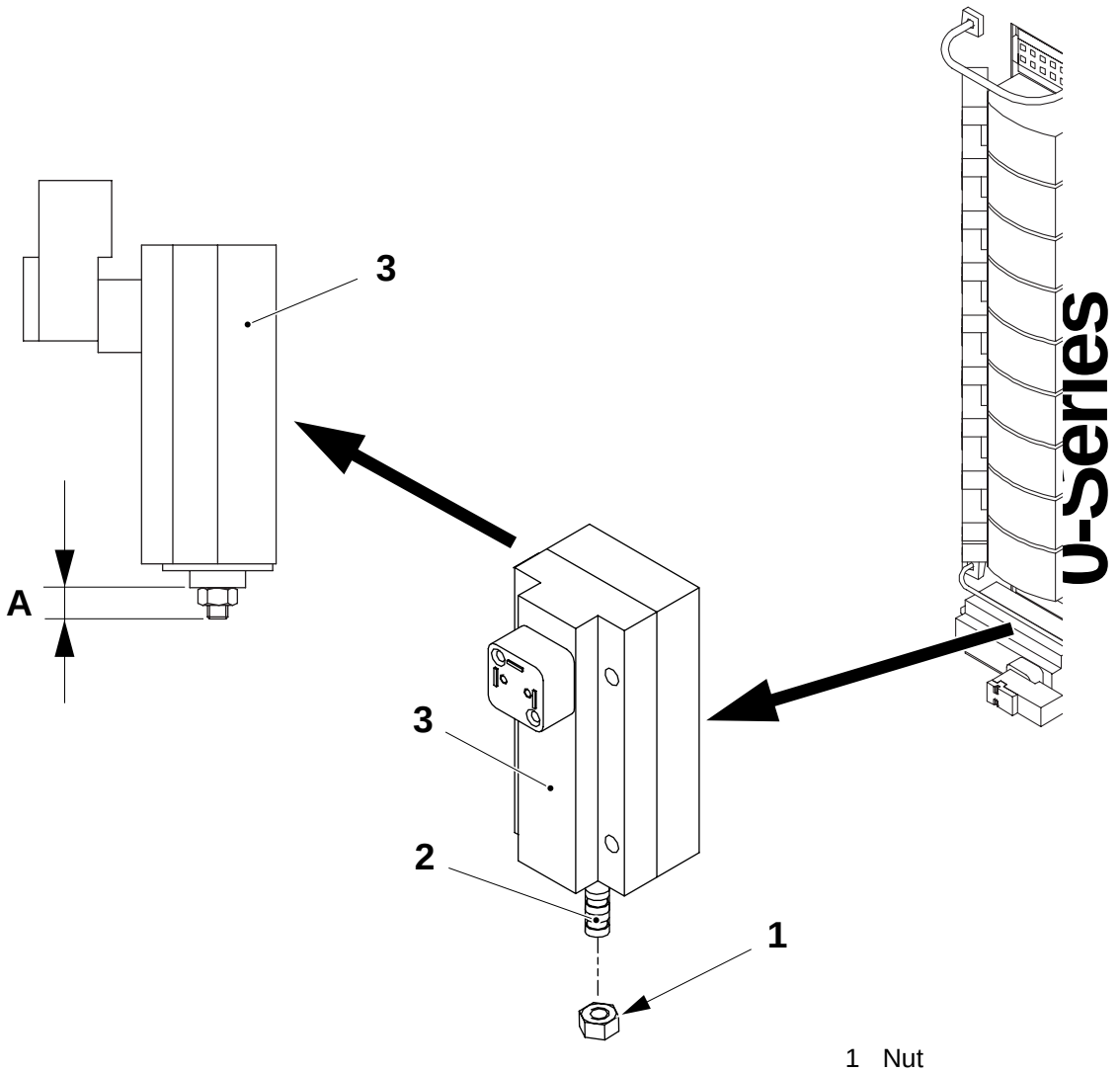

A = 9 ±1 mm

1 Nut
2 Screw
3 Valve support

2.2B3024H01en.fm

8.6 Reel trolley

SPC reference	1282762-0100

8.6-1 Reel trolley - check

SPC reference	1282762-0100

a) Press the brake handle (1) and check that the brake releases. If not, see *8.6-8 Reel trolley - set brake.*

b) Check that all connections are oil free. Clean as required.

c) Pump up the lift arms to their highest position and check that the cylinder piston (3) is dry. Clean as required.

d) Put a packaging material reel in the trolley and pump until the reel lifts from the floor wait for 10 minutes. Make sure that the reel does not sink. Sinking can be caused by a broken pump cylinder (2). Change as required, see *8.6-2 Reel trolley - change pump cylinder*.

e) Pump up again until the reel lifts from the floor and let it down. If the lifts go down very fast, set the regulating valve (4), see *8.6-3 Reel trolley - set regulating valve*.

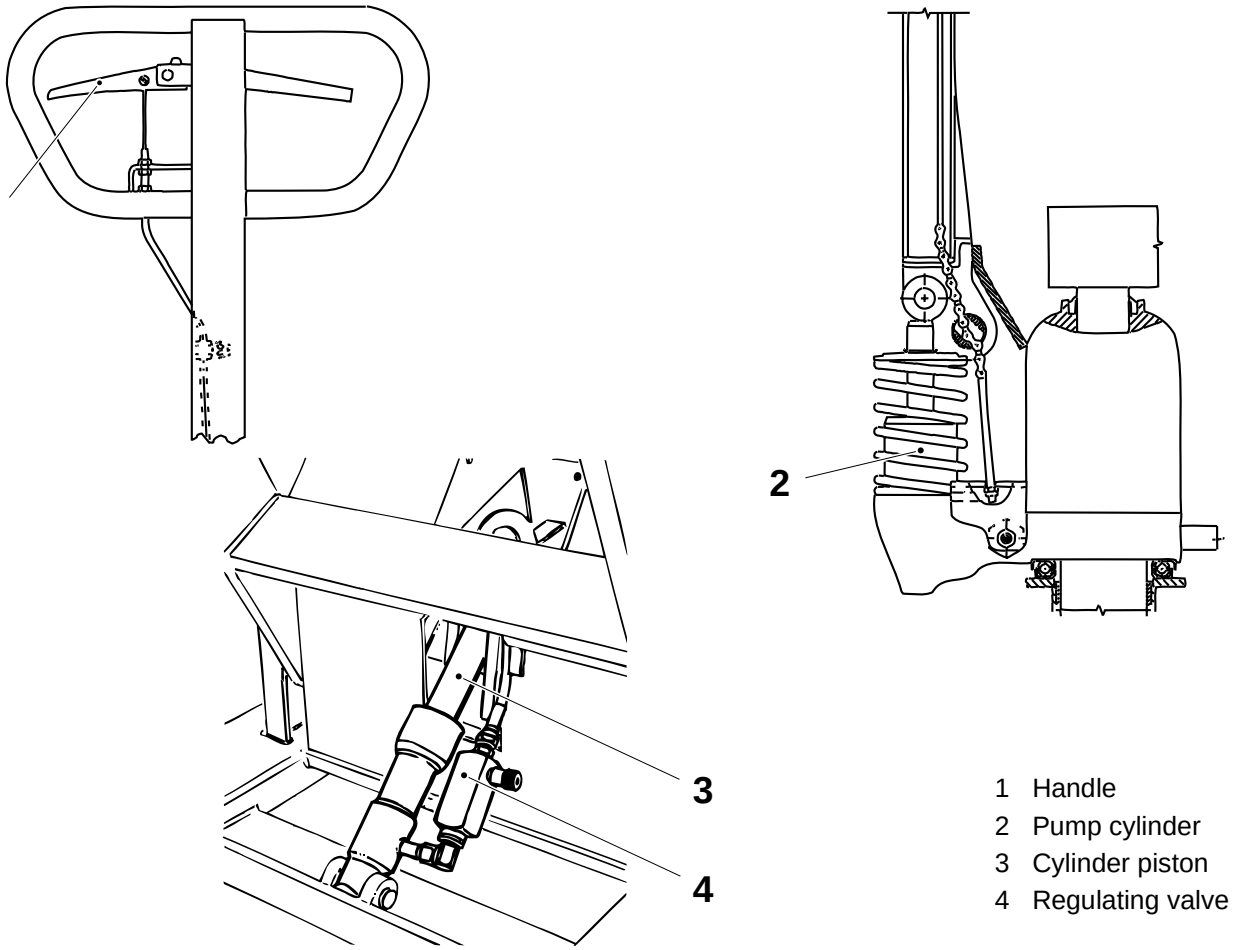

1 Handle
2 Pump cylinder
3 Cylinder piston
4 Regulating valve

0-Series

2.2B3024H01en.fm

8.6-2 Reel trolley - change pump cylinder

Consumables - lubricant	code C
SPC reference	1282762-0100

Tie rod

a) Release the chain (1) from the valve arm (2).

b) Unscrew the screw (3) to the axle pin (4).

c) Turn the axle pin (4) a bit clockwise and pull out the chain (1).

d) Pull out the axle pin (4) and remove the tie rod (5).

Pump cylinder

a) Remove the retaining ring (6), the washer (7) and the spring (8).

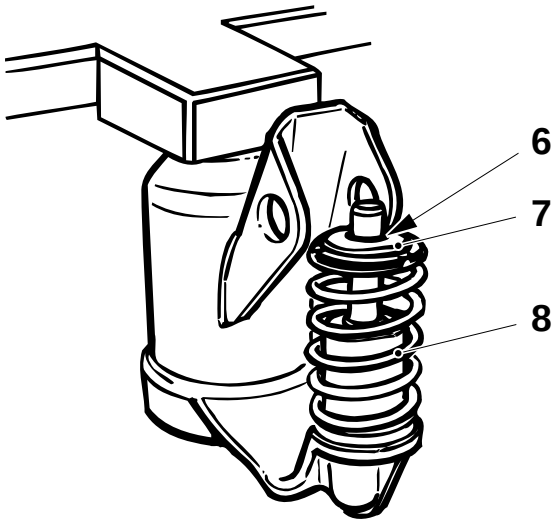

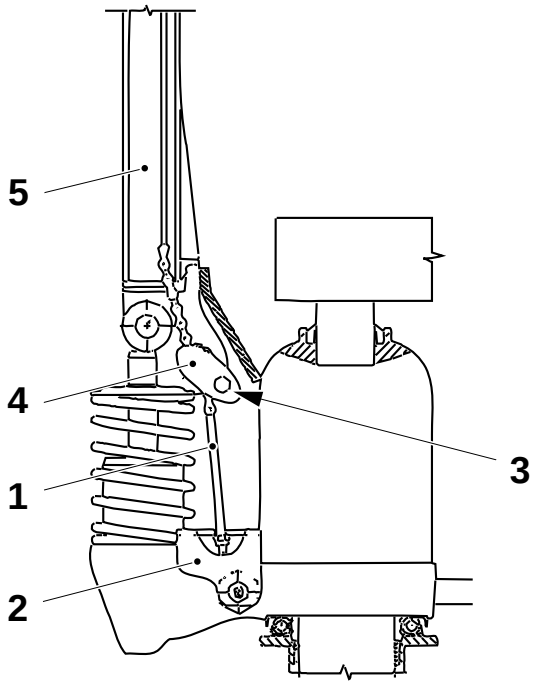

1 Chain
2 Valve arm
3 Screw
4 Axle pin
5 Tie rod
6 Retaining ring
7 Washer
8 Spring

(Cont'd)

2.2B3024H01en.fm

(Cont'd)

b) Unscrew the cylinder (9) and pull the axle (10) in the arrow direction.

c) Remove the oil seal (11), the retaining ring (12), the spacer (13) and the seal (14).

d) Change the oil seal (11) and the seal (14).

e) Assemble in the reverse order. Put the lifting arms in lowered position. If required undo the plug (15) and fill up with oil, code C, see *10.3-1 Lubricants*.

f) Fill up until oil starts to flow out of the hole.

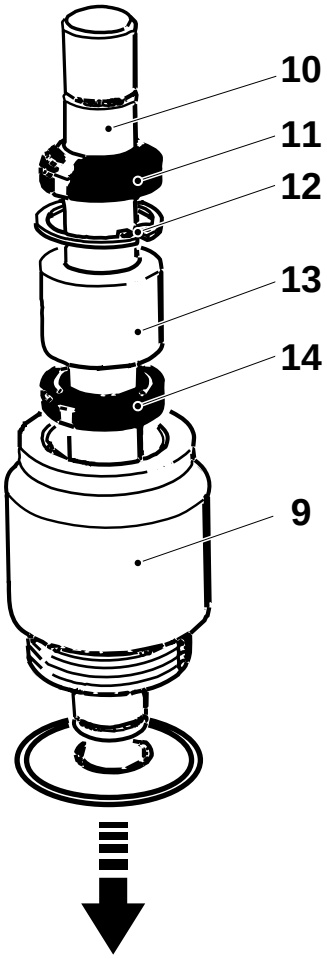

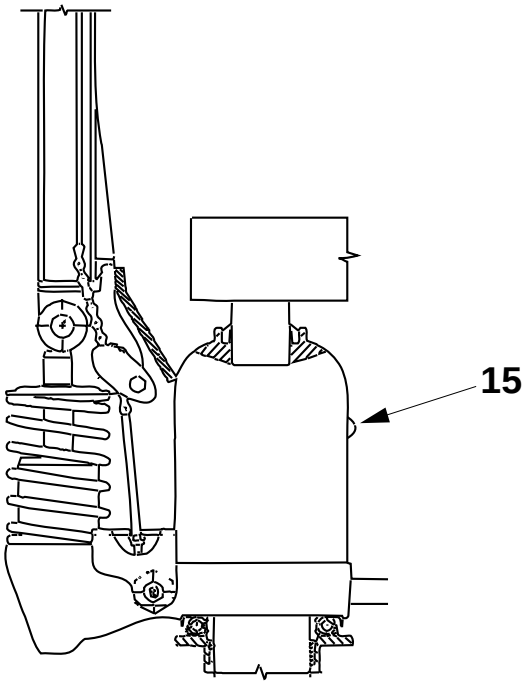

9 Cylinder
10 Axle
11 Oil seal
12 Retaining ring
13 Spacer
14 Seal
15 Oil plug

0-Series

2.2B3024H01en.fm

8.6-3 Reel trolley - set regulating valve

SPC reference	1282762-0100

a) Pump with the handle (2) until the lift arms (3) are in their highest position.

b) Press in the sink handle (1) to sink the lift arms (3). Set the knob (4) so that the lift arms reach the lowest position in **8 - 9 seconds**.

c) If it is not possible to set the lift arms sink time, change the sink valve, see *8.6-4 Reel trolley - change sink valve*.

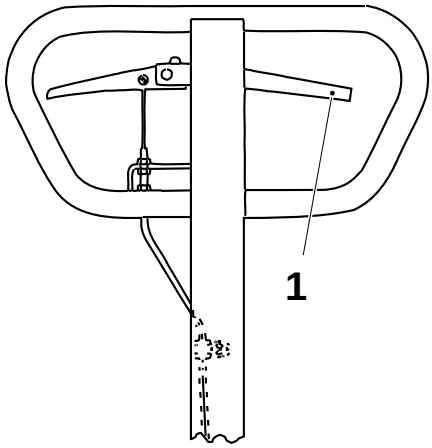

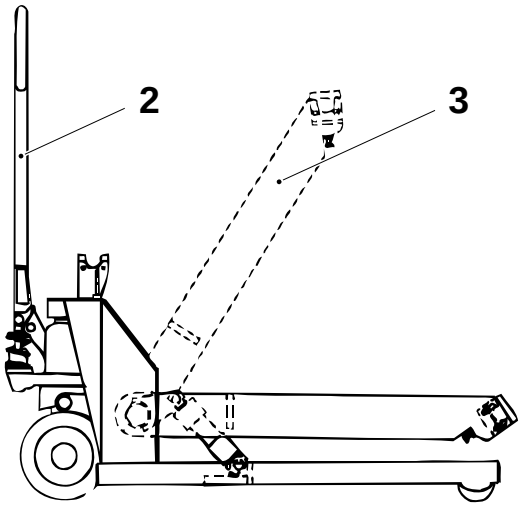

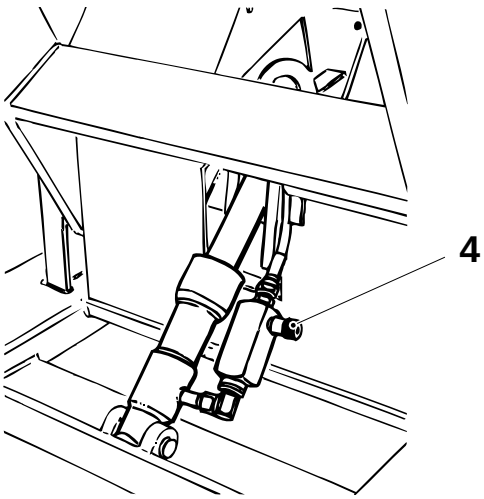

1 Sink handle
2 Handle
3 Lift arms
4 Knob

2.2B3024H01en.fm

8.6-4 Reel trolley - change sink valve

Consumables - lubricant	code C
SPC reference	1282762-0100

a) Release the chain (1) and drive out the slotted turf (2). Remove the valve arm (3).

b) Unscrew the sink valve (4).

c) Change the O-rings (5), the copper washer (6) and the teflon washer (7).

d) Assemble in the reverse order.

e) Pump up the lifter arms to their highest position.

f) Unscrew the setting screw (8) in the valve arm. Press in the handle and at the same time screw in the screw (8) until the lifting arms start to sink, secure the screw with the lock nut.

g) Put the lifting arms in lowered position. If required undo the plug (9) and fill up with oil, code C, see *10.3-1 Lubricants*. Fill up until oil starts to flow out of the hole.

h) Set the sink time, see *8.6-3 Reel trolley - set regulating valve*.

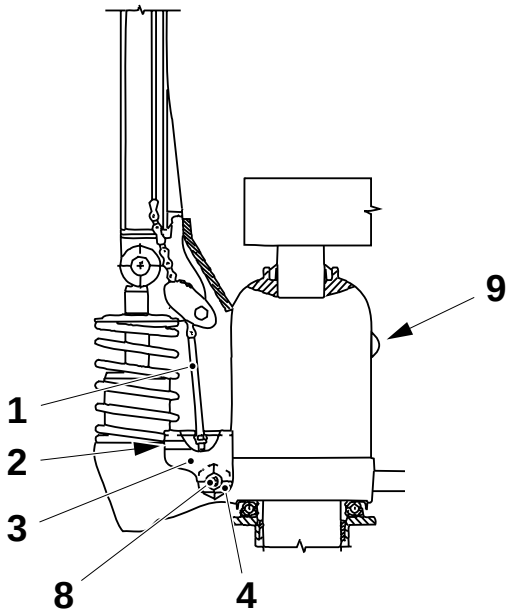

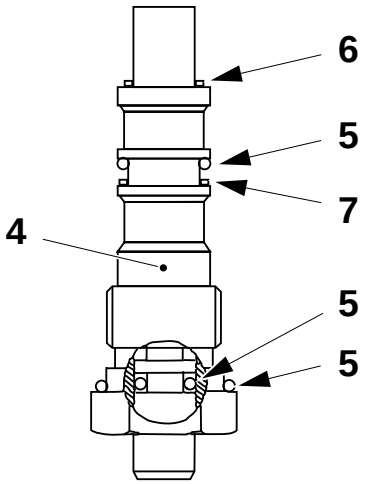

1 Chain
2 Slotted turf
3 Valve arm
4 Sink valve
5 O-ring
6 Copper washer
7 Teflon washer
8 Setting screw
9 Oil plug

0-Series

2.2B3024H01en.fm

8.6-5 Reel trolley - overhaul lifting cylinder

Consumables - lubricant	code C
SPC reference	1282762-0100

a) Undo the oil connection (1).

b) Drive in the slotted turfs (2) until they stop.

c) Drive out the axles (3).

d) Pull out the cylinder piston (4).

e) Change the seal (5).

f) Remove the retaining ring (6) and the spacer (7).

g) Change the seal (8).

h) Assemble in the reverse order and fill up through the plug (9) with oil, code C, see *10.3-1 Lubricants*.

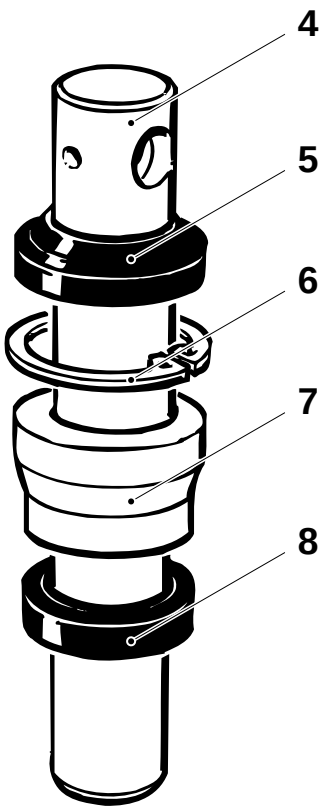

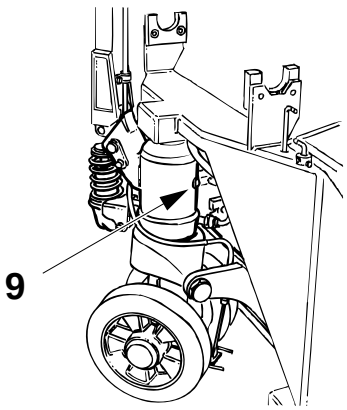

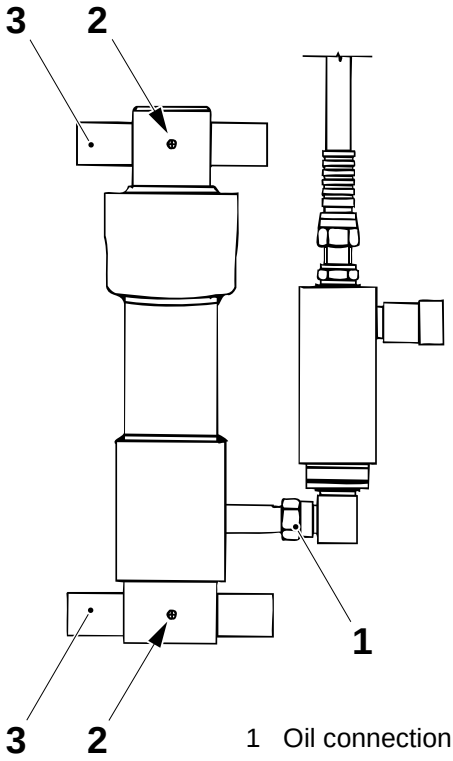

1 Oil connection
2 Slotted turf
3 Axle
4 Cylinder piston
5 Seal
6 Retaining ring
7 Spacer
8 Seal
9 Oil plug

2.2B3024H01en.fm

8.6-6 Reel trolley - remove fork wheel

SPC reference	1282762-0100

a) Put the trolley on its side.

b) Drive the pins (1) in to the axle (2) and pull out the axle.

c) Remove the wheel (3) and the sleeves (4).

d) Assemble in the reverse order.

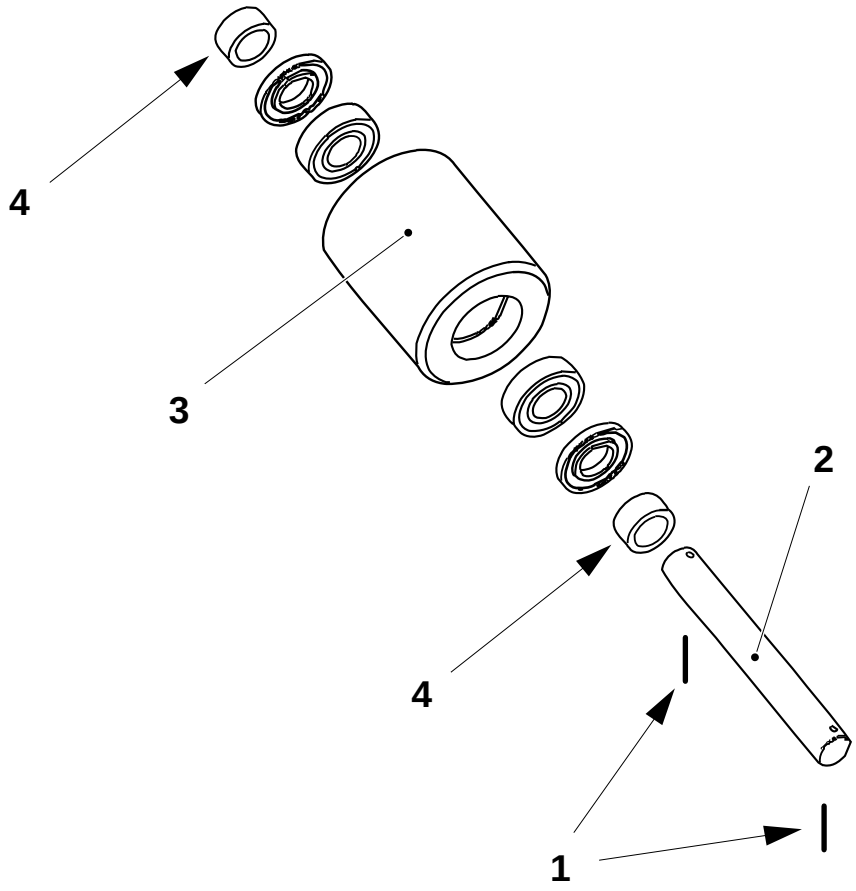

1 Pin
2 Axle
3 Wheel
4 Sleeve

0-Series

2.2B3024H01en.fm

8.6-7 Reel trolley - remove guide wheel

SPC reference	1282762-0100

a) Put the trolley on its side.

b) Remove the plastic plug (1), the retaining ring (2) and the wheel (3).

c) Release the torsion spring (4).

d) Remove the springs (5) holding the two break linings (6) together.

e) Assemble in the reverse order.

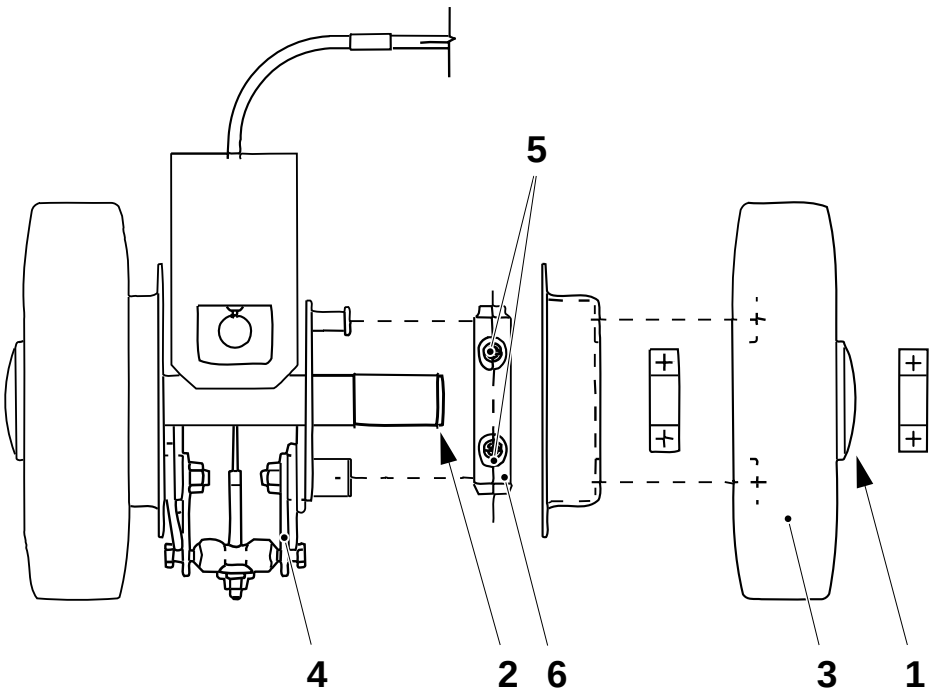

1 Plastic plug
2 Retaining ring
3 Wheel
4 Torsion spring
5 Spring
6 Brake lining

2.2B3024H01en.fm

8.6-8 Reel trolley - set brake

SPC reference	1282762-0100

a) Press in the brake handle to distance **A**.

b) Adjust the nuts (1) and (2) until the brake releases.

A = 35 ±5.0 mm

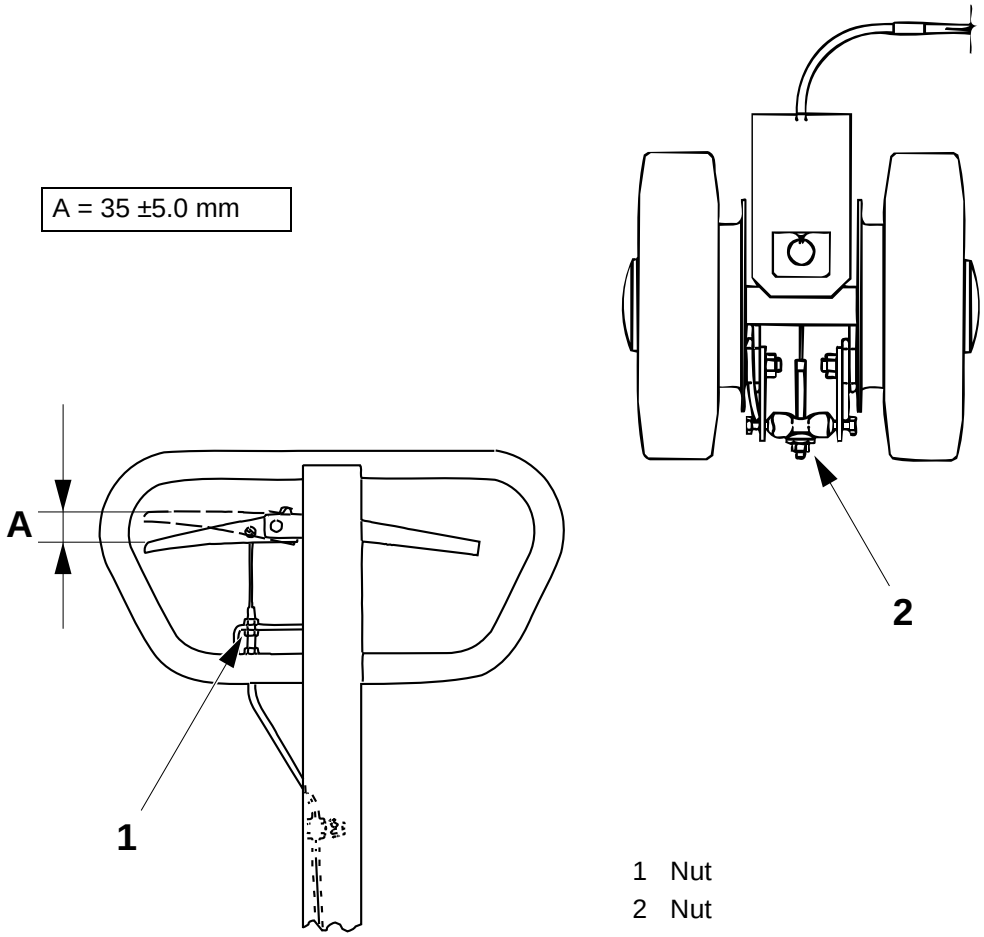

1 Nut
2 Nut

0-Series

2.2B3024H01en.fm

9 Electrical cabinet

This chapter has been moved to the EM

2.2B3024J01en.fm

10 General

2.2B3024Y01en.fm

10-1 General - description

SPC reference	648570-0500

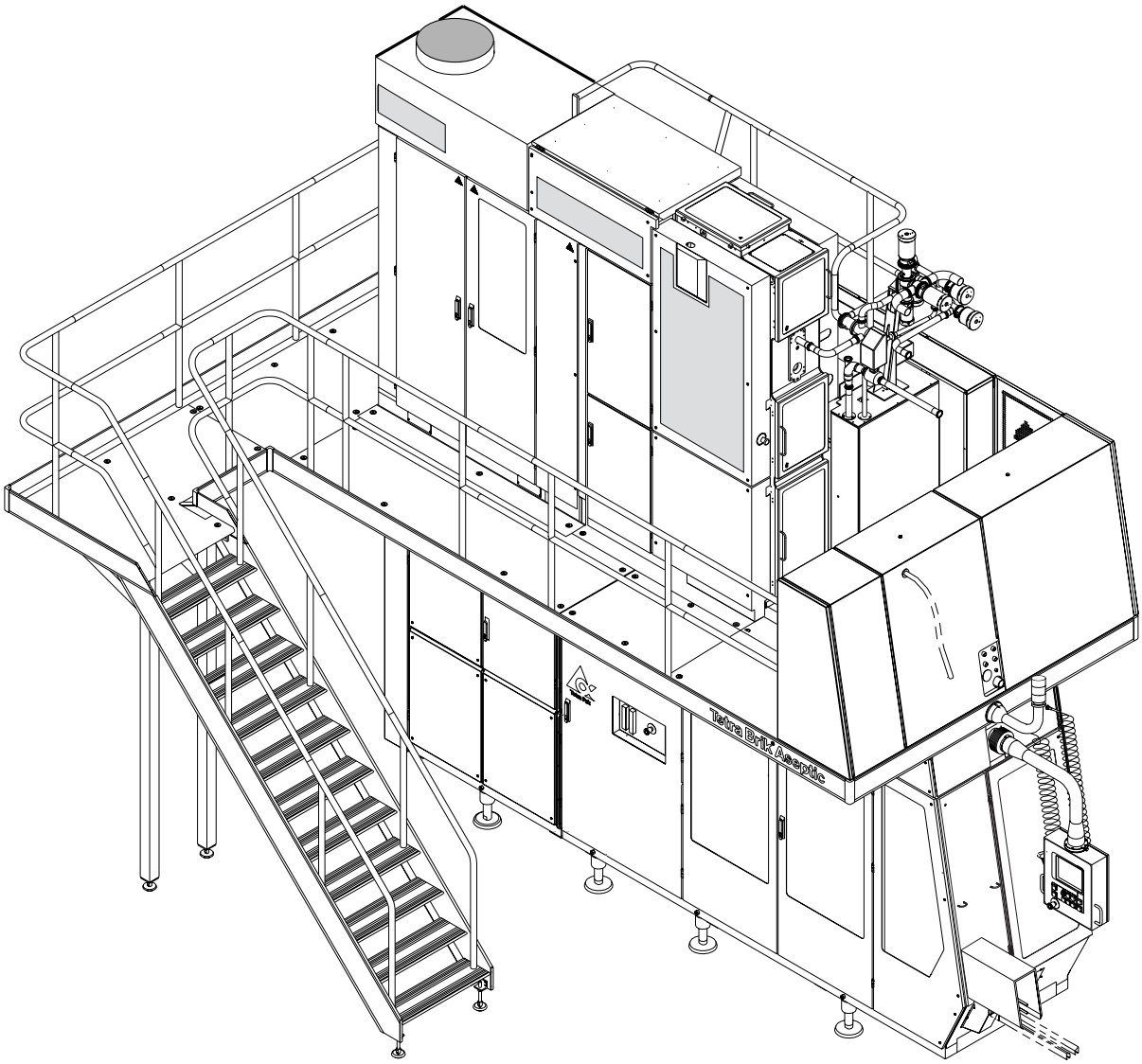

0-Series

2.2B3024Y01en.fm

10.1 Technical data
10.2 Templates and tools
10.3 Consumables

10.1 Technical data

Pressures	Unit	Value
Top flap sealing	kPa (bar)	150 - 250 (1.5 - 2.5)
Bottom flap sealing	kPa (bar)	150 - 250 (1.5 - 2.5)
Flap blowing	kPa (bar)	300 - 500 (3.0 - 5.0)
Air-spray	kPa (bar)	300 (3.0)
Peroxide tank filling	kPa (bar)	20 (0.2)
Photocells, design correction, air blast	kPa (bar)	30 (0.3)
Pendulum roller	kPa (bar)	120 (1.2)
Calendar roller	kPa (bar)	250 (2.5)
Cooling water system	kPa (bar)	200 (2.0)
Sterile air system (water separator)	kPa (bar)	20 (0.20)
Foaming	kPa (bar)	500 (5.0)
Cleaning pump	kPa (bar)	400 (4.0)
Water circulation - peroxide (Cold machine during startup)	kPa (bar)	min. 70 (0.7)
Air	kPa (bar)	500 - 600 (5 - 6)
Warm water	kPa (bar)	300 - 450 (3 - 4.5)
Cold water	kPa (bar)	300 - 450 (3 - 4.5)
Steam	kPa (bar)	170 ±300 (1.7 ±0.3)
Product pressure, permitted variation during **Production**	kPa (bar)	160 ±40 (1.6 ±0.4)

Pressure switches	Unit	Value
Incoming air	kPa (bar)	450 (4.5)
Incoming cooling water	kPa (bar)	100 - 200 (1.0 - 2.0)
Sterile air	kPa (bar)	14 (0.14)
Incoming water alarm	kPa (bar)	200 (2.0)

Induction heating	Unit	Value
Induction heating, transversal sealing (left / right) * depending on packaging material type		See *OM*
Induction heating, longitudinal sealing * depending on packaging material type		See *OM*
Induction heating, strip applicator		See *OM*
Induction heating, automatic splicing unit * depending on packaging material type		See *OM*

(Cont'd)

2.2B3024Y01en.fm

(Cont'd)

Temperature	Unit	Value
Heat sterilization	°C	280
Peroxide bath	°C	min 68
Water bath	°C	max 90
Peroxide tank	°C	74
Top aseptic chamber	°C	95
Cooling water	°C	7 - 12
Cooler electrical cabinet	°C	28 - 34
Flap sealing air nozzles (top)	°C	450
Flap sealing air nozzles (bottom)	°C	450
Steam	°C	125
Air superheater	°C	360
Warm water (external cleaning)	°C	55 - 60

Incoming media	Unit	Value
Electric voltage	V	400 ±10%
Electric frequency	Hz	50 or 60* ±2%

Note! *60 Hz kit required.

2.2B3024Y01en.fm

Flows	Unit	Value
Cooling water, TS right	l/min.	2.0
Cooling water, TS left	l/min.	2.0
Cooling water, final folder	l/min.	2.0
Cooling water, DI circuit	l/min.	2.0
Cooling water, IH SA	l/min.	2.0
Cooling water, IH LS	l/min.	2.0
Tube flushing	l/min.	0.5
Conveyor flushing	l/min.	0.5

Miscellaneous	Unit	Value
Noise declaration	dB	see IM manual

Consumption	Unit	Value
Hydrogen peroxide (% w/w 35)	l/h	3.0 - 5.0
Detergent, external cleaning	l/cycle	1.2 (1.8*)

Note! * If **External cleaning, Superstructure** is also running.

10.2 Templates and tools

Fig.	Description
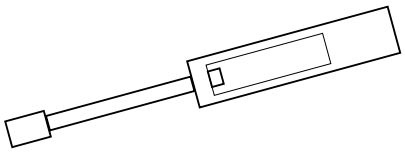	**Dynamometer** TP No. 74767-0102 *1 Superstructure* 4 Jaw system *5 Final folder module*
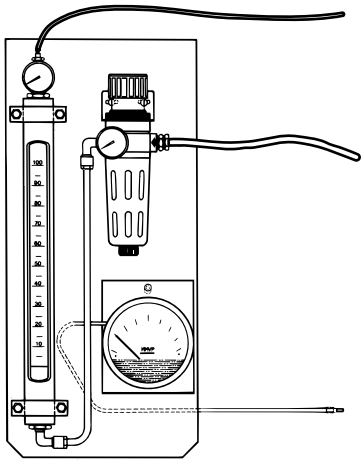	Test equipment TP No. 533014-0101 *1 Superstructure*
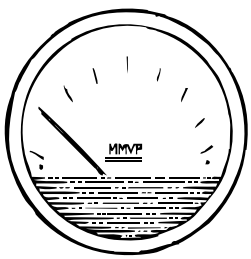	**Pressure gauge** TP No. 90243-0137 1 Superstructure
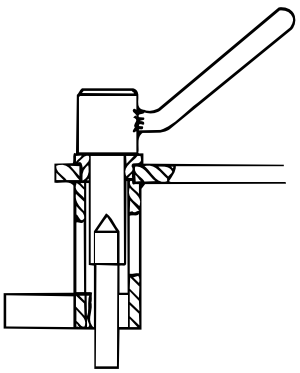	Tool TP No. 449969-101 *1 Superstructure*

2.2B3024Y01en.fm

0-Series

Fig.	Description
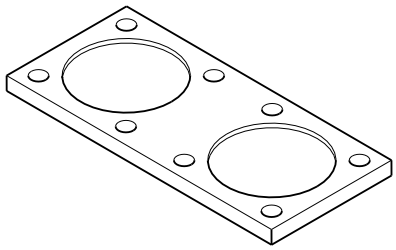	Heat exchanger bottom flange TP No. 1348263 *1 Superstructure*
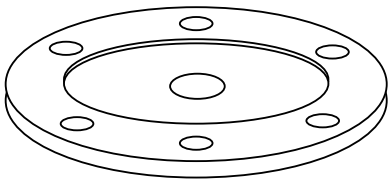	Heat exchanger top flange TP No. 979951 *1 Superstructure*
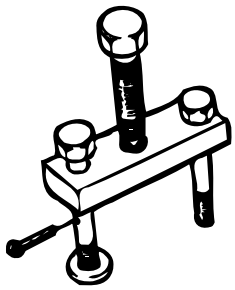	Extractor TP No. 74305-0101 *1 Superstructure*
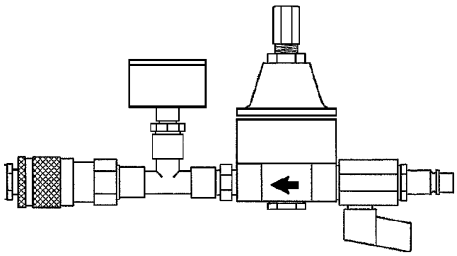	Hydrostatic test instrument TP No. 565536-0101 *1 Superstructure*
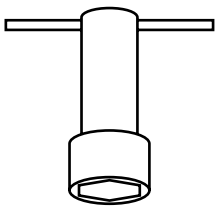	Socket wrench TP No. 90206-330 *1 Superstructure*

2.2B3024Y01en.fm

Fig.	Description
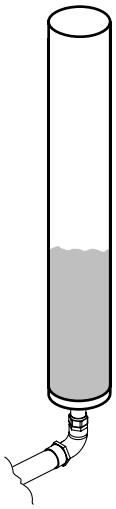	Template TP No. 1254449-1 *1 Superstructure*
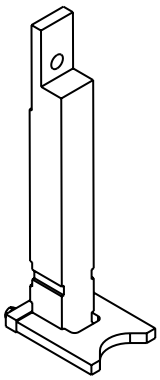	Filling tube alignment upper template TP No. 1498676-0100 *1 Superstructure*
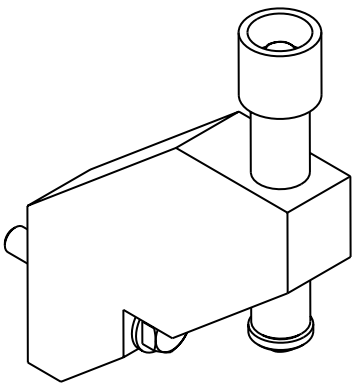	Filling tube alignment lower template TP No. 1498674-0100 *1 Superstructure*
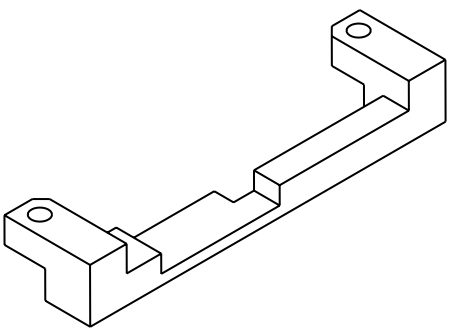	LS roller adjustment template TP No. 1498687 (200B and 250B) TP No. 1519639 (200M) *1 Superstructure*

Fig.	Description
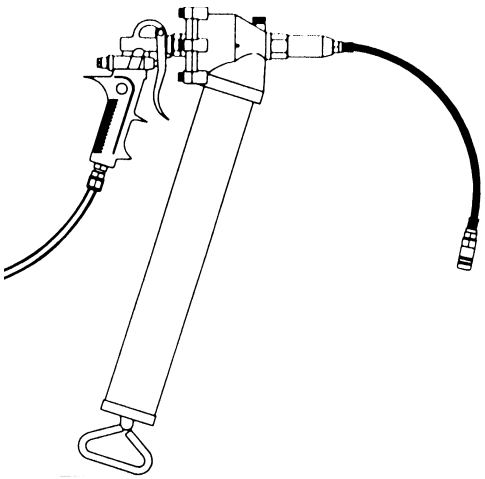	Pneumatic grease-gun TP No. 1512559 4 Jaw system
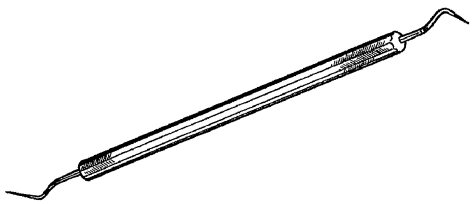	Tool TP No. 90243-0146 4 Jaw system
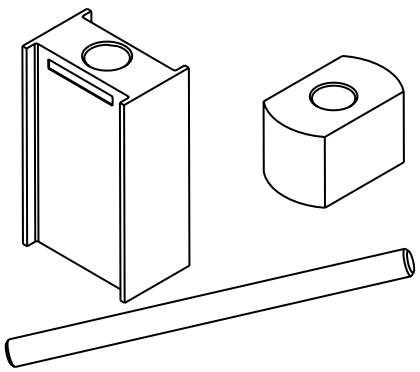	Support roller positioning template TP No. 1317849 TP No. 1317899 TP No. 1317900 *4 Jaw system*
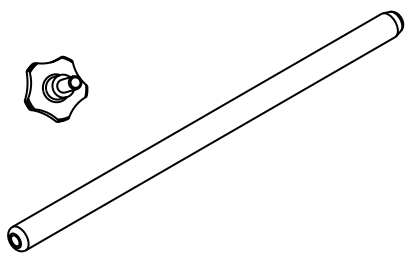	Knives synchronisation template TP No. 1317922 TP No. 90051-81 4 Jaw system

2.2B3024Y01en.fm

Fig.	Description
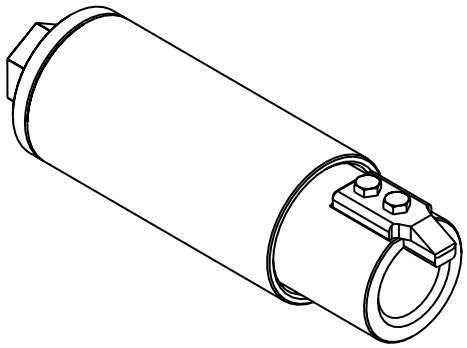	Jaw bearing extraction tool TP No. 1487215 *4 Jaw system*
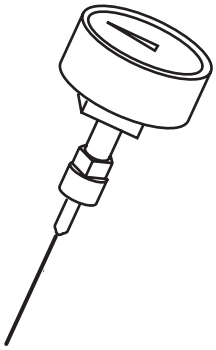	Needle pressure gauge TP No. 1478583-0100 *5 Final folder module*
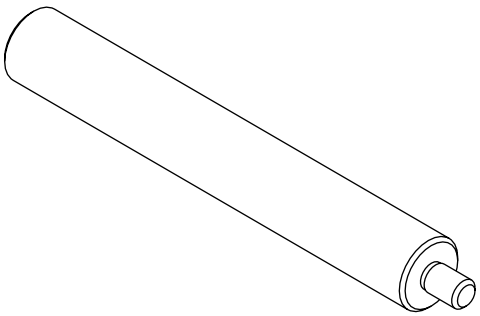	Template TP No. 1350716 *5 Final folder module*
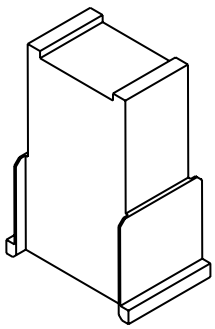	Heat applicator templates TP No. 1478644 (200B) TP No. 1296806 (250B) TP No. 1519199 (200M) *5 Final folder module*

Fig.	Description
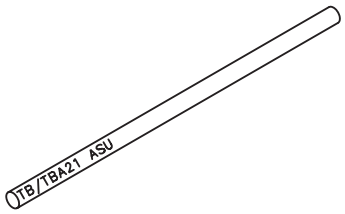	Tool TP No. 1038734 8 ASU
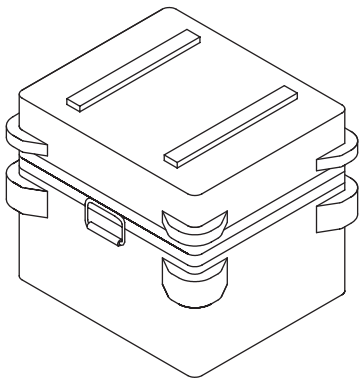	Calibration equipment TP No. 567732-0101 Electrical manual
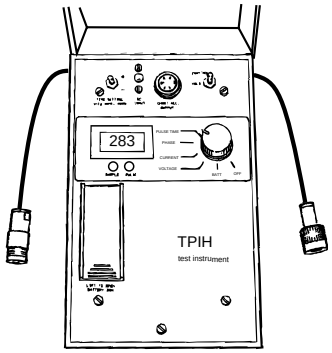	**Test instrument** TP No. 68462-0101 Electrical manual
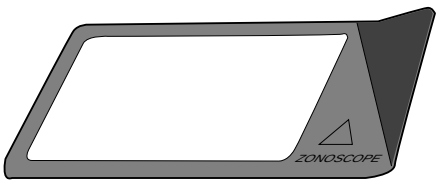	**Tool** TP No. 90243-203 Electrical manual

2.2B3024Y01en.fm

Fig.	Description
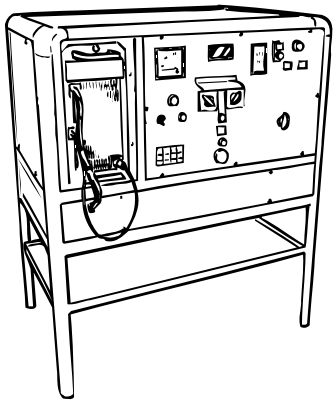	**Test instrument** TP No. 68466 Electrical manual
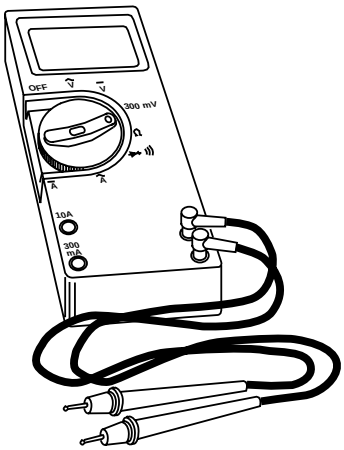	**Digital multimeter** TP No. 90220-078 Electrical manual
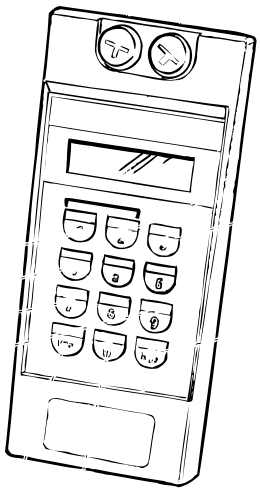	Calibration equipment Temperature calibrator (Micromite instrument) TP No. 90410-0338 Extension wire male 5m. (temp.controller) TP No. 90410-0308 Extension wire female 1m. (oven) TP No. 90410-0309 Label TP No. 90194-0113 Electrical manual

Fig.	Description
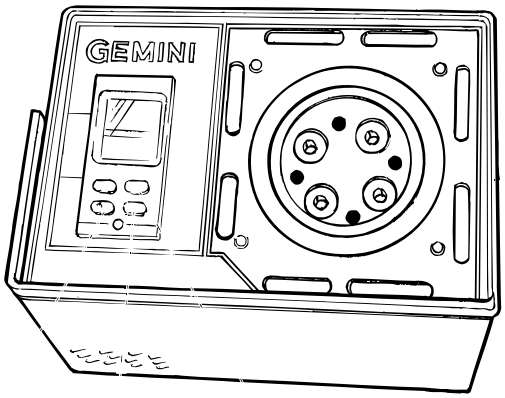	Calibration equipment Temperature calibrator oven (Gemini) TP No. 90410-0337 Calibrated thermocouple type K TP No. 90410-0310 Electrical manual

2.2B3024Y01en.fm

10.3 Consumables

10.3-1 Lubricants

The table below lists only a selection of lubricants with their respective designations. Comparable lubricants from other suppliers may be selected with the aid of the lubricant specifications (document No. in the table).

Lubrication specifications may be ordered from:

Standards Group
AB Tetra Pak
Ruben Rausings Gata
S-221 86 Lund (Sweden).

Lubricant code	Document No	Material No (internal TP designation for material type)	Part No (used when ordering from Tetra Pak)	Example	
				Supplier	Product designation
A Motor oil	M 1251.122	51122-85	90296-28	BP Esso Statoil Mobil Shell Caltex-Texaco Optimol	Vanellus FE 10W-30 Essolube XD-3 10W-30 PowerWay D2 10W-30 Delvac1400 Super 10W-30 Myrina TX 10W-30 Ursa LA 10W-30 Non Plus Ultra 10W-40
B High-pressure oil	M 1254.322	54322-220	90296-73 90296-78	BP Esso Statoil Mobil Shell Caltex-Texaco Imperial Kluber Optimol	Energol GR-XP 220 Spartan EP 220 LoadWay EP 220 Mobilgear 630 Omala oil 220 Meropa Lubricant 220 Tribol ET 280-220 Lamora 220 Optigear 5150 VG 220
		54322-150 For use in production plant with start temperature below 5°C.	90296-72	BP Esso Statoil Mobil Shell Caltex-Texaco Imperial Kluber Optimol	Energol GR-XP 150 Spartan EP 150 LoadWay EP 150 Mobilgear 629 Omala oil 150 Meropa Lubricant 150 Tribol ET 280-150 Lamora 150 Optigear 5120 VG 150

2.2B3024Y01en.fm

Lubricant code	Document No	Material No (internal TP designation for material type)	Part No (used when ordering from Tetra Pak)	Example	
				Supplier	Product designation
C Hydraulic oil	M 1252.122	52122-32	90296-53	BP Esso Statoil Mobil Shell	Bartran HV 32 Univis N 32 HydraWay HV 32 DTE Oil 13 Tellus T 32
D Mist lubrication oil	M 1251.822	51822-37	90296-80	BP Esso Statoil Mobil Shell Caltex-Texaco	Autran GM-MP ATF Dextron TransWay DX II ATF 220 ATF Dexron II Texamatic fluid (Dextron II)
E Com-pounded cylinder oil	M 1254.922	54922-460	90296-77 90296-2	BP Esso Statoil Mobil Shell Caltex-Texaco	Energol AC-C460 Cylesso TK 460 CylWay FZ 460 600W Super Cylinder Oil Valvata Oil J460 Vanguard Cylinder Oil
F Lithium, grease EP type	M 1255.115	55115-20	90296-68	BP Esso Statoil Mobil Shell Kluber Optimol	Energraese LS EP2 Esso MP Grease/ Beacon EP 2 UniWay EP 2N Mobillux EP2 Grease 1344 LiEP 2 Centoplex 2 EP Longtime PD2
H High pressure oil	M 1254.322	54322-320	90296-75 90296-76	BP Esso Statoil Mobil Shell Caltex-Texaco Imperial Kluber Optimol	Energol GR-XP 320 Spartan EP 320 LoadWay EP 320 Mobilgear 634 Omala oil 320 Meropa Lubricant 320 Tribol ET 280-320 Lamora 320 Opttigear 5180 VG 320

2.2B3024Y01en.fm

Lubricant code	Document No	Material No (internal TP designation for material type)	Part No (used when ordering from Tetra Pak)	Example	
				Supplier	**Product designation**
H High pressure oil	M 1254.322	54322-220	90296-73 90296-78	BP Esso Statoil Mobil Shell Caltex-Texaco Imperial Kluber Optimol	Energol GR-XP 220 Spartan EP 220 LoadWay EP 220 Mobilgear 630 Omala oil 220 Meropa Lubricant 220 Tribola ET 280-220 Lamora 220 Optigear 5150 VG 220
		For use in production plant with start temperature below 5°C			
K Circulation oil	M 1254.942	54942-100	90296-15	BP Esso Statoil Mobil Shell Caltex-Texaco Imperial Kluber	Energol CS 100 Turbesso 100 TurbWay 100 DTE Oil Heavy Tellus Oil 100 Regal Oil R & O 100 Tribol 775 Crucolan 100
L Silicon grease	M 1255.322	55322-30	90296-9	Dow Klüber	Dow Corning 7 Compound Unisilikon L 250L
M Lithium, grease, EP type	M 1255.112	55112-10	90296-70	BP Esso Statoil Mobil Kluber Optimol	Energrease LS EP 1 Beacon EP 1 UniWay EP 1 Mobillux EP 1 Centoplex 1 EP Longtime PD 1
N PTFE grease	M.1255.622	55622-20	90296-91	Sikema	Fluolub 175
O Lithium complex grease	M 1255.122	55122-30	90296-61	BP Esso Statoil Imperial	Energrease LS 3 Unirex N3 UniWay HT-63 Molub-Alloy ET 860-220
P Synthetic compressor oil	M 1254.632	54632-68	90296-54	BP Esso Statoil Mobil Shell Caltex-Texaco	Energol RC-R68 Compressor oil 68 CompWay 68 Rarus 427 Corena oil H68 Compressor oil VDL 68

2.2B3024Y01en.fm

10.3-2 Cleaning compounds

Caution! Do **not** use chlorine or iodine-based cleaning compounds when cleaning such parts which will come into contact with hydrogen peroxide.

Comparable qualities from other suppliers may be selected in compliance with the technical requirements listed in the table.

All cleaning compounds must comply with local legal requirements.

The supplier recommendations for concentration and temperature should be followed. When dosing the products automatically, their concentrations should be checked.

Cleaning	Code		Example				
			Type of product	Pure Chemicals	Formulated products		
					Henkel	Lever	Diversey
Cleaning CIP	**A**		Alkali	NaOH 1.5%	P3-mip RC P3-N 421	SU 559 (SU 159)	DSY 02
	B	**1**	Acid	HNO_3	P3-Horolith L31		
		2	Acid	H_3PO_4	P3-Horolith FPC P3-Horolith MSW		DSY 01
		3	Acid	HNO_3/H_3PO_4		SU 475	
External cleaning automatic	**C**	**1**	Alkali foam		P3-Topax 12	SU 931	DSY 03
		2	Alkali solution		P3-mip FPC P3-FPC	SU 118	DSY 12
Manual wipe	**D**		Alkali solution		P3-mip FPC P3-FPC	SU118	DSY 12
	E	**1**	Acid solution	HNO_3 0.5%			
		2	Acid solution	H_3PO_4 0.5%			
		3	Acid solution	Acetic Acid 0.5%			
Manual disinfection immersion	**F**	**1**	Low alkali foam		P3-Topax 99		
		2	Low alkali solution		P3-Steril BG *KL-HC 34 Ukes (IT)*	SU 319 SU 398	DSY 08 DSY 16
		3	Acid Solution		P3 - Oxonia Aktiv	SU 388	
Manual disinfection spray	**G**	**1**	Alcoholic solution	Isopropanol 70%		SU 393	
		2	Alcoholic solution	Ethanol 70%			DSY 10
		3	Acid Solution		P3 - Oxonia Aktiv	SU 388	
Hand disinfection	**H**				Spitacid	Leversept Levergel	DSY 10

2.2B3024Y01en.fm

11 Checklist overview

2.2B3024Z00en.fm

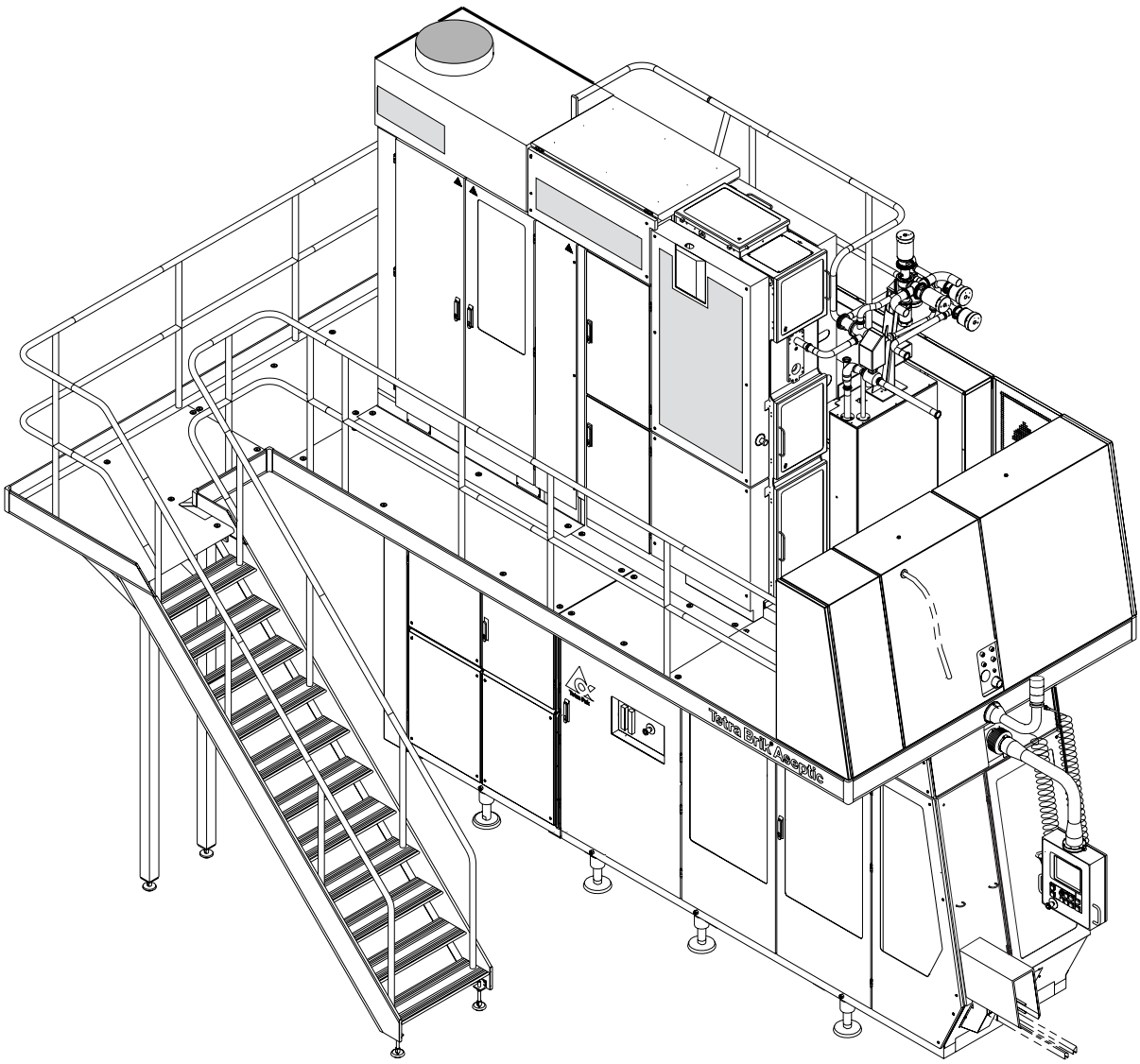

0-Series

Checklist overview - description

This section of the MM, **is intended for customers who do NOT use the Tetra Pak Maintenance System (TPMS).** The checklist overview contains all the check points for a specified machine type or equipment which are needed in order to keep the equipment in good condition. The following items can be found in the checklist:

- **MM code** – shows where you can find more information about the check point.
- **Text** – name of unit and type of activity. For further information, see MM code.
- **Action** – type of activity.
- **Interval** – how often the check item should be performed in production hours.

Note! The checklist overview in this manual **may differ from the TPMS checklists** delivered by your local service station, due to the fact that TPMS checklists are continuously updated and adapted to local demands.

TPMS - description

The maintenance system used for equipment from Tetra Pak is called the **Tetra Pak Maintenance System (TPMS)**. If you are using TPMS, the checklists will be delivered directly from your local Tetra Pak service station.

2.2B3024Z00en.fm

The TPMS checklists are designed to match and keep pace with the ongoing development of new and existing equipment from Tetra Pak, and to meet the demands set by our customers for even higher efficiency and better economy.

Some of the advantages of TPMS are:

- TPMS maintains complete production lines.
- TPMS reduces down-time to a minimum each time maintenance is carried out.
- Updates of the maintenance schedule based on experience gained, improvements, modifications and specific customer requirements are issued.
- Recommendations regarding spare parts, rotation units, tools and templates, etc. are included.

The service life of each item in the equipment is predicted and all items are checked before they affect the efficiency of the equipment. This leads to different maintenance intervals for each item and the check list is unique for each maintenance occasion.

The results of the maintenance are sent back to the Tetra Pak service station. Statistics are evaluated regularly, giving a continuously updated maintenance system.

If you require further information regarding TPMS, please do not hesitate to contact your local Tetra Pak office.

Checklist overview

MM code	Test	Action	Interval (h)
	Jaw system - Weekly check		
4.2-6	Pressure Link - Dolly	Change	120
4.1-7	Sealing Link - Inductor	Check	120
4.1-8	Sealing Link - Carbon brush	Clean	120
4.1-9	Sealing Link - TS Rail	Clean	120
4.3-6	Cutting - Dolly	Change	15
4.3-5	Cutting - Knife	Change	45
	Final folder - Weekly check		
5.1-1	Infeed conveyor; Belt - Condition	Check	120
5.2.1-1	Station chain	Lubriate	120

MM code	Test	Action	Interval (h)
	Pre-Maintenance Checks		
MM	WARNING! Before starting any service work, read the safety precaution in the corresponding Maintenance Manual. Doc No: MM 82302-0104	Check	250
MM	WARNING! Before starting any service work, read the safety precaution in the corresponding Maintenance Manual. Doc No: MM 82302-0104	Check	1000
	Go through the lists carried out by the customer since the last service, discuss with customer technician	Check	1000
OM	LS and TS seal quality	Check	1000
1.1.4-1	Aseptic chamber- Calender rollers	Check	1000
1.1.12-1	Aseptic chamber- Pendulum roller	Check	1000
OM	Aseptic chamber; Lower forming ring- Overlap	Check & Record	1000
OM	Aseptic chamber; Lower forming ring; Short stop function- Longitudinal sealing	Check	1000
1.2.2-2	Sterile air system; Compressor unit- Leaks, noise and vibrations.	Check	1000
1.2-1	Sterile air system- Leakage	Check	1000
1.2.2-1	Sterile air system; Compressor unit- Pressure	Record	1000
2.5-2	Hydrogen peroxide; Peroxide pump- Noise and vibrations	Check	1000
6.4.1-1	Supply system- Pneumatic unit	Check	1000
6.1.1-2	Compressor unit	Check	2000
1.6-1	Connection box- Pressure switch	Check	1000
	Superstructure		
1.1.11-1	Aseptic chamber- Seal	Check	1000
1.1-1	Aseptic chamber; Forming rings- Rotation	Check	500
1.1-1	Aseptic chamber; Upper forming ring- Bushings, Shafts, Clearance	Check	1000
1.1-1	Aseptic chamber; Lower forming ring- Bushings, Shafts, Clearance	Check	1000
1.1-1	Aseptic chamber; Upper tube support- Bushings, Shafts	Check	1000
1.1-1	Aseptic chamber; Edge roller - Bushings, Shafts	Check	1000

2.2B3024Z00en.fm

11 Checklist overview

MM code	Test	Action	Interval (h)
1.1.1-1 1.1.1-3	Aseptic chamber; Lower forming ring- Setting	Check	1000
1.1.4-1	Aseptic chamber; Calender roller- Bushing	Clean	1000
1.1.4-1	Aseptic chamber- Calender roller	Check	1000
1.1.5-1	Aseptic chamber- Drive unit	Check	1000
1.1.12-1	Aseptic chamber- Pendulum roller	Check	1000
	Aseptic chamber- Paper guide	Clean	500
1.1.10-1	Aseptic chamber- Paper guide	Check	1000
1.1-2	Frame section, upper- Bending roller	Check	1000
1.1.7-1	Aseptic chamber; Pillar- Seal	Check	1000
	Frame section, upper- Splice detector	Check	500
1.4.2-1	Hydrogen peroxide; Bath- Roller	Check	500
1.4.2-3	Hydrogen peroxide; Bath; Roller- Bearings	Change	2000
1.2.6-2	Sterile air system; Scrubber- Filters	Clean	1000
1.2.7-2	Sterile air system; Separator-Filter/Float	Clean	3000
1.2.1-2	Sterile air system; Heat exchanger- Air tightness, Clean	Check	2000
1.2.3-1	Sterile air system; Heat exchanger- Valve	Overaul	5000
1.2.5-1	Sterile air system- Air Valve	Overaul	5000
	Sterile air system- Nozzle	Clean	1000
1.4.1-1	Hydrogen peroxide- Water circulation	Check	1000
1.1.8-1	Aseptic chamber; Spray system- Leaks	Check	500
1.2.4-1	Sterile air system; Valve Ref. point- Setting	Check	3000
1.3.3-1	Filling system; Flow Regulator-Regulating valve	Overaul	1500
	Filling system; Flow Regulator, Regulating valve- Diaphragms	Change	500
1.3.2-2	Filling system; Product valve Group- Seal / Membranes	Change	1500
1.3.2-3	Filling system; Product valve Group, C-Cylinder- O-ring	Change	3000
1.3.2-3	Filling system; Product valve Group, A,B-Cylinder- O-ring	Change	6000
	Filling system; Cleaning in place Switch- Gasket	Check	500
1.3.7-2	Filling system; Cleaning in place Switch- Seal rings	Change	1500
1.3.8-2	Filling system; Steam system- Filter	Clean	1000
	Filling pipe- Spacer, Seal rings	Change	500
1.3.5-4	Filling pipe- Level probe	Check	2000
	Machine body		
2.5.1-1	Hydrogen peroxide- Peroxide pipe	Check	1000
2.5.1-2	Hydrogen peroxide- Strainer	Clean	500
	Hydrogen peroxide; Cabinet- Valve, Seal, Filter	Check	2000
	Hydrogen peroxide- Peroxide pump	Overaul	1000
2.5.5-1	Hydrogen peroxide- Peroxide tank	Check	1000
	Drive unit		
3.1-1	Drive - Connection	Check	1000
	Jaw system		
4-4	Sealing and Pressure Link	Lubrcate	250

2.2B3024Z00en.fm

MM code	Test	Action	Interval (h)
4.2-4 4.1-5	Sealing and Pressure Link; Cam follower - Wear	Check	250
4.1-2 4.1-4	Volume flap - Roller, Damper	Check	250
4.1-3	Volume Flap - Spring, Play	Check	250
4.2-5	Pressure Link - Spring	Check	1000
4.1-6	Folding flap - Function, Wear	Check	500
4.3-1	Cutting Drive - Belt	Check	500
4.3-2	Angle encoder - Belt	Check	500
4.5-1	Design correction; Belt - Condition	Check	500
	Drop chute - Function	Check	500
	Final folder		
	Station chain - Wear	Check	1000
5.2.3-1	Station chain Support - Condition	Check	500
	Squeezer; Side Belt - Condition	Check	500
	Squeezer; Top Belt - Condition	Check	500
5.2.5-1	Bottom flap; Heat Nozzles - Position	Check	250
5.1-2	Infeed; Bearings - Movement	Check	250
5-2	Synchronization	Check	1000
5.4-1	Drive; Couplings - Condition	Check	1000
5.4-2	Drive; Gear Box - Oil	Change	4000
	Service unit		
6.4.1-4	Pneumatic unit- Filter insert	Change	500
6.3-1	Water panel- Pressure switch	Check	1000
6.2.1-1	Cleaning pump- Connections	Check	1500
	Strip applicator		
7.2.1-1	Pressure roller	Check	500
7.1-1	Strip magazine- Rollers	Check	500
7.1.1-1	Strip magazine; Brake arms- Function	Check	1000
7.1.3-1	Strip magazine- Heating device	Check	1000
7.2.2-1	Splice detector	Check	500
7.1.2-1	Strip magazine- Dolly	Check	1500
7.2.1-2	Strip applicator- Pressure roller	Change	1000
7.2.3-1	Strip applicator- Inductor	Check	1000
	Automatic splicing unit		
8-3	ASU- Function	Check	1000
8-4	ASU- Bending rollers	Check	500
8-5	ASU- Web guide	Check	500
8.1.1-1	Drive unit Front	Check	1000
8.6-1	Reel trolley	Check	1500
8.3.4-1	Bracket- Roller/Photocells	Check	500

2.2B3024Z00en.fm

11 Checklist overview

MM code	Test	Action	Interval (h)
	Start-up checks		
	Safety relays - Function	Check	1000
	After-Maintenance Checks		
OM	LS,TS and flap seal quality	Check	1000
OM	Package appearence	Check	1000
OM	Aseptic chamber; Lower forming ring, Short stop function- Longitudinal sealing	Check	1000
OM	Longitudinal sealing- Strip Position	Check	1000
1.1-3	Aseptic chamber- Over-pressure	Check	2000
1.1.4-1	Aseptic chamber- Calender rollers	Check	1000
	If pre-maintenance checks have not been done-do them now	Check	1000

2.2B3024Z00en.fm

Tetra Pak