Document Folder

TBA/22 040V

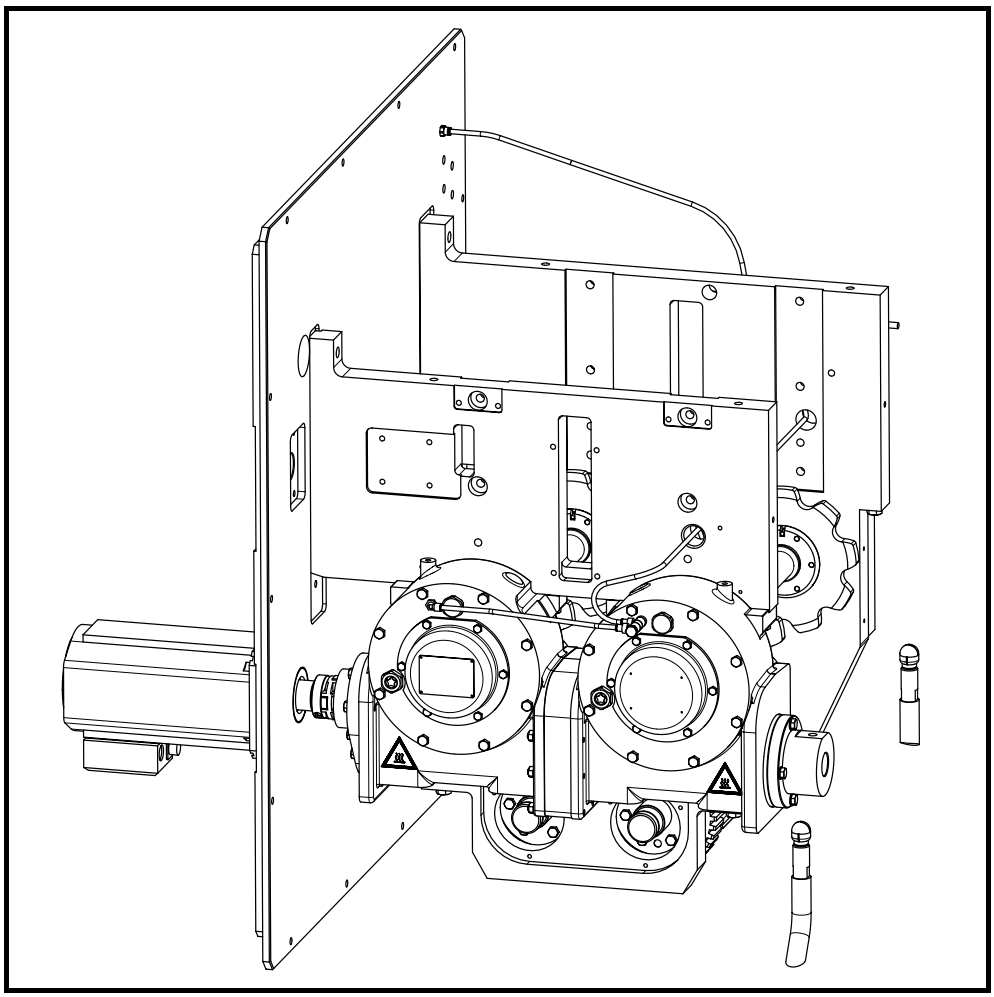

2.2BK483en-fro.fm

Jaw system gearbox and cutting belt

RK No. 2547324-0200

Tetra Pak

Doc No. DF-2547483-0106

This document is valid for:

Series No/ Machine No Sign.

Jaw system gearbox and cutting belt RK No. 2547324-0200

for:

TBA/22
648571-0400

ECM Lead No. 189474

2.2BK483en-fro.fm

Issue 2004-11

Doc No. DF-2547483-0106

Tetra Pak

Tetra Pak Carton Ambient

Introduction

Rebuilding kit information 6
Document information 6
Abbreviations 6

Safety precautions

Hazard information 8
General 8
Mandatory signs 9
Warning signs 10
Personnel 12
General safety precautions 13
Hygiene 13
High voltage 13
Electrical cabinet 14
Machine safety devices 15
Emergency stop buttons 15
Doors, covers and guards 16
Cooling system (electrical cabinet - service unit) . 17
Chemical products 18
Personal protective equipment 18
General emergency procedures 18
Hydrogen peroxide 19
Equipment for lifting and moving loads 21

Jaw system gearbox and cutting belt

General Information 24
Overview 24
Functional description 25
Enclosed documentation 25

2.2BK483en-froTOC.fm

Table of contents

Rebuilding time 26
Preparations 26
Tools. 26

Installation 27

1 Remove jaw system chains 27
2 Remove gearboxes. 39
3 Re-wire the encoder 46
4 Remove lower part of jaw unit. 48
5 Remove pulleys 49
6 Remove chain drive shaft bearings and seals, LH side. 52
7 Remove drum shaft bearings and seals, LH side . . 53
8 Remove bearings and seals, RH side 54
9 Remove drum and drive shaft 55
10 Modify frame 56
11 Modify plate. 57
12 Assemble new chain drive shafts. 60
13 Assemble the jaw unit 61
14 Connecting drive shaft to LH gearbox. 66
15 Fit cam 73
16 Fit jaw system chains. 74
17 Completing gearbox installation 81
18 Fit encoder 84
19 Fit belt tensioner 89
20 Modify plate. 92
21 Fit air hose 93
22 Completion tasks 95
23 Other tasks 101

Final operations 103

Checks 103
Machine updating. 103

2.2BK483en-froTOC.fm

MM - Supplementary instructions

Updating the Maintenance Manual 2

4 Jaw system

4-1 Jaw system - description 2
4-2 Jaw system - setting sequence 3
4-3 Jaw system - chain disassembly and reassembly . . 4
4-4 Jaw system - grease chains 15
4-5 Jaw system - check coupling 16
4-6 Jaw system - set coupling 17

4.1 Sealing link 20

4.1-1 Sealing link - check guides 20
4.1-2 Sealing link - check volume flap dampers 21
4.1-3 Sealing link - check volume flap springs and bushings 22
4.1-4 Sealing link - check volume flap rollers 23
4.1-5 Sealing link - check roller bearing 24
4.1-6 Sealing link - check folding flap 25
4.1-7 Sealing link - check inductor 26
4.1-8 Sealing link - check carbon brushes, busbar and bracket 27
4.1-9 Sealing link - change volume flap springs and bushings 28
4.1-10 Sealing link - change volume flap rollers 29
4.1-11 Sealing link - change carbon brushes, busbar and bracket 30
4.1-12 Sealing link - overhaul 31

4.2 Pressure link 36

4.2-1 Pressure link - check volume flap dampers 36
4.2-2 Pressure link - check volume flap springs and bushings 36
4.2-3 Pressure link - check volume flap rollers 36
4.2-4 Pressure link - check roller bearings 37
4.2-5 Pressure link - check pressure bar springs 38
4.2-6 Pressure link - change sealing dolly 39

2.2BK483en-froTOC.fm

4.2-7 Pressure link - overhaul 40

4.3 Drive unit 43

4.3-1 Drive unit - check cutting belts 43

4.3-2 Drive unit - set knives synchronization and cutting belt tension 45

4.3-3 Drive unit - change knife 49

4.3-4 Drive unit - remove knife holder 50

4.3-5 Drive unit - change cutting dolly 51

4.3-6 Drive unit - remove cutting dolly holder 52

4.3-7 Drive unit - set angle encoder 53

4.3-8 Drive unit - overhaul belt tensioner 55

4.3-9 Drive unit - overhaul 56

4.3-10 Drive unit - refill gearbox oil 94

4.3-11 Drive unit - open jaw system - (250 B machines only) 98

4.4 Volume adjustment 99

4.4-1 Volume adjustment - set 99

4.4-2 Volume adjustment - change cams 100

4.5 Design correction 101

4.5-1 Design correction - check belt tension 101

4.5-2 Design correction - change belt 102

4.5-3 Design correction - overhaul 103

4.5-4 Design correction - set 106

4.6 Electrical connection 109

4.6-1 Electrical connection - clean TS rail 109

4.6-2 Electrical connection - check TS rail 112

4.6-3 Electrical connection - check transformer 113

4.7 Lubricants 115

Enclosed documentation

Updating the machine documentation 2

2.2BK483en-froTOC.fm

Introduction

To ensure maximum safety, always read the *Safety precautions* section before doing any work on the equipment or making any adjustments.

2.2c BK483en-int.fm

Rebuilding kit information

Purpose

The purpose of this Rebuilding Kit is described in the *Functional description* part of the *General information* chapter.

CE Marking

This rebuilding kit does not contrast with the basic health and safety regulations of the European Economic Area (EEA).

Document information

Purpose of Document Folder

The purpose of this Document Folder is to provide service technicians with information on how to install the rebuilding kit. This information includes:

- instructions for the mechanical installation of the kit
- electrical and program alterations (if relevant)

Design modifications

The directives in this document are in accordance with the design and construction of the equipment at the time it was delivered from the Tetra Pak production plant.

Document producer

This document has been produced by:

Tetra Pak Carton Ambient S.p.A.
Via Delfini 1
41100 MODENA
Italy

Additional copies can be ordered from the nearest Tetra Pak service station.

Copyright © 2004
Tetra Pak Carton Ambient

All rights reserved. No part of this document may be reproduced or copied in any form or by any means without the written permission of Tetra Pak Carton Ambient.

Abbreviations

ECM	Engineering Change Master
LH	Left Hand (side)
OK/OE	Optional Kit/Optional Equipment
RH	Right Hand (side)
RK	Rebuilding Kit
SPC	Spare Part Catalogue
TBA	Tetra Brik Aseptic

2.2c BK483en-int.fm

Safety precautions

To ensure maximum safety, always read this section carefully before doing any work on the equipment or making any adjustments.

2.2c BK483en-sp.fm

Hazard information

General



Failure to observe information marked with “DANGER!” **puts your life in danger**.



Failure to observe information marked with “WARNING!” can result in **personal injury and/or serious damage to or destruction of equipment**.

Caution! Failure to observe information marked with “Caution!” can result in **damage to equipment**.

2.2c BK483en-sp.fm

Mandatory signs

 **Wear eye protection**	 **Wear hearing protection**
 **Wear head protection**	 **Wear protective gloves**
 **Disinfect hands/gloves**	

2.2c BK483en-sp.fm

Warning signs

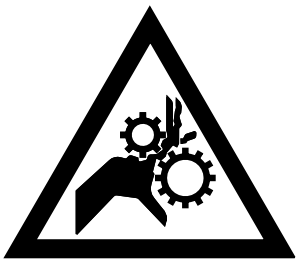 **Risk of entanglement!**	 **Risk of corrosion and acid burns!**
 **Risk of crushing!**	 **Risk of cutting/amputation!**
 **Risk of burns!**	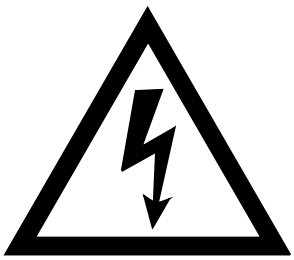 **Risk of electrocution!**

(Cont'd)

2.2c BK483en-sp.fm

(Cont'd)

 **Risk of crushing!**	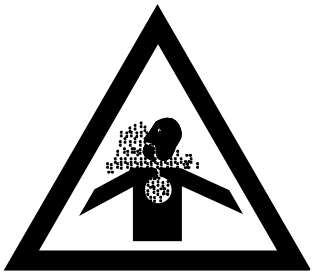 **Risk of intoxication!**
 **Risk of falling!**	 **Risk of personal injury!** (general)

Personnel

Only skilled or instructed persons are allowed to work on the equipment.

The manufacturer declines all responsibility for injury or damage if the instructions in this manual are not followed.

Personnel are responsible for:

- the equipment and the work area around the equipment
- all personnel in the vicinity of the equipment
- making sure that all safety devices are fully operational

Personnel must regard all electrical equipment as live. In general switch the equipment off at the mains power and padlock the switch before carrying out maintenance or repair work.

Electricians should be certified according to local regulations and have experience of similar types of installations, proven skills in reading and working from drawings and cable lists, and knowledge of local safety regulations regarding power and automation. Work with the electrical equipment must be performed only by skilled or instructed technicians.

According to EN 60204-1:1997 clause 3.52 a skilled person is:

– *a person with relevant education and experience to enable him or her to perceive risks and to avoid hazards which electricity can create.*

2.2c BK483en-sp.fm



General safety precautions

Wear hearing protection while the equipment is running.

Hygiene

To avoid microbiological pollution of the packaging material:

- always keep the doors in the filling room (area) closed and never open any windows when the machine is in **Production** to prevent contamination via air streams
- never clean the floors or the equipment in the filling room (area) when the machine is in **Production**



- prepare the splicing of the packaging material as late as possible
- disinfect hands and/or gloves before touching the packaging material, the strip(s) or any other equipment part that may come into contact with the product
- keep hands and/or gloves clean. Always wear some type of hair protection (cap or hair-net) and clean clothes (preferably white). Do not wear watch, rings, necklaces or earrings
- clean the platforms, the ladder and the area around the equipment when the machine is not in **Production**

To avoid production faults, it is important that the packaging material and the strip(s) never touch the floor, the platform or the area around the equipment.

2.2c BK483en-sp.fm

High voltage

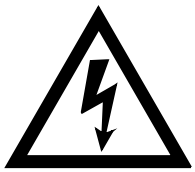

Work with parts marked with this symbol must be performed by **skilled or instructed** persons **only**.

Make sure that the mains power is disconnected before starting any work on electrical equipment marked with this symbol.

In case of accident, call for medical attention immediately.

Electrical cabinet



There is high voltage in the electrical cabinet (up to 560 V).

Work inside the electrical cabinet must be performed by skilled or instructed persons only.

Electrical cabinet doors locked with screws may be opened only by skilled or instructed persons.

LH side

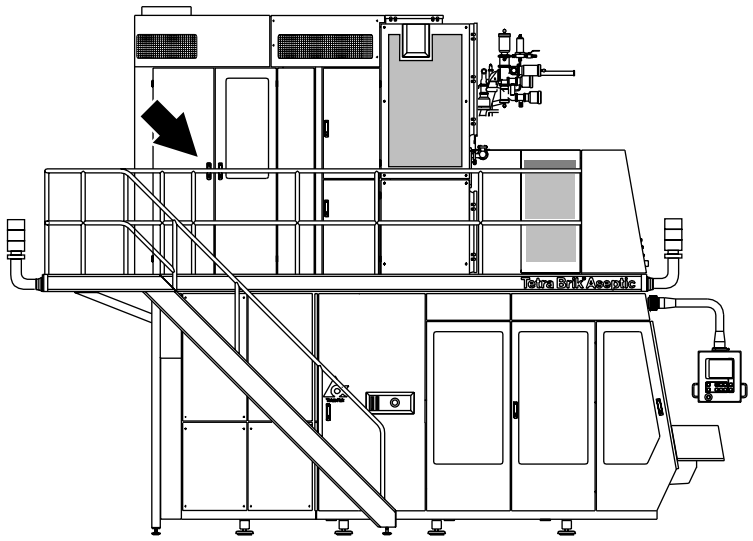

RH side

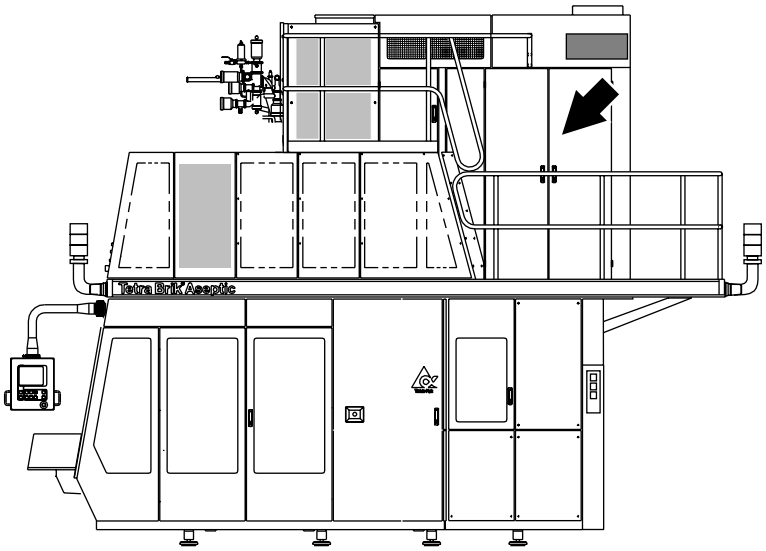

2.2c BK483en-sp.fm

TPIH generator



During operation the voltage in the TPIH generator can be up to 2000 V (400 V when not in operation). In case of accident call for medical attention immediately.

Never open the TPIH generator. Remove and return the unit to an authorized service centre for servicing and repair.

Machine safety devices

Emergency stop buttons

Learn the position of the **Emergency stop** buttons in order to stop the equipment immediately in case of danger to people or damage to the equipment.

The **Emergency stop** buttons do not switch off the power at the mains power switch.

Pushing the **Emergency stop** buttons will reset the equipment program to **Zero** position and deactivate all pneumatic cylinders.

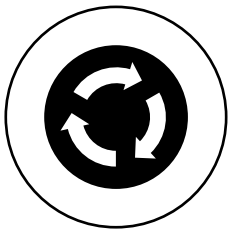

LH side

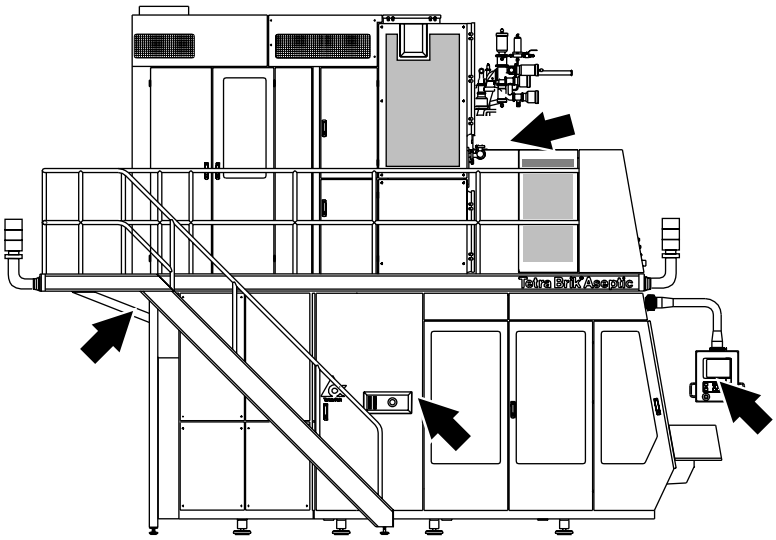

RH side

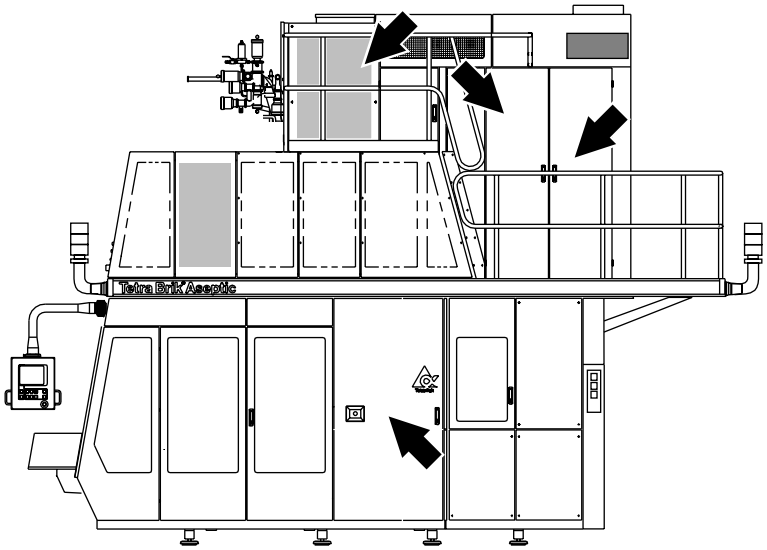

2.2c BK483en-sp.fm

Doors, covers and guards



WARNING!

Make sure that all doors, covers and guards are in place and functioning before operating the equipment.

Some equipment parts protected by doors, covers and guards may be hot.

In case of accident, call for medical attention.



WARNING!

Certain doors, covers and guards are fitted with safety switches. These switches are part of the safety system of the equipment and must **never** be bridged, by-passed or otherwise made non-operational.

- Never open doors or covers marked with arrows or remove covers or guards while the equipment is operating.
- Never stop the equipment by opening a door or a cover with a safety switch or by activating the crank switch.

LH side

RH side

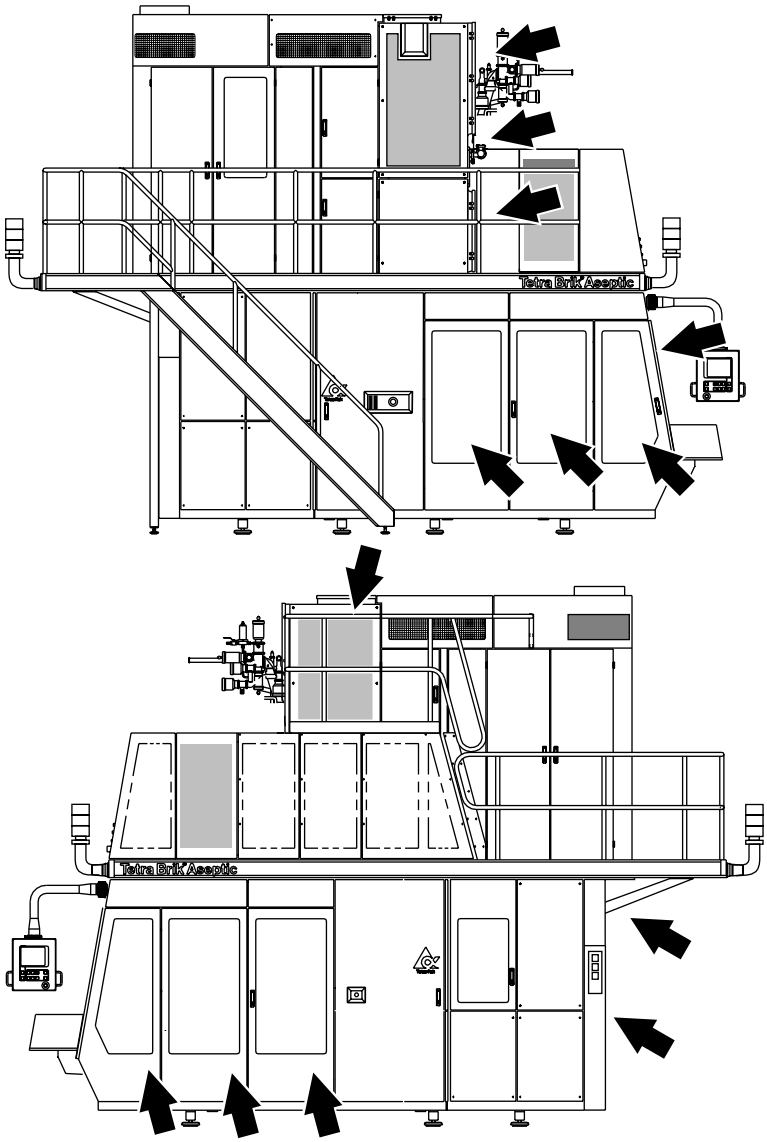

2.2c BK483en-sp.fm

Cooling system (electrical cabinet - service unit)



WARNING!

Risk of personal injury!
Cooling media R134A.
Carefully follow the supplier's instructions for handling and disposal of the R134A (freon).

Cooling media R134A container

- Ensure good ventilation
- Keep the container well closed and in a cool and dry place away from sources of heat
- Avoid direct contact with the product
- Wear suitable protective clothing, gloves, goggles, and eye/face protection
- In case of contact with eyes, rinse immediately with plenty of water for 15 minutes and call for medical attention
- Inhalation of a high concentration can cause shortage of breath and unconsciousness
- In case of inhalation move to fresh air; if needed use oxygen gas or artificial respiration
- Very fast evaporation can cause freezing injuries

Caution! Only specially trained personnel is allowed to operate with the compressor unit in case of compressor leakages.

2.2c BK483en-sp.fm

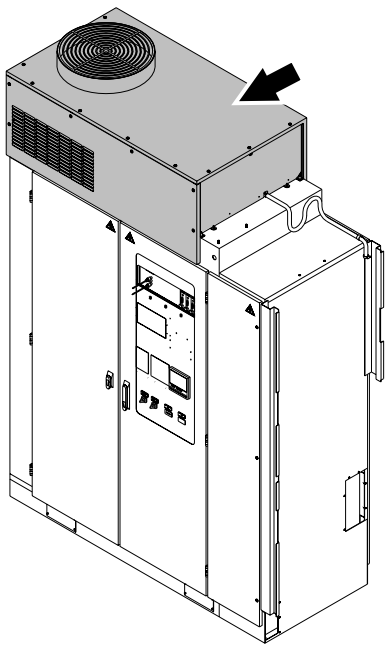

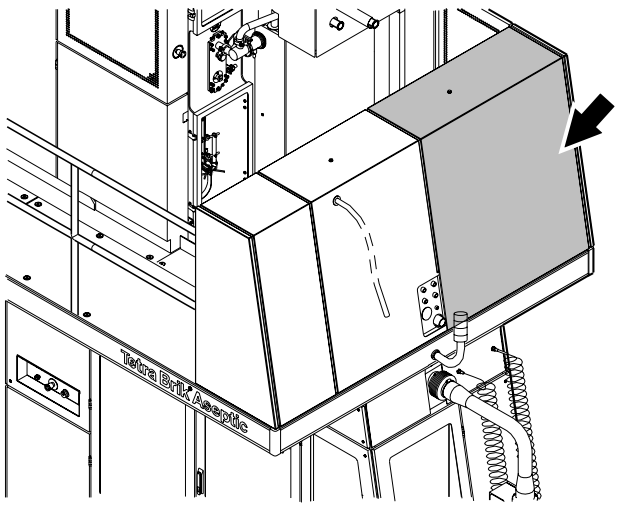

Chemical products



Risk of personal injury!
Certain chemical products are toxic and/or inflammable. Carefully follow the instructions on the container label.

Follow the supplier's instructions for handling and disposal of the chemical products.

Personal protective equipment

- **Safety goggles**, TP No. 90303-0011
- **Apron**, TP No. 90303-0013
- **Shoes** made of PVC, PE plastic or rubber
- **Protective gloves** made of neoprene, TP No. 90303-0012

Before starting work with any chemical products, make sure that:

- the showers work
- a portable, TP No. 90303-6, or wall-mounted eyewash device is available at or near each machine site
- there are additional washing facilities



General emergency procedures

If you accidentally **swallow** chemical products, drink large amounts of lukewarm water.

If you get splashes or vapor from chemical products in your **eyes**, wash your eyes thoroughly with lukewarm water for 15 minutes (keeping eyelids wide apart).

If chemical products come into contact with **skin** or **clothes**:

- rinse immediately with plenty of water
- if skin burns appear, call for medical attention immediately
- thoroughly wash clothes before wearing them again

If you experience irritation or pain due to having **inhaled** chemical products vapor:

- leave the affected area and get some fresh air
- if the symptoms get worse, call for medical attention

2.2c BK483en-sp.fm

Hydrogen peroxide

The liquid used for sterilising the packaging material consist of 35% hydrogen peroxide (H_2O_2).



WARNING!

Hydrogen peroxide in liquid and gas form can cause irritation and injury if it comes into contact with the skin, mucous membranes, the eyes or clothes. Carefully follow the instructions on the can label.

Hydrogen peroxide can

HYDROGEN PEROXIDE:

- 35% w/w Aqueous Solution UN No. 2014
- Corrosive
- Oxidizing
- Causes burns. Contact with combustible materials may cause fire
- Keep in a cool place away from sources of heat
- Avoid contamination
- Wear suitable protective clothing, gloves, and eye/face protection
- After contact with skin, wash immediately with plenty of water and call for medical attention
- In case of contact with eyes, rinse immediately with plenty of water and call for medical attention
- In case of spillage or fire, drench with water

Reference: TP document No. M 1751.80

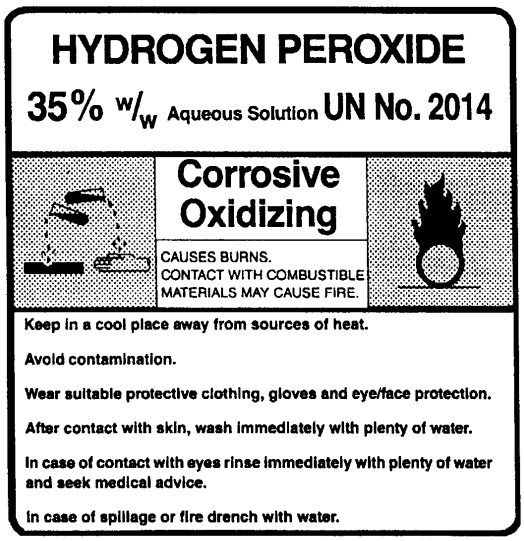

Example of can label

(Cont'd)

(Cont'd)

Storage of hydrogen peroxide

Make sure that the area or room used for storage is:

- cool, clean and well ventilated
- shielded from direct sunlight
- free from combustible materials

Hydrogen peroxide must be stored only in its **original container** as delivered by the suppliers.

Keep the container upright and closed with a **proper ventilation cap** which allows oxygen to escape.

Pumps and other equipment used for hydrogen peroxide must be used **for this purpose only**.

Never put used hydrogen peroxide back into storage.

Disposal of hydrogen peroxide

Hydrogen peroxide should be sent for destruction by waste disposal specialists.



WARNING!

Risk of explosion!
Do not pour surplus hydrogen peroxide back into its original container. Hydrogen peroxide may decompose. In case of accident, call for medical attention immediately.

In some countries it is permitted to dilute hydrogen peroxide with water to a concentration below 1% and to dispose of it in the normal waste water drain. Hydrogen peroxide with a concentration below 1% is considered harmless.

2.2c BK483en-sp.fm

Equipment for lifting and moving loads



WARNING!

Make sure that the capacity of the lifting equipment is adequate and that the equipment itself is in good working order.

If lifting tackle has to be joined to make up the necessary lengths, make sure that the joins are secure and have the same lifting capacity as the rest of the tackle.

Always engage the safety clip on lifting hooks to prevent the tackle from slipping off.

Use ropes or poles to steady and manoeuvre loads. Do **not** use hands or feet.

Make sure that the route and the destination are free from obstacles before moving a suspended load. It must be possible to lower the load to the floor quickly and safely in an emergency.

When depositing loads, keep the lifting equipment in place until the stability of the load has been checked.

This page intentionally left blank

Jaw system gearbox and cutting belt

2.2c BK483en-10.fm

General Information

Overview

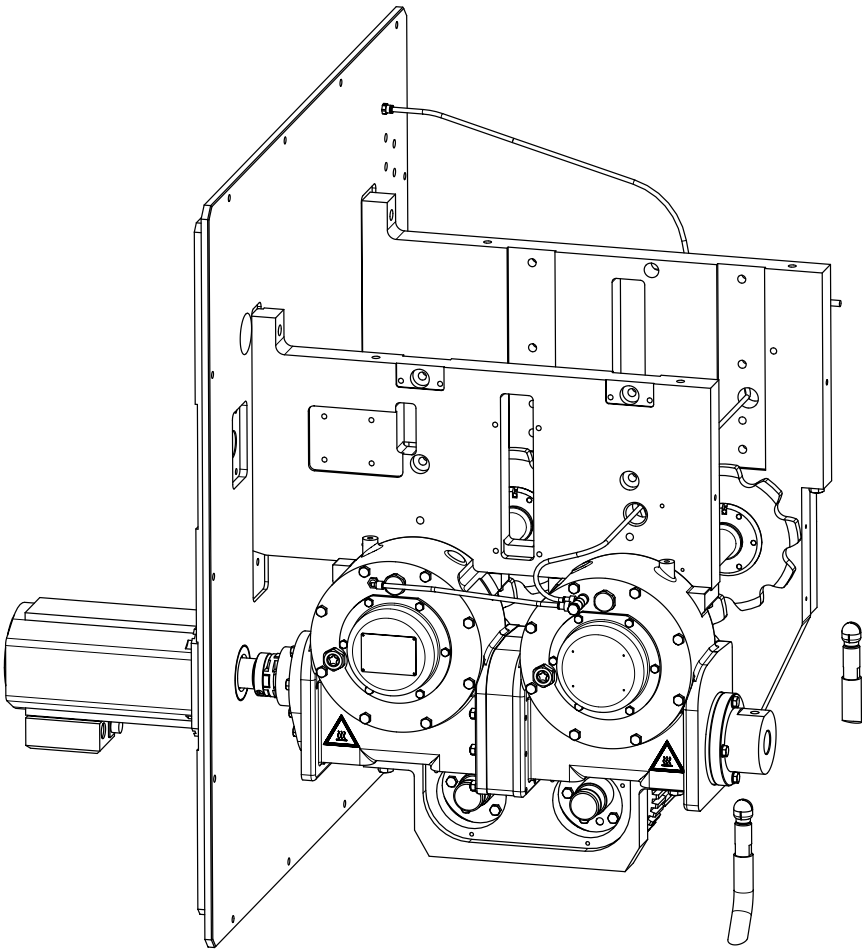

2.2c BK483en-10.fm

This rebuilding kit is valid for the following machine variants:

Machine	Development step	Package/Volume shape
TBA/22	648571-040V	TBA 200 B - TBA 250 B

Caution! Be sure the filling machine is updated with the Rebuilding Kit *Servo Motor Sealing No. 2550186-0100* before installing the *Jaw system gearbox and cutting belt* kit.

Functional description

The purpose of this kit is to:

- improve the lifetime of the gearboxes
- improve the lifetime of the cutting belt
- reduce machine downtime due to damage of the angle encoder belt
- reduce the operating temperature of the angle encoder, to improve reliability.

Enclosed documentation

Mechanical documents

Description	Bill of material No.	Document No.
RK Jaw system gearbox and cutting belt SPC pages	-	SPC-DF 2547483-0106
Modification drawing	-	2594855-1

Electrical documents

There are no electrical documents for this rebuilding kit.

2.2c BK483en-10.fm

Rebuilding time

Note! The times given below do not include the time required for cleaning and/or the time it takes to prepare the machine and step up to Production.

	Total man-hours	Recommended personnel
Mechanics	6	2

Preparations

Machine status	Power **Off** Water **Off** Steam **Off** Air **Off**

Before starting any operation on the machine make sure that:

- this Document Folder is correct for the specific machine
- all the parts listed in the kit's bill of material have been delivered
- all the lists and drawings listed in *Enclosed documentation* (see above) are present

For further information, please contact the Liaison Centre in Modena, Italy.

Tools

No special tools are required for this rebuilding.

Installation

1 Remove jaw system chains

SPC reference	648524-0400
RK reference	2547324-0100

Preparation

Caution! To prevent damage to the conveyor or knives, make sure that the knives are not in the vertical position before swinging the jaw system open.

a) Remove the two screws (1) holding the jaw system to the bulkhead. Then swing the jaw system away from the bulkhead.

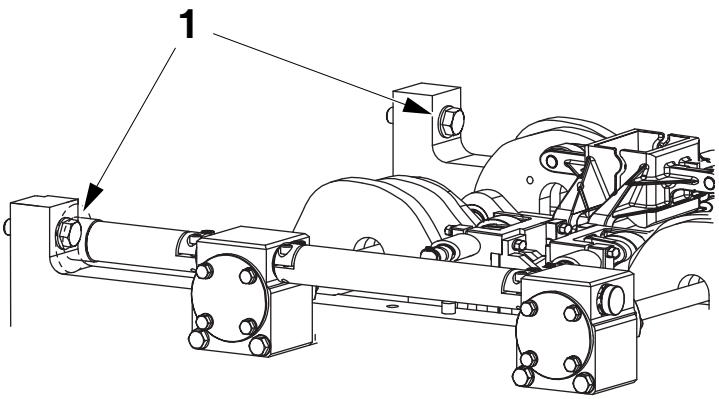

1 Screw

(Cont'd)

2.2c BK483en-20.fm

(Cont'd)



Risk of cutting!
The knife is sharp.

b) Remove the screws (2).
c) Remove the knife holder (3).
d) Repeat the process on the other knives.

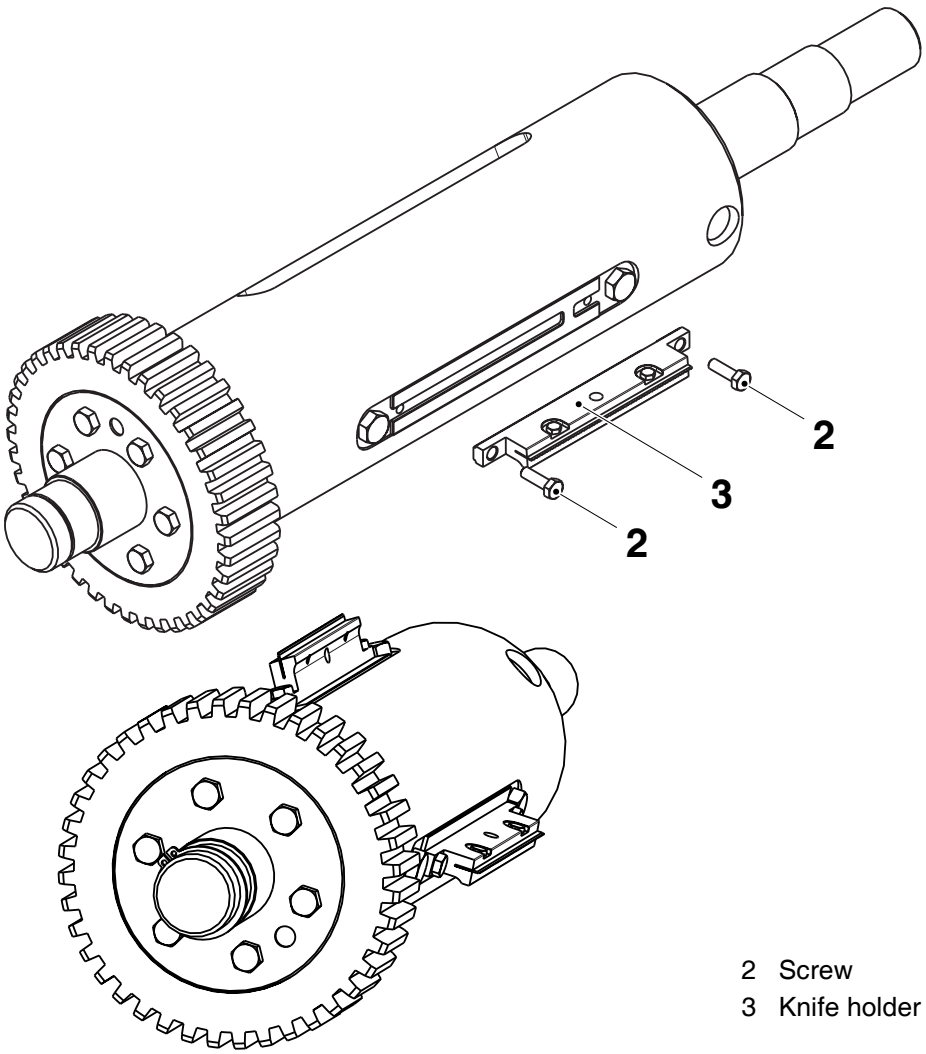

2.2c BK483en-20.fm

2 Screw
3 Knife holder

(Cont'd)

(Cont'd)

e) Remove the screws (4).

f) Remove the dolly holder (5).

g) Repeat the process on the other cutting dollies.

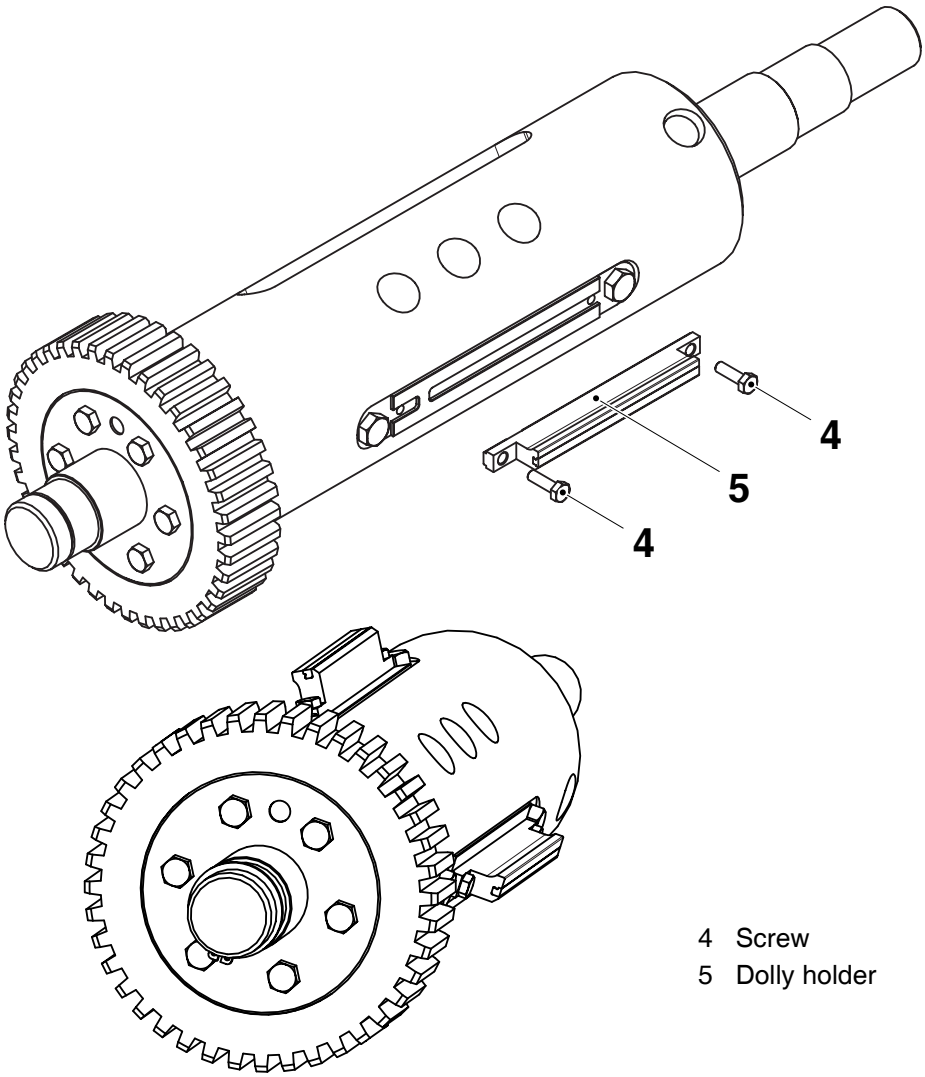

4 Screw
5 Dolly holder

(Cont'd)

2.2c BK483en-20.fm

(Cont'd)

Note! For TBA 250 B machines, discard the packages guides (7) after removing them. New guides are supplied as part of this kit.

h) Remove the four screws (6). Then remove the two package guides (7).

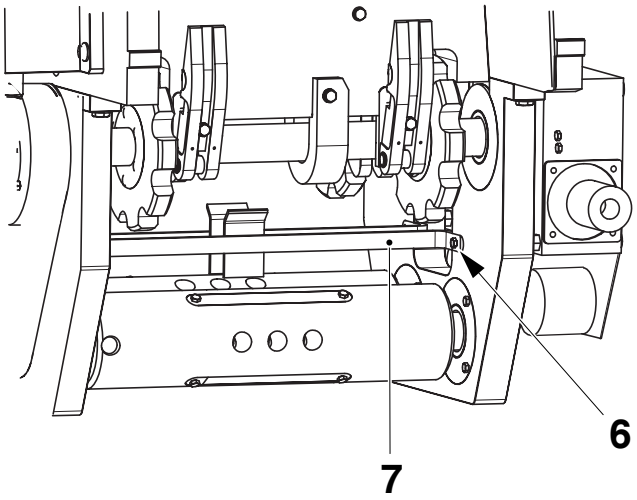

6 Screw
7 Guide

(Cont'd)

2.2c BK483en-20.fm

(Cont'd)



Risk of crushing!
Be careful not to trap your fingers between the links.

Chain removal

It is easier to remove the sealing link chain before removing the pressure link chain.

Shims are fitted to ensure that each volume box will produce a package of optimum size. For this reason it is important that mating pressure and sealing links are marked before the chains are removed.

On assembly the numbered links must be matched again to ensure that packages are produced with the correct volume.

In the example below, the pressure and sealing jaws of link number 1 have been marked with an **X**.

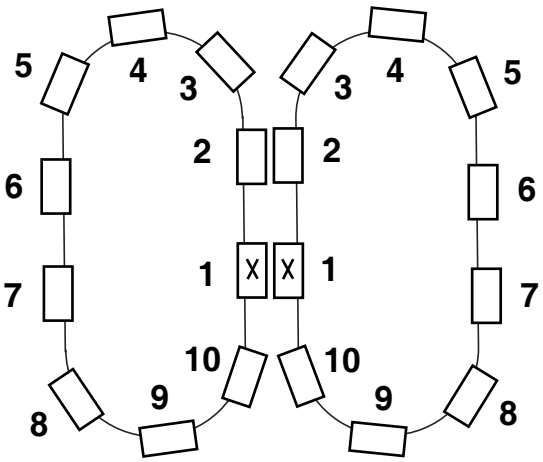

(Cont'd)

2.2c BK483en-20.fm

(Cont'd)

Note! Take care not to drop the bolts into the jaw mechanism.

a) Release the chain tension by inserting M8 x 45 hexagonal socket head screws (1) into the tensioning mechanism and tightening them fully.

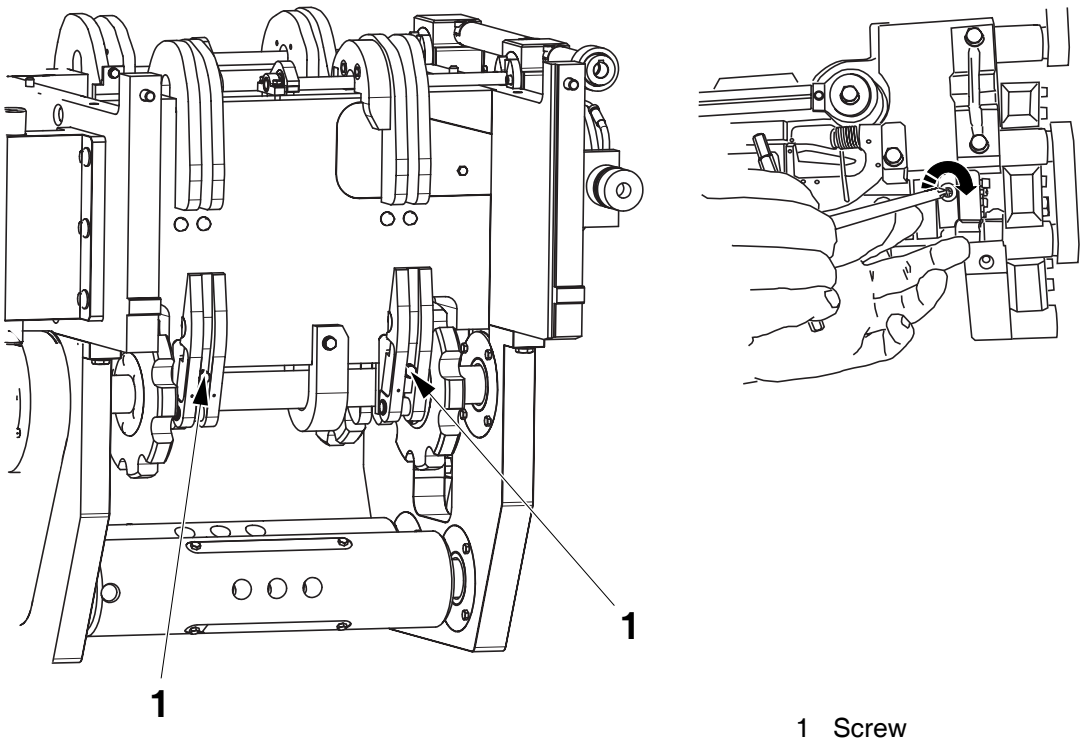

1 Screw

2.2c BK483en-20.fm

(Cont'd)

(Cont'd)

b) Separate the sealing link chain (2) at the top (point **A**).

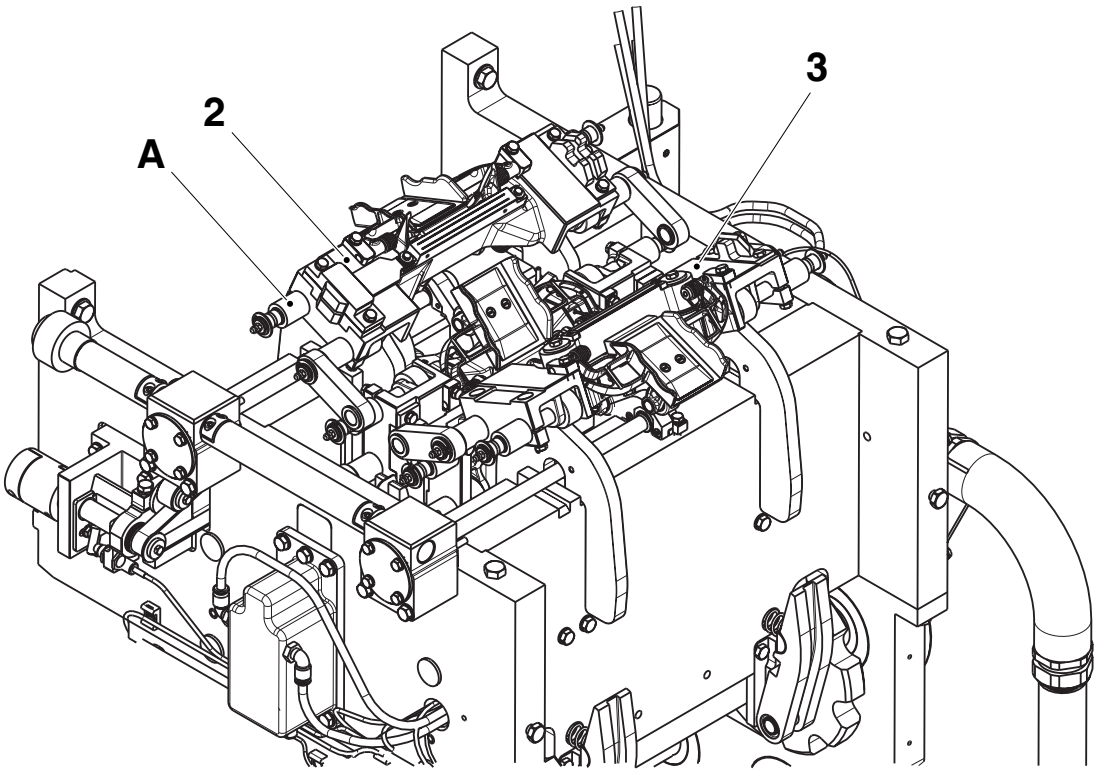

2 Sealing link chain
3 Pressure link chain

2.2c BK483en-20.fm

c) To separate the chain, remove the retaining ring and washer. Then remove the chain link.

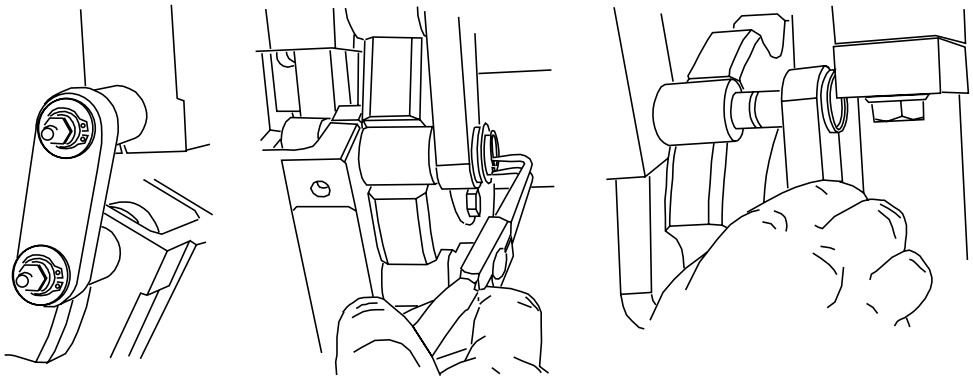

(Cont'd)

(Cont'd)

Note! Use two people to remove the chain, use a third to crank the jaw system.

d) Load a pallet truck with pallets and place a layer of cardboard on it. Push the pallet truck into position beneath the jaw system.

e) Pull the leading end of the chain (4) away from the jaw system and lay it on the pallets.

Note! While cranking keep the chain in tension by pulling it to keep the link shaft (5) in the wheel (6).

f) Crank the jaw system to move the inner links of the chain through the jaw system until the trailing link (7) is at point **B** were it will still be supported by the jaw system.
While this is being done, pull the end of the chain (4) and lay the links on the pallets.

g) Disengage the trailing link from the jaw system and remove the chain completely.

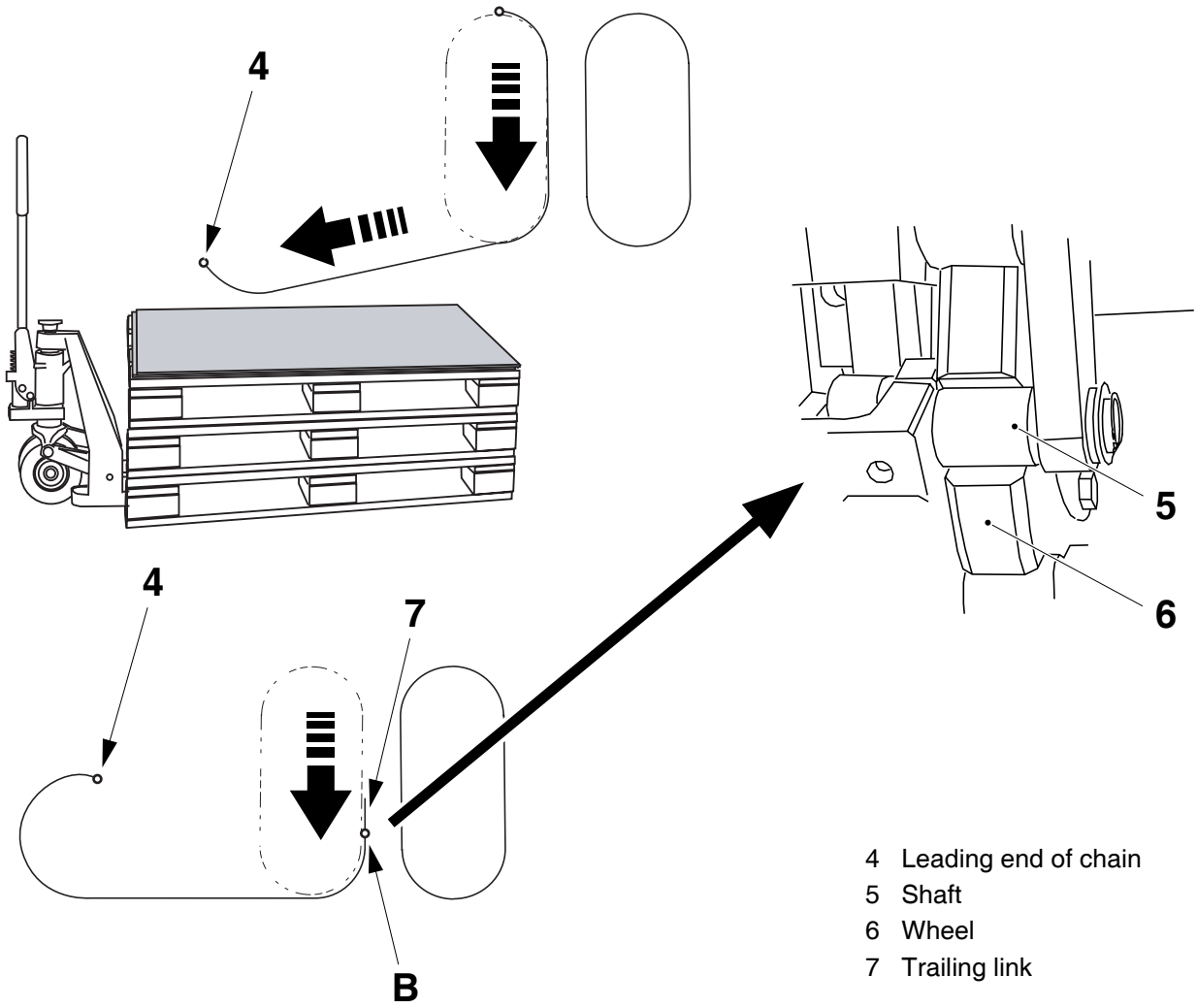

4 Leading end of chain
5 Shaft
6 Wheel
7 Trailing link

2.2c BK483en-20.fm

(Cont'd)

(Cont'd)

h) Prepare the pallet truck again and push it into position beneath the jaw system.

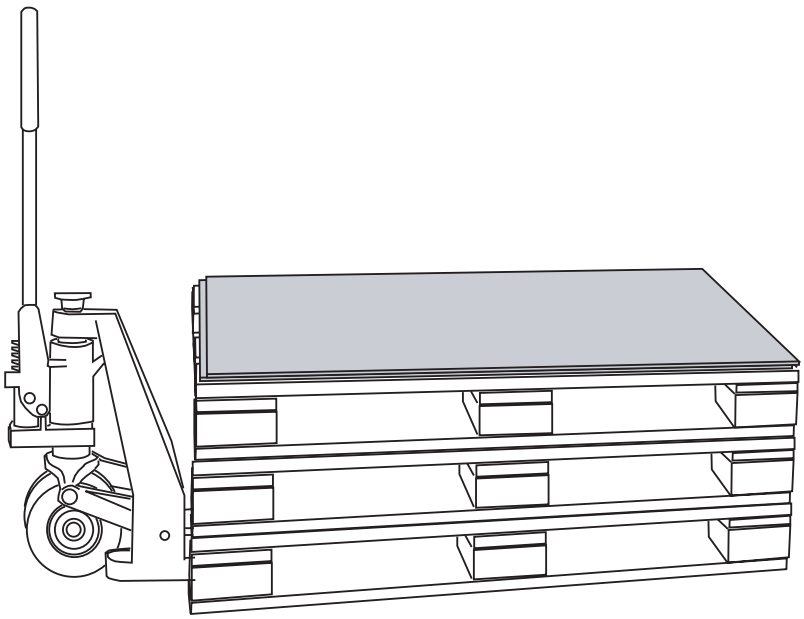

(Cont'd)

(Cont'd)

Caution! Do not split the chain without securing the ends of the chain with rope.

i) Attach a suitable piece of rope (8) to last link (9) of the chain and secure the free end of the rope to a part of the machine.

j) Separate the pressure link chain (3) at the top (point **C**).

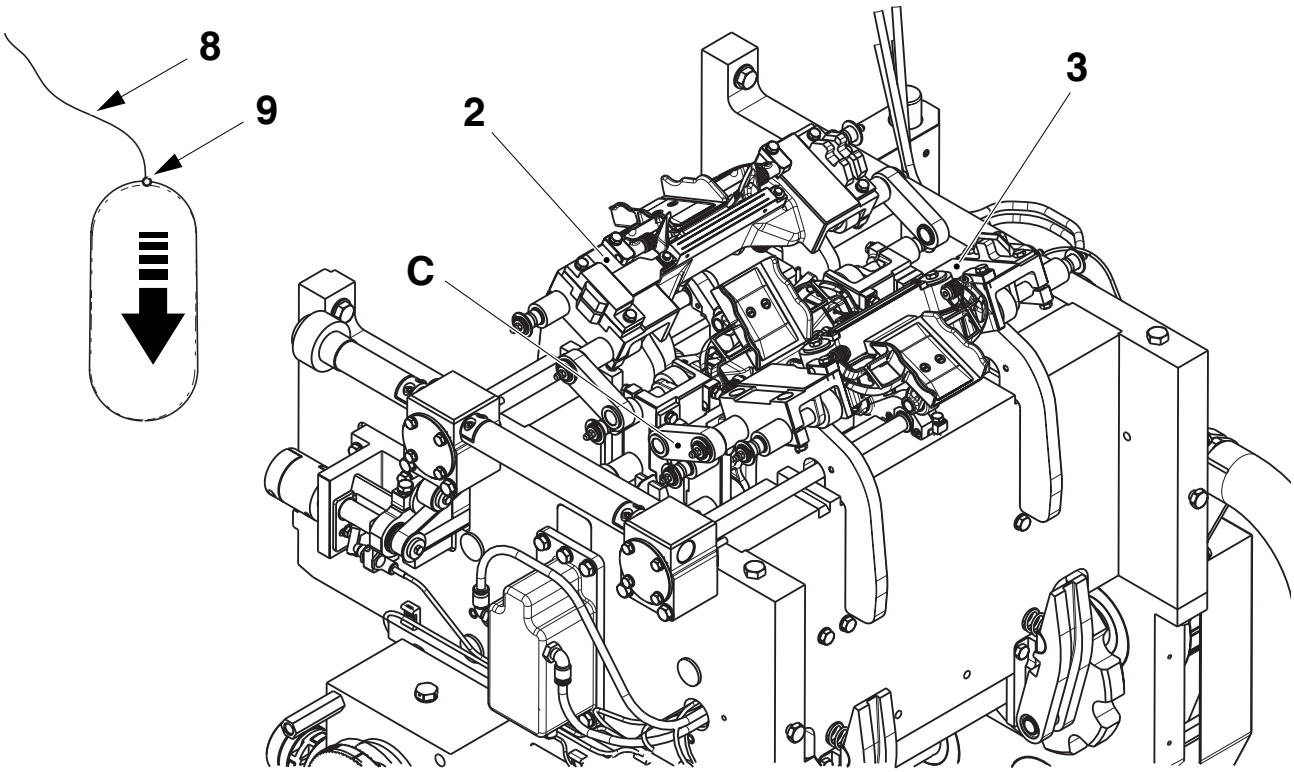

2.2c BK483en-20.fm

2 Sealing link chain
3 Pressure link chain
8 Rope
9 Last link

k) To separate the chain, remove the retaining ring and washer. Then remove the chain link.

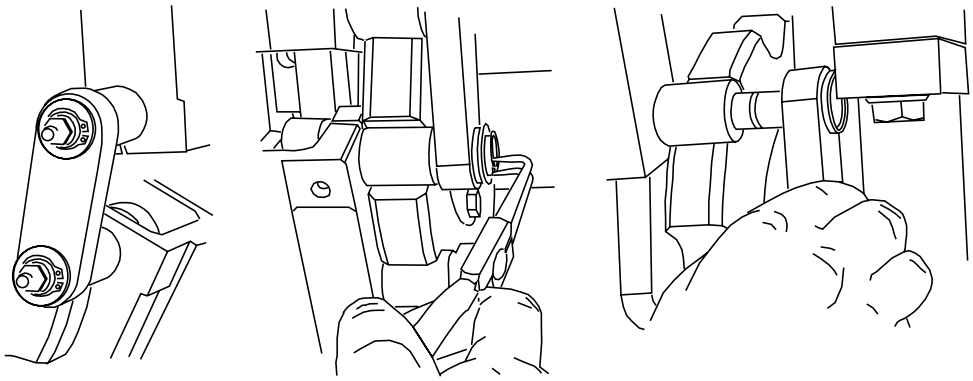

(Cont'd)

(Cont'd)

l) Pull the end of the chain (10) away from the jaw system and lay it on the pallets.

m) Release the free end of the rope (8) and lower the inner links of the chain through the jaw system until the last link (9) is at point **D**.
When lowering the chain, pull the end of the chain (10) to keep the link shaft (11) in the wheel (12) and the chain in tension.

n) Remove the chain.

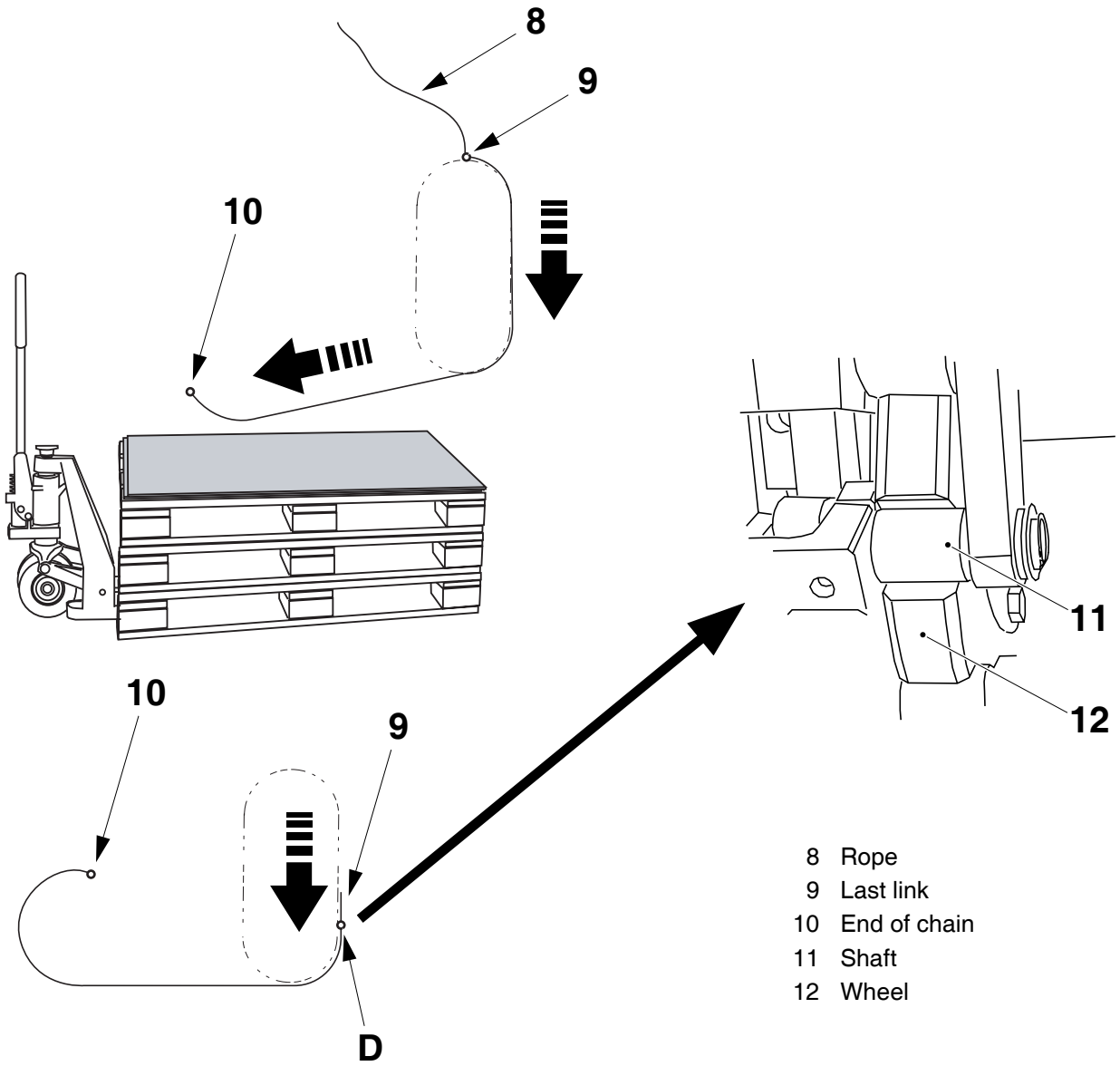

8 Rope
9 Last link
10 End of chain
11 Shaft
12 Wheel

2.2c BK483en-20.fm

(Cont'd)

(Cont'd)

o) Remove the cam (13).

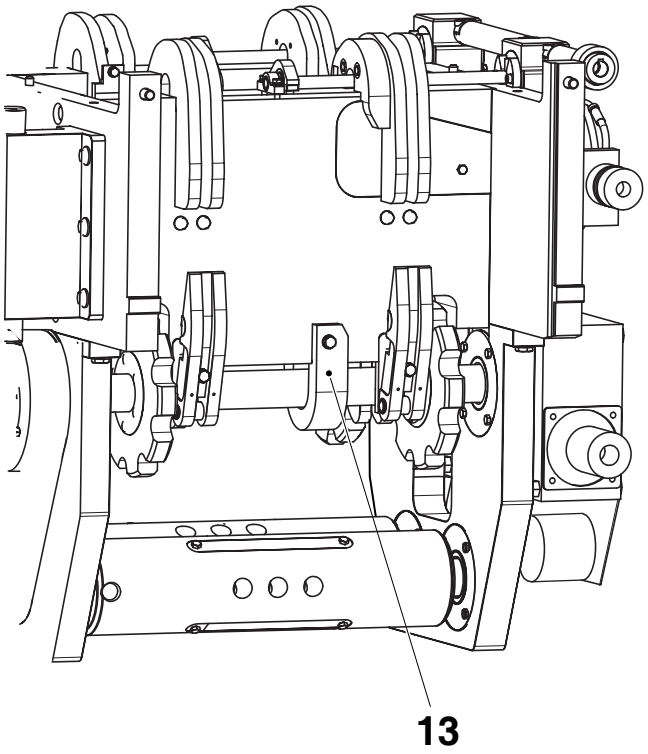

13 Cam

2.2c BK483en-20.fm

2 Remove gearboxes

SPC reference	648524-0400

a) Remove the screws (1) and the cover (2).

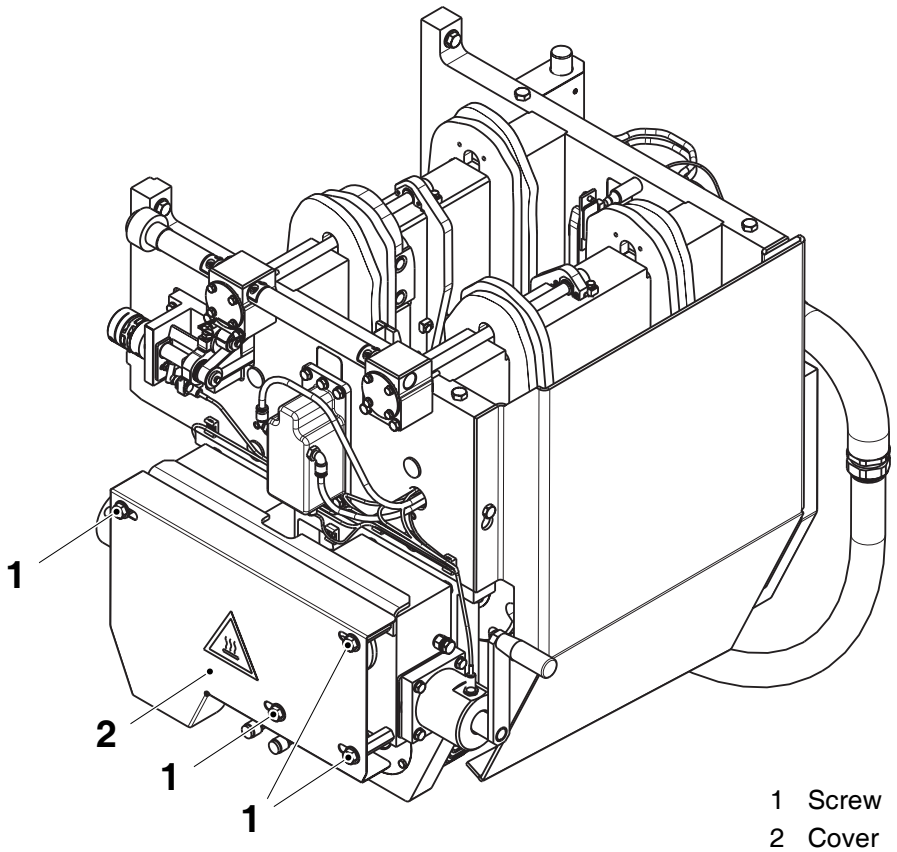

1 Screw
2 Cover

(Cont'd)

2.2c BK483en-20.fm

(Cont'd)

Note! Do not try to disconnect the cable from the angle encoder.

b) Remove the nuts (3), the belt (4) and the plate (5).

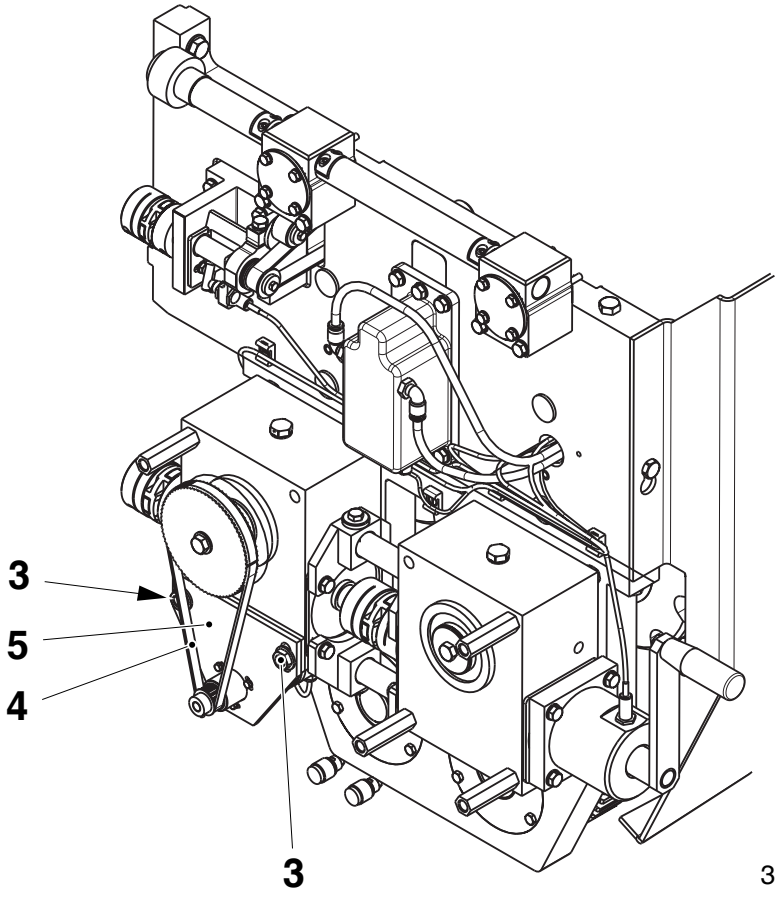

3 Nut
4 Belt
5 Plate

2.2c BK483en-20.fm

(Cont'd)

(Cont'd)

c) Remove the screws (6) and plate (5).

d) Remove the screws (7) and intermediate part (8) from the encoder (9).

e) Support the encoder (9) in a safe position.

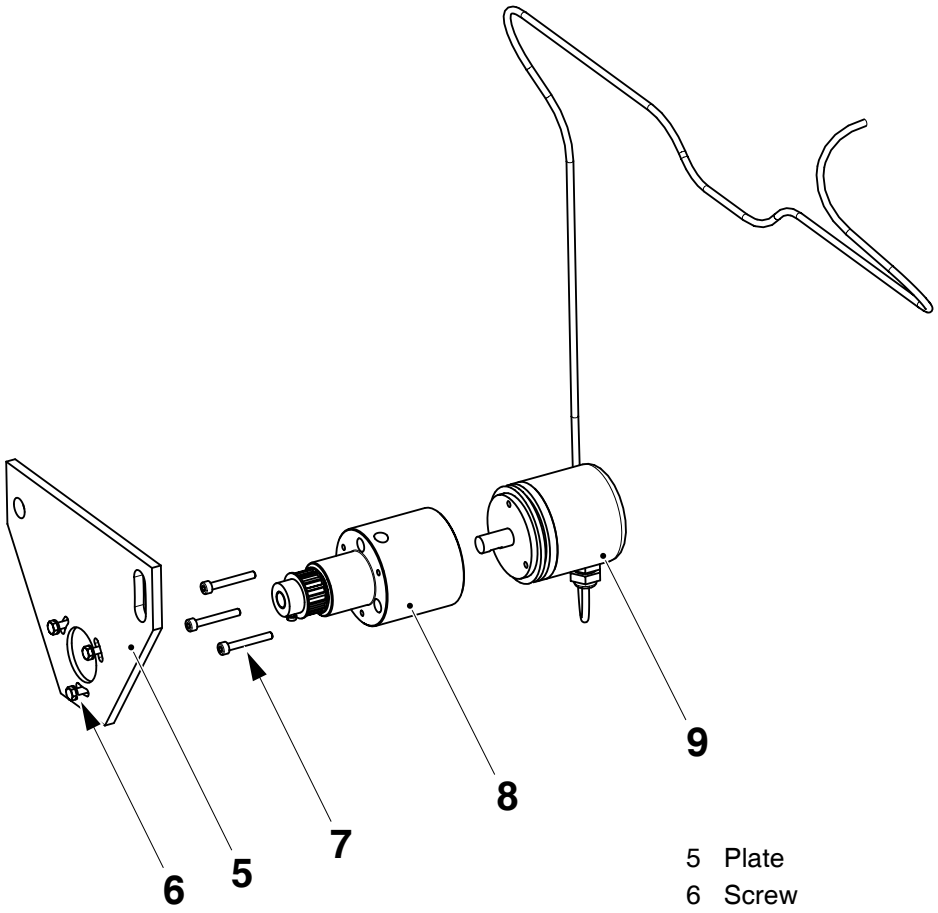

5 Plate
6 Screw
7 Screw
8 Intermediate part
9 Encoder

(Cont'd)

(Cont'd)

f) Remove the screw (10) and pulley (11).

g) Remove the pin (12).

h) Remove the screw (13) and washer (14).

i) Remove the plate (15).

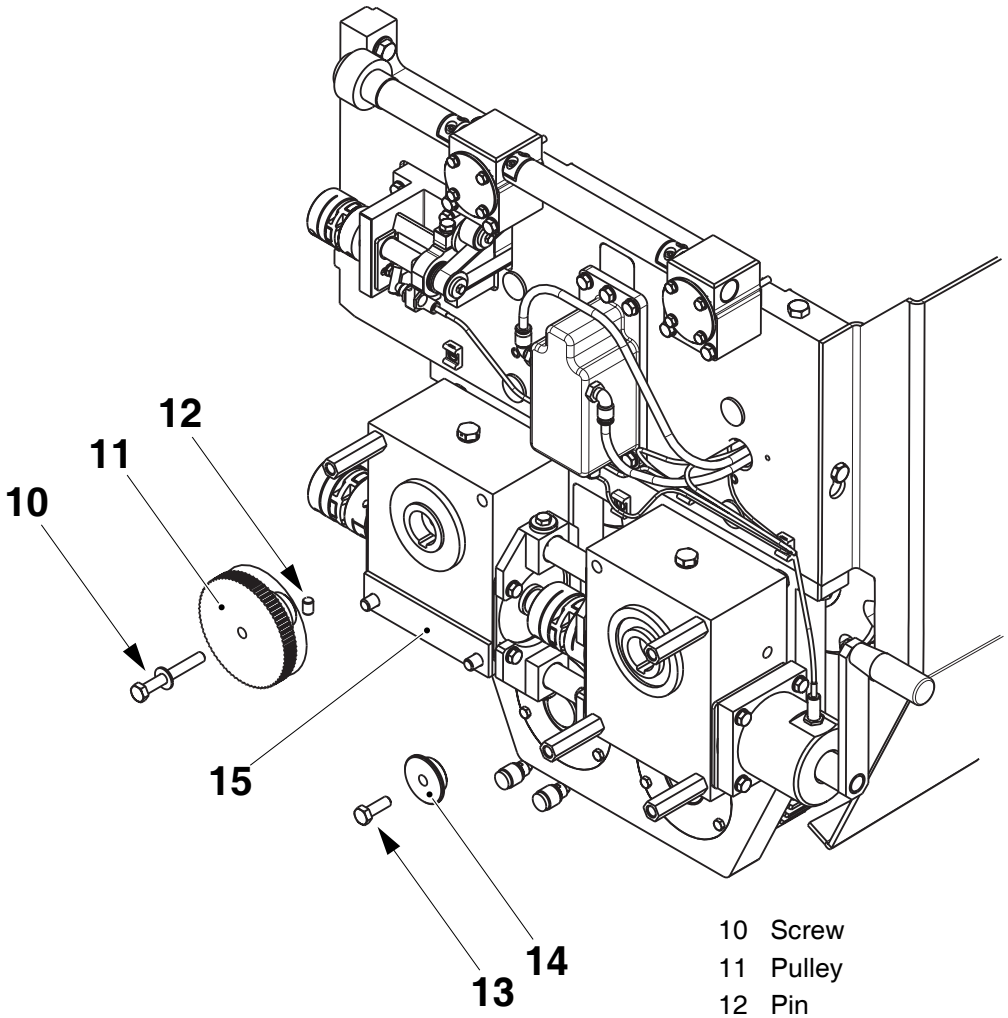

2.2c BK483en-20.fm

10 Screw
11 Pulley
12 Pin
13 Screw
14 Washer
15 Plate

(Cont'd)

(Cont'd)

j) Loosen the screws (16) in the four brackets (17).

k) Remove the screws (18), brackets (17) and shafts (19).

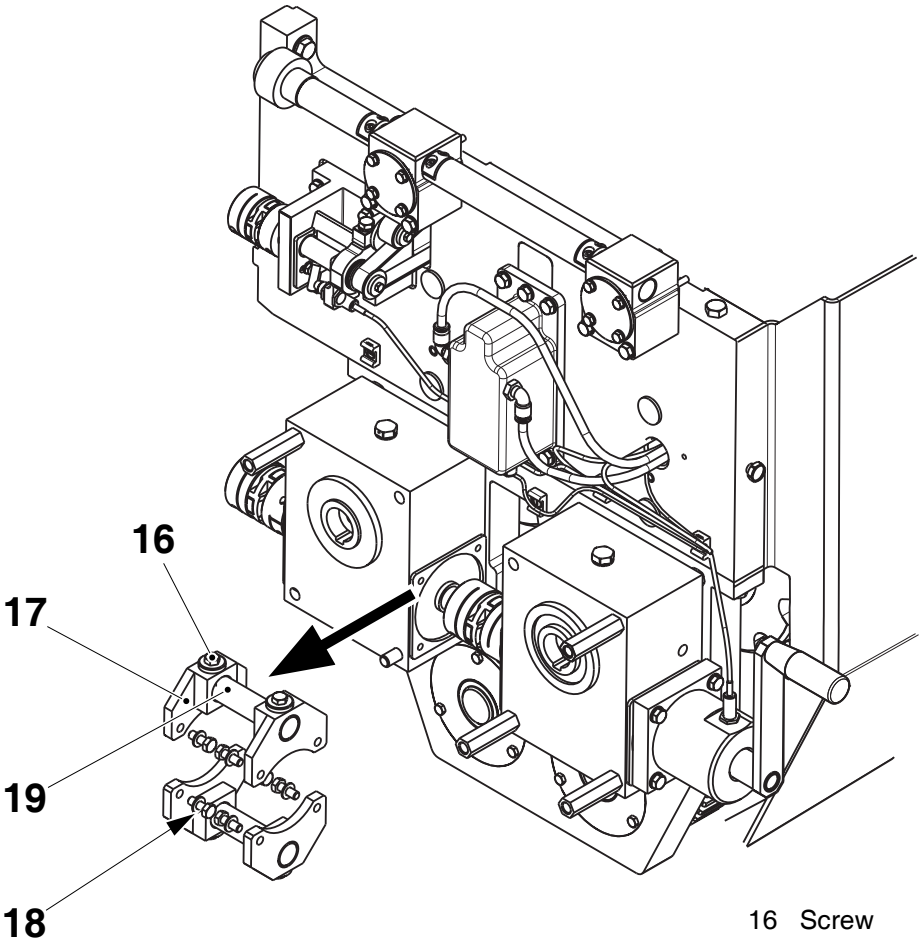

16 Screw
17 Bracket
18 Screw
19 Shaft

(Cont'd)

2.2c BK483en-20.fm

(Cont'd)

l) Crank the jaw system with the handle and turn the remaining part of the coupling (20) counterclockwise by hand.
The gearboxes (21) and (22) will rotate splitting the central coupling (23).

m) Remove the central part (24) of the coupling (23).

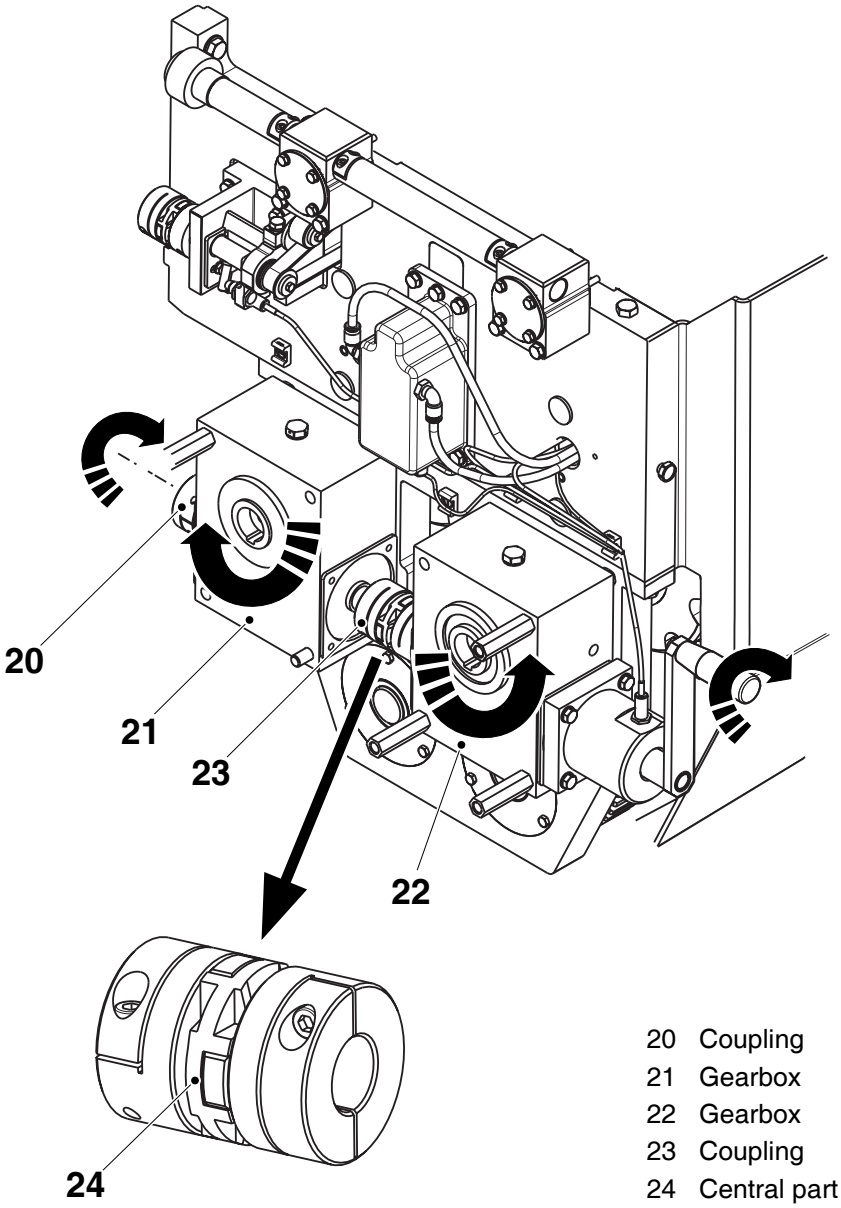

20 Coupling
21 Gearbox
22 Gearbox
23 Coupling
24 Central part

2.2c BK483en-20.fm

(Cont'd)

(Cont'd)

n) Loosen the screws (25) and pull off the remaining part of the couplings (26).

Note! Do not damage the sensor and cable (30).

o) Disconnect the sensor (30) from the crank handle holder (28).

p) Remove the screws (27) and the crank handle holder (28).

q) Remove the spacers (29).

r) Remove the gearboxes (21) and (22).

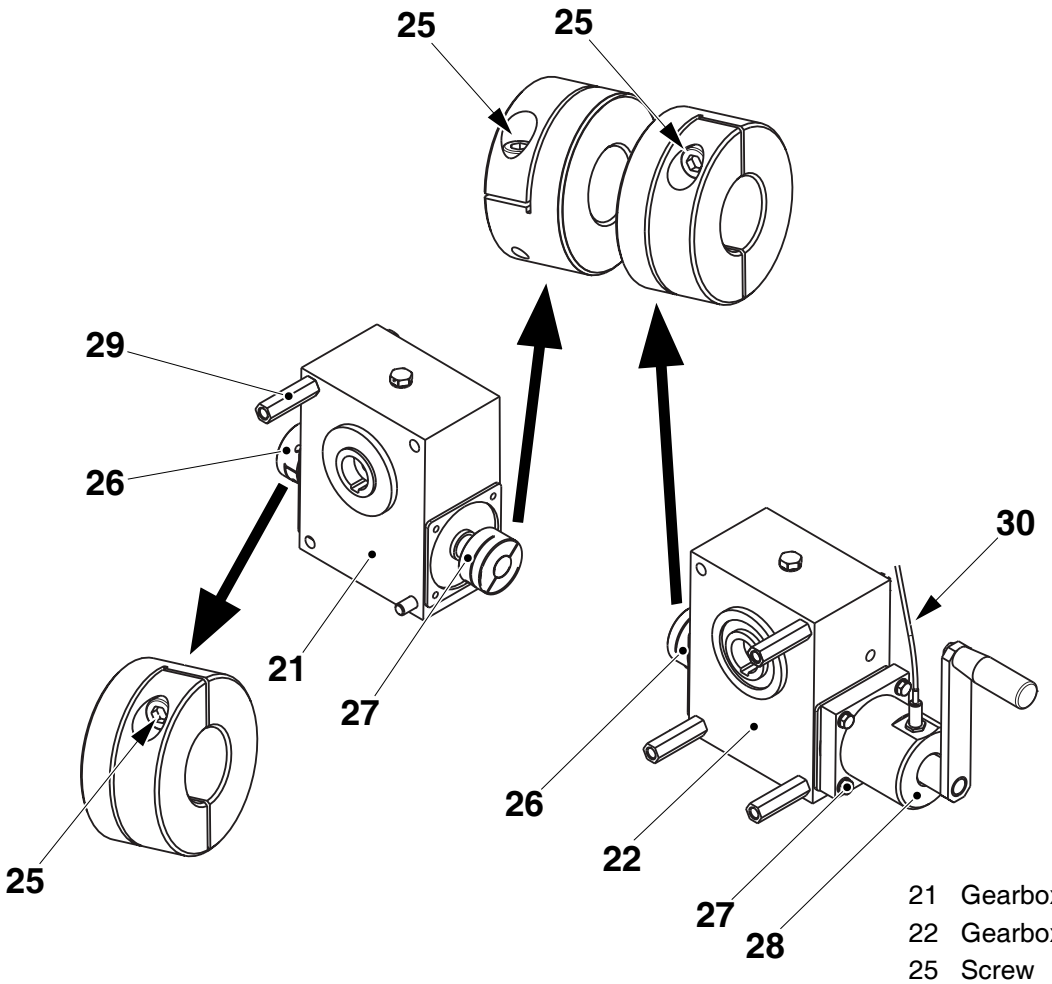

21 Gearbox
22 Gearbox
25 Screw
26 Coupling part
27 Screw
28 Crank handle holder
29 Spacer
30 Sensor

2.2c BK483en-20.fm

3 Re-wire the encoder

SPC reference	648524-0400

a) In the machine body, disconnect the encoder cable from connector X4002 on the plate (1).

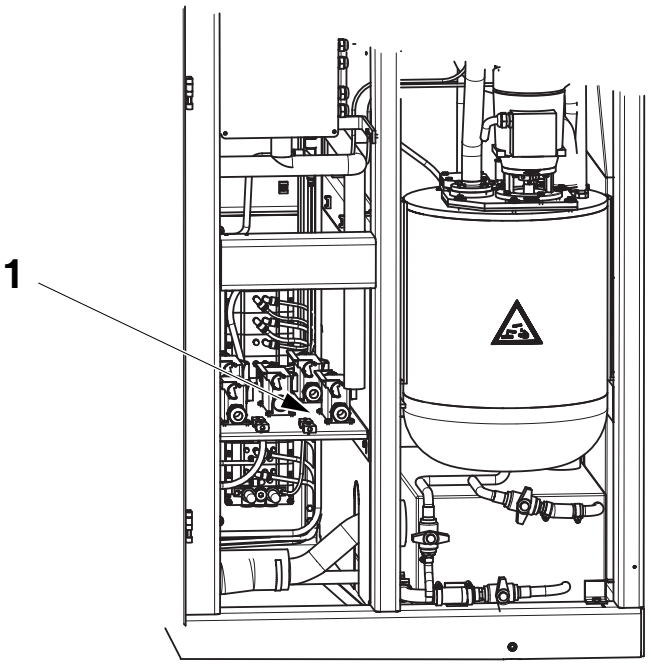

1 Plate

b) Attach a draw wire to the free end of the cable (2) and pull the cable through the cable harness (3) and the jaw unit (4).

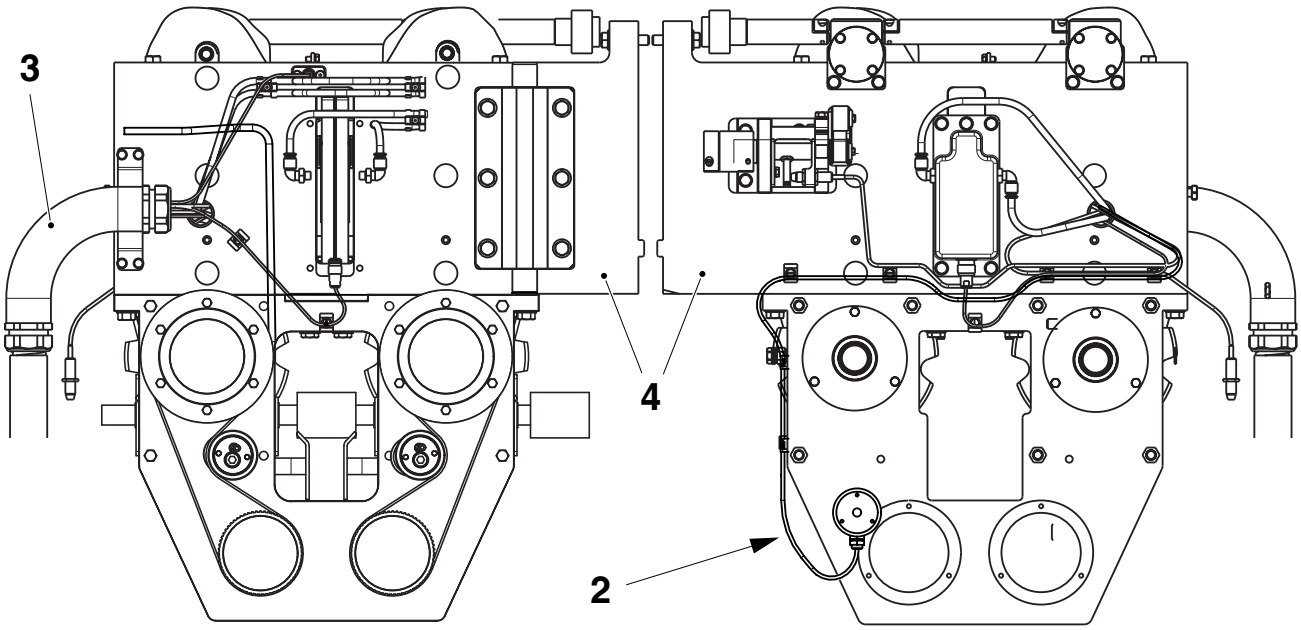

2 Encoder cable
3 Cable harness
4 Jaw unit

(Cont'd)

2.2c BK483en-20.fm

(Cont'd)

c) Using the draw wire, pull the cable (2) through the cable harness (3) into the machine body.

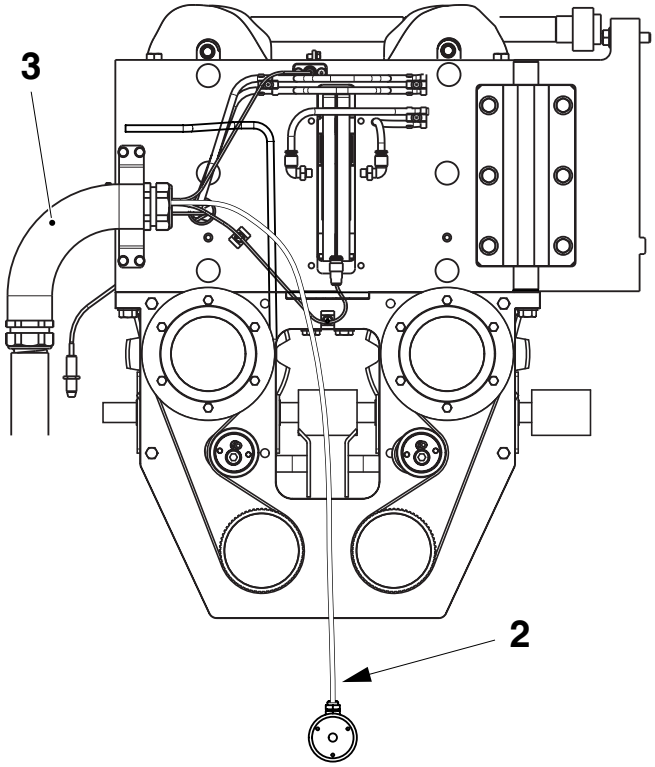

2 Encoder cable
3 Cable harness

2.2c BK483en-20.fm

d) Connect the encoder cable to connector X4002 on the plate (1).

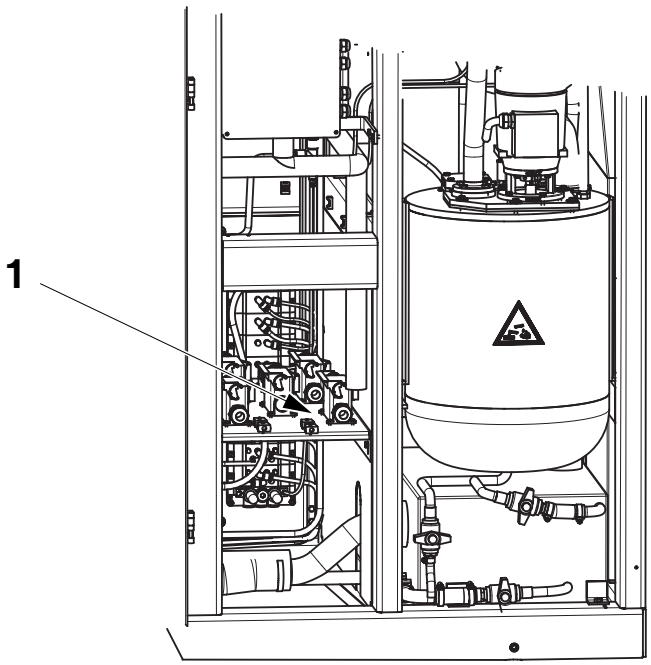

1 Plate

4 Remove lower part of jaw unit

SPC reference	648524-0400



WARNING!

Risk of crushing!
Be careful not to trap your fingers under the jaw unit.

a) Prepare a pallet truck and place it below the jaw unit.

b) Remove the screws (1) and lower the bottom half of the jaw unit (2) onto the pallet.

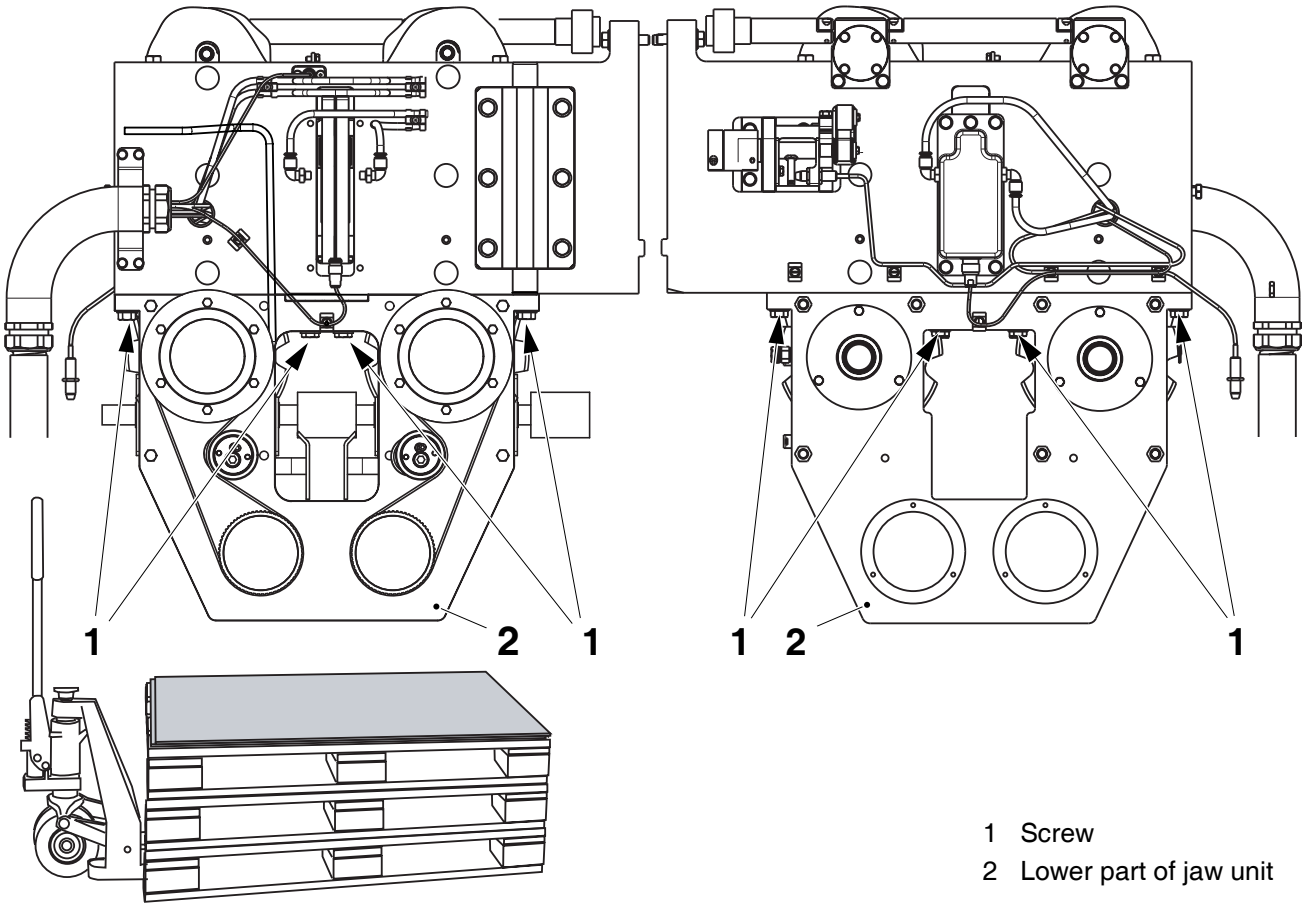

2.2c BK483en-20.fm

1 Screw
2 Lower part of jaw unit

5 Remove pulleys

SPC reference	648524-0400

a) Loosen the screw (1) in a belt tensioner (2).

b) Insert a prong key in the holes (3) and turn it to minimize the belt tension.

c) Remove the belt (4).

d) Remove the screw (1) and the belt tensioner (2).

e) Repeat for the other belt.

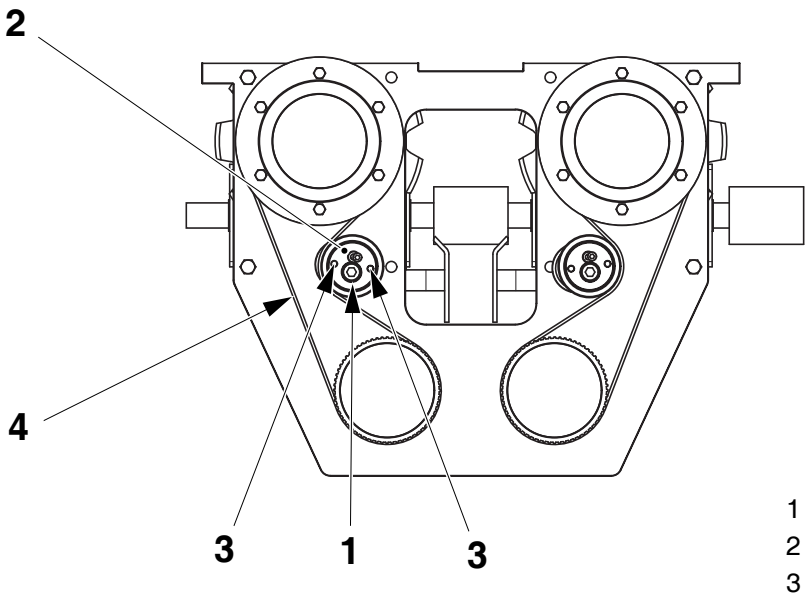

1 Screw
2 Tensioner
3 Hole
4 Belt

(Cont'd)

2.2c BK483en-20.fm

(Cont'd)

f) Remove the screws (5), cover (6), gasket (7), the clamping element (8) and the pulley (9).

g) Repeat for the other pulley.

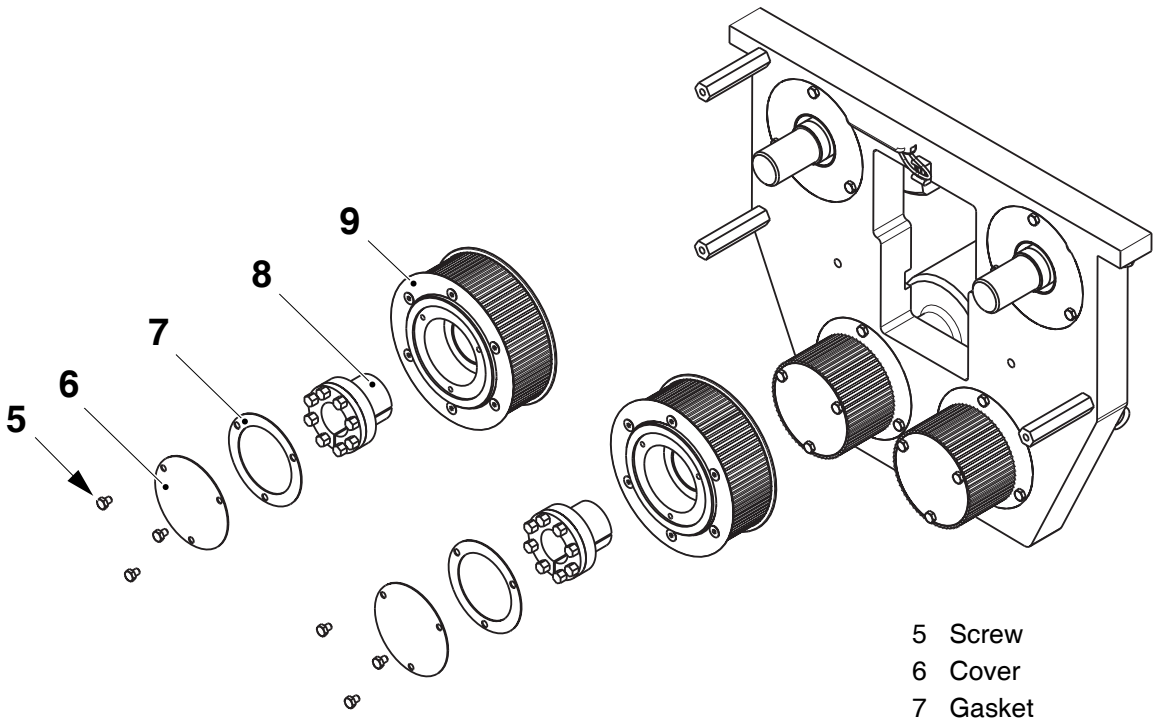

5 Screw
6 Cover
7 Gasket
8 Clamping element
9 Pulley

2.2c BK483en-20.fm

(Cont'd)

(Cont'd)

h) Remove the screws (10), cover (11), gasket (12), the clamping element (13) and the pulley (14).

i) Repeat for the other pulley.

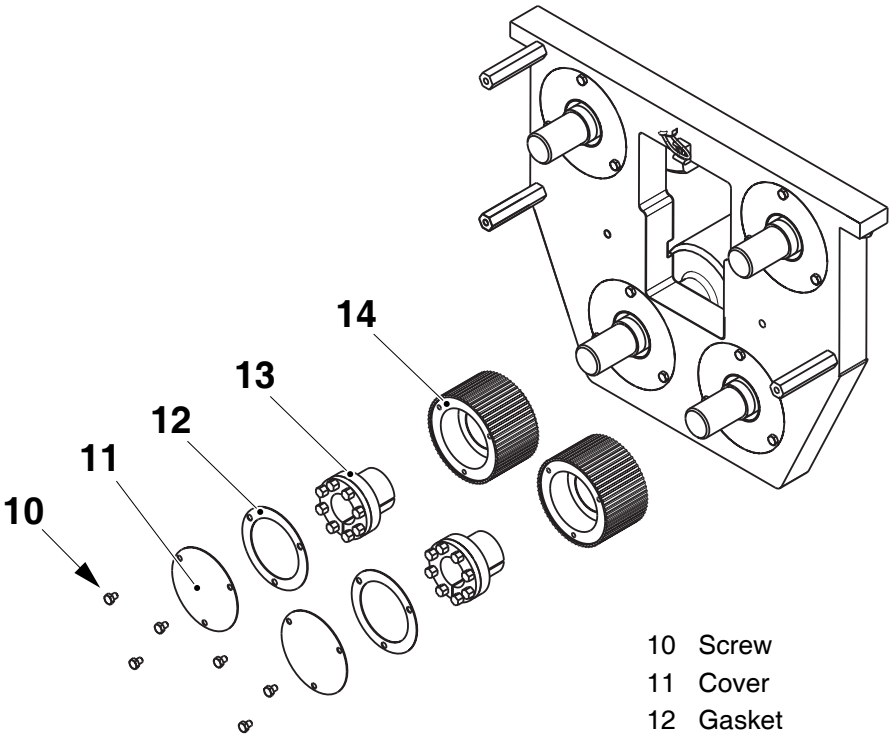

10 Screw
11 Cover
12 Gasket
13 Clamping element
14 Pulley

2.2c BK483en-20.fm

6 Remove chain drive shaft bearings and seals, LH side

SPC reference	648524-0400

Remove:

- the screws (1) and the covers (2)
- the sealing rings (3)
- the retaining rings (4)
- the bearings (5)
- the housings (6)
- the sealing rings (7).

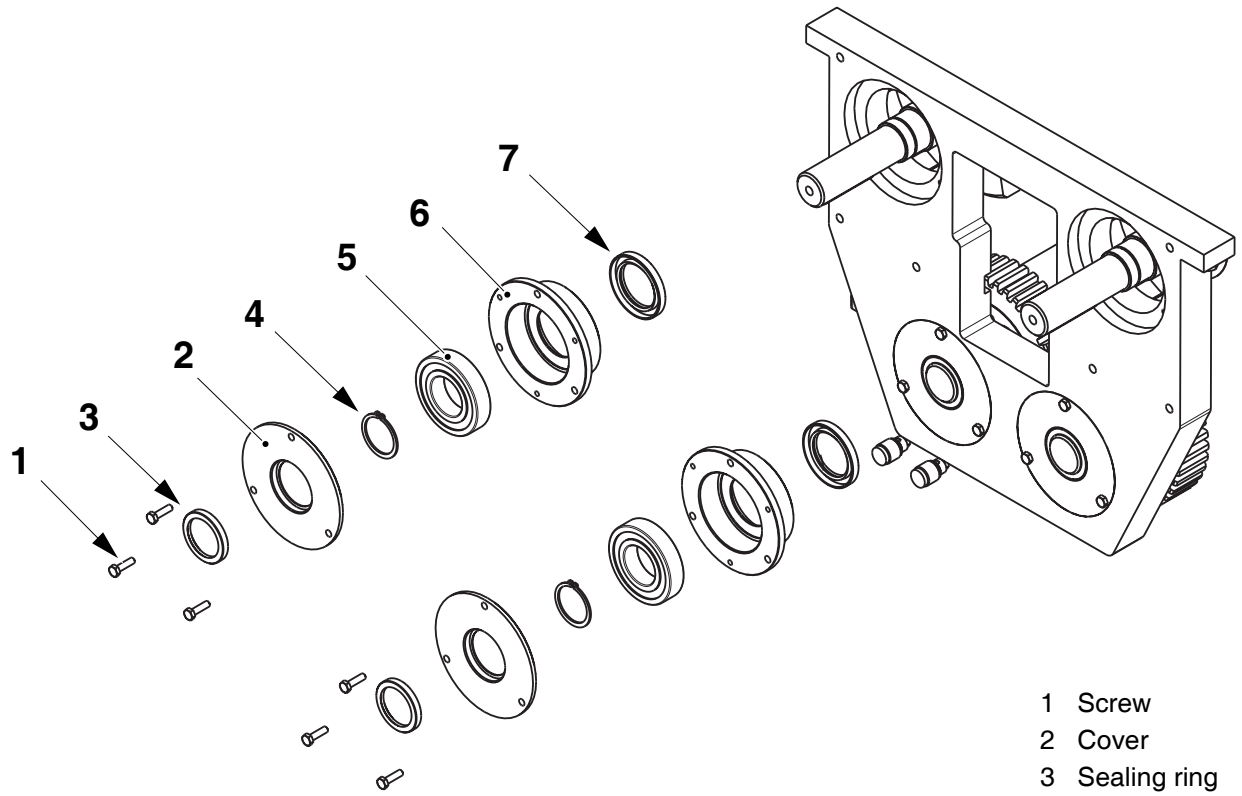

2.2c BK483en-20.fm

1 Screw
2 Cover
3 Sealing ring
4 Retaining ring
5 Bearing
6 Housing
7 Sealing ring

7 Remove drum shaft bearings and seals, LH side

SPC reference	648524-0400

Remove:

- the screws (1) and the covers (2)
- the sealing rings (3)
- the retaining rings (4)
- the bearings (5)
- the housings (6)
- the sealing rings (7).

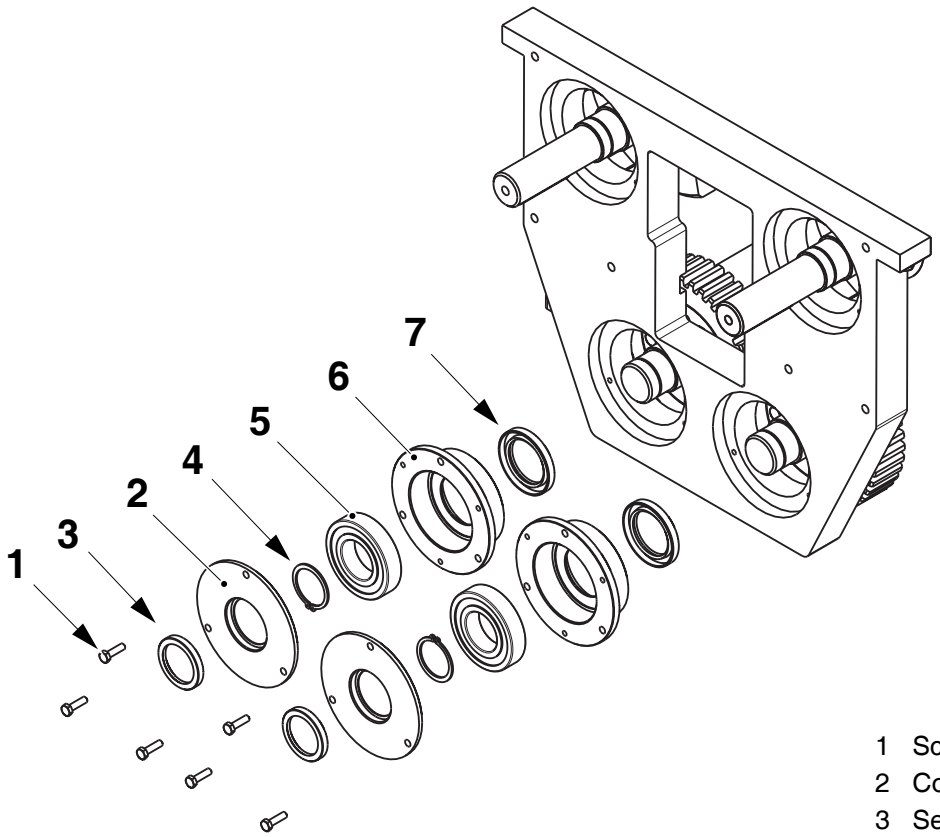

1 Screw
2 Cover
3 Sealing ring
4 Retaining ring
5 Bearing
6 Housing
7 Sealing ring

2.2c BK483en-20.fm

8 Remove bearings and seals, RH side

SPC reference	648524-0400

a) At one of the chain drive shafts, remove:
   – the screws (1) and the covers (2)
   – the sealing rings (3)
   – the bearings (4)
   – the housings (5)
   – the sealing rings (6).

b) Repeat for the other drive shaft (7).

c) At one of the drum shafts, remove:
   – the screws (8) and the covers (9)
   – the sealing rings (10)
   – the bearings (11)
   – the housings (12)
   – the sealing rings (13).

d) Repeat for the other drum shaft (14).

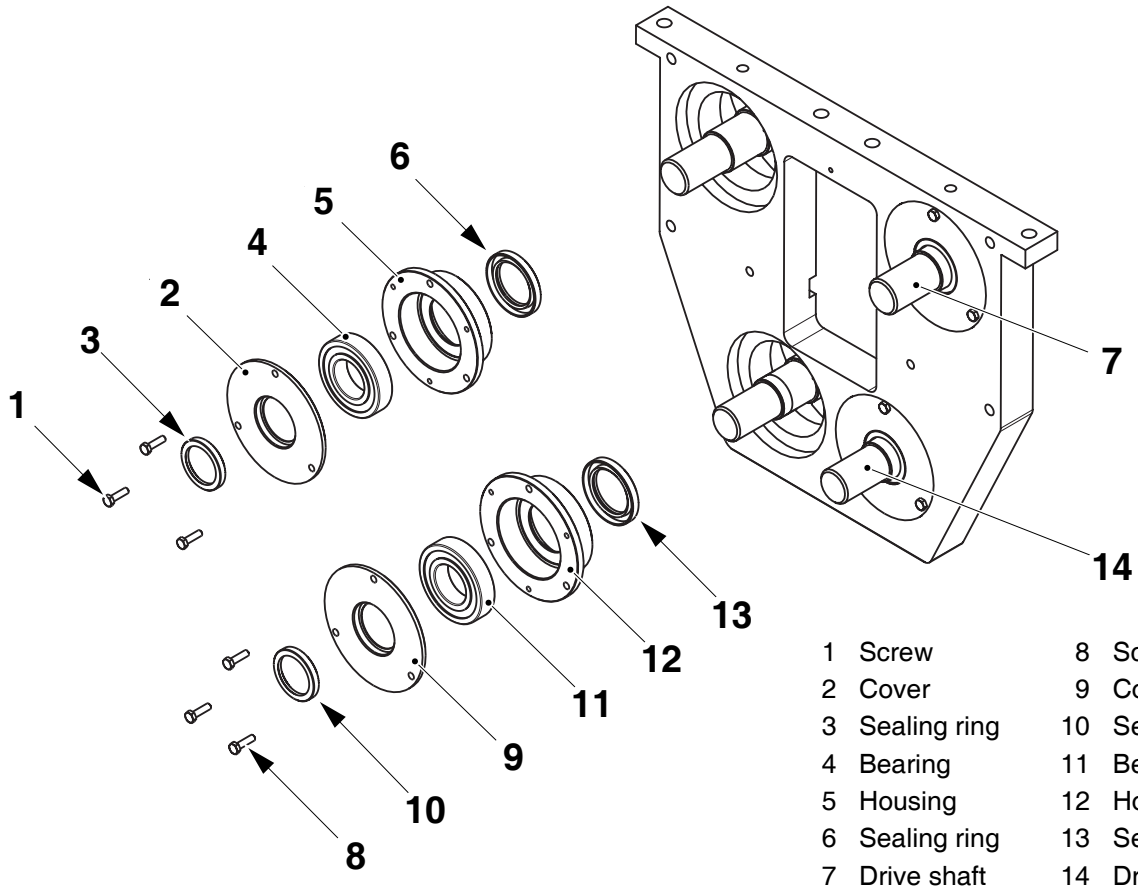

2.2c BK483en-20.fm

1	Screw	8	Screw
2	Cover	9	Cover
3	Sealing ring	10	Sealing ring
4	Bearing	11	Bearing
5	Housing	12	Housing
6	Sealing ring	13	Sealing ring
7	Drive shaft	14	Drum shaft

(Cont'd)

9 Remove drum and drive shaft

SPC reference	648524-0400

a) Remove the shafts (1), (2), (3) and (4).
Discard the chain drive shafts (1) and (2).

b) Discard the plate (5) at the gearbox end.

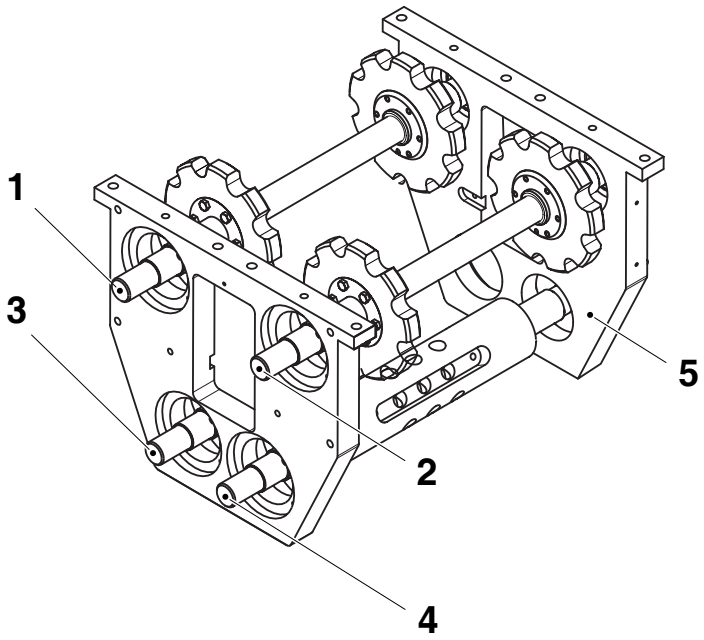

1 Shaft
2 Shaft
3 Shaft
4 Shaft
5 Plate

2.2c BK483en-20.fm

10 Modify frame

According to	2594855-1
RK reference	2547324-0100

a) Remove and discard the spacers (1).

b) Drill holes in the plate (2) at the positions shown and fit M8 helicoils. See the modification drawing.

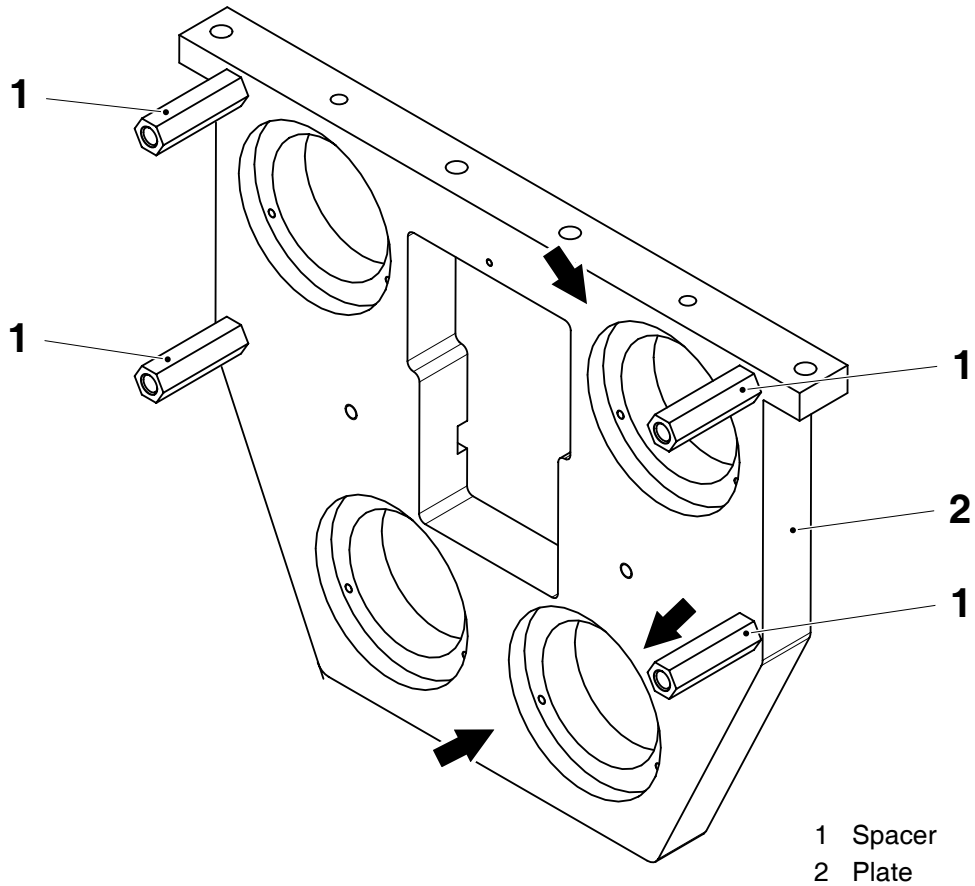

1 Spacer
2 Plate

2.2c BK483en-20.fm

11 Modify plate

SPC reference	648524-0400

For all volumes

a) Remove the existing screw (1) from the end of the shaft (2).

b) Insert a screw M10x100 in the shaft (2) and use a spanner to stop the shaft (2) turning.

c) Tighten the screw and remove the shaft (2) and gasket (3). Discard the shaft, retain the screw.

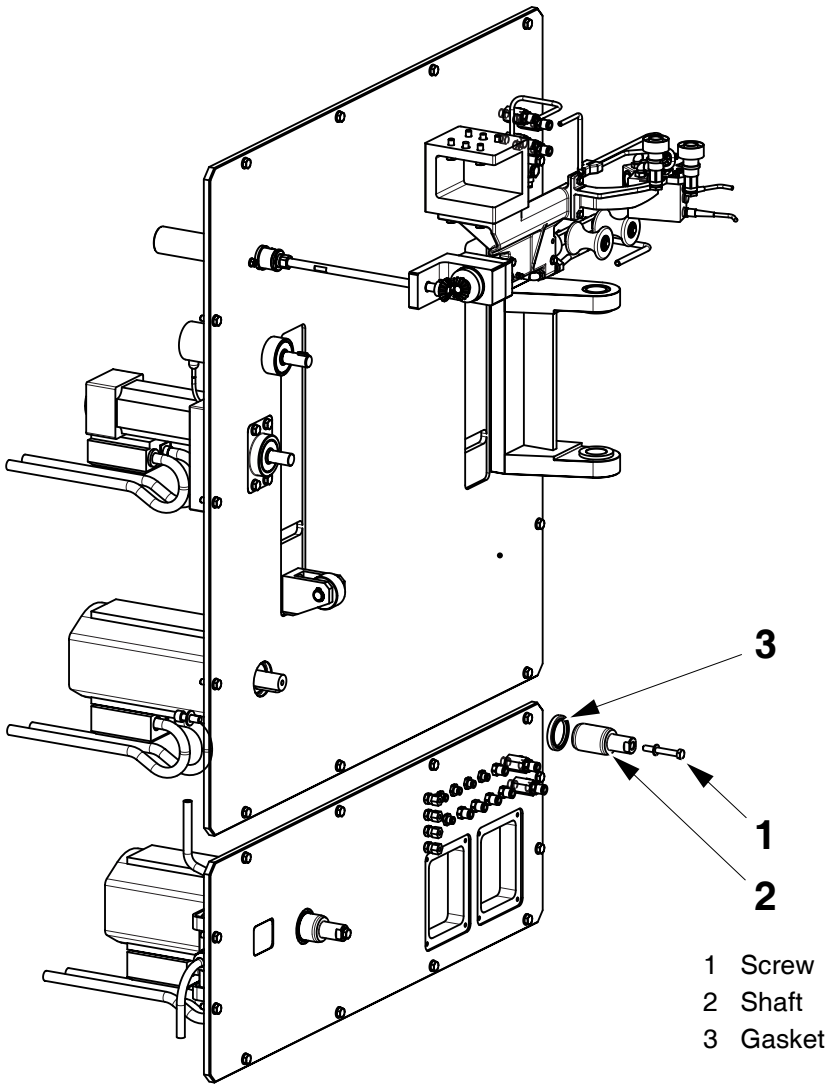

1 Screw
2 Shaft
3 Gasket

(Cont'd)

2.2c BK483en-20.fm

(Cont'd)

For Volumes TBA 200 S and TBA 250 S

a) Remove the screws (1) and servomotor (2).

b) Fit the plate (3) between the servomotor (2) and the plate (4) and insert and tighten the screws (1).

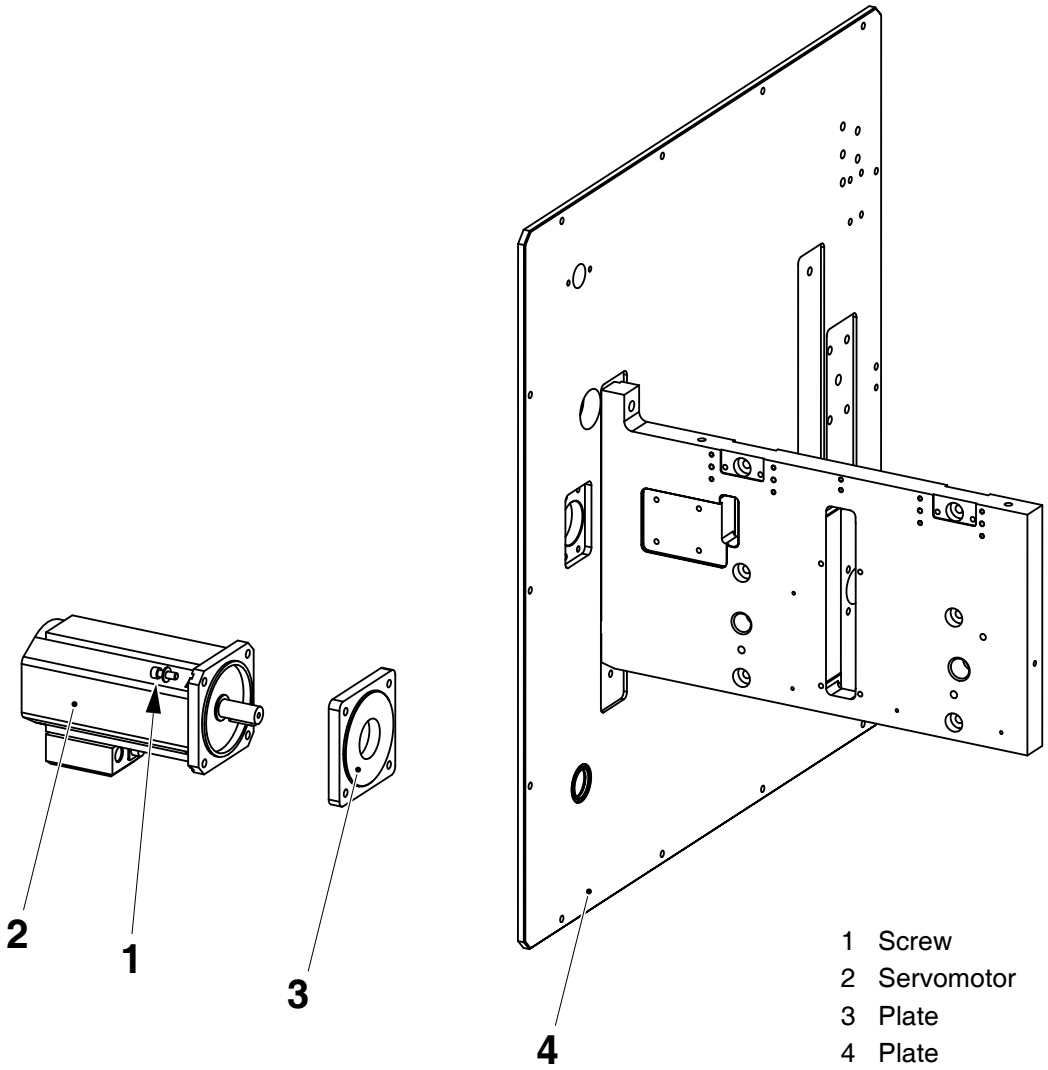

2.2c BK483en-20.fm

(Cont'd)

(Cont'd)

For all Volumes

a) Fit the gasket (1) and then fit the intermediate shaft (3) on the motor shaft (2) with the screw (4).

b) Fit the coupling part (5) on the intermediate shaft (3).

c) Push the coupling part until it touches the surface (7) of the intermediate shaft (3) and tighten the screw (6).

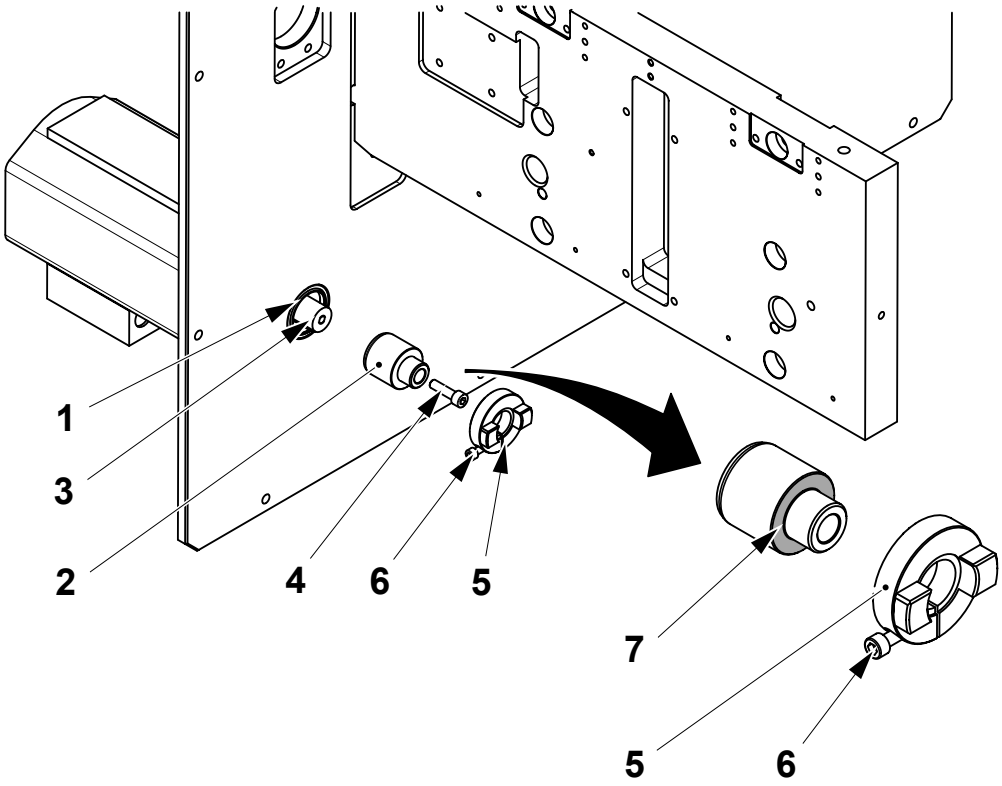

1 Gasket
2 Motor shaft
3 Intermediate shaft
4 Screw
5 Coupling part
6 Screw
7 Surface

2.2c BK483en-20.fm

12 Assemble new chain drive shafts

RK reference	2547324-0100

Note! This procedure is the new drive shaft assemblies supplied as part of the kit.

a) Fit the bushings (1) and pin (2) in the wheel (3).

b) Fit the wheel (3) on the shaft (4) so the reference pin (2) mates with the slot (5) in the shaft (4).

c) Fit the flange (6) and tighten the screws (7) crosswise to 30 +5/-0 Nm.

d) Repeat steps *a)* to *c)* at the other end of the shaft.

e) Fit the O-ring (8) in the groove on the shaft (4).

f) Repeat the procedure for the other shaft.

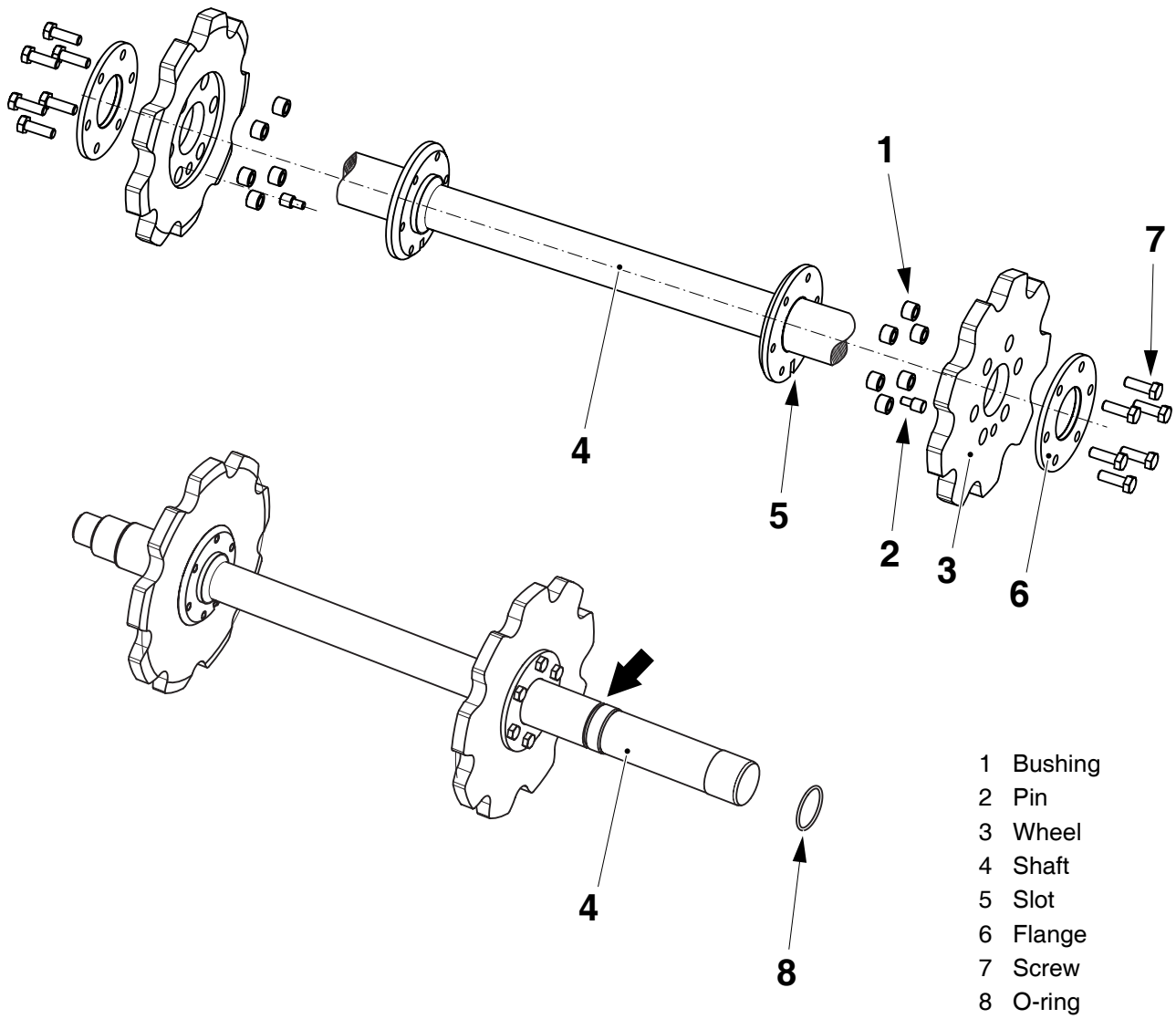

2.2c BK483en-20.fm

1 Bushing
2 Pin
3 Wheel
4 Shaft
5 Slot
6 Flange
7 Screw
8 O-ring

13 Assemble the jaw unit

SPC reference	648524-0400
RK reference	2547324-0100

a) Remove the covers (1) and (2) from the gearboxes (3) and (4).

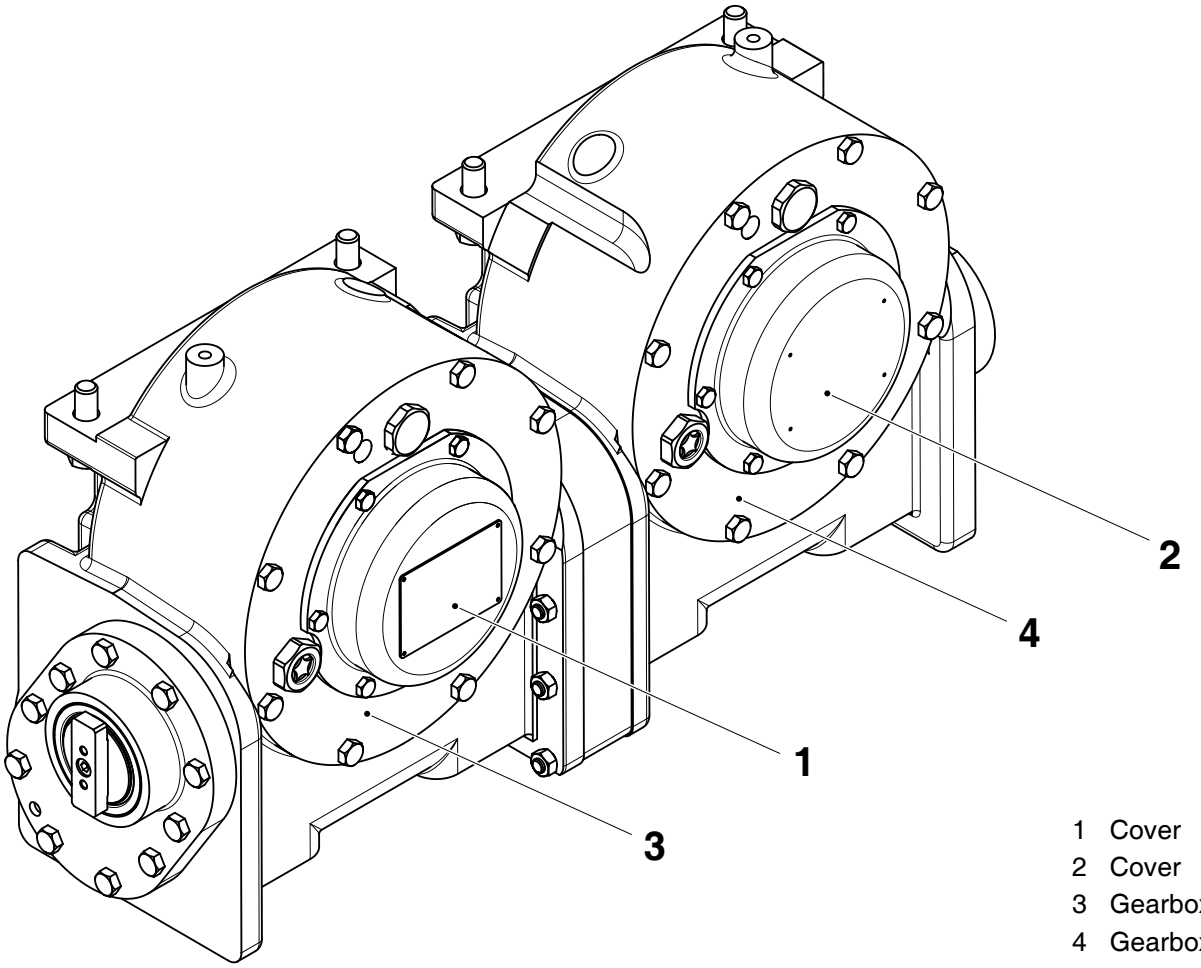

1 Cover
2 Cover
3 Gearbox
4 Gearbox

2.2c BK483en-20.fm

(Cont'd)

(Cont'd)

b) Loosen the screws (5) in the outer ring (6) of the clamp and pull off the clamp.

c) Separate the components of the clamp and clean them.

d) Repeat for the other gearbox.

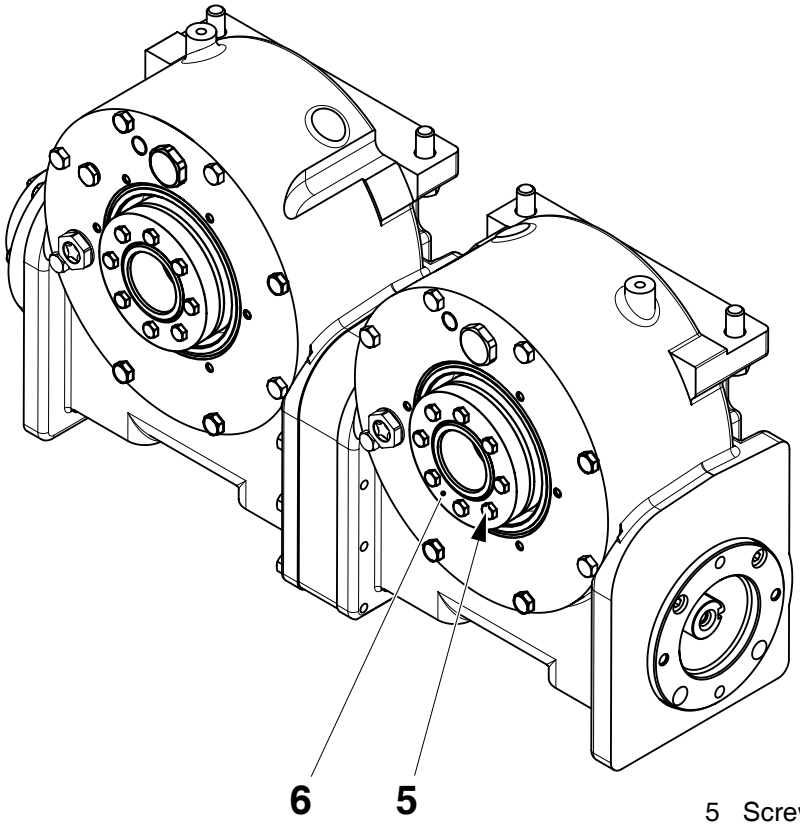

5 Screw
6 Clamp, outer ring

2.2c BK483en-20.fm

(Cont'd)

(Cont'd)

e) Fit the shafts (7) and (8) in the gearboxes (3) and (4).

f) Fit the two pins (9) and (10).

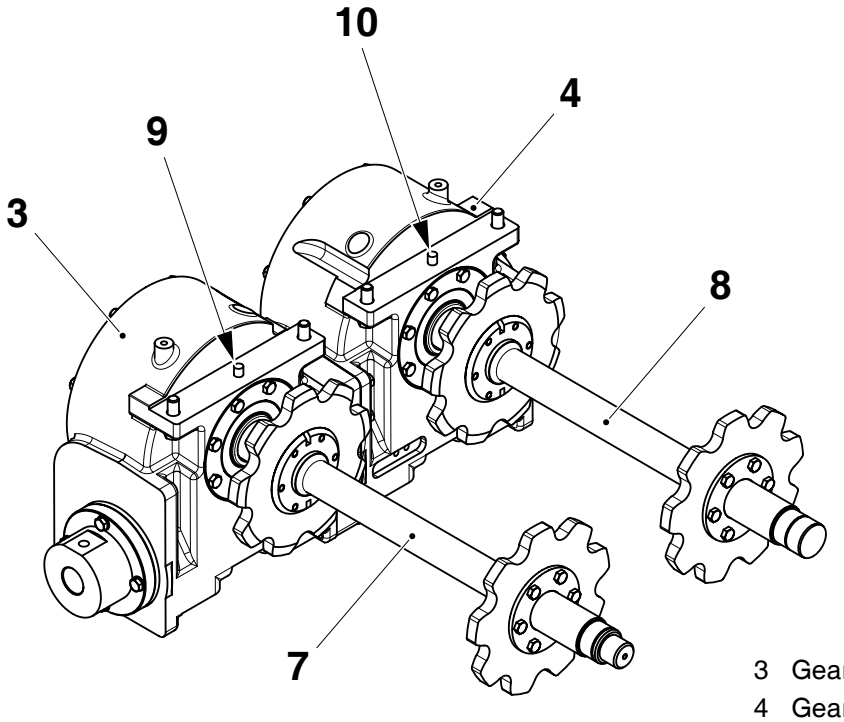

3 Gearbox
4 Gearbox
7 Shaft
8 Shaft
9 Pin
10 Pin

(Cont'd)

(Cont'd)

g) Position the shaft (7) in the plate (11).

h) Fit the sealing ring (12) and bearing (13) in the housing (14) and then fit the housing on the shaft (7).

i) Fit the seal ring (15) in the cover (16) and then secure the cover in position with the screws (17).

j) Repeat for the other shaft.

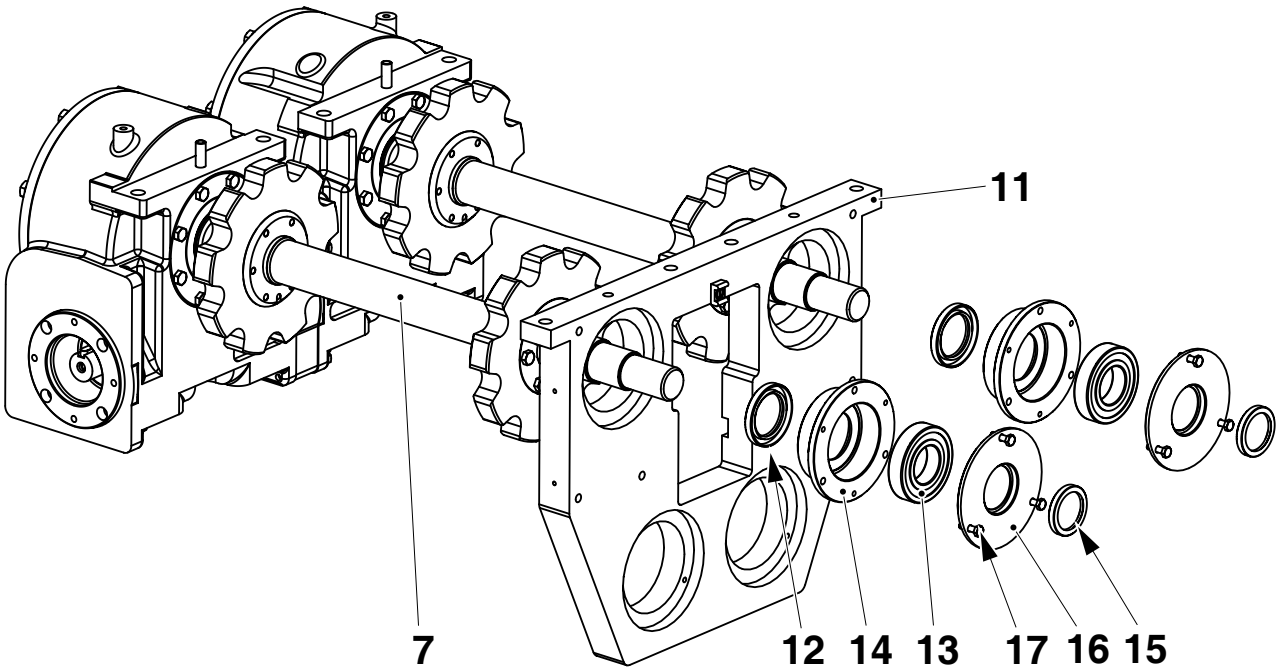

2.2c BK483en-20.fm

7 Shaft
11 Plate
12 Seal ring
13 Bearing
14 Housing
15 Seal ring
16 Cover
17 Screw

(Cont'd)

(Cont'd)

k) Place the gearbox assembly (18) on a pallet and manoeuvre it so the toothed wheels (19) are directly below the cut-outs (20) in the plate.

l) Lock the gearbox assembly (18) to the jaw system frame (21) with the screws (22).

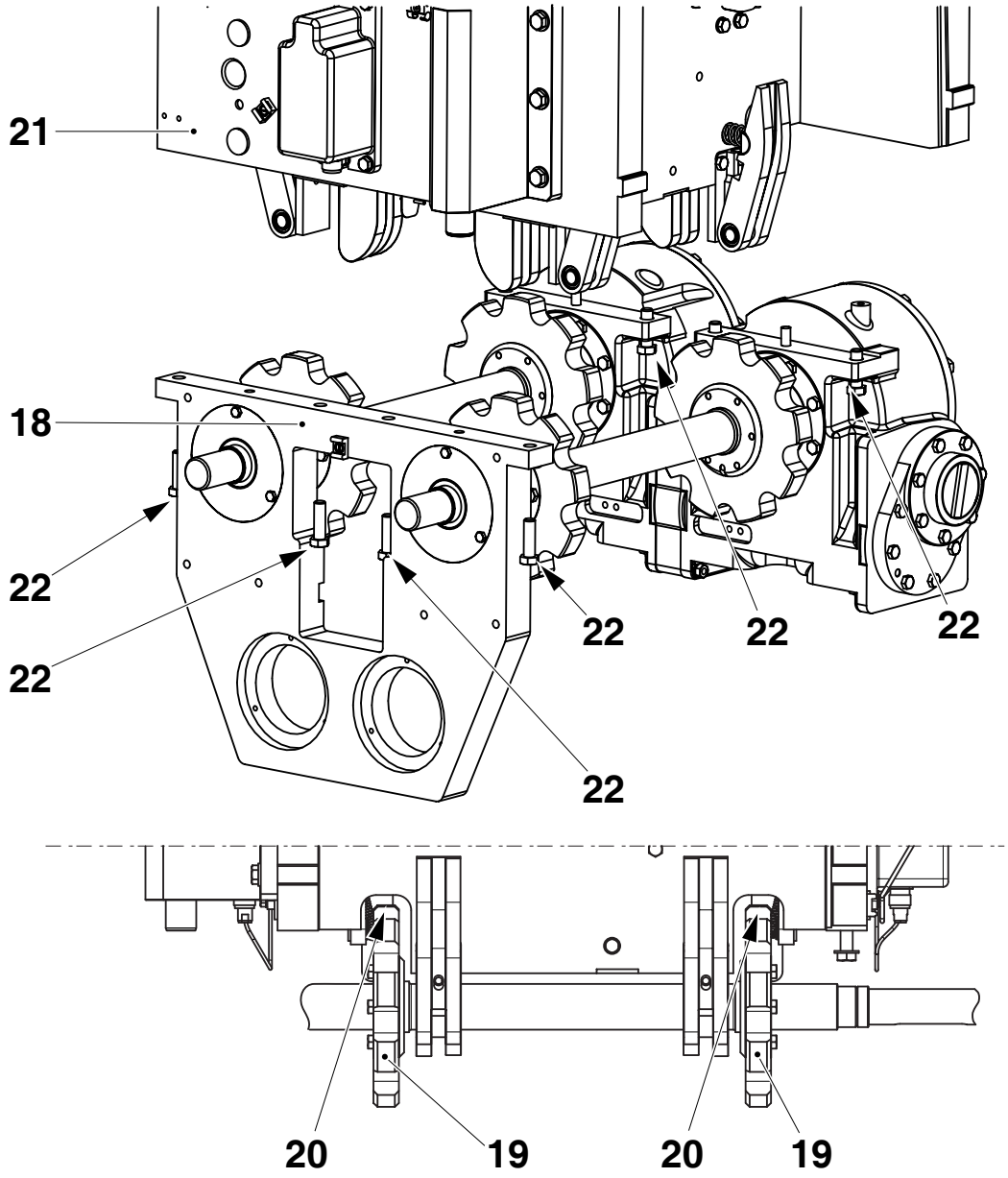

18 Gearbox assembly
19 Wheel
20 Cut-out
21 Jaw system frame
22 Screw

2.2c BK483en-20.fm

14 Connecting drive shaft to LH gearbox

SPC reference	648524-0400

a) Assemble the three parts of the clamp (1), (2) and (3) and slide them onto the gearbox shaft (4).

Note! Tighten the screws (5) by hand.

b) Push the clamp until the inner ring (3) presses against the shoulder (6) on the shaft (4) and tighten the screws (5).

c) Repeat for the other gearbox.

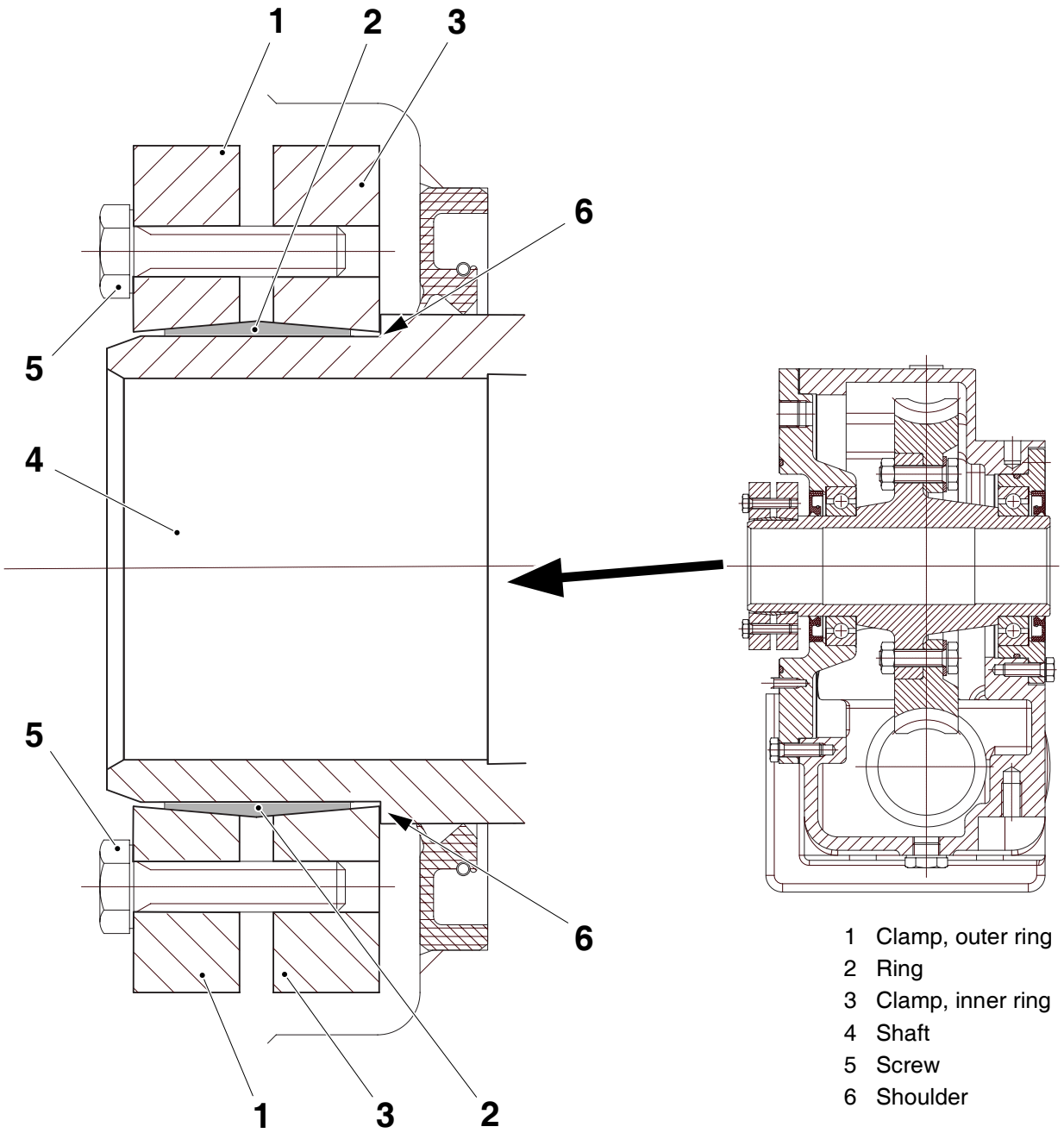

2.2c BK483en-20.fm

1 Clamp, outer ring
2 Ring
3 Clamp, inner ring
4 Shaft
5 Screw
6 Shoulder

(Cont'd)

(Cont'd)

d) At the sealing link side, insert the tool (7), oriented as shown, between the cam (8) and the wheel (9).

e) Push the wheel (9) so it clamps the tool (7) between itself and the cam (8).

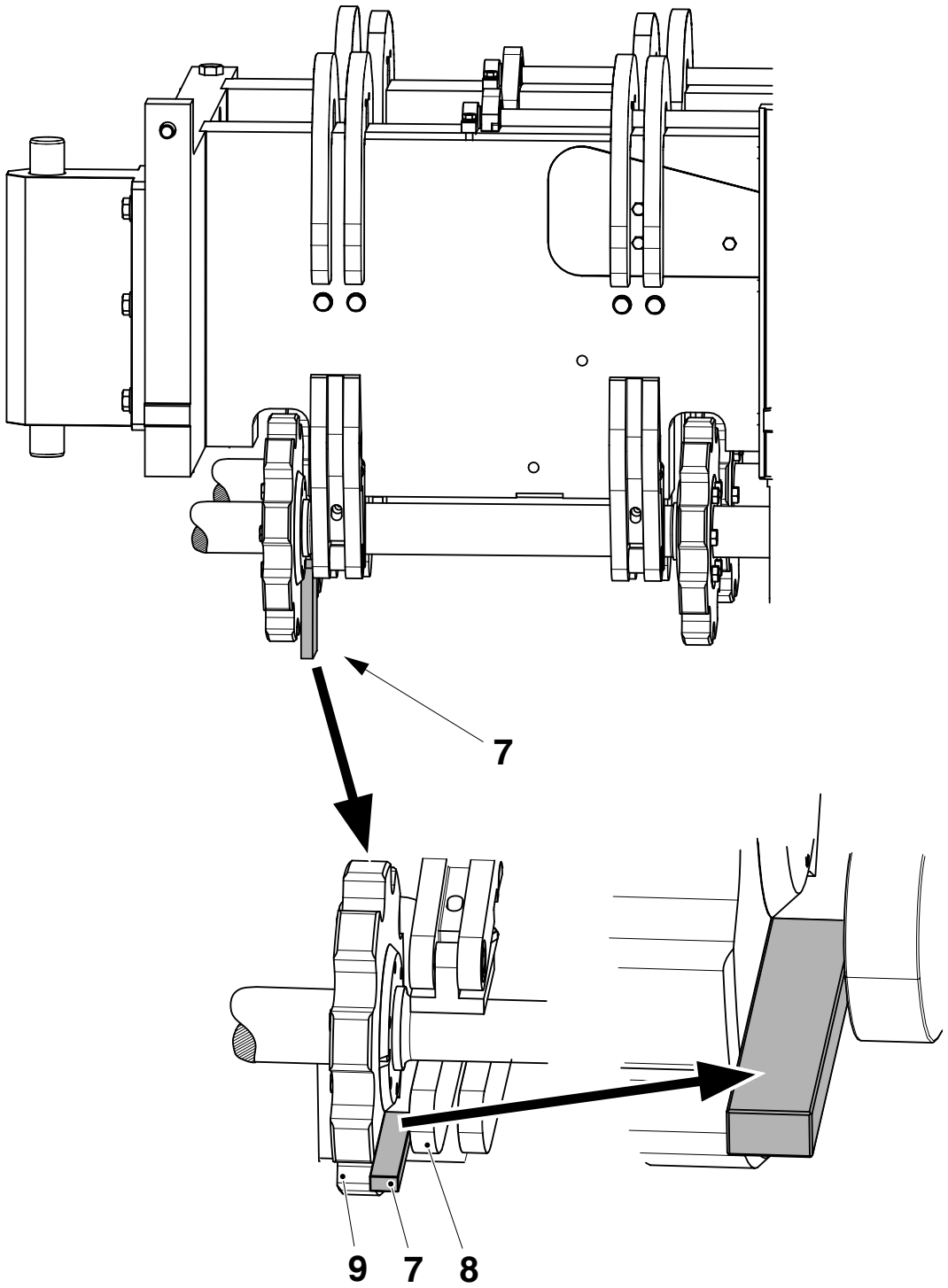

2.2c BK483en-20.fm

7 Tool
8 Cam
9 Wheel

(Cont'd)

(Cont'd)

f) Tighten the screws (5) in the outer ring (1) to 12 ±1 Nm.

Note! **Do not** tighten the screws in the other gearbox.

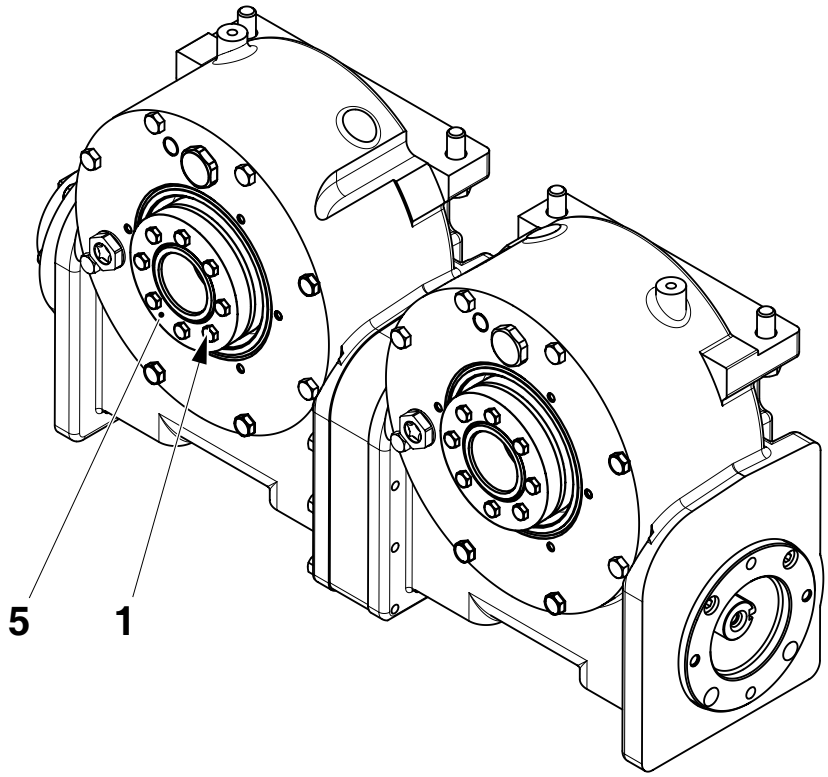

1 Outer ring
5 Screw

2.2c BK483en-20.fm

g) Remove the tool (7).

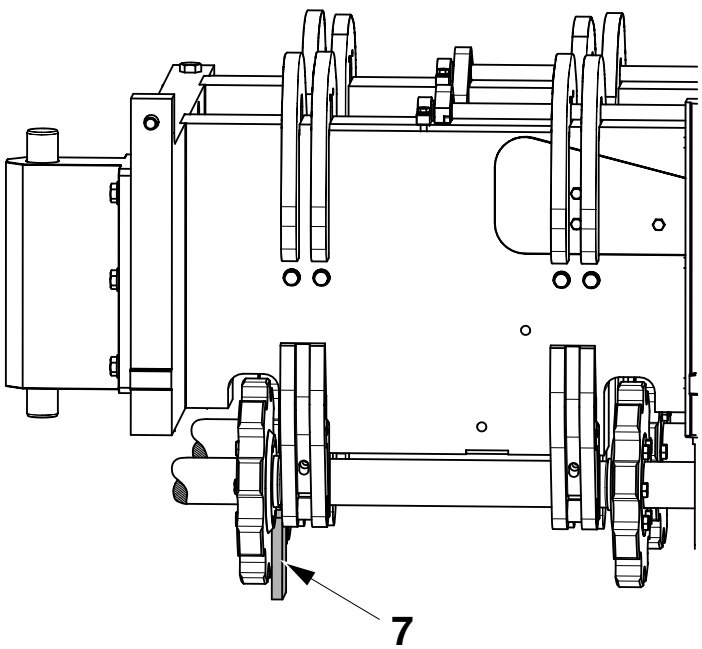

7 Tool

(Cont'd)

(Cont'd)

Completing gearbox installation

a) Fit the pins (1) and (2) in the plate (3).

b) Lift the plate (3) into position below the assembly (4) and secure it position with the screws (5).

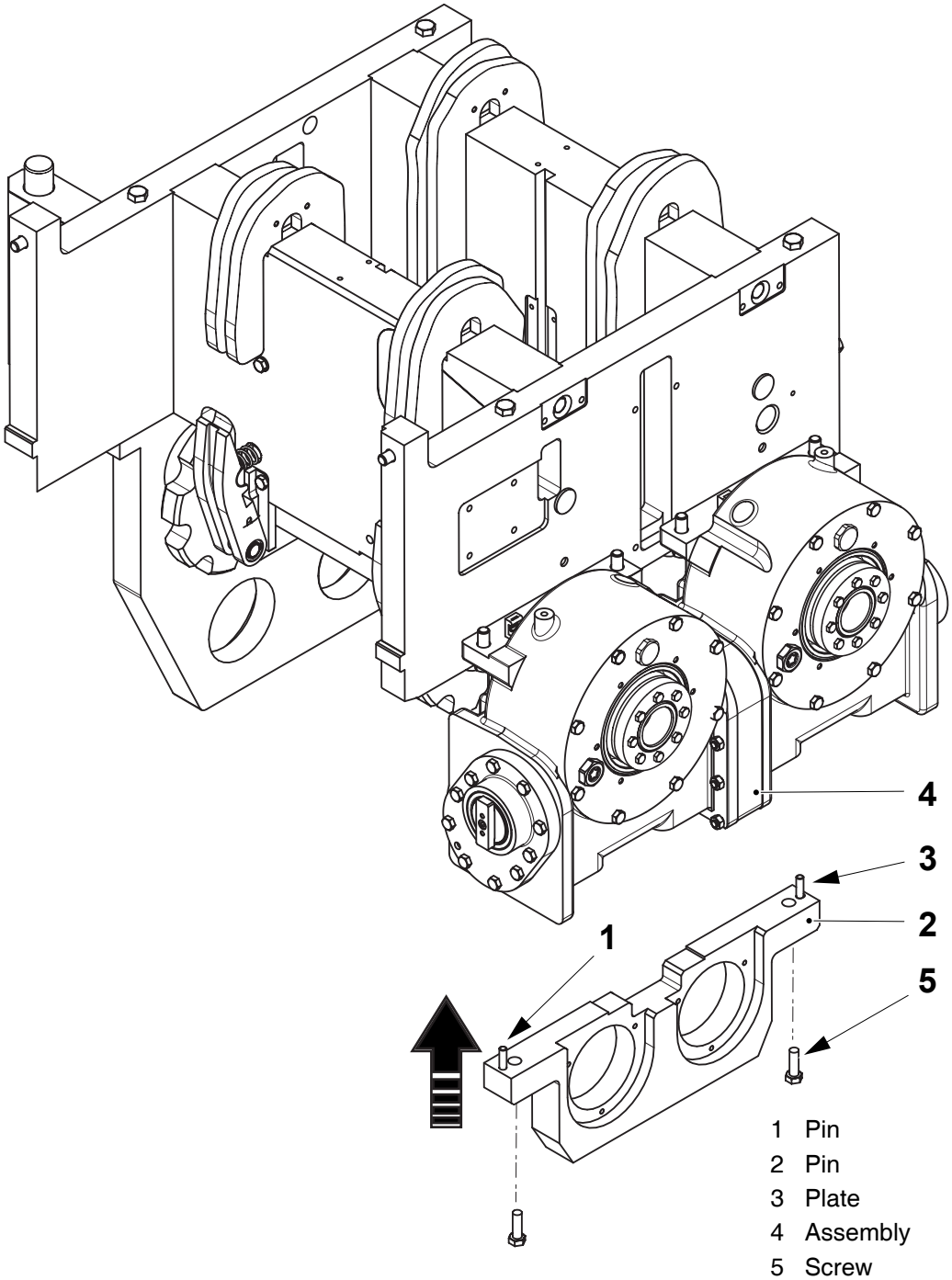

(Cont'd)

(Cont'd)

Note! It is important that the drums are aligned correctly to achieve synchronization. between the knives and the dollies.

c) Manoeuvre the drums (6) and (7) into the position. When the drums are in the correct position, it must be possible to pass the template (8) through the holes (9) and (10) so that a dolly holder is aligned with a knife holder.

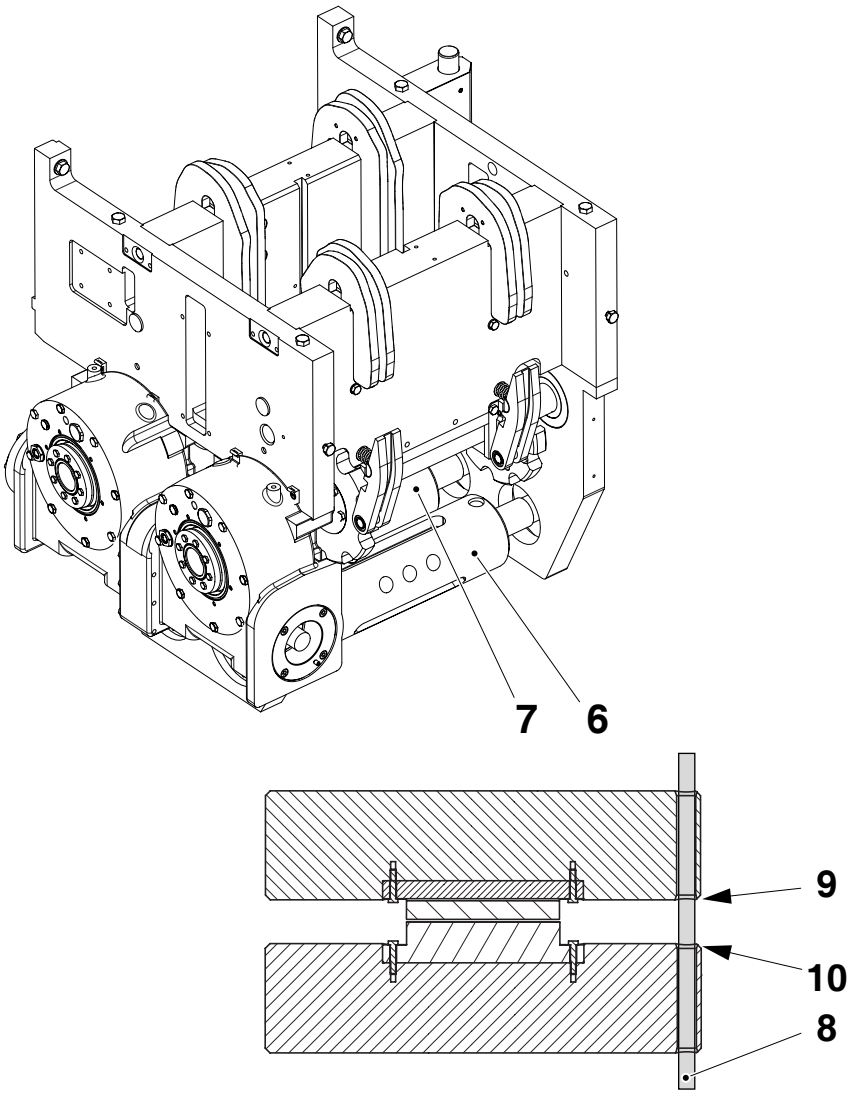

6 Drum
7 Drum
8 Template
9 Hole
10 Hole

2.2c BK483en-20.fm

(Cont'd)

(Cont'd)

d) Fit the sealing ring (11) and bearing (12) in the housing (13).

e) Fit the housing (13) on the shaft of the drum (6) and secure in position with the retaining ring (14).

f) Fit the seal ring (15) in the cover (16) and secure in position with the screws (17).

g) Fit the sealing ring (18) and bearing (19) in the housing (20).

h) Fit the housing (20) on the shaft of the drum (6).

i) Fit the retaining ring (21).

j) Fit the seal ring (22) in the cover (23) and secure in position with the screws (24).

k) Repeat for the other drum.

2.2c BK483en-20.fm

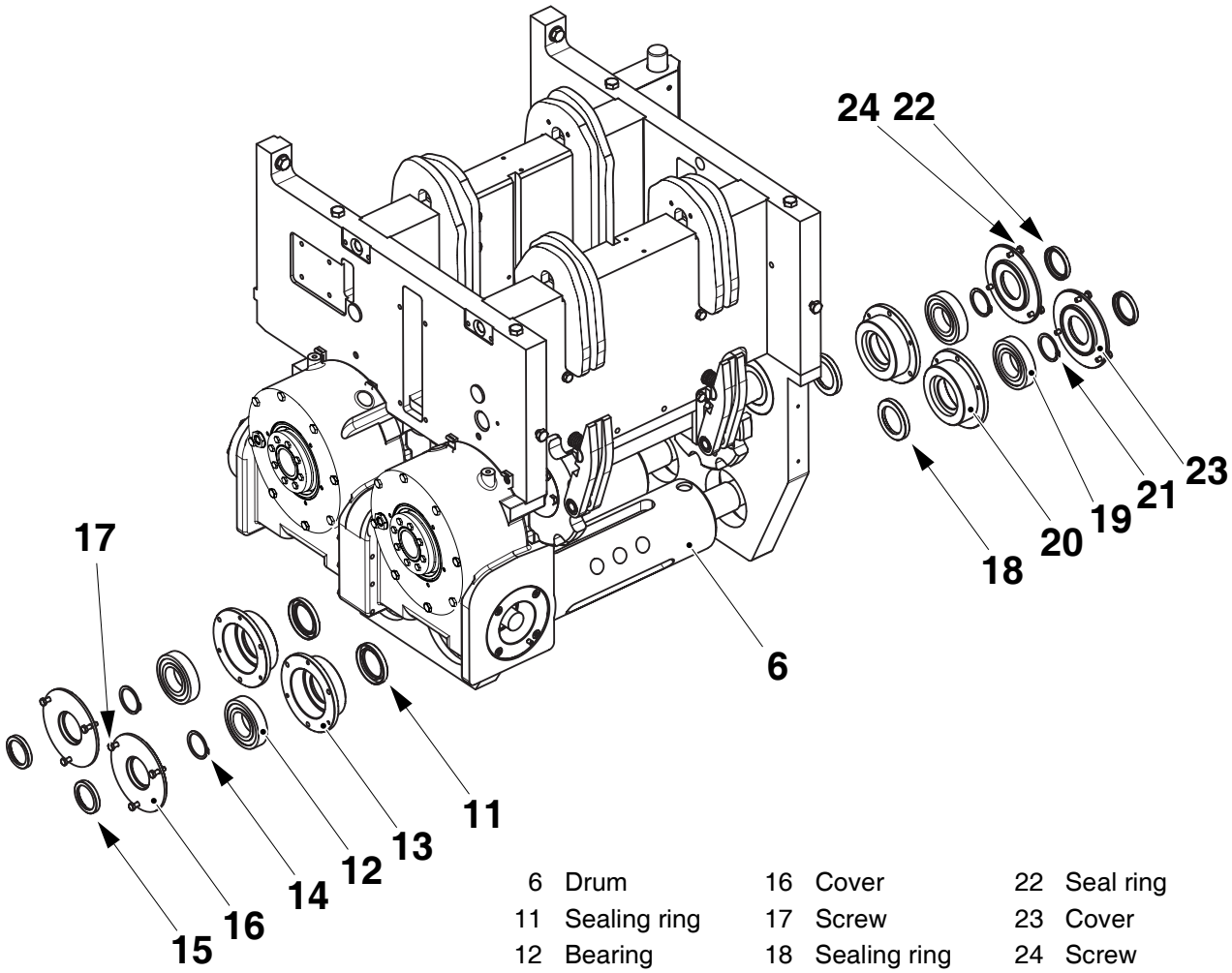

6	Drum	16	Cover	22	Seal ring
11	Sealing ring	17	Screw	23	Cover
12	Bearing	18	Sealing ring	24	Screw
13	Housing	19	Bearing		
14	Retaining ring	20	Housing		
15	Seal ring	21	Retaining ring		

(Cont'd)

(Cont'd)

l) Slide the sleeve (25) over the key (26) and shaft (27).

m) Insert and tighten the screw (28).

n) Fit the pin (29) and secure it in position with the screw (30).

o) Fit the housing (31) and secure in position with the screws (32).

p) Fit the crank handle sensor (33) and set it so the LED in the sensor is **On** when the handle is inserted.

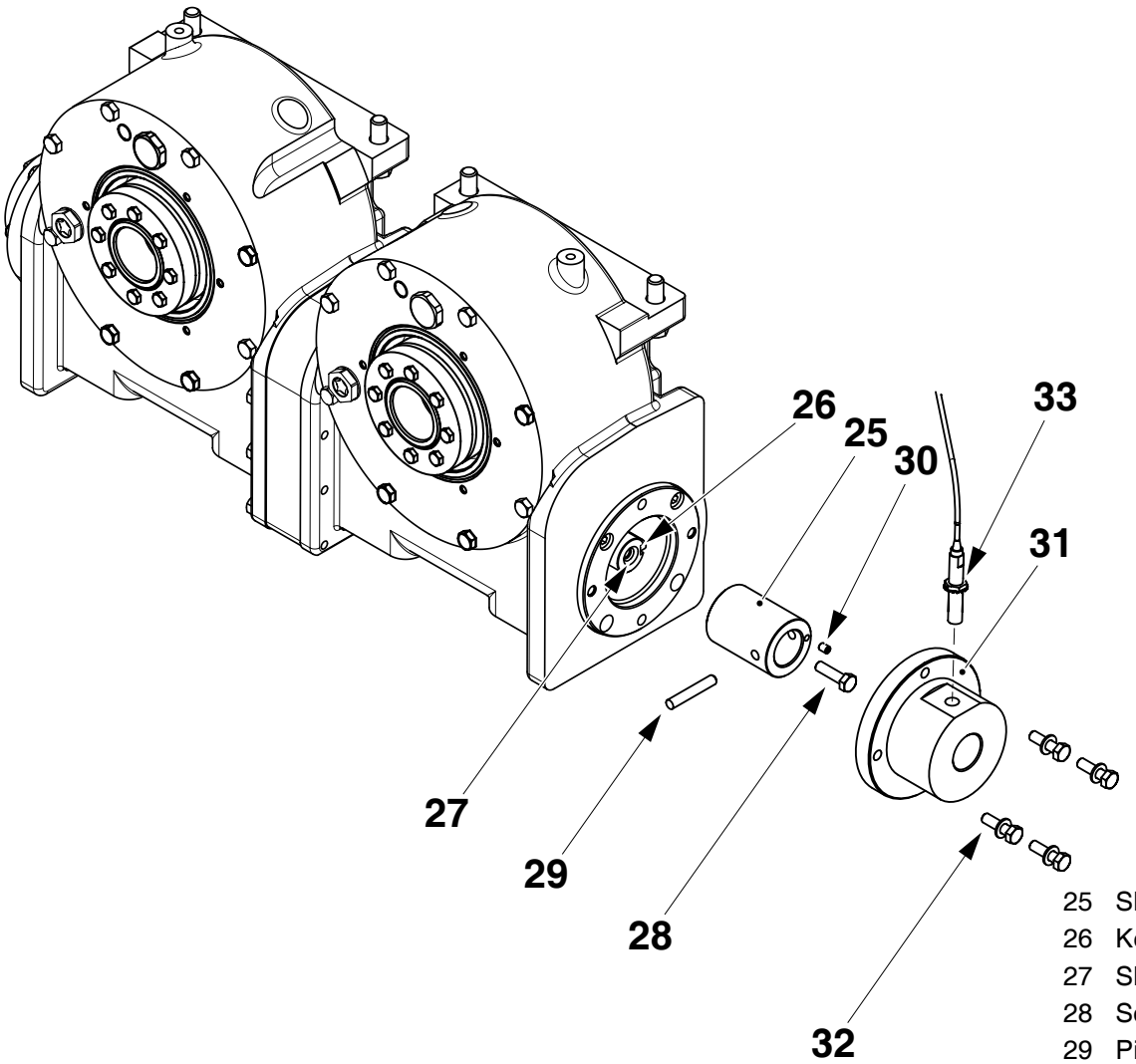

25 Sleeve
26 Key
27 Shaft
28 Screw
29 Pin
30 Screw
31 Housing
32 Screw
33 Sensor

2.2c BK483en-20.fm

15 Fit cam

SPC reference	648524-0400

Fit the cam (1) on the jaw unit.

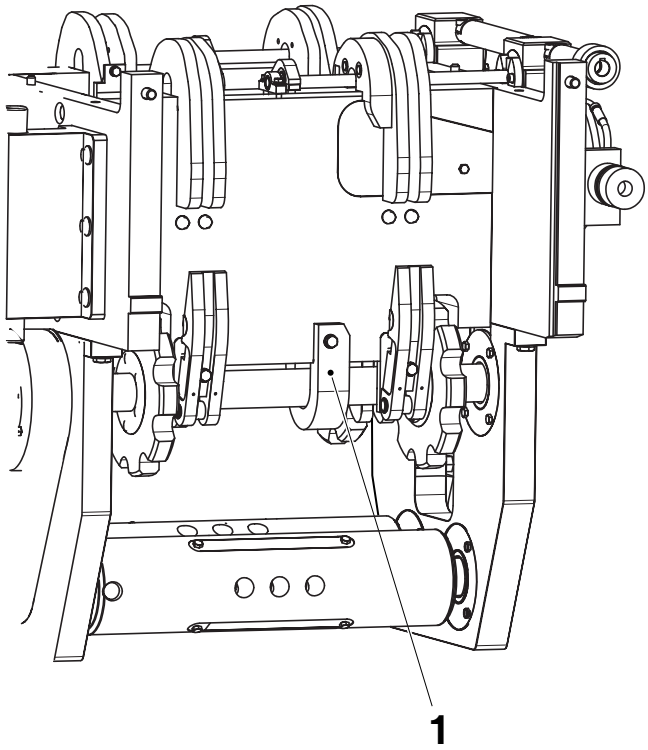

1 Cam

2.2c BK483en-20.fm

16 Fit jaw system chains

SPC reference	648524-0400

Note! The sealing link chain (1) is nearest to the plate (3).

a) Fit the sealing link chain (1).

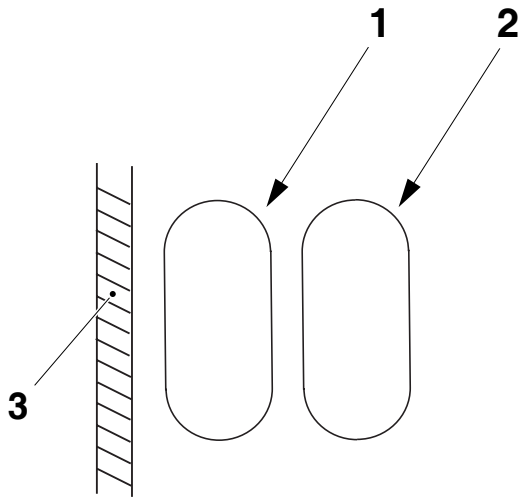

1 Sealing link chain
2 Pressure link chain
3 Plate

Note! When fitting the chains, seal the threads on the grease nipples with PTFE tape.

b) Lift the sealing link chain (1) onto the jaw unit so the leading link (4) is in position **A**.

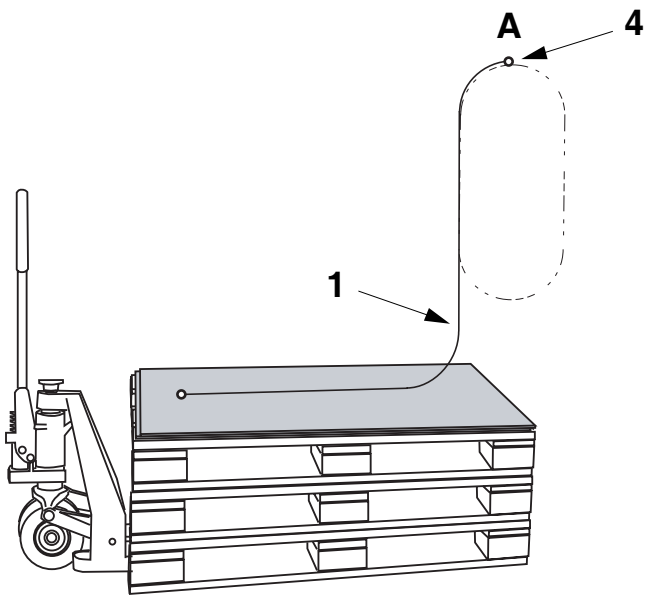

1 Sealing link chain
4 Leading link

(Cont'd)

2.2c BK483en-20.fm

(Cont'd)

c) Manoeuvre the chain so that the leading link (4) and the trailing link (5) are in the position shown.

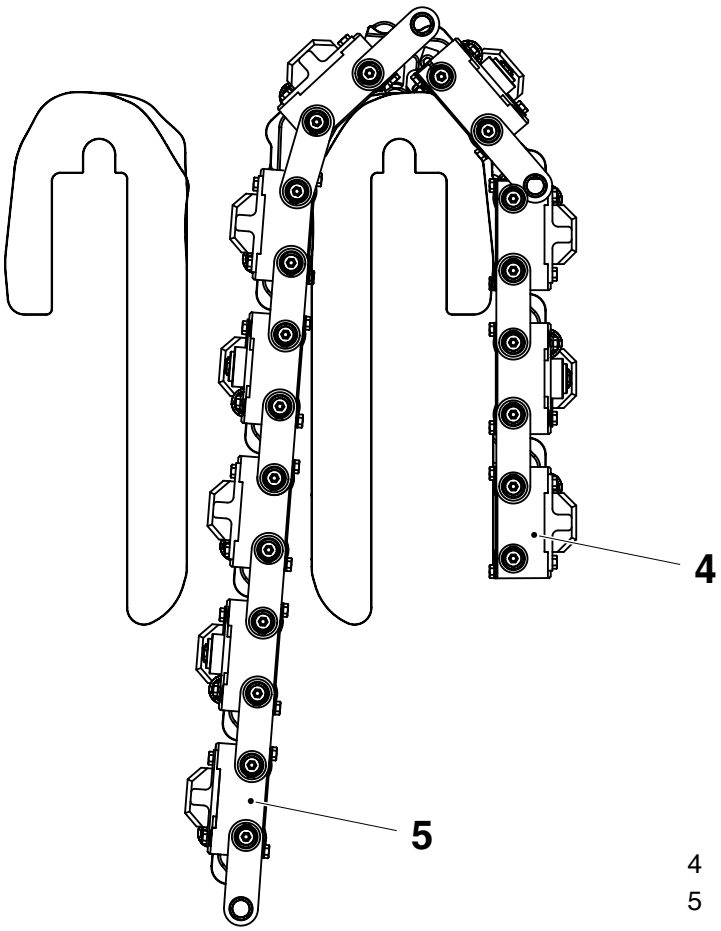

4 Leading link
5 Trailing link

2.2c BK483en-20.fm

d) To connect the chain, remove the grease nipples (6) and (7), fit the chain link and then the washer and retaining ring.

e) Fit the grease nipples (6) and (7).

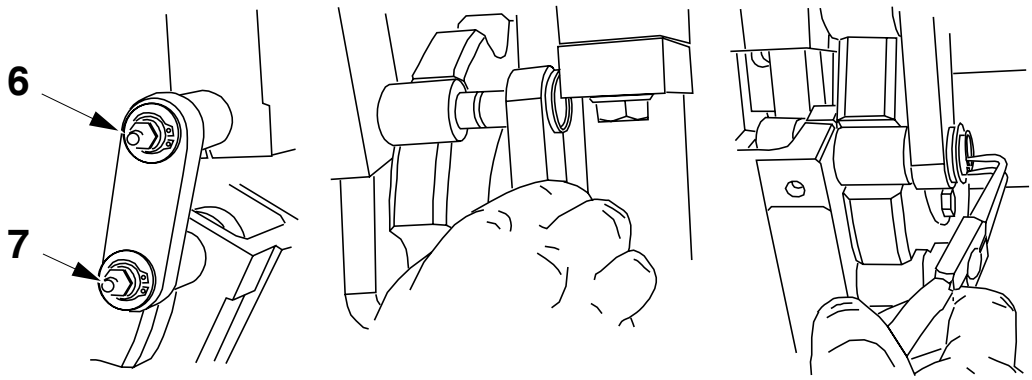

6 Grease nipple
7 Grease nipple

(Cont'd)

(Cont'd)

f) Crank the chain so that the link (8) of the sealing link chain (1) is in position **A**.

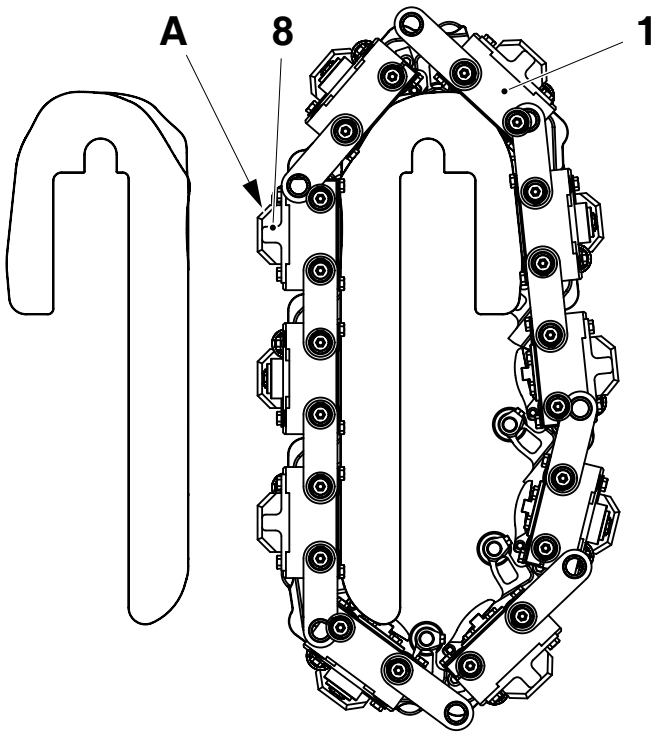

1 Pressure link chain
8 Link

2.2c BK483en-20.fm

(Cont'd)

(Cont'd)

g) Divide the pressure link chain in two parts.

h) Lift the first part of the pressure link chain (9) and place it on the cam.

i) Mate the leading link (10) of the pressure link chain (9) with the matching link (8) of the sealing link chain (1) (position **A**).

WARNING!

Risk of injury!
Be careful not to trap your fingers between the links.Never crank the jaw system backwards. Crank the jaw system very slowly to prevent injury to the persons guiding the chain links into the jaw system and damage to the equipment. Do not try to force the crank handle around. If the jaws become blocked, cease cranking and ascertain the cause of the problem.

j) Crank until the last link (11) of the pressure link chain is in position **B**.

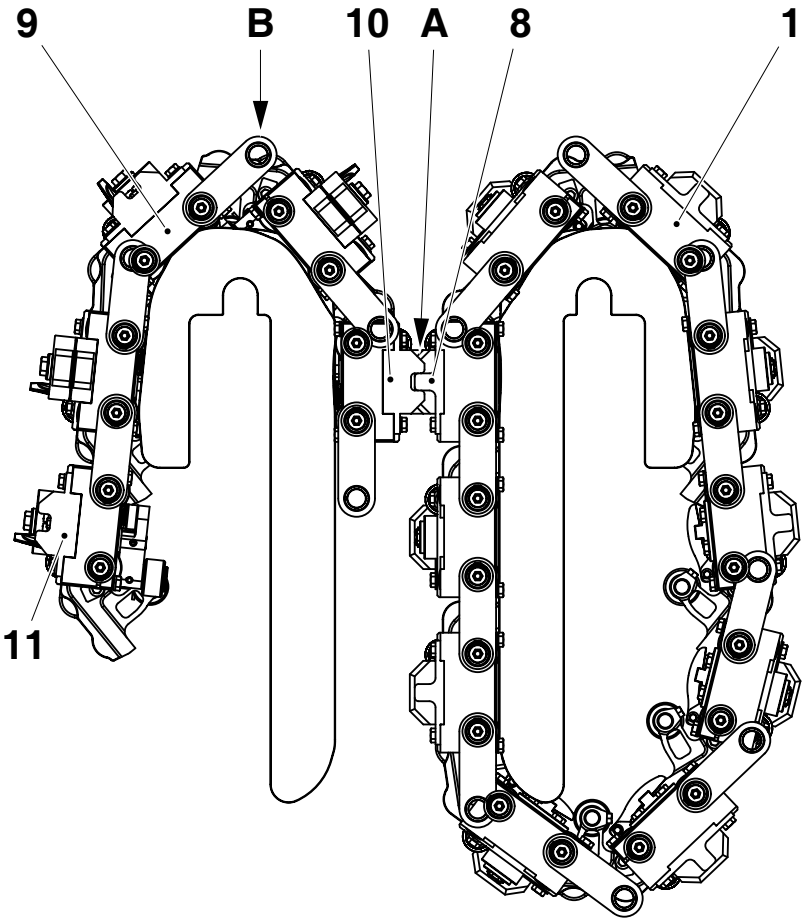

1 Sealing link chain
8 Matching link, sealing link chain
9 First part, pressure link chain
10 Leading link, pressure link chain
11 Last link, pressure link chain

(Cont'd)

2.2c BK483en-20.fm

(Cont'd)

k) Lift the second part of the pressure link chain (12) and place it on the cam. Hold it in position while the second person connects it to the first part (9) at point (**B**).

Note! While cranking keep the chain in tension by pulling it to keep the link shaft (14) in the wheel (13).

l) Crank the jaw system until the end of the chain (15) is at the top in position (**B**).

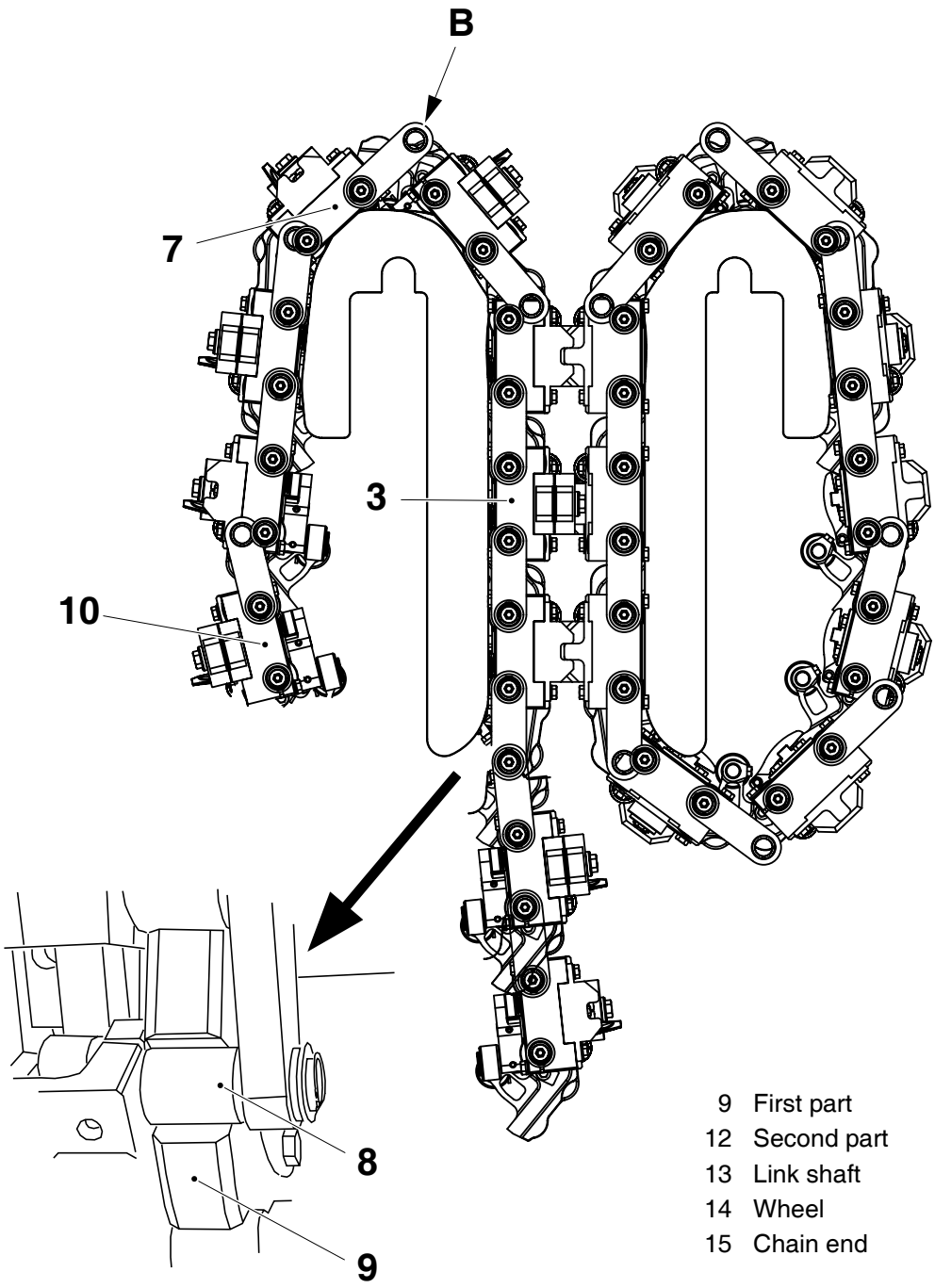

2.2c BK483en-20.fm

(Cont'd)

(Cont'd)

m) Bring the two ends of the chain (15) and (16) together and then link them.

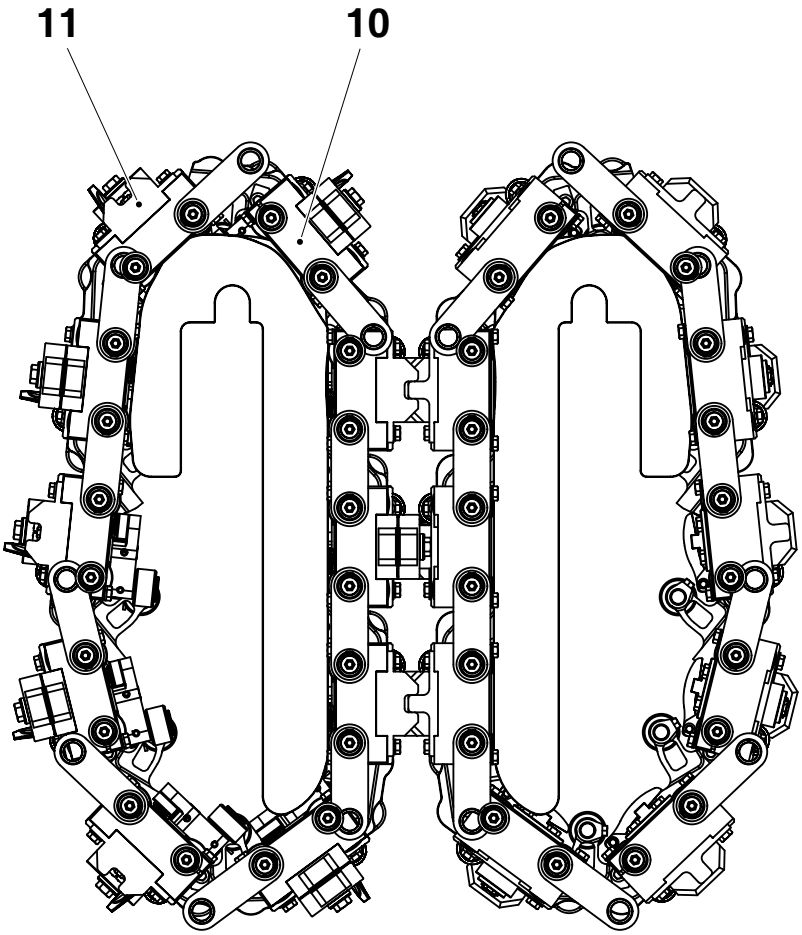

15 Chain end
16 Chain end

n) To connect the chain, fit the chain link and then the washer and retaining ring.

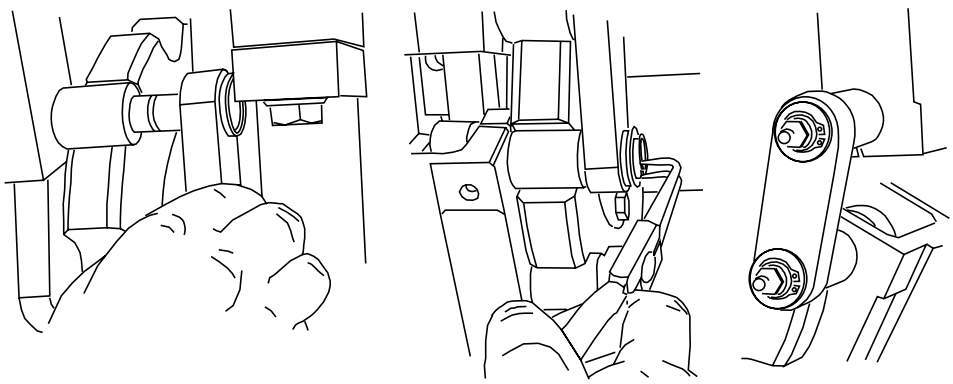

(Cont'd)

(Cont'd)

o) Tension the chain by removing the M8 x 45 hexagonal socket head screws (17) from the tensioner mechanism.

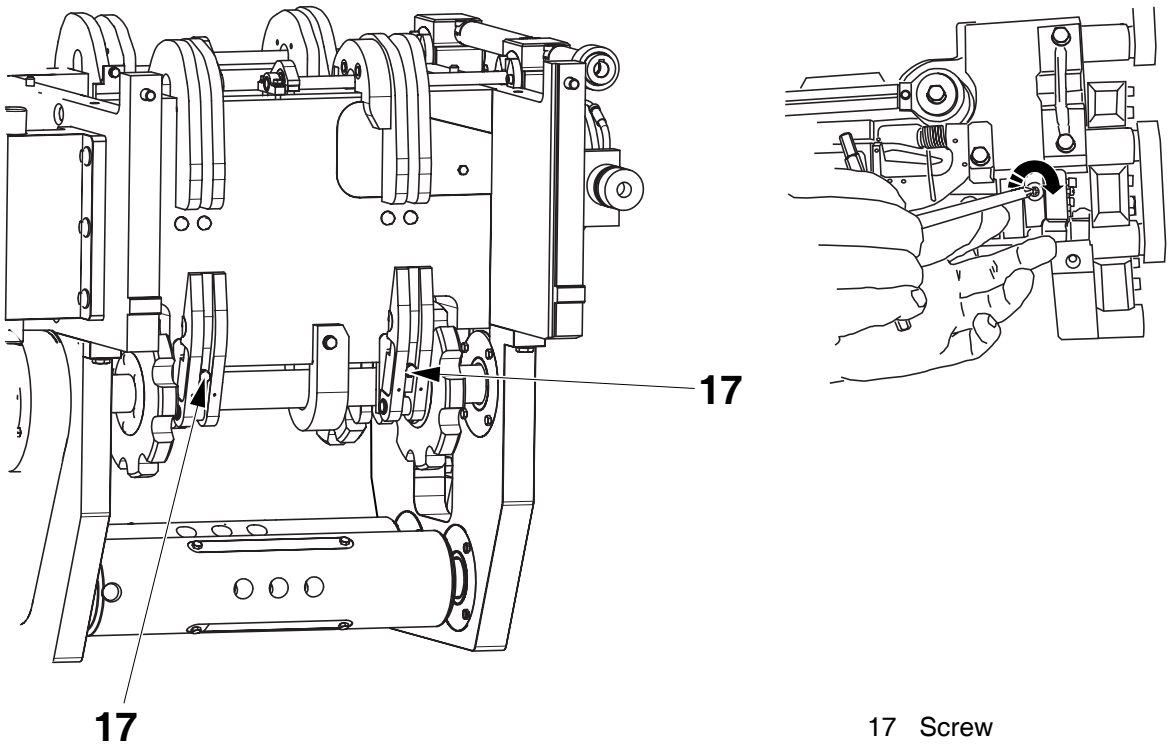

17 Screw

2.2c BK483en-20.fm

17 Completing gearbox installation

RK reference	2547324-0100

a) Crank the jaw system slowly until the chains have made two complete revolutions.

b) At the pressure link side, push the clamp until the inner ring (1) presses against the shoulder (2) on the shaft (3) and tighten the screws (4) to 12 ±1 Nm.

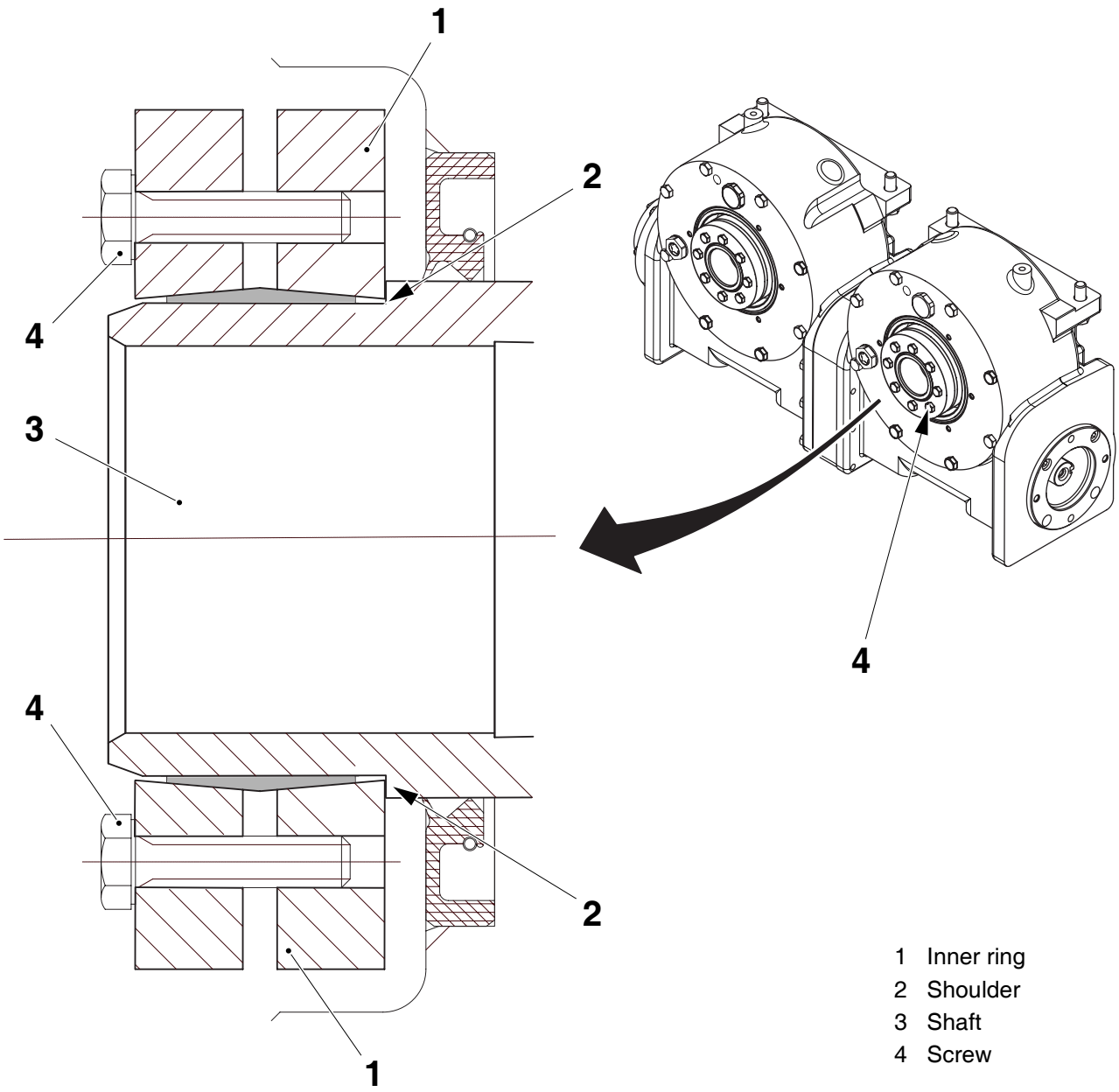

1 Inner ring
2 Shoulder
3 Shaft
4 Screw

2.2c BK483en-20.fm

(Cont'd)

(Cont'd)

c) Apply grease (5), code to the components at the end of the drive shafts.

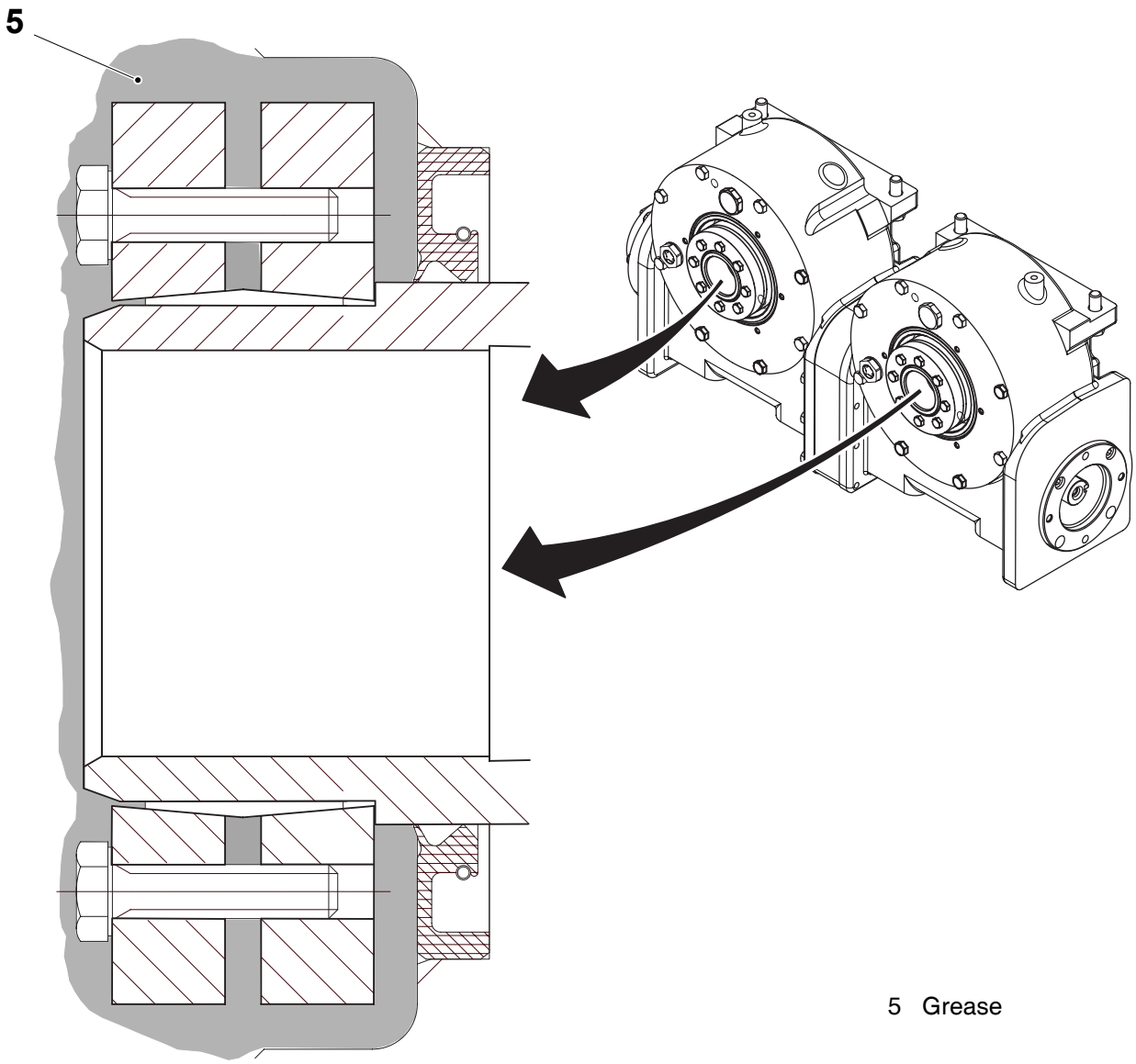

2.2c BK483en-20.fm

5 Grease

(Cont'd)

(Cont'd)

Note! It is important that the area immediately behind the covers (6) and (7) is packed with grease before the covers are fitted.

d) Fit the covers (6) and (7) on the gearboxes (8) and (9).

e) Turn on the water, air and electrical supplies.

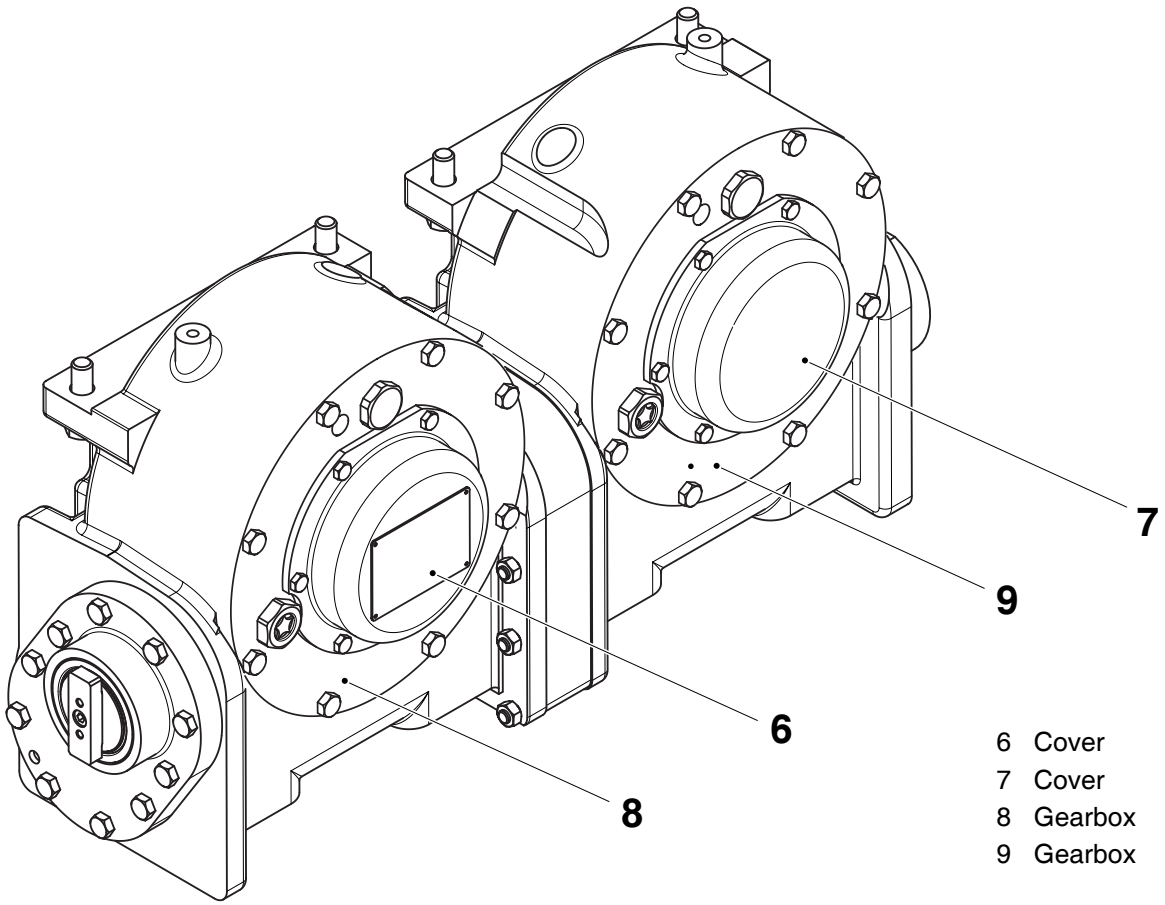

6 Cover
7 Cover
8 Gearbox
9 Gearbox

2.2c BK483en-20.fm

18 Fit encoder

RK reference	2547324-0100
SPC reference	648524-0400

Note! Use the sectional view on the following page also as a reference.

a) Fit the bearing (1) on the shaft (2) and push it against the shoulder on the shaft.

b) Mount the O-ring (3) on the bracket (4).

c) Secure the bracket (4) in position with the screws (5).

d) Fit the clamp (6) and push it against the bearing (1).

e) Fit and tighten the screw (7).

f) Fit the gear (8) and secure it position with the screws (9).

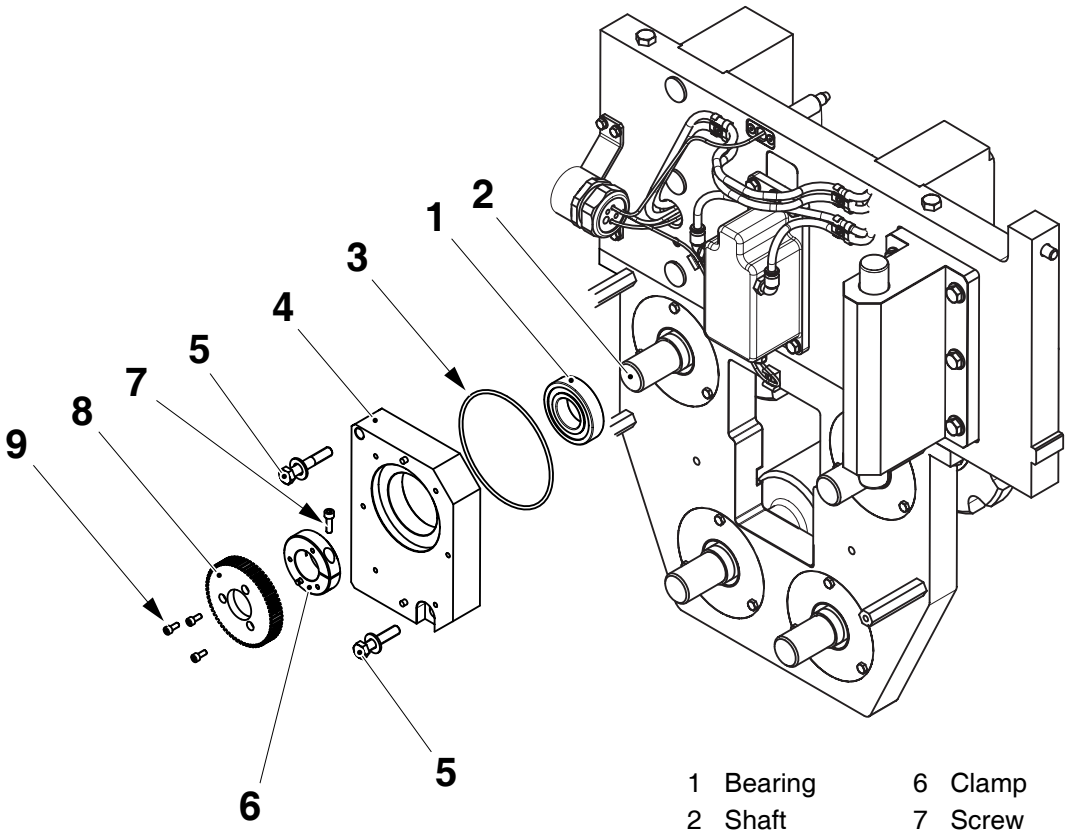

2.2c BK483en-20.fm

1 Bearing
2 Shaft
3 O-ring
4 Bracket
5 Screw
6 Clamp
7 Screw
8 Gear
9 Screw

(Cont'd)

(Cont'd)

See previous page.

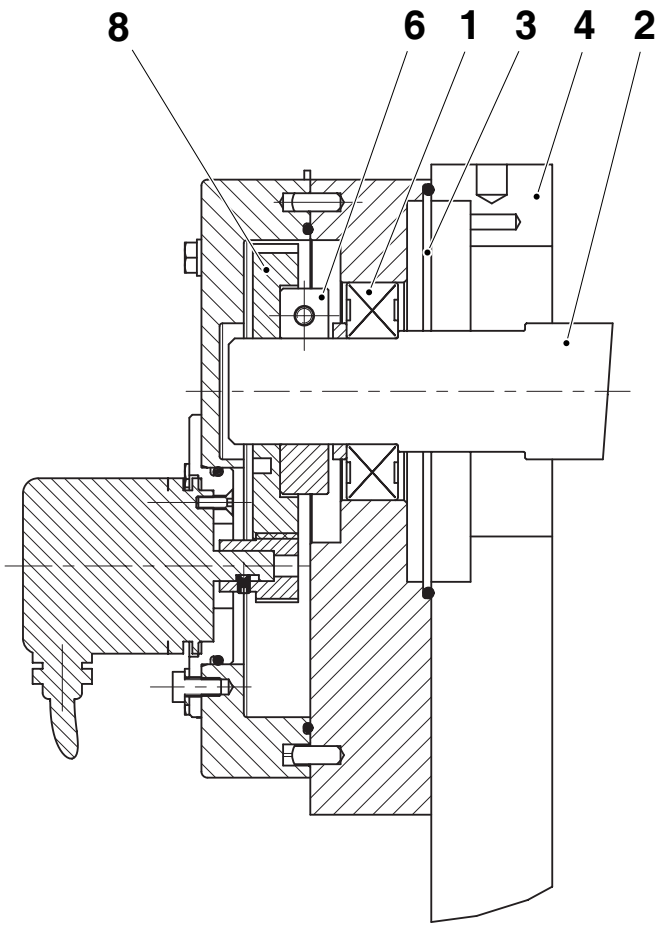

1 Bearing
2 Shaft
3 O-ring
4 Bracket
6 Clamp
8 Gear

2.2c BK483en-20.fm

(Cont'd)

(Cont'd)

g) Fit the seal (10) in the cover (11) and then secure it in position with the screws (12).

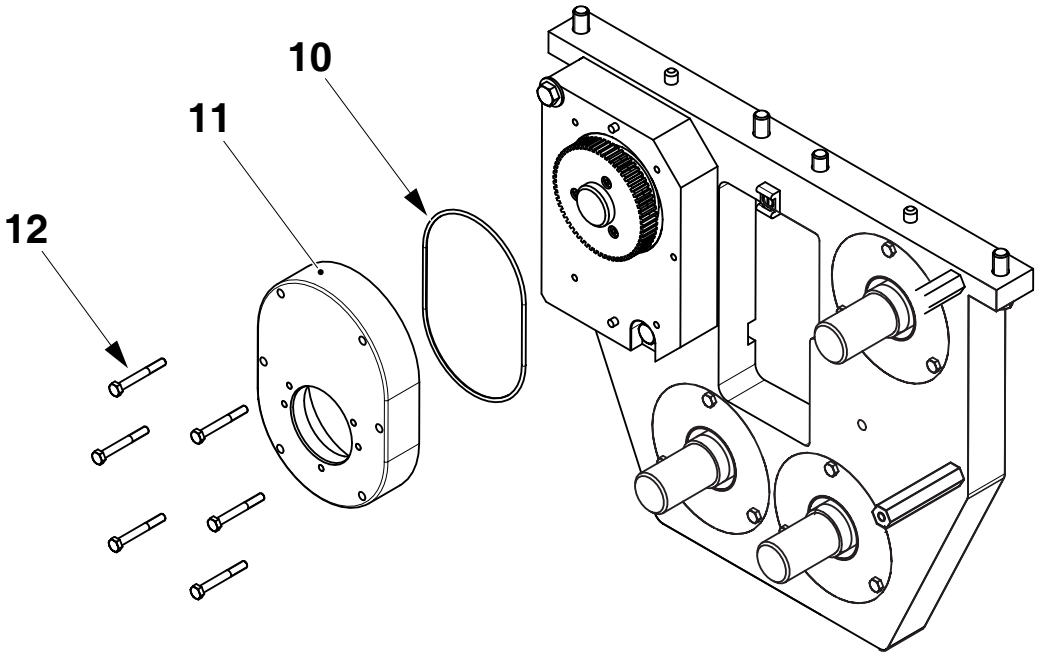

10 Seal
11 Cover
12 Screw

(Cont'd)

2.2c BK483en-20.fm

(Cont'd)

Use the sectional view on the following page also as a reference.

h) Fit the O-ring (13) on the plate (14).

Note! Push the gear (15) as far as it will go in the direction of the encoder (16) before tightening the grub screw (17).

i) Fit the gear (15) on the shaft of the encoder (16) and secure it in position with the grub screw (17).

j) Mount the encoder (16) on the plate (14) and lock it in position with the screws (18).

k) Mount the plate (14) on the cover (11) ensuring the gears mate and then insert and tighten the screws (19) by hand.

2.2c BK483en-20.fm

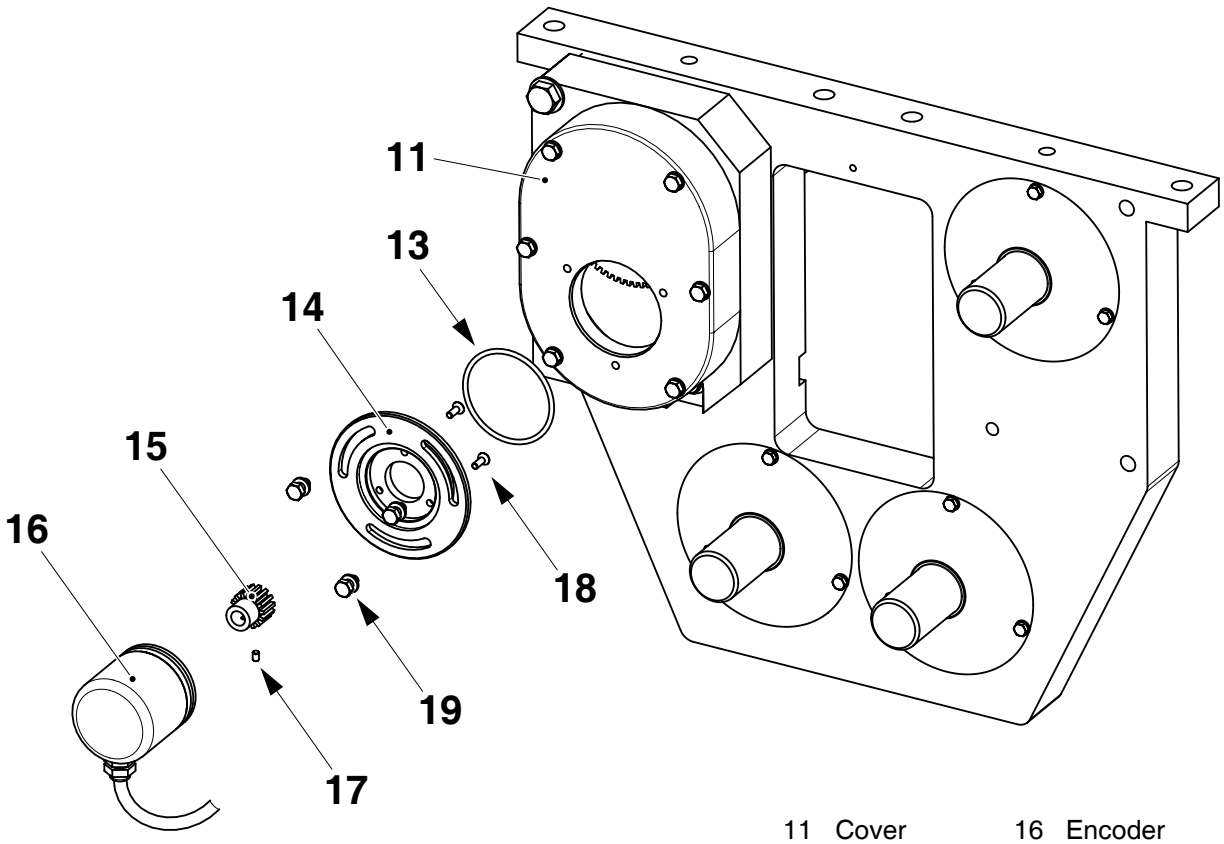

11	Cover	16	Encoder
13	O-ring	17	Grub screw
14	Plate	18	Screw
15	Gear	19	Screw

(Cont'd)

(Cont'd)

See previous page.

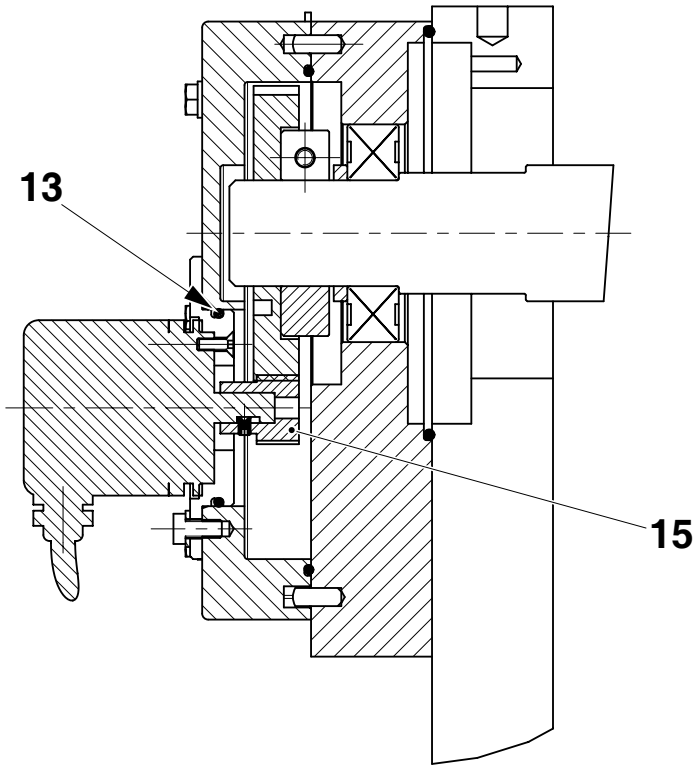

13 O-ring
15 Gear

2.2c BK483en-20.fm

19 Fit belt tensioner

RK reference	2547324-0100
SPC reference	648524-0400

a) Fit the bearing (1) and seal (2) in the roller (3).

b) Mount the assembly on the stub shaft (4).

c) Fill the roller (3) with grease, type M, see the Technical Data section in the filling machine MM.

d) Fit the bearing (5) in the roller.

e) Fit the retaining ring (6) and the seal (7).

f) Fit the grease nipple (8) in the stub shaft (4).

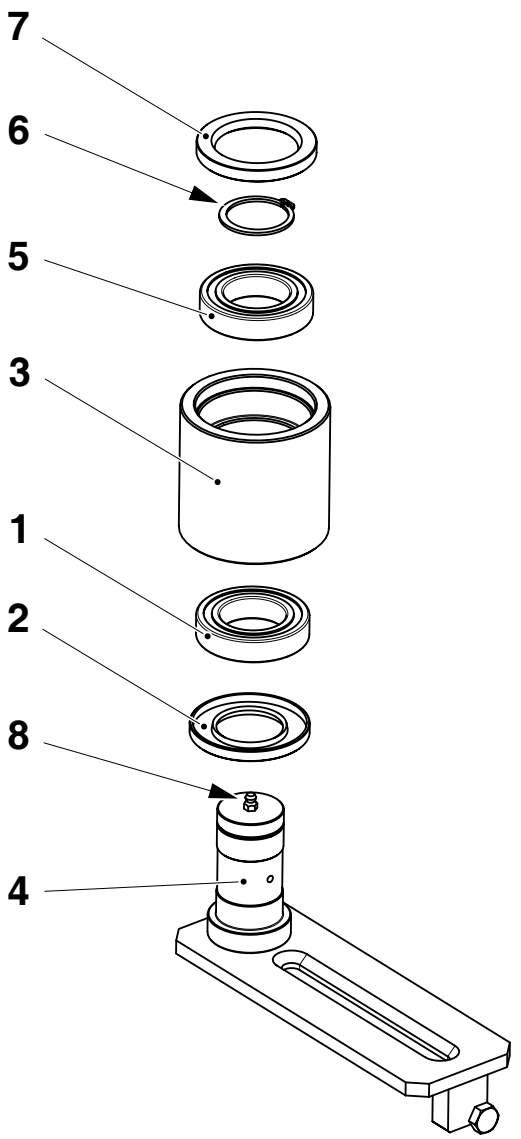

1 Bearing
2 Seal
3 Roller
4 Stub shaft
5 Bearing
6 Retaining ring
7 Seal
8 Grease nipple

(Cont'd)

2.2c BK483en-20.fm

(Cont'd)

g) Fit the bracket (9) and secure in position with the screws (10). Do not fully tighten the screws.

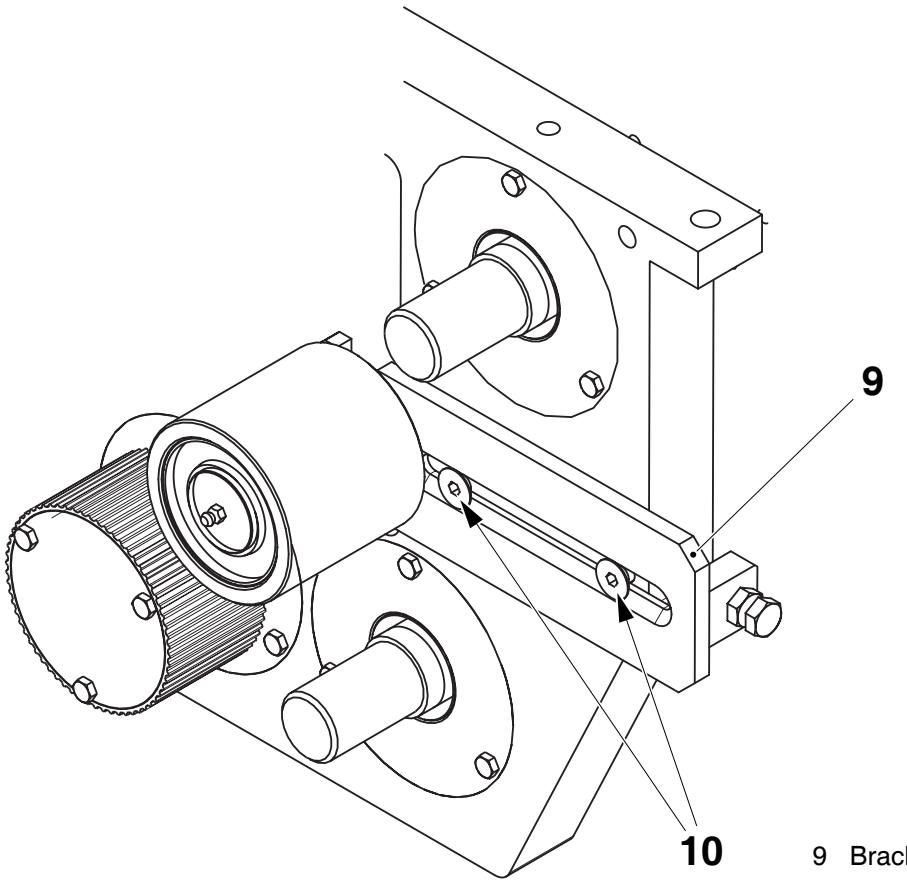

9 Bracket
10 Screw

2.2c BK483en-20.fm

(Cont'd)

(Cont'd)

h) Fit the pulley (11) on the shaft (12) and insert the clamping element (13).

i) Push the element (13) as far as it will go and then tighten the screws in the element, see *4.3-2 Drive unit - set knives synchronization and cutting belt tension*.

j) Fit the pulley (15) on the shaft (16) and insert the clamping element (17).

k) Push the element (17) as far as it will go and then tighten the screws in the element, see *4.3-2 Drive unit - set knives synchronization and cutting belt tension*.

l) Fit the belt (14).

m) Set the belt tension, see *4.3-2 Drive unit - set knives synchronization and cutting belt tension*.

n) Fit the covers (18) and (19).

2.2c BK483en-20.fm

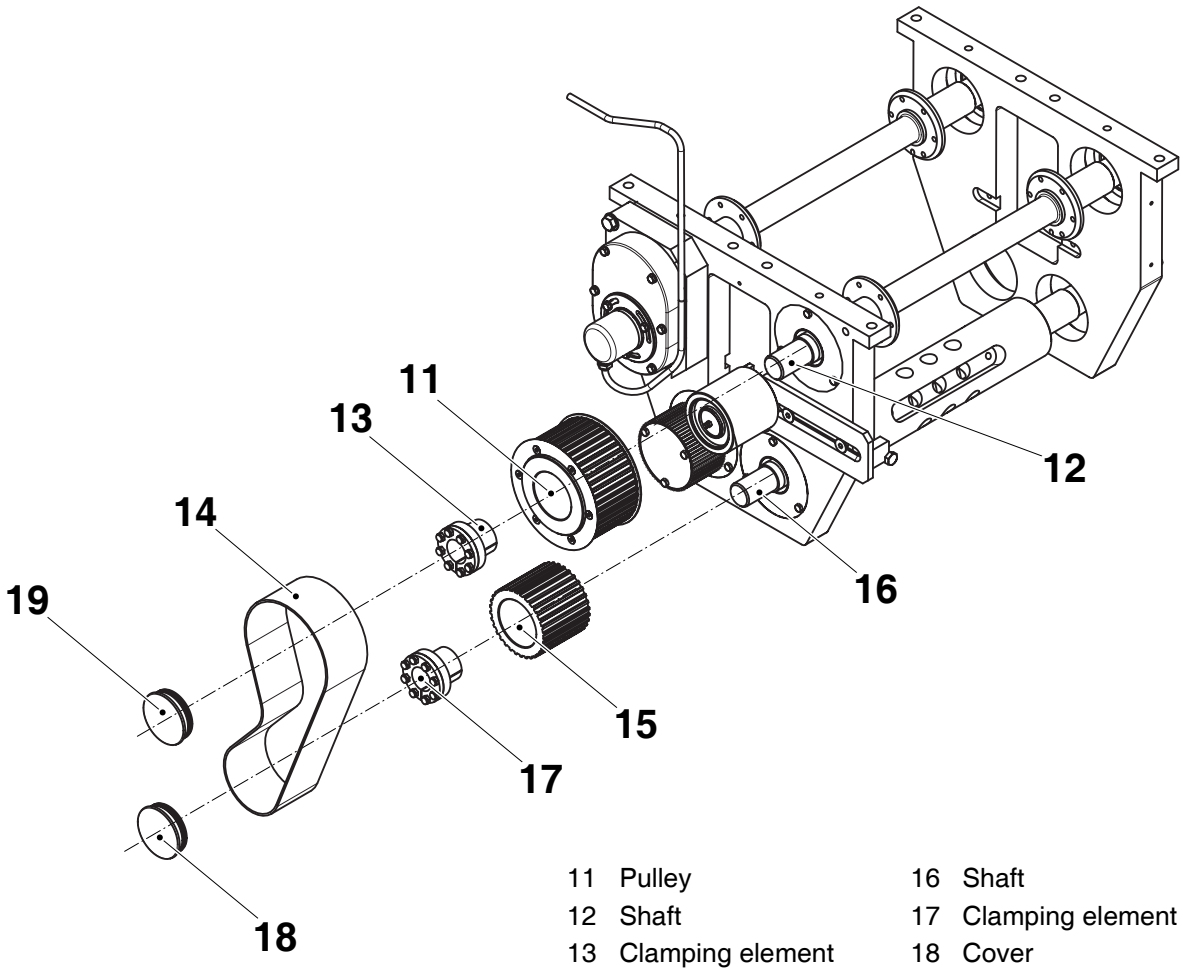

11	Pulley	16	Shaft
12	Shaft	17	Clamping element
13	Clamping element	18	Cover
14	Belt	19	Cover
15	Pulley		

20 Modify plate

Machine Status	Air **OFF** Mains Power **OFF** Steam **ON** Water **OFF**
RK Reference	2547324-0100
SPC Reference	648524-0400

Drill a 1/8” G diameter hole in the plate, see the modification drawing 2695386-1.

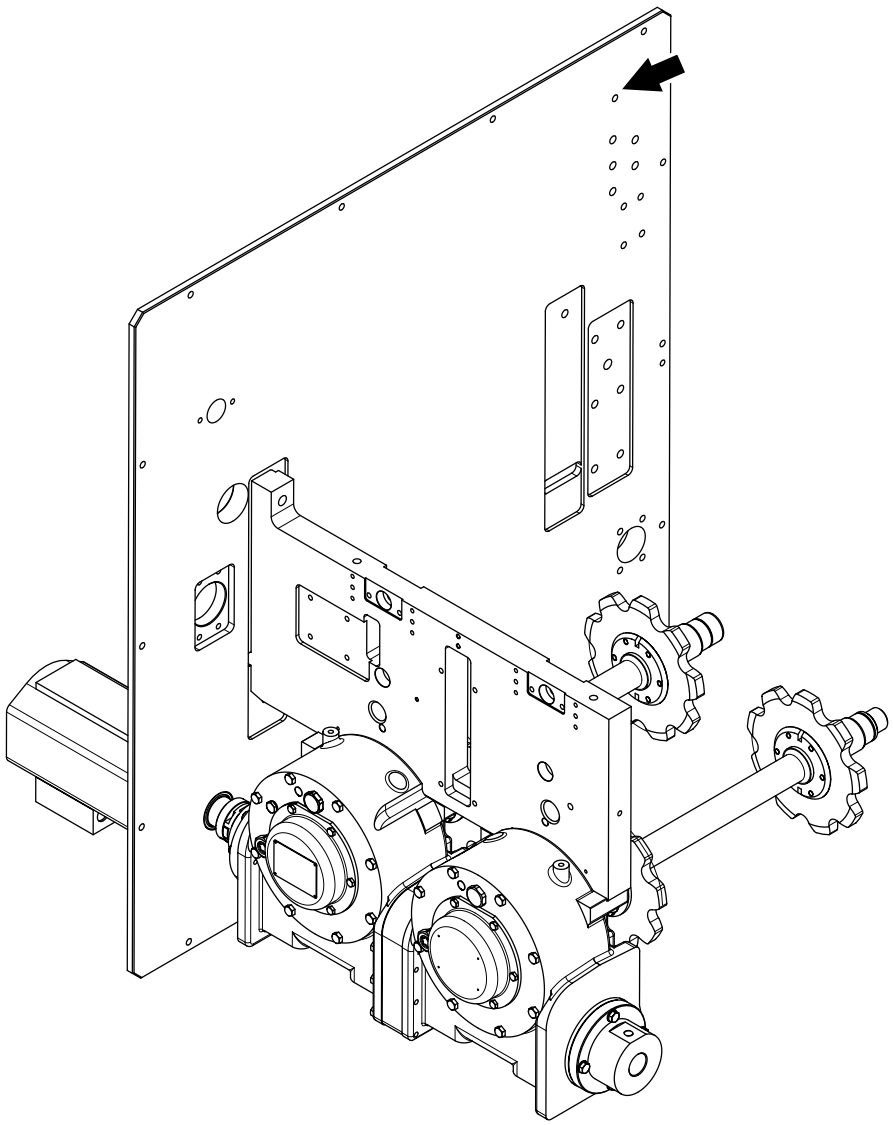

2.2c BK483en-20.fm

21 Fit air hose

Machine Status	Air **OFF** Mains Power **OFF** Steam **ON** Water **OFF**
RK Reference	2547324-0100
SPC Reference	648524-0400

a) Fit the hose connector (1) on the plate (2).

b) Remove the plug from the hole where the hose connector (3) will be fitted.

c) Fit the hose connector (3) on the gearbox (4).

d) Remove the plug from the hole where the hose connector (5) will be fitted.

e) Fit the hose connector (5) on the gearbox (6).

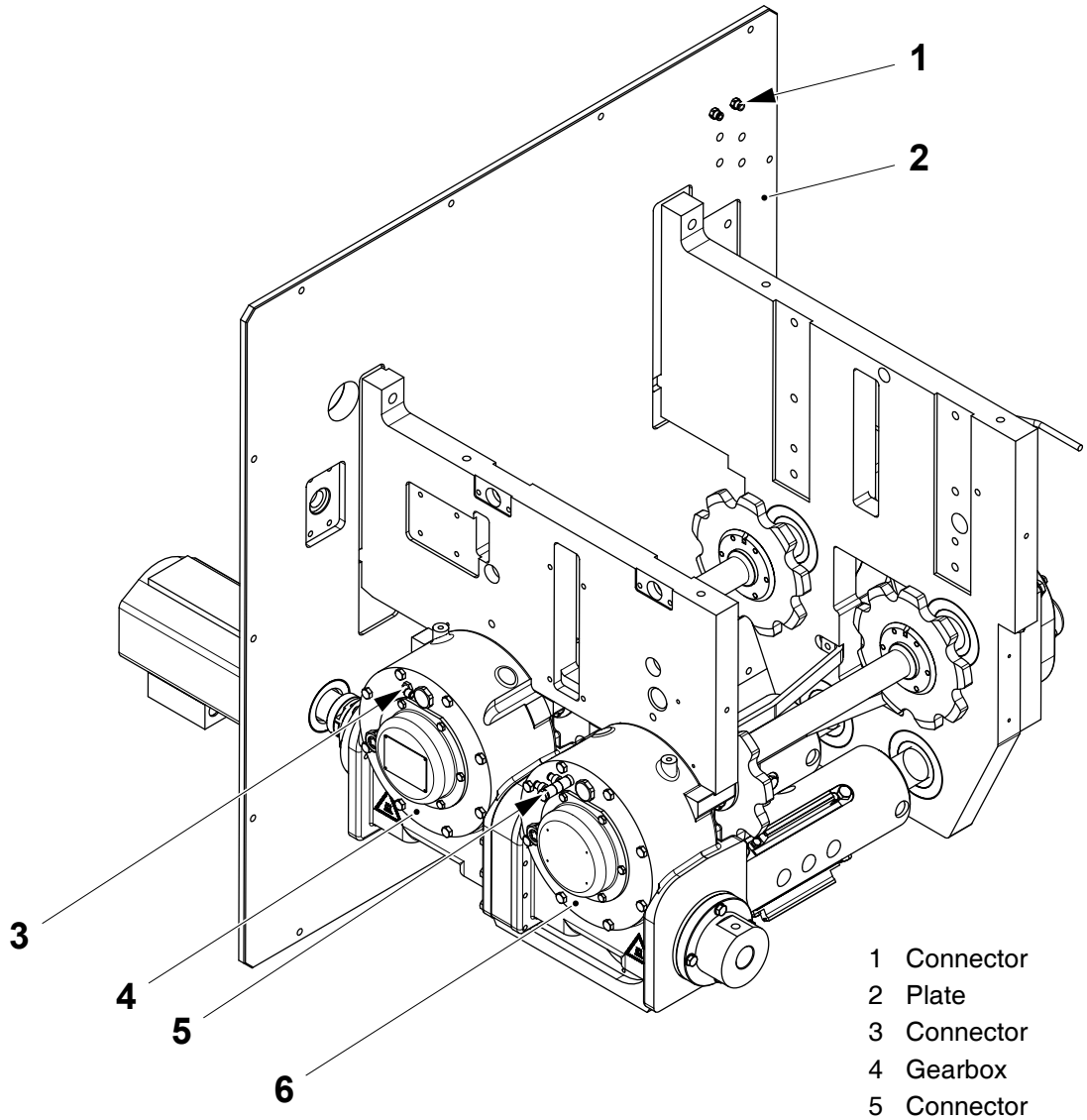

1 Connector
2 Plate
3 Connector
4 Gearbox
5 Connector
6 Gearbox

(Cont'd)

(Cont'd)

f) Fit the hoses (7) and (8).

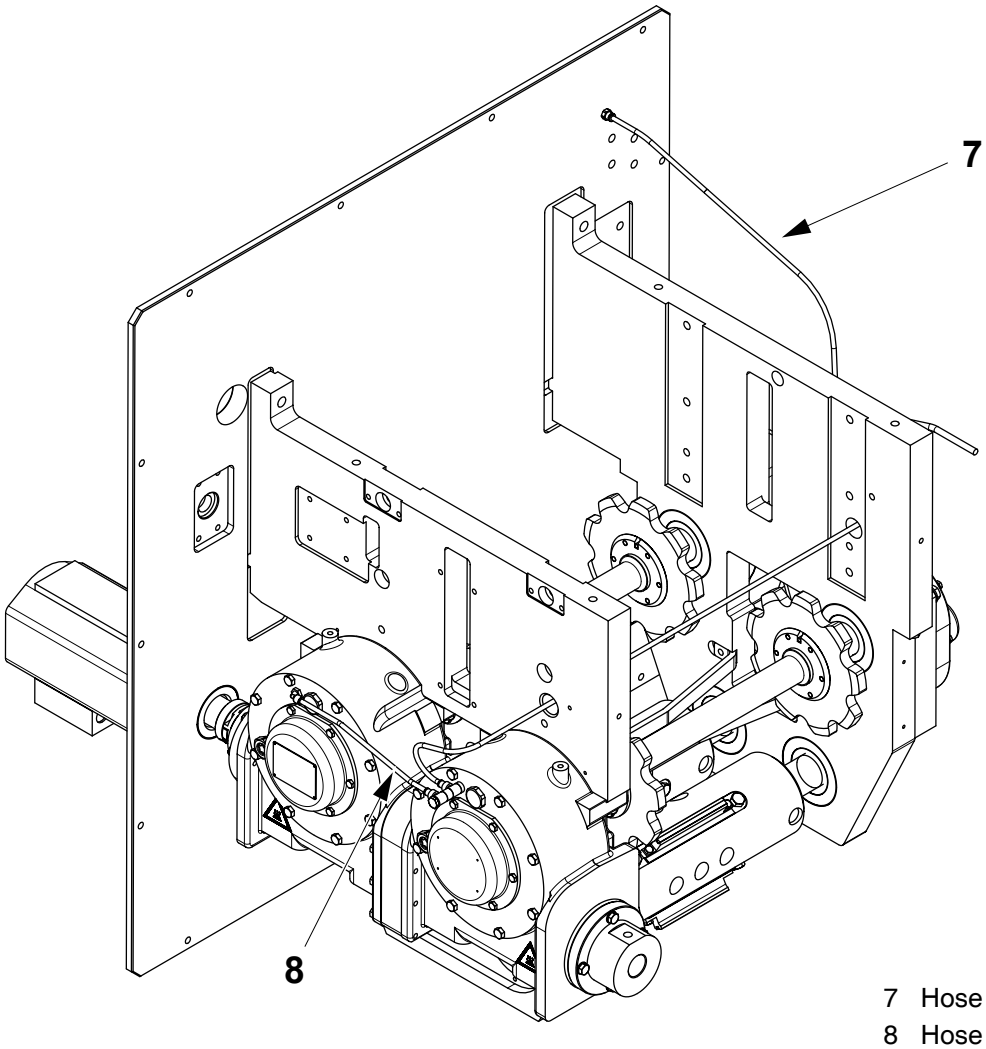

7 Hose
8 Hose

2.2c BK483en-20.fm

22 Completion tasks

SPC reference	648524-0400

Note! For TBA 250 B machines, fit the new packages guides (1) supplied as part of this kit.

a) Fit the two package guides (1).

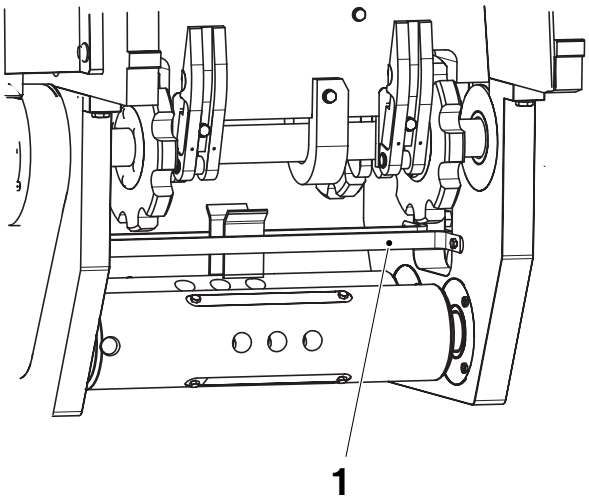

1 Guide

(Cont'd)

(Cont'd)

b) Fit the knife holder (2) and secure it in position with the screws (3).

Note! The knife holder (2) can only be fitted in one way. That is when the protrusions at the rear of the holder (2) mate with the cut-outs in the holder (4).

c) Repeat the process on the other knives.

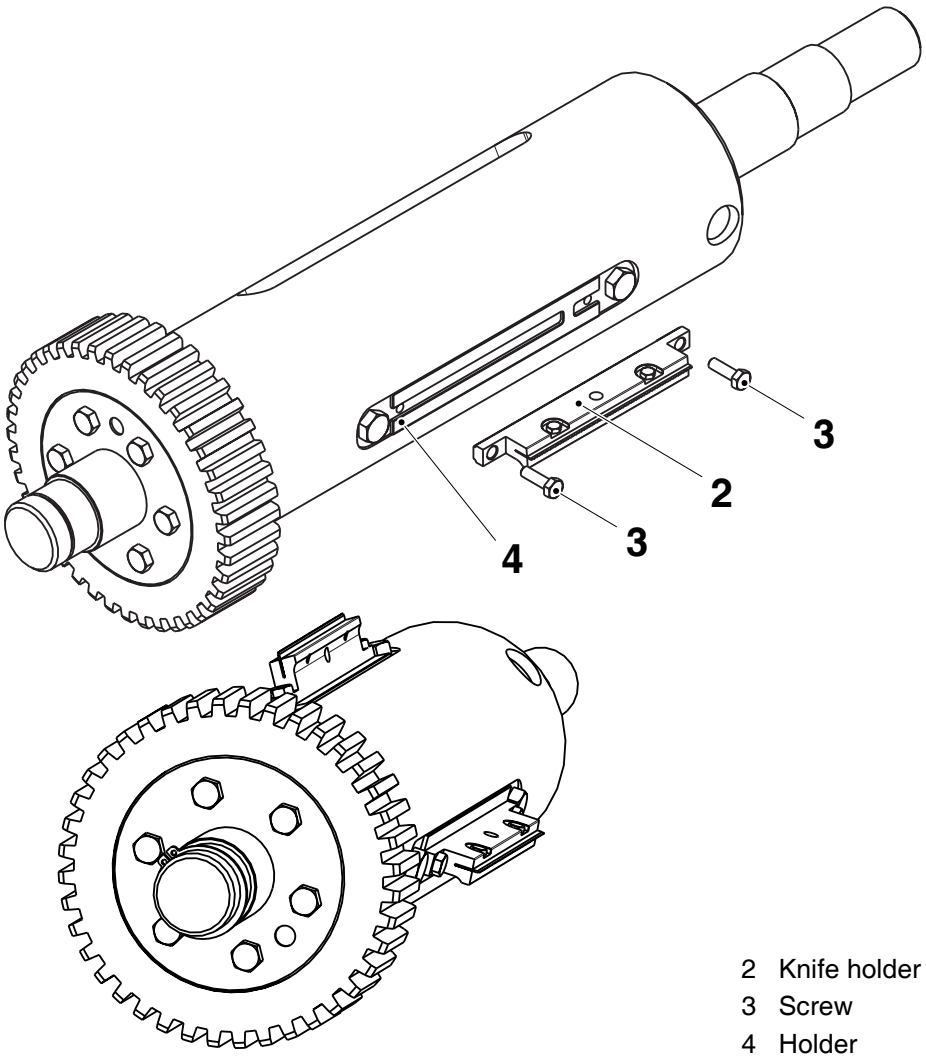

2.2c BK483en-20.fm

2 Knife holder
3 Screw
4 Holder

(Cont'd)

(Cont'd)

d) Fit the dolly holder (5) and secure it in position with the screws (6).

Note! The dolly holder (5) can only be fitted in one way. That is when the protrusions at the rear of the holder (5) mate with the cut-outs in the holder (7).

e) Repeat the process on the other cutting dollies.

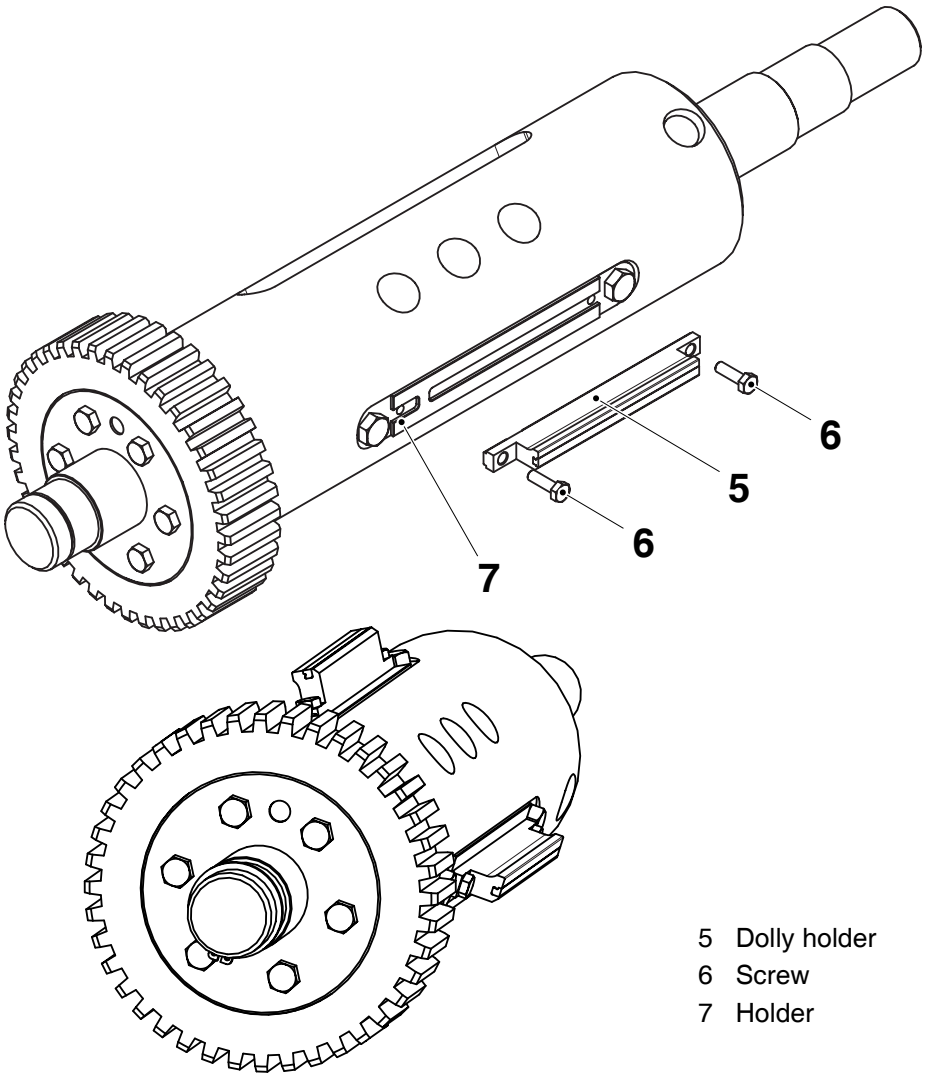

5 Dolly holder
6 Screw
7 Holder

(Cont'd)

2.2c BK483en-20.fm

(Cont'd)

f) Swing the jaw system toward the plate and insert the central part (8) between the gearbox coupling part (9) and the motor drive coupling part (10).

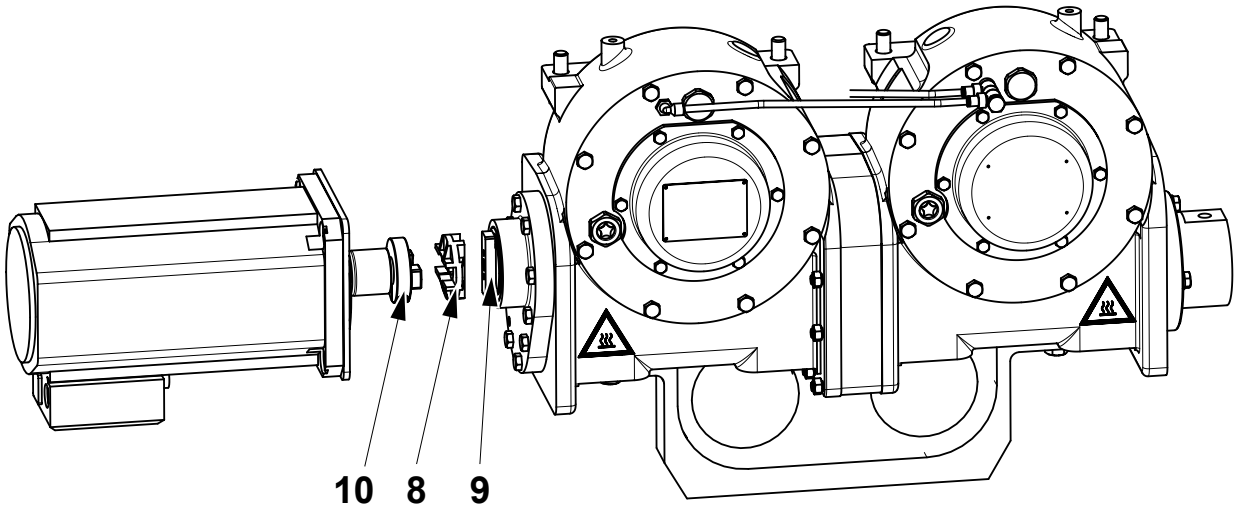

8 Central coupling part
9 Gearbox coupling part
10 Motor drive coupling part

(Cont'd)

2.2c BK483en-20.fm

(Cont'd)

g) Adjust the coupling, as follows.
   - Slide the central part of the coupling (8) until it touches the gearbox coupling part (9).
   - Set the gap **A** between the central part of the coupling (8) and the motor drive coupling part (10), then tighten the fixing screw (11) in the motor drive coupling part (10).

h) Set the angle encoder, see *4.3-7 Drive unit - set angle encoder*.

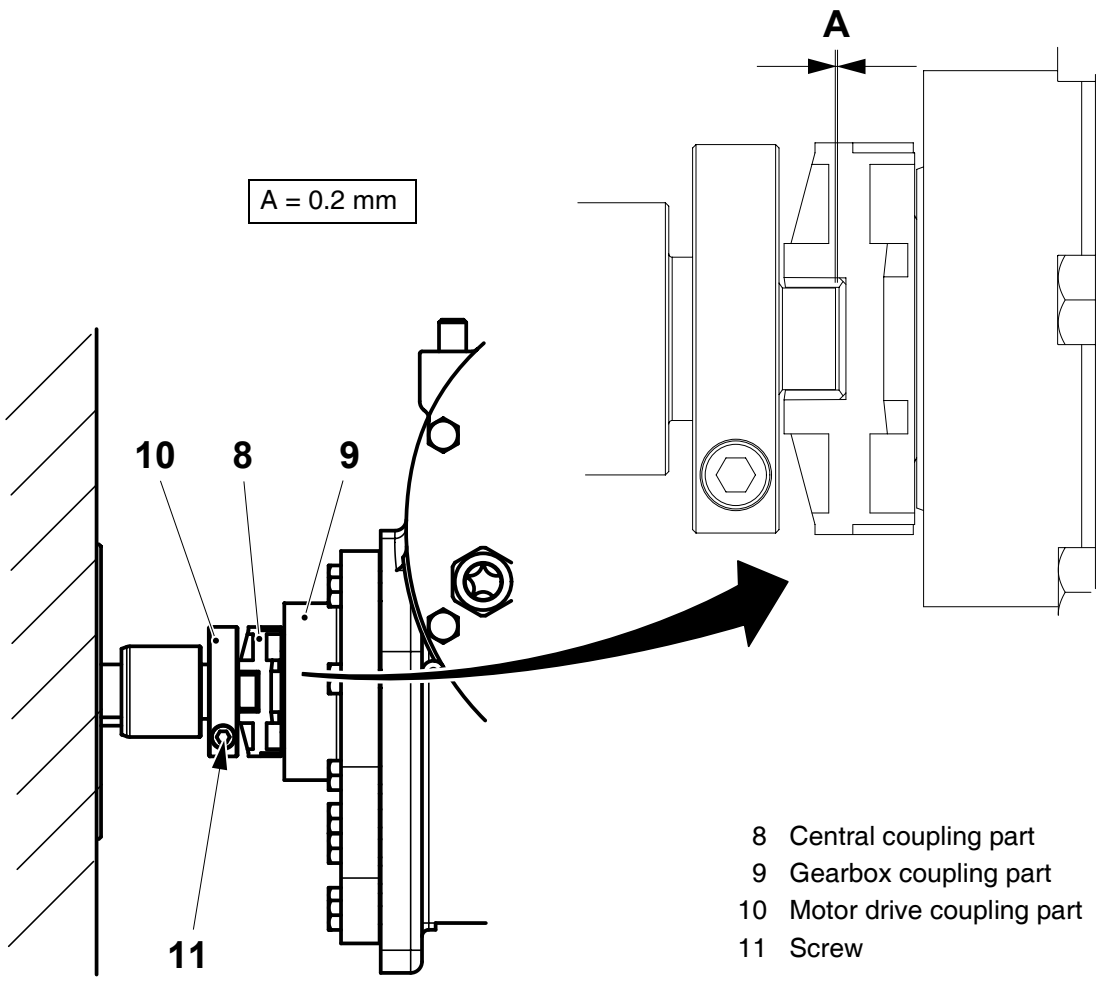

8 Central coupling part
9 Gearbox coupling part
10 Motor drive coupling part
11 Screw

(Cont'd)

2.2c BK483en-20.fm

(Cont'd)

i) Screw the pillars (12) into the frame (13).

j) Fit the cover (14) and secure it in place with the screws (15).

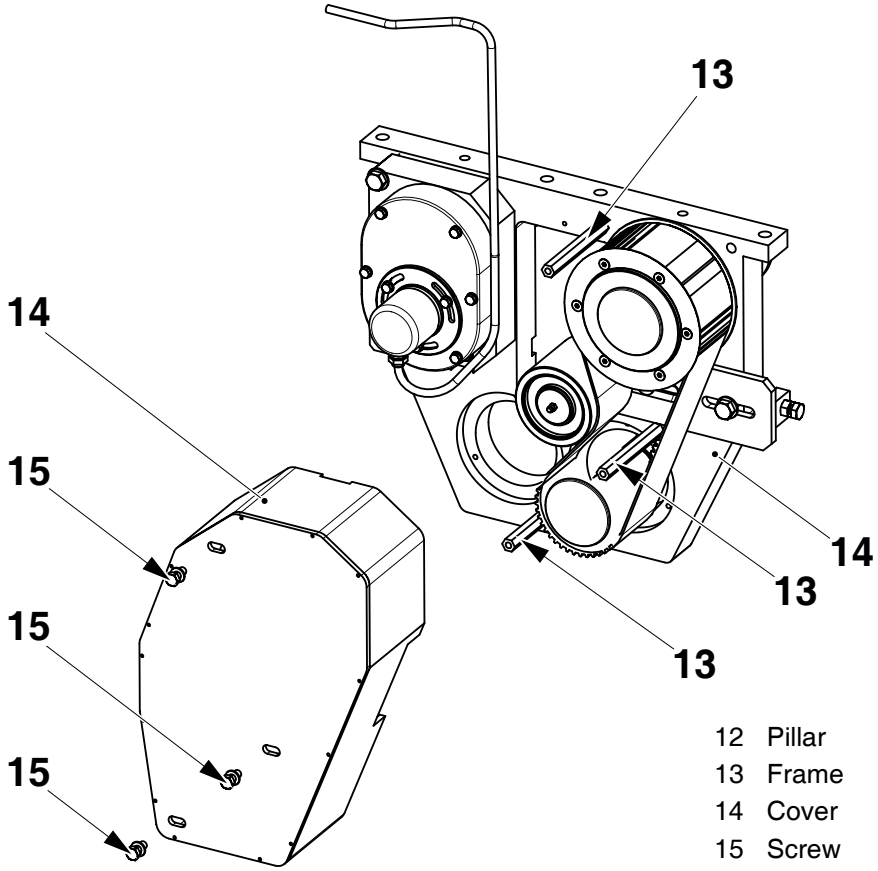

12 Pillar
13 Frame
14 Cover
15 Screw

2.2c BK483en-20.fm

23 Other tasks

SPC reference	648524-0400

Remove the four spray nozzles (1) from inside the Jaw System/Final Folder compartment.

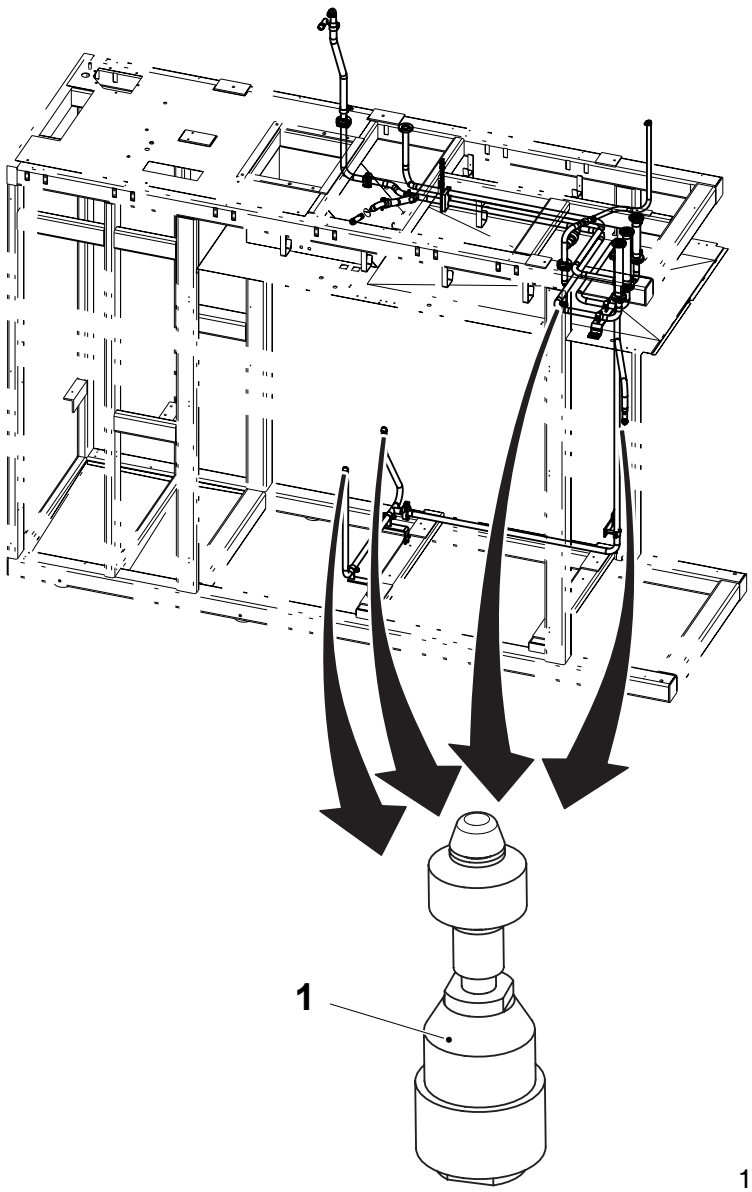

1 Spray nozzle

(Cont'd)

2.2c BK483en-20.fm

(Cont'd)

Fit the new spray nozzles (2) inside the Jaw System/Final Folder compartment.

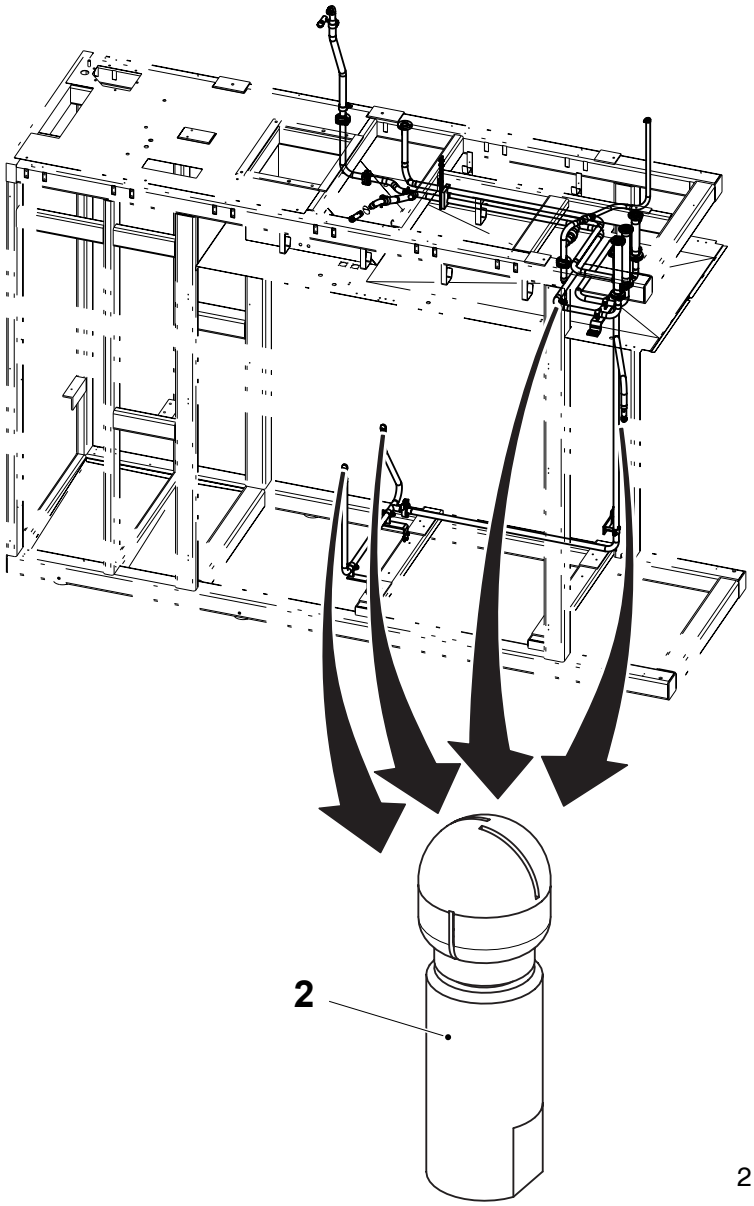

2 Spray nozzle

2.2c BK483en-20.fm

Final operations

Checks

After the rebuilding, run the machine and check for irregular noises and overheating.

Machine updating

Machine card

Write the name and number of this kit on the white machine card

Store the Technical Publications for the kit together with those of the machine.

2.2c BK483en-30.fm

This page intentionally left blank

2.2c BK483en-30.fm

MM - Supplementary instructions

Supplementary instructions

2.2c BK483en-mms1.fm

Updating the Maintenance Manual

Place these Supplementary instructions at the end of the machine's Maintenance Manual. Take care to clearly mark any old procedures with the words "**No longer valid: see Supplementary Instructions**".

Supplementary instructions

2.2c BK483en-mms1.fm

4 Jaw system

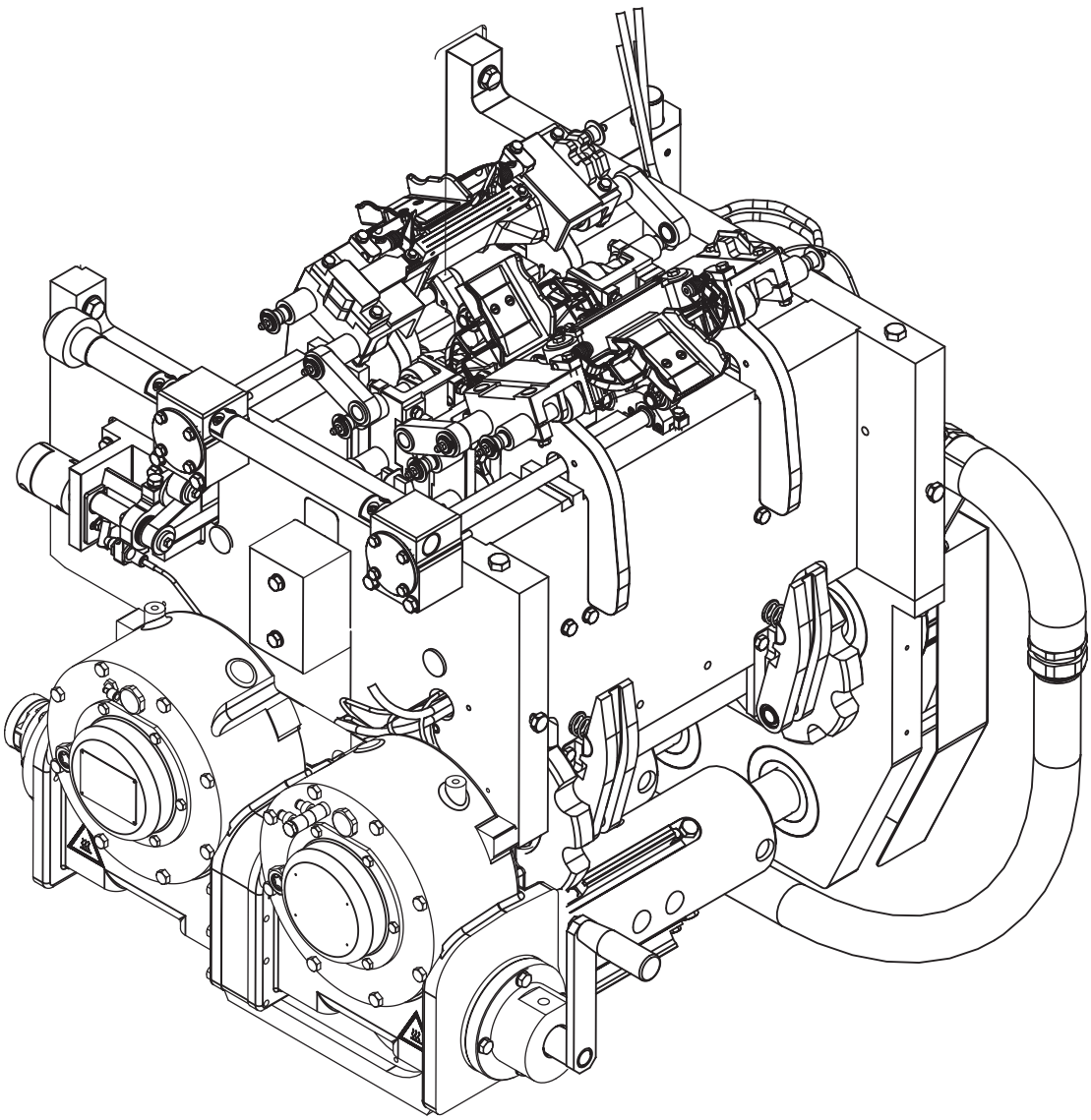

2.2BK483en-mms2.fm

4-1 Jaw system - description

SPC reference	648524-0400

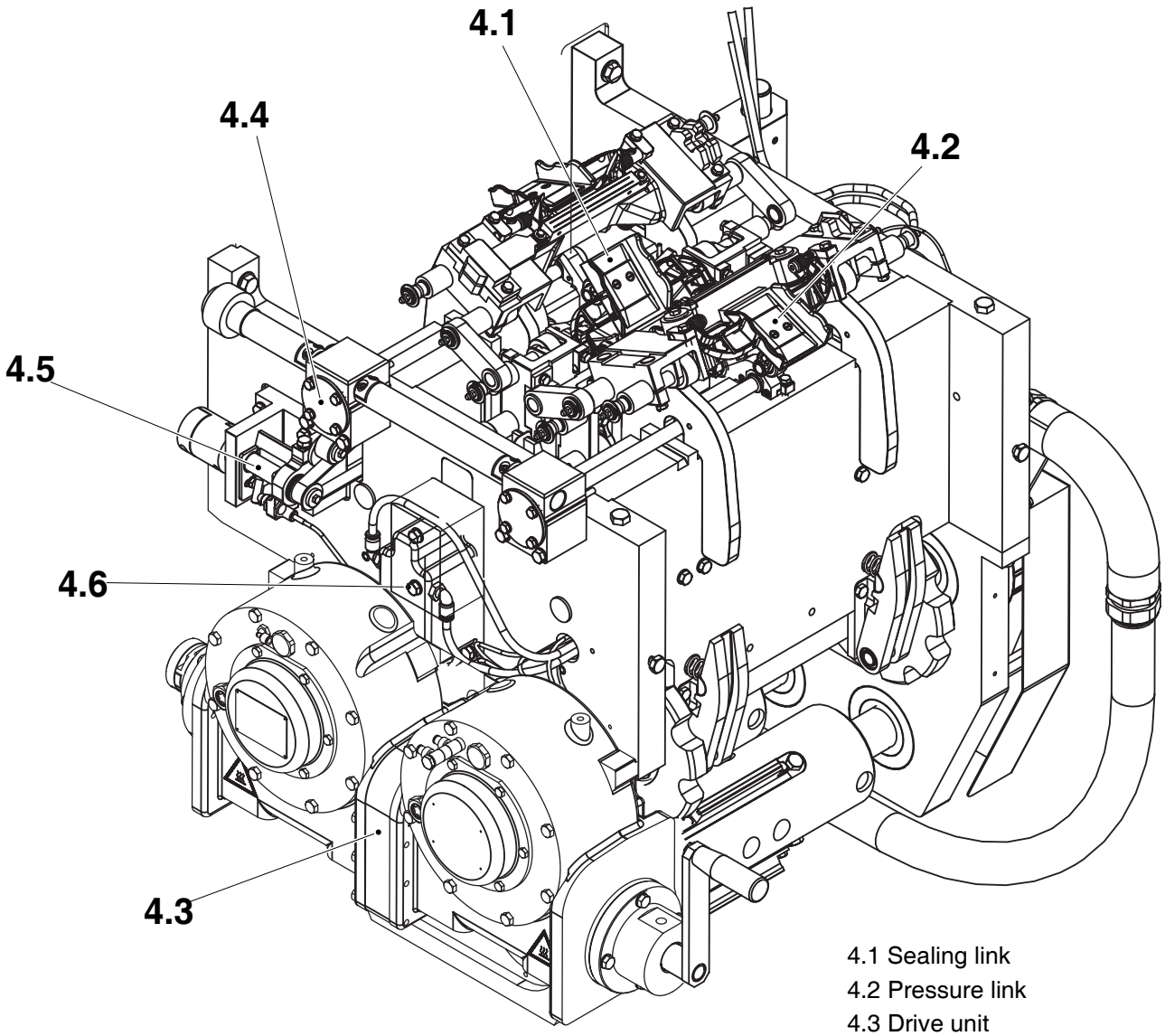

2.2BK483en-mms2.fm

4.1 Sealing link
4.2 Pressure link
4.3 Drive unit
4.4 Volume adjustment
4.5 Design correction
4.6 Electrical connection

4-2 Jaw system - setting sequence

SPC reference	648524-0400

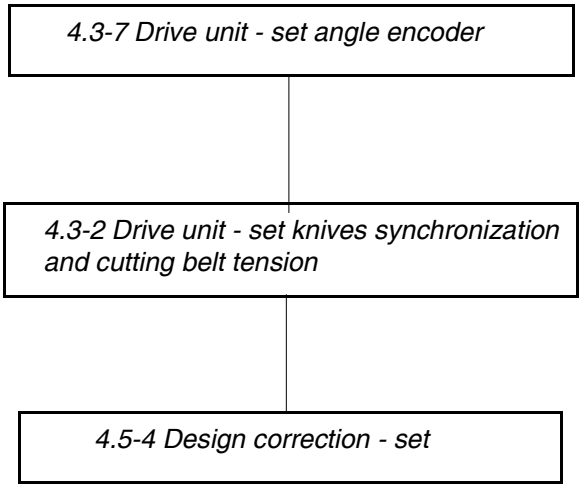

2.2BK483en-mms2.fm

4-3 Jaw system - chain disassembly and reassembly

SPC reference	648524-0400

Disassembly

Caution! To prevent damage to the conveyor or knives, make sure the knives are not in the vertical position before swinging the jaw system open.

a) Remove the two screws (1) holding the jaw system to the bulkhead. Then swing the jaw system away from the bulkhead.

b) Remove the knife holder and cutting dolly holder, see *4.3-4 Drive unit - remove knife holder* and *4.3-6 Drive unit - remove cutting dolly holder*.

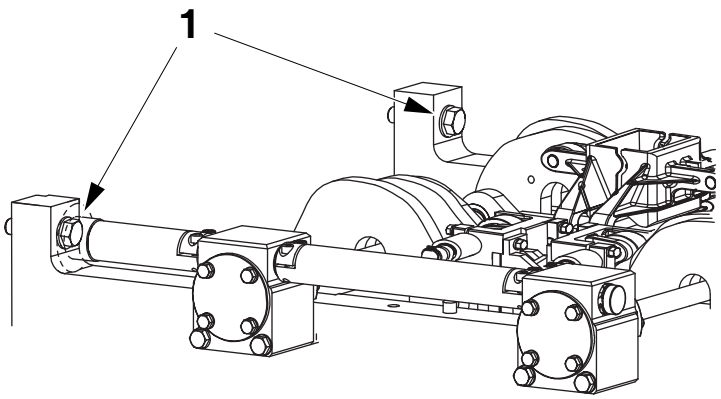

1 Screw

2.2BK483en-mms2.fm

c) Remove the four screws (2) and two package guides (3).

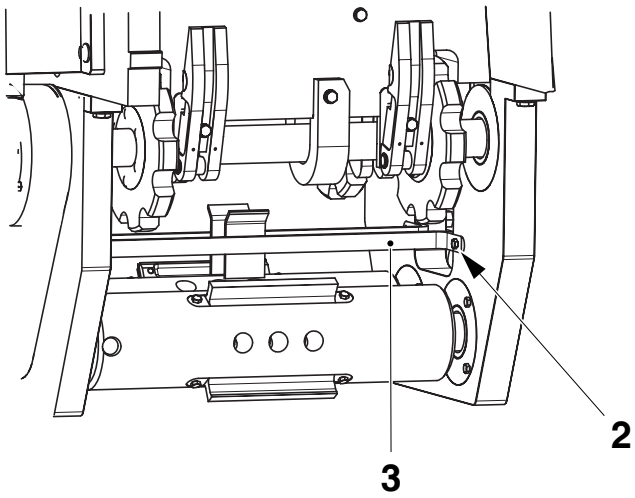

2 Screw
3 Guide

(Cont'd)

(Cont'd)



WARNING!

Risk of crushing!
Be careful not to trap your fingers between the links.

Always remove one chain, carry out the necessary maintenance and fit it again before removing the other chain. Failure to do this can lead to equipment damage.

It is easier to remove the sealing link chain before removing the pressure link chain.

Note! Shims are fitted to ensure that each volume box will produce a package of optimum size. For this reason it is important that mating pressure and sealing links are marked before the chains are removed.

On assembly the numbered links must be matched again to ensure that packages are produced with the correct volume.

In the example below, the pressure and sealing jaws of link number 1 have been marked with an **X**.

The toothed drive wheel (4) and the shaft (5) of a jaw link should also be marked to ensure complete matching.

2.2BK483en-mms2.fm

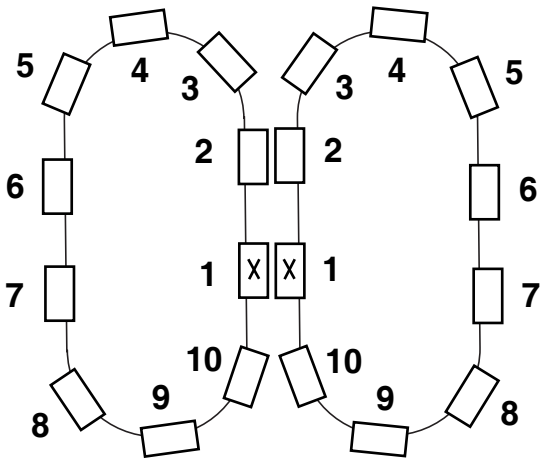

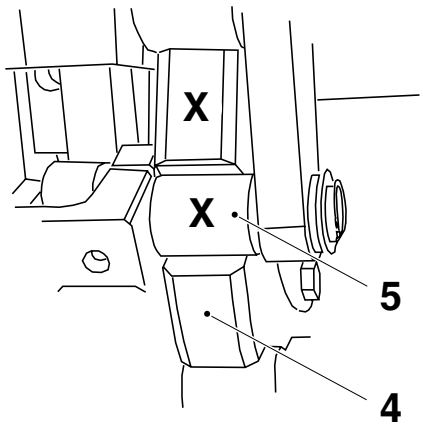

4 Wheel
5 Shaft

(Cont'd)

(Cont'd)

Note! Take care not to drop the bolts into the jaw mechanism.

d) Release the chain tension by inserting M8 x 45 hexagonal socket head screws (6) into the tensioning mechanism and tightening them fully.

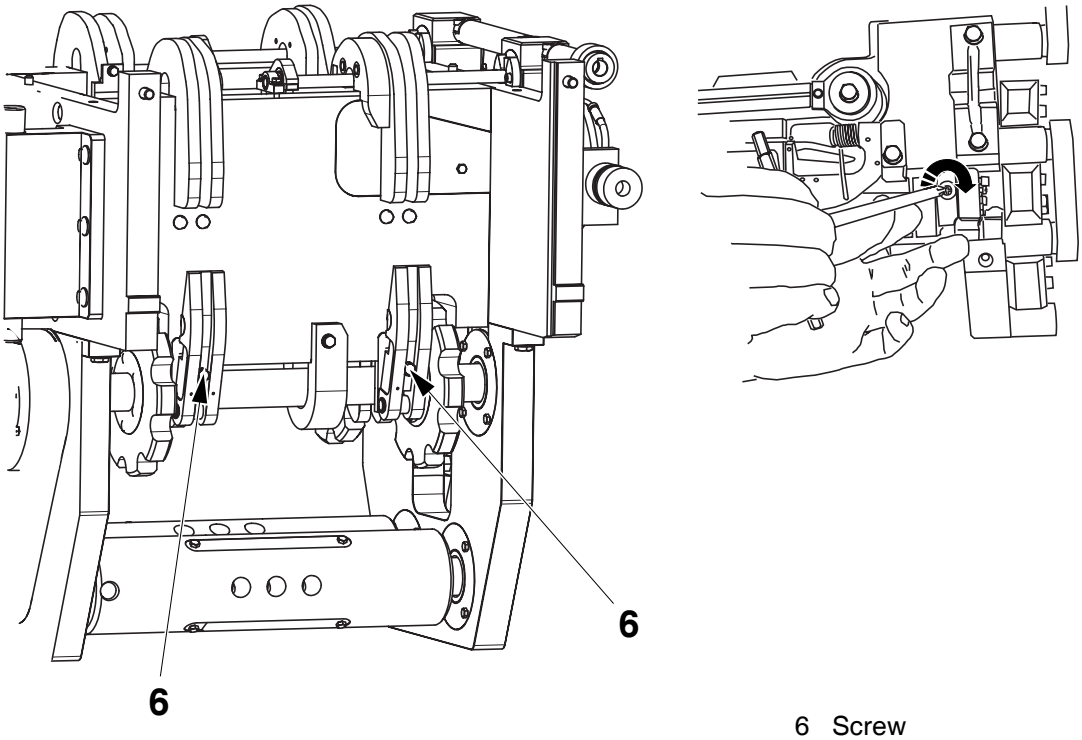

6 Screw

2.2BK483en-mms2.fm

(Cont'd)

(Cont'd)

Note! This procedure shows how to remove the sealing link chain ((7), the pressure link chain (8) can be removed in the same way.

e) Separate the sealing link chain (7) at the top (point **A**).

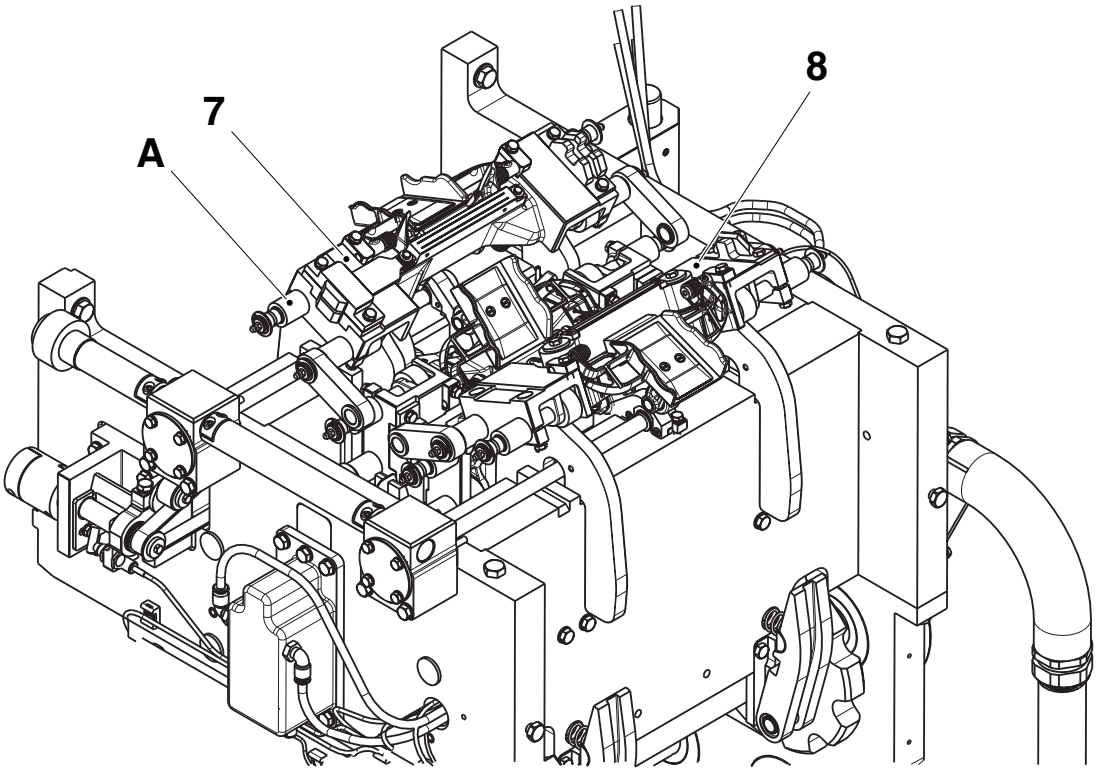

7 Sealing link chain
8 Pressure link chain

f) To separate the chain, remove the retaining ring and washer. Then remove the chain link.

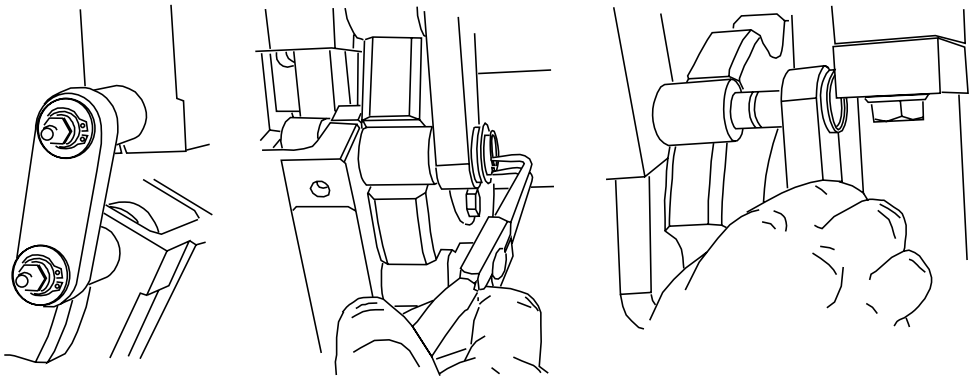

(Cont'd)

2.2BK483en-mms2.fm

(Cont'd)

Note! Use two people to remove the chain, use a third to crank the jaw system.

g) Load a pallet truck with pallets and place a layer of cardboard on it. Push the pallet truck into position beneath the jaw system.

h) Pull the leading end of the chain (9) away from the jaw system and lay it on the pallets.

Note! While cranking keep the chain in tension by pulling it to keep the link shaft (10) in the wheel (11).

i) Crank the jaw system to move the inner links of the chain through the jaw system until the trailing link (12) is at point **B** were it will still be supported by the jaw system.
While this is being done, pull the end of the chain (9) and lay the links on the pallets.

j) Disengage the trailing link from the jaw system and remove the chain completely.

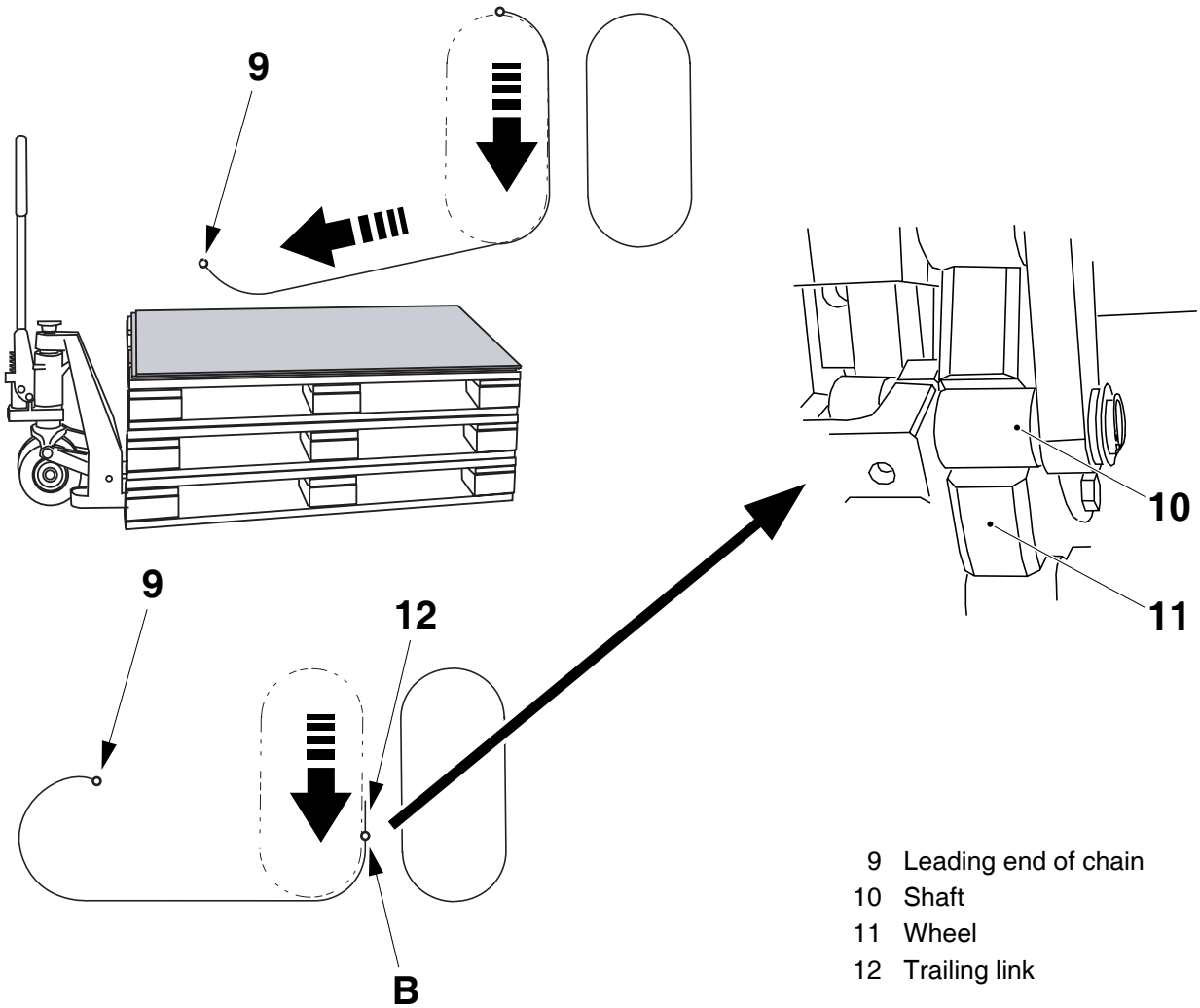

2.2BK483en-mms2.fm

9 Leading end of chain
10 Shaft
11 Wheel
12 Trailing link

(Cont'd)

(Cont'd)

Assembly

Note! When fitting the chains, seal the threads on the grease nipples with PTFE tape.

a) Crank the chain so that the link (2) of the pressure link chain (1) is in position **A**.

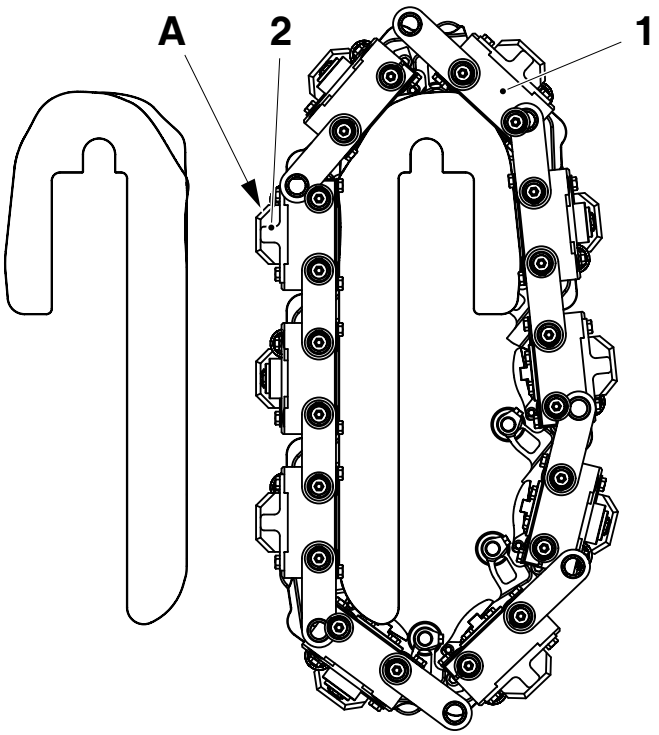

1 Pressure link chain
2 Link

2.2BK483en-mms2.fm

(Cont'd)

(Cont'd)

b) Divide the sealing link chain in two parts.

c) Lift the first part of the sealing link chain (3) and place it on the cam.

d) Mate the leading link (4) of the sealing link chain (3) with the matching link (5) of the pressure link chain (1) (position **A**).

WARNING!

Risk of injury!
Be careful not to trap your fingers between the links.Never crank the jaw system backwards. Crank the jaw system very slowly to prevent injury to the persons guiding the chain links into the jaw system and damage to the equipment. Do not try to force the crank handle around. If the jaws become blocked, cease cranking and ascertain the cause of the problem.

e) Crank until the last link (6) of the sealing link chain is in position **B**.

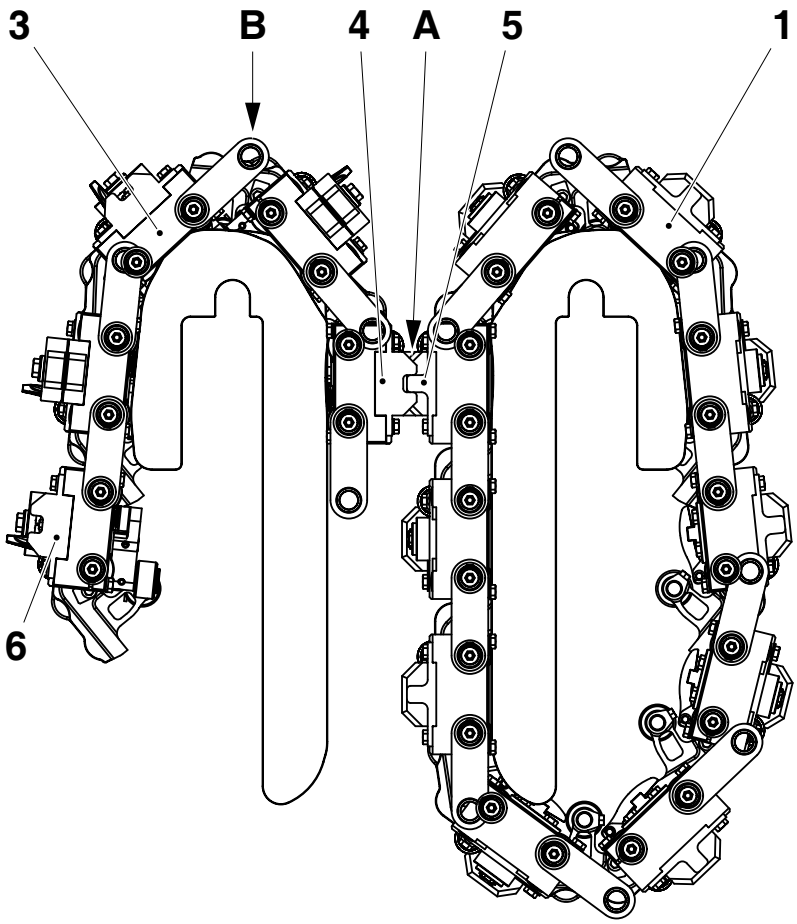

1 Pressure link chain
3 First part, sealing link chain
4 Leading link, sealing link chain
5 Matching link, pressure link chain
6 Last link, sealing link chain

(Cont'd)

2.2BK483en-mms2.fm

(Cont'd)

f) Lift the second part of the sealing link chain (7) and place it on the cam. Hold it in position while the second person connects it to the first part (3) at point (**B**).

Note! While cranking keep the chain in tension by pulling it to keep the link shaft (8) in the wheel (9).

g) Crank the jaw system until the end of the chain (10) is at the top in position (**B**).

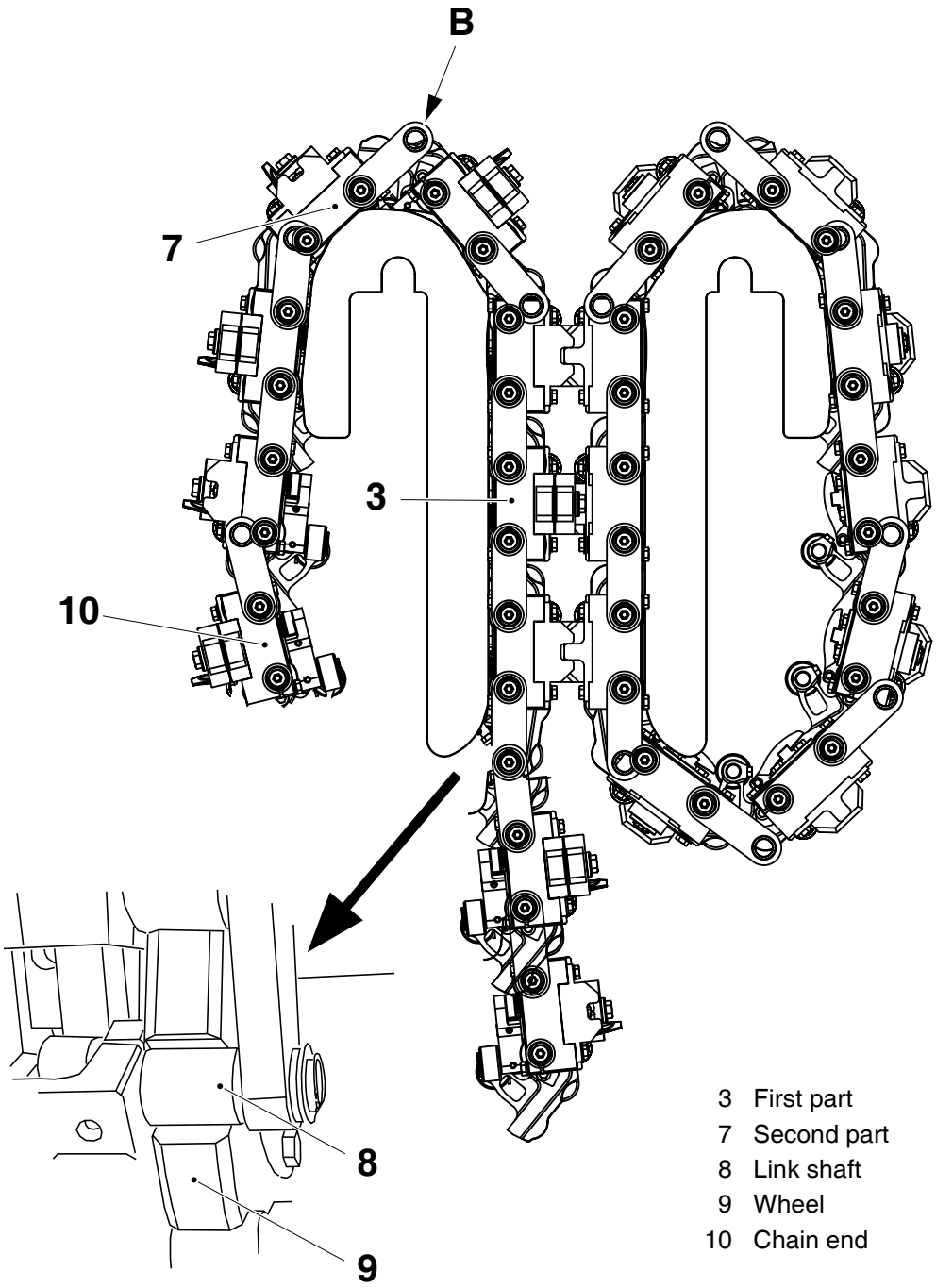

3 First part
7 Second part
8 Link shaft
9 Wheel
10 Chain end

(Cont'd)

2.2BK483en-mms2.fm

(Cont'd)

h) Bring the two ends of the chain (10) and (11) together and then link them.

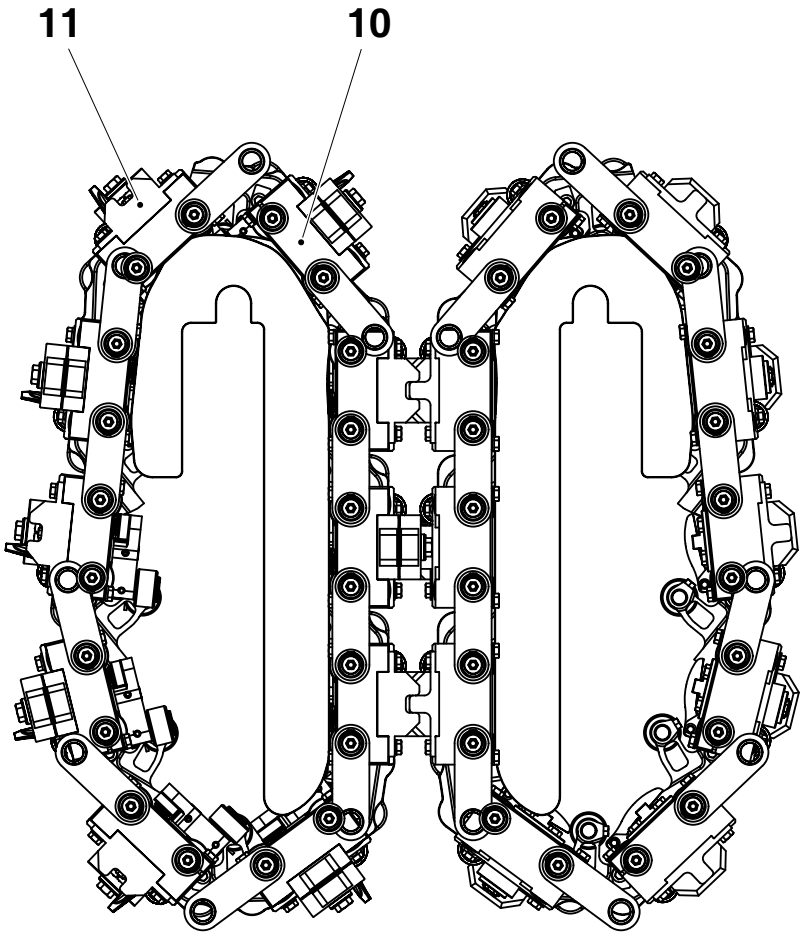

10 Chain end
11 Chain end

2.2BK483en-mms2.fm

i) To connect the chain, fit the chain link and then the washer and retaining ring.



(Cont'd)

(Cont'd)

j) Tension the chain by removing the M8 x 45 hexagonal socket head screws (12) from the tensioner mechanism.

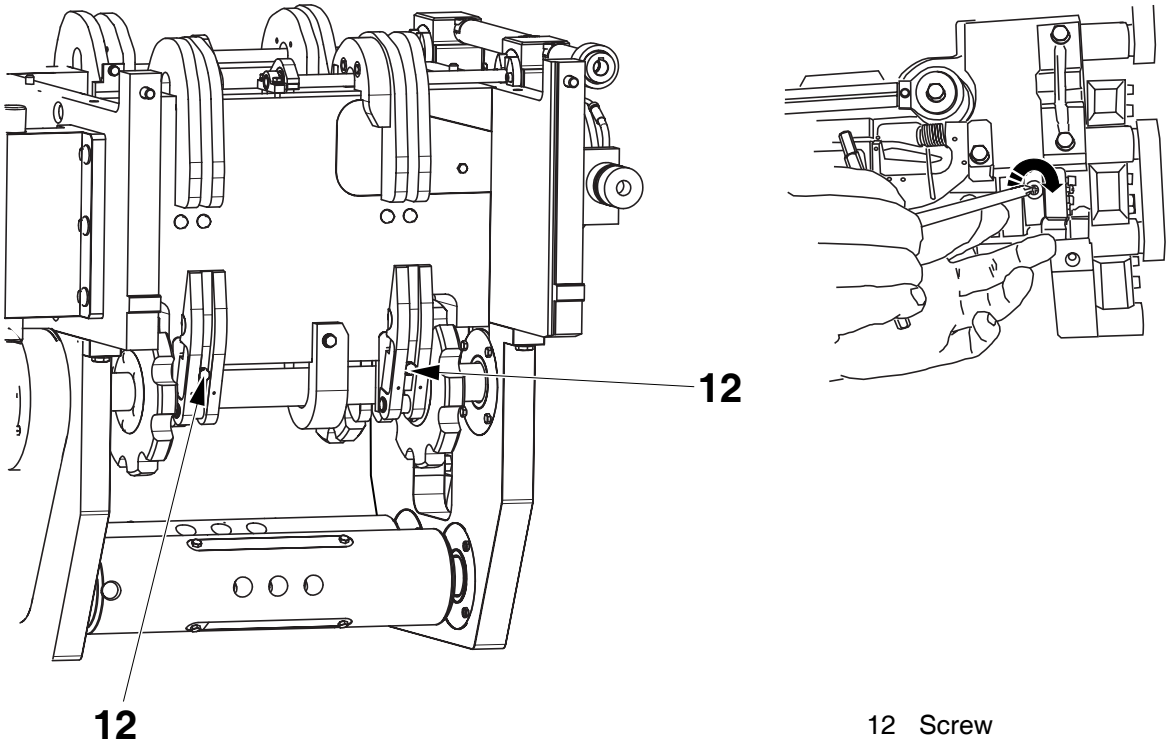

12 Screw

2.2BK483en-mms2.fm

k) Fit the two package guides (13) and secure them in position with the screws (14).

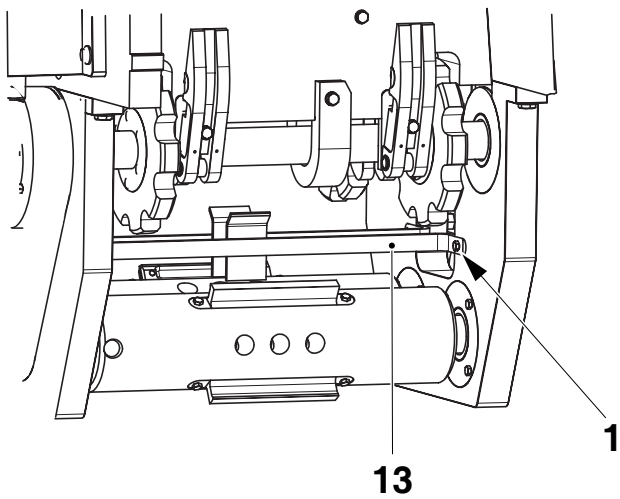

13 Screw
14 Guide

(Cont'd)

(Cont'd)

l) Fit the knife holder and cutting dolly holder, see *4.3-4 Drive unit - remove knife holder* and *4.3-6 Drive unit - remove cutting dolly holder*.

m) Swing the jaw system toward the bulkhead and secure it in position with the screws (15).

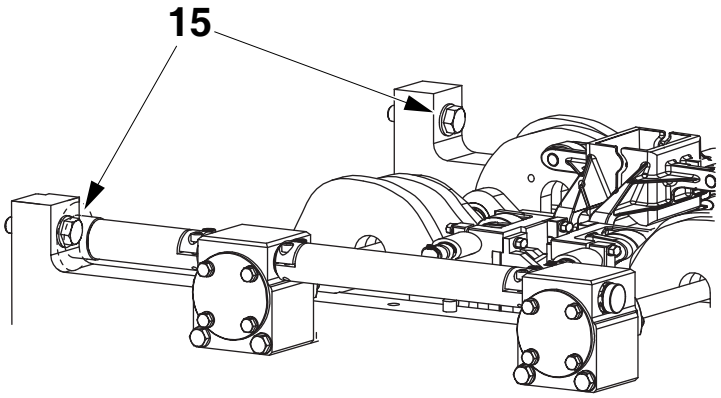

15 Screw

2.2BK483en-mms2.fm

4-4 Jaw system - grease chains

Tools: - pneumatic grease gun	TP No. 1512559
Consumable: - food grade grease 151/L	TP No. 90458-0134
SPC reference	648524-0400

Using a grease gun, apply grease to the grease nipples (1) on each side of the two chains every week.

Note! Apply grease until it comes out from the rollers (2).

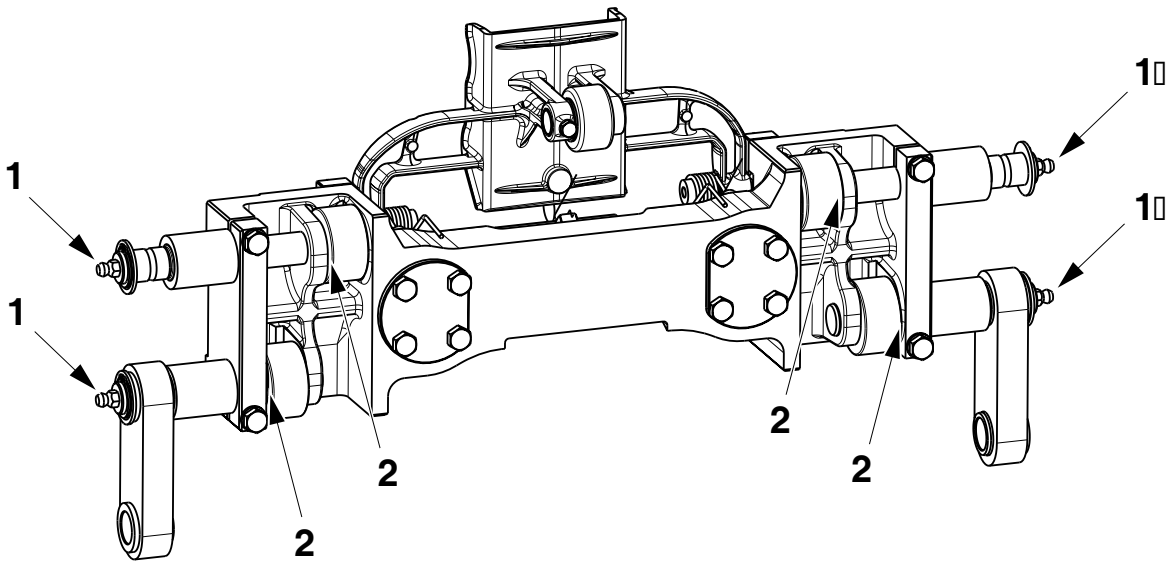

2.2BK483en-mms2.fm

1 Grease nipple
2 Roller

4-5 Jaw system - check coupling

SPC reference	648524-0400

Check the couplings (1) and (2) for signs of ware, damage or play.
Change as required.

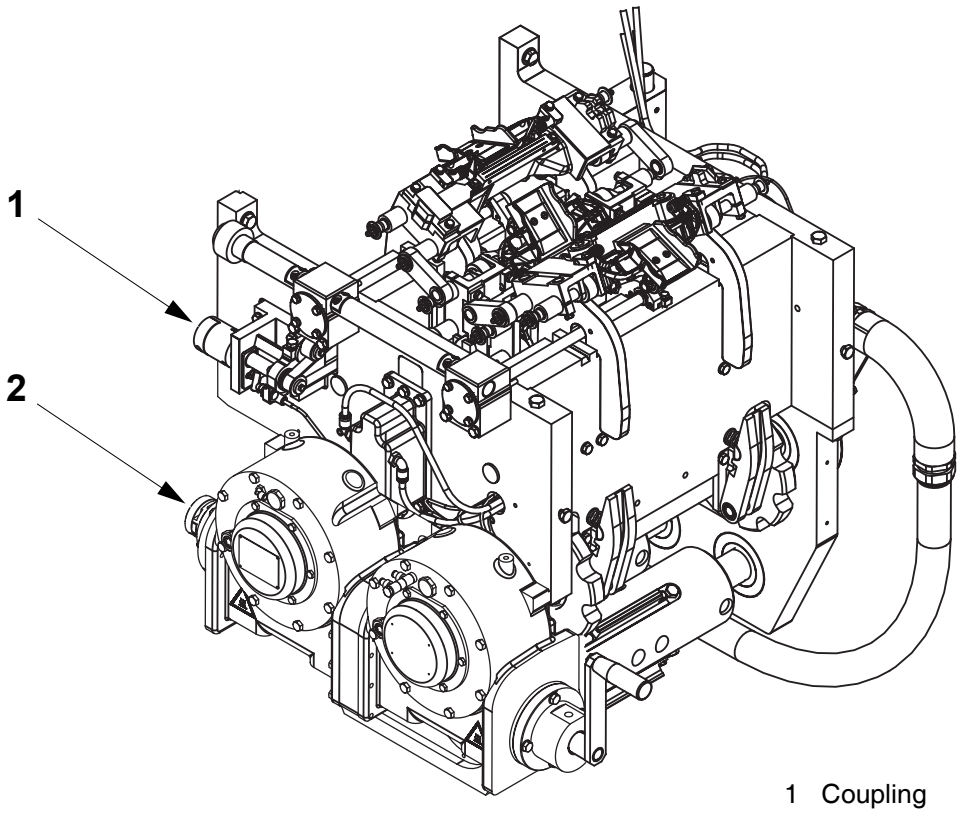

1 Coupling
2 Coupling

2.2BK483en-mms2.fm

4-6 Jaw system - set coupling

SPC reference	648524-0400

Set the coupling (1), see *Design correction coupling*.

Set the coupling (2), see *Jaw drive coupling*.

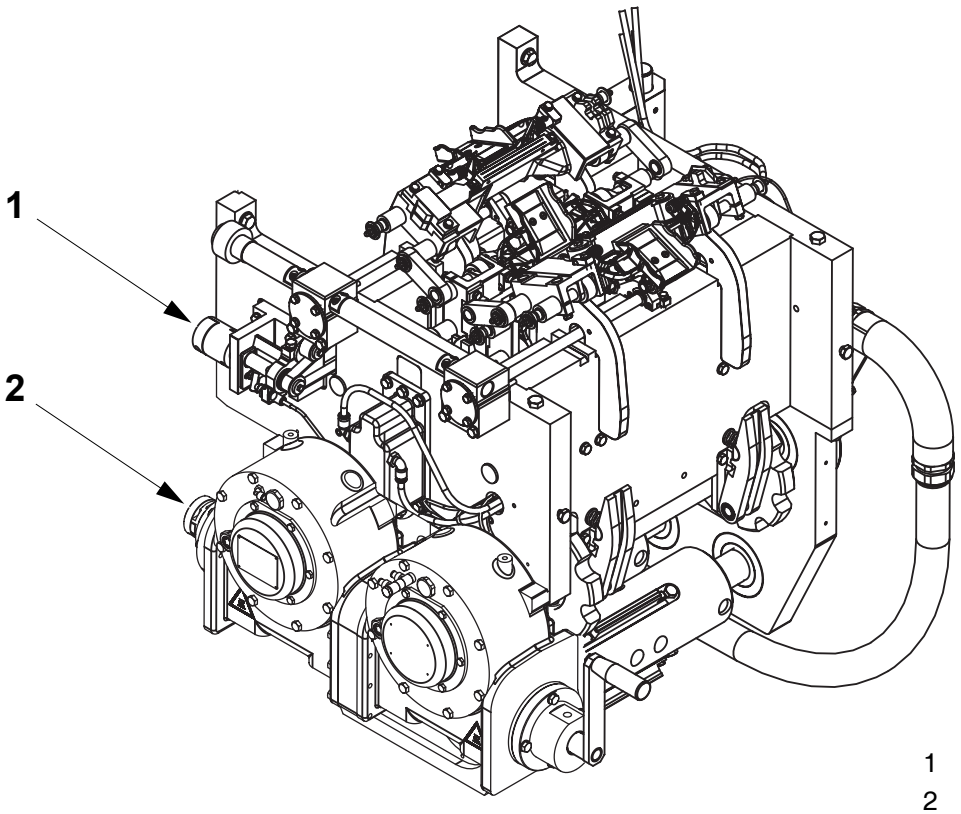

1 Coupling
2 Coupling

(Cont'd)

2.2BK483en-mms2.fm

(Cont'd)

Jaw drive coupling

Adjust the coupling, as follows.

- Slide the central part of the coupling (1) until it touches the gearbox coupling part (2).
- Set the gap **A** between the central part of the coupling (1) and the motor drive coupling part (3), then tighten the fixing screw (4) in the coupling part (3).

Package	A (mm)
TBA 200 B - TBA 200 M -TBA 200 S TBA 250 B - TBA 250 S	0.2

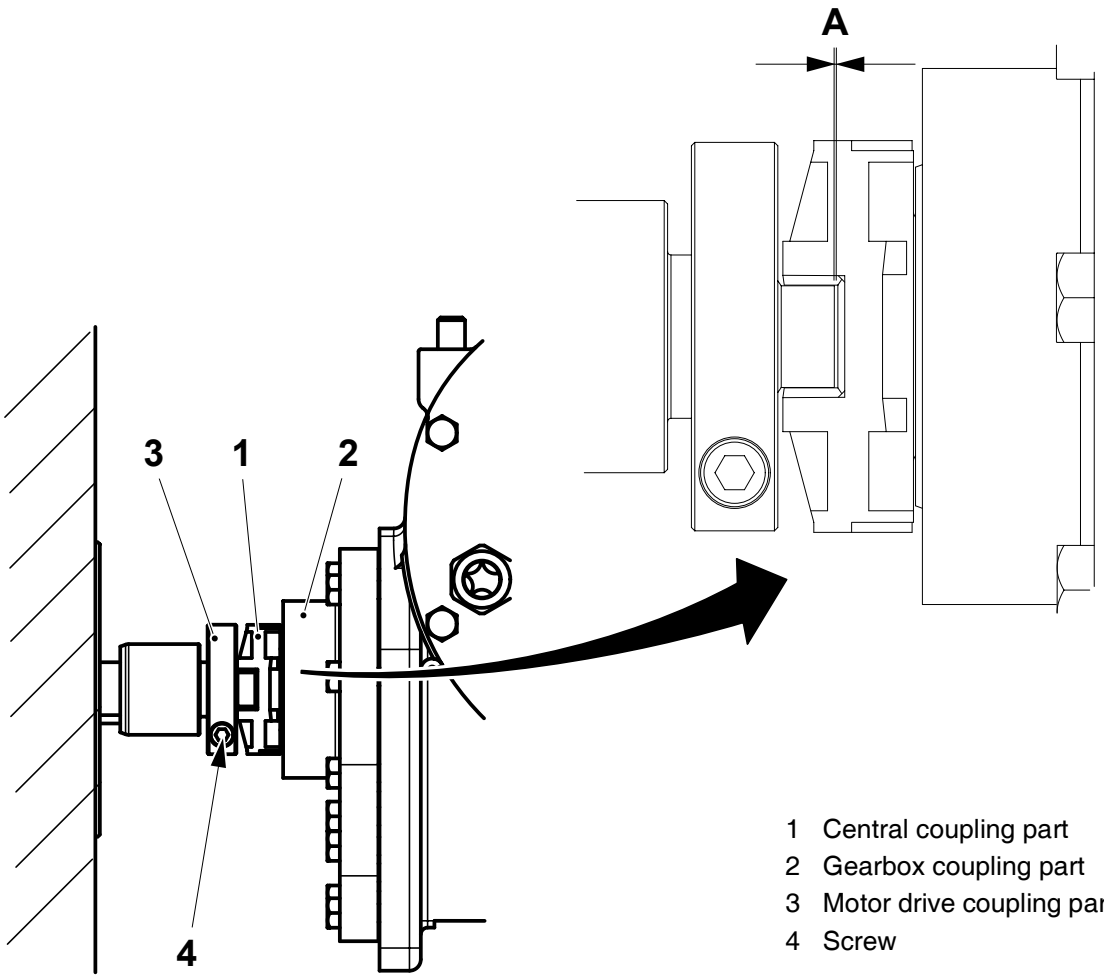

1 Central coupling part
2 Gearbox coupling part
3 Motor drive coupling par
4 Screw

2.2BK483en-mms2.fm

(Cont'd)

(Cont'd)

Design correction coupling

a) Loosen the screws (1) and (2).

b) Push the pulley (3) and coupling piece (4) toward each other as far as they will go and hold the components there.

c) Tighten the screw (1).

d) Fit the coupling pieces (5) and (6).

e) Insert feeler gauge (distance **A**) between the surfaces (7) and (8).

f) Hold the feeler gauge in position with the coupling piece (6) and tighten the screw (2).

Package	A (mm)
200B	0.2
250B	0.2

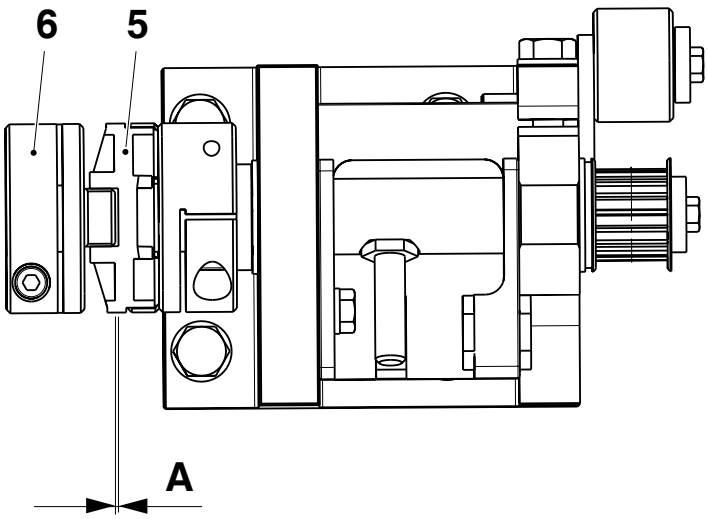

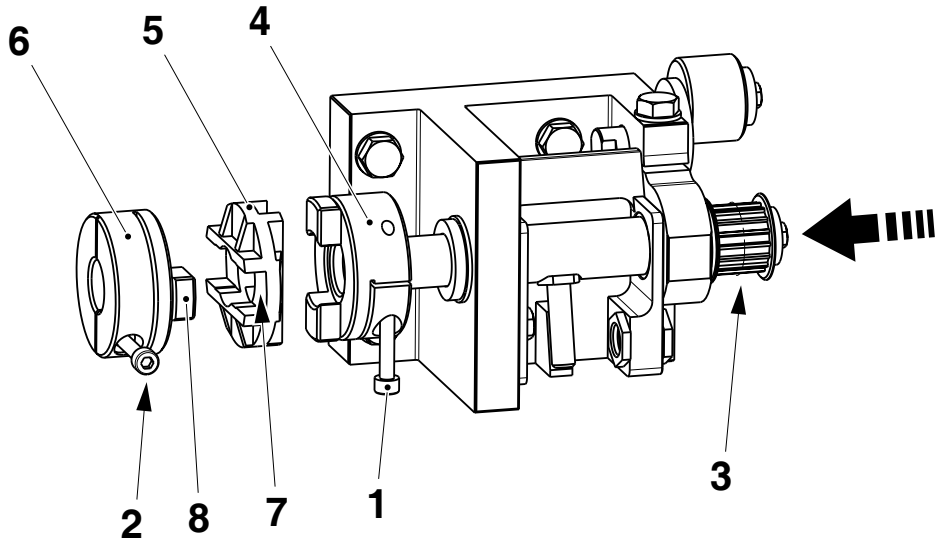

1 Screw
2 Screw
3 Pulley
4 Coupling piece
5 Coupling piece
6 Coupling piece
7 Surface
8 Surface

2.2BK483en-mms2.fm

4.1 Sealing link

SPC reference	1549918-0100 1549920-0100

4.1-1 Sealing link - check guides

SPC reference	1549918-0100 1549920-0100

Crank the jaw system and check the guides (1) are not worn or damaged. If necessary, change the guides as follow:

a) On one of the links, remove the screws (2) and change the guide (1).

b) Assemble in reverse order.

c) Repeat the procedure on the other links.

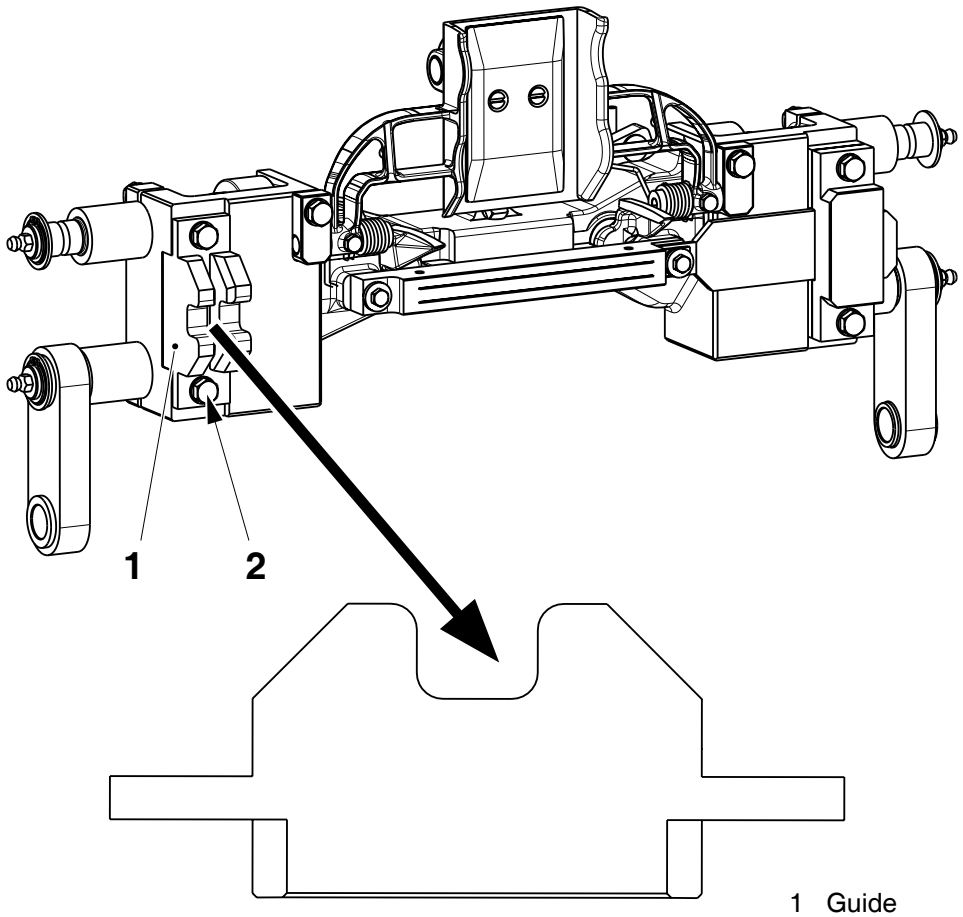

2.2BK483en-mms2.fm

1 Guide
2 Screw

4.1-2 Sealing link - check volume flap dampers

Consumable: - loctite 242	 TP No. 90157-16
SPC reference	1549918-0100 1549920-0100

Lift the folding flap (1) and check the damper (2) for wear or damage.
If necessary, change the damper, as follow:

a) Remove the damper (2).

b) Apply the locking fluid **Loctite 242** to the new damper and insert it in the hole.

c) Remove any excessive locking fluid.

d) Repeat the procedure on the other links.

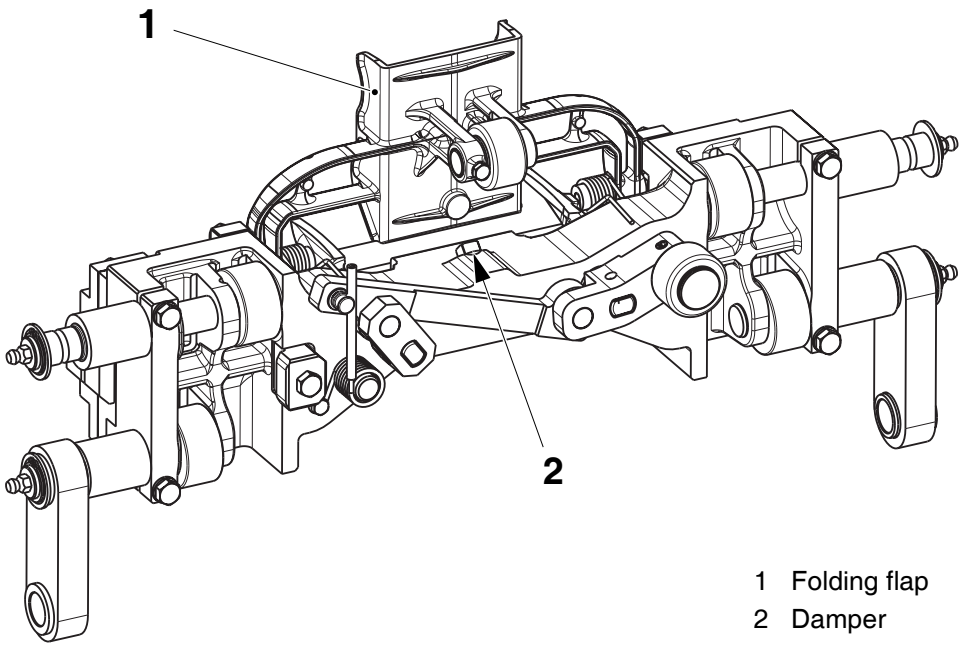

1 Folding flap
2 Damper

2.2BK483en-mms2.fm

4.1-3 Sealing link - check volume flap springs and bushings

SPC reference	1549918-0100 1549920-0100

a) Check the springs (1) for damage.

b) Check for excessive play in the volume flap bushings (2).
If necessary, change the springs or bushings, see *4.1-9 Sealing link - change volume flap springs and bushings*.

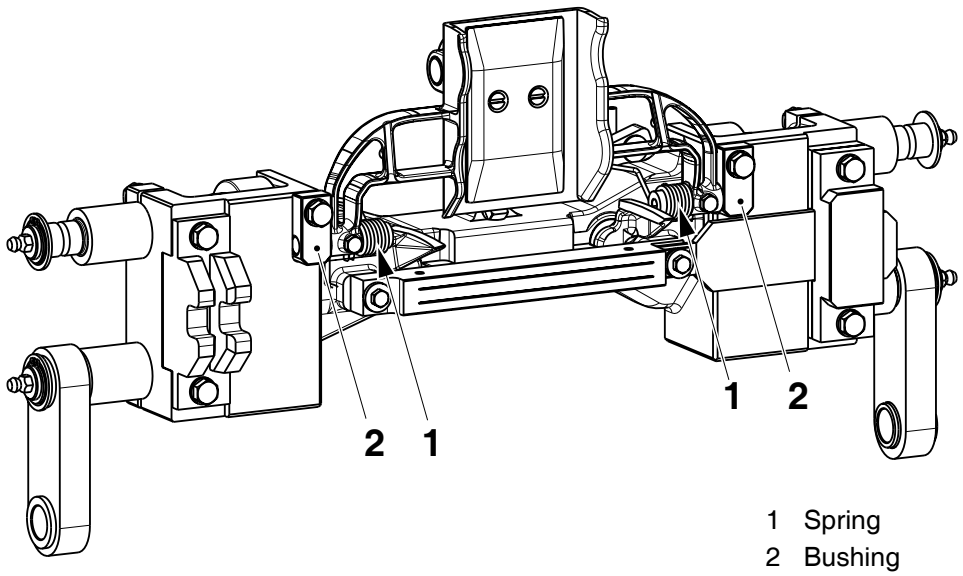

1 Spring
2 Bushing

2.2BK483en-mms2.fm

4.1-4 Sealing link - check volume flap rollers

SPC reference	1549918-0100 1549920-0100

Check the roller (1) rotates freely.
If necessary, change the bushings, see *4.1-10 Sealing link - change volume flap rollers*.

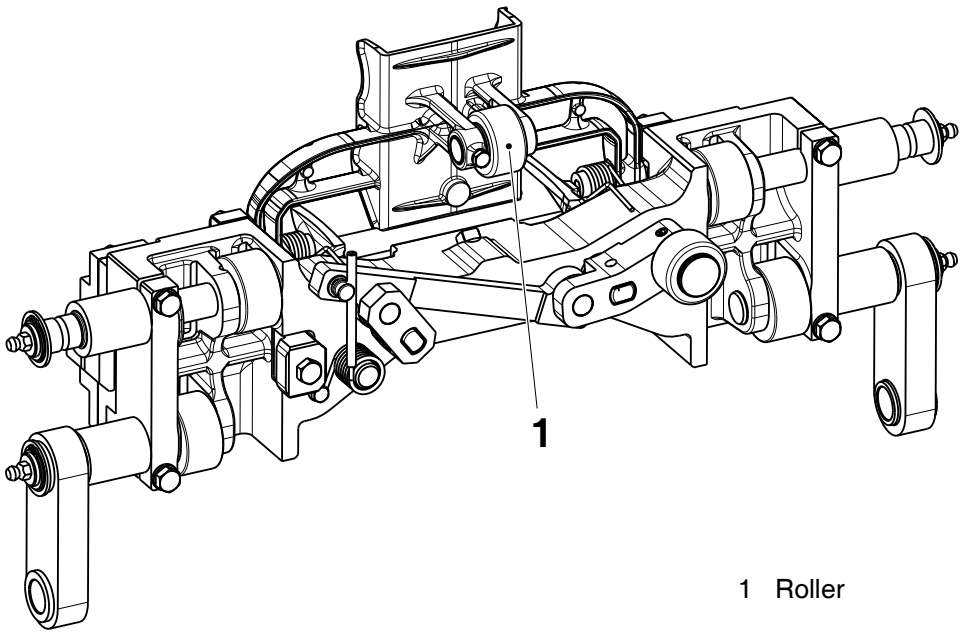

1 Roller

2.2BK483en-mms2.fm

4.1-5 Sealing link - check roller bearing

SPC reference	1549918-0100 1549920-0100

Check the rollers (1) for wear or damage.
If necessary, change the rollers, see *4.1-12 Sealing link - overhaul*.

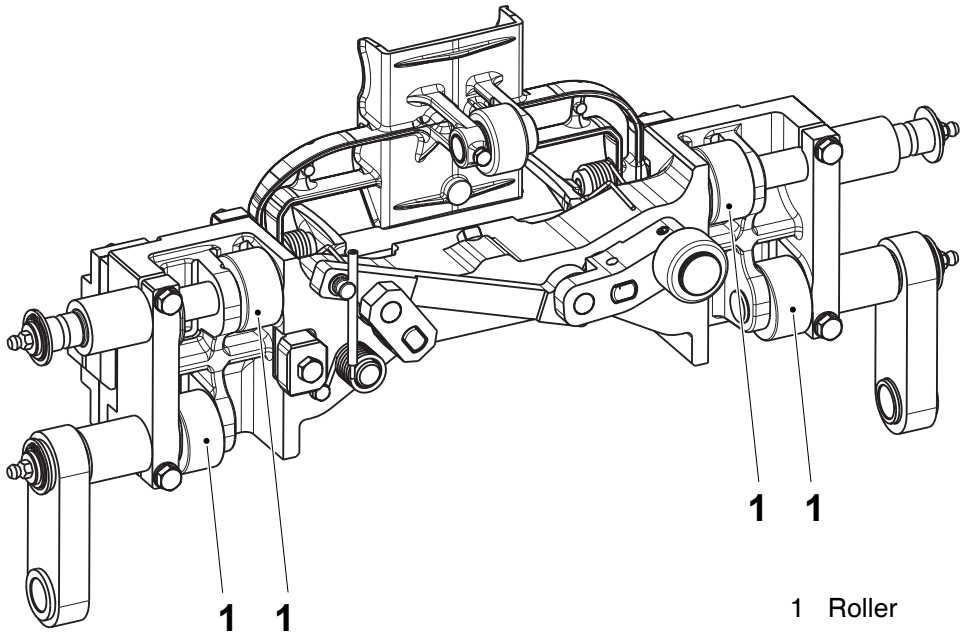

1 Roller

2.2BK483en-mms2.fm

4.1-6 Sealing link - check folding flap

SPC reference	1549918-0100 1549920-0100

a) Check the shafts (1), (2), (3), (4) and (5) for wear or damage and replace as necessary. See *4.1-12 Sealing link - overhaul*.

b) Check the spring (6) for wear or damage and replace as necessary. See *4.1-12 Sealing link - overhaul*.

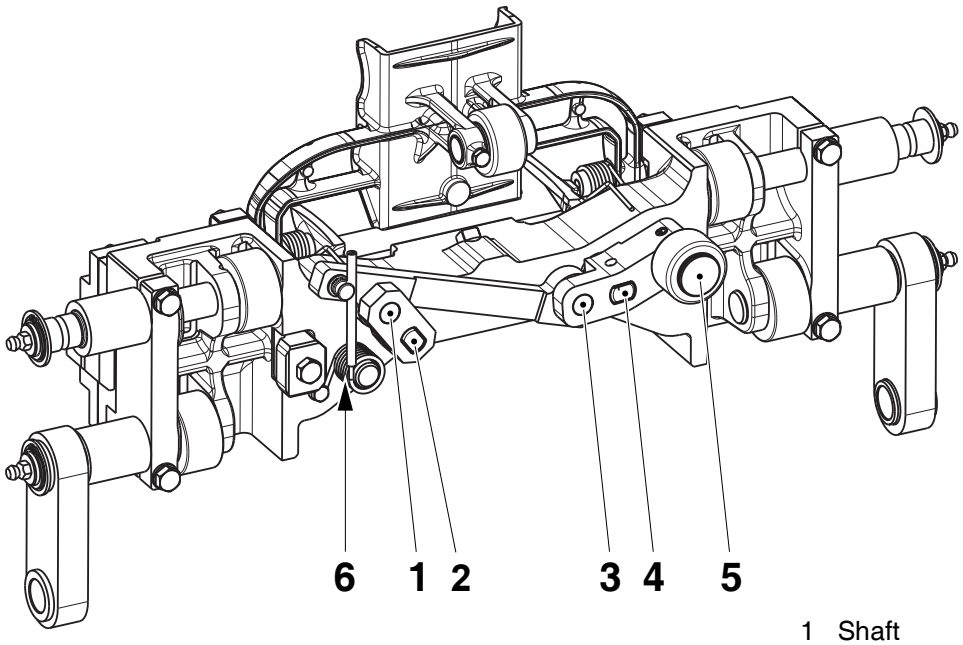

1 Shaft
2 Shaft
3 Shaft
4 Shaft
5 Shaft
6 Spring

2.2BK483en-mms2.fm

4.1-7 Sealing link - check inductor

SPC reference	1549918-0100 1549920-0100

Check the inductor (1) for wear or damage.
If necessary, change the inductor as follow:

a) On one link, remove the screws (2) and change the inductor (1).

b) Repeat the procedure at the other links.

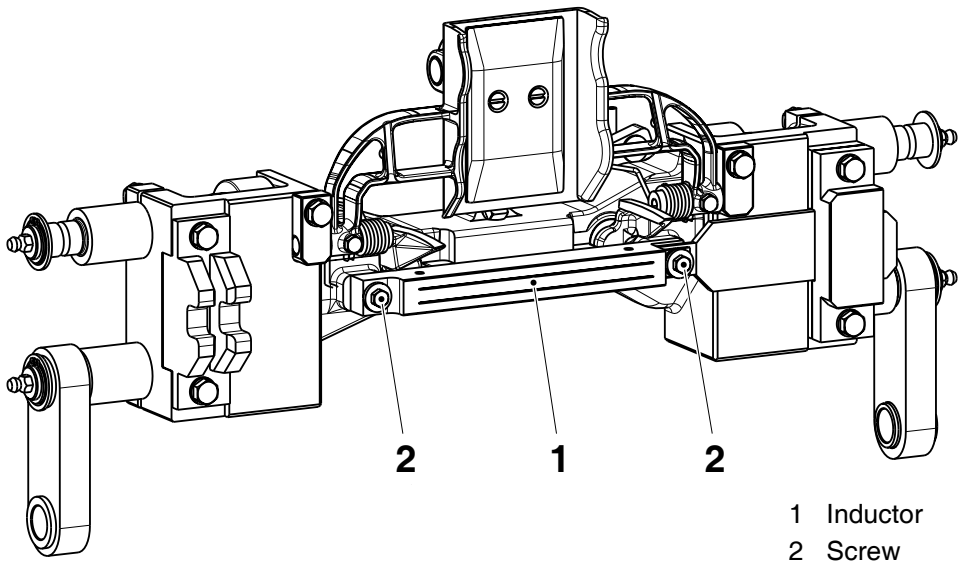

1 Inductor
2 Screw

2.2BK483en-mms2.fm

4.1-8 Sealing link - check carbon brushes, busbar and bracket

SPC reference	1549918-0100 1549920-0100

a) Check the carbon brushes (1), bracket (2) and busbar (3) for wear or damage.

b) Change as required, see *4.1-11 Sealing link - change carbon brushes, busbar and bracket*.

If the carbon brushes are not damaged, clean them with 400-grade abrasive paper.

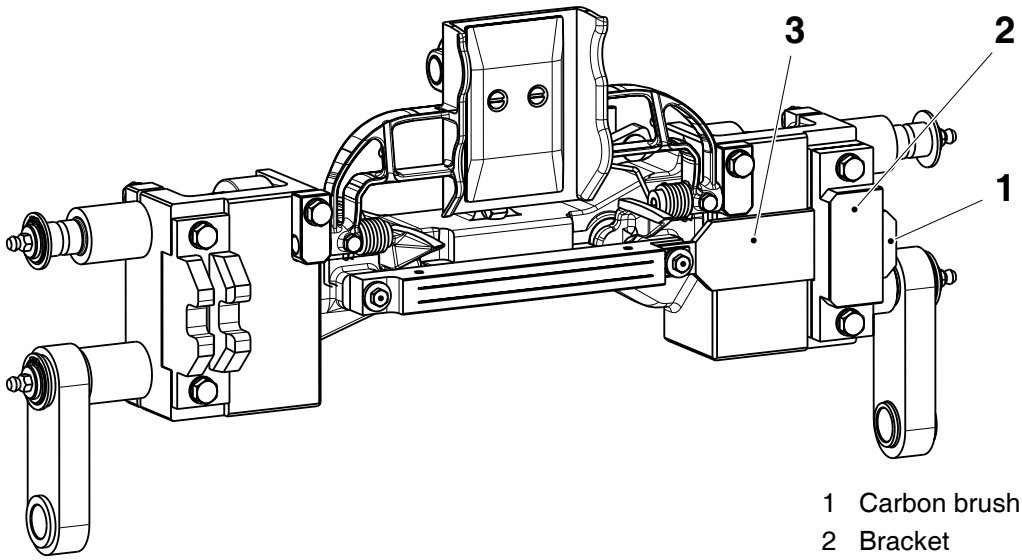

1 Carbon brush
2 Bracket
3 Busbar

2.2BK483en-mms2.fm

4.1-9 Sealing link - change volume flap springs and bushings

SPC reference	1549918-0100 1549920-0100

a) Remove the screws (1), brackets (2) and complete flap (3).

b) Remove the screws (4) and shafts (5)

c) Change the bushings (6) and springs (7).

d) Assemble in the reverse order.

e) Repeat the procedure on the other links.

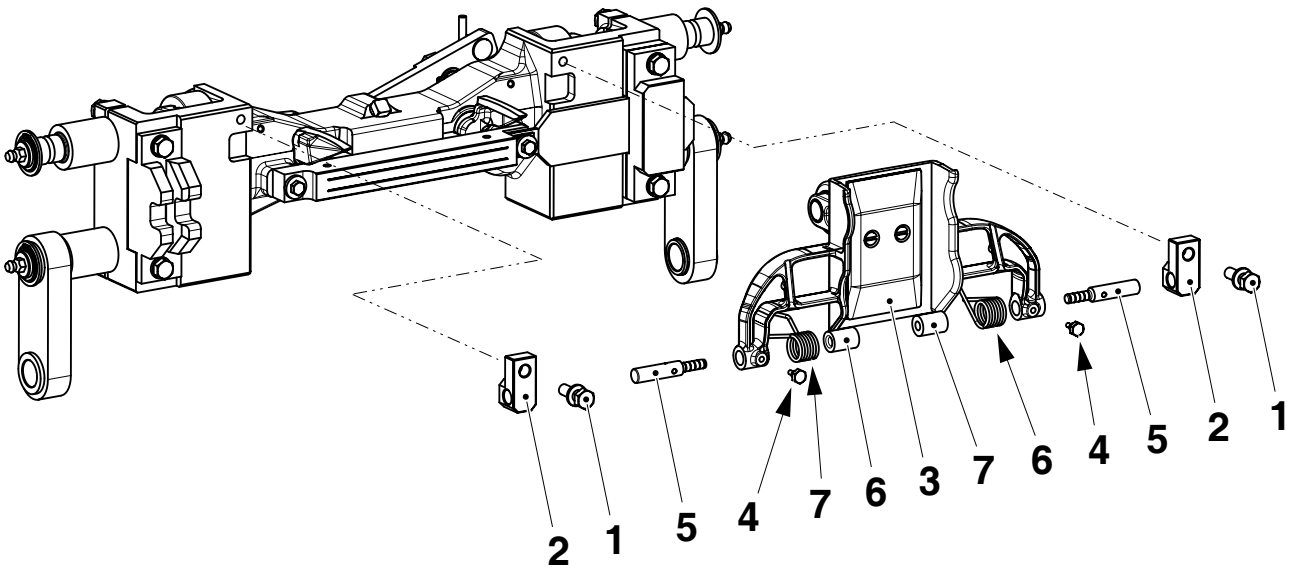

2.2BK483en-mms2.fm

1 Screw
2 Bracket
3 Flap
4 Screw
5 Shaft
6 Bushing
7 Spring

4.1-10 Sealing link - change volume flap rollers

SPC reference	1549918-0100 1549920-0100

a) Remove the volume flap, see *4.1-9 Sealing link - change volume flap springs and bushings*.

b) Remove the screw (1) and press out the shaft (2).

c) Pull out the roller (3) and change the bushings (4).

d) Assemble in the reverse order.

e) Repeat on the other links.

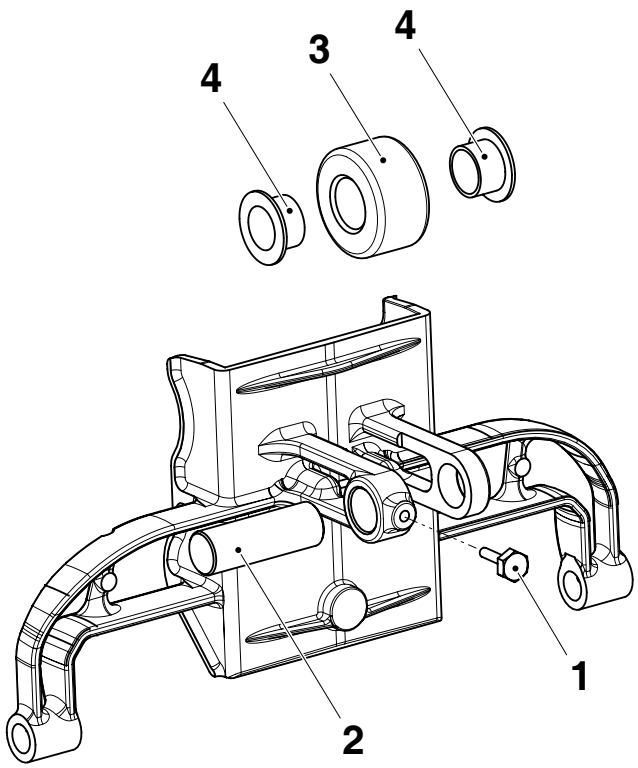

1 Screw
2 Shaft
3 Roller
4 Bushing

2.2BK483en-mms2.fm

4.1-11 Sealing link - change carbon brushes, busbar and bracket

SPC reference	1549918-0100 1549920-0100

a) On one link, remove the screws (1), bracket (2) and carbon brush (3). Change as required.

b) Remove the screw (4) and busbar (5). Change as required.

c) Remove the carbon brush (6). Change as required.

d) Assemble in the reverse order.

Note! Before tightening the screws (1) push the brushes in the direction shown by the arrow.

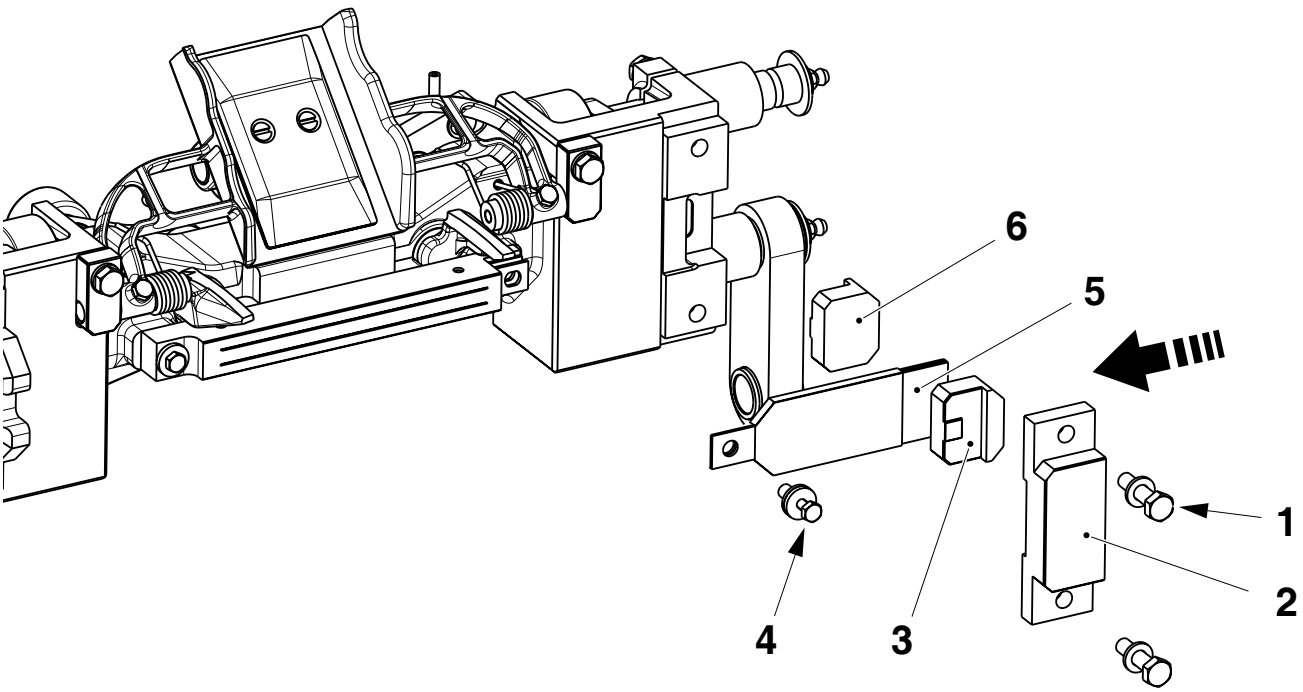

2.2BK483en-mms2.fm

1 Screw
2 Bracket
3 Carbon brush
4 Screw
5 Busbar
6 Carbon brush

4.1-12 Sealing link - overhaul

Tools - axle extractor - attachment	 TP. No. 1487215 TP. No. 1499129
SPC reference	1549918-0100 1549920-0100

a) Remove the chains, see *4-3 Jaw system - chain disassembly and reassembly*.

b) Remove the grease nipples and retaining ring (1), then change the links (2).

c) Remove the screws (3) and volume flap (4).

d) Overhaul the volume flap (4), see *4.1-9 Sealing link - change volume flap springs and bushings* and *4.1-10 Sealing link - change volume flap rollers*.

e) Change the carbon brushes (5), see *4.1-11 Sealing link - change carbon brushes, busbar and bracket*.

2.2BK483en-mms2.fm

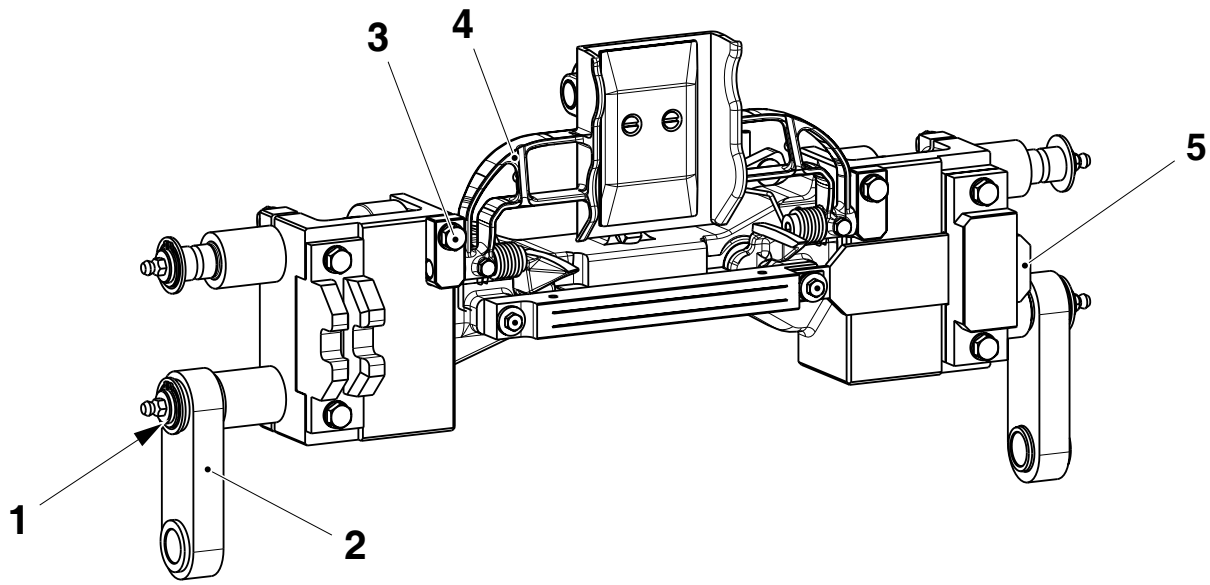

1 Retaining ring
2 Link
3 Screw
4 Volume flap
5 Carbon brush

(Cont'd)

(Cont'd)

f) Loosen the screws (6).

g) Slide the tool (7), with the thicker of the two attachments, over the axle (8) until it touches the link (9).

h) Screw the bolt (10) into the hole (11) where the grease nipple is normally fitted. Do not over tighten.

Note! Do not try to split the link by inserting a tool in the groove (12).

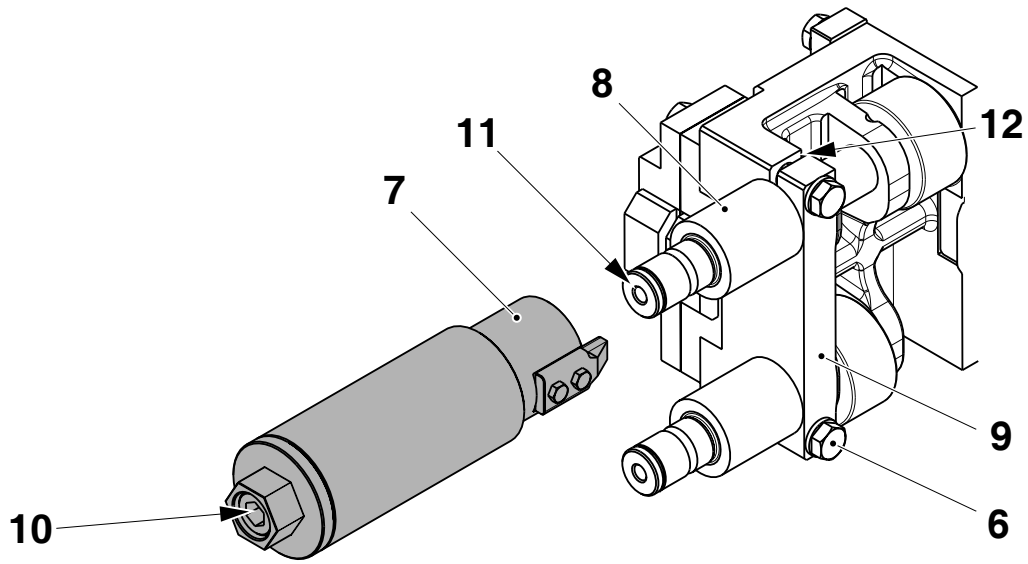

6 Screw
7 Axle tool
8 Axle
9 Link
10 Bolt
11 Hole
12 Groove

2.2BK483en-mms2.fm

i) Turn the knurled part (13) of the tool clockwise to extract the axle.

j) Remove the roller (14).

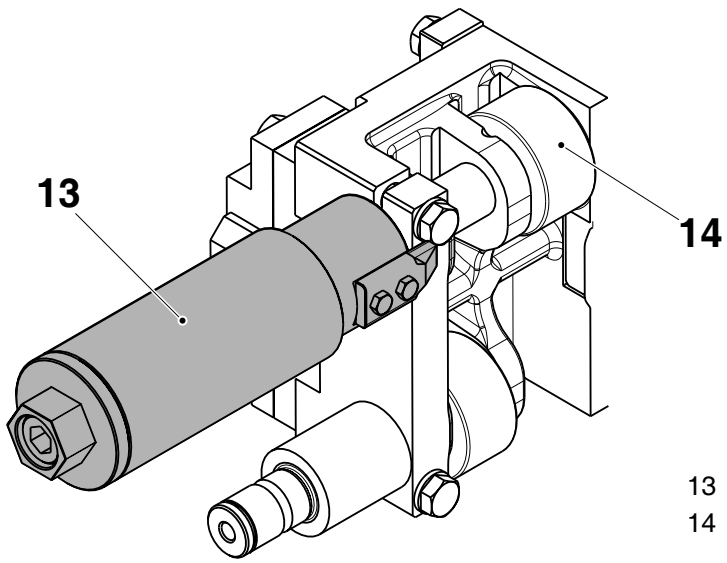

13 Knurled part
14 Roller

(Cont'd)

(Cont'd)

k) Pull out and change the damper (15).

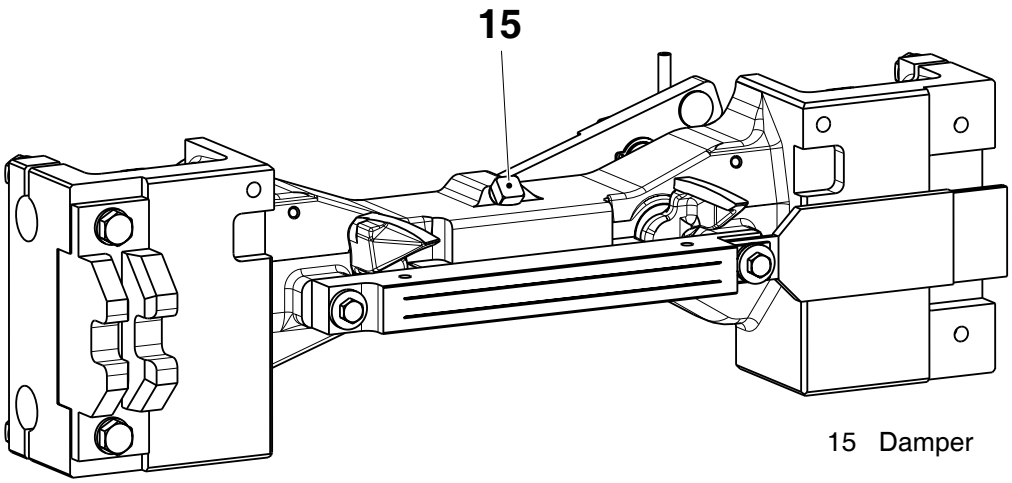

15 Damper

l) Remove the screw (16) and change the spring (17).

m) Remove the spring pins (18) and (19) and remove the design correction link (20).

2.2BK483en-mms2.fm

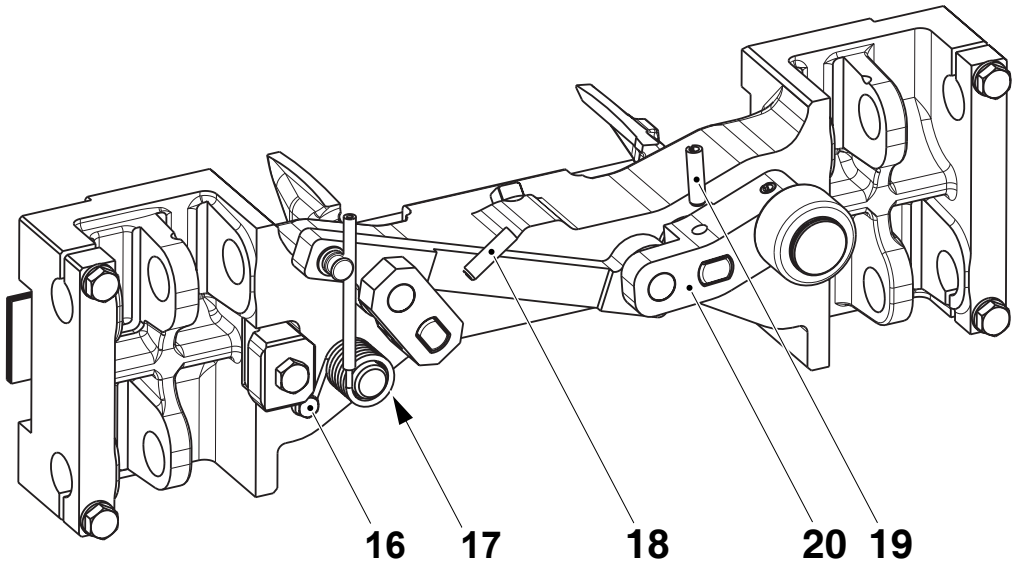

16 Screw
17 Spring
18 Spring pin
19 Spring pin
20 Link

(Cont'd)

(Cont'd)

n) Remove the spring pin (21) and pull out the shaft (22).

o) Change the bushings (23) and (24) and the roller (25).

p) Remove the retaining rings (26), (27) and (28), pull out the shafts (29), (30) and (31), change the bracket (32).

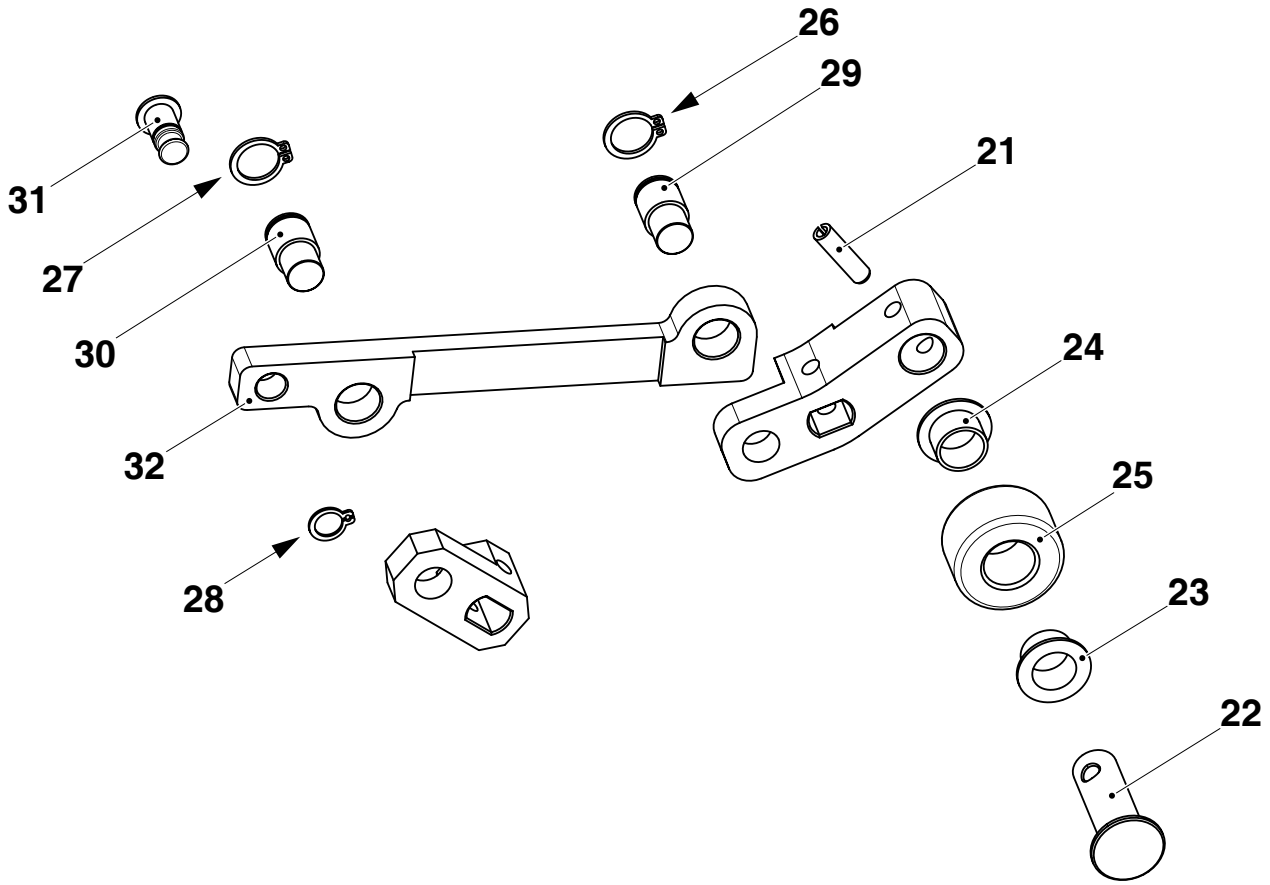

21	Spring pin	27	Retaining ring
22	Shaft	28	Retaining ring
23	Bushing	29	Shaft
24	Bushing	30	Shaft
25	Roller	31	Shaft
26	Retaining ring	32	Bracket

2.2BK483en-mms2.fm

(Cont'd)

(Cont'd)

q) Remove the screws (33) and inductor (34).

r) If necessary, replace the insulating washer (35).

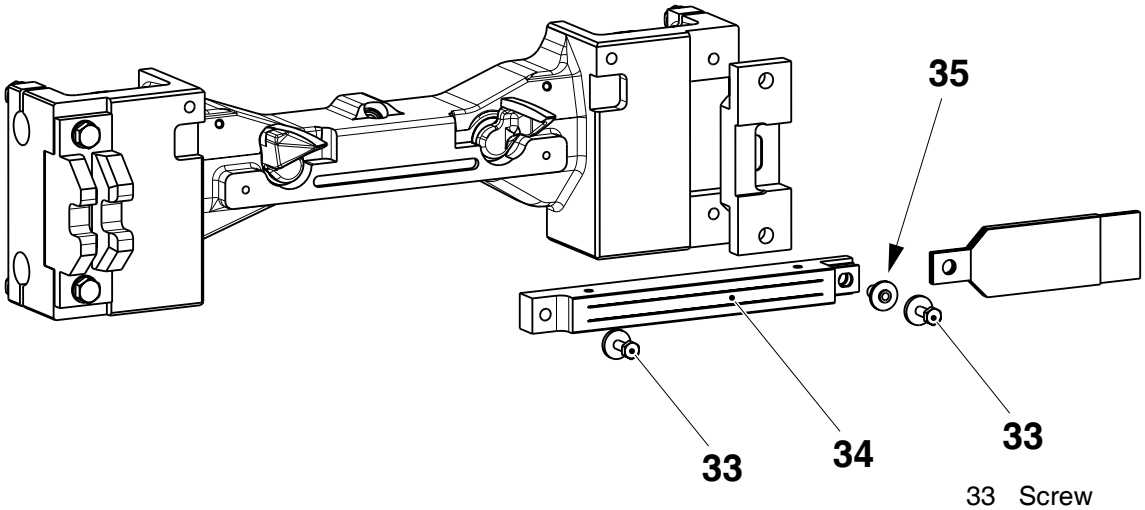

33 Screw
34 Inductor
35 Washer

s) Pull out the shafts (36) and change the bushings (37) and (38).

t) Clean all mating surfaces.

u) Assemble in the reverse order.

v) Fit and tension the chains, see *4-3 Jaw system - chain disassembly and reassembly*.

w) Grease the jaw system.

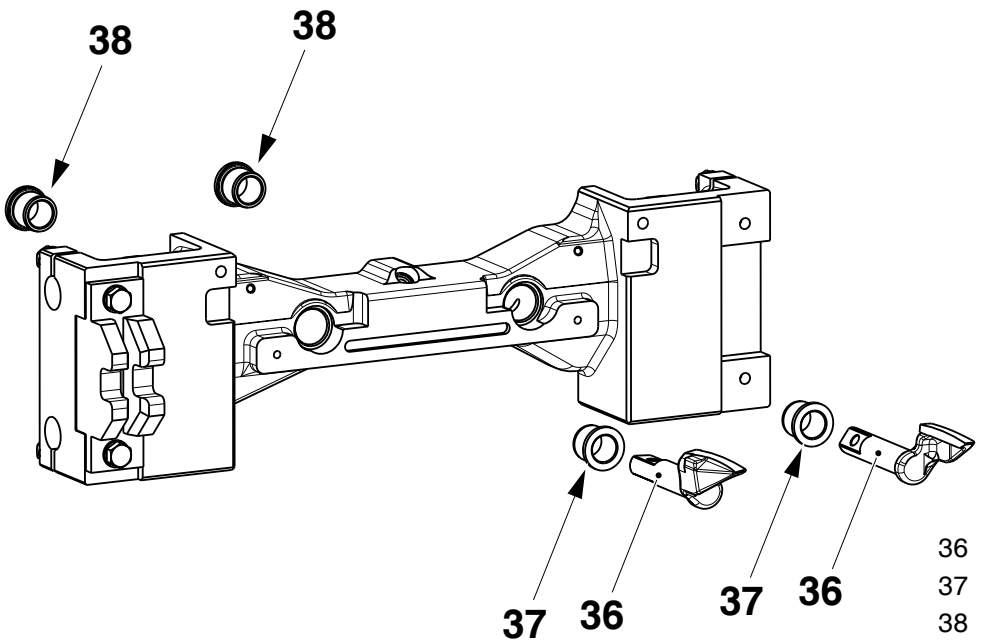

36 Shaft
37 Bushing
38 Bushing

2.2BK483en-mms2.fm

4.2 Pressure link

SPC reference	1549917-0100 1549919-0100

4.2-1 Pressure link - check volume flap dampers

SPC reference	1549917-0100 1549919-0100

Check the volume flap damper, see *4.1-2 Sealing link - check volume flap dampers*.

4.2-2 Pressure link - check volume flap springs and bushings

SPC reference	1549917-0100 1549919-0100

Check the volume flap springs and bushings, see *4.1-3 Sealing link - check volume flap springs and bushings*.

4.2-3 Pressure link - check volume flap rollers

SPC reference	1549917-0100 1549919-0100

Check the volume flap rollers, see *4.1-4 Sealing link - check volume flap rollers*.

2.2BK483en-mms2.fm

4.2-4 Pressure link - check roller bearings

SPC reference	1549917-0100 1549919-0100

Check the roller bearings (1) for wear or damage and replace as necessary. See *4.2-7 Pressure link - overhaul*.

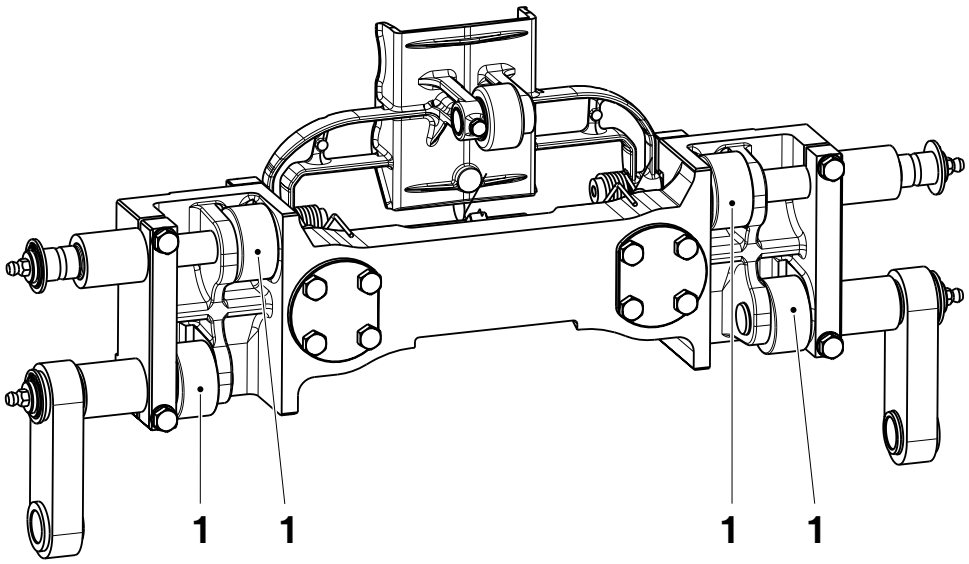

1 Roller bearing

2.2BK483en-mms2.fm

4.2-5 Pressure link - check pressure bar springs

SPC reference	1549917-0100 1549919-0100

a) Remove the screws (1), washer (2) and pressure bar (3).

b) Remove the sleeve (4).

c) Pull out and check the springs (5) for damage. Change as required.

d) Assemble in the reverse order.

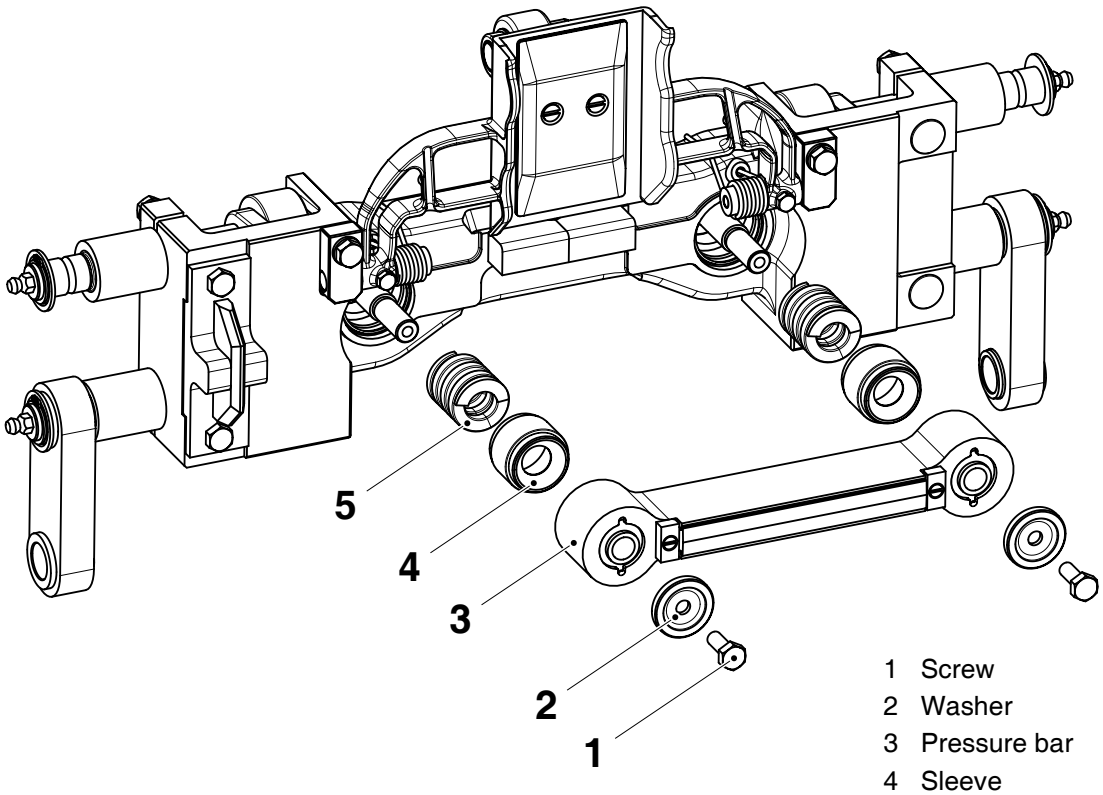

1 Screw
2 Washer
3 Pressure bar
4 Sleeve
5 Spring

2.2BK483en-mms2.fm

4.2-6 Pressure link - change sealing dolly

SPC reference	1549917-0100 1549919-0100

a) Check the condition of the dolly (1) and change it if it is hardened, worn or damaged.

b) To remove the dolly, pull it out from the pressure bar (2).

c) To replace the dolly, insert it in the correct direction, making sure it is seated properly.

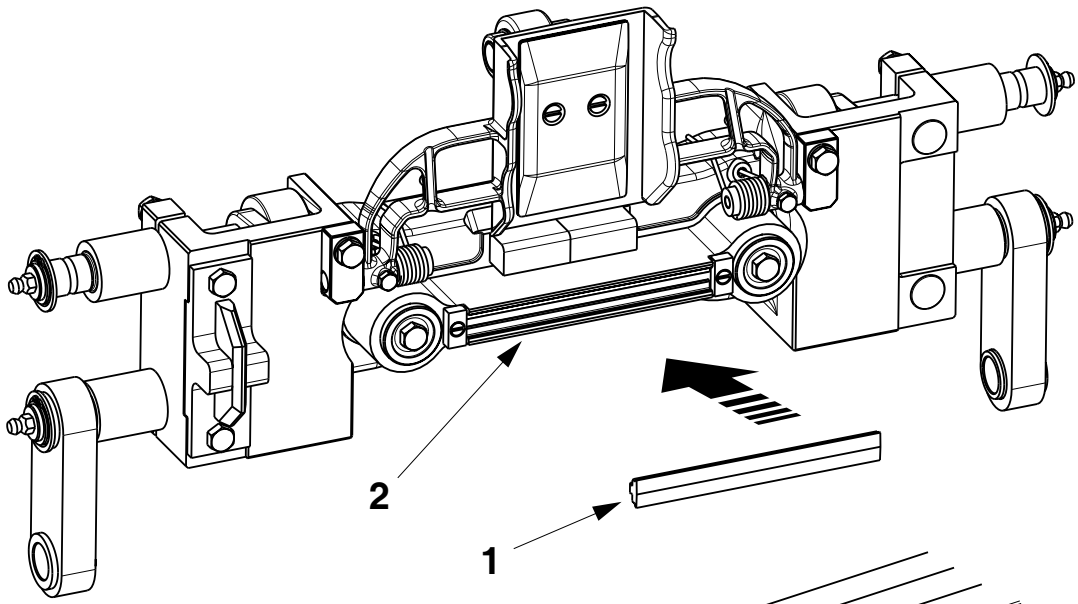

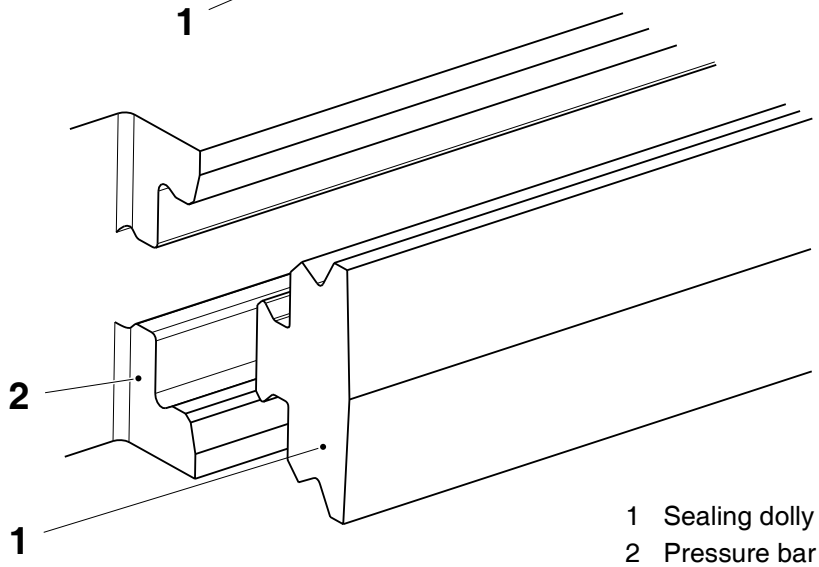

1 Sealing dolly
2 Pressure bar

2.2BK483en-mms2.fm

4.2-7 Pressure link - overhaul

Tools - axle extractor - attachment	 TP. No. 1487215 TP. No. 1499186
SPC reference	1549917-0100 1549919-0100

a) Remove the chains, see *4-3 Jaw system - chain disassembly and reassembly*.

b) Remove the screws (1), washers (2) and pressure bar (3).

c) Remove the sleeve (4).

d) Change the springs (5) and seal rings (6).

e) Remove the grease nipples (7), retaining rings (8) and change the links (9).

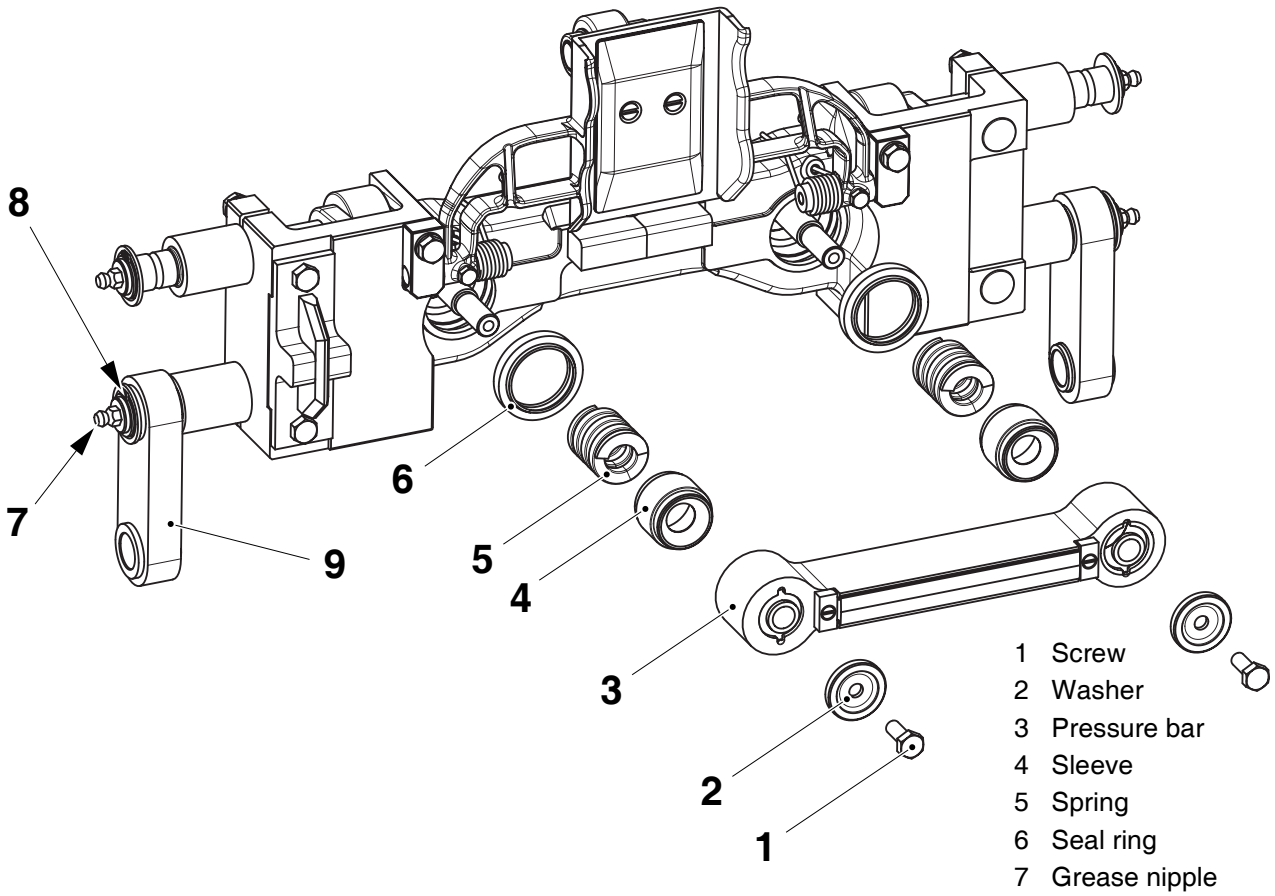

1 Screw
2 Washer
3 Pressure bar
4 Sleeve
5 Spring
6 Seal ring
7 Grease nipple
8 Retaining ring
9 Link

2.2BK483en-mms2.fm

(Cont'd)

(Cont'd)

f) Loosen the screws (10).

g) Slide the tool (11), with the thinner of the two attachments, over the axle (12) until it touches the link (13).

h) Screw the bolt (14) into the hole where the grease nipple is normally fitted (15).
Do not over tighten.

Note! Do not try to split the link by inserting a tool in the groove (16).

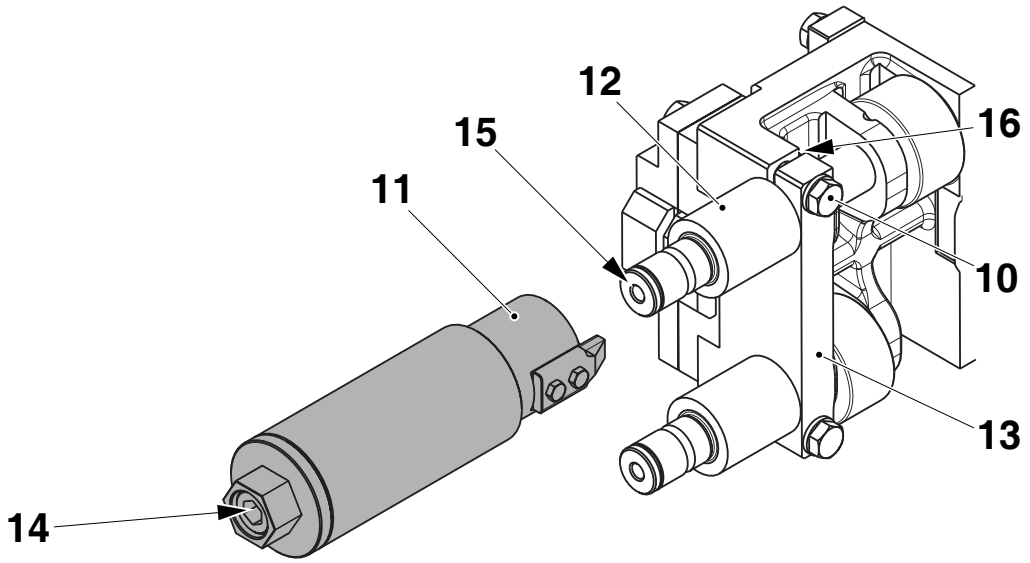

10 Screw
11 Axle tool
12 Axle
13 Link
14 Bolt
15 Hole
16 Groove

2.2BK483en-mms2.fm

i) Turn the knurled part (17) of the tool clockwise to extract the axle.

j) Change the roller (18).

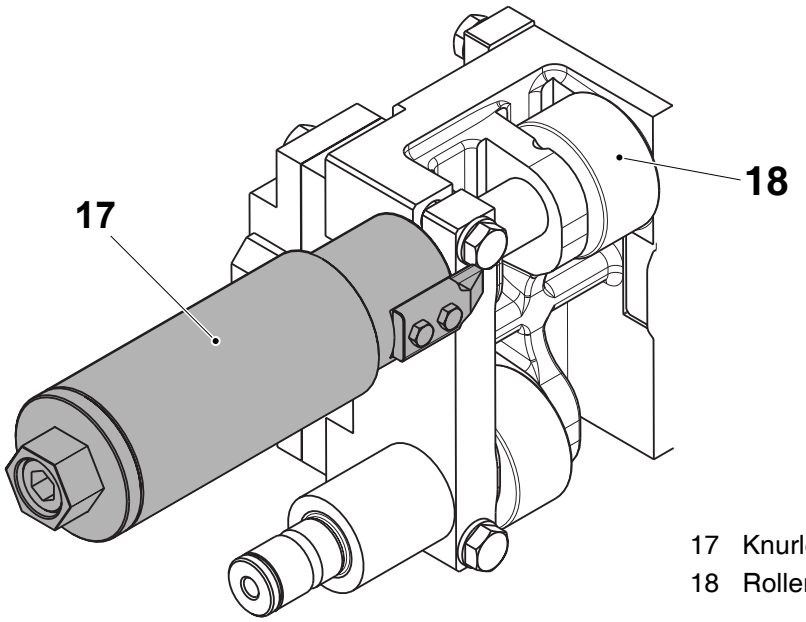

17 Knurled part
18 Roller

(Cont'd)

(Cont'd)

k) Remove the screws (19) and volume flap (20).

l) Overhaul the volume flap (20), see *4.1-9 Sealing link - change volume flap springs and bushings* and *4.1-10 Sealing link - change volume flap rollers*.

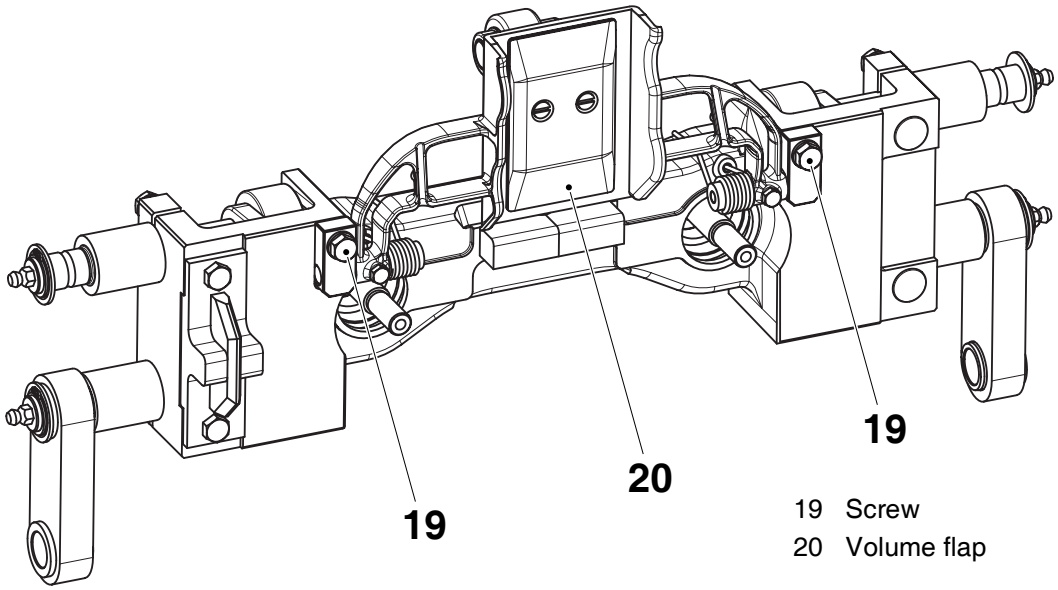

19 Screw
20 Volume flap

m) Change the damper (21).

n) Clean all shafts and mating surfaces.

o) Assemble in the reverse order.

p) Fit and tension the chains, see *4-3 Jaw system - chain disassembly and reassembly*.

q) Grease the jaw system.

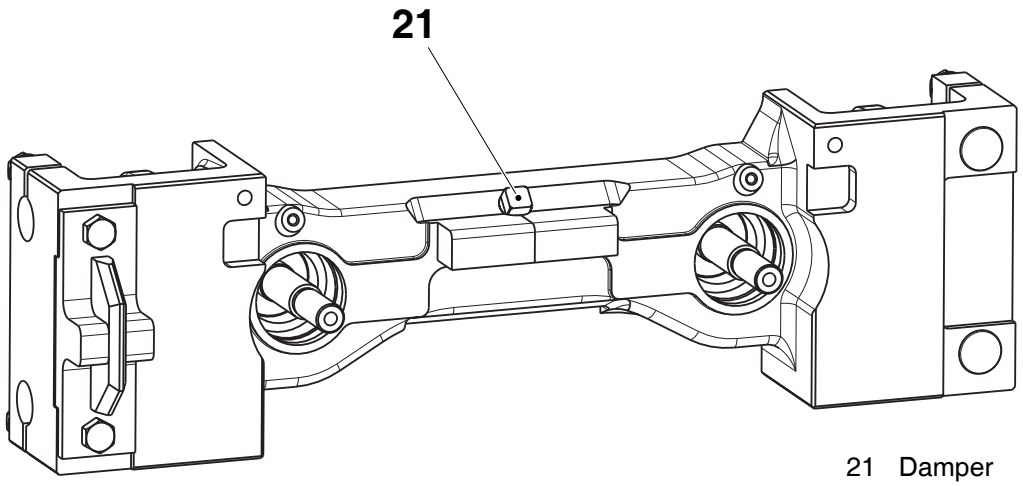

21 Damper

2.2BK483en-mms2.fm

4.3 Drive unit

4.3-1 Drive unit - check cutting belts

SPC reference	575238-0400 1348944-0100

a) Remove the screws (1) and the cover (2).

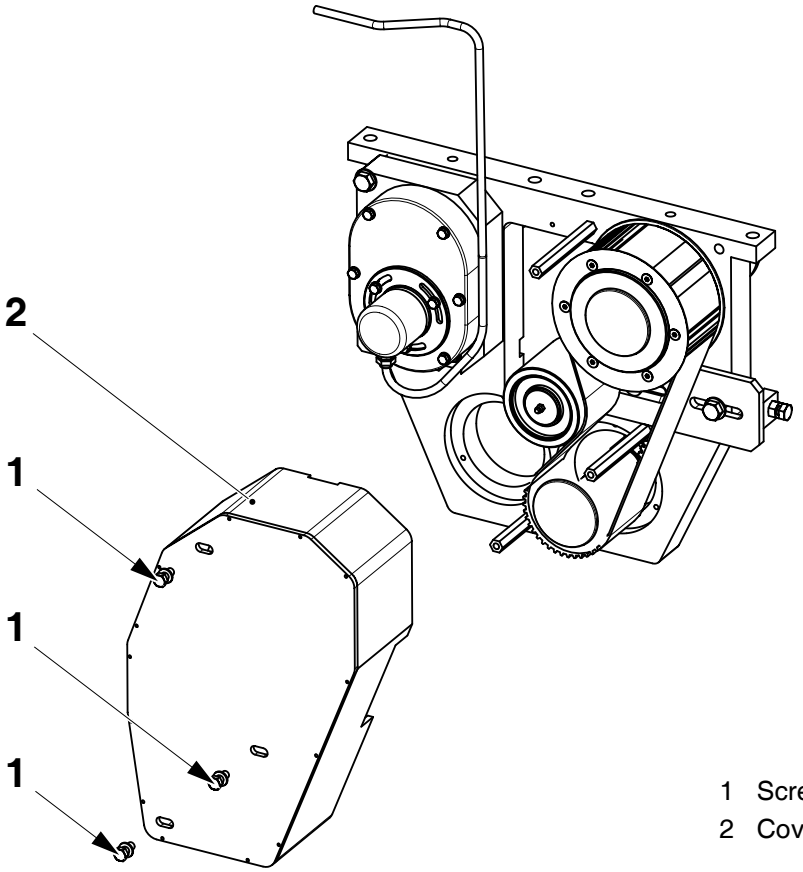

1 Screw
2 Cover

(Cont'd)

2.2BK483en-mms2.fm

(Cont'd)

b) Check the belt (3) for wear or damage. Reduce the belt tension using the eccentric roller (4). Change the belts as required.

c) Set the belt tensions, see *4.3-2 Drive unit - set knives synchronization and cutting belt tension*

d) Fit the cover.

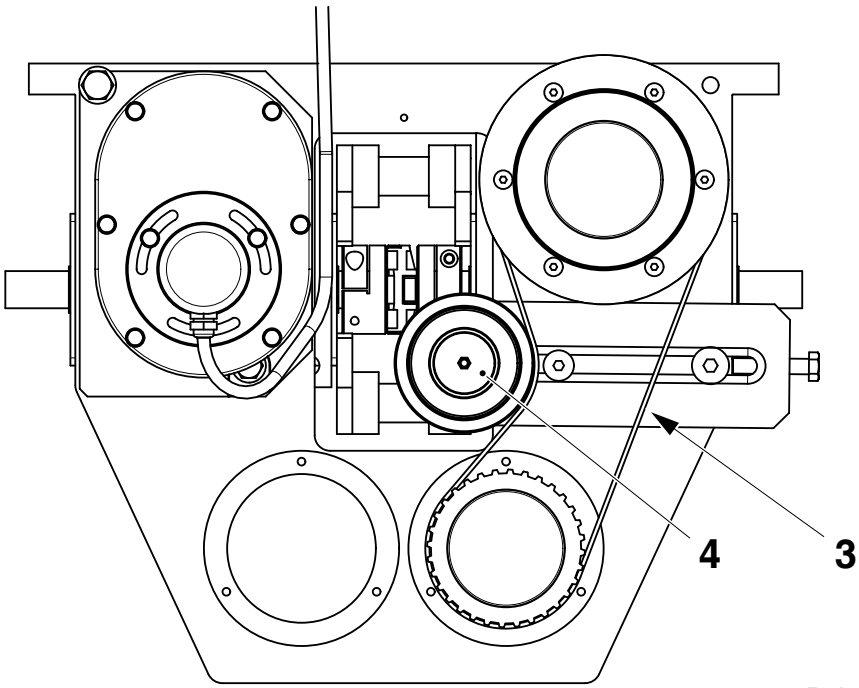

3 Belt
4 Roller

2.2BK483en-mms2.fm

4.3-2 Drive unit - set knives synchronization and cutting belt tension

Tools - template - torque wrench - dynamometer - prong key	 TP No. 1317922 min 17 Nm min 10 N
SPC reference	575238-0400 1348944-0100

a) Crank the jaw system so you have access to the holder (2) next to the alignment hole (3).

b) Remove the screws (1) and pull out the holder (2) at the alignment hole (3).

c) Crank the jaw system until the template (4) fits in the alignment holes (3) and the holders (2) and (5) are in front of each other.

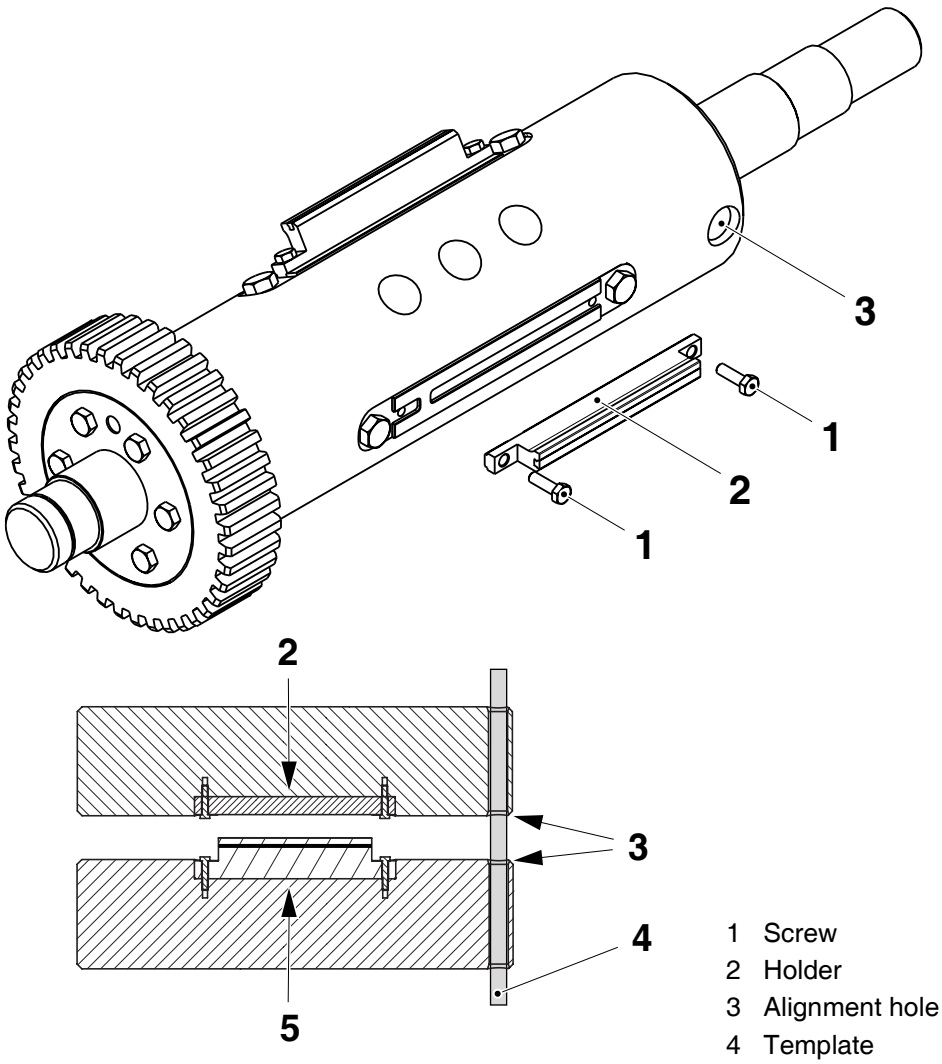

1 Screw
2 Holder
3 Alignment hole
4 Template
5 Holder

(Cont'd)

2.2BK483en-mms2.fm

(Cont'd)

d) Remove the screws (6) and the cover (7).

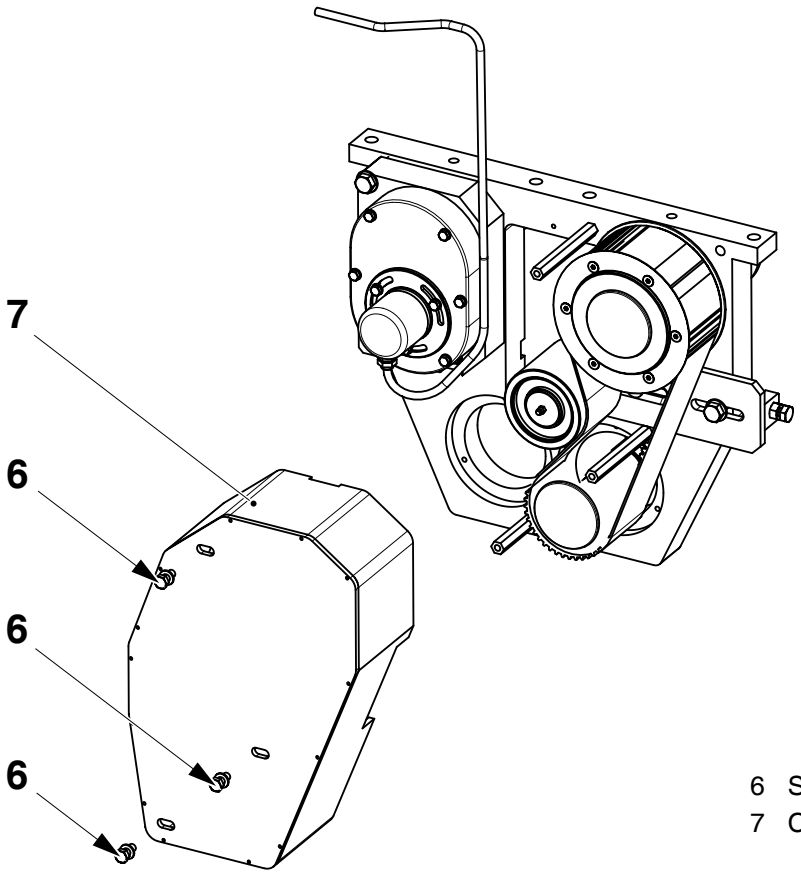

6 Screw
7 Cover

2.2BK483en-mms2.fm

(Cont'd)

(Cont'd)

e) Remove the plug (8).

f) Loosen the screws (9) in a clamping element (10).

g) Put four screws into the puller holes (11). Tighten these screws crosswise, in small steps, until the clamping element (10) is free to rotate.

h) Crank the jaw system until it is in the correct position according to the package volume, see table below.

Package	Value
200 B	13_8
250 B	300_8

i) Remove the screws from the puller holes (11).

Caution! It is important that the clamping element (10) and toothed pulley (12) is in the correct position before the screw (9) is tightened. If this operation is not performed correctly belt misalignment will occur.

j) Using the torque wrench, tighten the screws (9) clockwise to 17 Nm.

2.2BK483en-mms2.fm

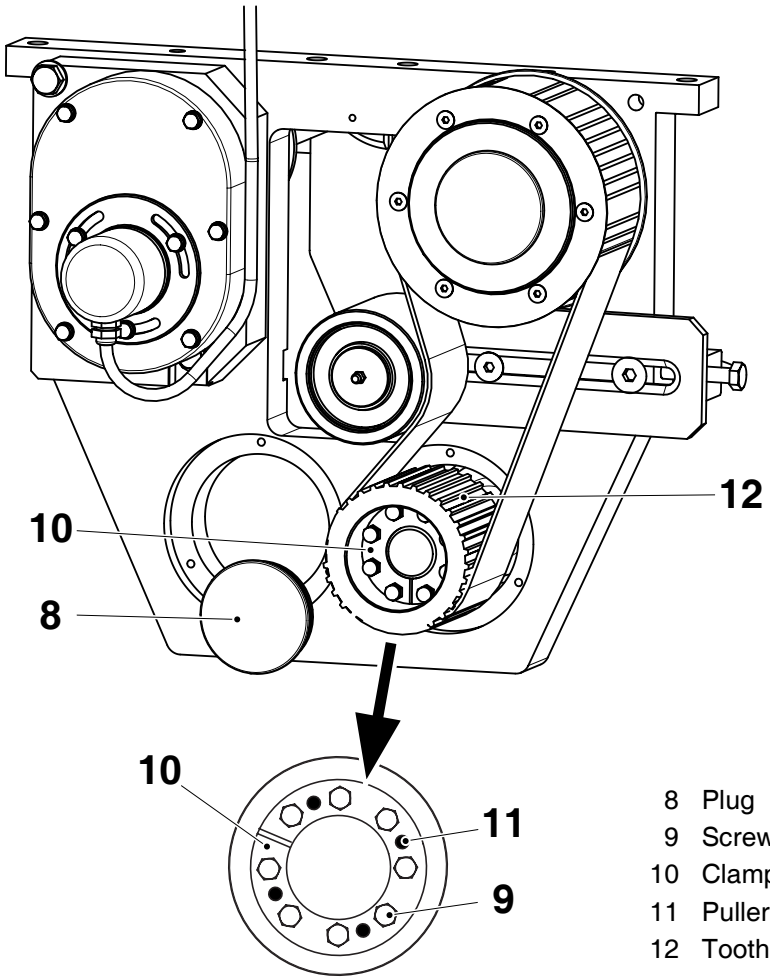

8 Plug
9 Screw
10 Clamping element
11 Puller hole
12 Toothed pulley

(Cont'd)

(Cont'd)

k) Loosen the screws (13).

Note! When using the dynamometer, make sure the belt does not twist.

l) Using the dynamometer (14), set the tension of the timing belt (15) to 55 N with a deflection of 5 mm. Adjust the tension by turning the screw (16).

m) Tighten the screw (13) and locknut (17).

n) Check the angle encoder value, see table on previous page.

o) Fit the cover.

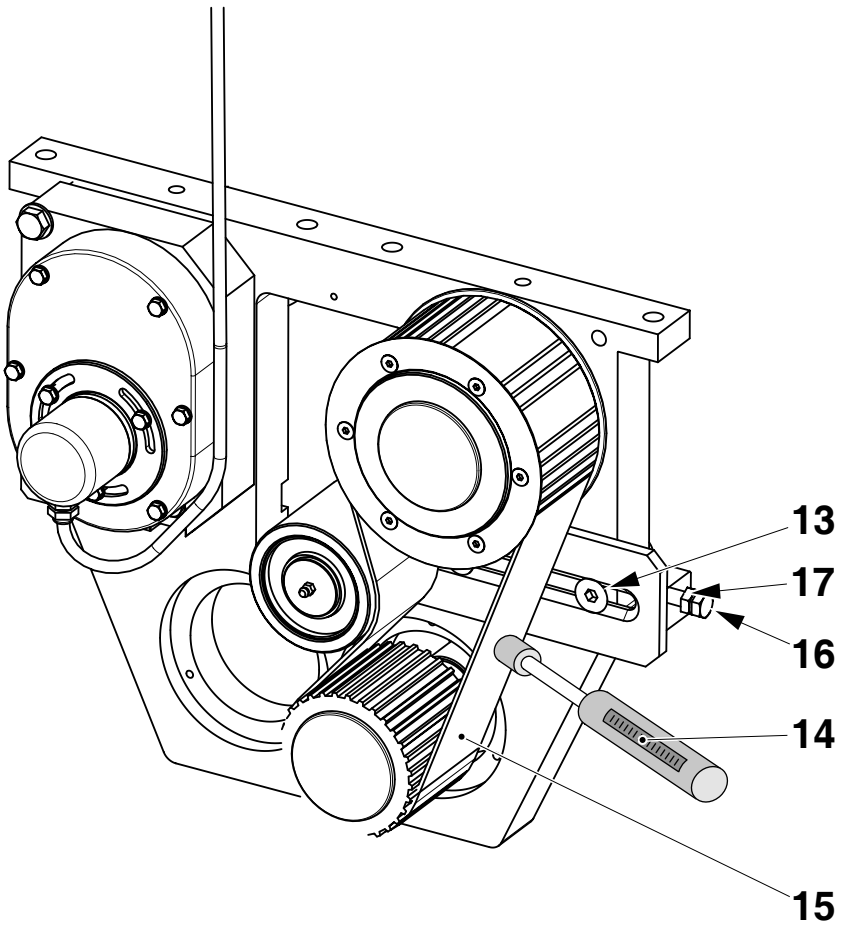

2.2BK483en-mms2.fm

13 Screw
14 Dynamometer
15 Timing belt
16 Screw
17 Locknut

4.3-3 Drive unit - change knife

SPC reference	575238-0400 1348944-0100



Risk of cutting!
The knife is sharp.

Remove the screws (1), change the knife (2), and refit the screws (1).

Repeat the process on the other knives.

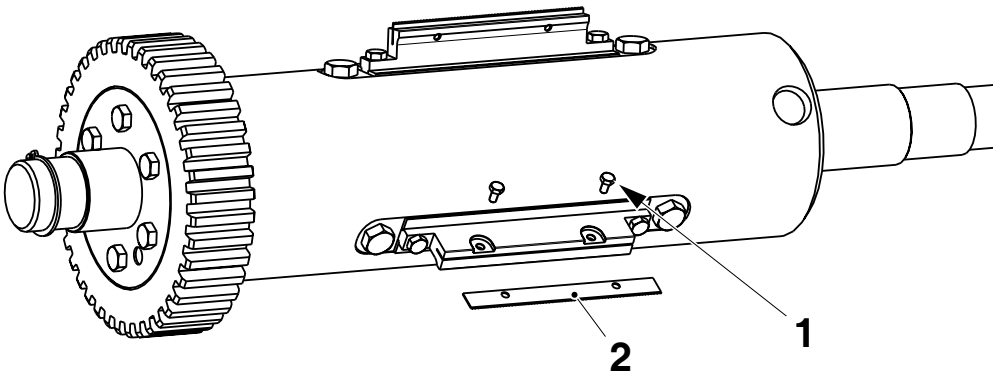

1 Screw
2 Knife

2.2BK483en-mms2.fm

4.3-4 Drive unit - remove knife holder

SPC reference	575238-0400 1348944-0100



Risk of cutting!
The knife is sharp.

a) Remove the screws (1).

b) Remove the knife holder (2).

c) Assemble in the reverse order.

Note! The knife holder (2) can only be fitted in one way. That is when the protrusions at the rear of the holder (2) mate with the cut-outs in the holder (3) and the pin (4) fits in the hole (5).

d) Repeat the process on the other knives.

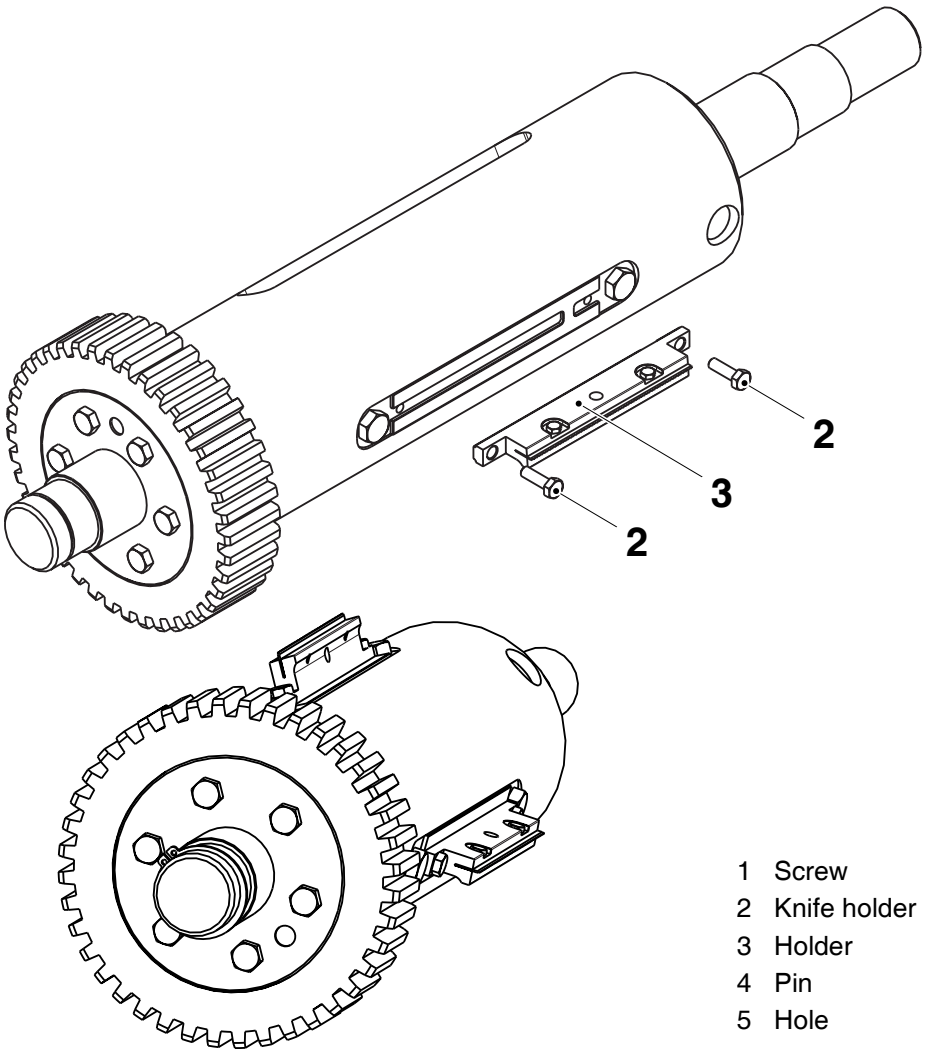

1 Screw
2 Knife holder
3 Holder
4 Pin
5 Hole

2.2BK483en-mms2.fm

4.3-5 Drive unit - change cutting dolly

SPC reference	575238-0400 1348944-0100

a) Pull the dolly (1) out from the holder (2).

b) Insert the new dolly (1) it in the holder, making sure it is seated properly.

c) Repeat the process on the other cutting dollies.

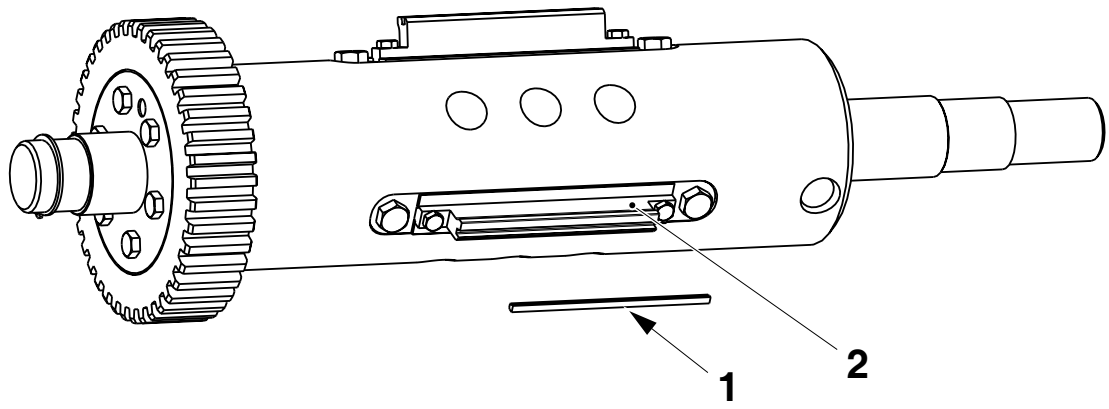

1 Cutting dolly
2 Holder

2.2BK483en-mms2.fm

4.3-6 Drive unit - remove cutting dolly holder

SPC reference	575238-0400 1348944-0100

a) Remove the screws (1).

b) Remove the dolly holder (2).

c) Assemble when necessary in the reverse order.

Note! The dolly holder (2) can only be fitted in one way. That is when the protrusions at the rear of the holder (2) mate with the cut-outs in the holder (3) and the pin (4) fits in the hole (5).

d) Repeat the process on the other cutting dollies.

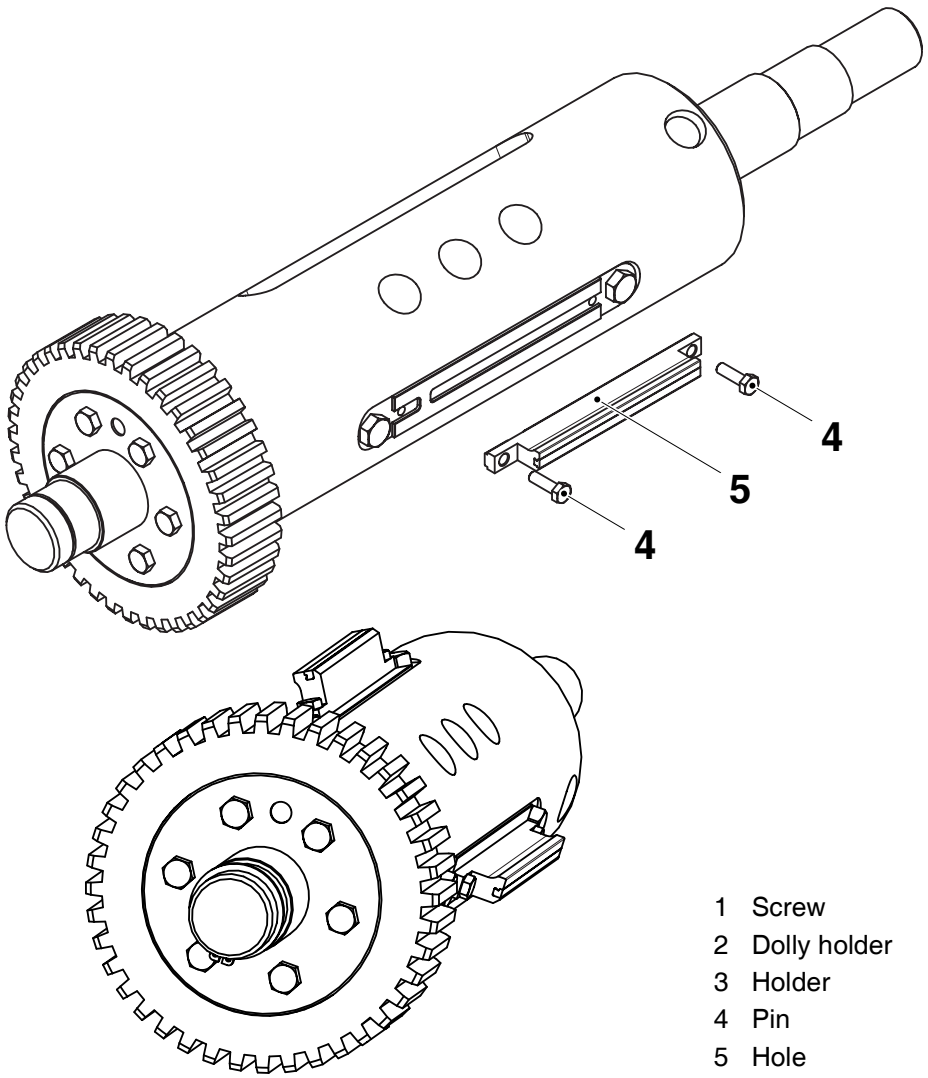

2.2BK483en-mms2.fm

1 Screw
2 Dolly holder
3 Holder
4 Pin
5 Hole

4.3-7 Drive unit - set angle encoder

Machine status	Power **On**
SPC reference	575238-0400 1348944-0100

a) Crank the jaw system until the inductive switch (1) is just activated by the flag (2) of pressure link No. 10.

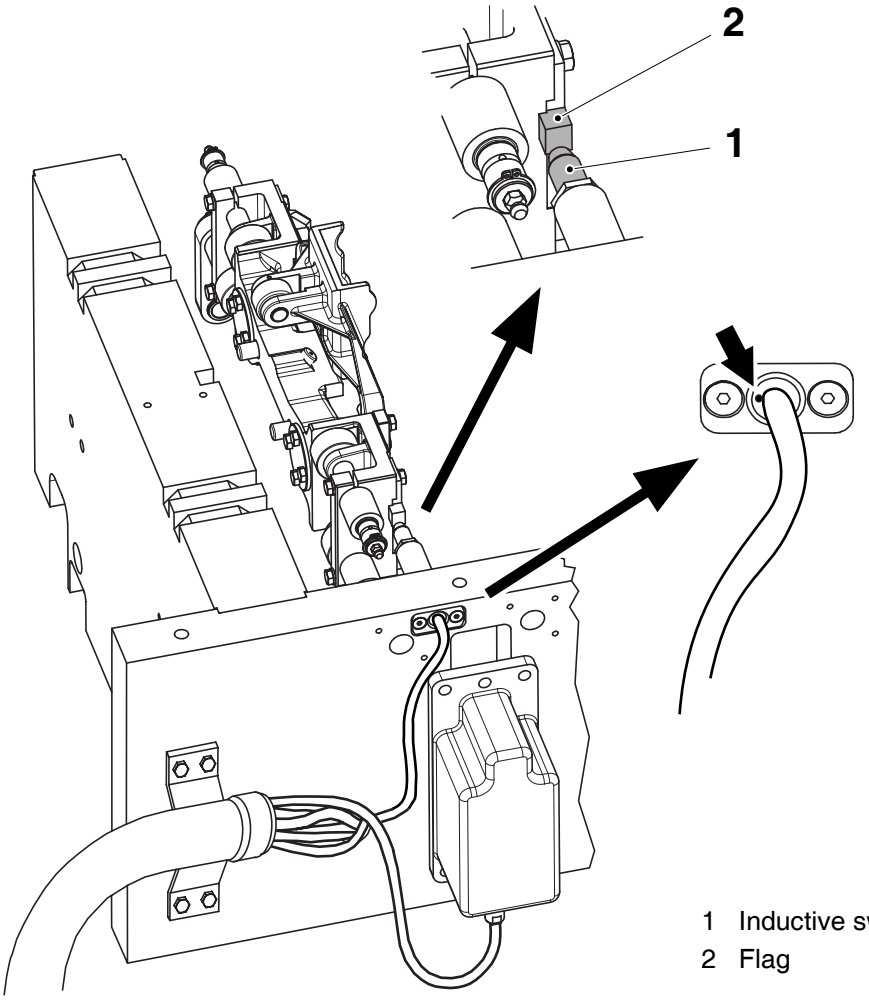

1 Inductive switch
2 Flag

(Cont'd)

2.2BK483en-mms2.fm

(Cont'd)

b) Loosen the screws (3) and turn the angle encoder (4) until the angle display shows $200_{8.}$

Note! Do not move the angle encoder (4) when tightening the screws (3).

c) Tighten the screws (3).

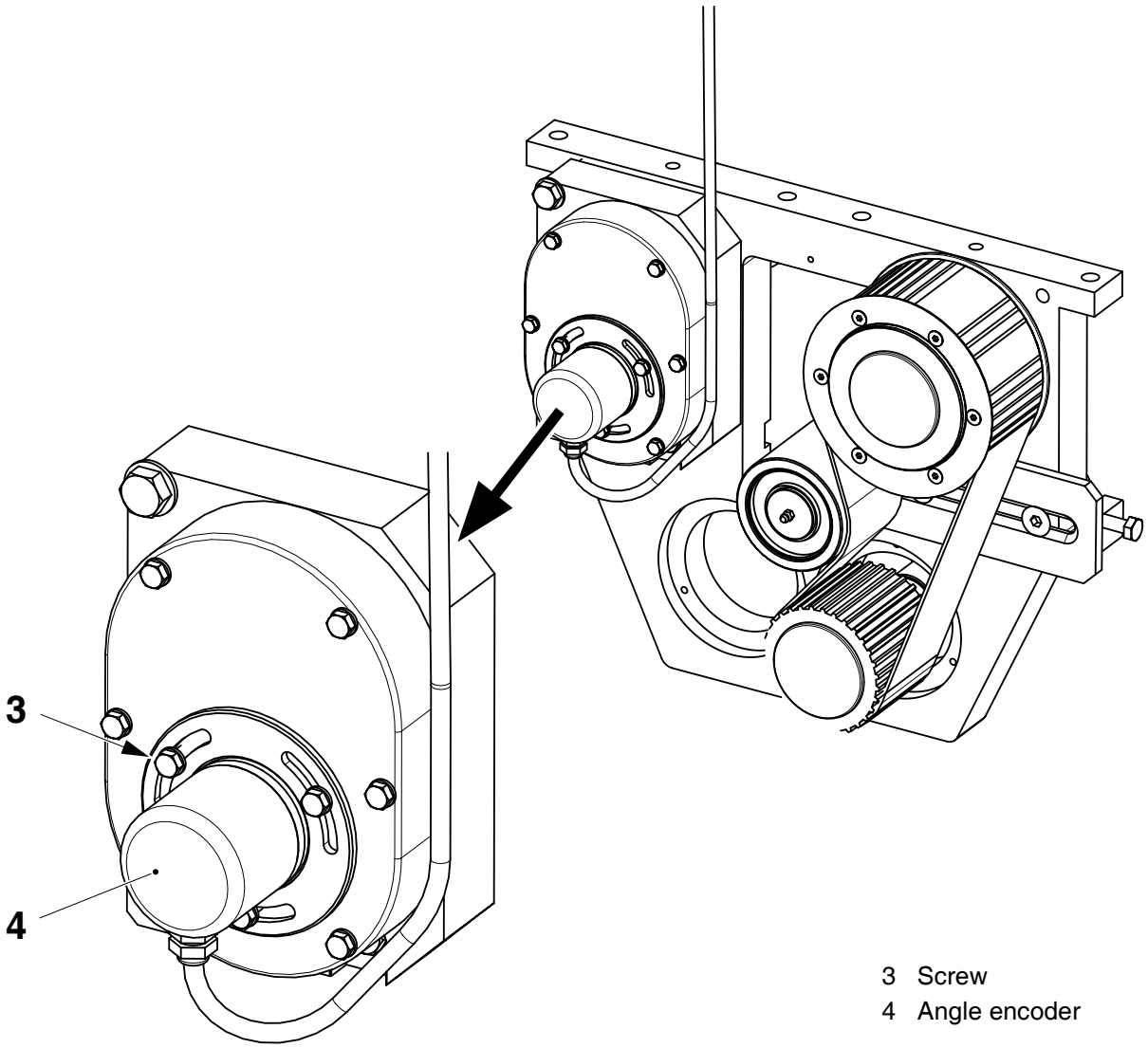

2.2BK483en-mms2.fm

3 Screw
4 Angle encoder

4.3-8 Drive unit - overhaul belt tensioner

RK reference	2547324-0100
SPC reference	648524-0400

a) Remove and change the seal (1).

b) Remove the retaining ring (2) and the roller (3).

c) Remove and change the bearings (4) and (5).

d) Remove and change the seal (6).

e) Fit the seal (6) in the roller (3).

f) Fill the roller (3) with grease, type M, see the Technical Data section in the filling machine MM.

g) Fit the bearing (5) in the roller.

h) Fit the bearing (4), the retaining ring (2) and the seal (1).

i) Fit the grease nipple (7) in the stub shaft (8).

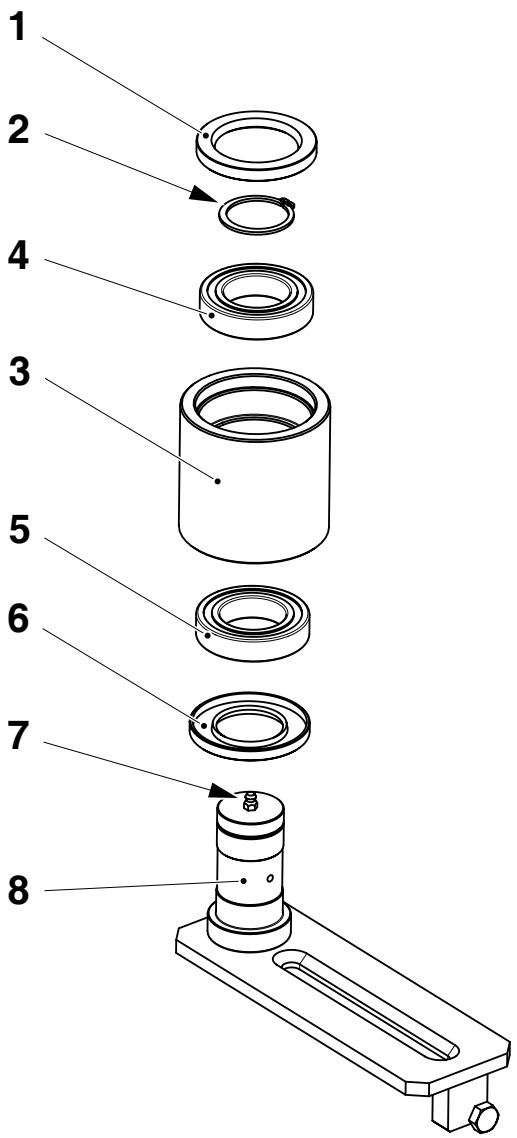

1 Seal
2 Retaining ring
3 Roller
4 Bearing
5 Bearing
6 Seal
7 Grease nipple
8 Stub shaft

2.2BK483en-mms2.fm

4.3-9 Drive unit - overhaul

SPC reference	575238-0400 1348944-0100

Remove encoder and drive elements

a) Remove the screws (1) and the bracket (2).

b) Remove the cover (3).

c) Loosen the screws (4) in the clamping element (5).

d) Put four screws into the puller holes (6). Tighten these screws cross-wise, in small steps, until the clamping element (5) is free to rotate.

e) Pull the toothed pulley (7) and the clamping element (5) off the shaft (8).

f) Repeat the procedure for the other pulleys (9).

g) Remove the belt (10).

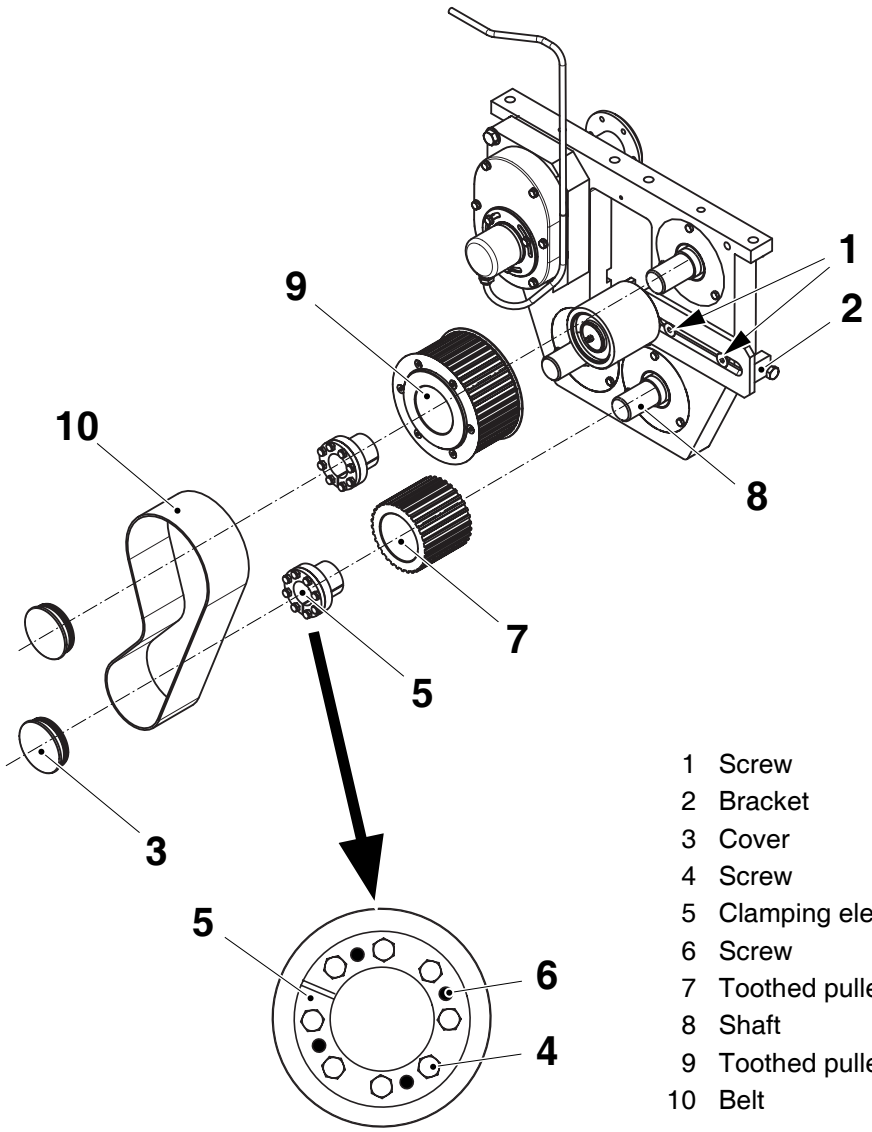

1 Screw
2 Bracket
3 Cover
4 Screw
5 Clamping element
6 Screw
7 Toothed pulley
8 Shaft
9 Toothed pulley
10 Belt

2.2BK483en-mms2.fm

(Cont'd)

(Cont'd)

h) Remove the screws (11) and the cover (12).
Take care of the O-ring (13) behind the cover.

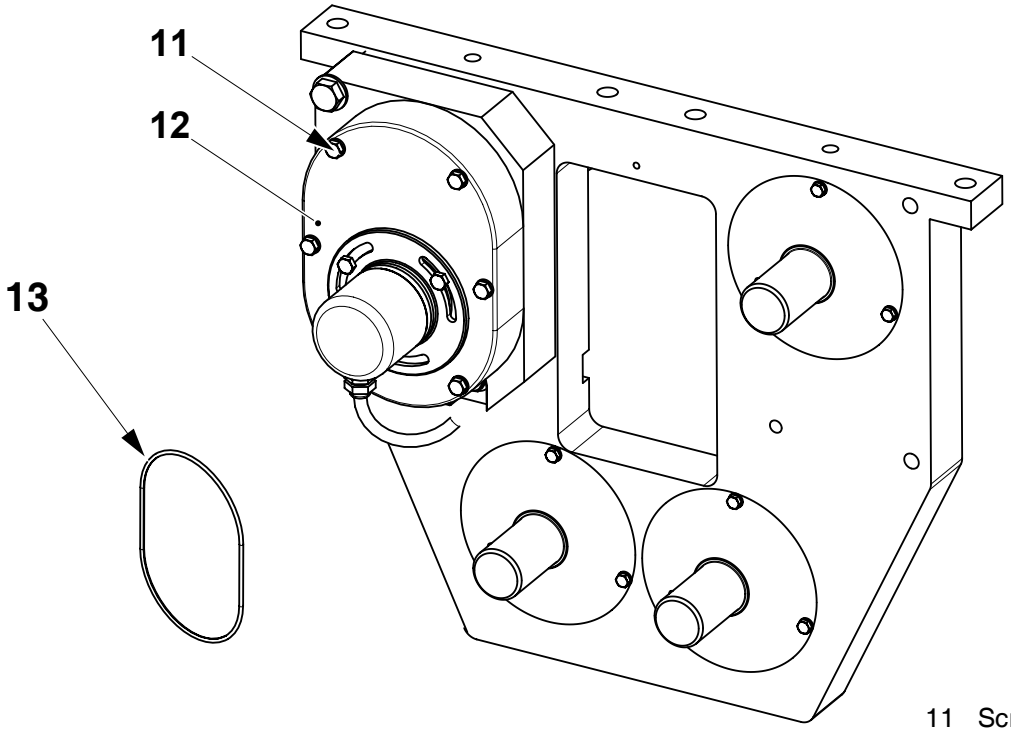

11 Screw
12 Cover
13 O-ring

2.2BK483en-mms2.fm

(Cont'd)

(Cont'd)

i) Remove the screws (14) and the gear (15).

j) Remove the screw (16) and the clamp (17).

k) Remove the screws (18).

l) Pull the bearing (19) off the shaft (20) with the bracket (21). Take care of the O-ring (22).

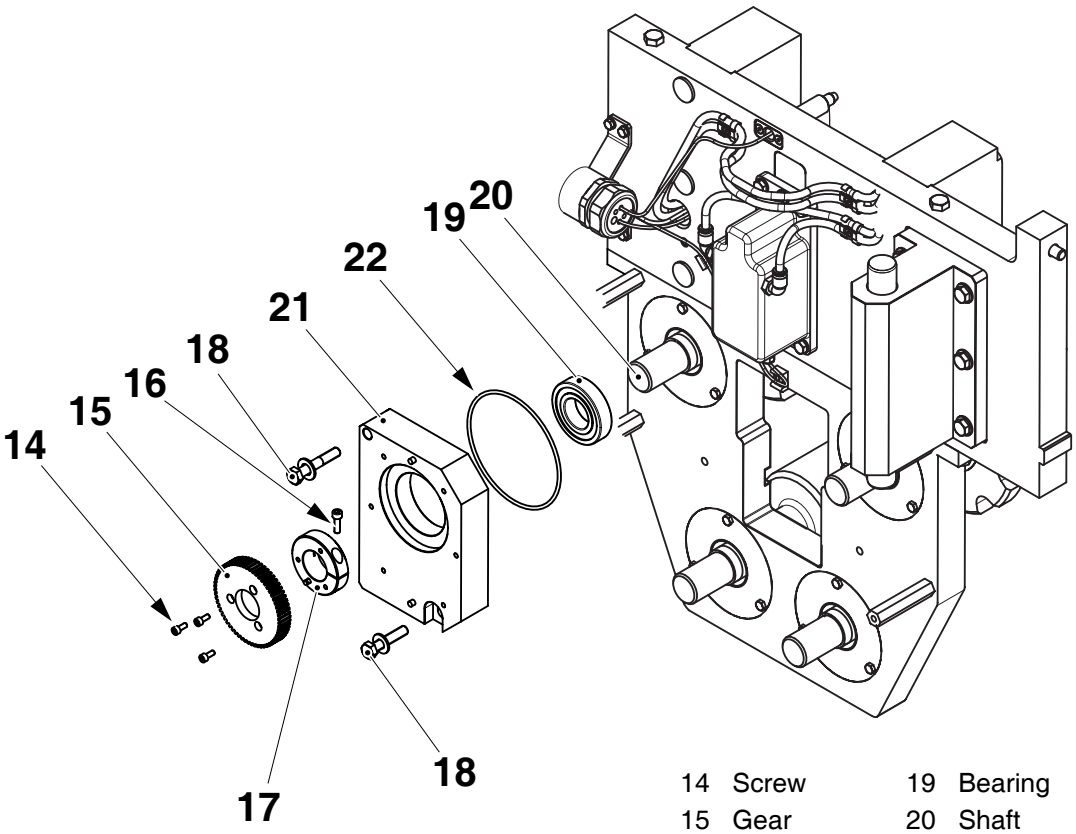

14	Screw	19	Bearing
15	Gear	20	Shaft
16	Screw	21	Bracket
17	Clamp	22	O-ring
18	Screw		

2.2BK483en-mms2.fm

(Cont'd)

(Cont'd)

Remove gearboxes and drive shafts

a) Remove the chains, see *4-3 Jaw system - chain disassembly and reassembly*.

Note! Do not try to remove the sensor (2) from the holder (1). Doing so may damage the cable.

b) Remove the crank handle holder (1) and sensor (2).

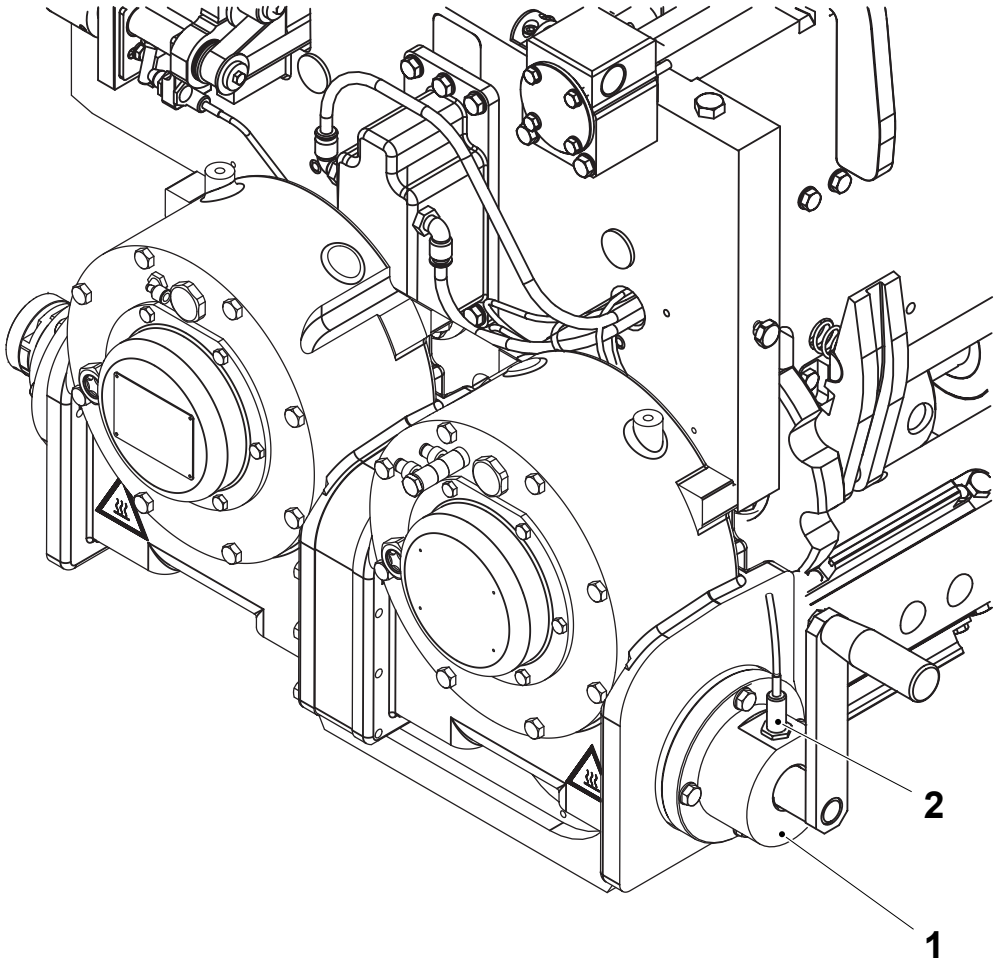

1 Holder
2 Sensor

(Cont'd)

2.2BK483en-mms2.fm

(Cont'd)

c) Remove the cam (3) from the jaw unit.

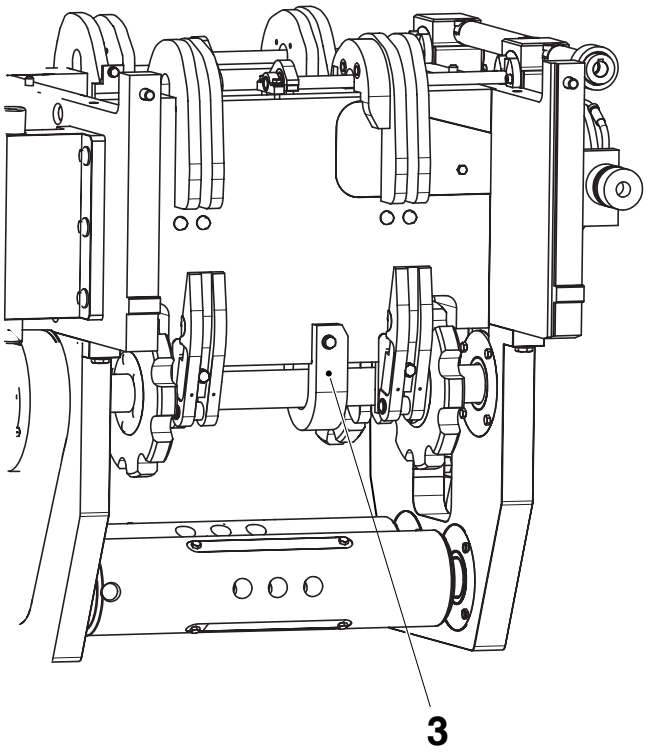

3 Cam

(Cont'd)

2.2BK483en-mms2.fm

(Cont'd)

d) Remove screws (4) and cover (5).
e) Remove and change the sealing ring (6).
f) Remove the retaining ring (7).
g) Remove the housing (8).
h) Remove and change the bearing (9).
i) Remove and change the sealing ring (10).
j) Remove screws (11) and cover (12).
k) Remove and change the sealing ring (13).
l) Remove the housing (14).
m) Remove and change the bearing (15).
n) Remove and change the sealing ring (16).
o) Repeat for the other drum.

2.2BK483en-mms2.fm

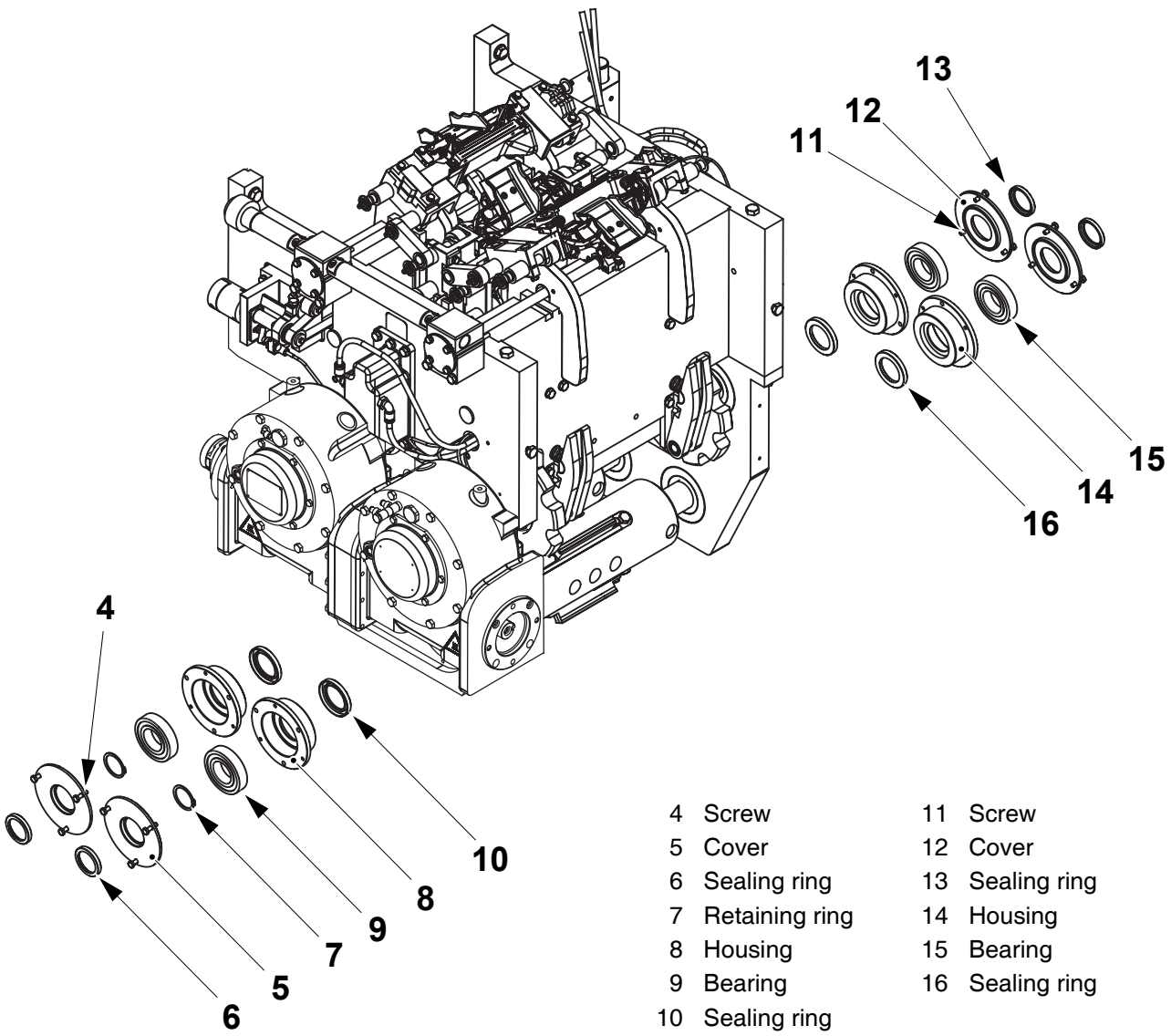

4	Screw	11	Screw
5	Cover	12	Cover
6	Sealing ring	13	Sealing ring
7	Retaining ring	14	Housing
8	Housing	15	Bearing
9	Bearing	16	Sealing ring
10	Sealing ring		

(Cont'd)

(Cont'd)

p) Manoeuvre the drums (17) and (18) out of the unit.

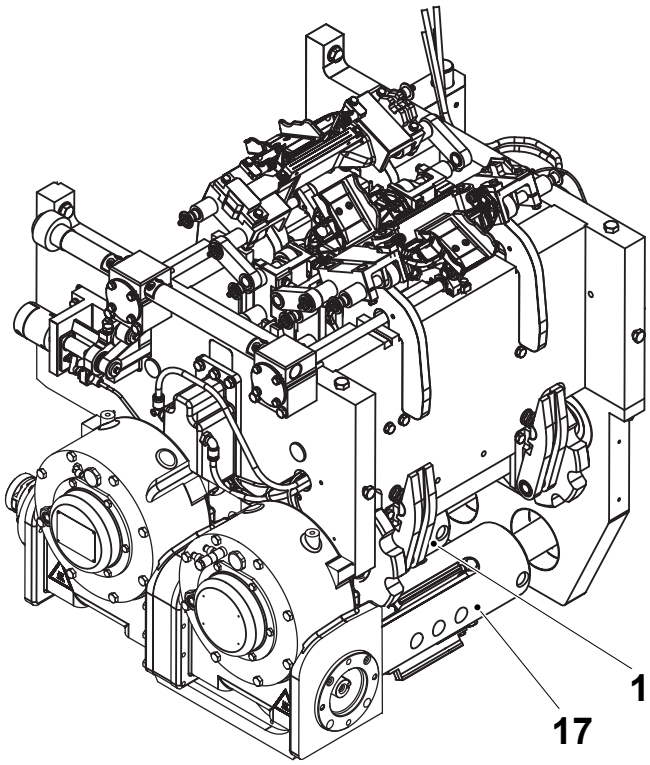

17 Drum
18 Drum

(Cont'd)

2.2BK483en-mms2.fm

(Cont'd)

q) Remove the screws (19) and the plate (20) from the gearbox assembly (21).

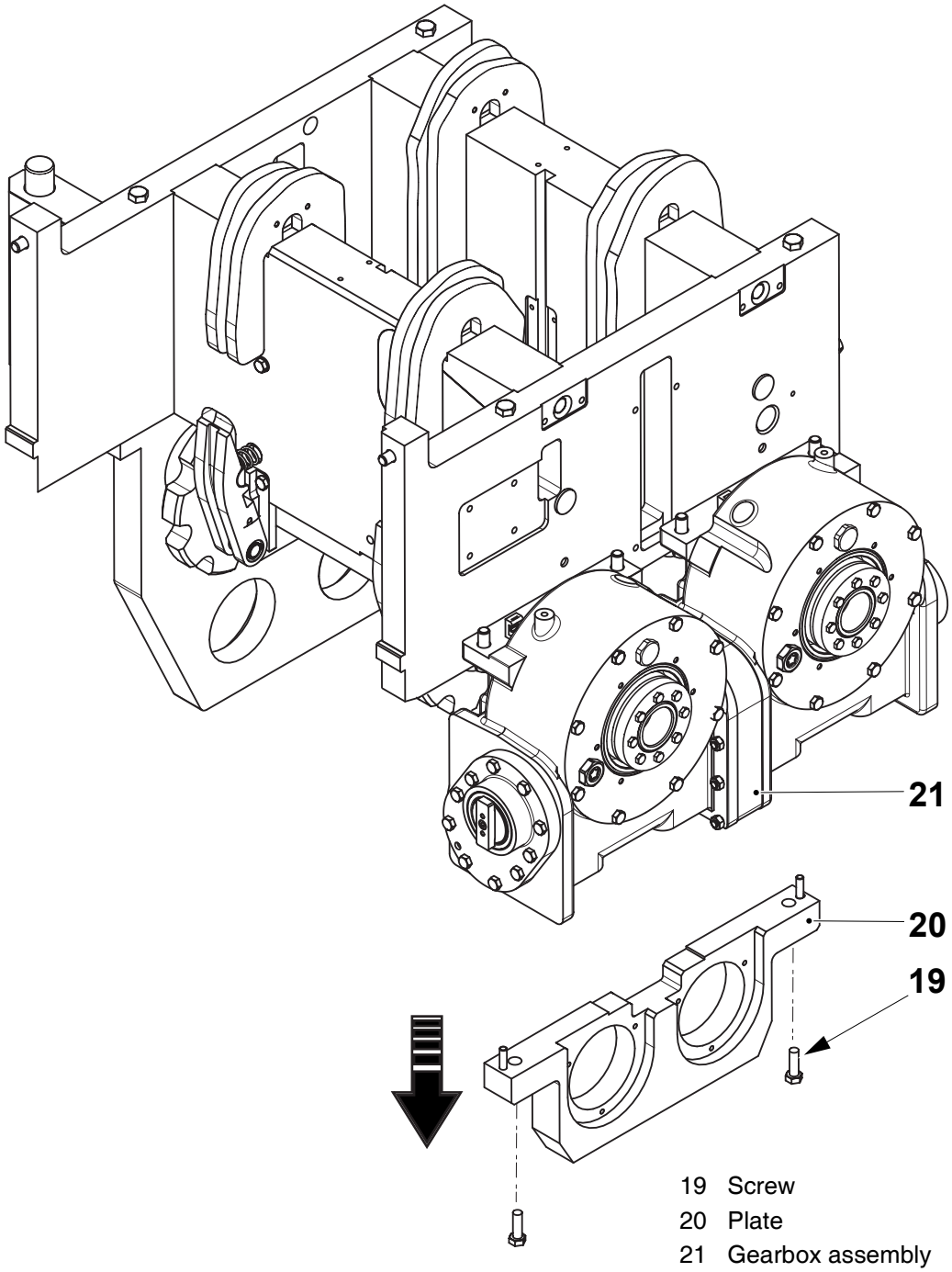

19 Screw
20 Plate
21 Gearbox assembly

(Cont'd)

2.2BK483en-mms2.fm

(Cont'd)

r) Load a pallet truck with pallets and place a layer of cardboard on it. Push the pallet truck into position beneath the gearbox assembly (21).

s) Remove the screws (22) so the gearbox assembly (21) is separated from the upper Jaw assembly (23).

t) Lower the pallet truck and move the gearbox assembly (21) to a work area.

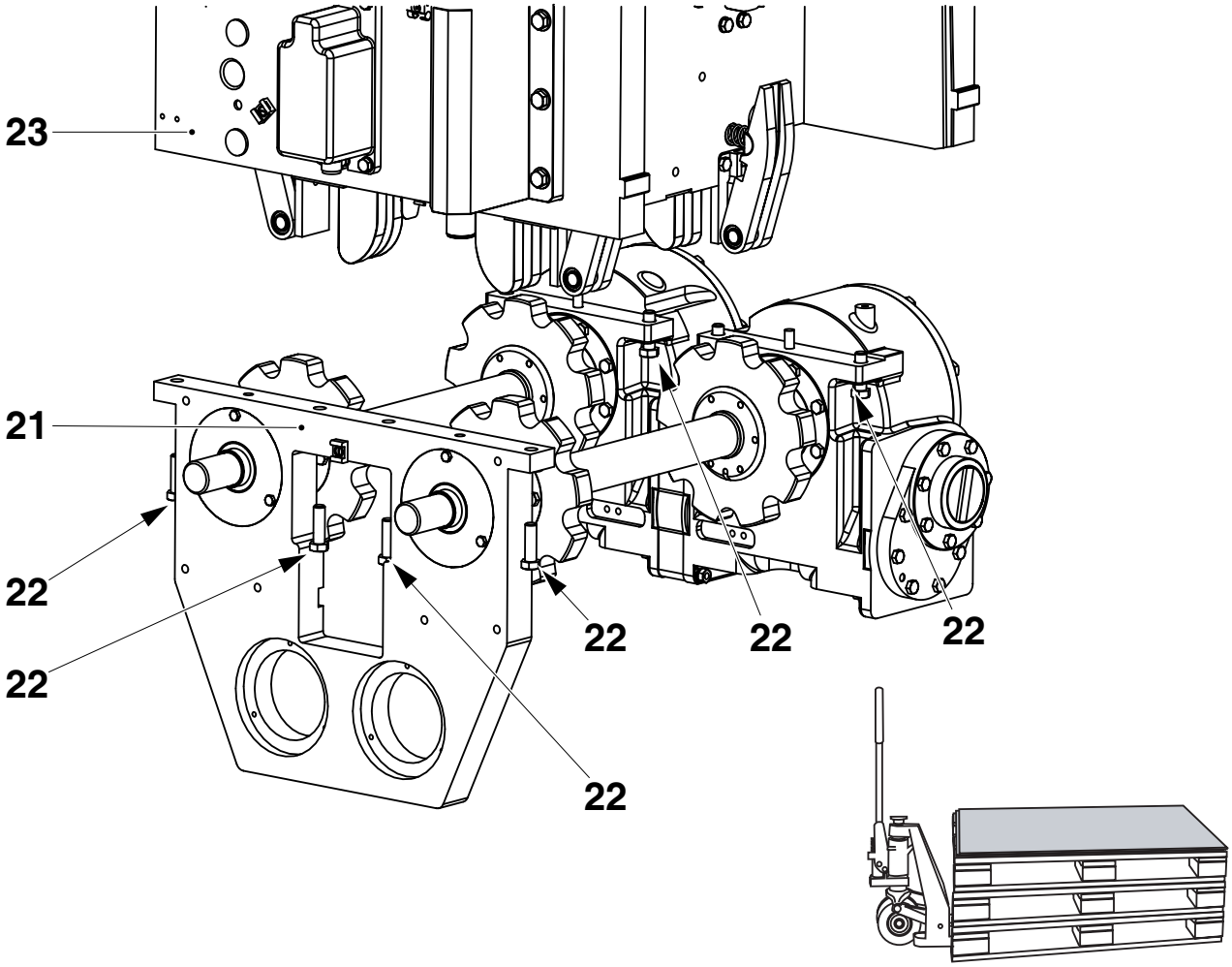

2.2BK483en-mms2.fm

21 Gearbox assembly
22 Screw
23 Upper jaw assembly

(Cont'd)

(Cont'd)

u) Remove screws (24) and cover (25).
v) Remove and change the sealing ring (26).
w) Remove the housing (27).
x) Remove and change the bearing (28).
y) Remove and change the sealing ring (29).
z) Repeat for the other shaft.
aa) Remove the plate (30).

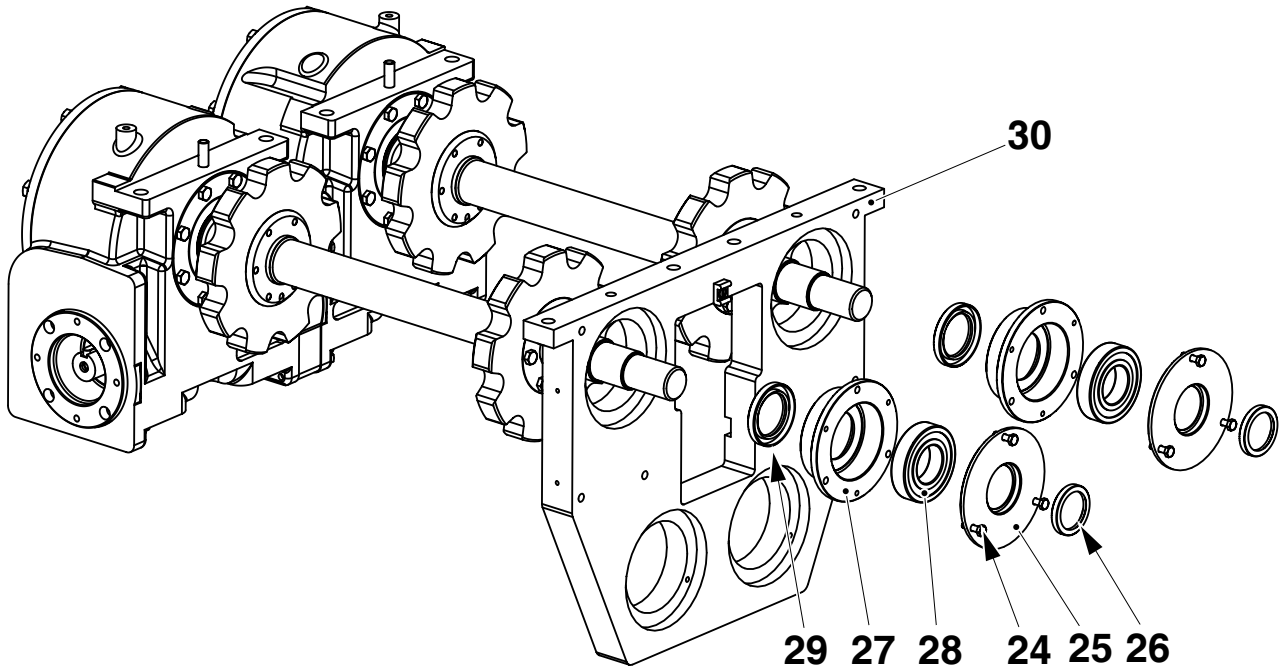

2.2BK483en-mms2.fm

24 Screw
25 Cover
26 Sealing ring
27 Housing
28 Bearing
29 Sealing ring
30 Plate

(Cont'd)

(Cont'd)

Separate Gearboxes and Drive Shafts

a) Remove the covers (1) and (2) from the gearboxes (3) and (4).

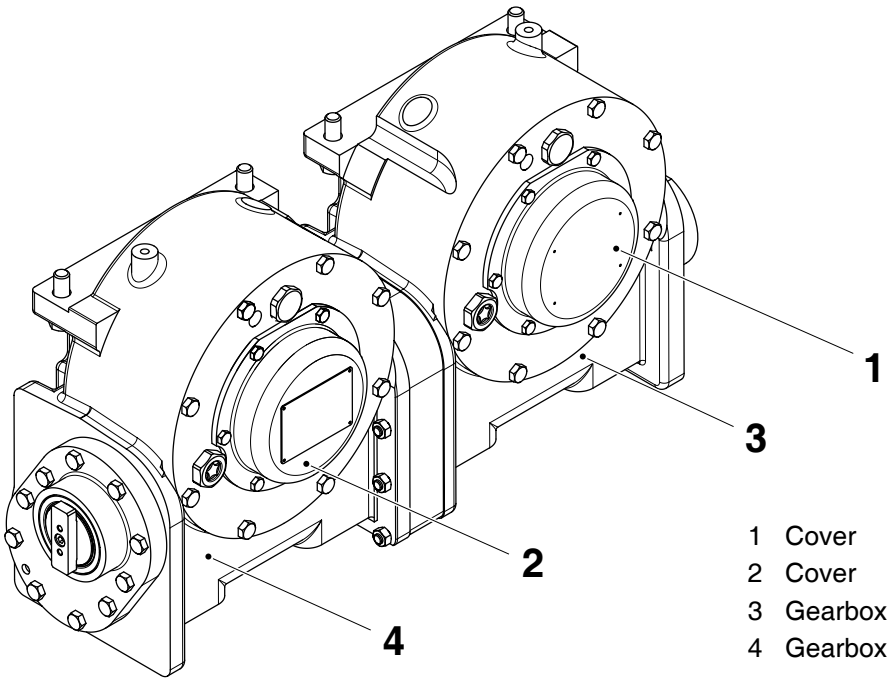

1 Cover
2 Cover
3 Gearbox
4 Gearbox

(Cont'd)

2.2BK483en-mms2.fm

(Cont'd)

b) Loosen the screws (5) and (6) and remove the clamps (7) and (8).

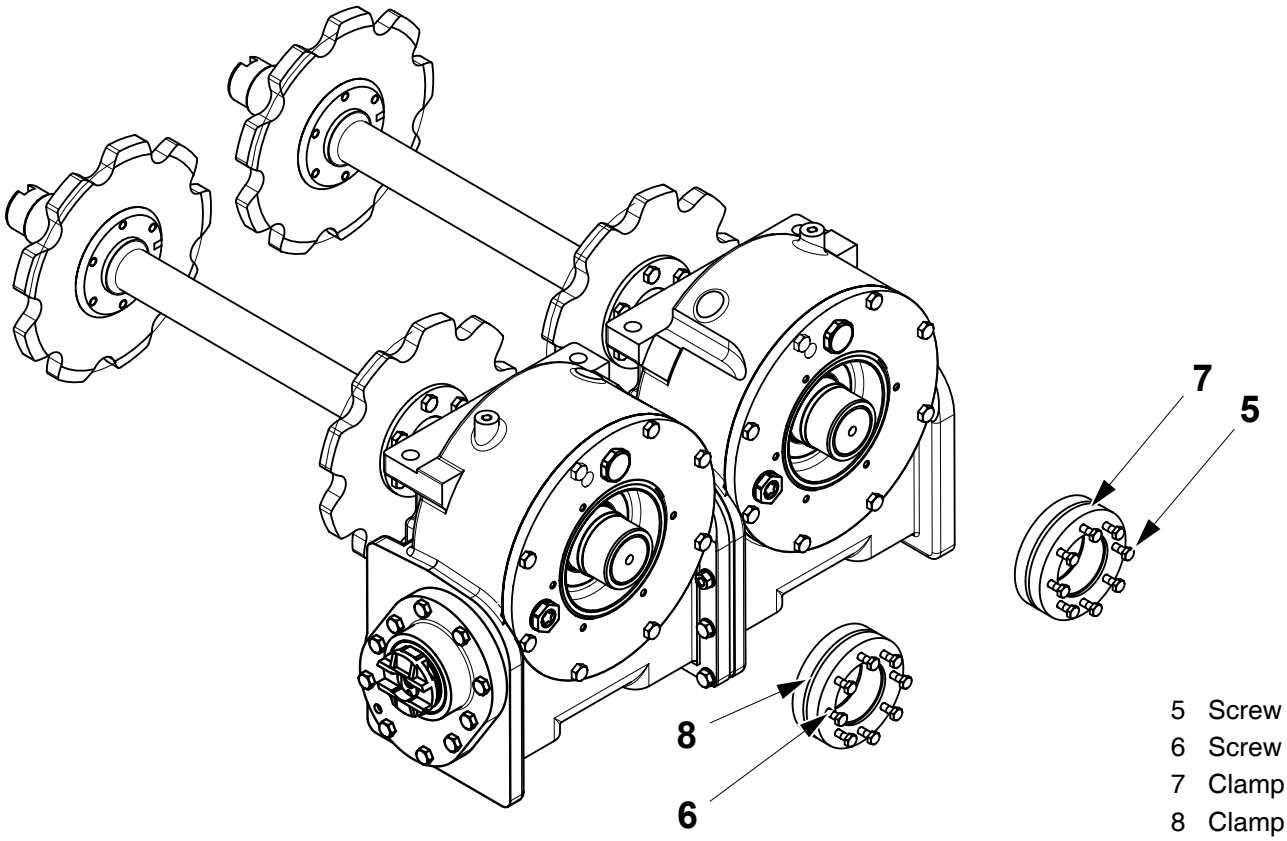

2.2BK483en-mms2.fm

5 Screw
6 Screw
7 Clamp
8 Clamp

(Cont'd)

(Cont'd)

c) Using an Allen key, screw the tool shaft (9) counterclockwise as far as possible.

d) Screw the body of the tool (10) onto the gearbox shaft (11) until it is tight.

e) Screw the tool shaft (9) clockwise to push the drive shaft (12) out of the gearbox (3).

f) Repeat the procedure to remove the drive shaft (13) from the gearbox (4).

g) Change the drive shafts (12) and (13) as required, see *Change Wheels and Shafts*.

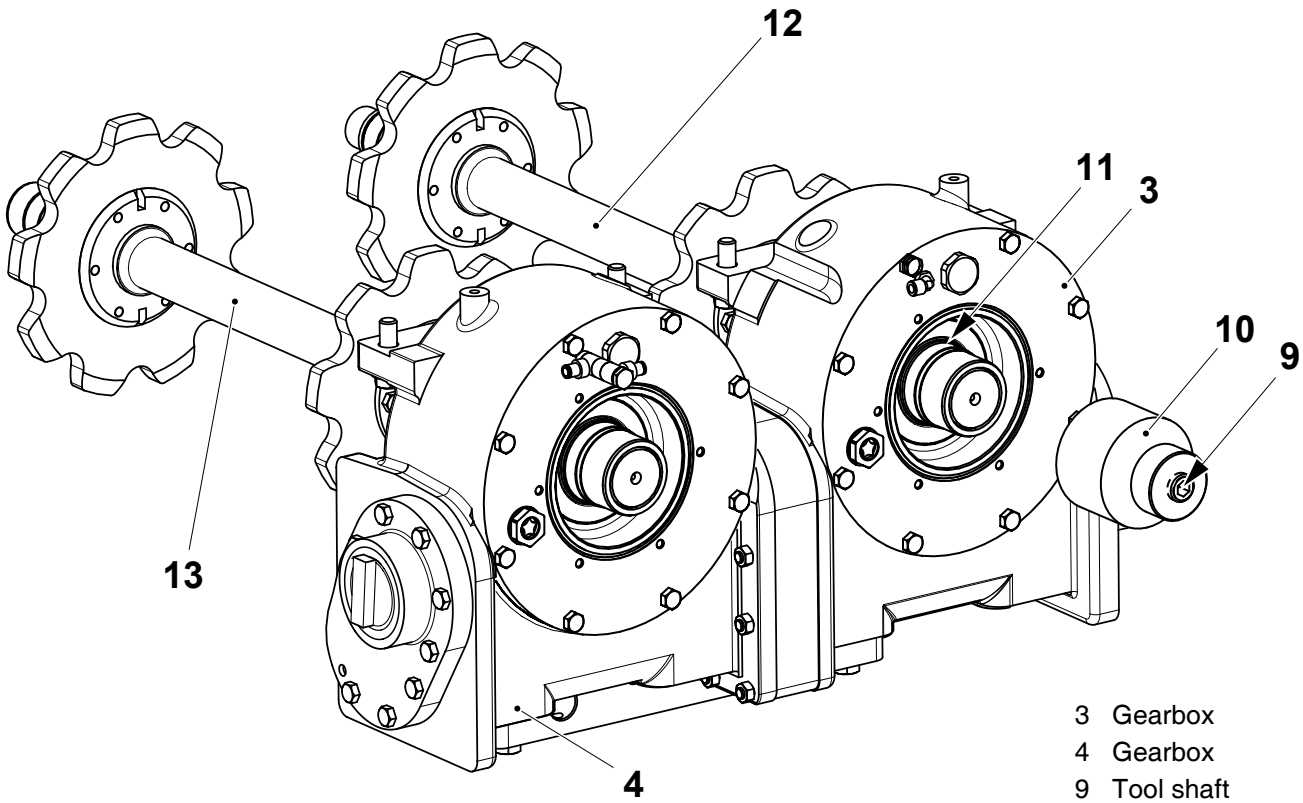

2.2BK483en-mms2.fm

3 Gearbox
4 Gearbox
9 Tool shaft
10 Tool body
11 Gearbox shaft
12 Drive shaft
13 Drive shaft

(Cont'd)

(Cont'd)

Change Wheels and Shafts

a) Remove the screws (1), the flange (2) and the wheel (3) from the shaft (4).

b) Remove the bushings (5) and the reference pin (6) from the wheel. Retain the bushings and the pin.

c) Fit the bushings (5) and the pin (6) in the new wheel (3).

d) Fit the wheel (3) on the shaft (4) so that the reference pin (6) mates with the slot (7) in the shaft (4).

e) Fit the flange (2) and tighten the screws (1) crosswise to 30 +5/-0 Nm.

f) Repeat steps *a)* to *e)* at the other end of the shaft.

g) Fit the O-ring (8) in the groove on the shaft (4).

h) Repeat the procedure for the other shaft.

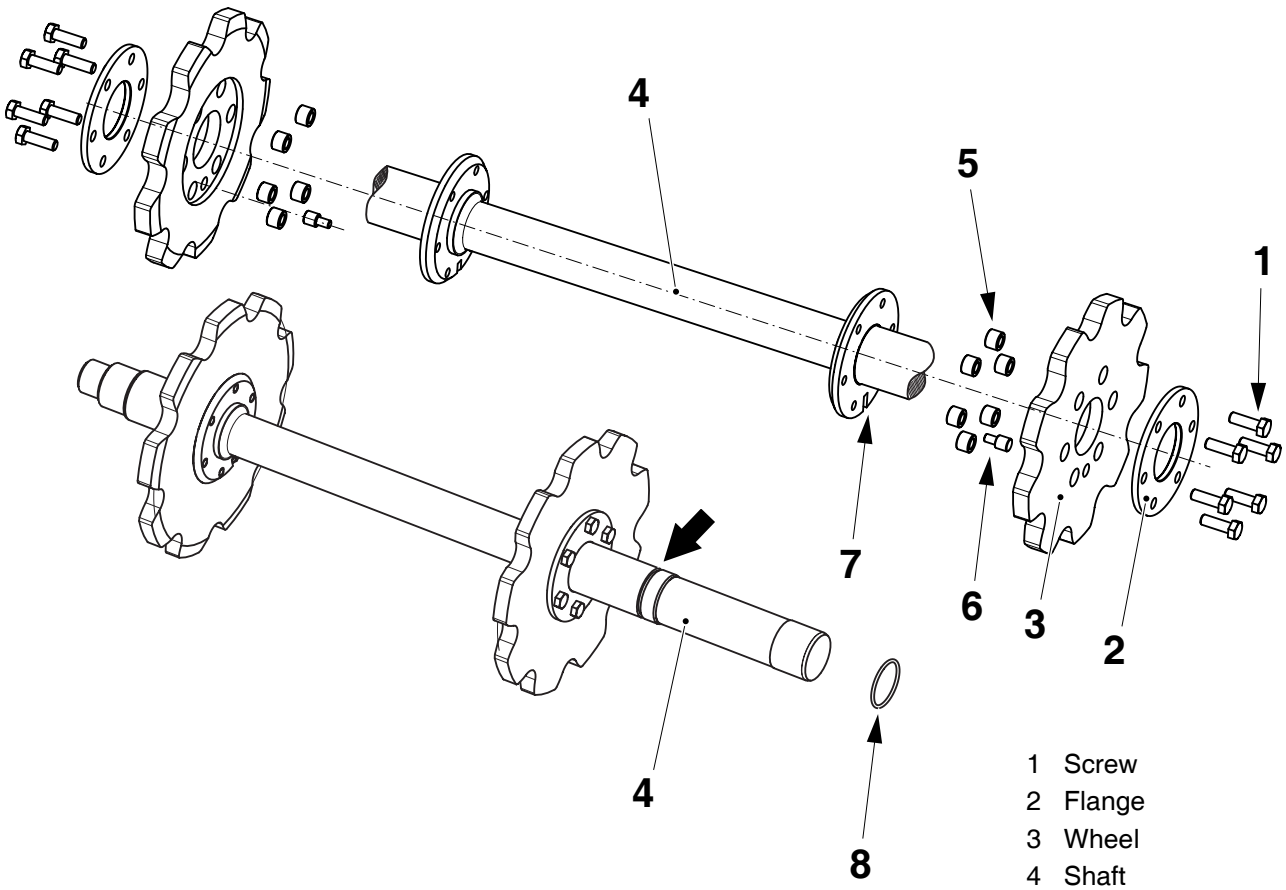

1 Screw
2 Flange
3 Wheel
4 Shaft
5 Bushing
6 Reference pin
7 Slot
8 O-ring

2.2BK483en-mms2.fm

(Cont'd)

(Cont'd)

Assemble gearboxes and drive shafts

a) Remove the covers (1) and (2) from the gearboxes (3) and (4).

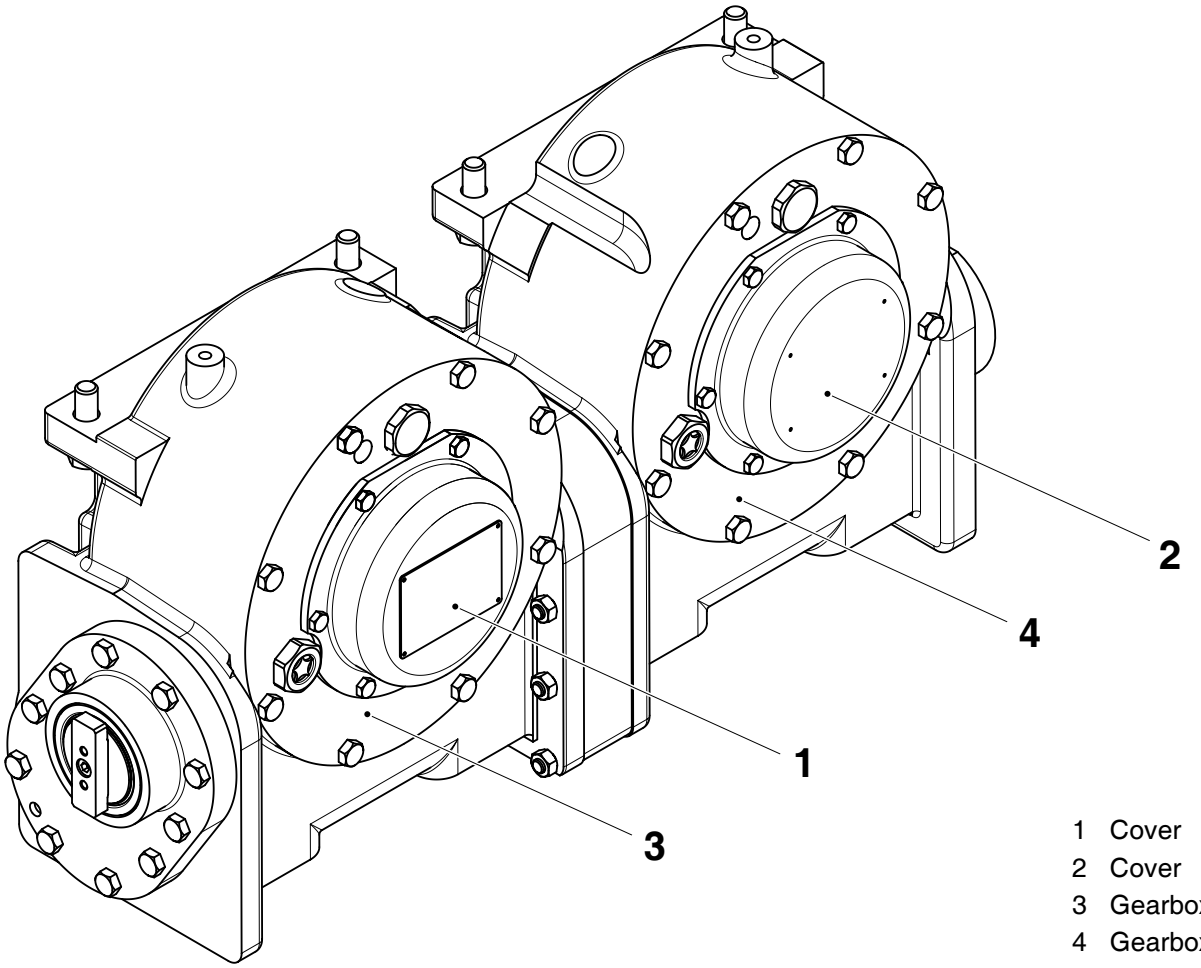

1 Cover
2 Cover
3 Gearbox
4 Gearbox

2.2BK483en-mms2.fm

(Cont'd)

(Cont'd)

b) Loosen the screws (5) in the outer ring (6) of the clamp and pull off the clamp.

c) Separate the components of the clamp and clean them.

d) Repeat for the other gearbox.

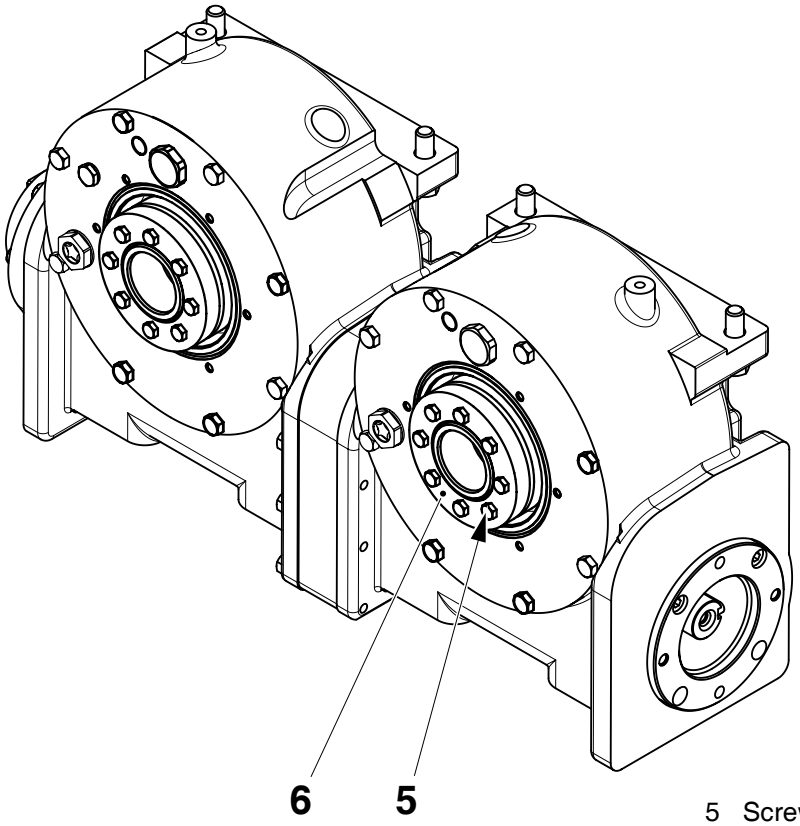

5 Screw
6 Clamp, outer ring

(Cont'd)

2.2BK483en-mms2.fm

(Cont'd)

Note! The shafts (7) and (8) are different. The shaft (7) for the encoder has a key. This shaft should be fitted in the gearbox (3) as shown.

e) Fit the shafts (7) and (8) in the gearboxes (3) and (4).

f) Fit the two pins (9) and (10).

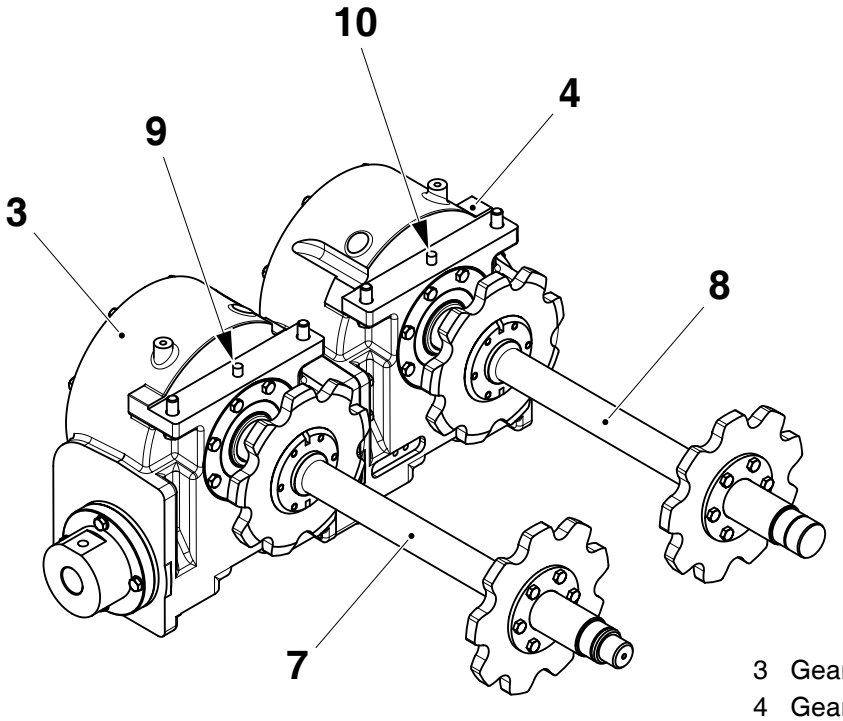

3 Gearbox
4 Gearbox
7 Shaft
8 Shaft
9 Pin
10 Pin

2.2BK483en-mms2.fm

(Cont'd)

(Cont'd)

g) Position the shaft (7) in the plate (11).

h) Fit the sealing ring (12) and bearing (13) in the housing (14) and then fit the housing on the shaft (7).

i) Fit the seal ring (15) in the cover (16) and then secure the cover in position with the screws (17).

j) Repeat for the other shaft.

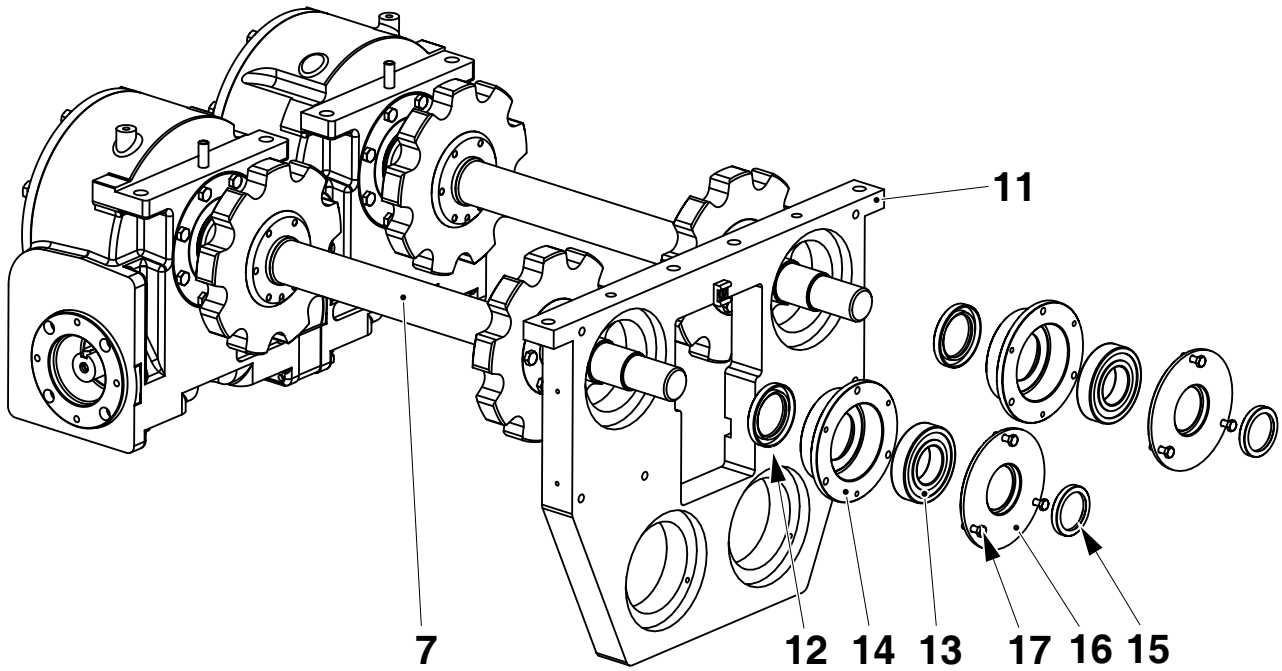

2.2BK483en-mms2.fm

7 Shaft
11 Plate
12 Seal ring
13 Bearing
14 Housing
15 Seal ring
16 Cover
17 Screw

(Cont'd)

(Cont'd)

k) Place the gearbox assembly (18) on a pallet and manoeuvre it so the toothed wheels (19) are directly below the cut-outs (20) in the plate.

l) Lock the gearbox assembly (18) to the jaw system frame (21) with the screws (22).

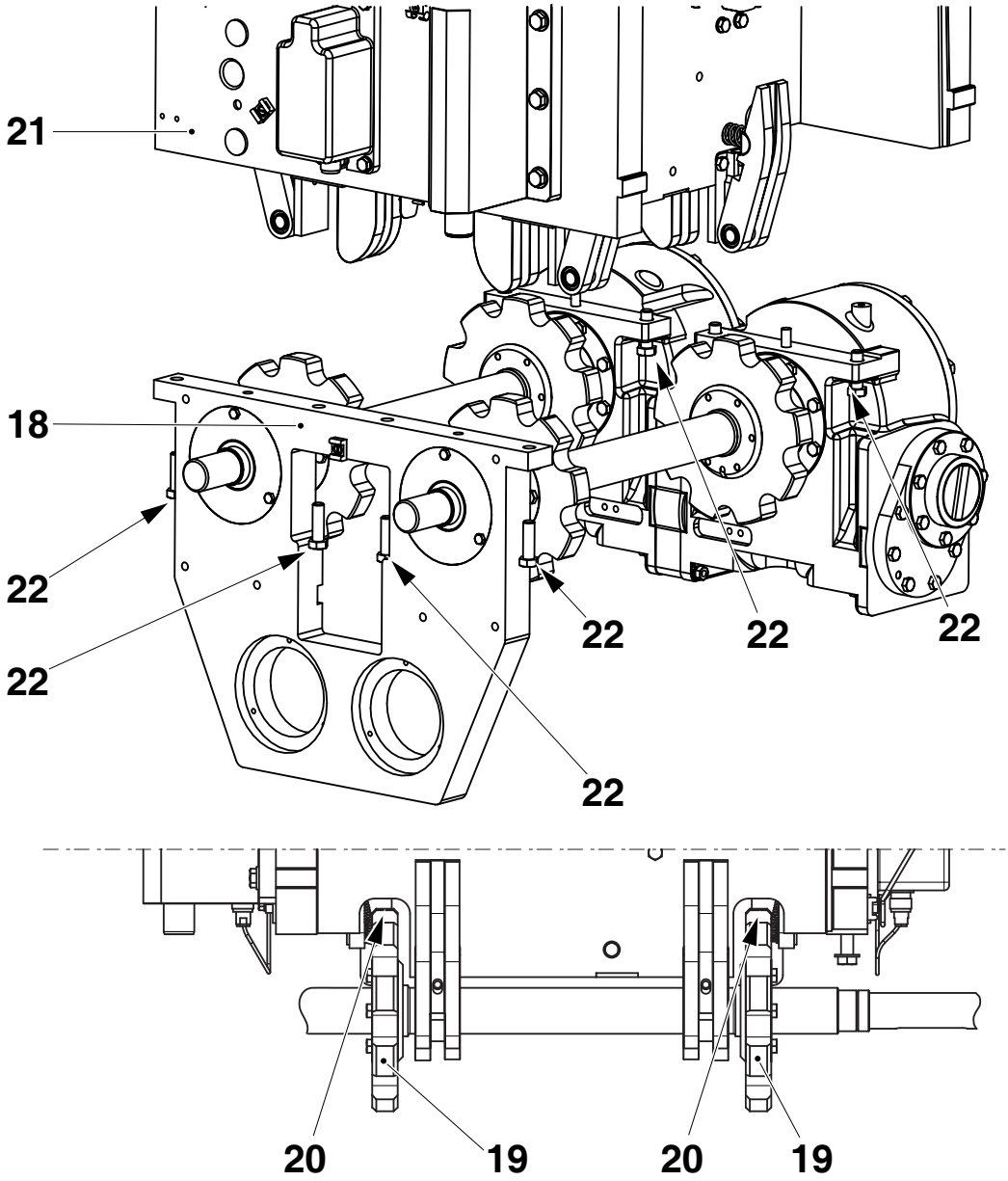

2.2BK483en-mms2.fm

18 Gearbox assembly
19 Wheel
20 Cut-out
21 Jaw system frame
22 Screw

(Cont'd)

(Cont'd)

Set gearbox position

a) Assemble the three parts of the clamp (1), (2) and (3) and slide them onto the gearbox shaft (4).

Note! Tighten the screws (5) by hand.

b) Push the clamp until the inner ring (3) presses against the shoulder (6) on the shaft (4) and tighten the screws (5).

c) Repeat for the other gearbox.

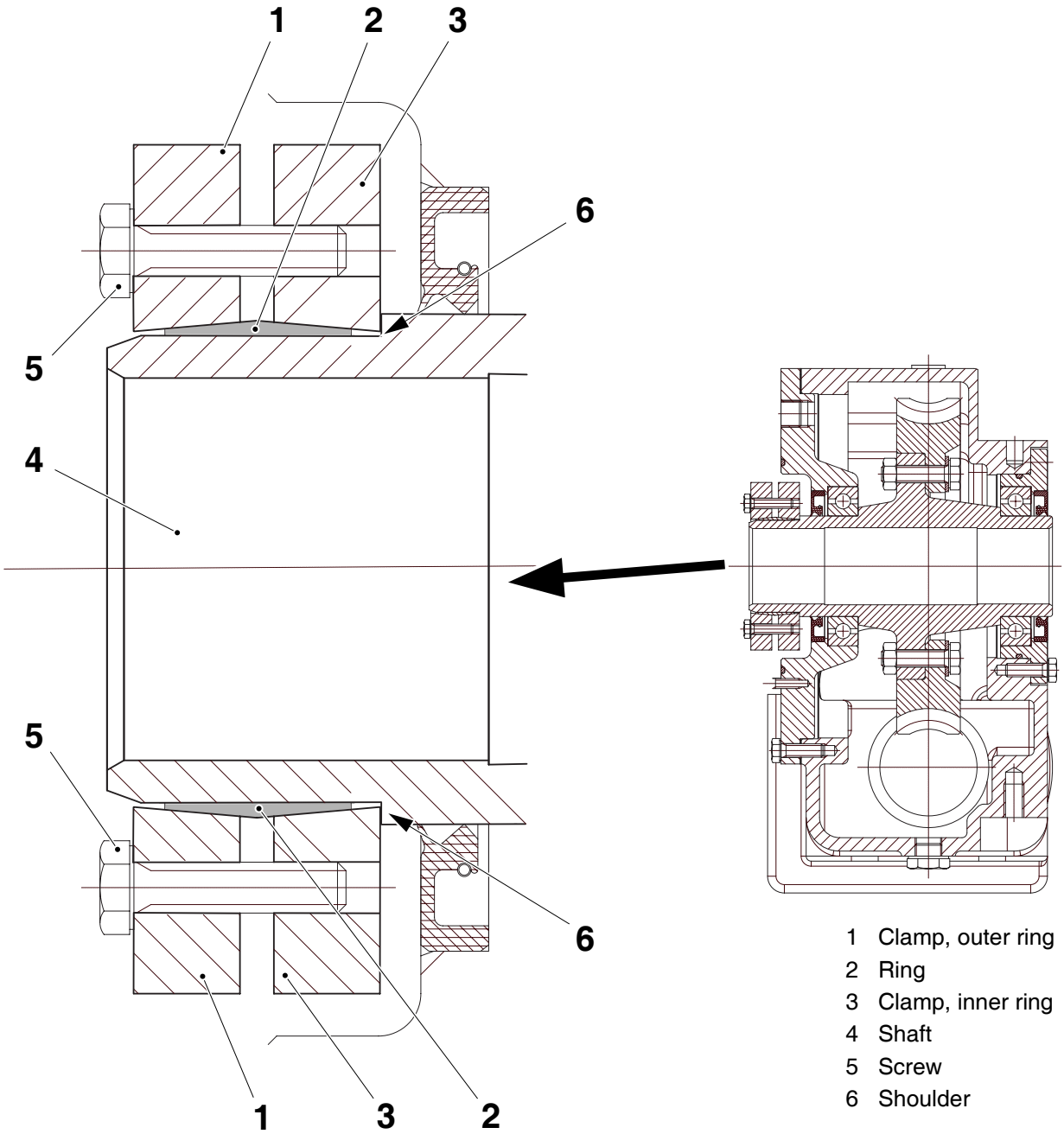

1 Clamp, outer ring
2 Ring
3 Clamp, inner ring
4 Shaft
5 Screw
6 Shoulder

(Cont'd)

2.2BK483en-mms2.fm

(Cont'd)

d) At the sealing link side, insert the tool (7), oriented as shown, between the cam (8) and the wheel (9).

e) Push the wheel (9) so it clamps the tool (7) between itself and the cam (8).

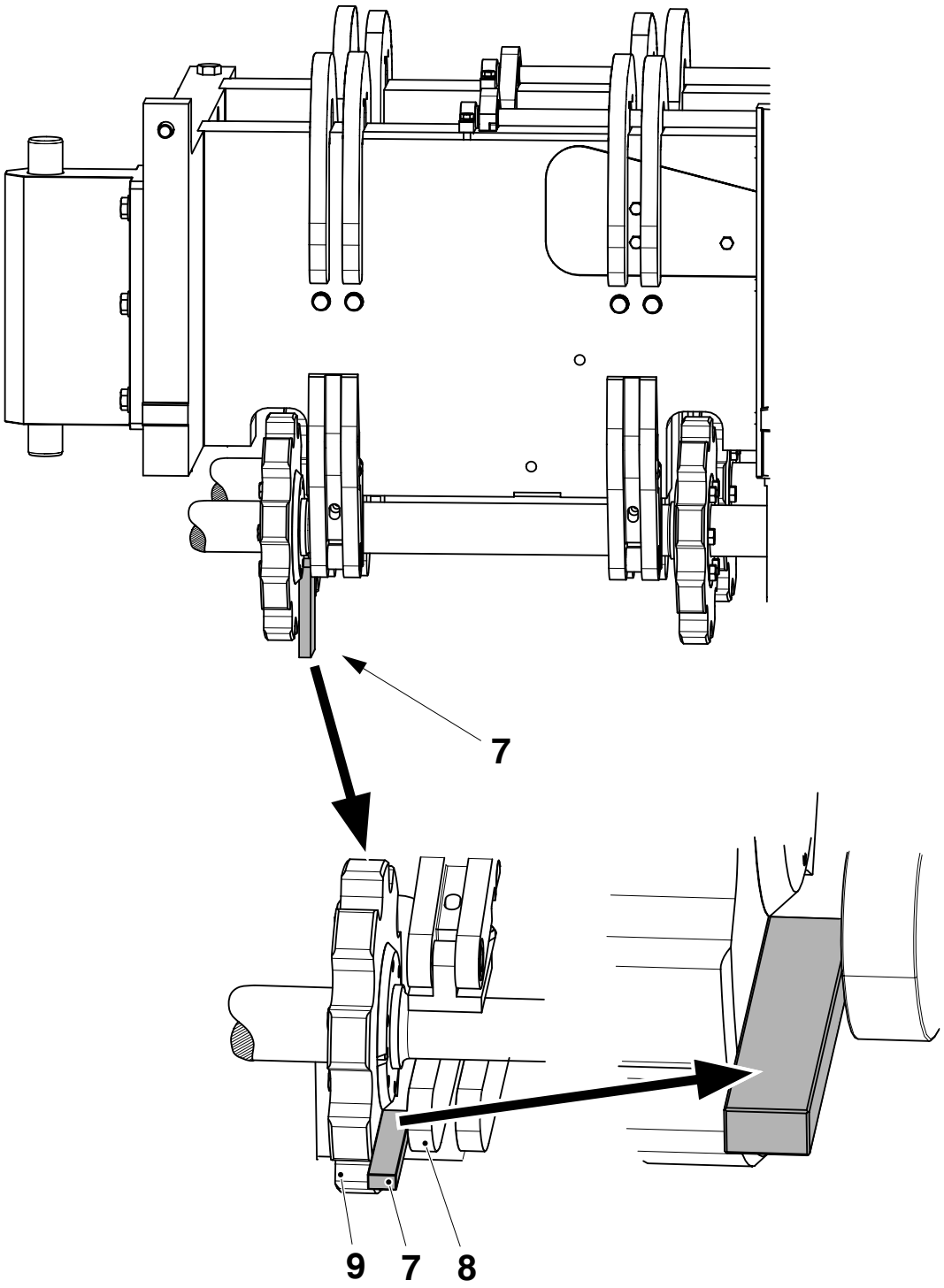

2.2BK483en-mms2.fm

7 Tool
8 Cam
9 Wheel

(Cont'd)

(Cont'd)

f) Tighten the screws (5) in the outer ring (1) to 12 ±1 Nm.

Note! **Do not** tighten the screws in the other gearbox.

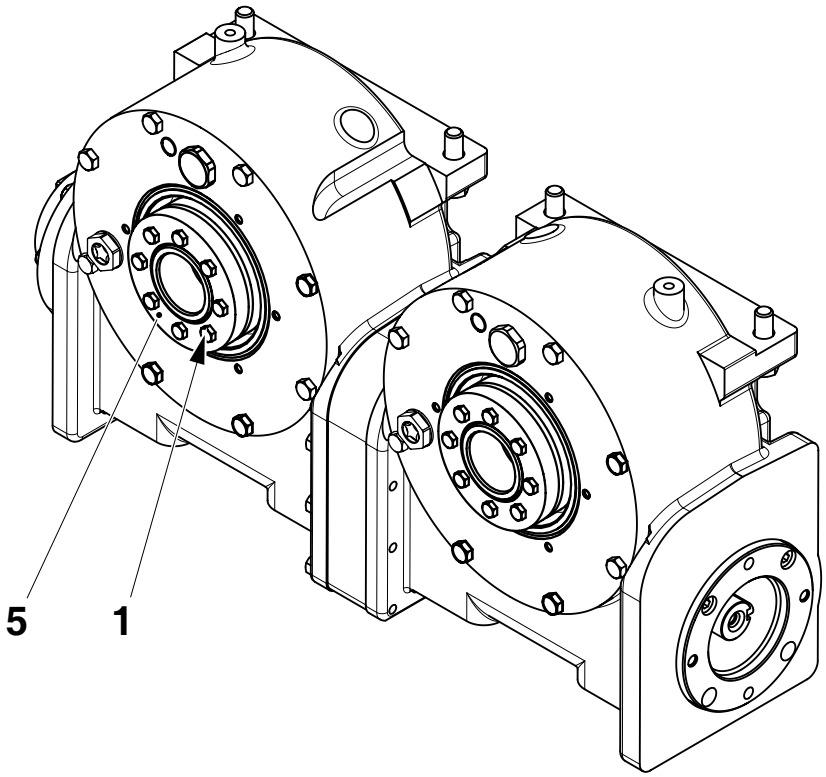

1 Outer ring
5 Screw

2.2BK483en-mms2.fm

g) Remove the tool (7).

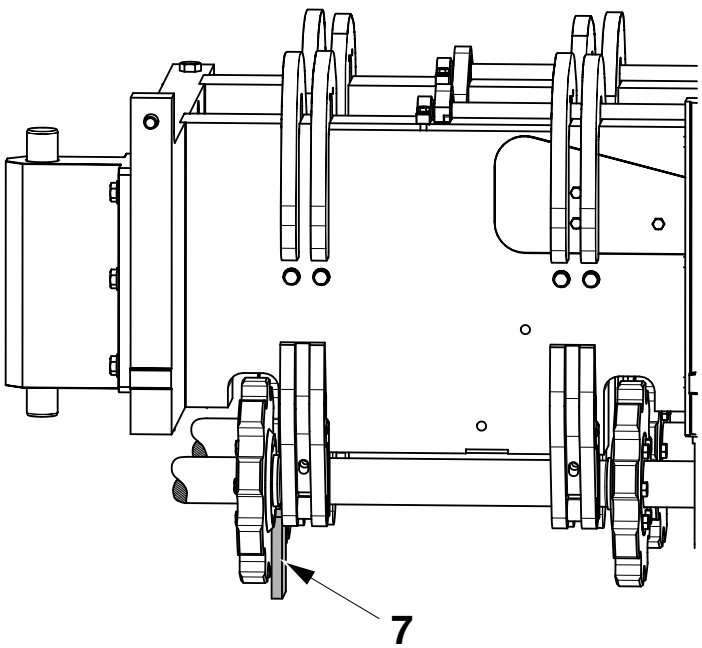

7 Tool

(Cont'd)

(Cont'd)

Completion tasks 1

a) Fit the pins (1) and (2) in the plate (3).

b) Lift the plate (3) into position below the assembly (4) and secure it position with the screws (5).

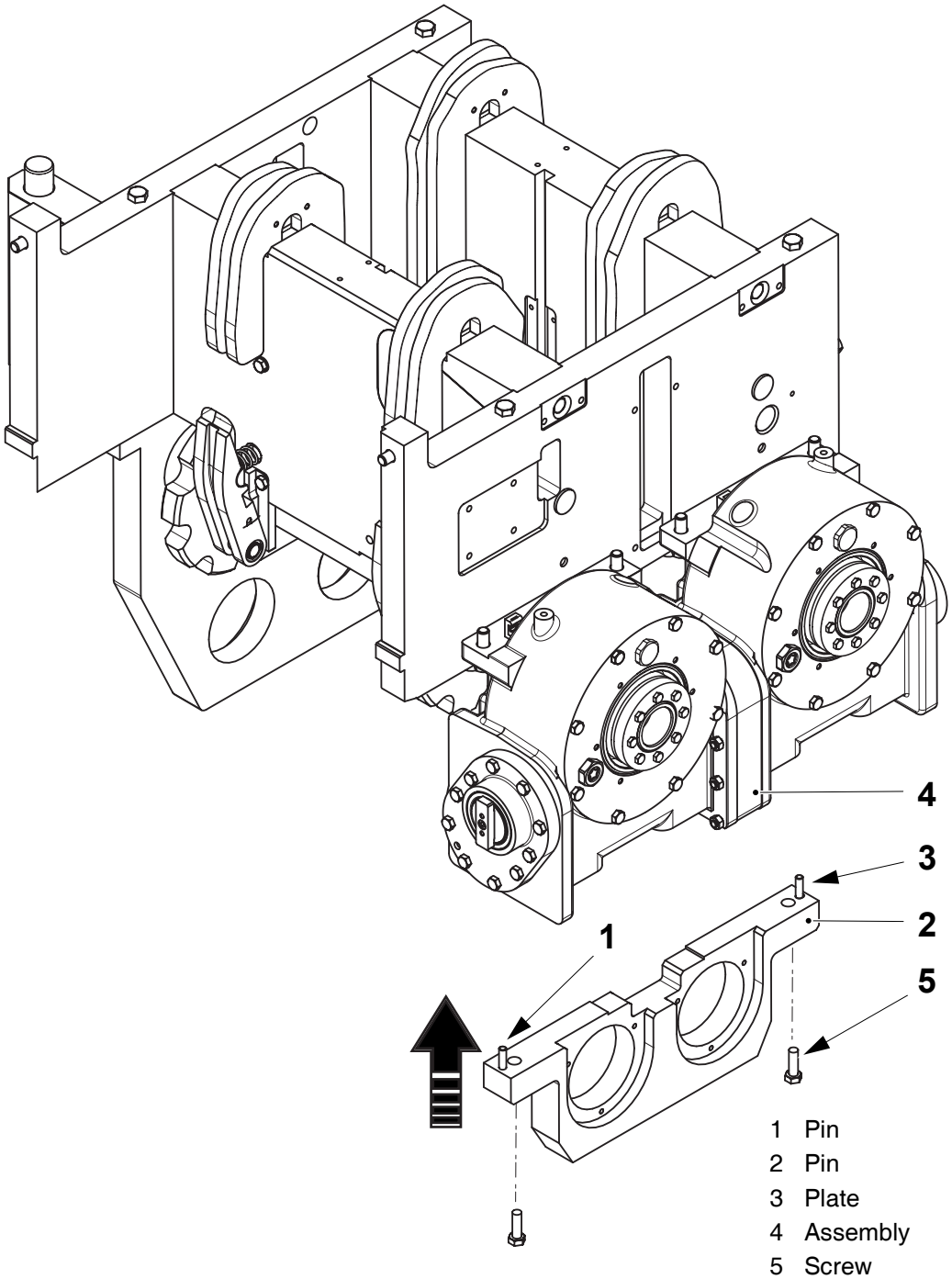

2.2BK483en-mms2.fm

(Cont'd)

(Cont'd)

Note! It is important that the drums are aligned correctly to achieve synchronization. between the knives and the dollies.

c) Manoeuvre the drums (6) and (7) into the position. When the drums are in the correct position, it must be possible to pass the template (8) through the holes (9) and (10) so that a dolly holder is aligned with a knife holder.

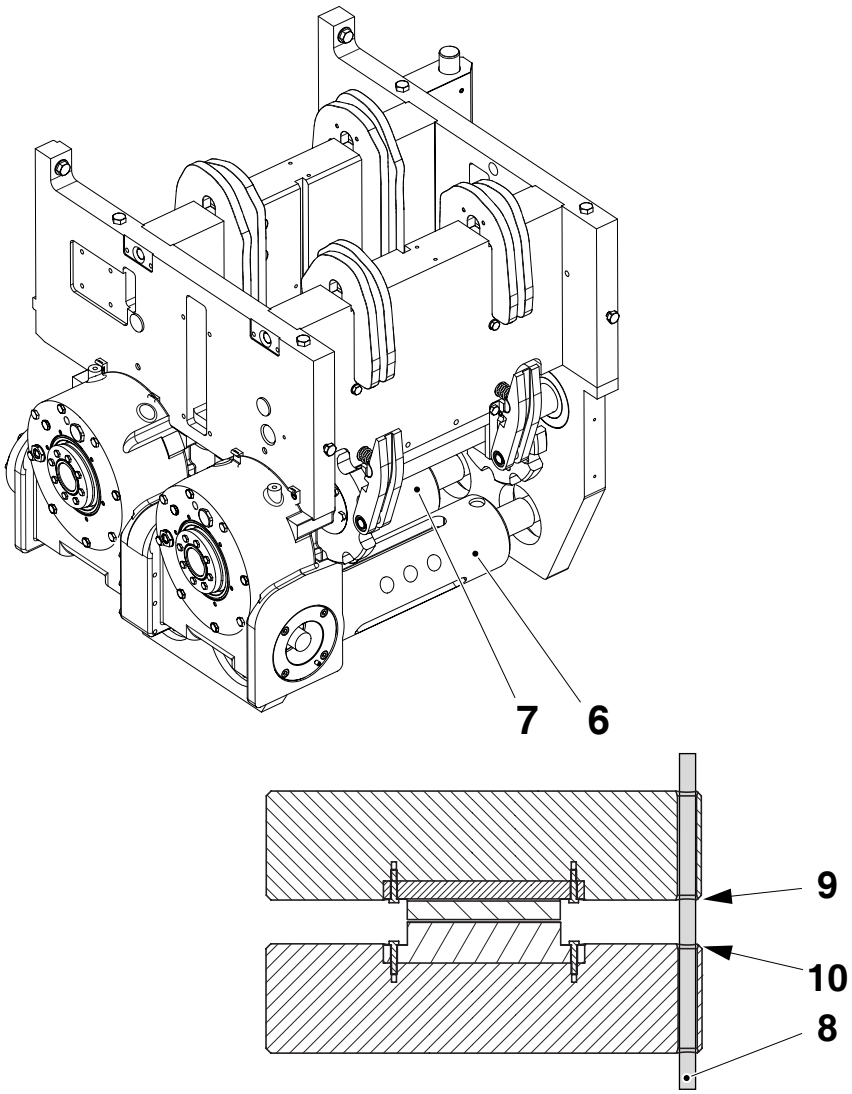

6 Drum
7 Drum
8 Template
9 Hole
10 Hole

(Cont'd)

2.2BK483en-mms2.fm

(Cont'd)

d) Fit the sealing ring (11) and bearing (12) in the housing (13).

e) Fit the housing (13) on the shaft of the drum (6) and secure in position with the retaining ring (14).

f) Fit the seal ring (15) in the cover (16) and secure in position with the screws (17).

g) Fit the sealing ring (18) and bearing (19) in the housing (20).

h) Fit the housing (20) on the shaft of the drum (6).

i) Fit the retaining ring (21).

j) Fit the seal ring (22) in the cover (23) and secure in position with the screws (24).

k) Repeat for the other drum.

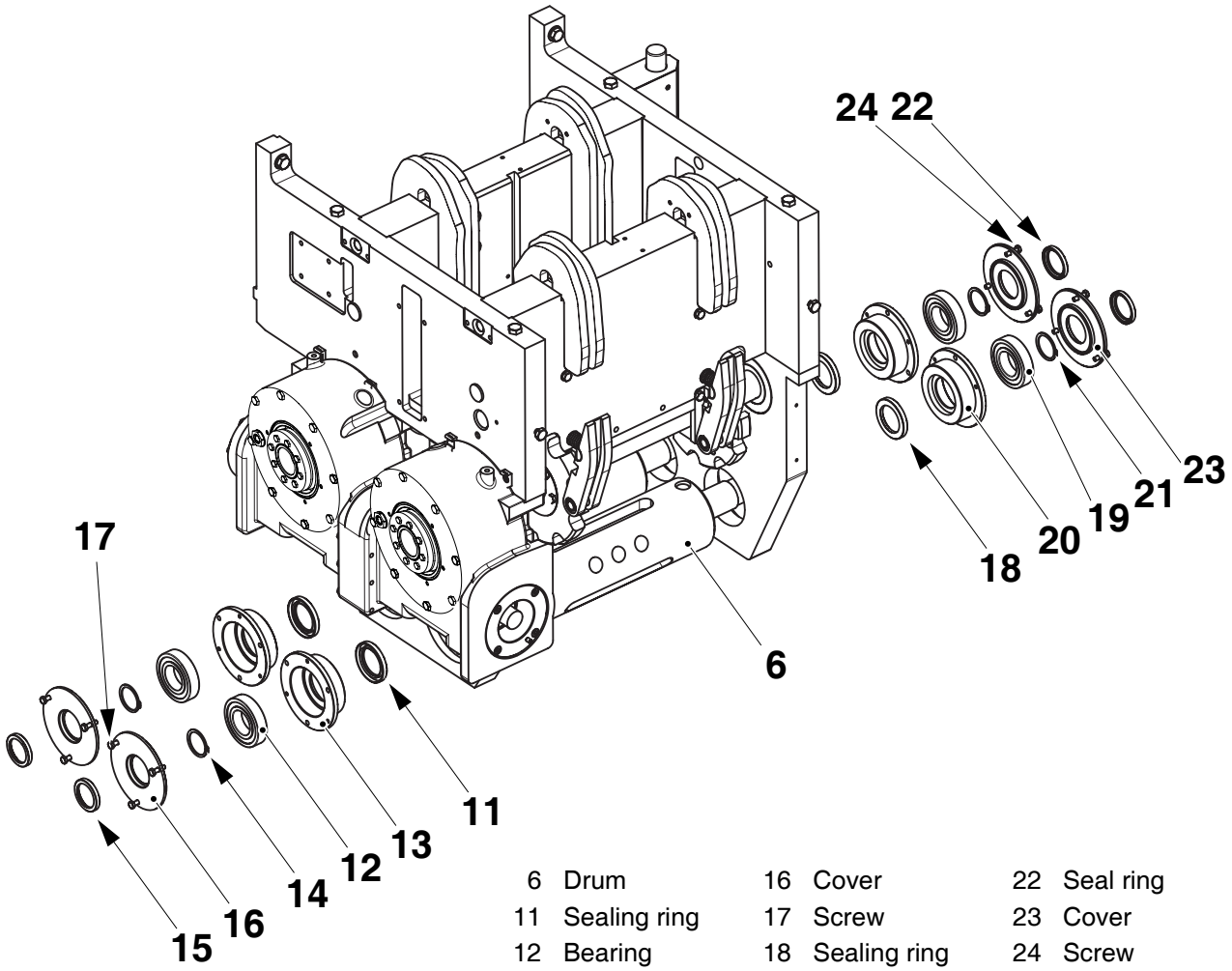

2.2BK483en-mms2.fm

6	Drum	16	Cover	22	Seal ring
11	Sealing ring	17	Screw	23	Cover
12	Bearing	18	Sealing ring	24	Screw
13	Housing	19	Bearing		
14	Retaining ring	20	Housing		
15	Seal ring	21	Retaining ring		

(Cont'd)

(Cont'd)

l) Fit the crank handle holder (25) and sensor (26).

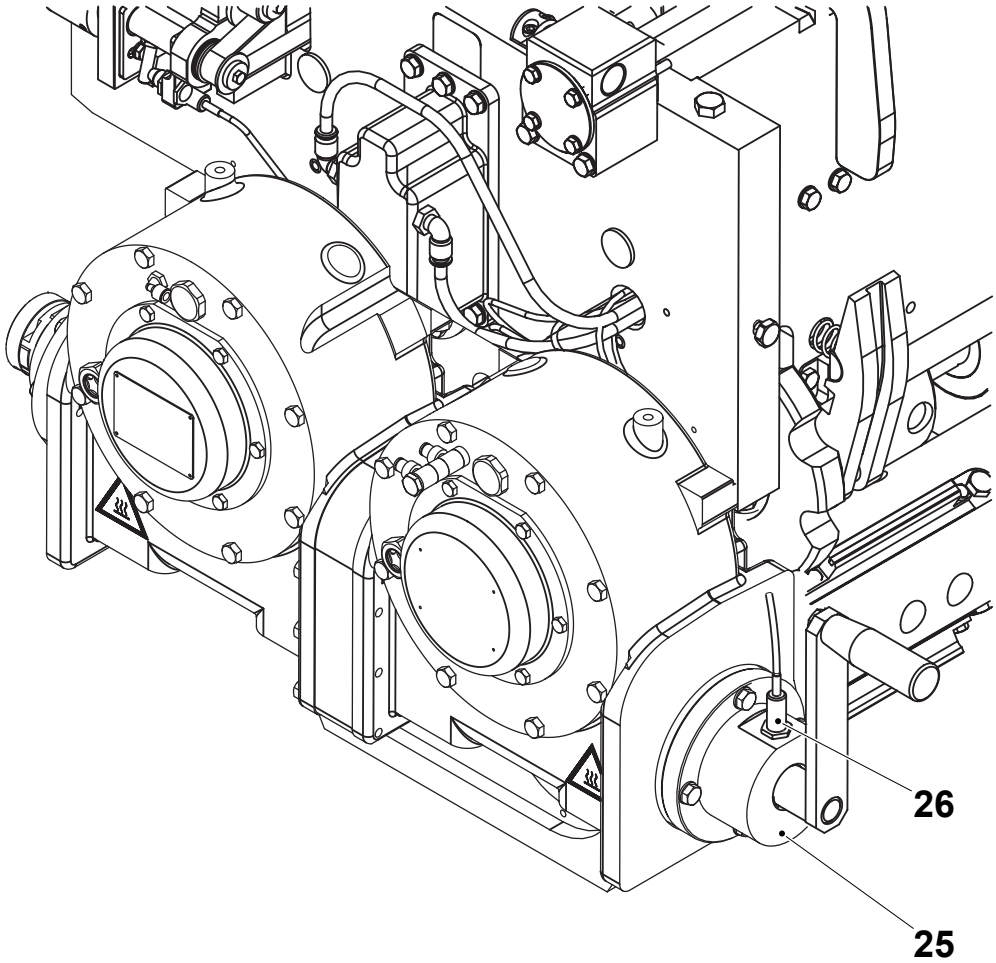

25 Holder
26 Sensor

(Cont'd)

2.2BK483en-mms2.fm

(Cont'd)

m) Fit the cam (27) on the jaw unit.

n) Fit and tension the chains, see *4-3 Jaw system - chain disassembly and reassembly*.

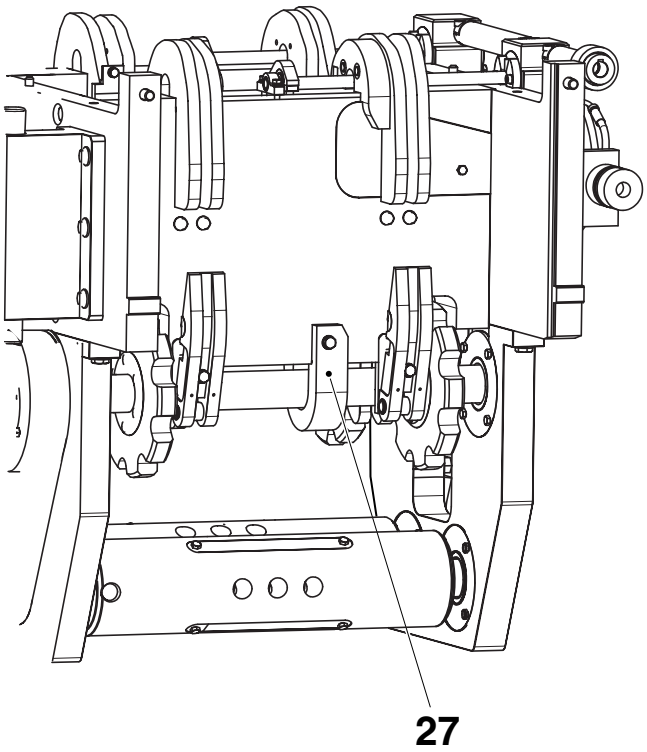

27 Cam

(Cont'd)

2.2BK483en-mms2.fm

(Cont'd)

Completion tasks 2

a) Crank the jaw system slowly until the chains have made two complete revolutions.

b) At the pressure link side, push the clamp until the inner ring (1) presses against the shoulder (2) on the shaft (3) and tighten the screws (4) to 12 ±1 Nm.

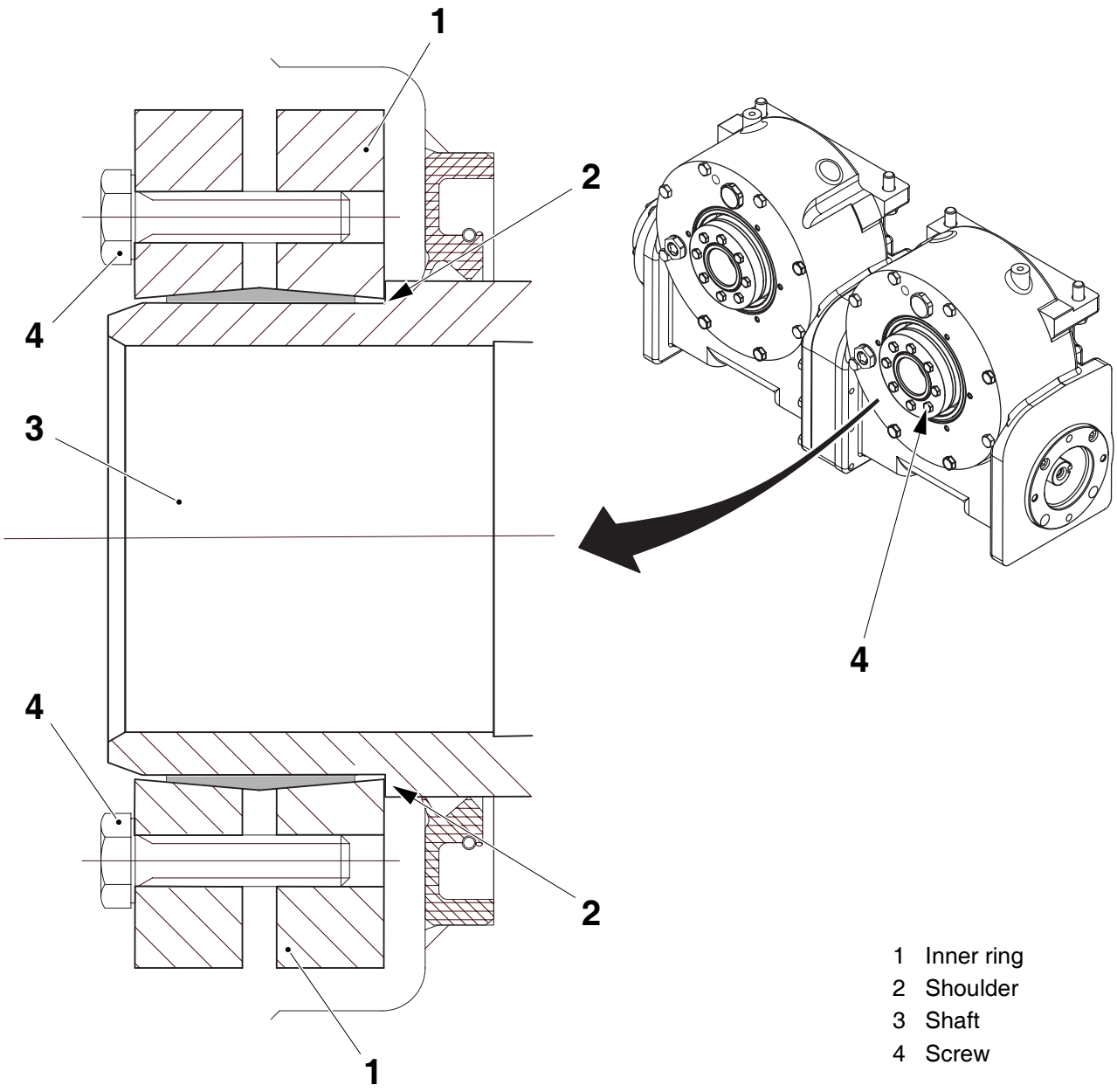

1 Inner ring
2 Shoulder
3 Shaft
4 Screw

(Cont'd)

2.2BK483en-mms2.fm

(Cont'd)

c) Apply grease (5), code to the components at the end of the drive shafts.

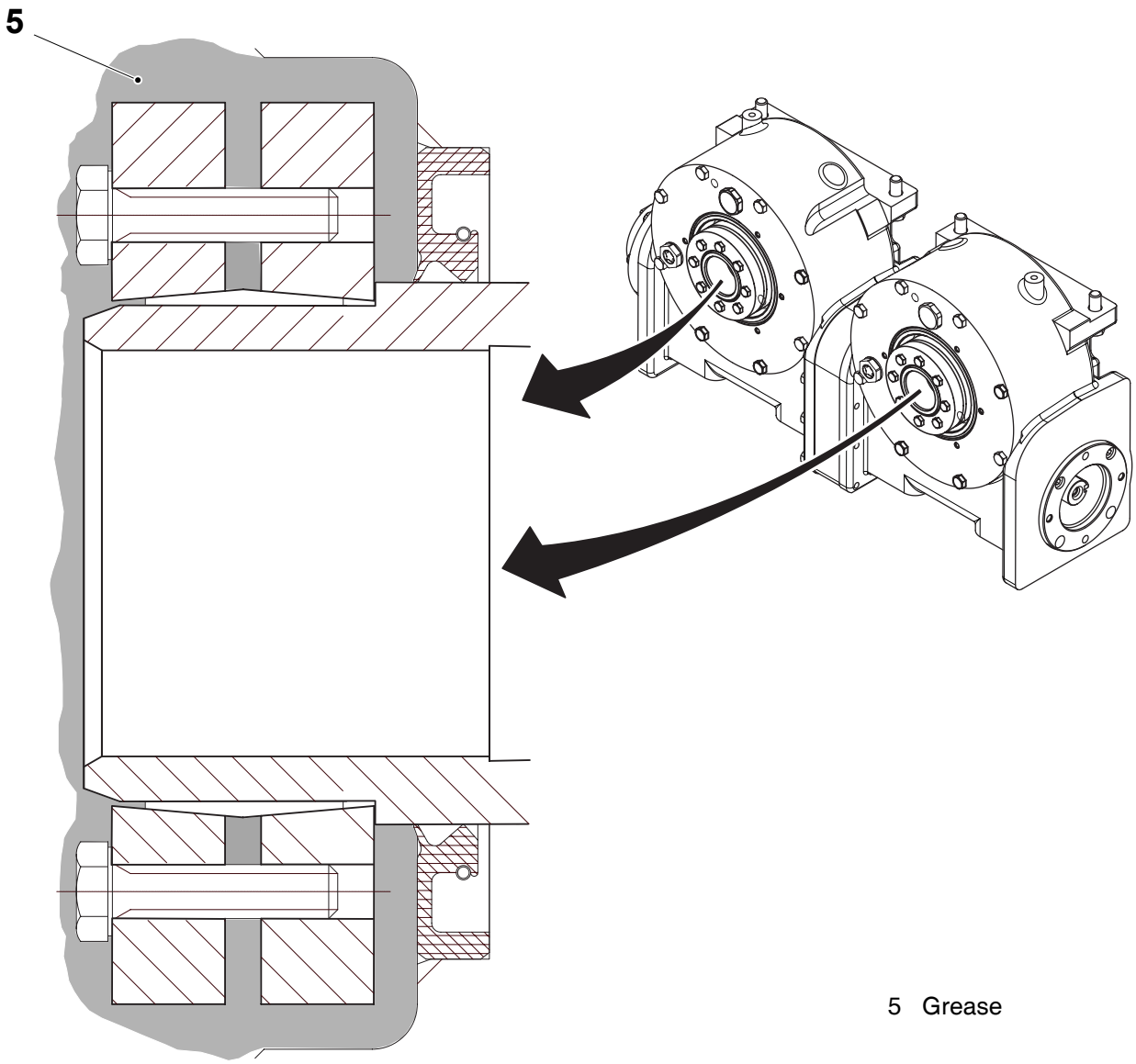

2.2BK483en-mms2.fm

5 Grease

(Cont'd)

(Cont'd)

Note! It is important that the area immediately behind the covers (6) and (7) is packed with grease before the covers are fitted.

d) Fit the covers (6) and (7) on the gearboxes (8) and (9).

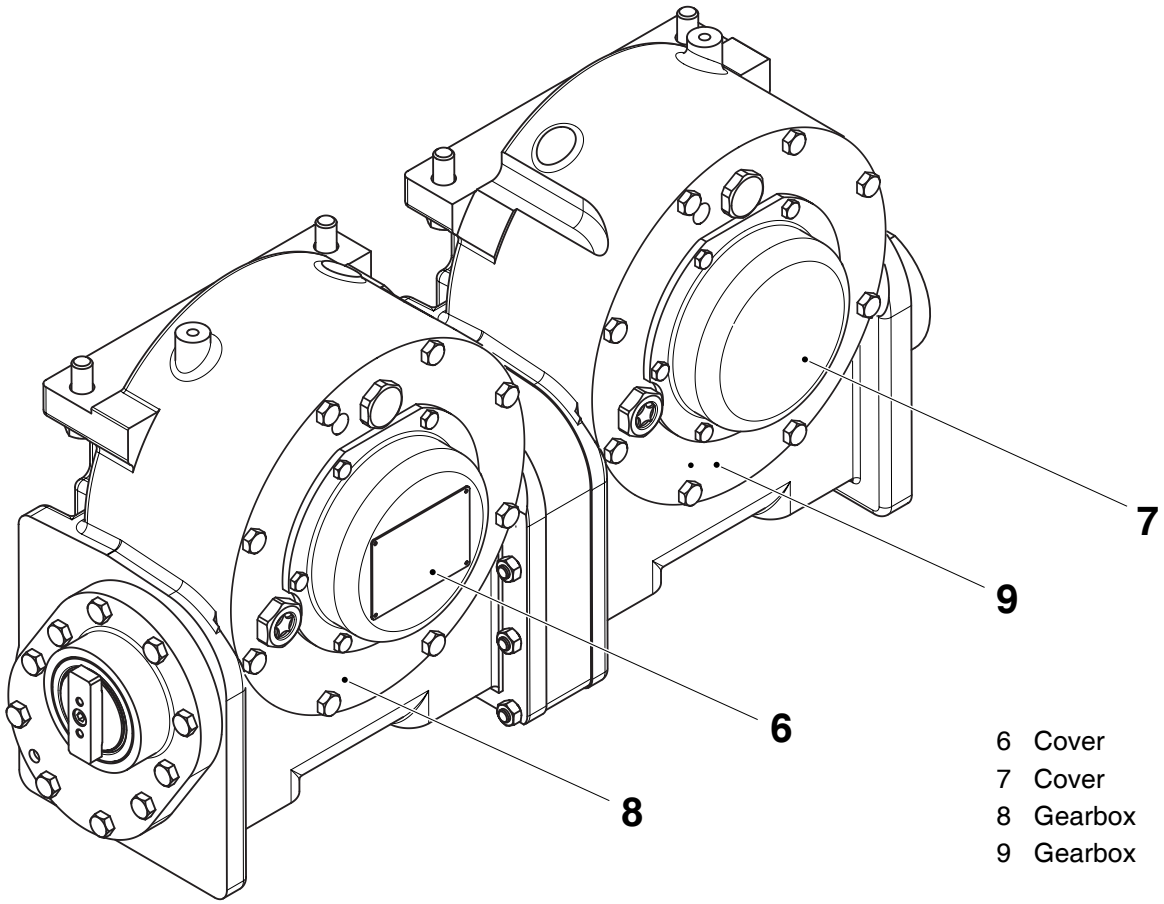

6 Cover
7 Cover
8 Gearbox
9 Gearbox

(Cont'd)

2.2BK483en-mms2.fm

(Cont'd)

Completion tasks 4

Note! Use the sectional view on the following page also as a reference.

a) Fit the bearing (1) on the shaft (2) and push it against the shoulder on the shaft.

b) Mount the O-ring (3) on the bracket (4).

c) Secure the bracket (4) in position with the screws (5).

d) Fit the clamp (6) and push it against the bearing (1).

e) Fit and tighten the screw (7).

f) Fit the gear (8) and secure it position with the screws (9).

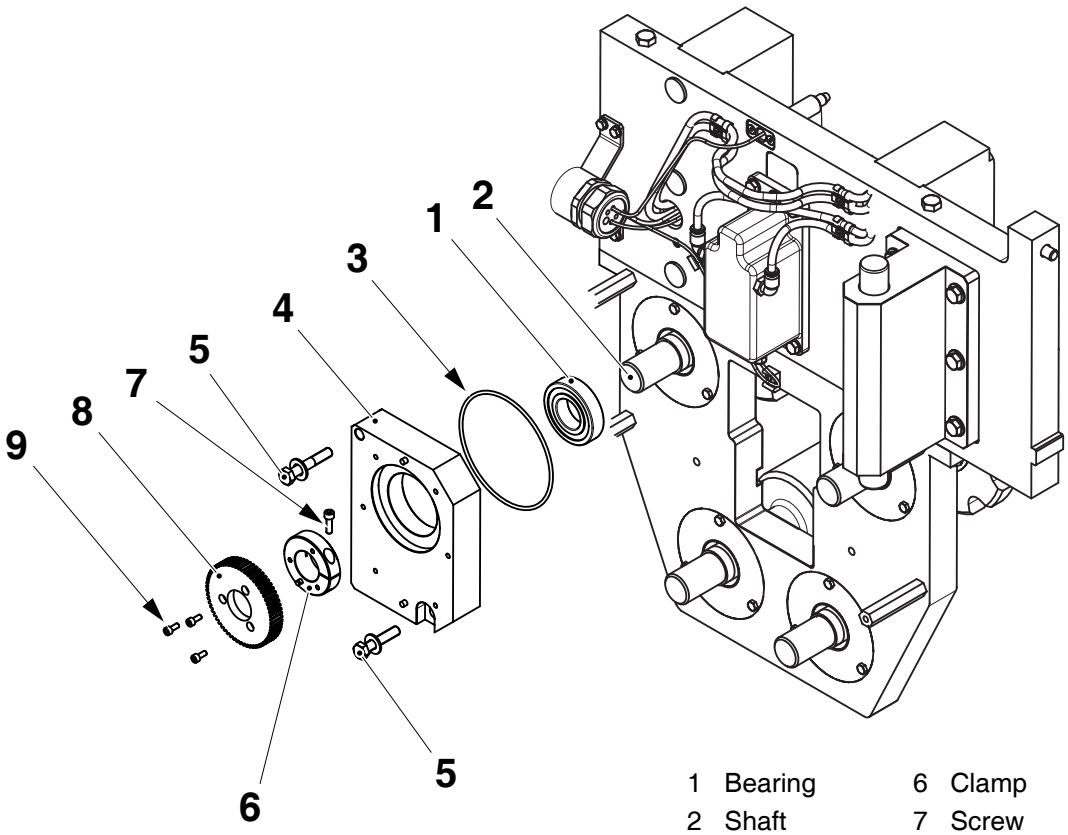

2.2BK483en-mms2.fm

1	Bearing	6	Clamp
2	Shaft	7	Screw
3	O-ring	8	Gear
4	Bracket	9	Screw
5	Screw		

(Cont'd)

(Cont'd)

See previous page.

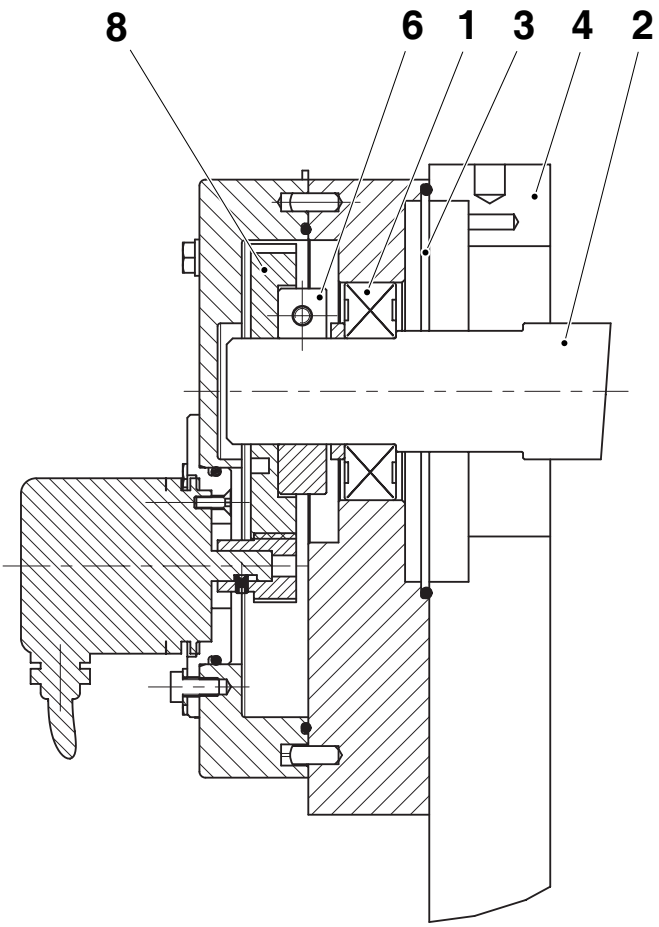

1 Bearing
2 Shaft
3 O-ring
4 Bracket
6 Clamp
8 Gear

2.2BK483en-mms2.fm

(Cont'd)

(Cont'd)

g) Fit the seal (10) in the cover (11) and then secure it in position with the screws (12).

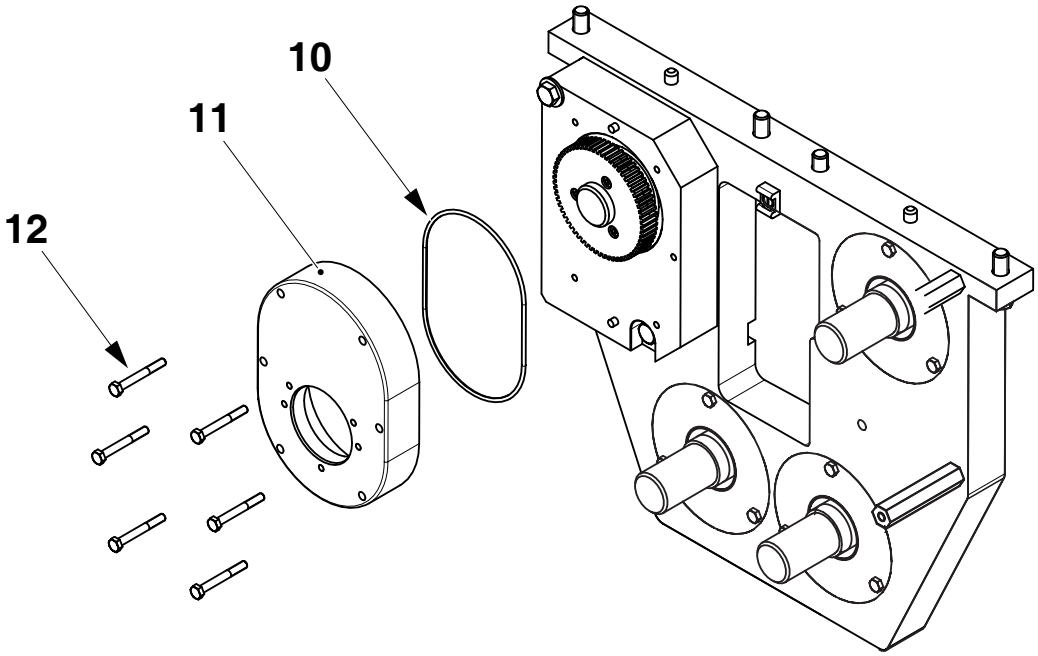

10 Seal
11 Cover
12 Screw

2.2BK483en-mms2.fm

(Cont'd)

(Cont'd)

Use the sectional view on the following page also as a reference.

h) Fit the O-ring (13) on the plate (14).

Note! Push the gear (15) as far as it will go in the direction of the encoder (16) before tightening the grub screw (17).

i) Fit the gear (15) on the shaft of the encoder (16) and secure it in position with the grub screw (17).

j) Mount the encoder (16) on the plate (14) and lock it in position with the screws (18).

k) Mount the plate (14) on the cover (11) ensuring the gears mate and then insert and tighten the screws (19) by hand.

2.2BK483en-mms2.fm

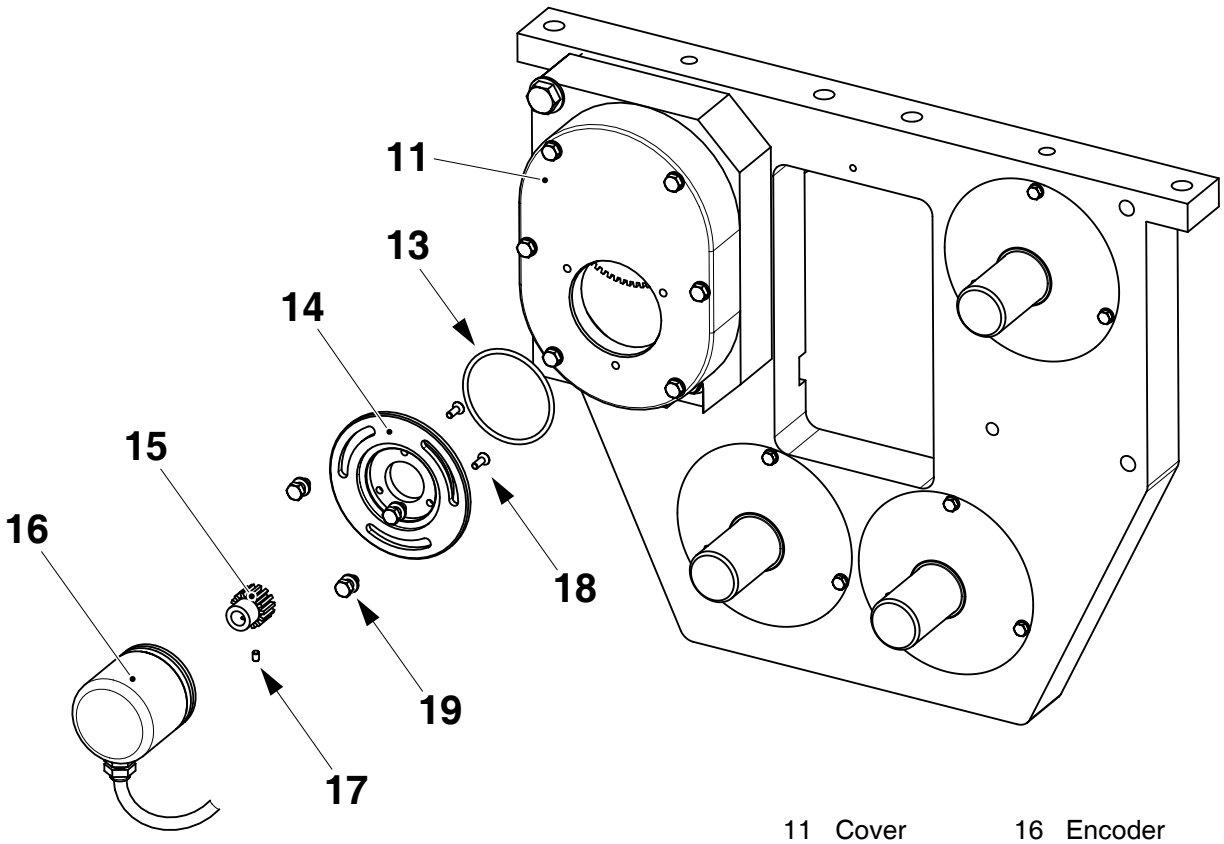

11	Cover	16	Encoder
13	O-ring	17	Grub screw
14	Plate	18	Screw
15	Gear	19	Screw

(Cont'd)

(Cont'd)

See previous page.

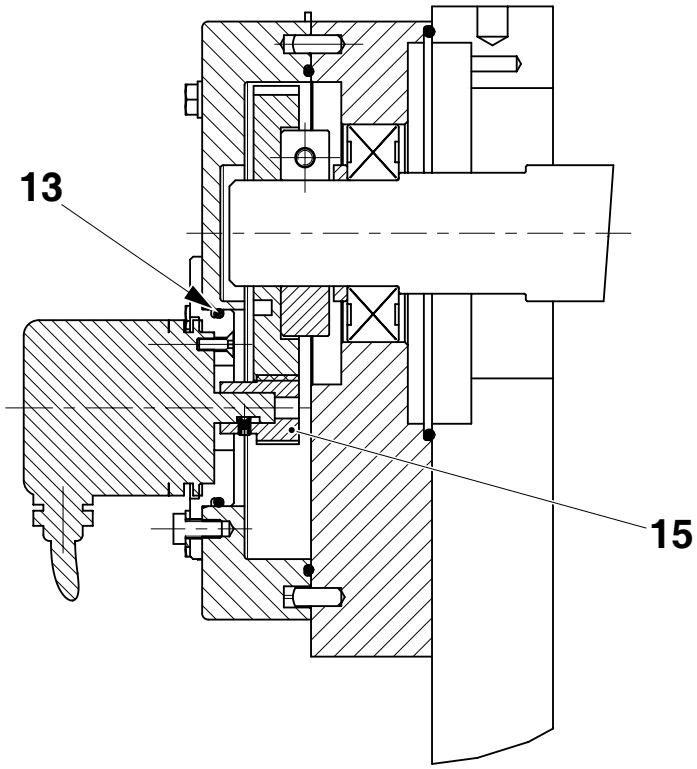

13 O-ring
15 Gear

(Cont'd)

2.2BK483en-mms2.fm

(Cont'd)

l) Fit the bracket (20) and secure in position with the screws (21). Do not fully tighten the screws.

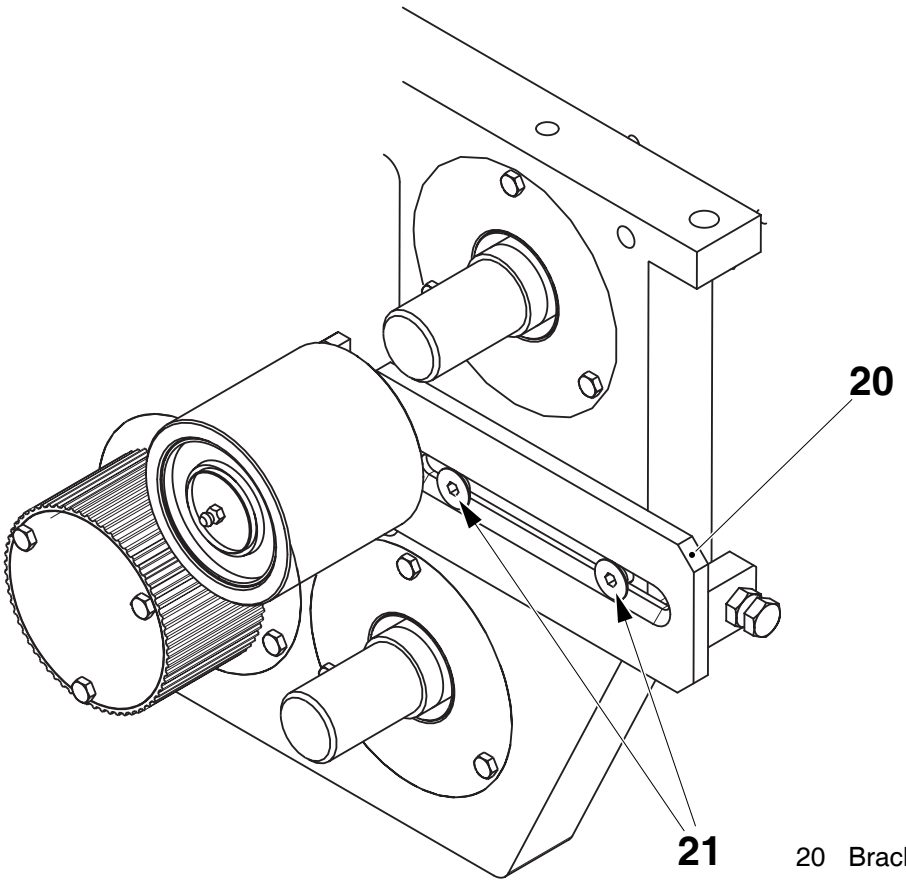

20 Bracket
21 Screw

(Cont'd)

2.2BK483en-mms2.fm

(Cont'd)

m) Fit the pulley (22) on the shaft (23) and insert the clamping element (24).

n) Push the element (24) as far as it will go and then tighten the screws in the element, see *4.3-2 Drive unit - set knives synchronization and cutting belt tension*.

o) Fit the pulley (25) on the shaft (26) and insert the clamping element (27).

p) Push the element (27) as far as it will go and then tighten the screws in the element, see *4.3-2 Drive unit - set knives synchronization and cutting belt tension*.

q) Fit the belt (28).

r) Set the belt tension, see *4.3-2 Drive unit - set knives synchronization and cutting belt tension*.

s) Fit the covers (29) and (30).

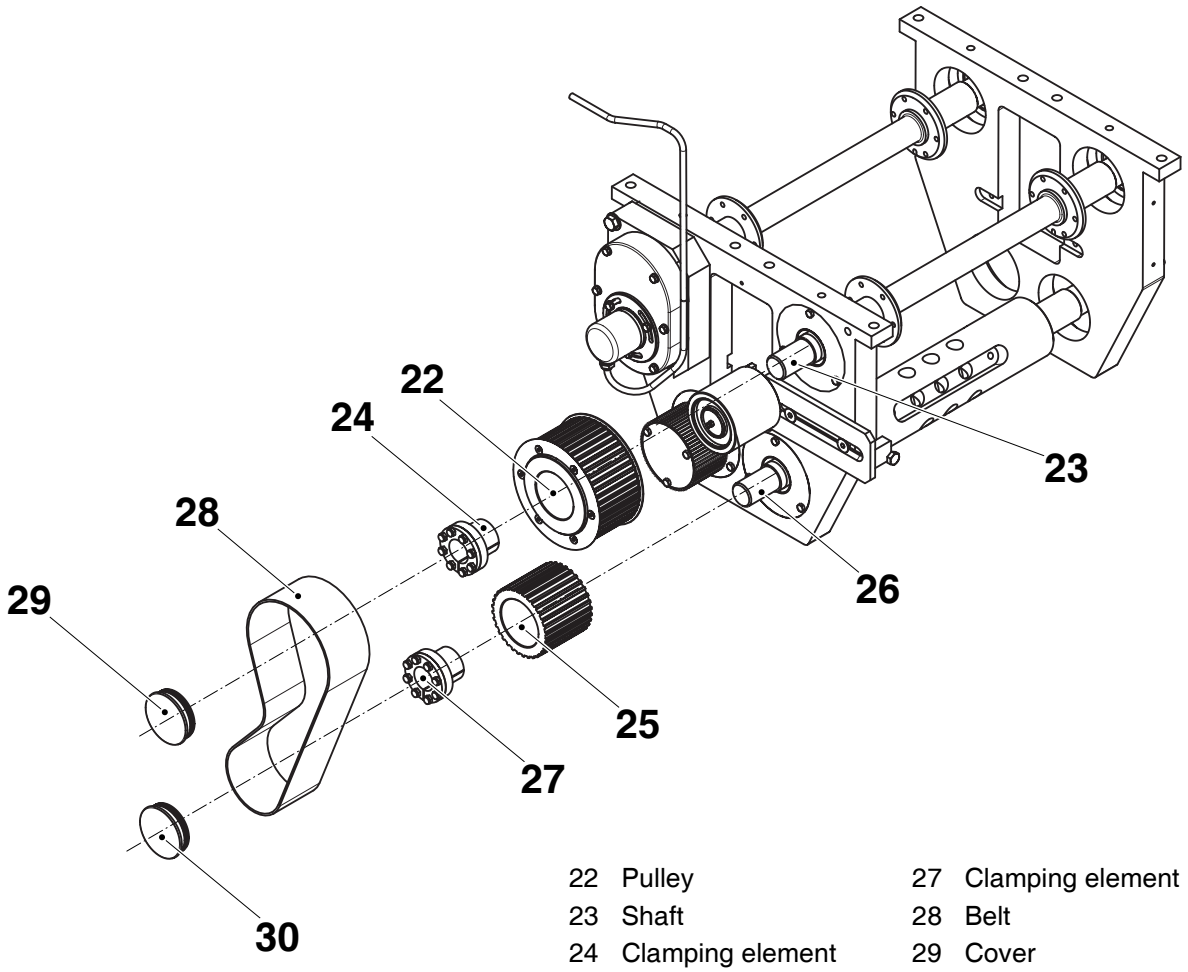

2.2BK483en-mms2.fm

22	Pulley	27	Clamping element
23	Shaft	28	Belt
24	Clamping element	29	Cover
25	Pulley	30	Cover
26	Shaft		

(Cont'd)

(Cont'd)

t) Swing the jaw system toward the plate and insert the central part (31) between the gearbox coupling part (32) and the motor drive coupling part (33).

u) Adjust the coupling, see *4-6 Jaw system - set coupling.*

v) Set the angle encoder, see *4.3-7 Drive unit - set angle encoder*.

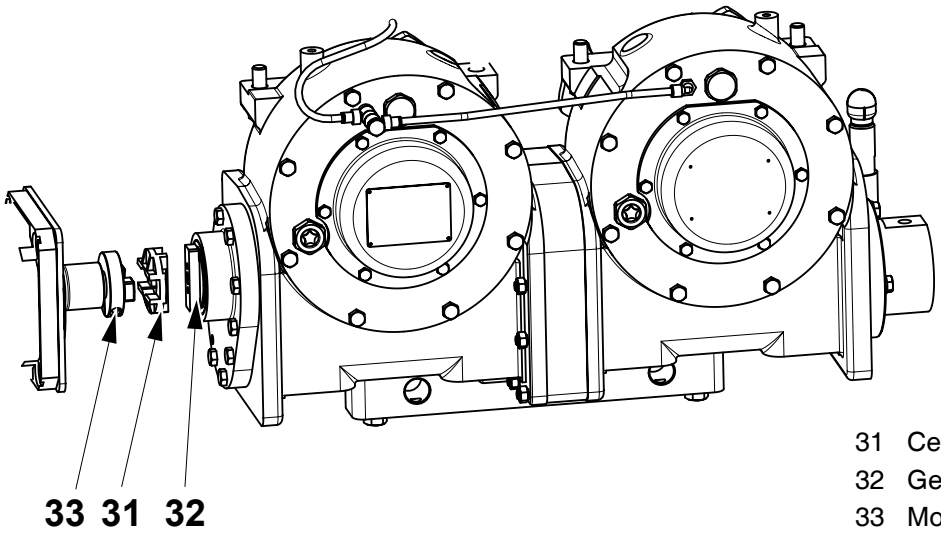

31 Central coupling part
32 Gearbox coupling part
33 Motor drive coupling

2.2BK483en-mms2.fm

w) Secure the jaw system in position with the screws (34).

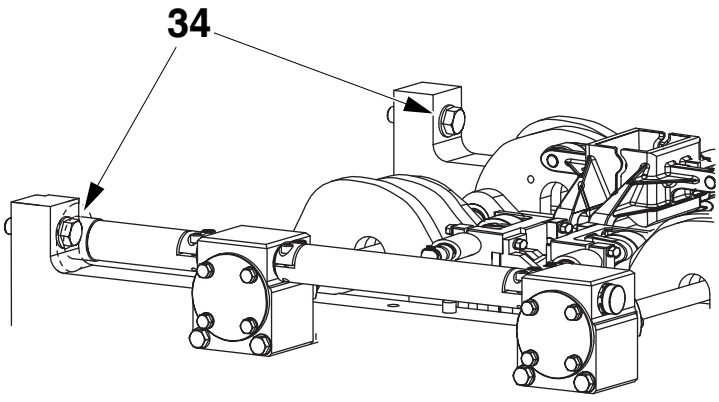

34 Screw

4.3-10 Drive unit - refill gearbox oil

Consumables: - lubricant	TP No. 90459-1041
SPC reference	2511256-0100

Valid for New Gearboxes Mounted on the Machine

a) Check the level of oil in the gearboxes.
The view below shows the correct level of oil in the gearboxes.

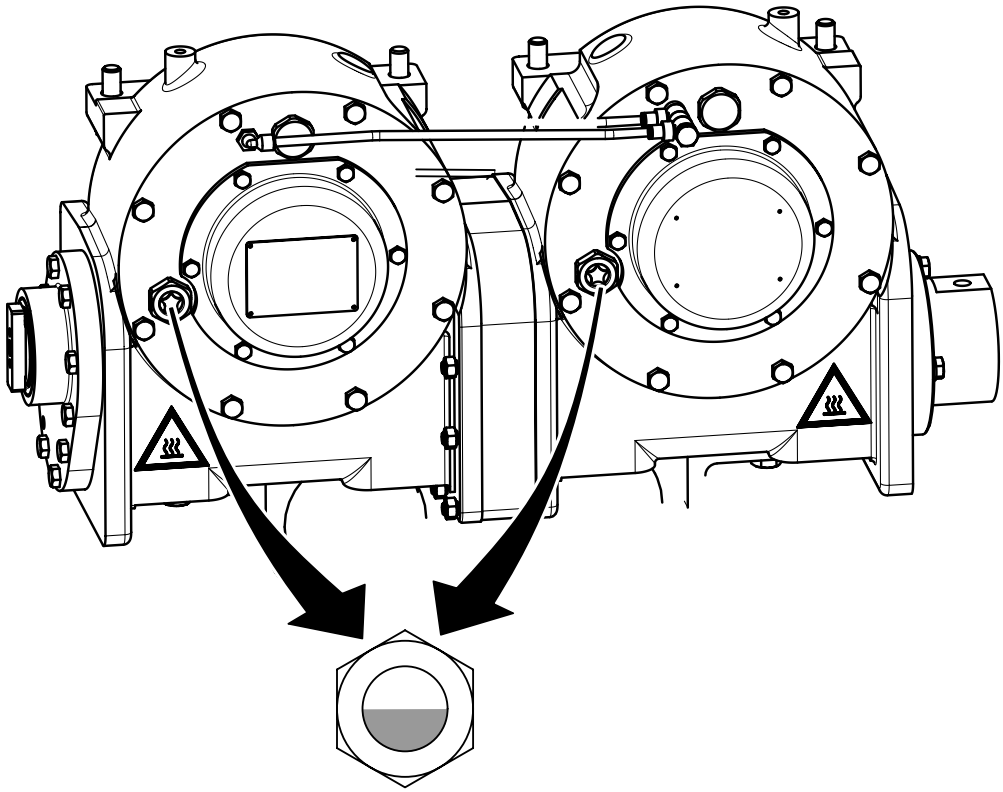

2.2BK483en-mms2.fm

(Cont'd)

(Cont'd)

Note! Do not over fill. Excess oil will cause overpressure and may lead to leakages. The correct amount of oil is **4.8 litres**.

Note! An alternative oil may be used, see MM section *10.3 Consumables*.

b) If the level is low, remove the filler caps (1) and (2) from the gearboxes (3) and (4).

c) Top up the oil level with the correct lubricant, see MM section *10.3 Consumables*.

d) Fit the filler caps (1) and (2).

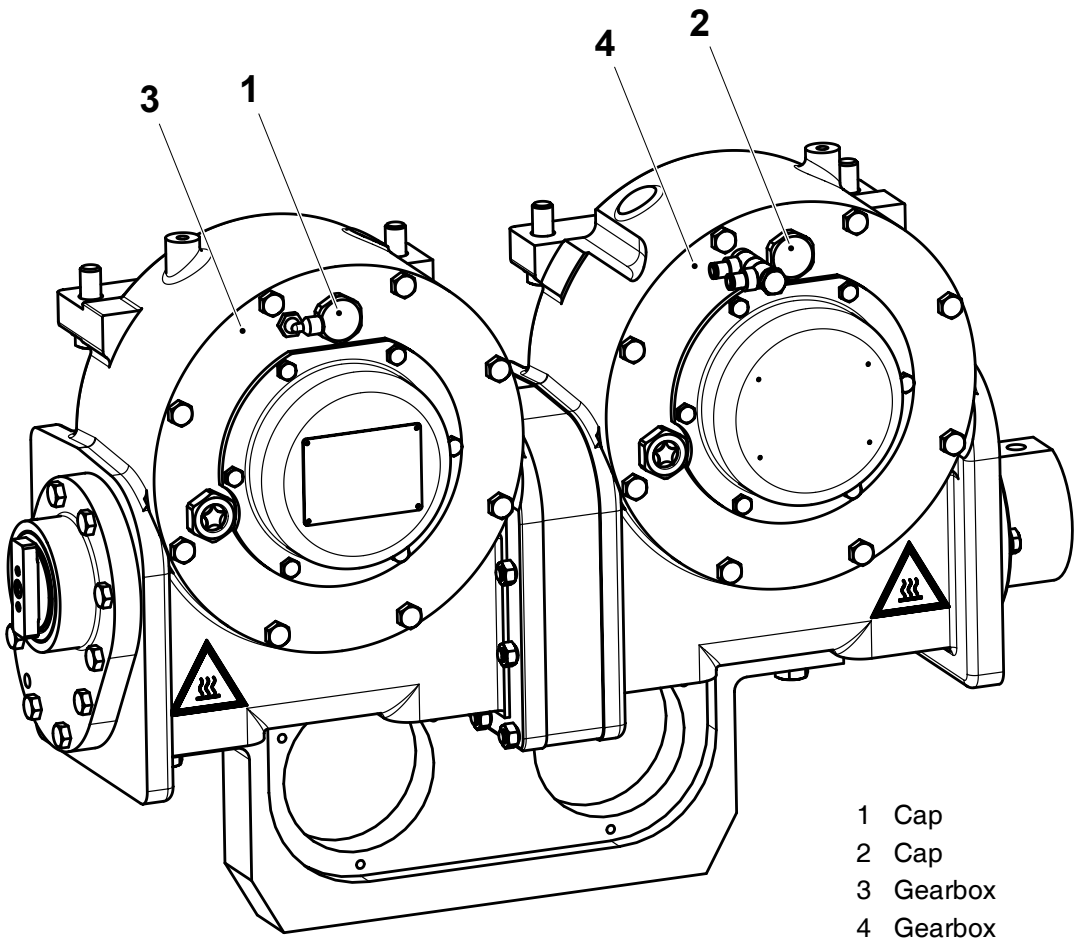

1 Cap
2 Cap
3 Gearbox
4 Gearbox

(Cont'd)

2.2BK483en-mms2.fm

(Cont'd)

Valid for New Gearboxes Not Mounted on the Machine

The oil in its clean state is virtual clear and is difficult to see.

The best method to check the oil level is to tilt the gearboxes until the upper surface of the oil can be seen in the sight glass (1).

If the oil cannot be seen this indicates that the gearbox is either completely full or empty. The amount of oil in the gearboxes should be checked as described below and then filled or drained and then filled until the correct level is obtained.

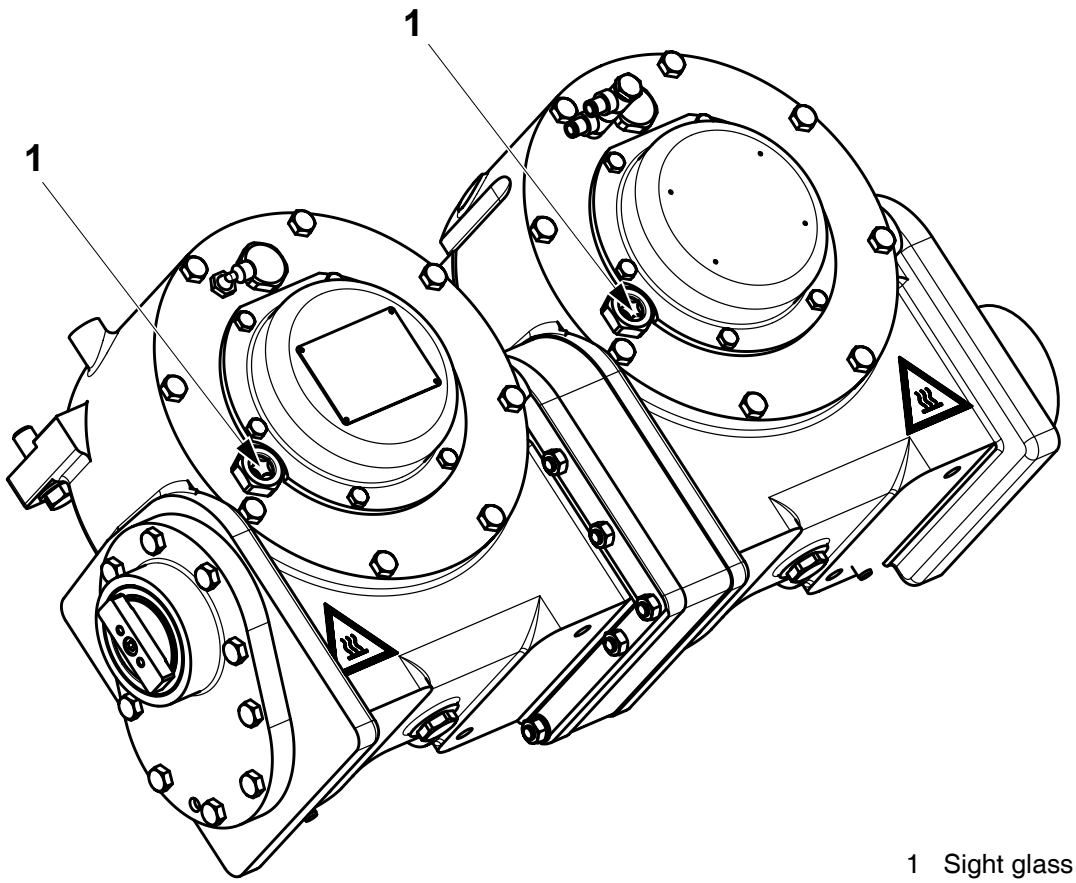

2.2BK483en-mms2.fm

1 Sight glass

(Cont'd)

(Cont'd)

a) Remove the filler cap (2) from the gearbox to be checked.

b) Remove the drain plug (3) from the gearbox to be checked and drain off some oil. The oil level should be corrected as follows:

- if there is no oil in the gearbox fit the drain plug (3) and fill the gearbox with the correct oil as described in *Valid for New Gearboxes Mounted on the Machine*
- if the gearbox has an excess amount of oil, drain it completely into a suitable container (4) and then fit the drain plug. Fill the gearbox with the correct amount of the oil just drained from it, see *Valid for New Gearboxes Mounted on the Machine*.

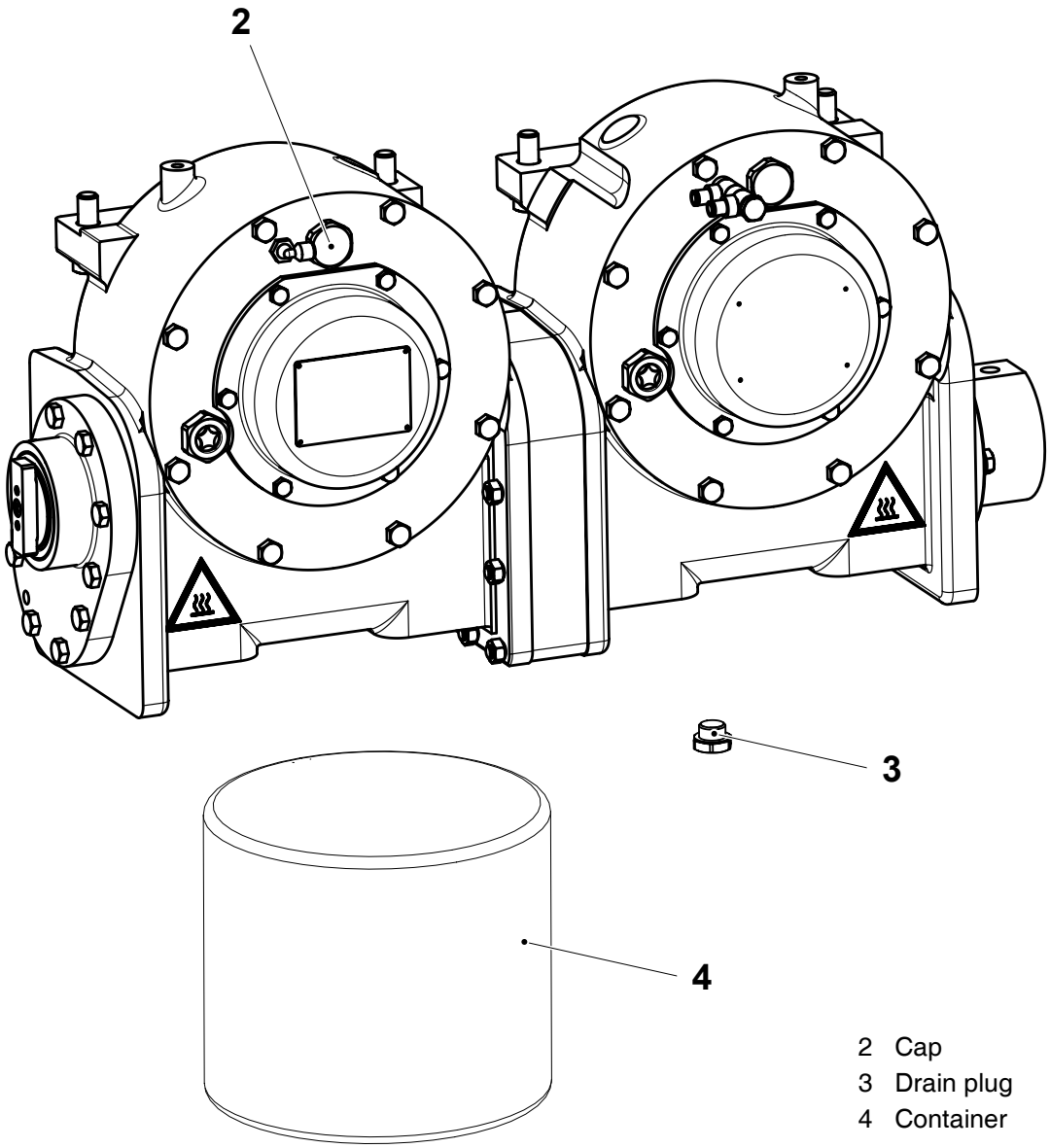

2 Cap
3 Drain plug
4 Container

2.2BK483en-mms2.fm

4.3-11 Drive unit - open jaw system - (250 B machines only)

Machine status	Power **Off**
SPC reference	648525-0400

Before swinging the jaw system open for any reason, remove the cover (1).

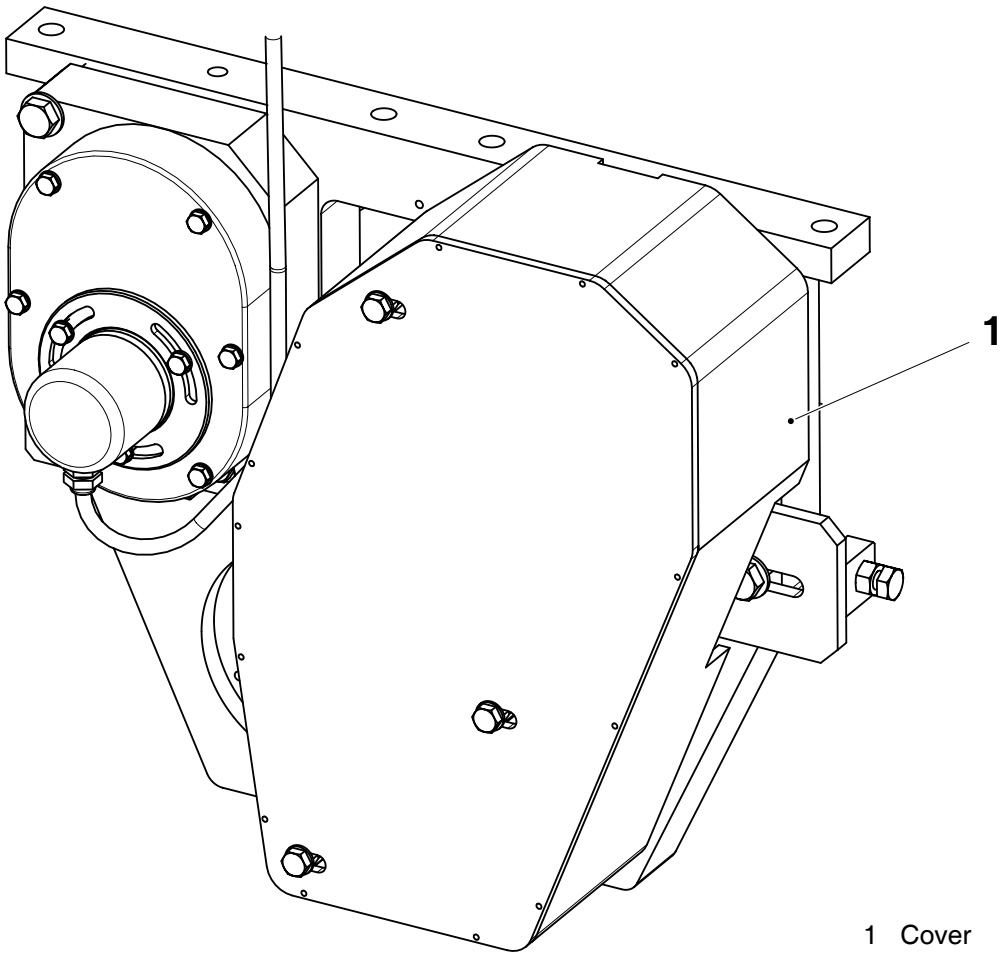

1 Cover

2.2BK483en-mms2.fm

4.4 Volume adjustment

SPC reference	575241-0200 1348947-0100

4.4-1 Volume adjustment - set

SPC reference	575241-0200 1348947-0100

a) Loosen the screws (1).

b) Turn the shaft (2) until the pin (3) reaches the outside stop as shown.

c) Turn the shaft (4) until the pin (5) reaches the outside stop as shown.

d) Tighten the screws (1).

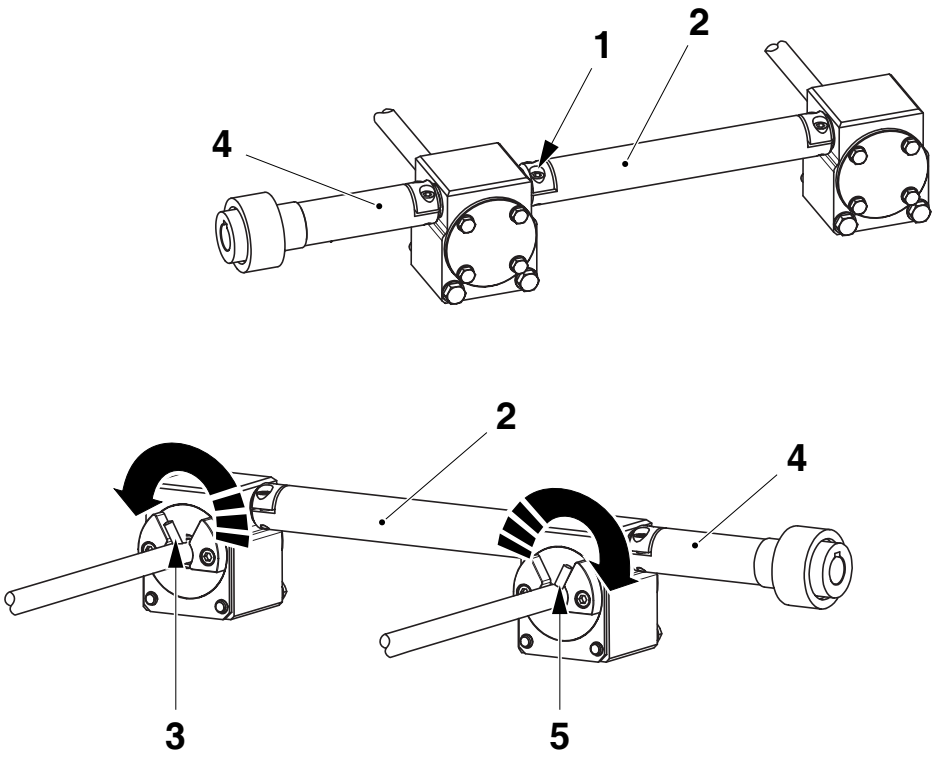

1 Screw
2 Shaft
3 Pin
4 Shaft
5 Pin

2.2BK483en-mms2.fm

4.4-2 Volume adjustment - change cams

SPC reference	575241-0200 1348947-0100

a) Remove the chains, see *4-3 Jaw system - chain disassembly and reassembly*.

b) Remove the screws (1) and pull out the cams (2).

c) Remove the screws (3), supports (4) and axles (5).

d) Change the cams (2) and assemble in the reverse order.

e) Fit the chains, see *4-3 Jaw system - chain disassembly and reassembly*.

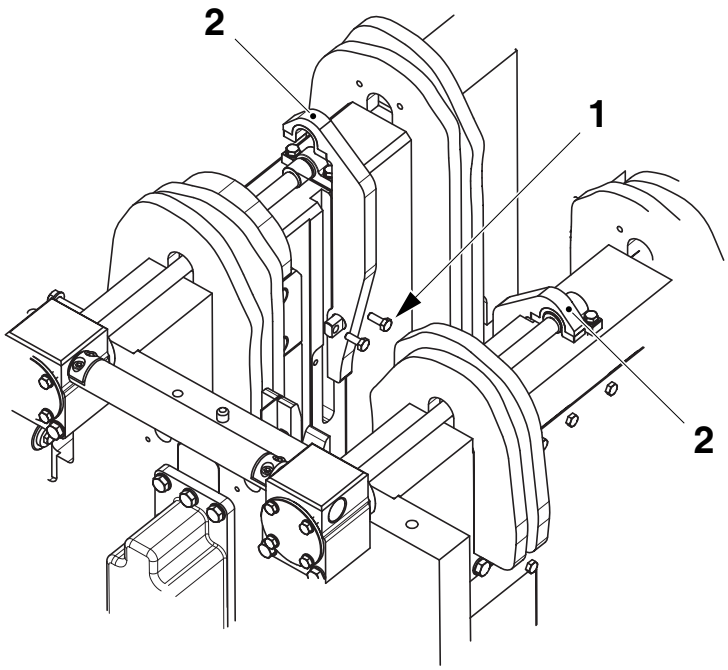

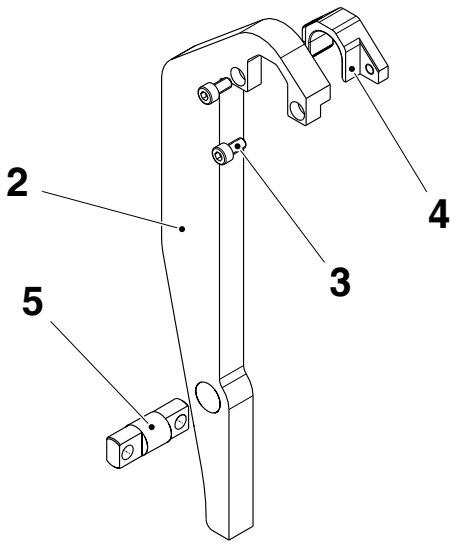

1 Screw
2 Cam
3 Screw
4 Support
5 Axle

2.2BK483en-mms2.fm

4.5 Design correction

SPC reference	575240-0100 1348946-0100

4.5-1 Design correction - check belt tension

SPC reference	575240-0100 1348946-0100

The belt deflection at its point (A) should be 5 mm. To adjust:

a) Loosen the screw (1).

b) With one hand press the roller (2) fully down.

c) Tighten the screw (1).

d) Check the belt tension.

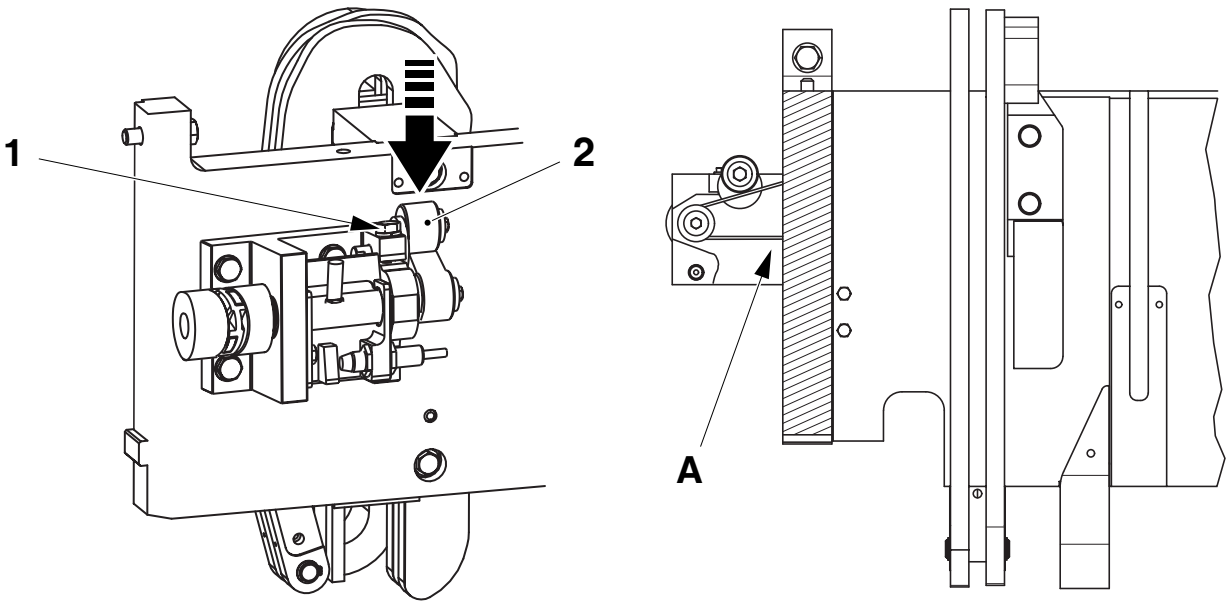

1 Screw
2 Roller

2.2BK483en-mms2.fm

4.5-2 Design correction - change belt

SPC reference	575240-0100 1348946-0100

a) Remove the chains, see *4-3 Jaw system - chain disassembly and reassembly*.

b) Remove the screws (1) and cover (2).

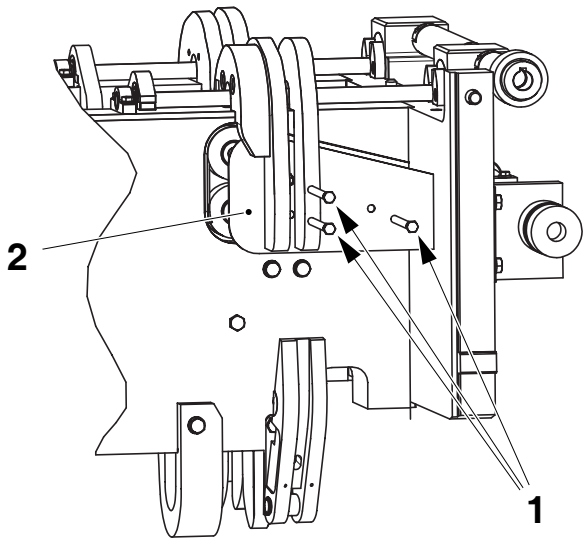

1 Screw
2 Cover

c) Loosen the screw (3), release the roller (4) and change the belt (5).

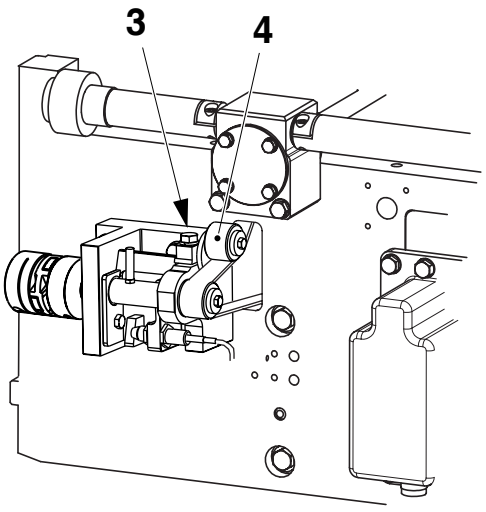

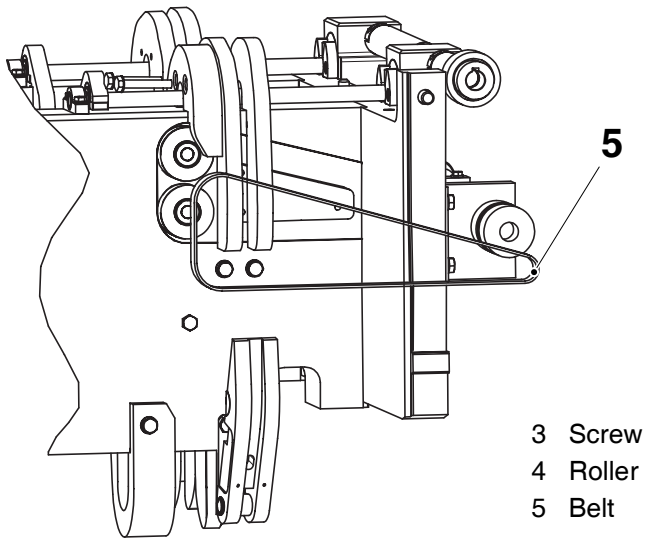

3 Screw
4 Roller
5 Belt

2.2BK483en-mms2.fm

4.5-3 Design correction - overhaul

SPC reference	575240-0100 1348946-0100

a) Remove the chains, see *4-3 Jaw system - chain disassembly and reassembly*.

b) Remove the screws (1) and cover (2).

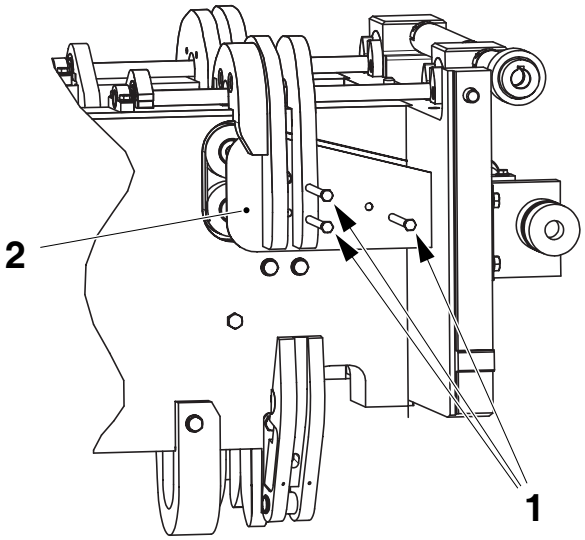

1 Screw
2 Cover

c) Loosen the screw (3), release the roller (4) and change the belt (5).

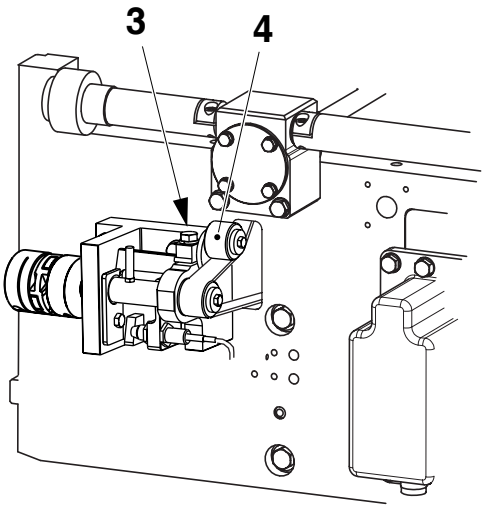

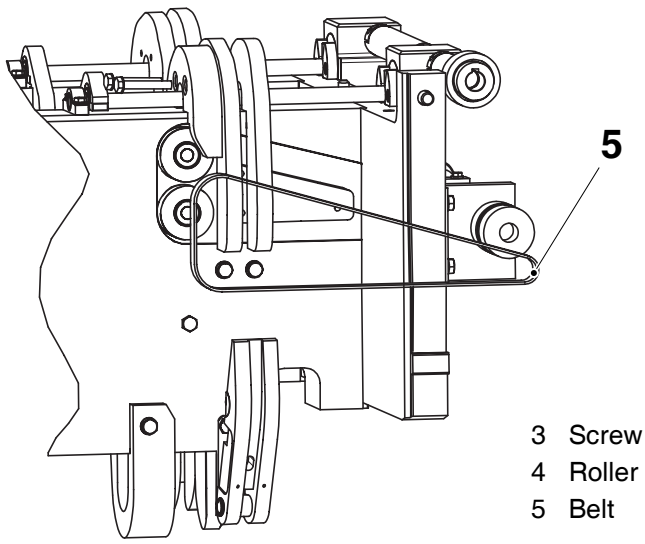

3 Screw
4 Roller
5 Belt

(Cont'd)

2.2BK483en-mms2.fm

(Cont'd)

d) Remove the screws (6) and plastic cam (7).

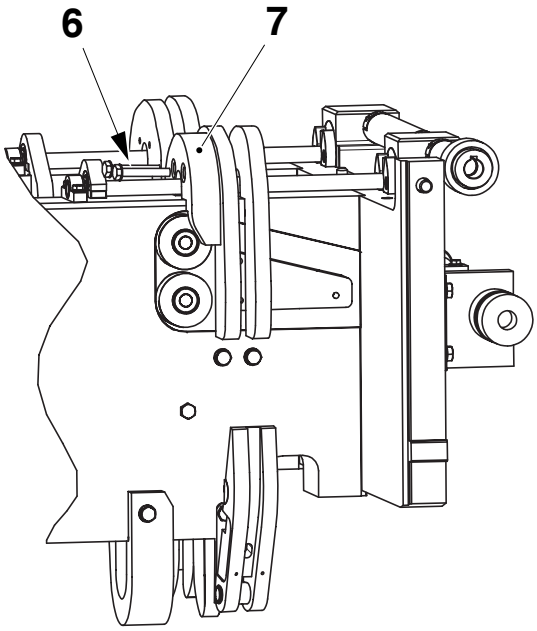

6 Screw
7 Cam

e) Remove the screws and washers (8).

f) Remove the rollers (9) and change the bushings (10). Remove the screw (11).

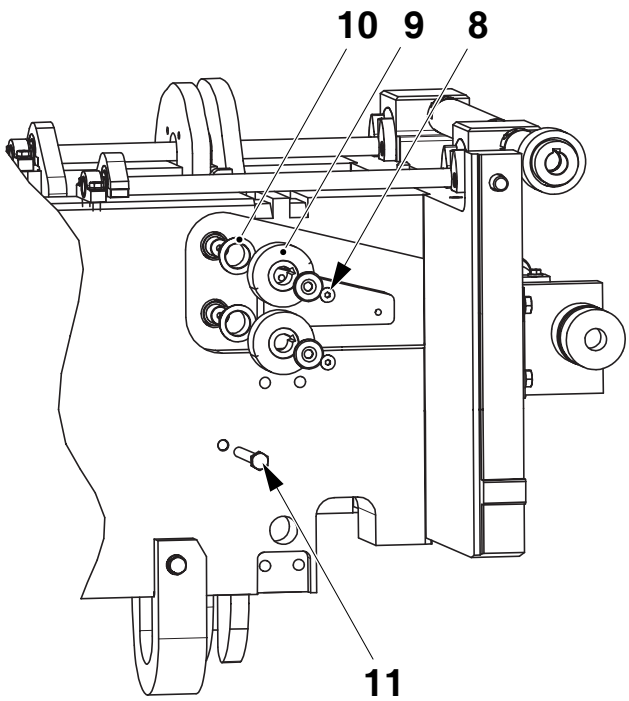

8 Screw
9 Roller
10 Bushing
11 Screw

(Cont'd)

2.2BK483en-mms2.fm

(Cont'd)

g) Remove the cam (12).

h) Change the cam (13).

i) Remove the eccentrics (14) and change the bushings (15).

j) Assemble in the reverse order.

k) Set the design correction, see *4.5-4 Design correction - set*.

l) Fit the chains, see *4-3 Jaw system - chain disassembly and reassembly*.

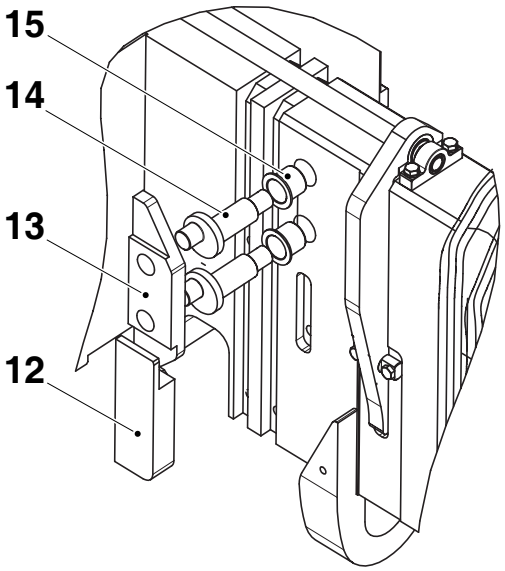

12 Cam
13 Cam
14 Eccentric
15 Bushing

2.2BK483en-mms2.fm

4.5-4 Design correction - set

SPC reference	575240-0100 1348946-0100

a) Loosen the screw (1) and release the roller (2).

b) Loosen the screw (3) and push the stop (4) fully in.

c) Rotate the design correction coupling (5) by hand until the shaft (6) is fully against the stop (4).

d) With the shaft (6) vertically down, the cam (8) is to be fully retracted. If necessary skip some teeth between the belt (7) and the pulley (9) until the above is achieved.

e) Tension the belt by tightening the roller (2).

f) Set the belt tension, see *4.5-1 Design correction - check belt tension*.

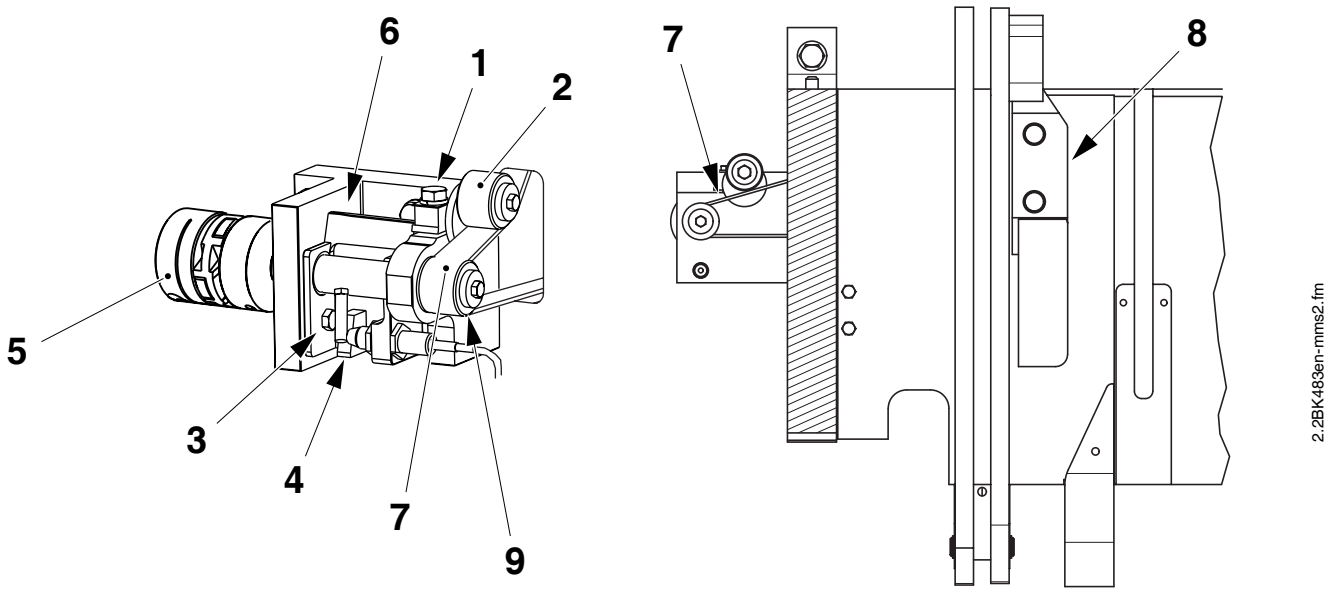

2.2BK483en-mms2.fm

1 Screw
2 Roller
3 Screw
4 Stop
5 Coupling
6 Shaft
7 Belt
8 Cam
9 Pulley

(Cont'd)

(Cont'd)

g) Rotate the design correction coupling (5) by hand so the shaft (6) is fully against the opposite stop (10).

h) Insert a 0.5 mm feeler gauge in four points: between the folding flaps (11) and the inductor (12), and between the folding flaps and pressure rail (13). The minimum distance must be no less than 0.5 mm.

i) Tighten the screw (3) and check the folding flaps with a feeler gauge again.

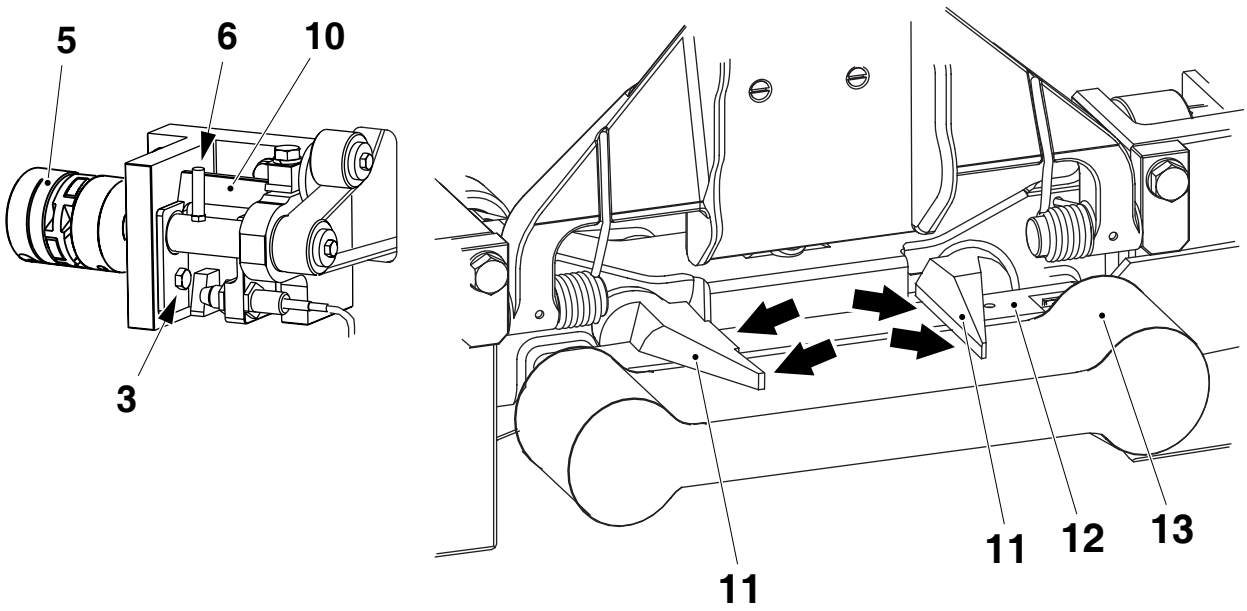

2.2BK483en-mms2.fm

3	Screw	11	Folding flaps
5	Coupling	12	Inductor
6	Shaft	13	Pressure rail
10	Stop		

(Cont'd)

(Cont'd)

Fine tuning

a) Touch the **Manoeuvre System** button on the TPOP.



b) Touch the **Superstructure Settings** button.

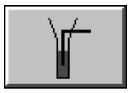

c) Touch the **Design correction** button.

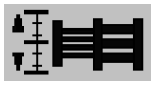

d) Set the **Design Correction Offset** (1) to **0** using the buttons (2) for coarse tuning and (3) for fine tuning.

e) Check the creases are correctly positioned on the packages, if not adjust **Design Correction Offset** (1) while the machine is running.

f) Fine tune with the buttons (2) or (3) while the machine is running until the **Alignment Percentage** (4) shows the highest possible value.

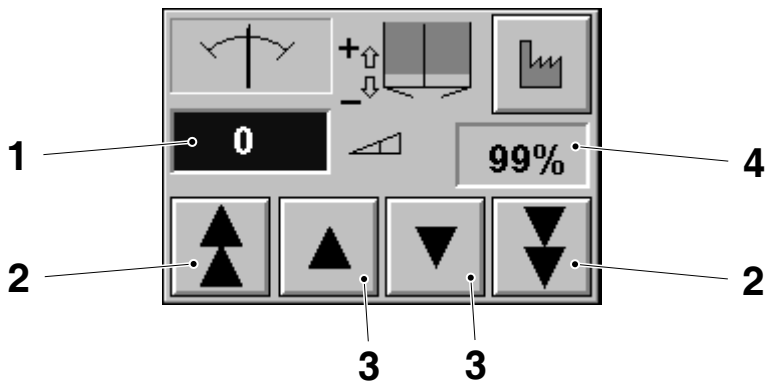

g) Touch the **Exit** button.



2.2BK483en-mms2.fm

4.6 Electrical connection

4.6-1 Electrical connection - clean TS rail

SPC reference	2511259-0100

Valid for machines with RK 2539539-0100 TS load error improvement

a) Close the cooling water valves (1).

b) Remove the screws (2) and cover (3).

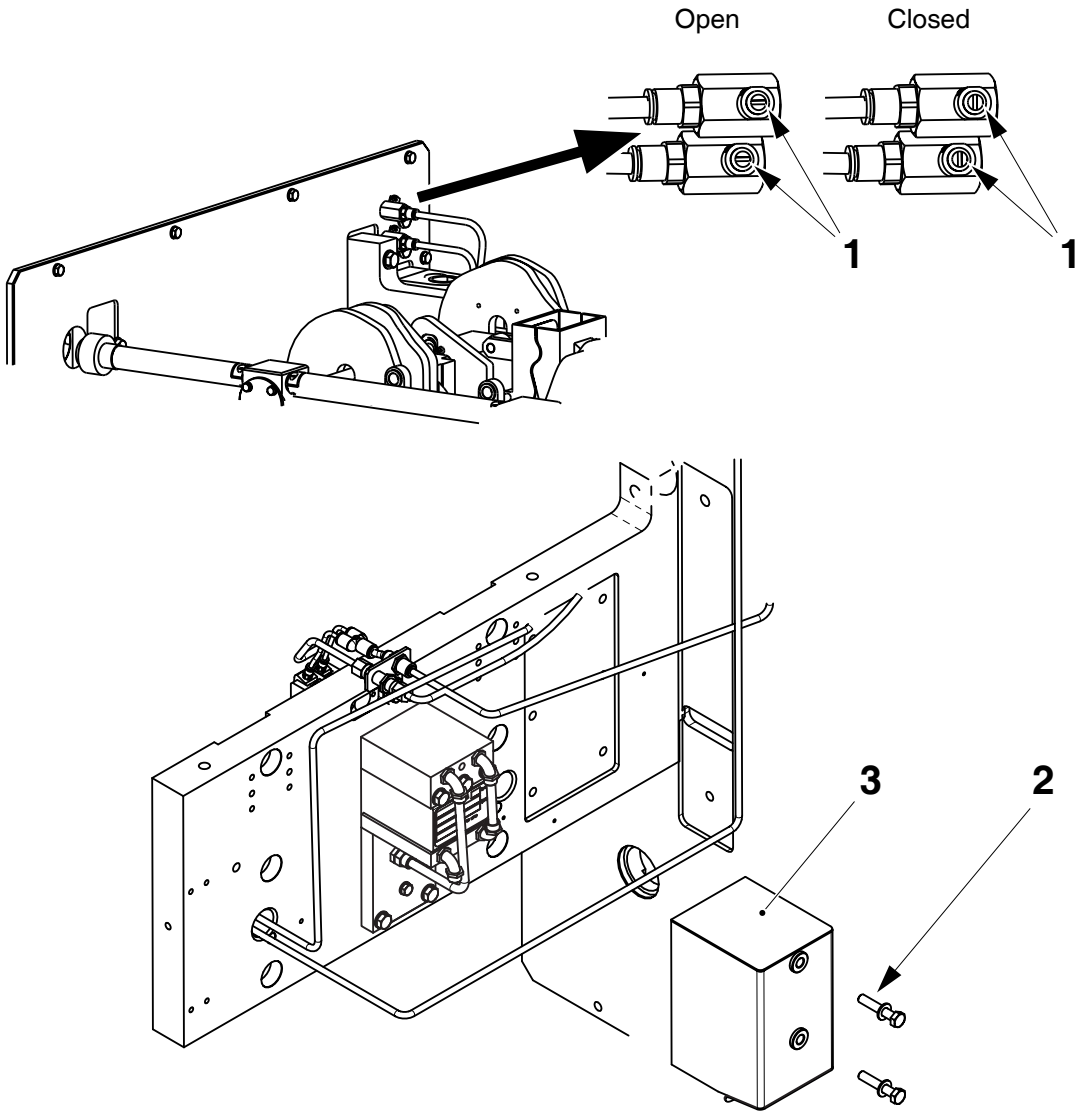

1 Water valve
2 Screw
3 Cover

(Cont'd)

2.2BK483en-mms2.fm

(Cont'd)

c) Disconnect the hoses (4) and (5).

d) Remove the connectors (6).

e) Remove the RF connector (7).

Note! Take care when removing the transformer/rail assembly, the plastic parts may be damaged.

Note! Do not remove the screws (10) and (11).

f) Remove the screws (8) and (9) and transformer/rail assembly (12).

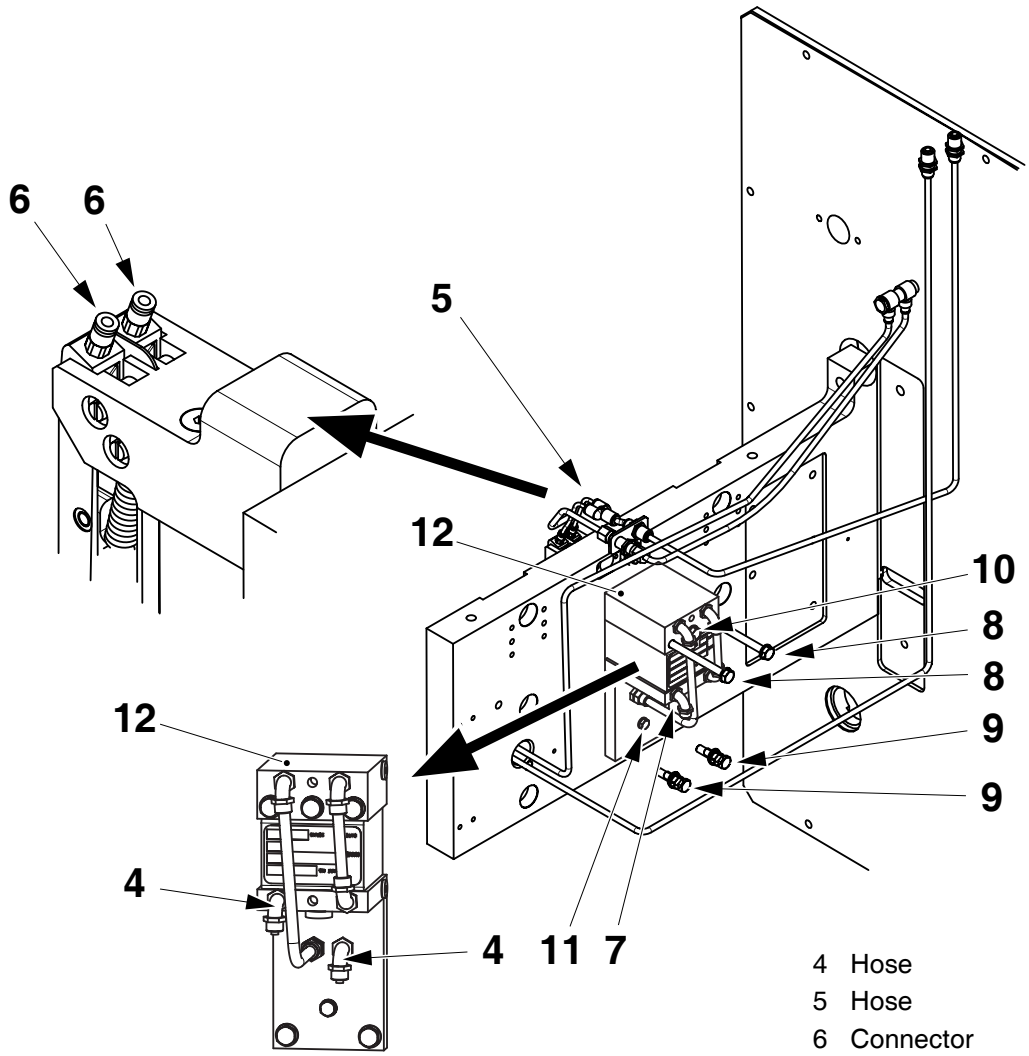

4 Hose
5 Hose
6 Connector
7 RF connector
8 Screw
9 Screw
10 Screw
11 Screw
12 Transformer/rail

2.2BK483en-mms2.fm

(Cont'd)

(Cont'd)

g) Clean the copper rails (13) and their leading edges (14) using 400-grade abrasive paper. Do not damage the plastic insulation (15).

h) Assemble in the reverse order.

i) Open the cooling water valves.

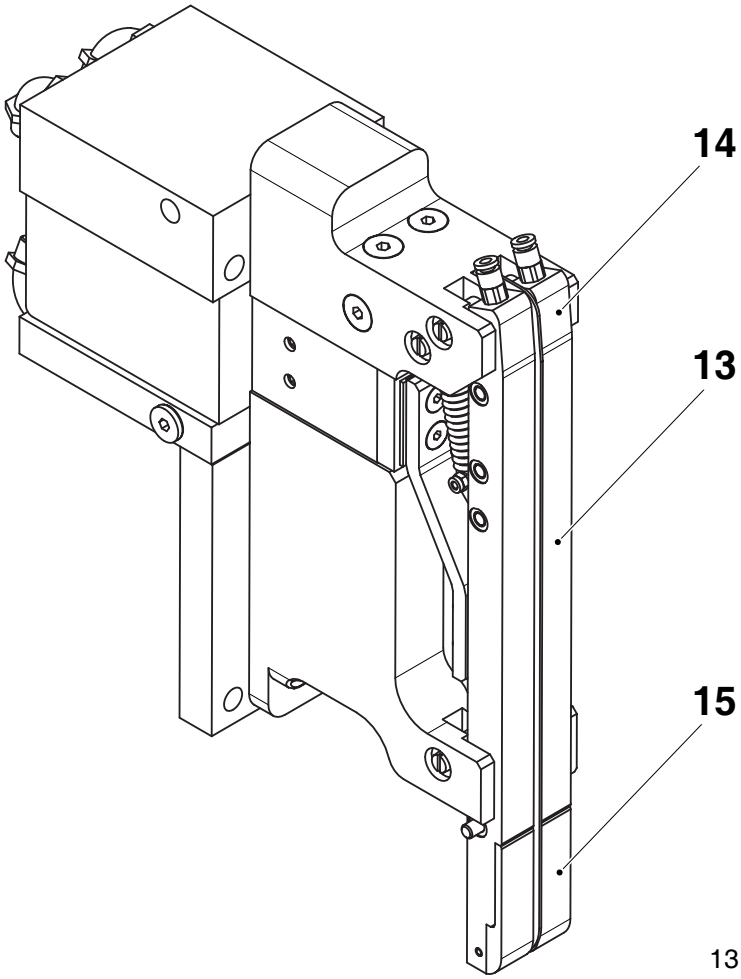

13 Copper rail
14 Leading edge
15 Insulation

2.2BK483en-mms2.fm

4.6-2 Electrical connection - check TS rail

SPC reference	2511259-0100

Valid for machines with RK 2539539-0100 TS load error improvement

From each side of the jaw unit, remove the TS transformer (1), see *4.6 Electrical connection*.

Do the following:

- check the contact rails (2) and (3) are clean and undamaged.
  If they are dirty or show signs of arcing, clean them using 400-grade abrasive paper. Take care not to damage the insulator (4).
  If they are damaged replace them.
- check the insulator (4) is undamaged.
  If necessary, change it.
- check the cable (copper braid) (5) is undamaged.
  If necessary, change it.
- check the tightness of the connections (6) and (7).
- check the spring (8) is undamaged.
  If necessary, change it.
- check the copper rails move freely when pushed.
  If necessary, disconnect the cable (5) and spring (8) and remove the screws (9) and (10) then clean the rails and pivots.

2.2BK483en-mms2.fm

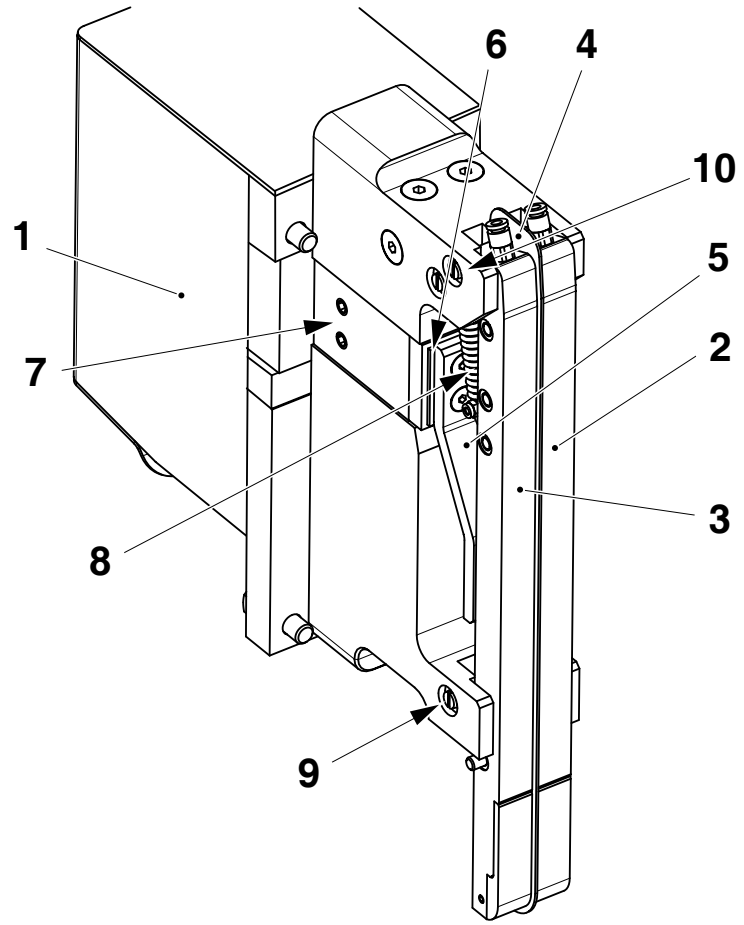

1 TS transformer
2 Rail
3 Rail
4 Insulator
5 Cable
6 Connection
7 Connection
8 Spring
9 Screw
10 Screw

4.6-3 Electrical connection - check transformer

SPC reference	2511259-0100

Valid for machines with RK 2539539-0100 TS load error improvement

a) From each side of the jaw unit, remove the TS transformer (1), see *4.6 Electrical connection*.

b) Remove the screws (2) and (3).

c) At both sides of the assembly, loosen the grub screws (4).

d) Separate the transformer section (5) from the rail section (6).

e) Change the O-rings (7).

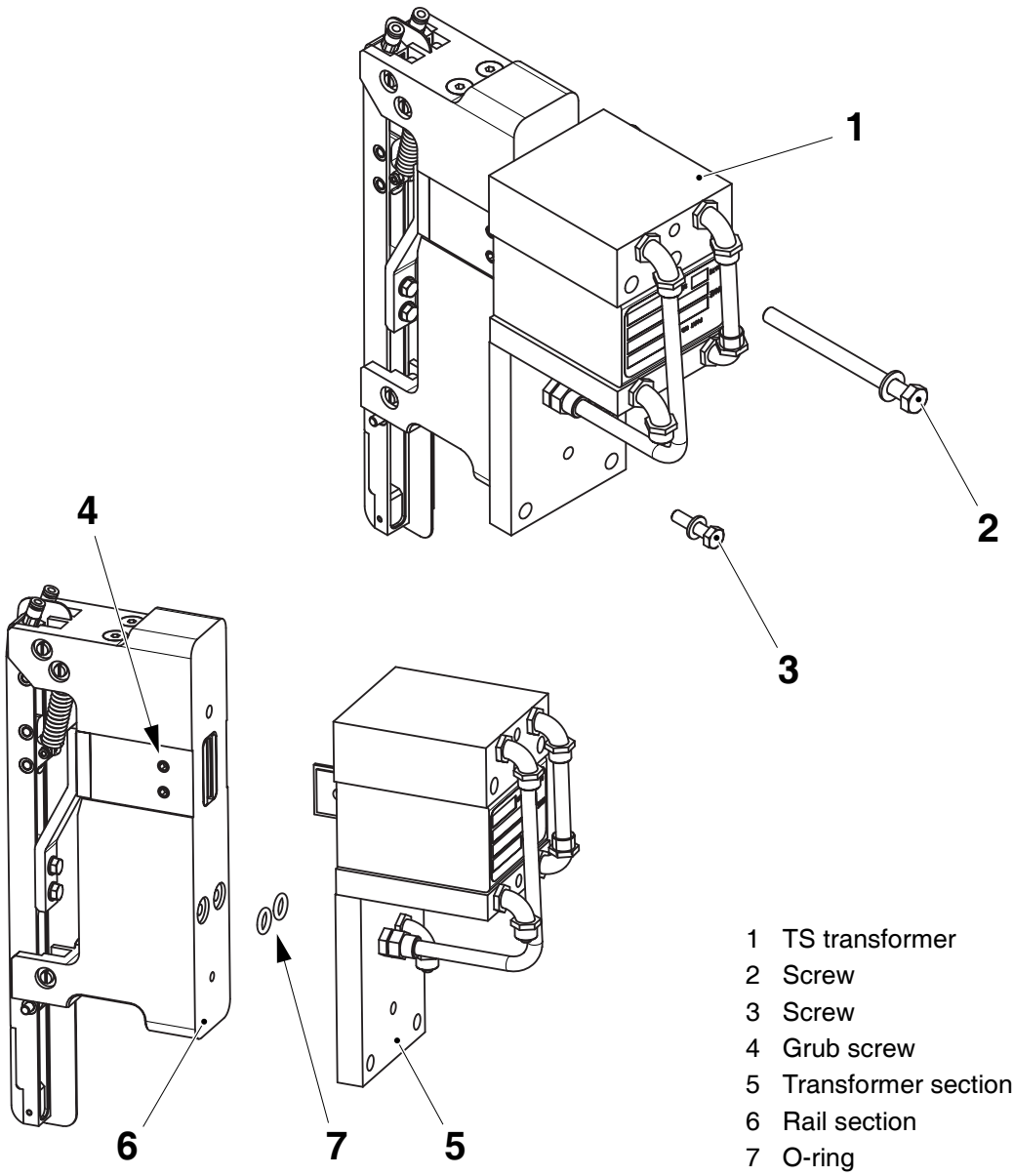

1 TS transformer
2 Screw
3 Screw
4 Grub screw
5 Transformer section
6 Rail section
7 O-ring

(Cont'd)

2.2BK483en-mms2.fm

(Cont'd)

f) Check the transformer (8) is intact and clean.
Pay particular attention to the contact (9) and coaxial connector (10).
Clean or change as necessary.

g) To change, remove the screw (11), lift off the block (12) and change the transformer (8).

h) Assemble in the reverse order.

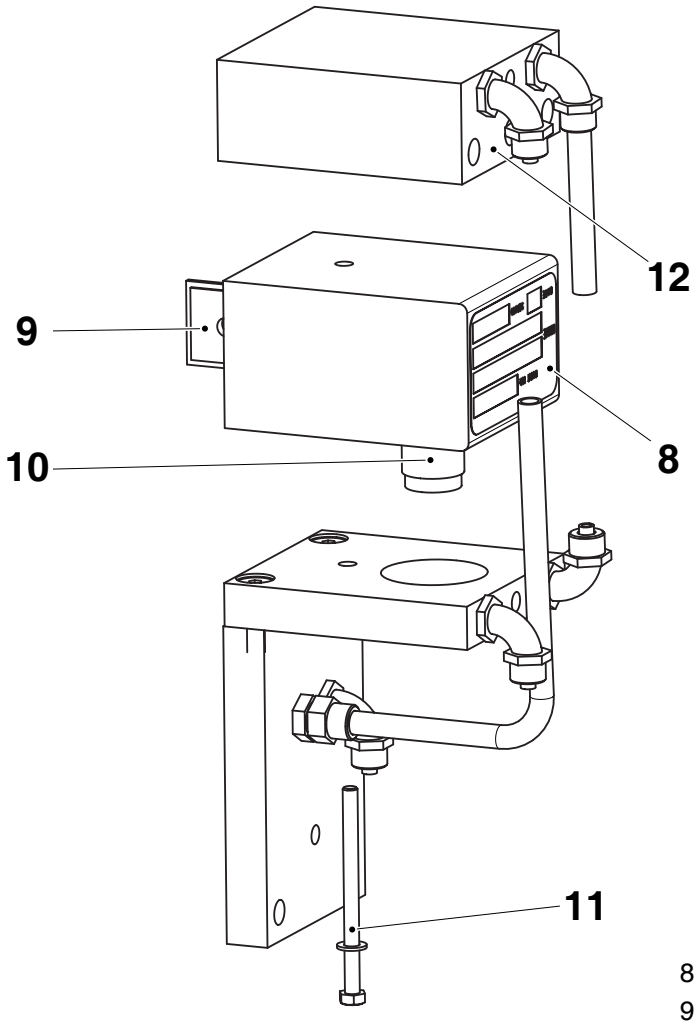

8 Transformer
9 Contact
10 Coaxial connector
11 Screw
12 Block

2.2BK483en-mms2.fm

4.7 Lubricants



Risk of personal injury!
Certain lubricants can cause injury if they come into contact with the eyes, skin, mucous membranes, or clothing. Always follow the manufacturer's instructions for handling chemical products.

The table below lists only a selection of lubricants with their respective designations.

Lubricant specifications may be ordered from:
Tetra Pak Global Technical Support AB, Ruben Rausings gata, SE-221 86 LUND, Sweden.

Lubricant Code	Part No. (used when ordering from Tetra Pak)	Example	
		Supplier	Product Designation (2002-10)
A Motor oil	90 296-28	Statoil	PowerWay D2 10W-30
B High-pressure oil	90 296-73 90 296-78	BP Esso Statoil Mobil Shell	Energol GR-XP 220 Spartan EP 220 LoadWay EP 220 Mobilgear 630 Omala oil 220
	90 296-72 For use in production plant with start temperature below 5° C.	BP Esso Statoil Mobil Shell	Energol GR-XP 150 Spartan EP 150 LoadWay EP 150 Mobilgear 629 Omala oil 150
C Hydraulic oil	90 296-53	BP Esso Statoil Mobil Shell	Bartran HV 32 Univis N 32 HydraWay HVX 32 DTE Oil 13 Tellus Oil T 32
D Mist lubrication oil	90 296-80	BP Esso Statoil Mobil Shell	Autran DX ATF Dextron II TransWay DX II ATF 220 ATF Dextron II
E Compounded cylinder oil	90 296-77 90 296-2	BP Esso Statoil Mobil Shell	Energol AC-C460 Cylesso TK 460 CylWay FZ 460 600W Super Cylinder Oil Valvata Oil J460

2.2BK483en-mms2.fm

Lubricant Code	Part No. (used when ordering from Tetra Pak)	Example	
		Supplier	Product Designation (2002-10)
F Lithium grease, EP type	90 296-68	BP Esso Statoil Mobil Shell Shell	Energrease LS EP 2 / XRB2 EP Esso MP Grease/Beacon EP 2 UniWay LI 62 Mobillux EP 2 Grease 1344 LiEP 2 Calithia EP Grease T2
H High-pressure oil	90 296-75 90 296-76	BP Esso Statoil Mobil Shell	Energol GR-XP 320 Spartan EP 320 / Mobilgear 632 (mineral) 320 LoadWay EP 320 Mobilgear 632 Omala oil 320
	90 296-73 90 296-78 For use in production plant with start temperature below 5° C.	BP Esso Statoil Mobil Shell	Energol GR-XP 220 Spartan EP 220 LoadWay EP 220 Mobilgear 630 Omala oil 220
K Circulation oil	90 296-15	BP Esso Statoil Mobil Shell	Energol CS 100 Teresso 100 TurbWay 100 DTE Oil Heavy Tellus Oil 100
L Silicon grease	90 296-9		Grease 55322-30 ACC to M 1255.322 TUBE 100 GR
M Lithium grease, EP type	90 296-70	BP Esso Statoil Mobil	Energrease LS EP 1 Beacon EP 1 UniWay LI 61 Mobillux EP 1
N PTFE grease	90 296-91	Sikema	
O Lithium complex grease	90 296-61	BP Esso Statoil	Energrease LS 3 Unirex N3 UniWay HT-63
P Synthetic compressor oil	90 296-54	BP Esso Statoil Mobil Shell	Energol RC 68 Compressor Oil 68 CompWay 68 Rarus 427 Corena Oil H68
Q Low friction assembly paste	90 296-12	Dow Kluber	Molykote G-N Plus Unimoly Plus

2.2BK483en-mms2.fm

4.7 Lubricants

Lubricant Code	Part No. (used when ordering from Tetra Pak)	Example	
		Supplier	Product Designation (2002-10)
R Synthetic grease	90 459-246	Kluber	Klubersynth UH1 14-1600
S Synthetic hydrocarbon grease	90 296-10	Mecman	435-1
T Synthetic lubricating grease	90 459-0340	Shell	Cassida HDS2
U Hydraulic fluid	90 459-1310	Shell	Cassida Fluid HF32
V Oil	90 296-104	Molykote	Molykote Foodslip EP Gear Oil 220
W Hydraulic fluid	90 458-1427	Shell	Hydraulic Oil 46 Shell Tellus T 46
X Oil	90 296-105	Kluber Lubrication	Kluberoil 4 UH1-220
Y Lubrication oil	90 458-2735	Mobil	Mobil SHC 634
Lubricant (New gear box)	90459-1041	Shell	Tivella SD 65173
	-	Shell	Tivella S 460)
	90459-1062	Mobil	Glycoyle HE 460

2.2BK483en-mms2.fm

This page intentionally left blank

2.2BK483en-mms2.fm

Enclosed documentation

2.2c BK483en-ed.fm

Updating the machine documentation

Obsolete parts

Place the enclosed **Obsolete Parts** pages in the machine's SPC.

SPC (Spare Parts Catalogue)

Place the enclosed SPC pages in the machine's SPC. Take care to clearly mark any old page (if any) with the words "**No longer valid: see additional SPC pages**".

Modification drawings

Keep the enclosed modification drawings, after the use, together with the Document Folder instructions.

2.2c BK483en-ed.fm

Obsolete parts

The following tables show the parts to be removed and not to be used again in machines with equipped with the kit described below.

Note! This list does not include screws, nuts, and washers, which are purchased components, i.e. has a number like 90xxx-xxxx or 3xxxxx-xxxx.

Kit No.	Kit Name	DF No.
2547324-0200	Gear Box	2547483-0106

SPC Reference 1549911-0100

Common parts			
Pos	**Part No.**	**Qty**	**Description**
020	1140751-0000	4	Ring
030	1140757-0000	1	Pulley
040	1140759-0000	2	Pulley
080	1260087-0000	2	Wheel
070	1260086-0000	2	Eccentric shaft
090	1260088-0000	1	Cover
110	1260094-0000	2	Pulley
170	1487860-0000	1	Pulley
210	1487857-0000	1	Shaft
220	1487856-0000	1	Spacer
250	1478198-0000	2	Shaft
290	1487859-0000	1	Bracket
310	1524442-0000	4	Support
340	1484484-0000	1	protection
350	1484485-0000	1	Protection
360	1140820-0000	4	Spacer
370	1484507-0000	4	Spacer
380	1487858-0000	1	Insulation
390	1487930-0000	4	Cover
400	1512613-0000	1	Hub
450	90214-0112	2	BALL BEARING
470	90417-0413	2	Timing belt
480	90417-0412	1	Timing belt
490	90056-0164	1	Worm Gear
500	90056-0163	1	Worm Gear
530	90355-0031	1	Torque rigid coupling

(Cont'd)

(Cont'd)

SPC Reference 1549911-0100

Variant: 200B			
Pos	**Part No.**	**Qty**	**Description**
050	1478191-0000	4	Wheel
395	1538130-0000	2	Shaft
Variant: 250B			
Pos	**Part No.**	**Qty**	**Description**
010	1140750-0000	2	Guide
050	1140767-0000	4	Wheel
395	1532952-0000	2	Shaft

SPC Reference 575203-0100

Common parts			
Pos	**Part No.**	**Qty**	**Description**
010	1082973-0000	1	Steering
020	1538133-0000	1	Sleeve

SPC
Spare Parts Catalogue

Jaw system gearbox and cutting belt
RK No. 2547324-0200

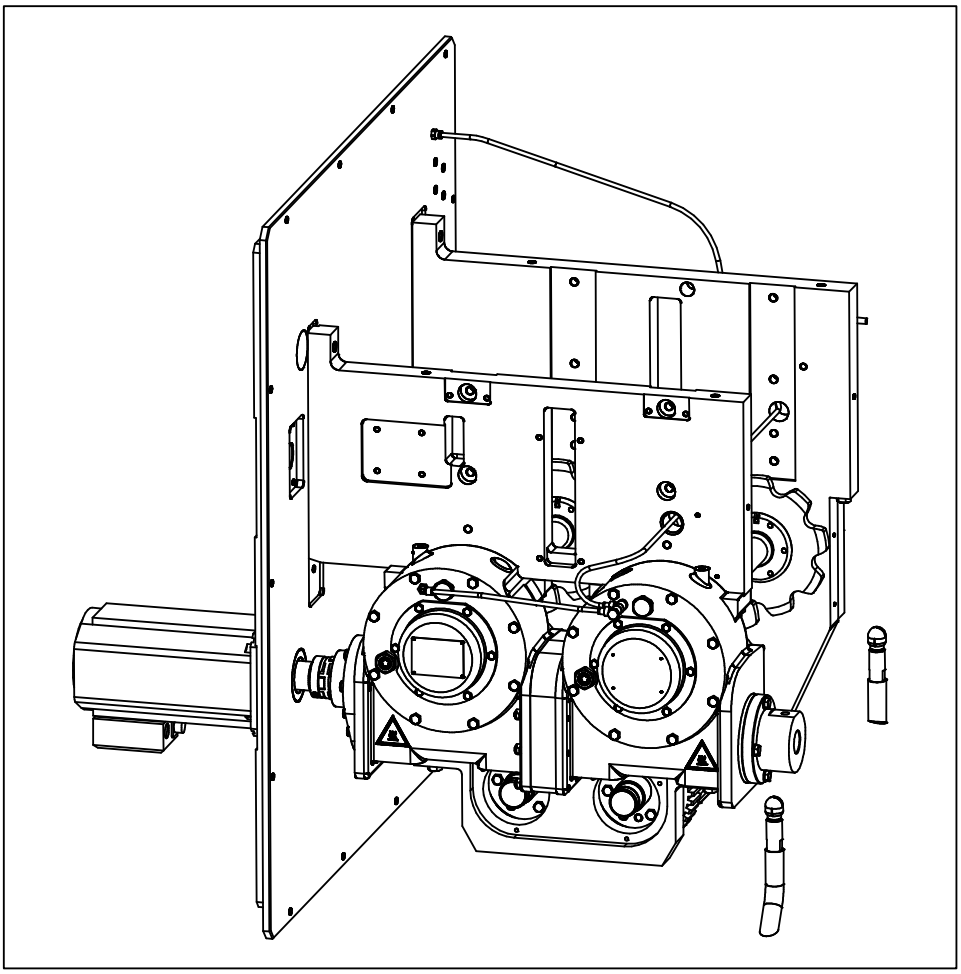

Tetra Pak

Doc. No: SPC-DF 2547483-0106

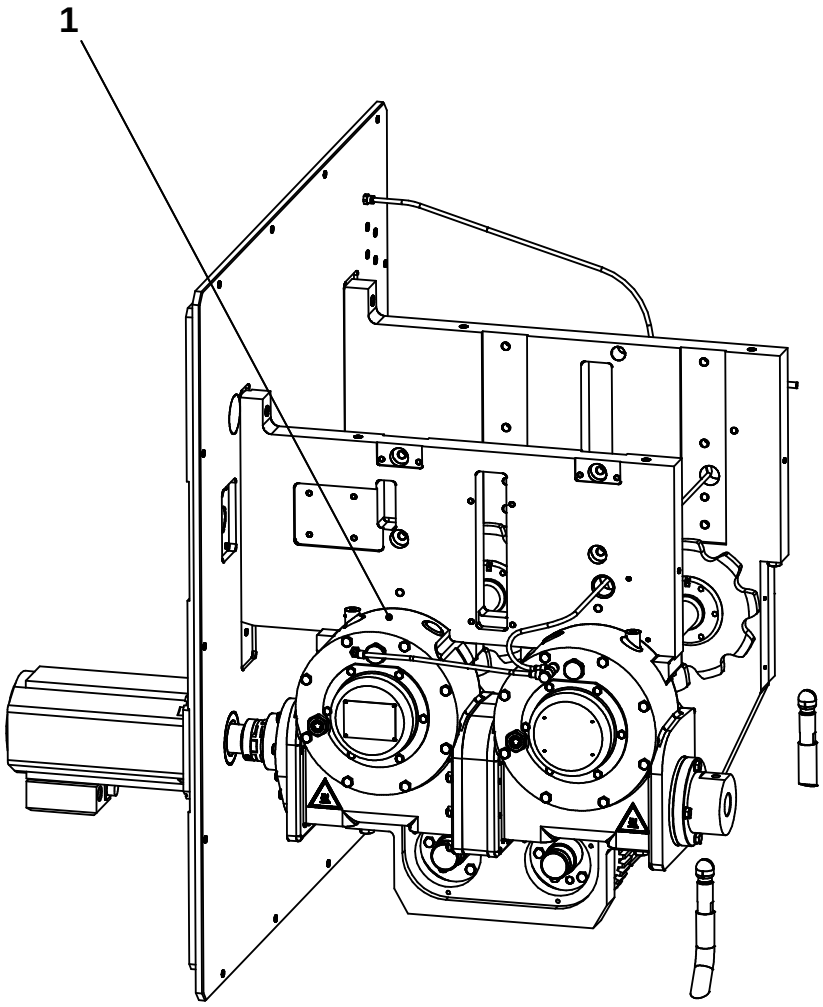

The position numbers in the illustration correspond with the chapter numbers listed on the next page.

Copyright © 2004 Tetra Pak Group

All rights reserved. No part of this document may be reproduced or copied in any form or by any means without written permission from Tetra Pak Carton Ambient S.p.A..

Tetra Pak and all Tetra Pak products are trademarks belonging to the Tetra Pak Group.

The content of this manual is in accordance with the design and construction of the machine or equipment at the time of publishing. Tetra Pak reserves the right to introduce design modifications without prior notice.

This document was produced by:

Tetra Pak Carton Ambient S.p.A.
Technical Publications
Via Delfini 1
41100 Modena /Italy

This Tetra Pak equipment was manufactured by:

Tetra Pak Carton Ambient S.p.A.
Via Delfini 1
41100 Modena /Italy

Additional copies can be ordered from Tetra Pak Parts or the nearest Tetra Pak office. When ordering additional copies, always provide the document number. This can be found in the machine specification document. It is also printed on the front cover and in the footer on each page of the manual.

Doc. No. SPC-DF 2547483-0106

Issue 2004-10

This document is valid for:

Series No/Machine No Sign.

i Introduction

1 Mandatory Kit
RK-2547324-0200

ii Part Number Index

SPC
Spare Parts Catalogue

TBA/22 040V
648571-0400

Doc. No: SPC-DF 2547483-0106

Issue 2004-11

Tetra Pak

Tetra Pak Carton Ambient S.p.A.

This page left intentionally blank

i Introduction

About the Introduction Chapter

This chapter contains basic information about this catalogue and related Tetra Pak equipment.

Introduction

Illustrations . . . . . i - 5
Manual Information . . . . . i - 7

This page left intentionally blank

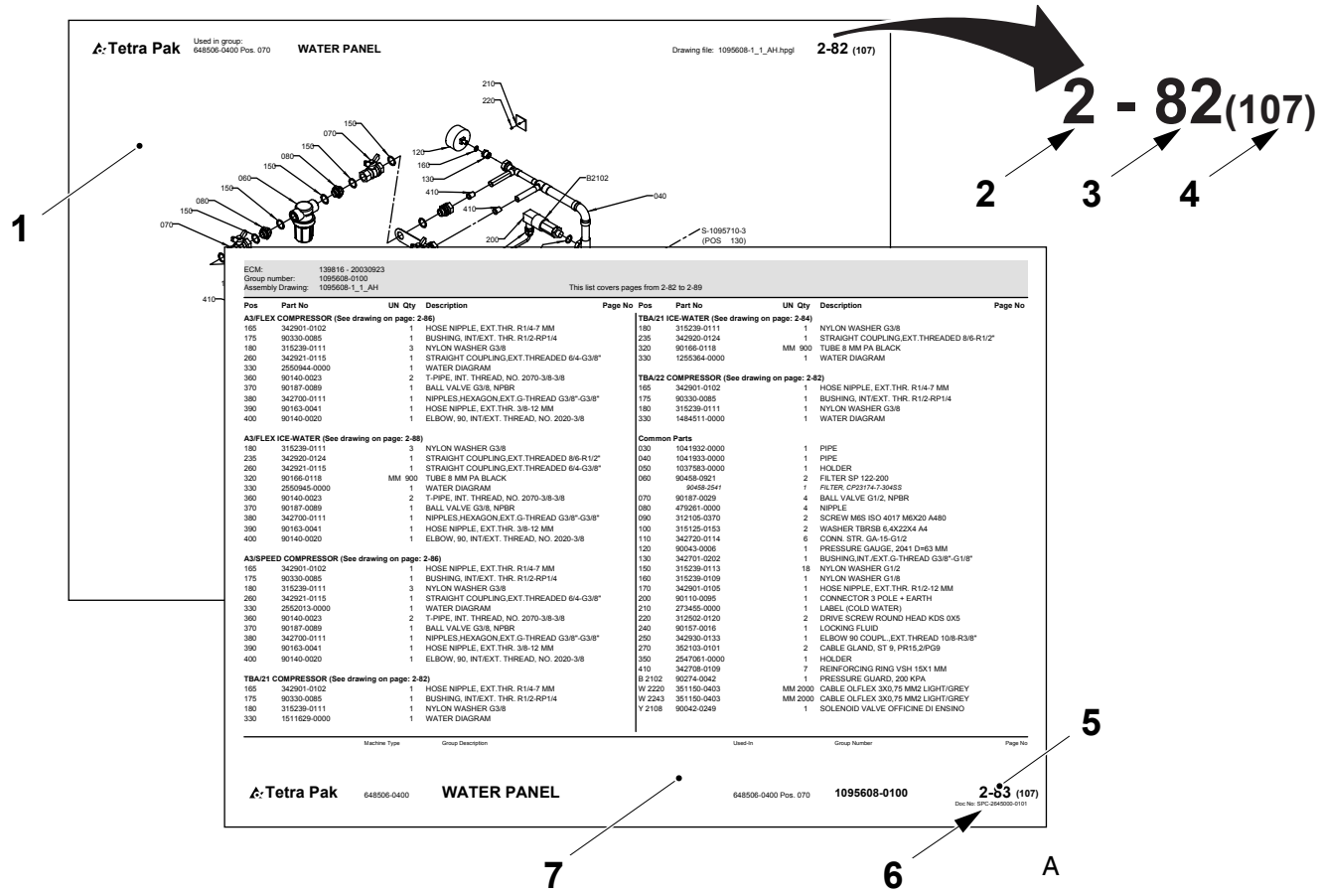
Tetra Pak
Used in group:
648506-0400 Pos. 070
WATER PANEL
Drawing file: 1095608-1_1_AH.hpgl
2-82 (107)
2 - 82(107)
1
2
3
4
5
6
7
A
ECM: 139816 - 20030923
Group number: 1095608-0100
Assembly Drawing: 1095608-1_1_AH
This list covers pages from 2-82 to 2-89
Tetra Pak
648506-0400
WATER PANEL
648506-0400 Pos. 070
1095608-0100
2-83 (107)

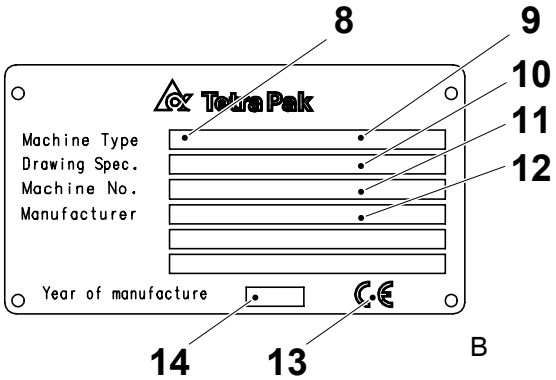
8
9
10
11
12
Tetra Pak
Machine Type
Drawing Spec.
Machine No.
Manufacturer
Year of manufacture
14
13
B

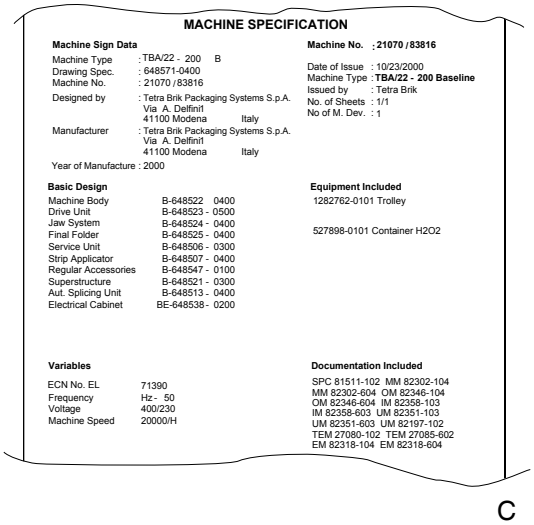
MACHINE SPECIFICATION
Machine Sign Data
Machine Type : TBA/22 - 200 B
Drawing Spec. : 648571-0400
Machine No. : 21070 / 83816
Designed by : Tetra Brik Packaging Systems S.p.A.
Via A. Delfini1
41100 Modena Italy
Manufacturer : Tetra Brik Packaging Systems S.p.A.
Via A. Delfini1
41100 Modena Italy
Year of Manufacture : 2000
Machine No. : 21070 / 83816
Date of Issue : 10/23/2000
Machine Type : TBA/22 - 200 Baseline
Issued by : Tetra Brik
No. of Sheets : 1/1
No of M. Dev. : 1
Basic Design
Machine Body B-648522 0400
Drive Unit B-648523 - 0500
Jaw System B-648524 - 0400
Final Folder B-648525 - 0400
Service Unit B-648506 - 0300
Strip Applicator B-648507 - 0400
Regular Accessories B-648547 - 0100
Superstructure B-648521 - 0300
Aut. Splicing Unit B-648513 - 0400
Electrical Cabinet BE-648538 - 0200
Equipment Included
1282762-0101 Trolley
527898-0101 Container H2O2
Variables
ECN No. EL 71390
Frequency Hz - 50
Voltage 400/230
Machine Speed 20000/H
Documentation Included
SPC 81511-102 MM 82302-104
MM 82302-604 OM 82346-104
OM 82346-604 IM 82358-103
IM 82358-603 UM 82351-103
UM 82351-603 UM 82197-102
TEM 27080-102 TEM 27085-602
EM 82318-104 EM 82318-604
C

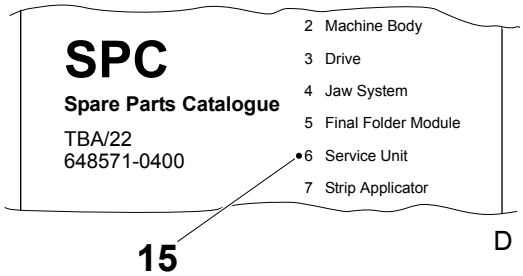
SPC
Spare Parts Catalogue
TBA/22
648571-0400
2 Machine Body
3 Drive
4 Jaw System
5 Final Folder Module
6 Service Unit
7 Strip Applicator
15
D

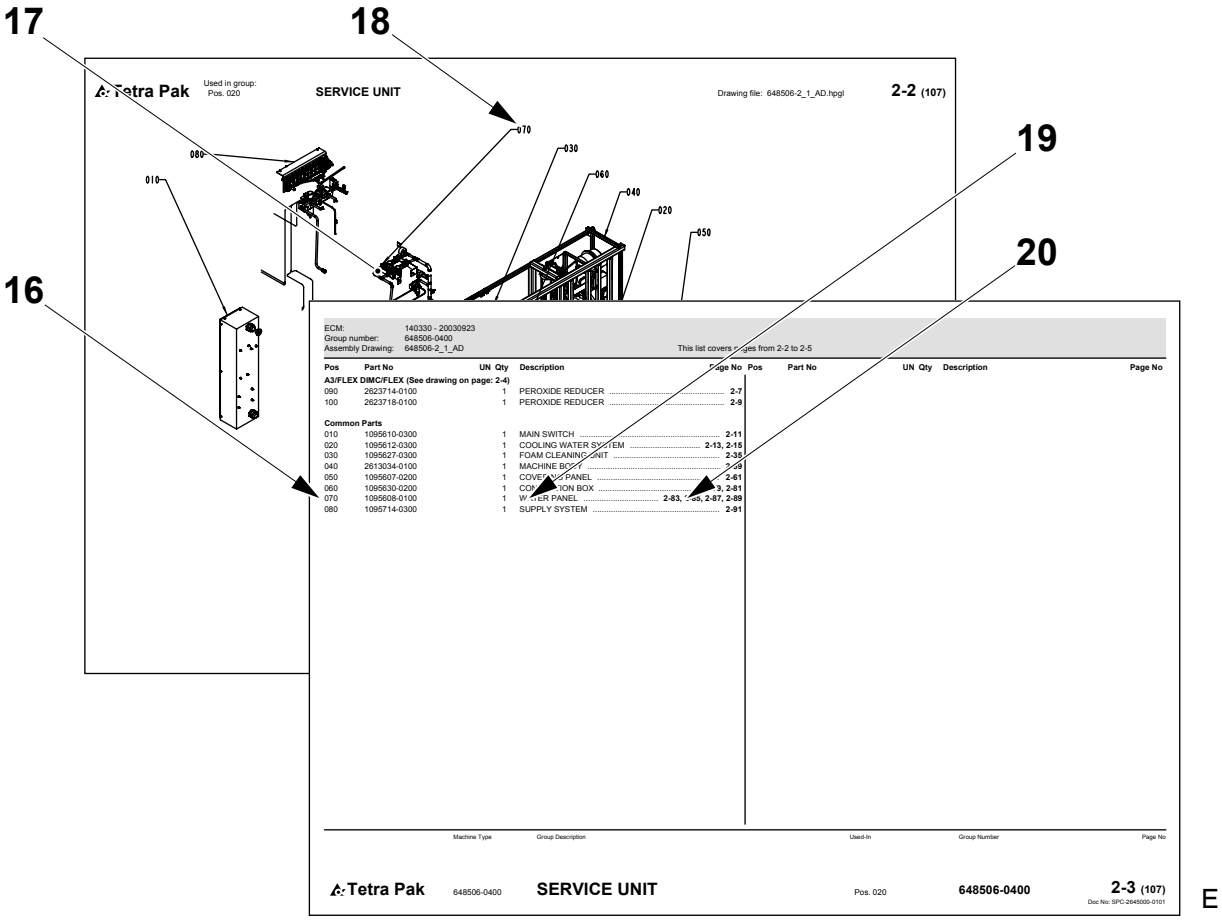
17
18
19
20
16
Tetra Pak
SERVICE UNIT
Drawing file: 648506-2_1_AD.hpgl
2-2 (107)
070
030
080
060
010
040
020
050
ECM: 140330 - 20030923
Group number: 648506-0400
Assembly Drawing: 648506-2_1_AD
This list covers pages from 2-2 to 2-5
Pos Part No UN Qty Description Page No
A3/FLEX DIMC/FLEX (See drawing on page: 2-4)
090 2623714-0100 1 PEROXIDE REDUCER 2-7
100 2623718-0100 1 PEROXIDE REDUCER 2-9
Common Parts
010 1095610-0300 1 MAIN SWITCH 2-11
020 1095612-0300 1 COOLING WATER SYSTEM 2-13, 2-15
030 1095627-0300 1 FOAM CLEANING UNIT 2-35
040 2613034-0100 1 MACHINE BODY
050 1095607-0200 1 COVERING PANEL 2-61
060 1095630-0200 1 CONTROL BOX 2-3, 2-81
070 1095608-0100 1 WATER PANEL 2-83, 2-87, 2-89
080 1095714-0300 1 SUPPLY SYSTEM 2-91
Machine Type
Group Description
Used-In
Group Number
Page No
Tetra Pak
648506-0400
SERVICE UNIT
Pos. 020
648506-0400
2-3 (107)
Doc No: SPC-2645000-0101
E

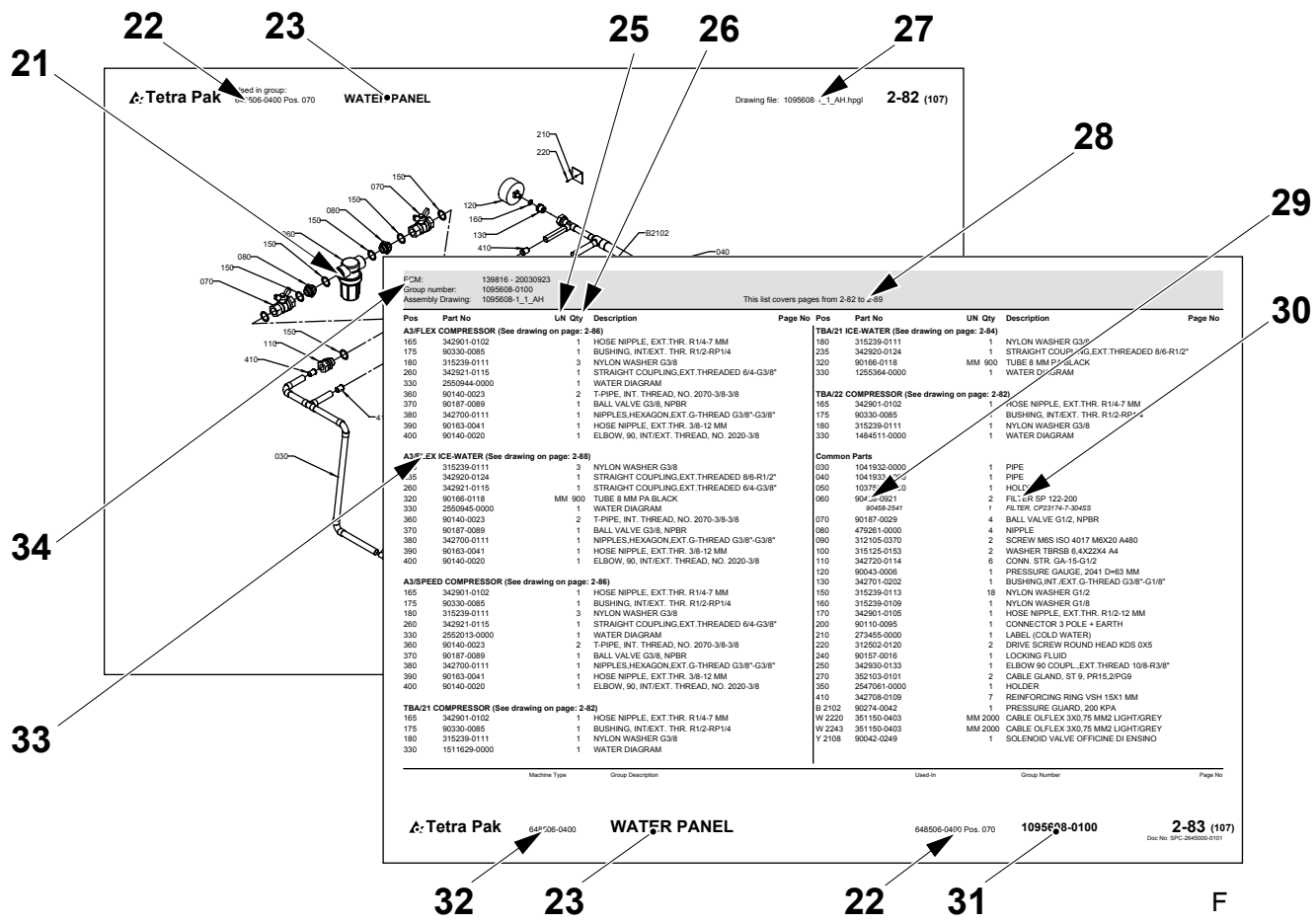
22
23
25
26
27
21
28
29
30
34
33
Tetra Pak
WATER PANEL
Drawing file: 1095608-1_1_AH.hpgl
2-82 (107)
210
220
150
070
080
120
160
130
410
B2102
040
030
110
ECM: 139816 - 20030923
Group number: 1095608-0100
Assembly Drawing: 1095608-1_1_AH
This list covers pages from 2-82 to 2-89
Pos Part No UN Qty Description Page No
A3/FLEX COMPRESSOR (See drawing on page: 2-86)
165 342901-0102 1 HOSE NIPPLE, EXT.THR. R1/4-7 MM
175 90330-0085 1 BUSHING, INT/EXT. THR. R1/2-RP1/4
180 315239-0111 3 NYLON WASHER G3/8
260 342921-0115 1 STRAIGHT COUPLING,EXT.THREADED 6/4-G3/8"
330 2550944-0000 1 WATER DIAGRAM
360 90140-0023 2 T-PIPE, INT. THREAD, NO. 2070-3/8-3/8
370 90187-0089 1 BALL VALVE G3/8, NPBR
380 342700-0111 1 NIPPLES,HEXAGON,EXT.G-THREAD G3/8"-G3/8"
390 90163-0041 1 HOSE NIPPLE, EXT.THR. 3/8-12 MM
400 90140-0020 1 ELBOW, 90, INT/EXT. THREAD, NO. 2020-3/8
A3/FLEX ICE-WATER (See drawing on page: 2-88)
165 315239-0111 3 NYLON WASHER G3/8
175 342920-0124 1 STRAIGHT COUPLING,EXT.THREADED 8/6-R1/2"
260 342921-0115 1 STRAIGHT COUPLING,EXT.THREADED 6/4-G3/8"
320 90166-0118 MM 900 TUBE 8 MM PA BLACK
330 2550945-0000 1 WATER DIAGRAM
360 90140-0023 2 T-PIPE, INT. THREAD, NO. 2070-3/8-3/8
370 90187-0089 1 BALL VALVE G3/8, NPBR
380 342700-0111 1 NIPPLES,HEXAGON,EXT.G-THREAD G3/8"-G3/8"
390 90163-0041 1 HOSE NIPPLE, EXT.THR. 3/8-12 MM
400 90140-0020 1 ELBOW, 90, INT/EXT. THREAD, NO. 2020-3/8
A3/SPEED COMPRESSOR (See drawing on page: 2-86)
165 342901-0102 1 HOSE NIPPLE, EXT.THR. R1/4-7 MM
175 90330-0085 1 BUSHING, INT/EXT. THR. R1/2-RP1/4
180 315239-0111 3 NYLON WASHER G3/8
260 342921-0115 1 STRAIGHT COUPLING,EXT.THREADED 6/4-G3/8"
330 2552013-0000 1 WATER DIAGRAM
360 90140-0023 2 T-PIPE, INT. THREAD, NO. 2070-3/8-3/8
370 90187-0089 1 BALL VALVE G3/8, NPBR
380 342700-0111 1 NIPPLES,HEXAGON,EXT.G-THREAD G3/8"-G3/8"
390 90163-0041 1 HOSE NIPPLE, EXT.THR. 3/8-12 MM
400 90140-0020 1 ELBOW, 90, INT/EXT. THREAD, NO. 2020-3/8
TBA/21 COMPRESSOR (See drawing on page: 2-82)
165 342901-0102 1 HOSE NIPPLE, EXT.THR. R1/4-7 MM
175 90330-0085 1 BUSHING, INT/EXT. THR. R1/2-RP1/4
180 315239-0111 1 NYLON WASHER G3/8
330 1511629-0000 1 WATER DIAGRAM
TBA/21 ICE-WATER (See drawing on page: 2-84)
180 315239-0111 1 NYLON WASHER G3/8
235 342920-0124 1 STRAIGHT COUPLING,EXT.THREADED 8/6-R1/2"
320 90166-0118 MM 900 TUBE 8 MM PA BLACK
330 1255364-0000 1 WATER DIAGRAM
TBA/22 COMPRESSOR (See drawing on page: 2-82)
165 342901-0102 1 HOSE NIPPLE, EXT.THR. R1/4-7 MM
175 90330-0085 1 BUSHING, INT/EXT. THR. R1/2-RP1/4
180 315239-0111 1 NYLON WASHER G3/8
330 1484511-0000 1 WATER DIAGRAM
Common Parts
030 1041932-0000 1 PIPE
040 1041933-0000 1 PIPE
050 1037[illegible] 1 HOLDER
060 9045[illegible]-0921 2 FILTER SP 122-200
90458-2541 1 FILTER, CP23174-7-30ASS
070 90187-0029 4 BALL VALVE G1/2, NPBR
080 479261-0000 4 NIPPLE
090 312105-0370 2 SCREW M6S ISO 4017 M6X20 A480
100 315125-0153 2 WASHER TBRSB 6,4X22X4 A4
110 342720-0114 6 CONN. STR. GA-15-G1/2
120 90043-0006 1 PRESSURE GAUGE, 2041 D=63 MM
130 342701-0202 1 BUSHING,INT./EXT.G-THREAD G3/8"-G1/8"
150 315239-0113 18 NYLON WASHER G1/2
160 315239-0109 1 NYLON WASHER G1/8
170 342901-0105 1 HOSE NIPPLE, EXT.THR. R1/2-12 MM
200 90110-0095 1 CONNECTOR 3 POLE + EARTH
210 273455-0000 1 LABEL (COLD WATER)
220 312502-0120 2 DRIVE SCREW ROUND HEAD KDS 0X5
240 90157-0016 1 LOCKING FLUID
250 342930-0133 1 ELBOW 90 COUPL.,EXT.THREAD 10/8-R3/8"
270 352103-0101 2 CABLE GLAND, ST 9, PR15,2/PG9
350 2547061-0000 1 HOLDER
410 342708-0109 7 REINFORCING RING VSH 15X1 MM
B 2102 90274-0042 1 PRESSURE GUARD, 200 KPA
W 2220 351150-0403 MM 2000 CABLE OLFLEX 3X0,75 MM2 LIGHT/GREY
W 2243 351150-0403 MM 2000 CABLE OLFLEX 3X0,75 MM2 LIGHT/GREY
Y 2108 90042-0249 1 SOLENOID VALVE OFFICINE DI ENSINO
Machine Type
Group Description
Used-In
Group Number
Page No
Tetra Pak
648506-0400
WATER PANEL
648506-0400 Pos. 070
1095608-0100
2-83 (107)
Doc No: SPC-2648000-0101
32
23
22
31
F

Introduction

Manual Information

Tetra Pak recommends reading all delivered manuals carefully. Make sure that the delivered manuals are available to personnel who operate or maintain the equipment.

It is important to keep this catalogue for the lifetime of the equipment and to pass the catalogue on to any subsequent holder or user.

Tetra Pak will not be held responsible for any damage to the equipment caused by not following the instructions given in the manuals that accompany this equipment.

Delivered Manuals

The manuals delivered with this equipment may include

- Conversion Manual (CM)
  This manual provides technicians with information on converting the equipment between different production modes.
- Electrical Manual (EM)
  This manual provides technicians with information about the equipment's electrical system.
- Installation Manual (IM)
  This manual provides technicians with information required to safely install the equipment.
- Maintenance Manual (MM)
  This manual provides technicians with information on maintaining the equipment.
- Operation Manual (OM)
  This manual provides the operator with information on handling and operating the equipment before, during, and after production.
- Spare Parts Catalogue (SPC)
  This manual provides the information necessary to order spare parts from Tetra Pak.
- Technical Manual (TeM)
  - provides technicians with information required to safely install the equipment
  - provides technicians with information on maintaining the equipment
  - provides technicians with information about the equipment's electrical system
  - provides the information necessary to order spare parts from Tetra Pak

Page Layout

Refer to the illustration (A) on page i-5: The main pages in a Spare Parts Catalogue consist of an illustration page (1) and a corresponding list page (7). The page number (5) is shown in the header of an illustration page and in the footer of a list page. The document number (6) is shown in the footer of a list page.

Page Numbering

Refer to the illustration (A) on page i-5: A page number (5) has three parts:

- chapter number (2)
- consecutive page number within the chapter (3)
- total number of pages in the chapter (4)

Machine Introduction

Manufacturer

For the manufacturer's name and address, see the second page of this catalogue.

Service

To order spare parts for this machine, or to report problems associated with operating this machine, contact the nearest Tetra Pak office.

Contact the Liaison with other inquiries, comments, or suggestions for improvement regarding the equipment and its documentation.

Identification

CE Classification

This equipment complies with the basic health and safety regulations of the European Economic Area (EEA).

Machine Plate

The illustration (B) on page i-5 shows an example of a machine plate. An illustration of the valid machine plate and its location on the equipment is shown in the Introduction chapter of the manuals delivered with this equipment. The machine plate contains the data listed below, needed when contacting Tetra Pak concerning this specific equipment.

- Machine type (8)
- Volume (9)
- Drawing specifications (10)
- Machine serial number (11)
- Manufacturer (12)
- CE mark (13)
- Year of manufacture (14)

The illustration (C) on page i-5 shows an example of a machine specification. Make sure that the equipment data listed in the front pages of this manual corresponds to the machine plate data and the machine specification.

How to Use This Spare Parts Catalogue

Locate a Spare Part Number

a) Refer to the illustration (D) on page i-5: Go to the chapter number (15) indicated beside the main group that contains the part you want to locate.

Items b) and c) refer to the illustration (E) on page i-6.

b) On the main group illustration, look for the machine subgroup (17) that contains the part or subgroup you are looking for. Note the position number (18) and go to the list page that follows the illustration.

c) Look for the position number (16) or the subgroup name (19). Go to the corresponding page number (20) listed in the right-hand column.

Items d) and e) refer to the illustration (F) on page i-6.

d) Locate the part (21) that you are looking for on the subgroup illustration and note the part's position number.

e) The part number (29) and part description (30) are listed beside the position number on the list page.

Information Listed in a Spare Parts Catalogue

The list below refers to the illustration (F) on page i-6. A Spare Parts Catalogue contains the following information about groups, subgroups, and spare parts for the equipment:

- Group structure reference (22). Indicates the next higher group in the equipment list structure.
- Group name (23)
- Unit of measure (25)
- Quantity (26)
- Assembly drawing number (27)
- List page range (28). Included if there are multiple pages in the group illustration or list.
- Part or subgroup number (29)
- Subgroup name or part description (30)
- Group number (31)
- Equipment number (32)
- Group information heading (33). Indicates if the section below the heading is for a specific machine variant or if it is a list of common parts. If a list has more than one variant and each variant has its own assembly drawing, a page reference to the variant's assembly drawing is shown.
- Internal information (34)

SPC
Spare Parts Catalogue

This page is intentionally left blank.

ECM: 189477 - 90001231
Group number: 2547324-0200
Assembly Drawing:

Pos	Part No	UN	Qty	Description	Page No
-					
	2542321-0200		1	GEAR BOX	**1-5, 1-7**
	2550188-0100		1	SPARE PARTS	**1-9**
	2640362-0000		1	TOOL	
	2547483-0106		1	DOCUMENT FOLDER	
	767141-0106		1	TAP	
	90287-0359		1	SCREW M6S ISO 4017 M10X100 A480	
	2594855-0001		1	MODIFICATION DRAWING	**1-11**
	2695386-0001		1	MODIFICATION DRAWING	**1-13**

Pos	Part No	UN	Qty	Description	Page No

Machine Type | Group Description | Used-In | Group Number | Page No

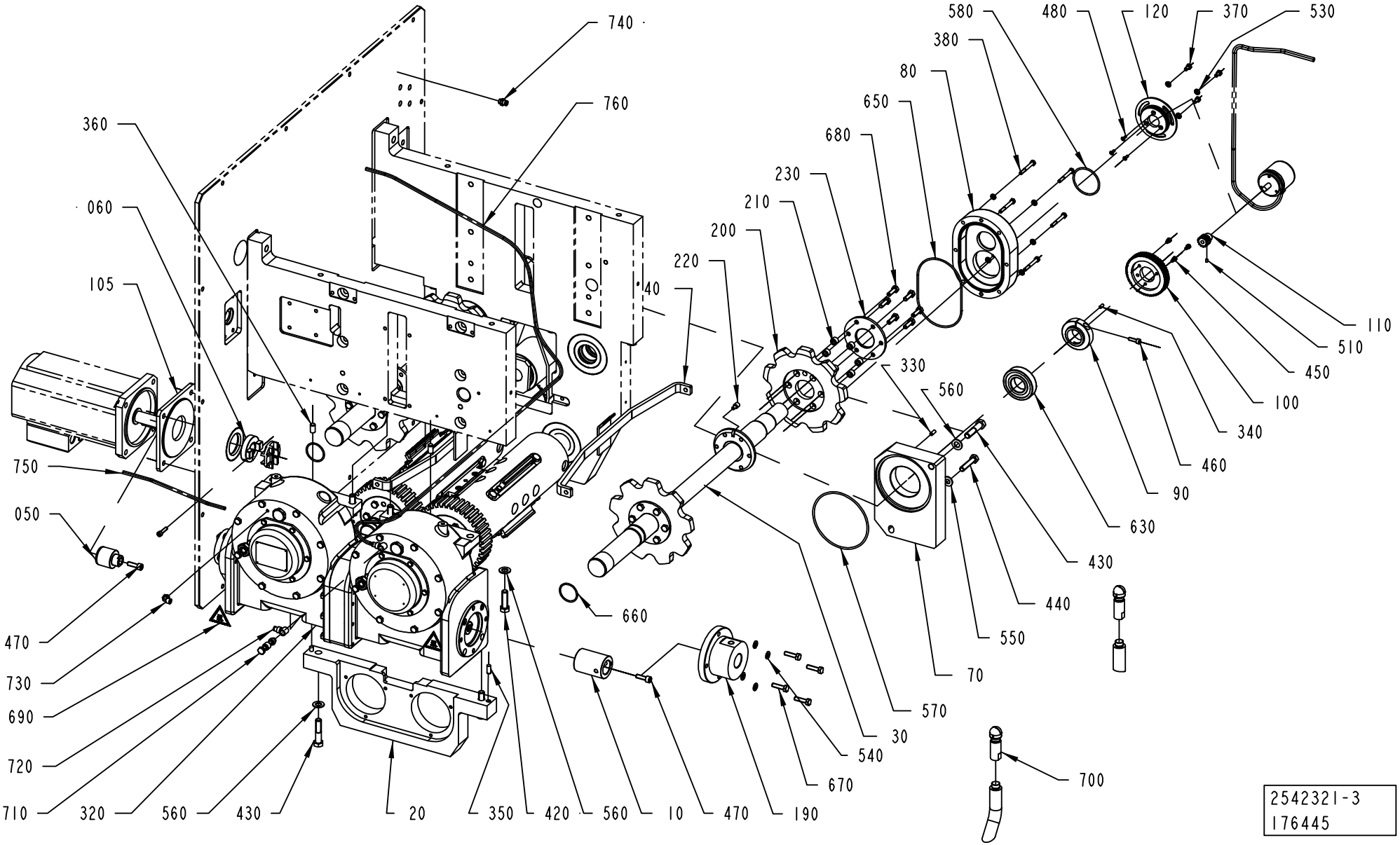
740
760
360
060
105
750
050
470
730
690
720
710
320
560
430
20
350
420
560
10
470
190
670
540
30
570
660
70
550
440
430
630
90
460
340
100
450
510
110
330
560
40
220
200
210
230
680
650
80
380
580
480
120
370
530
700
2542321-3
176445

ECM: 176445 - 20040702
Group number: 2542321-0200
Assembly Drawing: 2542321-3_1_AA

This list covers pages from 1-4 to 1-7

Pos	Part No	UN	Qty	Description	Page No
TBA 0200B					
020	2532004-0000		1	PLATE	
050	2694094-0000		1	SHAFT	
200	2644108-0000		4	WHEEL	
320	90459-4812		1	WORM GEAR 10.756.247	
TBA 0250B					
020	2531475-0000		1	PLATE	
040	2531476-0000		2	GUIDE	
050	2694027-0000		1	SHAFT	
105	2694081-0000		1	MOTOR BRACKET	
200	2644109-0000		4	WHEEL	
320	90459-4811		1	WORM GEAR 10.756.248	
Common Parts					
010	2531489-0000		1	SLEEVE	
	311102-0413		*1*	*PARALLELL PIN ISO 2338 8M6X50 ST*	
	312318-0362		*1*	*SCREW ISO4029 M6X8 A4*	
030	2644364-0000		2	SHAFT	
060	2694026-0000		1	HUB	
070	2525664-0000		1	PLATE	
080	1532961-0000		1	BRACKET	
090	2525666-0000		1	HUB	
100	2525665-0000		1	.GEAR WHEEL	
110	2504641-0000		1	GEAR WHEEL	
120	1532947-0000		1	BRACKET	
130	2539497-0000		1	PULLEY	
140	2539537-0000		1	PULLEY	
150	2531951-0000		1	SUPPORT	
160	2531952-0000		1	ROLLER	
170	2570876-0000		3	SPACER	
180	2569830-0000		1	COVER	
190	2531474-0000		1	STEERING	
210	2633447-0000		24	BUSHING	
220	2641241-0000		4	PIN	
230	2641243-0000		4	FLANGE	
300	90459-0329		1	TIMING BELT 8X920X70	
310	90459-0352		2	PLUG, GPN 320 GL 763	
330	311103-0351		2	PARALLEL PIN ISO 2338 6M6X16 A1	
340	311103-0306		1	PARALLEL PIN ISO 2338 5M6X12 A1	
350	311103-0401		2	PARALLEL PIN ISO 2338 8M6X20 A1	
360	311103-0454		2	PARALLEL PIN ISO 2338 10M6X20 A1	
370	312105-0366		3	SCREW M6S ISO 4017 M6X12 A480	
380	312105-0380		6	SCREW M6S ISO 4014 M6X50 A480	
390	312105-0451		3	SCREW M6S ISO 4017 M8X20 A480	
400	312105-0501		1	SCREW M6S ISO 4014 M10X50 A480	
410	312105-0536		1	SCREW M6S ISO 4017 M12X30 A480	
420	312105-0540		4	SCREW M6S ISO 4017 M12X40 A480	
430	312105-0543		3	SCREW M6S ISO 4014 M12X55 A480	
440	312109-0501		1	SCREW M6S ISO 4017 M10X50 A480	
450	312115-0323		3	SCREW ISO4762 M5X8 A4	
460	312115-0370		1	SCREW ISO4762 M6X20 A4	
470	312115-0453		2	SCREW ISO4762 M8X25 A4	
480	312155-0291		3	SCREW EN 10642 MF6S M4X12 A480	
490	312155-0366		12	SCREW EN 10642 MF6S M6X12 A480	
500	312155-0495		1	SCREW EN 10642 MF6S M10X30 A480	
510	312318-0285		1	SCREW ISO4029 M4X6 A4	
520	312605-0320		1	HEXAGON NUT, M6M M10 A280	
530	315105-0153		9	WASHER BRB6,4X12RFR	
540	315105-0165		7	WASHER BRB8,4X16RFR	
550	315105-0173		1	WASHER BRB10,5X22RFR	
560	315105-0178		8	WASHER BRB13X24RFR	
570	315202-0622		1	O-RING 129,77X3,53 MM	
580	315204-0303		1	O-RING 59,5X3 MM	
590	315221-0187		1	RADIAL SEAL 40X72X7 MM	
600	315221-0200		1	RADIAL SEAL 50X72X8 MM	
610	315751-0127		1	RETAINING RING FOR SHAFT DIN 471 40 A2	
620	321306-0108		2	BALL BEARING, 40X68X15 MM	
630	321313-0107		1	BALL BEARING, 35X72X17MM	
640	344502-0021		1	GREASE NIPPLE STRAIGHT M6	
650	315204-0319		1	O-RING 139,5X3 MM	
660	315205-0729		2	O-RING 39,34X2,62 MM	
670	312105-0455		4	SCREW M6S ISO 4017 M8X30 A480	
680	312105-0453		24	SCREW M6S ISO 4017 M8X25 A480	
690	359705-0007		2	WARNING SIGN ISO, HOT SURFACE	
700	90459-2735		4	ROT.SPRAY NOZZLE, 5MC.049.17.AF.00.02	
710	342980-0313		1	BANJO-HOLLOW BOLT COUPL,EXT.THR.02-G1/8"	
720	342981-0113		2	BANJO CONNEC,RING,FOR PLAST.TUBE 6-G1/8"	
730	90458-2956		1	ELBOW PIPE JOINT, EXT.THREAD, D=6MM-G1/8	
740	342722-0202		1	PIPE COUPLING 1/8" D=6MM	
750	90166-0081	MM	400	TUBE 6 MM PA BLUE	
760	90166-0081	MM	1600	TUBE 6 MM PA BLUE	
770	312115-0455		1	SCREW ISO4762 M8X30 A4	
780	312115-0372		1	SCREW ISO4762 M6X25 A4	

Machine Type	Group Description	Used-In	Group Number	Page No

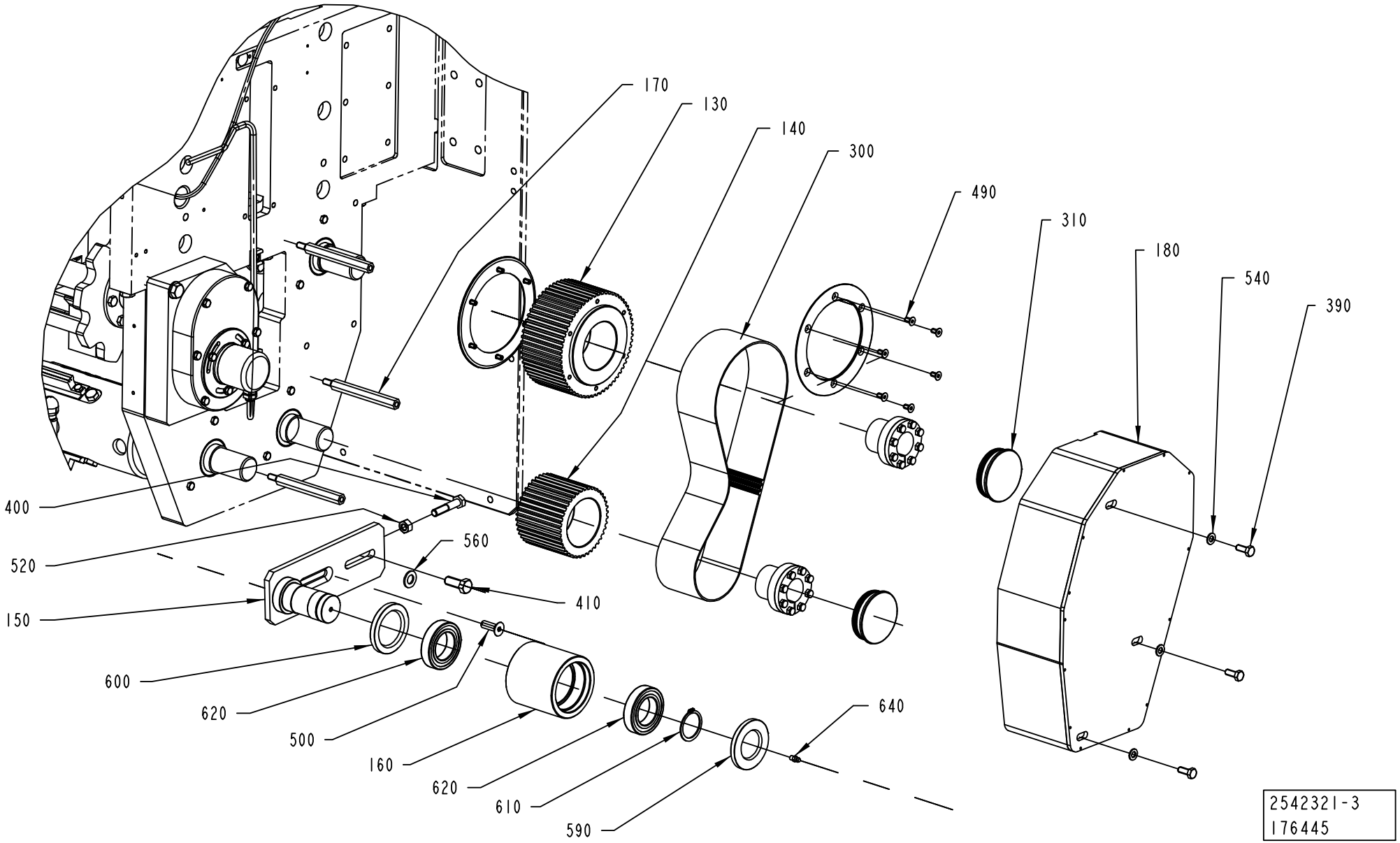
170
130
140
300
490
310
180
540
390
400
520
560
410
150
600
620
500
160
620
610
590
640
2542321-3
176445

ECM: 176445 - 20040702
Group number: 2542321-0200
Assembly Drawing: 2542321-3_2_AA

This list covers pages from 1-4 to 1-7

Pos	Part No	UN	Qty	Description	Page No
TBA 0200B					
020	2532004-0000		1	PLATE	
050	2694094-0000		1	SHAFT	
200	2644108-0000		4	WHEEL	
320	90459-4812		1	WORM GEAR 10.756.247	
TBA 0250B					
020	2531475-0000		1	PLATE	
040	2531476-0000		2	GUIDE	
050	2694027-0000		1	SHAFT	
105	2694081-0000		1	MOTOR BRACKET	
200	2644109-0000		4	WHEEL	
320	90459-4811		1	WORM GEAR 10.756.248	
Common Parts					
010	2531489-0000		1	SLEEVE	
	311102-0413		*1*	*PARALLELL PIN ISO 2338 8M6X50 ST*	
	312318-0362		*1*	*SCREW ISO4029 M6X8 A4*	
030	2644364-0000		2	SHAFT	
060	2694026-0000		1	HUB	
070	2525664-0000		1	PLATE	
080	1532961-0000		1	BRACKET	
090	2525666-0000		1	HUB	
100	2525665-0000		1	.GEAR WHEEL	
110	2504641-0000		1	GEAR WHEEL	
120	1532947-0000		1	BRACKET	
130	2539497-0000		1	PULLEY	
140	2539537-0000		1	PULLEY	
150	2531951-0000		1	SUPPORT	
160	2531952-0000		1	ROLLER	
170	2570876-0000		3	SPACER	
180	2569830-0000		1	COVER	
190	2531474-0000		1	STEERING	
210	2633447-0000		24	BUSHING	
220	2641241-0000		4	PIN	
230	2641243-0000		4	FLANGE	
300	90459-0329		1	TIMING BELT 8X920X70	
310	90459-0352		2	PLUG, GPN 320 GL 763	
330	311103-0351		2	PARALLEL PIN ISO 2338 6M6X16 A1	
340	311103-0306		1	PARALLEL PIN ISO 2338 5M6X12 A1	
350	311103-0401		2	PARALLEL PIN ISO 2338 8M6X20 A1	
360	311103-0454		2	PARALLEL PIN ISO 2338 10M6X20 A1	
370	312105-0366		3	SCREW M6S ISO 4017 M6X12 A480	
380	312105-0380		6	SCREW M6S ISO 4014 M6X50 A480	
390	312105-0451		3	SCREW M6S ISO 4017 M8X20 A480	
400	312105-0501		1	SCREW M6S ISO 4014 M10X50 A480	
410	312105-0536		1	SCREW M6S ISO 4017 M12X30 A480	
420	312105-0540		4	SCREW M6S ISO 4017 M12X40 A480	
430	312105-0543		3	SCREW M6S ISO 4014 M12X55 A480	
440	312109-0501		1	SCREW M6S ISO 4017 M10X50 A480	
450	312115-0323		3	SCREW ISO4762 M5X8 A4	
460	312115-0370		1	SCREW ISO4762 M6X20 A4	
470	312115-0453		2	SCREW ISO4762 M8X25 A4	
480	312155-0291		3	SCREW EN 10642 MF6S M4X12 A480	
490	312155-0366		12	SCREW EN 10642 MF6S M6X12 A480	
500	312155-0495		1	SCREW EN 10642 MF6S M10X30 A480	
510	312318-0285		1	SCREW ISO4029 M4X6 A4	
520	312605-0320		1	HEXAGON NUT, M6M M10 A280	
530	315105-0153		9	WASHER BRB6,4X12RFR	
540	315105-0165		7	WASHER BRB8,4X16RFR	
550	315105-0173		1	WASHER BRB10,5X22RFR	
560	315105-0178		8	WASHER BRB13X24RFR	
570	315202-0622		1	O-RING 129,77X3,53 MM	
580	315204-0303		1	O-RING 59,5X3 MM	
590	315221-0187		1	RADIAL SEAL 40X72X7 MM	
600	315221-0200		1	RADIAL SEAL 50X72X8 MM	
610	315751-0127		1	RETAINING RING FOR SHAFT DIN 471 40 A2	
620	321306-0108		2	BALL BEARING, 40X68X15 MM	
630	321313-0107		1	BALL BEARING, 35X72X17MM	
640	344502-0021		1	GREASE NIPPLE STRAIGHT M6	
650	315204-0319		1	O-RING 139,5X3 MM	
660	315205-0729		2	O-RING 39,34X2,62 MM	
670	312105-0455		4	SCREW M6S ISO 4017 M8X30 A480	
680	312105-0453		24	SCREW M6S ISO 4017 M8X25 A480	
690	359705-0007		2	WARNING SIGN ISO, HOT SURFACE	
700	90459-2735		4	ROT.SPRAY NOZZLE, 5MC.049.17.AF.00.02	
710	342980-0313		1	BANJO-HOLLOW BOLT COUPL,EXT.THR.02-G1/8"	
720	342981-0113		2	BANJO CONNEC,RING,FOR PLAST.TUBE 6-G1/8"	
730	90458-2956		1	ELBOW PIPE JOINT, EXT.THREAD, D=6MM-G1/8	
740	342722-0202		1	PIPE COUPLING 1/8" D=6MM	
750	90166-0081	MM	400	TUBE 6 MM PA BLUE	
760	90166-0081	MM	1600	TUBE 6 MM PA BLUE	
770	312115-0455		1	SCREW ISO4762 M8X30 A4	
780	312115-0372		1	SCREW ISO4762 M6X25 A4	

Machine Type | Group Description | Used-In | Group Number | Page No

This page is intentionally left blank.

ECM: 109095 - 20031023
Group number: 2550188-0100
Assembly Drawing:

Pos	Part No	UN	Qty	Description	Page No
-					
	2525665-0000		1	.GEAR WHEEL	
	2504641-0000		1	GEAR WHEEL	
	321313-0107		1	BALL BEARING, 35X72X17MM	
	321306-0108		2	BALL BEARING, 40X68X15 MM	
	315751-0127		1	RETAINING RING FOR SHAFT DIN 471 40 A2	
	315221-0200		1	RADIAL SEAL 50X72X8 MM	
	315221-0187		1	RADIAL SEAL 40X72X7 MM	
	90459-0329		8	TIMING BELT 8X920X70	
	90214-0236		6	BALL BEARING, 40X80X18 MM	
	90091-0298		6	RADIAL SEAL 45X65X8 MM DUST LIP	
	90091-0296		6	RADIAL SEAL 40X52X7 MM DUST LIP	

Pos	Part No	UN	Qty	Description	Page No

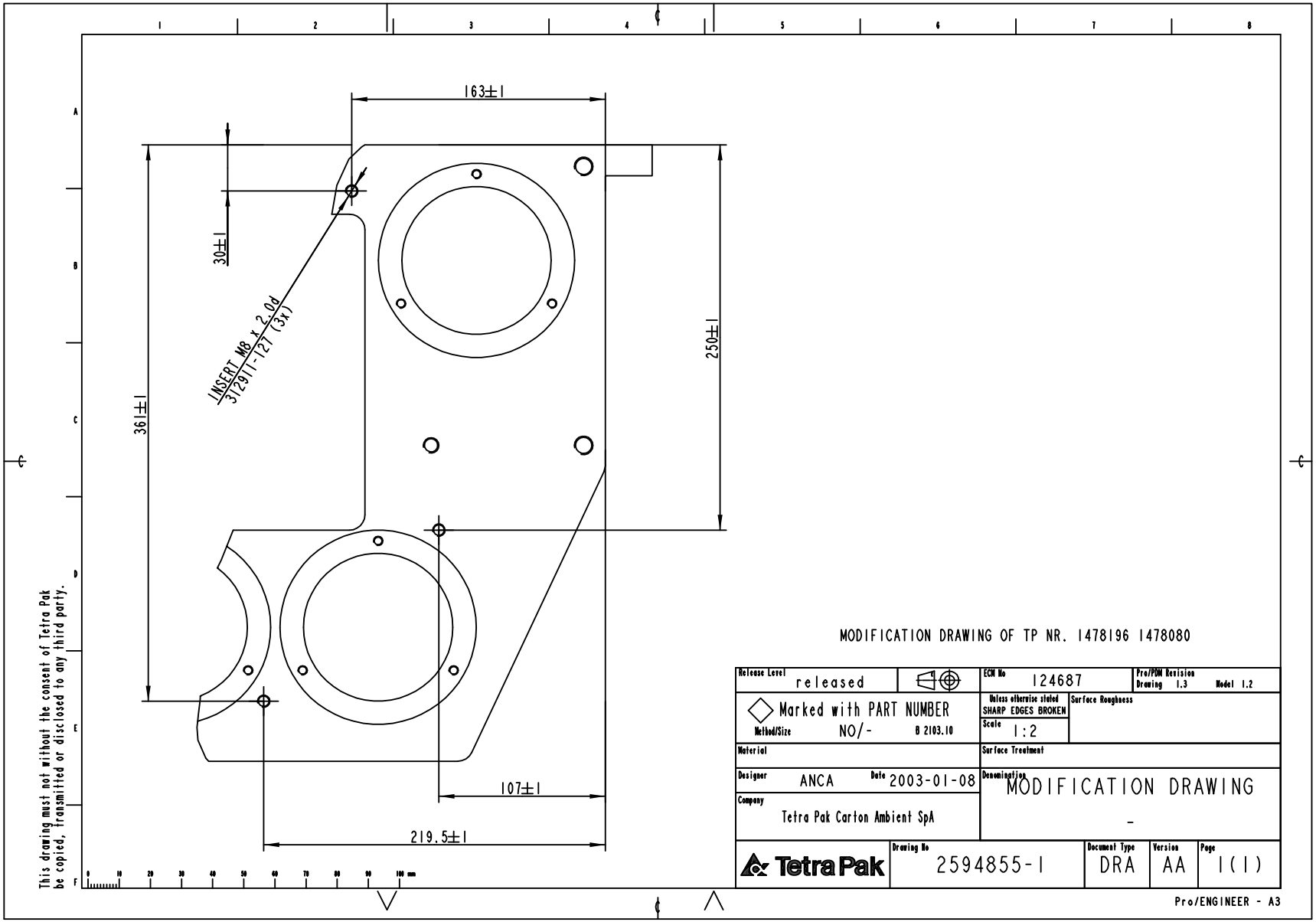
163±1
30±1
INSERT M8 x 2.0d
3729I1-127 (3x)
361±1
250±1
107±1
219.5±1
MODIFICATION DRAWING OF TP NR. 1478196 1478080
Release Level released
ECN No 124687
Pro/PDM Revision Drawing 1.3 Model 1.2
Marked with PART NUMBER
Method/Size NO/- B 2103.10
Unless otherwise stated SHARP EDGES BROKEN
Scale 1:2
Surface Roughness
Material
Surface Treatment
Designer ANCA Date 2003-01-08
Company Tetra Pak Carton Ambient SpA
Denomination MODIFICATION DRAWING
-
Tetra Pak
Drawing No 2594855-1
Document Type DRA
Version AA
Page 1(1)
Pro/ENGINEER - A3
This drawing must not without the consent of Tetra Pak be copied, transmitted or disclosed to any third party.

ECM: - -
Group number: 2594855-0001
Assembly Drawing: 2594855-1_1_AA

Pos	Part No	UN	Qty	Description	Page No	Pos	Part No	UN	Qty	Description	Page No

THIS GROUP HAS NO LIST.

Machine Type	Group Description	Used-In	Group Number	Page No

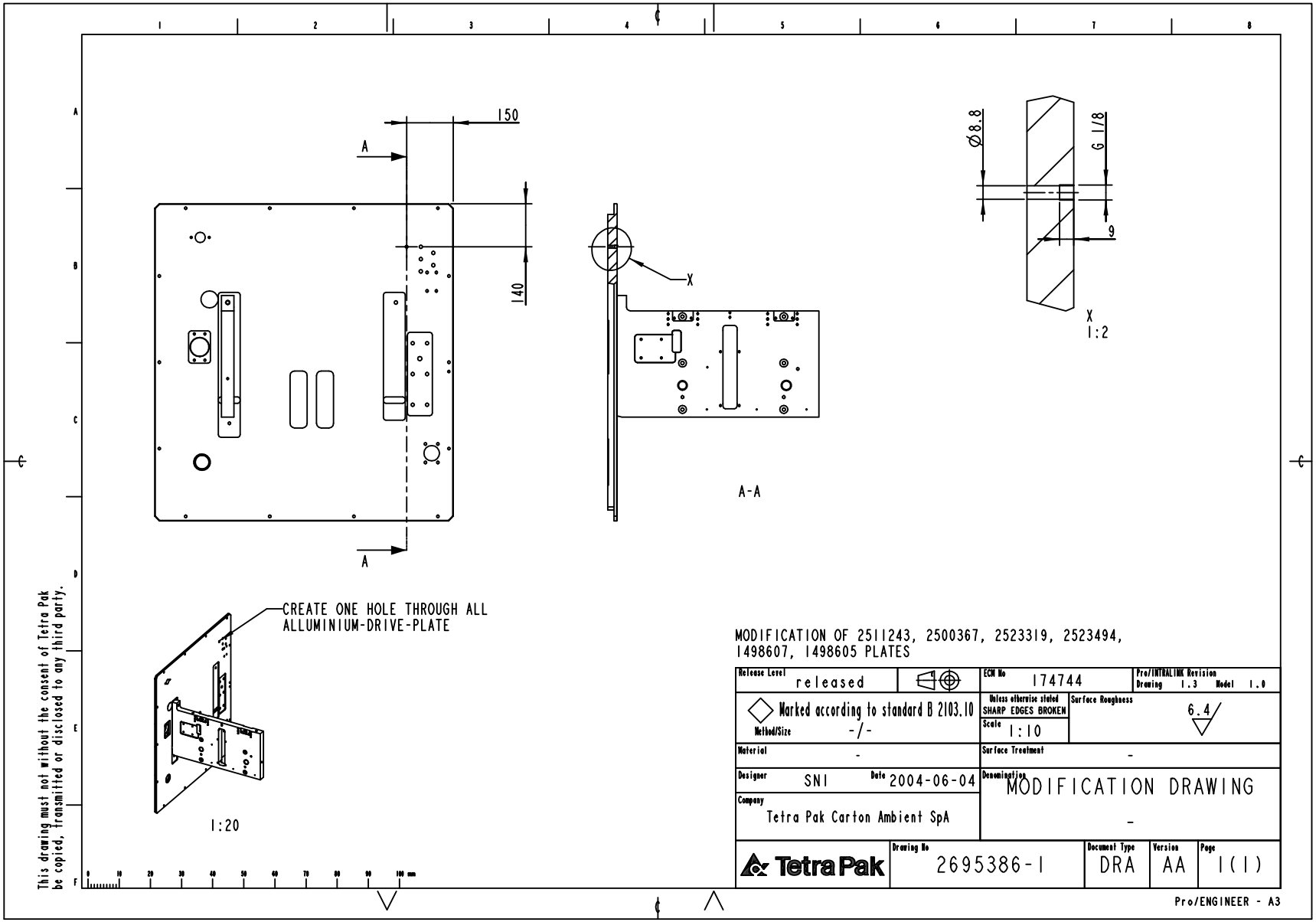
150
140
A
A
X
A-A
Ø8.8
G 1/8
9
X
1:2
CREATE ONE HOLE THROUGH ALL
ALLUMINIUM-DRIVE-PLATE
1:20
MODIFICATION OF 2511243, 2500367, 2523319, 2523494,
1498607, 1498605 PLATES
Release Level released
ECN No 174744
Pro/INTRALINK Revision Drawing 1.3 Model 1.0
Marked according to standard B 2103.10
Method/Size -/-
Unless otherwise stated SHARP EDGES BROKEN
Scale 1:10
Surface Roughness 6.4
Material -
Surface Treatment -
Designer SNI
Date 2004-06-04
Denomination MODIFICATION DRAWING
Company Tetra Pak Carton Ambient SpA
Drawing No 2695386-1
Document Type DRA
Version AA
Page 1(1)
Pro/ENGINEER - A3
This drawing must not without the consent of Tetra Pak be copied, transmitted or disclosed to any third party.

ECM: - -
Group number: 2695386-0001
Assembly Drawing: 2695386-1_1_AA

Pos	Part No	UN	Qty	Description	Page No	Pos	Part No	UN	Qty	Description	Page No

THIS GROUP HAS NO LIST.

Machine Type	Group Description	Used-In	Group Number	Page No

Tetra Pak

SPC
Spare Parts Catalogue

Part No	Description	Page No
90091-0296	RADIAL SEAL 40X52X7 MM DUST LIP	1-9
90091-0298	RADIAL SEAL 45X65X8 MM DUST LIP	1-9
90166-0081	TUBE 6 MM PA BLUE	1-5, 1-7
90214-0236	BALL BEARING, 40X80X18 MM	1-9
90287-0359	SCREW M6S ISO 4017 M10X100 A480	1-3
90458-2956	ELBOW PIPE JOINT, EXT.THREAD, D=6MM-G1/8	1-5, 1-7
90459-0329	TIMING BELT 8X920X70	1-5, 1-7, 1-9
90459-0352	PLUG, GPN 320 GL 763	1-5, 1-7
90459-2735	ROT.SPRAY NOZZLE, 5MC.049.17.AF.00.02	1-5, 1-7
90459-4811	WORM GEAR 10.756.248	1-5, 1-7
90459-4812	WORM GEAR 10.756.247	1-5, 1-7
311103-0306 ..	PARALLEL PIN ISO 2338 5M6X12 A1	1-5, 1-7
311103-0351 ..	PARALLEL PIN ISO 2338 6M6X16 A1	1-5, 1-7
311103-0401 ..	PARALLEL PIN ISO 2338 8M6X20 A1	1-5, 1-7
311103-0454 ..	PARALLEL PIN ISO 2338 10M6X20 A1	1-5, 1-7
312105-0366 ..	SCREW M6S ISO 4017 M6X12 A480	1-5, 1-7
312105-0380 ..	SCREW M6S ISO 4014 M6X50 A480	1-5, 1-7
312105-0451 ..	SCREW M6S ISO 4017 M8X20 A480	1-5, 1-7
312105-0453 ..	SCREW M6S ISO 4017 M8X25 A480	1-5, 1-7
312105-0455 ..	SCREW M6S ISO 4017 M8X30 A480	1-5, 1-7
312105-0501 ..	SCREW M6S ISO 4014 M10X50 A480	1-5, 1-7
312105-0536 ..	SCREW M6S ISO 4017 M12X30 A480	1-5, 1-7
312105-0540 ..	SCREW M6S ISO 4017 M12X40 A480	1-5, 1-7
312105-0543 ..	SCREW M6S ISO 4014 M12X55 A480	1-5, 1-7
312109-0501 ..	SCREW M6S ISO 4017 M10X50 A480	1-5, 1-7
312115-0323 ..	SCREW ISO4762 M5X8 A4	1-5, 1-7
312115-0370 ..	SCREW ISO4762 M6X20 A4	1-5, 1-7
312115-0372 ..	SCREW ISO4762 M6X25 A4	1-5, 1-7
312115-0453 ..	SCREW ISO4762 M8X25 A4	1-5, 1-7
312115-0455 ..	SCREW ISO4762 M8X30 A4	1-5, 1-7
312155-0291 ..	SCREW EN 10642 MF6S M4X12 A480	1-5, 1-7
312155-0366 ..	SCREW EN 10642 MF6S M6X12 A480	1-5, 1-7
312155-0495 ..	SCREW EN 10642 MF6S M10X30 A480	1-5, 1-7
312318-0285 ..	SCREW ISO4029 M4X6 A4	1-5, 1-7
312605-0320 ..	HEXAGON NUT, M6M M10 A280	1-5, 1-7
315105-0153 ..	WASHER BRB6,4X12RFR	1-5, 1-7
315105-0165 ..	WASHER BRB8,4X16RFR	1-5, 1-7
315105-0173 ..	WASHER BRB10,5X22RFR	1-5, 1-7
315105-0178 ..	WASHER BRB13X24RFR	1-5, 1-7
315202-0622 ..	O-RING 129,77X3,53 MM	1-5, 1-7
315204-0303 ..	O-RING 59,5X3 MM	1-5, 1-7
315204-0319 ..	O-RING 139,5X3 MM	1-5, 1-7
315205-0729 ..	O-RING 39,34X2,62 MM	1-5, 1-7
315221-0187 ..	RADIAL SEAL 40X72X7 MM	1-5, 1-7, 1-9
315221-0200 ..	RADIAL SEAL 50X72X8 MM	1-5, 1-7, 1-9
315751-0127 ..	RETAINING RING FOR SHAFT DIN 471 40 A2	1-5, 1-7, 1-9
321306-0108 ..	BALL BEARING, 40X68X15 MM	1-5, 1-7, 1-9
321313-0107 ..	BALL BEARING, 35X72X17MM	1-5, 1-7, 1-9
342722-0202 ..	PIPE COUPLING 1/8" D=6MM	1-5, 1-7
342980-0313 ..	BANJO-HOLLOW BOLT COUPL,EXT.THR.02-G1/8"	1-5, 1-7
342981-0113 ..	BANJO CONNEC,RING,FOR PLAST.TUBE 6-G1/8"	1-5, 1-7
344502-0021 ..	GREASE NIPPLE STRAIGHT M6	1-5, 1-7
359705-0007 ..	WARNING SIGN ISO, HOT SURFACE	1-5, 1-7
767141-0106 ..	TAP	1-3
1532947-0000 .	BRACKET	1-5, 1-7
1532961-0000 .	BRACKET	1-5, 1-7
2504641-0000 .	GEAR WHEEL	1-5, 1-7, 1-9
2525664-0000 .	PLATE	1-5, 1-7
2525665-0000 ..	GEAR WHEEL	1-5, 1-7, 1-9
2525666-0000 .	HUB	1-5, 1-7
2531474-0000 .	STEERING	1-5, 1-7
2531475-0000 .	PLATE	1-5, 1-7
2531476-0000 .	GUIDE	1-5, 1-7
2531489-0000 .	SLEEVE	1-5, 1-7
2531951-0000 .	SUPPORT	1-5, 1-7
2531952-0000 .	ROLLER	1-5, 1-7
2532004-0000 .	PLATE	1-5, 1-7
2539497-0000 .	PULLEY	1-5, 1-7
2539537-0000 .	PULLEY	1-5, 1-7
2542321-0200 .	GEAR BOX	1-3
2547483-0106 .	DOCUMENT FOLDER	1-3
2550188-0100 .	SPARE PARTS	1-3
2569830-0000 .	COVER	1-5, 1-7
2570876-0000 .	SPACER	1-5, 1-7
2594855-0001 .	MODIFICATION DRAWING	1-3
2633447-0000 .	BUSHING	1-5, 1-7
2640362-0000 .	TOOL	1-3
2641241-0000 .	PIN	1-5, 1-7
2641243-0000 .	FLANGE	1-5, 1-7
2644108-0000 .	WHEEL	1-5, 1-7
2644109-0000 .	WHEEL	1-5, 1-7
2644364-0000 .	SHAFT	1-5, 1-7
2694026-0000 .	HUB	1-5, 1-7
2694027-0000 .	SHAFT	1-5, 1-7

Part No	Description	Page No
2694081-0000	.MOTOR BRACKET	1-5, 1-7
2694094-0000	.SHAFT	1-5, 1-7
2695386-0001	.MODIFICATION DRAWING	1-3

Tetra Pak