SPC
Spare Parts Catalogue

TBA/22 040V

648571-040V

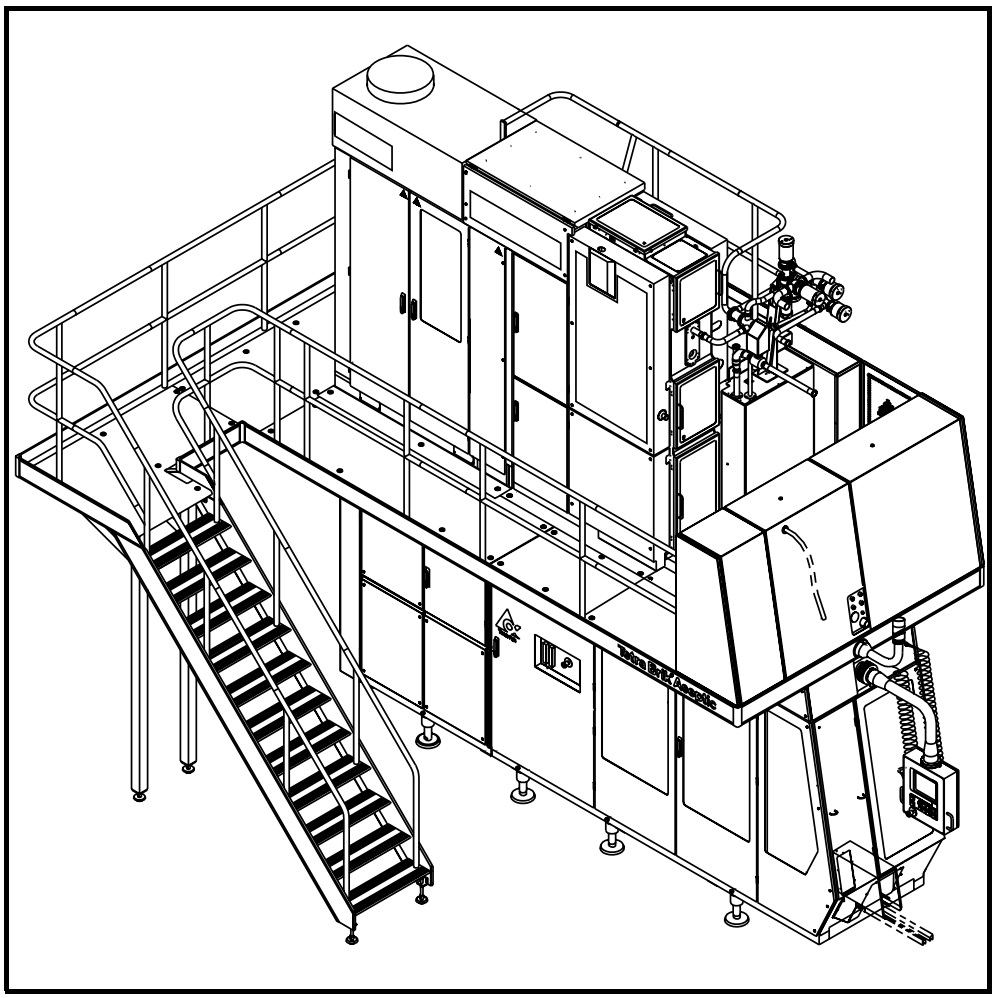

0-Series

Tetra Pak

Doc No: SPC-81511-0102

Main Groups of the Machine

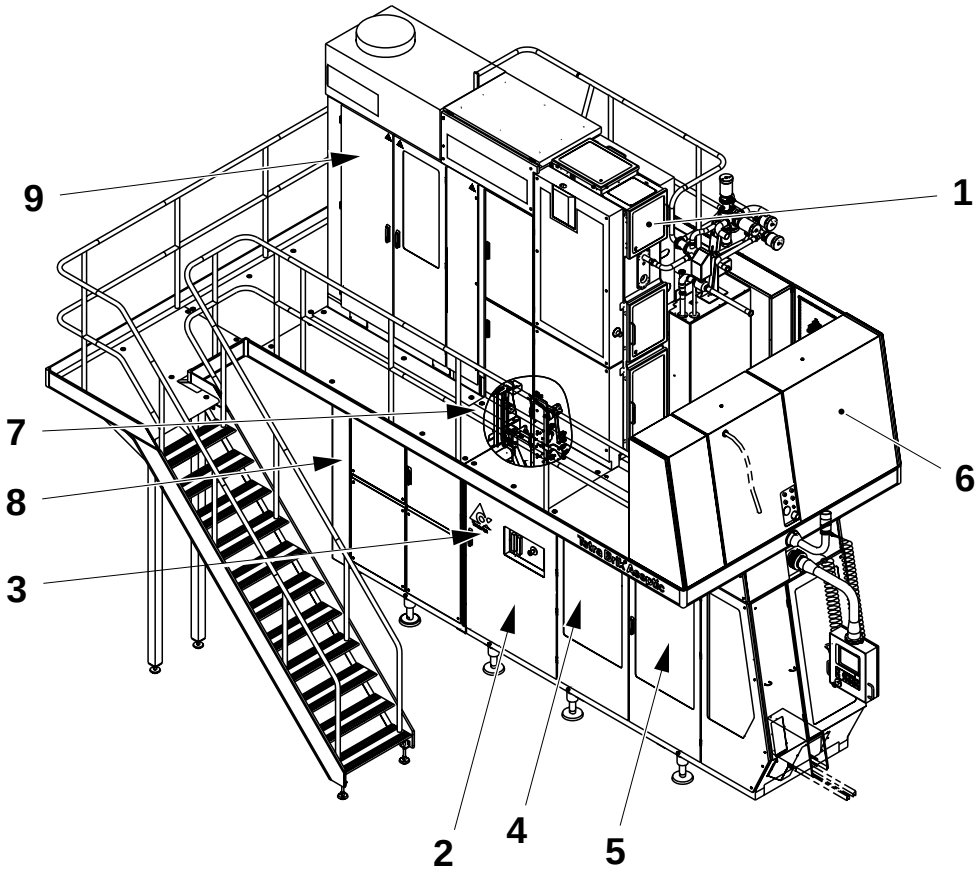

1 - Superstructure
2 - Machine Body
3 - Drive
4 - Jaw System
5 - Final Folder
6 - Service Unit
7 - Strip Applicator
8 - Automatic Splicing Unit
9 - Electrical Cabinet

For the correct machine data, check your machine specification, supplied with the machine!

This document is valid for:

Series No/ Machine No Sign.

SPC
Spare Parts Catalogue

Tetra Brik Aseptic
TBA/22
648571-040V

Table of Content:

Introduction **5**

Superstructure
B- 648521-0300 ..... , **9**

Machine Body
B- 648522-0400 ..... , **177**

Drive
B- 648523-0600 ..... , **283**

Jaw System
B- 648524-0400 ..... , **307**

Final Folder Module
B- 648525-0400 ..... , **389**

Service Unit
B- 648506-0300 ..... , **419**

Strip Applicator
B- 648507-0400 ..... , **497**

Automatic Splicing Unit
B- 648513-0400 ..... , **539**

Electrical Cabinet
B- 648538-0200 ..... , **677**

Part number index ..... , **743**

0-Series

Doc No: SPC-81511-0102

Issue 2000-03

Tetra Pak

Tetra Brik Packaging Systems S.p.A.

General information

Manufacturer

This machine is produced by:
Tetra Brik Packaging Systems S.p.A.
Via Delfini 1
41100 Modena /Italy

Document producer

This document has been produced by:
Tetra Brik Packaging Systems S.p.A.
Technical Publications
Via Delfini 1
41100 Modena /Italy

Number of pages

This document contains totally **788 pages,** including the first **8** introduction pages.

Copyright © 2000 Tetra Brik Packaging Systems S.p.A.

All rights reserved. No parts of this document may be reproduced or copied in any forms or by any means, without written permission from Tetra Brik Packaging Systems S.p.A..

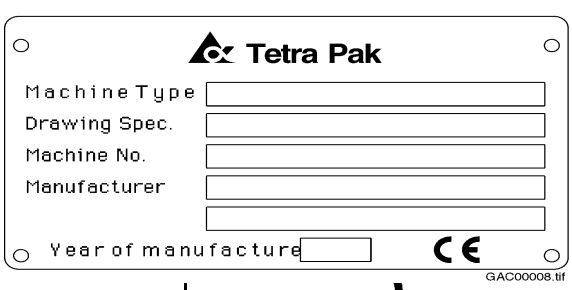

Figure 1

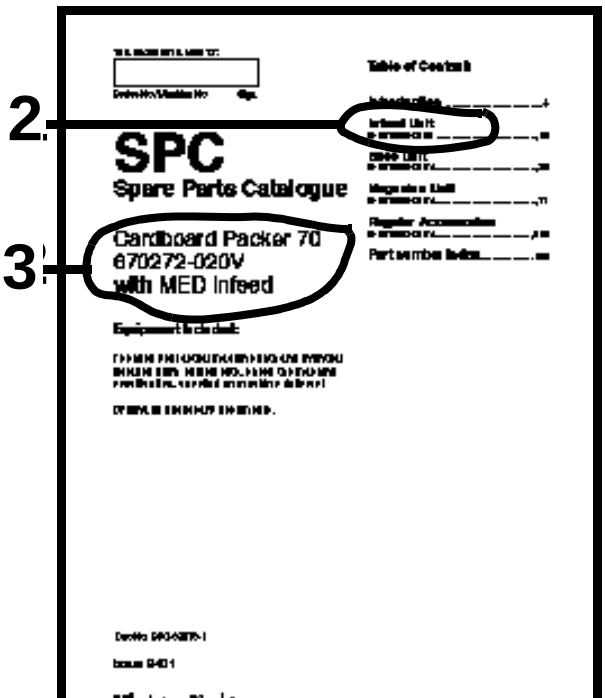

Figure 2

Figure 3



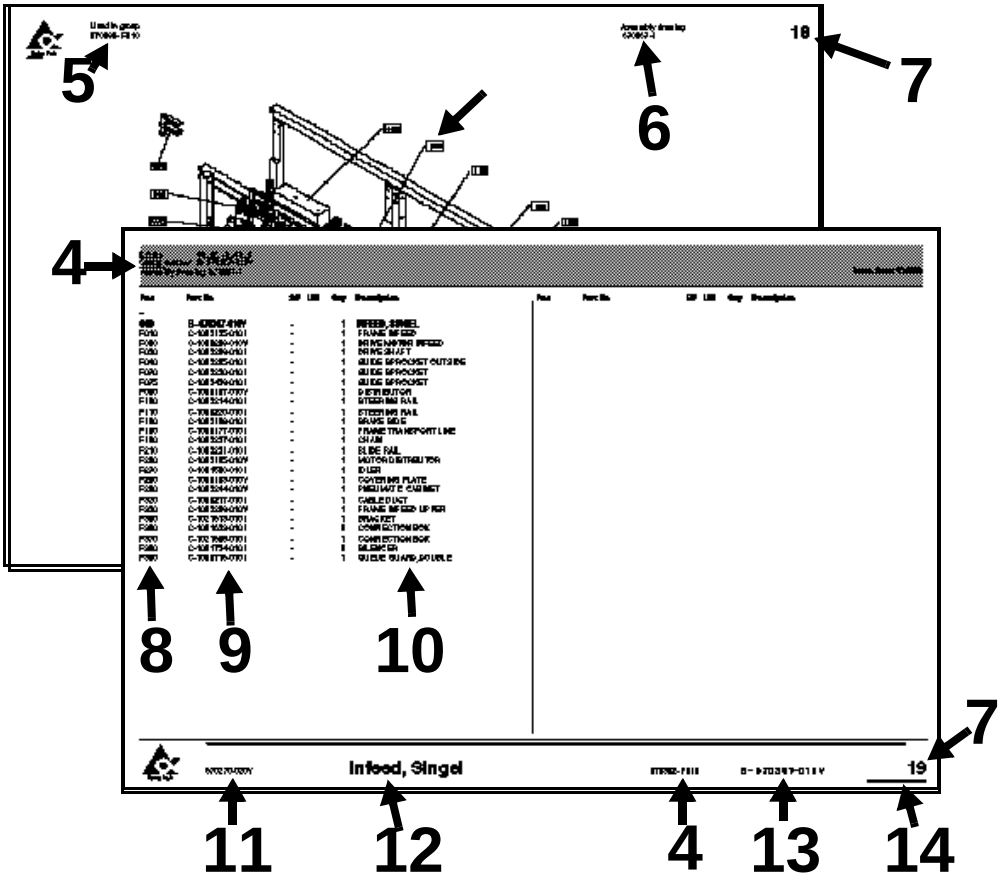

Figure 4

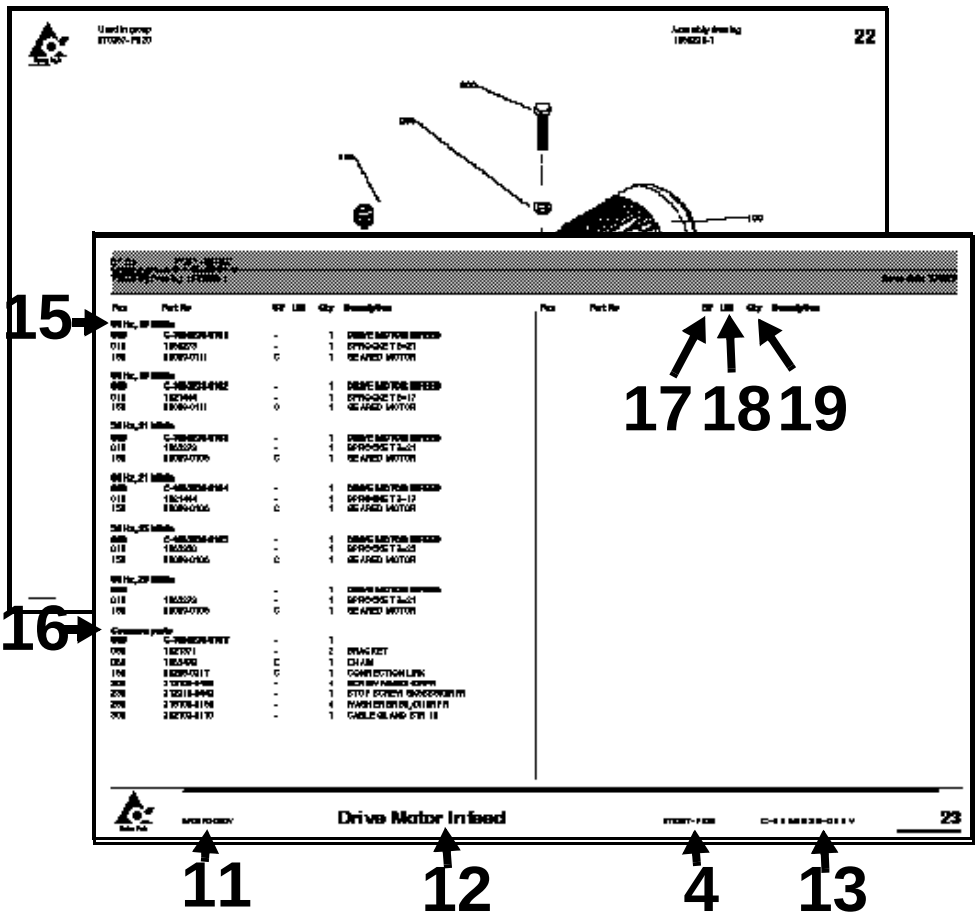

Figure 5

General information

Service

When ordering spare parts for your machine, contact the nearest Tetra Pak service station.

Machine identification

This machine plate is an example of the type of machine plate, attached to the machine frame. The plate carries data needed when contacting Tetra Pak concerning this particular machine.
The location of the different machine plates is shown on the page “Location of machine number plates”, **see page 2**

Purpose of the Spare Parts Catalogue.

The purpose of the Spare Parts Catalogue (SPC) is to provide the technicians and contact personnel with information on how to find and order spare parts for maintenance and service of the machine.
For instructions of how to replace parts and adjust machine setup, see the Maintenance Manual (MM).

Delivered documentation

The technical documentation delivered with this machine is stated in the Machine Specification.
Note! If any of these documents is missing, it must be reported in the document **Start Up Machine Quality Report.** For more information, see chapter 8 Preparation for Commissioning in the Installation Manual.
It is important that you keep these documents for the life of the equipment, and pass the documents on to any subsequent holder or user of the equipment.

Design modification

The content of this document is in accordance with the design and construction of the machine at the time it was delivered from the Tetra Pak machine production facility.

Copyright © 2000 Tetra Brik Packaging Systems S.p.A.

All rights reserved. No parts of this document may be reproduced or copied in any forms or by any means, without written permission from Tetra Brik Packaging Systems S.p.A..

Further copies

Additional copies can be ordered from the nearest Tetra Pak service station. When ordering technical publications, always quote the document number printed on the front cover of the document concerned.

Tetra Pak Part numbering system

The third and forth digits in the subnumber, specify one unique group which can be ordered. If the forth digit is replaced by a “V”, the number combination only points to a bill-of-material document.
The first and second digits in the sub-number, specify the development step (model) of the machine or group. **(see fig. 3)**
Main number of machine /group /article, depending on level.
Prefix, giving information about level, eg.
A = Machine
B = Main section (*****)
C = Groups and subgroups
***)** Customized distribution machines are registered as B-level as well.

How to find the correct Spare Part Number

A. Check that the data on your machine sign, and /or machine specification, corresponds with the catalogue. **(see fig.1)**

1) Main groups of the machine

B. The second catalogue sheet contains a table of content for the main groups, included in the catalogue. The information regarding machine and main group status MUST correspond with your machine specification.
Locate and choose the main groups page number (1), in which you want to search for spare parts.
(see fig. 2)

2) Main group
3) Machine type

C. Search in the main group illustration, the item number, which may hold your wanted spare part. Go to the text page below and find the page number for the actual group. **(see fig. 4)**

4) Internal information, such as latest Engineering Change, bill-of-material included in the catalogue page.
5) Used-In reference to next higher level in the machine structure
6) Assembly drawing number
7) Continuous page numbering through the document
8) Pos number corresponding to illustration
9) Group or article number.
10) Group or article description. The letter “B” in front of some article numbers indicates that this article contains other parts, shown in an additional page at the end the section. Letter “A” indicatates a subgroup number with an own page directly after the actual page.
11) Machine type including development staus
12) Group description
13) Group number (bill-of-material) including development status
14) Document number

D. Continue to the found page number, and search in the illustration for your spare part. Go to the text row for the found item number, and read the part number. Take eventual variant headings in consideration; if you are unsure, read your machine specification. **(see fig. 5)**

15) Variant heading, eg volume, left /right etc.
16) Heading for common parts
17) SP = Code for articles, which are included into various spare part kits.

A = Stop function, no rep/available/bypassed
B = Stop function, rep/available/bypassed
C = Don’t stop function, can bypassed
D = Seldom break, long time production
E = 100 operating hours
F = 250 operating hours
G = 500 operating hours
H = 750 operating hours
I = 1000 operating hours
J = 2000 operating hours
K = 3000 operating hours
L = 4000 operating hours
M = 5000 operating hours
N = 6000 operating hour
O = 7000 operating hour
P = 8000 operating hour
Q = 9000 operating hour
R = 10000 operating hour
S = 11000 operating hours
T = 12000 operating hours
U = 13000 operating hours
V = 14000 operating hours
W = 15000 operating hour
X = 20000 operating hour
Y = 25000 operating hour
Z = 30000 operating hour

18) UN = Short code for measure units, eg mm, kg etc.
19) Qty = Number of items needed in the complete assembly.

SPC

Spare Parts Catalogue

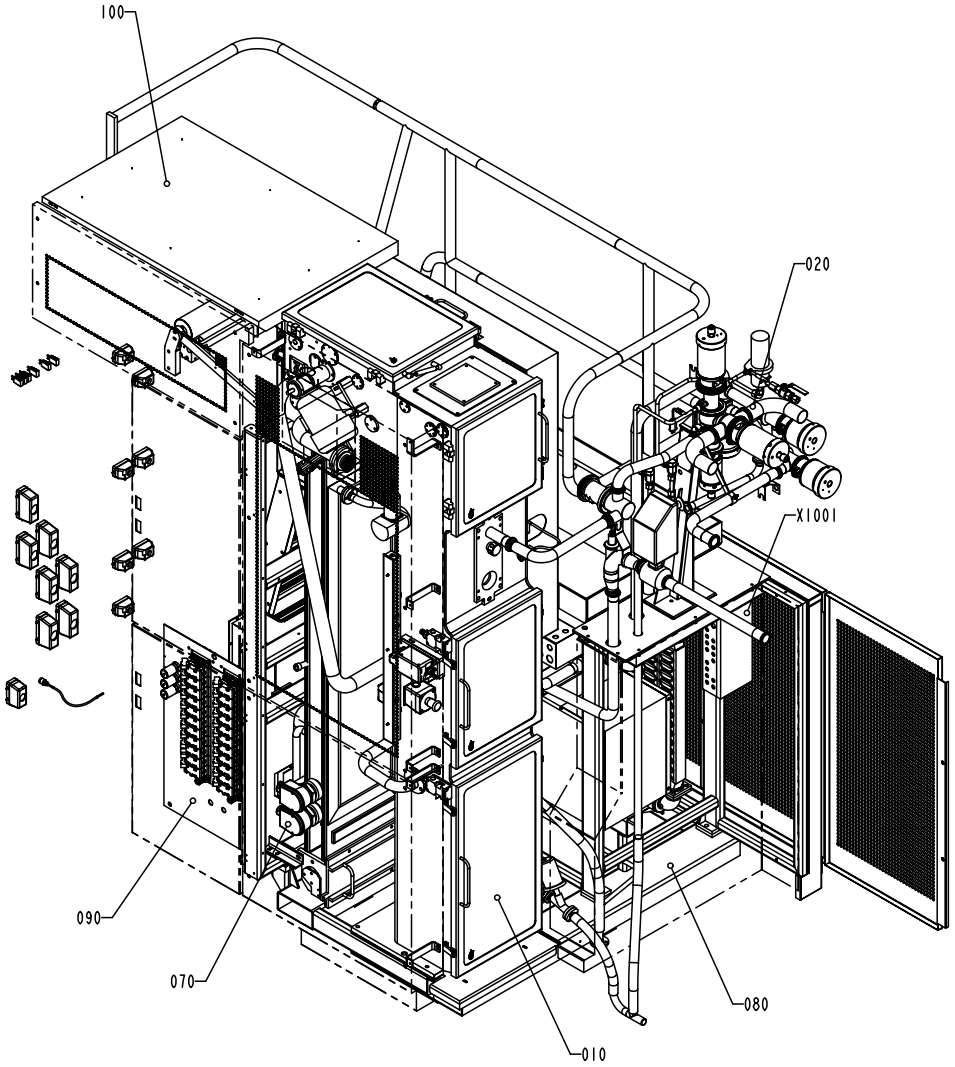

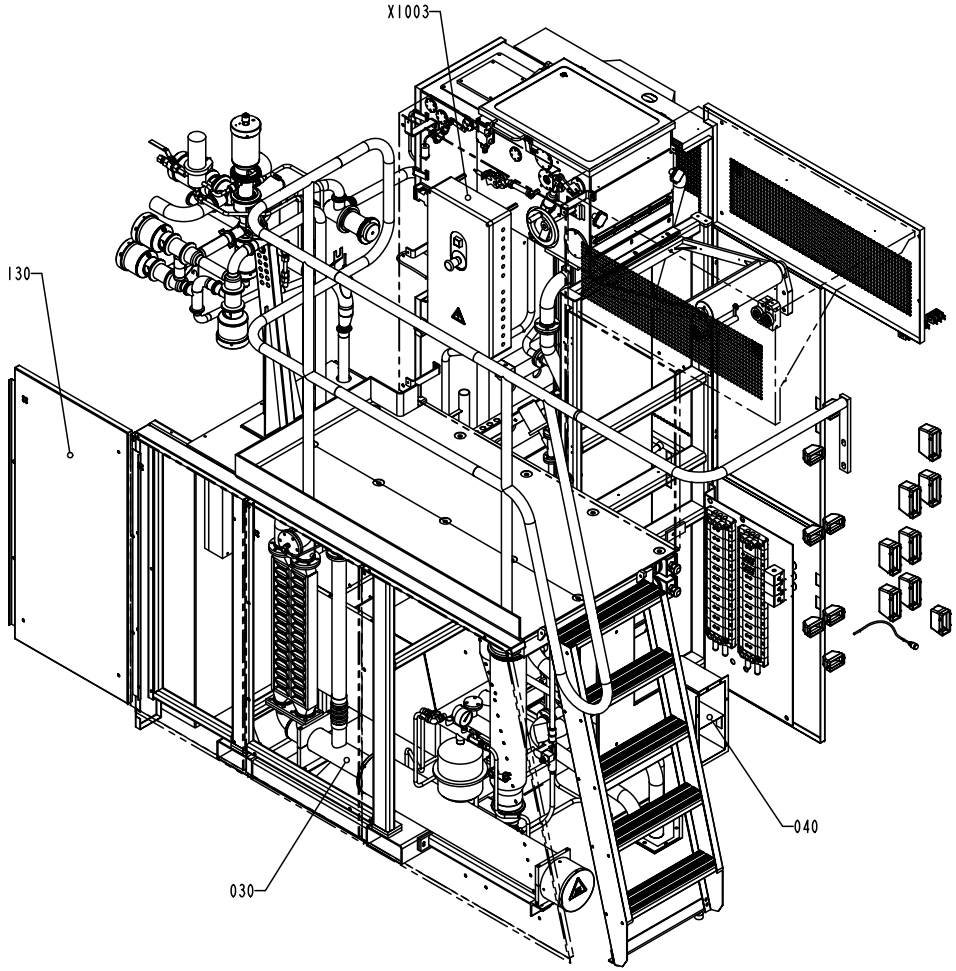

S - 648521-3
ECN 71899

Pos	Part No	SP	UN	Qty	Description	Page No
Common parts						
010	A 577102-0300	-		1	ASEPTIC CHAMBER	**13**
020	A 577103-0200	-		1	FILLING SYSTEM	**69**
030	A 577104-0200	-		1	STERILE AIR SYSTEM	**109**
040	A1347140-0100	-		1	CABLE TRENCH	**131**, **133**
070	A1347171-0100	-		1	HYDROGEN PEROXIDE	**135**
080	A1279802-0200	-		1	FRAME	**145**
090	A1347547-0100	-		1	PNEUMATIC SYSTEM SUPERSTR	**157**
100	A1285400-0200	-		1	COVERING PANEL	**167**
130	A1347615-0100	-		1	COVERING PANEL	**169**
X1001	A1347191-0100	-		1	CONNECTION BOX	**171**
X1003	A1296847-0200	-		1	CONNECTION BOX	**173**

Pos	Part No	SP	UN	Qty	Description	Page No

ASEPTIC CHAMBER

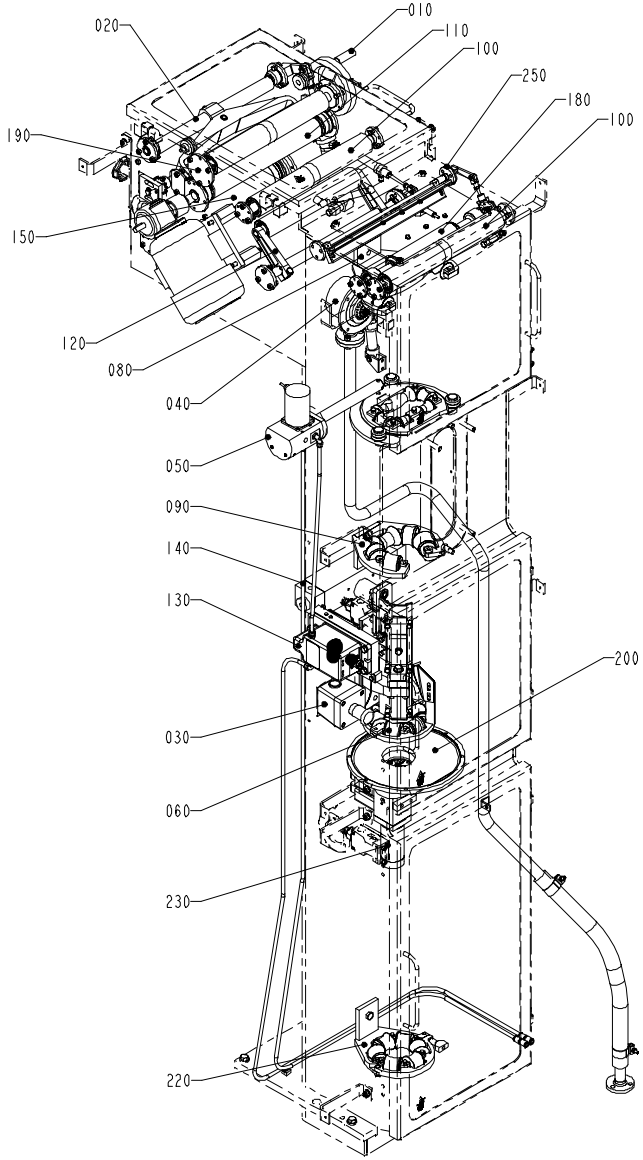

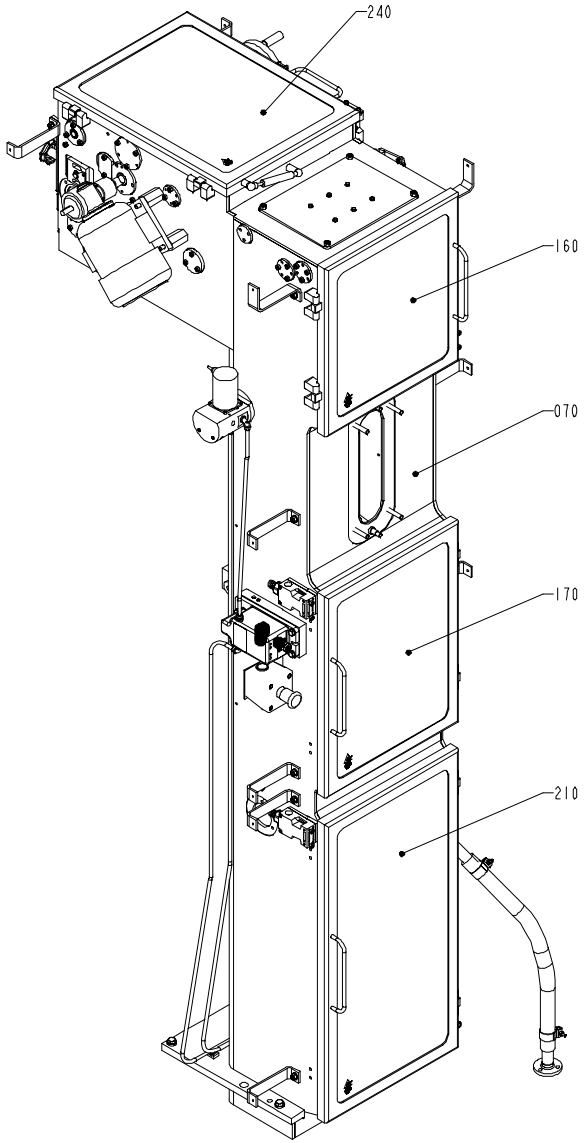

S - 577102-3
ECN 73068

Pos	Part No	SP	UN	Qty	Description	Page No
Common parts						
010	A 996451-0100	-		1	CRANK	**15**
020	A1334008-0200	-		1	CALENDER ROLLER	**17**
030	A1035382-0100	-		1	EMERGENCY STOP	**19**
040	A1347875-0100	-		1	BALL	**21**
050	A1195161-0200	-		1	MOVABLE FORMING RING	**23**
060	A1195162-0100	-		1	LOWER FORMING RING	**25**, **27**
070	A1195163-0200	-		1	PILLAR	**29**
080	A1195164-0200	-		1	UPPER FORMING RING	**31**
090	A1195165-0200	-		1	FORMING RING	**33**
100	A1195166-0200	-		2	PAPER GUIDE	**35**
110	A1347485-0100	-		1	DRIVE UNIT	**37**
120	A1195173-0300	-		1	PENDULUM ROLLER	**39**
130	A1195174-0200	-		1	LONGITUDINAL SEALING	**41**
140	A1195175-0100	-		1	SHORT STOP	**43**
150	A1195180-0100	-		1	BENDING ROLLER	**45**
160	A1195181-0100	-		1	DOOR	**47**
170	A1195182-0100	-		1	DOOR	**49**
180	A1195183-0200	-		1	BENDING ROLLER	**51**
190	A1195209-0200	-		1	BENDING ROLLER	**53**
200	A1195214-0100	-		1	SEAL	**55**
210	A1195269-0100	-		1	DOOR	**57**
220	A1348895-0100	-		1	TUBE SUPPORT	**59**
230	A1095864-0100	-		1	SPRAY SYSTEM	**61**
240	A1347493-0100	-		1	DOOR	**63**
250	A1095790-0100	-		1	DRYING TUNNEL LID	**65**, **67**

Pos	Part No	SP	UN	Qty	Description	Page No

CRANK

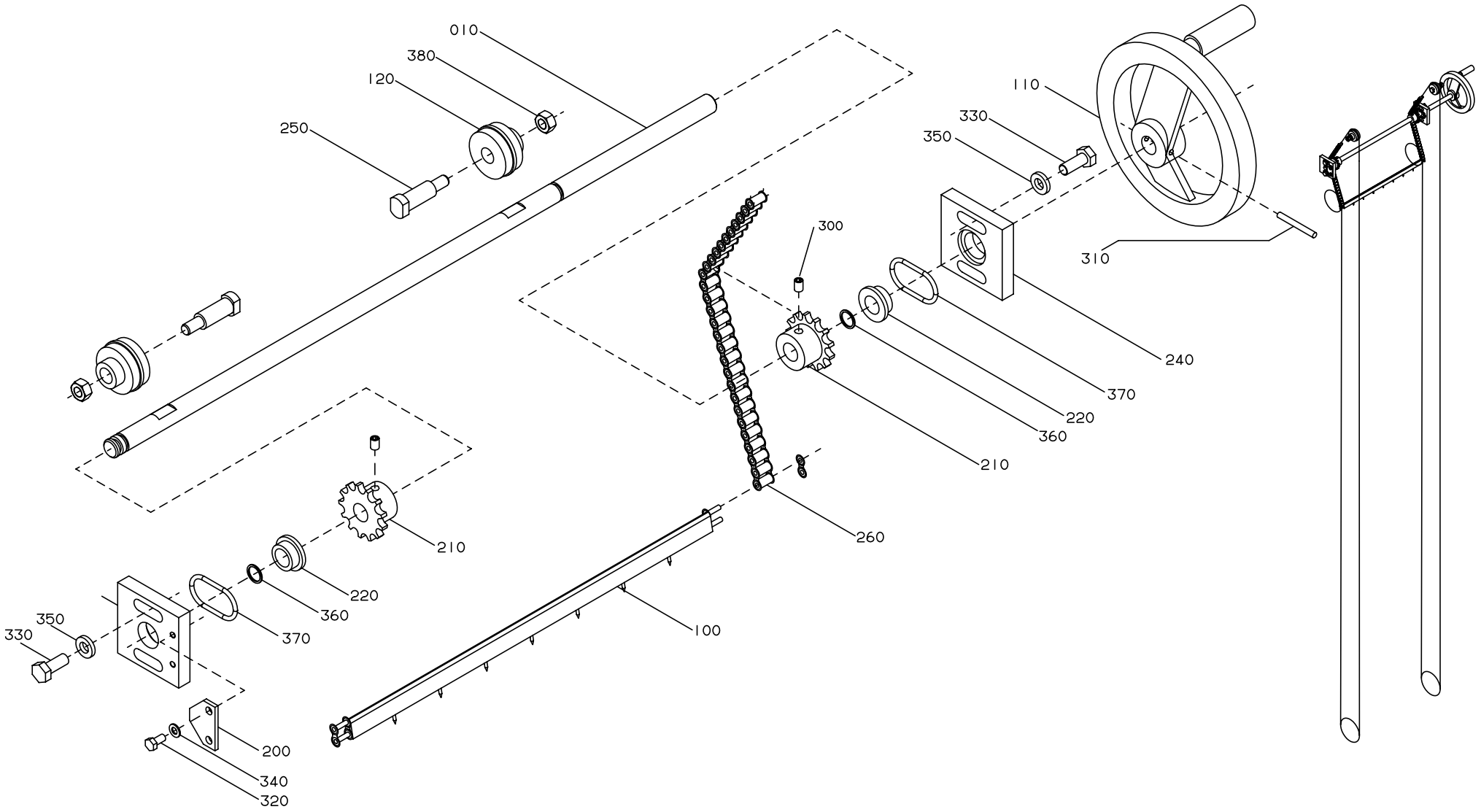

S-996451-1
ECN 21833

Pos	Part No	SP	UN	Qty	Description	Page No
Common parts						
010	1036841-0000	D		1	SHAFT	
100	1040777-0000	D		1	CARRIER	
110	247358-0000	D		1	SHIFTER HANDLE	
120	1036832-0000	-		2	WHEEL	
200	247355-0000	-		1	LOCK WASHER	
210	1038464-0000	Q		2	SPROCKET	
220	531191-0000	Q		2	BUSHING	
230	279009-0000	-		1	BEARING PLATE	
240	279010-0000	-		1	BEARING PLATE	
250	1036833-0000	-		2	SCREW	
260	1036868-0000	Q		2	CHAIN	
300	312318-0362	-		2	SET SCREW CUP POINT ISO 4029 M6x8 RFR	
310	311103-0278	-		1	PIN,STRAIGHT M6 4x35	
320	312105-0325	-		2	SCREW M6S 5x10 A2 80	
330	312105-0451	-		4	SCREW M6S ISO 4017 8x20 A280	
340	315105-0146	-		2	WASHER,PLAIN ROUND 5,3x10 Stainless	
350	315115-0165	-		4	WASHER TBRB 8,4x16 Stainless	
360	315204-0109	K		2	O-RINGS 11,1X1,6	
370	315204-0221	K		2	O-RING 34,2x3 VITON	
380	312605-0318	-		2	NUT,HEXAGON,M8 RFR	

Pos	Part No	SP	UN	Qty	Description	Page No

CALENDER ROLLER

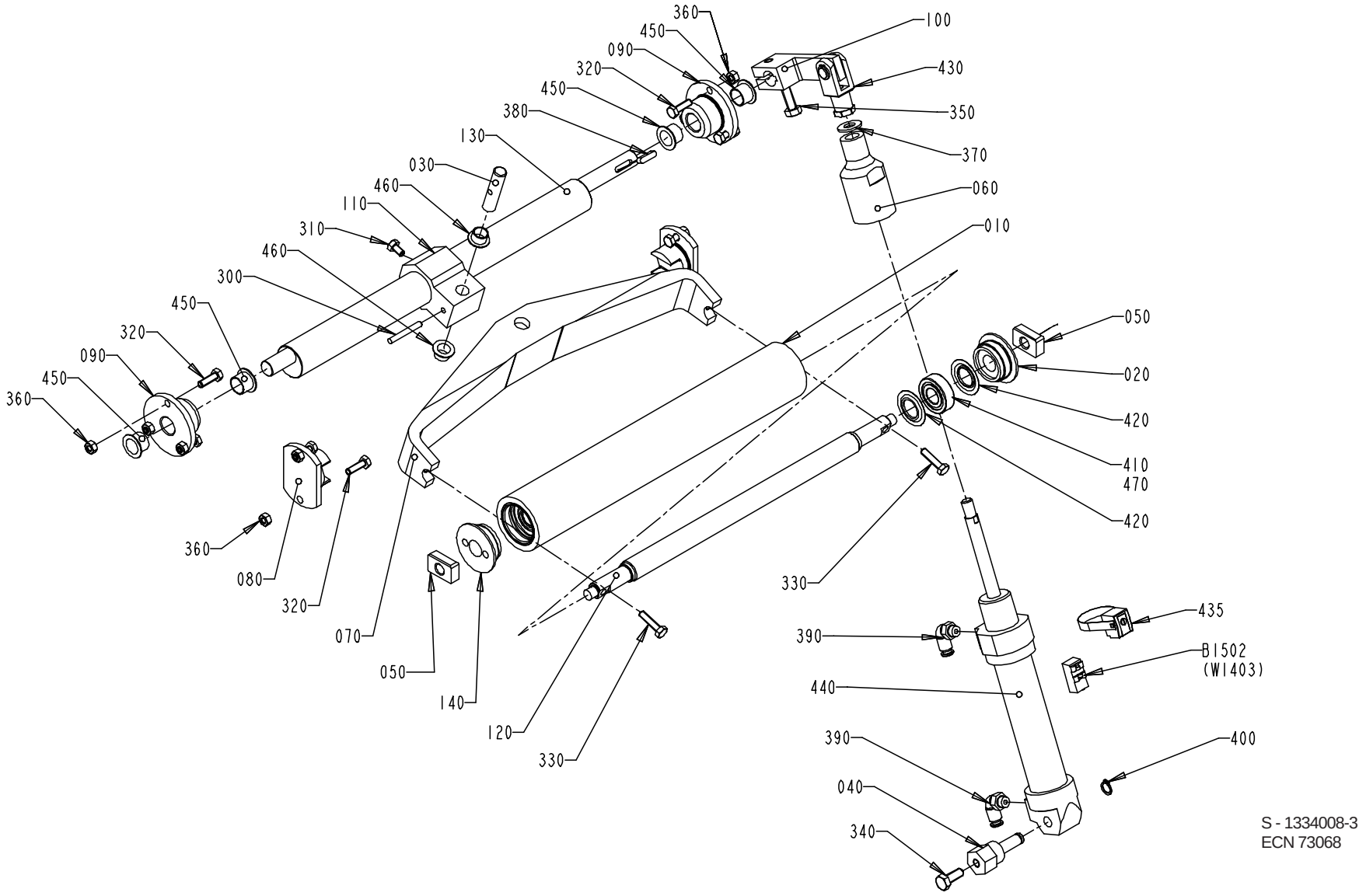

Pos	Part No	SP	UN	Qty	Description	Page No
Common parts						
010	1498644-0000	J		1	CALENDER ROLLER	
020	1498646-0000	D		1	BEARING COVER	
030	1317997-0000	-		1	SHAFT	
040	1317998-0000	-		1	BRACKET	
050	1317999-0000	K		2	BLOCK	
060	1334000-0000	D		1	STOP	
070	1334001-0000	-		1	BRACKET	
080	1347499-0000	D		2	BEARING BUSHING	
090	1334003-0000	-		2	FLANGE	
100	1334004-0000	R		1	ARM	
110	1334005-0000	-		1	LINK	
120	1334006-0000	M		1	SHAFT	
130	1347500-0000	-		1	SHAFT	
140	1498647-0000	-		1	BEARING COVER	
300	311103-0318	-		1	PIN,STRAIGHT 5x40	
310	312105-0364	-		1	SCREW M6S 6x10 A280	
320	312105-0370	-		10	SCREW M6S ISO 4017 M6x20 A280	
330	312105-0372	-		2	SCREW M6S ISO 4017 M6x25 A280	
340	312105-0451	-		1	SCREW M6S ISO 4017 8x20 A280	
350	312105-0452	-		1	SCREW M6S 8x22 Stainless	
360	312605-0316	-		10	NUT,HEXAGON A280 M6M6	
370	315105-0173	-		1	WASHER,PLAIN ROUND 10,5x22 STAINLESS	
380	315705-0201	-		1	KEYS,PARALLEL WITH ROUND ENDS 5X5X20	
390	342732-0102	-		2	ELBOW PIPE JOINT	
400	90141-0016	-		1	RETAINING RING FOR SHAFT 10	
410	90214-0098	J		2	BALL BEARING,STAINLESS	
420	90214-0303	J		4	SEALING RING 18,6X35X2	
430	90239-0516	-		1	ROD END,CLEVIS WITH AXLE,M10X1,25	
435	90239-0582	-		1	CYLINDER,SENSOR,BRACKETS,FOR CYL.32	
440	90239-0837	R		1	DOUBLE ACTING,MINI-ISO,CYL.32-100	
450	90240-0263	-		4	Flange Bushing, 15x17x12	
460	90240-0261	-		2	Flange Bushing, 12x14x9	
470	90296-0091	-		x	LUBRICATION GREASE	
B1502	90044-0116	R		1	PROXIMITY SWITCH	

Pos	Part No	SP	UN	Qty	Description	Page No

EMERGENCY STOP

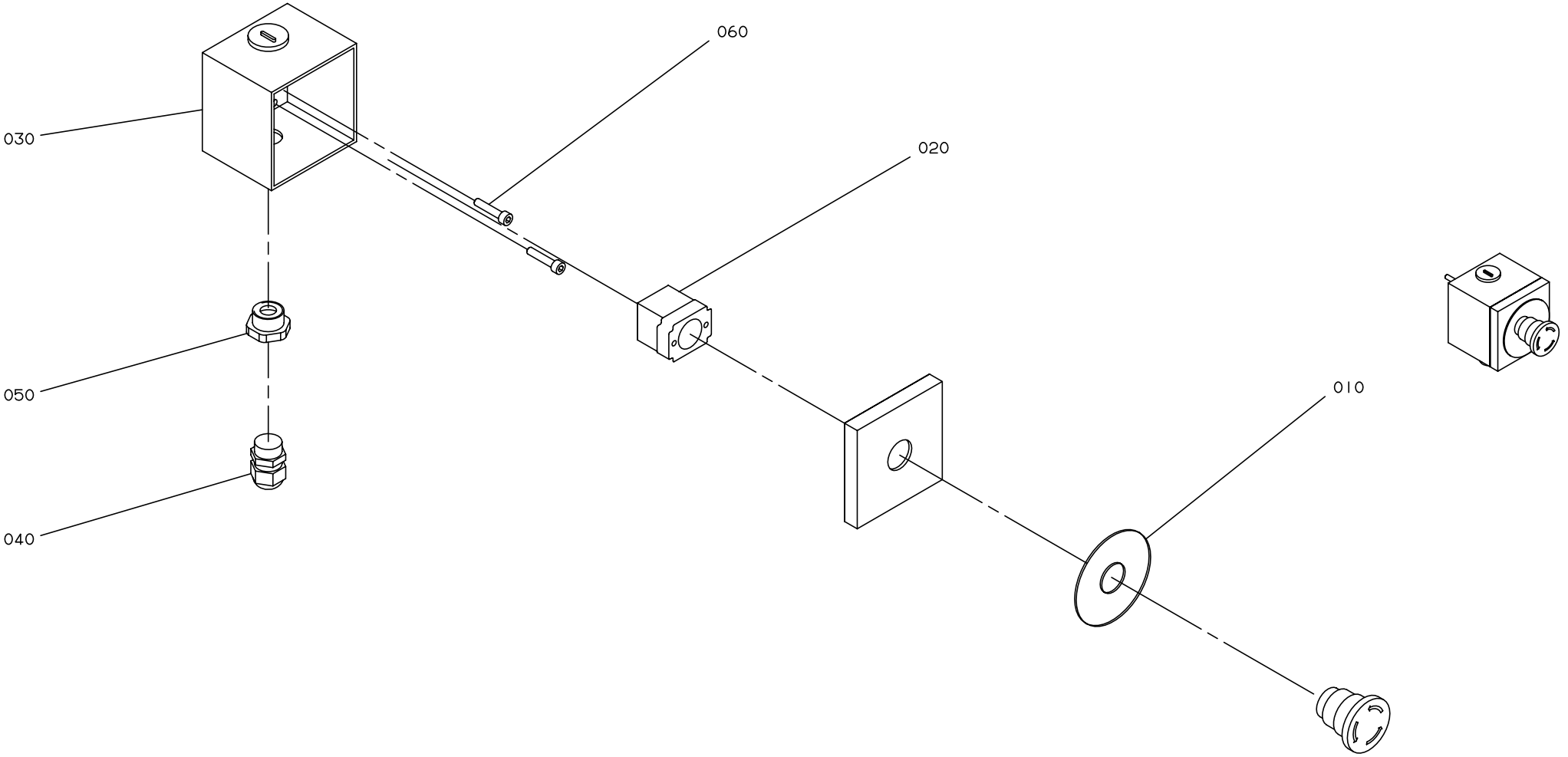

S-1035382-1
ECN 21061

Pos	Part No	SP	UN	Qty	Description	Page No
Common parts						
010	486826-0001	-		1	SIGN "EMERGENCY STOP"	
020	90064-0124	D		1	SWITCH,EMERGENCY STOP	
030	90066-0021	-		1	PUSH BUTTON BOX XAP-M1501 Telemecanique	
040	90012-0071	-		1	GLAND FITTING	
050	90089-0021	-		1	REDUCTION SLEEVE,PLASTIC GREY	
060	312115-0333	-		2	SCREW MC6S ISO 4762 M5x25 A280	

Pos	Part No	SP	UN	Qty	Description	Page No

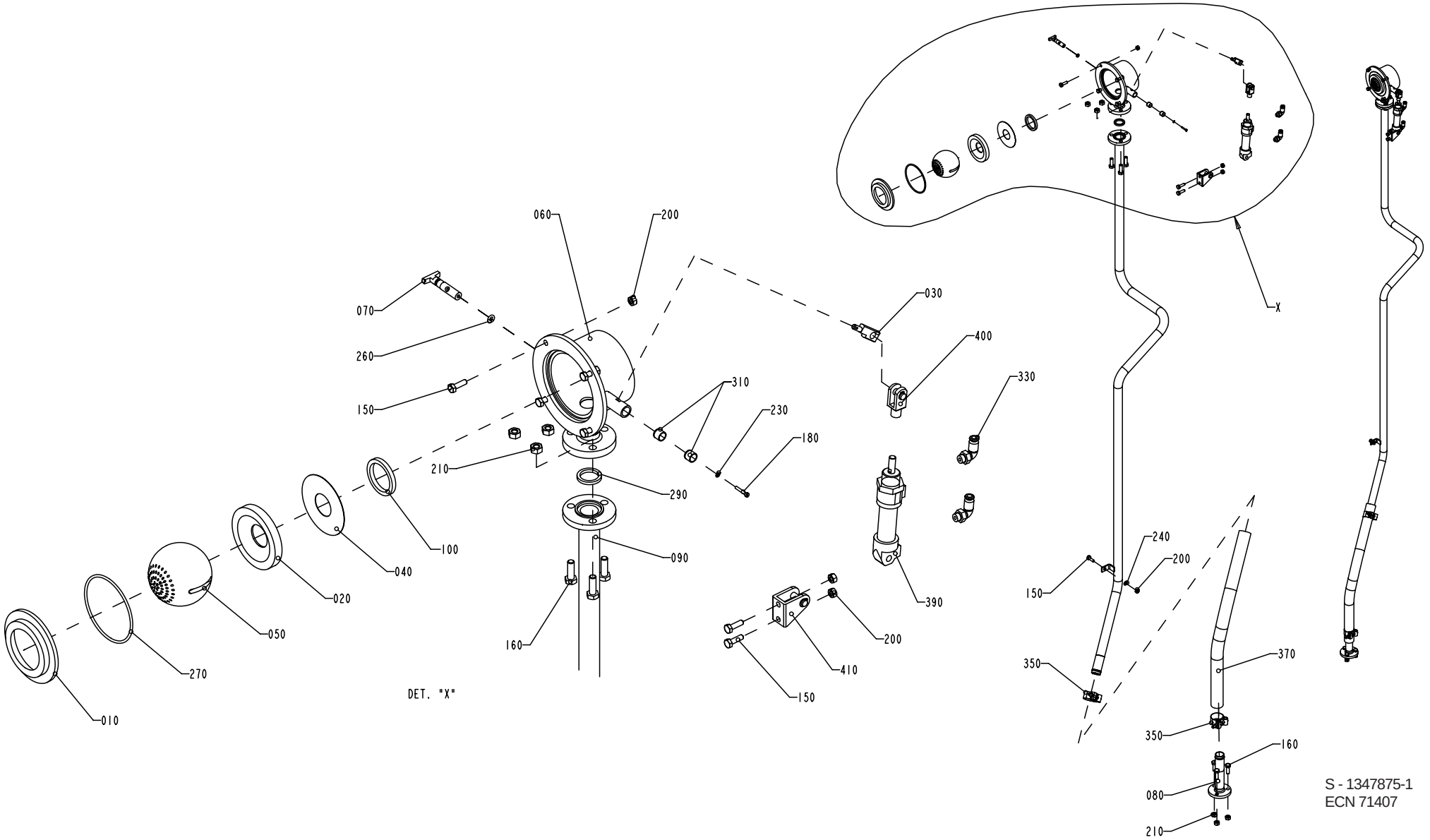
060
200
070
260
150
030
400
330
310
230
180
210
290
100
040
020
050
270
010
090
160
390
200
410
150
DET. "X"
X
240
200
150
350
370
350
160
080
210
S - 1347875-1
ECN 71407

Pos	Part No	SP	UN	Qty	Description	Page No
Common parts						
010	1037423-0000	J		1	SEAT RING	
020	1037424-0000	J		1	SEAT RING	
030	1037425-0000	-		1	LEVER	
040	1038409-0000	-		1	WASHER	
050	1129837-0000	-		1	BALL	
060	1129855-0000	-		1	HOUSE	
070	1129871-0000	-		1	SPINDLE	
080	1255504-0000	-		1	PIPE	
090	1348941-0000	-		1	PIPE	
100	12242-0003	-		1	GASKET	
150	312105-0370	-		7	SCREW M6S ISO 4017 M6x20 A280	
160	312105-0453	-		6	SCREW M6S ISO 4017 M8x25 A280	
180	312125-0230	-		1	SLOTTED CHEESE HEAD ISO 1207 M3X20 RFR	
200	312605-0316	-		7	NUT,HEXAGON A280 M6M6	
210	312605-0318	-		6	NUT,HEXAGON,M8 RFR	
230	315105-0124	-		1	WASHER,PLAIN ROUND 3,2x6	
240	315105-0153	-		1	WASHER,PLAIN ROUND 6,4x12 Stainless	
260	315202-0204	-		1	O-RING 5,3x2,4	
270	315202-0308	J		1	O-RINGS 84,5X3	
290	315229-0103	-		1	GASKET 40533-1	
310	321120-0104	-		2	Bushing, 10x12x10	
330	342732-0102	-		2	ELBOW PIPE JOINT	
350	90165-0147	-		2	HOSE CLIP	
370	90166-0233	-	MM	600	HOSE	
390	90239-0487	-		1	BRACKET,REAR,CLEVIS FLANG,MINI-ISO,20-25	
400	90239-0490	-		1	ROD END,CLEVIS WITH AXLE,M8	
410	90239-0847	-		1	DOUBLE ACTING,MINI-ISO,CYL.20-50	

Pos	Part No	SP	UN	Qty	Description	Page No

MOVABLE FORMING RING

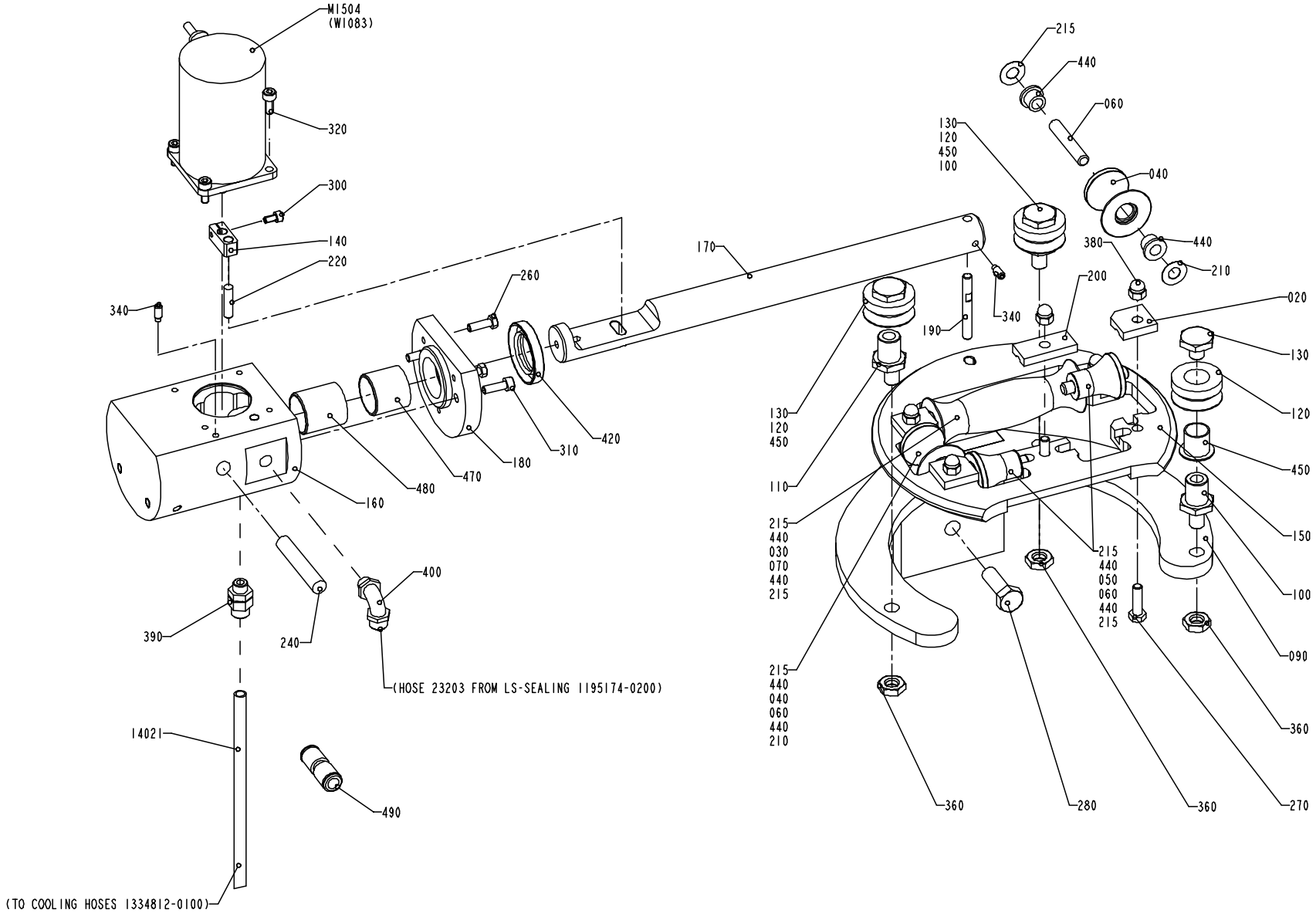

S - 1195161-2
ECN 73068

Pos	Part No	SP	UN	Qty	Description	Page No
Common parts						
020	456139-0000	-		4	LOCK PLATE	
030	751491-0000	R		1	ROLL	
040	751492-0000	R		2	ROLL	
050	751493-0000	R		2	ROLL	
060	752186-0005	J		4	SHAFT	
070	752186-0009	J		1	SHAFT	
090	1195191-0000	-		1	MOVABLE FORMING RING	
100	1296754-0000	-		2	SHAFT	
110	1296755-0000	-		1	SHAFT	
120	1296758-0000	D		3	ROLL	
130	1296760-0000	-		3	NUT	
140	1347556-0000	-		1	ECCENTRIC	
14021	90166-0118	-	MM	3000	TUBE 8 mm PA Black	
150	1347557-0000	D		1	MOVABLE FORMING RING	
160	1347558-0000	-		1	SUPPORT	
170	1347559-0000	-		1	SHAFT	
180	1478182-0000	-		1	SPACER	
190	1478570-0000	-		1	AXLE PIN	
200	1487687-0000	-		1	LOCK PLATE	
210	2033-0007	-		2	WASHER	
215	2033-0011	-		8	WASHER	
220	311103-0355	-		1	PIN,STRAIGHT 6x25	
240	311103-0470	-		1	PINS,STRAIGHT 10X60	
260	312105-0329	-		3	SCREW M6S ISO 4017 M5x16 A280	
270	312105-0371	-		5	SCREW M6S6X22RFR	
280	312105-0495	-		1	SCREW M6S ISO 4017 M10X30 A280	
300	312115-0287	-		1	SCREW MC6S ISO 4762 M4X8 A280	
310	312115-0329	-		2	SCREW MC6S ISO 4762 M5x16 A280	
320	312115-0327	-		4	SCREW MC6S ISO 4762 M5X12 A280	
340	312318-0327	-		2	SET SCREW CUP POINT ISO 4029 M5X12 RFR	
360	312625-0320	-		3	NUTS,HEXAGON,M10	
380	312705-0316	-		5	NUT,DOMED CAP,HEXAGON,M6	
390	342921-0121	-		1	STRAIGHT COUPLING,EXT.THREADED 8/6-G1/8"	
400	342931-0121	-		1	ELBOW 90 COUPL.,EXT.THREAD 8/6-G1/8"	
420	90091-0322	D		1	SEALING RINGS,TYPE RADIAL SEAL 25X42X7	
440	90240-0172	J		10	Flange Bushing, 8x12x10 NFB	
450	90240-0264	R		3	Flange Bushing, 15x17x17	
470	90240-0321	R		1	Bushing	
480	90240-0322	R		1	Bushing	
490	342728-0103	-		1	PIPE COUPLING	
M1504	90045-0189	D		1	STEPPER MOTOR	

Pos	Part No	SP	UN	Qty	Description	Page No

LOWER FORMING RING

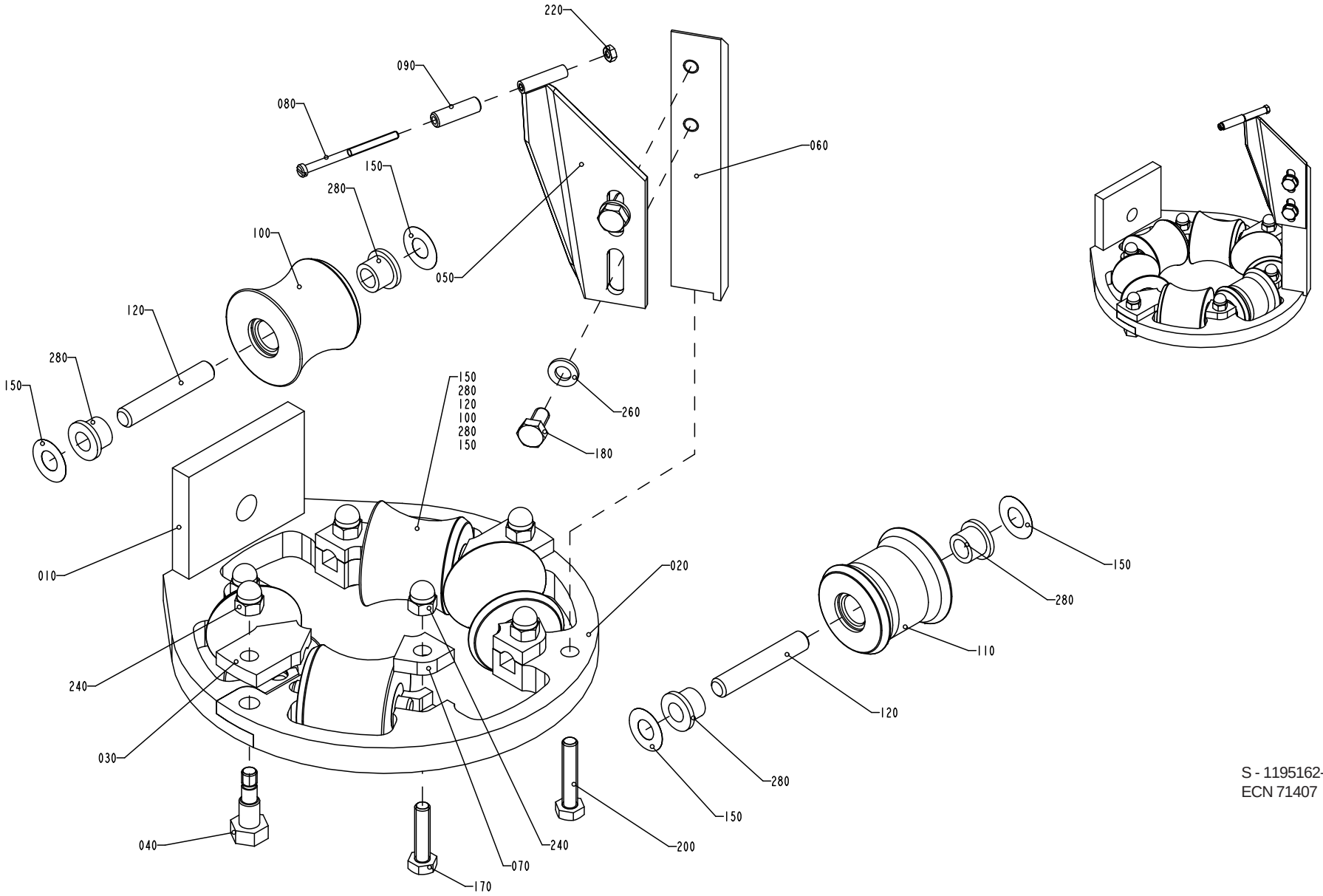

S - 1195162-1
ECN 71407

Pos	Part No	SP	UN	Qty	Description	Page No
TBA 0250B						
010	1195195-0000	-		1	LOWER FORMING RING	
020	1195298-0000	-		1	LOWER FORMING RING	
030	1195318-0000	-		2	PLATE	
070	1348938-0000	D		4	LOCK PLATE	
100	751502-0000	R		5	ROLLER	
110	B 751503-0000	J		1	COUNTER ROLLER	
120	752186-0005	J		6	SHAFT	
150	2033-0011	J		12	WASHER	
170	312105-0372	-		4	SCREW M6S ISO 4017 M6x25 A280	
240	312705-0316	-		6	NUT,DOMED CAP,HEXAGON,M6	
280	90240-0172	J		12	Flange Bushing, 8x12x10 NFB	
TBA 0200B						
010	1484862-0000	-		1	FORMING RING	
020	1484863-0000	-		1	FORMING RING	
030	1484860-0000	-		2	LOCK PLATE	
070	1484861-0000	-		2	LOCK PLATE	
100	1484859-0000	-		3	ROLLER	
110	1498168-0000	-		1	COUNTER ROLLER	
120	752186-0016	-		4	SHAFT	
150	2033-0011	-		8	WASHER	
170	312105-0372	-		2	SCREW M6S ISO 4017 M6x25 A280	
240	312705-0316	-		4	NUT,DOMED CAP,HEXAGON,M6	
280	90240-0172	-		8	Flange Bushing, 8x12x10 NFB	
Common parts						
040	1195319-0000	-		2	FITTING BOLT	
050	1296109-0000	-		1	BRACKET	
060	1296110-0000	-		1	SUPPORT	
080	257050-0000	-		1	SHAFT	
090	1478267-0000	K		1	ROLL	
180	312105-0366	-		2	SCREW M6S ISO 4017 M6x12 A280	
200	312109-0374	-		1	SCREW M6S ISO 4017 M6X30 A280	
220	312605-0310	-		1	NUT,HEXAGON M6M 3 A2 80	
260	315105-0153	-		2	WASHER,PLAIN ROUND 6,4x12 Stainless	

Pos	Part No	SP	UN	Qty	Description	Page No

LOWER FORMING RING

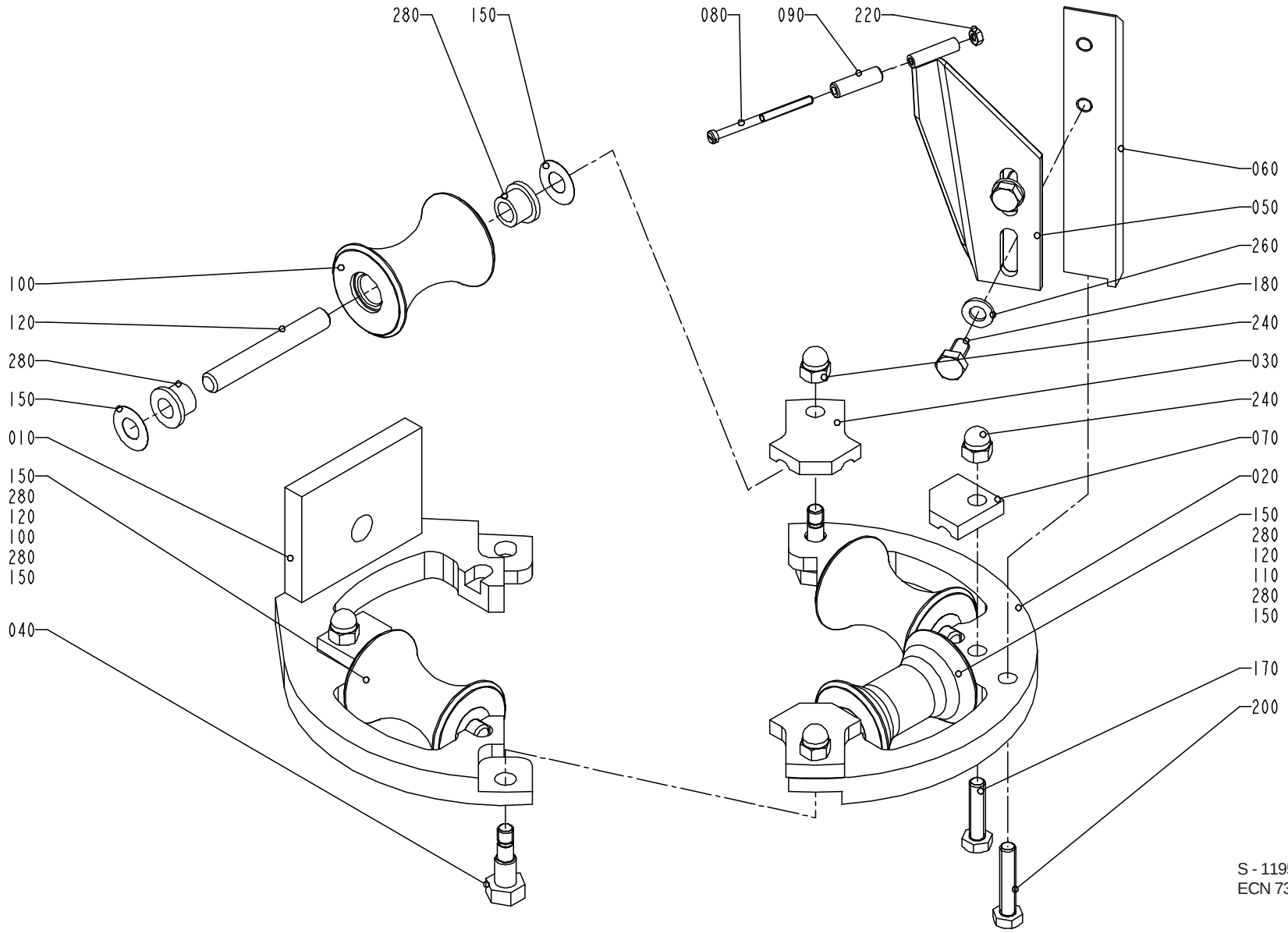

S - 1195162-3
ECN 73068

Pos	Part No	SP	UN	Qty	Description	Page No
TBA 0250B						
010	1195195-0000	-		1	LOWER FORMING RING	
020	1195298-0000	-		1	LOWER FORMING RING	
030	1195318-0000	-		2	PLATE	
070	1348938-0000	D		4	LOCK PLATE	
100	751502-0000	R		5	ROLLER	
110	B 751503-0000	J		1	COUNTER ROLLER	
120	752186-0005	J		6	SHAFT	
150	2033-0011	J		12	WASHER	
170	312105-0372	-		4	SCREW M6S ISO 4017 M6x25 A280	
240	312705-0316	-		6	NUT,DOMED CAP,HEXAGON,M6	
280	90240-0172	J		12	Flange Bushing, 8x12x10 NFB	
TBA 0200B						
010	1484862-0000	-		1	FORMING RING	
020	1484863-0000	-		1	FORMING RING	
030	1484860-0000	-		2	LOCK PLATE	
070	1484861-0000	-		2	LOCK PLATE	
100	1484859-0000	-		3	ROLLER	
110	1498168-0000	-		1	COUNTER ROLLER	
120	752186-0016	-		4	SHAFT	
150	2033-0011	-		8	WASHER	
170	312105-0372	-		2	SCREW M6S ISO 4017 M6x25 A280	
240	312705-0316	-		4	NUT,DOMED CAP,HEXAGON,M6	
280	90240-0172	-		8	Flange Bushing, 8x12x10 NFB	
Common parts						
040	1195319-0000	-		2	FITTING BOLT	
050	1296109-0000	-		1	BRACKET	
060	1296110-0000	-		1	SUPPORT	
080	257050-0000	-		1	SHAFT	
090	1478267-0000	K		1	ROLL	
180	312105-0366	-		2	SCREW M6S ISO 4017 M6x12 A280	
200	312109-0374	-		1	SCREW M6S ISO 4017 M6X30 A280	
220	312605-0310	-		1	NUT,HEXAGON M6M 3 A2 80	
260	315105-0153	-		2	WASHER,PLAIN ROUND 6,4x12 Stainless	

Pos	Part No	SP	UN	Qty	Description	Page No

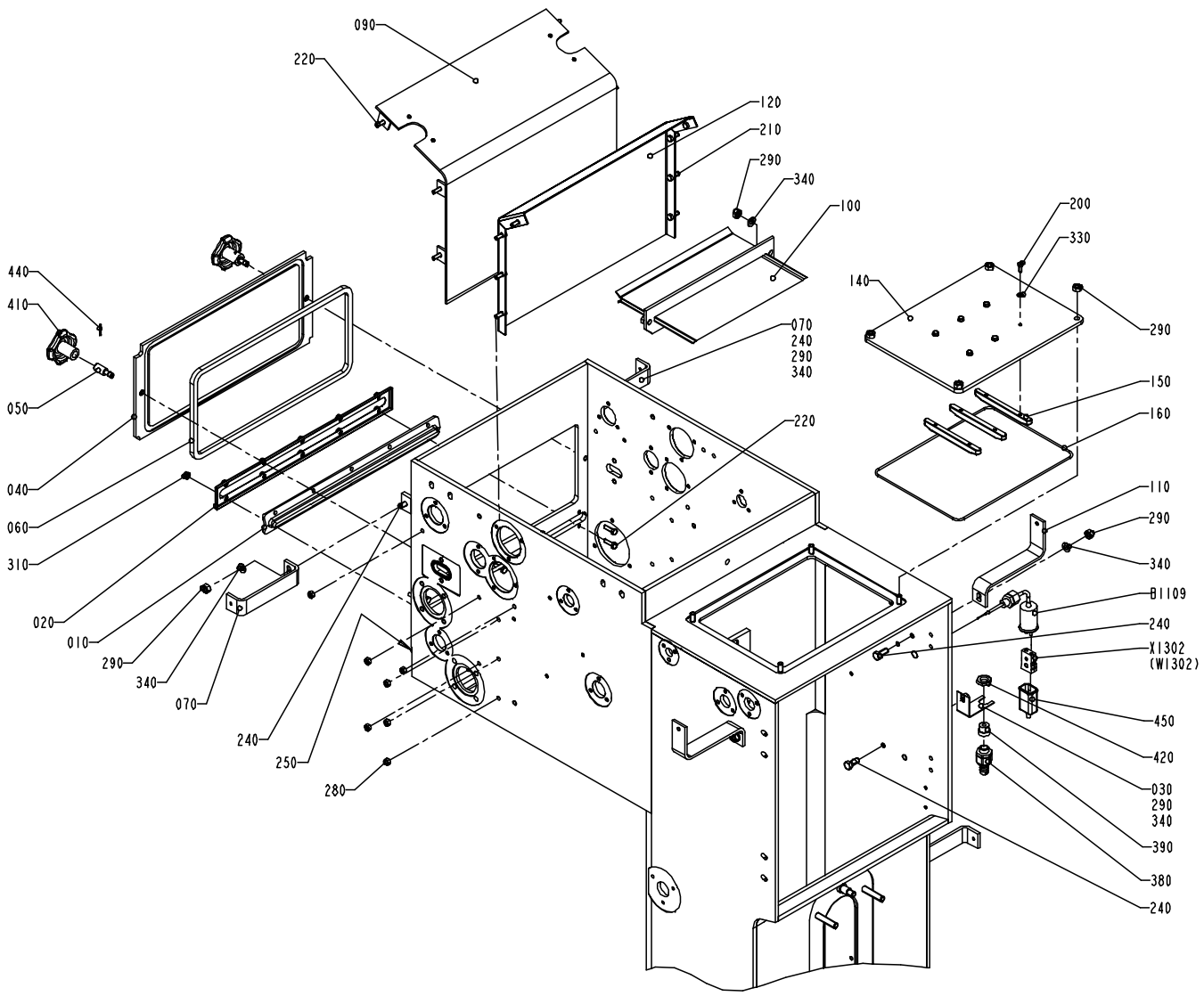

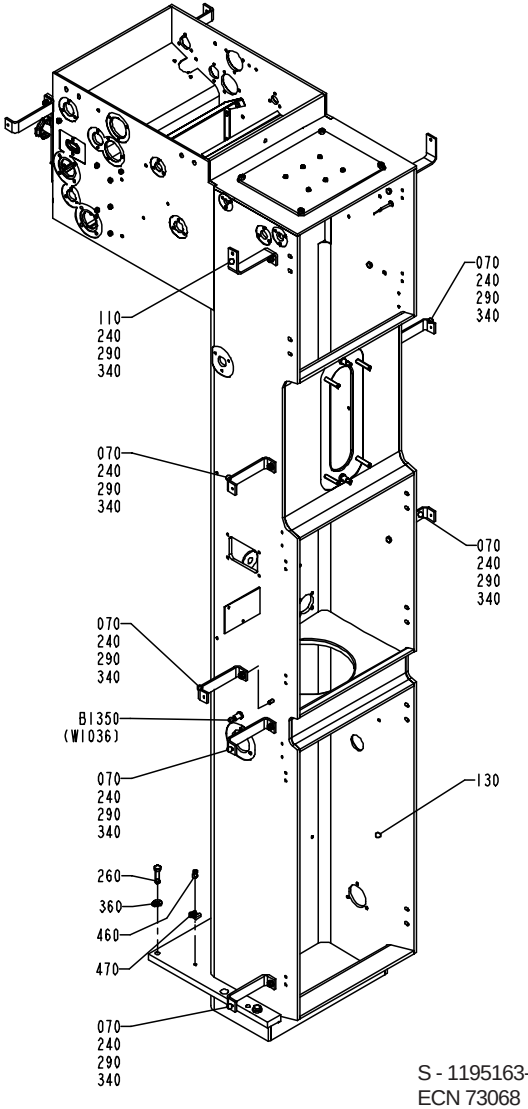

S - 1195163-3
ECN 73068

Pos	Part No	SP	UN	Qty	Description	Page No
Common parts						
010	273961-0000	J		1	SEAL	
020	476087-0000	-		1	LID	
030	1036373-0000	R		1	HOLDER	
040	1036465-0000	-		1	LID	
050	1036475-0000	-		2	PIN	
060	1036478-0000	R		1	GASKET	
070	1037456-0000	-		8	BRACKET	
090	1195311-0000	-		1	PLATE	
100	1195321-0000	-		1	TUNNEL	
110	1195322-0000	-		2	BRACKET	
120	1347513-0000	-		1	SHEET	
130	1348093-0000	-		1	COLUMN	
140	1498670-0000	-		1	LID	
150	1498671-0000	K		3	PAPER GUIDE	
160	1348622-0000	-		1	O-RING	
200	312105-0327	-		6	SCREW M6S ISO 4017 M5X12 A280	
210	312105-0368	-		8	SCREW M6S ISO 4017 M6x16 A280	
220	312105-0370	-		16	SCREW M6S ISO 4017 M6x20 A280	
240	312105-0451	-		11	SCREW M6S ISO 4017 8x20 A280	
250	312105-0453	-		3	SCREW M6S ISO 4017 M8x25 A280	
260	312105-0497	-		4	SCREW M6S ISO 4017 M10x35 A280	
280	312605-0316	-		14	NUT,HEXAGON A280 M6M6	
290	312605-0318	-		17	NUT,HEXAGON,M8 RFR	
310	312812-0316	-		10	NUT,HEXAGON,LOCK,WITH NYLON INSERT,M6	
330	315105-0146	-		6	WASHER,PLAIN ROUND 5,3x10 Stainless	
340	315105-0165	-		13	WASHER,PLAIN ROUND 8,4x16 Stainless	
360	315115-0173	-		4	WASHER TBRB 10,5x22 Stainless	
380	353243-0001	-		1	GLAND,HOSE,EXTENDED,WITHOUT INSERT PG9	
390	353249-0008	-		1	GLAND,INSERT,SINGLE HOLE,EXTEND.4-6,5	
410	90051-0045	-		2	HANDLE	
420	90099-0104	-		1	NUT PR 15,2 (PG9)	
430	90153-0023	-		x	ADHESIVE	
440	90258-0031	-		2	PINS,Slotted Tubular, 3x 20, DIN1481	
450	90326-0012	-		1	PROTECTIVE COVER	
460	312125-0366	-		3	SLOTTED CHEESE HEAD ISO 1207 M6X12 RFR	
470	352113-0204	-		3	ANCHOR TM3S25-M	
B1109	90326-0053	R		1	THERMO ELEMENT	
B1350	90044-0124	-		1	PROX.SWITCH 922AB2XM-A9P-050-LZ-876Hwell	
X1302	90326-0020	-		1	PLUG,FEMALE YELLOW CR-AL	

Pos	Part No	SP	UN	Qty	Description	Page No

UPPER FORMING RING

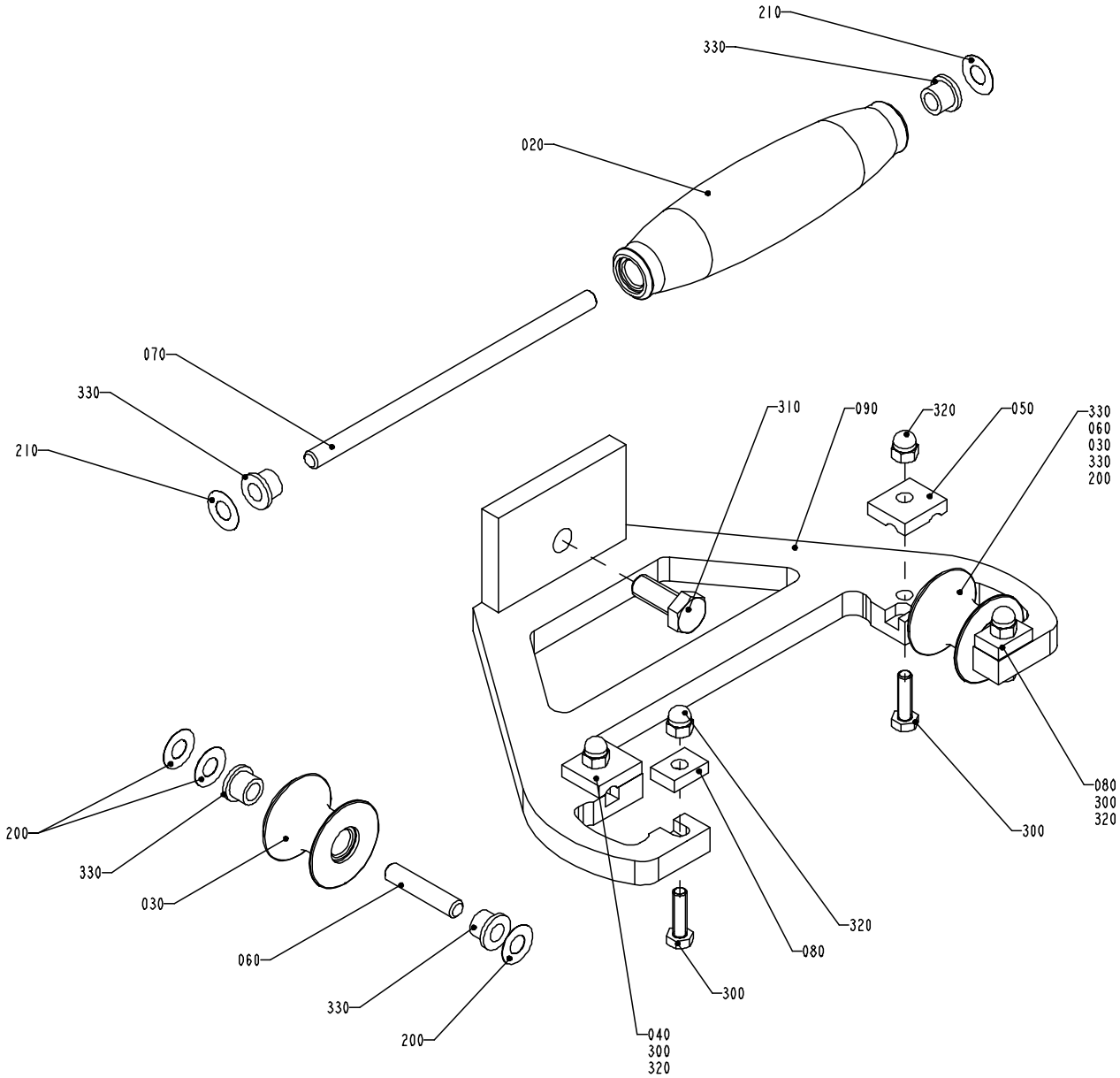

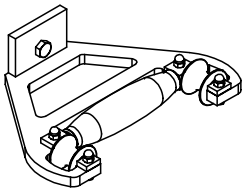

S - 1195164-2
ECN 72287

Pos	Part No	SP	UN	Qty	Description	Page No
Common parts						
020	1350904-0000	R		1	ROLL	
030	751284-0000	R		2	ROLL	
040	1350905-0000	D		1	LOCKING PLATE	
050	1350906-0000	D		1	LOCKING PLATE	
060	752186-0003	J		2	SHAFT	
070	752186-0017	J		1	SHAFT	
080	1038428-0000	D		2	LOCK PLATE	
090	1350907-0000	-		1	UPPER FORMING RING	
200	2033-0007	-		6	WASHER	
210	2033-0011	-		2	WASHER	
300	312105-0371	-		4	SCREW M6S6X22RFR	
310	312105-0493	-		1	SCREW M6S ISO 4017 M10X25 A280	
320	312705-0316	-		4	NUT,DOMED CAP,HEXAGON,M6	
330	90240-0172	J		6	Flange Bushing, 8x12x10 NFB	

Pos	Part No	SP	UN	Qty	Description	Page No

FORMING RING

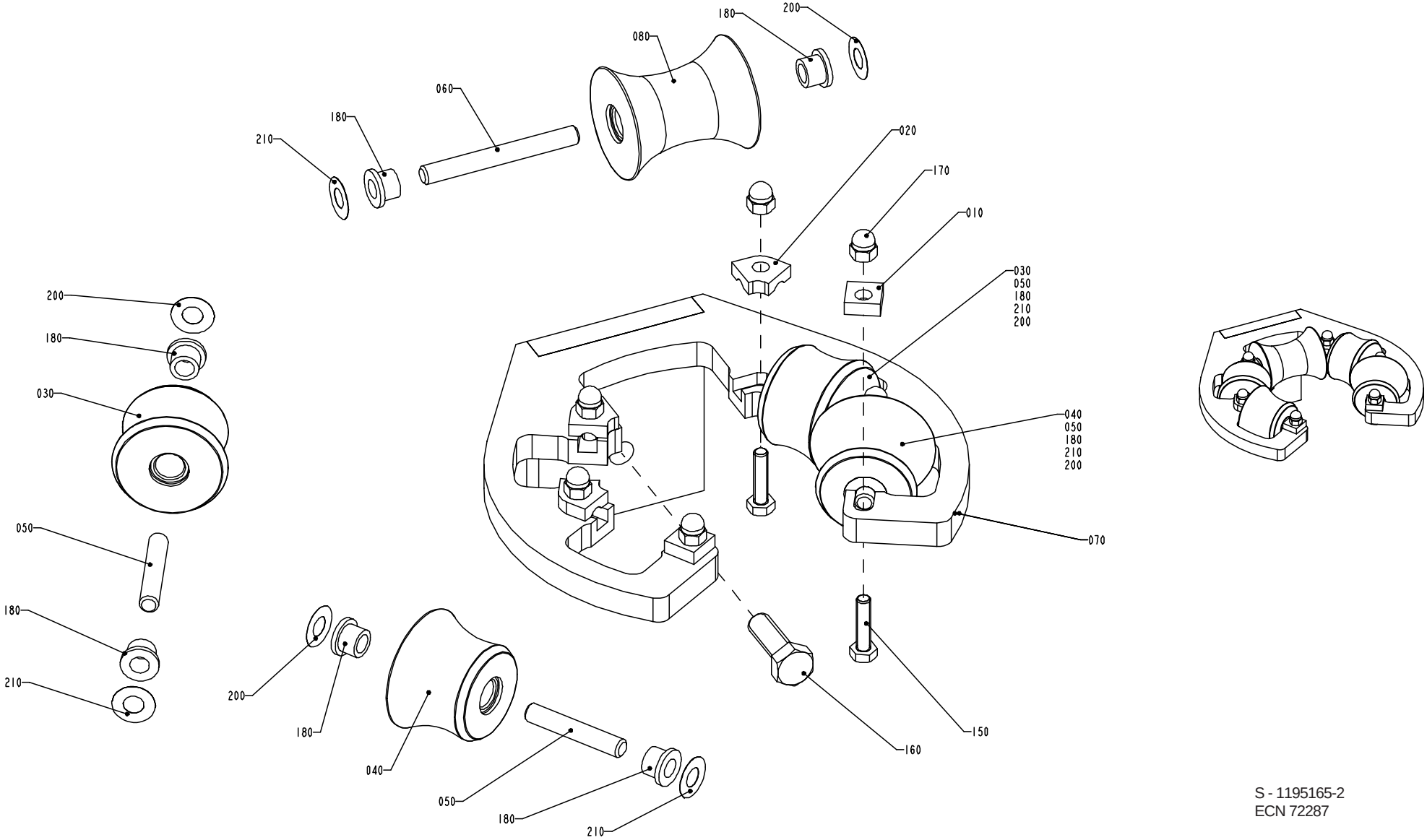

S - 1195165-2
ECN 72287

Pos	Part No	SP	UN	Qty	Description	Page No
Common parts						
010	1347881-0000	-		2	LOCK PLATE	
020	1348938-0000	-		4	LOCK PLATE	
030	751499-0000	R		2	ROLL	
040	751500-0000	R		2	ROLL	
050	752186-0005	J		4	SHAFT	
060	752186-0007	J		1	SHAFT	
070	1347601-0000	-		1	DIVIDED FORMING RING	
080	1350289-0000	R		1	ROLL	
150	312105-0372	-		6	SCREW M6S ISO 4017 M6x25 A280	
160	312105-0495	-		1	SCREW M6S ISO 4017 M10X30 A280	
170	312705-0316	-		6	NUT,DOMED CAP,HEXAGON,M6	
180	90240-0172	J		10	Flange Bushing, 8x12x10 NFB	
200	2033-0011	-		5	WASHER	
210	2033-0007	-		5	WASHER	

Pos	Part No	SP	UN	Qty	Description	Page No

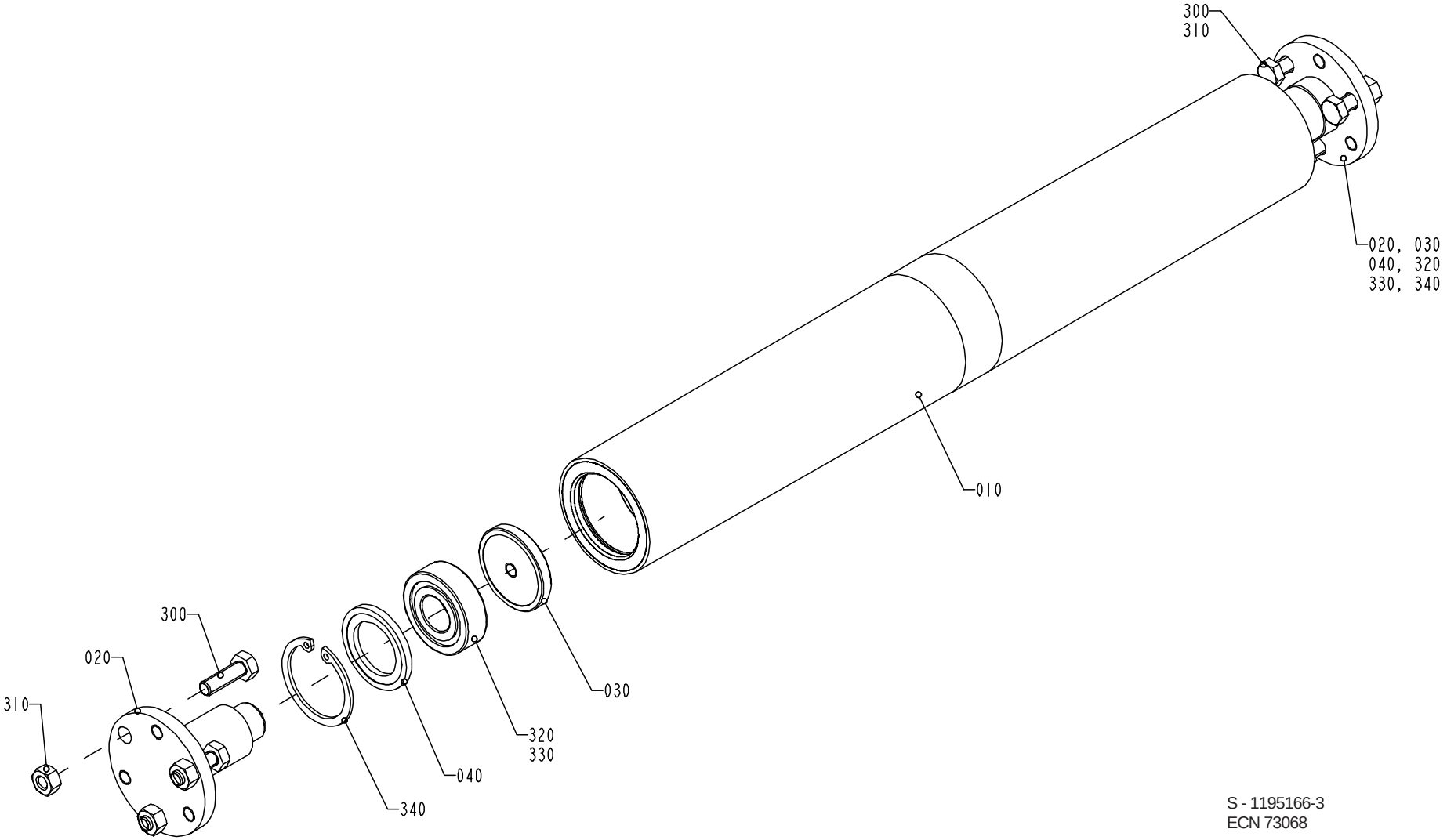

S - 1195166-3
ECN 73068

Pos	Part No	SP	UN	Qty	Description	Page No
Common parts						
010	1490405-0000	D		1	ROLLER	
020	1490408-0000	-		2	SHAFT	
030	1490407-0000	-		2	WASHER	
040	1490406-0000	-		2	WASHER	
300	312105-0370	-		6	SCREW M6S ISO 4017 M6x20 A280	
310	312605-0316	-		6	NUT,HEXAGON A280 M6M6	
320	90214-0098	J		2	BALL BEARING,STAINLESS	
330	90296-0091	-		x	LUBRICATION GREASE	
340	315753-0124	-		2	RETAINING RINGS FOR HOLE 35	

Pos	Part No	SP	UN	Qty	Description	Page No

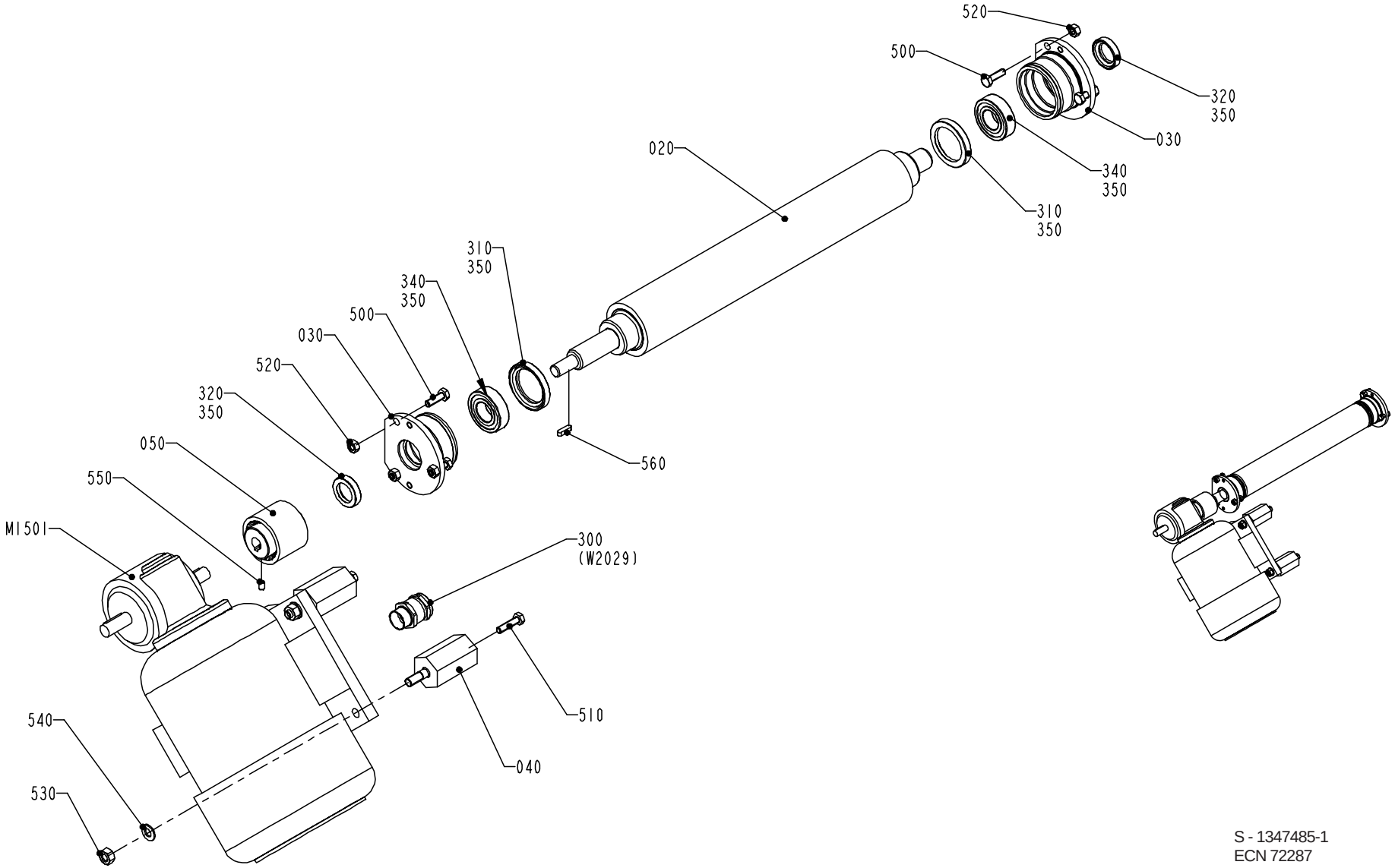

S - 1347485-1
ECN 72287

Pos	Part No	SP	UN	Qty	Description	Page No
Common parts						
020	1387381-0000	J		1	CALENDER ROLLER	
030	1484514-0000	D		2	HOUSING	
040	1347484-0000	-		4	SPACER	
050	1129298-0000	-		1	SHAFT COUPLING	
300	90012-0137	-		1	GLAND,EMC,EXTENDED WITH INSERT	
310	90091-0297	J		2	SEALING RINGS,TYPE AS 35X47X7	
320	90091-0320	-		2	SEALING RINGS,TYPE AS 20X30X7	
340	90214-0225	J		2	BEARINGS,BALL BEARING,STAINLESS	
350	90296-0091	-		x	LUBRICATION GREASE	
500	312105-0370	-		6	SCREW M6S ISO 4017 M6x20 A280	
510	312105-0372	-		4	SCREW M6S ISO 4017 M6x25 A280	
520	312605-0316	-		6	NUT,HEXAGON A280 M6M6	
530	312605-0318	-		4	NUT,HEXAGON,M8 RFR	
540	315105-0165	-		4	WASHER,PLAIN ROUND 8,4x16 Stainless	
550	312318-0323	-		2	SET SCREW CUP POINT ISO 4029 M5X8 RFR	
560	315701-0168	-		1	KEYS,PARALLEL WITH ROUND ENDS 4X4X16	
M1501	90069-0608	D		1	Worm Gear Motor	

Pos	Part No	SP	UN	Qty	Description	Page No

PENDULUM ROLLER

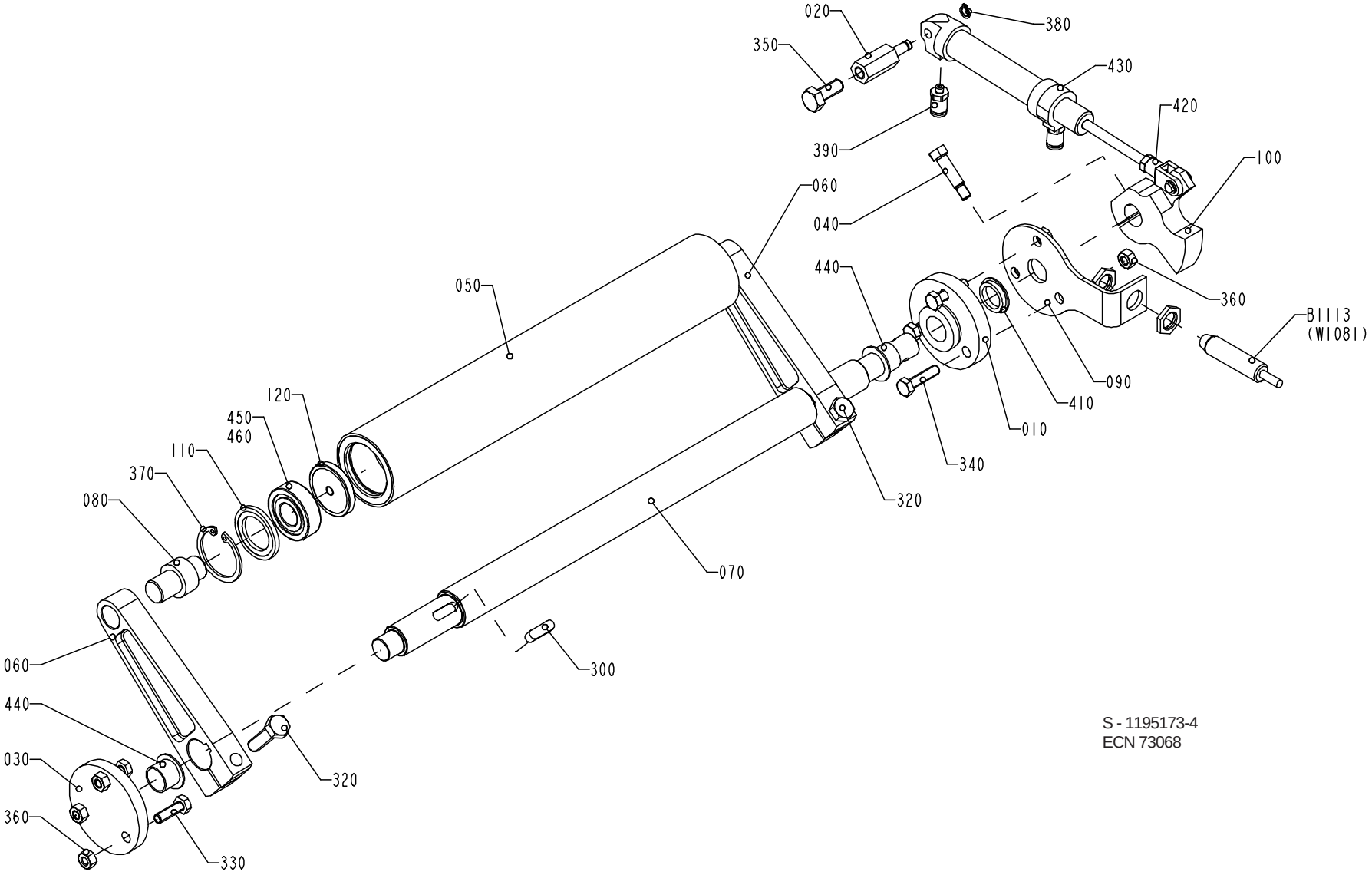

S - 1195173-4
ECN 73068

Pos	Part No	SP	UN	Qty	Description	Page No
Common parts						
010	1036174-0000	D		1	BEARING COVER	
020	1036178-0000	-		1	SHAFT	
030	1036328-0000	-		1	LID	
040	1041688-0000	-		1	FITTING BOLT	
050	1490409-0000	D		1	ROLLER	
060	1347938-0000	D		2	PENDULUM ARM	
070	1347940-0000	-		1	SHAFT	
080	1490410-0000	-		2	SHAFT	
090	1347941-0000	-		1	LID	
100	1348063-0000	D		1	LEVER	
110	1490406-0000	-		2	WASHER	
120	1490407-0000	-		2	WASHER	
300	315705-0232	-		2	KEYS,PARALLEL WITH ROUND ENDS 6X6X20	
320	312105-0455	-		2	SCREW M6S ISO 4017 M8x30 A280	
330	312105-0370	-		3	SCREW M6S ISO 4017 M6x20 A280	
340	312105-0372	-		3	SCREW M6S ISO 4017 M6x25 A280	
350	312105-0451	-		1	SCREW M6S ISO 4017 8x20 A280	
360	312605-0316	-		6	NUT,HEXAGON A280 M6M6	
370	315753-0124	-		2	RETAINING RINGS FOR HOLE 35	
380	315751-0103	-		1	RETAINING RINGS FOR SHAFT 6	
390	342722-0197	-		2	STRAIGHT COUPLING	
410	90091-0357	R		1	SEALING RING	
420	90239-0489	-		1	ROD END,CLEVIS WITH AXLE,M6	
430	90239-0817	R		1	DOUBLE ACTING,MINI-ISO,CYL.16-50	
440	90240-0263	R		2	Flange Bushing, 15x17x12	
450	90214-0098	J		2	BALL BEARING,STAINLESS	
460	90296-0091	-		x	LUBRICATION GREASE	
B1113	90044-0124	D		1	PROX.SWITCH 922AB2XM-A9P-050-LZ-876Hwell	

Pos	Part No	SP	UN	Qty	Description	Page No

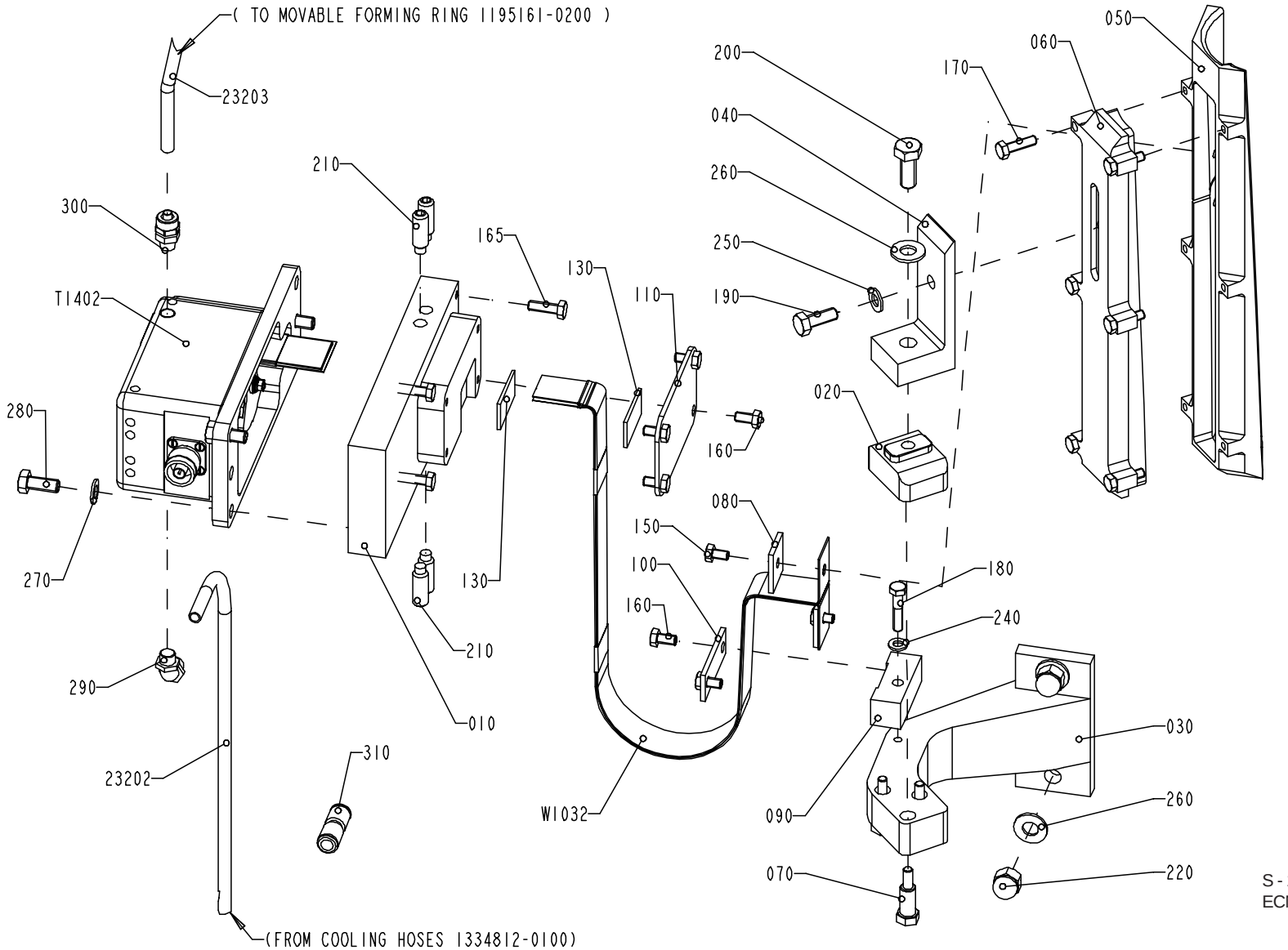

S - 1195174-2
ECN 73068

Pos	Part No	SP	UN	Qty	Description	Page No
Common parts						
010	1334324-0000	-		1	PLATE	
020	1260773-0000	-		1	SPACER	
030	1296111-0000	-		1	HOLDER	
040	1296112-0000	-		1	BRACKET	
050	1296113-0000	J		1	INDUCTOR	
060	1296114-0000	A		1	BRACKET	
070	1296996-0000	-		3	SCREW	
080	1296997-0000	-		2	WASHER	
090	1334326-0000	-		1	BRACKET	
100	1334327-0000	-		1	PLATE	
110	1334325-0000	-		1	PLATE	
130	1478524-0000	M		2	GASKET	
150	312105-0364	-		2	SCREW M6S 6x10 A280	
160	312105-0366	-		6	SCREW M6S ISO 4017 M6x12 A280	
165	312105-0370	-		4	SCREW M6S ISO 4017 M6x20 A280	
170	312105-0371	-		6	SCREW M6S6X22RFR	
180	312105-0374	-		1	SCREW M6S ISO 4017 M6x30 A280	
190	312105-0452	-		1	SCREW M6S 8x22 Stainless	
200	312105-0493	-		1	SCREW M6S ISO 4017 M10X25 A280	
210	312311-0495	-		4	SET SCREW FULL DOGPOINT ISO 4028 M10X30	
220	312705-0320	-		2	NUT,DOMED CAP,HEXAGON,M10	
23202	90166-0118	-	MM	2500	TUBE 8 mm PA Black	
23203	90166-0118	-	MM	600	TUBE 8 mm PA Black	
240	315105-0153	-		1	WASHER,PLAIN ROUND 6,4x12 Stainless	
250	315105-0165	-		1	WASHER,PLAIN ROUND 8,4x16 Stainless	
260	315105-0173	-		3	WASHER,PLAIN ROUND 10,5x22 STAINLESS	
270	315105-0165	-		3	WASHER,PLAIN ROUND 8,4x16 Stainless	
280	312105-0451	-		3	SCREW M6S ISO 4017 8x20 A280	
290	342931-0121	-		1	ELBOW 90 COUPL.,EXT.THREAD 8/6-G1/8"	
300	342920-0121	-		1	STRAIGHT COUPLING,EXT.THREADED 8/6-R1/8"	
310	342728-0103	-		1	PIPE COUPLING	
W1032	1349976-0000	M		1	CABLE	
TBA 0200B						
T1402	1110461-0000	A		1	TRANSFORMER	
TBA 0250B						
T1402	1110462-0000	A		1	TRANSFORMER	

Pos	Part No	SP	UN	Qty	Description	Page No

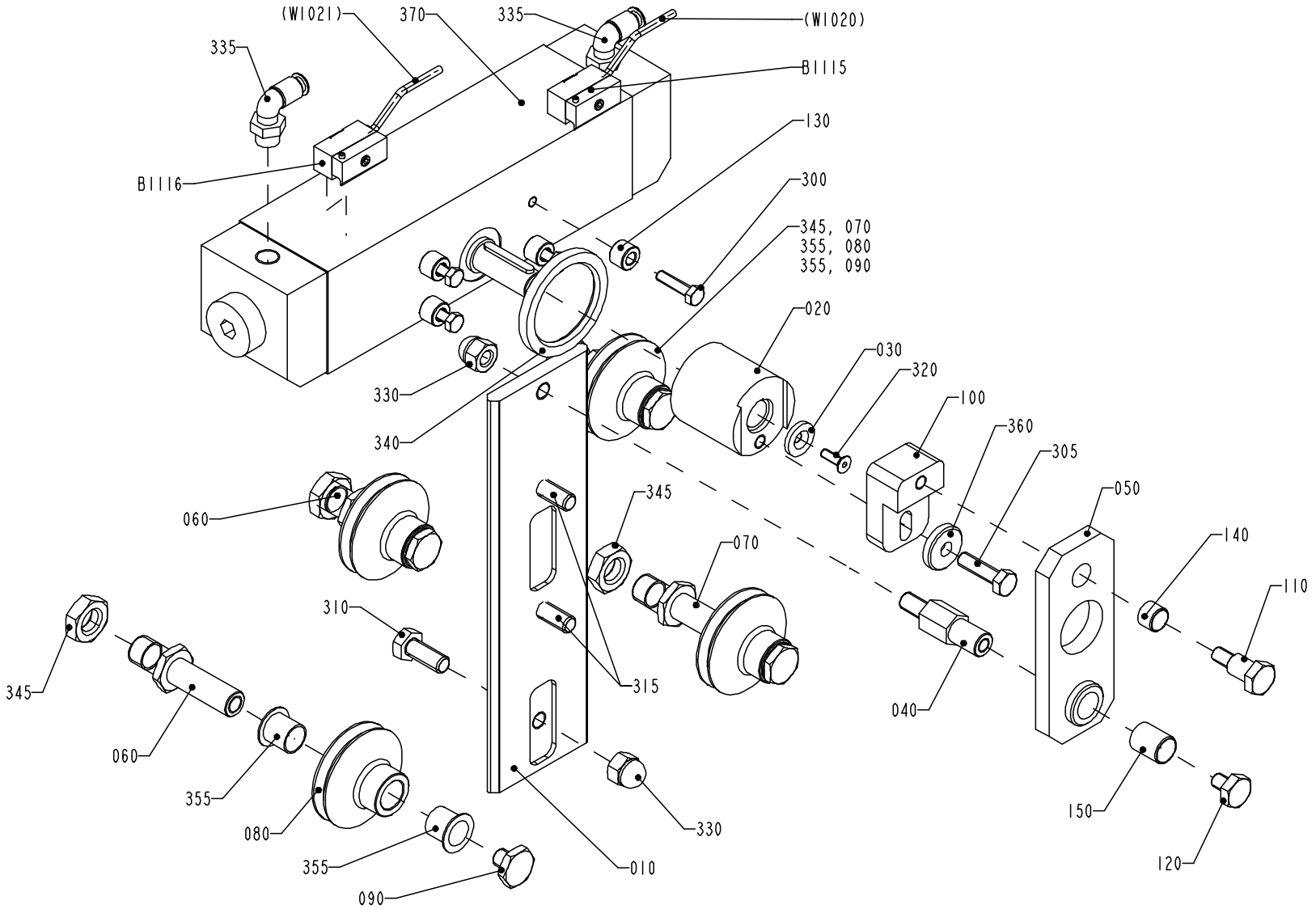

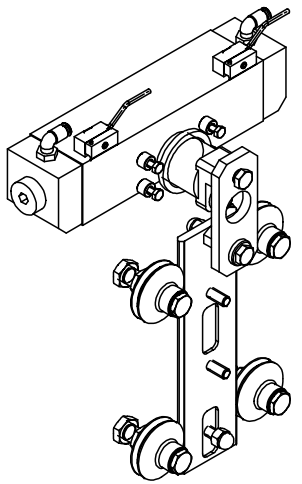

S - 1195175-2
ECN 72287

Pos	Part No	SP	UN	Qty	Description	Page No
Common parts						
010	1296764-0000	D		1	RAIL	
020	1349915-0000	-		1	SHAFT	
030	1255970-0000	-		1	WASHER	
040	1487167-0000	-		1	AXLE PIN	
050	1487168-0000	-		1	PLATE	
060	1296756-0000	-		2	SHAFT	
070	1296757-0000	-		2	SHAFT	
080	1296759-0000	D		4	ROLL	
090	1296760-0000	-		4	NUT	
100	1487164-0000	-		1	PLATE	
110	1487165-0000	-		1	SCREW	
120	1487166-0000	-		1	SCREW	
130	1349397-0000	-		4	SHIM	
140	1498615-0000	K		1	BUSHING	
150	1498616-0000	K		1	BUSHING	
300	312105-0372	-		4	SCREW M6S ISO 4017 M6x25 A280	
305	312105-0455	-		1	SCREW M6S ISO 4017 M8x30 A280	
310	312105-0493	-		1	SCREW M6S ISO 4017 M10X25 A280	
315	312105-0495	-		2	SCREW M6S ISO 4017 M10X30 A280	
320	312155-0329	-		1	SCREW MF6S DIN 7991 M5x16 A280	
330	312705-0320	-		2	NUT,DOMED CAP,HEXAGON,M10	
335	342732-0103	-		2	ELBOW PIPE JOINT	
340	90091-0143	J		1	SEAL RINGS TYPE AS 47X62X6	
345	90099-0131	-		4	NUTS,HEXAGON, M16x2, ISO4035	
355	90240-0264	R		8	Flange Bushing, 15x17x17	
360	315125-0165	-		1	WASHERS,PLAIN ROUND,CHAMFERED 8,4X26X5	
370	90450-0509	R		1	Cylinder	
B2115	1498614-0000	K		1	SENSOR	
B2116	1498614-0000	K		1	SENSOR	

Pos	Part No	SP	UN	Qty	Description	Page No

BENDING ROLLER

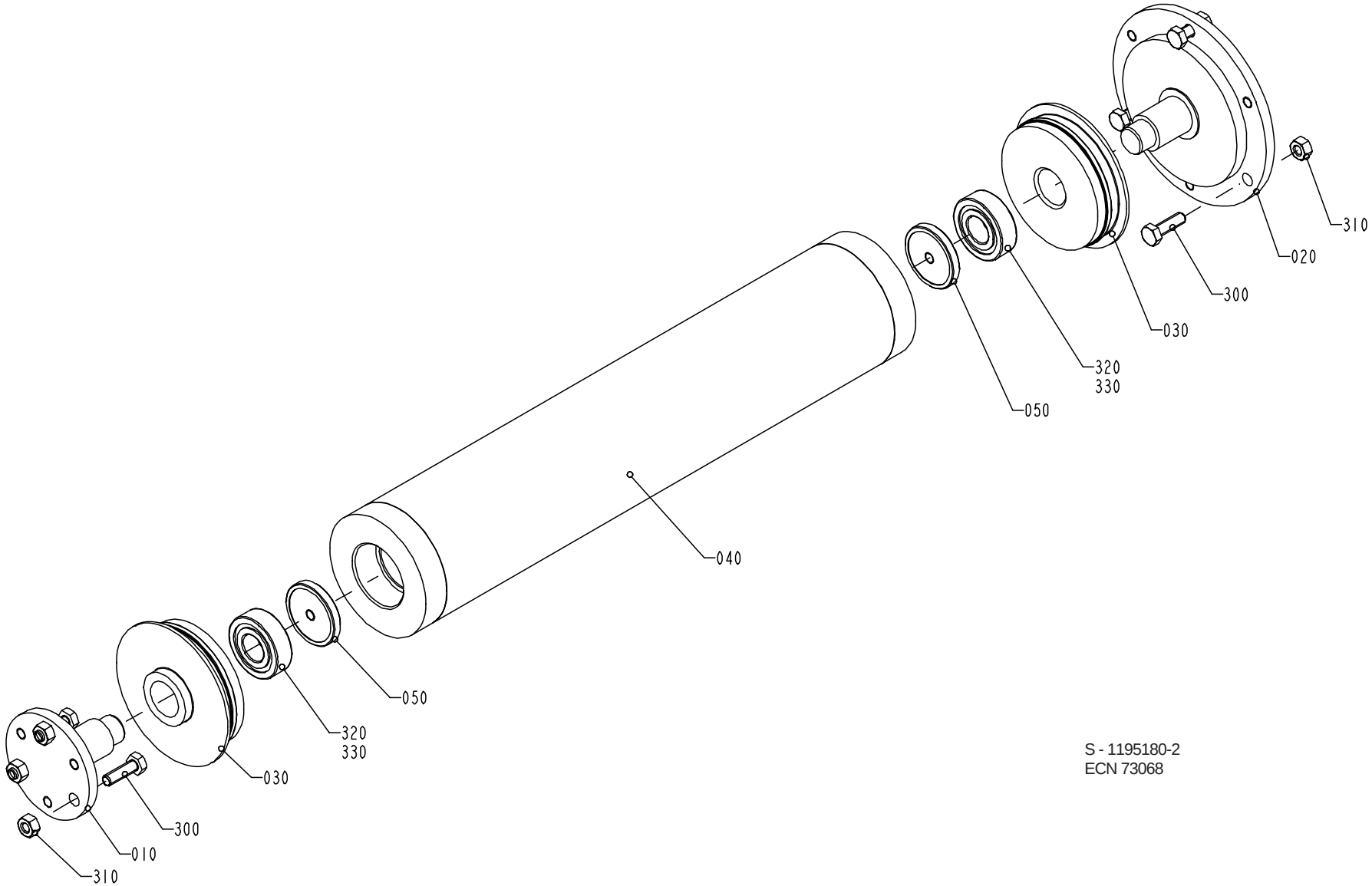

S - 1195180-2
ECN 73068

Pos	Part No	SP	UN	Qty	Description	Page No
Common parts						
010	1490413-0000	D		1	SHAFT	
020	1490412-0000	-		1	SHAFT	
030	1036496-0000	-		2	WHEEL	
040	1490411-0000	D		1	ROLLER	
050	1490407-0000	-		2	WASHER	
300	312105-0370	-		6	SCREW M6S ISO 4017 M6x20 A280	
310	312605-0316	-		6	NUT,HEXAGON A280 M6M6	
320	90214-0098	J		2	BALL BEARING,STAINLESS	
330	90296-0091	-		x	LUBRICATION GREASE	

Pos	Part No	SP	UN	Qty	Description	Page No

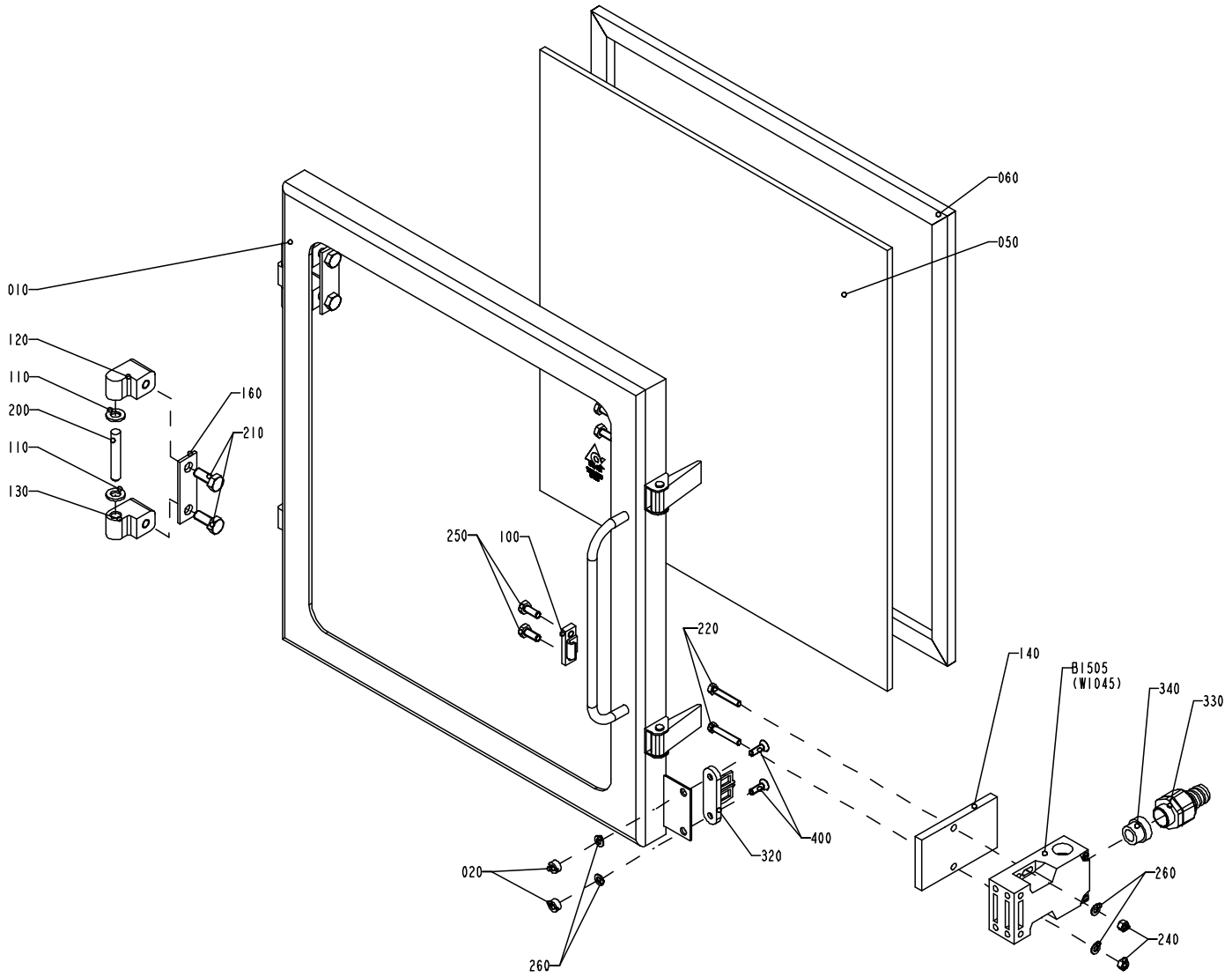

S - 1195181-1
ECN 73068

Pos	Part No	SP	UN	Qty	Description	Page No
Common parts						
010	1195270-0000	-		1	FRAME	
020	575034-0000	-		2	ROUND NUT	
050	1195271-0000	-		1	GLASS PANE	
060	1195272-0000	D		1	GASKET	
100	271860-0000	-		2	CLAMP BLOCK	
110	441739-0000	-		4	WASHER	
120	1041979-0000	-		2	HINGE FLANGE	
130	1041978-0000	-		2	HINGE FLANGE	
140	1037048-0000	-		1	PLATE	
160	441737-0000	-		2	WASHER	
200	311103-0413	-		2	PINS,STRAIGHT 8X50	
210	312105-0451	-		4	SCREW M6S ISO 4017 8x20 A280	
220	312109-0335	-		2	SCREW M6S ISO 4017 M5X30 A280	
240	312605-0314	-		2	NUT,HEXAGON,M6M5 Stainless	
250	312105-0367	-		4	SCREW M6S 6x14 A2 80	
260	315105-0146	-		4	WASHER,PLAIN ROUND 5,3x10 Stainless	
320	90044-0310	-		1	KEY FOR SAFETY SWITCH -103	
330	353243-0003	D		1	GLAND,HOSE,EXTENDED WITHOUT INSERT PG11	
340	353249-0011	-		1	GLAND,INSERT,SINGLE HOLE,EXTEND.7-10,5	
400	312155-0329	-		2	SCREW MF6S DIN 7991 M5x16 A280	
420	90153-0023	-		x	ADHESIVE	
B1505	90044-0139	D		1	KEY SAFETY SWITCH AZ-16-02 ZVRK-2254	

Pos	Part No	SP	UN	Qty	Description	Page No

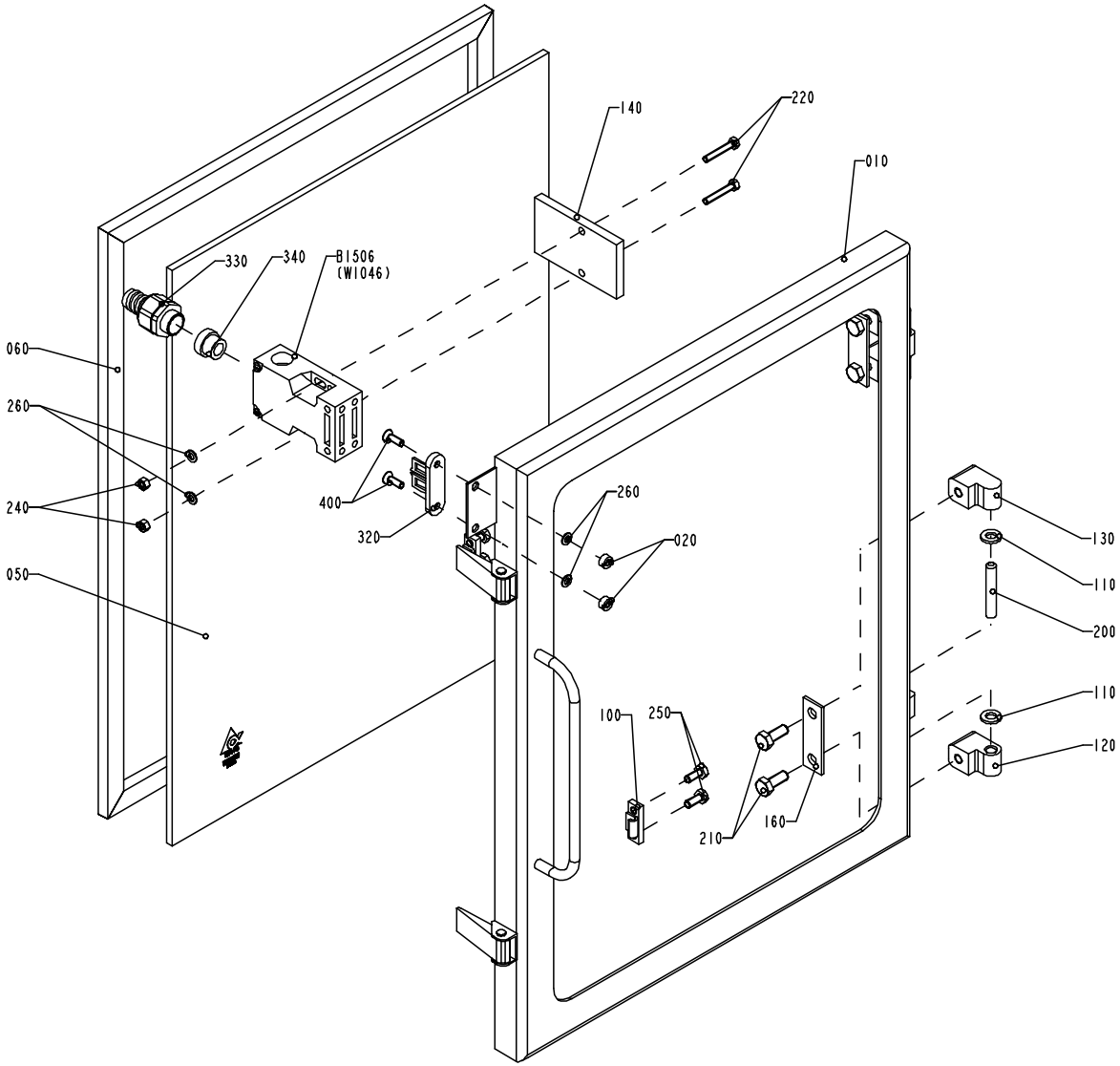

S - 1195182-1
ECN 73068

Pos	Part No	SP	UN	Qty	Description	Page No
Common parts						
010	1195273-0000	-		1	FRAME	
020	575034-0000	-		2	ROUND NUT	
050	1195274-0000	-		1	GLASS PANE	
060	1195275-0000	D		1	GASKET	
100	271860-0000	-		2	CLAMP BLOCK	
110	441739-0000	-		4	WASHER	
120	1041979-0000	-		2	HINGE FLANGE	
130	1041978-0000	-		2	HINGE FLANGE	
140	1037048-0000	-		1	PLATE	
160	441737-0000	-		2	WASHER	
200	311103-0413	-		2	PINS,STRAIGHT 8X50	
210	312105-0451	-		4	SCREW M6S ISO 4017 8x20 A280	
220	312109-0335	-		2	SCREW M6S ISO 4017 M5X30 A280	
240	312605-0314	-		2	NUT,HEXAGON,M6M5 Stainless	
250	312105-0367	-		4	SCREW M6S 6x14 A2 80	
260	315105-0146	-		4	WASHER,PLAIN ROUND 5,3x10 Stainless	
320	90044-0310	D		1	KEY FOR SAFETY SWITCH -103	
330	353243-0003	-		1	GLAND,HOSE,EXTENDED WITHOUT INSERT PG11	
340	353249-0011	-		1	GLAND,INSERT,SINGLE HOLE,EXTEND.7-10,5	
400	312155-0329	-		2	SCREW MF6S DIN 7991 M5x16 A280	
420	90153-0023	-		x	ADHESIVE	
B1506	90044-0139	D		1	KEY SAFETY SWITCH AZ-16-02 ZVRK-2254	

Pos	Part No	SP	UN	Qty	Description	Page No

BENDING ROLLER

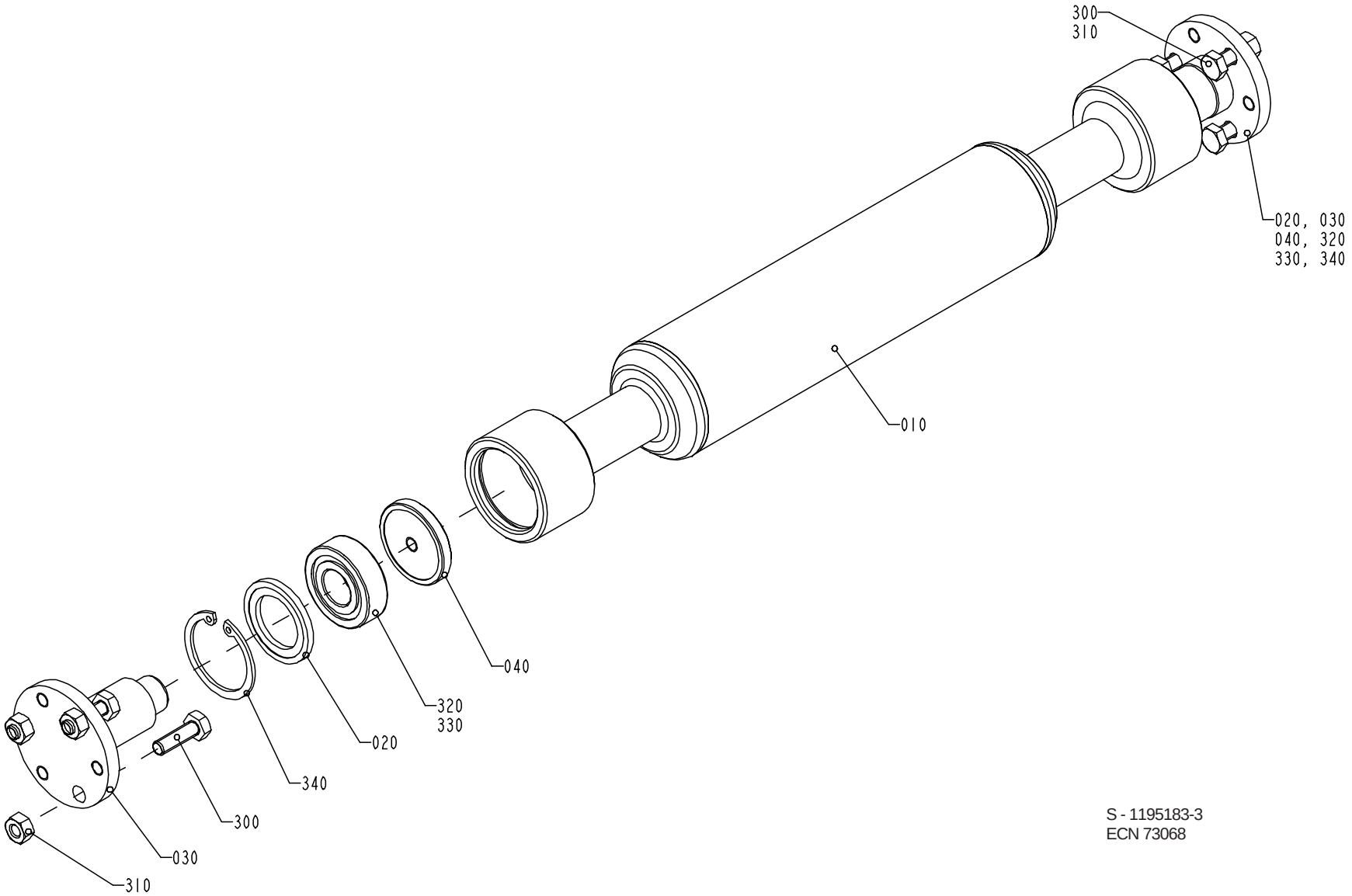

S - 1195183-3
ECN 73068

Pos	Part No	SP	UN	Qty	Description	Page No
Common parts						
010	1490414-0000	D		1	ROLLER	
020	1490406-0000	-		2	WASHER	
030	1490408-0000	D		2	SHAFT	
040	1490407-0000	-		2	WASHER	
300	312105-0370	-		6	SCREW M6S ISO 4017 M6x20 A280	
310	312605-0316	-		6	NUT,HEXAGON A280 M6M6	
320	90214-0098	J		2	BALL BEARING,STAINLESS	
330	90296-0091	-		x	LUBRICATION GREASE	
340	315753-0124	-		2	RETAINING RINGS FOR HOLE 35	

Pos	Part No	SP	UN	Qty	Description	Page No

BENDING ROLLER

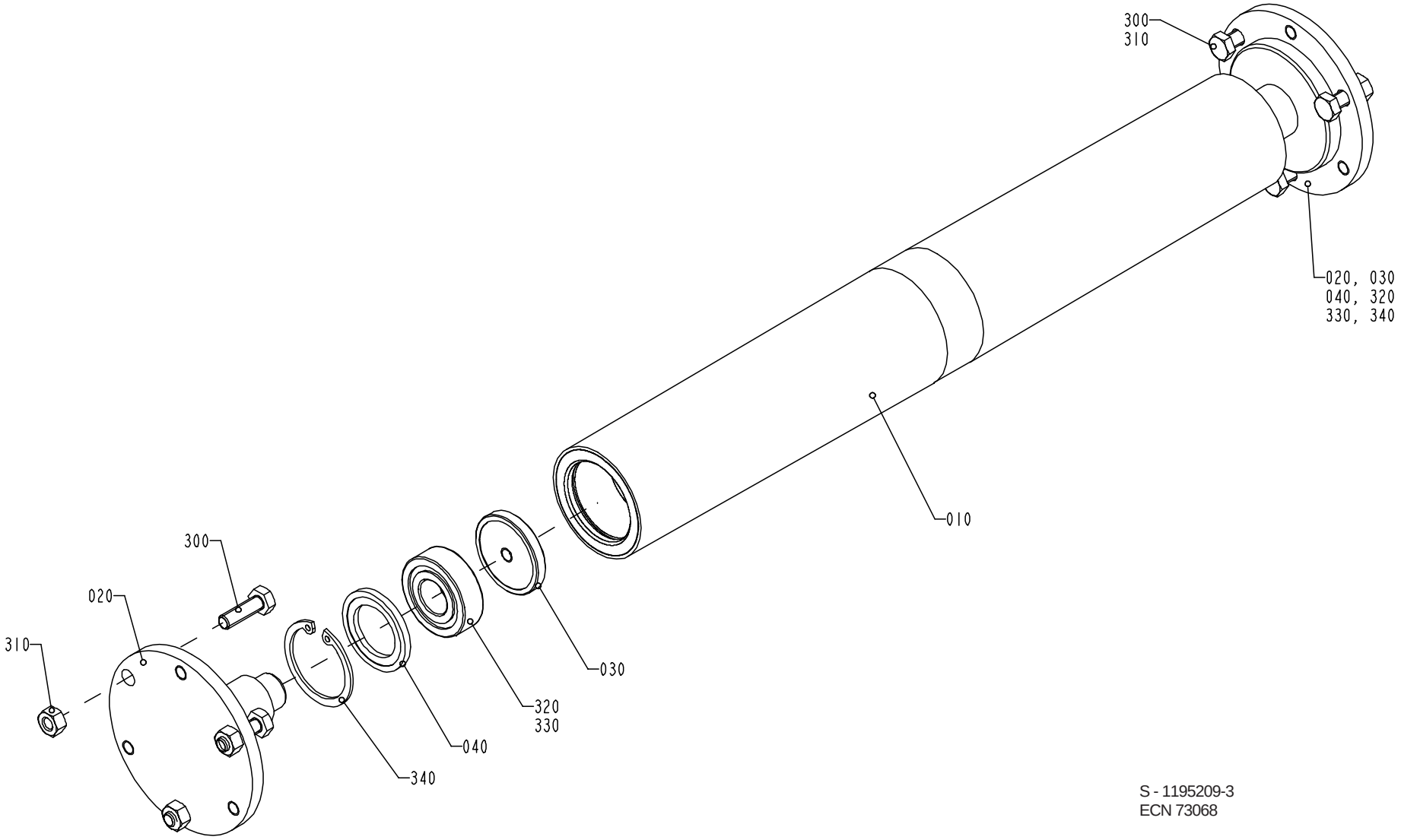

S - 1195209-3
ECN 73068

Pos	Part No	SP	UN	Qty	Description	Page No
Common parts						
010	1490405-0000	D		1	ROLLER	
020	1490415-0000	D		2	SHAFT	
030	1490407-0000	-		2	WASHER	
040	1490406-0000	-		2	WASHER	
300	312105-0370	-		6	SCREW M6S ISO 4017 M6x20 A280	
310	312605-0316	-		6	NUT,HEXAGON A280 M6M6	
320	90214-0098	J		2	BALL BEARING,STAINLESS	
330	90296-0091	-		x	LUBRICATION GREASE	
340	315753-0124	-		2	RETAINING RINGS FOR HOLE 35	

Pos	Part No	SP	UN	Qty	Description	Page No

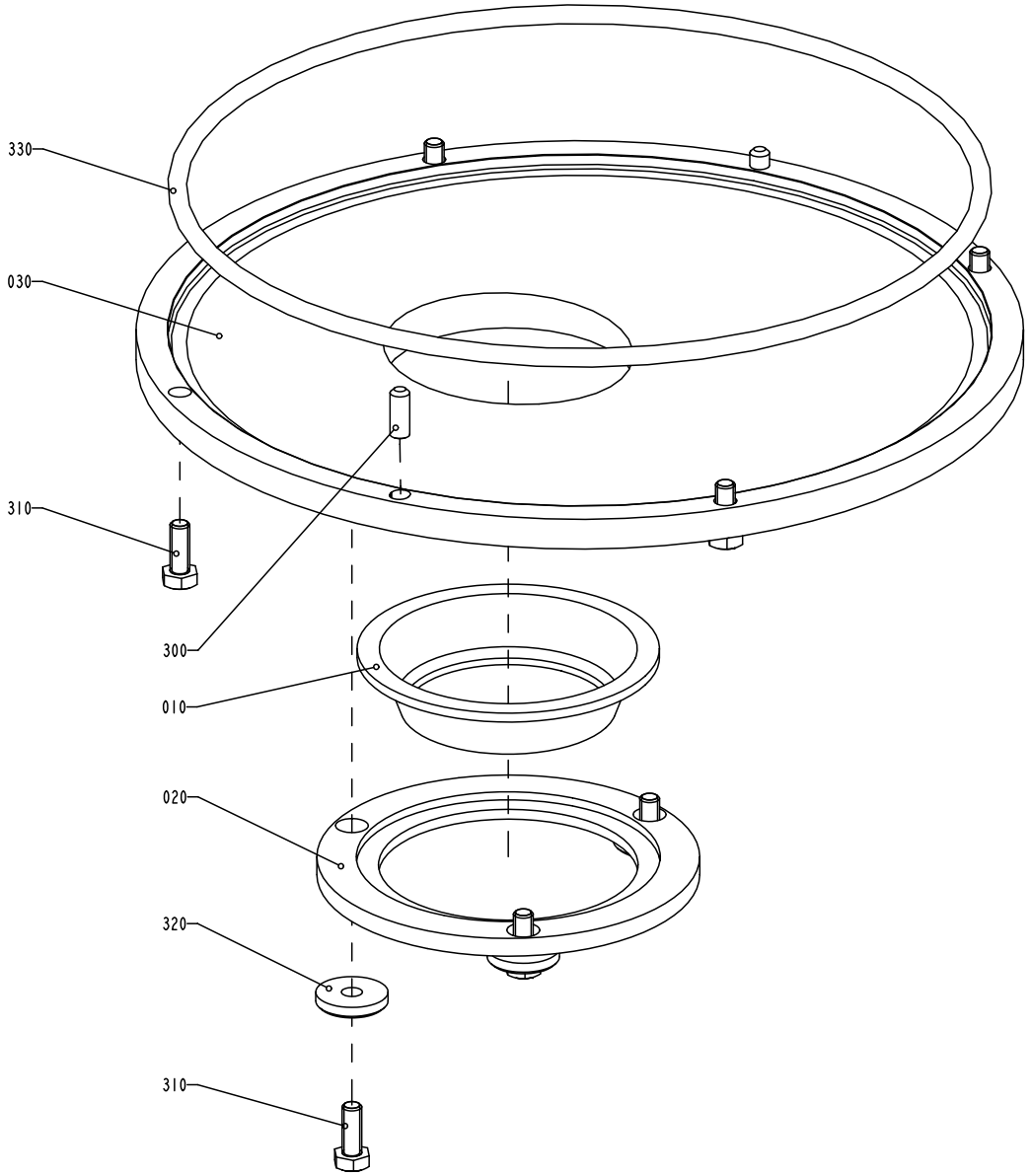

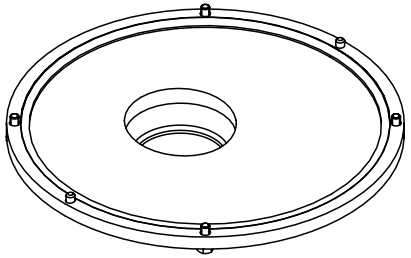

S - 1195214-1
ECN 71407

Pos	Part No	SP	UN	Qty	Description	Page No
Common parts						
010	273953-0000	J		1	SEAL	
020	1255975-0000	-		1	SEAL HOLDER	
030	1255976-0000	-		1	SEAL HOLDER	
300	311103-0351	-		2	PINS,STRAIGHT 6x16	
310	312105-0368	-		7	SCREW M6S ISO 4017 M6x16 A280	
320	315125-0153	-		3	WASHERS,PLAIN ROUND,CHAMFERED 6,4X22X4	
330	315202-0335	R		1	O-RINGS 239,3X5,7	

Pos	Part No	SP	UN	Qty	Description	Page No

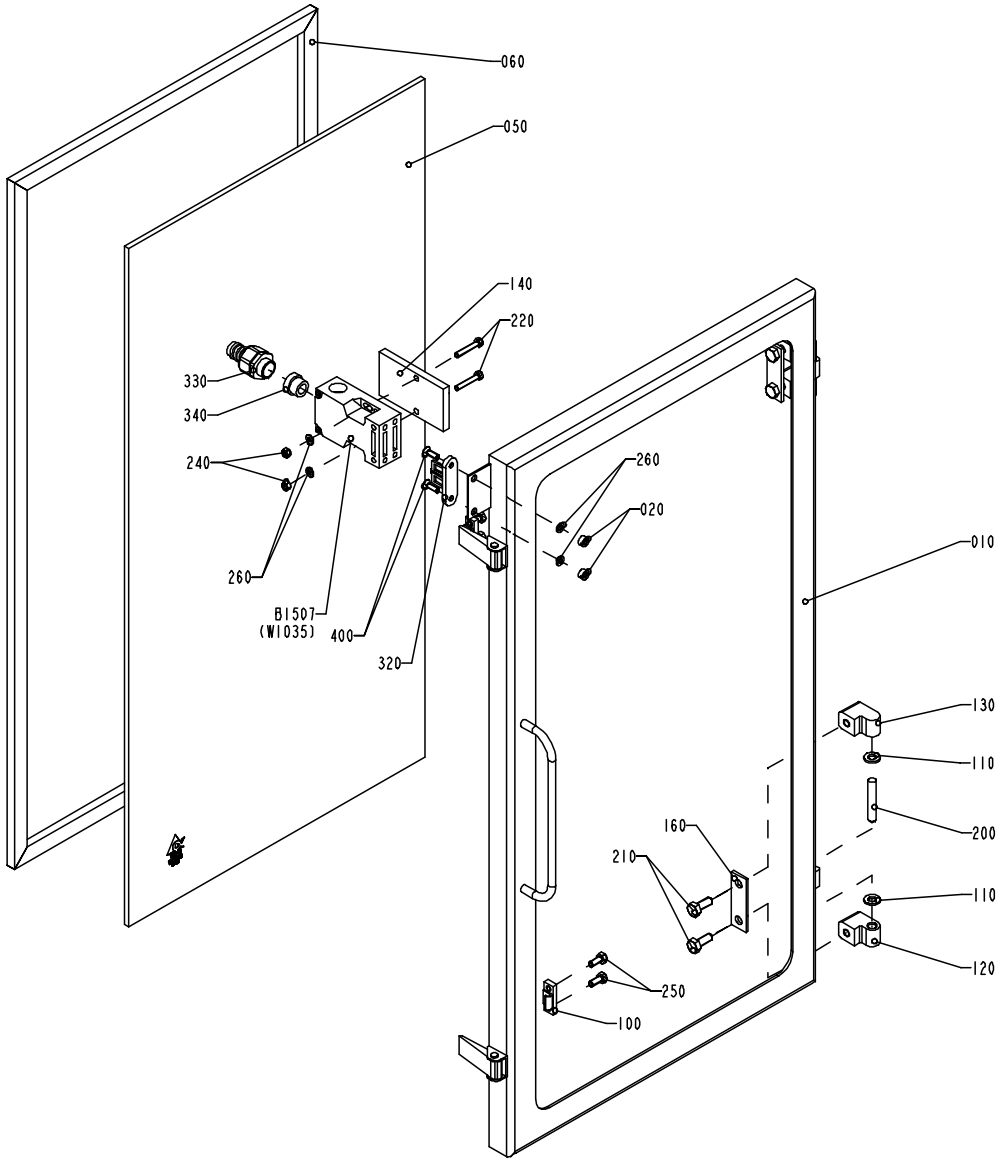

S - 1195269-1
ECN 73068

Pos	Part No	SP	UN	Qty	Description	Page No
Common parts						
010	1195276-0000	-		1	FRAME	
020	575034-0000	-		2	ROUND NUT	
050	1195277-0000	-		1	GLASS PANE	
060	1195278-0000	D		1	GASKET	
100	271860-0000	-		2	CLAMP BLOCK	
110	441739-0000	-		4	WASHER	
120	1041979-0000	-		2	HINGE FLANGE	
130	1041978-0000	-		2	HINGE FLANGE	
140	1037048-0000	-		1	PLATE	
160	441737-0000	-		2	WASHER	
200	311103-0413	-		2	PINS,STRAIGHT 8X50	
210	312105-0451	-		4	SCREW M6S ISO 4017 8x20 A280	
220	312109-0335	-		2	SCREW M6S ISO 4017 M5X30 A280	
240	312605-0314	-		2	NUT,HEXAGON,M6M5 Stainless	
250	312105-0367	-		4	SCREW M6S 6x14 A2 80	
260	315105-0146	-		4	WASHER,PLAIN ROUND 5,3x10 Stainless	
320	90044-0310	D		1	KEY FOR SAFETY SWITCH -103	
330	353243-0003	-		1	GLAND,HOSE,EXTENDED WITHOUT INSERT PG11	
340	353249-0011	-		1	GLAND,INSERT,SINGLE HOLE,EXTEND.7-10,5	
400	312155-0329	-		2	SCREW MF6S DIN 7991 M5x16 A280	
420	90153-0023	-		x	ADHESIVE	
B1507	90044-0139	D		1	KEY SAFETY SWITCH AZ-16-02 ZVRK-2254	

Pos	Part No	SP	UN	Qty	Description	Page No

TUBE SUPPORT

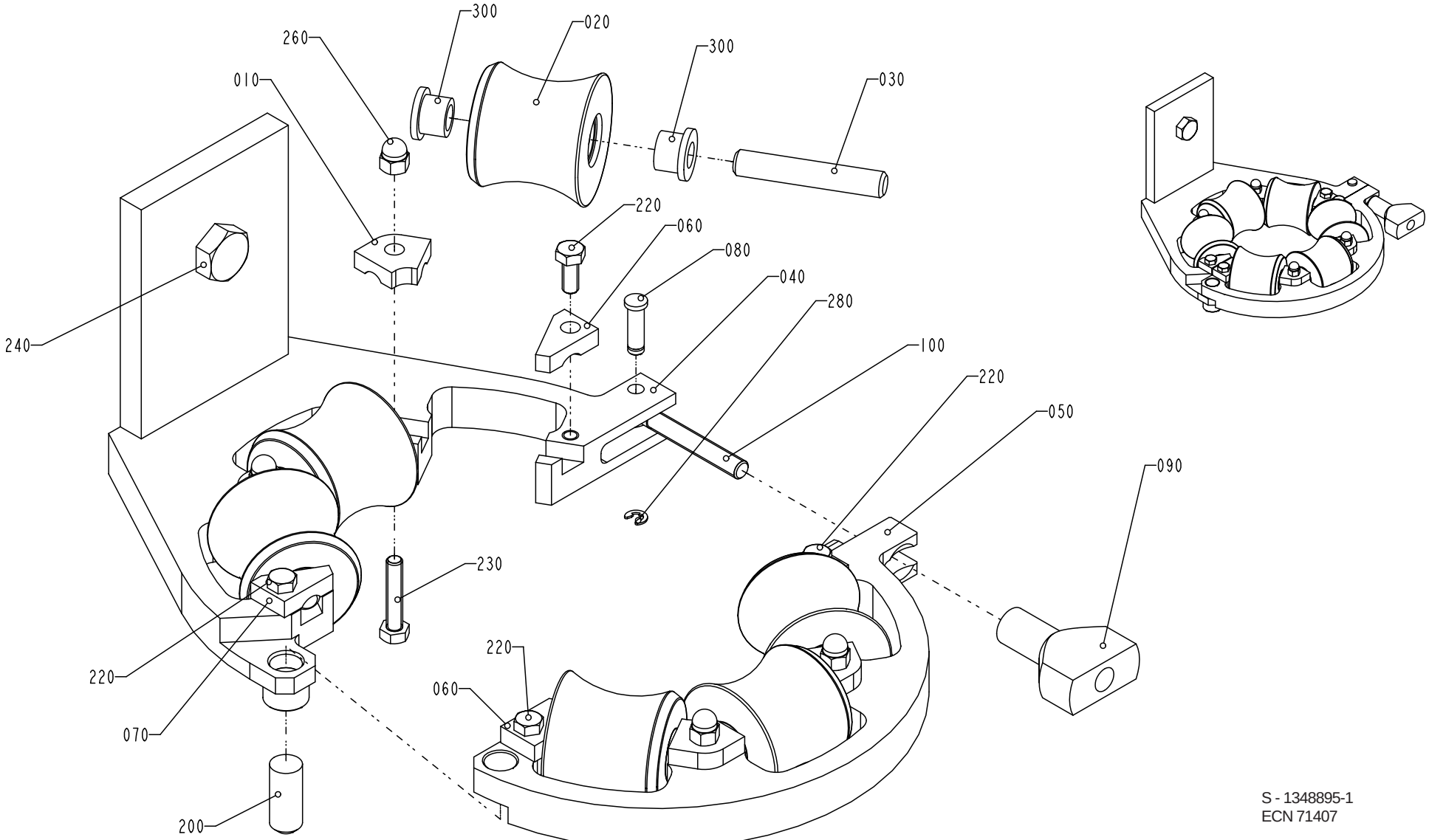

S - 1348895-1
ECN 71407

Pos	Part No	SP	UN	Qty	Description	Page No
Common parts						
010	490538-0000	-		4	LOCKING PLATE	
020	751502-0000	R		6	ROLLER	
030	752186-0005	J		6	SHAFT	
040	1348896-0000	-		1	RING	
050	1348935-0000	-		1	RING	
060	1348936-0000	-		2	LOCK PLATE	
070	1348937-0000	-		2	LOCK PLATE	
080	1350482-0000	-		1	PIN	
090	1350483-0000	-		1	SCREW	
100	1350484-0000	-		1	SCREW	
200	311103-0456	-		1	PINS,STRAIGHT 10X25	
220	312105-0327	-		4	SCREW M6S ISO 4017 M5X12 A280	
230	312105-0333	-		4	SCREW M6S ISO 4017 M5x25 A280	
240	312105-0495	-		1	SCREW M6S ISO 4017 M10X30 A280	
260	312705-0314	-		4	NUT,DOMED CAP,HEXAGON,M5	
280	315755-0105	-		1	RETAINING RINGS,RADIAL ASSEMBLY 3,2	
300	90240-0172	J		12	Flange Bushing, 8x12x10 NFB	

Pos	Part No	SP	UN	Qty	Description	Page No

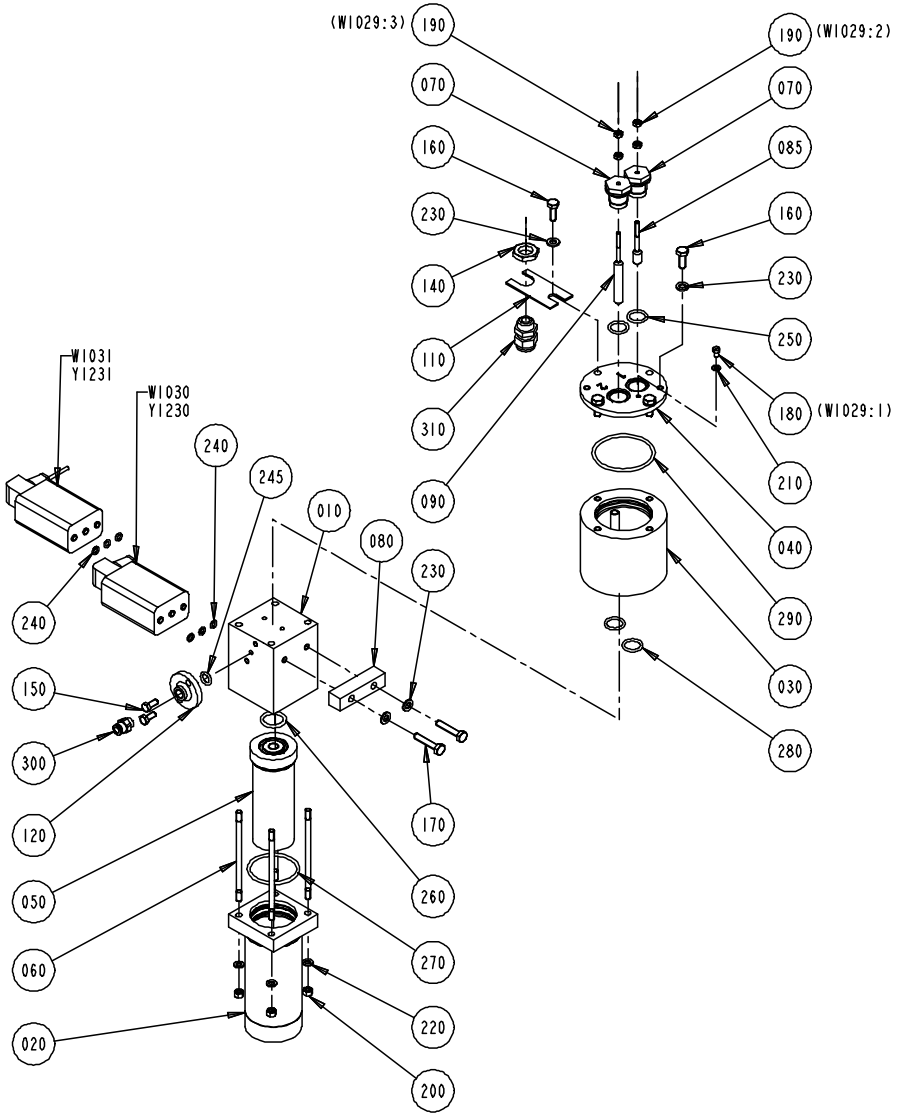

S - 1095864-1
ECN 73085

Pos	Part No	SP	UN	Qty	Description	Page No
TBA/22						
030	1129345-0000	D		1	CONTAINER	
060	554585-0000	D		4	STUD SCREW	
070	560931-0000	D		2	BRACKET	
085	560933-0000	D		1	ELECTRODE	
090	567070-0012	D		1	ELECTRODE	
180	312125-0285	-		1	SLOTTED HEAD SCREW MCS 4x6 RFR	
190	312605-0312	-		4	NUT,HEXAGON,M4 RFR	
210	315105-0136	-		1	WASHER,PLAIN ROUND 4,3x8 Stainless	
240	927420-0001	J		6	O-RING 5.1X1.6 SILICON	
250	927421-0004	J		2	O-RING 15.3X2.4 SILICON	
280	927421-0002	J		2	O-RING 12.3X2.4 SILICON	
Common parts						
010	549263-0000	D		1	BLOCK	
020	554142-0000	D		1	FILTER HOUSING	
040	549267-0000	D		1	LID	
050	554141-0000	M		1	FILTER	
080	560932-0000	-		1	INTERMEDIATE PART	
110	1040970-0000	-		1	BRACKET	
120	1040980-0000	D		1	FLANGE	
140	90099-0104	-		1	NUT PR 15,2 (PG9)	
150	312105-0327	-		2	SCREW M6S ISO 4017 M5X12 A280	
160	312105-0368	-		4	SCREW M6S ISO 4017 M6x16 A280	
170	312109-0374	-		2	SCREW M6S ISO 4017 M6X30 A280	
200	312605-0314	-		4	NUT,HEXAGON,M6M5 Stainless	
220	315105-0146	-		4	WASHER,PLAIN ROUND 5,3x10 Stainless	
230	315105-0153	-		6	WASHER,PLAIN ROUND 6,4x12 Stainless	
245	927421-0001	J		1	O-RING 9.3X2.4 SILICON	
260	927422-0001	J		1	O-RING 19.2X3 SILICON	
270	927422-0007	J		1	O-RING 44.2X3 SILICON	
290	927422-0009	J		1	O-RING 54.5X3 SILICON	
300	342722-0202	-		1	PIPE COUPLING 1/8" D=6mm	
310	352103-0101	-		1	CABLE GLAND ST 9;PR15,2/PG9	
Y1230	90042-0203	-		1	SOLENOID VALVE BURKERT	
Y1231	90042-0203	-		1	SOLENOID VALVE BURKERT	

Pos	Part No	SP	UN	Qty	Description	Page No

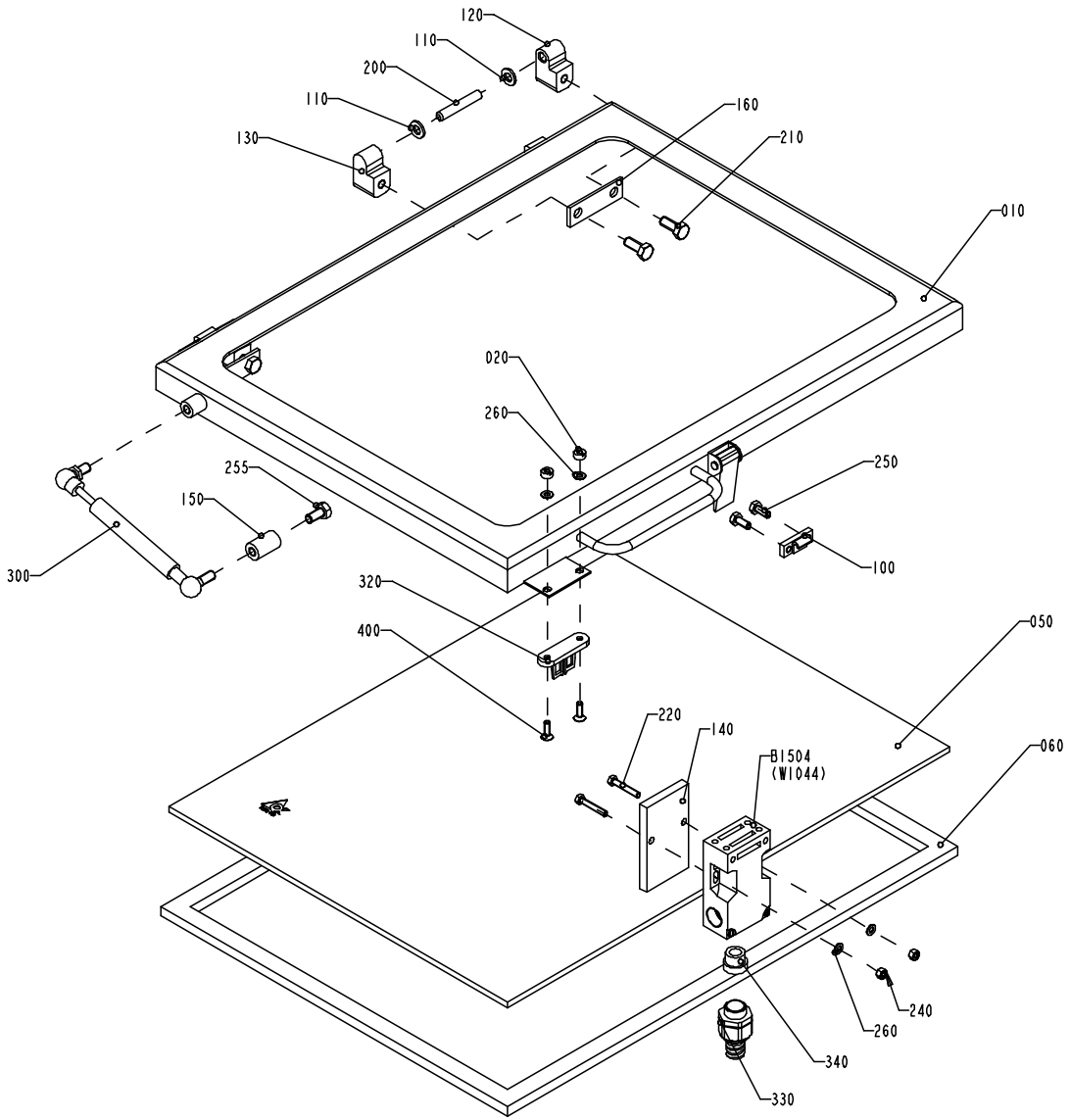

S - 1347493-1
ECN 73068

Pos	Part No	SP	UN	Qty	Description	Page No
Common parts						
010	1347494-0000	-		1	FRAME	
020	575034-0000	-		2	ROUND NUT	
050	1037080-0000	-		1	GLASS PANE	
060	1037081-0000	D		1	GASKET	
100	271860-0000	-		1	CLAMP BLOCK	
110	441739-0000	-		4	WASHER	
120	1041979-0000	-		2	HINGE FLANGE	
130	1041978-0000	-		2	HINGE FLANGE	
140	1037048-0000	-		1	PLATE	
150	1037089-0000	-		1	SPACER	
160	441737-0000	-		2	WASHER	
200	311103-0413	-		2	PINS,STRAIGHT 8X50	
210	312105-0451	-		4	SCREW M6S ISO 4017 8x20 A280	
220	312109-0335	-		2	SCREW M6S ISO 4017 M5X30 A280	
240	312605-0314	-		2	NUT,HEXAGON,M6M5 Stainless	
250	312105-0367	-		2	SCREW M6S 6x14 A2 80	
255	312105-0449	-		1	SCREW M6S ISO 4017 M8x16 A280	
260	315105-0146	-		4	WASHER,PLAIN ROUND 5,3x10 Stainless	
300	90347-0039	-		1	DAMPER	
320	90044-0310	D		1	KEY FOR SAFETY SWITCH -103	
330	353243-0003	-		1	GLAND,HOSE,EXTENDED WITHOUT INSERT PG11	
340	353249-0011	-		1	GLAND,INSERT,SINGLE HOLE,EXTEND.7-10,5	
400	312155-0329	-		2	SCREW MF6S DIN 7991 M5x16 A280	
420	90153-0023	-		x	ADHESIVE	
B1504	90044-0139	D		1	KEY SAFETY SWITCH AZ-16-02 ZVRK-2254	

Pos	Part No	SP	UN	Qty	Description	Page No

DRYING TUNNEL LID

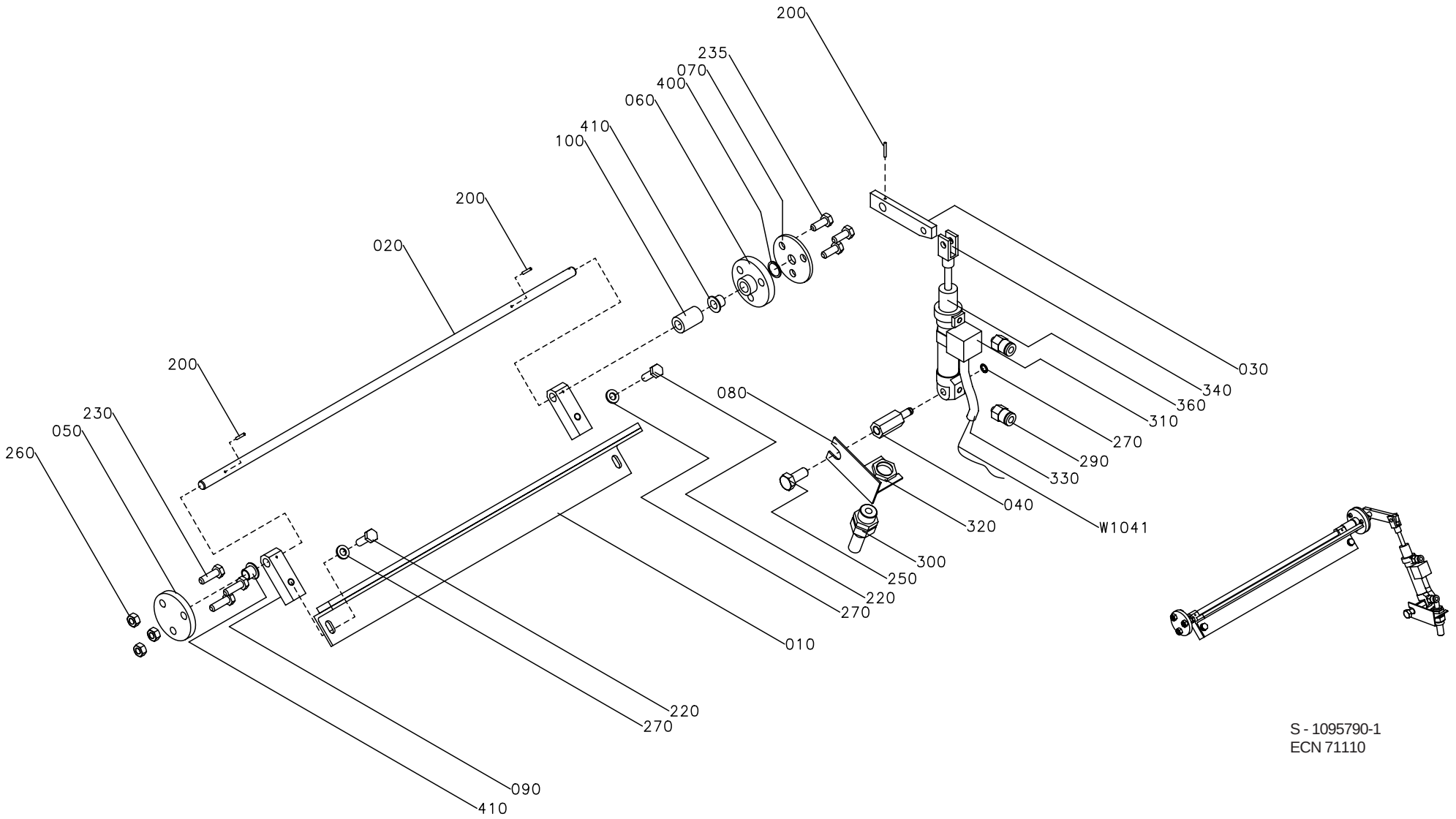

S - 1095790-1
ECN 71110

Pos	Part No	SP	UN	Qty	Description	Page No
FULLYEQUIP						
010	1037195-0000	-		1	SEAL	
020	1038413-0000	-		1	SHAFT	
030	1037194-0000	-		1	LEVER	
040	1036178-0000	-		1	SHAFT	
050	1037196-0000	-		1	LID	
060	1037197-0000	-		1	LID	
070	1037198-0000	-		1	LID	
080	1037199-0000	-		1	BRACKET	
090	1037200-0000	-		2	ARM	
100	1038418-0000	-		1	SPACER	
200	311112-0167	-		3	SLOTTED TURP 2X14 RFR	
220	312105-0367	-		2	SCREW M6S 6x14 A2 80	
250	312105-0451	-		1	SCREW M6S ISO 4017 8x20 A280	
270	315105-0153	-		2	WASHER,PLAIN ROUND 6,4x12 Stainless	
280	315751-0103	-		1	RETAINING RINGS FOR SHAFT 6	
290	342722-0197	-		2	STRAIGHT COUPLING	
300	90012-0077	-		1	GLAND FITTING	
310	90044-0116	-		1	PROXIMITY SWITCH	
320	90099-0001	-		1	NUT PR 15,2 BRASS	
330	90152-0058	-	MM	900	GLANDS,HOSE 15x9	
340	90239-0489	-		1	ROD END,CLEVIS WITH AXLE,M6	
350	90239-0579	-		1	CYLINDER,SENSOR,BRACKETS,FOR CYL.16	
360	90239-0816	-		1	DOUBLE ACTING,MINI-ISO,CYL.16-25	
400	90091-0356	-		1	SEALING RING	
410	90240-0260	-		2	Flange Bushing, 8x10x9	
HIGH HYGIEN. or STD						
110	1038429-0000	-		2	LID	
210	312105-0364	-		2	SCREW M6S 6x10 A280	
240	312105-0447	-		1	SCREW M6S ISO 4017 M8x12 A280	
Common parts						
230	312105-0370	-		6	SCREW M6S ISO 4017 M6x20 A280	
260	312625-0316	-		3	NUTS,HEXAGON,M6	
265	312705-0316	-		3	NUT,DOMED CAP,HEXAGON,M6	

Pos	Part No	SP	UN	Qty	Description	Page No

DRYING TUNNEL LID

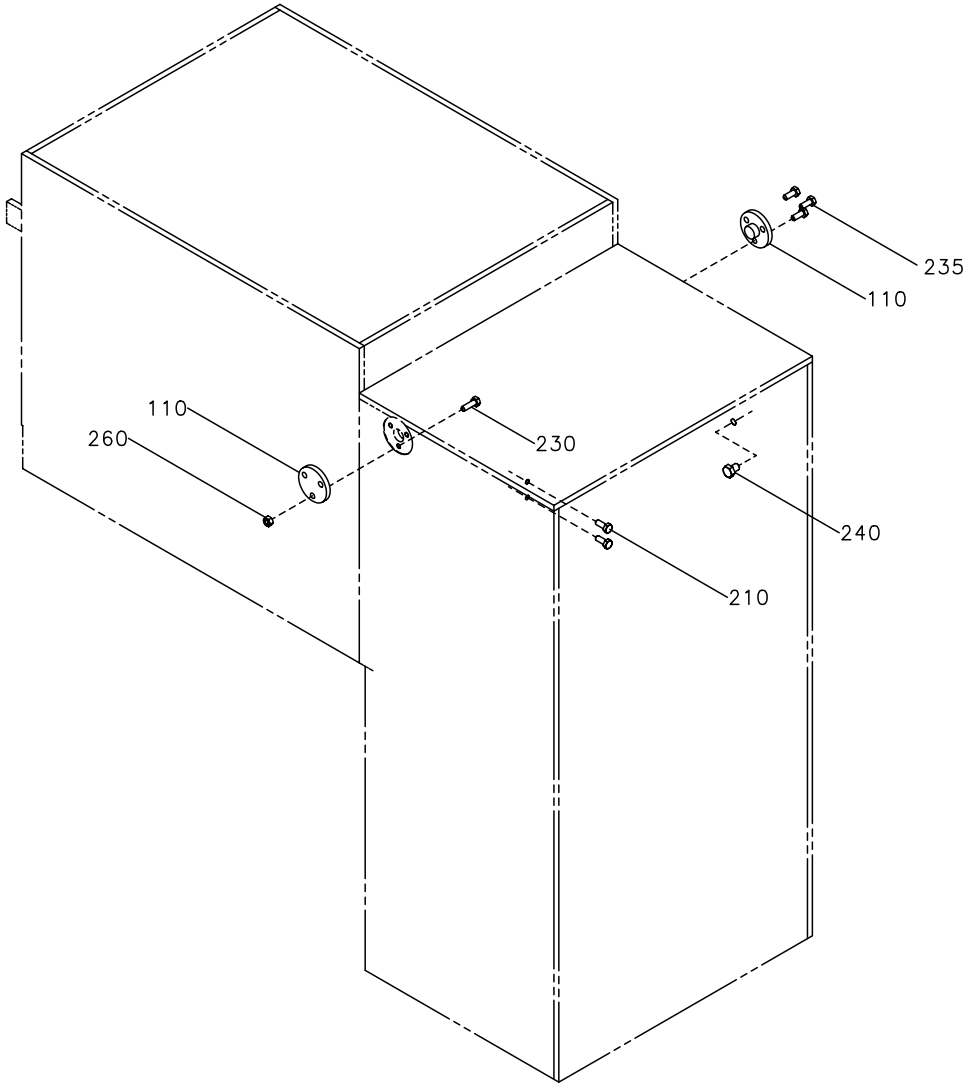

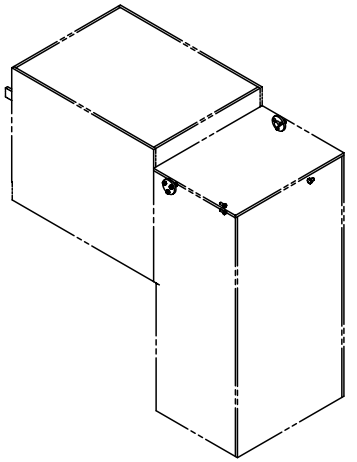

S - 1095790-2
ECN 71110

Pos	Part No	SP	UN	Qty	Description	Page No
FULLYEQUIP						
010	1037195-0000	-		1	SEAL	
020	1038413-0000	-		1	SHAFT	
030	1037194-0000	-		1	LEVER	
040	1036178-0000	-		1	SHAFT	
050	1037196-0000	-		1	LID	
060	1037197-0000	-		1	LID	
070	1037198-0000	-		1	LID	
080	1037199-0000	-		1	BRACKET	
090	1037200-0000	-		2	ARM	
100	1038418-0000	-		1	SPACER	
200	311112-0167	-		3	SLOTTED TURP 2X14 RFR	
220	312105-0367	-		2	SCREW M6S 6x14 A2 80	
250	312105-0451	-		1	SCREW M6S ISO 4017 8x20 A280	
270	315105-0153	-		2	WASHER,PLAIN ROUND 6,4x12 Stainless	
280	315751-0103	-		1	RETAINING RINGS FOR SHAFT 6	
290	342722-0197	-		2	STRAIGHT COUPLING	
300	90012-0077	-		1	GLAND FITTING	
310	90044-0116	-		1	PROXIMITY SWITCH	
320	90099-0001	-		1	NUT PR 15,2 BRASS	
330	90152-0058	-	MM	900	GLANDS,HOSE 15x9	
340	90239-0489	-		1	ROD END,CLEVIS WITH AXLE,M6	
350	90239-0579	-		1	CYLINDER,SENSOR,BRACKETS,FOR CYL.16	
360	90239-0816	-		1	DOUBLE ACTING,MINI-ISO,CYL.16-25	
400	90091-0356	-		1	SEALING RING	
410	90240-0260	-		2	Flange Bushing, 8x10x9	
HIGH HYGIEN. or STD						
110	1038429-0000	-		2	LID	
210	312105-0364	-		2	SCREW M6S 6x10 A280	
240	312105-0447	-		1	SCREW M6S ISO 4017 M8x12 A280	
Common parts						
230	312105-0370	-		6	SCREW M6S ISO 4017 M6x20 A280	
260	312625-0316	-		3	NUTS,HEXAGON,M6	
265	312705-0316	-		3	NUT,DOMED CAP,HEXAGON,M6	

Pos	Part No	SP	UN	Qty	Description	Page No

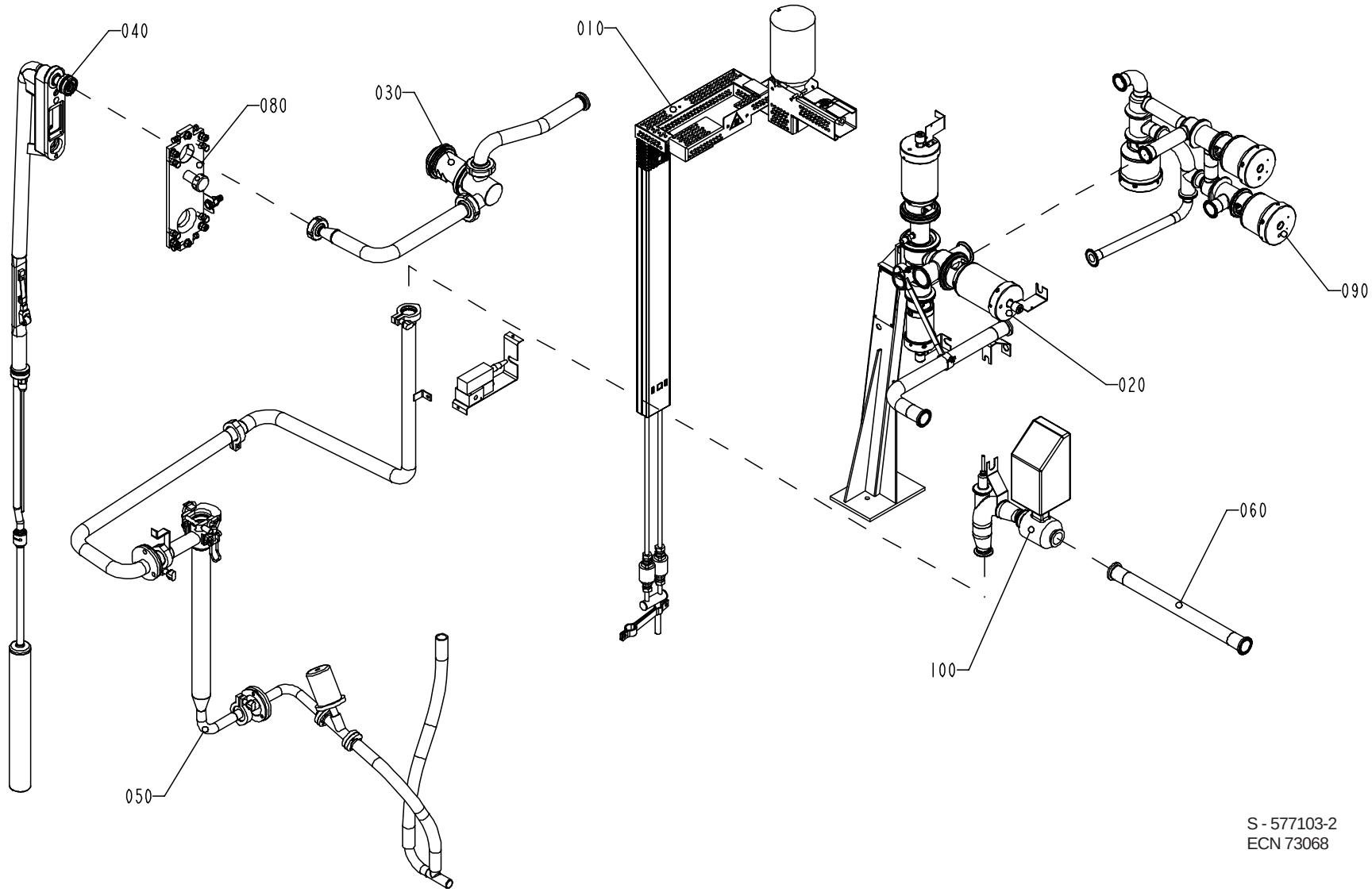

S - 577103-2
ECN 73068

Pos	Part No	SP	UN	Qty	Description	Page No
Common parts						
010	A1347194-0200	-		1	STEAM SYSTEM	**71**
020	A1255980-0200	-		1	PRODUCT VALVE GROUP	**73**
030	A1498700-0100	-		1	FLOW REGULATOR	**87**
040	A1498668-0100	-		1	FILLING PIPE	**91**
050	A1498673-0100	-		1	CLEANING SLEEVE	**93**
060	A1255984-0200	-		1	CLEANING PIPE	**95**
080	A1498667-0100	-		1	FASTENING PLATE	**97**
090	A1035107-0100	-		1	CIP SWITCH	**99**, **101**
100	A1035259-0100	-		1	INTERMEDIATE PART	**105**, **107**

Pos	Part No	SP	UN	Qty	Description	Page No

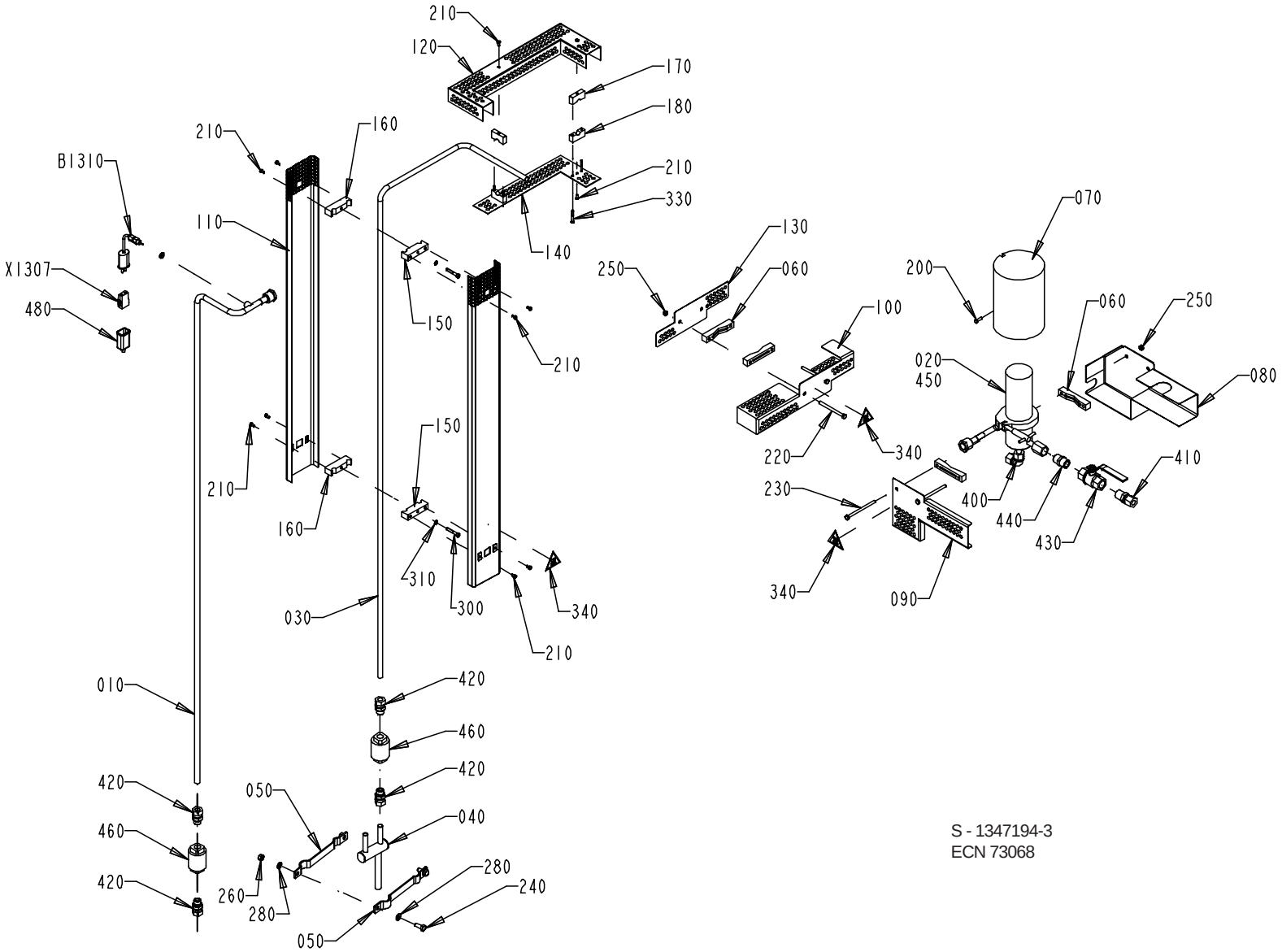

S - 1347194-3
ECN 73068

Pos	Part No	SP	UN	Qty	Description	Page No
Common parts						
010	1487194-0000	-		1	STEAM PIPE	
020	B1129137-0000	D		1	HOUSE	
030	1487193-0000	-		1	STEAM PIPE	
040	1487195-0000	-		1	STEAM PIPE	
050	1347665-0000	-		2	BRACKET	
060	1487200-0000	-		4	CLAMP	
070	752176-0000	-		1	PROTECTIVE CASING	
080	1487230-0000	-		1	TOUCH GUARD	
090	1487229-0000	-		1	TOUCH GUARD	
100	1487228-0000	-		1	TOUCH GUARD	
110	1487841-0000	-		2	TOUCH GUARD	
120	1487842-0000	-		1	TOUCH GUARD	
130	1487199-0000	-		1	TOUCH GUARD	
140	1487843-0000	-		1	TOUCH GUARD	
150	1487837-0000	-		2	CLAMP	
160	1487838-0000	-		2	CLAMP	
170	1487839-0000	-		2	CLAMP	
180	1487840-0000	-		2	CLAMP	
200	312105-0329	-		1	SCREW M6S ISO 4017 M5x16 A280	
210	312105-0287	-		12	SCREW M6S ISO 4017 M4x8 A280	
220	312105-0386	-		2	SCREW M6S ISO 4014 M6x80 A280	
230	312105-0388	-		2	SCREW M6S ISO 4014 M6x90 A280	
240	312105-0451	-		2	SCREW M6S ISO 4017 8x20 A280	
250	312605-0316	-		4	NUT,HEXAGON A280 M6M6	
260	312605-0318	-		2	NUT,HEXAGON,M8 RFR	
280	315105-0165	-		4	WASHER,PLAIN ROUND 8,4x16 Stainless	
300	312115-0337	-		2	SCREW MC6S ISO 4762 M5X35 A280	
310	315105-0146	-		2	WASHER,PLAIN ROUND 5,3x10 Stainless	
330	312105-0299	-		4	SCREW M6S ISO 4014 M4X30 A280	
340	359705-0007	-		3	WARNING SIGN "HOT SURFACE"	
400	90030-0096	-		1	ELBOW CONNECTION W-12	
410	90030-0180	-		1	STRAIGHT CONNECTION GE 12-1/2"-14 NPTF	
420	90030-0187	-		4	STRAIGHT CONNECTION GA-12-G3/8"	
430	90187-0082	-		1	BALL VALVE, Sealing PTFE	
440	90330-0021	-		1	NIPPLES,HEXAGON,EXT.R-THREAD R1/2"-R1/2"	
450	90337-0315	M		1	FILTER	
460	90360-0020	M		2	STEAM TRAP	
480	90326-0012	-		1	PROTECTIVE COVER	
B1310	90326-0089	-		1	THERMOCOUPLE	
X1307	90326-0020	-		1	PLUG,FEMALE YELLOW CR-AL	

Pos	Part No	SP	UN	Qty	Description	Page No

PRODUCT VALVE GROUP

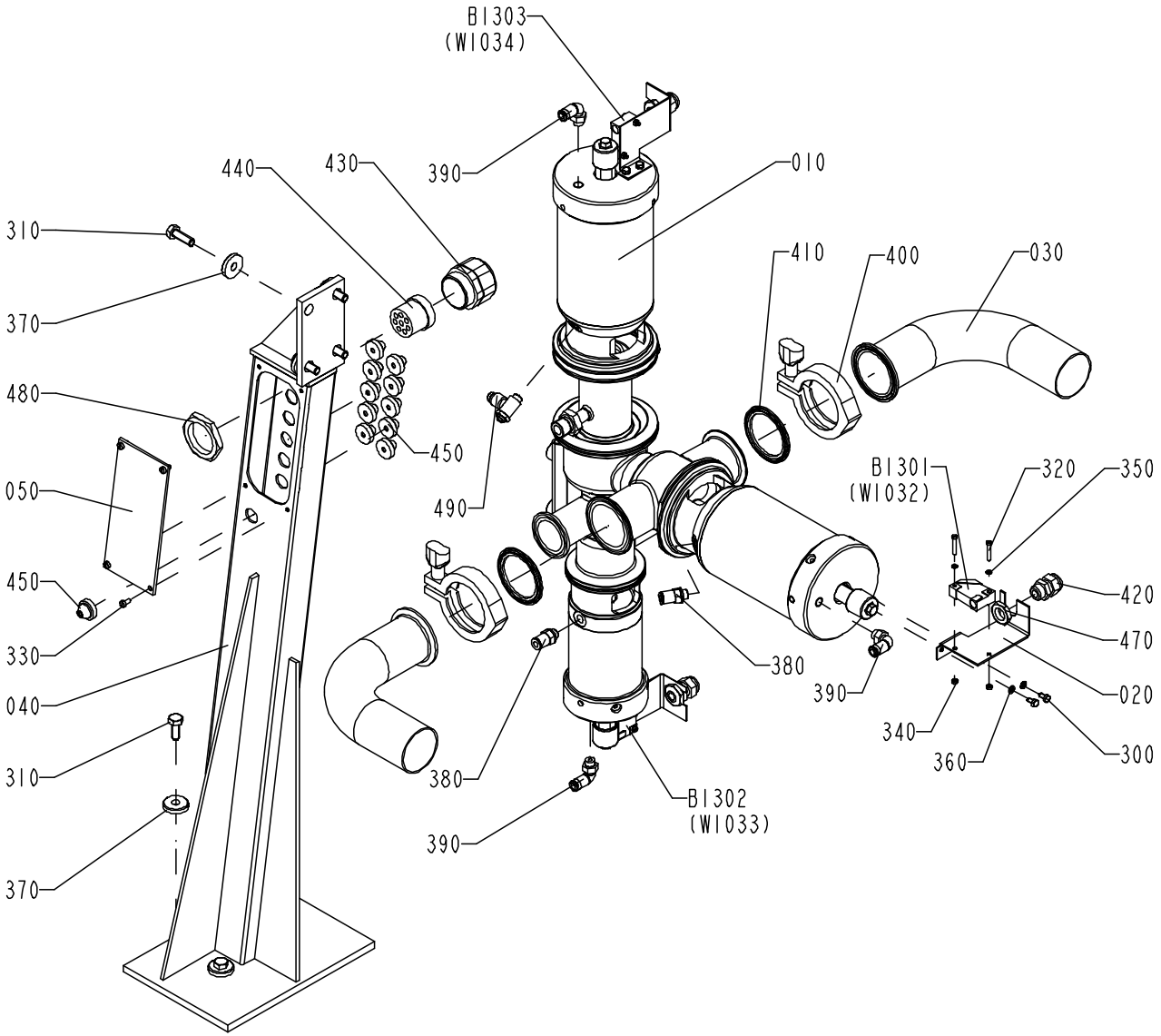

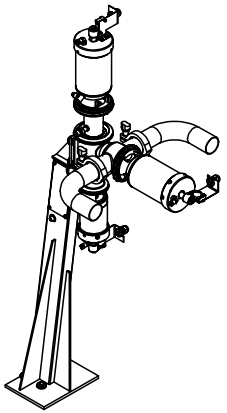

S - 1255980-2
ECN 72287

Pos	Part No	SP	UN	Qty	Description	Page No
Common parts						
010	A 576434-0100	-		1	AP-VALVE 51-38	**75**
020	1037093-0000	-		3	SENSOR BRACKET	
030	1129801-0000	-		2	PIPE	
040	1255986-0000	-		1	VALVE BRACKET	
050	1255987-0000	-		1	COVER	
300	312105-0287	-		6	SCREW M6S ISO 4017 M4x8 A280	
310	312105-0453	-		8	SCREW M6S ISO 4017 M8x25 A280	
320	312125-0230	-		6	SLOTTED CHEESE HEAD ISO 1207 M3X20 RFR	
330	312125-0287	-		4	SLOTTED CHEESE HEAD ISO 1207 M4X8 RFR	
340	312605-0310	-		6	NUT,HEXAGON M6M 3 A2 80	
350	315105-0124	-		6	WASHER,PLAIN ROUND 3,2x6	
360	315105-0136	-		6	WASHER,PLAIN ROUND 4,3x8 Stainless	
370	315125-0165	-		8	WASHERS,PLAIN ROUND,CHAMFERED 8,4X26X5	
380	342722-0202	-		2	PIPE COUPLING 1/8" D=6mm	
390	342732-0102	-		3	ELBOW PIPE JOINT	
400	342840-0105	-		2	CLAMPING PIECE	
410	342850-0305	J		2	GASKET	
420	352103-0101	-		3	CABLE GLAND ST 9;PR15,2/PG9	
430	353240-0006	-		1	GLANDS,NORMAL WITHOUT INSERT PG 29	
440	353249-0079	-		1	GLAND,INSERT,MULTI HOLE,NORMAL 8x5,5	
450	90015-0020	-		11	GLANDS,Lead-in,IP67	
470	90099-0104	-		3	NUT PR 15,2 (PG9)	
480	90099-0120	-		1	NUT PR 37 (PG29)	
490	90235-0288	-		1	VALVE 540-196 000	
B1301	90044-0104	R		1	PROX.SWITCH IFM IN 3002 48Vdc	
B1302	90044-0104	R		1	PROX.SWITCH IFM IN 3002 48Vdc	
B1303	90044-0104	R		1	PROX.SWITCH IFM IN 3002 48Vdc	

Pos	Part No	SP	UN	Qty	Description	Page No

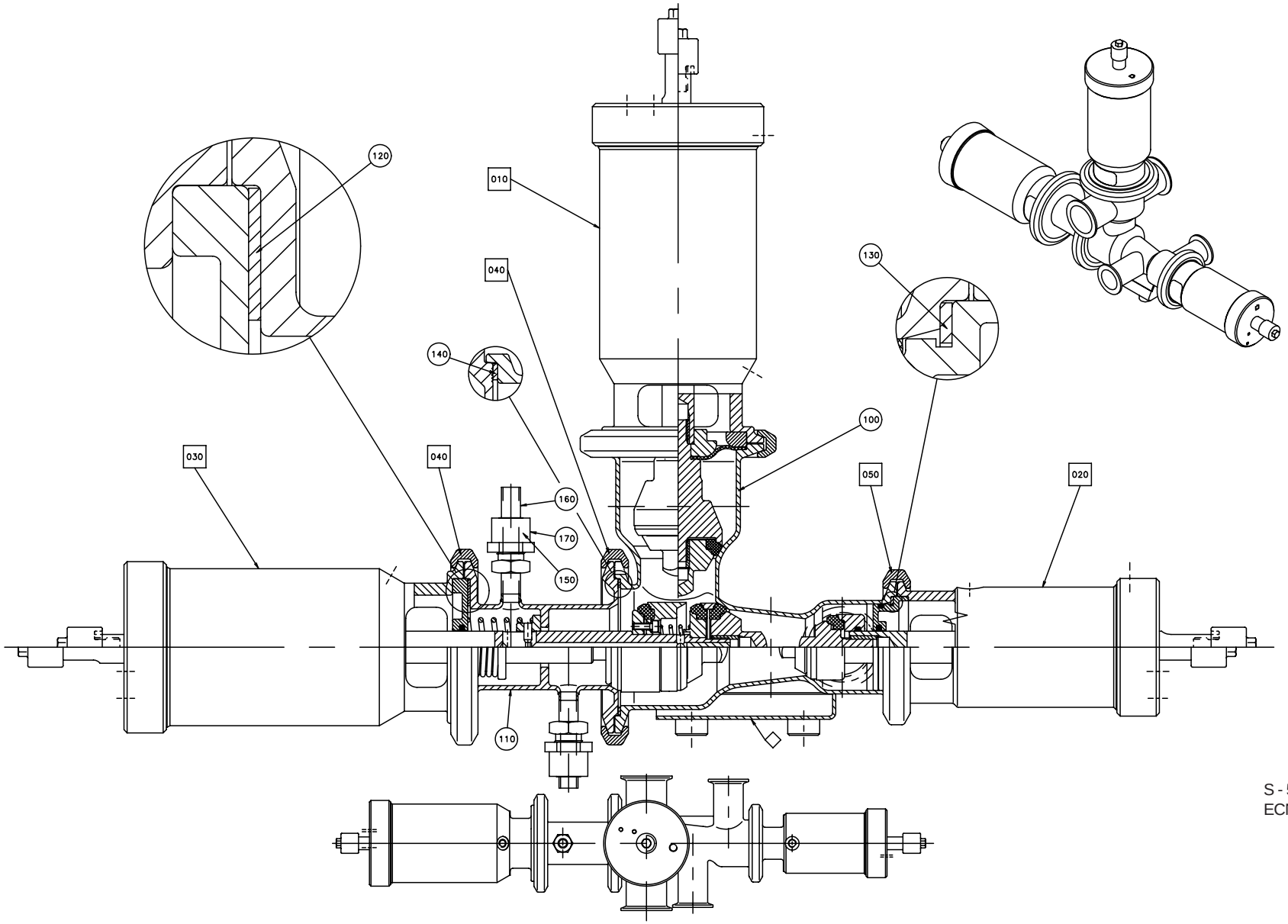

S - 576434-1
ECN 20065

Pos	Part No	SP	UN	Qty	Description	Page No
Common parts						
010	A 576436-0100	-		1	A-CYLINDER	**77**
020	A 576438-0100	-		1	B-CYLINDER	**79**
030	A 576437-0100	-		1	C-CYLINDER	**81**
040	A 541163-0200	-		3	CLAMP RING	**83**
050	A 541164-0200	-		1	CLAMP RING	**85**
100	556702-0000	D		1	AP-VALVE-BODY (51-38)	
110	567018-0000	D		1	STEAM HOUSE	
120	539212-0000	J		1	GASKET	
130	90207-0365	J		1	GASKET	
140	90207-0363	J		1	GASKET	
150	90091-0266	J		2	SEAL RING	
160	90030-0336	-		2	GLAND	
170	90030-0338	-		2	NUT	

Pos	Part No	SP	UN	Qty	Description	Page No

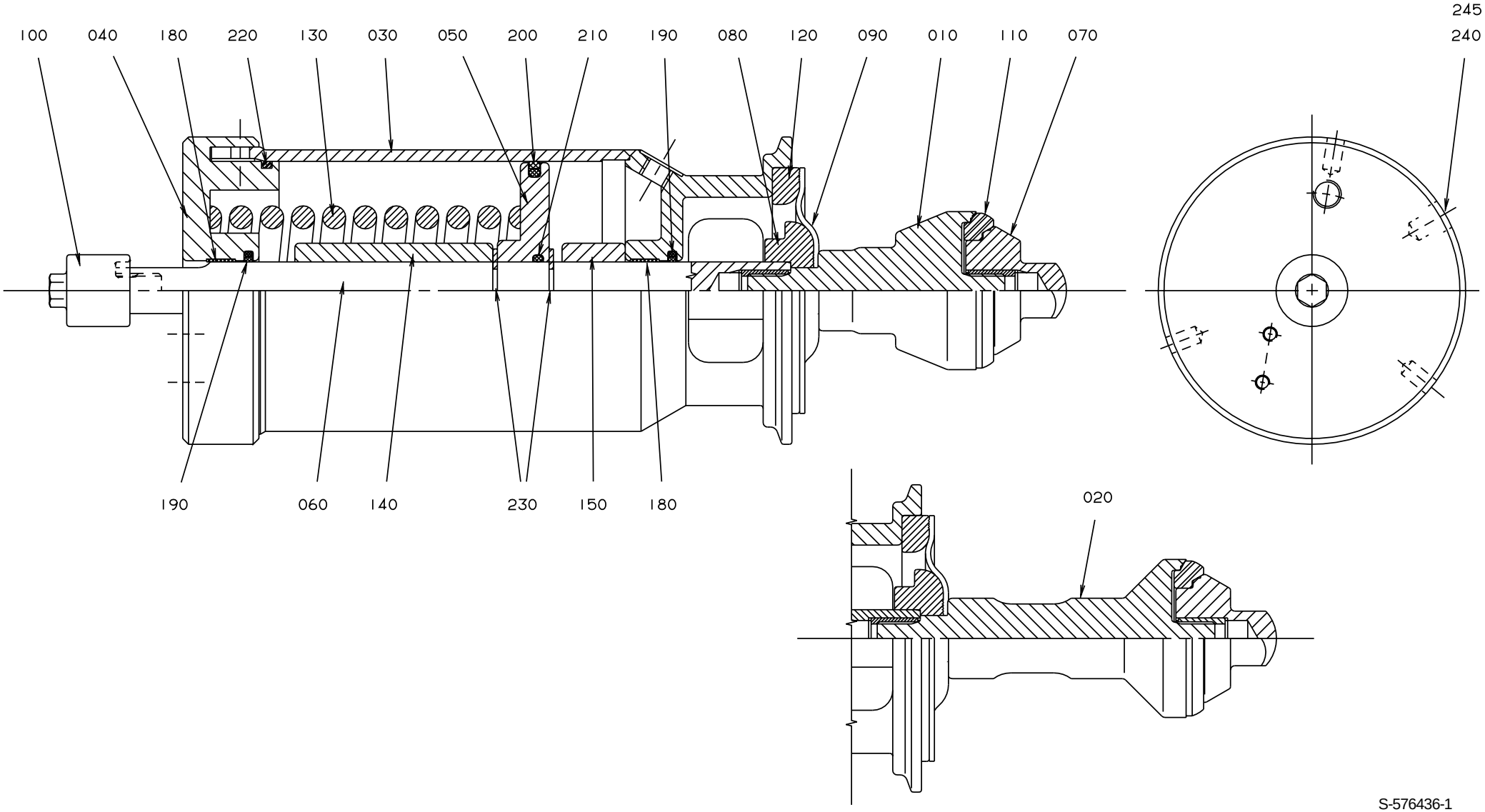

S-576436-1
ECN 20065

Pos	Part No	SP	UN	Qty	Description	Page No
Common parts						
030	576439-0000	-		1	CYLINDER HOUSING	
040	576440-0000	-		1	END SECTION	
050	576441-0000	D		1	PISTON	
060	576446-0000	R		1	PISTON ROD	
070	530590-0000	D		1	VALVE CONE	
080	541166-0000	D		1	WASHER	
090	533169-0000	I		1	DIAPHRAGM	
100	553607-0000	-		1	SLEEVE	
110	530589-0000	I		1	SEAL RING	
120	440655-0000	D		1	RING	
130	440663-0000	D		1	COMPRESSION SPRING	
140	576448-0000	-		1	SPACER	
150	576449-0000	-		1	SPACER	
180	90091-0238	J		2	SEAL RING	
190	90091-0237	J		2	SEALING RINGS,TYPE "GLYD-RING" 20/27,5X3	
200	90091-0336	J		1	SEALING RINGS,TYPE "GLYD-RING" 90/79X4	
210	315204-0215	J		1	O-RING 19,2x3 VITON	
220	315202-0308	J		1	O-RINGS 84,5X3	
230	315754-0113	-		2	LOCKING WAE 15	
240	312125-0323	-		1	SLOTTED CHEESE HEAD ISO 1207 M5X8 RFR	
245	315233-0101	-		1	PLAIN ROUND,NYLON M5	
2"						
010	530592-0000	D		1	SEAL RING HOLDER	
3"						
020	530595-0000	D		1	SEAL RING HOLDER	

Pos	Part No	SP	UN	Qty	Description	Page No

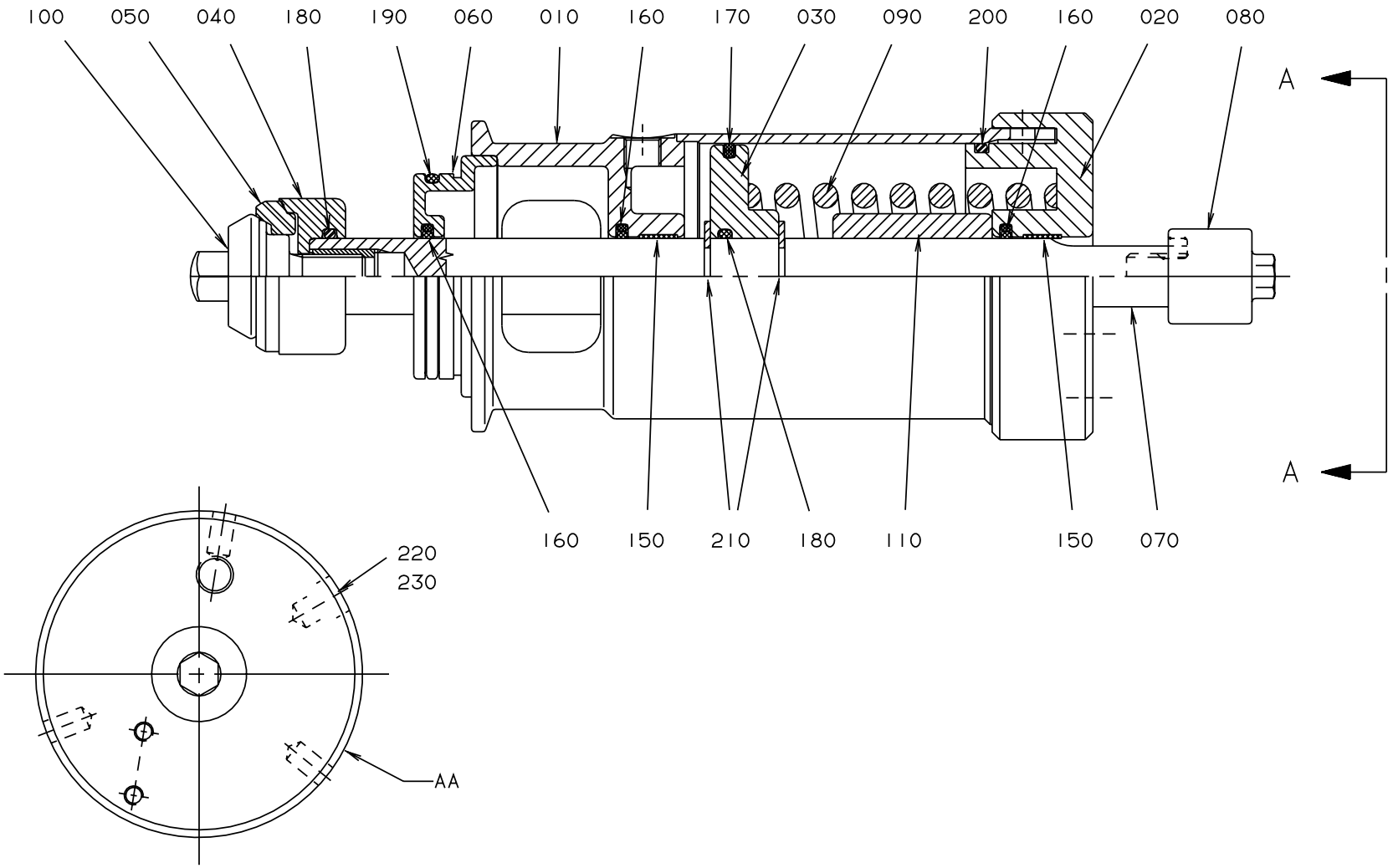

S-576438-1
ECN 20065

Pos	Part No	SP	UN	Qty	Description	Page No
Common parts						
010	576443-0000	-		1	CYLINDER HOUSING	
020	576444-0000	-		1	END SECTION	
030	576445-0000	D		1	PISTON	
040	530587-0000	D		1	WASHER	
050	530588-0000	I		1	SEAL RING	
060	556133-0000	-		1	SEALING WASHER	
070	576447-0000	R		1	PISTON ROD	
080	553607-0000	-		1	SLEEVE	
090	440662-0000	D		1	COMPRESSION SPRING	
100	476185-0000	D		1	VALVE CONE	
110	576451-0000	-		1	SPACER	
150	90091-0238	J		2	SEAL RING	
160	90091-0237	J		3	SEALING RINGS,TYPE "GLYD-RING" 20/27,5X3	
170	90091-0335	J		1	SEALING RINGS,TYPE "GLYD-RING" 70/62,5X3	
180	315204-0215	J		2	O-RING 19,2x3 VITON	
190	315204-0301	J		1	O-RINGS 49,5X3	
200	315202-0304	J		1	O-RINGS 64,5X3	
210	315754-0113	-		2	LOCKING WAE 15	
220	312125-0323	-		1	SLOTTED CHEESE HEAD ISO 1207 M5X8 RFR	
230	315233-0101	-		1	PLAIN ROUND,NYLON M5	

Pos	Part No	SP	UN	Qty	Description	Page No

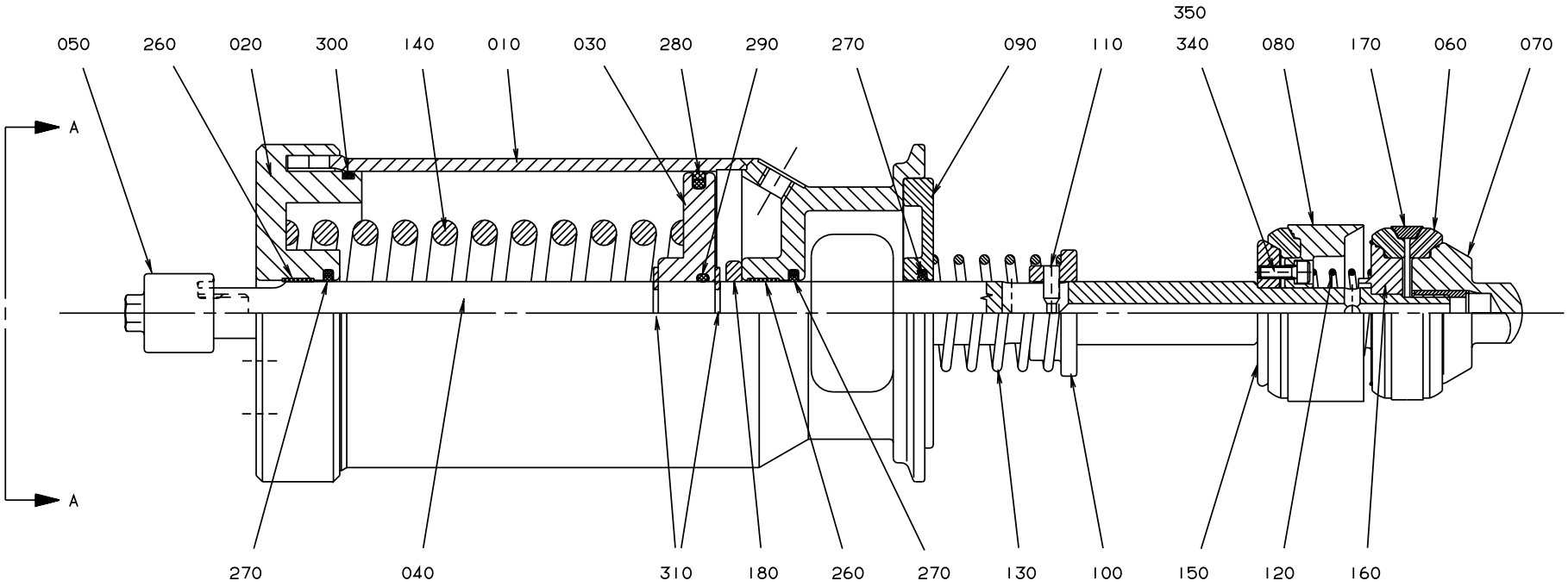

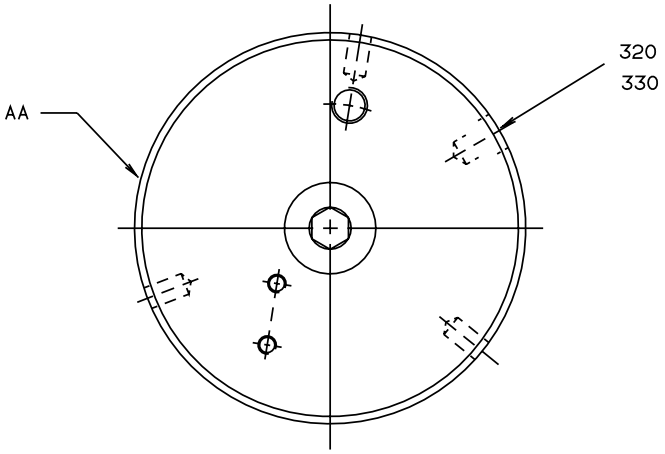

S-576437-1
ECN 20065

Pos	Part No	SP	UN	Qty	Description	Page No
Common parts						
010	576439-0000	-		1	CYLINDER HOUSING	
020	576440-0000	-		1	END SECTION	
030	576441-0000	D		1	PISTON	
040	576442-0000	R		1	PISTON ROD	
050	553607-0000	-		1	SLEEVE	
060	530589-0000	I		3	SEAL RING	
070	530590-0000	-		1	VALVE CONE	
080	530591-0000	-		1	HOLDER	
090	555458-0000	-		1	SEALING WASHER	
100	440650-0000	-		1	WASHER	
110	440659-0000	-		1	CYLINDRICAL PIN	
120	440660-0000	D		1	COMPRESSION SPRING	
130	440661-0000	D		1	COMPRESSION SPRING	
140	440663-0000	D		1	COMPRESSION SPRING	
150	530597-0000	-		1	WASHER	
160	530598-0000	-		1	WASHER	
170	530599-0000	-		2	RING	
180	576450-0000	-		1	SPACER	
260	90091-0238	J		2	SEAL RING	
270	90091-0237	J		3	SEALING RINGS,TYPE "GLYD-RING" 20/27,5X3	
280	90091-0336	J		1	SEALING RINGS,TYPE "GLYD-RING" 90/79X4	
290	315204-0215	J		1	O-RING 19,2x3 VITON	
300	315202-0308	J		1	O-RINGS 84,5X3	
310	315754-0113	-		2	LOCKING WAE 15	
320	312125-0323	-		1	SLOTTED CHEESE HEAD ISO 1207 M5X8 RFR	
330	315233-0101	-		1	PLAIN ROUND,NYLON M5	
340	312115-0291	-		4	SCREW MC6S ISO 4762 M4x12 A280	
350	315402-0136	-		4	WASHER FBB4,1RFR	

Pos	Part No	SP	UN	Qty	Description	Page No

CLAMP RING

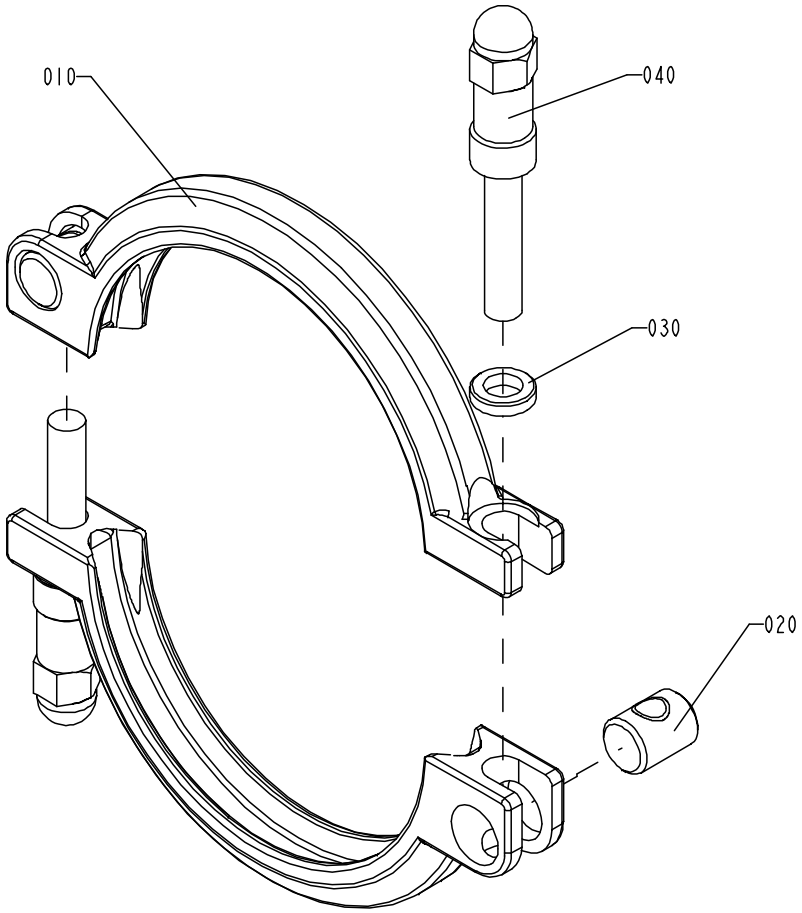

S - 541163-2
ECN 71956

Pos	Part No	SP	UN	Qty	Description	Page No
Common parts						
010	532117-0000	-		2	CLAMP RING	
020	497748-0000	-		2	PIN	
030	541165-0000	-		2	WASHER	
040	554162-0000	-		2	SCREW	

Pos	Part No	SP	UN	Qty	Description	Page No

CLAMP RING

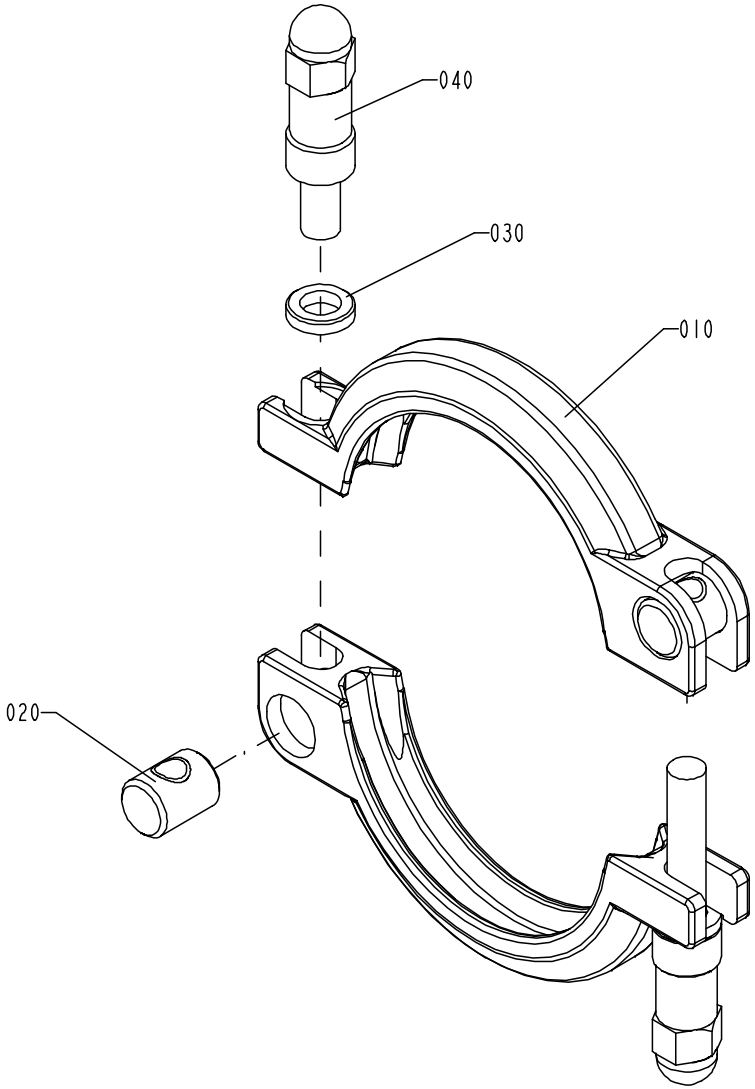

S - 541164-2
ECN 71956

Pos	Part No	SP	UN	Qty	Description	Page No
Common parts						
010	532118-0000	-		2	CLAMP RING	
020	497748-0000	-		2	PIN	
030	541165-0000	-		2	WASHER	
040	554162-0000	-		2	SCREW	

Pos	Part No	SP	UN	Qty	Description	Page No

FLOW REGULATOR

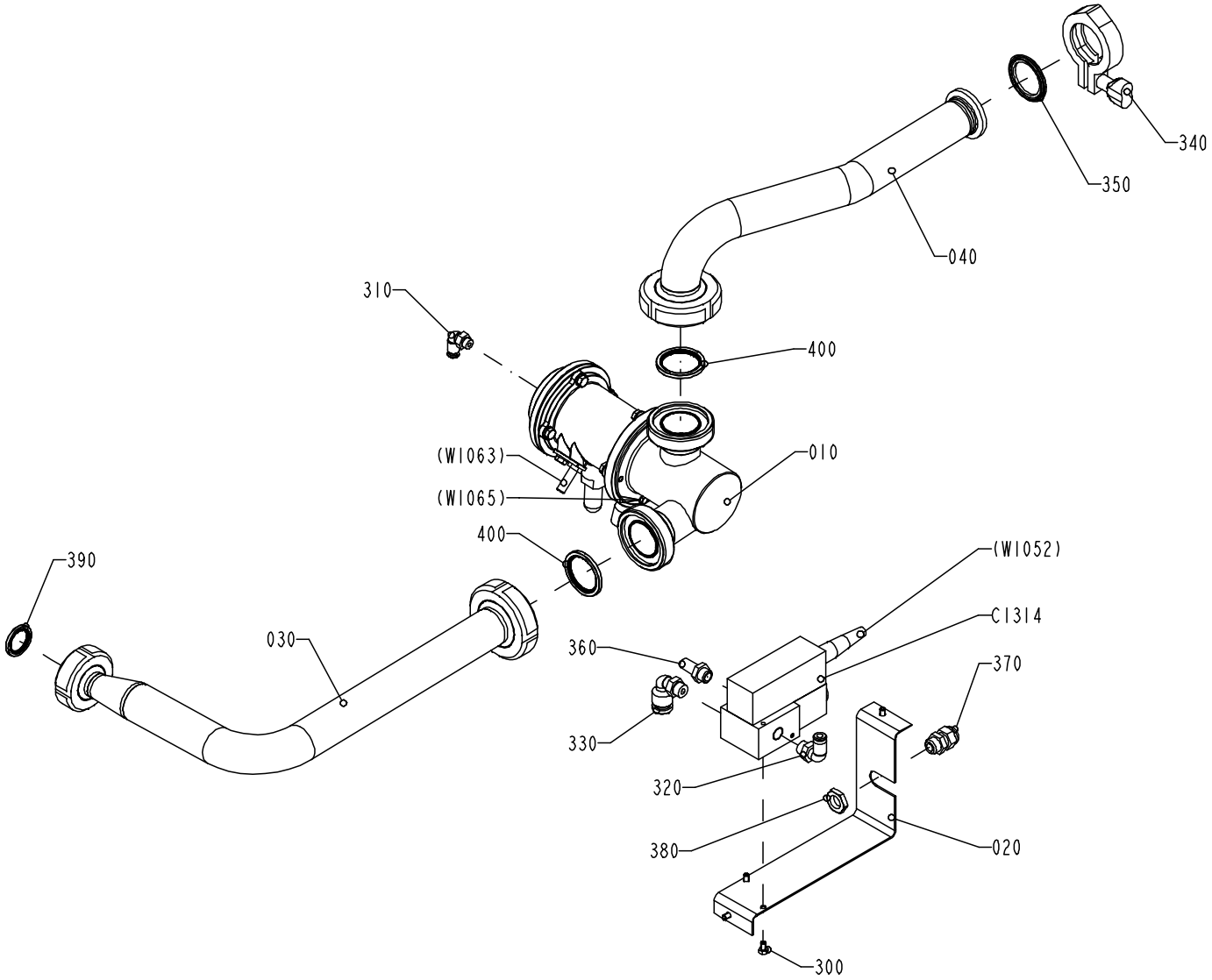

S - 1498700-1
ECN 73068

Pos	Part No	SP	UN	Qty	Description	Page No
Common parts						
010	A1498669-0100	-		1	REGULATING VALVE	**89**
020	1036853-0000	-		1	BRACKET	
030	1498699-0000	-		1	PIPE	
040	1498698-0000	-		1	PIPE	
300	312105-0323	-		4	SCREW M6S ISO 4017 M5X8 A280	
310	342732-0102	-		1	ELBOW PIPE JOINT	
320	342732-0103	-		1	ELBOW PIPE JOINT	
330	342732-0109	-		1	ELBOW PIPE JOINT	
340	342840-0103	-		1	CLAMPING PIECE	
350	342850-0304	H		1	GASKET	
360	346800-0110	-		1	SILENCER FILTER R1/4"	
370	352103-0101	-		1	CABLE GLAND ST 9;PR15,2/PG9	
380	90099-0104	-		1	NUT PR 15,2 (PG9)	
390	90217-0347	H		1	GASKET	
400	90217-0348	H		2	GASKET	
C1314	90274-0099	M		1	IP-transducer	

Pos	Part No	SP	UN	Qty	Description	Page No

REGULATING VALVE

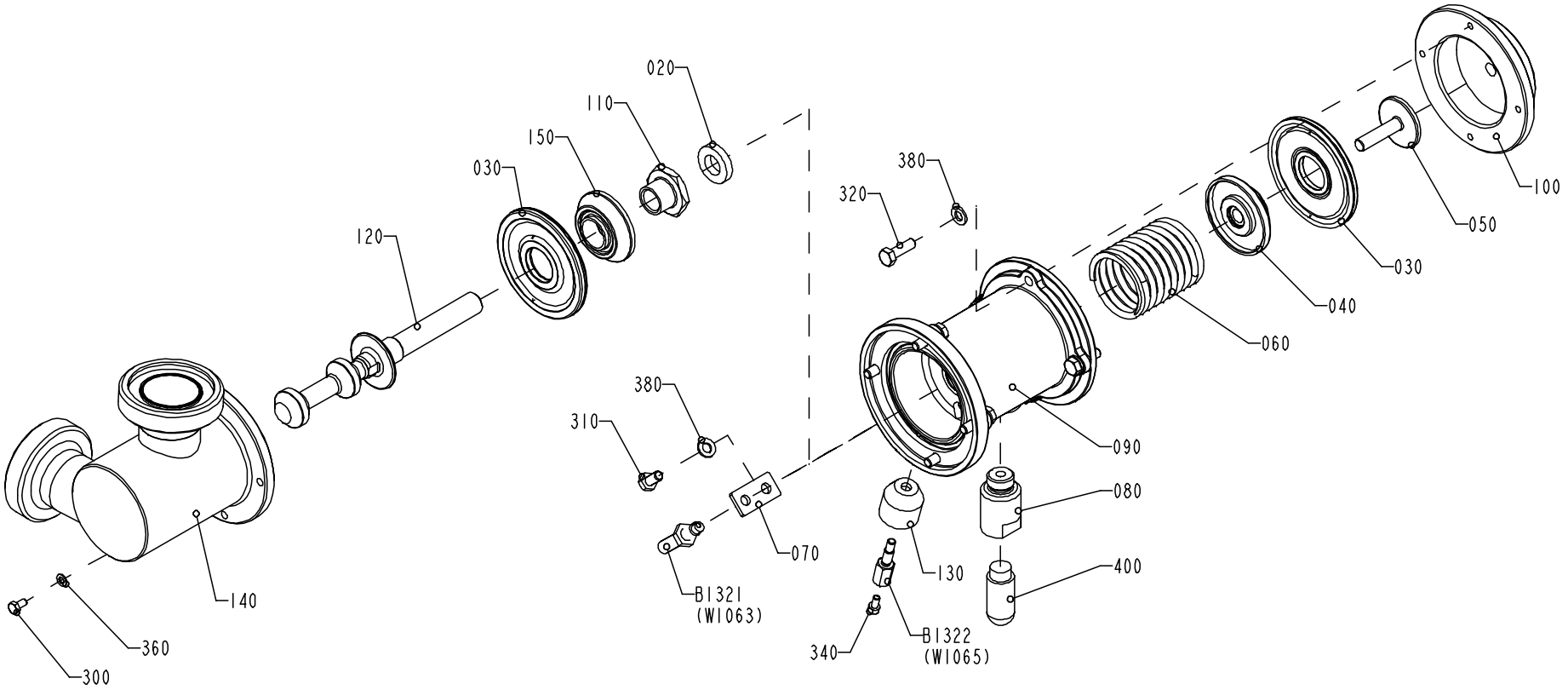

S - 1498669-1
ECN 73068

Pos	Part No	SP	UN	Qty	Description	Page No
Common parts						
020	736514-0000	J		1	SHOCK ABSORBER	
030	925998-0000	J		2	DIAPHRAGM	
040	926906-0000	-		1	SPACER	
050	926907-0000	-		1	SCREW	
060	926909-0000	M		1	COMPRESSION SPRING	
070	926934-0000	-		1	SUPPORT	
080	927044-0000	-		1	SPACER	
090	927194-0000	-		1	BODY	
100	927203-0000	-		1	COVER	
110	979434-0000	-		1	FERRULE	
120	1129321-0000	D		1	SHUTTER	
130	1478813-0000	-		1	SPACER	
140	1498526-0000	-		1	REGULATOR BODY	
150	1511600-0000	M		1	SPACER	
300	312105-0287	-		1	SCREW M6S ISO 4017 M4x8 A280	
310	312105-0366	-		1	SCREW M6S ISO 4017 M6x12 A280	
320	312105-0370	-		8	SCREW M6S ISO 4017 M6x20 A280	
340	312115-0287	-		1	SCREW MC6S ISO 4762 M4X8 A280	
360	315105-0136	-		1	WASHER,PLAIN ROUND 4,3x8 Stainless	
380	315105-0153	-		9	WASHER,PLAIN ROUND 6,4x12 Stainless	
400	90328-0026	J		1	SILENCER	
B1321	90044-0145	R		1	PROXIMITY SWITCH	
B1322	1478814-0000	R		1	SENSOR	

Pos	Part No	SP	UN	Qty	Description	Page No

FILLING PIPE

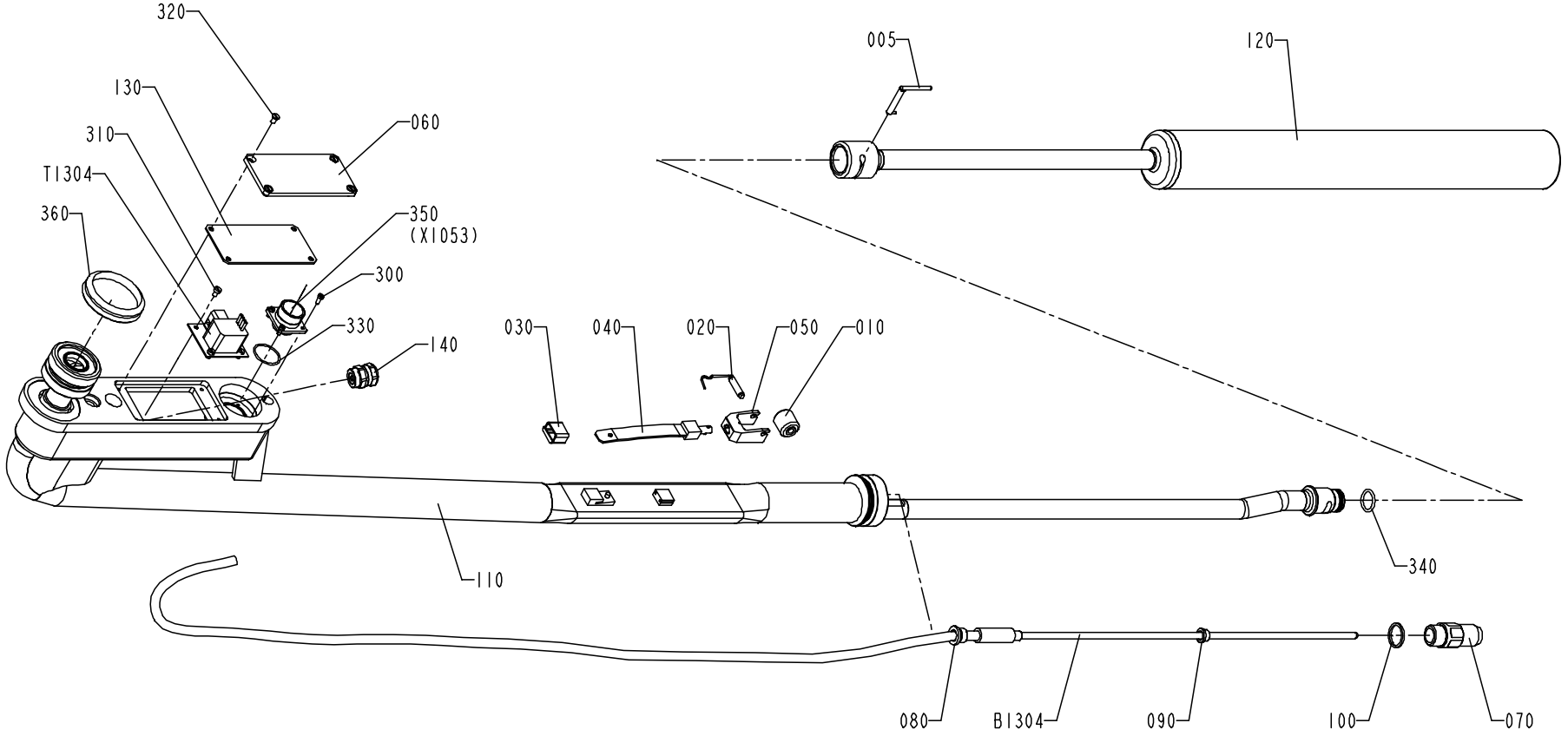

S - 1498668-1
ECN 73068

Pos	Part No	SP	UN	Qty	Description	Page No
Common parts						
005	38535-0001	K		1	LOCKING FINGER	
010	257330-0000	E		1	PRESSURE ROLLER	
020	1334051-0000	-		1	SHAFT	
030	295377-0001	T		1	HOOD	
040	544894-0000	K		1	SPRING	
050	1317438-0000	K		1	FORK	
060	1484515-0000	-		1	LID	
070	1347511-0000	I		1	FITTING	
080	1349913-0000	T		1	BUSHING	
090	1348639-0000	I		1	SEALING GASKET	
100	1348555-0000	I		1	SEALING RING	
110	1498697-0000	Z		1	FILLING PIPE	
130	1484516-0000	T		1	GASKET	
140	1334056-0000	-		1	COMPRESSION GLAND	
300	312125-0222	-		4	SLOTTED CHEESE HEAD ISO 1207 M3x8 RFR	
310	312125-0285	-		4	SLOTTED HEAD SCREW MCS 4x6 RFR	
320	312145-0287	-		4	SLOTTED HEMFS4X8RFR	
330	315204-0119	-		1	O-RINGS 25,1X1,6	
340	315204-0214	E		1	O-RING 17,3x2,4 VITON	
350	90110-0222	T		1	CONNECTOR	
360	315220-0198	K		1	SEAL RING V-50S	
B1304	90274-0096	T		1	Level probe	
T1304	90245-0043	T		1	Transformer Z-8782	
TBA 0200B						
120	1498672-0000	M		1	FILLING PIPE	
TBA 0250B						
120	1498696-0000	M		1	FILLING PIPE	

Pos	Part No	SP	UN	Qty	Description	Page No

CLEANING SLEEVE

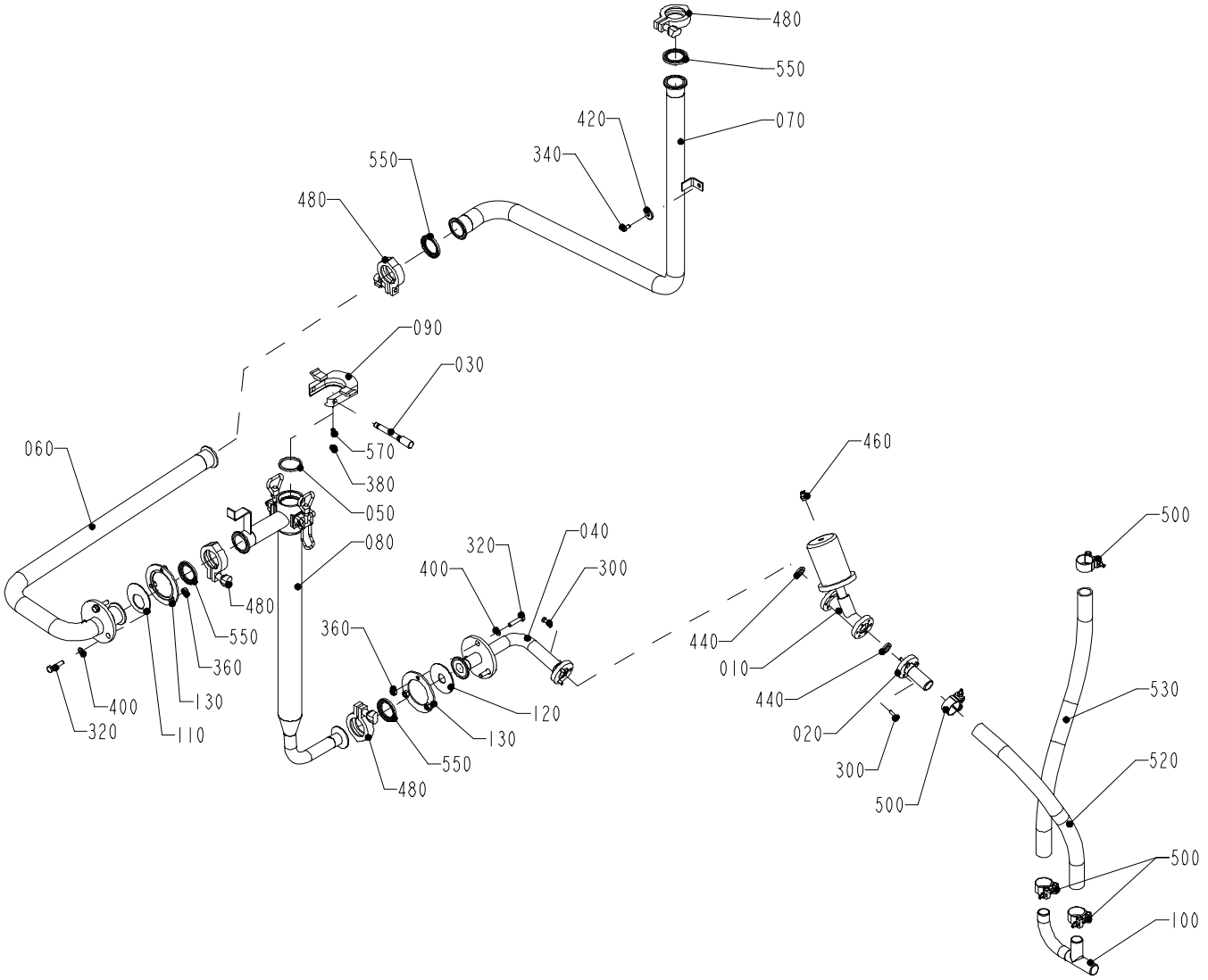

S - 1498673-1
ECN 73068

Pos	Part No	SP	UN	Qty	Description	Page No
Common parts						
010	1038905-0000	R		1	VALVE	
020	1285329-0000	-		1	PIPE	
030	1346353-0000	-		1	LOCK PIN	
040	1348099-0000	-		1	PIPE	
050	1348475-0000	E		1	GASKET	
060	1484295-0000	-		1	PIPE	
070	1484391-0000	-		1	PIPE	
080	1487036-0000	-		1	CLEANING SLEEVE	
090	1487037-0000	-		1	FLANGE	
100	1484399-0000	-		1	PIPE	
110	1499125-0000	K		1	SEAL	
120	1499126-0000	K		1	SEAL	
130	1499127-0000	-		2	FLANGE	
300	312105-0370	-		6	SCREW M6S ISO 4017 M6x20 A280	
320	312109-0457	-		6	SCREW M6S ISO 4017 M8X35 A280	
340	312115-0366	-		1	SCREW MC6S ISO 4762 M6X12 A280	
360	312605-0318	-		6	NUT,HEXAGON,M8 RFR	
380	312625-0318	-		1	NUTS,HEXAGON,M8	
400	315105-0165	-		6	WASHER,PLAIN ROUND 8,4x16 Stainless	
420	315125-0153	-		1	WASHERS,PLAIN ROUND,CHAMFERED 6,4X22X4	
440	315229-0102	K		2	GASKET 40532-1	
460	342722-0203	-		1	STRAIGHT COUPLING	
480	342840-0103	-		4	CLAMPING PIECE	
500	90165-0147	-		4	HOSE CLIP	
520	90166-0233	-	MM	500	HOSE	
530	90166-0233	-	MM	700	HOSE	
550	90217-0307	H		4	SEAL RING	
570	90287-0112	-		1	SCREW SPRINGLOADED M8x16	

Pos	Part No	SP	UN	Qty	Description	Page No

CLEANING PIPE

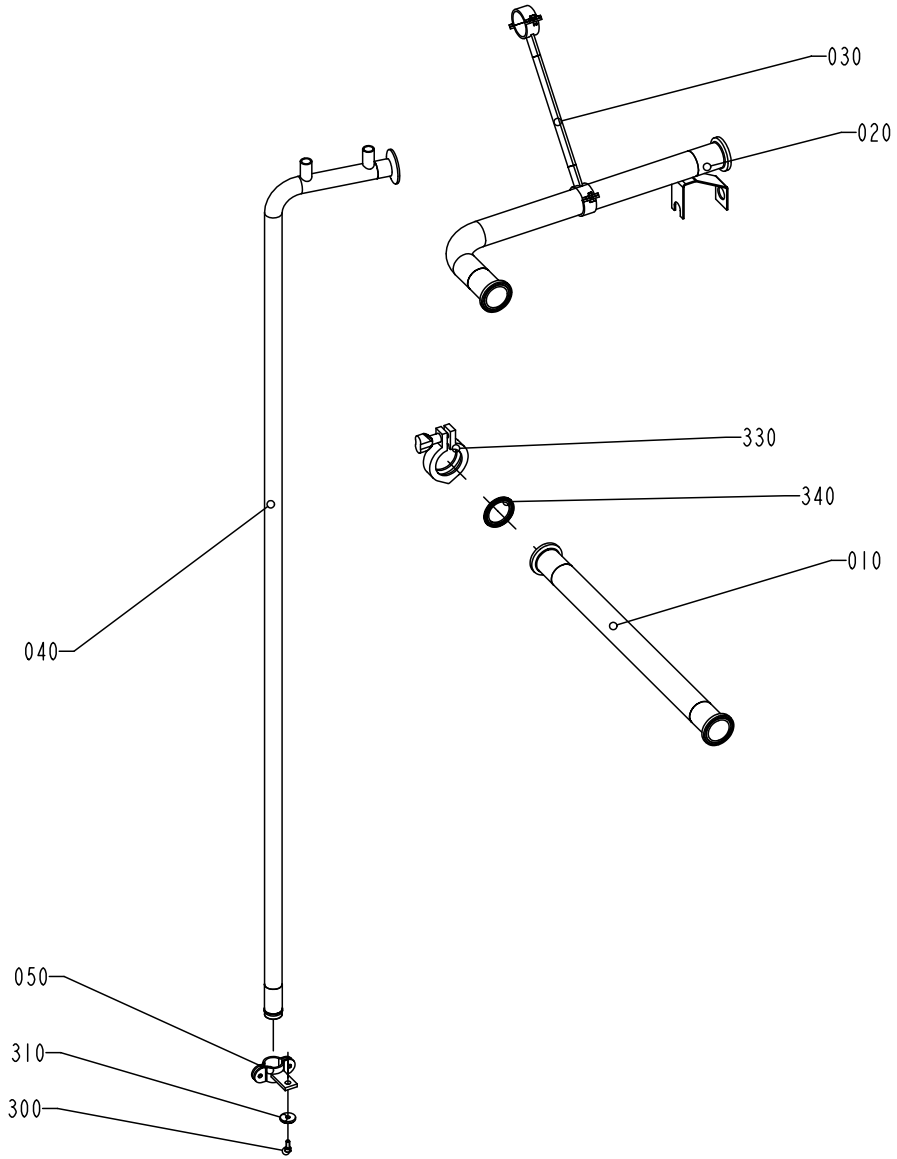

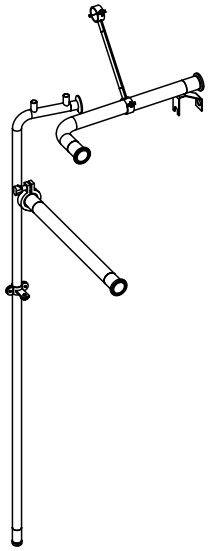

S - 1255984-2
ECN 71895

Pos	Part No	SP	UN	Qty	Description	Page No
Common parts						
010	1037279-0000	-		1	PIPE	
020	1038964-0000	-		1	INTERMEDIATE PART	
030	1038965-0000	-		1	HOLDER	
040	1487247-0000	-		1	PIPE	
050	1349383-0000	-		1	HOLDER	
300	312115-0327	-		1	SCREW MC6S ISO 4762 M5X12 A280	
310	315125-0153	-		1	WASHERS,PLAIN ROUND,CHAMFERED 6,4X22X4	
330	342840-0103	-		1	CLAMPING PIECE	
340	342850-0304	-		1	GASKET	

Pos	Part No	SP	UN	Qty	Description	Page No

FASTENING PLATE

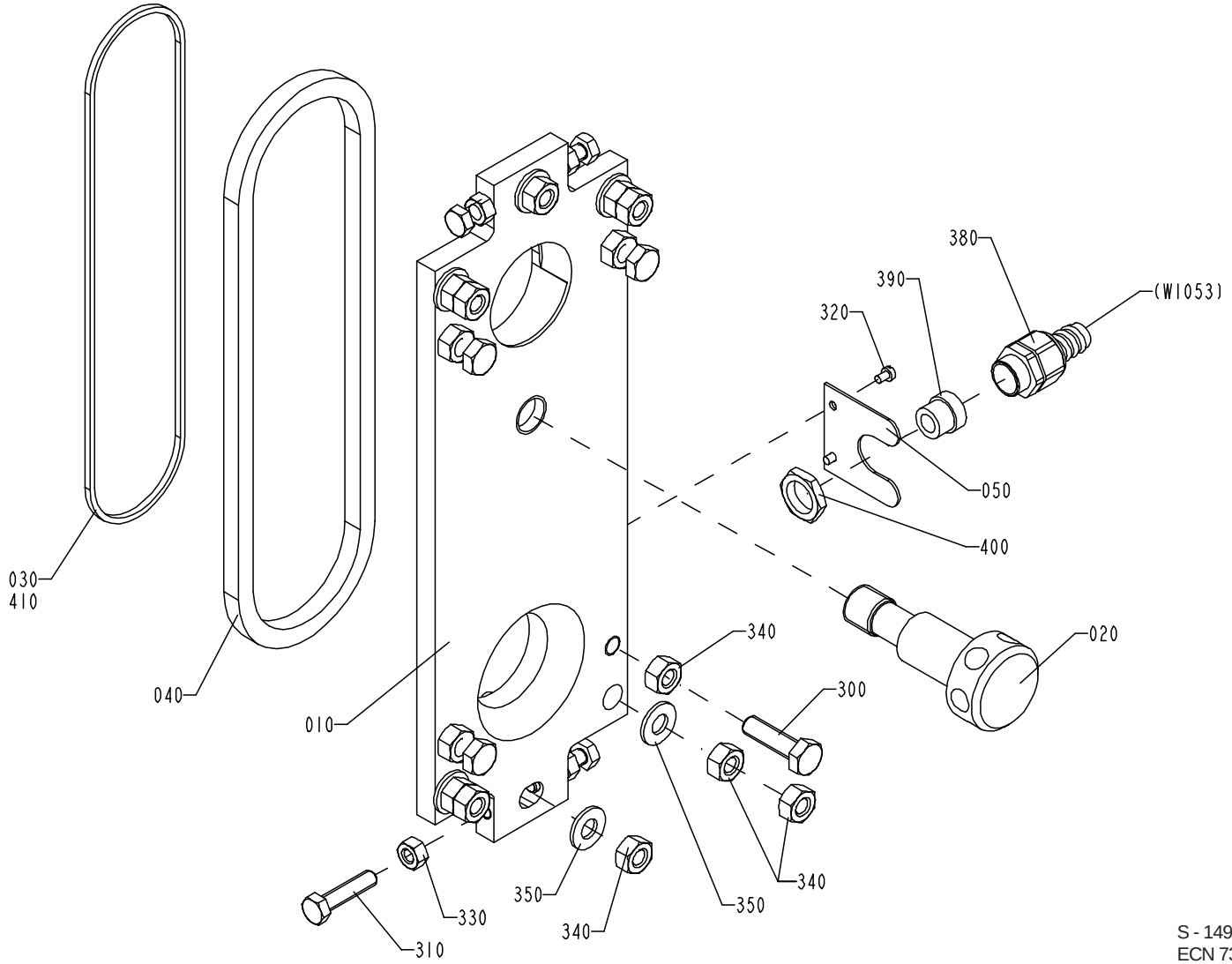

S - 1498667-1
ECN 73068

Pos	Part No	SP	UN	Qty	Description	Page No
Common parts						
010	1498527-0000	-		1	MOUNTING PLATE	
020	1484285-0000	-		1	SCREW	
030	1036777-0000	J		1	GASKET	
040	1036778-0000	J		1	GASKET	
050	1036782-0000	-		1	HOLDER	
300	312105-0497	-		4	SCREW M6S ISO 4017 M10x35 A280	
310	312109-0457	-		4	SCREW M6S ISO 4017 M8X35 A280	
320	312125-0285	-		2	SLOTTED HEAD SCREW MCS 4x6 RFR	
330	312605-0318	-		4	NUT,HEXAGON,M8 RFR	
340	312605-0320	-		14	NUT,HEXAGON,M10 A280	
350	315105-0173	-		6	WASHER,PLAIN ROUND 10,5x22 STAINLESS	
380	353243-0002	-		1	GLAND,HOSE,EXTENDED,WITHOUT INSERT PG11	
390	353249-0009	-		1	GLAND,INSERT,SINGLE HOLE,EXTEND.6,5-9,5	
400	90099-0117	-		1	NUT PR 18,6 (PG11)	
410	90153-0016	-	L	1	ADHESIVE TUBE 100G RHODORSIL CAF 3	

Pos	Part No	SP	UN	Qty	Description	Page No

CIP SWITCH

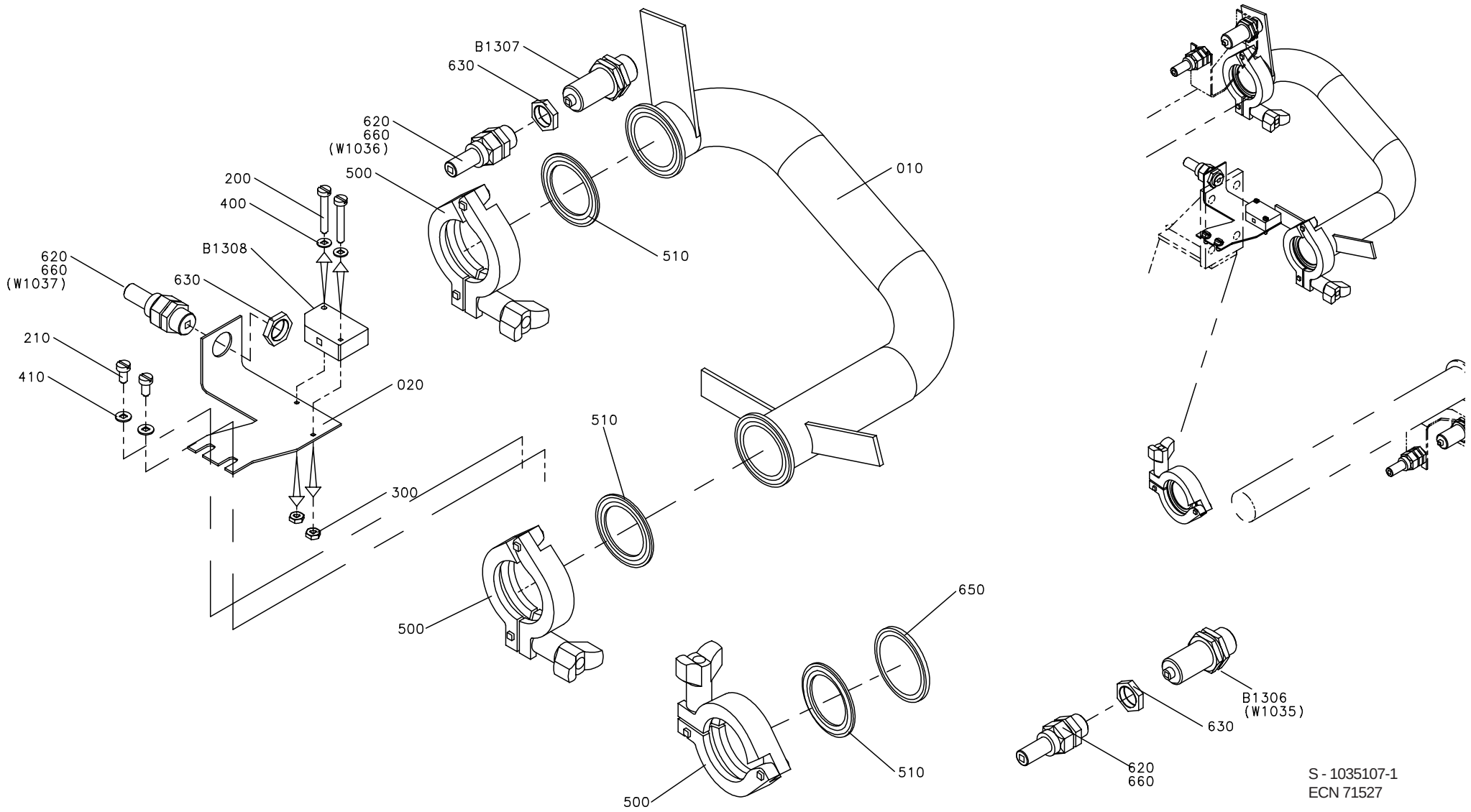

S - 1035107-1
ECN 71527

Pos	Part No	SP	UN	Qty	Description	Page No
NOUPGRADEDCIP						
010	1036907-0000	-		1	SWITCH OVER PIPE	
020	1036908-0000	-		1	HOLDER	
200	312125-0230	-		2	SLOTTED CHEESE HEAD ISO 1207 M3X20 RFR	
210	312125-0325	-		2	SLOTTED HEMCS5X10RFR	
300	312605-0310	-		2	NUT,HEXAGON M6M 3 A2 80	
400	315105-0124	-		2	WASHER,PLAIN ROUND 3,2x6	
410	315105-0146	-		2	WASHER,PLAIN ROUND 5,3x10 Stainless	
500	342840-0103	-		3	CLAMPING PIECE	
510	342850-0304	I		3	GASKET	
620	353243-0001	-		3	GLAND,HOSE,EXTENDED,WITHOUT INSERT PG9	
650	90217-0332	-		1	BLANK-OFF FLANGE	
660	353249-0008	-		3	GLAND,INSERT,SINGLE HOLE,EXTEND.4-6,5	
B1306	90044-0126	R		1	PROX.SWITCH 922AA3XM-A9P-060-LZ876	
B1307	90044-0126	R		1	PROX.SWITCH 922AA3XM-A9P-060-LZ876	
B1308	90044-0104	R		1	PROX.SWITCH IFM IN 3002 48Vdc	
UPGRADEDCIP						
010	A 556693-0100	-		3	CYL.CHANGE-OVER V. N.OPEN	**103**
020	1040849-0000	-		3	HOLDER	
030	1038895-0000	-		1	VALVE HOUSING	
040	1037493-0000	-		1	STERILE AIR INLET	
050	1037494-0000	-		2	VALVE HOUSING	
060	1038894-0000	-		1	PIPE	
065	1129184-0000	-		1	PIPE	
070	1037496-0000	-		12	SPACER	
080	532118-0000	-		12	CLAMP RING	
090	497748-0000	-		12	PIN	
200	312125-0230	-		6	SLOTTED CHEESE HEAD ISO 1207 M3X20 RFR	
220	312105-0463	-		12	SCREW M6S ISO 4014 M8x60 A280	
400	315105-0124	-		6	WASHER,PLAIN ROUND 3,2x6	
500	342840-0103	-		7	CLAMPING PIECE	
510	342850-0304	I		7	GASKET	
530	342742-0102	-		4	T-COUPLING,ADJUST,F.PLASTIC TUBE 6-G1/8"	
535	342732-0102	-		2	ELBOW PIPE JOINT	
620	352103-0101	-		3	CABLE GLAND ST 9;PR15,2/PG9	
640	90207-0365	-		6	GASKET	
B13111	90044-0104	R		1	PROX.SWITCH IFM IN 3002 48Vdc	
B13112	90044-0104	R		1	PROX.SWITCH IFM IN 3002 48Vdc	
B13113	90044-0104	R		1	PROX.SWITCH IFM IN 3002 48Vdc	
Common parts						
630	90099-0104	-		3	NUT PR 15,2 (PG9)	

Pos	Part No	SP	UN	Qty	Description	Page No

CIP SWITCH

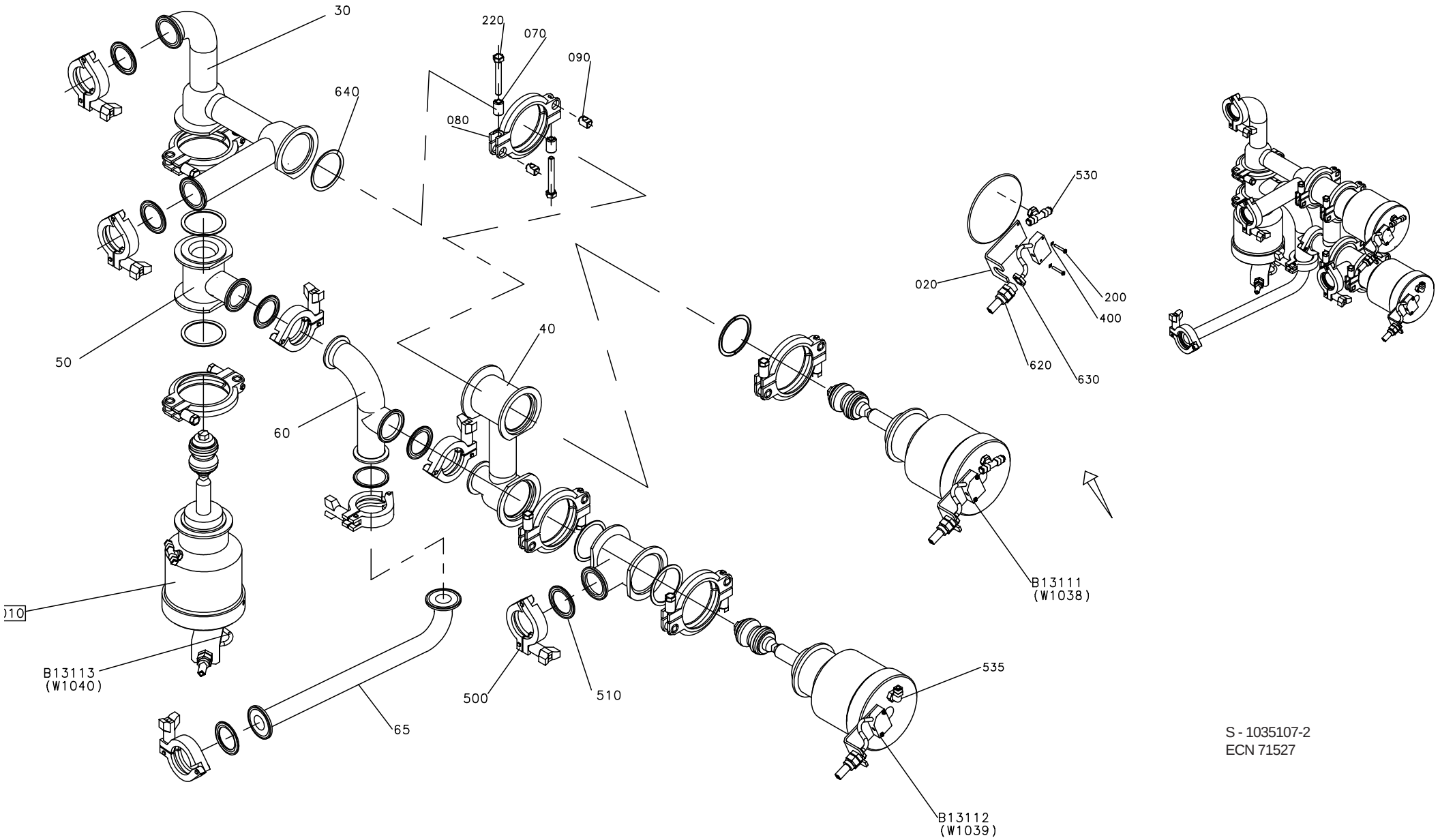

S - 1035107-2
ECN 71527

Pos	Part No	SP	UN	Qty	Description	Page No
NOUPGRADEDCIP						
010	1036907-0000	-		1	SWITCH OVER PIPE	
020	1036908-0000	-		1	HOLDER	
200	312125-0230	-		2	SLOTTED CHEESE HEAD ISO 1207 M3X20 RFR	
210	312125-0325	-		2	SLOTTED HEMCS5X10RFR	
300	312605-0310	-		2	NUT,HEXAGON M6M 3 A2 80	
400	315105-0124	-		2	WASHER,PLAIN ROUND 3,2x6	
410	315105-0146	-		2	WASHER,PLAIN ROUND 5,3x10 Stainless	
500	342840-0103	-		3	CLAMPING PIECE	
510	342850-0304	I		3	GASKET	
620	353243-0001	-		3	GLAND,HOSE,EXTENDED,WITHOUT INSERT PG9	
650	90217-0332	-		1	BLANK-OFF FLANGE	
660	353249-0008	-		3	GLAND,INSERT,SINGLE HOLE,EXTEND.4-6,5	
B1306	90044-0126	R		1	PROX.SWITCH 922AA3XM-A9P-060-LZ876	
B1307	90044-0126	R		1	PROX.SWITCH 922AA3XM-A9P-060-LZ876	
B1308	90044-0104	R		1	PROX.SWITCH IFM IN 3002 48Vdc	
UPGRADEDCIP						
010	A 556693-0100	-		3	CYL.CHANGE-OVER V. N.OPEN	**103**
020	1040849-0000	-		3	HOLDER	
030	1038895-0000	-		1	VALVE HOUSING	
040	1037493-0000	-		1	STERILE AIR INLET	
050	1037494-0000	-		2	VALVE HOUSING	
060	1038894-0000	-		1	PIPE	
065	1129184-0000	-		1	PIPE	
070	1037496-0000	-		12	SPACER	
080	532118-0000	-		12	CLAMP RING	
090	497748-0000	-		12	PIN	
200	312125-0230	-		6	SLOTTED CHEESE HEAD ISO 1207 M3X20 RFR	
220	312105-0463	-		12	SCREW M6S ISO 4014 M8x60 A280	
400	315105-0124	-		6	WASHER,PLAIN ROUND 3,2x6	
500	342840-0103	-		7	CLAMPING PIECE	
510	342850-0304	I		7	GASKET	
530	342742-0102	-		4	T-COUPLING,ADJUST,F.PLASTIC TUBE 6-G1/8"	
535	342732-0102	-		2	ELBOW PIPE JOINT	
620	352103-0101	-		3	CABLE GLAND ST 9;PR15,2/PG9	
640	90207-0365	-		6	GASKET	
B13111	90044-0104	R		1	PROX.SWITCH IFM IN 3002 48Vdc	
B13112	90044-0104	R		1	PROX.SWITCH IFM IN 3002 48Vdc	
B13113	90044-0104	R		1	PROX.SWITCH IFM IN 3002 48Vdc	
Common parts						
630	90099-0104	-		3	NUT PR 15,2 (PG9)	

Pos	Part No	SP	UN	Qty	Description	Page No

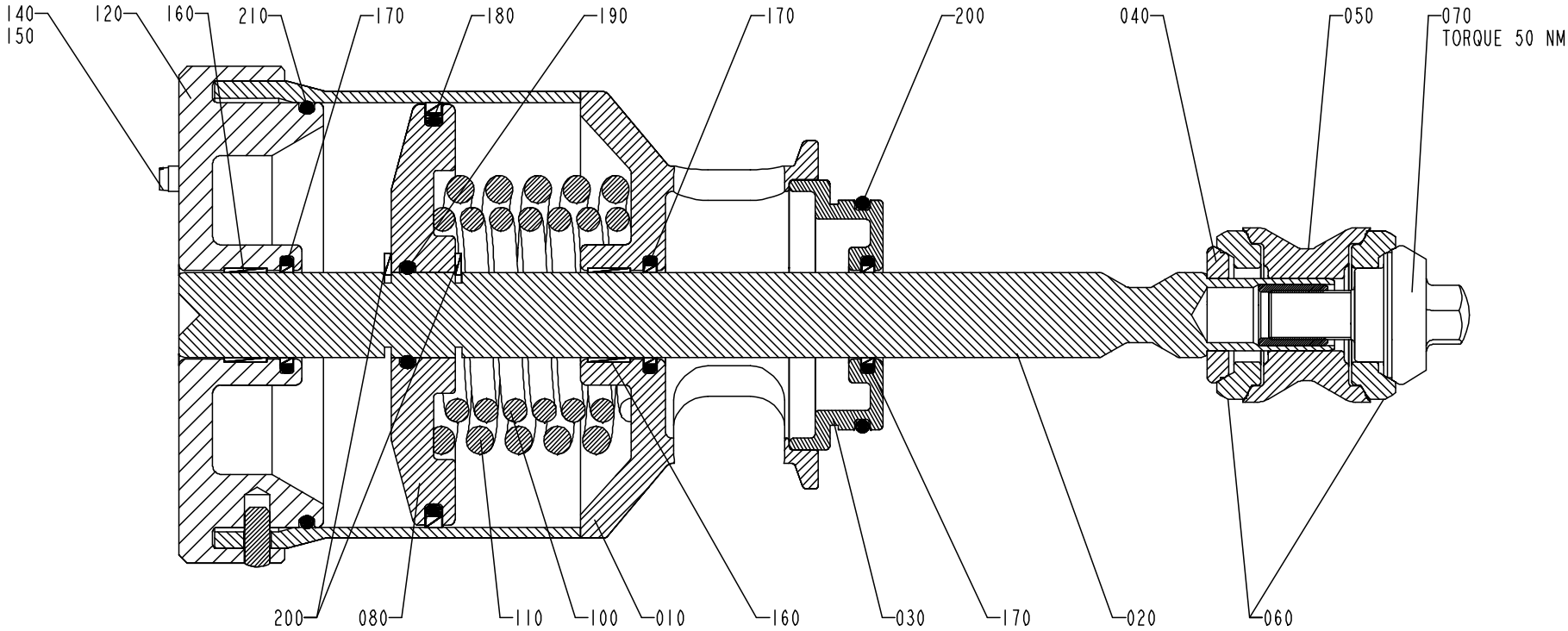

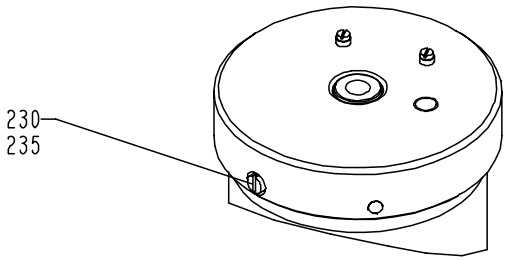

S - 556693-1
ECN 71956

Pos	Part No	SP	UN	Qty	Description	Page No
Common parts						
010	556109-0000	-		1	CYLINDER HOUSING	
020	556701-0000	M		1	PISTON ROD	
030	556133-0000	-		1	SEALING WASHER	
040	449876-0000	-		1	WASHER	
050	556697-0000	-		1	SEAL-RING HOLDER	
060	530588-0000	J		2	SEAL RING	
070	476185-0000	-		1	VALVE CONE	
080	556692-0000	D		1	PISTON	
100	556699-0000	D		1	COMPRESSION SPRING	
110	556698-0000	D		1	COMPRESSION SPRING	
120	556691-0000	-		1	END SECTION	
140	556717-0000	-		2	WASHER	
150	312125-0220	-		2	SLOTTED HEMCS3X6RFR	
160	90091-0238	J		2	SEAL RING	
170	90091-0237	J		3	SEALING RINGS,TYPE "GLYD-RING" 20/27,5X3	
180	90091-0236	J		1	SEALING RINGS,TYPE "GLYD-RING" 100/89X4	
190	315204-0215	J		1	O-RING 19,2x3 VITON	
200	315204-0301	J		1	O-RINGS 49,5X3	
210	315204-0310	J		1	O-RINGS 94,5X3	
220	315754-0113	-		2	LOCKING WAE 15	
230	312125-0323	-		1	SLOTTED CHEESE HEAD ISO 1207 M5X8 RFR	
235	315233-0101	-		1	PLAIN ROUND,NYLON M5	

Pos	Part No	SP	UN	Qty	Description	Page No

INTERMEDIATE PART

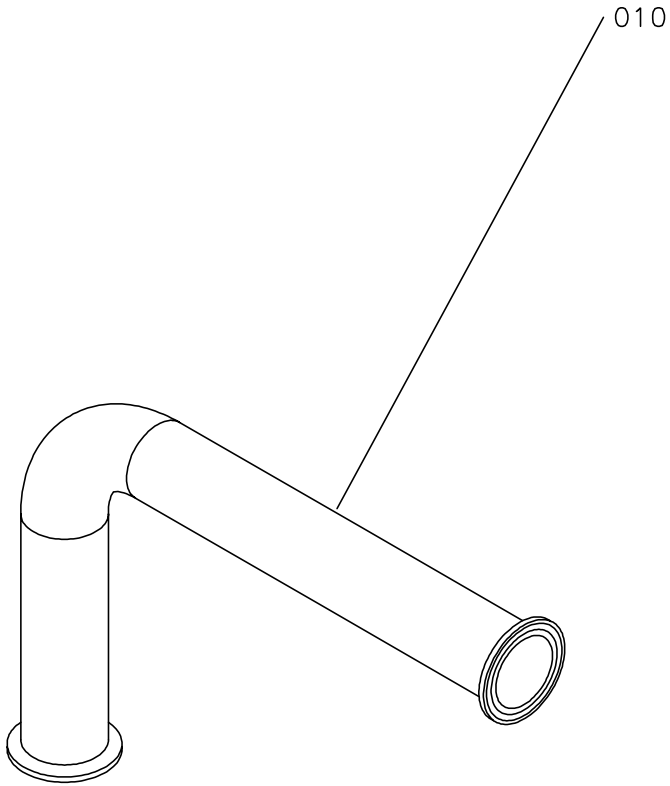

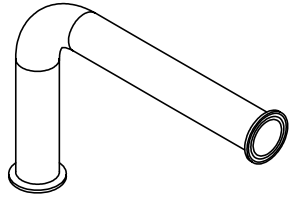

S-1035259-1
ECN 21829

Pos	Part No	SP	UN	Qty	Description	Page No
NOUPGRADEDCIP						
010	1038334-0000	-		1	PIPE	
UPGRADEDCIP						
020	1037461-0000	-		1	CONDUCTIVITY PIPE	
300	342840-0103	-		2	CLAMPING PIECE	
310	342850-0304	-		2	GASKET	
600	90012-0071	-		1	GLAND FITTING	
610	90012-0073	-		2	GLAND FITTING	
620	90099-0002	-		1	NUT Pr 18,6 Brass	
640	90243-0430	-		1	Flow meter	
B1315	B 90243-0321	-		1	CONDUCTIVITY CELL	

Pos	Part No	SP	UN	Qty	Description	Page No

INTERMEDIATE PART

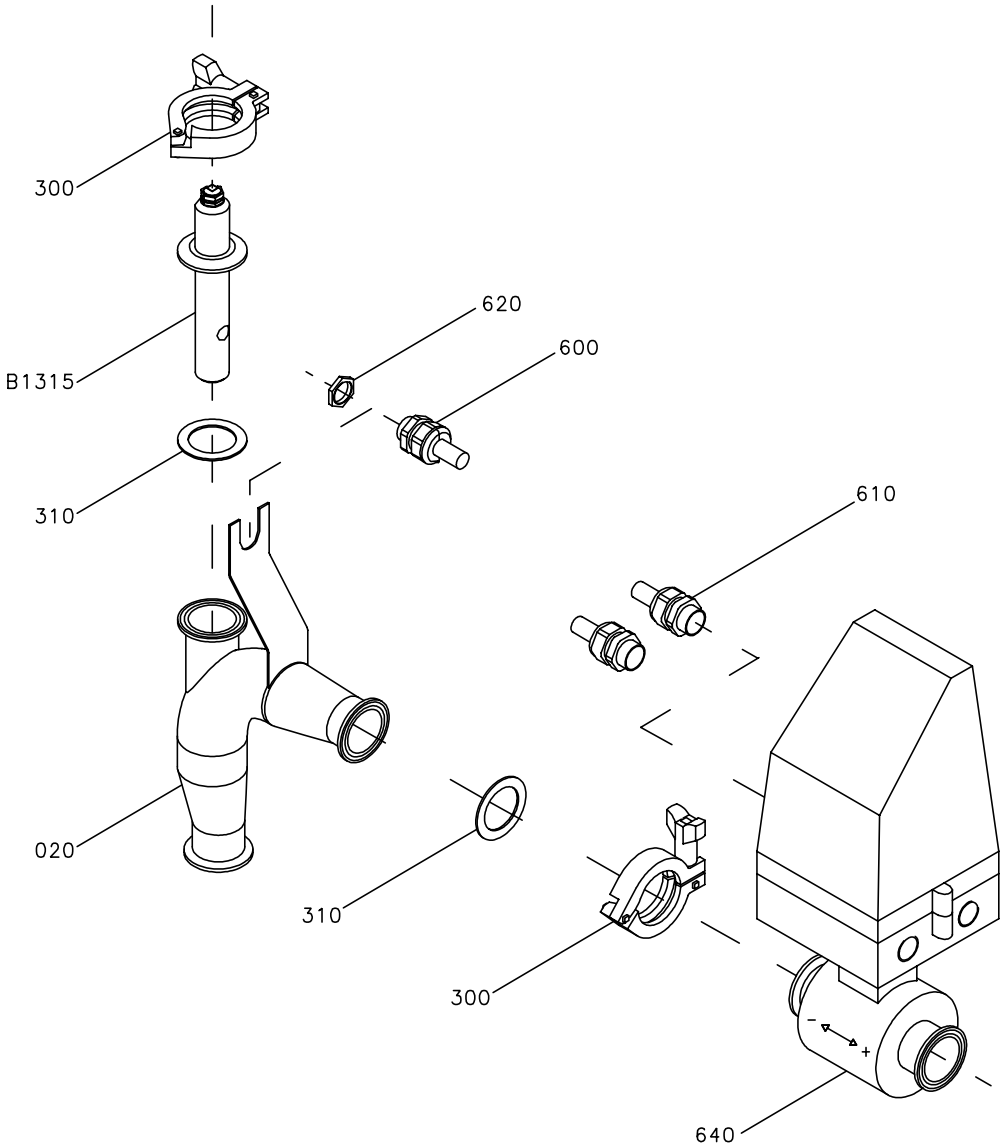

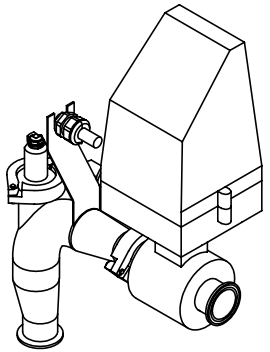

S-1035259-2
ECN 70157

Pos	Part No	SP	UN	Qty	Description	Page No
NOUPGRADEDCIP						
010	1038334-0000	-		1	PIPE	
UPGRADEDCIP						
020	1037461-0000	-		1	CONDUCTIVITY PIPE	
300	342840-0103	-		2	CLAMPING PIECE	
310	342850-0304	-		2	GASKET	
600	90012-0071	-		1	GLAND FITTING	
610	90012-0073	-		2	GLAND FITTING	
620	90099-0002	-		1	NUT Pr 18,6 Brass	
640	90243-0430	-		1	Flow meter	
B1315	B 90243-0321	-		1	CONDUCTIVITY CELL	

Pos	Part No	SP	UN	Qty	Description	Page No

STERILE AIR SYSTEM

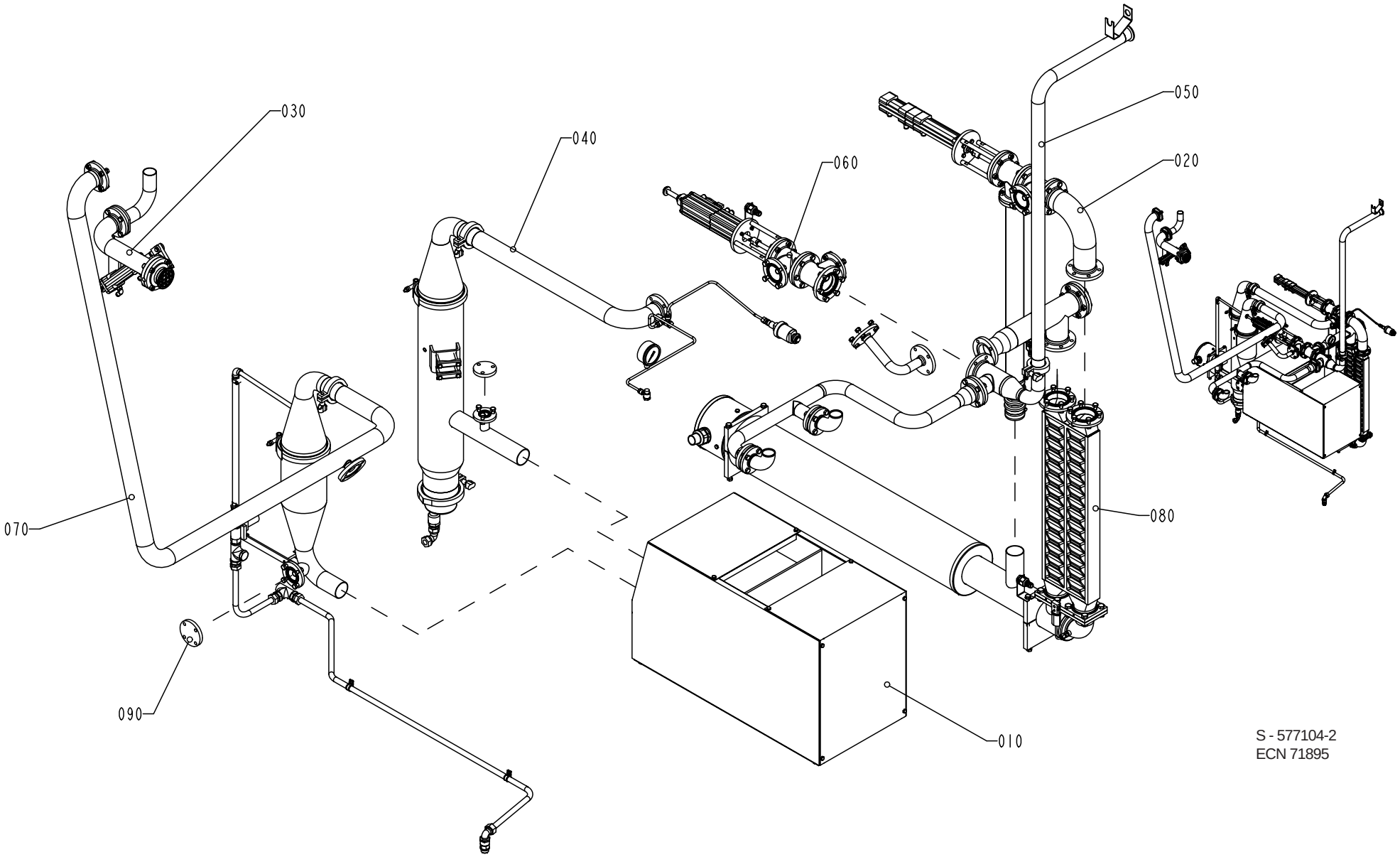

S - 577104-2
ECN 71895

Pos	Part No	SP	UN	Qty	Description	Page No
Common parts						
010	A 996475-0200	-		1	COMPRESSOR UNIT	**111**
020	A1347141-0100	-		1	VALVE HEAT EXCHANGER	**113**
030	A 996481-0200	-		1	VALVE REF.POINT	**115**
040	A1347142-0100	-		1	SEPARATOR	**117**
050	A1195284-0200	-		1	PIPE-LINE	**119**
060	A1195285-0200	-		1	AIR VALVE	**121**
070	A1255979-0200	-		1	SCRUBBER	**123**
080	A1347246-0100	-		1	AIR SUPER-HEATER	**125**
090	A1478765-0100	-		1	PRESSURE REGULATOR	**127**, **129**

Pos	Part No	SP	UN	Qty	Description	Page No

COMPRESSOR UNIT

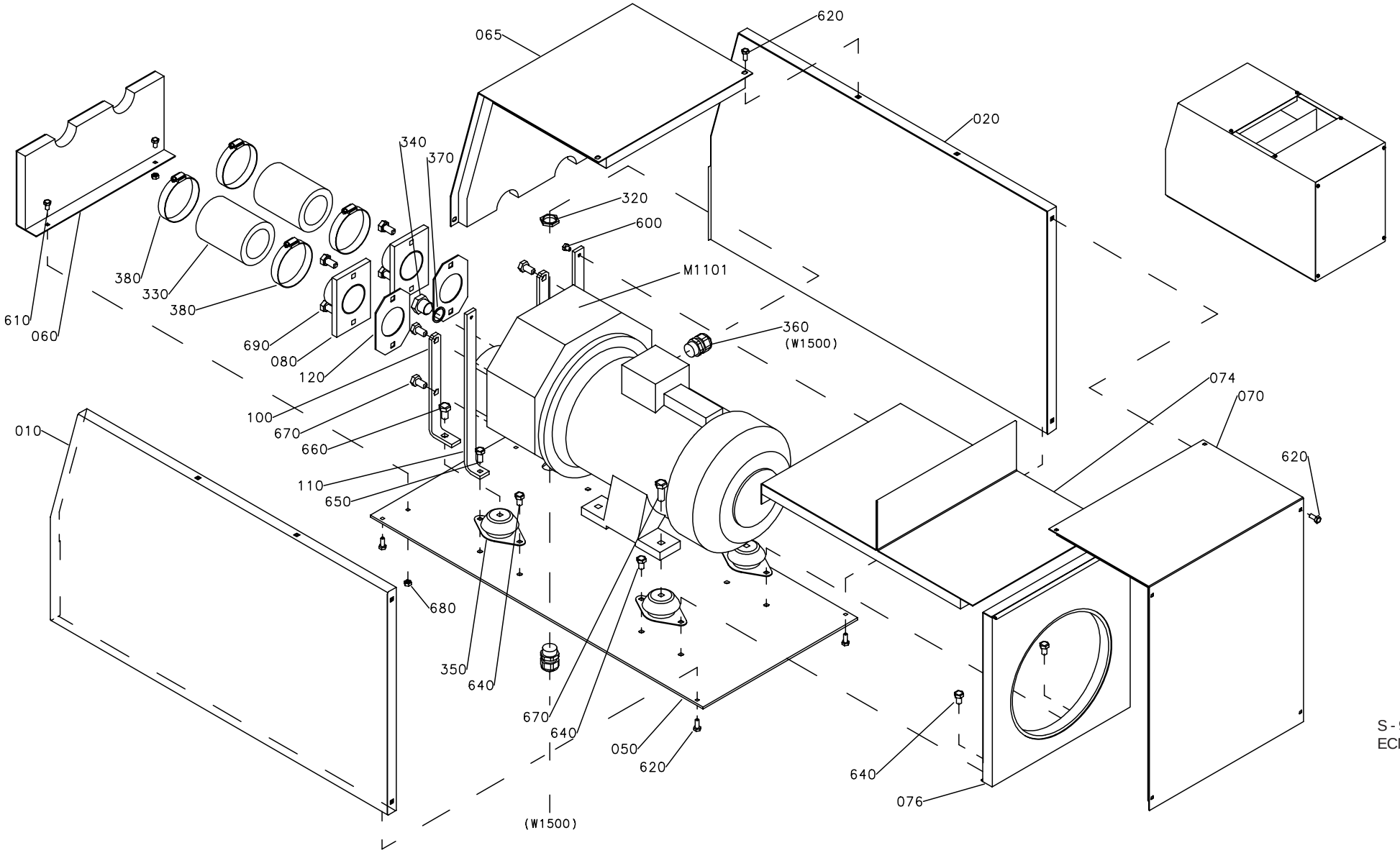

S - 996475-2
ECN 71527

Pos	Part No	SP	UN	Qty	Description	Page No
Common parts						
010	1040859-0000	-		1	COVER	
020	1040874-0000	-		1	COVER	
050	1036314-0000	-		1	BOTTOM PANEL	
060	1036315-0000	-		1	FRONT PLATE	
065	1040875-0000	-		1	COVER	
070	1040876-0000	-		1	COVER	
074	1040877-0000	-		1	PLATE	
076	1040878-0000	-		1	PLATE	
080	1036318-0000	-		2	PIPE	
100	269859-0000	-		2	BRACKET	
110	1036319-0000	-		2	BRACKET	
120	230551-0000	J		2	GASKET	
320	90099-0110	-		1	NUT PR 22,5 (PG16)	
330	90166-0199	R	MM	240	RUBBER HOSE	
340	342713-0213	-		1	PLUG,EXT.G-THREAD,HEXAGON SOCKET G1/2"	
350	90347-0144	-		4	DAMPER	
360	352103-0111	-		2	CABLE GLAND ST 16	
370	315234-0113	R		1	PLAIN ROUND,COPPER R1/2",M20	
380	342991-0111	-		4	HOSE CLIP,WORM DRIVE TYPE (63)-73	
600	312105-0362	-		2	SCREW M6S ISO 4017 M6x8 A280	
610	312105-0366	-		2	SCREW M6S ISO 4017 M6x12 A280	
620	312105-0368	-		14	SCREW M6S ISO 4017 M6x16 A280	
640	312105-0449	-		6	SCREW M6S ISO 4017 M8x16 A280	
650	312105-0451	-		2	SCREW M6S ISO 4017 8x20 A280	
660	312105-0491	-		2	SCREW M6S ISO 4017 M10x20 A280	
670	312105-0495	-		6	SCREW M6S ISO 4017 M10X30 A280	
680	312605-0316	-		2	NUT,HEXAGON A280 M6M6	
690	312105-0493	-		4	SCREW M6S ISO 4017 M10X25 A280	
M1101	90270-0017	D		1	Compressor NASH/ELMO 112 MB/4-2083	

Pos	Part No	SP	UN	Qty	Description	Page No

VALVE HEAT EXCHANGER

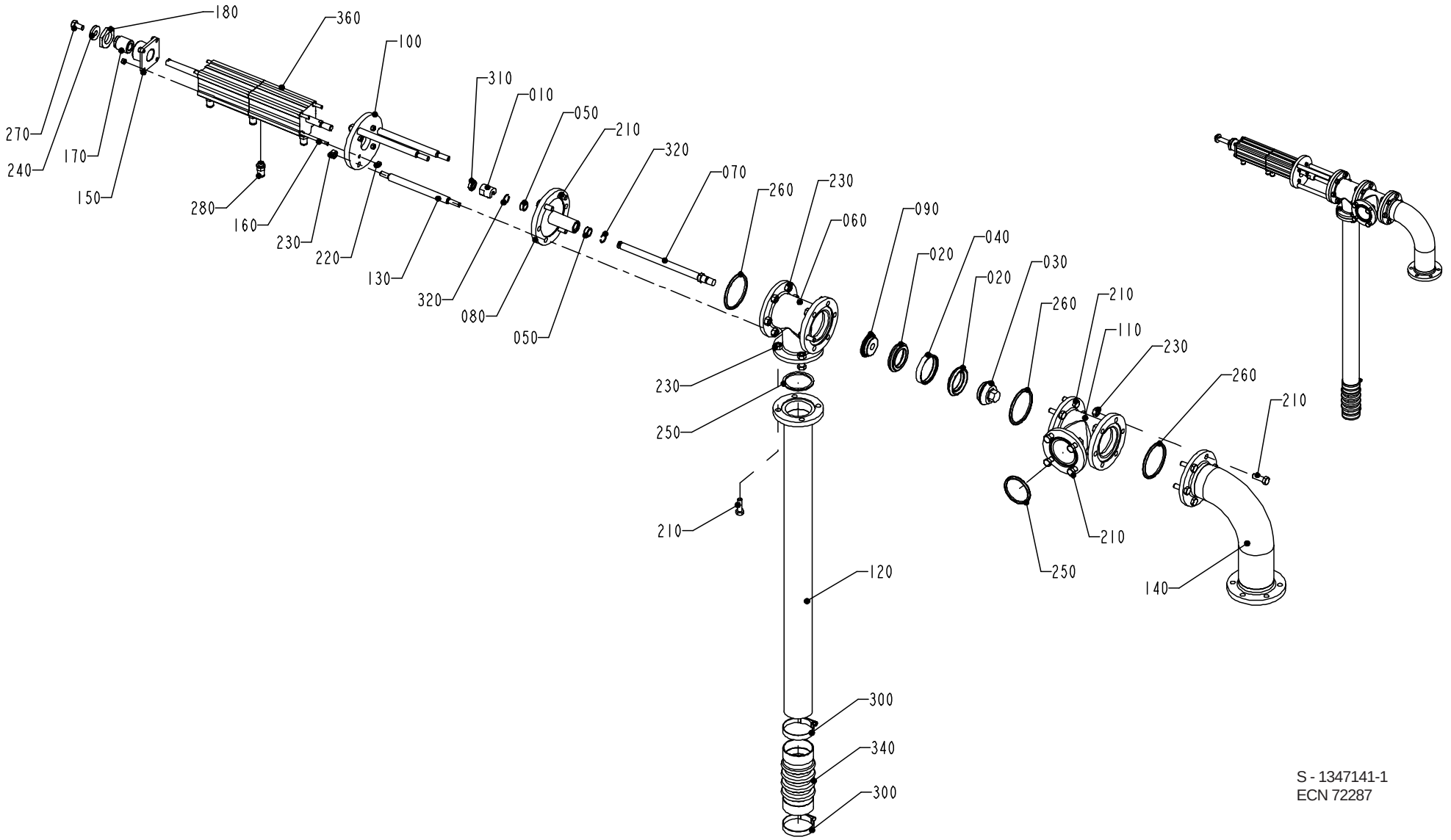

S - 1347141-1
ECN 72287

Pos	Part No	SP	UN	Qty	Description	Page No
Common parts						
010	441871-0000	D		1	PENDULUM SUSPENSION	
020	530589-0000	M		2	SEAL RING	
030	530590-0000	D		1	VALVE CONE	
040	530599-0000	D		1	RING	
050	532349-0000	M		2	PLAIN BEARING	
060	1036187-0000	-		1	T-PIPE	
070	1036188-0000	R		1	SHAFT	
080	1036189-0000	D		1	SPINDLE GUIDE	
090	1036191-0000	D		1	SEAL HOLDER	
100	1346657-0000	D		1	CYLINDER BRACKET	
110	1036194-0000	-		1	T-PIPE	
120	1036587-0000	-		1	PIPE	
130	1036192-0000	-		3	SPACER ROD	
140	1347113-0000	-		1	PIPE	
150	1346658-0000	-		1	BRACKET	
160	1346656-0000	-		4	ROD	
170	1346659-0000	-		1	SCREW	
180	1349398-0000	-		1	NUT	
210	312105-0453	-		23	SCREW M6S ISO 4017 M8x25 A280	
220	312605-0314	-		8	NUT,HEXAGON,M6M5 Stainless	
230	312605-0318	-		29	NUT,HEXAGON,M8 RFR	
240	315125-0165	-		1	WASHERS,PLAIN ROUND,CHAMFERED 8,4X26X5	
250	315229-0205	M		2	GASKET	
260	315229-0206	M		3	GASKET	
270	312105-0449	-		1	SCREW M6S ISO 4017 M8x16 A280	
280	342722-0202	-		4	PIPE COUPLING 1/8" D=6mm	
300	342991-0109	-		2	HOSE CLIP,WORM DRIVE TYPE (48)-50	
310	90099-0051	-		1	NUTS,HEXAGON, M10x1,25, DIN439	
320	90141-0022	M		2	RING	
340	90342-0022	D		1	BELLOWS	
360	1346677-0000	R		1	CYLINDER	

Pos	Part No	SP	UN	Qty	Description	Page No

VALVE REF.POINT

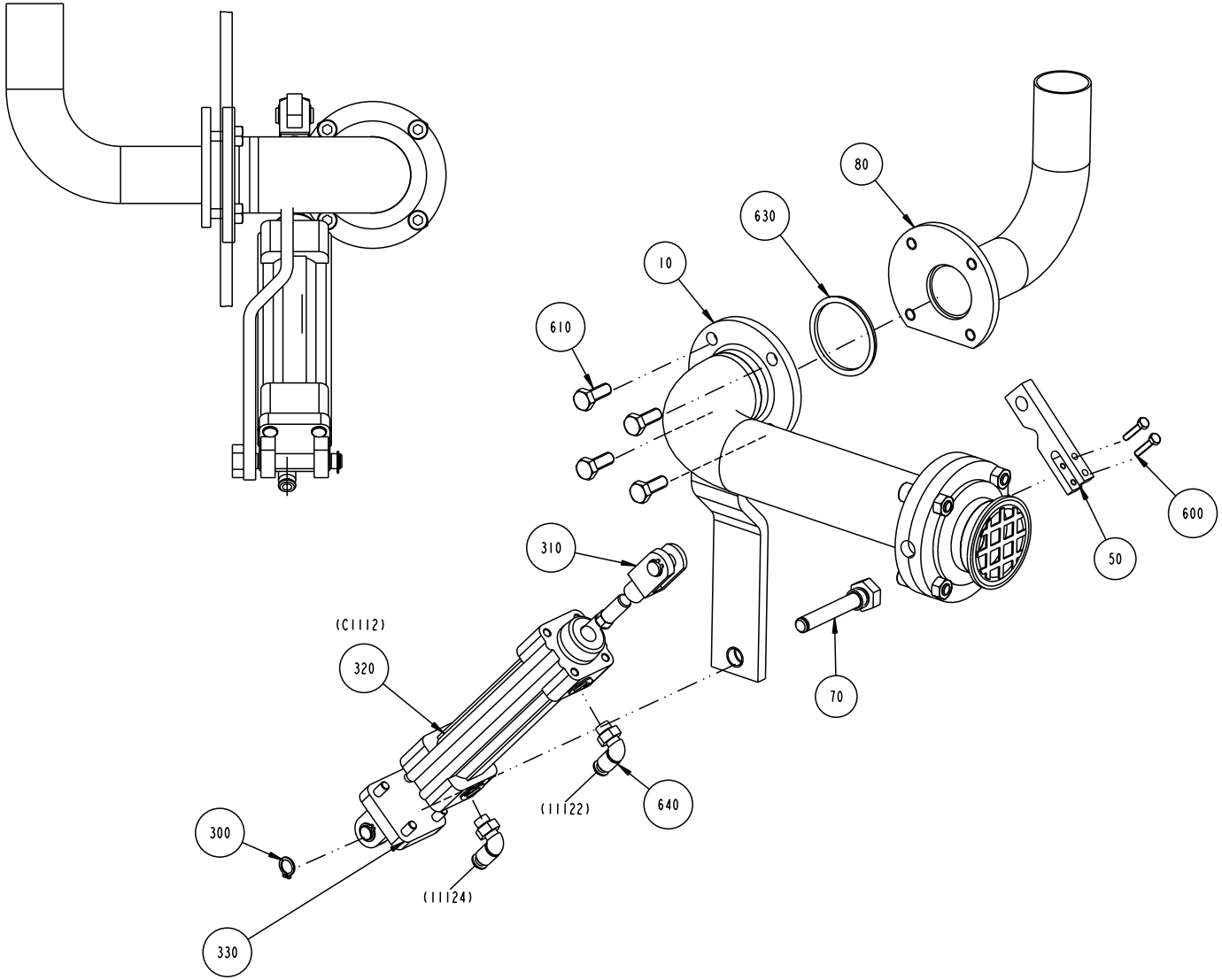

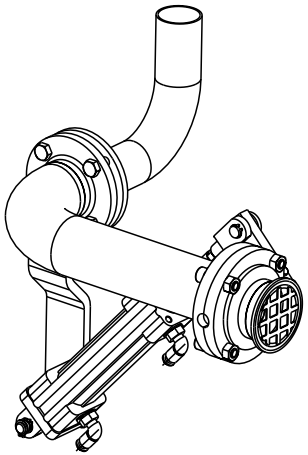

S - 996481-2
ECN 71527

Pos	Part No	SP	UN	Qty	Description	Page No
Common parts						
010	1038711-0000	-		1	PIPE	
050	1037128-0000	-		1	BRACKET	
070	1038340-0000	-		1	SCREW	
080	1350774-0000	-		1	PIPE BEND	
300	90141-0016	-		1	RETAINING RING FOR SHAFT 10	
310	90239-0516	R		1	ROD END,CLEVIS WITH AXLE,M10X1,25	
320	90450-0281	R		1	"DOUBLE ACTING,PROFILE cyl 32-80"	
330	90450-0654	-		1	BRACKET,REAR WITH AXLE,PROFILE,32	
600	312105-0295	-		2	SCREW M6S ISO 4017 M4X20 A280	
610	312105-0452	-		4	SCREW M6S 8x22 Stainless	
630	315229-0205	R		1	GASKET	
640	342732-0102	-		2	ELBOW PIPE JOINT	

Pos	Part No	SP	UN	Qty	Description	Page No

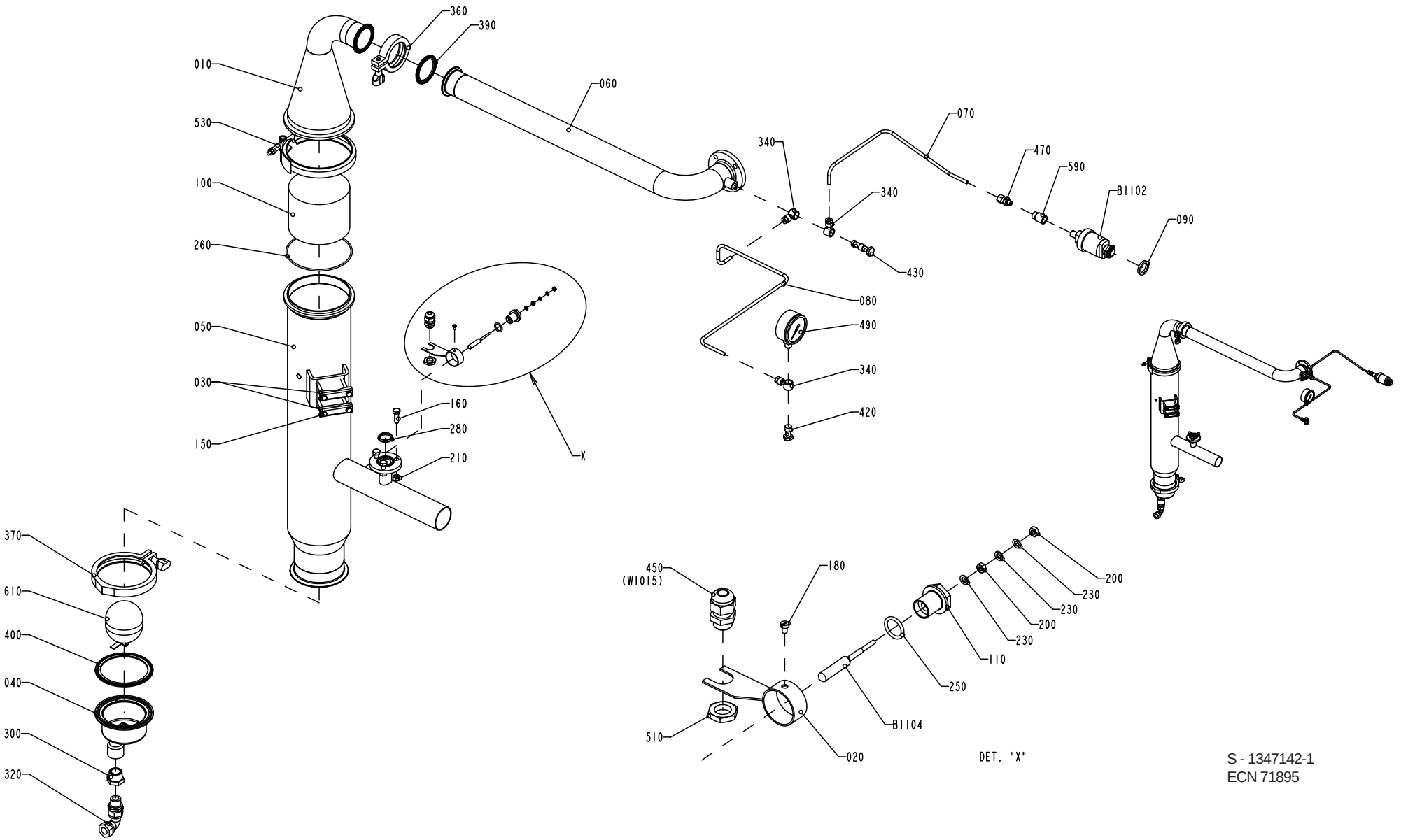

S - 1347142-1
ECN 71895

Pos	Part No	SP	UN	Qty	Description	Page No
Common parts						
010	1036753-0000	-		1	UPPER SECTION	
020	1036810-0000	-		1	HOLDER	
030	1036811-0000	-		2	CLAMP	
040	1038634-0000	D		1	DRAINING	
050	1038866-0000	-		1	INTERMEDIARY SECTION	
060	1347117-0000	-		1	PIPE	
070	1347135-0000	-		1	PIPE	
080	1347136-0000	-		1	PIPE	
090	479234-0000	-		1	WASHER	
100	546929-0000	M		1	FILTER	
110	560931-0000	M		1	BRACKET	
150	312105-0381	-		4	SCREW M6S ISO 4014 M6x55 A280	
160	312105-0453	-		3	SCREW M6S ISO 4017 M8x25 A280	
180	312125-0285	-		1	SLOTTED HEAD SCREW MCS 4x6 RFR	
200	312605-0312	-		2	NUT,HEXAGON,M4 RFR	
210	312605-0318	-		3	NUT,HEXAGON,M8 RFR	
230	315105-0136	-		3	WASHER,PLAIN ROUND 4,3x8 Stainless	
250	315204-0213	J		1	O-RING 15,3x2,4 VITON	
260	315204-0317	J		1	O-RINGS 129,5X3	
280	315229-0203	J		1	GASKET	
300	342206-0109	-		1	BUSHING	
320	342738-0221	-		1	ELBOW CONNECTION EVW,EXT 15-G1/2"	
340	342797-0122	-		3	BANJO CONNECTION,RINGPIECE 6-1/4"	
360	342840-0105	-		1	CLAMPING PIECE	
370	342840-0108	-		1	CLAMPING PIECE	
390	342850-0405	J		1	GASKET	
400	342850-0408	J		1	GASKET	
420	342980-0304	-		1	BANJO-HOLLOW BOLT COUPL,EXT.THR.01-G1/4"	
430	342980-0314	-		1	BANJO-HOLLOW BOLT COUPL,EXT.THR.02-G1/4"	
450	352103-0101	-		1	CABLE GLAND ST 9;PR15,2/PG9	
470	90030-0184	-		1	STRAIGHT CONNECTION GA-6-G1/8"	
490	90043-0095	D		1	PRESSURE GAUGE	
510	90099-0104	-		1	NUT PR 15,2 (PG9)	
530	90132-0030	-		1	HOLDER MV 87177 KS 580T	
540	90144-0073	-		x	TREBOFLON-TAPE W=13mm	
590	90330-0012	-		1	SLEEVE,REDUCTION Rp1/8"-Rp1/4"	
610	90360-0305	M		1	FLOAT	
B1102	90274-0045	D		1	PRESSURE SWITCH	
B1104	979500-0003	D		1	ELECTRODE	

Pos	Part No	SP	UN	Qty	Description	Page No

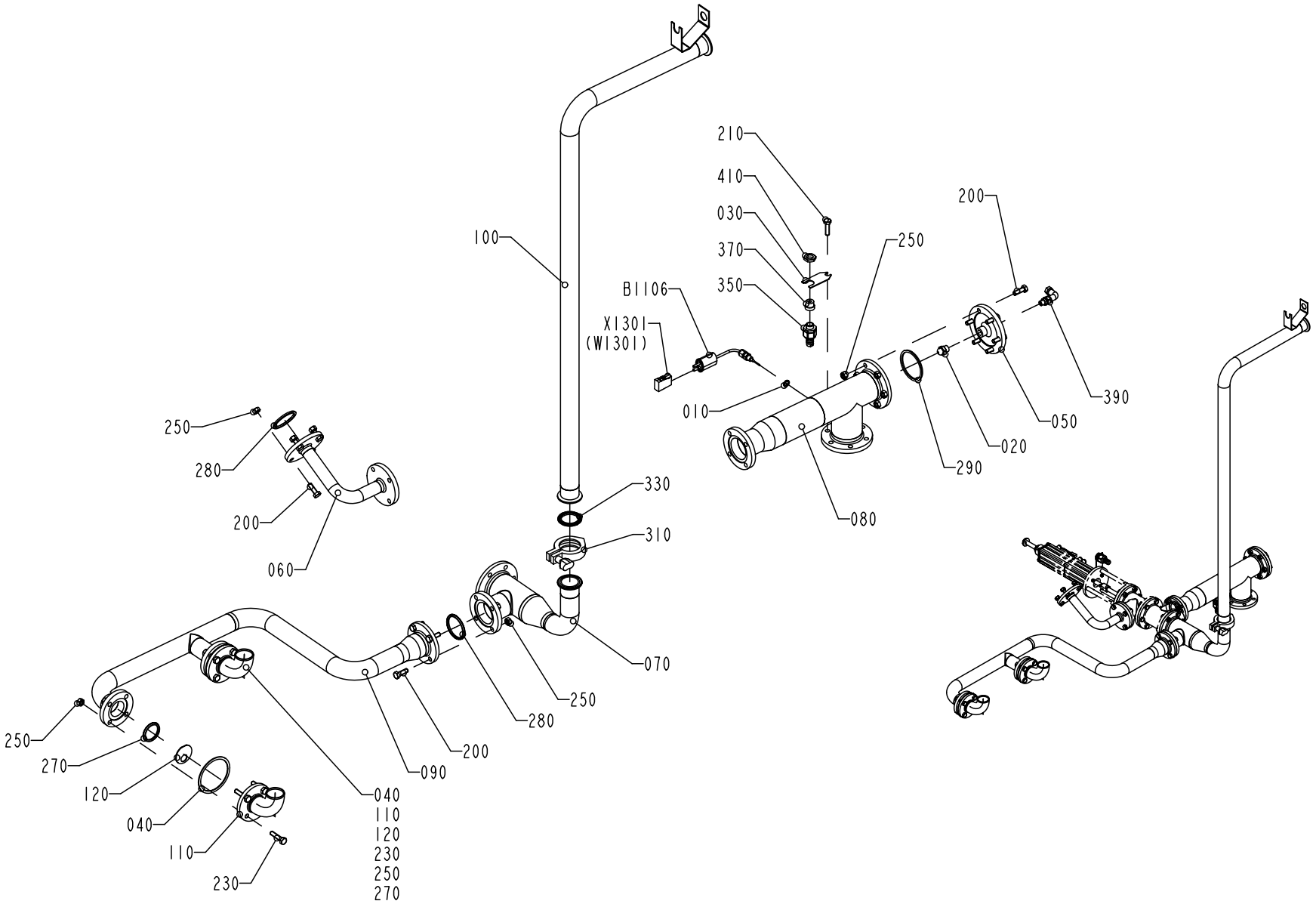

S - 1195284-2
ECN 71895

Pos	Part No	SP	UN	Qty	Description	Page No
Common parts						
010	273429-0000	-		1	WASHER	
020	B 544996-0000	M		1	SPREADER NOZZLE	
030	1036293-0000	-		1	HOLDER	
040	1036294-0000	M		2	GASKET	
050	1037455-0000	D		1	FLANGE	
060	1347114-0000	-		1	PIPE	
070	1347116-0000	-		1	PIPE	
080	1347118-0000	-		1	PIPE	
090	1347133-0000	-		1	PIPE	
100	1347134-0000	-		1	PIPE	
110	1347223-0000	-		2	PIPE	
120	1347225-0000	-		2	WASHER	
200	312105-0453	-		14	SCREW M6S ISO 4017 M8x25 A280	
210	312105-0455	-		1	SCREW M6S ISO 4017 M8x30 A280	
230	312109-0457	-		8	SCREW M6S ISO 4017 M8X35 A280	
250	312605-0318	-		22	NUT,HEXAGON,M8 RFR	
270	315229-0204	M		2	GASKET	
280	315229-0205	M		2	GASKET	
290	315229-0206	M		1	GASKET	
310	342840-0103	-		1	CLAMPING PIECE	
330	342850-0304	-		1	GASKET	
350	353243-0001	-		1	GLAND,HOSE,EXTENDED,WITHOUT INSERT PG9	
370	353249-0008	-		1	GLAND,INSERT,SINGLE HOLE,EXTEND.4-6,5	
390	90030-0171	-		1	ELBOW CONNECTION EVW,EXT 6-G1/8"	
410	90099-0104	-		1	NUT PR 15,2 (PG9)	
B1106	90326-0051	M		1	THERMO COUPLE	
X1301	90326-0020	-		1	PLUG,FEMALE YELLOW CR-AL	

Pos	Part No	SP	UN	Qty	Description	Page No

AIR VALVE

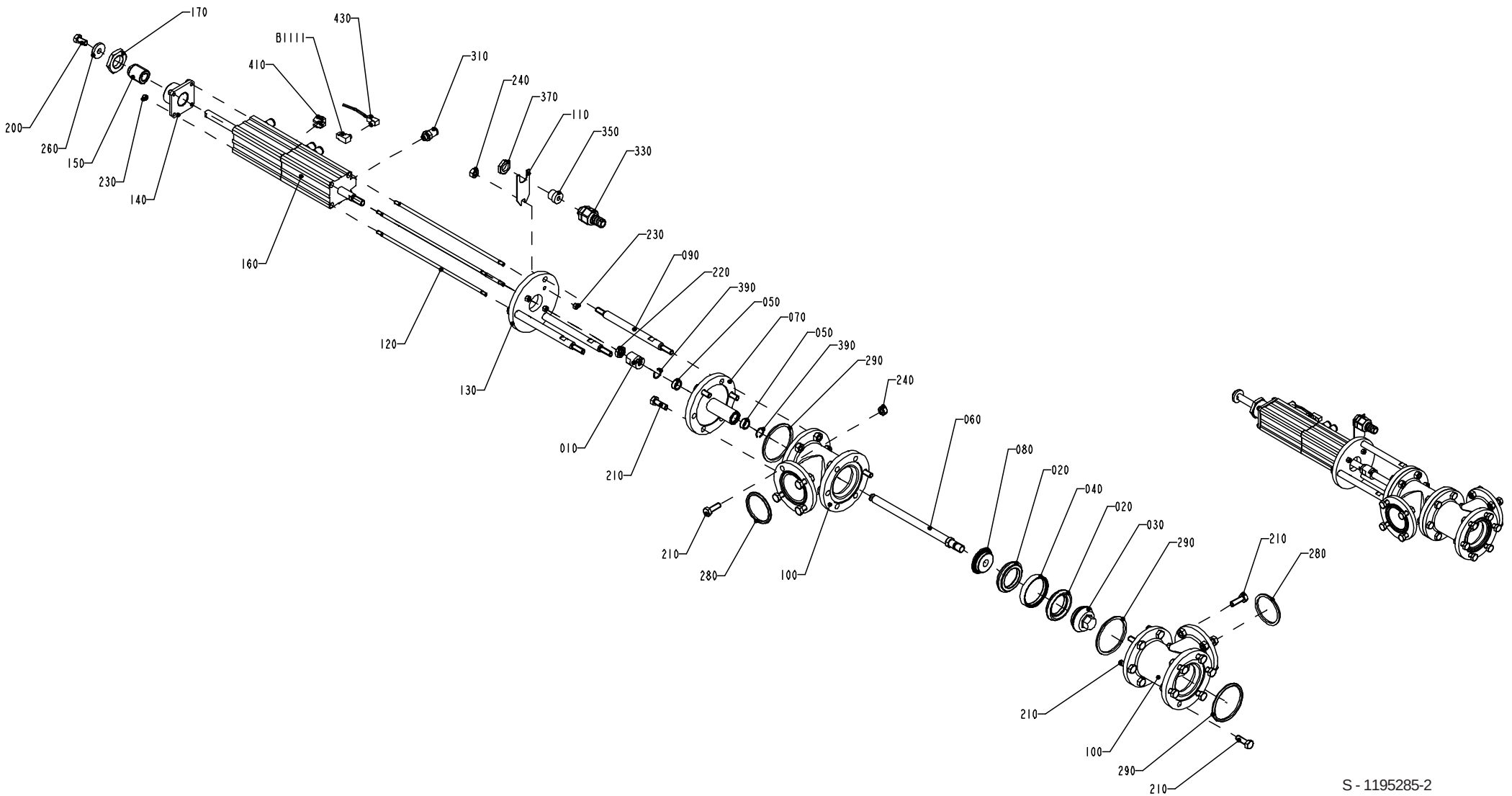

S - 1195285-2
ECN 72287

Pos	Part No	SP	UN	Qty	Description	Page No
Common parts						
010	441871-0000	R		1	PENDULUM SUSPENSION	
020	530589-0000	R		2	SEAL RING	
030	530590-0000	-		1	VALVE CONE	
040	530599-0000	R		1	RING	
050	532349-0000	R		2	PLAIN BEARING	
060	1036188-0000	-		1	SHAFT	
070	1036189-0000	R		1	SPINDLE GUIDE	
080	1036191-0000	D		1	SEAL HOLDER	
090	1036192-0000	-		3	SPACER ROD	
100	1036194-0000	-		2	T-PIPE	
110	1036293-0000	-		1	HOLDER	
120	1346656-0000	-		4	ROD	
130	1346657-0000	-		1	CYLINDER BRACKET	
140	1346658-0000	-		1	BRACKET	
150	1346659-0000	-		1	SCREW	
160	1346677-0000	-		1	CYLINDER	
170	1349398-0000	-		1	NUT	
200	312105-0449	-		1	SCREW M6S ISO 4017 M8x16 A280	
210	312105-0453	-		23	SCREW M6S ISO 4017 M8x25 A280	
220	90099-0051	-		1	NUTS,HEXAGON, M10x1,25, DIN439	
230	312605-0314	-		8	NUT,HEXAGON,M6M5 Stainless	
240	312605-0318	-		29	NUT,HEXAGON,M8 RFR	
260	315125-0165	-		1	WASHERS,PLAIN ROUND,CHAMFERED 8,4X26X5	
280	315229-0205	-		2	GASKET	
290	315229-0206	-		3	GASKET	
310	342722-0202	-		4	PIPE COUPLING 1/8" D=6mm	
330	353243-0001	-		1	GLAND,HOSE,EXTENDED,WITHOUT INSERT PG9	
350	353249-0008	-		1	GLAND,INSERT,SINGLE HOLE,EXTEND.4-6,5	
370	90099-0104	-		1	NUT PR 15,2 (PG9)	
390	90141-0022	R		2	RING	
410	90450-0816	-		1	SENSOR, BRACKET	
430	1484470-0000	-		1	CABLE	
B1111	90044-0193	D		1	Sensor REXROTH MECMAN	

Pos	Part No	SP	UN	Qty	Description	Page No

SCRUBBER

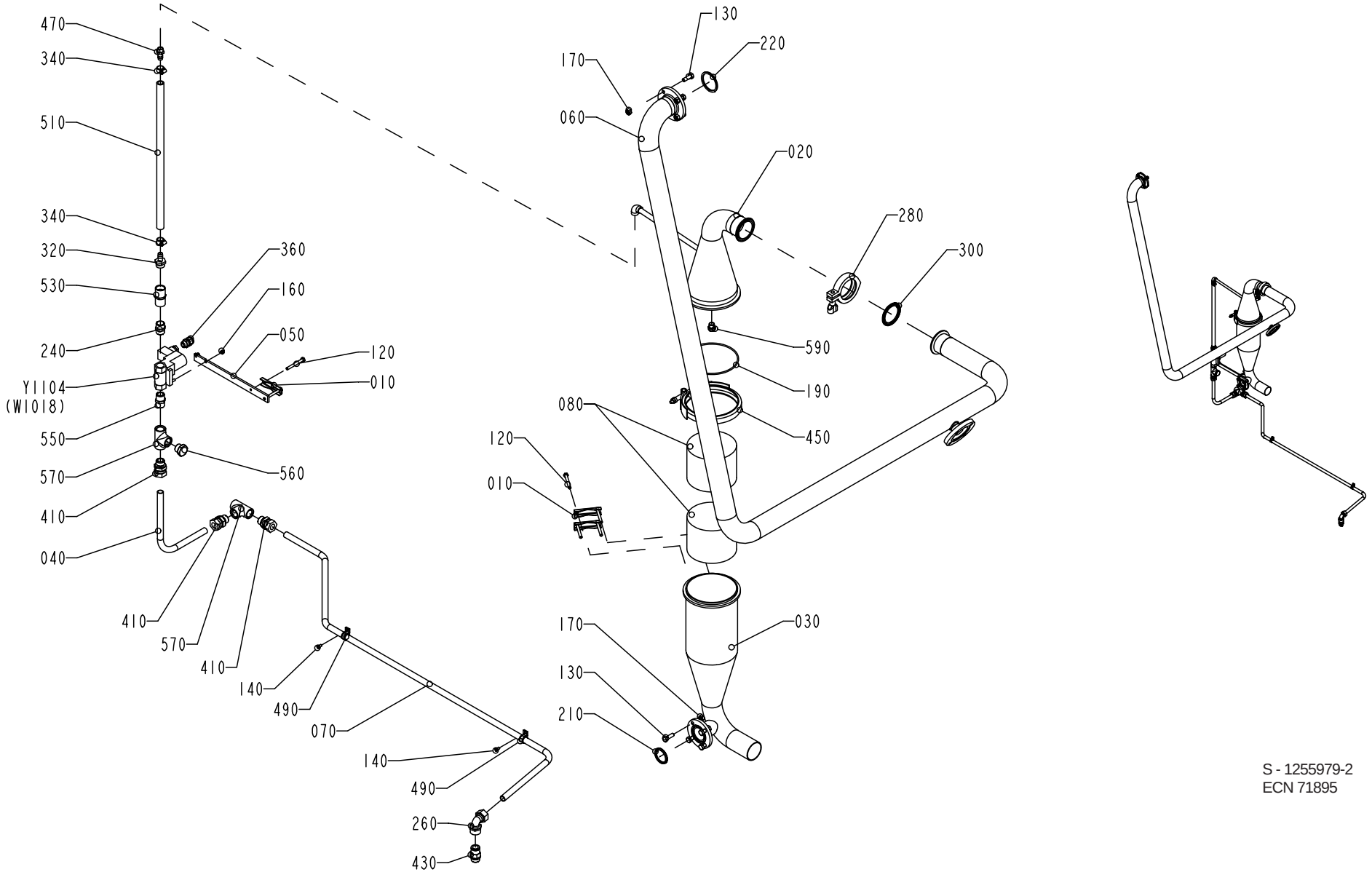

S - 1255979-2
ECN 71895

Pos	Part No	SP	UN	Qty	Description	Page No
Common parts						
010	1036811-0000	-		3	CLAMP	
020	1036910-0000	-		1	UPPER SECTION	
030	1036911-0000	-		1	CONTAINER	
040	1037011-0000	-		1	PIPE	
050	1037041-0000	-		1	HOLDER	
060	1347115-0000	-		1	PIPE	
070	1347129-0000	-		1	PIPE	
080	546929-0000	M		2	FILTER	
120	312105-0381	-		6	SCREW M6S ISO 4014 M6x55 A280	
130	312105-0453	-		8	SCREW M6S ISO 4017 M8x25 A280	
140	312125-0323	-		2	SLOTTED CHEESE HEAD ISO 1207 M5X8 RFR	
160	312605-0314	-		2	NUT,HEXAGON,M6M5 Stainless	
170	312605-0318	-		8	NUT,HEXAGON,M8 RFR	
190	315204-0317	J		1	O-RINGS 129,5X3	
210	315229-0204	J		1	GASKET	
220	315229-0205	J		1	GASKET	
240	342700-0113	-		1	NIPPLES,HEXAGON,EXT.G-THREAD G1/2"-G1/2"	
260	342733-0114	-		1	ELBOW CONNECTION WI-15-G1/2"	
280	342840-0105	-		1	CLAMPING PIECE	
300	342850-0405	J		1	GASKET	
320	342901-0105	-		1	HOSE NIPPLE,EXT. THREADED G1/2"-12	
340	342991-0101	-		2	HOSE CLIP,WORM DRIVE TYPE (13)-16	
360	352103-0101	-		1	CABLE GLAND ST 9;PR15,2/PG9	
410	90030-0188	-		3	STRAIGHT CONNECTION GA-15-G1/2"	
430	90055-0097	-		1	STRAIGHT COUPLING	
450	90132-0030	-		1	HOLDER MV 87177 KS 580T	
470	90163-0052	-		1	HOSE NIPPLE,EXT.THREAD 1/4"-12	
490	90165-0039	-		2	CLIP	
510	90166-0121	-	MM	450	HOSE	
530	90270-0349	M		1	FLOW VALVE DOLE 2GALL/MIN	
550	90330-0021	-		1	NIPPLES,HEXAGON,EXT.R-THREAD R1/2"-R1/2"	
560	90330-0037	-		1	PLUG,EXTERNAL G-THREAD G1/2"	
570	90330-0049	-		2	T-PIPE,INTERNAL THREAD Rp1/2"	
590	90424-0054	M		1	NOZZLE	
610	90144-0073	-		x	TREBOFLON-TAPE W=13mm	
Y1104	B 90042-0172	R		1	SOLENOID VALVE 4023/1005/1032 24VDC	

Pos	Part No	SP	UN	Qty	Description	Page No

AIR SUPER-HEATER

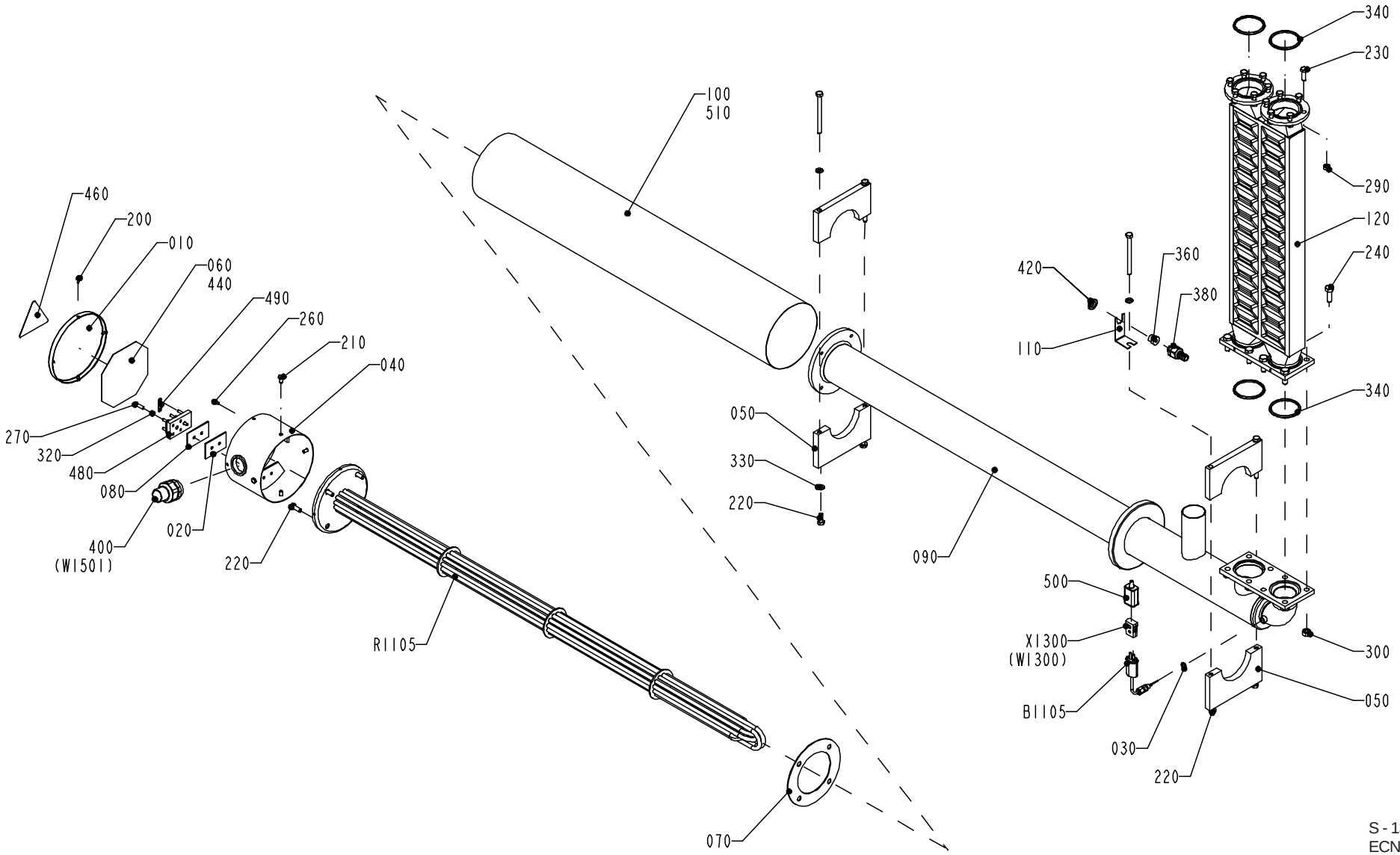

S - 1347246-1
ECN 72287

Pos	Part No	SP	UN	Qty	Description	Page No
Common parts						
010	29876-0000	-		1	COVER	
020	30298-0000	-		1	INSULATION	
030	273429-0000	-		1	WASHER	
040	B 451430-0000	-		1	CONNECTION HOUS.(MINOR)	
050	B 456123-0000	-		2	SUPPORT	
060	491305-0000	D		1	CONN.DIAGRAM AIR SUPERH.	
070	531731-0000	M		1	GASKET	
080	751009-0000	-		1	INSULATION	
090	1035942-0000	-		1	HEATING PIPE	
100	1036372-0000	-		1	PIPE	
110	1036373-0000	-		1	HOLDER	
120	1347245-0000	R		1	HEAT EXCHANGER	
200	312105-0287	-		4	SCREW M6S ISO 4017 M4x8 A280	
210	312105-0366	-		4	SCREW M6S ISO 4017 M6x12 A280	
220	312105-0451	-		8	SCREW M6S ISO 4017 8x20 A280	
230	312105-0453	-		12	SCREW M6S ISO 4017 M8x25 A280	
240	312105-0495	-		8	SCREW M6S ISO 4017 M10X30 A280	
260	312125-0323	-		1	SLOTTED CHEESE HEAD ISO 1207 M5X8 RFR	
270	312125-0331	-		2	SLOTTED CHEESE HEAD ISO 1207 M5X20 RFR	
290	312605-0318	-		12	NUT,HEXAGON,M8 RFR	
300	312605-0320	-		8	NUT,HEXAGON,M10 A280	
320	315105-0146	-		2	WASHER,PLAIN ROUND 5,3x10 Stainless	
330	315105-0165	-		2	WASHER,PLAIN ROUND 8,4x16 Stainless	
340	315229-0206	M		4	GASKET	
360	353243-0001	-		1	GLAND,HOSE,EXTENDED,WITHOUT INSERT PG9	
380	353249-0008	-		1	GLAND,INSERT,SINGLE HOLE,EXTEND.4-6,5	
400	90012-0126	-		1	GLANDS,HOSE,NORMAL,WITHOUT INSERT PG29	
420	90099-0104	-		1	NUT PR 15,2 (PG9)	
440	90153-0020	-	L	x	ADHESIVE BOSTIK 1782 125ml	
460	90194-0075	-		1	WARNING SIGN	
480	90195-0028	D		1	TERM.BLOCK 6-POLE STEATIT	
490	90195-0029	D		3	CONN. LINK NO324 FOR -28	
500	90326-0012	-		1	PROTECTIVE COVER	
510	90411-0005	-	MM	900	INSULATOR	
B1105	90326-0051	R		1	THERMO COUPLE	
R1105	B 449939-0001	R		1	HEATING ELEMENT 15KW	
X1300	90326-0020	D		1	PLUG,FEMALE YELLOW CR-AL	

Pos	Part No	SP	UN	Qty	Description	Page No

PRESSURE REGULATOR

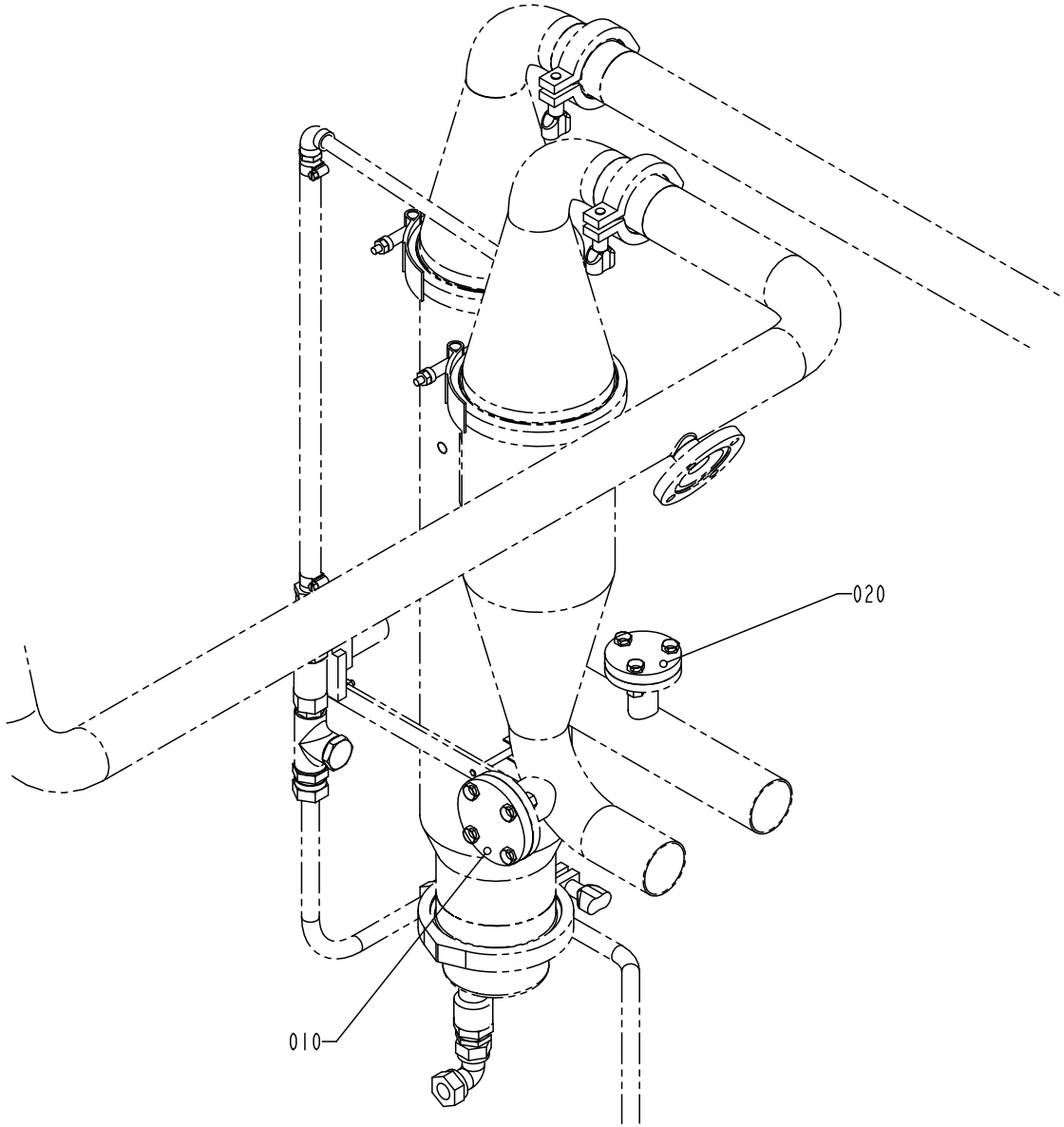

S - 1478765-1
ECN 71895

Pos	Part No	SP	UN	Qty	Description	Page No
50HZ						
010	1037268-0000	D		1	LID	
020	1037129-0000	D		1	LID	
60HZ						
050	1478766-0000	-		1	PIPE	
060	1037267-0000	-		1	PIPE	
070	442237-0000	-		1	NUT	
080	490998-0000	-		1	THROTTLE SCREW	
600	312105-0453	-		3	SCREW M6S ISO 4017 M8x25 A280	
610	312605-0318	-		3	NUT,HEXAGON,M8 RFR	
620	315202-0119	M		1	O-RING 25,1x1,6	
630	315229-0203	M		1	GASKET	

Pos	Part No	SP	UN	Qty	Description	Page No

PRESSURE REGULATOR

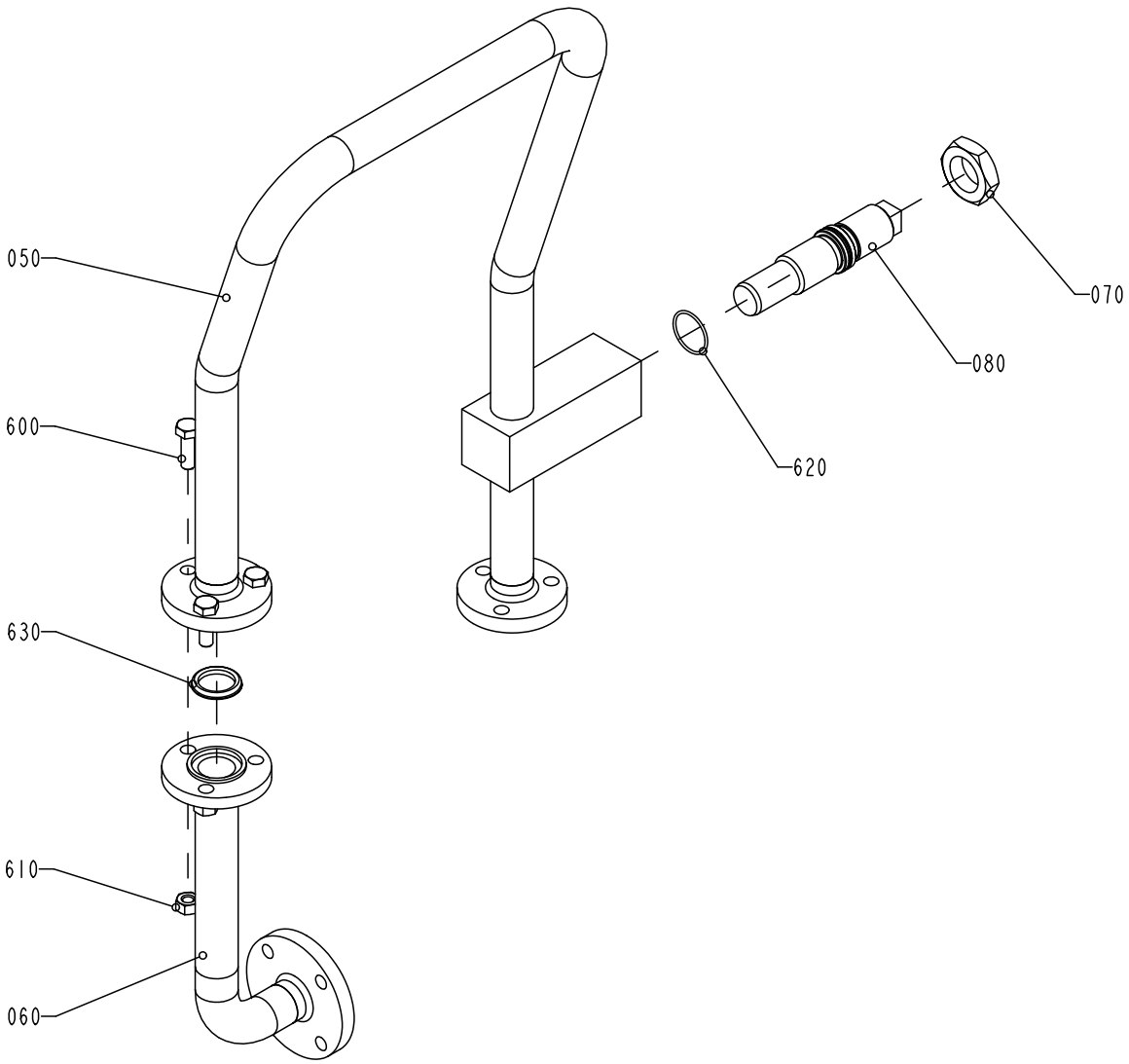

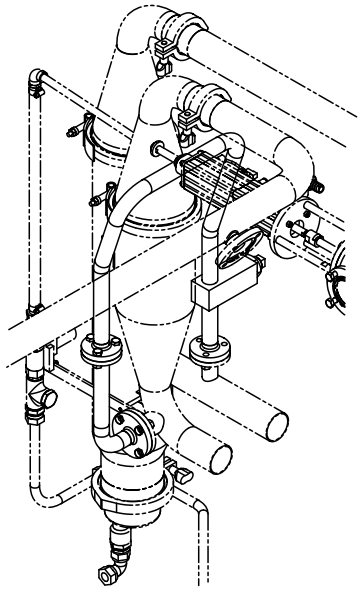

S - 1478765-2
ECN 71895

Pos	Part No	SP	UN	Qty	Description	Page No
50HZ						
010	1037268-0000	D		1	LID	
020	1037129-0000	D		1	LID	
60HZ						
050	1478766-0000	-		1	PIPE	
060	1037267-0000	-		1	PIPE	
070	442237-0000	-		1	NUT	
080	490998-0000	-		1	THROTTLE SCREW	
600	312105-0453	-		3	SCREW M6S ISO 4017 M8x25 A280	
610	312605-0318	-		3	NUT,HEXAGON,M8 RFR	
620	315202-0119	M		1	O-RING 25,1x1,6	
630	315229-0203	M		1	GASKET	

Pos	Part No	SP	UN	Qty	Description	Page No

CABLE TRENCH

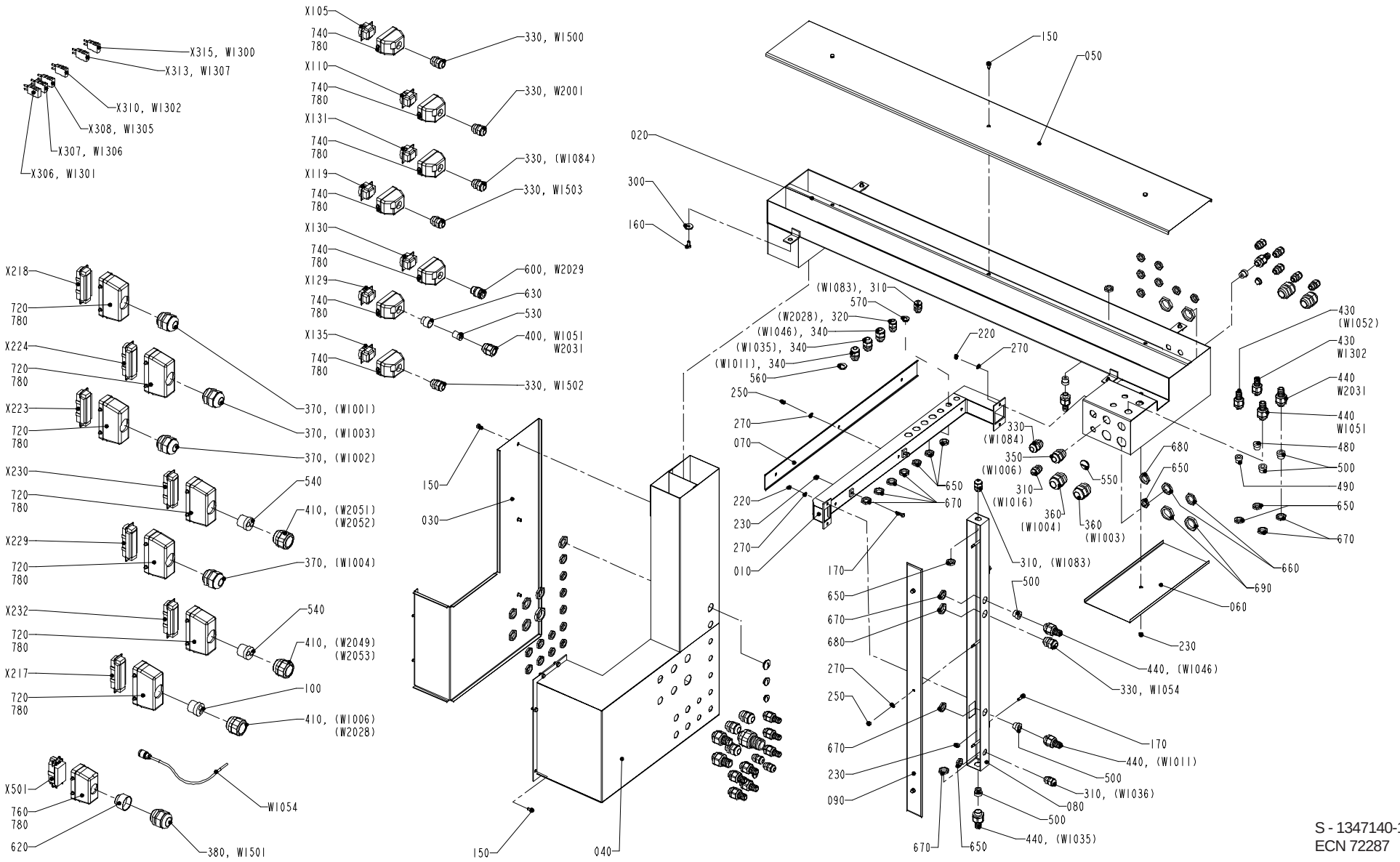

S - 1347140-1
ECN 72287

Pos	Part No	SP	UN	Qty	Description	Page No
Common parts						
010	1347871-0000	-		1	CABLE DUCT	
020	1347143-0000	-		1	CABLE DUCT	
030	1347195-0000	-		1	LID	
040	1347144-0000	-		1	CABLE DUCT	
050	1347193-0000	-		1	LID	
060	1347192-0000	-		1	LID	
070	1347872-0000	-		1	LID	
080	1347873-0000	-		1	CABLE DUCT	
090	1347874-0000	-		1	LID	
100	1347880-0000	-		1	INSERT	
150	312105-0364	-		12	SCREW M6S 6x10 A280	
160	312105-0367	-		4	SCREW M6S 6x14 A2 80	
170	312105-0370	-		4	SCREW M6S ISO 4017 M6x20 A280	
220	312605-0314	-		4	NUT,HEXAGON,M6M5 Stainless	
230	312605-0316	-		5	NUT,HEXAGON A280 M6M6	
250	312705-0314	-		6	NUT,DOMED CAP,HEXAGON,M5	
270	315105-0146	-		10	WASHER,PLAIN ROUND 5,3x10 Stainless	
300	315125-0153	-		4	WASHERS,PLAIN ROUND,CHAMFERED 6,4X22X4	
310	352103-0100	-		5	CABLE GLAND STR 9;PR15,2	
320	352103-0101	-		7	CABLE GLAND ST 9;PR15,2/PG9	
330	352103-0108	-		7	CABLE GLAND ST 13	
340	352103-0106	-		3	CABLE GLAND ST 11	
350	352103-0111	-		3	CABLE GLAND ST 16	
360	352103-0116	-		4	CABLE GLAND ST 21	
370	352103-0120	-		4	CABLE GLAND STR 29	
380	352103-0121	-		1	CABLE GLAND ST 29	
390	352103-0110	-		1	CABLE GLAND STR 16	
400	353240-0004	-		1	GLANDS,NORMAL WITHOUT INSERT PG 16	
410	353240-0006	-		3	GLANDS,NORMAL WITHOUT INSERT PG 29	
430	353243-0001	-		7	GLAND,HOSE,EXTENDED,WITHOUT INSERT PG9	
440	353243-0003	-		9	GLAND,HOSE,EXTENDED WITHOUT INSERT PG11	
450	353243-0004	-		2	GLANDS,HOSE,EXTEND.WITHOUT INSERT PG13,5	
460	353243-0007	-		1	GLAND,HOSE,EXTENDED,WITHOUT INSERT PG21	
480	353249-0008	-		6	GLAND,INSERT,SINGLE HOLE,EXTEND.4-6,5	
490	353249-0009	-		1	GLAND,INSERT,SINGLE HOLE,EXTEND.6,5-9,5	
500	353249-0011	-		9	GLAND,INSERT,SINGLE HOLE,EXTEND.7-10,5	
510	353249-0013	-		2	GLAND,INSERT,SINGLE HOLE,EXTEND.9-13	
520	353249-0061	-		1	GLAND,INSERT,SINGLE HOLE,EXTEND.17-20,5	
530	353249-0028	-		1	GLAND,INSERT,MULTI HOLE,NORMAL 2x8	
540	353249-0060	-		2	GLAND,INSERT,MULTI HOLE,NORMAL 2x13	
550	90002-0004	-		2	BLANK-OFF PLUG 22,5	
560	90002-0009	-		2	BLANK-OFF PLUG 18.6	
570	90002-0013	-		4	BLANK-OFF PLUG 15,2(PG 9)	
600	90012-0138	-		1	GLAND,EMC,EXTENDED WITH INSERT	
620	90089-0015	-		1	SLEEVE PR28,3/37.PG21/29	
630	90089-0029	-		1	Enlarging sleeve	
650	90099-0104	-		23	NUT PR 15,2 (PG9)	
660	90099-0110	-		6	NUT PR 22,5 (PG16)	
670	90099-0117	-		14	NUT PR 18,6 (PG11)	
680	90099-0118	-		4	NUT PR 20,4 (PG13,5)	
690	90099-0119	-		5	NUT PR 28,3 (PG21)	
720	90110-0152	-		7	CABLE HOOD 24-P	
740	90110-0157	-		7	COVER	
760	90110-0160	-		1	COVER	
780	90110-0385	-		15	Holder	
810	359005-0050	-		2	MARKING SEATS "X"	
820	359005-0010	-		15	MARKING SESATS 0-9	
850	90152-0051	-	MM	3400	GLANDS,HOSE 25x18	
860	90152-0058	-	MM	2000	GLANDS,HOSE 15x9	
870	90152-0070	-	MM	1000	GLANDS,HOSE 32,5X26	
880	90152-0050	-	M	16	GLANDS,HOSE 20x13	
W1051	90220-0092	-	MM	6000	MULTI-CONDUCT,SCREEN,PAIR-TWIST 3x2x0,25	
W1054	548770-0001	R		1	COAXIAL CABLE L=5000 mm	
W1300	90220-0034	-	MM	5700	THERMO-CABLE	
W1301	90220-0034	-	MM	6300	THERMO-CABLE	
W1302	90220-0034	-	MM	6700	THERMO-CABLE	
W1305	90220-0034	-	MM	5400	THERMO-CABLE	
W1306	90220-0034	-	MM	5300	THERMO-CABLE	
W1307	90220-0034	-	MM	7000	THERMO-CABLE	
W1500	351150-0418	-	MM	5100	CABLE OLFLEX 4x2,5mm2	
W1501	351120-0168	-	MM	4000	CABLE SIHF 4G10	
W1502	351120-0165	-	MM	4500	CABLE SIHF 4G2,5	
W1503	351120-0165	-	MM	4500	CABLE SIHF 4G2,5	
W2001	351150-0418	-	MM	4300	CABLE OLFLEX 4x2,5mm2	
W2029	90220-0104	-	MM	6500	CABLE,SCREENED 4x1,5mm2	
W2031	351150-0412	-	MM	6000	CABLE OLFLEX 3x1,5mm2	
X105	90110-0159	-		1	CONTACT	
X110	90110-0159	-		1	CONTACT	
X119	90110-0159	-		1	CONTACT	
X129	90110-0159	-		1	CONTACT	
X130	90110-0159	-		1	CONTACT	
X131	90110-0159	-		1	CONTACT	
X135	90110-0159	-		1	CONTACT	
X217	90110-0150	-		1	MALE INSERT 24-P, CABLE	
X218	90110-0150	-		1	MALE INSERT 24-P, CABLE	

CABLE TRENCH

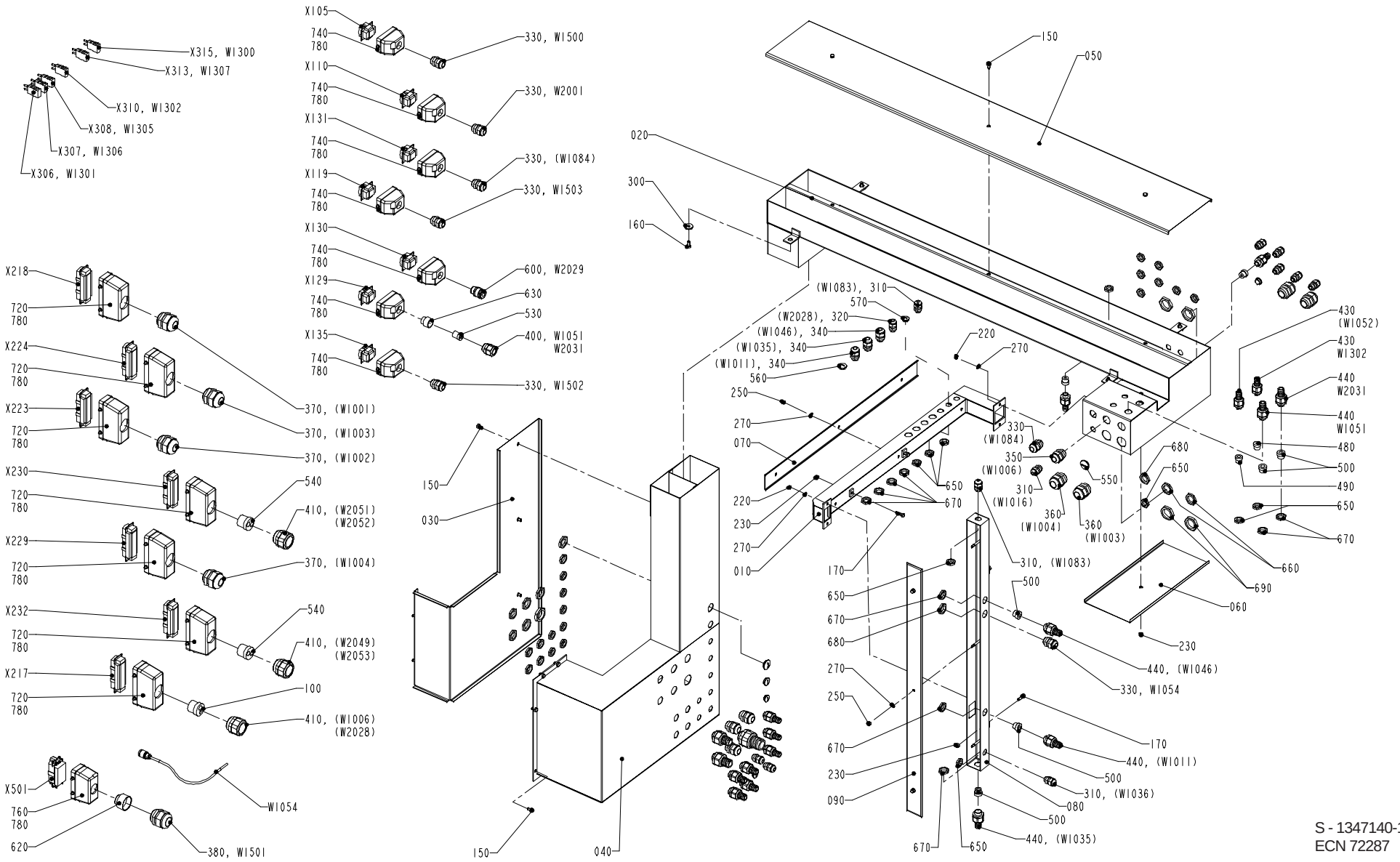

S - 1347140-1
ECN 72287

Pos	Part No	SP	UN	Qty	Description	Page No
X223	90110-0150	-		1	MALE INSERT 24-P, CABLE	
X224	90110-0150	-		1	MALE INSERT 24-P, CABLE	
X229	90110-0150	-		1	MALE INSERT 24-P, CABLE	
X230	90110-0150	-		1	MALE INSERT 24-P, CABLE	
X232	90110-0150	-		1	MALE INSERT 24-P, CABLE	
X306	90326-0022	-		1	PLUG,MALE YELLOW CR-AL	
X307	90326-0022	-		1	PLUG,MALE YELLOW CR-AL	
X308	90326-0022	-		1	PLUG,MALE YELLOW CR-AL	
X310	90326-0022	-		1	PLUG,MALE YELLOW CR-AL	
X313	90326-0022	-		1	PLUG,MALE YELLOW CR-AL	
X315	90326-0022	-		1	PLUG,MALE YELLOW CR-AL	
X501	90110-0156	-		1	CONTACT	

Pos	Part No	SP	UN	Qty	Description	Page No

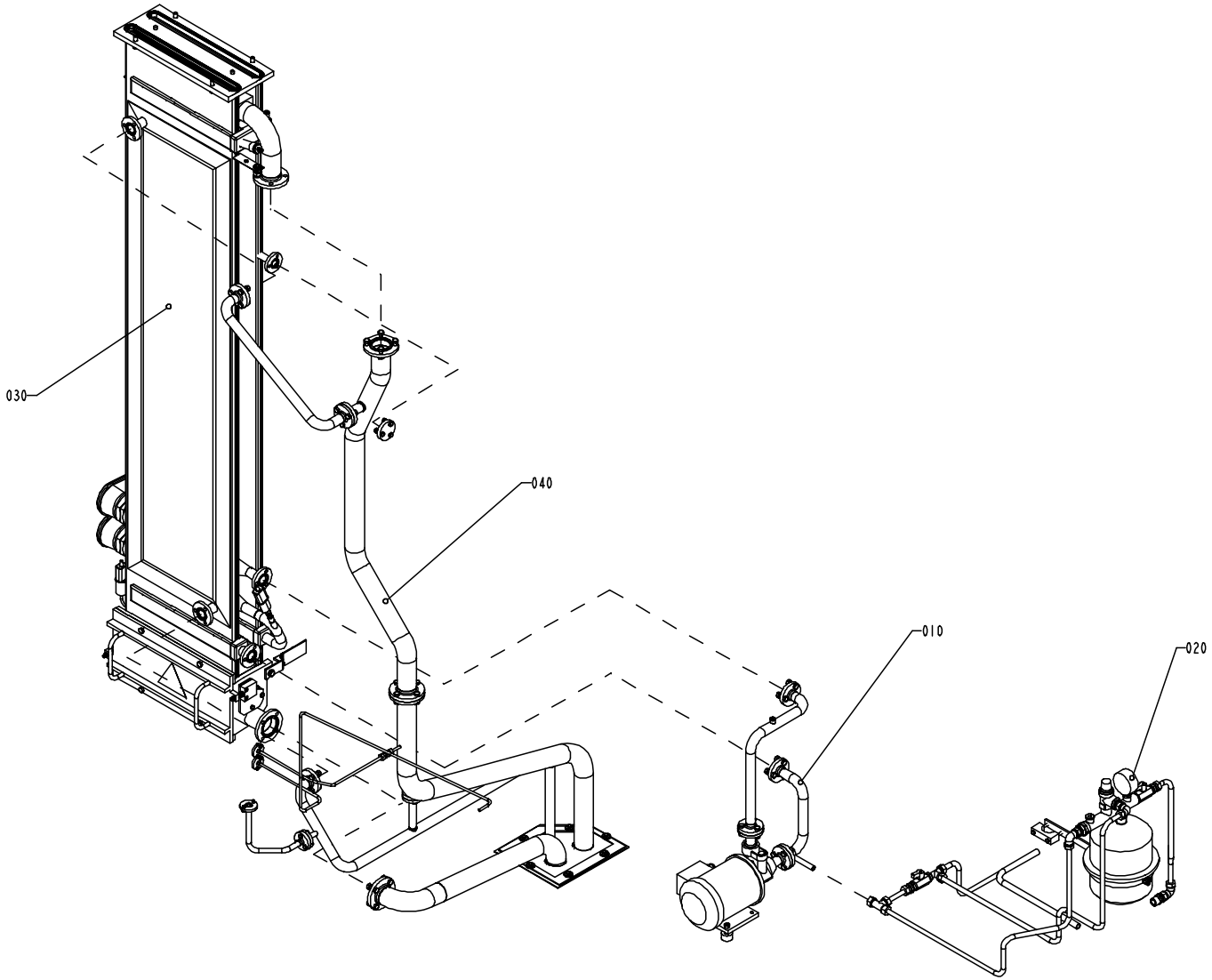

S - 1347171-1
ECN 73068

Pos	Part No	SP	UN	Qty	Description	Page No
Common parts						
010	A1347173-0100	-		1	WATER CIRCULATION	**137**
020	A1347174-0100	-		1	WATER CIRCULATION	**139**
030	A1035008-0200	-		1	BATH	**141**
040	A1347172-0100	-		1	PEROXIDE PIPE	**143**

Pos	Part No	SP	UN	Qty	Description	Page No

WATER CIRCULATION

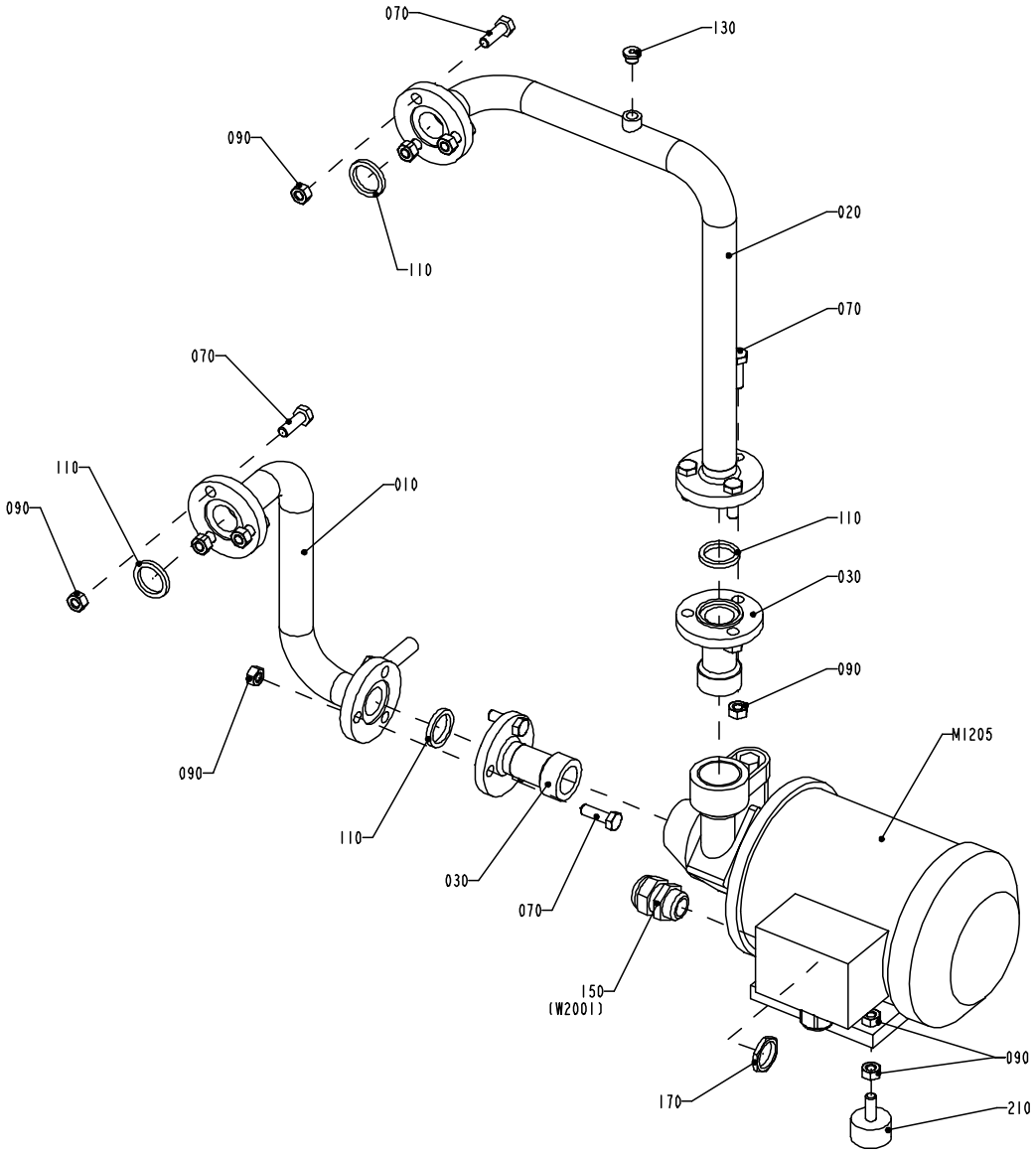

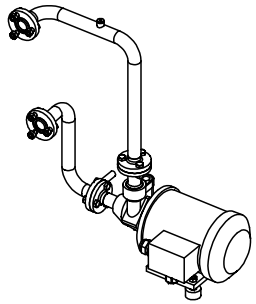

S - 1347173-1
ECN 72287

Pos	Part No	SP	UN	Qty	Description	Page No
Common parts						
010	1347126-0000	-		1	PIPE	
020	1347127-0000	-		1	PIPE	
030	1037314-0000	-		2	PIPE CONNECTION	
070	312105-0453	-		12	SCREW M6S ISO 4017 M8x25 A280	
090	312605-0318	-		16	NUT,HEXAGON,M8 RFR	
110	315229-0103	M		4	GASKET 40533-1	
130	342713-0209	-		1	PLUG,EXT.G-THREAD,HEXAGON SOCKET G1/8"	
150	352103-0111	-		1	CABLE GLAND ST 16	
170	90099-0003	-		1	NUT	
180	90144-0073	-		x	TREBOFLON-TAPE W=13mm	
190	90157-0037	-		x	SEALING COMPOUND	
210	90347-0004	-		2	VIBRATION DAMPER D=30 Th=M8 H=17 H2=21mm	
50HZ						
M1205	B 90321-0100	D		1	PUMP PBK 16/A 220/380V 50 Hz 3 Ph.	
60HZ						
M1205	90321-0127	D		1	Centrifugal Pump LOWARA	

Pos	Part No	SP	UN	Qty	Description	Page No

WATER CIRCULATION

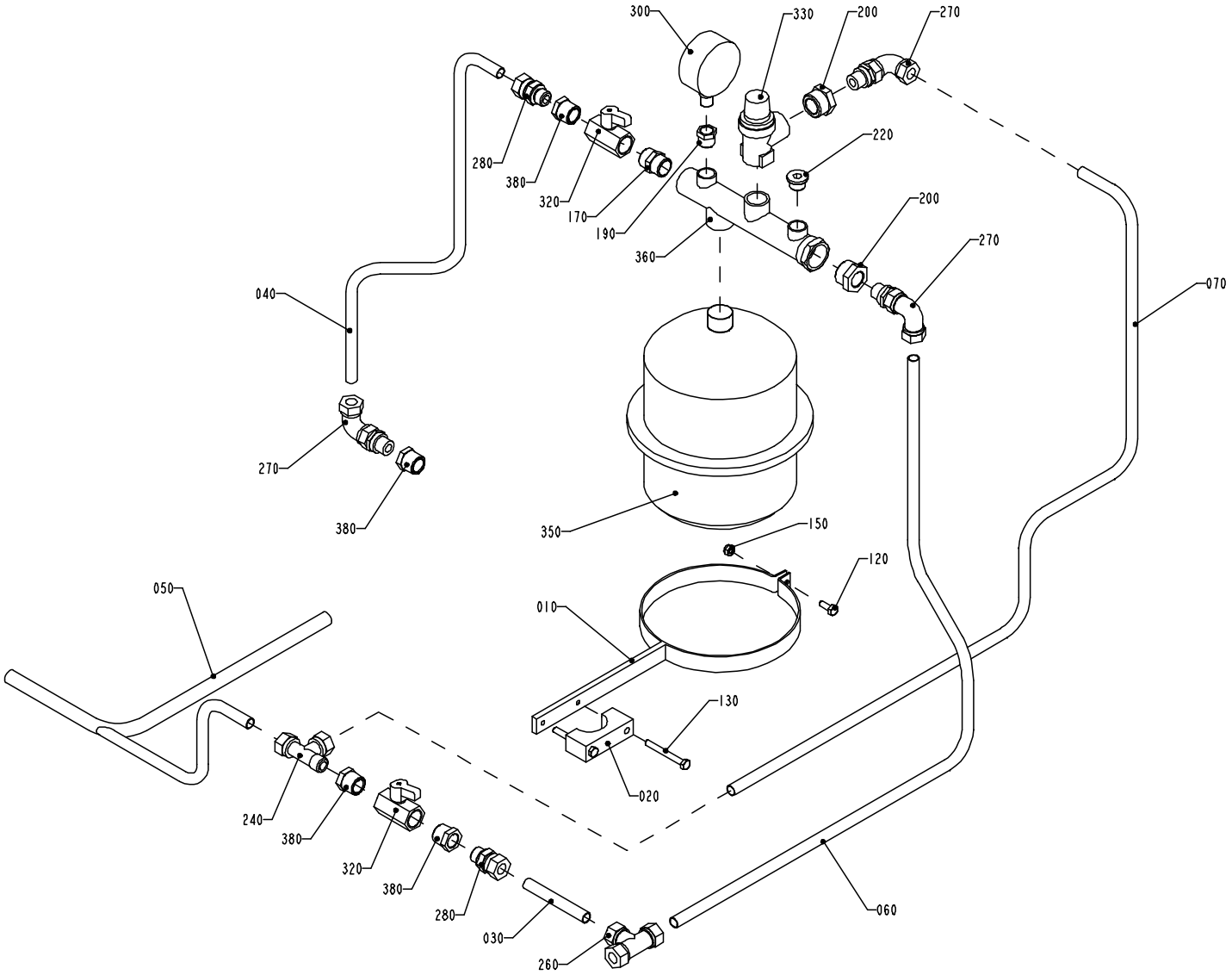

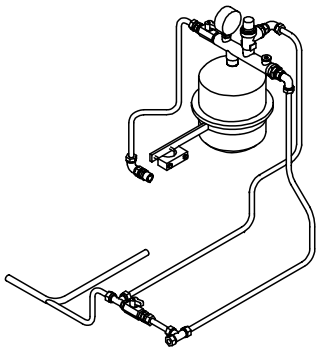

S - 1347174-1
ECN 72287

Pos	Part No	SP	UN	Qty	Description	Page No
Common parts						
010	1129101-0000	-		1	BRACKET	
020	1140645-0000	-		1	BRACKET	
030	1347124-0000	-		1	PIPE	
040	1347128-0000	-		1	PIPE	
050	1347130-0000	-		1	PIPE	
060	1347131-0000	-		1	PIPE	
070	1347132-0000	-		1	PIPE	
120	312105-0368	-		1	SCREW M6S ISO 4017 M6x16 A280	
130	312105-0381	-		2	SCREW M6S ISO 4014 M6x55 A280	
150	312812-0316	-		1	NUT,HEXAGON,LOCK,WITH NYLON INSERT,M6	
170	342700-0113	-		1	NIPPLES,HEXAGON,EXT.G-THREAD G1/2"-G1/2"	
190	342701-0203	-		1	BUSHING RNI3/8"-1/4"	
200	342701-0209	-		2	BUSHING,INT./EXT.G-THREAD G3/4"-G3/8"	
220	342713-0211	-		1	PLUG,EXT.G-THREAD,HEXAGON SOCKET G3/8"	
240	342751-0215	-		1	L-PIPE CONNECTION LE-12-R3/8"	
260	90030-0058	-		1	T-PIPE CONNECTION T-12	
270	90030-0136	-		3	ELBOW CONNECTION EVW,EXT 12-G3/8"	
280	90030-0187	-		2	STRAIGHT CONNECTION GA-12-G3/8"	
300	90043-0002	D		1	PRESSURE GAUGE	
320	90187-0062	-		2	Shut of valves,Ball valve, G1/2	
330	90187-0104	D		1	SAFETY VALVE	
350	90304-0020	D		1	LIQUID CONTAINER	
360	90304-0307	D		1	ATTACHMENT PIPE	
380	90330-0048	-		4	BUSHING,INT./EXT.R-THREAD R1/2"-Rp3/8"	
400	90144-0073	-	MM	x	TREBOFLON-TAPE W=13mm	
410	90157-0037	-		x	SEALING COMPOUND	

Pos	Part No	SP	UN	Qty	Description	Page No

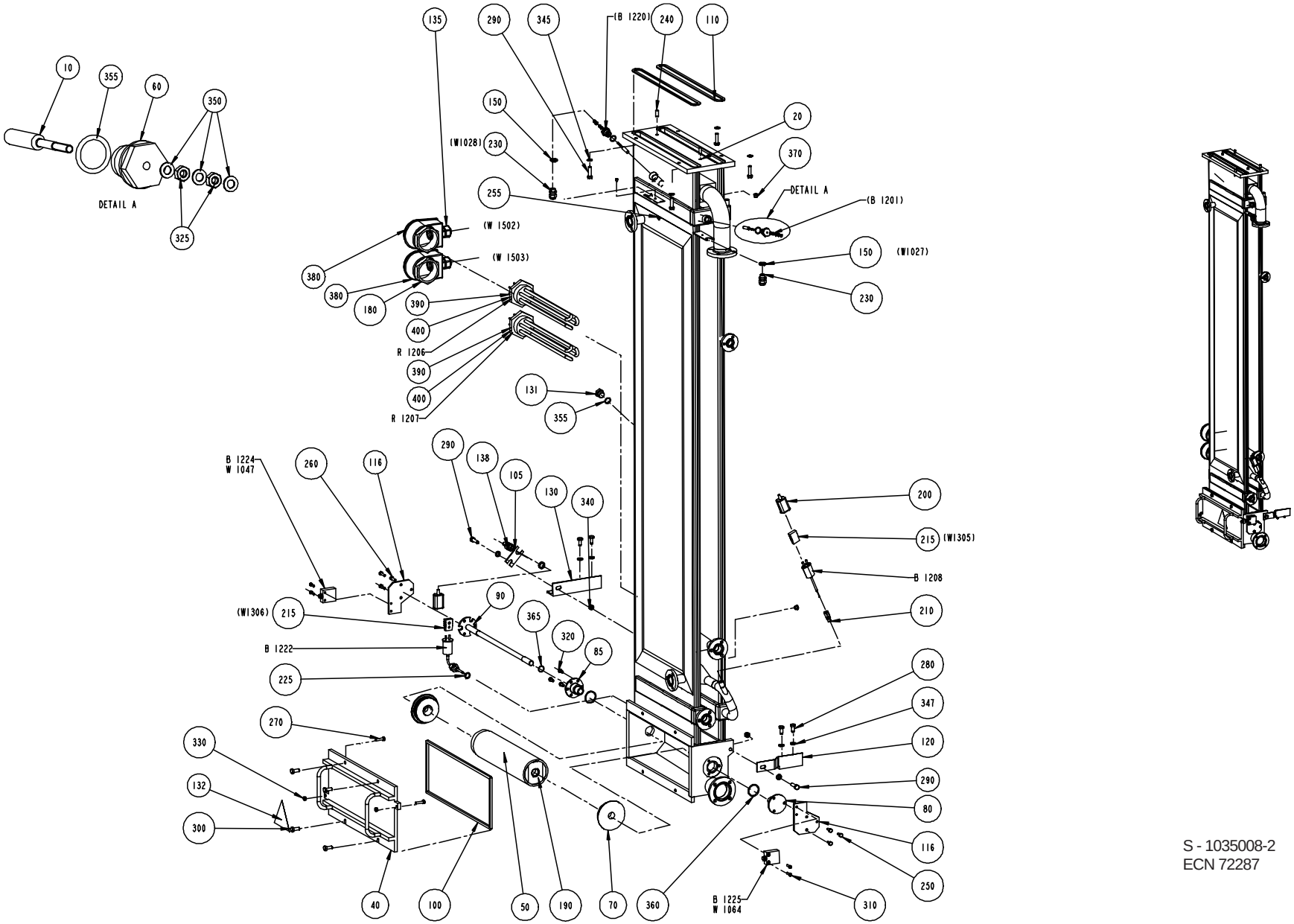

S - 1035008-2
ECN 72287

Pos	Part No	SP	UN	Qty	Description	Page No
Common parts						
010	567070-0011	D		2	ELECTRODE	
040	1038856-0000	-		1	HATCH	
050	541177-0000	D		1	BENDING ROLLER	
060	560931-0000	D		2	BRACKET	
070	1036553-0000	M		2	WHEEL	
080	1038857-0000	-		1	FLANGE	
085	1038858-0000	-		1	FLANGE	
090	1255839-0000	K		1	SHAFT	
100	1038862-0000	J		1	GASKET	
105	1040970-0000	-		1	BRACKET	
116	1195460-0000	-		2	BRACKET	
120	1038860-0000	-		1	BRACKET	
130	1038861-0000	-		1	BRACKET	
131	1254270-0000	-		1	PLUG	
132	359705-0004	-		1	WARNIG SIGN "CORROSION"	
135	90012-0131	-		2	GLAND FITTING	
138	90012-0077	-		1	GLAND FITTING	
150	90099-0001	-		3	NUT PR 15,2 BRASS	
180	90206-0326	-		2	CONNECTION BOX	
190	90240-0146	J		2	Flange Bushing, 15x21x20	
200	90326-0012	-		2	PROTECTIVE COVER	
210	90326-0306	-		1	GLAND FITTING 9041-45-KS-KR.1/8"D=4,5mm	
215	90326-0020	-		2	PLUG,FEMALE YELLOW CR-AL	
225	315237-0110	J		1	PLAIN ROUND,ALUMINIUM R1/4"	
230	352103-0101	-		2	CABLE GLAND ST 9;PR15,2/PG9	
240	311103-0401	-		2	PINS,STRAIGHT 8X20	
250	312105-0368	-		3	SCREW M6S ISO 4017 M6x16 A280	
255	312132-0284	-		2	SLOTTED PAN HEAD ISO 1580 M4X5 MSGFN	
260	312105-0371	-		3	SCREW M6S6X22RFR	
270	312105-0372	-		2	SCREW M6S ISO 4017 M6x25 A280	
280	312105-0449	-		4	SCREW M6S ISO 4017 M8x16 A280	
290	312105-0455	-		6	SCREW M6S ISO 4017 M8x30 A280	
300	312105-0451	-		4	SCREW M6S ISO 4017 8x20 A280	
310	312115-0329	-		4	SCREW MC6S ISO 4762 M5x16 A280	
320	312115-0366	-		3	SCREW MC6S ISO 4762 M6X12 A280	
325	312605-0312	-		4	NUT,HEXAGON,M4 RFR	
330	312605-0316	-		2	NUT,HEXAGON A280 M6M6	
340	312605-0318	-		2	NUT,HEXAGON,M8 RFR	
345	315105-0165	-		4	WASHER,PLAIN ROUND 8,4x16 Stainless	
347	315115-0165	-		6	WASHER TBRB 8,4x16 Stainless	
350	315105-0136	-		6	WASHER,PLAIN ROUND 4,3x8 Stainless	
355	927421-0004	J		3	O-RING 15.3X2.4 SILICON	
360	90242-0265	J		2	"O-RING 32,2X3"	
365	90242-0264	J		1	"O-RING 16,1X1,6"	
370	342713-0209	-		2	PLUG,EXT.G-THREAD,HEXAGON SOCKET G1/8"	
380	359705-0015	-		2	WARNING SIGN "ELECTRIC SHOCK"	
390	90157-0037	-		x	SEALING COMPOUND	
400	90144-0007	-		x	TAPE	
B1208	90326-0038	R		1	THERMOELEMENT CR-AL	
B1222	90326-0053	R		1	THERMO ELEMENT	
B1224	90044-0084	D		2	LIMITSWITCH HONEYWELL 14CE1-4	
R1206	B 90206-0070	I		1	HEATING ELEMENT 6000W 380/220V	
R1207	B 90206-0070	-		1	HEATING ELEMENT 6000W 380/220V	
TBA/22						
020	1517078-0000	-		1	BATH	
110	1346557-0000	-		2	GASKET	

PEROXIDE PIPE

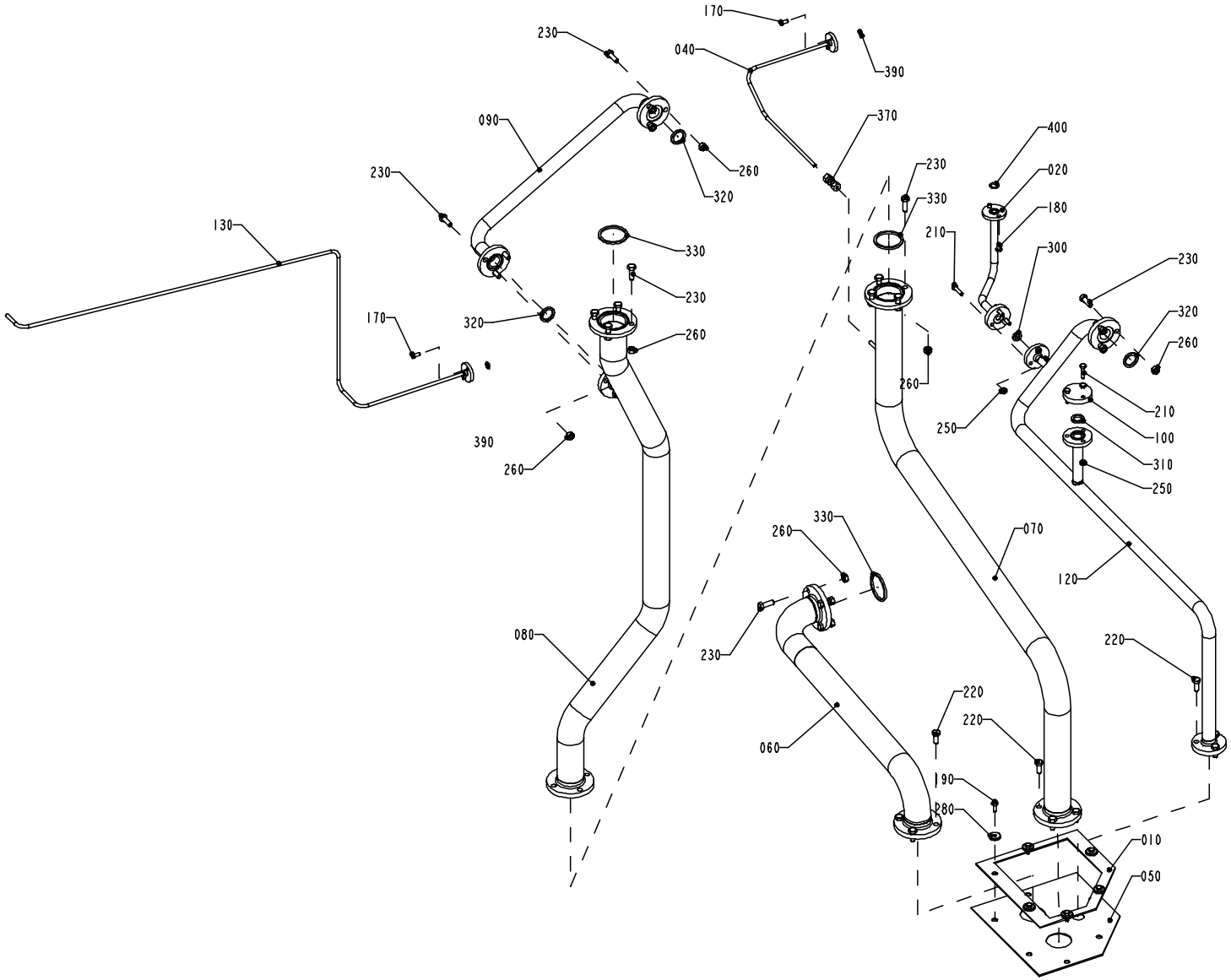

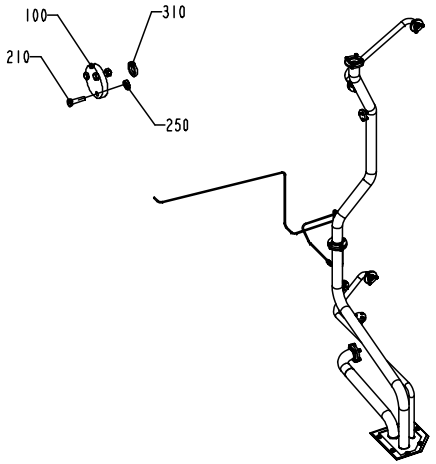

S - 1347172-1
ECN 72287

Pos	Part No	SP	UN	Qty	Description	Page No
Common parts						
010	1038688-0000	-		1	HOLDER	
020	1038879-0000	-		1	PIPE	
040	1129168-0000	-		1	PIPE	
050	1255551-0000	R		1	SEAL CLOTH	
060	1282889-0000	-		1	PIPE	
070	1282900-0000	-		1	PIPE	
080	1347119-0000	-		1	PIPE	
090	1347120-0000	-		1	PIPE	
100	1346563-0000	-		2	COVER	
120	1347123-0000	-		1	PIPE	
130	1347125-0000	-		1	PIPE	
170	312105-0327	-		4	SCREW M6S ISO 4017 M5X12 A280	
180	312105-0366	-		2	SCREW M6S ISO 4017 M6x12 A280	
190	312105-0368	-		6	SCREW M6S ISO 4017 M6x16 A280	
210	312105-0372	-		9	SCREW M6S ISO 4017 M6x25 A280	
220	312105-0451	-		11	SCREW M6S ISO 4017 8x20 A280	
230	312105-0453	-		21	SCREW M6S ISO 4017 M8x25 A280	
250	312605-0316	-		9	NUT,HEXAGON A280 M6M6	
260	312605-0318	-		21	NUT,HEXAGON,M8 RFR	
280	315125-0153	-		6	WASHERS,PLAIN ROUND,CHAMFERED 6,4X22X4	
300	315229-0101	J		1	GASKET 40531-1	
310	315229-0102	J		2	GASKET 40532-1	
320	315229-0103	J		3	GASKET 40533-1	
330	315229-0105	J		3	GASKET 40535-1	
370	90030-0075	-		1	PIPE CONNECTION G-6	
390	927421-0001	J		2	O-RING 9.3X2.4 SILICON	
400	927421-0003	J		1	O-RING 13.3X2.4 SILICON	

Pos	Part No	SP	UN	Qty	Description	Page No

FRAME

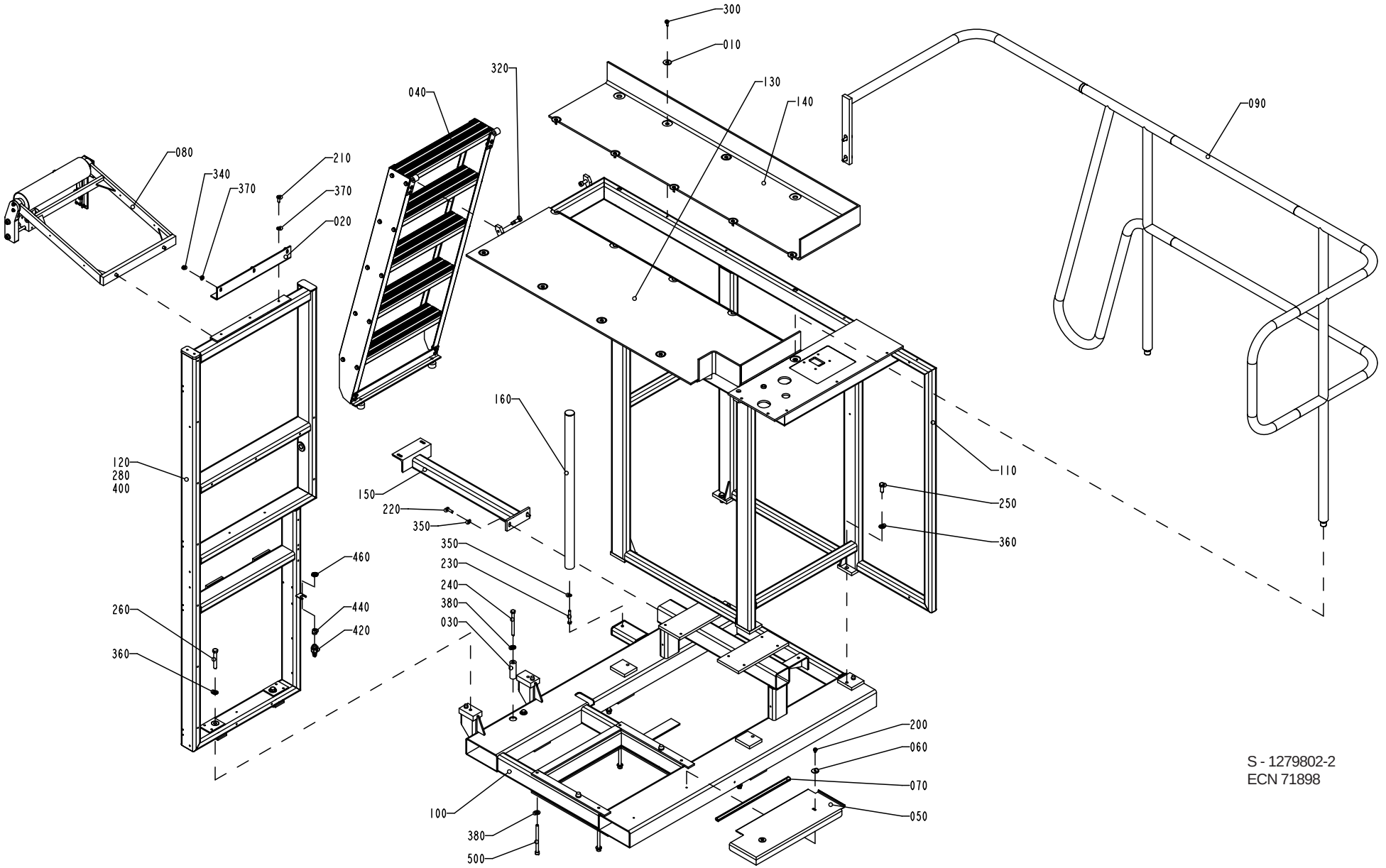

S - 1279802-2
ECN 71898

Pos	Part No	SP	UN	Qty	Description	Page No
Common parts						
040	A1095862-0100	-		1	LADDER	**147**
080	A1279803-0100	-		1	BENDING ROLLER	**149**
090	A1347639-0100	-		1	RAILING	**155**
010	1036241-0000	-		13	WASHER	
020	1038850-0000	-		1	ANGLE BRACKET	
030	1040856-0000	-		2	SPACER	
050	1129637-0000	-		1	COVER PLATE	
060	1129638-0000	-		2	WASHER	
070	1129641-0000	-		1	SILICON RUBBER PROFILE	
100	1347695-0000	-		1	FRAME	
110	1347696-0000	-		1	FRAME	
120	1347697-0000	-		1	FRAME	
130	1347867-0000	-		1	CHECKER PLATE	
140	1347868-0000	-		1	CHECKER PLATE	
150	1347869-0000	-		1	BRACKET	
160	1347870-0000	-		1	BRACKET	
200	312105-0362	-		2	SCREW M6S ISO 4017 M6x8 A280	
210	312105-0451	-		3	SCREW M6S ISO 4017 8x20 A280	
220	312105-0453	-		2	SCREW M6S ISO 4017 M8x25 A280	
230	312105-0462	-		1	SCREW M6S ISO 4014 M8x55 A280	
240	312105-0513	-		2	SCREW M6S ISO 4014 M10X110 A280	
250	312105-0536	-		4	SCREW M6S ISO 4017 M12X30 A280	
260	312105-0548	-		2	SCREW M6S ISO 4014 M12X80 A280	
280	312125-0366	-		28	SLOTTED CHEESE HEAD ISO 1207 M6X12 RFR	
300	312155-0370	-		13	SCREW MF6S DIN 7991 M6X20 A280	
320	312180-0534	-		2	REAMED BOLT	
340	312605-0318	-		3	NUT,HEXAGON,M8 RFR	
350	315105-0165	-		3	WASHER,PLAIN ROUND 8,4x16 Stainless	
360	315105-0178	-		6	WASHER,PLAIN ROUND 13x24	
370	315115-0165	-		6	WASHER TBRB 8,4x16 Stainless	
380	315115-0173	-		8	WASHER TBRB 10,5x22 Stainless	
400	352113-0204	-		28	ANCHOR TM3S25-M	
420	353243-0001	-		1	GLAND,HOSE,EXTENDED,WITHOUT INSERT PG9	
440	353249-0008	-		1	GLAND,INSERT,SINGLE HOLE,EXTEND.4-6,5	
460	90099-0104	-		1	NUT PR 15,2 (PG9)	
480	90153-0023	-		1	ADHESIVE	
500	90287-0349	-		6	Screw	

Pos	Part No	SP	UN	Qty	Description	Page No

LADDER

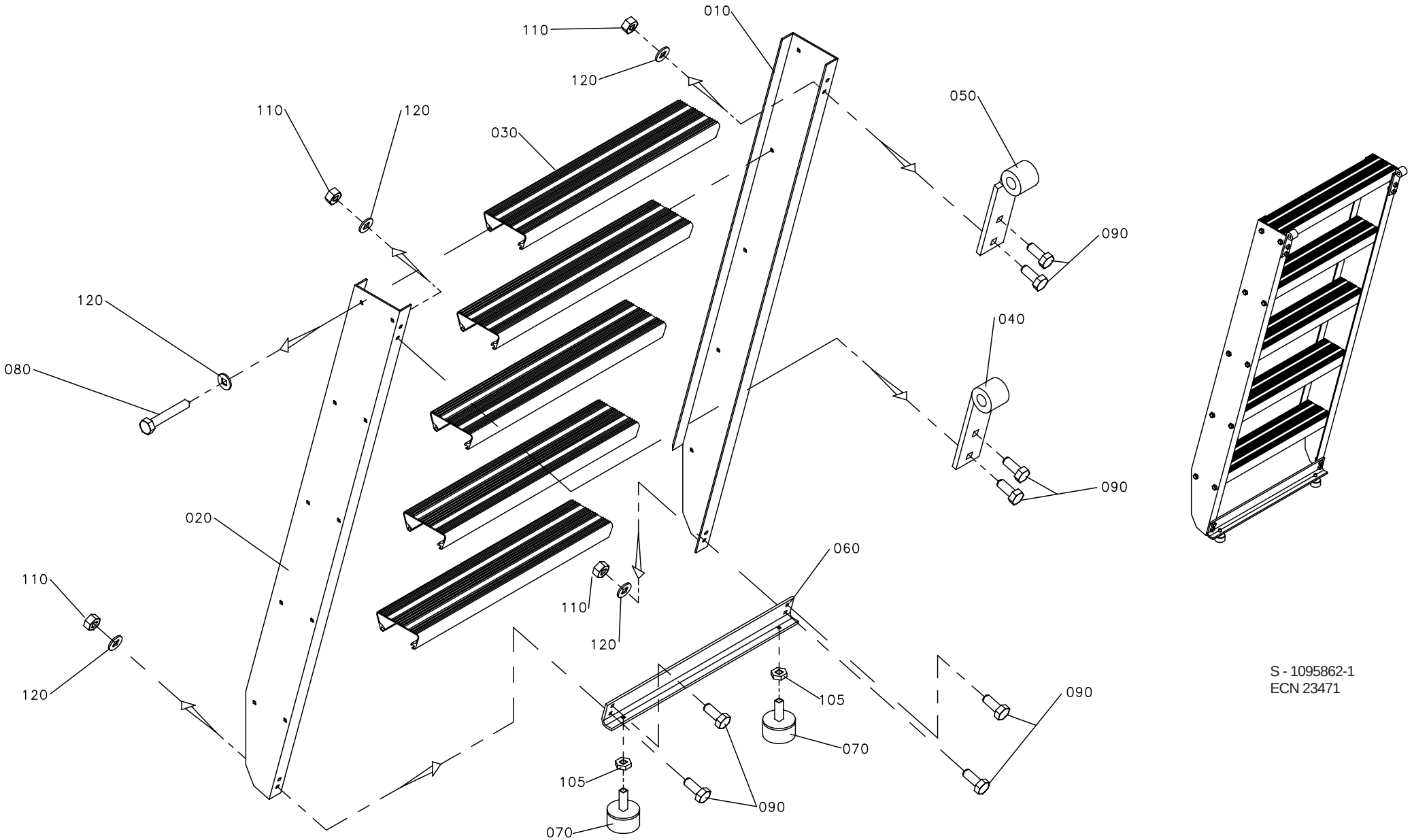

S - 1095862-1
ECN 23471

Pos	Part No	SP	UN	Qty	Description	Page No
Common parts						
010	1036939-0000	-		1	SIDE PIECE	
020	1036940-0000	-		1	SIDE PIECE	
030	1129643-0000	-		5	STAIR	
040	1036963-0000	-		1	HOOK HOLDER	
050	1036965-0000	-		1	HOOK HOLDER	
060	1129644-0000	-		2	BRACKET	
070	90347-0004	-		2	VIBRATION DAMPER D=30 Th=M8 H=17 H2=21mm	
080	312104-0461	-		20	SCREW M6S8X50H8.8 FZB	
090	312105-0451	-		8	SCREW M6S ISO 4017 8x20 A280	
105	312625-0318	-		2	NUTS,HEXAGON,M8	
110	312605-0318	-		8	NUT,HEXAGON,M8 RFR	
120	315101-0165	-		28	WASHER BRB 8,4x16 FZB	

Pos	Part No	SP	UN	Qty	Description	Page No

BENDING ROLLER

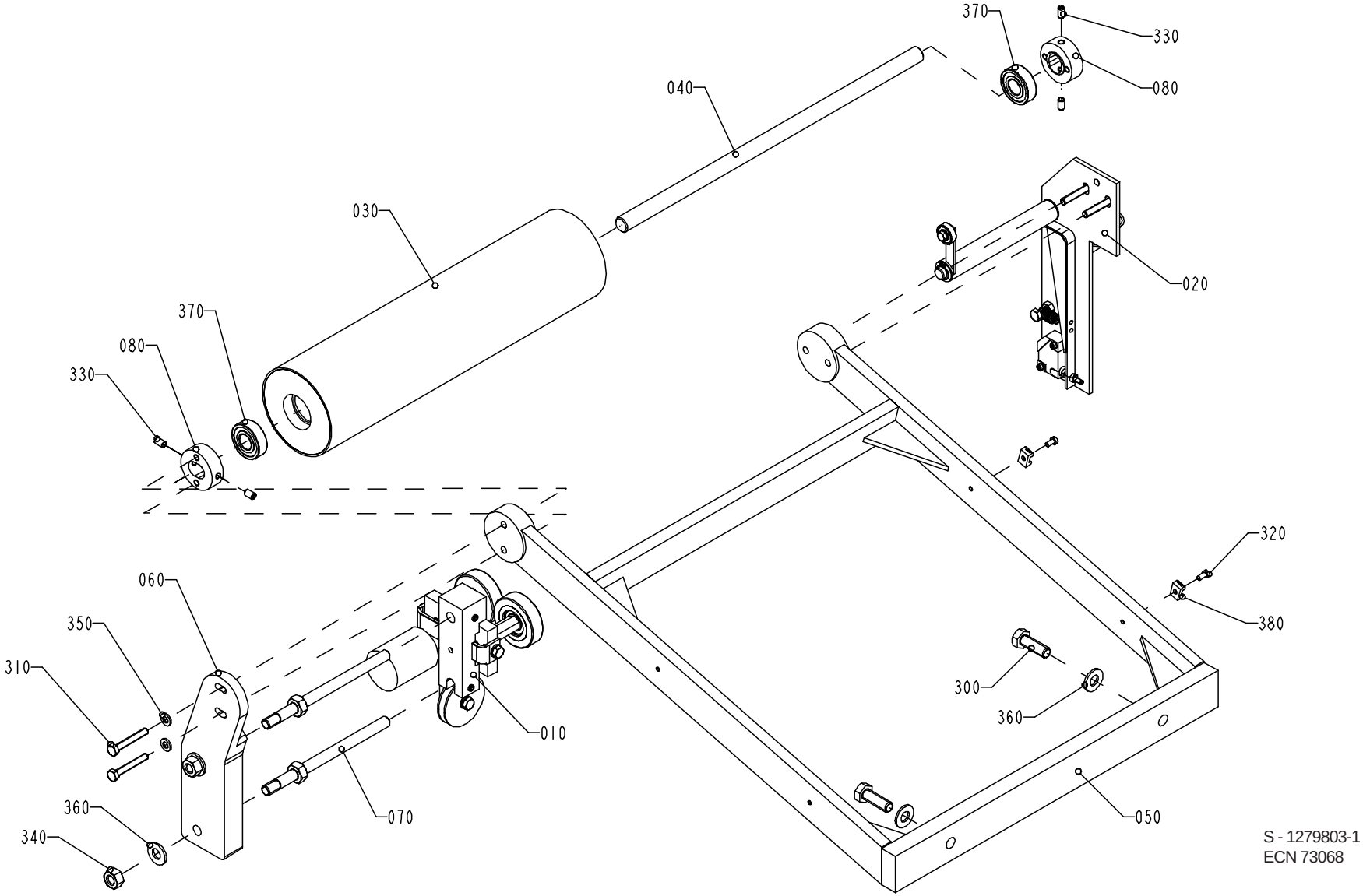

S - 1279803-1
ECN 73068

Pos	Part No	SP	UN	Qty	Description	Page No
Common parts						
010	A1498624-0100	-		1	WEB GUIDE	**151**
020	A1095806-0100	-		1	SPLICE DETECTOR	**153**
030	1035882-0000	D		1	BENDING ROLLER	
040	1036130-0000	D		1	SHAFT	
050	1296407-0000	-		1	BRACKET	
060	1260960-0000	-		1	HOLDER	
070	1279603-0000	-		2	SHAFT	
080	1487827-0000	-		2	SPACER DISC	
300	312105-0495	-		2	SCREW M6S ISO 4017 M10X30 A280	
310	312109-0378	-		2	SCREW M6S ISO 4017 M6X40 A280	
320	312125-0287	-		2	SLOTTED CHEESE HEAD ISO 1207 M4X8 RFR	
330	312318-0364	-		4	STOP SCREW SK6SS6X10RFR	
340	312605-0320	-		2	NUT,HEXAGON,M10 A280	
350	315105-0153	-		2	WASHER,PLAIN ROUND 6,4x12 Stainless	
360	315105-0173	-		4	WASHER,PLAIN ROUND 10,5x22 STAINLESS	
370	321313-0102	J		2	BALL BEARING 15x35x11	
380	352113-0205	-		2	ANCHOR TM2S8-C100	

Pos	Part No	SP	UN	Qty	Description	Page No

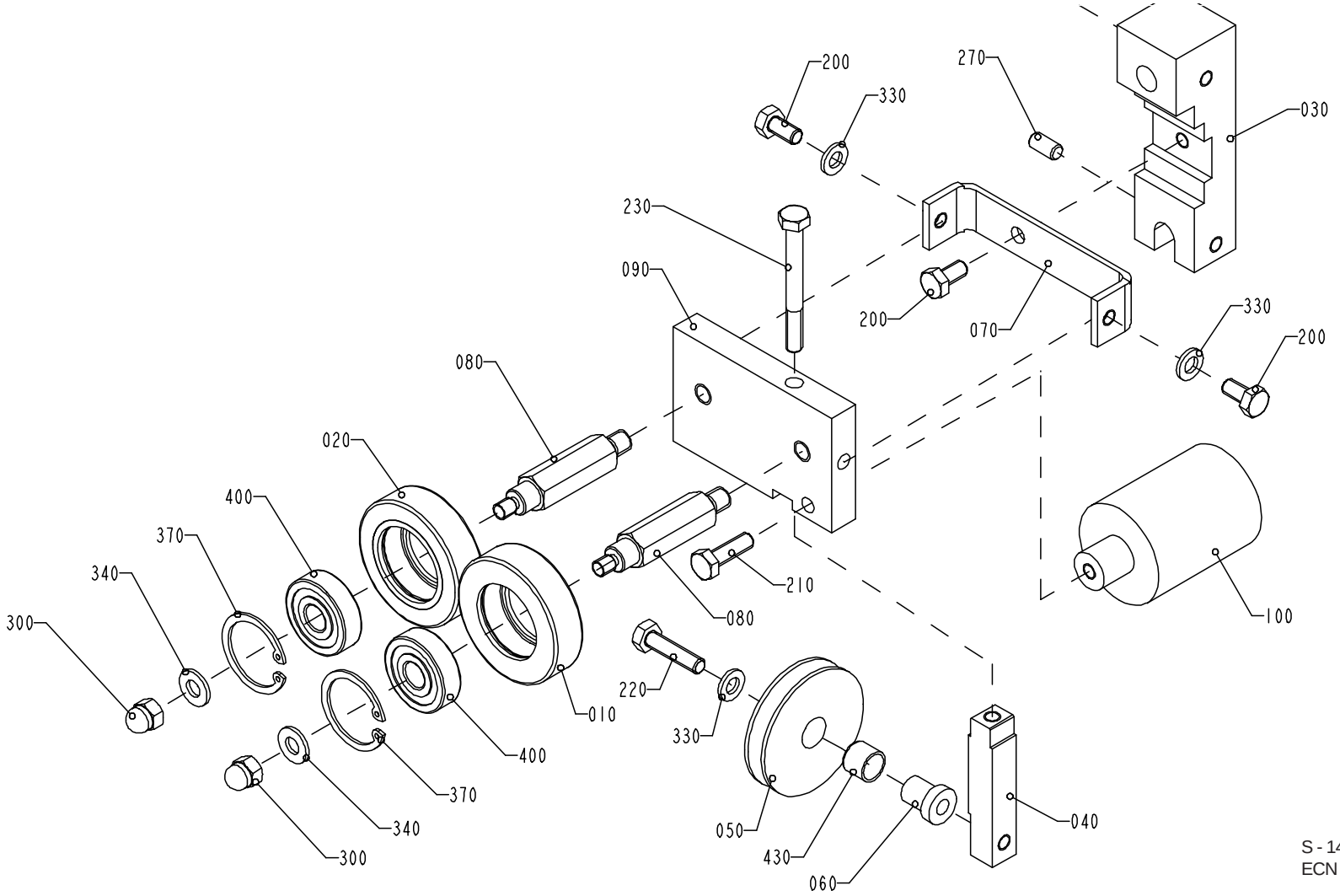

S - 1498624-1
ECN 73068

Pos	Part No	SP	UN	Qty	Description	Page No
Common parts						
010	1036622-0000	M		1	GUIDE ROLLER	
020	1036623-0000	M		1	GUIDE ROLLER	
030	1511002-0000	-		1	HOLDER	
040	1499024-0000	-		1	BAR	
050	1499025-0000	K		1	ROLLER	
060	1499026-0000	-		1	SHAFT	
070	1499027-0000	-		1	BRACKET	
080	1511001-0000	-		2	SHAFT	
090	1511000-0000	-		1	PLATE	
100	1511003-0000	-		1	WEIGHT	
200	312105-0366	-		3	SCREW M6S ISO 4017 M6x12 A280	
210	312105-0370	-		1	SCREW M6S ISO 4017 M6x20 A280	
220	312105-0372	-		1	SCREW M6S ISO 4017 M6x25 A280	
230	312105-0381	-		1	SCREW M6S ISO 4014 M6x55 A280	
270	312318-0366	-		2	SET SCREW CUP POINT ISO 4029 M6x12 RFR	
300	312705-0316	-		2	NUT,DOMED CAP,HEXAGON,M6	
330	315105-0153	-		3	WASHER,PLAIN ROUND 6,4x12 Stainless	
340	315105-0156	-		2	WASHER BRB 6,7x14 RFR	
370	315753-0122	-		2	RETAINING RING FOR HOLE 30	
400	321313-0100	K		2	BALL BEARING 10x30x9	
430	90240-0287	K		1	BUSHING	

Pos	Part No	SP	UN	Qty	Description	Page No

SPLICE DETECTOR

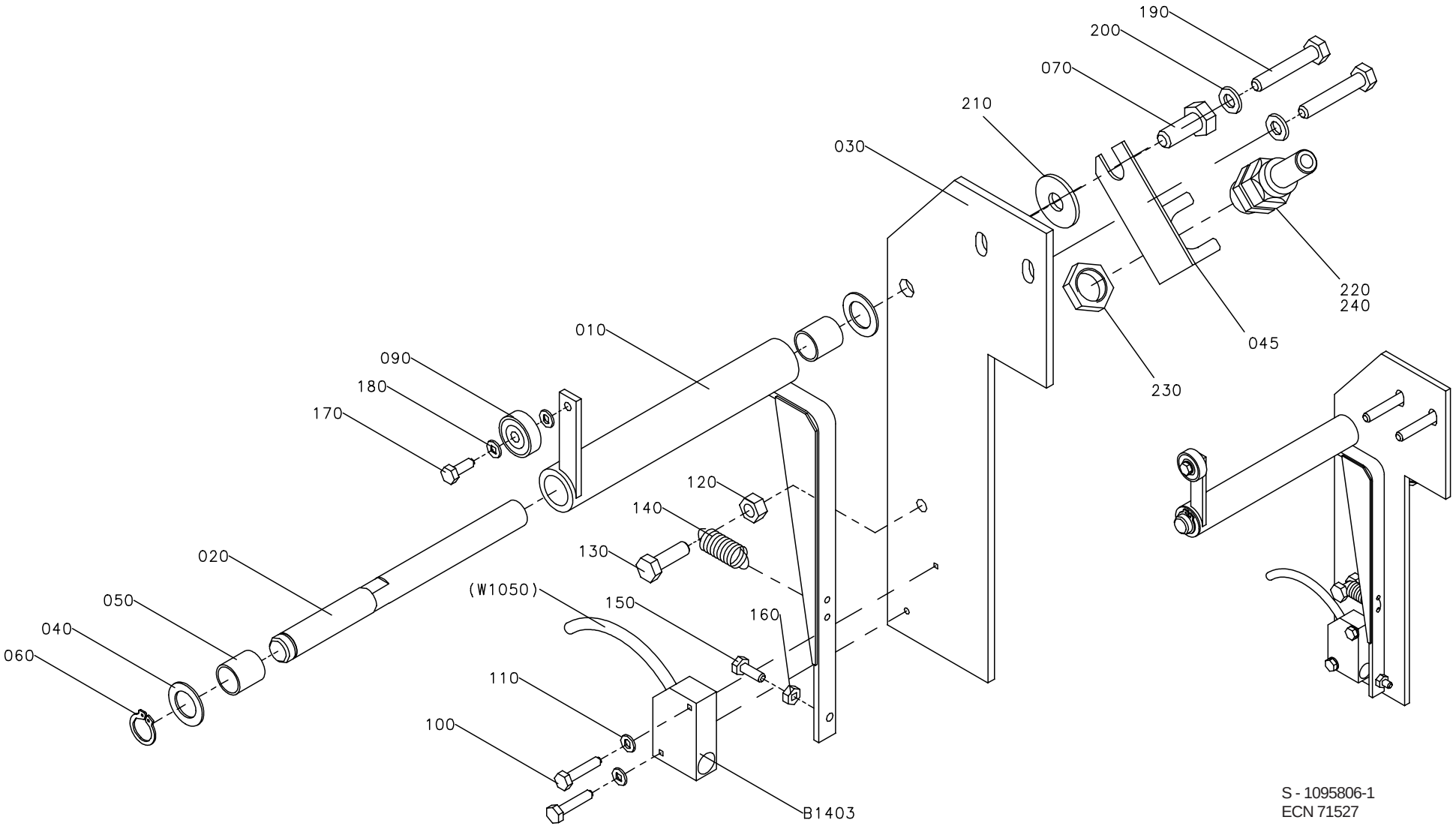

S - 1095806-1
ECN 71527

Pos	Part No	SP	UN	Qty	Description	Page No
Common parts						
010	1035898-0000	-		1	BRACKET	
020	1035897-0000	-		1	SHAFT	
030	1038095-0000	-		1	HOLDER	
040	266737-0000	-		2	WASHER	
045	1036610-0000	-		1	BRACKET	
050	321120-0111	-		2	Bushing, 12x14x15	
060	315751-0109	-		1	RETAINING RINGS FOR SHAFT 12	
070	312105-0451	-		1	SCREW M6S ISO 4017 8x20 A280	
090	90214-0138	M		1	BEARINGS,BALL BEARING,STAINLESS	
100	312115-0228	-		2	SCREW MC6S ISO 4762 M3X16 A280	
110	315105-0124	-		2	WASHER,PLAIN ROUND 3,2x6	
120	312605-0316	-		1	NUT,HEXAGON A280 M6M6	
130	312105-0370	-		1	SCREW M6S ISO 4017 M6x20 A280	
140	90335-0089	R		1	SPRING	
150	312105-0295	-		1	SCREW M6S ISO 4017 M4X20 A280	
160	312605-0312	-		1	NUT,HEXAGON,M4 RFR	
170	312105-0328	-		1	SCREW M6S5X14 A2 80	
180	315105-0146	-		2	WASHER,PLAIN ROUND 5,3x10 Stainless	
190	312105-0376	-		2	SCREW M6S ISO 4017 M6x35 A280	
200	315105-0153	-		2	WASHER,PLAIN ROUND 6,4x12 Stainless	
210	90005-0116	-		1	WASHER,Plain Round 8,4x24; H=2 M8	
220	353243-0001	-		1	GLAND,HOSE,EXTENDED,WITHOUT INSERT PG9	
230	90099-0104	-		1	NUT PR 15,2 (PG9)	
240	353249-0008	-		1	GLAND,INSERT,SINGLE HOLE,EXTEND.4-6,5	
B1403	90044-0104	R		1	PROX.SWITCH IFM IN 3002 48Vdc	

Pos	Part No	SP	UN	Qty	Description	Page No

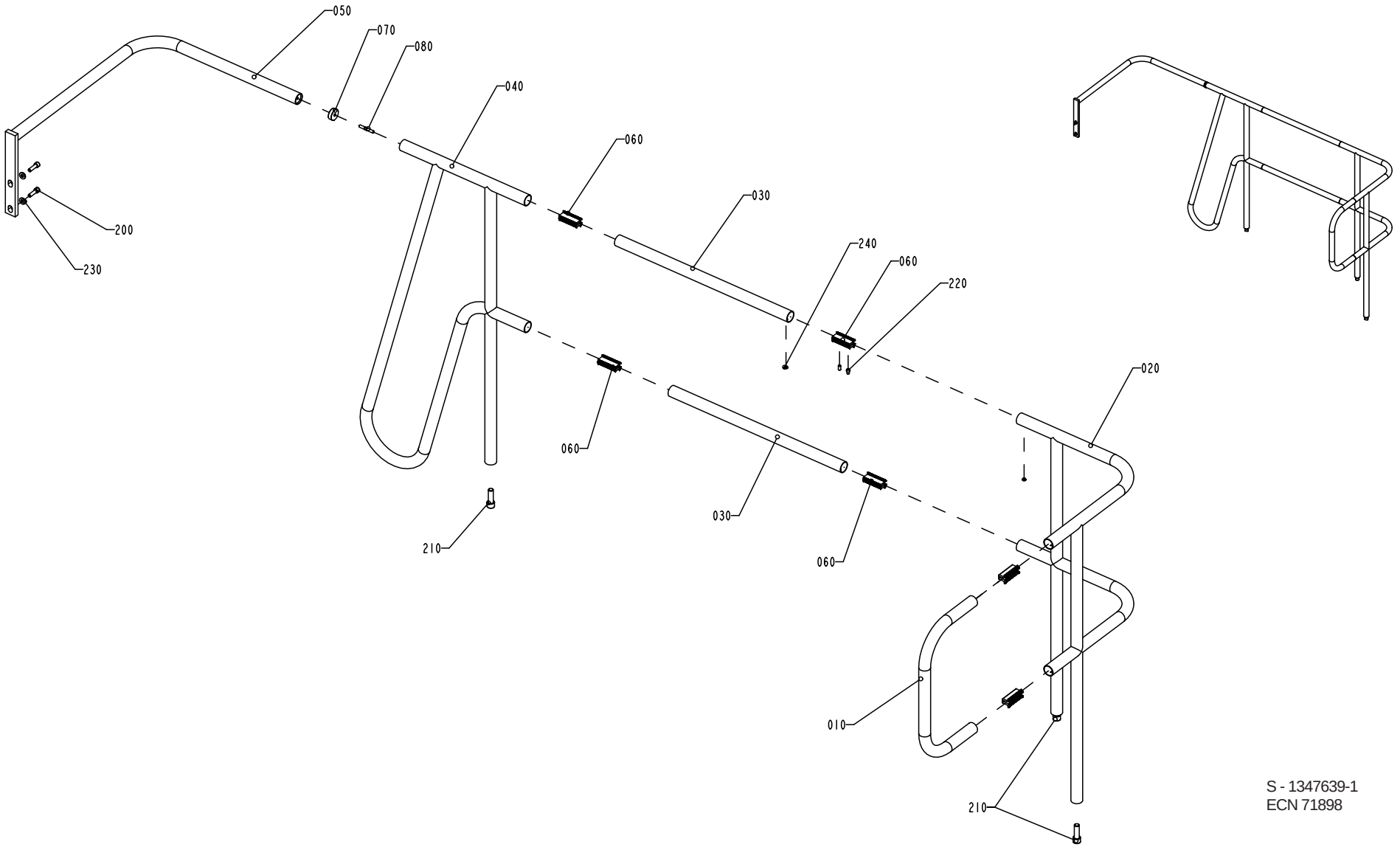

S - 1347639-1
ECN 71898

Pos	Part No	SP	UN	Qty	Description	Page No
Common parts						
010	1347641-0000	-		1	RAILING	
020	B1010822-0000	-		1	RAILING	
030	1037044-0000	-		2	RAILING	
040	1129741-0000	-		1	RAILING	
050	1347640-0000	-		1	RAILING	
060	B1035654-0000	-		6	CONNECTION	
070	578640-0000	-		1	CLAMPING RING	
080	751485-0000	-		1	SCREW	
200	312115-0497	-		2	SCREW MC6S ISO 4762 M10X35 A280	
210	312115-0630	-		3	SCREW MC6S ISO 4762 M16X50 A280	
220	312318-0449	-		12	SET SCREW COP POINT ISO 4029 M8X16 RFR	
230	315115-0173	-		2	WASHER TBRB 10,5x22 Stainless	
240	90261-0068	-		12	PLASTIC PLUG	

Pos	Part No	SP	UN	Qty	Description	Page No

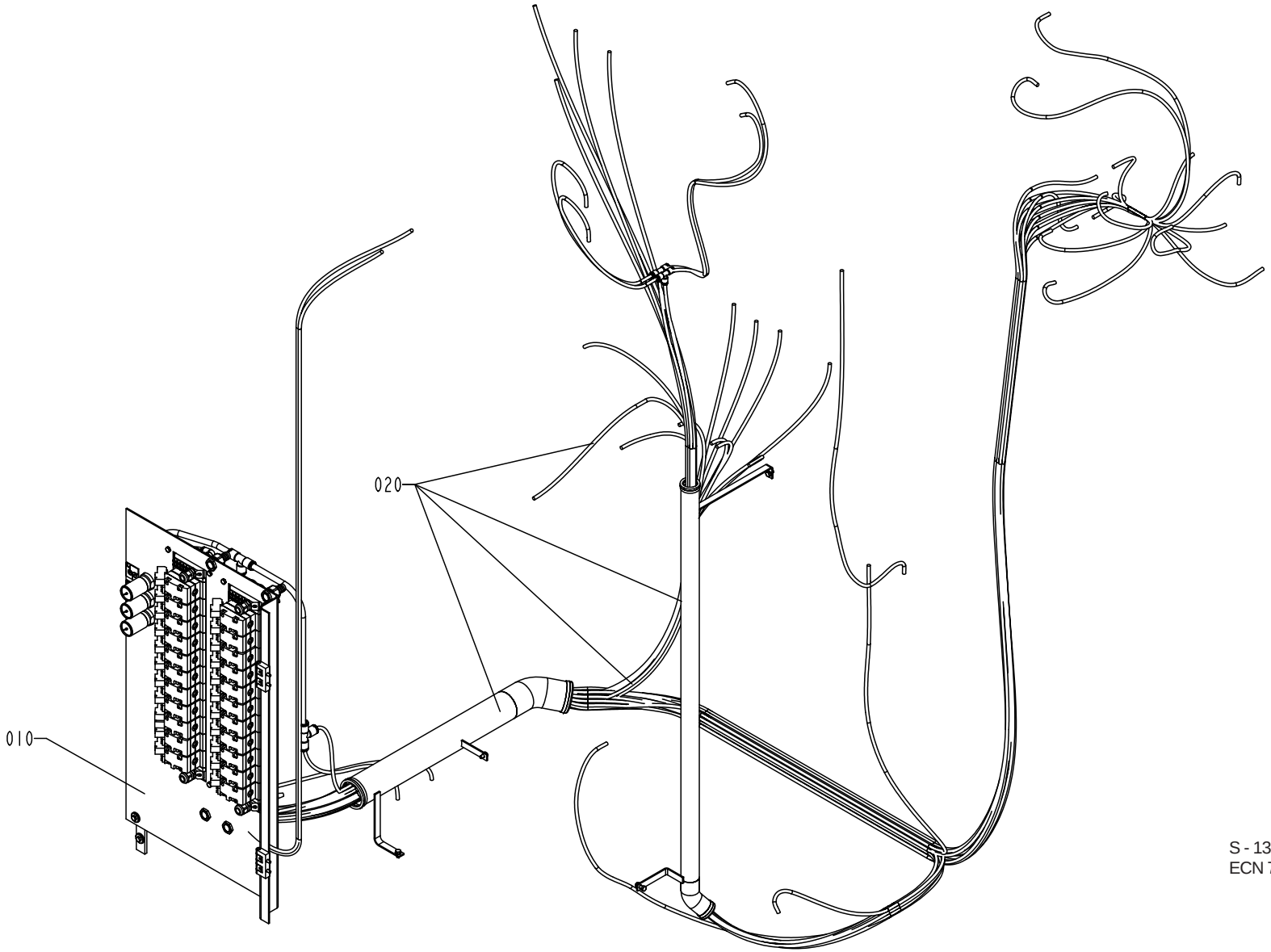

S - 1347547-1
ECN 71899

Pos	Part No	SP	UN	Qty	Description	Page No
Common parts						
010	A1347548-0100	-		1	VALVE PANEL SUPERSTRUCT.	**159**
020	A1347551-0100	-		1	HOSE INSTALLATION	**165**

Pos	Part No	SP	UN	Qty	Description	Page No

VALVE PANEL SUPERSTRUCT.

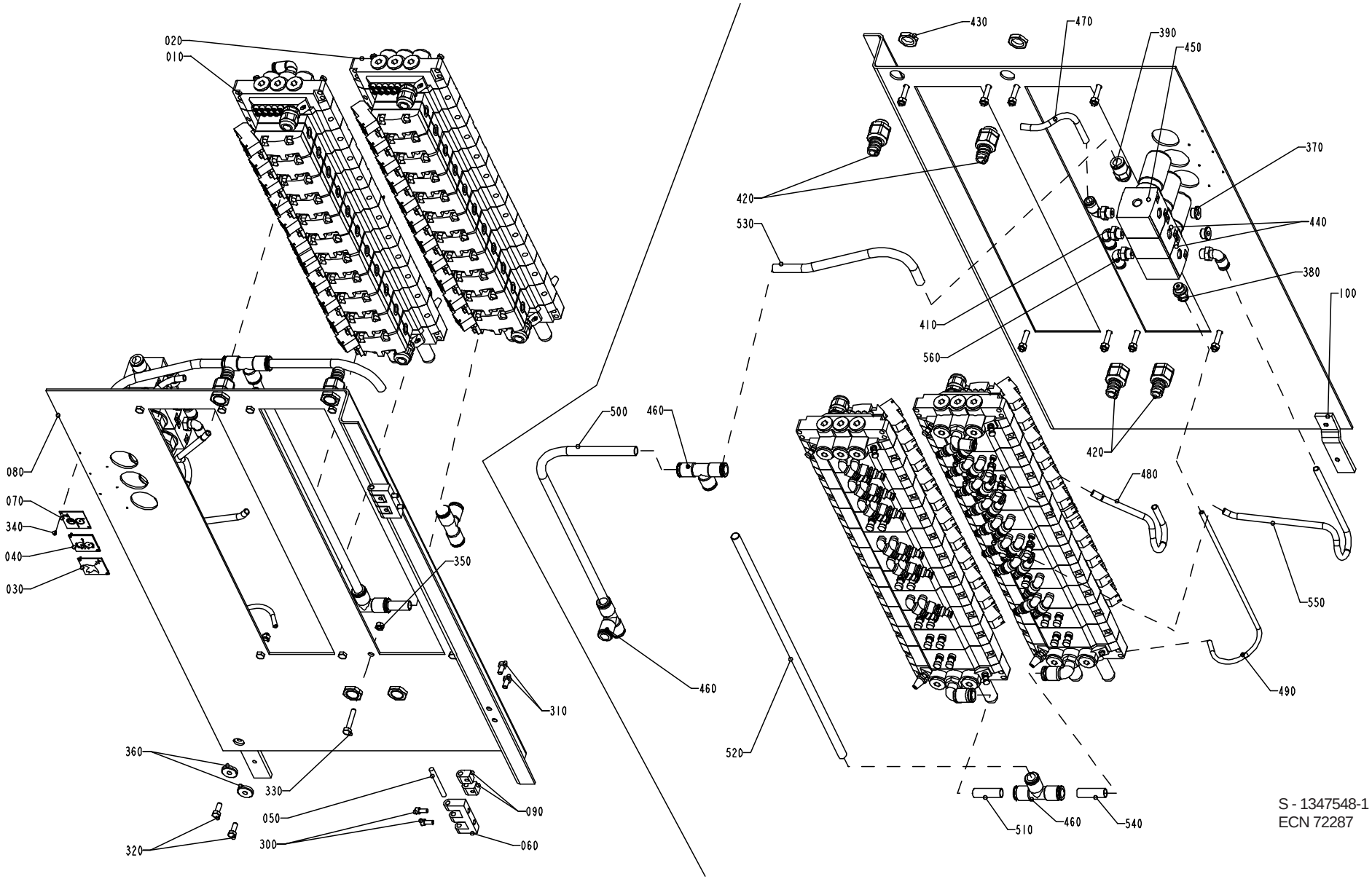

S - 1347548-1
ECN 72287

Pos	Part No	SP	UN	Qty	Description	Page No
Common parts						
010	A1347549-0100	-		1	VALVE RAMP SUPERSTRUCT.	**161**
020	A1347550-0100	-		1	VALVE RAMP SUPERSTRUCT.	**163**
030	273450-0000	-		1	SIGN	
040	273452-0000	-		1	SIGN	
050	988685-0000	-		2	PIN	
060	1035792-0000	-		2	E-HINGE	
070	1041937-0000	-		1	SIGN	
080	1347584-0000	-		1	PLATE	
090	1129770-0000	-		4	BLOCKING PIECE	
100	1140380-0000	-		1	BRACKET	
110	1347585-0000	-		1	DIAGRAM	
300	312115-0327	-		4	SCREW MC6S ISO 4762 M5X12 A280	
310	312105-0366	-		4	SCREW M6S ISO 4017 M6x12 A280	
320	312105-0368	-		2	SCREW M6S ISO 4017 M6x16 A280	
330	312109-0376	-		8	SCREW M6S ISO 4017 M6X35 A280	
340	312502-0120	-		6	DRIVE SCREW ROUND HEAD SMS 1549 KDS 0X5	
350	312605-0316	-		8	NUT,HEXAGON A280 M6M6	
360	315125-0153	-		2	WASHERS,PLAIN ROUND,CHAMFERED 6,4X22X4	
370	342713-0210	-		2	PLUG,EXT.THREAD,HEXAGON SOCKET 1/4"Brass	
380	342722-0203	-		1	STRAIGHT COUPLING	
390	342722-0209	-		1	STRAIGHT COUPLING D=12-R1/4"	
410	342732-0104	-		3	ELBOW PIPE JOINT	
420	353243-0003	-		4	GLAND,HOSE,EXTENDED WITHOUT INSERT PG11	
430	90099-0117	-		4	NUT PR 18,6 (PG11)	
440	90113-0095	D		2	PRESSURE REGULATOR	
450	90113-0096	D		1	PRESSURE REGULATOR	
460	342748-0109	-		3	T-CONNECTION	
470	90166-0013	-	MM	150	TUBE 8/6 PA Blue	
480	90166-0013	-	MM	250	TUBE 8/6 PA Blue	
490	90166-0081	-	MM	490	TUBE 6/4 PA Blue	
500	90166-0153	-	MM	500	TUBE 12 mm PA Black	
510	90166-0153	-	MM	40	TUBE 12 mm PA Black	
520	90166-0153	-	MM	500	TUBE 12 mm PA Black	
530	90166-0153	-	MM	250	TUBE 12 mm PA Black	
540	90166-0153	-	MM	40	TUBE 12 mm PA Black	
550	90166-0013	-	MM	300	TUBE 8/6 PA Blue	
560	342732-0103	-		1	ELBOW PIPE JOINT	

Pos	Part No	SP	UN	Qty	Description	Page No

VALVE RAMP SUPERSTRUCT.

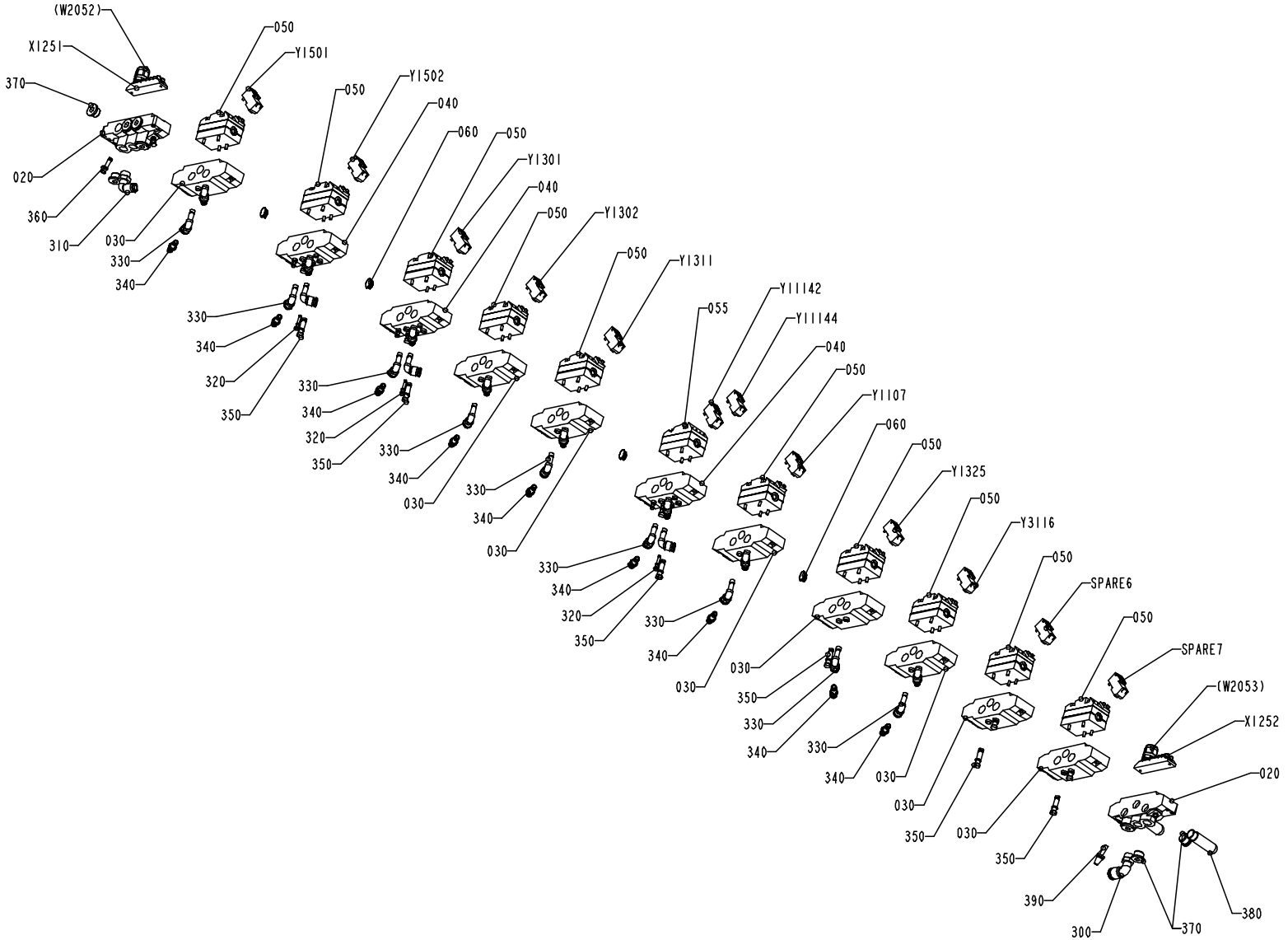

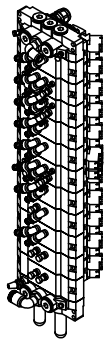

S - 1347549-1
ECN 72287

Pos	Part No	SP	UN	Qty	Description	Page No
Common parts						
020	90042-0522	-		2	END PIECE MECMAN 07931 080 01	
030	90042-0532	-		8	PNEUMATIC,VALVES,PLATE MECMAN	
040	90042-0520	-		3	BASE PLATE MECMAN	
050	90042-0215	-		10	SOLENOID VALVE 07931 067 18 ISO 1	
055	90042-0230	-		1	PNEUMATIC,VALVE	
060	90042-0528	-		4	SEAL KIT MECMAN	
300	342732-0110	-		1	ELBOW PIPE JOINT	
310	342732-0105	-		1	ELBOW PIPE D8-R3/8"	
320	342715-0100	-		6	PLUG	
330	90055-0118	-		20	ELBOW PIPE JOINT -8mm	
340	342716-0203	-		17	REDUCER 6-8	
350	342715-0103	-		11	BLIND PLUG	
360	342715-0102	-		2	PLUG	
370	342713-0211	-		8	PLUG,EXT.G-THREAD,HEXAGON SOCKET G3/8"	
380	90328-0024	-		2	SILENCER	
390	90328-0017	-		1	SILENCER	
SPARE6	90042-0538	-		1	COIL MECMAN series 590 L=500mm	
SPARE7	90042-0538	-		1	COIL MECMAN series 590 L=500mm	
X1251	90042-0535	-		1	CONNECTION BOARD MECMAN	
X1252	90042-0535	-		1	CONNECTION BOARD MECMAN	
Y1107	90042-0538	-		1	COIL MECMAN series 590 L=500mm	
Y11142	90042-0538	-		1	COIL MECMAN series 590 L=500mm	
Y11144	90042-0538	-		1	COIL MECMAN series 590 L=500mm	
Y1301	90042-0538	-		1	COIL MECMAN series 590 L=500mm	
Y1302	90042-0538	-		1	COIL MECMAN series 590 L=500mm	
Y1311	90042-0538	-		1	COIL MECMAN series 590 L=500mm	
Y1325	90042-0538	-		1	COIL MECMAN series 590 L=500mm	
Y1501	90042-0538	-		1	COIL MECMAN series 590 L=500mm	
Y1502	90042-0538	-		1	COIL MECMAN series 590 L=500mm	
Y3116	90042-0538	-		1	COIL MECMAN series 590 L=500mm	

Pos	Part No	SP	UN	Qty	Description	Page No

VALVE RAMP SUPERSTRUCT.

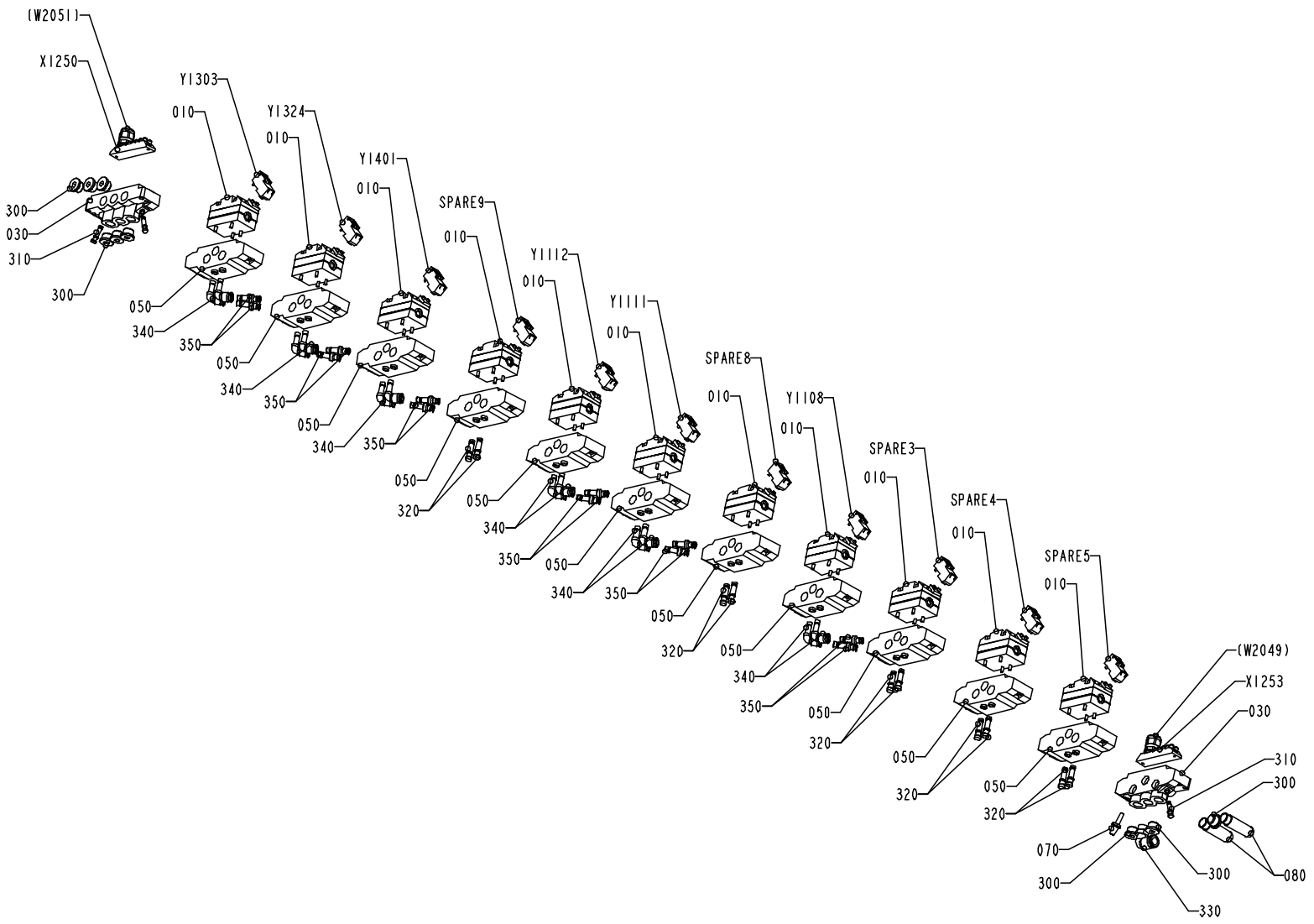

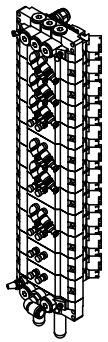

S - 1347550-1
ECN 72287

Pos	Part No	SP	UN	Qty	Description	Page No
Common parts						
010	90042-0215	-		11	SOLENOID VALVE 07931 067 18 ISO 1	
030	90042-0522	-		2	END PIECE MECMAN 07931 080 01	
050	90042-0532	-		11	PNEUMATIC,VALVES,PLATE MECMAN	
070	90328-0017	-		1	SILENCER	
080	90328-0024	-		2	SILENCER	
300	342713-0211	-		9	PLUG,EXT.G-THREAD,HEXAGON SOCKET G3/8"	
310	342715-0102	-		3	PLUG	
320	342715-0103	-		10	BLIND PLUG	
330	342732-0110	-		1	ELBOW PIPE JOINT	
340	90055-0118	-		12	ELBOW PIPE JOINT -8mm	
350	342716-0203	-		12	REDUCER 6-8	
SPARE3	90042-0538	-		1	COIL MECMAN series 590 L=500mm	
SPARE4	90042-0538	-		1	COIL MECMAN series 590 L=500mm	
SPARE5	90042-0538	-		1	COIL MECMAN series 590 L=500mm	
SPARE8	90042-0538	-		1	COIL MECMAN series 590 L=500mm	
SPARE9	90042-0538	-		1	COIL MECMAN series 590 L=500mm	
X1250	90042-0535	-		1	CONNECTION BOARD MECMAN	
X1253	90042-0535	-		1	CONNECTION BOARD MECMAN	
Y1108	90042-0538	-		1	COIL MECMAN series 590 L=500mm	
Y1111	90042-0538	-		1	COIL MECMAN series 590 L=500mm	
Y1112	90042-0538	-		1	COIL MECMAN series 590 L=500mm	
Y1303	90042-0538	-		1	COIL MECMAN series 590 L=500mm	
Y1324	90042-0538	-		1	COIL MECMAN series 590 L=500mm	
Y1401	90042-0538	-		1	COIL MECMAN series 590 L=500mm	

Pos	Part No	SP	UN	Qty	Description	Page No

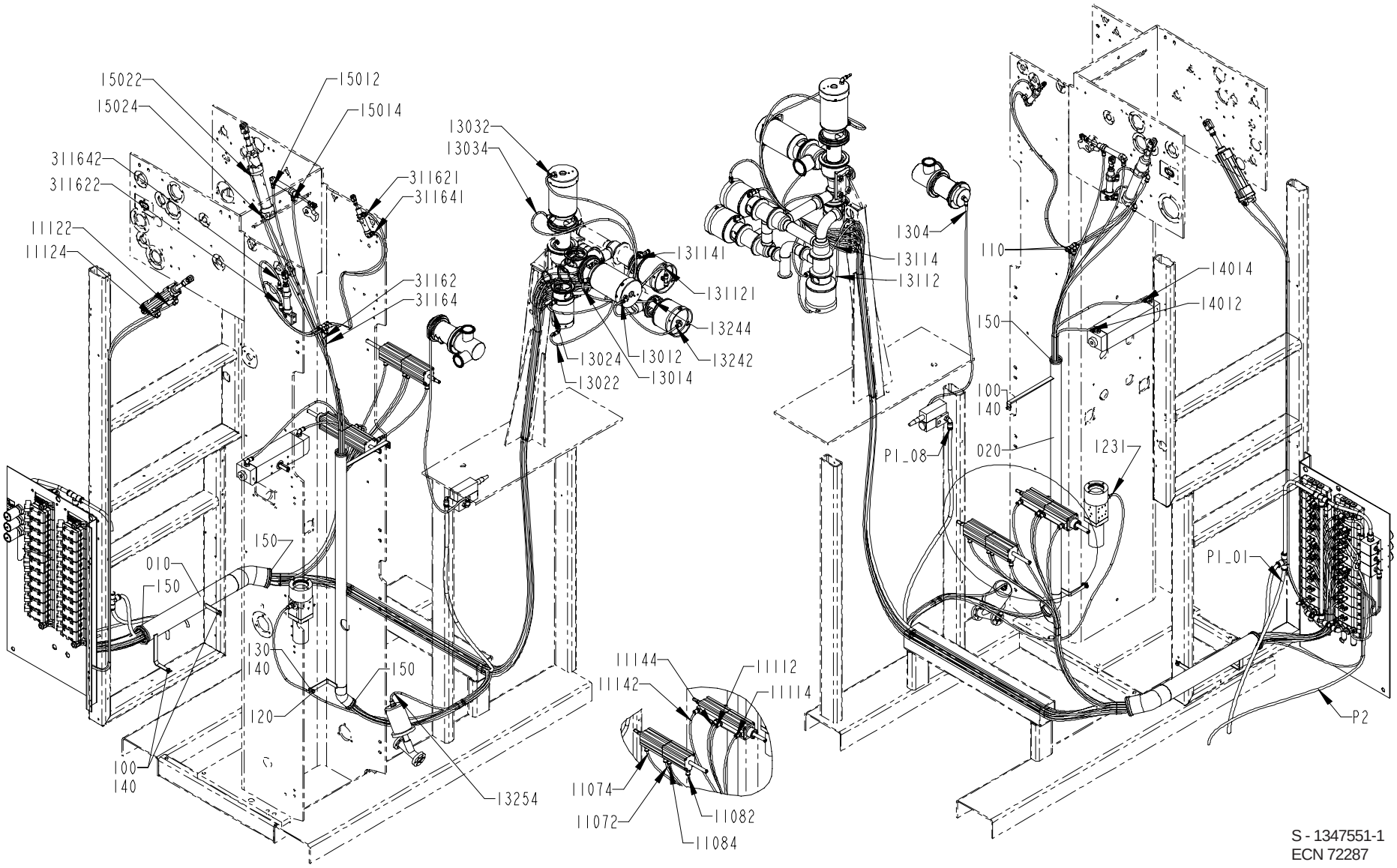

S - 1347551-1
ECN 72287

Pos	Part No	SP	UN	Qty	Description	Page No
Common parts						
010	1348939-0000	-		1	PIPE	
020	1348940-0000	-		1	PIPE	
100	312105-0366	-		3	SCREW M6S ISO 4017 M6x12 A280	
110	342748-0102	-		2	T-CONNECTION	
120	312105-0370	-		1	SCREW M6S ISO 4017 M6x20 A280	
130	312605-0316	-		1	NUT,HEXAGON A280 M6M6	
140	315105-0153	-		4	WASHER,PLAIN ROUND 6,4x12 Stainless	
150	90143-0059	-	MM	700	SEAL STRIP 4610069	
11072	90166-0081	-	MM	2600	TUBE 6/4 PA Blue	
11074	90166-0081	-	MM	2600	TUBE 6/4 PA Blue	
11082	90166-0081	-	MM	2600	TUBE 6/4 PA Blue	
11084	90166-0081	-	MM	2600	TUBE 6/4 PA Blue	
11112	90166-0081	-	MM	2600	TUBE 6/4 PA Blue	
11114	90166-0081	-	MM	2600	TUBE 6/4 PA Blue	
11122	90166-0081	-	MM	2200	TUBE 6/4 PA Blue	
11124	90166-0081	-	MM	2200	TUBE 6/4 PA Blue	
11142	90166-0081	-	MM	2600	TUBE 6/4 PA Blue	
11144	90166-0081	-	MM	2600	TUBE 6/4 PA Blue	
1231	90166-0081	-	MM	2600	TUBE 6/4 PA Blue	
13012	90166-0081	-	MM	5000	TUBE 6/4 PA Blue	
13014	90166-0081	-	MM	5000	TUBE 6/4 PA Blue	
13022	90166-0081	-	MM	4900	TUBE 6/4 PA Blue	
13024	90166-0081	-	MM	4900	TUBE 6/4 PA Blue	
13032	90166-0081	-	MM	5200	TUBE 6/4 PA Blue	
13034	90166-0081	-	MM	5100	TUBE 6/4 PA Blue	
1304	90166-0081	-	MM	1300	TUBE 6/4 PA Blue	
13112	90166-0081	-	MM	4600	TUBE 6/4 PA Blue	
131121	90166-0081	-	MM	700	TUBE 6/4 PA Blue	
13114	90166-0081	-	MM	4500	TUBE 6/4 PA Blue	
131141	90166-0081	-	MM	500	TUBE 6/4 PA Blue	
13242	90166-0081	-	MM	5000	TUBE 6/4 PA Blue	
13244	90166-0081	-	MM	4900	TUBE 6/4 PA Blue	
13254	90166-0081	-	MM	3500	TUBE 6/4 PA Blue	
14012	90166-0081	-	MM	4900	TUBE 6/4 PA Blue	
14014	90166-0081	-	MM	4900	TUBE 6/4 PA Blue	
15012	90166-0081	-	MM	5600	TUBE 6/4 PA Blue	
15014	90166-0081	-	MM	5600	TUBE 6/4 PA Blue	
15022	90166-0081	-	MM	5600	TUBE 6/4 PA Blue	
15024	90166-0081	-	MM	5600	TUBE 6/4 PA Blue	
31162	90166-0081	-	MM	5300	TUBE 6/4 PA Blue	
311621	90166-0081	-	MM	250	TUBE 6/4 PA Blue	
311622	90166-0081	-	MM	250	TUBE 6/4 PA Blue	
31164	90166-0081	-	MM	5300	TUBE 6/4 PA Blue	
311641	90166-0081	-	MM	250	TUBE 6/4 PA Blue	
311642	90166-0081	-	MM	250	TUBE 6/4 PA Blue	
P1_01	90166-0068	-	MM	1000	TUBE 12 mm PA Blue	
P1_08	90166-0068	-	MM	3200	TUBE 12 mm PA Blue	
P2	90166-0013	-	MM	1200	TUBE 8/6 PA Blue	

COVERING PANEL

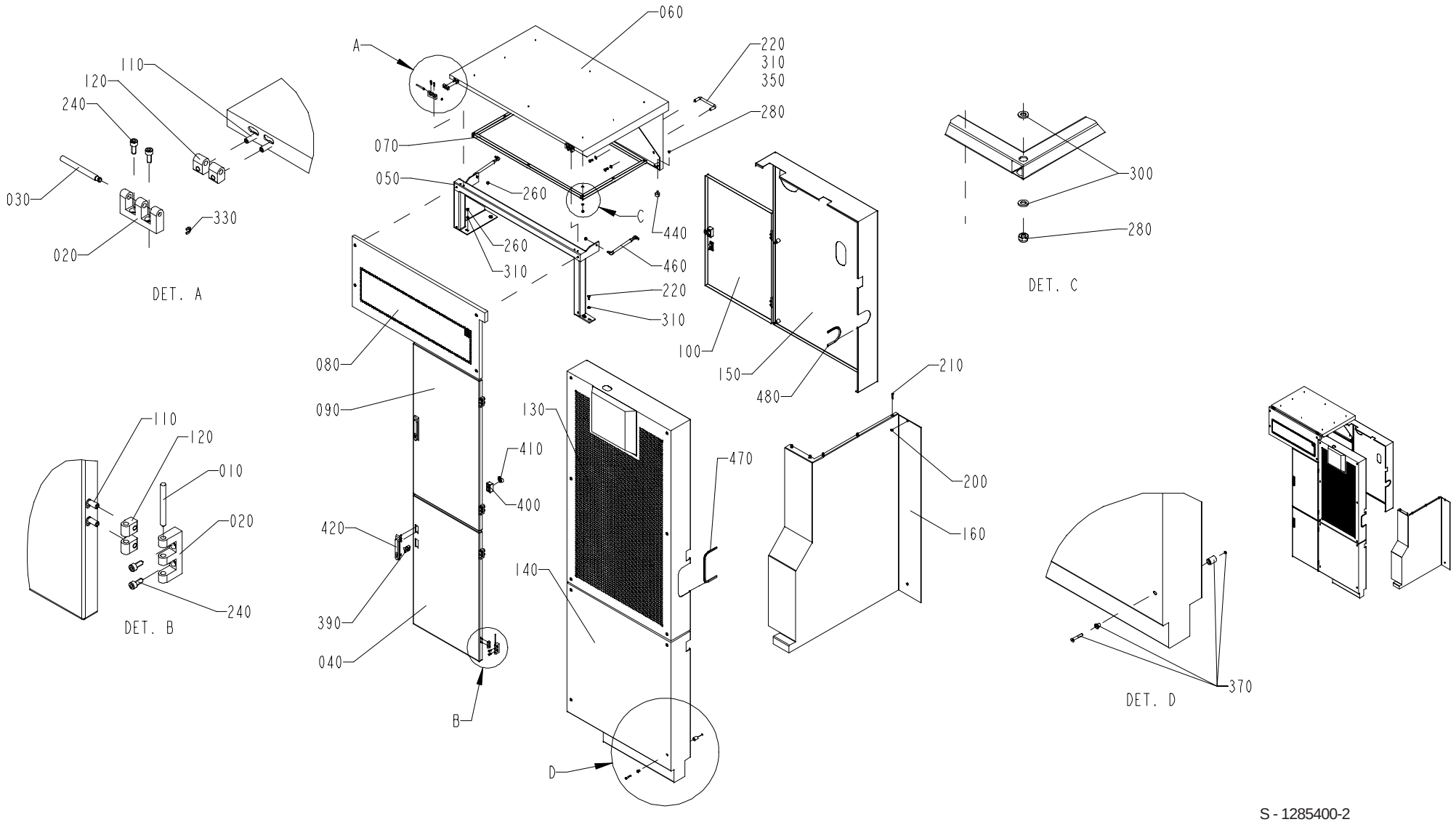

S - 1285400-2
ECN 72287

Pos	Part No	SP	UN	Qty	Description	Page No
Common parts						
010	988685-0000	-		6	PIN	
020	1035792-0000	-		8	E-HINGE	
030	1036329-0000	-		2	PIN	
040	1037497-0000	-		1	DOOR	
050	1129194-0000	-		1	FRAME	
060	1129195-0000	-		1	OPENING	
070	1129196-0000	-		1	FRAME	
080	1129197-0000	-		1	OPENING	
090	1129198-0000	-		1	DOOR	
100	1129199-0000	-		1	DOOR	
110	1129767-0000	-		16	SCREW	
120	1129770-0000	-		16	BLOCKING PIECE	
130	1285401-0000	-		1	COVERING	
140	1285402-0000	-		1	COVERING	
150	1285403-0000	-		1	COVERING	
160	1478236-0000	-		1	COVERING	
200	312105-0362	-		2	SCREW M6S ISO 4017 M6x8 A280	
210	312105-0372	-		5	SCREW M6S ISO 4017 M6x25 A280	
220	312105-0449	-		4	SCREW M6S ISO 4017 M8x16 A280	
240	312115-0327	-		16	SCREW MC6S ISO 4762 M5X12 A280	
260	312605-0318	-		4	NUT,HEXAGON,M8 RFR	
280	312812-0316	-		10	NUT,HEXAGON,LOCK,WITH NYLON INSERT,M6	
300	315105-0153	-		16	WASHER,PLAIN ROUND 6,4x12 Stainless	
310	315105-0165	-		6	WASHER,PLAIN ROUND 8,4x16 Stainless	
330	315755-0106	-		2	RETAINING RINGS,RADIAL ASSEMBLY 4	
350	90017-0016	-		1	HANDLE,STAINLESS	
370	90226-0458	R		20	MOUNTING SCREW	
390	90237-0128	-		3	LOCK CYLINDER	
400	90237-0154	-		3	LOCK HOUSING,Black PA	
410	90237-0165	-		3	LATCH	
420	90237-0175	-		3	TURNING HANDLE	
440	90347-0034	-		2	VIBRATION DAMPER	
460	90347-0127	-		2	DAMPER	
470	90143-0060	-	MM	400	EDGE STRIP 9,5x6,3mm Black PVC	
480	90143-0060	-	MM	260	EDGE STRIP 9,5x6,3mm Black PVC	

Pos	Part No	SP	UN	Qty	Description	Page No

COVERING PANEL

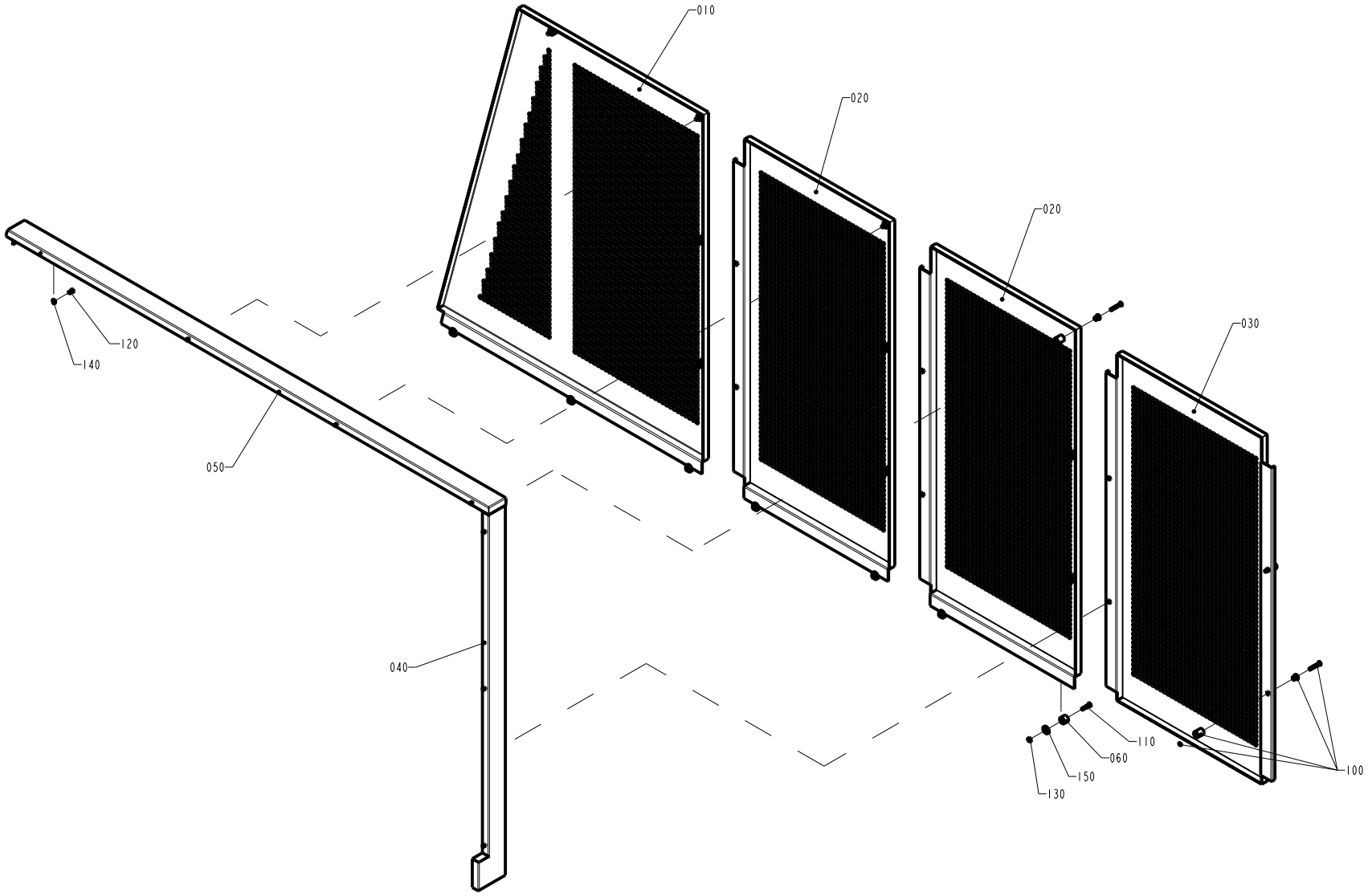

S - 1347615-1
ECN 71900

Pos	Part No	SP	UN	Qty	Description	Page No
Common parts						
010	1037502-0000	-		1	COVERING PLATE	
020	1037508-0000	-		2	COVERING PLATE	
030	1037528-0000	-		1	COVERING PLATE	
040	1347616-0000	-		1	COVERING PLATE	
050	1347617-0000	-		1	COVERING PLATE	
060	1037552-0000	-		7	SPACER	
100	90226-0458	-		12	MOUNTING SCREW	
110	312155-0374	-		7	SCREW MF6S6X30RFR	
120	312105-0366	-		7	SCREW M6S ISO 4017 M6x12 A280	
130	312605-0316	-		7	NUT,HEXAGON A280 M6M6	
140	315105-0153	-		7	WASHER,PLAIN ROUND 6,4x12 Stainless	
150	315125-0153	-		7	WASHERS,PLAIN ROUND,CHAMFERED 6,4X22X4	

Pos	Part No	SP	UN	Qty	Description	Page No

CONNECTION BOX

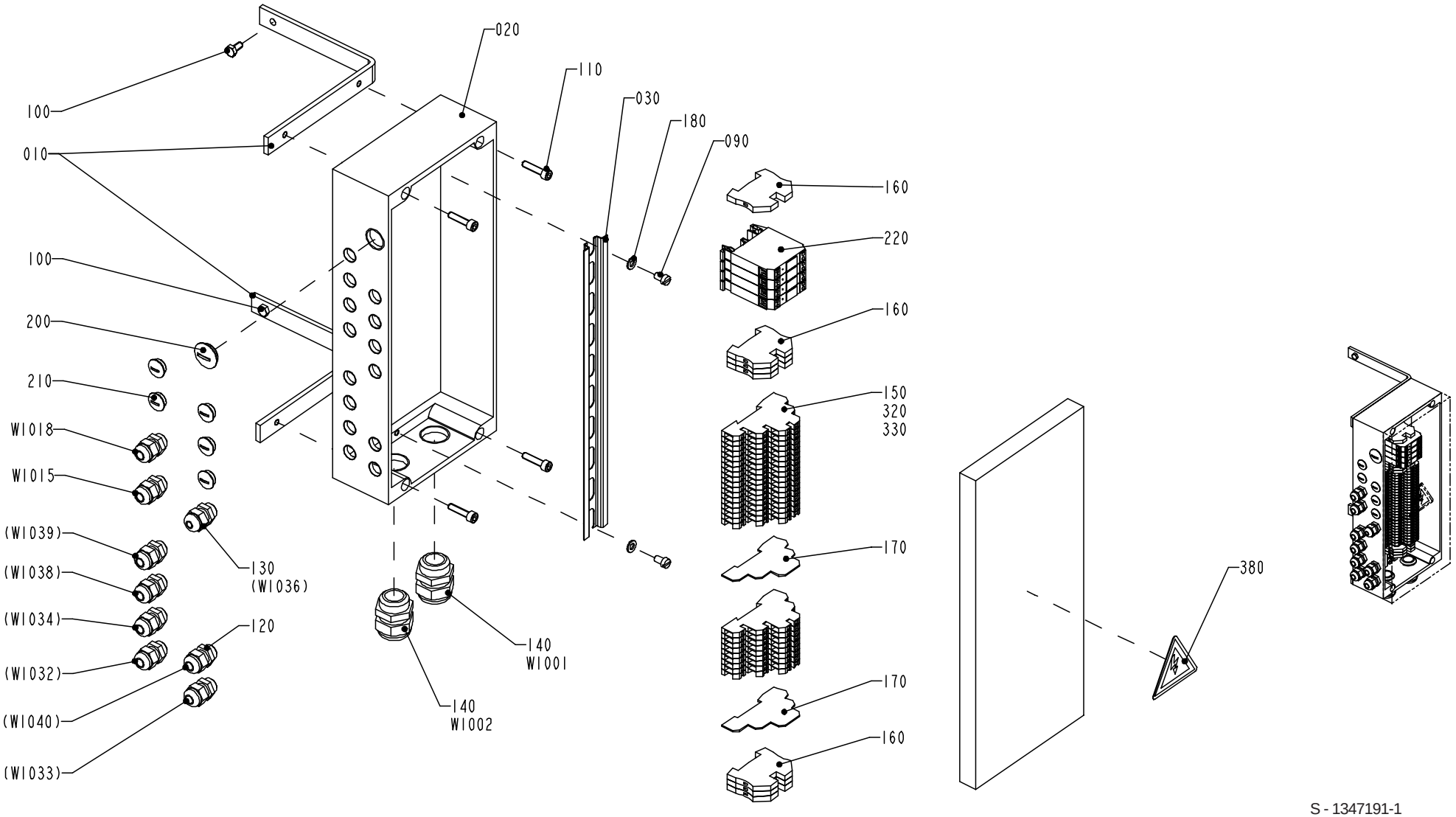

S - 1347191-1
ECN 72287

Pos	Part No	SP	UN	Qty	Description	Page No
Common parts						
010	1347877-0000	-		2	HOLDER	
020	1348943-0000	-		1	CONNECTION BOX	
030	1129422-0000	-		1	RAIL	
090	312125-0366	-		2	SLOTTED CHEESE HEAD ISO 1207 M6X12 RFR	
100	312105-0366	-		2	SCREW M6S ISO 4017 M6x12 A280	
110	312115-0372	-		4	SCREW MC6S ISO 4762 M6x25 A280	
120	352103-0101	-		8	CABLE GLAND ST 9;PR15,2/PG9	
130	352103-0100	-		1	CABLE GLAND STR 9;PR15,2	
140	352103-0116	-		2	CABLE GLAND ST 21	
150	353021-0302	-		27	TERMINAL,TRIPLE-LEVEL, DLD 2,5/35 PA	
160	353024-0205	-		7	EARTH TERMINAL WPE 4	
170	353032-0302	-		2	END PLATE WAP	
180	315105-0153	-		2	WASHER,PLAIN ROUND 6,4x12 Stainless	
200	90002-0004	-		1	BLANK-OFF PLUG 22,5	
210	90002-0013	-		5	BLANK-OFF PLUG 15,2(PG 9)	
220	90119-0063	-		4	OPTO-RELAY DC/DC AMMS-10-1	
320	353034-0404	-		6	BRIDGE CONLECK Q10	
330	353034-0401	-		4	BRIDGE CONLECK Q2	
340	359011-0823	-		2	SET OF SIGNS 6-FW 101-150	
350	359011-0832	-		2	SET OF SIGNS 6-GW (+)	
360	359011-0833	-		2	SET OF SIGNS 6-GW (-)	
370	359011-0834	-		1	SET OF SIGNS 6-GW(EARTH)	
380	90194-0016	-		1	SIGN "FLASH SIGN" 50X50MM	
W1001	351150-0425	-	MM	6000	CABLE OILFLEX 25x0,75mm2	
W1002	351150-0425	-	MM	6000	CABLE OILFLEX 25x0,75mm2	
W1015	351150-0403	-	MM	3400	CABLE OLFLEX 3x0,75 MM2	
W1018	351150-0403	-	MM	3400	CABLE OLFLEX 3x0,75 MM2	

Pos	Part No	SP	UN	Qty	Description	Page No

CONNECTION BOX

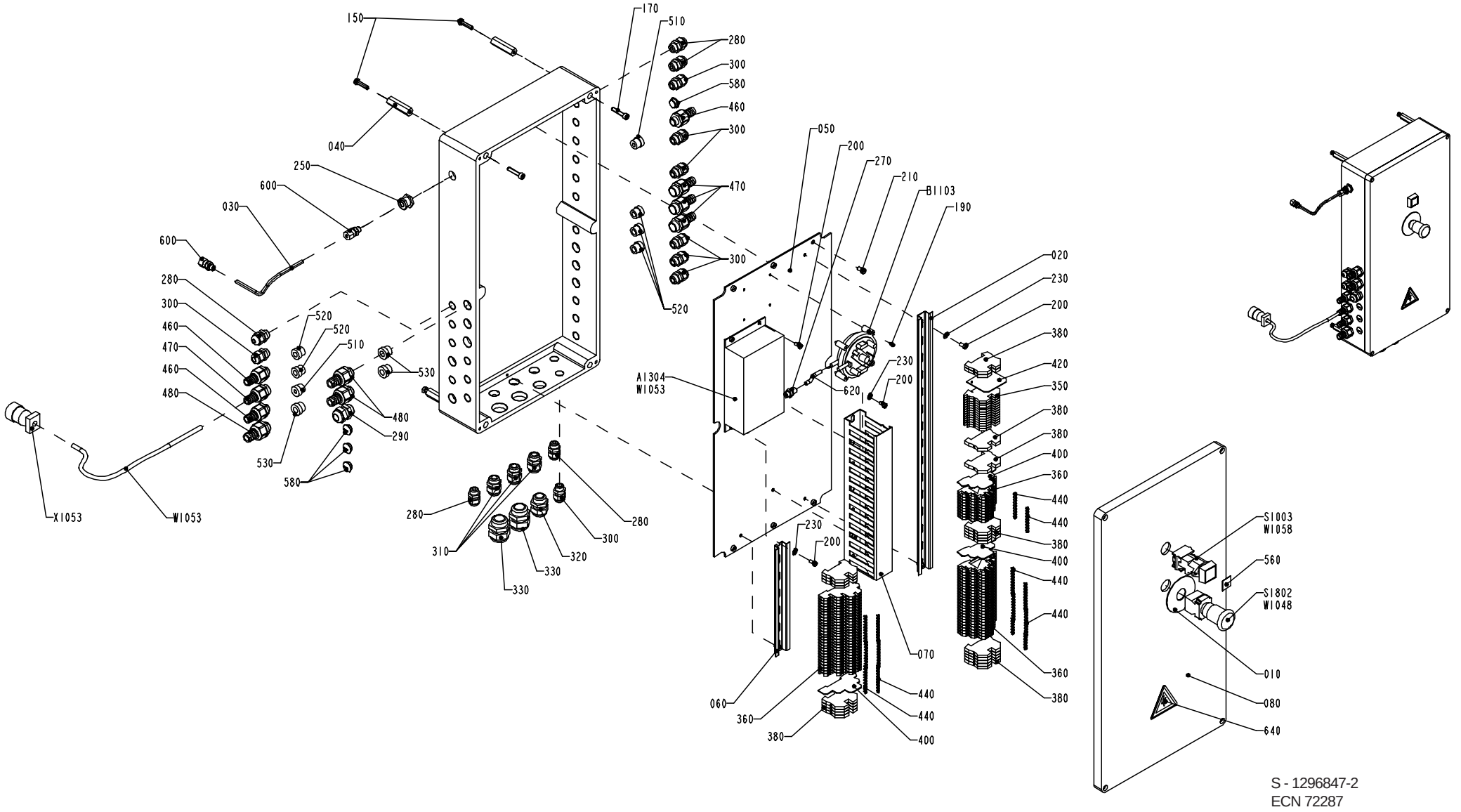

S - 1296847-2
ECN 72287

Pos	Part No	SP	UN	Qty	Description	Page No
Common parts						
010	486826-0001	-		1	SIGN "EMERGENCY STOP"	
020	1037615-0000	-		1	RAIL	
030	1038358-0000	-		1	PIPE	
040	1129475-0000	-		3	HOLDER	
050	1349872-0000	-		1	MOUNTING PLATE	
060	1129479-0000	-		1	RAIL	
070	1129480-0000	-		1	CABLE DUCT	
080	1347879-0000	-		1	CONNECTION BOX	
150	312105-0372	-		3	SCREW M6S ISO 4017 M6x25 A280	
170	312115-0374	-		3	SCREW MC6S ISO 4762 M6x30 A280	
190	312125-0222	-		4	SLOTTED CHEESE HEAD ISO 1207 M3x8 RFR	
200	312125-0325	-		10	SLOTTED HEMCS5X10RFR	
210	312125-0364	-		6	SCREW,SLOTTED HEAD MCS 6x10 RFR	
230	315105-0146	-		6	WASHER,PLAIN ROUND 5,3x10 Stainless	
250	342767-0100	-		1	BULKHEAD CONNECTOR G1/8"	
270	342921-0113	-		1	STRAIGHT COUPLING,EXT.THREADED 6/4-G1/8"	
280	352103-0100	-		5	CABLE GLAND STR 9;PR15,2	
290	352103-0108	-		1	CABLE GLAND ST 13	
300	352103-0101	-		8	CABLE GLAND ST 9;PR15,2/PG9	
310	352103-0106	-		3	CABLE GLAND ST 11	
320	352103-0111	-		1	CABLE GLAND ST 16	
330	352103-0116	-		2	CABLE GLAND ST 21	
350	353021-0216	-		13	BY PASS TERMINAL WDU 2,5 Blue	
360	353021-0302	-		61	TERMINAL,TRIPLE-LEVEL, DLD 2,5/35 PA	
380	353024-0205	-		20	EARTH TERMINAL WPE 4	
400	353032-0302	-		3	END PLATE WAP	
420	353033-0106	-		1	PARTITION WTW 2,5-10 BLUE	
440	353034-0404	-		14	BRIDGE CONLECK Q10	
460	353243-0001	-		3	GLAND,HOSE,EXTENDED,WITHOUT INSERT PG9	
470	353243-0002	-		4	GLAND,HOSE,EXTENDED,WITHOUT INSERT PG11	
480	353243-0003	-		3	GLAND,HOSE,EXTENDED WITHOUT INSERT PG11	
510	353249-0008	-		2	GLAND,INSERT,SINGLE HOLE,EXTEND.4-6,5	
520	353249-0009	-		5	GLAND,INSERT,SINGLE HOLE,EXTEND.6,5-9,5	
530	353249-0011	-		3	GLAND,INSERT,SINGLE HOLE,EXTEND.7-10,5	
560	359301-0110	-		1	SIGN "SHORT STOP"	
580	90002-0013	-		4	BLANK-OFF PLUG 15,2(PG 9)	
600	90030-0184	-		2	STRAIGHT CONNECTION GA-6-G1/8"	
620	90166-0176	-	MM	50	RUBBER HOSE	
640	90194-0016	-		1	SIGN "FLASH SIGN" 50X50MM	
660	359011-0810	-		2	Marking Plates 5-FW 151-200	
670	359011-0823	-		2	SET OF SIGNS 6-FW 101-150	
680	359011-0824	-		2	SET OF SIGNS 6-FW 151-200	
690	359011-0832	-		3	SET OF SIGNS 6-GW (+)	
700	359011-0833	-		3	SET OF SIGNS 6-GW (-)	
710	359011-0834	-		1	SET OF SIGNS 6-GW(EARTH)	
760	351172-0102	-	MM	3500	CABLE AWM D.BLUE 0,75mm2	
770	90152-0050	-	MM	9000	GLANDS,HOSE 20x13	
780	90152-0059	-	MM	350	HOSE 18x12	
A1304	90314-0044	D		1	Signal Converter	
B1103	90274-0088	R		1	PRESSURE SWITCH	
S1003	90064-0085	R		1	PUSH BUTTON RED	
S1802	90064-0124	R		1	SWITCH,EMERGENCY STOP	
W1003	351150-0425	-	MM	6000	CABLE OILFLEX 25x0,75mm2	
W1004	351150-0425	-	MM	5800	CABLE OILFLEX 25x0,75mm2	
W1006	351150-0407	-	MM	5800	CABLE OLFLEX 12x0,75 MM2	
W1011	351150-0405	-	MM	3000	CABLE,OLFLEX 5x0,75 MM2	
W1027	351150-0403	-	MM	2000	CABLE OLFLEX 3x0,75 MM2	
W1028	351150-0403	-	MM	3000	CABLE OLFLEX 3x0,75 MM2	
W1029	351150-0404	-	MM	3000	CABLE OLFLEX 4x0,75 MM2	
W1030	351150-0403	-	MM	3000	CABLE OLFLEX 3x0,75 MM2	
W1031	351150-0403	-	MM	3000	CABLE OLFLEX 3x0,75 MM2	
W1035	351150-0405	-	MM	3000	CABLE,OLFLEX 5x0,75 MM2	
W1044	351150-0405	-	MM	2500	CABLE,OLFLEX 5x0,75 MM2	
W1045	351150-0405	-	MM	2000	CABLE,OLFLEX 5x0,75 MM2	
W1046	351150-0405	-	MM	3000	CABLE,OLFLEX 5x0,75 MM2	
W1048	351150-0405	-	MM	1000	CABLE,OLFLEX 5x0,75 MM2	
W1052	351150-0404	-	MM	3000	CABLE OLFLEX 4x0,75 MM2	
W1053	90220-0092	-	MM	1100	MULTI-CONDUCT,SCREEN,PAIR-TWIST 3x2x0,25	
W1058	351150-0403	-	MM	1000	CABLE OLFLEX 3x0,75 MM2	
W1065	351150-0403	-	MM	2500	CABLE OLFLEX 3x0,75 MM2	
W1084	90220-0107	-	MM	6500	CABLE,SCREENED 5x0,75mm2	
W2028	90220-0162	-	MM	6200	CABLE,MULTI-CONDUCTOR SCREENED 10x0,25	
X1053	90110-0223	-		1	CONNECTOR	

This page is intentionally left blank

Pos	Part No	SP	UN	Qty	Description	Page No
90042-0172						
	90042-0467	F		1	COIL 24VDC GSR	
90206-0070						
	90206-0326	-		1	CONNECTION BOX	
90243-0321						
	90242-0198	-		1	"O-RING 19,3X2,4"	
451430-0000						
	312605-0312	-		4	NUT,HEXAGON,M4 RFR	
456123-0000						
	312105-0471	-		2	SCREW M6S ISO 4014 M8x100 A280	
	315105-0165	-		2	WASHER,PLAIN ROUND 8,4x16 Stainless	
544996-0000						
	90424-0031	-		1	NOZZLE	
751503-0000						
	90166-0179	-	M	1	SHRINKABLE HOSE	
1010822-0000						
	1140619-0000	-		2	PLUG	
1035654-0000						
	1035653-0000	-		1	PROFILE	
1129137-0000						
	90277-0088	-		1	FILTER HOUSING	

Pos	Part No	SP	UN	Qty	Description	Page No

SPC

Spare Parts Catalogue

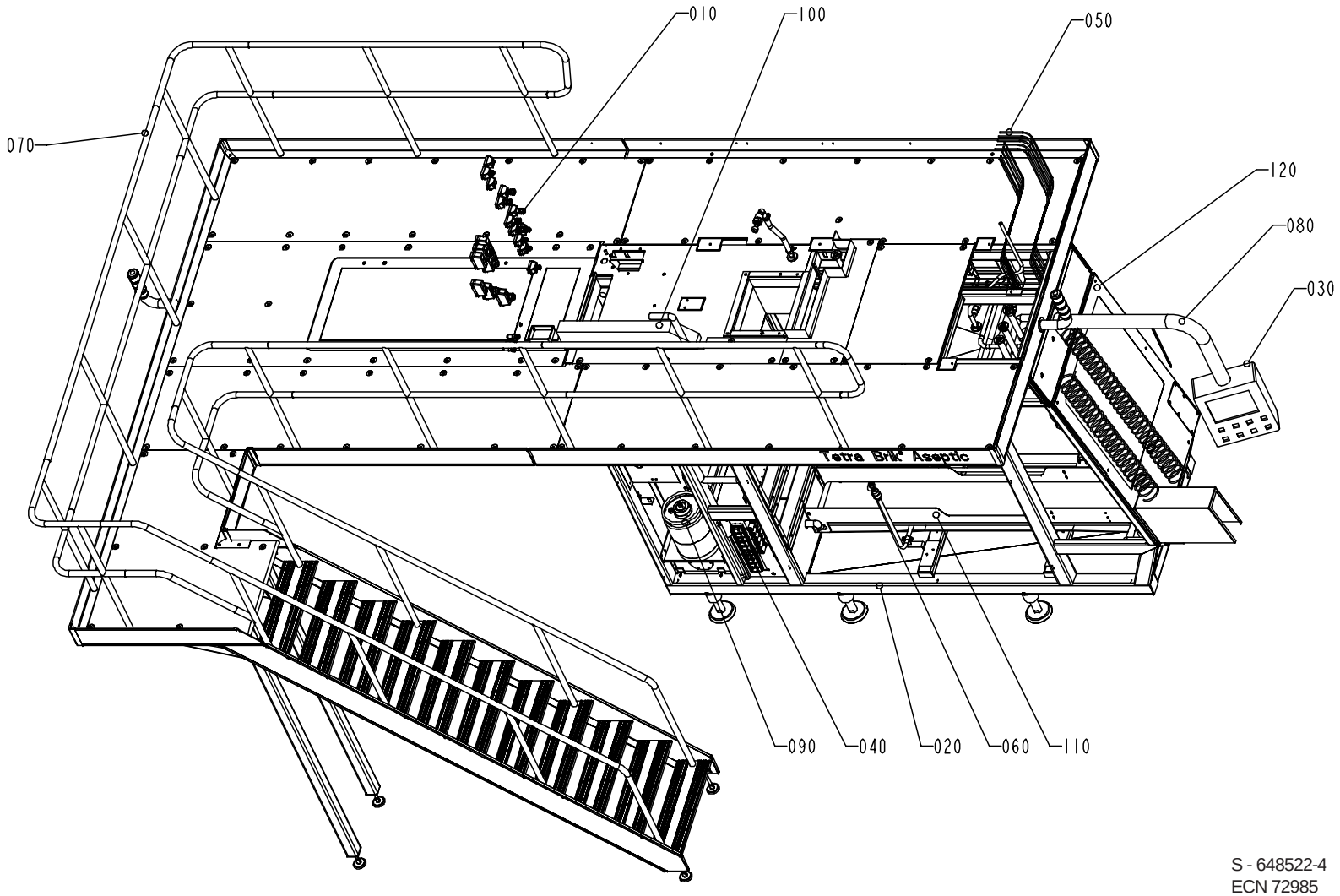

S - 648522-4
ECN 72985

Pos	Part No	SP	UN	Qty	Description	Page No
Common parts						
010	A 577117-0300	-		1	ELECTRICAL SUPPLY	**181**
020	A 577118-0400	-		1	MACHINE BODY	**193**, **195**
030	A1349772-0100	-		1	TPOP PANEL 12"	**201**
040	A 577119-0400	-		1	PNEUMATIC SYSTEM	**209**, **211**
050	A 577121-0400	-		1	PIPE WORK	**217**
060	A 577122-0300	-		1	EXTERNAL CLEANING SYSTEM	**225**
070	A1254245-0200	-		1	PLATFORM	**233**
080	A1095863-0100	-		1	PIVOT ARM	**241**
090	A1317102-0100	-		1	HYDROGEN PEROXIDE	**243**
100	A1095876-0100	-		1	CABLE DUCT	**259**
110	A 577114-0300	-		1	WASTE CONVEYOR	**261**
120	A 577120-0300	-		1	DOORS-COVERS	**263**

Pos	Part No	SP	UN	Qty	Description	Page No

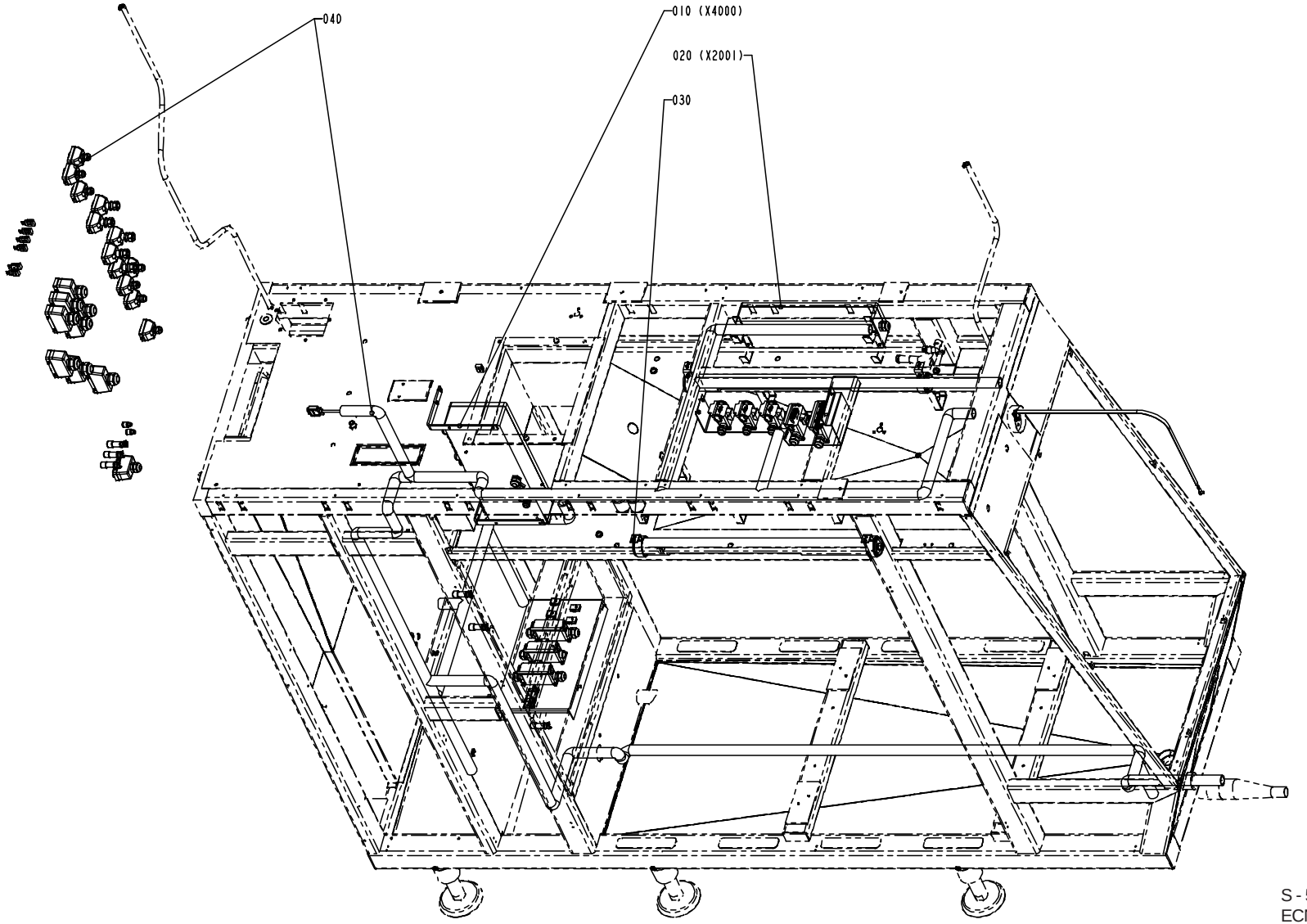

S - 577117-3
ECN 72267

Pos	Part No	SP	UN	Qty	Description	Page No
Common parts						
010	A1348496-0100	-		1	CONNECTION BOX	**183**
020	A1348497-0100	-		1	CONNECTION BOX	**185**
030	A1095861-0100	-		1	LIGHT FIXTURE	**187**
040	A1348090-0100	-		1	CABLE HARNESS	**189**, **191**

Pos	Part No	SP	UN	Qty	Description	Page No

CONNECTION BOX

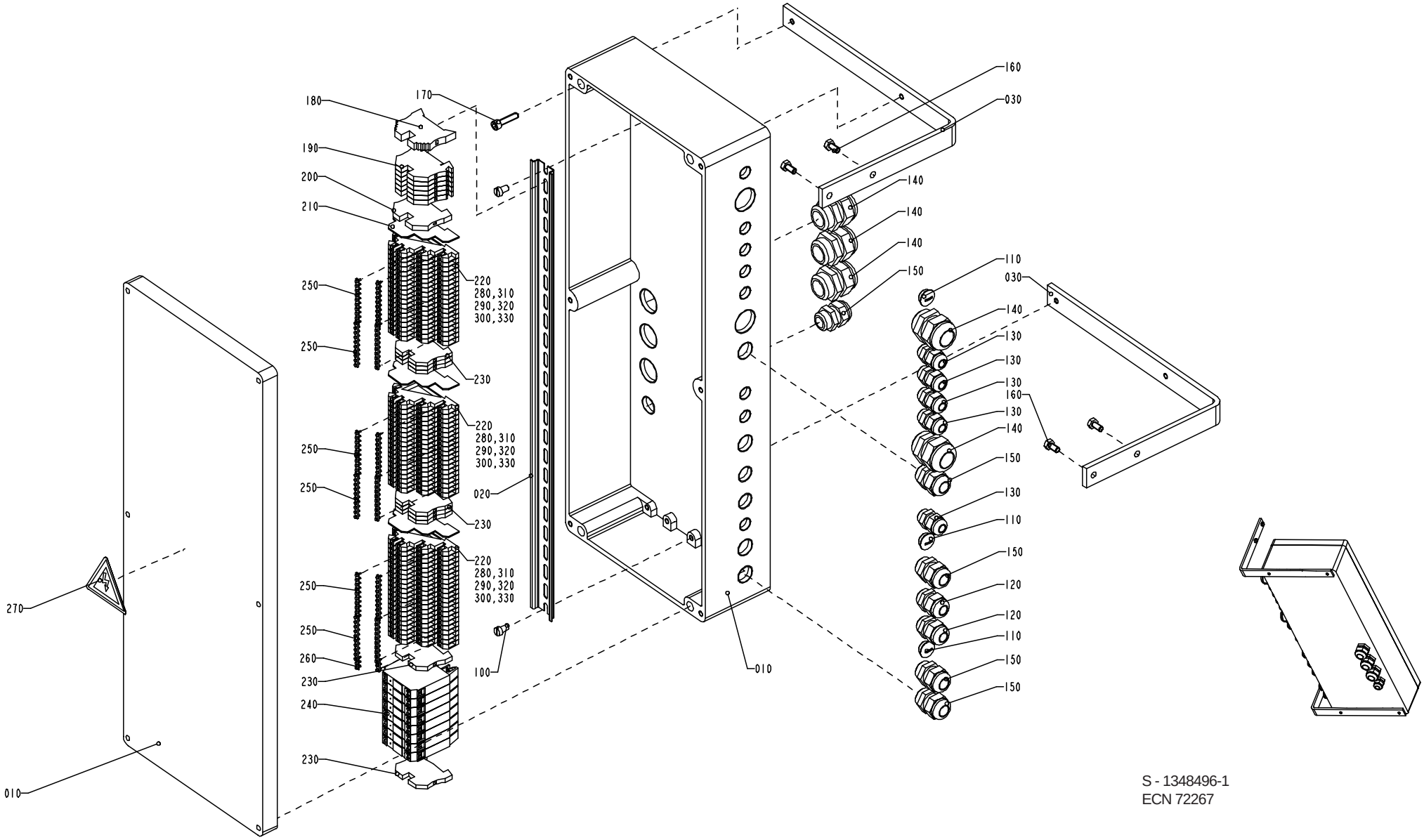

S - 1348496-1
ECN 72267

Pos	Part No	SP	UN	Qty	Description	Page No
Common parts						
010	1348500-0000	-		1	CONNECTION BOX	
020	1347878-0000	-		1	RAIL	
030	1348498-0000	-		2	HOLDER	
100	312121-0364	-		2	SLOTTED HEMCS6X10FZB	
110	90002-0013	-		3	BLANK-OFF PLUG 15,2(PG 9)	
120	352103-0106	-		2	CABLE GLAND ST 11	
130	352103-0101	-		5	CABLE GLAND ST 9;PR15,2/PG9	
140	352103-0116	-		5	CABLE GLAND ST 21	
150	352103-0108	-		5	CABLE GLAND ST 13	
160	312105-0366	-		4	SCREW M6S ISO 4017 M6x12 A280	
170	312115-0372	-		4	SCREW MC6S ISO 4762 M6x25 A280	
180	353031-0203	-		1	END BRACKET WEW 35/2	
190	353021-0213	-		6	FEED THROUGH TERMINAL WDU 4 Beige	
200	353024-0205	-		1	EARTH TERMINAL WPE 4	
210	353032-0302	-		3	END PLATE WAP	
220	353021-0302	-		59	TERMINAL,TRIPLE-LEVEL, DLD 2,5/35 PA	
230	353024-0204	-		8	EARTH TERMINAL WPE 2,5	
240	90119-0063	-		8	OPTO-RELAY DC/DC AMMS-10-1	
250	353034-0404	-		12	BRIDGE CONLECK Q10	
260	353034-0402	-		2	BRIDGE CONLECK Q3	
270	90194-0016	-		1	SIGN "FLASH SIGN" 50X50MM	
280	359011-0823	-		2	SET OF SIGNS 6-FW 101-150	
290	359011-0819	-		1	MARKING PLATES 5-GW (Earth)	
300	359011-0834	-		1	SET OF SIGNS 6-GW(EARTH)	
310	359011-0832	-		3	SET OF SIGNS 6-GW (+)	
320	359011-0833	-		3	SET OF SIGNS 6-GW (-)	
330	359011-0824	-		2	SET OF SIGNS 6-FW 151-200	
340	359011-0821	-		2	SET OF SIGNS 6-FW 1-50	

Pos	Part No	SP	UN	Qty	Description	Page No

CONNECTION BOX

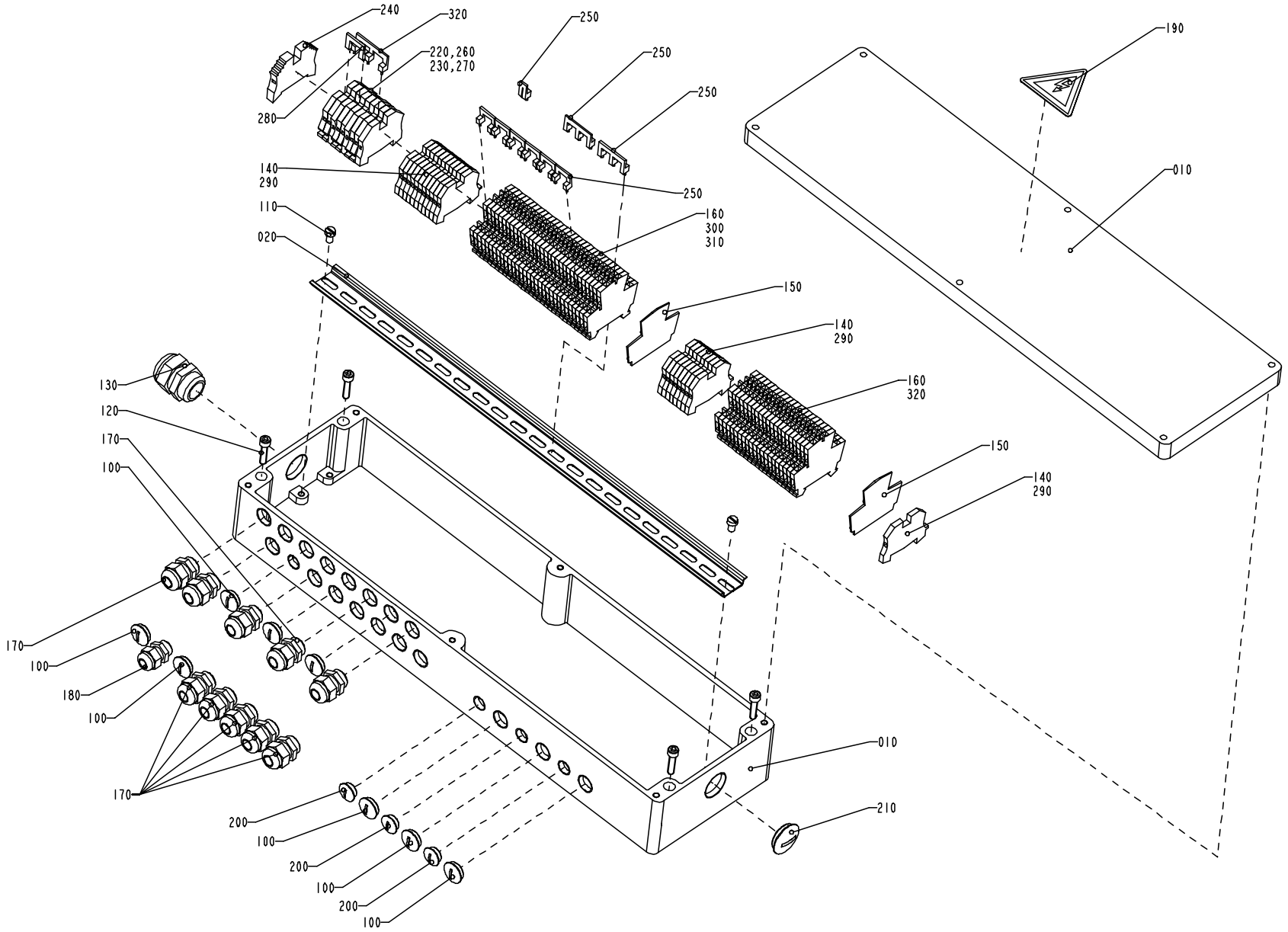

S - 1348497-1
ECN 72985

Pos	Part No	SP	UN	Qty	Description	Page No
Common parts						
010	1348499-0000	-		1	CONNECTION BOX	
020	1129504-0000	-		1	MOUNTING RAIL	
100	90002-0009	-		8	BLANK-OFF PLUG 18.6	
110	312125-0364	-		2	SCREW,SLOTTED HEAD MCS 6x10 RFR	
120	312115-0372	-		4	SCREW MC6S ISO 4762 M6x25 A280	
130	352103-0116	-		1	CABLE GLAND ST 21	
140	353024-0204	-		20	EARTH TERMINAL WPE 2,5	
150	353032-0010	-		2	END PLATE WAP	
160	353021-0120	-		52	FEED THROUGH TERMINAL WDK 2,5	
170	352103-0106	-		10	CABLE GLAND ST 11	
180	352103-0101	-		1	CABLE GLAND ST 9;PR15,2/PG9	
190	90194-0016	-		1	SIGN "FLASH SIGN" 50X50MM	
200	90002-0013	-		3	BLANK-OFF PLUG 15,2(PG 9)	
210	90002-0012	-		1	BLANK-OFF PLUG 28,3	
220	353024-0205	-		3	EARTH TERMINAL WPE 4	
230	353021-0213	-		6	FEED THROUGH TERMINAL WDU 4 Beige	
240	353031-0203	-		1	END BRACKET WEW 35/2	
250	353034-0030	-		10	BRIDGE CONLECK WQV 2,5/10	
260	359011-0821	-		2	SET OF SIGNS 6-FW 1-50	
270	359011-0834	-		1	SET OF SIGNS 6-GW(EARTH)	
280	353034-0039	-		1	BRIDGE CONN. WQV 4/4	
290	359011-0819	-		1	MARKING PLATES 5-GW (Earth)	
300	359011-0809	-		2	MARKING PLATES 5-FW 101-150	
310	359011-0810	-		2	Marking Plates 5-FW 151-200	
320	353034-0031	-		1	BRIDGE CONNECTOR WQV 4/10	
330	359011-0821	-		2	SET OF SIGNS 6-FW 1-50	

Pos	Part No	SP	UN	Qty	Description	Page No

LIGHT FIXTURE

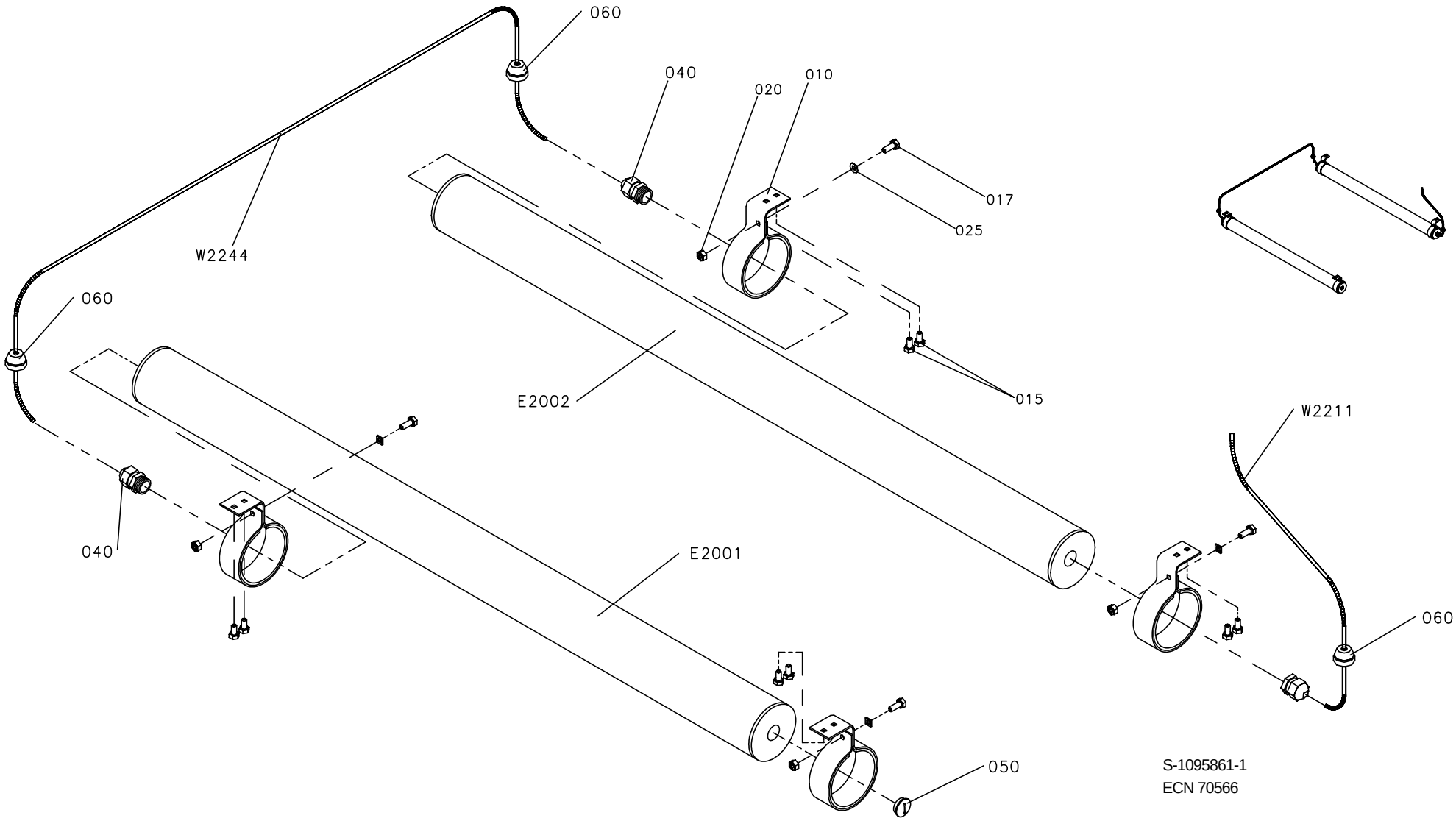

S-1095861-1
ECN 70566

Pos	Part No	SP	UN	Qty	Description	Page No
Common parts						
010	1140129-0000	-		4	HOLDER	
015	312105-0366	-		8	SCREW M6S ISO 4017 M6x12 A280	
017	312105-0368	-		4	SCREW M6S ISO 4017 M6x16 A280	
020	312605-0316	-		4	NUT,HEXAGON A280 M6M6	
025	315105-0153	-		4	WASHER,PLAIN ROUND 6,4x12 Stainless	
040	352103-0106	-		3	CABLE GLAND ST 11	
050	90002-0009	-		1	BLANK-OFF PLUG 18.6	
060	90015-0023	-		3	GLANDS,Lead-in,IP67	
E 2001	B 90164-0008	M		1	LIGHT FIXTURE 1x20W	
E 2002	B 90164-0008	M		1	LIGHT FIXTURE 1x20W	
W 2211	351150-0412	-	MM	1800	CABLE OLFLEX 3x1,5mm2	
W 2244	351150-0412	-	MM	2000	CABLE OLFLEX 3x1,5mm2	

Pos	Part No	SP	UN	Qty	Description	Page No

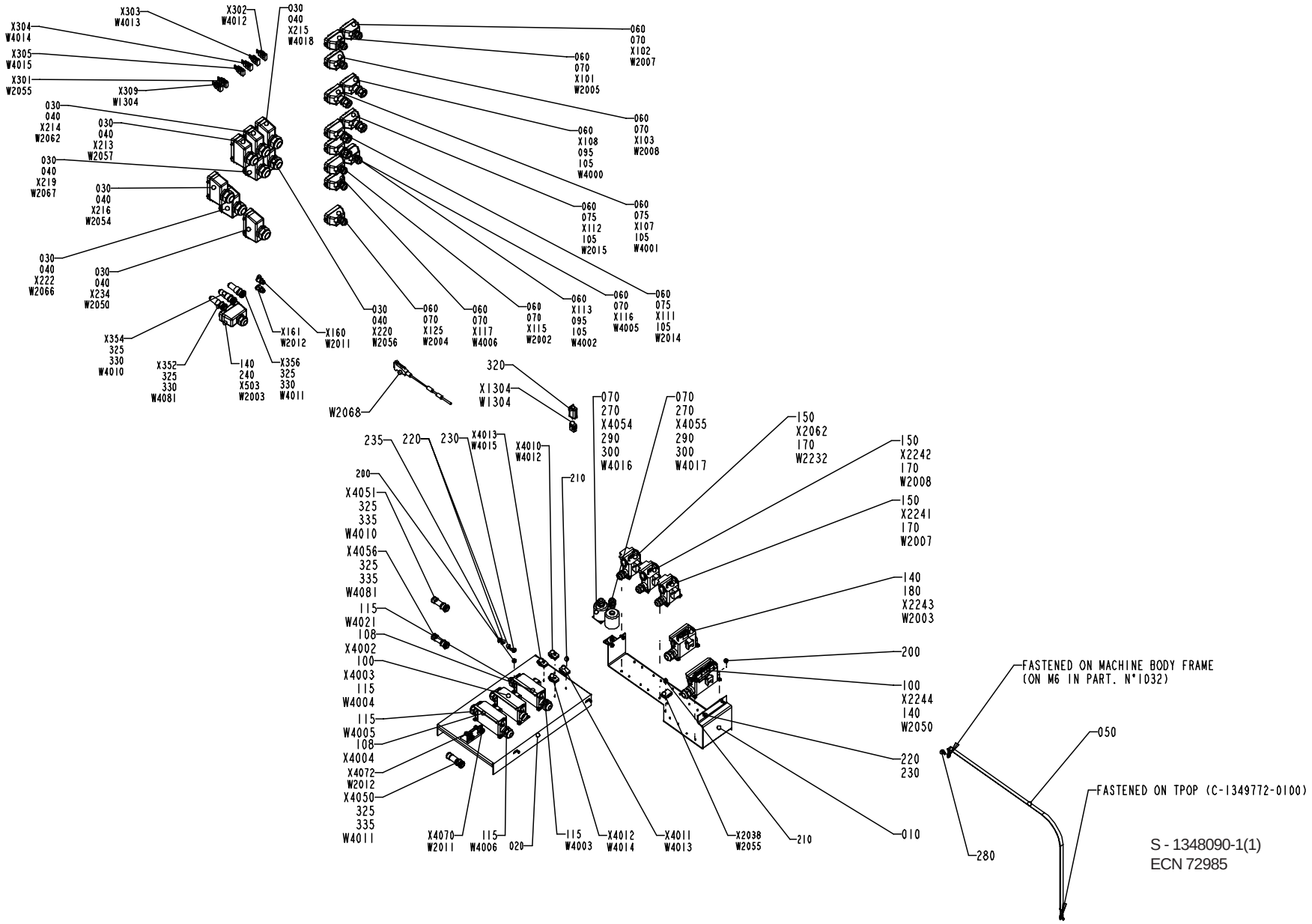
X303 W4013
X302 W4012
030 040 X215 W4018
X304 W4014
X305 W4015
X301 W2055
X309 W1304
030 040 X214 W2062
030 040 X213 W2057
030 040 X219 W2067
030 040 X216 W2054
030 040 X222 W2066
030 040 X234 W2050
060 070 X102 W2007
060 070 X101 W2005
060 070 X103 W2008
060 X108 095 105 W4000
060 075 X112 105 W2015
060 075 X107 105 W4001
060 X113 095 105 W4002
060 070 X116 W4005
060 075 X111 105 W2014
030 040 X220 W2056
060 070 X125 W2004
060 070 X117 W4006
060 070 X115 W2002
X354 325 330 W4010
X352 325 330 W4081
140 240 X503 W2003
X356 325 330 W4011
X161 W2012
X160 W2011
W2068
320
X1304 W1304
070 270 X4054 290 300 W4016
070 270 X4055 290 300 W4017
150 X2062 170 W2232
150 X2242 170 W2008
150 X2241 170 W2007
140 180 X2243 W2003
200
100 X2244 140 W2050
220 230
010
210
X2038 W2055
X4011 W4013
X4012 W4014
115 W4003
020
115 W4006
X4070 W2011
X4050 325 335 W4011
X4072 W2012
X4004
108
W4005
115
W4004
X4003
115
X4002
100
W4021
115
X4056 325 335 W4081
X4051 325 335 W4010
200
235
220
230
X4013 W4015
X4010 W4012
210
FASTENED ON MACHINE BODY FRAME (ON M6 IN PART. N°1032)
050
FASTENED ON TPOP (C-1349772-0100)
280
S - 1348090-1(1)
ECN 72985

Pos	Part No	SP	UN	Qty	Description	Page No
Common parts						
010	1129710-0000	-		1	CANTILEVER	
020	1348384-0000	-		1	PLATE	
030	90110-0152	-		8	CABLE HOOD 24-P	
040	352103-0121	-		8	CABLE GLAND ST 29	
050	1129600-0000	-		1	BRAID	
060	90110-0157	-		12	COVER	
070	352103-0108	-		9	CABLE GLAND ST 13	
075	353245-0004	-		3	GLAND,EMC,EXTENDED WITH INSERT PR 22,5	
090	90326-0022	-		6	PLUG,MALE YELLOW CR-AL	
095	353245-0005	-		2	GLAND,EMC,EXTENDED WITH INSERT PR 22,5	
100	90110-0225	-		2	CHASSIS CONTACT	
105	90089-0029	-		5	Enlarging sleeve	
108	90110-0513	D		2	Chassis Contact	
115	352103-0115	-		5	CABLE GLAND STR 21	
140	352103-0116	-		3	CABLE GLAND ST 21	
150	90110-0221	-		3	CONTACT HOUSING	
160	90110-0163	-		3	FEMALE INSERT 6-POLE	
170	352103-0111	-		3	CABLE GLAND ST 16	
180	90110-0224	-		1	CHASSI HOUSING	
190	90110-0247	D		1	CONTACT	
200	312125-0287	-		32	SLOTTED CHEESE HEAD ISO 1207 M4X8 RFR	
210	312125-0230	-		5	SLOTTED CHEESE HEAD ISO 1207 M3X20 RFR	
220	315105-0153	-		10	WASHER,PLAIN ROUND 6,4x12 Stainless	
230	312105-0367	-		8	SCREW M6S 6x14 A2 80	
235	312605-0316	-		2	NUT,HEXAGON A280 M6M6	
240	90110-0160	-		1	COVER	
270	1037673-0000	-		2	SLEEVE	
280	312105-0366	-		2	SCREW M6S ISO 4017 M6x12 A280	
290	312125-0226	-		8	SLOTTED CHEESE HEAD ISO 1207 M3X12 RFR	
300	315105-0124	-		8	WASHER,PLAIN ROUND 3,2x6	
310	90110-0127	-		2	PLUG (EL.)	
320	90326-0012	-		1	PROTECTIVE COVER	
325	90012-0117	-		6	GLAND,EMC,EXTENDED WITH INSERT	
330	90110-0380	-		21	Contact Pin	
335	90110-0209	-		21	CONTACT PIN	
W0001	351150-0426	-	M	6	CABLE,MULTI-CONDUCTOR 5x25 MM2	
W1304	90220-0034	N	M	6	THERMO-CABLE	
W2002	351150-0418	-	M	5	CABLE OLFLEX 4x2,5mm2	
W2003	351150-0166	-	M	4	CABLE OLFLEX 4x4 MM2	
W2004	90220-0107	-	M	5	CABLE,SCREENED 5x0,75mm2	
W2005	351150-0412	-	M	7	CABLE OLFLEX 3x1,5mm2	
W2007	351150-0418	-	M	6	CABLE OLFLEX 4x2,5mm2	
W2008	351150-0418	-	M	6	CABLE OLFLEX 4x2,5mm2	
W2011	90220-0062	-	M	6	COAX.CABLE G 03212-01	
W2012	90220-0062	-	M	6	COAX.CABLE G 03212-01	
W2014	351150-0418	-	M	9	CABLE OLFLEX 4x2,5mm2	
W2015	90220-0105	-	M	16	CABLE,SCREENED 4x2,5mm2	
W2050	351150-0425	-	M	5	CABLE OILFLEX 25x0,75mm2	
W2054	351150-0425	-	M	7	CABLE OILFLEX 25x0,75mm2	
W2055	90220-0034	-	M	6	THERMO-CABLE	
W2056	351150-0425	-	M	5	CABLE OILFLEX 25x0,75mm2	
W2057	351150-0425	-	M	6	CABLE OILFLEX 25x0,75mm2	
W2062	351150-0425	-	M	6	CABLE OILFLEX 25x0,75mm2	
W2066	351150-0425	-	M	8	CABLE OILFLEX 25x0,75mm2	
W2067	351150-0425	-	M	8	CABLE OILFLEX 25x0,75mm2	
W2068	1363297-0000	-		1	CABLE LVDS 10M	
W2232	351150-0406	-	M	3	CABLE OLFLEX 7x0,75 MM2	
W2233	351150-0406	-	M	3	CABLE OLFLEX 7x0,75 MM2	
W4000	90220-0084	-	MM	5500	SERVOCABLE 4X2,5+2(2X0.75)	
W4001	90220-0116	-	M	5	CABLE 4x1,0+2(2x0,5)mm2	
W4002	90220-0084	-	MM	4500	SERVOCABLE 4X2,5+2(2X0.75)	
W4003	351150-0407	-	M	3	CABLE OLFLEX 12x0,75 MM2	
W4004	351150-0425	-	M	3	CABLE OILFLEX 25x0,75mm2	
W4005	351150-0419	-	M	7	CABLE OLFLEX 5x2,5mm2	
W4006	351150-0419	-	M	7	CABLE OLFLEX 5x2,5mm2	
W4010	90220-0131	-	M	4	CABLE,MULTI-COND.SCREENED PAIR TWIST	
W4011	90220-0131	-	M	4	CABLE,MULTI-COND.SCREENED PAIR TWIST	
W4012	90220-0034	N	M	7	THERMO-CABLE	
W4013	90220-0034	N	M	7	THERMO-CABLE	
W4014	90220-0034	N	M	7	THERMO-CABLE	
W4015	90220-0034	N	M	7	THERMO-CABLE	
W4016	90220-0107	-	M	6	CABLE,SCREENED 5x0,75mm2	
W4017	90220-0107	-	M	6	CABLE,SCREENED 5x0,75mm2	
W4018	351150-0407	-	MM	4500	CABLE OLFLEX 12x0,75 MM2	
W4021	351150-0407	-	MM	3500	CABLE OLFLEX 12x0,75 MM2	
W4054	351150-0405	-	M	3	CABLE,OLFLEX 5x0,75 MM2	
W4081	90220-0131	-	M	4	CABLE,MULTI-COND.SCREENED PAIR TWIST	
X101	90110-0159	D		1	CONTACT	
X102	90110-0159	-		1	CONTACT	
X103	90110-0159	-		1	CONTACT	
X107	90110-0159	-		1	CONTACT	
X108	90110-0159	-		1	CONTACT	
X111	90110-0159	-		1	CONTACT	
X112	90110-0159	-		1	CONTACT	
X113	90110-0159	-		1	CONTACT	

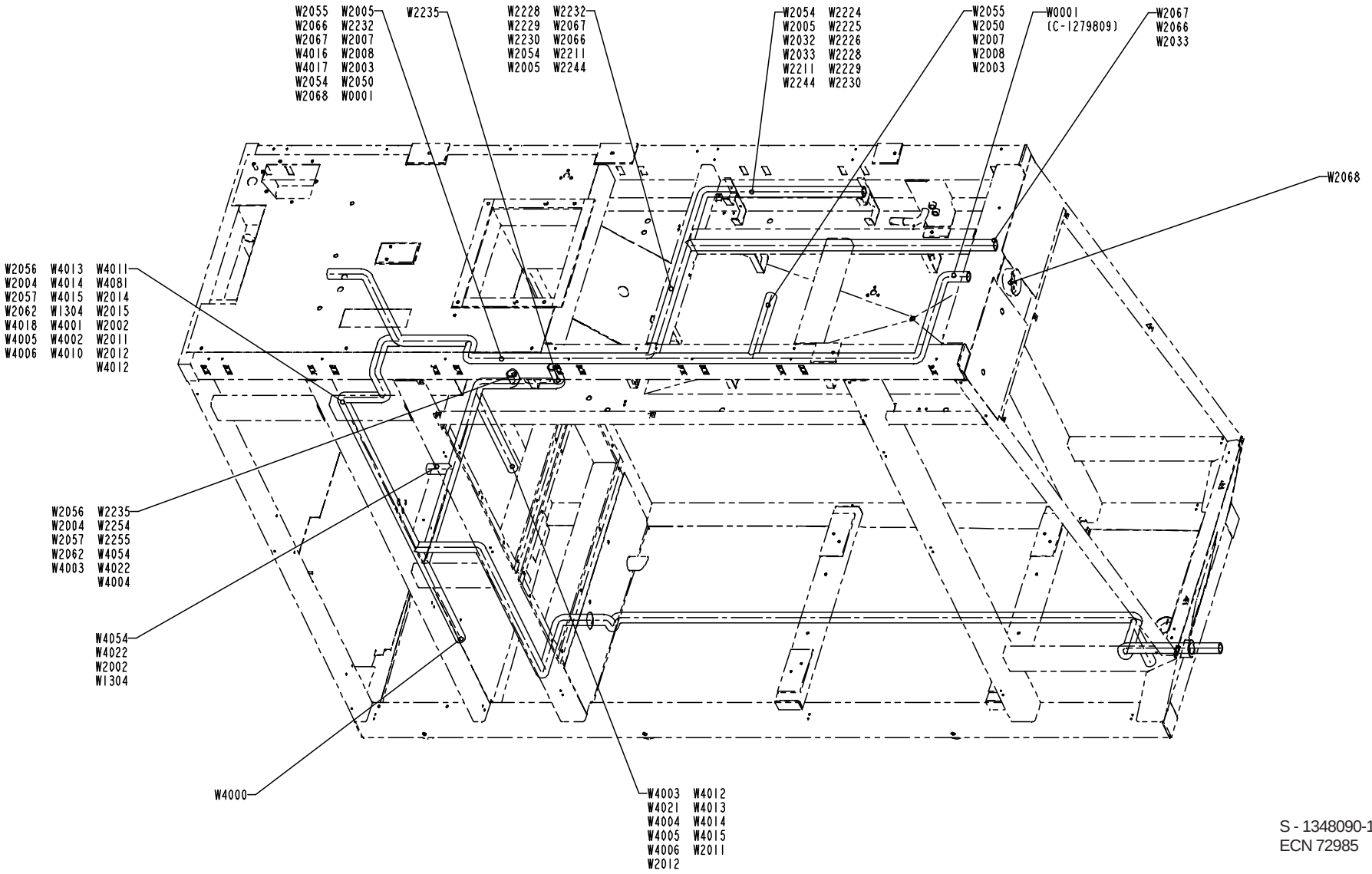

S - 1348090-1(2)
ECN 72985

Pos	Part No	SP	UN	Qty	Description	Page No
X115	90110-0159	-		1	CONTACT	
X116	90110-0159	-		1	CONTACT	
X117	90110-0159	-		1	CONTACT	
X125	90110-0159	-		1	CONTACT	
X1304	90326-0020	-		1	PLUG,FEMALE YELLOW CR-AL	
X160	90110-0125	-		1	ELECTRIC PLUG	
X161	90110-0125	-		1	ELECTRIC PLUG	
X2038	90326-0020	-		1	PLUG,FEMALE YELLOW CR-AL	
X2062	90110-0163	-		1	FEMALE INSERT 6-POLE	
X213	90110-0150	-		1	MALE INSERT 24-P, CABLE	
X214	90110-0150	-		1	MALE INSERT 24-P, CABLE	
X215	90110-0150	-		1	MALE INSERT 24-P, CABLE	
X216	90110-0150	-		1	MALE INSERT 24-P, CABLE	
X219	90110-0150	-		1	MALE INSERT 24-P, CABLE	
X220	90110-0150	-		1	MALE INSERT 24-P, CABLE	
X222	90110-0150	-		1	MALE INSERT 24-P, CABLE	
X2241	90110-0163	-		1	FEMALE INSERT 6-POLE	
X2242	90110-0163	-		1	FEMALE INSERT 6-POLE	
X2243	90110-0247	-		1	CONTACT	
X2244	90110-0151	-		1	FEMALE INSERT 24-P, CABLE	
X234	90110-0150	-		1	MALE INSERT 24-P, CABLE	
X301	90326-0022	-		1	PLUG,MALE YELLOW CR-AL	
X302	90326-0022	-		1	PLUG,MALE YELLOW CR-AL	
X303	90326-0022	-		1	PLUG,MALE YELLOW CR-AL	
X304	90326-0022	-		1	PLUG,MALE YELLOW CR-AL	
X305	90326-0022	-		1	PLUG,MALE YELLOW CR-AL	
X309	90326-0022	-		1	PLUG,MALE YELLOW CR-AL	
X352	90110-0504	D		1	Cable Contact	
X354	90110-0504	-		1	Cable Contact	
X356	90110-0504	-		1	Cable Contact	
X4002	90110-0151	-		1	FEMALE INSERT 24-P, CABLE	
X4003	90110-0151	-		1	FEMALE INSERT 24-P, CABLE	
X4004	90110-0151	-		1	FEMALE INSERT 24-P, CABLE	
X4010	90326-0020	-		1	PLUG,FEMALE YELLOW CR-AL	
X4011	90326-0020	-		1	PLUG,FEMALE YELLOW CR-AL	
X4012	90326-0020	-		1	PLUG,FEMALE YELLOW CR-AL	
X4013	90326-0020	-		1	PLUG,FEMALE YELLOW CR-AL	
X4050	90110-0208	D		1	CABLE CONTACT	
X4051	90110-0208	-		1	CABLE CONTACT	
X4054	90110-0236	D		1	CHASSIE CONTACT PX0767/S	
X4055	90110-0236	-		1	CHASSIE CONTACT PX0767/S	
X4056	90110-0208	-		1	CABLE CONTACT	
X4070	90110-0127	-		1	PLUG (EL.)	
X4072	90110-0127	-		1	PLUG (EL.)	
X503	90110-0156	D		1	CONTACT	

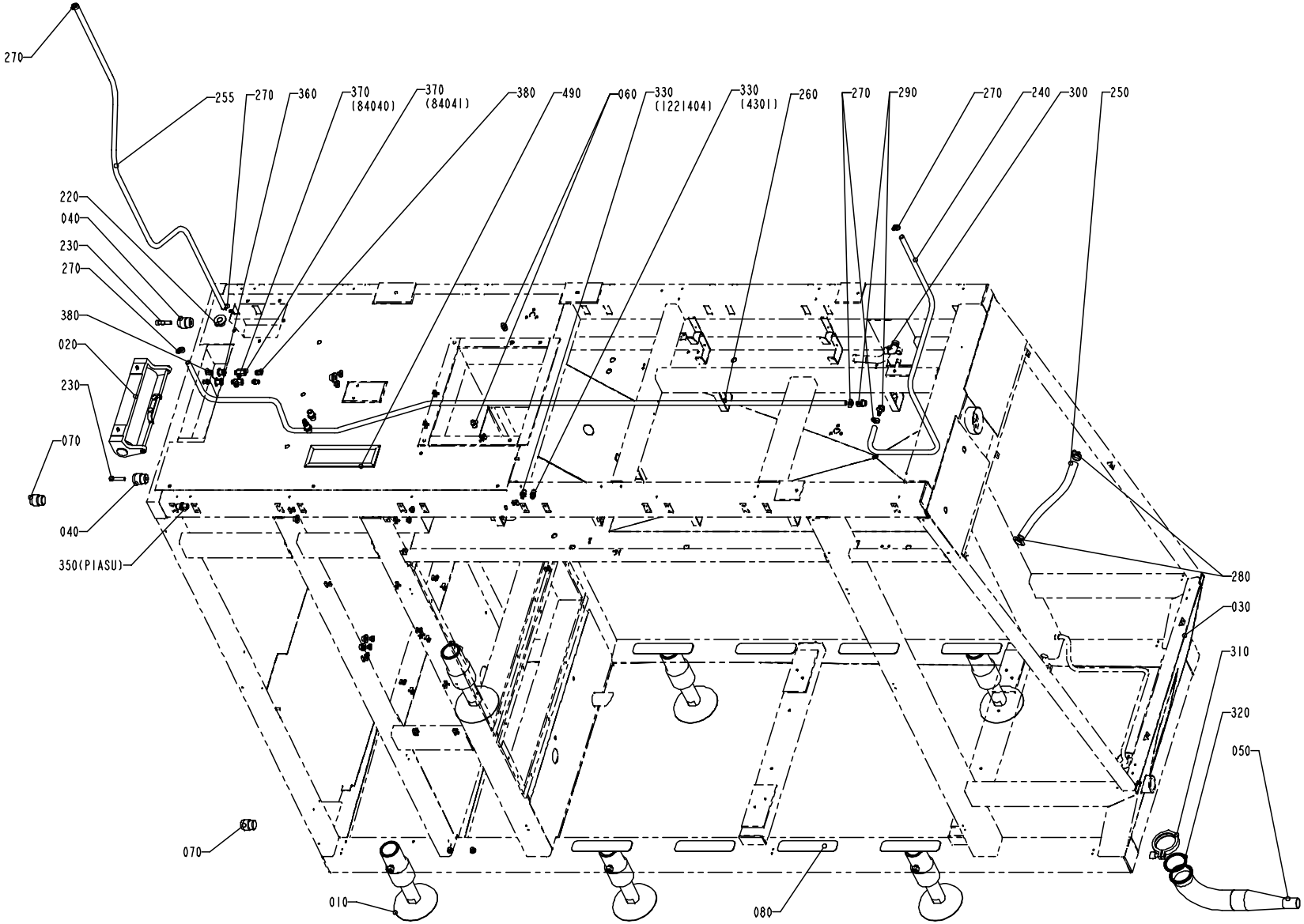

S - 577118-4(1)
ECN 72985

Pos	Part No	SP	UN	Qty	Description	Page No
Common parts						
010	A1035076-0100	-		6	LEG	**197**
020	A1095803-0100	-		1	BENDING ROLLER	**199**
030	1511715-0000	-		1	FRAME	
040	591341-0000	-		2	PIN	
050	1347638-0000	-		1	PIPE	
060	1037761-0000	-		2	PIN	
070	1037762-0000	-		2	PIN	
080	1103300-0000	-		8	NON-SKID	
200	90015-0021	-		3	GLANDS,Lead-in,IP67	
205	90015-0020	-		5	GLANDS,Lead-in,IP67	
210	90015-0023	-		2	GLANDS,Lead-in,IP67	
215	90015-0022	-		1	GLANDS,Lead-in,IP67	
220	90015-0024	-		1	GLANDS,Lead-in,IP67	
230	312115-0501	-		2	SCREW MC6S ISO 4762 M10X50 A280	
240	90166-0121	-	MM	1600	HOSE	
250	90166-0151	-	MM	500	HOSE	
255	90166-0121	-	MM	2100	HOSE	
260	90166-0121	-	MM	3000	HOSE	
270	342991-0101	-		6	HOSE CLIP,WORM DRIVE TYPE (13)-16	
280	342991-0105	-		2	HOSE CLIP,WORM DRIVE TYPE (27)-30	
290	342901-0105	-		2	HOSE NIPPLE,EXT. THREADED G1/2"-12	
300	90140-0012	-		1	ELBOW 90,INT./EXT.THREAD R1/2"	
310	342840-0107	-		1	CLAMPING PIECE	
320	342850-0107	-		1	GASKET	
330	342768-0102	-		2	BULKHEAD LEAD-IN	
340	90330-0026	-		2	PLUG,EXTERNAL G-THREAD G1/4"	
350	342768-0109	-		3	BULKHEAD LEAD-IN	
360	342767-0104	-		2	BULKHEAD CONNECTOR G1/4"	
370	90187-0158	-		2	VALVE	
380	342722-0205	-		4	STRAIGHT COUPLING D=8-R1/4"	
390	342716-0209	-		1	REDUCER 8-12	
400	352113-0204	-		21	ANCHOR TM3S25-M	
410	315237-0110	-		2	PLAIN ROUND,ALUMINIUM R1/4"	
440	312605-0314	-		2	NUT,HEXAGON,M6M5 Stainless	
450	312125-0327	-		21	SLOTTED CHEESE HEAD ISO 1207 M5X12 RFR	
490	90143-0059	-	MM	800	SEAL STRIP 4610069	
500	311103-0399	-		4	CYLINDRICAL PIN M6 8X16 RFR	

Pos	Part No	SP	UN	Qty	Description	Page No

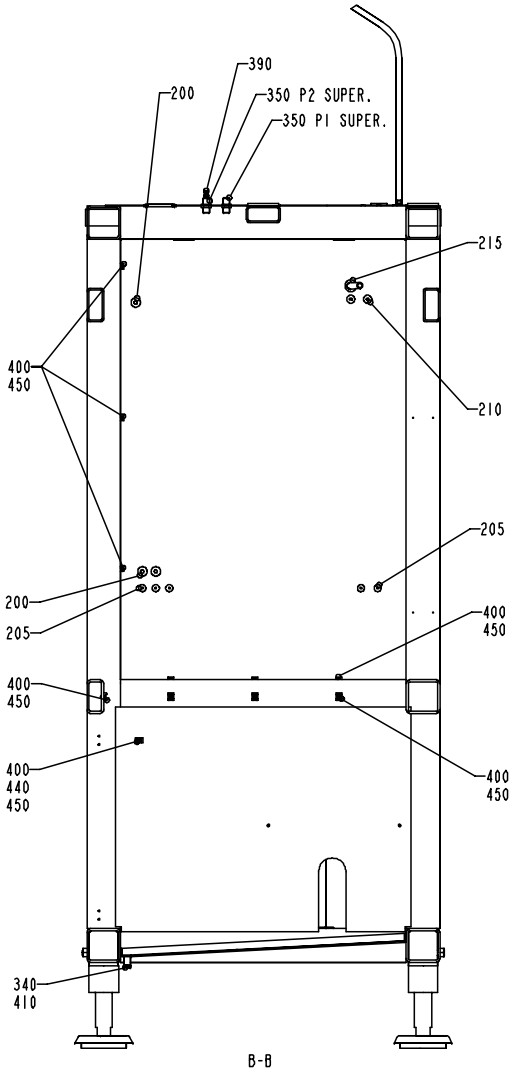

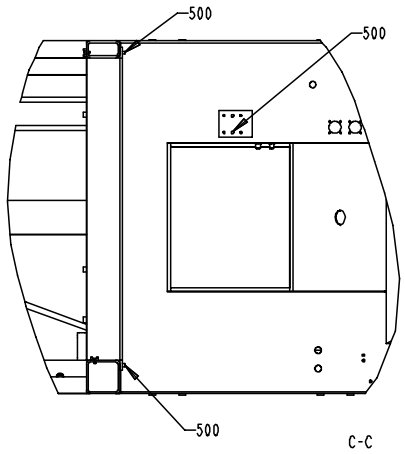

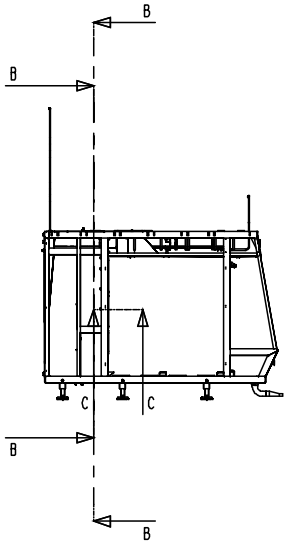

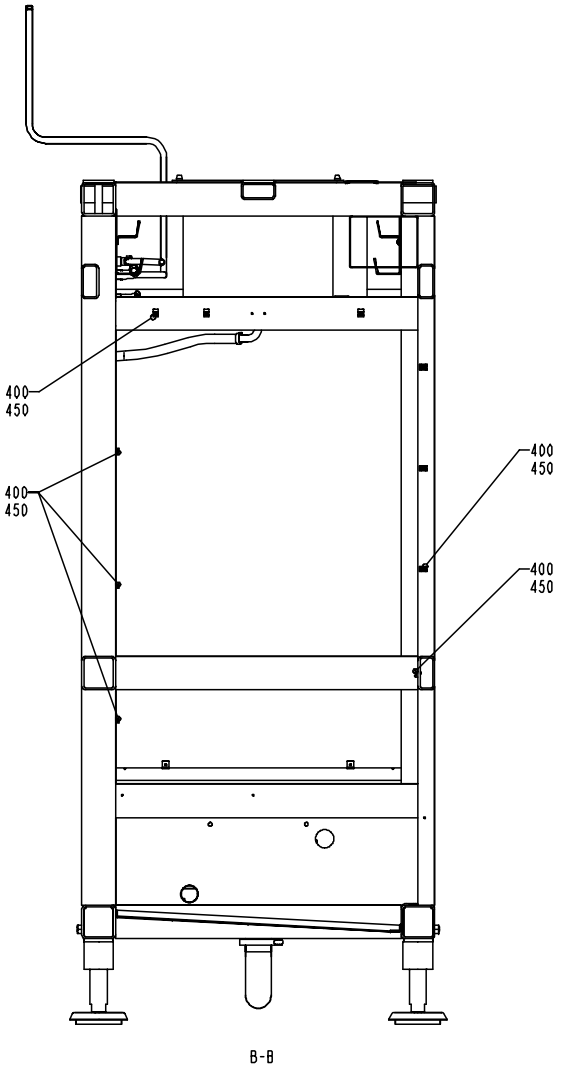

S - 577118-4(2)
ECN 72985

Pos	Part No	SP	UN	Qty	Description	Page No
Common parts						
010	A1035076-0100	-		6	LEG	**197**
020	A1095803-0100	-		1	BENDING ROLLER	**199**
030	1511715-0000	-		1	FRAME	
040	591341-0000	-		2	PIN	
050	1347638-0000	-		1	PIPE	
060	1037761-0000	-		2	PIN	
070	1037762-0000	-		2	PIN	
080	1103300-0000	-		8	NON-SKID	
200	90015-0021	-		3	GLANDS,Lead-in,IP67	
205	90015-0020	-		5	GLANDS,Lead-in,IP67	
210	90015-0023	-		2	GLANDS,Lead-in,IP67	
215	90015-0022	-		1	GLANDS,Lead-in,IP67	
220	90015-0024	-		1	GLANDS,Lead-in,IP67	
230	312115-0501	-		2	SCREW MC6S ISO 4762 M10X50 A280	
240	90166-0121	-	MM	1600	HOSE	
250	90166-0151	-	MM	500	HOSE	
255	90166-0121	-	MM	2100	HOSE	
260	90166-0121	-	MM	3000	HOSE	
270	342991-0101	-		6	HOSE CLIP,WORM DRIVE TYPE (13)-16	
280	342991-0105	-		2	HOSE CLIP,WORM DRIVE TYPE (27)-30	
290	342901-0105	-		2	HOSE NIPPLE,EXT. THREADED G1/2"-12	
300	90140-0012	-		1	ELBOW 90,INT./EXT.THREAD R1/2"	
310	342840-0107	-		1	CLAMPING PIECE	
320	342850-0107	-		1	GASKET	
330	342768-0102	-		2	BULKHEAD LEAD-IN	
340	90330-0026	-		2	PLUG,EXTERNAL G-THREAD G1/4"	
350	342768-0109	-		3	BULKHEAD LEAD-IN	
360	342767-0104	-		2	BULKHEAD CONNECTOR G1/4"	
370	90187-0158	-		2	VALVE	
380	342722-0205	-		4	STRAIGHT COUPLING D=8-R1/4"	
390	342716-0209	-		1	REDUCER 8-12	
400	352113-0204	-		21	ANCHOR TM3S25-M	
410	315237-0110	-		2	PLAIN ROUND,ALUMINIUM R1/4"	
440	312605-0314	-		2	NUT,HEXAGON,M6M5 Stainless	
450	312125-0327	-		21	SLOTTED CHEESE HEAD ISO 1207 M5X12 RFR	
490	90143-0059	-	MM	800	SEAL STRIP 4610069	
500	311103-0399	-		4	CYLINDRICAL PIN M6 8X16 RFR	

Pos	Part No	SP	UN	Qty	Description	Page No

LEG

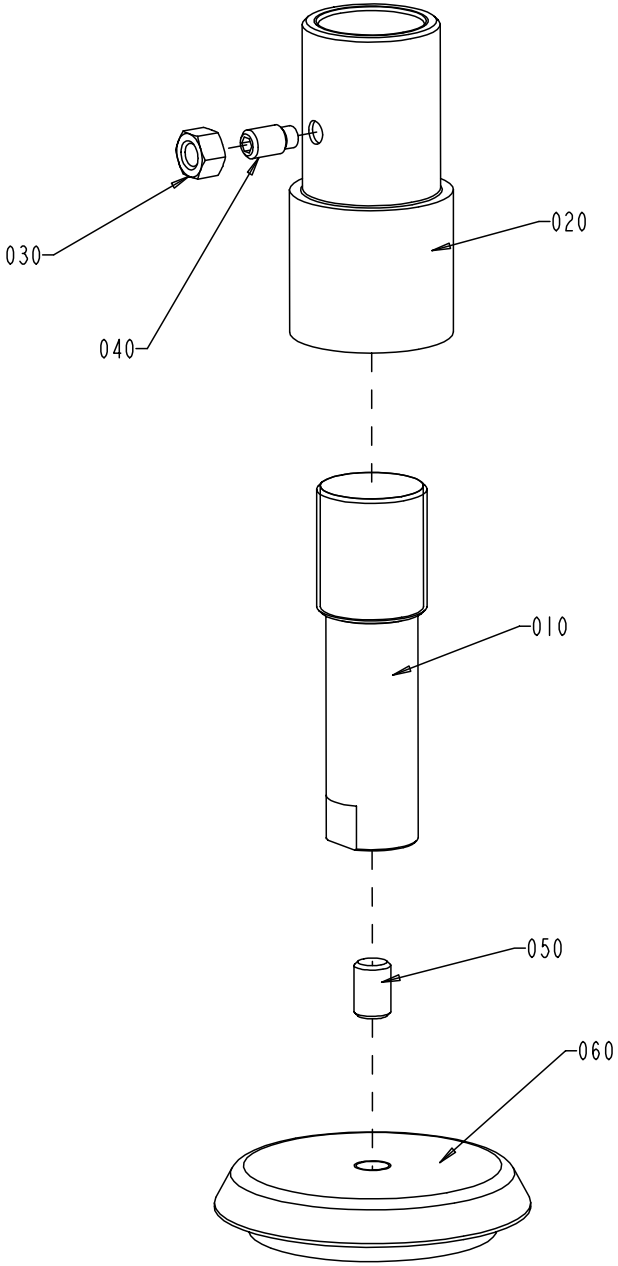

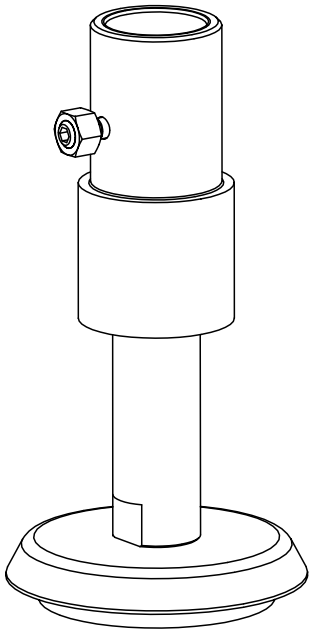

S - 1035076-1
ECN 71019

Pos	Part No	SP	UN	Qty	Description	Page No
Common parts						
010	1036119-0000	-		1	LEG	
020	1036120-0000	-		1	SLEEVE	
030	312605-0324	-		1	NUT,HEXAGON,M16 A280	
040	312311-0624	-		1	STOP SCREW T6SS16X30FZB	
050	90347-0029	-		1	DAMPER	
060	90287-0130	-		1	SCREW SET,CONE POINT,SK6SS M20x30	

Pos	Part No	SP	UN	Qty	Description	Page No

BENDING ROLLER

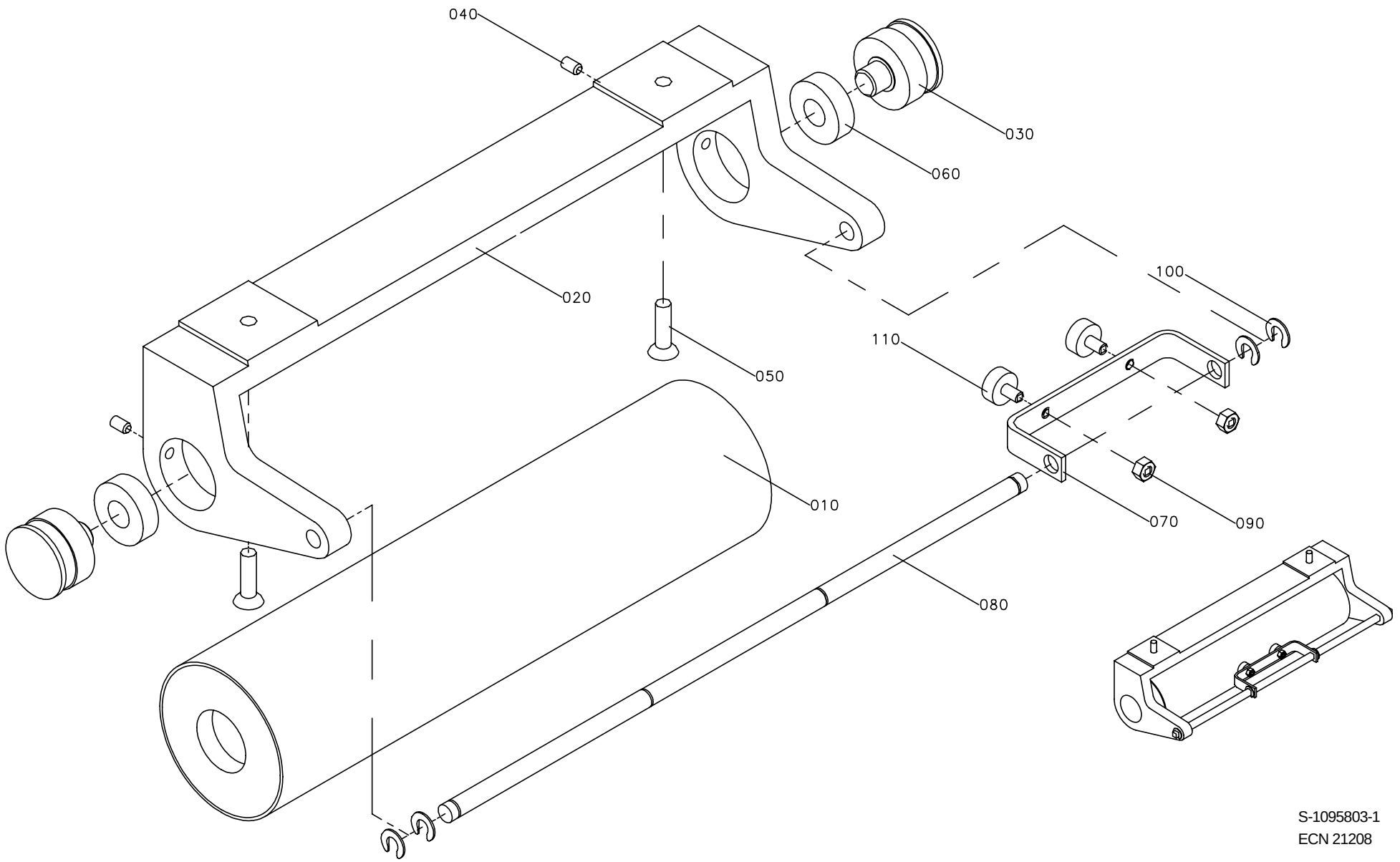

S-1095803-1
ECN 21208

Pos	Part No	SP	UN	Qty	Description	Page No
Common parts						
010	1035882-0000	D		1	BENDING ROLLER	
020	1036516-0000	-		1	CANTILEVER	
030	1037012-0000	D		2	AXLE PIN	
040	312318-0364	-		2	STOP SCREW SK6SS6X10RFR	
050	312155-0453	-		2	SCREW MF6S DIN 7991 M8x25 A280	
060	321313-0102	J		2	BALL BEARING 15x35x11	
070	1041603-0000	-		1	BRACKET	
080	1041606-0000	D		1	SHAFT	
090	312605-0316	-		2	NUT,HEXAGON A280 M6M6	
100	315755-0801	-		4	RETAINING RINGS,RADIAL ASSEMBLY 8	
110	90347-0007	D		2	VIBRATION DAMPER	

Pos	Part No	SP	UN	Qty	Description	Page No

TPOP PANEL 12"

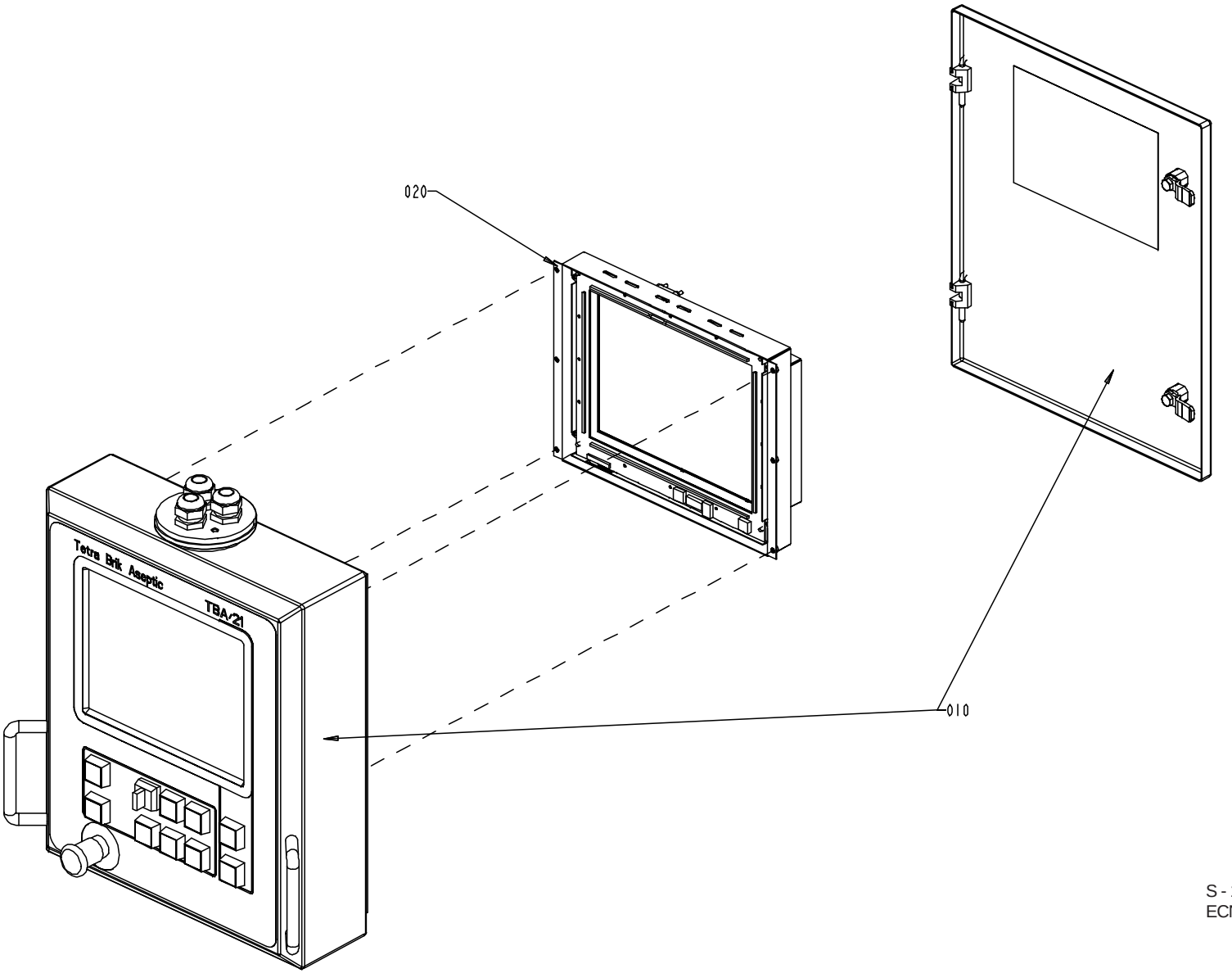

S - 1348772-1
ECN 72608

Pos	Part No	SP	UN	Qty	Description	Page No
Common parts						
010	A1349774-0100	-		1	PANEL UNIT 12"	**203**
020	A1348707-0100	-		1	DISPLAY UNIT 12"	**207**

Pos	Part No	SP	UN	Qty	Description	Page No

PANEL UNIT 12"

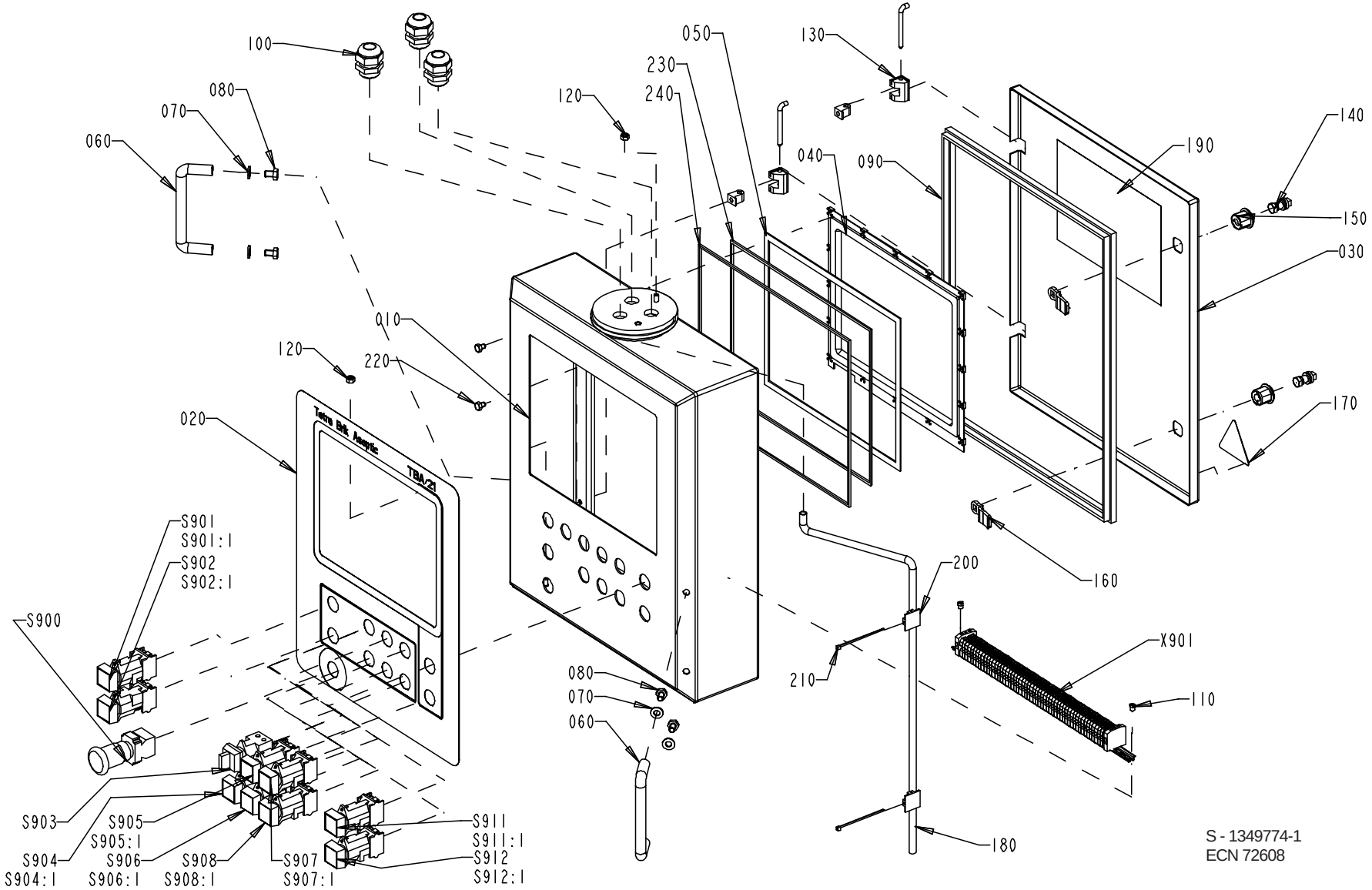

Pos	Part No	SP	UN	Qty	Description	Page No
Common parts						
X901	A1095597-0100	-		1	TERMINAL	**205**
010	1349773-0000	-		1	PANEL	
020	1349778-0000	-		1	FOIL	
030	1349777-0000	-		1	DOOR	
040	90041-0095	-		1	Frame 12"	
060	90017-0016	-		2	HANDLE,STAINLESS	
070	90005-0077	-		4	WASHER,Plain Round,nylon 8,4x7; H=2	
080	312105-0447	-		4	SCREW M6S ISO 4017 M8x12 A280	
090	90143-0057	-	MM	1800	STRIP EMKA 1011-05 21x11mm	
100	352103-0115	-		3	CABLE GLAND STR 21	
110	1041609-0000	-		2	NUT	
120	312605-0316	-		1	NUT,HEXAGON A280 M6M6	
130	90248-0047	-		2	Hinge 180 degree	
140	90237-0320	-		2	LOCK COMPONENT EMKA U136	
150	90237-0319	-		2	LOCK HOUSING EMKA U134	
160	90237-0157	-		2	LOCKING CATCH EMKA 1000-230	
170	90194-0016	-		1	SIGN "FLASH SIGN" 50X50MM	
180	90166-0008	-	MM	650	HOSE 7/10 PVC TRANSP.	
190	90194-0133	-		1	SIGN "DELIVERED DESIGN"	
200	352113-0206	-		2	ANCHOR 25,4x25,4mm ABM100-AT-MO	
210	90182-0005	-		2	CLIP STRIP 79x2,3mm REPL.BY 352113-101	
220	312105-0362	-		2	SCREW M6S ISO 4017 M6x8 A280	
230	90144-0075	-		x	GASKET 1,02x3,18mm	
240	90144-0075	-		x	GASKET 1,02x3,18mm	
S900	90064-0124	D		1	SWITCH,EMERGENCY STOP	
S901	B 90064-0082	D		1	PUSH BUTTON WHITE	
S901.1	359301-0519	-		1	Sign "TPOP RESET"	
S902	B 90064-0082	D		1	PUSH BUTTON WHITE	
S902.1	359301-0130	-		1	SIGN "LAMPTEST"	
S903	90111-0120	D		1	SWITCH 2 POS. EA OLTEN	
S904	B 90064-0082	D		1	PUSH BUTTON WHITE	
S904.1	359301-0170	-		1	SIGN "Manual Flushing FFU"	
S905	90064-0098	D		1	PUSH BUTTON CLEAR	
S905.1	359301-0091	-		1	SIGN "Inching FFU"	
S906	B 90064-0082	D		1	PUSH BUTTON WHITE	
S906.1	359301-0050	-		1	SIGN "DROP CHUTE"	
S907	90064-0098	D		1	PUSH BUTTON CLEAR	
S907.1	359301-0090	-		1	SIGN "INCHING"	
S908	90064-0084	D		1	PUSH BUTTON YELLOW	
S908.1	359301-0110	-		1	SIGN "SHORT STOP"	
S911	B 90064-0093	D		1	PUSH BUTTON GREEN	
S911.1	359301-0001	-		1	SIGN "UP"	
S912	B 90064-0082	D		1	PUSH BUTTON WHITE	
S912.1	359301-0005	-		1	SIGN "DOWN"	

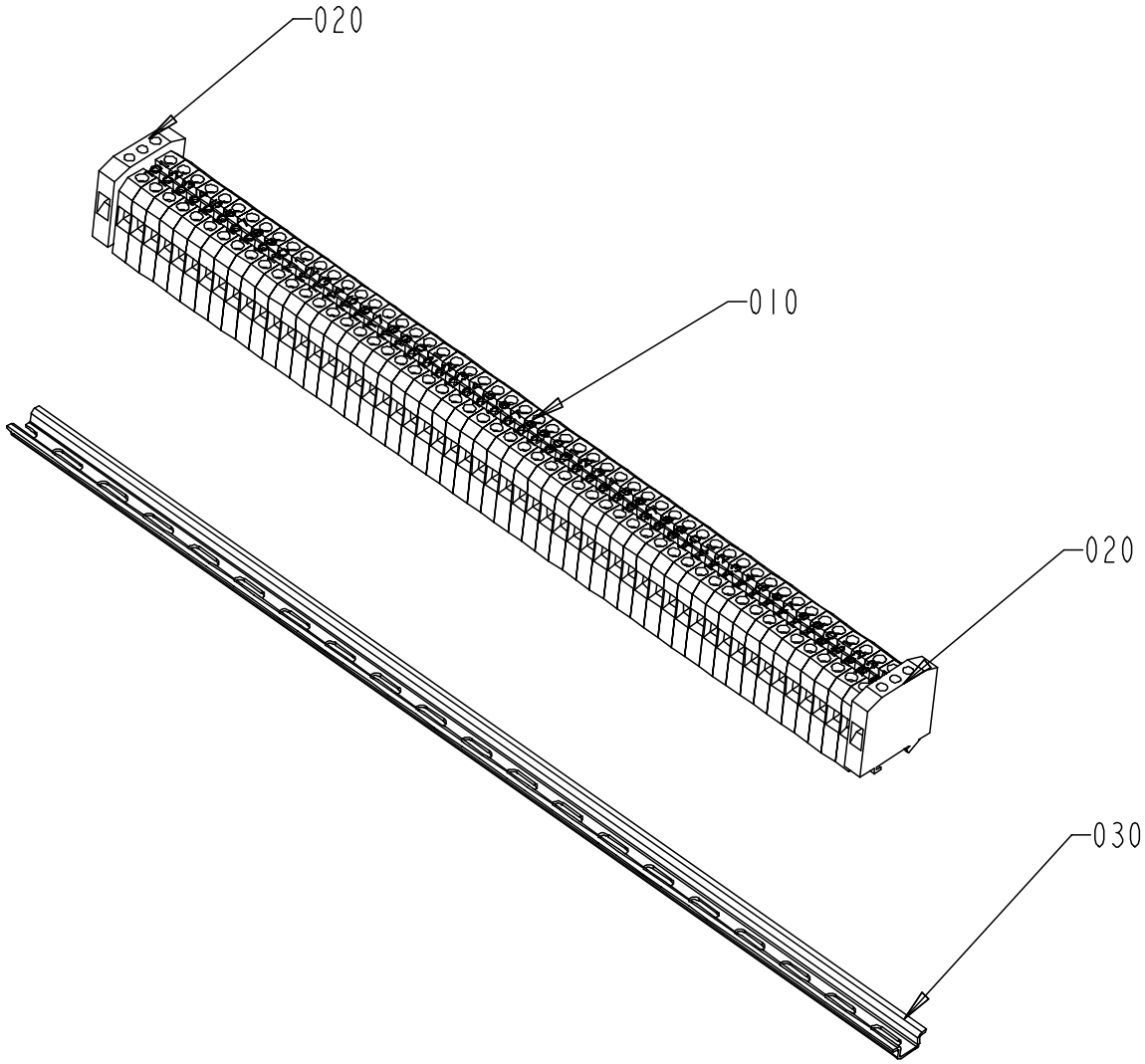

S - 1095597-1
ECN 72608

Pos	Part No	SP	UN	Qty	Description	Page No
Common parts						
010	90077-0079	-		56	FEED THROUGH TERMINAL AKZ 4PA for TS15	
020	90135-0026	-		2	EARTH TERMINAL AKE 4PA	
030	90077-0328	-	MM	390	RAIL TS15/5	
040	359011-0821	-		2	SET OF SIGNS 6-FW 1-50	
050	359011-0819	-		1	MARKING PLATES 5-GW (Earth)	

Pos	Part No	SP	UN	Qty	Description	Page No

DISPLAY UNIT 12"

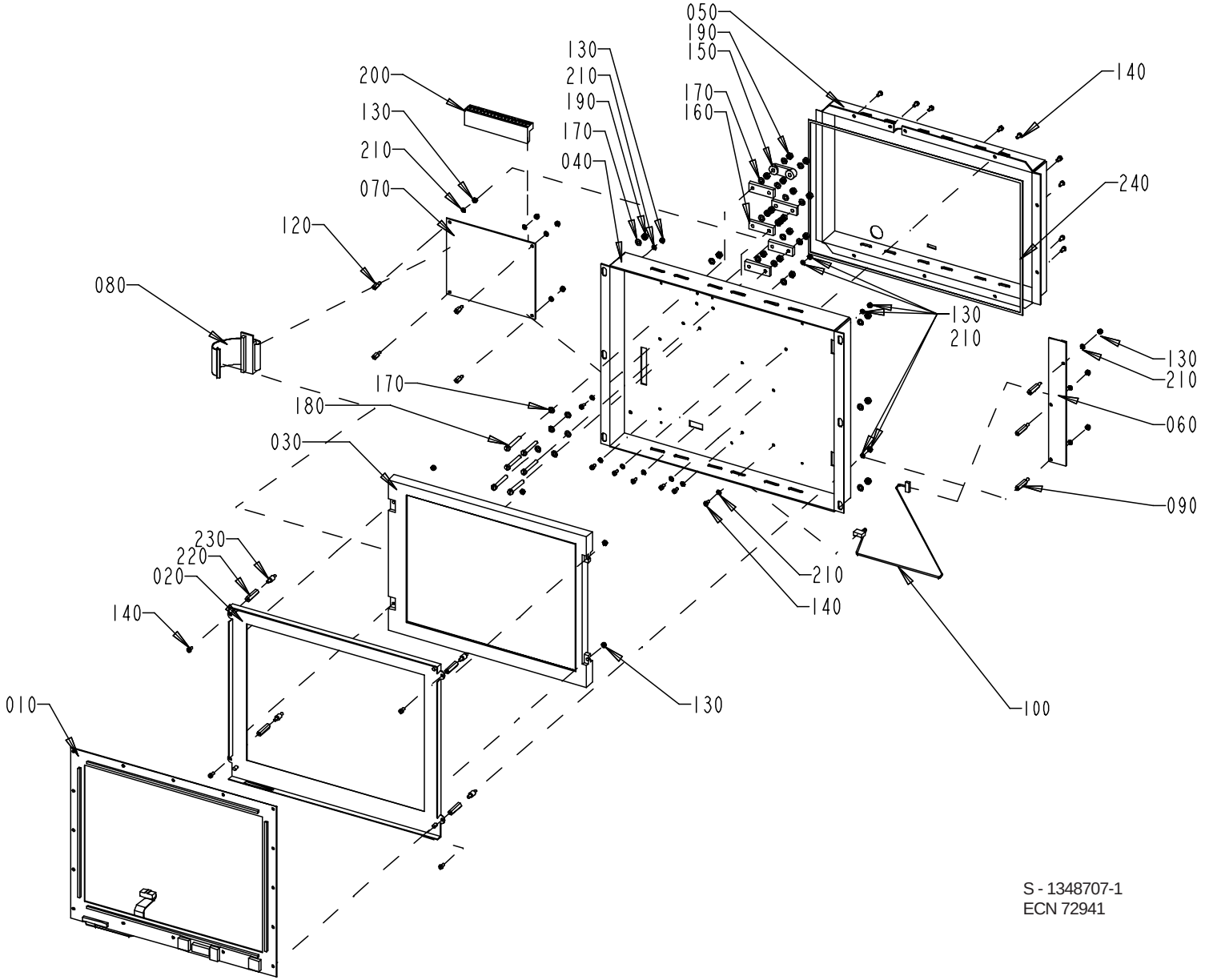

S - 1348707-1
ECN 72941

Pos	Part No	SP	UN	Qty	Description	Page No
Common parts						
010	90041-0099	D		1	IR Touch pcb, 12.1"	
020	90041-0104	-		1	CHASSIS FOR TOUCH 12,1"	
030	90041-0093	D		1	Display TOSHIBA 12,1"	
040	1348708-0000	-		1	COVER PLATE	
050	1348709-0000	-		1	COVER PLATE	
060	90041-0079	D		1	Adapter Backlight	
070	90041-0078	D		1	Remote Communication link Board	
080	90041-0103	-		1	DATACABLE Display L=150mm	
090	90316-0022	-		3	Spacer nut DSNF M3060x20	
100	90041-0082	-		1	Cable Display Power	
120	90316-0023	-		4	Spacer nut DSM M3055x8	
130	312605-0310	-		15	NUT,HEXAGON M6M 3 A2 80	
140	312125-0220	-		16	SLOTTED HEMCS3X6RFR	
150	90220-0302	-		1	CLAMP FOR SCR.CABLE 16MM	
160	90220-0304	-		5	CLAMP FOR SCR.CABLE 24MM	
170	315105-0136	-		24	WASHER,PLAIN ROUND 4,3x8 Stainless	
180	312125-0299	-		6	SLOTTED CHEESE HEAD ISO 1207 M4X30 RFR	
190	312605-0312	-		20	NUT,HEXAGON,M4 RFR	
200	B1129570-0000	-		1	LDS, LVDS TERMINAL 1	
210	315105-0124	-		18	WASHER,PLAIN ROUND 3,2x6	
220	90316-0029	-		4	SPACER NUT M3x16	
230	90316-0030	-		4	ELASTIC SCREW INNOSCAN 15060002	
240	90144-0074	-		x	GASKET 3,17x3,17x1,98mm	

Pos	Part No	SP	UN	Qty	Description	Page No

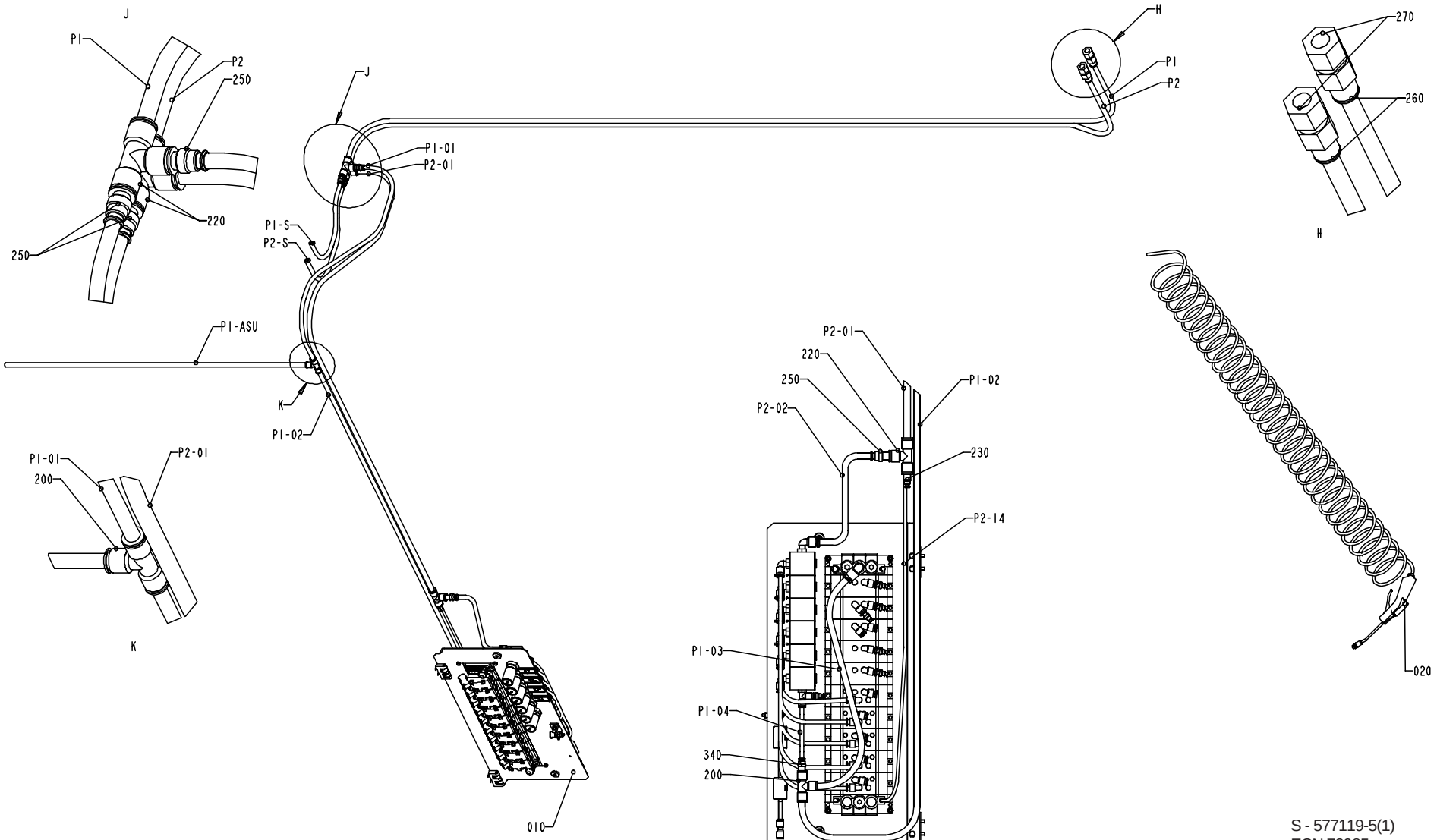

S - 577119-5(1)
ECN 72985

Pos	Part No	SP	UN	Qty	Description	Page No
Common parts						
010	A1346613-0200	-		1	VALVE PANEL	**213**
020	A1095682-0100	-		1	AIR JET GUN	**215**
1210-01	90166-0081	-	MM	1200	TUBE 6/4 PA Blue	
12204	90166-0081	-	MM	3000	TUBE 6/4 PA Blue	
12214	90166-0081	-	MM	3000	TUBE 6/4 PA Blue	
200	342748-0109	-		2	T-CONNECTION	
21044	90166-0081	-	MM	460	TUBE 6/4 PA Blue	
210441	90166-0081	-	MM	200	TUBE 6/4 PA Blue	
210442	90166-0081	-	MM	1200	TUBE 6/4 PA Blue	
220	342748-0110	-		3	T-CONNECTION	
230	90055-0116	-		1	REDUCER	
240	342748-0102	-		1	T-CONNECTION	
250	342716-0211	-		4	REDUCER 12-14	
260	90055-0097	-		2	STRAIGHT COUPLING	
270	342725-0114	-		2	STRAIGHT PIPE CONNECTION GAI 15-G1/2"	
340	342716-0209	-		1	REDUCER 8-12	
350	359000-0400	-		38	MARKING CO2/4"0"	
360	359000-0401	-		32	MARKING COLLAR 2/4 "1" Yellow	
370	359000-0402	-		42	MARKING COLLAR 2/4 "2" Yellow	
380	359000-0403	-		6	MARKING COLLAR PA2/4 "3" Yellow	
390	359000-0404	-		42	MARKING COLLAR PA2/4 "4" Yellow	
400	359000-0405	-		18	MARKING CO2/4"5"	
410	359000-0406	-		2	MARKING COLLAR PA2/4 "6" Yellow	
420	359000-0765	-		4	MARKING CO2/4"P"	
42002	90166-0013	-	MM	2000	TUBE 8/6 PA Blue	
42102	90166-0013	-	MM	2000	TUBE 8/6 PA Blue	
42202	90166-0013	-	MM	2000	TUBE 8/6 PA Blue	
42302	90166-0013	-	MM	2000	TUBE 8/6 PA Blue	
430	359000-0024	-		6	MARKING CO2/4 "-"	
4301-04	90166-0081	-	MM	3500	TUBE 6/4 PA Blue	
440	359000-0501	-		16	MARKING COLLAR 3/6 "1" Yellow	
450	359000-0502	-		12	MARKING CO3/6"2"	
460	359000-0503	-		2	MARKING CO3/6"3"	
470	359000-0815	-		20	MARKING CO3/6"P"	
480	359000-0800	-		2	MARKING CO3/6"A"	
490	359000-0818	-		6	MARKING CO3/6"S"	
500	359000-0820	-		2	MARKING CO3/6"U"	
510	359000-0025	-		16	MARKING CO3/6 "-"	
520	359000-0500	-		10	MARKING COLLAR 3/6 "0" Yellow	
53064	90166-0013	-	MM	1800	TUBE 8/6 PA Blue	
55012	90166-0013	-	MM	2000	TUBE 8/6 PA Blue	
55014	90166-0013	-	MM	2000	TUBE 8/6 PA Blue	
55042	90166-0081	-	MM	2100	TUBE 6/4 PA Blue	
55044	90166-0081	-	MM	2100	TUBE 6/4 PA Blue	
P1	90166-0196	-	MM	3000	TUBE 14 mm PA Blue	
P1-01	90166-0195	-	MM	900	TUBE 12 mm PA Blue	
P1-02	90166-0195	-	MM	2200	TUBE 12 mm PA Blue	
P1-03	90166-0195	-	MM	700	TUBE 12 mm PA Blue	
P1-ASU	90166-0195	-	MM	500	TUBE 12 mm PA Blue	
P1-S	90166-0195	-	MM	450	TUBE 12 mm PA Blue	
P104	90166-0013	-	MM	150	TUBE 8/6 PA Blue	
P2	90166-0196	-	MM	3000	TUBE 14 mm PA Blue	
P2-01	90166-0196	-	MM	2000	TUBE 14 mm PA Blue	
P2-02	90166-0195	-	MM	400	TUBE 12 mm PA Blue	
P2-14	90166-0081	-	MM	750	TUBE 6/4 PA Blue	
P2-S	90166-0195	-	MM	500	TUBE 12 mm PA Blue	

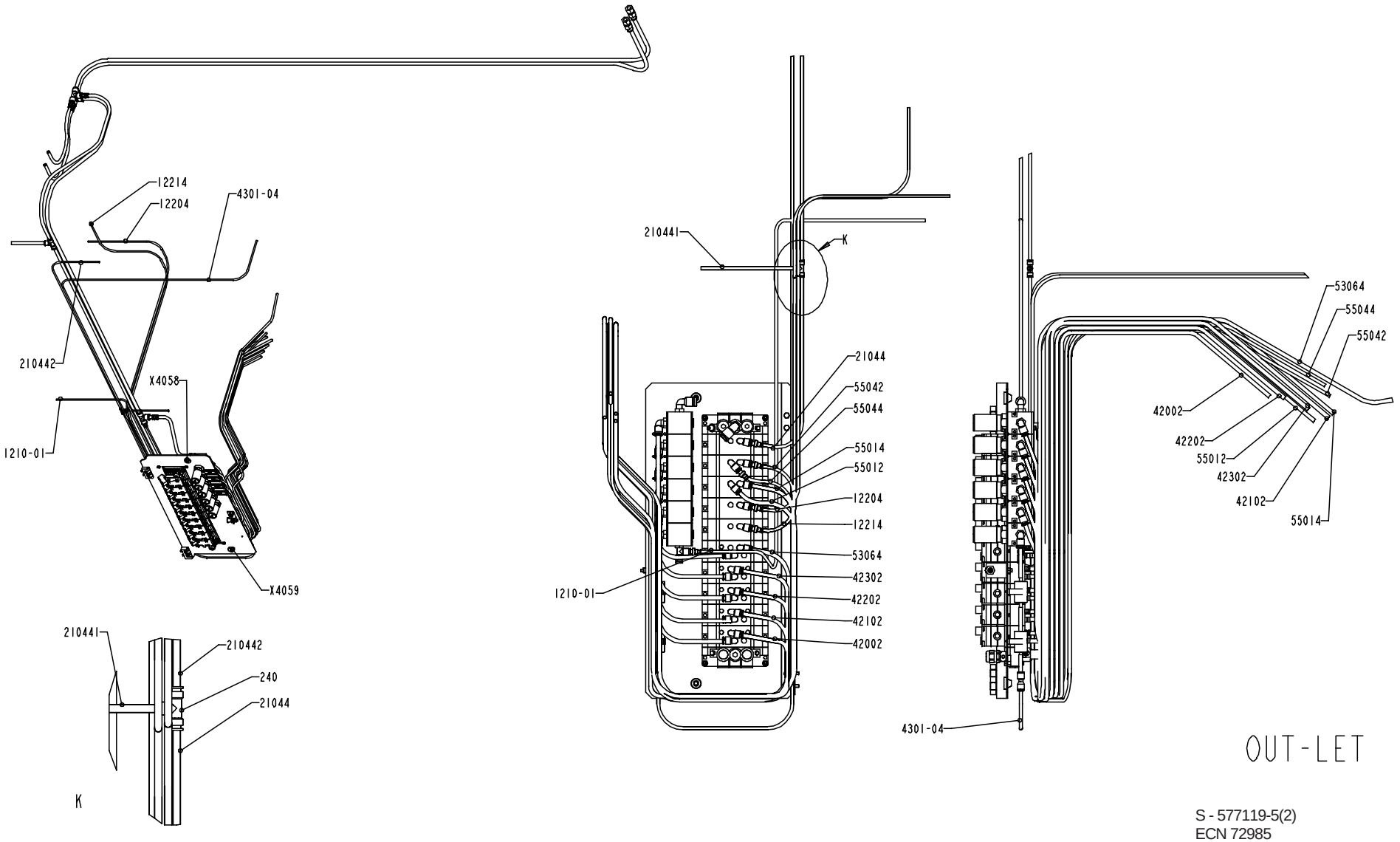

S - 577119-5(2)
ECN 72985

Pos	Part No	SP	UN	Qty	Description	Page No
Common parts						
010	A1346613-0200	-		1	VALVE PANEL	**213**
020	A1095682-0100	-		1	AIR JET GUN	**215**
1210-01	90166-0081	-	MM	1200	TUBE 6/4 PA Blue	
12204	90166-0081	-	MM	3000	TUBE 6/4 PA Blue	
12214	90166-0081	-	MM	3000	TUBE 6/4 PA Blue	
200	342748-0109	-		2	T-CONNECTION	
21044	90166-0081	-	MM	460	TUBE 6/4 PA Blue	
210441	90166-0081	-	MM	200	TUBE 6/4 PA Blue	
210442	90166-0081	-	MM	1200	TUBE 6/4 PA Blue	
220	342748-0110	-		3	T-CONNECTION	
230	90055-0116	-		1	REDUCER	
240	342748-0102	-		1	T-CONNECTION	
250	342716-0211	-		4	REDUCER 12-14	
260	90055-0097	-		2	STRAIGHT COUPLING	
270	342725-0114	-		2	STRAIGHT PIPE CONNECTION GAI 15-G1/2"	
340	342716-0209	-		1	REDUCER 8-12	
350	359000-0400	-		38	MARKING CO2/4"0"	
360	359000-0401	-		32	MARKING COLLAR 2/4 "1" Yellow	
370	359000-0402	-		42	MARKING COLLAR 2/4 "2" Yellow	
380	359000-0403	-		6	MARKING COLLAR PA2/4 "3" Yellow	
390	359000-0404	-		42	MARKING COLLAR PA2/4 "4" Yellow	
400	359000-0405	-		18	MARKING CO2/4"5"	
410	359000-0406	-		2	MARKING COLLAR PA2/4 "6" Yellow	
420	359000-0765	-		4	MARKING CO2/4"P"	
42002	90166-0013	-	MM	2000	TUBE 8/6 PA Blue	
42102	90166-0013	-	MM	2000	TUBE 8/6 PA Blue	
42202	90166-0013	-	MM	2000	TUBE 8/6 PA Blue	
42302	90166-0013	-	MM	2000	TUBE 8/6 PA Blue	
430	359000-0024	-		6	MARKING CO2/4 "-"	
4301-04	90166-0081	-	MM	3500	TUBE 6/4 PA Blue	
440	359000-0501	-		16	MARKING COLLAR 3/6 "1" Yellow	
450	359000-0502	-		12	MARKING CO3/6"2"	
460	359000-0503	-		2	MARKING CO3/6"3"	
470	359000-0815	-		20	MARKING CO3/6"P"	
480	359000-0800	-		2	MARKING CO3/6"A"	
490	359000-0818	-		6	MARKING CO3/6"S"	
500	359000-0820	-		2	MARKING CO3/6"U"	
510	359000-0025	-		16	MARKING CO3/6 "-"	
520	359000-0500	-		10	MARKING COLLAR 3/6 "0" Yellow	
53064	90166-0013	-	MM	1800	TUBE 8/6 PA Blue	
55012	90166-0013	-	MM	2000	TUBE 8/6 PA Blue	
55014	90166-0013	-	MM	2000	TUBE 8/6 PA Blue	
55042	90166-0081	-	MM	2100	TUBE 6/4 PA Blue	
55044	90166-0081	-	MM	2100	TUBE 6/4 PA Blue	
P1	90166-0196	-	MM	3000	TUBE 14 mm PA Blue	
P1-01	90166-0195	-	MM	900	TUBE 12 mm PA Blue	
P1-02	90166-0195	-	MM	2200	TUBE 12 mm PA Blue	
P1-03	90166-0195	-	MM	700	TUBE 12 mm PA Blue	
P1-ASU	90166-0195	-	MM	500	TUBE 12 mm PA Blue	
P1-S	90166-0195	-	MM	450	TUBE 12 mm PA Blue	
P104	90166-0013	-	MM	150	TUBE 8/6 PA Blue	
P2	90166-0196	-	MM	3000	TUBE 14 mm PA Blue	
P2-01	90166-0196	-	MM	2000	TUBE 14 mm PA Blue	
P2-02	90166-0195	-	MM	400	TUBE 12 mm PA Blue	
P2-14	90166-0081	-	MM	750	TUBE 6/4 PA Blue	
P2-S	90166-0195	-	MM	500	TUBE 12 mm PA Blue	

VALVE PANEL

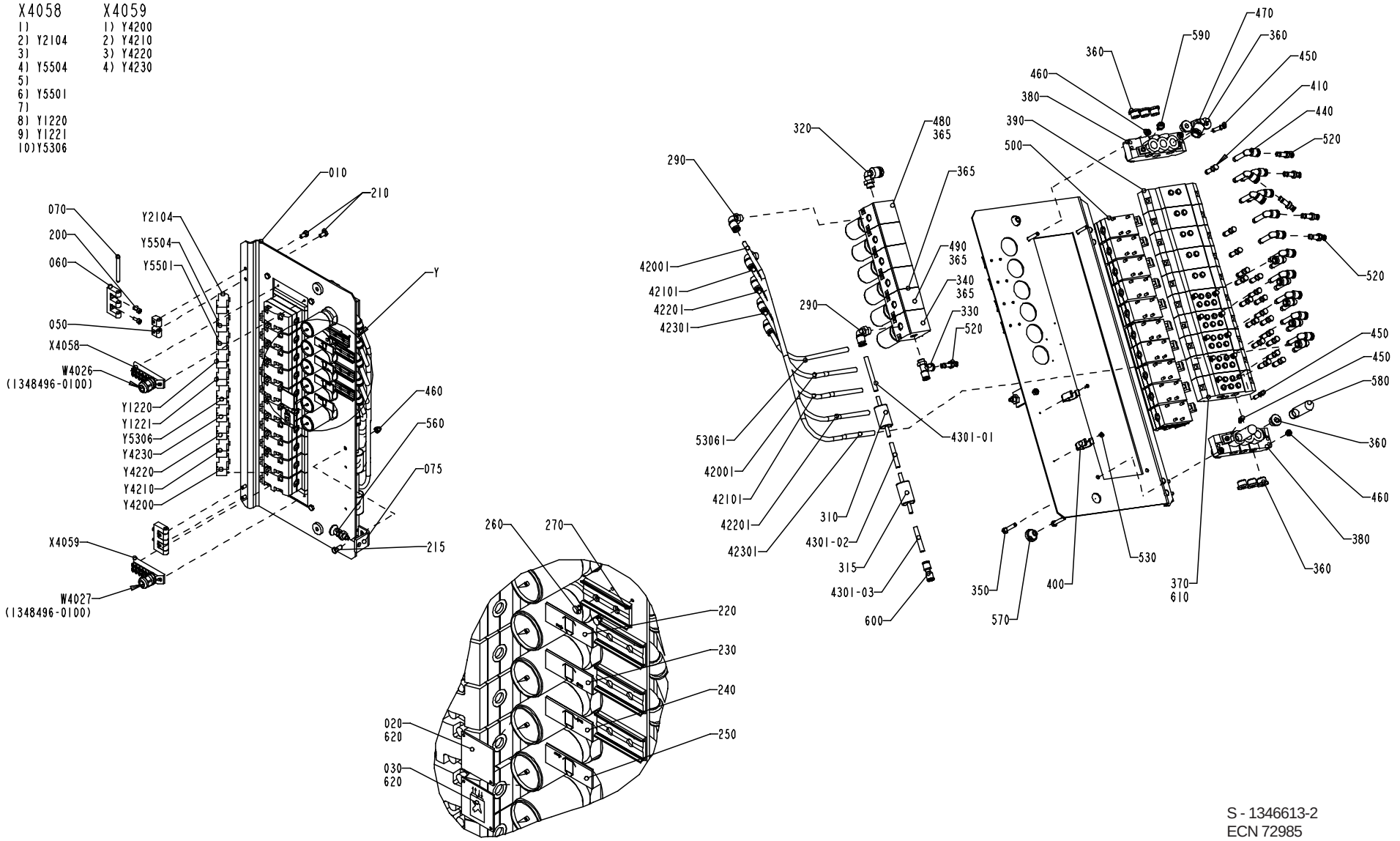

S - 1346613-2
ECN 72985

Pos	Part No	SP	UN	Qty	Description	Page No
Common parts						
005	1512376-0000	-		1	PNEUMATIC DIAGRAM	
010	1512321-0000	-		1	PLATE	
020	1487126-0000	-		1	SIGN	
030	978603-0000	-		1	SIGN	
050	1129770-0000	-		4	BLOCKING PIECE	
060	1035792-0000	-		2	E-HINGE	
070	988685-0000	-		2	PIN	
075	1348197-0000	-		1	HOLDER	
200	312115-0327	-		4	SCREW MC6S ISO 4762 M5X12 A280	
210	312105-0366	-		4	SCREW M6S ISO 4017 M6x12 A280	
215	312105-0368	-		1	SCREW M6S ISO 4017 M6x16 A280	
220	1511522-0000	-		1	LABEL	
230	1511521-0000	-		1	LABEL	
240	1511525-0000	-		1	LABEL	
250	1511526-0000	-		1	LABEL	
260	311520-0329	-		8	BLANK RIVET 2,4x8mm	
270	359240-0100	-		4	SIGN HOLDER	
290	342732-0104	-		6	ELBOW PIPE JOINT	
310	90277-0045	J		1	FILTER	
315	90277-0046	J		1	FILTER	
320	342732-0109	-		1	ELBOW PIPE JOINT	
330	342772-0122	-		1	ELBOW FITTING	
340	90113-0097	-		1	PRESSURE REGULATOR	
350	312109-0376	-		4	SCREW M6S ISO 4017 M6X35 A280	
360	342713-0211	-		9	PLUG,EXT.G-THREAD,HEXAGON SOCKET G3/8"	
365	342713-0210	-		7	PLUG,EXT.THREAD,HEXAGON SOCKET 1/4"Brass	
370	90042-0520	-		5	BASE PLATE MECMAN	
380	90042-0522	-		2	END PIECE MECMAN 07931 080 01	
390	90042-0532	-		5	PNEUMATIC,VALVES,PLATE MECMAN	
400	90165-0019	-		2	CLIP	
410	342715-0103	-		18	BLIND PLUG	
42001	90166-0013	-	MM	600	TUBE 8/6 PA Blue	
42101	90166-0013	-	MM	600	TUBE 8/6 PA Blue	
42201	90166-0013	-	MM	600	TUBE 8/6 PA Blue	
42301	90166-0013	-	MM	600	TUBE 8/6 PA Blue	
4301-01	90166-0013	-	MM	70	TUBE 8/6 PA Blue	
4301-02	90166-0013	-	MM	50	TUBE 8/6 PA Blue	
4301-03	90166-0013	-	MM	50	TUBE 8/6 PA Blue	
440	90055-0204	-		17	ELBOW-90 COUPLING,STEM,FPT 8-8	
450	342715-0102	-		12	PLUG	
460	312605-0316	-		5	NUT,HEXAGON A280 M6M6	
470	342732-0110	-		1	ELBOW PIPE JOINT	
480	90113-0096	-		4	PRESSURE REGULATOR	
490	90113-0095	-		1	PRESSURE REGULATOR	
500	90042-0215	-		10	SOLENOID VALVE 07931 067 18 ISO 1	
520	342716-0203	-		6	REDUCER 6-8	
530	312125-0220	-		2	SLOTTED HEMCS3X6RFR	
53061	90166-0013	-	MM	450	TUBE 8/6 PA Blue	
560	90051-0112	-		1	ADJUSTMENT BOLT	
570	90015-0023	-		2	GLANDS,Lead-in,IP67	
580	90328-0024	-		2	SILENCER	
590	90328-0017	-		1	SILENCER	
600	90055-0189	-		1	Hose,Nipple,reducer,tube, 6/8m	
610	90042-0528	-		5	SEAL KIT MECMAN	
620	312502-0120	-		4	DRIVE SCREW ROUND HEAD SMS 1549 KDS 0X5	
630	359000-0400	-		24	MARKING CO2/4"0"	
640	359000-0401	-		18	MARKING COLLAR 2/4 "1" Yellow	
650	359000-0402	-		12	MARKING COLLAR 2/4 "2" Yellow	
660	359000-0403	-		12	MARKING COLLAR PA2/4 "3" Yellow	
670	359000-0404	-		14	MARKING COLLAR PA2/4 "4" Yellow	
680	359000-0405	-		2	MARKING CO2/4"5"	
690	359000-0406	-		2	MARKING COLLAR PA2/4 "6" Yellow	
700	359000-0024	-		6	MARKING CO2/4 "-"	
X4058	90042-0535	-		1	CONNECTION BOARD MECMAN	
X4059	90042-0535	-		1	CONNECTION BOARD MECMAN	
Y1220	90042-0538	-		1	COIL MECMAN series 590 L=500mm	
Y1221	90042-0538	-		1	COIL MECMAN series 590 L=500mm	
Y2104	90042-0538	-		1	COIL MECMAN series 590 L=500mm	
Y4200	90042-0538	-		1	COIL MECMAN series 590 L=500mm	
Y4210	90042-0538	-		1	COIL MECMAN series 590 L=500mm	
Y4220	90042-0538	-		1	COIL MECMAN series 590 L=500mm	
Y4230	90042-0538	-		1	COIL MECMAN series 590 L=500mm	
Y5306	90042-0538	-		1	COIL MECMAN series 590 L=500mm	
Y5501	90042-0538	-		1	COIL MECMAN series 590 L=500mm	
Y5504	90042-0538	-		1	COIL MECMAN series 590 L=500mm	

AIR JET GUN

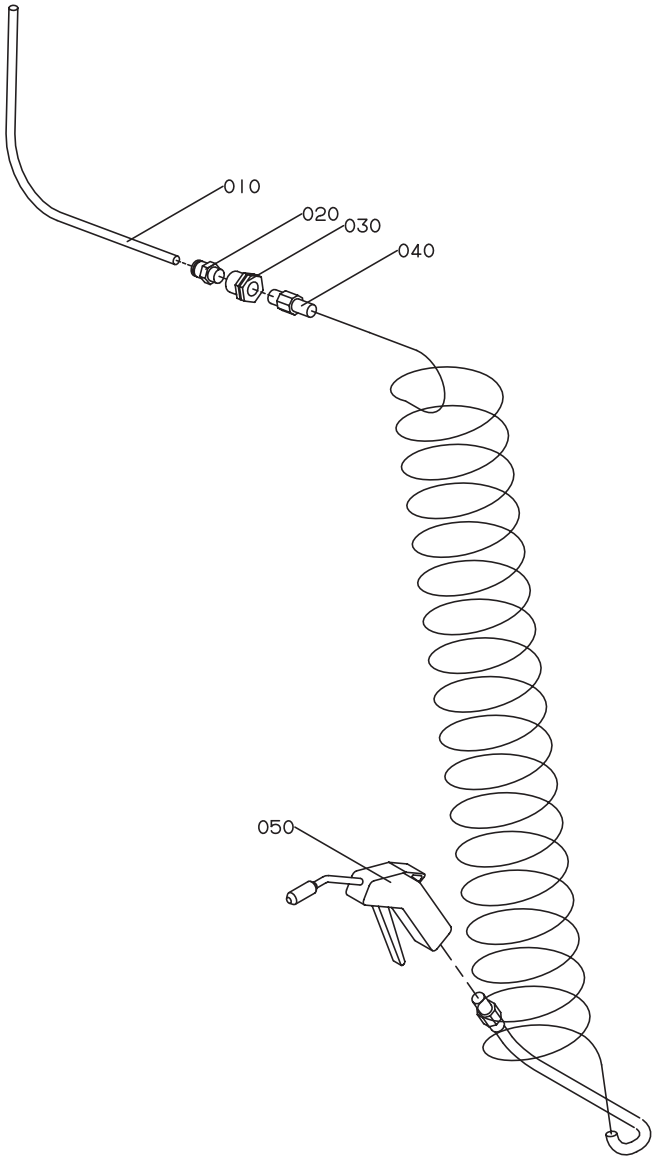

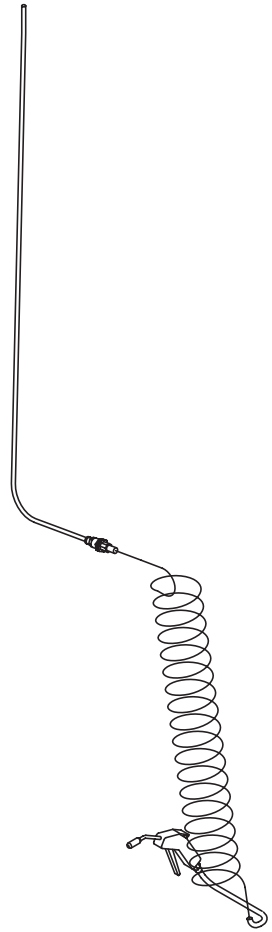

S-1095682-1
ECN 21193

Pos	Part No	SP	UN	Qty	Description	Page No
Common parts						
010	90166-0013	-	MM	1800	TUBE 8/6 PA Blue	
020	342920-0122	-		1	STRAIGHT COUPLING,EXT.THREADED 8/6-R1/4"	
030	342767-0104	-		1	BULKHEAD CONNECTOR G1/4"	
040	90152-0016	-		1	HOSE	
050	90243-0061	-		1	FAN NOZZLE	

Pos	Part No	SP	UN	Qty	Description	Page No

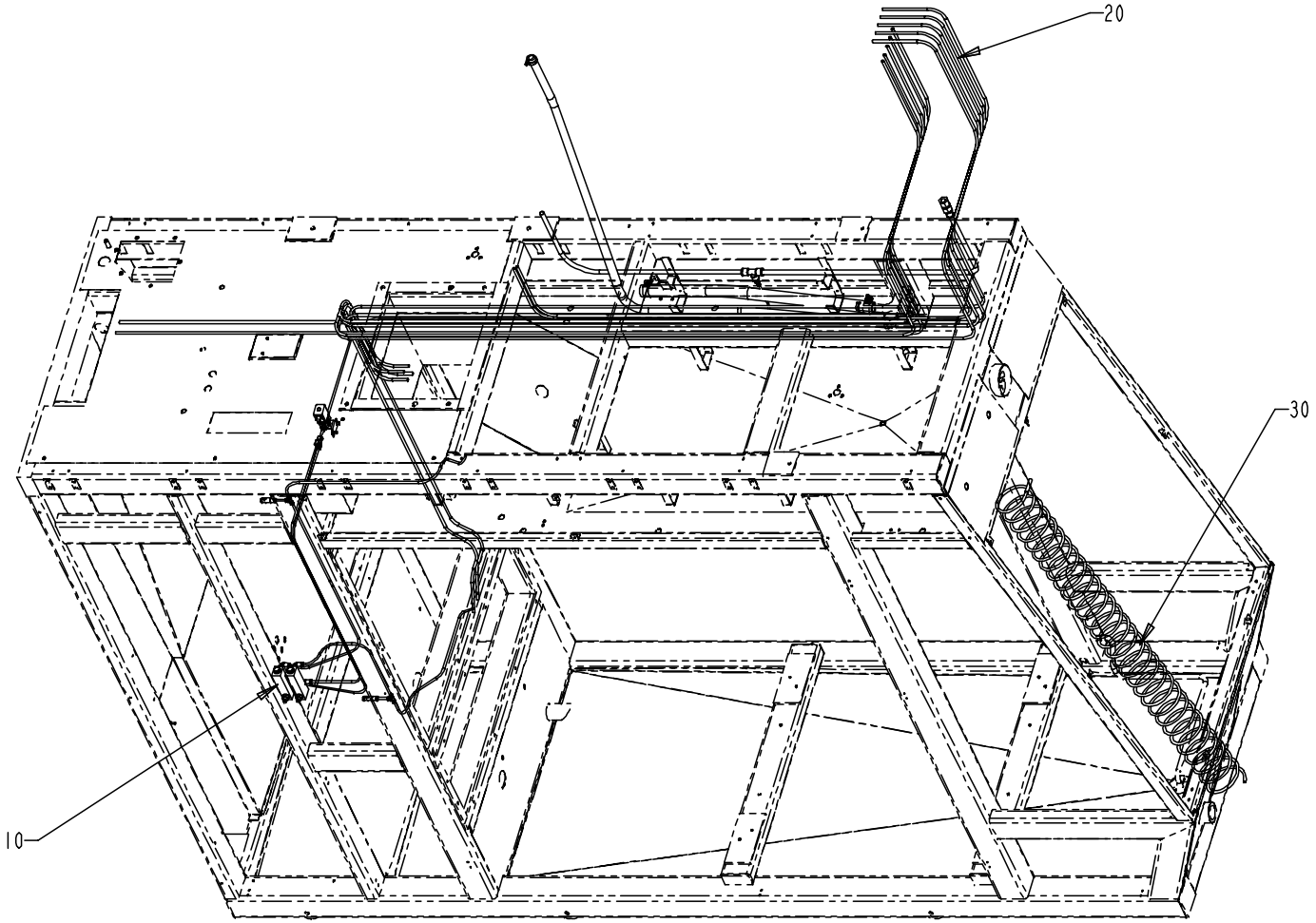

S - 577121-4
ECN 72985

Pos	Part No	SP	UN	Qty	Description	Page No
Common parts						
010	A1334810-0200	-		1	PIPE WORK	**219**
020	A1334812-0100	-		1	COOLING HOSES	**221**
030	A1095681-0100	-		1	SPRAY GUN	**223**

Pos	Part No	SP	UN	Qty	Description	Page No

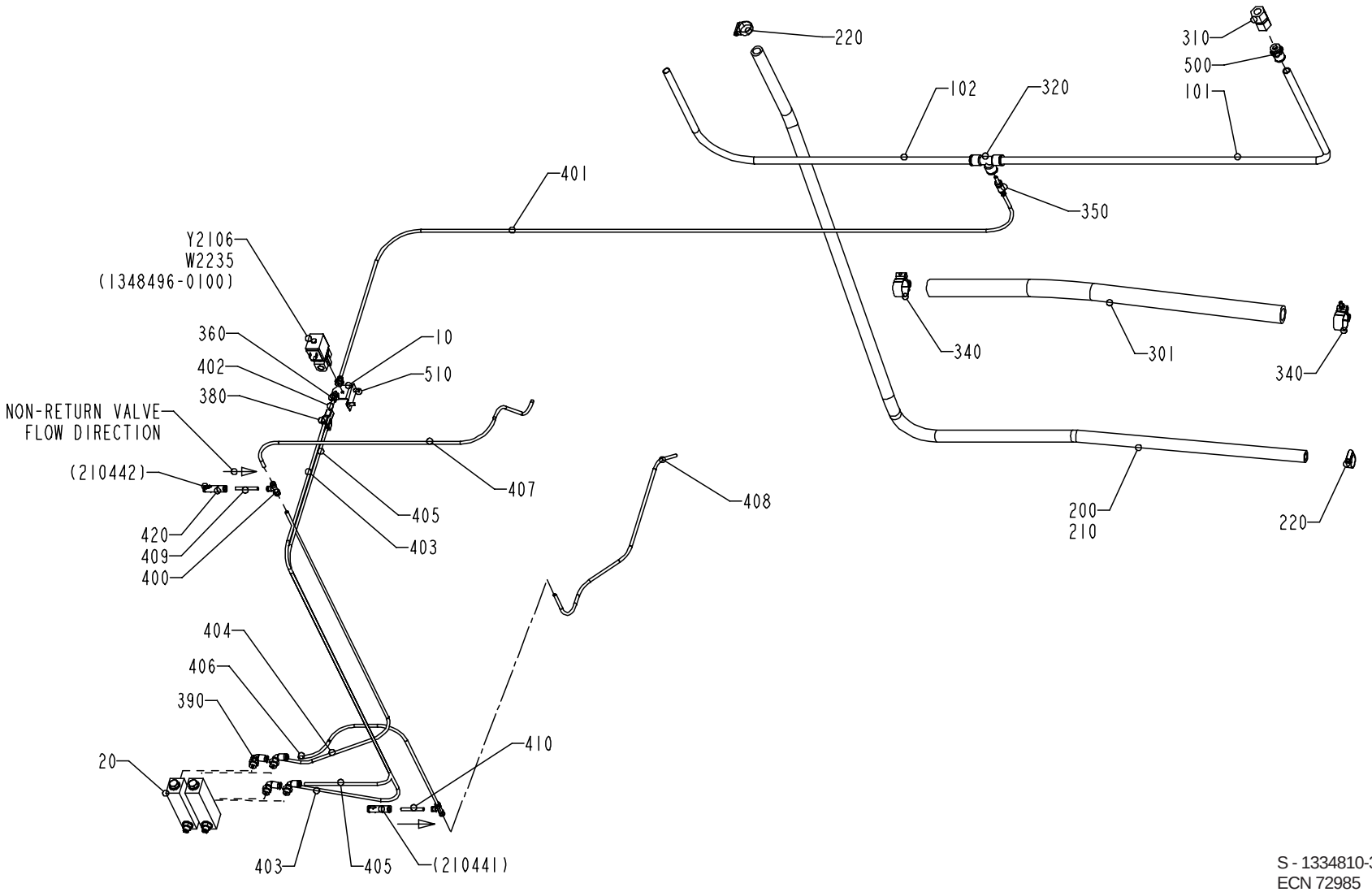

S - 1334810-3
ECN 72985

Pos	Part No	SP	UN	Qty	Description	Page No
Common parts						
010	1129408-0000	-		1	CANTILEVER	
020	90243-0112	-		2	FLOW METER	
101	90166-0196	-	MM	1400	TUBE 14 mm PA Blue	
102	90166-0196	-	MM	900	TUBE 14 mm PA Blue	
200	90166-0260	-	MM	2000	Hose	
210	90411-0020	-	MM	2000	Insulating Tube	
220	342991-0104	-		2	HOSE CLIP,WORM DRIVE TYPE (23)-27	
301	90166-0233	-	MM	1000	HOSE	
310	342725-0114	-		1	STRAIGHT PIPE CONNECTION GAI 15-G1/2"	
320	342748-0110	-		1	T-CONNECTION	
340	90165-0147	-		2	HOSE CLIP	
350	90055-0116	-		1	REDUCER	
360	342722-0203	-		2	STRAIGHT COUPLING	
380	90055-0100	-		1	Y-CONNECTION	
390	342732-0103	-		4	ELBOW PIPE JOINT	
400	342748-0102	-		2	T-CONNECTION	
401	90166-0081	-	MM	2100	TUBE 6/4 PA Blue	
402	90166-0081	-	MM	50	TUBE 6/4 PA Blue	
403	90166-0081	-	MM	1400	TUBE 6/4 PA Blue	
404	90166-0081	-	MM	1000	TUBE 6/4 PA Blue	
405	90166-0081	-	MM	1300	TUBE 6/4 PA Blue	
406	90166-0081	-	MM	500	TUBE 6/4 PA Blue	
407	90166-0081	-	MM	1000	TUBE 6/4 PA Blue	
408	90166-0081	-	MM	700	TUBE 6/4 PA Blue	
409	90166-0081	-	MM	50	TUBE 6/4 PA Blue	
410	90166-0081	-	MM	50	TUBE 6/4 PA Blue	
420	90230-0062	-		2	Non Return Valve	
500	90055-0097	-		1	STRAIGHT COUPLING	
510	312105-0366	-		2	SCREW M6S ISO 4017 M6x12 A280	
W2235	351150-0403	-	MM	3000	CABLE OLFLEX 3x0,75 MM2	
Y2106	90042-0248	-		1	SOLENOID VALVE OFFICIENE DI ENSINO	

Pos	Part No	SP	UN	Qty	Description	Page No

COOLING HOSES

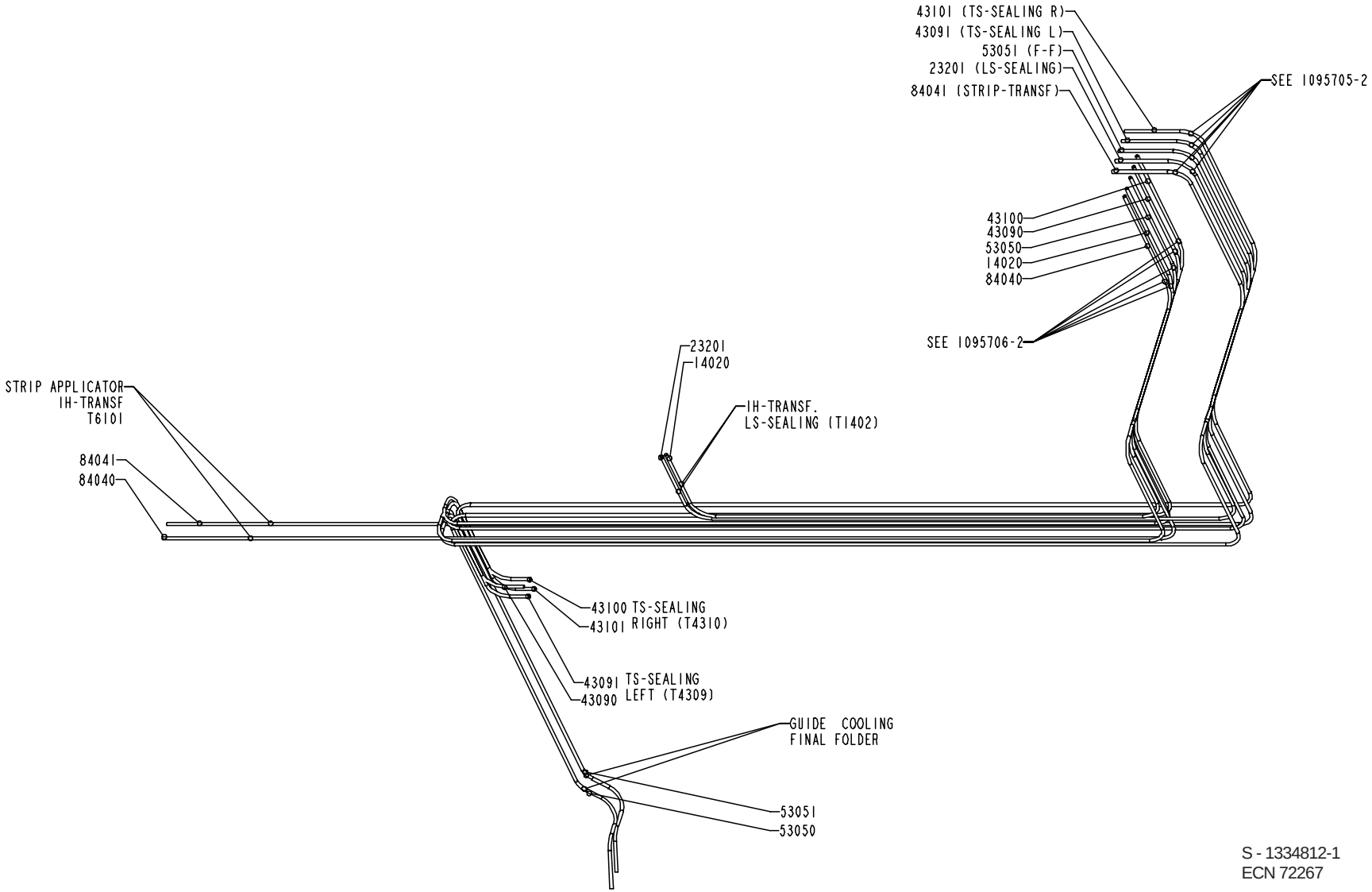

S - 1334812-1
ECN 72267

Pos	Part No	SP	UN	Qty	Description	Page No
Common parts						
100	359000-0400	-		30	MARKING CO2/4"0"	
110	359000-0401	-		16	MARKING COLLAR 2/4 "1" Yellow	
120	359000-0402	-		6	MARKING COLLAR 2/4 "2" Yellow	
130	359000-0403	-		14	MARKING COLLAR PA2/4 "3" Yellow	
140	359000-0404	-		18	MARKING COLLAR PA2/4 "4" Yellow	
14020	90166-0118	-	MM	2800	TUBE 8 mm PA Black	
150	359000-0405	-		8	MARKING CO2/4"5"	
160	359000-0408	-		4	MARKING COLLAR PA2/4 "8" Yellow	
170	359000-0409	-		4	MARKING COLLAR PA2/4 "9" Yellow	
23201	90166-0118	-	MM	3500	TUBE 8 mm PA Black	
43090	90166-0118	-	MM	4000	TUBE 8 mm PA Black	
43091	90166-0118	-	MM	4550	TUBE 8 mm PA Black	
43100	90166-0118	-	MM	4000	TUBE 8 mm PA Black	
43101	90166-0118	-	MM	4500	TUBE 8 mm PA Black	
53050	90166-0118	-	MM	5200	TUBE 8 mm PA Black	
53051	90166-0118	-	MM	5400	TUBE 8 mm PA Black	
84040	90166-0118	-	MM	4200	TUBE 8 mm PA Black	
84041	90166-0118	-	MM	4600	TUBE 8 mm PA Black	

Pos	Part No	SP	UN	Qty	Description	Page No

SPRAY GUN

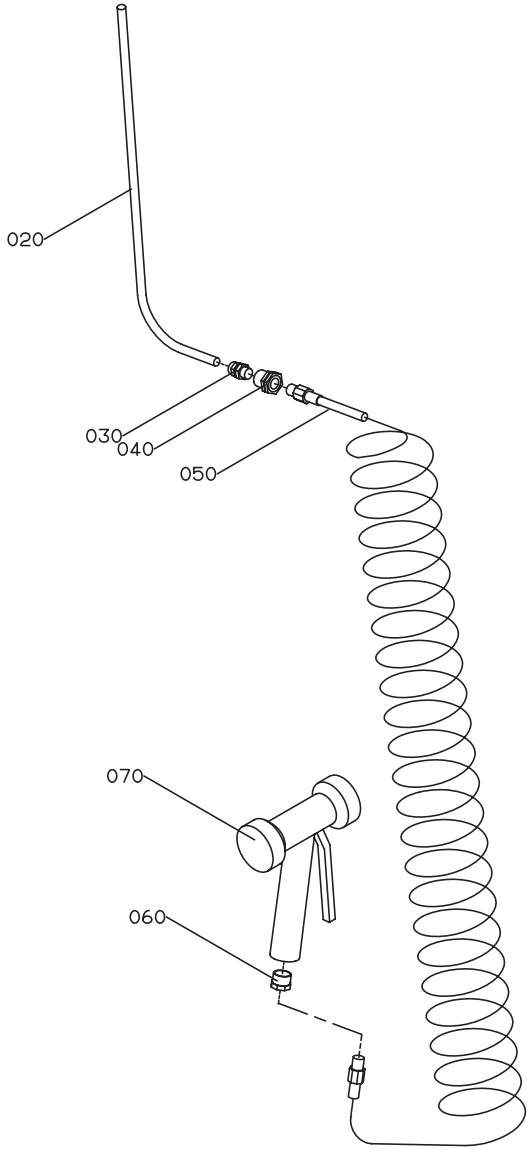

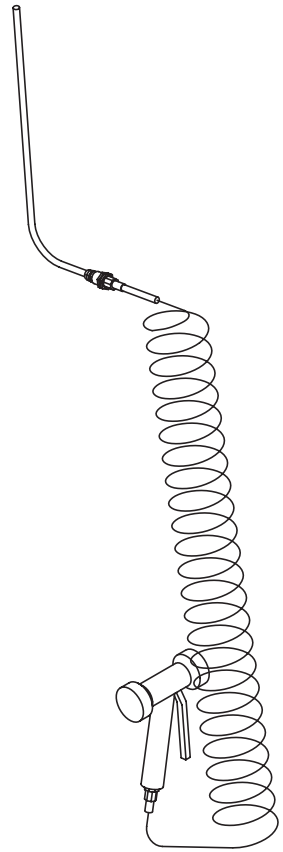

S-1095681-1
ECN 21960

Pos	Part No	SP	UN	Qty	Description	Page No
Common parts						
020	90166-0135	-	MM	1000	TUBE 10 mm PA Black	
030	342920-0132	-		1	STRAIGHT COUPL.,EXT.THREADED 10/8-R1/4"	
040	342767-0104	-		1	BULKHEAD CONNECTOR G1/4"	
050	90152-0017	-		1	HOSE	
060	342701-0205	-		1	BUSHING,INT./EXT.G-THREAD G1/2"-G1/4"	
070	90426-0003	-		1	HAND SHOWER	

Pos	Part No	SP	UN	Qty	Description	Page No

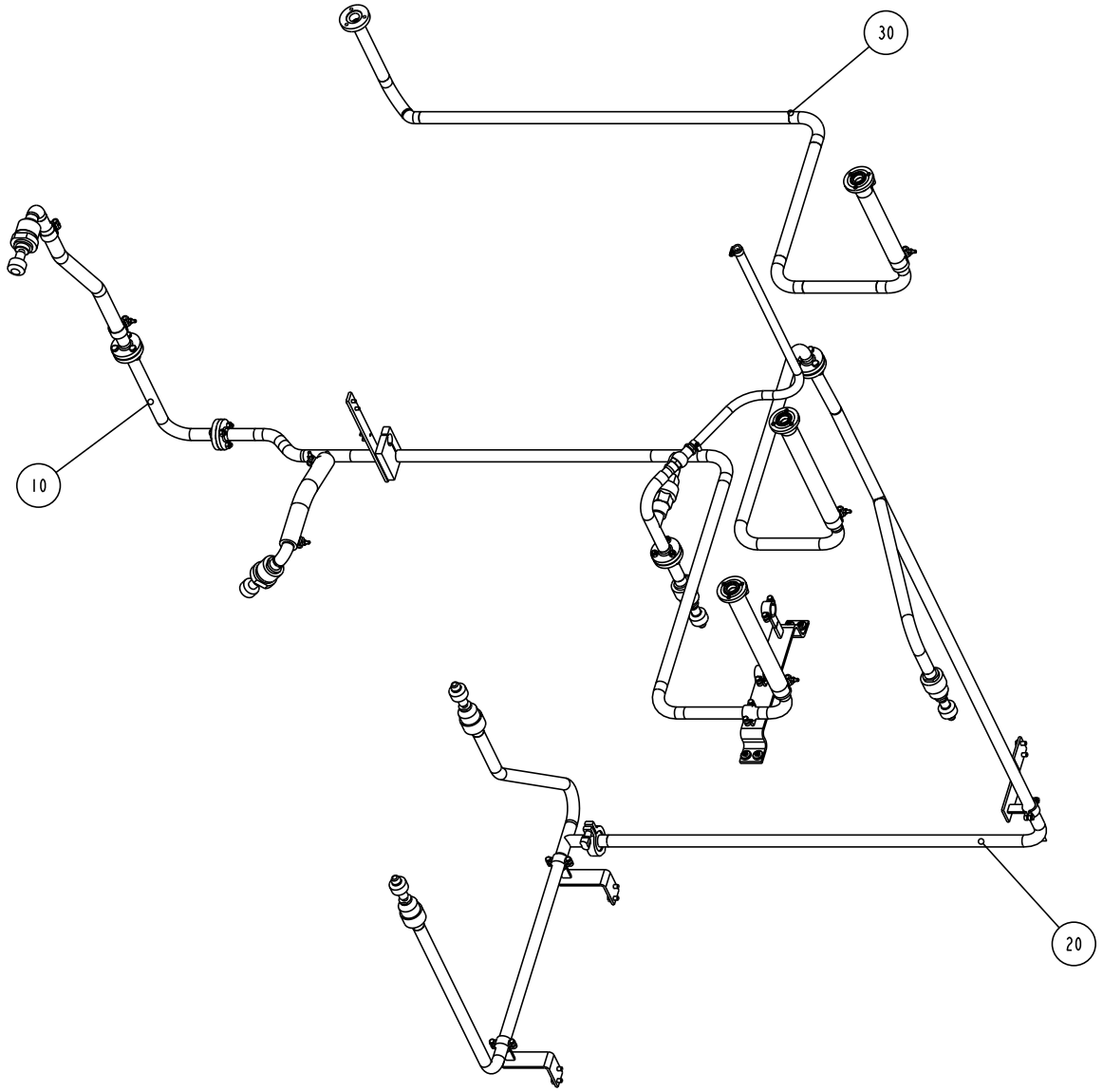

S - 577122-3
ECN 71406

Pos	Part No	SP	UN	Qty	Description	Page No
Common parts						
010	A1260097-0300	-		1	CLEANING PIPEWORK UPPER	**227**
020	A1260098-0300	-		1	CLEANING PIPEWORK	**229**
030	A1095853-0200	-		1	CLEANING PIPEWORK COLUMN	**231**

Pos	Part No	SP	UN	Qty	Description	Page No

CLEANING PIPEWORK UPPER

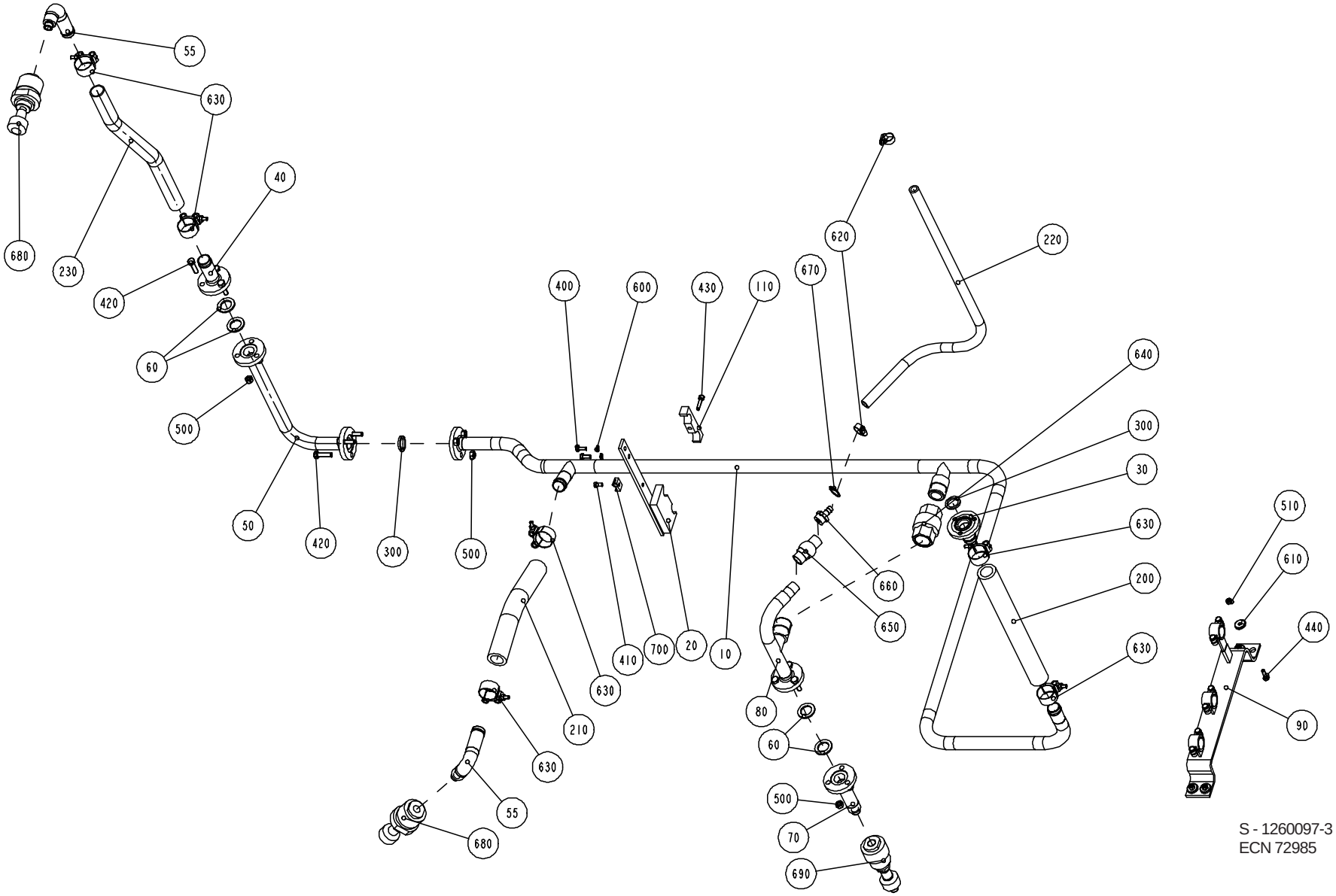

S - 1260097-3
ECN 72985

Pos	Part No	SP	UN	Qty	Description	Page No
Common parts						
010	1346920-0000	-		1	PIPE	
020	1317453-0000	-		1	BRACKET	
030	1195466-0000	-		1	PIPE	
040	1346665-0000	-		1	PIPE	
050	1260101-0000	-		1	PIPE	
055	B1129383-0000	-		2	PIPE	
060	1037443-0000	-		4	GASKET	
070	B1129379-0000	-		1	PIPE	
080	B1255493-0000	-		1	PIPE	
090	B1129378-0000	-		1	BRACKET	
110	1317486-0000	-		1	BRACKET	
200	90166-0233	-	MM	340	HOSE	
210	90166-0233	-	MM	300	HOSE	
220	90166-0121	-	MM	1000	HOSE	
230	90166-0233	-	MM	630	HOSE	
300	315229-0103	-		2	GASKET 40533-1	
400	312105-0368	-		2	SCREW M6S ISO 4017 M6x16 A280	
410	312125-0366	-		1	SLOTTED CHEESE HEAD ISO 1207 M6X12 RFR	
420	312105-0455	-		6	SCREW M6S ISO 4017 M8x30 A280	
430	312115-0372	-		1	SCREW MC6S ISO 4762 M6x25 A280	
440	312105-0370	-		4	SCREW M6S ISO 4017 M6x20 A280	
500	312605-0318	-		9	NUT,HEXAGON,M8 RFR	
510	312605-0316	-		4	NUT,HEXAGON A280 M6M6	
600	315105-0153	-		2	WASHER,PLAIN ROUND 6,4x12 Stainless	
610	315125-0153	-		4	WASHERS,PLAIN ROUND,CHAMFERED 6,4X22X4	
620	342991-0102	-		2	HOSE CLIP,WORM DRIVE TYPE (16)-19	
630	90165-0147	-		6	HOSE CLIP	
640	90230-0044	R		1	NON-RETURN VALVE 1"	
650	90230-0042	R		1	NON-RETURN VALVE 1/2"	
660	342901-0105	-		1	HOSE NIPPLE,EXT. THREADED G1/2"-12	
670	315233-0113	-		1	PLAIN ROUND,NYLON R1/2"	
680	90424-0071	R		2	NOZZLE UNIT	
690	90424-0066	R		1	NOZZLE UNIT	
700	352113-0204	-		1	ANCHOR TM3S25-M	

Pos	Part No	SP	UN	Qty	Description	Page No

CLEANING PIPEWORK

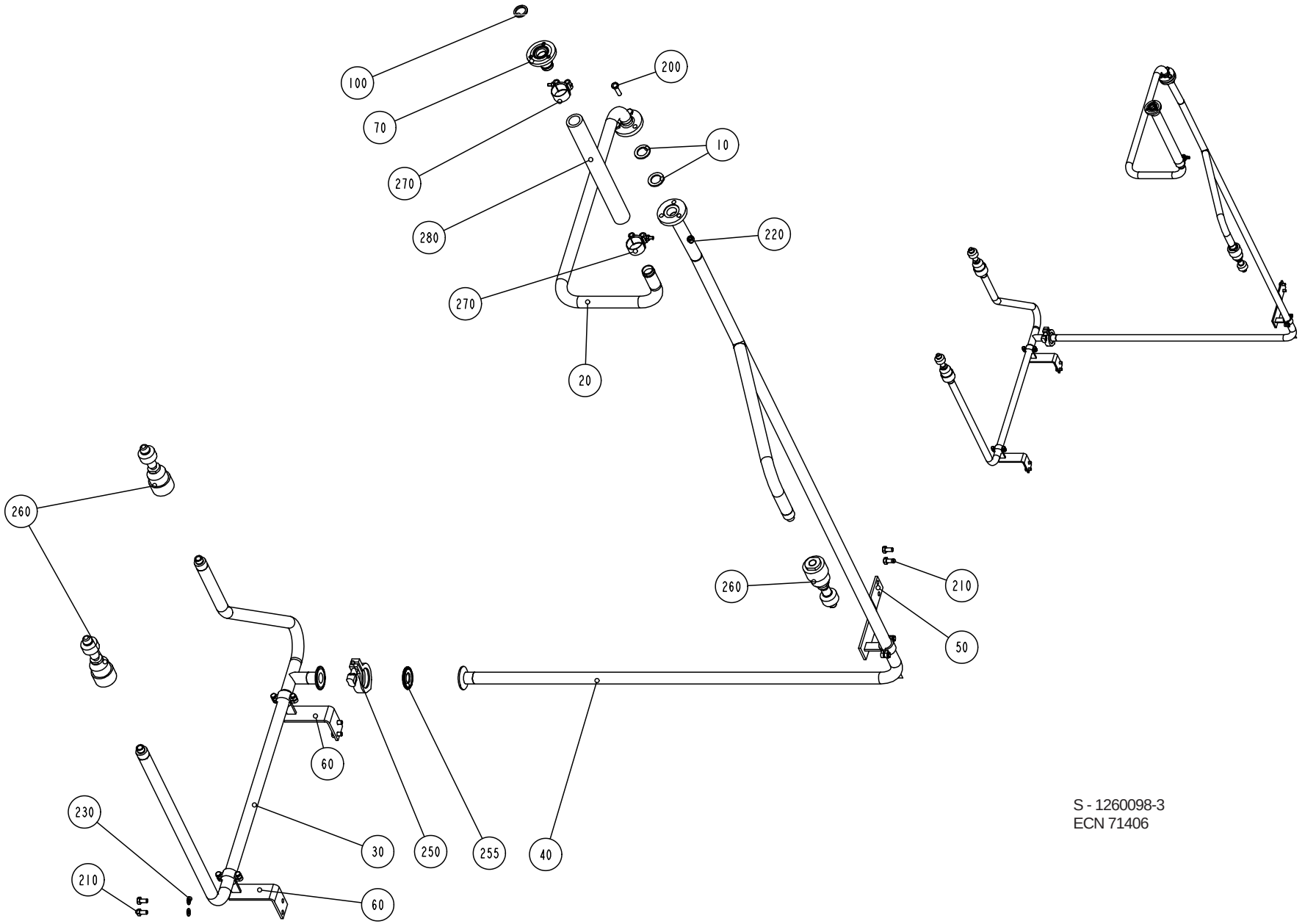

S - 1260098-3
ECN 71406

Pos	Part No	SP	UN	Qty	Description	Page No
Common parts						
010	1037443-0000	-		2	GASKET	
020	B1129434-0000	-		1	PIPE	
030	1260185-0000	-		1	PIPE	
040	1317447-0000	-		1	PIPE	
050	1317451-0000	-		1	BRACKET	
060	1317450-0000	-		2	BRACKET	
070	1195466-0000	-		1	PIPE	
100	315229-0103	-		1	GASKET 40533-1	
200	312105-0455	-		3	SCREW M6S ISO 4017 M8x30 A280	
210	312105-0449	-		6	SCREW M6S ISO 4017 M8x16 A280	
220	312605-0318	-		3	NUT,HEXAGON,M8 RFR	
230	315105-0165	-		4	WASHER,PLAIN ROUND 8,4x16 Stainless	
250	342840-0103	-		1	CLAMPING PIECE	
255	342850-0103	-		1	GASKET	
260	90424-0066	R		3	NOZZLE UNIT	
270	90165-0147	-		2	HOSE CLIP	
280	90166-0233	-	MM	340	HOSE	

Pos	Part No	SP	UN	Qty	Description	Page No

CLEANING PIPEWORK COLUMN

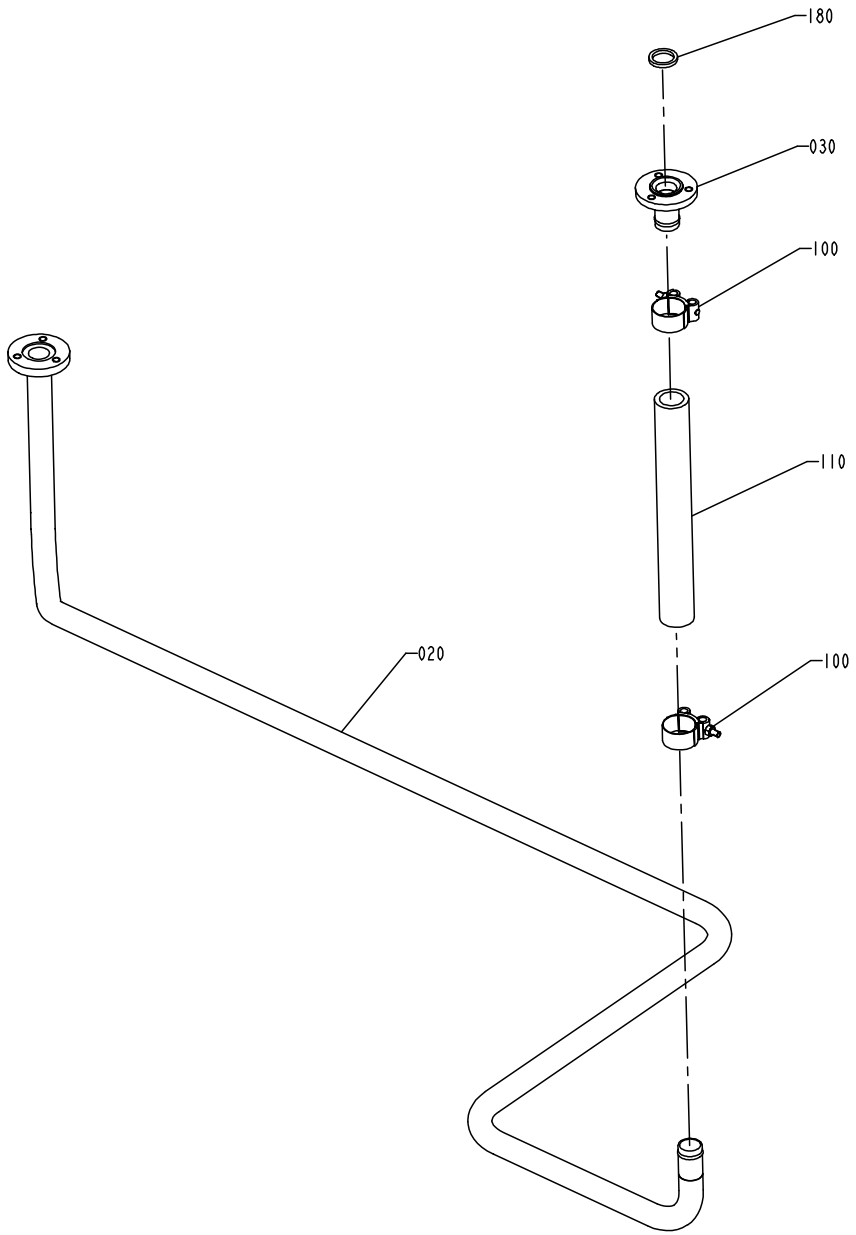

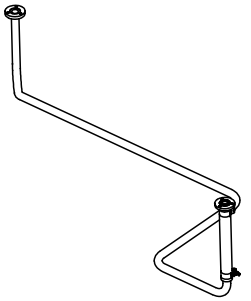

S - 1095853-2
ECN 70862

Pos	Part No	SP	UN	Qty	Description	Page No
Common parts						
020	1103321-0000	-		1	PIPE	
030	1195466-0000	-		1	PIPE	
100	90165-0147	-		2	HOSE CLIP	
110	90166-0233	D	MM	300	HOSE	
180	315229-0103	-		1	GASKET 40533-1	

Pos	Part No	SP	UN	Qty	Description	Page No

PLATFORM

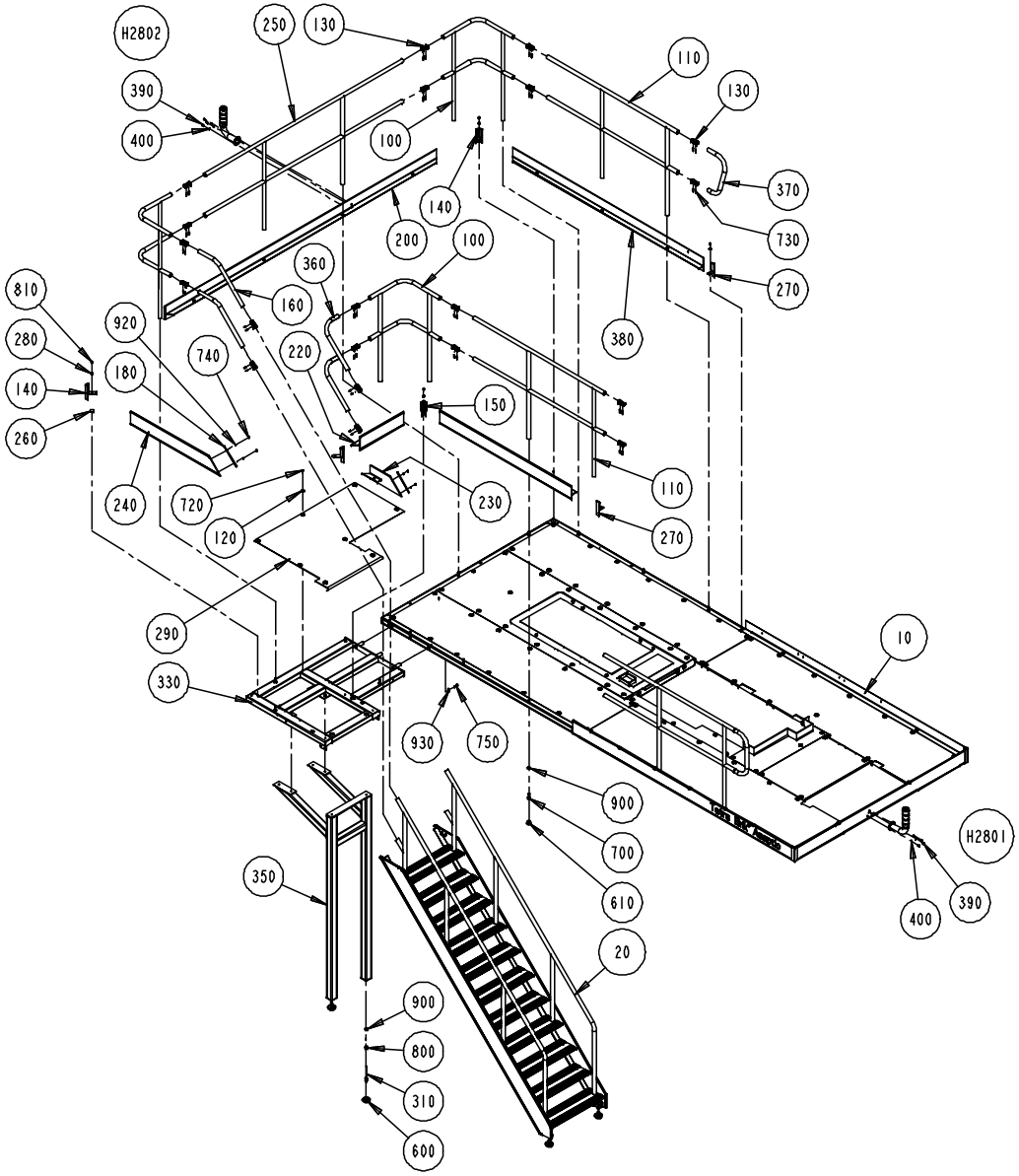

S - 1254245-2
ECN 72285

Pos	Part No	SP	UN	Qty	Description	Page No
Common parts						
010	A1095784-0300	-		1	PLATFORM	**235**
020	A1095786-0100	-		1	STAIRCASE	**237**
H2801	A1317983-0100	-		1	ALARM BEACON	**239**
H2802	A1317983-0100	-		1	ALARM BEACON	**239**
100	B1010822-0000	-		3	RAILING	
110	B 985390-0000	-		2	RAILING	
120	1036241-0000	-		10	WASHER	
130	B 985328-0000	-		20	CONNECTION	
140	1254027-0000	-		2	CORNER STRIP	
150	1254026-0000	-		2	CORNER STRIP	
160	1037328-0000	-		2	RAILING	
180	1037392-0000	-		1	SHEET	
190	1037393-0000	-		1	SHEET	
200	1317898-0000	-		1	TOE PLATE	
210	B 985397-0000	-		1	TOE PLATE	
220	B1254098-0000	-		1	TOE PLATE	
230	B1254099-0000	-		1	TOE PLATE	
240	B1254100-0000	-		1	TOE PLATE	
250	B 985389-0000	-		1	RAILING	
260	1254028-0000	-		8	FASTENING PLATE	
270	1254025-0000	-		2	STRIP	
280	38087-0000	-		8	WASHER	
290	1254029-0000	-		1	CHECKER PLATE	
310	1040860-0000	-		2	EXTENSION PIECE	
330	985398-0000	-		1	PLATFORM	
350	1041886-0000	-		1	LEG	
360	1041993-0000	-		2	RAILING	
370	1036893-0000	-		1	RAILING	
380	B 985393-0000	-		1	TOE PLATE	
390	312115-0329	-		6	SCREW MC6S ISO 4762 M5x16 A280	
400	315105-0146	-		6	WASHER,PLAIN ROUND 5,3x10 Stainless	
600	90347-0009	-		2	VIBRATION DAMPER	
610	90261-0067	-		15	PLASTIC PLUG 55-10365	
700	312101-0630	-		12	SCREW M6S16X50FZB	
720	312155-0370	-		10	SCREW MF6S DIN 7991 M6X20 A280	
730	312318-0453	-		40	SET SCREW CUP POINT ISO 4029 M8X25 RFR	
740	312115-0224	-		4	SCREW S 3X10 A4 80	
750	312105-0497	-		3	SCREW M6S ISO 4017 M10x35 A280	
760	312105-0493	-		6	SCREW M6S ISO 4017 M10X25 A280	
800	312605-0324	-		2	NUT,HEXAGON,M16 A280	
810	312605-0316	-		8	NUT,HEXAGON A280 M6M6	
900	315111-0186	-		14	WASHER TBRB 17x30 FZB	
920	315105-0124	-		4	WASHER,PLAIN ROUND 3,2x6	
930	315105-0173	-		9	WASHER,PLAIN ROUND 10,5x22 STAINLESS	

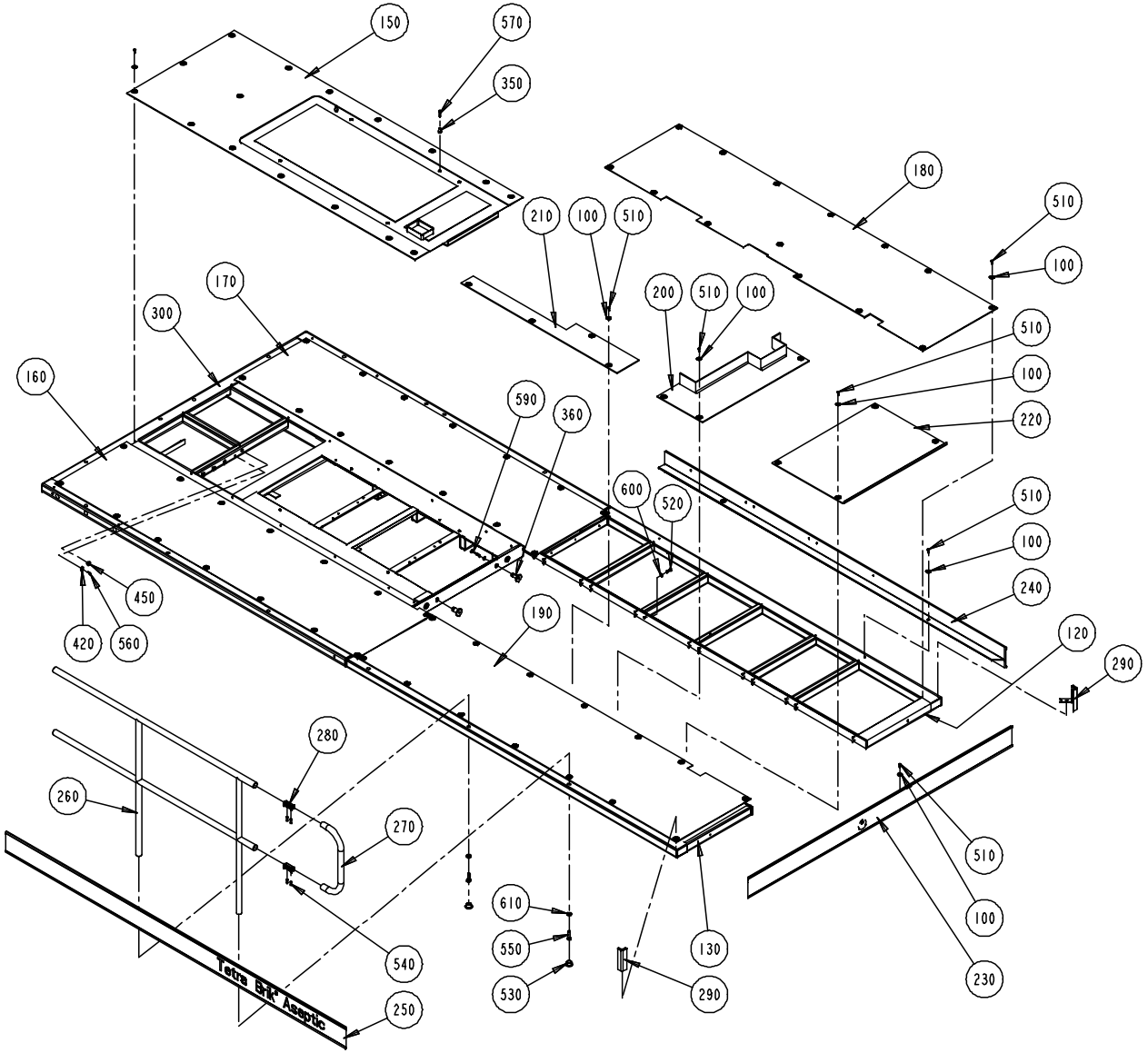

S - 1095784-3
ECN 72625

Pos	Part No	SP	UN	Qty	Description	Page No
Common parts						
100	1036241-0000	-		87	WASHER	
120	1487244-0000	-		1	PLATFORM	
130	1487245-0000	-		1	PLATFORM	
150	985382-0000	-		1	CHECKER PLATE	
160	985383-0000	-		1	CHECKER PLATE	
170	985384-0000	-		1	CHECKER PLATE	
180	985385-0000	-		1	CHECKER PLATE	
190	985386-0000	-		1	CHECKER PLATE	
200	1041949-0000	-		1	CHECKER PLATE	
210	1254118-0000	-		1	CHECKER PLATE	
220	1254030-0000	-		1	CHECKER PLATE	
230	1317897-0000	-		1	TOE PLATE	
240	B 985395-0000	-		1	TOE PLATE	
250	B 985396-0000	-		1	TOE PLATE	
260	B 985390-0000	-		1	RAILING	
270	985391-0000	-		1	RAILING	
280	B 985328-0000	-		2	CONNECTION	
290	1254027-0000	-		2	CORNER STRIP	
300	985670-0000	-		1	PLATFORM	
350	1037571-0000	-		1	GUIDE BUSHING	
360	1116048-0000	-		2	SPACER	
420	352113-0204	-		10	ANCHOR TM3S25-M	
450	90015-0023	-		1	GLANDS,Lead-in,IP67	
510	312155-0370	-		87	SCREW MF6S DIN 7991 M6X20 A280	
520	312105-0495	-		52	SCREW M6S ISO 4017 M10X30 A280	
530	90261-0067	-		2	PLASTIC PLUG 55-10365	
540	312318-0453	-		4	SET SCREW CUP POINT ISO 4029 M8X25 RFR	
550	312101-0630	-		2	SCREW M6S16X50FZB	
560	312125-0368	-		10	SLOTTED CHEESE HEAD ISO 1207 M6X16 RFR	
570	312109-0378	-		2	SCREW M6S ISO 4017 M6X40 A280	
590	312105-0505	-		2	SCREW M6S ISO 4014 M10X70 A280	
600	315105-0173	-		54	WASHER,PLAIN ROUND 10,5x22 STAINLESS	
610	315111-0186	-		2	WASHER TBRB 17x30 FZB	

Pos	Part No	SP	UN	Qty	Description	Page No

STAIRCASE

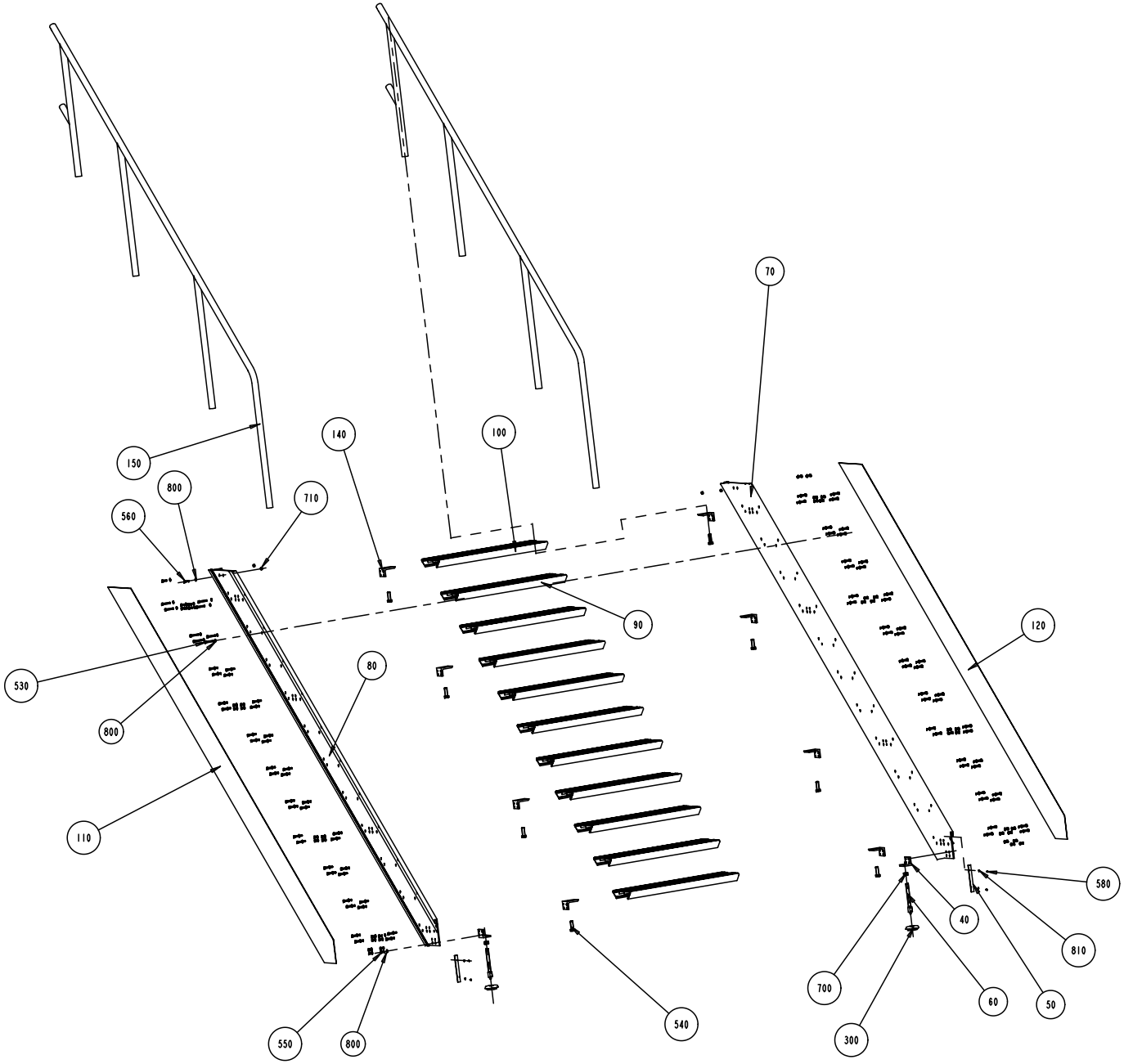

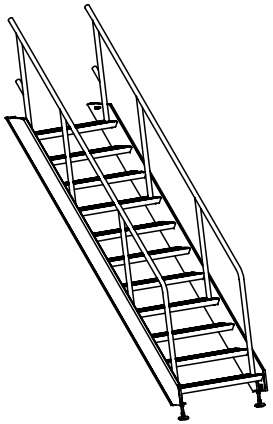

S - 1095786-1
ECN 71282

Pos	Part No	SP	UN	Qty	Description	Page No
Common parts						
040	1037391-0000	-		2	CANTILEVER	
050	1037394-0000	-		2	SHEET	
060	1040860-0000	-		2	EXTENSION PIECE	
070	B1040996-0000	-		1	PROFILE	
080	B1040997-0000	-		1	PROFILE	
090	B1040999-0000	-		7	STAIR	
100	B1041000-0000	-		4	STAIR	
110	1041036-0000	-		1	RIM	
120	1041037-0000	-		1	RIM	
140	1041890-0000	-		8	CANTILEVER	
150	B1140553-0000	-		2	RAILING	
300	90347-0009	-		2	VIBRATION DAMPER	
530	312104-0461	-		88	SCREW M6S8X50H8.8 FZB	
540	312101-0630	-		8	SCREW M6S16X50FZB	
550	312105-0449	-		40	SCREW M6S ISO 4017 M8x16 A280	
560	312105-0453	-		4	SCREW M6S ISO 4017 M8x25 A280	
580	312115-0224	-		4	SCREW S 3X10 A4 80	
700	312605-0324	-		2	NUT,HEXAGON,M16 A280	
710	312605-0318	-		4	NUT,HEXAGON,M8 RFR	
800	315105-0165	-		132	WASHER,PLAIN ROUND 8,4x16 Stainless	
810	315105-0124	-		4	WASHER,PLAIN ROUND 3,2x6	

Pos	Part No	SP	UN	Qty	Description	Page No

ALARM BEACON

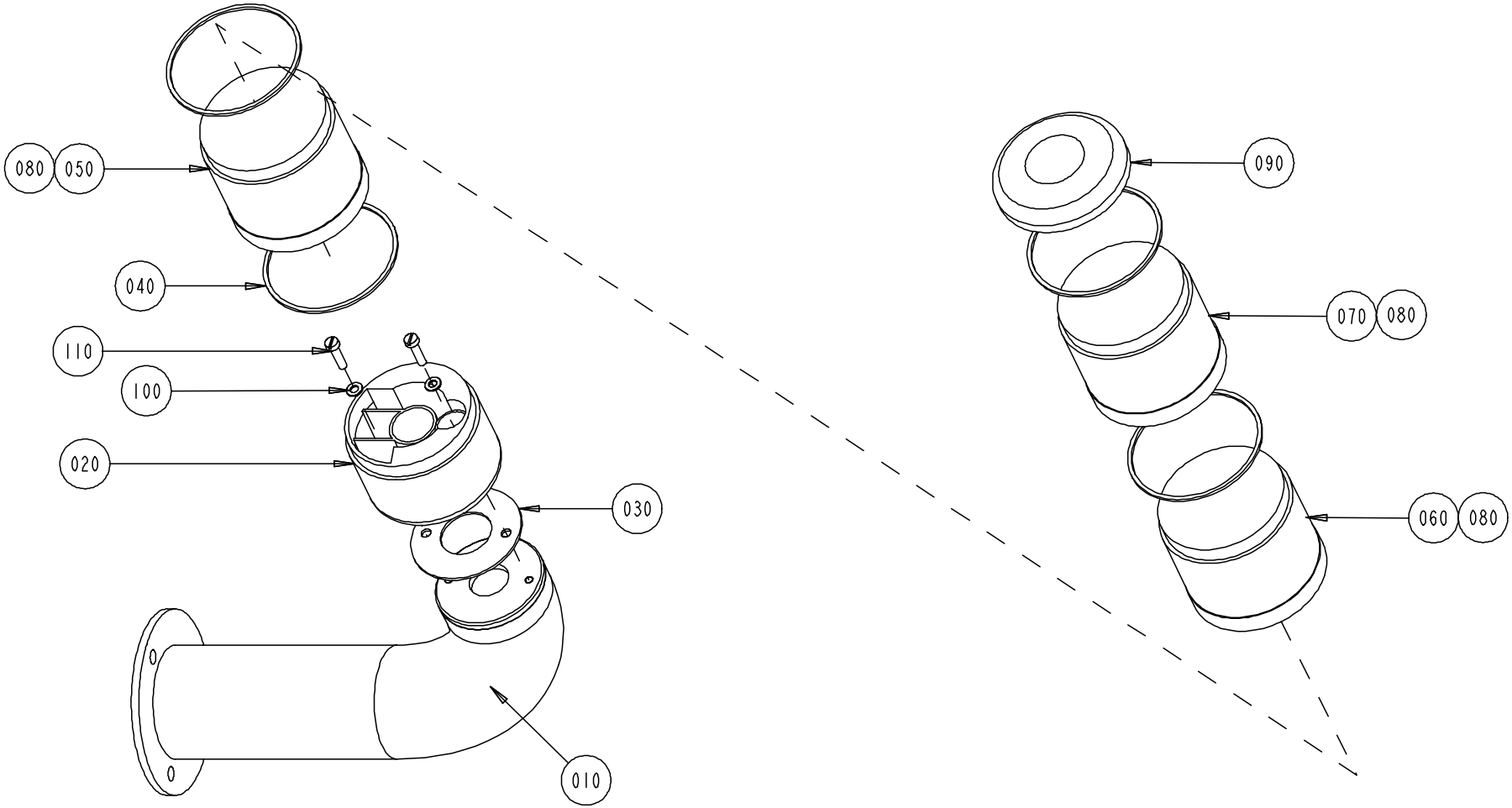

S - 1317983-1
ECN 71634

Pos	Part No	SP	UN	Qty	Description	Page No
Common parts						
010	1317793-0000	-		1	BASE	
020	1317794-0000	-		1	BASE	
030	90419-0310	J		1	GASKET	
040	90419-0307	J		4	GASKET	
050	90419-0013	-		1	LIGHT ELEMENT, BLUE	
060	90419-0014	-		1	LIGHT ELEMENT, YELLOW	
070	90419-0012	-		1	LIGHT ELEMENT, RED	
080	90036-0068	J		3	BULB 6.5W 24V	
090	90419-0017	-		1	BASE	
100	315105-0136	-		2	WASHER,PLAIN ROUND 4,3x8 Stainless	
110	312125-0293	-		2	SLOTTED CHEESE HEAD ISO 1207 M4X16 RFR	

Pos	Part No	SP	UN	Qty	Description	Page No

PIVOT ARM

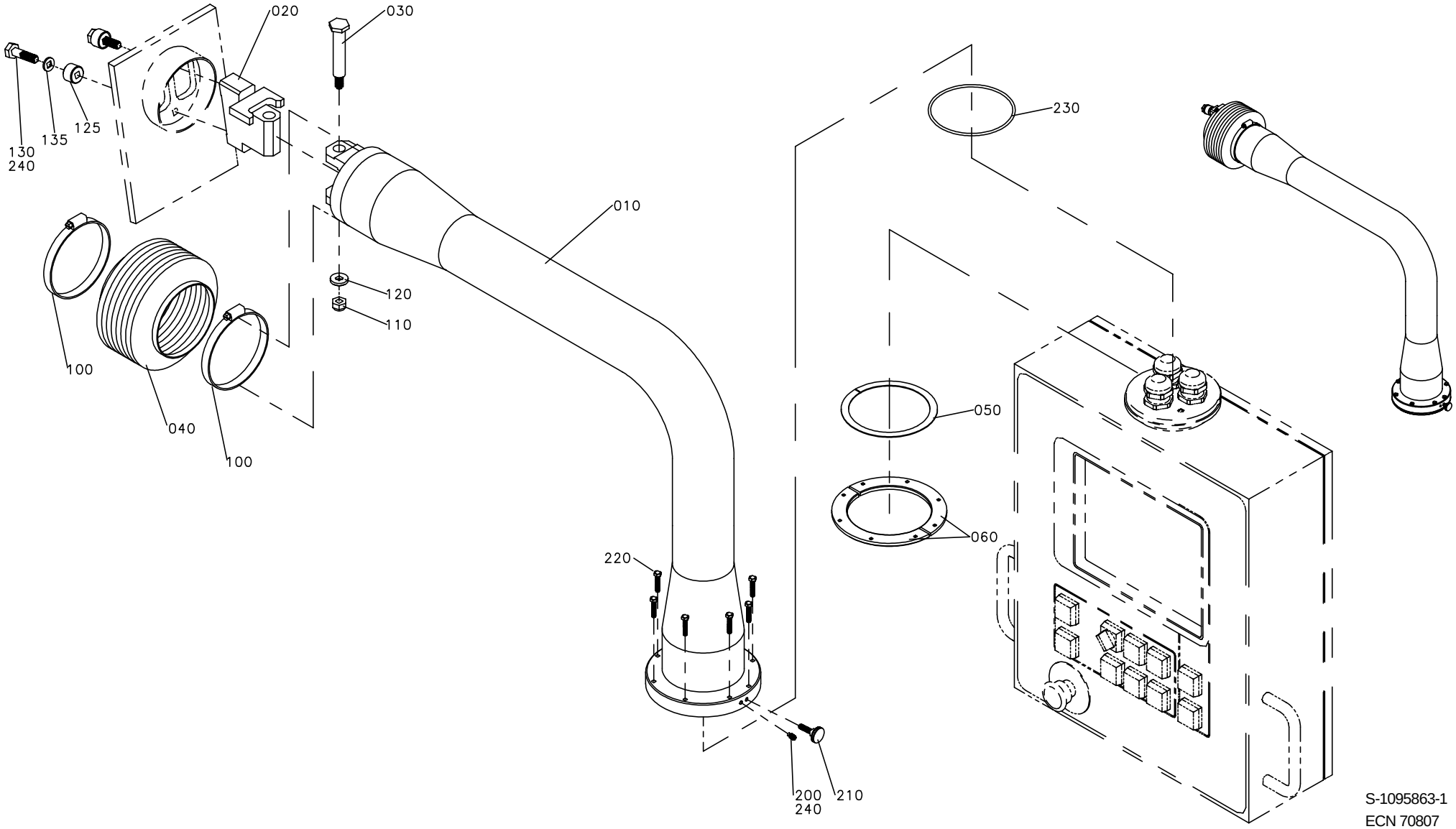
020
030
130
240
135
125
010
120
110
100
040
100
230
050
060
220
200
240
210
S-1095863-1
ECN 70807

Pos	Part No	SP	UN	Qty	Description	Page No
Common parts						
010	1129493-0000	-		1	PIPE BRACKET	
020	1129494-0000	-		1	BLOCKING PIECE	
030	1041598-0000	-		1	FITTING BOLT	
040	90342-0024	R		1	BELLOWS	
050	1129633-0000	M		2	RING	
060	1041597-0000	M		2	PLATE	
100	342991-0114	-		2	HOSE CLIP,WORM DRIVE TYPE (93)-110	
110	312812-0320	-		1	LOCK-NUT,HEXAGON,WITH NYLON INSERT,M10	
120	315115-0173	-		1	WASHER TBRB 10,5x22 Stainless	
125	1254494-0000	-		2	SPACER	
130	312115-0499	-		2	SCREW MC6S ISO 4762 M10X40 A280	
135	315402-0173	-		2	WASHER FBB 10,2 RFR	
200	312311-0327	-		1	SET SCREW FULL DOGPOINT ISO 4028 M5X12	
210	318860-0106	-		1	HANDL,KNOB,ADJUST,HI.THRE.TAP,M5 20X11.5	
220	312105-0333	-		8	SCREW M6S ISO 4017 M5x25 A280	
230	315202-0312	M		1	O-RINGS 104,5X3	
240	90157-0021	-	L	x	LOCKING FLUID	

Pos	Part No	SP	UN	Qty	Description	Page No

HYDROGEN PEROXIDE

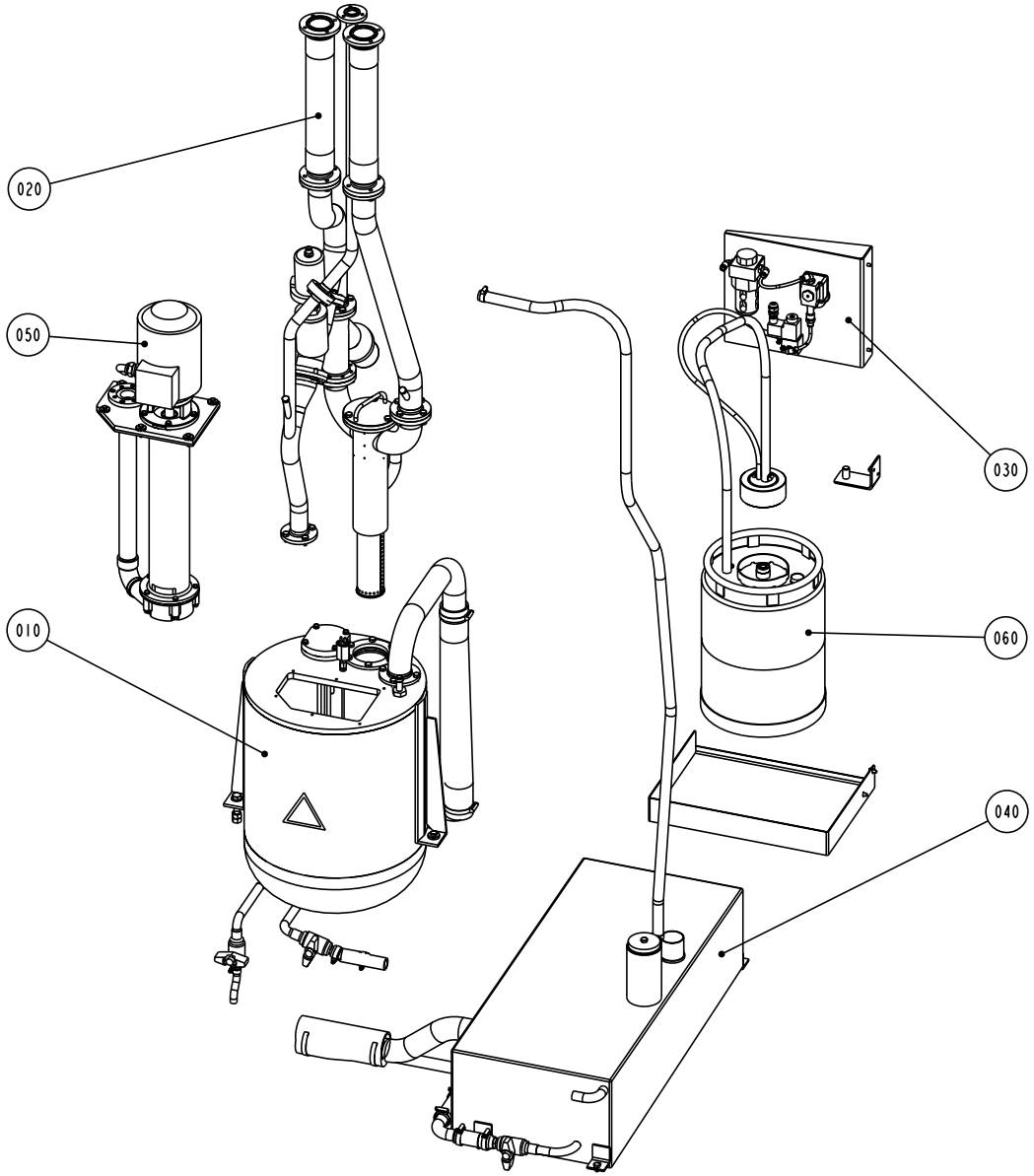

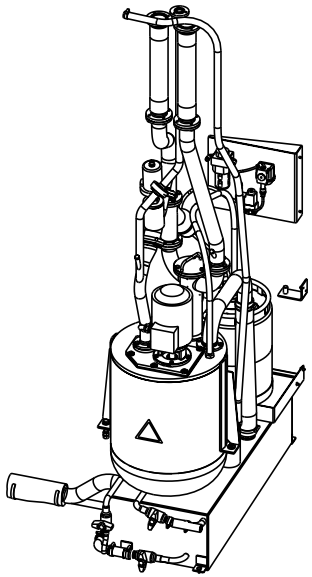

S - 1317102-1
ECN 71406

Pos	Part No	SP	UN	Qty	Description	Page No
Common parts						
010	A1282894-0100	-		1	PEROXIDE TANK	**245**
020	A1282895-0100	-		1	PEROXIDE PIPE	**247**
030	A1317103-0100	-		1	PUMP	**249**
040	A1282896-0100	-		1	TANK	**251**
050	A 996388-0400	-		1	PEROXIDE PUMP	**255**
060	A 527898-0100	-		1	CONTAINER H2O2	**257**

Pos	Part No	SP	UN	Qty	Description	Page No

PEROXIDE TANK

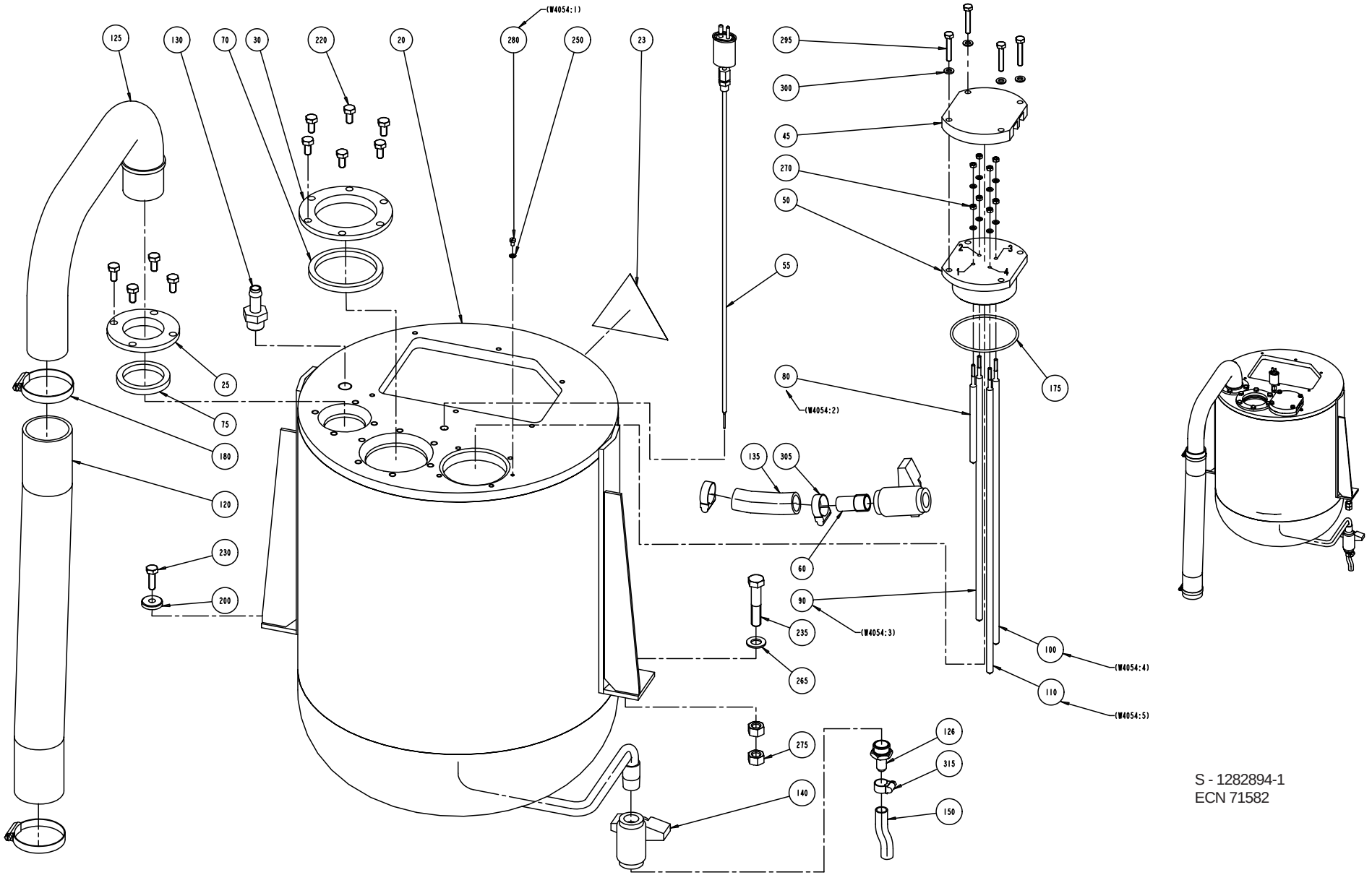

S - 1282894-1
ECN 71582

Pos	Part No	SP	UN	Qty	Description	Page No
Common parts						
020	1255559-0000	-		1	PEROXIDE TANK	
023	359705-0004	-		1	WARNIG SIGN "CORROSION"	
025	1040840-0000	-		1	FLANGE	
030	1040841-0000	-		1	FLANGE	
045	1282903-0000	-		1	FLANGE	
050	1282904-0000	-		1	LID	
055	B1347704-0000	D		1	THERMOCOUPLE	
060	1037102-0000	-		1	SPACER PIPE	
070	1040852-0000	J		1	SEALING RING	
075	1040853-0000	J		1	SEALING RING	
080	1129441-0001	D		1	ELECTRODE	
090	1129441-0002	D		1	ELECTRODE	
100	1129441-0003	D		1	ELECTRODE	
110	1129441-0004	D		1	ELECTRODE	
120	1282899-0000	R		1	HOSE	
125	1282891-0000	-		1	PIPE	
126	1282906-0000	-		1	NIPPLE	
130	90055-0051	-		1	Hose,Nipple,ext.threaded, R3/8"x13mm	
135	90166-0151	K	MM	85	HOSE	
140	90187-0059	R		2	BALLVALVE	
150	90166-0138	K	MM	85	HOSE	
175	927422-0016	J		1	O-RING 79.5X3 SILICON	
180	342991-0110	-		2	HOSE CLIP,WORM DRIVE TYPE (54)-63	
200	315125-0165	-		1	WASHERS,PLAIN ROUND,CHAMFERED 8,4X26X5	
220	312105-0449	-		10	SCREW M6S ISO 4017 M8x16 A280	
230	312105-0453	-		1	SCREW M6S ISO 4017 M8x25 A280	
235	312109-0544	-		1	SCREW 12X60 H RFR	
250	315105-0136	-		9	WASHER,PLAIN ROUND 4,3x8 Stainless	
265	315105-0178	-		1	WASHER,PLAIN ROUND 13x24	
270	312605-0312	-		8	NUT,HEXAGON,M4 RFR	
275	312605-0322	-		2	NUT,HEXAGON,M12 RFR	
280	312125-0285	-		1	SLOTTED HEAD SCREW MCS 4x6 RFR	
295	312109-0376	-		4	SCREW M6S ISO 4017 M6X35 A280	
300	315105-0153	-		4	WASHER,PLAIN ROUND 6,4x12 Stainless	
305	342991-0104	-		2	HOSE CLIP,WORM DRIVE TYPE (23)-27	
315	342991-0101	-		1	HOSE CLIP,WORM DRIVE TYPE (13)-16	

Pos	Part No	SP	UN	Qty	Description	Page No

PEROXIDE PIPE

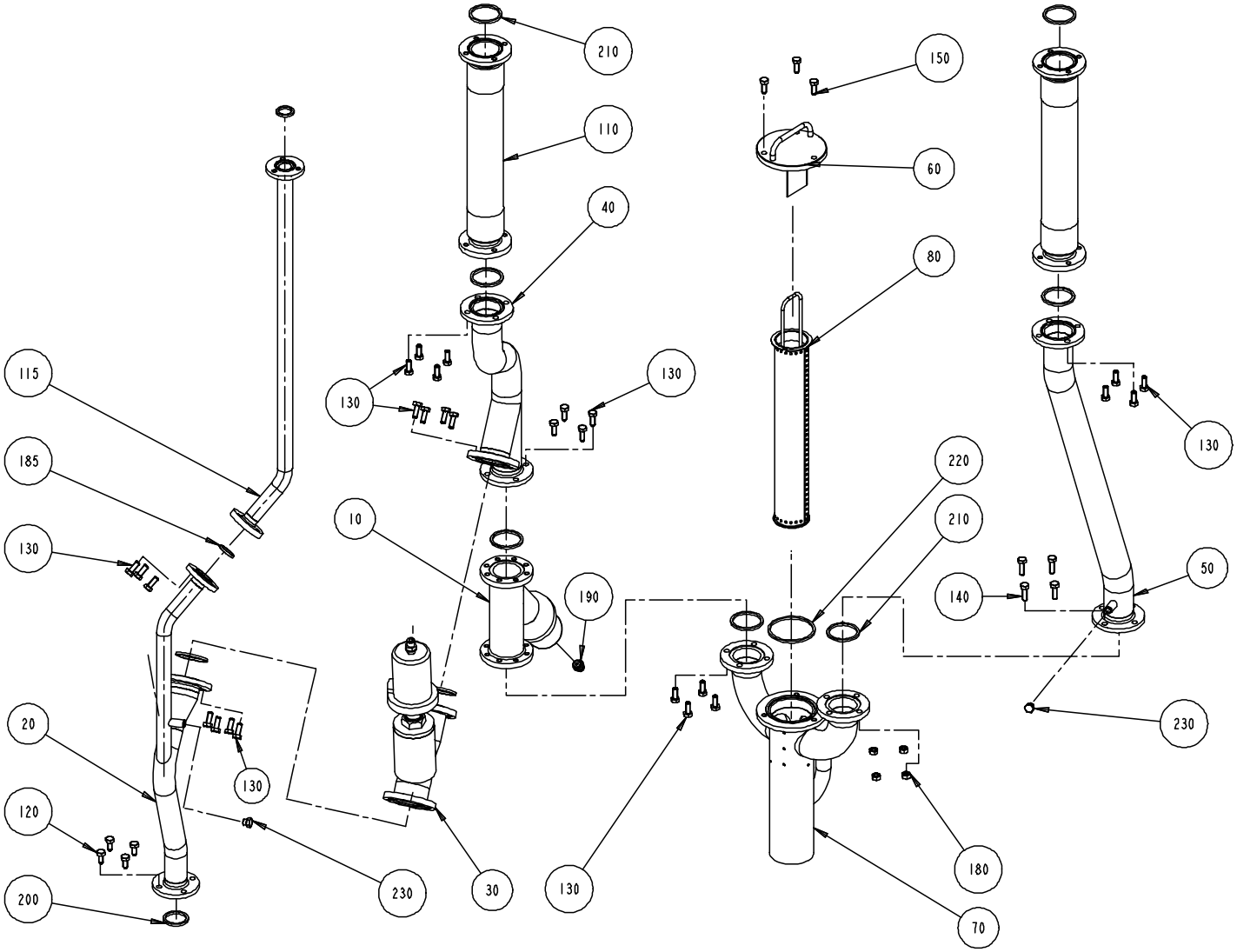

S - 1282895-1
ECN 72431

Pos	Part No	SP	UN	Qty	Description	Page No
Common parts						
010	B 978999-0000	D		1	VALVE	
020	1282874-0000	-		1	PIPE	
030	B1346565-0000	D		1	VALVE	
040	1282876-0000	-		1	PIPE	
050	1282877-0000	-		1	PIPE	
060	1348530-0000	-		1	LID	
070	1282879-0000	-		1	CONNECTING PIPE	
080	1348529-0000	R		1	STRAINER	
110	1285426-0000	R		2	PIPE	
115	1282901-0000	-		1	PIPE	
120	312105-0449	-		4	SCREW M6S ISO 4017 M8x16 A280	
130	312105-0451	-		27	SCREW M6S ISO 4017 8x20 A280	
140	312105-0453	-		4	SCREW M6S ISO 4017 M8x25 A280	
150	312105-0451	-		3	SCREW M6S ISO 4017 8x20 A280	
180	312605-0318	-		4	NUT,HEXAGON,M8 RFR	
185	315229-0103	J		2	GASKET 40533-1	
190	342722-0203	-		2	STRAIGHT COUPLING	
200	315229-0104	J		1	GASKET 40534-1	
210	315229-0105	J		9	GASKET 40535-1	
220	315229-0107	J		1	GASKET 40537-1	
230	90330-0066	-		2	PLUG,EXTERNAL G-THREAD G1/8"	

Pos	Part No	SP	UN	Qty	Description	Page No

PUMP

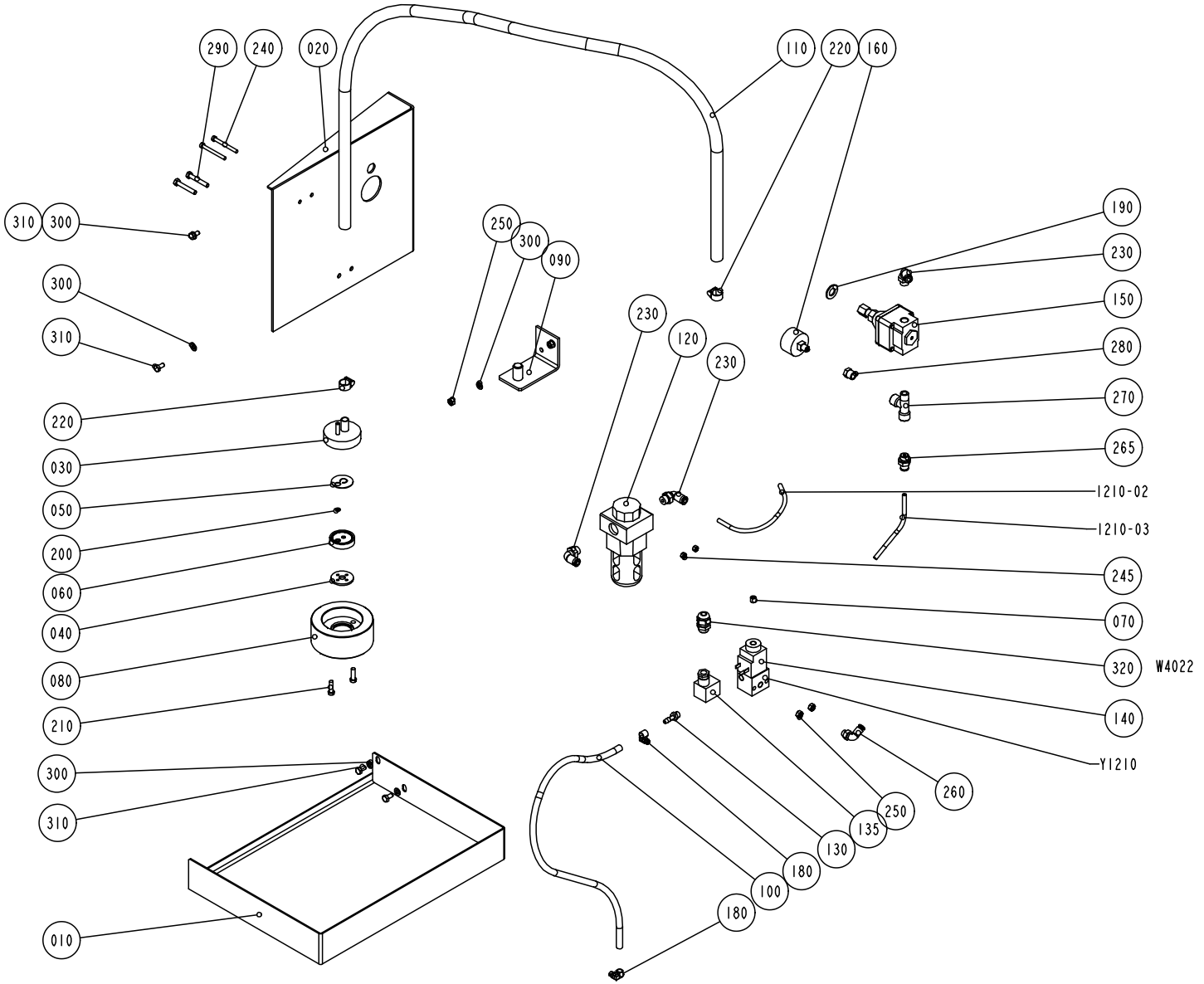

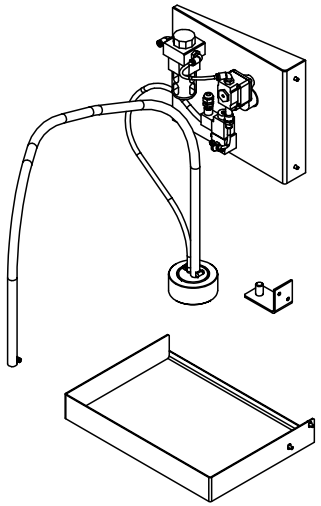

S - 1317103-1
ECN 71406

Pos	Part No	SP	UN	Qty	Description	Page No
Common parts						
010	1317104-0000	-		1	BRACKETS, FASTENING PLATES, - BRACKETS	
020	1317105-0000	-		1	BRACKET	
030	1129328-0000	D		1	ATTACHMENT	
040	273981-0000	K		1	GASKET	
050	527912-0000	K		1	NON-RETURN VALVE	
060	530551-0000	D		1	WASHER	
070	563285-0000	-		1	BLIND PLUG	
080	1317226-0000	D		1	WEIGHT	
090	1317784-0000	-		1	BRACKET	
100	90166-0101	K	MM	680	HOSE 6/10 SILICONE RUBBER	
110	1255768-0000	K		1	HOSE	
120	B 90277-0039	M		1	FILTER	
1210-02	90166-0081	K	MM	210	TUBE 6/4 PA Blue	
1210-03	90166-0081	K	MM	150	TUBE 6/4 PA Blue	
130	342901-0101	-		1	HOSE NIPPLE,EXT. THREADED G1/8"-7	
135	90042-0398	R		1	CONTACT 3 pole+earth	
140	90042-0487	R		1	COIL 24 VDC MECMAN	
150	90113-0056	R		1	PRESSURE REGULATOR	
160	90043-0021	D		1	PRESSURE GAUGE Wiegand 0-1 BAR 1/8"	
180	90132-0021	-		2	HOSE CLIP 6-10mm	
190	315105-0178	-		1	WASHER,PLAIN ROUND 13x24	
200	315204-0103	-		1	O-RINGS 5,1X1,6	
210	312125-0370	-		2	SLOTTED CHEESE HEAD ISO 1207 M6X20 RFR	
220	342991-0101	-		2	HOSE CLIP,WORM DRIVE TYPE (13)-16	
230	342732-0103	-		3	ELBOW PIPE JOINT	
240	312125-0341	-		2	SLOTTED HEMCS5X50RFR	
245	312605-0314	-		2	NUT,HEXAGON,M6M5 Stainless	
250	312605-0316	-		4	NUT,HEXAGON A280 M6M6	
260	342732-0102	-		1	ELBOW PIPE JOINT	
265	342722-0203	-		1	STRAIGHT COUPLING	
270	342245-0102	-		1	T-PIPE	
280	342701-0201	-		1	BUSHING,INT./EXT.G-THREAD G1/4"-G1/8"	
290	312105-0378	-		2	SCREW ISO 4017 M6x40 A280	
300	315105-0153	-		6	WASHER,PLAIN ROUND 6,4x12 Stainless	
310	312105-0366	-		4	SCREW M6S ISO 4017 M6x12 A280	
W4022	351150-0403	-	MM	2500	CABLE OLFLEX 3x0,75 MM2	
Y1210	90042-0206	M		1	SOLENOID VALVE 444-111-000-1	

Pos	Part No	SP	UN	Qty	Description	Page No

TANK

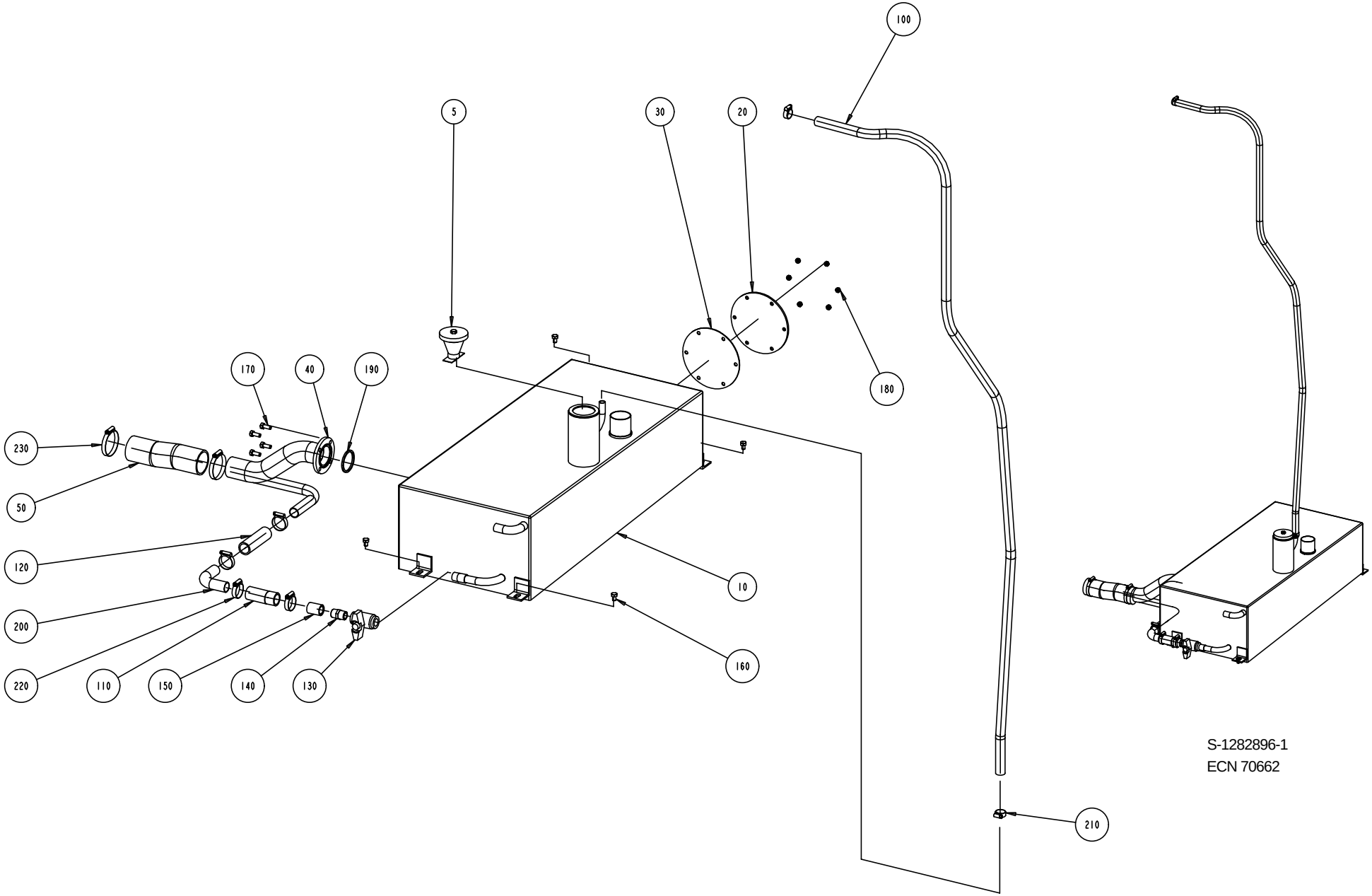

S-1282896-1
ECN 70662

Pos	Part No	SP	UN	Qty	Description	Page No
Common parts						
005	A 566196-0100	-		1	LID WITH WEIGHT	**253**
010	1282892-0000	-		1	TANK	
020	1040807-0000	-		1	LID	
030	1040808-0000	M		1	GASKET	
040	1282893-0000	-		1	PIPE	
050	1282898-0000	R		1	HOSE	
100	90166-0087	R	MM	2500	HOSE 15/23 Reinf.PVC Transp.	
110	90166-0158	R	MM	85	HOSE	
120	90166-0158	R	MM	105	HOSE	
130	90187-0059	-		1	BALLVALVE	
140	90330-0021	-		1	NIPPLES,HEXAGON,EXT.R-THREAD R1/2"-R1/2"	
150	90330-0054	-		1	SLEEVE	
160	312105-0447	-		4	SCREW M6S ISO 4017 M8x12 A280	
170	312105-0451	-		4	SCREW M6S ISO 4017 8x20 A280	
180	312605-0316	-		6	NUT,HEXAGON A280 M6M6	
190	315229-0105	K		1	GASKET 40535-1	
200	342844-0303	-		1	PIPE ELBOW 90	
210	342991-0103	-		2	HOSE CLIP,WORM DRIVE TYPE (19)-23	
220	342991-0106	-		4	HOSE CLIP,WORM DRIVE TYPE (30)-36	
230	342991-0110	-		2	HOSE CLIP,WORM DRIVE TYPE (54)-63	

Pos	Part No	SP	UN	Qty	Description	Page No

LID WITH WEIGHT

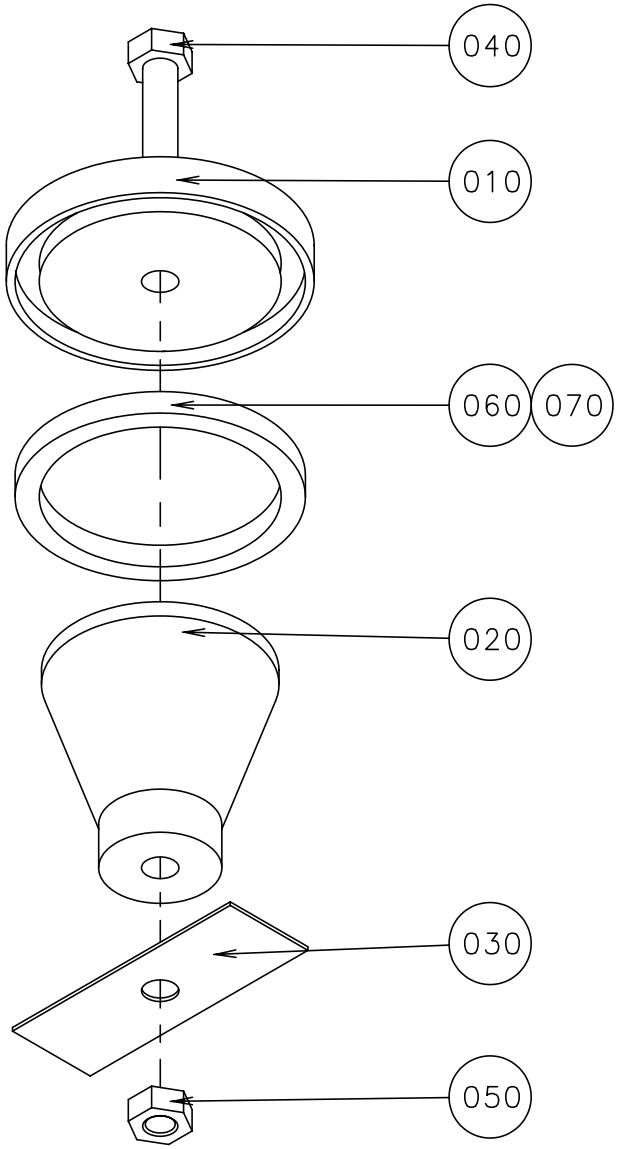

S-566196-1
ECN 70662

Pos	Part No	SP	UN	Qty	Description	Page No
Common parts						
010	566195-0000	-		1	LID	
020	566194-0000	-		1	WEIGHT	
030	566171-0000	-		1	CUP SPRING	
040	312105-0466	-		1	SCREW M6S ISO 4014 M8x75 A280	
050	312605-0318	-		1	NUT,HEXAGON,M8 RFR	
060	90143-0020	-	MM	190	STRIP	
070	90153-0023	-		1	ADHESIVE	

Pos	Part No	SP	UN	Qty	Description	Page No

PEROXIDE PUMP

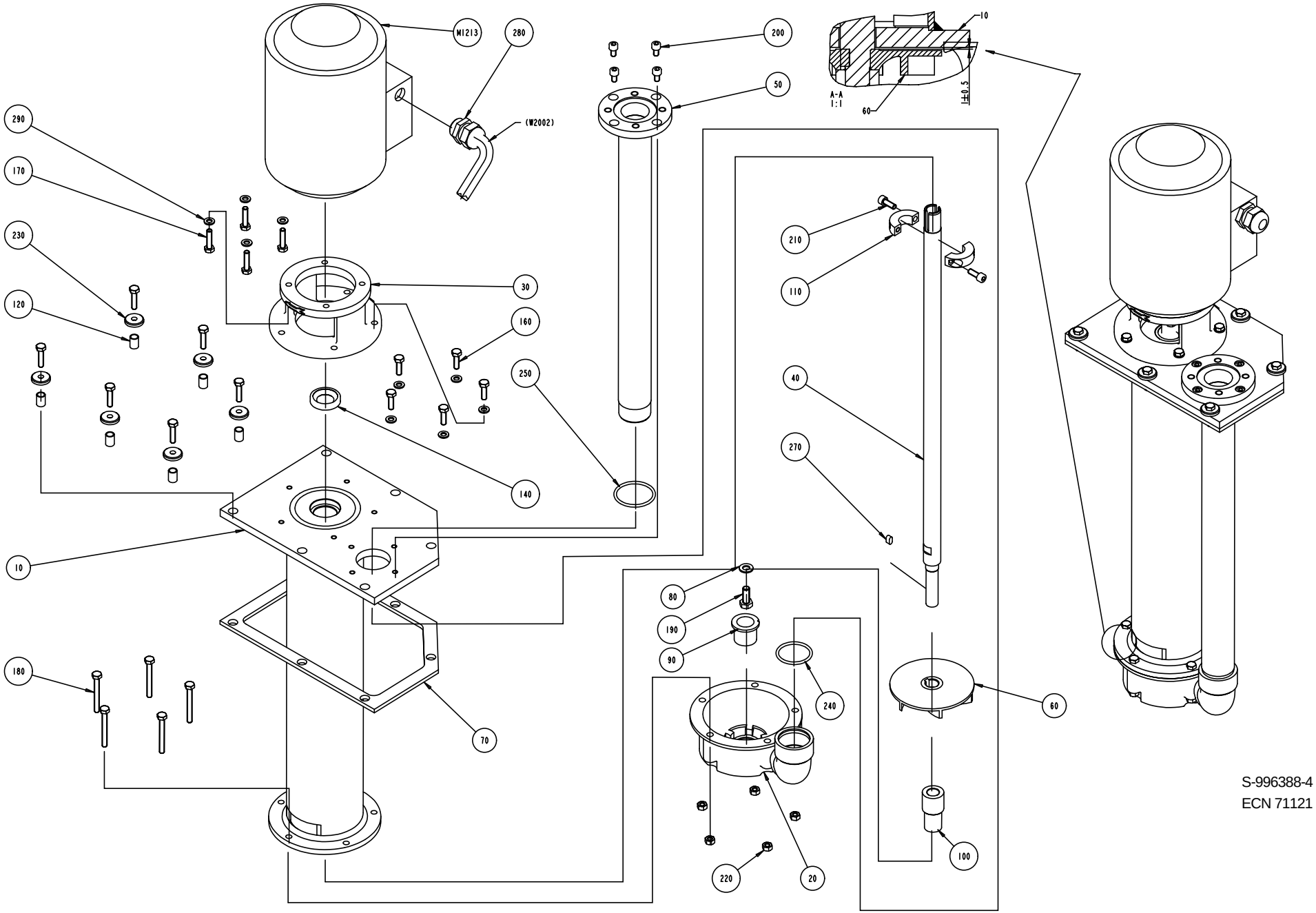

S-996388-4
ECN 71121

Pos	Part No	SP	UN	Qty	Description	Page No
Common parts						
010	1255558-0000	-		1	EXTENSION PIPE	
020	1036755-0000	K		1	PUMP HOUSING	
030	751395-0000	-		1	FLANGE	
040	1040797-0000	K		1	SHAFT	
050	1040796-0000	-		1	PIPE	
060	491929-0000	K		1	IMPELLER WHEEL	
070	1255557-0000	J		1	GASKET	
080	315105-0165	-		1	WASHER,PLAIN ROUND 8,4x16 Stainless	
090	1478171-0000	J		1	BUSHING	
100	1478048-0000	J		1	SLEEVE	
110	1282905-0000	D		2	CLAMP	
120	1041980-0000	K		6	SPACER	
140	90091-0412	J		1	Seal Ring	
160	312105-0370	-		5	SCREW M6S ISO 4017 M6x20 A280	
170	312105-0372	-		10	SCREW M6S ISO 4017 M6x25 A280	
180	312109-0380	-		5	SCREW M6S6X50H RFR	
190	312105-0451	-		1	SCREW M6S ISO 4017 8x20 A280	
200	312115-0364	-		4	SCREW MC6S 6x10 A4 80	
210	312115-0368	-		2	SCREW MC6S ISO 4762 M6x16 A280	
220	312605-0316	-		5	NUT,HEXAGON A280 M6M6	
230	315125-0153	-		6	WASHERS,PLAIN ROUND,CHAMFERED 6,4X22X4	
240	927422-0005	-		1	O-RING 36.2X3 SILICON	
250	927422-0006	-		1	O-RING 42.2X3 SILICON	
270	315705-0196	-		1	KEYS,PARALLEL WITH ROUND ENDS 5X5X10	
280	352103-0110	-		1	CABLE GLAND STR 16	
290	315105-0153	-		9	WASHER,PLAIN ROUND 6,4x12 Stainless	
M 1213	90045-0087	D		1	PUMPMOTOR ABB 0,55KW;1,4A	
W 2002	351150-0418	-	M	4	CABLE OLFLEX 4x2,5mm2	

Pos	Part No	SP	UN	Qty	Description	Page No

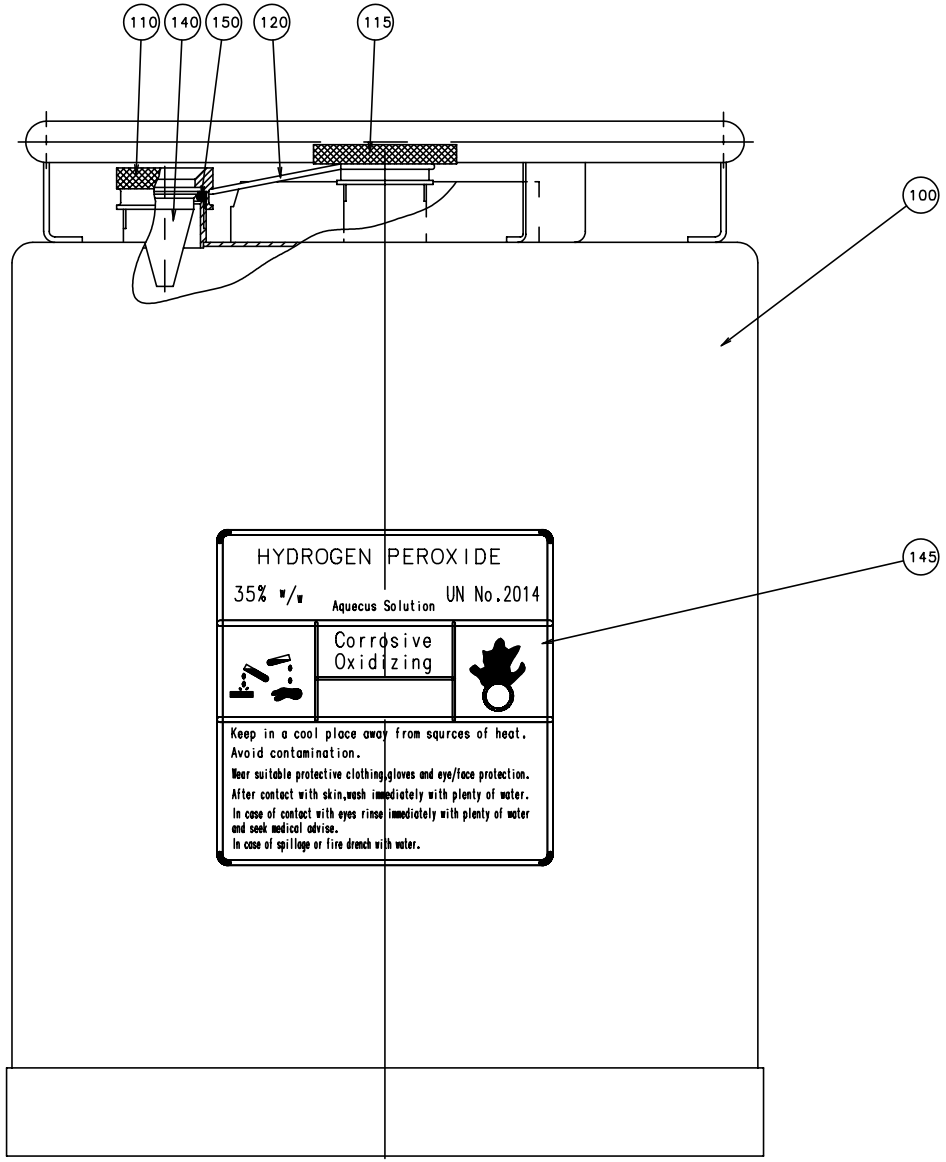

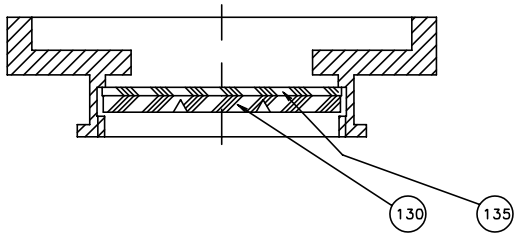

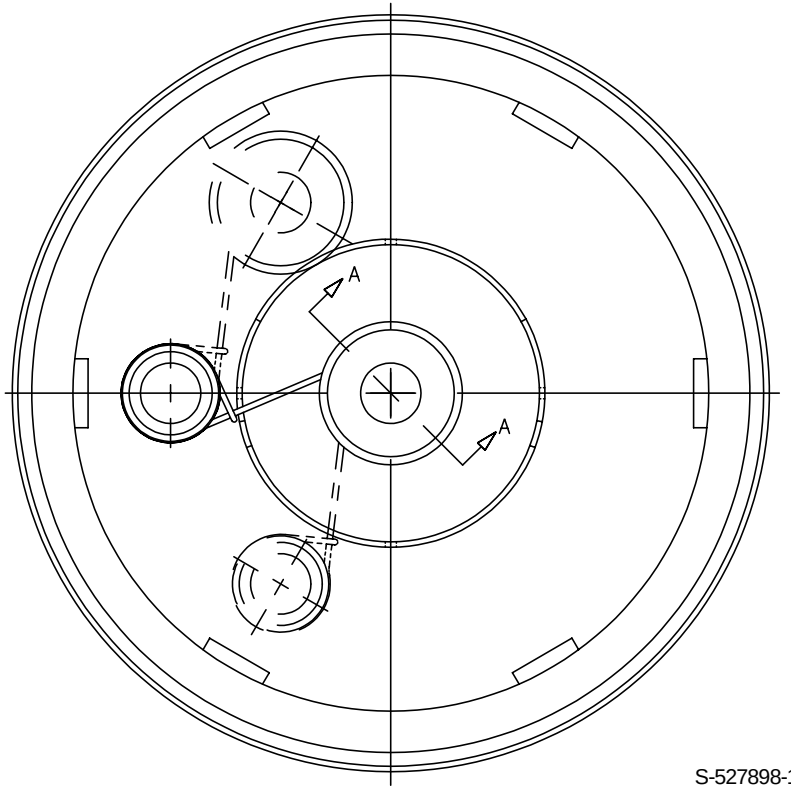

S-527898-1
ECN 15566

Pos	Part No	SP	UN	Qty	Description	Page No
Common parts						
100	561427-0000	-		1	CONTAINER	
110	273977-0000	R		1	NUT	
115	273996-0000	R		1	NUT	
120	273980-0000	R		1	SPRING	
130	565250-0000	R		1	WASHER	
135	565251-0000	N		1	VALVE	
140	273978-0000	R		1	LEVEL GLASS	
145	532655-0000	-		1	CAUTION SIGN	
150	927422-0003	J		1	O.RING 24.2X3 SILICON	

Pos	Part No	SP	UN	Qty	Description	Page No

CABLE DUCT

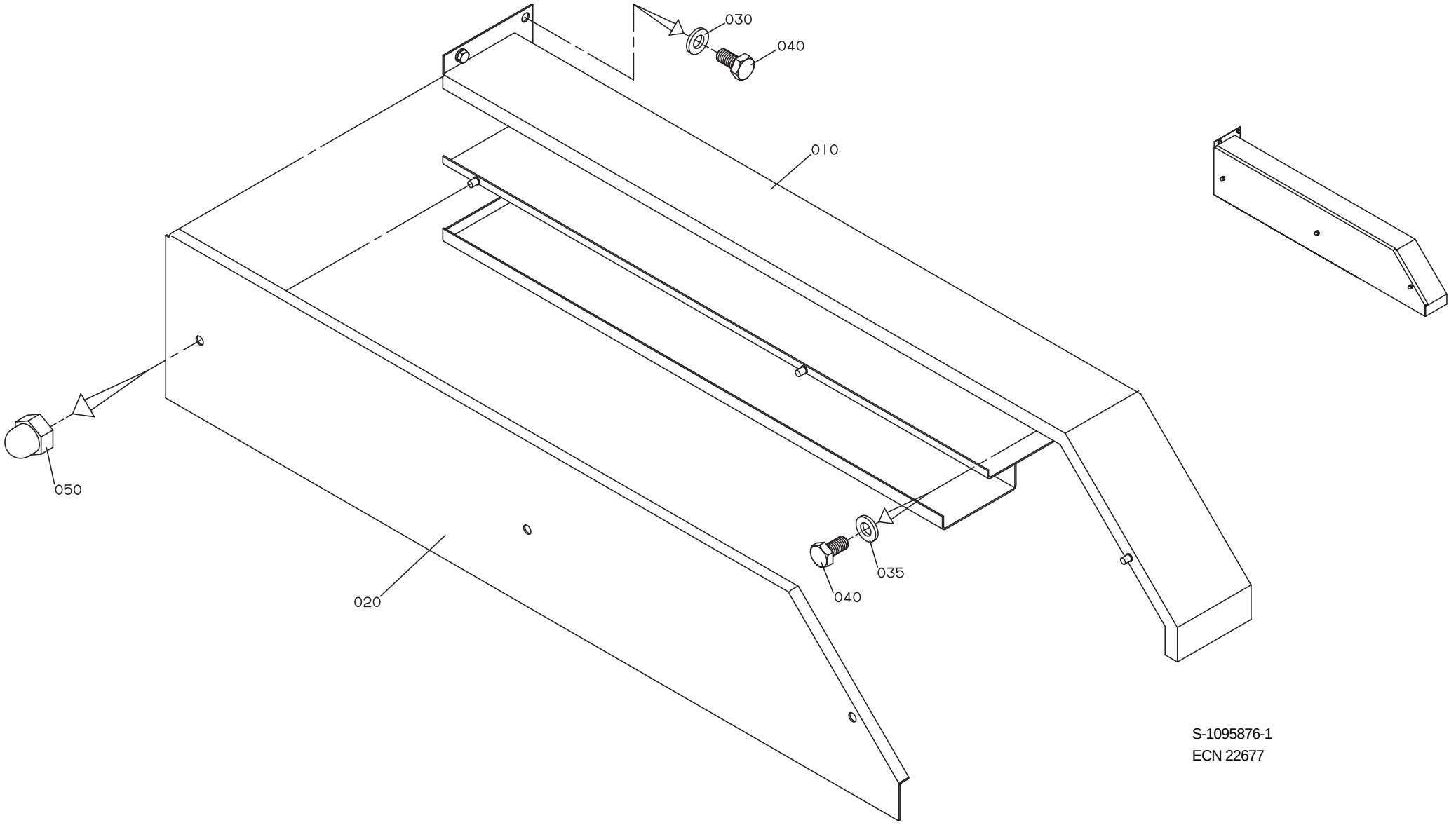

S-1095876-1
ECN 22677

Pos	Part No	SP	UN	Qty	Description	Page No
Common parts						
010	1129443-0000	-		1	CABLE DUCT	
020	1129444-0000	-		1	LID	
030	315105-0153	-		4	WASHER,PLAIN ROUND 6,4x12 Stainless	
035	315125-0153	-		1	WASHERS,PLAIN ROUND,CHAMFERED 6,4X22X4	
040	312105-0366	-		5	SCREW M6S ISO 4017 M6x12 A280	
050	312705-0316	-		3	NUT,DOMED CAP,HEXAGON,M6	

Pos	Part No	SP	UN	Qty	Description	Page No

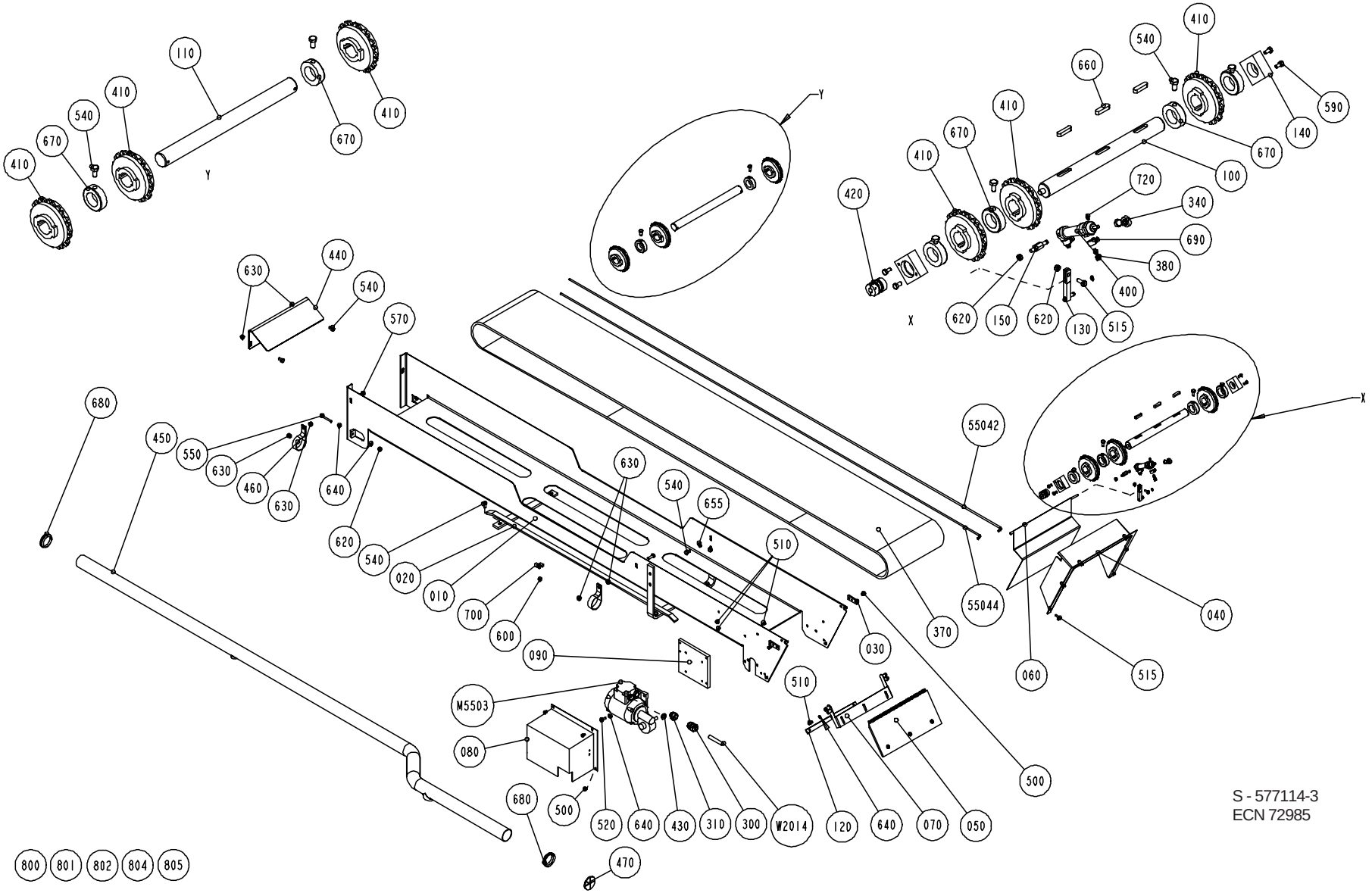

S - 577114-3
ECN 72985

Pos	Part No	SP	UN	Qty	Description	Page No
Common parts						
010	1346523-0000	-		1	CHUTE	
020	1195266-0000	-		1	BRACKET	
030	1140208-0000	-		2	BRACKET	
040	1129247-0000	-		1	FRAME	
050	1129248-0001	-		1	GUARD PLATE	
060	1346524-0000	-		1	HATCH	
070	1129594-0000	-		1	BRACKET	
080	1037559-0000	-		1	MOTOR COVER	
090	1037560-0000	-		1	MOTOR PLATE	
100	1037561-0000	-		1	DRIVE SHAFT	
110	1512584-0000	-		1	DRIVE SHAFT	
120	1129253-0000	-		1	FASTENING PLATE	
130	1140641-0000	-		1	ARM	
140	1037565-0000	-		2	BEARING UNIT	
150	1346822-0000	-		1	SHAFT	
300	352103-0111	-		1	CABLE GLAND ST 16	
310	90089-0017	-		1	TRANSITION SLEEVE PR18,6/PR22,5;PG11/16	
340	90115-0173	K		1	ROD ENDS,MAINTENANCE FREE,6-M6X1RH	
370	1346541-0000	-		1	CONVEYOR CHAIN	
380	90235-0290	-		2	THROTTLE CHECK VALVE M5, Manual	
400	90239-0842	K		1	DOUBLE ACTING,MINI-ISO,CYL.16-50	
410	90267-0027	D		6	TOOTHED WHEEL	
420	90355-0208	D		1	CONNECTION	
430	90002-0009	-		1	BLANK-OFF PLUG 18.6	
440	1346525-0000	-		1	COVER	
450	1346526-0000	-		1	PIPE	
460	1346527-0000	-		2	CLAMP	
470	1346528-0000	-		1	RUBBER	
500	312105-0362	-		5	SCREW M6S ISO 4017 M6x8 A280	
510	312105-0366	-		12	SCREW M6S ISO 4017 M6x12 A280	
515	312105-0368	-		7	SCREW M6S ISO 4017 M6x16 A280	
520	312105-0370	-		4	SCREW M6S ISO 4017 M6x20 A280	
540	312105-0449	-		16	SCREW M6S ISO 4017 M8x16 A280	
550	312109-0380	-		2	SCREW M6S6X50H RFR	
55042	90166-0132	-	MM	3000	TUBE 6/4 PA,Transp.	
55044	90166-0132	-	MM	3000	TUBE 6/4 PA,Transp.	
570	312105-0453	-		2	SCREW M6S ISO 4017 M8x25 A280	
590	312115-0366	-		3	SCREW MC6S ISO 4762 M6X12 A280	
600	312125-0285	-		5	SLOTTED HEAD SCREW MCS 4x6 RFR	
620	312605-0316	-		3	NUT,HEXAGON A280 M6M6	
630	312605-0318	-		6	NUT,HEXAGON,M8 RFR	
640	315105-0153	-		10	WASHER,PLAIN ROUND 6,4x12 Stainless	
655	315115-0165	-		4	WASHER TBRB 8,4x16 Stainless	
660	315705-0269	-		3	KEYS,PARALLEL WITH ROUND ENDS 8X7X35	
670	315742-0122	-		6	RETAINING RINGS 30	
680	315220-0198	-		2	SEAL RING V-50S	
690	342980-0112	-		2	BANJO-CONNECTION,RING 6/4-M6	
700	352113-0203	-		5	ANCHOR TM3S8-M0	
720	315751-0103	-		2	RETAINING RINGS FOR SHAFT 6	
800	359000-0400	-		6	MARKING CO2/4"0"	
801	359000-0401	-		2	MARKING COLLAR 2/4 "1" Yellow	
802	359000-0402	-		4	MARKING COLLAR 2/4 "2" Yellow	
804	359000-0404	-		8	MARKING COLLAR PA2/4 "4" Yellow	
805	359000-0405	-		8	MARKING CO2/4"5"	
M5503	90069-0257	D		1	WORM GEAR MOTOR	
W2014	351150-0418	-	M	3	CABLE OLFLEX 4x2,5mm2	

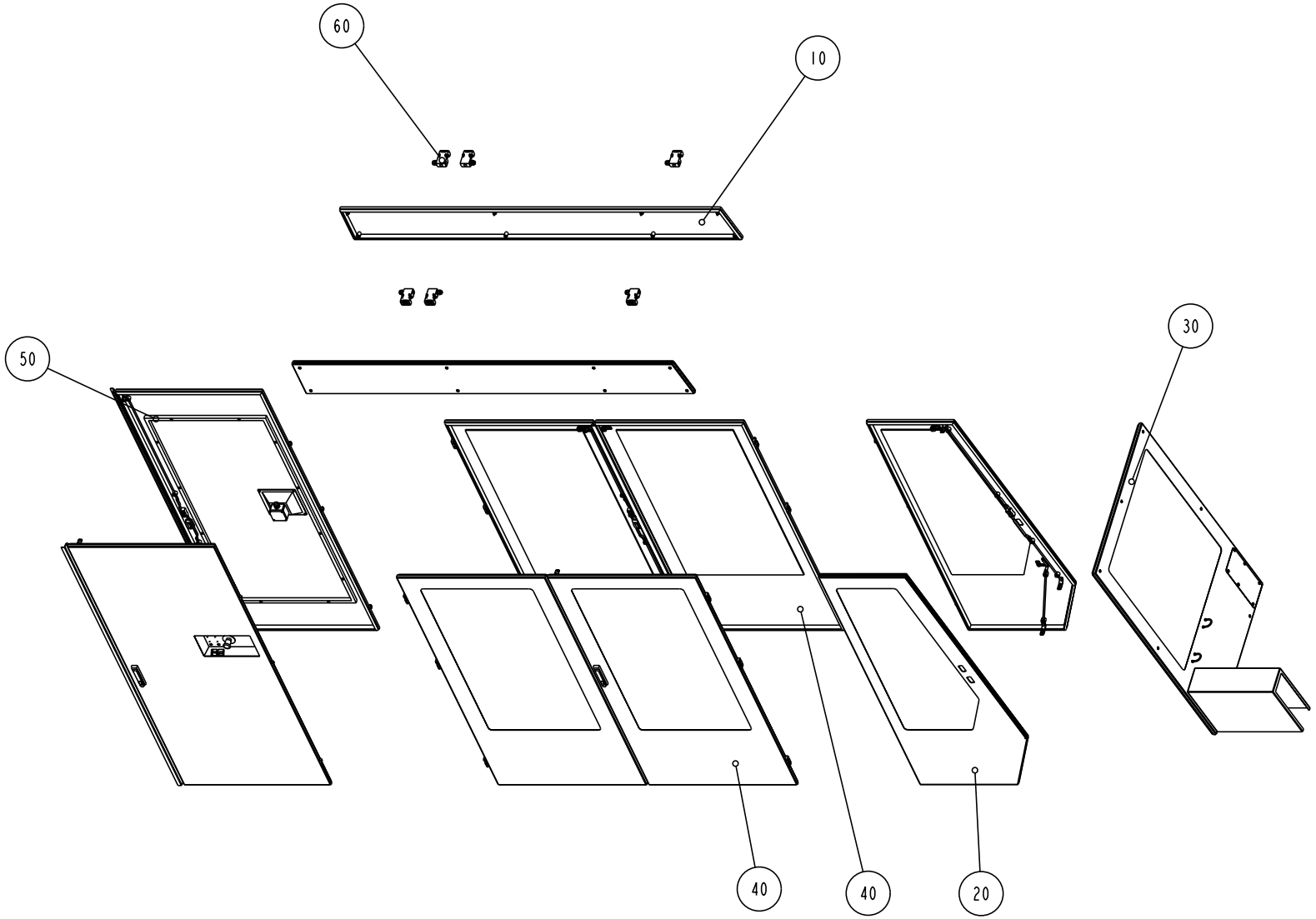

S - 577120-3
ECN 71879

Pos	Part No	SP	UN	Qty	Description	Page No
Common parts						
010	A1317268-0100	-		1	COVERS	**265**
020	A1285958-0100	-		1	DOOR	**267**
030	A1346823-0100	-		1	FRONT COVERS	**269**
040	A1317273-0100	-		2	DOORS	**273**
050	A1317388-0100	-		1	DOORS	**275**
060	A1347069-0100	-		1	SAFETY SWITCH	**279**

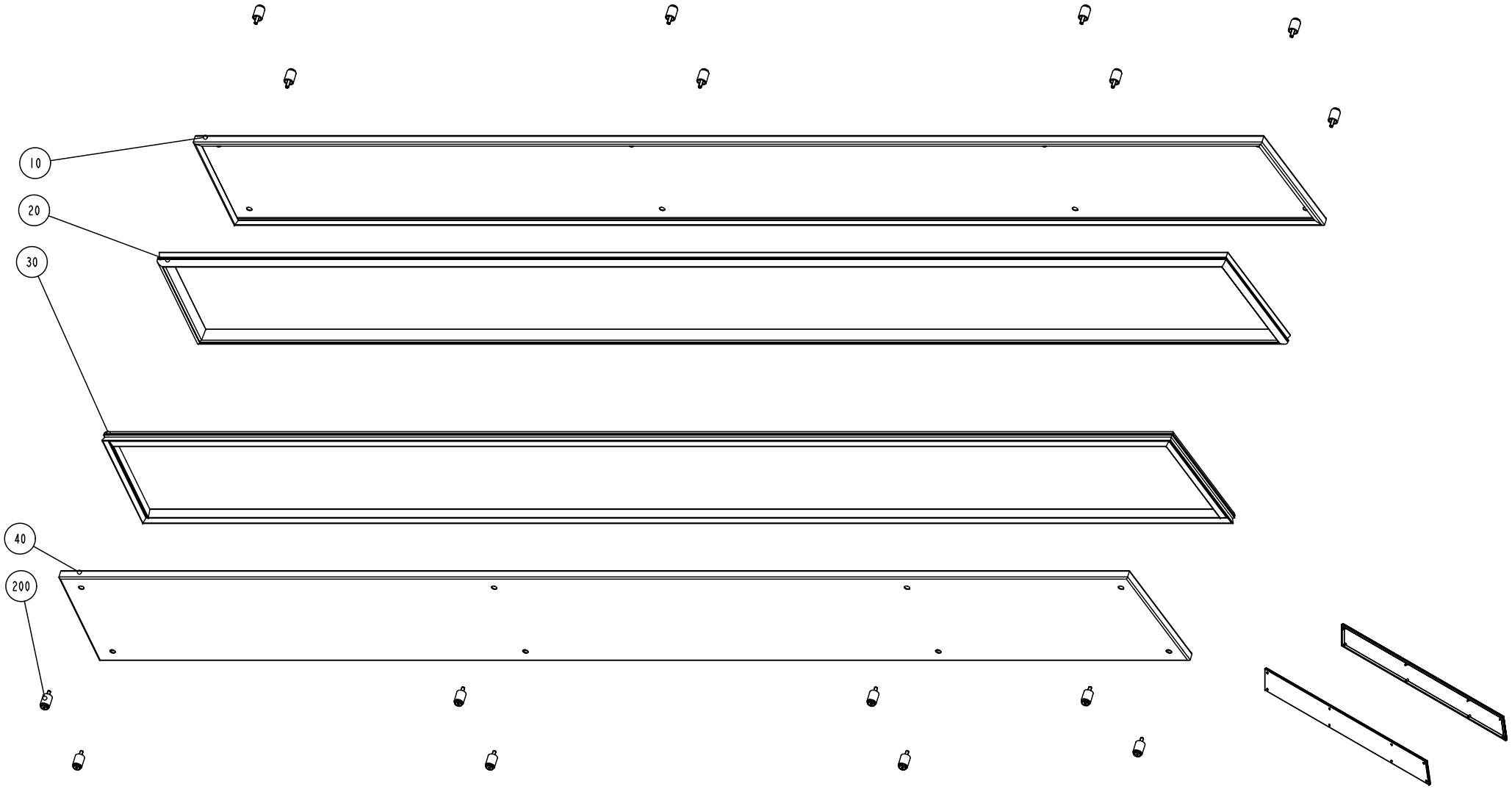

S - 1317268-1
ECN 71879

Pos	Part No	SP	UN	Qty	Description	Page No
Common parts						
010	1346758-0000	-		1	COVER	
020	1346759-0000	-		1	GASKET	
030	1346757-0000	-		1	GASKET	
040	1346756-0000	-		1	COVER	
200	90226-0458	-		16	MOUNTING SCREW	

Pos	Part No	SP	UN	Qty	Description	Page No

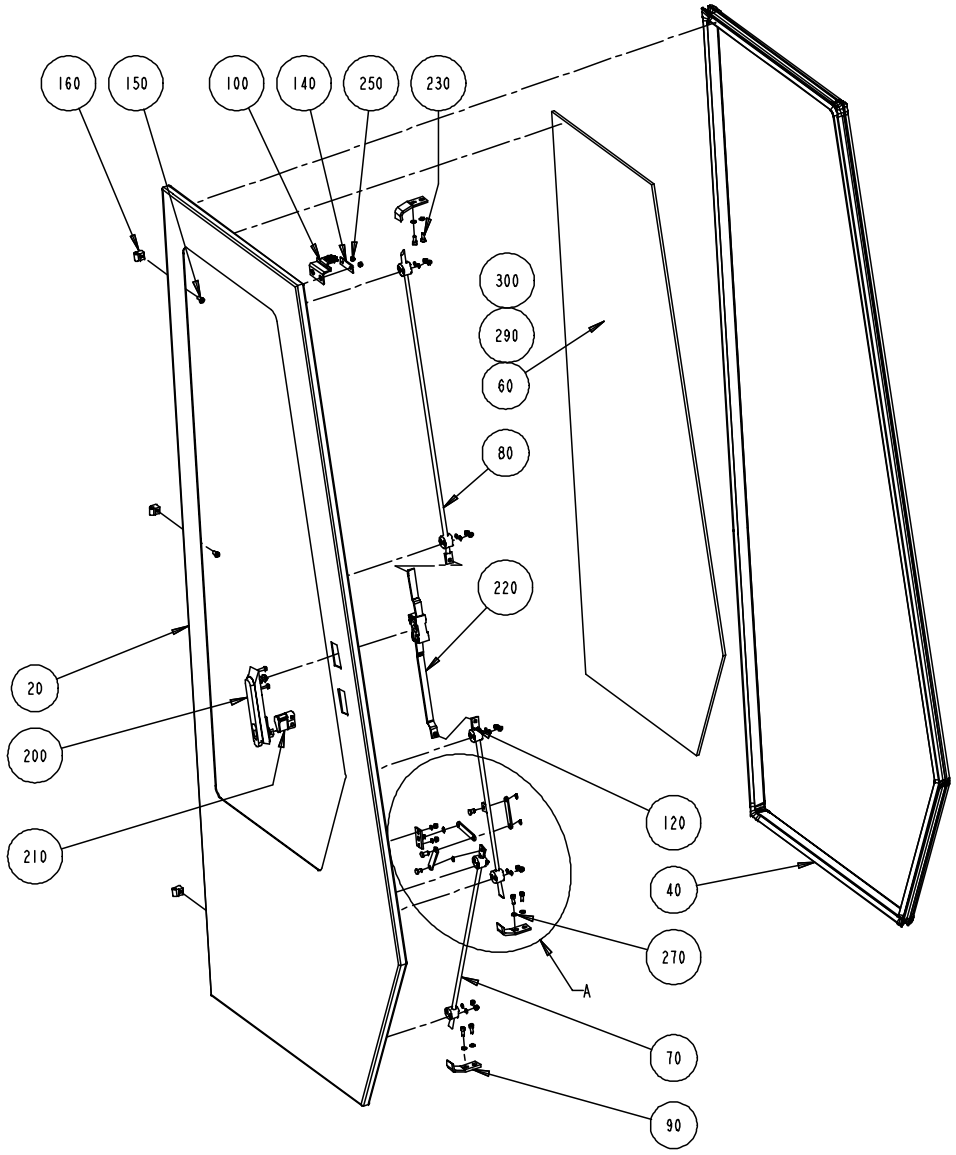

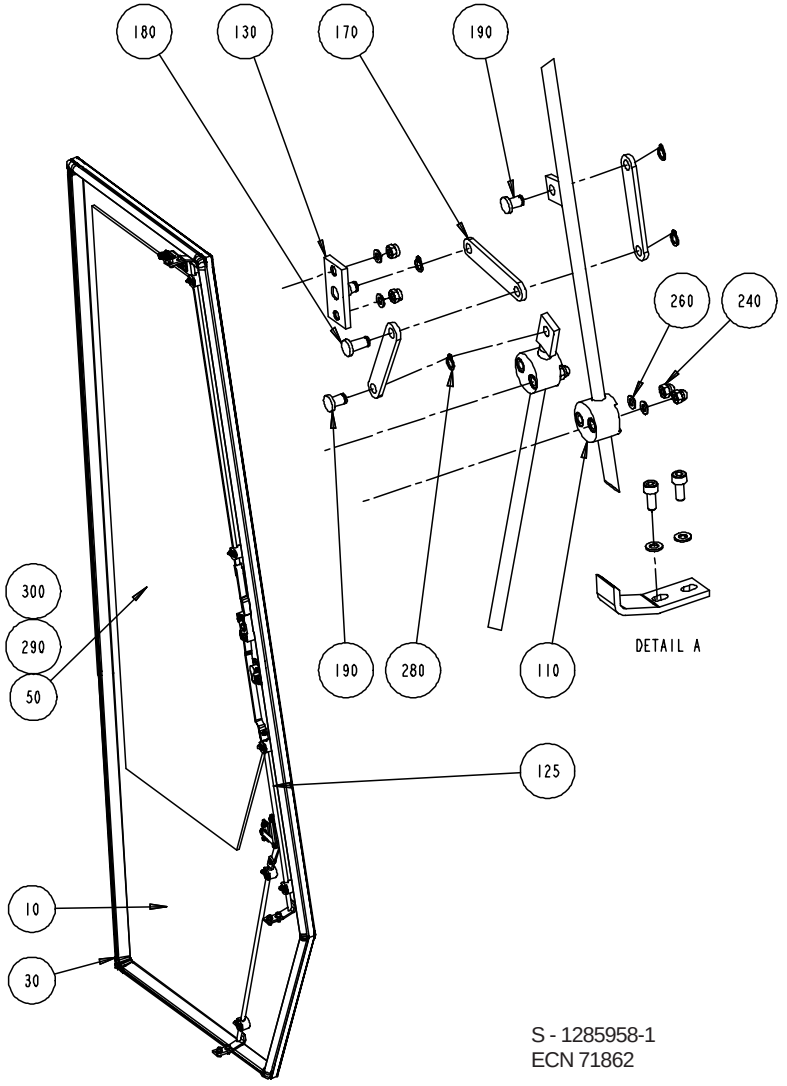

S - 1285958-1
ECN 71862

Pos	Part No	SP	UN	Qty	Description	Page No
Common parts						
010	1285842-0000	-		1	DOOR	
020	1285843-0000	-		1	DOOR	
030	1279075-0000	-		1	SEALING STRIP	
040	1279076-0000	-		1	SEALING STRIP	
050	1296204-0001	-		1	GLASS PANE	
060	1296204-0002	-		1	GLASS PANE	
070	1350708-0000	-		2	LOCKING ARM	
080	1036304-0018	-		2	LOCKING ARM	
090	1036227-0000	-		6	BRACKET	
100	1129042-0000	-		2	KEY	
110	1129274-0000	-		12	GUIDE LUG	
120	1285844-0000	-		1	LOCKING ARM	
125	1478005-0000	-		1	LOCKING ARM	
130	1285845-0000	-		2	BRACKET	
140	1036563-0000	-		2	WASHER	
150	1129767-0000	-		6	SCREW	
160	1129770-0000	-		6	BLOCKING PIECE	
170	1285846-0000	-		6	LINK	
180	1285847-0000	-		2	SHAFT	
190	1285848-0000	-		4	SHAFT	
200	90237-0126	-		2	TURNING HANDLE "REPBY 90237-175	
210	90237-0128	-		2	LOCK CYLINDER	
220	90237-0153	-		2	LOCK HOUSING	
230	312115-0327	-		12	SCREW MC6S ISO 4762 M5X12 A280	
240	312705-0312	-		24	NUT,DOMED CAP,HEXAGON,M4	
250	312812-0312	-		8	LOCK-NUT,HEXAGON,WITH NYLONINSERT,M4	
260	315105-0136	-		28	WASHER,PLAIN ROUND 4,3x8 Stainless	
270	315105-0146	-		12	WASHER,PLAIN ROUND 5,3x10 Stainless	
280	315751-0103	-		8	RETAINING RINGS FOR SHAFT 6	
290	90153-0049	-		x	ADHESIVE	
300	90157-0041	-		x	SEALING COMPOUND	

Pos	Part No	SP	UN	Qty	Description	Page No

FRONT COVERS

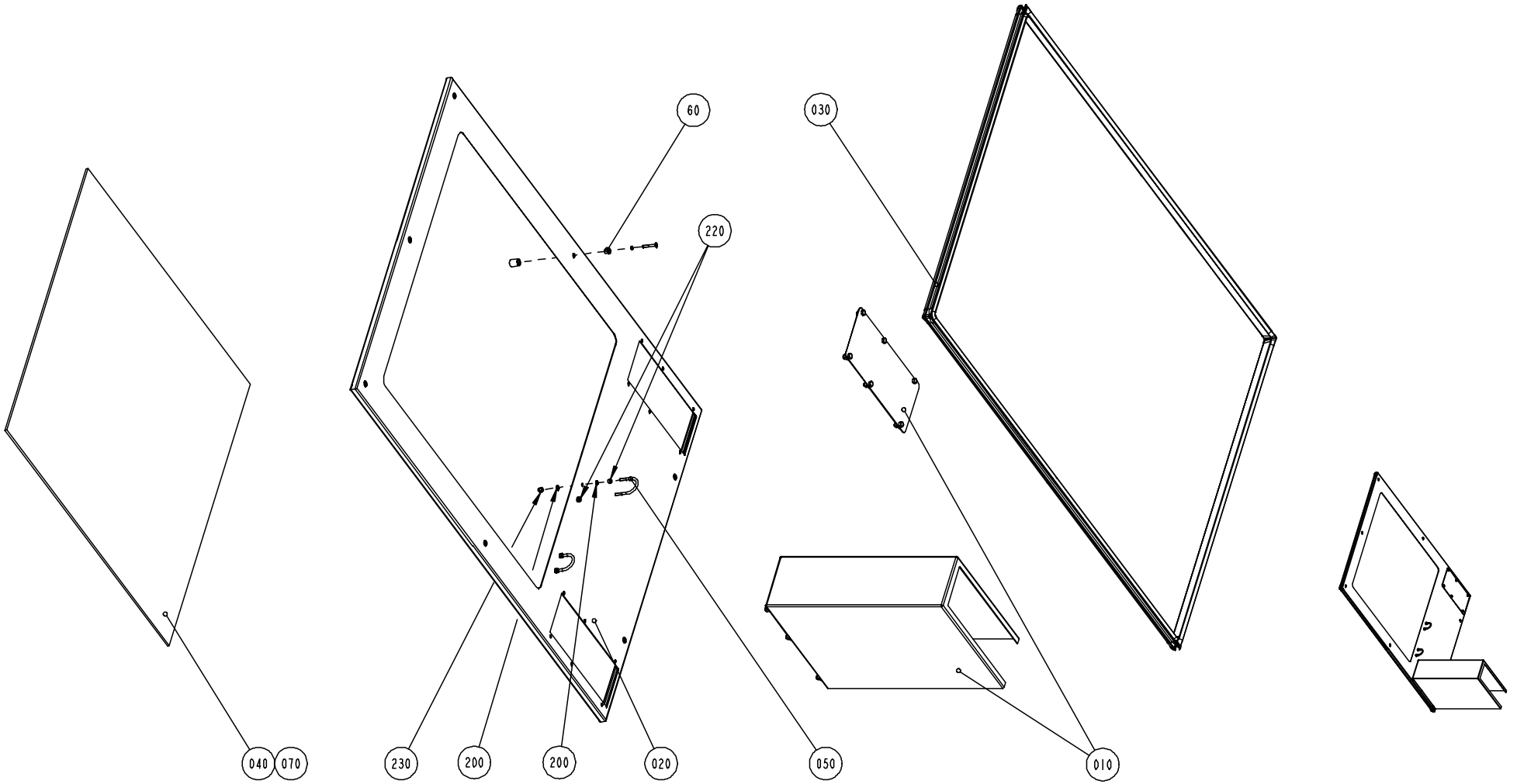

S - 1346823-1
ECN 72267

Pos	Part No	SP	UN	Qty	Description	Page No
Common parts						
010	A1346959-0100	-		1	LID	**271**
020	1346819-0000	-		1	COVER	
030	1296219-0000	-		1	SEALING STRIP	
040	1346818-0000	-		1	GLASS PANE	
050	531616-0000	-		2	HOLDER	
060	90226-0458	-		7	MOUNTING SCREW	
070	90157-0041	-		x	SEALING COMPOUND	
200	315105-0153	-		8	WASHER,PLAIN ROUND 6,4x12 Stainless	
220	312605-0316	-		4	NUT,HEXAGON A280 M6M6	
230	312705-0316	-		4	NUT,DOMED CAP,HEXAGON,M6	

Pos	Part No	SP	UN	Qty	Description	Page No

LID

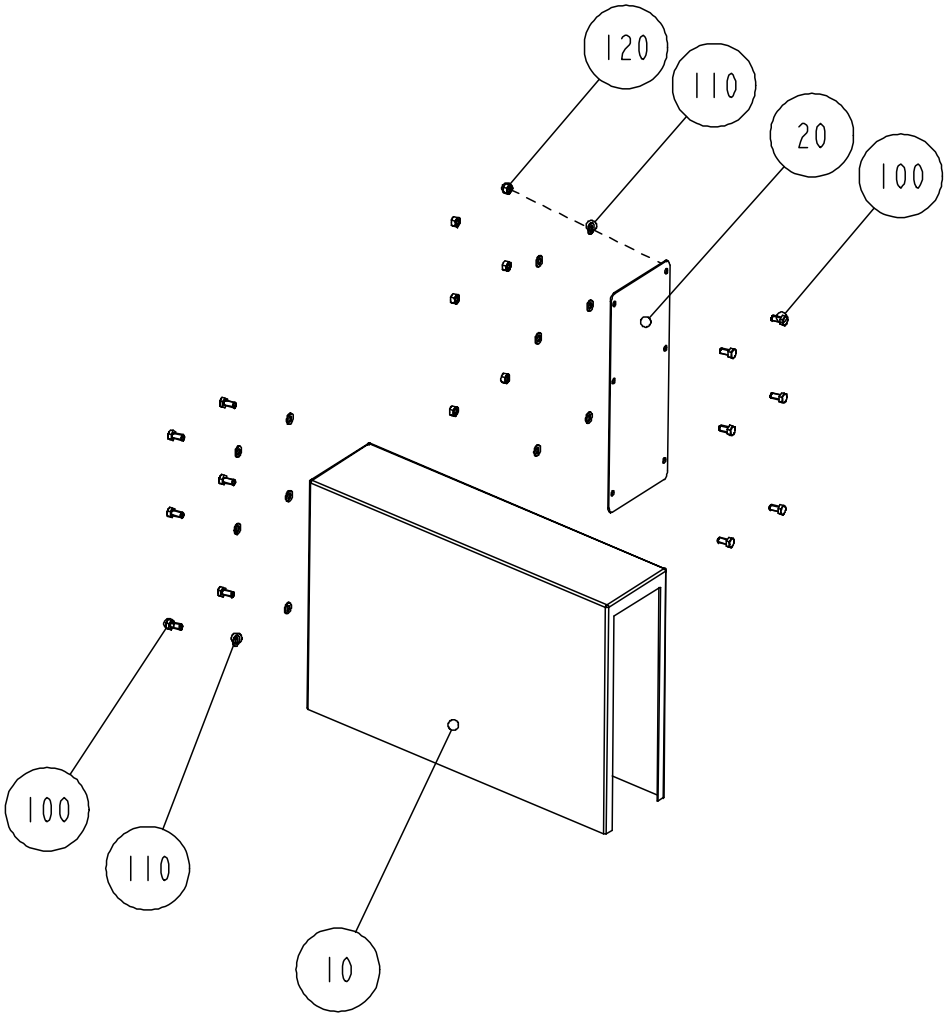

S - 1346959-1
ECN 72985

Pos	Part No	SP	UN	Qty	Description	Page No
Common parts						
010	1346957-0000	-		1	TUNNEL	
020	1346958-0000	-		1	PLATE	
100	312105-0449	-		12	SCREW M6S ISO 4017 M8x16 A280	
110	315105-0165	-		12	WASHER,PLAIN ROUND 8,4x16 Stainless	
120	312605-0318	-		6	NUT,HEXAGON,M8 RFR	

Pos	Part No	SP	UN	Qty	Description	Page No

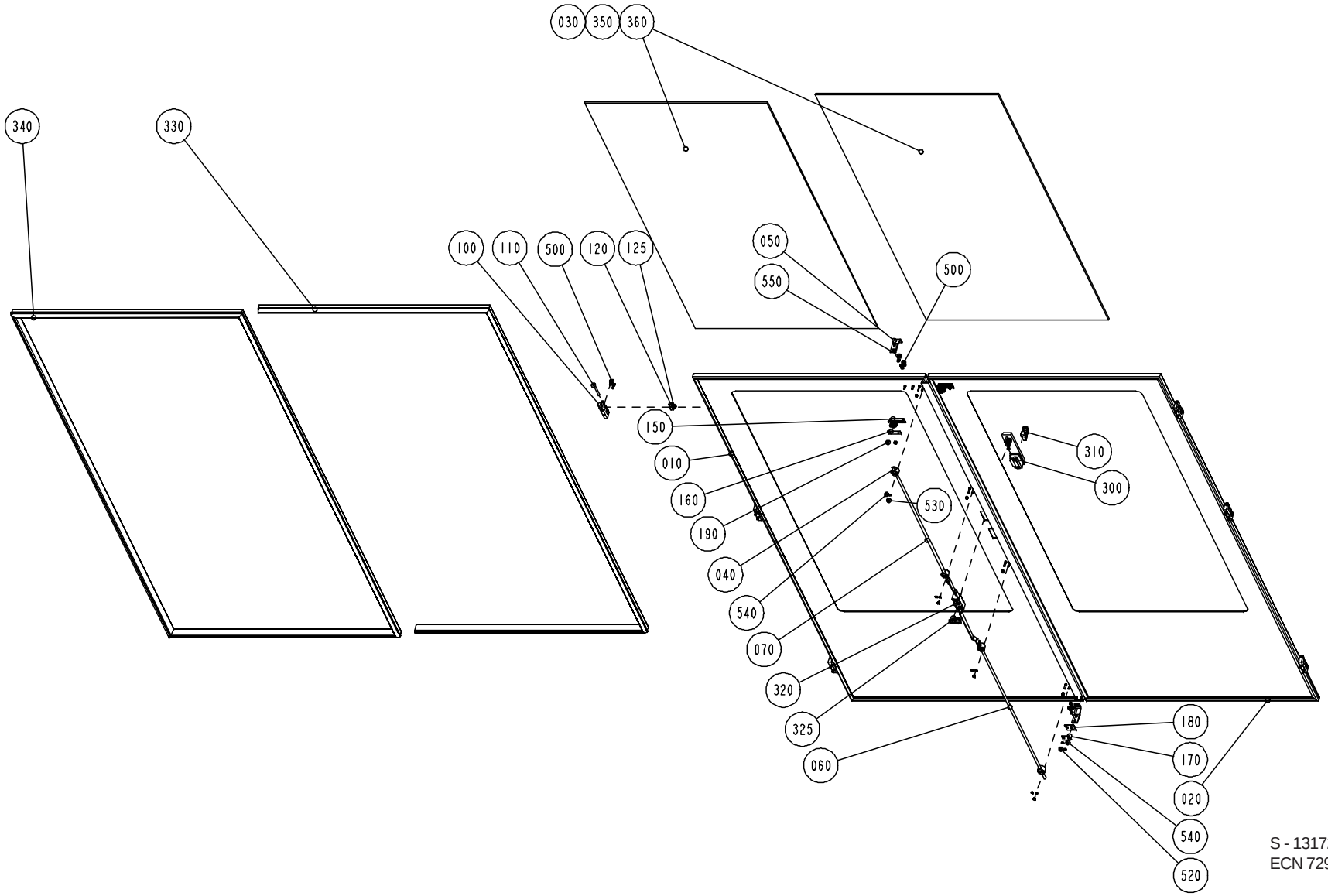

S - 1317273-1
ECN 72985

Pos	Part No	SP	UN	Qty	Description	Page No
Common parts						
010	1317271-0000	-		1	DOOR	
020	1317272-0000	-		1	DOOR	
030	1129064-0000	-		2	GLASS PANE	
040	1129274-0000	-		4	GUIDE LUG	
050	1036227-0000	-		2	BRACKET	
060	1036304-0006	-		1	LOCKING ARM	
070	1036304-0013	-		1	LOCKING ARM	
100	1035792-0000	-		6	E-HINGE	
110	988685-0000	-		6	PIN	
120	1129770-0000	-		6	BLOCKING PIECE	
125	1129767-0000	-		6	SCREW	
150	1129042-0000	-		2	KEY	
160	1036563-0000	-		2	WASHER	
170	1129324-0000	-		1	WASHER	
180	1129325-0000	-		1	SEALING FLANGE	
190	1512644-0000	-		4	ROUND NUT	
300	90237-0176	D		1	TURNING HANDLE	
310	90237-0128	-		1	LOCK CYLINDER	
320	90237-0153	-		1	LOCK HOUSING	
325	90237-0165	-		1	LATCH	
330	1317274-0000	-		1	SEALING STRIP	
340	1317275-0000	-		1	SEALING STRIP	
350	90157-0041	-		x	SEALING COMPOUND	
360	90153-0049	-		x	ADHESIVE	
500	312115-0327	-		16	SCREW MC6S ISO 4762 M5X12 A280	
520	312812-0312	-		2	LOCK-NUT,HEXAGON,WITH NYLONINSERT,M4	
530	312705-0312	-		8	NUT,DOMED CAP,HEXAGON,M4	
540	315105-0136	-		10	WASHER,PLAIN ROUND 4,3x8 Stainless	
550	315105-0146	-		4	WASHER,PLAIN ROUND 5,3x10 Stainless	

Pos	Part No	SP	UN	Qty	Description	Page No

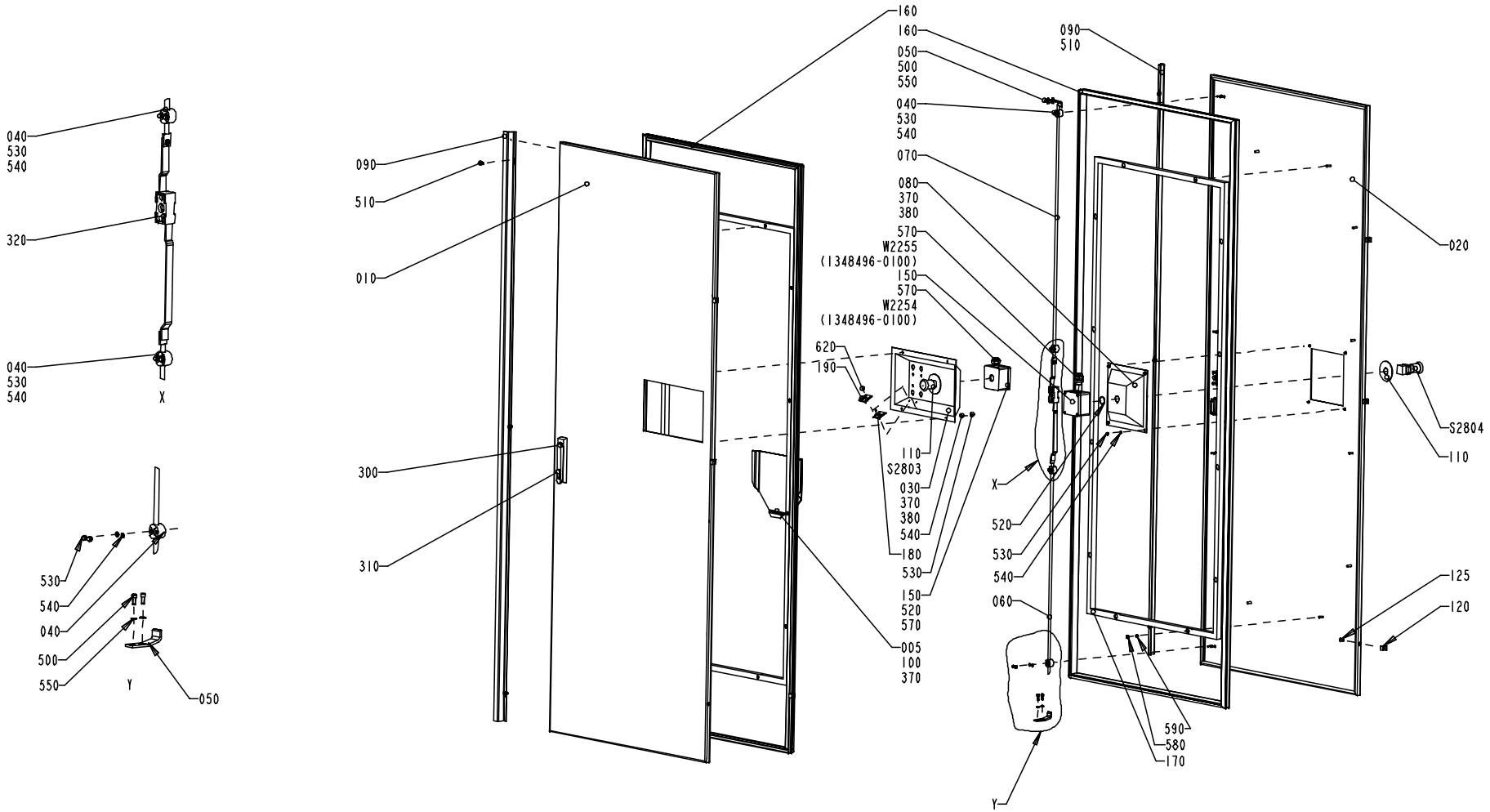

S - 1317388-1
ECN 72985

Pos	Part No	SP	UN	Qty	Description	Page No
Common parts						
005	A1512398-0100	-		1	DIAGRAM	**277**
010	1317386-0000	-		1	DOOR	
020	1317387-0000	-		1	DOOR	
030	1317389-0000	-		1	COVER	
040	1129274-0000	-		8	GUIDE LUG	
050	1036227-0000	-		4	BRACKET	
060	1036304-0006	-		2	LOCKING ARM	
070	1036304-0007	-		2	LOCKING ARM	
080	1317390-0000	-		1	COVER	
090	1317392-0000	-		2	COVER	
100	1129275-0000	-		1	BOX FOR DIAGRAM	
110	486826-0001	-		2	SIGN "EMERGENCY STOP"	
120	1129770-0000	-		6	BLOCKING PIECE	
125	1129767-0000	-		6	SCREW	
150	1037130-0000	-		2	CONNECTION BOX	
160	1317391-0000	-		2	SEALING STRIP	
170	1348232-0000	-		2	FRAME	
180	1347766-0000	-		1	SIGN	
190	1347767-0000	-		1	SIGN	
300	90237-0176	-		2	TURNING HANDLE	
310	90237-0128	-		2	LOCK CYLINDER	
320	90237-0153	-		2	LOCK HOUSING	
370	90157-0041	-		x	SEALING COMPOUND	
380	90153-0049	-		x	ADHESIVE	
500	312115-0327	-		8	SCREW MC6S ISO 4762 M5X12 A280	
510	312115-0323	-		6	SCREW MC6S ISO 4762 M5X8 A280	
520	315202-0119	-		2	O-RING 25,1x1,6	
530	312705-0312	-		24	NUT,DOMED CAP,HEXAGON,M4	
540	315105-0136	-		24	WASHER,PLAIN ROUND 4,3x8 Stainless	
550	315105-0146	-		8	WASHER,PLAIN ROUND 5,3x10 Stainless	
570	352103-0110	-		2	CABLE GLAND STR 16	
580	312605-0316	-		24	NUT,HEXAGON A280 M6M6	
590	315105-0153	-		24	WASHER,PLAIN ROUND 6,4x12 Stainless	
620	312502-0120	-		4	DRIVE SCREW ROUND HEAD SMS 1549 KDS 0X5	
S2803	90064-0124	-		1	SWITCH,EMERGENCY STOP	
S2804	90064-0124	-		1	SWITCH,EMERGENCY STOP	
W2254	351150-0405	-	MM	2000	CABLE,OLFLEX 5x0,75 MM2	
W2255	351150-0405	-	MM	3000	CABLE,OLFLEX 5x0,75 MM2	

Pos	Part No	SP	UN	Qty	Description	Page No

This page is intentionally left blank

Pos	Part No	SP	UN	Qty	Description	Page No
Common parts						
010	1512376-0000	-		1	PNEUMATIC DIAGRAM	
020	1484892-0000	-		1	PNEUMATIC DIAGRAM	
030	1347585-0000	-		1	DIAGRAM	
040	1484511-0000	-		1	WATER DIAGRAM	
050	1484893-0000	-		1	EXTERNAL CLEANING DIAGRAM	
060	1129998-0000	-		1	PNEUMATIC DIAGRAM	

Pos	Part No	SP	UN	Qty	Description	Page No

SAFETY SWITCH

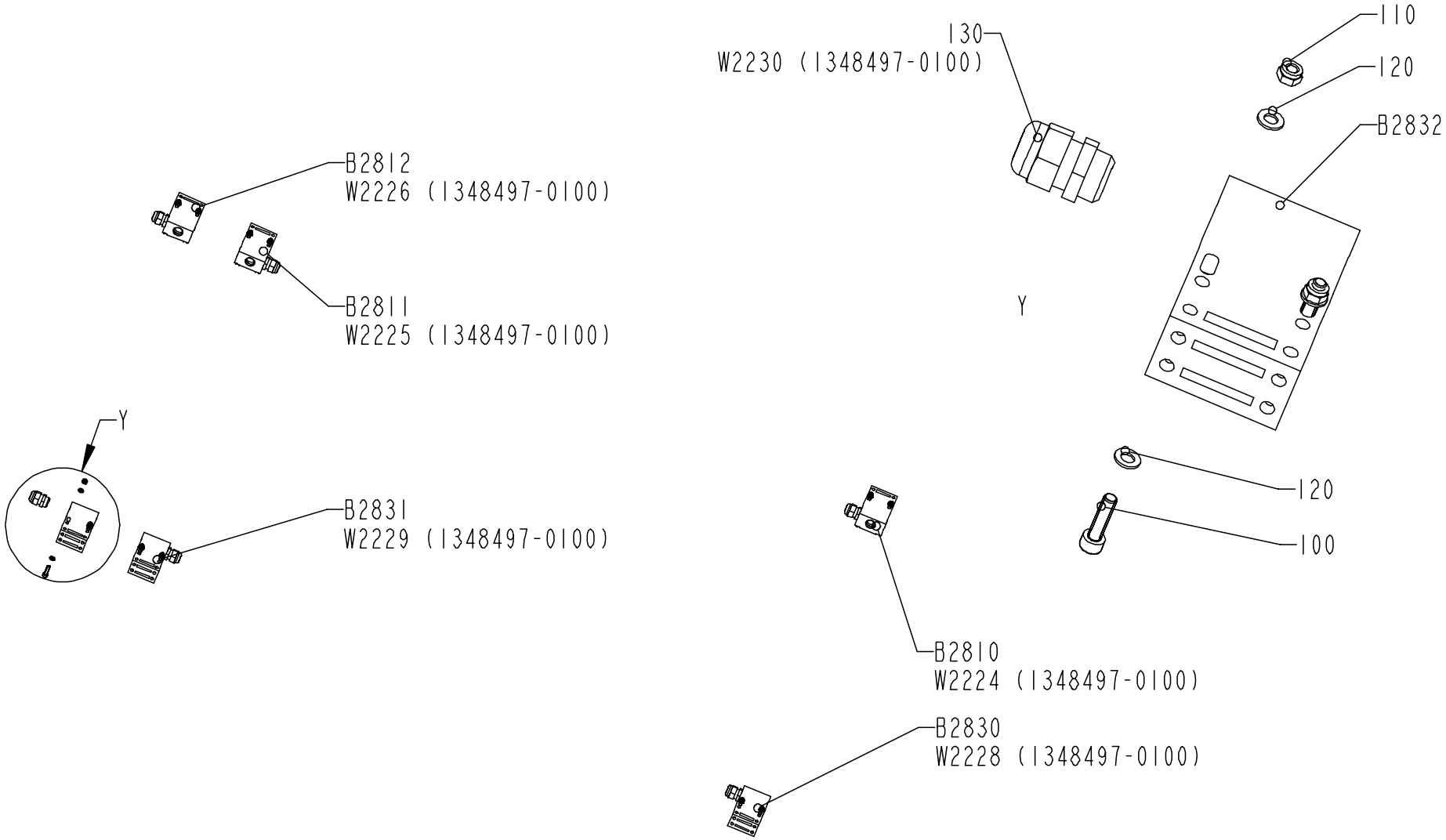

S - 1347069-1
ECN 72267

Pos	Part No	SP	UN	Qty	Description	Page No
Common parts						
100	312125-0331	-		12	SLOTTED CHEESE HEAD ISO 1207 M5X20 RFR	
110	312812-0314	-		12	NUT,HEXAGON,LOCK,WITH NYLON,M5	
120	315105-0146	-		24	WASHER,PLAIN ROUND 5,3x10 Stainless	
130	352103-0106	-		6	CABLE GLAND ST 11	
B2810	90044-0139	R		1	Key saf.sw. AZ16-02 ZVR K-2254	
B2811	90044-0139	R		1	Key saf.sw. AZ16-02 ZVR K-2254	
B2812	90044-0139	R		1	Key saf.sw. AZ16-02 ZVR K-2254	
B2830	90044-0139	R		1	Key saf.sw. AZ16-02 ZVR K-2254	
B2831	90044-0139	R		1	Key saf.sw. AZ16-02 ZVR K-2254	
B2832	90044-0139	R		1	Key saf.sw. AZ16-02 ZVR K-2254	
W2224	351150-0405	-	MM	2500	CABLE,OLFLEX 5x0,75 MM2	
W2225	351150-0405	-	MM	2500	CABLE,OLFLEX 5x0,75 MM2	
W2226	351150-0405	-	MM	2500	CABLE,OLFLEX 5x0,75 MM2	
W2228	351150-0405	-	MM	4500	CABLE,OLFLEX 5x0,75 MM2	
W2229	351150-0405	-	MM	3500	CABLE,OLFLEX 5x0,75 MM2	
W2230	351150-0405	-	MM	3500	CABLE,OLFLEX 5x0,75 MM2	

Pos	Part No	SP	UN	Qty	Description	Page No

This page is intentionally left blank

Pos	Part No	SP	UN	Qty	Description	Page No
90064-0082						
	90036-0057	F		1	LIGHT BULB BA9S 28V	
90064-0093						
	90036-0057	F		1	LIGHT BULB BA9S 28V	
90164-0008						
	90297-0002	F		1	FLUORESCENT TUBE 18W	
90277-0039						
	90234-0328	K		1	COVER	
	90277-0346	K		1	FILTER CARTRIDGE	
978999-0000						
	90235-0483	R		x	Gasket	
985328-0000						
	985327-0000	-		1	PROFILE	
985389-0000						
	1140619-0000	-		2	PLUG	
985390-0000						
	1140619-0000	-		2	PLUG	
985393-0000						
	1254024-0000	-		1	PROFILE	
985395-0000						
	1254024-0000	-		1	PROFILE	
985396-0000						
	1254024-0000	-		1	PROFILE	
985397-0000						
	1254024-0000	-		1	PROFILE	
1010822-0000						
	1140619-0000	-		2	PLUG	
1040996-0000						
	1040995-0000	-		1	PROFILE	
1040997-0000						
	1040995-0000	-		1	PROFILE	
1040999-0000						
	1040971-0000	-		1	PROFILE	
1041000-0000						
	1040971-0000	-		1	PROFILE	
1129378-0000						
	90165-0089	-		3	PIPE CLAMP	
1129379-0000						
	1129438-0000	-		1	ADAPTOR	

Pos	Part No	SP	UN	Qty	Description	Page No
1129383-0000						
	1129269-0000	-		1	HOSE CONNECTION	
	1129438-0000	-		1	ADAPTOR	
1129434-0000						
	1129269-0000	-		1	HOSE CONNECTION	
1129570-0000						
	90110-0282	-		1	PLINTH	
	90194-0154	-		1	Marking, Terminals	
1140553-0000						
	1140619-0000	-		4	PLUG	
1254098-0000						
	1254024-0000	-		1	PROFILE	
1254099-0000						
	1254024-0000	-		1	PROFILE	
1254100-0000						
	1254024-0000	-		1	PROFILE	
1255493-0000						
	90217-0097	-		1	PIPE ELBOW 90 "PMCS"	
	90217-0129	-		1	T-PIPE "PMCS"	
	90330-0059	-		1	NIPPLE	
	343421-0103	-		1	FLANGE	
1346565-0000						
	90235-0483	R		1	Gasket	
1347704-0000						
	90326-0306	-		1	GLAND FITTING 9041-45-KS-KR.1/8"D=4,5mm	
	1040890-0000	D		1	THERMOCOUPLE	

SPC

Spare Parts Catalogue

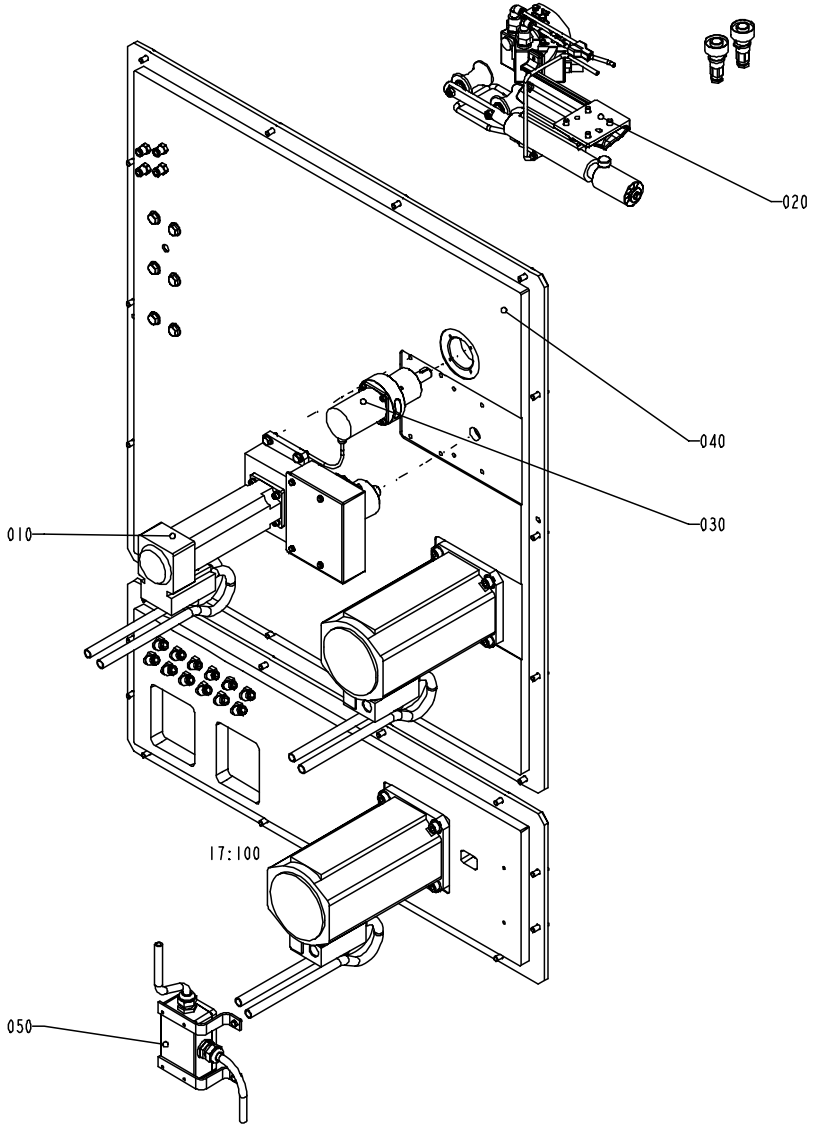

S - 648523-12
ECN 73159

Pos	Part No	SP	UN	Qty	Description	Page No
Common parts						
010	A 577110-0100	-		1	DRIVEUNIT DESIGNCORRECT.	**289**
020	A1347515-0200	-		1	PHOTOCELL UNIT	**291**, **293**
030	A1260120-0100	-		1	VOLUME ADJUSTER	**295**
040	A1279000-0600	-		1	PLATES	**297**, **299**
050	A1349464-0300	-		1	CONNECTION BOX	**301**

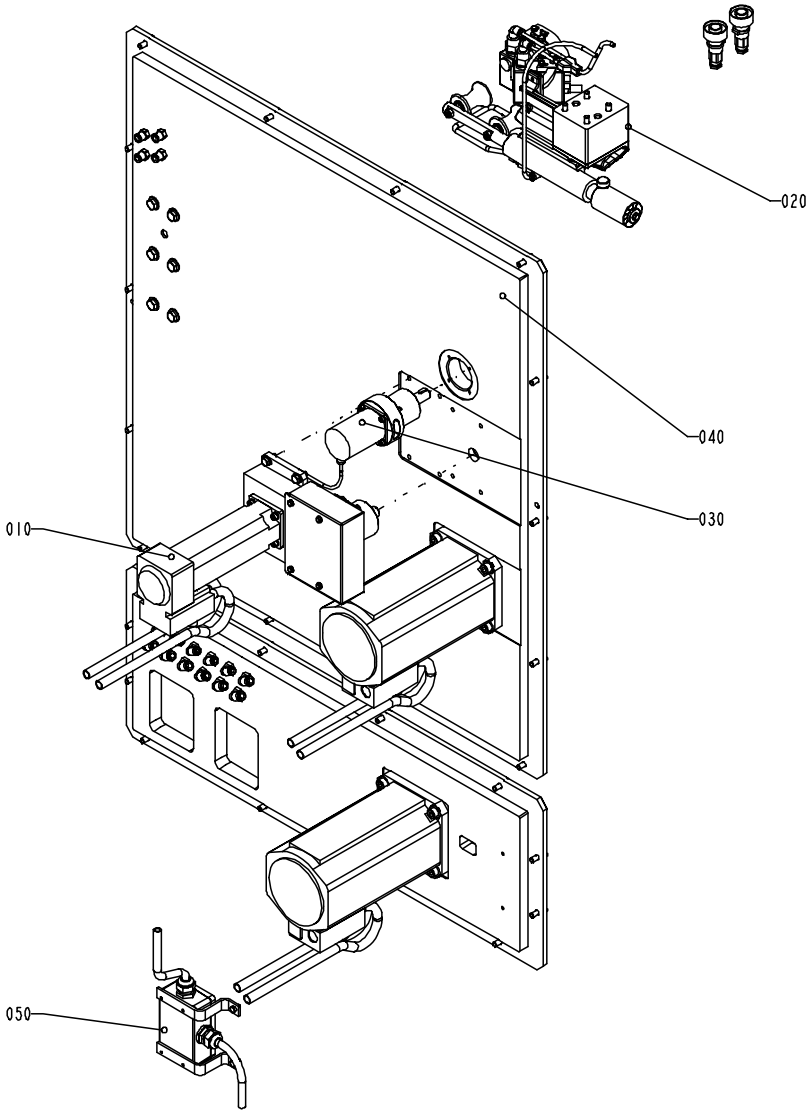

S - 648523-13
ECN 73160

Pos	Part No	SP	UN	Qty	Description	Page No
Common parts						
010	A 577110-0100	-		1	DRIVEUNIT DESIGNCORRECT.	**289**
020	A1347515-0200	-		1	PHOTOCELL UNIT	**291**, **293**
030	A1260120-0100	-		1	VOLUME ADJUSTER	**295**
040	A1279000-0600	-		1	PLATES	**297**, **299**
050	A1349464-0300	-		1	CONNECTION BOX	**301**

Pos	Part No	SP	UN	Qty	Description	Page No

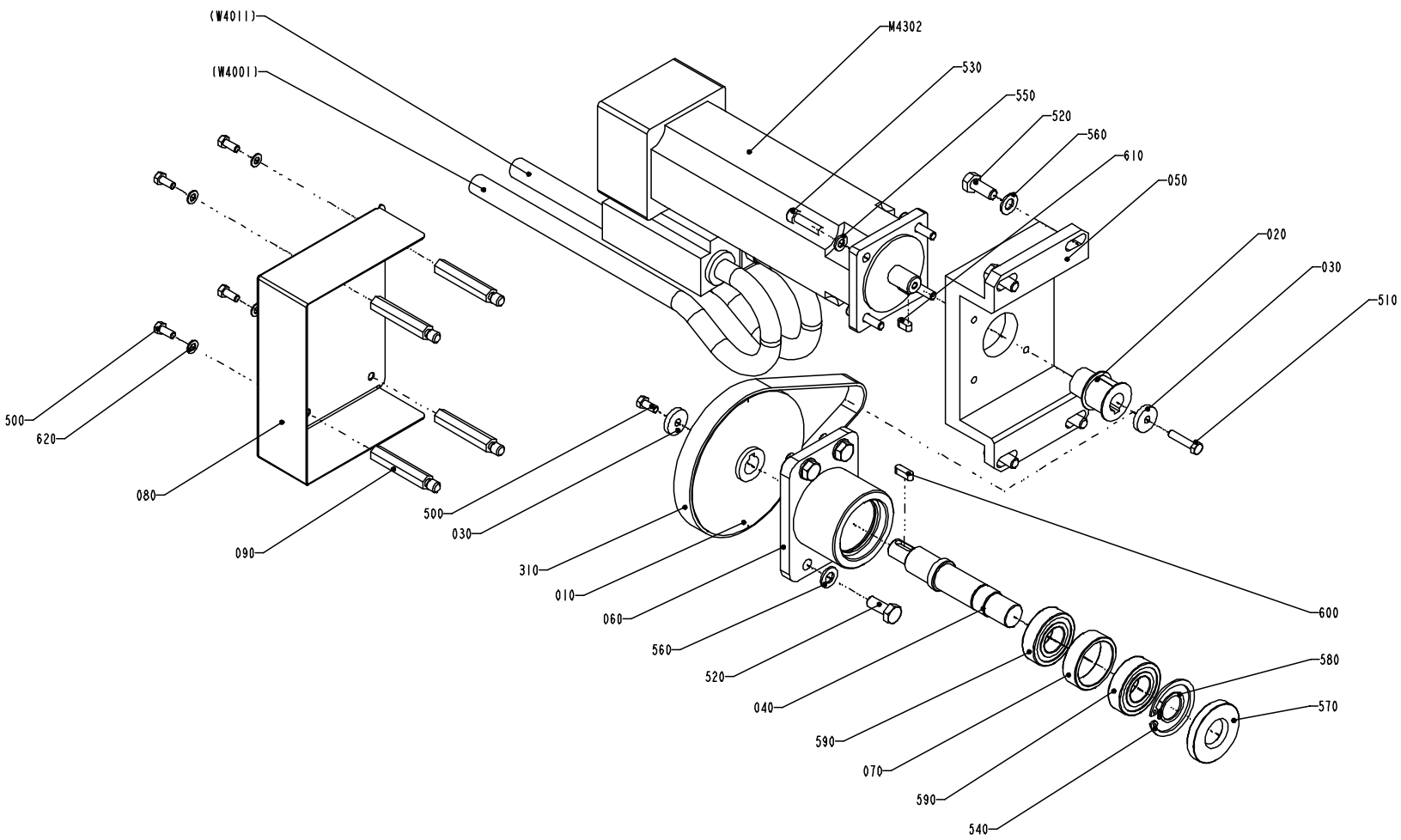

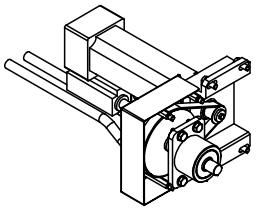

S - 577110-1
ECN 72266

Pos	Part No	SP	UN	Qty	Description	Page No
Common parts						
010	1140837-0000	R		1	PULLEY	
020	1140839-0000	R		1	PULLEY	
030	1140851-0000	-		2	WASHER	
040	1260859-0000	-		1	SHAFT	
050	1260863-0000	-		1	PLATE	
060	1260864-0000	-		1	BEARING HOUSING	
070	1260865-0000	-		1	SPACER	
080	1487099-0000	-		1	COVER	
090	1487127-0000	-		4	SPACER SCREW	
310	90252-0047	R		1	TIMING BELT AT5X450X16	
500	312105-0327	-		5	SCREW M6S ISO 4017 M5X12 A280	
510	312105-0333	-		1	SCREW M6S ISO 4017 M5x25 A280	
520	312105-0451	-		8	SCREW M6S ISO 4017 8x20 A280	
530	312115-0372	-		4	SCREW MC6S ISO 4762 M6x25 A280	
540	90141-0020	-		1	RETAINING RINGS FOR HOLE 42	
550	315105-0153	-		4	WASHER,PLAIN ROUND 6,4x12 Stainless	
560	315105-0165	-		8	WASHER,PLAIN ROUND 8,4x16 Stainless	
570	315221-0147	R		1	SEALING RINGS,TYPE A 20X47X7	
580	315751-0116	-		1	RETAINING RINGS FOR SHAFT 20	
590	321308-0204	R		2	BALL BEARING 20X42X12	
600	315701-0199	-		1	KEYS,PARALLEL WITH ROUND ENDS 5X5X16	
610	315701-0197	-		1	KEYS,PARALLEL WITH ROUND ENDS 5X5X12	
620	315105-0146	-		4	WASHER,PLAIN ROUND 5,3x10 Stainless	
M4302	90045-0164	R		1	SERVOMOTOR ELMO EP075112-44T3B	

Pos	Part No	SP	UN	Qty	Description	Page No

PHOTOCELL UNIT

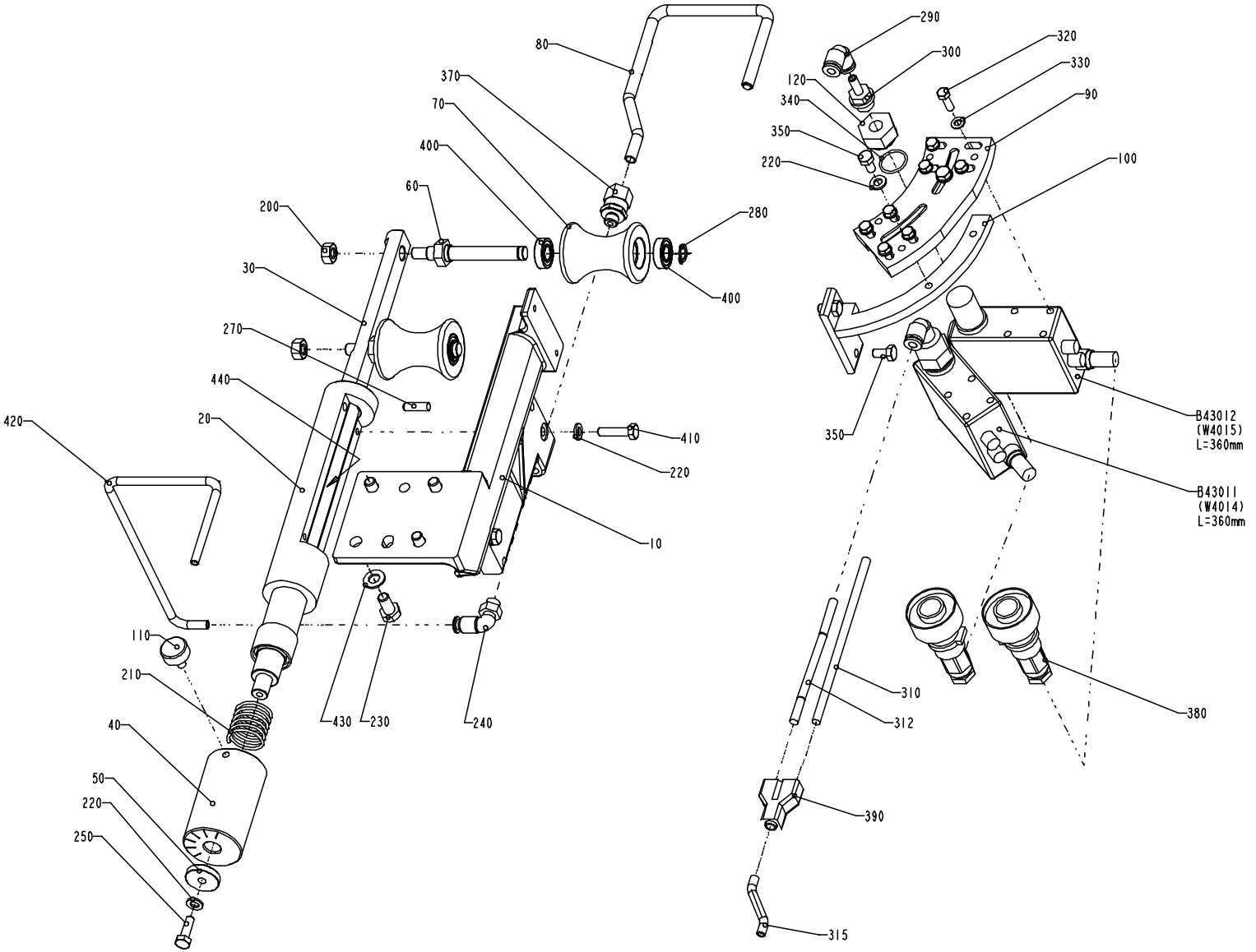

S - 1347515-3
ECN 72266

Pos	Part No	SP	UN	Qty	Description	Page No
TBA 0250B						
230	312105-0449	-		4	SCREW M6S ISO 4017 M8x16 A280	
430	315105-0165	-		4	WASHER,PLAIN ROUND 8,4x16 Stainless	
TBA 0200B						
130	1484442-0000	-		1	SPACER	
230	312105-0449	-		1	SCREW M6S ISO 4017 M8x16 A280	
430	315105-0165	-		5	WASHER,PLAIN ROUND 8,4x16 Stainless	
450	312105-0469	-		3	SCREW M6S ISO 4014 M8x90 A280	
460	312105-0453	-		1	SCREW M6S ISO 4017 M8x25 A280	
470	311103-0405	-		2	PINS,STRAIGHT 8X30	
Common parts						
010	1487120-0000	-		1	HOLDER	
020	1347519-0000	-		1	FLANGE	
030	1347517-0000	-		1	SHAFT	
040	1347518-0000	-		1	ADJUSTING SCREW	
050	1347523-0000	-		1	SPACER	
060	1347520-0000	-		2	SHAFT	
070	1347521-0000	J		2	ROLLER	
080	1347522-0000	-		1	NOZZLE	
090	978735-0000	-		1	FASTENING PLATE	
100	751457-0000	-		1	CANTILEVER	
110	1348207-0000	-		1	SCREW	
120	548337-0000	-		2	BUSHING	
200	312605-0318	-		2	NUT,HEXAGON,M8 RFR	
210	90335-0080	-		1	SPRING	
220	315105-0153	-		5	WASHER,PLAIN ROUND 6,4x12 Stainless	
240	342732-0102	-		1	ELBOW PIPE JOINT	
250	312105-0370	-		1	SCREW M6S ISO 4017 M6x20 A280	
270	311103-0353	-		2	PIN,STRAIGHT 6x20	
280	90141-0016	-		2	RETAINING RING FOR SHAFT 10	
290	90055-0113	-		2	Hose,V-junction,fpt, 13 x6mm	
300	90055-0162	-		2	NIPPLE-6mm	
310	90166-0013	-	MM	150	TUBE 8/6 PA Blue	
312	90166-0013	-	MM	150	TUBE 8/6 PA Blue	
315	90166-0013	-	MM	100	TUBE 8/6 PA Blue	
320	312105-0329	-		8	SCREW M6S ISO 4017 M5x16 A280	
330	315105-0146	-		8	WASHER,PLAIN ROUND 5,3x10 Stainless	
340	315204-0116	-		2	O-RINGS 18,1X1,6	
350	312105-0366	-		4	SCREW M6S ISO 4017 M6x12 A280	
370	342720-0103	-		1	STRAIGHT CONNECTION GA-8-G1/8"	
380	90110-0235	-		2	CABLE CONTACT	
390	90055-0100	-		1	Y-CONNECTION	
400	90214-0036	J		4	BALL BEARING,STAINLESS 10X22X6	
410	312105-0372	-		2	SCREW M6S ISO 4017 M6x25 A280	
420	90166-0124	-	MM	300	TUBE 6 mm PA 11/12,Transp.	
440	90296-0070	-		x	GREASE	
B43011	90232-0075	Q		1	Ph.cell NT6-14900S12	
B43012	90232-0075	Q		1	Ph.cell NT6-14900S12	

PHOTOCELL UNIT

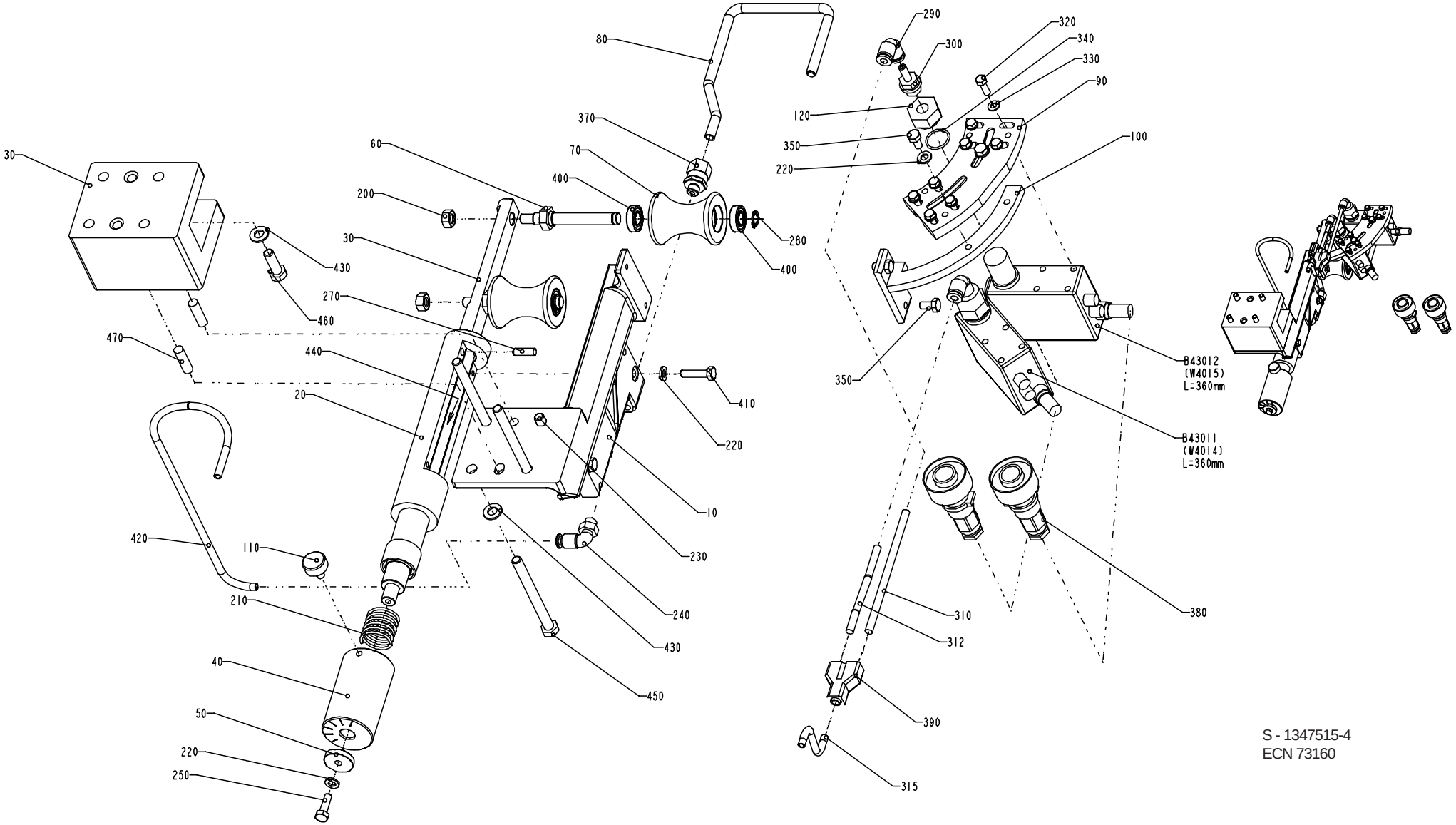

S - 1347515-4
ECN 73160

Pos	Part No	SP	UN	Qty	Description	Page No
TBA 0250B						
230	312105-0449	-		4	SCREW M6S ISO 4017 M8x16 A280	
430	315105-0165	-		4	WASHER,PLAIN ROUND 8,4x16 Stainless	
TBA 0200B						
130	1484442-0000	-		1	SPACER	
230	312105-0449	-		1	SCREW M6S ISO 4017 M8x16 A280	
430	315105-0165	-		5	WASHER,PLAIN ROUND 8,4x16 Stainless	
450	312105-0469	-		3	SCREW M6S ISO 4014 M8x90 A280	
460	312105-0453	-		1	SCREW M6S ISO 4017 M8x25 A280	
470	311103-0405	-		2	PINS,STRAIGHT 8X30	
Common parts						
010	1487120-0000	-		1	HOLDER	
020	1347519-0000	-		1	FLANGE	
030	1347517-0000	-		1	SHAFT	
040	1347518-0000	-		1	ADJUSTING SCREW	
050	1347523-0000	-		1	SPACER	
060	1347520-0000	-		2	SHAFT	
070	1347521-0000	J		2	ROLLER	
080	1347522-0000	-		1	NOZZLE	
090	978735-0000	-		1	FASTENING PLATE	
100	751457-0000	-		1	CANTILEVER	
110	1348207-0000	-		1	SCREW	
120	548337-0000	-		2	BUSHING	
200	312605-0318	-		2	NUT,HEXAGON,M8 RFR	
210	90335-0080	-		1	SPRING	
220	315105-0153	-		5	WASHER,PLAIN ROUND 6,4x12 Stainless	
240	342732-0102	-		1	ELBOW PIPE JOINT	
250	312105-0370	-		1	SCREW M6S ISO 4017 M6x20 A280	
270	311103-0353	-		2	PIN,STRAIGHT 6x20	
280	90141-0016	-		2	RETAINING RING FOR SHAFT 10	
290	90055-0113	-		2	Hose,V-junction,fpt, 13 x6mm	
300	90055-0162	-		2	NIPPLE-6mm	
310	90166-0013	-	MM	150	TUBE 8/6 PA Blue	
312	90166-0013	-	MM	150	TUBE 8/6 PA Blue	
315	90166-0013	-	MM	100	TUBE 8/6 PA Blue	
320	312105-0329	-		8	SCREW M6S ISO 4017 M5x16 A280	
330	315105-0146	-		8	WASHER,PLAIN ROUND 5,3x10 Stainless	
340	315204-0116	-		2	O-RINGS 18,1X1,6	
350	312105-0366	-		4	SCREW M6S ISO 4017 M6x12 A280	
370	342720-0103	-		1	STRAIGHT CONNECTION GA-8-G1/8"	
380	90110-0235	-		2	CABLE CONTACT	
390	90055-0100	-		1	Y-CONNECTION	
400	90214-0036	J		4	BALL BEARING,STAINLESS 10X22X6	
410	312105-0372	-		2	SCREW M6S ISO 4017 M6x25 A280	
420	90166-0124	-	MM	300	TUBE 6 mm PA 11/12,Transp.	
440	90296-0070	-		x	GREASE	
B43011	90232-0075	Q		1	Ph.cell NT6-14900S12	
B43012	90232-0075	Q		1	Ph.cell NT6-14900S12	

VOLUME ADJUSTER

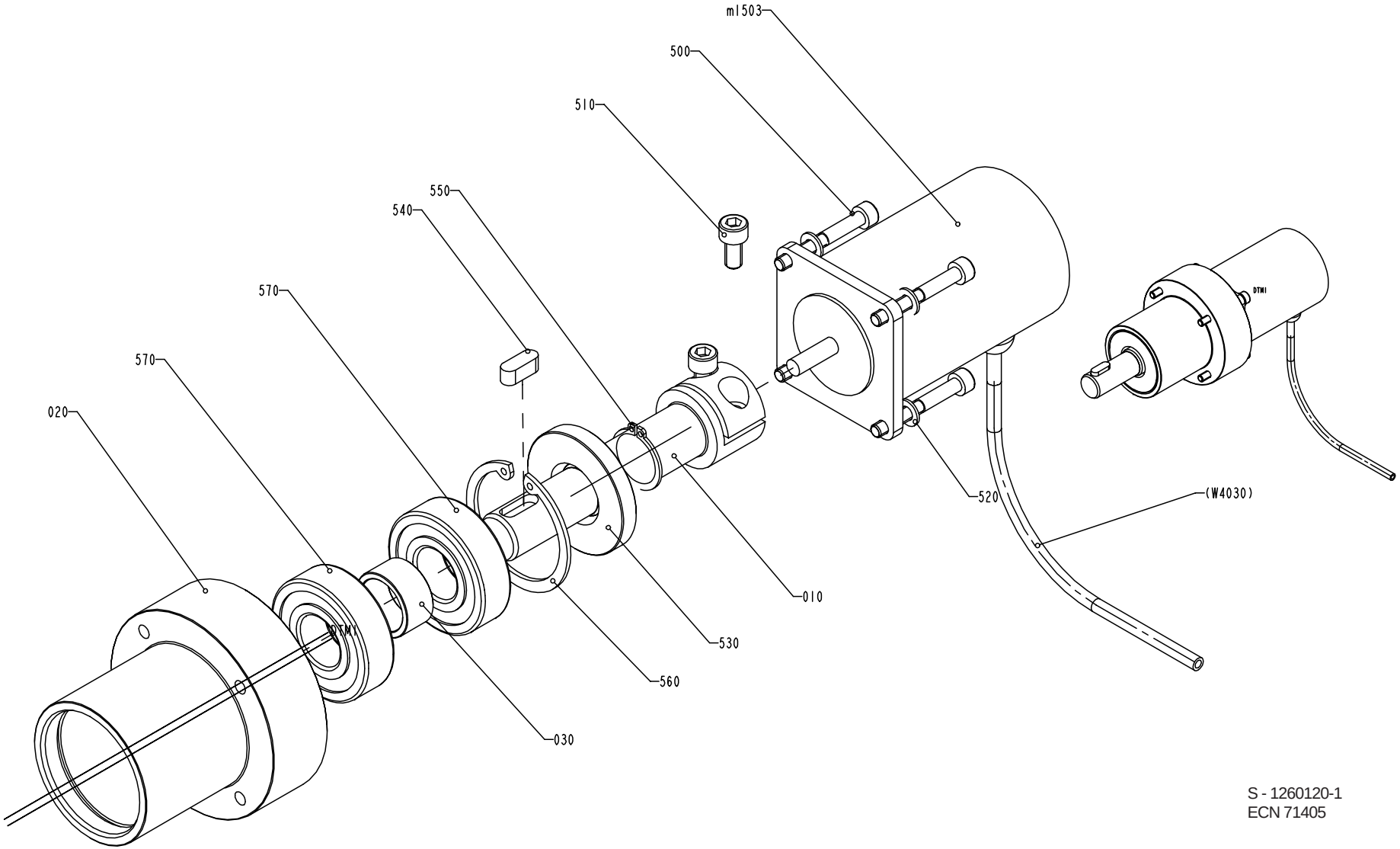

S - 1260120-1
ECN 71405

Pos	Part No	SP	UN	Qty	Description	Page No
Common parts						
010	1260171-0000	-		1	SHAFT	
020	1260172-0000	-		1	BUSHING	
030	1260187-0000	-		1	SPACER	
500	312115-0339	-		4	SCREW MC6S ISO 4762 M5X40 A280	
510	312115-0366	-		2	SCREW MC6S ISO 4762 M6X12 A280	
520	315105-0146	-		4	WASHER,PLAIN ROUND 5,3x10 Stainless	
530	315221-0147	R		1	SEALING RINGS,TYPE A 20X47X7	
540	315705-0230	-		1	KEYS,PARALLEL WITH ROUND ENDS 6X6X16	
550	315751-0116	-		1	RETAINING RINGS FOR SHAFT 20	
560	315753-0130	-		1	RETAINING RINGS FOR HOLE 47	
570	321313-0104	-		2	BALL BEARING 20x47x14	
M1503	90045-0189	R		1	STEPPER MOTOR	

Pos	Part No	SP	UN	Qty	Description	Page No

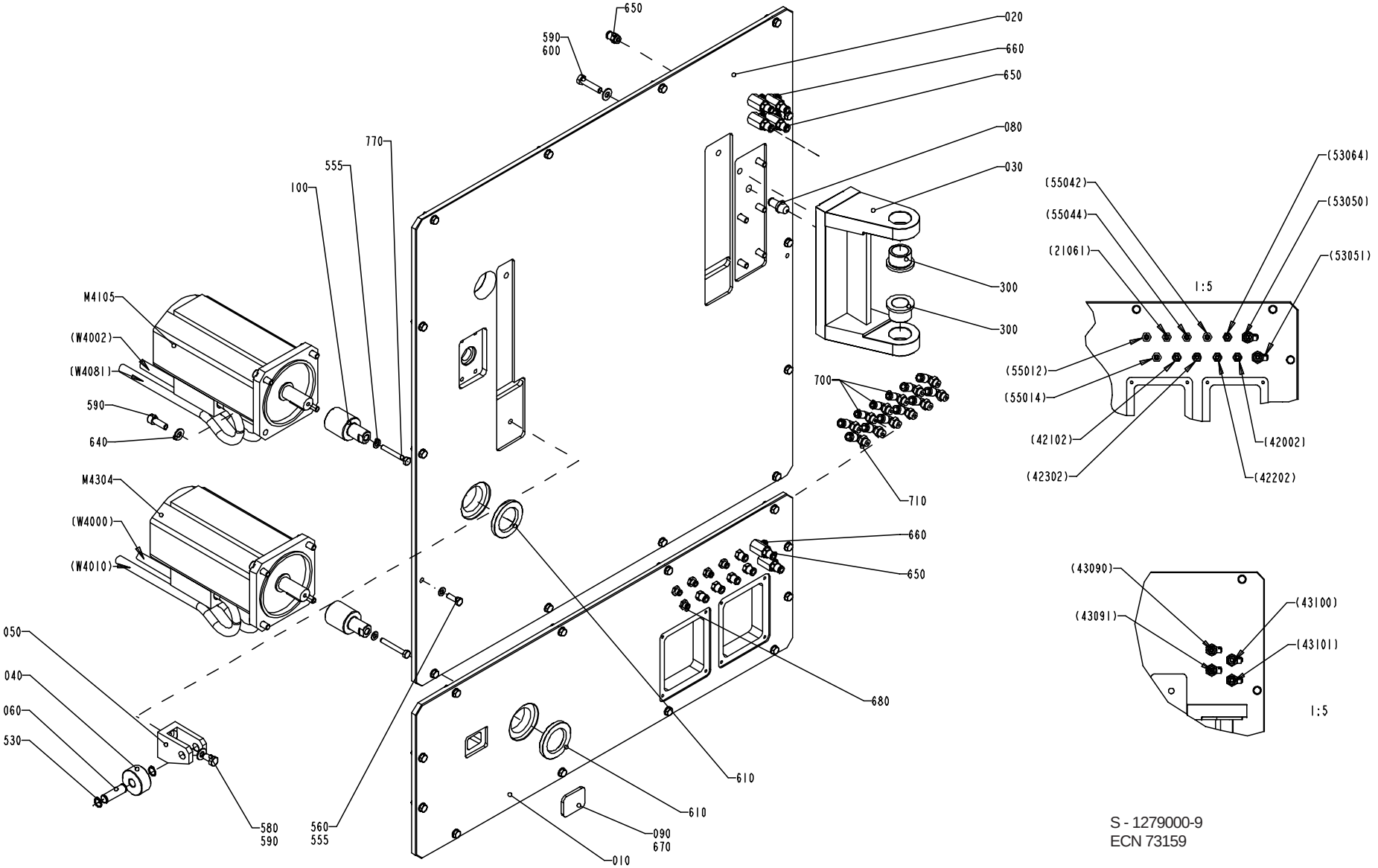

S - 1279000-9
ECN 73159

Pos	Part No	SP	UN	Qty	Description	Page No
TBA 0250B						
020	1498605-0000	-		1	PLATE	
TBA 0200B						
020	1498607-0000	-		1	PLATE	
Common parts						
010	1511672-0000	-		1	PLATE	
030	1260750-0000	-		1	HINGE	
040	1140865-0000	-		1	ROLL	
050	1140866-0000	-		1	BRACKET	
060	1041216-0000	-		1	SHAFT	
080	1260753-0000	-		1	PIN	
090	1350902-0000	-		1	GLASS PANE	
100	1487119-0000	-		2	SHAFT	
300	321101-0273	-		2	FLANGE BUS 30F7X30	
530	315751-0112	-		2	RETAINING RINGS FOR SHAFT 15	
555	315105-0165	-		28	WASHER,PLAIN ROUND 8,4x16 Stainless	
560	312105-0453	-		26	SCREW M6S ISO 4017 M8x25 A280	
580	312105-0491	-		1	SCREW M6S ISO 4017 M10x20 A280	
590	315105-0173	-		15	WASHER,PLAIN ROUND 10,5x22 STAINLESS	
600	312105-0500	-		6	SCREW 4017 M10X45A280	
610	315221-0194	R		2	SEALING RINGS,TYPE A 45X72X8	
640	312115-0495	-		8	SCREW MC6S ISO 4762 M10X30 A280	
650	342722-0205	-		15	STRAIGHT COUPLING D=8-R1/4"	
660	90187-0158	-		6	VALVE	
670	90153-0016	-		1	ADHESIVE TUBE 100G RHODORSIL CAF 3	
680	342722-0203	-		5	STRAIGHT COUPLING	
700	342732-0103	-		3	ELBOW PIPE JOINT	
710	342732-0104	-		9	ELBOW PIPE JOINT	
770	312105-0463	-		2	SCREW M6S ISO 4014 M8x60 A280	
M4105	90045-0197	R		1	Servo Motor Elmo	
M4304	90045-0197	R		1	Servo Motor Elmo	

Pos	Part No	SP	UN	Qty	Description	Page No

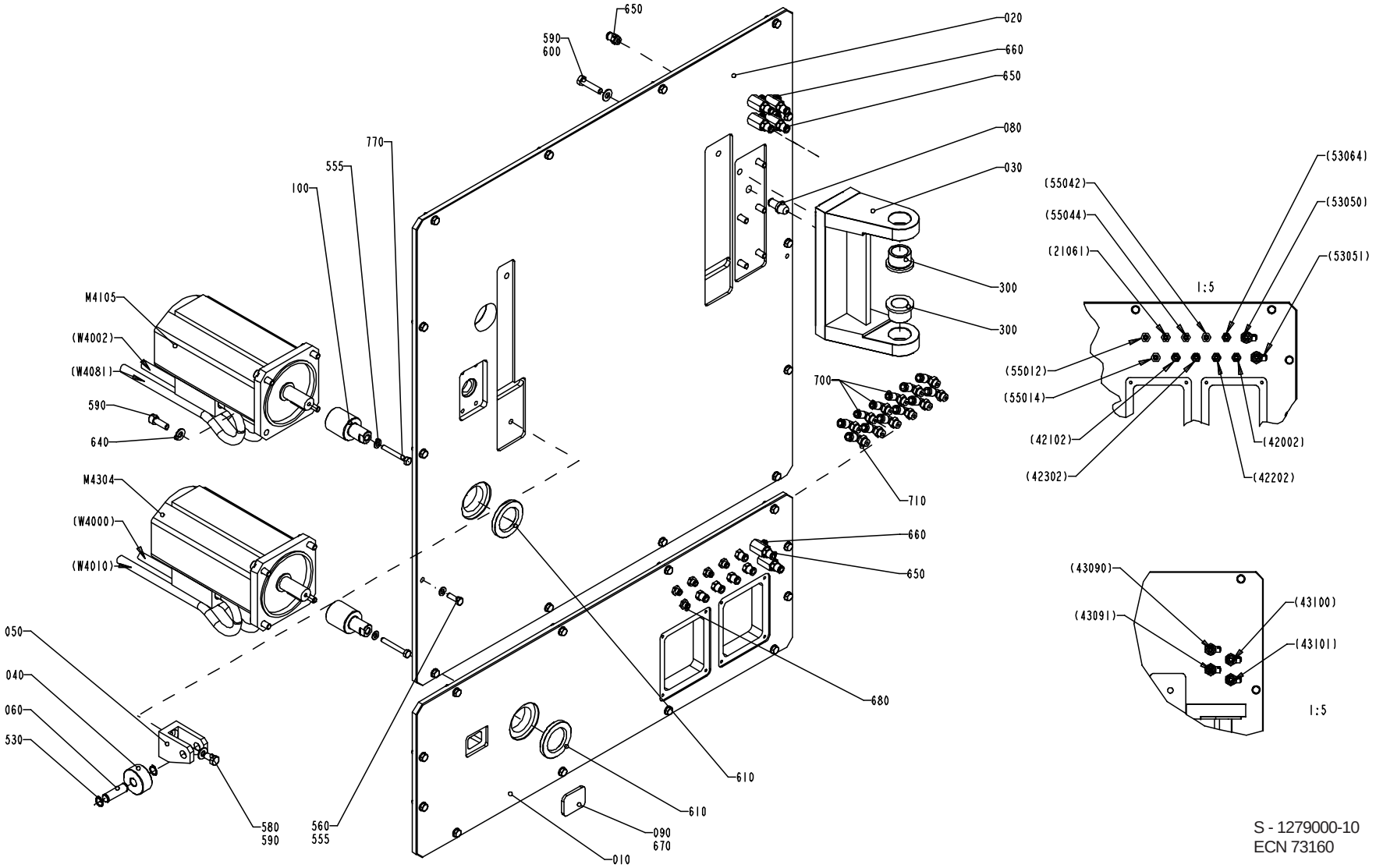

S - 1279000-10
ECN 73160

Pos	Part No	SP	UN	Qty	Description	Page No
TBA 0250B						
020	1498605-0000	-		1	PLATE	
TBA 0200B						
020	1498607-0000	-		1	PLATE	
Common parts						
010	1511672-0000	-		1	PLATE	
030	1260750-0000	-		1	HINGE	
040	1140865-0000	-		1	ROLL	
050	1140866-0000	-		1	BRACKET	
060	1041216-0000	-		1	SHAFT	
080	1260753-0000	-		1	PIN	
090	1350902-0000	-		1	GLASS PANE	
100	1487119-0000	-		2	SHAFT	
300	321101-0273	-		2	FLANGE BUS 30F7X30	
530	315751-0112	-		2	RETAINING RINGS FOR SHAFT 15	
555	315105-0165	-		28	WASHER,PLAIN ROUND 8,4x16 Stainless	
560	312105-0453	-		26	SCREW M6S ISO 4017 M8x25 A280	
580	312105-0491	-		1	SCREW M6S ISO 4017 M10x20 A280	
590	315105-0173	-		15	WASHER,PLAIN ROUND 10,5x22 STAINLESS	
600	312105-0500	-		6	SCREW 4017 M10X45A280	
610	315221-0194	R		2	SEALING RINGS,TYPE A 45X72X8	
640	312115-0495	-		8	SCREW MC6S ISO 4762 M10X30 A280	
650	342722-0205	-		15	STRAIGHT COUPLING D=8-R1/4"	
660	90187-0158	-		6	VALVE	
670	90153-0016	-		1	ADHESIVE TUBE 100G RHODORSIL CAF 3	
680	342722-0203	-		5	STRAIGHT COUPLING	
700	342732-0103	-		3	ELBOW PIPE JOINT	
710	342732-0104	-		9	ELBOW PIPE JOINT	
770	312105-0463	-		2	SCREW M6S ISO 4014 M8x60 A280	
M4105	90045-0197	R		1	Servo Motor Elmo	
M4304	90045-0197	R		1	Servo Motor Elmo	

Pos	Part No	SP	UN	Qty	Description	Page No

CONNECTION BOX

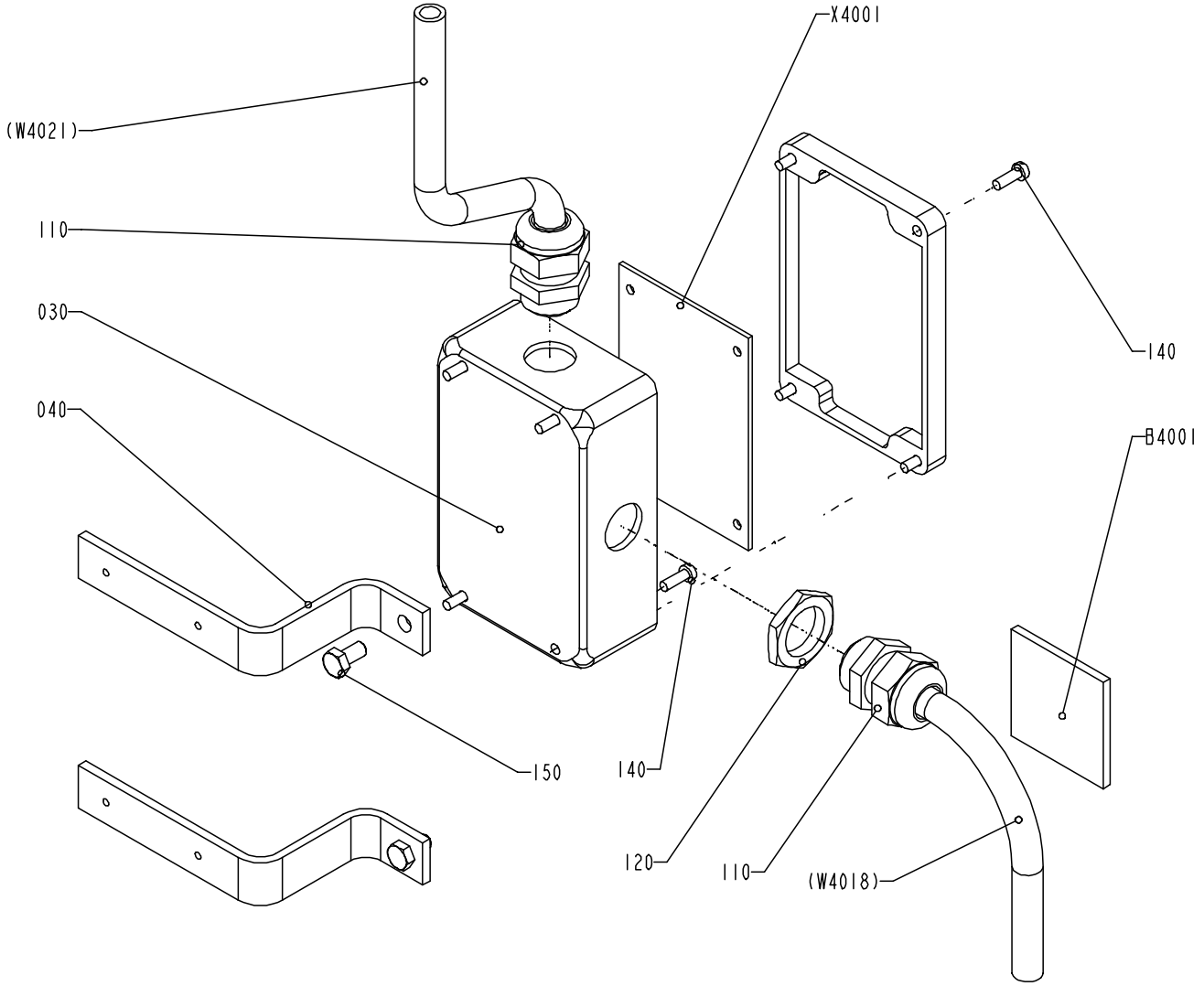

S - 1349464-3
ECN 73159

Pos	Part No	SP	UN	Qty	Description	Page No
Common parts						
B 4001	A 68917-0100	M		1	ANGLE INDICATOR	**303**
030	1349465-0000	-		1	CONNECTION BOX	
040	1511673-0000	-		2	BRACKET	
110	352103-0111	-		2	CABLE GLAND ST 16	
120	90099-0110	-		1	NUT PR 22,5 (PG16)	
140	312125-0291	-		8	SLOTTED CHEESE HEAD ISO 1207 M4x12 RFR	
150	312105-0366	-		2	SCREW M6S ISO 4017 M6x12 A280	
X 4001	451423-0000	M		1	CIRCUIT BOARD	

Pos	Part No	SP	UN	Qty	Description	Page No

This page is intentionally left blank

Pos	Part No	SP	UN	Qty	Description	Page No
Common parts						
010	540306-0001	-		1	COMPONENTS WITHOUT TP-NO	
020	540307-0000	-		1	PRINTED CIRCUIT BOARD	

Pos	Part No	SP	UN	Qty	Description	Page No

This page is intentionally left blank

Pos	Part No	SP	UN	Qty	Description	Page No
90202-0011						
	90239-0349	K		2	SEAL KIT	
256834-0000						
	312911-0118	-		18	THREADED I M6X1,5D	
	312911-0126	-		6	THREADED I M8X1,5D	
441031-0000						
	90240-0049	-		1	PLAIN BEARING REPBY 0090240-0021	
	256737-0000	-		1	LINK REPBY 0441031-0000	
441749-0000						
	312911-0125	-		2	THREADED INSERTS M8X1,0D	

Pos	Part No	SP	UN	Qty	Description	Page No

SPC

Spare Parts Catalogue

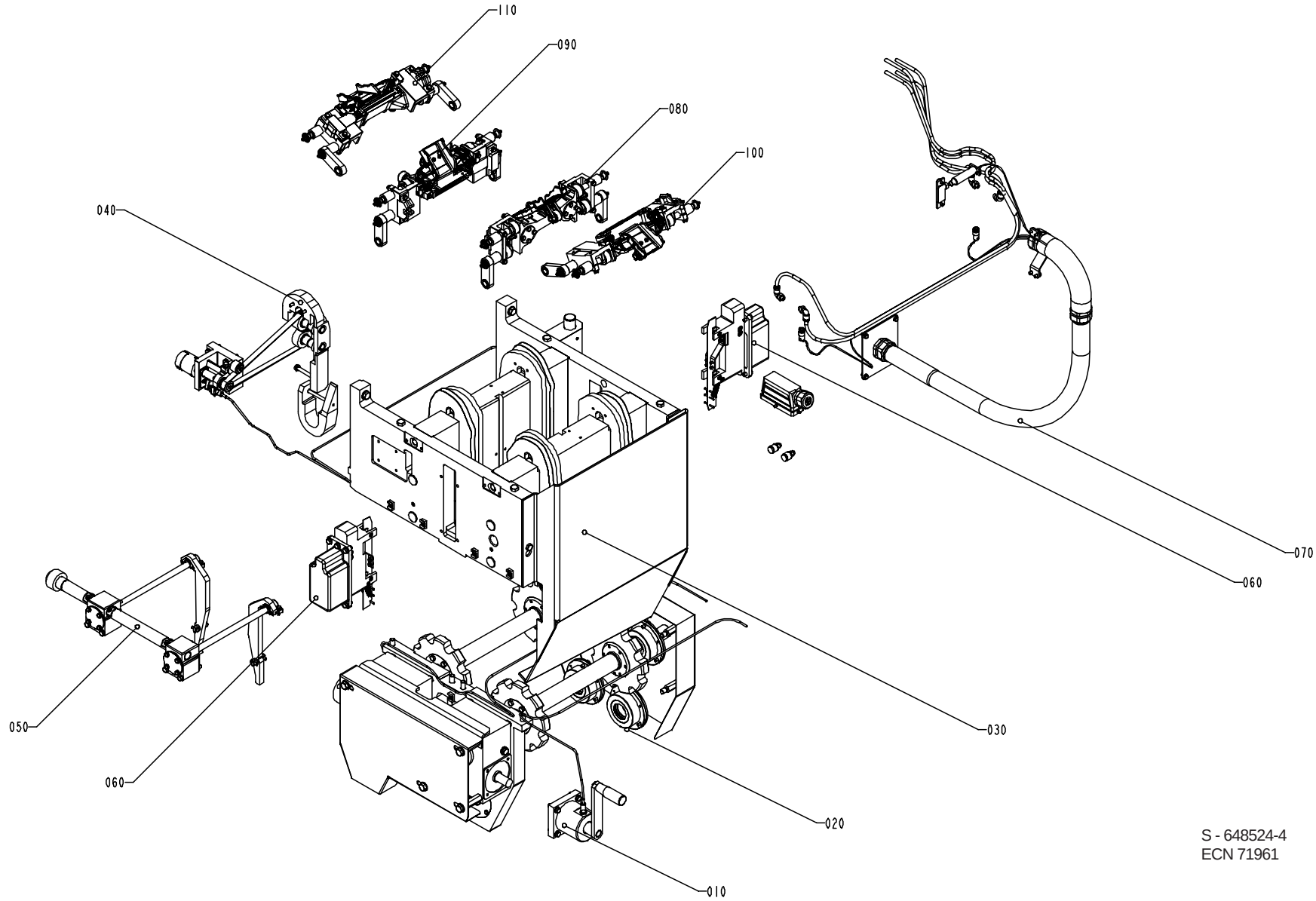

S - 648524-4
ECN 71961

Pos	Part No	SP	UN	Qty	Description	Page No
TBA 0250B						
020	A 575238-0400	-		1	DRIVE UNIT	**315**,**317** , **319**, **321**, **323**, **325**, **327**, **329**, **331**
030	A 575239-0300	-		1	FRAME	**351**
040	A 575240-0100	-		1	DESIGN CORRECTION	**355**
050	A 575241-0200	-		1	VOLUME ADJUSTER	**359**
060	A1095985-0200	-		2	ELECTRICAL CONNECTION	**363**
070	A1195268-0200	-		1	CABLE HARNESS	**367**
080	A1195312-0100	-		5	PRESSURE JAW	**371**
090	A1195313-0100	-		5	SEALING JAW	**375**
100	A1478265-0100	-		5	PRESSURE JAW	**379**
110	A1478266-0100	-		5	SEALING JAW	**383**
TBA 0200B						
020	A1348944-0100	-		1	DRIVE UNIT	**333**, **335**, **337**, **339**, **341**, **343**, **345**, **347**, **349**
030	A1348945-0100	-		1	FRAME	**353**
040	A1348946-0100	-		1	DESIGN CORRECTION	**357**
050	A1348947-0100	-		1	VOLUME ADJUSTER	**361**
060	A1349382-0100	-		2	ELECTRICAL CONNECTION	**365**
070	A1478598-0100	-		1	CABLE HARNESS	**369**
080	A1484483-0100	-		5	PRESSURE JAW	**373**
090	A1484482-0100	-		5	SEALING JAW	**377**
100	A1348949-0100	-		5	PRESSURE JAW	**381**
110	A1348948-0100	-		5	SEALING JAW	**385**
Common parts						
010	A 575203-0100	-		1	HAND CRANK	**313**

Pos	Part No	SP	UN	Qty	Description	Page No

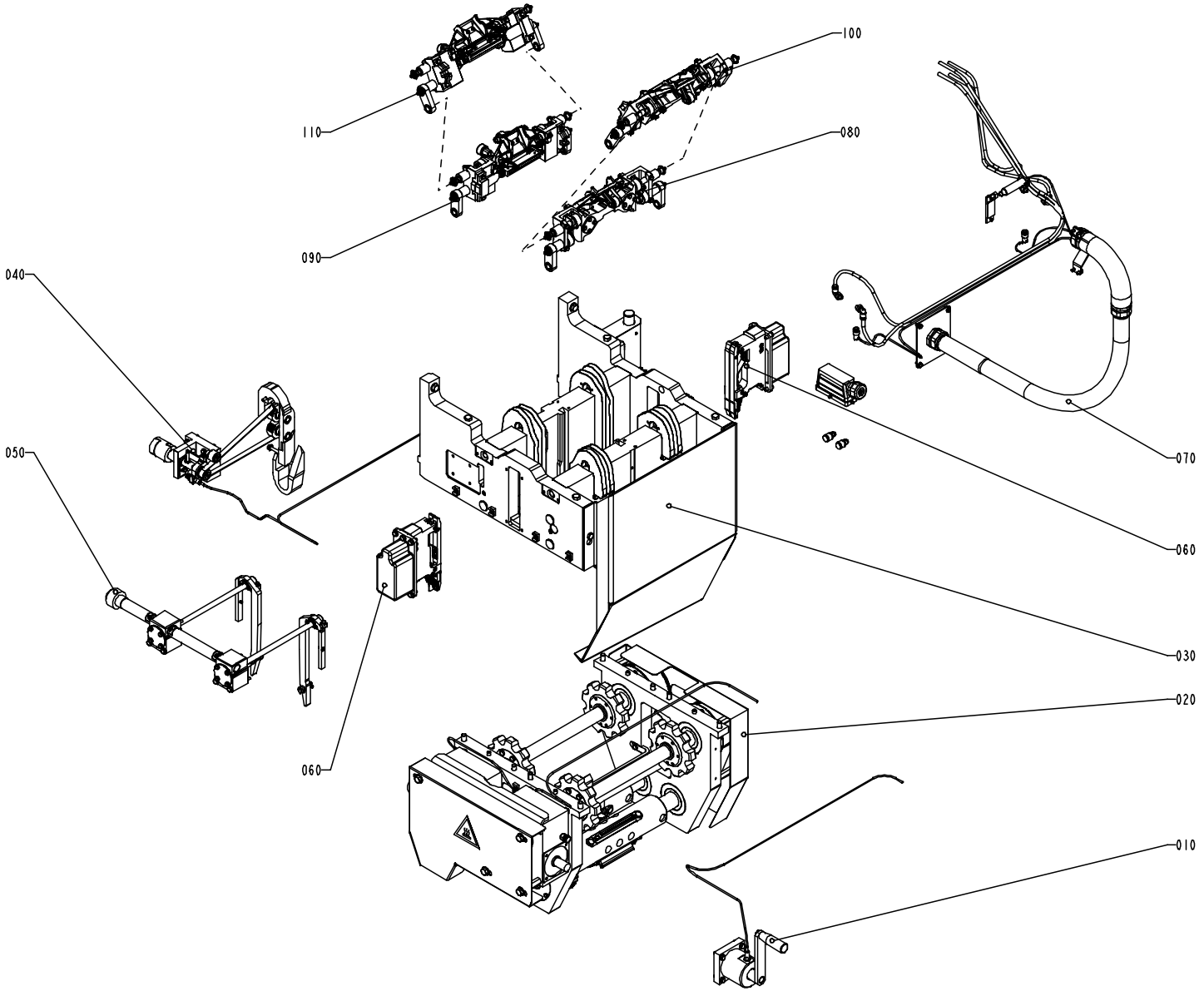

S - 648524-5
ECN 71727

Pos	Part No	SP	UN	Qty	Description	Page No
TBA 0250B						
020	A 575238-0400	-		1	DRIVE UNIT	**315**,**317** , **319**, **321**, **323**, **325**, **327**, **329**, **331**
030	A 575239-0300	-		1	FRAME	**351**
040	A 575240-0100	-		1	DESIGN CORRECTION	**355**
050	A 575241-0200	-		1	VOLUME ADJUSTER	**359**
060	A1095985-0200	-		2	ELECTRICAL CONNECTION	**363**
070	A1195268-0200	-		1	CABLE HARNESS	**367**
080	A1195312-0100	-		5	PRESSURE JAW	**371**
090	A1195313-0100	-		5	SEALING JAW	**375**
100	A1478265-0100	-		5	PRESSURE JAW	**379**
110	A1478266-0100	-		5	SEALING JAW	**383**
TBA 0200B						
020	A1348944-0100	-		1	DRIVE UNIT	**333**, **335**, **337**, **339**, **341**, **343**, **345**, **347**, **349**
030	A1348945-0100	-		1	FRAME	**353**
040	A1348946-0100	-		1	DESIGN CORRECTION	**357**
050	A1348947-0100	-		1	VOLUME ADJUSTER	**361**
060	A1349382-0100	-		2	ELECTRICAL CONNECTION	**365**
070	A1478598-0100	-		1	CABLE HARNESS	**369**
080	A1484483-0100	-		5	PRESSURE JAW	**373**
090	A1484482-0100	-		5	SEALING JAW	**377**
100	A1348949-0100	-		5	PRESSURE JAW	**381**
110	A1348948-0100	-		5	SEALING JAW	**385**
Common parts						
010	A 575203-0100	-		1	HAND CRANK	**313**

Pos	Part No	SP	UN	Qty	Description	Page No

HAND CRANK

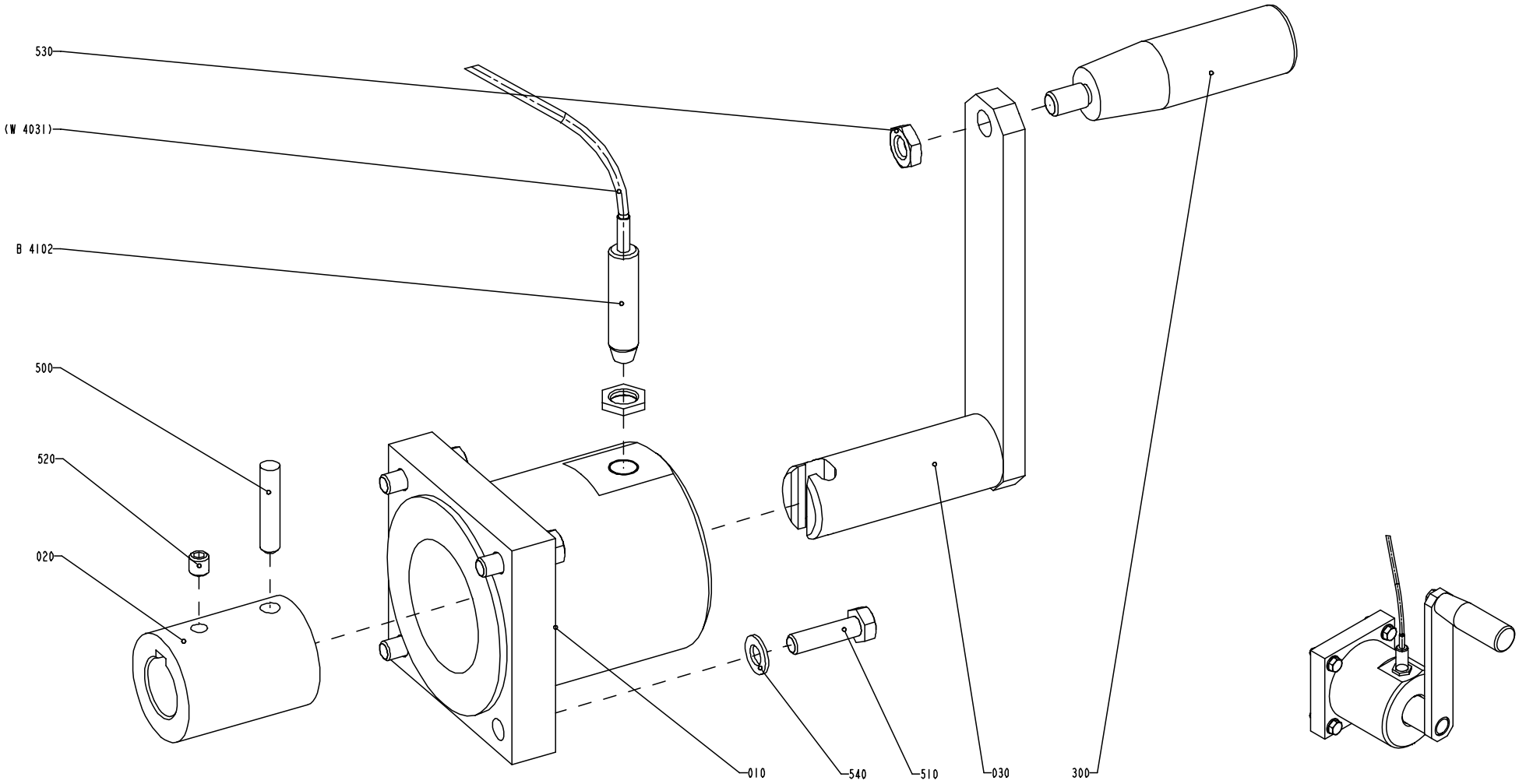

S - 575203-1
ECN 71962

Pos	Part No	SP	UN	Qty	Description	Page No
Common parts						
010	1082973-0000	-		1	STEERING	
020	1082972-0000	-		1	SLEEVE	
030	1082974-0000	-		1	CRANK	
300	90051-0127	-		1	HANDLE	
500	311103-0409	-		1	PINS,STRAIGHT 8X40	
510	312105-0455	-		4	SCREW M6S ISO 4017 M8x30 A280	
520	312318-0443	-		1	SET SCREW CUP POINT ISO 4029 M8X8 RFR	
530	312625-0320	-		1	NUTS,HEXAGON,M10	
540	315105-0165	-		4	WASHER,PLAIN ROUND 8,4x16 Stainless	
B4102	90044-0124	J		1	Prox.sw. 922AB2XM-A9P-050-LZ-876	

Pos	Part No	SP	UN	Qty	Description	Page No

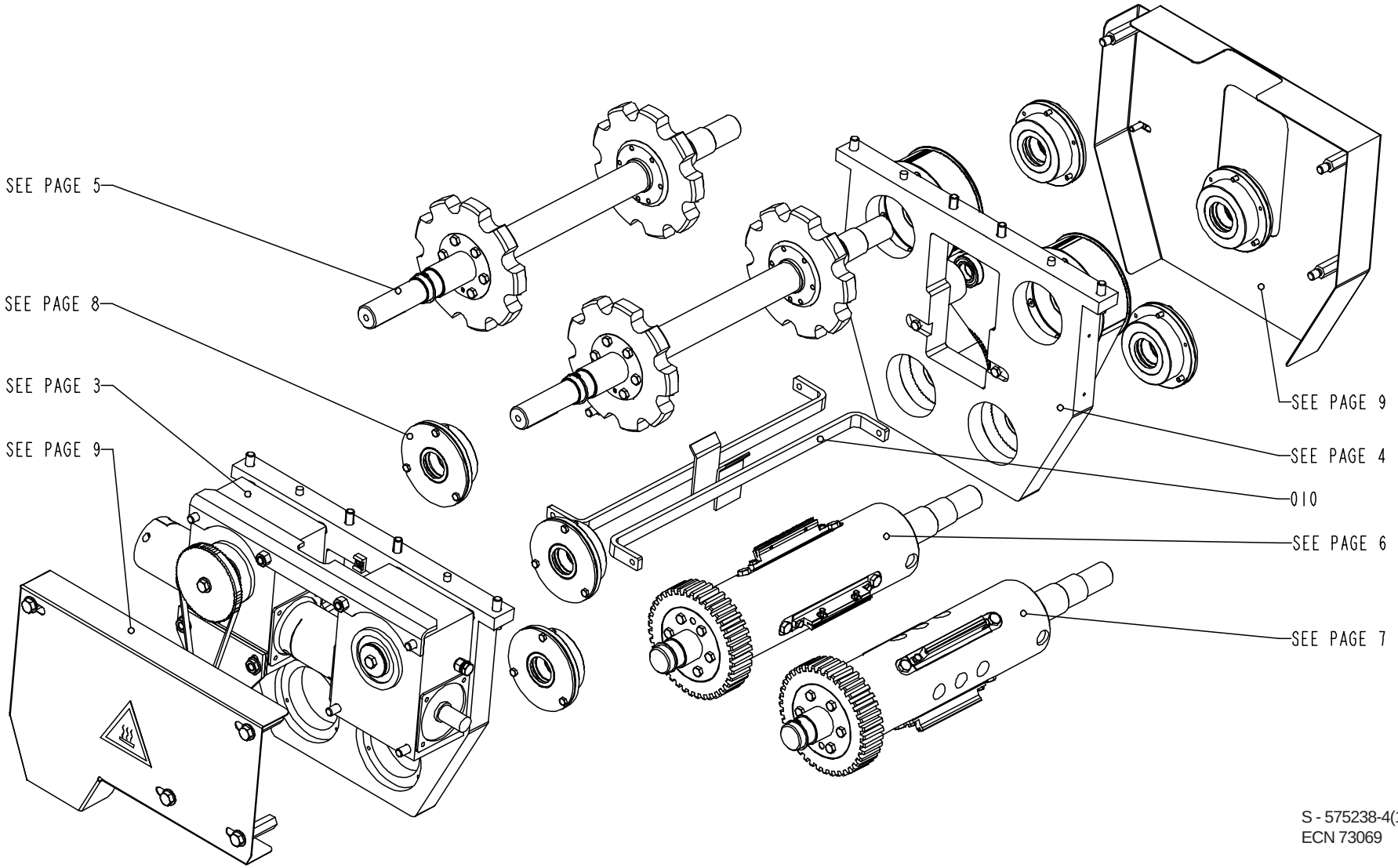

S - 575238-4(1)
ECN 73069

Pos	Part No	SP	UN	Qty	Description	Page No
Common parts						
010	1140750-0000	-		2	GUIDE	
020	1140751-0000	-		4	RING	
030	1140757-0000	D		1	PULLEY	
040	1140759-0000	D		2	PULLEY	
050	1140767-0000	M		4	WHEEL	
070	1260086-0000	D		2	ECCENTRIC SHAFT	
080	1260087-0000	D		2	WHEEL	
090	1260088-0000	D		2	COVER	
100	1260089-0000	D		2	SPACER	
110	1260094-0000	D		2	PULLEY	
120	1260190-0000	-		4	FLANGE	
125	1487487-0000	-		3	HOLDER	
130	1512661-0000	E		3	KNIFE	
135	1487480-0000	-		3	HOLDER	
140	1490404-0000	E		3	DOLLY	
150	1334792-0000	-		1	PIN	
160	1334793-0000	-		1	WASHER	
170	1487860-0000	D		1	PULLEY	
190	1348703-0000	-		8	COVER	
200	1348704-0000	-		8	BEARING HOUSING	
210	1487857-0000	D		1	SHAFT	
220	1487856-0000	-		1	SPACER	
230	1349621-0000	M		2	GEAR WHEEL	
240	1349623-0000	-		2	WASHER	
250	1478074-0000	D		2	SHAFT	
260	1478075-0000	-		1	DRUM	
270	1478079-0000	-		1	DRUM	
280	1478080-0000	-		2	FRAME	
290	1487859-0000	-		1	BRACKET	
300	1348661-0000	-		1	SPACER	
320	1484164-0000	-		6	HOLDER	
330	1499914-0000	-		4	GASKET	
340	1484484-0000	-		1	PROTECTION	
350	1484485-0000	-		1	PROTECTION	
360	1140820-0000	-		4	SPACER	
370	1484507-0000	-		2	SPACER	
380	1487858-0000	-		1	INSULATION	
390	1487930-0000	-		4	COVER	
400	1487988-0000	-		2	SPACER	
410	352113-0204	-		4	ANCHOR TM3S25-M	
420	90091-0296	J		8	SEALING RINGS,TYPE AS 40X52X7	
430	90091-0298	J		8	SEALING RINGS,TYPE AS 45X65X8	
440	90208-0084	-		4	CLAMPING ELEMENT WITH SLEEVE 35X47	
450	90214-0112	K		2	BALL BEARING,STAINLESS 12X24X6	
460	90214-0165	K		4	BEARINGS,BALL BEARING,STAINLESS	
470	90417-0413	J		2	TIMING BELT AT5/975	
480	90417-0412	J		1	TIMING BELT AT5/600	
490	90056-0164	D		1	WORM GEAR	
500	90056-0163	D		1	WORM GEAR	
510	90355-0197	J		2	ELASTIC COUPLING	
520	90056-0527	-		2	PLUG	
530	90355-0031	J		1	Bellow Coupling 10/10	
600	311103-0357	-		4	PIN,STRAIGHT 6x30	
610	311103-0470	-		2	PINS,STRAIGHT 10X60	
620	312105-0291	-		3	SCREW M6S ISO 4017 M4X12 A280	
630	312105-0370	-		12	SCREW M6S ISO 4017 M6x20 A280	
640	312105-0371	-		24	SCREW M6S6X22RFR	
650	312105-0449	-		4	SCREW M6S ISO 4017 M8x16 A280	
660	312105-0455	-		24	SCREW M6S ISO 4017 M8x30 A280	
670	312105-0462	-		12	SCREW M6S ISO 4014 M8x55 A280	
680	312105-0495	-		1	SCREW M6S ISO 4017 M10X30 A280	
690	312105-0497	-		12	SCREW M6S ISO 4017 M10x35 A280	
700	312105-0507	-		1	SCREW M6S ISO 4014 M10X80 A280	
710	312105-0540	-		4	SCREW M6S ISO 4017 M12X40 A280	
720	312105-0545	-		4	SCREW M6S12X65RFR	
730	312105-0556	-		8	SCREW M6S ISO 4014 M12X120 A280	
740	312105-0362	-		12	SCREW M6S ISO 4017 M6x8 A280	
750	312115-0299	-		3	SCREW MC6S ISO 4762 M4X30 A280	
760	312115-0331	-		2	SCREW MC6S ISO 4762 M5X20 A280	
770	312115-0509	-		2	SCREW MC6S ISO 4762 M10X90 A280	
780	312125-0222	-		1	SLOTTED CHEESE HEAD ISO 1207 M3x8 RFR	
790	312155-0366	-		24	SCREW MF6S DIN 7991 M6x12 A280	
800	312625-0322	-		2	NUTS,HEXAGON,M12	
810	312605-0322	-		2	NUT,HEXAGON,M12 RFR	
820	315105-0136	-		3	WASHER,PLAIN ROUND 4,3x8 Stainless	
830	315105-0173	-		1	WASHER,PLAIN ROUND 10,5x22 STAINLESS	
840	315105-0178	-		14	WASHER,PLAIN ROUND 13x24	
850	315705-0307	-		2	KEYS,PARALLEL WITH ROUND ENDS 10X8X70	
860	315751-0127	-		4	RETAINING RINGS FOR SHAFT 40	
870	315753-0119	-		1	RETAINING RINGS FOR HOLE 25	
880	315753-0130	-		4	RETAINING RINGS FOR HOLE 47	
890	90214-0236	K		8	BALL BEARING	
900	312105-0452	-		4	SCREW M6S 8x22 Stainless	
910	312105-0534	-		4	SCREW M6S ISO 4017 M12X25 A280	
920	315105-0165	-		4	WASHER,PLAIN ROUND 8,4x16 Stainless	

POS.	SHEET
230	6 , 7
220	3
210	3
200	8
190	8
170	3
160	3
150	3
140	7
135	7
130	6
125	6
120	4
110	4
100	4
090	4
080	4
070	4
050	5
040	4
030	3
020	5
010	1

POS.	SHEET
470	4
460	4
450	3
440	4
430	8
420	8
410	3 , 4
400	9
390	4
380	3
370	9
360	9
350	9
340	9
330	4
320	6 , 7
300	3
290	3
280	3 , 4
270	6
260	7
250	5
240	6 , 7

POS.	SHEET
760	4
750	3
740	4
730	3
720	3 , 4
710	3 , 4
700	3
690	6 , 7
680	3
670	6 , 7
660	5
650	3 , 4
640	8
630	6 , 7
620	3
610	6 , 7
600	5
530	3
520	3
510	3
500	3
490	3
480	3

POS.	SHEET
B4103	3
990	3
980	3
970	9
960	3 , 4
950	6
930	3 , 4
920	9
910	9
900	9
890	8
880	4
870	3
860	5 , 6 , 7
850	5
840	3 , 4 , 9
830	3
820	3
810	3
800	3
790	4
780	3
770	4

Pos	Part No	SP	UN	Qty	Description	Page No
930	312132-0323	-		4	SLOTTED PAN HEAD ISO 1580 M5X8 MSGFN	
950	312105-0287	-		6	SCREW M6S ISO 4017 M4x8 A280	
960	311103-0454	-		4	PINS,STRAIGHT 10X20	
970	359710-0002	-		1	WARNING SIGN "HOT SURFACE"	
980	90030-0116	-		2	REDUCER	
990	315234-0109	-		2	PLAIN ROUND,COPPER R1/8",M10	
B4103	90061-0027	J		1	Angle encoder 670900035	

Pos	Part No	SP	UN	Qty	Description	Page No

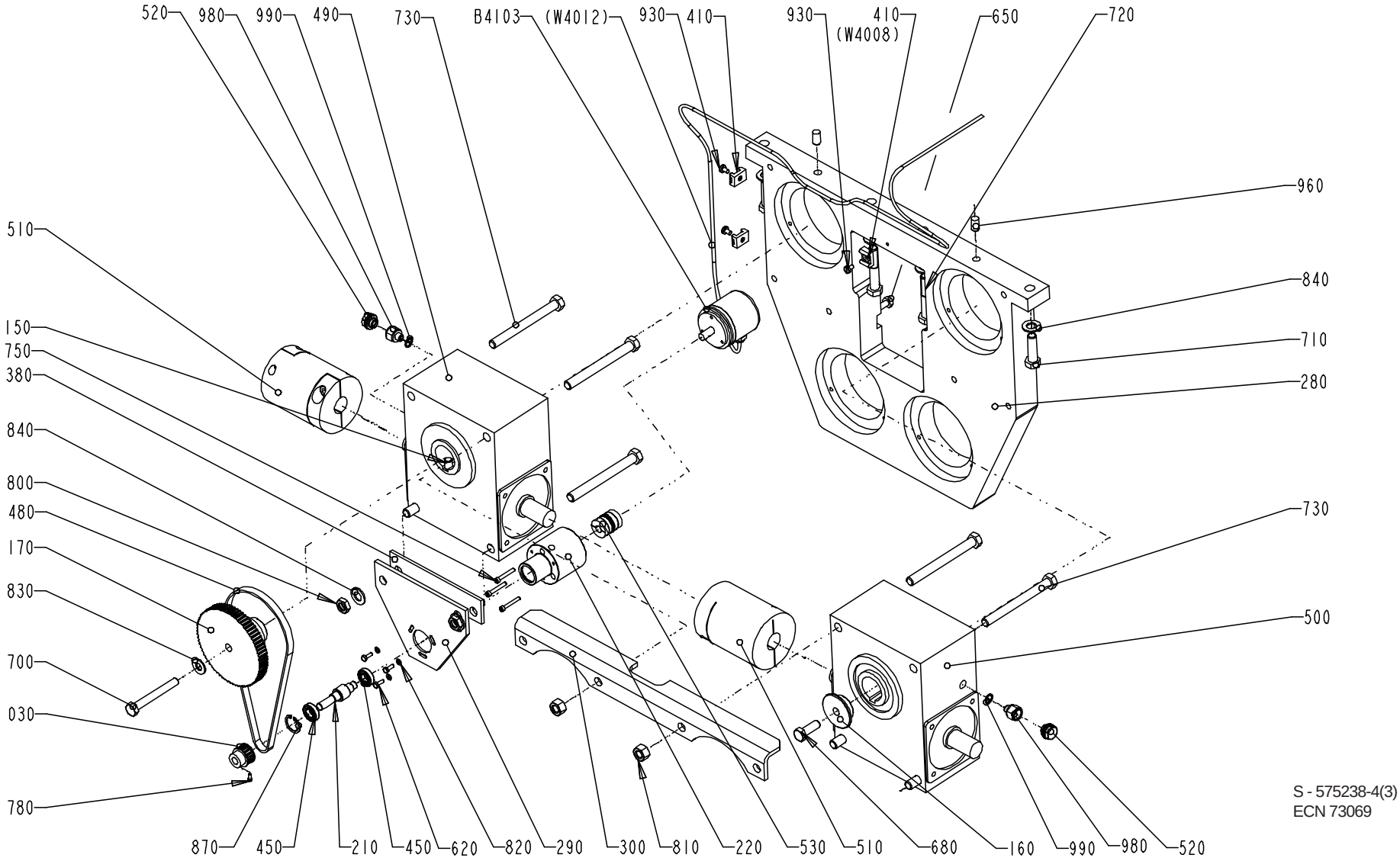

S - 575238-4(3)
ECN 73069

Pos	Part No	SP	UN	Qty	Description	Page No
Common parts						
010	1140750-0000	-		2	GUIDE	
020	1140751-0000	-		4	RING	
030	1140757-0000	D		1	PULLEY	
040	1140759-0000	D		2	PULLEY	
050	1140767-0000	M		4	WHEEL	
070	1260086-0000	D		2	ECCENTRIC SHAFT	
080	1260087-0000	D		2	WHEEL	
090	1260088-0000	D		2	COVER	
100	1260089-0000	D		2	SPACER	
110	1260094-0000	D		2	PULLEY	
120	1260190-0000	-		4	FLANGE	
125	1487487-0000	-		3	HOLDER	
130	1512661-0000	E		3	KNIFE	
135	1487480-0000	-		3	HOLDER	
140	1490404-0000	E		3	DOLLY	
150	1334792-0000	-		1	PIN	
160	1334793-0000	-		1	WASHER	
170	1487860-0000	D		1	PULLEY	
190	1348703-0000	-		8	COVER	
200	1348704-0000	-		8	BEARING HOUSING	
210	1487857-0000	D		1	SHAFT	
220	1487856-0000	-		1	SPACER	
230	1349621-0000	M		2	GEAR WHEEL	
240	1349623-0000	-		2	WASHER	
250	1478074-0000	D		2	SHAFT	
260	1478075-0000	-		1	DRUM	
270	1478079-0000	-		1	DRUM	
280	1478080-0000	-		2	FRAME	
290	1487859-0000	-		1	BRACKET	
300	1348661-0000	-		1	SPACER	
320	1484164-0000	-		6	HOLDER	
330	1499914-0000	-		4	GASKET	
340	1484484-0000	-		1	PROTECTION	
350	1484485-0000	-		1	PROTECTION	
360	1140820-0000	-		4	SPACER	
370	1484507-0000	-		2	SPACER	
380	1487858-0000	-		1	INSULATION	
390	1487930-0000	-		4	COVER	
400	1487988-0000	-		2	SPACER	
410	352113-0204	-		4	ANCHOR TM3S25-M	
420	90091-0296	J		8	SEALING RINGS,TYPE AS 40X52X7	
430	90091-0298	J		8	SEALING RINGS,TYPE AS 45X65X8	
440	90208-0084	-		4	CLAMPING ELEMENT WITH SLEEVE 35X47	
450	90214-0112	K		2	BALL BEARING,STAINLESS 12X24X6	
460	90214-0165	K		4	BEARINGS,BALL BEARING,STAINLESS	
470	90417-0413	J		2	TIMING BELT AT5/975	
480	90417-0412	J		1	TIMING BELT AT5/600	
490	90056-0164	D		1	WORM GEAR	
500	90056-0163	D		1	WORM GEAR	
510	90355-0197	J		2	ELASTIC COUPLING	
520	90056-0527	-		2	PLUG	
530	90355-0031	J		1	Bellow Coupling 10/10	
600	311103-0357	-		4	PIN,STRAIGHT 6x30	
610	311103-0470	-		2	PINS,STRAIGHT 10X60	
620	312105-0291	-		3	SCREW M6S ISO 4017 M4X12 A280	
630	312105-0370	-		12	SCREW M6S ISO 4017 M6x20 A280	
640	312105-0371	-		24	SCREW M6S6X22RFR	
650	312105-0449	-		4	SCREW M6S ISO 4017 M8x16 A280	
660	312105-0455	-		24	SCREW M6S ISO 4017 M8x30 A280	
670	312105-0462	-		12	SCREW M6S ISO 4014 M8x55 A280	
680	312105-0495	-		1	SCREW M6S ISO 4017 M10X30 A280	
690	312105-0497	-		12	SCREW M6S ISO 4017 M10x35 A280	
700	312105-0507	-		1	SCREW M6S ISO 4014 M10X80 A280	
710	312105-0540	-		4	SCREW M6S ISO 4017 M12X40 A280	
720	312105-0545	-		4	SCREW M6S12X65RFR	
730	312105-0556	-		8	SCREW M6S ISO 4014 M12X120 A280	
740	312105-0362	-		12	SCREW M6S ISO 4017 M6x8 A280	
750	312115-0299	-		3	SCREW MC6S ISO 4762 M4X30 A280	
760	312115-0331	-		2	SCREW MC6S ISO 4762 M5X20 A280	
770	312115-0509	-		2	SCREW MC6S ISO 4762 M10X90 A280	
780	312125-0222	-		1	SLOTTED CHEESE HEAD ISO 1207 M3x8 RFR	
790	312155-0366	-		24	SCREW MF6S DIN 7991 M6x12 A280	
800	312625-0322	-		2	NUTS,HEXAGON,M12	
810	312605-0322	-		2	NUT,HEXAGON,M12 RFR	
820	315105-0136	-		3	WASHER,PLAIN ROUND 4,3x8 Stainless	
830	315105-0173	-		1	WASHER,PLAIN ROUND 10,5x22 STAINLESS	
840	315105-0178	-		14	WASHER,PLAIN ROUND 13x24	
850	315705-0307	-		2	KEYS,PARALLEL WITH ROUND ENDS 10X8X70	
860	315751-0127	-		4	RETAINING RINGS FOR SHAFT 40	
870	315753-0119	-		1	RETAINING RINGS FOR HOLE 25	
880	315753-0130	-		4	RETAINING RINGS FOR HOLE 47	
890	90214-0236	K		8	BALL BEARING	
900	312105-0452	-		4	SCREW M6S 8x22 Stainless	
910	312105-0534	-		4	SCREW M6S ISO 4017 M12X25 A280	
920	315105-0165	-		4	WASHER,PLAIN ROUND 8,4x16 Stainless	

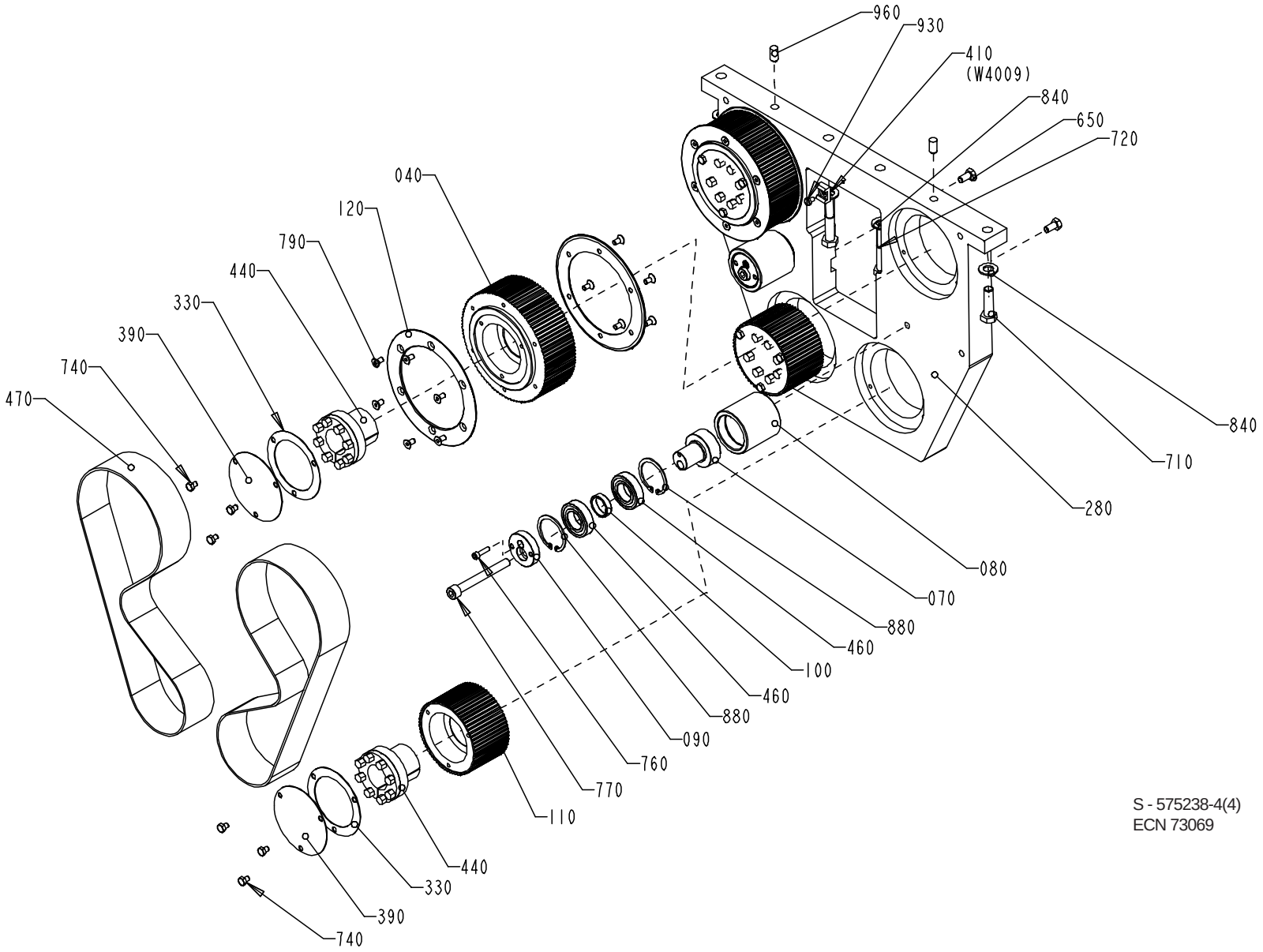

S - 575238-4(4)
ECN 73069

Pos	Part No	SP	UN	Qty	Description	Page No
930	312132-0323	-		4	SLOTTED PAN HEAD ISO 1580 M5X8 MSGFN	
950	312105-0287	-		6	SCREW M6S ISO 4017 M4x8 A280	
960	311103-0454	-		4	PINS,STRAIGHT 10X20	
970	359710-0002	-		1	WARNING SIGN "HOT SURFACE"	
980	90030-0116	-		2	REDUCER	
990	315234-0109	-		2	PLAIN ROUND,COPPER R1/8",M10	
B4103	90061-0027	J		1	Angle encoder 670900035	

Pos	Part No	SP	UN	Qty	Description	Page No

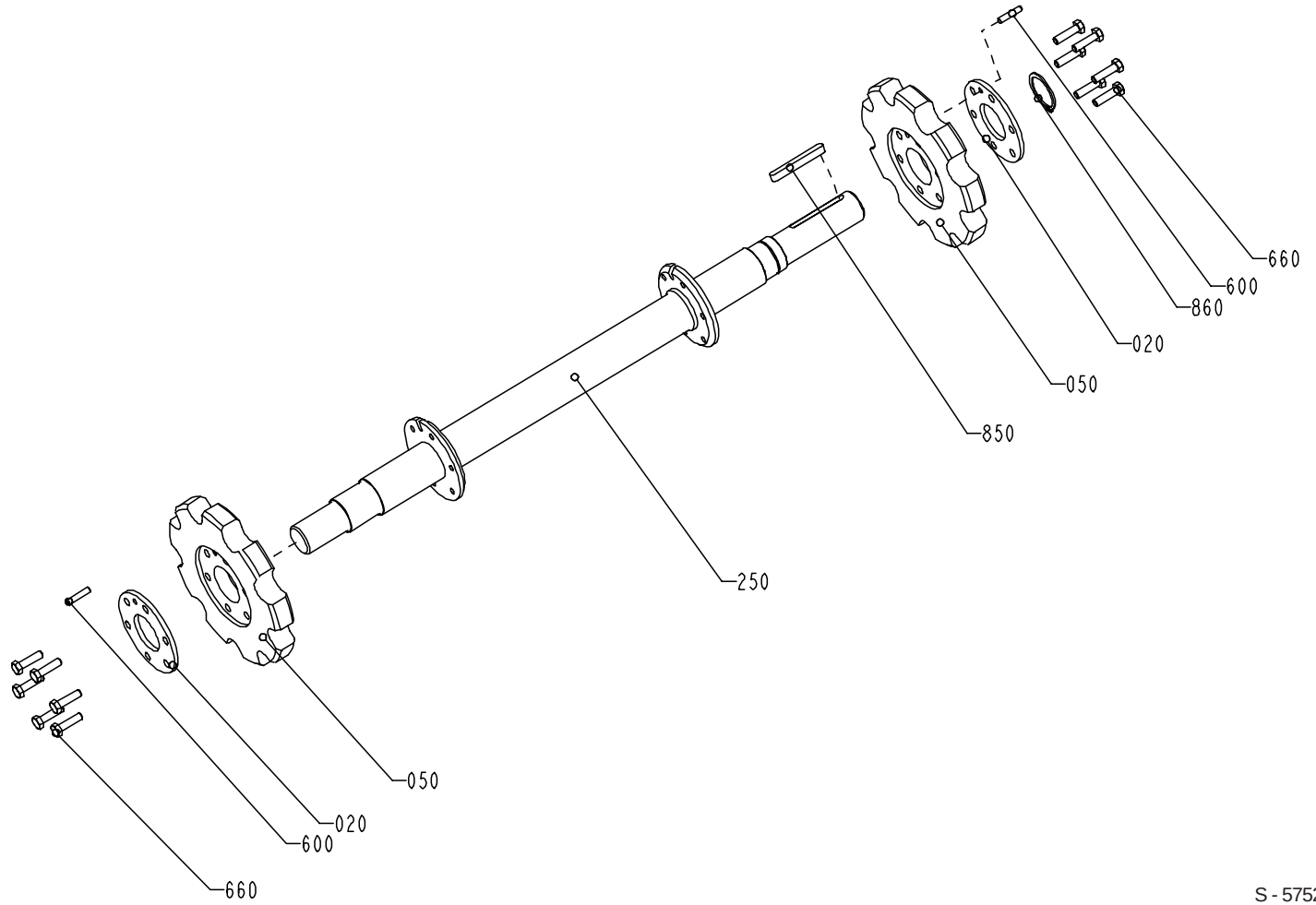

S - 575238-4(5)
ECN 73069

Pos	Part No	SP	UN	Qty	Description	Page No
Common parts						
010	1140750-0000	-		2	GUIDE	
020	1140751-0000	-		4	RING	
030	1140757-0000	D		1	PULLEY	
040	1140759-0000	D		2	PULLEY	
050	1140767-0000	M		4	WHEEL	
070	1260086-0000	D		2	ECCENTRIC SHAFT	
080	1260087-0000	D		2	WHEEL	
090	1260088-0000	D		2	COVER	
100	1260089-0000	D		2	SPACER	
110	1260094-0000	D		2	PULLEY	
120	1260190-0000	-		4	FLANGE	
125	1487487-0000	-		3	HOLDER	
130	1512661-0000	E		3	KNIFE	
135	1487480-0000	-		3	HOLDER	
140	1490404-0000	E		3	DOLLY	
150	1334792-0000	-		1	PIN	
160	1334793-0000	-		1	WASHER	
170	1487860-0000	D		1	PULLEY	
190	1348703-0000	-		8	COVER	
200	1348704-0000	-		8	BEARING HOUSING	
210	1487857-0000	D		1	SHAFT	
220	1487856-0000	-		1	SPACER	
230	1349621-0000	M		2	GEAR WHEEL	
240	1349623-0000	-		2	WASHER	
250	1478074-0000	D		2	SHAFT	
260	1478075-0000	-		1	DRUM	
270	1478079-0000	-		1	DRUM	
280	1478080-0000	-		2	FRAME	
290	1487859-0000	-		1	BRACKET	
300	1348661-0000	-		1	SPACER	
320	1484164-0000	-		6	HOLDER	
330	1499914-0000	-		4	GASKET	
340	1484484-0000	-		1	PROTECTION	
350	1484485-0000	-		1	PROTECTION	
360	1140820-0000	-		4	SPACER	
370	1484507-0000	-		2	SPACER	
380	1487858-0000	-		1	INSULATION	
390	1487930-0000	-		4	COVER	
400	1487988-0000	-		2	SPACER	
410	352113-0204	-		4	ANCHOR TM3S25-M	
420	90091-0296	J		8	SEALING RINGS,TYPE AS 40X52X7	
430	90091-0298	J		8	SEALING RINGS,TYPE AS 45X65X8	
440	90208-0084	-		4	CLAMPING ELEMENT WITH SLEEVE 35X47	
450	90214-0112	K		2	BALL BEARING,STAINLESS 12X24X6	
460	90214-0165	K		4	BEARINGS,BALL BEARING,STAINLESS	
470	90417-0413	J		2	TIMING BELT AT5/975	
480	90417-0412	J		1	TIMING BELT AT5/600	
490	90056-0164	D		1	WORM GEAR	
500	90056-0163	D		1	WORM GEAR	
510	90355-0197	J		2	ELASTIC COUPLING	
520	90056-0527	-		2	PLUG	
530	90355-0031	J		1	Bellow Coupling 10/10	
600	311103-0357	-		4	PIN,STRAIGHT 6x30	
610	311103-0470	-		2	PINS,STRAIGHT 10X60	
620	312105-0291	-		3	SCREW M6S ISO 4017 M4X12 A280	
630	312105-0370	-		12	SCREW M6S ISO 4017 M6x20 A280	
640	312105-0371	-		24	SCREW M6S6X22RFR	
650	312105-0449	-		4	SCREW M6S ISO 4017 M8x16 A280	
660	312105-0455	-		24	SCREW M6S ISO 4017 M8x30 A280	
670	312105-0462	-		12	SCREW M6S ISO 4014 M8x55 A280	
680	312105-0495	-		1	SCREW M6S ISO 4017 M10X30 A280	
690	312105-0497	-		12	SCREW M6S ISO 4017 M10x35 A280	
700	312105-0507	-		1	SCREW M6S ISO 4014 M10X80 A280	
710	312105-0540	-		4	SCREW M6S ISO 4017 M12X40 A280	
720	312105-0545	-		4	SCREW M6S12X65RFR	
730	312105-0556	-		8	SCREW M6S ISO 4014 M12X120 A280	
740	312105-0362	-		12	SCREW M6S ISO 4017 M6x8 A280	
750	312115-0299	-		3	SCREW MC6S ISO 4762 M4X30 A280	
760	312115-0331	-		2	SCREW MC6S ISO 4762 M5X20 A280	
770	312115-0509	-		2	SCREW MC6S ISO 4762 M10X90 A280	
780	312125-0222	-		1	SLOTTED CHEESE HEAD ISO 1207 M3x8 RFR	
790	312155-0366	-		24	SCREW MF6S DIN 7991 M6x12 A280	
800	312625-0322	-		2	NUTS,HEXAGON,M12	
810	312605-0322	-		2	NUT,HEXAGON,M12 RFR	
820	315105-0136	-		3	WASHER,PLAIN ROUND 4,3x8 Stainless	
830	315105-0173	-		1	WASHER,PLAIN ROUND 10,5x22 STAINLESS	
840	315105-0178	-		14	WASHER,PLAIN ROUND 13x24	
850	315705-0307	-		2	KEYS,PARALLEL WITH ROUND ENDS 10X8X70	
860	315751-0127	-		4	RETAINING RINGS FOR SHAFT 40	
870	315753-0119	-		1	RETAINING RINGS FOR HOLE 25	
880	315753-0130	-		4	RETAINING RINGS FOR HOLE 47	
890	90214-0236	K		8	BALL BEARING	
900	312105-0452	-		4	SCREW M6S 8x22 Stainless	
910	312105-0534	-		4	SCREW M6S ISO 4017 M12X25 A280	
920	315105-0165	-		4	WASHER,PLAIN ROUND 8,4x16 Stainless	

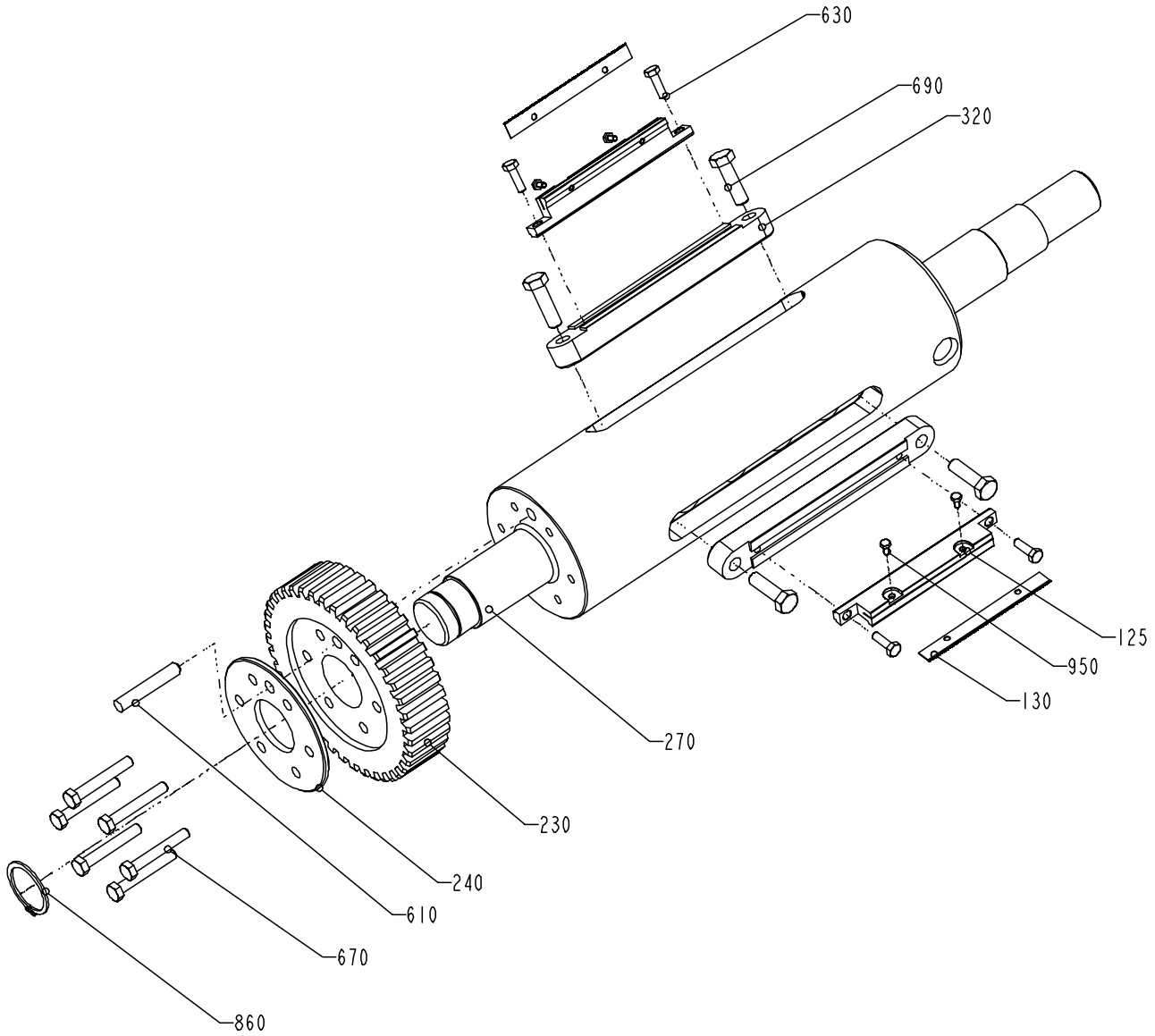

S - 575238-4(6)
ECN 73069

Pos	Part No	SP	UN	Qty	Description	Page No
930	312132-0323	-		4	SLOTTED PAN HEAD ISO 1580 M5X8 MSGFN	
950	312105-0287	-		6	SCREW M6S ISO 4017 M4x8 A280	
960	311103-0454	-		4	PINS,STRAIGHT 10X20	
970	359710-0002	-		1	WARNING SIGN "HOT SURFACE"	
980	90030-0116	-		2	REDUCER	
990	315234-0109	-		2	PLAIN ROUND,COPPER R1/8",M10	
B4103	90061-0027	J		1	Angle encoder 670900035	

Pos	Part No	SP	UN	Qty	Description	Page No

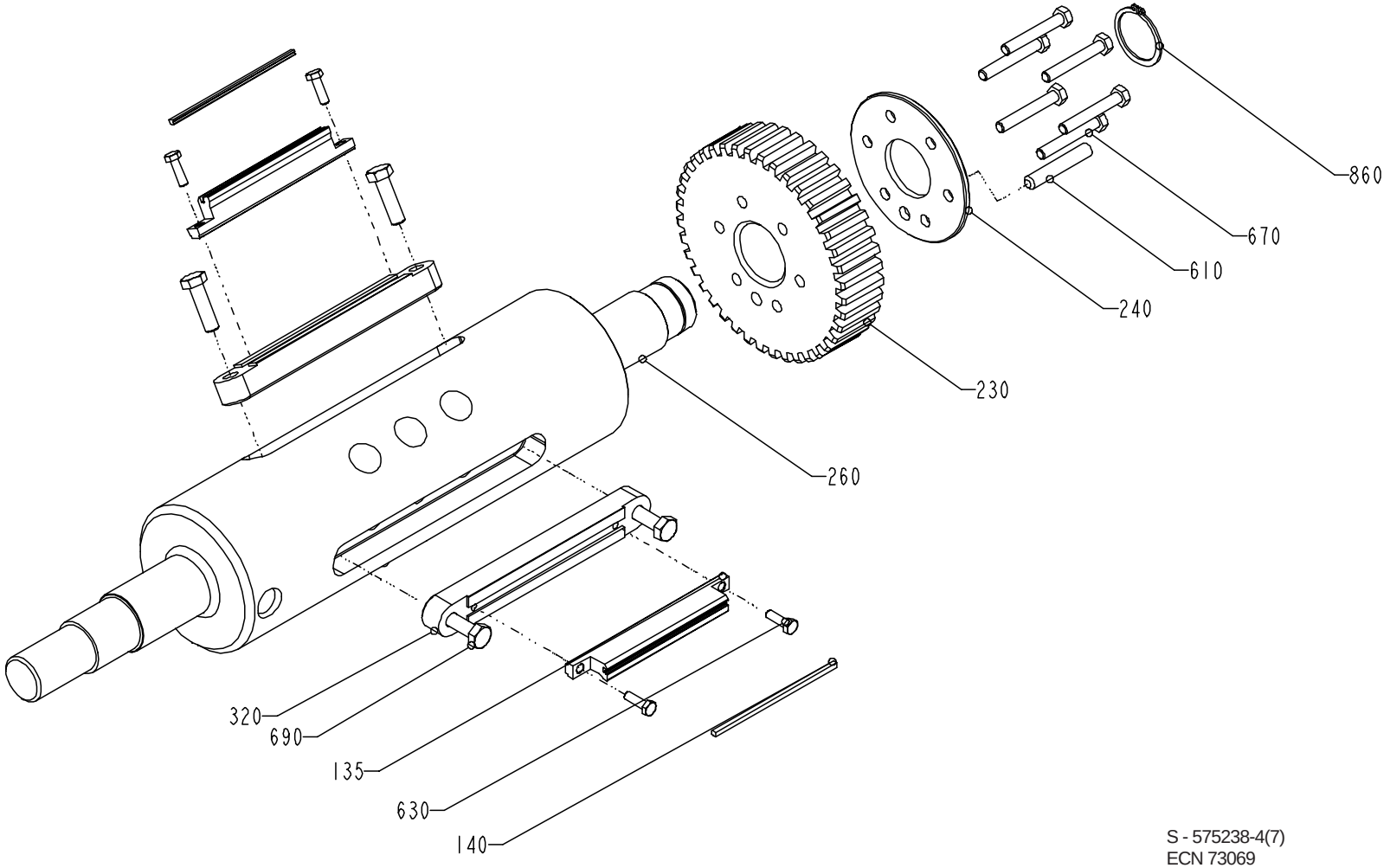

S - 575238-4(7)
ECN 73069

Pos	Part No	SP	UN	Qty	Description	Page No
Common parts						
010	1140750-0000	-		2	GUIDE	
020	1140751-0000	-		4	RING	
030	1140757-0000	D		1	PULLEY	
040	1140759-0000	D		2	PULLEY	
050	1140767-0000	M		4	WHEEL	
070	1260086-0000	D		2	ECCENTRIC SHAFT	
080	1260087-0000	D		2	WHEEL	
090	1260088-0000	D		2	COVER	
100	1260089-0000	D		2	SPACER	
110	1260094-0000	D		2	PULLEY	
120	1260190-0000	-		4	FLANGE	
125	1487487-0000	-		3	HOLDER	
130	1512661-0000	E		3	KNIFE	
135	1487480-0000	-		3	HOLDER	
140	1490404-0000	E		3	DOLLY	
150	1334792-0000	-		1	PIN	
160	1334793-0000	-		1	WASHER	
170	1487860-0000	D		1	PULLEY	
190	1348703-0000	-		8	COVER	
200	1348704-0000	-		8	BEARING HOUSING	
210	1487857-0000	D		1	SHAFT	
220	1487856-0000	-		1	SPACER	
230	1349621-0000	M		2	GEAR WHEEL	
240	1349623-0000	-		2	WASHER	
250	1478074-0000	D		2	SHAFT	
260	1478075-0000	-		1	DRUM	
270	1478079-0000	-		1	DRUM	
280	1478080-0000	-		2	FRAME	
290	1487859-0000	-		1	BRACKET	
300	1348661-0000	-		1	SPACER	
320	1484164-0000	-		6	HOLDER	
330	1499914-0000	-		4	GASKET	
340	1484484-0000	-		1	PROTECTION	
350	1484485-0000	-		1	PROTECTION	
360	1140820-0000	-		4	SPACER	
370	1484507-0000	-		2	SPACER	
380	1487858-0000	-		1	INSULATION	
390	1487930-0000	-		4	COVER	
400	1487988-0000	-		2	SPACER	
410	352113-0204	-		4	ANCHOR TM3S25-M	
420	90091-0296	J		8	SEALING RINGS,TYPE AS 40X52X7	
430	90091-0298	J		8	SEALING RINGS,TYPE AS 45X65X8	
440	90208-0084	-		4	CLAMPING ELEMENT WITH SLEEVE 35X47	
450	90214-0112	K		2	BALL BEARING,STAINLESS 12X24X6	
460	90214-0165	K		4	BEARINGS,BALL BEARING,STAINLESS	
470	90417-0413	J		2	TIMING BELT AT5/975	
480	90417-0412	J		1	TIMING BELT AT5/600	
490	90056-0164	D		1	WORM GEAR	
500	90056-0163	D		1	WORM GEAR	
510	90355-0197	J		2	ELASTIC COUPLING	
520	90056-0527	-		2	PLUG	
530	90355-0031	J		1	Bellow Coupling 10/10	
600	311103-0357	-		4	PIN,STRAIGHT 6x30	
610	311103-0470	-		2	PINS,STRAIGHT 10X60	
620	312105-0291	-		3	SCREW M6S ISO 4017 M4X12 A280	
630	312105-0370	-		12	SCREW M6S ISO 4017 M6x20 A280	
640	312105-0371	-		24	SCREW M6S6X22RFR	
650	312105-0449	-		4	SCREW M6S ISO 4017 M8x16 A280	
660	312105-0455	-		24	SCREW M6S ISO 4017 M8x30 A280	
670	312105-0462	-		12	SCREW M6S ISO 4014 M8x55 A280	
680	312105-0495	-		1	SCREW M6S ISO 4017 M10X30 A280	
690	312105-0497	-		12	SCREW M6S ISO 4017 M10x35 A280	
700	312105-0507	-		1	SCREW M6S ISO 4014 M10X80 A280	
710	312105-0540	-		4	SCREW M6S ISO 4017 M12X40 A280	
720	312105-0545	-		4	SCREW M6S12X65RFR	
730	312105-0556	-		8	SCREW M6S ISO 4014 M12X120 A280	
740	312105-0362	-		12	SCREW M6S ISO 4017 M6x8 A280	
750	312115-0299	-		3	SCREW MC6S ISO 4762 M4X30 A280	
760	312115-0331	-		2	SCREW MC6S ISO 4762 M5X20 A280	
770	312115-0509	-		2	SCREW MC6S ISO 4762 M10X90 A280	
780	312125-0222	-		1	SLOTTED CHEESE HEAD ISO 1207 M3x8 RFR	
790	312155-0366	-		24	SCREW MF6S DIN 7991 M6x12 A280	
800	312625-0322	-		2	NUTS,HEXAGON,M12	
810	312605-0322	-		2	NUT,HEXAGON,M12 RFR	
820	315105-0136	-		3	WASHER,PLAIN ROUND 4,3x8 Stainless	
830	315105-0173	-		1	WASHER,PLAIN ROUND 10,5x22 STAINLESS	
840	315105-0178	-		14	WASHER,PLAIN ROUND 13x24	
850	315705-0307	-		2	KEYS,PARALLEL WITH ROUND ENDS 10X8X70	
860	315751-0127	-		4	RETAINING RINGS FOR SHAFT 40	
870	315753-0119	-		1	RETAINING RINGS FOR HOLE 25	
880	315753-0130	-		4	RETAINING RINGS FOR HOLE 47	
890	90214-0236	K		8	BALL BEARING	
900	312105-0452	-		4	SCREW M6S 8x22 Stainless	
910	312105-0534	-		4	SCREW M6S ISO 4017 M12X25 A280	
920	315105-0165	-		4	WASHER,PLAIN ROUND 8,4x16 Stainless	

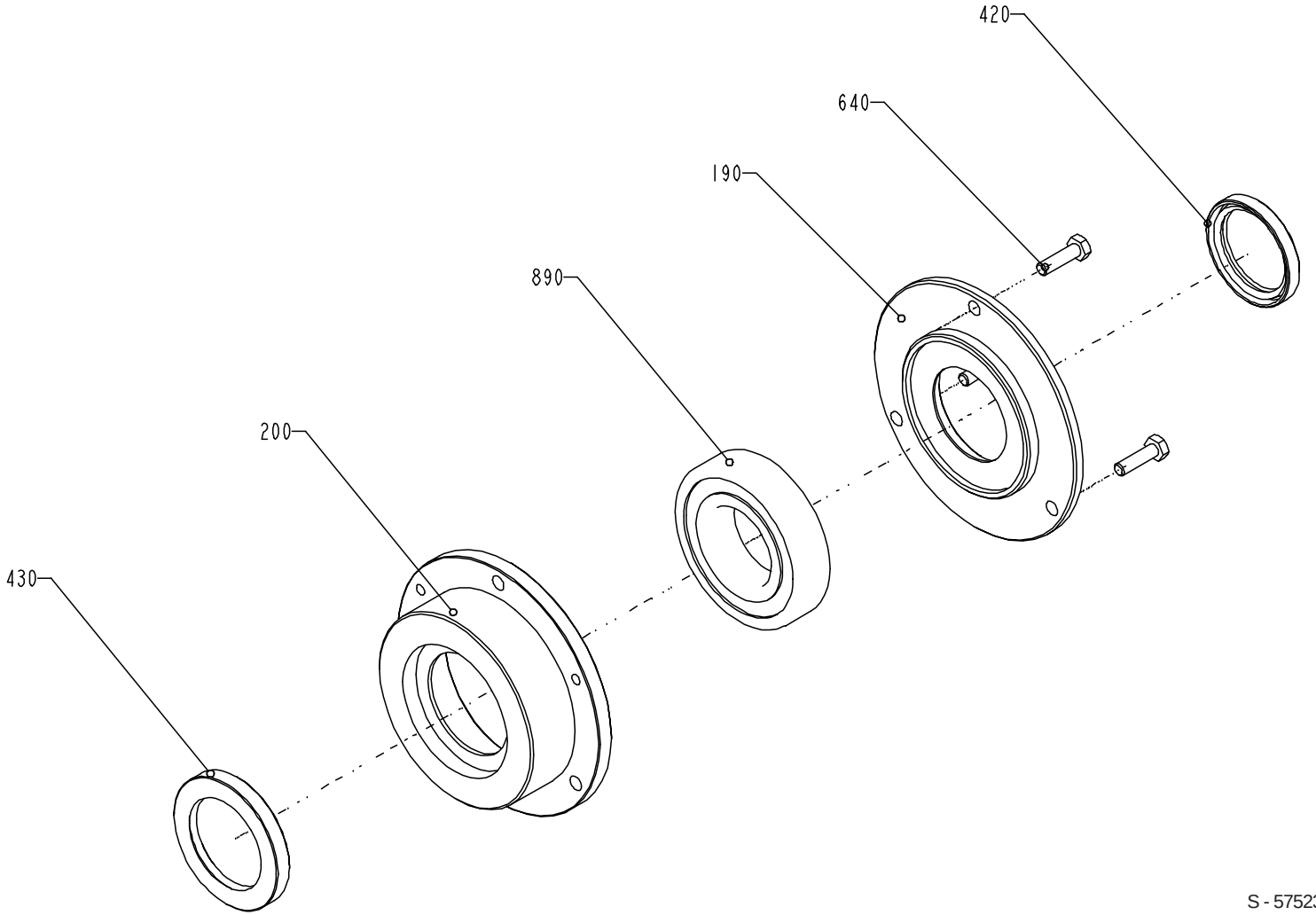

S - 575238-4(8)
ECN 73069

Pos	Part No	SP	UN	Qty	Description	Page No
930	312132-0323	-		4	SLOTTED PAN HEAD ISO 1580 M5X8 MSGFN	
950	312105-0287	-		6	SCREW M6S ISO 4017 M4x8 A280	
960	311103-0454	-		4	PINS,STRAIGHT 10X20	
970	359710-0002	-		1	WARNING SIGN "HOT SURFACE"	
980	90030-0116	-		2	REDUCER	
990	315234-0109	-		2	PLAIN ROUND,COPPER R1/8",M10	
B4103	90061-0027	J		1	Angle encoder 670900035	

Pos	Part No	SP	UN	Qty	Description	Page No

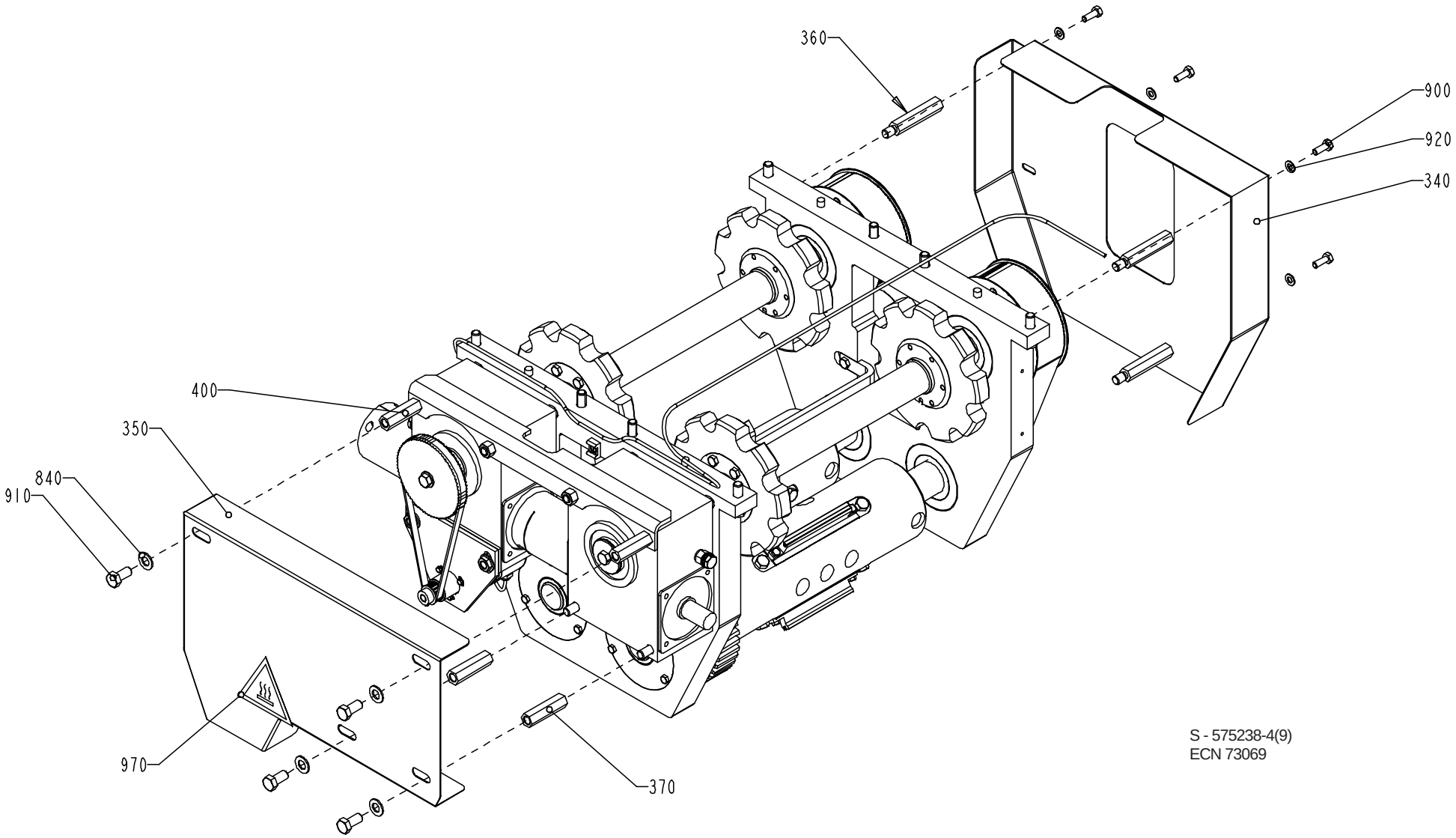

S - 575238-4(9)
ECN 73069

Pos	Part No	SP	UN	Qty	Description	Page No
SEE PREVIOUS LIST PAGES.						

Pos	Part No	SP	UN	Qty	Description	Page No

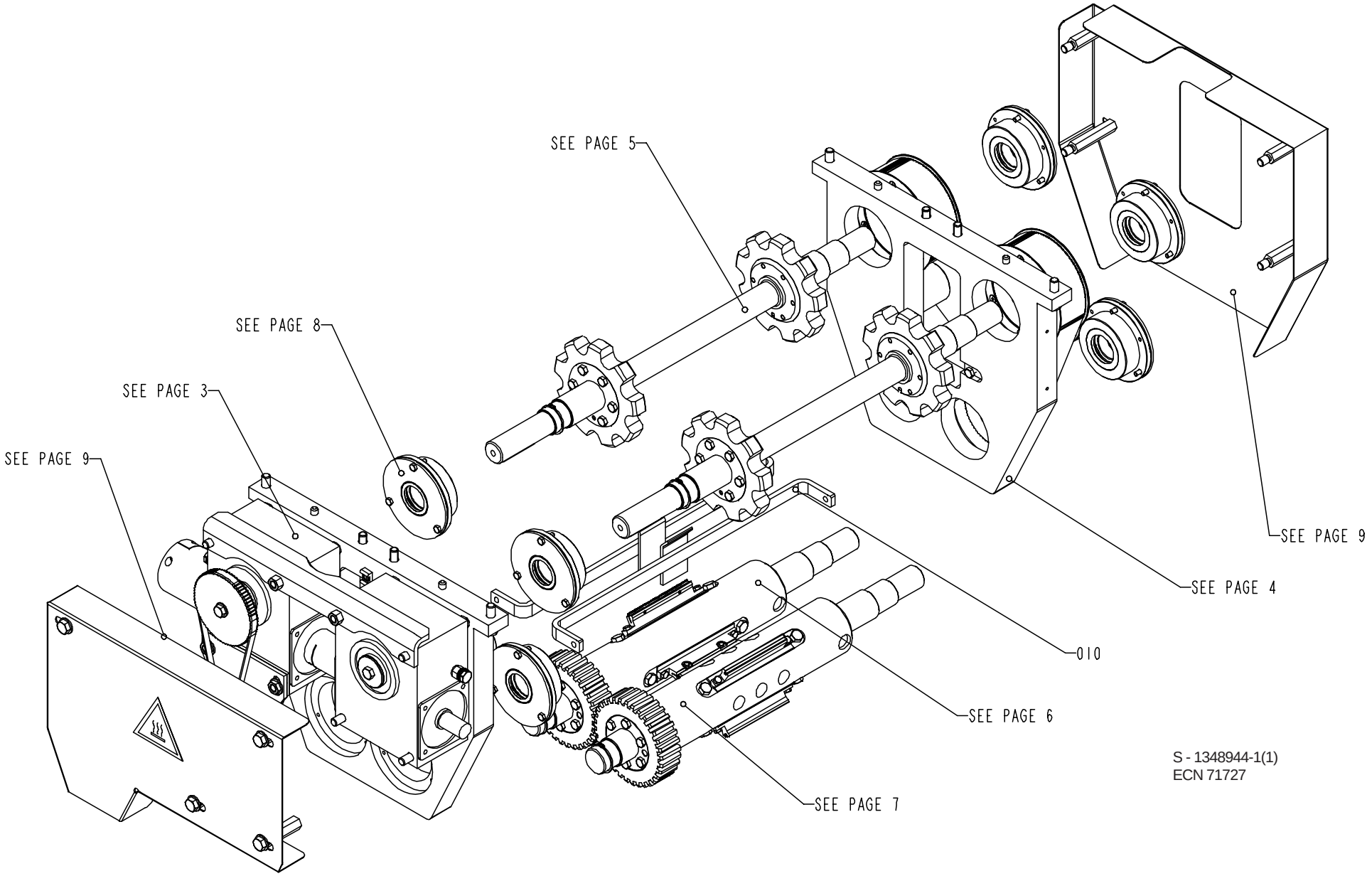

S - 1348944-1(1)
ECN 71727

Pos	Part No	SP	UN	Qty	Description	Page No
Common parts						
010	1140750-0000	-		2	GUIDE	
020	1140751-0000	-		4	RING	
030	1140757-0000	D		1	PULLEY	
040	1140759-0000	D		2	PULLEY	
050	1478191-0000	M		4	WHEEL	
070	1260086-0000	D		2	ECCENTRIC SHAFT	
080	1260087-0000	D		2	WHEEL	
090	1260088-0000	D		2	COVER	
100	1260089-0000	D		2	SPACER	
110	1260094-0000	D		2	PULLEY	
120	1260190-0000	-		4	FLANGE	
125	1487487-0000	-		3	HOLDER	
130	1512661-0000	E		3	KNIFE	
135	1487480-0000	-		3	HOLDER	
140	1490404-0000	E		3	DOLLY	
150	1334792-0000	-		1	PIN	
160	1334793-0000	-		1	WASHER	
170	1487860-0000	D		1	PULLEY	
190	1348703-0000	-		8	COVER	
200	1348704-0000	-		8	BEARING HOUSING	
210	1487857-0000	D		1	SHAFT	
220	1487856-0000	-		1	SPACER	
230	1478193-0000	M		2	GEAR WHEEL	
240	1478221-0000	-		2	WASHER	
250	1478198-0000	D		2	SHAFT	
260	1478194-0000	-		1	DRUM	
270	1478195-0000	-		1	DRUM	
280	1478196-0000	-		2	FRAME	
290	1487859-0000	-		1	BRACKET	
300	1478192-0000	-		1	SPACER	
310	1499914-0000	-		4	GASKET	
320	1484164-0000	-		6	HOLDER	
340	1484484-0000	-		1	PROTECTION	
350	1484485-0000	-		1	PROTECTION	
360	1140820-0000	-		4	SPACER	
370	1484507-0000	-		2	SPACER	
380	1487858-0000	-		1	INSULATION	
390	1487930-0000	-		4	COVER	
400	1487988-0000	-		2	SPACER	
410	352113-0204	-		4	ANCHOR TM3S25-M	
420	90091-0296	J		8	SEALING RINGS,TYPE AS 40X52X7	
430	90091-0298	J		8	SEALING RINGS,TYPE AS 45X65X8	
440	90208-0084	-		4	CLAMPING ELEMENT WITH SLEEVE 35X47	
450	90214-0112	K		2	BALL BEARING,STAINLESS 12X24X6	
460	90214-0165	K		4	BEARINGS,BALL BEARING,STAINLESS	
470	90417-0413	J		2	TIMING BELT AT5/975	
480	90417-0412	J		1	TIMING BELT AT5/600	
490	90056-0164	D		1	WORM GEAR	
500	90056-0163	D		1	WORM GEAR	
510	90355-0197	J		1	ELASTIC COUPLING	
520	90056-0527	-		2	PLUG	
530	90355-0031	J		1	Bellow Coupling 10/10	
540	90355-0204	-		1	ELASTIC COUPLING	
600	311103-0357	-		4	PIN,STRAIGHT 6x30	
610	311103-0470	-		2	PINS,STRAIGHT 10X60	
620	312105-0291	-		3	SCREW M6S ISO 4017 M4X12 A280	
630	312105-0370	-		12	SCREW M6S ISO 4017 M6x20 A280	
640	312105-0371	-		24	SCREW M6S6X22RFR	
650	312105-0449	-		4	SCREW M6S ISO 4017 M8x16 A280	
660	312105-0455	-		24	SCREW M6S ISO 4017 M8x30 A280	
670	312105-0462	-		12	SCREW M6S ISO 4014 M8x55 A280	
680	312105-0495	-		1	SCREW M6S ISO 4017 M10X30 A280	
690	312105-0497	-		12	SCREW M6S ISO 4017 M10x35 A280	
700	312105-0507	-		1	SCREW M6S ISO 4014 M10X80 A280	
710	312105-0540	-		4	SCREW M6S ISO 4017 M12X40 A280	
720	312105-0545	-		2	SCREW M6S12X65RFR	
730	312105-0556	-		8	SCREW M6S ISO 4014 M12X120 A280	
740	312105-0362	-		12	SCREW M6S ISO 4017 M6x8 A280	
750	312115-0299	-		3	SCREW MC6S ISO 4762 M4X30 A280	
760	312115-0331	-		2	SCREW MC6S ISO 4762 M5X20 A280	
770	312115-0509	-		2	SCREW MC6S ISO 4762 M10X90 A280	
780	312125-0222	-		1	SLOTTED CHEESE HEAD ISO 1207 M3x8 RFR	
790	312155-0366	-		24	SCREW MF6S DIN 7991 M6x12 A280	
800	312625-0322	-		2	NUTS,HEXAGON,M12	
810	312605-0322	-		2	NUT,HEXAGON,M12 RFR	
820	315105-0136	-		3	WASHER,PLAIN ROUND 4,3x8 Stainless	
830	315105-0173	-		1	WASHER,PLAIN ROUND 10,5x22 STAINLESS	
840	315105-0178	-		14	WASHER,PLAIN ROUND 13x24	
850	315705-0307	-		2	KEYS,PARALLEL WITH ROUND ENDS 10X8X70	
860	315751-0127	-		4	RETAINING RINGS FOR SHAFT 40	
870	315753-0119	-		1	RETAINING RINGS FOR HOLE 25	
880	315753-0130	-		4	RETAINING RINGS FOR HOLE 47	
890	90214-0236	K		8	BALL BEARING	
900	312105-0452	-		4	SCREW M6S 8x22 Stainless	
910	312105-0534	-		4	SCREW M6S ISO 4017 M12X25 A280	

POS.	SHEET
240	6 , 7
230	6 , 7
220	3
210	3
200	8
190	8
170	3
160	3
150	3
140	7
135	7
130	6
125	6
120	4
110	4
100	4
090	4
080	4
070	4
050	5
040	4
030	3
020	5
010	1

POS.	SHEET
490	3
480	3
470	4
460	4
450	3
440	4
430	8
420	8
410	3 , 4
400	9
390	4
380	3
370	9
360	9
350	9
340	9
320	6 , 7
310	4
300	3
290	3
280	3 , 4
270	6
260	7
250	5

POS.	SHEET
780	3
770	4
760	4
750	3
740	4
730	3
720	3 , 4
710	3 , 4
700	3
690	6 , 7
680	3
670	6 , 7
660	5
650	3 , 4
640	8
630	6 , 7
620	3
610	6 , 7
600	5
540	3
530	3
520	3
510	3
500	3

POS.	SHEET
B4103	3
990	3
980	3
970	3 , 4
960	3 , 4
950	6
940	9
930	3 , 4
920	9
910	9
900	9
890	8
880	4
870	3
860	5 , 6 , 7
850	5
840	3 , 4 , 9
830	3
820	3
810	3
800	3
790	4

S - 1348944-1(2)
ECN 71727

Pos	Part No	SP	UN	Qty	Description	Page No
920	315105-0165	-		4	WASHER,PLAIN ROUND 8,4x16 Stainless	
930	312132-0323	-		4	SLOTTED PAN HEAD ISO 1580 M5X8 MSGFN	
940	359710-0002	-		1	WARNING SIGN "HOT SURFACE"	
950	312105-0287	-		6	SCREW M6S ISO 4017 M4x8 A280	
960	311103-0454	-		4	PINS,STRAIGHT 10X20	
970	312105-0544	-		2	SCREW M6S ISO 4014 M12X60 A280	
980	90030-0116	-		2	REDUCER	
990	315234-0109	-		2	PLAIN ROUND,COPPER R1/8",M10	
B4103	90061-0027	J		1	Angle encoder 670900035	

Pos	Part No	SP	UN	Qty	Description	Page No

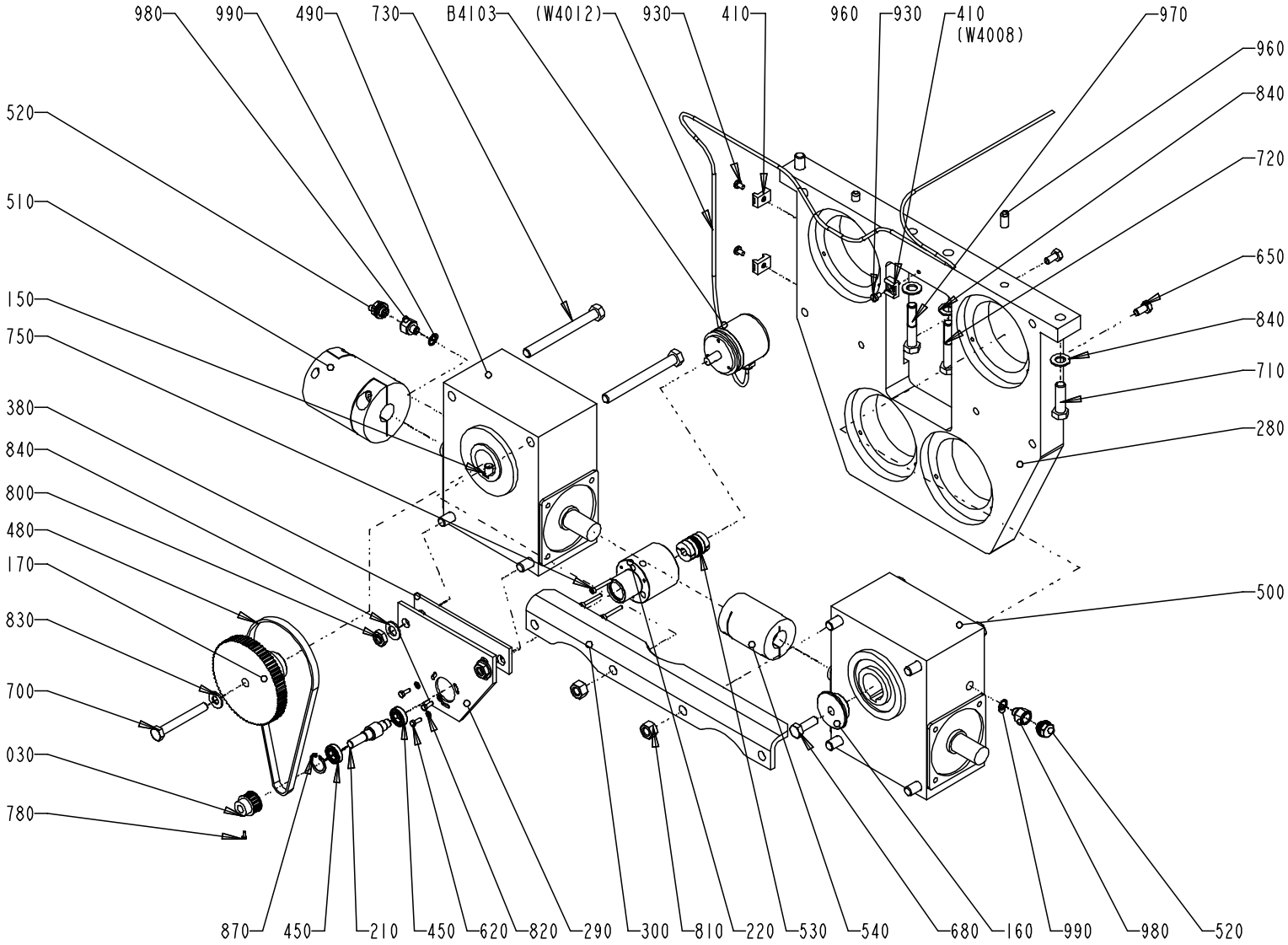

S - 1348944-1(3)
ECN 71727

Pos	Part No	SP	UN	Qty	Description	Page No
Common parts						
010	1140750-0000	-		2	GUIDE	
020	1140751-0000	-		4	RING	
030	1140757-0000	D		1	PULLEY	
040	1140759-0000	D		2	PULLEY	
050	1478191-0000	M		4	WHEEL	
070	1260086-0000	D		2	ECCENTRIC SHAFT	
080	1260087-0000	D		2	WHEEL	
090	1260088-0000	D		2	COVER	
100	1260089-0000	D		2	SPACER	
110	1260094-0000	D		2	PULLEY	
120	1260190-0000	-		4	FLANGE	
125	1487487-0000	-		3	HOLDER	
130	1512661-0000	E		3	KNIFE	
135	1487480-0000	-		3	HOLDER	
140	1490404-0000	E		3	DOLLY	
150	1334792-0000	-		1	PIN	
160	1334793-0000	-		1	WASHER	
170	1487860-0000	D		1	PULLEY	
190	1348703-0000	-		8	COVER	
200	1348704-0000	-		8	BEARING HOUSING	
210	1487857-0000	D		1	SHAFT	
220	1487856-0000	-		1	SPACER	
230	1478193-0000	M		2	GEAR WHEEL	
240	1478221-0000	-		2	WASHER	
250	1478198-0000	D		2	SHAFT	
260	1478194-0000	-		1	DRUM	
270	1478195-0000	-		1	DRUM	
280	1478196-0000	-		2	FRAME	
290	1487859-0000	-		1	BRACKET	
300	1478192-0000	-		1	SPACER	
310	1499914-0000	-		4	GASKET	
320	1484164-0000	-		6	HOLDER	
340	1484484-0000	-		1	PROTECTION	
350	1484485-0000	-		1	PROTECTION	
360	1140820-0000	-		4	SPACER	
370	1484507-0000	-		2	SPACER	
380	1487858-0000	-		1	INSULATION	
390	1487930-0000	-		4	COVER	
400	1487988-0000	-		2	SPACER	
410	352113-0204	-		4	ANCHOR TM3S25-M	
420	90091-0296	J		8	SEALING RINGS,TYPE AS 40X52X7	
430	90091-0298	J		8	SEALING RINGS,TYPE AS 45X65X8	
440	90208-0084	-		4	CLAMPING ELEMENT WITH SLEEVE 35X47	
450	90214-0112	K		2	BALL BEARING,STAINLESS 12X24X6	
460	90214-0165	K		4	BEARINGS,BALL BEARING,STAINLESS	
470	90417-0413	J		2	TIMING BELT AT5/975	
480	90417-0412	J		1	TIMING BELT AT5/600	
490	90056-0164	D		1	WORM GEAR	
500	90056-0163	D		1	WORM GEAR	
510	90355-0197	J		1	ELASTIC COUPLING	
520	90056-0527	-		2	PLUG	
530	90355-0031	J		1	Bellow Coupling 10/10	
540	90355-0204	-		1	ELASTIC COUPLING	
600	311103-0357	-		4	PIN,STRAIGHT 6x30	
610	311103-0470	-		2	PINS,STRAIGHT 10X60	
620	312105-0291	-		3	SCREW M6S ISO 4017 M4X12 A280	
630	312105-0370	-		12	SCREW M6S ISO 4017 M6x20 A280	
640	312105-0371	-		24	SCREW M6S6X22RFR	
650	312105-0449	-		4	SCREW M6S ISO 4017 M8x16 A280	
660	312105-0455	-		24	SCREW M6S ISO 4017 M8x30 A280	
670	312105-0462	-		12	SCREW M6S ISO 4014 M8x55 A280	
680	312105-0495	-		1	SCREW M6S ISO 4017 M10X30 A280	
690	312105-0497	-		12	SCREW M6S ISO 4017 M10x35 A280	
700	312105-0507	-		1	SCREW M6S ISO 4014 M10X80 A280	
710	312105-0540	-		4	SCREW M6S ISO 4017 M12X40 A280	
720	312105-0545	-		2	SCREW M6S12X65RFR	
730	312105-0556	-		8	SCREW M6S ISO 4014 M12X120 A280	
740	312105-0362	-		12	SCREW M6S ISO 4017 M6x8 A280	
750	312115-0299	-		3	SCREW MC6S ISO 4762 M4X30 A280	
760	312115-0331	-		2	SCREW MC6S ISO 4762 M5X20 A280	
770	312115-0509	-		2	SCREW MC6S ISO 4762 M10X90 A280	
780	312125-0222	-		1	SLOTTED CHEESE HEAD ISO 1207 M3x8 RFR	
790	312155-0366	-		24	SCREW MF6S DIN 7991 M6x12 A280	
800	312625-0322	-		2	NUTS,HEXAGON,M12	
810	312605-0322	-		2	NUT,HEXAGON,M12 RFR	
820	315105-0136	-		3	WASHER,PLAIN ROUND 4,3x8 Stainless	
830	315105-0173	-		1	WASHER,PLAIN ROUND 10,5x22 STAINLESS	
840	315105-0178	-		14	WASHER,PLAIN ROUND 13x24	
850	315705-0307	-		2	KEYS,PARALLEL WITH ROUND ENDS 10X8X70	
860	315751-0127	-		4	RETAINING RINGS FOR SHAFT 40	
870	315753-0119	-		1	RETAINING RINGS FOR HOLE 25	
880	315753-0130	-		4	RETAINING RINGS FOR HOLE 47	
890	90214-0236	K		8	BALL BEARING	
900	312105-0452	-		4	SCREW M6S 8x22 Stainless	
910	312105-0534	-		4	SCREW M6S ISO 4017 M12X25 A280	

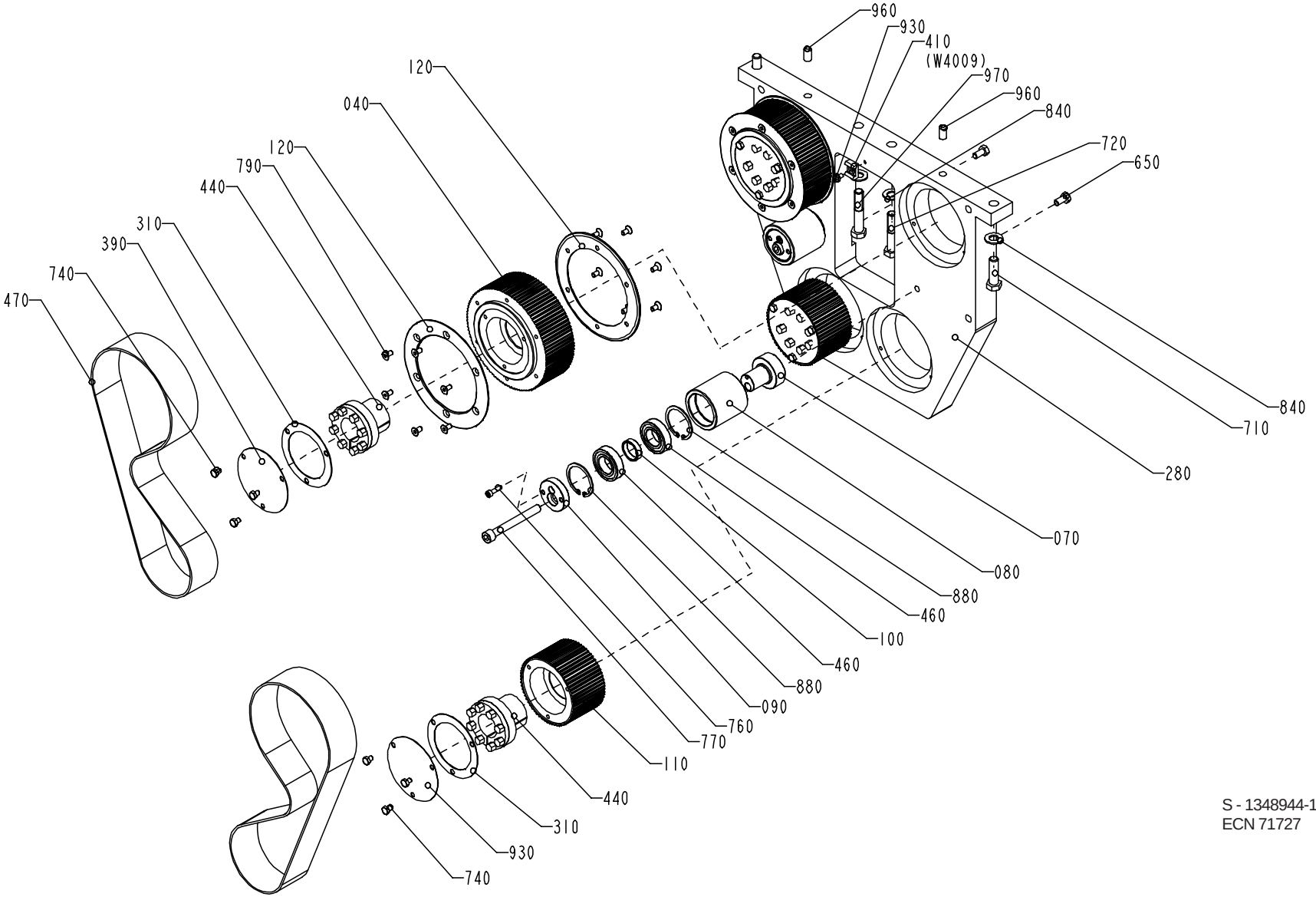

S - 1348944-1(4)
ECN 71727

Pos	Part No	SP	UN	Qty	Description	Page No
920	315105-0165	-		4	WASHER,PLAIN ROUND 8,4x16 Stainless	
930	312132-0323	-		4	SLOTTED PAN HEAD ISO 1580 M5X8 MSGFN	
940	359710-0002	-		1	WARNING SIGN "HOT SURFACE"	
950	312105-0287	-		6	SCREW M6S ISO 4017 M4x8 A280	
960	311103-0454	-		4	PINS,STRAIGHT 10X20	
970	312105-0544	-		2	SCREW M6S ISO 4014 M12X60 A280	
980	90030-0116	-		2	REDUCER	
990	315234-0109	-		2	PLAIN ROUND,COPPER R1/8",M10	
B4103	90061-0027	J		1	Angle encoder 670900035	

Pos	Part No	SP	UN	Qty	Description	Page No

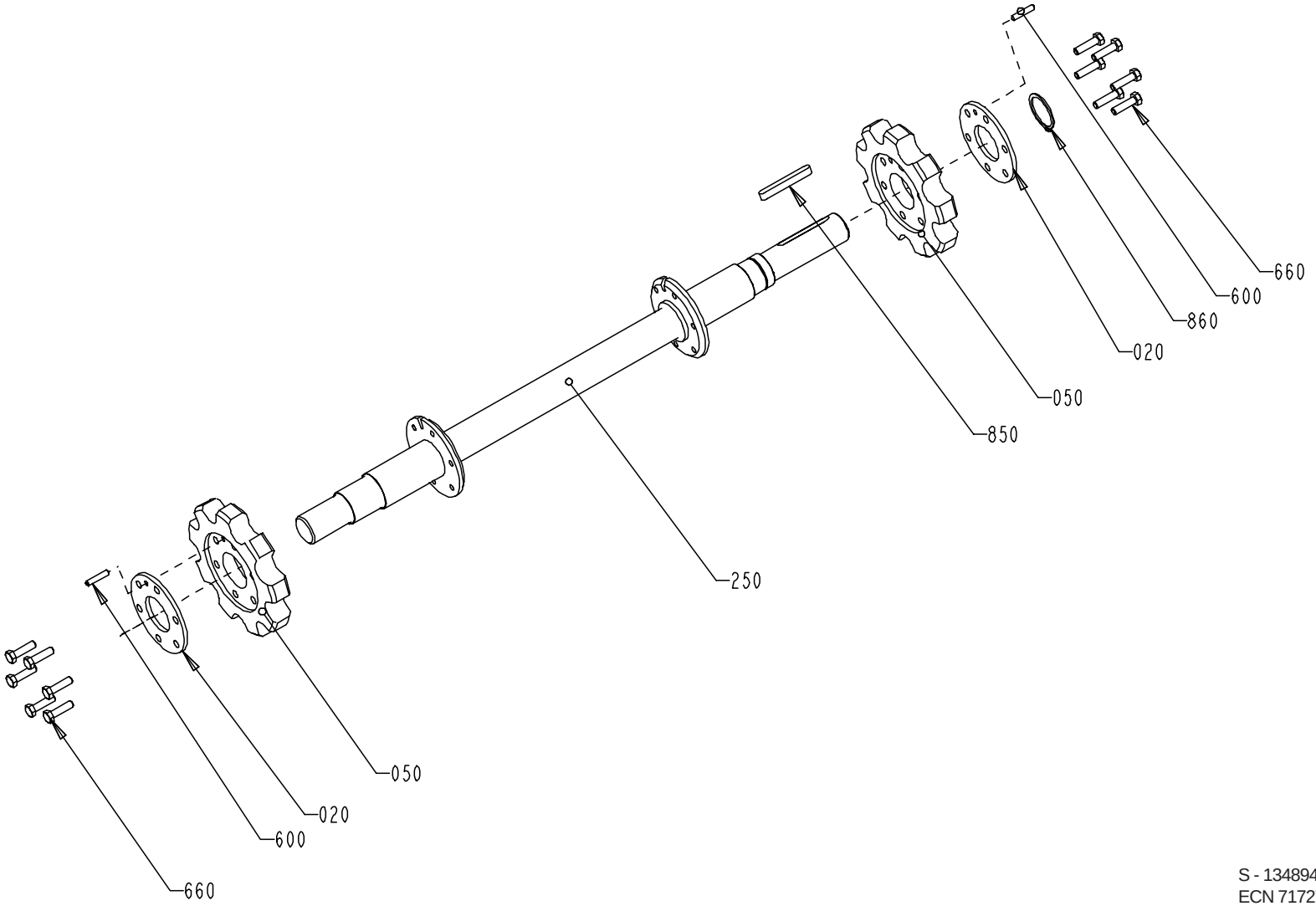

S - 1348944-1(5)
ECN 71727

Pos	Part No	SP	UN	Qty	Description	Page No
Common parts						
010	1140750-0000	-		2	GUIDE	
020	1140751-0000	-		4	RING	
030	1140757-0000	D		1	PULLEY	
040	1140759-0000	D		2	PULLEY	
050	1478191-0000	M		4	WHEEL	
070	1260086-0000	D		2	ECCENTRIC SHAFT	
080	1260087-0000	D		2	WHEEL	
090	1260088-0000	D		2	COVER	
100	1260089-0000	D		2	SPACER	
110	1260094-0000	D		2	PULLEY	
120	1260190-0000	-		4	FLANGE	
125	1487487-0000	-		3	HOLDER	
130	1512661-0000	E		3	KNIFE	
135	1487480-0000	-		3	HOLDER	
140	1490404-0000	E		3	DOLLY	
150	1334792-0000	-		1	PIN	
160	1334793-0000	-		1	WASHER	
170	1487860-0000	D		1	PULLEY	
190	1348703-0000	-		8	COVER	
200	1348704-0000	-		8	BEARING HOUSING	
210	1487857-0000	D		1	SHAFT	
220	1487856-0000	-		1	SPACER	
230	1478193-0000	M		2	GEAR WHEEL	
240	1478221-0000	-		2	WASHER	
250	1478198-0000	D		2	SHAFT	
260	1478194-0000	-		1	DRUM	
270	1478195-0000	-		1	DRUM	
280	1478196-0000	-		2	FRAME	
290	1487859-0000	-		1	BRACKET	
300	1478192-0000	-		1	SPACER	
310	1499914-0000	-		4	GASKET	
320	1484164-0000	-		6	HOLDER	
340	1484484-0000	-		1	PROTECTION	
350	1484485-0000	-		1	PROTECTION	
360	1140820-0000	-		4	SPACER	
370	1484507-0000	-		2	SPACER	
380	1487858-0000	-		1	INSULATION	
390	1487930-0000	-		4	COVER	
400	1487988-0000	-		2	SPACER	
410	352113-0204	-		4	ANCHOR TM3S25-M	
420	90091-0296	J		8	SEALING RINGS,TYPE AS 40X52X7	
430	90091-0298	J		8	SEALING RINGS,TYPE AS 45X65X8	
440	90208-0084	-		4	CLAMPING ELEMENT WITH SLEEVE 35X47	
450	90214-0112	K		2	BALL BEARING,STAINLESS 12X24X6	
460	90214-0165	K		4	BEARINGS,BALL BEARING,STAINLESS	
470	90417-0413	J		2	TIMING BELT AT5/975	
480	90417-0412	J		1	TIMING BELT AT5/600	
490	90056-0164	D		1	WORM GEAR	
500	90056-0163	D		1	WORM GEAR	
510	90355-0197	J		1	ELASTIC COUPLING	
520	90056-0527	-		2	PLUG	
530	90355-0031	J		1	Bellow Coupling 10/10	
540	90355-0204	-		1	ELASTIC COUPLING	
600	311103-0357	-		4	PIN,STRAIGHT 6x30	
610	311103-0470	-		2	PINS,STRAIGHT 10X60	
620	312105-0291	-		3	SCREW M6S ISO 4017 M4X12 A280	
630	312105-0370	-		12	SCREW M6S ISO 4017 M6x20 A280	
640	312105-0371	-		24	SCREW M6S6X22RFR	
650	312105-0449	-		4	SCREW M6S ISO 4017 M8x16 A280	
660	312105-0455	-		24	SCREW M6S ISO 4017 M8x30 A280	
670	312105-0462	-		12	SCREW M6S ISO 4014 M8x55 A280	
680	312105-0495	-		1	SCREW M6S ISO 4017 M10X30 A280	
690	312105-0497	-		12	SCREW M6S ISO 4017 M10x35 A280	
700	312105-0507	-		1	SCREW M6S ISO 4014 M10X80 A280	
710	312105-0540	-		4	SCREW M6S ISO 4017 M12X40 A280	
720	312105-0545	-		2	SCREW M6S12X65RFR	
730	312105-0556	-		8	SCREW M6S ISO 4014 M12X120 A280	
740	312105-0362	-		12	SCREW M6S ISO 4017 M6x8 A280	
750	312115-0299	-		3	SCREW MC6S ISO 4762 M4X30 A280	
760	312115-0331	-		2	SCREW MC6S ISO 4762 M5X20 A280	
770	312115-0509	-		2	SCREW MC6S ISO 4762 M10X90 A280	
780	312125-0222	-		1	SLOTTED CHEESE HEAD ISO 1207 M3x8 RFR	
790	312155-0366	-		24	SCREW MF6S DIN 7991 M6x12 A280	
800	312625-0322	-		2	NUTS,HEXAGON,M12	
810	312605-0322	-		2	NUT,HEXAGON,M12 RFR	
820	315105-0136	-		3	WASHER,PLAIN ROUND 4,3x8 Stainless	
830	315105-0173	-		1	WASHER,PLAIN ROUND 10,5x22 STAINLESS	
840	315105-0178	-		14	WASHER,PLAIN ROUND 13x24	
850	315705-0307	-		2	KEYS,PARALLEL WITH ROUND ENDS 10X8X70	
860	315751-0127	-		4	RETAINING RINGS FOR SHAFT 40	
870	315753-0119	-		1	RETAINING RINGS FOR HOLE 25	
880	315753-0130	-		4	RETAINING RINGS FOR HOLE 47	
890	90214-0236	K		8	BALL BEARING	
900	312105-0452	-		4	SCREW M6S 8x22 Stainless	
910	312105-0534	-		4	SCREW M6S ISO 4017 M12X25 A280	

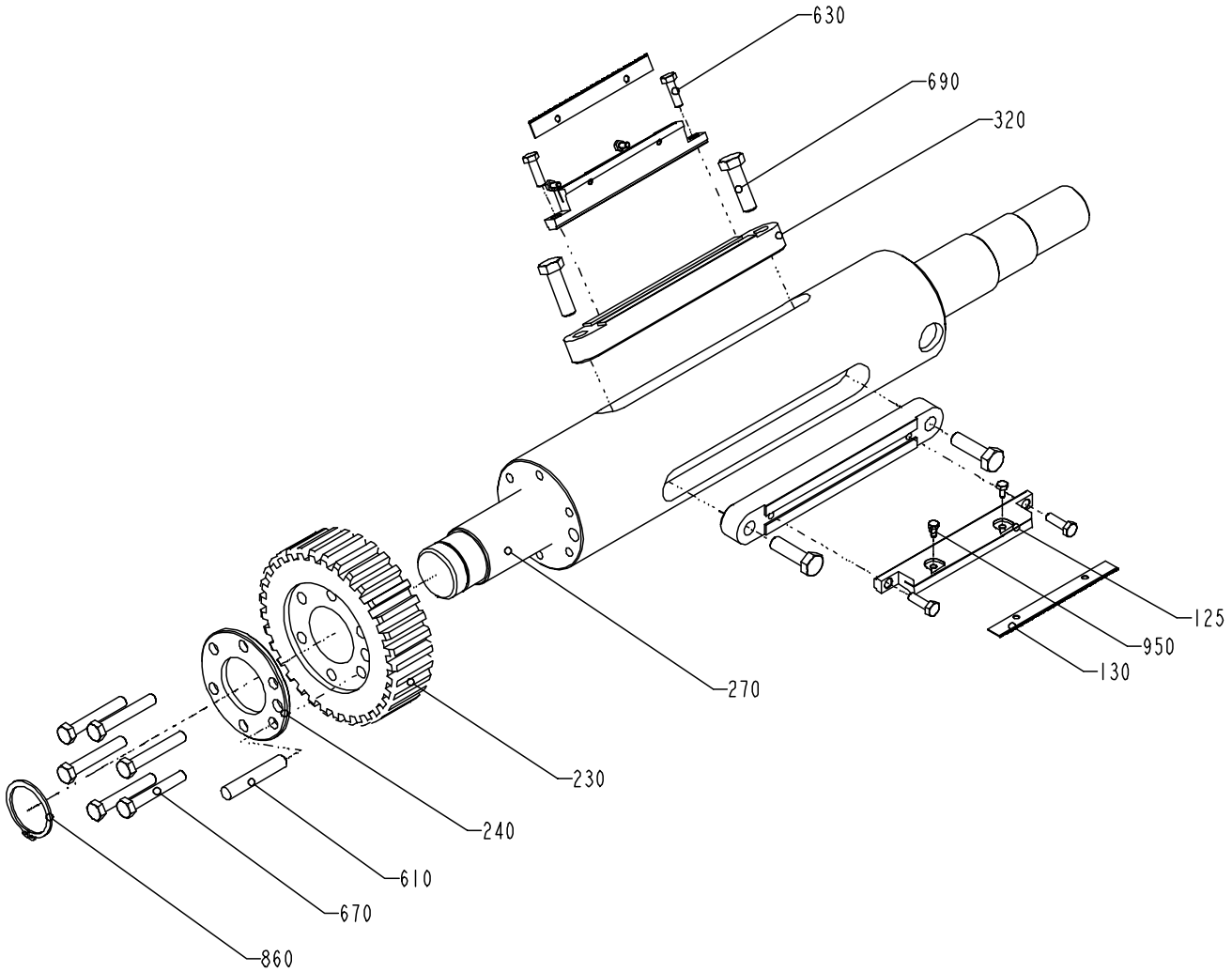

S - 1348944-1(6)
ECN 71727

Pos	Part No	SP	UN	Qty	Description	Page No
920	315105-0165	-		4	WASHER,PLAIN ROUND 8,4x16 Stainless	
930	312132-0323	-		4	SLOTTED PAN HEAD ISO 1580 M5X8 MSGFN	
940	359710-0002	-		1	WARNING SIGN "HOT SURFACE"	
950	312105-0287	-		6	SCREW M6S ISO 4017 M4x8 A280	
960	311103-0454	-		4	PINS,STRAIGHT 10X20	
970	312105-0544	-		2	SCREW M6S ISO 4014 M12X60 A280	
980	90030-0116	-		2	REDUCER	
990	315234-0109	-		2	PLAIN ROUND,COPPER R1/8",M10	
B4103	90061-0027	J		1	Angle encoder 670900035	

Pos	Part No	SP	UN	Qty	Description	Page No

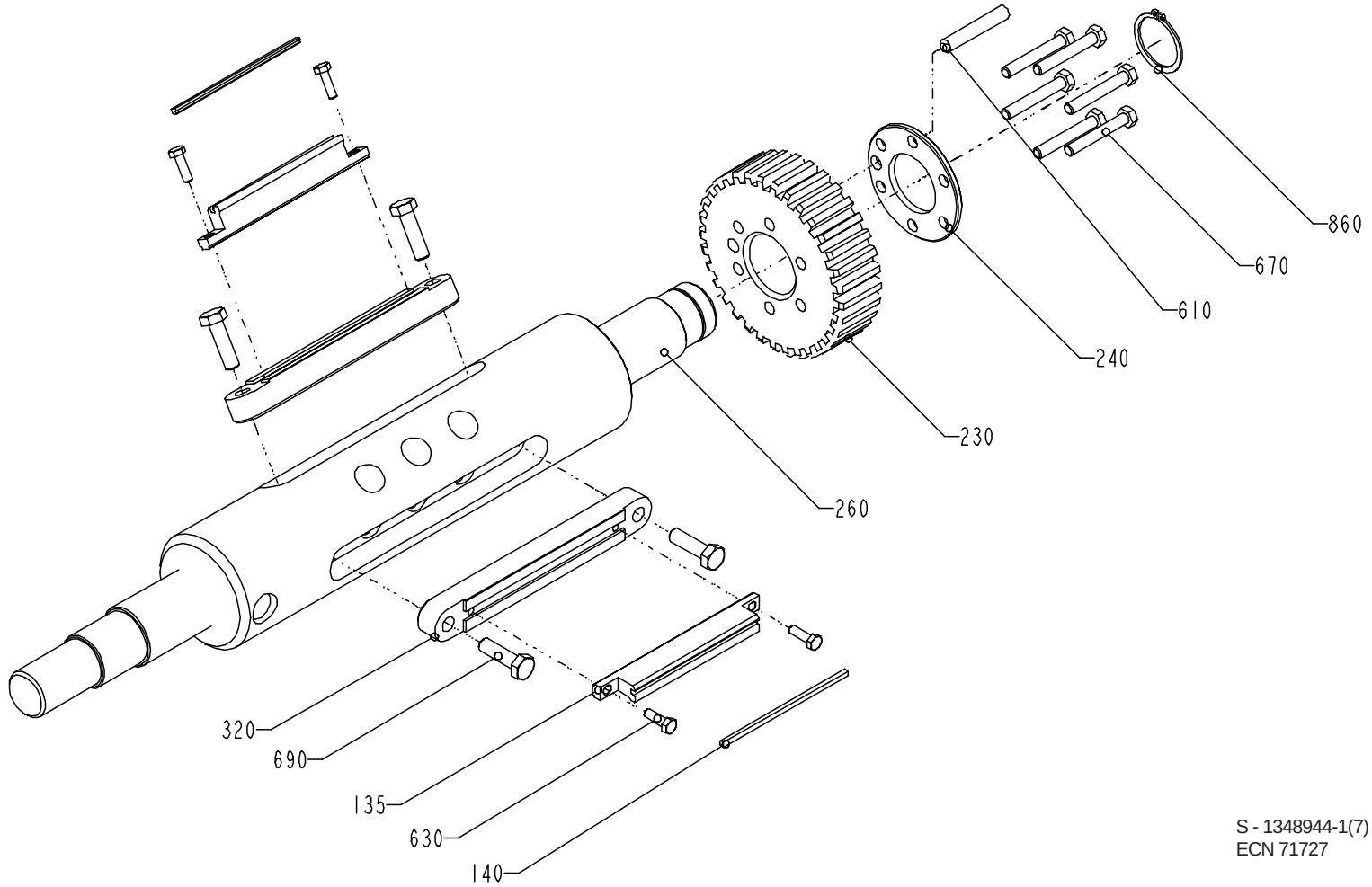

S - 1348944-1(7)
ECN 71727

Pos	Part No	SP	UN	Qty	Description	Page No
Common parts						
010	1140750-0000	-		2	GUIDE	
020	1140751-0000	-		4	RING	
030	1140757-0000	D		1	PULLEY	
040	1140759-0000	D		2	PULLEY	
050	1478191-0000	M		4	WHEEL	
070	1260086-0000	D		2	ECCENTRIC SHAFT	
080	1260087-0000	D		2	WHEEL	
090	1260088-0000	D		2	COVER	
100	1260089-0000	D		2	SPACER	
110	1260094-0000	D		2	PULLEY	
120	1260190-0000	-		4	FLANGE	
125	1487487-0000	-		3	HOLDER	
130	1512661-0000	E		3	KNIFE	
135	1487480-0000	-		3	HOLDER	
140	1490404-0000	E		3	DOLLY	
150	1334792-0000	-		1	PIN	
160	1334793-0000	-		1	WASHER	
170	1487860-0000	D		1	PULLEY	
190	1348703-0000	-		8	COVER	
200	1348704-0000	-		8	BEARING HOUSING	
210	1487857-0000	D		1	SHAFT	
220	1487856-0000	-		1	SPACER	
230	1478193-0000	M		2	GEAR WHEEL	
240	1478221-0000	-		2	WASHER	
250	1478198-0000	D		2	SHAFT	
260	1478194-0000	-		1	DRUM	
270	1478195-0000	-		1	DRUM	
280	1478196-0000	-		2	FRAME	
290	1487859-0000	-		1	BRACKET	
300	1478192-0000	-		1	SPACER	
310	1499914-0000	-		4	GASKET	
320	1484164-0000	-		6	HOLDER	
340	1484484-0000	-		1	PROTECTION	
350	1484485-0000	-		1	PROTECTION	
360	1140820-0000	-		4	SPACER	
370	1484507-0000	-		2	SPACER	
380	1487858-0000	-		1	INSULATION	
390	1487930-0000	-		4	COVER	
400	1487988-0000	-		2	SPACER	
410	352113-0204	-		4	ANCHOR TM3S25-M	
420	90091-0296	J		8	SEALING RINGS,TYPE AS 40X52X7	
430	90091-0298	J		8	SEALING RINGS,TYPE AS 45X65X8	
440	90208-0084	-		4	CLAMPING ELEMENT WITH SLEEVE 35X47	
450	90214-0112	K		2	BALL BEARING,STAINLESS 12X24X6	
460	90214-0165	K		4	BEARINGS,BALL BEARING,STAINLESS	
470	90417-0413	J		2	TIMING BELT AT5/975	
480	90417-0412	J		1	TIMING BELT AT5/600	
490	90056-0164	D		1	WORM GEAR	
500	90056-0163	D		1	WORM GEAR	
510	90355-0197	J		1	ELASTIC COUPLING	
520	90056-0527	-		2	PLUG	
530	90355-0031	J		1	Bellow Coupling 10/10	
540	90355-0204	-		1	ELASTIC COUPLING	
600	311103-0357	-		4	PIN,STRAIGHT 6x30	
610	311103-0470	-		2	PINS,STRAIGHT 10X60	
620	312105-0291	-		3	SCREW M6S ISO 4017 M4X12 A280	
630	312105-0370	-		12	SCREW M6S ISO 4017 M6x20 A280	
640	312105-0371	-		24	SCREW M6S6X22RFR	
650	312105-0449	-		4	SCREW M6S ISO 4017 M8x16 A280	
660	312105-0455	-		24	SCREW M6S ISO 4017 M8x30 A280	
670	312105-0462	-		12	SCREW M6S ISO 4014 M8x55 A280	
680	312105-0495	-		1	SCREW M6S ISO 4017 M10X30 A280	
690	312105-0497	-		12	SCREW M6S ISO 4017 M10x35 A280	
700	312105-0507	-		1	SCREW M6S ISO 4014 M10X80 A280	
710	312105-0540	-		4	SCREW M6S ISO 4017 M12X40 A280	
720	312105-0545	-		2	SCREW M6S12X65RFR	
730	312105-0556	-		8	SCREW M6S ISO 4014 M12X120 A280	
740	312105-0362	-		12	SCREW M6S ISO 4017 M6x8 A280	
750	312115-0299	-		3	SCREW MC6S ISO 4762 M4X30 A280	
760	312115-0331	-		2	SCREW MC6S ISO 4762 M5X20 A280	
770	312115-0509	-		2	SCREW MC6S ISO 4762 M10X90 A280	
780	312125-0222	-		1	SLOTTED CHEESE HEAD ISO 1207 M3x8 RFR	
790	312155-0366	-		24	SCREW MF6S DIN 7991 M6x12 A280	
800	312625-0322	-		2	NUTS,HEXAGON,M12	
810	312605-0322	-		2	NUT,HEXAGON,M12 RFR	
820	315105-0136	-		3	WASHER,PLAIN ROUND 4,3x8 Stainless	
830	315105-0173	-		1	WASHER,PLAIN ROUND 10,5x22 STAINLESS	
840	315105-0178	-		14	WASHER,PLAIN ROUND 13x24	
850	315705-0307	-		2	KEYS,PARALLEL WITH ROUND ENDS 10X8X70	
860	315751-0127	-		4	RETAINING RINGS FOR SHAFT 40	
870	315753-0119	-		1	RETAINING RINGS FOR HOLE 25	
880	315753-0130	-		4	RETAINING RINGS FOR HOLE 47	
890	90214-0236	K		8	BALL BEARING	
900	312105-0452	-		4	SCREW M6S 8x22 Stainless	
910	312105-0534	-		4	SCREW M6S ISO 4017 M12X25 A280	

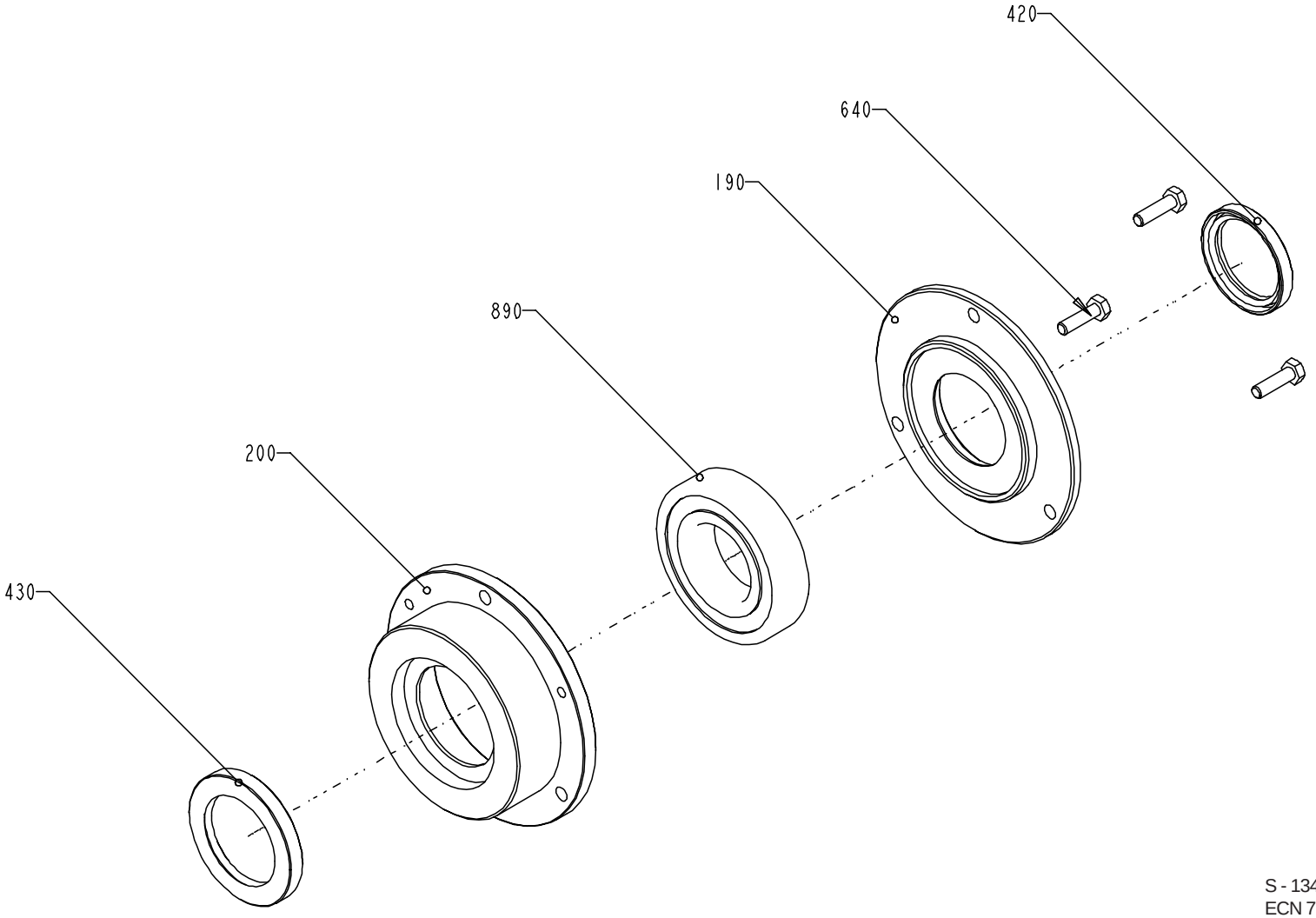

S - 1348944-1(8)
ECN 71727

Pos	Part No	SP	UN	Qty	Description	Page No
920	315105-0165	-		4	WASHER,PLAIN ROUND 8,4x16 Stainless	
930	312132-0323	-		4	SLOTTED PAN HEAD ISO 1580 M5X8 MSGFN	
940	359710-0002	-		1	WARNING SIGN "HOT SURFACE"	
950	312105-0287	-		6	SCREW M6S ISO 4017 M4x8 A280	
960	311103-0454	-		4	PINS,STRAIGHT 10X20	
970	312105-0544	-		2	SCREW M6S ISO 4014 M12X60 A280	
980	90030-0116	-		2	REDUCER	
990	315234-0109	-		2	PLAIN ROUND,COPPER R1/8",M10	
B4103	90061-0027	J		1	Angle encoder 670900035	

Pos	Part No	SP	UN	Qty	Description	Page No

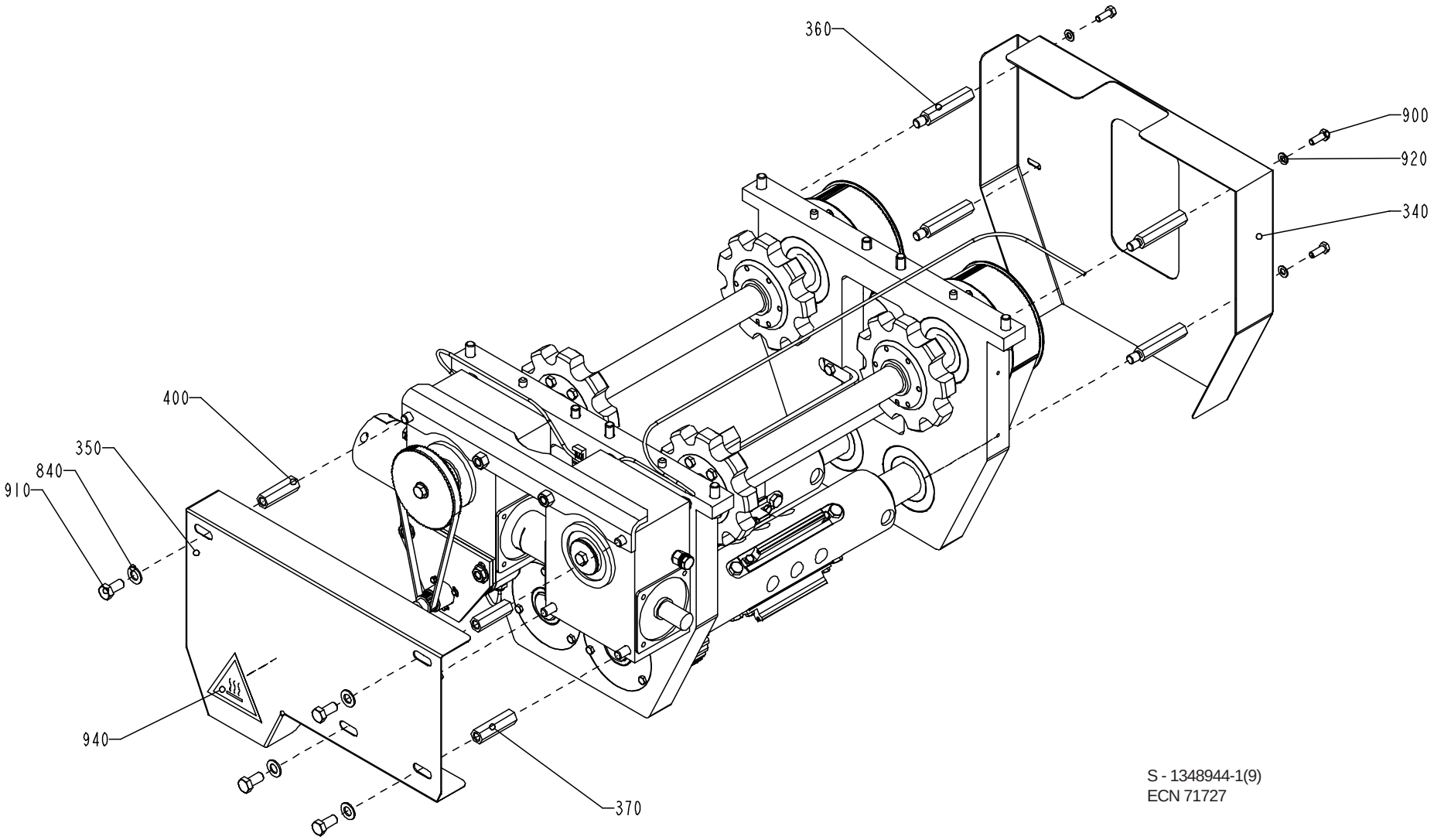

S - 1348944-1(9)
ECN 71727

Pos	Part No	SP	UN	Qty	Description	Page No
SEE PREVIOUS LIST PAGES.						

Pos	Part No	SP	UN	Qty	Description	Page No

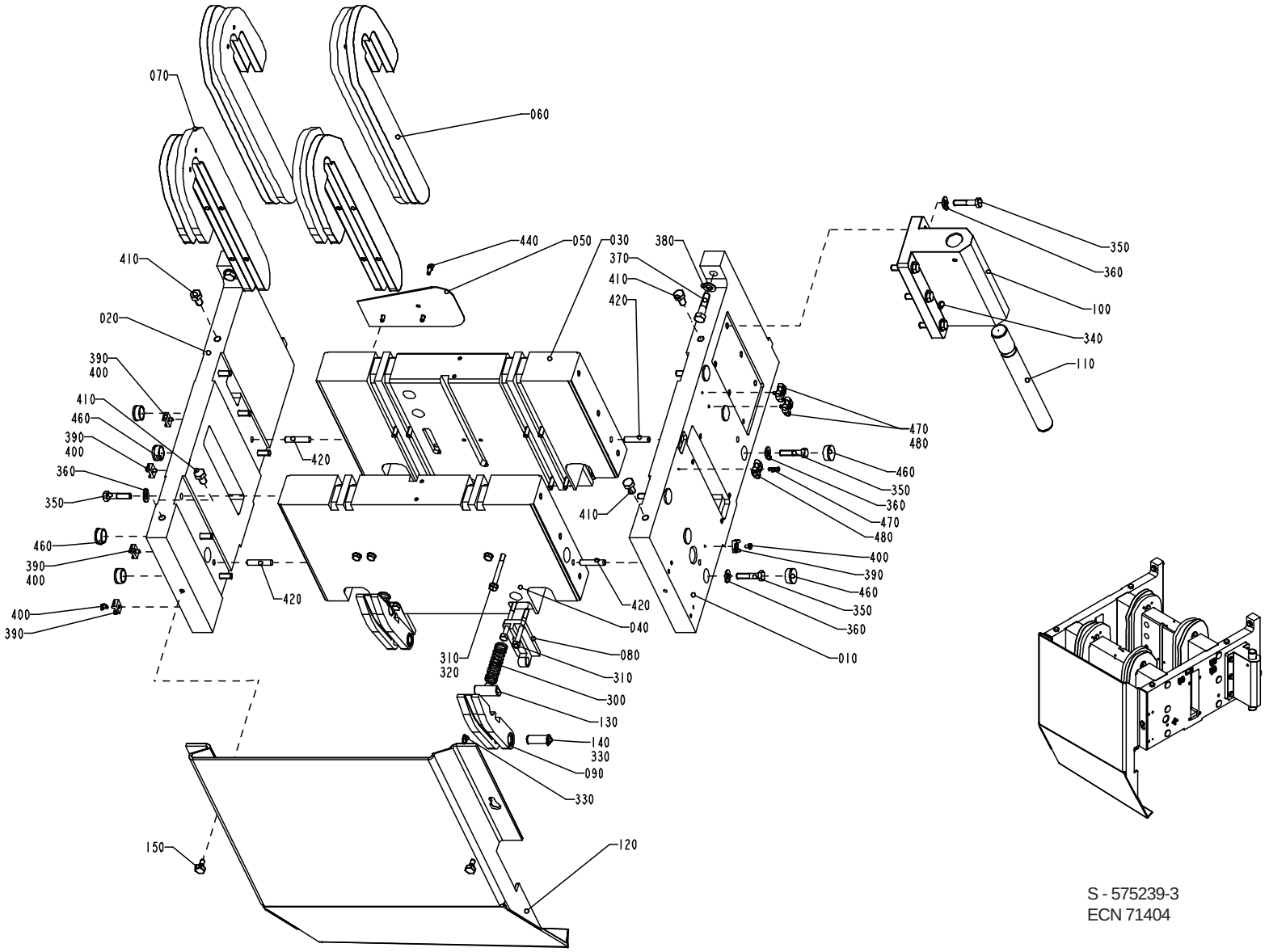

S - 575239-3
ECN 71404

Pos	Part No	SP	UN	Qty	Description	Page No
Common parts						
010	1285364-0000	-		1	PLATE	
020	1285365-0000	-		1	PLATE	
030	1285366-0000	-		1	PLATE	
040	1285925-0000	-		1	PLATE	
050	1140856-0000	-		1	PROTECTION	
060	1140287-0000	D		4	CURVE	
070	1140288-0000	D		4	CURVE	
080	1140872-0000	-		4	BRACKET	
090	1498278-0000	R		4	CAM	
100	1260751-0000	-		1	HINGE	
110	1260752-0000	-		1	SHAFT	
120	1285368-0000	D		1	PROTECTION	
130	1041215-0000	R		4	BLOCKING PIECE	
140	1498279-0000	-		4	SHAFT	
150	1282995-0000	-		2	SCREW	
300	1487205-0000	R		4	SPRING	
310	312105-0467	-		16	SCREW M6S ISO 4014 M8x80 A280	
320	315105-0165	-		8	WASHER,PLAIN ROUND 8,4x16 Stainless	
330	315751-0112	-		8	RETAINING RINGS FOR SHAFT 15	
340	312318-0447	-		1	SET SCREW CUP POINT ISO 4029 M8X12 RFR	
350	312105-0500	-		18	SCREW 4017 M10X45A280	
360	315105-0173	-		18	WASHER,PLAIN ROUND 10,5x22 STAINLESS	
370	312105-0542	-		2	SCREW M6S ISO 4014 M12X50 A280	
380	315105-0178	-		2	WASHER,PLAIN ROUND 13x24	
390	352113-0204	-		5	ANCHOR TM3S25-M	
400	312132-0323	-		5	SLOTTED PAN HEAD ISO 1580 M5X8 MSGFN	
410	312105-0532	-		4	SCREW M6S ISO 4017 M12X20 A280	
420	311103-0466	-		4	PINS,STRAIGHT 10X50	
440	312105-0366	-		3	SCREW M6S ISO 4017 M6x12 A280	
460	90261-0011	-		10	PLUG,BLIND PLASTIC FOR M30/M28x1,5	
470	90165-0076	-		3	PIPE CLAMP	
480	312155-0295	-		3	SCREW MF6S DIN 7991 M4x20 A480	

Pos	Part No	SP	UN	Qty	Description	Page No

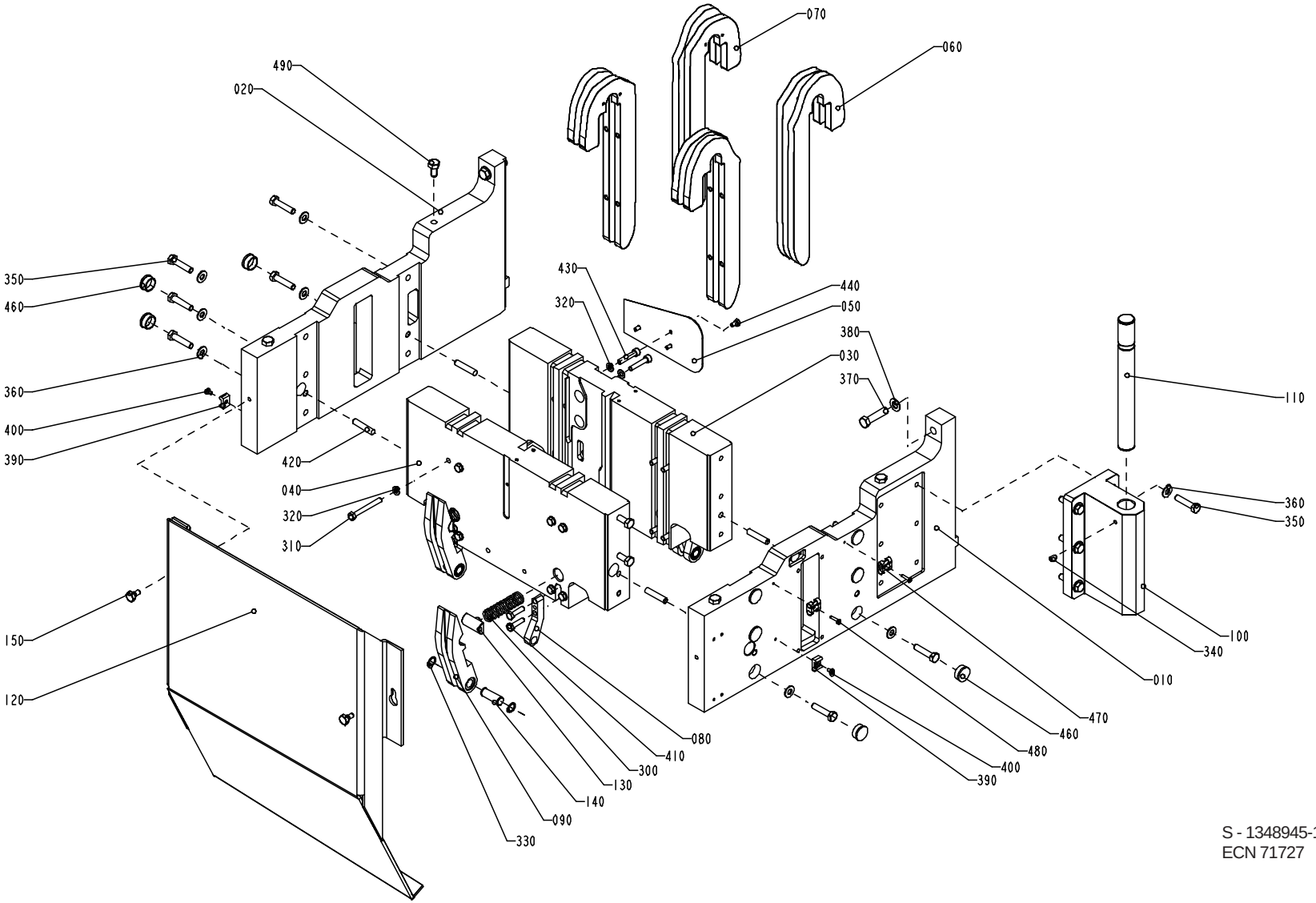

S - 1348945-1
ECN 71727

Pos	Part No	SP	UN	Qty	Description	Page No
Common parts						
010	1349372-0000	-		1	PLATE	
020	1349373-0000	-		1	PLATE	
030	1349370-0000	-		1	PLATE	
040	1499410-0000	-		1	PLATE	
050	1140856-0000	-		1	PROTECTION	
060	1349392-0000	D		4	CAM	
070	1349391-0000	D		4	CAM	
080	1349367-0000	-		4	BRACKET	
090	1487219-0000	R		4	CURVE	
100	1260751-0000	-		1	HINGE	
110	1260752-0000	-		1	SHAFT	
120	1349374-0000	D		1	PROTECTION	
130	1041215-0000	R		4	BLOCKING PIECE	
140	1498279-0000	-		4	SHAFT	
150	1282995-0000	-		2	SCREW	
300	1487205-0000	R		4	SPRING	
310	312105-0465	-		14	SCREW M6S ISO 4014 M8x70 A280	
320	315105-0165	-		16	WASHER,PLAIN ROUND 8,4x16 Stainless	
330	315751-0112	-		8	RETAINING RINGS FOR SHAFT 15	
340	312318-0447	-		1	SET SCREW CUP POINT ISO 4029 M8X12 RFR	
350	312105-0500	-		17	SCREW 4017 M10X45A280	
360	315105-0173	-		17	WASHER,PLAIN ROUND 10,5x22 STAINLESS	
370	312105-0542	-		2	SCREW M6S ISO 4014 M12X50 A280	
380	315105-0178	-		2	WASHER,PLAIN ROUND 13x24	
390	352113-0204	-		5	ANCHOR TM3S25-M	
400	312132-0323	-		5	SLOTTED PAN HEAD ISO 1580 M5X8 MSGFN	
410	312105-0455	-		8	SCREW M6S ISO 4017 M8x30 A280	
420	311103-0466	-		4	PINS,STRAIGHT 10X50	
430	312115-0459	-		2	SCREW MC6S ISO 4762 M8X40 A280	
440	312105-0366	-		3	SCREW M6S ISO 4017 M6x12 A280	
460	90261-0011	-		9	PLUG,BLIND PLASTIC FOR M30/M28x1,5	
470	90165-0076	-		2	PIPE CLAMP	
480	312155-0295	-		2	SCREW MF6S DIN 7991 M4x20 A480	
490	312105-0532	-		4	SCREW M6S ISO 4017 M12X20 A280	

Pos	Part No	SP	UN	Qty	Description	Page No

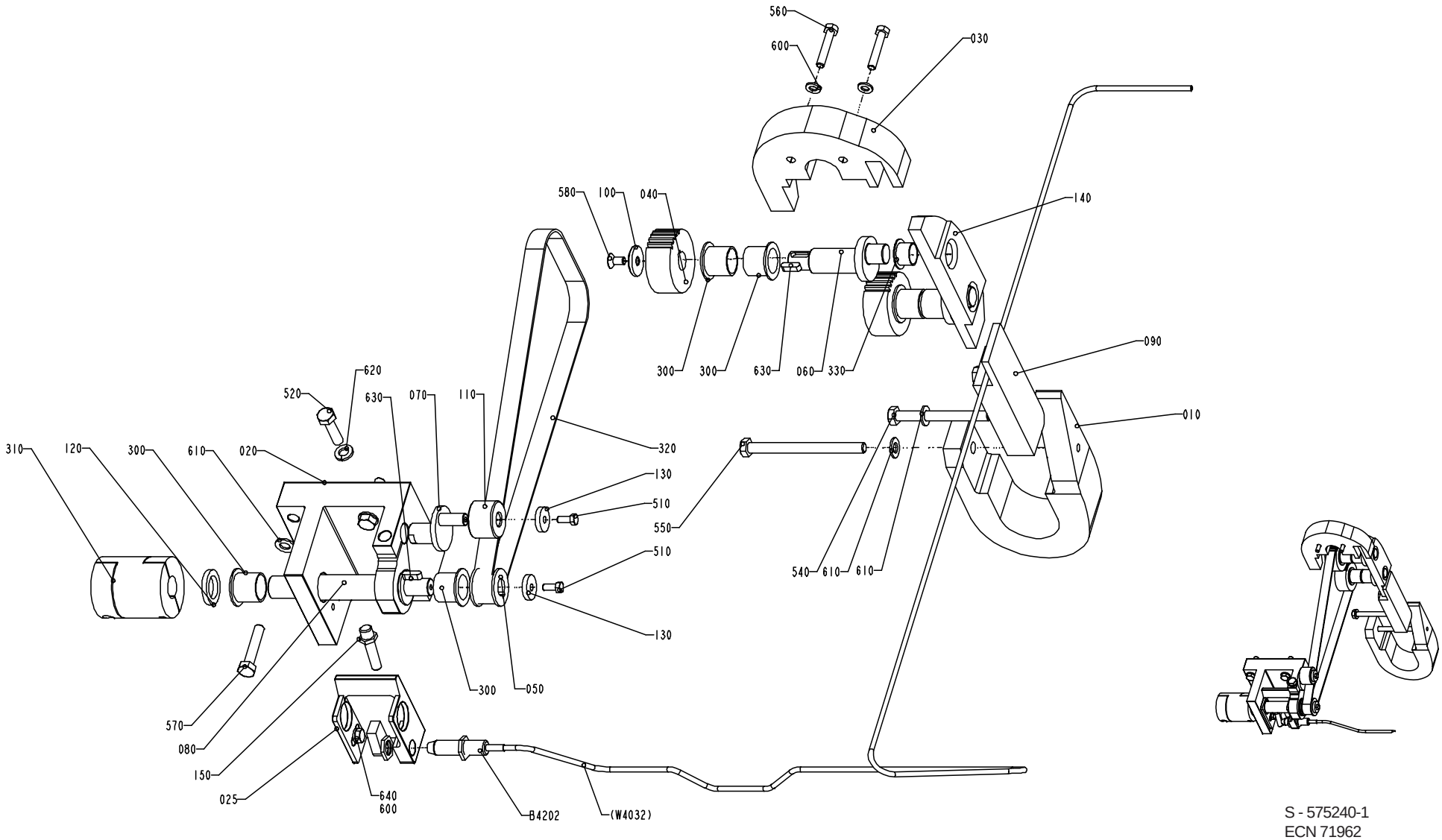

S - 575240-1
ECN 71962

Pos	Part No	SP	UN	Qty	Description	Page No
Common parts						
010	1140844-0000	D		1	CURVE	
020	1484479-0000	-		1	SUPPORT	
025	1484480-0000	-		1	ADJUSTER	
030	1260950-0000	D		1	CURVE	
040	1041550-0000	D		2	PULLEY	
050	1140838-0000	D		1	PULLEY	
060	1140846-0000	R		2	ECCENTRIC SHAFT	
070	1260858-0000	R		1	ECCENTRIC SHAFT	
080	1260860-0000	R		1	SHAFT	
090	1260875-0000	D		1	CURVE	
100	1041549-0000	-		2	WASHER	
110	1140845-0000	R		1	ROLLER	
120	1140850-0000	-		1	WASHER	
130	1140851-0000	-		2	WASHER	
140	1350718-0000	J		1	CURVE	
150	1490296-0000	R		1	SHAFT	
300	90240-0265	J		6	Flange Bushing, 20x23x21	
310	90355-0194	J		1	Bellow Coupling 18/18	
320	90417-0411	J		1	TIMING BELT T 5X750X16	
330	90240-0325	J		2	Flange Bushing, 16x18x12	
510	312105-0327	-		2	SCREW M6S ISO 4017 M5X12 A280	
520	312105-0455	-		1	SCREW M6S ISO 4017 M8x30 A280	
540	312105-0467	-		1	SCREW M6S ISO 4014 M8x80 A280	
550	312105-0471	-		1	SCREW M6S ISO 4014 M8x100 A280	
560	312109-0376	-		2	SCREW M6S ISO 4017 M6X35 A280	
570	312109-0459	-		4	SCREW M6S ISO 4017 M8X40 A280	
580	312155-0366	-		2	SCREW MF6S DIN 7991 M6x12 A280	
600	315105-0153	-		3	WASHER,PLAIN ROUND 6,4x12 Stainless	
610	315105-0165	-		6	WASHER,PLAIN ROUND 8,4x16 Stainless	
620	315401-0165	-		1	WASHER FBH8,2FZB	
630	315701-0199	-		3	KEYS,PARALLEL WITH ROUND ENDS 5X5X16	
640	312105-0366	-		1	SCREW M6S ISO 4017 M6x12 A280	
B4202	90044-0124	J		1	Prox.sw. 922AB2XM-A9P-050-LZ-876	

Pos	Part No	SP	UN	Qty	Description	Page No

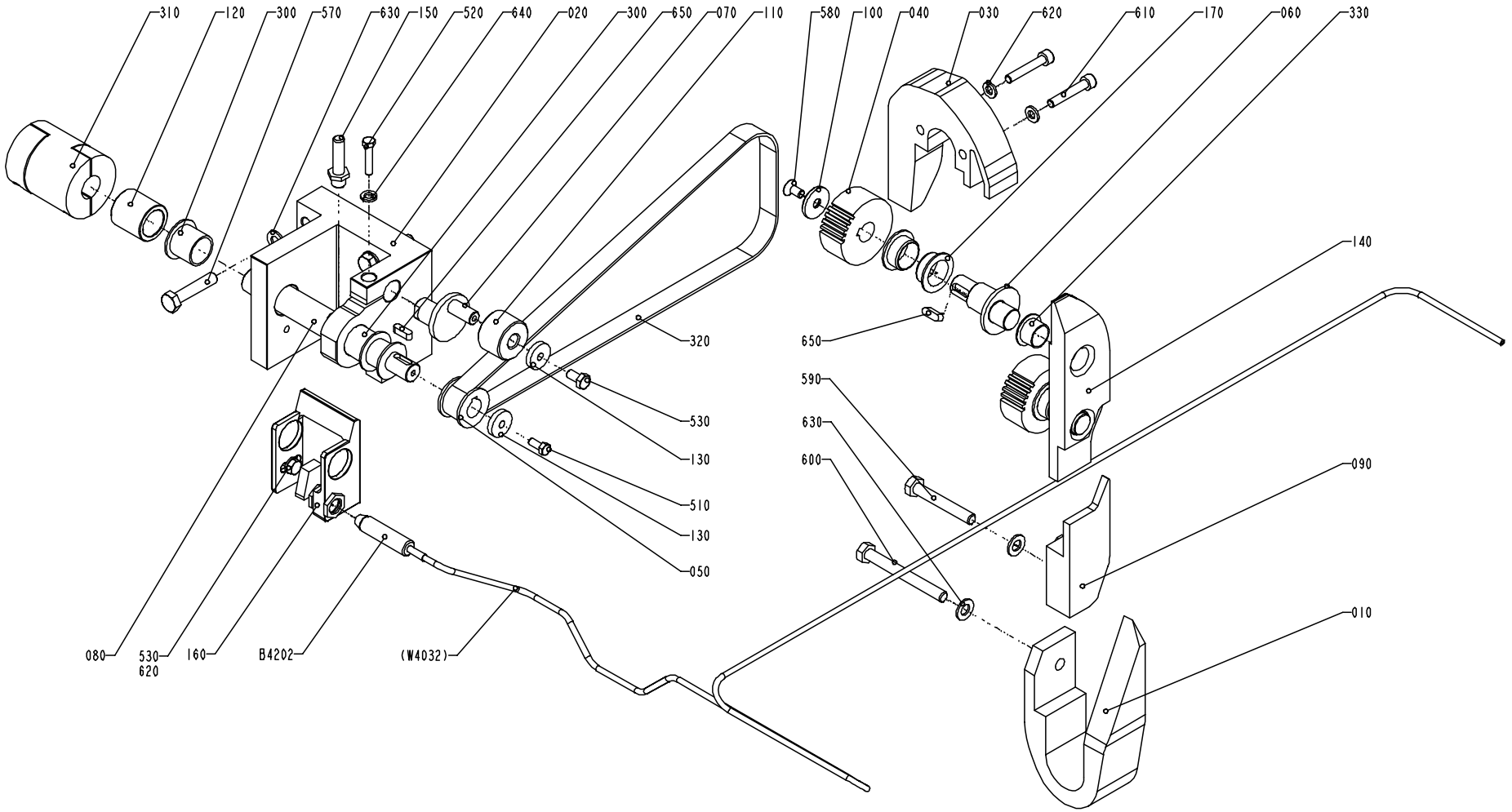

S - 1348946-1
ECN 71727

Pos	Part No	SP	UN	Qty	Description	Page No
Common parts						
010	1349377-0000	D		1	CURVE	
020	1484479-0000	-		1	SUPPORT	
030	1349380-0000	D		1	CURVE	
040	1041550-0000	D		2	PULLEY	
050	1140838-0000	D		1	PULLEY	
060	1349381-0000	R		2	ECCENTRIC SHAFT	
070	1260858-0000	R		1	ECCENTRIC SHAFT	
080	1349376-0000	R		1	SHAFT	
090	1349379-0000	D		1	CURVE	
100	1041549-0000	-		2	WASHER	
110	1140845-0000	-		1	ROLLER	
120	1349388-0000	R		1	SPACER	
130	1140851-0000	-		2	WASHER	
140	1349375-0000	J		1	CURVE	
150	1490296-0000	R		1	SHAFT	
160	1484480-0000	-		1	ADJUSTER	
170	1499915-0000	-		4	FLANGE BUSHING	
300	90240-0265	J		2	Flange Bushing, 20x23x21	
310	90355-0194	J		1	Bellow Coupling 18/18	
320	90417-0411	J		1	TIMING BELT T 5X750X16	
330	90240-0325	J		2	Flange Bushing, 16x18x12	
510	312105-0327	-		1	SCREW M6S ISO 4017 M5X12 A280	
520	312105-0333	-		1	SCREW M6S ISO 4017 M5x25 A280	
530	312105-0366	-		2	SCREW M6S ISO 4017 M6x12 A280	
570	312109-0459	-		4	SCREW M6S ISO 4017 M8X40 A280	
580	312155-0366	-		2	SCREW MF6S DIN 7991 M6x12 A280	
590	312105-0462	-		1	SCREW M6S ISO 4014 M8x55 A280	
600	312105-0466	-		1	SCREW M6S ISO 4014 M8x75 A280	
610	312115-0376	-		2	SCREW MC6S ISO 4762 M6x35 A280	
620	315105-0153	-		3	WASHER,PLAIN ROUND 6,4x12 Stainless	
630	315105-0165	-		6	WASHER,PLAIN ROUND 8,4x16 Stainless	
640	315402-0156	-		1	WASHER FBB6,5RFR	
650	315701-0199	-		3	KEYS,PARALLEL WITH ROUND ENDS 5X5X16	
B4202	90044-0124	J		1	Prox.sw. 922AB2XM-A9P-050-LZ-876	

Pos	Part No	SP	UN	Qty	Description	Page No

VOLUME ADJUSTER

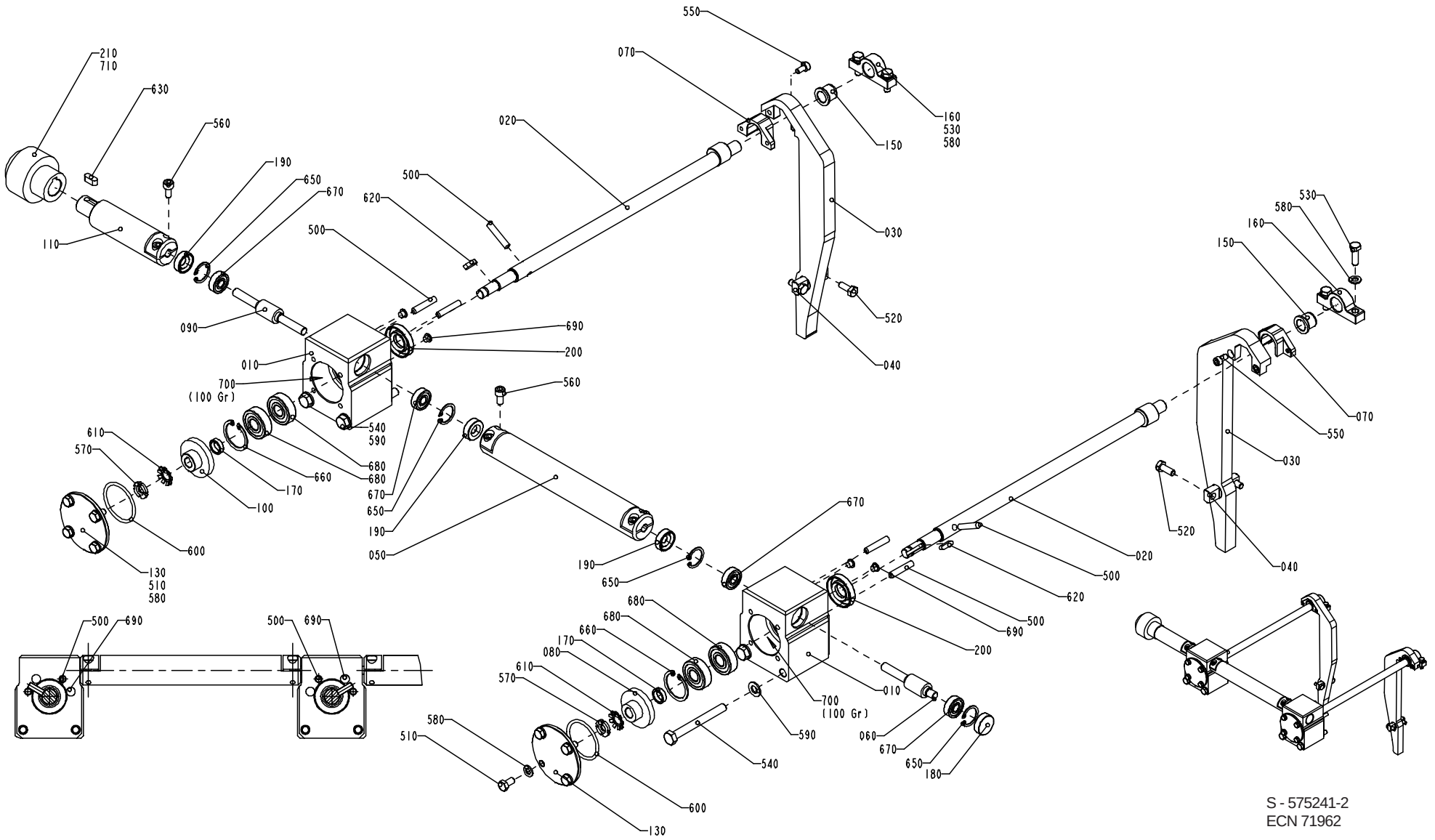

S - 575241-2
ECN 71962

Pos	Part No	SP	UN	Qty	Description	Page No
Common parts						
010	1260051-0000	-		2	HOUSING	
020	1260148-0000	M		2	ECCENTRIC SHAFT	
030	1348288-0000	J		2	VOLUME CAM	
040	1140961-0000	-		2	CURVE BRACKET	
050	1260050-0000	D		1	SHAFT	
060	1260149-0000	R		1	WORM SCREW	
070	1348287-0000	M		2	GUIDE	
080	1260152-0000	R		1	WORM WHEEL	
090	1260154-0000	R		1	WORM SCREW	
100	1260169-0000	R		1	WORM WHEEL	
110	1260170-0000	D		1	SHAFT	
130	1260177-0000	-		2	COVER	
150	1140437-0000	M		2	BUSHING	
160	1260151-0000	-		2	BRACKET	
170	1260153-0000	-		2	SPACER	
180	90355-0369	-		1	GASKET	
190	90091-0431	-		3	"SEALING RINGS,TYPE AS 8X22X7"	
200	90091-0430	-		2	SEAL RINGS 15X35X7	
210	90355-0195	J		1	SHAFT COUPLING	
500	311103-0358	-		6	PIN,STRIGHT M6 6x32 RFR	
510	312105-0366	-		8	SCREW M6S ISO 4017 M6x12 A280	
520	312105-0368	-		4	SCREW M6S ISO 4017 M6x16 A280	
530	312105-0370	-		4	SCREW M6S ISO 4017 M6x20 A280	
540	312105-0466	-		4	SCREW M6S ISO 4014 M8x75 A280	
550	312115-0325	-		4	SCREW 5X10 A4 80	
560	312115-0366	-		6	SCREW MC6S ISO 4762 M6X12 A280	
570	312805-0100	-		2	NUT,ROUND,WITH SLOTS,M10x0,75	
580	315105-0153	-		12	WASHER,PLAIN ROUND 6,4x12 Stainless	
590	315105-0165	-		4	WASHER,PLAIN ROUND 8,4x16 Stainless	
600	315202-0223	-		2	O-RING 39,2x3	
610	315410-0100	-		2	WASHERS,LOCK 10X13,5	
620	315701-0168	-		2	KEYS,PARALLEL WITH ROUND ENDS 4X4X16	
630	315701-0230	-		1	KEYS,PARALLEL WITH ROUND ENDS 6X6X16	
650	315753-0117	-		4	RETAINING RINGS FOR HOLE 22	
660	315753-0123	-		2	RETAINING RINGS FOR HOLE 32	
670	321302-0298	R		4	BALL BEARING 8X22X7	
680	321313-0101	R		4	BALL BEARING 12x32x10	
690	90261-0071	-		4	PLASTIC PLUG 6mm	
700	90296-0070	-		x	GREASE	
710	312318-0320	-		2	STOPPSKRUV SK6SS5X5RFR	

Pos	Part No	SP	UN	Qty	Description	Page No

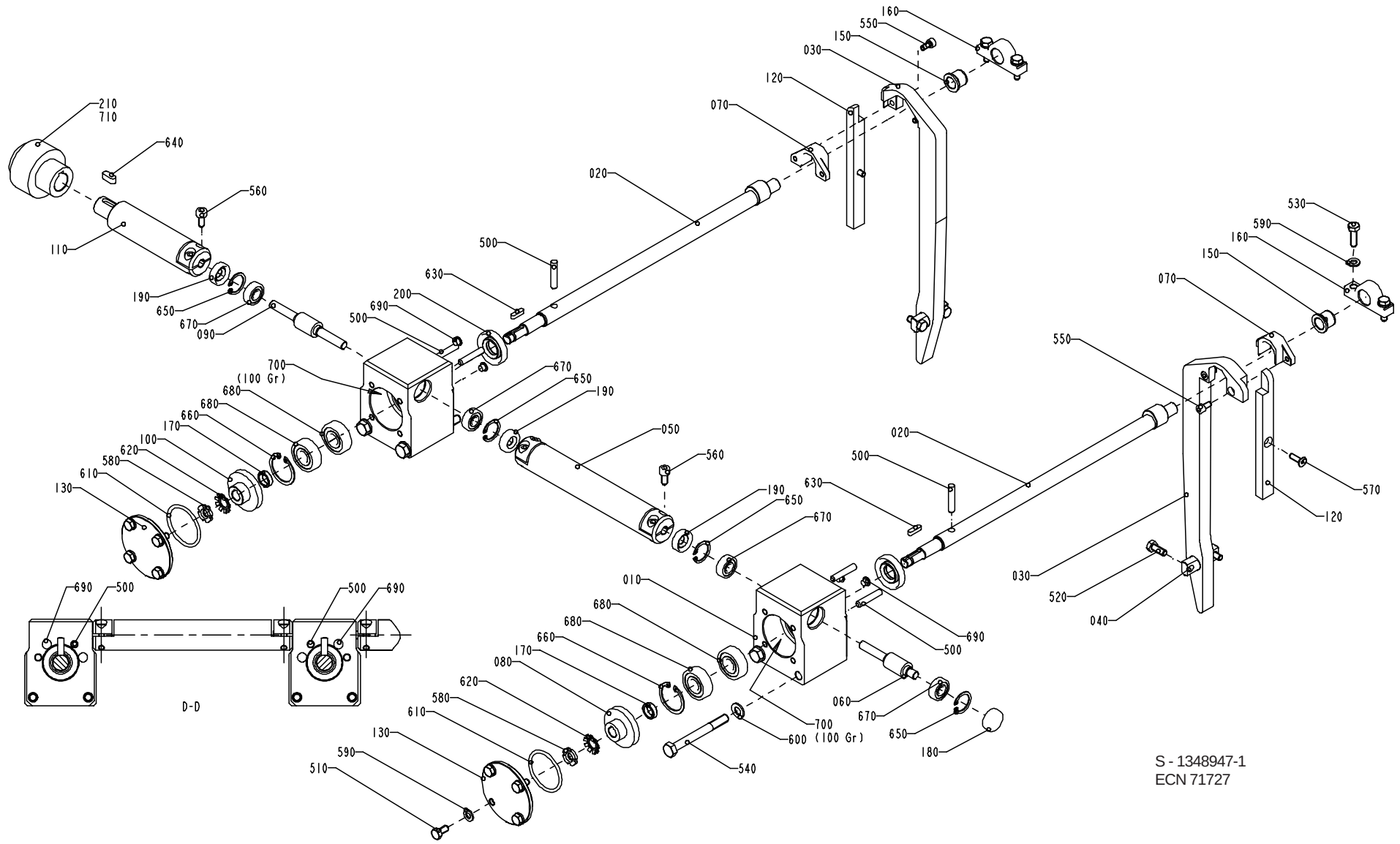

S - 1348947-1
ECN 71727

Pos	Part No	SP	UN	Qty	Description	Page No
Common parts						
010	1260051-0000	-		2	HOUSING	
020	1260148-0000	M		2	ECCENTRIC SHAFT	
030	1349384-0000	J		2	VOLUME CAM	
040	1140961-0000	-		2	CURVE BRACKET	
050	1349386-0000	D		1	SHAFT	
060	1260149-0000	R		1	WORM SCREW	
070	1348287-0000	M		2	GUIDE	
080	1260152-0000	R		1	WORM WHEEL	
090	1260154-0000	R		1	WORM SCREW	
100	1260169-0000	R		1	WORM WHEEL	
110	1349387-0000	D		1	SHAFT	
120	1349385-0000	-		2	GUIDE	
130	1260177-0000	-		2	COVER	
150	1140437-0000	M		2	BUSHING	
160	1260151-0000	-		2	BRACKET	
170	1260153-0000	-		2	SPACER	
180	90355-0369	-		1	GASKET	
190	90091-0431	-		3	"SEALING RINGS,TYPE AS 8X22X7"	
200	90091-0430	-		2	SEAL RINGS 15X35X7	
210	90355-0195	J		1	SHAFT COUPLING	
500	311103-0358	-		6	PIN,STRIGHT M6 6x32 RFR	
510	312105-0366	-		8	SCREW M6S ISO 4017 M6x12 A280	
520	312105-0368	-		4	SCREW M6S ISO 4017 M6x16 A280	
530	312105-0370	-		4	SCREW M6S ISO 4017 M6x20 A280	
540	312105-0466	-		4	SCREW M6S ISO 4014 M8x75 A280	
550	312115-0325	-		4	SCREW 5X10 A4 80	
560	312115-0366	-		6	SCREW MC6S ISO 4762 M6X12 A280	
570	312155-0329	-		2	SCREW MF6S DIN 7991 M5x16 A280	
580	312805-0100	-		2	NUT,ROUND,WITH SLOTS,M10x0,75	
590	315105-0153	-		12	WASHER,PLAIN ROUND 6,4x12 Stainless	
600	315105-0165	-		4	WASHER,PLAIN ROUND 8,4x16 Stainless	
610	315202-0223	-		2	O-RING 39,2x3	
620	315410-0100	-		2	WASHERS,LOCK 10X13,5	
630	315701-0168	-		2	KEYS,PARALLEL WITH ROUND ENDS 4X4X16	
640	315701-0230	-		1	KEYS,PARALLEL WITH ROUND ENDS 6X6X16	
650	315753-0117	-		4	RETAINING RINGS FOR HOLE 22	
660	315753-0123	-		2	RETAINING RINGS FOR HOLE 32	
670	321302-0298	R		4	BALL BEARING 8X22X7	
680	321313-0101	R		4	BALL BEARING 12x32x10	
690	90261-0071	-		4	PLASTIC PLUG 6mm	
700	90296-0070	-		x	GREASE	
710	312318-0320	-		2	STOPPSKRUV SK6SS5X5RFR	

ELECTRICAL CONNECTION

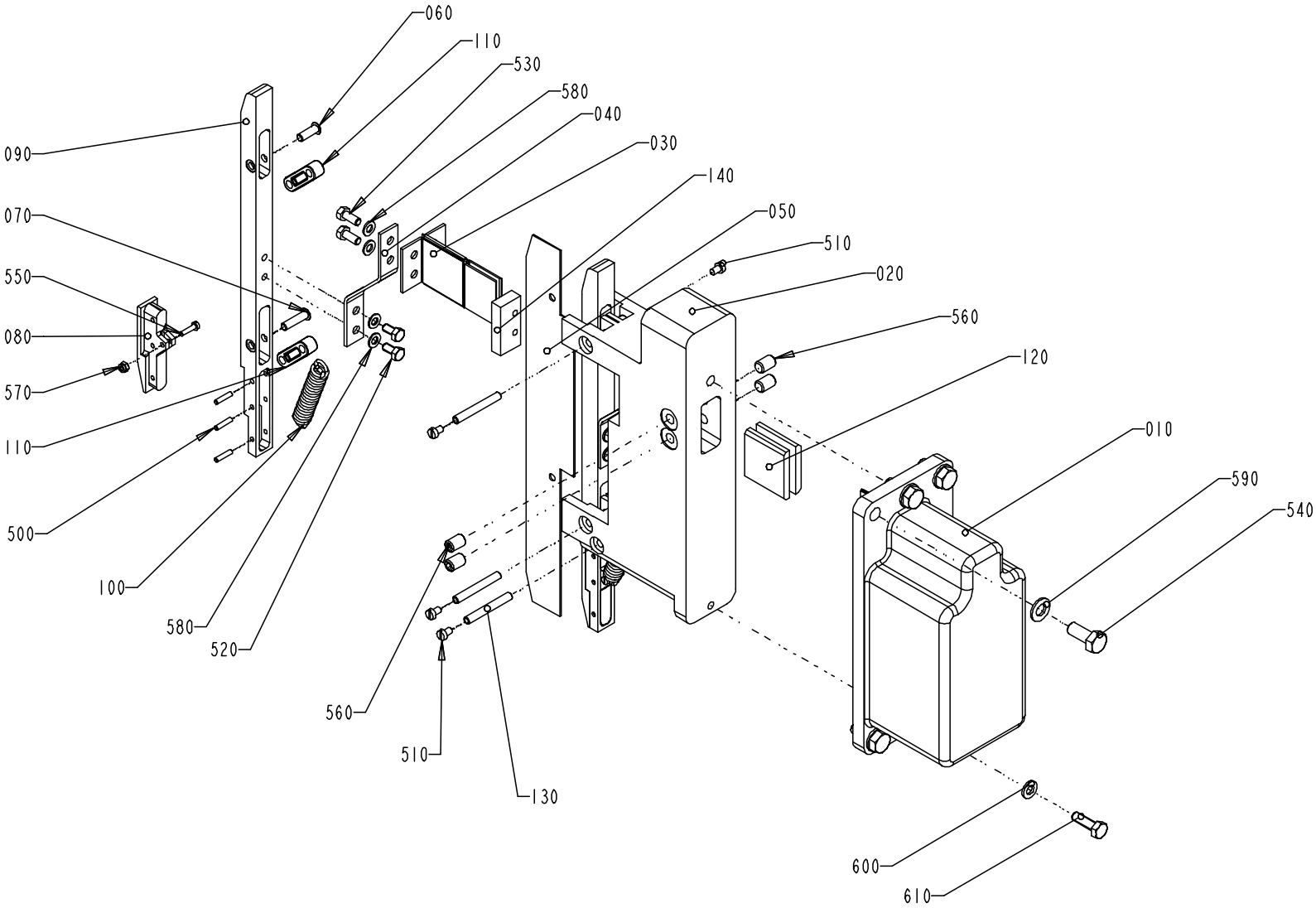

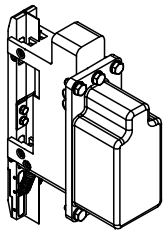

S - 1095985-2
ECN 71961

Pos	Part No	SP	UN	Qty	Description	Page No
Common parts						
010	1110463-0000	M		1	TRANSFORMER	
020	1140708-0000	D		1	BRACKET	
030	1140709-0000	M		1	BUSBAR	
040	1140710-0000	M		2	CABLE	
050	1140712-0000	D		1	SPACER	
060	1140716-0000	K		2	PIN	
070	1140717-0000	K		2	PIN	
080	1478873-0000	-		2	BRACKET	
090	1478874-0000	K		2	CONTACT RAIL	
100	243989-0000	K		2	TENSION SPRING	
110	1484294-0000	K		4	LINK ARM	
120	1487249-0000	-		2	WASHER	
130	1487332-0000	D		3	SHAFT	
140	1487373-0000	-		2	WASHER	
500	311103-0235	-		6	CYLINDRICAL PIN CP M6 3x14 RFR	
510	312125-0285	-		6	SLOTTED HEAD SCREW MCS 4x6 RFR	
520	312105-0325	-		4	SCREW M6S 5x10 A2 80	
530	312105-0327	-		4	SCREW M6S ISO 4017 M5X12 A280	
540	312105-0451	-		5	SCREW M6S ISO 4017 8x20 A280	
550	312125-0226	-		2	SLOTTED CHEESE HEAD ISO 1207 M3X12 RFR	
560	312318-0447	-		4	SET SCREW CUP POINT ISO 4029 M8X12 RFR	
570	312812-0310	-		2	NUT,HEXAGON,LOCK,WITH NYLON,M3	
580	315105-0146	-		8	WASHER,PLAIN ROUND 5,3x10 Stainless	
590	315105-0165	-		5	WASHER,PLAIN ROUND 8,4x16 Stainless	
600	315105-0153	-		1	WASHER,PLAIN ROUND 6,4x12 Stainless	
610	312105-0370	-		1	SCREW M6S ISO 4017 M6x20 A280	

Pos	Part No	SP	UN	Qty	Description	Page No

ELECTRICAL CONNECTION

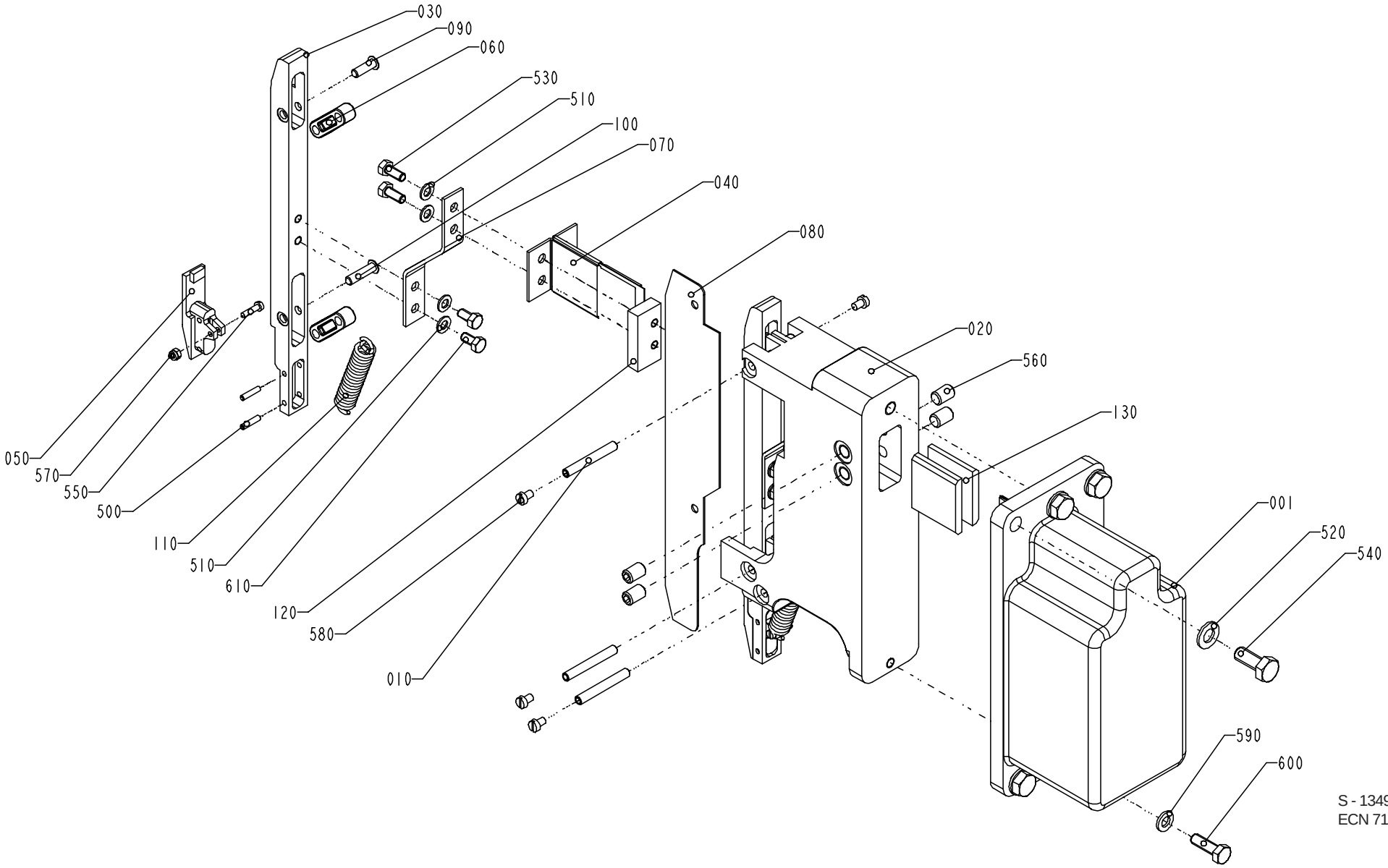

S - 1349382-1
ECN 71727

Pos	Part No	SP	UN	Qty	Description	Page No
Common parts						
001	1110463-0000	M		1	TRANSFORMER	
010	1487332-0000	D		3	SHAFT	
020	1478394-0000	D		1	BRACKET	
030	1478397-0000	K		2	CONTACT RAIL	
040	1140709-0000	M		1	BUSBAR	
050	1478399-0000	-		2	BRACKET	
060	1484294-0000	K		4	LINK ARM	
070	1140710-0000	M		2	CABLE	
080	1478398-0000	D		1	SPACER	
090	1140716-0000	K		2	PIN	
100	1140717-0000	K		2	PIN	
110	243989-0000	K		2	TENSION SPRING	
120	1487373-0000	-		2	WASHER	
130	1487249-0000	-		2	WASHER	
500	311103-0235	-		4	CYLINDRICAL PIN CP M6 3x14 RFR	
510	315105-0146	-		8	WASHER,PLAIN ROUND 5,3x10 Stainless	
520	315105-0165	-		5	WASHER,PLAIN ROUND 8,4x16 Stainless	
530	312105-0327	-		4	SCREW M6S ISO 4017 M5X12 A280	
540	312105-0451	-		5	SCREW M6S ISO 4017 8x20 A280	
550	312125-0226	-		2	SLOTTED CHEESE HEAD ISO 1207 M3X12 RFR	
560	312318-0447	-		4	SET SCREW CUP POINT ISO 4029 M8X12 RFR	
570	312812-0310	-		2	NUT,HEXAGON,LOCK,WITH NYLON,M3	
580	312125-0285	-		6	SLOTTED HEAD SCREW MCS 4x6 RFR	
590	315105-0153	-		1	WASHER,PLAIN ROUND 6,4x12 Stainless	
600	312105-0370	-		1	SCREW M6S ISO 4017 M6x20 A280	
610	312105-0325	-		4	SCREW M6S 5x10 A2 80	

Pos	Part No	SP	UN	Qty	Description	Page No

CABLE HARNESS

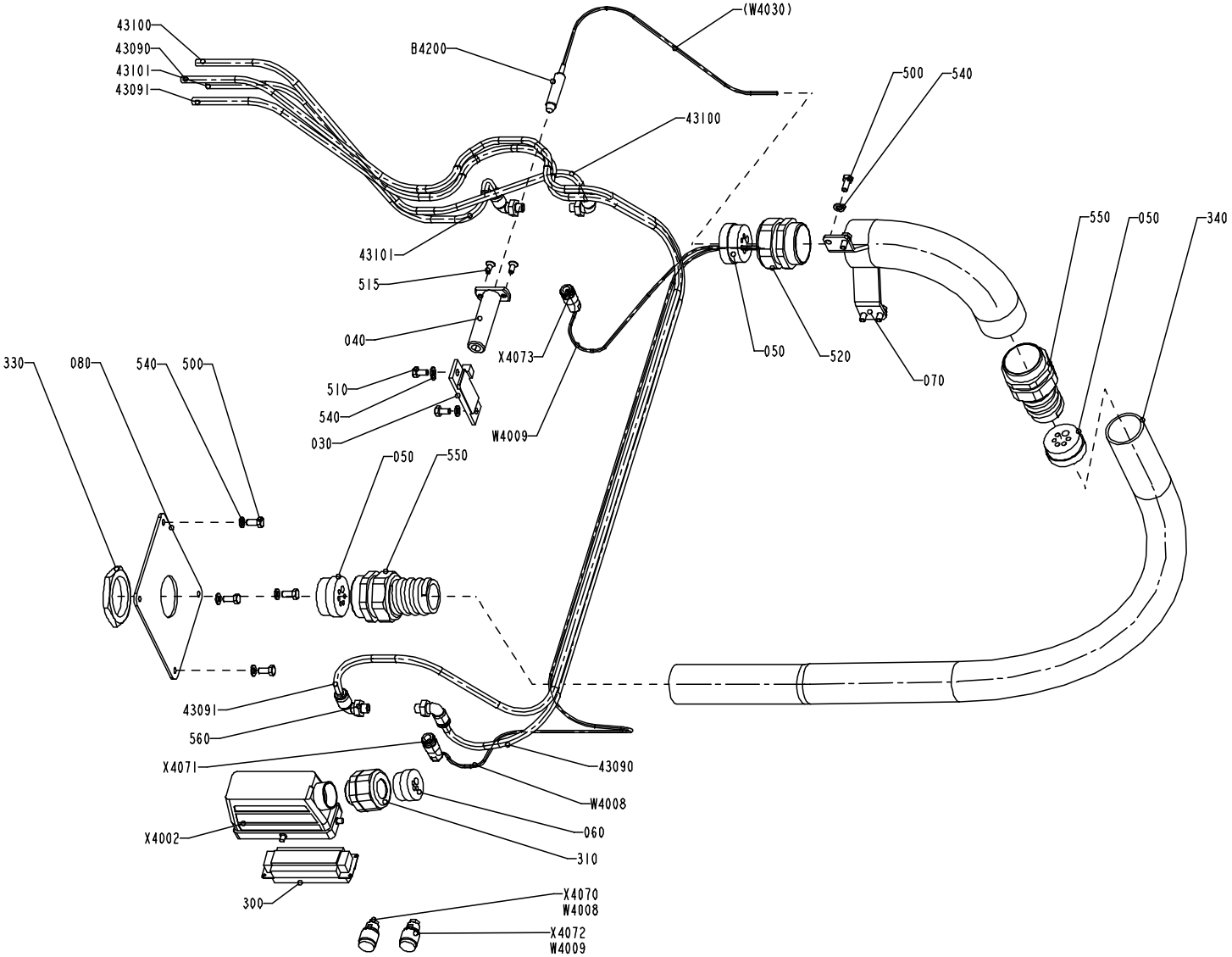

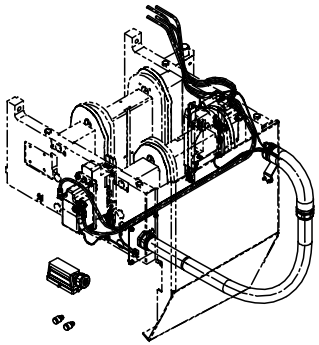

S - 1195268-2
ECN 71962

Pos	Part No	SP	UN	Qty	Description	Page No
Common parts						
030	1140963-0000	-		1	FLAG	
040	1260749-0000	-		1	HOLDER	
050	1348511-0000	-		3	INSERT	
060	1348509-0000	-		1	INSERT	
070	1348657-0000	-		1	HOUSING	
080	1348510-0000	-		1	PLATE	
300	90110-0150	-		1	MALE INSERT 24-P, CABLE	
310	353241-0003	-		1	GLANDS,EXTENDED WITHOUT INSERT PG 21	
330	90099-0103	-		1	NUT PR 47 (PG36)	
340	90152-0060	-	MM	1100	GLANDS,HOSE 42X35	
43090	90166-0211	-	MM	1600	TUBE 8 mm PUR Black	
43091	90166-0211	-	MM	1700	TUBE 8 mm PUR Black	
43100	90166-0211	-	MM	600	TUBE 8 mm PUR Black	
43101	90166-0211	-	MM	500	TUBE 8 mm PUR Black	
500	312105-0367	-		8	SCREW M6S 6x14 A2 80	
510	312105-0366	-		2	SCREW M6S ISO 4017 M6x12 A280	
515	312155-0327	-		2	SCREW MF6S DIN 7991 M5x12 A280	
520	353240-0007	-		1	GLANDS,NORMAL WITHOUT INSERT PG 36	
540	315105-0153	-		10	WASHER,PLAIN ROUND 6,4x12 Stainless	
550	353242-0004	-		2	GLANDS,HOSE,NORMAL,WITHOUT INSERT PG36	
560	342732-0801	-		4	ELBOW PIPE JOINT,Ext.thread,D=8 mm G1/8	
B4200	90044-0124	J		1	Prox.sw. 922AB2XM-A9P-050-LZ-876	
W4008	90220-0062	-	MM	3500	COAX.CABLE G 03212-01	
W4009	90220-0062	-	MM	3000	COAX.CABLE G 03212-01	
X4002	90110-0228	-		1	COVER 24 POLE	
X4070	90110-0125	-		1	ELECTRIC PLUG	
X4071	90110-0126	-		1	SLEEVE CONTACT	
X4072	90110-0125	-		1	ELECTRIC PLUG	
X4073	90110-0126	-		1	SLEEVE CONTACT	

Pos	Part No	SP	UN	Qty	Description	Page No

CABLE HARNESS

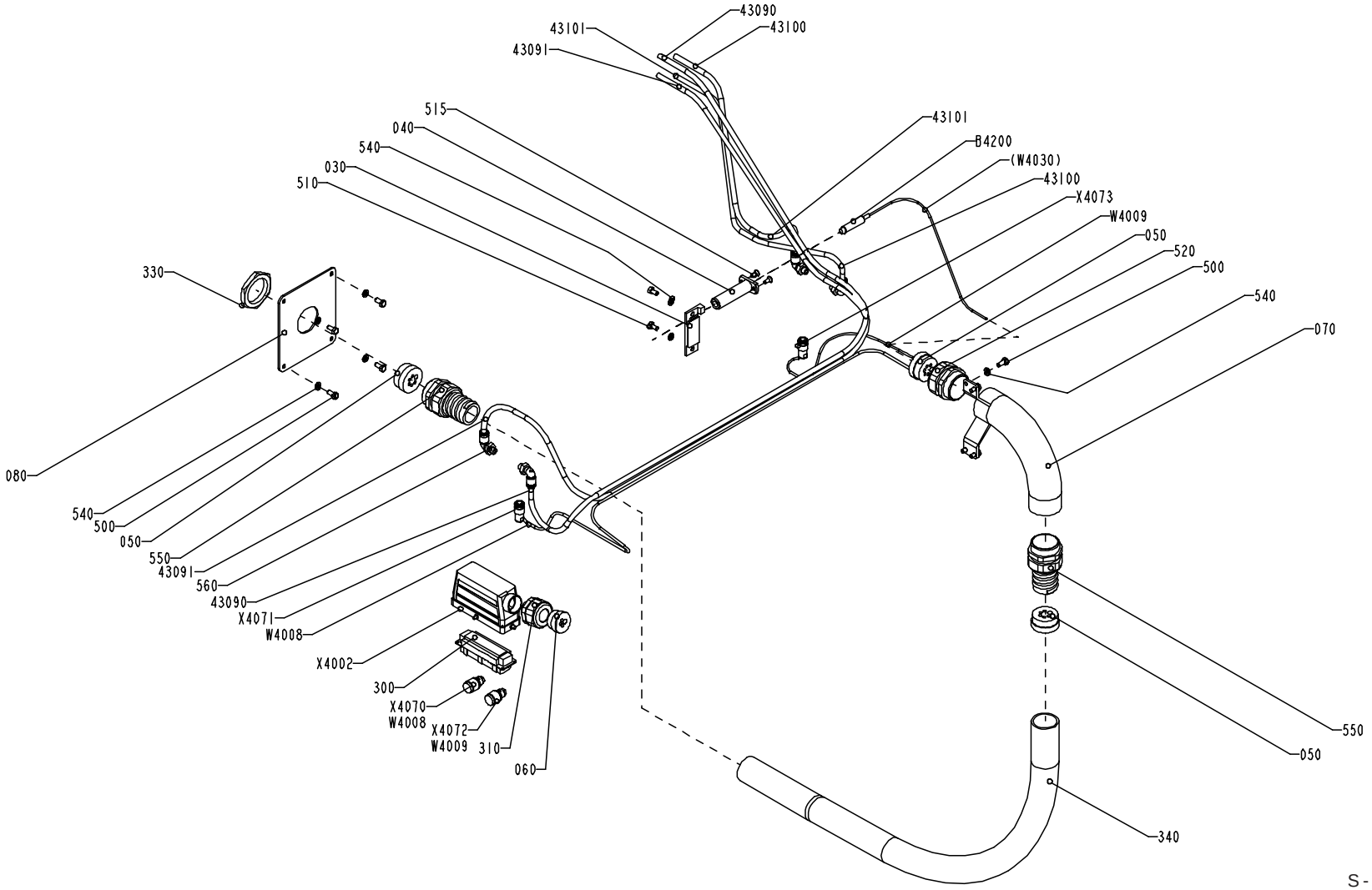

S - 1478598-1
ECN 71727

Pos	Part No	SP	UN	Qty	Description	Page No
Common parts						
030	1478597-0000	-		1	FLAG	
040	1260749-0000	-		1	HOLDER	
050	1348511-0000	-		3	INSERT	
060	1348509-0000	-		1	INSERT	
070	1348657-0000	-		1	HOUSING	
080	1348510-0000	-		1	PLATE	
300	90110-0150	-		1	MALE INSERT 24-P, CABLE	
310	353241-0003	-		1	GLANDS,EXTENDED WITHOUT INSERT PG 21	
330	90099-0103	-		1	NUT PR 47 (PG36)	
340	90152-0060	-	MM	1100	GLANDS,HOSE 42X35	
43090	90166-0211	-	MM	1600	TUBE 8 mm PUR Black	
43091	90166-0211	-	MM	1700	TUBE 8 mm PUR Black	
43100	90166-0211	-	MM	600	TUBE 8 mm PUR Black	
43101	90166-0211	-	MM	500	TUBE 8 mm PUR Black	
500	312105-0367	-		8	SCREW M6S 6x14 A2 80	
510	312105-0366	-		2	SCREW M6S ISO 4017 M6x12 A280	
515	312155-0327	-		2	SCREW MF6S DIN 7991 M5x12 A280	
520	353240-0007	-		1	GLANDS,NORMAL WITHOUT INSERT PG 36	
540	315105-0153	-		10	WASHER,PLAIN ROUND 6,4x12 Stainless	
550	353242-0004	-		2	GLANDS,HOSE,NORMAL,WITHOUT INSERT PG36	
560	342732-0801	-		4	ELBOW PIPE JOINT,Ext.thread,D=8 mm G1/8	
B4200	90044-0124	J		1	Prox.sw. 922AB2XM-A9P-050-LZ-876	
W4008	90220-0062	-	MM	3500	COAX.CABLE G 03212-01	
W4009	90220-0062	-	MM	3000	COAX.CABLE G 03212-01	
X4002	90110-0228	-		1	COVER 24 POLE	
X4070	90110-0125	-		1	ELECTRIC PLUG	
X4071	90110-0126	-		1	SLEEVE CONTACT	
X4072	90110-0125	-		1	ELECTRIC PLUG	
X4073	90110-0126	-		1	SLEEVE CONTACT	

Pos	Part No	SP	UN	Qty	Description	Page No

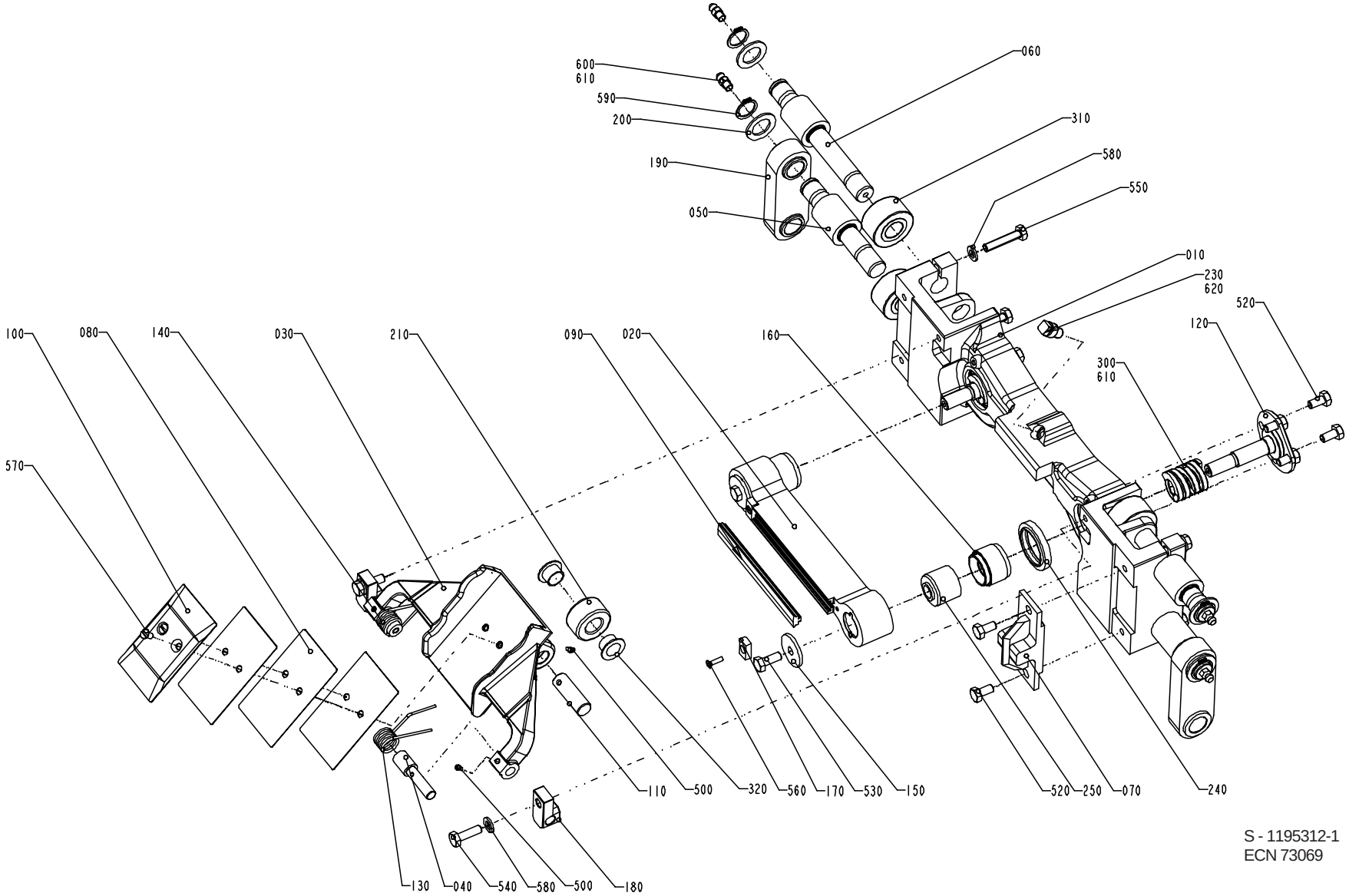

S - 1195312-1
ECN 73069

Pos	Part No	SP	UN	Qty	Description	Page No
Common parts						
010	1195261-0000	D		1	LINK	
020	1499910-0000	-		1	PRESSURE RAIL	
030	1195219-0000	M		1	VOLUME FLAP	
040	1195280-0000	M		2	SHAFT	
050	1140312-0000	D		2	SHAFT	
060	1140313-0000	D		2	SHAFT	
070	1140436-0000	-		1	MOUNTING BLOCK	
080	1348257-0000	M		3	VOLUME SHIM	
090	1110397-0000	E		1	DOLLY	
100	1348256-0000	M		1	VOLUME BULGE	
110	1041424-0000	M		1	SHAFT	
120	1195293-0000	M		2	SHAFT	
130	1041460-0000	J		1	SPRING	
140	1041461-0000	J		1	SPRING	
150	1195263-0000	-		2	WASHER	
160	1195294-0000	D		2	SLEEVE	
170	1140233-0000	M		2	WASHER	
180	1195258-0000	J		2	BRACKET	
190	B1195208-0000	D		2	LINK	
200	1140419-0000	D		4	WASHER	
210	1140479-0000	M		1	ROLLER	
230	1498606-0000	M		1	DAMPER	
240	1195317-0000	M		2	SEALING RING	
250	1255973-0000	M		2	RUBBER BUSHING	
300	90335-0253	K		2	SPRING	
310	90083-0055	K		4	ROLLER BEARING	
320	90240-0261	M		2	Flange Bushing, 12x14x9	
500	90287-0128	-		3	SCREW, SET,FULL DOG POINT,T6SS M4x6 A2	
520	312105-0366	-		10	SCREW M6S ISO 4017 M6x12 A280	
530	312105-0368	-		2	SCREW M6S ISO 4017 M6x16 A280	
540	312105-0370	-		2	SCREW M6S ISO 4017 M6x20 A280	
550	312109-0374	-		4	SCREW M6S ISO 4017 M6X30 A280	
560	312145-0226	-		2	SLOTTED HEMFS3X12RFR	
570	312145-0287	-		2	SLOTTED HEMFS4X8RFR	
580	315105-0153	-		6	WASHER,PLAIN ROUND 6,4x12 Stainless	
590	315751-0112	-		4	RETAINING RINGS FOR SHAFT 15	
600	90286-0013	-		4	GREASE NIPPLE	
610	90296-0070	-		x	GREASE	
620	90153-0016	-		x	ADHESIVE TUBE 100G RHODORSIL CAF 3	

Pos	Part No	SP	UN	Qty	Description	Page No

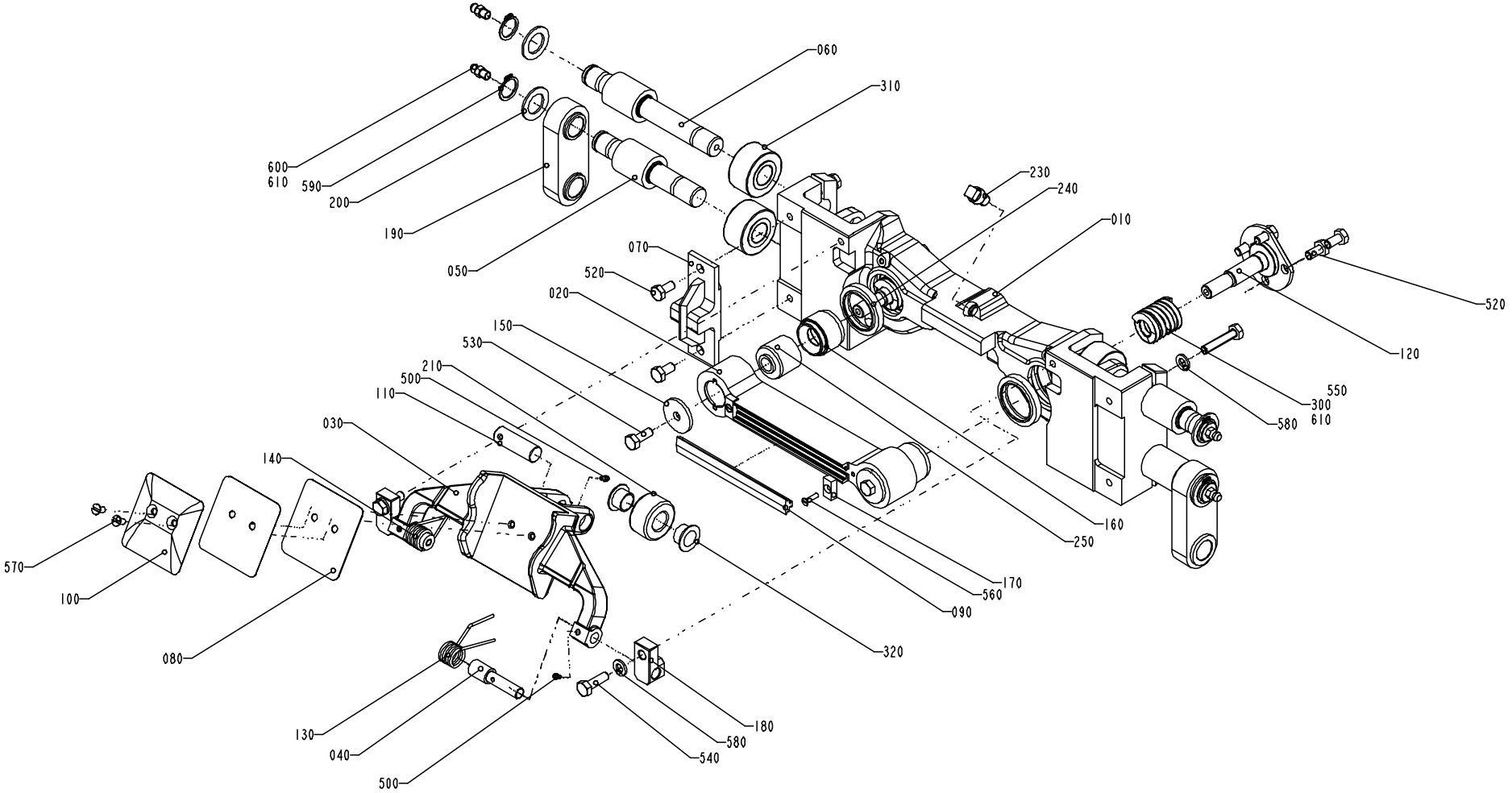

S - 1484483-1
ECN 71727

Pos	Part No	SP	UN	Qty	Description	Page No
Common parts						
010	1349365-0000	D		1	LINK	
020	1499910-0000	-		1	PRESSURE RAIL	
030	1349396-0000	-		1	VOLUME FLAP	
040	1195280-0000	M		2	SHAFT	
050	1140312-0000	D		2	SHAFT	
060	1140313-0000	D		2	SHAFT	
070	1140436-0000	-		1	MOUNTING BLOCK	
080	1487208-0000	M		2	VOLUME SHIM	
090	1110397-0000	E		1	DOLLY	
100	1487207-0000	M		1	VOLUME BULGE	
110	1041424-0000	M		1	SHAFT	
120	1195293-0000	M		2	SHAFT	
130	1041460-0000	J		1	SPRING	
140	1041461-0000	J		1	SPRING	
150	1195263-0000	-		2	WASHER	
160	1195294-0000	D		2	SLEEVE	
170	1140233-0000	M		2	WASHER	
180	1195258-0000	J		2	BRACKET	
190	B1349360-0000	D		2	LINK	
200	1140419-0000	D		4	WASHER	
210	1140479-0000	M		1	ROLLER	
230	1498606-0000	-		1	DAMPER	
240	1195317-0000	M		2	SEALING RING	
250	1255973-0000	M		2	RUBBER BUSHING	
300	90335-0253	K		2	SPRING	
310	90083-0055	K		4	ROLLER BEARING	
320	90240-0261	M		2	Flange Bushing, 12x14x9	
500	90287-0128	-		3	SCREW, SET,FULL DOG POINT,T6SS M4x6 A2	
520	312105-0366	-		10	SCREW M6S ISO 4017 M6x12 A280	
530	312105-0368	-		2	SCREW M6S ISO 4017 M6x16 A280	
540	312105-0370	-		2	SCREW M6S ISO 4017 M6x20 A280	
550	312109-0374	-		4	SCREW M6S ISO 4017 M6X30 A280	
560	312145-0226	-		2	SLOTTED HEMFS3X12RFR	
570	312145-0287	-		2	SLOTTED HEMFS4X8RFR	
580	315105-0153	-		6	WASHER,PLAIN ROUND 6,4x12 Stainless	
590	315751-0112	-		4	RETAINING RINGS FOR SHAFT 15	
600	90286-0013	-		4	GREASE NIPPLE	
610	90296-0070	-		x	GREASE	
620	90153-0016	-		x	ADHESIVE TUBE 100G RHODORSIL CAF 3	

Pos	Part No	SP	UN	Qty	Description	Page No

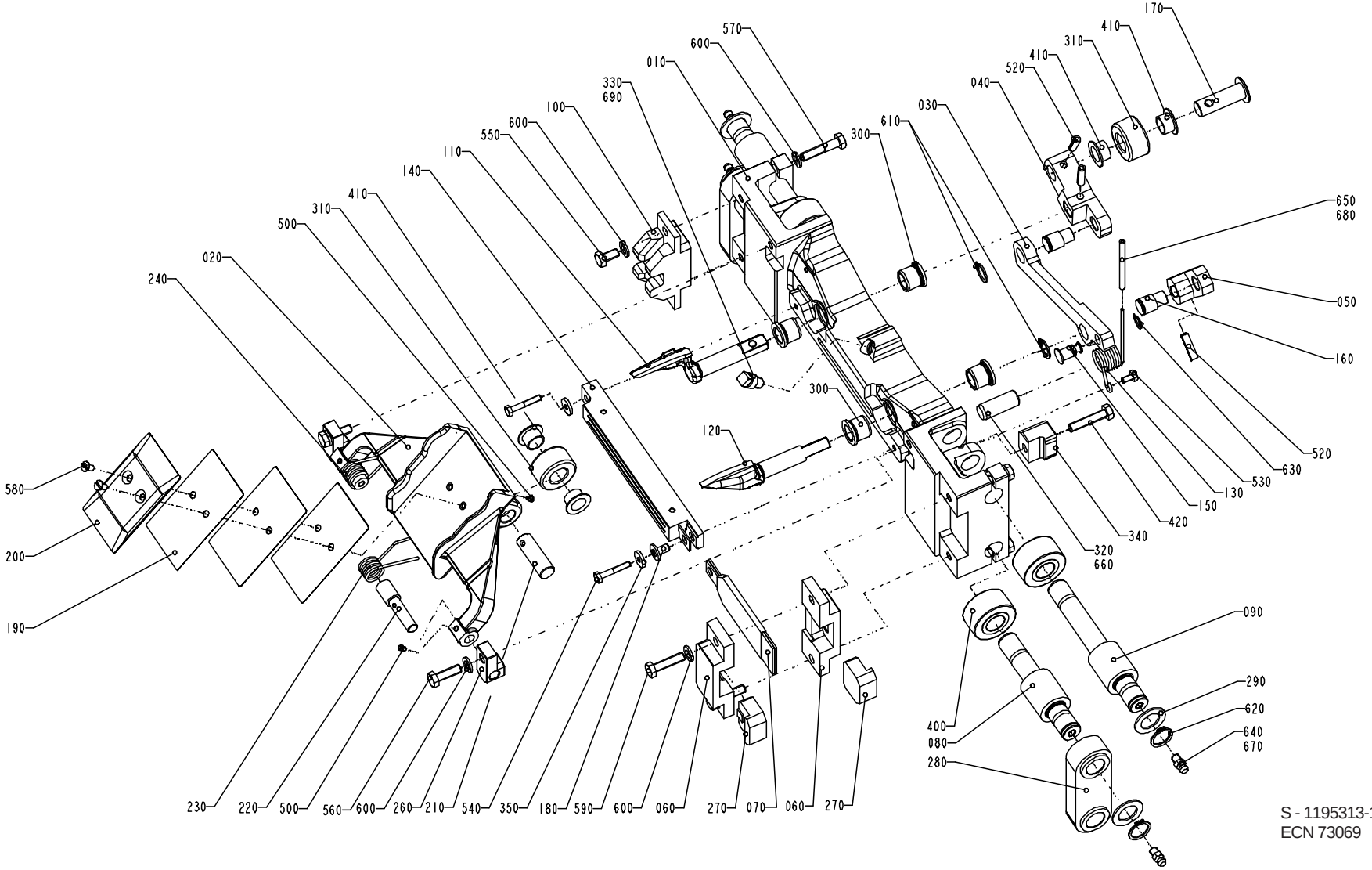

S - 1195313-1
ECN 73069

Pos	Part No	SP	UN	Qty	Description	Page No
Common parts						
010	1195262-0000	D		1	LINK	
020	1195219-0000	M		1	VOLUME FLAP	
030	1260046-0000	J		1	LINK ARM	
040	1347088-0000	D		1	ARM	
050	1347086-0000	D		1	ARM	
060	1140308-0000	M		2	CARBON BRUSH HOLDER	
070	1140309-0000	-		1	BUSBAR	
080	1140312-0000	D		2	SHAFT	
090	1140313-0000	D		2	SHAFT	
100	1140435-0000	J		1	GUIDE	
110	1487599-0000	D		1	FOLDING FLAP	
120	1487600-0000	D		1	FOLDING FLAP	
130	1140485-0000	J		1	SPRING	
140	1110725-0000	I		1	INDUCTOR	
150	1195247-0000	M		1	SHAFT	
160	1140488-0000	M		2	SHAFT	
170	1195305-0000	M		1	SHAFT	
180	32544-0000	I		1	INSULATION NUT	
190	1348257-0000	M		3	VOLUME SHIM	
200	1348256-0000	M		1	VOLUME BULGE	
210	1041424-0000	M		1	SHAFT	
220	1195280-0000	M		2	SHAFT	
230	1041460-0000	J		1	SPRING	
240	1041461-0000	J		1	SPRING	
260	1195258-0000	J		2	BRACKET	
270	1140307-0000	G		2	CARBON BRUSH	
280	B1195208-0000	D		2	LINK	
290	1140419-0000	D		4	WASHER	
300	1140437-0000	D		4	BUSHING	
310	1140479-0000	M		2	ROLLER	
320	1140492-0000	-		1	PIN	
330	1498606-0000	M		1	DAMPER	
340	1498479-0000	D		1	GUIDE	
350	1349399-0000	-		2	WASHER	
400	90083-0055	K		4	ROLLER BEARING	
410	90240-0261	M		4	Flange Bushing, 12x14x9	
420	312109-0374	-		1	SCREW M6S ISO 4017 M6X30 A280	
500	90287-0128	-		3	SCREW, SET,FULL DOG POINT,T6SS M4x6 A2	
520	311112-0308	-		3	SLOTTED TURP 5X20 RFR	
530	312105-0287	-		1	SCREW M6S ISO 4017 M4x8 A280	
540	312105-0297	-		2	SCREW M6S ISO 4014 M4X25 A280	
550	312105-0366	-		2	SCREW M6S ISO 4017 M6x12 A280	
560	312105-0370	-		2	SCREW M6S ISO 4017 M6x20 A280	
570	312105-0374	-		4	SCREW M6S ISO 4017 M6x30 A280	
580	312145-0287	-		2	SLOTTED HEMFS4X8RFR	
590	312105-0372	-		2	SCREW M6S ISO 4017 M6x25 A280	
600	315105-0153	-		10	WASHER,PLAIN ROUND 6,4x12 Stainless	
610	315751-0109	-		2	RETAINING RINGS FOR SHAFT 12	
620	315751-0112	-		4	RETAINING RINGS FOR SHAFT 15	
630	90141-0015	-		1	RETAINING RINGS FOR SHAFT 8	
640	90286-0013	-		4	GREASE NIPPLE	
650	90166-0109	-	MM	55	TUBE 4 mm PA,Transp.	
660	90157-0035	-		x	LOCKING FLUID 641	
670	90296-0070	-		x	GREASE	
680	90153-0015	-		x	ADHESIVE Loctite IS 496/CYANOLIT 303	
690	90153-0016	-		x	ADHESIVE TUBE 100G RHODORSIL CAF 3	

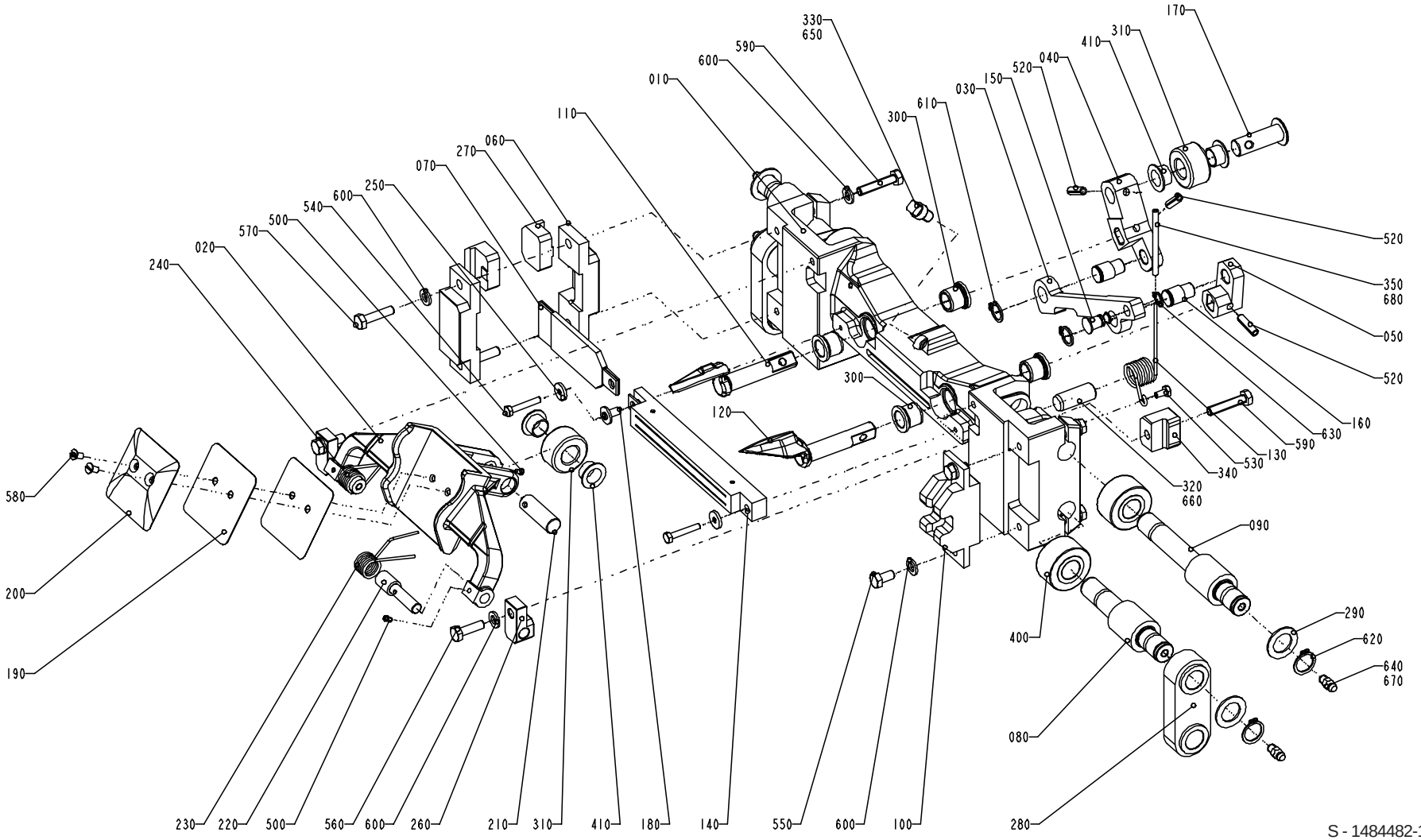

S - 1484482-1
ECN 71727

Pos	Part No	SP	UN	Qty	Description	Page No
Common parts						
010	1349362-0000	D		1	LINK	
020	1349396-0000	-		1	VOLUME FLAP	
030	1484291-0000	J		1	LINK ARM	
040	1347088-0000	D		1	ARM	
050	1347086-0000	D		1	ARM	
060	1140308-0000	M		2	CARBON BRUSH HOLDER	
070	1140309-0000	-		1	BUSBAR	
080	1140312-0000	D		2	SHAFT	
090	1140313-0000	D		2	SHAFT	
100	1140435-0000	J		1	GUIDE	
110	1487599-0000	D		1	FOLDING FLAP	
120	1487600-0000	D		1	FOLDING FLAP	
130	1140485-0000	J		1	SPRING	
140	1110725-0000	I		1	INDUCTOR	
150	1195247-0000	M		1	SHAFT	
160	1140488-0000	M		2	SHAFT	
170	1195305-0000	M		1	SHAFT	
180	32544-0000	I		1	INSULATION NUT	
190	1487208-0000	M		2	VOLUME SHIM	
200	1487207-0000	M		1	VOLUME BULGE	
210	1041424-0000	M		1	SHAFT	
220	1195280-0000	M		2	SHAFT	
230	1041460-0000	J		1	SPRING	
240	1041461-0000	J		1	SPRING	
250	1349399-0000	-		2	WASHER	
260	1195258-0000	J		2	BRACKET	
270	1140307-0000	G		2	CARBON BRUSH	
280	B1349360-0000	D		2	LINK	
290	1140419-0000	D		4	WASHER	
300	1140437-0000	D		4	BUSHING	
310	1140479-0000	M		2	ROLLER	
320	1140492-0000	-		1	PIN	
330	1498606-0000	-		1	DAMPER	
340	1498479-0000	D		1	GUIDE	
350	90166-0109	-	MM	55	TUBE 4 mm PA,Transp.	
400	90083-0055	K		4	ROLLER BEARING	
410	90240-0261	M		4	Flange Bushing, 12x14x9	
500	90287-0128	-		3	SCREW, SET,FULL DOG POINT,T6SS M4x6 A2	
520	311112-0308	-		3	SLOTTED TURP 5X20 RFR	
530	312105-0287	-		1	SCREW M6S ISO 4017 M4x8 A280	
540	312105-0297	-		2	SCREW M6S ISO 4014 M4X25 A280	
550	312105-0366	-		2	SCREW M6S ISO 4017 M6x12 A280	
560	312105-0370	-		2	SCREW M6S ISO 4017 M6x20 A280	
570	312105-0372	-		2	SCREW M6S ISO 4017 M6x25 A280	
580	312145-0287	-		2	SLOTTED HEMFS4X8RFR	
590	312109-0374	-		5	SCREW M6S ISO 4017 M6X30 A280	
600	315105-0153	-		10	WASHER,PLAIN ROUND 6,4x12 Stainless	
610	315751-0109	-		2	RETAINING RINGS FOR SHAFT 12	
620	315751-0112	-		4	RETAINING RINGS FOR SHAFT 15	
630	90141-0015	-		1	RETAINING RINGS FOR SHAFT 8	
640	90286-0013	-		4	GREASE NIPPLE	
650	90157-0016	-		x	LOCKING FLUID LOCTITE 242 50 ML	
660	90157-0035	-		x	LOCKING FLUID 641	
670	90296-0070	-		x	GREASE	
680	90153-0015	-		x	ADHESIVE Loctite IS 496/CYANOLIT 303	

PRESSURE JAW

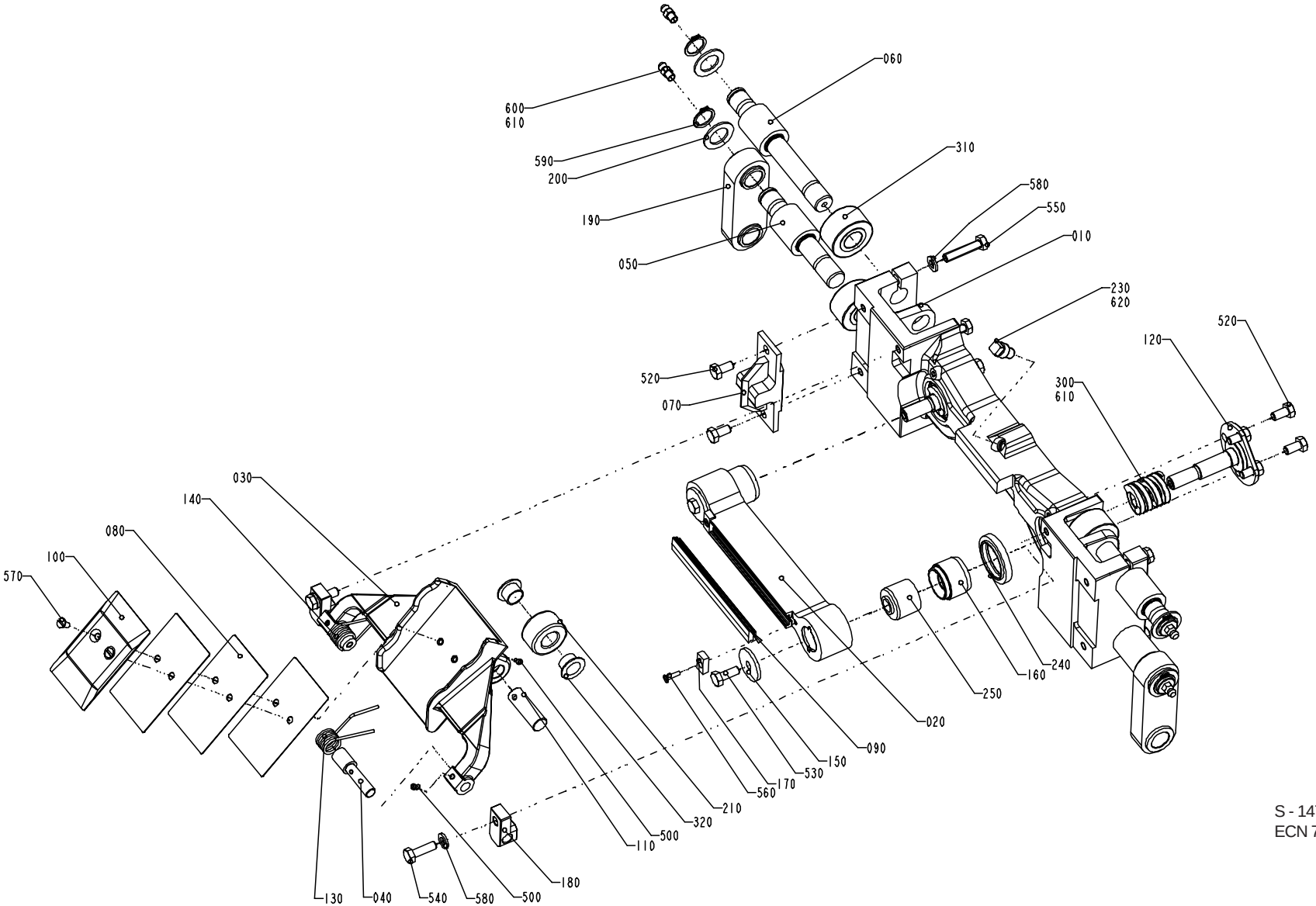

S - 1478265-1
ECN 73069

Pos	Part No	SP	UN	Qty	Description	Page No
Common parts						
010	1195261-0000	D		1	LINK	
020	1499910-0000	-		1	PRESSURE RAIL	
030	1195219-0000	M		1	VOLUME FLAP	
040	1195280-0000	M		2	SHAFT	
050	1140312-0000	D		2	SHAFT	
060	1140313-0000	D		2	SHAFT	
070	1140436-0000	-		1	MOUNTING BLOCK	
080	1348257-0000	M		3	VOLUME SHIM	
090	1110397-0000	E		1	DOLLY	
100	1348256-0000	M		1	VOLUME BULGE	
110	1041424-0000	M		1	SHAFT	
120	1195293-0000	M		2	SHAFT	
130	1041460-0000	J		1	SPRING	
140	1041461-0000	J		1	SPRING	
150	1195263-0000	-		2	WASHER	
160	1195294-0000	D		2	SLEEVE	
170	1140233-0000	M		2	WASHER	
180	1195258-0000	J		2	BRACKET	
190	B1195208-0000	D		2	LINK	
200	1140419-0000	D		4	WASHER	
210	1140479-0000	M		1	ROLLER	
230	1498606-0000	M		1	DAMPER	
240	1195317-0000	M		2	SEALING RING	
250	1255973-0000	M		2	RUBBER BUSHING	
300	90335-0253	K		2	SPRING	
310	90083-0055	K		4	ROLLER BEARING	
320	90240-0261	M		2	Flange Bushing, 12x14x9	
500	90287-0128	-		3	SCREW, SET,FULL DOG POINT,T6SS M4x6 A2	
520	312105-0366	-		10	SCREW M6S ISO 4017 M6x12 A280	
530	312105-0368	-		2	SCREW M6S ISO 4017 M6x16 A280	
540	312105-0370	-		2	SCREW M6S ISO 4017 M6x20 A280	
550	312109-0374	-		4	SCREW M6S ISO 4017 M6X30 A280	
560	312145-0226	-		2	SLOTTED HEMFS3X12RFR	
570	312145-0287	-		2	SLOTTED HEMFS4X8RFR	
580	315105-0153	-		6	WASHER,PLAIN ROUND 6,4x12 Stainless	
590	315751-0112	-		4	RETAINING RINGS FOR SHAFT 15	
600	90286-0013	-		4	GREASE NIPPLE	
610	90296-0070	-		x	GREASE	
620	90153-0016	-		x	ADHESIVE TUBE 100G RHODORSIL CAF 3	

Pos	Part No	SP	UN	Qty	Description	Page No

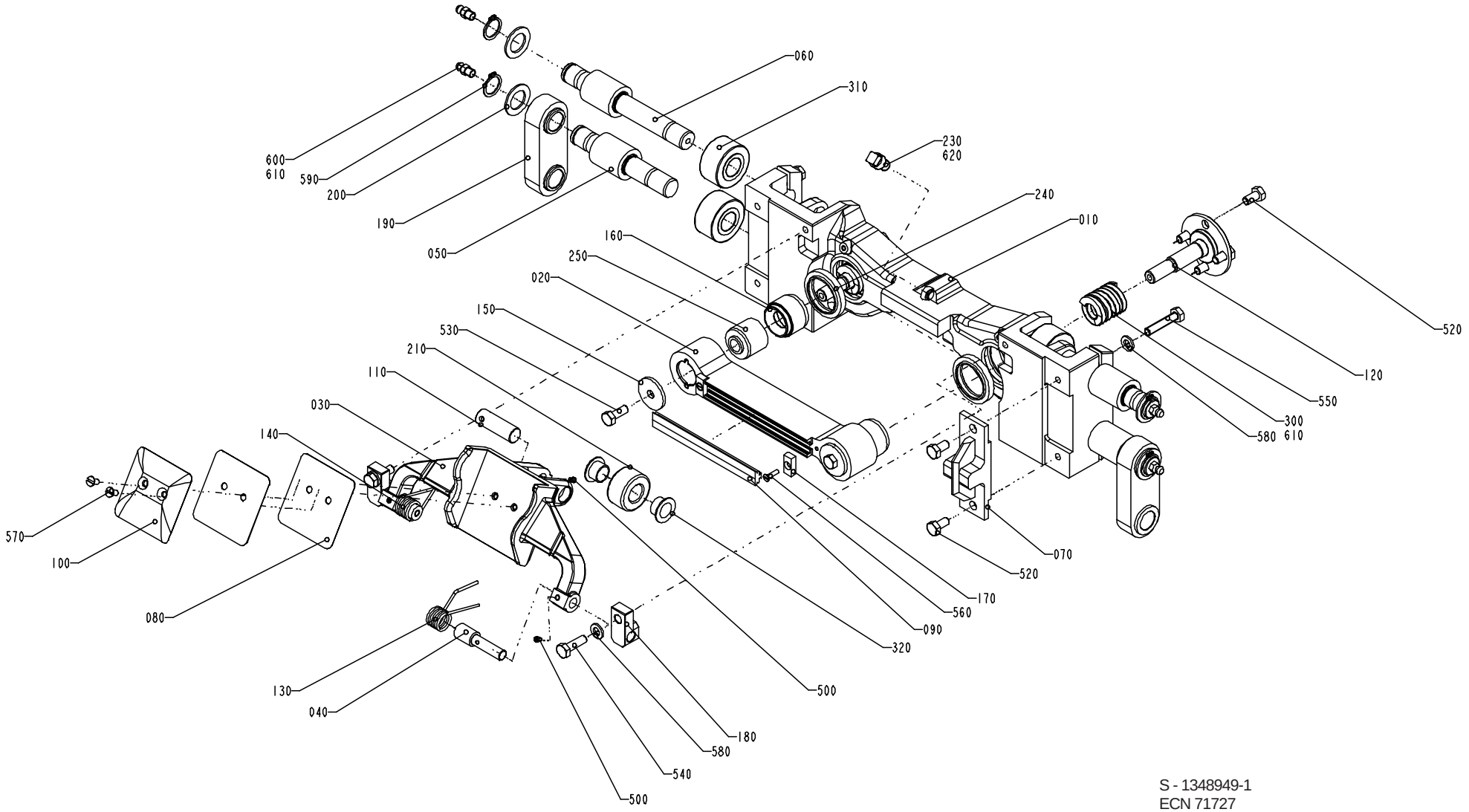

S - 1348949-1
ECN 71727

Pos	Part No	SP	UN	Qty	Description	Page No
Common parts						
010	1349365-0000	D		1	LINK	
020	1499910-0000	-		1	PRESSURE RAIL	
030	1349396-0000	-		1	VOLUME FLAP	
040	1195280-0000	M		2	SHAFT	
050	1140312-0000	D		2	SHAFT	
060	1140313-0000	D		2	SHAFT	
070	1140436-0000	-		1	MOUNTING BLOCK	
080	1487208-0000	M		2	VOLUME SHIM	
090	1110397-0000	E		1	DOLLY	
100	1487207-0000	M		1	VOLUME BULGE	
110	1041424-0000	M		1	SHAFT	
120	1195293-0000	M		2	SHAFT	
130	1041460-0000	J		1	SPRING	
140	1041461-0000	J		1	SPRING	
150	1195263-0000	-		2	WASHER	
160	1195294-0000	D		2	SLEEVE	
170	1140233-0000	M		2	WASHER	
180	1195258-0000	J		2	BRACKET	
190	B1349360-0000	D		2	LINK	
200	1140419-0000	D		4	WASHER	
210	1140479-0000	M		1	ROLLER	
230	1498606-0000	-		1	DAMPER	
240	1195317-0000	M		2	SEALING RING	
250	1255973-0000	M		2	RUBBER BUSHING	
300	90335-0253	K		2	SPRING	
310	90083-0055	K		4	ROLLER BEARING	
320	90240-0261	K		2	Flange Bushing, 12x14x9	
500	90287-0128	-		3	SCREW, SET,FULL DOG POINT,T6SS M4x6 A2	
520	312105-0366	-		10	SCREW M6S ISO 4017 M6x12 A280	
530	312105-0368	-		2	SCREW M6S ISO 4017 M6x16 A280	
540	312105-0370	-		2	SCREW M6S ISO 4017 M6x20 A280	
550	312109-0374	-		4	SCREW M6S ISO 4017 M6X30 A280	
560	312145-0226	-		2	SLOTTED HEMFS3X12RFR	
570	312145-0287	-		2	SLOTTED HEMFS4X8RFR	
580	315105-0153	-		6	WASHER,PLAIN ROUND 6,4x12 Stainless	
590	315751-0112	-		4	RETAINING RINGS FOR SHAFT 15	
600	90286-0013	-		4	GREASE NIPPLE	
610	90296-0070	-		x	GREASE	
620	90153-0016	-		x	ADHESIVE TUBE 100G RHODORSIL CAF 3	

Pos	Part No	SP	UN	Qty	Description	Page No

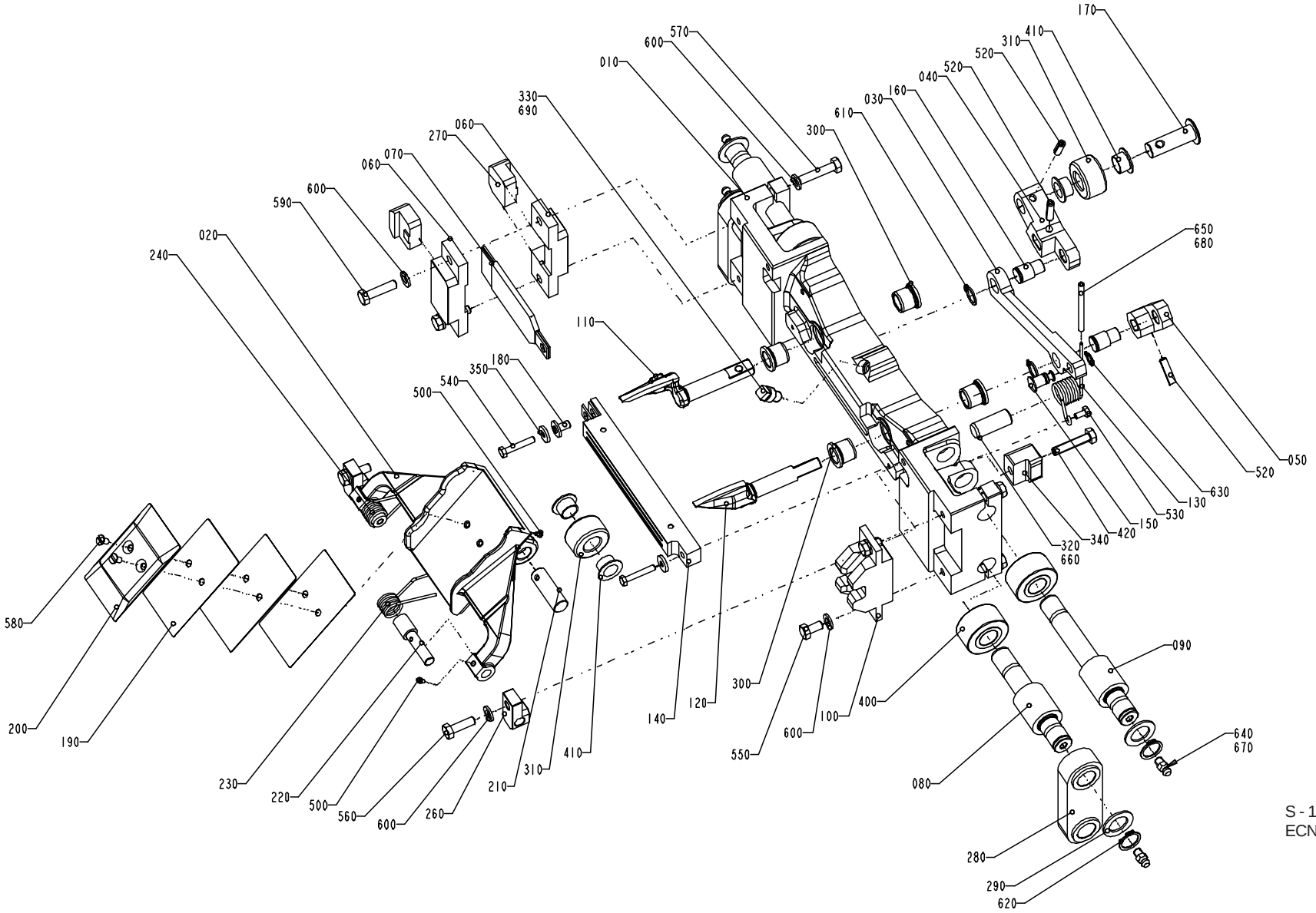

S - 1478266-1
ECN 73069

Pos	Part No	SP	UN	Qty	Description	Page No
Common parts						
010	1195262-0000	D		1	LINK	
020	1195219-0000	M		1	VOLUME FLAP	
030	1260046-0000	J		1	LINK ARM	
040	1347088-0000	D		1	ARM	
050	1347086-0000	D		1	ARM	
060	1140308-0000	M		2	CARBON BRUSH HOLDER	
070	1140309-0000	-		1	BUSBAR	
080	1140312-0000	D		2	SHAFT	
090	1140313-0000	D		2	SHAFT	
100	1140435-0000	J		1	GUIDE	
110	1487599-0000	D		1	FOLDING FLAP	
120	1487600-0000	D		1	FOLDING FLAP	
130	1140485-0000	J		1	SPRING	
140	1110725-0000	I		1	INDUCTOR	
150	1195247-0000	M		1	SHAFT	
160	1140488-0000	M		2	SHAFT	
170	1195305-0000	M		1	SHAFT	
180	32544-0000	I		1	INSULATION NUT	
190	1348257-0000	M		3	VOLUME SHIM	
200	1348256-0000	M		1	VOLUME BULGE	
210	1041424-0000	M		1	SHAFT	
220	1195280-0000	M		2	SHAFT	
230	1041460-0000	J		1	SPRING	
240	1041461-0000	J		1	SPRING	
260	1195258-0000	J		2	BRACKET	
270	1140307-0000	G		2	CARBON BRUSH	
280	B1195208-0000	D		2	LINK	
290	1140419-0000	D		4	WASHER	
300	1140437-0000	D		4	BUSHING	
310	1140479-0000	M		2	ROLLER	
320	1140492-0000	-		1	PIN	
330	1498606-0000	M		1	DAMPER	
340	1498479-0000	D		1	GUIDE	
350	1349399-0000	-		2	WASHER	
400	90083-0055	K		4	ROLLER BEARING	
410	90240-0261	M		4	Flange Bushing, 12x14x9	
420	312109-0374	-		1	SCREW M6S ISO 4017 M6X30 A280	
500	90287-0128	-		3	SCREW, SET,FULL DOG POINT,T6SS M4x6 A2	
520	311112-0308	-		3	SLOTTED TURP 5X20 RFR	
530	312105-0287	-		1	SCREW M6S ISO 4017 M4x8 A280	
540	312105-0297	-		2	SCREW M6S ISO 4014 M4X25 A280	
550	312105-0366	-		2	SCREW M6S ISO 4017 M6x12 A280	
560	312105-0370	-		2	SCREW M6S ISO 4017 M6x20 A280	
570	312105-0374	-		4	SCREW M6S ISO 4017 M6x30 A280	
580	312145-0287	-		2	SLOTTED HEMFS4X8RFR	
590	312105-0372	-		2	SCREW M6S ISO 4017 M6x25 A280	
600	315105-0153	-		10	WASHER,PLAIN ROUND 6,4x12 Stainless	
610	315751-0109	-		2	RETAINING RINGS FOR SHAFT 12	
620	315751-0112	-		4	RETAINING RINGS FOR SHAFT 15	
630	90141-0015	-		1	RETAINING RINGS FOR SHAFT 8	
640	90286-0013	-		4	GREASE NIPPLE	
650	90166-0109	-	MM	55	TUBE 4 mm PA,Transp.	
660	90157-0035	-		x	LOCKING FLUID 641	
670	90296-0070	-		x	GREASE	
680	90153-0015	-		x	ADHESIVE Loctite IS 496/CYANOLIT 303	
690	90153-0016	-		x	ADHESIVE TUBE 100G RHODORSIL CAF 3	

SEALING JAW

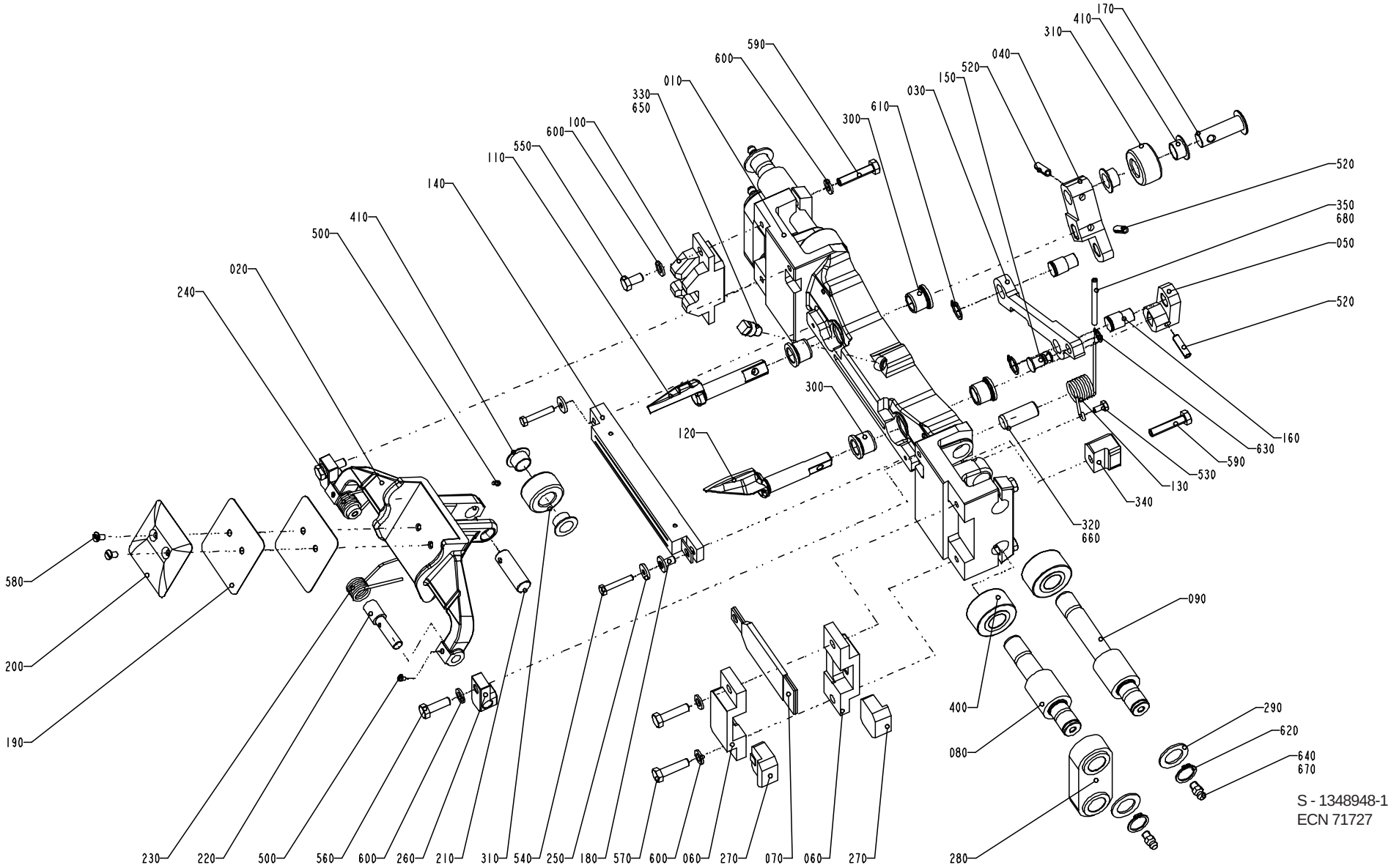

S - 1348948-1
ECN 71727

Pos	Part No	SP	UN	Qty	Description	Page No
Common parts						
010	1349362-0000	D		1	LINK	
020	1349396-0000	-		1	VOLUME FLAP	
030	1484291-0000	J		1	LINK ARM	
040	1347088-0000	D		1	ARM	
050	1347086-0000	D		1	ARM	
060	1140308-0000	M		2	CARBON BRUSH HOLDER	
070	1140309-0000	-		1	BUSBAR	
080	1140312-0000	D		2	SHAFT	
090	1140313-0000	D		2	SHAFT	
100	1140435-0000	J		1	GUIDE	
110	1487599-0000	D		1	FOLDING FLAP	
120	1487600-0000	D		1	FOLDING FLAP	
130	1140485-0000	J		1	SPRING	
140	1110725-0000	I		1	INDUCTOR	
150	1195247-0000	M		1	SHAFT	
160	1140488-0000	M		2	SHAFT	
170	1195305-0000	M		1	SHAFT	
180	32544-0000	I		1	INSULATION NUT	
190	1487208-0000	M		2	VOLUME SHIM	
200	1487207-0000	M		1	VOLUME BULGE	
210	1041424-0000	M		1	SHAFT	
220	1195280-0000	M		2	SHAFT	
230	1041460-0000	J		1	SPRING	
240	1041461-0000	J		1	SPRING	
250	1349399-0000	-		2	WASHER	
260	1195258-0000	J		2	BRACKET	
270	1140307-0000	G		2	CARBON BRUSH	
280	B1349360-0000	D		2	LINK	
290	1140419-0000	D		4	WASHER	
300	1140437-0000	D		4	BUSHING	
310	1140479-0000	M		2	ROLLER	
320	1140492-0000	-		1	PIN	
330	1498606-0000	-		1	DAMPER	
340	1498479-0000	D		1	GUIDE	
350	90166-0109	-	MM	55	TUBE 4 mm PA,Transp.	
400	90083-0055	K		4	ROLLER BEARING	
410	90240-0261	M		4	Flange Bushing, 12x14x9	
500	90287-0128	-		3	SCREW, SET,FULL DOG POINT,T6SS M4x6 A2	
520	311112-0308	-		3	SLOTTED TURP 5X20 RFR	
530	312105-0287	-		1	SCREW M6S ISO 4017 M4x8 A280	
540	312105-0297	-		2	SCREW M6S ISO 4014 M4X25 A280	
550	312105-0366	-		2	SCREW M6S ISO 4017 M6x12 A280	
560	312105-0370	-		2	SCREW M6S ISO 4017 M6x20 A280	
570	312105-0372	-		2	SCREW M6S ISO 4017 M6x25 A280	
580	312145-0287	-		2	SLOTTED HEMFS4X8RFR	
590	312109-0374	-		5	SCREW M6S ISO 4017 M6X30 A280	
600	315105-0153	-		10	WASHER,PLAIN ROUND 6,4x12 Stainless	
610	315751-0109	-		2	RETAINING RINGS FOR SHAFT 12	
620	315751-0112	-		4	RETAINING RINGS FOR SHAFT 15	
630	90141-0015	-		1	RETAINING RINGS FOR SHAFT 8	
640	90286-0013	-		4	GREASE NIPPLE	
650	90157-0016	-		x	LOCKING FLUID LOCTITE 242 50 ML	
660	90157-0035	-		x	LOCKING FLUID 641	
670	90296-0070	-		x	GREASE	
680	90153-0015	-		x	ADHESIVE Loctite IS 496/CYANOLIT 303	

This page is intentionally left blank

Pos	Part No	SP	UN	Qty	Description	Page No
1195208-0000						
	1195204-0000	-		2	BUSHING	
	1195207-0000	-		1	LINK	
1349360-0000						
	1195204-0000	-		2	BUSHING	
	1349361-0000	-		1	LINK	

Pos	Part No	SP	UN	Qty	Description	Page No

SPC

Spare Parts Catalogue

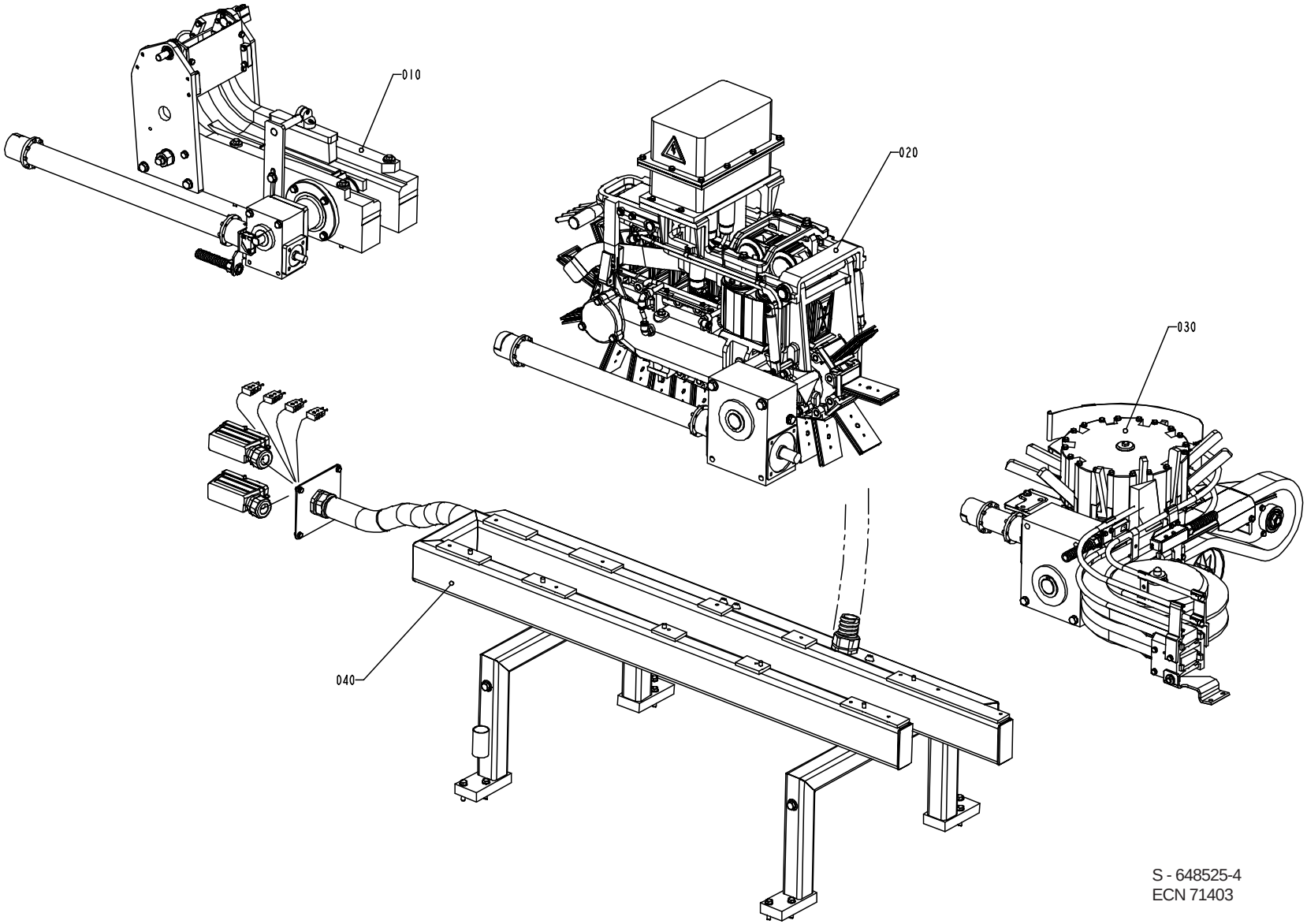

S - 648525-4
ECN 71403

Pos	Part No	SP	UN	Qty	Description	Page No
Common parts						
010	A 577111-0200	-		1	CONVEYOR	**393**
020	A 577112-0300	-		1	FINAL FOLDER	**395**
030	A 577113-0200	-		1	DISCHARGE UNIT	**409**
040	A 577115-0300	-		1	FRAME	**415**

Pos	Part No	SP	UN	Qty	Description	Page No

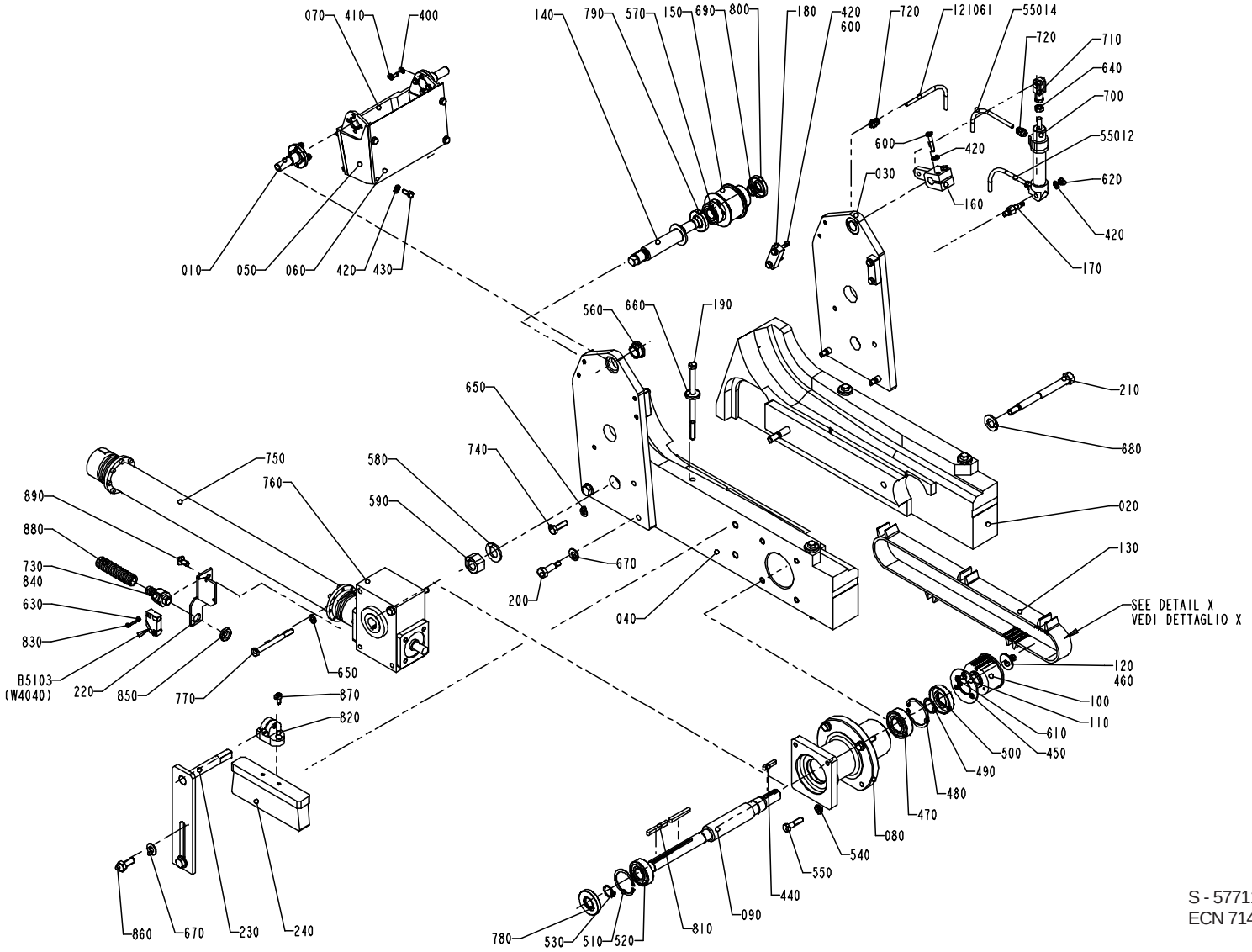

S - 577111-2
ECN 71403

Pos	Part No	SP	UN	Qty	Description	Page No
Common parts						
010	1260122-0000	D		2	SHAFT	
030	1260137-0000	-		2	PLATE	
050	1260134-0000	-		2	PLATE	
060	1260124-0000	-		1	PLATE	
070	1334707-0000	-		1	PLATE	
080	1260136-0000	-		1	HOLDER	
090	1260126-0000	D		1	SHAFT	
100	1499908-0000	D		1	PULLEY	
110	1499909-0000	-		2	FLANGE	
120	1260167-0000	-		1	WASHER	
121061	90166-0119	-	MM	1500	HOSE PUR TPU6x1/5-50 Black	
130	1260168-0000	G		1	BELT	
140	1260128-0000	D		1	SHAFT	
150	1260129-0000	D		1	PULLEY	
160	1260131-0000	-		1	ARM	
170	1260132-0000	-		1	CYLINDER BRACKET	
180	1260133-0000	-		4	LOCK COMPONENT	
190	1260139-0000	-		4	BOLT	
200	1260166-0000	-		4	BOLT	
210	1260174-0000	-		2	BOLT	
220	1334521-0000	-		1	SUPPORT	
230	1478631-0000	-		1	SUPPORT	
240	1347077-0000	G		1	BRUSH	
400	315105-0146	-		8	WASHER,PLAIN ROUND 5,3x10 Stainless	
410	312105-0327	-		8	SCREW M6S ISO 4017 M5X12 A280	
420	315105-0153	-		18	WASHER,PLAIN ROUND 6,4x12 Stainless	
430	312105-0368	-		8	SCREW M6S ISO 4017 M6x16 A280	
440	315705-0236	-		1	KEYS.PARALLEL WITH ROUND ENDS 6X6X30	
450	312155-0291	-		4	SCREW MF6S DIN 7991 M4x12 A480	
460	312105-0368	-		1	SCREW M6S ISO 4017 M6x16 A280	
470	90214-0096	K		1	BEARINGS,BALL BEARING,STAINLESS	
480	315753-0132	-		1	RETAINING RINGS FOR HOLE 52	
490	315751-0119	-		1	RETAINING RINGS FOR SHAFT 25	
500	90091-0438	K		1	"SEAL RING,GR-NEEDLE BEARINGS 25X52X10"	
510	315753-0130	-		1	RETAINING RINGS FOR HOLE 47	
520	90214-0232	K		1	BEARINGS,BALL BEARING,STAINLESS 10X47X14	
530	315751-0116	-		1	RETAINING RINGS FOR SHAFT 20	
540	315115-0165	-		4	WASHER TBRB 8,4x16 Stainless	
550	312105-0457	-		4	SCREW ISO 4017 M8x35 A280	
55012	90166-0089	-	MM	1500	HOSE 4/6.2 PE BLUE	
55014	90166-0089	-	MM	1500	HOSE 4/6.2 PE BLUE	
560	321111-0273	K		2	Flange Bushing, 18x24x12	
570	90214-0189	K		2	BEARINGS,BALL BEARING,STAINLESS	
580	315105-0191	-		1	WASHER BRB20X36RFR	
590	312605-0326	-		1	NUT,HEXAGON,M20 A280	
600	312105-0374	-		10	SCREW M6S ISO 4017 M6x30 A280	
610	312155-0366	-		2	SCREW MF6S DIN 7991 M6x12 A280	
620	312812-0316	-		1	NUT,HEXAGON,LOCK,WITH NYLON INSERT,M6	
630	315105-0124	-		13	WASHER,PLAIN ROUND 3,2x6	
640	312605-0318	-		1	NUT,HEXAGON,M8 RFR	
650	315105-0165	-		5	WASHER,PLAIN ROUND 8,4x16 Stainless	
660	315125-0165	-		4	WASHERS,PLAIN ROUND,CHAMFERED 8,4X26X5	
670	315105-0173	-		6	WASHER,PLAIN ROUND 10,5x22 STAINLESS	
680	315105-0186	-		2	WASHER,PLAIN ROUND 17x30	
690	90141-0017	-		1	RETAINING RINGS FOR SHAFT 17	
700	90239-0822	T		1	Double acting, Mini-ISO, Cyl. 20-50	
710	90239-0532	-		1	ROD END,CLEVIS WITH AXLE,M8	
720	342722-0202	-		3	STRAIGHT COUPLING, D=6mm - G1/8"	
730	353243-0001	-		1	GLAND,HOSE,EXTENDED,WITHOUT INSERT PG9	
740	312105-0455	-		2	SCREW M6S ISO 4017 M8x30 A280	
750	1512464-0000	-		1	INTERMEDIARY SHAFT	
760	90056-0170	D		1	WORM GEAR	
770	312105-0469	-		2	SCREW M6S ISO 4014 M8x90 A280	
780	90091-0435	K		1	"SEAL RING,GR-NEEDLE BEARINGS 20X47X7"	
790	90091-0436	K		1	"SEAL RING,GR-NEEDLE BEARINGS 20X40X7"	
800	90091-0437	K		1	"SEAL RING,GR-NEEDLE BEARINGS 17X40X7"	
810	315705-0241	-		2	FLAT WEDGE	
820	90236-0045	-		1	SUPPORT	
830	312115-0228	-		2	SCREW MC6S ISO 4762 M3X16 A280	
840	353249-0009	-		1	GLAND,INSERT,SINGLE HOLE,EXTEND.6,5-9,5	
850	90099-0104	-		2	NUT PR 15,2 (PG9)	
860	312105-0493	-		2	SCREW M6S ISO 4017 M10X25 A280	
870	312155-0366	-		2	SCREW MF6S DIN 7991 M6x12 A280	
880	90152-0059	-	M	2	HOSE 18x12	
890	312155-0449	-		2	SCREW MF6S DIN 7991 M8X16 A280	
900	90296-0068	-		x	Grease Uniway LI 62 Cartridge 400 Gr.	
B5103	90044-0104	K		1	PROX.SWITCH IFM IN 3002 48Vdc	
TBA 0200B						
020	1348762-0000	-		1	FRAME	
040	1348761-0000	-		1	FRAME	
TBA 0250B						
020	1260127-0000	-		1	FRAME	
040	1260125-0000	-		1	FRAME	

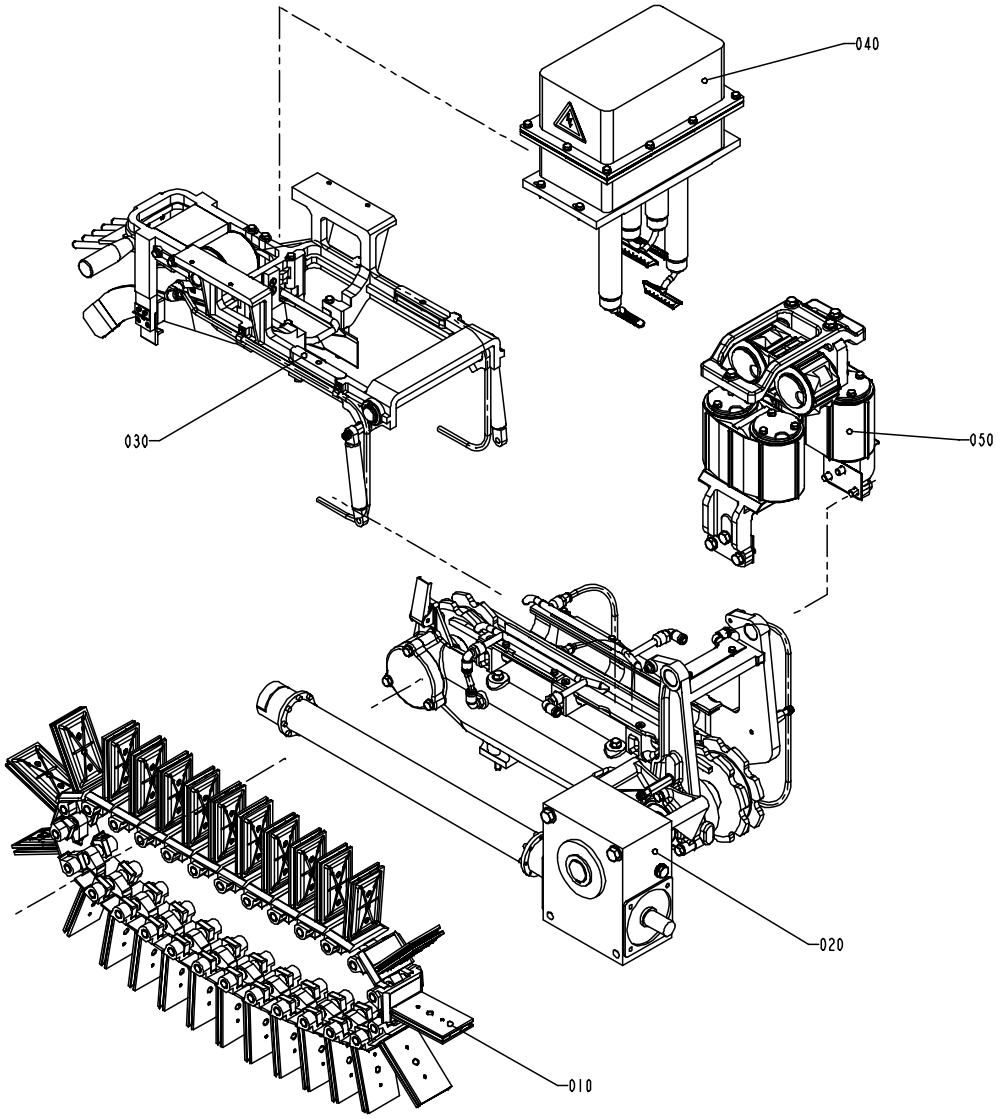

S - 577112-3
ECN 71403

Pos	Part No	SP	UN	Qty	Description	Page No
Common parts						
010	A1195203-0200	-		1	STATION CHAIN	**397**
020	A1195176-0300	-		1	CHAIN SUPPORT	**399**
030	A1195206-0300	-		1	SWING FRAME	**401**
040	A1478630-0100	-		1	HEATING CHAMBER	**403**, **405**
050	A1499690-0100	-		1	SQUEEZER	**407**

Pos	Part No	SP	UN	Qty	Description	Page No

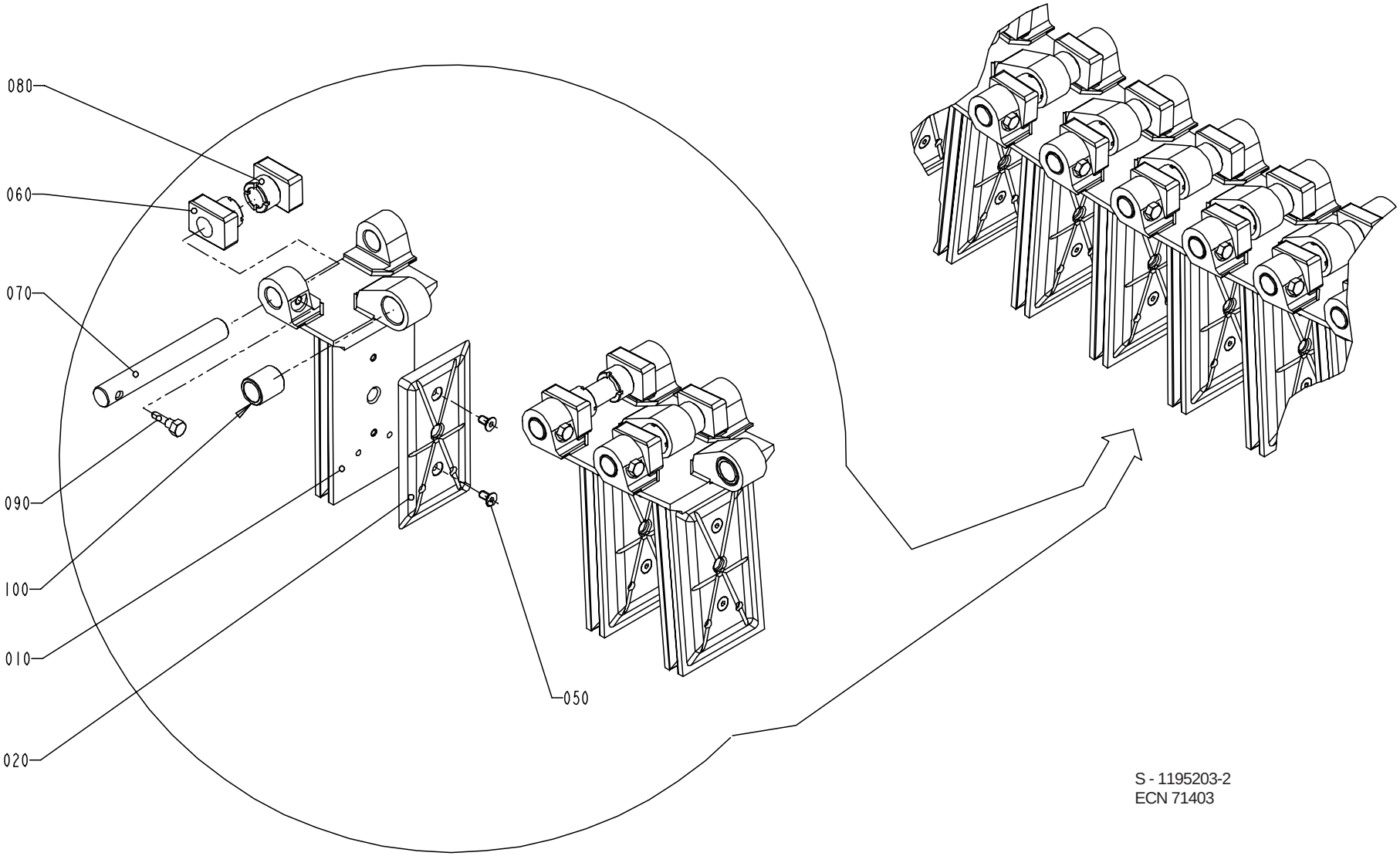

S - 1195203-2
ECN 71403

Pos	Part No	SP	UN	Qty	Description	Page No
Common parts						
050	312155-0287	-		54	Screw MF6S 4x8	
060	491227-0000	M		54	SLIDER	
070	491228-0001	M		27	SHAFT	
080	491229-0000	M		54	BUSHING	
090	491230-0000	-		27	GRUB SCREW	
100	491231-0000	M		27	BUSHING	
TBA 0200B						
010	1348758-0000	M		27	CARTON STATION	
020	1498039-0000	M		27	VOLUME BULGE	
TBA 0250B						
010	1334699-0000	M		27	CARTON STATION	
020	1334698-0000	M		27	VOLUME BULGE	

Pos	Part No	SP	UN	Qty	Description	Page No

CHAIN SUPPORT

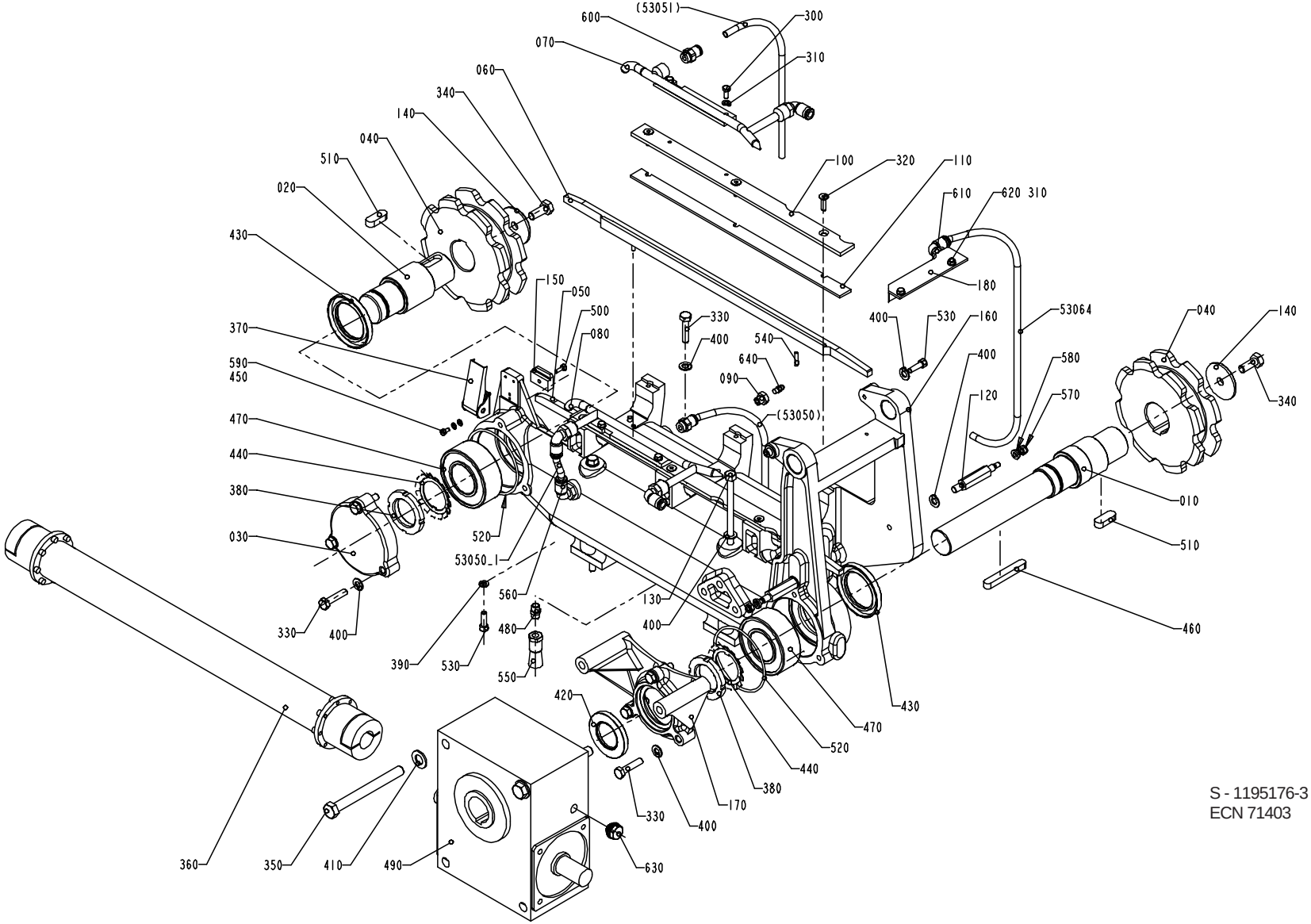

S - 1195176-3
ECN 71403

Pos	Part No	SP	UN	Qty	Description	Page No
Common parts						
010	1255989-0000	D		1	SHAFT	
020	1255990-0000	D		1	SHAFT	
030	1255991-0000	-		1	COVER	
040	1255992-0000	D		2	SPROCKET	
050	1282782-0000	-		1	GUIDE	
060	1282783-0000	-		1	GUIDE	
070	1346638-0000	-		1	GUIDE	
080	1346637-0000	-		1	GUIDE	
090	1487898-0000	-		1	PLUG	
100	1346636-0000	-		2	PLATE	
110	1282786-0000	G		2	PLATE	
120	1478633-0000	-		2	HOLDER	
130	1260008-0000	-		2	BOLT	
140	1260009-0000	-		2	WASHER	
150	1346639-0000	-		1	PLATE	
170	1260183-0000	-		1	COVER	
180	1498998-0000	-		1	PLATE	
300	312105-0327	-		4	SCREW M6S ISO 4017 M5X12 A280	
310	315105-0146	-		6	WASHER,PLAIN ROUND 5,3x10 Stainless	
320	312155-0370	-		6	SCREW MF6S DIN 7991 M6X20 A280	
330	312105-0457	-		8	SCREW ISO 4017 M8x35 A280	
340	312105-0493	-		2	SCREW M6S ISO 4017 M10X25 A280	
350	312105-0556	-		2	SCREW M6S ISO 4014 M12X120 A280	
370	90237-0215	-		1	LOCK	
380	312805-0108	-		2	NUT,ROUND,WITH SLOTS,M40x1,5	
390	315105-0153	-		6	WASHER,PLAIN ROUND 6,4x12 Stainless	
400	315105-0165	-		12	WASHER,PLAIN ROUND 8,4x16 Stainless	
410	315105-0178	-		2	WASHER,PLAIN ROUND 13x24	
420	90091-0439	K		1	"SEAL RING,GR-NEEDLE BEARINGS 35X62X7"	
430	90091-0441	K		2	SEAL RING	
440	315410-0108	-		2	WASHERS,LOCK 40X50	
450	315105-0136	-		4	WASHER,PLAIN ROUND 4,3x8 Stainless	
460	315705-0307	-		1	KEYS,PARALLEL WITH ROUND ENDS 10X8X70	
470	321330-0108	K		2	BALL BEARING,ANGULAR 40X80X30,2	
480	342700-0109	-		2	NIPPLES,HEXAGON,EXT.G-THREAD G1/8"-G1/8"	
490	90056-0164	D		1	WORM GEAR	
500	312115-0291	-		1	SCREW MC6S ISO 4762 M4x12 A280	
510	315705-0330	-		2	FLAT WEDGE	
520	315202-0308	K		2	O-RINGS 84,5X3	
530	312115-0370	-		6	SCREW MC6S ISO 4762 M6x20 A280	
53050_1	90166-0118	-	MM	100	TUBE 8 mm PA Black	
53064	90166-0013	-	MM	2200	TUBE 8/6 PA Blue	

Pos	Part No	SP	UN	Qty	Description	Page No
540	311103-0272	-		4	PIN,STRAIGHT M6 4x20	
550	90092-0083	G		2	OIL BRUSH	
560	342732-0104	-		4	ELBOW PIPE JOINT,Ext.thread,D=8 mm G1/4	
570	312812-0316	-		2	NUT,HEXAGON,LOCK,WITH NYLON INSERT,M6	
580	315115-0153	-		2	WASHER TBRB 6,4x12 Stainless	
590	312105-0287	-		3	SCREW M6S ISO 4017 M4x8 A280	
600	342722-0205	-		2	STRAIGHT COUPLING, D=8 mm - R1/4"	
610	342732-0801	-		1	ELBOW PIPE JOINT,Ext.thread,D=8 mm G1/8	
620	312105-0323	-		2	SCREW M6S ISO 4017 M5X8 A280	
630	90056-0527	-		1	PLUG	
640	90286-0013	-		1	GREASE NIPPLE	
TBA 0200B						
160	1348755-0000	-		1	FRAME	
360	90355-0203	-		1	INTERMEDIARY SHAFT	
TBA 0250B						
160	1260173-0000	-		1	FRAME	
360	90355-0200	-		1	INTERMEDIARY SHAFT	

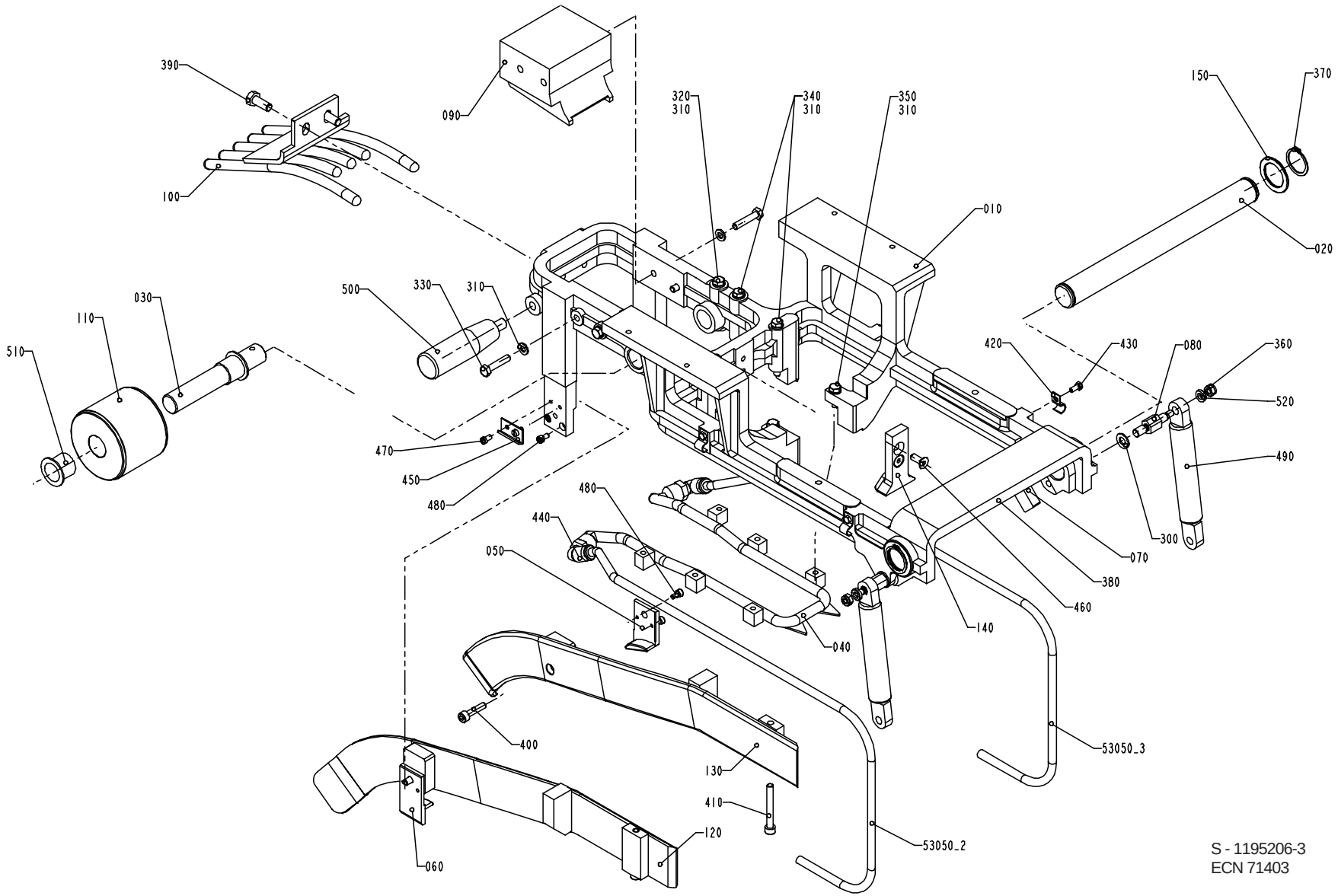

S - 1195206-3
ECN 71403

Pos	Part No	SP	UN	Qty	Description	Page No
Common parts						
020	1260019-0000	-		1	PIN	
030	1260020-0000	R		1	PIN	
040	1347071-0000	-		1	GUIDE	
050	1260022-0000	-		1	GUIDE	
060	1347072-0000	-		1	GUIDE	
070	1347076-0000	-		2	LOCK COMPONENT	
080	1478632-0000	-		2	PIN	
090	1282798-0000	-		1	SLIDER	
100	1082717-0000	-		1	TOP SECTION	
110	1347073-0000	R		1	PULLEY	
140	1296303-0000	-		1	PLATE	
150	1282796-0000	-		2	WASHER	
300	315105-0165	-		2	WASHER,PLAIN ROUND 8,4x16 Stainless	
310	315105-0153	-		11	WASHER,PLAIN ROUND 6,4x12 Stainless	
320	312105-0376	-		1	SCREW M6S ISO 4017 M6x35 A280	
330	312105-0374	-		4	SCREW M6S ISO 4017 M6x30 A280	
340	312105-0382	-		4	SCREW M6S ISO 4014 M6x60 A280	
350	312105-0370	-		2	SCREW M6S ISO 4017 M6x20 A280	
360	312812-0316	-		2	NUT,HEXAGON,LOCK,WITH NYLON INSERT,M6	
370	315751-0119	-		2	RETAINING RINGS FOR SHAFT 25	
380	312115-0293	-		2	SCREW MC6S ISO 4762 M4X16 A280	
390	312105-0451	-		2	SCREW M6S ISO 4017 8x20 A280	
400	312115-0372	-		2	SCREW MC6S ISO 4762 M6x25 A280	
410	312115-0380	-		2	SCREW MC6S ISO 4762 M6X50 A280	
420	90165-0007	-		4	PIPE-CLIPS,FOR SINGLE,ONE SIDE PIPE 8	
430	312105-0289	-		4	SCREW M6S4X10 A2 80	
440	342732-0104	-		2	ELBOW PIPE JOINT,Ext.thread,D=8 mm G1/4	
450	90237-0216	-		1	CATCH	
460	312155-0368	-		2	SCREW MF6S DIN7991 M6X16 A280	
470	312125-0287	-		2	SLOTTED CHEESE HEAD ISO 1207 M4X8 RFR	
480	312115-0287	-		4	SCREW MC6S ISO 4762 M4X8 A280	
490	90347-0183	R		2	DAMPER	
500	90051-0127	-		1	HANDLE	
510	90240-0265	K		2	Flange Bushing, 20x23x21	
520	315115-0153	-		2	WASHER TBRB 6,4x12 Stainless	
53050_2	90166-0118	-	MM	1000	TUBE 8 mm PA Black	
53050_3	90166-0118	-	MM	1000	TUBE 8 mm PA Black	
TBA 0200B						
010	1348754-0000	-		1	SWING FRAME	
120	1511643-0000	-		1	GUIDE	
130	1511644-0000	-		1	GUIDE	
TBA 0250B						
010	1260175-0000	-		1	SWING FRAME	
120	1487068-0000	-		1	GUIDE	
130	1487069-0000	-		1	GUIDE	

HEATING CHAMBER

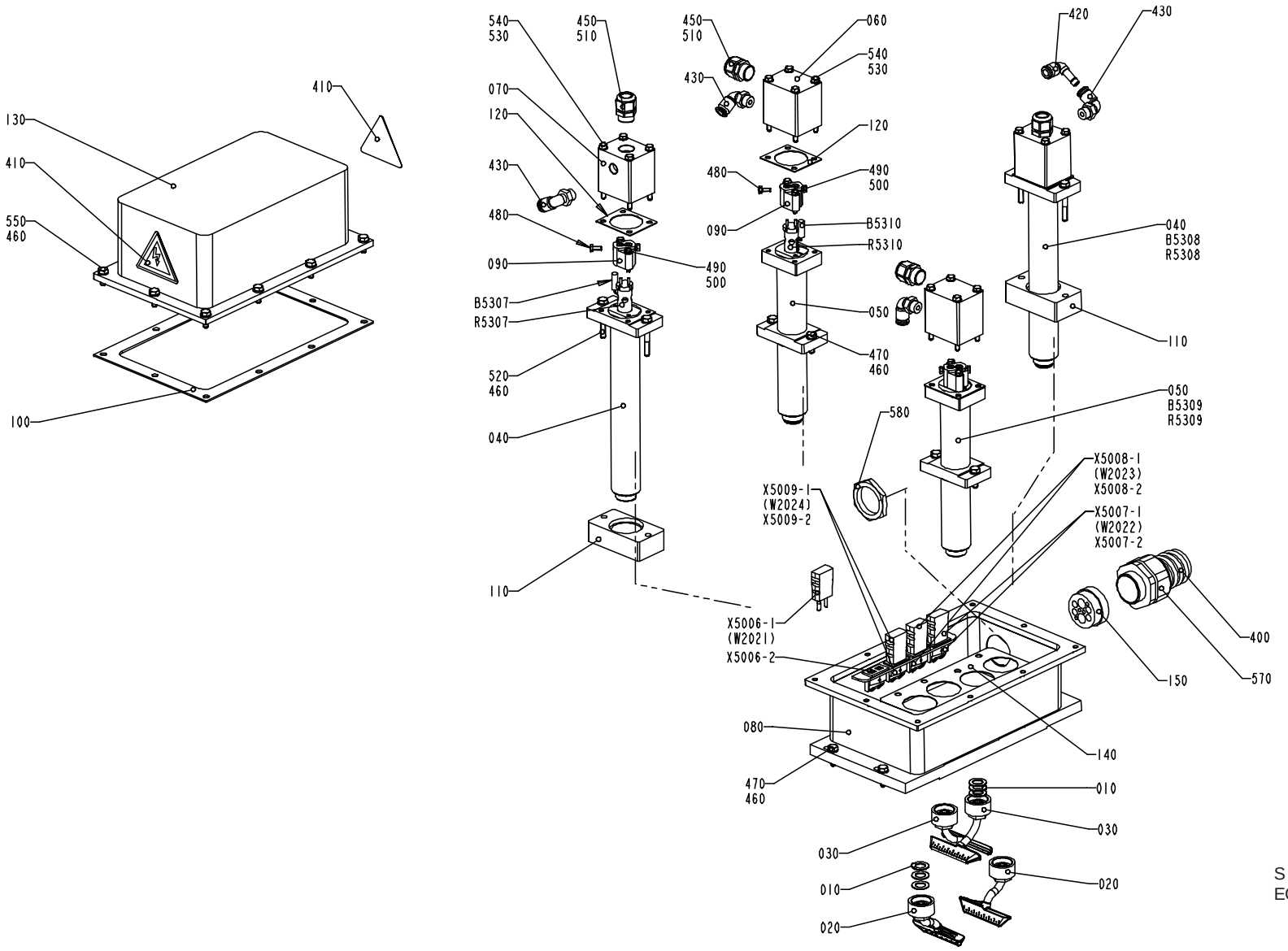

S - 1478630-1(1)
ECN 71403

Pos	Part No	SP	UN	Qty	Description	Page No
Common parts						
010	1010947-0000	K		12	GASKET	
020	1348760-0000	F		2	NOZZLE	
030	1348770-0000	F		2	NOZZLE	
040	1478616-0000	-		2	HEATING PIPE	
050	1478617-0000	-		2	HEATING PIPE	
060	1478629-0000	-		2	CAP	
070	1478619-0000	-		2	CAP	
080	1478620-0000	-		1	BRACKET	
090	1478621-0000	-		4	CLAMP	
100	1487075-0000	K		1	GASKET	
120	1487076-0000	K		4	GASKET	
130	1478625-0000	-		1	COVER HOUSING	
140	1478626-0000	K		1	GASKET	
150	1498980-0000	-		1	INSERT	
400	90152-0060	-	MM	800	GLANDS,HOSE 42X35	
410	90194-0016	-		2	SIGN "FLASH SIGN" 50X50MM	
420	90055-0118	-		1	Elbow with tailpiece	
430	342732-0104	-		4	ELBOW PIPE JOINT,Ext.thread,D=8 mm G1/4	
450	353240-0002	-		4	GLANDS,NORMAL WITHOUT INSERT PG 11	
460	315105-0153	-		22	WASHER,PLAIN ROUND 6,4x12 Stainless	
470	312105-0370	-		8	SCREW M6S ISO 4017 M6x20 A280	
480	312105-0289	-		8	SCREW M6S4X10 A2 80	
490	315105-0136	-		8	WASHER,PLAIN ROUND 4,3x8 Stainless	
500	312105-0297	-		8	SCREW M6S ISO 4014 M4X25 A280	
510	353249-0041	-		4	GLAND,INSERT,SOLID,NORMAL E151G	
520	312105-0379	-		4	SCREW M6S ISO 4014 M6x45 A280	
530	315105-0146	-		16	WASHER,PLAIN ROUND 5,3x10 Stainless	
540	312101-0344	-		16	SCREW M6S5X65FZB	
550	312105-0368	-		10	SCREW M6S ISO 4017 M6x16 A280	
570	353243-0008	-		1	GLAND,HOSE,EXTENDED WITHOUT INSERT PG29	
580	90099-0120	-		1	NUT PR 37 (PG29)	
B5307	1512463-0000	R		1	THERMOCOUPLE	
B5308	1512463-0000	R		1	THERMOCOUPLE	
B5309	1512463-0000	R		1	THERMOCOUPLE	
B5310	1512463-0000	R		1	THERMOCOUPLE	
R5307	90206-0132	T		1	HOT AIR ELEMENT	
R5308	90206-0132	T		1	HOT AIR ELEMENT	
R5309	90206-0132	T		1	HOT AIR ELEMENT	
R5310	90206-0132	T		1	HOT AIR ELEMENT	
X5006-1	90326-0022	-		1	PLUG,MALE YELLOW CR-AL	
X5006-2	90326-0077	-		1	CONTACT	
X5007-1	90326-0022	-		1	PLUG,MALE YELLOW CR-AL	
X5007-2	90326-0077	-		1	CONTACT	
X5008-1	90326-0022	-		1	PLUG,MALE YELLOW CR-AL	
X5008-2	90326-0077	-		1	CONTACT	
X5009-1	90326-0022	-		1	PLUG,MALE YELLOW CR-AL	
X5009-2	90326-0077	-		1	CONTACT	
TBA 0200B						
110	1478627-0000	-		2	SPACER	
TBA 0250B						
110	1478623-0000	-		2	SPACER	

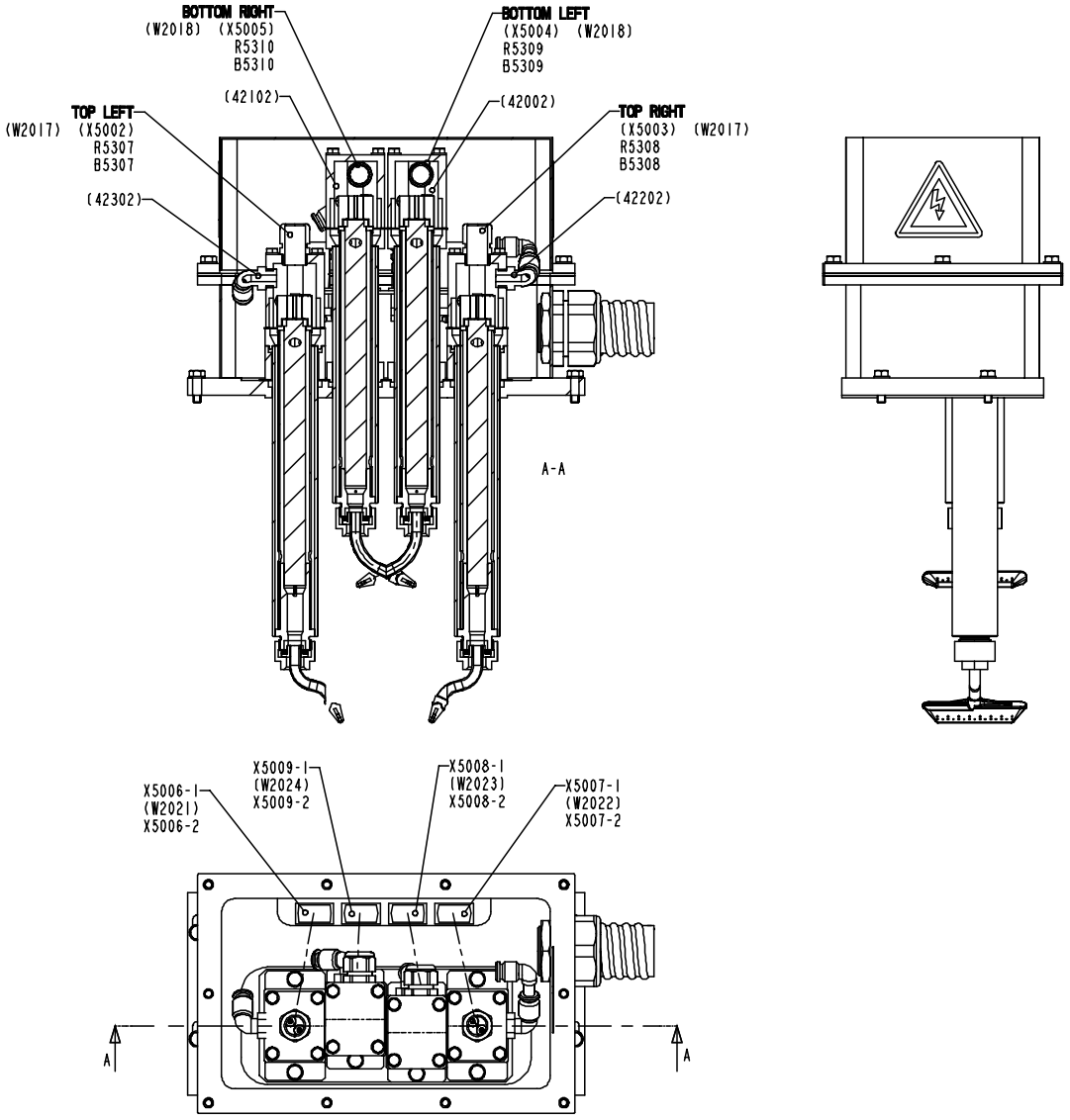

S - 1478630-1(2)
ECN 71403

Pos	Part No	SP	UN	Qty	Description	Page No
Common parts						
010	1010947-0000	K		12	GASKET	
020	1348760-0000	F		2	NOZZLE	
030	1348770-0000	F		2	NOZZLE	
040	1478616-0000	-		2	HEATING PIPE	
050	1478617-0000	-		2	HEATING PIPE	
060	1478629-0000	-		2	CAP	
070	1478619-0000	-		2	CAP	
080	1478620-0000	-		1	BRACKET	
090	1478621-0000	-		4	CLAMP	
100	1487075-0000	K		1	GASKET	
120	1487076-0000	K		4	GASKET	
130	1478625-0000	-		1	COVER HOUSING	
140	1478626-0000	K		1	GASKET	
150	1498980-0000	-		1	INSERT	
400	90152-0060	-	MM	800	GLANDS,HOSE 42X35	
410	90194-0016	-		2	SIGN "FLASH SIGN" 50X50MM	
420	90055-0118	-		1	Elbow with tailpiece	
430	342732-0104	-		4	ELBOW PIPE JOINT,Ext.thread,D=8 mm G1/4	
450	353240-0002	-		4	GLANDS,NORMAL WITHOUT INSERT PG 11	
460	315105-0153	-		22	WASHER,PLAIN ROUND 6,4x12 Stainless	
470	312105-0370	-		8	SCREW M6S ISO 4017 M6x20 A280	
480	312105-0289	-		8	SCREW M6S4X10 A2 80	
490	315105-0136	-		8	WASHER,PLAIN ROUND 4,3x8 Stainless	
500	312105-0297	-		8	SCREW M6S ISO 4014 M4X25 A280	
510	353249-0041	-		4	GLAND,INSERT,SOLID,NORMAL E151G	
520	312105-0379	-		4	SCREW M6S ISO 4014 M6x45 A280	
530	315105-0146	-		16	WASHER,PLAIN ROUND 5,3x10 Stainless	
540	312101-0344	-		16	SCREW M6S5X65FZB	
550	312105-0368	-		10	SCREW M6S ISO 4017 M6x16 A280	
570	353243-0008	-		1	GLAND,HOSE,EXTENDED WITHOUT INSERT PG29	
580	90099-0120	-		1	NUT PR 37 (PG29)	
B5307	1512463-0000	R		1	THERMOCOUPLE	
B5308	1512463-0000	R		1	THERMOCOUPLE	
B5309	1512463-0000	R		1	THERMOCOUPLE	
B5310	1512463-0000	R		1	THERMOCOUPLE	
R5307	90206-0132	T		1	HOT AIR ELEMENT	
R5308	90206-0132	T		1	HOT AIR ELEMENT	
R5309	90206-0132	T		1	HOT AIR ELEMENT	
R5310	90206-0132	T		1	HOT AIR ELEMENT	
X5006-1	90326-0022	-		1	PLUG,MALE YELLOW CR-AL	
X5006-2	90326-0077	-		1	CONTACT	
X5007-1	90326-0022	-		1	PLUG,MALE YELLOW CR-AL	
X5007-2	90326-0077	-		1	CONTACT	
X5008-1	90326-0022	-		1	PLUG,MALE YELLOW CR-AL	
X5008-2	90326-0077	-		1	CONTACT	
X5009-1	90326-0022	-		1	PLUG,MALE YELLOW CR-AL	
X5009-2	90326-0077	-		1	CONTACT	
TBA 0200B						
110	1478627-0000	-		2	SPACER	
TBA 0250B						
110	1478623-0000	-		2	SPACER	

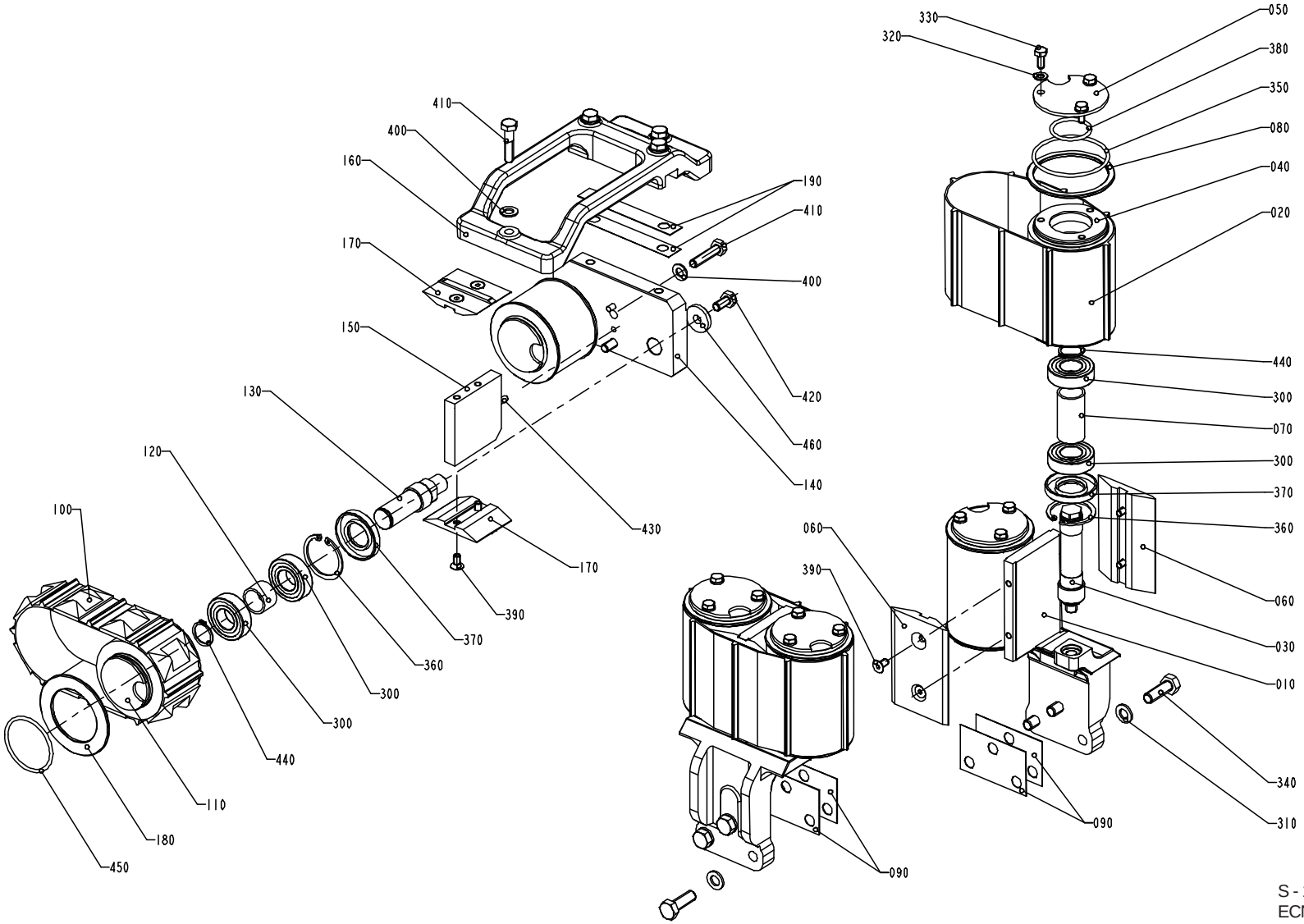

S - 1499690-1
ECN 72027

Pos	Part No	SP	UN	Qty	Description	Page No
Common parts						
050	1487052-0000	-		4	FLANGE	
080	1487050-0000	-		4	FLANGE	
090	1478618-0000	-		4	SHIM	
100	1260040-0000	E		1	BELT	
110	1478638-0000	-		2	PULLEY	
120	1478640-0000	-		2	SPACER	
130	1478637-0000	-		2	SHAFT	
140	1478636-0000	-		1	PLATE	
150	1478635-0000	-		1	PLATE	
160	1487077-0000	-		1	SUPPORT	
170	1348252-0000	K		2	SLIDER	
180	1478639-0000	-		2	FLANGE	
190	1487874-0000	-		2	SHIM	
300	90214-0225	K		12	BEARINGS,BALL BEARING,STAINLESS	
310	315105-0171	-		6	WASHER,PLAIN ROUND 10x18	
320	315105-0153	-		12	WASHER,PLAIN ROUND 6,4x12 Stainless	
330	312105-0367	-		12	SCREW M6S 6x14 A2 80	
340	312105-0495	-		6	SCREW M6S ISO 4017 M10X30 A280	
350	315202-0304	K		4	O-RINGS 64,5X3	
360	90141-0020	-		6	RETAINING RINGS FOR HOLE 42	
370	90091-0263	-		6	SEAL RINGS 24X47X7	
380	315202-0220	K		4	O-RING 32,2x3	
390	312155-0366	-		12	SCREW MF6S DIN 7991 M6x12 A280	
400	315105-0165	-		6	WASHER,PLAIN ROUND 8,4x16 Stainless	
410	312109-0457	-		6	SCREW M6S ISO 4017 M8X35 A280	
420	312105-0449	-		2	SCREW M6S ISO 4017 M8x16 A280	
430	311103-0308	-		2	PINS,STRAIGHT 5X16	
440	315751-0116	-		6	RETAINING RINGS FOR SHAFT 20	
450	315202-0301	K		2	O-RINGS 49,5X3	
460	315125-0165	-		2	WASHERS,PLAIN ROUND,CHAMFERED 8,4X26X5	
470	90157-0016	-		1	LOCKING FLUID LOCTITE 242 50 ML	
TBA 0200B						
010	1499013-0000	-		2	SUPPORT	
020	1348756-0000	F		2	BELT	
030	1499686-0000	-		4	SHAFT	
040	1499687-0000	-		4	ROLLER	
060	1499688-0000	K		4	SLIDER	
070	1499689-0000	-		4	SPACER	
TBA 0250B						
010	1487881-0000	-		2	SUPPORT	
020	1347079-0000	F		2	BELT	
030	1487054-0000	-		4	SHAFT	
040	1487053-0000	-		4	ROLLER	
060	1487055-0000	K		4	SLIDER	
070	1487051-0000	-		4	SPACER	

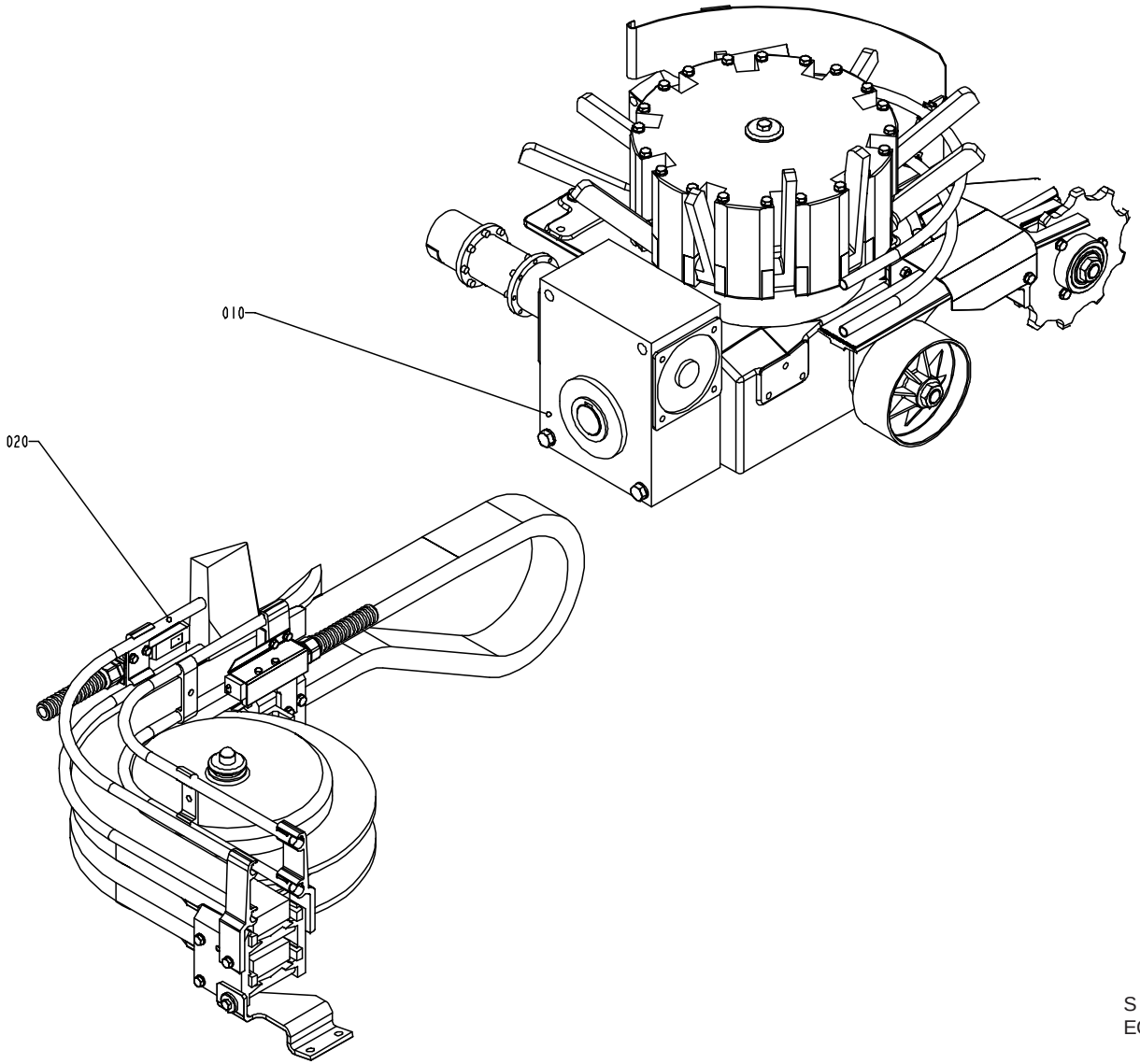

S - 577113-2
ECN 72027

Pos	Part No	SP	UN	Qty	Description	Page No
Common parts						
010	A1348751-0100	-		1	OUTFEED UNIT	**411**
020	A1260142-0200	-		1	CURVE WHEEL	**413**

Pos	Part No	SP	UN	Qty	Description	Page No

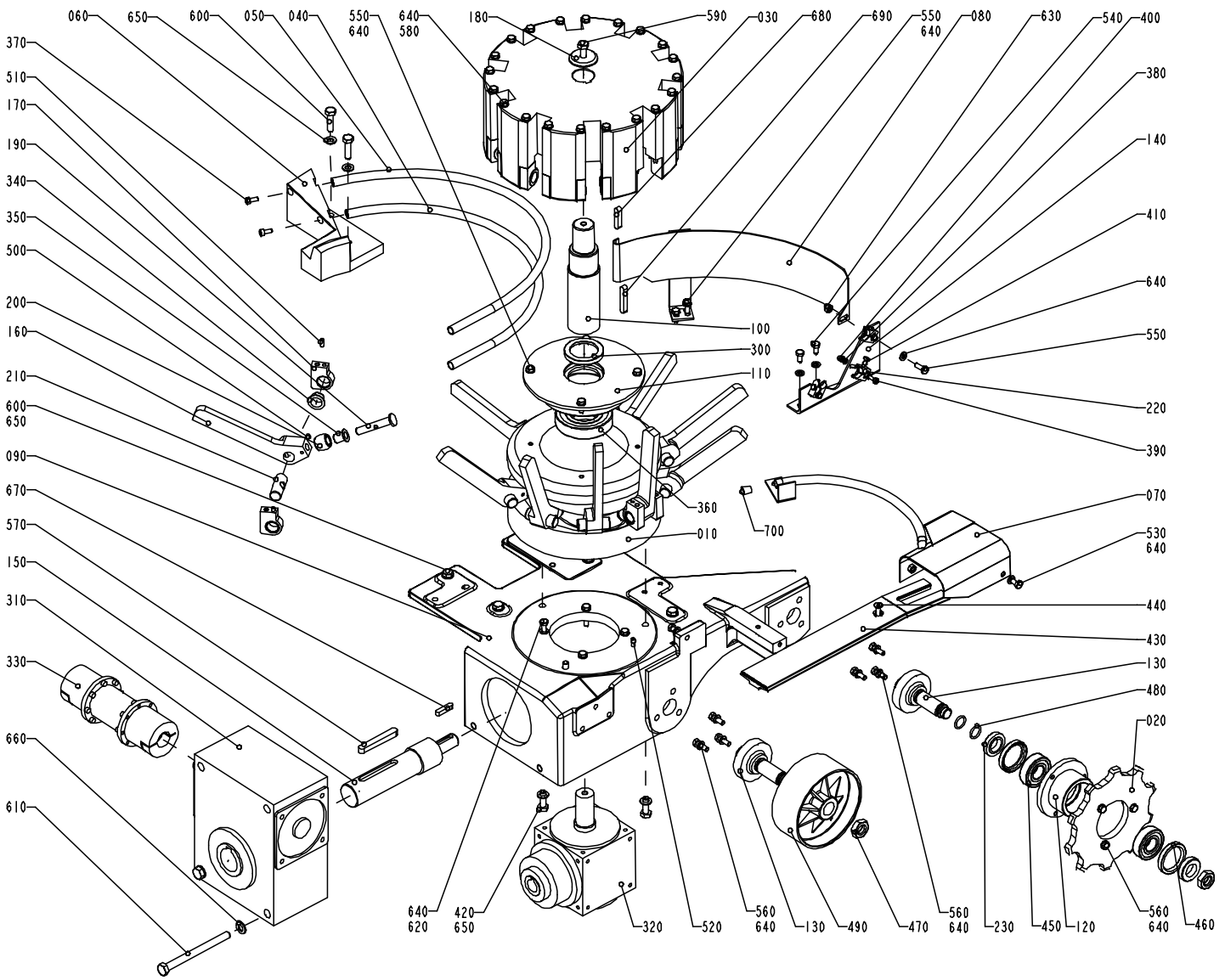

S - 1348751-1
ECN 72027

Pos	Part No	SP	UN	Qty	Description	Page No
Common parts						
010	1348744-0000	-		1	CAM	
020	1348242-0000	-		1	SPROCKET	
030	1260064-0000	-		1	DRUM	
040	1347082-0000	-		1	PIPE	
090	1348244-0000	-		1	BRACKET	
100	1260056-0000	-		1	SHAFT	
110	1260061-0000	-		1	HOUSING	
120	1348241-0000	-		1	HOSE CLAMP	
130	1347910-0000	-		2	SHAFT	
150	1260059-0000	-		1	SHAFT	
170	1260065-0000	-		20	BRACKET	
180	1260066-0000	-		1	WASHER	
190	1260068-0000	-		10	SHAFT	
200	1260069-0000	-		10	ROLLER	
210	1260070-0000	-		10	SHAFT	
220	1334705-0000	-		3	CLAMP	
230	1348243-0000	-		2	SPACER	
300	90091-0305	K		1	SEALING RINGS,TYPE RADIAL SEAL 40X55X7	
310	90056-0171	-		1	WORM GEAR	
320	90056-0172	-		1	BEVEL GEAR	
340	90240-0332	-		20	BUSHING	
350	90240-0331	-		10	BUSHING	
360	90214-0236	-		1	BALL BEARING	
370	312115-0327	-		2	SCREW MC6S ISO 4762 M5X12 A280	
380	315105-0136	-		6	WASHER,PLAIN ROUND 4,3x8 Stainless	
390	312105-0295	-		3	SCREW M6S ISO 4017 M4X20 A280	
400	312605-0312	-		3	NUT,HEXAGON,M4 RFR	
410	312105-0293	-		3	SCREW M6S ISO 4017 M4X16 A280	
420	312105-0453	-		3	SCREW M6S ISO 4017 M8x25 A280	
430	531503-0000	-		1	SLIDE RAIL	
440	312155-0370	-		1	SCREW MF6S DIN 7991 M6X20 A280	
450	90214-0232	-		2	BEARINGS,BALL BEARING,STAINLESS 10X47X14	
460	315221-0175	K		2	SEALING RINGS,TYPE A 35X47X7	
470	90099-0131	-		2	NUTS,HEXAGON, M16x2, ISO4035	
480	315202-0213	-		2	O-RING 15,3x2,4	
490	476975-0000	-		1	WHEEL	
500	311103-0272	-		10	PIN,STRAIGHT M6 4x20	
510	311103-0306	-		20	PINS,STRAIGHT 5X12	
520	311103-0310	-		1	STRAIGHT PIN M6 5x20	
530	312105-0362	-		1	SCREW M6S ISO 4017 M6x8 A280	
540	312105-0366	-		2	SCREW M6S ISO 4017 M6x12 A280	
550	312105-0368	-		7	SCREW M6S ISO 4017 M6x16 A280	
560	312105-0370	-		10	SCREW M6S ISO 4017 M6x20 A280	
570	315705-0307	-		1	KEYS,PARALLEL WITH ROUND ENDS 10X8X70	
580	312105-0388	-		20	SCREW M6S ISO 4014 M6x90 A280	
590	312105-0451	-		1	SCREW M6S ISO 4017 8x20 A280	
600	312105-0455	-		7	SCREW M6S ISO 4017 M8x30 A280	
610	312105-0515	-		2	SCREW M6S ISO 4014 M10X120 A280	
620	312109-0374	-		4	SCREW M6S ISO 4017 M6X30 A280	
630	312812-0316	-		1	NUT,HEXAGON,LOCK,WITH NYLON INSERT,M6	
640	315105-0153	-		44	WASHER,PLAIN ROUND 6,4x12 Stainless	
650	315105-0165	-		10	WASHER,PLAIN ROUND 8,4x16 Stainless	
660	315105-0171	-		2	WASHER,PLAIN ROUND 10x18	
670	315705-0236	-		1	KEYS.PARALLEL WITH ROUND ENDS 6X6X30	
680	315705-0269	-		1	KEYS,PARALLEL WITH ROUND ENDS 8X7X35	
690	315705-0271	-		1	KEYS,PARALLEL WITH ROUND ENDS 8X7X45	
700	484701-0000	-		1	SHUTTER	
710	90296-0068	-		x	Grease Uniway LI 62 Cartridge 400 Gr.	
TBA 0200B						
050	1348768-0000	-		1	PIPE	
060	1348766-0000	-		1	BRACKET	
070	1487047-0000	-		1	GUIDE	
080	1348767-0000	-		1	GUIDE	
140	1348765-0000	-		1	BRACKET	
160	1348769-0000	D		10	CARRIER	
330	1517283-0000	-		1	INTERMEDIARY SHAFT	
TBA 0250B						
050	1347083-0000	-		1	PIPE	
060	1348748-0000	-		1	BRACKET	
070	1348746-0000	-		1	GUIDE	
080	1348745-0000	-		1	GUIDE	
140	1348749-0000	-		1	BRACKET	
160	1260067-0000	D		10	CARRIER	
330	90355-0201	-		1	INTERMEDIARY SHAFT	

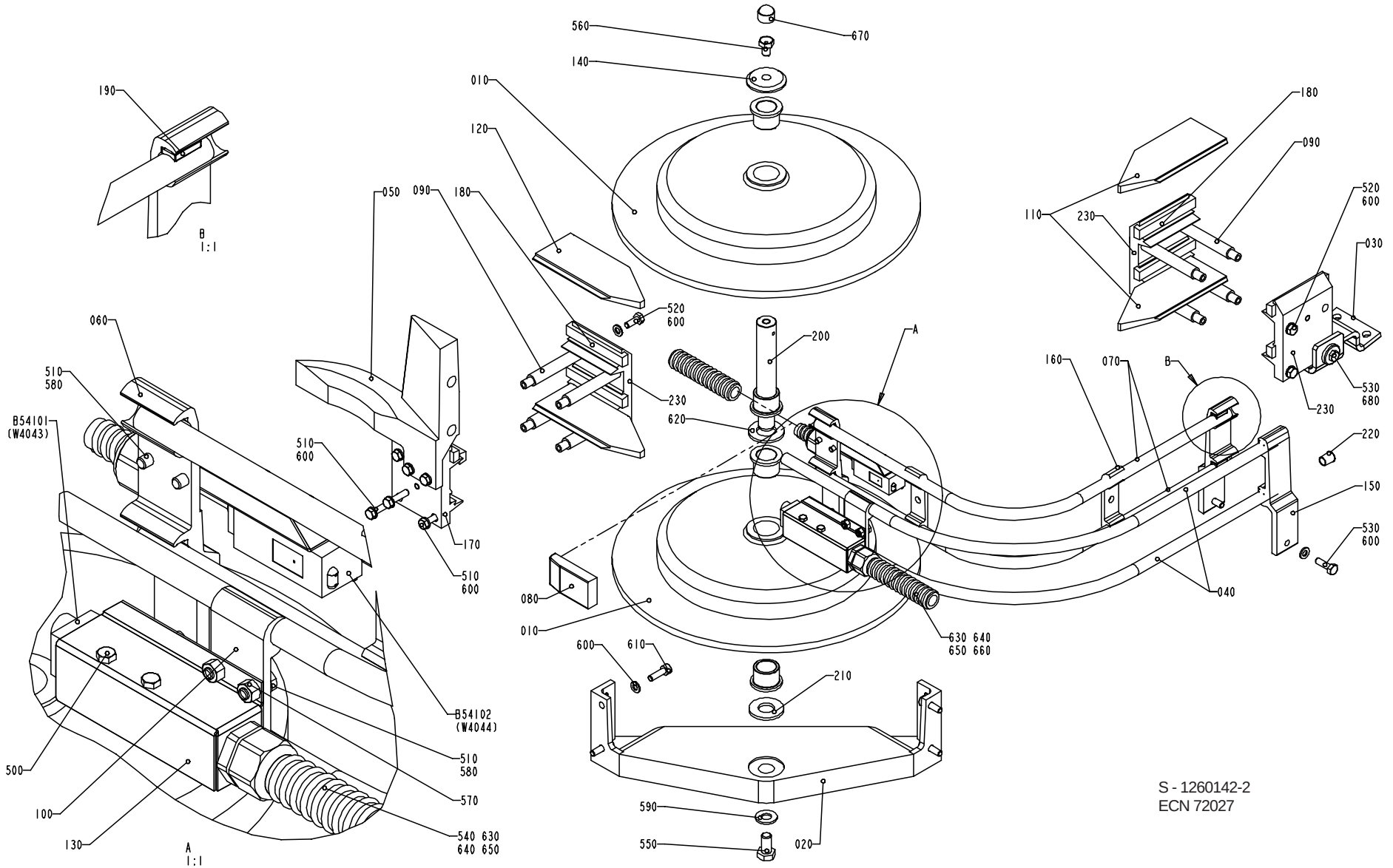

S - 1260142-2
ECN 72027

Pos	Part No	SP	UN	Qty	Description	Page No
Common parts						
010	497991-0000	-		2	CURVE WHEEL	
020	476243-0000	-		1	BOTTOM PLATE	
040	1260145-0000	-		2	ARCH	
050	1348747-0000	-		1	GUIDE	
060	1347905-0000	-		1	HOLDER	
070	1478628-0000	-		2	ARCH	
080	1347090-0000	-		1	CHUTE	
090	1347900-0000	-		8	SPACER	
100	1020637-0000	-		1	HOLDER	
110	1086625-0000	-		2	SLIDE RAIL	
120	1086626-0000	-		2	SLIDE RAIL	
130	1347907-0000	-		2	HOLDER	
140	1260066-0000	-		1	WASHER	
150	1020142-0002	-		2	RAIL HOLDER	
160	1020635-0001	-		2	HOLDER	
170	1348750-0000	-		1	BRACKET	
180	466074-0002	-		8	SLIDER	
190	1020146-0000	-		12	LOCKING BLOCK REPL BY 1020290-101	
200	476978-0000	-		1	SHAFT	
210	476979-0000	-		1	WASHER	
220	484701-0000	-		4	SHUTTER	
230	457696-0001	-		3	JOINT PIECE	
500	312105-0291	-		4	SCREW M6S ISO 4017 M4X12 A280	
510	312105-0327	-		4	SCREW M6S ISO 4017 M5X12 A280	
520	312105-0368	-		5	SCREW M6S ISO 4017 M6x16 A280	
530	312105-0370	-		6	SCREW M6S ISO 4017 M6x20 A280	
540	90152-0059	-	MM	1500	HOSE 18x12	
550	312105-0491	-		1	SCREW M6S ISO 4017 M10x20 A280	
560	526767-0000	-		1	SCREW	
570	312605-0314	-		2	NUT,HEXAGON,M6M5 Stainless	
580	315105-0146	-		4	WASHER,PLAIN ROUND 5,3x10 Stainless	
590	315105-0173	-		1	WASHER,PLAIN ROUND 10,5x22 STAINLESS	
600	315105-0153	-		18	WASHER,PLAIN ROUND 6,4x12 Stainless	
610	312115-0370	-		4	SCREW MC6S ISO 4762 M6x20 A280	
620	315105-0191	-		1	WASHER BRB20X36RFR	
630	353243-0001	-		2	GLAND,HOSE,EXTENDED,WITHOUT INSERT PG9	
640	353249-0008	-		2	GLAND,INSERT,SINGLE HOLE,EXTEND.4-6,5	
650	90099-0104	-		2	NUT PR 15,2 (PG9)	
660	90152-0059	-	MM	1500	HOSE 18x12	
670	90261-0038	-		1	HOOD GPN 1000/893	
680	315125-0153	-		1	WASHERS,PLAIN ROUND,CHAMFERED 6,4X22X4	
B54101	90232-0103	K		1	Ph.cell E3S-CT61-L-5M	
B54102	90232-0104	K		1	Ph.cell E3S-CT61-D-5M	
TBA 0200B						
030	1478634-0000	-		1	SUPPORT	
TBA 0250B						
030	1347902-0000	-		1	SUPPORT	

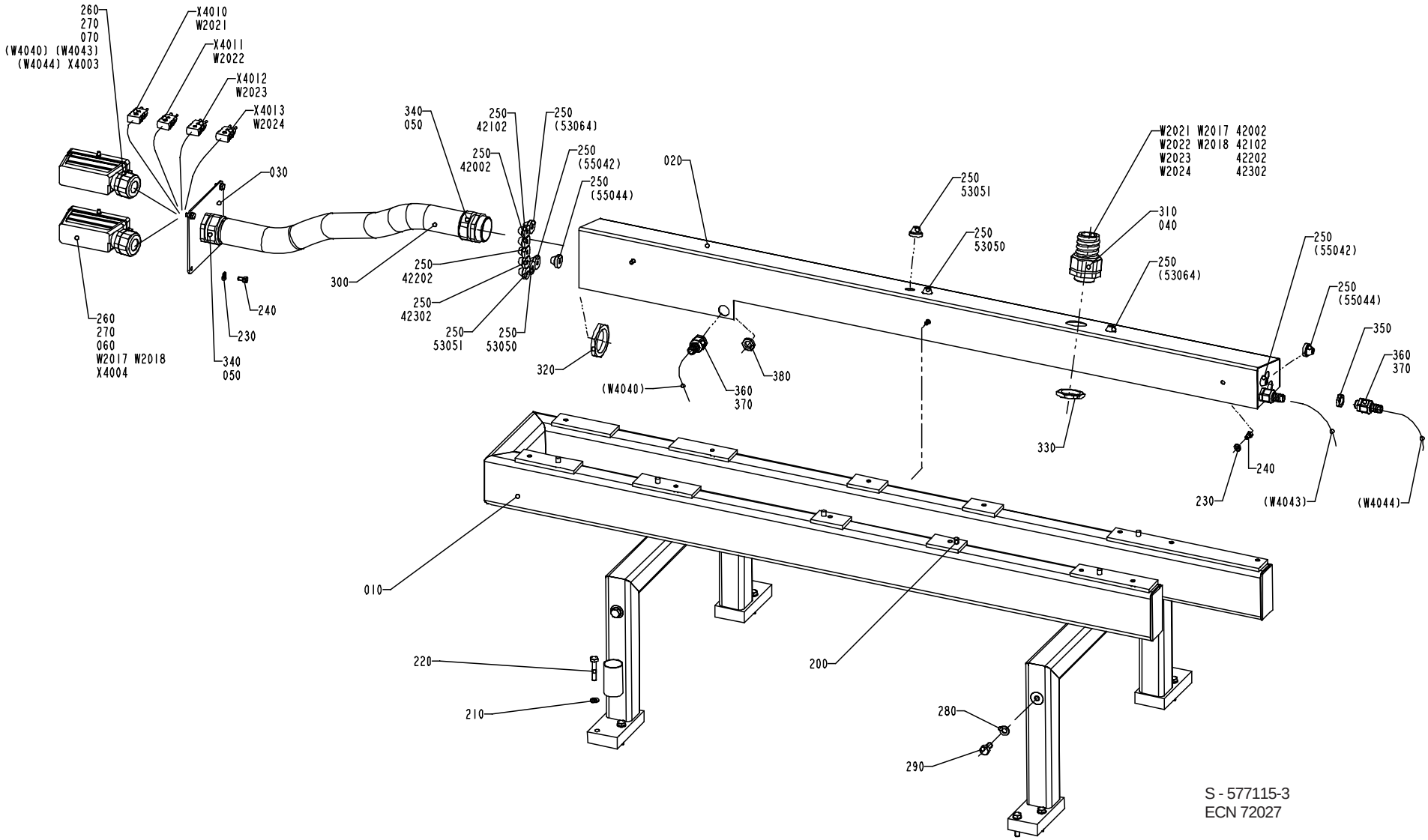
260
270
070
(W4040) (W4043)
(W4044) X4003
X4010
W2021
X4011
W2022
X4012
W2023
X4013
W2024
030
240
230
340
050
260
270
060
W2017 W2018
X4004
300
340
050
250
42102
250
(53064)
250
42002
250
(55042)
250
(55044)
250
42202
250
42302
250
53051
250
53050
320
(W4040)
360
370
380
020
250
53051
250
53050
W2021 W2017 42002
W2022 W2018 42102
W2023 42202
W2024 42302
310
040
250
(53064)
250
(55042)
250
(55044)
350
360
370
330
240
230
(W4043)
(W4044)
010
220
210
200
280
290
S - 577115-3
ECN 72027

Pos	Part No	SP	UN	Qty	Description	Page No
Common parts						
020	1348752-0000	-		1	BOX	
030	1348510-0000	-		1	PLATE	
040	1498980-0000	-		1	INSERT	
050	1498981-0000	-		2	INSERT	
060	1499089-0000	-		1	INSERT	
070	1499090-0000	-		1	INSERT	
200	311103-0403	-		6	PIN,STRAIGHT 8x25	
210	315105-0165	-		8	WASHER,PLAIN ROUND 8,4x16 Stainless	
220	312105-0459	-		8	SCREW ISO 4017 M8x40 A280	
230	315105-0153	-		7	WASHER,PLAIN ROUND 6,4x12 Stainless	
240	312105-0366	-		7	SCREW M6S ISO 4017 M6x12 A280	
250	90015-0020	-		14	GLANDS,Lead-in,IP67	
260	90110-0150	-		2	MALE INSERT 24-P, CABLE	
270	353241-0003	-		2	GLANDS,EXTENDED WITHOUT INSERT PG 21	
280	315105-0171	-		4	WASHER,PLAIN ROUND 10x18	
290	312105-0491	-		4	SCREW M6S ISO 4017 M10x20 A280	
300	90152-0060	-	MM	550	GLANDS,HOSE 42X35	
310	353243-0008	-		1	GLAND,HOSE,EXTENDED WITHOUT INSERT PG29	
320	90099-0103	-		2	NUT PR 47 (PG36)	
330	90099-0120	-		1	NUT PR 37 (PG29)	
340	353242-0004	-		2	GLANDS,HOSE,NORMAL,WITHOUT INSERT PG36	
350	90099-0104	-		3	NUT PR 15,2 (PG9)	
360	353243-0001	-		3	GLAND,HOSE,EXTENDED,WITHOUT INSERT PG9	
370	353249-0008	-		3	GLAND,INSERT,SINGLE HOLE,EXTEND.4-6,5	
42002	90166-0013	-	MM	3000	TUBE 8/6 PA Blue	
42102	90166-0013	-	MM	3000	TUBE 8/6 PA Blue	
42202	90166-0013	-	MM	3000	TUBE 8/6 PA Blue	
42302	90166-0013	-	MM	3000	TUBE 8/6 PA Blue	
53050	90166-0118	-	MM	2000	TUBE 8 mm PA Black	
53051	90166-0118	-	MM	2000	TUBE 8 mm PA Black	
W2017	351150-0419	-	MM	5000	CABLE OLFLEX 5x2,5mm2	
W2018	351150-0419	-	MM	5000	CABLE OLFLEX 5x2,5mm2	
W2021	90220-0034	-	MM	5000	THERMO-CABLE	
W2022	90220-0034	-	MM	5000	THERMO-CABLE	
W2023	90220-0034	-	MM	5000	THERMO-CABLE	
W2024	90220-0034	-	MM	5000	THERMO-CABLE	
X4003	90110-0228	-		1	COVER 24 POLE	
X4004	90110-0228	-		1	COVER 24 POLE	
X4010	90326-0022	-		1	PLUG,MALE YELLOW CR-AL	
X4011	90326-0022	-		1	PLUG,MALE YELLOW CR-AL	
X4012	90326-0022	-		1	PLUG,MALE YELLOW CR-AL	
X4013	90326-0022	-		1	PLUG,MALE YELLOW CR-AL	

Pos	Part No	SP	UN	Qty	Description	Page No
TBA 0200B						
010	1487048-0000	-		1	FRAME	
TBA 0250B						
010	1260052-0000	-		1	FRAME	

This page is intentionally left blank

Pos	Part No	SP	UN	Qty	Description	Page No
90202-0011						
	90239-0349	K		2	SEAL KIT	
256834-0000						
	312911-0118	-		18	THREADED I M6X1,5D	
	312911-0126	-		6	THREADED I M8X1,5D	
441031-0000						
	90240-0049	-		1	PLAIN BEARING REPBY 0090240-0021	
	256737-0000	-		1	LINK REPBY 0441031-0000	
441749-0000						
	312911-0125	-		2	THREADED INSERTS M8X1,0D	

Pos	Part No	SP	UN	Qty	Description	Page No

SPC

Spare Parts Catalogue

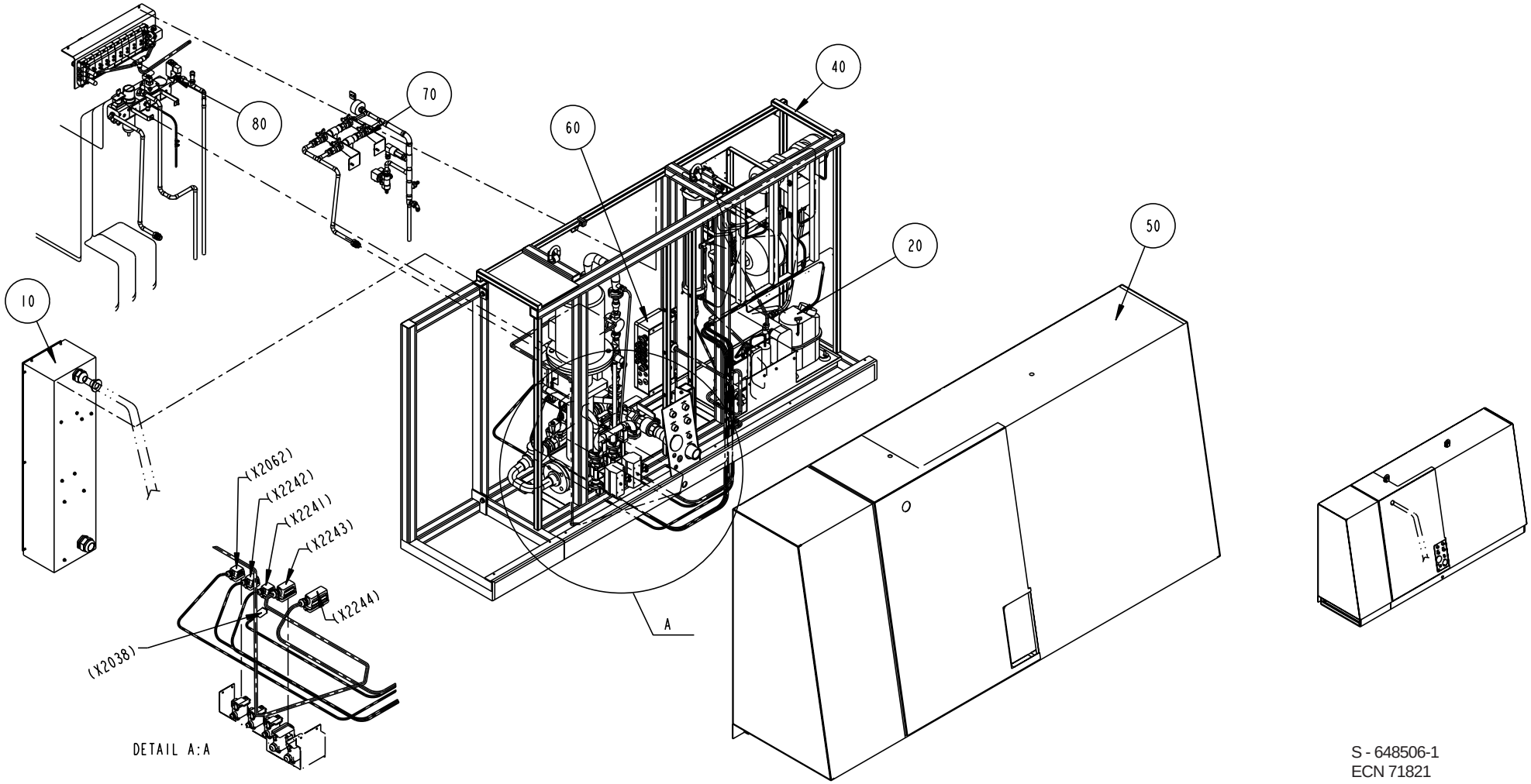

S - 648506-1
ECN 71821

Pos	Part No	SP	UN	Qty	Description	Page No
Common parts						
010	A1095610-0300	-		1	MAIN SWITCH	**423**
020	A1095612-0200	-		1	COOLING WATER SYSTEM	**425**, **427**
030	A1095627-0200	-		1	FOAM CLEANING UNIT	**441**
040	A1095606-0200	-		1	MACHINE BODY	**455**
050	A1095607-0200	-		1	COVERING PANEL	**461**
060	A1095630-0200	-		1	CONNECTION BOX	**479**
070	A1095608-0100	-		1	WATER PANEL	**481**, **483**
080	A1095714-0200	-		1	SUPPLY SYSTEM	**487**

Pos	Part No	SP	UN	Qty	Description	Page No

MAIN SWITCH

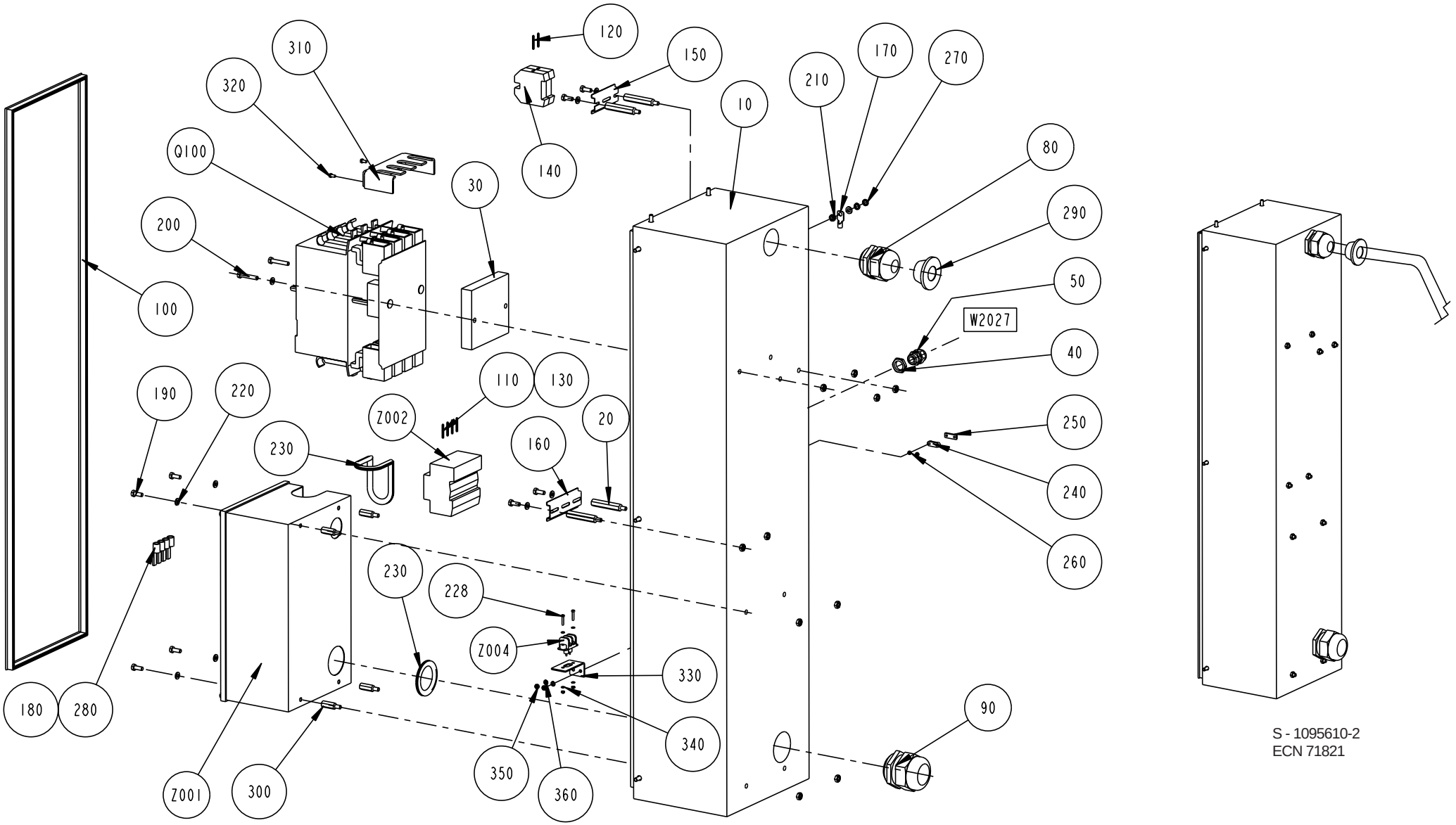

S - 1095610-2
ECN 71821

Pos	Part No	SP	UN	Qty	Description	Page No
Common parts						
010	1041893-0000	-		1	CABINET	
020	1037184-0000	-		4	SPACER SCREW	
030	1037531-0000	-		1	SPACER PLATE	
040	90099-0117	-		1	NUT PR 18,6 (PG11)	
050	352103-0106	-		1	CABLE GLAND ST 11	
060	90099-0085	-		1	NUT	
070	90099-0096	-		1	NUT	
080	352103-0122	-		1	CABLE GLAND ST 36	
090	352103-0123	-		1	CABLE GLAND ST 42	
100	90143-0057	-	MM	2600	STRIP EMKA 1011-05 21x11mm	
110	351173-0110	-	MM	2400	CABLE AWM LIGHTBLUE 25MM2	
120	351175-0109	-	MM	850	CABLE AWM YELL/GREEN 16mm2	
130	351179-0110	-	MM	6000	CABLE AWM BLACK 25MM2	
140	353024-0209	-		2	EARTH TERMINAL WPE 35	
150	353042-0005	-	MM	75	RAIL TS 35/7.5	
160	353042-0005	-	MM	100	RAIL TS 35/7.5	
170	353104-0168	-		1	CABLE SHO YAV 16 M6*	
180	353105-0200	-		9	PIN CABLE SKO A4630SR	
190	312105-0368	-		13	SCREW M6S ISO 4017 M6x16 A280	
200	312105-0376	-		2	SCREW M6S ISO 4017 M6X35 A280	
210	312605-0316	-		1	NUT,HEXAGON A280 M6M6	
220	315105-0153	-		16	WASHER,PLAIN ROUND 6,4x12 Stainless	
230	90143-0060	-	MM	600	EDGE STRIP 9,5x6,3mm Black PVC	
240	90220-0303	-		1	CLAMP FOE SCR.CABLE 10MM	
250	90220-0305	-		1	CLAMP FOR SCR.CABLE 10MM	
260	312605-0310	-		2	NUT,HEXAGON,M6M3 RFR	
270	90062-0015	-		2	LOCK WASHER AZ 6,4 ZINC PLATED	
280	90166-0232	-	MM	500	SHRINKABLE HOSE	
290	90015-0025	-		1	BUSHING	
300	1129402-0000	-		4	SPACER SCREW	
310	1255866-0000	-		1	PROTECTION	
320	312125-0287	-		2	SLOTTED CHEESE HEAD ISO 1207 M4X8 RFR	
330	1349864-0000	-		1	BRACKET	
340	315105-0124	-		4	WASHER,PLAIN ROUND 3,2x6	
350	312601-0312	-		2	NUT M6M4FZB	
360	315101-0136	-		2	WASHER BRB4,3X8FZB	
Q100	90111-0173	R		1	MAIN SWITCH	
W2027	90220-0095	-	MM	3000	CABLES,MULTI-CONDUCT,SCREENED 3X0,75 MM2	
Z001	B1129088-0000	D		1	FILTER	
Z002	B 90082-0010	-		1	OVERVOLT.PROT.PU4R230V3PH	
Z004	90024-0036	-		1	FILTERED TERMINAL BLOCK	

Pos	Part No	SP	UN	Qty	Description	Page No

COOLING WATER SYSTEM

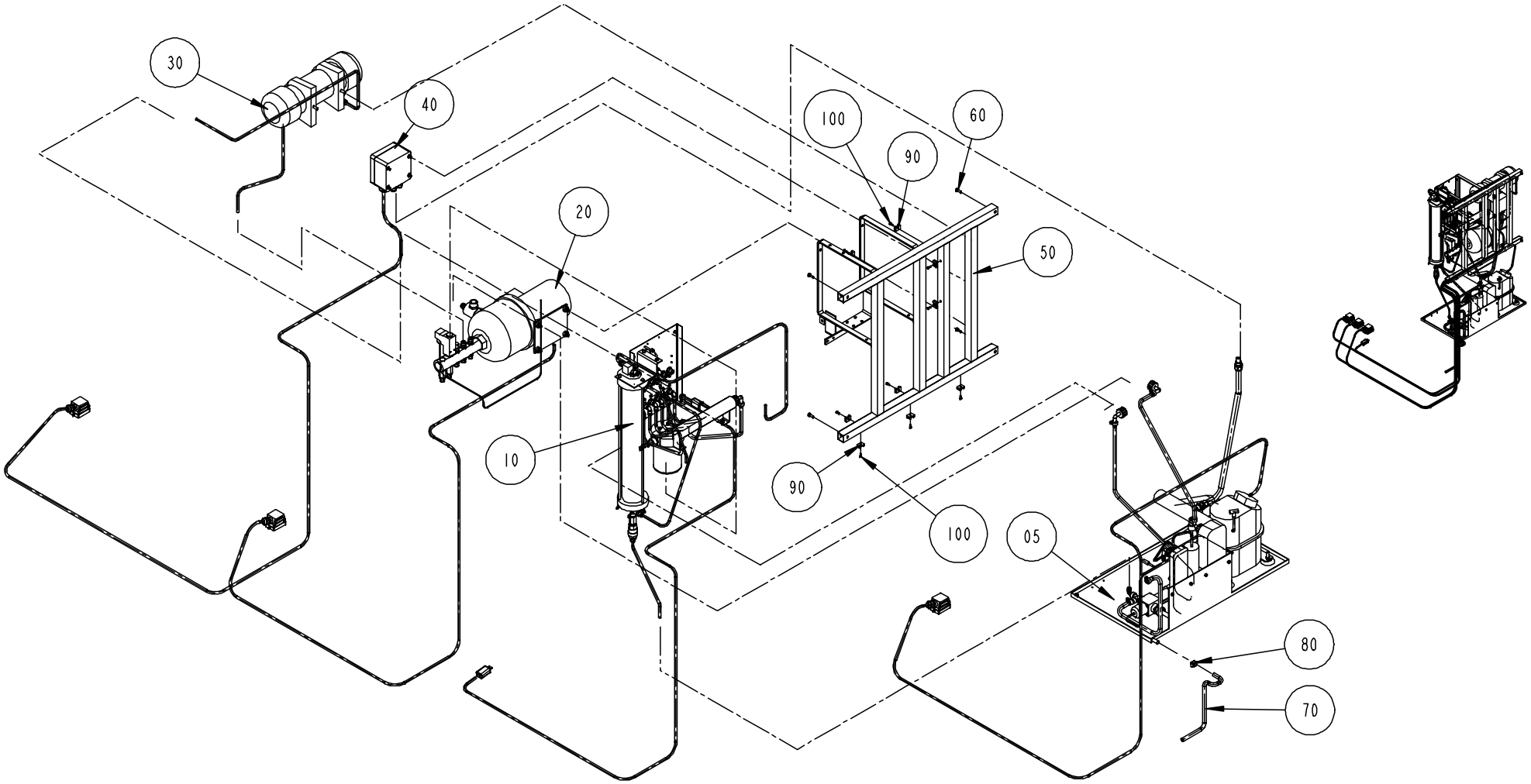

S - 1095612-2
ECN 71821

Pos	Part No	SP	UN	Qty	Description	Page No
TBA/21 COMPRESSOR						
005	A1095710-0200	-		1	COMPRESSOR UNIT	**429**
TBA/21 ICE-WATER						
007	A1260547-0100	-		1	ICE WATER UNIT	**431**
Common parts						
010	A1095705-0200	-		1	FLOW METER	**433**
020	A1095706-0200	-		1	COOLING WATER PUMP	**435**
030	A1095708-0100	-		1	EXPANSION VESSEL	**437**
040	A1095709-0100	-		1	CONNECTION BOX	**439**
050	1129141-0000	-		1	MACHINE BODY	
060	312115-0368	-		4	SCREW MC6S ISO 4762 M6x16 A280	
070	90166-0121	N	MM	1000	HOSE	
080	342991-0101	-		1	HOSE CLIP,WORM DRIVE TYPE (13)-16	
090	352113-0203	-		9	ANCHOR TM3S8-M0	
100	312125-0289	-		9	SLOTTED HEMCS4X10RFR	

Pos	Part No	SP	UN	Qty	Description	Page No

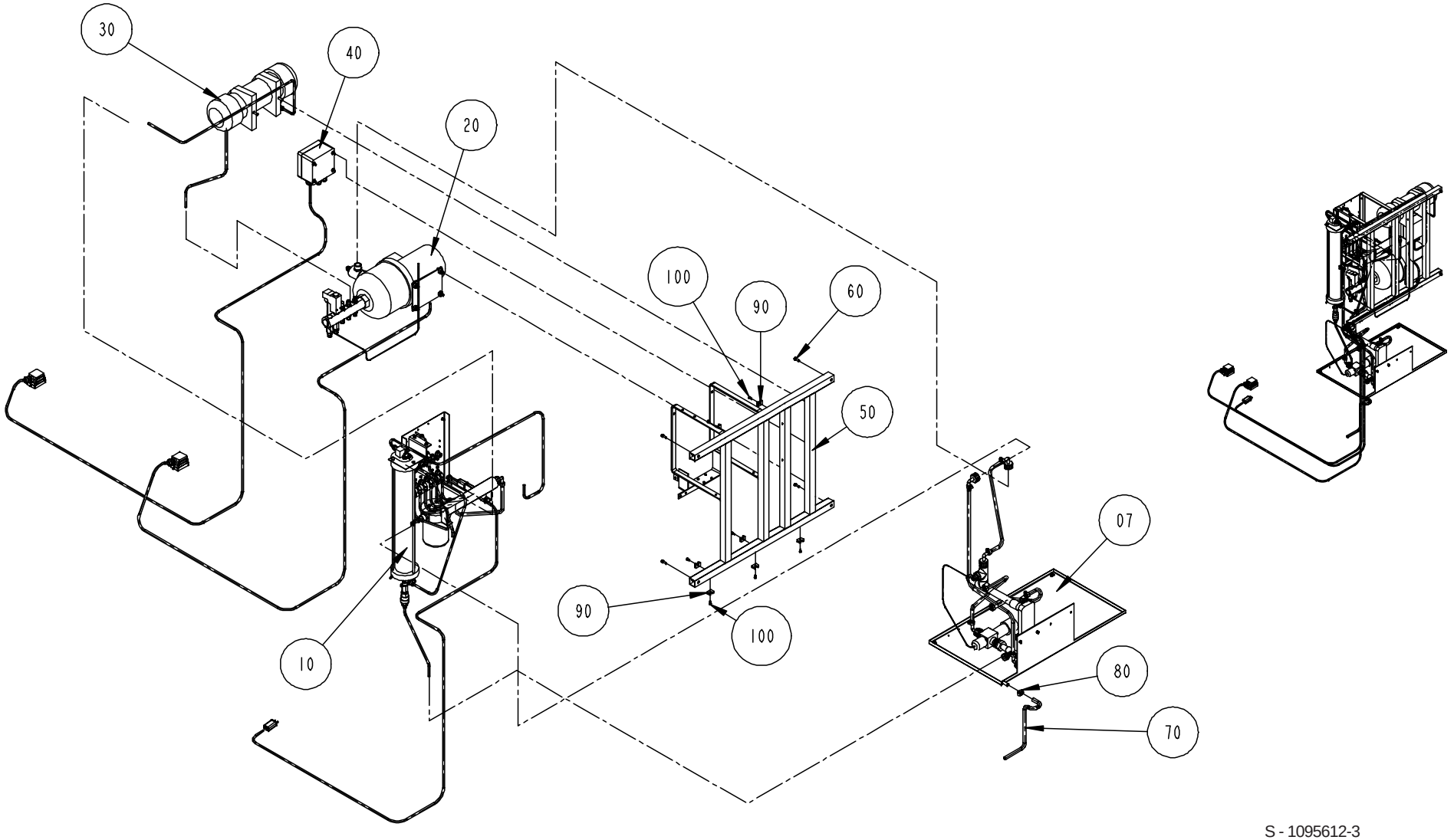

S - 1095612-3
ECN 71821

Pos	Part No	SP	UN	Qty	Description	Page No
TBA/21 COMPRESSOR						
005	A1095710-0200	-		1	COMPRESSOR UNIT	**429**
TBA/21 ICE-WATER						
007	A1260547-0100	-		1	ICE WATER UNIT	**431**
Common parts						
010	A1095705-0200	-		1	FLOW METER	**433**
020	A1095706-0200	-		1	COOLING WATER PUMP	**435**
030	A1095708-0100	-		1	EXPANSION VESSEL	**437**
040	A1095709-0100	-		1	CONNECTION BOX	**439**
050	1129141-0000	-		1	MACHINE BODY	
060	312115-0368	-		4	SCREW MC6S ISO 4762 M6x16 A280	
070	90166-0121	N	MM	1000	HOSE	
080	342991-0101	-		1	HOSE CLIP,WORM DRIVE TYPE (13)-16	
090	352113-0203	-		9	ANCHOR TM3S8-M0	
100	312125-0289	-		9	SLOTTED HEMCS4X10RFR	

Pos	Part No	SP	UN	Qty	Description	Page No

COMPRESSOR UNIT

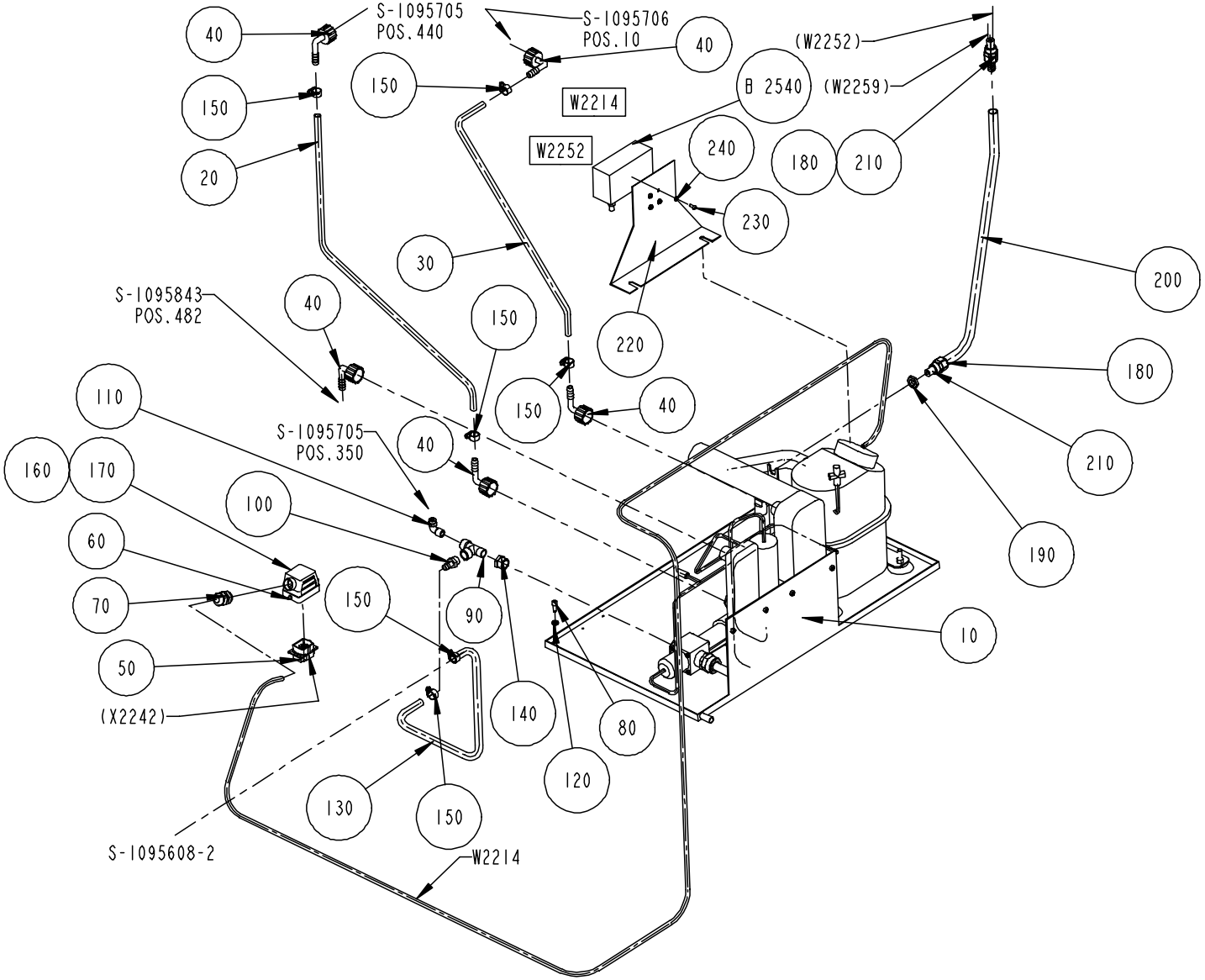

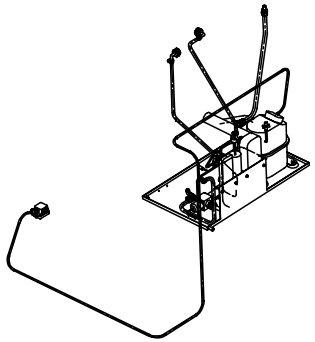

S - 1095710-2
ECN 71821

Pos	Part No	SP	UN	Qty	Description	Page No
Common parts						
010	1140603-0000	D		1	COMPRESSOR UNIT	
020	90166-0121	-	MM	930	HOSE	
030	90166-0121	-	MM	840	HOSE	
040	90358-0090	-		5	ELBOW PIPE JOINT	
050	90110-0159	-		1	CONTACT	
060	90110-0226	-		1	COVER 6-POLE	
070	352103-0108	-		1	CABLE GLAND ST 13	
080	312115-0368	-		2	SCREW MC6S ISO 4762 M6x16 A280	
090	90140-0023	-		1	T-PIECE	
100	90163-0041	-		3	HOSE NIPPLE,EXT. THREAD 3/8"-12	
110	342930-0123	-		1	ELBOW 90 COUPL.,EXT.THREAD 8/6-R3/8"	
120	315115-0153	-		2	WASHER TBRB 6,4x12 Stainless	
130	90166-0121	-	MM	705	HOSE	
140	342701-0206	-		1	BUSHING,INT./EXT.G-THREAD G1/2"-G3/8"	
150	342991-0101	-		6	HOSE CLIP,WORM DRIVE TYPE (13)-16	
160	359005-0050	-		x	MARKING SEATS "X"	
170	359005-0010	-		x	MARKING SESATS 0-9	
180	353242-0001	-		2	GLANDS,HOSE,NORMAL,WITHOUT INSERT PG13,5	
190	90099-0104	-		1	NUT PR 15,2 (PG9)	
200	90152-0059	-	MM	700	HOSE 18x12	
210	353249-0001	-		2	GLANDS,INSERT,SINGLE HOLE,NORMAL 4-6,5mm	
220	1361560-0000	-		1	PLATE	
230	312132-0289	-		4	SLOTTED PAN HEAD ISO 1580 M4X10 MSGFN	
240	90062-0029	-		4	WASHER,Lock 5,1x 8,6, T= 1,5 DIN 7980	
B2540	90274-0108	-		1	Pressure guard	
W 2214	351150-0418	-	MM	3500	CABLE OLFLEX 4x2,5mm2	

Pos	Part No	SP	UN	Qty	Description	Page No

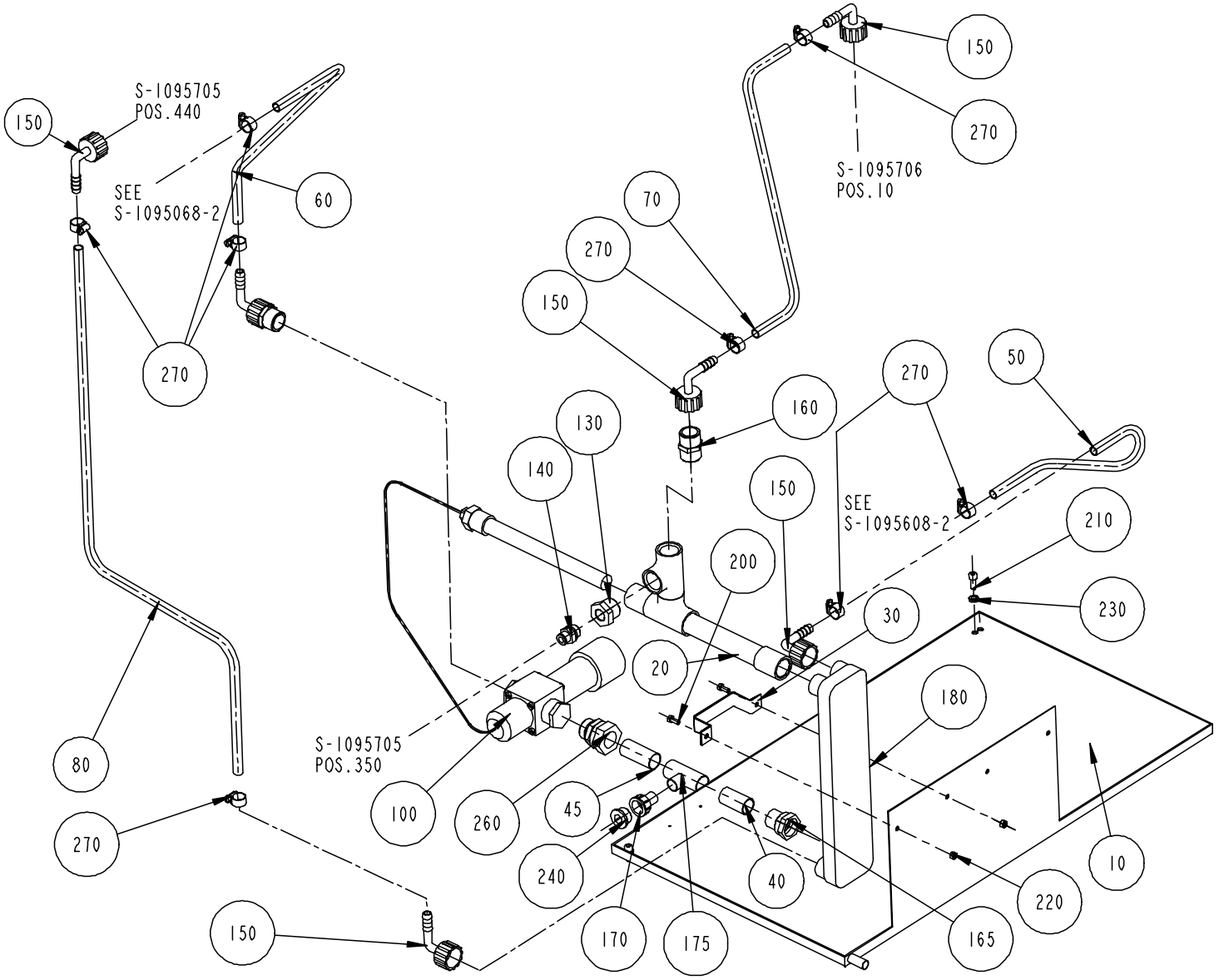

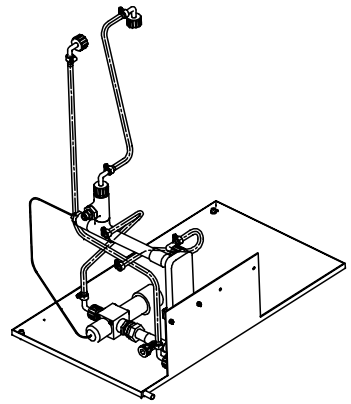

S - 1260547-1
ECN 71821

Pos	Part No	SP	UN	Qty	Description	Page No
Common parts						
010	1255365-0000	-		1	MOUNTING PLATE	
020	1260246-0000	-		1	TUBE	
030	1260247-0000	-		1	CLIP	
040	1260327-0000	-		1	TUBE	
045	1285363-0000	-		1	TUBE	
050	90166-0121	-	MM	400	HOSE	
060	90166-0121	-	MM	550	HOSE	
070	90166-0121	-	MM	600	HOSE	
080	90166-0121	-	MM	850	HOSE	
100	90187-0130	-		1	VALVE	
130	90330-0078	-		1	BUSHING,INT./EXT.R-THREAD R3/4"-Rp3/8"	
140	342722-0206	-		1	STRAIGHT COUPLING D=8-R3/8"	
150	90358-0090	-		6	ELBOW PIPE JOINT	
160	90358-0092	-		2	DOUBLE NIPPLE	
165	90418-0045	-		1	ADAPTER,INTERNAL CONNECTION 22-G3/4"	
170	90418-0057	-		1	ADAPTER,EXTERNAL CONNECTION 15-G1/2"	
175	90418-0062	-		1	T-PIPE,REDUCTION INTERNAL CONNE.22X15X22	
180	90422-0037	D		1	HEAT EXCHANGER	
200	312105-0327	-		2	SCREW M6S ISO 4017 M5X12 A280	
210	312105-0368	-		2	SCREW M6S ISO 4017 M6x16 A280	
220	312605-0314	-		2	NUT,HEXAGON,M6M5 Stainless	
230	315115-0153	-		2	WASHER TBRB 6,4x12 Stainless	
240	342713-0213	-		1	PLUG,EXT.G-THREAD,HEXAGON SOCKET G1/2"	
260	342720-0119	-		1	STRAIGHT CONNECTION GA-22-G3/4"	
270	342991-0101	-		8	HOSE CLIP,WORM DRIVE TYPE (13)-16	

Pos	Part No	SP	UN	Qty	Description	Page No

FLOW METER

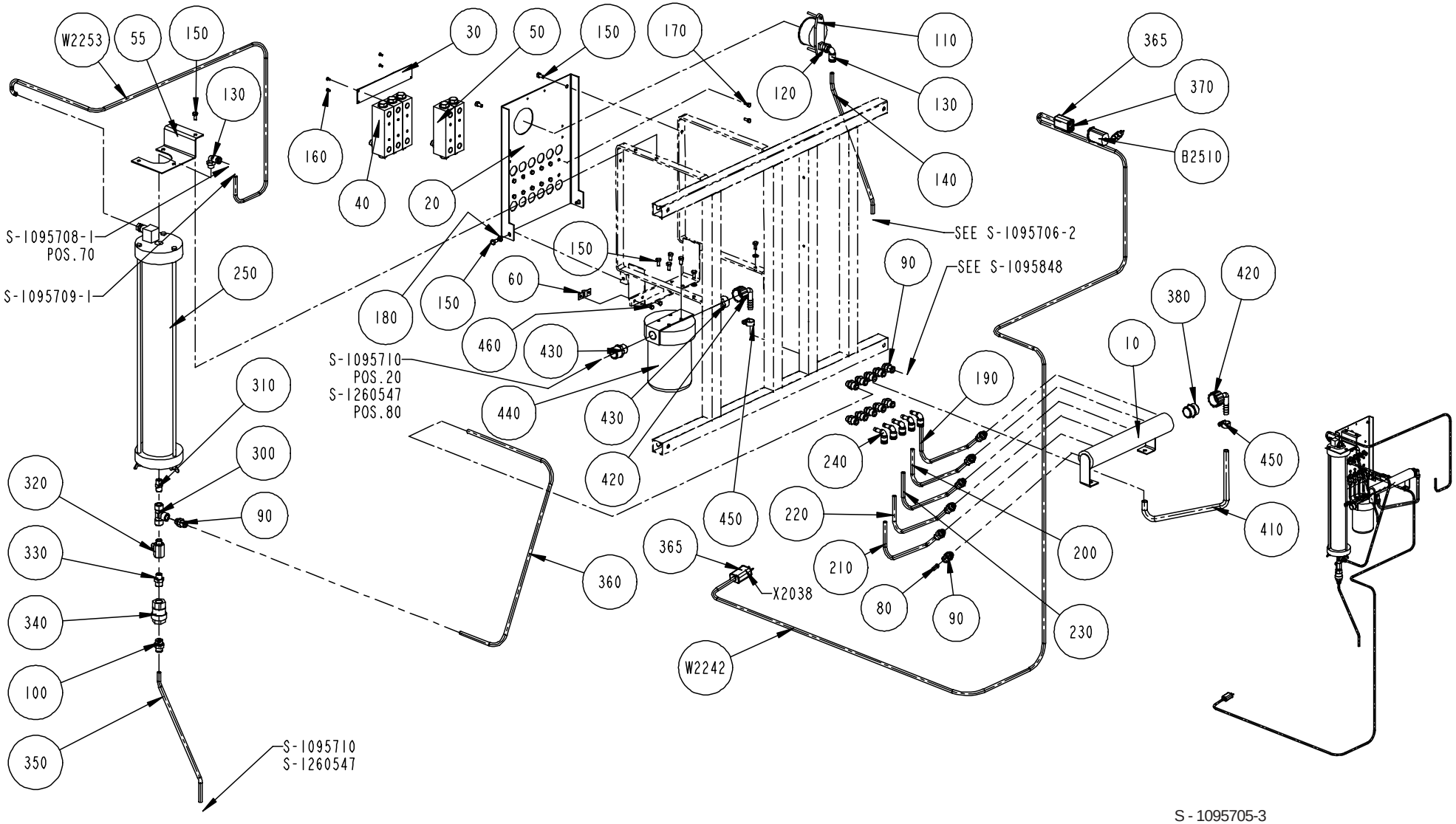

S - 1095705-3
ECN 71821

Pos	Part No	SP	UN	Qty	Description	Page No
TBA/21HS						
030	1484886-0000	-		1	SIGN LANGUAGEINDEPENDENT	
040	B1041046-0000	-		6	FLOW METER	
Common parts						
010	1041984-0000	-		1	ATTACHMENT PIPE	
020	1041959-0000	-		1	PIVOT BRACKET	
055	1041944-0000	-		1	BRACKET	
060	1260248-0000	-		1	CLAMP	
100	342722-0206	-		1	STRAIGHT COUPLING D=8-R3/8"	
110	90043-0100	D		1	MANOMETER	
120	342707-0110	-		1	SLEEVE,INTERNAL THREAD G1/4"	
130	342732-0104	-		2	ELBOW PIPE JOINT	
140	90166-0139	-	MM	490	HOSE	
150	312105-0366	-		12	SCREW M6S ISO 4017 M6X12 A280	
160	312125-0220	-		4	SLOTTED HEMCS3X6RFR	
170	312105-0327	-		12	SCREW M6S ISO 4017 M5X12 A280	
180	315105-0153	-		4	WASHER,PLAIN ROUND 6,4x12 Stainless	
190	90166-0139	-	MM	255	HOSE	
200	90166-0139	-	MM	255	HOSE	
210	90166-0139	-	MM	255	HOSE	
220	90166-0139	-	MM	255	HOSE	
230	90166-0139	-	MM	255	HOSE	
250	B 90415-0060	J		1	ION EXCHANGER	
300	90140-0018	-		1	T-PIPE,INTERNAL THREAD Rp1/4"	
310	90330-0043	-		1	NIPPLES,HEXAGON EXT.R-THREAD R1/4"-R1/4"	
320	90187-0158	-		1	VALVE	
330	90330-0083	-		1	NIPPLES,HEXAGON,EXT.R-THREAD R3/8"-R1/4"	
340	90230-0028	-		1	NON-RETURN VALVE	
350	90166-0139	-	MM	500	HOSE	
360	90166-0139	-	MM	800	HOSE	
365	90326-0012	-		2	PROTECTIVE COVER	
370	90326-0020	-		1	PLUG,FEMALE YELLOW CR-AL	
380	342700-0115	-		1	NIPPLES,HEXAGON,EXT.G-THREAD G3/4"-G3/4"	
410	90166-0121	-	MM	400	HOSE	
420	90358-0090	-		2	ELBOW PIPE JOINT	
430	90358-0091	-		2	REDUCING NIPPLE	
440	B 90415-0065	D		1	FILTER	
450	342991-0101	-		2	HOSE CLIP,WORM DRIVE TYPE (13)-16	
460	312105-0327	-		2	SCREW M6S ISO 4017 M5X12 A280	
B 2510	90326-0057	-		1	THERMOCOUPLE CR-AL	
B 2520	90326-0020	-		1	PLUG,FEMALE YELLOW CR-AL	
W 2242	90220-0034	-	MM	3000	THERMO-CABLE	
W 2253	351150-0122	-	MM	1400	CABLE OLFLEX N 2x0,75 MM2	

Pos	Part No	SP	UN	Qty	Description	Page No
X 2038	90326-0022	-		1	PLUG,MALE YELLOW CR-AL	

COOLING WATER PUMP

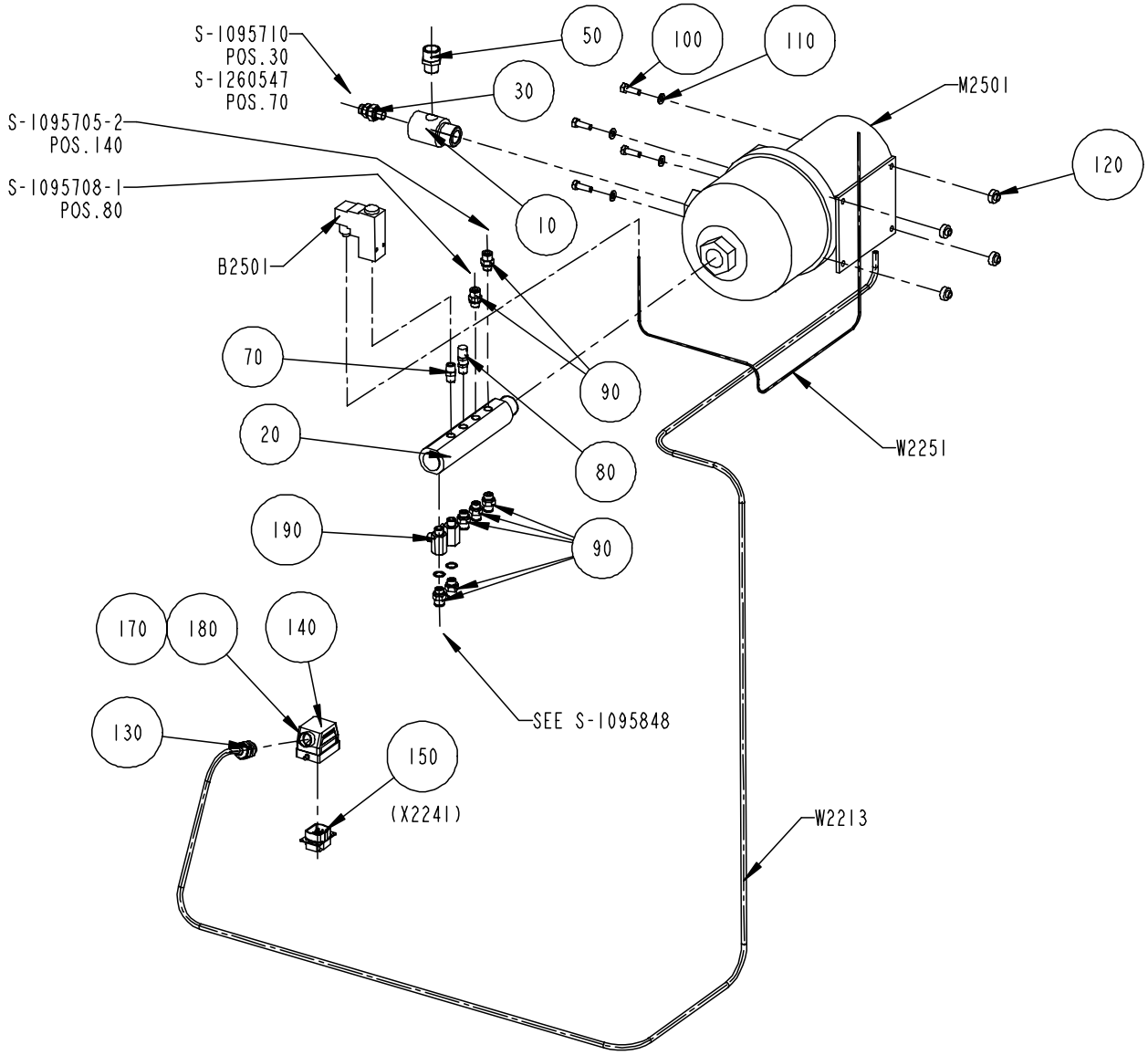

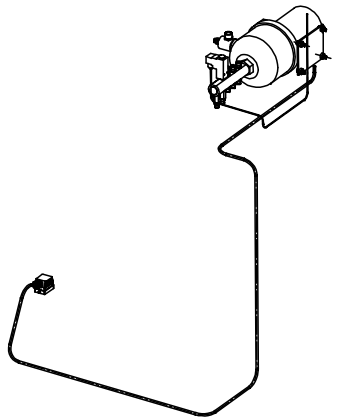

S - 1095706-2
ECN 71821

Pos	Part No	SP	UN	Qty	Description	Page No
Common parts						
010	1129046-0000	-		1	ATTACHMENT PIPE	
020	1129066-0000	-		1	RETURN PIPE	
030	90358-0091	-		1	REDUCING NIPPLE	
050	90187-0157	-		1	VALVE	
070	90330-0043	-		1	NIPPLES,HEXAGON EXT.R-THREAD R1/4"-R1/4"	
080	90230-0041	-		1	VALVE	
090	342722-0205	-		7	STRAIGHT COUPLING D=8-R1/4"	
100	312105-0453	-		4	SCREW M6S ISO 4017 M8x25 A280	
110	315105-0165	-		4	WASHER,PLAIN ROUND 8,4x16 Stainless	
120	90015-0037	-		4	RUBBER BUSHING	
130	352103-0108	-		1	CABLE GLAND ST 13	
140	90110-0226	-		1	COVER 6-POLE	
150	90110-0159	-		1	CONTACT	
170	359005-0050	-		x	MARKING SEATS "X"	
180	359005-0010	-		x	MARKING SESATS 0-9	
190	90187-0158	-		2	VALVE	
B 2501	90274-0056	R		1	PRESSURE SWITCH	
M 2501	90321-0116	D		1	PUMP GRUNDFOSS CHI 2-60	
W 2213	351150-0418	-	MM	3000	CABLE OLFLEX 4x2,5mm2	
W 2251	351150-0122	-	MM	1000	CABLE OLFLEX N 2x0,75 MM2	

Pos	Part No	SP	UN	Qty	Description	Page No

EXPANSION VESSEL

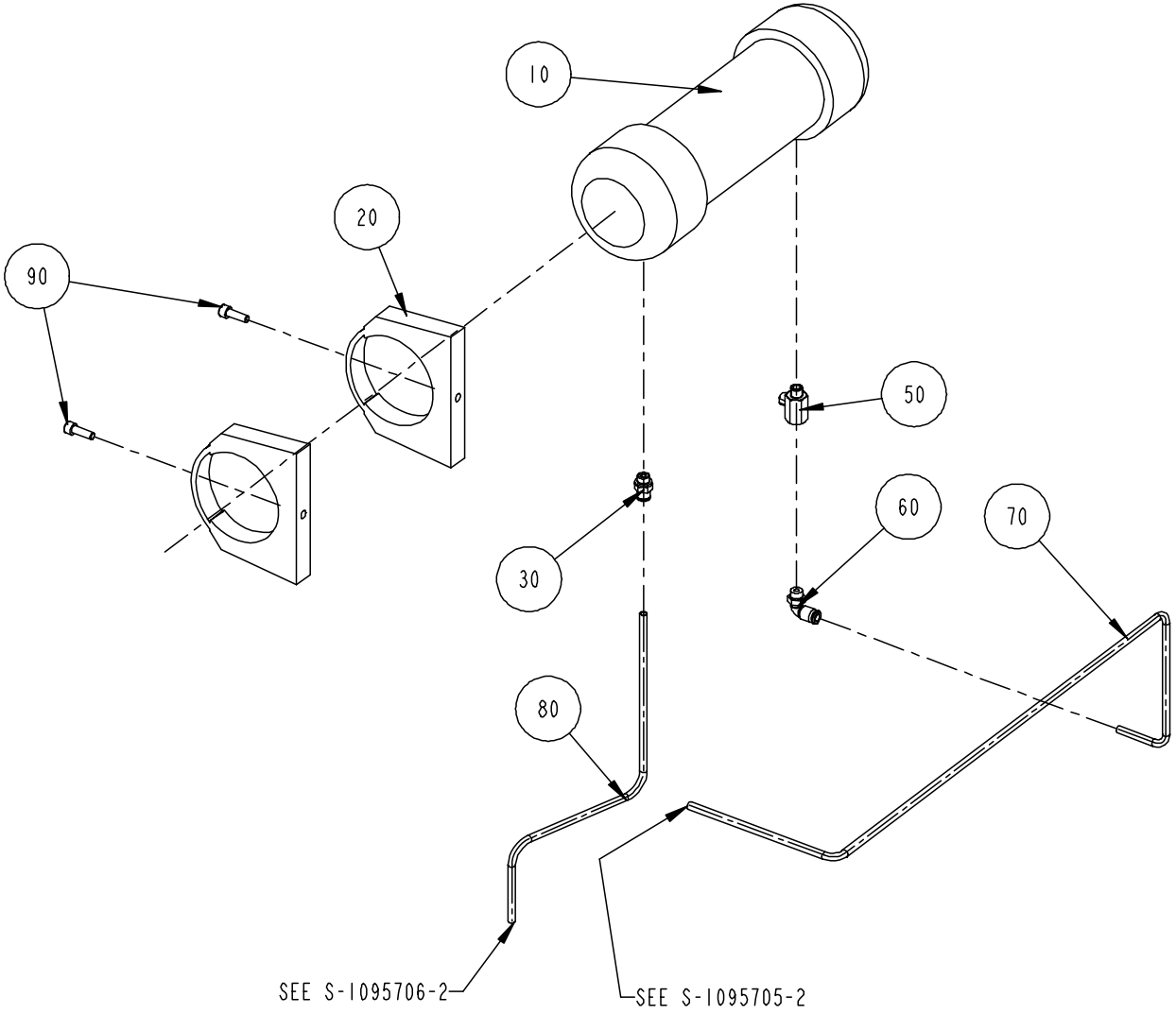

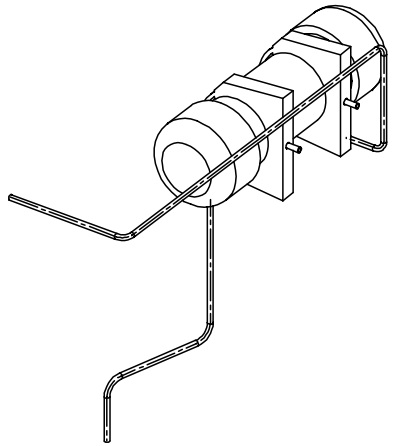

S - 1095708-1
ECN 71821

Pos	Part No	SP	UN	Qty	Description	Page No
Common parts						
010	90304-0030	D		1	EXPANSION TANK	
020	90165-0118	-		2	PIPE CLAMP	
030	342722-0205	-		1	STRAIGHT COUPLING D=8-R1/4"	
050	90187-0158	-		1	VALVE	
060	342732-0104	-		1	ELBOW PIPE JOINT	
070	90166-0139	-	MM	800	HOSE	
080	90166-0139	-	MM	450	HOSE	
090	312115-0453	-		2	SCREW MC6S ISO 4762 M8X25 A280	

Pos	Part No	SP	UN	Qty	Description	Page No

CONNECTION BOX

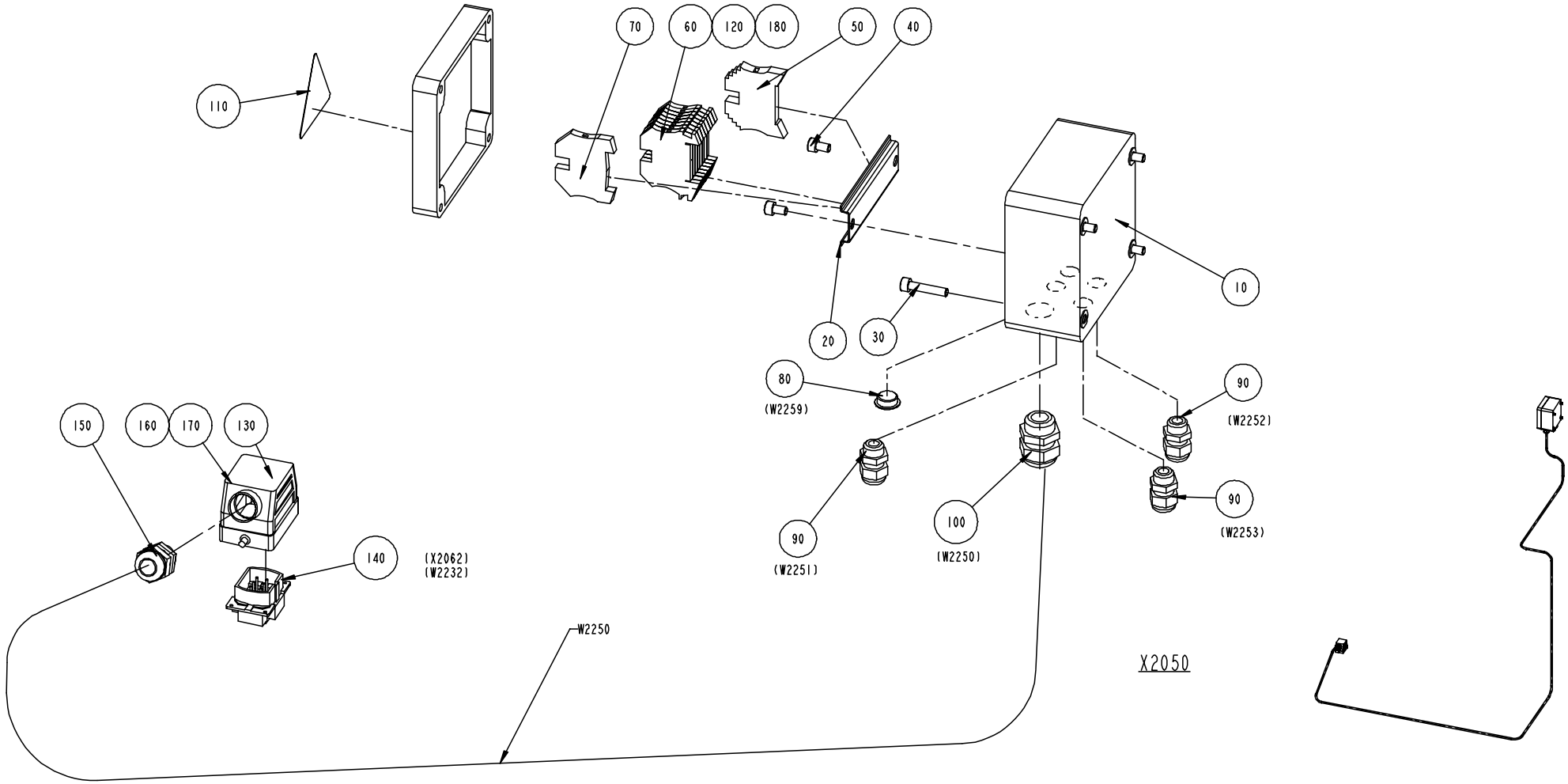

S - 1095709-1
ECN 71821

Pos	Part No	SP	UN	Qty	Description	Page No
Common parts						
010	1041943-0000	-		1	CONNECTION BOX	
020	1129210-0000	-		1	MOUNTING RAIL	
030	312115-0374	-		4	SCREW MC6S ISO 4762 M6x30 A280	
040	312115-0364	-		2	SCREW MC6S 6x10 A4 80	
050	353031-0203	-		1	END BRACKET WEW 35/2	
060	353021-0216	-		8	FEED THROUGH TERMINAL WDU 2,5 Blue	
070	353024-0205	-		1	EARTH TERMINAL WPE 4	
080	90002-0013	-		1	BLANK-OFF PLUG 15,2	
090	352103-0101	-		3	CABLE GLAND ST 9	
100	352103-0110	-		1	CABLE GLAND STR 16	
110	90194-0016	-		1	SIGN "FLASH SIGN" 50X50MM	
120	359011-0809	-		x	MARKING PLATES 5-FW 101-150	
130	90110-0226	-		1	COVER 6-POLE	
140	90110-0159	-		1	CONTACT	
150	352103-0108	-		1	CABLE GLAND ST 13	
160	359005-0050	-		x	MARKING SEATS "X"	
170	359005-0010	-		x	MARKING SESATS 0-9	
180	353034-0030	-		1	BRIDGE CONLECK WQV 2,5/10	
W 2250	351150-0406	-	MM	3500	CABLE OLFLEX 7x0,75 MM2	

Pos	Part No	SP	UN	Qty	Description	Page No

FOAM CLEANING UNIT

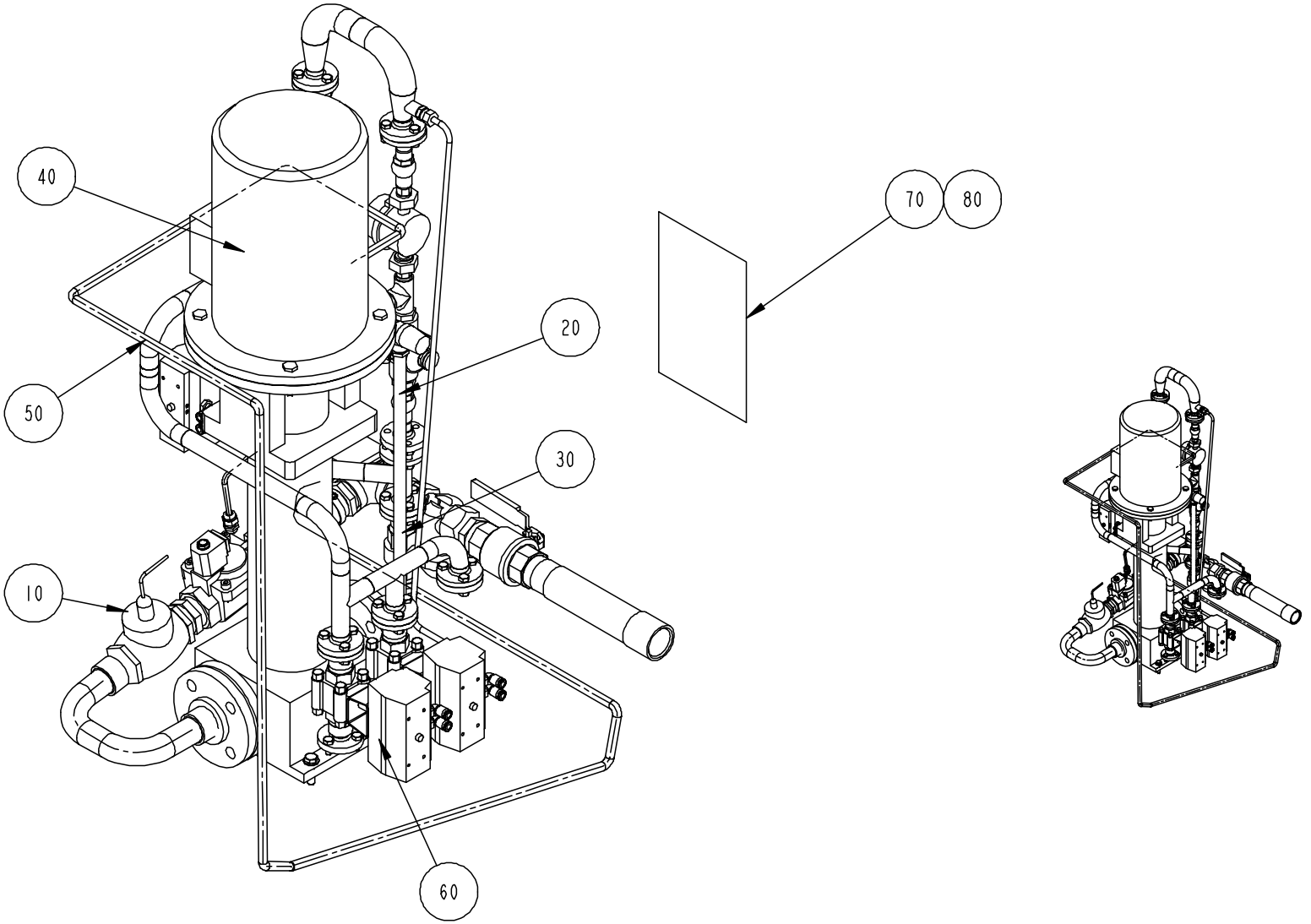

S - 1095627-1
ECN 71821

Pos	Part No	SP	UN	Qty	Description	Page No
Common parts						
010	A1095672-0100	-		1	PIPE	**443**
020	A1095673-0100	-		1	SIDE	**445**
030	A1095675-0100	-		1	PIPE	**447**
040	A1095676-0100	-		1	PUMP	**449**
050	A1095677-0100	-		1	BRANCHING PIPE	**451**
060	A1095678-0200	-		1	BALL VALVE	**453**
TBA/21HS						
080	1484893-0000	-		x	EXTERNAL CLEANING DIAGRAM	

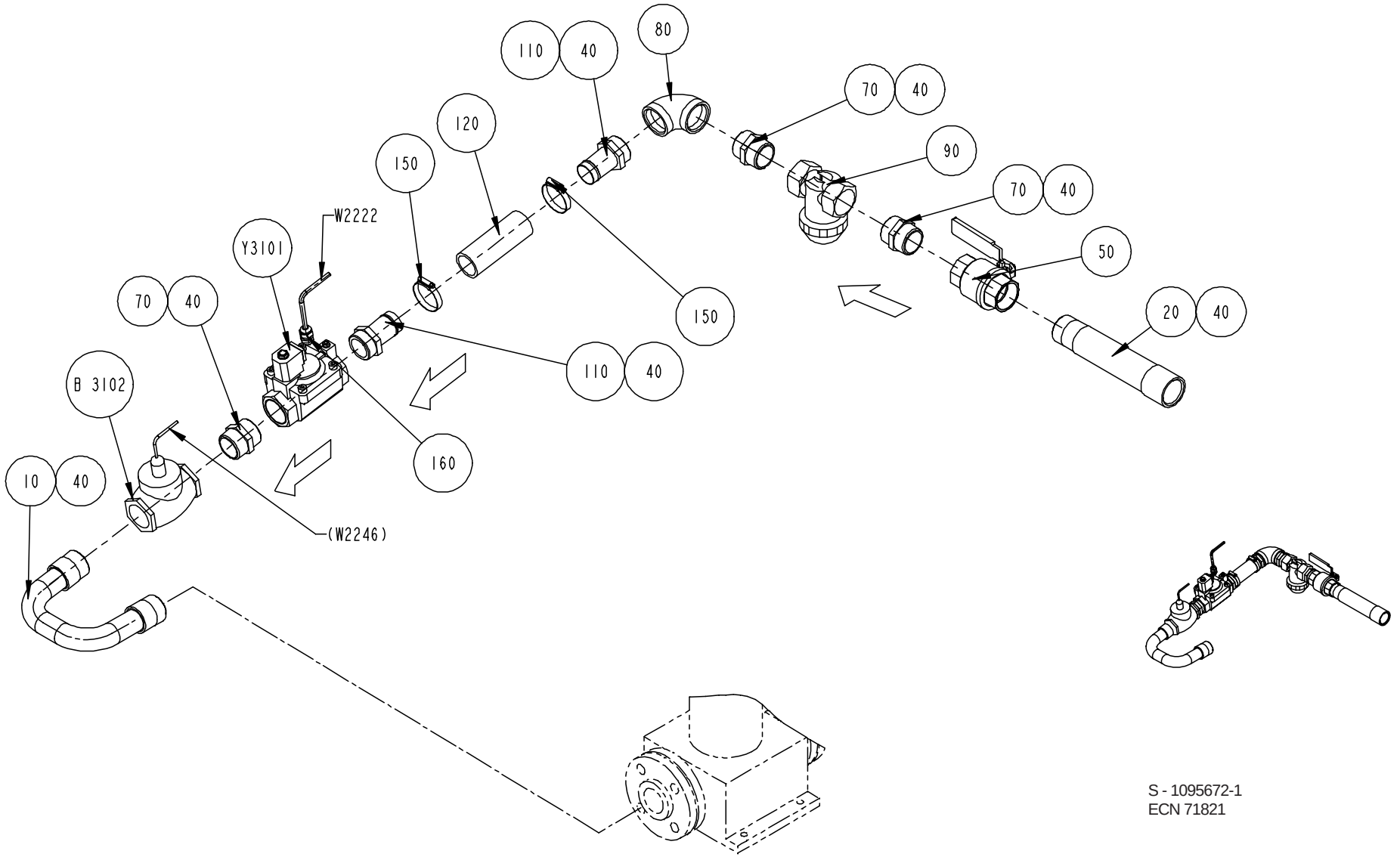

S - 1095672-1
ECN 71821

Pos	Part No	SP	UN	Qty	Description	Page No
Common parts						
010	1041925-0000	-		1	PIPE	
020	1041926-0000	-		1	PIPE	
040	90144-0007	-	MM	x	TAPE	
050	90187-0147	-		1	VALVE	
070	90330-0056	-		3	NIPPLES,ext tapper thread, R11/2-R11/2	
080	90330-0057	-		1	ELBOW,90 int thread, R11/2	
090	B 90415-0032	D		1	FILTER	
110	90055-0166	-		2	FITTING	
120	90166-0236	-	MM	150	HOSE	
150	342991-0108	-		2	HOSE CLIP 38-50MMRFR	
160	352103-0101	-		1	CABLE GLAND ST 9	
B3102	90274-0082	D		1	FLOW SWITCH	
W2222	351150-0403	-	M	2	CABLE OLFLEX 3x0,75 MM2	
Y3101	B 90042-0254	-		1	SOLENOID VALVE ODE(VENTIM)	

Pos	Part No	SP	UN	Qty	Description	Page No

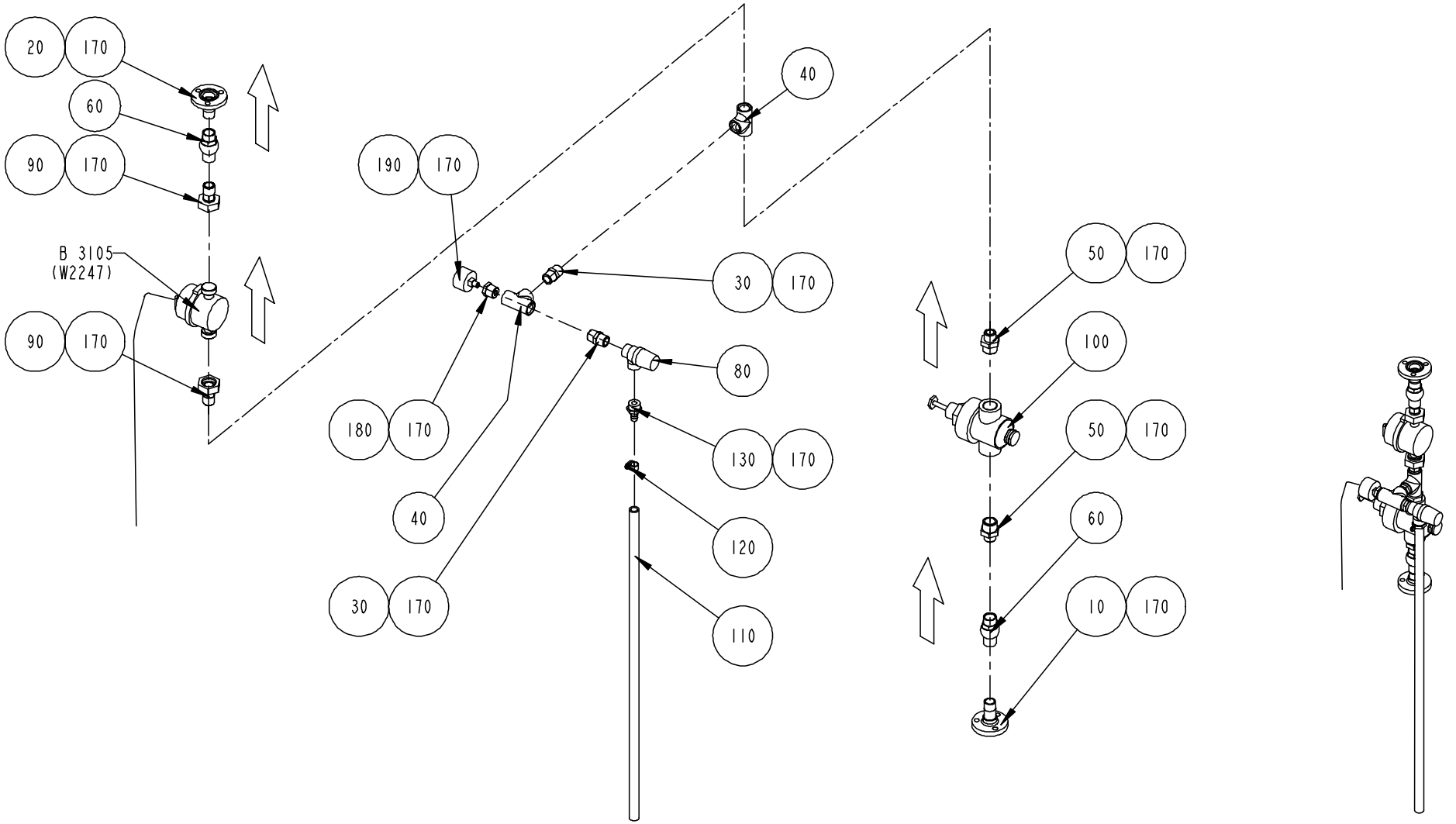

S - 1095673-1
ECN 71821

Pos	Part No	SP	UN	Qty	Description	Page No
Common parts						
010	1036826-0000	-		1	PIPE	
020	1036827-0000	-		1	PIPE	
030	90330-0021	-		2	NIPPLES,HEXAGON,EXT.R-THREAD R1/2"-R1/2"	
040	90330-0049	-		2	T-PIPE,INTERNAL THREAD Rp1/2"	
050	90330-0080	-		2	NIPPLES,HEXAGON,EXT.R-THREAD R3/4"-R1/2"	
060	90230-0042	-		2	NON-RETURN VALVE	
080	90187-0133	-		1	VALVE	
090	90030-0465	-		2	STRAIGHT CONNECTION	
100	90113-0098	D		1	PRESSURE REGULATOR	
110	90166-0121	-	MM	700	HOSE	
120	342991-0100	-		1	HOSE CLIP,WORM DRIVE TYPE 10-13	
130	342901-0105	-		1	HOSE NIPPLE,EXT. THREADED G1/2"-12	
170	90144-0007	-	MM	x	TAPE	
180	90330-0036	-		1	BUSHING,tapper,int/ext thr, Rp1/8-Rp1/2	
190	90043-0043	R		1	PRESSURE GAUGE Wiegand 0-10 BAR 1/8"	
B3105	90243-0245	-		1	MEASURING INSTRUMENT	

Pos	Part No	SP	UN	Qty	Description	Page No

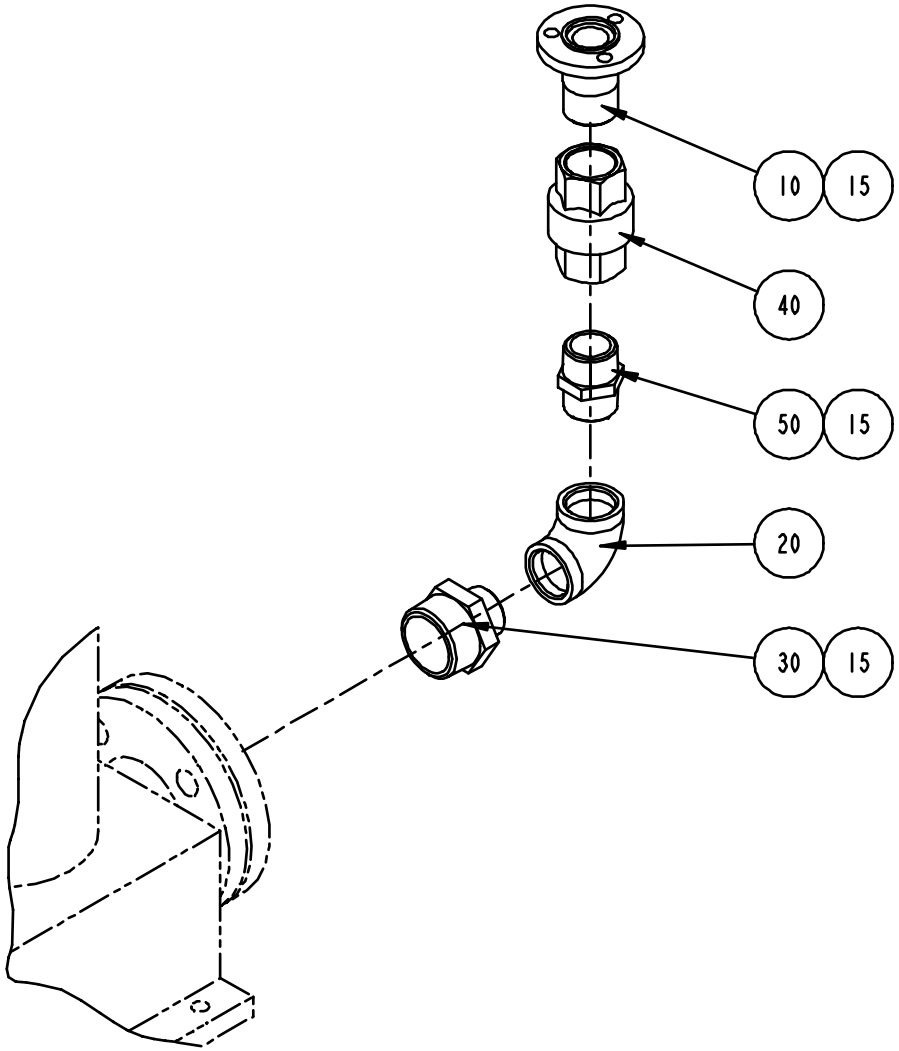

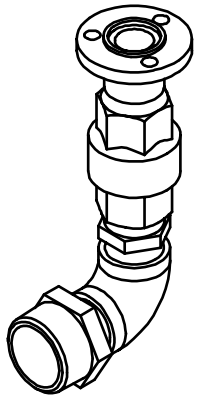

S - 1095675-1
ECN 71821

Pos	Part No	SP	UN	Qty	Description	Page No
Common parts						
010	1036794-0000	-		1	PIPE	
015	90144-0007	-	MM	x	TAPE	
020	90330-0014	-		1	ELBOW 90,INTERNAL THREAD Rp1"	
030	90330-0045	-		1	NIPPLES,ext tappered thread, R11/2-R1/4	
040	90230-0044	-		1	NON-RETURN VALVE	
050	342203-0120	-		1	HEXAGON NIPPLE	

Pos	Part No	SP	UN	Qty	Description	Page No

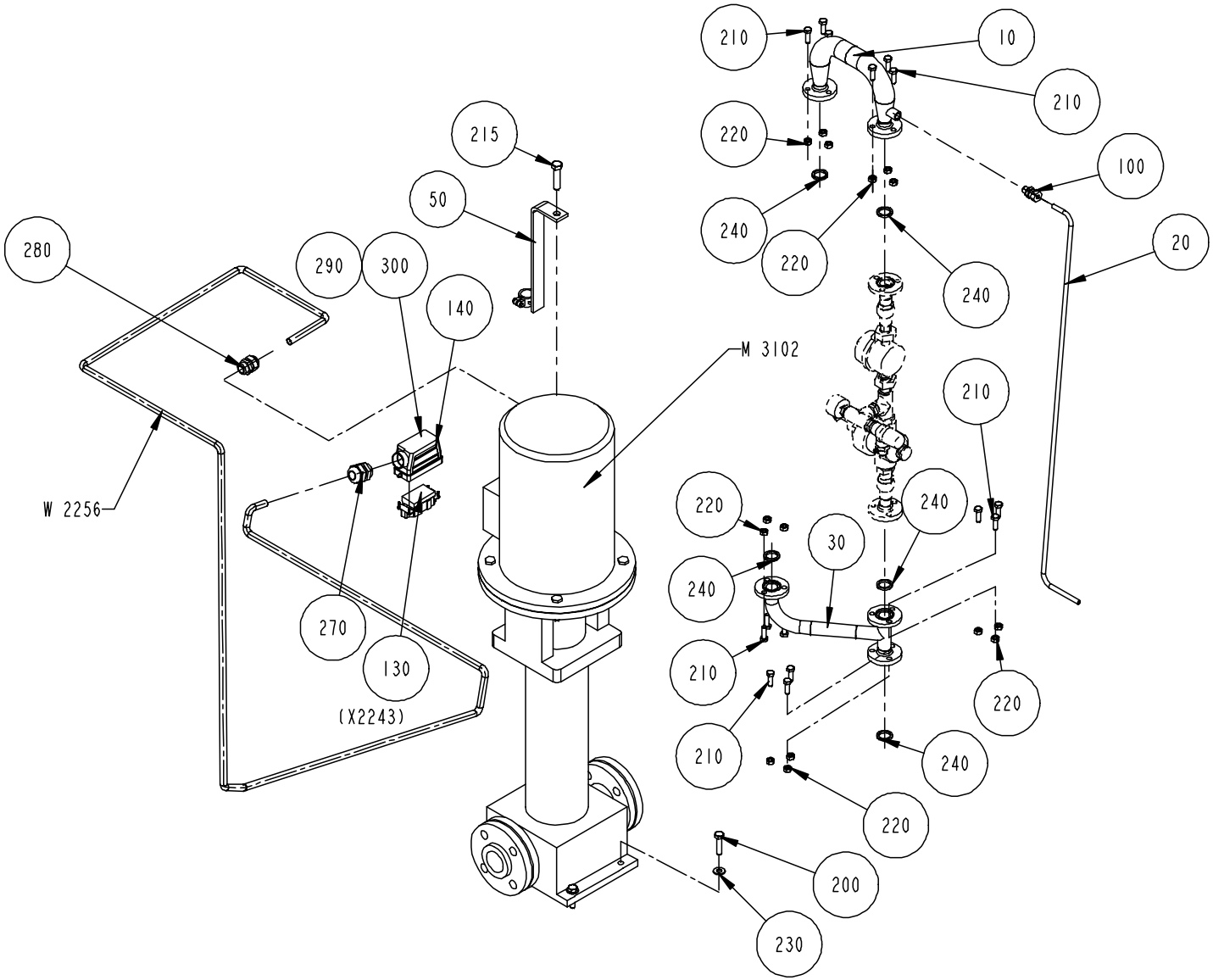

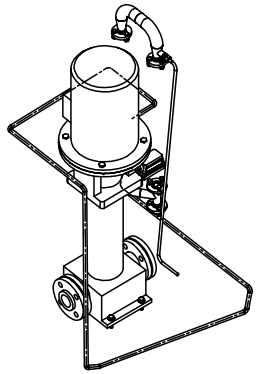

S - 1095676-1
ECN 71821

Pos	Part No	SP	UN	Qty	Description	Page No
Common parts						
010	1036828-0000	-		1	TANK	
050	1140670-0000	-		1	BRACKET	
100	90030-0185	-		1	STRAIGHT CONNECTION GA-8-G1/4"	
130	90110-0156	-		1	CONTACT	
140	90110-0227	-		1	COVER 16-6 POLE	
200	312105-0499	-		4	SCREW 4017 M10X40A280	
210	312105-0453	-		15	SCREW M6S ISO 4017 M8x25 A280	
215	312105-0542	-		1	SCREW M6S ISO 4014 M12X50 A280	
220	312605-0318	-		15	NUT,HEXAGON,M8 RFR	
230	315105-0173	-		4	WASHER,PLAIN ROUND 10,5x22 STAINLESS	
240	315229-0103	M		5	GASKET	
270	352103-0115	-		1	CABLE GLAND STR 21	
280	352103-0111	-		1	CABLE GLAND ST 16	
290	359005-0010	-		2	MARKING SESATS 0-9	
300	359005-0050	-		1	MARKING SEATS "X"	
W2256	351150-0166	-	MM	3300	CABLE OLFLEX 4x4 MM2	
TBA/21HS 50HZ						
M3102	90321-0117	D		1	PUMP LOWARA SV8-14 F75T	
TBA/21HS 60HZ						
M3102	90321-0120	D		1	PUMP LOWARA SV8-09 F75 6T	

Pos	Part No	SP	UN	Qty	Description	Page No

BRANCHING PIPE

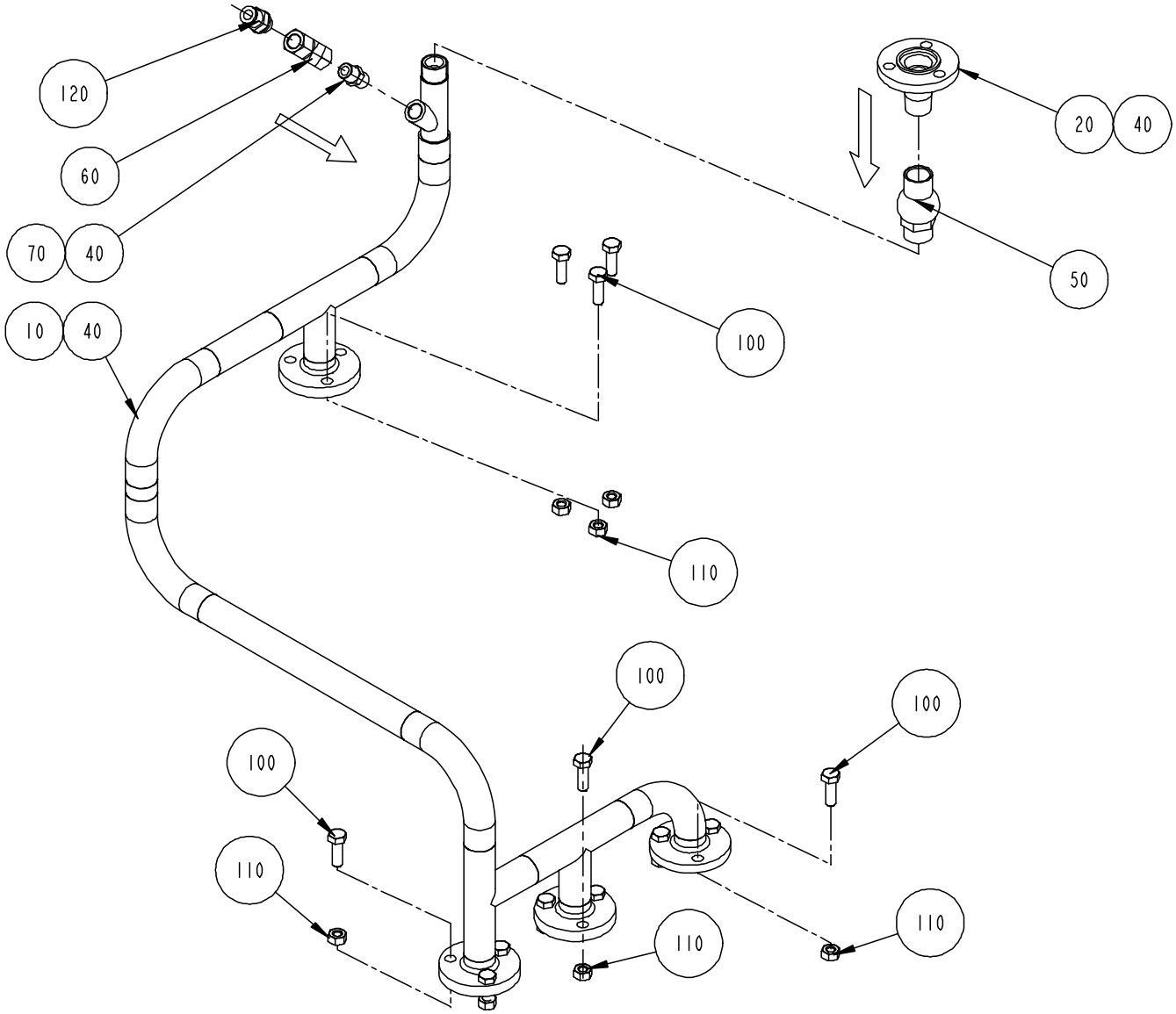

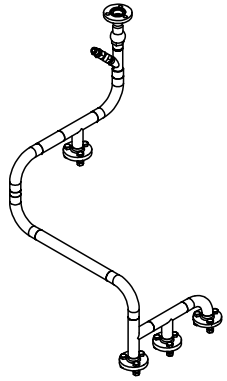

S - 1095677-1
ECN 71821

Pos	Part No	SP	UN	Qty	Description	Page No
Common parts						
010	1041934-0000	-		1	PIPE	
020	1036827-0000	-		1	PIPE	
040	90144-0007	-	MM	x	TAPE	
050	90230-0042	-		1	NON-RETURN VALVE	
060	90235-0151	-		1	NON-RETURN VALVE	
070	90330-0043	-		1	NIPPLES,HEXAGON EXT.R-THREAD R1/4"-R1/4"	
100	312115-0453	-		12	SCREW MC6S ISO 4762 M8X25 A280	
110	312605-0318	-		12	NUT,HEXAGON,M8 RFR	
120	342722-0205	-		1	STRAIGHT COUPLING D=8-R1/4"	

Pos	Part No	SP	UN	Qty	Description	Page No

BALL VALVE

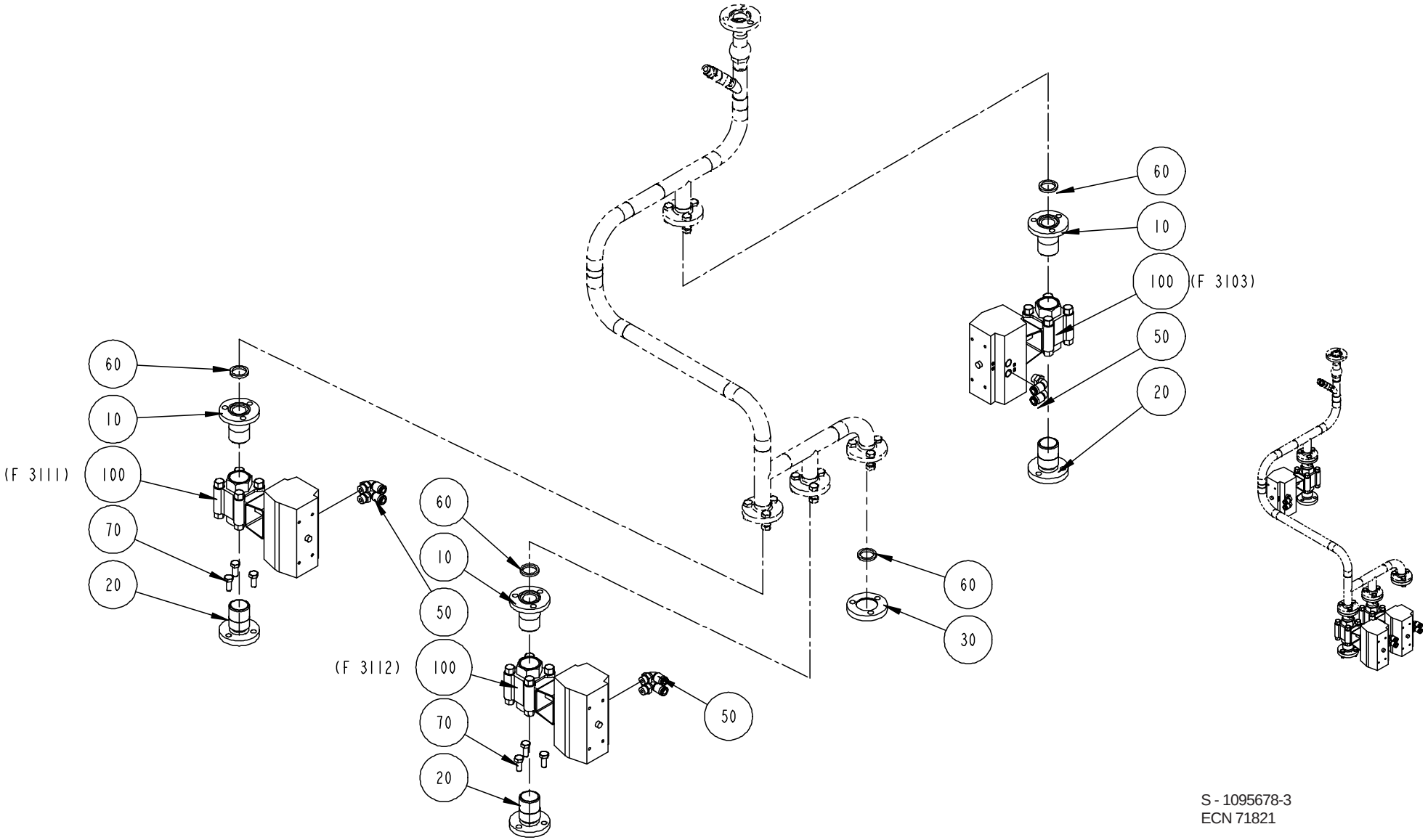

S - 1095678-3
ECN 71821

Pos	Part No	SP	UN	Qty	Description	Page No
Common parts						
060	315229-0103	-		4	GASKET	
070	312115-0451	-		6	SCREW MC6S ISO 4762 M8x20 A280	
TBA/21HS						
010	1036794-0000	-		4	PIPE	
020	1036871-0000	-		4	PIPE	
050	342732-0104	-		8	ELBOW PIPE JOINT	
100	B 90187-0148	-		4	BALL VALVE	

Pos	Part No	SP	UN	Qty	Description	Page No

MACHINE BODY

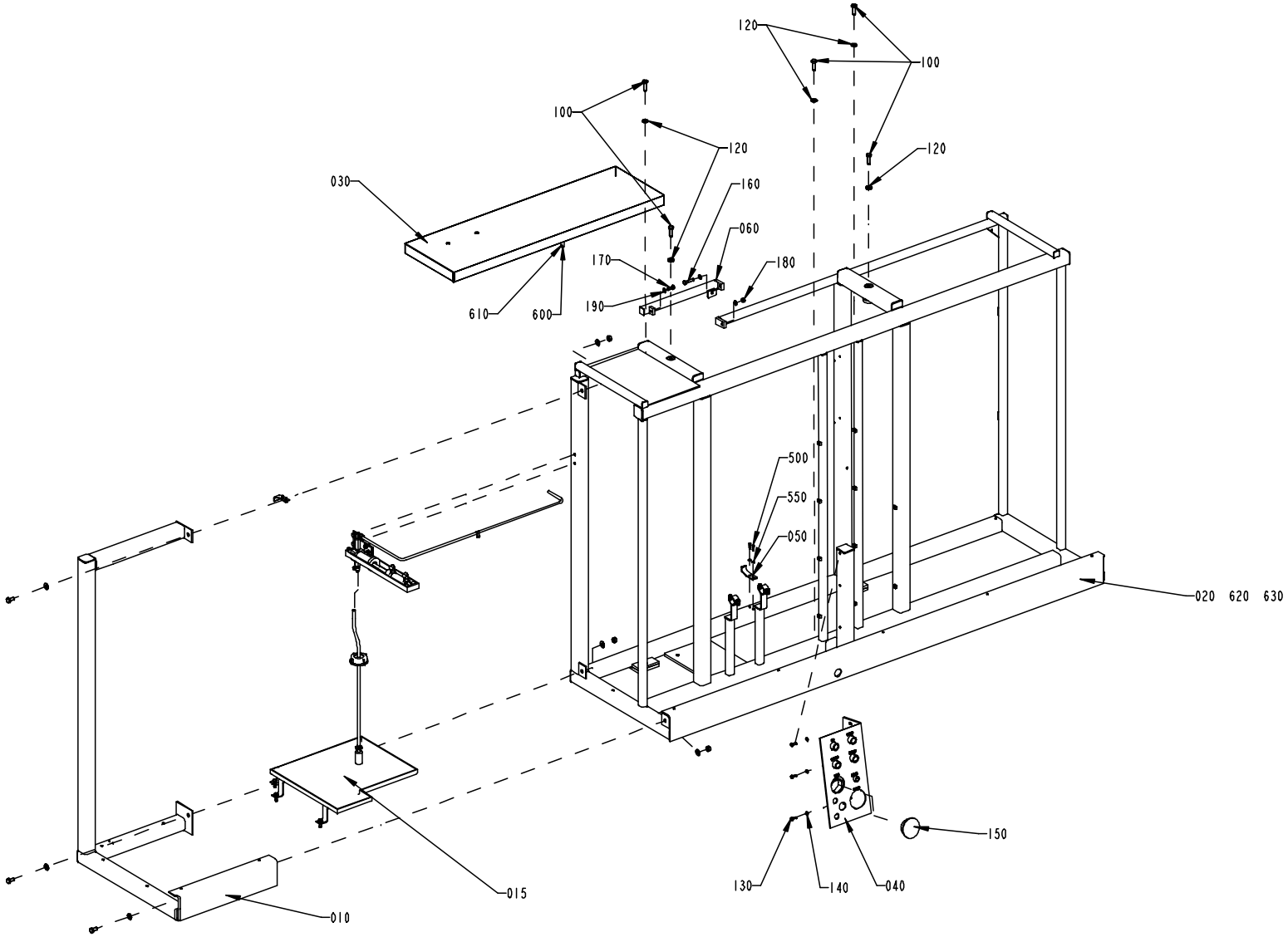

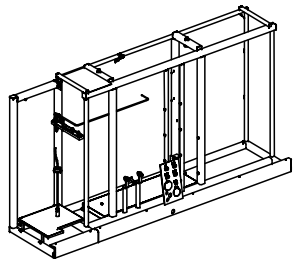

S - 11095606-3
ECN 71402

Pos	Part No	SP	UN	Qty	Description	Page No
TBA/21HS						
015	A1478943-0100	-		1	CHEMICALS UNIT	**459**
Common parts						
010	A1095882-0200	-		1	FRAME SECTION	**457**
020	1255295-0000	-		1	MACHINE BODY	
030	1041963-0000	-		1	WASTE BOX	
040	1129387-0000	-		1	CONNECTION TABLE	
050	1036227-0000	-		1	BRACKET	
060	1255293-0000	-		1	CROSS BAR	
100	312105-0495	-		5	SCREW M6S ISO 4017 M10X30 A280	
120	315105-0173	-		5	WASHER,PLAIN ROUND 10,5x22 STAINLESS	
130	312105-0368	-		3	SCREW M6S ISO 4017 M6x16 A280	
140	315105-0153	-		3	WASHER,PLAIN ROUND 6,4x12 Stainless	
150	90261-0069	-		1	PLASTIC PLUG	
160	312109-0457	-		1	SCREW M6S ISO 4017 M8X35 A280	
170	315105-0165	-		3	WASHER,PLAIN ROUND 8,4x16 Stainless	
180	312605-0318	-		1	NUT,HEXAGON,M8 RFR	
190	312105-0451	-		1	SCREW M6S ISO 4017 8x20 A280	
500	312115-0327	-		2	SCREW MC6S ISO 4762 M5X12 A280	
550	315105-0146	-		2	WASHER,PLAIN ROUND 5,3x10 Stainless	
600	90166-0121	-	MM	500	HOSE	
610	342991-0102	-		1	HOSE CLIP,WORM DRIVE TYPE (16)-19	
620	352113-0205	-		15	ANCHOR TM2S8-C100	
630	312125-0287	-		15	SLOTTED CHEESE HEAD ISO 1207 M4X8 RFR	

Pos	Part No	SP	UN	Qty	Description	Page No

FRAME SECTION

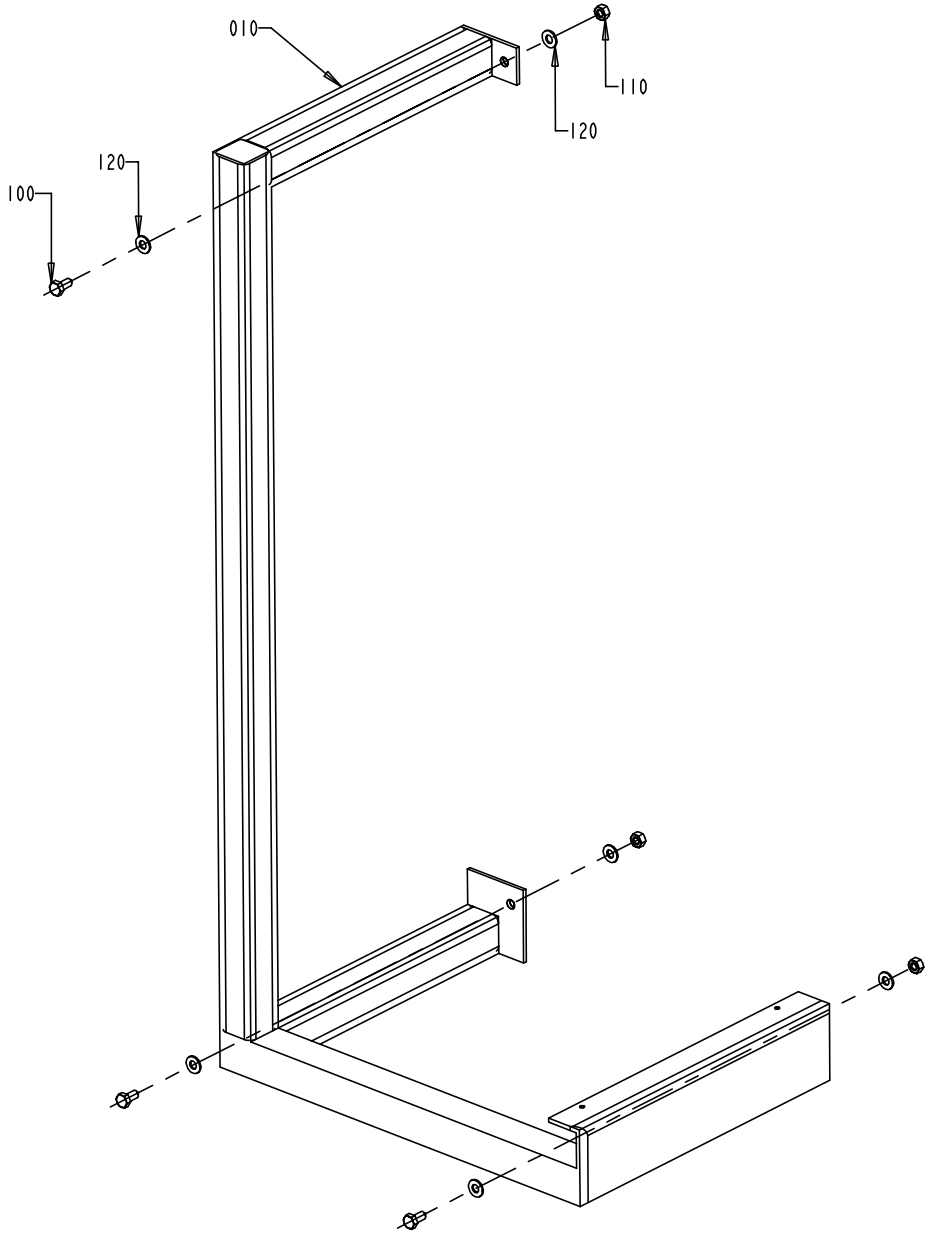

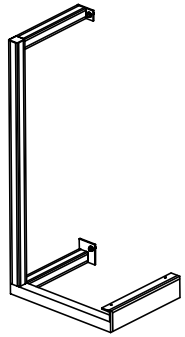

S-1095882-2
ECN 70357

Pos	Part No	SP	UN	Qty	Description	Page No
Common parts						
010	1255294-0000	-		1	FRAME SECTION	
100	312105-0491	-		3	SCREW M6S ISO 4017 M10X20 A280	
110	312605-0320	-		3	NUT,HEXAGON,M10 A280	
120	315105-0173	-		6	WASHER,PLAIN ROUND 10,5x22 STAINLESS	

Pos	Part No	SP	UN	Qty	Description	Page No

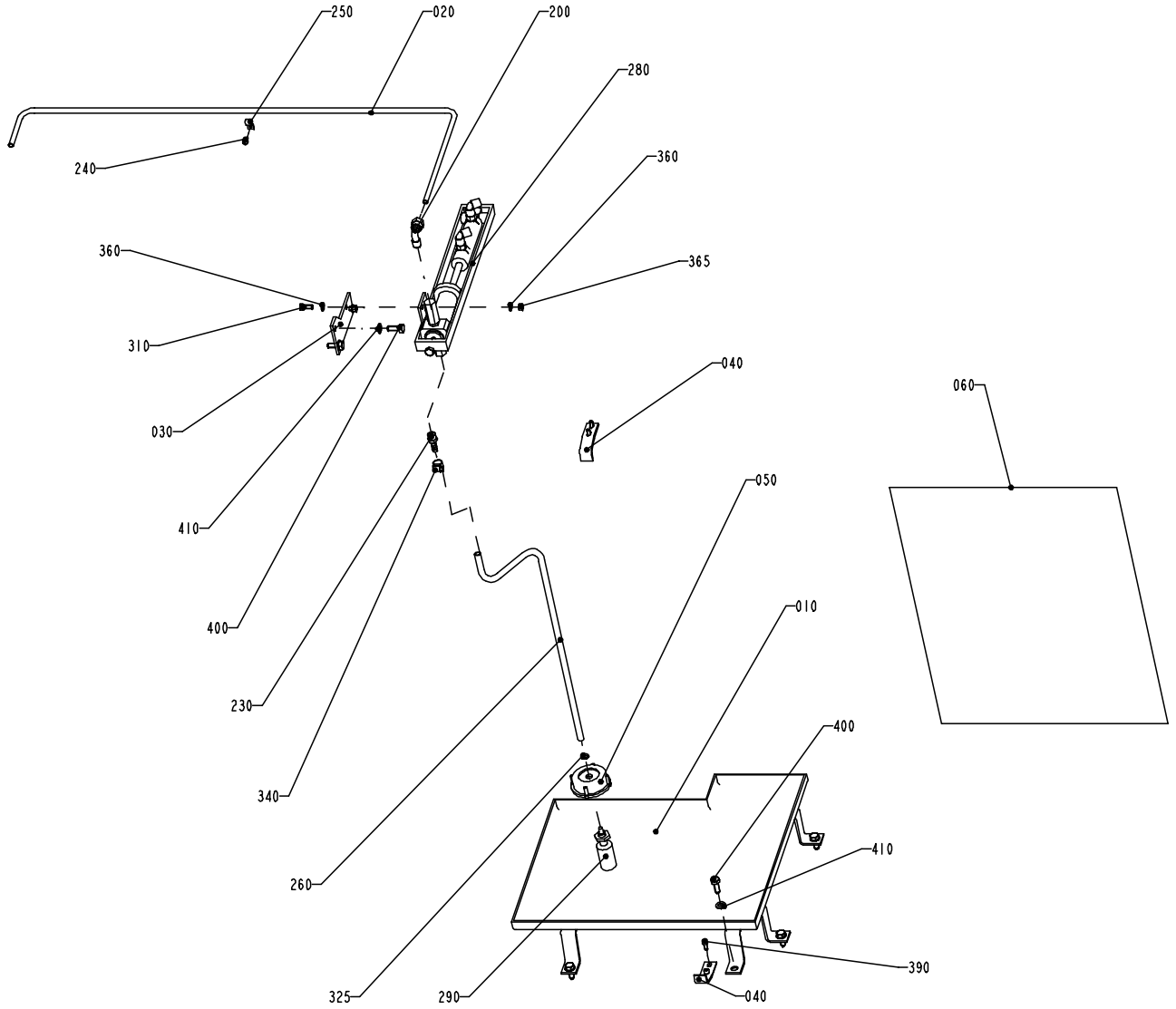

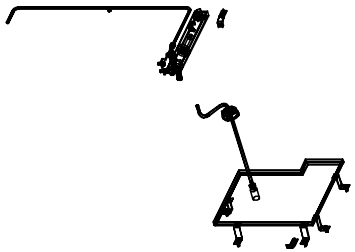

S - 1478943-1
ECN 71402

Pos	Part No	SP	UN	Qty	Description	Page No
Common parts						
010	1484885-0000	-		1	SPLASH PLATE	
020	1484888-0000	-		1	PIPE	
030	1484887-0000	-		1	PLATE	
040	1036227-0000	-		2	BRACKET	
050	1129432-0000	-		1	LID	
060	1484511-0000	-		1	WATER DIAGRAM	
200	90030-0071	-		1	ELBOW CONNECTION WA 8-R1/4	
230	90055-0132	-		1	HOSE NIPPLE	
240	312125-0323	-		1	SLOTTED CHEESE HEAD ISO 1207 M5X8 RFR	
250	316810-0106	-		1	PIPE-CLIPS,FOR SINGLE PIPE,ONE SIDE 8	
260	90166-0008	-	MM	750	HOSE 7/10 PVC TRANSP.	
280	1038628-0000	-		1	PUMP	
290	90321-0396	N		1	FILTER	
310	312105-0368	-		2	SCREW M6S ISO 4017 M6x16 A280	
325	315204-0207	-		1	O-RINGS 8,3X2,4	
340	342991-0100	-		1	HOSE CLIP,WORM DRIVE TYPE 10-13	
360	315105-0153	-		4	WASHER,PLAIN ROUND 6,4x12 Stainless	
365	312605-0316	-		2	NUT,HEXAGON A280 M6M6	
390	312115-0327	-		4	SCREW MC6S ISO 4762 M5X12 A280	
400	312105-0451	-		7	SCREW M6S ISO 4017 8x20 A280	
410	315105-0165	-		7	WASHER,PLAIN ROUND 8,4x16 Stainless	

Pos	Part No	SP	UN	Qty	Description	Page No

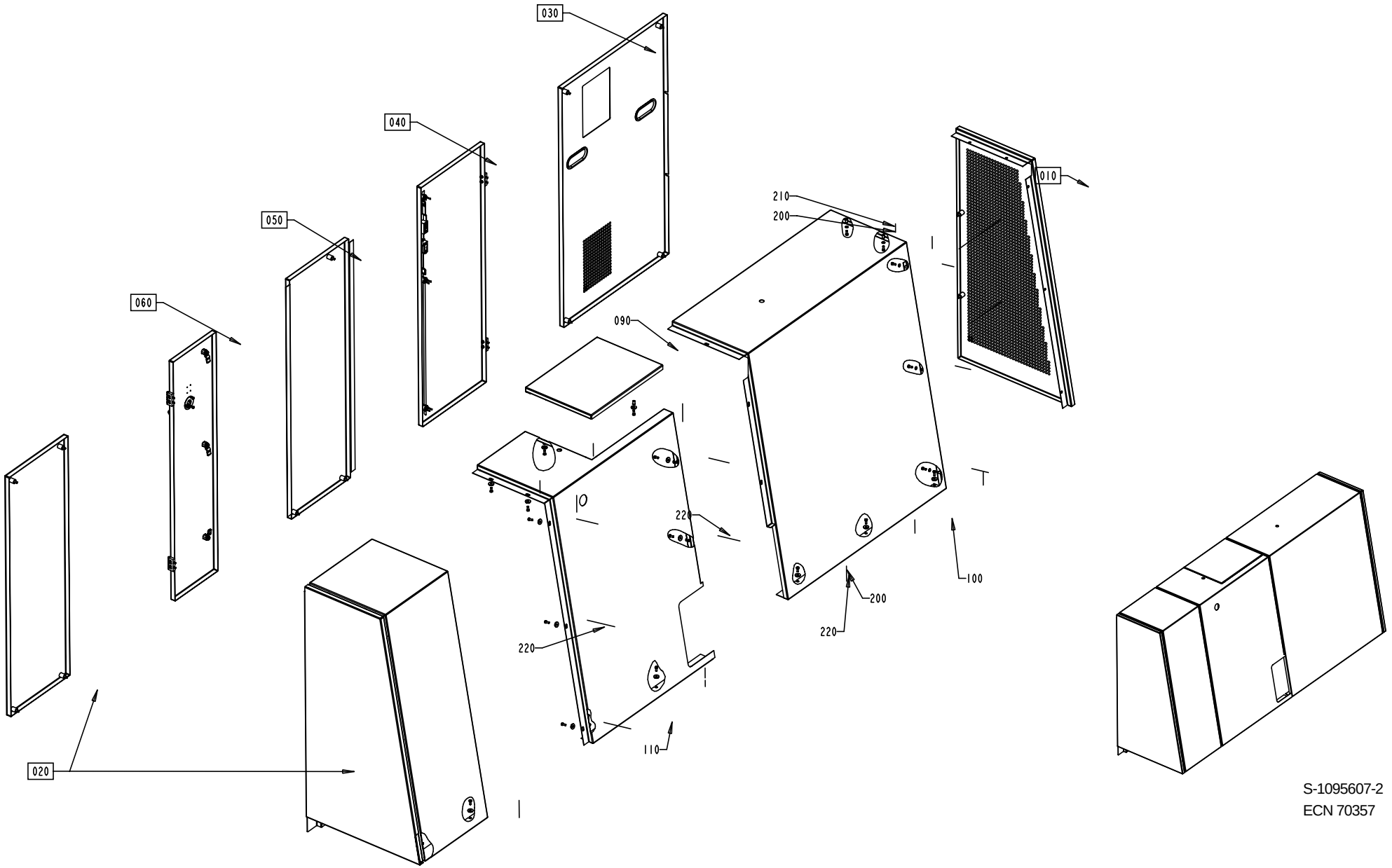

S-1095607-2
ECN 70357

Pos	Part No	SP	UN	Qty	Description	Page No
Common parts						
010	A1095883-0200	-		1	GABLE PLATE	**463**
020	A1095886-0200	-		1	COVERING PANEL	**465**
030	A1095888-0200	-		1	HATCH	**471**
040	A1095889-0100	-		1	DOOR	**473**
050	A1095890-0200	-		1	HATCH	**475**
060	A1095891-0200	-		1	DOOR	**477**
090	1255637-0000	-		1	COVER	
100	1255636-0000	-		1	COVERING PANEL	
110	1255638-0000	-		1	COVERING PANEL	
200	312105-0368	-		19	SCREW M6S ISO 4017 M6x16 A280	
210	315105-0153	-		5	WASHER,PLAIN ROUND 6,4x12 Stainless	
220	315125-0153	-		14	WASHERS,PLAIN ROUND,CHAMFERED 6,4X22X4	

Pos	Part No	SP	UN	Qty	Description	Page No

GABLE PLATE

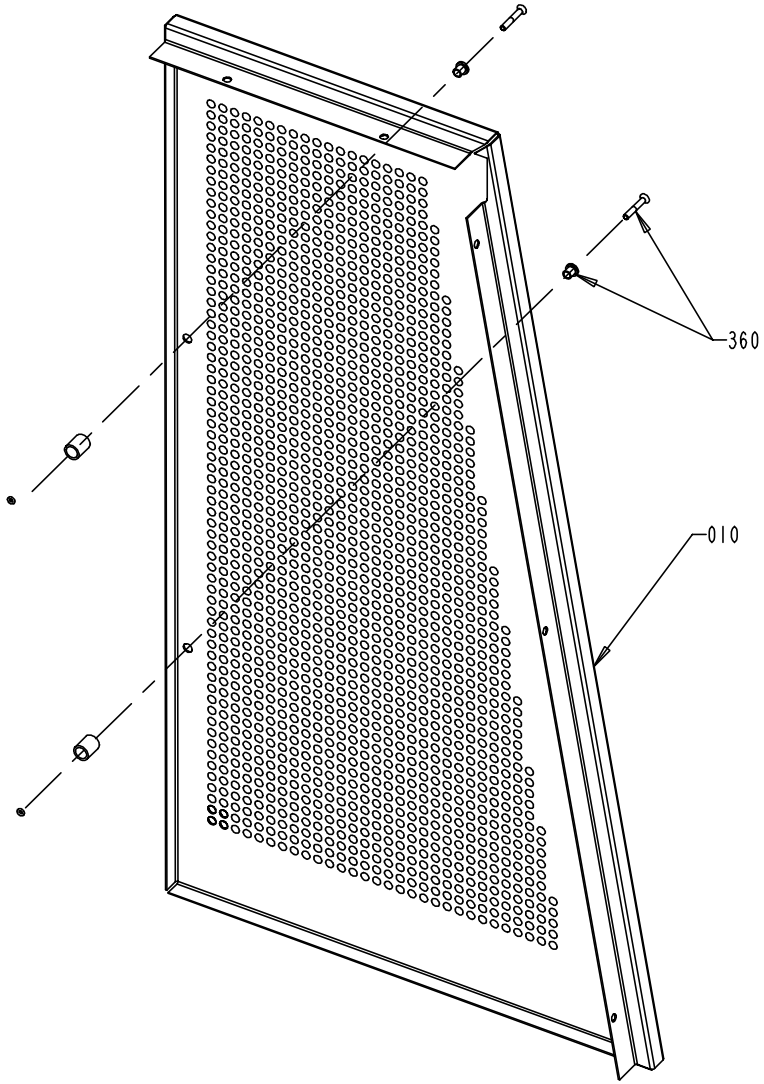

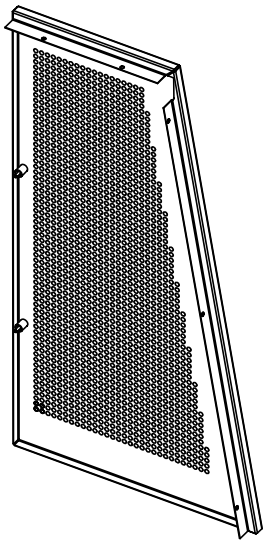

S-1095883-2
ECN 70357

Pos	Part No	SP	UN	Qty	Description	Page No
Common parts						
010	1255671-0000	-		1	GABLE PLATE	
360	90226-0458	-		2	MOUNTING SCREW	

Pos	Part No	SP	UN	Qty	Description	Page No

COVERING PANEL

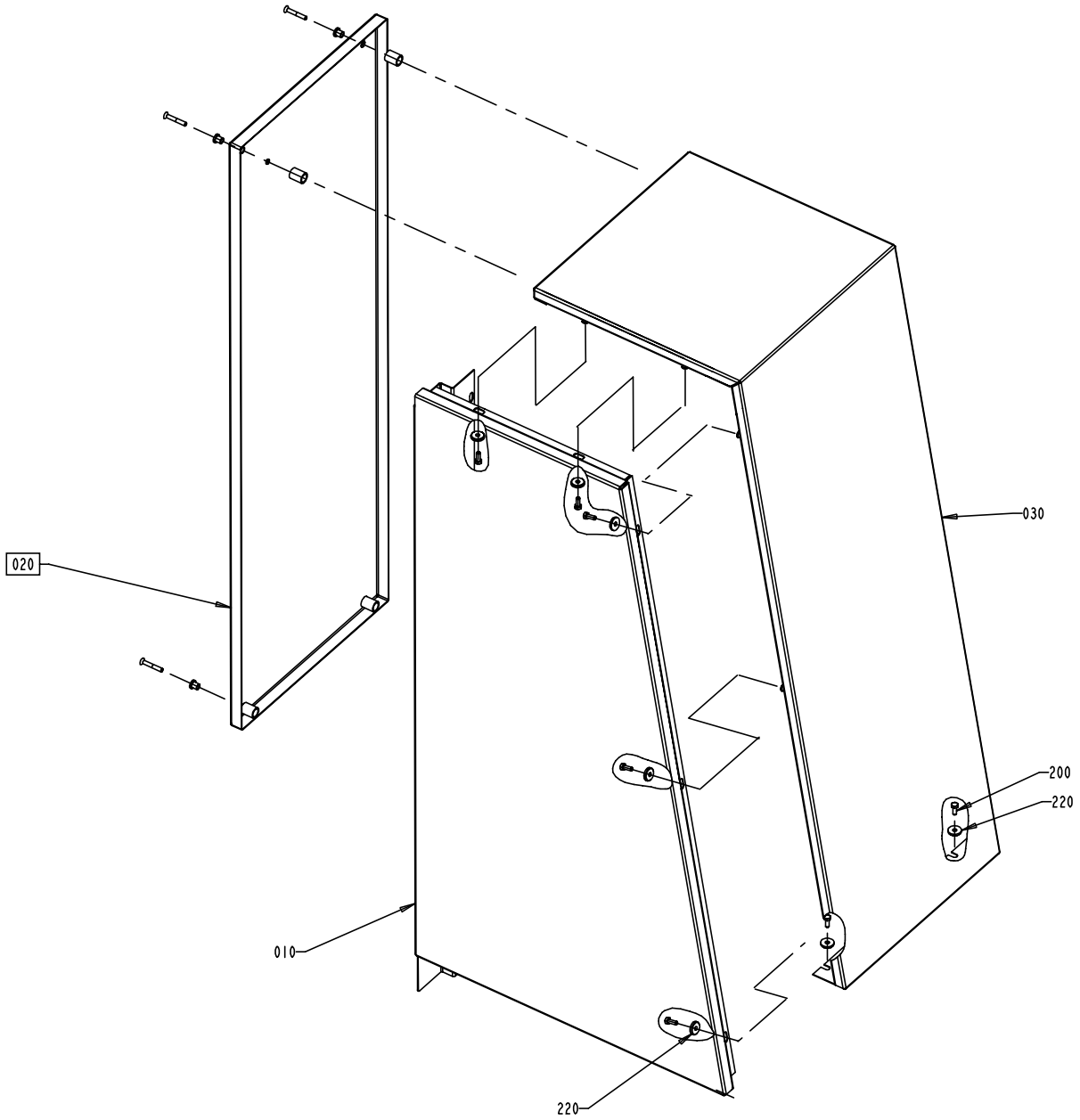

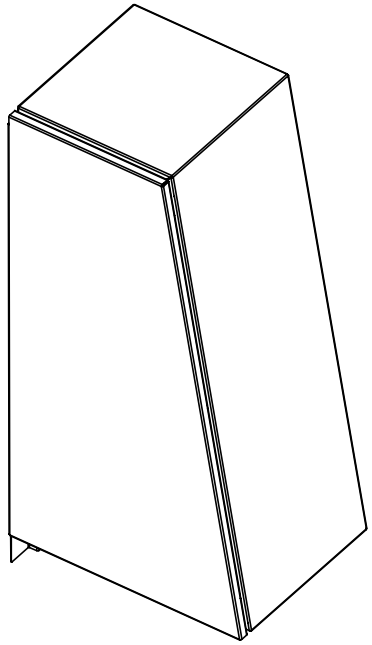

S-1095886-2
ECN 70357

Pos	Part No	SP	UN	Qty	Description	Page No
Common parts						
010	1255670-0000	-		1	GABLE PLATE	
030	1041967-0000	-		1	COVERING PANEL	
200	312105-0368	-		7	SCREW M6S ISO 4017 M6x16 A280	
220	315125-0153	-		7	WASHERS,PLAIN ROUND,CHAMFERED 6,4X22X4	
TBA/21HS						
020	A1484889-0100	-		1	DOOR	**469**

Pos	Part No	SP	UN	Qty	Description	Page No

HATCH

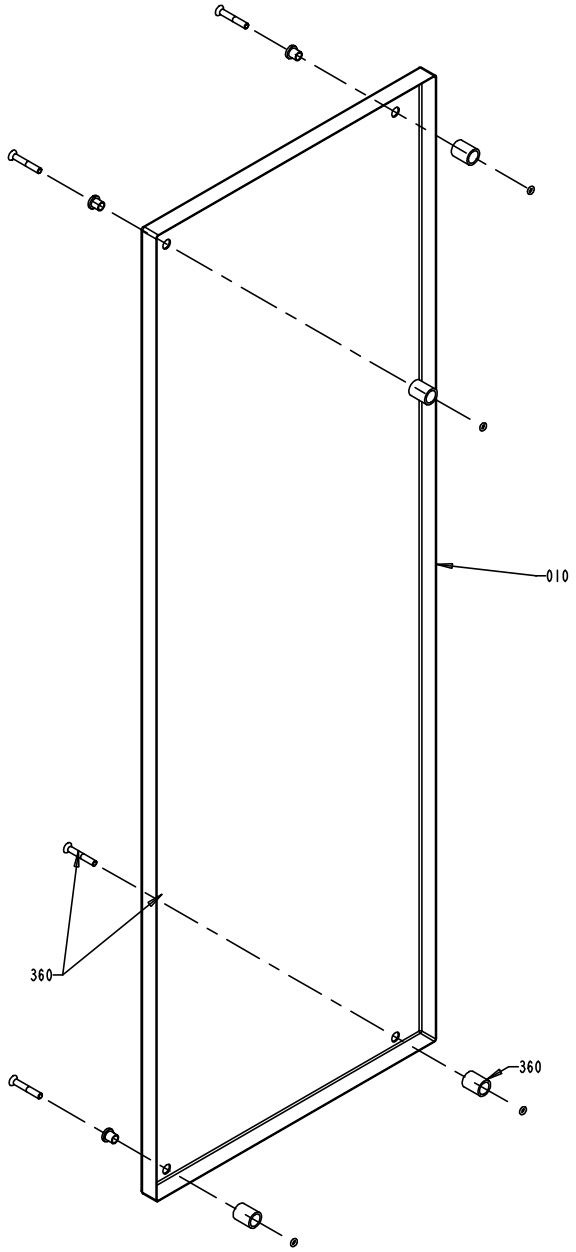

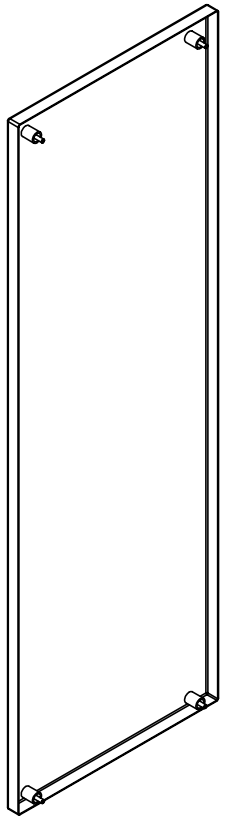

S-1095892-2
ECN 70357

Pos	Part No	SP	UN	Qty	Description	Page No
Common parts						
010	1255634-0000	-		1	HATCH	
360	90226-0458	-		4	MOUNTING SCREW	

Pos	Part No	SP	UN	Qty	Description	Page No

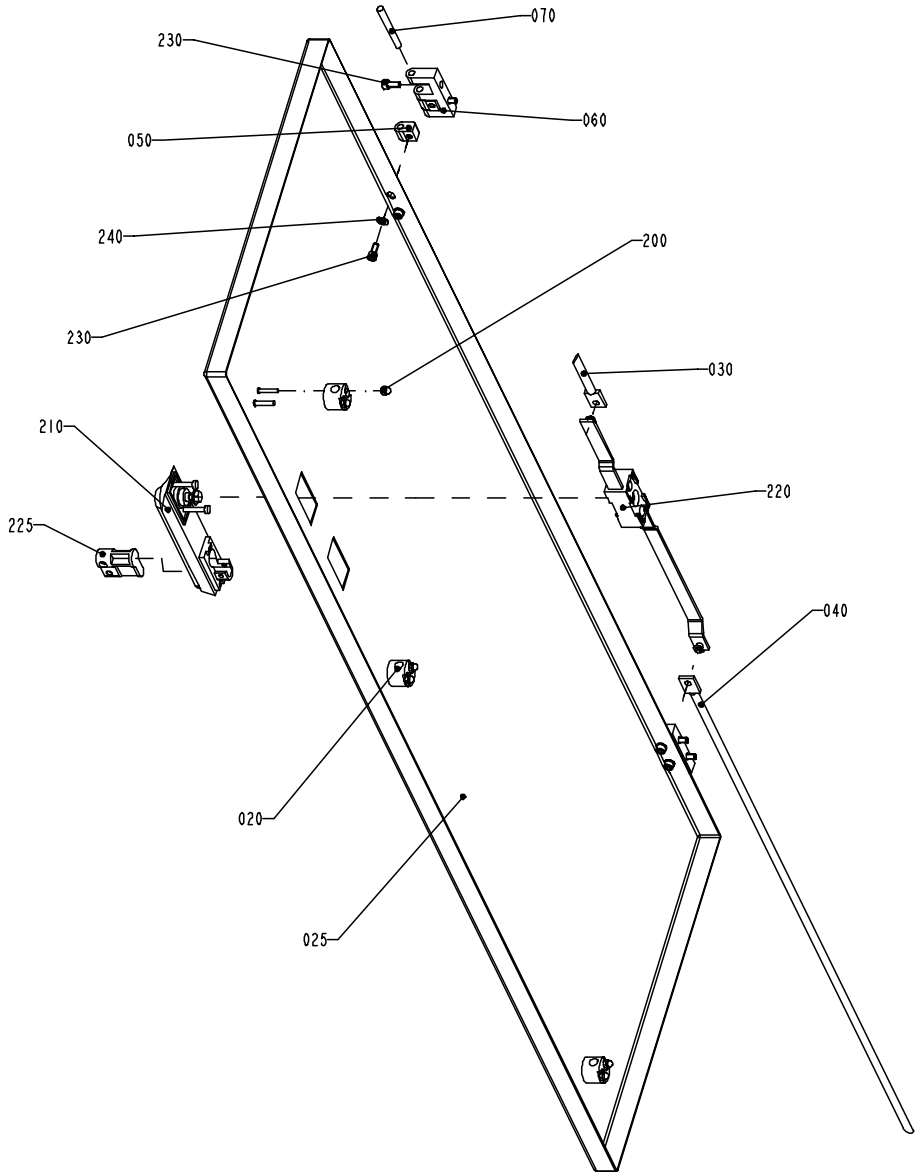

S - 1484889-1
ECN 71402

Pos	Part No	SP	UN	Qty	Description	Page No
Common parts						
020	1129274-0000	-		3	GUIDE LUG	
025	1484890-0000	-		1	DOOR	
030	1036304-0001	-		1	LOCKING ARM	
040	1484891-0000	-		1	LOCKING ARM	
050	1035794-0000	-		4	BLOCKING PIECE	
060	1035792-0000	-		2	E-HINGE	
070	988685-0000	-		2	PIN	
200	312705-0312	-		6	NUT,DOMED CAP,HEXAGON,M4	
210	90237-0126	-		1	TURNING HANDLE	
220	90237-0153	-		1	LOCK HOUSING	
225	90237-0128	-		1	LOCK CYLINDER	
230	312115-0327	-		8	SCREW MC6S ISO 4762 M5X12 A280	
240	315105-0146	-		4	WASHER,PLAIN ROUND 5,3x10 Stainless	

Pos	Part No	SP	UN	Qty	Description	Page No

HATCH

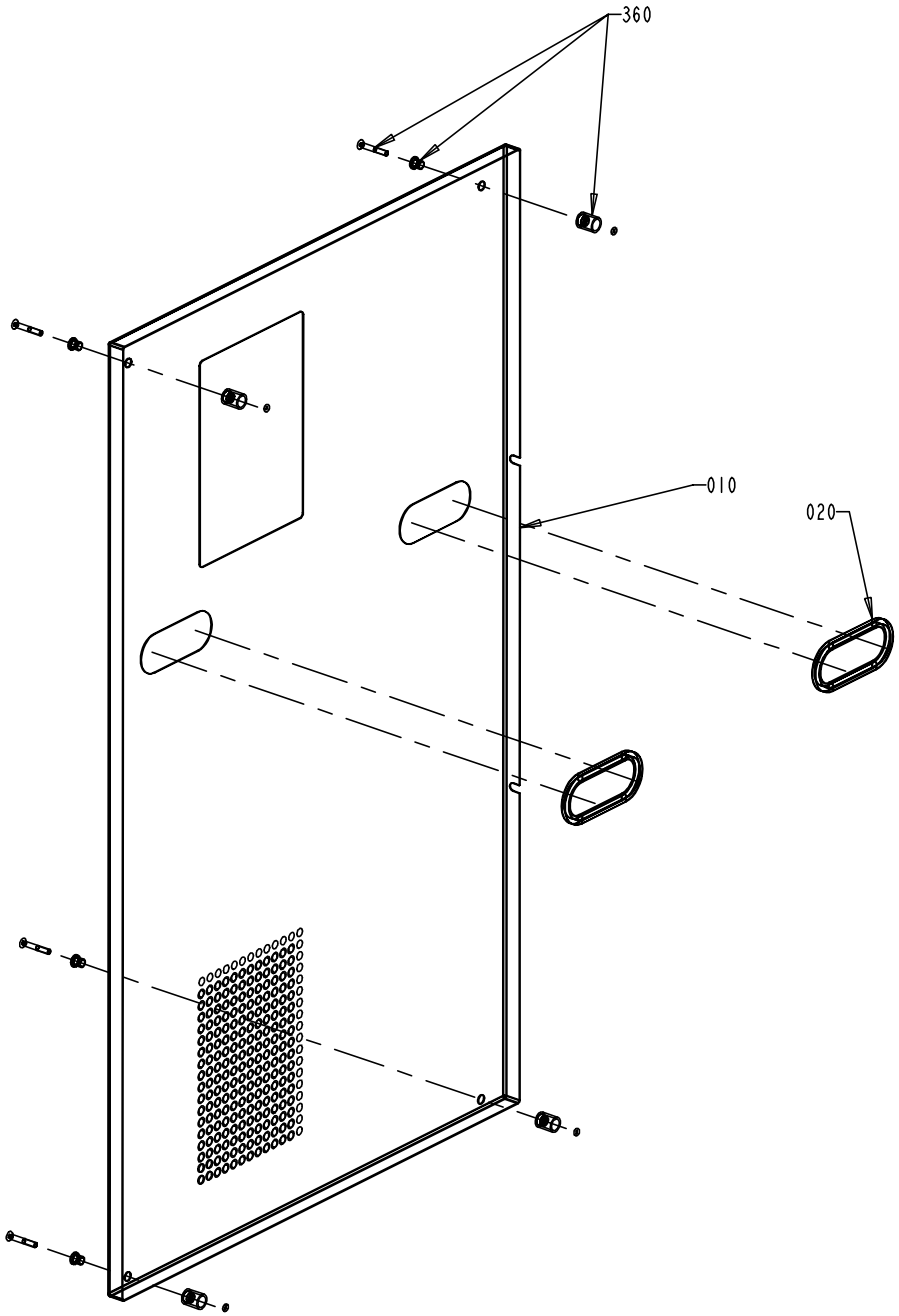

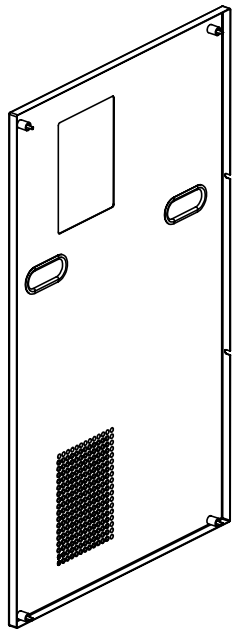

S-1095888-2
ECN 70357

Pos	Part No	SP	UN	Qty	Description	Page No
Common parts						
010	1255633-0000	-		1	HATCH	
020	90143-0060	-	M	1	EDGE STRIP 9,5x6,3mm Black PVC	
360	90226-0458	-		4	MOUNTING SCREW	

Pos	Part No	SP	UN	Qty	Description	Page No

DOOR

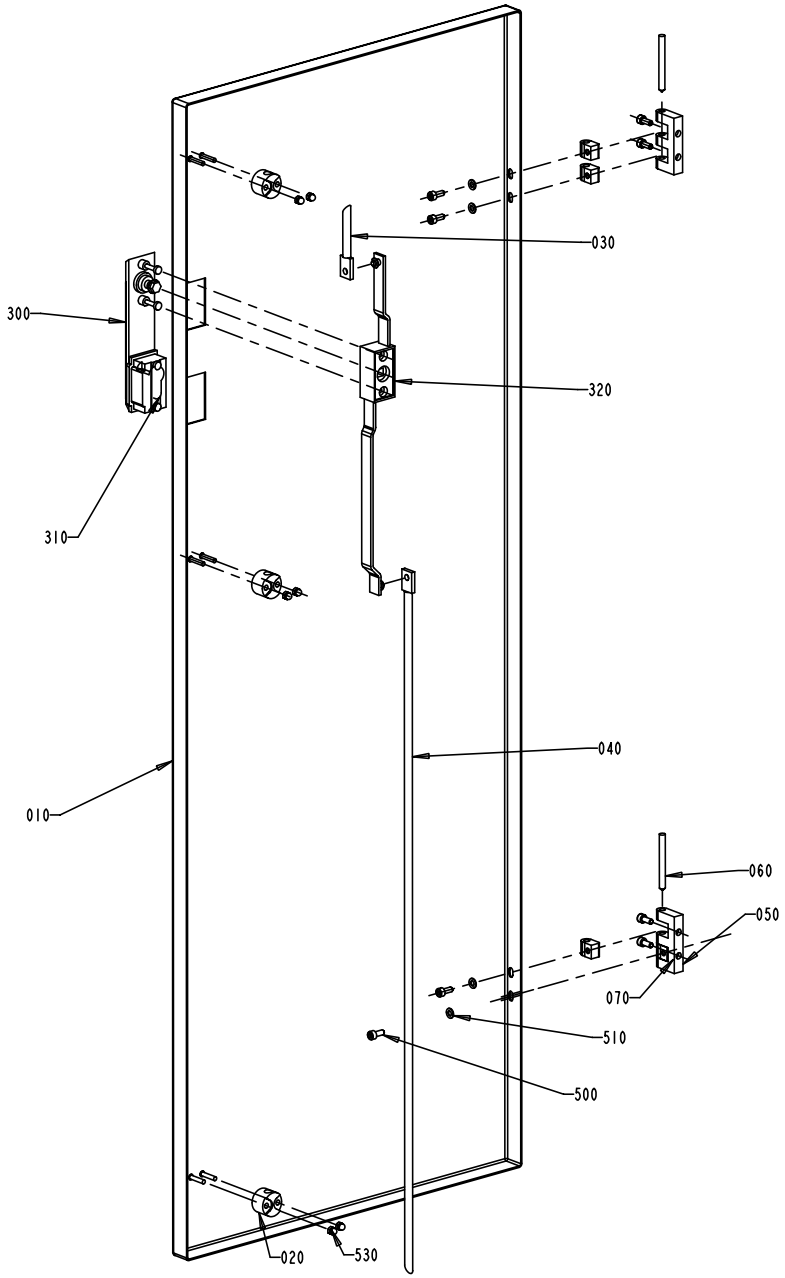

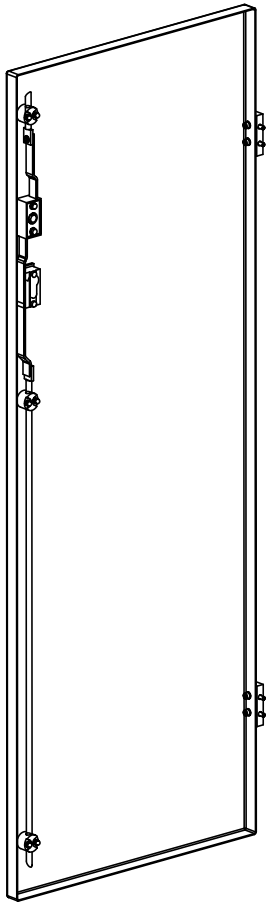

S-1095889-1
ECN 70357

Pos	Part No	SP	UN	Qty	Description	Page No
Common parts						
010	1041970-0000	-		1	DOOR	
020	1129274-0000	-		1	GUIDE LUG	
030	1036304-0001	-		1	LOCKING ARM	
040	1036304-0014	-		1	LOCKING ARM	
050	1035792-0000	-		2	E-HINGE	
060	988685-0000	-		2	PIN	
070	1035794-0000	-		4	BLOCKING PIECE	
300	90237-0126	-		1	TURNING HANDLE	
310	90237-0128	-		1	LOCK CYLINDER	
320	90237-0153	-		1	LOCK HOUSING	
500	312115-0327	-		8	SCREW MC6S ISO 4762 M5X12 A280	
510	315105-0146	-		4	WASHER,PLAIN ROUND 5,3x10 Stainless	
530	312705-0312	-		6	NUT,DOMED CAP,HEXAGON,M4	

Pos	Part No	SP	UN	Qty	Description	Page No

HATCH

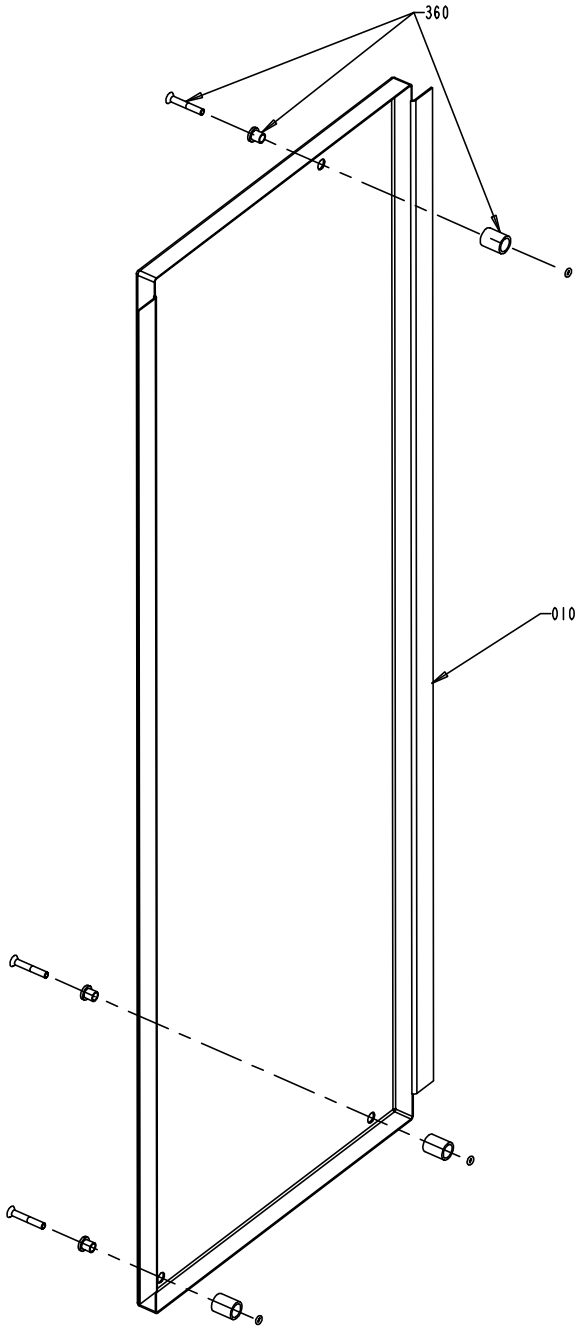

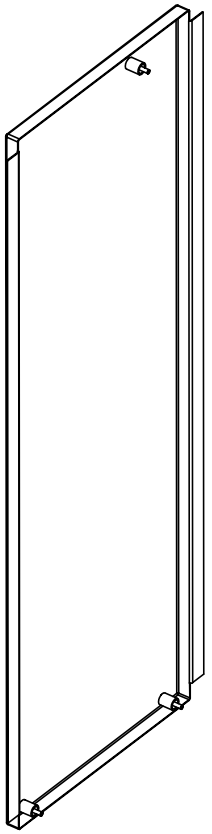

S-1095890-2
ECN 70357

Pos	Part No	SP	UN	Qty	Description	Page No
Common parts						
010	1255635-0000	-		1	HATCH	
360	90226-0458	-		3	MOUNTING SCREW	

Pos	Part No	SP	UN	Qty	Description	Page No

DOOR

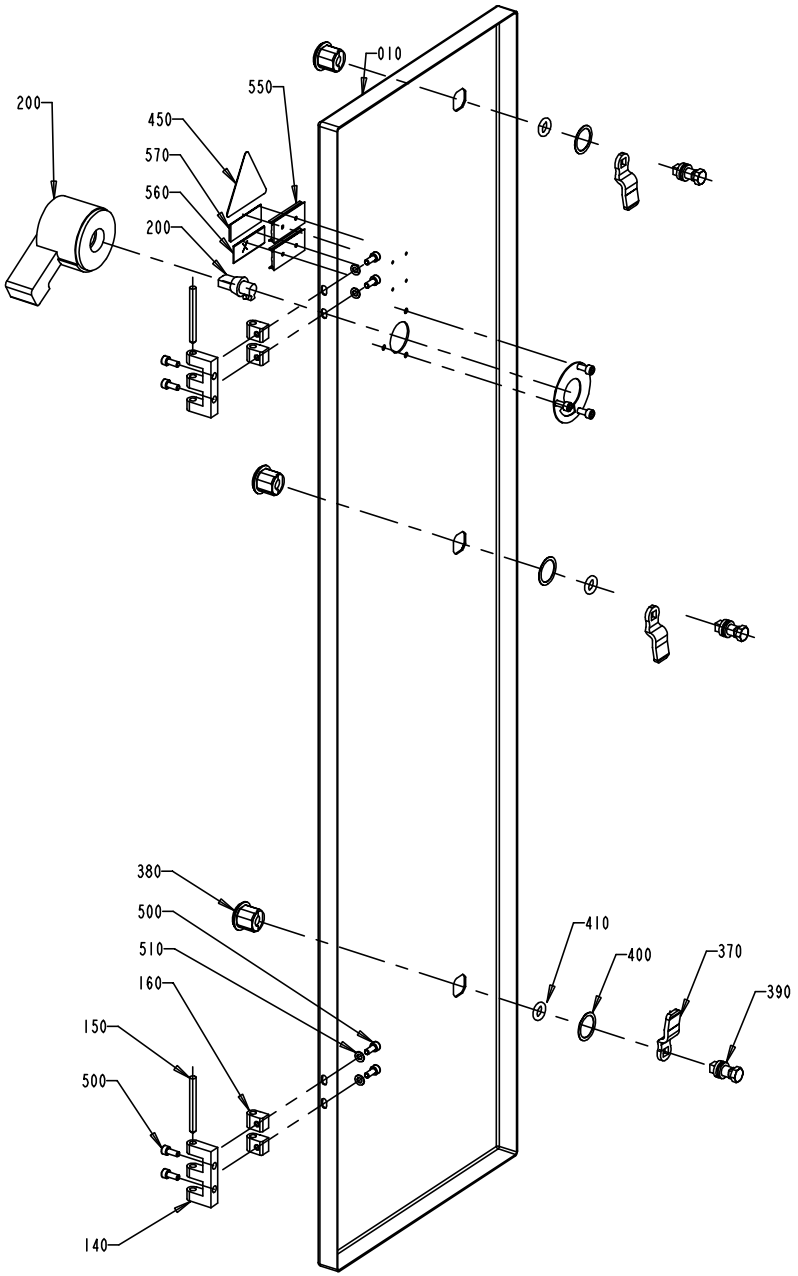

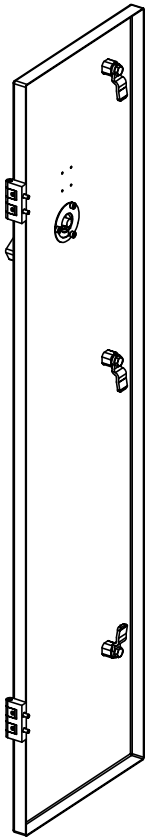

S-1095891-1
ECN 70357

Pos	Part No	SP	UN	Qty	Description	Page No
Common parts						
010	1041972-0000	-		1	DOOR	
140	1035792-0000	-		2	E-HINGE	
150	988685-0000	-		2	PIN	
160	1035794-0000	-		4	BLOCKING PIECE	
200	90051-0106	-		1	COCK HANDLE	
370	90237-0157	-		3	LOCKING CATCH	
380	90237-0319	-		3	LOCK HOUSING EMKA U134	
390	90237-0320	-		3	LOCK COMPONENT EMKA U136	
400	90237-0322	-		3	LOCK GASKET EMKA 1000-23	
410	90237-0323	-		3	O-RING	
450	90194-0016	-		1	SIGN "FLASH SIGN" 50X50MM	
490	311520-0329	-		4	BLANK RIVET 2,4x8mm	
500	312115-0327	-		8	SCREW MC6S ISO 4762 M5X12 A280	
510	315105-0146	-		4	WASHER,PLAIN ROUND 5,3x10 Stainless	
550	359240-0100	-		2	SIGN HOLDER	
560	359241-0431	-		1	SIGN "MAIN SWITCH"	
60HZ						
570	359243-0918	-		1	SIGN"400V, 60HZ, 100A"	
50HZ						
570	359243-0917	-		1	SIGN"400V, 50HZ, 100A"	

Pos	Part No	SP	UN	Qty	Description	Page No

CONNECTION BOX

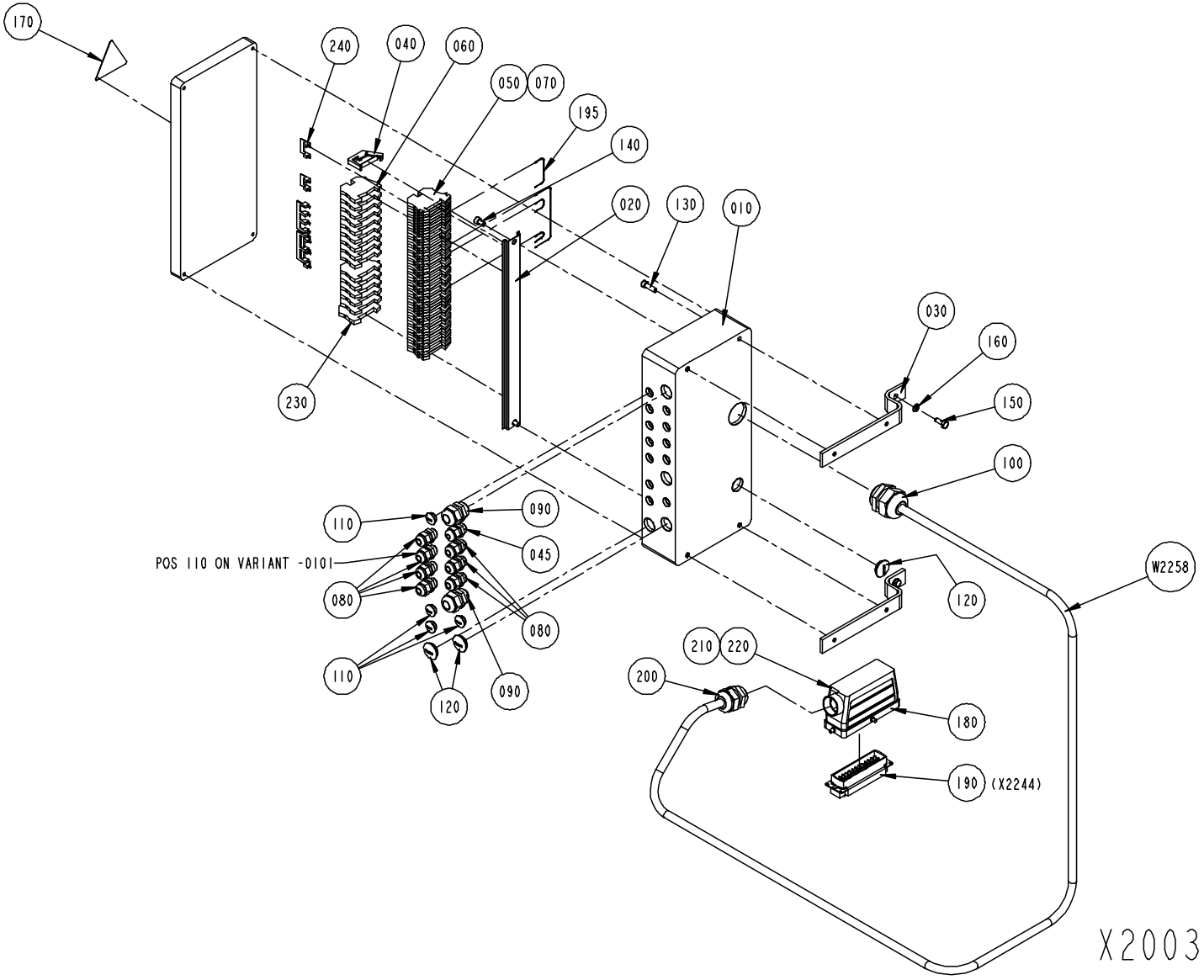

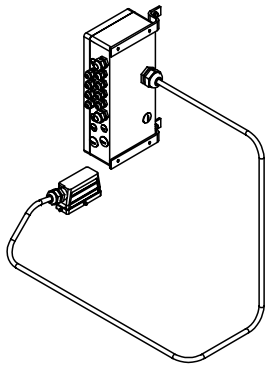

S - 1095630-2
ECN 71821

Pos	Part No	SP	UN	Qty	Description	Page No
Common parts						
010	1129202-0000	-		1	CONNECTION BOX	
020	1129209-0000	-		1	MOUNTING RAIL	
030	1129182-0000	-		2	BRACKET	
040	353031-0201	-		1	END BRACKET EW35	
045	352103-0100	-		1	CABLE GLAND STR 9;PR15,2	
050	353021-0216	-		40	FEED THROUGH TERMINAL WDU 2,5 Blue	
060	353024-0204	-		14	EARTH TERMINAL WPE 2,5	
070	359011-0809	-		2	MARKING PLATES 5-FW 101-150	
080	352103-0101	-		6	CABLE GLAND ST 9	
090	352103-0110	-		2	CABLE GLAND STR 16	
100	352103-0120	-		1	CABLE GLAND STR 29	
110	90002-0013	-		5	BLANK-OFF PLUG 15,2	
120	90002-0004	-		3	BLANK-OFF PLUG 22,5	
130	312115-0370	-		4	SCREW MC6S ISO 4762 M6x20 A280	
140	312115-0364	-		2	SCREW MC6S 6x10 A4 80	
150	312105-0368	-		2	SCREW M6S ISO 4017 M6x16 A280	
160	315105-0153	-		2	WASHER,PLAIN ROUND 6,4x12 Stainless	
170	90194-0016	-		1	SIGN "FLASH SIGN" 50X50MM	
180	90110-0228	-		1	COVER 24 POLE	
190	90110-0150	X		1	MALE INSERT 24-P, CABLE	
195	351172-0102	-	M	1	CABLE AWM BLUE 0,75MM2	
200	352103-0116	-		1	CABLE GLAND ST 21	
210	359005-0050	-		x	MARKING SEATS "X"	
220	359005-0010	-		x	MARKING SESATS 0-9	
230	353024-0205	-		1	EARTH TERMINAL WPE 4	
240	353034-0030	-		4	BRIDGE CONLECK WQV 2,5/10	
W2258	351150-0425	-	MM	2300	CABLE OILFLEX 25x0,75mm2	

Pos	Part No	SP	UN	Qty	Description	Page No

WATER PANEL

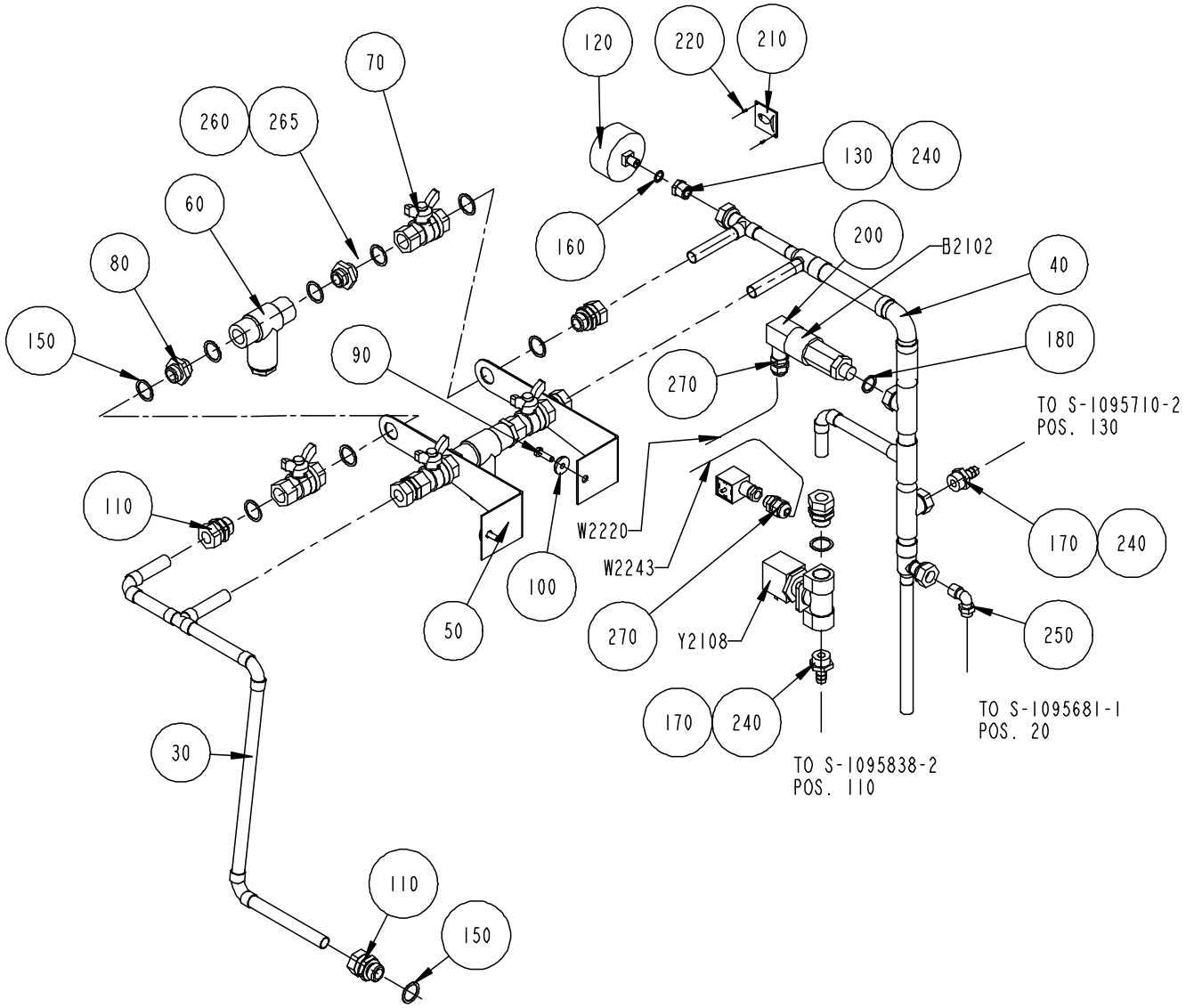

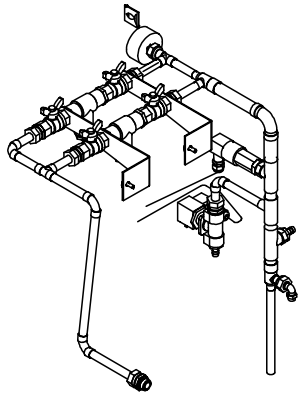

S - 1095608-1
ECN 71821

Pos	Part No	SP	UN	Qty	Description	Page No
Common parts						
030	1041932-0000	-		1	PIPE	
040	1041933-0000	-		1	PIPE	
050	1037583-0000	-		2	HOLDER	
060	B 271823-0000	R		2	FILTER	
070	90187-0029	-		4	VALVE	
080	479261-0000	-		4	NIPPLE	
090	312105-0370	-		2	SCREW M6S ISO 4017 M6x20 A280	
100	315125-0153	-		2	WASHERS,PLAIN ROUND,CHAMFERED 6,4X22X4	
110	342720-0114	-		6	STRAIGHT CONNECTION GA-15-G1/2"	
120	90043-0006	R		1	PRESSURE GAUGE	
130	342701-0202	-		1	BUSHING,INT./EXT.G-THREAD G3/8"-G1/8"	
150	315233-0113	-		18	PLAIN ROUND,NYLON R1/2"	
160	315233-0109	-		1	PLAIN ROUND,NYLON R1/8"	
180	315233-0111	-		1	PLAIN ROUND,NYLON R3/8"	
200	90110-0095	-		1	CONTACT 3 POLE+EARTH	
210	273455-0000	-		1	LABEL (COLD WATER)	
220	312502-0120	-		2	DRIVE SCREW ROUND HEAD SMS 1549 KDS 0X5	
240	90157-0016	-		x	LOCKING FLUID	
250	342930-0133	-		1	ELBOW 90 COUPL.,EXT.THREAD 10/8-R3/8"	
260	2612-0007	-		5	WASHER	
265	2612-0008	-		5	WASHER	
270	352103-0101	-		2	CABLE GLAND ST 9	
B 2102	90274-0042	D		1	PRESSURE SWITCH 2BAR Nacov	
W 2220	351150-0403	-	MM	2000	CABLE OLFLEX 3x0,75 MM2	
W 2243	351150-0403	-	MM	2000	CABLE OLFLEX 3x0,75 MM2	
Y 2108	90042-0249	-		1	SOLENOID VALVE OFFICINE DI ENSINO	
COMPRESSOR						
170	342901-0105	-		2	HOSE NIPPLE,EXT. THREADED G1/2"-12	
ICE-WATER						
300	A1095715-0100	-		1	ICE WATER	
170	342901-0105	-		1	HOSE NIPPLE,EXT. THREADED G1/2"-12	
230	342921-0124	-		1	STRAIGHT COUPLING,EXT.THREADED 8/6-G1/2"	

Pos	Part No	SP	UN	Qty	Description	Page No

WATER PANEL

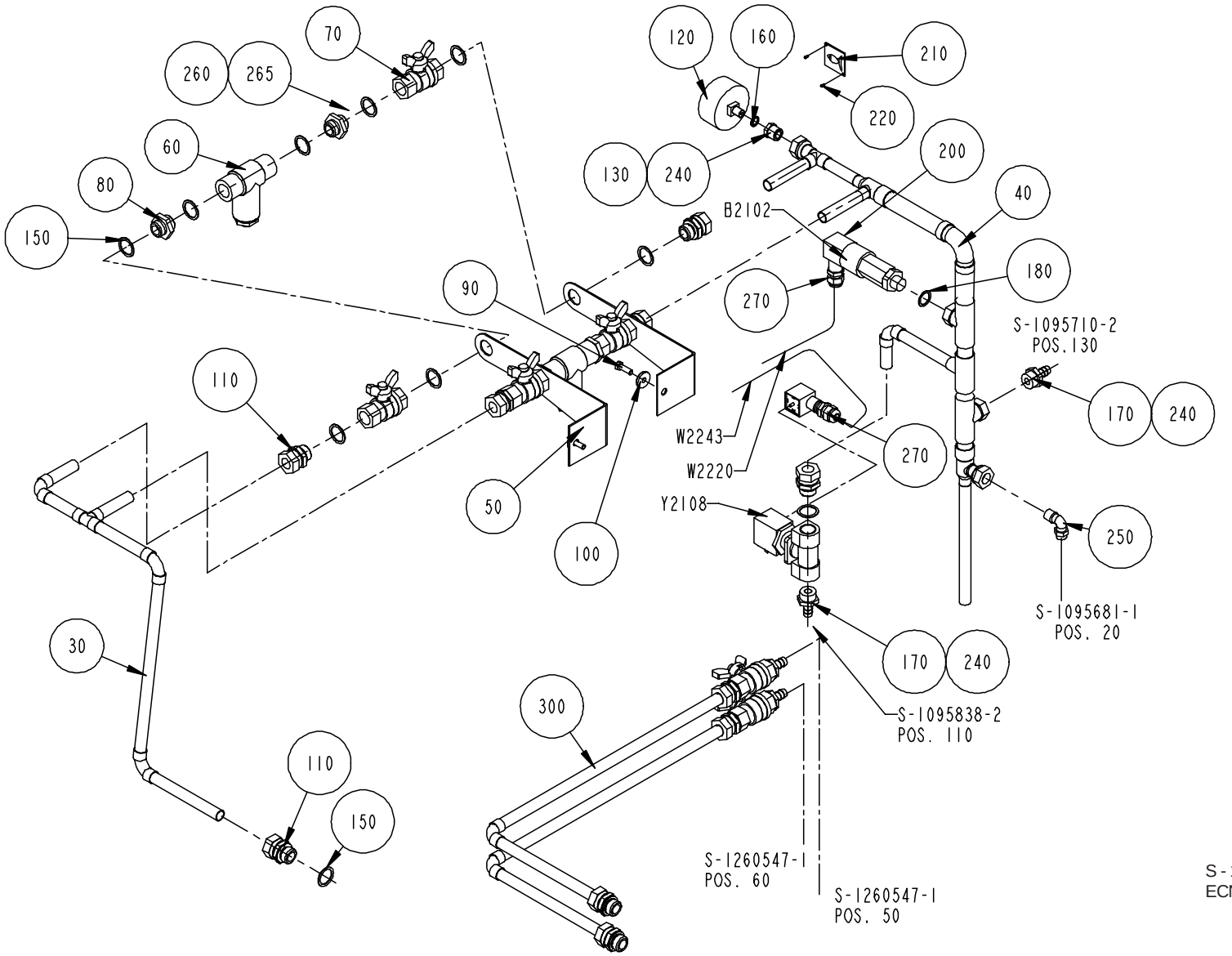

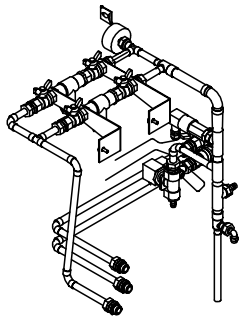

S - 1095608-2
ECN 71821

Pos	Part No	SP	UN	Qty	Description	Page No
Common parts						
030	1041932-0000	-		1	PIPE	
040	1041933-0000	-		1	PIPE	
050	1037583-0000	-		2	HOLDER	
060	B 271823-0000	R		2	FILTER	
070	90187-0029	-		4	VALVE	
080	479261-0000	-		4	NIPPLE	
090	312105-0370	-		2	SCREW M6S ISO 4017 M6x20 A280	
100	315125-0153	-		2	WASHERS,PLAIN ROUND,CHAMFERED 6,4X22X4	
110	342720-0114	-		6	STRAIGHT CONNECTION GA-15-G1/2"	
120	90043-0006	R		1	PRESSURE GAUGE	
130	342701-0202	-		1	BUSHING,INT./EXT.G-THREAD G3/8"-G1/8"	
150	315233-0113	-		18	PLAIN ROUND,NYLON R1/2"	
160	315233-0109	-		1	PLAIN ROUND,NYLON R1/8"	
180	315233-0111	-		1	PLAIN ROUND,NYLON R3/8"	
200	90110-0095	-		1	CONTACT 3 POLE+EARTH	
210	273455-0000	-		1	LABEL (COLD WATER)	
220	312502-0120	-		2	DRIVE SCREW ROUND HEAD SMS 1549 KDS 0X5	
240	90157-0016	-		x	LOCKING FLUID	
250	342930-0133	-		1	ELBOW 90 COUPL.,EXT.THREAD 10/8-R3/8"	
260	2612-0007	-		5	WASHER	
265	2612-0008	-		5	WASHER	
270	352103-0101	-		2	CABLE GLAND ST 9	
B 2102	90274-0042	D		1	PRESSURE SWITCH 2BAR Nacov	
W 2220	351150-0403	-	MM	2000	CABLE OLFLEX 3x0,75 MM2	
W 2243	351150-0403	-	MM	2000	CABLE OLFLEX 3x0,75 MM2	
Y 2108	90042-0249	-		1	SOLENOID VALVE OFFICINE DI ENSINO	
COMPRESSOR						
170	342901-0105	-		2	HOSE NIPPLE,EXT. THREADED G1/2"-12	
ICE-WATER						
300	A1095715-0100	-		1	ICE WATER	
170	342901-0105	-		1	HOSE NIPPLE,EXT. THREADED G1/2"-12	
230	342921-0124	-		1	STRAIGHT COUPLING,EXT.THREADED 8/6-G1/2"	

Pos	Part No	SP	UN	Qty	Description	Page No

ICE WATER

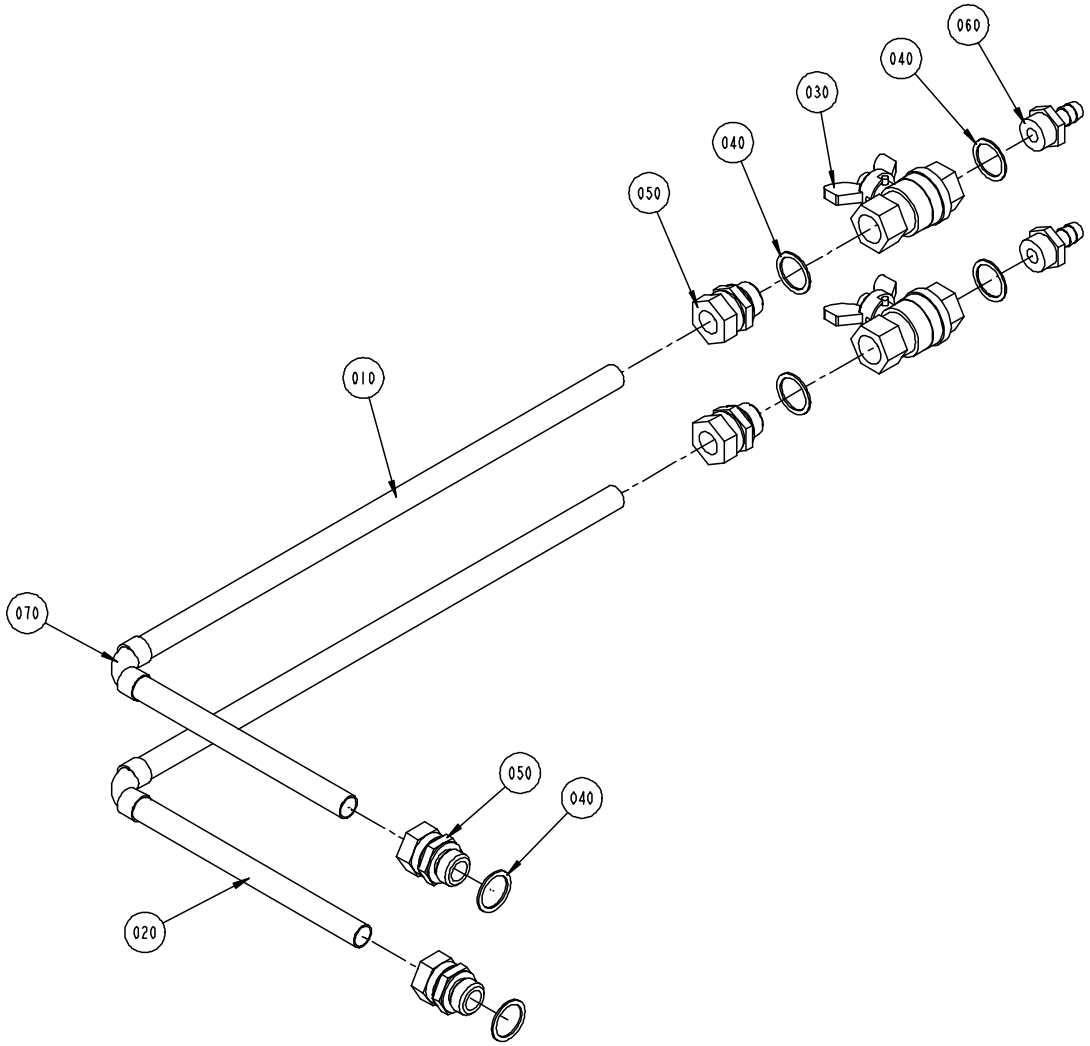

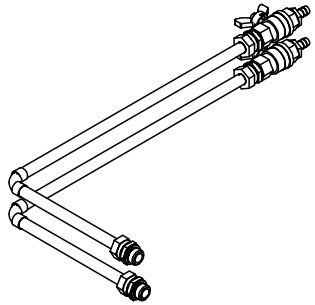

S - 1095715-1
ECN 71821

Pos	Part No	SP	UN	Qty	Description	Page No
Common parts						
010	1041930-0000	-		1	PIPE	
020	1041931-0000	-		1	PIPE	
030	90187-0029	-		2	VALVE	
040	315233-0113	-		6	PLAIN ROUND,NYLON R1/2"	
050	342720-0114	-		4	STRAIGHT CONNECTION GA-15-G1/2"	
060	342901-0105	-		2	HOSE NIPPLE,EXT. THREADED G1/2"-12	

Pos	Part No	SP	UN	Qty	Description	Page No

This page is intentionally left blank

Pos	Part No	SP	UN	Qty	Description	Page No
Common parts						
010	A1095611-0100	-		1	VALVE PANEL	**489**
020	A1095609-0200	-		1	PNEUMATIC UNIT	**491**
030	A1095716-0100	-		1	PIPE WORK-AIR	**493**

Pos	Part No	SP	UN	Qty	Description	Page No

VALVE PANEL

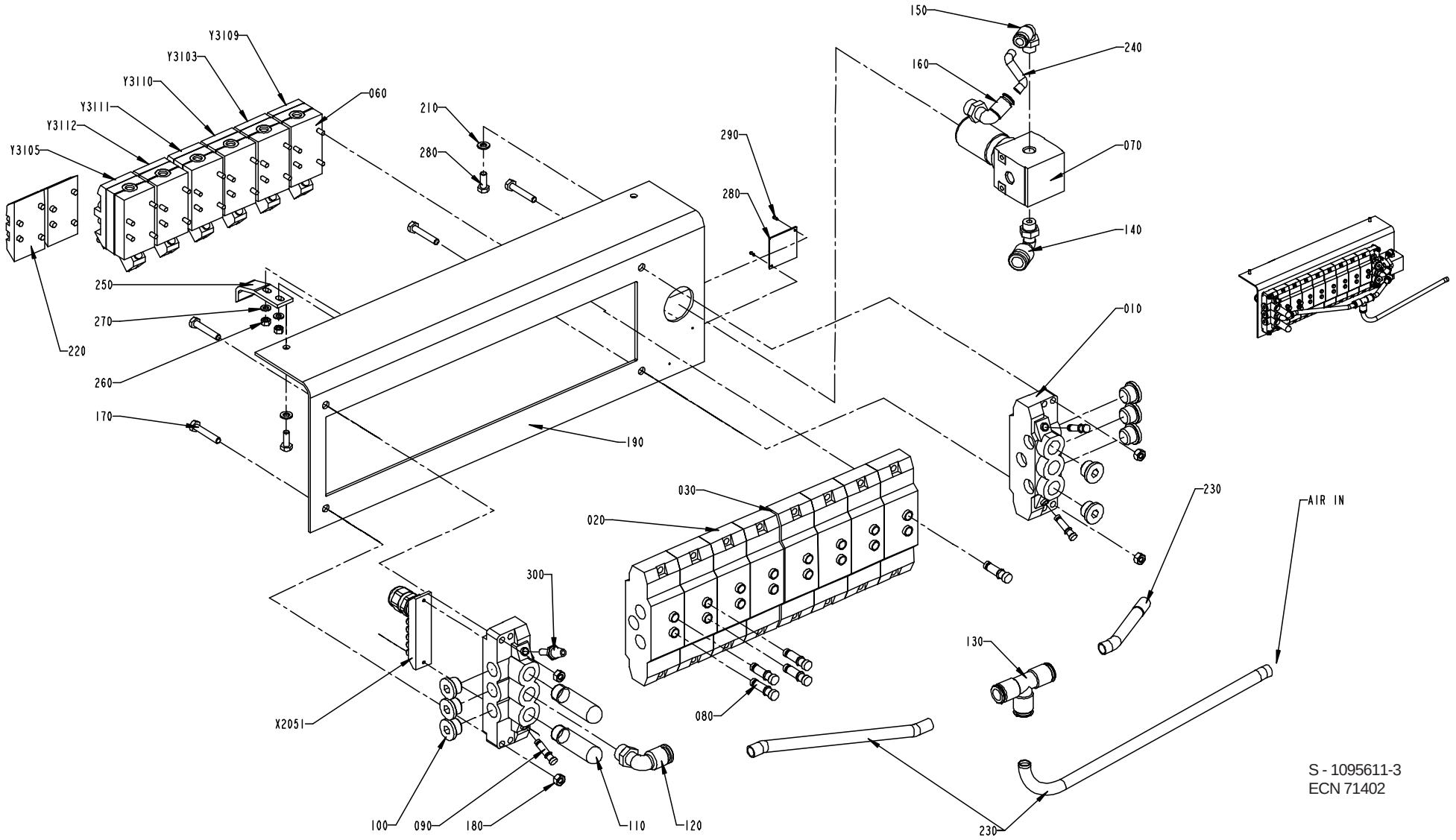

S - 1095611-3
ECN 71402

Pos	Part No	SP	UN	Qty	Description	Page No
TBA/21HS						
005	1484892-0000	-		1	PNEUMATIC DIAGRAM	
060	90042-0215	-		6	SOLENOID VALVE 07931 067 18 ISO 1	
080	342715-0103	-		5	BLIND PLUG	
130	342748-0109	-		1	T-CONNECTION	
220	90042-0519	-		2	VALVES,ACCESSORIES,BLANKING PLATE	
Y 3105	90042-0538	-		1	PNEUMATICS,VALVES	
Y 3110	90042-0538	-		1	PNEUMATICS,VALVES	
Common parts						
010	90042-0522	-		2	PNEUMATICS,VALVES,PLATES	
020	90042-0532	-		8	PNEUMATICS,VALVES,PLATES	
030	90042-0528	-		1	VALVES,ACCESSORIES,BLANKING KIT	
050	90042-0526	-		5	PROTECTIVE SLEEVE	
070	90113-0095	D		1	PRESSURE REGULATOR	
090	342715-0102	-		3	PLUG	
100	342713-0211	-		8	PLUG,EXT.G-THREAD,HEXAGON SOCKET G3/8"	
110	90328-0024	-		2	SILENCER	
120	342732-0110	-		1	ELBOW PIPE JOINT	
140	342732-0109	-		1	ELBOW PIPE JOINT	
150	342732-0104	-		1	ELBOW PIPE JOINT	
160	342732-0105	-		1	ELBOW PIPE D8-R3/8"	
170	312105-0376	-		4	SCREW M6S ISO 4017 M6X35 A280	
180	312605-0316	-		4	NUT,HEXAGON A280 M6M6	
190	1041911-0000	-		1	SHEET	
200	312105-0368	-		2	SCREW M6S ISO 4017 M6x16 A280	
210	315105-0153	-		2	WASHER,PLAIN ROUND 6,4x12 Stainless	
230	90166-0068	-	MM	1000	HOSE N12x1,5/3-50	
240	90166-0194	-	MM	400	PLASTIC HOSE	
250	1036227-0000	-		1	BRACKET	
260	312605-0314	-		2	NUT,HEXAGON,M6M5 Stainless	
270	315105-0146	-		2	WASHER,PLAIN ROUND 5,3x10 Stainless	
280	1041938-0000	-		1	SIGN	
290	312502-0120	-		2	DRIVE SCREW ROUND HEAD SMS 1549 KDS 0X5	
300	90328-0017	-		1	SILENCER	
X 2051	90042-0535	-		1	VALVES,ACCESSORIES,TERMINAL MODULE	
Y 3103	90042-0538	-		1	PNEUMATICS,VALVES	
Y 3109	90042-0538	-		1	PNEUMATICS,VALVES	
Y 3111	90042-0538	-		1	PNEUMATICS,VALVES	
Y 3112	90042-0538	-		1	PNEUMATICS,VALVES	

Pos	Part No	SP	UN	Qty	Description	Page No

PNEUMATIC UNIT

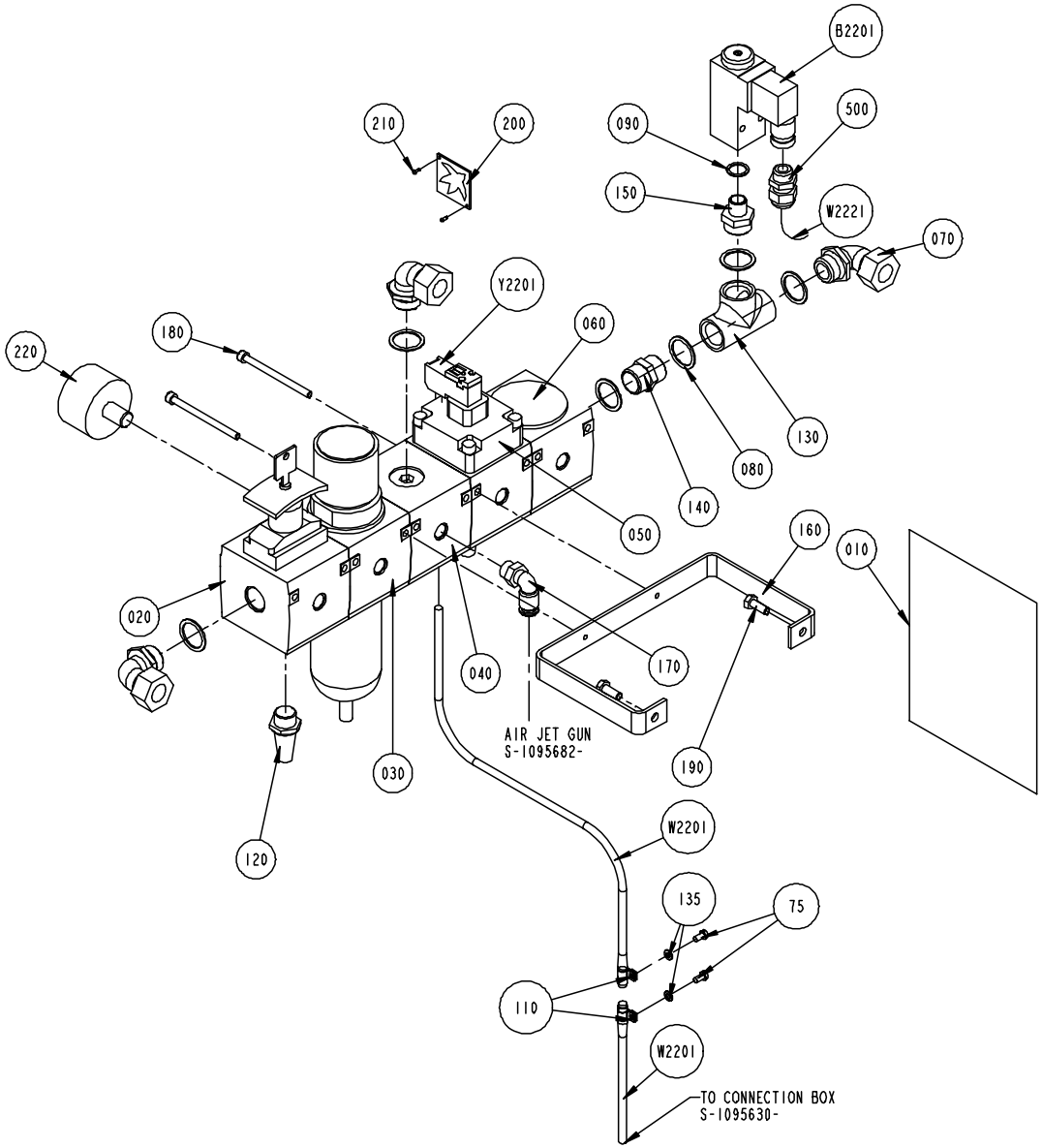

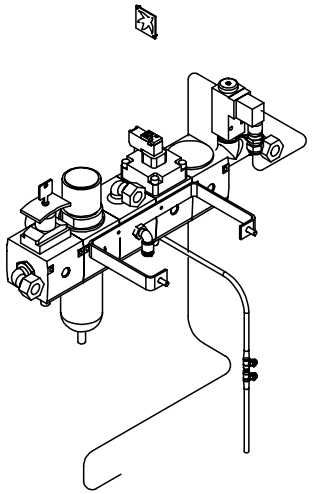

S - 1095609-2
ECN 71821

Pos	Part No	SP	UN	Qty	Description	Page No
Common parts						
010	1129150-0000	-		1	PNEUMATIC DIAGRAM	
020	90113-0377	D		1	SHUT-OFF VALVE	
030	B 90113-0072	D		1	PRESSURE REGULATOR	
040	90113-0375	D		1	PRESSURE DISTRIBUTION	
050	90113-0423	D		1	High speed venting valve	
060	90113-0374	D		1	SLOW STARTING VALVE	
070	342730-0114	-		3	ELBOW CONNECTION WA-15-1/2"	
075	312125-0287	-		2	SLOTTED CHEESE HEAD ISO 1207 M4X8 RFR	
080	315233-0113	-		6	PLAIN ROUND,NYLON R1/2"	
090	315233-0110	-		1	PLAIN ROUND,NYLON R1/4"	
110	90074-0025	-		2	PIPE-CLIP,single 8	
120	90328-0007	-		1	SILENCER	
130	90330-0049	-		1	T-PIPE,INTERNAL THREAD Rp1/2"	
135	315105-0136	-		2	WASHER,PLAIN ROUND 4,3x8 Stainless	
140	342700-0113	-		1	NIPPLES,HEXAGON,EXT.G-THREAD G1/2"-G1/2"	
150	342700-0205	-		1	NIPPLES,HEXAGON,EXT.G-THREAD G1/2"-G1/4"	
160	1041921-0000	-		1	HOLDER	
170	342732-0104	-		1	ELBOW PIPE JOINT	
180	90287-0073	-		2	SCREW, MC6S ISO4762, M5x70 12.9	
190	312105-0368	-		2	SCREW M6S ISO 4017 M6x16 A280	
200	273458-0000	-		1	LABEL (AIR)	
210	312502-0120	-		2	DRIVE SCREW ROUND HEAD SMS 1549 KDS 0X5	
220	90043-0107	D		1	PRESSURE GAUGE	
500	352103-0101	-		1	CABLE GLAND ST 9	
B2201	90274-0074	D		1	PRESSURE SWITCH	
W2201	90042-0583	D		1	Cable	
W2221	351150-0403	D	MM	2000	CABLE OLFLEX 3x0,75 MM2	
Y2201	90042-0585	-		1	Pilot valve	

Pos	Part No	SP	UN	Qty	Description	Page No

PIPE WORK-AIR

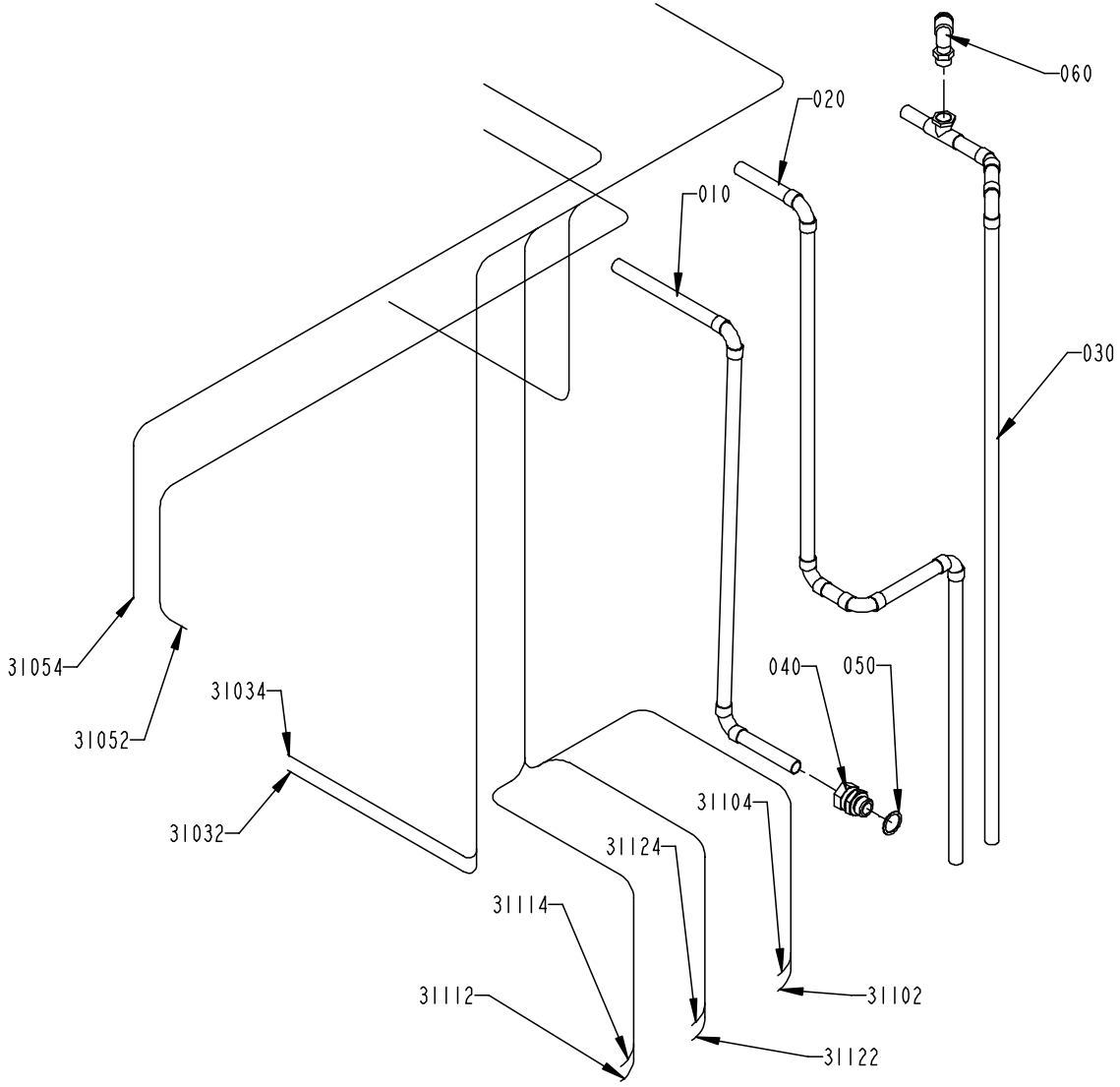

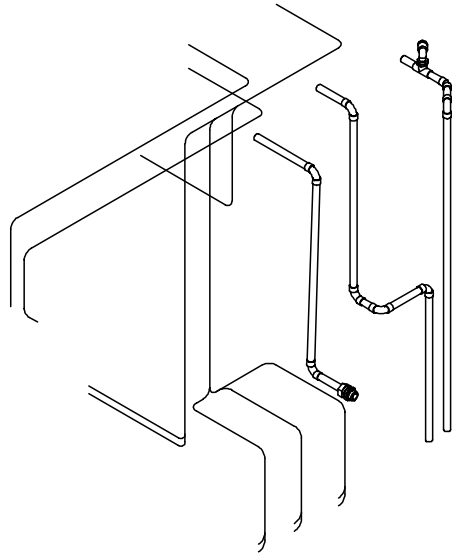

S - 1095716-2
ECN 71402

Pos	Part No	SP	UN	Qty	Description	Page No
TBA/21HS						
31052	90166-0013	-	MM	1700	HOSE 8/6	
31054	90166-0013	-	MM	1700	HOSE 8/6	
Common parts						
010	1041922-0000	-		1	PIPE	
020	1041923-0000	-		1	PIPE	
030	1041924-0000	-		1	PIPE	
040	342720-0114	-		1	STRAIGHT CONNECTION GA-15-G1/2"	
050	315233-0113	-		1	PLAIN ROUND,NYLON R1/2"	
060	342732-0110	-		1	ELBOW PIPE JOINT	
31032	90166-0013	-	MM	1400	HOSE 8/6	
31034	90166-0013	-	MM	1400	HOSE 8/6	
31094	90166-0013	-	MM	1400	HOSE 8/6	
31102	90166-0013	-	MM	1500	HOSE 8/6	
31104	90166-0013	-	MM	1500	HOSE 8/6	
31112	90166-0013	-	MM	1500	HOSE 8/6	
31114	90166-0013	-	MM	1500	HOSE 8/6	
31122	90166-0013	-	MM	1500	HOSE 8/6	
31124	90166-0013	-	MM	1500	HOSE 8/6	

Pos	Part No	SP	UN	Qty	Description	Page No

This page is intentionally left blank

Pos	Part No	SP	UN	Qty	Description	Page No
90042-0254						
	90042-0557	-		1	COIL V24DC-N3	
90082-0010						
	90082-0300	S		1	OVERVOLT.PROT.PU1 230V	
90113-0072						
	90113-0387	-		1	FILTER	
	90113-0459	-		1	O-RING	
90187-0148						
	90187-0319	-		1	GASKET UNIT	
90415-0032						
	90415-0328	K		1	FILTER INSERT	
90415-0060						
	90415-0354	K		1	DEIONIZER CARTRIDGE	
90415-0065						
010	90415-0357	-		1	FILTER INSERT	
271823-0000						
	90415-0314	F		1	FILTERINSERT 5594-36	
	90415-0325	F		1	GASKET	
1041046-0000						
	90243-0113	-		1	FLOW METER	
1129079-0000						
	90243-0134	-		1	FLOW METER	
1129088-0000						
	90024-0031	-		1	FILTER 3-PH SIEMENS	

Pos	Part No	SP	UN	Qty	Description	Page No

SPC

Spare Parts Catalogue

STRIP APPLICATOR

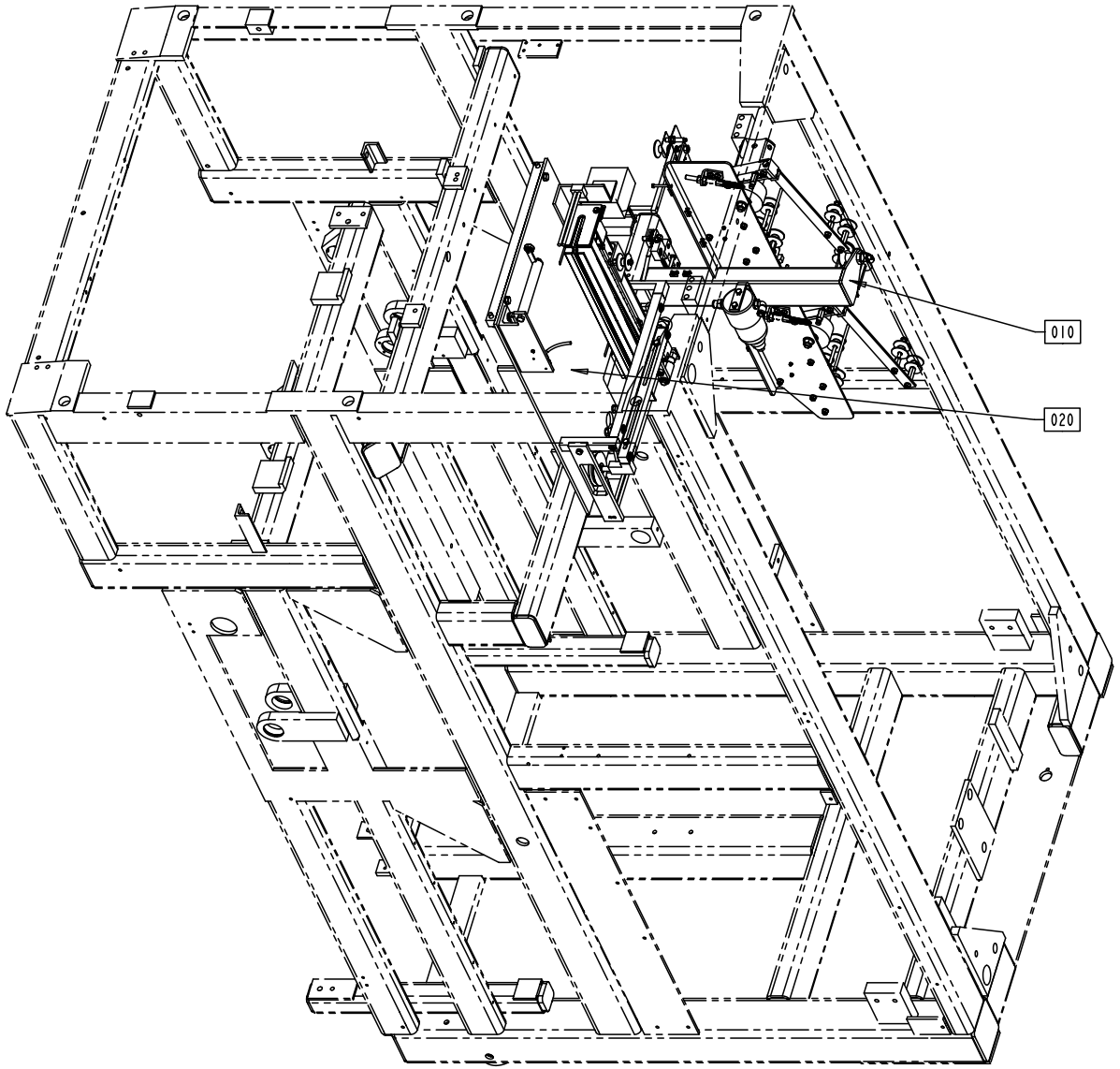

S - 648507-3
ECN 71873

Pos	Part No	SP	UN	Qty	Description	Page No
Common parts						
010	A1195500-0200	-		1	STRIP MAGAZINE	**501**
020	A1195505-0200	-		1	STRIP APPLICATOR	**521**

Pos	Part No	SP	UN	Qty	Description	Page No

STRIP MAGAZINE

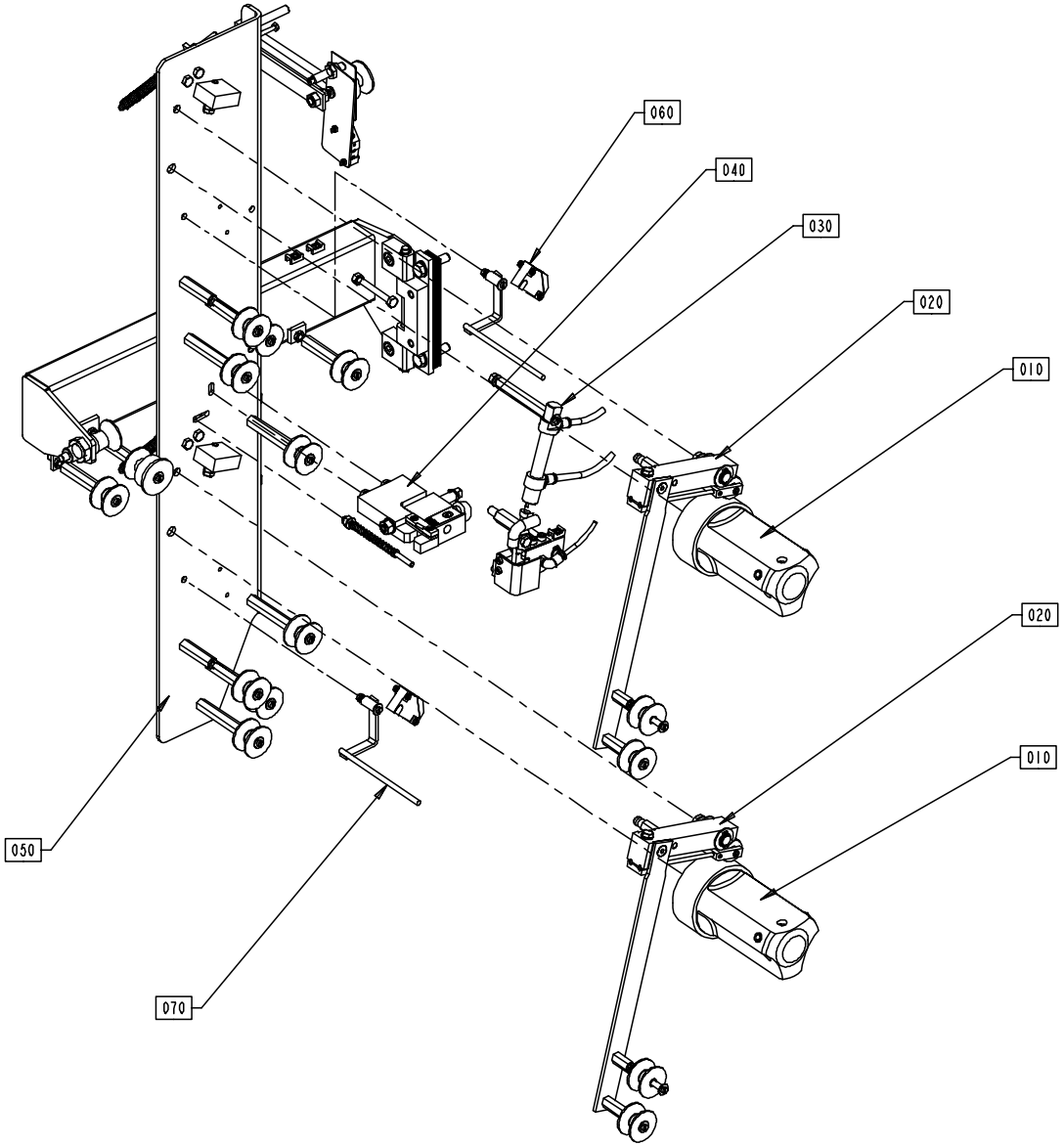

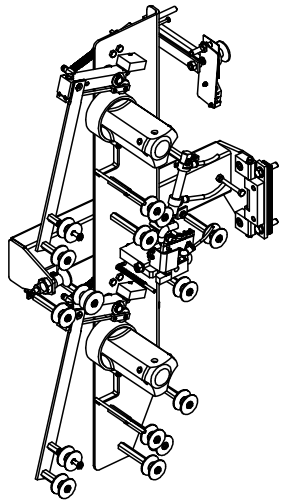

S - 1195500-2
ECN 72489

Pos	Part No	SP	UN	Qty	Description	Page No
Common parts						
010	A1095815-0100	-		2	HUB	**503**
020	A1095816-0100	-		2	BRAKE ARM	**505**
030	A1490806-0100	-		1	HEATING DEVICE	**507**
040	A1347260-0100	-		1	CUTTING TABLE	**509**
050	A1195501-0200	-		1	MOUNTING SHEET	**511**, **513**
060	A1195502-0200	-		1	ROCKER ARM	**517**
070	A1195503-0200	-		1	ROCKER ARM	**519**

Pos	Part No	SP	UN	Qty	Description	Page No

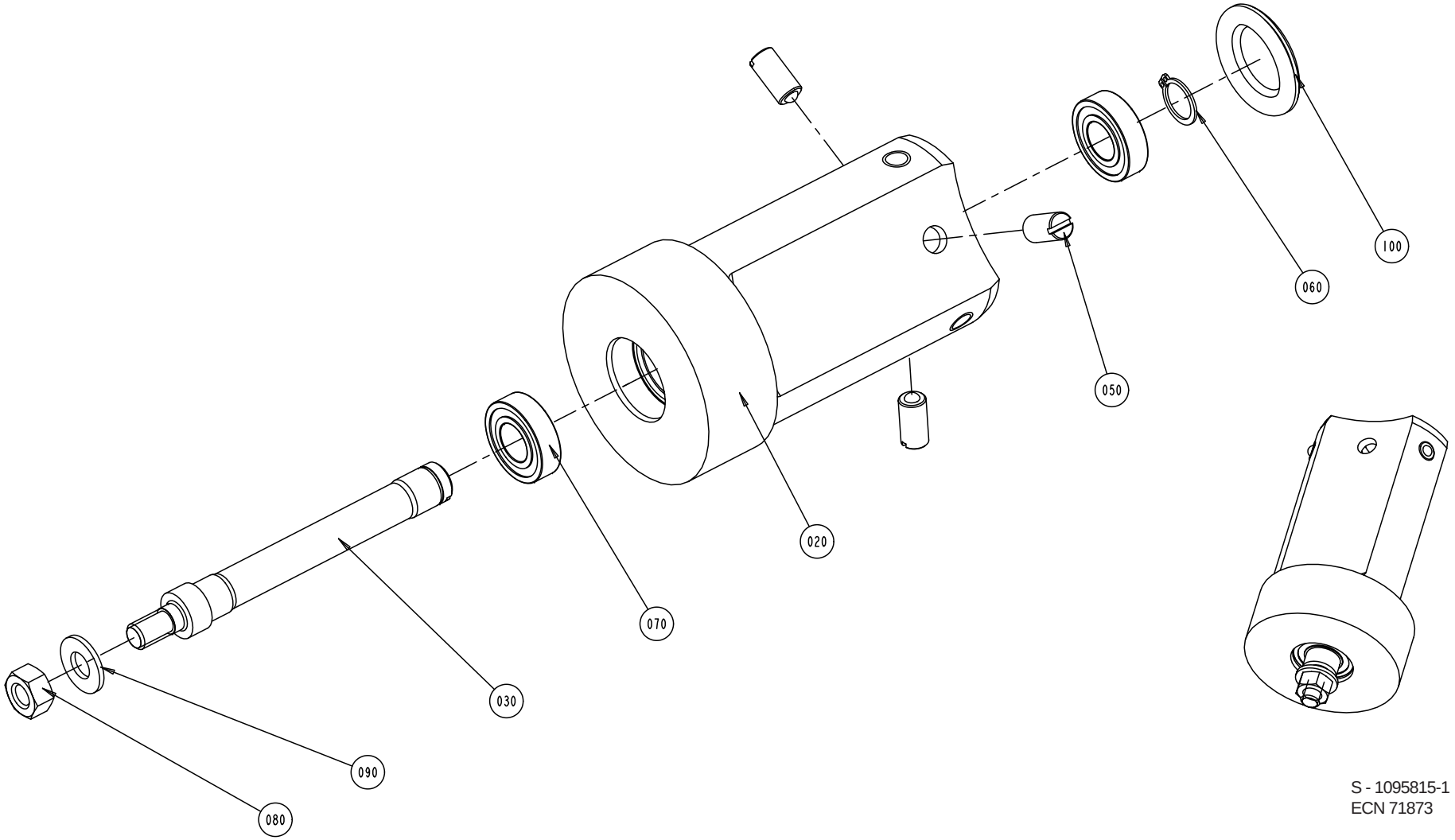

S - 1095815-1
ECN 71873

Pos	Part No	SP	UN	Qty	Description	Page No
Common parts						
010	541751-0000	-		x	CONICAL BOBBIN	
020	536913-0000	D		1	HUB	
030	537327-0000	D		1	SHAFT	
040	90157-0016	-		x	LOCKING FLUID	
050	90287-0106	-		3	SCREW SPRINGLOADED M10x21	
060	315751-0112	-		1	RETAINING RINGS FOR SHAFT 15	
070	90214-0207	M		2	BEARINGS,BALL BEARING,STAINLESS	
080	312605-0320	-		1	NUT,HEXAGON,M10 A280	
090	315105-0173	-		1	WASHER,PLAIN ROUND 10,5x22 STAINLESS	
100	90261-0049	-		1	PLASTIC PLUG SR 1750	

Pos	Part No	SP	UN	Qty	Description	Page No

BRAKE ARM

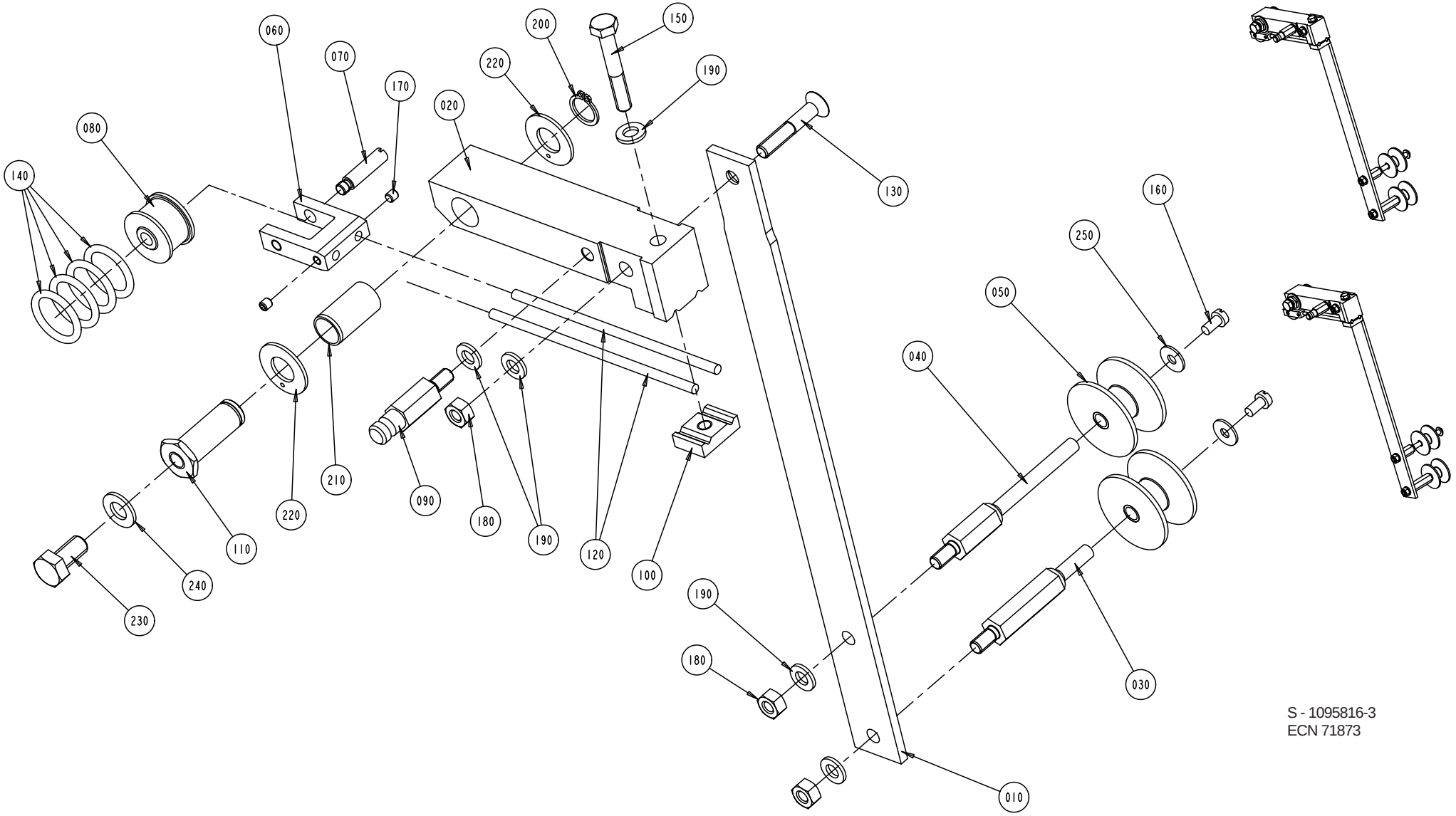

S - 1095816-3
ECN 71873

Pos	Part No	SP	UN	Qty	Description	Page No
Common parts						
010	1036124-0000	-		1	ARM	
020	541057-0000	-		1	ARM	
030	536917-0000	-		1	AXLE PIN	
040	544726-0000	-		1	AXLE PIN	
050	B 544730-0000	M		2	ROLL	
060	541064-0000	D		1	FORK	
070	541065-0000	-		1	SHAFT	
080	541066-0000	M		1	ROLL	
090	541067-0000	-		1	SPRING BRACKET	
100	541069-0000	-		1	SPRING BRACKET	
110	541070-0000	D		1	SHAFT	
120	543820-0000	D		2	SPRING	
130	312155-0376	-		1	SCREW MF6S DIN 7991 M6X35 A280	
140	90242-0148	J		4	"O-RING 19,2X3"	
150	312105-0378	-		1	SCREW ISO 4017 M6x40 A280	
160	312125-0287	-		2	SLOTTED CHEESE HEAD ISO 1207 M4X8 RFR	
170	312318-0283	-		2	SET SCREW CUP POINT ISO 4029 M4X4 RFR	
180	312605-0316	-		3	NUT,HEXAGON A280 M6M6	
190	315105-0153	-		5	WASHER,PLAIN ROUND 6,4x12 Stainless	
200	315751-0109	-		1	RETAINING RINGS FOR SHAFT 12	
210	321120-0113	M		1	BEARING BUSHING WITHOUT FLANGE,12/14X25	
220	321129-0104	-		2	THRUST WASHER 12/24X1,5	
230	312105-0449	-		1	SCREW M6S ISO 4017 M8x16 A280	
240	315105-0165	-		1	WASHER,PLAIN ROUND 8,4x16 Stainless	
250	90005-0082	-		2	WASHER,Plain Round 4,3x12;H=1 M4	

Pos	Part No	SP	UN	Qty	Description	Page No

HEATING DEVICE

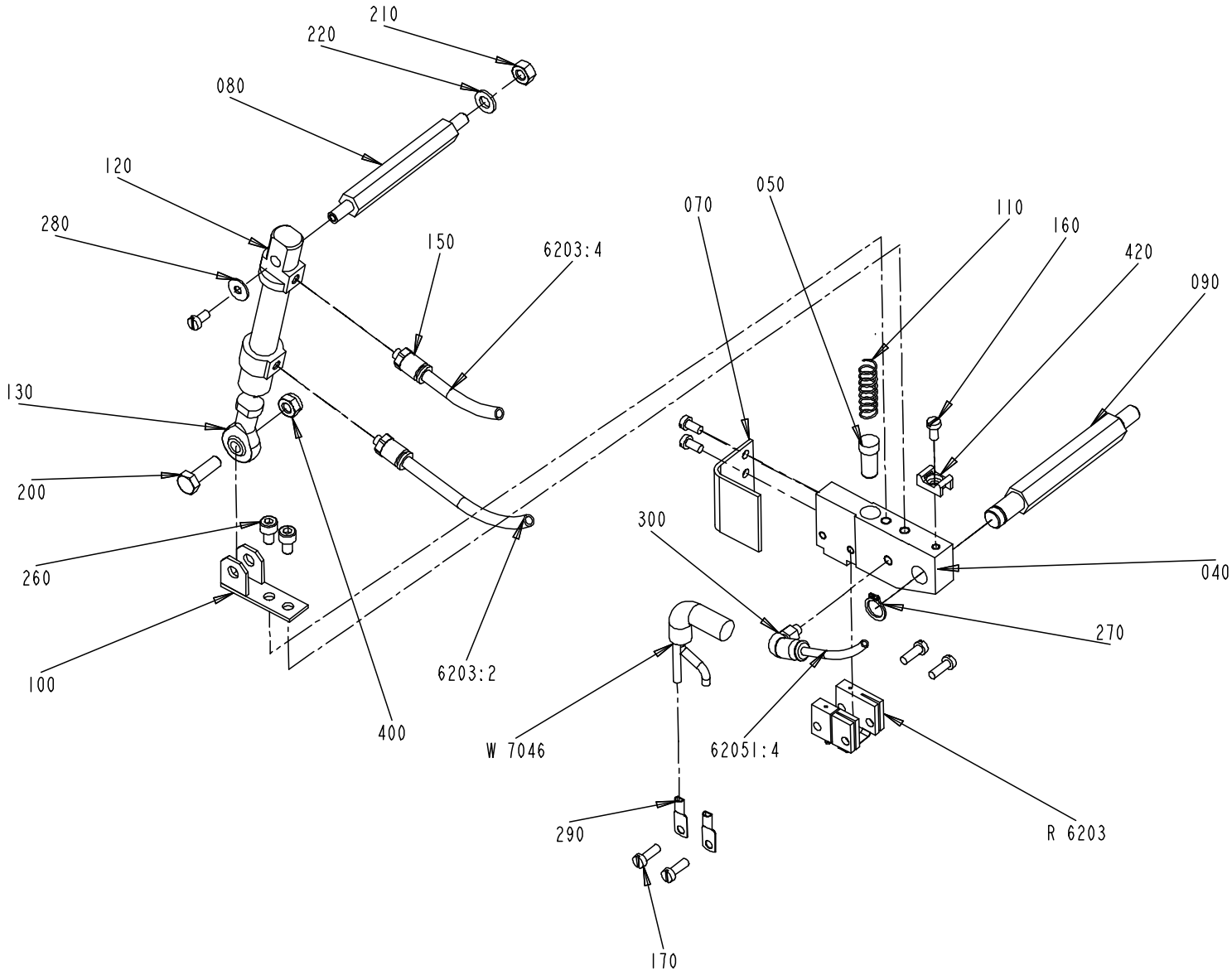

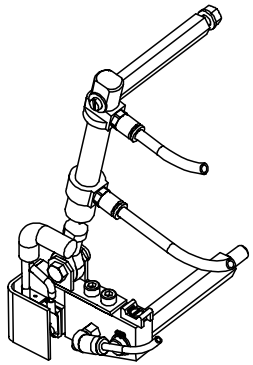

S - 1490806-1
ECN 72489

Pos	Part No	SP	UN	Qty	Description	Page No
Common parts						
040	1490804-0000	-		1	HOLDER	
050	400833-0000	-		1	PLUNGER	
070	1349181-0000	-		1	TOUCH GUARD	
080	1037121-0000	-		1	SHAFT	
090	1037120-0000	-		1	SHAFT	
100	1037124-0000	-		1	HOLDER	
110	400828-0000	-		1	SPRING	
120	90450-0306	R		1	"DOUBLE ACTING,MINI-ISO cyl 12-25"	
130	90239-0491	R		1	ROD END,BALL JOINT EYE,MINI-ISO,M6	
150	342722-0197	-		2	STRAIGHT COUPLING	
160	312125-0287	-		4	SLOTTED CHEESE HEAD ISO 1207 M4X8 RFR	
170	312125-0291	-		4	SLOTTED CHEESE HEAD ISO 1207 M4x12 RFR	
200	312105-0370	-		1	SCREW M6S ISO 4017 M6x20 A280	
210	312605-0316	-		1	NUT,HEXAGON A280 M6M6	
260	312115-0323	-		2	SCREW MC6S ISO 4762 M5X8 A280	
270	90141-0016	-		1	RETAINING RING FOR SHAFT 10	
280	90005-0082	-		1	WASHER,Plain Round 4,3x12;H=1 M4	
290	353104-0140	-		2	CABLE SHOEYAV 06 M 4*	
300	342732-0099	-		1	ELBOW PIPE JOINT	
400	312812-0316	-		1	NUT,HEXAGON,LOCK,WITH NYLON INSERT,M6	
420	352113-0205	-		1	ANCHOR TM2S8-C100	
6203.2	90166-0193	-	M	50	TUBE 6/4 PUR Blue	
6203.4	90166-0193	-	M	100	TUBE 6/4 PUR Blue	
62051.4	90166-0095	-	M	150	TUBE 4 mm PA Blue	
R6203	1498047-0000	R		1	SEALING BLOCK	
W7046	351120-0126	-	M	1	CABLE SIHF 2X4	

Pos	Part No	SP	UN	Qty	Description	Page No

CUTTING TABLE

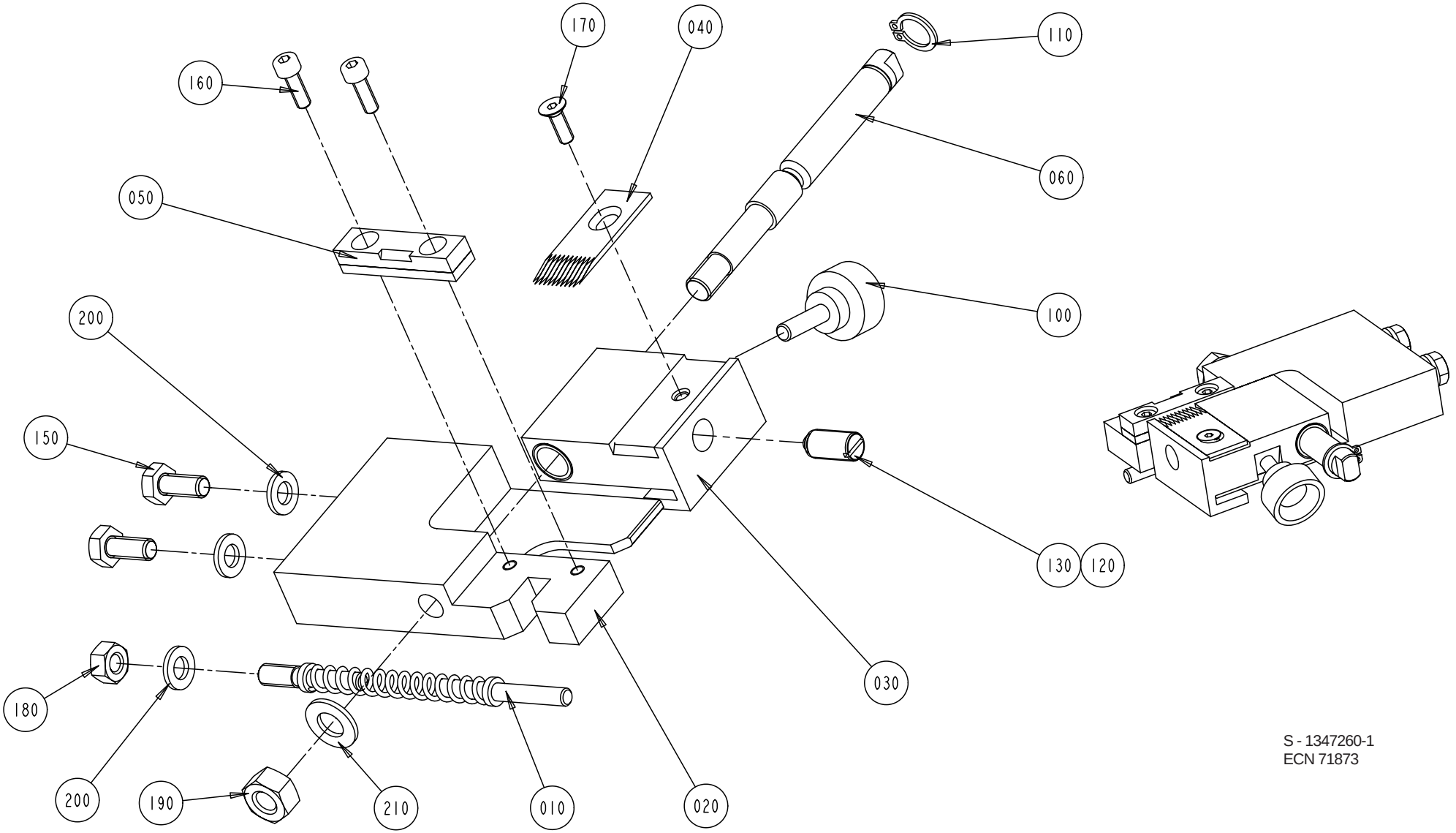

S - 1347260-1
ECN 71873

Pos	Part No	SP	UN	Qty	Description	Page No
Common parts						
010	1349179-0000	J		1	FINGER	
020	1349926-0000	-		1	SPLICING TABLE	
030	B1349927-0000	-		1	SLIDE	
040	1347258-0000	I		1	KNIFE	
050	1349014-0000	G		1	PAD	
060	1349928-0000	-		1	SHAFT	
100	90051-0035	-		1	HANDLES,KNOB,ADJUST.,THREAD.TAP,M5 20X15	
110	90141-0016	-		1	RETAINING RING FOR SHAFT 10	
120	90157-0016	-		x	LOCKING FLUID	
130	90287-0112	M		1	SCREW SPRINGLOADED M8x16	
150	312105-0367	-		2	SCREW M6S 6x14 A2 80	
160	312115-0291	-		2	SCREW MC6S ISO 4762 M4x12 A280	
170	312155-0291	-		1	SCREW MF6S DIN 7991 M4x12 A480	
180	312605-0316	-		1	NUT,HEXAGON A280 M6M6	
190	312605-0318	-		1	NUT,HEXAGON,M8 RFR	
200	315105-0153	-		3	WASHER,PLAIN ROUND 6,4x12 Stainless	
210	315105-0165	-		1	WASHER,PLAIN ROUND 8,4x16 Stainless	

Pos	Part No	SP	UN	Qty	Description	Page No

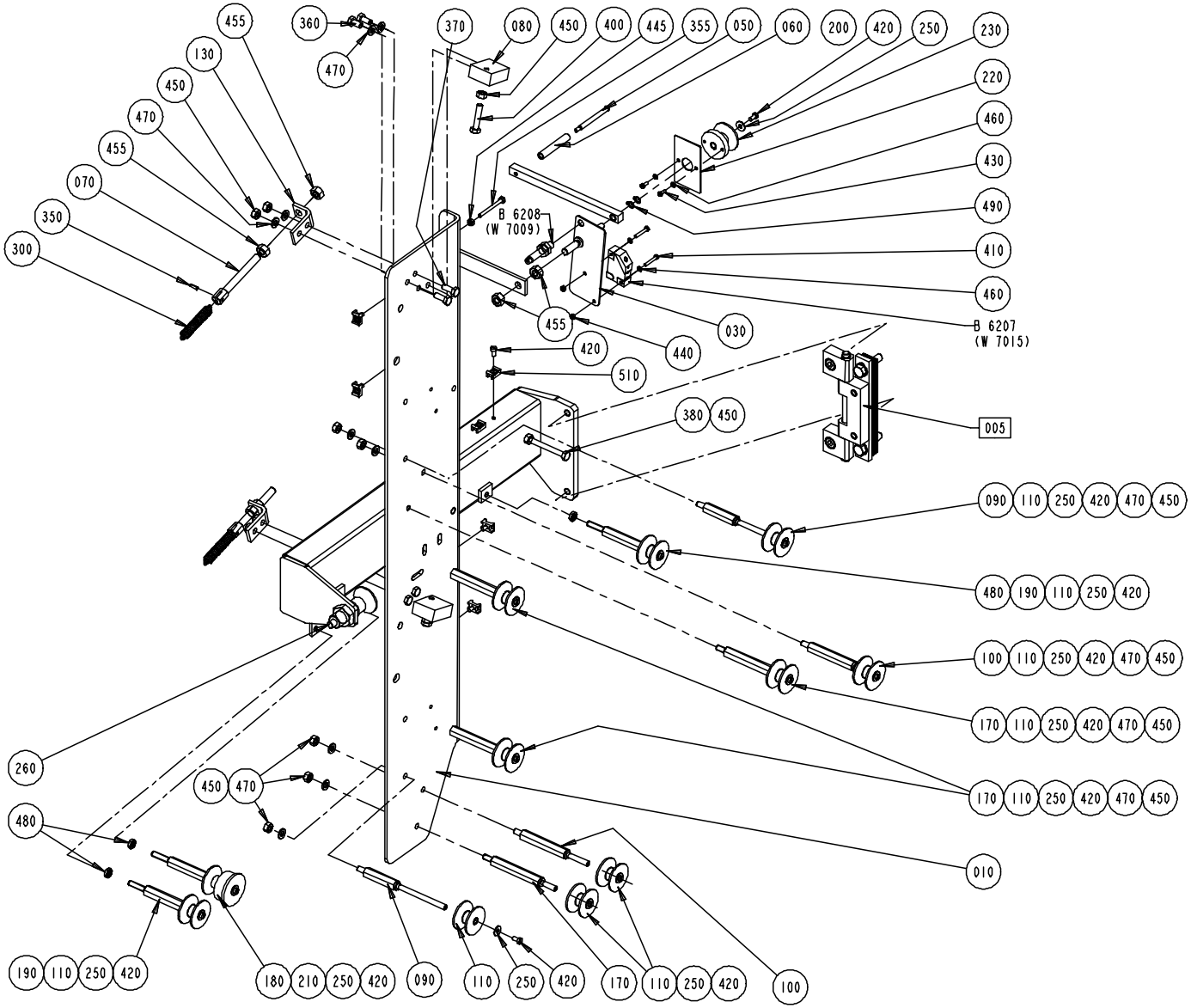

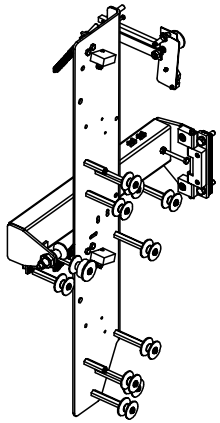

S - 1195501-3
ECN 72489

Pos	Part No	SP	UN	Qty	Description	Page No
Common parts						
005	A1346640-0100	-		1	HINGE	**515**
010	1347261-0000	-		1	MOUNTING PLATE	
030	1347885-0000	D		1	AXLE PIN	
050	1347882-0000	J		1	SHAFT	
060	1347883-0000	R		1	ROLLER	
070	541068-0000	-		2	SPRING HOLDER	
080	541173-0000	-		2	STOP	
090	544725-0000	D		2	AXLE PIN	
100	544727-0000	D		2	AXLE PIN	
110	B 544730-0000	R		10	ROLL	
130	1037284-0000	-		2	HOLDER	
170	1195488-0000	D		4	AXLE PIN	
180	1349178-0000	D		1	AXLE PIN	
190	1349177-0000	D		2	AXLE PIN	
200	1347737-0000	D		1	ARM	
210	B1285545-0000	R		1	ROLL	
220	1349581-0000	-		1	FLAG	
230	B1349986-0000	R		1	ROLLER	
250	90005-0082	-		12	WASHER,Plain Round 4,3x12;H=1 M4	
260	90051-0088	-		1	ADJUSTMENT SCREW	
350	311112-0205	-		2	PINS,SLOTTED TUBULAR SPRING PIN 3X10	
355	312105-0303	-		1	SCREW M6S ISO 4014 M4X40 A280	
380	312105-0383	-		1	SCREW M6S ISO 4014 M6x65 A280	
400	312109-0374	-		2	SCREW M6S ISO 4017 M6X30 A280	
410	312125-0230	-		2	SLOTTED CHEESE HEAD ISO 1207 M3X20 RFR	
420	312125-0287	-		18	SLOTTED CHEESE HEAD ISO 1207 M4X8 RFR	
430	312125-0222	-		2	SLOTTED CHEESE HEAD ISO 1207 M3x8 RFR	
440	312605-0310	-		2	NUT,HEXAGON M6M 3 A2 80	
445	312605-0312	-		1	NUT,HEXAGON,M4 RFR	
450	312605-0316	-		14	NUT,HEXAGON A280 M6M6	
455	312605-0318	-		6	NUT,HEXAGON,M8 RFR	
460	315105-0124	-		4	WASHER,PLAIN ROUND 3,2x6	
480	312625-0316	-		3	NUTS,HEXAGON,M6	
490	315751-0103	-		2	RETAINING RINGS FOR SHAFT 6	
510	352113-0205	-		6	ANCHOR TM2S8-C100	
B 6207	90044-0104	R		1	PROX.SWITCH IFM IN 3002 48Vdc	
B 6208	90044-0145	R		1	PROXIMITY SWITCH	
TBA/21HS						
300	1499610-0000	-		1	SPRING	

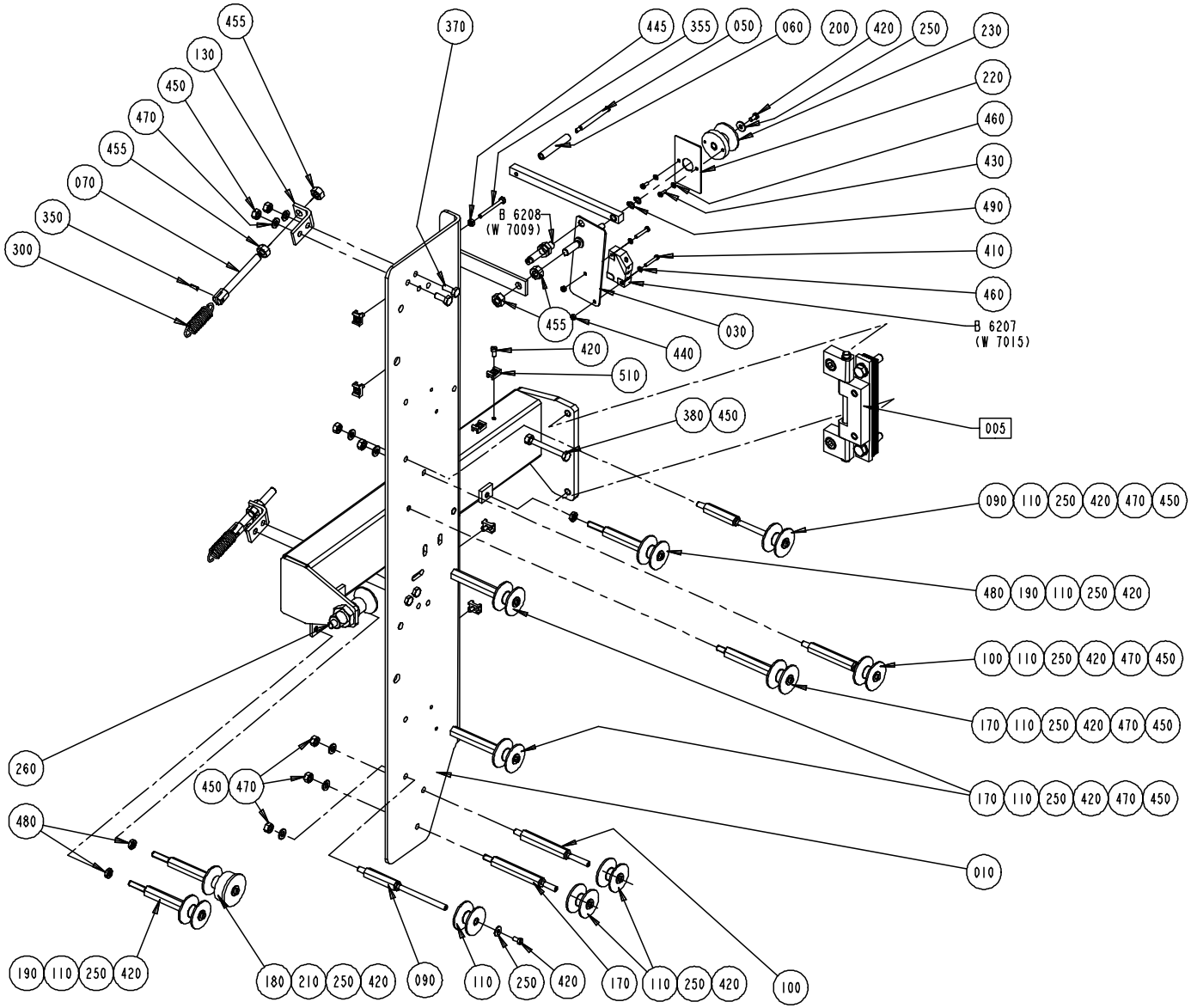

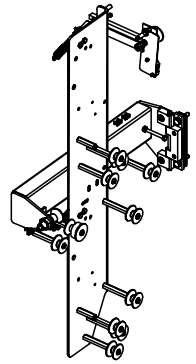

S - 1195501-4
ECN 72892

Pos	Part No	SP	UN	Qty	Description	Page No
Common parts						
005	A1346640-0100	-		1	HINGE	**515**
010	1347261-0000	-		1	MOUNTING PLATE	
030	1347885-0000	D		1	AXLE PIN	
050	1347882-0000	J		1	SHAFT	
060	1347883-0000	R		1	ROLLER	
070	541068-0000	-		2	SPRING HOLDER	
080	541173-0000	-		2	STOP	
090	544725-0000	D		2	AXLE PIN	
100	544727-0000	D		2	AXLE PIN	
110	B 544730-0000	R		10	ROLL	
130	1037284-0000	-		2	HOLDER	
170	1195488-0000	D		4	AXLE PIN	
180	1349178-0000	D		1	AXLE PIN	
190	1349177-0000	D		2	AXLE PIN	
200	1347737-0000	D		1	ARM	
210	B1285545-0000	R		1	ROLL	
220	1349581-0000	-		1	FLAG	
230	B1349986-0000	R		1	ROLLER	
250	90005-0082	-		12	WASHER,Plain Round 4,3x12;H=1 M4	
260	90051-0088	-		1	ADJUSTMENT SCREW	
350	311112-0205	-		2	PINS,SLOTTED TUBULAR SPRING PIN 3X10	
355	312105-0303	-		1	SCREW M6S ISO 4014 M4X40 A280	
380	312105-0383	-		1	SCREW M6S ISO 4014 M6x65 A280	
400	312109-0374	-		2	SCREW M6S ISO 4017 M6X30 A280	
410	312125-0230	-		2	SLOTTED CHEESE HEAD ISO 1207 M3X20 RFR	
420	312125-0287	-		18	SLOTTED CHEESE HEAD ISO 1207 M4X8 RFR	
430	312125-0222	-		2	SLOTTED CHEESE HEAD ISO 1207 M3x8 RFR	
440	312605-0310	-		2	NUT,HEXAGON M6M 3 A2 80	
445	312605-0312	-		1	NUT,HEXAGON,M4 RFR	
450	312605-0316	-		14	NUT,HEXAGON A280 M6M6	
455	312605-0318	-		6	NUT,HEXAGON,M8 RFR	
460	315105-0124	-		4	WASHER,PLAIN ROUND 3,2x6	
480	312625-0316	-		3	NUTS,HEXAGON,M6	
490	315751-0103	-		2	RETAINING RINGS FOR SHAFT 6	
510	352113-0205	-		6	ANCHOR TM2S8-C100	
B 6207	90044-0104	R		1	PROX.SWITCH IFM IN 3002 48Vdc	
B 6208	90044-0145	R		1	PROXIMITY SWITCH	
TBA/21HS						
300	1499610-0000	-		1	SPRING	

HINGE

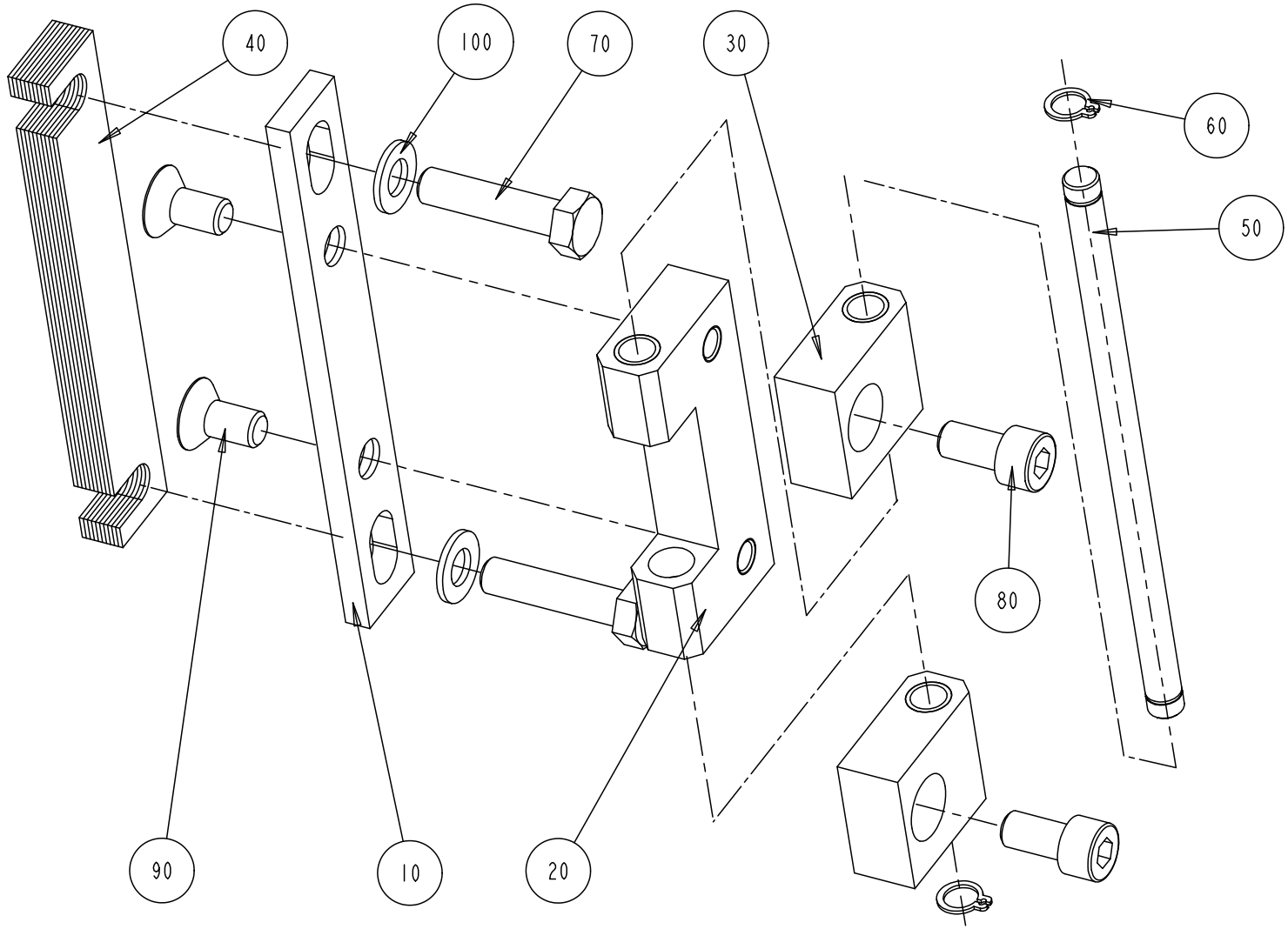

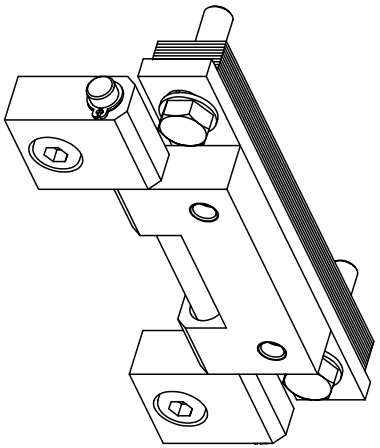

S - 1346640-1
ECN 71228

Pos	Part No	SP	UN	Qty	Description	Page No
Common parts						
010	1334187-0000	-		1	PLATE	
020	1334189-0000	-		1	BLOCK	
030	1334190-0000	-		2	BLOCK	
040	1334191-0000	-		10	SHIM	
050	1334188-0000	-		1	AXLE PIN	
060	90141-0015	-		2	RETAINING RINGS FOR SHAFT 8	
070	312109-0457	-		2	SCREW M6S ISO 4017 M8X35 A280	
080	312115-0449	-		2	SCREW MC6S ISO 4762 M8X16 A280	
090	312155-0449	-		2	SCREW MF6S DIN 7991 M8X16 A280	
100	315105-0165	-		2	WASHER,PLAIN ROUND 8,4x16 Stainless	

Pos	Part No	SP	UN	Qty	Description	Page No

ROCKER ARM

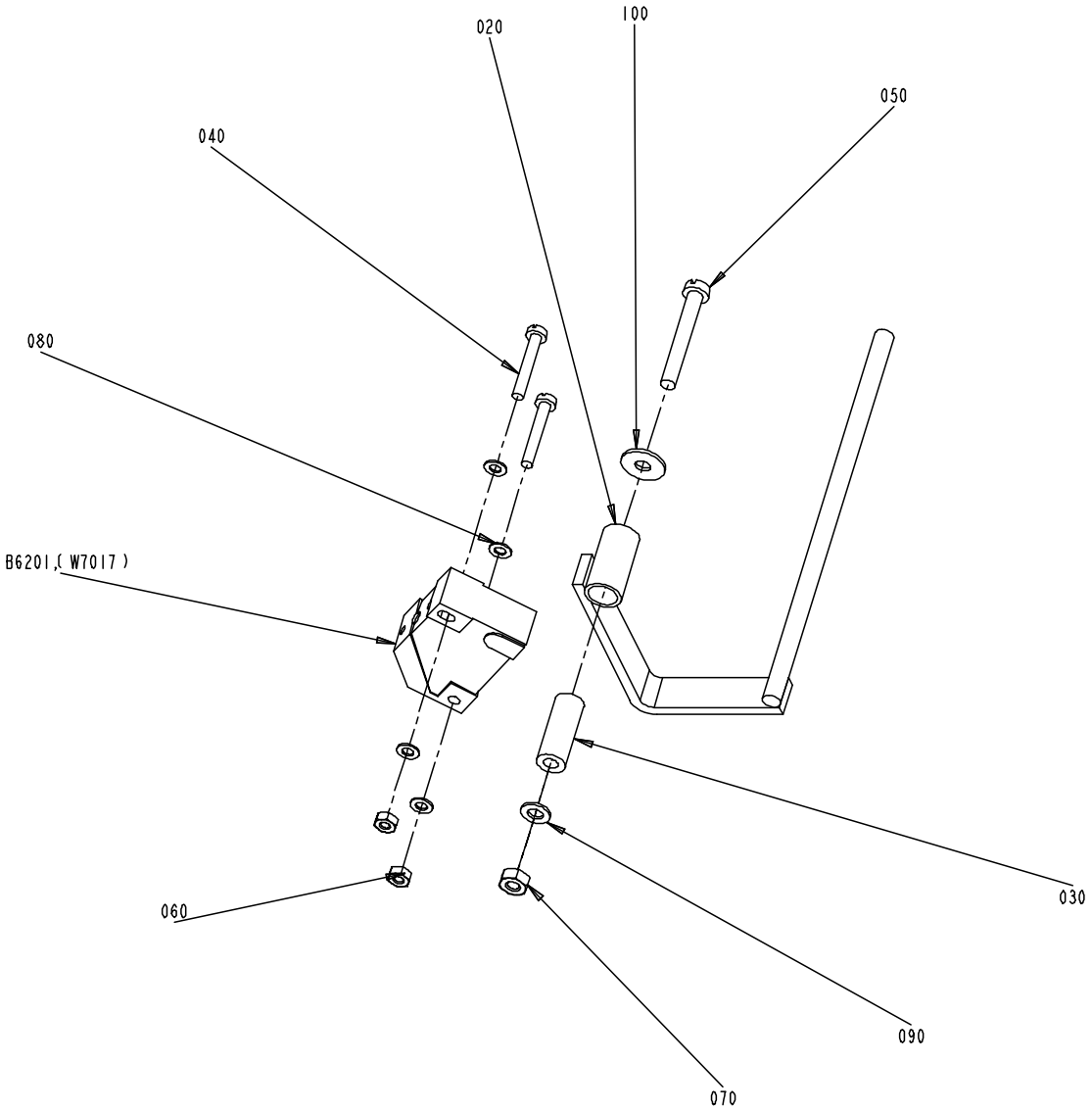

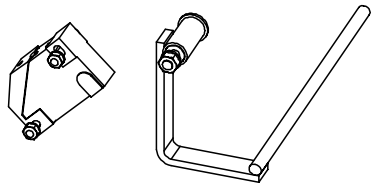

S - 1195502-2
ECN 72489

Pos	Part No	SP	UN	Qty	Description	Page No
Common parts						
020	1490187-0000	D		1	ROCKER ARM	
030	1490185-0000	D		1	SPACER	
040	312125-0230	-		2	SLOTTED CHEESE HEAD ISO 1207 M3X20 RFR	
050	312125-0299	-		1	SLOTTED CHEESE HEAD ISO 1207 M4X30 RFR	
060	312605-0310	-		2	NUT,HEXAGON M6M 3 A2 80	
070	312605-0312	-		1	NUT,HEXAGON,M4 RFR	
080	315105-0124	-		4	WASHER,PLAIN ROUND 3,2x6	
090	315105-0136	-		1	WASHER,PLAIN ROUND 4,3x8 Stainless	
100	90005-0082	-		1	WASHER,Plain Round 4,3x12;H=1 M4	
B6201	90044-0104	R		1	PROX.SWITCH IFM IN 3002 48Vdc	

Pos	Part No	SP	UN	Qty	Description	Page No

ROCKER ARM

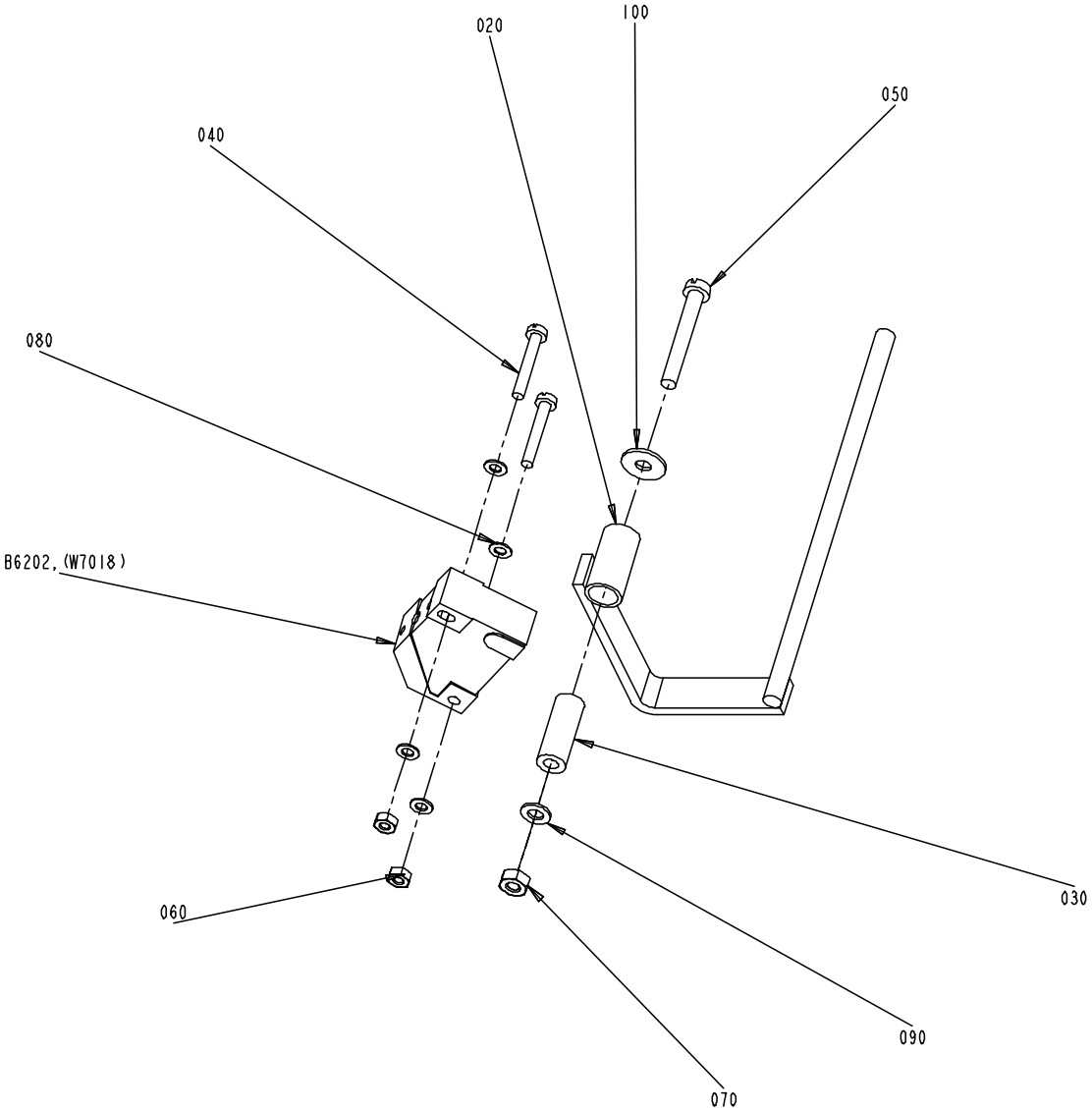

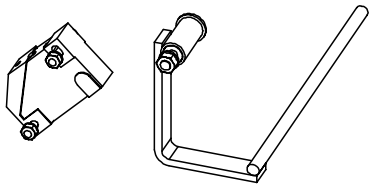

S - 1195503-2
ECN 72489

Pos	Part No	SP	UN	Qty	Description	Page No
Common parts						
020	1490187-0000	D		1	ROCKER ARM	
030	1490185-0000	D		1	SPACER	
040	312125-0230	-		2	SLOTTED CHEESE HEAD ISO 1207 M3X20 RFR	
050	312125-0299	-		1	SLOTTED CHEESE HEAD ISO 1207 M4X30 RFR	
060	312605-0310	-		2	NUT,HEXAGON M6M 3 A2 80	
070	312605-0312	-		1	NUT,HEXAGON,M4 RFR	
080	315105-0124	-		4	WASHER,PLAIN ROUND 3,2x6	
090	315105-0136	-		1	WASHER,PLAIN ROUND 4,3x8 Stainless	
100	90005-0082	-		1	WASHER,Plain Round 4,3x12;H=1 M4	
B 6202	90044-0104	R		1	PROX.SWITCH IFM IN 3002 48Vdc	

Pos	Part No	SP	UN	Qty	Description	Page No

STRIP APPLICATOR

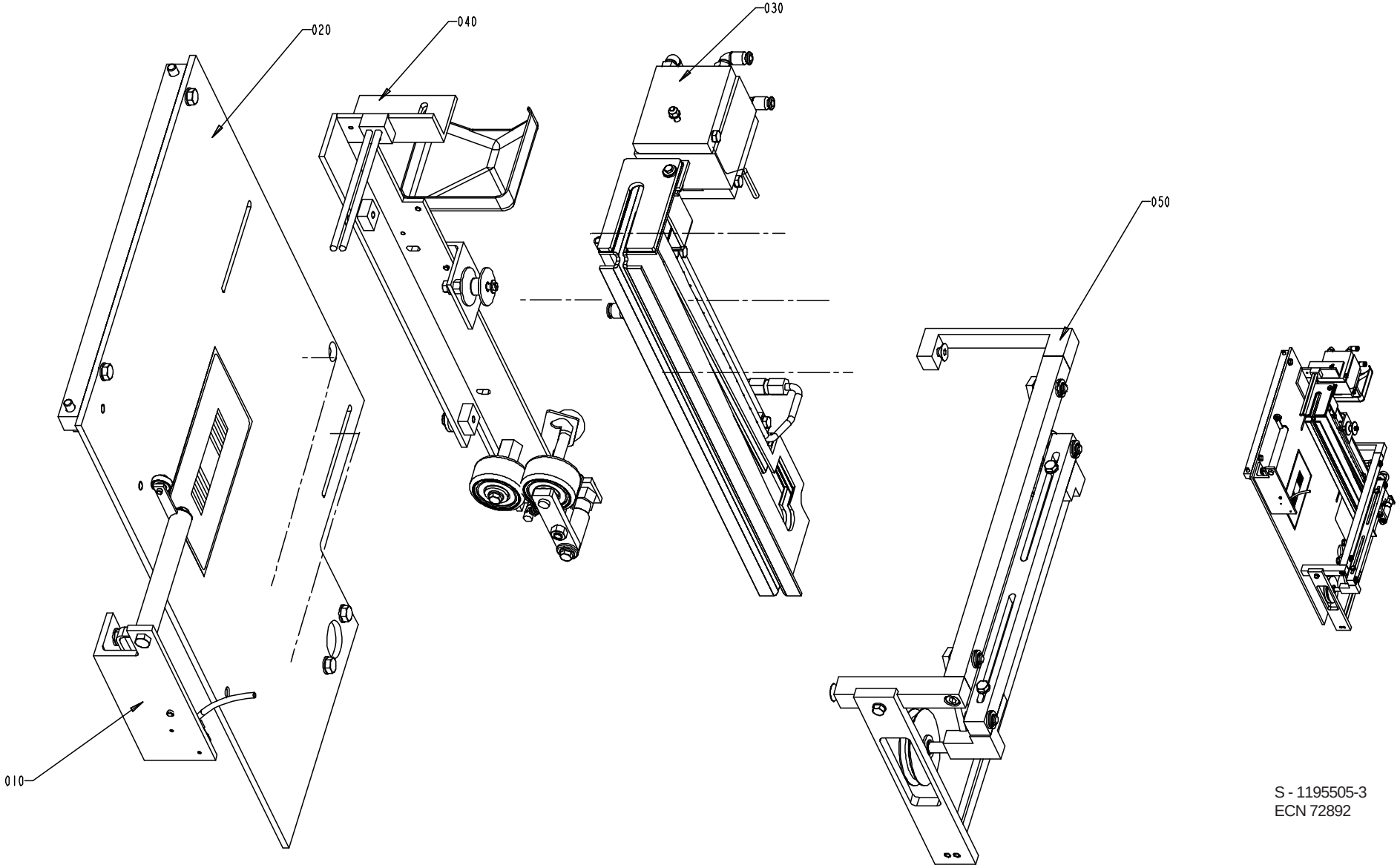

S - 1195505-3
ECN 72892

Pos	Part No	SP	UN	Qty	Description	Page No
TBA/21HS						
030	A1347897-0100	-		1	INDUCTOR	**529**
040	A1347896-0100	-		1	PRESSURE ROLLER	**533**
Common parts						
010	A1095798-0100	-		1	SPLICE DETECTOR	**523**
020	A1195504-0100	-		1	BOTTOM PANEL	**525**
050	A1334220-0200	-		1	STRIP GUIDE	**535**

Pos	Part No	SP	UN	Qty	Description	Page No

SPLICE DETECTOR

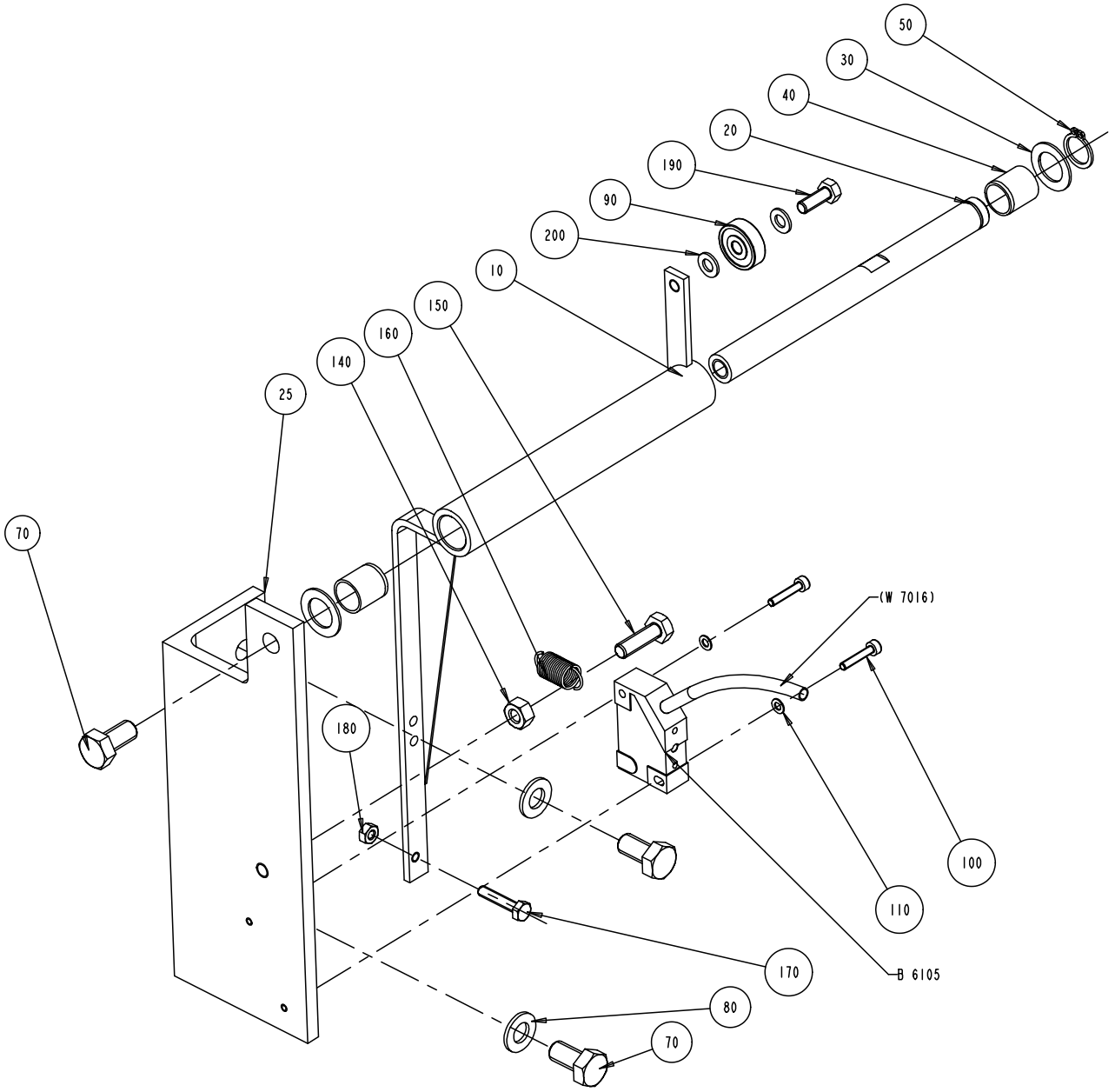

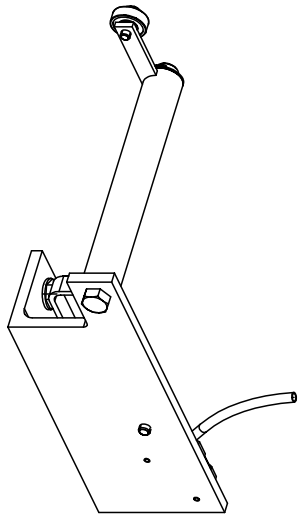

S - 1095798-1
ECN 71228

Pos	Part No	SP	UN	Qty	Description	Page No
Common parts						
010	1035898-0000	-		1	BRACKET	
020	1035897-0000	-		1	SHAFT	
025	1036186-0000	-		1	HOLDER	
030	266737-0000	-		2	WASHER	
040	321120-0111	-		2	BEARING BUSHING WITHOUT FLANGE,12/14X15	
050	315751-0109	-		1	RETAINING RINGS FOR SHAFT 12	
070	312105-0449	-		3	SCREW M6S ISO 4017 M8x16 A280	
080	315105-0165	-		2	WASHER,PLAIN ROUND 8,4x16 Stainless	
090	90214-0138	M		1	BEARINGS,BALL BEARING,STAINLESS	
100	312115-0228	-		2	SCREW MC6S ISO 4762 M3X16 A280	
110	315105-0124	-		2	WASHER,PLAIN ROUND 3,2x6	
140	312605-0316	-		1	NUT,HEXAGON A280 M6M6	
150	312105-0370	-		1	SCREW M6S ISO 4017 M6x20 A280	
160	90335-0089	D		1	SPRING	
170	312105-0295	-		1	SCREW M6S ISO 4017 M4X20 A280	
180	312605-0312	-		1	NUT,HEXAGON,M4 RFR	
190	312105-0328	-		1	SCREW M6S5X14 A2 80	
200	315105-0146	-		2	WASHER,PLAIN ROUND 5,3x10 Stainless	
B 6105	90044-0104	R		1	PROX.SWITCH IFM IN 3002 48Vdc	

Pos	Part No	SP	UN	Qty	Description	Page No

BOTTOM PANEL

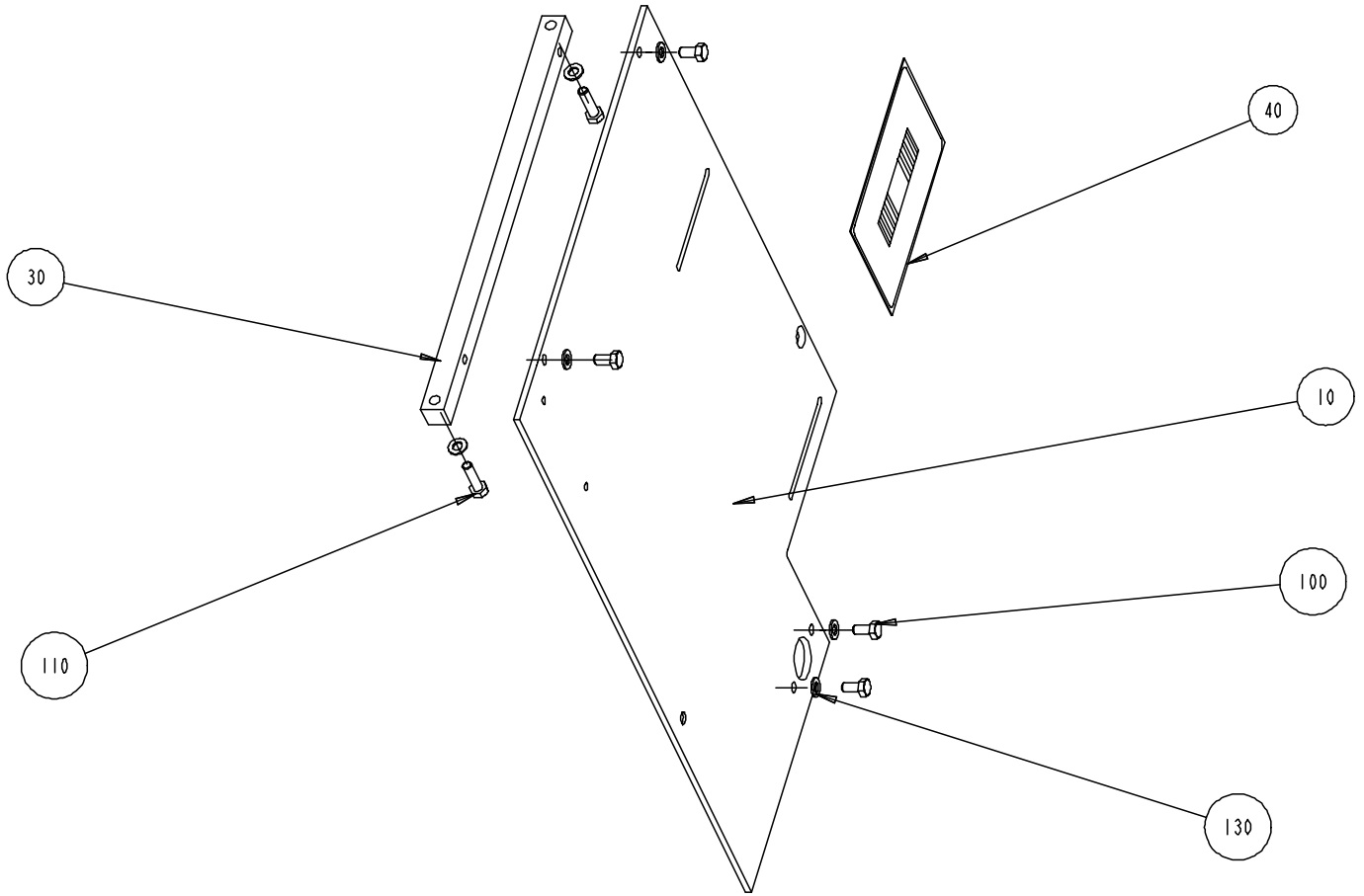

S - 1195504-1
ECN 72489

Pos	Part No	SP	UN	Qty	Description	Page No
Common parts						
010	1116028-0000	-		1	SHEET	
030	1255136-0000	-		1	ROD	
040	599809-0000	-		1	SIGN	
100	312105-0449	-		4	SCREW M6S ISO 4017 M8x16 A280	
110	312105-0455	-		2	SCREW M6S ISO 4017 M8x30 A280	
130	315105-0165	-		6	WASHER,PLAIN ROUND 8,4x16 Stainless	

Pos	Part No	SP	UN	Qty	Description	Page No

INDUCTOR

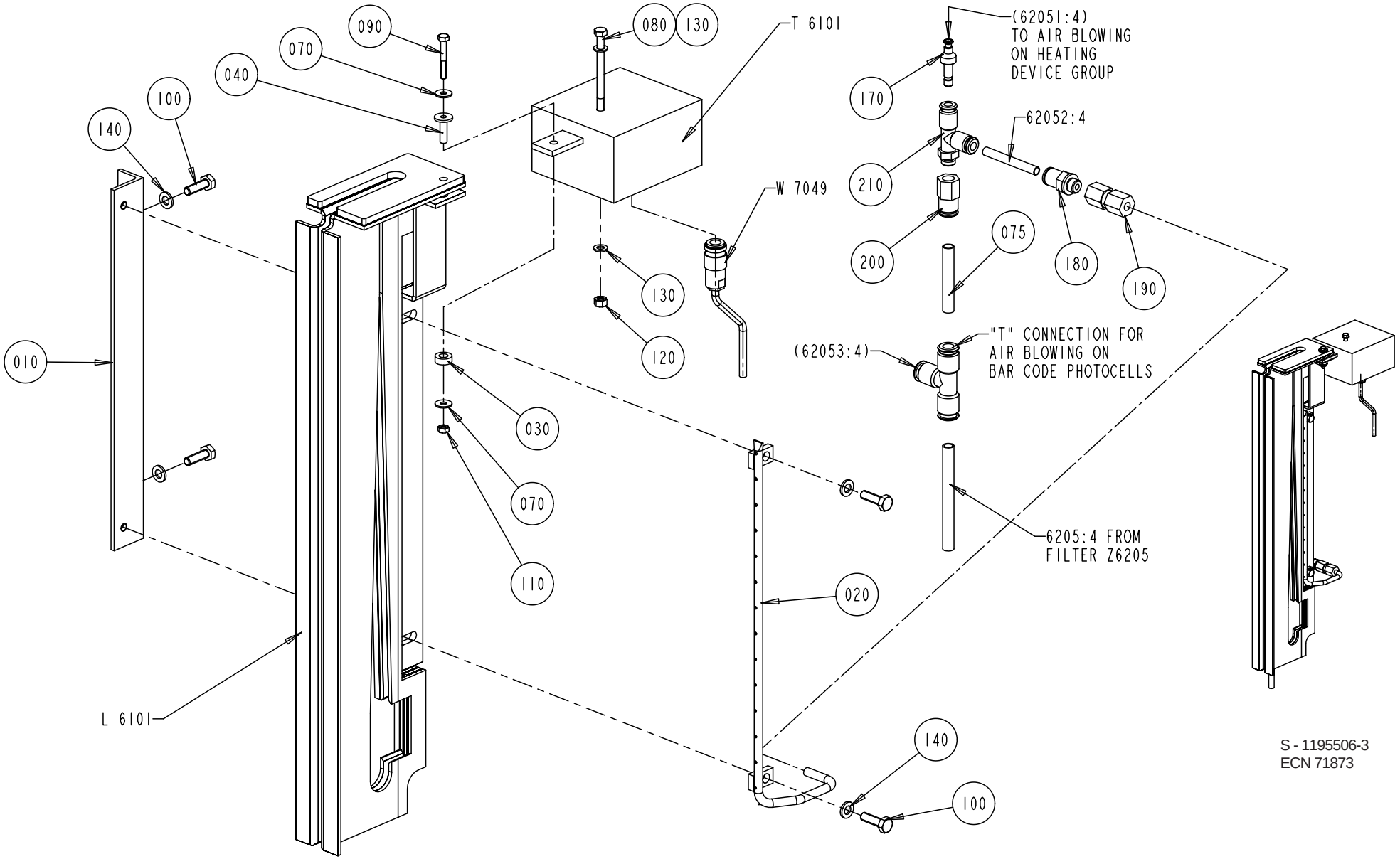

S - 1195506-3
ECN 71873

Pos	Part No	SP	UN	Qty	Description	Page No
Common parts						
010	1036588-0000	-		1	BRACKET	
020	1255308-0000	R		1	FAN NOZZLE	
030	1260680-0000	R		1	WASHER	
040	1478304-0000	R		1	SPACER BUSHING	
070	90005-0082	R		2	WASHER,Plain Round 4,3x12;H=1 M4	
075	90166-0194	-	MM	50	TUBE 8 mm PUR Blue	
080	312101-0344	-		1	SCREW M6S5X65FZB	
090	312105-0299	-		1	SCREW M6S ISO 4014 M4X30 A280	
100	312105-0370	-		4	SCREW M6S ISO 4017 M6x20 A280	
110	312605-0312	-		1	NUT,HEXAGON,M4 RFR	
120	312605-0314	-		1	NUT,HEXAGON,M6M5 Stainless	
130	315105-0146	-		2	WASHER,PLAIN ROUND 5,3x10 Stainless	
140	315105-0153	-		4	WASHER,PLAIN ROUND 6,4x12 Stainless	
170	342716-0202	-		1	REDUCER 4-6	
180	342722-0202	-		1	PIPE COUPLING 1/8" D=6mm	
190	342725-0102	-		1	STRAIGHT PIPE CONNECTION GAI 6-G1/8"	
200	342770-0107	-		1	HOSE COUPLING	
210	342772-0113	-		1	ELBOW FITTING	
62052.4	90166-0193	-	MM	250	TUBE 6/4 PUR Blue	
6205.4	90166-0194	-	MM	800	TUBE 8 mm PUR Blue	
L 6101	1103749-0000	R		1	INDUCTOR	
W 7049	1036962-0000	R		1	CABLE	
TBA 0200B or TBA 0250B						
T 6101	67380-0101	R		1	IH TRANSF.SEC.=2 PRIMARY=6.C=21,6 NF	

Pos	Part No	SP	UN	Qty	Description	Page No

INDUCTOR

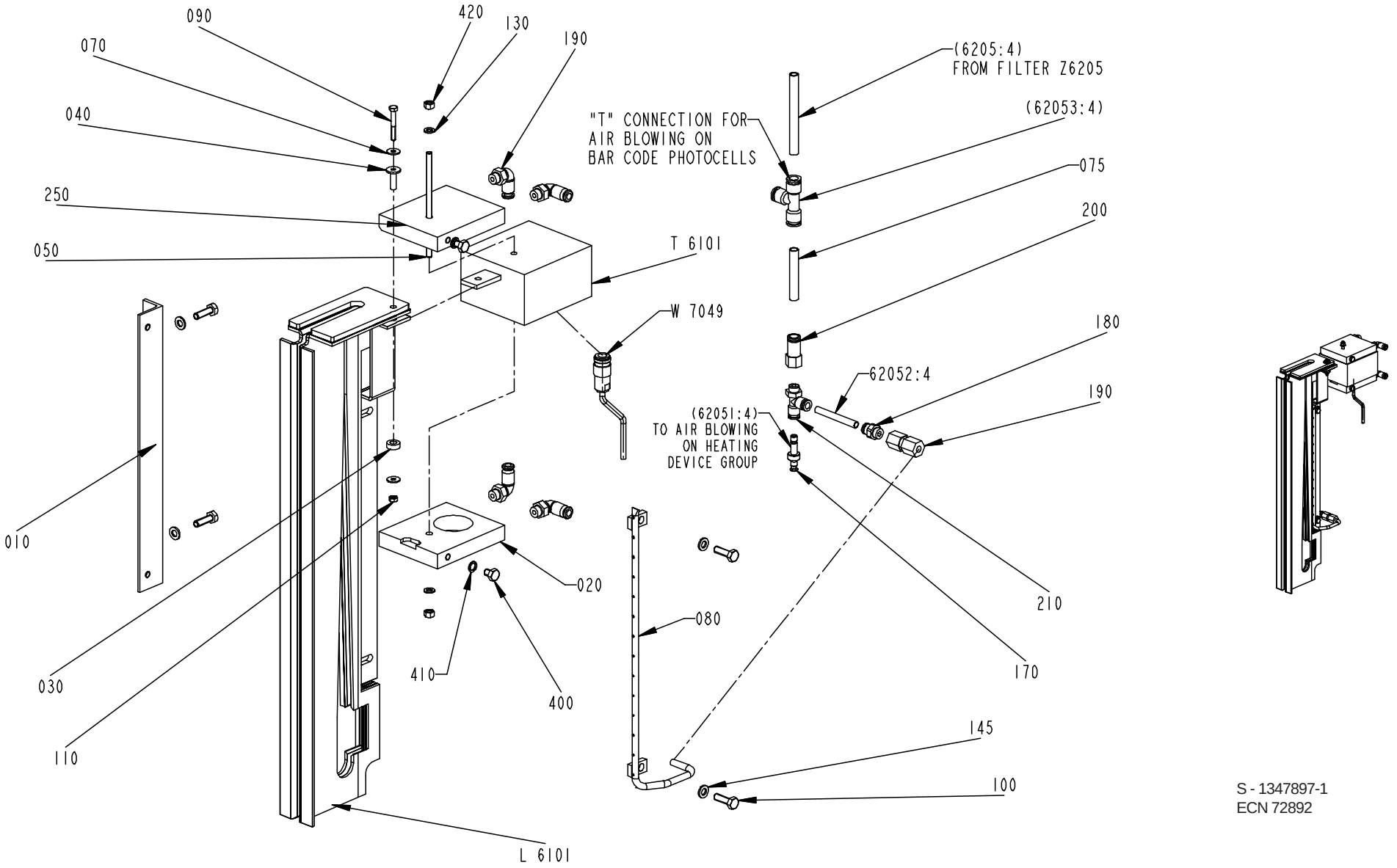

S - 1347897-1
ECN 72892

Pos	Part No	SP	UN	Qty	Description	Page No
Common parts						
010	1036588-0000	-		1	BRACKET	
020	1129839-0000	-		1	COOLING PLATE	
030	1260680-0000	-		1	WASHER	
040	1478304-0000	R		1	SPACER BUSHING	
050	1498430-0000	-		50	ROD	
070	90005-0082	R		2	WASHER,Plain Round 4,3x12;H=1 M4	
075	90166-0194	-	MM	200	TUBE 8 mm PUR Blue	
080	1255308-0000	R		1	FAN NOZLE	
090	312105-0299	-		1	SCREW M6S ISO 4014 M4X30 A280	
100	312105-0370	-		4	SCREW M6S ISO 4017 M6x20 A280	
110	312605-0312	-		1	NUT,HEXAGON,M4 RFR	
130	315105-0146	-		2	WASHER,PLAIN ROUND 5,3x10 Stainless	
145	315105-0153	-		4	WASHER,PLAIN ROUND 6,4x12 Stainless	
180	342722-0202	-		1	PIPE COUPLING 1/8" D=6mm	
190	342725-0102	-		1	STRAIGHT PIPE CONNECTION GAI 6-G1/8"	
200	342770-0107	-		1	HOSE COUPLING	
210	342772-0113	-		1	ELBOW FITTING	
250	1129869-0000	-		1	COOLING PLATE	
260	342732-0102	-		4	ELBOW PIPE JOINT	
400	312105-0362	-		2	SCREW M6S ISO 4017 M6x8 A280	
410	1140077-0000	-		2	RING	
420	312605-0314	-		2	NUT,HEXAGON,M6M5 Stainless	
62052.4	90166-0193	-	MM	250	TUBE 6/4 PUR Blue	
6205.4	90166-0194	-	MM	800	TUBE 8 mm PUR Blue	
L 6101	1103749-0000	R		1	INDUCTOR	
W 7049	1036962-0000	R		1	CABLE	
TBA 0200B or TBA 0250B						
T 6101	67380-0101	R		1	IH TRANSF.SEC.=2 PRIMARY=6.C=21,6 NF	

Pos	Part No	SP	UN	Qty	Description	Page No

PRESSURE ROLLER

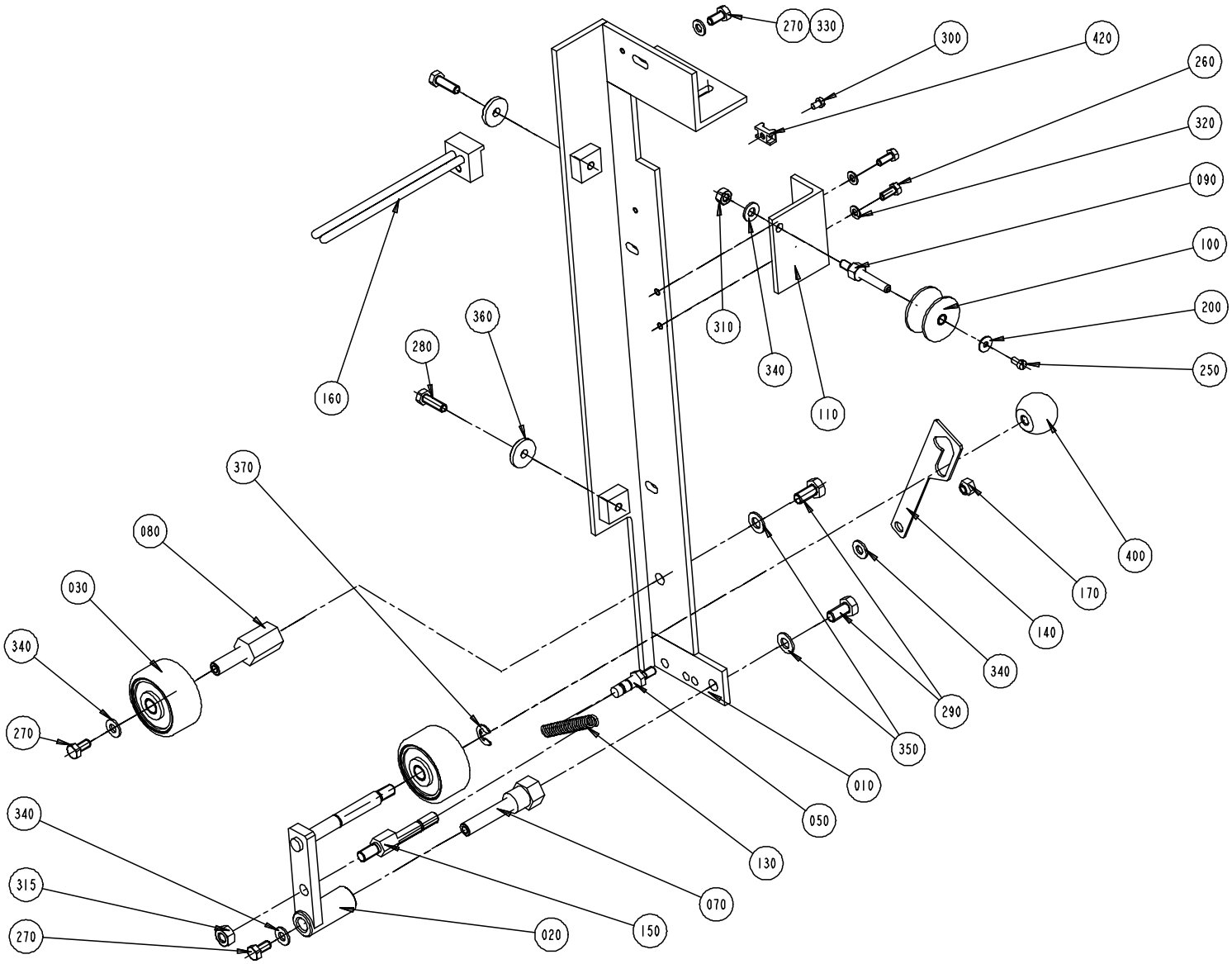

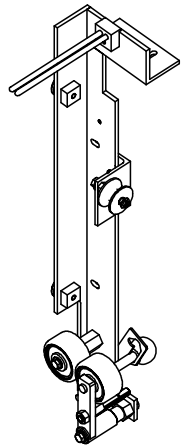

S - 1255305-3
ECN 72489

Pos	Part No	SP	UN	Qty	Description	Page No
Common parts						
010	1255306-0000	-		1	FASTENING BRACKET	
020	1346751-0000	D		1	HOLDER	
030	B1346988-0000	J		2	ROLL	
050	1035890-0000	D		1	HOLDER	
070	1035894-0000	D		1	SHAFT	
080	1035895-0000	D		1	SHAFT	
090	1478607-0000	N		1	SHAFT	
100	B 544730-0000	R		1	ROLL	
110	1350777-0000	-		1	BRACKET	
130	1478303-0000	R		1	TENSION SPRING	
140	1349432-0000	D		1	CATCH	
150	1346752-0000	-		1	AXLE PIN	
160	1349672-0000	-		1	GUIDE	
170	1349994-0000	-		1	NUT	
200	90005-0082	-		1	WASHER,Plain Round 4,3x12;H=1 M4	
250	312125-0287	-		1	SLOTTED CHEESE HEAD ISO 1207 M4X8 RFR	
260	312105-0327	-		2	SCREW M6S ISO 4017 M5X12 A280	
270	312105-0366	-		3	SCREW M6S ISO 4017 M6x12 A280	
280	312105-0370	-		2	SCREW M6S ISO 4017 M6x20 A280	
290	312105-0449	-		2	SCREW M6S ISO 4017 M8x16 A280	
300	312125-0285	-		1	SLOTTED HEAD SCREW MCS 4x6 RFR	
310	312605-0316	-		1	NUT,HEXAGON A280 M6M6	
315	312605-0318	-		1	NUT,HEXAGON,M8 RFR	
320	315105-0146	-		2	WASHER,PLAIN ROUND 5,3x10 Stainless	
330	315105-0153	-		1	WASHER,PLAIN ROUND 6,4x12 Stainless	
340	315105-0156	-		4	WASHER BRB 6,7x14 RFR	
350	315105-0165	-		2	WASHER,PLAIN ROUND 8,4x16 Stainless	
360	315125-0153	-		2	WASHERS,PLAIN ROUND,CHAMFERED 6,4X22X4	
370	315755-0801	-		1	RETAINING RINGS,RADIAL ASSEMBLY 8	
400	318800-0104	-		1	HANDLE,SPHERICAL KNOB,INT.THRE.,D.30-M8	
420	352113-0205	-		1	ANCHOR TM2S8-C100	

Pos	Part No	SP	UN	Qty	Description	Page No

PRESSURE ROLLER

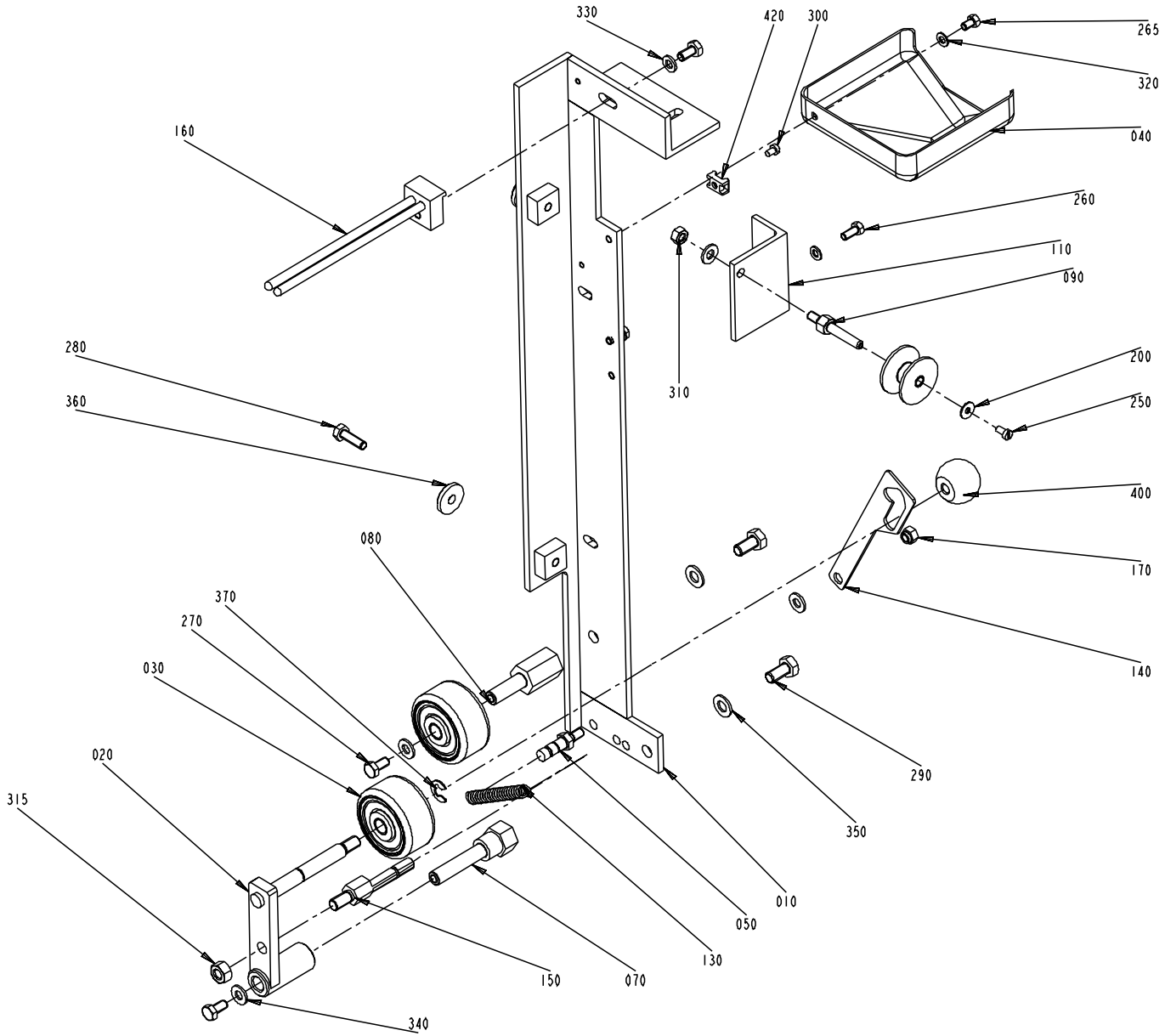

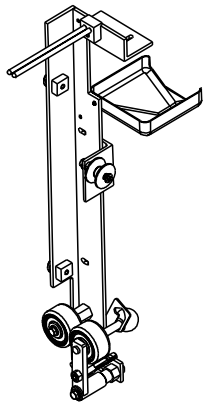

S - 1347896-1
ECN 72892

Pos	Part No	SP	UN	Qty	Description	Page No
Common parts						
010	1347895-0000	-		1	FASTENING BRACKET	
020	1346751-0000	D		1	HOLDER	
030	B1346988-0000	J		2	ROLL	
040	1347899-0000	D		1	TANK	
050	1035890-0000	-		1	HOLDER	
070	1035894-0000	D		1	SHAFT	
080	1035895-0000	D		1	SHAFT	
090	1478607-0000	N		1	SHAFT	
100	B 544730-0000	R		1	ROLL	
110	1350777-0000	-		1	BRACKET	
130	1478303-0000	R		1	TENSION SPRING	
140	1349432-0000	D		1	CATCH	
150	1346752-0000	-		1	AXLE PIN	
250	312125-0287	-		1	SLOTTED CHEESE HEAD ISO 1207 M4X8 RFR	
260	312105-0327	-		3	SCREW M6S ISO 4017 M5X12 A280	
265	312105-0323	-		2	SCREW M6S ISO 4017 M5X8 A280	
270	312105-0366	-		2	SCREW M6S ISO 4017 M6x12 A280	
280	312105-0370	-		2	SCREW M6S ISO 4017 M6x20 A280	
290	312105-0449	-		2	SCREW M6S ISO 4017 M8x16 A280	
300	312125-0285	-		1	SLOTTED HEAD SCREW MCS 4x6 RFR	
305	312605-0314	-		1	NUT,HEXAGON,M6M5 Stainless	
310	312605-0316	-		1	NUT,HEXAGON A280 M6M6	
315	312605-0318	-		1	NUT,HEXAGON,M8 RFR	
320	315105-0146	-		2	WASHER,PLAIN ROUND 5,3x10 Stainless	
330	315105-0153	-		1	WASHER,PLAIN ROUND 6,4x12 Stainless	
340	315105-0156	-		3	WASHER BRB 6,7x14 RFR	
350	315105-0165	-		2	WASHER,PLAIN ROUND 8,4x16 Stainless	
360	315125-0153	-		2	WASHERS,PLAIN ROUND,CHAMFERED 6,4X22X4	
370	315755-0801	-		1	RETAINING RINGS,RADIAL ASSEMBLY 8	
400	318800-0104	-		1	HANDLE,SPHERICAL KNOB,INT.THRE.,D.30-M8	
420	352113-0205	-		1	ANCHOR TM2S8-C100	

Pos	Part No	SP	UN	Qty	Description	Page No

STRIP GUIDE

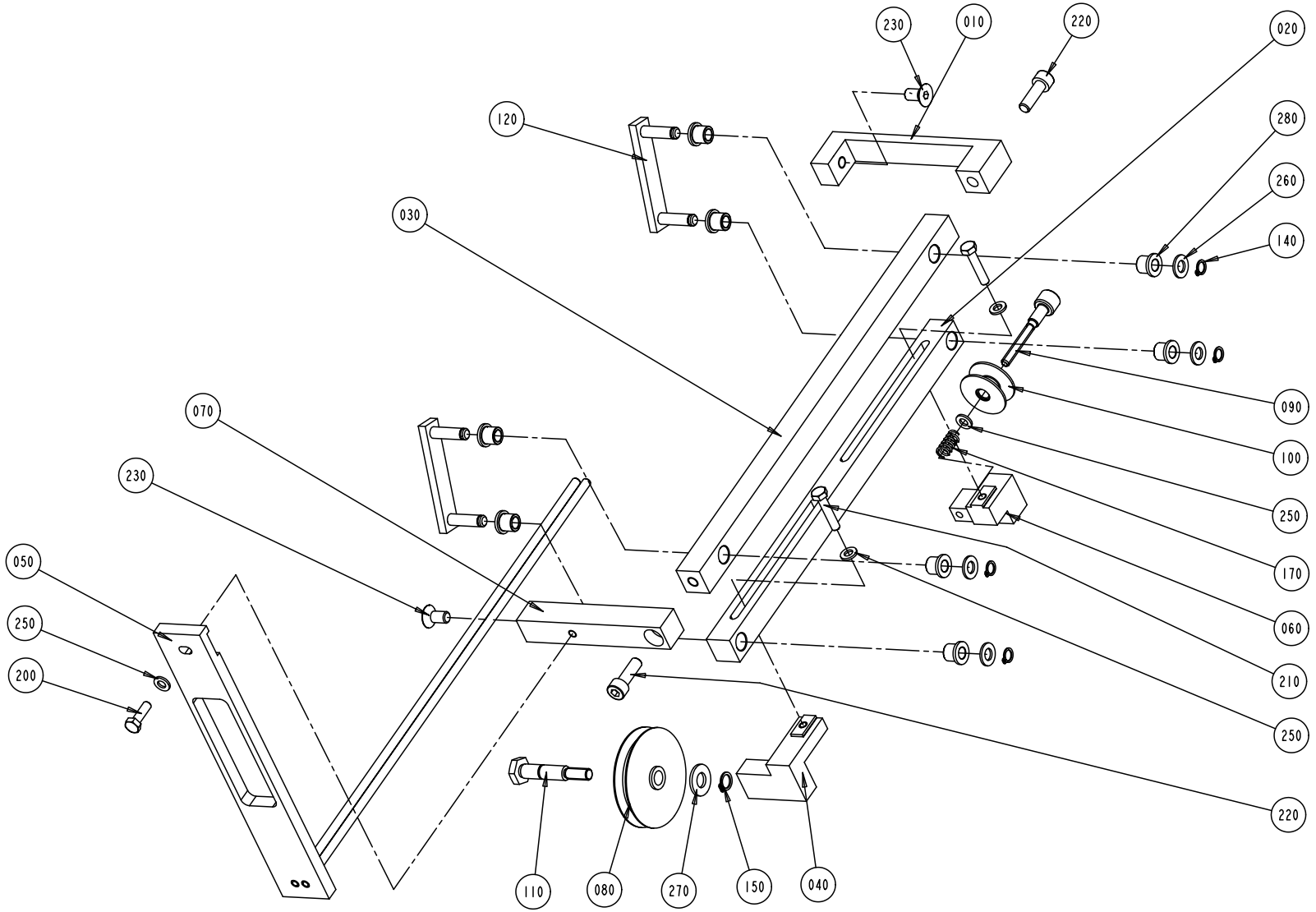

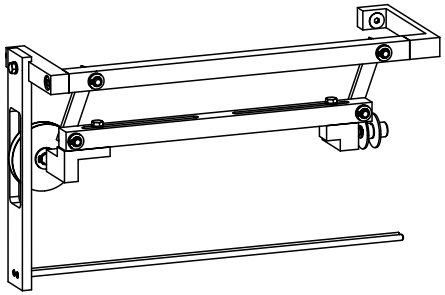

S - 1334220-2
ECN 71873

Pos	Part No	SP	UN	Qty	Description	Page No
Common parts						
010	1478587-0000	-		1	BRACKET	
020	1334085-0000	-		1	ROD	
030	1347252-0000	-		1	ROD	
040	1478590-0000	-		1	BRACKET	
050	1349509-0000	-		1	GUIDE	
060	1478589-0000	-		1	BRACKET	
070	1478588-0000	-		1	BRACKET	
080	282635-0000	D		1	GUIDE WHEEL	
090	1035893-0000	D		1	ADJUSTING SCREW	
100	B1285546-0000	D		1	ROLL	
110	1334197-0000	-		1	AXLE PIN	
120	1346746-0000	-		2	LEVER	
140	90141-0015	-		4	RETAINING RINGS FOR SHAFT 8	
150	90141-0016	-		1	RETAINING RING FOR SHAFT 10	
170	90335-0027	D		1	SPRING	
200	312105-0370	-		1	SCREW M6S ISO 4017 M6x20 A280	
210	312105-0374	-		2	SCREW M6S ISO 4017 M6X30 A280	
220	312115-0453	-		2	SCREW MC6S ISO 4762 M8X25 A280	
230	312155-0449	-		2	SCREW MF6S DIN 7991 M8X16 A280	
250	315105-0153	-		4	WASHER,PLAIN ROUND 6,4x12 Stainless	
260	315105-0165	-		4	WASHER,PLAIN ROUND 8,4x16 Stainless	
270	315105-0173	-		1	WASHER,PLAIN ROUND 10,5x22 STAINLESS	
280	321111-0097	R		8	BEARING BUSHING WITH FLANGE, 8/12X12	

Pos	Part No	SP	UN	Qty	Description	Page No

This page is intentionally left blank

Pos	Part No	SP	UN	Qty	Description	Page No
544730-0000						
	321120-0101	-		2	BEARING BUSHING WITHOUT FLANGE,6/8X6	
1285545-0000						
010	321120-0101	J		2	BEARING BUSHING WITHOUT FLANGE,6/8X6	
1285546-0000						
010	321120-0100	J		1	BEARING BUSHING WITHOUT FLANGE,8/10x12	
1346988-0000						
010	90166-0056	-	MM	40	SHRINKABLE HOSE	
020	321120-0104	-		2	BEARING BUSHING WITHOUT FLANGE,10/12x10	
1349927-0000						
010	321120-0104	J		2	BEARING BUSHING WITHOUT FLANGE,10/12x10	
1349986-0000						
010	321120-0101	J		2	BEARING BUSHING WITHOUT FLANGE,6/8X6	

Pos	Part No	SP	UN	Qty	Description	Page No

SPC

Spare Parts Catalogue

AUTOMATIC SPLICING UNIT

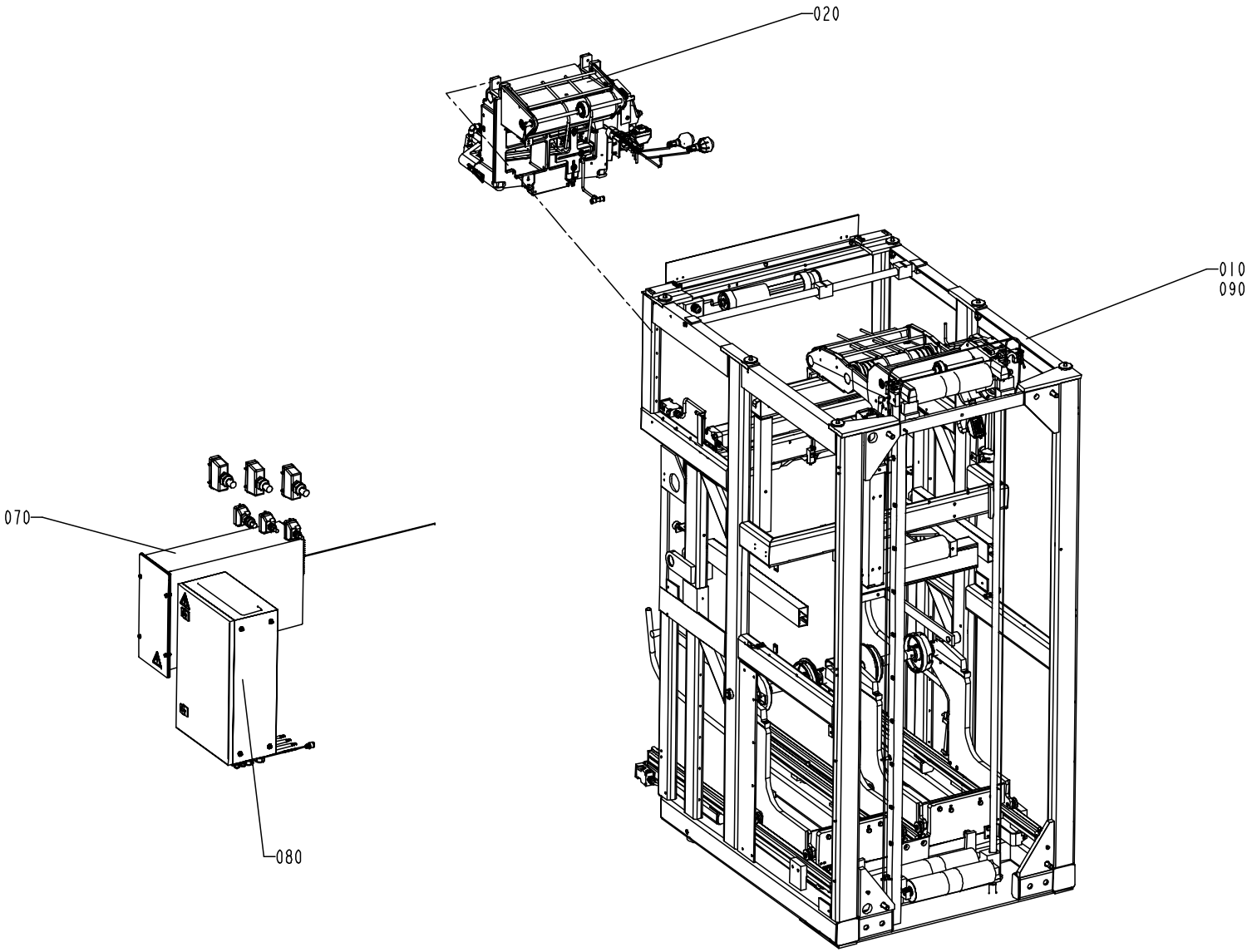

S - 648513-5(2)
ECN 71911

Pos	Part No	SP	UN	Qty	Description	Page No
TBA ASU						
010	A 590490-0200	-		1	MACHINE BODY	**547**, **549**, **551**, **553**, **555**, **557**
020	A1348436-0100	-		1	SPLICING DEVICE	**587**
030	A1255867-0100	-		1	MATERIAL HOLDER LINE 2	**603**
040	A1255868-0100	-		1	CYLINDER LINE 2	**605**
050	A1255869-0100	-		1	MATERIAL HOLDER LINE 1	**607**
060	A1255870-0100	-		1	CYLINDER LINE 1	**609**
070	A1095768-0100	-		1	GENERATOR CABINET	**611**
080	A1095775-0100	-		1	ELECTRICAL CABINET	**613**
090	A1035082-0300	-		1	CABLE HARNESS	**615**, **617**, **619**
100	A1260235-0200	-		1	VALVE PANEL	**621**
120	A1035088-0400	-		1	COVERING PANEL	**623**
130	A1255304-0100	-		1	PROTECTIVE COVER	**659**
140	A1035076-0200	-		2	LEG	**661**
150	A1035471-0100	-		2	LEG	**663**

Pos	Part No	SP	UN	Qty	Description	Page No

AUTOMATIC SPLICING UNIT

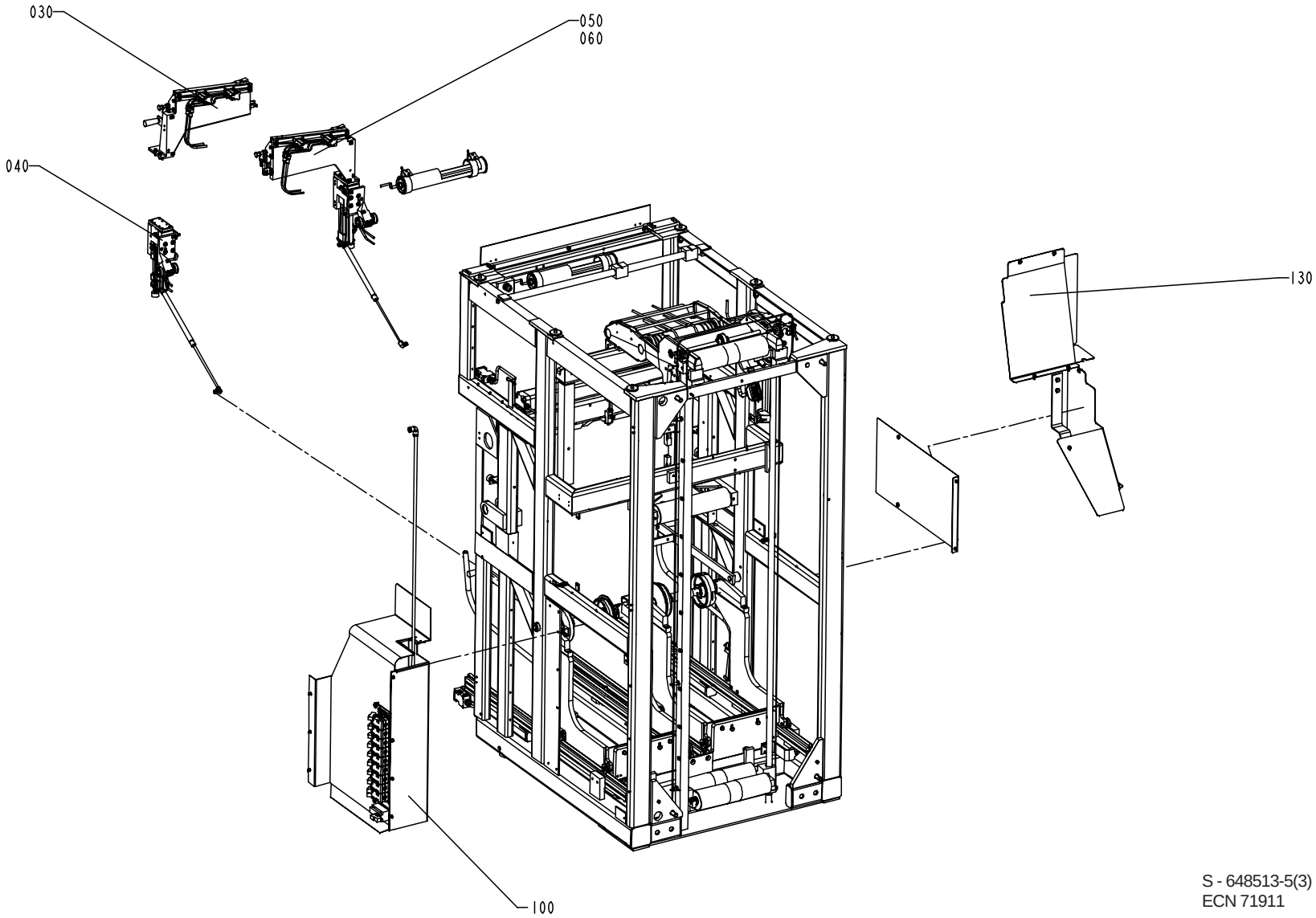

S - 648513-5(3)
ECN 71911

Pos	Part No	SP	UN	Qty	Description	Page No
TBA ASU						
010	A 590490-0200	-		1	MACHINE BODY	**547**, **549**, **551**, **553**, **555**, **557**
020	A1348436-0100	-		1	SPLICING DEVICE	**587**
030	A1255867-0100	-		1	MATERIAL HOLDER LINE 2	**603**
040	A1255868-0100	-		1	CYLINDER LINE 2	**605**
050	A1255869-0100	-		1	MATERIAL HOLDER LINE 1	**607**
060	A1255870-0100	-		1	CYLINDER LINE 1	**609**
070	A1095768-0100	-		1	GENERATOR CABINET	**611**
080	A1095775-0100	-		1	ELECTRICAL CABINET	**613**
090	A1035082-0300	-		1	CABLE HARNESS	**615**, **617**, **619**
100	A1260235-0200	-		1	VALVE PANEL	**621**
120	A1035088-0400	-		1	COVERING PANEL	**623**
130	A1255304-0100	-		1	PROTECTIVE COVER	**659**
140	A1035076-0200	-		2	LEG	**661**
150	A1035471-0100	-		2	LEG	**663**

Pos	Part No	SP	UN	Qty	Description	Page No

AUTOMATIC SPLICING UNIT

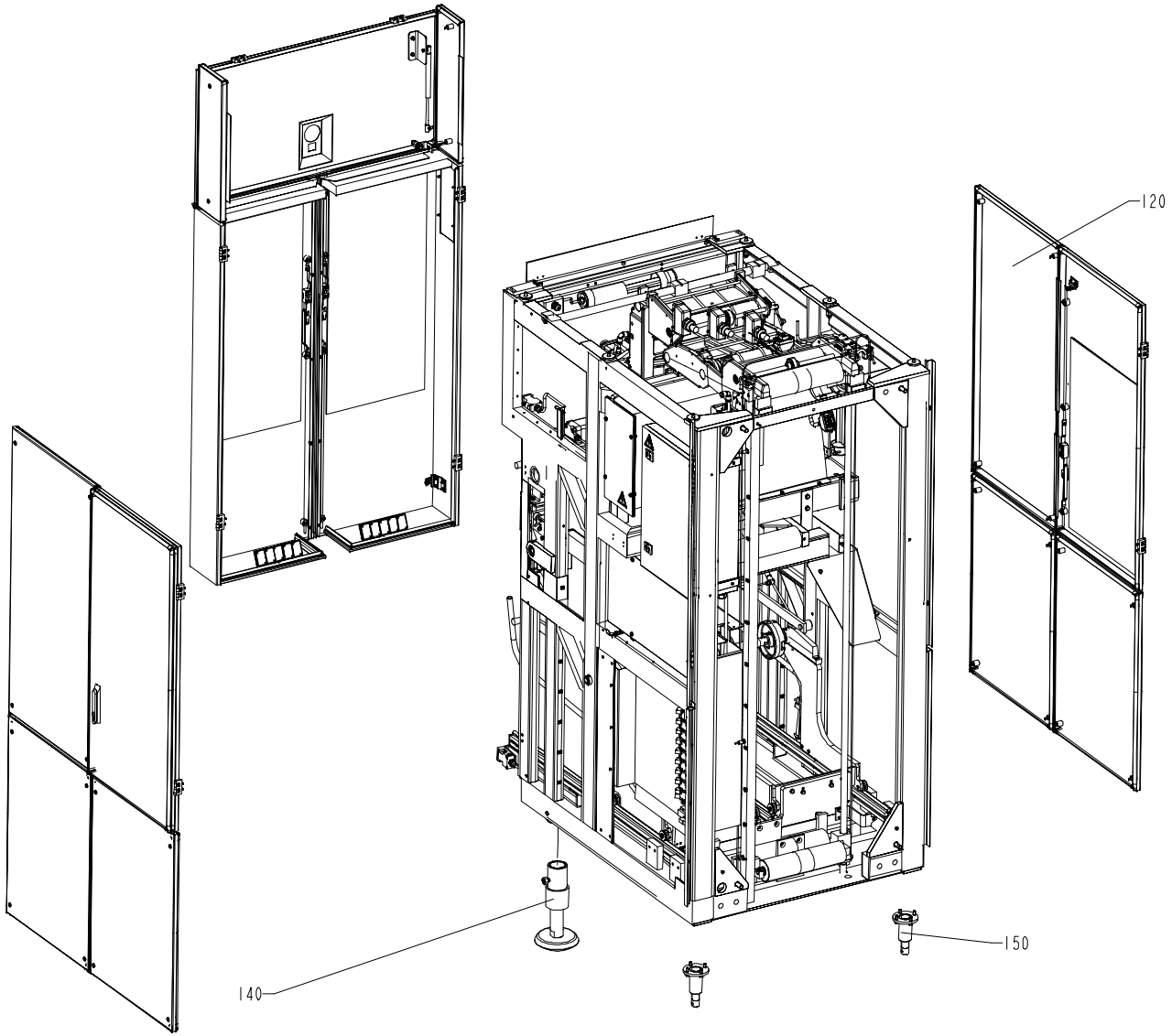

S - 648513-5(4)
ECN 71911

Pos	Part No	SP	UN	Qty	Description	Page No
TBA ASU						
010	A 590490-0200	-		1	MACHINE BODY	**547**, **549**, **551**, **553**, **555**, **557**
020	A1348436-0100	-		1	SPLICING DEVICE	**587**
030	A1255867-0100	-		1	MATERIAL HOLDER LINE 2	**603**
040	A1255868-0100	-		1	CYLINDER LINE 2	**605**
050	A1255869-0100	-		1	MATERIAL HOLDER LINE 1	**607**
060	A1255870-0100	-		1	CYLINDER LINE 1	**609**
070	A1095768-0100	-		1	GENERATOR CABINET	**611**
080	A1095775-0100	-		1	ELECTRICAL CABINET	**613**
090	A1035082-0300	-		1	CABLE HARNESS	**615**, **617**, **619**
100	A1260235-0200	-		1	VALVE PANEL	**621**
120	A1035088-0400	-		1	COVERING PANEL	**623**
130	A1255304-0100	-		1	PROTECTIVE COVER	**659**
140	A1035076-0200	-		2	LEG	**661**
150	A1035471-0100	-		2	LEG	**663**

Pos	Part No	SP	UN	Qty	Description	Page No

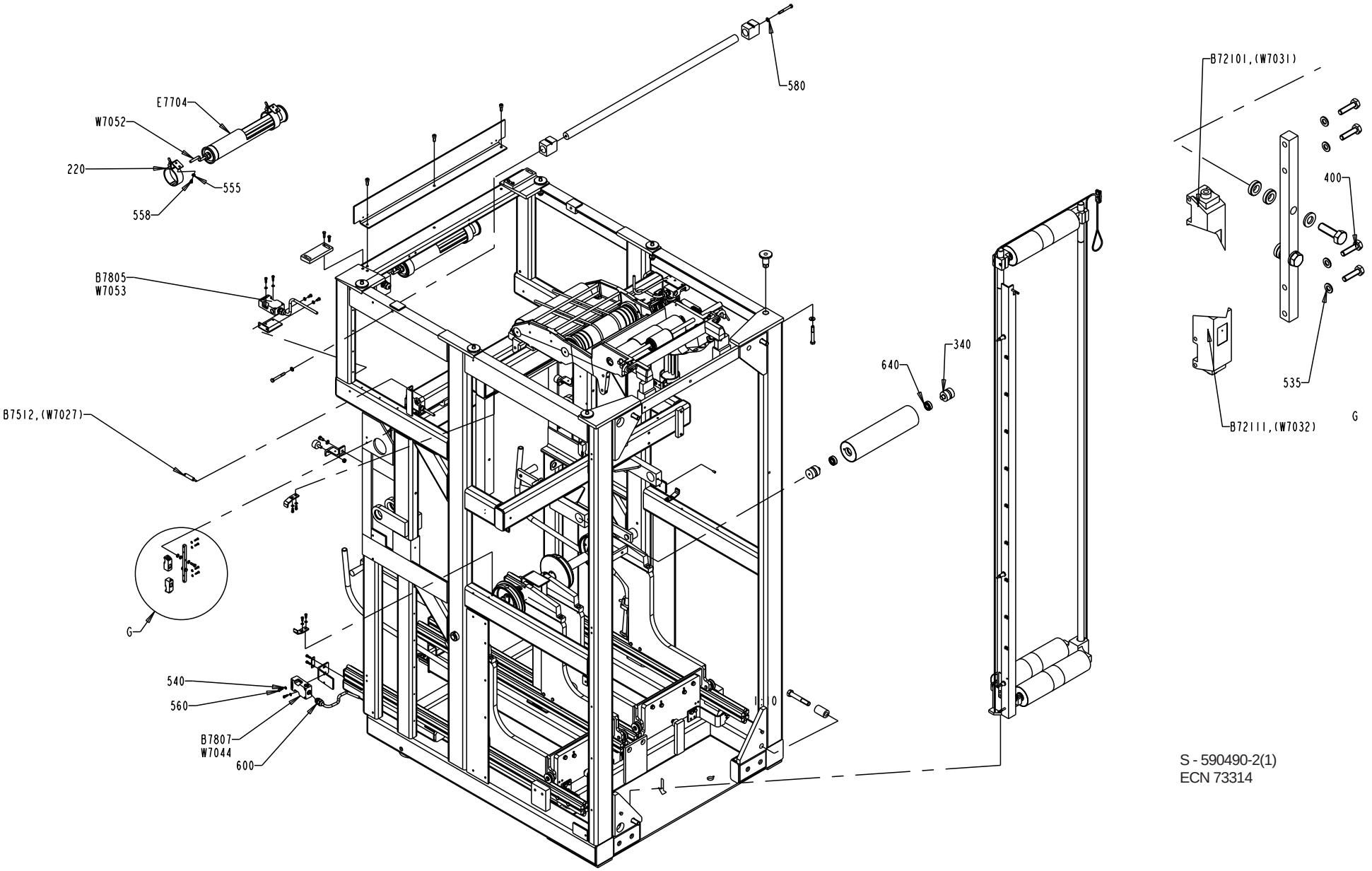

S - 590490-2(1)
ECN 73314

Pos	Part No	SP	UN	Qty	Description	Page No
NOPT						
190	1116153-0000	-		1	BRACKET	
220	90164-0303	D		6	BRACKET SK2202 Waldmann	
555	315105-0153	-		16	WASHER,PLAIN ROUND 6,4x12 Stainless	
558	312105-0364	-		7	SCREW M6S 6x10 A280	
E7704	90164-0015	-		1	LIGHT FIXTURE DWDV 206	
W7052	351150-0412	-	MM	4500	CABLE OLFLEX 3x1,5mm2	
TBA ASU						
190	590483-0000	-		1	HOLDER	
190	1116153-0000	-		1	BRACKET	
220	90164-0303	D		6	BRACKET SK2202 Waldmann	
220	90164-0303	D		4	BRACKET SK2202 Waldmann	
555	315105-0153	-		16	WASHER,PLAIN ROUND 6,4x12 Stainless	
555	315105-0153	-		13	WASHER,PLAIN ROUND 6,4x12 Stainless	
558	312105-0364	-		7	SCREW M6S 6x10 A280	
558	312105-0364	-		4	SCREW M6S 6x10 A280	
E7704	90164-0015	-		1	LIGHT FIXTURE DWDV 206	
W7052	351150-0412	-	MM	4500	CABLE OLFLEX 3x1,5mm2	
Common parts						
010	A1347753-0100	-		1	DRIVE UNIT FRONT	**559**
015	A1347738-0100	-		1	DOUBLE WEB MAGAZINE	**561**
020	A1347751-0100	-		1	RAIL	**563**
025	A1347740-0100	-		1	CARRIAGE	**565**
027	A1347749-0100	-		1	CARRIAGE	**567**
030	A1348428-0100	-		1	LOCKING ARM	**569**
035	A1095835-0100	-		2	PAPER REEL HOLDER	**571**
045	A1095770-0200	-		1	SIDE FEEDER	**573**
050	A1348437-0100	-		1	BRACKET	**575**
051	A1517090-0100	-		1	WEB GUIDE	**577**
057	A1035081-0100	-		1	PIPE WORK-PNEUMATIC	
058	A1478826-0100	-		1	GUIDE	**581**
055	1348987-0000	-		1	FRAME	
060	1036227-0000	-		4	BRACKET	
070	1038903-0000	-		2	BRACKET	
085	1038904-0000	-		2	WASHER	
095	590489-0000	-		1	BRACKET	
100	985756-0000	-		2	PLATE	
115	1140518-0000	-		2	WASHER	
125	985712-0000	-		1	HOLDER	
155	591319-0000	-		1	HOLDER	
160	579802-0000	-		1	SPACER	
170	579803-0000	-		1	SPACER	
175	1116048-0000	-		6	SPACER	
180	1116049-0000	-		1	SHAFT	
210	90002-0010	-		2	BLANK-OFF PLUG 37	
310	1040994-0000	-		2	FASTENING BRACKET	
320	1038865-0000	-		4	SPACER DISC	
330	1041170-0000	Q		2	DANCER ROLLER	
340	1036758-0000	Q		6	AXLE PIN	
345	1350925-0000	-		1	BENDING ROLLER	
350	311103-0401	-		1	PINS,STRAIGHT 8X20	
355	311103-0454	-		4	PINS,STRAIGHT 10X20	
360	311103-0466	-		1	PINS,STRAIGHT 10X50	
400	312105-0293	-		12	SCREW M6S ISO 4017 M4X16 A280	
450	312105-0331	-		4	SCREW M6S ISO 4017 M5X20 A280	
470	312105-0366	-		4	SCREW M6S ISO 4017 M6x12 A280	
500	312115-0327	-		8	SCREW MC6S ISO 4762 M5X12 A280	
507	312115-0380	-		2	SCREW MC6S ISO 4762 M6X50 A280	
510	312105-0370	-		6	SCREW M6S ISO 4017 M6x20 A280	
530	312105-0640	-		4	SCREW M6S ISO 4014 M16X100 A280	
535	315105-0136	-		12	WASHER,PLAIN ROUND 4,3x8 Stainless	
540	315105-0146	-		16	WASHER,PLAIN ROUND 5,3x10 Stainless	
560	312115-0329	-		14	SCREW MC6S ISO 4762 M5x16 A280	
565	312105-0464	-		2	SCREW M6S ISO 4014 M8x65 A280	
567	312605-0316	-		2	NUT,HEXAGON A280 M6M6	
580	315105-0165	-		4	WASHER,PLAIN ROUND 8,4x16 Stainless	
590	315111-0153	-		4	WASHER TBRB6,4X12FZB	
600	352103-0106	-		4	CABLE GLAND ST 11	
610	90012-0049	-		1	CABLE GLAND STR13	
620	90099-0118	-		1	NUT PR 20,4 (PG13,5)	
640	321313-0102	-		6	BALL BEARING 15x35x11	
900	312105-0506	-		6	SCREW M6S ISO 4014 M10X75 A280	
910	315105-0173	-		6	WASHER,PLAIN ROUND 10,5x22 STAINLESS	
920	1254055-0000	-		2	HOLDER	
930	312105-0449	-		5	SCREW M6S ISO 4017 M8x16 A280	
940	312605-0318	-		2	NUT,HEXAGON,M8 RFR	
950	90347-0004	-		2	VIBRATION DAMPER D=30 Th=M8 H=17 H2=21mm	
960	312318-0366	-		12	SET SCREW CUP POINT ISO 4029 M6x12 RFR	
970	1036559-0000	-		2	BEARING BLOCK	
B72101	90232-0103	N		1	Ph.cell E3S-CT61-L-5M	
B72102	90232-0104	N		1	Ph.cell E3S-CT61-D-5M	
B72111	90232-0103	N		1	Ph.cell E3S-CT61-L-5M	
B72112	90232-0104	N		1	Ph.cell E3S-CT61-D-5M	
B74012	90232-0106	N		1	Ph.cell E3S-CR11-5M	
B7412	90044-0124	K		1	Prox.sw. 922AB2XM-A9P-050-LZ-876	
B75011	90232-0106	N		1	Ph.cell E3S-CR11-5M	

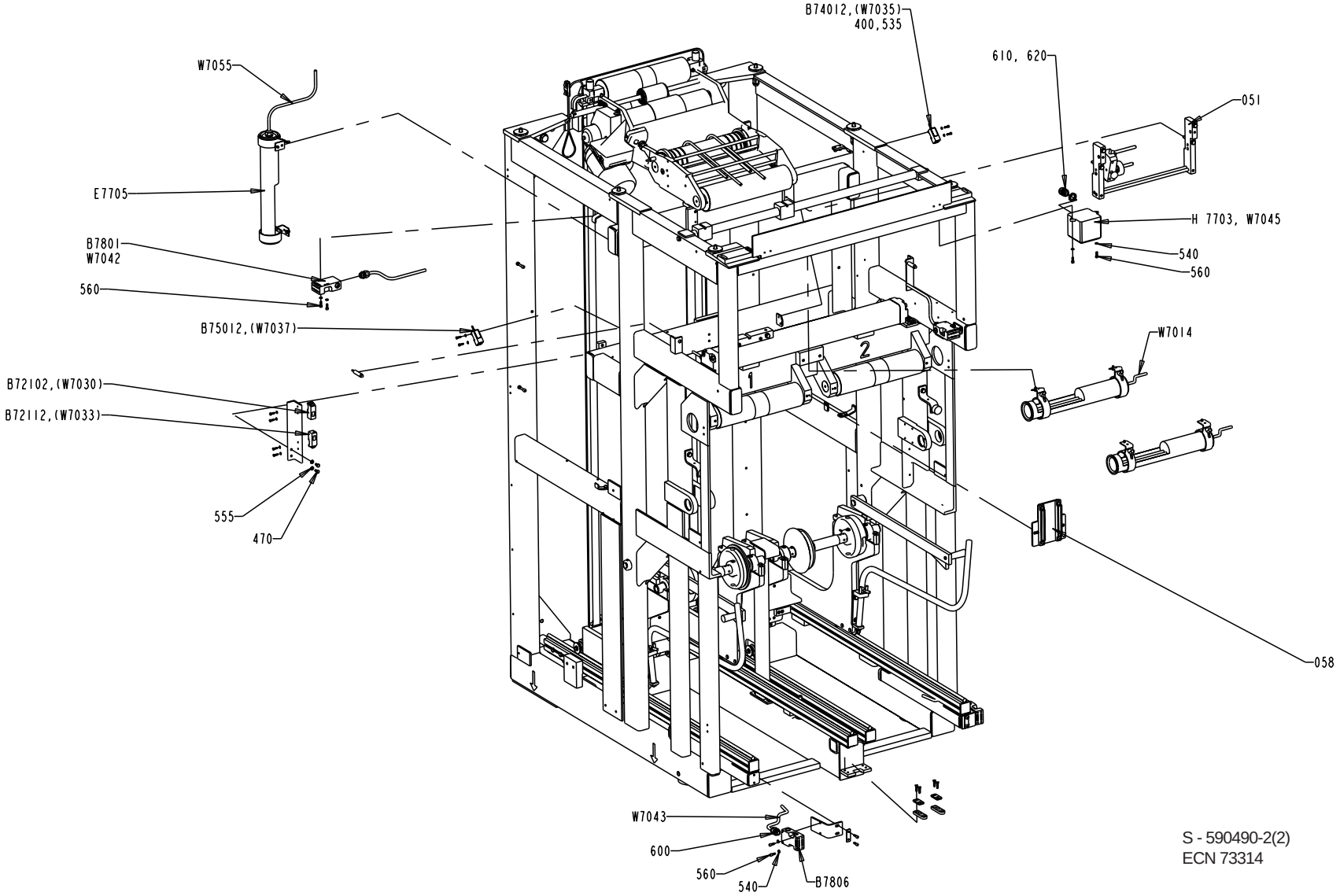

S - 590490-2(2)
ECN 73314

Pos	Part No	SP	UN	Qty	Description	Page No
B7512	90044-0124	K		1	Prox.sw. 922AB2XM-A9P-050-LZ-876	
B7801	90044-0139	Q		1	Key saf.sw. AZ16-02 ZVR K-2254	
B7805	90044-0139	-		1	Key saf.sw. AZ16-02 ZVR K-2254	
B7806	90044-0139	Q		1	Key saf.sw. AZ16-02 ZVR K-2254	
B7807	90044-0139	Q		1	Key saf.sw. AZ16-02 ZVR K-2254	
E7702	90164-0015	-		1	LIGHT FIXTURE DWDV 206	
E7705	90164-0015	-		1	LIGHT FIXTURE DWDV 206	
H7703	90052-0011	-		1	HORN	
W7014	351150-0412	-	MM	3500	CABLE OLFLEX 3x1,5mm2	
W7042	351150-0405	-	M	4	CABLE,OLFLEX 5x0,75 MM2	
W7043	351150-0405	-	M	5	CABLE,OLFLEX 5x0,75 MM2	
W7044	351150-0405	-	M	4	CABLE,OLFLEX 5x0,75 MM2	
W7045	351150-0122	-	M	4	CABLE "REPL.BY 351150-431"	
W7053	351150-0405	-	MM	2800	CABLE,OLFLEX 5x0,75 MM2	
W7054	351150-0406	-	M	8	CABLE OLFLEX 7x0,75 MM2	
W7055	351150-0412	-	M	2	CABLE OLFLEX 3x1,5mm2	

Pos	Part No	SP	UN	Qty	Description	Page No

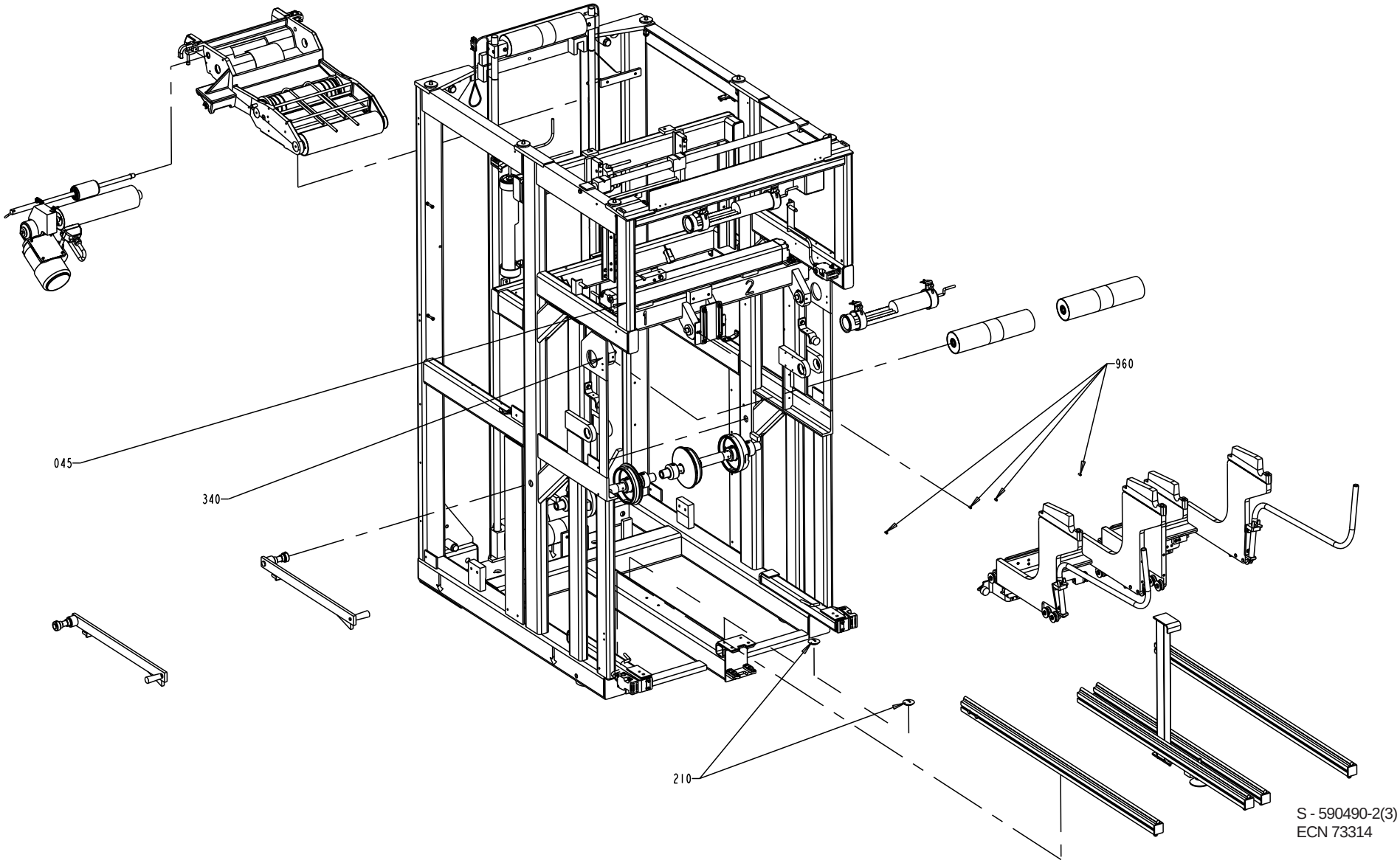
045
340
960
210
S - 590490-2(3)
ECN 73314

Pos	Part No	SP	UN	Qty	Description	Page No
NOPT						
190	1116153-0000	-		1	BRACKET	
220	90164-0303	D		6	BRACKET SK2202 Waldmann	
555	315105-0153	-		16	WASHER,PLAIN ROUND 6,4x12 Stainless	
558	312105-0364	-		7	SCREW M6S 6x10 A280	
E7704	90164-0015	-		1	LIGHT FIXTURE DWDV 206	
W7052	351150-0412	-	MM	4500	CABLE OLFLEX 3x1,5mm2	
TBA ASU						
190	590483-0000	-		1	HOLDER	
190	1116153-0000	-		1	BRACKET	
220	90164-0303	D		6	BRACKET SK2202 Waldmann	
220	90164-0303	D		4	BRACKET SK2202 Waldmann	
555	315105-0153	-		16	WASHER,PLAIN ROUND 6,4x12 Stainless	
555	315105-0153	-		13	WASHER,PLAIN ROUND 6,4x12 Stainless	
558	312105-0364	-		7	SCREW M6S 6x10 A280	
558	312105-0364	-		4	SCREW M6S 6x10 A280	
E7704	90164-0015	-		1	LIGHT FIXTURE DWDV 206	
W7052	351150-0412	-	MM	4500	CABLE OLFLEX 3x1,5mm2	
Common parts						
010	A1347753-0100	-		1	DRIVE UNIT FRONT	**559**
015	A1347738-0100	-		1	DOUBLE WEB MAGAZINE	**561**
020	A1347751-0100	-		1	RAIL	**563**
025	A1347740-0100	-		1	CARRIAGE	**565**
027	A1347749-0100	-		1	CARRIAGE	**567**
030	A1348428-0100	-		1	LOCKING ARM	**569**
035	A1095835-0100	-		2	PAPER REEL HOLDER	**571**
045	A1095770-0200	-		1	SIDE FEEDER	**573**
050	A1348437-0100	-		1	BRACKET	**575**
051	A1517090-0100	-		1	WEB GUIDE	**577**
057	A1035081-0100	-		1	PIPE WORK-PNEUMATIC	
058	A1478826-0100	-		1	GUIDE	**581**
055	1348987-0000	-		1	FRAME	
060	1036227-0000	-		4	BRACKET	
070	1038903-0000	-		2	BRACKET	
085	1038904-0000	-		2	WASHER	
095	590489-0000	-		1	BRACKET	
100	985756-0000	-		2	PLATE	
115	1140518-0000	-		2	WASHER	
125	985712-0000	-		1	HOLDER	
155	591319-0000	-		1	HOLDER	
160	579802-0000	-		1	SPACER	
170	579803-0000	-		1	SPACER	
175	1116048-0000	-		6	SPACER	
180	1116049-0000	-		1	SHAFT	
210	90002-0010	-		2	BLANK-OFF PLUG 37	
310	1040994-0000	-		2	FASTENING BRACKET	
320	1038865-0000	-		4	SPACER DISC	
330	1041170-0000	Q		2	DANCER ROLLER	
340	1036758-0000	Q		6	AXLE PIN	
345	1350925-0000	-		1	BENDING ROLLER	
350	311103-0401	-		1	PINS,STRAIGHT 8X20	
355	311103-0454	-		4	PINS,STRAIGHT 10X20	
360	311103-0466	-		1	PINS,STRAIGHT 10X50	
400	312105-0293	-		12	SCREW M6S ISO 4017 M4X16 A280	
450	312105-0331	-		4	SCREW M6S ISO 4017 M5X20 A280	
470	312105-0366	-		4	SCREW M6S ISO 4017 M6x12 A280	
500	312115-0327	-		8	SCREW MC6S ISO 4762 M5X12 A280	
507	312115-0380	-		2	SCREW MC6S ISO 4762 M6X50 A280	
510	312105-0370	-		6	SCREW M6S ISO 4017 M6x20 A280	
530	312105-0640	-		4	SCREW M6S ISO 4014 M16X100 A280	
535	315105-0136	-		12	WASHER,PLAIN ROUND 4,3x8 Stainless	
540	315105-0146	-		16	WASHER,PLAIN ROUND 5,3x10 Stainless	
560	312115-0329	-		14	SCREW MC6S ISO 4762 M5x16 A280	
565	312105-0464	-		2	SCREW M6S ISO 4014 M8x65 A280	
567	312605-0316	-		2	NUT,HEXAGON A280 M6M6	
580	315105-0165	-		4	WASHER,PLAIN ROUND 8,4x16 Stainless	
590	315111-0153	-		4	WASHER TBRB6,4X12FZB	
600	352103-0106	-		4	CABLE GLAND ST 11	
610	90012-0049	-		1	CABLE GLAND STR13	
620	90099-0118	-		1	NUT PR 20,4 (PG13,5)	
640	321313-0102	-		6	BALL BEARING 15x35x11	
900	312105-0506	-		6	SCREW M6S ISO 4014 M10X75 A280	
910	315105-0173	-		6	WASHER,PLAIN ROUND 10,5x22 STAINLESS	
920	1254055-0000	-		2	HOLDER	
930	312105-0449	-		5	SCREW M6S ISO 4017 M8x16 A280	
940	312605-0318	-		2	NUT,HEXAGON,M8 RFR	
950	90347-0004	-		2	VIBRATION DAMPER D=30 Th=M8 H=17 H2=21mm	
960	312318-0366	-		12	SET SCREW CUP POINT ISO 4029 M6x12 RFR	
970	1036559-0000	-		2	BEARING BLOCK	
B72101	90232-0103	N		1	Ph.cell E3S-CT61-L-5M	
B72102	90232-0104	N		1	Ph.cell E3S-CT61-D-5M	
B72111	90232-0103	N		1	Ph.cell E3S-CT61-L-5M	
B72112	90232-0104	N		1	Ph.cell E3S-CT61-D-5M	
B74012	90232-0106	N		1	Ph.cell E3S-CR11-5M	
B7412	90044-0124	K		1	Prox.sw. 922AB2XM-A9P-050-LZ-876	
B75011	90232-0106	N		1	Ph.cell E3S-CR11-5M	

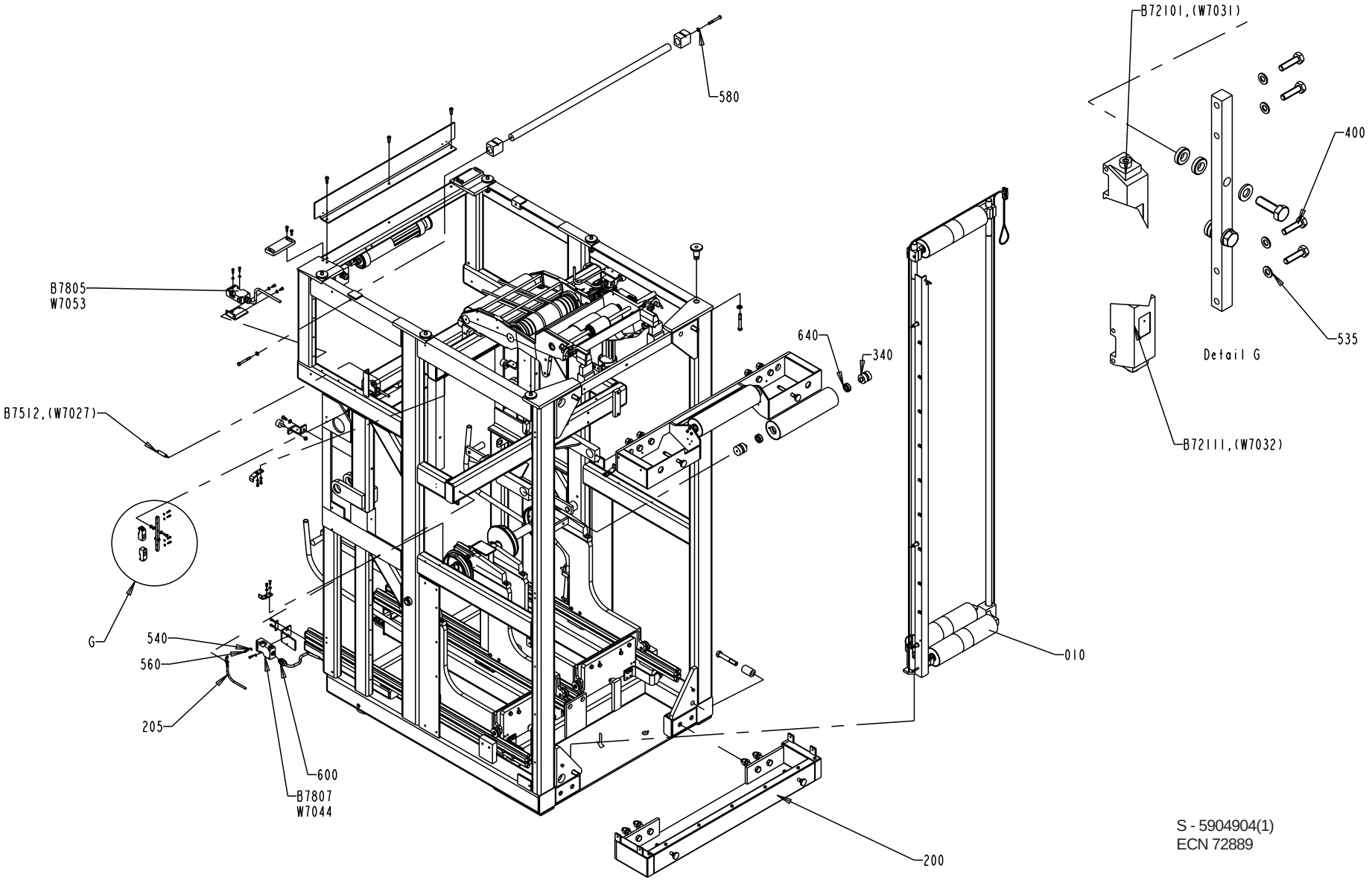

S - 5904904(1)
ECN 72889

Pos	Part No	SP	UN	Qty	Description	Page No
B7512	90044-0124	K		1	Prox.sw. 922AB2XM-A9P-050-LZ-876	
B7801	90044-0139	Q		1	Key saf.sw. AZ16-02 ZVR K-2254	
B7805	90044-0139	-		1	Key saf.sw. AZ16-02 ZVR K-2254	
B7806	90044-0139	Q		1	Key saf.sw. AZ16-02 ZVR K-2254	
B7807	90044-0139	Q		1	Key saf.sw. AZ16-02 ZVR K-2254	
E7702	90164-0015	-		1	LIGHT FIXTURE DWDV 206	
E7705	90164-0015	-		1	LIGHT FIXTURE DWDV 206	
H7703	90052-0011	-		1	HORN	
W7014	351150-0412	-	MM	3500	CABLE OLFLEX 3x1,5mm2	
W7042	351150-0405	-	M	4	CABLE,OLFLEX 5x0,75 MM2	
W7043	351150-0405	-	M	5	CABLE,OLFLEX 5x0,75 MM2	
W7044	351150-0405	-	M	4	CABLE,OLFLEX 5x0,75 MM2	
W7045	351150-0122	-	M	4	CABLE "REPL.BY 351150-431"	
W7053	351150-0405	-	MM	2800	CABLE,OLFLEX 5x0,75 MM2	
W7054	351150-0406	-	M	8	CABLE OLFLEX 7x0,75 MM2	
W7055	351150-0412	-	M	2	CABLE OLFLEX 3x1,5mm2	

Pos	Part No	SP	UN	Qty	Description	Page No

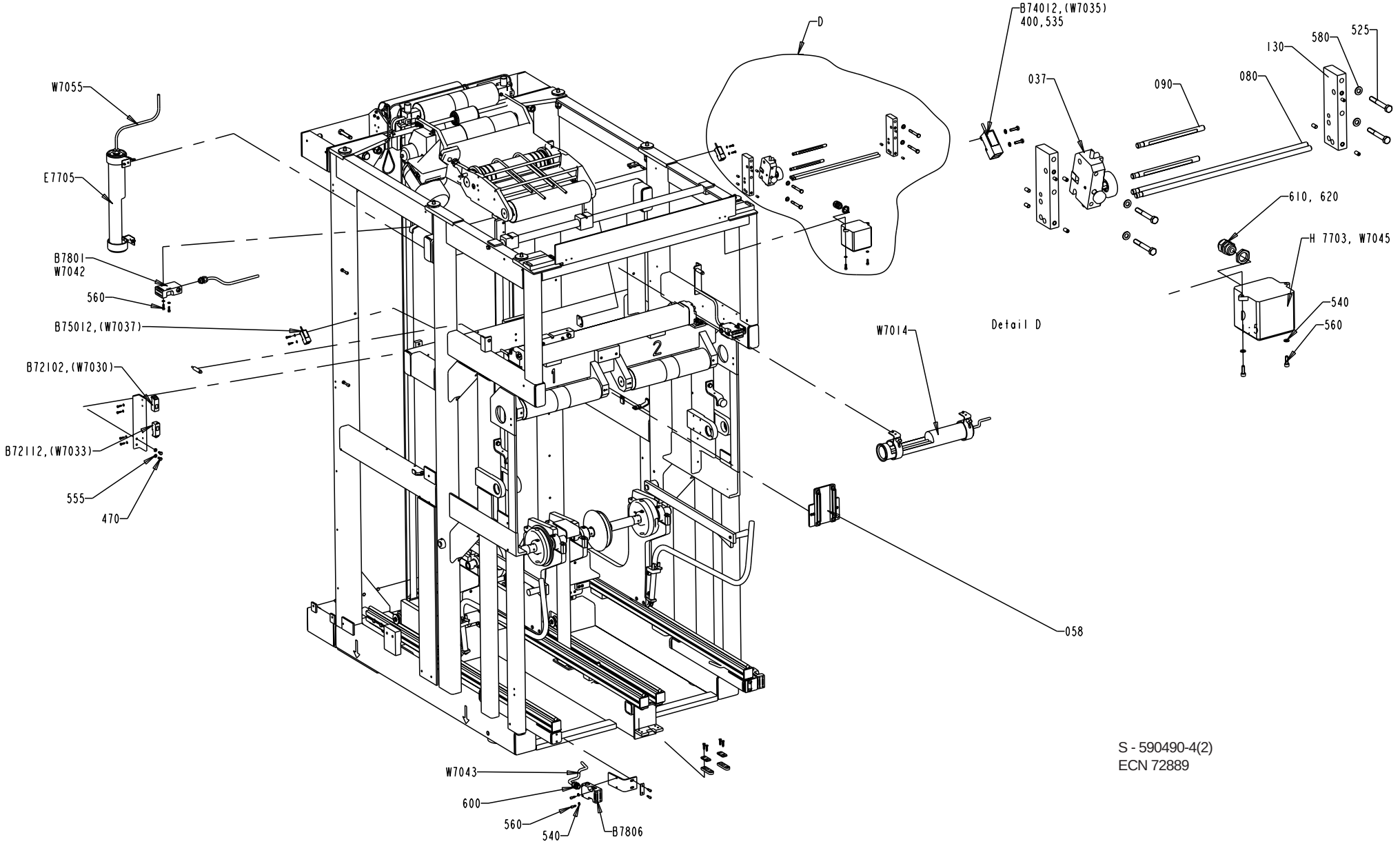

S - 590490-4(2)
ECN 72889

Pos	Part No	SP	UN	Qty	Description	Page No
NOPT						
190	1116153-0000	-		1	BRACKET	
220	90164-0303	D		6	BRACKET SK2202 Waldmann	
555	315105-0153	-		16	WASHER,PLAIN ROUND 6,4x12 Stainless	
558	312105-0364	-		7	SCREW M6S 6x10 A280	
E7704	90164-0015	-		1	LIGHT FIXTURE DWDV 206	
W7052	351150-0412	-	MM	4500	CABLE OLFLEX 3x1,5mm2	
TBA ASU						
190	590483-0000	-		1	HOLDER	
190	1116153-0000	-		1	BRACKET	
220	90164-0303	D		6	BRACKET SK2202 Waldmann	
220	90164-0303	D		4	BRACKET SK2202 Waldmann	
555	315105-0153	-		16	WASHER,PLAIN ROUND 6,4x12 Stainless	
555	315105-0153	-		13	WASHER,PLAIN ROUND 6,4x12 Stainless	
558	312105-0364	-		7	SCREW M6S 6x10 A280	
558	312105-0364	-		4	SCREW M6S 6x10 A280	
E7704	90164-0015	-		1	LIGHT FIXTURE DWDV 206	
W7052	351150-0412	-	MM	4500	CABLE OLFLEX 3x1,5mm2	
Common parts						
010	A1347753-0100	-		1	DRIVE UNIT FRONT	**559**
015	A1347738-0100	-		1	DOUBLE WEB MAGAZINE	**561**
020	A1347751-0100	-		1	RAIL	**563**
025	A1347740-0100	-		1	CARRIAGE	**565**
027	A1347749-0100	-		1	CARRIAGE	**567**
030	A1348428-0100	-		1	LOCKING ARM	**569**
035	A1095835-0100	-		2	PAPER REEL HOLDER	**571**
045	A1095770-0200	-		1	SIDE FEEDER	**573**
050	A1348437-0100	-		1	BRACKET	**575**
051	A1517090-0100	-		1	WEB GUIDE	**577**
057	A1035081-0100	-		1	PIPE WORK-PNEUMATIC	
058	A1478826-0100	-		1	GUIDE	**581**
055	1348987-0000	-		1	FRAME	
060	1036227-0000	-		4	BRACKET	
070	1038903-0000	-		2	BRACKET	
085	1038904-0000	-		2	WASHER	
095	590489-0000	-		1	BRACKET	
100	985756-0000	-		2	PLATE	
115	1140518-0000	-		2	WASHER	
125	985712-0000	-		1	HOLDER	
155	591319-0000	-		1	HOLDER	
160	579802-0000	-		1	SPACER	
170	579803-0000	-		1	SPACER	
175	1116048-0000	-		6	SPACER	
180	1116049-0000	-		1	SHAFT	
210	90002-0010	-		2	BLANK-OFF PLUG 37	
310	1040994-0000	-		2	FASTENING BRACKET	
320	1038865-0000	-		4	SPACER DISC	
330	1041170-0000	Q		2	DANCER ROLLER	
340	1036758-0000	Q		6	AXLE PIN	
345	1350925-0000	-		1	BENDING ROLLER	
350	311103-0401	-		1	PINS,STRAIGHT 8X20	
355	311103-0454	-		4	PINS,STRAIGHT 10X20	
360	311103-0466	-		1	PINS,STRAIGHT 10X50	
400	312105-0293	-		12	SCREW M6S ISO 4017 M4X16 A280	
450	312105-0331	-		4	SCREW M6S ISO 4017 M5X20 A280	
470	312105-0366	-		4	SCREW M6S ISO 4017 M6x12 A280	
500	312115-0327	-		8	SCREW MC6S ISO 4762 M5X12 A280	
507	312115-0380	-		2	SCREW MC6S ISO 4762 M6X50 A280	
510	312105-0370	-		6	SCREW M6S ISO 4017 M6x20 A280	
530	312105-0640	-		4	SCREW M6S ISO 4014 M16X100 A280	
535	315105-0136	-		12	WASHER,PLAIN ROUND 4,3x8 Stainless	
540	315105-0146	-		16	WASHER,PLAIN ROUND 5,3x10 Stainless	
560	312115-0329	-		14	SCREW MC6S ISO 4762 M5x16 A280	
565	312105-0464	-		2	SCREW M6S ISO 4014 M8x65 A280	
567	312605-0316	-		2	NUT,HEXAGON A280 M6M6	
580	315105-0165	-		4	WASHER,PLAIN ROUND 8,4x16 Stainless	
590	315111-0153	-		4	WASHER TBRB6,4X12FZB	
600	352103-0106	-		4	CABLE GLAND ST 11	
610	90012-0049	-		1	CABLE GLAND STR13	
620	90099-0118	-		1	NUT PR 20,4 (PG13,5)	
640	321313-0102	-		6	BALL BEARING 15x35x11	
900	312105-0506	-		6	SCREW M6S ISO 4014 M10X75 A280	
910	315105-0173	-		6	WASHER,PLAIN ROUND 10,5x22 STAINLESS	
920	1254055-0000	-		2	HOLDER	
930	312105-0449	-		5	SCREW M6S ISO 4017 M8x16 A280	
940	312605-0318	-		2	NUT,HEXAGON,M8 RFR	
950	90347-0004	-		2	VIBRATION DAMPER D=30 Th=M8 H=17 H2=21mm	
960	312318-0366	-		12	SET SCREW CUP POINT ISO 4029 M6x12 RFR	
970	1036559-0000	-		2	BEARING BLOCK	
B72101	90232-0103	N		1	Ph.cell E3S-CT61-L-5M	
B72102	90232-0104	N		1	Ph.cell E3S-CT61-D-5M	
B72111	90232-0103	N		1	Ph.cell E3S-CT61-L-5M	
B72112	90232-0104	N		1	Ph.cell E3S-CT61-D-5M	
B74012	90232-0106	N		1	Ph.cell E3S-CR11-5M	
B7412	90044-0124	K		1	Prox.sw. 922AB2XM-A9P-050-LZ-876	
B75011	90232-0106	N		1	Ph.cell E3S-CR11-5M	

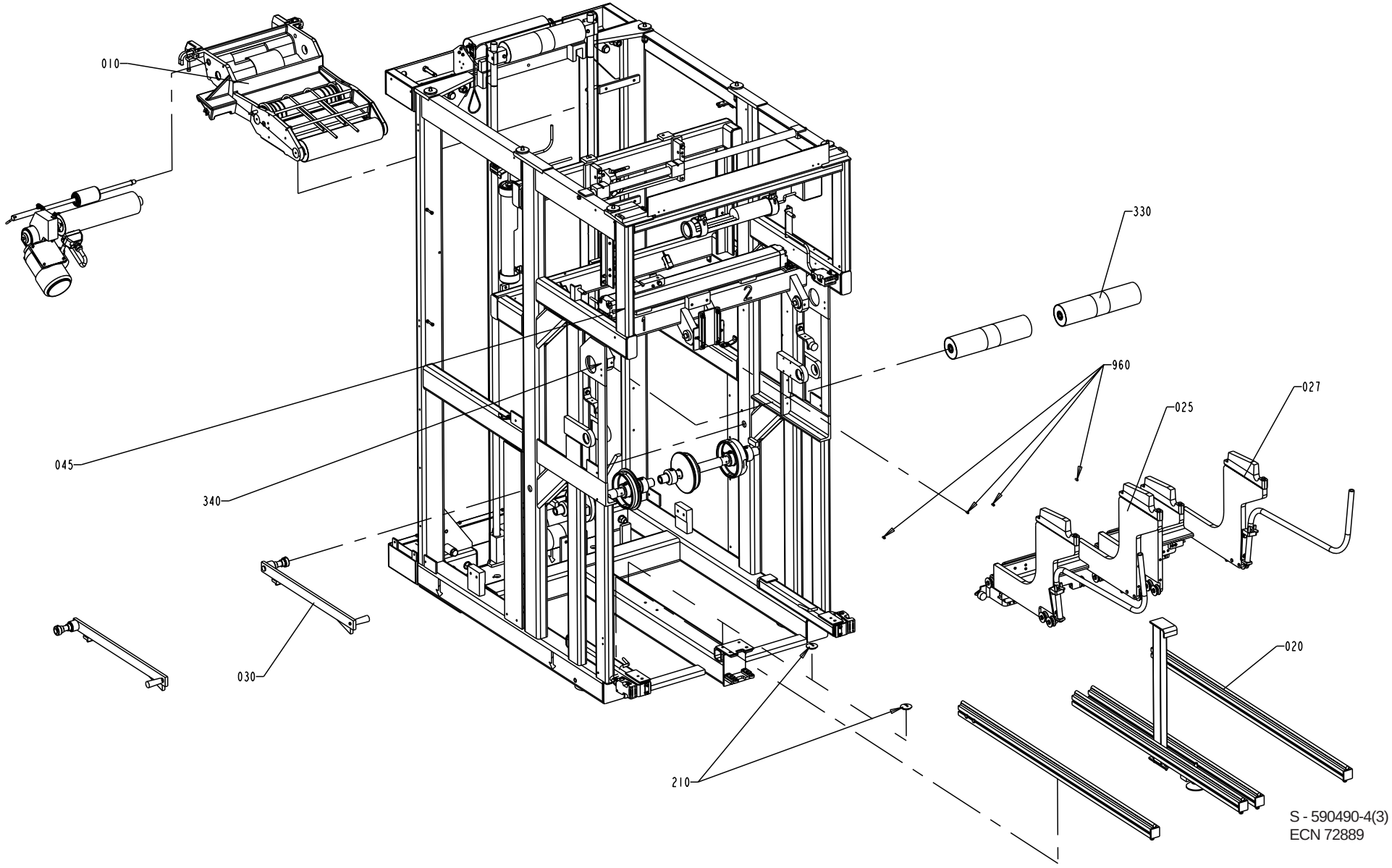
010
045
340
030
210
330
960
025
027
020
S - 590490-4(3)
ECN 72889

Pos	Part No	SP	UN	Qty	Description	Page No
B7512	90044-0124	K		1	Prox.sw. 922AB2XM-A9P-050-LZ-876	
B7801	90044-0139	Q		1	Key saf.sw. AZ16-02 ZVR K-2254	
B7805	90044-0139	-		1	Key saf.sw. AZ16-02 ZVR K-2254	
B7806	90044-0139	Q		1	Key saf.sw. AZ16-02 ZVR K-2254	
B7807	90044-0139	Q		1	Key saf.sw. AZ16-02 ZVR K-2254	
E7702	90164-0015	-		1	LIGHT FIXTURE DWDV 206	
E7705	90164-0015	-		1	LIGHT FIXTURE DWDV 206	
H7703	90052-0011	-		1	HORN	
W7014	351150-0412	-	MM	3500	CABLE OLFLEX 3x1,5mm2	
W7042	351150-0405	-	M	4	CABLE,OLFLEX 5x0,75 MM2	
W7043	351150-0405	-	M	5	CABLE,OLFLEX 5x0,75 MM2	
W7044	351150-0405	-	M	4	CABLE,OLFLEX 5x0,75 MM2	
W7045	351150-0122	-	M	4	CABLE "REPL.BY 351150-431"	
W7053	351150-0405	-	MM	2800	CABLE,OLFLEX 5x0,75 MM2	
W7054	351150-0406	-	M	8	CABLE OLFLEX 7x0,75 MM2	
W7055	351150-0412	-	M	2	CABLE OLFLEX 3x1,5mm2	

Pos	Part No	SP	UN	Qty	Description	Page No

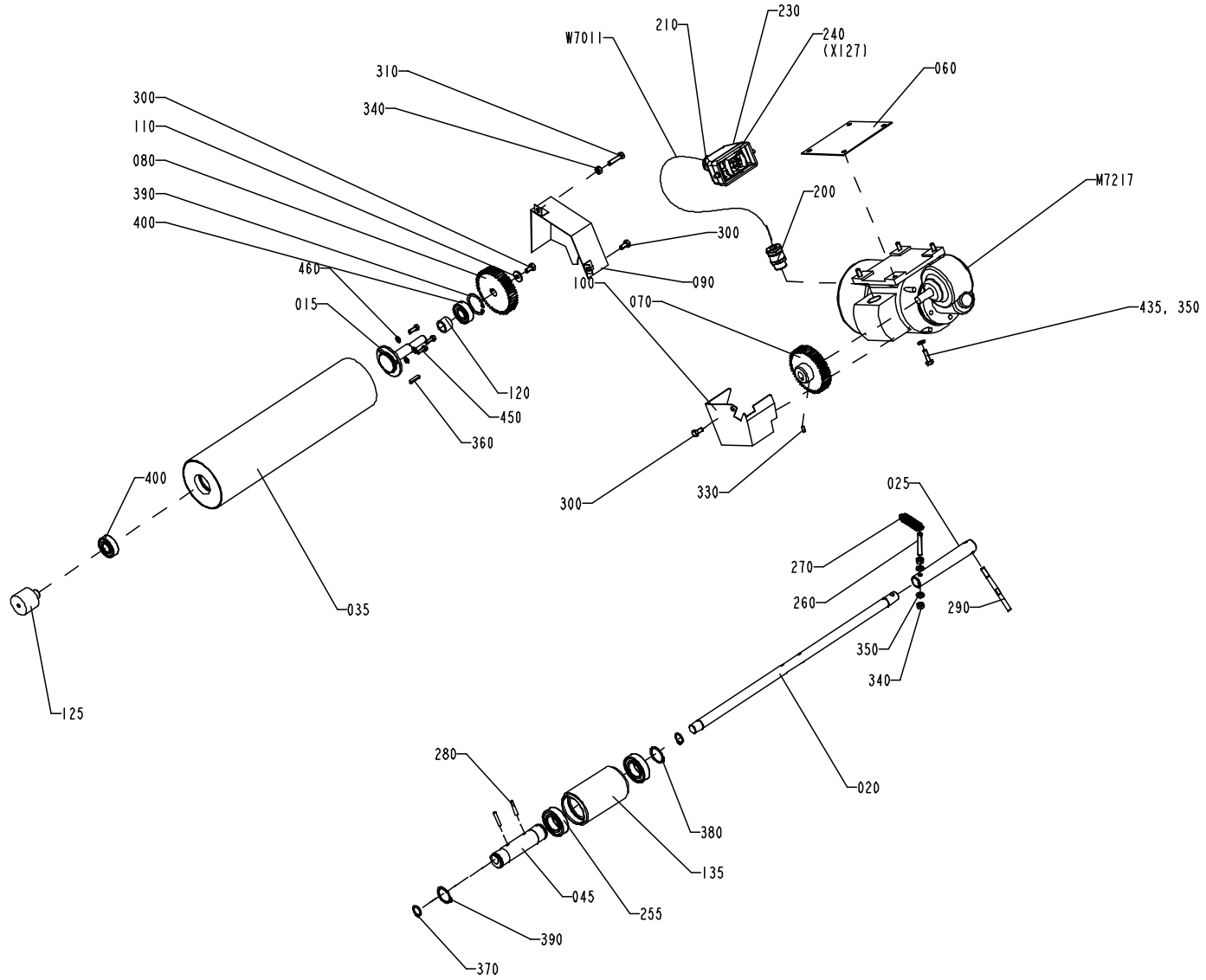

S - 1347753-1
ECN 73095

Pos	Part No	SP	UN	Qty	Description	Page No
Common parts						
W7011	90220-0104	-	M	7	CABLE,SCREENED 4x1,5mm2	
015	1519767-0000	D		1	SHAFT	
020	1523042-0000	D		1	SHAFT	
025	1523043-0000	-		1	SHAFT	
035	1519766-0000	Q		1	BENDING ROLLER	
045	1512267-0000	-		1	ECCENTRIC BUSHING	
060	1036390-0000	Q		1	SHIM	
070	1037052-0000	Q		1	GEAR WHEEL	
080	1037053-0000	Q		1	GEAR WHEEL	
090	1255513-0000	-		1	COVER	
100	1347755-0000	-		1	COVER	
110	6278-0000	K		1	WASHER	
120	1036298-0000	-		1	SPACER	
125	1487766-0000	-		1	AXLE PIN	
135	906254-0000	Q		1	ROLLER	
200	90012-0137	-		1	GLAND,EMC,EXTENDED WITH INSERT	
210	352103-0108	-		1	CABLE GLAND ST 13	
230	90110-0157	Q		1	COVER	
240	90110-0159	Q		1	CONTACT	
255	321308-0205	-		2	BALL BEARING 25X47X12	
260	578684-0000	D		1	SPRING BRACKET	
270	90335-0091	Q		1	SPRING	
280	311112-0258	-		2	PINS,SLOTTED TUBULAR SPRING PIN 4X24	
290	1317021-0000	-		1	PIN	
300	312105-0366	-		3	SCREW M6S ISO 4017 M6x12 A280	
310	312105-0372	-		1	SCREW M6S ISO 4017 M6x25 A280	
330	312318-0287	-		1	SET SCREW CUP POINT ISO 4029 M4x8 RFR	
340	312605-0316	-		3	NUT,HEXAGON A280 M6M6	
350	315105-0153	-		6	WASHER,PLAIN ROUND 6,4x12 Stainless	
360	315701-0170	-		1	KEYS,PARALLEL WITH ROUND ENDS 4X4X20	
370	315751-0112	-		2	RETAINING RINGS FOR SHAFT 15	
380	315751-0119	-		2	RETAINING RINGS FOR SHAFT 25	
390	315753-0124	-		1	RETAINING RINGS FOR HOLE 35	
400	321313-0102	K		2	BALL BEARING 15x35x11	
420	359005-0010	-		1	MARKING SESATS 0-9	
430	359005-0050	-		1	MARKING SEATS "X"	
435	312105-0370	-		4	SCREW M6S ISO 4017 M6x20 A280	
450	312105-0328	-		3	SCREW M6S5X14 A2 80	
460	315105-0146	-		3	WASHER,PLAIN ROUND 5,3x10 Stainless	
M7217	90069-0606	N		1	Worm Gear Motor	

Pos	Part No	SP	UN	Qty	Description	Page No

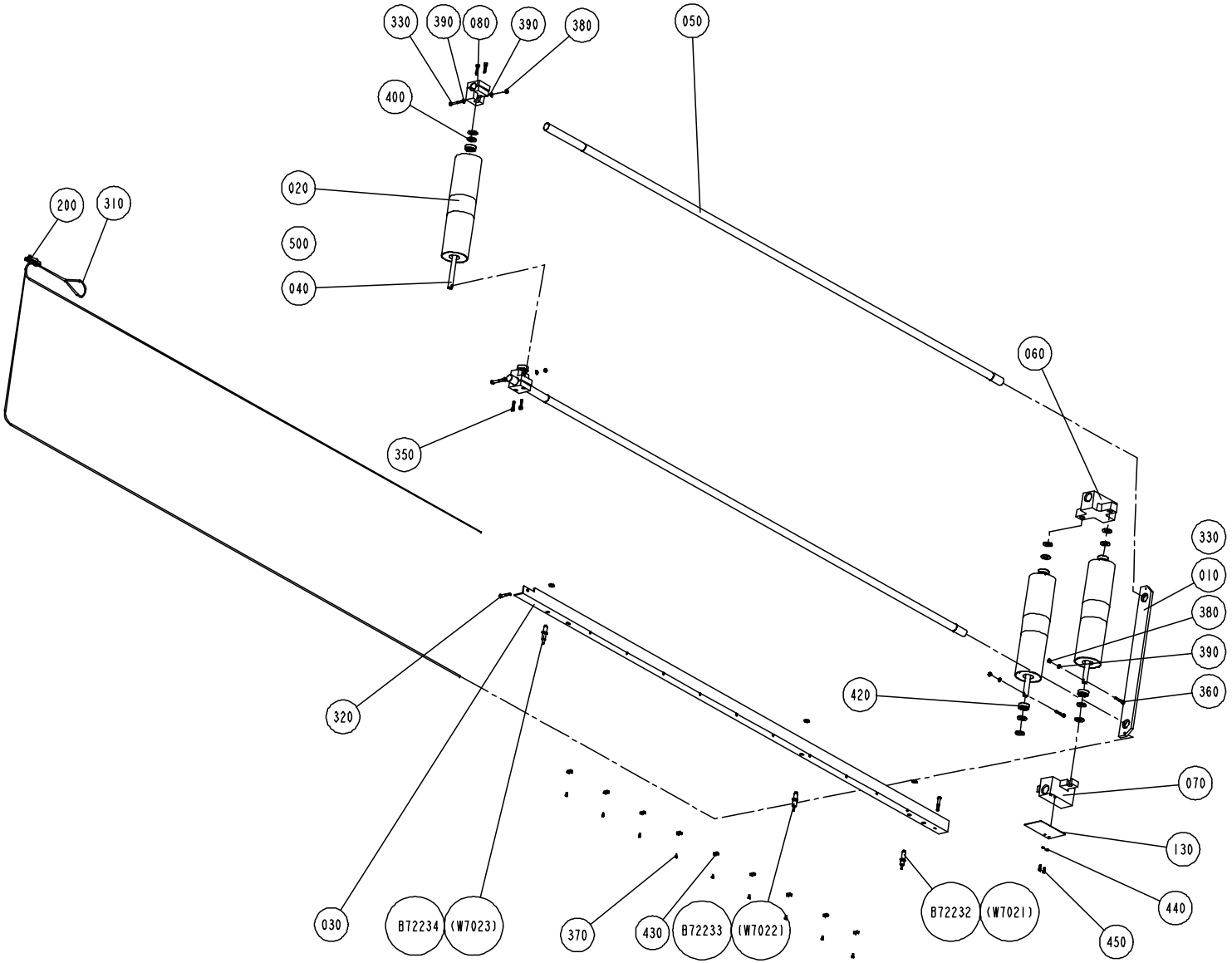

S - 1347738-1
ECN 72500

Pos	Part No	SP	UN	Qty	Description	Page No
Common parts						
010	1036300-0000	-		1	PLATE	
020	1041170-0000	Q		3	DANCER ROLLER	
030	1105673-0000	-		1	ANGLE BRACKET	
040	1285221-0000	D		3	SHAFT	
050	1346633-0000	-		2	GUIDE ROD	
060	1347743-0000	-		1	SLIDER	
070	1347744-0000	-		1	SLIDER	
080	1347754-0000	-		2	SLIDER	
130	1499595-0000	-		1	PLATE	
200	90211-0002	-		1	LOCK	
210	90319-0013	-	MM	6200	ROPE 4MM BLUE 3700N	
220	90335-0013	-		1	SPRING	
330	312105-0379	-		2	SCREW M6S ISO 4014 M6x45 A280	
350	312115-0372	-		4	SCREW MC6S ISO 4762 M6x25 A280	
360	312115-0376	-		2	SCREW MC6S ISO 4762 M6x35 A280	
370	312125-0287	-		9	SLOTTED CHEESE HEAD ISO 1207 M4X8 RFR	
380	312601-0316	-		2	NUT M6M 6-8 FZB	
390	315105-0153	-		6	WASHER,PLAIN ROUND 6,4x12 Stainless	
400	315105-0186	-		12	WASHER,PLAIN ROUND 17x30	
420	321313-0102	-		6	BALL BEARING 15x35x11	
430	352113-0205	-		430	ANCHOR TM2S8-C100	
440	315105-0146	-		2	WASHER,PLAIN ROUND 5,3x10 Stainless	
450	312105-0327	-		2	SCREW M6S ISO 4017 M5X12 A280	
B72232	90044-0124	K		1	Prox.sw. 922AB2XM-A9P-050-LZ-876	
B72233	90044-0124	K		1	Prox.sw. 922AB2XM-A9P-050-LZ-876	
B72234	90044-0124	K		1	Prox.sw. 922AB2XM-A9P-050-LZ-876	

Pos	Part No	SP	UN	Qty	Description	Page No

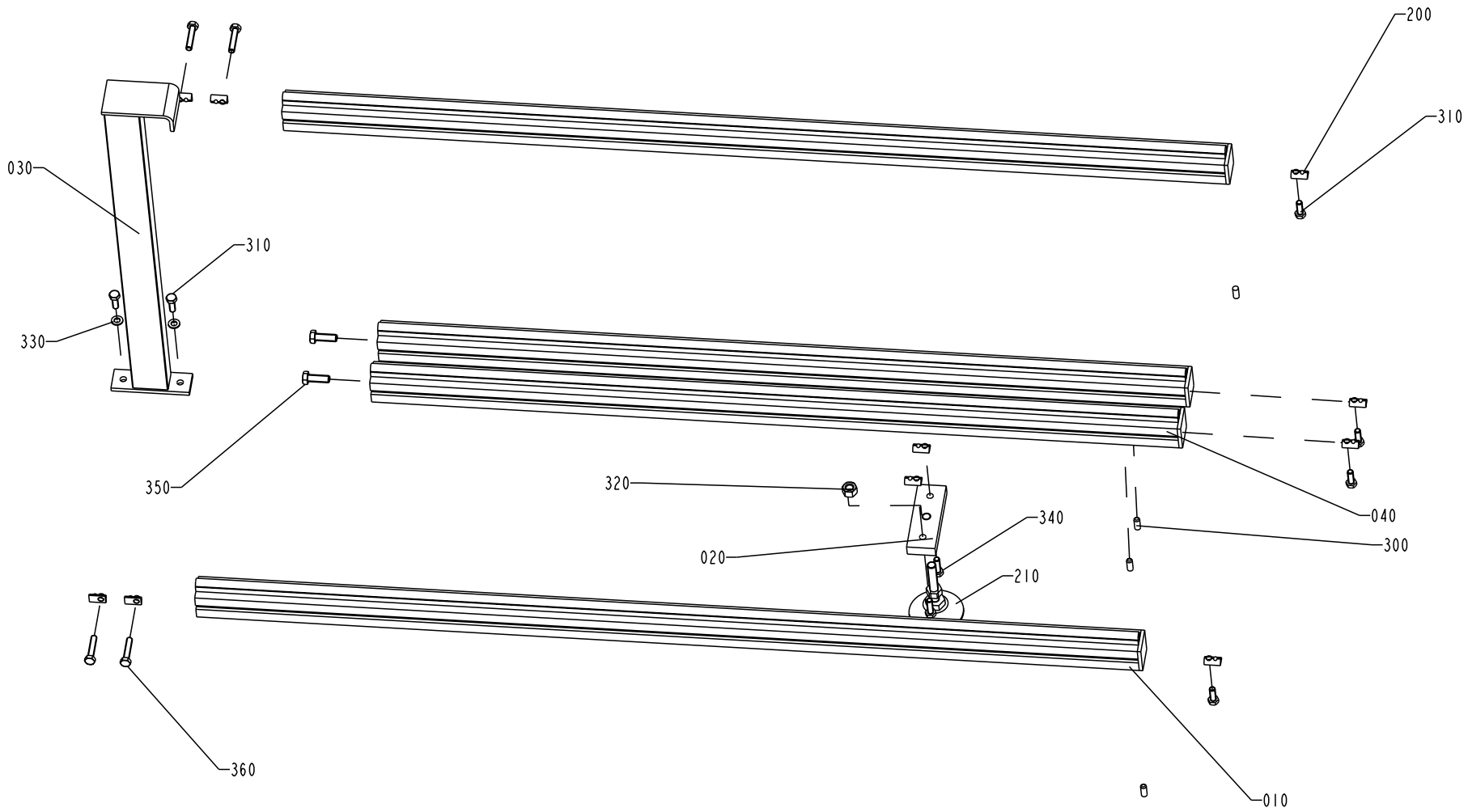

S - 1347751-1
ECN 72500

Pos	Part No	SP	UN	Qty	Description	Page No
Common parts						
010	1036134-0000	-		2	GUIDE	
020	1129423-0000	-		1	HOLDER	
030	1129768-0000	-		1	POST	
040	1347739-0000	-		2	GUIDE	
200	90099-0130	-		10	NUTS,HEXAGON, M8	
210	90347-0152	-		1	FOOT	
300	311103-0401	-		4	PINS,STRAIGHT 8X20	
310	312105-0452	-		14	SCREW M6S 8x22 Stainless	
320	312605-0322	-		1	NUT,HEXAGON,M12 RFR	
330	315105-0165	-		2	WASHER,PLAIN ROUND 8,4x16 Stainless	
340	312105-0453	-		2	SCREW M6S ISO 4017 M8x25 A280	
350	312105-0495	-		2	SCREW M6S ISO 4017 M10X30 A280	
360	312109-0459	-		4	SCREW M6S ISO 4017 M8X40 A280	

Pos	Part No	SP	UN	Qty	Description	Page No

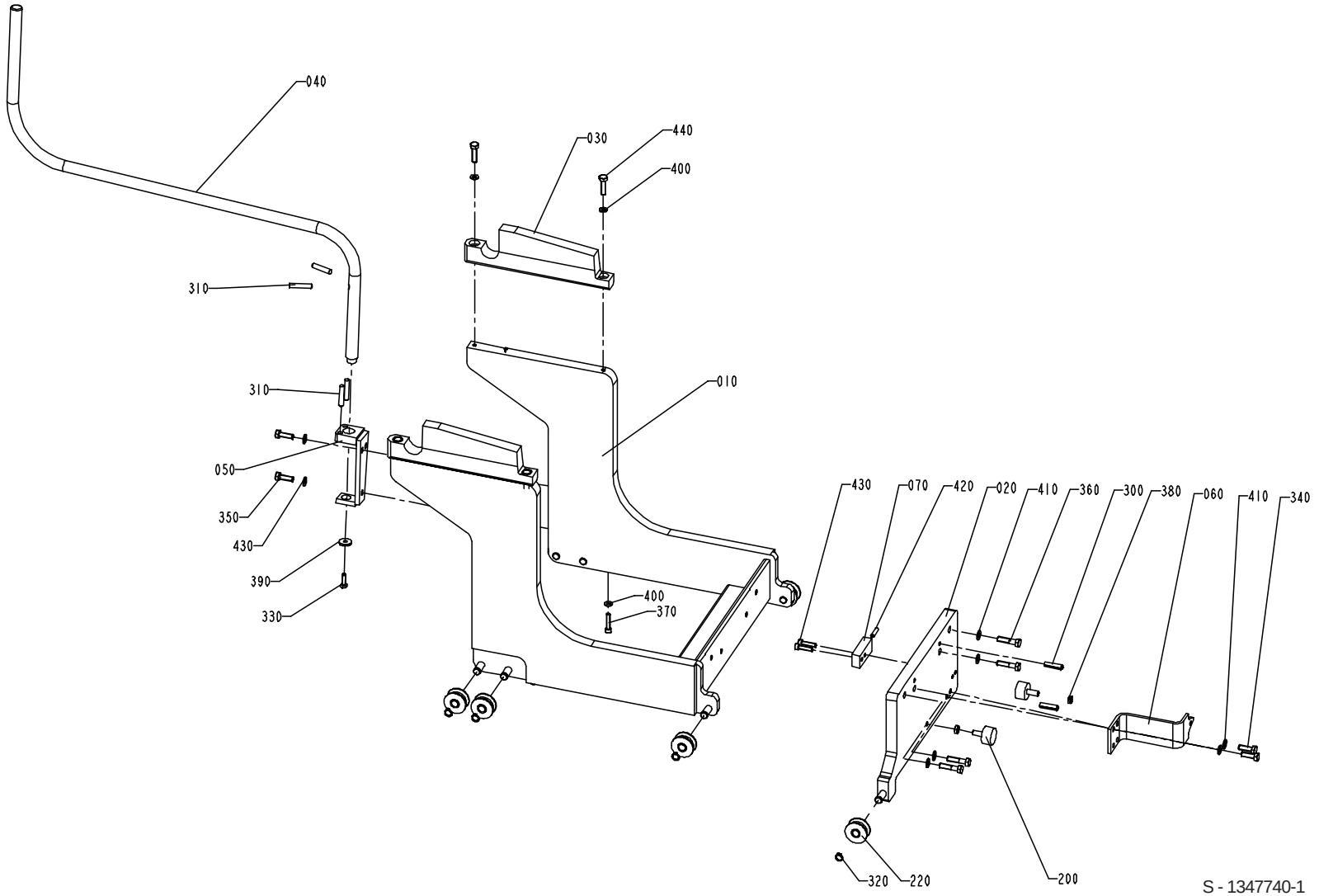

S - 1347740-1
ECN 72500

Pos	Part No	SP	UN	Qty	Description	Page No
Common parts						
010	1347741-0000	-		1	FRAME	
020	1347748-0000	-		1	FRAME LOWER	
030	1040885-0000	-		2	BEARING BLOCK	
040	1347742-0000	-		1	HANDLE	
050	1140027-0000	-		1	HANDLE BRACKET	
060	1478719-0000	-		1	BRACKET	
070	1478738-0000	-		1	BLOCK	
200	90347-0004	-		2	VIBRATION DAMPER D=30 Th=M8 H=17 H2=21mm	
210	90157-0016	-		x	LOCKING FLUID LOCTITE 242 50 ML	
220	90191-0074	-		7	RUNNER	
300	311112-0381	-		2	PINS,SLOTTED TUBULAR SPRING PIN 8X32	
310	311103-0409	-		4	PINS,STRAIGHT 8X40	
320	315751-0108	-		7	RETAINING RINGS FOR SHAFT 11	
330	312105-0370	-		1	SCREW M6S ISO 4017 M6x20 A280	
340	312105-0453	-		4	SCREW M6S ISO 4017 M8x25 A280	
350	312109-0374	-		4	SCREW M6S ISO 4017 M6X30 A280	
360	312105-0455	-		4	SCREW M6S ISO 4017 M8x30 A280	
370	312115-0374	-		2	SCREW MC6S ISO 4762 M6x30 A280	
380	312625-0318	-		2	NUTS,HEXAGON,M8	
390	315125-0153	-		1	WASHERS,PLAIN ROUND,CHAMFERED 6,4X22X4	
400	315105-0156	-		6	WASHER BRB 6,7x14 RFR	
410	315105-0165	-		8	WASHER,PLAIN ROUND 8,4x16 Stainless	
420	311103-0355	-		1	PIN,STRAIGHT 6x25	
430	312115-0372	-		2	SCREW MC6S ISO 4762 M6x25 A280	
440	312105-0379	-		2	SCREW M6S ISO 4014 M6x45 A280	

Pos	Part No	SP	UN	Qty	Description	Page No

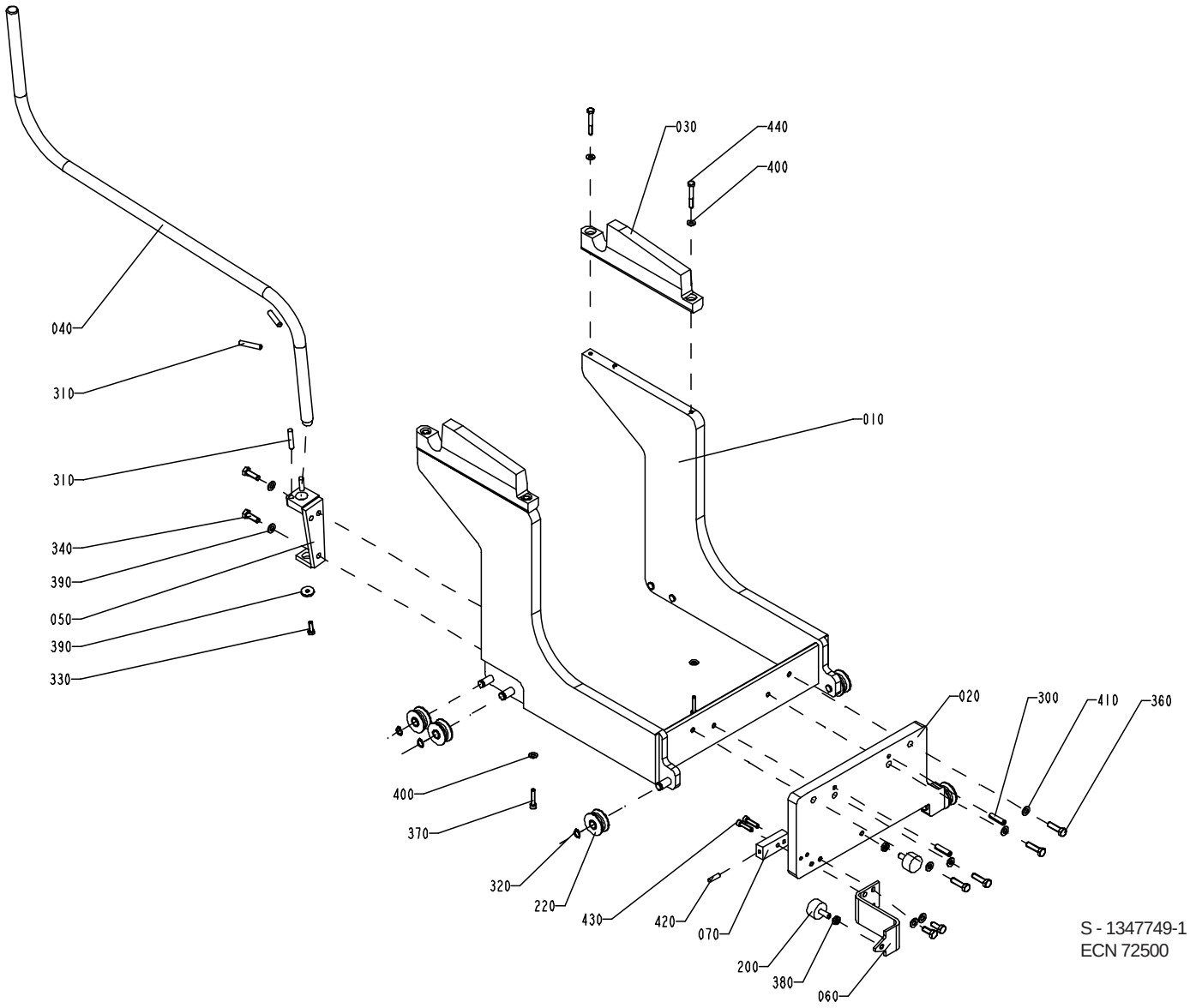

S - 1347749-1
ECN 72500

Pos	Part No	SP	UN	Qty	Description	Page No
Common parts						
010	1347741-0000	-		1	FRAME	
020	1347748-0000	-		1	FRAME LOWER	
030	1040885-0000	-		2	BEARING BLOCK	
040	1347742-0000	-		1	HANDLE	
050	1140027-0000	-		1	HANDLE BRACKET	
060	1478719-0000	-		1	BRACKET	
070	1478738-0000	-		1	BLOCK	
200	90347-0004	-		2	VIBRATION DAMPER D=30 Th=M8 H=17 H2=21mm	
210	90157-0016	-		x	LOCKING FLUID LOCTITE 242 50 ML	
220	90191-0074	-		7	RUNNER	
300	311112-0381	-		2	PINS,SLOTTED TUBULAR SPRING PIN 8X32	
310	311103-0409	-		4	PINS,STRAIGHT 8X40	
320	315751-0108	-		7	RETAINING RINGS FOR SHAFT 11	
330	312105-0370	-		1	SCREW M6S ISO 4017 M6x20 A280	
340	312105-0453	-		4	SCREW M6S ISO 4017 M8x25 A280	
350	312109-0374	-		4	SCREW M6S ISO 4017 M6X30 A280	
360	312105-0455	-		4	SCREW M6S ISO 4017 M8x30 A280	
370	312115-0374	-		2	SCREW MC6S ISO 4762 M6x30 A280	
380	312625-0318	-		2	NUTS,HEXAGON,M8	
390	315125-0153	-		1	WASHERS,PLAIN ROUND,CHAMFERED 6,4X22X4	
400	315105-0156	-		4	WASHER BRB 6,7x14 RFR	
410	315105-0165	-		8	WASHER,PLAIN ROUND 8,4x16 Stainless	
420	311103-0355	-		1	PIN,STRAIGHT 6x25	
430	312115-0372	-		2	SCREW MC6S ISO 4762 M6x25 A280	
440	312105-0379	-		2	SCREW M6S ISO 4014 M6x45 A280	

Pos	Part No	SP	UN	Qty	Description	Page No

LOCKING ARM

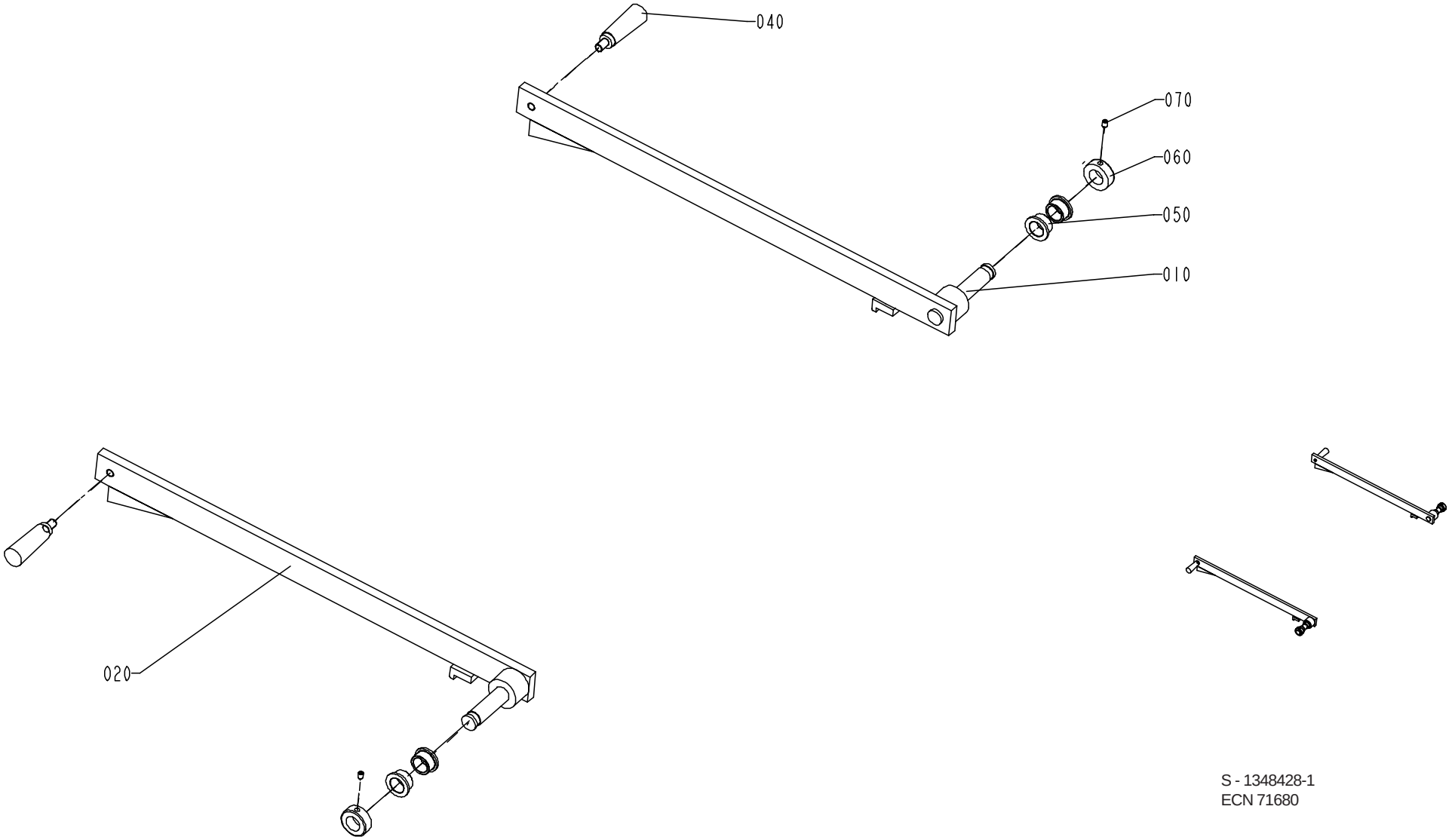

S - 1348428-1
ECN 71680

Pos	Part No	SP	UN	Qty	Description	Page No
Common parts						
010	1348430-0000	-		1	LOCKING ARM	
020	1348429-0000	-		1	LOCKING ARM	
040	90051-0065	-		2	HANDLES,EXTERNAL THREAD M10-25X86	
050	321111-0302	-		4	Flange Bushing, 20x26x15	
060	315742-0116	-		2	RETAINING RINGS 20	
070	312318-0362	-		4	SET SCREW CUP POINT ISO 4029 M6x8 RFR	

Pos	Part No	SP	UN	Qty	Description	Page No

PAPER REEL HOLDER

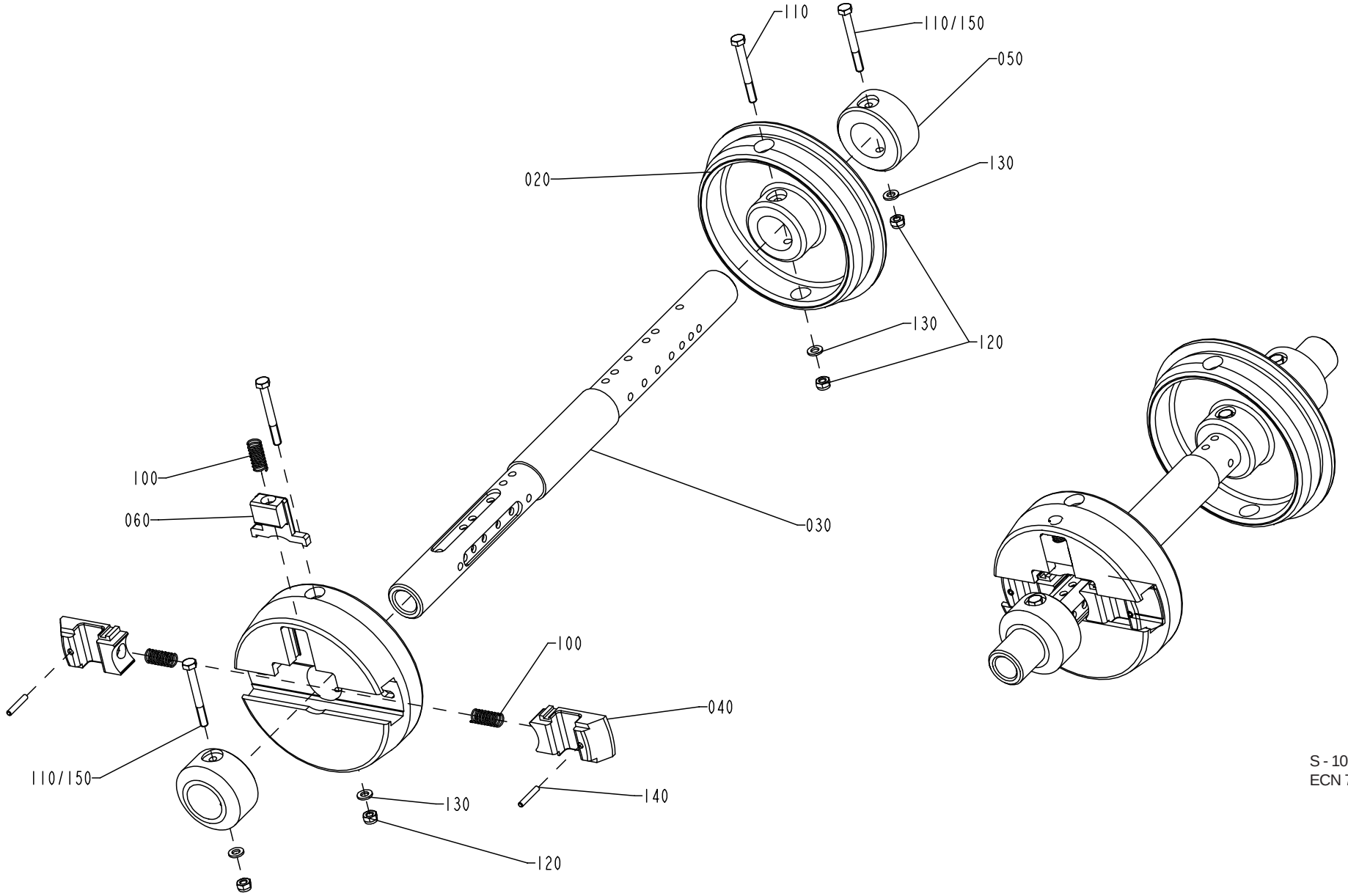

S - 1095835-1
ECN 71019

Pos	Part No	SP	UN	Qty	Description	Page No
Common parts						
030	1282976-0000	-		1	AXLE	
060	272728-0000	-		1	BARRIER	
100	90335-0025	-		3	SPRING BARNES 22010	
140	311103-0274	-		2	PIN,STRAIGHT 4x25	
TBA 0200B or TBA 0250B						
010	272814-0000	-		1	SLEEVE	
020	272815-0001	-		1	SLEEVE	
040	575002-0000	-		2	PLUNGER	
050	440259-0000	-		2	RETAINING RING	
110	312101-0381	-		4	SCREW M6S 6x55 FZB	
120	312812-0316	-		4	NUT,HEXAGON,LOCK,WITH NYLON INSERT,M6	
130	315101-0153	-		4	WASHER BRB 6,4x12 FZB	

Pos	Part No	SP	UN	Qty	Description	Page No

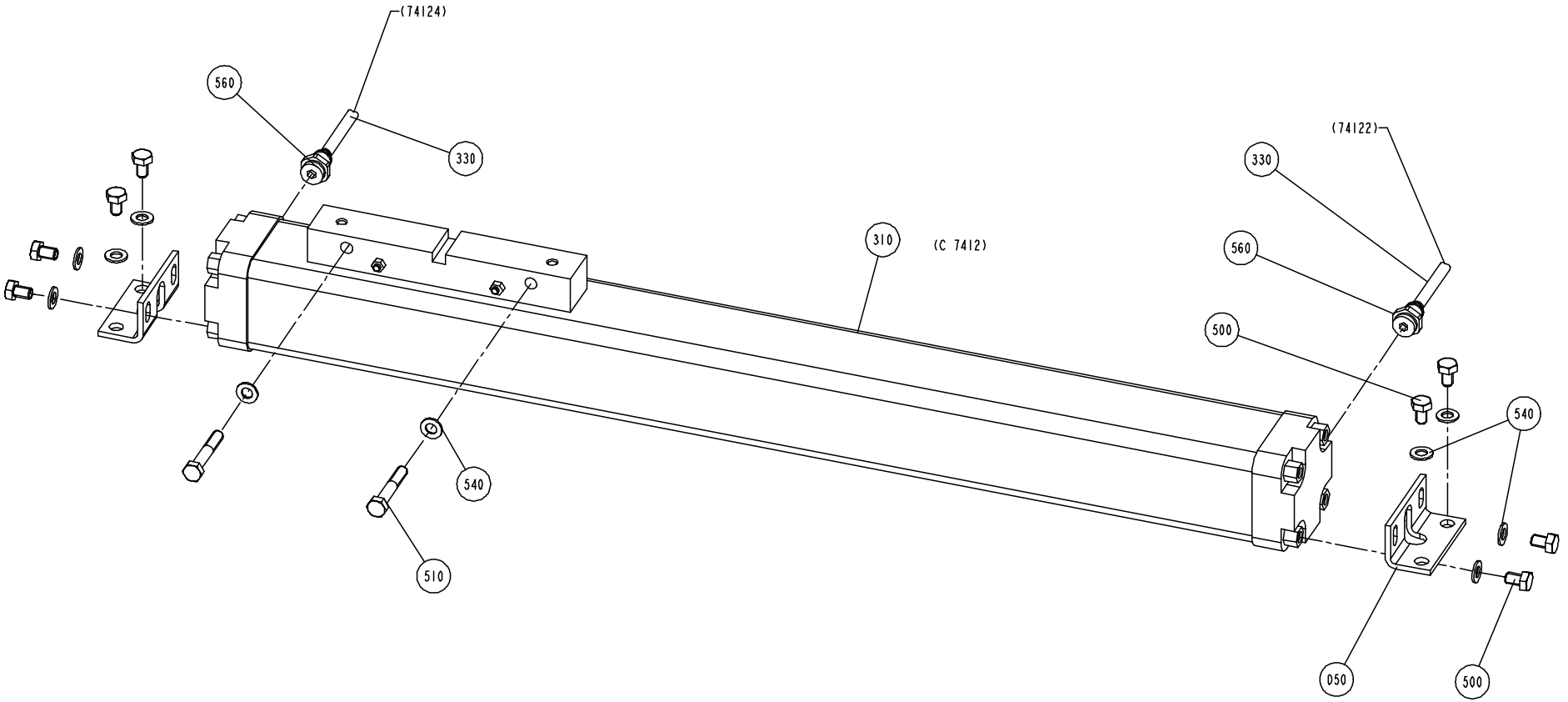

S - 1095770-2
ECN 72500

Pos	Part No	SP	UN	Qty	Description	Page No
Common parts						
050	1116017-0000	-		2	BRACKET	
310	90450-0222	R		1	"DOUBLE ACTING,SHUTTLE cyl 50-488"	
330	90166-0194	-	M	6	TUBE 8 mm PUR Blue	
500	312105-0447	-		8	SCREW M6S ISO 4017 M8x12 A280	
510	312105-0461	-		2	SCREW ISO 4017 M8x50 A280	
540	315105-0165	-		10	WASHER,PLAIN ROUND 8,4x16 Stainless	
560	342722-0206	-		2	STRAIGHT COUPLING, D=8 mm - R3/8"	

Pos	Part No	SP	UN	Qty	Description	Page No

BRACKET

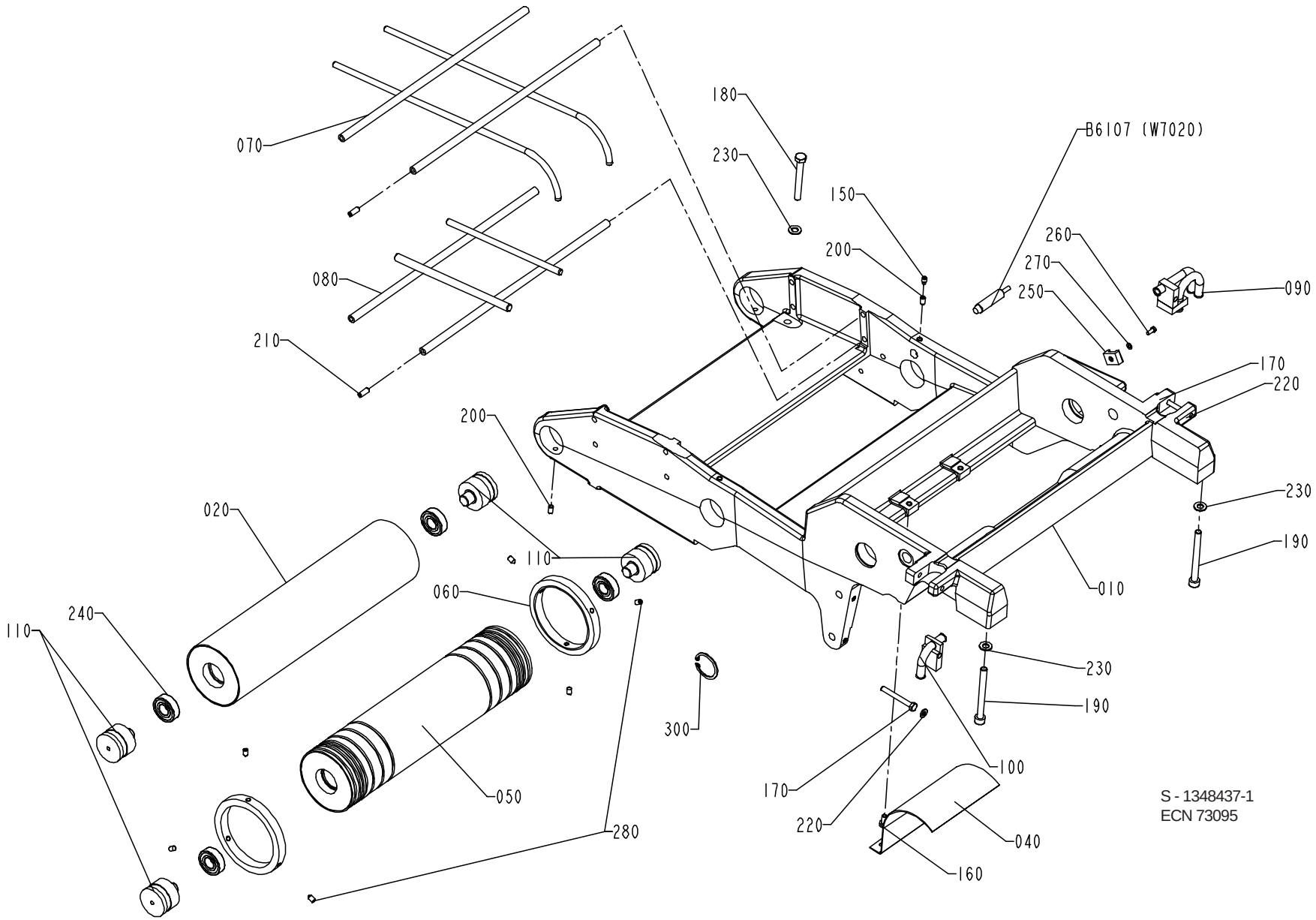
070
080
210
180
230
150
200
B6107 (W7020)
260
270
250
090
170
220
200
230
190
010
020
110
060
240
110
300
230
190
100
170
220
040
160
050
280
S - 1348437-1
ECN 73095

Pos	Part No	SP	UN	Qty	Description	Page No
Common parts						
010	1347752-0000	-		1	BRACKET	
020	1035882-0000	Q		1	BENDING ROLLER	
040	1041237-0000	-		1	LEAD PLATE	
050	1348897-0000	Q		1	BENDING ROLLER	
060	1499567-0000	-		2	FLANGE	
070	1255508-0000	-		1	GUIDE	
080	1255509-0000	-		1	GUIDE	
090	1255511-0000	-		1	ROPE BRACKET	
100	1255512-0000	-		1	ROPE BRACKET	
110	1036429-0000	Q		4	AXLE PIN	
150	90287-0154	-		1	SCREW,SET,FULL DOG POINT,T6SS M6x10 A4	
160	312105-0366	-		2	SCREW M6S ISO 4017 M6x12 A280	
170	312105-0380	-		2	SCREW M6S ISO 4014 M6x50 A280	
180	312105-0464	-		2	SCREW M6S ISO 4014 M8x65 A280	
190	312115-0467	-		2	SCREW MC6S ISO 4762 M8X80 A280	
200	312318-0364	-		4	STOP SCREW SK6SS6X10RFR	
210	312318-0368	-		8	SET SCREW CUP POINT ISO 4029 M6x16 RFR	
220	315105-0153	-		2	WASHER,PLAIN ROUND 6,4x12 Stainless	
230	315105-0165	-		4	WASHER,PLAIN ROUND 8,4x16 Stainless	
240	321313-0102	K		4	BALL BEARING 15x35x11	
250	352113-0204	-		1	ANCHOR TM3S25-M	
260	312125-0289	-		1	SLOTTED HEMCS4X10RFR	
270	315105-0136	-		1	WASHER,PLAIN ROUND 4,3x8 Stainless	
280	90287-0348	-		6	Stop Screw	
300	315753-0124	-		1	RETAINING RINGS FOR HOLE 35	
B6107	90044-0124	K		1	Prox.sw. 922AB2XM-A9P-050-LZ-876	

Pos	Part No	SP	UN	Qty	Description	Page No

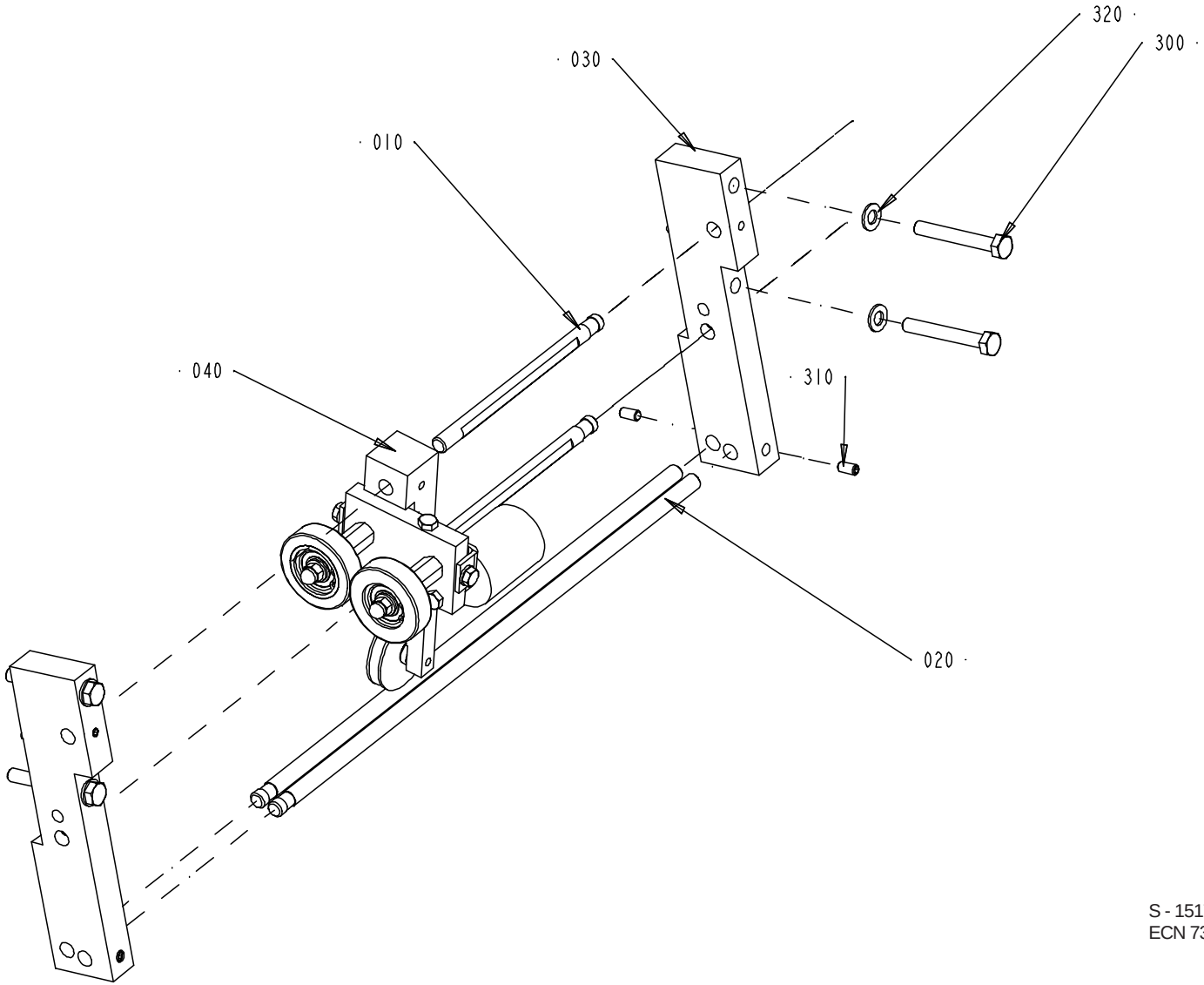

S - 1517090-2
ECN 73314

Pos	Part No	SP	UN	Qty	Description	Page No
TBA/22						
040	A1498624-0100	-		1	WEB GUIDE	**579**
Common parts						
010	1037546-0000	-		2	SHAFT	
020	1038470-0000	-		2	SHAFT	
030	1499047-0000	-		2	BRACKET	
300	312105-0463	-		4	SCREW M6S ISO 4014 M8x60 A280	
310	312318-0366	-		6	SET SCREW CUP POINT ISO 4029 M6x12 RFR	
320	315105-0165	-		4	WASHER,PLAIN ROUND 8,4x16 Stainless	

Pos	Part No	SP	UN	Qty	Description	Page No

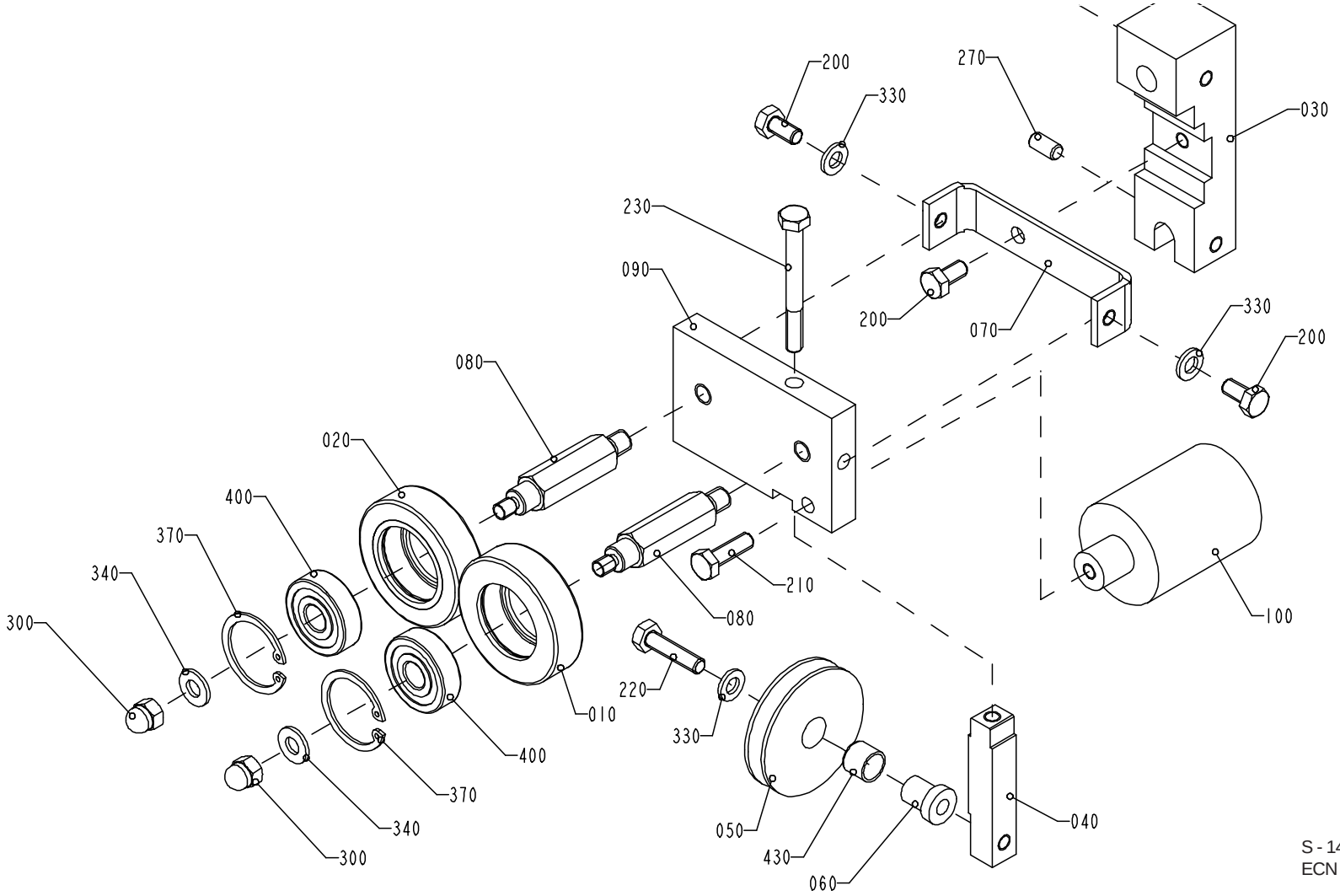

S - 1498624-1
ECN 73068

Pos	Part No	SP	UN	Qty	Description	Page No
Common parts						
010	1036622-0000	M		1	GUIDE ROLLER	
020	1036623-0000	M		1	GUIDE ROLLER	
030	1511002-0000	-		1	HOLDER	
040	1499024-0000	-		1	BAR	
050	1499025-0000	K		1	ROLLER	
060	1499026-0000	-		1	SHAFT	
070	1499027-0000	-		1	BRACKET	
080	1511001-0000	-		2	SHAFT	
090	1511000-0000	-		1	PLATE	
100	1511003-0000	-		1	WEIGHT	
200	312105-0366	-		3	SCREW M6S ISO 4017 M6x12 A280	
210	312105-0370	-		1	SCREW M6S ISO 4017 M6x20 A280	
220	312105-0372	-		1	SCREW M6S ISO 4017 M6x25 A280	
230	312105-0381	-		1	SCREW M6S ISO 4014 M6x55 A280	
270	312318-0366	-		2	SET SCREW CUP POINT ISO 4029 M6x12 RFR	
300	312705-0316	-		2	NUT,DOMED CAP,HEXAGON,M6	
330	315105-0153	-		3	WASHER,PLAIN ROUND 6,4x12 Stainless	
340	315105-0156	-		2	WASHER BRB 6,7x14 RFR	
370	315753-0122	-		2	RETAINING RING FOR HOLE 30	
400	321313-0100	K		2	BALL BEARING 10x30x9	
430	90240-0287	K		1	Bushing, 10x12x10	

Pos	Part No	SP	UN	Qty	Description	Page No

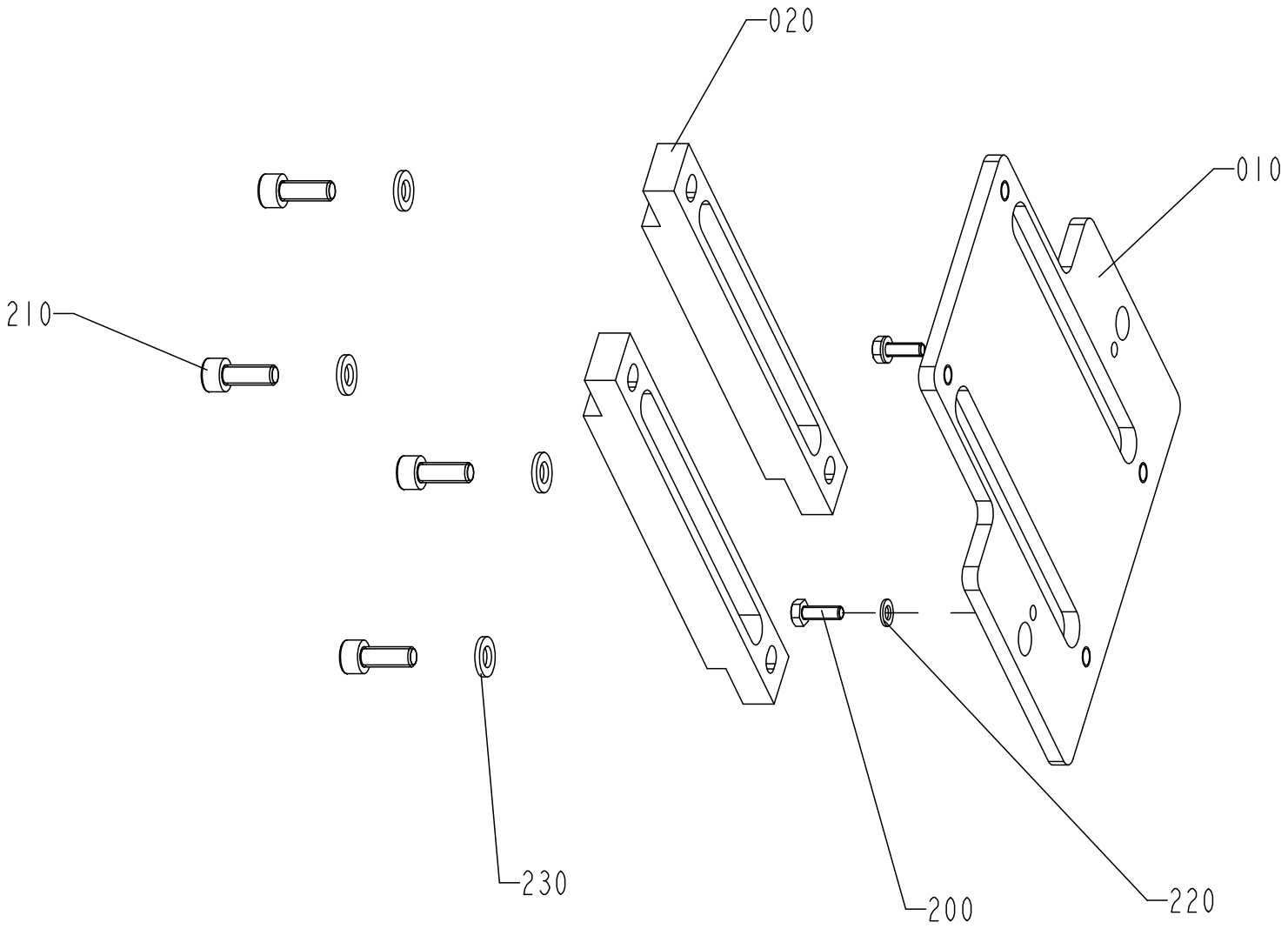

S - 1478826-1
ECN 71977

Pos	Part No	SP	UN	Qty	Description	Page No
Common parts						
010	1478720-0000	-		1	BRACKET	
020	1478721-0000	-		2	GUIDE	
200	312105-0291	-		2	SCREW M6S ISO 4017 M4X12 A280	
210	312115-0368	-		4	SCREW MC6S ISO 4762 M6x16 A280	
220	315105-0136	-		2	WASHER,PLAIN ROUND 4,3x8 Stainless	
230	315105-0153	-		4	WASHER,PLAIN ROUND 6,4x12 Stainless	

Pos	Part No	SP	UN	Qty	Description	Page No

BRACKET

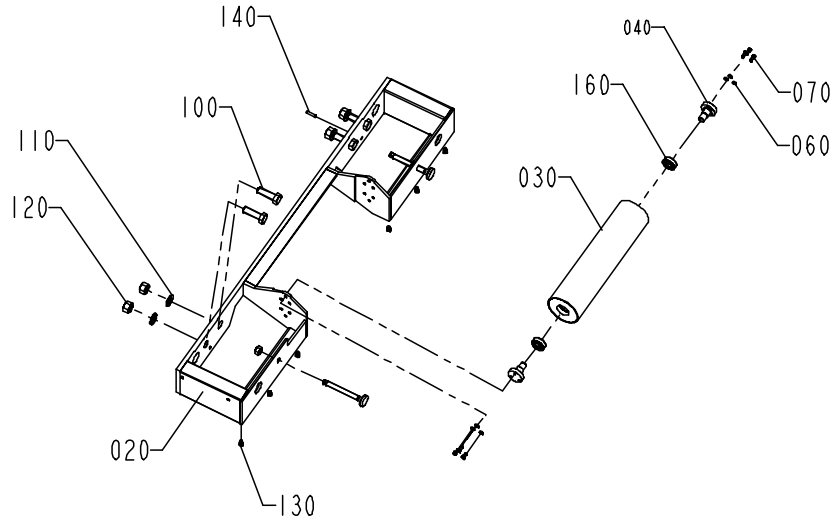

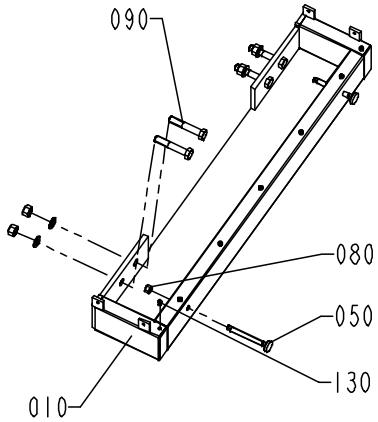

S - 1346429-1
ECN 71634

Pos	Part No	SP	UN	Qty	Description	Page No
Common parts						
010	1346421-0000	-		1	FRAME	
020	1346418-0000	-		1	FRAME	
030	1035882-0000	D		1	BENDING ROLLER	
040	1346401-0000	D		2	HOLDER	
050	1346399-0000	-		4	DISTANCE	
060	315105-0146	-		6	WASHER,PLAIN ROUND 5,3x10 Stainless	
070	312105-0327	-		6	SCREW M6S ISO 4017 M5X12 A280	
080	312605-0322	-		4	NUT,HEXAGON,M12 RFR	
090	312105-0638	-		4	SCREW M6S ISO 4014 M16X90 A280	
100	312105-0630	-		4	SCREW M6S ISO 4017 M16X50 A280	
110	315105-0186	-		8	WASHER,PLAIN ROUND 17x30	
120	312605-0324	-		8	NUT,HEXAGON,M16 A280	
130	312115-0362	-		13	SCREW MC6S ISO 4762 M6X8 A280	
140	311103-0355	-		2	PIN,STRAIGHT 6x25	
160	321313-0102	M		2	BALL BEARING 15x35x11	

Pos	Part No	SP	UN	Qty	Description	Page No

ELECTRICAL CONNECTION

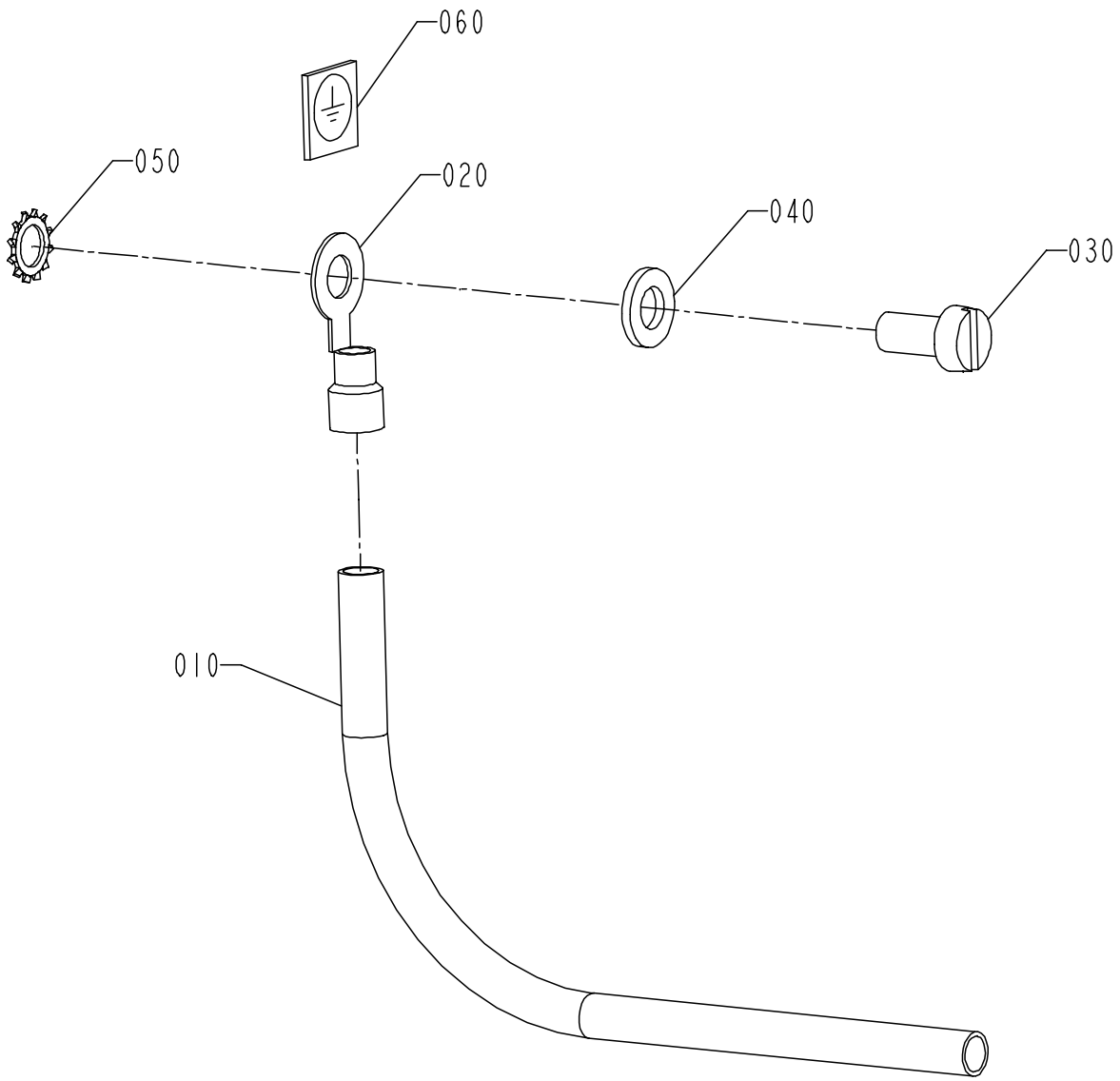

S - 1348919-1
ECN 71634

Pos	Part No	SP	UN	Qty	Description	Page No
Common parts						
010	351175-0107	-	M	5	CABLE AWM GN/YE 6mm2	
020	353101-0153	-		2	CABLE SHOE 4-6mm2 Yellow	
030	312125-0366	-		2	SLOTTED CHEESE HEAD ISO 1207 M6X12 RFR	
040	315105-0153	-		2	WASHER,PLAIN ROUND 6,4x12 Stainless	
050	90062-0022	-		2	LOCKING WASHER D=6,4/11	
060	90194-0152	-		2	SIGN "EARTH"	

Pos	Part No	SP	UN	Qty	Description	Page No

SPLICING DEVICE

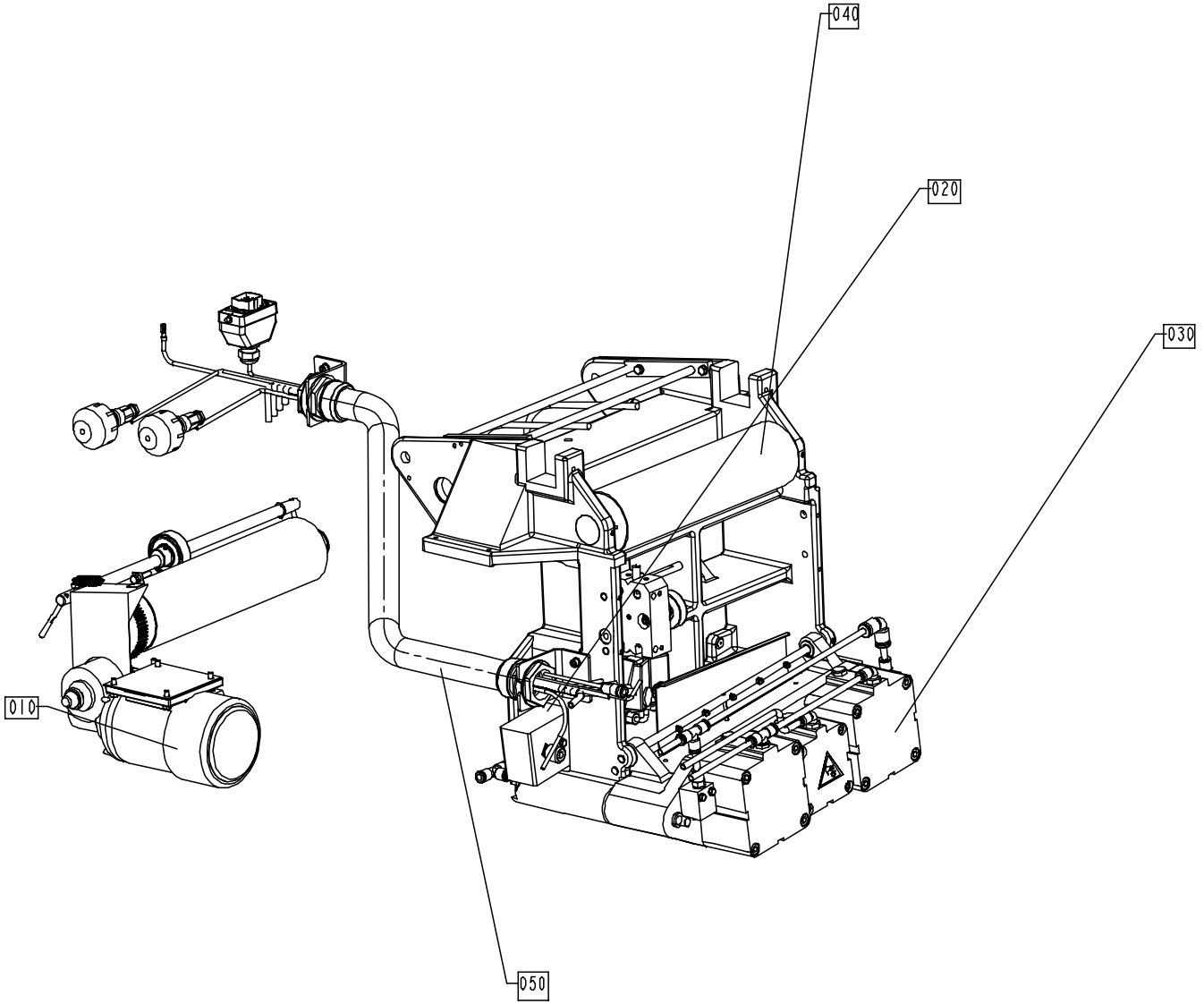

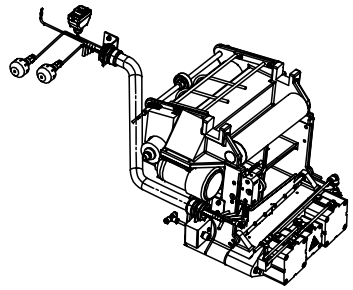

S - 1348436-1
ECN 71680

Pos	Part No	SP	UN	Qty	Description	Page No
Common parts						
010	A1348431-0100	-		1	DRIVE UNIT REAR	**589**
020	A1095763-0100	-		1	SEALING UNIT	**591**
030	A1095761-0100	-		1	PRESSURE JAW	**593**
050	A1095766-0300	-		1	CABLE CONDUIT	**601**
TBA ASU						
040	A1095765-0200	-		1	BRACKET	**595**

Pos	Part No	SP	UN	Qty	Description	Page No

DRIVE UNIT REAR

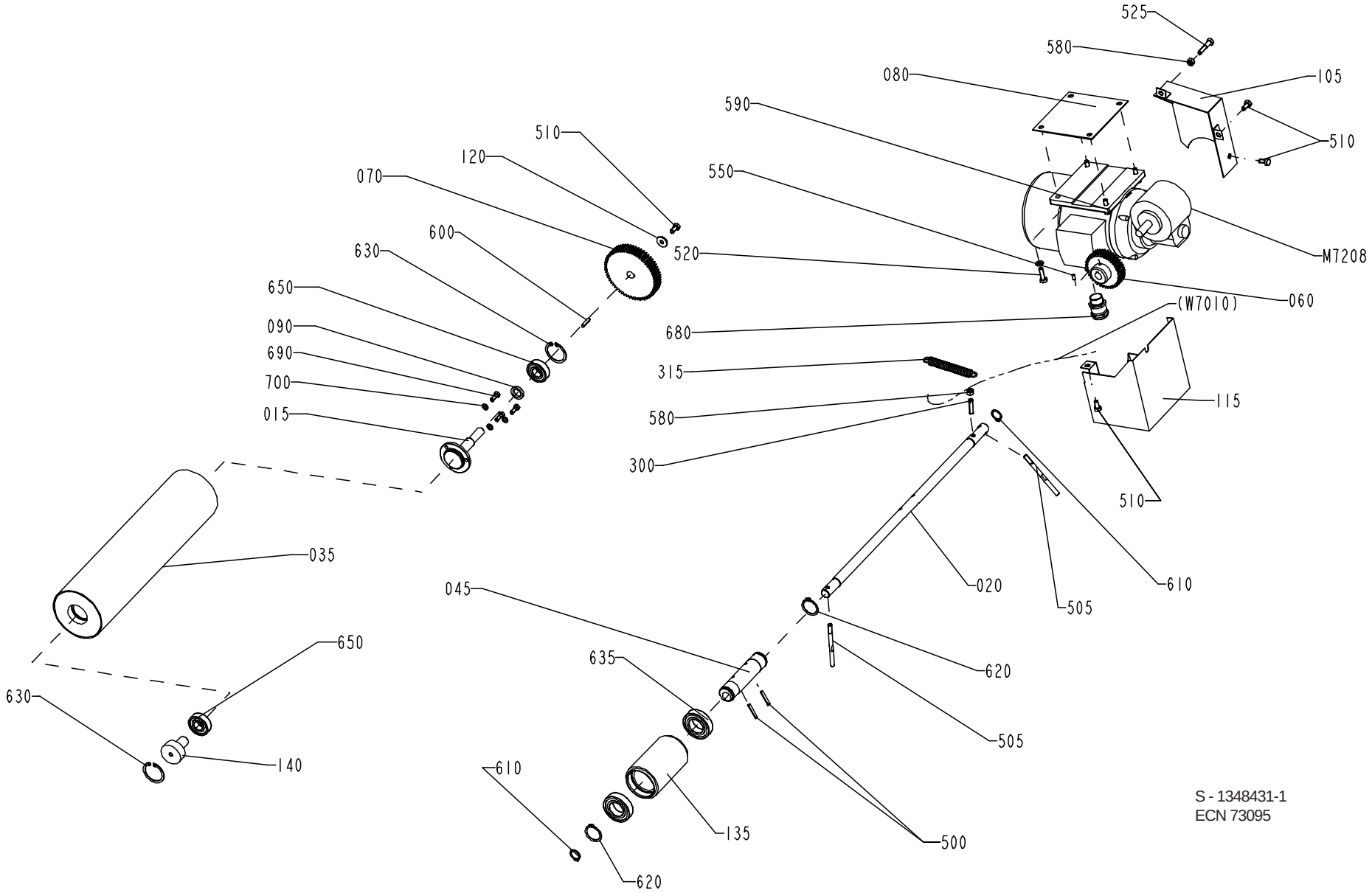

S - 1348431-1
ECN 73095

Pos	Part No	SP	UN	Qty	Description	Page No
Common parts						
015	1519767-0000	D		1	SHAFT	
020	1317020-0000	-		1	SHAFT	
035	1519766-0000	Q		1	BENDING ROLLER	
045	1512267-0000	-		1	ECCENTRIC BUSHING	
060	985581-0000	Q		1	GEAR WHEEL	
070	985582-0000	Q		1	GEAR WHEEL	
080	1036390-0000	Q		1	SHIM	
090	1036415-0000	-		1	SPACER	
105	1517605-0000	-		1	COVER TOP	
115	1517606-0000	-		1	COVER BOTTOM	
120	6278-0000	K		1	WASHER	
135	906254-0000	Q		1	ROLLER	
140	1519772-0000	-		1	AXLE PIN	
300	578684-0000	D		1	SPRING BRACKET	
315	1499611-0000	Q		1	SPRING	
500	311112-0258	-		2	PINS,SLOTTED TUBULAR SPRING PIN 4X24	
505	1317021-0000	-		2	PIN	
510	312105-0366	-		4	SCREW M6S ISO 4017 M6x12 A280	
525	312105-0374	-		1	SCREW M6S ISO 4017 M6x30 A280	
550	312318-0287	-		1	SET SCREW CUP POINT ISO 4029 M4x8 RFR	
580	312605-0316	-		2	NUT,HEXAGON A280 M6M6	
590	315105-0153	-		3	WASHER,PLAIN ROUND 6,4x12 Stainless	
600	315701-0170	-		1	KEYS,PARALLEL WITH ROUND ENDS 4X4X20	
610	315751-0112	-		2	RETAINING RINGS FOR SHAFT 15	
620	315751-0119	-		2	RETAINING RINGS FOR SHAFT 25	
630	315753-0124	-		2	RETAINING RINGS FOR HOLE 35	
635	321308-0205	-		2	BALL BEARING 25X47X12	
650	321313-0102	-		3	BALL BEARING 15x35x11	
665	90015-0021	-		1	GLANDS,Lead-in,IP67	
680	90012-0137	-		1	GLAND,EMC,EXTENDED WITH INSERT	
690	312105-0328	-		3	SCREW M6S5X14 A2 80	
700	315105-0146	-		3	WASHER,PLAIN ROUND 5,3x10 Stainless	
M7208	90069-0606	N		1	Worm Gear Motor	

Pos	Part No	SP	UN	Qty	Description	Page No

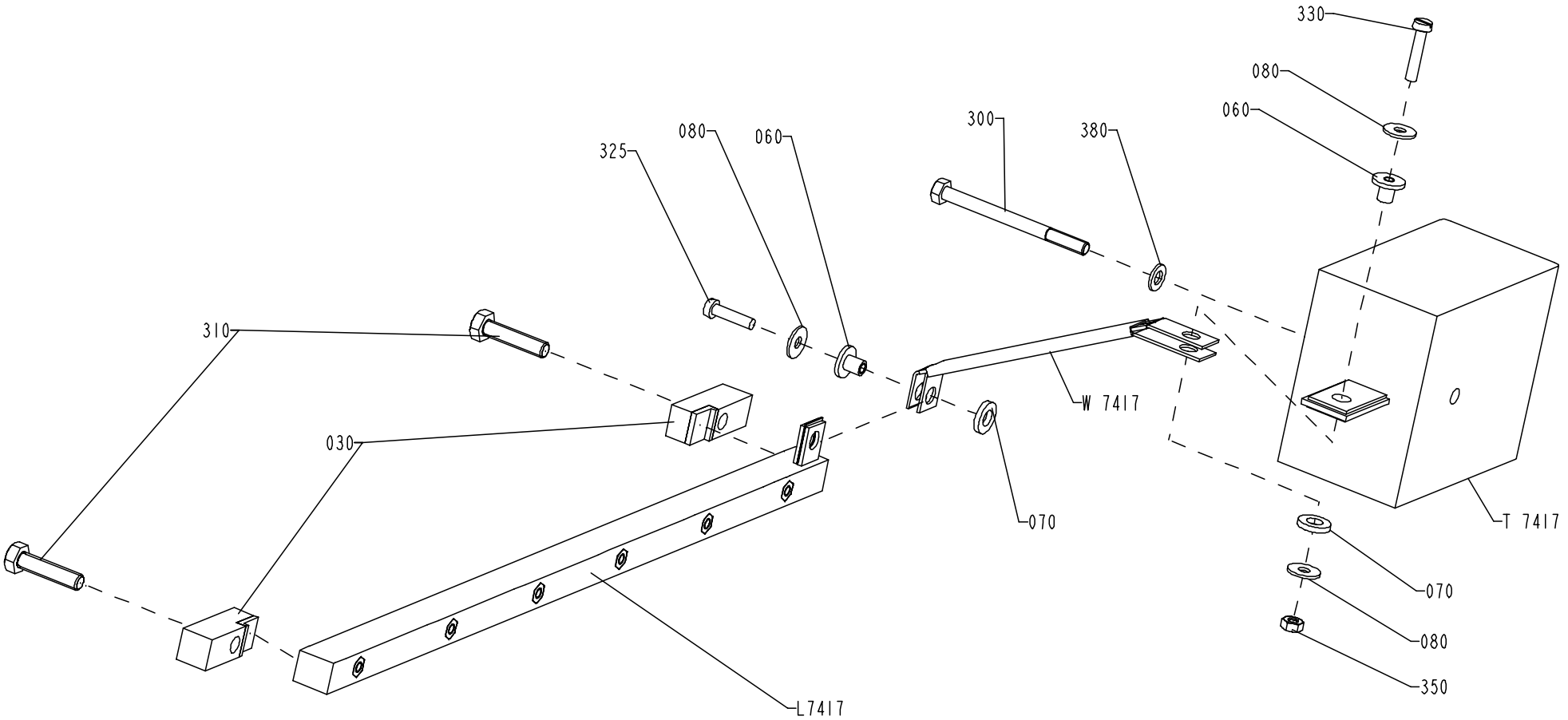

S - 1095763-1
ECN 72500

Pos	Part No	SP	UN	Qty	Description	Page No
Common parts						
030	1036487-0000	D		2	BRACKET	
060	1036488-0000	J		2	INSULATING BUSHING	
070	1036489-0000	J		2	WASHER	
080	90005-0082	J		3	WASHER,Plain Round 4,3x12;H=1 M4	
300	312105-0343	-		1	SCREW M6S5X60 A2 80	
310	312105-0372	-		2	SCREW M6S ISO 4017 M6x25 A280	
325	312125-0293	-		1	SLOTTED CHEESE HEAD ISO 1207 M4X16 RFR	
330	312125-0295	-		1	SLOTTED CHEESE HEAD ISO 1207 M4X20 RFR	
350	312605-0312	-		1	NUT,HEXAGON,M4 RFR	
380	315105-0146	-		1	WASHER,PLAIN ROUND 5,3x10 Stainless	
L7417	B1041706-0000	M		1	INDUCTOR	
T7417	67379-0106	M		1	IH TRANSF.1.PRIM.4;31,8NF	
W7417	1036486-0000	M		1	BUSBAR	

Pos	Part No	SP	UN	Qty	Description	Page No

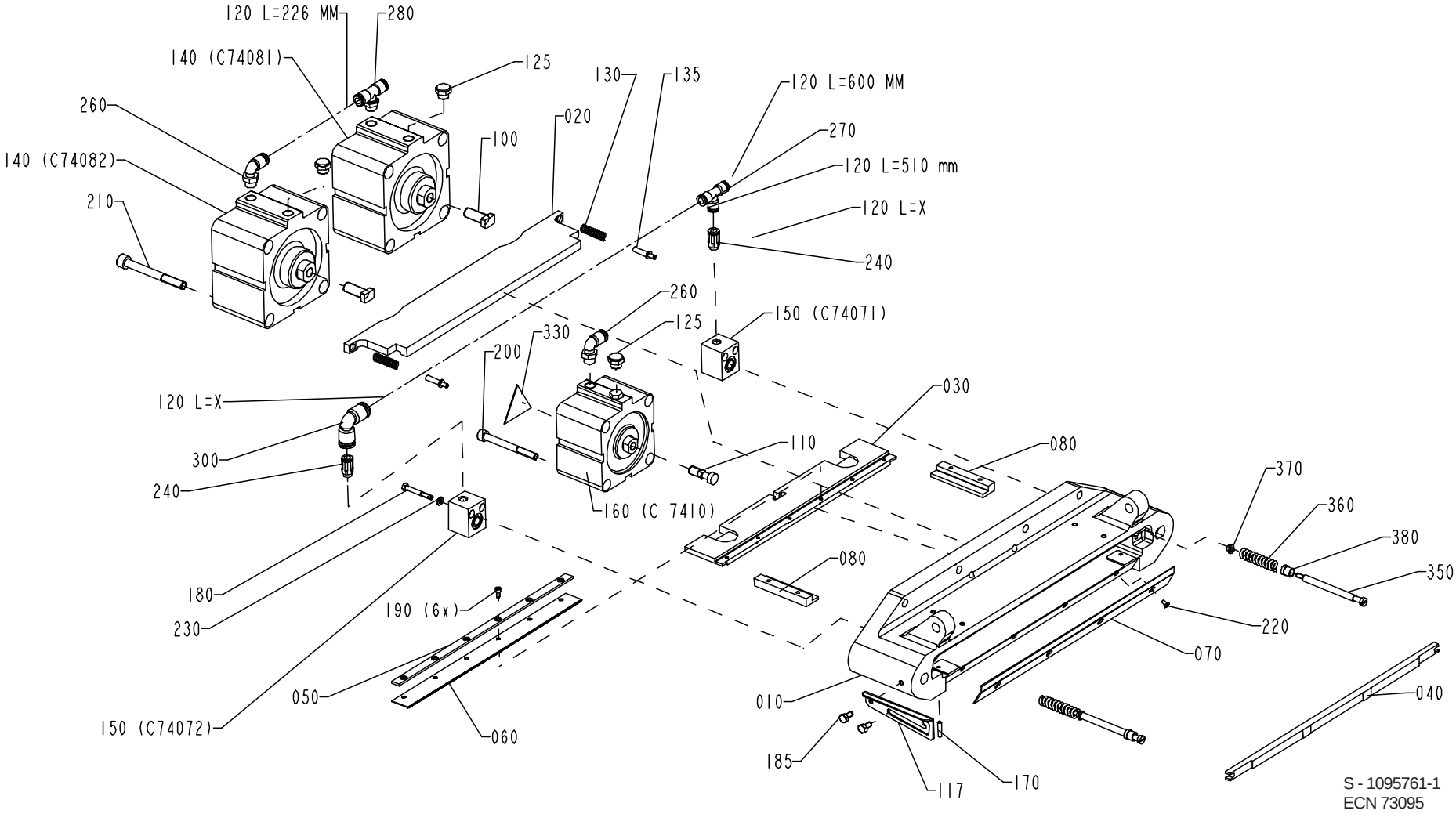
120 L=226 MM
280
140 (C74081)
125
130
135
120 L=600 MM
260
020
270
100
140 (C74082)
120 L=510 mm
210
120 L=X
240
260
150 (C74071)
125
330
200
120 L=X
030
110
080
300
240
160 (C 7410)
370
360
380
350
080
180
230
190 (6x)
220
070
050
010
040
150 (C74072)
060
185
117
170
S - 1095761-1
ECN 73095

Pos	Part No	SP	UN	Qty	Description	Page No
Common parts						
010	1036182-0000	D		1	PRESSURE JAW	
020	1036670-0000	D		1	PRESSURE RAIL	
030	1036671-0000	D		1	KNIFE HOLDER	
040	1346327-0000	D		1	RAIL	
050	1036675-0000	D		1	CLAMP	
060	1036676-0000	J		1	KNIFE	
070	1036677-0000	D		1	HEAD PLATE	
080	1036678-0000	R		2	SLIDE RAIL	
100	1036680-0000	R		2	SCREW	
110	1036681-0000	R		1	COUPLING BOLT	
117	1040974-0000	-		1	CATCH	
120	90166-0194	-	MM	740	TUBE 8 mm PUR Blue	
125	90257-0001	-		3	FILTER PLUG MECMAN F14	
130	90335-0149	R		2	COMPRESSION SPRING	
135	1350172-0000	-		2	PIN	
140	90450-0156	R		2	Double acting, Compact, cyl 100-25	
150	90450-0207	R		2	CYLINDER	
160	90450-0221	R		1	CYLINDER	
170	311112-0256	-		4	PIN,SLOTTED TUBULAR SPRING PIN 4x20	
180	312105-0339	-		4	SCREW M6S ISO 4014 M5X40 A280	
185	312105-0366	-		2	SCREW M6S ISO 4017 M6x12 A280	
190	312115-0287	-		6	SCREW MC6S ISO 4762 M4X8 A280	
200	312115-0467	-		4	SCREW MC6S ISO 4762 M8X80 A280	
210	312115-0509	-		8	SCREW MC6S ISO 4762 M10X90 A280	
220	312145-0287	-		4	SLOTTED HEMFS4X8RFR	
230	315105-0146	-		4	WASHER,PLAIN ROUND 5,3x10 Stainless	
240	342722-0204	-		2	STRAIGHT COUPLING, D=8 mm - G1/8"	
260	342732-0104	-		2	ELBOW PIPE JOINT,Ext.thread,D=8 mm G1/4	
270	342748-0103	-		1	T-CONNECTION 8 mm	
280	342742-0104	-		1	T-COUPLING,ADJUST,F.PLASTIC TUBE 8-G1/4"	
300	342735-0103	-		1	Elbow pipe joint 8x8 mm	
330	359705-0009	-		1	WARNING SIGN "SHARP PART"	
350	1147087-0000	D		2	COMPRESSION ROD	
360	1147089-0000	R		2	SPRING	
370	1147091-0000	D		2	NUT	
380	1147094-0000	D		2	SLEEVE	

Pos	Part No	SP	UN	Qty	Description	Page No

BRACKET

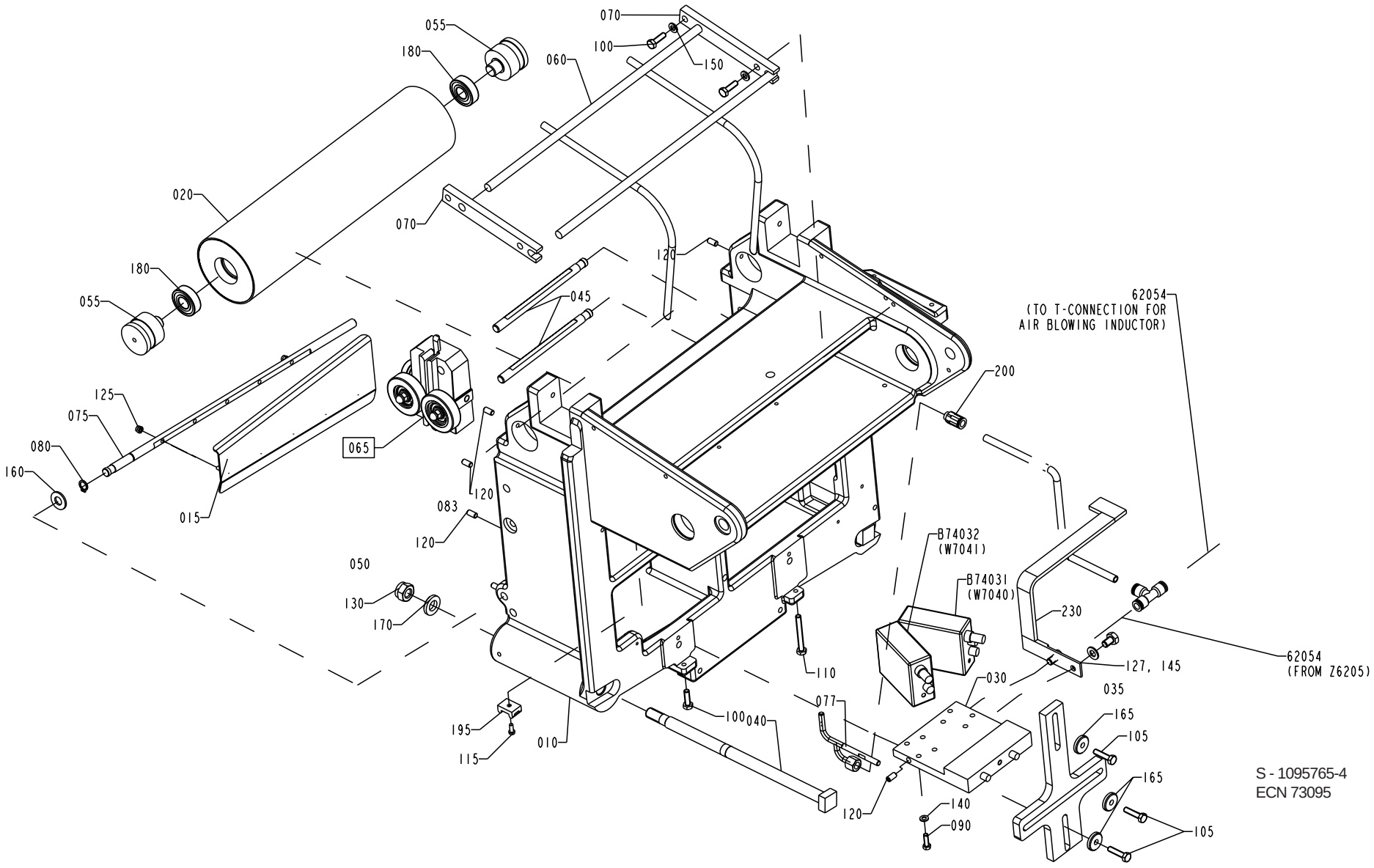

S - 1095765-4
ECN 73095

Pos	Part No	SP	UN	Qty	Description	Page No
Common parts						
065	A1484745-0100	-		1	WEB GUIDE	**597**
010	1036183-0000	-		1	BRACKET	
015	1317798-0000	D		1	GUIDING PLATE	
020	1035882-0000	Q		1	BENDING ROLLER	
030	1346083-0000	-		1	PHOTOCELL BRACKET	
040	1036818-0000	Q		2	TIE ROD	
045	1037546-0000	Q		2	SHAFT	
055	1036429-0000	Q		2	AXLE PIN	
060	1348435-0000	-		1	GUIDE	
070	1041020-0000	-		2	HOLDER	
075	1317799-0000	-		1	ROD	
077	1317800-0000	-		1	GUIDE FINGER	
080	90141-0016	-		1	RETAINING RING FOR SHAFT 10	
090	312105-0329	-		8	SCREW M6S ISO 4017 M5x16 A280	
100	312105-0370	-		5	SCREW M6S ISO 4017 M6x20 A280	
105	312105-0372	-		3	SCREW M6S ISO 4017 M6x25 A280	
110	312109-0380	-		1	SCREW M6S6X50H RFR	
115	312125-0289	-		3	SLOTTED HEMCS4X10RFR	
120	312318-0366	-		7	SET SCREW CUP POINT ISO 4029 M6x12 RFR	
125	312812-0312	-		5	LOCK-NUT,HEXAGON,WITH NYLONINSERT,M4	
127	312105-0366	-		2	SCREW M6S ISO 4017 M6x12 A280	
130	312812-0322	-		2	LOCK-NUT,HEXAGON,WITH NYLON INSERT,M12	
140	315105-0146	-		8	WASHER,PLAIN ROUND 5,3x10 Stainless	
145	315105-0153	-		2	WASHER,PLAIN ROUND 6,4x12 Stainless	
150	315105-0153	-		4	WASHER,PLAIN ROUND 6,4x12 Stainless	
160	315105-0173	-		1	WASHER,PLAIN ROUND 10,5x22 STAINLESS	
165	315125-0153	-		3	WASHERS,PLAIN ROUND,CHAMFERED 6,4X22X4	
170	315115-0178	-		2	WASHER TBRB 13x24 Stainless	
180	321313-0102	-		2	BALL BEARING 15x35x11	
195	352113-0203	-		3	ANCHOR TM3S8-M0	
200	342722-0204	-		1	STRAIGHT COUPLING, D=8 mm - G1/8"	
B74031	90232-0112	Q		1	Ph.cell NT6-14920E01	
B74032	90232-0112	Q		1	Ph.cell NT6-14920E01	

Pos	Part No	SP	UN	Qty	Description	Page No

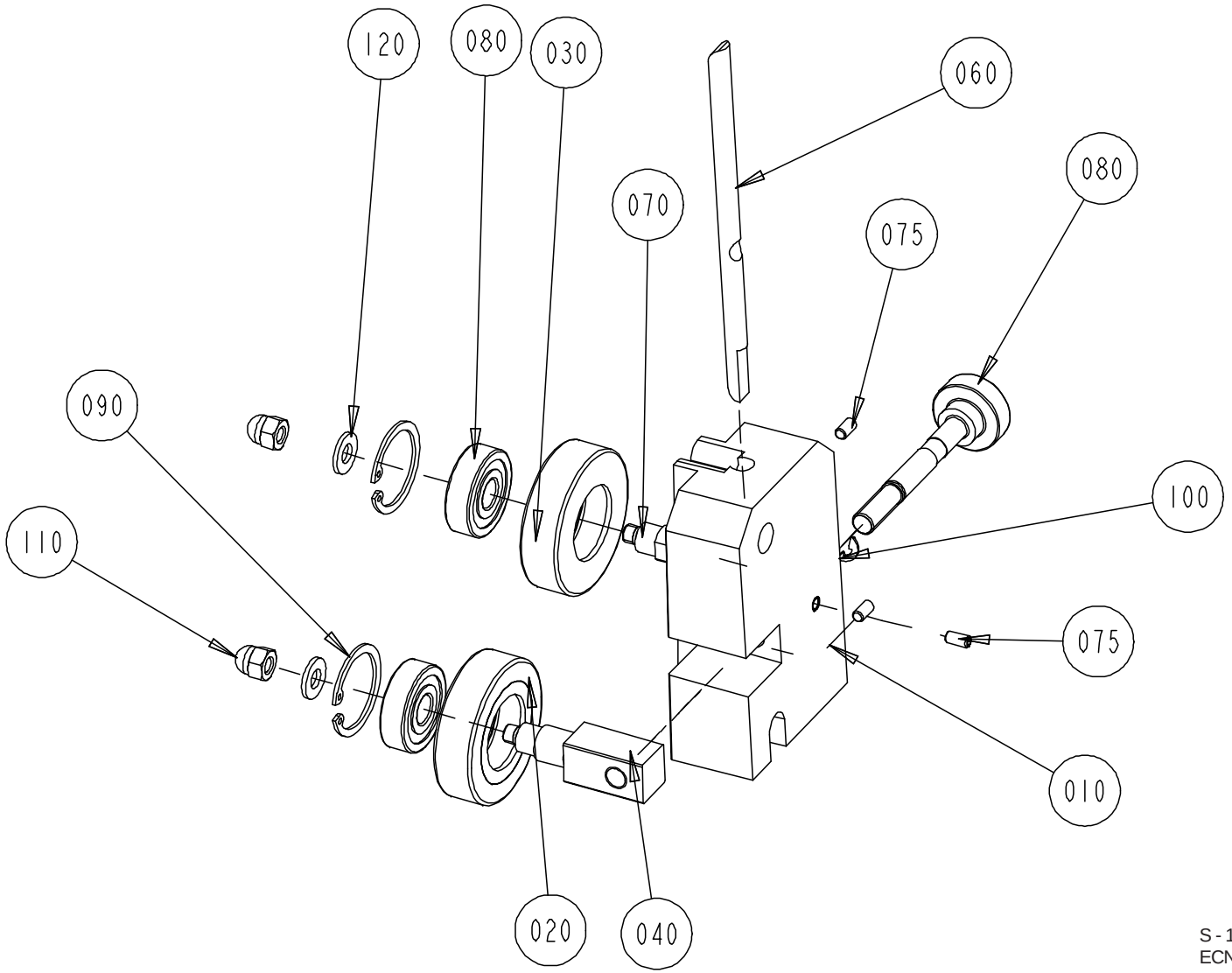

S - 1484745-1
ECN 73095

Pos	Part No	SP	UN	Qty	Description	Page No
Common parts						
010	1484750-0000	-		1	BRACKET	
020	1036623-0000	D		1	GUIDE ROLLER	
030	1036622-0000	-		1	GUIDE ROLLER	
040	1317711-0000	-		1	SHAFT	
050	1317712-0000	-		1	SHAFT	
060	1512526-0000	-		1	STEERING	
070	583727-0000	-		1	SHAFT	
075	312318-0287	-		2	SET SCREW CUP POINT ISO 4029 M4x8 RFR	
080	321313-0100	J		2	BALL BEARING 10x30x9	
090	315753-0122	-		2	RETAINING RING FOR HOLE 30	
100	315755-0108	-		1	RETAINING RINGS,RADIAL ASSEMBLY 6	
110	312705-0316	-		2	NUT,DOMED CAP,HEXAGON,M6	
120	315105-0156	-		2	WASHER BRB 6,7x14 RFR	

Pos	Part No	SP	UN	Qty	Description	Page No

BRACKET

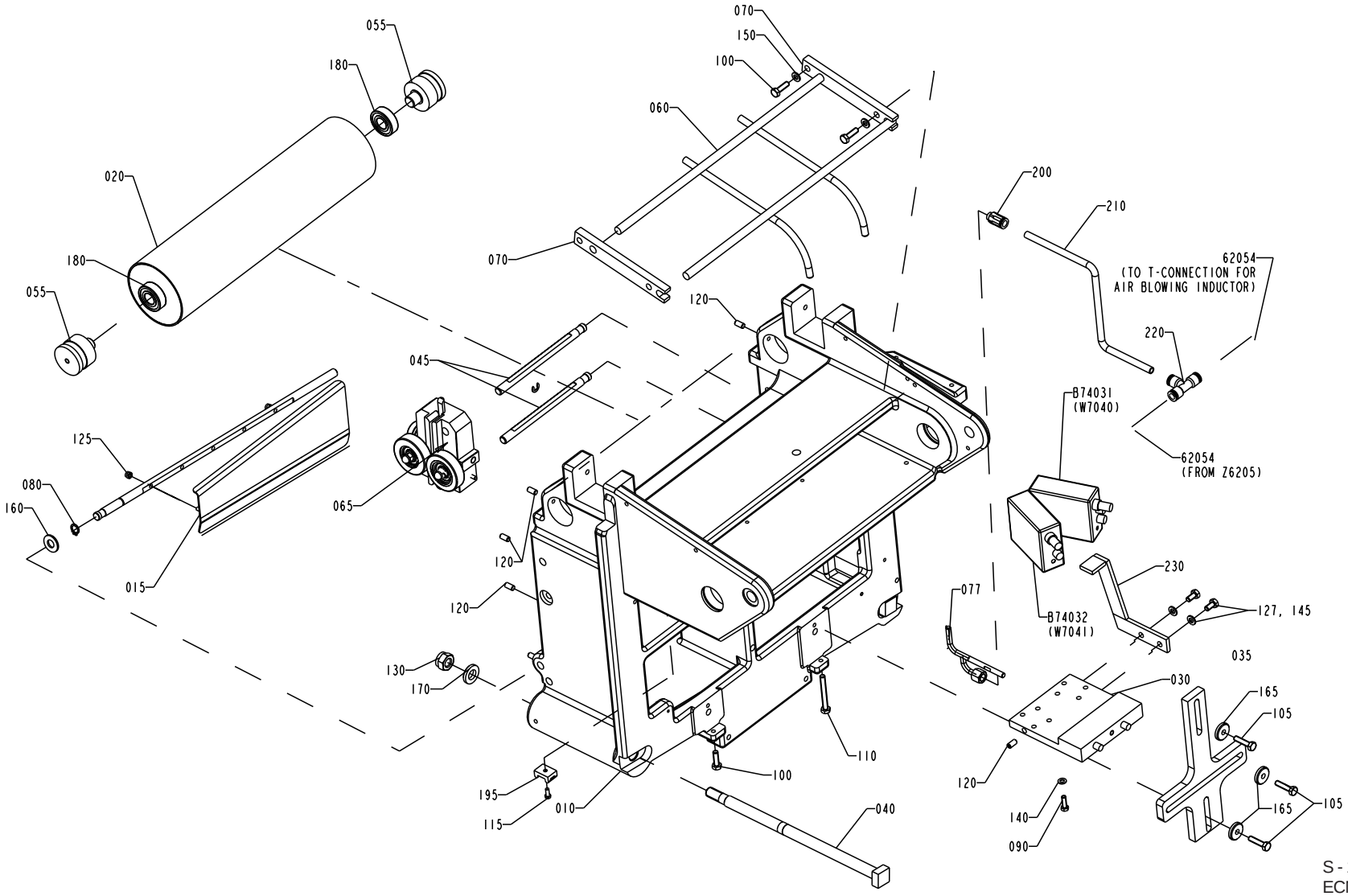

S - 1095765-5
ECN 70395

Pos	Part No	SP	UN	Qty	Description	Page No
Common parts						
065	A1484745-0100	-		1	WEB GUIDE	**597**
010	1036183-0000	D		1	BRACKET	
015	1317798-0000	-		1	GUIDING PLATE	
020	1035882-0000	D		1	BENDING ROLLER	
030	1346083-0000	D		1	PHOTOCELL BRACKET	
035	1036817-0000	D		1	BRACKET	
040	1036818-0000	D		2	TIE ROD	
045	1037546-0000	-		2	SHAFT	
050	1036820-0000	-		1	ROD	
055	1036429-0000	D		2	AXLE PIN	
060	1010785-0000	-		1	GUIDE	
070	1041020-0000	-		2	HOLDER	
075	1317799-0000	-		1	ROD	
077	1317800-0000	D		1	GUIDE FINGER	
080	90141-0016	-		1	RETAINING RING FOR SHAFT 10	
083	311112-0258	-		1	PINS,SLOTTED TUBULAR SPRING PIN 4X24	
090	312105-0329	-		8	SCREW M6S ISO 4017 M5x16 A280	
100	312105-0370	-		5	SCREW M6S ISO 4017 M6x20 A280	
105	312105-0372	-		3	SCREW M6S ISO 4017 M6x25 A280	
110	312109-0380	-		1	SCREW M6S6X50H RFR	
115	312125-0289	-		3	SLOTTED HEMCS4X10RFR	
120	312318-0366	-		7	SET SCREW CUP POINT ISO 4029 M6x12 RFR	
125	312812-0312	-		5	LOCK-NUT,HEXAGON,WITH NYLONINSERT,M4	
127	312105-0366	-		2	SCREW M6S ISO 4017 M6x12 A280	
130	312812-0322	-		2	LOCK-NUT,HEXAGON,WITH NYLON INSERT,M12	
140	315105-0146	-		8	WASHER,PLAIN ROUND 5,3x10 Stainless	
145	315105-0153	-		2	WASHER,PLAIN ROUND 6,4x12 Stainless	
150	315105-0153	-		4	WASHER,PLAIN ROUND 6,4x12 Stainless	
160	315105-0173	-		1	WASHER,PLAIN ROUND 10,5x22 STAINLESS	
165	315125-0153	-		3	WASHERS,PLAIN ROUND,CHAMFERED 6,4X22X4	
170	315115-0178	-		2	WASHER TBRB 13x24 Stainless	
180	321313-0102	R		2	BALL BEARING 15x35x11	
195	352113-0203	-		3	ANCHOR TM3S8-M0	
200	342722-0204	-		1	STRAIGHT COUPLING, D=8 mm - G1/8"	
210	90166-0194	-	MM	2000	TUBE 8 mm PUR Blue	
220	342748-0103	-		1	T-CONNECTION 8 mm	
230	1349330-0000	-		1	LINK FORK	
B74031	90232-0125	R		1	Ph.cell NT6-1492E02	
B74032	90232-0125	R		1	Ph.cell NT6-1492E02	

Pos	Part No	SP	UN	Qty	Description	Page No

CABLE CONDUIT

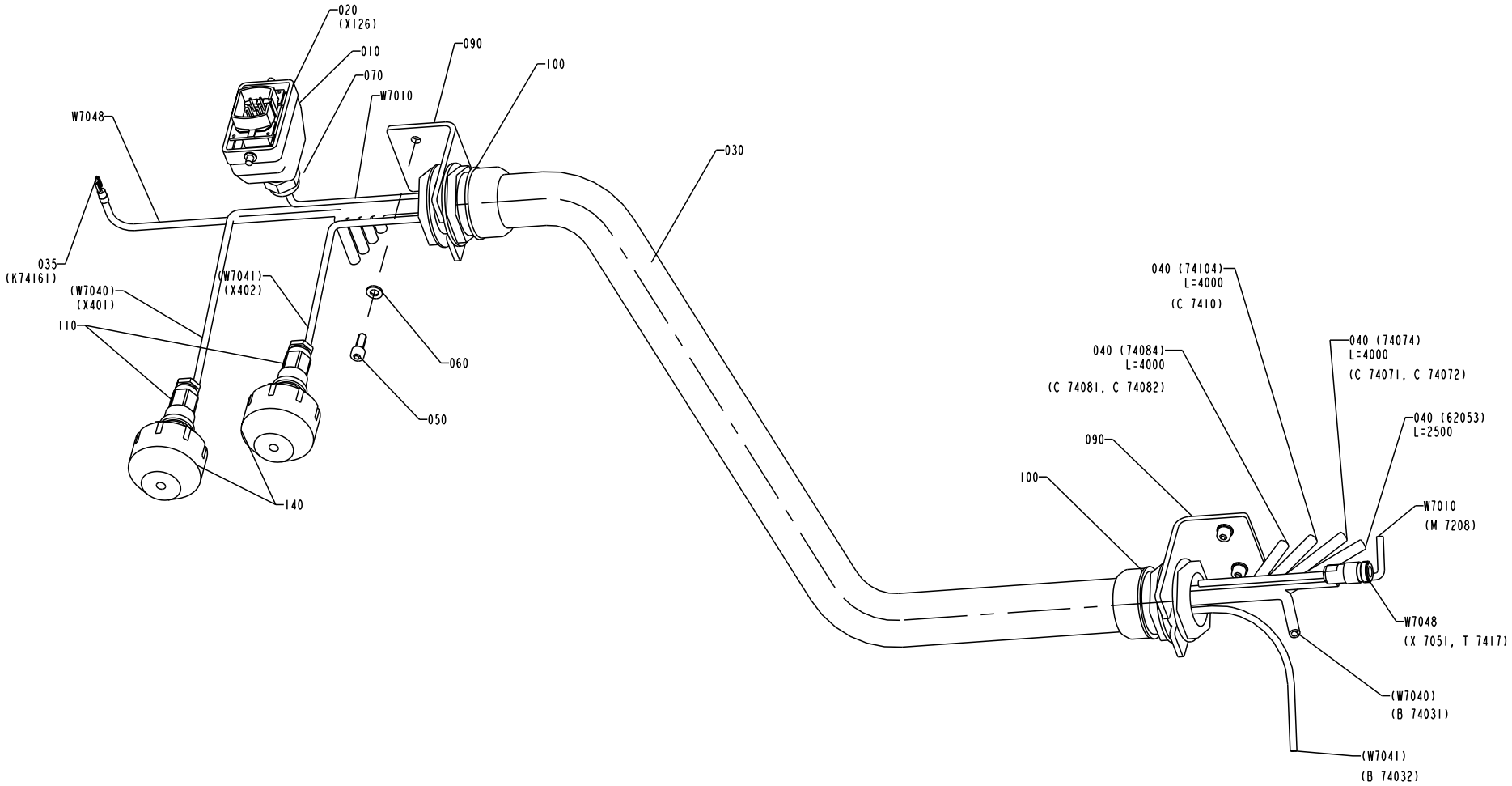

S - 1095766-4
ECN 71680

Pos	Part No	SP	UN	Qty	Description	Page No
Common parts						
010	90110-0157	-		1	COVER	
020	90110-0159	-		1	CONTACT	
030	90152-0029	-	MM	745	HOSE 35/41	
035	92097-0009	-		1	SLEEVE	
040	90166-0194	-	M	15	TUBE 8 mm PUR Blue	
050	312115-0368	-		4	SCREW MC6S ISO 4762 M6x16 A280	
060	315105-0153	-		4	WASHER,PLAIN ROUND 6,4x12 Stainless	
070	352103-0108	-		1	CABLE GLAND ST 13	
090	1334248-0000	-		2	BRACKET	
100	352136-0167	-		2	GLAND FITTING	
110	90110-0235	-		2	CABLE CONTACT	
120	359005-0010	-		1	MARKING SESATS 0-9	
130	359005-0050	-		1	MARKING SEATS "X"	
140	90110-0348	-		2	SEAL	
W7010	90220-0104	-	MM	8500	CABLE,SCREENED 4x1,5mm2	
W7048	1037055-0000	M		1	COAXIAL CABLE	

Pos	Part No	SP	UN	Qty	Description	Page No

MATERIAL HOLDER LINE 2

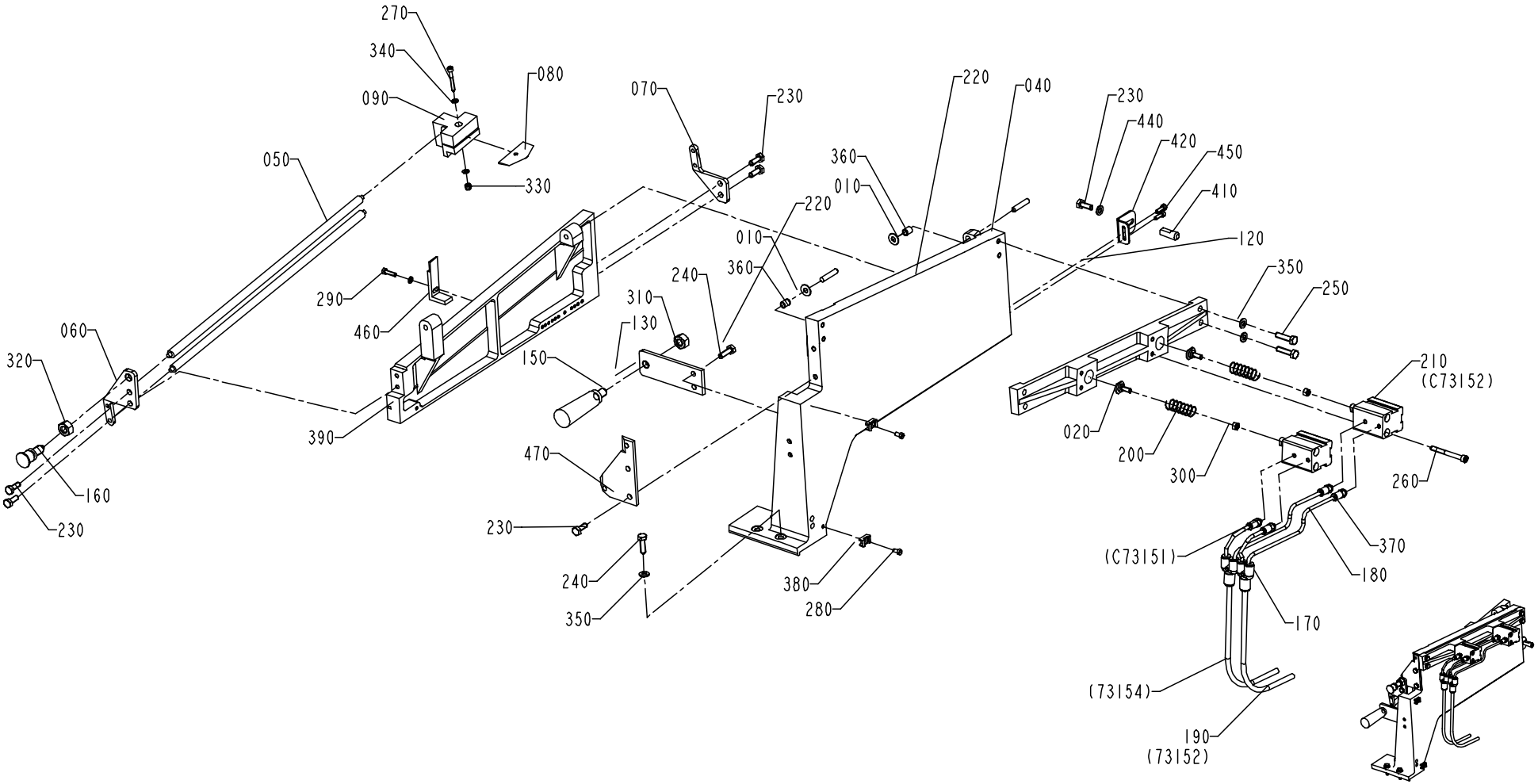

S - 1255867-1
ECN 72175

Pos	Part No	SP	UN	Qty	Description	Page No
Common parts						
010	271011-0000	-		2	WASHER	
020	1036695-0000	R		2	LOCK STUD	
040	1041158-0000	D		1	MATERIAL HOLDER	
050	1041159-0000	-		2	SHAFT	
060	1041160-0000	-		1	BRACKET	
070	1041161-0000	-		1	BRACKET	
080	1041162-0000	M		1	KNIFE	
090	1041163-0000	D		1	KNIFE HOLDER	
120	1041526-0000	D		1	MATERIAL PRESSURE	
130	1041753-0000	-		1	BRACKET	
150	90051-0065	-		1	HANDLES,EXTERNAL THREAD M10-25X86	
160	90051-0087	-		1	ADJUSTMENT SCREW GN 617 A5	
170	90055-0154	-		2	Y-connection, 4-6	
180	90166-0095	-	MM	1600	TUBE 4 mm PA Blue	
190	90166-0193	-	M	9	TUBE 6/4 PUR Blue	
200	90335-0183	R		2	SPRING	
210	90450-0310	R		2	CYLINDER ADV-20-15 A	
220	311103-0357	-		2	PIN,STRAIGHT 6x30	
230	312105-0368	-		7	SCREW M6S ISO 4017 M6x16 A280	
240	312105-0370	-		6	SCREW M6S ISO 4017 M6x20 A280	
250	312105-0372	-		4	SCREW M6S ISO 4017 M6x25 A280	
260	312111-0341	-		4	SCREW MC6S5X50FZB	
270	312115-0299	-		1	SCREW MC6S ISO 4762 M4X30 A280	
280	312125-0287	-		2	SLOTTED CHEESE HEAD ISO 1207 M4X8 RFR	
290	312105-0293	-		1	SCREW M6S ISO 4017 M4X16 A280	
300	312605-0314	-		2	NUT,HEXAGON,M6M5 Stainless	
310	312605-0320	-		1	NUT,HEXAGON,M10 A280	
320	312630-0320	-		1	NUTS,HEXAGON,M10X1	
330	312812-0312	-		1	LOCK-NUT,HEXAGON,WITH NYLONINSERT,M4	
340	315105-0136	-		3	WASHER,PLAIN ROUND 4,3x8 Stainless	
350	315105-0153	-		9	WASHER,PLAIN ROUND 6,4x12 Stainless	
360	321120-0102	-		2	Bushing, 6x8x10	
370	342722-0198	-		4	STRAIGHT COUPLING, D=4 mm - M5	
380	352113-0205	-		2	ANCHOR TM2S8-C100	
390	1348905-0000	-		1	CUTTING TABLE	
410	1478723-0000	-		1	PIN	
420	1478722-0000	-		1	BRACKET	
450	312115-0291	-		2	SCREW MC6S ISO 4762 M4x12 A280	
460	1478938-0000	-		1	ANGLE PIECE	
470	1478907-0000	-		1	SECURING PLATE	

Pos	Part No	SP	UN	Qty	Description	Page No

CYLINDER LINE 2

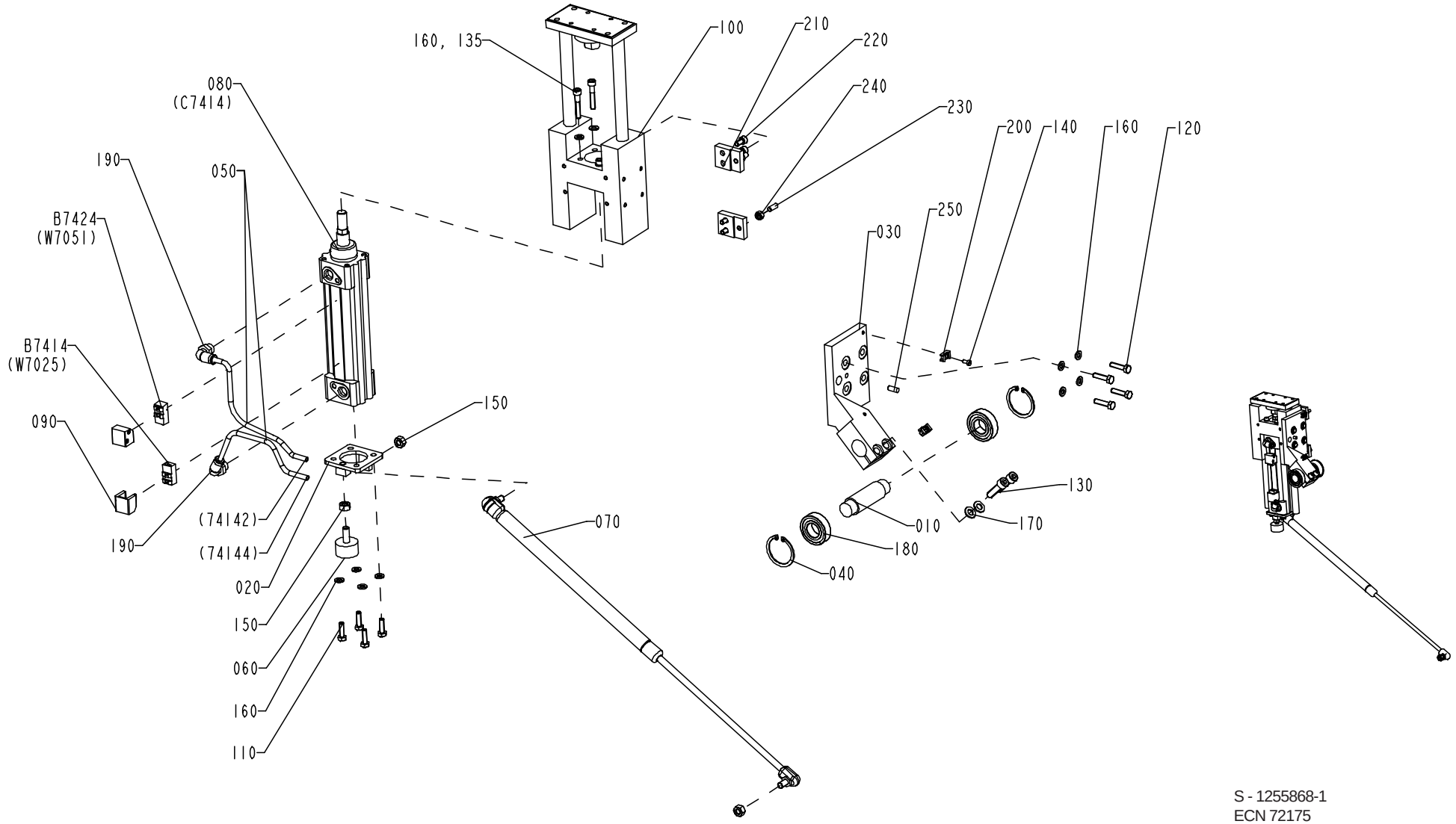

S - 1255868-1
ECN 72175

Pos	Part No	SP	UN	Qty	Description	Page No
Common parts						
010	1037132-0000	D		1	SHAFT	
020	1037133-0000	D		1	BRACKET	
030	1129041-0000	D		1	ARM	
040	90141-0020	-		2	RETAINING RINGS FOR HOLE 42	
050	90166-0193	-	M	9	TUBE 6/4 PUR Blue	
060	90347-0004	R		1	VIBRATION DAMPER D=30 Th=M8 H=17 H2=21mm	
070	90347-0163	R		1	GAS-DAMPER	
080	90450-0272	R		1	DOUBLE ACTING,PROFILE,CYL.40-100	
090	90450-0669	-		2	CYLINDER,SENSOR,BRACKETS,22X18X33	
100	1478735-0000	R		1	STEERING	
110	312105-0370	-		4	SCREW M6S ISO 4017 M6x20 A280	
120	312105-0372	-		4	SCREW M6S ISO 4017 M6x25 A280	
130	312115-0455	-		2	SCREW MC6S ISO 4762 M8X30 A280	
135	312115-0376	-		4	SCREW MC6S ISO 4762 M6x35 A280	
140	312125-0287	-		2	SLOTTED CHEESE HEAD ISO 1207 M4X8 RFR	
150	312605-0318	-		3	NUT,HEXAGON,M8 RFR	
160	315105-0153	-		12	WASHER,PLAIN ROUND 6,4x12 Stainless	
170	315105-0165	-		2	WASHER,PLAIN ROUND 8,4x16 Stainless	
180	321308-0204	R		2	BALL BEARING 20X42X12	
190	342732-0103	-		2	ELBOW PIPE JOINT,Ext.thread,D=6 mm G1/4	
200	352113-0205	-		2	ANCHOR TM2S8-C100	
210	1478736-0000	-		2	BLOCK	
220	312115-0366	-		4	SCREW MC6S ISO 4762 M6X12 A280	
230	312318-0368	-		2	SET SCREW CUP POINT ISO 4029 M6x16 RFR	
240	312605-0316	-		2	NUT,HEXAGON A280 M6M6	
250	311103-0351	-		1	PINS,STRAIGHT 6x16	
B7414	90044-0116	R		1	PROXIMITY SWITCH	
B7424	90044-0116	R		1	PROXIMITY SWITCH	

Pos	Part No	SP	UN	Qty	Description	Page No

MATERIAL HOLDER LINE 1

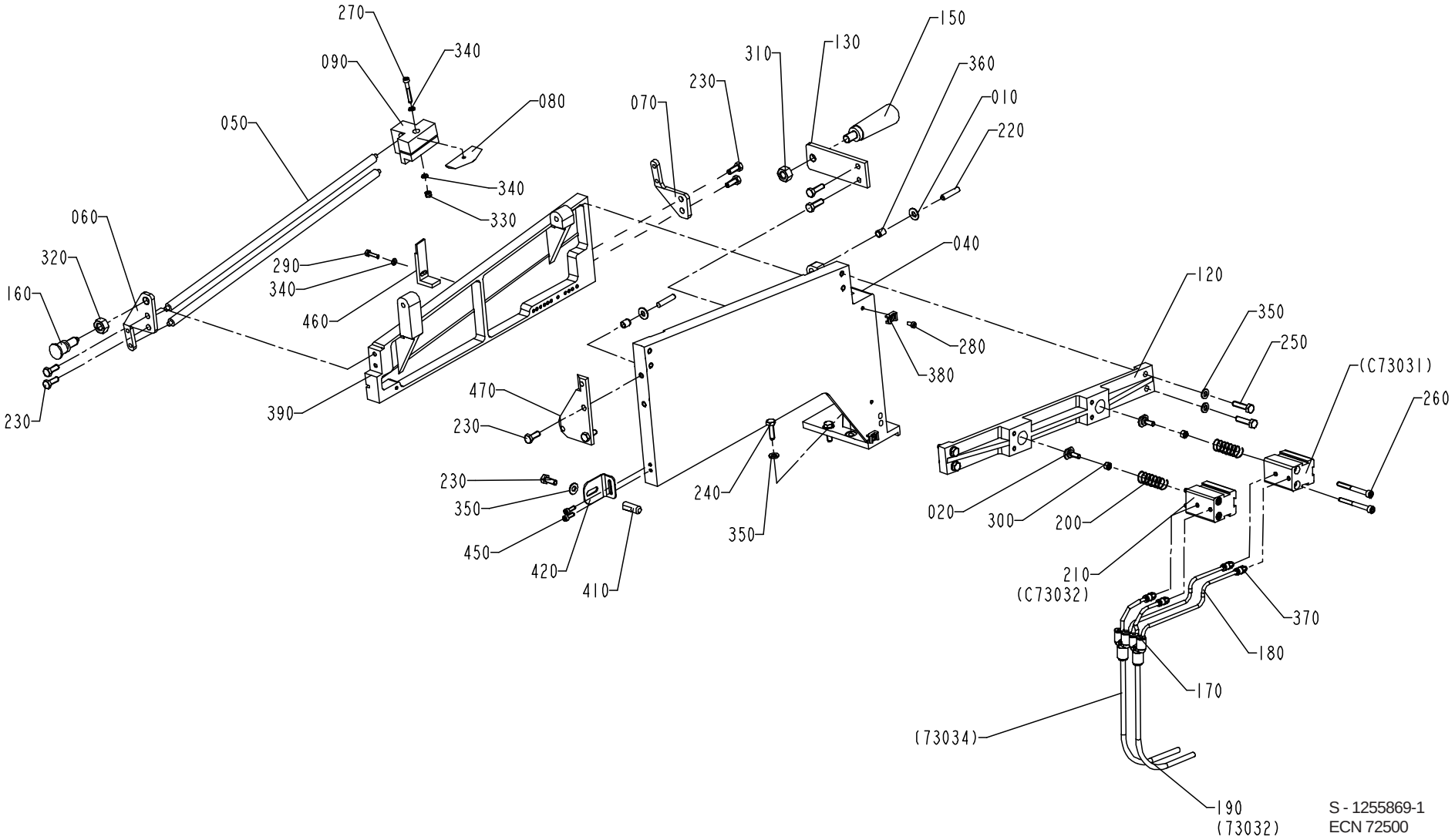

S - 1255869-1
ECN 72500

Pos	Part No	SP	UN	Qty	Description	Page No
Common parts						
010	271011-0000	-		2	WASHER	
020	1036695-0000	R		2	LOCK STUD	
040	1041157-0000	D		1	MATERIAL HOLDER	
050	1041159-0000	-		2	SHAFT	
060	1041160-0000	-		1	BRACKET	
070	1041161-0000	-		1	BRACKET	
080	1041162-0000	M		1	KNIFE	
090	1041163-0000	D		1	KNIFE HOLDER	
120	1041526-0000	-		1	MATERIAL PRESSURE	
130	1041753-0000	-		1	BRACKET	
150	90051-0065	-		1	HANDLES,EXTERNAL THREAD M10-25X86	
160	90051-0087	-		1	ADJUSTMENT SCREW GN 617 A5	
170	90055-0154	-		2	Y-connection, 4-6	
180	90166-0095	-	MM	1600	TUBE 4 mm PA Blue	
190	90166-0193	-	M	9	TUBE 6/4 PUR Blue	
200	90335-0183	R		2	SPRING	
210	90450-0310	R		2	CYLINDER ADV-20-15 A	
220	311103-0357	-		2	PIN,STRAIGHT 6x30	
230	312105-0368	-		7	SCREW M6S ISO 4017 M6x16 A280	
240	312105-0370	-		6	SCREW M6S ISO 4017 M6x20 A280	
250	312105-0372	-		4	SCREW M6S ISO 4017 M6x25 A280	
260	312111-0341	-		4	SCREW MC6S5X50FZB	
270	312115-0299	-		1	SCREW MC6S ISO 4762 M4X30 A280	
280	312125-0287	-		2	SLOTTED CHEESE HEAD ISO 1207 M4X8 RFR	
290	312105-0291	-		1	SCREW M6S ISO 4017 M4X12 A280	
300	312605-0314	-		2	NUT,HEXAGON,M6M5 Stainless	
310	312605-0320	-		1	NUT,HEXAGON,M10 A280	
320	312630-0320	-		1	NUTS,HEXAGON,M10X1	
330	312812-0312	-		1	LOCK-NUT,HEXAGON,WITH NYLONINSERT,M4	
340	315105-0136	-		3	WASHER,PLAIN ROUND 4,3x8 Stainless	
350	315105-0153	-		9	WASHER,PLAIN ROUND 6,4x12 Stainless	
360	321120-0102	-		2	Bushing, 6x8x10	
370	342722-0198	-		4	STRAIGHT COUPLING, D=4 mm - M5	
380	352113-0205	-		2	ANCHOR TM2S8-C100	
390	1348905-0000	-		1	CUTTING TABLE	
410	1478723-0000	-		1	PIN	
420	1478722-0000	-		1	BRACKET	
450	312115-0291	-		2	SCREW MC6S ISO 4762 M4x12 A280	
460	1478938-0000	-		1	ANGLE PIECE	
470	1478907-0000	-		1	SECURING PLATE	

Pos	Part No	SP	UN	Qty	Description	Page No

CYLINDER LINE 1

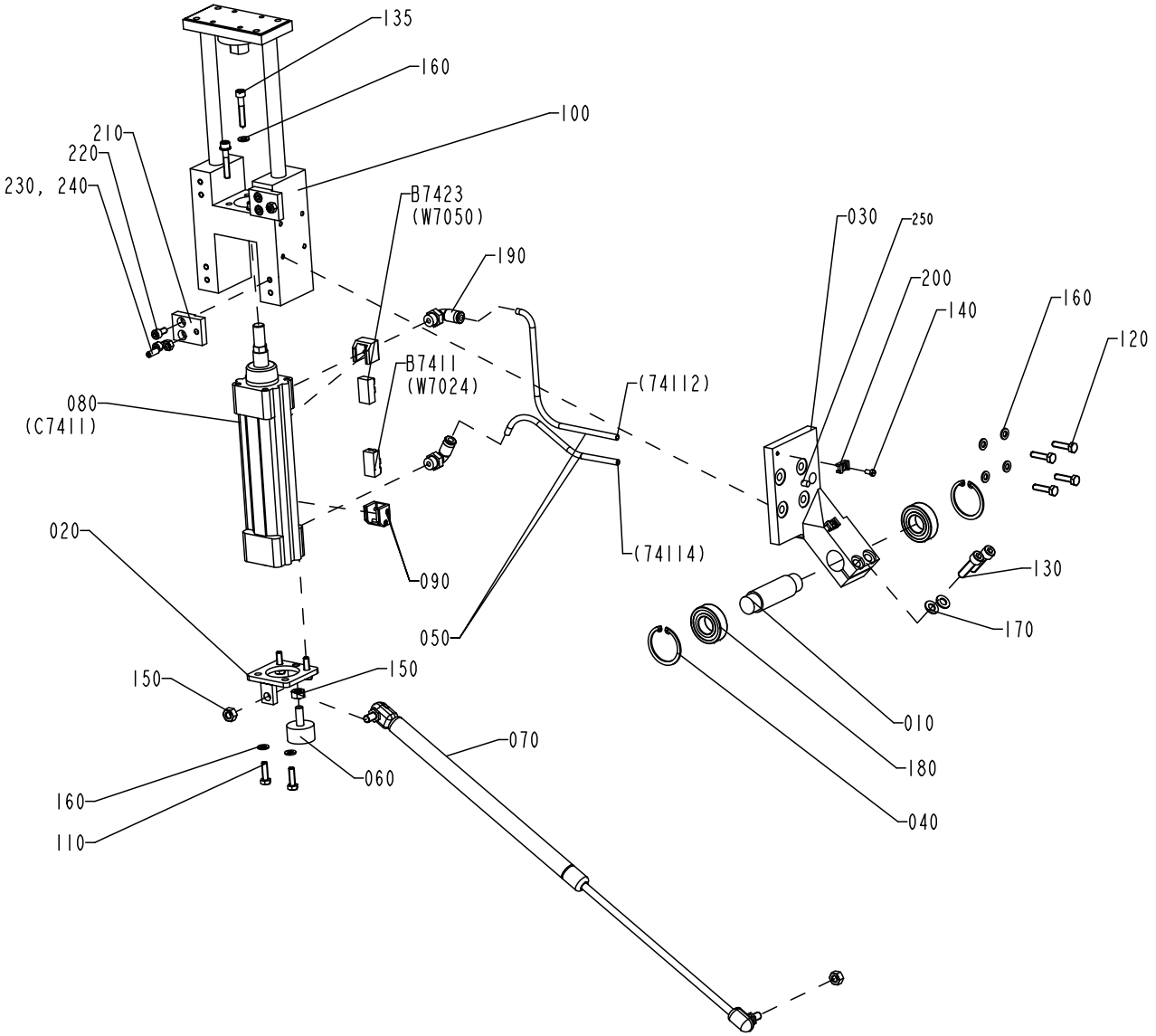

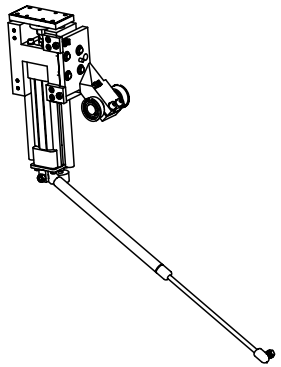

S - 1255870-1
ECN 71977

Pos	Part No	SP	UN	Qty	Description	Page No
Common parts						
010	1037132-0000	D		1	SHAFT	
020	1037133-0000	D		1	BRACKET	
030	1129040-0000	D		1	ARM	
040	90141-0020	-		2	RETAINING RINGS FOR HOLE 42	
050	90166-0193	-	M	9	TUBE 6/4 PUR Blue	
060	90347-0004	R		1	VIBRATION DAMPER D=30 Th=M8 H=17 H2=21mm	
070	90347-0163	R		1	GAS-DAMPER	
080	90450-0272	R		1	DOUBLE ACTING,PROFILE,CYL.40-100	
090	90450-0669	-		2	CYLINDER,SENSOR,BRACKETS,22X18X33	
100	1478735-0000	D		1	STEERING	
110	312105-0370	-		4	SCREW M6S ISO 4017 M6x20 A280	
120	312105-0372	-		4	SCREW M6S ISO 4017 M6x25 A280	
130	312115-0455	-		2	SCREW MC6S ISO 4762 M8X30 A280	
135	312115-0376	-		4	SCREW MC6S ISO 4762 M6x35 A280	
140	312125-0287	-		2	SLOTTED CHEESE HEAD ISO 1207 M4X8 RFR	
150	312605-0318	-		3	NUT,HEXAGON,M8 RFR	
160	315105-0153	-		12	WASHER,PLAIN ROUND 6,4x12 Stainless	
170	315105-0165	-		2	WASHER,PLAIN ROUND 8,4x16 Stainless	
180	321308-0204	R		2	BALL BEARING 20X42X12	
190	342732-0103	-		2	ELBOW PIPE JOINT,Ext.thread,D=6 mm G1/4	
200	352113-0205	-		2	ANCHOR TM2S8-C100	
210	1478736-0000	-		2	BLOCK	
220	312115-0366	-		4	SCREW MC6S ISO 4762 M6X12 A280	
230	312318-0368	-		2	SET SCREW CUP POINT ISO 4029 M6x16 RFR	
240	312605-0316	-		2	NUT,HEXAGON A280 M6M6	
250	311103-0351	-		1	PINS,STRAIGHT 6x16	
B7411	90044-0116	R		1	PROXIMITY SWITCH	
B7423	90044-0116	R		1	PROXIMITY SWITCH	

Pos	Part No	SP	UN	Qty	Description	Page No

GENERATOR CABINET

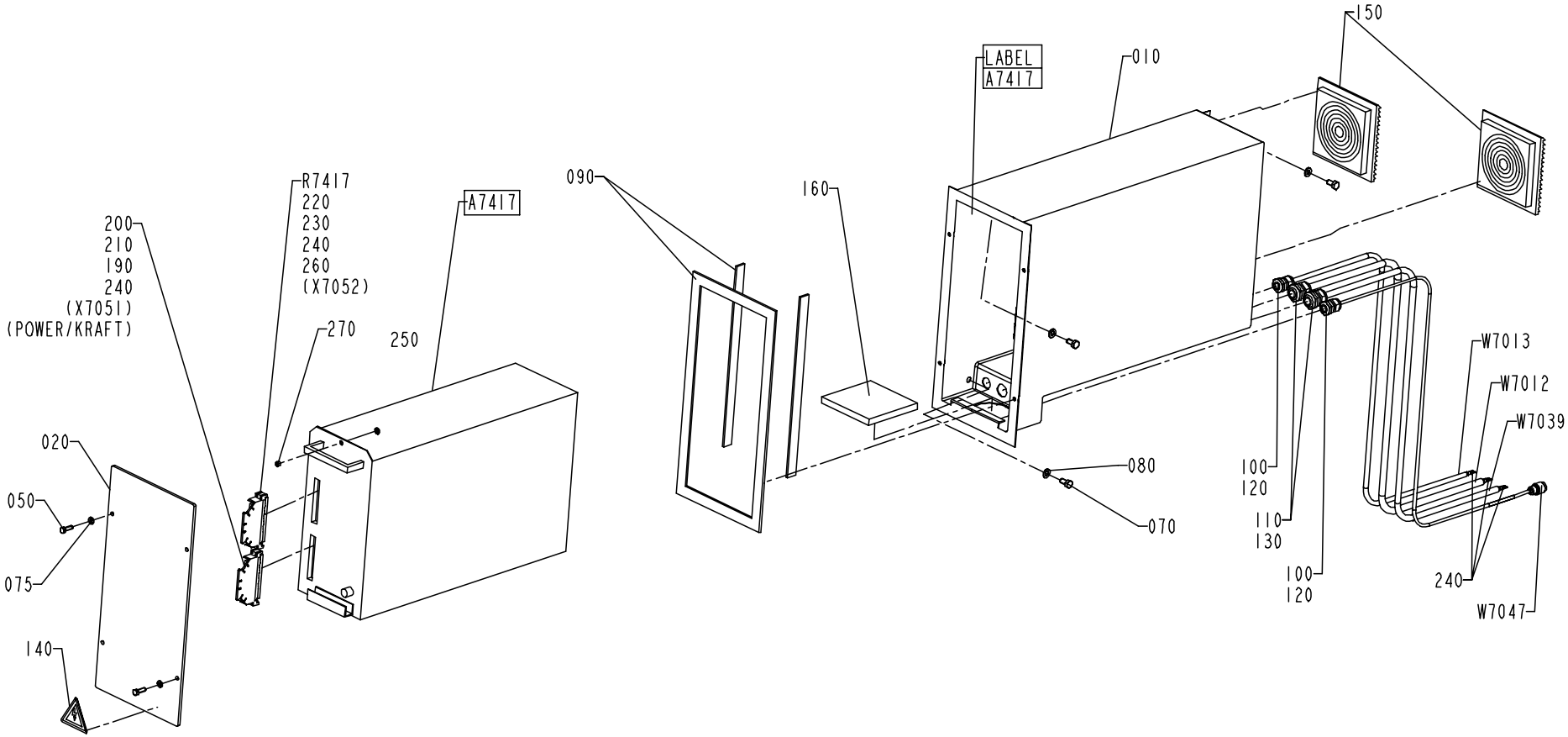

S - 1095768-1
ECN 72500

Pos	Part No	SP	UN	Qty	Description	Page No
Common parts						
010	1036814-0000	-		1	APPLIANCE BOX	
020	1036815-0000	-		1	LID	
050	312105-0370	-		4	SCREW M6S ISO 4017 M6x20 A280	
070	312105-0449	-		3	SCREW M6S ISO 4017 M8x16 A280	
075	315105-0153	-		4	WASHER,PLAIN ROUND 6,4x12 Stainless	
080	315105-0165	-		3	WASHER,PLAIN ROUND 8,4x16 Stainless	
090	90143-0071	-	MM	2200	RUBBER STRIP 4X20MM	
100	352103-0106	-		2	CABLE GLAND ST 11	
110	352103-0110	-		2	CABLE GLAND STR 16	
120	90099-0117	-		2	NUT PR 18,6 (PG11)	
130	90099-0110	-		2	NUT PR 22,5 (PG16)	
140	90194-0016	-		1	SIGN "FLASH SIGN" 50X50MM	
150	90277-0129	-		2	EXHAUST FILTER	
160	90277-0393	-		1	Filter insert RITTAL SK 3170100	
190	90097-0017	-		5	FLAT PIN PLUG 6,3mm	
200	90110-0121	-		1	FEMALECONT.15POLE HARTING	
210	90110-0122	-		1	COVER HARTING	
220	90110-0121	-		1	FEMALECONT.15POLE HARTING	
230	90110-0122	-		1	COVER HARTING	
240	92097-0009	-		16	SLEEVE	
250	90062-0060	-		1	WASHER,Lock 5,3x 10, T= 0,6 DIN 6798	
260	90166-0214	-		1	SHRINKABLE HOSE 1,2 mm	
270	312605-0314	-		1	NUT,HEXAGON,M6M5 Stainless	
A7417	67600-0501	D		1	TPIH 2000 GENERATOR	
R7417	90121-0090	D		1	Resistance fixed, 10 kOhm, 0,5 W	
W7012	351150-0419	-	M	2	CABLE OLFLEX 5x2,5mm2	
W7013	351150-0412	-	M	2	CABLE OLFLEX 3x1,5mm2	
W7039	351150-0406	-	M	2	CABLE OLFLEX 7x0,75 MM2	
W7047	1037056-0000	M		1	COAXIAL CABLE	

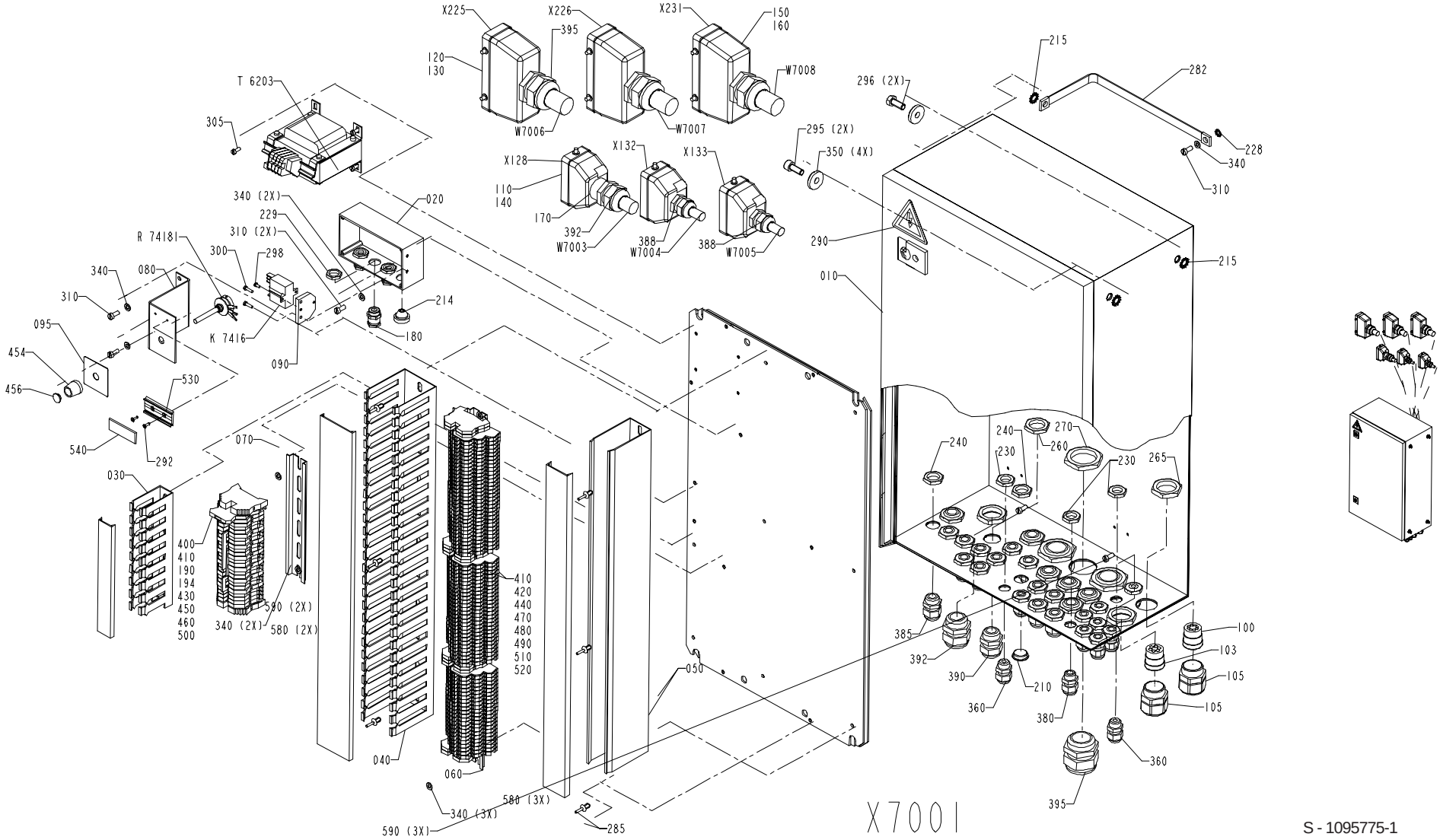

S - 1095775-1
ECN 72175

Pos	Part No	SP	UN	Qty	Description	Page No
NOPT						
390	352103-0110	-		7	CABLE GLAND STR 16	
Common parts						
010	1036909-0000	-		1	ELECTRICAL CABINET	
020	1038907-0000	-		1	CONNECTION BOX	
030	1036922-0000	-		1	CABLE DUCT	
040	1036923-0000	-		1	CABLE DUCT	
050	1036924-0000	-		1	CABLE DUCT	
060	1036925-0000	-		1	TERMINAL RAIL	
070	1036926-0000	-		1	TERMINAL RAIL	
080	1038403-0000	-		1	BRACKET	
090	1041264-0000	-		1	BRACKET	
095	551922-0000	-		1	LABEL,POTENTIOMETER DESIGN CORR.	
100	90012-0127	-		1	PLUG	
103	90012-0125	-		1	GLAND FITTING	
105	353240-0005	-		2	GLANDS,NORMAL WITHOUT INSERT PG 21	
110	90110-0159	-		3	CONTACT	
120	90110-0150	-		3	MALE INSERT 24-P, CABLE	
130	90110-0152	-		3	CABLE HOOD 24-P	
140	90110-0157	-		3	COVER	
150	359005-0010	-		7	MARKING SESATS 0-9	
160	359005-0050	-		1	MARKING SEATS "X"	
170	90089-0028	-		1	MUFF	
180	90012-0124	-		3	GLAND FITTING	
190	353034-0039	-		1	BRIDGE CONN. WQV 4/4	
194	353034-0031	-		2	BRIDGE CONNECTOR WQV 4/10	
210	90002-0009	-		1	BLANK-OFF PLUG 18.6	
214	90015-0020	-		1	GLANDS,Lead-in,IP67	
215	90062-0016	-		5	LOCK WASHER AZ 8,4	
228	90062-0060	-		1	WASHER,Lock 5,3x 10, T= 0,6 DIN 6798	
229	90099-0001	-		3	NUT PR 15,2 BRASS	
230	90099-0104	-		11	NUT PR 15,2 (PG9)	
240	90099-0117	-		14	NUT PR 18,6 (PG11)	
260	90099-0110	-		7	NUT PR 22,5 (PG16)	
265	90099-0119	-		3	NUT PR 28,3 (PG21)	
270	90099-0120	-		3	NUT PR 37 (PG29)	
282	90135-0035	-		1	LOW IMPEDANCELITZ L=250MM	
285	90181-0088	-		8	PLASTIC RIVET	
290	90194-0016	-		1	SIGN "FLASH SIGN" 50X50MM	
292	311520-0329	-		2	BLANK RIVET 2,4x8mm	
295	312115-0451	-		2	SCREW MC6S ISO 4762 M8x20 A280	
296	312105-0451	-		2	SCREW M6S ISO 4017 8x20 A280	
298	312121-0220	-		2	SLOTTED HEMCS3X6FZB	
300	312121-0226	-		2	SLOTTED HEMCS3X12FZB	
305	312121-0289	-		4	SLOTTED HEAD SCREW MCS 4x10 D60	
310	312121-0327	-		5	SLOTTED HEMCS5X12FZB	
340	315105-0146	-		10	WASHER,PLAIN ROUND 5,3x10 Stainless	
350	315125-0165	-		4	WASHERS,PLAIN ROUND,CHAMFERED 8,4X26X5	
360	352103-0100	-		3	CABLE GLAND STR 9;PR15,2	
380	352103-0101	-		8	CABLE GLAND ST 9;PR15,2/PG9	
385	352103-0106	-		13	CABLE GLAND ST 11	
388	352103-0108	-		2	CABLE GLAND ST 13	
392	352103-0116	-		2	CABLE GLAND ST 21	
395	352103-0121	-		6	CABLE GLAND ST 29	
400	353021-0122	-		1	DIODE-TERMINAL WTRD 2,5	
410	353031-0203	-		2	END BRACKET WEW 35/2	
420	353021-0302	-		80	TERMINAL,TRIPLE-LEVEL, DLD 2,5/35 PA	
430	353021-0213	-		16	FEED THROUGH TERMINAL WDU 4 Beige	
440	353024-0204	-		10	EARTH TERMINAL WPE 2,5	
450	353024-0205	-		8	EARTH TERMINAL WPE 4	
454	90130-0303	-		1	SHIFTER HANDLE	
456	90130-0304	-		1	PLATE	
460	353032-0004	-		1	END PLATE WAP 2,5-10 Beige	
470	353032-0302	-		3	END PLATE WAP	
480	353034-0401	-		16	BRIDGE CONLECK Q2	
490	353034-0404	-		17	BRIDGE CONLECK Q10	
500	359011-0821	-		2	SET OF SIGNS 6-FW 1-50	
510	359011-0823	-		2	SET OF SIGNS 6-FW 101-150	
520	359011-0824	-		2	SET OF SIGNS 6-FW 151-200	
530	359240-0100	-		1	SIGN HOLDER	
540	359241-0186	-		1	SIGN"LS"	
560	359011-0817	-		4	SYMBOL 5-GW (+) 50pc	
570	359011-0818	-		4	SYMBOL 5-GW (-) 50pc	
580	495118-0014	-		5	DISTANCE PIPE L=14 MM	
590	312125-0333	-		5	SLOTTED CHEESE HEAD ISO 1207 M5x25 RFR	
K 7416	90119-0078	R		1	TPIH-RELAY	
R74181	90130-0021	R		1	POTENTIOMETER "REPBY 90130-28"	
R74182	90121-0119	R		1	Resistance fixed, 8,2 kOhm, 1 W	
T 6203	563461-0000	R		1	TRANSFORMER	
W 7003	351150-0420	-	MM	4800	CABLE OILFLEX 7x2,5mm2	
W 7004	351150-0413	-	MM	4700	CABLE OLFLEX 4x1,5mm2	
W 7005	351150-0412	-	MM	4500	CABLE OLFLEX 3x1,5mm2	
W 7006	351150-0425	-	MM	4900	CABLE OILFLEX 25x0,75mm2	
W 7007	351150-0425	-	MM	4900	CABLE OILFLEX 25x0,75mm2	
W 7008	351150-0425	-	MM	5100	CABLE OILFLEX 25x0,75mm2	

CABLE HARNESS

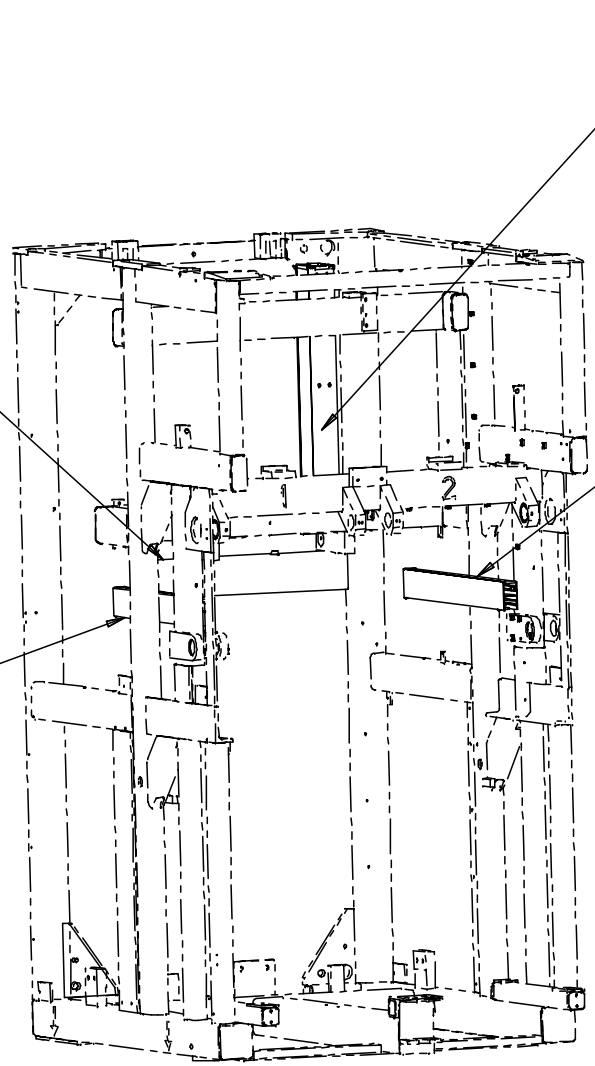

040

W 7040 (B74031)
W 7041 (B74032)
W 7011 (M7217)
W 7010 (M7208)
W 7016 (B6105)
ALL CABLES FROM ASU TO MAIN TBA/21 EL. CAB.

030

-
-

INSIDE CABLES:

W 7011 (M7217)
W 7015 (B6207)
W 7017 (B6201)
W 7018 (B6202)
W 7019 (B6204)
W 7020 (B6107)
W 7042 (B7801)
W 7046 (R6203)
W 7049 (L6101)
W 7055 (E7705)
W 7048 (L7417)
W 7010 (M7208)
W 7041 (B74032)
W 7040 (B74031)
W 7030(B72102)
W 733 (B72112)
ALL CABLES INSIDE POS. 020

SIDE 1 (RIGHT)

010

070
100 (2X)

SIDE 2 (LEFT)

INSIDE CABLES:

W 7014 (E7702)
W 7025 (B7414)
W 7027 (B7512)
W 7031 (B72101)
W 7044 (B7807)
W 7045 (H7703)
W 7051 (B7424)
W 7053 (B7805)
W 7052 (E7704) VERSION NO PT
W 7054 (H2802) VERSION NO PT
W 7029 (S7813)
(S7303)
W 7032 (B 72111)

020

-
-

INSIDE CALBES:

W 7050 (B7423)
W 7024 (B7411)
W 7026 (B7412)
W 7028 (S7402)(S6202)(S7701)
W 7043 (B7806)
-

S - 1035082-6(1)
ECN 71911

Pos	Part No	SP	UN	Qty	Description	Page No
Common parts						
010	1103373-0000	-		1	CABLE DUCT	
020	1103374-0000	-		1	CABLE DUCT	
030	1334260-0000	-		1	CABLE DUCT	
040	1334261-0000	-		1	CABLE DUCT	
050	90015-0021	-		1	GLANDS,Lead-in,IP67	
060	90099-0104	-		1	NUT PR 15,2 (PG9)	
070	90143-0060	-	MM	750	EDGE STRIP 9,5x6,3mm Black PVC	
100	312115-0366	-		6	SCREW MC6S ISO 4762 M6X12 A280	
110	312125-0287	-		39	SLOTTED CHEESE HEAD ISO 1207 M4X8 RFR	
120	312503-0275	-		4	DRIVE SCREW RXK POZ.B6x6,5 FZB	
130	352103-0101	-		1	CABLE GLAND ST 9;PR15,2/PG9	
140	352113-0102	-		60	CLIP-STRIP,Black 188x4,8mm	
150	352113-0205	-		39	ANCHOR TM2S8-C100	

Pos	Part No	SP	UN	Qty	Description	Page No

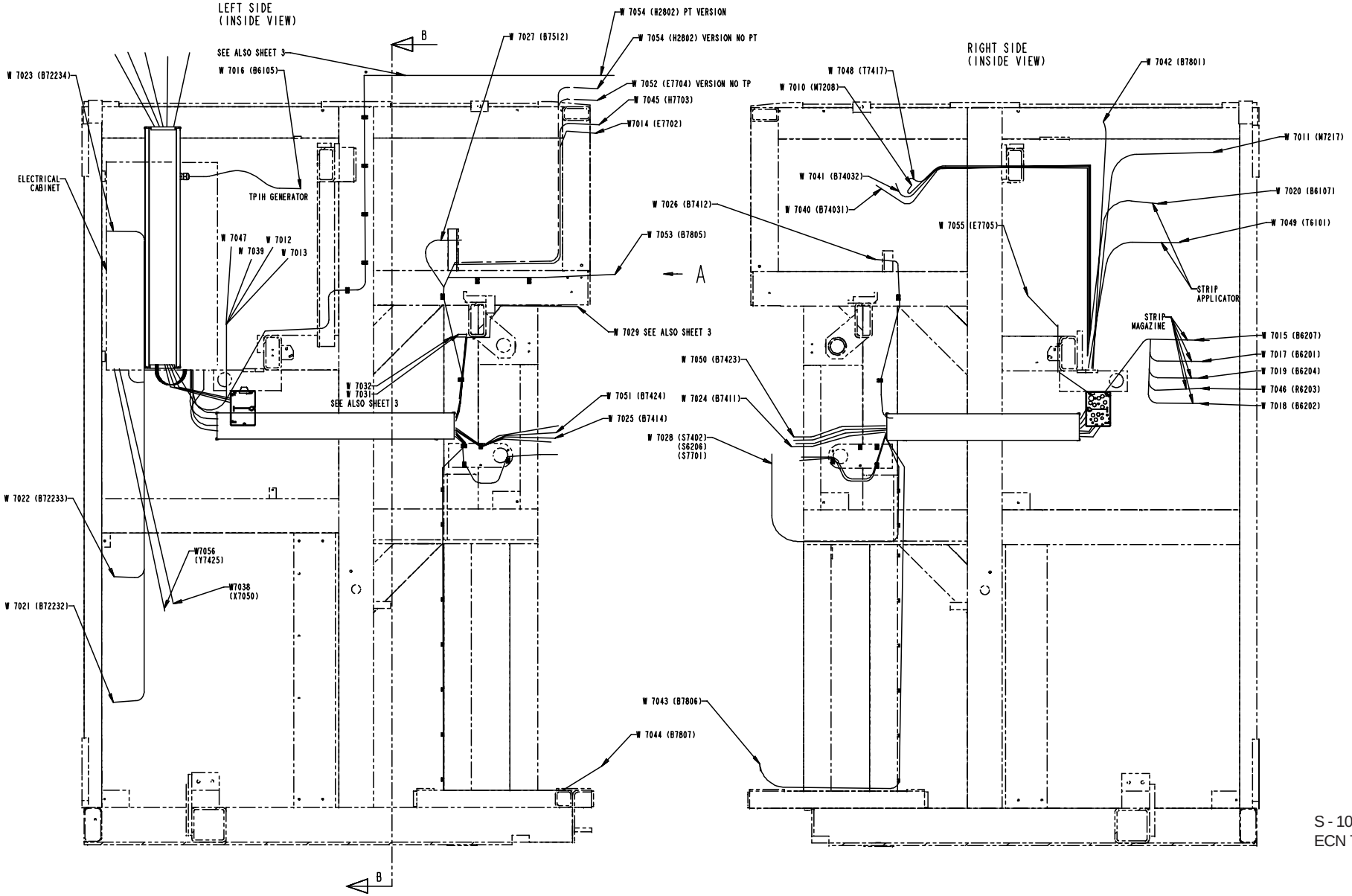

S - 1035082-6(2)
ECN 71911

Pos	Part No	SP	UN	Qty	Description	Page No
Common parts						
010	1103373-0000	-		1	CABLE DUCT	
020	1103374-0000	-		1	CABLE DUCT	
030	1334260-0000	-		1	CABLE DUCT	
040	1334261-0000	-		1	CABLE DUCT	
050	90015-0021	-		1	GLANDS,Lead-in,IP67	
060	90099-0104	-		1	NUT PR 15,2 (PG9)	
070	90143-0060	-	MM	750	EDGE STRIP 9,5x6,3mm Black PVC	
100	312115-0366	-		6	SCREW MC6S ISO 4762 M6X12 A280	
110	312125-0287	-		39	SLOTTED CHEESE HEAD ISO 1207 M4X8 RFR	
120	312503-0275	-		4	DRIVE SCREW RXK POZ.B6x6,5 FZB	
130	352103-0101	-		1	CABLE GLAND ST 9;PR15,2/PG9	
140	352113-0102	-		60	CLIP-STRIP,Black 188x4,8mm	
150	352113-0205	-		39	ANCHOR TM2S8-C100	

Pos	Part No	SP	UN	Qty	Description	Page No

VIEW A.

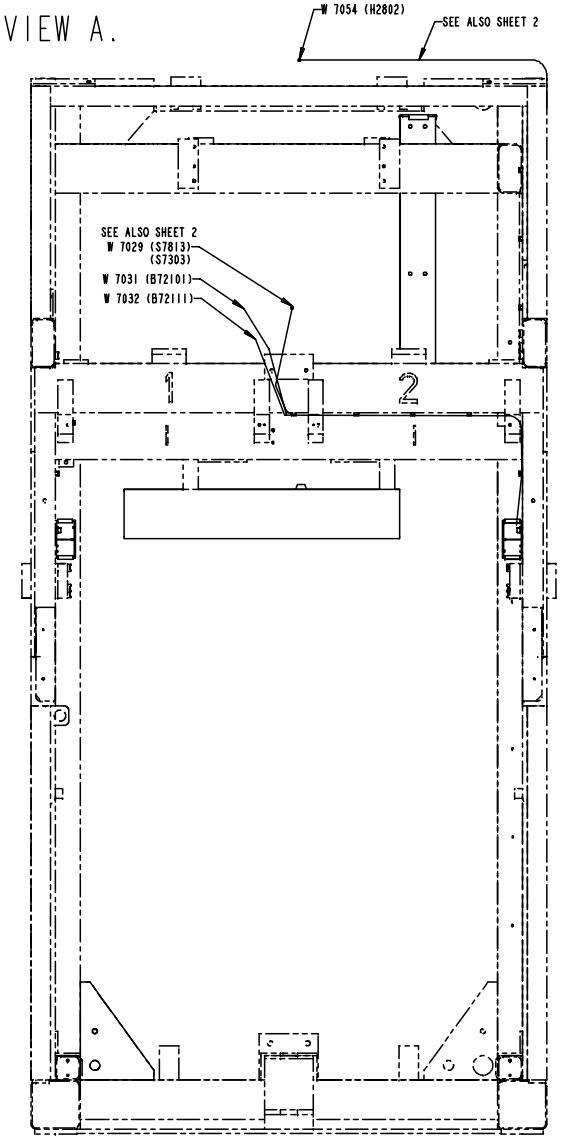

SEC. B-B

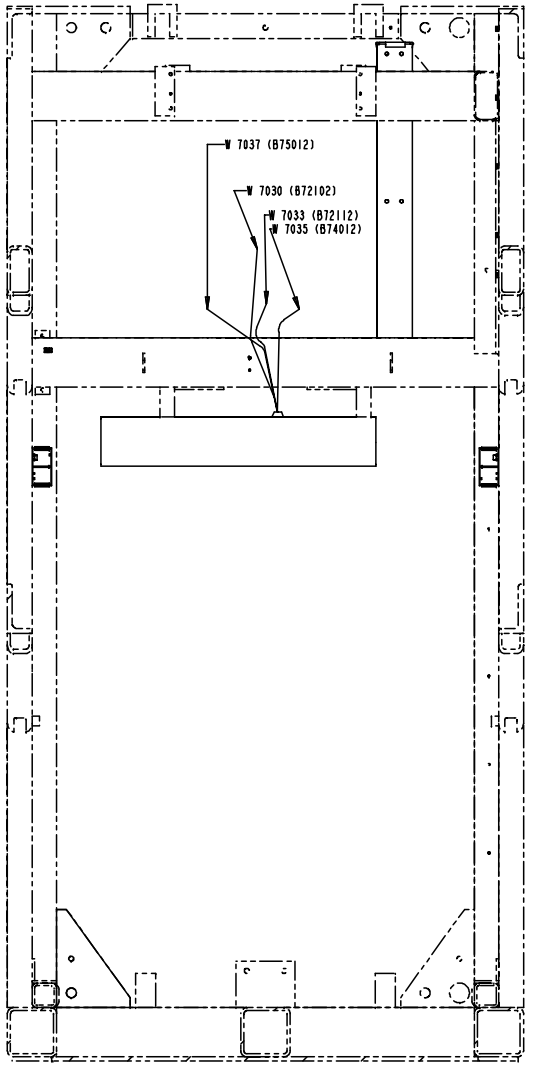

S - 1035082-6(3)
ECN 71911

Pos	Part No	SP	UN	Qty	Description	Page No
Common parts						
010	1103373-0000	-		1	CABLE DUCT	
020	1103374-0000	-		1	CABLE DUCT	
030	1334260-0000	-		1	CABLE DUCT	
040	1334261-0000	-		1	CABLE DUCT	
050	90015-0021	-		1	GLANDS,Lead-in,IP67	
060	90099-0104	-		1	NUT PR 15,2 (PG9)	
070	90143-0060	-	MM	750	EDGE STRIP 9,5x6,3mm Black PVC	
100	312115-0366	-		6	SCREW MC6S ISO 4762 M6X12 A280	
110	312125-0287	-		39	SLOTTED CHEESE HEAD ISO 1207 M4X8 RFR	
120	312503-0275	-		4	DRIVE SCREW RXK POZ.B6x6,5 FZB	
130	352103-0101	-		1	CABLE GLAND ST 9;PR15,2/PG9	
140	352113-0102	-		60	CLIP-STRIP,Black 188x4,8mm	
150	352113-0205	-		39	ANCHOR TM2S8-C100	

Pos	Part No	SP	UN	Qty	Description	Page No

VALVE PANEL

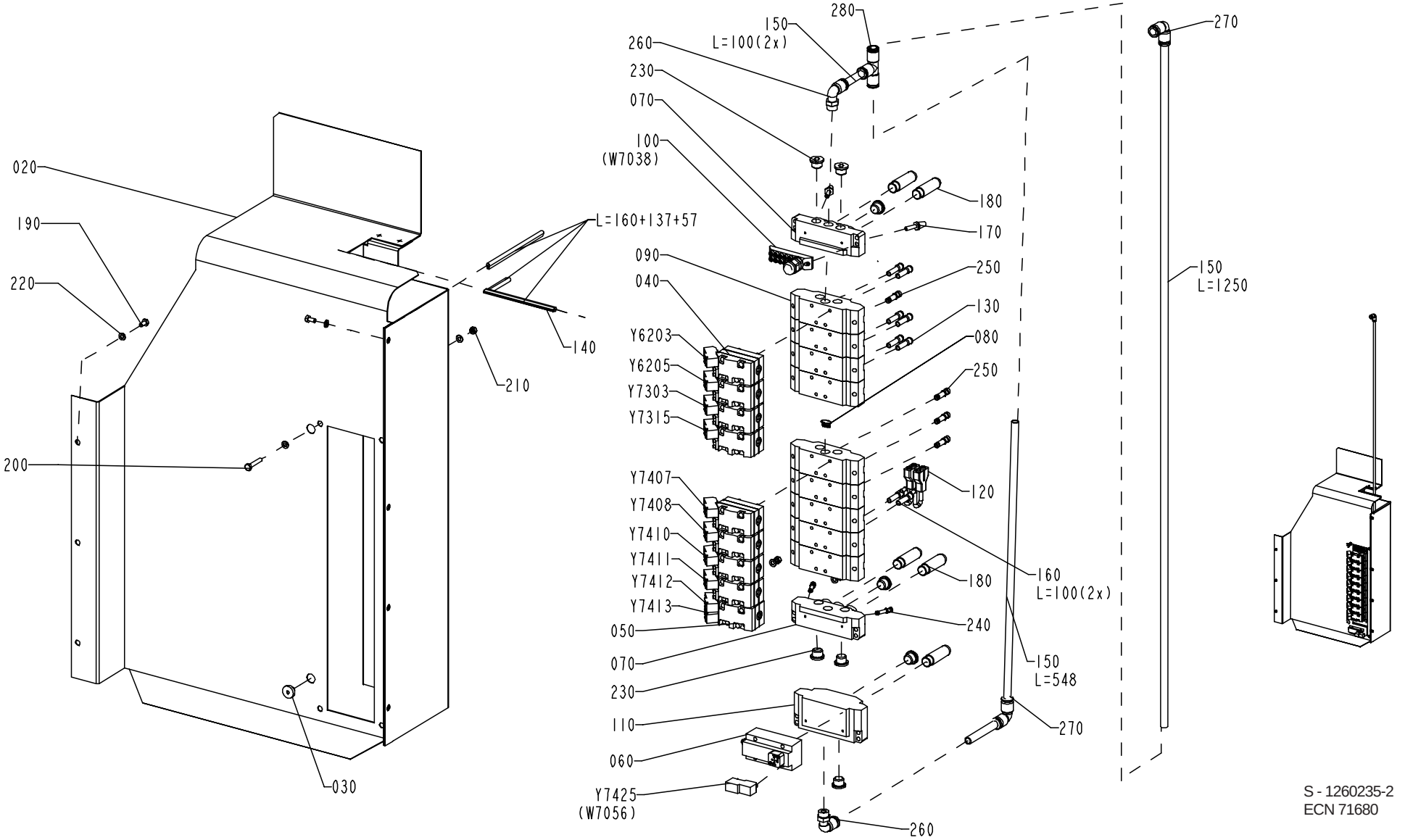

S - 1260235-2
ECN 71680

Pos	Part No	SP	UN	Qty	Description	Page No
Common parts						
010	1129998-0000	-		1	PNEUMATIC DIAGRAM	
020	1348438-0000	-		1	MOUNTING PLATE	
030	90015-0020	-		2	GLANDS,Lead-in,IP67	
040	90042-0215	N		8	Pneumatic valve ISO 1, 5/2 Unistable	
050	90042-0221	Q		1	Pneumatic valve ISO 1, 5/2 Bistable	
060	90042-0265	D		1	High speed venting valve 583-590-000-1	
070	90042-0522	Q		2	Ported end piece ISO 1	
080	90042-0528	N		1	Blanking kit seals ISO 1	
090	90042-0532	Q		9	Base plate ISO 1	
100	90042-0535	Q		1	Terminal module 19 cords	
110	90042-0545	D		1	Base plate softstart	
120	90055-0100	Q		2	Y-connection, 6-6	
130	90055-0171	-		8	Reducer-8/6	
140	90143-0060	-	MM	194	EDGE STRIP 9,5x6,3mm Black PVC	
150	90166-0068	-	MM	2000	TUBE 12 mm PA Blue	
160	90166-0081	-	MM	200	TUBE 6/4 PA Blue	
170	90328-0017	Q		2	SILENCER, d=6 mm	
180	90328-0024	Q		5	SILENCER G3/8	
190	312105-0366	-		7	SCREW M6S ISO 4017 M6x12 A280	
200	312109-0376	-		4	SCREW M6S ISO 4017 M6X35 A280	
210	312605-0316	-		4	NUT,HEXAGON A280 M6M6	
220	315105-0153	-		15	WASHER,PLAIN ROUND 6,4x12 Stainless	
230	342713-0211	-		8	PLUG,EXT.G-THREAD,HEXAGON SOCKET G3/8"	
240	342715-0102	-		2	Blind plug 6 mm	
250	342715-0103	-		4	Blind plug 8 mm	
260	342732-0110	-		2	ELBOW PIPE JOINT,Ext.thread,D=12 mm G3/8	
270	342735-0109	-		2	Elbow pipe joint 12x12 mm	
280	342748-0109	-		1	T-CONNECTION 12 mm	
Y6203	90042-0538	N		1	Pilot valve, L=350 mm	
Y6205	90042-0538	N		1	Pilot valve, L=350 mm	
Y7303	90042-0538	N		1	Pilot valve, L=350 mm	
Y7315	90042-0538	N		1	Pilot valve, L=350 mm	
Y7407	90042-0538	N		1	Pilot valve, L=350 mm	
Y7408	90042-0538	N		1	Pilot valve, L=350 mm	
Y7410	90042-0538	N		1	Pilot valve, L=350 mm	
Y7411	90042-0538	N		1	Pilot valve, L=350 mm	
Y7412	90042-0538	N		1	Pilot valve, L=350 mm	
Y7413	90042-0538	N		1	Pilot valve, L=350 mm	
Y7425	90042-0585	D		1	Pilot valve, L=200 mm	

Pos	Part No	SP	UN	Qty	Description	Page No

COVERING PANEL

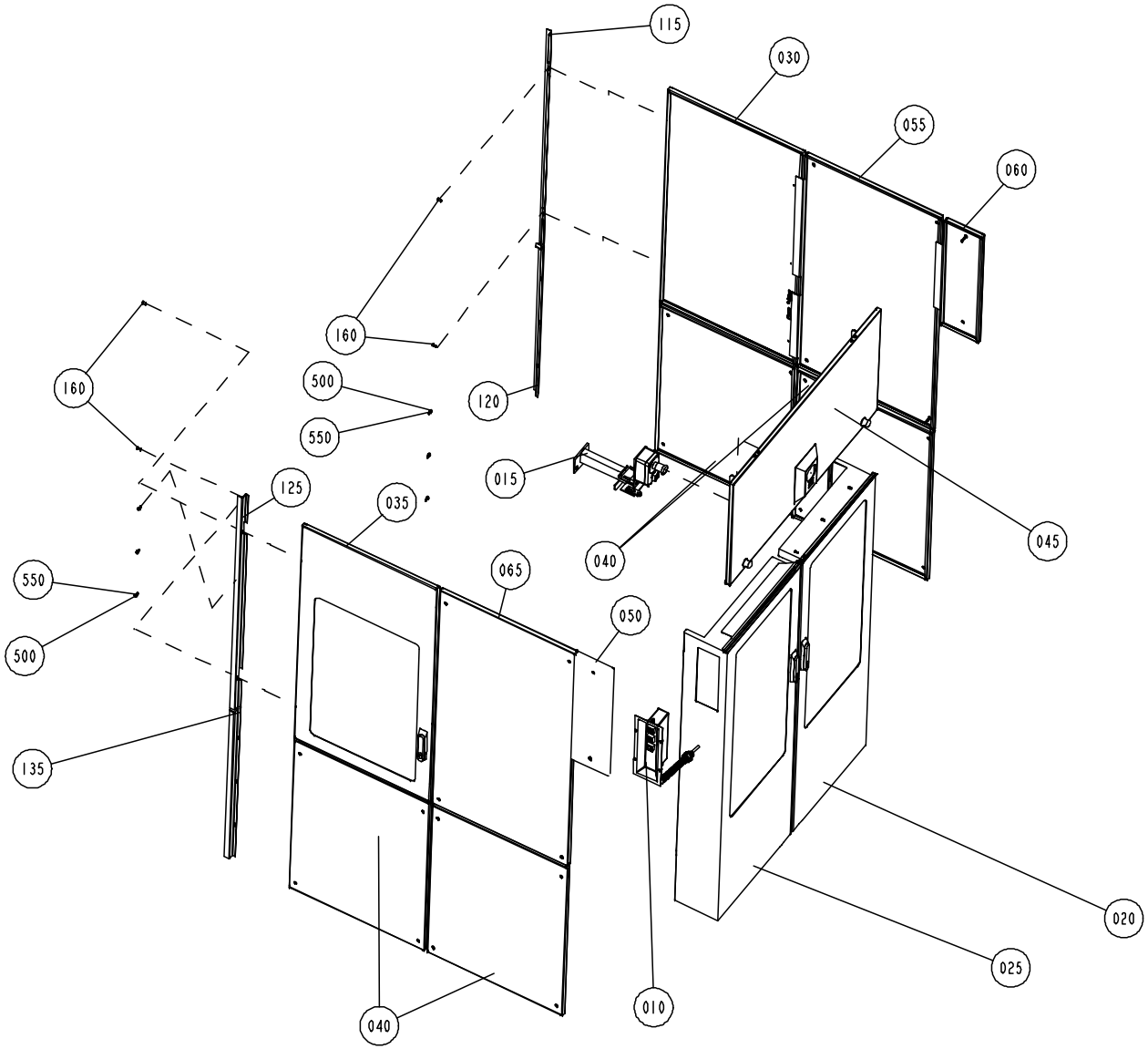

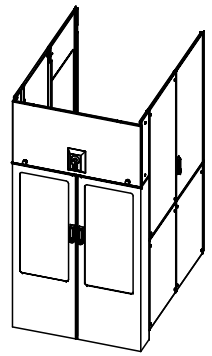

S - 1035088-6
ECN 71911

Pos	Part No	SP	UN	Qty	Description	Page No
TBA ASU						
010	A1095793-0400	-		1	CONTROL PANEL	**625**
065	A1035323-0200	-		1	COVER	**647**
Common parts						
015	A1035313-0200	-		1	EMERGENCY STOP	**627**
020	A1035314-0100	-		1	DOOR	**629**
025	A1035315-0100	-		1	DOOR	**631**
030	A1035316-0200	-		1	DOOR	**633**
035	A1035317-0200	-		1	DOOR	**635**
040	A1035318-0200	-		4	COVER	**637**
045	A1035319-0200	-		1	DOOR	**639**
050	A 591321-0100	-		1	COVER	**641**
055	A1035321-0200	-		1	COVER	**643**
060	A 591322-0100	-		1	COVER	**645**
115	1037828-0000	-		1	COVER SLIP	
120	1037829-0000	-		1	COVER SLIP	
125	1037830-0000	-		1	COVER SLIP	
135	1140009-0000	-		1	COVER SLIP	
160	1129767-0000	-		4	SCREW	
500	312115-0327	-		6	SCREW MC6S ISO 4762 M5X12 A280	
550	315105-0146	-		6	WASHER,PLAIN ROUND 5,3x10 Stainless	

Pos	Part No	SP	UN	Qty	Description	Page No

CONTROL PANEL

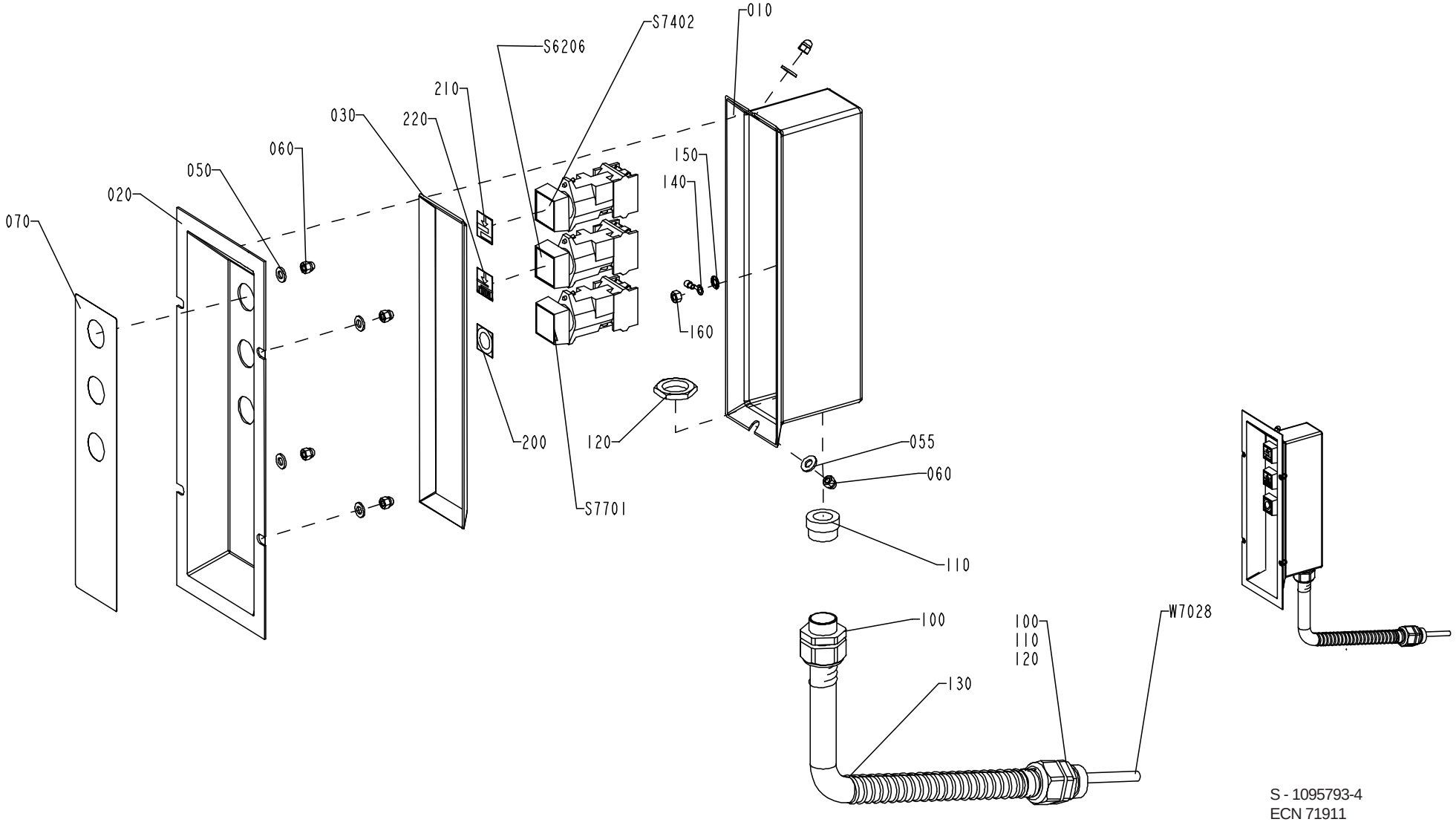

S - 1095793-4
ECN 71911

Pos	Part No	SP	UN	Qty	Description	Page No
Common parts						
010	1037097-0000	-		1	PUSH BUTTON BOX	
020	1037098-0000	-		1	LID	
030	90143-0069	-	MM	800	RUBBER STRIP	
050	315105-0153	-		4	WASHER,PLAIN ROUND 6,4x12 Stainless	
055	315105-0156	-		2	WASHER BRB 6,7x14 RFR	
060	312705-0314	-		6	NUT,DOMED CAP,HEXAGON,M5	
070	1037142-0000	-		1	FOIL	
100	353243-0005	-		2	GLANDS,HOSE,EXTENDED WITHOUT INSERT PG16	
110	353249-0014	-		2	GLAND,INSERT,SINGLE HOLE,EXTE.11,5-15,5	
120	90099-0110	-		2	NUT PR 22,5 (PG16)	
130	90152-0051	-	MM	480	GLANDS,HOSE 25x18	
140	353101-0122	-		1	CABLE SHOE	
150	90062-0040	-		1	WASHER,Lock 5,3x 10, T= 0,6 DIN 6798	
160	312605-0314	-		1	NUT,HEXAGON,M6M5 Stainless	
200	359301-0110	-		1	SIGN "SHORT STOP"	
210	359301-0100	-		1	SIGN "SPLICING"	
220	359301-0101	-		1	SIGN	
S6206	B 90064-0082	R		1	PUSH BUTTON WHITE	
S7402	B 90064-0082	R		1	PUSH BUTTON WHITE	
S7701	90064-0084	R		1	PUSH BUTTON YELLOW	
W7028	351150-0406	-	MM	5000	CABLE OLFLEX 7x0,75 MM2	

Pos	Part No	SP	UN	Qty	Description	Page No

EMERGENCY STOP

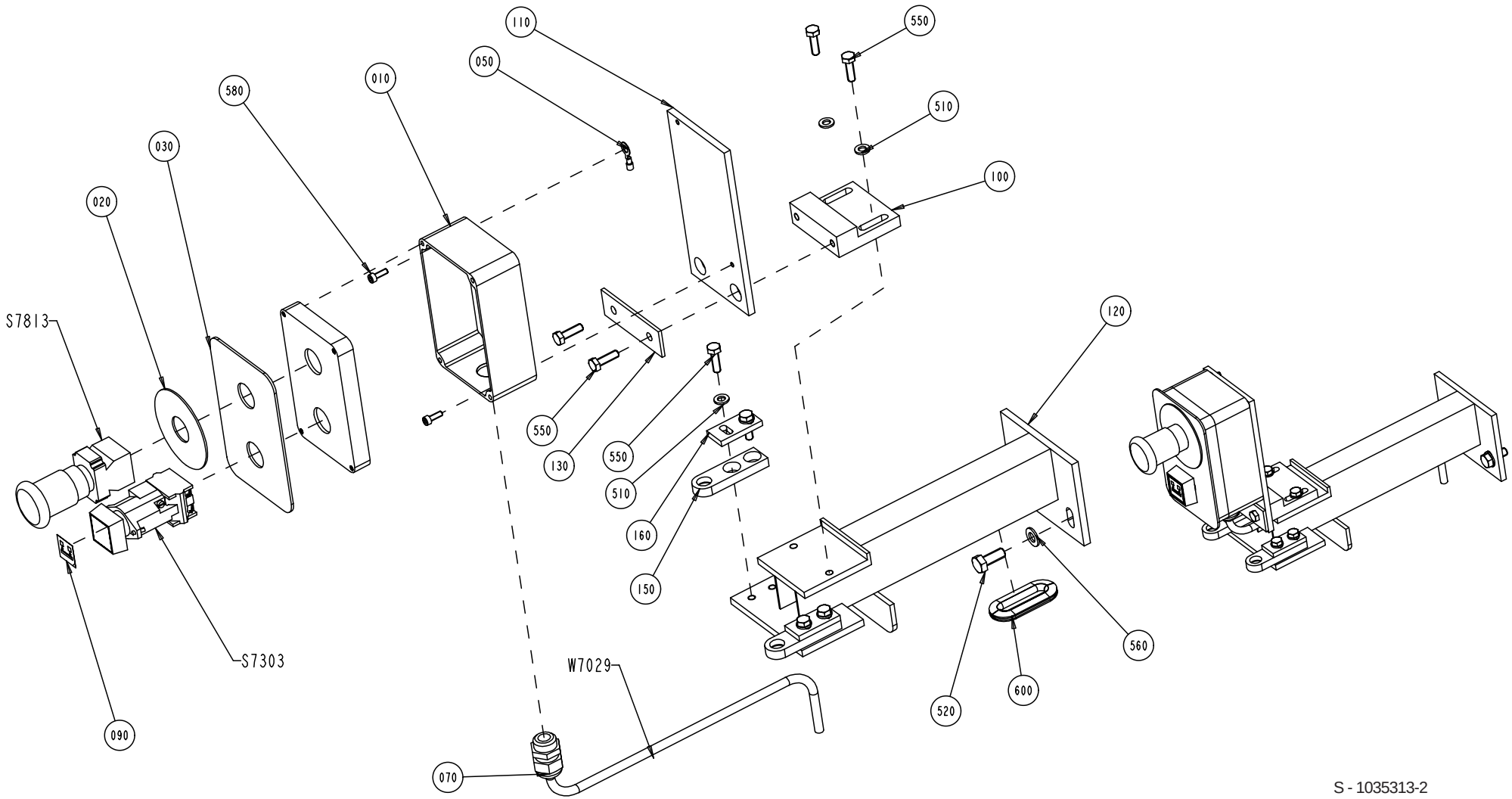

S - 1035313-2
ECN 71019

Pos	Part No	SP	UN	Qty	Description	Page No
Common parts						
010	1254022-0000	-		1	PUSH BUTTON BOX	
020	486826-0001	-		1	SIGN "EMERGENCY STOP"	
030	1040990-0000	-		1	RUBBER PLATE	
050	353101-0123	-		1	CABLE SHOE 0,5-1,5mm2 Red	
070	352103-0106	-		1	CABLE GLAND ST 11	
090	359301-0488	-		1	SIGN "MATERIAL LOCKING"	
100	591324-0000	-		1	HOLDER	
110	1254003-0000	-		1	BRACKET	
120	1254004-0000	-		1	BRACKET	
130	591325-0000	-		1	WASHER	
150	1038903-0000	-		2	BRACKET	
160	1038904-0000	-		2	WASHER	
510	315105-0153	-		6	WASHER,PLAIN ROUND 6,4x12 Stainless	
520	312105-0451	-		2	SCREW M6S ISO 4017 8x20 A280	
550	312105-0370	-		8	SCREW M6S ISO 4017 M6x20 A280	
560	315105-0165	-		2	WASHER,PLAIN ROUND 8,4x16 Stainless	
580	312115-0291	-		2	SCREW MC6S ISO 4762 M4x12 A280	
600	90143-0060	-	MM	120	EDGE STRIP 9,5x6,3mm Black PVC	
S7303	B 90064-0082	Q		1	PUSH BUTTON WHITE	
S7813	90064-0124	D		1	SWITCH,EMERGENCY STOP	
W7029	351150-0406	-	M	5	CABLE OLFLEX 7x0,75 MM2	

Pos	Part No	SP	UN	Qty	Description	Page No

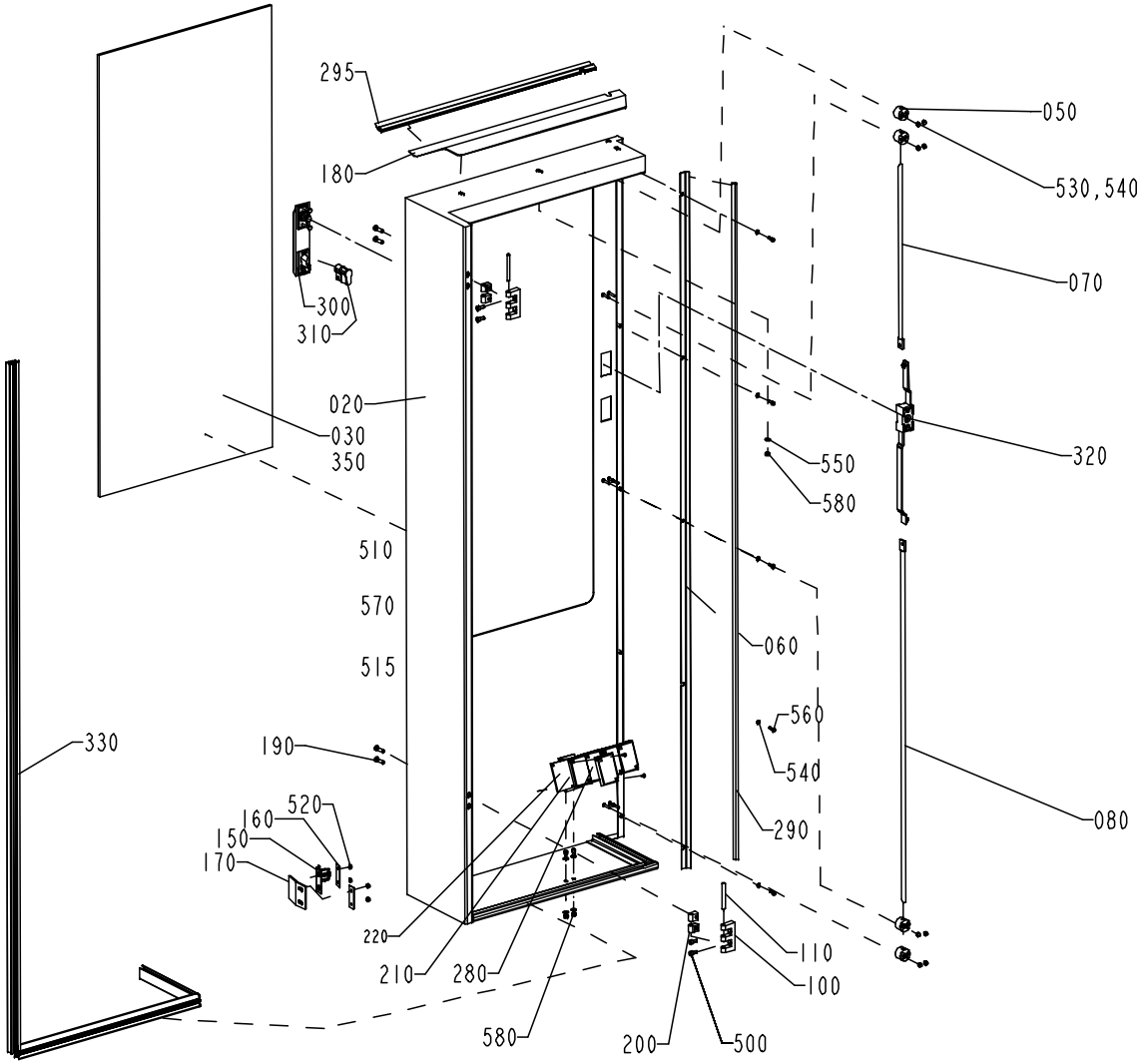

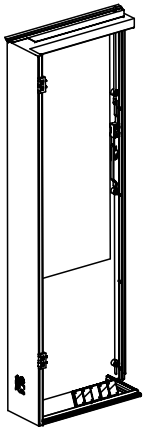

S - 1035314-1
ECN 71911

Pos	Part No	SP	UN	Qty	Description	Page No
Common parts						
020	1040981-0000	-		1	DOOR	
030	1037201-0000	-		1	GLASS PANE	
050	1129274-0000	-		4	GUIDE LUG	
060	1038901-0000	-		1	RIM	
070	1036304-0009	-		1	LOCKING ARM	
080	1036304-0010	-		1	LOCKING ARM	
100	1035792-0000	-		2	E-HINGE	
110	988685-0000	-		2	PIN	
150	975917-0000	-		1	KEY FOR SAFETY SWITCH 90044-103	
160	1036563-0000	-		2	WASHER	
170	1040993-0000	-		1	MOUNTING SHEET	
180	1038899-0000	-		1	RIM	
190	1129767-0000	-		4	SCREW	
200	1129770-0000	-		4	BLOCKING PIECE	
210	1348902-0000	-		1	BRACKET	
220	1484717-0000	-		1	PLATE	
280	90232-0333	-		5	Reflector E39-R1	
290	90143-0059	-	MM	1500	SEAL STRIP 4610069	
295	90143-0050	-	MM	550	STRIP	
300	90237-0126	-		1	TURNING HANDLE "REPBY 90237-175	
310	90237-0128	-		1	LOCK CYLINDER	
320	90237-0153	-		1	LOCK HOUSING	
330	90143-0089	-	MM	2250	RUBBER STRIP	
350	90157-0041	-	L	x	SEALING COMPOUND	
500	312115-0327	-		4	SCREW MC6S ISO 4762 M5X12 A280	
510	312115-0327	-		2	SCREW MC6S ISO 4762 M5X12 A280	
515	315101-0146	-		2	WASHER BRB 5,3x10 FZB	
520	312605-0312	-		4	NUT,HEXAGON,M4 RFR	
530	312705-0312	-		8	NUT,DOMED CAP,HEXAGON,M4	
540	315105-0136	-		13	WASHER,PLAIN ROUND 4,3x8 Stainless	
550	315105-0146	-		3	WASHER,PLAIN ROUND 5,3x10 Stainless	
560	312115-0291	-		5	SCREW MC6S ISO 4762 M4x12 A280	
570	312125-0222	-		10	SLOTTED CHEESE HEAD ISO 1207 M3x8 RFR	
580	312605-0314	-		5	NUT,HEXAGON,M6M5 Stainless	

Pos	Part No	SP	UN	Qty	Description	Page No

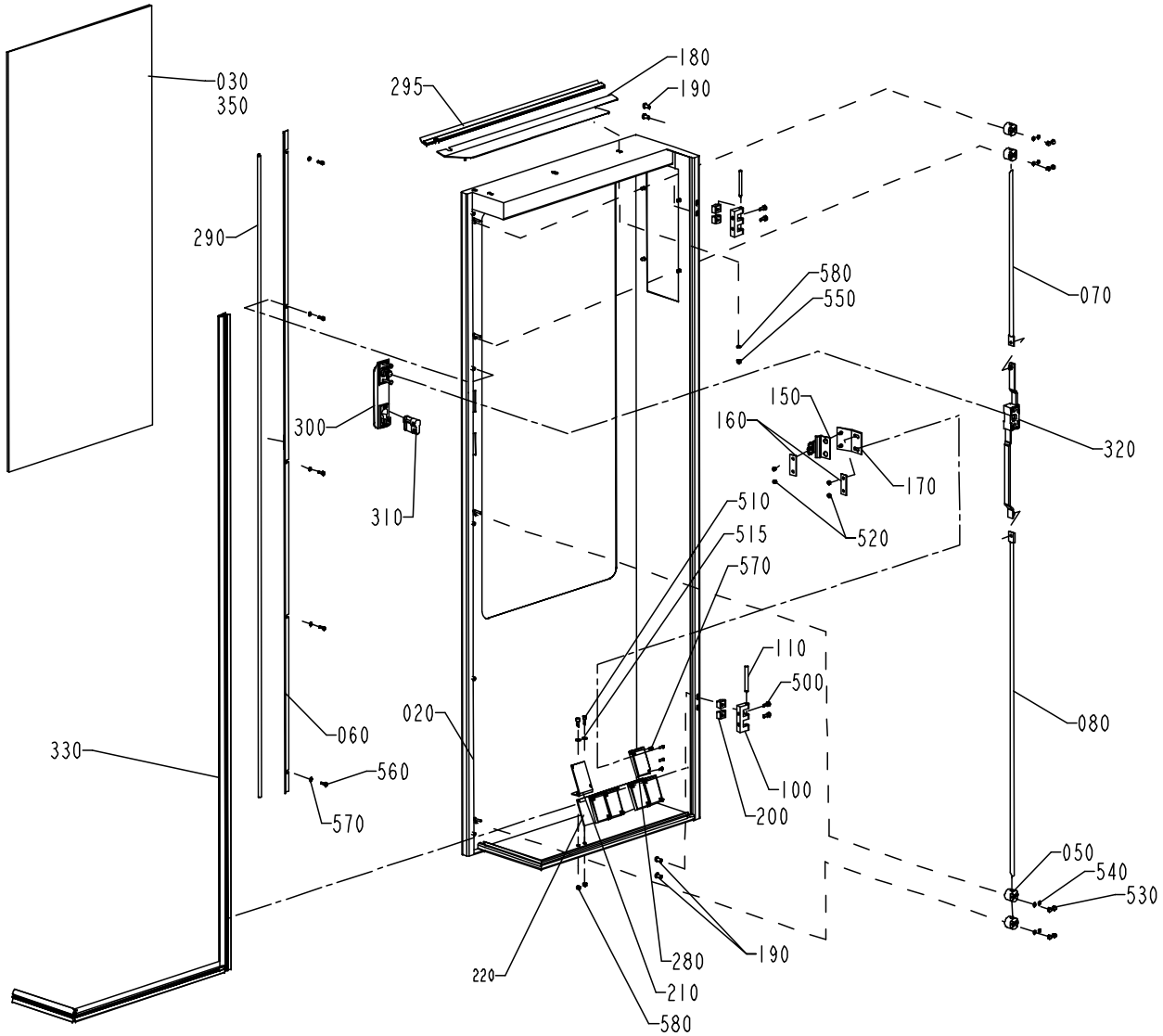

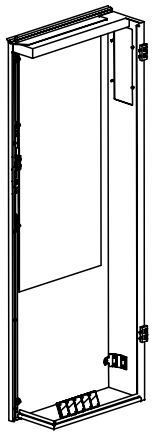

S - 1035315-1
ECN 71911

Pos	Part No	SP	UN	Qty	Description	Page No
Common parts						
020	1040982-0000	-		1	DOOR	
030	1037201-0000	-		1	GLASS PANE	
050	1129274-0000	-		4	GUIDE LUG	
060	1038901-0000	-		1	RIM	
070	1036304-0009	-		1	LOCKING ARM	
080	1036304-0010	-		1	LOCKING ARM	
100	1035792-0000	-		2	E-HINGE	
110	988685-0000	-		2	PIN	
150	975917-0000	-		1	KEY FOR SAFETY SWITCH 90044-103	
160	1036563-0000	-		2	WASHER	
170	1040993-0000	-		1	MOUNTING SHEET	
180	1038900-0000	-		1	RIM	
190	1129767-0000	-		4	SCREW	
200	1129770-0000	-		4	BLOCKING PIECE	
210	1348902-0000	-		1	BRACKET	
220	1484717-0000	-		1	PLATE	
280	90232-0333	-		5	Reflector E39-R1	
290	90143-0059	-	MM	1500	SEAL STRIP 4610069	
295	90143-0050	-	MM	550	STRIP	
300	90237-0126	-		1	TURNING HANDLE "REPBY 90237-175	
310	90237-0128	-		1	LOCK CYLINDER	
320	90237-0153	-		1	LOCK HOUSING	
330	90143-0089	-	MM	2250	RUBBER STRIP	
350	90157-0041	-	L	x	SEALING COMPOUND	
500	312115-0327	-		4	SCREW MC6S ISO 4762 M5X12 A280	
510	312115-0327	-		2	SCREW MC6S ISO 4762 M5X12 A280	
515	315101-0146	-		2	WASHER BRB 5,3x10 FZB	
520	312605-0312	-		4	NUT,HEXAGON,M4 RFR	
530	312705-0312	-		8	NUT,DOMED CAP,HEXAGON,M4	
540	315105-0136	-		8	WASHER,PLAIN ROUND 4,3x8 Stainless	
550	315105-0146	-		3	WASHER,PLAIN ROUND 5,3x10 Stainless	
560	312115-0291	-		5	SCREW MC6S ISO 4762 M4x12 A280	
570	312125-0222	-		10	SLOTTED CHEESE HEAD ISO 1207 M3x8 RFR	
570	315105-0136	-		5	WASHER,PLAIN ROUND 4,3x8 Stainless	
580	312605-0314	-		5	NUT,HEXAGON,M6M5 Stainless	

Pos	Part No	SP	UN	Qty	Description	Page No

DOOR

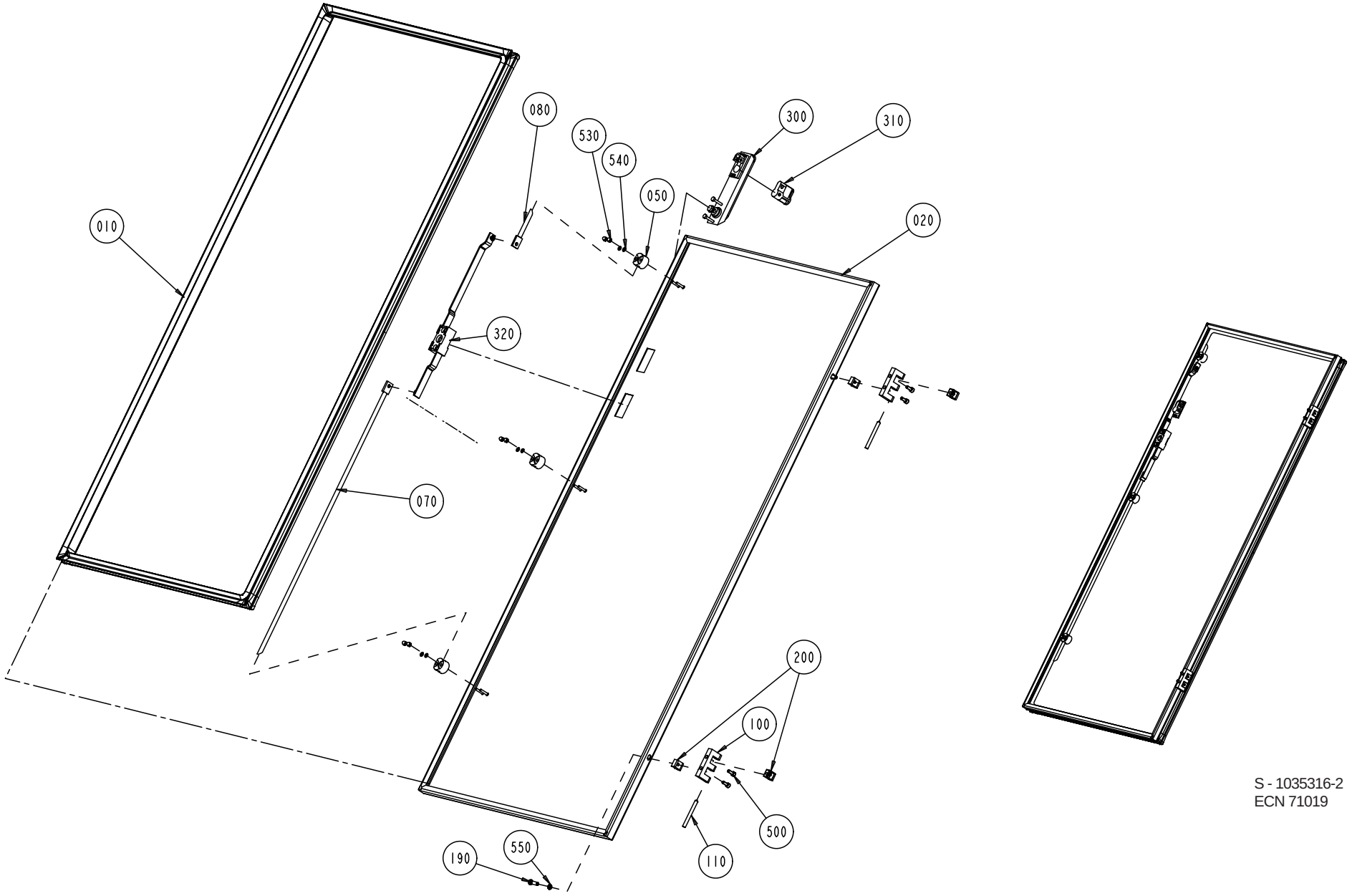

S - 1035316-2
ECN 71019

Pos	Part No	SP	UN	Qty	Description	Page No
Common parts						
010	1279083-0000	-		1	SEALING STRIP	
020	590484-0000	-		1	DOOR	
050	1129274-0000	-		3	GUIDE LUG	
070	1036304-0015	-		1	LOCKING ARM	
080	1036304-0016	-		1	LOCKING ARM	
100	1035792-0000	-		2	E-HINGE	
110	988685-0000	-		2	PIN	
190	1129767-0000	-		2	SCREW	
200	1129770-0000	-		4	BLOCKING PIECE	
300	90237-0126	-		1	TURNING HANDLE "REPBY 90237-175	
310	90237-0128	-		1	LOCK CYLINDER	
320	90237-0153	-		1	LOCK HOUSING	
500	312115-0327	-		4	SCREW MC6S ISO 4762 M5X12 A280	
530	312705-0312	-		6	NUT,DOMED CAP,HEXAGON,M4	
540	315105-0136	-		6	WASHER,PLAIN ROUND 4,3x8 Stainless	
550	315105-0146	-		2	WASHER,PLAIN ROUND 5,3x10 Stainless	

Pos	Part No	SP	UN	Qty	Description	Page No

DOOR

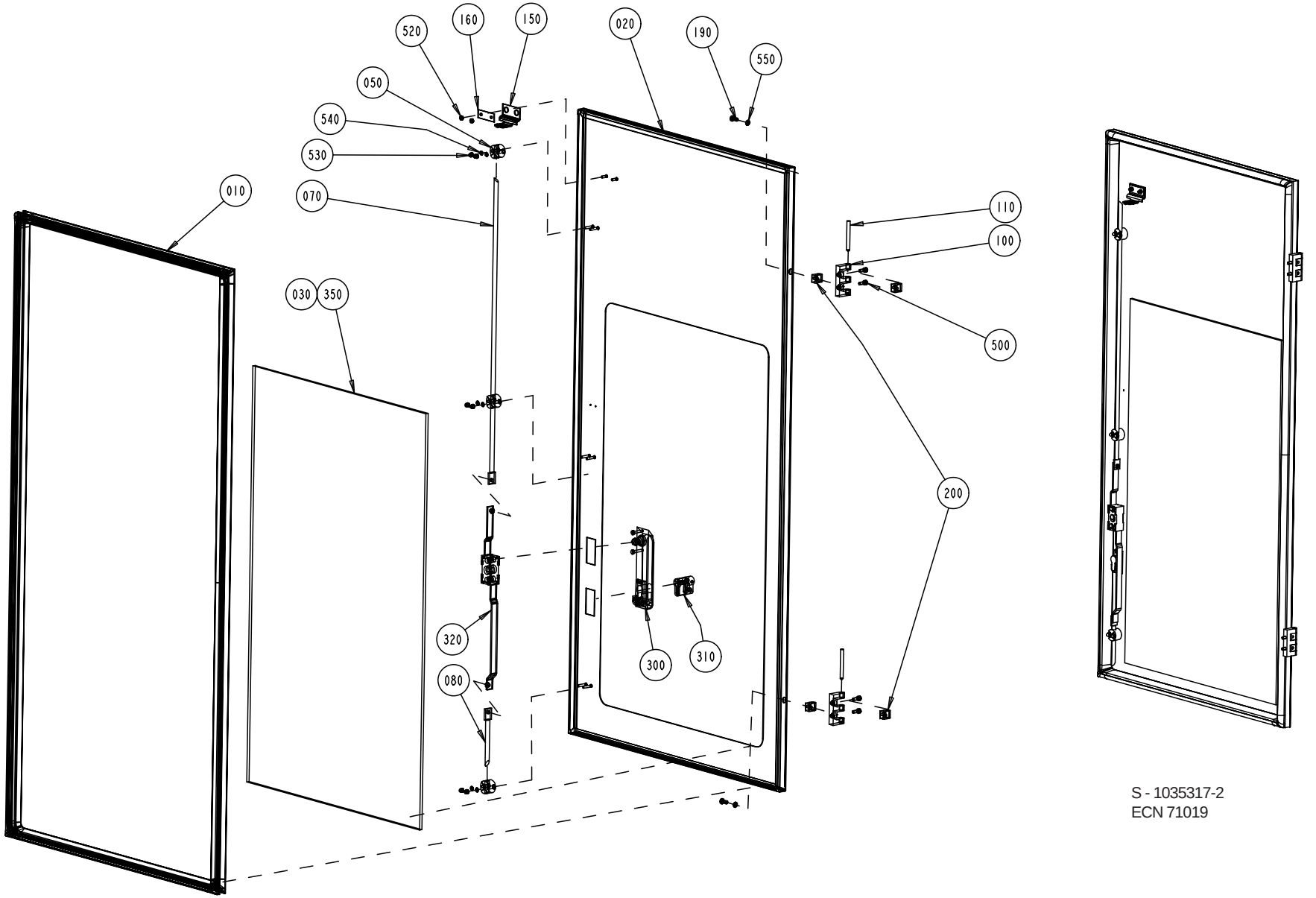

S - 1035317-2
ECN 71019

Pos	Part No	SP	UN	Qty	Description	Page No
Common parts						
010	1279083-0000	-		1	SEALING STRIP	
020	590485-0000	-		1	DOOR	
030	1037202-0000	-		1	GLASS PANE	
050	1129274-0000	-		3	GUIDE LUG	
070	1036304-0015	-		1	LOCKING ARM	
080	1036304-0012	-		1	LOCKING ARM	
100	1035792-0000	-		2	E-HINGE	
110	988685-0000	-		2	PIN	
150	975917-0000	-		1	KEY FOR SAFETY SWITCH 90044-103	
160	1036563-0000	-		1	WASHER	
190	1129767-0000	-		2	SCREW	
200	1129770-0000	-		4	BLOCKING PIECE	
300	90237-0126	-		1	TURNING HANDLE "REPBY 90237-175	
310	90237-0128	-		1	LOCK CYLINDER	
320	90237-0153	-		1	LOCK HOUSING	
350	90157-0041	-		1	SEALING COMPOUND	
500	312115-0327	-		4	SCREW MC6S ISO 4762 M5X12 A280	
520	312605-0312	-		2	NUT,HEXAGON,M4 RFR	
530	312705-0312	-		6	NUT,DOMED CAP,HEXAGON,M4	
540	315105-0136	-		6	WASHER,PLAIN ROUND 4,3x8 Stainless	
550	315105-0146	-		2	WASHER,PLAIN ROUND 5,3x10 Stainless	

Pos	Part No	SP	UN	Qty	Description	Page No

COVER

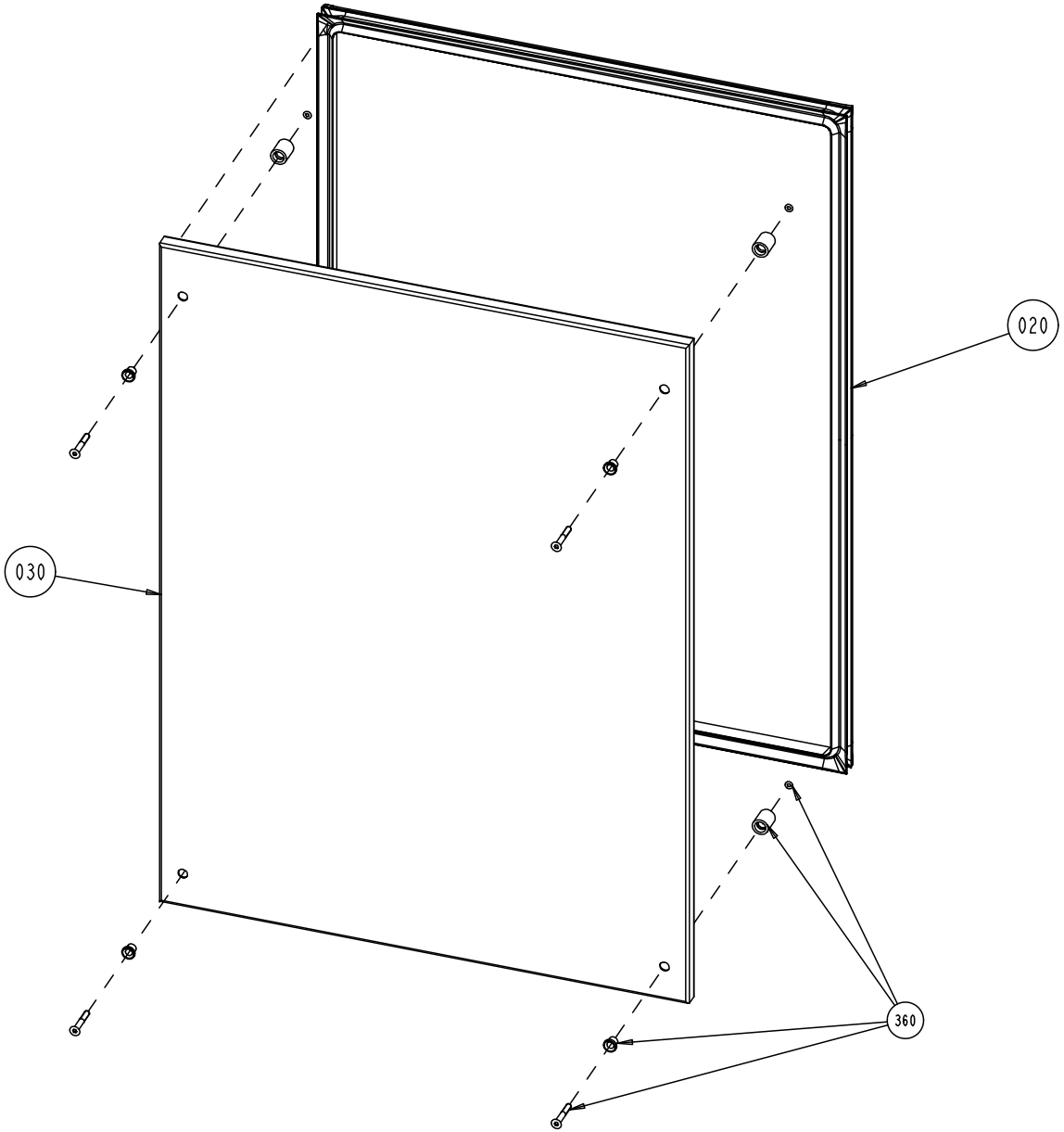

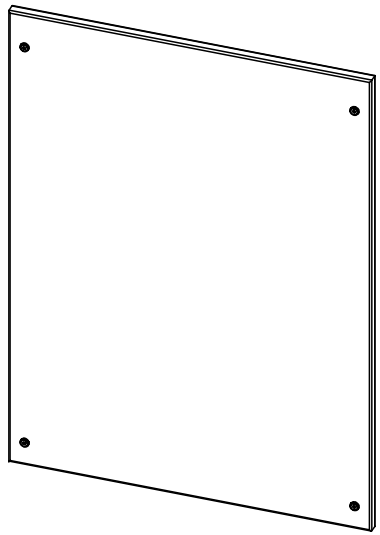

S - 1035318-2
ECN 71019

Pos	Part No	SP	UN	Qty	Description	Page No
Common parts						
020	1279084-0000	-		1	SEALING STRIP	
030	590487-0000	-		1	DOOR	
360	90226-0458	-		4	MOUNTING SCREW	

Pos	Part No	SP	UN	Qty	Description	Page No

DOOR

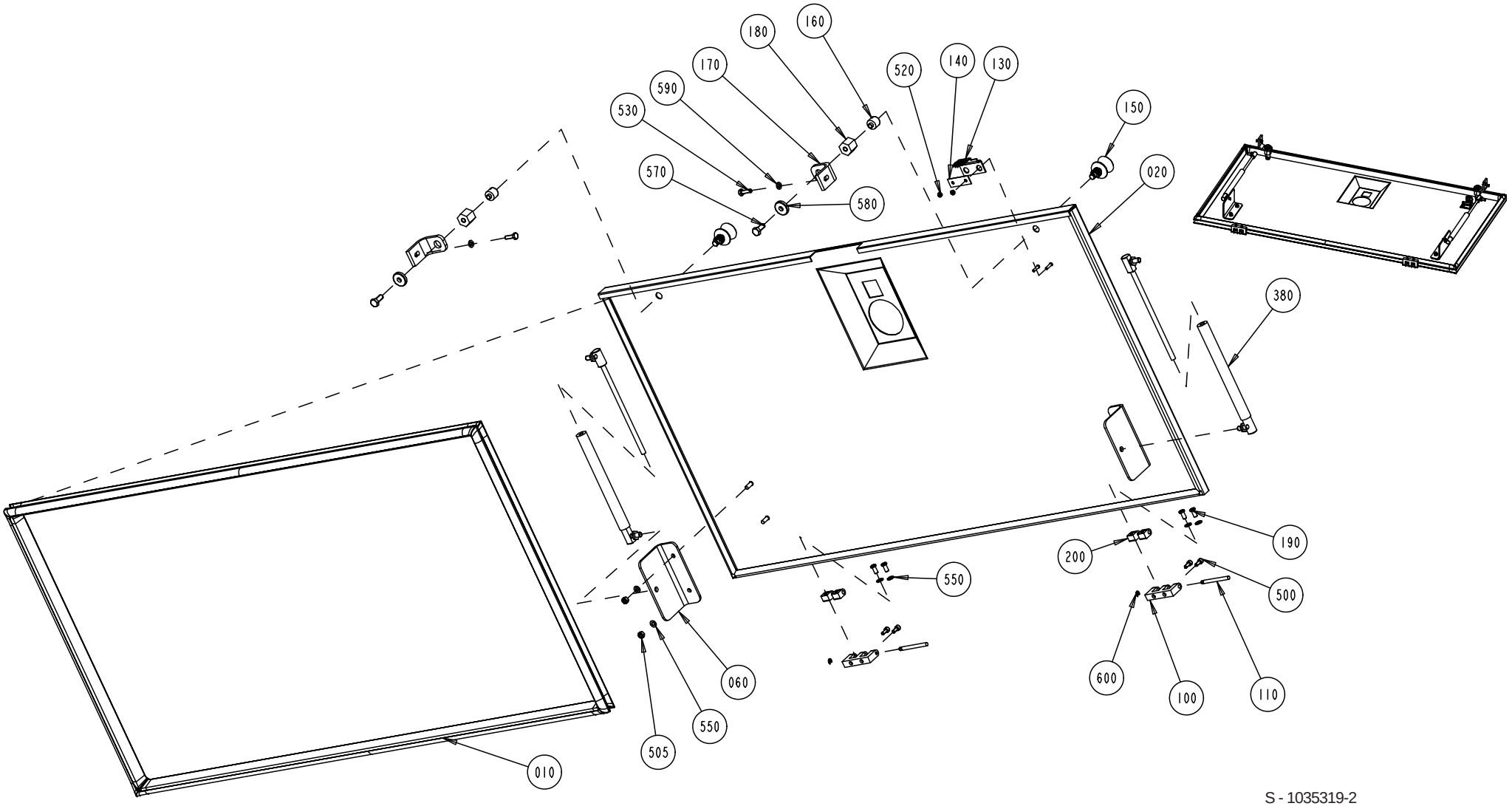

S - 1035319-2
ECN 71019

Pos	Part No	SP	UN	Qty	Description	Page No
Common parts						
010	1296102-0000	-		1	SEALING STRIP	
020	1116138-0000	-		1	HATCH	
060	591323-0000	-		2	HOLDER	
100	1035792-0000	-		2	E-HINGE	
110	1036329-0000	-		2	PIN	
130	975917-0000	-		1	KEY FOR SAFETY SWITCH 90044-103	
140	1036563-0000	-		1	WASHER	
150	90237-0079	-		2	QUICK-ACTION LOCK FSQ-M8	
160	90237-0178	-		2	QUICK-ACTION LOCK	
170	1040991-0000	-		2	ANGLE	
180	1040992-0000	-		2	SPACER NUT	
190	1129767-0000	-		4	SCREW	
200	1129770-0000	-		4	BLOCKING PIECE	
380	90347-0106	R		2	GAS SPRING LIFT-O-MAT 095621 0308 160	
500	312115-0327	-		4	SCREW MC6S ISO 4762 M5X12 A280	
505	312605-0316	-		4	NUT,HEXAGON A280 M6M6	
520	312605-0312	-		2	NUT,HEXAGON,M4 RFR	
530	312105-0370	-		2	SCREW M6S ISO 4017 M6x20 A280	
550	315105-0153	-		8	WASHER,PLAIN ROUND 6,4x12 Stainless	
570	312105-0451	-		2	SCREW M6S ISO 4017 8x20 A280	
580	315125-0165	-		2	WASHERS,PLAIN ROUND,CHAMFERED 8,4X26X5	
590	315105-0153	-		2	WASHER,PLAIN ROUND 6,4x12 Stainless	
600	315755-0106	-		2	RETAINING RINGS,RADIAL ASSEMBLY 4	

Pos	Part No	SP	UN	Qty	Description	Page No

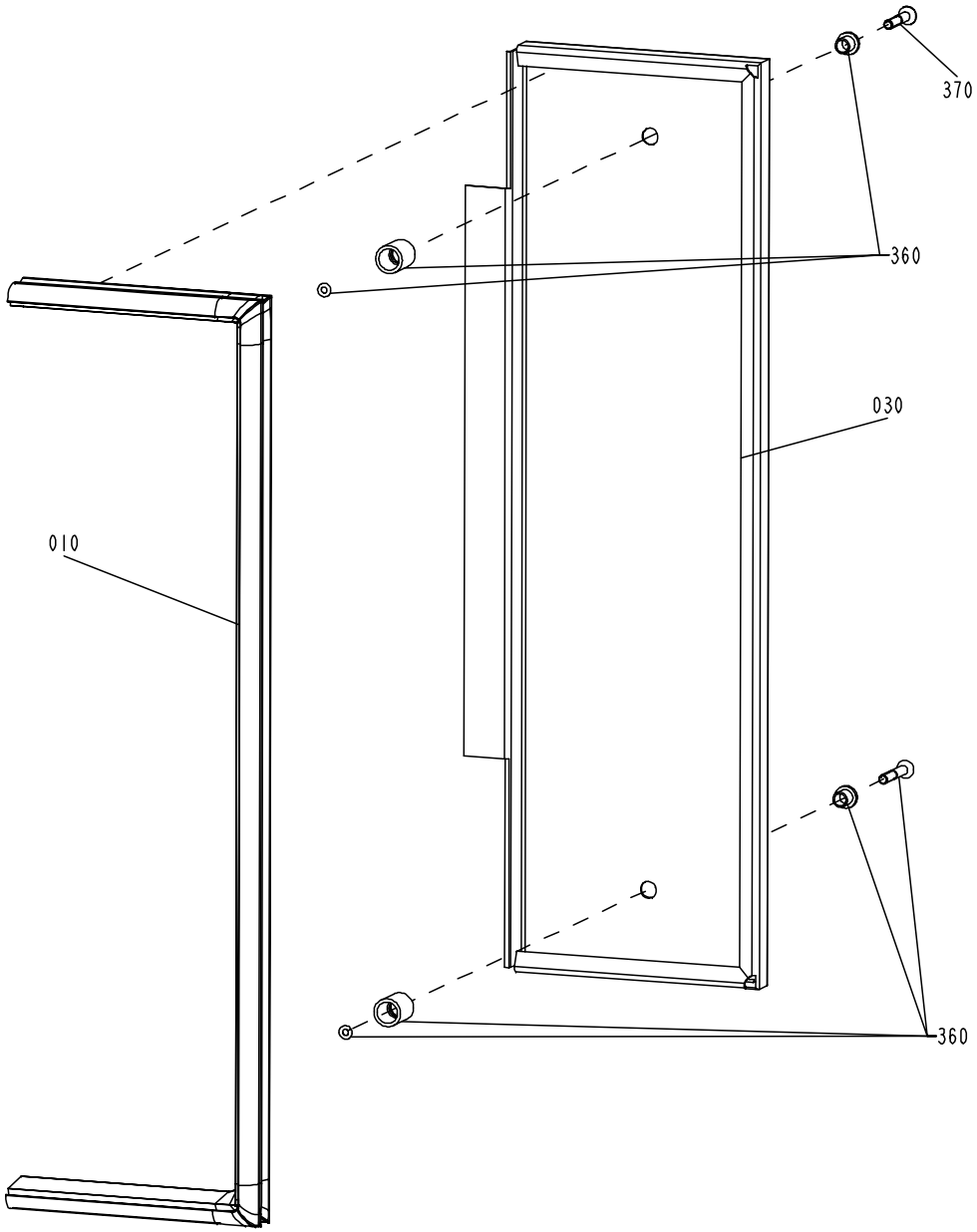

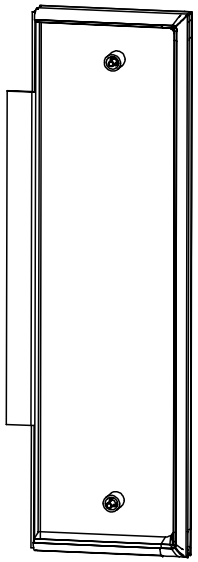

S - 591321-1
ECN 72175

Pos	Part No	SP	UN	Qty	Description	Page No
Common parts						
010	1296103-0000	-		1	SEALING STRIP	
030	1116123-0000	-		1	HATCH	
360	90226-0458	-		2	MOUNTING SCREW	
370	312155-0376	-		1	SCREW MF6S DIN 7991 M6X35 A280	

Pos	Part No	SP	UN	Qty	Description	Page No

COVER

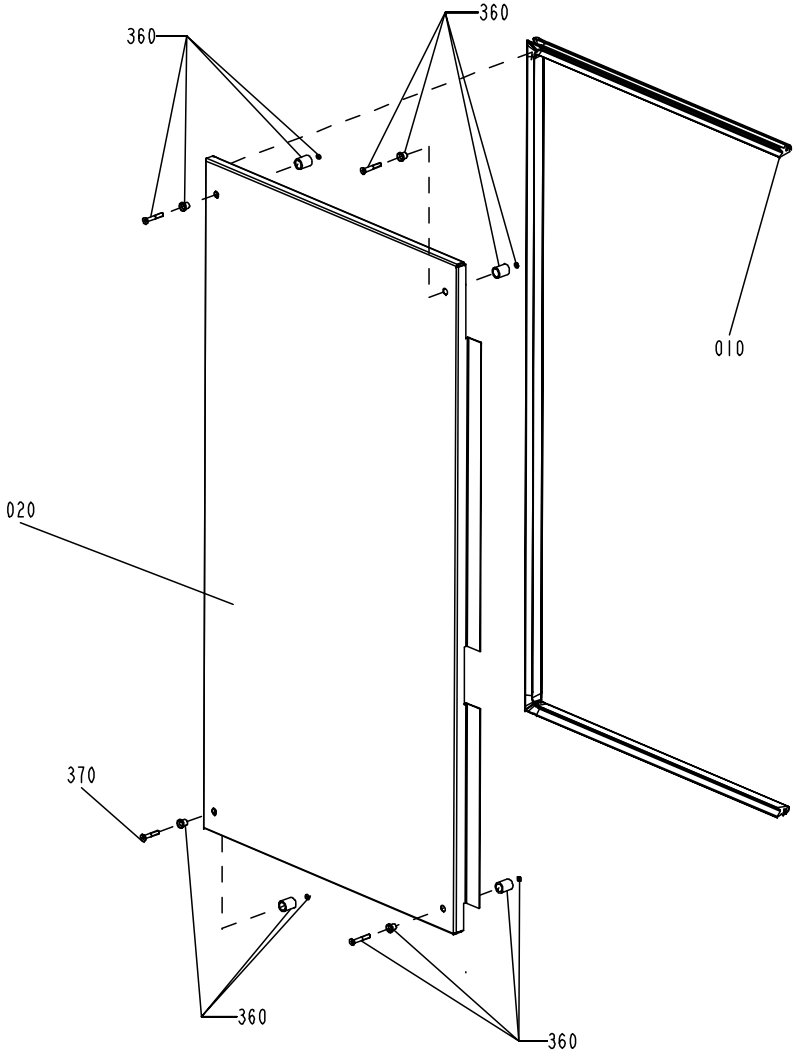

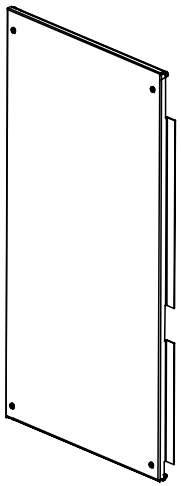

S - 1035321-2
ECN 72175

Pos	Part No	SP	UN	Qty	Description	Page No
Common parts						
010	1296105-0000	-		1	SEALING STRIP	
020	1116046-0000	-		1	HATCH	
360	90226-0458	-		4	MOUNTING SCREW	
370	312155-0376	-		1	SCREW MF6S DIN 7991 M6X35 A280	

Pos	Part No	SP	UN	Qty	Description	Page No

COVER

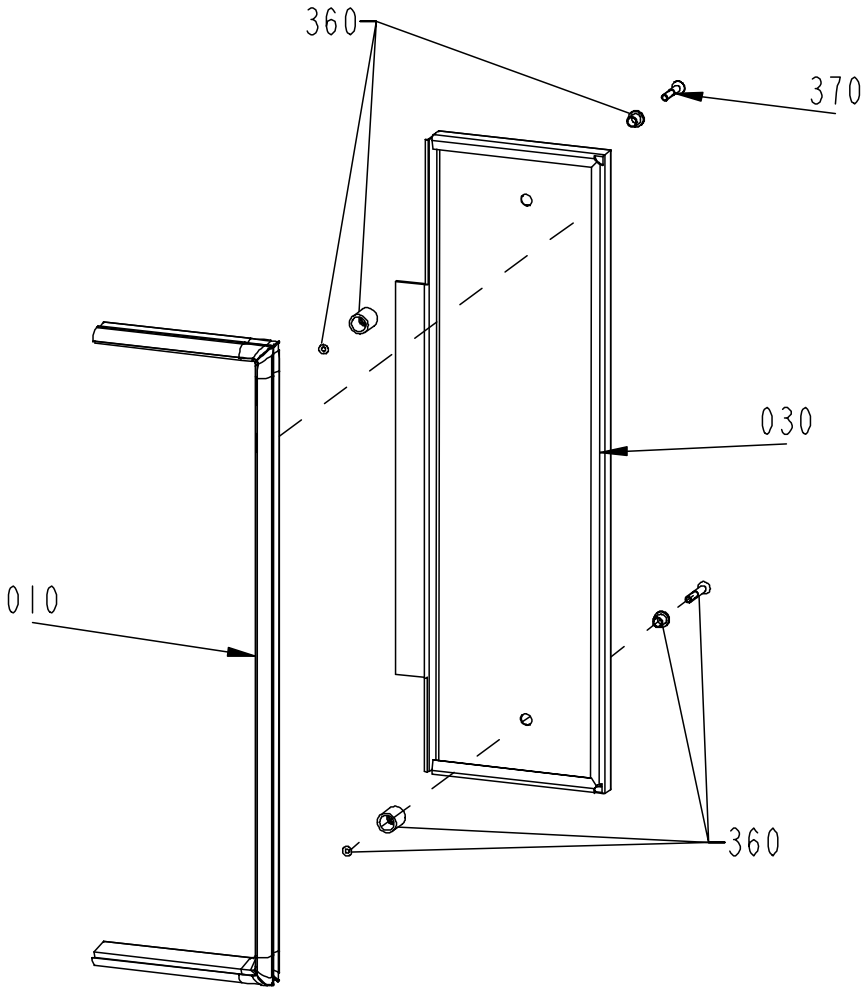

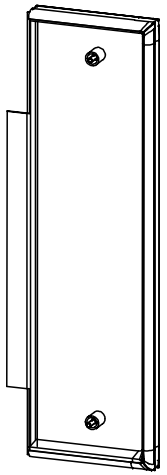

S - 591322-1
ECN 72175

Pos	Part No	SP	UN	Qty	Description	Page No
Common parts						
010	1296103-0000	-		1	SEALING STRIP	
030	1116126-0000	-		1	HATCH	
360	90226-0458	-		2	MOUNTING SCREW	
370	312155-0376	-		1	SCREW MF6S DIN 7991 M6X35 A280	

Pos	Part No	SP	UN	Qty	Description	Page No

COVER

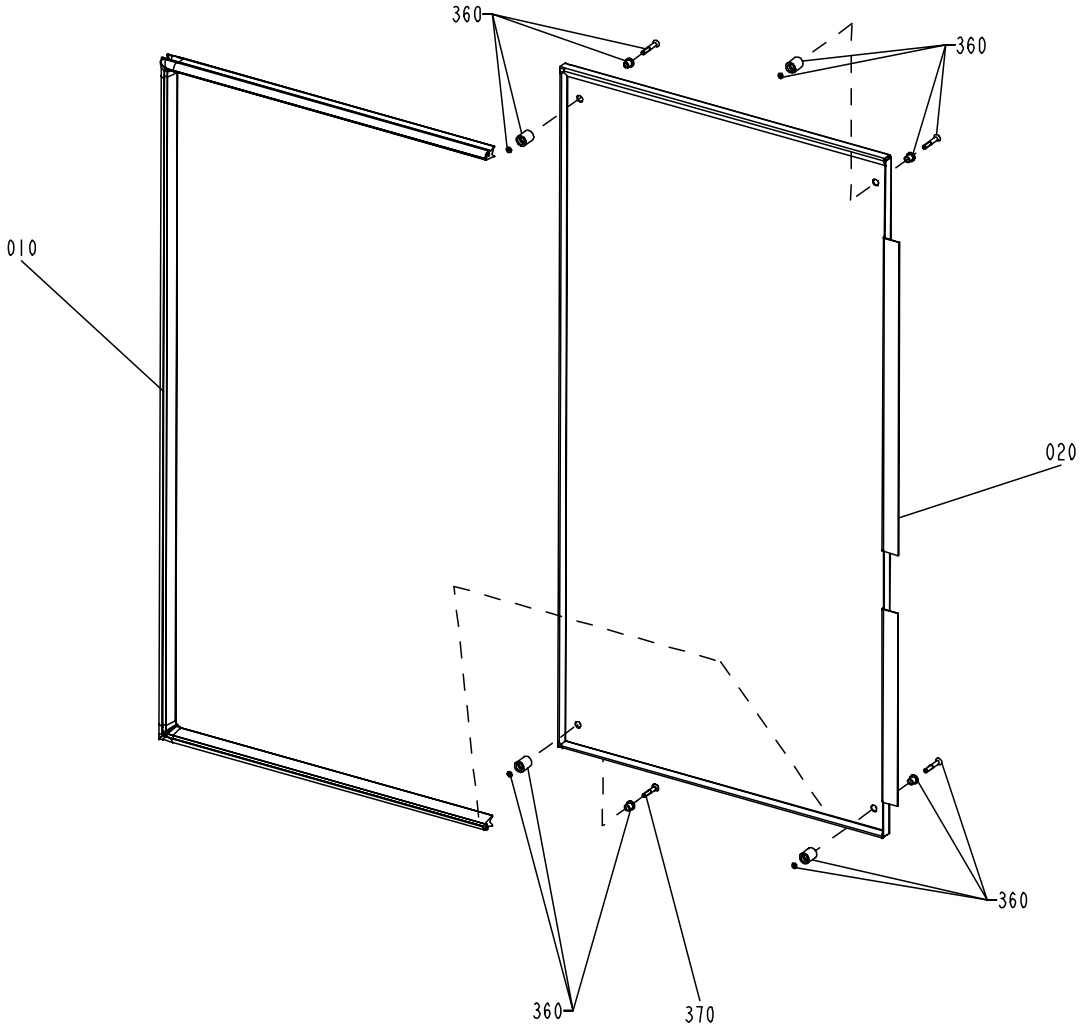

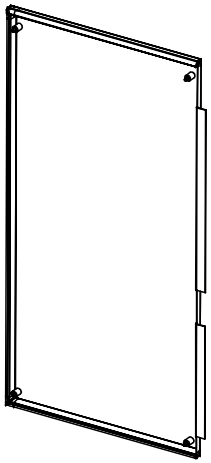

S - 1035323-2
ECN 72175

Pos	Part No	SP	UN	Qty	Description	Page No
Common parts						
010	1296105-0000	-		1	SEALING STRIP	
020	1116047-0000	-		1	HATCH	
360	90226-0458	-		4	MOUNTING SCREW	
370	312155-0376	-		1	SCREW MF6S DIN 7991 M6X35 A280	

Pos	Part No	SP	UN	Qty	Description	Page No

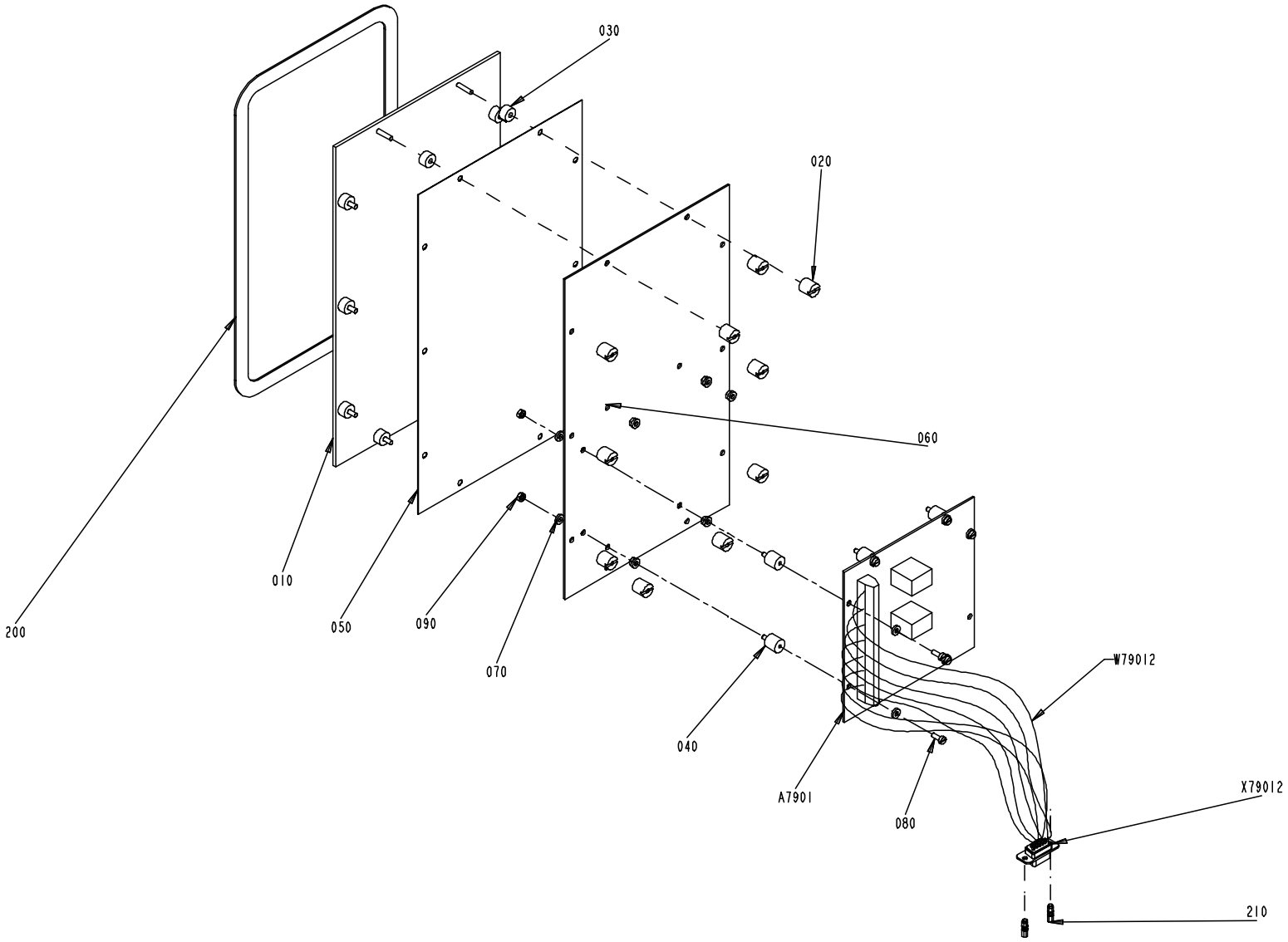

S - 1488009-1
ECN 72226

Pos	Part No	SP	UN	Qty	Description	Page No
Common parts						
010	599556-0000	-		1	WINDOW	
020	970261-0000	-		10	SPACER SCREW 10,2X10MM	
030	971286-0000	-		10	SPACER H=6MM	
040	970262-0000	-		8	SPACER NUT	
050	1361273-0000	-		1	DISPLAY	
060	599251-0000	-		1	CIRCUIT BOARD	
070	1488007-0000	-		16	WASHER	
080	312125-0222	-		8	SLOTTED CHEESE HEAD ISO 1207 M3x8 RFR	
090	312605-0310	-		81	NUT,HEXAGON M6M 3 A2 80	
200	90144-0044	-		1	TAPE Scotch VHB 4945;12,7mm	
210	90110-0382	-		2	Fastening Nut	
A7901	68699-0101	-		1	MULTIPLEXER CARD 56LED	
W79012	351179-0102	-	MM	1000	CABLE AWM BLACK 0,75mm2	
X79012	90110-0141	-		1	CONTACT UNIT	

Pos	Part No	SP	UN	Qty	Description	Page No

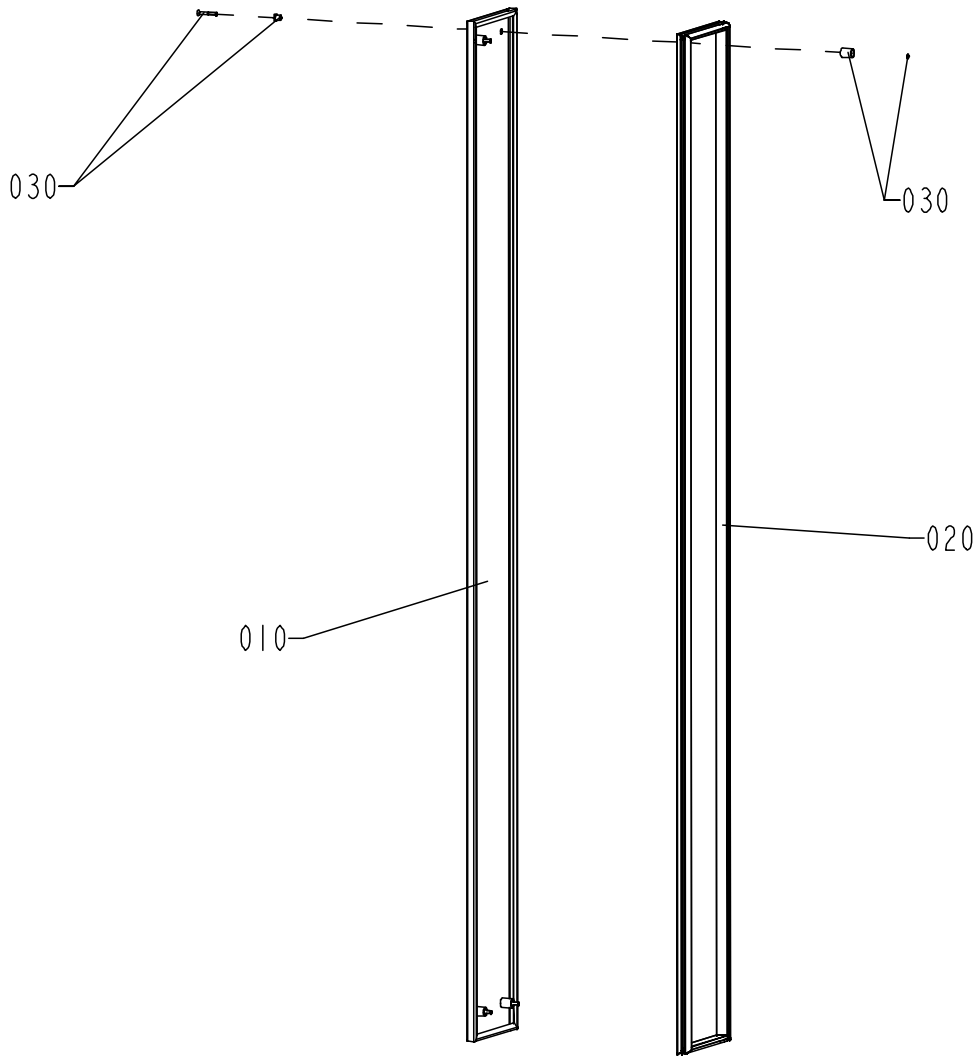

S - 1346904-1
ECN 71634

Pos	Part No	SP	UN	Qty	Description	Page No
Common parts						
010	1346414-0000	-		1	COVER PLATE	
020	1346428-0000	-		1	RUBBER STRIP	
030	90226-0458	-		4	MOUNTING SCREW	

Pos	Part No	SP	UN	Qty	Description	Page No

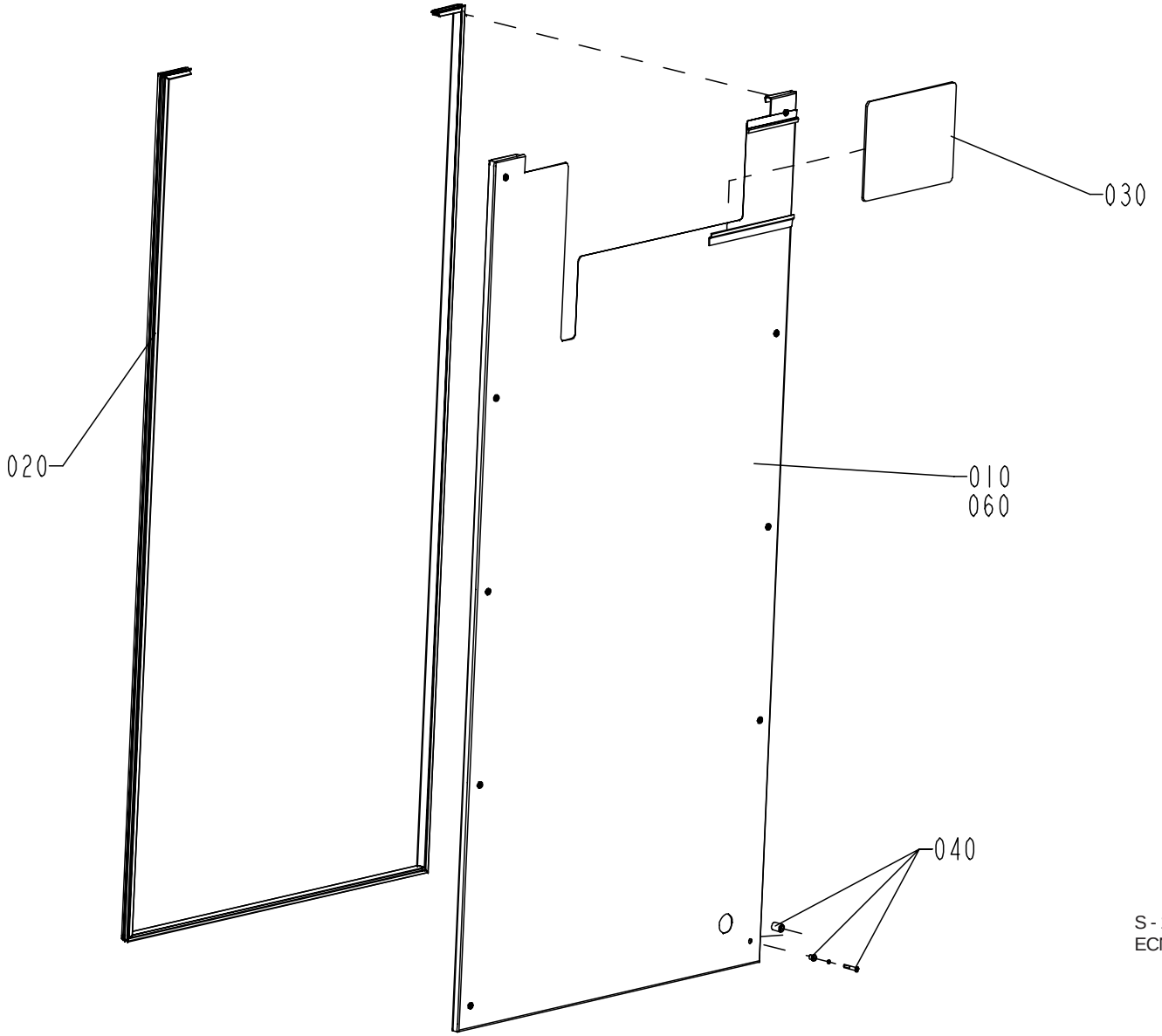

S - 1346903-1
ECN 71634

Pos	Part No	SP	UN	Qty	Description	Page No
Common parts						
010	1346425-0000	-		1	COVER PLATE	
020	1346907-0000	-		1	RUBBER STRIP	
030	1348898-0000	-		1	GLASS	
040	90226-0458	-		10	MOUNTING SCREW	
060	90143-0060	-	M	1	EDGE STRIP 9,5x6,3mm Black PVC	

Pos	Part No	SP	UN	Qty	Description	Page No

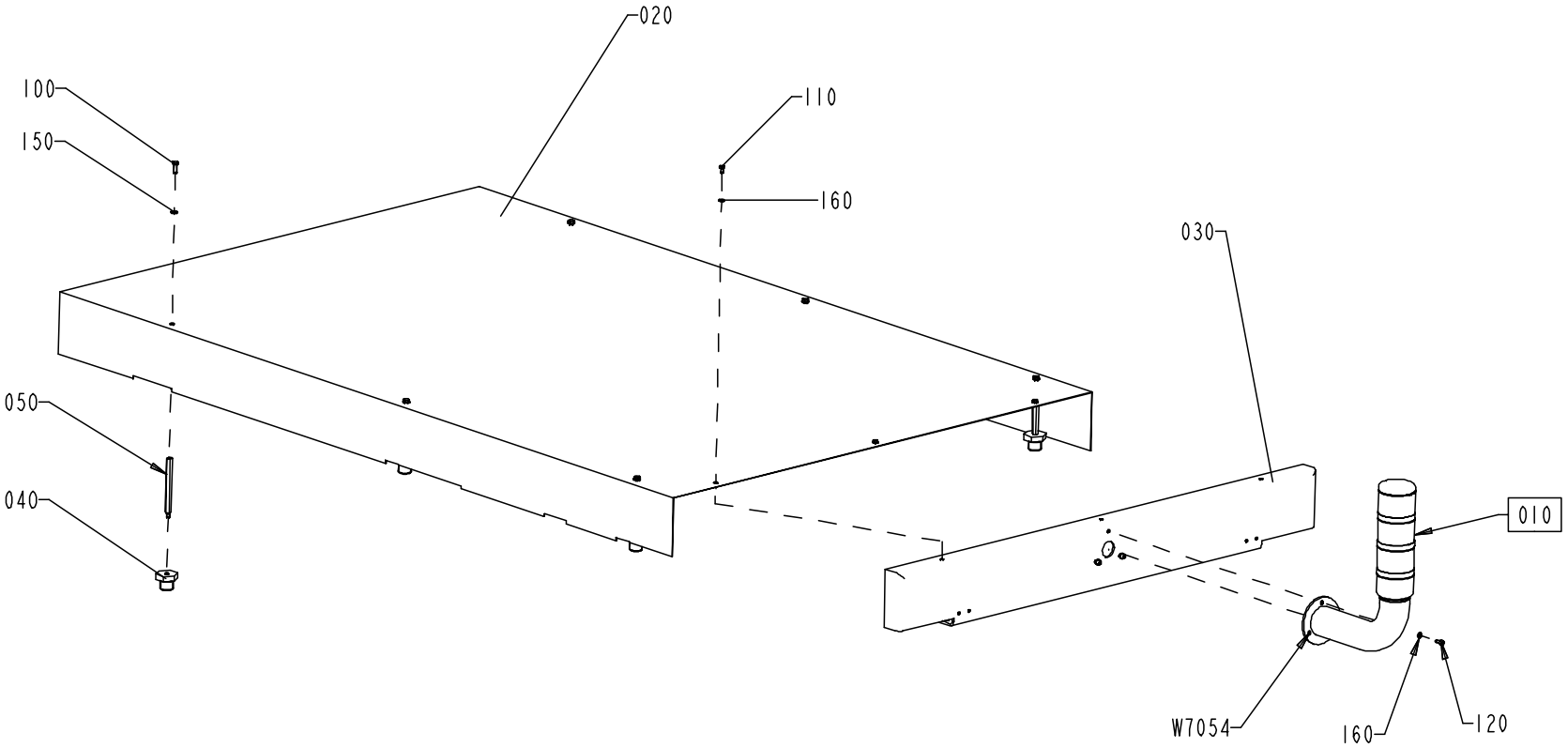

S - 1346433-1
ECN 71634

Pos	Part No	SP	UN	Qty	Description	Page No
Common parts						
010	A1317983-0100	-		1	ALARM BEACON	**657**
020	1346415-0000	-		1	COVER PLATE	
030	1346416-0000	-		1	HOLDER	
040	1346427-0000	-		6	DISTANCE	
050	1348918-0000	-		6	DISTANCE	
100	312105-0368	-		6	SCREW M6S ISO 4017 M6x16 A280	
110	312105-0323	-		3	SCREW M6S ISO 4017 M5X8 A280	
120	312105-0366	-		3	SCREW M6S ISO 4017 M6x12 A280	
150	315105-0153	-		6	WASHER,PLAIN ROUND 6,4x12 Stainless	
160	315105-0146	-		6	WASHER,PLAIN ROUND 5,3x10 Stainless	
W 7054	351150-0406	-	M	8	CABLE OLFLEX 7x0,75 MM2	

Pos	Part No	SP	UN	Qty	Description	Page No

ALARM BEACON

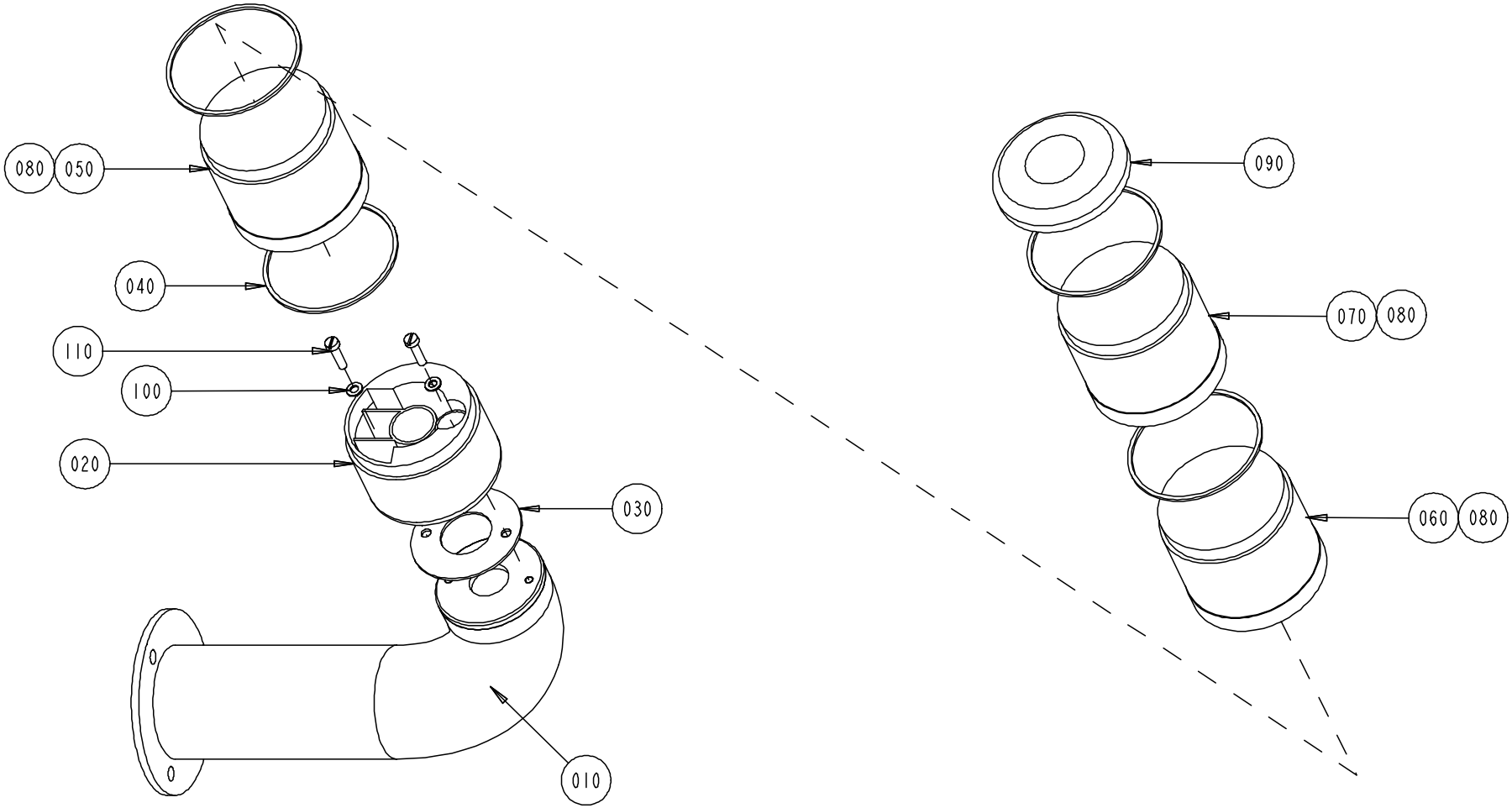

S - 1317983-1
ECN 71634

Pos	Part No	SP	UN	Qty	Description	Page No
Common parts						
010	1317793-0000	-		1	BASE	
020	1317794-0000	-		1	BASE	
030	90419-0310	J		1	GASKET	
040	90419-0307	J		4	GASKET	
050	90419-0013	-		1	LIGHT ELEMENT, BLUE	
060	90419-0014	-		1	LIGHT ELEMENT, YELLOW	
070	90419-0012	-		1	LIGHT ELEMENT, RED	
080	90036-0068	J		3	BULB 6.5W 24V	
090	90419-0017	-		1	BASE	
100	315105-0136	-		2	WASHER,PLAIN ROUND 4,3x8 Stainless	
110	312125-0293	-		2	SLOTTED CHEESE HEAD ISO 1207 M4X16 RFR	

Pos	Part No	SP	UN	Qty	Description	Page No

PROTECTIVE COVER

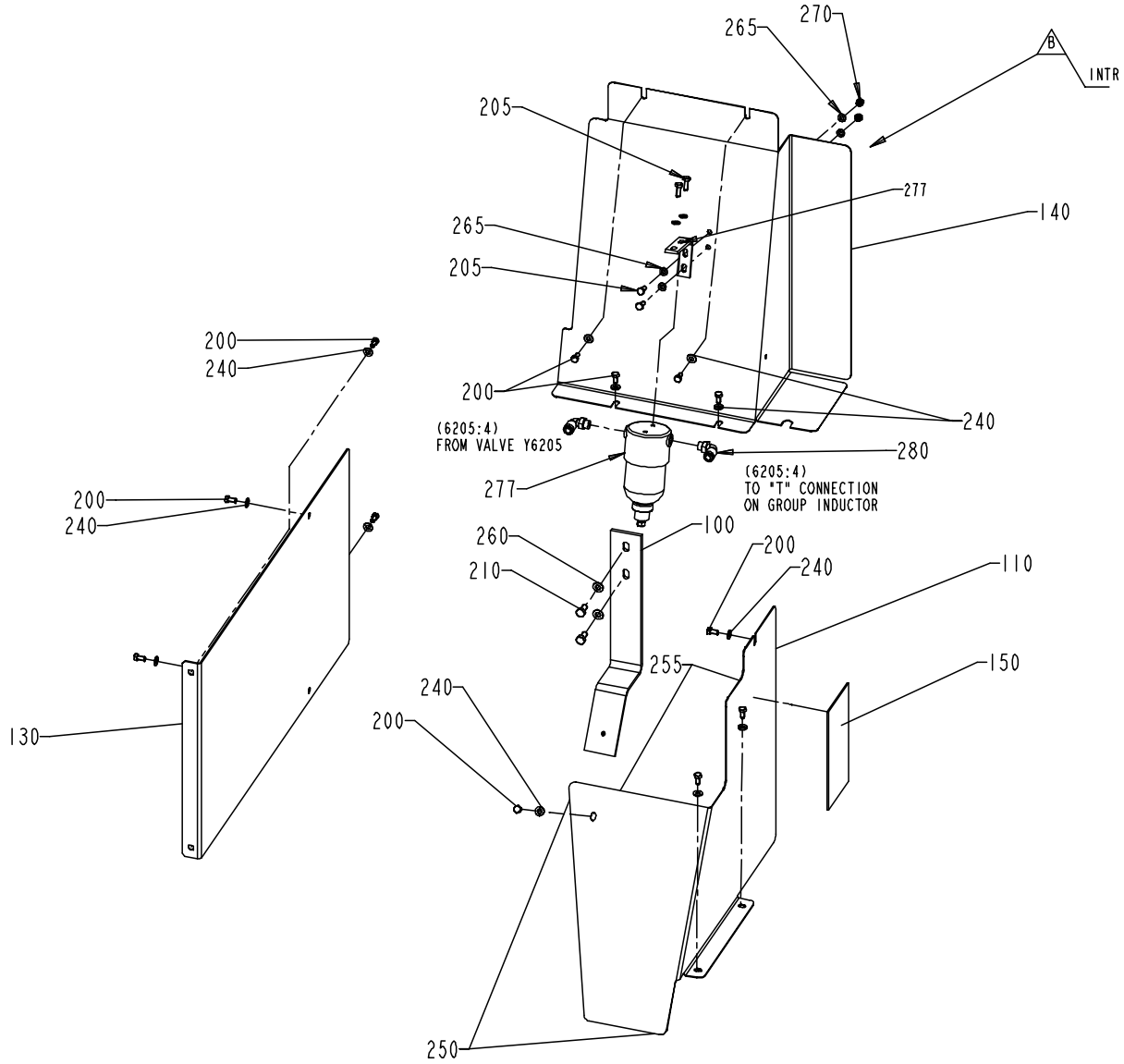

S - 1255304-1
ECN 72500

Pos	Part No	SP	UN	Qty	Description	Page No
Common parts						
100	1254053-0000	-		1	BRACKET	
110	1254054-0000	-		1	PROTECTION PLATE	
130	1260237-0000	-		1	PLATE	
140	1143599-0000	-		1	PROTECTION PLATE	
150	1349246-0000	-		1	SIGN	
200	312105-0366	-		12	SCREW M6S ISO 4017 M6x12 A280	
205	312105-0368	-		4	SCREW M6S ISO 4017 M6x16 A280	
210	312105-0449	-		2	SCREW M6S ISO 4017 M8x16 A280	
240	315105-0156	-		12	WASHER BRB 6,7x14 RFR	
250	90143-0060	-	MM	480	EDGE STRIP 9,5x6,3mm Black PVC	
255	90143-0060	-	MM	450	EDGE STRIP 9,5x6,3mm Black PVC	
260	315105-0165	-		2	WASHER,PLAIN ROUND 8,4x16 Stainless	
265	315105-0153	-		6	WASHER,PLAIN ROUND 6,4x12 Stainless	
270	312605-0316	-		2	NUT,HEXAGON A280 M6M6	
277	90277-0116	-		1	Filter Housing760-50c +EXTRA BRACKET	
280	342732-0104	-		2	ELBOW PIPE JOINT,Ext.thread,D=8 mm G1/4	

Pos	Part No	SP	UN	Qty	Description	Page No

LEG

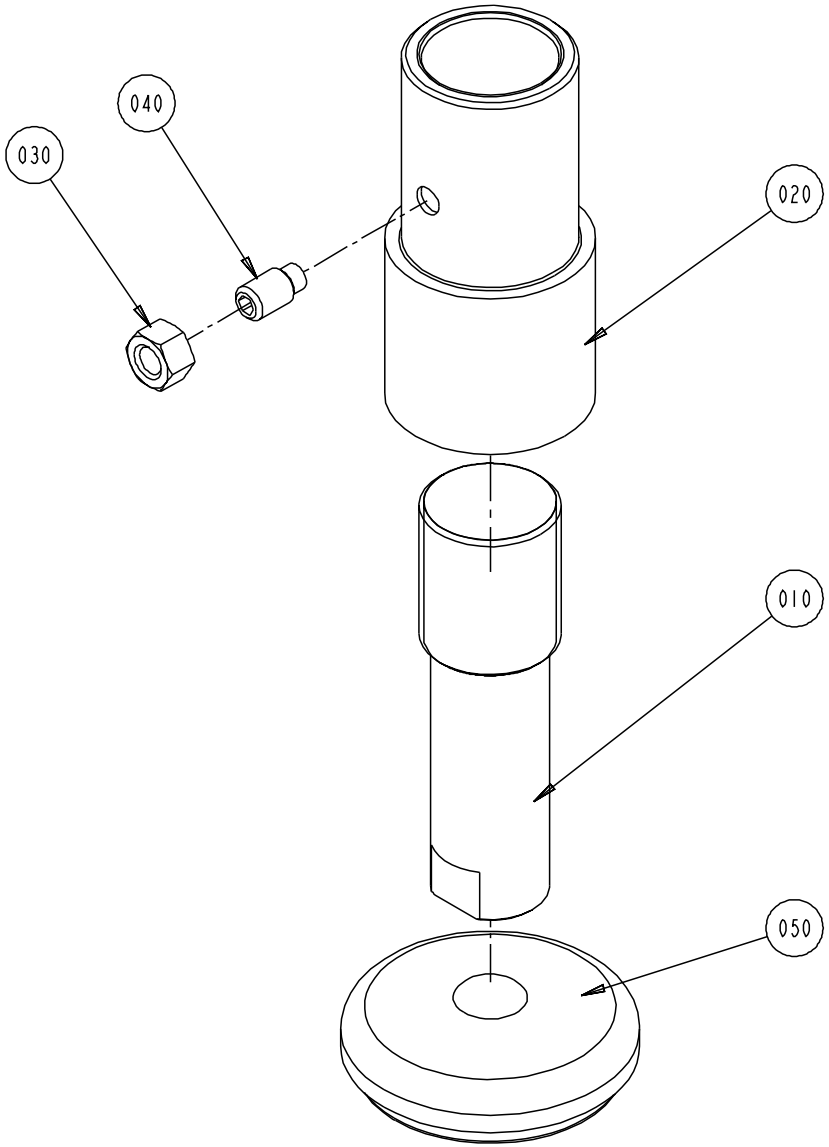

S - 1035076-2
ECN 71457

Pos	Part No	SP	UN	Qty	Description	Page No
Common parts						
010	1487712-0000	-		1	LEG	
020	1036120-0000	-		1	SLEEVE	
030	312605-0324	-		1	NUT,HEXAGON,M16 A280	
040	312311-0624	-		1	STOP SCREW T6SS16X30FZB	
050	90347-0175	-		1	Machine Shoe	

Pos	Part No	SP	UN	Qty	Description	Page No

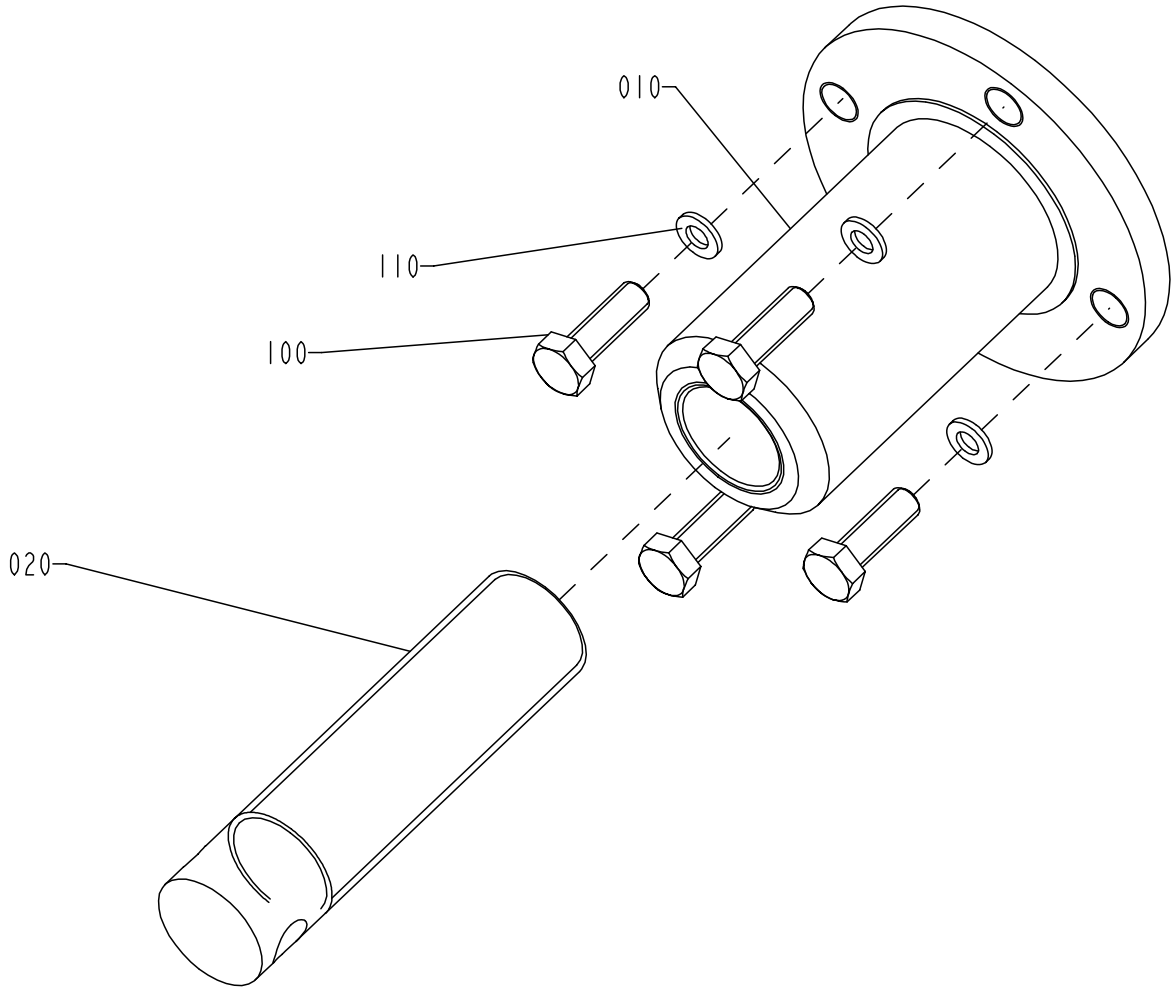

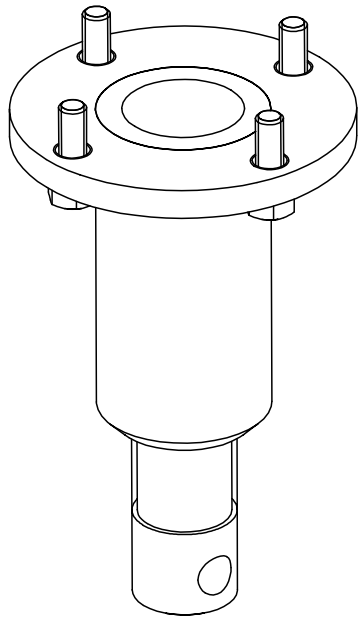

S - 1035471-1
ECN 71019

Pos	Part No	SP	UN	Qty	Description	Page No
Common parts						
010	469095-0000	-		1	HOLDER	
020	469096-0000	-		1	LEG	
100	312105-0453	-		4	SCREW M6S ISO 4017 M8x25 A280	
110	315125-0165	-		4	WASHERS,PLAIN ROUND,CHAMFERED 8,4X26X5	

Pos	Part No	SP	UN	Qty	Description	Page No

HOLDER

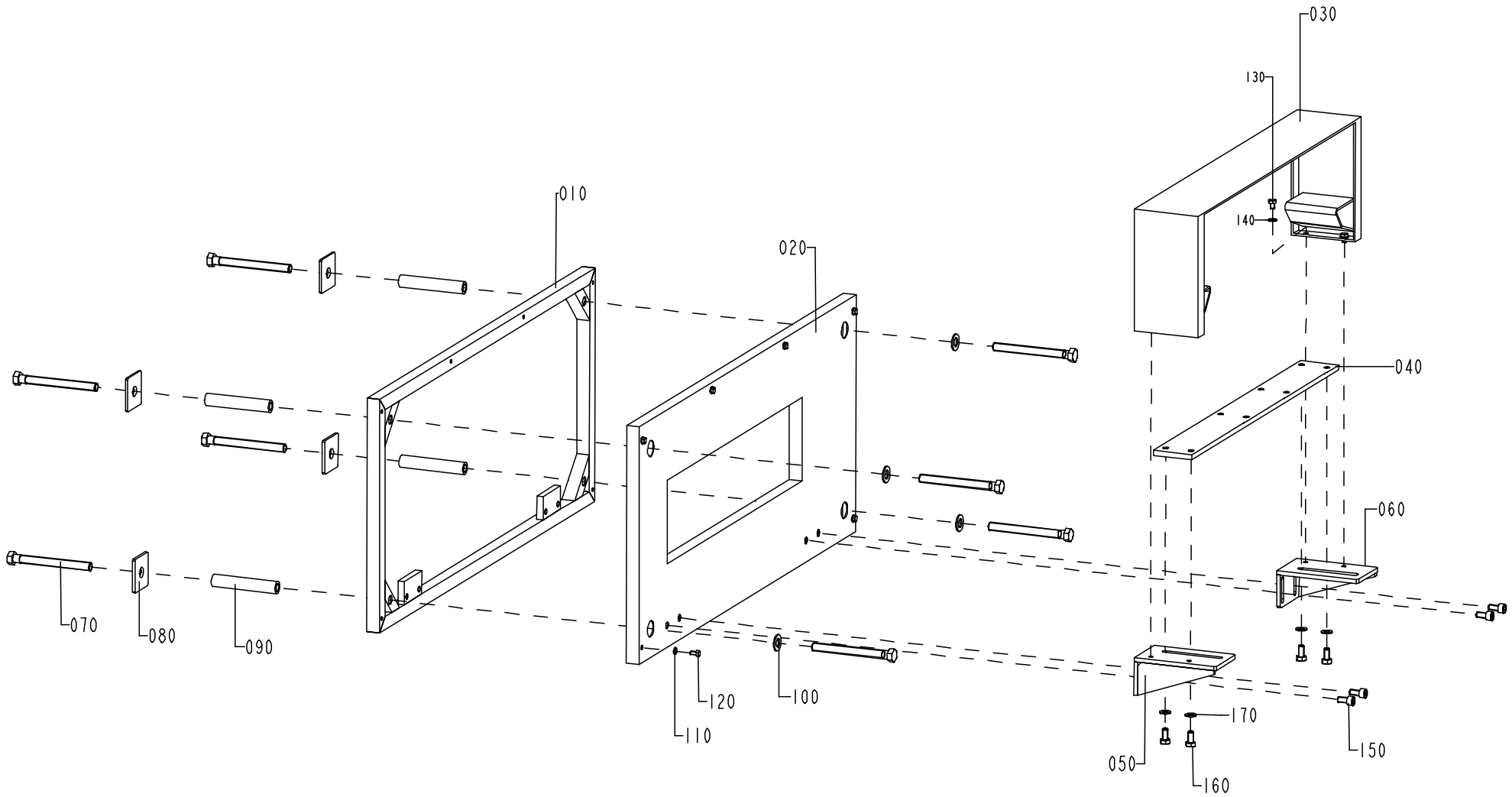

S - 1346431-1
ECN 71634

Pos	Part No	SP	UN	Qty	Description	Page No
Common parts						
010	1346417-0000	-		1	FRAME	
020	1346406-0000	-		1	COVER PLATE	
030	1346407-0000	-		1	COVER	
040	1346402-0000	-		1	PLATE	
050	1346410-0000	-		1	BRACKET	
060	1346411-0000	-		1	BRACKET	
070	476202-0000	-		8	SCREW	
080	1346405-0000	-		4	WASHER	
090	476201-0000	-		4	SLEEVE	
100	315105-0178	-		4	WASHER,PLAIN ROUND 13x24	
110	315105-0146	-		6	WASHER,PLAIN ROUND 5,3x10 Stainless	
120	312105-0325	-		6	SCREW M6S 5x10 A2 80	
130	312105-0362	-		4	SCREW M6S ISO 4017 M6x8 A280	
140	315105-0153	-		4	WASHER,PLAIN ROUND 6,4x12 Stainless	
150	312115-0449	-		4	SCREW MC6S ISO 4762 M8X16 A280	
160	312105-0449	-		4	SCREW M6S ISO 4017 M8x16 A280	
170	315105-0165	-		4	WASHER,PLAIN ROUND 8,4x16 Stainless	

Pos	Part No	SP	UN	Qty	Description	Page No

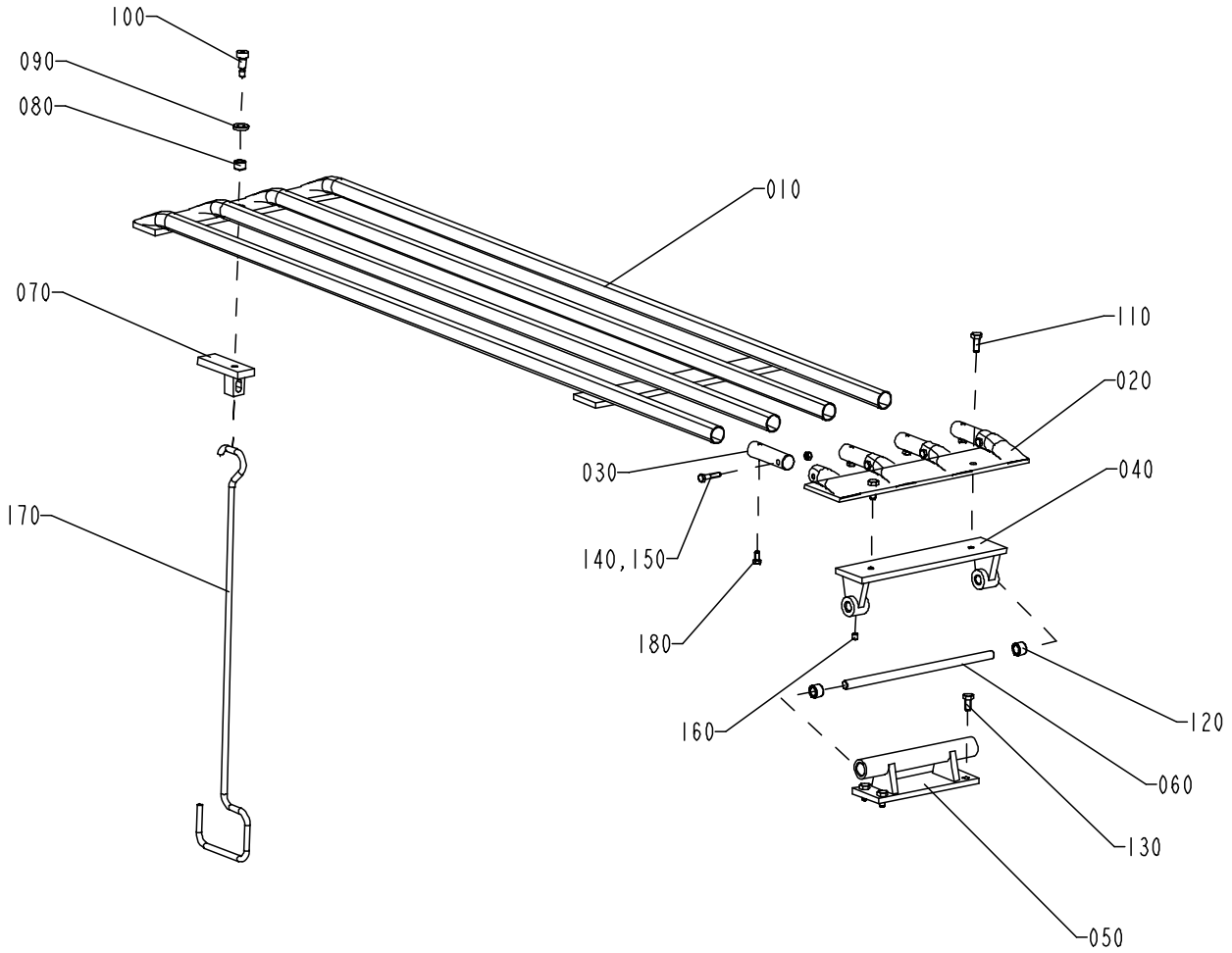

S - 1346430-1
ECN 71634

Pos	Part No	SP	UN	Qty	Description	Page No
Common parts						
010	1346408-0000	-		1	SUPPORT	
020	530775-0000	-		1	END PIECE	
030	1346409-0000	-		4	SHAFT	
040	1346404-0000	-		1	BRACKET	
050	1346403-0000	-		1	BRACKET	
060	236634-0000	-		1	SHAFT	
070	1346395-0000	-		1	LOCKING ARM	
080	321105-0163	-		1	BUSHING 10F7X16X10	
090	315111-0173	-		1	WASHER TBRB10,5X22FZB	
100	312180-0489	-		1	HEX.SOCKET HEAD SHOULD.ISO 7379 M8x16	
110	312105-0449	-		2	SCREW M6S ISO 4017 M8x16 A280	
120	321105-0173	-		2	BUSHING 12F7X18X12	
130	312105-0449	-		4	SCREW M6S ISO 4017 M8x16 A280	
140	312605-0316	-		4	NUT,HEXAGON A280 M6M6	
150	312105-0374	-		4	SCREW M6S ISO 4017 M6x30 A280	
160	312318-0443	-		1	SET SCREW CUP POINT ISO 4029 M8X8 RFR	
170	236631-0000	-		1	HANDLE	
180	312105-0366	-		4	SCREW M6S ISO 4017 M6x12 A280	

Pos	Part No	SP	UN	Qty	Description	Page No

BRACKET

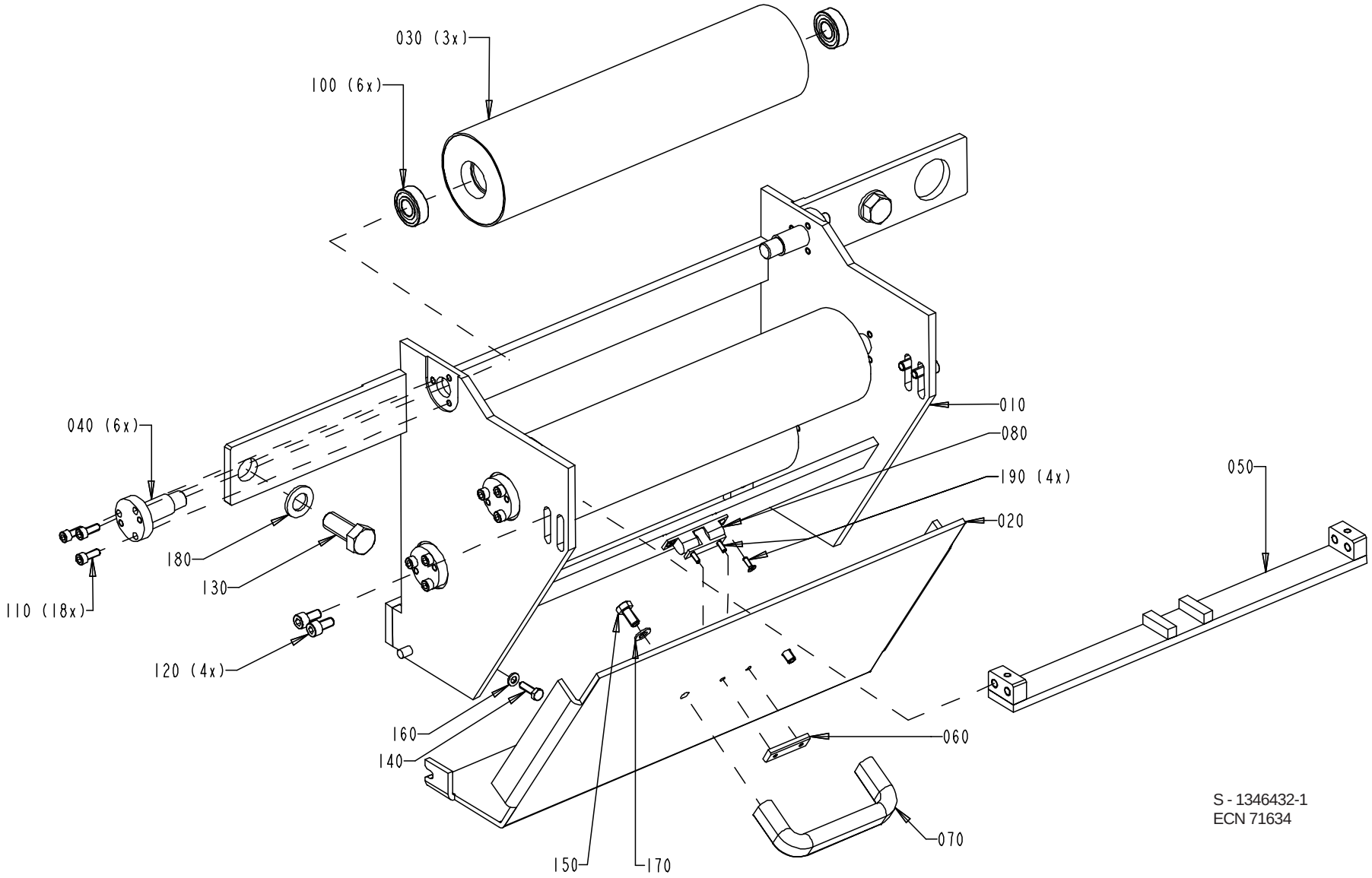

S - 1346432-1
ECN 71634

Pos	Part No	SP	UN	Qty	Description	Page No
Common parts						
010	1346419-0000	-		1	BRACKET	
020	1346426-0000	-		1	COVER	
030	1035882-0000	D		3	BENDING ROLLER	
040	1348917-0000	D		6	HOLDER	
050	1348914-0000	-		1	BAR	
060	1348916-0000	-		1	PLATE	
070	90017-0022	-		1	HANDLE	
080	90237-0070	-		1	Snap-In-Lock	
100	321313-0102	M		6	BALL BEARING 15x35x11	
110	312115-0368	-		18	SCREW MC6S ISO 4762 M6x16 A280	
120	312115-0449	-		4	SCREW MC6S ISO 4762 M8X16 A280	
130	312105-0628	-		2	SCREW M6S ISO 4017 M16X40 A280	
140	312105-0370	-		2	SCREW M6S ISO 4017 M6x20 A280	
150	312105-0449	-		2	SCREW M6S ISO 4017 M8x16 A280	
160	315105-0153	-		2	WASHER,PLAIN ROUND 6,4x12 Stainless	
170	315105-0165	-		2	WASHER,PLAIN ROUND 8,4x16 Stainless	
180	315105-0186	-		2	WASHER,PLAIN ROUND 17x30	
190	312155-0291	-		4	SCREW MF6S DIN 7991 M4x12 A480	

Pos	Part No	SP	UN	Qty	Description	Page No

PAPER COVER

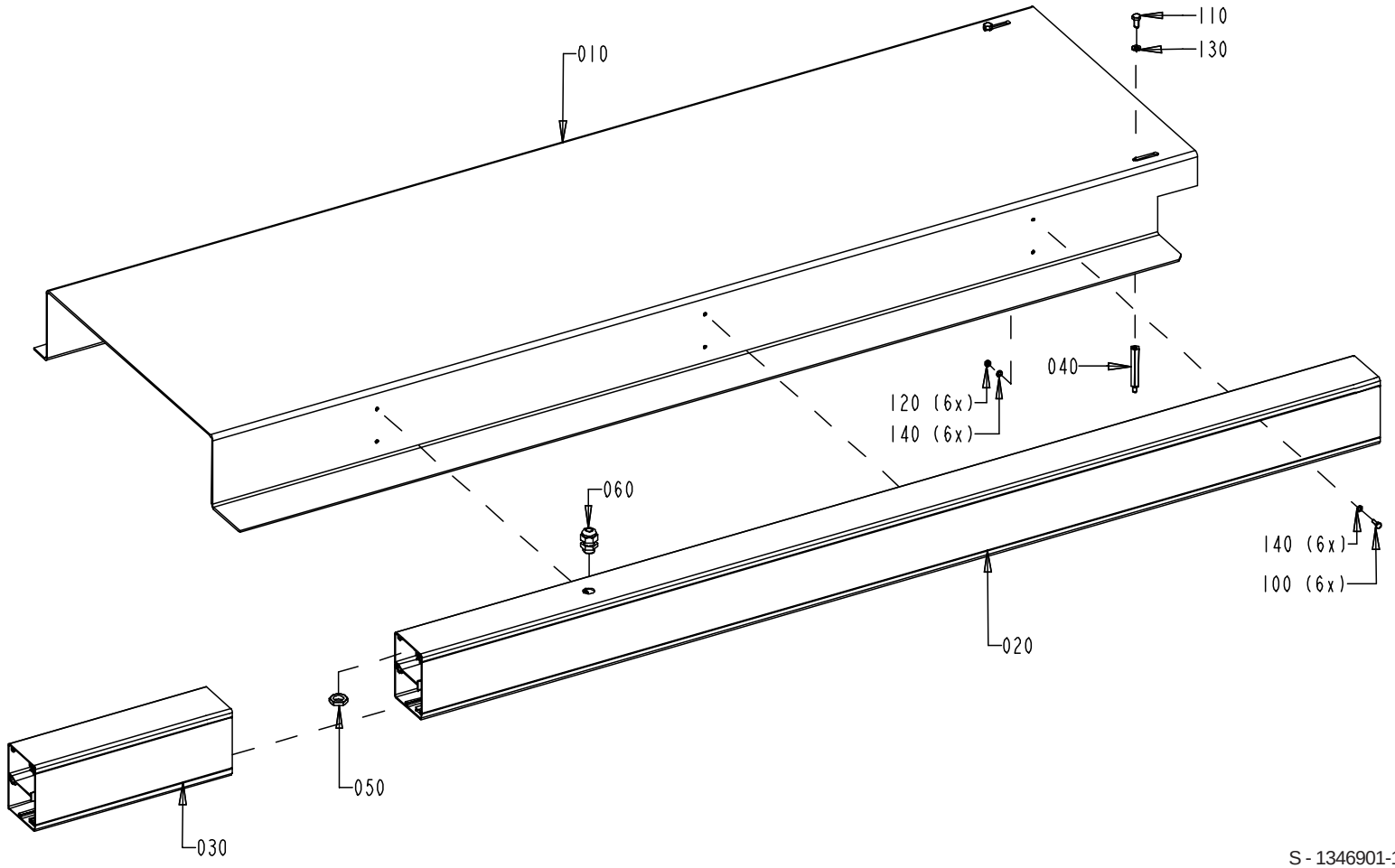

S - 1346901-1
ECN 71634

Pos	Part No	SP	UN	Qty	Description	Page No
Common parts						
010	1346412-0000	-		1	PAPPER COVER	
020	1346424-0000	-		1	CABLE DUCT	
030	1346400-0000	-		1	CABLE DUCT	
040	1348915-0000	-		2	SPACER	
050	90099-0104	-		1	NUT PR 15,2 (PG9)	
060	352103-0101	-		1	CABLE GLAND ST 9;PR15,2/PG9	
100	312105-0291	-		6	SCREW M6S ISO 4017 M4X12 A280	
110	312105-0366	-		2	SCREW M6S ISO 4017 M6x12 A280	
120	312605-0312	-		6	NUT,HEXAGON,M4 RFR	
130	315105-0153	-		2	WASHER,PLAIN ROUND 6,4x12 Stainless	
140	315105-0136	-		12	WASHER,PLAIN ROUND 4,3x8 Stainless	

Pos	Part No	SP	UN	Qty	Description	Page No

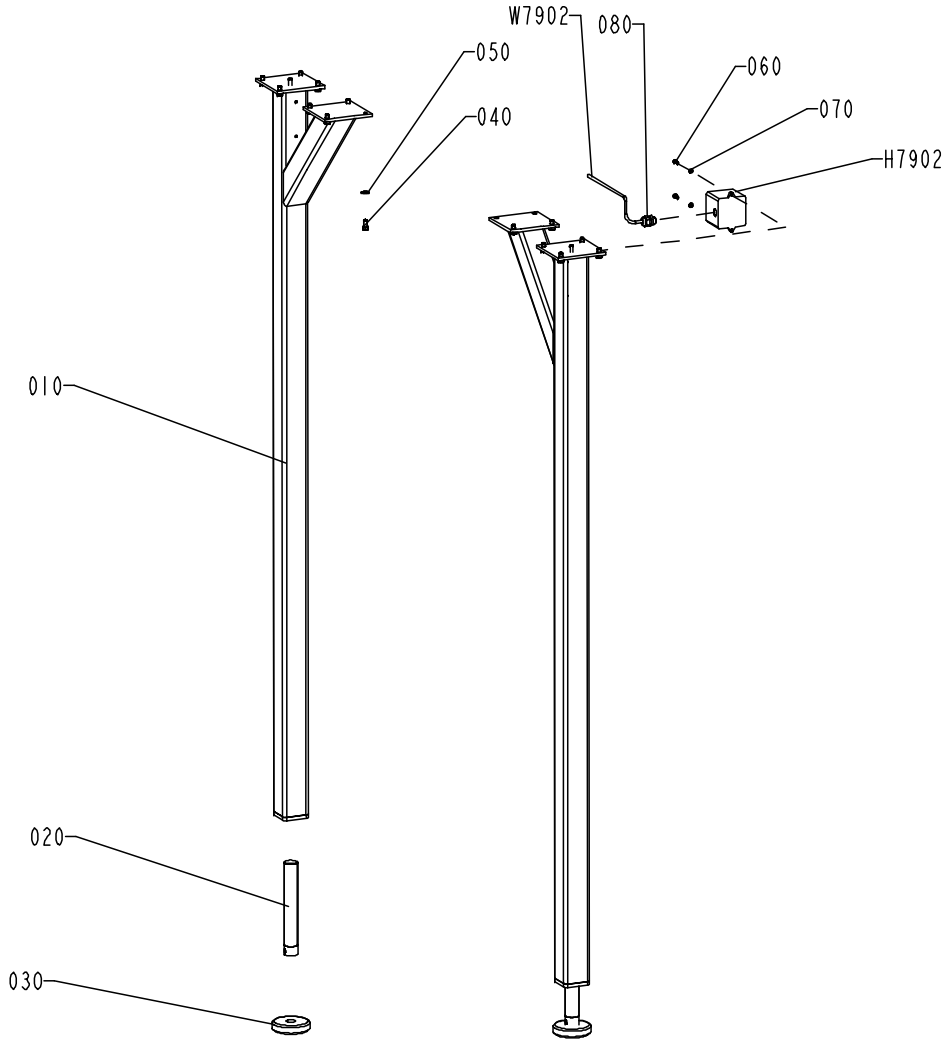

S - 1346902-1
ECN 72226

Pos	Part No	SP	UN	Qty	Description	Page No
Common parts						
010	1346394-0000	-		2	LEG	
020	905373-0000	-		2	SCREW - LEG	
030	90347-0080	-		2	DAMPER TFE 1201	
040	312105-0491	-		8	SCREW M6S ISO 4017 M10x20 A280	
050	315105-0173	-		8	WASHER,PLAIN ROUND 10,5x22 STAINLESS	
060	315105-0153	-		2	WASHER,PLAIN ROUND 6,4x12 Stainless	
070	312115-0368	-		2	SCREW MC6S ISO 4762 M6x16 A280	
080	352103-0110	-		1	CABLE GLAND STR 16	
H7902	90052-0011	R		1	HORN	
W7902	351150-0403	-	M	10	CABLE OLFLEX 3x0,75 MM2	

Pos	Part No	SP	UN	Qty	Description	Page No

This page is intentionally left blank

Pos	Part No	SP	UN	Qty	Description	Page No
90064-0082						
	90036-0057	F		1	LIGHT BULB BA9S 28V	
1041706-0000						
010	1110544-0000	-		1	CORE	
020	1110545-0000	-		1	COIL	
030	1110500-0005	-		6	NIPPLE	

Pos	Part No	SP	UN	Qty	Description	Page No

SPC

Spare Parts Catalogue

ELECTRICAL CABINET

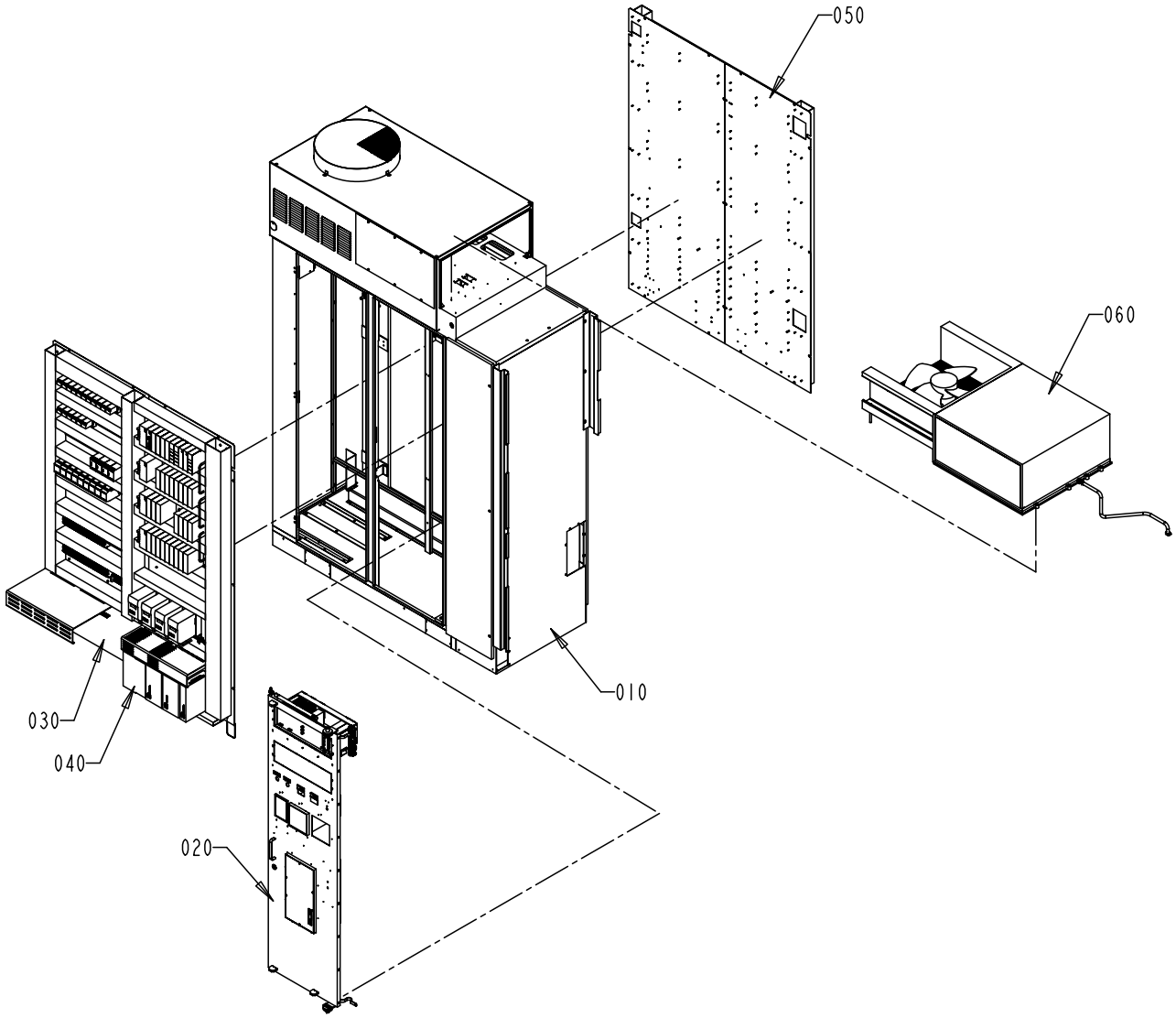

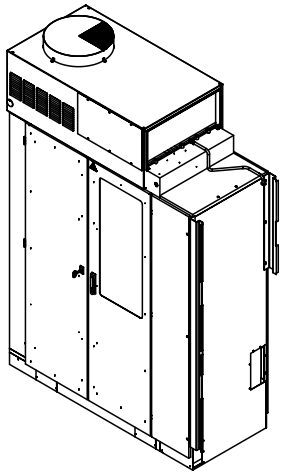

S - 648538-2
ECN 72082

Pos	Part No	SP	UN	Qty	Description	Page No
Common parts						
010	A1279809-0200	-		1	CABINET	**681**, **683**, **685**
020	A1346314-0100	-		1	COMPONENT DOOR	**705**
030	A 575235-0200	-		1	CONTROL LEFT	**713**
040	A 575236-0200	-		1	CONTROL RIGHT	**719**, **721**
050	A 575237-0200	-		1	POWER SIDE	**723**
060	A1095954-0200	-		1	COOLING SYSTEM	**735**

Pos	Part No	SP	UN	Qty	Description	Page No

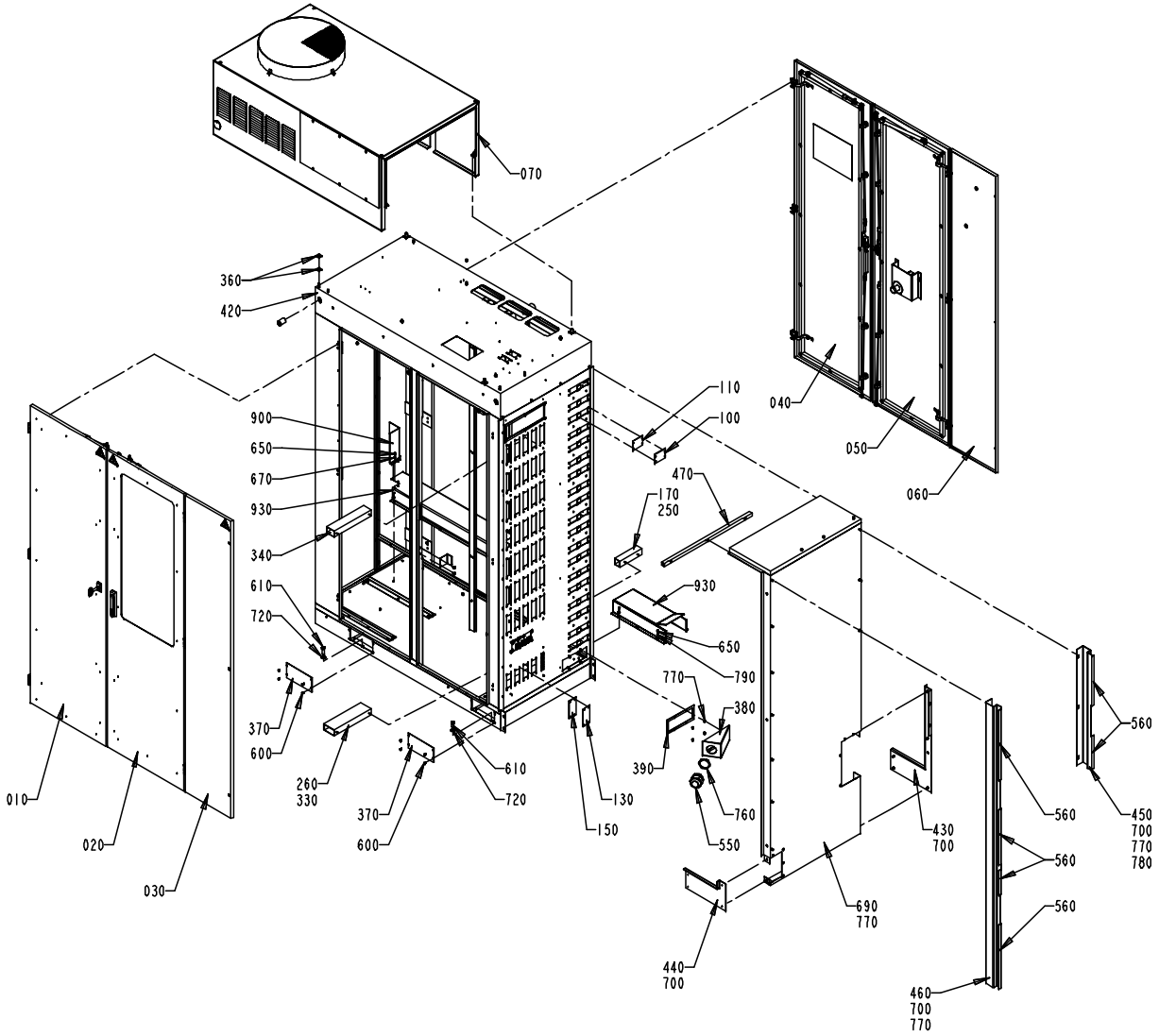

S - 1279809-2(1)
ECN 72187

Pos	Part No	SP	UN	Qty	Description	Page No
Common parts						
010	A1282034-0200	-		1	DOOR	**687**
020	A1282031-0200	-		1	DOOR	**689**
030	A1095634-0100	-		1	DOOR	**691**
040	A1282037-0200	-		1	DOOR	**693**
050	A1282036-0200	-		1	DOOR	**695**
060	A1095637-0100	-		1	DOOR	**697**
070	A1282032-0300	-		1	HOOD	**699**
080	A1095778-0100	-		1	PLINTH	**701**
090	A1350120-0100	-		1	IH EQUIPMENT	**703**
100	1037572-0000	-		7	COVER PLATE	
110	1037573-0000	-		7	GASKET	
120	1037574-0000	-		9	COVER PLATE	
130	1129481-0000	-		2	COVERING PLATE	
140	1037575-0000	-		9	GASKET	
150	1129478-0000	-		2	GASKET	
160	1037576-0000	-		1	GASKET	
170	90181-0038	-	MM	170	CABLE DUCT 40x40mm	
180	90181-0038	-	MM	170	CABLE DUCT 40x40mm	
190	90181-0038	-	MM	170	CABLE DUCT 40x40mm	
200	90181-0038	-	MM	170	CABLE DUCT 40x40mm	
210	90181-0038	-	MM	170	CABLE DUCT 40x40mm	
220	90181-0038	-	MM	170	CABLE DUCT 40x40mm	
230	90181-0038	-	MM	170	CABLE DUCT 40x40mm	
240	90181-0038	-	MM	170	CABLE DUCT 40x40mm	
250	90181-0038	-	MM	170	CABLE DUCT 40x40mm	
260	90181-0053	-	MM	285	CABLE DUCT 40X80MM	
270	90181-0053	-	MM	285	CABLE DUCT 40X80MM	
280	90181-0053	-	MM	285	CABLE DUCT 40X80MM	
290	90181-0053	-	MM	285	CABLE DUCT 40X80MM	
300	90181-0053	-	MM	285	CABLE DUCT 40X80MM	
310	90181-0053	-	MM	285	CABLE DUCT 40X80MM	
320	90181-0053	-	MM	285	CABLE DUCT 40X80MM	
330	90181-0053	-	MM	285	CABLE DUCT 40X80MM	
340	90181-0045	-	MM	285	CABLE DUCT 40x60mm	
350	1140519-0000	-		1	PROTECTION	
360	1129276-0000	-		8	GASKET	
370	1038408-0000	-		4	COVERING PLATE	
380	1038518-0000	-		1	BRACKET	
390	1038519-0000	-		1	GASKET	
400	985842-0000	-		1	BRACKET	
410	1350704-0000	-		1	BRACKET	
420	1285522-0000	-		1	WELDED CABINET	
430	1129155-0000	-		1	COVERING PLATE	
440	1129156-0000	-		1	COVERING PLATE	
450	1129157-0000	-		1	PROFILE	
460	1129158-0000	-		1	PROFILE	
470	1129159-0000	-		6	BRACKET	
480	1129264-0000	-		3	SLIDING STRIP	
490	1129280-0000	-		1	PLATE	
500	1129322-0000	-		1	BRACKET	
510	1129318-0000	-		1	BRACKET	
520	90110-0166	-		30	CONTACT HOUSE	
530	90110-0167	-		2	CONTACT HOUSE CHI 16	
540	90110-0153	-		22	CHASSI HOUSING 24-P	
550	352103-0123	-		1	CABLE GLAND ST 42	
560	90143-0057	D	M	30	STRIP EMKA 1011-05 21x11mm	
570	90246-0326	-		1	CONTACT WITH CONNECTIONS	
580	90287-0124	-		36	SCREW,CHEESE HEAD,MSCS DIN84, M4x12	
590	312145-0287	-		11	SLOTTED HEMFS4X8RFR	
600	312105-0287	-		16	SCREW M6S ISO 4017 M4x8 A280	
610	312105-0534	-		2	SCREW M6S ISO 4017 M12X25 A280	
620	312105-0538	-		2	SCREW M6S ISO 4017 M12X35 A280	
630	312125-0222	-		22	SLOTTED CHEESE HEAD ISO 1207 M3x8 RFR	
640	315105-0124	-		12	WASHER,PLAIN ROUND 3,2x6	
650	312105-0323	-		24	SCREW M6S ISO 4017 M5X8 A280	
660	312125-0289	-		370	SLOTTED HEMCS4X10RFR	
670	315105-0136	-		352	WASHER,PLAIN ROUND 4,3x8 Stainless	
680	90330-0034	-		1	NUT,HEXAGON G1/4"	
690	1129973-0000	-		1	COVERING PANEL	
700	315105-0153	-		77	WASHER,PLAIN ROUND 6,4x12 Stainless	
710	315105-0136	-		16	WASHER,PLAIN ROUND 4,3x8 Stainless	
720	315105-0178	-		4	WASHER,PLAIN ROUND 13x24	
730	352113-0203	-		19	ANCHOR TM3S8-M0	
740	312605-0312	-		15	NUT,HEXAGON,M4 RFR	
750	90182-0005	-		15	CLIP STRIP 79x2,3mm REPL.BY 352113-101	
760	90099-0096	-		1	NUT	
770	312605-0316	-		60	NUT,HEXAGON A280 M6M6	
780	352113-0204	-		4	ANCHOR TM3S25-M	
790	315105-0146	-		24	WASHER,PLAIN ROUND 5,3x10 Stainless	
800	1129550-0000	-		5	GASKET	
810	1129549-0000	-		3	SHEET	
820	90062-0022	-		1	LOCKING WASHER D=6,4/11	
830	312105-0364	-		4	SCREW M6S 6x10 A280	
840	1038820-0000	-		1	COVER PLATE	
850	352103-0108	-		2	CABLE GLAND ST 13	

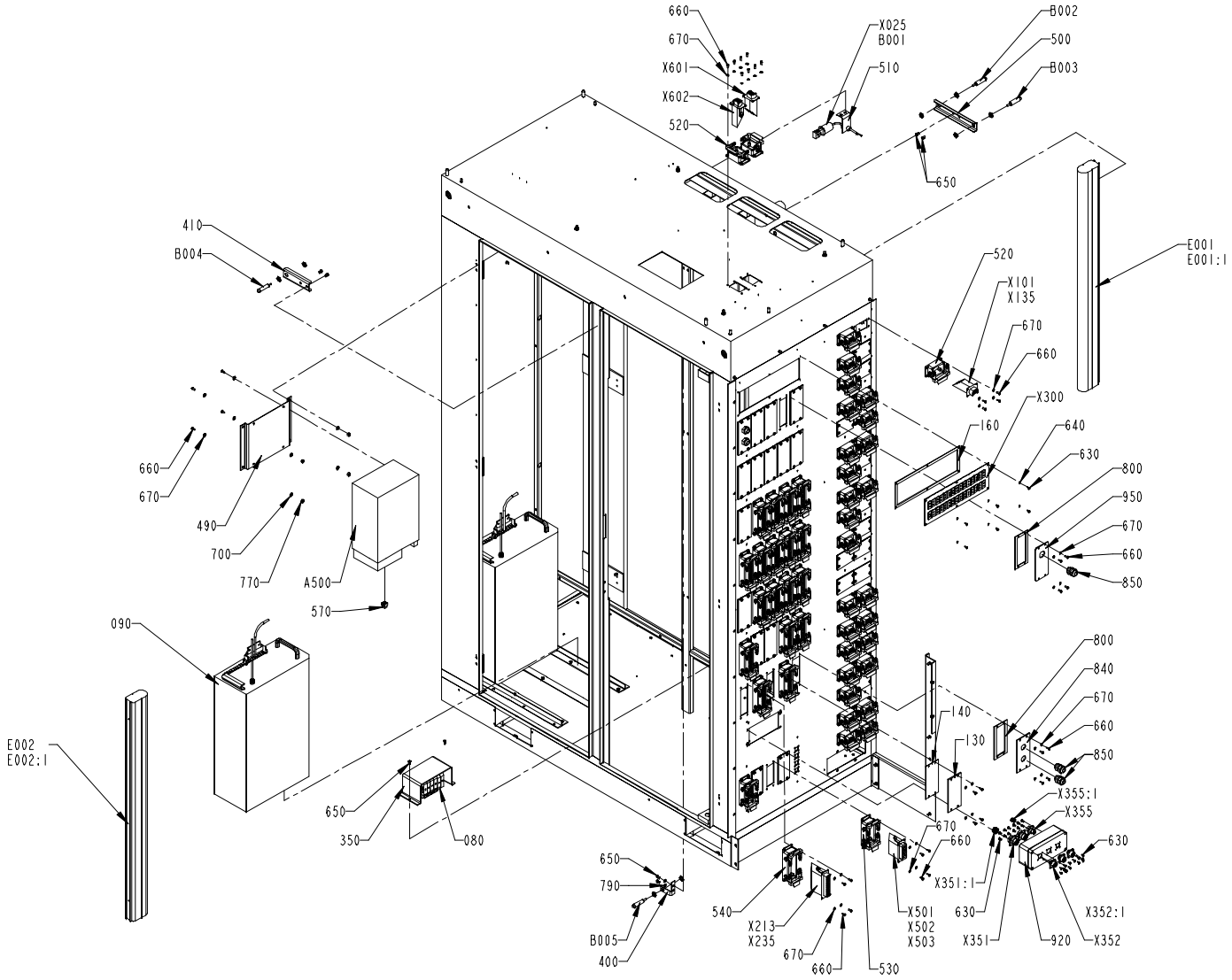

S - 1279809-2(2)
ECN 72187

Pos	Part No	SP	UN	Qty	Description	Page No
860	90099-0118	-		2	NUT PR 20,4 (PG13,5)	
870	312115-0329	-		6	SCREW MC6S ISO 4762 M5x16 A280	
880	1140769-0000	-		2	DOOR STOPPER	
890	312812-0316	-		4	NUT,HEXAGON,LOCK,WITH NYLON INSERT,M6	
900	1140529-0000	-		1	PROTECTION PLATE	
910	1140523-0000	-		1	PROTECTION PLATE	
920	1285523-0000	-		1	CONNECTION BOX	
930	1254092-0000	-		1	PROTECTION PLATE	
940	312115-0291	-		1	SCREW MC6S ISO 4762 M4x12 A280	
950	1346984-0000	-		1	PLATE	
A500	90246-0021	N		1	POWER SUPPLY UNIT	
B001	90326-0053	N		1	THERMO ELEMENT	
B002	90044-0124	-		1	PROX.SWITCH 922AB2XM-A9P-050-LZ-876Hwell	
B003	90044-0124	-		1	PROX.SWITCH 922AB2XM-A9P-050-LZ-876Hwell	
B004	90044-0124	-		1	PROX.SWITCH 922AB2XM-A9P-050-LZ-876Hwell	
B005	90044-0124	-		1	PROX.SWITCH 922AB2XM-A9P-050-LZ-876Hwell	
E001	90297-0011	-		1	FLUORESCENT TUBE 30W	
E001.1	90164-0018	D		1	FLUORESCENT TUBE 30W	
E002	90164-0018	-		1	FLUORESCENT TUBE 30W	
E002.1	90297-0011	D		1	FLUORESCENT TUBE 30W	
X025	90326-0020	-		1	PLUG,FEMALE YELLOW CR-AL	
X101	90110-0161	-		1	FEMALE CONTACT 6-POLES	
X102	90110-0161	-		1	FEMALE CONTACT 6-POLES	
X103	90110-0161	-		1	FEMALE CONTACT 6-POLES	
X104	90110-0161	-		1	FEMALE CONTACT 6-POLES	
X105	90110-0161	-		1	FEMALE CONTACT 6-POLES	
X107	90110-0161	-		1	FEMALE CONTACT 6-POLES	
X108	90110-0161	-		1	FEMALE CONTACT 6-POLES	
X110	90110-0161	-		1	FEMALE CONTACT 6-POLES	
X111	90110-0161	-		1	FEMALE CONTACT 6-POLES	
X112	90110-0161	-		1	FEMALE CONTACT 6-POLES	
X113	90110-0161	-		1	FEMALE CONTACT 6-POLES	
X115	90110-0161	-		1	FEMALE CONTACT 6-POLES	
X116	90110-0161	-		1	FEMALE CONTACT 6-POLES	
X117	90110-0161	-		1	FEMALE CONTACT 6-POLES	
X119	90110-0161	-		1	FEMALE CONTACT 6-POLES	
X121	90110-0161	-		1	FEMALE CONTACT 6-POLES	
X122	90110-0161	-		1	FEMALE CONTACT 6-POLES	
X125	90110-0161	-		1	FEMALE CONTACT 6-POLES	
X126	90110-0161	-		1	FEMALE CONTACT 6-POLES	
X127	90110-0161	-		1	FEMALE CONTACT 6-POLES	
X128	90110-0161	-		1	FEMALE CONTACT 6-POLES	
X129	90110-0161	-		1	FEMALE CONTACT 6-POLES	
X130	90110-0161	-		1	FEMALE CONTACT 6-POLES	
X132	90110-0161	-		1	FEMALE CONTACT 6-POLES	
X133	90110-0161	-		1	FEMALE CONTACT 6-POLES	
X135	90110-0161	-		1	FEMALE CONTACT 6-POLES	
X136	90110-0161	-		1	FEMALE CONTACT 6-POLES	
X137	90110-0161	-		1	FEMALE CONTACT 6-POLES	
X138	90110-0161	-		1	FEMALE CONTACT 6-POLES	
X213	90110-0164	-		1	FEMALE CONTACT 24-POLES	
X214	90110-0164	-		1	FEMALE CONTACT 24-POLES	
X215	90110-0164	-		1	FEMALE CONTACT 24-POLES	
X216	90110-0164	-		1	FEMALE CONTACT 24-POLES	
X217	90110-0164	-		1	FEMALE CONTACT 24-POLES	
X218	90110-0164	-		1	FEMALE CONTACT 24-POLES	
X219	90110-0164	-		1	FEMALE CONTACT 24-POLES	
X220	90110-0164	-		1	FEMALE CONTACT 24-POLES	
X221	90110-0164	-		1	FEMALE CONTACT 24-POLES	
X222	90110-0164	-		1	FEMALE CONTACT 24-POLES	
X223	90110-0164	-		1	FEMALE CONTACT 24-POLES	
X224	90110-0164	-		1	FEMALE CONTACT 24-POLES	
X225	90110-0164	-		1	FEMALE CONTACT 24-POLES	
X226	90110-0164	-		1	FEMALE CONTACT 24-POLES	
X227	90110-0164	-		1	FEMALE CONTACT 24-POLES	
X228	90110-0164	-		1	FEMALE CONTACT 24-POLES	
X229	90110-0164	-		1	FEMALE CONTACT 24-POLES	
X230	90110-0164	-		1	FEMALE CONTACT 24-POLES	
X231	90110-0164	-		1	FEMALE CONTACT 24-POLES	
X232	90110-0164	-		1	FEMALE CONTACT 24-POLES	
X234	90110-0164	-		1	FEMALE CONTACT 24-POLES	
X235	90110-0164	-		1	FEMALE CONTACT 24-POLES	
X300	90326-0316	-		1	THERMO CONTACT PANEL	
X351	90110-0507	-		1	Chassies Contact	
X351.1	90110-0380	-		7	Contact Pin	
X352	90110-0505	-		1	Chassies Contact	
X352.1	90110-0209	-		7	CONTACT PIN	
X353	90110-0507	-		1	Chassies Contact	
X353.1	90110-0380	-		11	Contact Pin	
X354	90110-0505	-		1	Chassies Contact	
X354.1	90110-0209	-		7	CONTACT PIN	
X355	90110-0506	-		1	Chassies Contact	
X355.1	90110-0380	-		7	Contact Pin	
X356	90110-0505	-		1	Chassies Contact	
X356.1	90110-0209	-		7	CONTACT PIN	
X401	90110-0236	-		1	CHASSIE CONTACT PX0767/S	

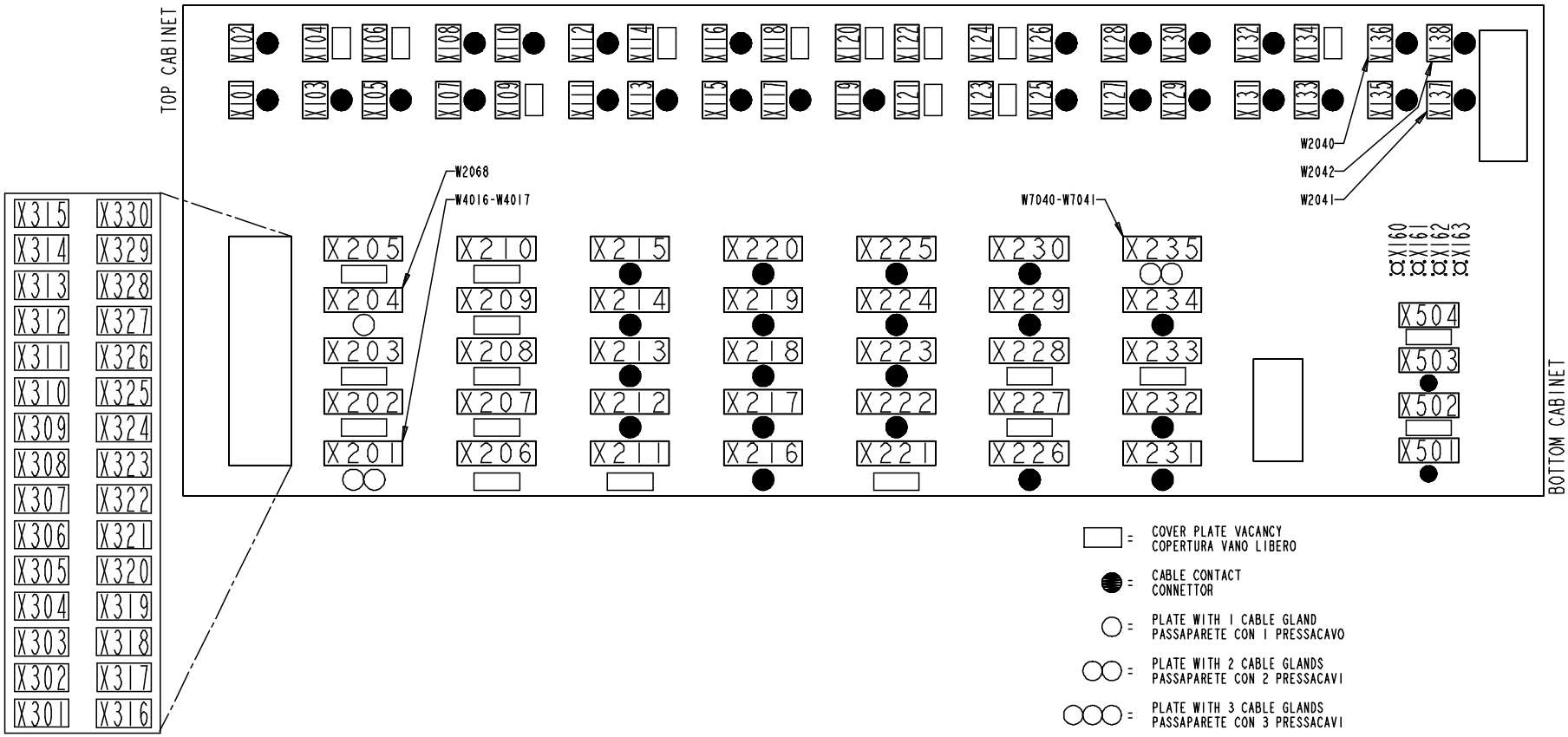

S - 1279809-2(3)
ECN 72187

Pos	Part No	SP	UN	Qty	Description	Page No
X402	90110-0236	-		1	CHASSIE CONTACT PX0767/S	
X403	90110-0236	-		1	CHASSIE CONTACT PX0767/S	
X404	90110-0236	-		1	CHASSIE CONTACT PX0767/S	
X501	90110-0165	-		1	FEMALE INSERT 6-POLE/35	
X502	90110-0165	-		1	FEMALE INSERT 6-POLE/35	
X503	90110-0165	-		1	FEMALE INSERT 6-POLE/35	
X601	90110-0161	-		1	FEMALE CONTACT 6-POLES	
X602	90110-0161	-		1	FEMALE CONTACT 6-POLES	

Pos	Part No	SP	UN	Qty	Description	Page No

DOOR

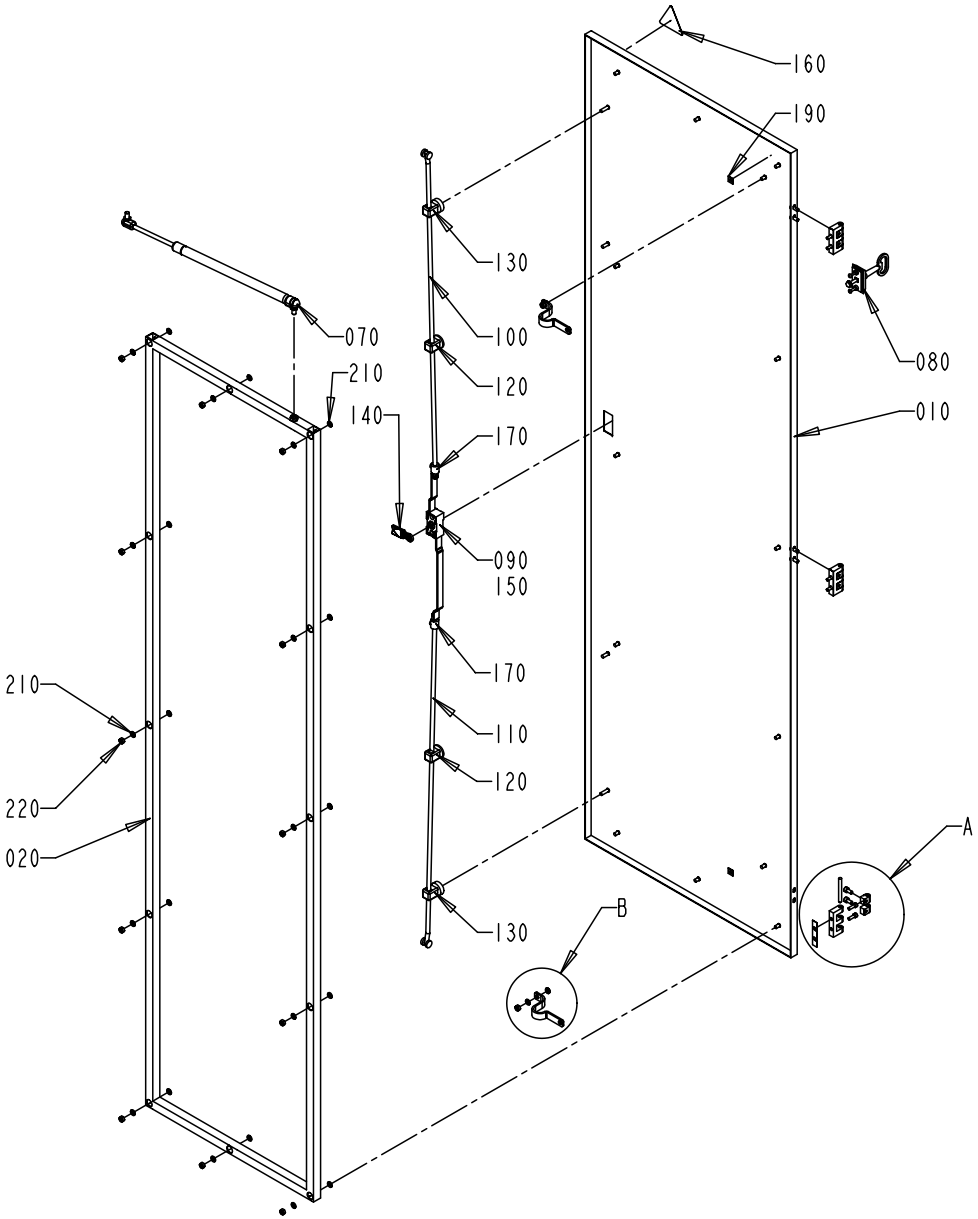

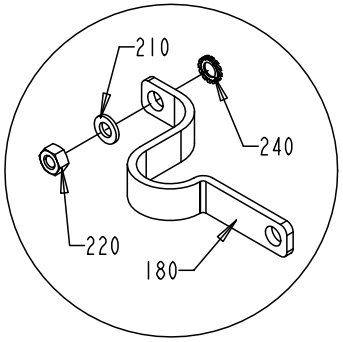

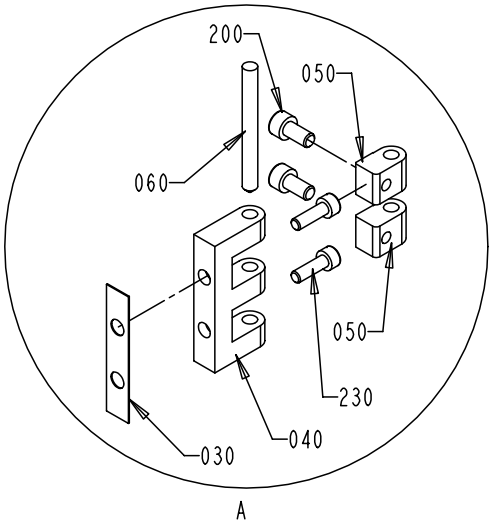

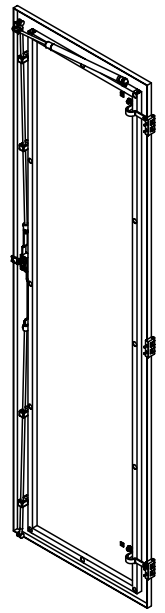

S - 1282034-2
ECN 70798

Pos	Part No	SP	UN	Qty	Description	Page No
Common parts						
010	1346468-0000	-		1	DOOR	
020	1348913-0000	-		1	FRAME	
030	988666-0000	-		3	GASKET	
040	1035792-0000	-		3	E-HINGE	
050	1129770-0000	-		6	BLOCKING PIECE	
060	988685-0000	-		3	PIN	
070	90347-0163	-		1	GAS-DAMPER	
080	90237-0160	-		1	LOCK	
090	90237-0153	-		1	LOCK HOUSING	
100	90237-0168	-		1	ROUND BAR WITH END WHEEL	
110	1348846-0000	-		1	ROD	
120	90237-0151	-		2	STEERING GUIDE,Black PA	
130	90237-0152	-		2	STEERING	
140	90237-0156	-		1	LOCKING CATCH	
150	90237-0155	-		1	LOCK ADAPTER	
160	90194-0016	-		1	SIGN "FLASH SIGN" 50X50MM	
170	90237-0169	-		2	LOCK-ADAPTER	
180	90135-0035	-		2	LOW IMPEDANCELITZ L=250MM	
190	90194-0152	-		2	SIGN "EARTH"	
200	312115-0366	-		6	SCREW MC6S ISO 4762 M6X12 A280	
210	315105-0153	-		12	WASHER,PLAIN ROUND 6,4x12 Stainless	
220	312605-0316	-		12	NUT,HEXAGON A280 M6M6	
230	312115-0329	-		6	SCREW MC6S ISO 4762 M5x16 A280	
240	90062-0015	-		2	LOCK WASHER AZ 6,4 ZINC PLATED	

Pos	Part No	SP	UN	Qty	Description	Page No

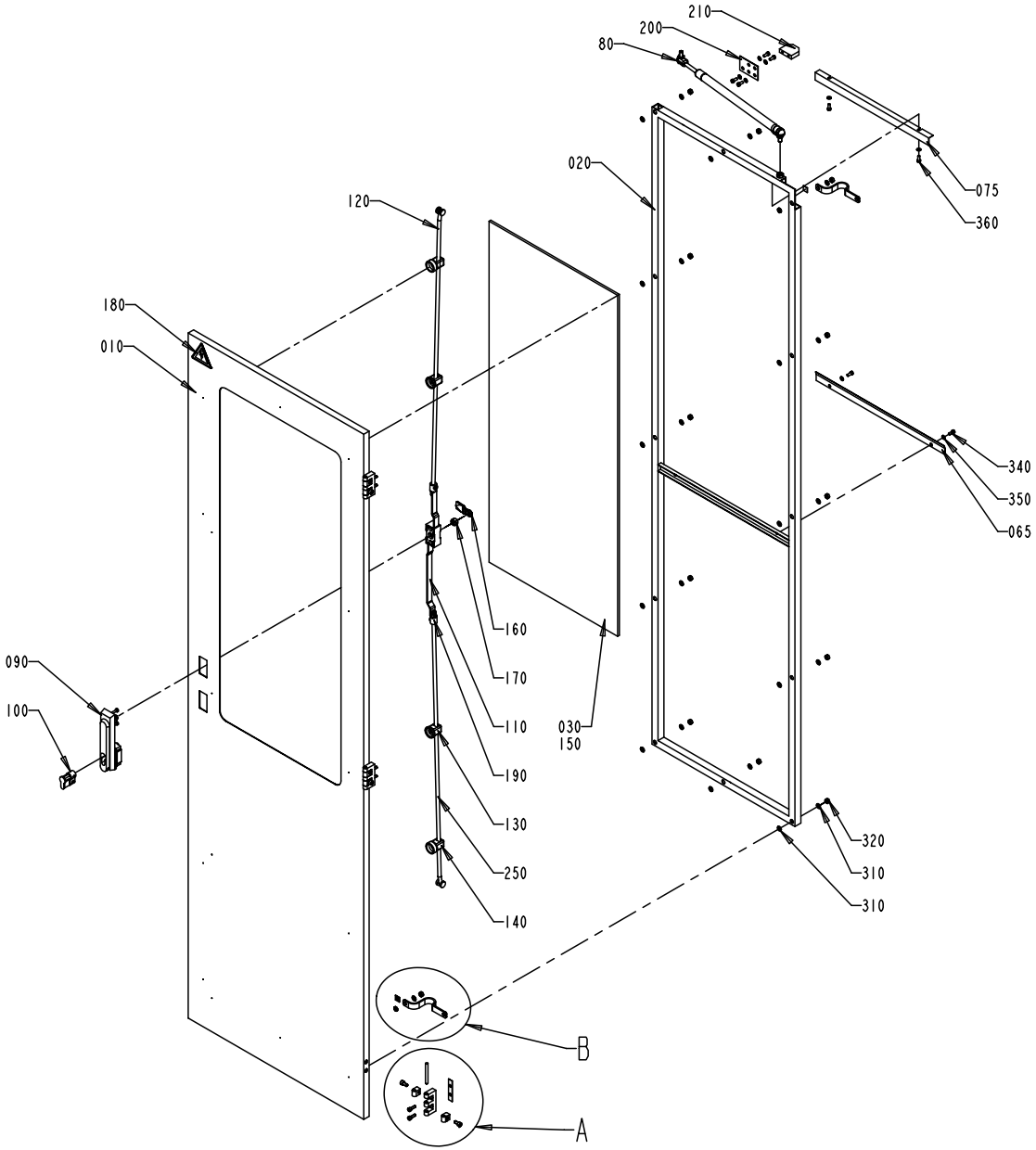

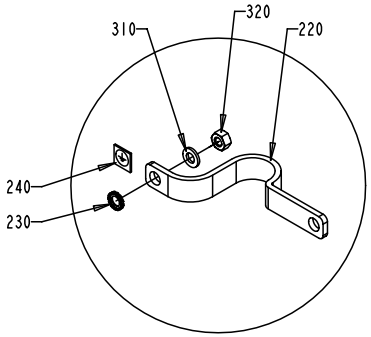

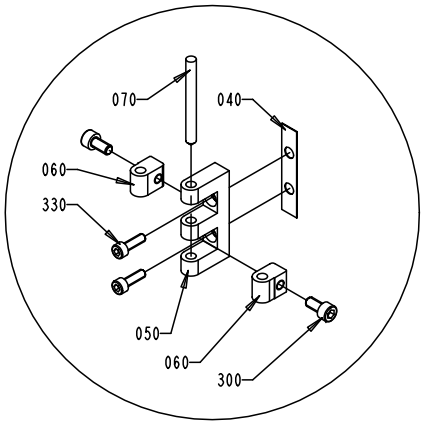

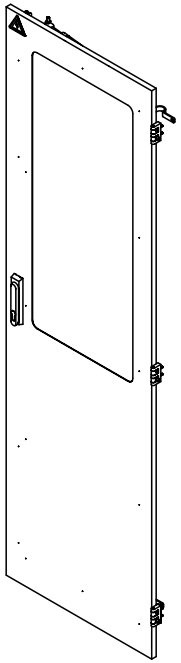

S - 1282031-2
ECN 70798

Pos	Part No	SP	UN	Qty	Description	Page No
Common parts						
010	1041905-0000	-		1	DOOR	
020	1282030-0000	-		1	FRAME	
030	1129047-0000	-		1	GLASS PANE	
040	988666-0000	-		3	GASKET	
050	1035792-0000	-		3	E-HINGE	
060	1129770-0000	-		6	BLOCKING PIECE	
065	1282028-0000	-		1	BRACKET	
070	988685-0000	-		3	PIN	
075	1282029-0000	-		1	BRACKET	
080	90347-0163	-		1	GAS-DAMPER	
090	90237-0176	-		1	TURNING HANDLE	
100	90237-0128	-		1	LOCK CYLINDER	
110	90237-0153	-		1	LOCK HOUSING	
120	90237-0168	-		1	ROUND BAR WITH END WHEEL	
130	90237-0151	-		2	STEERING GUIDE,Black PA	
140	90237-0152	-		2	STEERING	
150	90157-0041	-		x	SEALING COMPOUND	
160	90237-0156	-		1	LOCKING CATCH	
170	90237-0155	-		1	LOCK ADAPTER	
180	90194-0016	-		1	SIGN "FLASH SIGN" 50X50MM	
190	90237-0169	-		2	LOCK-ADAPTER	
200	985851-0000	-		1	BRACKET	
210	970215-0000	-		1	STOP BLOCK	
220	90135-0035	-		2	LOW IMPEDANCELITZ L=250MM	
230	90062-0015	-		2	LOCK WASHER AZ 6,4 ZINC PLATED	
240	90194-0152	-		2	SIGN "EARTH"	
250	1348846-0000	-		1	ROD	
300	312115-0366	-		6	SCREW MC6S ISO 4762 M6X12 A280	
310	315105-0153	-		24	WASHER,PLAIN ROUND 6,4x12 Stainless	
320	312605-0316	-		12	NUT,HEXAGON A280 M6M6	
330	312115-0329	-		6	SCREW MC6S ISO 4762 M5x16 A280	
340	312125-0327	-		7	SLOTTED CHEESE HEAD ISO 1207 M5X12 RFR	
350	315105-0146	-		9	WASHER,PLAIN ROUND 5,3x10 Stainless	
360	312121-0327	-		2	SLOTTED HEMCS5X12FZB	

Pos	Part No	SP	UN	Qty	Description	Page No

DOOR

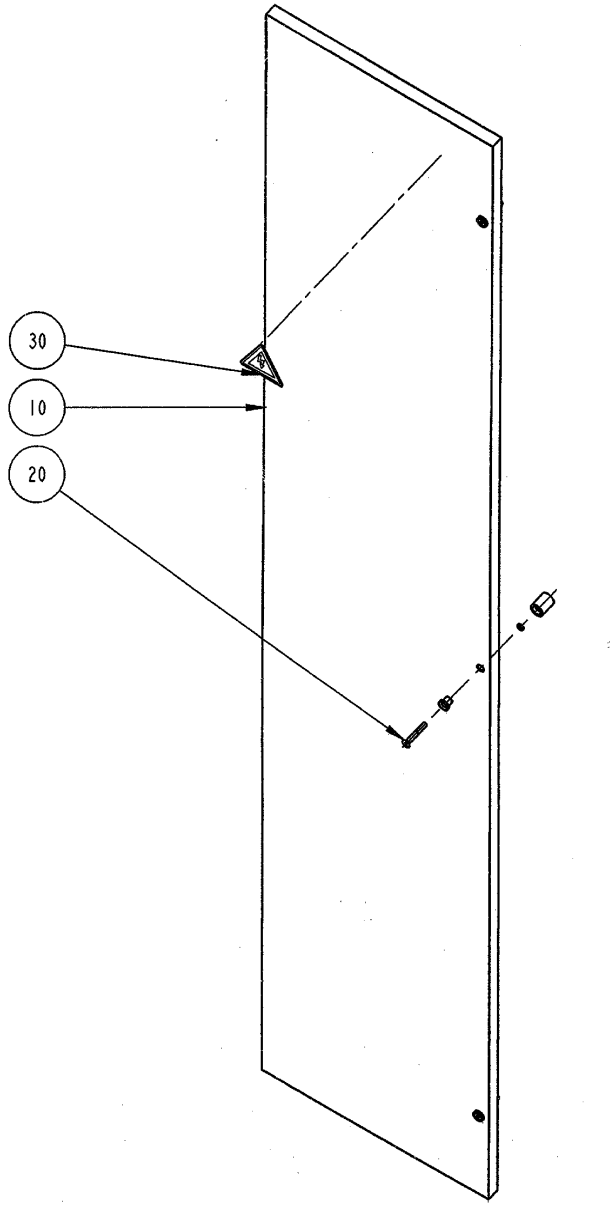

S - 1095634-1
ECN 71142

Pos	Part No	SP	UN	Qty	Description	Page No
Common parts						
010	1041939-0000	-		1	DOOR	
020	90226-0458	-		3	MOUNTING SCREW	
030	90194-0016	-		1	SIGN "FLASH SIGN" 50X50MM	

Pos	Part No	SP	UN	Qty	Description	Page No

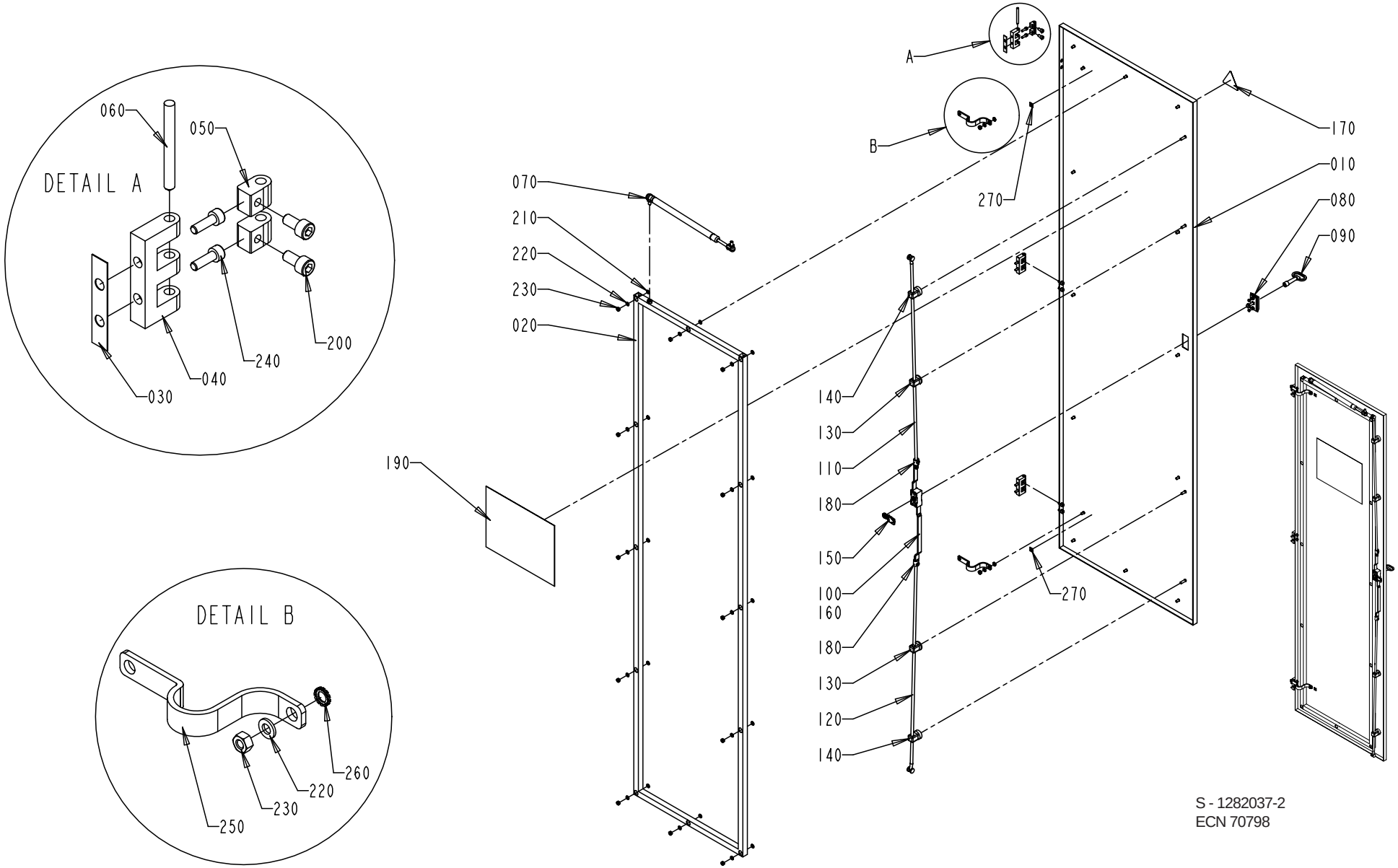

S - 1282037-2
ECN 70798

Pos	Part No	SP	UN	Qty	Description	Page No
Common parts						
010	1041977-0000	-		1	DOOR	
020	1282350-0000	-		1	FRAME	
030	988666-0000	-		3	GASKET	
040	1035792-0000	-		3	E-HINGE	
050	1129770-0000	-		6	BLOCKING PIECE	
060	988685-0000	-		3	PIN	
070	90347-0163	-		1	GAS-DAMPER	
080	90237-0160	-		1	LOCK	
090	90237-0324	-		1	SQUARE-KEY 8mm	
100	90237-0153	-		1	LOCK HOUSING	
110	90237-0168	-		1	ROUND BAR WITH END WHEEL	
120	1348846-0000	-		1	ROD	
130	90237-0151	-		2	STEERING GUIDE,Black PA	
140	90237-0152	-		2	STEERING	
150	90237-0156	-		1	LOCKING CATCH	
160	90237-0155	-		1	LOCK ADAPTER	
170	90194-0016	-		1	SIGN "FLASH SIGN" 50X50MM	
180	90237-0169	-		2	LOCK-ADAPTER	
190	1285520-0000	-		1	FUSE BOARD	
200	312115-0366	-		6	SCREW MC6S ISO 4762 M6X12 A280	
210	315105-0153	-		12	WASHER,PLAIN ROUND 6,4x12 Stainless	
220	315101-0153	-		12	WASHER BRB 6,4x12 FZB	
223	312605-0316	-		12	NUT,HEXAGON A280 M6M6	
240	312115-0329	-		6	SCREW MC6S ISO 4762 M5x16 A280	
250	90135-0035	-		2	LOW IMPEDANCELITZ L=250MM	
260	90062-0015	-		2	LOCK WASHER AZ 6,4 ZINC PLATED	
270	90194-0152	-		2	SIGN "EARTH"	

Pos	Part No	SP	UN	Qty	Description	Page No

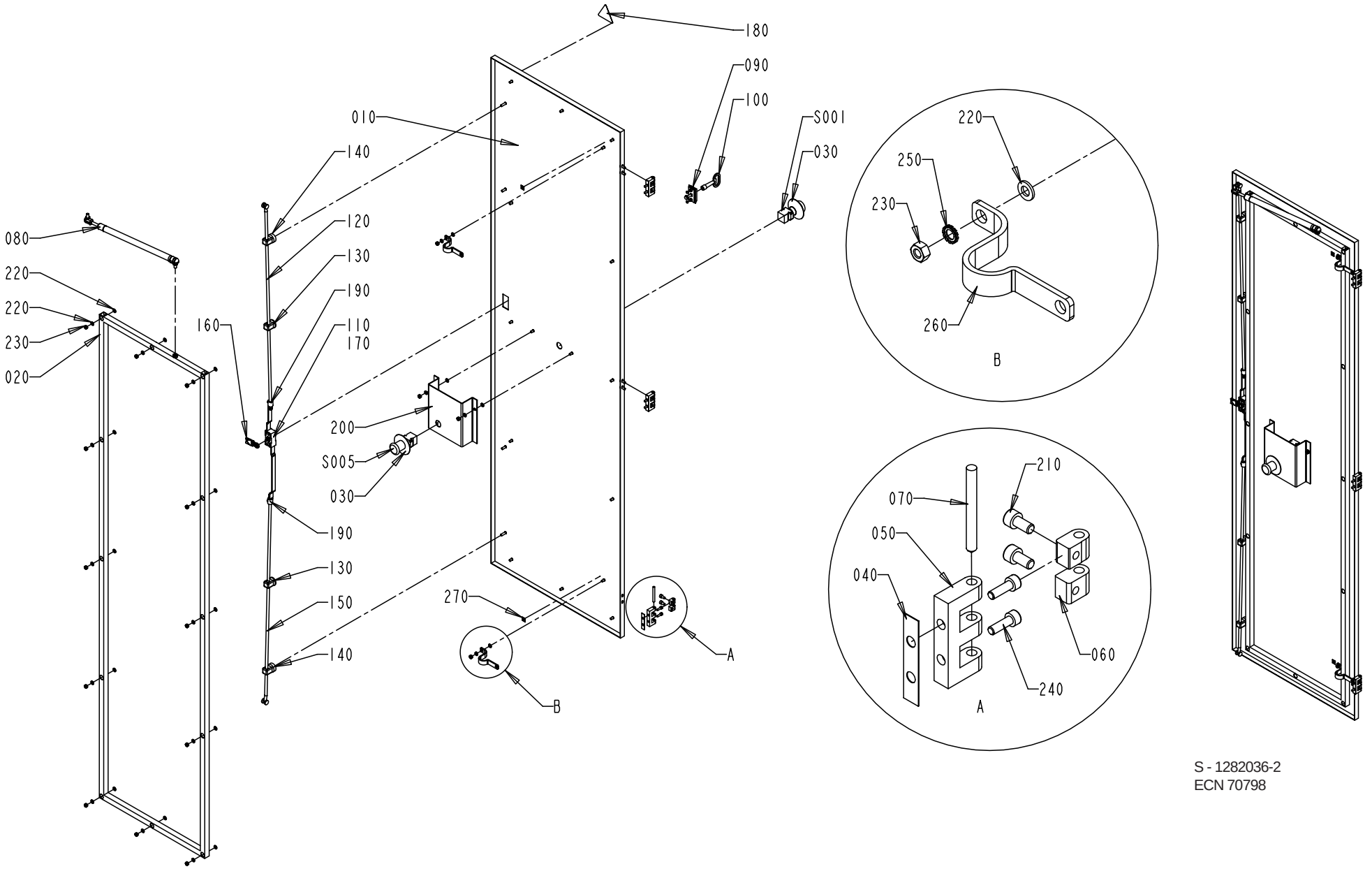

S - 1282036-2
ECN 70798

Pos	Part No	SP	UN	Qty	Description	Page No
Common parts						
010	1041920-0000	-		1	DOOR	
020	1285521-0000	-		1	FRAME	
030	486826-0001	-		2	SIGN "EMERGENCY STOP"	
040	988666-0000	-		3	GASKET	
050	1035792-0000	-		3	E-HINGE	
060	1129770-0000	-		6	BLOCKING PIECE	
070	988685-0000	-		3	PIN	
080	90347-0163	-		1	GAS-DAMPER	
090	90237-0160	-		1	LOCK	
100	90237-0324	-		1	SQUARE-KEY 8mm	
110	90237-0153	-		1	LOCK HOUSING	
120	90237-0168	-		2	ROUND BAR WITH END WHEEL	
130	90237-0151	-		2	STEERING GUIDE,Black PA	
140	90237-0152	-		2	STEERING	
150	1348846-0000	-		1	ROD	
160	90237-0156	-		1	LOCKING CATCH	
170	90237-0155	-		1	LOCK ADAPTER	
180	90194-0016	-		1	SIGN "FLASH SIGN" 50X50MM	
190	90237-0169	-		2	LOCK-ADAPTER	
200	1140555-0000	-		1	BRACKET	
210	312115-0366	-		6	SCREW MC6S ISO 4762 M6X12 A280	
220	315105-0153	-		30	WASHER,PLAIN ROUND 6,4x12 Stainless	
230	312605-0316	-		16	NUT,HEXAGON A280 M6M6	
240	312115-0329	-		6	SCREW MC6S ISO 4762 M5x16 A280	
250	90062-0015	-		2	LOCK WASHER AZ 6,4 ZINC PLATED	
260	90135-0035	-		2	LOW IMPEDANCELITZ L=250MM	
270	90194-0152	-		2	SIGN "EARTH"	
S001	90064-0124	-		1	SWITCH,EMERGENCY STOP	
S005	90064-0124	-		1	SWITCH,EMERGENCY STOP	

Pos	Part No	SP	UN	Qty	Description	Page No

DOOR

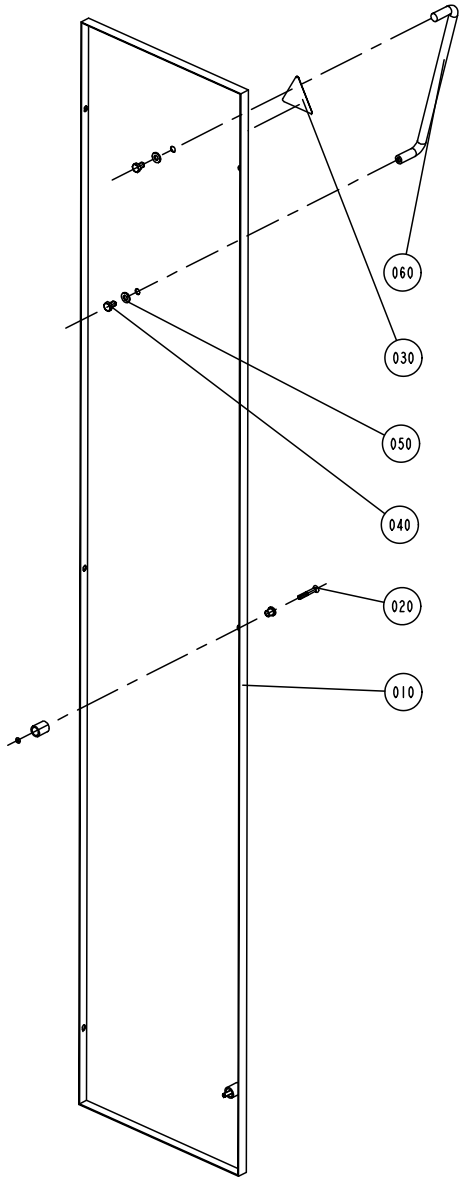

S - 1095637-1
ECN 71142

Pos	Part No	SP	UN	Qty	Description	Page No
Common parts						
010	1041948-0000	-		1	DOOR	
020	90226-0458	-		3	MOUNTING SCREW	
030	90194-0016	-		1	SIGN "FLASH SIGN" 50X50MM	
040	312105-0447	-		2	SCREW M6S ISO 4017 M8x12 A280	
050	90005-0077	-		2	WASHER,Plain Round,nylon 8,4x7; H=2	
060	90017-0015	-		1	HANDLE,STAINLESS	

Pos	Part No	SP	UN	Qty	Description	Page No

HOOD

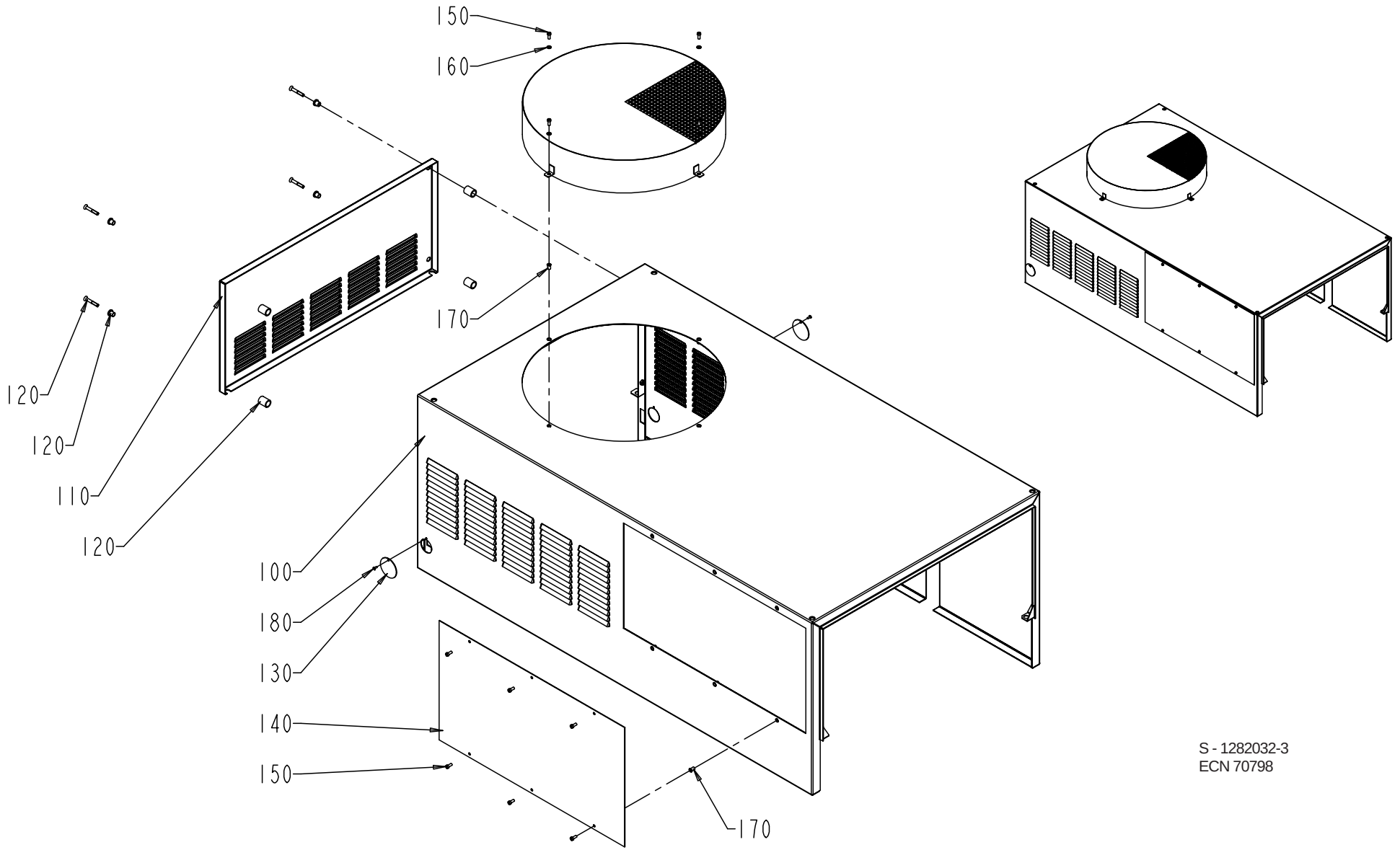

S - 1282032-3
ECN 70798

Pos	Part No	SP	UN	Qty	Description	Page No
Common parts						
100	1285622-0000	-		1	HOOD	
110	1478610-0000	-		1	COVER	
120	90226-0458	-		4	MOUNTING SCREW	
130	1478611-0000	-		2	COVER	
140	1478612-0000	-		1	COVER	
150	312125-0327	-		10	SLOTTED CHEESE HEAD ISO 1207 M5X12 RFR	
160	315105-0146	-		4	WASHER,PLAIN ROUND 5,3x10 Stainless	
170	312923-0122	-		10	NUTS,BLIND RIVET M5X11,6	
180	311521-0143	-		2	COLD SQUEEZE TYPE "POP RIVET" 3,2x8	

Pos	Part No	SP	UN	Qty	Description	Page No

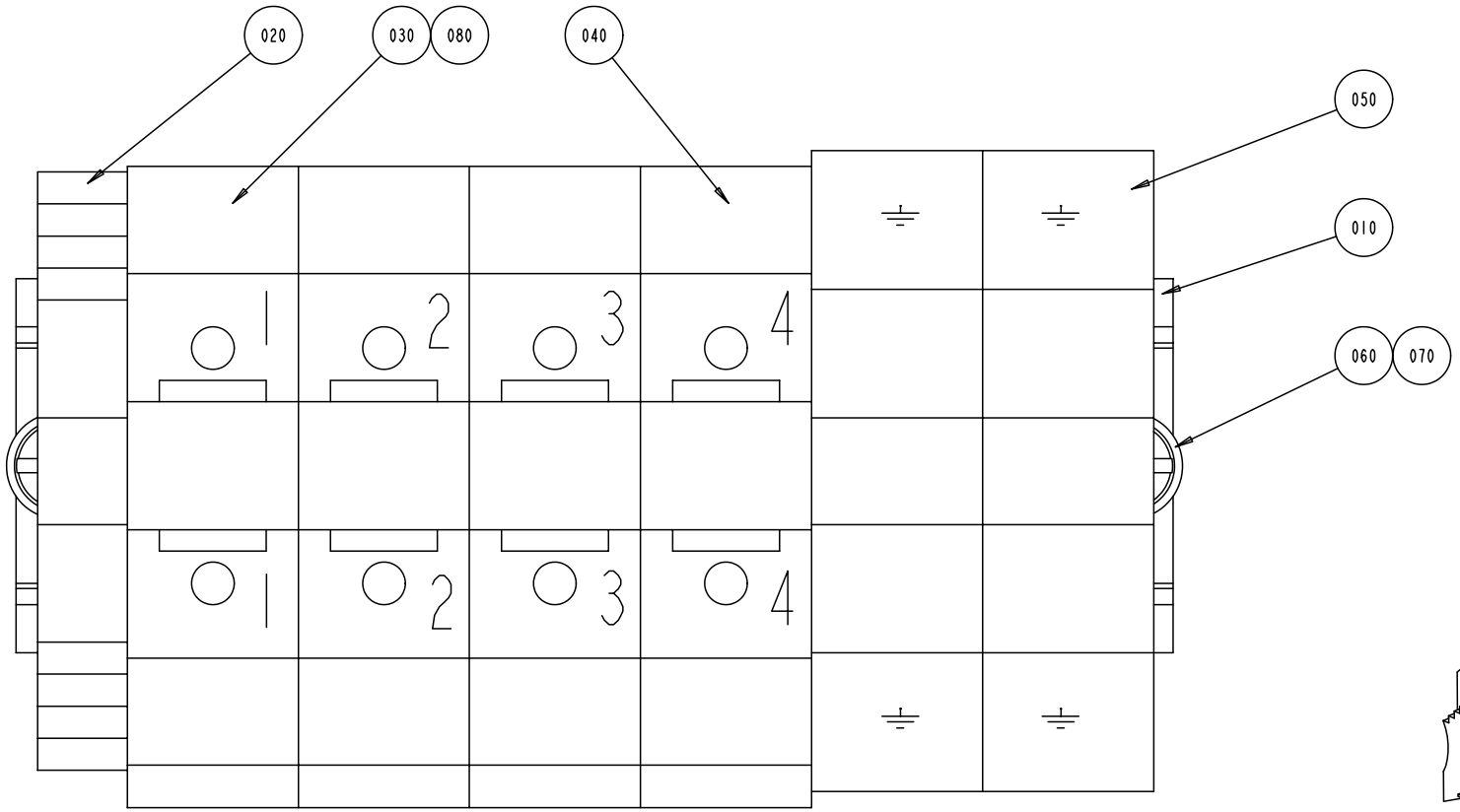

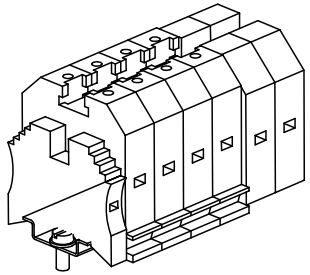

S - 1095778-1
ECN 71142

Pos	Part No	SP	UN	Qty	Description	Page No
Common parts						
010	353042-0005	-	MM	130	RAIL TS 35/7.5	
020	353031-0203	-		1	END BRACKET WEW 35/2	
030	353021-0219	-		3	BY PASS TERMINAL WDU 35	
040	353021-0226	-		1	BY-PASS TERMINAL WDU 35	
050	353024-0209	-		2	EARTH TERMINAL WPE 35	
060	312125-0327	-		2	SLOTTED CHEESE HEAD ISO 1207 M5X12 RFR	
070	315105-0146	-		2	WASHER,PLAIN ROUND 5,3x10 Stainless	
080	359011-0807	-		2	MARKING PLATES 5-FW 1-50	

Pos	Part No	SP	UN	Qty	Description	Page No

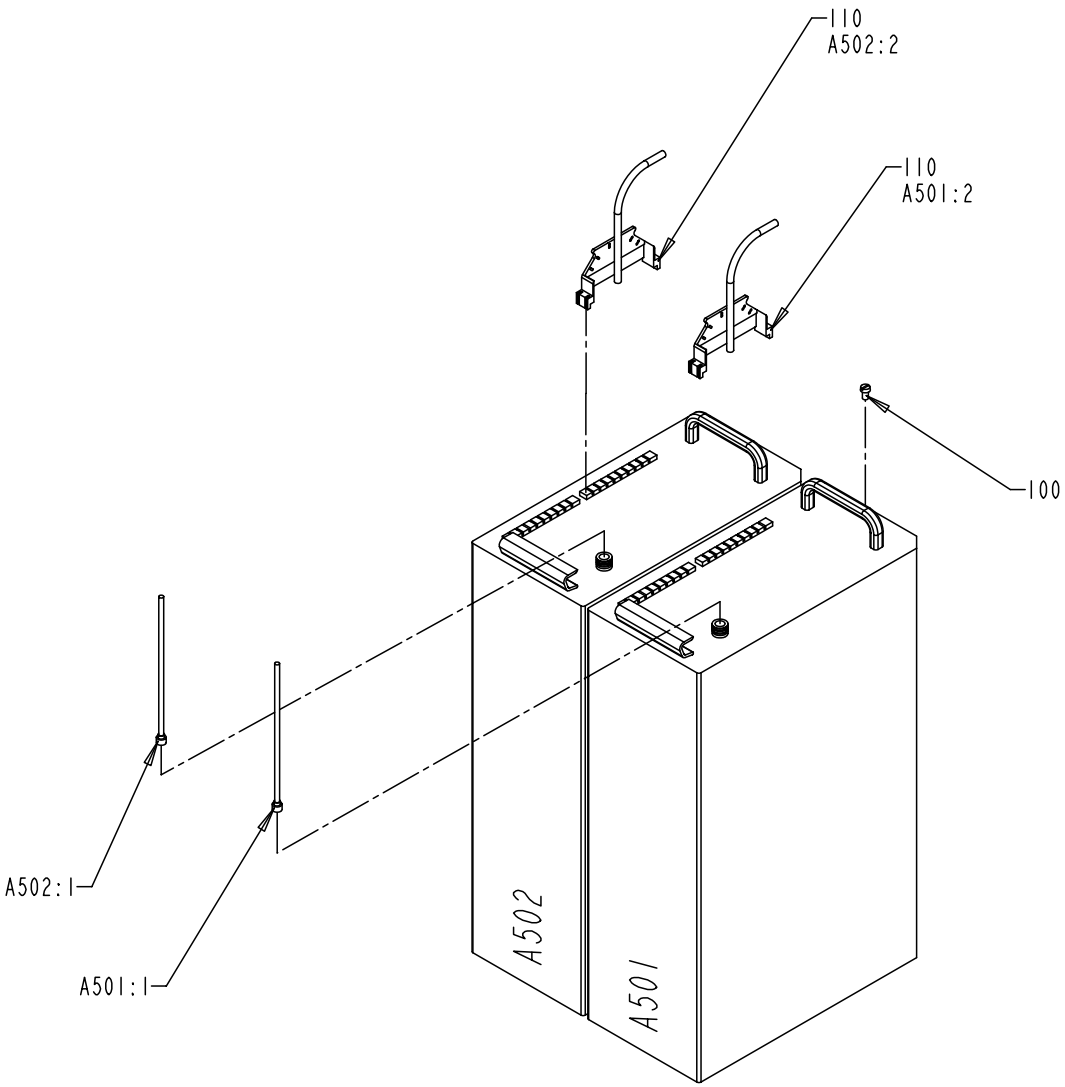

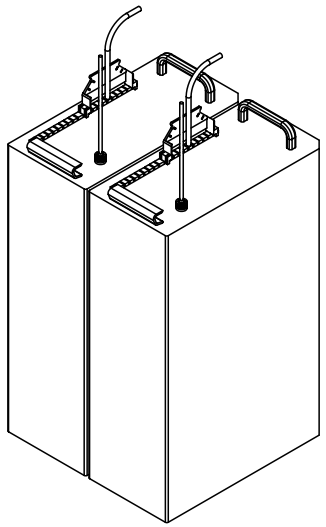

S - 1350120-1
ECN 70798

Pos	Part No	SP	UN	Qty	Description	Page No
Common parts						
100	312125-0364	-		2	SCREW,SLOTTED HEAD MCS 6x10 RFR	
110	90110-0122	-		4	COVER HARTING	
A501	67600-0501	D		1	TPIH 2000 GENERATOR	
A501.1	1140285-0006	-		1	COAXIAL CABLE L= 3000 MM	
A501.2	90110-0121	-		1	FEMALECONT.15POLE HARTING	
A502	67600-0501	D		1	TPIH 2000 GENERATOR	
A502.1	1140284-0010	-		1	COAXIAL CABLE L=3500 mm	
A502.2	90110-0121	-		1	FEMALECONT.15POLE HARTING	

Pos	Part No	SP	UN	Qty	Description	Page No

COMPONENT DOOR

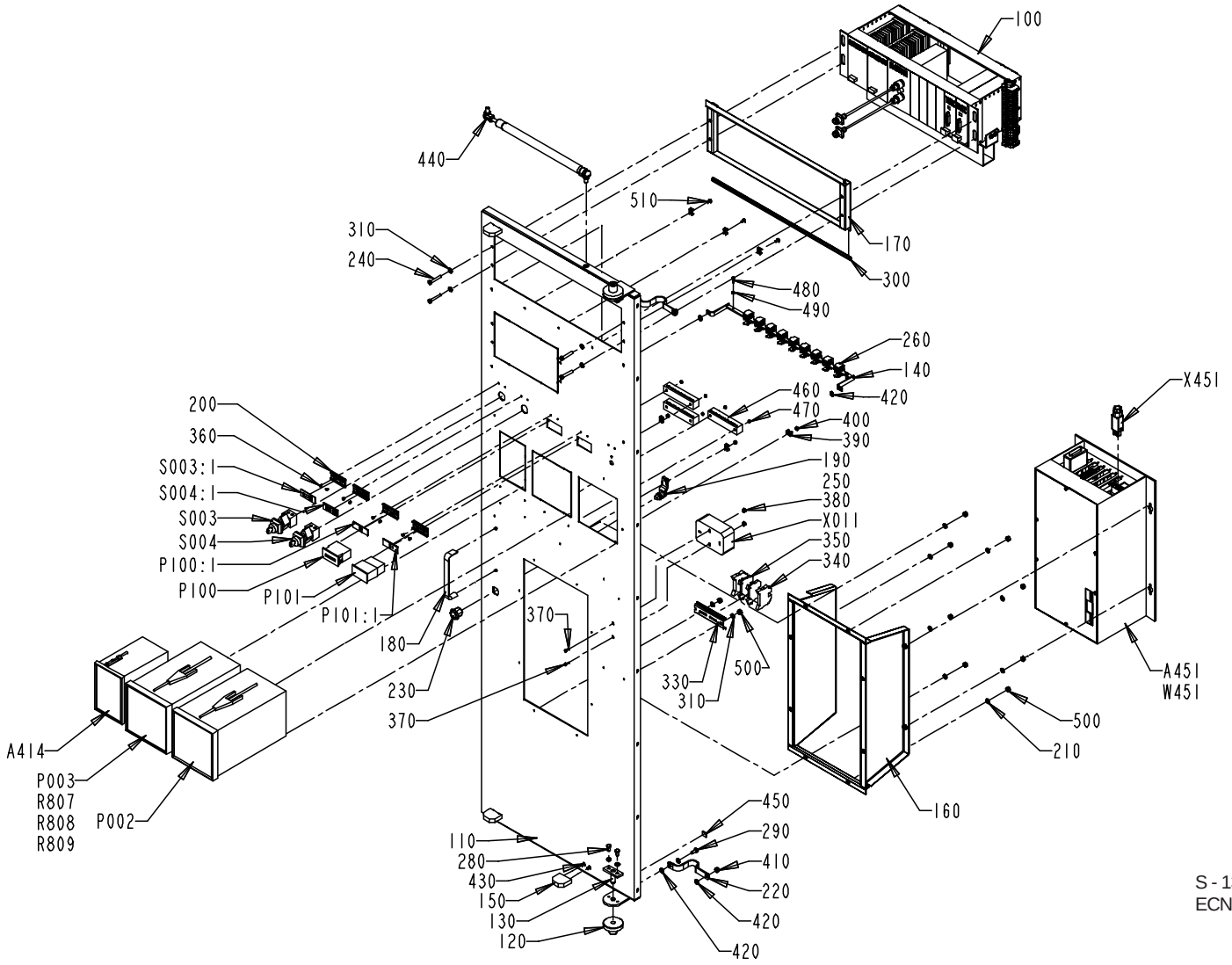

S - 1346314-1
ECN 72187

Pos	Part No	SP	UN	Qty	Description	Page No
Common parts						
100	A1317249-0200	-		1	RACK	**707**
110	1484235-0000	-		1	SWING FRAME	
120	495377-0000	-		2	BUSH	
130	971346-0000	-		2	GUIDE PIN	
140	1116536-0000	-		1	BRACKET	
150	970215-0000	-		3	STOP BLOCK	
160	1347145-0000	-		2	FRAME	
170	1038355-0000	-		1	FRAME	
180	90017-0017	-		1	HANDLE,Brass	
190	90237-0320	-		1	LOCK COMPONENT EMKA U136	
200	359240-0100	-		4	SIGN HOLDER	
210	315105-0153	-		18	WASHER,PLAIN ROUND 6,4x12 Stainless	
220	90135-0035	-		2	LOW IMPEDANCELITZ L=250MM	
230	90237-0319	-		1	LOCK HOUSING EMKA U134	
240	312125-0376	-		4	SLOTTED CHEESE HEAD ISO 1207 M6X35 RFR	
250	90237-0157	-		1	LOCKING CATCH EMKA 1000-230	
260	90135-0039	-		9	SHIELD CLIP KLBU 4-13.5	
270	312121-0285	-		2	SLOTTED HEAD SCREW MCS 4x6 FZB	
280	312101-0364	-		4	SCREW M6S 6x10-8,8 FZB	
290	312101-0366	-		6	SCREW M6S 6x12-8,8 FZB	
300	90143-0060	-	MM	485	EDGE STRIP 9,5x6,3mm Black PVC	
310	315101-0153	-		20	WASHER BRB 6,4x12 FZB	
320	315101-0146	-		6	WASHER BRB 5,3x10 FZB	
330	353042-0005	-	MM	100	RAIL TS 35/7.5	
340	353031-0203	-		2	END BRACKET WEW 35/2	
350	353021-0216	-		2	BY PASS TERMINAL WDU 2,5 Blue	
360	311520-0329	-		8	BLANK RIVET 2,4x8mm	
370	312121-0224	-		2	SLOTTED HEMCS3X10FZB	
380	312601-0314	-		2	NUT M6M5FZB	
390	352113-0205	-		7	ANCHOR TM2S8-C100	
400	312601-0312	-		4	NUT M6M 4-8 FZB	
410	312601-0316	-		4	NUT M6M 6-8 FZB	
420	90062-0022	-		8	LOCKING WASHER D=6,4/11	
430	312101-0325	-		6	SCREW M6S 5x10-8,8 FZB	
440	90347-0163	-		1	GAS-DAMPER	
450	90194-0152	-		2	SIGN "EARTH"	
460	90077-0106	-		3	TERMINAL MK 16 KRG 16-POLE	
470	312601-0310	-		6	NUT M6M3FZB	
480	312122-0291	-		11	SLOTTED CHEESE HEAD ISO 1207 M4X12 MSGFN	
490	90062-0058	-		11	WASHER,Lock 3,2x 6, T= 0,4 DIN 6798	
500	312605-0316	-		8	NUT,HEXAGON A280 M6M6	
510	312132-0287	-		3	SLOTTED PAN HEAD ISO 1580 M4X8 MSGFN	

Pos	Part No	SP	UN	Qty	Description	Page No
P002	90332-0020	D		1	Recorder Honeywell	
P100	90053-0031	D		1	HOUR COUNTER BOWER B906.10	
P100.1	359241-0201	-		1	SIGN "HOUR METER"	
P101	90053-0029	D		1	Pack Counter 8 Digits IVO	
P101.1	359241-0482	-		1	Sign "PACKAGE COUNTER"	
R807	90121-0120	-		1	Resistance fixed, 0,25 kOhm, 0,125 W	
R808	90121-0120	-		1	Resistance fixed, 0,25 kOhm, 0,125 W	
R809	90121-0120	-		1	Resistance fixed, 0,25 kOhm, 0,125 W	
S003	90111-0122	D		1	KEY SWITCH 2 NO Contacts	
S003.1	359241-0133	-		1	SIGN "SERVICE SWITCH"	
S004	90111-0124	D		1	KEY SWITCH 1NO,1NC Contact	
S004.1	359241-0122	-		1	SIGN "Cl.of Steam Barrier"	
W451	1317252-0000	-		1	CABLE SERIAL	
X011	90001-0033	-		1	Wall socket Outlet	
X451	90110-0028	-		1	CONTACT UNIT 4-POLE,STAK 3/930074-106	
CIPSUPERV						
A451	A1346753-0100	D		1	FLEXBOX UNIT	
A414	90243-0214	D		1	CONDUCTIVITY METER	
P003	90332-0020	D		1	Recorder Honeywell	
NOCIPSUPERV						
A451	A1346753-0100	D		1	FLEXBOX UNIT	

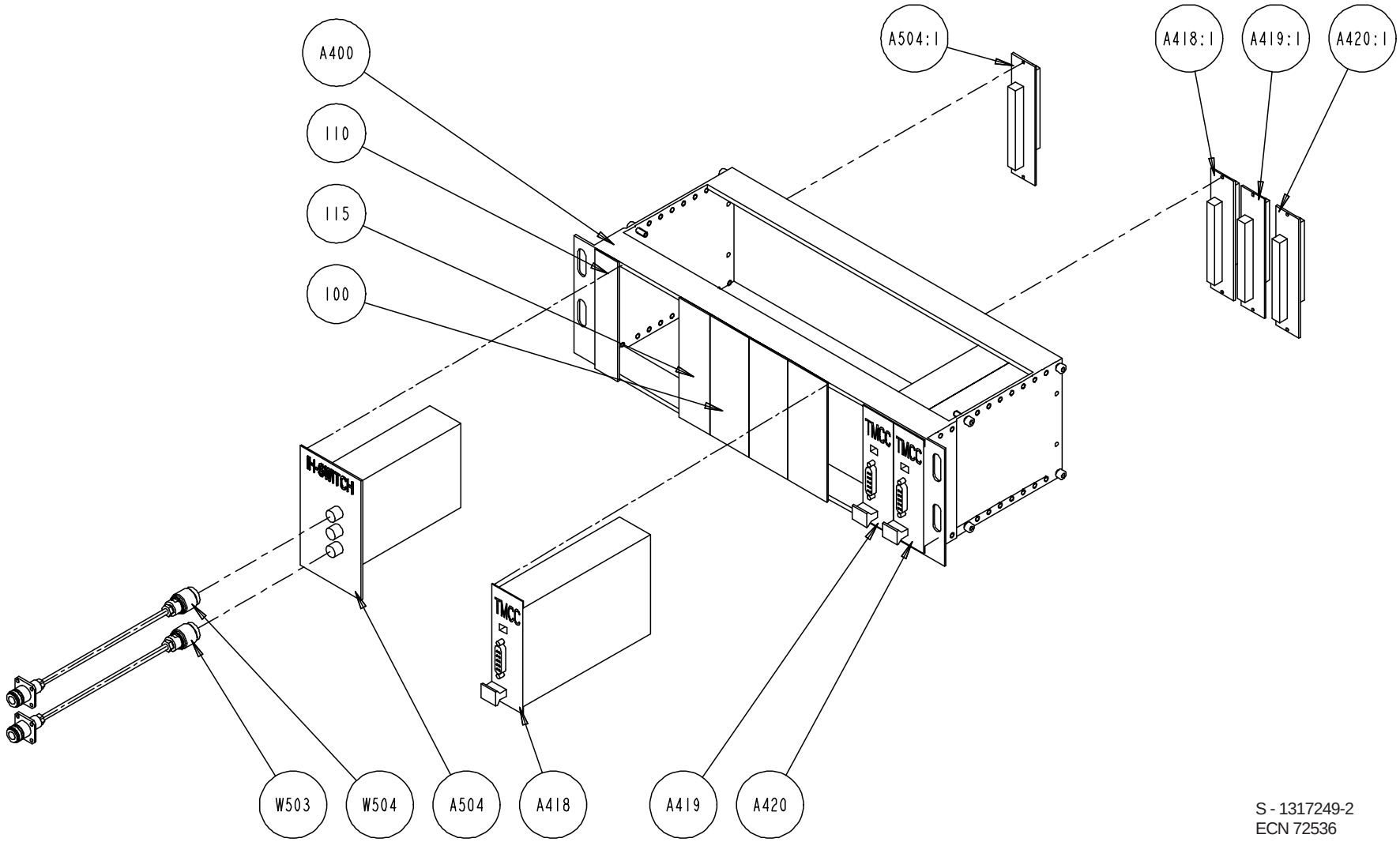

S - 1317249-2
ECN 72536

Pos	Part No	SP	UN	Qty	Description	Page No
Common parts						
100	68445-0105	-		3	FRONT PLATE 10TE	
110	68445-0103	-		1	FRONT PLATE 6TE	
115	68445-0104	-		1	FRONT PLATE 8 TE	
A400	67388-0102	D		1	RACK FRONTMOUNTED 84TE	
A418	B 558230-0301	D		1	TMCC Controller	
A418.1	68262-0101	D		1	BACKPLANE FRONT RACK 8TE	
A419	B 558230-0301	D		1	TMCC Controller	
A419.1	68262-0101	D		1	BACKPLANE FRONT RACK 8TE	
A420	B 558230-0301	D		1	TMCC Controller	
A420.1	68262-0101	D		1	BACKPLANE FRONT RACK 8TE	
A504	558321-0101	D		1	TPIH-SWITCH	
A504.1	68262-0101	D		1	BACKPLANE FRONT RACK 8TE	
W503	1140285-0007	D		1	COAXIAL CABLE L= 4000 MM	
W504	1140285-0007	D		1	COAXIAL CABLE L= 4000 MM	

Pos	Part No	SP	UN	Qty	Description	Page No

FLEXBOX UNIT

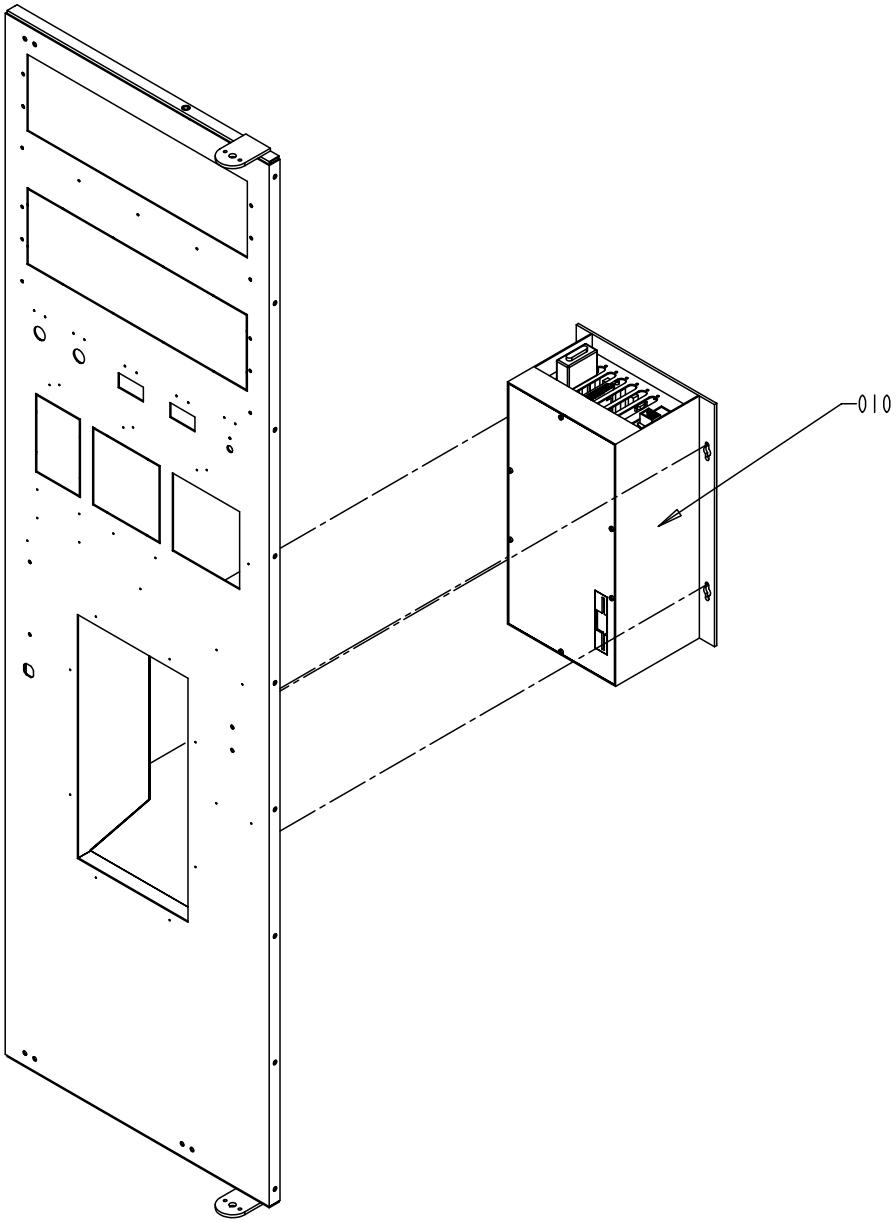

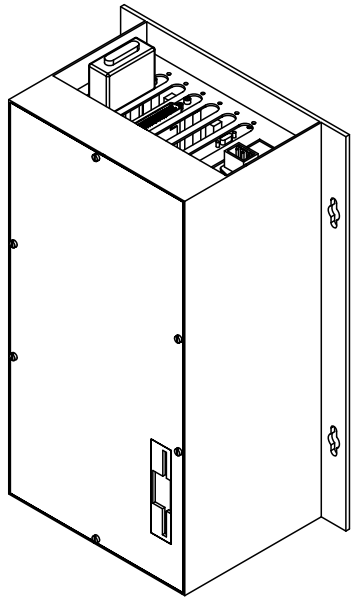

S - 1346753-1
ECN 72082

Pos	Part No	SP	UN	Qty	Description	Page No
Common parts						
010	A1095978-0400	-		1	FLEXBOX	**711**

Pos	Part No	SP	UN	Qty	Description	Page No

FLEXBOX

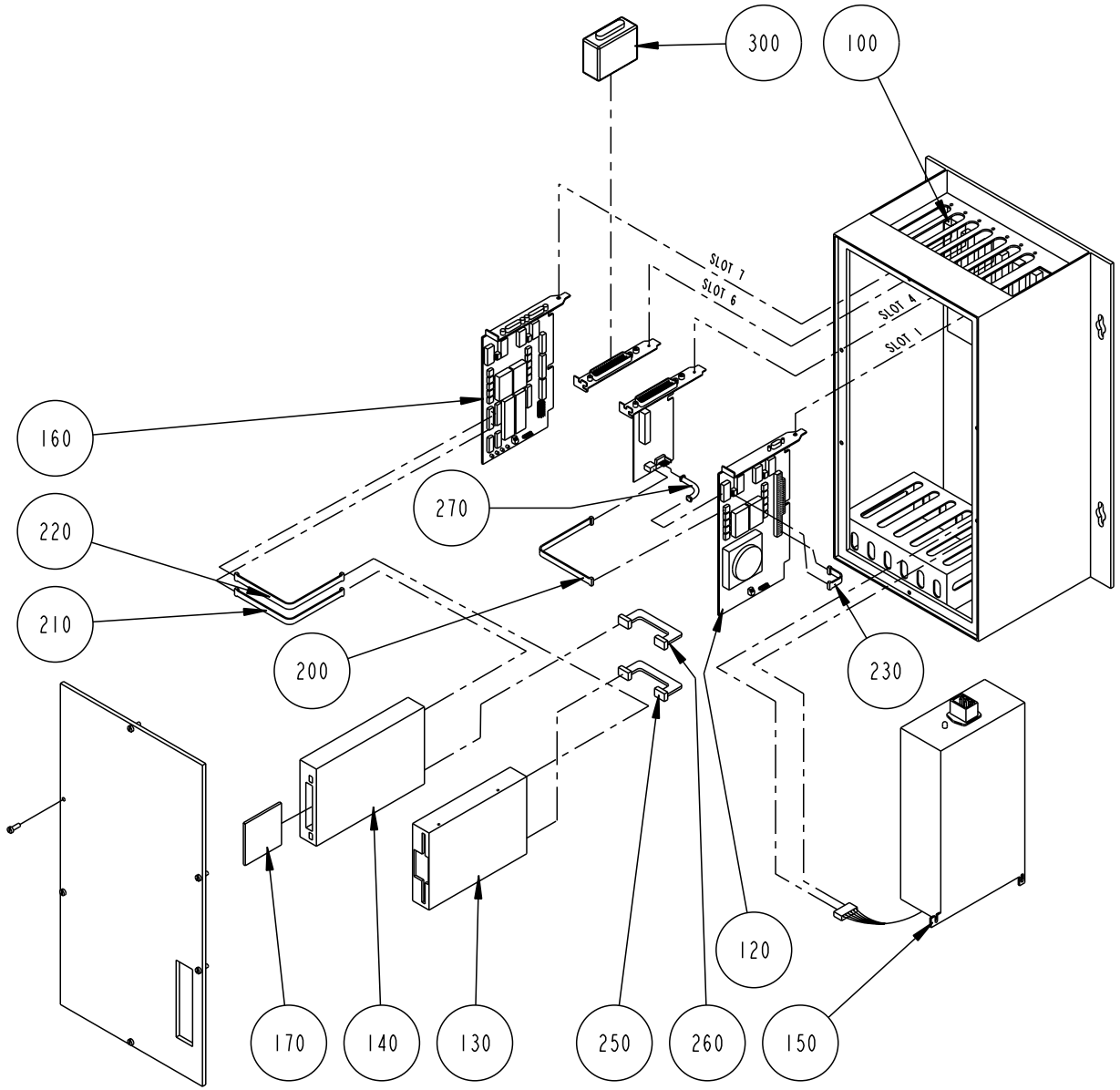

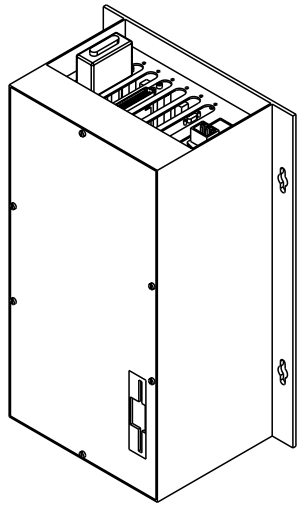

S - 1095978-4
ECN 71102

Pos	Part No	SP	UN	Qty	Description	Page No
Common parts						
100	90041-0052	D		1	Flex box Innoscan	
110	90041-0083	D		1	Host Communication Link Board LVDS	
120	90041-0084	D		1	Processor Board 133 MHz	
130	90041-0029	D		x	Floppy disc unit FD-235HF 1,4Mb	
140	90041-0053	D		x	PC MCIA HD BAY	
150	90041-0032	D		x	Power unit DC/PC	
160	90041-0087	D		1	Serial card 2 Channel RS486/422 Board	
170	90041-0051	D		1	MCIA HD Viper 340	
200	90041-0086	D		x	Cable COM 2 INNOSCAN	
210	90041-0038	D		x	Cable FD unit	
220	90041-0043	D		x	Cable, HD unit	
230	90041-0080	D		1	Cable CPU-LVDScard+display-LVDScard	
240	90041-0040	D		1	Cable Keyboard	
250	90041-0042	D		x	Cable, Floppy disk power	
260	90041-0054	D		x	Hard disk cable	
270	90041-0085	D		1	Cable Keyboard	
300	90041-0060	D		1	Hardware lock	

Pos	Part No	SP	UN	Qty	Description	Page No

CONTROL LEFT

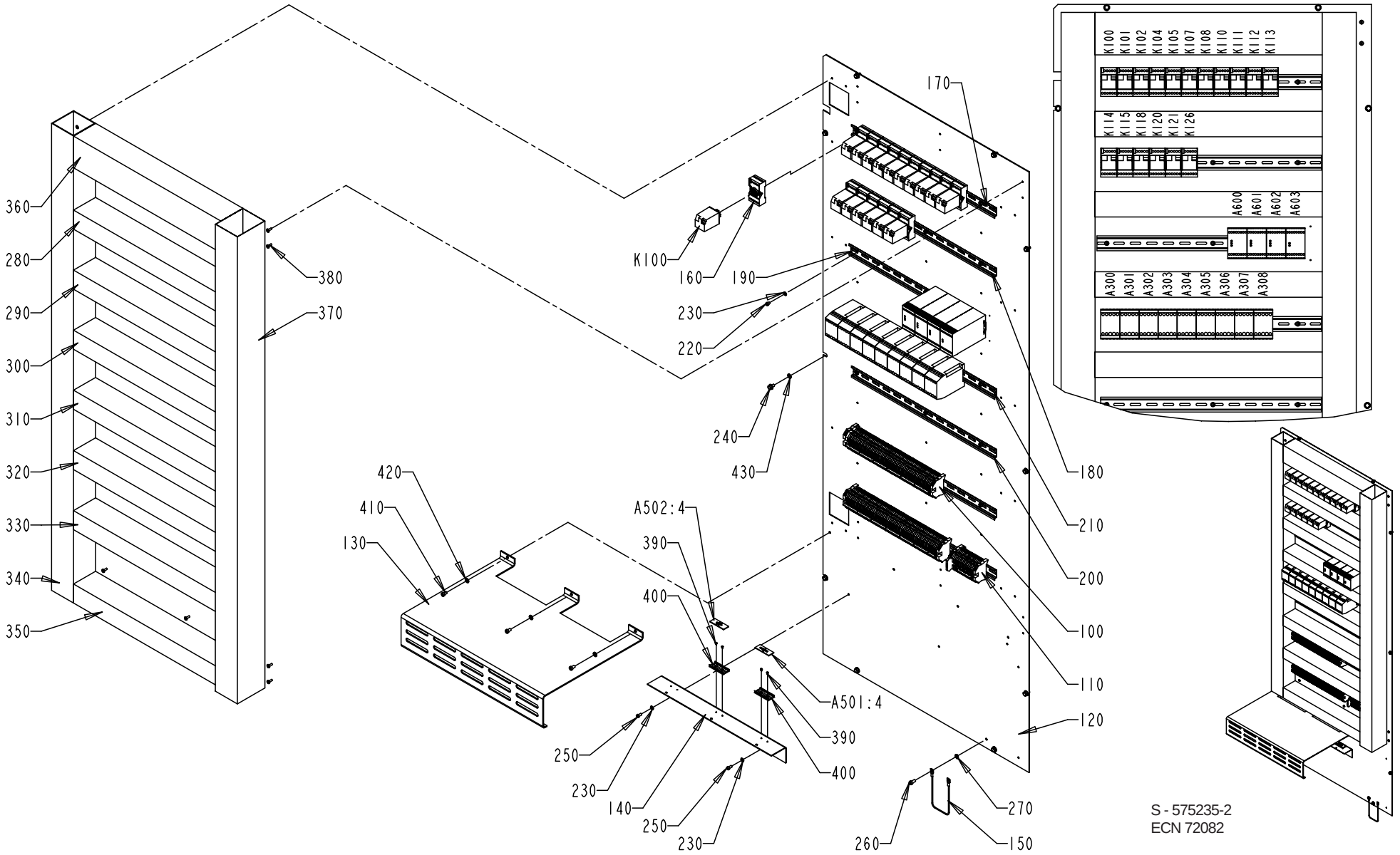

S - 575235-2
ECN 72082

Pos	Part No	SP	UN	Qty	Description	Page No
Common parts						
100	A1285530-0100	-		1	DISTRIBUTION TERMINAL	**715**
110	A1285532-0100	-		1	DISTRIBUTION TERMINAL	**717**
120	1484227-0000	-		1	MOUNTING PLATE	
130	1140259-0000	-		1	PROTECTION	
140	1129335-0000	-		1	BRACKET	
150	B1038714-0000	-		1	CABLE	
160	90129-0006	-		19	BASE 11 POLE	
170	353042-0005	-	MM	520	RAIL TS 35/7.5	
180	353042-0005	-	MM	520	RAIL TS 35/7.5	
190	353042-0005	-	MM	490	RAIL TS 35/7.5	
200	353042-0005	-	MM	520	RAIL TS 35/7.5	
210	353042-0005	-	MM	520	RAIL TS 35/7.5	
220	312121-0321	-		15	SLOTTED HEMCS5X6FZB	
230	315101-0146	-		17	WASHER BRB 5,3x10 FZB	
240	90287-0157	-		10	SCREW, M6SF ISO4014, M6x10 8,8	
250	312121-0325	-		2	SLOTTED HEMCS5X10FZB	
260	312121-0366	-		1	SLOTTED HEMCS6X12FZB	
270	90062-0022	-		3	LOCKING WASHER D=6,4/11	
280	90181-0054	-	MM	535	CABLE DUCT 60X80mm	
290	90181-0054	-	MM	535	CABLE DUCT 60X80mm	
300	90181-0054	-	MM	535	CABLE DUCT 60X80mm	
310	90181-0054	-	MM	535	CABLE DUCT 60X80mm	
320	90181-0054	-	MM	535	CABLE DUCT 60X80mm	
330	90181-0054	-	MM	535	CABLE DUCT 60X80mm	
340	90181-0055	-	MM	1470	CABLE DUCT 80X80mm	
350	90181-0054	-	MM	535	CABLE DUCT 60X80mm	
360	90181-0056	-	MM	535	CABLE DUCT 100X80MM	
370	90181-0056	-	MM	1470	CABLE DUCT 100X80MM	
380	90181-0313	-		52	Rivet DUCTAFIX R4	
390	311520-0320	-		4	BLANK RIVET 2,4x6mm	
400	359240-0100	-		2	SIGN HOLDER	
410	312121-0364	-		3	SLOTTED HEMCS6X10FZB	
420	315105-0153	-		3	WASHER,PLAIN ROUND 6,4x12 Stainless	
430	315103-0153	-		10	WASHER,PLAIN ROUND 6,4x12	
A300	90314-0038	D		1	Level control relay RM3	
A301	90314-0038	D		1	Level control relay RM3	
A302	90314-0038	D		1	Level control relay RM3	
A303	90314-0038	D		1	Level control relay RM3	
A304	90314-0038	D		1	Level control relay RM3	
A305	90314-0038	D		1	Level control relay RM3	
A306	90314-0038	D		1	Level control relay RM3	
A307	90314-0038	D		1	Level control relay RM3	
A308	90314-0038	D		1	Level control relay RM3	
A501.4	359241-0131	-		1	SIGN "LONGITUDINAL SEALING"	
A502.4	359241-0135	-		1	SIGN "TRANSVERSAL SEALING"	
A600	90119-0072	D		1	SAFETY RELAY JSBR4	
A601	90119-0072	D		1	SAFETY RELAY JSBR4	
A602	90119-0089	D		1	SAFETY RELAY JSBT4 24VDC	
A603	90119-0084	D		1	EXPANSION RELAY JSR1T-500ms	
K100	90119-0056	D		1	PLUG-IN RELAY 24VDC	
K101	90119-0056	D		1	PLUG-IN RELAY 24VDC	
K102	90119-0056	D		1	PLUG-IN RELAY 24VDC	
K104	90119-0056	D		1	PLUG-IN RELAY 24VDC	
K105	90119-0056	D		1	PLUG-IN RELAY 24VDC	
K107	90119-0056	D		1	PLUG-IN RELAY 24VDC	
K108	90119-0056	D		1	PLUG-IN RELAY 24VDC	
K110	90119-0056	D		1	PLUG-IN RELAY 24VDC	
K111	90119-0056	D		1	PLUG-IN RELAY 24VDC	
K112	90119-0056	D		1	PLUG-IN RELAY 24VDC	
K113	90119-0056	D		1	PLUG-IN RELAY 24VDC	
K114	90119-0056	D		1	PLUG-IN RELAY 24VDC	
K115	90119-0056	D		1	PLUG-IN RELAY 24VDC	
K118	90119-0056	D		1	PLUG-IN RELAY 24VDC	
K120	90119-0056	D		1	PLUG-IN RELAY 24VDC	
K121	90119-0056	D		1	PLUG-IN RELAY 24VDC	
K126	90119-0056	D		1	PLUG-IN RELAY 24VDC	

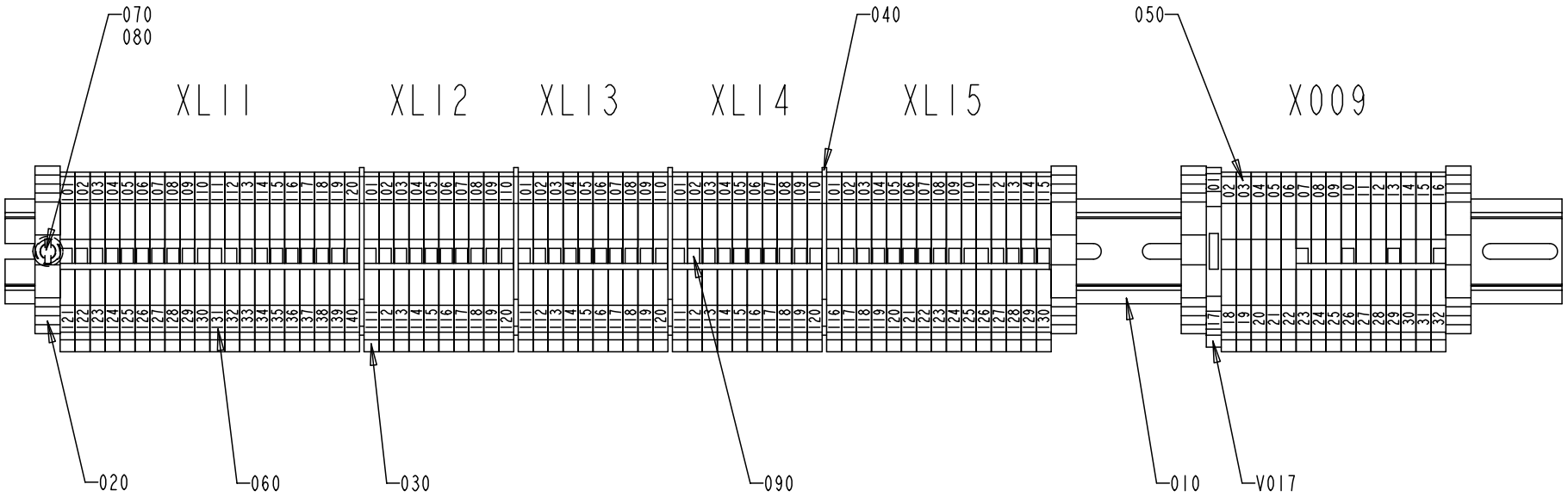

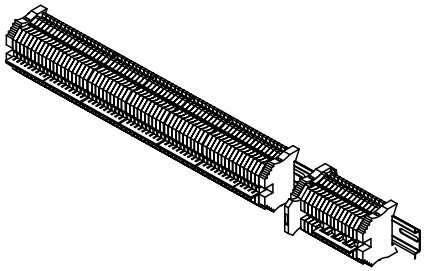

S - 1285530-1
ECN 72082

Pos	Part No	SP	UN	Qty	Description	Page No
Common parts						
010	353042-0005	-	MM	520	RAIL TS 35/7.5	
020	353031-0203	-		4	END BRACKET WEW 35/2	
030	353021-0216	-		81	BY PASS TERMINAL WDU 2,5 Blue	
040	353032-0005	-		4	END PLATE WAP 2,5-10 Blue	
050	359011-0807	-		2	MARKING PLATES 5-FW 1-50	
060	359011-0809	-		5	MARKING PLATES 5-FW 101-150	
070	312121-0323	-		3	SLOTTED HEMCS5X8FZB	
080	315101-0146	-		3	WASHER BRB 5,3x10 FZB	
090	353034-0030	-		7	BRIDGE CONLECK WQV 2,5/10	
V017	353021-0122	-		1	DIODE-TERMINAL WTRD 2,5	

Pos	Part No	SP	UN	Qty	Description	Page No

DISTRIBUTION TERMINAL

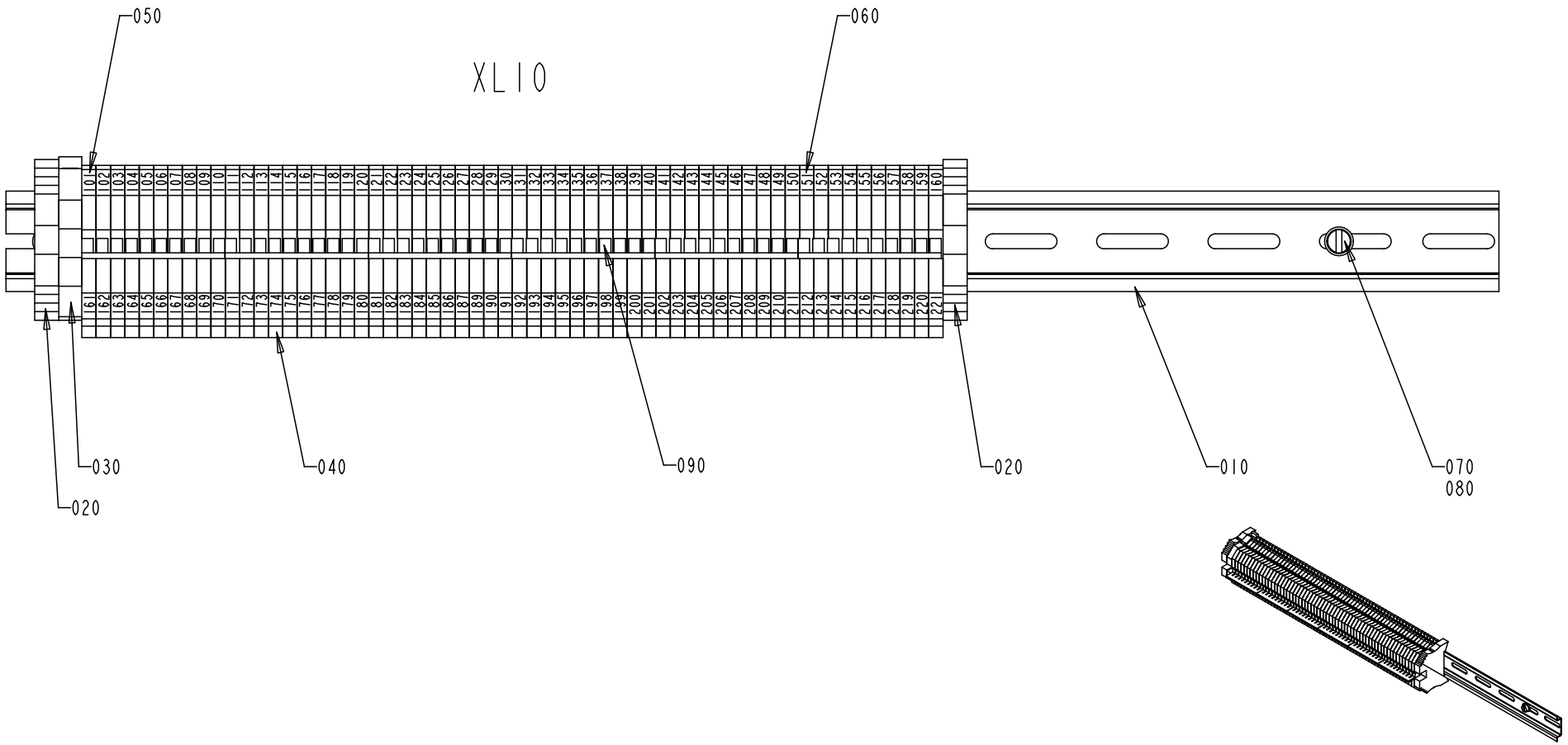

S - 1285532-1
ECN 72082

Pos	Part No	SP	UN	Qty	Description	Page No
Common parts						
010	353042-0005	-	MM	520	RAIL TS 35/7.5	
020	353031-0203	-		2	END BRACKET WEW 35/2	
030	353021-0223	-		1	BY-PASS TERMINAL WDU 6	
040	353021-0216	-		60	BY PASS TERMINAL WDU 2,5 Blue	
050	359011-0809	-		1	MARKING PLATES 5-FW 101-150	
060	359011-0810	-		1	Marking Plates 5-FW 151-200	
070	312121-0323	-		3	SLOTTED HEMCS5X8FZB	
080	315101-0146	-		3	WASHER BRB 5,3x10 FZB	
090	353034-0030	-		6	BRIDGE CONLECK WQV 2,5/10	

Pos	Part No	SP	UN	Qty	Description	Page No

CONTROL RIGHT

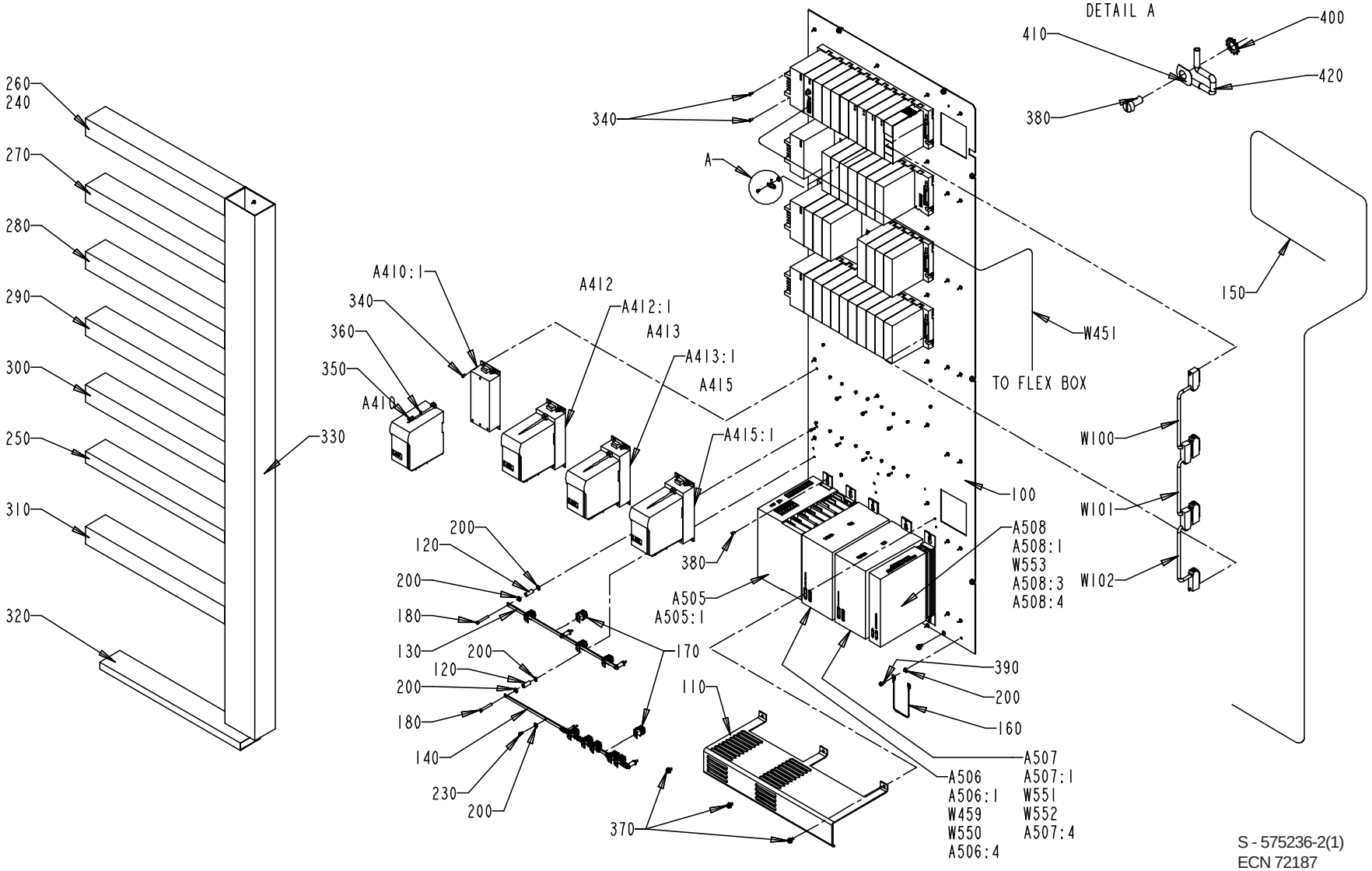

S - 575236-2(1)
ECN 72187

Pos	Part No	SP	UN	Qty	Description	Page No
Common parts						
100	1285535-0000	-		1	MOUNTING PLATE	
110	1350916-0000	-		1	PROTECTION	
120	1140053-0000	-		6	SPACER	
130	1484170-0000	-		1	EARTH BAR	
140	1484171-0000	-		1	EARTH BAR	
150	1348067-0000	-		1	CABLE	
160	B1038714-0000	-		1	CABLE	
170	90135-0039	-		10	SHIELD CLIP KLBU 4-13.5	
180	312121-0339	-		6	SLOTTED HEMCS5X40FZB	
190	312121-0364	-		2	SLOTTED HEMCS6X10FZB	
200	90062-0022	-		23	LOCKING WASHER D=6,4/11	
210	353042-0005	-	MM	530	RAIL TS 35/7.5	
220	315101-0146	-		3	WASHER BRB 5,3x10 FZB	
230	312121-0323	-		21	SLOTTED HEMCS5X8FZB	
240	90181-0313	-		38	Rivet DUCTAFIX R4	
250	90181-0040	-	MM	555	CABLE DUCT 80x40mm	
260	90181-0054	-	MM	555	CABLE DUCT 60X80mm	
270	90181-0054	-	MM	555	CABLE DUCT 60X80mm	
280	90181-0054	-	MM	555	CABLE DUCT 60X80mm	
290	90181-0054	-	MM	555	CABLE DUCT 60X80mm	
300	90181-0054	-	MM	555	CABLE DUCT 60X80mm	
310	90181-0054	-	MM	555	CABLE DUCT 60X80mm	
320	90181-0052	-	MM	560	CABLE DUCT 25X80MM	
330	90181-0057	-	MM	1810	CABLE DUCT 120x80mm	
340	312125-0287	-		38	SLOTTED CHEESE HEAD ISO 1207 M4X8 RFR	
350	312115-0291	-		4	SCREW MC6S ISO 4762 M4x12 A280	
360	315105-0136	-		4	WASHER,PLAIN ROUND 4,3x8 Stainless	
370	90287-0157	-		13	SCREW, M6SF ISO4014, M6x10 8,8	
380	312122-0287	-		12	SLOTTED CHEESE HEAD ISO 1207 M4X8 MSGFN	
390	312121-0366	-		1	SLOTTED HEMCS6X12FZB	
400	90062-0021	-		2	LOCKING WASHER A 5,3	
410	353104-0132	-		2	CABLE SHOEYAV 025 M 5	
420	1143884-0000	-		2	COPPER BRAID	
A101	90031-0058	D		1	PLC,Digital Input Module,fast ,16pt,+/-	
A102	90031-0059	D		1	PLC,Digital Output Module,24VDC,16pt,+/-	
A103	90031-0065	D		1	PLC,Temperatur Control,Input module 8 pt	
A104	90031-0065	D		1	PLC,Temperatur Control,Input module 8 pt	
A105	90031-0061	D		1	PLC,Analog Input Module, current, 16pt	
A106	90031-0060	D		1	PLC,Analog Input Module, voltage, 16pt	
A107	90031-0062	D		1	PLC,Analog Output Module, curr/volt, 8pt	
A108	90031-0062	D		1	PLC,Analog Output Module, curr/volt, 8pt	
A109	90031-0031	D		1	PLC,COMMUNICATION,Enhanced Genius module	
A112	90031-0057	D		1	PLC,Digital Input Module,24VDC,16pt,+/-	
A113	90031-0057	D		1	PLC,Digital Input Module,24VDC,16pt,+/-	
A114	90031-0057	D		1	PLC,Digital Input Module,24VDC,16pt,+/-	
A115	90031-0057	D		1	PLC,Digital Input Module,24VDC,16pt,+/-	
A116	90031-0057	D		1	PLC,Digital Input Module,24VDC,16pt,+/-	
A117	90031-0057	D		1	PLC,Digital Input Module,24VDC,16pt,+/-	
A118	90031-0057	D		1	PLC,Digital Input Module,24VDC,16pt,+/-	
A119	90031-0057	D		1	PLC,Digital Input Module,24VDC,16pt,+/-	
A120	90031-0057	D		1	PLC,Digital Input Module,24VDC,16pt,+/-	
A121	90031-0057	D		1	PLC,Digital Input Module,24VDC,16pt,+/-	
A122	90031-0057	D		1	PLC,Digital Input Module,24VDC,16pt,+/-	
A126	90031-0059	D		1	PLC,Digital Output Module,24VDC,16pt,+/-	
A127	90031-0059	D		1	PLC,Digital Output Module,24VDC,16pt,+/-	
A128	90031-0059	D		1	PLC,Digital Output Module,24VDC,16pt,+/-	
A129	90031-0059	D		1	PLC,Digital Output Module,24VDC,16pt,+/-	
A130	90031-0059	D		1	PLC,Digital Output Module,24VDC,16pt,+/-	
A131	90031-0059	D		1	PLC,Digital Output Module,24VDC,16pt,+/-	
A132	90031-0059	D		1	PLC,Digital Output Module,24VDC,16pt,+/-	
A133	90031-0059	D		1	PLC,Digital Output Module,24VDC,16pt,+/-	
A134	90031-0059	D		1	PLC,Digital Output Module,24VDC,16pt,+/-	
A135	90031-0059	D		1	PLC,Digital Output Module,24VDC,16pt,+/-	
A136	90031-0059	D		1	PLC,Digital Output Module,24VDC,16pt,+/-	
A137	90031-0059	D		1	PLC,Digital Output Module,24VDC,16pt,+/-	
A138	90031-0059	D		1	PLC,Digital Output Module,24VDC,16pt,+/-	
A160	90031-0051	D		1	Baseplate 10-Slot	
A161	90031-0053	D		1	Baseplate,10-Slot	
A162	90031-0053	D		1	Baseplate,10-Slot	
A163	90031-0053	D		1	Baseplate,10-Slot	
A163.1	90031-0302	D		1	I/O Bus Termination Plug	
A410	90430-0070	D		1	Freq.Conv.Siemens 6SE3213-6CA40 750W	
A410.1	90430-0326	D		1	Filter 6SE3290-0BA87-0FB2 SIEMENS	
A410.3	90024-0047	D		1	EMI SUPPRESSION FERRITE	
A412	90430-0070	D		1	Freq.Conv.Siemens 6SE3213-6CA40 750W	
A412.1	90430-0326	D		1	Filter 6SE3290-0BA87-0FB2 SIEMENS	
A412.3	90024-0047	D		1	EMI SUPPRESSION FERRITE	
A413	90430-0070	D		1	Freq.Conv.Siemens 6SE3213-6CA40 750W	
A413.1	90430-0326	D		1	Filter 6SE3290-0BA87-0FB2 SIEMENS	
A413.3	90024-0047	D		1	EMI SUPPRESSION FERRITE	
A415	90430-0070	D		1	Freq.Conv.Siemens 6SE3213-6CA40 750W	
A415.1	90430-0326	D		1	Filter 6SE3290-0BA87-0FB2 SIEMENS	
A415.3	90024-0047	D		1	EMI SUPPRESSION FERRITE	
A505	90045-0397	D		1	VOLTAGE SUPPLY UNIT	
A505.1	90045-0378	D		1	PLINTH	

CONTROL RIGHT

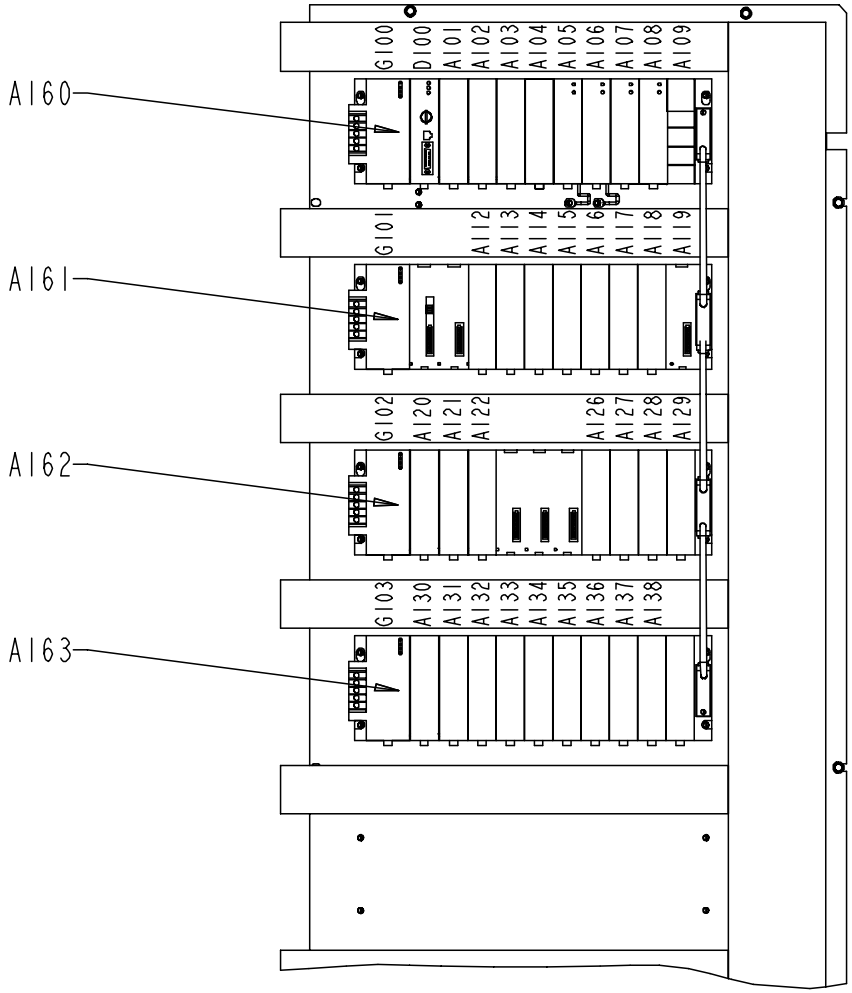

S - 575236-2(2)
ECN 72187

Pos	Part No	SP	UN	Qty	Description	Page No
A506	90045-0399	D		1	SERVO AMPLIFIER 110.5A RMS	
A506.1	90045-0382	D		1	PLINTH	
A506.3	90220-0187	D	MM	300	Cable 6x2x0.22	
A506.6	90110-0209	D		11	CONTACT PIN	
A506.7	353245-0005	D		1	GLAND,EMC,EXTENDED WITH INSERT PR 22,5	
A507	90045-0399	D		1	SERVO AMPLIFIER 110.5A RMS	
A507.1	90045-0382	D		1	PLINTH	
A507.6	90110-0508	-		1	Cable Contact	
A507.7	90110-0209	D		11	CONTACT PIN	
A507.7	353245-0005	D		1	GLAND,EMC,EXTENDED WITH INSERT PR 22,5	
A508	90045-0394	D		1	SERVO AMPLIFIER 5A RMS	
A508.1	90045-0375	D		1	PLINTH ATLAS COPCO	
A508.3	90220-0131	D	MM	600	CABLE,MULTI-COND.SCREENED PAIR TWIST	
A508.6	90110-0209	D		7	CONTACT PIN	
A508.7	90012-0117	D		1	GLAND,EMC,EXTENDED WITH INSERT	
D100	90031-0075	D		1	CPU363, Serial communication	
G100	90031-0068	D		1	Powersupply 240VAC Hi Cap	
G101	90031-0068	D		1	Powersupply 240VAC Hi Cap	
G102	90031-0068	D		1	Powersupply 240VAC Hi Cap	
G103	90031-0068	D		1	Powersupply 240VAC Hi Cap	
W100	90031-0305	D		1	Backplane Expansion cable 0,3 m	
W101	90031-0305	D		1	Backplane Expansion cable 0,3 m	
W102	90031-0305	D		1	Backplane Expansion cable 0,3 m	
W201	90220-0104	D	MM	5000	CABLE,SCREENED 4x1,5mm2	
W202	90220-0104	D	MM	5000	CABLE,SCREENED 4x1,5mm2	
W203	90220-0104	D	MM	5000	CABLE,SCREENED 4x1,5mm2	
W204	90220-0104	D	MM	5000	CABLE,SCREENED 4x1,5mm2	
W549	90220-0084	D	MM	3000	SERVOCABLE 4X2,5+2(2X0.75)	
W551	90220-0084	D	MM	3000	SERVOCABLE 4X2,5+2(2X0.75)	
W552	90220-0187	D	MM	300	Cable 6x2x0.22	
W553	90220-0116	D	MM	3000	CABLE 4x1,0+2(2x0,5)mm2	
W554	90110-0508	D		1	Cable Contact	
W556	90110-0208	D		1	CABLE CONTACT	

Pos	Part No	SP	UN	Qty	Description	Page No

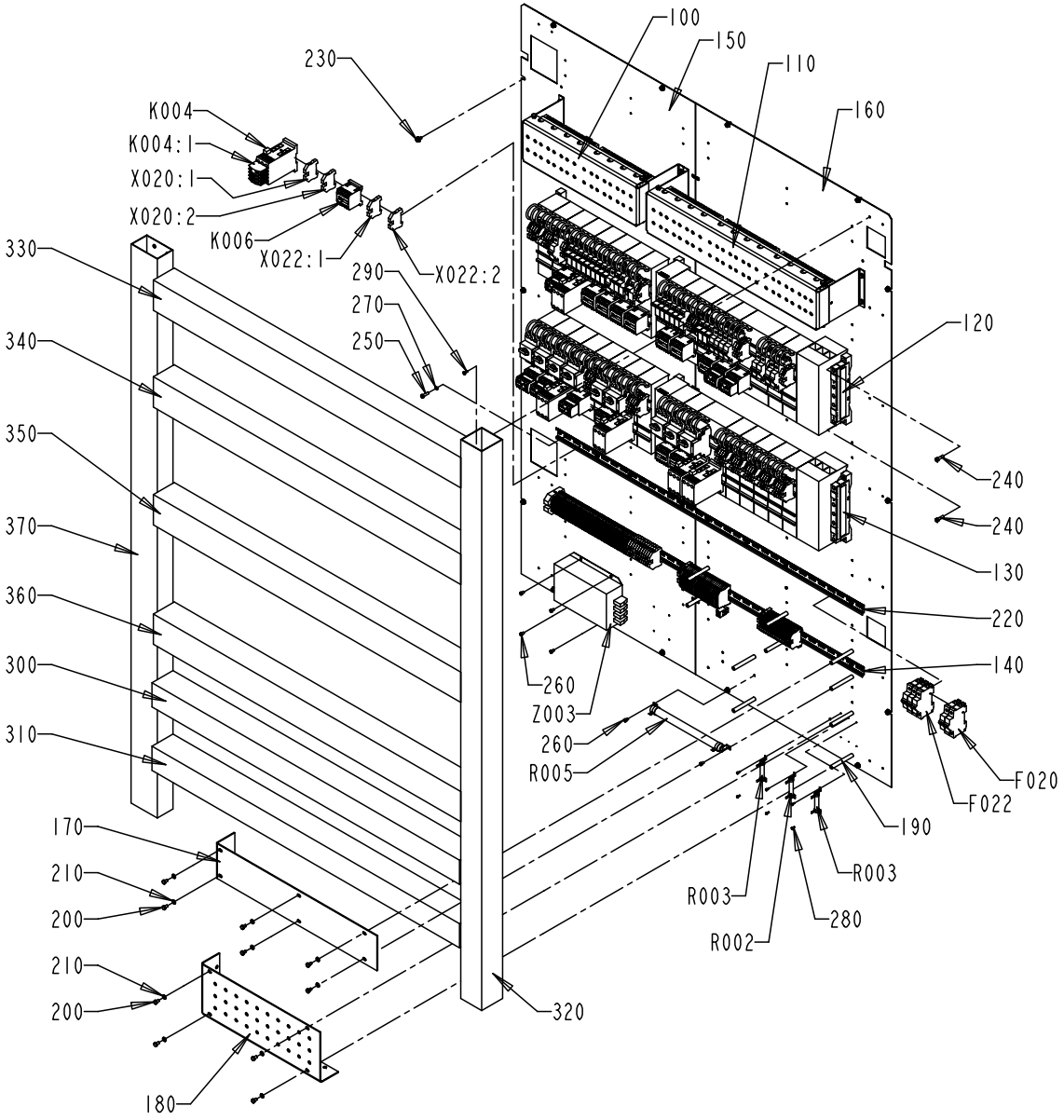

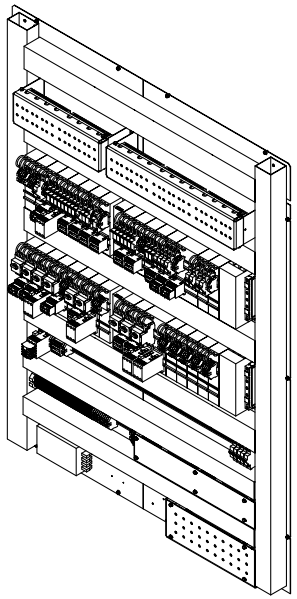

S - 575237-2
ECN 72082

Pos	Part No	SP	UN	Qty	Description	Page No
Common parts						
100	A1095644-0200	-		1	RELAY UNIT 1	**725**
110	A1285537-0200	-		1	RELAY UNIT 2	**727**
120	A1285539-0200	-		1	FUSE BOARD 1	**729**
130	A1285528-0200	-		1	FUSE BOARD 2	**731**
140	A1285538-0100	-		1	PLINTH	**733**
150	1484466-0000	-		1	MOUNTING PLATE	
160	1484467-0000	-		1	MOUNTING PLATE	
170	1129341-0000	-		1	PROTECTION	
180	1254091-0000	-		1	PROTECTION	
190	1038275-0012	-		10	SPACER	
200	312101-0364	-		20	SCREW M6S 6x10-8,8 FZB	
210	315101-0153	-		10	WASHER BRB 6,4x12 FZB	
220	353042-0005	-	MM	1170	RAIL TS 35/7.5	
230	90287-0157	-		14	SCREW, M6SF ISO4014, M6x10 8,8	
240	312111-0370	-		10	SCREW MC6S6X20FZB	
250	312121-0370	-		8	SLOTTED HEMCS6X20FZB	
260	312121-0323	-		13	SLOTTED HEMCS5X8FZB	
270	315101-0146	-		8	WASHER BRB 5,3x10 FZB	
280	312121-0222	-		6	SLOTTED HEMCS3X8FZB	
290	90181-0313	-		100	Rivet DUCTAFIX R4	
300	90181-0055	-	MM	1175	CABLE DUCT 80X80mm	
310	90181-0055	-	MM	1175	CABLE DUCT 80X80mm	
320	90181-0055	-	MM	1850	CABLE DUCT 80X80mm	
330	90181-0056	-	MM	1175	CABLE DUCT 100X80MM	
340	90181-0056	-	MM	1175	CABLE DUCT 100X80MM	
350	90181-0056	-	MM	1175	CABLE DUCT 100X80MM	
360	90181-0056	-	MM	1175	CABLE DUCT 100X80MM	
370	90181-0048	-	MM	1840	CABLE DUCT 100x60mm	
F020	90007-0138	-		1	FUSE 2P 10A K	
F022	90007-0149	-		1	FUSE 3P 20A K	
K004	90075-0128	D		1	CONTACTOR 7,5KW COIL 24VDC	
K004.1	90075-0313	-		1	AUXILIARY CONTACT K&M 22 DILM.2NO;2NC	
K006	90075-0141	-		1	CONTACTOR 4KW COIL 24VDC	
R001	90121-0114	D		1	Resistance fixed, 0,22 kOhm, 25 W	
R002	90121-0114	D		1	Resistance fixed, 0,22 kOhm, 25 W	
R003	90121-0114	D		1	Resistance fixed, 0,22 kOhm, 25 W	
R505	90121-0115	D		1	Resistance fixed, 0,047 kOhm, 200 W	
X020.1	353024-0206	-		1	EARTH TERMINAL WPE 6	
X020.2	353024-0206	-		1	EARTH TERMINAL WPE 6	
X022.1	353024-0206	-		1	EARTH TERMINAL WPE 6	
X022.2	353024-0206	-		1	EARTH TERMINAL WPE 6	
Z003	90024-0039	D		1	FILTER	

Pos	Part No	SP	UN	Qty	Description	Page No

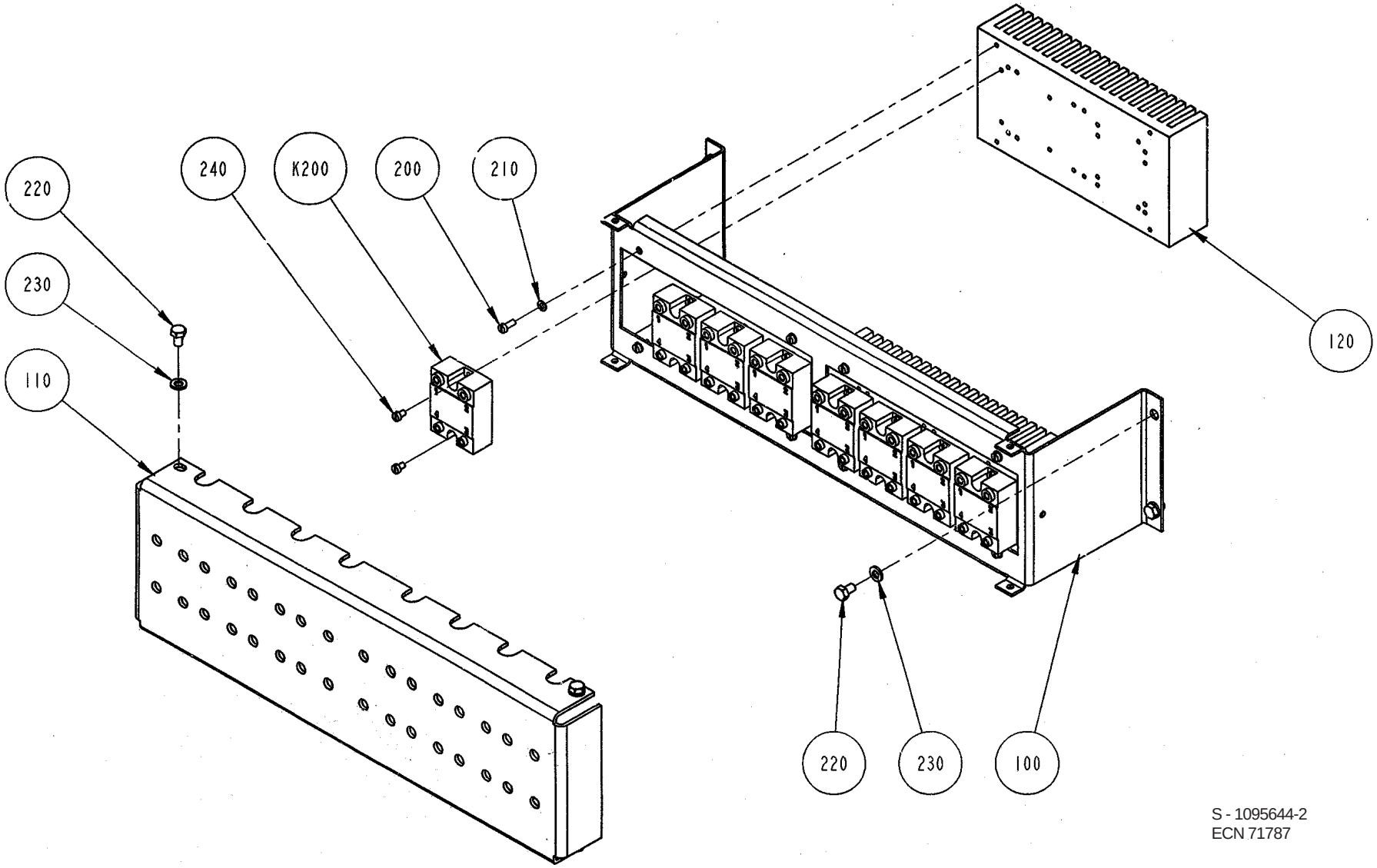

S - 1095644-2
ECN 71787

Pos	Part No	SP	UN	Qty	Description	Page No
Common parts						
100	1347673-0000	-		1	BRACKET	
110	1129342-0000	-		1	PROTECTION	
120	495495-0000	-		2	COOLING ELEMENT SSR	
200	312121-0289	-		8	SLOTTED HEAD SCREW MCS 4x10 D60	
210	315101-0136	-		8	WASHER BRB 4,3x8 FZB	
220	312101-0364	-		4	SCREW M6S 6x10-8,8 FZB	
230	315101-0153	-		4	WASHER BRB 6,4x12 FZB	
240	312121-0285	-		16	SLOTTED HEAD SCREW MCS 4x6 FZB	
K200	90119-0067	D		1	SOLID STATE RELAY H12WD	
K201	90119-0067	D		1	SOLID STATE RELAY H12WD	
K202	90119-0067	D		1	SOLID STATE RELAY H12WD	
K203	90119-0067	D		1	SOLID STATE RELAY H12WD	
K204	90119-0067	D		1	SOLID STATE RELAY H12WD	
K205	90119-0067	D		1	SOLID STATE RELAY H12WD	
K206	90119-0067	-		1	SOLID STATE RELAY H12WD	
K207	90119-0067	-		1	SOLID STATE RELAY H12WD	

Pos	Part No	SP	UN	Qty	Description	Page No

RELAY UNIT 2

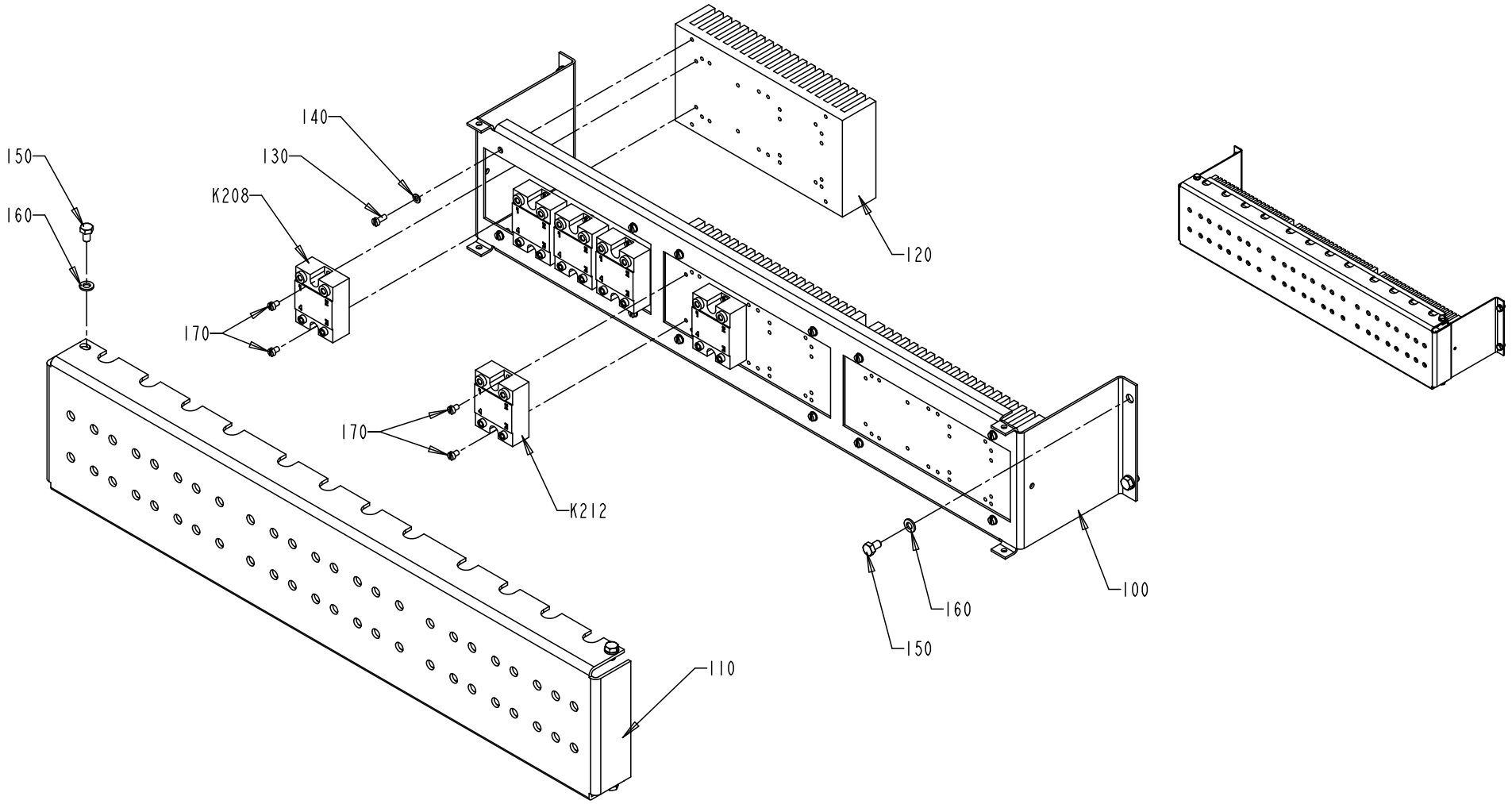

S - 1285537-2
ECN 72082

Pos	Part No	SP	UN	Qty	Description	Page No
Common parts						
100	1129338-0000	-		1	BRACKET	
110	1129343-0000	-		1	PROTECTION	
120	495495-0000	-		3	COOLING ELEMENT SSR	
130	312121-0289	-		12	SLOTTED HEAD SCREW MCS 4x10 D60	
140	315101-0136	-		12	WASHER BRB 4,3x8 FZB	
150	312101-0364	-		8	SCREW M6S 6x10-8,8 FZB	
160	315101-0153	-		8	WASHER BRB 6,4x12 FZB	
170	312121-0285	-		12	SLOTTED HEAD SCREW MCS 4x6 FZB	
K208	90119-0067	D		1	SOLID STATE RELAY H12WD	
K209	90119-0067	D		1	SOLID STATE RELAY H12WD	
K210	90119-0067	D		1	SOLID STATE RELAY H12WD	
K211	90119-0067	D		1	SOLID STATE RELAY H12WD	
K212	90119-0067	D		1	SOLID STATE RELAY H12WD	
K213	90119-0067	D		1	SOLID STATE RELAY H12WD	

Pos	Part No	SP	UN	Qty	Description	Page No

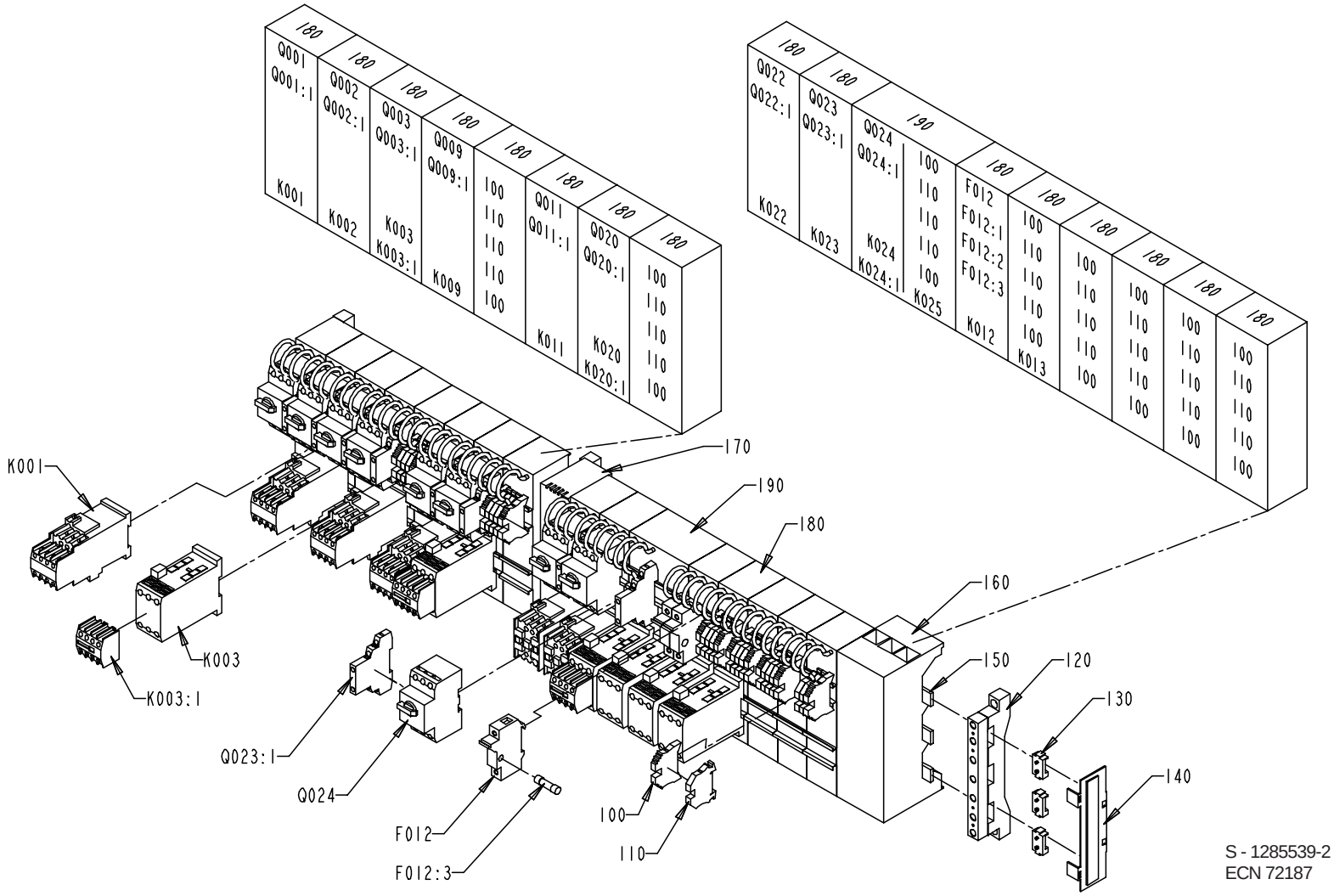
Q001
Q001:1
K001
Q002
Q002:1
K002
Q003
Q003:1
K003
K003:1
Q009
Q009:1
K009
Q011
Q011:1
K011
Q020
Q020:1
K020
K020:1
Q022
Q022:1
K022
Q023
Q023:1
K023
Q024
Q024:1
K024
K024:1
F012
F012:1
F012:2
F012:3
K012
K025
K013
K001
K003
K003:1
Q023:1
Q024
F012
F012:3
100
110
170
190
180
160
150
120
130
140
S - 1285539-2
ECN 72187

Pos	Part No	SP	UN	Qty	Description	Page No
Common parts						
100	353031-0203	-		14	END BRACKET WEW 35/2	
110	353021-0214	-		21	FEED TRHOUGH TERMINAL WDU 6 Beige	
120	1129925-0000	-		3	BUSBAR	
130	353042-0010	-		3	BUSBAR HÝLLARE	
140	353042-0012	-		9	ADJUSTMENTPLATTA	
150	353042-0019	-		2	SIDE GUARD	
160	353042-0016	-		1	CONNECTIONSADAPTER	
170	353042-0013	-		1	PROTECTIVE CASING	
180	353042-0014	-		15	BUSBAR ADA ADAPTER	
190	353042-0015	-		1	BUSBAR ADAPTER	
F012	90233-0303	-		3	FUSEHOLDER FERRAZ ST10	
F012.1	90233-0029	-		1	FUSE 25A FERRAZ	
F012.2	90233-0029	-		1	FUSE 25A FERRAZ	
F012.3	90233-0029	-		1	FUSE 25A FERRAZ	
K001	B 90075-0124	D		1	CONTACTOR 4KW COIL 24VDC	
K002	B 90075-0124	D		1	CONTACTOR 4KW COIL 24VDC	
K003	90075-0128	D		1	CONTACTOR 7,5KW COIL 24VDC	
K003.1	90075-0313	D		1	AUXILIARY CONTACT K&M 22 DILM.2NO;2NC	
K009	B 90075-0124	D		1	CONTACTOR 4KW COIL 24VDC	
K011	B 90075-0124	D		1	CONTACTOR 4KW COIL 24VDC	
K012	90075-0128	-		1	CONTACTOR 7,5KW COIL 24VDC	
K013	90075-0128	-		1	CONTACTOR 7,5KW COIL 24VDC	
K020	90075-0128	D		1	CONTACTOR 7,5KW COIL 24VDC	
K020.1	90075-0313	D		1	AUXILIARY CONTACT K&M 22 DILM.2NO;2NC	
K022	90075-0127	D		1	CONTACTOR 4KW COIL 24VDC	
K023	90075-0127	D		1	CONTACTOR 4KW COIL 24VDC	
K024	90075-0128	D		1	CONTACTOR 7,5KW COIL 24VDC	
K024.1	90075-0313	D		1	AUXILIARY CONTACT K&M 22 DILM.2NO;2NC	
K025	90075-0128	D		1	CONTACTOR 7,5KW COIL 24VDC	
Q001	90095-0072	D		1	OVERLOAD PROTECTION PKZM 1,0A	
Q001.1	90259-0313	D		1	AUX. CONTACT K&M NHI21-PKZM0	
Q002	90095-0073	D		1	OVERLOAD PROTECTION PKZM 1,6A	
Q002.1	90259-0313	D		1	AUX. CONTACT K&M NHI21-PKZM0	
Q003	90095-0078	D		1	OVERLOAD PROT. PKZM0-16A	
Q003.1	90259-0313	D		1	AUX. CONTACT K&M NHI21-PKZM0	
Q009	90095-0070	D		1	OVERLOAD PROT. PKZM 0,4A	
Q009.1	90259-0313	D		1	AUX. CONTACT K&M NHI21-PKZM0	
Q011	90095-0074	D		1	OVERLOAD PROT. PKZM 2,5A	
Q011.1	90259-0313	D		1	AUX. CONTACT K&M NHI21-PKZM0	
Q020	90095-0077	D		1	OVERLOAD PROTECTION PKZM 6-10A	
Q020.1	90259-0313	D		1	AUX. CONTACT K&M NHI21-PKZM0	
Q022	90095-0074	D		1	OVERLOAD PROT. PKZM 2,5A	
Q022.1	90259-0313	D		1	AUX. CONTACT K&M NHI21-PKZM0	
Q023	90095-0074	D		1	OVERLOAD PROT. PKZM 2,5A	
Q023.1	90259-0313	D		1	AUX. CONTACT K&M NHI21-PKZM0	
Q024	90095-0080	D		1	OVERLOAD PROTECTION PKZM 25A	
Q024.1	90259-0313	D		1	AUX. CONTACT K&M NHI21-PKZM0	

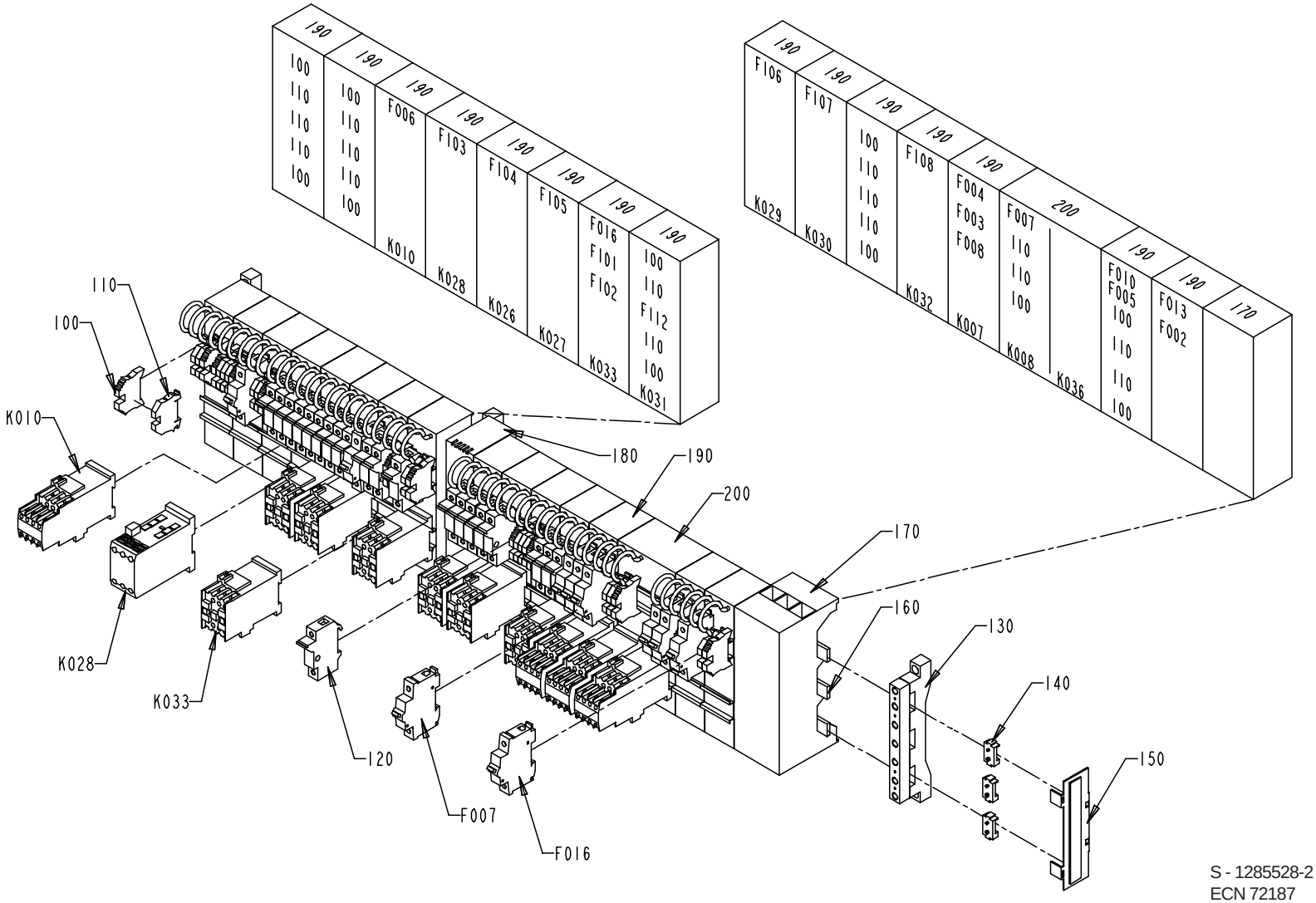

S - 1285528-2
ECN 72187

Pos	Part No	SP	UN	Qty	Description	Page No
Common parts						
100	353031-0203	-		12	END BRACKET WEW 35/2	
110	353021-0214	-		15	FEED TRHOUGH TERMINAL WDU 6 Beige	
120	90233-0303	-		21	FUSEHOLDER FERRAZ ST10	
130	353042-0010	-		3	BUSBAR HÝLLARE	
140	353042-0012	-		9	ADJUSTMENTPLATTA	
150	353042-0019	-		2	SIDE GUARD	
160	1129925-0000	-		3	BUSBAR	
170	353042-0016	-		1	CONNECTIONSADAPTER	
180	353042-0013	-		1	PROTECTIVE CASING	
190	353042-0014	-		15	BUSBAR ADA ADAPTER	
200	353042-0015	-		2	BUSBAR ADAPTER	
F002	90007-0128	-		1	FUSE 1P 6A K	
F003	90007-0129	-		1	FUSE 1P 10A K	
F004	90007-0129	-		1	FUSE 1P 10A K	
F005	90007-0129	-		1	FUSE 1P 10A K	
F006	90007-0129	-		1	FUSE 1P 10A K	
F007	90007-0129	-		1	FUSE 1P 10A K	
F008	90007-0129	-		1	FUSE 1P 10A K	
F010	90007-0129	-		1	FUSE 1P 10A K	
F013	90007-0129	-		1	FUSE 1P 10A K	
F016	90007-0128	-		1	FUSE 1P 6A K	
F101	90233-0029	-		1	FUSE 25A FERRAZ	
F102	90233-0029	-		1	FUSE 25A FERRAZ	
F103	90233-0029	-		3	FUSE 25A FERRAZ	
F104	90233-0028	-		3	FUSE 10A FERRAZ	
F105	90233-0028	-		3	FUSE 10A FERRAZ	
F106	90233-0028	-		3	FUSE 10A FERRAZ	
F107	90233-0028	-		3	FUSE 10A FERRAZ	
F108	90233-0028	-		3	FUSE 10A FERRAZ	
F112	90233-0028	-		1	FUSE 10A FERRAZ	
K007	B 90075-0124	D		1	CONTACTOR 4KW COIL 24VDC	
K008	B 90075-0124	D		1	CONTACTOR 4KW COIL 24VDC	
K010	B 90075-0124	D		1	CONTACTOR 4KW COIL 24VDC	
K026	90075-0127	D		1	CONTACTOR 4KW COIL 24VDC	
K027	90075-0127	D		1	CONTACTOR 4KW COIL 24VDC	
K028	90075-0128	D		1	CONTACTOR 7,5KW COIL 24VDC	
K029	90075-0127	D		1	CONTACTOR 4KW COIL 24VDC	
K030	90075-0127	D		1	CONTACTOR 4KW COIL 24VDC	
K031	90075-0127	D		1	CONTACTOR 4KW COIL 24VDC	
K032	90075-0127	D		1	CONTACTOR 4KW COIL 24VDC	
K033	90075-0127	D		1	CONTACTOR 4KW COIL 24VDC	
K036	B 90075-0124	D		1	CONTACTOR 4KW COIL 24VDC	

Pos	Part No	SP	UN	Qty	Description	Page No

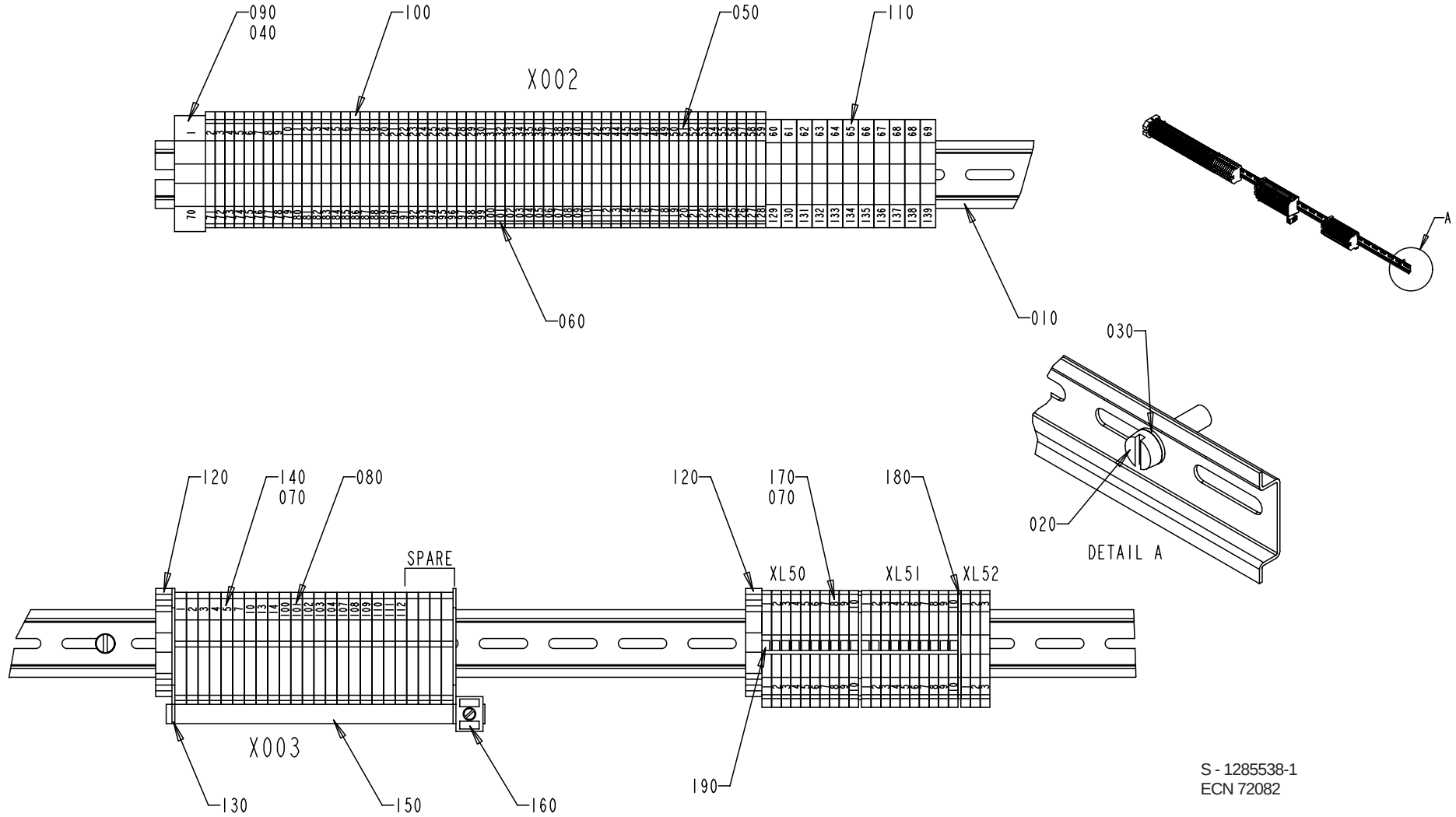

S - 1285538-1
ECN 72082

Pos	Part No	SP	UN	Qty	Description	Page No
Common parts						
010	353042-0005	-	MM	1170	RAIL TS 35/7.5	
020	312121-0370	-		6	SLOTTED HEMCS6X20FZB	
030	315101-0146	-		6	WASHER BRB 5,3x10 FZB	
040	359011-0807	-		4	MARKING PLATES 5-FW 1-50	
050	359011-0808	-		1	MARKING PLATES 5-FW 51-100	
060	359011-0809	-		1	MARKING PLATES 5-FW 101-150	
070	359011-0821	-		1	SET OF SIGNS 6-FW 1-50	
080	359011-0823	-		1	SET OF SIGNS 6-FW 101-150	
090	353024-0209	-		1	EARTH TERMINAL WPE 35	
100	353024-0204	-		58	EARTH TERMINAL WPE 2,5	
110	353024-0206	-		11	EARTH TERMINAL WPE 6	
120	353031-0203	-		4	END BRACKET WEW 35/2	
130	353033-0104	-		2	END PLATE WHP 2,5-10 BLUE	
140	353022-0002	-		25	NEUTRAL TERMINAL WNT 4	
150	353041-0001	-	MM	180	RAIL 10x3mm SSCH	
160	353041-0106	-		1	HOLDER ZB35 K 5026.8	
170	353021-0212	-		23	FEED THROUGH TERMINAL WDU 2,5 Beige	
180	353032-0004	-		2	END PLATE WAP 2,5-10 Beige	
190	353034-0030	-		2	BRIDGE CONLECK WQV 2,5/10	

Pos	Part No	SP	UN	Qty	Description	Page No

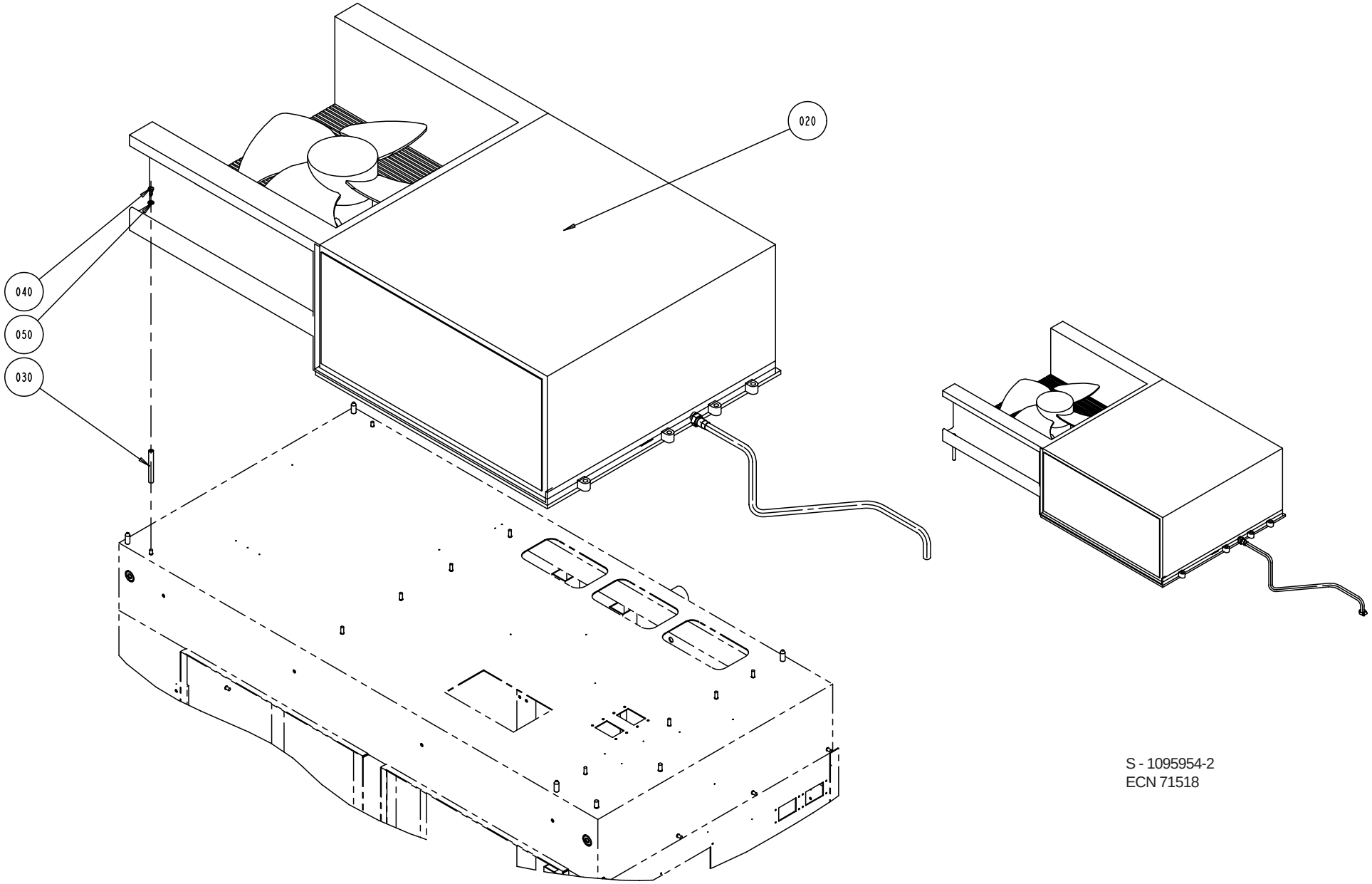

S - 1095954-2
ECN 71518

Pos	Part No	SP	UN	Qty	Description	Page No
Common parts						
020	A1095722-0300	-		1	COOLER	**737**
030	1038275-0021	-		8	SPACER	
040	312105-0366	-		8	SCREW M6S ISO 4017 M6x12 A280	
050	315105-0153	-		8	WASHER,PLAIN ROUND 6,4x12 Stainless	

Pos	Part No	SP	UN	Qty	Description	Page No

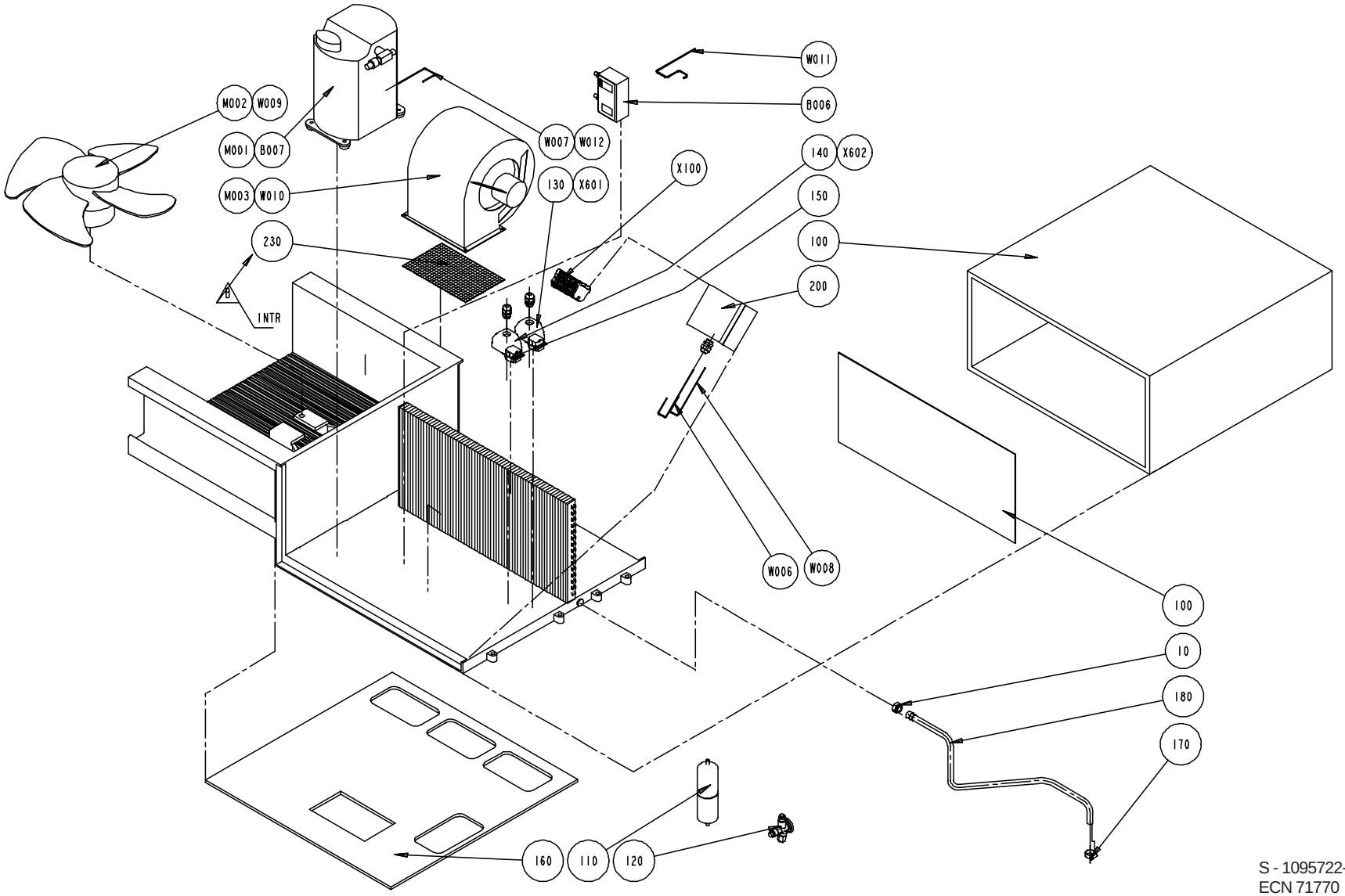

S - 1095722-3
ECN 71770

Pos	Part No	SP	UN	Qty	Description	Page No
Common parts						
X100	A1185023-0100	-		1	PLINTH	**739**
100	90422-0038	-		1	COOLER	
110	90415-0062	D		1	FILTER	
120	90187-0162	D		1	VALVE	
130	90110-0157	-		2	COVER	
140	352103-0108	-		2	CABLE GLAND ST 13	
150	352103-0106	-		7	CABLE GLAND ST 11	
160	1254272-0000	-		1	GASKET	
170	342991-0103	-		1	HOSE CLIP,WORM DRIVE TYPE (19)-23	
180	1254448-0000	-		1	PIPE	
190	90099-0190	-		1	Nut AJ3085-15-R15	
200	90265-0051	-		1	ACCESSORY BOX ROSE 1121208	
210	1140514-0000	-		4	LIFTING CYLINDER	
220	312105-0493	-		2	SCREW M6S ISO 4017 M10X25 A280	
230	1254469-0000	-		1	GRILL	
B006	90274-0108	D		1	Pressure guard	
M001	90270-0016	D		1	COMPRESSOR TAJ 4511 Y	
M002	90264-0059	D		1	FAN	
M003	90264-0058	D		1	FAN	
W006	351150-0413	-	MM	500	CABLE OLFLEX 4x1,5mm2	
W007	351150-0413	-	MM	500	CABLE OLFLEX 4x1,5mm2	
W008	351150-0415	-	MM	500	CABLE OILFLEX 7x1,5mm2	
W010	351150-0403	-	MM	500	CABLE OLFLEX 3x0,75 MM2	
W011	351150-0403	-	MM	500	CABLE OLFLEX 3x0,75 MM2	
W012	351150-0122	-	MM	500	CABLE "REPL.BY 351150-431"	
X601	90110-0159	D		1	CONTACT	
X602	90110-0159	D		1	CONTACT	

Pos	Part No	SP	UN	Qty	Description	Page No

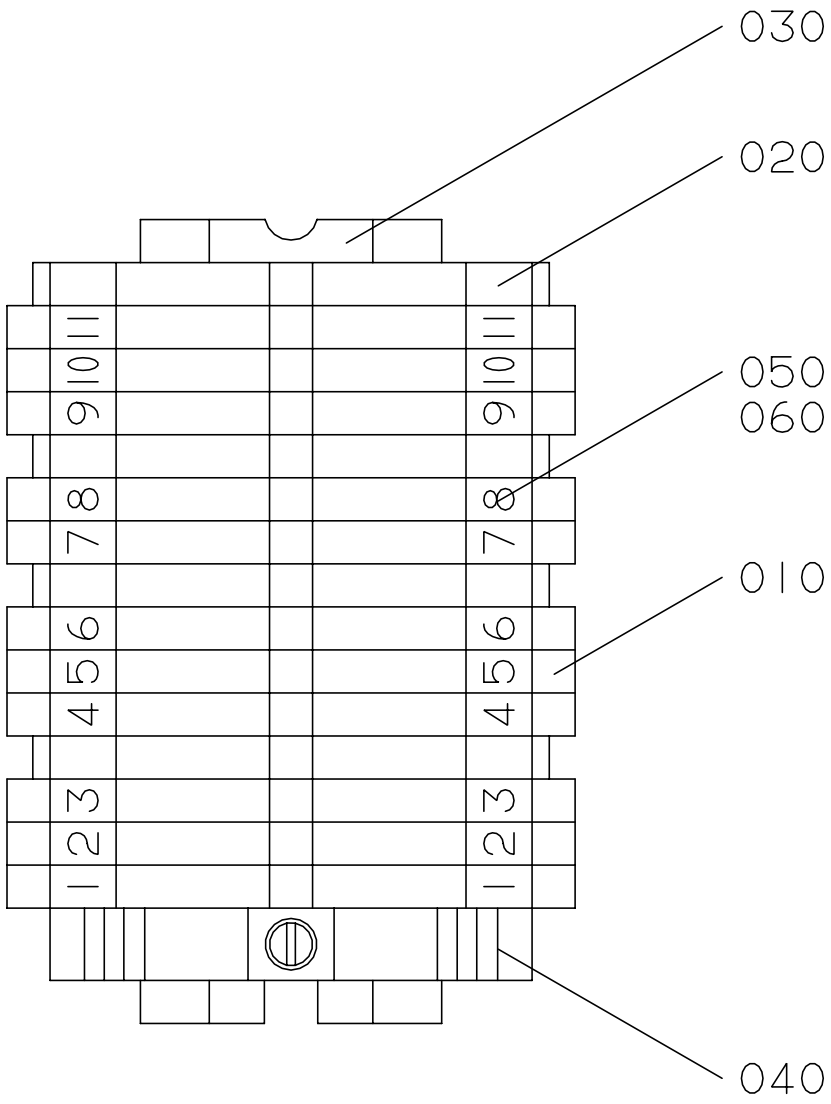

S-1185023-1
ECN 22680

Pos	Part No	SP	UN	Qty	Description	Page No
Common parts						
010	353021-0212	-		11	FEED THROUGH TERMINAL WDU 2,5 Beige	
020	353024-0204	-		4	EARTH TERMINAL WPE 2,5	
030	353042-0005	-	MM	100	RAIL TS 35/7.5	
040	353031-0203	-		1	END BRACKET WEW 35/2	
050	359011-0807	-		2	MARKING PLATES 5-FW 1-50	

Pos	Part No	SP	UN	Qty	Description	Page No

This page is intentionally left blank

Pos	Part No	SP	UN	Qty	Description	Page No
90075-0124						
	90075-0313	K		1	AUXILIARY CONTACT K&M 22 DILM.2NO;2NC	
1038714-0000						
	351175-0109	-	MM	275	CABLE AWM GN/YE 16mm2	
	353104-0168	-		2	CABLE SHO YAV 16 M6*	

Pos	Part No	SP	UN	Qty	Description	Page No

SPC

Spare Parts Catalogue

Part No	Description	Page No
1,4A		255
1010785-0000	GUIDE	599
1010822-0000	RAILING	155, 233
1010947-0000	GASKET	403, 405
1020142-0002	RAIL HOLDER	413
1020146-0000	LOCKING BLOCK REPL BY 1020290-101	413
1020635-0001	HOLDER	413
1020637-0000	HOLDER	413
1035008-0200	BATH	135
1035076-0100	LEG	193, 195
1035076-0200	LEG	541, 543, 545
1035081-0100	PIPE WORK-PNEUMATIC	547, 551, 555
1035082-0300	CABLE HARNESS	541, 543, 545
1035088-0400	COVERING PANEL	541, 543, 545
1035107-0100	CIP SWITCH	69
1035259-0100	INTERMEDIATE PART	69
1035313-0200	EMERGENCY STOP	623
1035314-0100	DOOR	623
1035315-0100	DOOR	623
1035316-0200	DOOR	623
1035317-0200	DOOR	623
1035318-0200	COVER	623
1035319-0200	DOOR	623
1035321-0200	COVER	623
1035323-0200	COVER	623
1035382-0100	EMERGENCY STOP	13
1035471-0100	LEG	541, 543, 545
1035653-0000	PROFILE	175
1035654-0000	CONNECTION	155
1035792-0000	E-HINGE 159, 167, 213, 273, 469, 473, 477, 629, 631, 633, 635, 639, 687, 689,	693, 695
1035794-0000	BLOCKING PIECE	469, 473, 477
1035882-0000	BENDING ROLLER	149, 199, 575, 583, 595, 599, 669
1035890-0000	HOLDER	531, 533
1035893-0000	ADJUSTING SCREW	535
1035894-0000	SHAFT	531, 533
1035895-0000	SHAFT	531, 533
1035897-0000	SHAFT	153, 523
1035898-0000	BRACKET	153, 523
1035942-0000	HEATING PIPE	125
1036119-0000	LEG	197
1036120-0000	SLEEVE	197, 661
1036124-0000	ARM	505
1036130-0000	SHAFT	149
1036134-0000	GUIDE	563
1036174-0000	BEARING COVER	39
1036178-0000	SHAFT	39, 65, 67
1036182-0000	PRESSURE JAW	593
1036183-0000	BRACKET	595, 599
1036186-0000	HOLDER	523
1036187-0000	T-PIPE	113
1036188-0000	SHAFT	113, 121
1036189-0000	SPINDLE GUIDE	113, 121
1036191-0000	SEAL HOLDER	113, 121
1036192-0000	SPACER ROD	113, 121
1036194-0000	T-PIPE	113, 121
1036227-0000	BRACKET	267, 273, 275, 455, 459, 489, 547, 551, 555
1036241-0000	WASHER	145, 233, 235
1036293-0000	HOLDER	119, 121
1036294-0000	GASKET	119
1036298-0000	SPACER	559
1036300-0000	PLATE	561
1036304-0001	LOCKING ARM	469, 473
1036304-0006	LOCKING ARM	273, 275
1036304-0007	LOCKING ARM	275
1036304-0009	LOCKING ARM	629, 631
1036304-0010	LOCKING ARM	629, 631
1036304-0012	LOCKING ARM	635
1036304-0013	LOCKING ARM	273
1036304-0014	LOCKING ARM	473
1036304-0015	LOCKING ARM	633, 635
1036304-0016	LOCKING ARM	633
1036304-0018	LOCKING ARM	267
1036314-0000	BOTTOM PANEL	111
1036315-0000	FRONT PLATE	111
1036318-0000	PIPE	111
1036319-0000	BRACKET	111
1036328-0000	LID	39
1036329-0000	PIN	167, 639
1036372-0000	PIPE	125
1036373-0000	HOLDER	29, 125
1036390-0000	SHIM	559, 589
1036415-0000	SPACER	589
1036429-0000	AXLE PIN	575, 595, 599
1036465-0000	LID	29
1036475-0000	PIN	29

Part No	Description	Page No
1036478-0000	GASKET	29
1036486-0000	BUSBAR	591
1036487-0000	BRACKET	591
1036488-0000	INSULATING BUSHING	591
1036489-0000	WASHER	591
1036496-0000	WHEEL	45
1036516-0000	CANTILEVER	199
1036553-0000	WHEEL	141
1036559-0000	BEARING BLOCK	547, 551, 555
1036563-0000	WASHER	267, 273, 629, 631, 635, 639
1036587-0000	PIPE	113
1036588-0000	BRACKET	527, 529
1036610-0000	BRACKET	153
1036622-0000	GUIDE ROLLER	151, 579, 597
1036623-0000	GUIDE ROLLER	151, 579, 597
1036670-0000	PRESSURE RAIL	593
1036671-0000	KNIFE HOLDER	593
1036675-0000	CLAMP	593
1036676-0000	KNIFE	593
1036677-0000	HEAD PLATE	593
1036678-0000	SLIDE RAIL	593
1036680-0000	SCREW	593
1036681-0000	COUPLING BOLT	593
1036695-0000	LOCK STUD	603, 607
1036753-0000	UPPER SECTION	117
1036755-0000	PUMP HOUSING	255
1036758-0000	AXLE PIN	547, 551, 555
1036777-0000	GASKET	97
1036778-0000	GASKET	97
1036782-0000	HOLDER	97
1036794-0000	PIPE	447, 453
1036810-0000	HOLDER	117
1036811-0000	CLAMP	117, 123
1036814-0000	APPLIANCE BOX	611
1036815-0000	LID	611
1036817-0000	BRACKET	599
1036818-0000	TIE ROD	595, 599
1036820-0000	ROD	599
1036826-0000	PIPE	445
1036827-0000	PIPE	445, 451
1036828-0000	TANK	449
1036832-0000	WHEEL	15
1036833-0000	SCREW	15
1036841-0000	SHAFT	15
1036853-0000	BRACKET	87
1036868-0000	CHAIN	15
1036871-0000	PIPE	453
1036893-0000	RAILING	233
1036907-0000	SWITCH OVER PIPE	99, 101
1036908-0000	HOLDER	99, 101
1036909-0000	ELECTRICAL CABINET	613
1036910-0000	UPPER SECTION	123
1036911-0000	CONTAINER	123
1036922-0000	CABLE DUCT	613
1036923-0000	CABLE DUCT	613
1036924-0000	CABLE DUCT	613
1036925-0000	TERMINAL RAIL	613
1036926-0000	TERMINAL RAIL	613
1036939-0000	SIDE PIECE	147
1036940-0000	SIDE PIECE	147
1036962-0000	CABLE	527, 529
1036963-0000	HOOK HOLDER	147
1036965-0000	HOOK HOLDER	147
1037011-0000	PIPE	123
1037012-0000	AXLE PIN	199
1037041-0000	HOLDER	123
1037044-0000	RAILING	155
1037048-0000	PLATE	47, 49, 57, 63
1037052-0000	GEAR WHEEL	559
1037053-0000	GEAR WHEEL	559
1037055-0000	COAXIAL CABLE	601
1037056-0000	COAXIAL CABLE	611
1037080-0000	GLASS PANE	63
1037081-0000	GASKET	63
1037089-0000	SPACER	63
1037093-0000	SENSOR BRACKET	73
1037097-0000	PUSH BUTTON BOX	625
1037098-0000	LID	625
1037102-0000	SPACER PIPE	245
1037120-0000	SHAFT	507
1037121-0000	SHAFT	507
1037124-0000	HOLDER	507
1037128-0000	BRACKET	115
1037129-0000	LID	127, 129
1037130-0000	CONNECTION BOX	275
1037132-0000	SHAFT	605, 609

Part No	Description	Page No
1037133-0000	BRACKET	605, 609
1037142-0000	FOIL	625
1037184-0000	SPACER SCREW	423
1037194-0000	LEVER	65, 67
1037195-0000	SEAL	65, 67
1037196-0000	LID	65, 67
1037197-0000	LID	65, 67
1037198-0000	LID	65, 67
1037199-0000	BRACKET	65, 67
1037200-0000	ARM	65, 67
1037201-0000	GLASS PANE	629, 631
1037202-0000	GLASS PANE	635
1037267-0000	PIPE	127, 129
1037268-0000	LID	127, 129
1037279-0000	PIPE	95
1037284-0000	HOLDER	511, 513
1037314-0000	PIPE CONNECTION	137
1037328-0000	RAILING	233
1037391-0000	CANTILEVER	237
1037392-0000	SHEET	233
1037393-0000	SHEET	233
1037394-0000	SHEET	237
1037423-0000	SEAT RING	21
1037424-0000	SEAT RING	21
1037425-0000	LEVER	21
1037443-0000	GASKET	227, 229
1037455-0000	FLANGE	119
1037456-0000	BRACKET	29
1037461-0000	CONDUCTIVITY PIPE	105, 107
1037493-0000	STERILE AIR INLET	99, 101
1037494-0000	VALVE HOUSING	99, 101
1037496-0000	SPACER	99, 101
1037497-0000	DOOR	167
1037502-0000	COVERING PLATE	169
1037508-0000	COVERING PLATE	169
1037528-0000	COVERING PLATE	169
1037531-0000	SPACER PLATE	423
1037546-0000	SHAFT	577, 595, 599
1037552-0000	SPACER	169
1037559-0000	MOTOR COVER	261
1037560-0000	MOTOR PLATE	261
1037561-0000	DRIVE SHAFT	261
1037565-0000	BEARING UNIT	261
1037571-0000	GUIDE BUSHING	235
1037572-0000	COVER PLATE	681
1037573-0000	GASKET	681
1037574-0000	COVER PLATE	681
1037575-0000	GASKET	681
1037576-0000	GASKET	681
1037583-0000	HOLDER	481, 483
1037615-0000	RAIL	173
1037673-0000	SLEEVE	189
1037761-0000	PIN	193, 195
1037762-0000	PIN	193, 195
1037828-0000	COVER SLIP	623
1037829-0000	COVER SLIP	623
1037830-0000	COVER SLIP	623
1038095-0000	HOLDER	153
1038275-0012	SPACER	723
1038275-0021	SPACER	735
1038334-0000	PIPE	105, 107
1038340-0000	SCREW	115
1038355-0000	FRAME	705
1038358-0000	PIPE	173
1038403-0000	BRACKET	613
1038408-0000	COVERING PLATE	681
1038409-0000	WASHER	21
1038413-0000	SHAFT	65, 67
1038418-0000	SPACER	65, 67
1038428-0000	LOCK PLATE	31
1038429-0000	LID	65, 67
1038464-0000	SPROCKET	15
1038470-0000	SHAFT	577
1038518-0000	BRACKET	681
1038519-0000	GASKET	681
1038628-0000	PUMP	459
1038634-0000	DRAINING	117
1038688-0000	HOLDER	143
1038711-0000	PIPE	115
1038714-0000	CABLE	713, 719
1038820-0000	COVER PLATE	681
1038850-0000	ANGLE BRACKET	145
1038856-0000	HATCH	141
1038857-0000	FLANGE	141
1038858-0000	FLANGE	141
1038860-0000	BRACKET	141

Part No	Description	Page No
1038861-0000	BRACKET	141
1038862-0000	GASKET	141
1038865-0000	SPACER DISC	547, 551, 555
1038866-0000	INTERMEDIARY SECTION	117
1038879-0000	PIPE	143
1038894-0000	PIPE	99, 101
1038895-0000	VALVE HOUSING	99, 101
1038899-0000	RIM	629
1038900-0000	RIM	631
1038901-0000	RIM	629, 631
1038903-0000	BRACKET	547, 551, 555, 627
1038904-0000	WASHER	547, 551, 555, 627
1038905-0000	VALVE	93
1038907-0000	CONNECTION BOX	613
1038964-0000	INTERMEDIATE PART	95
1038965-0000	HOLDER	95
1040777-0000	CARRIER	15
1040796-0000	PIPE	255
1040797-0000	SHAFT	255
1040807-0000	LID	251
1040808-0000	GASKET	251
1040840-0000	FLANGE	245
1040841-0000	FLANGE	245
1040849-0000	HOLDER	99, 101
1040852-0000	SEALING RING	245
1040853-0000	SEALING RING	245
1040856-0000	SPACER	145
1040859-0000	COVER	111
1040860-0000	EXTENSION PIECE	233, 237
1040874-0000	COVER	111
1040875-0000	COVER	111
1040876-0000	COVER	111
1040877-0000	PLATE	111
1040878-0000	PLATE	111
1040885-0000	BEARING BLOCK	565, 567
1040890-0000	THERMOCOUPLE	281
1040970-0000	BRACKET	61, 141
1040971-0000	PROFILE	281
1040974-0000	CATCH	593
1040980-0000	FLANGE	61
1040981-0000	DOOR	629
1040982-0000	DOOR	631
1040990-0000	RUBBER PLATE	627
1040991-0000	ANGLE	639
1040992-0000	SPACER NUT	639
1040993-0000	MOUNTING SHEET	629, 631
1040994-0000	FASTENING BRACKET	547, 551, 555
1040995-0000	PROFILE	281
1040996-0000	PROFILE	237
1040997-0000	PROFILE	237
1040999-0000	STAIR	237
1041000-0000	STAIR	237
1041020-0000	HOLDER	595, 599
1041036-0000	RIM	237
1041037-0000	RIM	237
1041046-0000	FLOW METER	433
1041157-0000	MATERIAL HOLDER	607
1041158-0000	MATERIAL HOLDER	603
1041159-0000	SHAFT	603, 607
1041160-0000	BRACKET	603, 607
1041161-0000	BRACKET	603, 607
1041162-0000	KNIFE	603, 607
1041163-0000	KNIFE HOLDER	603, 607
1041170-0000	DANCER ROLLER	547, 551, 555, 561
1041215-0000	BLOCKING PIECE	351, 353
1041216-0000	SHAFT	297, 299
1041237-0000	LEAD PLATE	575
1041264-0000	BRACKET	613
1041424-0000	SHAFT	371, 373, 375, 377, 379, 381, 383, 385
1041460-0000	SPRING	371, 373, 375, 377, 379, 381, 383, 385
1041461-0000	SPRING	371, 373, 375, 377, 379, 381, 383, 385
1041526-0000	MATERIAL PRESSURE	603, 607
1041549-0000	WASHER	355, 357
1041550-0000	PULLEY	355, 357
1041597-0000	PLATE	241
1041598-0000	FITTING BOLT	241
1041603-0000	BRACKET	199
1041606-0000	SHAFT	199
1041609-0000	NUT	203
1041688-0000	FITTING BOLT	39
1041706-0000	INDUCTOR	591
1041753-0000	BRACKET	603, 607
1041886-0000	LEG	233
1041890-0000	CANTILEVER	237
1041893-0000	CABINET	423
1041905-0000	DOOR	689

Part No	Description	Page No
1041911-0000	SHEET	489
1041920-0000	DOOR	695
1041921-0000	HOLDER	491
1041922-0000	PIPE	493
1041923-0000	PIPE	493
1041924-0000	PIPE	493
1041925-0000	PIPE	443
1041926-0000	PIPE	443
1041930-0000	PIPE	485
1041931-0000	PIPE	485
1041932-0000	PIPE	481, 483
1041933-0000	PIPE	481, 483
1041934-0000	PIPE	451
1041937-0000	SIGN	159
1041938-0000	SIGN	489
1041939-0000	DOOR	691
1041943-0000	CONNECTION BOX	439
1041944-0000	BRACKET	433
1041948-0000	DOOR	697
1041949-0000	CHECKER PLATE	235
1041959-0000	PIVOT BRACKET	433
1041963-0000	WASTE BOX	455
1041967-0000	COVERING PANEL	465
1041970-0000	DOOR	473
1041972-0000	DOOR	477
1041977-0000	DOOR	693
1041978-0000	HINGE FLANGE	47, 49, 57, 63
1041979-0000	HINGE FLANGE	47, 49, 57, 63
1041980-0000	SPACER	255
1041984-0000	ATTACHMENT PIPE	433
1041993-0000	RAILING	233
1082717-0000	TOP SECTION	401
1082972-0000	SLEEVE	313
1082973-0000	STEERING	313
1082974-0000	CRANK	313
1086625-0000	SLIDE RAIL	413
1086626-0000	SLIDE RAIL	413
1095597-0100	TERMINAL	203
1095606-0200	MACHINE BODY	421
1095607-0200	COVERING PANEL	421
1095608-0100	WATER PANEL	421
1095609-0200	PNEUMATIC UNIT	487
1095610-0300	MAIN SWITCH	421
1095611-0100	VALVE PANEL	487
1095612-0200	COOLING WATER SYSTEM	421
1095627-0200	FOAM CLEANING UNIT	421
1095630-0200	CONNECTION BOX	421
1095634-0100	DOOR	681
1095637-0100	DOOR	681
1095644-0200	RELAY UNIT 1	723
1095672-0100	PIPE	441
1095673-0100	SIDE	441
1095675-0100	PIPE	441
1095676-0100	PUMP	441
1095677-0100	BRANCHING PIPE	441
1095678-0200	BALL VALVE	441
1095681-0100	SPRAY GUN	217
1095682-0100	AIR JET GUN	209, 211
1095705-0200	FLOW METER	425, 427
1095706-0200	COOLING WATER PUMP	425, 427
1095708-0100	EXPANSION VESSEL	425, 427
1095709-0100	CONNECTION BOX	425, 427
1095710-0200	COMPRESSOR UNIT	425, 427
1095714-0200	SUPPLY SYSTEM	421
1095715-0100	ICE WATER	481, 483
1095716-0100	PIPE WORK-AIR	487
1095722-0300	COOLER	735
1095761-0100	PRESSURE JAW	587
1095763-0100	SEALING UNIT	587
1095765-0200	BRACKET	587
1095766-0300	CABLE CONDUIT	587
1095768-0100	GENERATOR CABINET	541, 543, 545
1095770-0200	SIDE FEEDER	547, 551, 555
1095775-0100	ELECTRICAL CABINET	541, 543, 545
1095778-0100	PLINTH	681
1095784-0300	PLATFORM	233
1095786-0100	STAIRCASE	233
1095790-0100	DRYING TUNNEL LID	13
1095793-0400	CONTROL PANEL	623
1095798-0100	SPLICE DETECTOR	521
1095803-0100	BENDING ROLLER	193, 195
1095806-0100	SPLICE DETECTOR	149
1095815-0100	HUB	501
1095816-0100	BRAKE ARM	501
1095835-0100	PAPER REEL HOLDER	547, 551, 555
1095853-0200	CLEANING PIPEWORK COLUMN	225

Part No	Description	Page No
1095861-0100	LIGHT FIXTURE	181
1095862-0100	LADDER	145
1095863-0100	PIVOT ARM	179
1095864-0100	SPRAY SYSTEM	13
1095876-0100	CABLE DUCT	179
1095882-0200	FRAME SECTION	455
1095883-0200	GABLE PLATE	461
1095886-0200	COVERING PANEL	461
1095888-0200	HATCH	461
1095889-0100	DOOR	461
1095890-0200	HATCH	461
1095891-0200	DOOR	461
1095954-0200	COOLING SYSTEM	679
1095978-0400	FLEXBOX	709
1095985-0200	ELECTRICAL CONNECTION	309, 311
1103300-0000	NON-SKID	193, 195
1103321-0000	PIPE	231
1103373-0000	CABLE DUCT	615, 617, 619
1103374-0000	CABLE DUCT	615, 617, 619
1103749-0000	INDUCTOR	527, 529
1105673-0000	ANGLE BRACKET	561
1110397-0000	DOLLY	371, 373, 379, 381
1110461-0000	TRANSFORMER	41
1110462-0000	TRANSFORMER	41
1110463-0000	TRANSFORMER	363, 365
1110500-0005	NIPPLE	675
1110544-0000	CORE	675
1110545-0000	COIL	675
1110725-0000	INDUCTOR	375, 377, 383, 385
1116017-0000	BRACKET	573
1116028-0000	SHEET	525
1116046-0000	HATCH	643
1116047-0000	HATCH	647
1116048-0000	SPACER	235, 547, 551, 555
1116049-0000	SHAFT	547, 551, 555
1116123-0000	HATCH	641
1116126-0000	HATCH	645
1116138-0000	HATCH	639
1116153-0000	BRACKET	547, 551, 555
1116536-0000	BRACKET	705
1129040-0000	ARM	609
1129041-0000	ARM	605
1129042-0000	KEY	267, 273
1129046-0000	ATTACHMENT PIPE	435
1129047-0000	GLASS PANE	689
1129064-0000	GLASS PANE	273
1129066-0000	RETURN PIPE	435
1129088-0000	FILTER	423
1129101-0000	BRACKET	139
1129137-0000	HOUSE	71
1129141-0000	MACHINE BODY	425, 427
1129150-0000	PNEUMATIC DIAGRAM	491
1129155-0000	COVERING PLATE	681
1129156-0000	COVERING PLATE	681
1129157-0000	PROFILE	681
1129158-0000	PROFILE	681
1129159-0000	BRACKET	681
1129168-0000	PIPE	143
1129182-0000	BRACKET	479
1129184-0000	PIPE	99, 101
1129194-0000	FRAME	167
1129195-0000	OPENING	167
1129196-0000	FRAME	167
1129197-0000	OPENING	167
1129198-0000	DOOR	167
1129199-0000	DOOR	167
1129202-0000	CONNECTION BOX	479
1129209-0000	MOUNTING RAIL	479
1129210-0000	MOUNTING RAIL	439
1129247-0000	FRAME	261
1129248-0001	GUARD PLATE	261
1129253-0000	FASTENING PLATE	261
1129264-0000	SLIDING STRIP	681
1129269-0000	HOSE CONNECTION	281
1129274-0000	GUIDE LUG	267, 273, 275, 469, 473, 629, 631, 633, 635
1129275-0000	BOX FOR DIAGRAM	275
1129276-0000	GASKET	681
1129280-0000	PLATE	681
1129298-0000	SHAFT COUPLING	37
1129318-0000	BRACKET	681
1129321-0000	SHUTTER	89
1129322-0000	BRACKET	681
1129324-0000	WASHER	273
1129325-0000	SEALING FLANGE	273
1129328-0000	ATTACHMENT	249
1129335-0000	BRACKET	713

Part No	Description	Page No
1129338-0000	BRACKET	727
1129341-0000	PROTECTION	723
1129342-0000	PROTECTION	725
1129343-0000	PROTECTION	727
1129345-0000	CONTAINER	61
1129378-0000	BRACKET	227
1129379-0000	PIPE	227
1129383-0000	PIPE	227
1129387-0000	CONNECTION TABLE	455
1129402-0000	SPACER SCREW	423
1129408-0000	CANTILEVER	219
1129422-0000	RAIL	171
1129423-0000	HOLDER	563
1129432-0000	LID	459
1129434-0000	PIPE	229
1129438-0000	ADAPTOR	281
1129441-0001	ELECTRODE	245
1129441-0002	ELECTRODE	245
1129441-0003	ELECTRODE	245
1129441-0004	ELECTRODE	245
1129443-0000	CABLE DUCT	259
1129444-0000	LID	259
1129475-0000	HOLDER	173
1129478-0000	GASKET	681
1129479-0000	RAIL	173
1129480-0000	CABLE DUCT	173
1129481-0000	COVERING PLATE	681
1129493-0000	PIPE BRACKET	241
1129494-0000	BLOCKING PIECE	241
1129504-0000	MOUNTING RAIL	185
1129549-0000	SHEET	681
1129550-0000	GASKET	681
1129570-0000	LDS, LVDS TERMINAL 1	207
1129594-0000	BRACKET	261
1129600-0000	BRAID	189
1129633-0000	RING	241
1129637-0000	COVER PLATE	145
1129638-0000	WASHER	145
1129641-0000	SILICON RUBBER PROFILE	145
1129643-0000	STAIR	147
1129644-0000	BRACKET	147
1129710-0000	CANTILEVER	189
1129741-0000	RAILING	155
1129767-0000	SCREW	167, 267, 273, 275, 623, 629, 631, 633, 635, 639
1129768-0000	POST	563
1129770-0000	BLOCKING PIECE	159, 167, 213, 267, 273, 275, 629, 631, 633, 635, 639, 687, 689, 693, 695
1129801-0000	PIPE	73
1129837-0000	BALL	21
1129839-0000	COOLING PLATE	529
1129855-0000	HOUSE	21
1129869-0000	COOLING PLATE	529
1129871-0000	SPINDLE	21
1129925-0000	BUSBAR	729, 731
1129973-0000	COVERING PANEL	681
1129998-0000	PNEUMATIC DIAGRAM	277, 621
1140009-0000	COVER SLIP	623
1140027-0000	HANDLE BRACKET	565, 567
1140053-0000	SPACER	719
1140077-0000	RING	529
1140129-0000	HOLDER	187
1140208-0000	BRACKET	261
1140233-0000	WASHER	371, 373, 379, 381
1140259-0000	PROTECTION	713
1140284-0010	COAXIAL CABLE L=3500 mm	703
1140285-0006	COAXIAL CABLE L= 3000 MM	703
1140285-0007	COAXIAL CABLE L= 4000 MM	707
1140287-0000	CURVE	351
1140288-0000	CURVE	351
1140307-0000	CARBON BRUSH	375, 377, 383, 385
1140308-0000	CARBON BRUSH HOLDER	375, 377, 383, 385
1140309-0000	BUSBAR	375, 377, 383, 385
1140312-0000	SHAFT	371, 373, 375, 377, 379, 381, 383, 385
1140313-0000	SHAFT	371, 373, 375, 377, 379, 381, 383, 385
1140380-0000	BRACKET	159
1140419-0000	WASHER	371, 373, 375, 377, 379, 381, 383, 385
1140435-0000	GUIDE	375, 377, 383, 385
1140436-0000	MOUNTING BLOCK	371, 373, 379, 381
1140437-0000	BUSHING	359, 361, 375, 377, 383, 385
1140479-0000	ROLLER	371, 373, 375, 377, 379, 381, 383, 385
1140485-0000	SPRING	375, 377, 383, 385
1140488-0000	SHAFT	375, 377, 383, 385
1140492-0000	PIN	375, 377, 383, 385
1140514-0000	LIFTING CYLINDER	737
1140518-0000	WASHER	547, 551, 555
1140519-0000	PROTECTION	681

Part No	Description	Page No
1140523-0000	PROTECTION PLATE	683
1140529-0000	PROTECTION PLATE	683
1140553-0000	RAILING	237
1140555-0000	BRACKET	695
1140603-0000	COMPRESSOR UNIT	429
1140619-0000	PLUG	175, 281
1140641-0000	ARM	261
1140645-0000	BRACKET	139
1140670-0000	BRACKET	449
1140708-0000	BRACKET	363
1140709-0000	BUSBAR	363, 365
1140710-0000	CABLE	363, 365
1140712-0000	SPACER	363
1140716-0000	PIN	363, 365
1140717-0000	PIN	363, 365
1140750-0000	GUIDE	315, 319, 323, 327, 333, 337, 341, 345
1140751-0000	RING	315, 319, 323, 327, 333, 337, 341, 345
1140757-0000	PULLEY	315, 319, 323, 327, 333, 337, 341, 345
1140759-0000	PULLEY	315, 319, 323, 327, 333, 337, 341, 345
1140767-0000	WHEEL	315, 319, 323, 327
1140769-0000	DOOR STOPPER	683
1140820-0000	SPACER	315, 319, 323, 327, 333, 337, 341, 345
1140837-0000	PULLEY	289
1140838-0000	PULLEY	355, 357
1140839-0000	PULLEY	289
1140844-0000	CURVE	355
1140845-0000	ROLLER	355, 357
1140846-0000	ECCENTRIC SHAFT	355
1140850-0000	WASHER	355
1140851-0000	WASHER	289, 355, 357
1140856-0000	PROTECTION	351, 353
1140865-0000	ROLL	297, 299
1140866-0000	BRACKET	297, 299
1140872-0000	BRACKET	351
1140961-0000	CURVE BRACKET	359, 361
1140963-0000	FLAG	367
1143599-0000	PROTECTION PLATE	659
1143884-0000	COPPER BRAID	719
1147087-0000	COMPRESSION ROD	593
1147089-0000	SPRING	593
1147091-0000	NUT	593
1147094-0000	SLEEVE	593
1185023-0100	PLINTH	737

Part No	Description	Page No
1195161-0200	MOVABLE FORMING RING	13
1195162-0100	LOWER FORMING RING	13
1195163-0200	PILLAR	13
1195164-0200	UPPER FORMING RING	13
1195165-0200	FORMING RING	13
1195166-0200	PAPER GUIDE	13
1195173-0300	PENDULUM ROLLER	13
1195174-0200	LONGITUDINAL SEALING	13
1195175-0100	SHORT STOP	13
1195176-0300	CHAIN SUPPORT	395
1195180-0100	BENDING ROLLER	13
1195181-0100	DOOR	13
1195182-0100	DOOR	13
1195183-0200	BENDING ROLLER	13
1195191-0000	MOVABLE FORMING RING	23
1195195-0000	LOWER FORMING RING	25, 27
1195203-0200	STATION CHAIN	395
1195204-0000	BUSHING	387
1195206-0300	SWING FRAME	395
1195207-0000	LINK	387
1195208-0000	LINK	371, 375, 379, 383
1195209-0200	BENDING ROLLER	13
1195214-0100	SEAL	13
1195219-0000	VOLUME FLAP	371, 375, 379, 383
1195247-0000	SHAFT	375, 377, 383, 385
1195258-0000	BRACKET	371, 373, 375, 377, 379, 381, 383, 385
1195261-0000	LINK	371, 379
1195262-0000	LINK	375, 383
1195263-0000	WASHER	371, 373, 379, 381
1195266-0000	BRACKET	261
1195268-0200	CABLE HARNESS	309, 311
1195269-0100	DOOR	13
1195270-0000	FRAME	47
1195271-0000	GLASS PANE	47
1195272-0000	GASKET	47
1195273-0000	FRAME	49
1195274-0000	GLASS PANE	49
1195275-0000	GASKET	49
1195276-0000	FRAME	57
1195277-0000	GLASS PANE	57
1195278-0000	GASKET	57
1195280-0000	SHAFT	371, 373, 375, 377, 379, 381, 383, 385
1195284-0200	PIPE-LINE	109

Part No	Description	Page No
1195285-0200	AIR VALVE	109
1195293-0000	SHAFT	371, 373, 379, 381
1195294-0000	SLEEVE	371, 373, 379, 381
1195298-0000	LOWER FORMING RING	25, 27
1195305-0000	SHAFT	375, 377, 383, 385
1195311-0000	PLATE	29
1195312-0100	PRESSURE JAW	309, 311
1195313-0100	SEALING JAW	309, 311
1195317-0000	SEALING RING	371, 373, 379, 381
1195318-0000	PLATE	25, 27
1195319-0000	FITTING BOLT	25, 27
1195321-0000	TUNNEL	29
1195322-0000	BRACKET	29
1195460-0000	BRACKET	141
1195466-0000	PIPE	227, 229, 231
1195488-0000	AXLE PIN	511, 513
1195500-0200	STRIP MAGAZINE	499
1195501-0200	MOUNTING SHEET	501
1195502-0200	ROCKER ARM	501
1195503-0200	ROCKER ARM	501
1195504-0100	BOTTOM PANEL	521
1195505-0200	STRIP APPLICATOR	499
12,7mm		649
12242-0003	GASKET	21
1254003-0000	BRACKET	627
1254004-0000	BRACKET	627
1254022-0000	PUSH BUTTON BOX	627
1254024-0000	PROFILE	281
1254025-0000	STRIP	233
1254026-0000	CORNER STRIP	233
1254027-0000	CORNER STRIP	233, 235
1254028-0000	FASTENING PLATE	233
1254029-0000	CHECKER PLATE	233
1254030-0000	CHECKER PLATE	235
1254053-0000	BRACKET	659
1254054-0000	PROTECTION PLATE	659
1254055-0000	HOLDER	547, 551, 555
1254091-0000	PROTECTION	723
1254092-0000	PROTECTION PLATE	683
1254098-0000	TOE PLATE	233
1254099-0000	TOE PLATE	233
1254100-0000	TOE PLATE	233
1254118-0000	CHECKER PLATE	235
1254245-0200	PLATFORM	179
1254270-0000	PLUG	141
1254272-0000	GASKET	737
1254448-0000	PIPE	737
1254469-0000	GRILL	737
1254494-0000	SPACER	241
1255136-0000	ROD	525
1255293-0000	CROSS BAR	455
1255294-0000	FRAME SECTION	457
1255295-0000	MACHINE BODY	455
1255304-0100	PROTECTIVE COVER	541, 543, 545
1255306-0000	FASTENING BRACKET	531
1255308-0000	FAN NOZLE	527, 529
1255365-0000	MOUNTING PLATE	431
1255493-0000	PIPE	227
1255504-0000	PIPE	21
1255508-0000	GUIDE	575
1255509-0000	GUIDE	575
1255511-0000	ROPE BRACKET	575
1255512-0000	ROPE BRACKET	575
1255513-0000	COVER	559
1255551-0000	SEAL CLOTH	143
1255557-0000	GASKET	255
1255558-0000	EXTENSION PIPE	255
1255559-0000	PEROXIDE TANK	245
1255633-0000	HATCH	471
1255634-0000	HATCH	467
1255635-0000	HATCH	475
1255636-0000	COVERING PANEL	461
1255637-0000	COVER	461
1255638-0000	COVERING PANEL	461
1255670-0000	GABLE PLATE	465
1255671-0000	GABLE PLATE	463
1255768-0000	HOSE	249
1255839-0000	SHAFT	141
1255866-0000	PROTECTION	423
1255867-0100	MATERIAL HOLDER LINE 2	541, 543, 545
1255868-0100	CYLINDER LINE 2	541, 543, 545
1255869-0100	MATERIAL HOLDER LINE 1	541, 543, 545
1255870-0100	CYLINDER LINE 1	541, 543, 545
1255970-0000	WASHER	43
1255973-0000	RUBBER BUSHING	371, 373, 379, 381
1255975-0000	SEAL HOLDER	55

Part No	Description	Page No
1255976-0000	SEAL HOLDER	55
1255979-0200	SCRUBBER	109
1255980-0200	PRODUCT VALVE GROUP	69
1255984-0200	CLEANING PIPE	69
1255986-0000	VALVE BRACKET	73
1255987-0000	COVER	73
1255989-0000	SHAFT	399
1255990-0000	SHAFT	399
1255991-0000	COVER	399
1255992-0000	SPROCKET	399
1260008-0000	BOLT	399
1260009-0000	WASHER	399
1260019-0000	PIN	401
1260020-0000	PIN	401
1260022-0000	GUIDE	401
1260040-0000	BELT	407
1260046-0000	LINK ARM	375, 383
1260050-0000	SHAFT	359
1260051-0000	HOUSING	359, 361
1260052-0000	FRAME	415
1260056-0000	SHAFT	411
1260059-0000	SHAFT	411
1260061-0000	HOUSING	411
1260064-0000	DRUM	411
1260065-0000	BRACKET	411
1260066-0000	WASHER	411, 413
1260067-0000	CARRIER	411
1260068-0000	SHAFT	411
1260069-0000	ROLLER	411
1260070-0000	SHAFT	411
1260086-0000	ECCENTRIC SHAFT	315, 319, 323, 327, 333, 337, 341, 345
1260087-0000	WHEEL	315, 319, 323, 327, 333, 337, 341, 345
1260088-0000	COVER	315, 319, 323, 327, 333, 337, 341, 345
1260089-0000	SPACER	315, 319, 323, 327, 333, 337, 341, 345
1260094-0000	PULLEY	315, 319, 323, 327, 333, 337, 341, 345
1260097-0300	CLEANING PIPEWORK UPPER	225
1260098-0300	CLEANING PIPEWORK	225
1260101-0000	PIPE	227
1260120-0100	VOLUME ADJUSTER	285, 287
1260122-0000	SHAFT	393
1260124-0000	PLATE	393
1260125-0000	FRAME	393
1260126-0000	SHAFT	393
1260127-0000	FRAME	393
1260128-0000	SHAFT	393
1260129-0000	PULLEY	393
1260131-0000	ARM	393
1260132-0000	CYLINDER BRACKET	393
1260133-0000	LOCK COMPONENT	393
1260134-0000	PLATE	393
1260136-0000	HOLDER	393
1260137-0000	PLATE	393
1260139-0000	BOLT	393
1260142-0200	CURVE WHEEL	409
1260145-0000	ARCH	413
1260148-0000	ECCENTRIC SHAFT	359, 361
1260149-0000	WORM SCREW	359, 361
1260151-0000	BRACKET	359, 361
1260152-0000	WORM WHEEL	359, 361
1260153-0000	SPACER	359, 361
1260154-0000	WORM SCREW	359, 361
1260166-0000	BOLT	393
1260167-0000	WASHER	393
1260168-0000	BELT	393
1260169-0000	WORM WHEEL	359, 361
1260170-0000	SHAFT	359
1260171-0000	SHAFT	295
1260172-0000	BUSHING	295
1260173-0000	FRAME	399
1260174-0000	BOLT	393
1260175-0000	SWING FRAME	401
1260177-0000	COVER	359, 361
1260183-0000	COVER	399
1260185-0000	PIPE	229
1260187-0000	SPACER	295
1260190-0000	FLANGE	315, 319, 323, 327, 333, 337, 341, 345
1260235-0200	VALVE PANEL	541, 543, 545
1260237-0000	PLATE	659
1260246-0000	TUBE	431
1260247-0000	CLIP	431
1260248-0000	CLAMP	433
1260327-0000	TUBE	431
1260547-0100	ICE WATER UNIT	425, 427
1260680-0000	WASHER	527, 529
1260749-0000	HOLDER	367, 369
1260750-0000	HINGE	297, 299

Part No	Description	Page No
1260751-0000	HINGE	351, 353
1260752-0000	SHAFT	351, 353
1260753-0000	PIN	297, 299
1260773-0000	SPACER	41
1260858-0000	ECCENTRIC SHAFT	355, 357
1260859-0000	SHAFT	289
1260860-0000	SHAFT	355
1260863-0000	PLATE	289
1260864-0000	BEARING HOUSING	289
1260865-0000	SPACER	289
1260875-0000	CURVE	355
1260950-0000	CURVE	355
1260960-0000	HOLDER	149
1279000-0600	PLATES	285, 287
1279075-0000	SEALING STRIP	267
1279076-0000	SEALING STRIP	267
1279083-0000	SEALING STRIP	633, 635
1279084-0000	SEALING STRIP	637
1279603-0000	SHAFT	149
1279802-0200	FRAME	11
1279803-0100	BENDING ROLLER	145
1279809-0200	CABINET	679
1282028-0000	BRACKET	689
1282029-0000	BRACKET	689
1282030-0000	FRAME	689
1282031-0200	DOOR	681
1282032-0300	HOOD	681
1282034-0200	DOOR	681
1282036-0200	DOOR	681
1282037-0200	DOOR	681
1282350-0000	FRAME	693
1282782-0000	GUIDE	399
1282783-0000	GUIDE	399
1282786-0000	PLATE	399
1282796-0000	WASHER	401
1282798-0000	SLIDER	401
1282874-0000	PIPE	247
1282876-0000	PIPE	247
1282877-0000	PIPE	247
1282879-0000	CONNECTING PIPE	247
1282889-0000	PIPE	143
1282891-0000	PIPE	245
1282892-0000	TANK	251
1282893-0000	PIPE	251
1282894-0100	PEROXIDE TANK	243
1282895-0100	PEROXIDE PIPE	243
1282896-0100	TANK	243
1282898-0000	HOSE	251
1282899-0000	HOSE	245
1282900-0000	PIPE	143
1282901-0000	PIPE	247
1282903-0000	FLANGE	245
1282904-0000	LID	245
1282905-0000	CLAMP	255
1282906-0000	NIPPLE	245
1282976-0000	AXLE	571
1282995-0000	SCREW	351, 353
1285221-0000	SHAFT	561
1285329-0000	PIPE	93
1285363-0000	TUBE	431
1285364-0000	PLATE	351
1285365-0000	PLATE	351
1285366-0000	PLATE	351
1285368-0000	PROTECTION	351
1285400-0200	COVERING PANEL	11
1285401-0000	COVERING	167
1285402-0000	COVERING	167
1285403-0000	COVERING	167
1285426-0000	PIPE	247
1285520-0000	FUSE BOARD	693
1285521-0000	FRAME	695
1285522-0000	WELDED CABINET	681
1285523-0000	CONNECTION BOX	683
1285528-0200	FUSE BOARD 2	723
1285530-0100	DISTRIBUTION TERMINAL	713
1285532-0100	DISTRIBUTION TERMINAL	713
1285535-0000	MOUNTING PLATE	719
1285537-0200	RELAY UNIT 2	723
1285538-0100	PLINTH	723
1285539-0200	FUSE BOARD 1	723
1285545-0000	ROLL	511, 513
1285546-0000	ROLL	535
1285622-0000	HOOD	699
1285842-0000	DOOR	267
1285843-0000	DOOR	267
1285844-0000	LOCKING ARM	267

Part No	Description	Page No
1285845-0000	BRACKET	267
1285846-0000	LINK	267
1285847-0000	SHAFT	267
1285848-0000	SHAFT	267
1285925-0000	PLATE	351
1285958-0100	DOOR	263
1296102-0000	SEALING STRIP	639
1296103-0000	SEALING STRIP	641, 645
1296105-0000	SEALING STRIP	643, 647
1296109-0000	BRACKET	25, 27
1296110-0000	SUPPORT	25, 27
1296111-0000	HOLDER	41
1296112-0000	BRACKET	41
1296113-0000	INDUCTOR	41
1296114-0000	BRACKET	41
1296204-0001	GLASS PANE	267
1296204-0002	GLASS PANE	267
1296219-0000	SEALING STRIP	269
1296303-0000	PLATE	401
1296407-0000	BRACKET	149
1296754-0000	SHAFT	23
1296755-0000	SHAFT	23
1296756-0000	SHAFT	43
1296757-0000	SHAFT	43
1296758-0000	ROLL	23
1296759-0000	ROLL	43
1296760-0000	NUT	23, 43
1296764-0000	RAIL	43
1296847-0200	CONNECTION BOX	11
1296996-0000	SCREW	41
1296997-0000	WASHER	41
1317020-0000	SHAFT	589
1317021-0000	PIN	559, 589
1317102-0100	HYDROGEN PEROXIDE	179
1317103-0100	PUMP	243
1317104-0000	BRACKETS, FASTENING PLATES, - BRACKETS	249
1317105-0000	BRACKET	249
1317226-0000	WEIGHT	249
1317249-0200	RACK	705
1317252-0000	CABLE SERIAL	705
1317268-0100	COVERS	263
1317271-0000	DOOR	273
1317272-0000	DOOR	273
1317273-0100	DOORS	263
1317274-0000	SEALING STRIP	273
1317275-0000	SEALING STRIP	273
1317386-0000	DOOR	275
1317387-0000	DOOR	275
1317388-0100	DOORS	263
1317389-0000	COVER	275
1317390-0000	COVER	275
1317391-0000	SEALING STRIP	275
1317392-0000	COVER	275
1317438-0000	FORK	91
1317447-0000	PIPE	229
1317450-0000	BRACKET	229
1317451-0000	BRACKET	229
1317453-0000	BRACKET	227
1317486-0000	BRACKET	227
1317711-0000	SHAFT	597
1317712-0000	SHAFT	597
1317784-0000	BRACKET	249
1317793-0000	BASE	239, 657
1317794-0000	BASE	239, 657
1317798-0000	GUIDING PLATE	595, 599
1317799-0000	ROD	595, 599
1317800-0000	GUIDE FINGER	595, 599
1317897-0000	TOE PLATE	235
1317898-0000	TOE PLATE	233
1317983-0100	ALARM BEACON	233, 655
1317997-0000	SHAFT	17
1317998-0000	BRACKET	17
1317999-0000	BLOCK	17
1334000-0000	STOP	17
1334001-0000	BRACKET	17
1334003-0000	FLANGE	17
1334004-0000	ARM	17
1334005-0000	LINK	17
1334006-0000	SHAFT	17
1334008-0200	CALENDER ROLLER	13
1334051-0000	SHAFT	91
1334056-0000	COMPRESSION GLAND	91
1334085-0000	ROD	535
1334187-0000	PLATE	515
1334188-0000	AXLE PIN	515
1334189-0000	BLOCK	515

Part No	Description	Page No
1334190-0000	BLOCK	515
1334191-0000	SHIM	515
1334197-0000	AXLE PIN	535
1334220-0200	STRIP GUIDE	521
1334248-0000	BRACKET	601
1334260-0000	CABLE DUCT	615, 617, 619
1334261-0000	CABLE DUCT	615, 617, 619
1334324-0000	PLATE	41
1334325-0000	PLATE	41
1334326-0000	BRACKET	41
1334327-0000	PLATE	41
1334521-0000	SUPPORT	393
1334698-0000	VOLUME BULGE	397
1334699-0000	CARTON STATION	397
1334705-0000	CLAMP	411
1334707-0000	PLATE	393
1334792-0000	PIN	315, 319, 323, 327, 333, 337, 341, 345
1334793-0000	WASHER	315, 319, 323, 327, 333, 337, 341, 345
1334810-0200	PIPE WORK	217
1334812-0100	COOLING HOSES	217
1346083-0000	PHOTOCELL BRACKET	595, 599
1346314-0100	COMPONENT DOOR	679
1346327-0000	RAIL	593
1346353-0000	LOCK PIN	93
1346394-0000	LEG	673
1346395-0000	LOCKING ARM	667
1346399-0000	DISTANCE	583
1346400-0000	CABLE DUCT	671
1346401-0000	HOLDER	583
1346402-0000	PLATE	665
1346403-0000	BRACKET	667
1346404-0000	BRACKET	667
1346405-0000	WASHER	665
1346406-0000	COVER PLATE	665
1346407-0000	COVER	665
1346408-0000	SUPPORT	667
1346409-0000	SHAFT	667
1346410-0000	BRACKET	665
1346411-0000	BRACKET	665
1346412-0000	PAPPER COVER	671
1346414-0000	COVER PLATE	651
1346415-0000	COVER PLATE	655
1346416-0000	HOLDER	655
1346417-0000	FRAME	665
1346418-0000	FRAME	583
1346419-0000	BRACKET	669
1346421-0000	FRAME	583
1346424-0000	CABLE DUCT	671
1346425-0000	COVER PLATE	653
1346426-0000	COVER	669
1346427-0000	DISTANCE	655
1346428-0000	RUBBER STRIP	651
1346468-0000	DOOR	687
1346523-0000	CHUTE	261
1346524-0000	HATCH	261
1346525-0000	COVER	261
1346526-0000	PIPE	261
1346527-0000	CLAMP	261
1346528-0000	RUBBER	261
1346541-0000	CONVEYOR CHAIN	261
1346557-0000	GASKET	141
1346563-0000	COVER	143
1346565-0000	VALVE	247
1346613-0200	VALVE PANEL	209, 211
1346633-0000	GUIDE ROD	561
1346636-0000	PLATE	399
1346637-0000	GUIDE	399
1346638-0000	GUIDE	399
1346639-0000	PLATE	399
1346640-0100	HINGE	511, 513
1346656-0000	ROD	113, 121
1346657-0000	CYLINDER BRACKET	113, 121
1346658-0000	BRACKET	113, 121
1346659-0000	SCREW	113, 121
1346665-0000	PIPE	227
1346677-0000	CYLINDER	113, 121
1346746-0000	LEVER	535
1346751-0000	HOLDER	531, 533
1346752-0000	AXLE PIN	531, 533
1346753-0100	FLEXBOX UNIT	705
1346756-0000	COVER	265
1346757-0000	GASKET	265
1346758-0000	COVER	265
1346759-0000	GASKET	265
1346818-0000	GLASS PANE	269
1346819-0000	COVER	269

Part No	Description	Page No
1346822-0000	SHAFT	261
1346823-0100	FRONT COVERS	263
1346907-0000	RUBBER STRIP	653
1346920-0000	PIPE	227
1346957-0000	TUNNEL	271
1346958-0000	PLATE	271
1346959-0100	LID	269
1346984-0000	PLATE	683
1346988-0000	ROLL	531, 533
1347069-0100	SAFETY SWITCH	263
1347071-0000	GUIDE	401
1347072-0000	GUIDE	401
1347073-0000	PULLEY	401
1347076-0000	LOCK COMPONENT	401
1347077-0000	BRUSH	393
1347079-0000	BELT	407
1347082-0000	PIPE	411
1347083-0000	PIPE	411
1347086-0000	ARM	375, 377, 383, 385
1347088-0000	ARM	375, 377, 383, 385
1347090-0000	CHUTE	413
1347113-0000	PIPE	113
1347114-0000	PIPE	119
1347115-0000	PIPE	123
1347116-0000	PIPE	119
1347117-0000	PIPE	117
1347118-0000	PIPE	119
1347119-0000	PIPE	143
1347120-0000	PIPE	143
1347123-0000	PIPE	143
1347124-0000	PIPE	139
1347125-0000	PIPE	143
1347126-0000	PIPE	137
1347127-0000	PIPE	137
1347128-0000	PIPE	139
1347129-0000	PIPE	123
1347130-0000	PIPE	139
1347131-0000	PIPE	139
1347132-0000	PIPE	139
1347133-0000	PIPE	119
1347134-0000	PIPE	119
1347135-0000	PIPE	117
1347136-0000	PIPE	117
1347140-0100	CABLE TRENCH	11
1347141-0100	VALVE HEAT EXCHANGER	109
1347142-0100	SEPARATOR	109
1347143-0000	CABLE DUCT	131
1347144-0000	CABLE DUCT	131
1347145-0000	FRAME	705
1347171-0100	HYDROGEN PEROXIDE	11
1347172-0100	PEROXIDE PIPE	135
1347173-0100	WATER CIRCULATION	135
1347174-0100	WATER CIRCULATION	135
1347191-0100	CONNECTION BOX	11
1347192-0000	LID	131
1347193-0000	LID	131
1347194-0200	STEAM SYSTEM	69
1347195-0000	LID	131
1347223-0000	PIPE	119
1347225-0000	WASHER	119
1347245-0000	HEAT EXCHANGER	125
1347246-0100	AIR SUPER-HEATER	109
1347252-0000	ROD	535
1347258-0000	KNIFE	509
1347260-0100	CUTTING TABLE	501
1347261-0000	MOUNTING PLATE	511, 513
1347484-0000	SPACER	37
1347485-0100	DRIVE UNIT	13
1347493-0100	DOOR	13
1347494-0000	FRAME	63
1347499-0000	BEARING BUSHING	17
1347500-0000	SHAFT	17
1347511-0000	FITTING	91
1347513-0000	SHEET	29
1347515-0200	PHOTOCELL UNIT	285, 287
1347517-0000	SHAFT	291, 293
1347518-0000	ADJUSTING SCREW	291, 293
1347519-0000	FLANGE	291, 293
1347520-0000	SHAFT	291, 293
1347521-0000	ROLLER	291, 293
1347522-0000	NOZZLE	291, 293
1347523-0000	SPACER	291, 293
1347547-0100	PNEUMATIC SYSTEM SUPERSTR	11
1347548-0100	VALVE PANEL SUPERSTRUCT.	157
1347549-0100	VALVE RAMP SUPERSTRUCT.	159
1347550-0100	VALVE RAMP SUPERSTRUCT.	159

Part No	Description	Page No
1347551-0100	HOSE INSTALLATION	157
1347556-0000	ECCENTRIC	23
1347557-0000	MOVABLE FORMING RING	23
1347558-0000	SUPPORT	23
1347559-0000	SHAFT	23
1347584-0000	PLATE	159
1347585-0000	DIAGRAM	159, 277
1347601-0000	DIVIDED FORMING RING	33
1347615-0100	COVERING PANEL	11
1347616-0000	COVERING PLATE	169
1347617-0000	COVERING PLATE	169
1347638-0000	PIPE	193, 195
1347639-0100	RAILING	145
1347640-0000	RAILING	155
1347641-0000	RAILING	155
1347665-0000	BRACKET	71
1347673-0000	BRACKET	725
1347695-0000	FRAME	145
1347696-0000	FRAME	145
1347697-0000	FRAME	145
1347704-0000	THERMOCOUPLE	245
1347737-0000	ARM	511, 513
1347738-0100	DOUBLE WEB MAGAZINE	547, 551, 555
1347739-0000	GUIDE	563
1347740-0100	CARRIAGE	547, 551, 555
1347741-0000	FRAME	565, 567
1347742-0000	HANDLE	565, 567
1347743-0000	SLIDER	561
1347744-0000	SLIDER	561
1347748-0000	FRAME LOWER	565, 567
1347749-0100	CARRIAGE	547, 551, 555
1347751-0100	RAIL	547, 551, 555
1347752-0000	BRACKET	575
1347753-0100	DRIVE UNIT FRONT	547, 551, 555
1347754-0000	SLIDER	561
1347755-0000	COVER	559
1347766-0000	SIGN	275
1347767-0000	SIGN	275
1347867-0000	CHECKER PLATE	145
1347868-0000	CHECKER PLATE	145
1347869-0000	BRACKET	145
1347870-0000	BRACKET	145
1347871-0000	CABLE DUCT	131
1347872-0000	LID	131
1347873-0000	CABLE DUCT	131
1347874-0000	LID	131
1347875-0100	BALL	13
1347877-0000	HOLDER	171
1347878-0000	RAIL	183
1347879-0000	CONNECTION BOX	173
1347880-0000	INSERT	131
1347881-0000	LOCK PLATE	33
1347882-0000	SHAFT	511, 513
1347883-0000	ROLLER	511, 513
1347885-0000	AXLE PIN	511, 513
1347895-0000	FASTENING BRACKET	533
1347896-0100	PRESSURE ROLLER	521
1347897-0100	INDUCTOR	521
1347899-0000	TANK	533
1347900-0000	SPACER	413
1347902-0000	SUPPORT	413
1347905-0000	HOLDER	413
1347907-0000	HOLDER	413
1347910-0000	SHAFT	411
1347938-0000	PENDULUM ARM	39
1347940-0000	SHAFT	39
1347941-0000	LID	39
1348063-0000	LEVER	39
1348067-0000	CABLE	719
1348090-0100	CABLE HARNESS	181
1348093-0000	COLUMN	29
1348099-0000	PIPE	93
1348197-0000	HOLDER	213
1348207-0000	SCREW	291, 293
1348232-0000	FRAME	275
1348241-0000	HOSE CLAMP	411
1348242-0000	SPROCKET	411
1348243-0000	SPACER	411
1348244-0000	BRACKET	411
1348252-0000	SLIDER	407
1348256-0000	VOLUME BULGE	371, 375, 379, 383
1348257-0000	VOLUME SHIM	371, 375, 379, 383
1348287-0000	GUIDE	359, 361
1348288-0000	VOLUME CAM	359
1348384-0000	PLATE	189
1348428-0100	LOCKING ARM	547, 551, 555

Part No	Description	Page No
1348429-0000	LOCKING ARM	569
1348430-0000	LOCKING ARM	569
1348431-0100	DRIVE UNIT REAR	587
1348435-0000	GUIDE	595
1348436-0100	SPLICING DEVICE	541, 543, 545
1348437-0100	BRACKET	547, 551, 555
1348438-0000	MOUNTING PLATE	621
1348475-0000	GASKET	93
1348496-0100	CONNECTION BOX	181
1348497-0100	CONNECTION BOX	181
1348498-0000	HOLDER	183
1348499-0000	CONNECTION BOX	185
1348500-0000	CONNECTION BOX	183
1348509-0000	INSERT	367, 369
1348510-0000	PLATE	367, 369, 415
1348511-0000	INSERT	367, 369
1348529-0000	STRAINER	247
1348530-0000	LID	247
1348555-0000	SEALING RING	91
1348622-0000	O-RING	29
1348639-0000	SEALING GASKET	91
1348657-0000	HOUSING	367, 369
1348661-0000	SPACER	315, 319, 323, 327
1348703-0000	COVER	315, 319, 323, 327, 333, 337, 341, 345
1348704-0000	BEARING HOUSING	315, 319, 323, 327, 333, 337, 341, 345
1348707-0100	DISPLAY UNIT 12"	201
1348708-0000	COVER PLATE	207
1348709-0000	COVER PLATE	207
1348744-0000	CAM	411
1348745-0000	GUIDE	411
1348746-0000	GUIDE	411
1348747-0000	GUIDE	413
1348748-0000	BRACKET	411
1348749-0000	BRACKET	411
1348750-0000	BRACKET	413
1348751-0100	OUTFEED UNIT	409
1348752-0000	BOX	415
1348754-0000	SWING FRAME	401
1348755-0000	FRAME	399
1348756-0000	BELT	407
1348758-0000	CARTON STATION	397
1348760-0000	NOZZLE	403, 405
1348761-0000	FRAME	393
1348762-0000	FRAME	393
1348765-0000	BRACKET	411
1348766-0000	BRACKET	411
1348767-0000	GUIDE	411
1348768-0000	PIPE	411
1348769-0000	CARRIER	411
1348770-0000	NOZZLE	403, 405
1348846-0000	ROD	687, 689, 693, 695
1348895-0100	TUBE SUPPORT	13
1348896-0000	RING	59
1348897-0000	BENDING ROLLER	575
1348898-0000	GLASS	653
1348902-0000	BRACKET	629, 631
1348905-0000	CUTTING TABLE	603, 607
1348913-0000	FRAME	687
1348914-0000	BAR	669
1348915-0000	SPACER	671
1348916-0000	PLATE	669
1348917-0000	HOLDER	669
1348918-0000	DISTANCE	655
1348935-0000	RING	59
1348936-0000	LOCK PLATE	59
1348937-0000	LOCK PLATE	59
1348938-0000	LOCK PLATE	25, 27, 33
1348939-0000	PIPE	165
1348940-0000	PIPE	165
1348941-0000	PIPE	21
1348943-0000	CONNECTION BOX	171
1348944-0100	DRIVE UNIT	309, 311
1348945-0100	FRAME	309, 311
1348946-0100	DESIGN CORRECTION	309, 311
1348947-0100	VOLUME ADJUSTER	309, 311
1348948-0100	SEALING JAW	309, 311
1348949-0100	PRESSURE JAW	309, 311
1348987-0000	FRAME	547, 551, 555
1349014-0000	PAD	509
1349177-0000	AXLE PIN	511, 513
1349178-0000	AXLE PIN	511, 513
1349179-0000	FINGER	509
1349181-0000	TOUCH GUARD	507
1349246-0000	SIGN	659
1349330-0000	LINK FORK	599
1349360-0000	LINK	373, 377, 381, 385

Part No	Description	Page No
1349361-0000	LINK	387
1349362-0000	LINK	377, 385
1349365-0000	LINK	373, 381
1349367-0000	BRACKET	353
1349370-0000	PLATE	353
1349372-0000	PLATE	353
1349373-0000	PLATE	353
1349374-0000	PROTECTION	353
1349375-0000	CURVE	357
1349376-0000	SHAFT	357
1349377-0000	CURVE	357
1349379-0000	CURVE	357
1349380-0000	CURVE	357
1349381-0000	ECCENTRIC SHAFT	357
1349382-0100	ELECTRICAL CONNECTION	309, 311
1349383-0000	HOLDER	95
1349384-0000	VOLUME CAM	361
1349385-0000	GUIDE	361
1349386-0000	SHAFT	361
1349387-0000	SHAFT	361
1349388-0000	SPACER	357
1349391-0000	CAM	353
1349392-0000	CAM	353
1349396-0000	VOLUME FLAP	373, 377, 381, 385
1349397-0000	SHIM	43
1349398-0000	NUT	113, 121
1349399-0000	WASHER	375, 377, 383, 385
1349432-0000	CATCH	531, 533
1349464-0300	CONNECTION BOX	285, 287
1349465-0000	CONNECTION BOX	301
1349509-0000	GUIDE	535
1349581-0000	FLAG	511, 513
1349621-0000	GEAR WHEEL	315, 319, 323, 327
1349623-0000	WASHER	315, 319, 323, 327
1349672-0000	GUIDE	531
1349772-0100	TPOP PANEL 12"	179
1349773-0000	PANEL	203
1349774-0100	PANEL UNIT 12"	201
1349777-0000	DOOR	203
1349778-0000	FOIL	203
1349864-0000	BRACKET	423
1349872-0000	MOUNTING PLATE	173
1349913-0000	BUSHING	91
1349915-0000	SHAFT	43
1349926-0000	SPLICING TABLE	509
1349927-0000	SLIDE	509
1349928-0000	SHAFT	509
1349976-0000	CABLE	41
1349986-0000	ROLLER	511, 513
1349994-0000	NUT	531
1350120-0100	IH EQUIPMENT	681
1350172-0000	PIN	593
1350289-0000	ROLL	33
1350482-0000	PIN	59
1350483-0000	SCREW	59
1350484-0000	SCREW	59
1350704-0000	BRACKET	681
1350708-0000	LOCKING ARM	267
1350718-0000	CURVE	355
1350774-0000	PIPE BEND	115
1350777-0000	BRACKET	531, 533
1350902-0000	GLASS PANE	297, 299
1350904-0000	ROLL	31
1350905-0000	LOCKING PLATE	31
1350906-0000	LOCKING PLATE	31
1350907-0000	UPPER FORMING RING	31
1350916-0000	PROTECTION	719
1350925-0000	BENDING ROLLER	547, 551, 555
1361273-0000	DISPLAY	649
1361560-0000	PLATE	429
1363297-0000	CABLE LVDS 10M	189
1387381-0000	CALENDER ROLLER	37
1478005-0000	LOCKING ARM	267
1478048-0000	SLEEVE	255
1478074-0000	SHAFT	315, 319, 323, 327
1478075-0000	DRUM	315, 319, 323, 327
1478079-0000	DRUM	315, 319, 323, 327
1478080-0000	FRAME	315, 319, 323, 327
1478171-0000	BUSHING	255
1478182-0000	SPACER	23
1478191-0000	WHEEL	333, 337, 341, 345
1478192-0000	SPACER	333, 337, 341, 345
1478193-0000	GEAR WHEEL	333, 337, 341, 345
1478194-0000	DRUM	333, 337, 341, 345
1478195-0000	DRUM	333, 337, 341, 345
1478196-0000	FRAME	333, 337, 341, 345

Part No	Description	Page No
1478198-0000	SHAFT	333, 337, 341, 345
1478221-0000	WASHER	333, 337, 341, 345
1478236-0000	COVERING	167
1478265-0100	PRESSURE JAW	309, 311
1478266-0100	SEALING JAW	309, 311
1478267-0000	ROLL	25, 27
1478303-0000	TENSION SPRING	531, 533
1478304-0000	SPACER BUSHING	527, 529
1478394-0000	BRACKET	365
1478397-0000	CONTACT RAIL	365
1478398-0000	SPACER	365
1478399-0000	BRACKET	365
1478524-0000	GASKET	41
1478570-0000	AXLE PIN	23
1478587-0000	BRACKET	535
1478588-0000	BRACKET	535
1478589-0000	BRACKET	535
1478590-0000	BRACKET	535
1478597-0000	FLAG	369
1478598-0100	CABLE HARNESS	309, 311
1478607-0000	SHAFT	531, 533
1478610-0000	COVER	699
1478611-0000	COVER	699
1478612-0000	COVER	699
1478616-0000	HEATING PIPE	403, 405
1478617-0000	HEATING PIPE	403, 405
1478618-0000	SHIM	407
1478619-0000	CAP	403, 405
1478620-0000	BRACKET	403, 405
1478621-0000	CLAMP	403, 405
1478623-0000	SPACER	403, 405
1478625-0000	COVER HOUSING	403, 405
1478626-0000	GASKET	403, 405
1478627-0000	SPACER	403, 405
1478628-0000	ARCH	413
1478629-0000	CAP	403, 405
1478630-0100	HEATING CHAMBER	395
1478631-0000	SUPPORT	393
1478632-0000	PIN	401
1478633-0000	HOLDER	399
1478634-0000	SUPPORT	413
1478635-0000	PLATE	407
1478636-0000	PLATE	407
1478637-0000	SHAFT	407
1478638-0000	PULLEY	407
1478639-0000	FLANGE	407
1478640-0000	SPACER	407
1478719-0000	BRACKET	565, 567
1478720-0000	BRACKET	581
1478721-0000	GUIDE	581
1478722-0000	BRACKET	603, 607
1478723-0000	PIN	603, 607
1478735-0000	STEERING	605, 609
1478736-0000	BLOCK	605, 609
1478738-0000	BLOCK	565, 567
1478765-0100	PRESSURE REGULATOR	109
1478766-0000	PIPE	127, 129
1478813-0000	SPACER	89
1478814-0000	SENSOR	89
1478826-0100	GUIDE	547, 551, 555
1478873-0000	BRACKET	363
1478874-0000	CONTACT RAIL	363
1478907-0000	SECURING PLATE	603, 607
1478938-0000	ANGLE PIECE	603, 607
1478943-0100	CHEMICALS UNIT	455
1484164-0000	HOLDER	315, 319, 323, 327, 333, 337, 341, 345
1484170-0000	EARTH BAR	719
1484171-0000	EARTH BAR	719
1484227-0000	MOUNTING PLATE	713
1484235-0000	SWING FRAME	705
1484285-0000	SCREW	97
1484291-0000	LINK ARM	377, 385
1484294-0000	LINK ARM	363, 365
1484295-0000	PIPE	93
1484391-0000	PIPE	93
1484399-0000	PIPE	93
1484442-0000	SPACER	291, 293
1484466-0000	MOUNTING PLATE	723
1484467-0000	MOUNTING PLATE	723
1484470-0000	CABLE	121
1484479-0000	SUPPORT	355, 357
1484480-0000	ADJUSTER	355, 357
1484482-0100	SEALING JAW	309, 311
1484483-0100	PRESSURE JAW	309, 311
1484484-0000	PROTECTION	315, 319, 323, 327, 333, 337, 341, 345
1484485-0000	PROTECTION	315, 319, 323, 327, 333, 337, 341, 345

Part No	Description	Page No
1484507-0000	SPACER	315, 319, 323, 327, 333, 337, 341, 345
1484511-0000	WATER DIAGRAM	277, 459
1484514-0000	HOUSING	37
1484515-0000	LID	91
1484516-0000	GASKET	91
1484717-0000	PLATE	629, 631
1484745-0100	WEB GUIDE	595, 599
1484750-0000	BRACKET	597
1484859-0000	ROLLER	25, 27
1484860-0000	LOCK PLATE	25, 27
1484861-0000	LOCK PLATE	25, 27
1484862-0000	FORMING RING	25, 27
1484863-0000	FORMING RING	25, 27
1484885-0000	SPLASH PLATE	459
1484886-0000	SIGN LANGUAGEINDEPENDENT	433
1484887-0000	PLATE	459
1484888-0000	PIPE	459
1484889-0100	DOOR	465
1484890-0000	DOOR	469
1484891-0000	LOCKING ARM	469
1484892-0000	PNEUMATIC DIAGRAM	277, 489
1484893-0000	EXTERNAL CLEANING DIAGRAM	277, 441
1487036-0000	CLEANING SLEEVE	93
1487037-0000	FLANGE	93
1487047-0000	GUIDE	411
1487048-0000	FRAME	415
1487050-0000	FLANGE	407
1487051-0000	SPACER	407
1487052-0000	FLANGE	407
1487053-0000	ROLLER	407
1487054-0000	SHAFT	407
1487055-0000	SLIDER	407
1487068-0000	GUIDE	401
1487069-0000	GUIDE	401
1487075-0000	GASKET	403, 405
1487076-0000	GASKET	403, 405
1487077-0000	SUPPORT	407
1487099-0000	COVER	289
1487119-0000	SHAFT	297, 299
1487120-0000	HOLDER	291, 293
1487126-0000	SIGN	213
1487127-0000	SPACER SCREW	289
1487164-0000	PLATE	43
1487165-0000	SCREW	43
1487166-0000	SCREW	43
1487167-0000	AXLE PIN	43
1487168-0000	PLATE	43
1487193-0000	STEAM PIPE	71
1487194-0000	STEAM PIPE	71
1487195-0000	STEAM PIPE	71
1487199-0000	TOUCH GUARD	71
1487200-0000	CLAMP	71
1487205-0000	SPRING	351, 353
1487207-0000	VOLUME BULGE	373, 377, 381, 385
1487208-0000	VOLUME SHIM	373, 377, 381, 385
1487219-0000	CURVE	353
1487228-0000	TOUCH GUARD	71
1487229-0000	TOUCH GUARD	71
1487230-0000	TOUCH GUARD	71
1487244-0000	PLATFORM	235
1487245-0000	PLATFORM	235
1487247-0000	PIPE	95
1487249-0000	WASHER	363, 365
1487332-0000	SHAFT	363, 365
1487373-0000	WASHER	363, 365
1487480-0000	HOLDER	315, 319, 323, 327, 333, 337, 341, 345
1487487-0000	HOLDER	315, 319, 323, 327, 333, 337, 341, 345
1487599-0000	FOLDING FLAP	375, 377, 383, 385
1487600-0000	FOLDING FLAP	375, 377, 383, 385
1487687-0000	LOCK PLATE	23
1487712-0000	LEG	661
1487766-0000	AXLE PIN	559
1487827-0000	SPACER DISC	149
1487837-0000	CLAMP	71
1487838-0000	CLAMP	71
1487839-0000	CLAMP	71
1487840-0000	CLAMP	71
1487841-0000	TOUCH GUARD	71
1487842-0000	TOUCH GUARD	71
1487843-0000	TOUCH GUARD	71
1487856-0000	SPACER	315, 319, 323, 327, 333, 337, 341, 345
1487857-0000	SHAFT	315, 319, 323, 327, 333, 337, 341, 345
1487858-0000	INSULATION	315, 319, 323, 327, 333, 337, 341, 345
1487859-0000	BRACKET	315, 319, 323, 327, 333, 337, 341, 345
1487860-0000	PULLEY	315, 319, 323, 327, 333, 337, 341, 345
1487874-0000	SHIM	407

Part No	Description	Page No
1487881-0000	SUPPORT	407
1487898-0000	PLUG	399
1487930-0000	COVER	315, 319, 323, 327, 333, 337, 341, 345
1487988-0000	SPACER	315, 319, 323, 327, 333, 337, 341, 345
1488007-0000	WASHER	649
1490185-0000	SPACER	517, 519
1490187-0000	ROCKER ARM	517, 519
1490296-0000	SHAFT	355, 357
1490404-0000	DOLLY	315, 319, 323, 327, 333, 337, 341, 345
1490405-0000	ROLLER	35, 53
1490406-0000	WASHER	35, 39, 51, 53
1490407-0000	WASHER	35, 39, 45, 51, 53
1490408-0000	SHAFT	35, 51
1490409-0000	ROLLER	39
1490410-0000	SHAFT	39
1490411-0000	ROLLER	45
1490412-0000	SHAFT	45
1490413-0000	SHAFT	45
1490414-0000	ROLLER	51
1490415-0000	SHAFT	53
1490804-0000	HOLDER	507
1490806-0100	HEATING DEVICE	501
1498039-0000	VOLUME BULGE	397
1498047-0000	SEALING BLOCK	507
1498168-0000	COUNTER ROLLER	25, 27
1498278-0000	CAM	351
1498279-0000	SHAFT	351, 353
1498430-0000	ROD	529
1498479-0000	GUIDE	375, 377, 383, 385
1498526-0000	REGULATOR BODY	89
1498527-0000	MOUNTING PLATE	97
1498605-0000	PLATE	297, 299
1498606-0000	DAMPER	371, 373, 375, 377, 379, 381, 383, 385
1498607-0000	PLATE	297, 299
1498614-0000	SENSOR	43
1498615-0000	BUSHING	43
1498616-0000	BUSHING	43
1498624-0100	WEB GUIDE	149, 577
1498644-0000	CALENDER ROLLER	17
1498646-0000	BEARING COVER	17
1498647-0000	BEARING COVER	17
1498667-0100	FASTENING PLATE	69
1498668-0100	FILLING PIPE	69
1498669-0100	REGULATING VALVE	87
1498670-0000	LID	29
1498671-0000	PAPER GUIDE	29
1498672-0000	FILLING PIPE	91
1498673-0100	CLEANING SLEEVE	69
1498696-0000	FILLING PIPE	91
1498697-0000	FILLING PIPE	91
1498698-0000	PIPE	87
1498699-0000	PIPE	87
1498700-0100	FLOW REGULATOR	69
1498980-0000	INSERT	403, 405, 415
1498981-0000	INSERT	415
1498998-0000	PLATE	399
1499013-0000	SUPPORT	407
1499024-0000	BAR	151, 579
1499025-0000	ROLLER	151, 579
1499026-0000	SHAFT	151, 579
1499027-0000	BRACKET	151, 579
1499047-0000	BRACKET	577
1499089-0000	INSERT	415
1499090-0000	INSERT	415
1499125-0000	SEAL	93
1499126-0000	SEAL	93
1499127-0000	FLANGE	93
1499410-0000	PLATE	353
1499567-0000	FLANGE	575
1499595-0000	PLATE	561
1499610-0000	SPRING	511, 513
1499611-0000	SPRING	589
1499686-0000	SHAFT	407
1499687-0000	ROLLER	407
1499688-0000	SLIDER	407
1499689-0000	SPACER	407
1499690-0100	SQUEEZER	395
1499908-0000	PULLEY	393
1499909-0000	FLANGE	393
1499910-0000	PRESSURE RAIL	371, 373, 379, 381
1499914-0000	GASKET	315, 319, 323, 327, 333, 337, 341, 345
1499915-0000	FLANGE BUSHING	357
1511000-0000	PLATE	151, 579
1511001-0000	SHAFT	151, 579
1511002-0000	HOLDER	151, 579
1511003-0000	WEIGHT	151, 579

Part No	Description	Page No
1511521-0000	LABEL	213
1511522-0000	LABEL	213
1511525-0000	LABEL	213
1511526-0000	LABEL	213
1511600-0000	SPACER	89
1511643-0000	GUIDE	401
1511644-0000	GUIDE	401
1511672-0000	PLATE	297, 299
1511673-0000	BRACKET	301
1511715-0000	FRAME	193, 195
1512267-0000	ECCENTRIC BUSHING	559, 589
1512321-0000	PLATE	213
1512376-0000	PNEUMATIC DIAGRAM	213, 277
1512398-0100	DIAGRAM	275
1512463-0000	THERMOCOUPLE	403, 405
1512464-0000	INTERMEDIARY SHAFT	393
1512526-0000	STEERING	597
1512584-0000	DRIVE SHAFT	261
1512644-0000	ROUND NUT	273
1512661-0000	KNIFE	315, 319, 323, 327, 333, 337, 341, 345
1517078-0000	BATH	141
1517090-0100	WEB GUIDE	547, 551, 555
1517283-0000	INTERMEDIARY SHAFT	411
1517605-0000	COVER TOP	589
1517606-0000	COVER BOTTOM	589
1519766-0000	BENDING ROLLER	559, 589
1519767-0000	SHAFT	559, 589
1519772-0000	AXLE PIN	589
1523042-0000	SHAFT	559
1523043-0000	SHAFT	559
2033-0007	WASHER	23, 31, 33
2033-0011	WASHER	23, 25, 27, 31, 33
230551-0000	GASKET	111
236631-0000	HANDLE	667
236634-0000	SHAFT	667
243989-0000	TENSION SPRING	363, 365
247355-0000	LOCK WASHER	15
247358-0000	SHIFTER HANDLE	15
256737-0000	LINK REPBY 0441031-0000	305, 417
257050-0000	SHAFT	25, 27
257330-0000	PRESSURE ROLLER	91
2612-0007	WASHER	481, 483
2612-0008	WASHER	481, 483
266737-0000	WASHER	153, 523
269859-0000	BRACKET	111
271011-0000	WASHER	603, 607
271823-0000	FILTER	481, 483
271860-0000	CLAMP BLOCK	47, 49, 57, 63
272728-0000	BARRIER	571
272814-0000	SLEEVE	571
272815-0001	SLEEVE	571
273429-0000	WASHER	119, 125
273450-0000	SIGN	159
273452-0000	SIGN	159
273455-0000	LABEL (COLD WATER)	481, 483
273458-0000	LABEL (AIR)	491
273953-0000	SEAL	55
273961-0000	SEAL	29
273977-0000	NUT	257
273978-0000	LEVEL GLASS	257
273980-0000	SPRING	257
273981-0000	GASKET	249
273996-0000	NUT	257
279009-0000	BEARING PLATE	15
279010-0000	BEARING PLATE	15
282635-0000	GUIDE WHEEL	535
295377-0001	HOOD	91
29876-0000	COVER	125
2NC		723, 729, 741
30298-0000	INSULATION	125
31,8NF		591
311103-0235	CYLINDRICAL PIN CP M6 3x14 RFR	363, 365
311103-0272	PIN,STRAIGHT M6 4x20	399, 411
311103-0274	PIN,STRAIGHT 4x25	571
311103-0278	PIN,STRAIGHT M6 4x35	15
311103-0306	PINS,STRAIGHT 5X12	411
311103-0308	PINS,STRAIGHT 5X16	407
311103-0310	STRAIGHT PIN M6 5x20	411
311103-0318	PIN,STRAIGHT 5x40	17
311103-0351	PINS,STRAIGHT 6x16	55, 605, 609
311103-0353	PIN,STRAIGHT 6x20	291, 293
311103-0355	PIN,STRAIGHT 6x25	23, 565, 567, 583
311103-0357	PIN,STRAIGHT 6x30	315, 319, 323, 327, 333, 337, 341, 345, 603, 607
311103-0358	PIN,STRIGHT M6 6x32 RFR	359, 361
311103-0399	CYLINDRICAL PIN M6 8X16 RFR	193, 195
311103-0401	PINS,STRAIGHT 8X20	141, 547, 551, 555, 563

Part No	Description	Page No
311103-0403	PIN,STRAIGHT 8x25	415
311103-0405	PINS,STRAIGHT 8X30	291, 293
311103-0409	PINS,STRAIGHT 8X40	313, 565, 567
311103-0413	PINS,STRAIGHT 8X50	47, 49, 57, 63
311103-0454	PINS,STRAIGHT 10X20	317, 321, 325, 329, 335, 339, 343, 347, 547, 551, 555
311103-0456	PINS,STRAIGHT 10X25	59
311103-0466	PINS,STRAIGHT 10X50	351, 353, 547, 551, 555
311103-0470	PINS,STRAIGHT 10X60	23, 315, 319, 323, 327, 333, 337, 341, 345
311112-0167	SLOTTED TURP 2X14 RFR	65, 67
311112-0205	PINS,SLOTTED TUBULAR SPRING PIN 3X10	511, 513
311112-0256	PIN,SLOTTED TUBULAR SPRING PIN 4x20	593
311112-0258	PINS,SLOTTED TUBULAR SPRING PIN 4X24	559, 589, 599
311112-0308	SLOTTED TURP 5X20 RFR	375, 377, 383, 385
311112-0381	PINS,SLOTTED TUBULAR SPRING PIN 8X32	565, 567
311520-0320	BLANK RIVET 2,4x6mm	713
311520-0329	BLANK RIVET 2,4x8mm	213, 477, 613, 705
311521-0143	COLD SQUEEZE TYPE "POP RIVET" 3,2x8	699
312101-0325	SCREW M6S 5x10-8,8 FZB	705
312101-0344	SCREW M6S5X65FZB	403, 405, 527
312101-0364	SCREW M6S 6x10-8,8 FZB	705, 723, 725, 727
312101-0366	SCREW M6S 6x12-8,8 FZB	705
312101-0381	SCREW M6S 6x55 FZB	571
312101-0630	SCREW M6S16X50FZB	233, 235, 237
312104-0461	SCREW M6S8X50H8.8 FZB	147, 237
312105-0287	SCREW M6S ISO 4017 M4x8 A280	71, 73, 89, 125, 317, 321, 325, 329, 335, 339, 343, 347, 375, 377, 383, 385, 399, 681
312105-0289	SCREW M6S4X10 A2 80	401, 403, 405
312105-0291	SCREW M6S ISO 4017 M4X12 A280	315, 319, 323, 327, 333, 337, 341, 345, 413, 581, 607, 671
312105-0293	SCREW M6S ISO 4017 M4X16 A280	411, 547, 551, 555, 603
312105-0295	SCREW M6S ISO 4017 M4X20 A280	115, 153, 411, 523
312105-0297	SCREW M6S ISO 4014 M4X25 A280	375, 377, 383, 385, 403, 405
312105-0299	SCREW M6S ISO 4014 M4X30 A280	71, 527, 529
312105-0303	SCREW M6S ISO 4014 M4X40 A280	511, 513
312105-0323	SCREW M6S ISO 4017 M5X8 A280	87, 399, 533, 655, 681
312105-0325	SCREW M6S 5x10 A2 80	15, 363, 365, 665
312105-0327	SCREW M6S ISO 4017 M5X12 A280	29, 59, 61, 143, 289, 355, 357, 363, 365, 393, 399, 413, 431, 433, 531, 533, 561, 583
312105-0328	SCREW M6S5X14 A2 80	153, 523, 559, 589
312105-0329	SCREW M6S ISO 4017 M5x16 A280	23, 71, 291, 293, 595, 599
312105-0331	SCREW M6S ISO 4017 M5X20 A280	547, 551, 555
312105-0333	SCREW M6S ISO 4017 M5x25 A280	59, 241, 289, 357
312105-0339	SCREW M6S ISO 4014 M5X40 A280	593
312105-0343	SCREW M6S5X60 A2 80	591
312105-0362	SCREW M6S ISO 4017 M6x8 A280	111, 145, 167, 203, 261, 315, 319, 323, 327, 333, 337, 341, 345, 411, 529, 665
312105-0364	SCREW M6S 6x10 A280	17, 41, 65, 67, 131, 547, 551, 555, 681
312105-0366	SCREW M6S ISO 4017 M6X12 A280	433
312105-0366	SCREW M6S ISO 4017 M6x12 A280	25, 27, 41, 89, 111, 125, 143, 151, 159, 165, 169, 171, 183, 187, 189, 213, 219, 249, 259, 261, 291, 293, 301, 351, 353, 355, 357, 359, 361, 367, 369, 371, 373, 375, 377, 379, 381, 383, 385, 411, 415, 531, 533, 547, 551, 555, 559, 575, 579, 589, 593, 595, 599, 621, 655, 659, 667, 671, 735
312105-0367	SCREW M6S 6x14 A2 80	47, 49, 57, 63, 65, 67, 131, 189, 367, 369, 407, 509
312105-0368	SCREW M6S ISO 4017 M6x16 A280	29, 55, 61, 111, 139, 141, 143, 159, 187, 213, 227, 261, 359, 361, 371, 373, 379, 381, 393, 403, 405, 411, 413, 423, 431, 455, 459, 461, 465, 479, 489, 491, 603, 607, 655, 659
312105-0370	SCREW M6S ISO 4017 M6x20 A280	17, 21, 29, 35, 37, 39, 41, 45, 51, 53, 65, 67, 89, 93, 131, 151, 153, 165, 227, 255, 261, 291, 293, 315, 319, 323, 327, 333, 337, 341, 345, 359, 361, 363, 365, 371, 373, 375, 377, 379, 381, 383, 385, 401, 403, 405, 411, 413, 481, 483, 507, 523, 527, 529, 531, 533, 535, 547, 551, 555, 559, 565, 567, 579, 595, 599, 603, 605, 607, 609, 611, 627, 639, 669
312105-0371	SCREW M6S6X22RFR	23, 31, 41, 141, 315, 319, 323, 327, 333, 337, 341, 345
312105-0372	SCREW M6S ISO 4017 M6x25 A280	17, 25, 27, 33, 37, 39, 43, 141, 143, 151, 167, 173, 255, 291, 293, 375, 377, 383, 385, 559, 579, 591, 595, 599, 603, 605, 607, 609
312105-0374	SCREW M6S ISO 4017 M6X30 A280	535
312105-0374	SCREW M6S ISO 4017 M6x30 A280	41, 375, 383, 393, 401, 589, 667
312105-0376	SCREW M6S ISO 4017 M6X35 A280	423, 489
312105-0376	SCREW M6S ISO 4017 M6x35 A280	153, 401
312105-0378	SCREW ISO 4017 M6x40 A280	249, 505
312105-0379	SCREW M6S ISO 4014 M6x45 A280	403, 405, 561, 565, 567
312105-0380	SCREW M6S ISO 4014 M6x50 A280	575
312105-0381	SCREW M6S ISO 4014 M6x55 A280	117, 123, 139, 151, 579
312105-0382	SCREW M6S ISO 4014 M6x60 A280	401
312105-0383	SCREW M6S ISO 4014 M6x65 A280	511, 513
312105-0386	SCREW M6S ISO 4014 M6x80 A280	71
312105-0388	SCREW M6S ISO 4014 M6x90 A280	71, 411
312105-0447	SCREW M6S ISO 4017 M8x12 A280	65, 67, 203, 251, 573, 697
312105-0449	SCREW M6S ISO 4017 M8x16 A280	63, 111, 113, 121, 141, 167, 229, 237, 245, 247, 261, 271, 291, 293, 315, 319, 323, 327, 333, 337, 341, 345, 407, 505, 523, 525, 531, 533, 547, 551, 555, 611, 659, 665, 667, 669
312105-0451	SCREW M6S ISO 4017 8x20 A280	15, 17, 29, 39, 41, 47, 49, 57, 63, 65, 67, 71, 111, 125, 141, 143, 145, 147, 153, 247, 251, 255, 289, 363, 365, 401, 411, 455, 459, 613, 627, 639

Part No	Description	Page No
312105-0452	SCREW M6S 8x22 Stainless	17, 41, 115, 315, 319, 323, 327, 333, 337, 341, 345, 563
312105-0453	SCREW M6S ISO 4017 M8x25 A280	21, 29, 73, 113, 117, 119, 121, 123, 125, 127, 129, 137, 143, 145, 237, 245, 247, 261, 291, 293, 297, 299, 411, 435, 449, 563, 565, 567, 663
312105-0455	SCREW M6S ISO 4017 M8x30 A280	39, 43, 119, 141, 227, 229, 313, 315, 319, 323, 327, 333, 337, 341, 345, 353, 355, 393, 411, 525, 565, 567
312105-0457	SCREW ISO 4017 M8x35 A280	393, 399
312105-0459	SCREW ISO 4017 M8x40 A280	415
312105-0461	SCREW ISO 4017 M8x50 A280	573
312105-0462	SCREW M6S ISO 4014 M8x55 A280	145, 315, 319, 323, 327, 333, 337, 341, 345, 357
312105-0463	SCREW M6S ISO 4014 M8x60 A280	99, 101, 297, 299, 577
312105-0464	SCREW M6S ISO 4014 M8x65 A280	547, 551, 555, 575
312105-0465	SCREW M6S ISO 4014 M8x70 A280	353
312105-0466	SCREW M6S ISO 4014 M8x75 A280	253, 357, 359, 361
312105-0467	SCREW M6S ISO 4014 M8x80 A280	351, 355
312105-0469	SCREW M6S ISO 4014 M8x90 A280	291, 293, 393
312105-0471	SCREW M6S ISO 4014 M8x100 A280	175, 355
312105-0491	SCREW M6S ISO 4017 M10X20 A280	457
312105-0491	SCREW M6S ISO 4017 M10x20 A280	111, 297, 299, 413, 415, 673
312105-0493	SCREW M6S ISO 4017 M10X25 A280	31, 41, 43, 111, 233, 393, 399, 737
312105-0495	SCREW M6S ISO 4017 M10X30 A280	23, 33, 43, 59, 111, 125, 149, 235, 315, 319, 323, 327, 333, 337, 341, 345, 407, 455, 563
312105-0497	SCREW M6S ISO 4017 M10x35 A280	29, 97, 233, 315, 319, 323, 327, 333, 337, 341, 345
312105-0499	SCREW 4017 M10X40A280	449
312105-0500	SCREW 4017 M10X45A280	297, 299, 351, 353
312105-0505	SCREW M6S ISO 4014 M10X70 A280	235
312105-0506	SCREW M6S ISO 4014 M10X75 A280	547, 551, 555
312105-0507	SCREW M6S ISO 4014 M10X80 A280	315, 319, 323, 327, 333, 337, 341, 345
312105-0513	SCREW M6S ISO 4014 M10X110 A280	145
312105-0515	SCREW M6S ISO 4014 M10X120 A280	411
312105-0532	SCREW M6S ISO 4017 M12X20 A280	351, 353
312105-0534	SCREW M6S ISO 4017 M12X25 A280	315, 319, 323, 327, 333, 337, 341, 345, 681
312105-0536	SCREW M6S ISO 4017 M12X30 A280	145
312105-0538	SCREW M6S ISO 4017 M12X35 A280	681
312105-0540	SCREW M6S ISO 4017 M12X40 A280	315, 319, 323, 327, 333, 337, 341, 345
312105-0542	SCREW M6S ISO 4014 M12X50 A280	351, 353, 449
312105-0544	SCREW M6S ISO 4014 M12X60 A280	335, 339, 343, 347
312105-0545	SCREW M6S12X65RFR	315, 319, 323, 327, 333, 337, 341, 345
312105-0548	SCREW M6S ISO 4014 M12X80 A280	145
312105-0556	SCREW M6S ISO 4014 M12X120 A280	315, 319, 323, 327, 333, 337, 341, 345, 399
312105-0628	SCREW M6S ISO 4017 M16X40 A280	669
312105-0630	SCREW M6S ISO 4017 M16X50 A280	583
312105-0638	SCREW M6S ISO 4014 M16X90 A280	583
312105-0640	SCREW M6S ISO 4014 M16X100 A280	547, 551, 555
312109-0335	SCREW M6S ISO 4017 M5X30 A280	47, 49, 57, 63
312109-0374	SCREW M6S ISO 4017 M6X30 A280	25, 27, 61, 371, 373, 375, 377, 379, 381, 383, 385, 411, 511, 513, 565, 567
312109-0376	SCREW M6S ISO 4017 M6X35 A280	159, 213, 245, 355, 621
312109-0378	SCREW M6S ISO 4017 M6X40 A280	149, 235
312109-0380	SCREW M6S6X50H RFR	255, 261, 595, 599
312109-0457	SCREW M6S ISO 4017 M8X35 A280	93, 97, 119, 407, 455, 515
312109-0459	SCREW M6S ISO 4017 M8X40 A280	355, 357, 563
312109-0544	SCREW 12X60 H RFR	245
312111-0341	SCREW MC6S5X50FZB	603, 607
312111-0370	SCREW MC6S6X20FZB	723
312115-0224	SCREW S 3X10 A4 80	233, 237
312115-0228	SCREW MC6S ISO 4762 M3X16 A280	153, 393, 523
312115-0287	SCREW MC6S ISO 4762 M4X8 A280	23, 89, 401, 593
312115-0291	SCREW MC6S ISO 4762 M4x12 A280	81, 399, 509, 603, 607, 627, 629, 631, 683, 719
312115-0293	SCREW MC6S ISO 4762 M4X16 A280	401
312115-0299	SCREW MC6S ISO 4762 M4X30 A280	315, 319, 323, 327, 333, 337, 341, 345, 603, 607
312115-0323	SCREW MC6S ISO 4762 M5X8 A280	275, 507
312115-0325	SCREW 5X10 A4 80	359, 361
312115-0327	SCREW MC6S ISO 4762 M5X12 A280	23, 95, 159, 167, 213, 267, 273, 275, 411, 455, 459, 469, 473, 477, 547, 551, 555, 623, 629, 631, 633, 635, 639
312115-0329	SCREW MC6S ISO 4762 M5x16 A280	23, 141, 233, 547, 551, 555, 683, 687, 689, 693, 695
312115-0331	SCREW MC6S ISO 4762 M5X20 A280	315, 319, 323, 327, 333, 337, 341, 345
312115-0333	SCREW MC6S ISO 4762 M5x25 A280	19
312115-0337	SCREW MC6S ISO 4762 M5X35 A280	71
312115-0339	SCREW MC6S ISO 4762 M5X40 A280	295
312115-0362	SCREW MC6S ISO 4762 M6X8 A280	583
312115-0364	SCREW MC6S 6x10 A4 80	255, 439, 479
312115-0366	SCREW MC6S ISO 4762 M6X12 A280	93, 141, 261, 295, 359, 361, 605, 609, 615, 617, 619, 687, 689, 693, 695
312115-0368	SCREW MC6S ISO 4762 M6x16 A280	255, 425, 427, 429, 581, 601, 669, 673
312115-0370	SCREW MC6S ISO 4762 M6x20 A280	399, 413, 479
312115-0372	SCREW MC6S ISO 4762 M6x25 A280	171, 183, 185, 227, 289, 401, 561, 565, 567

Part No	Description	Page No
312115-0374	SCREW MC6S ISO 4762 M6x30 A280	173, 439, 565, 567
312115-0376	SCREW MC6S ISO 4762 M6x35 A280	357, 561, 605, 609
312115-0380	SCREW MC6S ISO 4762 M6X50 A280	401, 547, 551, 555
312115-0449	SCREW MC6S ISO 4762 M8X16 A280	515, 665, 669
312115-0451	SCREW MC6S ISO 4762 M8x20 A280	453, 613
312115-0453	SCREW MC6S ISO 4762 M8X25 A280	437, 451, 535
312115-0455	SCREW MC6S ISO 4762 M8X30 A280	605, 609
312115-0459	SCREW MC6S ISO 4762 M8X40 A280	353
312115-0467	SCREW MC6S ISO 4762 M8X80 A280	575, 593
312115-0495	SCREW MC6S ISO 4762 M10X30 A280	297, 299
312115-0497	SCREW MC6S ISO 4762 M10X35 A280	155
312115-0499	SCREW MC6S ISO 4762 M10X40 A280	241
312115-0501	SCREW MC6S ISO 4762 M10X50 A280	193, 195
312115-0509	SCREW MC6S ISO 4762 M10X90 A280	315, 319, 323, 327, 333, 337, 341, 345, 593
312115-0630	SCREW MC6S ISO 4762 M16X50 A280	155
312121-0220	SLOTTED HEMCS3X6FZB	613
312121-0222	SLOTTED HEMCS3X8FZB	723
312121-0224	SLOTTED HEMCS3X10FZB	705
312121-0226	SLOTTED HEMCS3X12FZB	613
312121-0285	SLOTTED HEAD SCREW MCS 4x6 FZB	705, 725, 727
312121-0289	SLOTTED HEAD SCREW MCS 4x10 D60	613, 725, 727
312121-0321	SLOTTED HEMCS5X6FZB	713
312121-0323	SLOTTED HEMCS5X8FZB	715, 717, 719, 723
312121-0325	SLOTTED HEMCS5X10FZB	713
312121-0327	SLOTTED HEMCS5X12FZB	613, 689
312121-0339	SLOTTED HEMCS5X40FZB	719
312121-0364	SLOTTED HEMCS6X10FZB	183, 713, 719
312121-0366	SLOTTED HEMCS6X12FZB	713, 719
312121-0370	SLOTTED HEMCS6X20FZB	723, 733
312122-0287	SLOTTED CHEESE HEAD ISO 1207 M4X8 MSGFN	719
312122-0291	SLOTTED CHEESE HEAD ISO 1207 M4X12 MSGFN	705
312125-0220	SLOTTED HEMCS3X6RFR	103, 207, 213, 433
312125-0222	SLOTTED CHEESE HEAD ISO 1207 M3x8 RFR	91, 173, 315, 319, 323, 327, 333, 337, 341, 345, 511, 513, 629, 631, 649, 681
312125-0226	SLOTTED CHEESE HEAD ISO 1207 M3X12 RFR	189, 363, 365
312125-0230	SLOTTED CHEESE HEAD ISO 1207 M3X20 RFR	21, 73, 99, 101, 189, 511, 513, 517, 519
312125-0285	SLOTTED HEAD SCREW MCS 4x6 RFR	61, 91, 97, 117, 245, 261, 363, 365, 531, 533
312125-0287	SLOTTED CHEESE HEAD ISO 1207 M4X8 RFR	73, 149, 189, 401, 423, 455, 491, 505, 507, 511, 513, 531, 533, 561, 603, 605, 607, 609, 615, 617, 619, 719
312125-0289	SLOTTED HEMCS4X10RFR	425, 427, 575, 595, 599, 681
312125-0291	SLOTTED CHEESE HEAD ISO 1207 M4x12 RFR	301, 507
312125-0293	SLOTTED CHEESE HEAD ISO 1207 M4X16 RFR	239, 591, 657
312125-0295	SLOTTED CHEESE HEAD ISO 1207 M4X20 RFR	591
312125-0299	SLOTTED CHEESE HEAD ISO 1207 M4X30 RFR	207, 517, 519
312125-0323	SLOTTED CHEESE HEAD ISO 1207 M5X8 RFR	77, 79, 81, 103, 123, 125, 459
312125-0325	SLOTTED HEMCS5X10RFR	99, 101, 173
312125-0327	SLOTTED CHEESE HEAD ISO 1207 M5X12 RFR	193, 195, 689, 699, 701
312125-0331	SLOTTED CHEESE HEAD ISO 1207 M5X20 RFR	125, 279
312125-0333	SLOTTED CHEESE HEAD ISO 1207 M5x25 RFR	613
312125-0341	SLOTTED HEMCS5X50RFR	249
312125-0364	SCREW,SLOTTED HEAD MCS 6x10 RFR	173, 185, 703
312125-0366	SLOTTED CHEESE HEAD ISO 1207 M6X12 RFR	29, 145, 171, 227, 585
312125-0368	SLOTTED CHEESE HEAD ISO 1207 M6X16 RFR	235
312125-0370	SLOTTED CHEESE HEAD ISO 1207 M6X20 RFR	249
312125-0376	SLOTTED CHEESE HEAD ISO 1207 M6X35 RFR	705
312132-0284	SLOTTED PAN HEAD ISO 1580 M4X5 MSGFN	141
312132-0287	SLOTTED PAN HEAD ISO 1580 M4X8 MSGFN	705
312132-0289	SLOTTED PAN HEAD ISO 1580 M4X10 MSGFN	429
312132-0323	SLOTTED PAN HEAD ISO 1580 M5X8 MSGFN	317, 321, 325, 329, 335, 339, 343, 347, 351, 353
312145-0226	SLOTTED HEMFS3X12RFR	371, 373, 379, 381
312145-0287	SLOTTED HEMFS4X8RFR	91, 371, 373, 375, 377, 379, 381, 383, 385, 593, 681
312155-0287	Screw MF6S 4x8	397
312155-0291	SCREW MF6S DIN 7991 M4x12 A480	393, 509, 669
312155-0295	SCREW MF6S DIN 7991 M4x20 A480	351, 353
312155-0327	SCREW MF6S DIN 7991 M5x12 A280	367, 369
312155-0329	SCREW MF6S DIN 7991 M5x16 A280	43, 47, 49, 57, 63, 361
312155-0366	SCREW MF6S DIN 7991 M6x12 A280	315, 319, 323, 327, 333, 337, 341, 345, 355, 357, 393, 407
312155-0368	SCREW MF6S DIN7991 M6X16 A280	401
312155-0370	SCREW MF6S DIN 7991 M6X20 A280	145, 233, 235, 399, 411
312155-0374	SCREW MF6S6X30RFR	169
312155-0376	SCREW MF6S DIN 7991 M6X35 A280	505, 641, 643, 645, 647
312155-0449	SCREW MF6S DIN 7991 M8X16 A280	393, 515, 535
312155-0453	SCREW MF6S DIN 7991 M8x25 A280	199
312180-0489	HEX.SOCKET HEAD SHOULD.ISO 7379 M8x16	667
312180-0534	REAMED BOLT	145
312311-0327	SET SCREW FULL DOGPOINT ISO 4028 M5X12	241
312311-0495	SET SCREW FULL DOGPOINT ISO 4028 M10X30	41
312311-0624	STOP SCREW T6SS16X30FZB	197, 661
312318-0283	SET SCREW CUP POINT ISO 4029 M4X4 RFR	505
312318-0287	SET SCREW CUP POINT ISO 4029 M4x8 RFR	559, 589, 597
312318-0320	STOPPSKRUV SK6SS5X5RFR	359, 361

Part No	Description	Page No
312318-0323	SET SCREW CUP POINT ISO 4029 M5X8 RFR	37
312318-0327	SET SCREW CUP POINT ISO 4029 M5X12 RFR	23
312318-0362	SET SCREW CUP POINT ISO 4029 M6x8 RFR	15, 569
312318-0364	STOP SCREW SK6SS6X10RFR	149, 199, 575
312318-0366	SET SCREW CUP POINT ISO 4029 M6x12 RFR	151, 547, 551, 555, 577, 579, 595, 599
312318-0368	SET SCREW CUP POINT ISO 4029 M6x16 RFR	575, 605, 609
312318-0443	SET SCREW CUP POINT ISO 4029 M8X8 RFR	313, 667
312318-0447	SET SCREW CUP POINT ISO 4029 M8X12 RFR	351, 353, 363, 365
312318-0449	SET SCREW COP POINT ISO 4029 M8X16 RFR	155
312318-0453	SET SCREW CUP POINT ISO 4029 M8X25 RFR	233, 235
312502-0120	DRIVE SCREW ROUND HEAD SMS 1549 KDS 0X5	159, 213, 275, 481, 483, 489, 491
312503-0275	DRIVE SCREW RXK POZ.B6x6,5 FZB	615, 617, 619
312601-0310	NUT M6M3FZB	705
312601-0312	NUT M6M 4-8 FZB	705
312601-0312	NUT M6M4FZB	423
312601-0314	NUT M6M5FZB	705
312601-0316	NUT M6M 6-8 FZB	561, 705
312605-0310	NUT,HEXAGON M6M 3 A2 80	25, 27, 73, 99, 101, 207, 511, 513, 517, 519, 649
312605-0310	NUT,HEXAGON,M6M3 RFR	423
312605-0312	NUT,HEXAGON,M4 RFR	61, 117, 141, 153, 175, 207, 245, 411, 511, 513, 517, 519, 523, 527, 529, 591, 629, 631, 635, 639, 671, 681
312605-0314	NUT,HEXAGON,M6M5 Stainless	47, 49, 57, 61, 63, 113, 121, 123, 131, 193, 195, 249, 413, 431, 489, 527, 529, 533, 603, 607, 611, 625, 629, 631
312605-0316	NUT,HEXAGON A280 M6M6	17, 21, 29, 35, 37, 39, 45, 51, 53, 71, 111, 131, 141, 143, 153, 159, 165, 169, 187, 189, 199, 203, 213, 227, 233, 249, 251, 255, 261, 269, 275, 423, 459, 489, 505, 507, 509, 511, 513, 523, 531, 533, 547, 551, 555, 559, 589, 605, 609, 621, 639, 659, 667, 681, 687, 689, 693, 695, 705
312605-0318	NUT,HEXAGON,M8 RFR	15, 21, 29, 37, 71, 93, 97, 113, 117, 119, 121, 123, 125, 127, 129, 137, 141, 143, 145, 147, 167, 227, 229, 237, 247, 253, 261, 271, 291, 293, 393, 449, 451, 455, 509, 511, 513, 531, 533, 547, 551, 555, 605, 609
312605-0320	NUT,HEXAGON,M10 A280	97, 125, 149, 457, 503, 603, 607
312605-0322	NUT,HEXAGON,M12 RFR	245, 315, 319, 323, 327, 333, 337, 341, 345, 563, 583
312605-0324	NUT,HEXAGON,M16 A280	197, 233, 237, 583, 661
312605-0326	NUT,HEXAGON,M20 A280	393
312625-0316	NUTS,HEXAGON,M6	65, 67, 511, 513
312625-0318	NUTS,HEXAGON,M8	93, 147, 565, 567
312625-0320	NUTS,HEXAGON,M10	23, 313
312625-0322	NUTS,HEXAGON,M12	315, 319, 323, 327, 333, 337, 341, 345
312630-0320	NUTS,HEXAGON,M10X1	603, 607
312705-0312	NUT,DOMED CAP,HEXAGON,M4	267, 273, 275, 469, 473, 629, 631, 633, 635
312705-0314	NUT,DOMED CAP,HEXAGON,M5	59, 131, 625
312705-0316	NUT,DOMED CAP,HEXAGON,M6	23, 25, 27, 31, 33, 65, 67, 151, 259, 269, 579, 597
312705-0320	NUT,DOMED CAP,HEXAGON,M10	41, 43
312805-0100	NUT,ROUND,WITH SLOTS,M10x0,75	359, 361
312805-0108	NUT,ROUND,WITH SLOTS,M40x1,5	399
312812-0310	NUT,HEXAGON,LOCK,WITH NYLON,M3	363, 365
312812-0312	LOCK-NUT,HEXAGON,WITH NYLONINSERT,M4	267, 273, 595, 599, 603, 607
312812-0314	NUT,HEXAGON,LOCK,WITH NYLON,M5	279
312812-0316	NUT,HEXAGON,LOCK,WITH NYLON INSERT,M6	29, 139, 167, 393, 399, 401, 411, 507, 571, 683
312812-0320	LOCK-NUT,HEXAGON,WITH NYLON INSERT,M10	241
312812-0322	LOCK-NUT,HEXAGON,WITH NYLON INSERT,M12	595, 599
312911-0118	THREADED I M6X1,5D	305, 417
312911-0125	THREADED INSERTS M8X1,0D	305, 417
312911-0126	THREADED I M8X1,5D	305, 417
312923-0122	NUTS,BLIND RIVET M5X11,6	699
315101-0136	WASHER BRB 4,3x8 FZB	725, 727
315101-0136	WASHER BRB4,3X8FZB	423
315101-0146	WASHER BRB 5,3x10 FZB	629, 631, 705, 713, 715, 717, 719, 723, 733
315101-0153	WASHER BRB 6,4x12 FZB	571, 693, 705, 723, 725, 727
315101-0165	WASHER BRB 8,4x16 FZB	147
315103-0153	WASHER,PLAIN ROUND 6,4x12	713
315105-0124	WASHER,PLAIN ROUND 3,2x6	21, 73, 99, 101, 153, 189, 207, 233, 237, 393, 423, 511, 513, 517, 519, 523, 681
315105-0136	WASHER,PLAIN ROUND 4,3x8 Stainless	61, 73, 89, 117, 141, 207, 239, 245, 267, 273, 275, 315, 319, 323, 327, 333, 337, 341, 345, 399, 403, 405, 411, 491, 517, 519, 547, 551, 555, 575, 581, 603, 607, 629, 631, 633, 635, 657, 671, 681, 719
315105-0146	WASHER,PLAIN ROUND 5,3x10 Stainless	15, 29, 47, 49, 57, 61, 63, 71, 99, 101, 125, 131, 153, 173, 233, 267, 273, 275, 279, 289, 291, 293, 295, 363, 365, 393, 399, 403, 405, 413, 455, 469, 473, 477, 489, 523, 527, 529, 531, 533, 547, 551, 555, 559, 561, 583, 589, 591, 593, 595, 599, 613, 623, 629, 631, 633, 635, 655, 665, 681, 689, 699, 701
315105-0153	WASHER,PLAIN ROUND 6,4x12 Stainless	21, 25, 27, 41, 61, 65, 67, 89, 149, 151, 153, 165, 167, 169, 171, 187, 189, 227, 245, 249, 255, 259, 261, 269, 275, 289, 291, 293, 355, 357, 359, 361, 363, 365, 367, 369, 371, 373, 375, 377, 379, 381, 383, 385, 393, 399, 401, 403, 405, 407, 411, 413, 415, 423, 433, 455, 459, 461, 479, 489, 505, 509, 527, 529, 531, 533, 535, 547, 551, 555, 559, 561, 575, 579, 581, 585, 589, 595, 599, 601, 603, 605, 607, 609, 611, 621, 625, 627, 639, 655, 659, 665, 669, 671, 673, 681, 687, 689, 693, 695,

Part No	Description	Page No
		705, 713, 735
315105-0156	WASHER BRB 6,7x14 RFR	151, 531, 533, 565, 567, 579, 597, 625, 659
315105-0165	WASHER,PLAIN ROUND 8,4x16 Stainless	29, 37, 41, 71, 93, 125, 141, 145, 167, 175, 229, 237, 255, 271, 289, 291, 293, 297, 299, 313, 315, 319, 323, 327, 335, 339, 343, 347, 351, 353, 355, 357, 359, 361, 363, 365, 393, 399, 401, 407, 411, 415, 435, 455, 459, 505, 509, 515, 523, 525, 531, 533, 535, 547, 551, 555, 563, 565, 567, 573, 575, 577, 605, 609, 611, 627, 659, 665, 669
315105-0171	WASHER,PLAIN ROUND 10x18	407, 411, 415
315105-0173	WASHER,PLAIN ROUND 10,5x22 STAINLESS	17, 41, 97, 149, 233, 235, 297, 299, 315, 319, 323, 327, 333, 337, 341, 345, 351, 353, 393, 413, 449, 455, 457, 503, 535, 547, 551, 555, 595, 599, 673
315105-0178	WASHER,PLAIN ROUND 13x24	145, 245, 249, 315, 319, 323, 327, 333, 337, 341, 345, 351, 353, 399, 665, 681
315105-0186	WASHER,PLAIN ROUND 17x30	393, 561, 583, 669
315105-0191	WASHER BRB20X36RFR	393, 413
315111-0153	WASHER TBRB6,4X12FZB	547, 551, 555
315111-0173	WASHER TBRB10,5X22FZB	667
315111-0186	WASHER TBRB 17x30 FZB	233, 235
315115-0153	WASHER TBRB 6,4x12 Stainless	399, 401, 429, 431
315115-0165	WASHER TBRB 8,4x16 Stainless	15, 141, 145, 261, 393
315115-0173	WASHER TBRB 10,5x22 Stainless	29, 145, 155, 241
315115-0178	WASHER TBRB 13x24 Stainless	595, 599
315125-0153	WASHERS,PLAIN ROUND,CHAMFERED 6,4X22X4	55, 93, 95, 131, 143, 159, 169, 227, 255, 259, 413, 461, 465, 481, 483, 531, 533, 565, 567, 595, 599
315125-0165	WASHERS,PLAIN ROUND,CHAMFERED 8,4X26X5	43, 73, 113, 121, 245, 393, 407, 613, 639, 663
315202-0119	O-RING 25,1x1,6	127, 129, 275
315202-0204	O-RING 5,3x2,4	21
315202-0213	O-RING 15,3x2,4	411
315202-0220	O-RING 32,2x3	407
315202-0223	O-RING 39,2x3	359, 361
315202-0301	O-RINGS 49,5X3	407
315202-0304	O-RINGS 64,5X3	79, 407
315202-0308	O-RINGS 84,5X3	21, 77, 81, 399
315202-0312	O-RINGS 104,5X3	241
315202-0335	O-RINGS 239,3X5,7	55
315204-0103	O-RINGS 5,1X1,6	249
315204-0109	O-RINGS 11,1X1,6	15
315204-0116	O-RINGS 18,1X1,6	291, 293
315204-0119	O-RINGS 25,1X1,6	91
315204-0207	O-RINGS 8,3X2,4	459
315204-0213	O-RING 15,3x2,4 VITON	117
315204-0214	O-RING 17,3x2,4 VITON	91
315204-0215	O-RING 19,2x3 VITON	77, 79, 81, 103
315204-0221	O-RING 34,2x3 VITON	15
315204-0301	O-RINGS 49,5X3	79, 103
315204-0310	O-RINGS 94,5X3	103
315204-0317	O-RINGS 129,5X3	117, 123
315220-0198	SEAL RING V-50S	91, 261
315221-0147	SEALING RINGS,TYPE A 20X47X7	289, 295
315221-0175	SEALING RINGS,TYPE A 35X47X7	411
315221-0194	SEALING RINGS,TYPE A 45X72X8	297, 299
315229-0101	GASKET 40531-1	143
315229-0102	GASKET 40532-1	93, 143
315229-0103	GASKET	449, 453
315229-0103	GASKET 40533-1	21, 137, 143, 227, 229, 231, 247
315229-0104	GASKET 40534-1	247
315229-0105	GASKET 40535-1	143, 247, 251
315229-0107	GASKET 40537-1	247
315229-0203	GASKET	117, 127, 129
315229-0204	GASKET	119, 123
315229-0205	GASKET	113, 115, 119, 121, 123
315229-0206	GASKET	113, 119, 121, 125
315233-0101	PLAIN ROUND,NYLON M5	77, 79, 81, 103
315233-0109	PLAIN ROUND,NYLON R1/8"	481, 483
315233-0110	PLAIN ROUND,NYLON R1/4"	491
315233-0111	PLAIN ROUND,NYLON R3/8"	481, 483
315233-0113	PLAIN ROUND,NYLON R1/2"	227, 481, 483, 485, 491, 493
315234-0109	PLAIN ROUND,COPPER R1/8",M10 .	317, 321, 325, 329, 335, 339, 343, 347
315234-0113	PLAIN ROUND,COPPER R1/2",M20	111
315237-0110	PLAIN ROUND,ALUMINIUM R1/4"	141, 193, 195
315401-0165	WASHER FBH8,2FZB	355
315402-0136	WASHER FBB4,1RFR	81
315402-0156	WASHER FBB6,5RFR	357
315402-0173	WASHER FBB 10,2 RFR	241
315410-0100	WASHERS,LOCK 10X13,5	359, 361
315410-0108	WASHERS,LOCK 40X50	399
315701-0168	KEYS,PARALLEL WITH ROUND ENDS 4X4X16	37, 359, 361
315701-0170	KEYS,PARALLEL WITH ROUND ENDS 4X4X20	559, 589
315701-0197	KEYS,PARALLEL WITH ROUND ENDS 5X5X12	289
315701-0199	KEYS,PARALLEL WITH ROUND ENDS 5X5X16	289, 355, 357
315701-0230	KEYS,PARALLEL WITH ROUND ENDS 6X6X16	359, 361
315705-0196	KEYS,PARALLEL WITH ROUND ENDS 5X5X10	255
315705-0201	KEYS,PARALLEL WITH ROUND ENDS 5X5X20	17
315705-0230	KEYS,PARALLEL WITH ROUND ENDS 6X6X16	295
315705-0232	KEYS,PARALLEL WITH ROUND ENDS 6X6X20	39

Part No	Description	Page No
315705-0236	KEYS.PARALLEL WITH ROUND ENDS 6X6X30	393, 411
315705-0241	FLAT WEDGE	393
315705-0269	KEYS,PARALLEL WITH ROUND ENDS 8X7X35	261, 411
315705-0271	KEYS,PARALLEL WITH ROUND ENDS 8X7X45	411
315705-0307	KEYS,PARALLEL WITH ROUND ENDS 10X8X70	315, 319, 323, 327, 333, 337, 341, 345, 399, 411
315705-0330	FLAT WEDGE	399
315742-0116	RETAINING RINGS 20	569
315742-0122	RETAINING RINGS 30	261
315751-0103	RETAINING RINGS FOR SHAFT 6	39, 65, 67, 261, 267, 511, 513
315751-0108	RETAINING RINGS FOR SHAFT 11	565, 567
315751-0109	RETAINING RINGS FOR SHAFT 12	153, 375, 377, 383, 385, 505, 523
315751-0112	RETAINING RINGS FOR SHAFT 15	297, 299, 351, 353, 371, 373, 375, 377, 379, 381, 383, 385, 503, 559, 589
315751-0116	RETAINING RINGS FOR SHAFT 20	289, 295, 393, 407
315751-0119	RETAINING RINGS FOR SHAFT 25	393, 401, 559, 589
315751-0127	RETAINING RINGS FOR SHAFT 40	315, 319, 323, 327, 333, 337, 341, 345
315753-0117	RETAINING RINGS FOR HOLE 22	359, 361
315753-0119	RETAINING RINGS FOR HOLE 25	315, 319, 323, 327, 333, 337, 341, 345
315753-0122	RETAINING RING FOR HOLE 30	151, 579, 597
315753-0123	RETAINING RINGS FOR HOLE 32	359, 361
315753-0124	RETAINING RINGS FOR HOLE 35	35, 39, 51, 53, 559, 575, 589
315753-0130	RETAINING RINGS FOR HOLE 47	295, 315, 319, 323, 327, 333, 337, 341, 345, 393
315753-0132	RETAINING RINGS FOR HOLE 52	393
315754-0113	LOCKING WAE 15	77, 79, 81, 103
315755-0105	RETAINING RINGS,RADIAL ASSEMBLY 3,2	59
315755-0106	RETAINING RINGS,RADIAL ASSEMBLY 4	167, 639
315755-0108	RETAINING RINGS,RADIAL ASSEMBLY 6	597
315755-0801	RETAINING RINGS,RADIAL ASSEMBLY 8	199, 531, 533
316810-0106	PIPE-CLIPS,FOR SINGLE PIPE,ONE SIDE 8	459
318800-0104	HANDLE,SPHERICAL KNOB,INT.THRE.,D.30-M8	531, 533
318860-0106	HANDL,KNOB,ADJUST,HI.THRE.TAP,M5 20X11.5	241
321101-0273	FLANGE BUS 30F7X30	297, 299
321105-0163	BUSHING 10F7X16X10	667
321105-0173	BUSHING 12F7X18X12	667
321111-0097	BEARING BUSHING WITH FLANGE, 8/12X12	535
321111-0273	Flange Bushing, 18x24x12	393
321111-0302	Flange Bushing, 20x26x15	569
321120-0100	BEARING BUSHING WITHOUT FLANGE,8/10x12	537
321120-0101	BEARING BUSHING WITHOUT FLANGE,6/8X6	537
321120-0102	Bushing, 6x8x10	603, 607
321120-0104	BEARING BUSHING WITHOUT FLANGE,10/12x10	537
321120-0104	Bushing, 10x12x10	21
321120-0111	BEARING BUSHING WITHOUT FLANGE,12/14X15	523
321120-0111	Bushing, 12x14x15	153
321120-0113	BEARING BUSHING WITHOUT FLANGE,12/14X25	505
321129-0104	THRUST WASHER 12/24X1,5	505
321302-0298	BALL BEARING 8X22X7	359, 361
321308-0204	BALL BEARING 20X42X12	289, 605, 609
321308-0205	BALL BEARING 25X47X12	559, 589
321313-0100	BALL BEARING 10x30x9	151, 579, 597
321313-0101	BALL BEARING 12x32x10	359, 361
321313-0102	BALL BEARING 15x35x11	149, 199, 547, 551, 555, 559, 561, 575, 583, 589, 595, 599, 669
321313-0104	BALL BEARING 20x47x14	295
321330-0108	BALL BEARING,ANGULAR 40X80X30,2	399
32544-0000	INSULATION NUT	375, 377, 383, 385
342203-0120	HEXAGON NIPPLE	447
342206-0109	BUSHING	117
342245-0102	T-PIPE	249
342700-0109	NIPPLES,HEXAGON,EXT.G-THREAD G1/8"-G1/8"	399
342700-0113	NIPPLES,HEXAGON,EXT.G-THREAD G1/2"-G1/2"	123, 139, 491
342700-0115	NIPPLES,HEXAGON,EXT.G-THREAD G3/4"-G3/4"	433
342700-0205	NIPPLES,HEXAGON,EXT.G-THREAD G1/2"-G1/4"	491
342701-0201	BUSHING,INT./EXT.G-THREAD G1/4"-G1/8"	249
342701-0202	BUSHING,INT./EXT.G-THREAD G3/8"-G1/8"	481, 483
342701-0203	BUSHING RNI3/8"-1/4"	139
342701-0205	BUSHING,INT./EXT.G-THREAD G1/2"-G1/4"	223
342701-0206	BUSHING,INT./EXT.G-THREAD G1/2"-G3/8"	429
342701-0209	BUSHING,INT./EXT.G-THREAD G3/4"-G3/8"	139
342707-0110	SLEEVE,INTERNAL THREAD G1/4"	433
342713-0209	PLUG,EXT.G-THREAD,HEXAGON SOCKET G1/8"	137, 141
342713-0210	PLUG,EXT.THREAD,HEXAGON SOCKET 1/4"Brass	159, 213
342713-0211	PLUG,EXT.G-THREAD,HEXAGON SOCKET G3/8"	139, 161, 163, 213, 489, 621
342713-0213	PLUG,EXT.G-THREAD,HEXAGON SOCKET G1/2"	111, 431
342715-0100	PLUG	161
342715-0102	Blind plug 6 mm	621
342715-0102	PLUG	161, 163, 213, 489
342715-0103	BLIND PLUG	161, 163, 213, 489
342715-0103	Blind plug 8 mm	621
342716-0202	REDUCER 4-6	527
342716-0203	REDUCER 6-8	161, 163, 213
342716-0209	REDUCER 8-12	193, 195, 209, 211
342716-0211	REDUCER 12-14	209, 211
342720-0103	STRAIGHT CONNECTION GA-8-G1/8"	291, 293

Part No	Description	Page No
342720-0114	STRAIGHT CONNECTION GA-15-G1/2"	481, 483, 485, 493
342720-0119	STRAIGHT CONNECTION GA-22-G3/4"	431
342722-0197	STRAIGHT COUPLING	39, 65, 67, 507
342722-0198	STRAIGHT COUPLING, D=4 mm - M5	603, 607
342722-0202	PIPE COUPLING 1/8" D=6mm	61, 73, 113, 121, 527, 529
342722-0202	STRAIGHT COUPLING, D=6mm - G1/8"	393
342722-0203	STRAIGHT COUPLING	93, 159, 219, 247, 249, 297, 299
342722-0204	STRAIGHT COUPLING, D=8 mm - G1/8"	593, 595, 599
342722-0205	STRAIGHT COUPLING D=8-R1/4"	193, 195, 297, 299, 435, 437, 451
342722-0205	STRAIGHT COUPLING, D=8 mm - R1/4"	399
342722-0206	STRAIGHT COUPLING D=8-R3/8"	431, 433
342722-0206	STRAIGHT COUPLING, D=8 mm - R3/8"	573
342722-0209	STRAIGHT COUPLING D=12-R1/4"	159
342725-0102	STRAIGHT PIPE CONNECTION GAI 6-G1/8"	527, 529
342725-0114	STRAIGHT PIPE CONNECTION GAI 15-G1/2"	209, 211, 219
342728-0103	PIPE COUPLING	23, 41
342730-0114	ELBOW CONNECTION WA-15-1/2"	491
342732-0099	ELBOW PIPE JOINT	507
342732-0102	ELBOW PIPE JOINT	17, 21, 73, 87, 99, 101, 115, 249, 291, 293, 529
342732-0103	ELBOW PIPE JOINT	43, 87, 159, 219, 249, 297, 299
342732-0103	ELBOW PIPE JOINT,Ext.thread,D=6 mm G1/4	605, 609
342732-0104	ELBOW PIPE JOINT	159, 213, 297, 299, 433, 437, 453, 489, 491
342732-0104	ELBOW PIPE JOINT,Ext.thread,D=8 mm G1/4	399, 401, 403, 405, 593, 659
342732-0105	ELBOW PIPE D8-R3/8"	161, 489
342732-0109	ELBOW PIPE JOINT	87, 213, 489
342732-0110	ELBOW PIPE JOINT	161, 163, 213, 489, 493
342732-0110	ELBOW PIPE JOINT,Ext.thread,D=12 mm G3/8	621
342732-0801	ELBOW PIPE JOINT,Ext.thread,D=8 mm G1/8	367, 369, 399
342733-0114	ELBOW CONNECTION WI-15-G1/2"	123
342735-0103	Elbow pipe joint 8x8 mm	593
342735-0109	Elbow pipe joint 12x12 mm	621
342738-0221	ELBOW CONNECTION EVW,EXT 15-G1/2"	117
342742-0102	T-COUPLING,ADJUST,F.PLASTIC TUBE 6-G1/8"	99, 101
342742-0104	T-COUPLING,ADJUST,F.PLASTIC TUBE 8-G1/4"	593
342748-0102	T-CONNECTION	165, 209, 211, 219
342748-0103	T-CONNECTION 8 mm	593, 599
342748-0109	T-CONNECTION	159, 209, 211, 489
342748-0109	T-CONNECTION 12 mm	621
342748-0110	T-CONNECTION	209, 211, 219
342751-0215	L-PIPE CONNECTION LE-12-R3/8"	139
342767-0100	BULKHEAD CONNECTOR G1/8"	173
342767-0104	BULKHEAD CONNECTOR G1/4"	193, 195, 215, 223
342768-0102	BULKHEAD LEAD-IN	193, 195
342768-0109	BULKHEAD LEAD-IN	193, 195
342770-0107	HOSE COUPLING	527, 529
342772-0113	ELBOW FITTING	527, 529
342772-0122	ELBOW FITTING	213
342797-0122	BANJO CONNECTION,RINGPIECE 6-1/4"	117
342840-0103	CLAMPING PIECE	87, 93, 95, 99, 101, 105, 107, 119, 229
342840-0105	CLAMPING PIECE	73, 117, 123
342840-0107	CLAMPING PIECE	193, 195
342840-0108	CLAMPING PIECE	117
342844-0303	PIPE ELBOW 90	251
342850-0103	GASKET	229
342850-0107	GASKET	193, 195
342850-0304	GASKET	87, 95, 99, 101, 105, 107, 119
342850-0305	GASKET	73
342850-0405	GASKET	117, 123
342850-0408	GASKET	117
342901-0101	HOSE NIPPLE,EXT. THREADED G1/8"-7	249
342901-0105	HOSE NIPPLE,EXT. THREADED G1/2"-12	123, 193, 195, 227, 445, 481, 483, 485
342920-0121	STRAIGHT COUPLING,EXT.THREADED 8/6-R1/8"	41
342920-0122	STRAIGHT COUPLING,EXT.THREADED 8/6-R1/4"	215
342920-0132	STRAIGHT COUPL.,EXT.THREADED 10/8-R1/4"	223
342921-0113	STRAIGHT COUPLING,EXT.THREADED 6/4-G1/8"	173
342921-0121	STRAIGHT COUPLING,EXT.THREADED 8/6-G1/8"	23
342921-0124	STRAIGHT COUPLING,EXT.THREADED 8/6-G1/2"	481, 483
342930-0123	ELBOW 90 COUPL.,EXT.THREAD 8/6-R3/8"	429
342930-0133	ELBOW 90 COUPL.,EXT.THREAD 10/8-R3/8"	481, 483
342931-0121	ELBOW 90 COUPL.,EXT.THREAD 8/6-G1/8"	23, 41
342980-0112	BANJO-CONNECTION,RING 6/4-M6	261
342980-0304	BANJO-HOLLOW BOLT COUPL,EXT.THR.01-G1/4"	117
342980-0314	BANJO-HOLLOW BOLT COUPL,EXT.THR.02-G1/4"	117
342991-0100	HOSE CLIP,WORM DRIVE TYPE 10-13	445, 459
342991-0101	HOSE CLIP,WORM DRIVE TYPE (13)-16	123, 193, 195, 245, 249, 425, 427, 429, 431, 433
342991-0102	HOSE CLIP,WORM DRIVE TYPE (16)-19	227, 455
342991-0103	HOSE CLIP,WORM DRIVE TYPE (19)-23	251, 737
342991-0104	HOSE CLIP,WORM DRIVE TYPE (23)-27	219, 245
342991-0105	HOSE CLIP,WORM DRIVE TYPE (27)-30	193, 195
342991-0106	HOSE CLIP,WORM DRIVE TYPE (30)-36	251
342991-0108	HOSE CLIP 38-50MMRFR	443
342991-0109	HOSE CLIP,WORM DRIVE TYPE (48)-50	113
342991-0110	HOSE CLIP,WORM DRIVE TYPE (54)-63	245, 251
342991-0111	HOSE CLIP,WORM DRIVE TYPE (63)-73	111
342991-0114	HOSE CLIP,WORM DRIVE TYPE (93)-110	241

Part No	Description	Page No
343421-0103	FLANGE	281
346800-0110	SILENCER FILTER R1/4"	87
351120-0126	CABLE SIHF 2X4	507
351120-0165	CABLE SIHF 4G2,5	131
351120-0168	CABLE SIHF 4G10	131
351150-0122	CABLE "REPL.BY 351150-431"	549, 553, 557, 737
351150-0122	CABLE OLFLEX N 2x0,75 MM2	433, 435
351150-0166	CABLE OLFLEX 4x4 MM2	189, 449
351150-0403	CABLE OLFLEX 3x0,75 MM2	171, 173, 219, 249, 443, 481, 483, 491, 673, 737
351150-0404	CABLE OLFLEX 4x0,75 MM2	173
351150-0405	CABLE,OLFLEX 5x0,75 MM2	173, 189, 275, 279, 549, 553, 557
351150-0406	CABLE OLFLEX 7x0,75 MM2	189, 439, 549, 553, 557, 611, 625, 627, 655
351150-0407	CABLE OLFLEX 12x0,75 MM2	173, 189
351150-0412	CABLE OLFLEX 3x1,5mm2	131, 187, 189, 547, 549, 551, 553, 555, 557, 611, 613
351150-0413	CABLE OLFLEX 4x1,5mm2	613, 737
351150-0415	CABLE OILFLEX 7x1,5mm2	737
351150-0418	CABLE OLFLEX 4x2,5mm2	131, 189, 255, 261, 429, 435
351150-0419	CABLE OLFLEX 5x2,5mm2	189, 415, 611
351150-0420	CABLE OILFLEX 7x2,5mm2	613
351150-0425	CABLE OILFLEX 25x0,75mm2	171, 173, 189, 479, 613
351150-0426	CABLE,MULTI-CONDUCTOR 5x25 MM2	189
351172-0102	CABLE AWM BLUE 0,75MM2	479
351172-0102	CABLE AWM D.BLUE 0,75mm2	173
351173-0110	CABLE AWM LIGHTBLUE 25MM2	423
351175-0107	CABLE AWM GN/YE 6mm2	585
351175-0109	CABLE AWM GN/YE 16mm2	741
351175-0109	CABLE AWM YELL/GREEN 16mm2	423
351179-0102	CABLE AWM BLACK 0,75mm2	649
351179-0110	CABLE AWM BLACK 25MM2	423
352103-0100	CABLE GLAND STR 9	131, 171, 173, 479, 613
352103-0101	CABLE GLAND ST 9	61, 73, 87, 99, 101, 117, 123, 131, 141, 171, 173, 183, 185, 439, 443, 479, 481, 483, 491, 613, 615, 617, 619, 671
352103-0106	CABLE GLAND ST 11	131, 173, 183, 185, 187, 279, 423, 547, 551, 555, 611, 613, 627, 737
352103-0108	CABLE GLAND ST 13	131, 173, 183, 189, 429, 435, 439, 559, 601, 613, 681, 737
352103-0110	CABLE GLAND STR 16	131, 255, 275, 439, 479, 611, 613, 673
352103-0111	CABLE GLAND ST 16	111, 131, 137, 173, 189, 261, 301, 449
352103-0115	CABLE GLAND STR 21	189, 203, 449
352103-0116	CABLE GLAND ST 21	131, 171, 173, 183, 185, 189, 479, 613
352103-0120	CABLE GLAND STR 29	131, 479
352103-0121	CABLE GLAND ST 29	131, 189, 613
352103-0122	CABLE GLAND ST 36	423
352103-0123	CABLE GLAND ST 42	423, 681
352113-0102	CLIP-STRIP,Black 188x4,8mm	615, 617, 619
352113-0203	ANCHOR TM3S8-M0	261, 425, 427, 595, 599, 681
352113-0204	ANCHOR TM3S25-M	29, 145, 193, 195, 227, 235, 315, 319, 323, 327, 333, 337, 341, 345, 351, 353, 575, 681
352113-0205	ANCHOR TM2S8-C100	149, 455, 507, 511, 513, 531, 533, 561, 603, 605, 607, 609, 615, 617, 619, 705
352113-0206	ANCHOR 25,4x25,4mm ABM100-AT-MO	203
352136-0167	GLAND FITTING	601
353021-0120	FEED THROUGH TERMINAL WDK 2,5	185
353021-0122	DIODE-TERMINAL WTRD 2,5	613, 715
353021-0212	FEED THROUGH TERMINAL WDU 2,5 Beige	733, 739
353021-0213	FEED THROUGH TERMINAL WDU 4 Beige	183, 185, 613
353021-0214	FEED TRHOUGH TERMINAL WDU 6 Beige	729, 731
353021-0216	BY PASS TERMINAL WDU 2,5 Blue	173, 705, 715, 717
353021-0216	FEED THROUGH TERMINAL WDU 2,5 Blue	439, 479
353021-0219	BY PASS TERMINAL WDU 35	701
353021-0223	BY-PASS TERMINAL WDU 6	717
353021-0226	BY-PASS TERMINAL WDU 35	701
353021-0302	TERMINAL,TRIPLE-LEVEL, DLD 2,5/35 PA	171, 173, 183, 613
353022-0002	NEUTRAL TERMINAL WNT 4	733
353024-0204	EARTH TERMINAL WPE 2,5	183, 185, 479, 613, 733, 739
353024-0205	EARTH TERMINAL WPE 4	171, 173, 183, 185, 439, 479, 613
353024-0206	EARTH TERMINAL WPE 6	723, 733
353024-0209	EARTH TERMINAL WPE 35	423, 701, 733
353031-0201	END BRACKET EW35	479
353031-0203	END BRACKET WEW 35/2	183, 185, 439, 613, 701, 705, 715, 717, 729, 731, 733, 739
353032-0004	END PLATE WAP 2,5-10 Beige	613, 733
353032-0005	END PLATE WAP 2,5-10 Blue	715
353032-0010	END PLATE WAP	185
353032-0302	END PLATE WAP	171, 173, 183, 613
353033-0104	END PLATE WHP 2,5-10 BLUE	733
353033-0106	PARTITION WTW 2,5-10 BLUE	173
353034-0030	BRIDGE CONLECK WQV 2,5/10	185, 439, 479, 715, 717, 733
353034-0031	BRIDGE CONNECTOR WQV 4/10	185, 613
353034-0039	BRIDGE CONN. WQV 4/4	185, 613
353034-0401	BRIDGE CONLECK Q2	171, 613
353034-0402	BRIDGE CONLECK Q3	183
353034-0404	BRIDGE CONLECK Q10	171, 173, 183, 613
353041-0001	RAIL 10x3mm SSCH	733
353041-0106	HOLDER ZB35 K 5026.8	733

Part No	Description	Page No
353042-0005	RAIL TS 35/7.5	423, 701, 705, 713, 715, 717, 719, 723, 733, 739
353042-0010	BUSBAR HÝLLARE	729, 731
353042-0012	ADJUSTMENTPLATTA	729, 731
353042-0013	PROTECTIVE CASING	729, 731
353042-0014	BUSBAR ADA ADAPTER	729, 731
353042-0015	BUSBAR ADAPTER	729, 731
353042-0016	CONNECTIONSADAPTER	729, 731
353042-0019	SIDE GUARD	729, 731
353101-0122	CABLE SHOE	625
353101-0123	CABLE SHOE 0,5-1,5mm2 Red	627
353101-0153	CABLE SHOE 4-6mm2 Yellow	585
353104-0132	CABLE SHOEYAV 025 M 5	719
353104-0140	CABLE SHOEYAV 06 M 4*	507
353104-0168	CABLE SHO YAV 16 M6*	423, 741
353105-0200	PIN CABLE SKO A4630SR	423
353240-0002	GLANDS,NORMAL WITHOUT INSERT PG 11	403, 405
353240-0004	GLANDS,NORMAL WITHOUT INSERT PG 16	131
353240-0005	GLANDS,NORMAL WITHOUT INSERT PG 21	613
353240-0006	GLANDS,NORMAL WITHOUT INSERT PG 29	73, 131
353240-0007	GLANDS,NORMAL WITHOUT INSERT PG 36	367, 369
353241-0003	GLANDS,EXTENDED WITHOUT INSERT PG 21	367, 369, 415
353242-0001	GLANDS,HOSE,NORMAL,WITHOUT INSERT PG13,5	429
353242-0004	GLANDS,HOSE,NORMAL,WITHOUT INSERT PG36	367, 369, 415
353243-0001	GLAND,HOSE,EXTENDED,WITHOUT INSERT PG9	29, 99, 101, 119, 121, 125, 131, 145, 153, 173, 393, 413, 415
353243-0002	GLAND,HOSE,EXTENDED,WITHOUT INSERT PG11	97, 173
353243-0003	GLAND,HOSE,EXTENDED WITHOUT INSERT PG11	47, 49, 57, 63, 131, 159, 173
353243-0004	GLANDS,HOSE,EXTEND.WITHOUT INSERT PG13,5	131
353243-0005	GLANDS,HOSE,EXTENDED WITHOUT INSERT PG16	625
353243-0007	GLAND,HOSE,EXTENDED,WITHOUT INSERT PG21	131
353243-0008	GLAND,HOSE,EXTENDED WITHOUT INSERT PG29	403, 405, 415
353245-0004	GLAND,EMC,EXTENDED WITH INSERT PR 22,5	189
353245-0005	GLAND,EMC,EXTENDED WITH INSERT PR 22,5	189, 721
353249-0001	GLANDS,INSERT,SINGLE HOLE,NORMAL 4-6,5mm	429
353249-0008	GLAND,INSERT,SINGLE HOLE,EXTEND.4-6,5	29, 99, 101, 119, 121, 125, 131, 145, 153, 173, 413, 415
353249-0009	GLAND,INSERT,SINGLE HOLE,EXTEND.6,5-9,5	97, 131, 173, 393
353249-0011	GLAND,INSERT,SINGLE HOLE,EXTEND.7-10,5	47, 49, 57, 63, 131, 173
353249-0013	GLAND,INSERT,SINGLE HOLE,EXTEND.9-13	131
353249-0014	GLAND,INSERT,SINGLE HOLE,EXTE.11,5-15,5	625
353249-0028	GLAND,INSERT,MULTI HOLE,NORMAL 2x8	131
353249-0041	GLAND,INSERT,SOLID,NORMAL E151G	403, 405
353249-0060	GLAND,INSERT,MULTI HOLE,NORMAL 2x13	131
353249-0061	GLAND,INSERT,SINGLE HOLE,EXTEND.17-20,5	131
353249-0079	GLAND,INSERT,MULTI HOLE,NORMAL 8x5,5	73
359000-0024	MARKING CO2/4 "-"	209, 211, 213
359000-0025	MARKING CO3/6 "-"	209, 211
359000-0400	MARKING CO2/4"0"	209, 211, 213, 221, 261
359000-0401	MARKING COLLAR 2/4 "1" Yellow	209, 211, 213, 221, 261
359000-0402	MARKING COLLAR 2/4 "2" Yellow	209, 211, 213, 221, 261
359000-0403	MARKING COLLAR PA2/4 "3" Yellow	209, 211, 213, 221
359000-0404	MARKING COLLAR PA2/4 "4" Yellow	209, 211, 213, 221, 261
359000-0405	MARKING CO2/4"5"	209, 211, 213, 221, 261
359000-0406	MARKING COLLAR PA2/4 "6" Yellow	209, 211, 213
359000-0408	MARKING COLLAR PA2/4 "8" Yellow	221
359000-0409	MARKING COLLAR PA2/4 "9" Yellow	221
359000-0500	MARKING COLLAR 3/6 "0" Yellow	209, 211
359000-0501	MARKING COLLAR 3/6 "1" Yellow	209, 211
359000-0502	MARKING CO3/6"2"	209, 211
359000-0503	MARKING CO3/6"3"	209, 211
359000-0765	MARKING CO2/4"P"	209, 211
359000-0800	MARKING CO3/6"A"	209, 211
359000-0815	MARKING CO3/6"P"	209, 211
359000-0818	MARKING CO3/6"S"	209, 211
359000-0820	MARKING CO3/6"U"	209, 211
359005-0010	MARKING SESATS 0-9	131, 429, 435, 439, 449, 479, 559, 601, 613
359005-0050	MARKING SEATS "X"	131, 429, 435, 439, 449, 479, 559, 601, 613
359011-0807	MARKING PLATES 5-FW 1-50	701, 715, 733, 739
359011-0808	MARKING PLATES 5-FW 51-100	733
359011-0809	MARKING PLATES 5-FW 101-150	185, 439, 479, 715, 717, 733
359011-0810	Marking Plates 5-FW 151-200	173, 185, 717
359011-0817	SYMBOL 5-GW (+) 50pc	613
359011-0818	SYMBOL 5-GW (-) 50pc	613
359011-0819	MARKING PLATES 5-GW (Earth)	183, 185, 205
359011-0821	SET OF SIGNS 6-FW 1-50	183, 185, 205, 613, 733
359011-0823	SET OF SIGNS 6-FW 101-150	171, 173, 183, 613, 733
359011-0824	SET OF SIGNS 6-FW 151-200	173, 183, 613
359011-0832	SET OF SIGNS 6-GW (+)	171, 173, 183
359011-0833	SET OF SIGNS 6-GW (-)	171, 173, 183
359011-0834	SET OF SIGNS 6-GW(EARTH)	171, 173, 183, 185
359240-0100	SIGN HOLDER	213, 477, 613, 705, 713
359241-0122	SIGN "Cl.of Steam Barrier"	705
359241-0131	SIGN "LONGITUDINAL SEALING"	713
359241-0133	SIGN "SERVICE SWITCH"	705
359241-0135	SIGN "TRANSVERSAL SEALING"	713
359241-0186	SIGN"LS"	613

Part No	Description	Page No
359241-0201	SIGN "HOUR METER"	705
359241-0431	SIGN "MAIN SWITCH"	477
359241-0482	Sign "PACKAGE COUNTER"	705
359243-0917	SIGN"400V, 50HZ, 100A"	477
359243-0918	SIGN"400V, 60HZ, 100A"	477
359301-0001	SIGN "UP"	203
359301-0005	SIGN "DOWN"	203
359301-0050	SIGN "DROP CHUTE"	203
359301-0090	SIGN "INCHING"	203
359301-0091	SIGN "Inching FFU"	203
359301-0100	SIGN "SPLICING"	625
359301-0101	SIGN	625
359301-0110	SIGN "SHORT STOP"	173, 203, 625
359301-0130	SIGN "LAMPTEST"	203
359301-0170	SIGN "Manual Flushing FFU"	203
359301-0488	SIGN "MATERIAL LOCKING"	627
359301-0519	Sign "TPOP RESET"	203
359705-0004	WARNIG SIGN "CORROSION"	141, 245
359705-0007	WARNING SIGN "HOT SURFACE"	71
359705-0009	WARNING SIGN "SHARP PART"	593
359705-0015	WARNING SIGN "ELECTRIC SHOCK"	141
359710-0002	WARNING SIGN "HOT SURFACE"	317, 321, 325, 329, 335, 339, 343, 347
38087-0000	WASHER	233
38535-0001	LOCKING FINGER	91
400828-0000	SPRING	507
400833-0000	PLUNGER	507
440259-0000	RETAINING RING	571
440650-0000	WASHER	81
440655-0000	RING	77
440659-0000	CYLINDRICAL PIN	81
440660-0000	COMPRESSION SPRING	81
440661-0000	COMPRESSION SPRING	81
440662-0000	COMPRESSION SPRING	79
440663-0000	COMPRESSION SPRING	77, 81
441737-0000	WASHER	47, 49, 57, 63
441739-0000	WASHER	47, 49, 57, 63
441871-0000	PENDULUM SUSPENSION	113, 121
442237-0000	NUT	127, 129
449876-0000	WASHER	103
449939-0001	HEATING ELEMENT 15KW	125
451423-0000	CIRCUIT BOARD	301
451430-0000	CONNECTION HOUS.(MINOR)	125
456123-0000	SUPPORT	125
456139-0000	LOCK PLATE	23
457696-0001	JOINT PIECE	413
466074-0002	SLIDER	413
469095-0000	HOLDER	663
469096-0000	LEG	663
476087-0000	LID	29
476185-0000	VALVE CONE	79, 103
476201-0000	SLEEVE	665
476202-0000	SCREW	665
476243-0000	BOTTOM PLATE	413
476975-0000	WHEEL	411
476978-0000	SHAFT	413
476979-0000	WASHER	413
479234-0000	WASHER	117
479261-0000	NIPPLE	481, 483
484701-0000	SHUTTER	411, 413
486826-0001	SIGN "EMERGENCY STOP"	19, 173, 275, 627, 695
490538-0000	LOCKING PLATE	59
490998-0000	THROTTLE SCREW	127, 129
491227-0000	SLIDER	397
491228-0001	SHAFT	397
491229-0000	BUSHING	397
491230-0000	GRUB SCREW	397
491231-0000	BUSHING	397
491305-0000	CONN.DIAGRAM AIR SUPERH.	125
491929-0000	IMPELLER WHEEL	255
495118-0014	DISTANCE PIPE L=14 MM	613
495377-0000	BUSH	705
495495-0000	COOLING ELEMENT SSR	725, 727
497748-0000	PIN	83, 85, 99, 101
497991-0000	CURVE WHEEL	413
526767-0000	SCREW	413
527898-0100	CONTAINER H2O2	243
527912-0000	NON-RETURN VALVE	249
530551-0000	WASHER	249
530587-0000	WASHER	79
530588-0000	SEAL RING	79, 103
530589-0000	SEAL RING	77, 81, 113, 121
530590-0000	VALVE CONE	77, 81, 113, 121
530591-0000	HOLDER	81
530592-0000	SEAL RING HOLDER	77
530595-0000	SEAL RING HOLDER	77
530597-0000	WASHER	81

Part No	Description	Page No
530598-0000	WASHER	81
530599-0000	RING	81, 113, 121
530775-0000	END PIECE	667
531191-0000	BUSHING	15
531503-0000	SLIDE RAIL	411
531616-0000	HOLDER	269
531731-0000	GASKET	125
532117-0000	CLAMP RING	83
532118-0000	CLAMP RING	85, 99, 101
532349-0000	PLAIN BEARING	113, 121
532655-0000	CAUTION SIGN	257
533169-0000	DIAPHRAGM	77
536913-0000	HUB	503
536917-0000	AXLE PIN	505
537327-0000	SHAFT	503
539212-0000	GASKET	75
540306-0001	COMPONENTS WITHOUT TP-NO	303
540307-0000	PRINTED CIRCUIT BOARD	303
541057-0000	ARM	505
541064-0000	FORK	505
541065-0000	SHAFT	505
541066-0000	ROLL	505
541067-0000	SPRING BRACKET	505
541068-0000	SPRING HOLDER	511, 513
541069-0000	SPRING BRACKET	505
541070-0000	SHAFT	505
541163-0200	CLAMP RING	75
541164-0200	CLAMP RING	75
541165-0000	WASHER	83, 85
541166-0000	WASHER	77
541173-0000	STOP	511, 513
541177-0000	BENDING ROLLER	141
541751-0000	CONICAL BOBBIN	503
543820-0000	SPRING	505
544725-0000	AXLE PIN	511, 513
544726-0000	AXLE PIN	505
544727-0000	AXLE PIN	511, 513
544730-0000	ROLL	505, 511, 513, 531, 533
544894-0000	SPRING	91
544996-0000	SPREADER NOZZLE	119
546929-0000	FILTER	117, 123
548337-0000	BUSHING	291, 293
548770-0001	COAXIAL CABLE L=5000 mm	131
549263-0000	BLOCK	61
549267-0000	LID	61
551922-0000	LABEL,POTENTIOMETER DESIGN CORR.	613
553607-0000	SLEEVE	77, 79, 81
554141-0000	FILTER	61
554142-0000	FILTER HOUSING	61
554162-0000	SCREW	83, 85
554585-0000	STUD SCREW	61
555458-0000	SEALING WASHER	81
556109-0000	CYLINDER HOUSING	103
556133-0000	SEALING WASHER	79, 103
556691-0000	END SECTION	103
556692-0000	PISTON	103
556693-0100	CYL.CHANGE-OVER V. N.OPEN	99, 101
556697-0000	SEAL-RING HOLDER	103
556698-0000	COMPRESSION SPRING	103
556699-0000	COMPRESSION SPRING	103
556701-0000	PISTON ROD	103
556702-0000	AP-VALVE-BODY (51-38)	75
556717-0000	WASHER	103
558230-0301	TMCC Controller	707
558321-0101	TPIH-SWITCH	707
560931-0000	BRACKET	61, 117, 141
560932-0000	INTERMEDIATE PART	61
560933-0000	ELECTRODE	61
561427-0000	CONTAINER	257
563285-0000	BLIND PLUG	249
563461-0000	TRANSFORMER	613
565250-0000	WASHER	257
565251-0000	VALVE	257
566171-0000	CUP SPRING	253
566194-0000	WEIGHT	253
566195-0000	LID	253
566196-0100	LID WITH WEIGHT	251
567018-0000	STEAM HOUSE	75
567070-0011	ELECTRODE	141
567070-0012	ELECTRODE	61
575002-0000	PLUNGER	571
575034-0000	ROUND NUT	47, 49, 57, 63
575203-0100	HAND CRANK	309, 311
575235-0200	CONTROL LEFT	679
575236-0200	CONTROL RIGHT	679
575237-0200	POWER SIDE	679

Part No	Description	Page No
575238-0400	DRIVE UNIT	309, 311
575239-0300	FRAME	309, 311
575240-0100	DESIGN CORRECTION	309, 311
575241-0200	VOLUME ADJUSTER	309, 311
576434-0100	AP-VALVE 51-38	73
576436-0100	A-CYLINDER	75
576437-0100	C-CYLINDER	75
576438-0100	B-CYLINDER	75
576439-0000	CYLINDER HOUSING	77, 81
576440-0000	END SECTION	77, 81
576441-0000	PISTON	77, 81
576442-0000	PISTON ROD	81
576443-0000	CYLINDER HOUSING	79
576444-0000	END SECTION	79
576445-0000	PISTON	79
576446-0000	PISTON ROD	77
576447-0000	PISTON ROD	79
576448-0000	SPACER	77
576449-0000	SPACER	77
576450-0000	SPACER	81
576451-0000	SPACER	79
577102-0300	ASEPTIC CHAMBER	11
577103-0200	FILLING SYSTEM	11
577104-0200	STERILE AIR SYSTEM	11
577110-0100	DRIVEUNIT DESIGNCORRECT.	285, 287
577111-0200	CONVEYOR	391
577112-0300	FINAL FOLDER	391
577113-0200	DISCHARGE UNIT	391
577114-0300	WASTE CONVEYOR	179
577115-0300	FRAME	391
577117-0300	ELECTRICAL SUPPLY	179
577118-0400	MACHINE BODY	179
577119-0400	PNEUMATIC SYSTEM	179
577120-0300	DOORS-COVERS	179
577121-0400	PIPE WORK	179
577122-0300	EXTERNAL CLEANING SYSTEM	179
578640-0000	CLAMPING RING	155
578684-0000	SPRING BRACKET	559, 589
579802-0000	SPACER	547, 551, 555
579803-0000	SPACER	547, 551, 555
583727-0000	SHAFT	597
590483-0000	HOLDER	547, 551, 555
590484-0000	DOOR	633
590485-0000	DOOR	635
590487-0000	DOOR	637
590489-0000	BRACKET	547, 551, 555
590490-0200	MACHINE BODY	541, 543, 545
591319-0000	HOLDER	547, 551, 555
591321-0100	COVER	623
591322-0100	COVER	623
591323-0000	HOLDER	639
591324-0000	HOLDER	627
591325-0000	WASHER	627
591341-0000	PIN	193, 195
599251-0000	CIRCUIT BOARD	649
599556-0000	WINDOW	649
599809-0000	SIGN	525
6278-0000	WASHER	559, 589
67379-0106	IH TRANSF.1.PRIM.4	591
67380-0101	IH TRANSF.SEC.=2 PRIMARY=6.C=21,6 NF	527, 529
67388-0102	RACK FRONTMOUNTED 84TE	707
67600-0501	TPIH 2000 GENERATOR	611, 703
68262-0101	BACKPLANE FRONT RACK 8TE	707
68445-0103	FRONT PLATE 6TE	707
68445-0104	FRONT PLATE 8 TE	707
68445-0105	FRONT PLATE 10TE	707
68699-0101	MULTIPLEXER CARD 56LED	649
68917-0100	ANGLE INDICATOR	301
736514-0000	SHOCK ABSORBER	89
751009-0000	INSULATION	125
751284-0000	ROLL	31
751395-0000	FLANGE	255
751457-0000	CANTILEVER	291, 293
751485-0000	SCREW	155
751491-0000	ROLL	23
751492-0000	ROLL	23
751493-0000	ROLL	23
751499-0000	ROLL	33
751500-0000	ROLL	33
751502-0000	ROLLER	25, 27, 59
751503-0000	COUNTER ROLLER	25, 27
752176-0000	PROTECTIVE CASING	71
752186-0003	SHAFT	31
752186-0005	SHAFT	23, 25, 27, 33, 59
752186-0007	SHAFT	33
752186-0009	SHAFT	23

Part No	Description	Page No
752186-0016	SHAFT	25, 27
752186-0017	SHAFT	31
90001-0033	Wall socket Outlet	705
90002-0004	BLANK-OFF PLUG 22,5	131, 171, 479
90002-0009	BLANK-OFF PLUG 18.6	131, 185, 187, 261, 613
90002-0010	BLANK-OFF PLUG 37	547, 551, 555
90002-0012	BLANK-OFF PLUG 28,3	185
90002-0013	BLANK-OFF PLUG 15,2	439, 479
90002-0013	BLANK-OFF PLUG 15,2(PG 9)	131, 171, 173, 183, 185
90005-0077	WASHER,Plain Round,nylon 8,4x7	203, 697
90005-0082	WASHER,Plain Round 4,3x12	505, 507, 511, 513, 517, 519, 527, 529, 531, 591
90005-0116	WASHER,Plain Round 8,4x24	153
90007-0128	FUSE 1P 6A K	731
90007-0129	FUSE 1P 10A K	731
90007-0138	FUSE 2P 10A K	723
90007-0149	FUSE 3P 20A K	723
90012-0049	CABLE GLAND STR13	547, 551, 555
90012-0071	GLAND FITTING	19, 105, 107
90012-0073	GLAND FITTING	105, 107
90012-0077	GLAND FITTING	65, 67, 141
90012-0117	GLAND,EMC,EXTENDED WITH INSERT	189, 721
90012-0124	GLAND FITTING	613
90012-0125	GLAND FITTING	613
90012-0126	GLANDS,HOSE,NORMAL,WITHOUT INSERT PG29	125
90012-0127	PLUG	613
90012-0131	GLAND FITTING	141
90012-0137	GLAND,EMC,EXTENDED WITH INSERT	37, 559, 589
90012-0138	GLAND,EMC,EXTENDED WITH INSERT	131
90015-0020	GLANDS,Lead-in,IP67	73, 193, 195, 415, 613, 621
90015-0021	GLANDS,Lead-in,IP67	193, 195, 589, 615, 617, 619
90015-0022	GLANDS,Lead-in,IP67	193, 195
90015-0023	GLANDS,Lead-in,IP67	187, 193, 195, 213, 235
90015-0024	GLANDS,Lead-in,IP67	193, 195
90015-0025	BUSHING	423
90015-0037	RUBBER BUSHING	435
90017-0015	HANDLE,STAINLESS	697
90017-0016	HANDLE,STAINLESS	167, 203
90017-0017	HANDLE,Brass	705
90017-0022	HANDLE	669
90024-0031	FILTER 3-PH SIEMENS	495
90024-0036	FILTERED TERMINAL BLOCK	423
90024-0039	FILTER	723
90024-0047	EMI SUPPRESSION FERRITE	719

Part No	Description	Page No
90030-0058	T-PIPE CONNECTION T-12	139
90030-0071	ELBOW CONNECTION WA 8-R1/4	459
90030-0075	PIPE CONNECTION G-6	143
90030-0096	ELBOW CONNECTION W-12	71
90030-0116	REDUCER	317, 321, 325, 329, 335, 339, 343, 347
90030-0136	ELBOW CONNECTION EVW,EXT 12-G3/8"	139
90030-0171	ELBOW CONNECTION EVW,EXT 6-G1/8"	119
90030-0180	STRAIGHT CONNECTION GE 12-1/2"-14 NPTF	71
90030-0184	STRAIGHT CONNECTION GA-6-G1/8"	117, 173
90030-0185	STRAIGHT CONNECTION GA-8-G1/4"	449
90030-0187	STRAIGHT CONNECTION GA-12-G3/8"	71, 139
90030-0188	STRAIGHT CONNECTION GA-15-G1/2"	123
90030-0336	GLAND	75
90030-0338	NUT	75
90030-0465	STRAIGHT CONNECTION	445
90031-0031	PLC,COMMUNICATION,Enhanced Genius module	719
90031-0051	Baseplate 10-Slot	719
90031-0053	Baseplate,10-Slot	719
90031-0057	PLC,Digital Input Module,24VDC,16pt,+/-	719
90031-0058	PLC,Digital Input Module,fast ,16pt,+/-	719
90031-0059	PLC,Digital Output Module,24VDC,16pt,+/-	719
90031-0060	PLC,Analog Input Module, voltage, 16pt	719
90031-0061	PLC,Analog Input Module, current, 16pt	719
90031-0062	PLC,Analog Output Module, curr/volt, 8pt	719
90031-0065	PLC,Temperatur Control,Input module 8 pt	719
90031-0068	Powersupply 240VAC Hi Cap	721
90031-0075	CPU363, Serial communication	721
90031-0302	I/O Bus Termination Plug	719
90031-0305	Backplane Expansion cable 0,3 m	721
90036-0057	LIGHT BULB BA9S 28V	281, 675
90036-0068	BULB 6.5W 24V	239, 657
90041-0029	Floppy disc unit FD-235HF 1,4Mb	711
90041-0032	Power unit DC/PC	711
90041-0038	Cable FD unit	711
90041-0040	Cable Keyboard	711
90041-0042	Cable, Floppy disk power	711
90041-0043	Cable, HD unit	711
90041-0051	MCIA HD Viper 340	711
90041-0052	Flex box Innoscan	711
90041-0053	PC MCIA HD BAY	711
90041-0054	Hard disk cable	711
90041-0060	Hardware lock	711
90041-0078	Remote Communication link Board	207

Part No	Description	Page No
90041-0079	Adapter Backlight	207
90041-0080	Cable CPU-LVDScard+display-LVDScard	711
90041-0082	Cable Display Power	207
90041-0083	Host Communication Link Board LVDS	711
90041-0084	Processor Board 133 MHz	711
90041-0085	Cable Keyboard	711
90041-0086	Cable COM 2 INNOSCAN	711
90041-0087	Serial card 2 Channel RS486/422 Board	711
90041-0093	Display TOSHIBA 12,1"	207
90041-0095	Frame 12"	203
90041-0099	IR Touch pcb, 12.1"	207
90041-0103	DATACABLE Display L=150mm	207
90041-0104	CHASSIS FOR TOUCH 12,1"	207
90042-0172	SOLENOID VALVE 4023/1005/1032 24VDC	123
90042-0203	SOLENOID VALVE BURKERT	61
90042-0206	SOLENOID VALVE 444-111-000-1	249
90042-0215	Pneumatic valve ISO 1, 5/2 Unistable	621
90042-0215	SOLENOID VALVE 07931 067 18 ISO 1	161, 163, 213, 489
90042-0221	Pneumatic valve ISO 1, 5/2 Bistable	621
90042-0230	PNEUMATIC,VALVE	161
90042-0248	SOLENOID VALVE OFFICIENE DI ENSINO	219
90042-0249	SOLENOID VALVE OFFICINE DI ENSINO	481, 483
90042-0254	SOLENOID VALVE ODE(VENTIM)	443
90042-0265	High speed venting valve 583-590-000-1	621
90042-0398	CONTACT 3 pole+earth	249
90042-0467	COIL 24VDC GSR	175
90042-0487	COIL 24 VDC MECMAN	249
90042-0519	VALVES,ACCESSORIES,BLANKING PLATE	489
90042-0520	BASE PLATE MECMAN	161, 213
90042-0522	END PIECE MECMAN 07931 080 01	161, 163, 213
90042-0522	PNEUMATICS,VALVES,PLATES	489
90042-0522	Ported end piece ISO 1	621
90042-0526	PROTECTIVE SLEEVE	489
90042-0528	Blanking kit seals ISO 1	621
90042-0528	SEAL KIT MECMAN	161, 213
90042-0528	VALVES,ACCESSORIES,BLANKING KIT	489
90042-0532	Base plate ISO 1	621
90042-0532	PNEUMATIC,VALVES,PLATE MECMAN	161, 163, 213
90042-0532	PNEUMATICS,VALVES,PLATES	489
90042-0535	CONNECTION BOARD MECMAN	161, 163, 213
90042-0535	Terminal module 19 cords	621
90042-0535	VALVES,ACCESSORIES,TERMINAL MODULE	489
90042-0538	COIL MECMAN series 590 L=500mm	161, 163, 213
90042-0538	Pilot valve, L=350 mm	621
90042-0538	PNEUMATICS,VALVES	489
90042-0545	Base plate softstart	621
90042-0557	COIL V24DC-N3	495
90042-0583	Cable	491
90042-0585	Pilot valve	491
90042-0585	Pilot valve, L=200 mm	621
90043-0002	PRESSURE GAUGE	139
90043-0006	PRESSURE GAUGE	481, 483
90043-0021	PRESSURE GAUGE Wiegand 0-1 BAR 1/8"	249
90043-0043	PRESSURE GAUGE Wiegand 0-10 BAR 1/8"	445
90043-0095	PRESSURE GAUGE	117
90043-0100	MANOMETER	433
90043-0107	PRESSURE GAUGE	491
90044-0084	LIMITSWITCH HONEYWELL 14CE1-4	141
90044-0104	PROX.SWITCH IFM IN 3002 48Vdc	73, 99, 101, 153, 393, 511, 513, 517, 519, 523
90044-0116	PROXIMITY SWITCH	17, 65, 67, 605, 609
90044-0124	Prox.sw. 922AB2XM-A9P-050-LZ-876	313, 355, 357, 367, 369, 547, 549, 551, 553, 555, 557, 561, 575
90044-0124	PROX.SWITCH 922AB2XM-A9P-050-LZ-876Hwell	29, 39, 683
90044-0126	PROX.SWITCH 922AA3XM-A9P-060-LZ876	99, 101
90044-0139	Key saf.sw. AZ16-02 ZVR K-2254	279, 549, 553, 557
90044-0139	KEY SAFETY SWITCH AZ-16-02 ZVRK-2254	47, 49, 57, 63
90044-0145	PROXIMITY SWITCH	89, 511, 513
90044-0193	Sensor REXROTH MECMAN	121
90044-0310	KEY FOR SAFETY SWITCH -103	47, 49, 57, 63
90045-0087	PUMPMOTOR ABB 0,55KW	255
90045-0164	SERVOMOTOR ELMO EP075112-44T3B	289
90045-0189	STEPPER MOTOR	23, 295
90045-0197	Servo Motor Elmo	297, 299
90045-0375	PLINTH ATLAS COPCO	721
90045-0378	PLINTH	719
90045-0382	PLINTH	721
90045-0394	SERVO AMPLIFIER 5A RMS	721
90045-0397	VOLTAGE SUPPLY UNIT	719
90045-0399	SERVO AMPLIFIER 110.5A RMS	721
90051-0035	HANDLES,KNOB,ADJUST.,THREAD.TAP,M5 20X15	509
90051-0045	HANDLE	29
90051-0065	HANDLES,EXTERNAL THREAD M10-25X86	569, 603, 607
90051-0087	ADJUSTMENT SCREW GN 617 A5	603, 607
90051-0088	ADJUSTMENT SCREW	511, 513
90051-0106	COCK HANDLE	477

Part No	Description	Page No
90051-0112	ADJUSTMENT BOLT	213
90051-0127	HANDLE	313, 401
90052-0011	HORN	549, 553, 557, 673
90053-0029	Pack Counter 8 Digits IVO	705
90053-0031	HOUR COUNTER BOWER B906.10	705
90055-0051	Hose,Nipple,ext.threaded, R3/8"x13mm	245
90055-0097	STRAIGHT COUPLING	123, 209, 211, 219
90055-0100	Y-CONNECTION	219, 291, 293
90055-0100	Y-connection, 6-6	621
90055-0113	Hose,V-junction,fpt, 13 x6mm	291, 293
90055-0116	REDUCER	209, 211, 219
90055-0118	ELBOW PIPE JOINT -8mm	161, 163
90055-0118	Elbow with tailpiece	403, 405
90055-0132	HOSE NIPPLE	459
90055-0154	Y-connection, 4-6	603, 607
90055-0162	NIPPLE-6mm	291, 293
90055-0166	FITTING	443
90055-0171	Reducer-8/6	621
90055-0189	Hose,Nipple,reducer,tube, 6/8m	213
90055-0204	ELBOW-90 COUPLING,STEM,FPT 8-8	213
90056-0163	WORM GEAR	315, 319, 323, 327, 333, 337, 341, 345
90056-0164	WORM GEAR	315, 319, 323, 327, 333, 337, 341, 345, 399
90056-0170	WORM GEAR	393
90056-0171	WORM GEAR	411
90056-0172	BEVEL GEAR	411
90056-0527	PLUG	315, 319, 323, 327, 333, 337, 341, 345, 399
90061-0027	Angle encoder 670900035	317, 321, 325, 329, 335, 339, 343, 347
90062-0015	LOCK WASHER AZ 6,4 ZINC PLATED	423, 687, 689, 693, 695
90062-0016	LOCK WASHER AZ 8,4	613
90062-0021	LOCKING WASHER A 5,3	719
90062-0022	LOCKING WASHER D=6,4/11	585, 681, 705, 713, 719
90062-0029	WASHER,Lock 5,1x 8,6, T= 1,5 DIN 7980	429
90062-0040	WASHER,Lock 5,3x 10, T= 0,6 DIN 6798	625
90062-0058	WASHER,Lock 3,2x 6, T= 0,4 DIN 6798	705
90062-0060	WASHER,Lock 5,3x 10, T= 0,6 DIN 6798	611, 613
90064-0082	PUSH BUTTON WHITE	203, 625, 627
90064-0084	PUSH BUTTON YELLOW	203, 625
90064-0085	PUSH BUTTON RED	173
90064-0093	PUSH BUTTON GREEN	203
90064-0098	PUSH BUTTON CLEAR	203
90064-0124	SWITCH,EMERGENCY STOP	19, 173, 203, 275, 627, 695
90066-0021	PUSH BUTTON BOX XAP-M1501 Telemecanique	19
90069-0257	WORM GEAR MOTOR	261
90069-0606	Worm Gear Motor	559, 589
90069-0608	Worm Gear Motor	37
90074-0025	PIPE-CLIP,single 8	491
90075-0124	CONTACTOR 4KW COIL 24VDC	729, 731
90075-0127	CONTACTOR 4KW COIL 24VDC	729, 731
90075-0128	CONTACTOR 7,5KW COIL 24VDC	723, 729, 731
90075-0141	CONTACTOR 4KW COIL 24VDC	723
90075-0313	AUXILIARY CONTACT K&M 22 DILM.2NO	723, 729, 741
90077-0079	FEED THROUGH TERMINAL AKZ 4PA for TS15	205
90077-0106	TERMINAL MK 16 KRG 16-POLE	705
90077-0328	RAIL TS15/5	205
90082-0010	OVERVOLT.PROT.PU4R230V3PH	423
90082-0300	OVERVOLT.PROT.PU1 230V	495
90083-0055	ROLLER BEARING	371, 373, 375, 377, 379, 381, 383, 385
90089-0015	SLEEVE PR28,3/37.PG21/29	131
90089-0017	TRANSITION SLEEVE PR18,6/PR22,5	261
90089-0021	REDUCTION SLEEVE,PLASTIC GREY	19
90089-0028	MUFF	613
90089-0029	Enlarging sleeve	131, 189
90091-0143	SEAL RINGS TYPE AS 47X62X6	43
90091-0236	SEALING RINGS,TYPE "GLYD-RING" 100/89X4	103
90091-0237	SEALING RINGS,TYPE "GLYD-RING" 20/27,5X3	77, 79, 81, 103
90091-0238	SEAL RING	77, 79, 81, 103
90091-0263	SEAL RINGS 24X47X7	407
90091-0266	SEAL RING	75
90091-0296	SEALING RINGS,TYPE AS 40X52X7	315, 319, 323, 327, 333, 337, 341, 345
90091-0297	SEALING RINGS,TYPE AS 35X47X7	37
90091-0298	SEALING RINGS,TYPE AS 45X65X8	315, 319, 323, 327, 333, 337, 341, 345
90091-0305	SEALING RINGS,TYPE RADIAL SEAL 40X55X7	411
90091-0320	SEALING RINGS,TYPE AS 20X30X7	37
90091-0322	SEALING RINGS,TYPE RADIAL SEAL 25X42X7	23
90091-0335	SEALING RINGS,TYPE "GLYD-RING" 70/62,5X3	79
90091-0336	SEALING RINGS,TYPE "GLYD-RING" 90/79X4	77, 81
90091-0356	SEALING RING	65, 67
90091-0357	SEALING RING	39
90091-0412	Seal Ring	255
90091-0430	SEAL RINGS 15X35X7	359, 361
90091-0431	"SEALING RINGS,TYPE AS 8X22X7"	359, 361
90091-0435	"SEAL RING,GR-NEEDLE BEARINGS 20X47X7"	393
90091-0436	"SEAL RING,GR-NEEDLE BEARINGS 20X40X7"	393
90091-0437	"SEAL RING,GR-NEEDLE BEARINGS 17X40X7"	393
90091-0438	"SEAL RING,GR-NEEDLE BEARINGS 25X52X10"	393
90091-0439	"SEAL RING,GR-NEEDLE BEARINGS 35X62X7"	399

Part No	Description	Page No
90091-0441	SEAL RING	399
90092-0083	OIL BRUSH	399
90095-0070	OVERLOAD PROT. PKZM 0,4A	729
90095-0072	OVERLOAD PROTECTION PKZM 1,0A	729
90095-0073	OVERLOAD PROTECTION PKZM 1,6A	729
90095-0074	OVERLOAD PROT. PKZM 2,5A	729
90095-0077	OVERLOAD PROTECTION PKZM 6-10A	729
90095-0078	OVERLOAD PROT. PKZM0-16A	729
90095-0080	OVERLOAD PROTECTION PKZM 25A	729
90097-0017	FLAT PIN PLUG 6,3mm	611
90099-0001	NUT PR 15,2 BRASS	65, 67, 141, 613
90099-0002	NUT Pr 18,6 Brass	105, 107
90099-0003	NUT	137
90099-0051	NUTS,HEXAGON, M10x1,25, DIN439	113, 121
90099-0085	NUT	423
90099-0096	NUT	423, 681
90099-0103	NUT PR 47 (PG36)	367, 369, 415
90099-0104	NUT PR 15,2 (PG9)	29, 61, 73, 87, 99, 101, 117, 119, 121, 125, 131, 145, 153, 393, 413, 415, 429, 613, 615, 617, 619, 671
90099-0110	NUT PR 22,5 (PG16)	111, 131, 301, 611, 613, 625
90099-0117	NUT PR 18,6 (PG11)	97, 131, 159, 423, 611, 613
90099-0118	NUT PR 20,4 (PG13,5)	131, 547, 551, 555, 683
90099-0119	NUT PR 28,3 (PG21)	131, 613
90099-0120	NUT PR 37 (PG29)	73, 403, 405, 415, 613
90099-0130	NUTS,HEXAGON, M8	563
90099-0131	NUTS,HEXAGON, M16x2, ISO4035	43, 411
90099-0190	Nut AJ3085-15-R15	737
90110-0028	CONTACT UNIT 4-POLE,STAK 3/930074-106	705
90110-0095	CONTACT 3 POLE+EARTH	481, 483
90110-0121	FEMALECONT.15POLE HARTING	611, 703
90110-0122	COVER HARTING	611, 703
90110-0125	ELECTRIC PLUG	191, 367, 369
90110-0126	SLEEVE CONTACT	367, 369
90110-0127	PLUG (EL.)	189, 191
90110-0141	CONTACT UNIT	649
90110-0150	MALE INSERT 24-P, CABLE	131, 133, 191, 367, 369, 415, 479, 613
90110-0151	FEMALE INSERT 24-P, CABLE	191
90110-0152	CABLE HOOD 24-P	131, 189, 613
90110-0153	CHASSI HOUSING 24-P	681
90110-0156	CONTACT	133, 191, 449
90110-0157	COVER	131, 189, 559, 601, 613, 737
90110-0159	CONTACT	131, 189, 191, 429, 435, 439, 559, 601, 613, 737
90110-0160	COVER	131, 189
90110-0161	FEMALE CONTACT 6-POLES	683, 685
90110-0163	FEMALE INSERT 6-POLE	189, 191
90110-0164	FEMALE CONTACT 24-POLES	683
90110-0165	FEMALE INSERT 6-POLE/35	685
90110-0166	CONTACT HOUSE	681
90110-0167	CONTACT HOUSE CHI 16	681
90110-0208	CABLE CONTACT	191, 721
90110-0209	CONTACT PIN	189, 683, 721
90110-0221	CONTACT HOUSING	189
90110-0222	CONNECTOR	91
90110-0223	CONNECTOR	173
90110-0224	CHASSI HOUSING	189
90110-0225	CHASSIS CONTACT	189
90110-0226	COVER 6-POLE	429, 435, 439
90110-0227	COVER 16-6 POLE	449
90110-0228	COVER 24 POLE	367, 369, 415, 479
90110-0235	CABLE CONTACT	291, 293, 601
90110-0236	CHASSIE CONTACT PX0767/S	191, 683, 685
90110-0247	CONTACT	189, 191
90110-0282	PLINTH	281
90110-0348	SEAL	601
90110-0380	Contact Pin	189, 683
90110-0382	Fastening Nut	649
90110-0385	Holder	131
90110-0504	Cable Contact	191
90110-0505	Chassies Contact	683
90110-0506	Chassies Contact	683
90110-0507	Chassies Contact	683
90110-0508	Cable Contact	721
90110-0513	Chassis Contact	189
90111-0120	SWITCH 2 POS. EA OLTEN	203
90111-0122	KEY SWITCH 2 NO Contacts	705
90111-0124	KEY SWITCH 1NO,1NC Contact	705
90111-0173	MAIN SWITCH	423
90113-0056	PRESSURE REGULATOR	249
90113-0072	PRESSURE REGULATOR	491
90113-0095	PRESSURE REGULATOR	159, 213, 489
90113-0096	PRESSURE REGULATOR	159, 213
90113-0097	PRESSURE REGULATOR	213
90113-0098	PRESSURE REGULATOR	445
90113-0374	SLOW STARTING VALVE	491
90113-0375	PRESSURE DISTRIBUTION	491
90113-0377	SHUT-OFF VALVE	491

Part No	Description	Page No
90113-0387	FILTER	495
90113-0423	High speed venting valve	491
90113-0459	O-RING	495
90115-0173	ROD ENDS,MAINTENANCE FREE,6-M6X1RH	261
90119-0056	PLUG-IN RELAY 24VDC	713
90119-0063	OPTO-RELAY DC/DC AMMS-10-1	171, 183
90119-0067	SOLID STATE RELAY H12WD	725, 727
90119-0072	SAFETY RELAY JSBR4	713
90119-0078	TPIH-RELAY	613
90119-0084	EXPANSION RELAY JSR1T-500ms	713
90119-0089	SAFETY RELAY JSBT4 24VDC	713
90121-0090	Resistance fixed, 10 kOhm, 0,5 W	611
90121-0114	Resistance fixed, 0,22 kOhm, 25 W	723
90121-0115	Resistance fixed, 0,047 kOhm, 200 W	723
90121-0119	Resistance fixed, 8,2 kOhm, 1 W	613
90121-0120	Resistance fixed, 0,25 kOhm, 0,125 W	705
90129-0006	BASE 11 POLE	713
90130-0021	POTENTIOMETER "REPBY 90130-28"	613
90130-0303	SHIFTER HANDLE	613
90130-0304	PLATE	613
90132-0021	HOSE CLIP 6-10mm	249
90132-0030	HOLDER MV 87177 KS 580T	117, 123
90135-0026	EARTH TERMINAL AKE 4PA	205
90135-0035	LOW IMPEDANCELITZ L=250MM	613, 687, 689, 693, 695, 705
90135-0039	SHIELD CLIP KLBU 4-13.5	705, 719
90140-0012	ELBOW 90,INT./EXT.THREAD R1/2"	193, 195
90140-0018	T-PIPE,INTERNAL THREAD Rp1/4"	433
90140-0023	T-PIECE	429
90141-0015	RETAINING RINGS FOR SHAFT 8	375, 377, 383, 385, 515, 535
90141-0016	RETAINING RING FOR SHAFT 10	17, 115, 291, 293, 507, 509, 535, 595, 599
90141-0017	RETAINING RINGS FOR SHAFT 17	393
90141-0020	RETAINING RINGS FOR HOLE 42	289, 407, 605, 609
90141-0022	RING	113, 121
90143-0020	STRIP	253
90143-0050	STRIP	629, 631
90143-0057	STRIP EMKA 1011-05 21x11mm	203, 423, 681
90143-0059	SEAL STRIP 4610069	165, 193, 195, 629, 631
90143-0060	EDGE STRIP 9,5x6,3mm Black PVC	167, 423, 471, 615, 617, 619, 621, 627, 653, 659, 705
90143-0069	RUBBER STRIP	625
90143-0071	RUBBER STRIP 4X20MM	611
90143-0089	RUBBER STRIP	629, 631
90144-0007	TAPE	141, 443, 445, 447, 451
90144-0044	TAPE Scotch VHB 4945	649
90144-0073	TREBOFLON-TAPE W=13mm	117, 123, 137, 139
90144-0074	GASKET 3,17x3,17x1,98mm	207
90144-0075	GASKET 1,02x3,18mm	203
90152-0016	HOSE	215
90152-0017	HOSE	223
90152-0029	HOSE 35/41	601
90152-0050	GLANDS,HOSE 20x13	131, 173
90152-0051	GLANDS,HOSE 25x18	131, 625
90152-0058	GLANDS,HOSE 15x9	65, 67, 131
90152-0059	HOSE 18x12	173, 393, 413, 429
90152-0060	GLANDS,HOSE 42X35	367, 369, 403, 405, 415
90152-0070	GLANDS,HOSE 32,5X26	131
90153-0015	ADHESIVE Loctite IS 496/CYANOLIT 303	375, 377, 383, 385
90153-0016	ADHESIVE TUBE 100G RHODORSIL CAF 3	97, 297, 299, 371, 373, 375, 379, 381, 383
90153-0020	ADHESIVE BOSTIK 1782 125ml	125
90153-0023	ADHESIVE	29, 47, 49, 57, 63, 145, 253
90153-0049	ADHESIVE	267, 273, 275
90157-0016	LOCKING FLUID	481, 483, 503, 509
90157-0016	LOCKING FLUID LOCTITE 242 50 ML	377, 385, 407, 565, 567
90157-0021	LOCKING FLUID	241
90157-0035	LOCKING FLUID 641	375, 377, 383, 385
90157-0037	SEALING COMPOUND	137, 139, 141
90157-0041	SEALING COMPOUND	267, 269, 273, 275, 629, 631, 635, 689
90163-0041	HOSE NIPPLE,EXT. THREAD 3/8"-12	429
90163-0052	HOSE NIPPLE,EXT.THREAD 1/4"-12	123
90164-0008	LIGHT FIXTURE 1x20W	187
90164-0015	LIGHT FIXTURE DWDV 206	547, 549, 551, 553, 555, 557
90164-0018	FLUORESCENT TUBE 30W	683
90164-0303	BRACKET SK2202 Waldmann	547, 551, 555
90165-0007	PIPE-CLIPS,FOR SINGLE,ONE SIDE PIPE 8	401
90165-0019	CLIP	213
90165-0039	CLIP	123
90165-0076	PIPE CLAMP	351, 353
90165-0089	PIPE CLAMP	281
90165-0118	PIPE CLAMP	437
90165-0147	HOSE CLIP	21, 93, 219, 227, 229, 231
90166-0008	HOSE 7/10 PVC TRANSP.	203, 459
90166-0013	HOSE 8/6	493
90166-0013	TUBE 8/6 PA Blue	159, 165, 209, 211, 213, 215, 291, 293, 399, 415
90166-0056	SHRINKABLE HOSE	537
90166-0068	HOSE N12x1,5/3-50	489

Part No	Description	Page No
90166-0068	TUBE 12 mm PA Blue	165, 621
90166-0081	TUBE 6/4 PA Blue	159, 165, 209, 211, 219, 249, 621
90166-0087	HOSE 15/23 Reinf.PVC Transp.	251
90166-0089	HOSE 4/6.2 PE BLUE	393
90166-0095	TUBE 4 mm PA Blue	507, 603, 607
90166-0101	HOSE 6/10 SILICONE RUBBER	249
90166-0109	TUBE 4 mm PA,Transp.	375, 377, 383, 385
90166-0118	TUBE 8 mm PA Black	23, 41, 221, 399, 401, 415
90166-0119	HOSE PUR TPU6x1/5-50 Black	393
90166-0121	HOSE	123, 193, 195, 227, 425, 427, 429, 431, 433, 445, 455
90166-0124	TUBE 6 mm PA 11/12,Transp.	291, 293
90166-0132	TUBE 6/4 PA,Transp.	261
90166-0135	TUBE 10 mm PA Black	223
90166-0138	HOSE	245
90166-0139	HOSE	433, 437
90166-0151	HOSE	193, 195, 245
90166-0153	TUBE 12 mm PA Black	159
90166-0158	HOSE	251
90166-0176	RUBBER HOSE	173
90166-0179	SHRINKABLE HOSE	175
90166-0193	TUBE 6/4 PUR Blue	507, 527, 529, 603, 605, 607, 609
90166-0194	PLASTIC HOSE	489
90166-0194	TUBE 8 mm PUR Blue	527, 529, 573, 593, 599, 601
90166-0195	TUBE 12 mm PA Blue	209, 211
90166-0196	TUBE 14 mm PA Blue	209, 211, 219
90166-0199	RUBBER HOSE	111
90166-0211	TUBE 8 mm PUR Black	367, 369
90166-0214	SHRINKABLE HOSE 1,2 mm	611
90166-0232	SHRINKABLE HOSE	423
90166-0233	HOSE	21, 93, 219, 227, 229, 231
90166-0236	HOSE	443
90166-0260	Hose	219
90181-0038	CABLE DUCT 40x40mm	681
90181-0040	CABLE DUCT 80x40mm	719
90181-0045	CABLE DUCT 40x60mm	681
90181-0048	CABLE DUCT 100x60mm	723
90181-0052	CABLE DUCT 25X80MM	719
90181-0053	CABLE DUCT 40X80MM	681
90181-0054	CABLE DUCT 60X80mm	713, 719
90181-0055	CABLE DUCT 80X80mm	713, 723
90181-0056	CABLE DUCT 100X80MM	713, 723
90181-0057	CABLE DUCT 120x80mm	719
90181-0088	PLASTIC RIVET	613
90181-0313	Rivet DUCTAFIX R4	713, 719, 723
90182-0005	CLIP STRIP 79x2,3mm REPL.BY 352113-101	203, 681
90187-0029	VALVE	481, 483, 485
90187-0059	BALLVALVE	245, 251
90187-0062	Shut of valves,Ball valve, G1/2	139
90187-0082	BALL VALVE, Sealing PTFE	71
90187-0104	SAFETY VALVE	139
90187-0130	VALVE	431
90187-0133	VALVE	445
90187-0147	VALVE	443
90187-0148	BALL VALVE	453
90187-0157	VALVE	435
90187-0158	VALVE	193, 195, 297, 299, 433, 435, 437
90187-0162	VALVE	737
90187-0319	GASKET UNIT	495
90191-0074	RUNNER	565, 567
90194-0016	SIGN "FLASH SIGN" 50X50MM	171, 173, 183, 185, 203, 403, 405, 439, 477, 479, 611, 613, 687, 689, 691, 693, 695, 697
90194-0075	WARNING SIGN	125
90194-0133	SIGN "DELIVERED DESIGN"	203
90194-0152	SIGN "EARTH"	585, 687, 689, 693, 695, 705
90194-0154	Marking, Terminals	281
90195-0028	TERM.BLOCK 6-POLE STEATIT	125
90195-0029	CONN. LINK NO324 FOR -28	125
90206-0070	HEATING ELEMENT 6000W 380/220V	141
90206-0132	HOT AIR ELEMENT	403, 405
90206-0326	CONNECTION BOX	141, 175
90207-0363	GASKET	75
90207-0365	GASKET	75, 99, 101
90208-0084	CLAMPING ELEMENT WITH SLEEVE 35X47	315, 319, 323, 327, 333, 337, 341, 345
90211-0002	LOCK	561
90214-0036	BALL BEARING,STAINLESS 10X22X6	291, 293
90214-0096	BEARINGS,BALL BEARING,STAINLESS	393
90214-0098	BALL BEARING,STAINLESS	17, 35, 39, 45, 51, 53
90214-0112	BALL BEARING,STAINLESS 12X24X6	315, 319, 323, 327, 333, 337, 341, 345
90214-0138	BEARINGS,BALL BEARING,STAINLESS	153, 523
90214-0165	BEARINGS,BALL BEARING,STAINLESS	315, 319, 323, 327, 333, 337, 341, 345
90214-0189	BEARINGS,BALL BEARING,STAINLESS	393
90214-0207	BEARINGS,BALL BEARING,STAINLESS	503
90214-0225	BEARINGS,BALL BEARING,STAINLESS	37, 407
90214-0232	BEARINGS,BALL BEARING,STAINLESS 10X47X14	393, 411
90214-0236	BALL BEARING	315, 319, 323, 327, 333, 337, 341, 345, 411

Part No	Description	Page No
90214-0303	SEALING RING 18,6X35X2	17
90217-0097	PIPE ELBOW 90 "PMCS"	281
90217-0129	T-PIPE "PMCS"	281
90217-0307	SEAL RING	93
90217-0332	BLANK-OFF FLANGE	99, 101
90217-0347	GASKET	87
90217-0348	GASKET	87
90220-0034	THERMO-CABLE	131, 189, 415, 433
90220-0062	COAX.CABLE G 03212-01	189, 367, 369
90220-0084	SERVOCABLE 4X2,5+2(2X0.75)	189, 721
90220-0092	MULTI-CONDUCT,SCREEN,PAIR-TWIST 3x2x0,25	131, 173
90220-0095	CABLES,MULTI-CONDUCT,SCREENED 3X0,75 MM2	423
90220-0104	CABLE,SCREENED 4x1,5mm2	131, 559, 601, 721
90220-0105	CABLE,SCREENED 4x2,5mm2	189
90220-0107	CABLE,SCREENED 5x0,75mm2	173, 189
90220-0116	CABLE 4x1,0+2(2x0,5)mm2	189, 721
90220-0131	CABLE,MULTI-COND.SCREENED PAIR TWIST	189, 721
90220-0162	CABLE,MULTI-CONDUCTOR SCREENED 10x0,25	173
90220-0187	Cable 6x2x0.22	721
90220-0302	CLAMP FOR SCR.CABLE 16MM	207
90220-0303	CLAMP FOE SCR.CABLE 10MM	423
90220-0304	CLAMP FOR SCR.CABLE 24MM	207
90220-0305	CLAMP FOR SCR.CABLE 10MM	423
90226-0458	MOUNTING SCREW 167, 169, 265, 269, 463, 467, 471, 475, 637, 641, 643, 645,	647, 651, 653, 691, 697, 699
90230-0028	NON-RETURN VALVE	433
90230-0041	VALVE	435
90230-0042	NON-RETURN VALVE	445, 451
90230-0042	NON-RETURN VALVE 1/2"	227
90230-0044	NON-RETURN VALVE	447
90230-0044	NON-RETURN VALVE 1"	227
90230-0062	Non Return Valve	219
90232-0075	Ph.cell NT6-14900S12	291, 293
90232-0103	Ph.cell E3S-CT61-L-5M	413, 547, 551, 555
90232-0104	Ph.cell E3S-CT61-D-5M	413, 547, 551, 555
90232-0106	Ph.cell E3S-CR11-5M	547, 551, 555
90232-0112	Ph.cell NT6-14920E01	595
90232-0125	Ph.cell NT6-1492E02	599
90232-0333	Reflector E39-R1	629, 631
90233-0028	FUSE 10A FERRAZ	731
90233-0029	FUSE 25A FERRAZ	729, 731
90233-0303	FUSEHOLDER FERRAZ ST10	729, 731
90234-0328	COVER	281
90235-0151	NON-RETURN VALVE	451
90235-0288	VALVE 540-196 000	73
90235-0290	THROTTLE CHECK VALVE M5, Manual	261
90235-0483	Gasket	281
90236-0045	SUPPORT	393
90237-0070	Snap-In-Lock	669
90237-0079	QUICK-ACTION LOCK FSQ-M8	639
90237-0126	TURNING HANDLE	469, 473
90237-0126	TURNING HANDLE "REPBY 90237-175	267, 629, 631, 633, 635
90237-0128	LOCK CYLINDER . 167, 267, 273, 275, 469, 473, 629, 631, 633, 635, 689	
90237-0151	STEERING GUIDE,Black PA	687, 689, 693, 695
90237-0152	STEERING	687, 689, 693, 695
90237-0153	LOCK HOUSING 267, 273, 275, 469, 473, 629, 631, 633, 635, 687, 689, 693,	695
90237-0154	LOCK HOUSING,Black PA	167
90237-0155	LOCK ADAPTER	687, 689, 693, 695
90237-0156	LOCKING CATCH	687, 689, 693, 695
90237-0157	LOCKING CATCH	477
90237-0157	LOCKING CATCH EMKA 1000-230	203, 705
90237-0160	LOCK	687, 693, 695
90237-0165	LATCH	167, 273
90237-0168	ROUND BAR WITH END WHEEL	687, 689, 693, 695
90237-0169	LOCK-ADAPTER	687, 689, 693, 695
90237-0175	TURNING HANDLE	167
90237-0176	TURNING HANDLE	273, 275, 689
90237-0178	QUICK-ACTION LOCK	639
90237-0215	LOCK	399
90237-0216	CATCH	401
90237-0319	LOCK HOUSING EMKA U134	203, 477, 705
90237-0320	LOCK COMPONENT EMKA U136	203, 477, 705
90237-0322	LOCK GASKET EMKA 1000-23	477
90237-0323	O-RING	477
90237-0324	SQUARE-KEY 8mm	693, 695
90239-0349	SEAL KIT	305, 417
90239-0487	BRACKET,REAR,CLEVIS FLANG,MINI-ISO,20-25	21
90239-0489	ROD END,CLEVIS WITH AXLE,M6	39, 65, 67
90239-0490	ROD END,CLEVIS WITH AXLE,M8	21
90239-0491	ROD END,BALL JOINT EYE,MINI-ISO,M6	507
90239-0516	ROD END,CLEVIS WITH AXLE,M10X1,25	17, 115
90239-0532	ROD END,CLEVIS WITH AXLE,M8	393
90239-0579	CYLINDER,SENSOR,BRACKETS,FOR CYL.16	65, 67
90239-0582	CYLINDER,SENSOR,BRACKETS,FOR CYL.32	17
90239-0816	DOUBLE ACTING,MINI-ISO,CYL.16-25	65, 67

Part No	Description	Page No
90239-0817	DOUBLE ACTING,MINI-ISO,CYL.16-50	39
90239-0822	Double acting, Mini-ISO, Cyl. 20-50	393
90239-0837	DOUBLE ACTING,MINI-ISO,CYL.32-100	17
90239-0842	DOUBLE ACTING,MINI-ISO,CYL.16-50	261
90239-0847	DOUBLE ACTING,MINI-ISO,CYL.20-50	21
90240-0049	PLAIN BEARING REPBY 0090240-0021	305, 417
90240-0146	Flange Bushing, 15x21x20	141
90240-0172	Flange Bushing, 8x12x10 NFB	23, 25, 27, 31, 33, 59
90240-0260	Flange Bushing, 8x10x9	65, 67
90240-0261	Flange Bushing, 12x14x9	17, 371, 373, 375, 377, 379, 381, 383, 385
90240-0263	Flange Bushing, 15x17x12	17, 39
90240-0264	Flange Bushing, 15x17x17	23, 43
90240-0265	Flange Bushing, 20x23x21	355, 357, 401
90240-0287	BUSHING	151
90240-0287	Bushing, 10x12x10	579
90240-0321	Bushing	23
90240-0322	Bushing	23
90240-0325	Flange Bushing, 16x18x12	355, 357
90240-0331	BUSHING	411
90240-0332	BUSHING	411
90242-0148	"O-RING 19,2X3"	505
90242-0198	"O-RING 19,3X2,4"	175
90242-0264	"O-RING 16,1X1,6"	141
90242-0265	"O-RING 32,2X3"	141
90243-0061	FAN NOZZLE	215
90243-0112	FLOW METER	219
90243-0113	FLOW METER	495
90243-0134	FLOW METER	495
90243-0214	CONDUCTIVITY METER	705
90243-0245	MEASURING INSTRUMENT	445
90243-0321	CONDUCTIVITY CELL	105, 107
90243-0430	Flow meter	105, 107
90245-0043	Transformer Z-8782	91
90246-0021	POWER SUPPLY UNIT	683
90246-0326	CONTACT WITH CONNECTIONS	681
90248-0047	Hinge 180 degree	203
90252-0047	TIMING BELT AT5X450X16	289
90257-0001	FILTER PLUG MECMAN F14	593
90258-0031	PINS,Slotted Tubular, 3x 20, DIN1481	29
90259-0313	AUX. CONTACT K&M NHI21-PKZM0	729
90261-0011	PLUG,BLIND PLASTIC FOR M30/M28x1,5	351, 353
90261-0038	HOOD GPN 1000/893	413
90261-0049	PLASTIC PLUG SR 1750	503
90261-0067	PLASTIC PLUG 55-10365	233, 235
90261-0068	PLASTIC PLUG	155
90261-0069	PLASTIC PLUG	455
90261-0071	PLASTIC PLUG 6mm	359, 361
90264-0058	FAN	737
90264-0059	FAN	737
90265-0051	ACCESSORY BOX ROSE 1121208	737
90267-0027	TOOTHED WHEEL	261
90270-0016	COMPRESSOR TAJ 4511 Y	737
90270-0017	Compressor NASH/ELMO 112 MB/4-2083	111
90270-0349	FLOW VALVE DOLE 2GALL/MIN	123
90274-0042	PRESSURE SWITCH 2BAR Nacov	481, 483
90274-0045	PRESSURE SWITCH	117
90274-0056	PRESSURE SWITCH	435
90274-0074	PRESSURE SWITCH	491
90274-0082	FLOW SWITCH	443
90274-0088	PRESSURE SWITCH	173
90274-0096	Level probe	91
90274-0099	IP-transducer	87
90274-0108	Pressure guard	429, 737
90277-0039	FILTER	249
90277-0045	FILTER	213
90277-0046	FILTER	213
90277-0088	FILTER HOUSING	175
90277-0116	Filter Housing760-50c +EXTRA BRACKET	659
90277-0129	EXHAUST FILTER	611
90277-0346	FILTER CARTRIDGE	281
90277-0393	Filter insert RITTAL SK 3170100	611
90286-0013	GREASE NIPPLE	371, 373, 375, 377, 379, 381, 383, 385, 399
90287-0073	SCREW, MC6S ISO4762, M5x70 12.9	491
90287-0106	SCREW SPRINGLOADED M10x21	503
90287-0112	SCREW SPRINGLOADED M8x16	93, 509
90287-0124	SCREW,CHEESE HEAD,MSCS DIN84, M4x12	681
90287-0128	SCREW, SET,FULL DOG POINT,T6SS M4x6 A2	371, 373, 375, 377, 379, 381, 383,
		385
90287-0130	SCREW SET,CONE POINT,SK6SS M20x30	197
90287-0154	SCREW,SET,FULL DOG POINT,T6SS M6x10 A4	575
90287-0157	SCREW, M6SF ISO4014, M6x10 8,8	713, 719, 723
90287-0348	Stop Screw	575
90287-0349	Screw	145
90296-0068	Grease Uniway LI 62 Cartridge 400 Gr.	393, 411
90296-0070	GREASE	291, 293, 359, 361, 371, 373, 375, 377, 379, 381, 383, 385
90296-0091	LUBRICATION GREASE	17, 35, 37, 39, 45, 51, 53

Part No	Description	Page No
90297-0002	FLUORESCENT TUBE 18W	281
90297-0011	FLUORESCENT TUBE 30W	683
90304-0020	LIQUID CONTAINER	139
90304-0030	EXPANSION TANK	437
90304-0307	ATTACHMENT PIPE	139
90314-0038	Level control relay RM3	713
90314-0044	Signal Converter	173
90316-0022	Spacer nut DSNF M3060x20	207
90316-0023	Spacer nut DSM M3055x8	207
90316-0029	SPACER NUT M3x16	207
90316-0030	ELASTIC SCREW INNOSCAN 15060002	207
90319-0013	ROPE 4MM BLUE 3700N	561
90321-0100	PUMP PBK 16/A 220/380V 50 Hz 3 Ph.	137
90321-0116	PUMP GRUNDFOSS CHI 2-60	435
90321-0117	PUMP LOWARA SV8-14 F75T	449
90321-0120	PUMP LOWARA SV8-09 F75 6T	449
90321-0127	Centrifugal Pump LOWARA	137
90321-0396	FILTER	459
90326-0012	PROTECTIVE COVER	29, 71, 125, 141, 189, 433
90326-0020	PLUG,FEMALE YELLOW CR-AL	29, 71, 119, 125, 141, 191, 433, 683
90326-0022	PLUG,MALE YELLOW CR-AL	133, 189, 191, 403, 405, 415, 433
90326-0038	THERMOELEMENT CR-AL	141
90326-0051	THERMO COUPLE	119, 125
90326-0053	THERMO ELEMENT	29, 141, 683
90326-0057	THERMOCOUPLE CR-AL	433
90326-0077	CONTACT	403, 405
90326-0089	THERMOCOUPLE	71
90326-0306	GLAND FITTING 9041-45-KS-KR.1/8"D=4,5mm	141, 281
90326-0316	THERMO CONTACT PANEL	683
90328-0007	SILENCER	491
90328-0017	SILENCER	161, 163, 213, 489
90328-0017	SILENCER, d=6 mm	621
90328-0024	SILENCER	161, 163, 213, 489
90328-0024	SILENCER G3/8	621
90328-0026	SILENCER	89
90330-0012	SLEEVE,REDUCTION Rp1/8"-Rp1/4"	117
90330-0014	ELBOW 90,INTERNAL THREAD Rp1"	447
90330-0021	NIPPLES,HEXAGON,EXT.R-THREAD R1/2"-R1/2"	71, 123, 251, 445
90330-0026	PLUG,EXTERNAL G-THREAD G1/4"	193, 195
90330-0034	NUT,HEXAGON G1/4"	681
90330-0036	BUSHING,tapper,int/ext thr, Rp1/8-Rp1/2	445
90330-0037	PLUG,EXTERNAL G-THREAD G1/2"	123
90330-0043	NIPPLES,HEXAGON EXT.R-THREAD R1/4"-R1/4"	433, 435, 451
90330-0045	NIPPLES,ext tappered thread, R11/2-R1/4	447
90330-0048	BUSHING,INT./EXT.R-THREAD R1/2"-Rp3/8"	139
90330-0049	T-PIPE,INTERNAL THREAD Rp1/2"	123, 445, 491
90330-0054	SLEEVE	251
90330-0056	NIPPLES,ext tapper thread, R11/2-R11/2	443
90330-0057	ELBOW,90 int thread, R11/2	443
90330-0059	NIPPLE	281
90330-0066	PLUG,EXTERNAL G-THREAD G1/8"	247
90330-0078	BUSHING,INT./EXT.R-THREAD R3/4"-Rp3/8"	431
90330-0080	NIPPLES,HEXAGON,EXT.R-THREAD R3/4"-R1/2"	445
90330-0083	NIPPLES,HEXAGON,EXT.R-THREAD R3/8"-R1/4"	433
90332-0020	Recorder Honeywell	705
90335-0013	SPRING	561
90335-0025	SPRING BARNES 22010	571
90335-0027	SPRING	535
90335-0080	SPRING	291, 293
90335-0089	SPRING	153, 523
90335-0091	SPRING	559
90335-0149	COMPRESSION SPRING	593
90335-0183	SPRING	603, 607
90335-0253	SPRING	371, 373, 379, 381
90337-0315	FILTER	71
90342-0022	BELLOWS	113
90342-0024	BELLOWS	241
90347-0004	VIBRATION DAMPER D=30 Th=M8 H=17 H2=21mm	137, 147, 547, 551, 555, 565, 567, 605, 609
90347-0007	VIBRATION DAMPER	199
90347-0009	VIBRATION DAMPER	233, 237
90347-0029	DAMPER	197
90347-0034	VIBRATION DAMPER	167
90347-0039	DAMPER	63
90347-0080	DAMPER TFE 1201	673
90347-0106	GAS SPRING LIFT-O-MAT 095621 0308 160	639
90347-0127	DAMPER	167
90347-0144	DAMPER	111
90347-0152	FOOT	563
90347-0163	GAS-DAMPER	605, 609, 687, 689, 693, 695, 705
90347-0175	Machine Shoe	661
90347-0183	DAMPER	401
90355-0031	Bellow Coupling 10/10	315, 319, 323, 327, 333, 337, 341, 345
90355-0194	Bellow Coupling 18/18	355, 357
90355-0195	SHAFT COUPLING	359, 361
90355-0197	ELASTIC COUPLING	315, 319, 323, 327, 333, 337, 341, 345

Part No	Description	Page No
90355-0200	INTERMEDIARY SHAFT	399
90355-0201	INTERMEDIARY SHAFT	411
90355-0203	INTERMEDIARY SHAFT	399
90355-0204	ELASTIC COUPLING	333, 337, 341, 345
90355-0208	CONNECTION	261
90355-0369	GASKET	359, 361
90358-0090	ELBOW PIPE JOINT	429, 431, 433
90358-0091	REDUCING NIPPLE	433, 435
90358-0092	DOUBLE NIPPLE	431
90360-0020	STEAM TRAP	71
90360-0305	FLOAT	117
90411-0005	INSULATOR	125
90411-0020	Insulating Tube	219
90415-0032	FILTER	443
90415-0060	ION EXCHANGER	433
90415-0062	FILTER	737
90415-0065	FILTER	433
90415-0314	FILTERINSERT 5594-36	495
90415-0325	GASKET	495
90415-0328	FILTER INSERT	495
90415-0354	DEIONIZER CARTRIDGE	495
90415-0357	FILTER INSERT	495
90417-0411	TIMING BELT T 5X750X16	355, 357
90417-0412	TIMING BELT AT5/600	315, 319, 323, 327, 333, 337, 341, 345
90417-0413	TIMING BELT AT5/975	315, 319, 323, 327, 333, 337, 341, 345
90418-0045	ADAPTER,INTERNAL CONNECTION 22-G3/4"	431
90418-0057	ADAPTER,EXTERNAL CONNECTION 15-G1/2"	431
90418-0062	T-PIPE,REDUCTION INTERNAL CONNE.22X15X22	431
90419-0012	LIGHT ELEMENT, RED	239, 657
90419-0013	LIGHT ELEMENT, BLUE	239, 657
90419-0014	LIGHT ELEMENT, YELLOW	239, 657
90419-0017	BASE	239, 657
90419-0307	GASKET	239, 657
90419-0310	GASKET	239, 657
90422-0037	HEAT EXCHANGER	431
90422-0038	COOLER	737
90424-0031	NOZZLE	175
90424-0054	NOZZLE	123
90424-0066	NOZZLE UNIT	227, 229
90424-0071	NOZZLE UNIT	227
90426-0003	HAND SHOWER	223
90430-0070	Freq.Conv.Siemens 6SE3213-6CA40 750W	719
90430-0326	Filter 6SE3290-0BA87-0FB2 SIEMENS	719

Part No	Description	Page No
90450-0156	Double acting, Compact, cyl 100-25	593
90450-0207	CYLINDER	593
90450-0221	CYLINDER	593
90450-0222	"DOUBLE ACTING,SHUTTLE cyl 50-488"	573
90450-0272	DOUBLE ACTING,PROFILE,CYL.40-100	605, 609
90450-0281	"DOUBLE ACTING,PROFILE cyl 32-80"	115
90450-0306	"DOUBLE ACTING,MINI-ISO cyl 12-25"	507
90450-0310	CYLINDER ADV-20-15 A	603, 607
90450-0509	Cylinder	43
90450-0654	BRACKET,REAR WITH AXLE,PROFILE,32	115
90450-0669	CYLINDER,SENSOR,BRACKETS,22X18X33	605, 609
90450-0816	SENSOR, BRACKET	121
905373-0000	SCREW - LEG	673
906254-0000	ROLLER	559, 589
92097-0009	SLEEVE	601, 611
925998-0000	DIAPHRAGM	89
926906-0000	SPACER	89
926907-0000	SCREW	89
926909-0000	COMPRESSION SPRING	89
926934-0000	SUPPORT	89
927044-0000	SPACER	89
927194-0000	BODY	89
927203-0000	COVER	89
927420-0001	O-RING 5.1X1.6 SILICON	61
927421-0001	O-RING 9.3X2.4 SILICON	61, 143
927421-0002	O-RING 12.3X2.4 SILICON	61
927421-0003	O-RING 13.3X2.4 SILICON	143
927421-0004	O-RING 15.3X2.4 SILICON	61, 141
927422-0001	O-RING 19.2X3 SILICON	61
927422-0003	O.RING 24.2X3 SILICON	257
927422-0005	O-RING 36.2X3 SILICON	255
927422-0006	O-RING 42.2X3 SILICON	255
927422-0007	O-RING 44.2X3 SILICON	61
927422-0009	O-RING 54.5X3 SILICON	61
927422-0016	O-RING 79.5X3 SILICON	245
970215-0000	STOP BLOCK	689, 705
970261-0000	SPACER SCREW 10,2X10MM	649
970262-0000	SPACER NUT	649
971286-0000	SPACER H=6MM	649
971346-0000	GUIDE PIN	705
975917-0000	KEY FOR SAFETY SWITCH 90044-103	629, 631, 635, 639
978603-0000	SIGN	213
978735-0000	FASTENING PLATE	291, 293

Part No	Description	Page No
978999-0000	VALVE	247
979434-0000	FERRULE	89
979500-0003	ELECTRODE	117
985327-0000	PROFILE	281
985328-0000	CONNECTION	233, 235
985382-0000	CHECKER PLATE	235
985383-0000	CHECKER PLATE	235
985384-0000	CHECKER PLATE	235
985385-0000	CHECKER PLATE	235
985386-0000	CHECKER PLATE	235
985389-0000	RAILING	233
985390-0000	RAILING	233, 235
985391-0000	RAILING	235
985393-0000	TOE PLATE	233
985395-0000	TOE PLATE	235
985396-0000	TOE PLATE	235
985397-0000	TOE PLATE	233
985398-0000	PLATFORM	233
985581-0000	GEAR WHEEL	589
985582-0000	GEAR WHEEL	589
985670-0000	PLATFORM	235
985712-0000	HOLDER	547, 551, 555
985756-0000	PLATE	547, 551, 555
985842-0000	BRACKET	681
985851-0000	BRACKET	689
988666-0000	GASKET	687, 689, 693, 695
988685-0000	PIN	159, 167, 213, 273, 469, 473, 477, 629, 631, 633, 635, 687, 689, 693, 695
996388-0400	PEROXIDE PUMP	243
996451-0100	CRANK	13
996475-0200	COMPRESSOR UNIT	109
996481-0200	VALVE REF.POINT	109

H

H=1 M4		505, 507, 511, 513, 517, 519, 527, 529, 531, 591
H=2		203, 697
H=2 M8		153

P

PG11/16		261
PR15,2		131, 171, 173, 479, 613
PR15,2/PG9	61, 73, 87, 99, 101, 117, 123, 131, 141, 171, 173, 183, 185, 613, 615, 617,	
		619, 671

Tetra Pak

SPC binder labels. 40 mm Full width *Note! This page is generated **automaticall***
*using the **variable definitions** made in the **front page** file!!*

TBA/22 040V
648571-040V(0-Series)

Issue: 2000-03 Doc No: SPC-81511-0102

TBA/22 040V
648571-040V(0-Series)

Issue: 2000-03 Doc No: SPC-81511-0102

TBA/22 040V
648571-040V(0-Series)

Issue: 2000-03 Doc No: SPC-81511-0102

TBA/22 040V
648571-040V(0-Series)

Issue: 2000-03 Doc No: SPC-81511-0102

TBA/22 040V
648571-040V(0-Series)

Issue: 2000-03 Doc No: SPC-81511-0102

TBA/22 040V
648571-040V(0-Series)

Issue: 2000-03 Doc No: SPC-81511-0102

TBA/22 040V
648571-040V(0-Series)

Issue: 2000-03 Doc No: SPC-81511-0102

TBA/22 040V
648571-040V(0-Series)

Issue: 2000-03 Doc No: SPC-81511-0102

TBA/22 040V
648571-040V(0-Series)

Issue: 2000-03 Doc No: SPC-81511-0102

TBA/22 040V
648571-040V(0-Series)

Issue: 2000-03 Doc No: SPC-81511-0102

TBA/22 040V
648571-040V(0-Series)

Issue: 2000-03 Doc No: SPC-81511-0102

SPC binder labels. 30 mm Half width *Note! This page is generated **automaticall***
*using the **variable definitions** made in the **front page** file!!*

TBA/22 040V
648571-040V(0-Series)
Issue: 2000-03 Doc No: SPC-81511-0102

TBA/22 040V
648571-040V(0-Series)
Issue: 2000-03 Doc No: SPC-81511-0102

TBA/22 040V
648571-040V(0-Series)
Issue: 2000-03 Doc No: SPC-81511-0102

TBA/22 040V
648571-040V(0-Series)
Issue: 2000-03 Doc No: SPC-81511-0102

TBA/22 040V
648571-040V(0-Series)
Issue: 2000-03 Doc No: SPC-81511-0102

TBA/22 040V
648571-040V(0-Series)
Issue: 2000-03 Doc No: SPC-81511-0102

TBA/22 040V
648571-040V(0-Series)
Issue: 2000-03 Doc No: SPC-81511-0102

TBA/22 040V
648571-040V(0-Series)
Issue: 2000-03 Doc No: SPC-81511-0102

TBA/22 040V
648571-040V(0-Series)
Issue: 2000-03 Doc No: SPC-81511-0102

TBA/22 040V
648571-040V(0-Series)
Issue: 2000-03 Doc No: SPC-81511-0102

TBA/22 040V
648571-040V(0-Series)
Issue: 2000-03 Doc No: SPC-81511-0102

This page intentionally left blank