EM

Electrical Manual

TBA/22 050V

648571-0500

TechPub_2614345_v3_DRAFT_Release81767017fro.fm

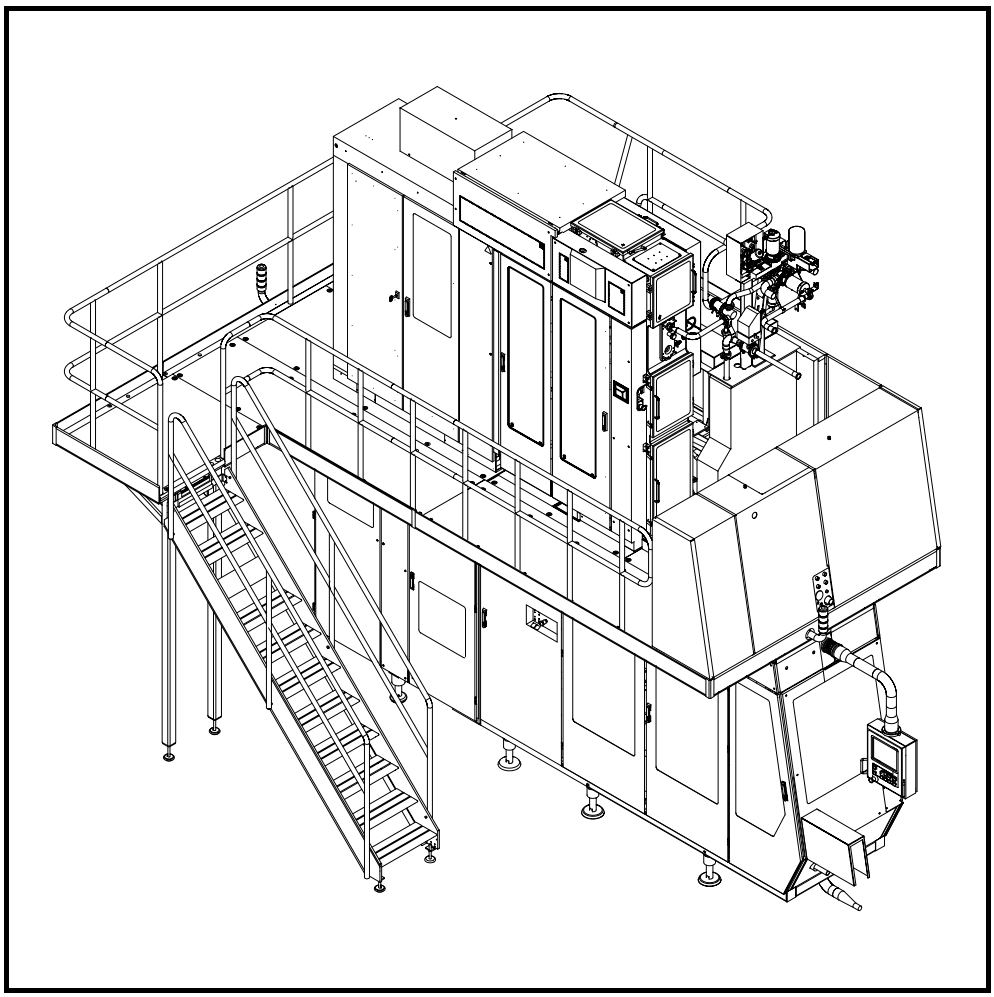

WARNING

Read and follow all safety precautions before working on or near this equipment.

Read all safety precautions throughout this manual and on safety signs attached to this equipment. Failure to follow all safety precautions could result in death or serious injury.

Tetra Pak

Doc. No. EM-81767-0107

Copyright © 2004 Tetra Pak Group

All rights reserved. No part of this document may be reproduced or copied in any form or by any means without written permission from Tetra Pak Carton Ambient

Tetra Pak and all Tetra Pak products are trademarks belonging to the Tetra Pak Group.

The content of this manual is in accordance with the design and construction of the machine or equipment at the time of publishing. Tetra Pak reserves the right to introduce design modifications without prior notice.

This document was produced by:

Tetra Pak Carton Ambient
Via Delfini, 1
41100 Modena
Italy

Additional copies can be ordered from Tetra Pak Parts or the nearest Tetra Pak office. When ordering additional copies, always provide the document number. This can be found in the machine specification document. It is also printed on the front cover and in the footer on each page of the manual.

Doc. No. EM-81767-0107

Issue 2004-05

TechPub_2614345_v3_DRAFT_Release81767017fro.fm

This manual is valid for:

Series No./ Machine No. Sign.

EM
Electrical Manual

TBA/22 050V
648571-0500

TechPub_2614345_v3_DRAFT_Release81767017fro.fm

A list of all optional equipment, optional kits, and rebuilding kits that this manual is valid for is found on the next page.

Doc. No. EM-81767-0107

Issue 2004-05

Tetra Pak

Tetra Pak Carton Ambient

i Introduction

ii Safety Precautions

1 Electrical Systems Description

2 Component Location

3 Document List

4 Position Summary

5 Circuit Diagrams

6 Line Summary

7 Cabinet Terminal Summary

8 Terminal Strip Overview

9 Cable Connection List

10 Mains Connections

11 Program Documents

12 Engineering Change Description

13 Bills of Material

14 Fuse Panel Label

15 Genius Bus Configuration

16 Other Information

Valid for:

TBA/22 050V
648571-0500

El. ECM No.: 153153

Valid from Series No.:

21203/00101

TechPub_2614345_v3_DRAFT_Release81767017fro.fm

Update Log for Doc. No. EM-81767-0107

This table shows all changes made to this manual, such as kits installed and pages added or removed.

Date	Installed Kit	Added Pages (Doc. No.)	Removed Pages	Signature

TechPub_2614345_v3_DRAFT_Release81767017fro.fm

Date	Installed Kit	Added Pages (Doc. No.)	Removed Pages	Signature

TechPub_2614345_v3_DRAFT_Release81767017fro.fm

i Introduction

TechPub_2614345_0102817670l7int.fm

About the Introduction Chapter

This chapter contains basic information about this manual and related Tetra Pak equipment.

TechPub_2614345_0102817670l7int.fm

Delivered Manuals . . . . . i - 5
Page Layout . . . . . i - 6
Page Numbering. . . . . i - 7
Typographical Conventions . . . . . i - 7
Symbols . . . . . i - 7

Machine Introduction . . . . . i - 8
Intended Use of the Equipment . . . . . i - 8
Manufacturer . . . . . i - 8
Service . . . . . i - 8

Identification . . . . . i - 9
CE Classification . . . . . i - 9
Machine Plate . . . . . i - 9

Orientation . . . . . i - 10

Hygiene. . . . . i - 11

Abbreviations and Terminology . . . . . i - 12

How to Use This Electrical Manual . . . . . i - 14
General . . . . . i - 14
Numbering System for Components . . . . . i - 16
Prefix. . . . . i - 16
Function Designation . . . . . i - 17
Running Number . . . . . i - 17
Optional Equipment . . . . . i - 18
How to Trace a Component. . . . . i - 19
Example 1: How to trace sensor +M-B8405. . . . . i - 19
Example 2: How to trace contactor +C-K8201 . . . i - 22
How to Trace a Cable . . . . . i - 24
Example: How to trace cable No. +M-W8202. . . . . i - 24
Supply Voltage/Line Connection Order . . . . . i - 26

TechPub_2614345_0102817670l7int.fm

How to Trace a Line. . . . . i - 26

Example: Line connection L810 to the component +C-A8305 . . . . . i - 26

How to Trace a Terminal . . . . . i - 28

Example 1: Terminal in the electrical cabinet +C-X8213:3 . . . . . i - 28

Example 2: Terminal outside the electrical cabinet +M-X8402:1, :2, :3 . . . . . i - 30

How to Find Electrical Components using the Spare Parts Catalogue . . . . . i - 32

TechPub_2614345_0102817670l7int.fm

Tetra Pak recommends reading all delivered manuals carefully. Make sure that the delivered manuals are available to personnel who operate or maintain the equipment.

It is important to keep this manual for the lifetime of the equipment and to pass the manual on to any subsequent holder or user.

Tetra Pak will not be held responsible for any damage to the equipment caused by not following the instructions given in this manual.

Delivered Manuals

The manuals delivered with this equipment include

- Conversion Manual (CM)
  This manual provides technicians with information on converting the equipment between different production modes.
- Electrical Manual (EM)
  This manual provides technicians with information about the equipment's electrical system.
- Installation Manual (IM)
  This manual provides technicians with information required to safely install the equipment.
- Maintenance Manual (MM)
  This manual provides technicians with information on maintaining the equipment.
- Operation Manual (OM)
  This manual provides the operator with information on handling and operating the equipment before, during, and after production.
- Spare Parts Catalogue (SPC)
  This manual provides the information necessary to order spare parts from Tetra Pak
- Technical Manual (TeM)
  - provides technicians with information required to safely install the equipment
  - provides technicians with information on maintaining the equipment
  - provides technicians with information about the equipment's electrical system
  - provides the information necessary to order spare parts from Tetra Pak

TechPub_2614345_01028176701 7int.fm

Page Layout

Every main page in a manual contains a header and a footer. The page header contains the section name (1) and the chapter name (2). The page footer contains the manual's document number (3), and the page number (4). See also Section Page Numbering.

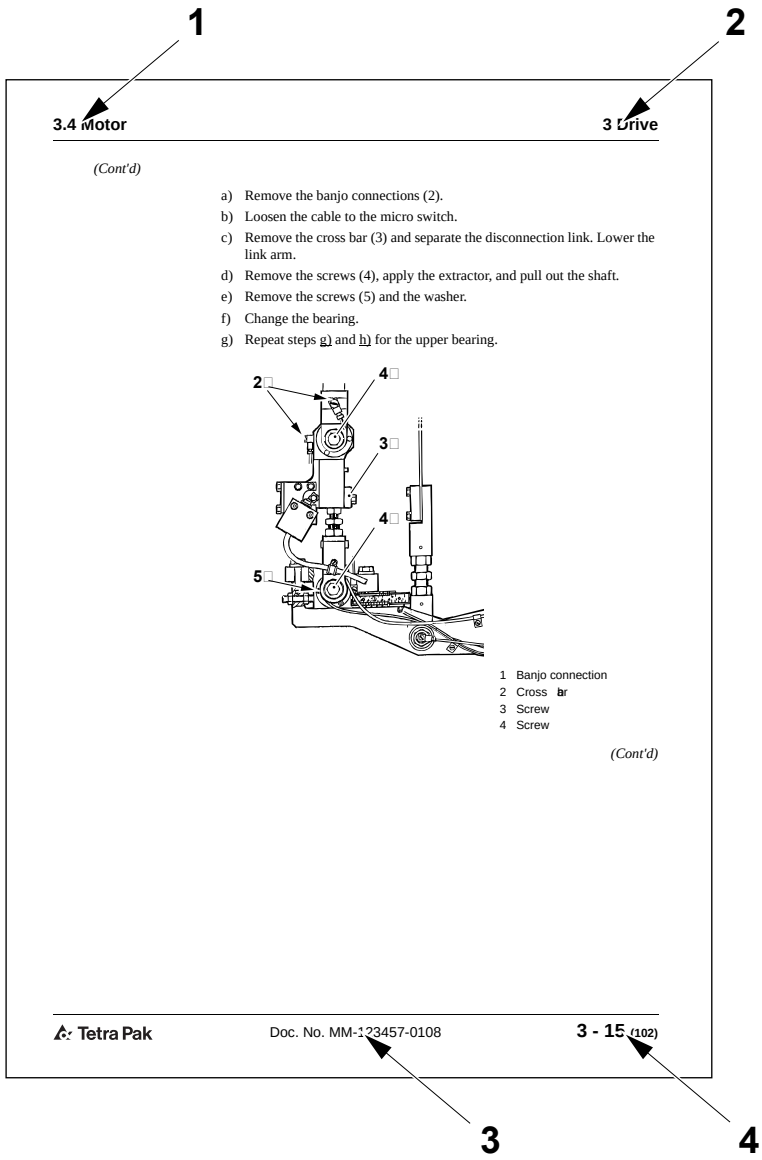

1 Section name
2 Chapter name
3 Document number
4 Page number

TechPub_2614345_0102817670l7int.fm

Page Numbering

A page number has three parts:

- chapter number (1)
- consecutive page number (2) within the chapter
- total number of pages (3) in the chapter.

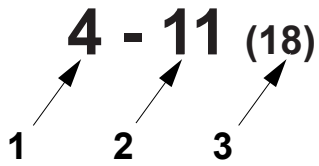

1 Chapter number
2 Consecutive page number
3 Total number of pages

Typographical Conventions

Controls on the operator panel, emergency stop devices, and program steps are printed in CAPITAL LETTERS.

Cross-references are underlined.

Symbols

The following symbols are used in illustrations:

- A pointer arrow (1) indicates the position of an object.
- A zoom arrow (2) indicates that an object view is enlarged. The arrow points towards the enlarged view of the object.
- A rotation movement arrow (3) indicates rotational movement of an object. The arrow points in the direction of rotation.
- A straight movement arrow (4) indicates movement of an object. The arrow points in the direction of movement.

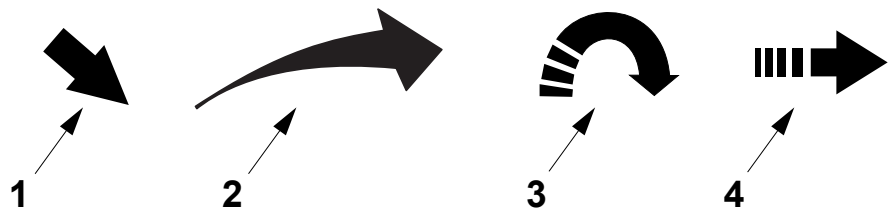

1 Pointer arrow
2 Zoom arrow
3 Rotation movement arrow
4 Straight movement arrow

TechPub_2614345_0102817670l7int.fm

Machine Introduction

Intended Use of the Equipment

The intended use of this Tetra Pak equipment is to...

All other use is prohibited. Tetra Pak will not be held responsible for injury or damage if the equipment is used for any other purpose.

Manufacturer

This Tetra Pak equipment has been manufactured by

Tetra Pak Carton Ambient
Via Delfini, 1
41100 Modena
Italy

Service

If you encounter problems when operating this equipment, contact the nearest Tetra Pak office.

Contact the Liaison with other inquiries, comments, or suggestions for improvement regarding the equipment and its documentation.

TechPub_2614345_0102817670l7int.fm

Identification

CE Classification

This equipment complies with the basic health and safety regulations of the European Economic Area (EEA).

Machine Plate

The illustration below shows an example of the machine plate and its location on the equipment. The machine plate carries data needed when contacting Tetra Pak concerning this specific equipment.

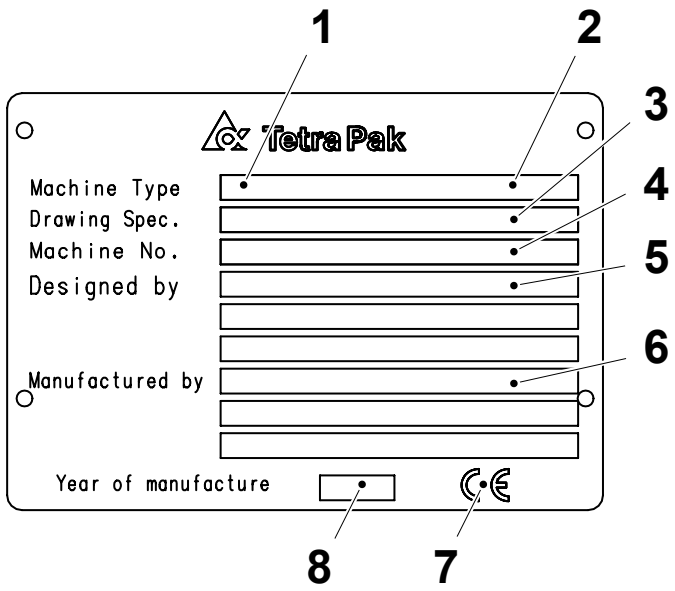

1 Machine type
2 Volume
3 Drawing specifications
4 Machine serial number
5 Designed by
6 Manufacturer
7 CE mark
8 Year of manufacture

TechPub_2614345_0102817670l7int.fm

Orientation

The illustration below shows the orientation of the equipment. This orientation information will be used throughout this manual.

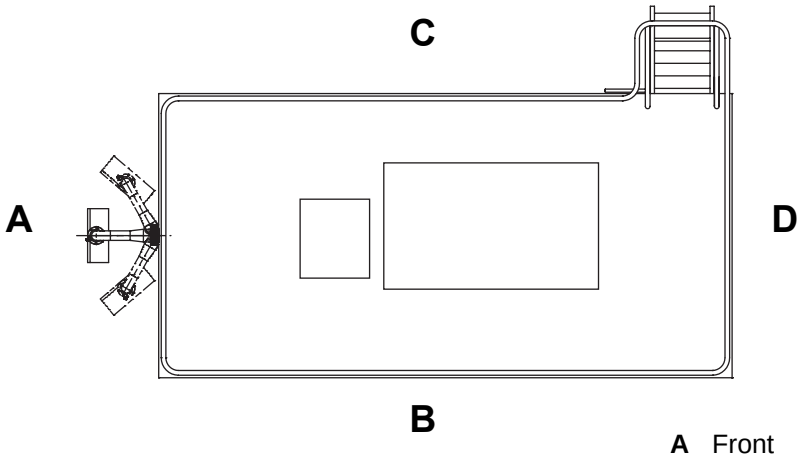

A Front
B Right-hand side
C Left-hand side
D Back

TechPub_2614345_0102817670l7int.fm

Hygiene

Avoid microbiological pollution of the packaging material:

- Always keep the doors to the filling room (area) closed. To prevent contamination via air streams, never open a window when the equipment is in production.
- Never clean the floors or the equipment in the filling room (area) when the equipment is in production.
- Compressed air used for cleaning purposes is to be used only for cleaning filters and should only be used outside of the filling room (area) or in the final folder compartment of the filling machine.
- Prepare the splicing of the packaging material as late as possible.
- Disinfect your hands before touching anything that may come into contact with the product. Use disinfectant code H. See Chapter Technical Data.
- Keep your hands and gloves clean.
- Always wear some type of hair protection (cap or hairnet) and clean clothes (preferably white).
- Do not wear a watch, ring, necklace, earrings, or any other exposed jewellery.

TechPub_2614345_01028176701 7int.fm

Abbreviations and Terminology

Abbreviation/ Terminology	Meaning	Translation
AP	Aseptic Product	
ASU	Automatic Splicing Unit	
CPU	Central Processing Unit	
CS	Control System	
DCSM	Design Control System Multistep	
DMC	Digital Motion Controller	
EM	Electrical Manual	
EN	Norme Européenne (European standard)	
FCMM	Frequency Controlled Main Motor	
FCS	Filling Control System	
HD	Hard Disk	
HI	Headspace by Injection	
HF	High Frequency	
IM	Installation Manual	
LED	Light Emitting Diode	
LS	Longitudinal Sealing	
MC	Motion Controller	
MDCS	Motorized Design Control System	
MM	Maintenance Manual	
OM	Operation Manual	
PC	Personal Computer	
PLC	Programmable Logic Controller	
PLMS	Packaging Line Monitoring System	
PMI	Packaging Material In-feed	
PT	Pull Tab (optional)	
RH	Right Hand	
SA	Strip Applicator	
SP	Spare Part	
SPC	Spare Part Catalogue	
SS	Short Stop	
SSS	Strip Splice Sensor	

(Cont'd)

TechPub_2614345_01028176701 7int.fm

(Cont'd)

Abbreviation/ Terminology	Meaning	Translation
TCSB	Temperature Controlled Steam Barrier	
TFD	Tube Folding Device	
TMCC	Tetra Pak Multipourpose Controller	
TP	Tetra Pak	
TPIH	Tetra Pak Induction Heating	
TPMS	Tetra Pak Maintenance System	
TPOP	Tetra Pak Operator panel	
TS	Transversal sealing	

TechPub_2614345_01028176701 7int.fm

How to Use This Electrical Manual

General

The chapters following Introduction and Safety Precautions are divided as follows.

Chapter	Name	Drawing No.
1	Electrical Systems Description	
2	Document List	2565627-0001
3	Position Summary	2565627-0002
4	Circuit Diagrams	2565627-0003
5	Line Summary	2565627-0004
6	Cabinet Terminal Summary	2565627-0005
7	Terminal Strip Overview	2565627-0006
8	Cable Connection List	2565627-0007
9	Mains Connections	2565627-0008
10	Program Documents	--
11	Component Location (optional)	--
12	Engineering Change Description	2565627-0099
13	Bill of Materials	--
14	Fuse Panel Label	--
15	Other Information, for example	--

The **Document List** is a Table of Contents for chapters 3 to 9, listing all drawings included.

In the **Circuit Diagrams**, the first pages are reserved for distribution terminals and the last pages are reserved for pre-connected cables (cables connected to spare terminals and reserved for future use).

The **Mains Connection** diagram shows how the machine should be connected to the local supply, the dimensions of the connection cable, and the connection of the matching transformer (when used).

The **Program Documents** consist of the PLC listings for this machine.

(Cont'd)

TechPub_2614345_0102817670l7int.fm

(Cont'd)

The documents and drawings in chapters 3 to 9 are identified by a drawing group number (1), a version code (2), and a page number (3).

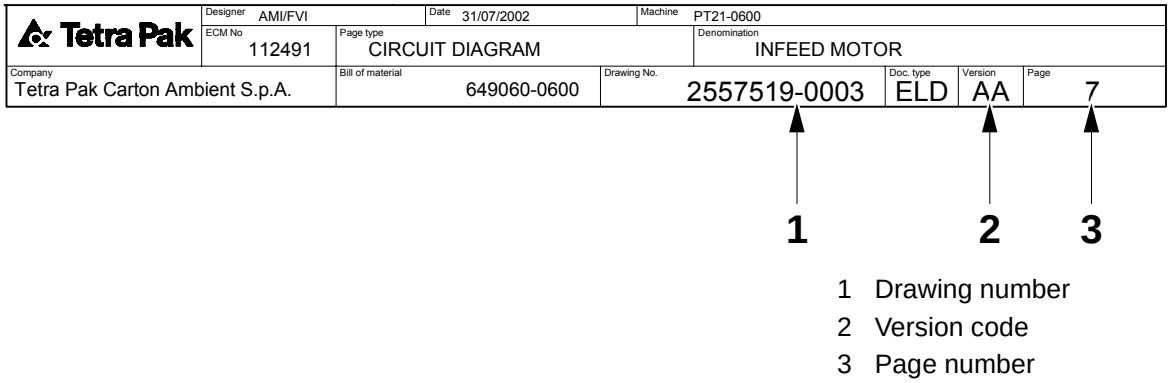

1 Drawing number
2 Version code
3 Page number

The page number is the consecutive numbering of the pages that belong to the main number and is used as a reference in the diagrams.

TechPub_2614345_0102817670l7int.fm

Numbering System for Components

The position number has three parts: a prefix (1), a function designation (2), and a running number (3). These parts are described in detail in the sections below.

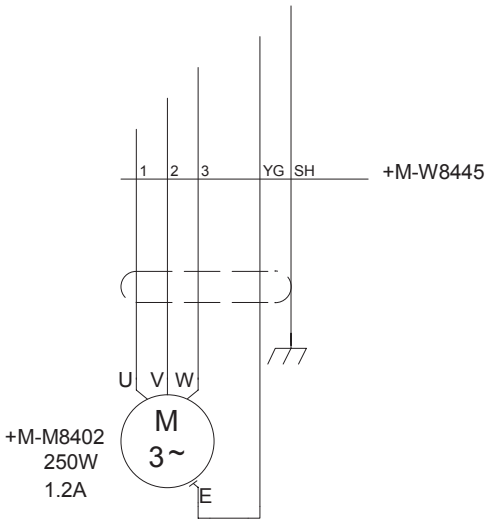

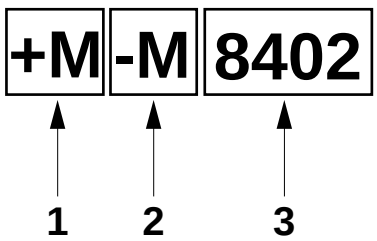

1 Prefix
2 Function designation
3 Running number

TechPub_2614345_0102817670l7int.fm

Prefix

The prefix shows the location of the component:

- +M indicates that the component is fitted on the machine, outside the electrical cabinet.
- +C indicates that the component is fitted on the electrical cabinet, on the TPOP, or on the process panel.

Note! The location +C is considered as default and is omitted on all **circuit diagram** pages.

(Cont'd)

(Cont'd)

Function Designation

The function designation is indicated in accordance with international standards. See the table below.

Designation	Signification in Electrical Diagram
A	Assemblies, Sub-assemblies
B	Transducers
C	Capacitors
D	Binary element, Delay devices, Storage devices
E	Miscellaneous
F	Protective devices
G	Generators, Power supplies
H	Signalling devices
K	Relays, Contactors
L	Inductors, Reactors
M	Motors
N	Analogue elements
P	Measuring equipment, Testing equipment
Q	Switching devices for power circuits
R	Resistors
S	Switching devices for control circuits selectors
T	Transformers
U	Modulators, Changers
V	Tubes, Semiconductors
W	Transmission paths, Waveguide aerials
X	Terminals, Plugs, Sockets
Y	Electrically operated mechanical devices
Z	Terminations, Hybrids, Filters, Equalizers, Limiters

Running Number

The electrical components are numbered in a consecutive non-logical order.

TechPub_2614345_01028176701 7int.fm

Optional Equipment

An optional equipment designation (1) indicates that the component belongs to specific optional equipment.

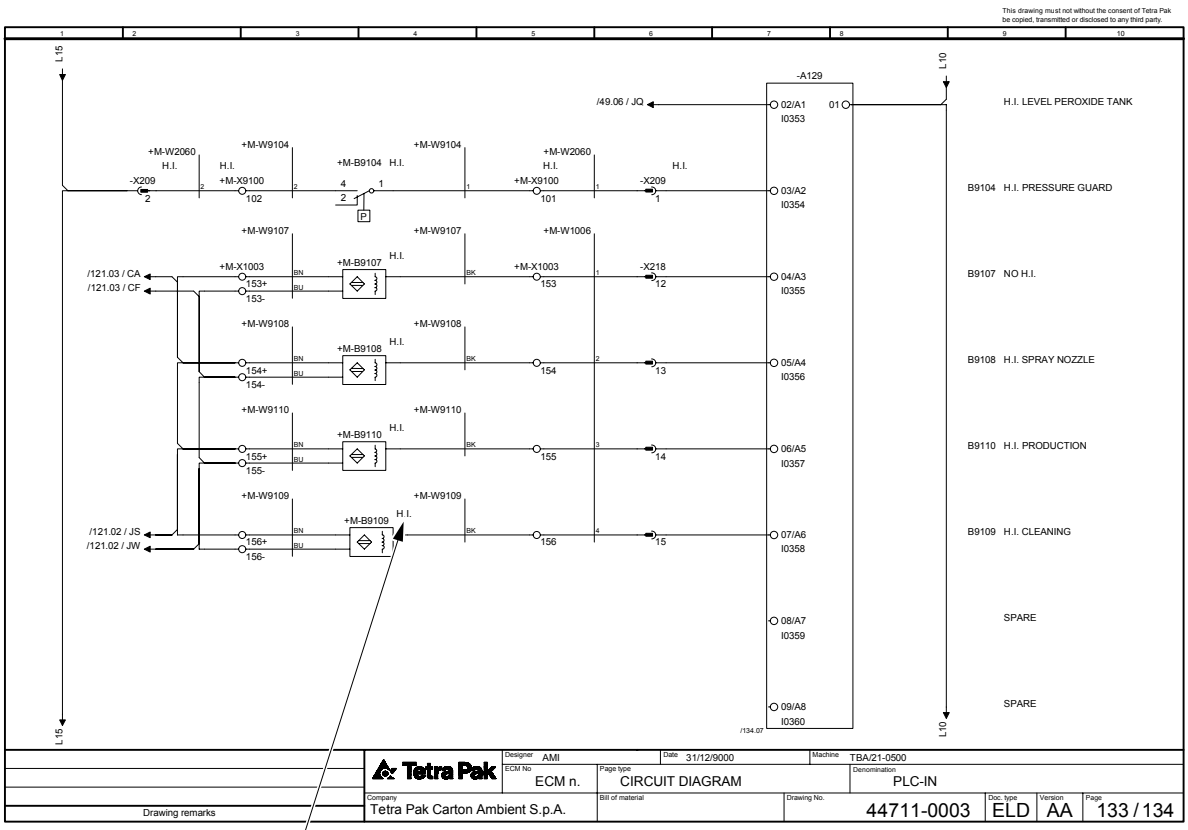

1

1 Optional equipment designation

TechPub_2614345_0102817670l7int.fm

How to Trace a Component

Example 1: How to trace sensor +M-B8405

a) Go to the **Position summary**. See the illustration on the next page.

b) On the right side of the table, find the circuit diagram reference page where the component +M-B8405 is located (page 035, column 4).

c) Go to page 035 in the **Circuit diagram**. See the illustration on the next page.

d) Find the component +M-B8405.

e) Note the connections +M-X8402 :1, :2, :3.

f) Note the cable +M-W8423.

(Cont'd)

TechPub_2614345_0102817670l7int.fm

(Cont'd)

Position summary of 2557519-0003

Component	Page .Col.	Opt.	Component	Page .Col.	Opt.
+C-A8201	006 .7		+M-B8405	035 .4	
+C-A8202	021 .7		+M-B8408	037 .5	
+C-A8205	015 .4		+M-B8409	028 .4	
+C-A8210	016 .3		+M-B8411	028 .4	
+C-A8211	017 .4		+M-B8413	037 .5	
+C-A8212	017 .4		+M-B8414	028 .4	
+C-A8216	007 .5		+M-B8421	027 .4	
+C-A8233	008 .7		+M-B8422	028 .4	
+C-A8250	018 .7		+M-B8423	027 .4	
+C-A8251	017 .8		+M-B8424	027 .4	
+C-A8252	022 .6		+M-B8426	034 .3	
+C-A8301	028 .7		+M-B8427	041 .3	

Position summary

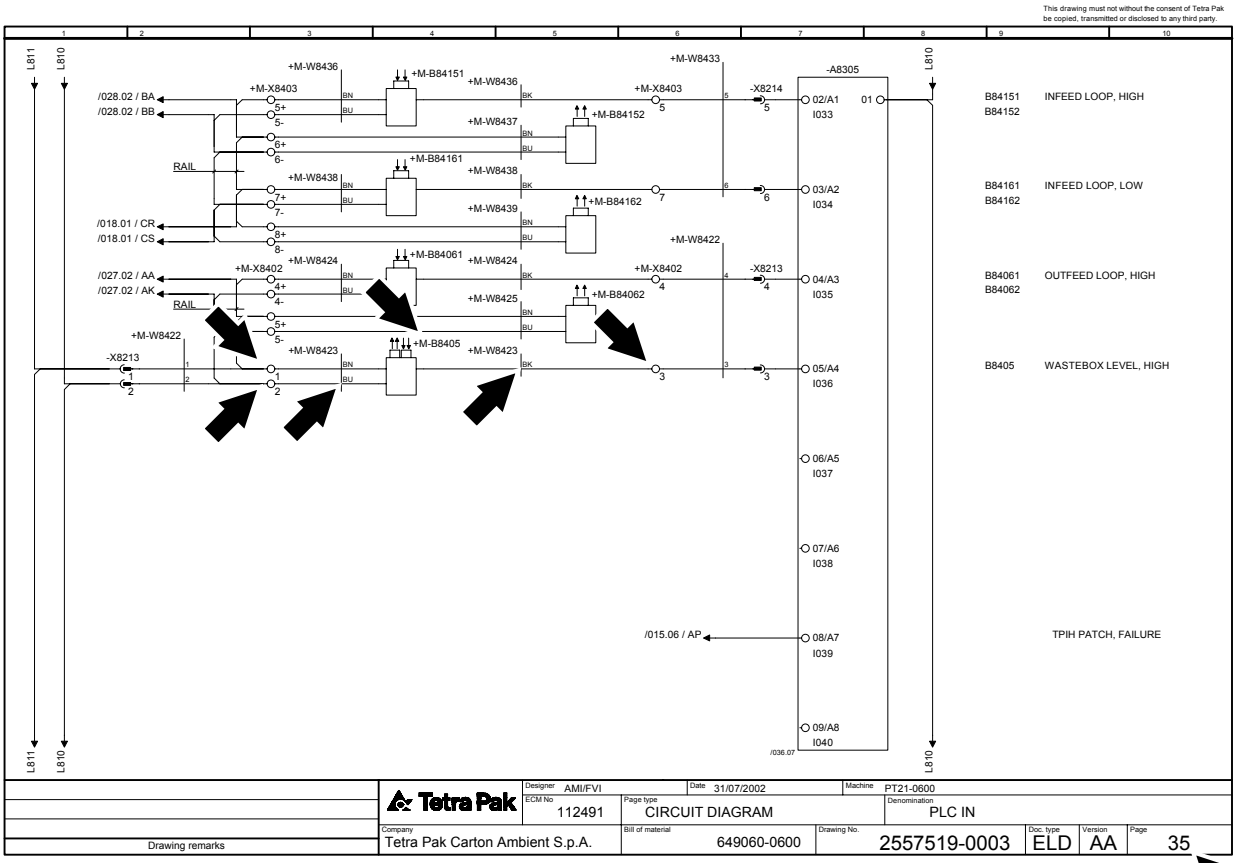

Circuit diagram

(Cont'd)

TechPub_2614345_0102817670l7int.fm

(Cont'd)

g) Go to the **Terminal strip overview**. See the illustration.

h) Find the connections +M-X8402 :1, :2, :3 (on the right side of the table, find the circuit diagram reference page where the connections are located).

Note! The **Terminal strip overview** shows how the sensor is connected (in this case via a connection box).

Terminal strip of 2557519-0003

+M-X8402

From	Cable	Terminal	Cable	To	Page.Col.	Option	Function text
+C-X8213:1	+M-W8422:1	1	+M-W8423:BN	+M-B8405:	035 .3		WASTEBOX LEVEL, HIGH
+C-X8213:2	+M-W8422:2	2	+M-W8423:BU	+M-B8405:	035 .3		WASTEBOX LEVEL, HIGH
+C-X8213:3	+M-W8422:3	3	+M-W8423:BK	+M-B8405:	035 .6		WASTEBOX LEVEL, HIGH
+C-X8213:4	+M-W8422:4	4	+M-W8424:BK	+M-B84061:	035 .6		OUTFEED LOOP, HIGH
		4+	+M-W8424:BN	+M-B84061:	035 .3		OUTFEED LOOP, HIGH
		4-	+M-W8424:BU	+M-B84061:	035 .3		OUTFEED LOOP, HIGH
		5					
		5+	+M-W8425:BN	+M-B84062:	035 .3		OUTFEED LOOP, HIGH
		5-	+M-W8425:BU	+M-B84062:	035 .3		OUTFEED LOOP, HIGH
+C-X8213:5	+M-W8422:5	6	+M-W8426:BK	+M-B84071:	027 .5		OUTFEED LOOP, LOW
		6+	+M-W8426:BN	+M-B84071:	027 .2		OUTFEED LOOP, LOW
		6-	+M-W8426:BU	+M-B84071:	027 .2		OUTFEED LOOP, LOW
		7					
		7+	+M-W8427:BN	+M-B84072:	027 .2		OUTFEED LOOP, LOW
		7-	+M-W8427:BU	+M-B84072:	027 .2		OUTFEED LOOP, LOW
+C-X8213:6	+M-W8422:6	8			040 .6		
		8+			040 .4		
		8-			040 .4		
+C-X8213:7	+M-W8422:7	9			040 .6		
		9+			040 .4		
		9-			040 .4		
+C-X8213:8	+M-W8422:8	10			040 .6		
		10+			040 .4		
		10-			040 .4		
+C-X8213:9	+M-W8422:9	11	+M-W8431:WH	+M-B8411:	028 .6		BLACK TAPE, DETECTED
		11+	+M-W8431:RD	+M-B8411:	028 .3		BLACK TAPE, DETECTED
		11-	+M-W8431:BK	+M-B8411:	028 .3		BLACK TAPE, DETECTED
+C-X8213:10	+M-W8422:10	12			040 .6		
		12+			040 .4		
		12-			040 .4		

Terminal strip overview

Note! When a cable is supplied with the component, such as sensors and photocells, the pin configuration is removed from the symbol in the **Circuit diagram**. The connection information is kept separately from the cable cores.

i) The location +M indicates that the component is fitted on the machine.

j) Locate the component using the SPC, see Section How to Find Electrical Components using the Spare Parts Catalogue.

(Cont'd)

TechPub_2614345_0102817670l7int.fm

(Cont'd)

Example 2: How to trace contactor +C-K8201

a) Go to the **Position summary**. See the illustration below.

b) On the right side of the table, find the circuit diagram reference page where the component +C-K8201 is located (page 043, column 4).

c) Go to page 043 in the **Circuit diagram**. See the illustration below.

d) Find the component +C-K8201.

e) Note the contact image on the right side and find the page references for the related contacts.

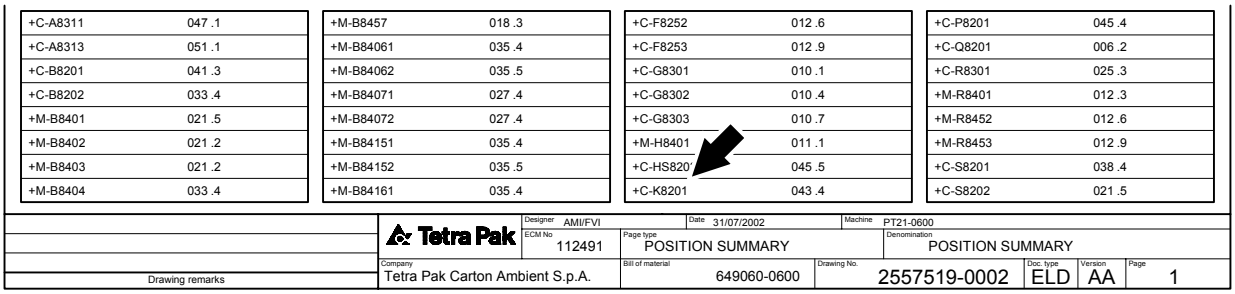

+C-A8311	047 .1	+M-B8457	018 .3	+C-F8252	012 .6	+C-P8201	045 .4
+C-A8313	051 .1	+M-B84061	035 .4	+C-F8253	012 .9	+C-Q8201	006 .2
+C-B8201	041 .3	+M-B84062	035 .5	+C-G8301	010 .1	+C-R8301	025 .3
+C-B8202	033 .4	+M-B84071	027 .4	+C-G8302	010 .4	+M-R8401	012 .3
+M-B8401	021 .5	+M-B84072	027 .4	+C-G8303	010 .7	+M-R8452	012 .6
+M-B8402	021 .2	+M-B84151	035 .4	+M-H8401	011 .1	+M-R8453	012 .9
+M-B8403	021 .2	+M-B84152	035 .5	+C-HS820'	045 .5	+C-S8201	038 .4
+M-B8404	033 .4	+M-B84161	035 .4	+C-K8201	043 .4	+C-S8202	021 .5

Tetra Pak | Designer AMI/FVI | Date 31/07/2002 | Machine PT21-0600
ECM No 112491 | Page type POSITION SUMMARY | Denomination POSITION SUMMARY
Company Tetra Pak Carton Ambient S.p.A. | Bill of material 649060-0600 | Drawing No. 2557519-0002 | Doc. type ELD | Version AA | Page 1
Drawing remarks

Position summary

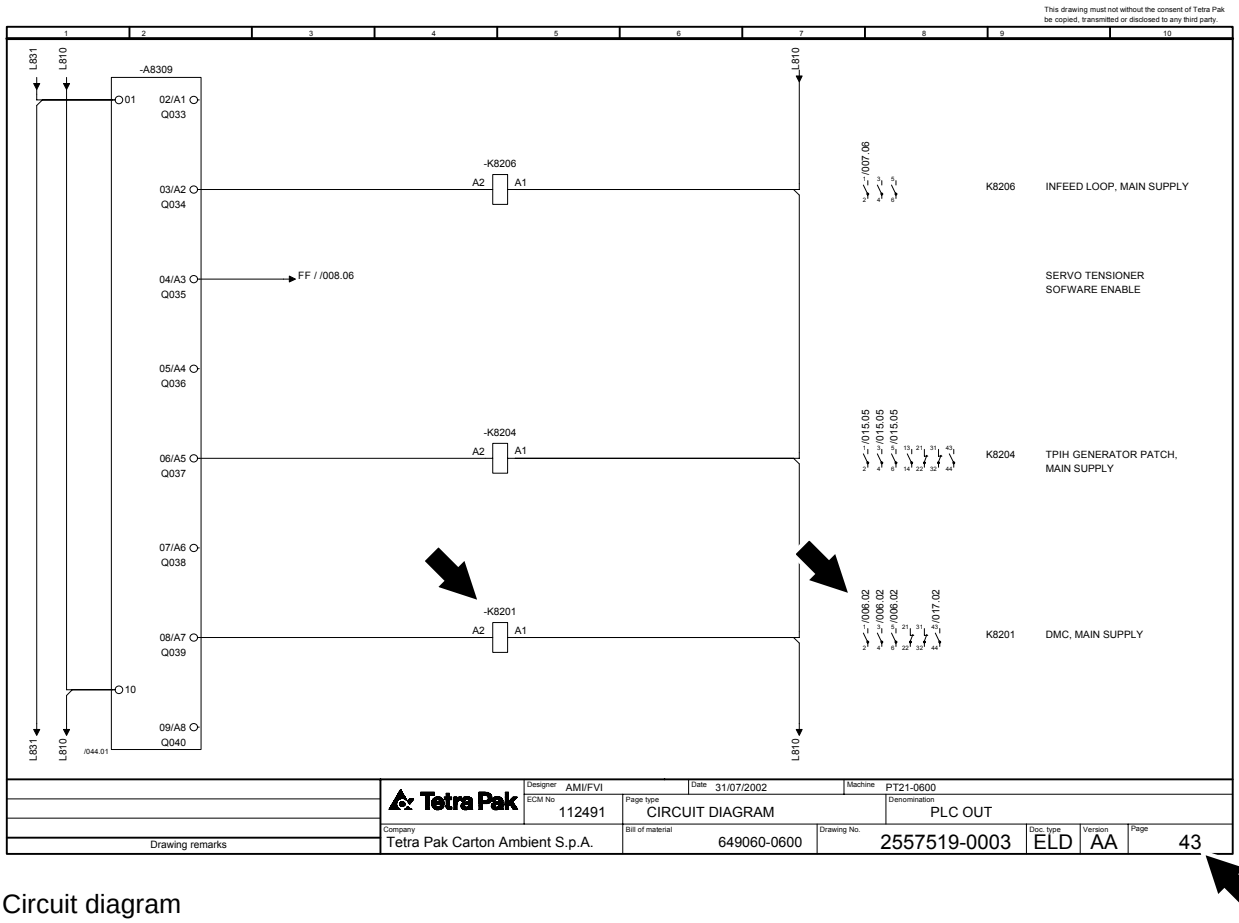

Circuit diagram

(Cont'd)

TechPub_2614345_0102817670l7int.fm

(Cont'd)

f) Go to page 006, column 2 in the **Circuit diagram**. See the illustration below.

g) Find the contacts +C-K8201.

Note! For master and slave components, such as coils and contacts, only the master is reported in the **Position summary**. The slave shows the page and column references of the master.

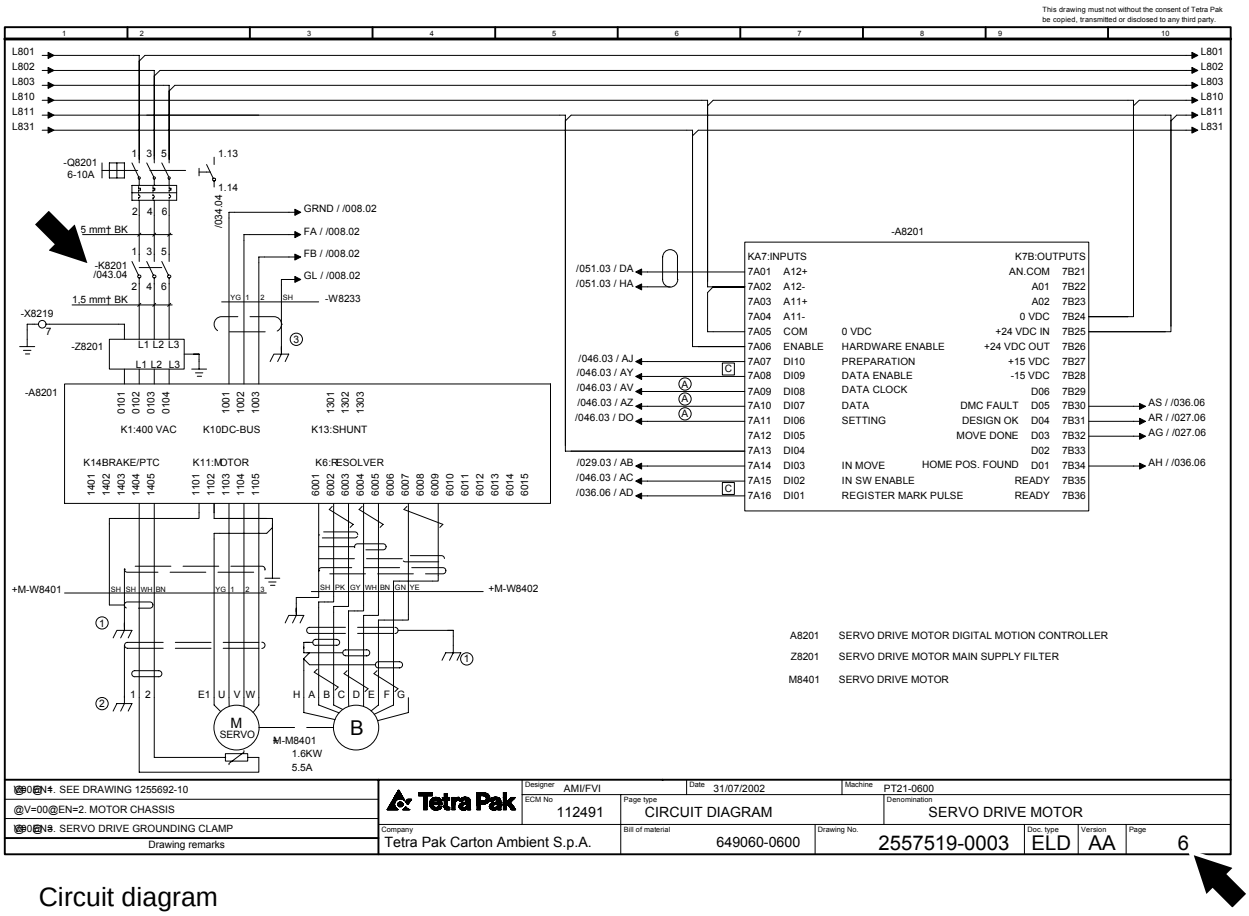

Circuit diagram

TechPub_2614345_01028176701 7int.fm

How to Trace a Cable

Example: How to trace cable No. +M-W8202

a) Go to the **Cable Connection list**. See the illustration on the next page.

b) On the right side of the table, find the circuit diagram reference page where the cable +M-W8202 is located (page 005, column 5).

Note! The cables are listed in alphanumerical order.

c) Go to page 005 in the **Circuit diagram**. See the illustration on the next page.

d) Find the cable +M-W8202.

Note! The spare cores are shown in the cable connection list.

(Cont'd)

TechPub_2614345_0102817670l7int.fm

(Cont'd)

Cable Connection List of 2557519-0003

Cable	Core	From	To	Page.Col.	Option
+M-W8201	4	+F-X106:6	+C-X8201:6	005 .5	
+M-W8201	YG	+F-X106:	+C-X8201:	005 .5	
+M-W8202	1	+F-X206:1	+C-X8202:1	005 .5	
+M-W8202	2	+F-X206:2	+C-X8202:2	005 .5	
	3				
	4				
+M-W8202	5	+F-X206:5	+C-X8202:5	005 .5	
+M-W8202	6	+F-X206:6	+C-X8202:6	005 .5	
+M-W8202	7	+F-X206:7	+C-X8202:7	005 .5	
+M-W8202	8	+F-X206:8	+C-X8202:8	005 .5	
+M-W8202	9	+F-X206:9	+C-X8202:9	005 .5	
+M-W8202	10	+F-X206:10	+C-X8202:10	005 .5	
+M-W8202	11	+F-X206:11	+C-X8202:11	005 .5	
+M-W8202	YG	+F-X206:	+C-X8202:	005 .5	
+M-W8203	WH	+F-X206:23	+C-X8202:23	005 .5	

Cable connection list

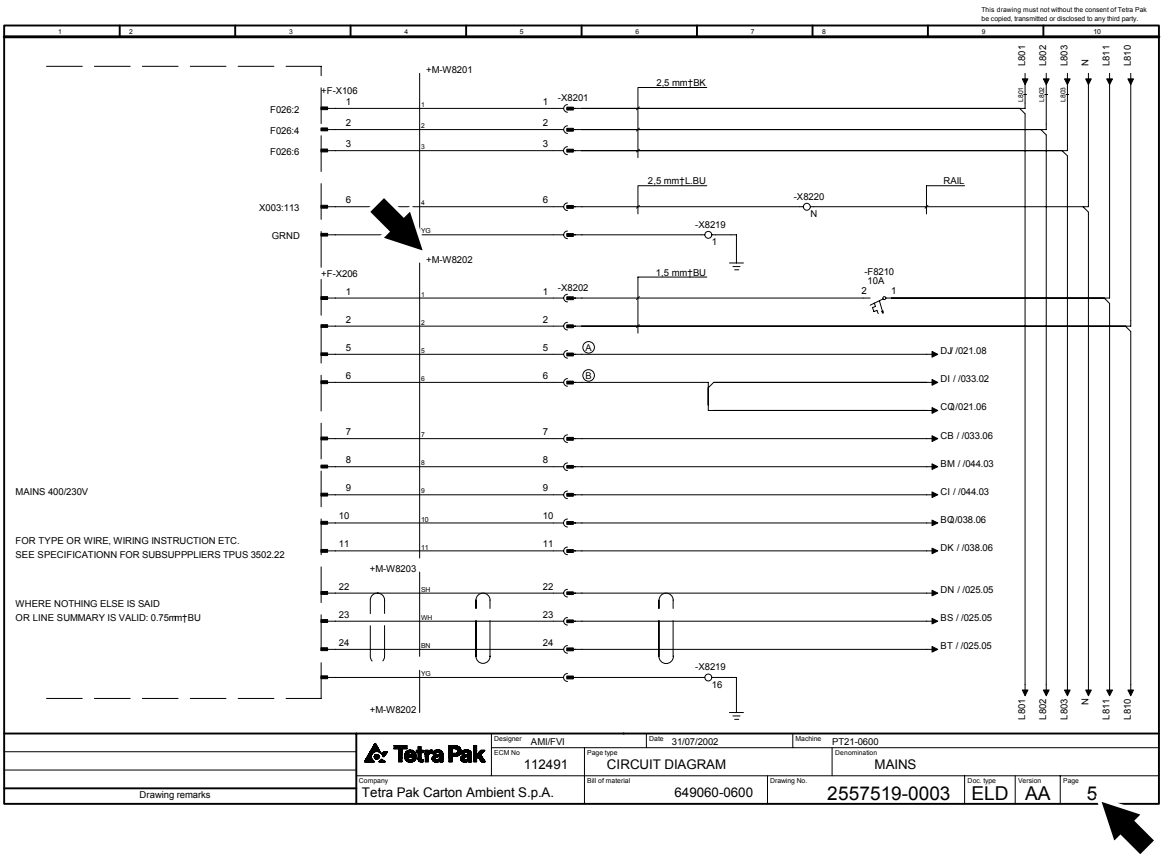

Circuit diagram

TechPub_2614345_0102817670l7int.fm

Supply Voltage/Line Connection Order

The supply voltage in the electrical cabinet has power voltage and control voltage designations:

- Power voltage: lines with designations **ending** with 01 to 09, for example, L03 and L803
- Control voltage: lines with designations **ending** with 10 to 99, for example, L12 and L812

The line connection order is shown in the **Line summary**.

How to Trace a Line

Example: Line connection L810 to the component +C-A8305

a) Go to the **Circuit diagram**. See the illustration on the next page.

b) Find the component +C-A8305 (input module).

c) Note which terminal of +C-A8305 is connected to the line connection L810 (pin 01).

d) Go to the **Line summary.** See the illustration on the next page.

e) Find the component terminal +C-A8305:01.

f) Note the relative upward line terminal connection order +C-XL810:7.

(Cont'd)

TechPub_2614345_0102817670l7int.fm

(Cont'd)

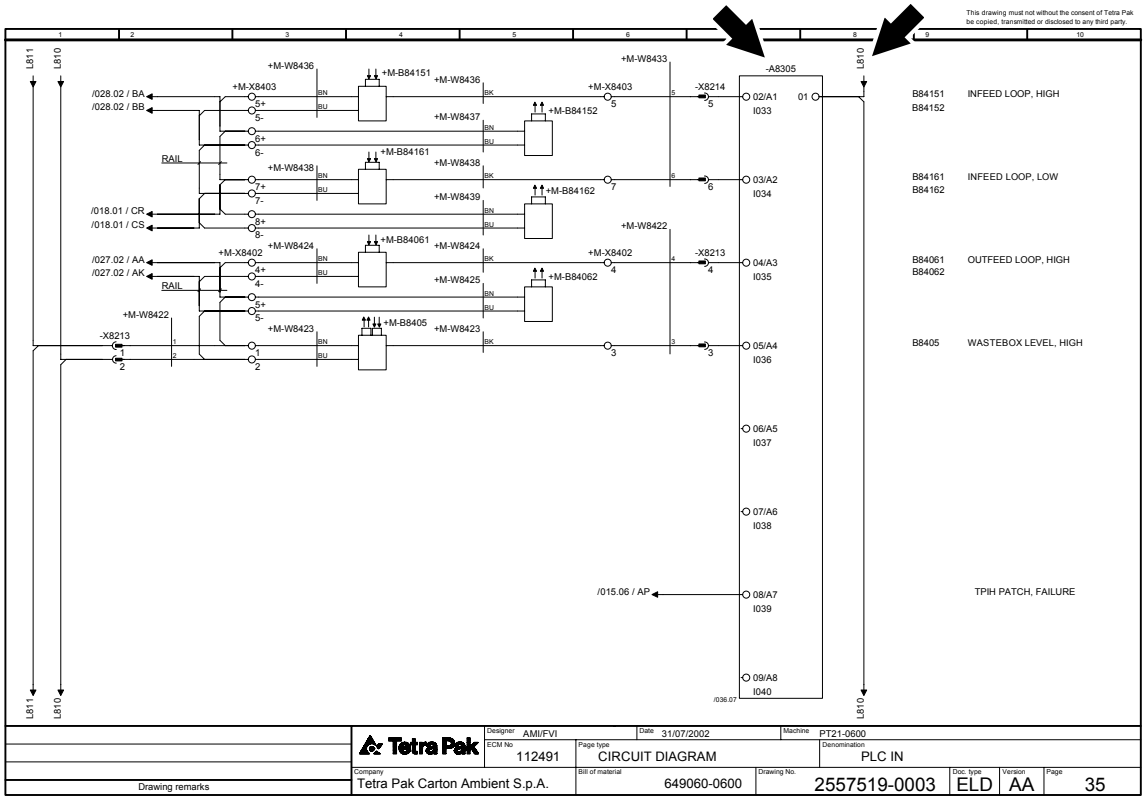

Circuit diagram

Line summary of 2557519-0003

Line	From	Page.Col.	To	Page.Col.	Area/Color	Opt.
L801	+C-X8201:1	005 .5	+C-F8201:1	007 .6	2.5 mm² BK	
L801	+C-F8201:1	007 .6	+C-F8207.1:1	015 .5		
L801	+C-F8207.1:1	015 .5	+C-F8211:1	010 .2		
L801	+C-F8211:1	010 .2	+C-Q8201:	006 .2		
L801	+C-Q8201:1	006 .2	+C-F8250:1	012 .3		
L802	+C-X8201:2	005 .5	+C-F8202:1	011 .1	2.5 mm² BK	
L802	+C-F8202:1	011 .1	+C-F8207.2:1	015 .5		
L802	+C-F8207.2:1	015 .5	+C-Q8203:	006 .2		
L803	+C-X8201:3	005 .5	+C-F8203:1	011 .7	2.5 mm² BK	
L803	+C-F8203:1	011 .7	+C-F8207.3:1	015 .5		
L803	+C-F8207.3:1	015 .5	+C-F8206:1	015 .3		
L803	+C-F8206:1	015 .3	+C-Q8205:	006 .2		
L810	+C-XL810:1	001 .1	+C-X8202:2	005 .5	1.50 mm² BU	
L810	+C-XL810:2	001 .1	+C-A8252:A2	022 .6	0.75 mm² BU	
L810	+C-A8252:A2	022 .6	+C-A8252:S24	022 .6		
L810	+C-XL810:3	001 .2	+C-XL810:4	001 .2	1.50 mm² BU	
L810	+C-XL810:5	001 .2	+C-A8211:18	017 .4	0.75 mm² BU	
L810	+C-A8211:18	017 .4	+C-A8301:01	027 .8		
L810	+C-A8301:01	027 .8	+C-A8211:20	017 .4		
L810	+C-A8211:20	017 .4	+C-A8212:18	017 .4		
L810	+C-A8212:18	017 .4	+C-A8212:20	017 .4		

Line	From	Page.Col.	To	Page.Col.	Area/Color	Opt.
L810	+C-A8303:10	032 .1	+C-A8303:20	032 .1		
L810	+C-XL810:7	001 .3	+C-A8304:01	033 .8	0.75 mm² BU	
L810	+C-A8304:01	033 .8	+C-A8305:01	035 .8		
L810	+C-A8305:01	035 .8	+C-A8306:01	037 .8		
L810	+C-XL810:8	001 .3	+C-A8309:10	043 .1	0.75 mm² BU	
L810	+C-A8309:10	043 .1	+C-A8309:20	044 .1		
L810	+C-A8309:20	044 .1	+C-A8310:10	045 .1		
L810	+C-A8310:10	045 .1	+C-A8310:20	046 .1		
L810	+C-A8310:20	046 .1	+C-A8313:18	051 .1		
L810	+C-A8313:18	051 .1	+C-A8311:10	047 .1		
L810	+C-A8311:10	047 .1	+C-A8311:20	048 .1		
L810	+C-XL810:9	001 .3	+C-K8206:A1	043 .4	0.75 mm² BU	
L810	+C-K8206:A1	043 .4	+C-K8207:10	044 .4		
L810	+C-K8207:10	044 .4	+C-K8208:10	044 .4		
L810	+C-K8208:10	044 .4	+C-K8209:10	044 .4		
L810	+C-K8209:10	044 .4	+C-K8214:10	045 .4		
L810	+C-K8214:10	045 .4	+C-K8250:10	047 .4		
L810	+C-XL810:10	001 .4	+C-K8213:4	012 .3	0.75 mm² BU	
L810	+C-K8213:4	012 .3	+C-K8252:4	012 .5		
L810	+C-K8252:4	012 .5	+C-K8253:4	012 .8		
L810	+C-XL810:11	001 .4	+C-K8201:A1	043 .4	0.75 mm² BU	

Line summary

TechPub_2614345_0102817670l7int.fm

How to Trace a Terminal

Example 1: Terminal in the electrical cabinet +C-X8213:3

a) Go to the **Cabinet terminal summary**. See the illustration on the next page.

b) Find the terminal +C-X8213:3.

c) On the right side of the table, find the circuit diagram reference page where the terminal +C-X8213:3 is located (page 035, column 7).

d) Go to the **Circuit diagram**. See the illustration on the next page.

(Cont'd)

TechPub_2614345_0102817670l7int.fm

(Cont'd)

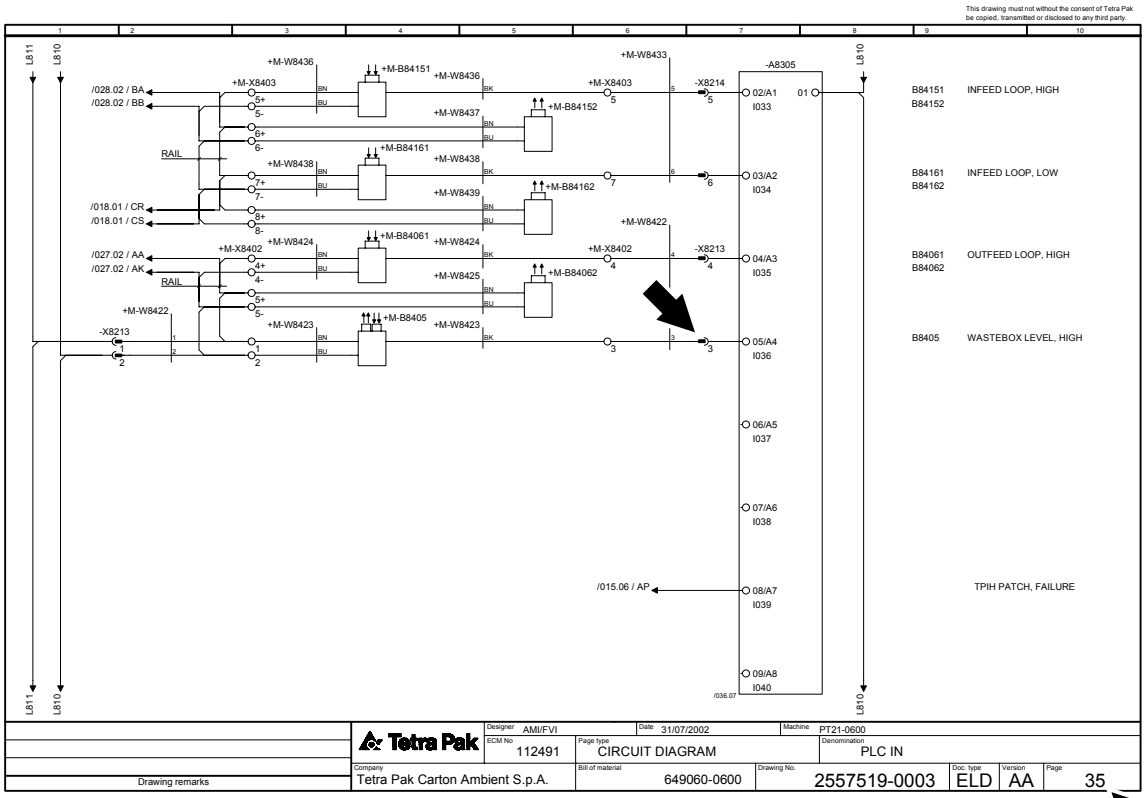

Circuit diagram

Cabinet terminal summary of 2557519-0003

Terminal	Page .Col.	Opt.
+C-X8212:15	032 .4	
+C-X8212:16		
+C-X8212:17	031 .3	
+C-X8212:18	031 .3	
+C-X8212:19	032 .8	
+C-X8212:20	039 .7	
+C-X8212:21	031 .7	
+C-X8212:22	031 .7	
+C-X8212:23	034 .2	
+C-X8212:24	034 .5	
+C-X8212:	031 .7	
+C-X8213:1	035 .1	
+C-X8213:2	035 .7	
+C-X8213:3	035 .7	
+C-X8213:4	035 .7	
+C-X8213:5	027 .6	
+C-X8213:6	040 .7	
+C-X8213:7	040 .7	
+C-X8213:8	040 .7	
+C-X8213:9	028 .6	
+C-X8213:10	040 .7	

Terminal	Page .Col.	Opt.
+C-X8214:7	018 .5	
+C-X8214:8	040 .7	
+C-X8214:9	040 .7	
+C-X8214:10	040 .7	
+C-X8214:	040 .7	
+C-X8215:1	011 .7	
+C-X8215:2	011 .8	
+C-X8215:3	011 .4	
+C-X8215:4	011 .4	
+C-X8215:5	011 .10	
+C-X8215:6	011 .9	
+C-X8215:	011 .9	
+C-X8216:1	027 .2	
+C-X8216:2	027 .2	
+C-X8216:3	027 .6	
+C-X8217:+	041 .4	
+C-X8217:-	041 .4	
+C-X8219:1	005 .7	
+C-X8219:2	053 .4	
+C-X8219:3	053 .4	
+C-X8219:4		

Cabinet terminal summary

(Cont'd)

TechPub_2614345_0102817670l7int.fm

(Cont'd)

Example 2: Terminal outside the electrical cabinet +M-X8402:1, :2, :3

a) Go to the **Terminal strip overview**. See the illustration on the next page.

b) Find the terminal strip page where +M-X8402 is located.

c) On the right side of the table, find the circuit diagram reference page where the terminals +M-X8402:1, :2, :3 are located (page 035, column 3).

d) Go to the **Circuit diagram**. See the illustration on the next page.

e) Note the component connected +M-B8405.

f) The location +M indicates that the component is fitted on the machine.

g) Locate the component using the SPC. See Section How to Find Electrical Components using the Spare Parts Catalogue.

(Cont'd)

TechPub_2614345_0102817670l7int.fm

(Cont'd)

Terminal st… 2557519-0003
+M-X8402

From	Cable	In… Jum…	Terminal	External Jumper	Cable	To	Page.Col.	Option	Function text
+C-X8213:1	+M-W8422:1		1		+M-W8423:BN	+M-B8405:	035 .3		WASTEBOX LEVEL, HIGH
+C-X8213:2	+M-W8422:2		2		+M-W8423:BU	+M-B8405:	035 .3		WASTEBOX LEVEL, HIGH
+C-X8213:3	+M-W8422:3		3		+M-W8423:BK	+M-B8405:	035 .6		WASTEBOX LEVEL, HIGH
+C-X8213:4	+M-W8422:4		4		+M-W8424:BK	+M-B84061:	035 .6		OUTFEED LOOP, HIGH
			4+		+M-W8424:BN	+M-B84061:	035 .3		OUTFEED LOOP, HIGH
			4-		+M-W8424:BU	+M-B84061:	035 .3		OUTFEED LOOP, HIGH
			5						
			5+		+M-W8425:BN	+M-B84062:	035 .3		OUTFEED LOOP, HIGH
			5-		+M-W8425:BU	+M-B84062:	035 .3		OUTFEED LOOP, HIGH
+C-X8213:5	+M-W8422:5		6		+M-W8426:BK	+M-B84071:	027 .5		OUTFEED LOOP, LOW
			6+		+M-W8426:BN	+M-B84071:	027 .2		OUTFEED LOOP, LOW
			6-		+M-W8426:BU	+M-B84071:	027 .2		OUTFEED LOOP, LOW
			7						
			7+		+M-W8427:BN	+M-B84072:	027 .2		OUTFEED LOOP, LOW
			7-		+M-W8427:BU	+M-B84072:	027 .2		OUTFEED LOOP, LOW

Terminal strip overview

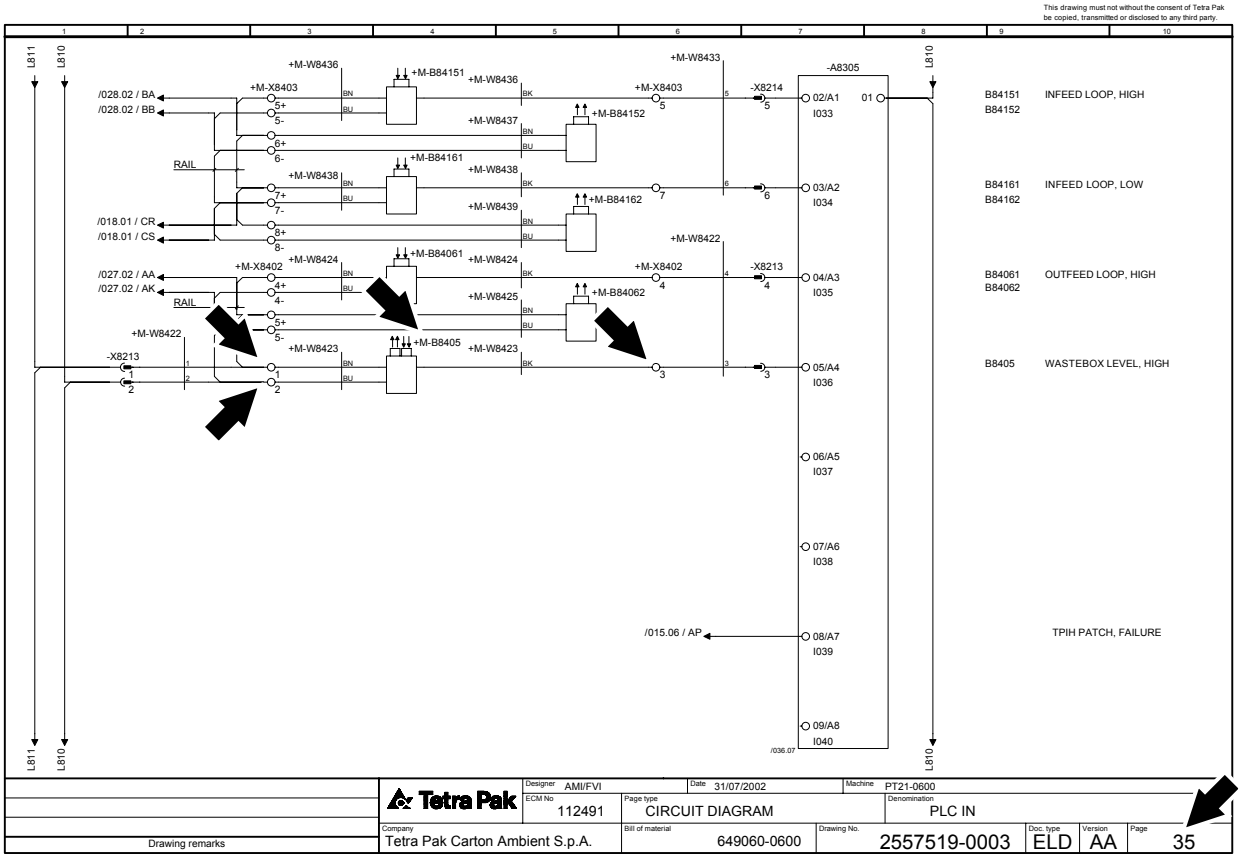

Circuit diagram

TechPub_2614345_01028176701 7int.fm

How to Find Electrical Components using the Spare Parts Catalogue

One of the chapters in the Spare Parts Catalogue (SPC) is the **Electrical Parts Index**. This index is used to locate electrical parts.

a) Go to the Electrical Parts Index of the SPC and locate, for example component B8405, and the SPC page on which it can be found.

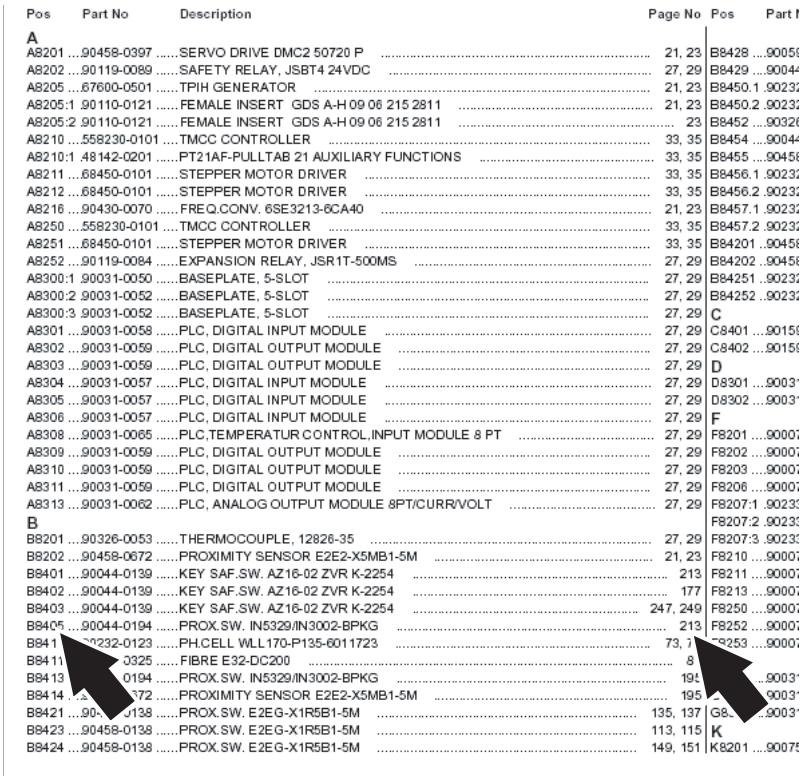

Pos	Part No	Description	Page No
A			
A8201	90458-0397	SERVO DRIVE DMC2 50720 P	21, 23
A8202	90119-0089	SAFETY RELAY, JSBT4 24VDC	27, 29
A8205	67600-0501	TPIH GENERATOR	21, 23
A8205:1	90110-0121	FEMALE INSERT GDS A-H 09 06 215 2811	21, 23
A8205:2	90110-0121	FEMALE INSERT GDS A-H 09 06 215 2811	23
A8210	558230-0101	TMCC CONTROLLER	33, 35
A8210:1	48142-0201	PT21AF-PULLTAB 21 AUXILIARY FUNCTIONS	33, 35
A8211	68450-0101	STEPPER MOTOR DRIVER	33, 35
A8212	68450-0101	STEPPER MOTOR DRIVER	33, 35
A8216	90430-0070	FREQ.CONV. 6SE3213-6CA40	21, 23
A8250	558230-0101	TMCC CONTROLLER	33, 35
A8251	68450-0101	STEPPER MOTOR DRIVER	33, 35
A8252	90119-0084	EXPANSION RELAY, JSR1T-500MS	27, 29
A8300:1	90031-0050	BASEPLATE, 5-SLOT	27, 29
A8300:2	90031-0052	BASEPLATE, 5-SLOT	27, 29
A8300:3	90031-0052	BASEPLATE, 5-SLOT	27, 29
A8301	90031-0058	PLC, DIGITAL INPUT MODULE	27, 29
A8302	90031-0059	PLC, DIGITAL OUTPUT MODULE	27, 29
A8303	90031-0059	PLC, DIGITAL OUTPUT MODULE	27, 29
A8304	90031-0057	PLC, DIGITAL INPUT MODULE	27, 29
A8305	90031-0057	PLC, DIGITAL INPUT MODULE	27, 29
A8306	90031-0057	PLC, DIGITAL INPUT MODULE	27, 29
A8308	90031-0065	PLC,TEMPERATUR CONTROL,INPUT MODULE 8 PT	27, 29
A8309	90031-0059	PLC, DIGITAL OUTPUT MODULE	27, 29
A8310	90031-0059	PLC, DIGITAL OUTPUT MODULE	27, 29
A8311	90031-0059	PLC, DIGITAL OUTPUT MODULE	27, 29
A8313	90031-0062	PLC, ANALOG OUTPUT MODULE 8PT/CURR/VOLT	27, 29
B			
B8201	90326-0053	THERMOCOUPLE, 12826-35	27, 29
B8202	90458-0672	PROXIMITY SENSOR E2E2-X5MB1-5M	21, 23
B8401	90044-0139	KEY SAF.SW. AZ16-02 ZVR K-2254	213
B8402	90044-0139	KEY SAF.SW. AZ16-02 ZVR K-2254	177
B8403	90044-0139	KEY SAF.SW. AZ16-02 ZVR K-2254	247, 249
B8405	90044-0194	PROX.SW. IN5329/IN3002-BPKG	213
B841	90232-0123	PH.CELL WLL170-P135-6011723	73, 7
B8411	0325	FIBRE E32-DC200	8
B8413	0194	PROX.SW. IN5329/IN3002-BPKG	195
B8414	372	PROXIMITY SENSOR E2E2-X5MB1-5M	195
B8421	90- 0138	PROX.SW. E2EG-X1R5B1-5M	135, 137
B8423	90458-0138	PROX.SW. E2EG-X1R5B1-5M	113, 115
B8424	90458-0138	PROX.SW. E2EG-X1R5B1-5M	149, 151

Pos	Part I
B8428	9005
B8429	9004
B8450.1	9023
B8450.2	9023
B8452	9032
B8454	9004
B8455	9045
B8456.1	9023
B8456.2	9023
B8457.1	9023
B8457.2	9023
B84201	9045
B84202	9045
B84251	9023
B84252	9023
C	
C8401	9015
C8402	9015
D	
D8301	9003
D8302	9003
F	
F8201	9000
F8202	9000
F8203	9000
F8206	9000
F8207:1	9023
F8207:2	9023
F8207:3	9023
F8210	9000
F8211	9000
F8213	9000
F8250	9000
F8252	9000
F8253	9000
G8	9003
K	
K8201	9007

Electrical Parts Index

(Cont'd)

TechPub_2614345_0102817670l7int.fm

(Cont'd)

b) Go to the page of the SPC on which the component is located. The position number of the component is the same as the component number. That position number is found on the drawing above the list. The drawing shows where the component is located.

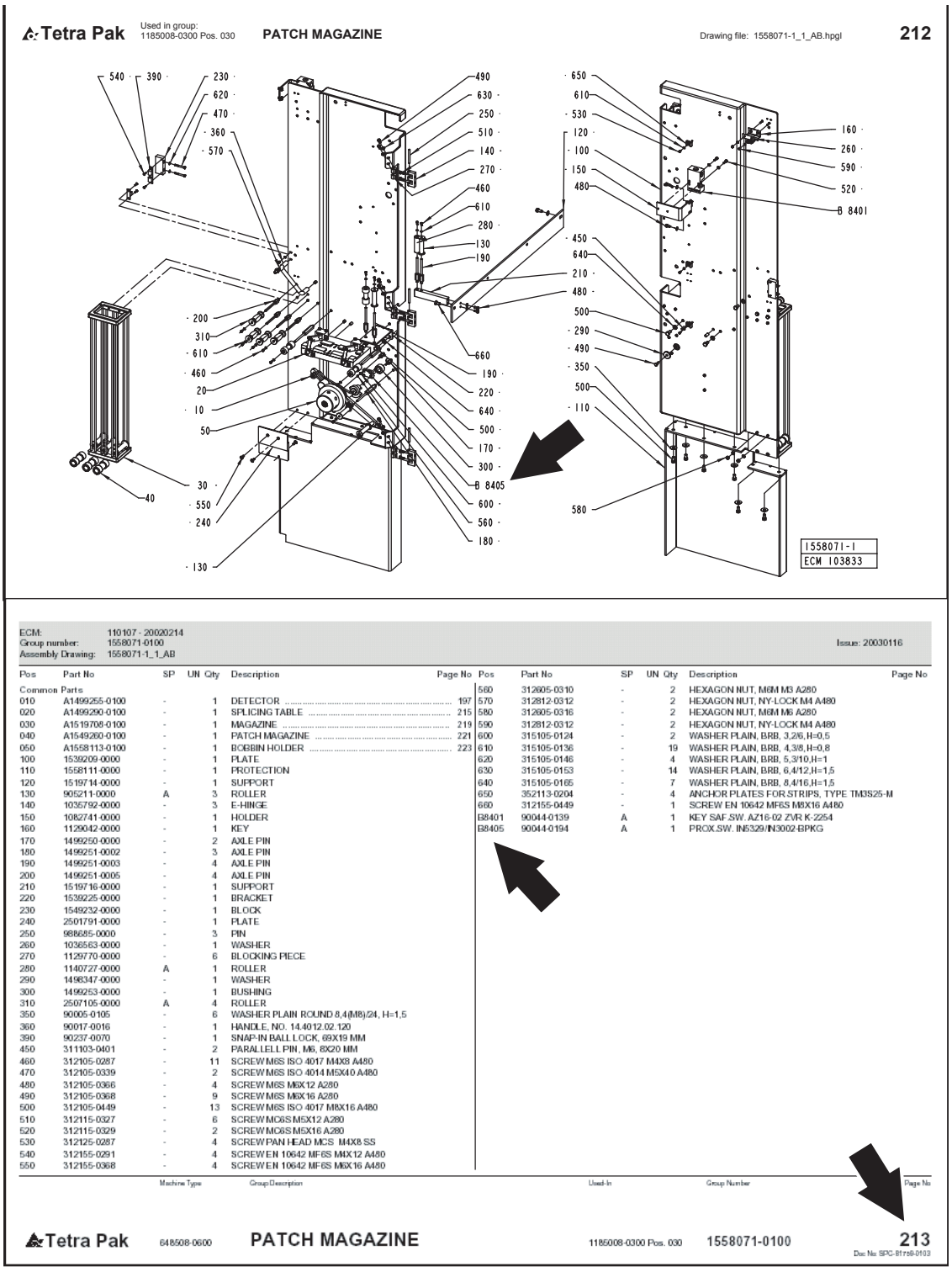

Tetra Pak Used in group: 1185008-0300 Pos. 030 PATCH MAGAZINE Drawing file: 1558071-1_1_AB.hpgl 212

ECM: 110107 - 20020214
Group number: 1558071-0100
Assembly Drawing: 1558071-1_1_AB
Issue: 20030116

Pos	Part No	SP	UN	Qty	Description	Page No
Common Parts						
010	A1499255-0100	-		1	DETECTOR	197
020	A1499290-0100	-		1	SPLICING TABLE	215
030	A1519708-0100	-		1	MAGAZINE	219
040	A1549260-0100	-		1	PATCH MAGAZINE	221
050	A1558113-0100	-		1	BOBBIN HOLDER	223
100	1539209-0000	-		1	PLATE	
110	1558111-0000	-		1	PROTECTION	
120	1519714-0000	-		1	SUPPORT	
130	905211-0000	A		3	ROLLER	
140	1035792-0000	-		3	E-HINGE	
150	1082741-0000	-		1	HOLDER	
160	1129042-0000	-		1	KEY	
170	1499250-0000	-		2	AXLE PIN	
180	1499251-0002	-		3	AXLE PIN	
190	1499251-0003	-		4	AXLE PIN	
200	1499251-0005	-		4	AXLE PIN	
210	1519716-0000	-		1	SUPPORT	
220	1539225-0000	-		1	BRACKET	
230	1549232-0000	-		1	BLOCK	
240	2501791-0000	-		1	PLATE	
250	988685-0000	-		3	PIN	
260	1036563-0000	-		1	WASHER	
270	1129770-0000	-		6	BLOCKING PIECE	
280	1140727-0000	A		1	ROLLER	
290	1498347-0000	-		1	WASHER	
300	1499253-0000	-		1	BUSHING	
310	2507105-0000	A		4	ROLLER	
350	90005-0105	-		6	WASHER PLAIN ROUND 8,4(M8)/24, H=1,5	
360	90017-0016	-		1	HANDLE, NO. 14.4012.02.120	
390	90237-0070	-		1	SNAP-IN BALL LOCK, 69X19 MM	
450	311103-0401	-		2	PARALLELL PIN, M6, 8X20 MM	
460	312105-0287	-		11	SCREW M6S ISO 4017 M4X8 A480	
470	312105-0339	-		2	SCREW M6S ISO 4014 M5X40 A480	
480	312105-0366	-		4	SCREW M6S M8X12 A280	
490	312105-0368	-		9	SCREW M6S M8X16 A280	
500	312105-0449	-		13	SCREW M6S ISO 4017 M8X16 A480	
510	312115-0327	-		6	SCREW MC6S M5X12 A280	
520	312115-0329	-		2	SCREW MC6S M5X16 A280	
530	312125-0287	-		4	SCREW PAN HEAD MCS M4X8 SS	
540	312155-0291	-		4	SCREW EN 10642 MF6S M4X12 A480	
550	312155-0368	-		4	SCREW EN 10642 MF6S M8X16 A480	

Pos	Part No	SP	UN	Qty	Description	Page No
560	312605-0310	-		2	HEXAGON NUT, M6M M3 A280	
570	312812-0312	-		2	HEXAGON NUT, NY-LOCK M4 A480	
580	312605-0316	-		2	HEXAGON NUT, M6M M5 A280	
590	312812-0312	-		2	HEXAGON NUT, NY-LOCK M4 A480	
600	315105-0124	-		2	WASHER PLAIN, BRB, 3,2/6, H=0,5	
610	315105-0136	-		19	WASHER PLAIN, BRB, 4,3/8, H=0,8	
620	315105-0146	-		4	WASHER PLAIN, BRB, 5,3/10,H=1	
630	315105-0153	-		14	WASHER PLAIN, BRB, 6,4/12,H=1,5	
640	315105-0165	-		7	WASHER PLAIN, BRB, 8,4/16,H=1,5	
650	352113-0204	-		4	ANCHOR PLATES FOR STRIPS, TYPE TM3S25-M	
660	312155-0449	-		1	SCREW EN 10642 MF6S M8X16 A480	
B8401	90044-0139	A		1	KEY SAF.SW. AZ16-02 ZVR K-2254	
B8405	90044-0194	A		1	PROX.SW. IN5329/IN3002-BPKG	

Machine Type | Group Description | Used-In | Group Number | Page No

Tetra Pak 648508-0600 PATCH MAGAZINE 1185008-0300 Pos. 030 1558071-0100 213
Doc No SPC-81768-0103

Spare Parts Catalogue spread

TechPub_2614345_0102817670l7int.fm

This page intentionally left blank

TechPub_2614345_0102817670l7int.fm

ii Safety Precautions

TechPub_2614345_0103 - 81767017sp.fm

Read the Safety Precautions

WARNING

Read and follow all safety precautions before working on or near this equipment.

Read all safety precautions throughout this manual and on safety signs attached to this equipment. Failure to follow all safety precautions could result in death or serious injury.

Definitions

Energy Isolating Device. A mechanical device that physically prevents transmission or release of energy.

Power Supply Disconnector. The energy isolating device for the electrical power supply to the equipment.

Lockout. The use of a device, such as a padlock, to make sure that an energy isolating device, such as a power supply disconnector, cannot be operated.

Lockout Procedure. A procedure to put each necessary energy isolating device in its safe position to prevent the energising of the equipment, such as when a maintenance procedure should be carried out.

TechPub_2614345_0103 - 81767017sp.fm

Personnel Requirements . . . . . ii - 6
Skilled Person . . . . . ii - 6
Instructed Person. . . . . ii - 6
Safety Signs . . . . . ii - 7
Locations of Safety Signs . . . . . ii - 9
Safety Devices . . . . . ii - 15
Emergency Stop. . . . . ii - 15
EMERGENCY STOP Push-Buttons . . . . . ii - 16
Safeguards . . . . . ii - 17
Warning Lamp . . . . . ii - 19
Audible Alarm. . . . . ii - 19
Personal Protection. . . . . ii - 20
Noise Hazard . . . . . ii - 20
Entanglement Hazard . . . . . ii - 20
Hazardous Materials . . . . . ii - 21
Hydrogen Peroxide (H_2O_2) . . . . . ii - 22
Emergency Procedures. . . . . ii - 22
Personal Protective Equipment . . . . . ii - 23
Handling . . . . . ii - 24
Storage . . . . . ii - 25
Disposal . . . . . ii - 26
Nitrogen (N2) . . . . . ii - 27
Emergency Procedures. . . . . ii - 27
Handling and Storage of Nitrogen Gas . . . . . ii - 27
Disposal of Nitrogen Gas . . . . . ii - 27
Cooling Media R134a. . . . . ii - 28
Emergency Procedures. . . . . ii - 28
Handling and Storage of Cooling Media R134a . ii - 28
Disposal of Cooling Media R134a . . . . . ii - 28

TechPub_2614345_0103 - 81767017sp.fm

Supply Systems . . . . . ii - 29

Electrical Cabinet . . . . . ii - 29

Power Supply . . . . . ii - 30

Air Supply . . . . . ii - 31

Steam Supply. . . . . ii - 32

Water Supply . . . . . ii - 33

Equipment for Lifting and Moving Loads . . . . ii - 34

TechPub_2614345_0103 - 81767017sp.fm

A safety message is always accompanied by a safety alert symbol and a signal word.



This is the **safety alert symbol**. It is used to alert about potential personal injury hazards. To avoid hazards, obey all safety messages that follow this symbol.

The following safety alert symbols and **signal words** are used in this manual to inform the user of hazards.



DANGER

Danger indicates an imminently hazardous situation which, if not avoided, will result in death or serious injury.



WARNING

Warning indicates a potentially hazardous situation which, if not avoided, **could** result in **death or serious injury**.



CAUTION

Caution indicates a potentially hazardous situation which, if not avoided, **may** result in **minor or moderate injury.** It may also be used to alert against unsafe practices.

CAUTION

Caution without the safety alert symbol indicates a potentially hazardous situation which, if not avoided, **may** result in **property damage**.

TechPub_2614345_0103 - 81767017sp.fm

Personnel Requirements

Note! Personnel includes all persons working on or near this equipment.

Only skilled or instructed personnel are allowed to work with this equipment.

Skilled Person

A skilled person must have relevant education and experience to enable him or her to identify hazards, analyse risks, and avoid hazards which electricity, machinery, chemicals, other energies, and supply systems on this equipment can create.

Skilled persons must meet local regulations, such as certifications and qualifications for working with electricity, mechanical systems, and so on.

Instructed Person

An instructed person must be adequately advised or supervised by a skilled person. The skilled person enables the instructed person to identify hazards, analyse risks, and avoid hazards which electricity, machinery, chemicals, other energies, and supply systems on this equipment can create.

TechPub_2614345_0103 - 81767017sp.fm

Safety Signs

WARNING

Damaged or missing safety signs increase the risk of death or serious injury.

Replace all missing or damaged safety signs immediately.

There are two types of safety sign

- ISO signs are used worldwide
- ANSI signs are used in the United States only.

The table shows all safety signs that are located on this equipment.

Note! The position numbers (Pos.) in the table refer to the positions in the illustration(s) in the Locations of Safety Signs section.

Pos.	ISO sign	ANSI sign
1		
	Moving part can crush and cut. Do not operate with guard removed. Follow lockout procedure before maintenance.	
2		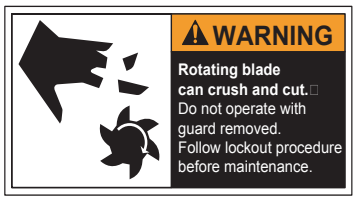
	Rotating blade can crush and cut. Do not operate with guard removed. Follow lockout procedure before maintenance.	
3		
	Hazardous voltage. Will shock, burn, or cause death. Follow lockout procedure before maintenance.	

TechPub_2614345_0103 - 81767017sp.fm

Pos.	ISO sign ANSI sign
4	 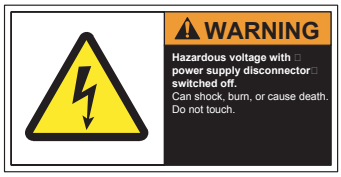 **Hazardous voltage with power supply disconnector switched off.** Can shock, burn, or cause death. Do not touch.
5	  **Chemical burn hazard.** Wear personal protective equipment.
6	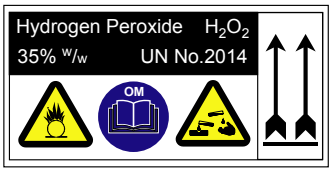 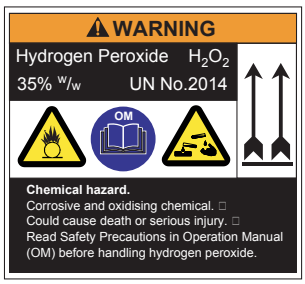 **Chemical hazard.** Corrosive and oxidising chemical. Could cause death or serious injury. Read Safety Precautions in Operation Manual (OM) before handling hydrogen peroxide.
7	  **Risk of eye injury.** Wear eye protection.
8	  **Hot surface.** Do not touch. Follow lockout procedure before maintenance.

TechPub_2614345_0103 - 81767017sp.fm

Locations of Safety Signs

Note! Make sure that each safety sign is undamaged and in its correct position after installation and maintenance. Replace all missing or damaged safety signs immediately.

The illustration shows where the safety signs are located. The position numbers refer to the table in the Safety Signs section.

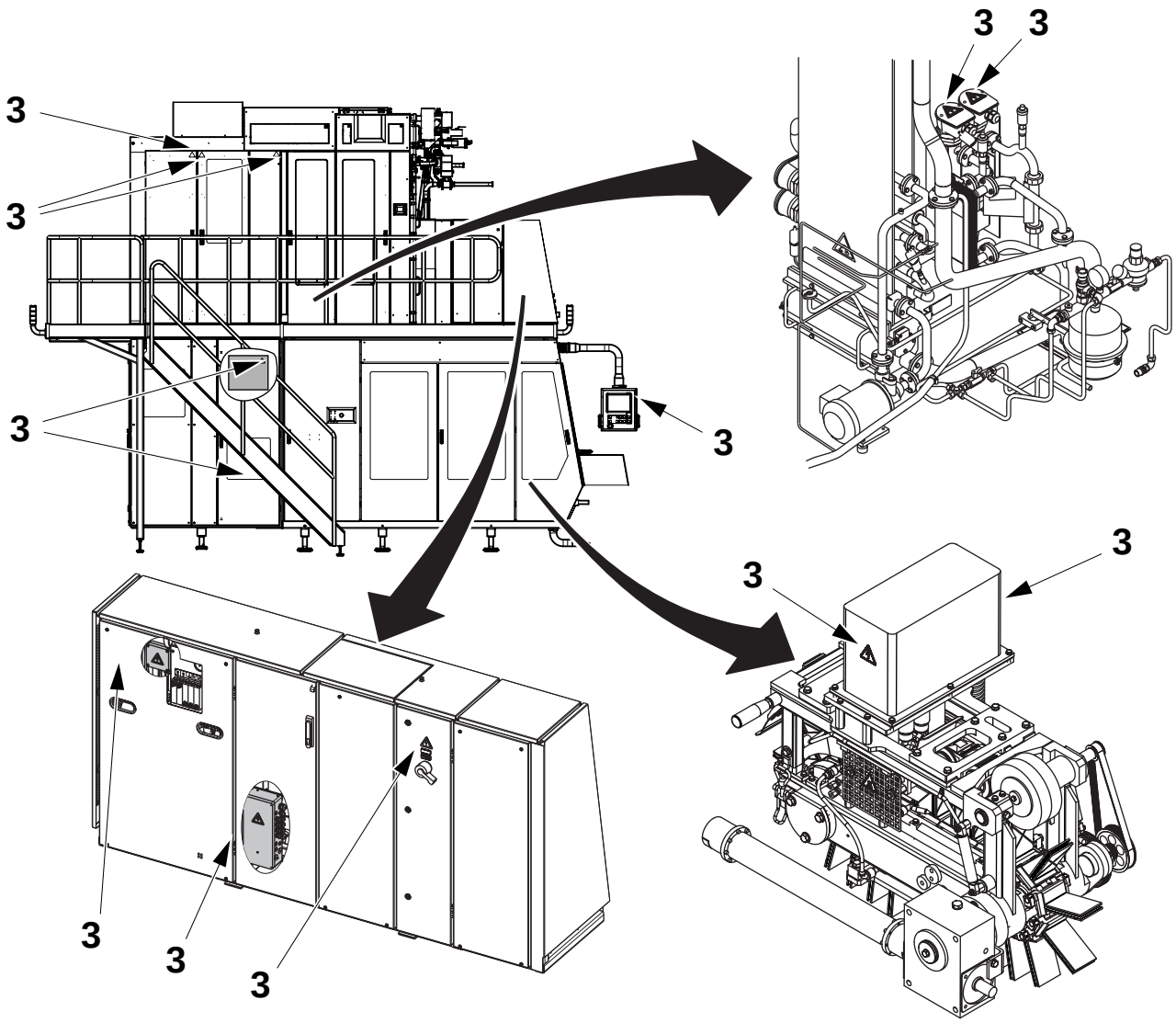

(Cont'd)

TechPub_2614345_0103 - 81767017sp.fm

(Cont'd)

The illustration shows where the safety signs are located. The position numbers refer to the table in the Safety Signs section.

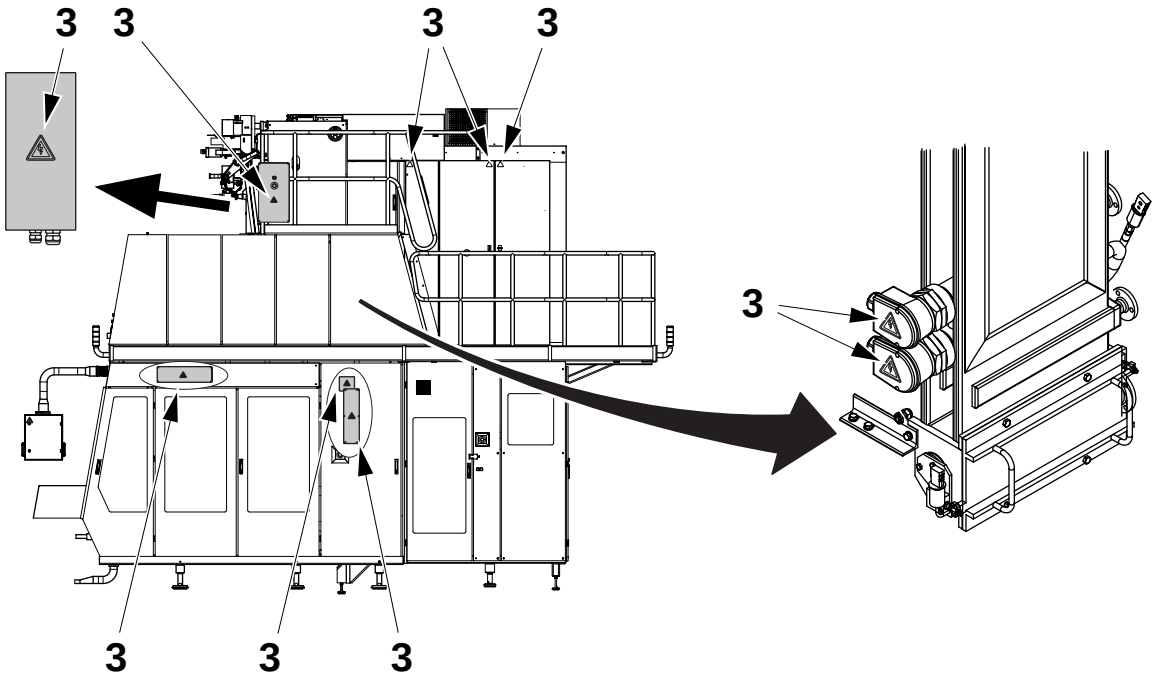

(Cont'd)

TechPub_2614345_0103 - 81767017sp.fm

(Cont'd)

The illustration shows where the safety signs are located. The position numbers refer to the table in the Safety Signs section.

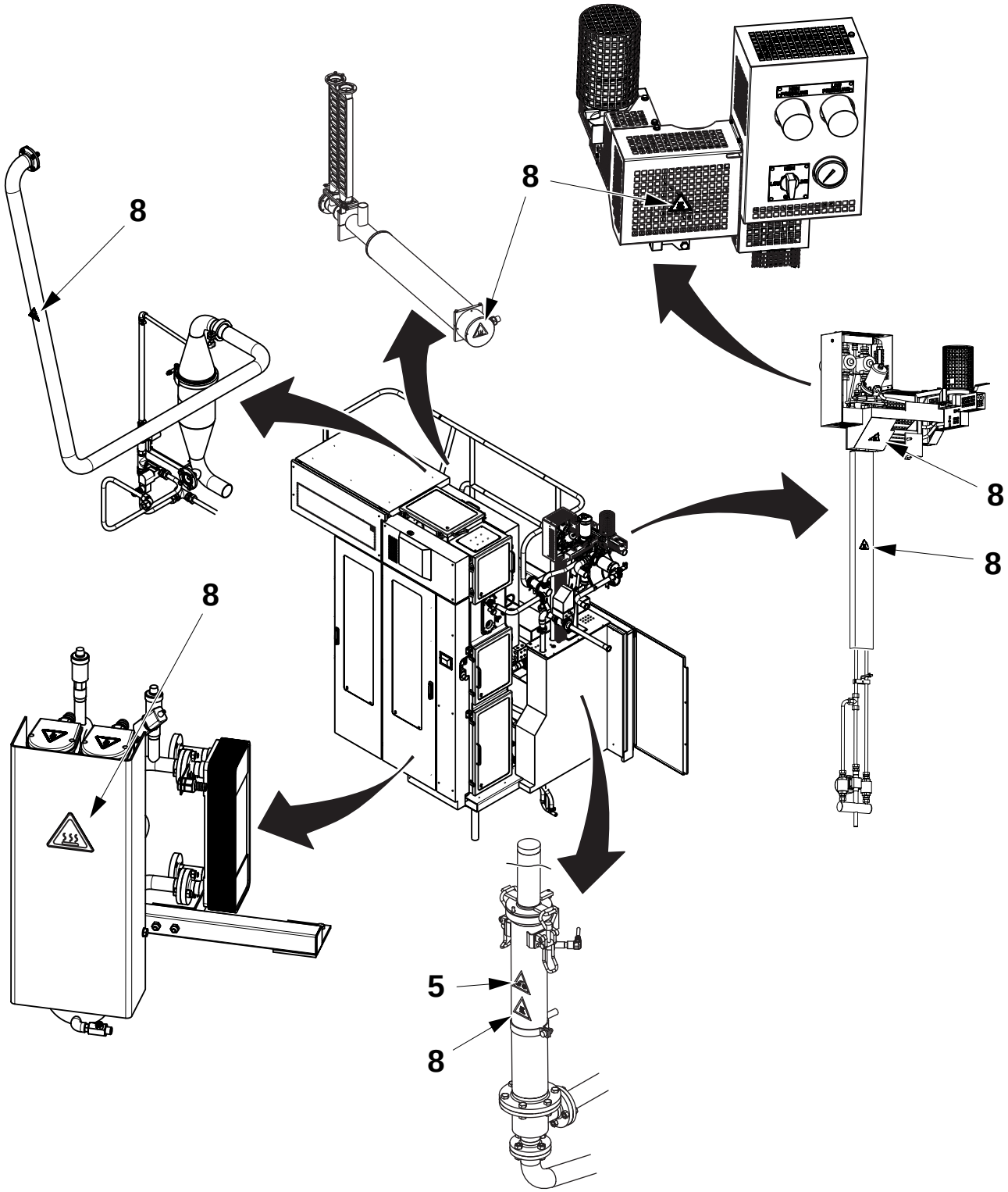

(Cont'd)

TechPub_2614345_0103 - 81767017sp.fm

(Cont'd)

The illustration shows where the safety signs are located. The position numbers refer to the table in the Safety Signs section.

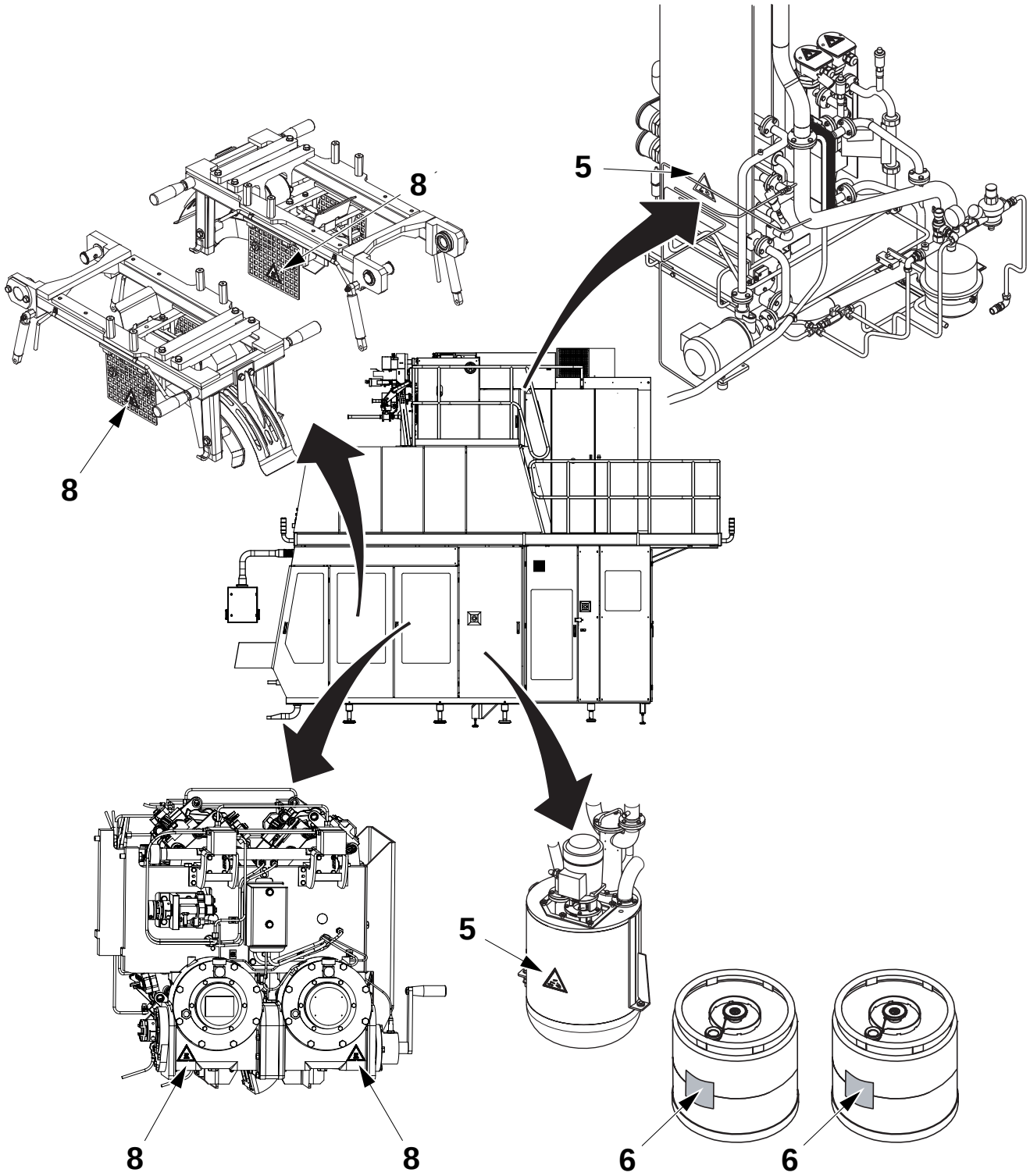

(Cont'd)

TechPub_2614345_0103 - 81767017sp.fm

(Cont'd)

The illustration shows where the safety signs are located. The position numbers refer to the table in the Safety Signs section.

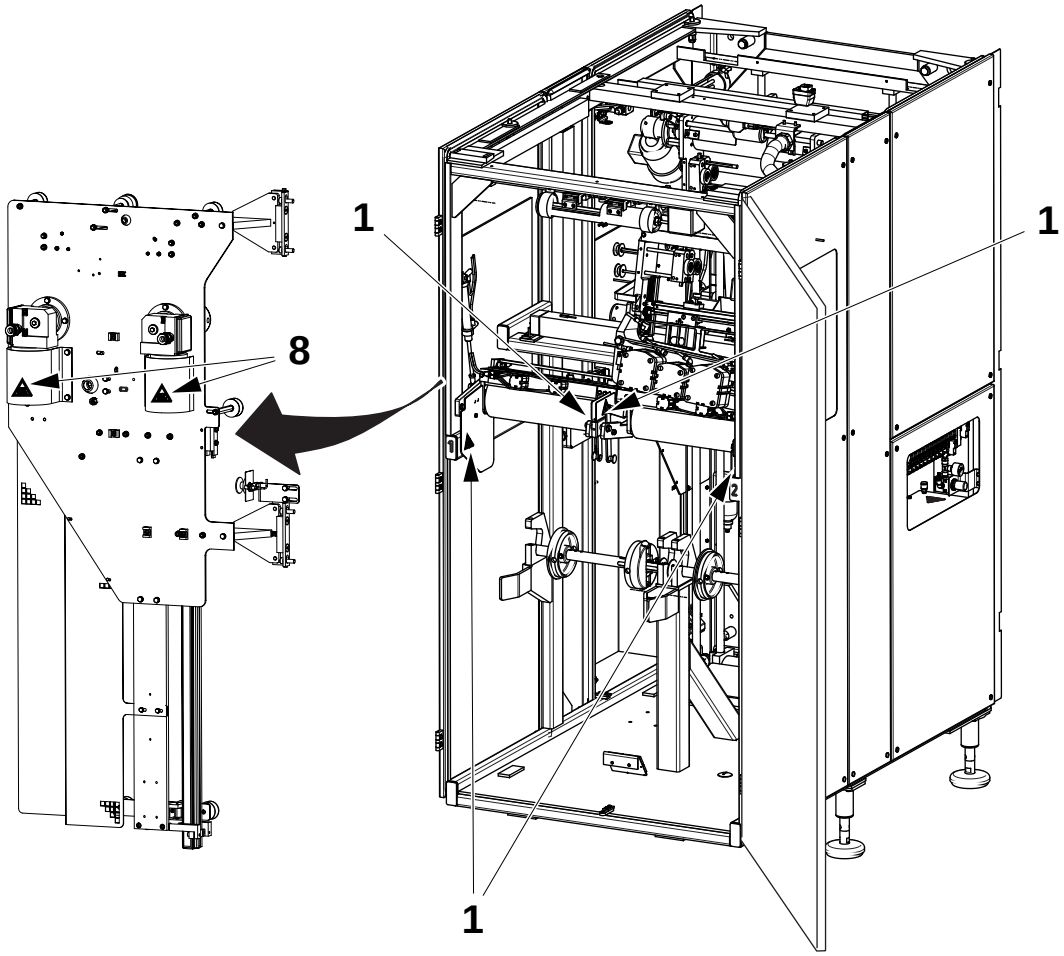

(Cont'd)

TechPub_2614345_0103 - 81767017sp.fm

(Cont'd)

Valid for Machines with HI

The illustration shows where the safety signs are located. The position numbers refer to the table in the Safety Signs section.

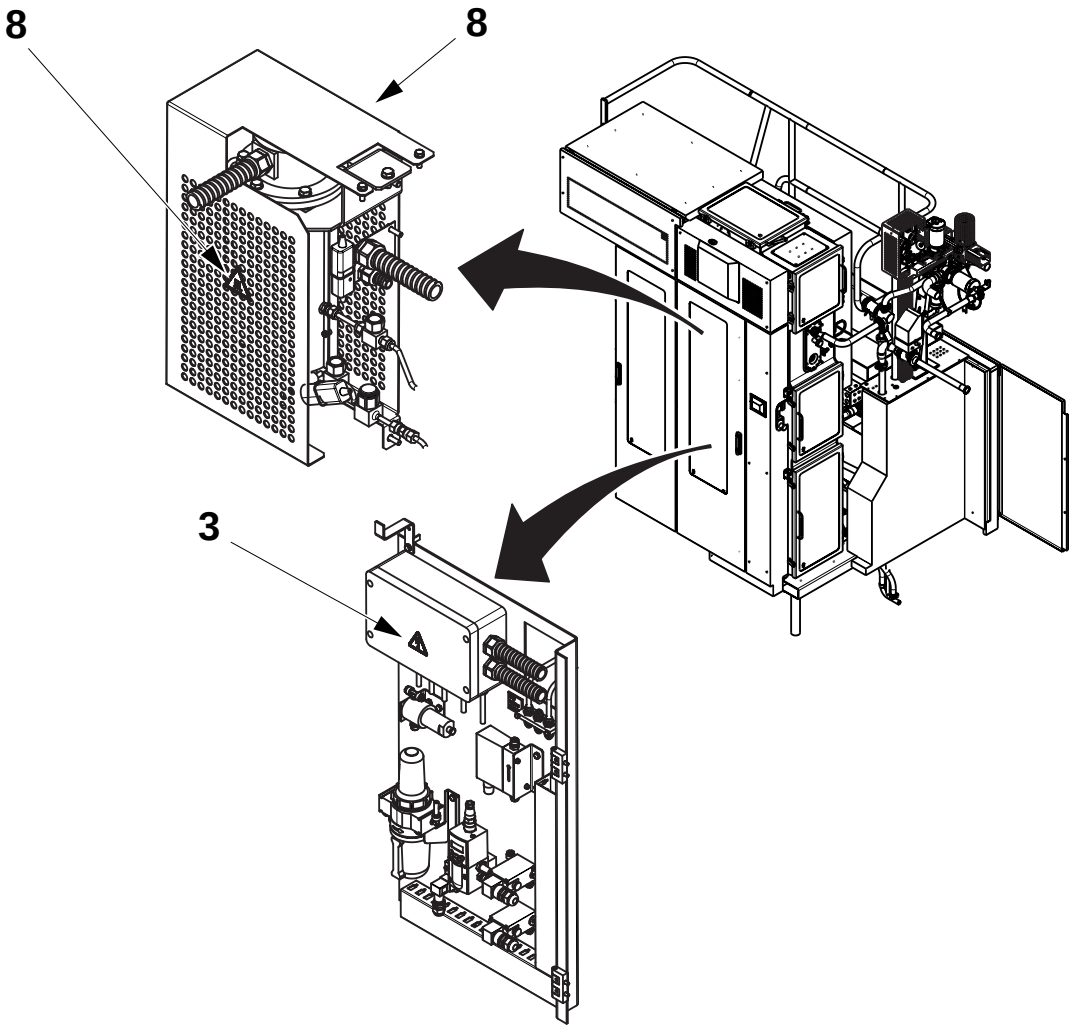

TechPub_2614345_0103 - 81767017sp.fm

Safety Devices

WARNING
Unshielded hazards.
Never inch or run this equipment if any safety device is inoperative.

Change inoperative components of the safety system immediately.

WARNING
Hazardous Voltage.
Activating a safety device, such as pressing an EMERGENCY STOP push-button or opening a door, does not disconnect the power supply from this equipment.

Emergency Stop

Emergency stop devices are used to stop this equipment immediately in an emergency. Learn the positions of all emergency stop devices and how to use them.

Instructions for a normal production stop are included in the Stop chapter of the Operation Manual.

TechPub_2614345_0103 - 81767017sp.fm

EMERGENCY STOP Push-Buttons

Push one of the EMERGENCY STOP push-buttons to stop this equipment immediately.

The illustration shows an EMERGENCY STOP push-button. The location of each EMERGENCY STOP push-button is shown by an arrow.

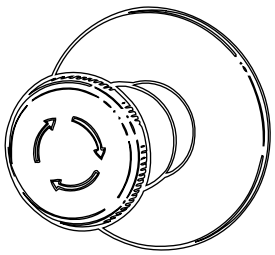

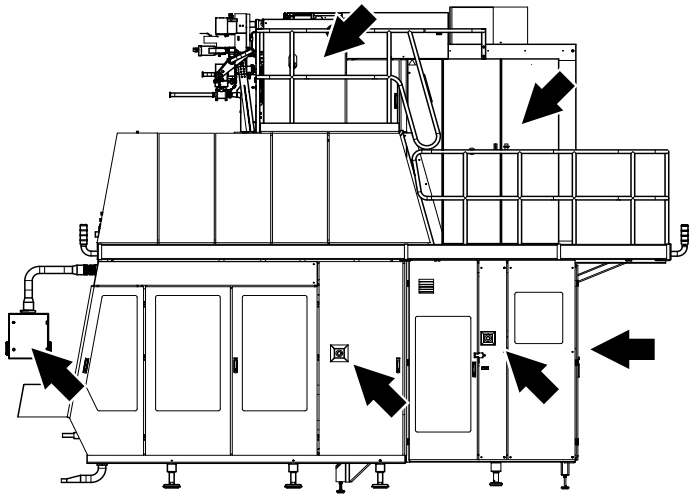

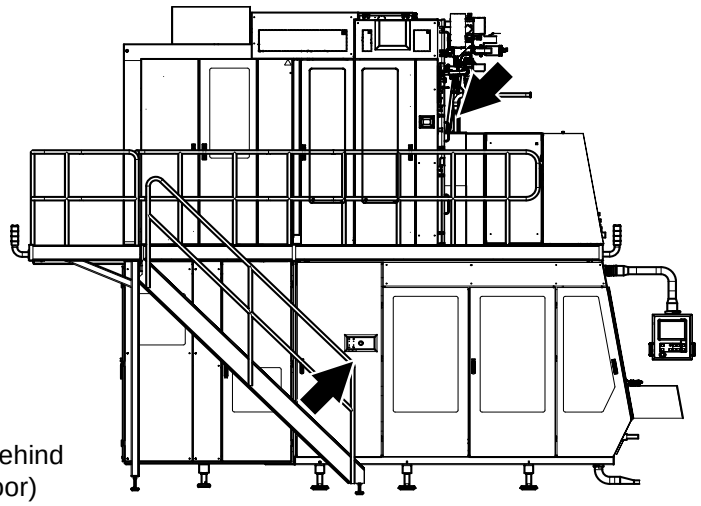

(behind door)

TechPub_2614345_0103 - 81767017sp.fm

Safeguards

WARNING
Moving machinery.
Never defeat or bypass the interlocking devices.

All movable guards, such as doors and covers, leading to hazardous areas are fitted with interlocking devices, usually electric safety switches. These devices are part of the safety system and must never be defeated, bypassed, or otherwise made inoperative.

CAUTION
Burn hazard.
Parts of this equipment protected by safeguards may be thermally hot after operation.

After installation and maintenance, and before this equipment is inched or run, check that all safeguards are in place and that they operate correctly.

CAUTION
Equipment damage.
Never stop this equipment by opening a movable guard.

(Cont'd)

TechPub_2614345_0103 - 81767017sp.fm

(Cont'd)

The location of each movable guard is shown by an arrow.

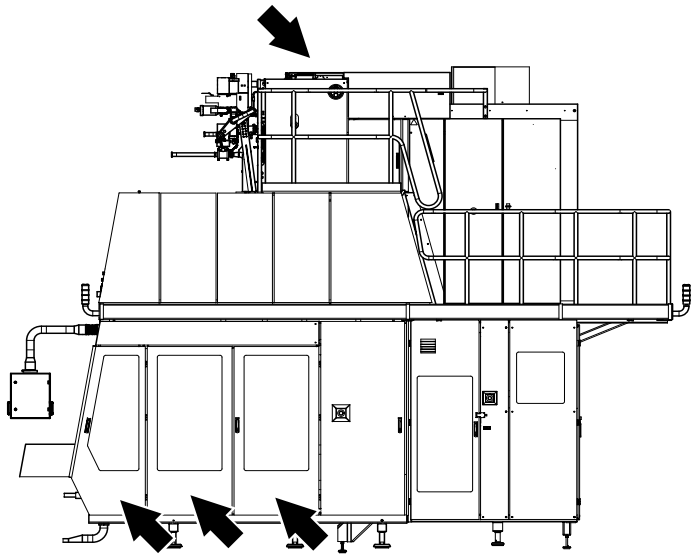

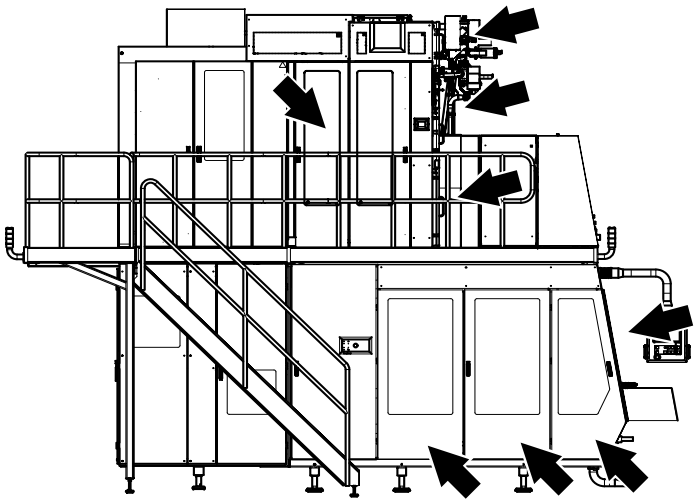

TechPub_2614345_0103 - 81767017sp.fm

Warning Lamp

A warning lamp is a column of warning lights:

- A red **light** (1) indicates a hazardous condition. This is an emergency situation that requires immediate action
- A yellow **light** (2) indicates an abnormal condition. This is an impending critical condition calling for action by the operator
- A blue **light** (3) indicates that operator action is required.

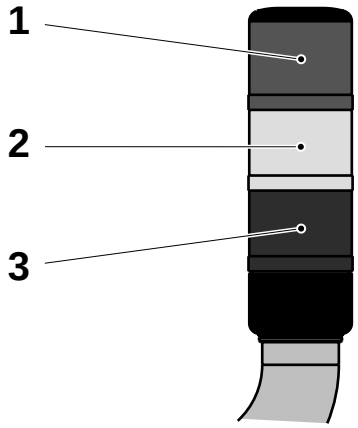

1 Red light
2 Yellow light
3 Blue light

A warning light flashes when operator action is required. The light stops flashing and remains lit when the alarm is acknowledged. After the fault is corrected or the operator takes the appropriate action, the warning light goes off.

Audible Alarm

The audible alarm produces a warning signal every time this equipment is about to start. The warning signal sounds for approximately three seconds prior to starting to alert personnel.

TechPub_2614345_0103 - 81767017sp.fm

Personal Protection

This section applies to all personnel at all times when this equipment is in operation. For special personal protection required when handling hazardous materials, see the Hazardous Materials section.

Noise Hazard

WARNING
Hazardous noise.
Risk of impaired hearing.
Wear hearing protection whenever this equipment is in operation.

CAUTION
Hazardous noise.
Risk of impaired hearing.
Hearing protection is recommended whenever this equipment is in operation.

Entanglement Hazard

WARNING
Risk of entanglement.
Do not wear jewellery or loose clothing when working on or near this equipment. Long hair may not be loose.

TechPub_2614345_0103 - 81767017sp.fm

Hazardous Materials

WARNING

Contact with chemicals can cause death, serious injury, and illness.

Always follow the chemical manufacturer’s instructions when handling chemicals.

Make sure that:

- the showers work
- an eyewash device, movable or wall-mounted, is available and operational
- additional washing facilities are nearby.

Note! Learn the locations of all washing facilities in order to act immediately in case of an accident.





TechPub_2614345_0103 - 81767017sp.fm

Hydrogen Peroxide (H_2O_2)

WARNING
Corrosive chemical.
Wear personal protective equipment.

In both liquid and gas states, hydrogen peroxide may cause irritation or damage if it comes into contact with skin, mucous membranes, eyes, or clothes. Call for medical attention immediately if there is an accident.

Liquid hydrogen peroxide in concentrations of less than 1% is generally considered harmless to humans.

Consult the instructions on the label of the tank or container.

Emergency Procedures

If there is an accident involving hydrogen peroxide, rinse the affected area as soon as possible with large amounts of water.

If hydrogen peroxide is swallowed

- do not attempt to cause vomiting
- drink large amounts of lukewarm water to dilute the peroxide
- call for medical attention immediately.

If splashes or vapour from hydrogen peroxide come in contact with the eyes

- wash the eyes thoroughly with lukewarm water for 15 minutes (keep eyelids wide apart)
- call for medical attention immediately.

If hydrogen peroxide comes into contact with skin or clothes

- rinse immediately with plenty of water
- call for medical attention immediately if skin burns appear
- thoroughly wash the clothes before wearing them again.

If irritation or pain is experienced due to having **inhaled** hydrogen peroxide vapour

- leave the affected area and get some fresh air
- call for medical attention if the symptoms get worse.

TechPub_2614345_0103 - 81767017sp.fm

Personal Protective Equipment

The personal protective equipment for hydrogen peroxide is

- safety goggles (TP No 90303-11)
- protective gloves made of neoprene (TP No.90303-12)
- apron (TP No. 90303-13)
- shoes made of PVC, PE plastic, or rubber.

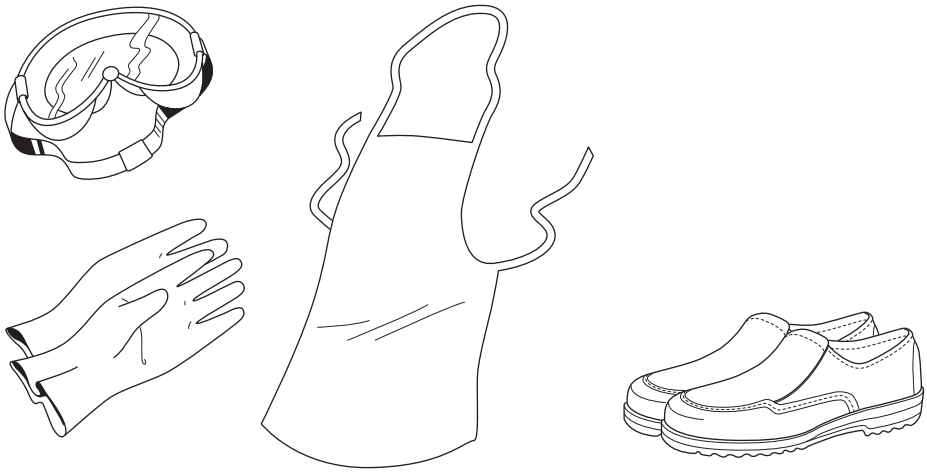

TechPub_2614345_0103 - 81767017sp.fm

Handling

WARNING
Sudden and violent chemical reaction.
Avoid any contamination of hydrogen peroxide.

Hydrogen peroxide reacts suddenly and violently with many compounds or if it is contaminated. The reaction is a violent decomposition liberating oxygen and heat, with a big increase in volume due to the oxygen produced by the peroxide decomposition.

Never pour surplus hydrogen peroxide back into the original container if it contains fresh hydrogen peroxide. There is a risk of explosion when hydrogen peroxide is in a closed container.

Ensure that equipment used for handling and diluting hydrogen peroxide is clean before it comes in contact with hydrogen peroxide. Pumps or other equipment used for handling hydrogen peroxide must be **used for this purpose only** and must be manufactured from appropriate materials, such as stainless steel 316 L, glass, polyethylene, or teflon. After use, make sure that all peroxide residue is rinsed away.

If hydrogen peroxide is spilled, dilute it with large amounts of water and flush it into a drain.



WARNING
Self-ignition.
Never wipe up hydrogen peroxide with materials such as rags or paper as these may self-ignite several hours after contact.
If there is a fire, spray with large quantities of water.

TechPub_2614345_0103 - 81767017sp.fm

Storage

DANGER

Containers will explode if not properly ventilated.
Keep the container upright and fitted with its proper ventilation cap. If there is a fire, cool all containers by spraying them with large quantities of water.

Hydrogen peroxide decomposes much faster with increasing temperature. There is a risk of explosion at high temperatures, since the ventilation cap cannot release the gases produced quickly enough.

Hydrogen peroxide **must** be stored in the **original container** delivered by the supplier. Keep the container upright and fitted with its proper ventilation cap, which allows oxygen to escape. Otherwise, there can be an explosion if decomposition of the peroxide occurs violently.

Make sure that the container is always properly closed.

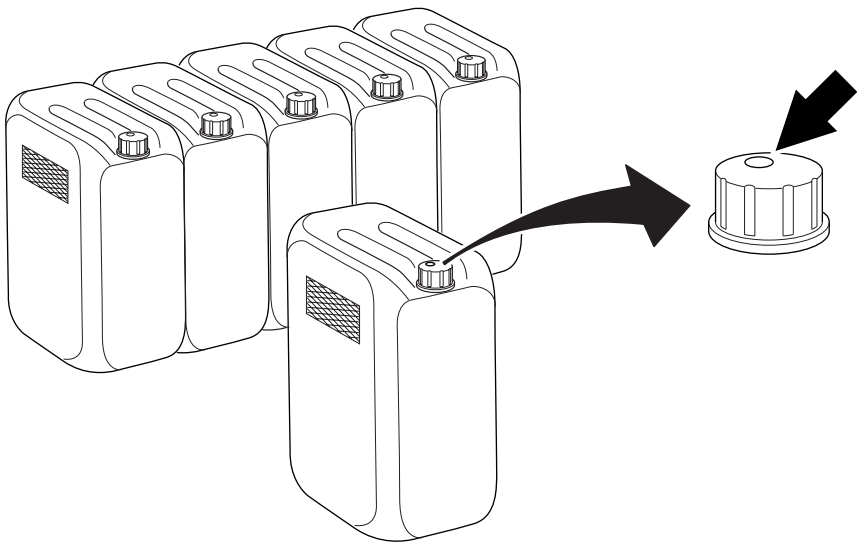

(Cont'd)

TechPub_2614345_0103 - 81767017sp.fm

(Cont'd)

Commercial food-grade hydrogen peroxide has been stabilized to inhibit the catalytic decomposition effects of metals and other impurities, but it can decompose into oxygen and water if it is exposed to heat or contaminated.

Make sure that the area used for storage of hydrogen peroxide is:

- cool, clean, and well ventilated
- shielded from direct sunlight
- kept free from combustible materials.

Disposal

Hydrogen peroxide should be sent to an approved facility for destruction. Some countries allow it to be diluted with water to a concentration of less than 1% and poured into the drain.

TechPub_2614345_0103 - 81767017sp.fm

Nitrogen (N_2)

WARNING

High pressure gas.

Nitrogen gas in high concentration can cause rapid suffocation. Make sure that the areas for storing and using this gas are adequately ventilated.

WARNING

Extremely cold high pressure gas.

Rapidly expanding nitrogen gas can cause frostbite injuries. Always wear personal protective equipment.

Emergency Procedures

Nitrogen gas in high concentrations can cause an oxygen deficient environment. Rapidly expanding nitrogen gas can cause frostbite injuries.

In the case of an accidental release of this gas:

- leave the affected area immediately
- never attempt to rescue victims of exposure to this gas without the proper personal protective equipment
- remove victims to fresh air and if necessary administer expired air resuscitation and/or cardiopulmonary resuscitation. Call for immediate medical attention
- in case of contact with eyes or skin, soak the exposed areas with luke warm water, not hot or cold. Call for immediate medical attention.
- allow the gas to dissipate, use auxiliary ventilation if available.

Handling and Storage of Nitrogen Gas

When handling nitrogen gas cylinders, make sure that:

- the areas used for the storage and handling of this gas are adequately ventilated (min. 19.5% oxygen)
- the cylinders are transported with the valves closed and with the valve protection caps securely in place
- the gas cylinders are connected only to connections marked for this gas
- the cylinder valves are opened slowly

Disposal of Nitrogen Gas

When returning nitrogen gas cylinders, make sure that:

- the cylinder valves are closed and the valve protection caps are securely in place
- there is still some gas in the cylinder.

TechPub_2614345_0103 - 81767017sp.fm

Cooling Media R134a

WARNING

Refrigerant gas.

High concentration of cooling media R134a vapour can cause dizziness, headache, confusion and unconsciousness. In liquid form R134a can cause frostbite injuries on contact with skin. Always wear personal protective equipment.

Emergency Procedures

Inhaling large quantities of cooling media R134a vapour can cause dizziness, headache, confusion and unconsciousness. In liquid form cooling media R134a can cause frostbite injuries on contact with skin.

In the case of an accidental release of this refrigerant:

- leave the affected area immediately
- remove victims to fresh air and if necessary administer expired air resuscitation and/or cardiopulmonary resuscitation. Call for immediate medical attention
- in case of contact with eyes or skin, soak the exposed areas with luke warm water, not hot or cold. Call for immediate medical attention
- allow the vapour to dissipate, use auxiliary ventilation if available.

Handling and Storage of Cooling Media R134a

When handling cooling media R134a, make sure that:

- the cylinders are stored in a cool dry place away from direct sunlight or sources of heat
- the areas used for the storage and handling of this refrigerant are adequately ventilated
- the cylinders are transported carefully
- the cylinder valves are opened slowly.

Disposal of Cooling Media R134a

Cooling media R134a should whenever possible be reprocessed or recycled. Contact the manufacturer or supplier for information on authorised refrigerant reclamation and recycling programs.

TechPub_2614345_0103 - 81767017sp.fm

Supply Systems

Electrical Cabinet

DANGER

Hazardous voltage.
Will shock, burn, or cause death.
The power supply disconnector must be switched off and secured with a lock before maintenance inside the electrical cabinet.

Note! The key to the lock must be removed by the technician and retained in his/her possession until all work is completed.

Make sure that the electrical cabinet doors are closed after working inside the electrical cabinet. Doors with lock must be locked.

The location of each electrical cabinet is shown by an arrow.

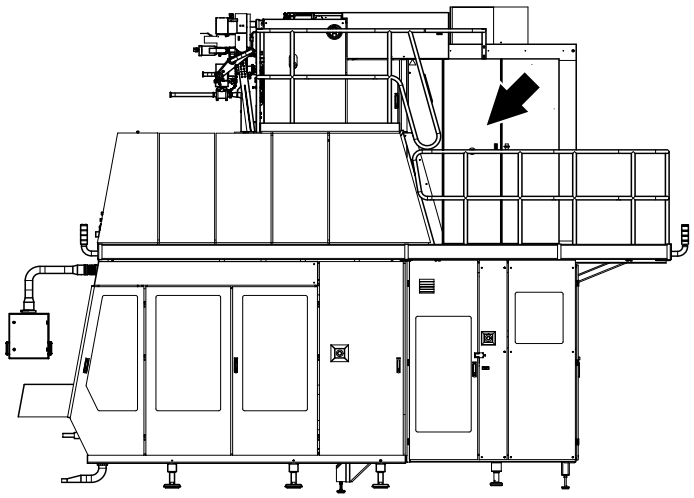

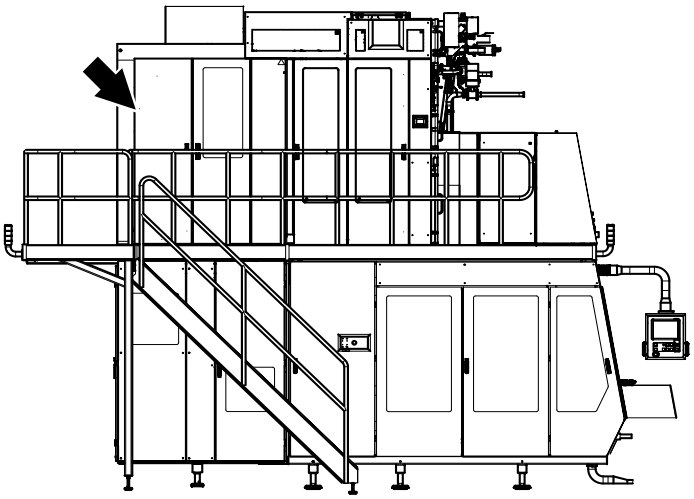

TechPub_2614345_0103 - 81767017sp.fm

Power Supply

DANGER

Hazardous voltage and moving machinery.
The power supply disconnector must be switched off and secured with a lock before any maintenance.

Note! The key to the lock must be removed by the technician and retained in his/her possession until all work is completed.

Certain maintenance procedures may require power supply systems to be on. These exceptions are clearly stated in the Maintenance Manual.

The illustration shows the power supply disconnector. The arrow shows its location on this equipment.

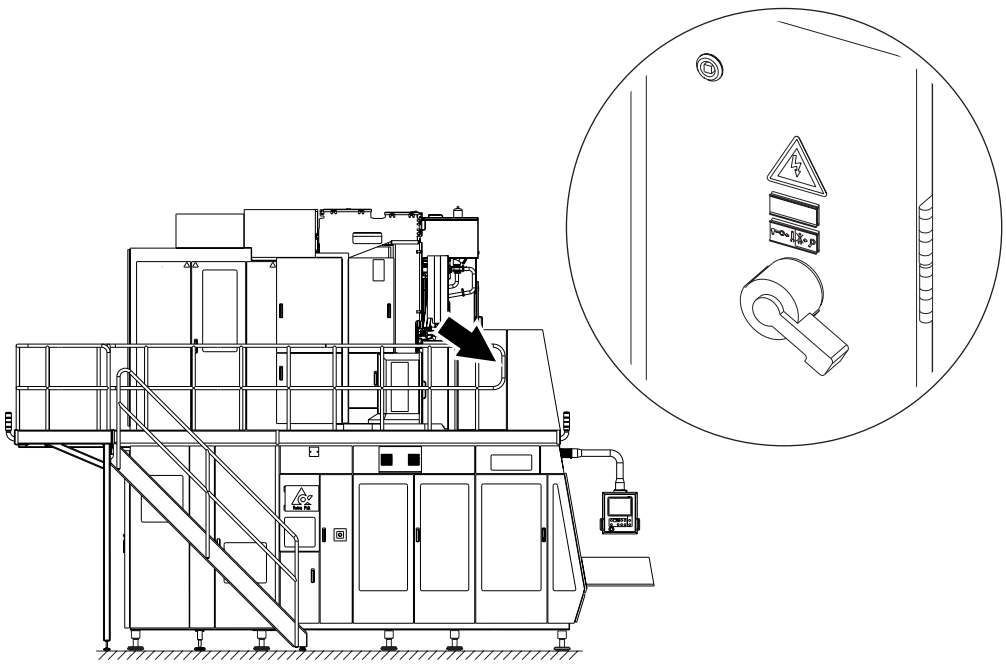

TechPub_2614345_0103 - 81767017sp.fm

Air Supply

WARNING

Compressed air and moving machinery.
Close the main air valve and secure it with a lock before any maintenance.

Note! The key to the lock must be removed by the technician and retained in his/her possession until all work is completed.

Certain maintenance procedures may require air supply systems to be on. These exceptions are clearly stated in the Maintenance Manual.

The illustrations show the main air valve (1) and the lock (2). The arrow shows their location on this equipment.

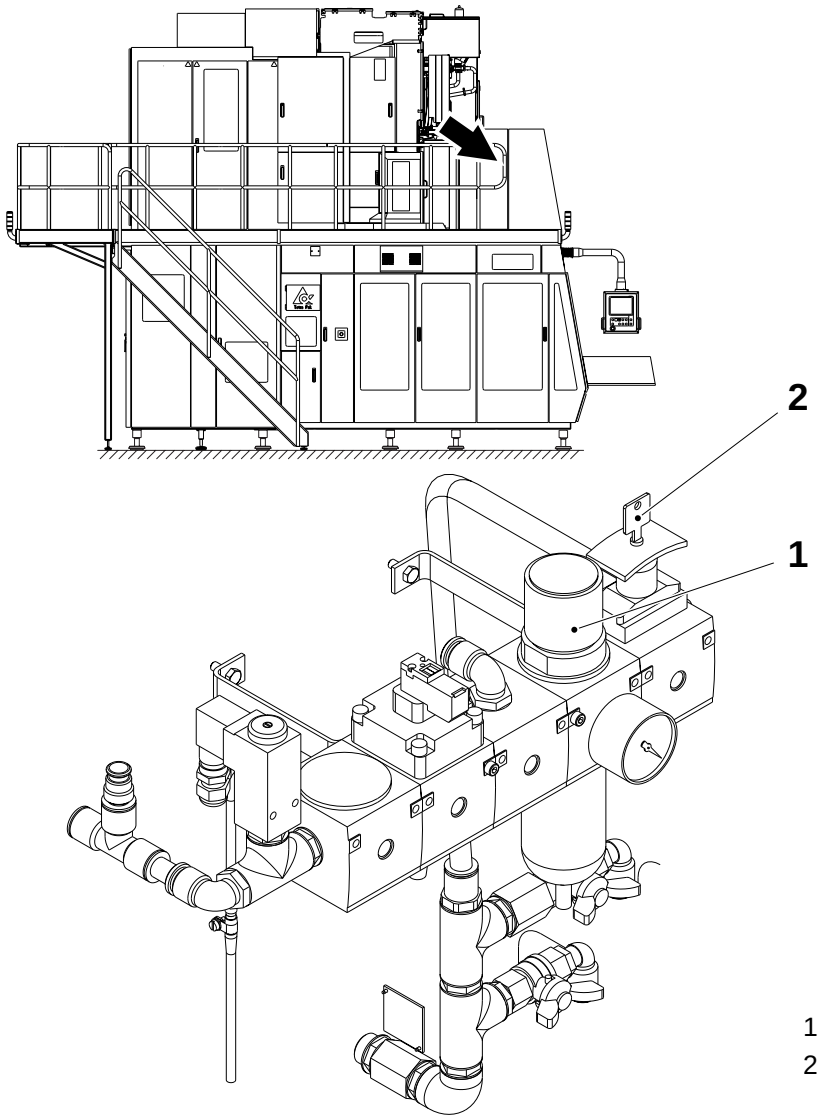

1 Main air valve
2 Padlock

TechPub_2614345_0103 - 81767017sp.fm

Steam Supply

WARNING

Hot steam can cause scalds.

Pressurized steam can be discharged unexpectedly.
Close the steam supply valve and secure it with a lock, depressurize and vent all steam safely before any maintenance on parts with steam, such as pipes and valves.

Note! The key to the lock must be removed by the technician and retained in his/her possession until all work is completed.

Certain maintenance procedures may require steam supply systems to be on. These exceptions are clearly stated in the Maintenance Manual.

The illustration shows the steam supply valve (1) and its location.

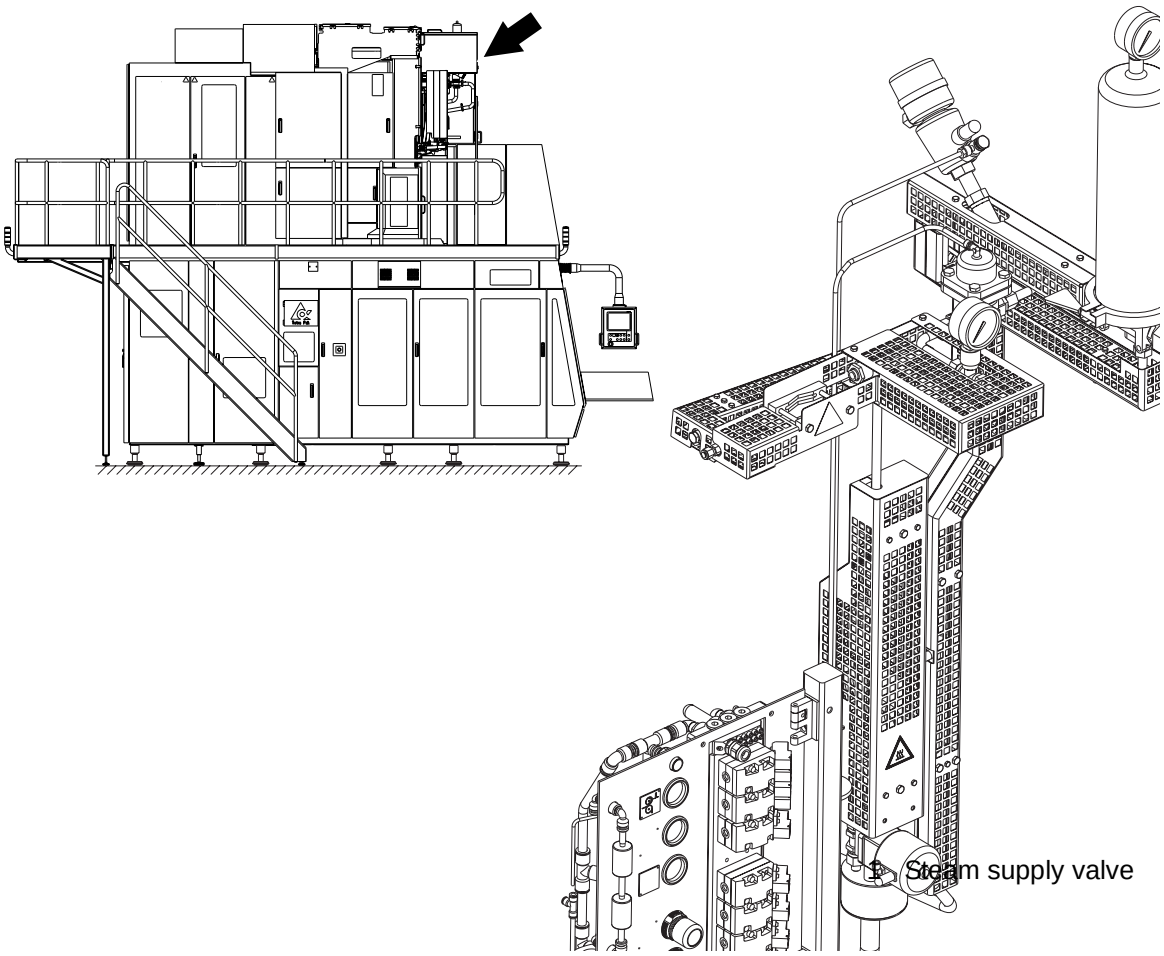

1. Steam supply valve

TechPub_2614345_0103 - 81767017sp.fm

Water Supply

WARNING

Water under pressure.

Close the water supply valves before any maintenance.

Certain maintenance procedures may require water supply systems to be on. These exceptions are clearly stated in the Maintenance Manual.

The illustration shows the water supply valves (1) and their location.

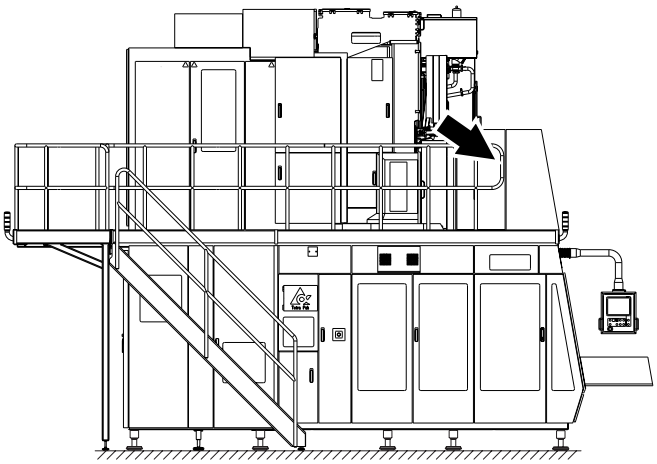

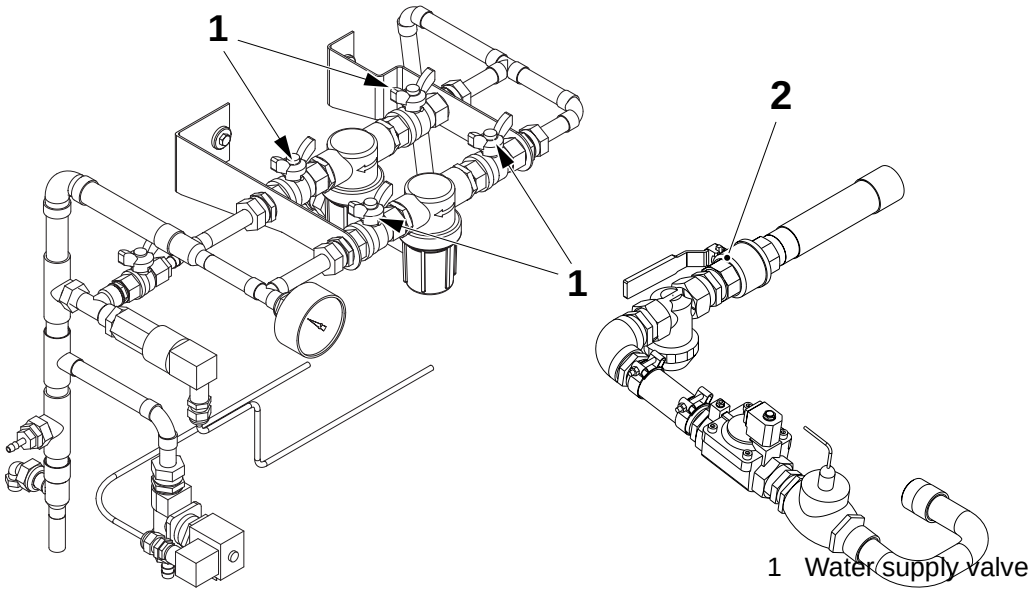

1 Water supply valve

TechPub_2614345_0103 - 81767017sp.fm

Equipment for Lifting and Moving Loads

WARNING

Risk of crushing injury.

Make sure that the capacity of the lifting equipment is adequate and that the equipment itself is in proper working order.

If lifting tackle must be joined to make up the necessary lengths, make sure that the joints are secure and have the same lifting capacity as the rest of the lifting tackle.

Always engage safety clips fitted to lifting hooks to prevent the lifting tackle from slipping off.

Use ropes or poles to steady and manoeuvre suspended loads. Do **not** use hands or feet.

Make sure that the route and destination are free from obstacles before moving a suspended load. It must always be possible to quickly and safely lower the load to the floor in an emergency.

When depositing loads, keep lifting tackle in place until the stability of the load has been substantiated.

TechPub_2614345_0103 - 81767017sp.fm

1 Electrical Systems Description

TechPub_2614345_v3_DRAFT_ReleaseTB017677en.fm

Description

This chapter contains a description of the electrical system in the machine or equipment.

TechPub_2614345_v3_DRAFT_ReleaseTB017677en.fm

1.1 Electrical System Description . . . . . 1 - 5

ASU - Web Splice/Web Control . . . . . 1 - 6
ASU - Strip Applicator . . . . . 1 - 7
Superstructure - Web Control . . . . . 1 - 8
Volume Adjustment . . . . . 1 - 9
Tube Positioning . . . . . 1 - 10
Longitudinal Sealing . . . . . 1 - 11
Filling System . . . . . 1 - 12
Transversal Sealing . . . . . 1 - 13
Design Correction System . . . . . 1 - 14
Jaw Unit / Final Folder . . . . . 1 - 15

1.2 Safety System . . . . . 1 - 16

Safety System - Description . . . . . 1 - 16
Safety System - Circuits . . . . . 1 - 17

TechPub_2614345_v3_DRAFT_ReleaseTB017677en.fm

This page intentionally left blank

TechPub_2614345_v3_DRAFT_ReleaseTB017677en.fm

1.1 Electrical System Description

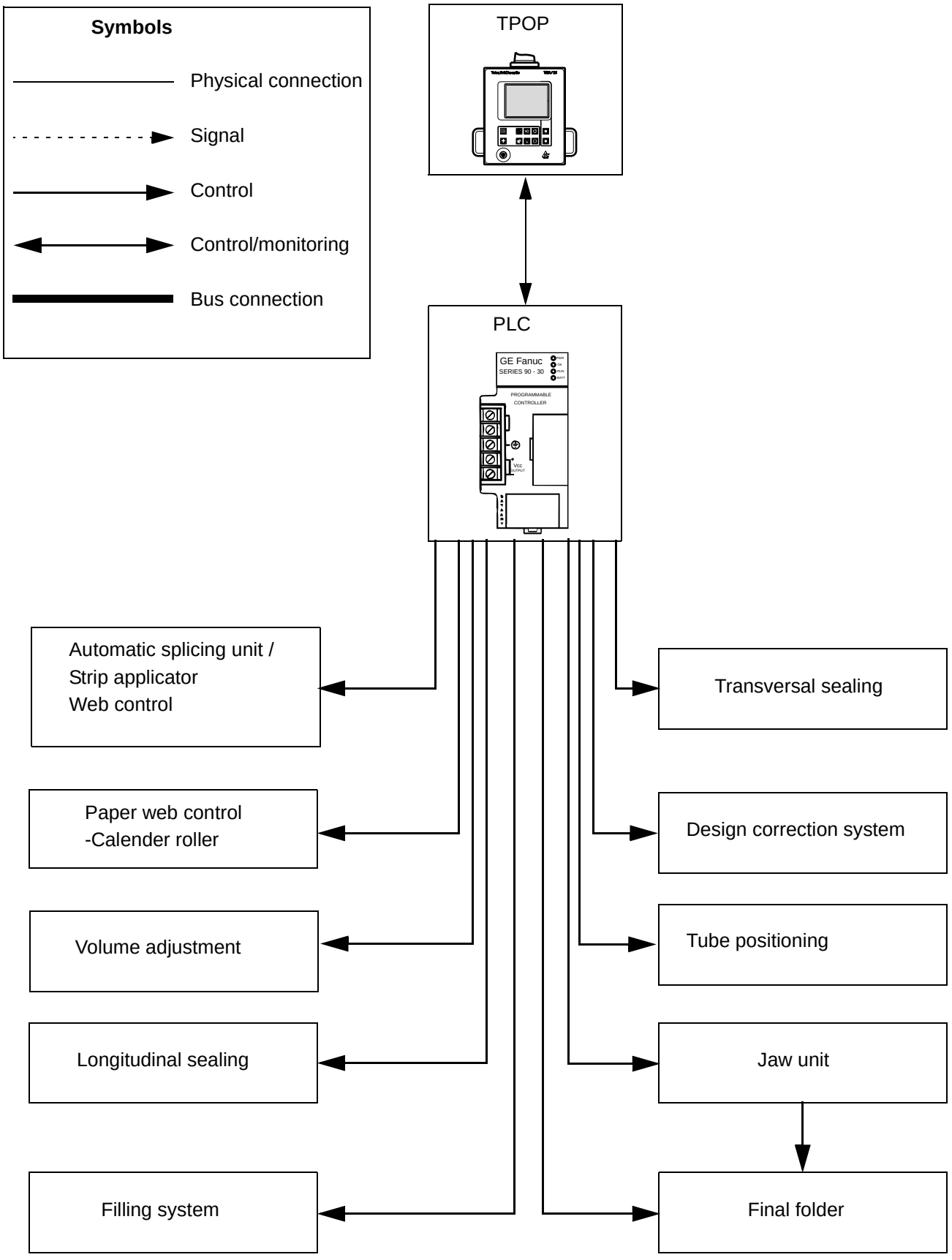

TechPub_2614345_v3_DRAFT_ReleaseTB017677en.fm

ASU - Web Splice/Web Control

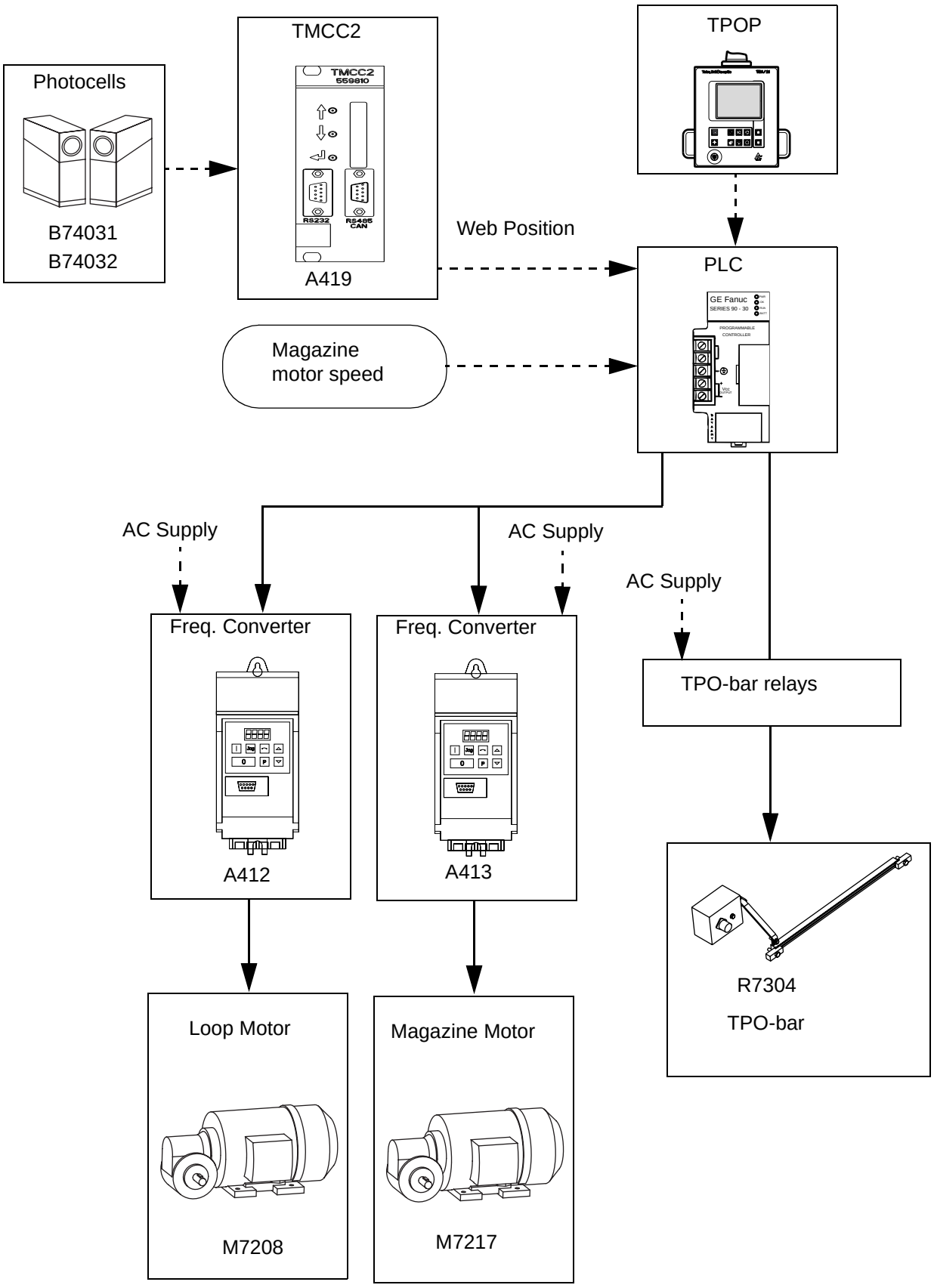

TechPub_2614345_v3_DRAFT_ReleaseTB017677en.fm

ASU - Strip Applicator

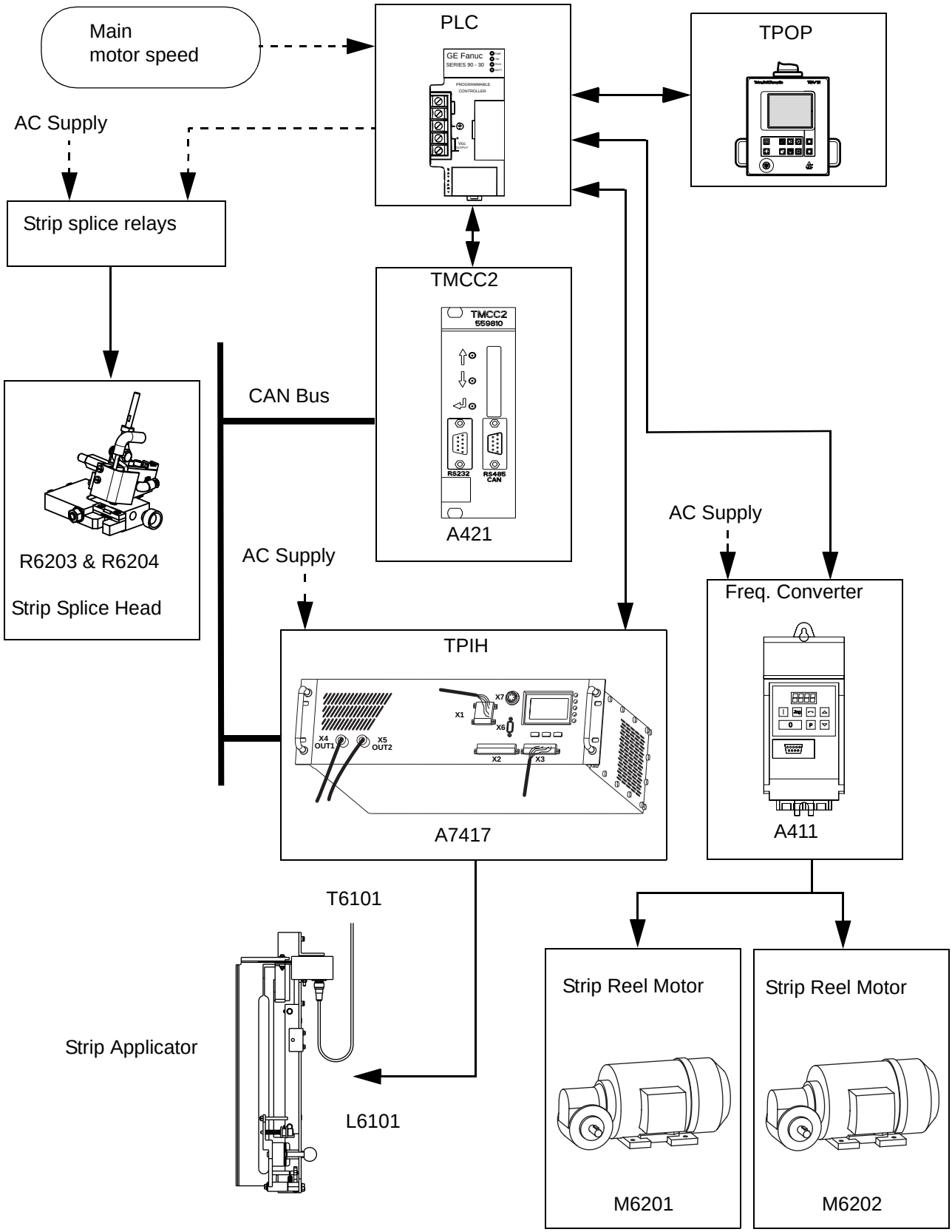

TechPub_2614345_v3_DRAFT_ReleaseTB017677en.fm

Superstructure - Web Control

Calender Roller: Superstructure

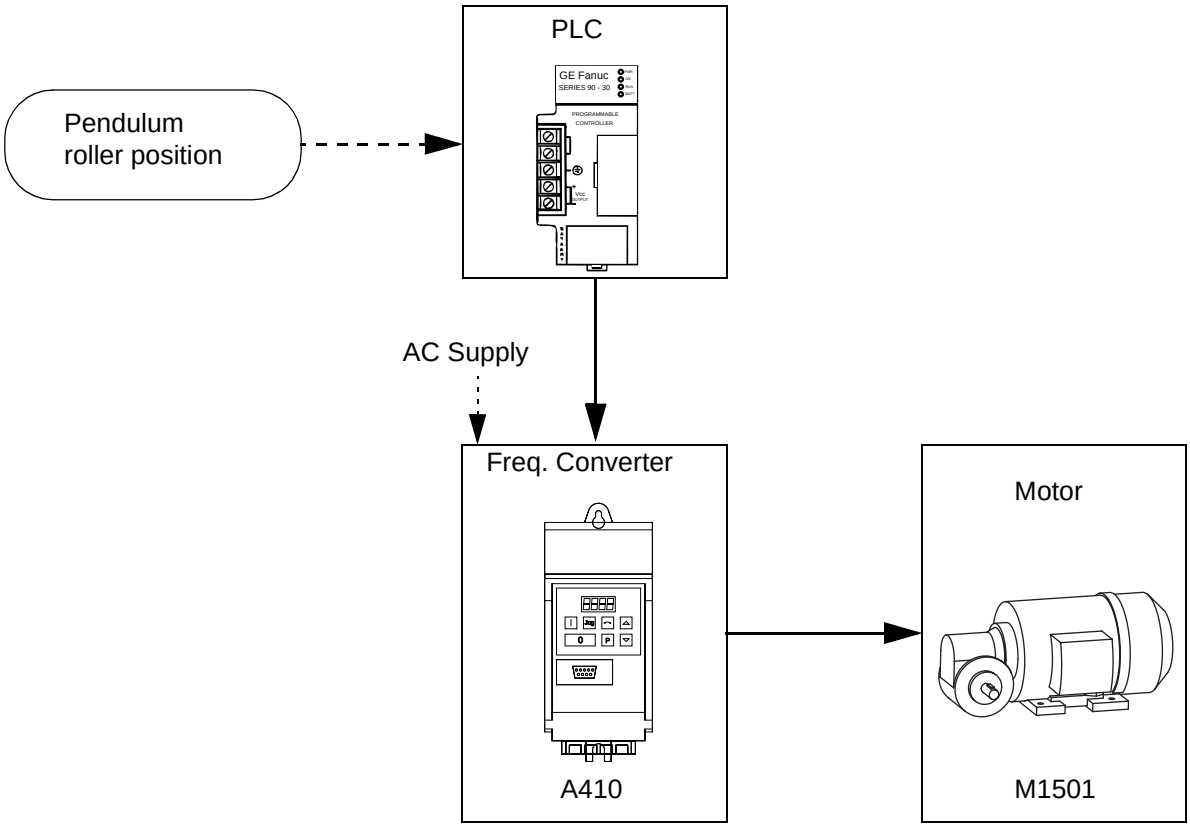

TechPub_2614345_v3_DRAFT_ReleaseTB017677en.fm

Volume Adjustment

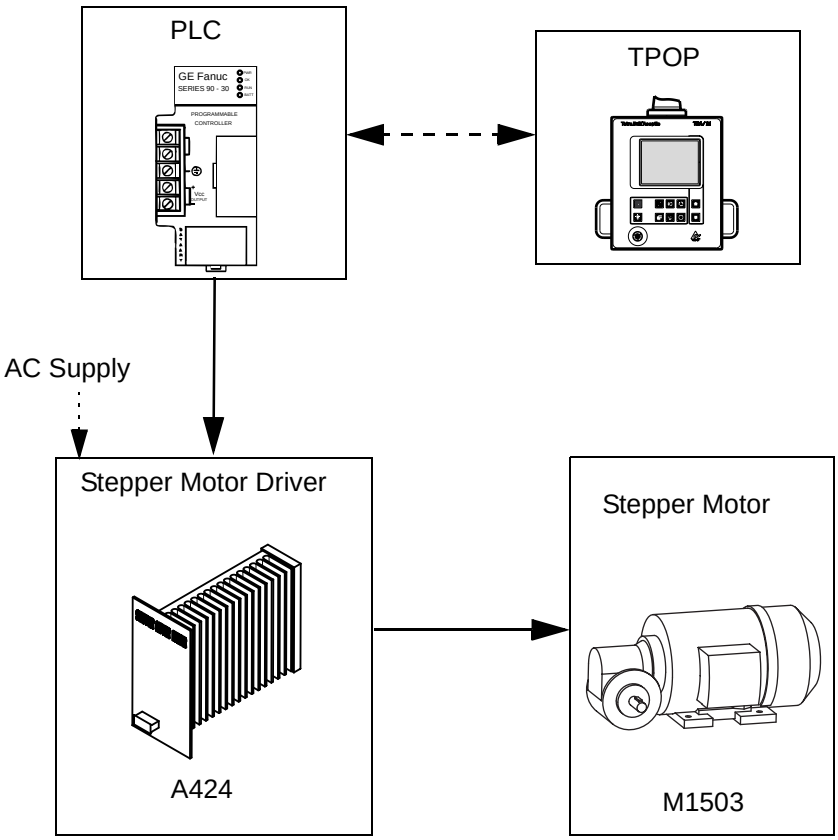

TechPub_2614345_v3_DRAFT_ReleaseTB017677en.fm

Tube Positioning

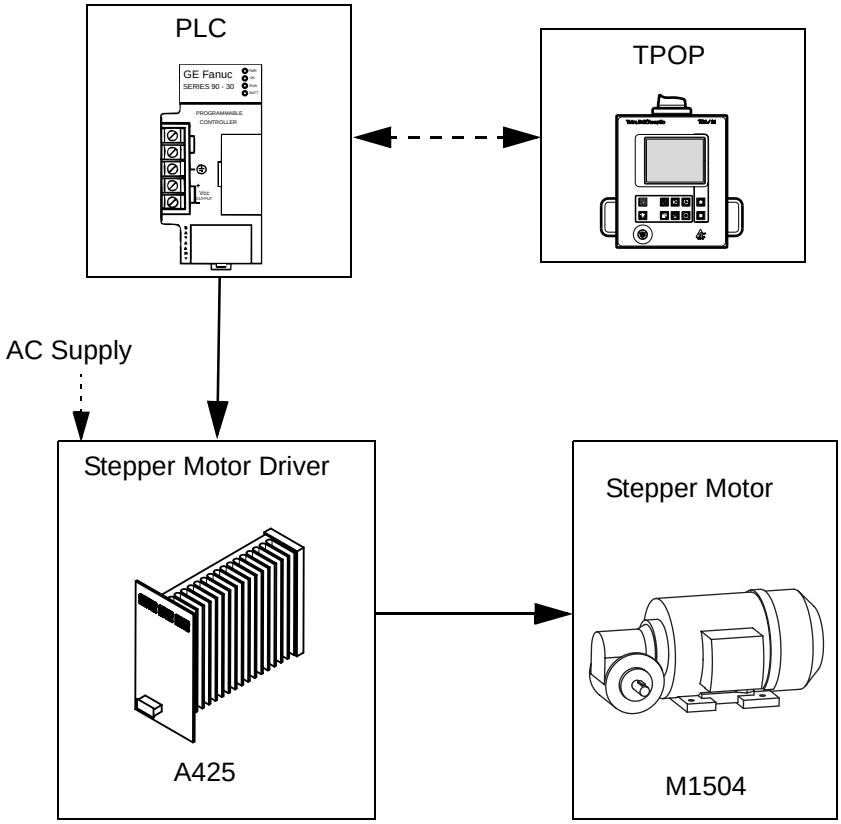

TechPub_2614345_v3_DRAFT_ReleaseTB017677en.fm

Longitudinal Sealing

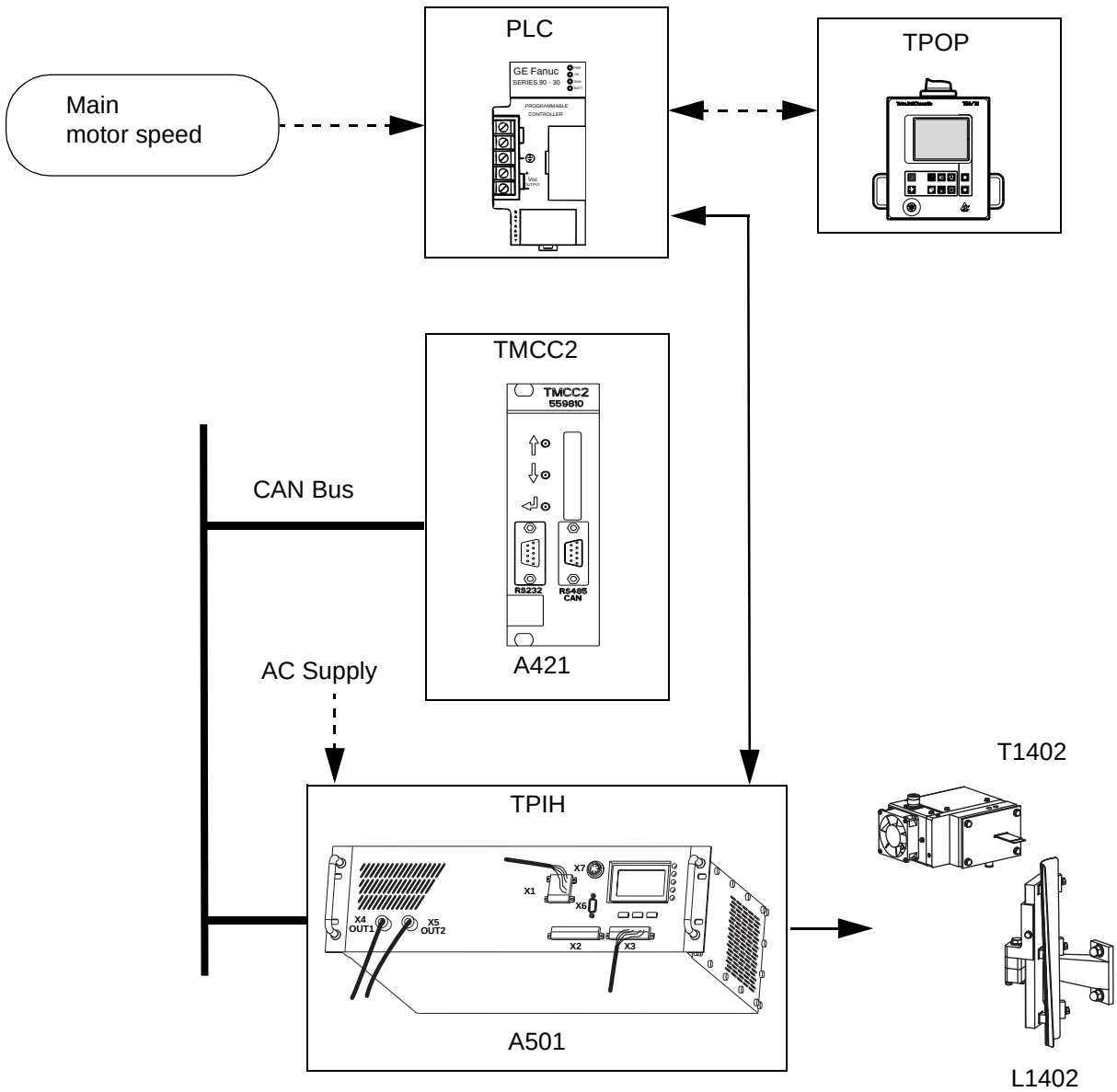

TechPub_2614345_v3_DRAFT_ReleaseTB017677en.fm

Filling System

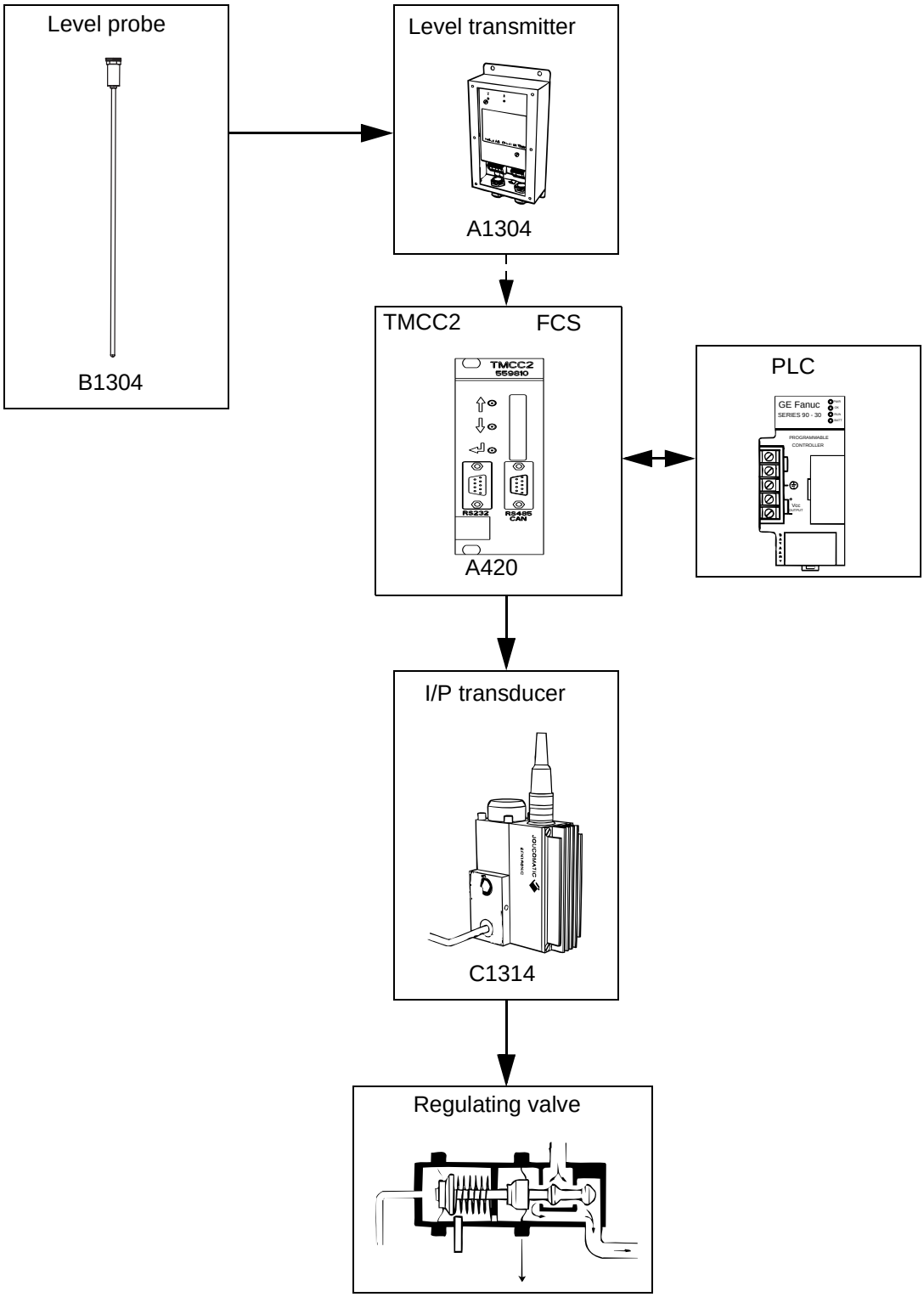

TechPub_2614345_v3_DRAFT_ReleaseTB017677en.fm

Transversal Sealing

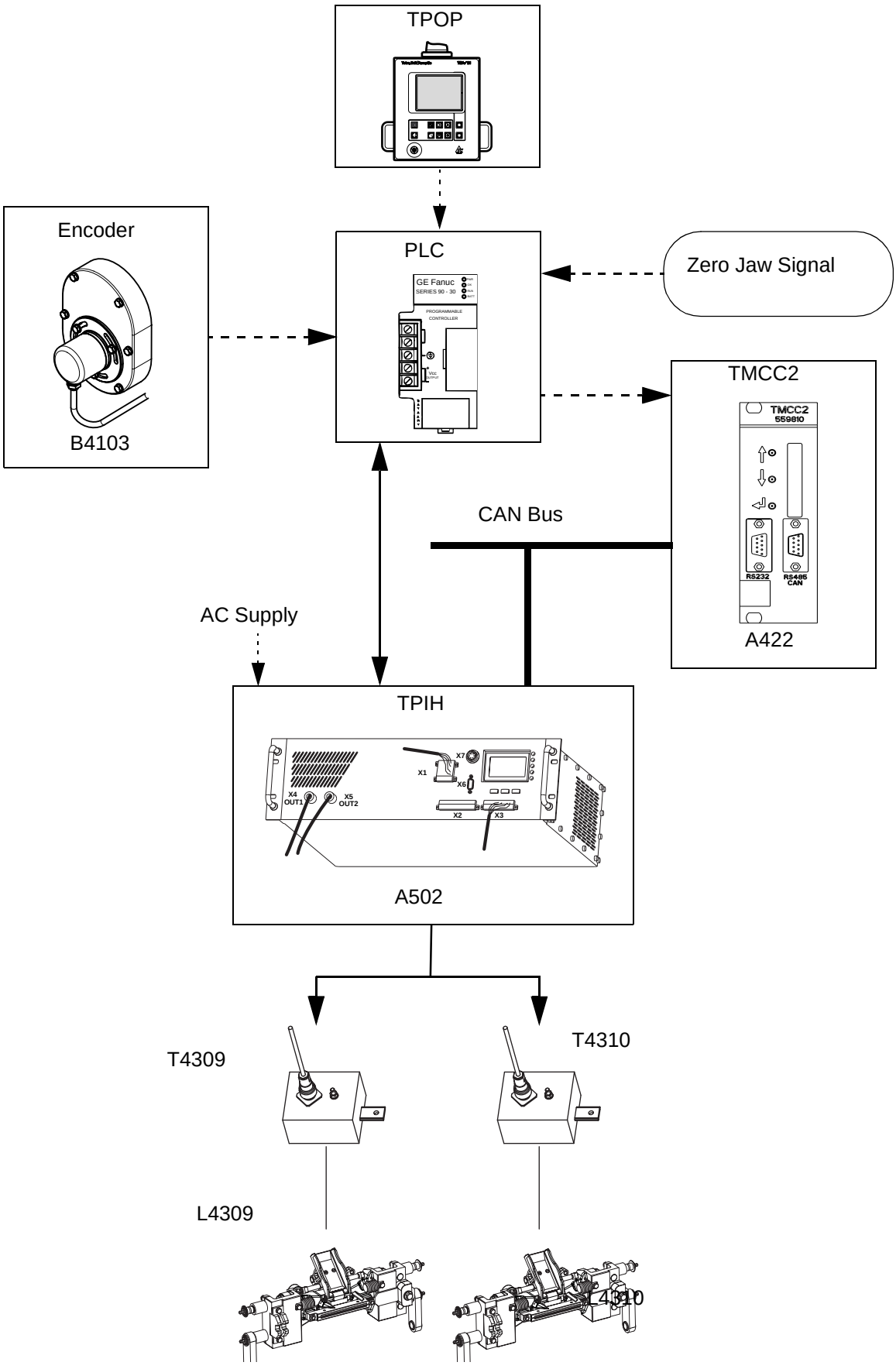

TechPub_2614345_v3_DRAFT_ReleaseTB017677en.fm

Design Correction System

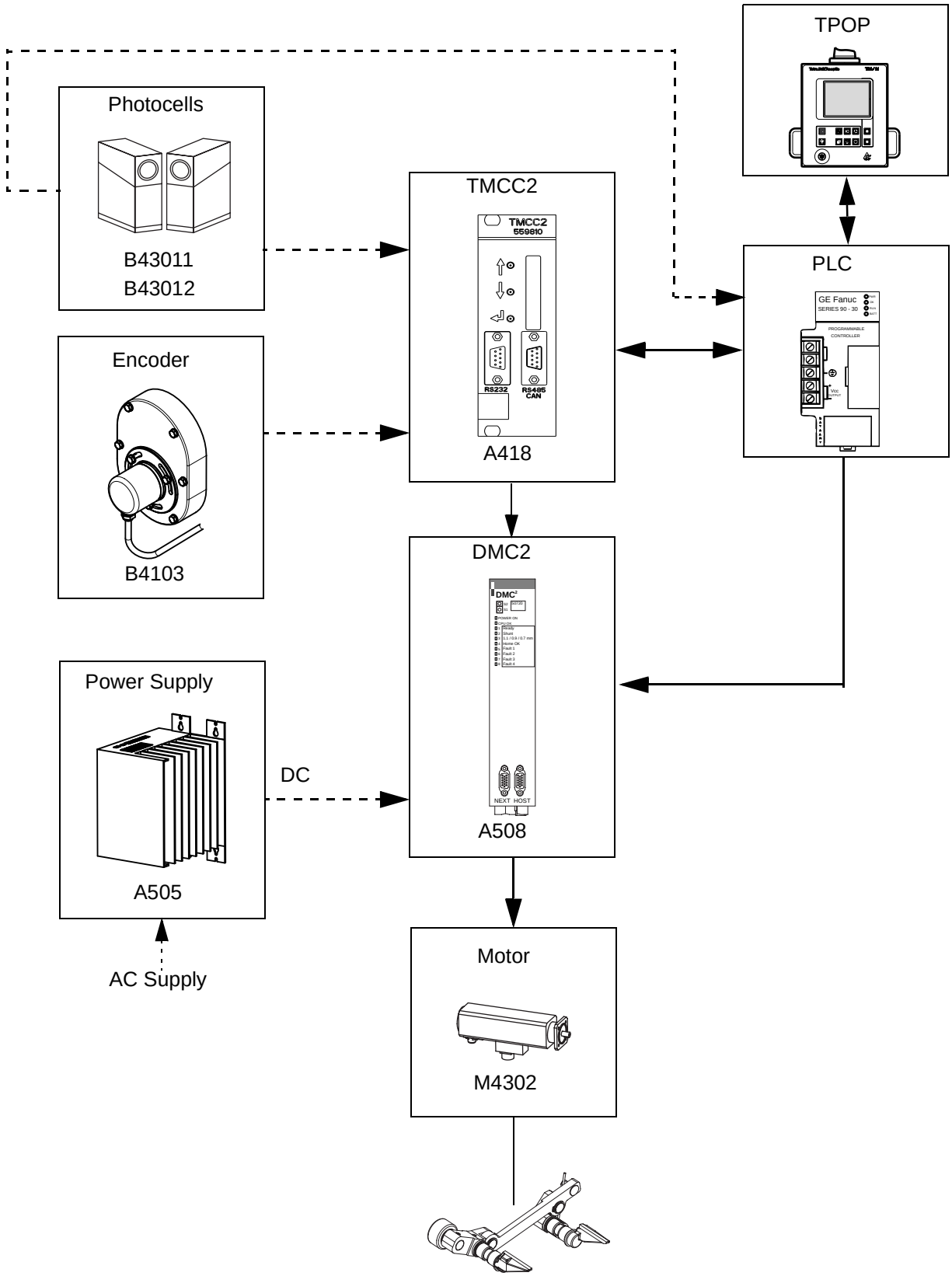

TechPub_2614345_v3_DRAFT_ReleaseTB017677en.fm

Jaw Unit / Final Folder

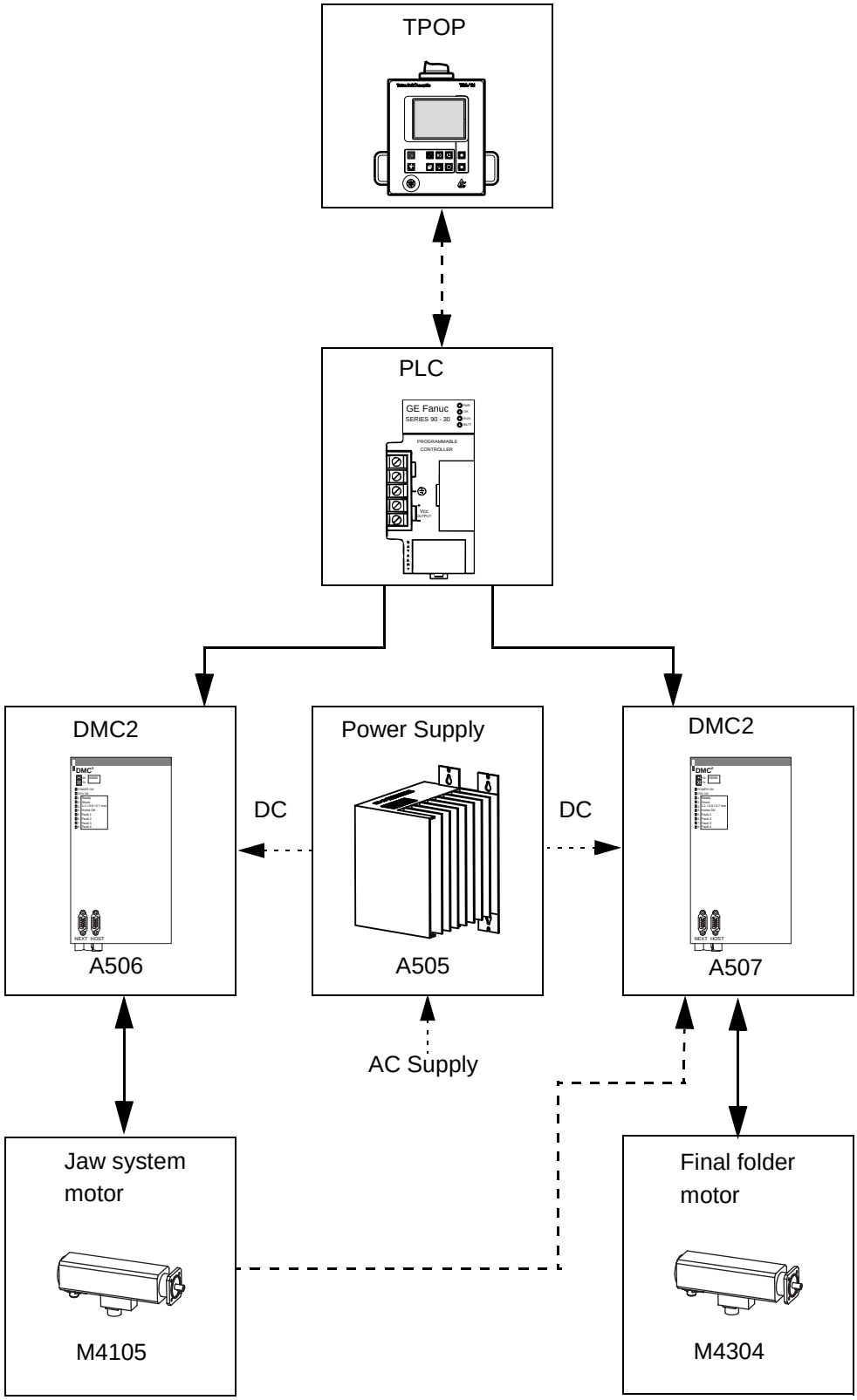

TechPub_2614345_v3_DRAFT_ReleaseTB017677en.fm

1.2 Safety System

Safety System - Description

SPC Reference	575235-0101

In case of a safety relay alarm in the TPOP, one or more LEDs in the safety relays are off.

The relay with one or more LEDs off, is activated.

Relay	Alarm
A600	Emergency stop push buttons
A601	Doors in the Final folder, in the Drive unit and in the bottom Superstructure
A602	Doors in the back of the ASU
A603	Delay DMC Power Bus

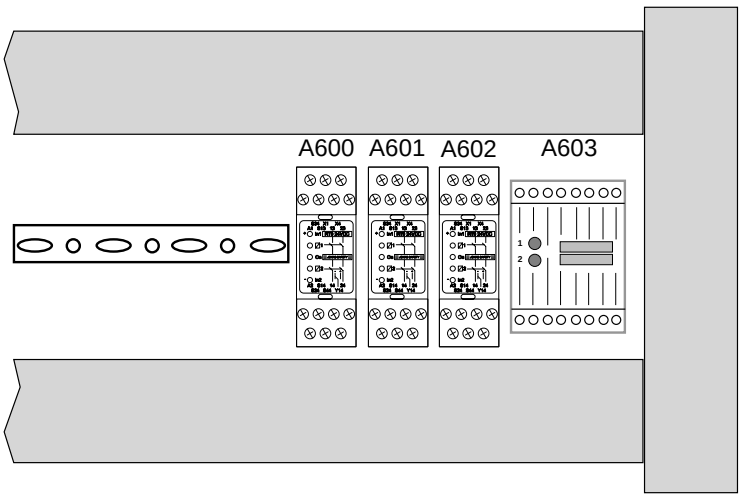

A600: Emergency stop
A601: Machine safety monitors
A602: ASU safety monitors
A603: Time relay main motor emergency stop

TechPub_2614345_v3_DRAFT_ReleaseTB017677en.fm

Safety System - Circuits

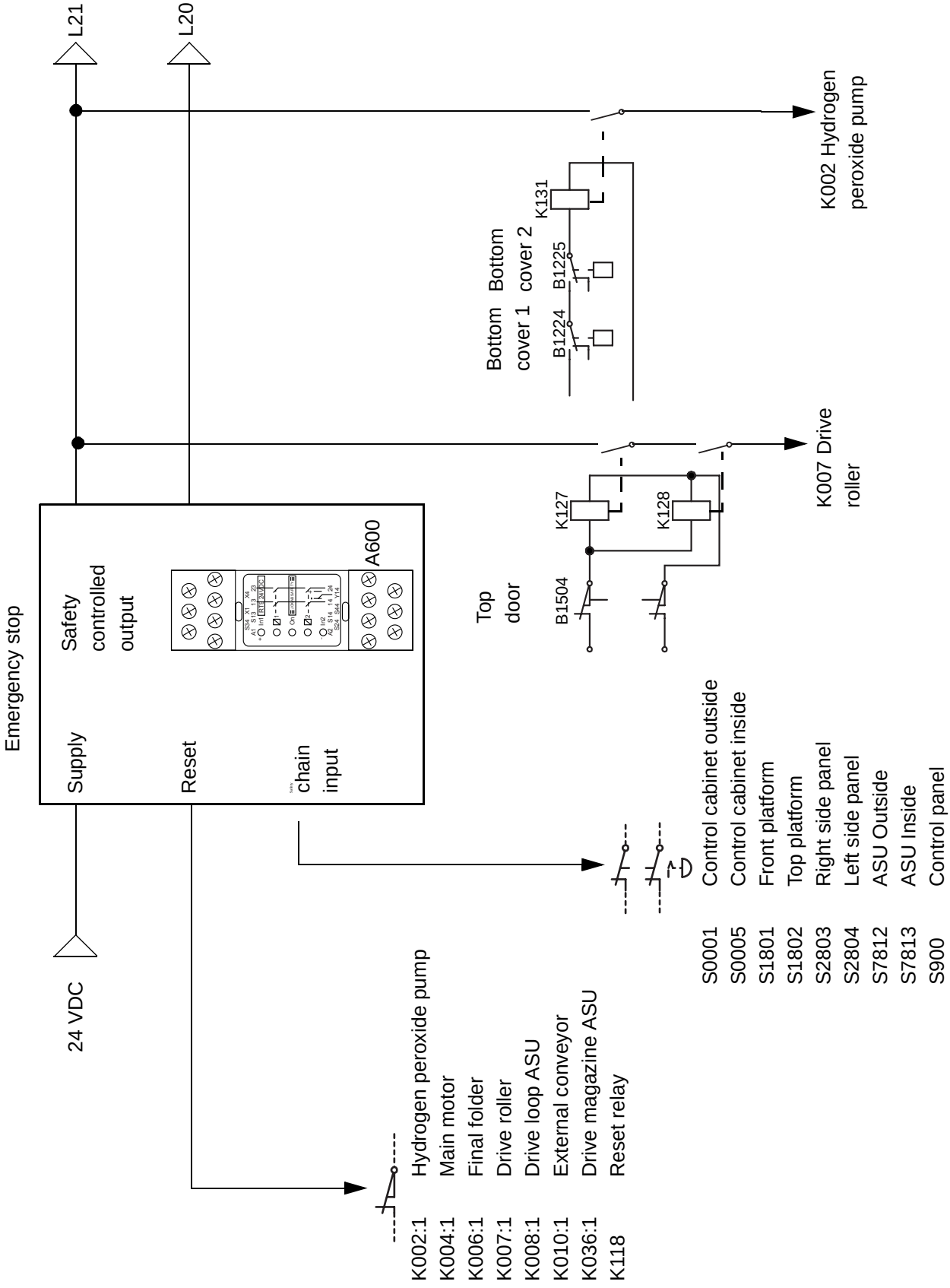

TechPub_2614345_v3_DRAFT_ReleaseTB017677en.fm

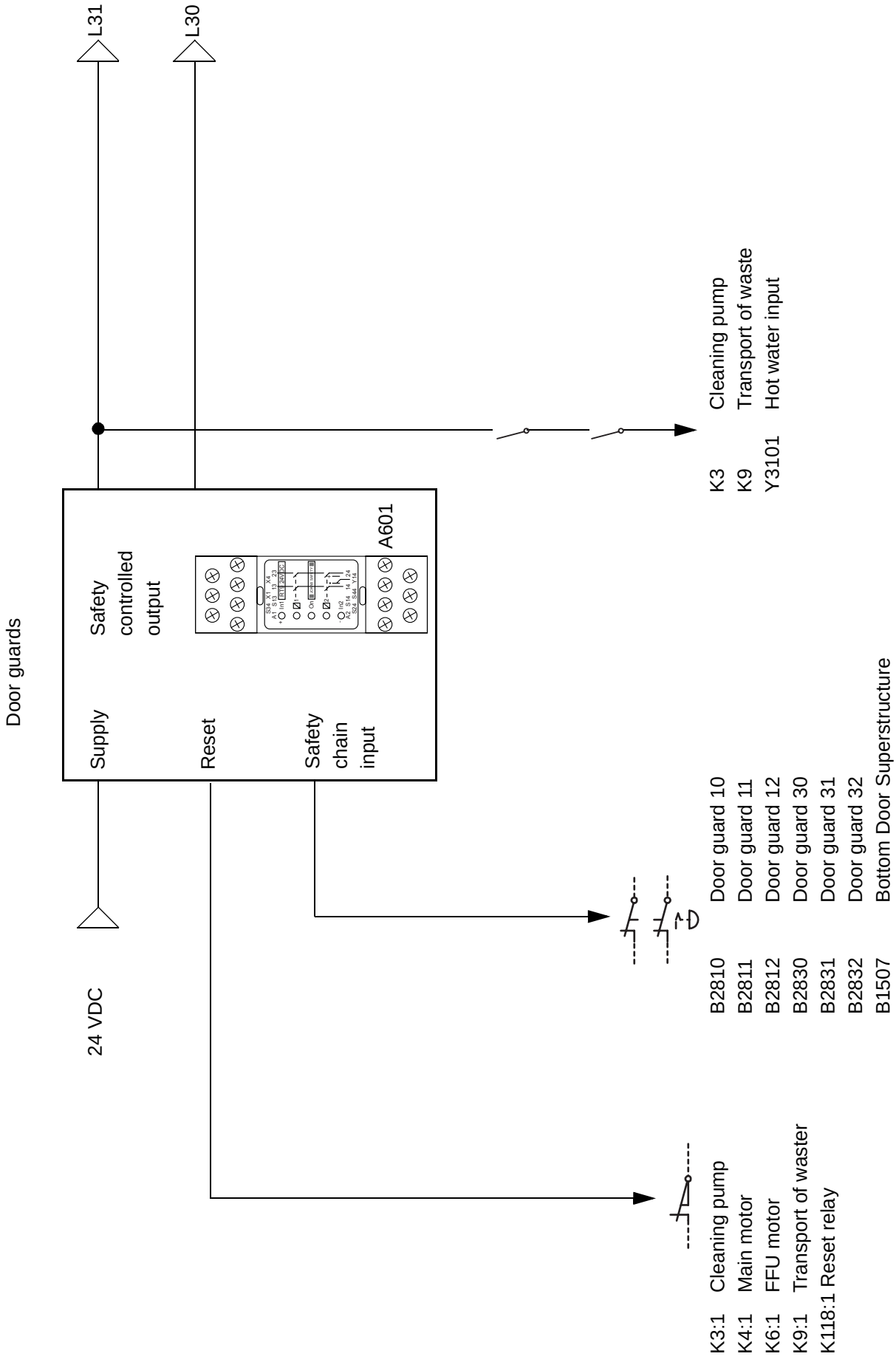

TechPub_2614345_v3_DRAFT_ReleaseTB017677en.fm

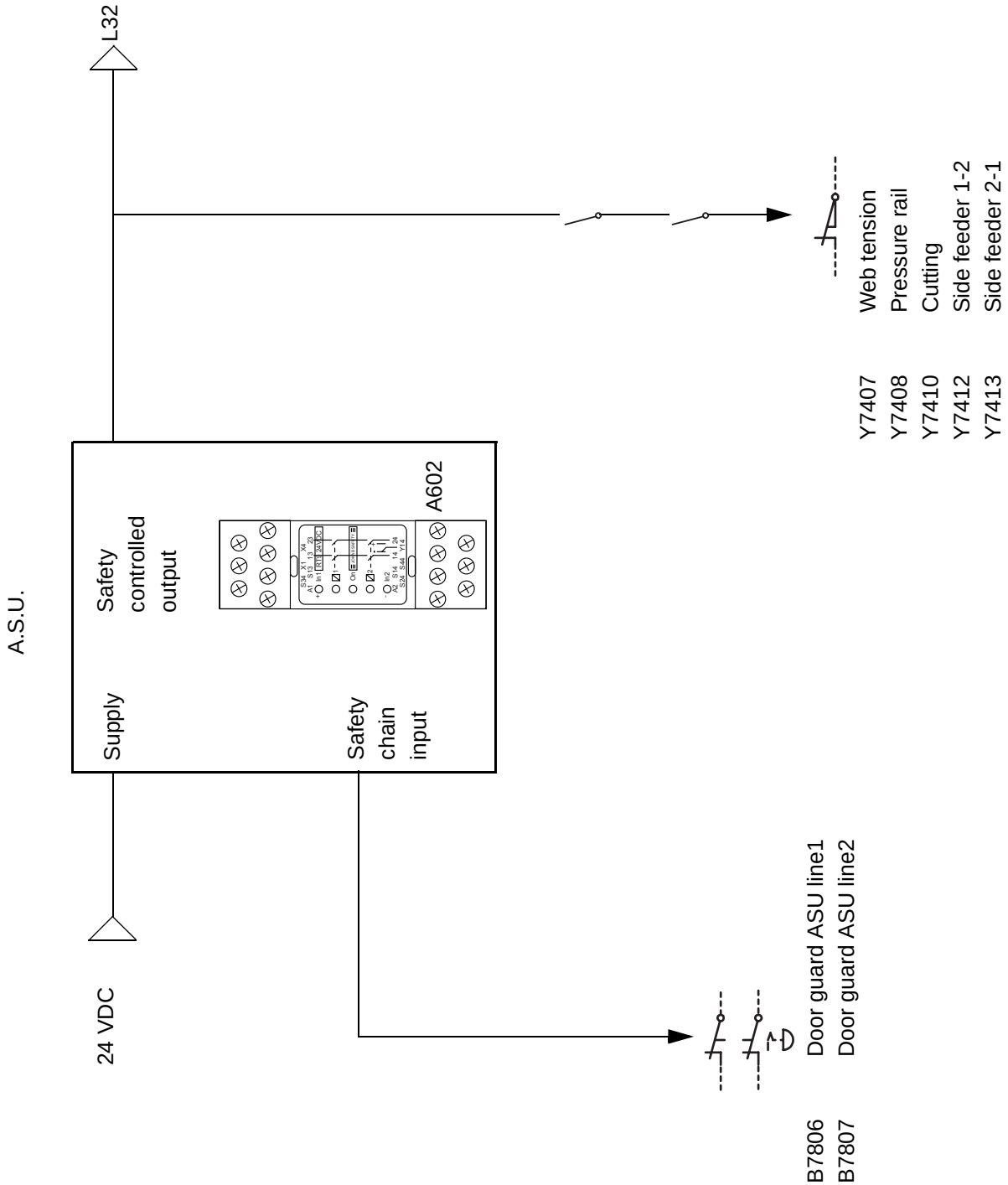

TechPub_2614345_v3_DRAFT_ReleaseTB017677en.fm

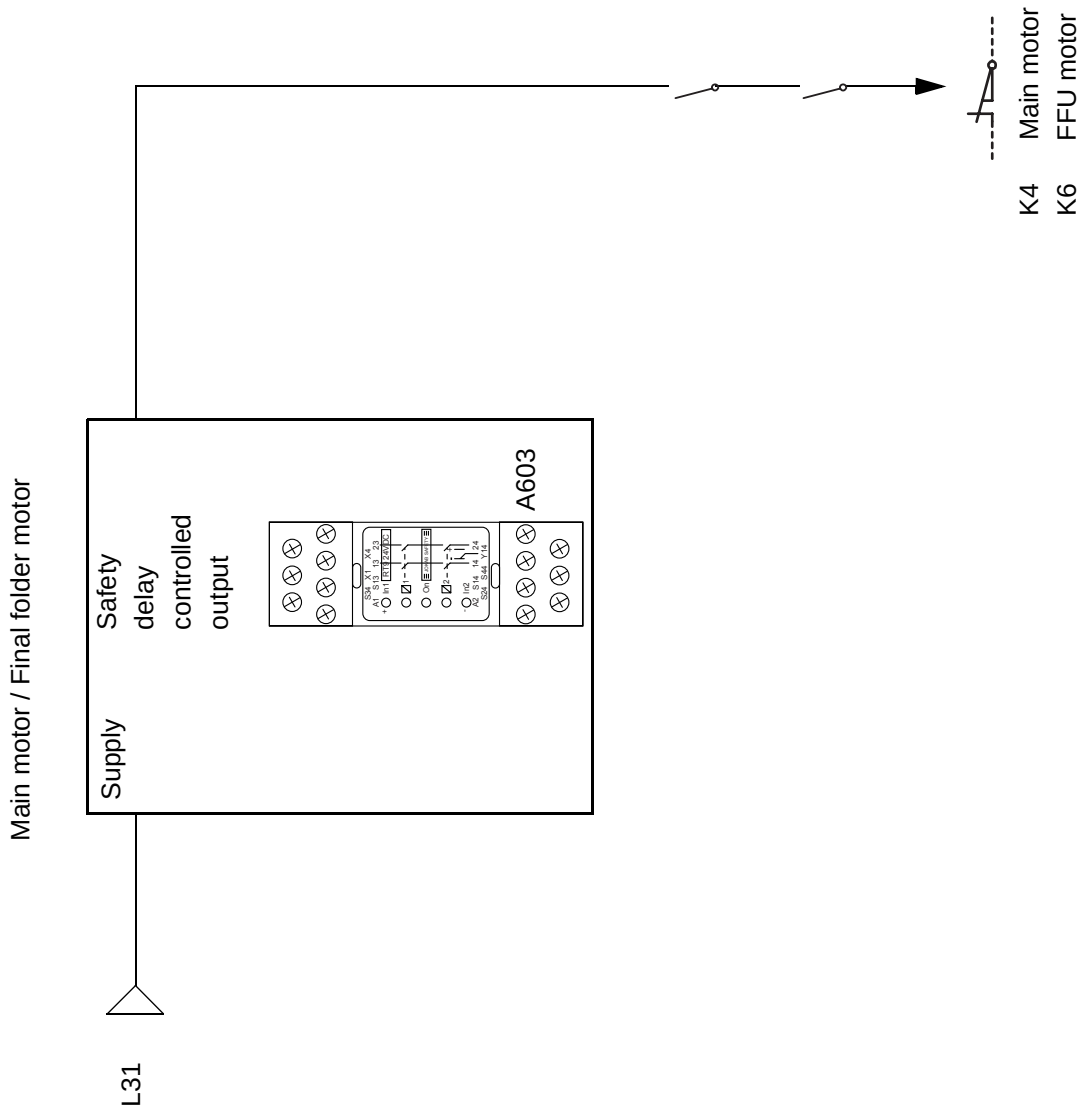

TechPub_2614345_v3_DRAFT_ReleaseTB017677en.fm

2 Component Location

TechPub_2614345_v3_DRAFT_ReleaseTB027677en.fm

Description

This chapter is the list of the components located on the machine.

Note! To find the component location see the Electrical Parts Index in the SPC.

TechPub_2614345_v3_DRAFT_ReleaseTB027677en.fm

3 Document List

TechPub_2614345_v3_DRAFT_ReleaseTB037677en.fm

Description

This chapter is a table of contents that includes the drawing specification for each electrical document valid for the equipment.

TechPub_2614345_v3_DRAFT_ReleaseTB037677en.fm

This drawing must not without the consent of Tetra Pak be copied, transmitted or disclosed to any third party.

RELEASED

Documents list

Drawing No	Denomination	Page type	Version
2593852-0001:001	DOCUMENTS LIST	DOCUMENTS LIST	AE
2593852-0001:002	DOCUMENTS LIST	DOCUMENTS LIST	AE
2593852-0001:003	DOCUMENTS LIST	DOCUMENTS LIST	AE
2593852-0001:004	DOCUMENTS LIST	DOCUMENTS LIST	AE
2593852-0001:005	DOCUMENTS LIST	DOCUMENTS LIST	AE
2593852-0001:006	DOCUMENTS LIST	DOCUMENTS LIST	AE
2593852-0001:007	DOCUMENTS LIST	DOCUMENTS LIST	AE
2593852-0001:008	DOCUMENTS LIST	DOCUMENTS LIST	AE
2593852-0002:001	POSITION SUMMARY	POSITION SUMMARY	AE
2593852-0002:002	POSITION SUMMARY	POSITION SUMMARY	AE
2593852-0002:003	POSITION SUMMARY	POSITION SUMMARY	AE
2593852-0002:004	POSITION SUMMARY	POSITION SUMMARY	AE
2593852-0002:005	POSITION SUMMARY	POSITION SUMMARY	AE
2593852-0003:001	CIRCUIT DIAGRAM	CIRCUIT DIAGRAM	AE
2593852-0003:002	CIRCUIT DIAGRAM	CIRCUIT DIAGRAM	AE
2593852-0003:003	CIRCUIT DIAGRAM	CIRCUIT DIAGRAM	AE
2593852-0003:005	CIRCUIT DIAGRAM	CIRCUIT DIAGRAM	AE
2593852-0003:006	CIRCUIT DIAGRAM	SUPER HEATER	AE
2593852-0003:007	CIRCUIT DIAGRAM	PEROXIDE TANK HEATERS	AE
2593852-0003:008	CIRCUIT DIAGRAM	PEROXIDE TANK HEATERS	AE
2593852-0003:010	CIRCUIT DIAGRAM	FLAP HEATING ELEMENT	AE
2593852-0003:011	CIRCUIT DIAGRAM	ELEMENTS, FLOW METER	AE
2593852-0003:012	CIRCUIT DIAGRAM	TPIH GENERATORS LS TS	AE
2593852-0003:013	CIRCUIT DIAGRAM	TPIH ASU	AE
2593852-0003:015	CIRCUIT DIAGRAM	STRIP FEEDING MOTORS	AE
2593852-0003:016	CIRCUIT DIAGRAM	DRIVE ROLLER, EXTERNAL CONVEYOR	AE
2593852-0003:017	CIRCUIT DIAGRAM	MOTORS ASU	AE
2593852-0003:018	CIRCUIT DIAGRAM	SERVO MOTORS	AE
2593852-0003:019	CIRCUIT DIAGRAM	MAIN SERVO MOTOR	AE
2593852-0003:020	CIRCUIT DIAGRAM	FFU SERVO MOTOR	AE
2593852-0003:021	CIRCUIT DIAGRAM	DCS SERVO MOTOR	AE
2593852-0003:022	CIRCUIT DIAGRAM	MOTORS	AE
2593852-0003:023	CIRCUIT DIAGRAM	MOTORS	AE
2593852-0003:024	CIRCUIT DIAGRAM	VOLUME ADJUSTMENT	AE
2593852-0003:025	CIRCUIT DIAGRAM	TUBE POSITIONING	AE
2593852-0003:026	CIRCUIT DIAGRAM	COOLING UNIT	AE
2593852-0003:032	CIRCUIT DIAGRAM	LIGHT FIXTURES	AE
2593852-0003:034	CIRCUIT DIAGRAM	CONTROL VOLTAGE	AE
2593852-0003:039	CIRCUIT DIAGRAM	RECORDER JUMO	AE
2593852-0003:045	CIRCUIT DIAGRAM	RECORDER HONEYWELL	AE
2593852-0003:046	CIRCUIT DIAGRAM	LEVEL RELAYS	AE
2593852-0003:047	CIRCUIT DIAGRAM	LEVEL RELAYS	AE
2593852-0003:048	CIRCUIT DIAGRAM	LEVEL RELAYS	AE
2593852-0003:049	CIRCUIT DIAGRAM	POWER SUPPLY PLC	AE
2593852-0003:050	CIRCUIT DIAGRAM	CONDUCTIVITY METER	AE
2593852-0003:051	CIRCUIT DIAGRAM	PEROXIDE METER	AE

Tetra Pak

Designer BMI
ECM No 175296
Date 07/06/2004
Denomination DOCUMENTS LIST
Machine TBA/22-0500
Page Type DOCUMENTS LIST
Document No. 2593852-0001
Doc. type ELD
Version AE
Page 1
Company Tetra Pak Carton Ambient S.p.A.
Drawing remarks

This drawing must not without the consent of Tetra Pak be copied, transmitted or disclosed to any third party.

RELEASED

Documents list

Drawing No	Denomination	Page type	Version
2593852-0003:052	CIRCUIT DIAGRAM	ASU BAR CODE	AE
2593852-0003:053	CIRCUIT DIAGRAM	DCS BAR CODE	AE
2593852-0003:054	CIRCUIT DIAGRAM	TMCC FCS	AE
2593852-0003:055	CIRCUIT DIAGRAM	TMCC LSM	AE
2593852-0003:056	CIRCUIT DIAGRAM	TMCC TSM	AE
2593852-0003:058	CIRCUIT DIAGRAM	BEACON LAMPS	AE
2593852-0003:059	CIRCUIT DIAGRAM	DAIRY COMMUNICATION	AE
2593852-0003:060	CIRCUIT DIAGRAM	DE COMMUNICATION	AE
2593852-0003:061	CIRCUIT DIAGRAM	TPOP COMMUNICATION	AE
2593852-0003:062	CIRCUIT DIAGRAM	DOOR GUARDS	AE
2593852-0003:063	CIRCUIT DIAGRAM	EMERGENCY STOP CHAIN	AE
2593852-0003:064	CIRCUIT DIAGRAM	DOOR GUARDS CHAIN	AE
2593852-0003:065	CIRCUIT DIAGRAM	ASU DOOR GUARDS CHAIN	AE
2593852-0003:066	CIRCUIT DIAGRAM	SAFETY RELAY SERVO	AE
2593852-0003:080	CIRCUIT DIAGRAM	ANGLE ENCODER, MAIN MACHINE	AE
2593852-0003:081	CIRCUIT DIAGRAM	PLC FAST INPUT	AE
2593852-0003:084	CIRCUIT DIAGRAM	PLC FAST OUTPUT	AE
2593852-0003:085	CIRCUIT DIAGRAM	PLC FAST OUTPUT	AE
2593852-0003:086	CIRCUIT DIAGRAM	THERMOCOUPLE MODULE	AE
2593852-0003:087	CIRCUIT DIAGRAM	THERMOCOUPLE MODULE	AE
2593852-0003:094	CIRCUIT DIAGRAM	PLC ANALOG IN CURRENT	AE
2593852-0003:095	CIRCUIT DIAGRAM	PLC ANALOG IN CURRENT	AE
2593852-0003:096	CIRCUIT DIAGRAM	PLC ANALOG IN VOLTAGE	AE
2593852-0003:097	CIRCUIT DIAGRAM	PLC ANALOG IN VOLTAGE	AE
2593852-0003:098	CIRCUIT DIAGRAM	PLC ANALOG OUTPUT C/V	AE
2593852-0003:099	CIRCUIT DIAGRAM	PLC ANALOG OUTPUT C/V	AE
2593852-0003:100	CIRCUIT DIAGRAM	PLC ANALOG OUTPUT C/V	AE
2593852-0003:101	CIRCUIT DIAGRAM	PLC ANALOG OUTPUT C/V	AE
2593852-0003:102	CIRCUIT DIAGRAM	PLC GENIUS MODULE	AE
2593852-0003:103	CIRCUIT DIAGRAM	PLC INPUT	AE
2593852-0003:104	CIRCUIT DIAGRAM	PLC INPUT	AE
2593852-0003:105	CIRCUIT DIAGRAM	PLC INPUT	AE
2593852-0003:106	CIRCUIT DIAGRAM	PLC INPUT	AE
2593852-0003:107	CIRCUIT DIAGRAM	PLC INPUT	AE
2593852-0003:108	CIRCUIT DIAGRAM	PLC INPUT	AE
2593852-0003:109	CIRCUIT DIAGRAM	PLC INPUT	AE
2593852-0003:110	CIRCUIT DIAGRAM	PLC INPUT	AE
2593852-0003:111	CIRCUIT DIAGRAM	PLC INPUT	AE
2593852-0003:112	CIRCUIT DIAGRAM	PLC INPUT	AE
2593852-0003:113	CIRCUIT DIAGRAM	PLC INPUT	AE
2593852-0003:114	CIRCUIT DIAGRAM	PLC INPUT	AE
2593852-0003:115	CIRCUIT DIAGRAM	PLC INPUT	AE
2593852-0003:116	CIRCUIT DIAGRAM	PLC INPUT	AE
2593852-0003:117	CIRCUIT DIAGRAM	PLC INPUT	AE
2593852-0003:118	CIRCUIT DIAGRAM	PLC INPUT	AE
2593852-0003:119	CIRCUIT DIAGRAM	PLC INPUT	AE

Tetra Pak

Company: Tetra Pak Carton Ambient S.p.A.

Designer: BMI | ECM No: 175296 | Denomination: DOCUMENTS LIST | Date: 07/06/2004

Machine: TBA/22-0500 | Page Type: DOCUMENTS LIST | Document No.: 2593852-0001 | Doc. type: ELD | Version: AE | Page: 2

Drawing remarks

This drawing must not without the consent of Tetra Pak be copied, transmitted or disclosed to any third party.

RELEASED

Documents list

Drawing No	Denomination	Page type	Version
2593852-0003:120	CIRCUIT DIAGRAM	PLC INPUT	AE
2593852-0003:121	CIRCUIT DIAGRAM	PLC INPUT	AE
2593852-0003:122	CIRCUIT DIAGRAM	PLC INPUT	AE
2593852-0003:123	CIRCUIT DIAGRAM	PLC INPUT	AE
2593852-0003:124	CIRCUIT DIAGRAM	PLC INPUT	AE
2593852-0003:125	CIRCUIT DIAGRAM	PLC INPUT	AE
2593852-0003:126	CIRCUIT DIAGRAM	PLC INPUT	AE
2593852-0003:127	CIRCUIT DIAGRAM	PLC INPUT	AE
2593852-0003:128	CIRCUIT DIAGRAM	PLC INPUT	AE
2593852-0003:129	CIRCUIT DIAGRAM	PLC INPUT	AE
2593852-0003:130	CIRCUIT DIAGRAM	PLC INPUT	AE
2593852-0003:131	CIRCUIT DIAGRAM	DE INPUT INTERFACE	AE
2593852-0003:132	CIRCUIT DIAGRAM	DE INPUT INTERFACE	AE
2593852-0003:133	CIRCUIT DIAGRAM	DE INPUT INTERFACE	AE
2593852-0003:134	CIRCUIT DIAGRAM	DE INPUT INTERFACE	AE
2593852-0003:139	CIRCUIT DIAGRAM	PLC OUTPUT	AE
2593852-0003:140	CIRCUIT DIAGRAM	PLC OUTPUT	AE
2593852-0003:141	CIRCUIT DIAGRAM	PLC OUTPUT	AE
2593852-0003:142	CIRCUIT DIAGRAM	PLC OUTPUT	AE
2593852-0003:143	CIRCUIT DIAGRAM	PLC OUTPUT	AE
2593852-0003:144	CIRCUIT DIAGRAM	PLC OUTPUT	AE
2593852-0003:145	CIRCUIT DIAGRAM	PLC OUTPUT	AE
2593852-0003:146	CIRCUIT DIAGRAM	PLC OUTPUT	AE
2593852-0003:147	CIRCUIT DIAGRAM	PLC OUTPUT	AE
2593852-0003:148	CIRCUIT DIAGRAM	PLC OUTPUT	AE
2593852-0003:149	CIRCUIT DIAGRAM	PLC OUTPUT	AE
2593852-0003:150	CIRCUIT DIAGRAM	PLC OUTPUT	AE
2593852-0003:151	CIRCUIT DIAGRAM	PLC OUTPUT	AE
2593852-0003:152	CIRCUIT DIAGRAM	PLC OUTPUT	AE
2593852-0003:153	CIRCUIT DIAGRAM	PLC OUTPUT	AE
2593852-0003:154	CIRCUIT DIAGRAM	PLC OUTPUT	AE
2593852-0003:155	CIRCUIT DIAGRAM	PLC OUTPUT	AE
2593852-0003:156	CIRCUIT DIAGRAM	PLC OUTPUT	AE
2593852-0003:157	CIRCUIT DIAGRAM	PLC OUTPUT	AE
2593852-0003:158	CIRCUIT DIAGRAM	PLC OUTPUT	AE
2593852-0003:159	CIRCUIT DIAGRAM	PLC OUTPUT	AE
2593852-0003:160	CIRCUIT DIAGRAM	PLC OUTPUT	AE
2593852-0003:161	CIRCUIT DIAGRAM	PLC OUTPUT	AE
2593852-0003:162	CIRCUIT DIAGRAM	PLC OUTPUT	AE
2593852-0003:163	CIRCUIT DIAGRAM	PLC OUTPUT	AE
2593852-0003:164	CIRCUIT DIAGRAM	PLC OUTPUT	AE
2593852-0003:165	CIRCUIT DIAGRAM	PLC OUTPUT	AE
2593852-0003:166	CIRCUIT DIAGRAM	PLC OUTPUT	AE
2593852-0003:171	CIRCUIT DIAGRAM	PLC INPUT	AE
2593852-0003:172	CIRCUIT DIAGRAM	PLC INPUT	AE
2593852-0003:173	CIRCUIT DIAGRAM	PLC INPUT	AE

Tetra Pak

Designer BMI | ECM No 175296 | Denomination DOCUMENTS LIST | Date 07/06/2004 | Machine TBA/22-0500 | Page Type DOCUMENTS LIST | Document No. 2593852-0001 | Doc. type ELD | Version AE | Page 3

Company Tetra Pak Carton Ambient S.p.A.

Drawing remarks

This drawing must not without the consent of Tetra Pak be copied, transmitted or disclosed to any third party.

RELEASED

Documents list

Drawing No	Denomination	Page type	Version
2593852-0003:174	CIRCUIT DIAGRAM	PLC INPUT	AE
2593852-0003:175	CIRCUIT DIAGRAM	PLC INPUT	AE
2593852-0003:176	CIRCUIT DIAGRAM	PLC INPUT	AE
2593852-0003:177	CIRCUIT DIAGRAM	PLC INPUT	AE
2593852-0003:181	CIRCUIT DIAGRAM	PLC OUTPUT	AE
2593852-0003:182	CIRCUIT DIAGRAM	PLC OUTPUT	AE
2593852-0003:183	CIRCUIT DIAGRAM	PLC OUTPUT	AE
2593852-0003:184	CIRCUIT DIAGRAM	PLC OUTPUT	AE
2593852-0003:185	CIRCUIT DIAGRAM	PLC OUTPUT	AE
2593852-0003:186	CIRCUIT DIAGRAM	PLC OUTPUT	AE
2593852-0003:200	CIRCUIT DIAGRAM	CIRCUIT DIAGRAM	AE
2593852-0003:201	CIRCUIT DIAGRAM	CIRCUIT DIAGRAM	AE
2593852-0003:202	CIRCUIT DIAGRAM	CIRCUIT DIAGRAM	AE
2593852-0003:203	CIRCUIT DIAGRAM	CIRCUIT DIAGRAM	AE
2593852-0003:204	CIRCUIT DIAGRAM	CIRCUIT DIAGRAM	AE
2593852-0003:205	CIRCUIT DIAGRAM	CIRCUIT DIAGRAM	AE
2593852-0003:206	CIRCUIT DIAGRAM	CIRCUIT DIAGRAM	AE
2593852-0003:207	CIRCUIT DIAGRAM	CIRCUIT DIAGRAM	AE
2593852-0003:208	CIRCUIT DIAGRAM	CIRCUIT DIAGRAM	AE
2593852-0003:209	CIRCUIT DIAGRAM	CIRCUIT DIAGRAM	AE
2593852-0004:001	LINE SUMMARY	LINE SUMMARY	AE
2593852-0004:002	LINE SUMMARY	LINE SUMMARY	AE
2593852-0004:003	LINE SUMMARY	LINE SUMMARY	AE
2593852-0004:004	LINE SUMMARY	LINE SUMMARY	AE
2593852-0004:005	LINE SUMMARY	LINE SUMMARY	AE
2593852-0004:006	LINE SUMMARY	LINE SUMMARY	AE
2593852-0004:007	LINE SUMMARY	LINE SUMMARY	AE
2593852-0004:008	LINE SUMMARY	LINE SUMMARY	AE
2593852-0005:001	CABINET TERMINAL SUMMARY	CABINET TERMINAL SUMMARY	AE
2593852-0005:002	CABINET TERMINAL SUMMARY	CABINET TERMINAL SUMMARY	AE
2593852-0005:003	CABINET TERMINAL SUMMARY	CABINET TERMINAL SUMMARY	AE
2593852-0005:004	CABINET TERMINAL SUMMARY	CABINET TERMINAL SUMMARY	AE
2593852-0005:005	CABINET TERMINAL SUMMARY	CABINET TERMINAL SUMMARY	AE
2593852-0005:006	CABINET TERMINAL SUMMARY	CABINET TERMINAL SUMMARY	AE
2593852-0005:007	CABINET TERMINAL SUMMARY	CABINET TERMINAL SUMMARY	AE
2593852-0005:008	CABINET TERMINAL SUMMARY	CABINET TERMINAL SUMMARY	AE
2593852-0005:009	CABINET TERMINAL SUMMARY	CABINET TERMINAL SUMMARY	AE
2593852-0005:010	CABINET TERMINAL SUMMARY	CABINET TERMINAL SUMMARY	AE
2593852-0005:011	CABINET TERMINAL SUMMARY	CABINET TERMINAL SUMMARY	AE
2593852-0005:012	CABINET TERMINAL SUMMARY	CABINET TERMINAL SUMMARY	AE
2593852-0006:001	TERMINAL STRIP OVERVIEW	TERMINAL STRIP OVERVIEW	AE
2593852-0006:002	TERMINAL STRIP OVERVIEW	TERMINAL STRIP OVERVIEW	AE
2593852-0006:003	TERMINAL STRIP OVERVIEW	TERMINAL STRIP OVERVIEW	AE
2593852-0006:004	TERMINAL STRIP OVERVIEW	TERMINAL STRIP OVERVIEW	AE
2593852-0006:005	TERMINAL STRIP OVERVIEW	TERMINAL STRIP OVERVIEW	AE
2593852-0006:006	TERMINAL STRIP OVERVIEW	TERMINAL STRIP OVERVIEW	AE

Machine TBA/22-0500
Page Type DOCUMENTS LIST
Document No. 2593852-0001
Doc. type ELD
Version AE
Page 4
Date 07/06/2004
Denomination DOCUMENTS LIST
Designer BMI
ECM No 175296
Tetra Pak
Company Tetra Pak Carton Ambient S.p.A.
Drawing remarks

This drawing must not without the consent of Tetra Pak be copied, transmitted or disclosed to any third party.

RELEASED

Documents list

Drawing No	Denomination	Page type	Version
2593852-0006:007	TERMINAL STRIP OVERVIEW	TERMINAL STRIP OVERVIEW	AE
2593852-0006:008	TERMINAL STRIP OVERVIEW	TERMINAL STRIP OVERVIEW	AE
2593852-0006:009	TERMINAL STRIP OVERVIEW	TERMINAL STRIP OVERVIEW	AE
2593852-0006:010	TERMINAL STRIP OVERVIEW	TERMINAL STRIP OVERVIEW	AE
2593852-0006:011	TERMINAL STRIP OVERVIEW	TERMINAL STRIP OVERVIEW	AE
2593852-0006:012	TERMINAL STRIP OVERVIEW	TERMINAL STRIP OVERVIEW	AE
2593852-0006:013	TERMINAL STRIP OVERVIEW	TERMINAL STRIP OVERVIEW	AE
2593852-0006:014	TERMINAL STRIP OVERVIEW	TERMINAL STRIP OVERVIEW	AE
2593852-0006:015	TERMINAL STRIP OVERVIEW	TERMINAL STRIP OVERVIEW	AE
2593852-0006:016	TERMINAL STRIP OVERVIEW	TERMINAL STRIP OVERVIEW	AE
2593852-0006:017	TERMINAL STRIP OVERVIEW	TERMINAL STRIP OVERVIEW	AE
2593852-0006:018	TERMINAL STRIP OVERVIEW	TERMINAL STRIP OVERVIEW	AE
2593852-0006:019	TERMINAL STRIP OVERVIEW	TERMINAL STRIP OVERVIEW	AE
2593852-0006:020	TERMINAL STRIP OVERVIEW	TERMINAL STRIP OVERVIEW	AE
2593852-0006:021	TERMINAL STRIP OVERVIEW	TERMINAL STRIP OVERVIEW	AE
2593852-0006:022	TERMINAL STRIP OVERVIEW	TERMINAL STRIP OVERVIEW	AE
2593852-0006:023	TERMINAL STRIP OVERVIEW	TERMINAL STRIP OVERVIEW	AE
2593852-0006:024	TERMINAL STRIP OVERVIEW	TERMINAL STRIP OVERVIEW	AE
2593852-0006:025	TERMINAL STRIP OVERVIEW	TERMINAL STRIP OVERVIEW	AE
2593852-0006:026	TERMINAL STRIP OVERVIEW	TERMINAL STRIP OVERVIEW	AE
2593852-0006:027	TERMINAL STRIP OVERVIEW	TERMINAL STRIP OVERVIEW	AE
2593852-0006:028	TERMINAL STRIP OVERVIEW	TERMINAL STRIP OVERVIEW	AE
2593852-0006:029	TERMINAL STRIP OVERVIEW	TERMINAL STRIP OVERVIEW	AE
2593852-0006:030	TERMINAL STRIP OVERVIEW	TERMINAL STRIP OVERVIEW	AE
2593852-0006:031	TERMINAL STRIP OVERVIEW	TERMINAL STRIP OVERVIEW	AE
2593852-0006:032	TERMINAL STRIP OVERVIEW	TERMINAL STRIP OVERVIEW	AE
2593852-0006:033	TERMINAL STRIP OVERVIEW	TERMINAL STRIP OVERVIEW	AE
2593852-0006:034	TERMINAL STRIP OVERVIEW	TERMINAL STRIP OVERVIEW	AE
2593852-0006:035	TERMINAL STRIP OVERVIEW	TERMINAL STRIP OVERVIEW	AE
2593852-0006:036	TERMINAL STRIP OVERVIEW	TERMINAL STRIP OVERVIEW	AE
2593852-0006:037	TERMINAL STRIP OVERVIEW	TERMINAL STRIP OVERVIEW	AE
2593852-0006:038	TERMINAL STRIP OVERVIEW	TERMINAL STRIP OVERVIEW	AE
2593852-0006:039	TERMINAL STRIP OVERVIEW	TERMINAL STRIP OVERVIEW	AE
2593852-0006:040	TERMINAL STRIP OVERVIEW	TERMINAL STRIP OVERVIEW	AE
2593852-0006:041	TERMINAL STRIP OVERVIEW	TERMINAL STRIP OVERVIEW	AE
2593852-0006:042	TERMINAL STRIP OVERVIEW	TERMINAL STRIP OVERVIEW	AE
2593852-0006:043	TERMINAL STRIP OVERVIEW	TERMINAL STRIP OVERVIEW	AE
2593852-0006:044	TERMINAL STRIP OVERVIEW	TERMINAL STRIP OVERVIEW	AE
2593852-0006:045	TERMINAL STRIP OVERVIEW	TERMINAL STRIP OVERVIEW	AE
2593852-0006:046	TERMINAL STRIP OVERVIEW	TERMINAL STRIP OVERVIEW	AE
2593852-0006:047	TERMINAL STRIP OVERVIEW	TERMINAL STRIP OVERVIEW	AE
2593852-0006:048	TERMINAL STRIP OVERVIEW	TERMINAL STRIP OVERVIEW	AE
2593852-0006:049	TERMINAL STRIP OVERVIEW	TERMINAL STRIP OVERVIEW	AE
2593852-0006:050	TERMINAL STRIP OVERVIEW	TERMINAL STRIP OVERVIEW	AE
2593852-0006:051	TERMINAL STRIP OVERVIEW	TERMINAL STRIP OVERVIEW	AE
2593852-0006:052	TERMINAL STRIP OVERVIEW	TERMINAL STRIP OVERVIEW	AE

Tetra Pak

Company: Tetra Pak Carton Ambient S.p.A.

Designer: BMI | ECM No: 175296 | Denomination: DOCUMENTS LIST | Date: 07/06/2004

Machine: TBA/22-0500 | Page Type: DOCUMENTS LIST | Document No.: 2593852-0001 | Doc. type: ELD | Version: AE | Page: 5

Drawing remarks

This drawing must not without the consent of Tetra Pak be copied, transmitted or disclosed to any third party.

RELEASED

Documents list

Drawing No	Denomination	Page type	Version
2593852-0006:053	TERMINAL STRIP OVERVIEW	TERMINAL STRIP OVERVIEW	AE
2593852-0006:054	TERMINAL STRIP OVERVIEW	TERMINAL STRIP OVERVIEW	AE
2593852-0006:055	TERMINAL STRIP OVERVIEW	TERMINAL STRIP OVERVIEW	AE
2593852-0006:056	TERMINAL STRIP OVERVIEW	TERMINAL STRIP OVERVIEW	AE
2593852-0006:057	TERMINAL STRIP OVERVIEW	TERMINAL STRIP OVERVIEW	AE
2593852-0006:058	TERMINAL STRIP OVERVIEW	TERMINAL STRIP OVERVIEW	AE
2593852-0006:059	TERMINAL STRIP OVERVIEW	TERMINAL STRIP OVERVIEW	AE
2593852-0006:060	TERMINAL STRIP OVERVIEW	TERMINAL STRIP OVERVIEW	AE
2593852-0006:061	TERMINAL STRIP OVERVIEW	TERMINAL STRIP OVERVIEW	AE
2593852-0006:062	TERMINAL STRIP OVERVIEW	TERMINAL STRIP OVERVIEW	AE
2593852-0006:063	TERMINAL STRIP OVERVIEW	TERMINAL STRIP OVERVIEW	AE
2593852-0006:064	TERMINAL STRIP OVERVIEW	TERMINAL STRIP OVERVIEW	AE
2593852-0006:065	TERMINAL STRIP OVERVIEW	TERMINAL STRIP OVERVIEW	AE
2593852-0006:066	TERMINAL STRIP OVERVIEW	TERMINAL STRIP OVERVIEW	AE
2593852-0006:067	TERMINAL STRIP OVERVIEW	TERMINAL STRIP OVERVIEW	AE
2593852-0006:068	TERMINAL STRIP OVERVIEW	TERMINAL STRIP OVERVIEW	AE
2593852-0006:069	TERMINAL STRIP OVERVIEW	TERMINAL STRIP OVERVIEW	AE
2593852-0006:070	TERMINAL STRIP OVERVIEW	TERMINAL STRIP OVERVIEW	AE
2593852-0006:071	TERMINAL STRIP OVERVIEW	TERMINAL STRIP OVERVIEW	AE
2593852-0006:072	TERMINAL STRIP OVERVIEW	TERMINAL STRIP OVERVIEW	AE
2593852-0006:073	TERMINAL STRIP OVERVIEW	TERMINAL STRIP OVERVIEW	AE
2593852-0006:074	TERMINAL STRIP OVERVIEW	TERMINAL STRIP OVERVIEW	AE
2593852-0006:075	TERMINAL STRIP OVERVIEW	TERMINAL STRIP OVERVIEW	AE
2593852-0006:076	TERMINAL STRIP OVERVIEW	TERMINAL STRIP OVERVIEW	AE
2593852-0006:077	TERMINAL STRIP OVERVIEW	TERMINAL STRIP OVERVIEW	AE
2593852-0006:078	TERMINAL STRIP OVERVIEW	TERMINAL STRIP OVERVIEW	AE
2593852-0006:079	TERMINAL STRIP OVERVIEW	TERMINAL STRIP OVERVIEW	AE
2593852-0006:080	TERMINAL STRIP OVERVIEW	TERMINAL STRIP OVERVIEW	AE
2593852-0006:081	TERMINAL STRIP OVERVIEW	TERMINAL STRIP OVERVIEW	AE
2593852-0006:082	TERMINAL STRIP OVERVIEW	TERMINAL STRIP OVERVIEW	AE
2593852-0006:083	TERMINAL STRIP OVERVIEW	TERMINAL STRIP OVERVIEW	AE
2593852-0006:084	TERMINAL STRIP OVERVIEW	TERMINAL STRIP OVERVIEW	AE
2593852-0006:085	TERMINAL STRIP OVERVIEW	TERMINAL STRIP OVERVIEW	AE
2593852-0006:086	TERMINAL STRIP OVERVIEW	TERMINAL STRIP OVERVIEW	AE
2593852-0006:087	TERMINAL STRIP OVERVIEW	TERMINAL STRIP OVERVIEW	AE
2593852-0006:088	TERMINAL STRIP OVERVIEW	TERMINAL STRIP OVERVIEW	AE
2593852-0006:089	TERMINAL STRIP OVERVIEW	TERMINAL STRIP OVERVIEW	AE
2593852-0006:090	TERMINAL STRIP OVERVIEW	TERMINAL STRIP OVERVIEW	AE
2593852-0006:091	TERMINAL STRIP OVERVIEW	TERMINAL STRIP OVERVIEW	AE
2593852-0006:092	TERMINAL STRIP OVERVIEW	TERMINAL STRIP OVERVIEW	AE
2593852-0006:093	TERMINAL STRIP OVERVIEW	TERMINAL STRIP OVERVIEW	AE
2593852-0006:094	TERMINAL STRIP OVERVIEW	TERMINAL STRIP OVERVIEW	AE
2593852-0006:095	TERMINAL STRIP OVERVIEW	TERMINAL STRIP OVERVIEW	AE
2593852-0006:096	TERMINAL STRIP OVERVIEW	TERMINAL STRIP OVERVIEW	AE
2593852-0006:097	TERMINAL STRIP OVERVIEW	TERMINAL STRIP OVERVIEW	AE
2593852-0006:098	TERMINAL STRIP OVERVIEW	TERMINAL STRIP OVERVIEW	AE

Tetra Pak

Company: Tetra Pak Carton Ambient S.p.A.

Designer: BMI | ECM No: 175296 | Denomination: DOCUMENTS LIST | Date: 07/06/2004

Machine: TBA/22-0500 | Page Type: DOCUMENTS LIST | Document No.: 2593852-0001 | Doc. type: ELD | Version: AE | Page: 6

Drawing remarks

This drawing must not without the consent of Tetra Pak be copied, transmitted or disclosed to any third party.

RELEASED

Documents list

Drawing No	Denomination	Page type	Version
2593852-0006:099	TERMINAL STRIP OVERVIEW	TERMINAL STRIP OVERVIEW	AE
2593852-0006:100	TERMINAL STRIP OVERVIEW	TERMINAL STRIP OVERVIEW	AE
2593852-0006:101	TERMINAL STRIP OVERVIEW	TERMINAL STRIP OVERVIEW	AE
2593852-0006:102	TERMINAL STRIP OVERVIEW	TERMINAL STRIP OVERVIEW	AE
2593852-0006:103	TERMINAL STRIP OVERVIEW	TERMINAL STRIP OVERVIEW	AE
2593852-0006:104	TERMINAL STRIP OVERVIEW	TERMINAL STRIP OVERVIEW	AE
2593852-0006:105	TERMINAL STRIP OVERVIEW	TERMINAL STRIP OVERVIEW	AE
2593852-0006:106	TERMINAL STRIP OVERVIEW	TERMINAL STRIP OVERVIEW	AE
2593852-0006:107	TERMINAL STRIP OVERVIEW	TERMINAL STRIP OVERVIEW	AE
2593852-0006:108	TERMINAL STRIP OVERVIEW	TERMINAL STRIP OVERVIEW	AE
2593852-0006:109	TERMINAL STRIP OVERVIEW	TERMINAL STRIP OVERVIEW	AE
2593852-0006:110	TERMINAL STRIP OVERVIEW	TERMINAL STRIP OVERVIEW	AE
2593852-0006:111	TERMINAL STRIP OVERVIEW	TERMINAL STRIP OVERVIEW	AE
2593852-0006:112	TERMINAL STRIP OVERVIEW	TERMINAL STRIP OVERVIEW	AE
2593852-0006:113	TERMINAL STRIP OVERVIEW	TERMINAL STRIP OVERVIEW	AE
2593852-0007:001	CABLE CONNECTION LIST	CABLE CONNECTION LIST	AE
2593852-0007:002	CABLE CONNECTION LIST	CABLE CONNECTION LIST	AE
2593852-0007:003	CABLE CONNECTION LIST	CABLE CONNECTION LIST	AE
2593852-0007:004	CABLE CONNECTION LIST	CABLE CONNECTION LIST	AE
2593852-0007:005	CABLE CONNECTION LIST	CABLE CONNECTION LIST	AE
2593852-0007:006	CABLE CONNECTION LIST	CABLE CONNECTION LIST	AE
2593852-0007:007	CABLE CONNECTION LIST	CABLE CONNECTION LIST	AE
2593852-0007:008	CABLE CONNECTION LIST	CABLE CONNECTION LIST	AE
2593852-0007:009	CABLE CONNECTION LIST	CABLE CONNECTION LIST	AE
2593852-0007:010	CABLE CONNECTION LIST	CABLE CONNECTION LIST	AE
2593852-0007:011	CABLE CONNECTION LIST	CABLE CONNECTION LIST	AE
2593852-0007:012	CABLE CONNECTION LIST	CABLE CONNECTION LIST	AE
2593852-0007:013	CABLE CONNECTION LIST	CABLE CONNECTION LIST	AE
2593852-0007:014	CABLE CONNECTION LIST	CABLE CONNECTION LIST	AE
2593852-0007:015	CABLE CONNECTION LIST	CABLE CONNECTION LIST	AE
2593852-0007:016	CABLE CONNECTION LIST	CABLE CONNECTION LIST	AE
2593852-0007:017	CABLE CONNECTION LIST	CABLE CONNECTION LIST	AE
2593852-0007:018	CABLE CONNECTION LIST	CABLE CONNECTION LIST	AE
2593852-0007:019	CABLE CONNECTION LIST	CABLE CONNECTION LIST	AE
2593852-0007:020	CABLE CONNECTION LIST	CABLE CONNECTION LIST	AE
2593852-0007:021	CABLE CONNECTION LIST	CABLE CONNECTION LIST	AE
2593852-0007:022	CABLE CONNECTION LIST	CABLE CONNECTION LIST	AE
2593852-0007:023	CABLE CONNECTION LIST	CABLE CONNECTION LIST	AE
2593852-0007:024	CABLE CONNECTION LIST	CABLE CONNECTION LIST	AE
2593852-0007:025	CABLE CONNECTION LIST	CABLE CONNECTION LIST	AE
2593852-0007:026	CABLE CONNECTION LIST	CABLE CONNECTION LIST	AE
2593852-0007:027	CABLE CONNECTION LIST	CABLE CONNECTION LIST	AE
2593852-0007:028	CABLE CONNECTION LIST	CABLE CONNECTION LIST	AE
2593852-0007:029	CABLE CONNECTION LIST	CABLE CONNECTION LIST	AE
2593852-0007:030	CABLE CONNECTION LIST	CABLE CONNECTION LIST	AE
2593852-0007:031	CABLE CONNECTION LIST	CABLE CONNECTION LIST	AE

Tetra Pak

Company: Tetra Pak Carton Ambient S.p.A.

Designer: BMI | ECM No: 175296 | Denomination: DOCUMENTS LIST | Date: 07/06/2004 | Machine: TBA/22-0500 | Page Type: DOCUMENTS LIST | Document No.: 2593852-0001 | Doc. type: ELD | Version: AE | Page: 7

Drawing remarks

RELEASED

This drawing must not without the consent of Tetra Pak
be copied, transmitted or disclosed to any third party.

Documents list

Drawing No	Denomination	Page type	Version
2593852-0007:032	CABLE CONNECTION LIST	CABLE CONNECTION LIST	AE
2593852-0007:033	CABLE CONNECTION LIST	CABLE CONNECTION LIST	AE
2593852-0007:034	CABLE CONNECTION LIST	CABLE CONNECTION LIST	AE
2593852-0007:035	CABLE CONNECTION LIST	CABLE CONNECTION LIST	AE
2593852-0007:036	CABLE CONNECTION LIST	CABLE CONNECTION LIST	AE
2593852-0007:037	CABLE CONNECTION LIST	CABLE CONNECTION LIST	AE
2593852-0007:038	CABLE CONNECTION LIST	CABLE CONNECTION LIST	AE
2593852-0008:001	MAINS CONNECTION	MAINS CONNECTION	AE
2593852-0008:002	MAINS CONNECTION	MAINS CONNECTION	AE

Drawing remarks

Tetra Pak

Designer BMI	Date 07/06/2004	Machine TBA/22-0500			
ECM No 175296	Denomination DOCUMENTS LIST	Page Type DOCUMENTS LIST			
Company Tetra Pak Carton Ambient S.p.A.	Document No. 2593852-0001	Doc. type ELD	Version AE	Page 8	

4 Position Summary

Description

This chapter is a list of all electrical components that are shown in the electrical drawings, with page references to the drawings where they are located.

This drawing must not without the consent of Tetra Pak be copied, transmitted or disclosed to any third party.

Position summary of 2593852-0003

Component	Page .Col.	Opt.
+C-A101	081 .7	
+C-A102	084 .1	
+C-A103	086 .7	
+C-A104	087 .7	
+C-A105	095 .7	
+C-A106	097 .7	
+C-A107	099 .1	
+C-A108	101 .1	
+C-A109	102 .2	
+C-A110	104 .7	
+C-A111	106 .7	
+C-A112	108 .7	
+C-A113	110 .7	
+C-A114	112 .7	
+C-A115	114 .7	
+C-A116	116 .7	
+C-A117	118 .7	
+C-A118	120 .7	
+C-A119	122 .7	
+C-A120	124 .7	
+C-A121	126 .7	
+C-A122	128 .7	
+C-A123	130 .7	
+C-A124	132 .7	
+C-A125	134 .7	
+C-A126	140 .1	
+C-A127	142 .1	
+C-A128	144 .1	

Component	Page .Col.	Opt.
+C-A129	146 .1	
+C-A130	148 .1	
+C-A131	150 .1	
+C-A132	152 .1	
+C-A133	154 .1	
+C-A134	156 .1	
+C-A135	158 .1	
+C-A136	160 .1	
+C-A137	162 .1	
+C-A138	164 .1	
+C-A139	166 .1	
+C-A140	172 .7	
+C-A141	174 .7	
+C-A142	176 .7	
+C-A143	177 .7	H.I.
+C-A145	182 .1	
+C-A146	184 .1	
+C-A147	186 .1	
+C-A160	049 .1	
+C-A161	049 .3	
+C-A162	049 .5	
+C-A163	049 .6	
+C-A164	049 .7	
+C-A300	046 .6	
+C-A301	046 .6	
+C-A302	046 .6	
+C-A303	047 .6	
+C-A304	047 .6	

Component	Page .Col.	Opt.
+C-A305	047 .6	
+C-A306	048 .6	
+C-A307	048 .6	
+C-A308	048 .6	
+C-A309	045 .6	H.I.
+C-A410	016 .2	
+C-A411	015 .3	
+C-A412	017 .2	
+C-A413	017 .7	
+C-A414	050 .4	
+C-A415	016 .7	
+C-A418	053 .2	
+C-A419	052 .2	
+C-A420	054 .9	
+C-A421	055 .6	
+C-A422	056 .6	
+C-A424	024 .4	
+C-A425	025 .4	
+C-A450	061 .3	
+C-A451	061 .1	
+C-A500	034 .2	
+C-A501	012 .1	
+C-A502	012 .6	
+C-A505	018 .7	
+C-A506	019 .7	
+C-A507	020 .7	
+C-A508	021 .2	
+C-A600	063 .6	

Component	Page .Col.	Opt.
+C-A601	064 .6	
+C-A602	065 .6	
+C-A603	066 .6	
+P-A951	061 .3	
+P-A952	061 .4	
+P-A953	061 .3	
+M-A1210	051 .3	
+M-A1304	054 .4	
+M-A4200	102 .8	
+M-A4500	061 .6	
+M-A4501	061 .7	
+M-A7417	013 .1	
+M-A9115	101 .6	H.I.
+C-B001	086 .2	
+C-B002	108 .2	
+C-B003	108 .4	
+C-B004	108 .5	
+C-B005	108 .7	
+M-B006	108 .5	
+M-B007	108 .3	
+M-B1102	117 .4	
+M-B1103	118 .4	
+M-B1104	046 .2	
+M-B1105	087 .2	
+M-B1106	086 .2	
+M-B1109	086 .2	
+M-B1111	118 .5	
+M-B1112	124 .5	

Drawing remarks

Tetra Pak

Designer BMI	Date 07/06/2004	Machine TBA/22-0500	
ECM No 175296	Denomination POSITION SUMMARY	Page Type POSITION SUMMARY	
Company Tetra Pak Carton Ambient S.p.A.	Document No. 2593852-0002	Doc. type ELD	Version AE	Page 1

This drawing must not without the consent of Tetra Pak be copied, transmitted or disclosed to any third party.

Position summary of 2593852-0003

Component	Page .Col.	Opt.
+M-B1113	118 .5	
+M-B1115	123 .5	
+M-B1116	123 .5	
+M-B1201	047 .2	
+M-B1208	086 .2	
+M-B1209	086 .2	
+M-B1210	048 .2	
+M-B1212	086 .2	
+M-B1220	046 .2	
+M-B1222	086 .2	
+M-B1224	062 .3	
+M-B1225	062 .5	
+M-B1230	046 .2	
+M-B1241	124 .5	
+M-B1242	124 .5	
+M-B1301	117 .5	
+M-B1302	117 .5	
+M-B1303	117 .5	
+M-B1304	054 .1	
+M-B1306	117 .5	
+M-B1307	117 .5	
+M-B1310	087 .2	
+M-B1314	054 .5	FLOATER
+M-B1315	050 .4	
+M-B1316	011 .8	
+M-B1321	118 .5	
+M-B1322	047 .2	
+M-B1330	124 .5	

Component	Page .Col.	Opt.
+M-B1350	117 .5	
+M-B1403	081 .4	
+M-B1405	123 .5	
+M-B1502	118 .5	
+M-B1504	062 .3	
+M-B1505	062 .3	
+M-B1506	062 .5	
+M-B1507	121 .4	
+M-B1508	062 .3	
+M-B2102	119 .4	
+M-B2201	119 .4	
+M-B2501	119 .4	
+M-B2510	086 .2	
+M-B2520	047 .2	
+M-B2540	119 .4	
+M-B2810	121 .4	
+M-B2811	121 .4	
+M-B2812	121 .4	
+M-B2830	122 .4	
+M-B2831	122 .4	
+M-B2832	122 .4	
+M-B3102	119 .4	
+M-B3105	119 .4	
+M-B3116	118 .5	
+M-B4001	080 .5	
+M-B4102	124 .4	
+M-B4103	080 .2	
+M-B4125	173 .5	

Component	Page .Col.	Opt.
+M-B4126	173 .5	
+M-B4127	173 .5	
+M-B4128	173 .5	
+M-B4129	173 .5	
+M-B4131	173 .5	
+M-B4132	173 .5	
+M-B4134	173 .5	
+M-B4135	174 .5	
+M-B4137	174 .5	
+M-B4138	174 .5	
+M-B4141	175 .4	
+M-B4200	081 .4	
+M-B4202	124 .4	
+M-B5103	125 .5	
+M-B5307	087 .2	
+M-B5308	087 .2	
+M-B5309	087 .2	
+M-B5310	087 .2	
+M-B6105	081 .4	
+M-B6107	127 .5	
+M-B6201	126 .5	
+M-B6202	126 .5	
+M-B6203	126 .5	
+M-B6204	127 .5	
+M-B6205	096 .1	
+M-B6208	126 .5	
+M-B6209	122 .4	
+M-B7210	128 .4	

Component	Page .Col.	Opt.
+M-B7211	128 .4	
+M-B7304	087 .2	
+M-B7401	128 .4	
+M-B7411	127 .5	
+M-B7412	127 .5	
+M-B7414	127 .5	
+M-B7501	128 .4	
+M-B7512	127 .5	
+M-B7801	128 .4	
+M-B7806	122 .4	
+M-B7807	122 .4	
+M-B7814	118 .4	
+M-B9104	176 .4	H.I.
+M-B9105	094 .2	H.I.
+M-B9106	177 .2	H.I.
+M-B9107	176 .5	H.I.
+M-B9108	176 .5	H.I.
+M-B9109	176 .5	H.I.
+M-B9110	176 .5	H.I.
+M-B9111	176 .5	H.I.
+M-B9113	045 .1	H.I.
+M-B9115	177 .2	H.I.
+M-B9116	177 .2	H.I.
+M-B43011	053 .8	
+M-B43012	053 .8	
+M-B54051	081 .4	
+M-B54052	081 .4	
+M-B54101	125 .4	

Drawing remarks

Tetra Pak

Designer	Date	Machine
BMI	07/06/2004	TBA/22-0500

ECM No	Denomination	Page Type
175296	POSITION SUMMARY	POSITION SUMMARY

Company	Document No.	Doc. type	Version	Page
Tetra Pak Carton Ambient S.p.A.	2593852-0002	ELD	AE	2

This drawing must not without the consent of Tetra Pak be copied, transmitted or disclosed to any third party.

Position summary of 2593852-0003

Component	Page .Col.	Opt.
+M-B54102	125 .5	
+M-B54121	125 .5	
+M-B54122	125 .4	
+M-B54123	125 .5	
+M-B54124	125 .4	
+M-B72232	127 .5	
+M-B72234	127 .5	
+M-B74031	052 .8	
+M-B74032	052 .8	
+M-C001	026 .2	
+M-C003	026 .4	
+M-C1314	054 .4	
+C-D100	049 .1	
+C-E001	032 .1	
+C-E002	032 .2	
+M-E2001	032 .8	
+M-E2002	032 .7	
+M-E7702	032 .5	
+M-E7705	032 .4	
+C-F002	034 .7	
+C-F003	032 .1	
+C-F004	016 .3	
+C-F005	026 .2	
+C-F006	016 .7	
+C-F007	017 .3	
+C-F008	032 .7	
+C-F011	015 .3	
+C-F012	008 .3	

Component	Page .Col.	Opt.
+C-F014	008 .8	
+C-F016	011 .8	
+C-F020	034 .3	
+C-F022	034 .4	
+C-F028	034 .2	
+C-F101	010 .2	
+C-F102	010 .7	
+C-F103	006 .3	
+C-F104	007 .3	
+C-F105	007 .8	
+C-F106	012 .1	
+C-F107	012 .7	
+C-F108	013 .2	
+C-F112	011 .5	
+C-F115	011 .3	
+C-F910	006 .8	H.I.
+C-G100	049 .1	
+C-G101	049 .3	
+C-G102	049 .5	
+C-G103	049 .6	
+C-G104	049 .7	
+P-H901	164 .5	
+P-H905	164 .5	
+P-H907	164 .5	
+P-H908	164 .5	
+P-H911	164 .5	
+P-H912	164 .5	
+M-H2801	058 .5	

Component	Page .Col.	Opt.
+M-H2802	058 .5	
+M-H7703	146 .5	
+C-K001	141 .5	
+C-K002	140 .5	
+C-K003	139 .5	
+C-K004	141 .5	
+C-K005	140 .5	
+C-K006	141 .5	
+C-K007	140 .5	
+C-K008	140 .5	
+C-K009	139 .5	
+C-K010	140 .5	
+C-K011	141 .5	
+C-K012	154 .5	
+C-K013	154 .5	
+C-K014	140 .5	
+C-K015	154 .5	
+C-K016	143 .5	
+C-K020	141 .5	
+C-K022	141 .5	
+C-K023	141 .5	
+C-K024	141 .5	
+C-K025	142 .5	
+C-K026	142 .5	
+C-K027	142 .5	
+C-K028	142 .5	
+C-K029	142 .5	
+C-K030	142 .5	

Component	Page .Col.	Opt.
+C-K031	142 .5	
+C-K032	142 .5	
+C-K033	143 .5	
+C-K036	140 .5	
+C-K100	143 .5	
+C-K101	143 .5	
+C-K102	143 .5	
+C-K104	143 .5	
+C-K105	058 .5	
+C-K107	143 .5	
+C-K108	143 .5	
+C-K110	144 .5	
+C-K111	062 .7	
+C-K112	062 .7	
+C-K113	062 .7	
+C-K114	062 .7	
+C-K115	062 .7	
+C-K116	062 .7	
+C-K118	144 .5	
+C-K120	144 .5	
+C-K121	144 .5	
+C-K122	182 .5	
+C-K126	144 .5	
+C-K140	146 .5	
+C-K200	006 .2	
+C-K201	006 .3	
+C-K202	007 .2	
+C-K203	007 .3	

Drawing remarks

Tetra Pak

Designer	Date	Machine
BMI	07/06/2004	TBA/22-0500

ECM No	Denomination	Page Type
175296	POSITION SUMMARY	POSITION SUMMARY

Company	Document No.	Doc. type	Version	Page
Tetra Pak Carton Ambient S.p.A.	2593852-0002	ELD	AE	3

This drawing must not without the consent of Tetra Pak be copied, transmitted or disclosed to any third party.

Position summary of 2593852-0003

Component	Page .Col.	Opt.
+C-K204	007 .7	
+C-K205	007 .8	
+C-K206	008 .2	
+C-K207	008 .3	
+C-K208	010 .2	
+C-K209	010 .4	
+C-K210	010 .7	
+C-K211	010 .9	
+C-K213	011 .2	
+C-K215	056 .8	
+C-K910	184 .5	H.I.
+C-K911	006 .7	H.I.
+M-K1000	108 .4	
+M-K1001	059 .5	
+M-K1003	059 .5	
+M-K1004	059 .5	
+M-K1005	059 .5	
+M-K1006	059 .5	
+M-K1100	108 .4	
+M-K1101	139 .5	
+M-K1102	139 .5	
+M-K1200	108 .4	
+M-K1201	108 .4	
+M-K1202	139 .5	
+M-K1203	139 .5	
+M-K7000	155 .5	
+M-K7001	157 .5	
+M-L1402	012 .2	

Component	Page .Col.	Opt.
+M-L4309	012 .6	
+M-L4310	012 .7	
+M-L6101	013 .2	
+M-M001	023 .1	
+M-M002	026 .2	
+M-M003	026 .4	
+M-M1101	023 .3	
+M-M1122	023 .8	
+M-M1205	022 .1	
+M-M1206	026 .7	
+M-M1213	022 .3	
+M-M1501	016 .5	
+M-M1503	024 .2	
+M-M1504	025 .2	
+M-M2501	023 .5	
+M-M2540	023 .6	
+M-M3102	022 .5	
+M-M4105	019 .2	
+M-M4302	021 .1	
+M-M4304	020 .2	
+M-M5406	016 .9	
+M-M5430	022 .8	
+M-M5503	022 .6	
+M-M6201	015 .7	
+M-M6202	015 .9	
+M-M7208	017 .5	
+M-M7217	017 .9	
+C-P002	039 .6	

Component	Page .Col.	Opt.
+C-P100	146 .5	
+C-P101	146 .5	
+C-Q001	022 .1	
+C-Q002	022 .3	
+C-Q003	022 .5	
+C-Q009	022 .6	
+C-Q011	023 .1	
+C-Q015	026 .7	
+C-Q016	022 .8	
+C-Q020	023 .3	
+C-Q022	023 .5	
+C-Q023	023 .6	
+C-Q024	018 .2	
+M-Q100	005 .3	
+C-Q122	023 .8	
+C-R001	018 .3	
+C-R002	018 .3	
+C-R003	018 .4	
+C-R139	102 .2	
+C-R421	055 .5	
+C-R505	018 .7	
+C-R807	039 .3	
+C-R808	039 .3	
+C-R809	039 .3	
+M-R1105	006 .3	
+M-R1206	007 .3	
+M-R1207	007 .8	
+M-R1208	008 .3	

Component	Page .Col.	Opt.
+M-R1209	008 .8	
+M-R5307	010 .2	
+M-R5308	010 .4	
+M-R5309	010 .7	
+M-R5310	010 .9	
+M-R6203	011 .5	
+M-R6204	011 .6	
+M-R7304	011 .3	
+M-R7417	013 .4	
+M-R9100	006 .8	H.I.
+C-S001	121 .3	
+C-S003	116 .3	
+C-S004	116 .3	
+C-S005	120 .3	
+P-S900	120 .3	
+P-S901	115 .3	
+P-S902	115 .3	
+P-S903	115 .3	
+P-S904	115 .3	
+P-S905	115 .3	
+P-S906	115 .3	
+P-S907	115 .3	
+P-S908	116 .3	
+P-S911	115 .3	
+P-S912	116 .3	
+M-S1003	116 .2	
+M-S1801	120 .3	
+M-S1802	120 .3	

Drawing remarks

Tetra Pak

Designer	Date	Machine
BMI	07/06/2004	TBA/22-0500

ECM No	Denomination	Page Type
175296	POSITION SUMMARY	POSITION SUMMARY

Company	Document No.	Doc. type	Version	Page
Tetra Pak Carton Ambient S.p.A.	2593852-0002	ELD	AE	4

This drawing must not without the consent of Tetra Pak be copied, transmitted or disclosed to any third party.

Position summary of 2593852-0003

Component	Page .Col.	Opt.
+M-S2803	120 .3	
+M-S2804	120 .3	
+M-S6206	126 .4	
+M-S7303	126 .4	
+M-S7402	126 .4	
+M-S7403	128 .4	
+M-S7701	126 .4	
+M-S7812	120 .3	
+M-S7813	120 .5	
+M-T1304	054 .2	
+M-T1402	012 .2	
+M-T4309	012 .6	
+M-T4310	012 .7	
+M-T6101	013 .2	
+M-T6203	011 .5	
+C-V017	058 .5	
+M-Y1104	154 .5	
+M-Y1105	154 .5	
+M-Y1107	152 .5	
+M-Y1108	150 .5	
+M-Y1111	150 .5	
+M-Y1114.2	152 .5	
+M-Y1114.4	152 .5	
+M-Y1210	157 .5	
+M-Y1220	158 .5	
+M-Y1221	159 .5	
+M-Y1230	154 .5	
+M-Y1231	154 .5	

Component	Page .Col.	Opt.
+M-Y1241	150 .5	
+M-Y1280	151 .5	
+M-Y1281	151 .5	
+M-Y1301	151 .5	
+M-Y1302	151 .5	
+M-Y1303	150 .5	
+M-Y1325	152 .5	
+M-Y1401	150 .5	
+M-Y1405	150 .5	
+M-Y1501	151 .5	
+M-Y1502	151 .5	
+M-Y2104	158 .5	
+M-Y2106	157 .5	
+M-Y2108	157 .5	
+M-Y2109	159 .5	
+M-Y2201	140 .5	
+M-Y3101	139 .5	
+M-Y3103	153 .5	
+M-Y3105	153 .5	
+M-Y3109	153 .5	
+M-Y3110	153 .5	
+M-Y3111	153 .5	
+M-Y3112	153 .5	
+M-Y3116	152 .5	
+M-Y4200	159 .5	
+M-Y4210	159 .5	
+M-Y4220	159 .5	
+M-Y4230	159 .5	

Component	Page .Col.	Opt.
+M-Y4260	182 .5	
+M-Y4262	182 .5	
+M-Y4263	182 .5	
+M-Y4264	182 .5	
+M-Y4265	182 .5	
+M-Y4266	185 .5	
+M-Y5306	159 .5	
+M-Y5501	158 .5	
+M-Y5504	158 .5	
+M-Y6201	155 .5	
+M-Y6203	155 .5	
+M-Y6205	155 .5	
+M-Y7303	155 .5	
+M-Y7315	155 .5	
+M-Y7407	156 .5	
+M-Y7408	156 .5	
+M-Y7410	156 .5	
+M-Y7412	156 .5	
+M-Y7413	156 .5	
+M-Y7414	155 .5	
+M-Y7415	155 .5	
+M-Y7420	156 .5	
+M-Y7421	156 .5	
+M-Y7425	156 .5	
+M-Y9101	184 .5	H.I.
+M-Y9103	184 .5	H.I.
+M-Y9105	148 .5	H.I.
+M-Y9106	148 .5	H.I.

Component	Page .Col.	Opt.
+M-Y9112	184 .5	H.I.
+M-Y9114	184 .5	H.I.
+M-Z001	005 .7	
+M-Z002	005 .6	
+C-Z003	018 .2	
+M-Z004	005 .7	
+C-Z018	015 .3	
+C-Z019	015 .3	
+C-Z020	016 .2	
+C-Z021	016 .2	
+C-Z022	016 .7	
+C-Z023	016 .7	
+C-Z024	017 .2	
+C-Z025	017 .2	
+C-Z026	017 .7	
+C-Z027	017 .7	
+C-Z410	016 .3	
+C-Z411	015 .3	
+C-Z412	017 .3	
+C-Z413	017 .7	
+C-Z415	016 .7	

Drawing remarks

Tetra Pak

Designer	Date	Machine
BMI	07/06/2004	TBA/22-0500

ECM No	Denomination	Page Type
175296	POSITION SUMMARY	POSITION SUMMARY

Company	Document No.	Doc. type	Version	Page
Tetra Pak Carton Ambient S.p.A.	2593852-0002	ELD	AE	5

This page left intentionally blank

5 Circuit Diagrams

TechPub_2614345_v3_DRAFT_ReleaseTB057677en.fm

Description

This chapter contains all component drawings, such as programmable logic controller (PLC) modules, terminals, and cables.

TechPub_2614345_v3_DRAFT_ReleaseTB057677en.fm

RELEASED

This drawing must not without the consent of Tetra Pak be copied, transmitted or disclosed to any third party.

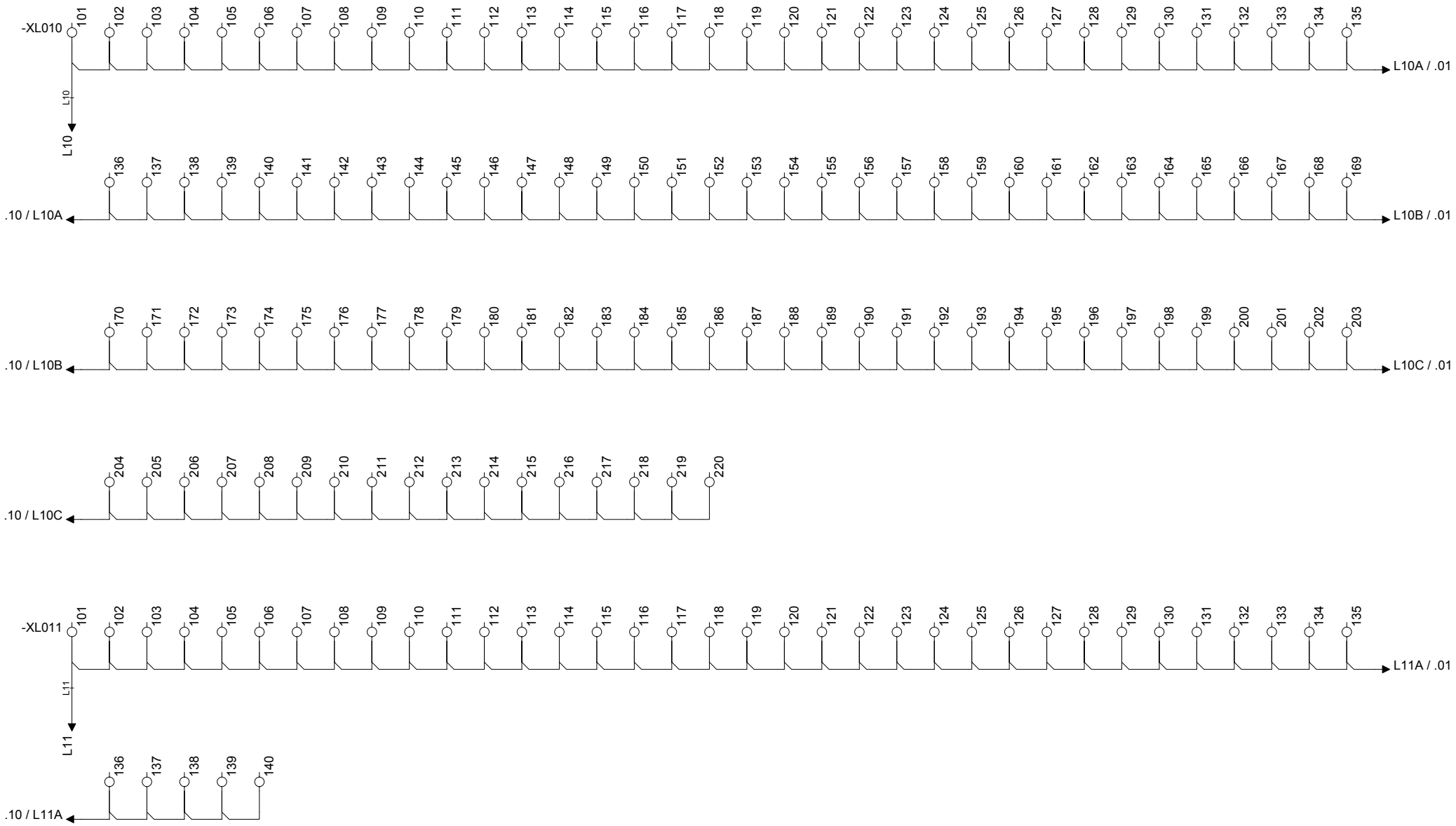

Drawing remarks	Tetra Pak	Designer BMI	Date 07/06/2004	Machine TBA/22-0500			
		ECM No 175296	Denomination CIRCUIT DIAGRAM	Page Type CIRCUIT DIAGRAM			
		Company Tetra Pak Carton Ambient S.p.A.	Document No. 2593852-0003	Doc. type ELD	Version AE	Page 001	

This drawing must not without the consent of Tetra Pak
be copied, transmitted or disclosed to any third party.

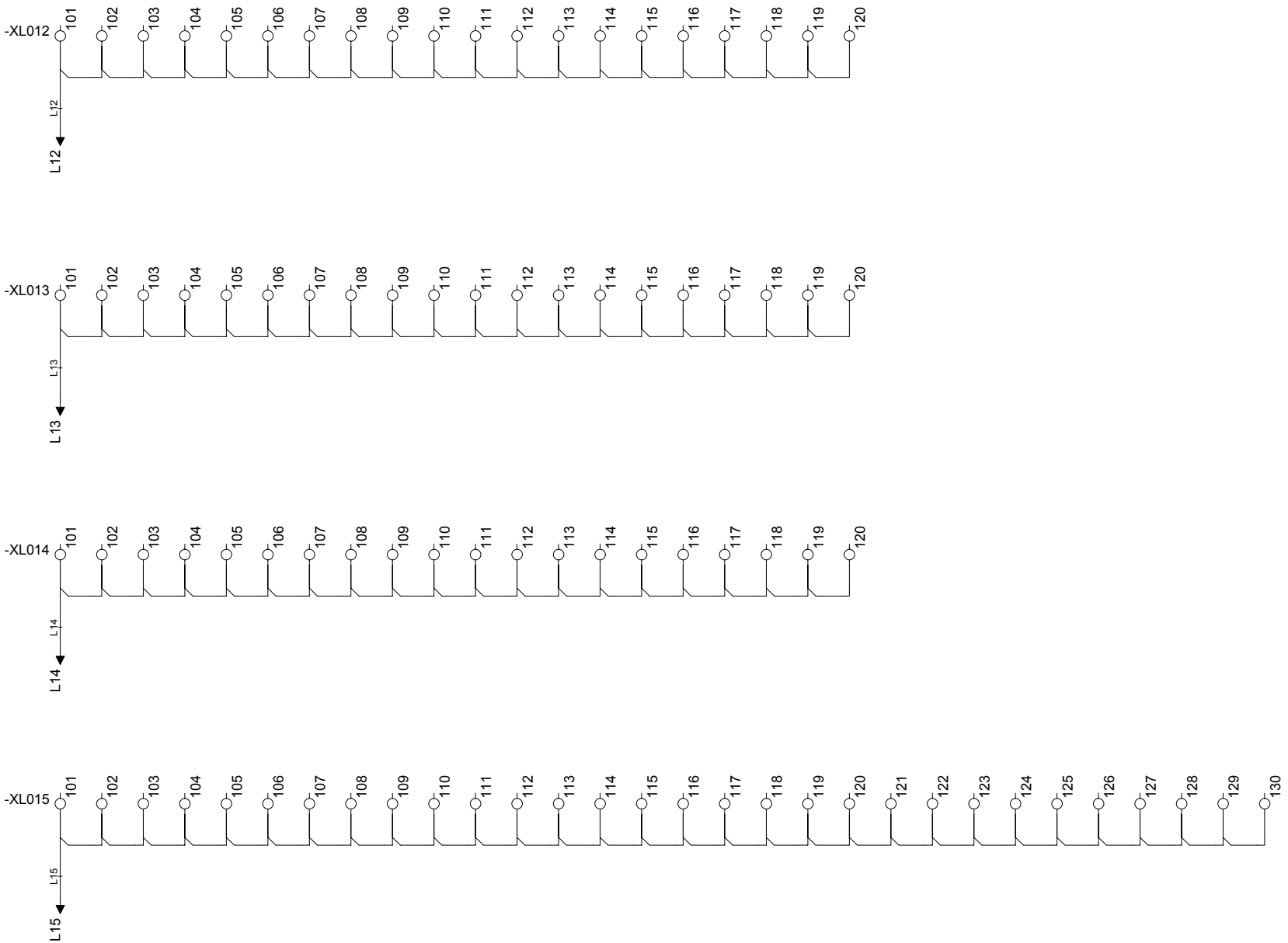

	Tetra Pak	Designer BMI	Date 07/06/2004	Machine TBA/22-0500			
		ECM No 175296	Denomination CIRCUIT DIAGRAM	Page Type CIRCUIT DIAGRAM			
Drawing remarks		Company Tetra Pak Carton Ambient S.p.A.		Document No. 2593852-0003	Doc. type ELD	Version AE	Page 002

This drawing must not without the consent of Tetra Pak be copied, transmitted or disclosed to any third party.

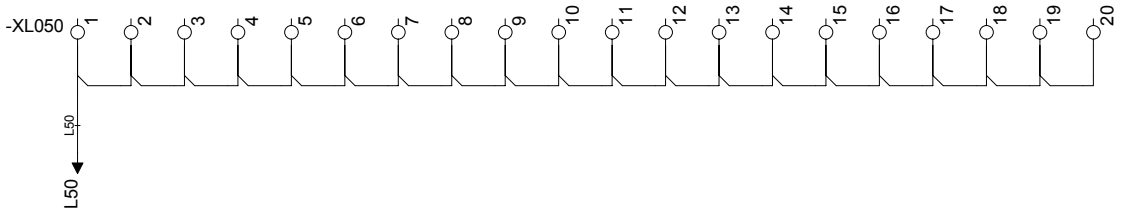

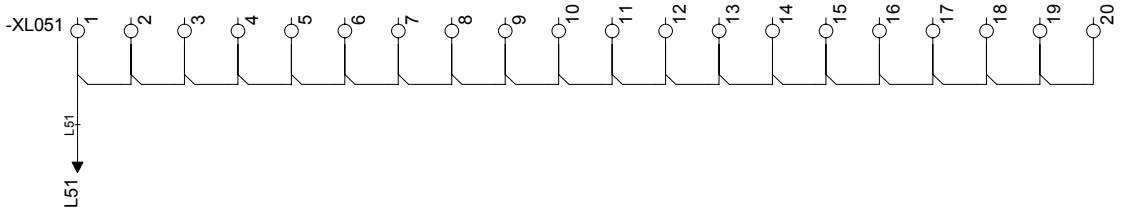

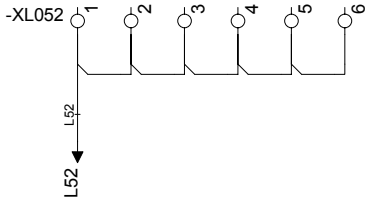

Drawing remarks

Tetra Pak

Designer BMI	Date 07/06/2004	Machine TBA/22-0500	
ECM No 175296	Denomination CIRCUIT DIAGRAM	Page Type CIRCUIT DIAGRAM	
Company Tetra Pak Carton Ambient S.p.A.	Document No. 2593852-0003	Doc. type ELD	Version AE	Page 003

This drawing must not without the consent of Tetra Pak be copied, transmitted or disclosed to any third party.

MAINS 400/230V
FOR CONNECTION
SEE DRAWINGS:
MAINS CONNECTION
61661

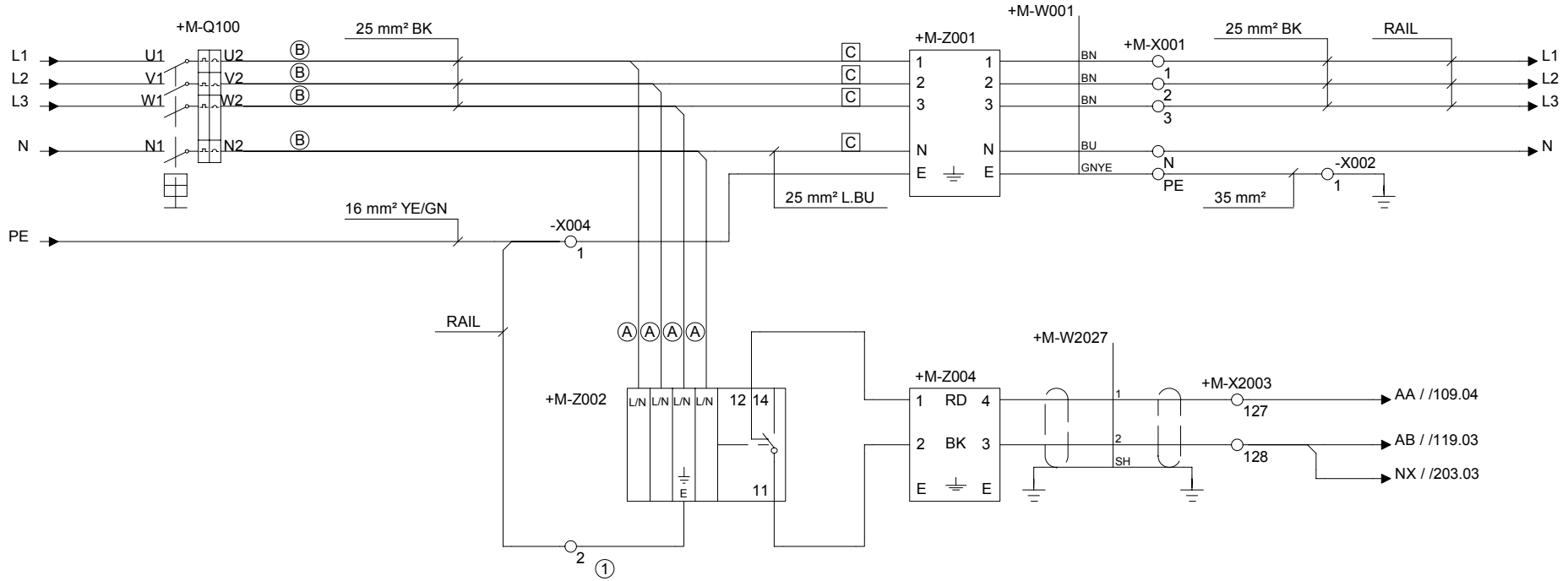

FOR TYPE OF WIRING, INSTRUCTION ETC.
SEE SPECIFICATION FOR SUBSUPPLIERS TPUS 3502.22

WHERE NOTHING ELSE IS SAID
OR LINE SUMMARY IS VALID : 0,75 mm2 BU

① CONNECTED TO CHASSIS

Drawing remarks

Tetra Pak

Designer	Date	Machine
BMI	07/06/2004	TBA/22-0500

ECM No	Denomination	Page Type
175296	CIRCUIT DIAGRAM	CIRCUIT DIAGRAM

Company	Document No.	Doc. type	Version	Page
Tetra Pak Carton Ambient S.p.A.	2593852-0003	ELD	AE	005

RELEASED

This drawing must not without the consent of Tetra Pak be copied, transmitted or disclosed to any third party.

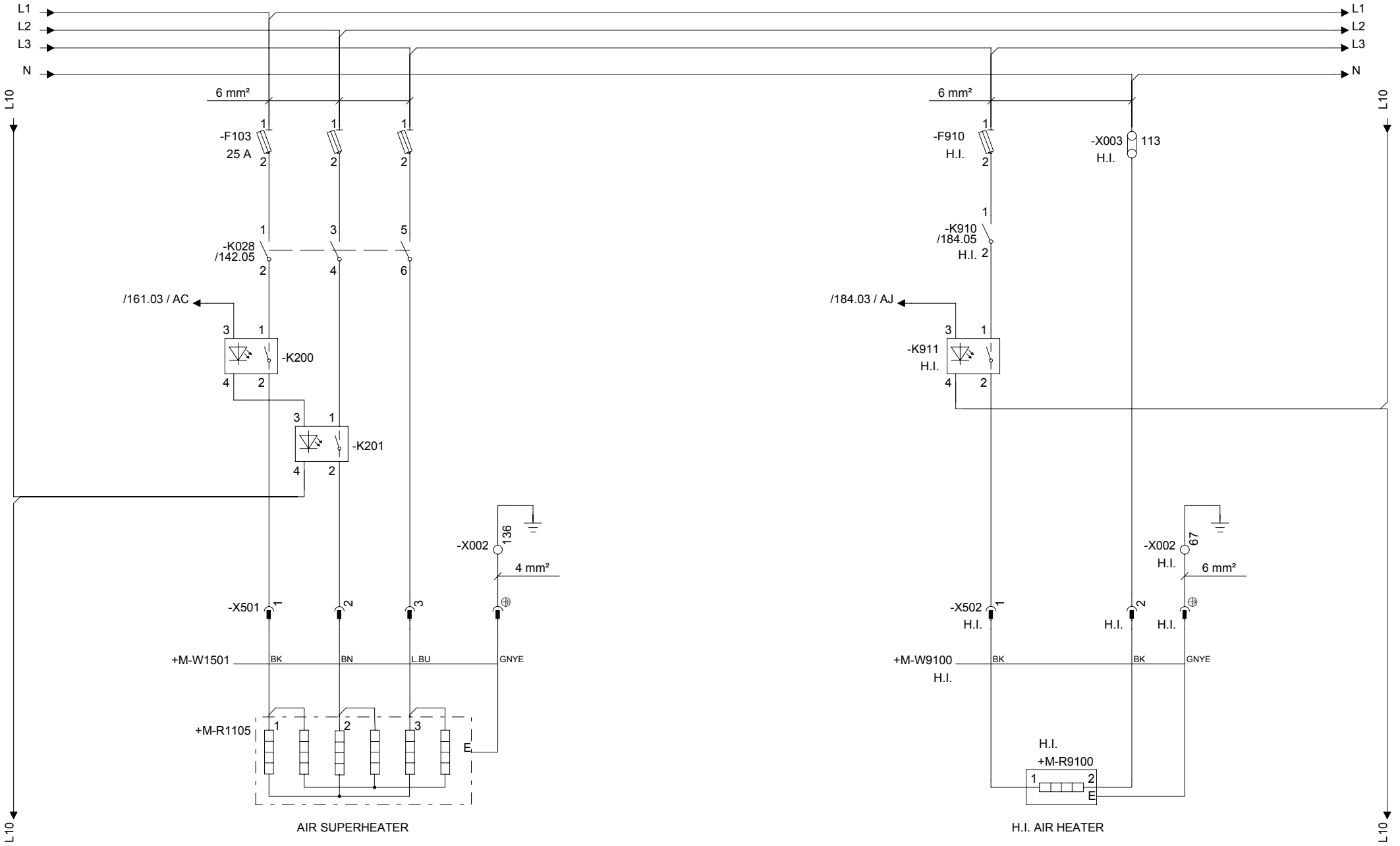

Drawing remarks	Tetra Pak	Designer BMI	Date 07/06/2004	Machine TBA/22-0500	
		ECM No 175296	Denomination CIRCUIT DIAGRAM	Page Type SUPER HEATER	
		Company Tetra Pak Carton Ambient S.p.A.	Document No. 2593852-0003	Doc. type ELD	Version AE	Page 006

RELEASED

This drawing must not without the consent of Tetra Pak be copied, transmitted or disclosed to any third party.

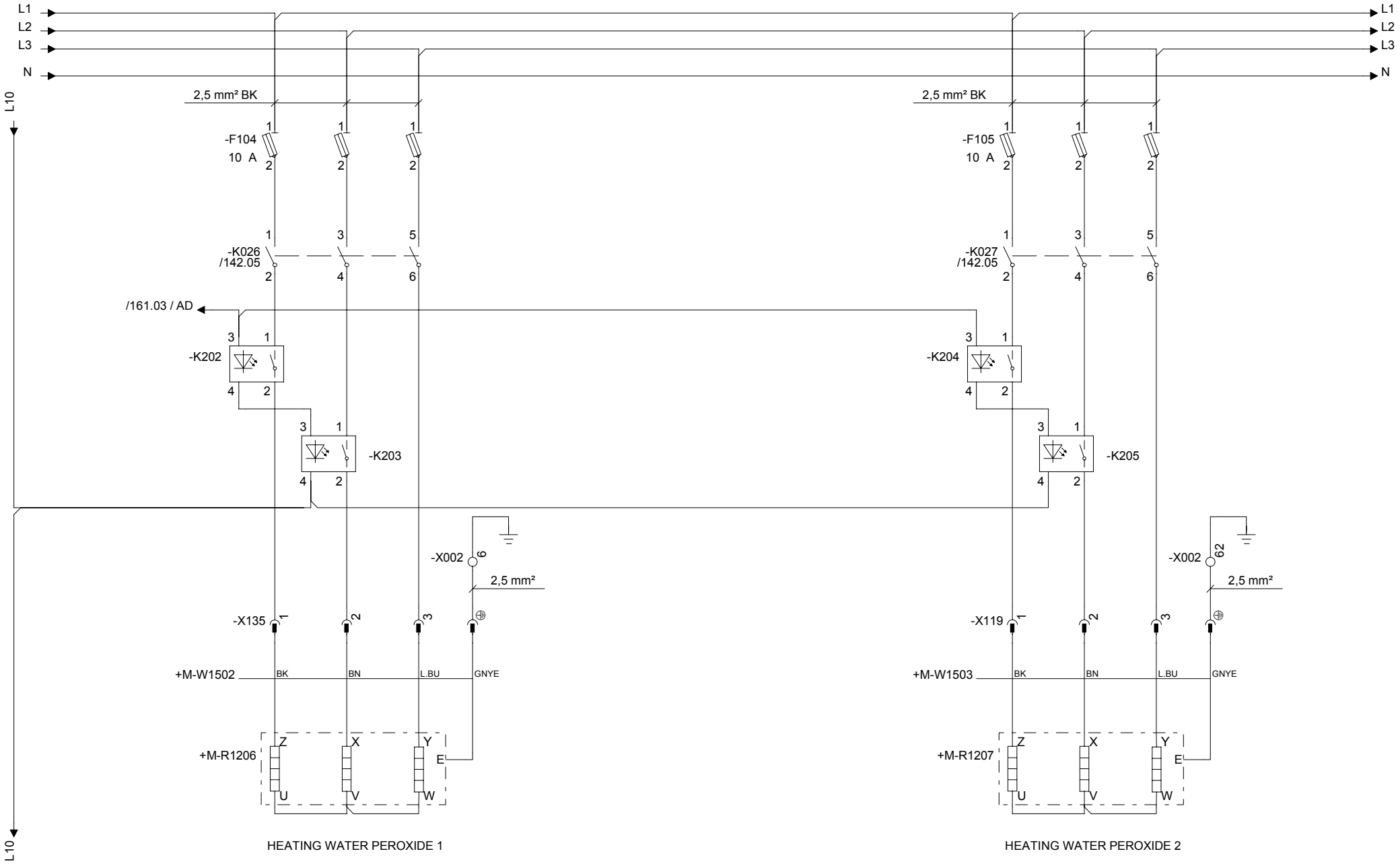

Drawing remarks	Tetra Pak	Designer BMI	Date 07/06/2004	Machine TBA/22-0500	
		ECM No 175296	Denomination CIRCUIT DIAGRAM	Page Type PEROXIDE TANK HEATERS	
		Company Tetra Pak Carton Ambient S.p.A.	Document No. 2593852-0003	Doc. type ELD	Version AE	Page 007

RELEASED

This drawing must not without the consent of Tetra Pak be copied, transmitted or disclosed to any third party.

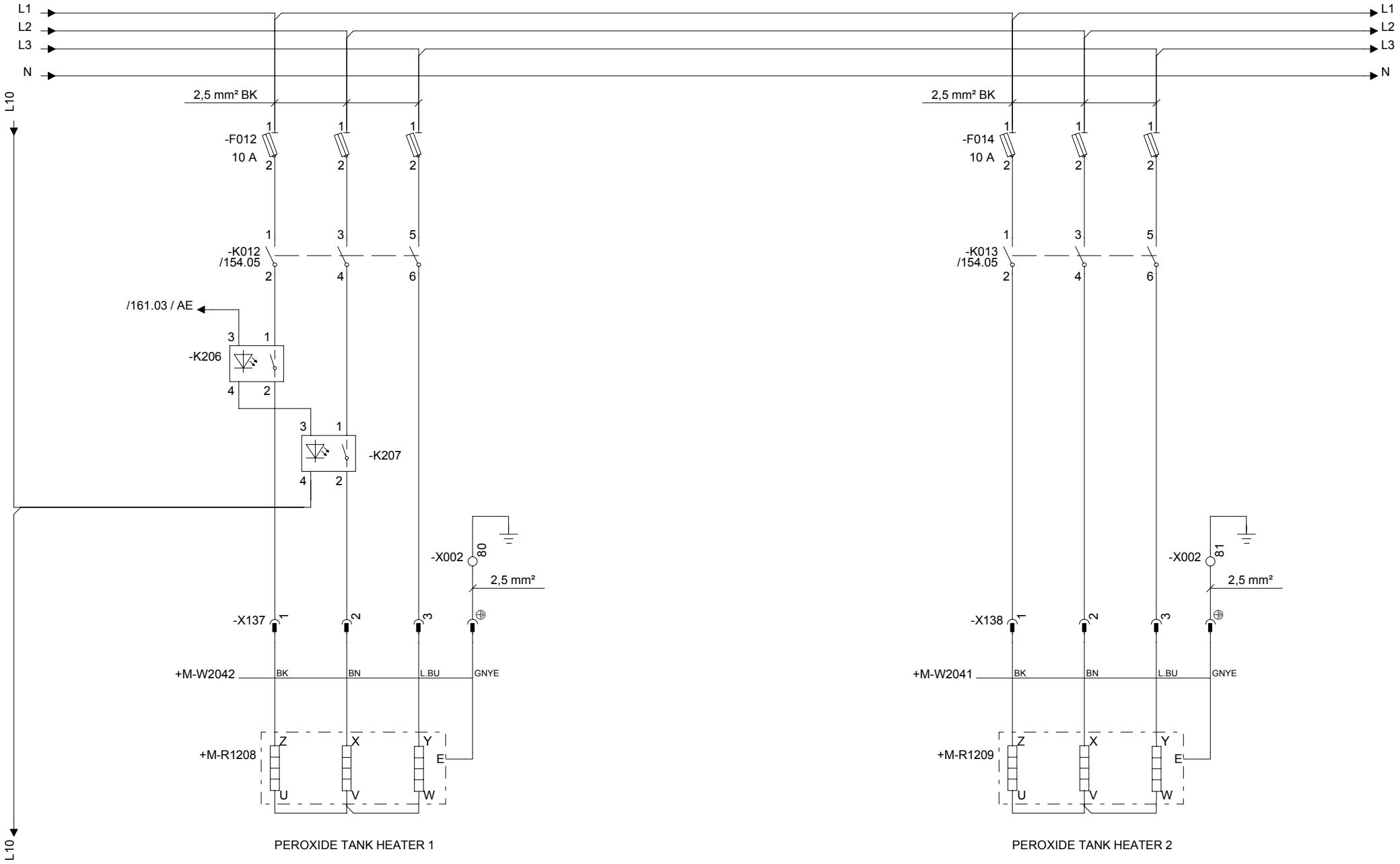

Drawing remarks	Tetra Pak	Designer BMI	Date 07/06/2004	Machine TBA/22-0500
		ECM No 175296	Denomination CIRCUIT DIAGRAM	Page Type PEROXIDE TANK HEATERS
		Company Tetra Pak Carton Ambient S.p.A.	Document No. 2593852-0003	Doc. type ELD / Version AE / Page 008

RELEASED

This drawing must not without the consent of Tetra Pak be copied, transmitted or disclosed to any third party.

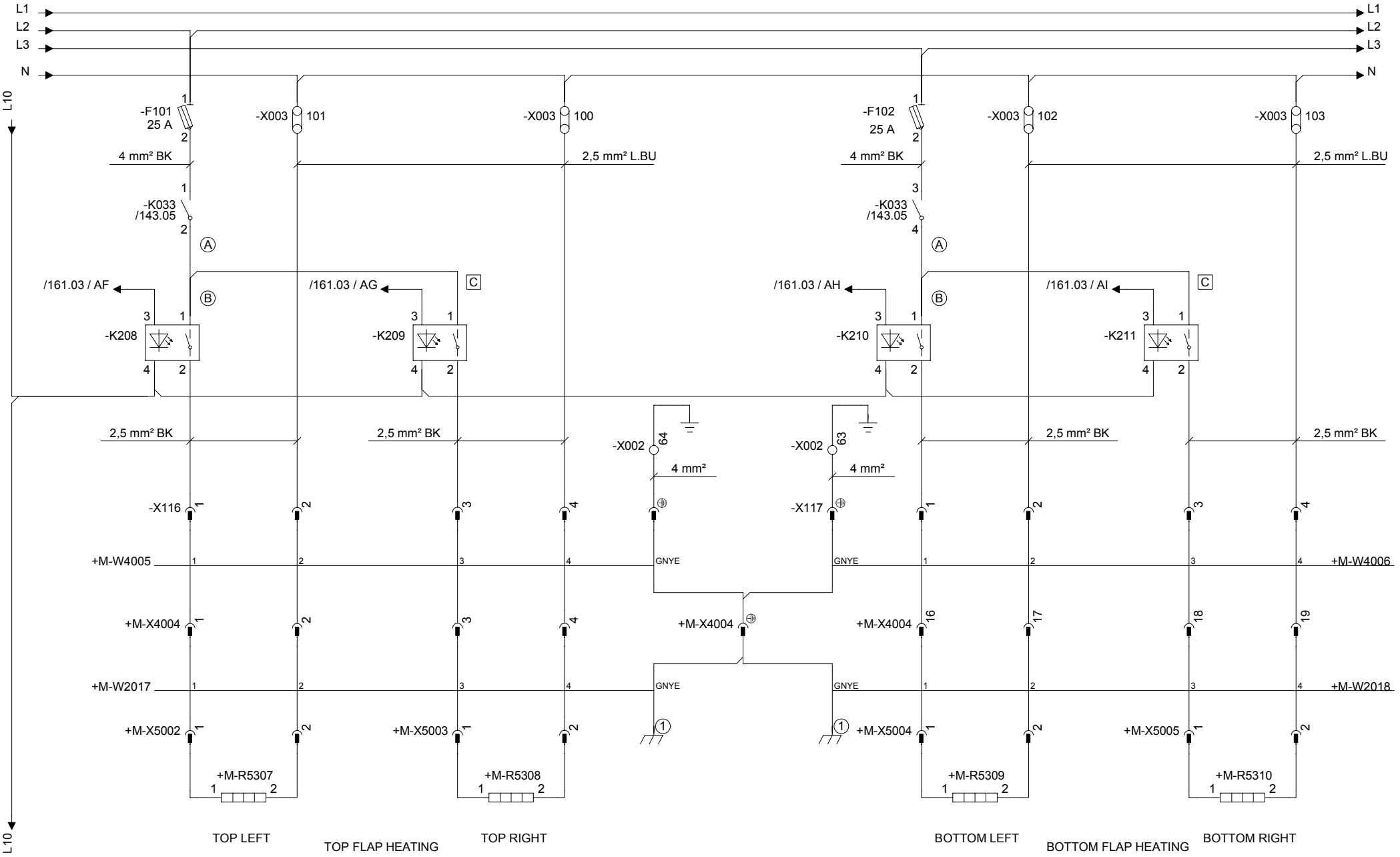

① CONNECTED TO CHASSIS

Drawing remarks

Tetra Pak

Designer BMI	Date 07/06/2004	Machine TBA/22-0500	
ECM No 175296	Denomination CIRCUIT DIAGRAM	Page Type FLAP HEATING ELEMENT	
Company Tetra Pak Carton Ambient S.p.A.	Document No. 2593852-0003	Doc. type ELD	Version AE	Page 010

RELEASED

This drawing must not without the consent of Tetra Pak be copied, transmitted or disclosed to any third party.

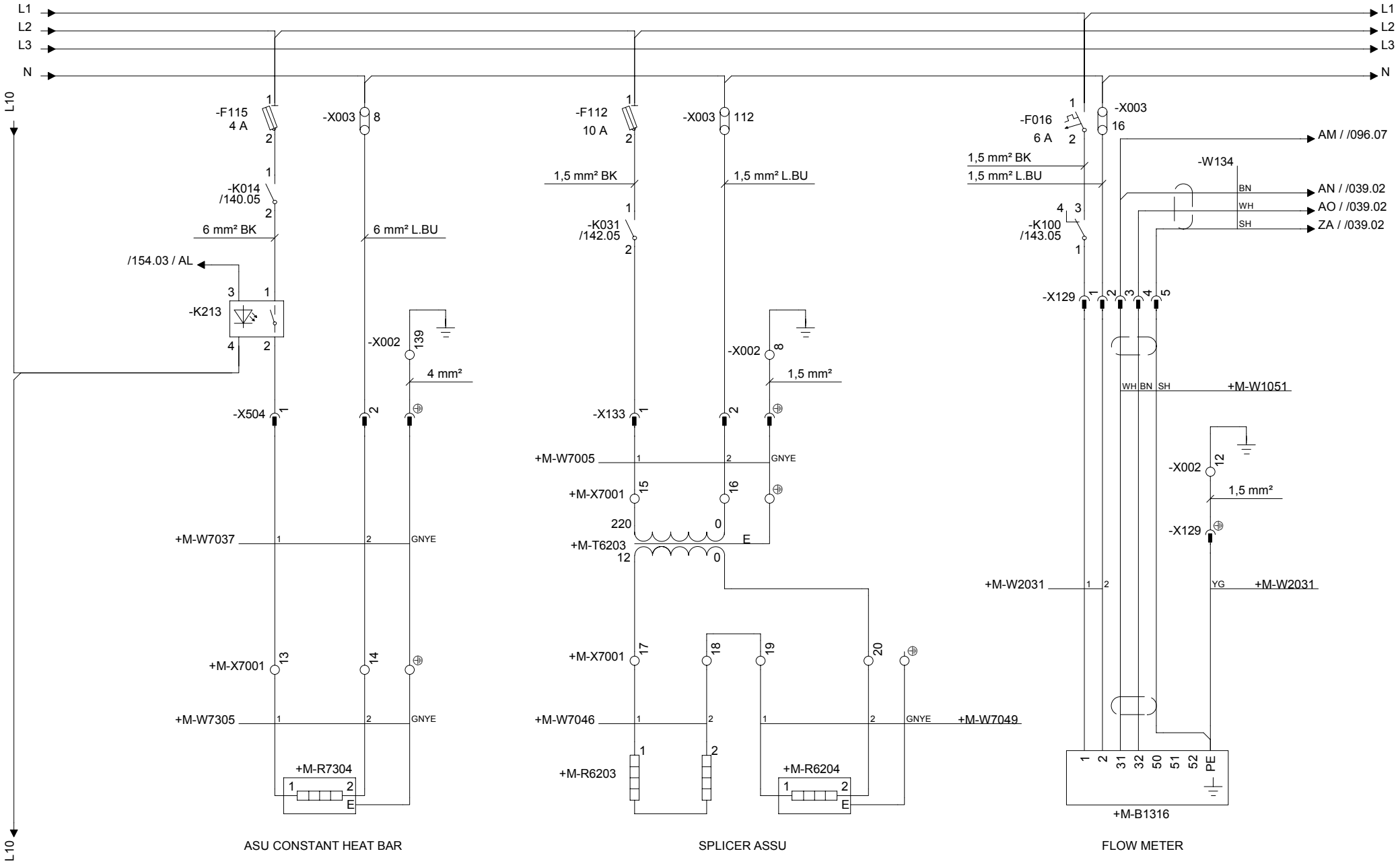

Drawing remarks	Tetra Pak	Designer BMI	Date 07/06/2004	Machine TBA/22-0500	
		ECM No 175296	Denomination CIRCUIT DIAGRAM	Page Type ELEMENTS, FLOW METER	
		Company Tetra Pak Carton Ambient S.p.A.	Document No. 2593852-0003	Doc. type ELD	Version AE	Page 011

RELEASED

This drawing must not without the consent of Tetra Pak be copied, transmitted or disclosed to any third party.

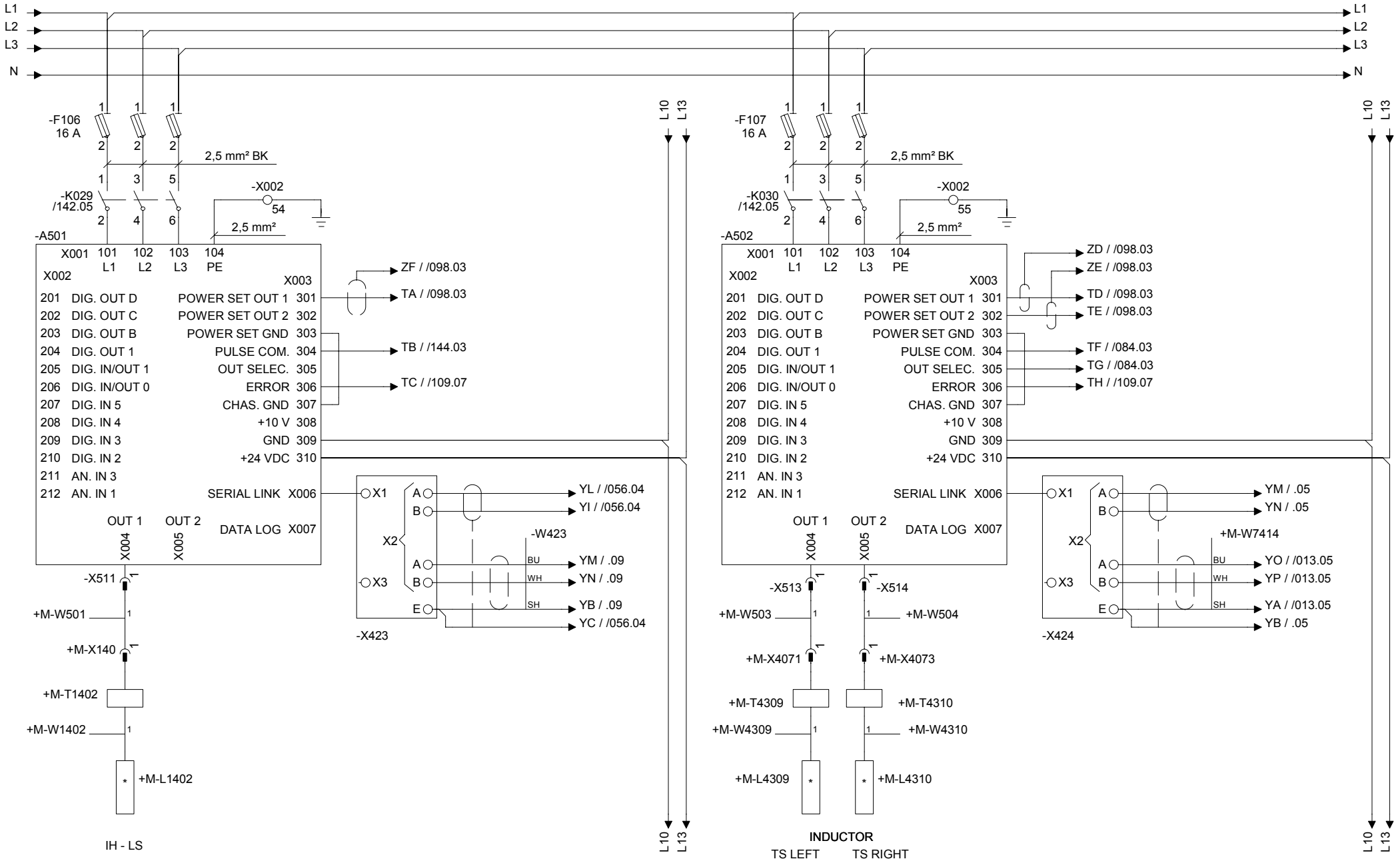

Drawing remarks	Tetra Pak	Designer BMI	Date 07/06/2004	Machine TBA/22-0500	
		ECM No 175296	Denomination CIRCUIT DIAGRAM	Page Type TPIH GENERATORS LS TS	
		Company Tetra Pak Carton Ambient S.p.A.	Document No. 2593852-0003	Doc. type ELD	Version AE	Page 012

This drawing must not without the consent of Tetra Pak
be copied, transmitted or disclosed to any third party.

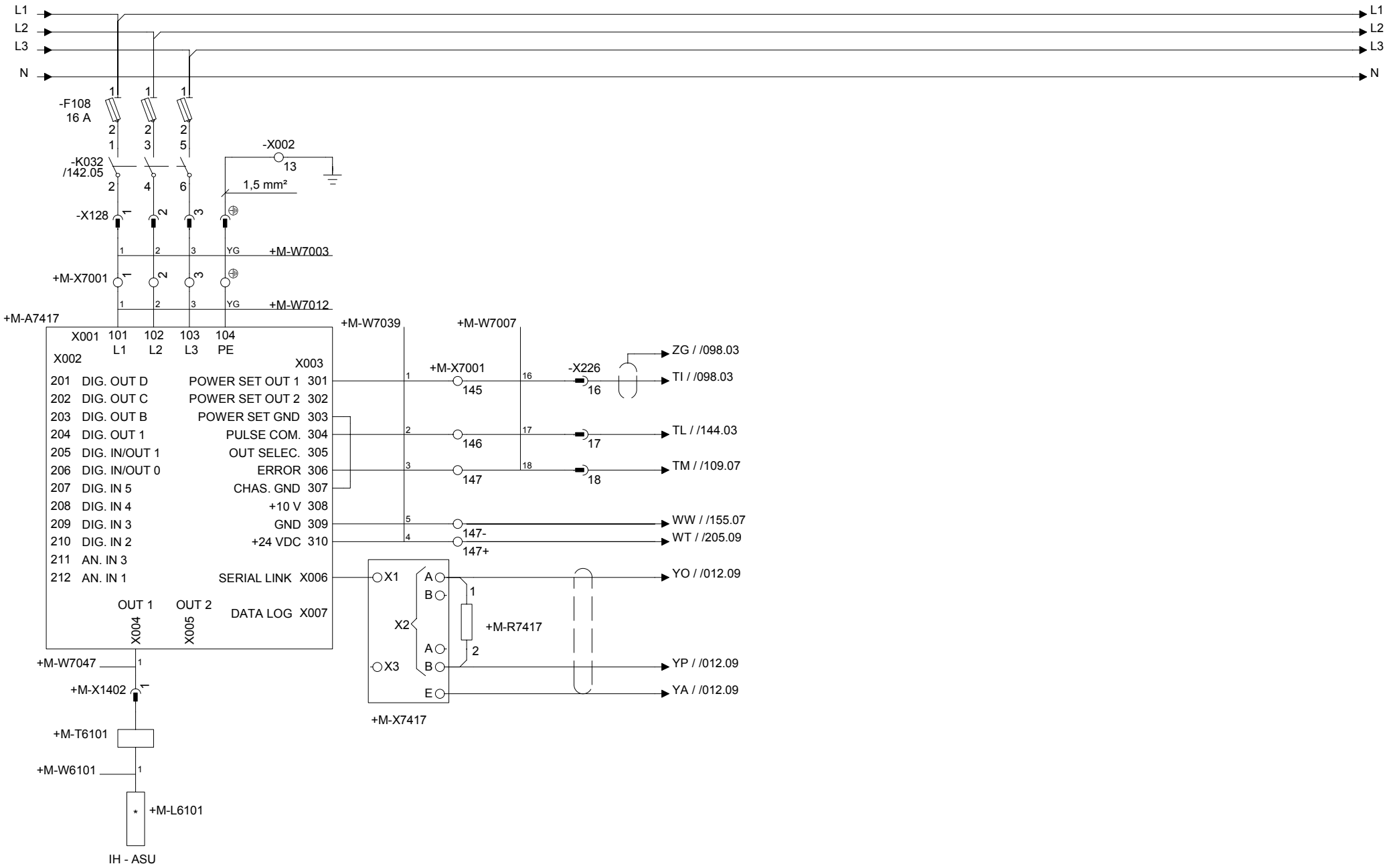

Drawing remarks	Tetra Pak	Designer BMI	Date 07/06/2004	Machine TBA/22-0500	
		ECM No 175296	Denomination CIRCUIT DIAGRAM	Page Type TPIH ASU	
		Company Tetra Pak Carton Ambient S.p.A.	Document No. 2593852-0003	Doc. type ELD	Version AE	Page 013

RELEASED

This drawing must not without the consent of Tetra Pak be copied, transmitted or disclosed to any third party.

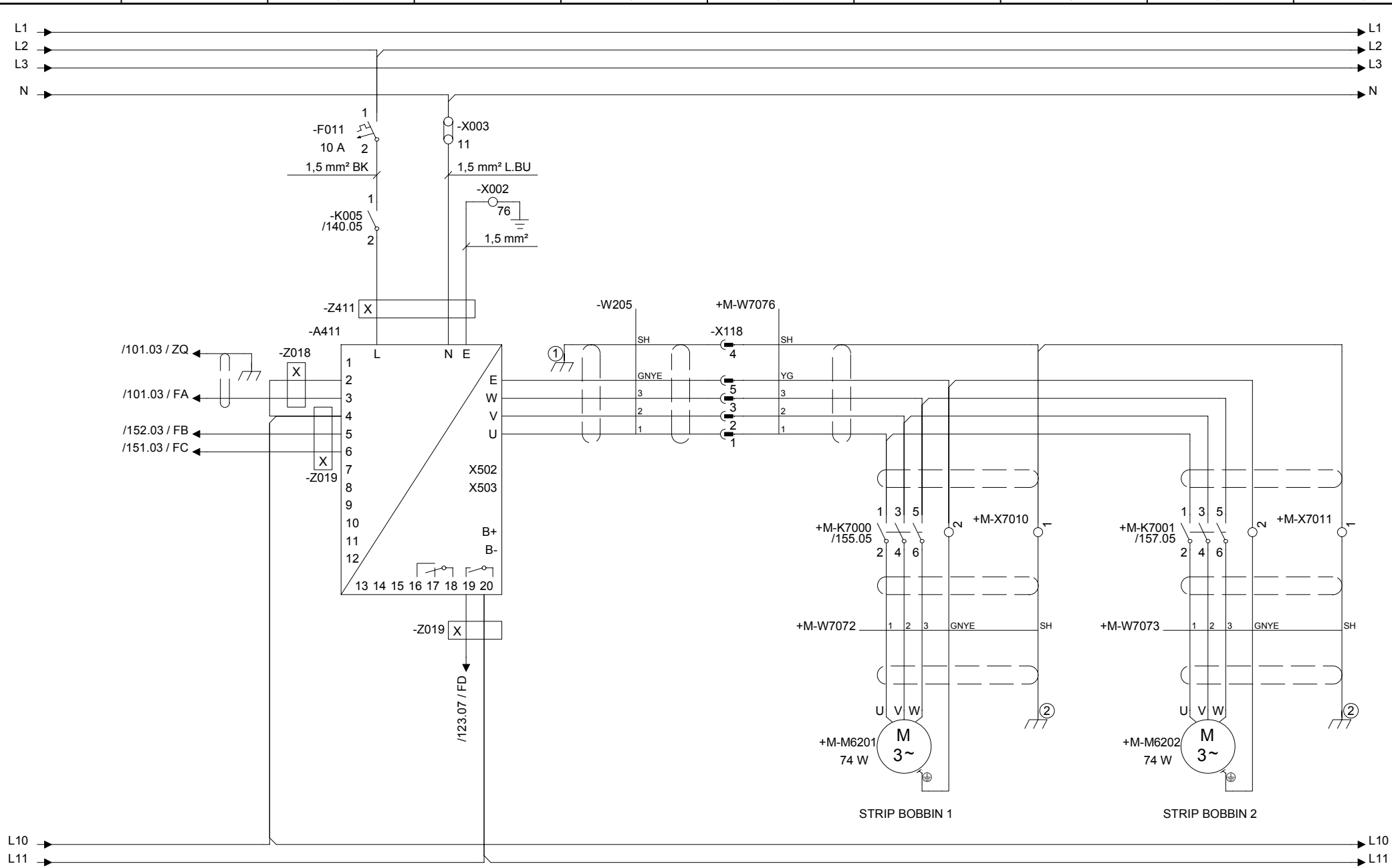

① CONNECTED TO RAIL

② CONNECTED TO THE GLAND

Drawing remarks

Tetra Pak

Designer BMI	Date 07/06/2004	Machine TBA/22-0500			
ECM No 175296	Denomination CIRCUIT DIAGRAM	Page Type STRIP FEEDING MOTORS			
Company Tetra Pak Carton Ambient S.p.A.	Document No. 2593852-0003	Doc. type ELD	Version AE	Page 015	

RELEASED

This drawing must not without the consent of Tetra Pak be copied, transmitted or disclosed to any third party.

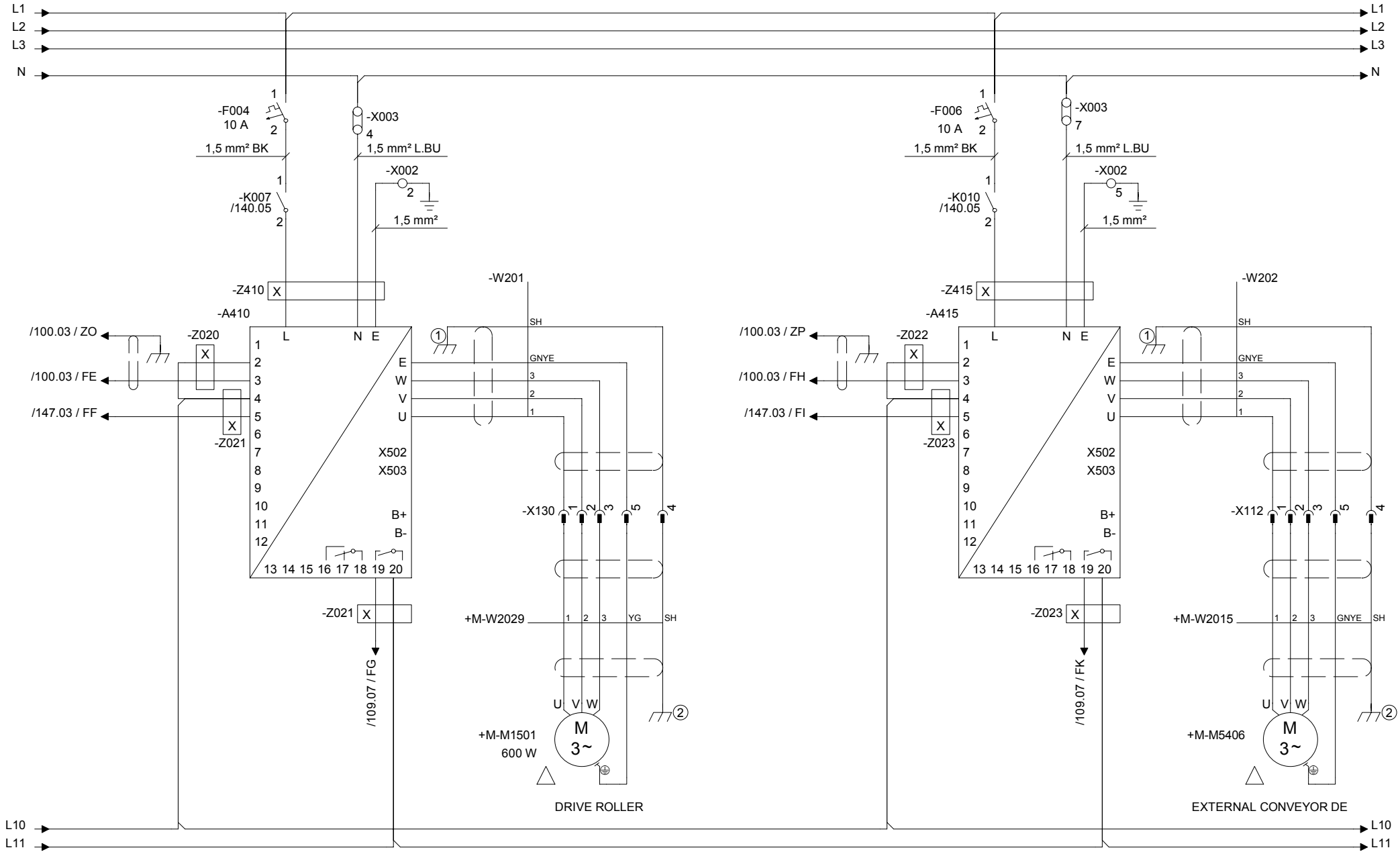

① CONNECTED TO RAIL

② CONNECTED TO THE GLAND

Drawing remarks

Tetra Pak

Designer BMI	Date 07/06/2004	Machine TBA/22-0500			
ECM No 175296	Denomination CIRCUIT DIAGRAM	Page Type DRIVE ROLLER, EXTERNAL CONVEYOR			
Company Tetra Pak Carton Ambient S.p.A.	Document No. 2593852-0003	Doc. type ELD	Version AE	Page 016	

RELEASED

This drawing must not without the consent of Tetra Pak be copied, transmitted or disclosed to any third party.

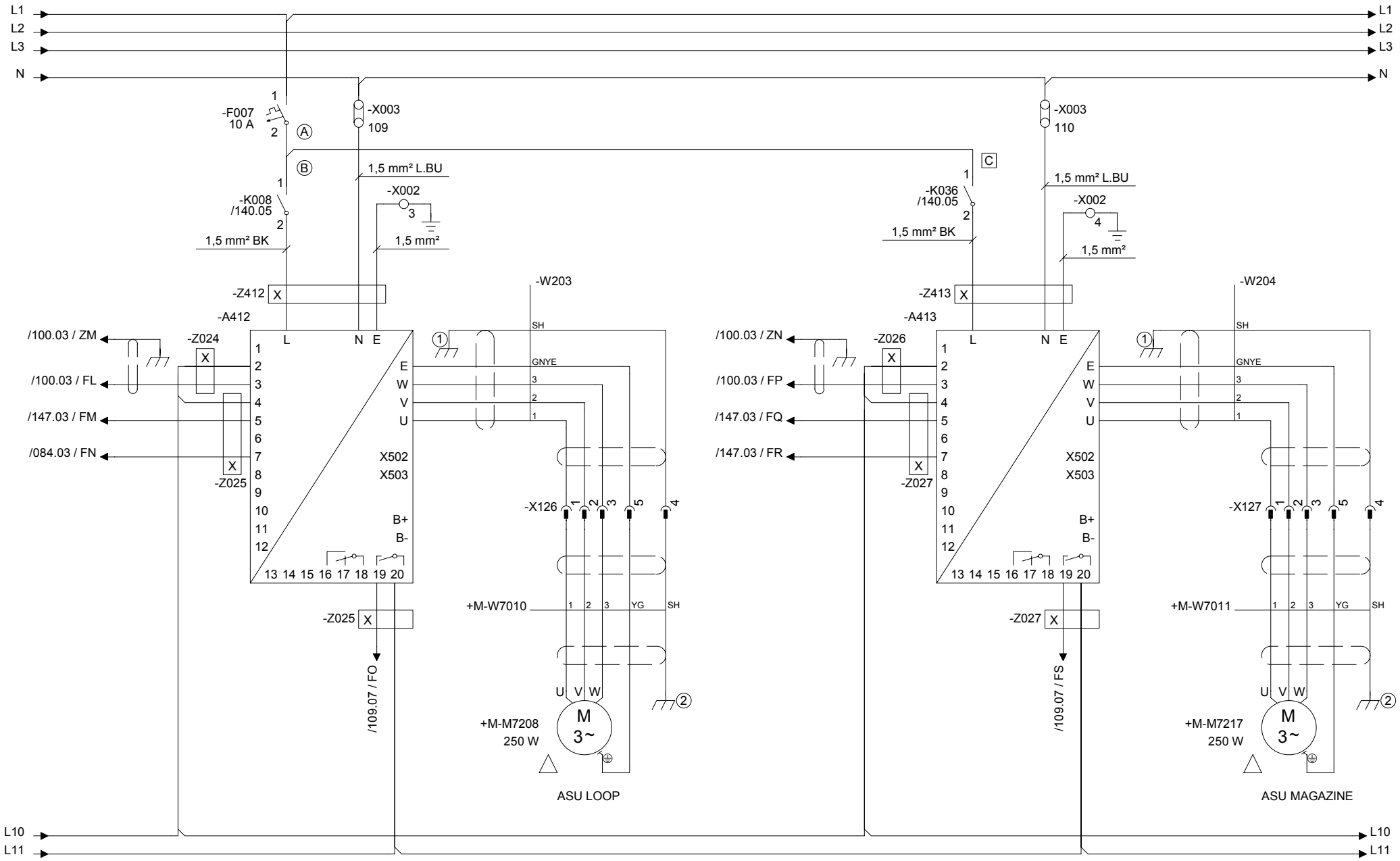

① CONNECTED TO RAIL

② CONNECTED TO THE GLAND

Drawing remarks

Tetra Pak

Designer BMI	Date 07/06/2004	Machine TBA/22-0500			
ECM No 175296	Denomination CIRCUIT DIAGRAM	Page Type MOTORS ASU			
Company Tetra Pak Carton Ambient S.p.A.	Document No. 2593852-0003	Doc. type ELD	Version AE	Page 017	

RELEASED

This drawing must not without the consent of Tetra Pak be copied, transmitted or disclosed to any third party.

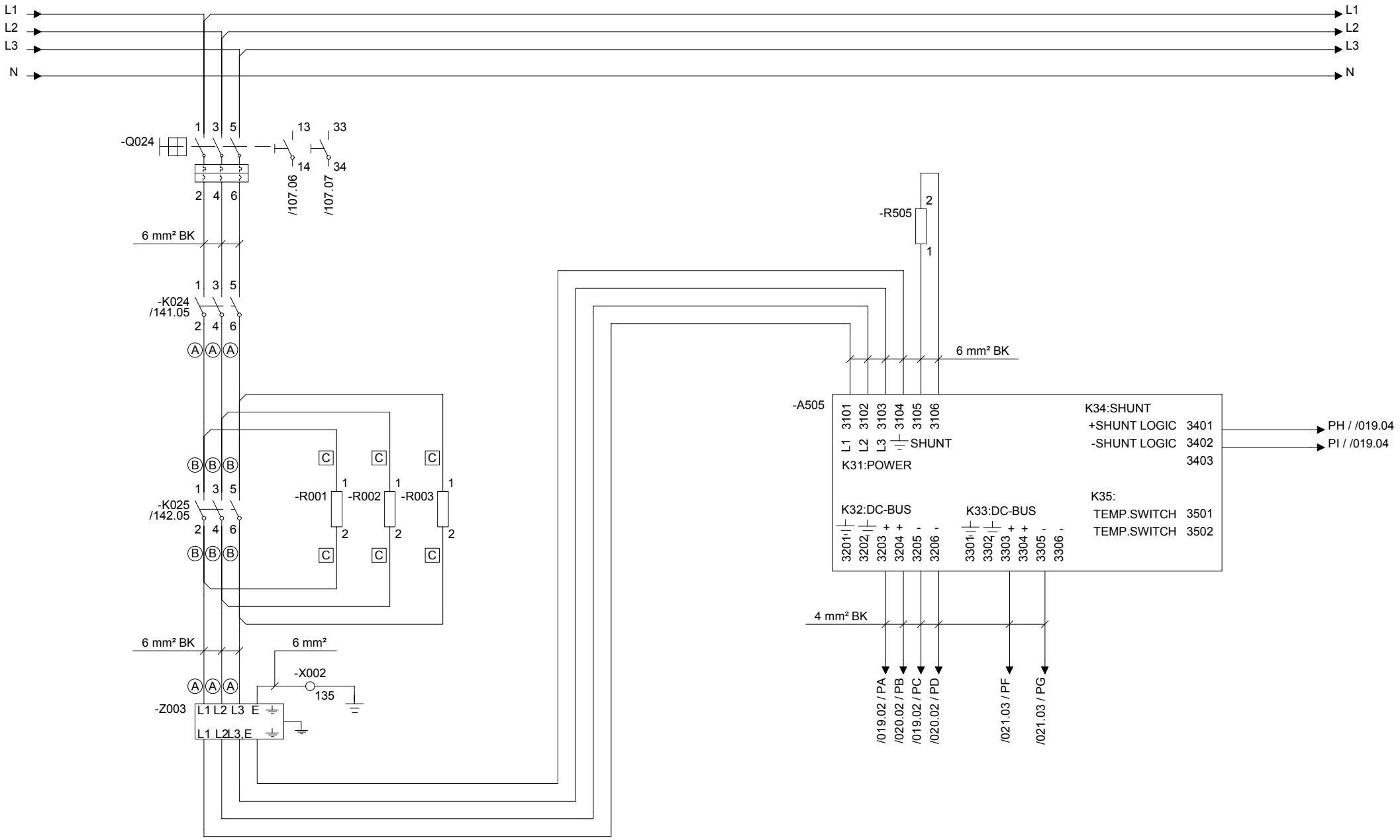

Drawing remarks	Tetra Pak	Designer BMI	Date 07/06/2004	Machine TBA/22-0500	
		ECM No 175296	Denomination CIRCUIT DIAGRAM	Page Type SERVO MOTORS	
		Company Tetra Pak Carton Ambient S.p.A.	Document No. 2593852-0003	Doc. type ELD	Version AE	Page 018

RELEASED

This drawing must not without the consent of Tetra Pak be copied, transmitted or disclosed to any third party.

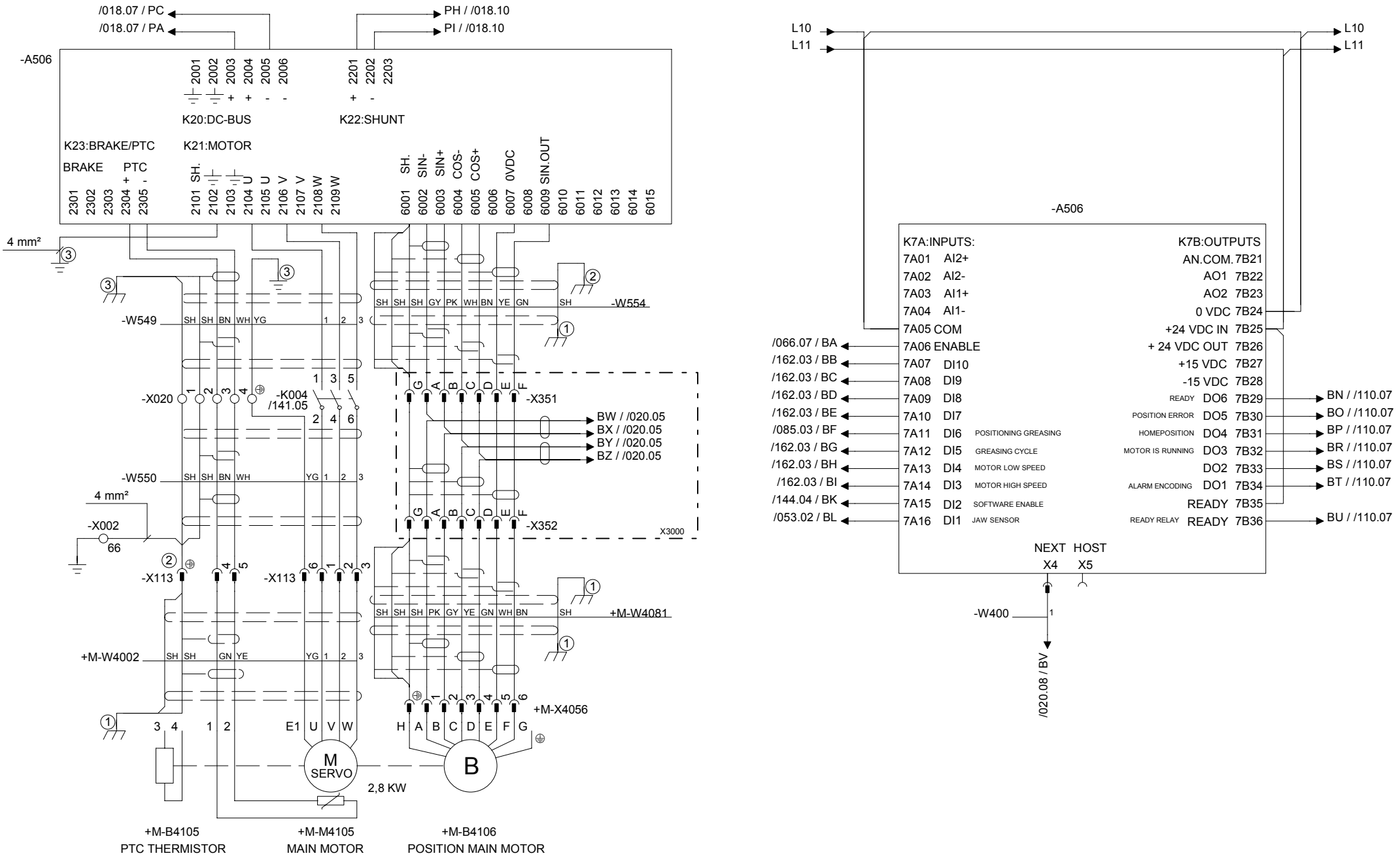

① CONNECTED TO THE GLAND
② CONNECTED TO THE CONNECTOR
③ CONNECTED TO RAIL

Drawing remarks

Tetra Pak

Designer BMI	Date 07/06/2004	Machine TBA/22-0500	
ECM No 175296	Denomination CIRCUIT DIAGRAM	Page Type MAIN SERVO MOTOR	
Company Tetra Pak Carton Ambient S.p.A.	Document No. 2593852-0003	Doc. type ELD	Version AE	Page 019

RELEASED

This drawing must not without the consent of Tetra Pak be copied, transmitted or disclosed to any third party.

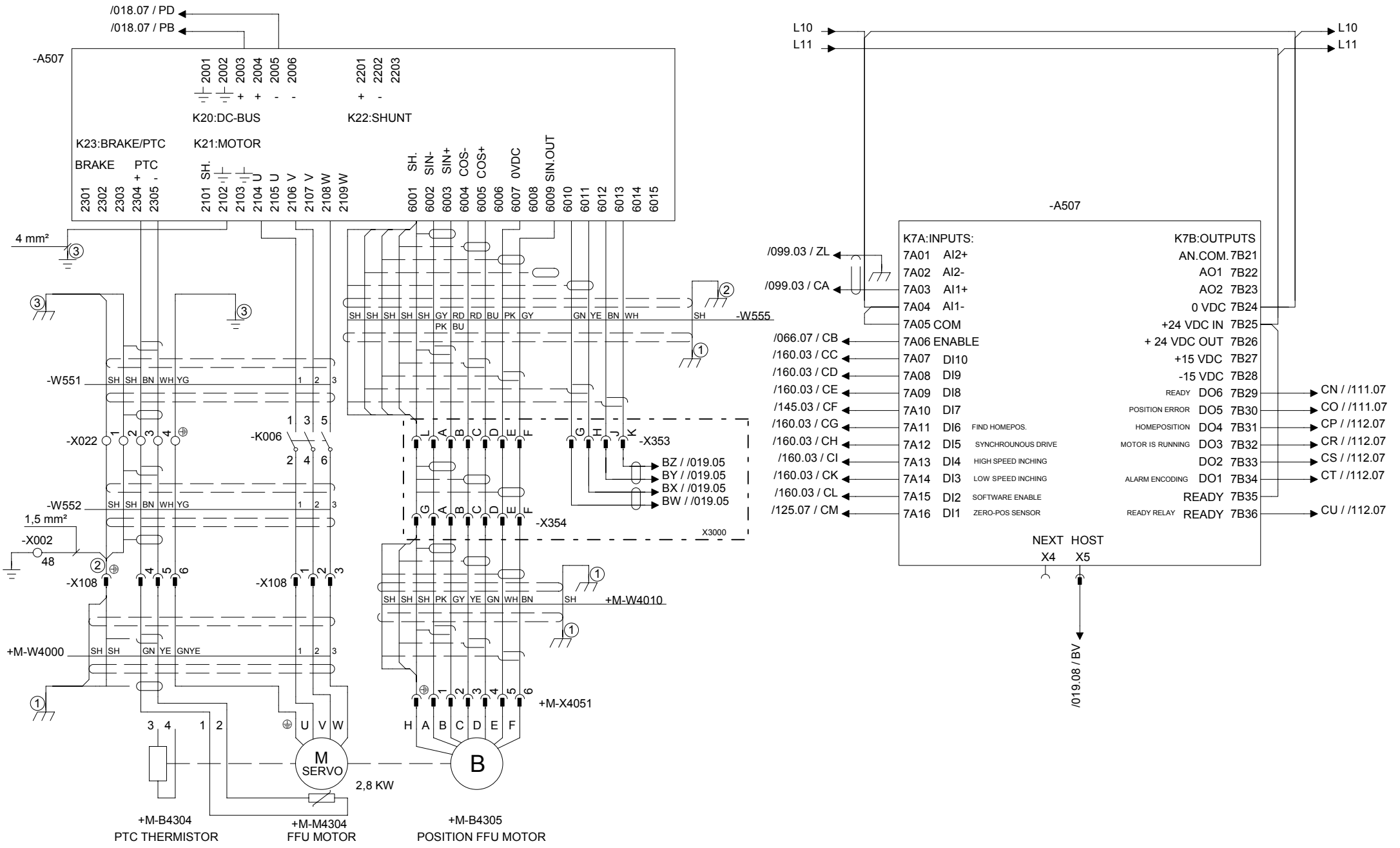

① CONNECTED TO THE GLAND
② CONNECTED TO THE CONNECTOR
③ CONNECTED TO RAIL

Drawing remarks

Tetra Pak

Designer BMI	Date 07/06/2004	Machine TBA/22-0500		
ECM No 175296	Denomination CIRCUIT DIAGRAM	Page Type FFU SERVO MOTOR		
Company Tetra Pak Carton Ambient S.p.A.	Document No. 2593852-0003	Doc. type ELD	Version AE	Page 020

RELEASED

This drawing must not without the consent of Tetra Pak be copied, transmitted or disclosed to any third party.

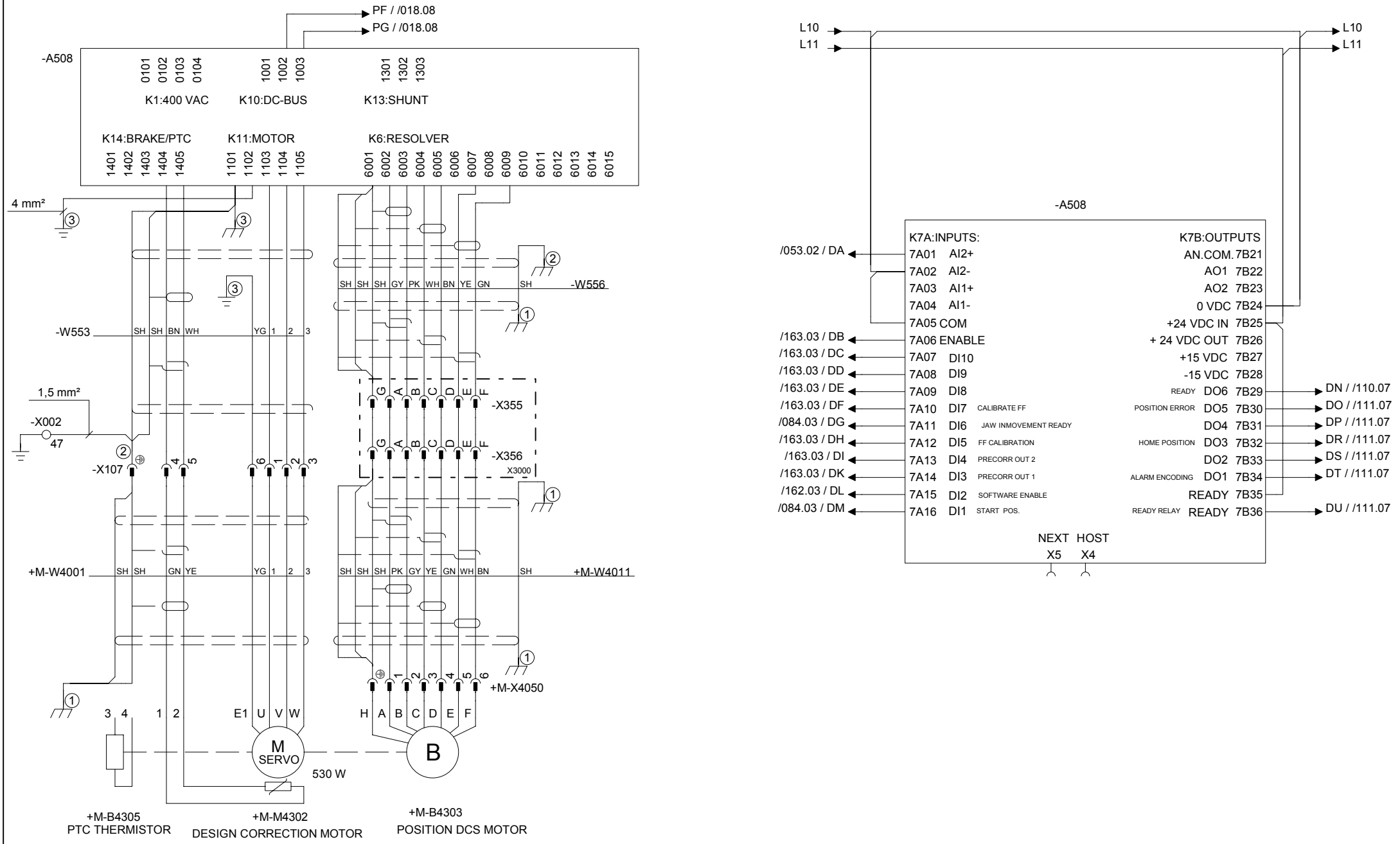

① CONNECTED TO THE GLAND
② CONNECTED TO THE CONNECTOR
③ CONNECTED TO RAIL

Drawing remarks

Tetra Pak

Designer BMI	Date 07/06/2004	Machine TBA/22-0500	
ECM No 175296	Denomination CIRCUIT DIAGRAM	Page Type DCS SERVO MOTOR	
Company Tetra Pak Carton Ambient S.p.A.	Document No. 2593852-0003	Doc. type ELD	Version AE	Page 021

RELEASED

This drawing must not without the consent of Tetra Pak be copied, transmitted or disclosed to any third party.

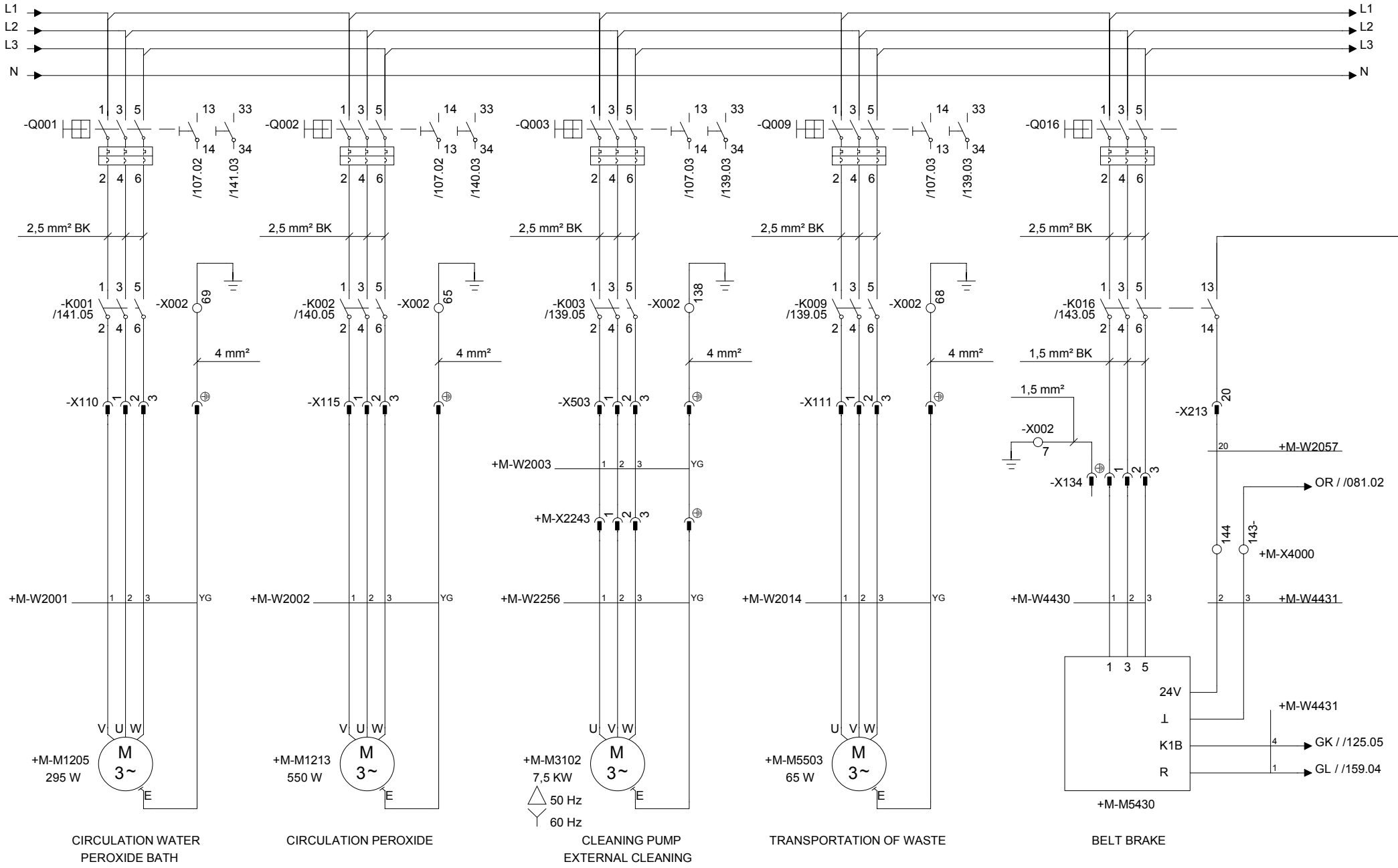

Drawing remarks	Tetra Pak	Designer BMI	Date 07/06/2004	Machine TBA/22-0500	
		ECM No 175296	Denomination CIRCUIT DIAGRAM	Page Type MOTORS	
	Company Tetra Pak Carton Ambient S.p.A.	Document No. 2593852-0003	Doc. type ELD	Version AE	Page 022

RELEASED

This drawing must not without the consent of Tetra Pak be copied, transmitted or disclosed to any third party.

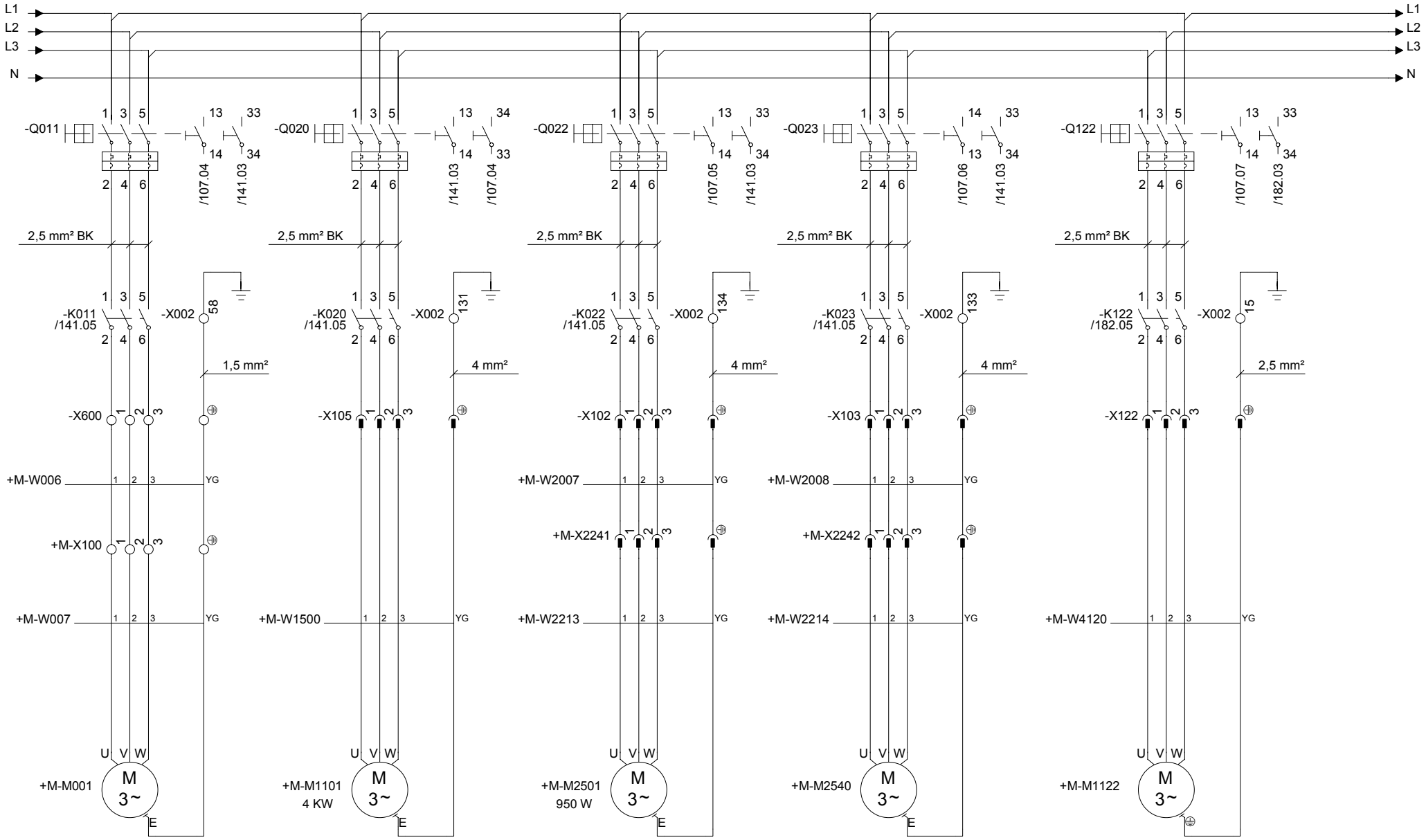

Drawing remarks	Tetra Pak	Designer BMI	Date 07/06/2004	Machine TBA/22-0500
		ECM No 175296	Denomination CIRCUIT DIAGRAM	Page Type MOTORS
	Company Tetra Pak Carton Ambient S.p.A.	Document No. 2593852-0003	Doc. type ELD	Version AE / Page 023

This drawing must not without the consent of Tetra Pak
be copied, transmitted or disclosed to any third party.

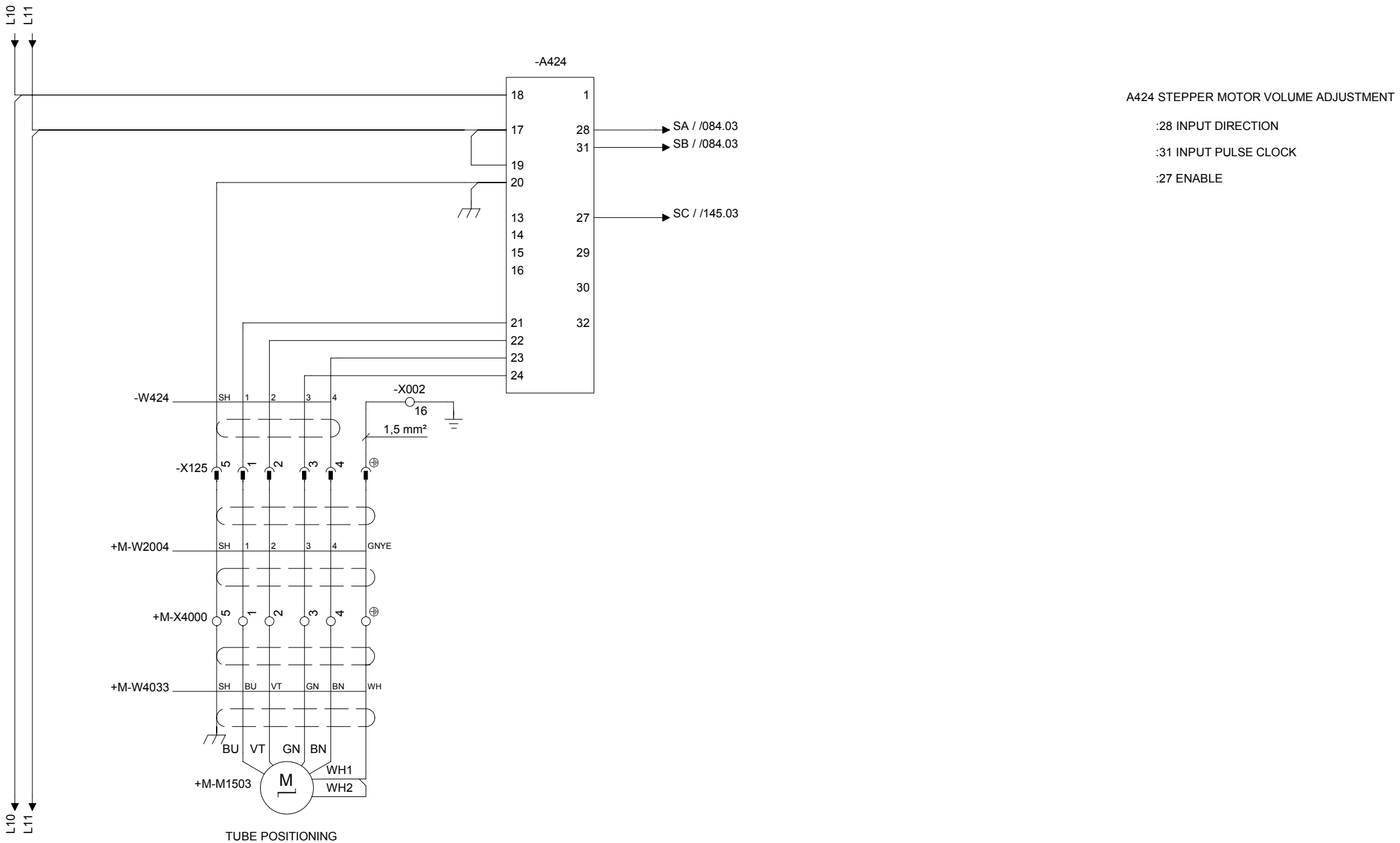

TUBE POSITIONING

A424 STEPPER MOTOR VOLUME ADJUSTMENT

:28 INPUT DIRECTION

:31 INPUT PULSE CLOCK

:27 ENABLE

Drawing remarks

Tetra Pak

Designer BMI	Date 07/06/2004	Machine TBA/22-0500		
ECM No 175296	Denomination CIRCUIT DIAGRAM	Page Type VOLUME ADJUSTMENT		
Company Tetra Pak Carton Ambient S.p.A.	Document No. 2593852-0003	Doc. type ELD	Version AE	Page 024

RELEASED

This drawing must not without the consent of Tetra Pak be copied, transmitted or disclosed to any third party.

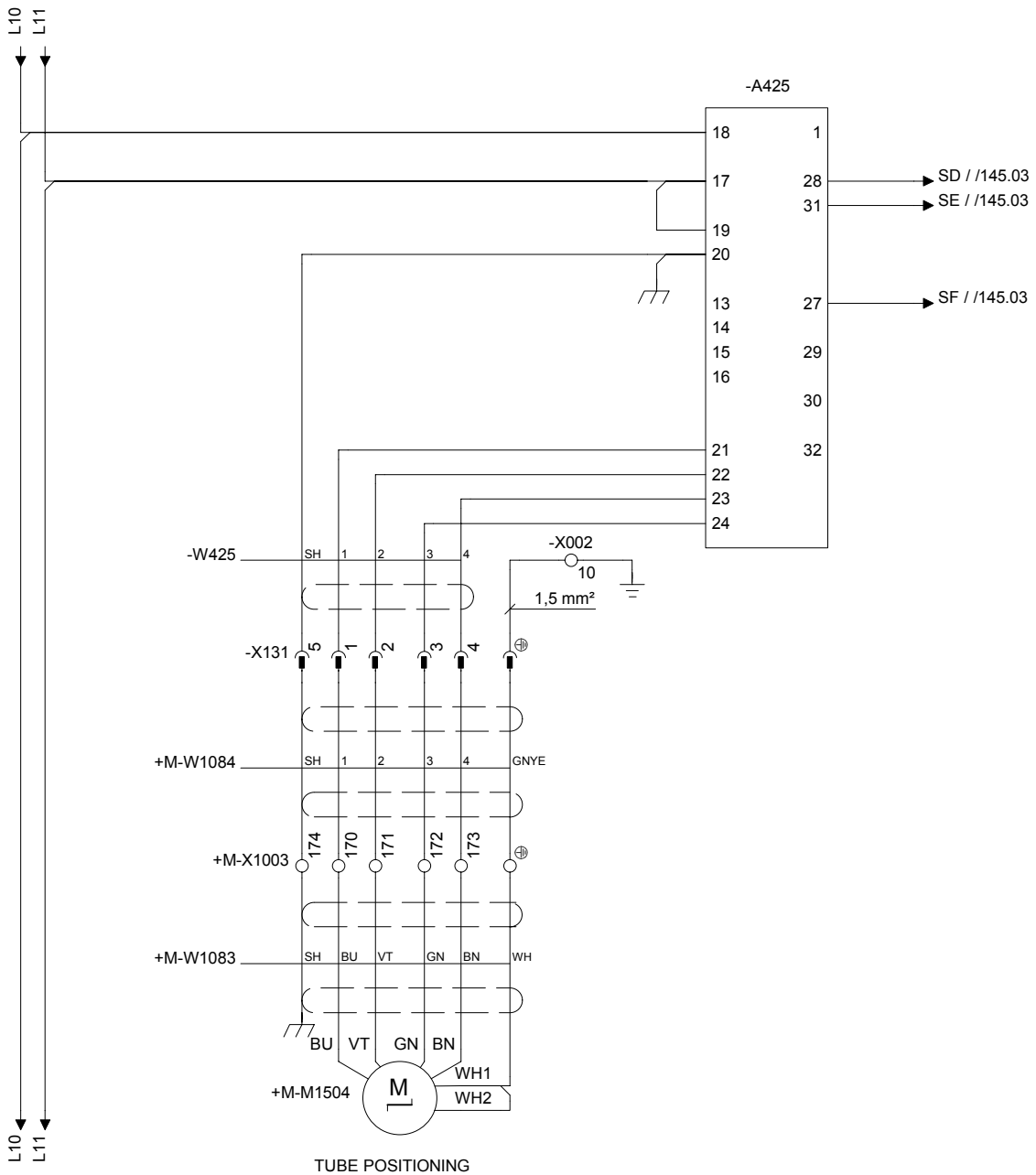

TUBE POSITIONING

A425 STEPPER MOTOR TUBE POSITIONING

:28 INPUT DIRECTION

:31 INPUT PULSE CLOCK

:27 ENABLE

Drawing remarks

Tetra Pak

Designer BMI	Date 07/06/2004	Machine TBA/22-0500			
ECM No 175296	Denomination CIRCUIT DIAGRAM	Page Type TUBE POSITIONING			
Company Tetra Pak Carton Ambient S.p.A.	Document No. 2593852-0003	Doc. type ELD	Version AE	Page 025	

This drawing must not without the consent of Tetra Pak be copied, transmitted or disclosed to any third party.

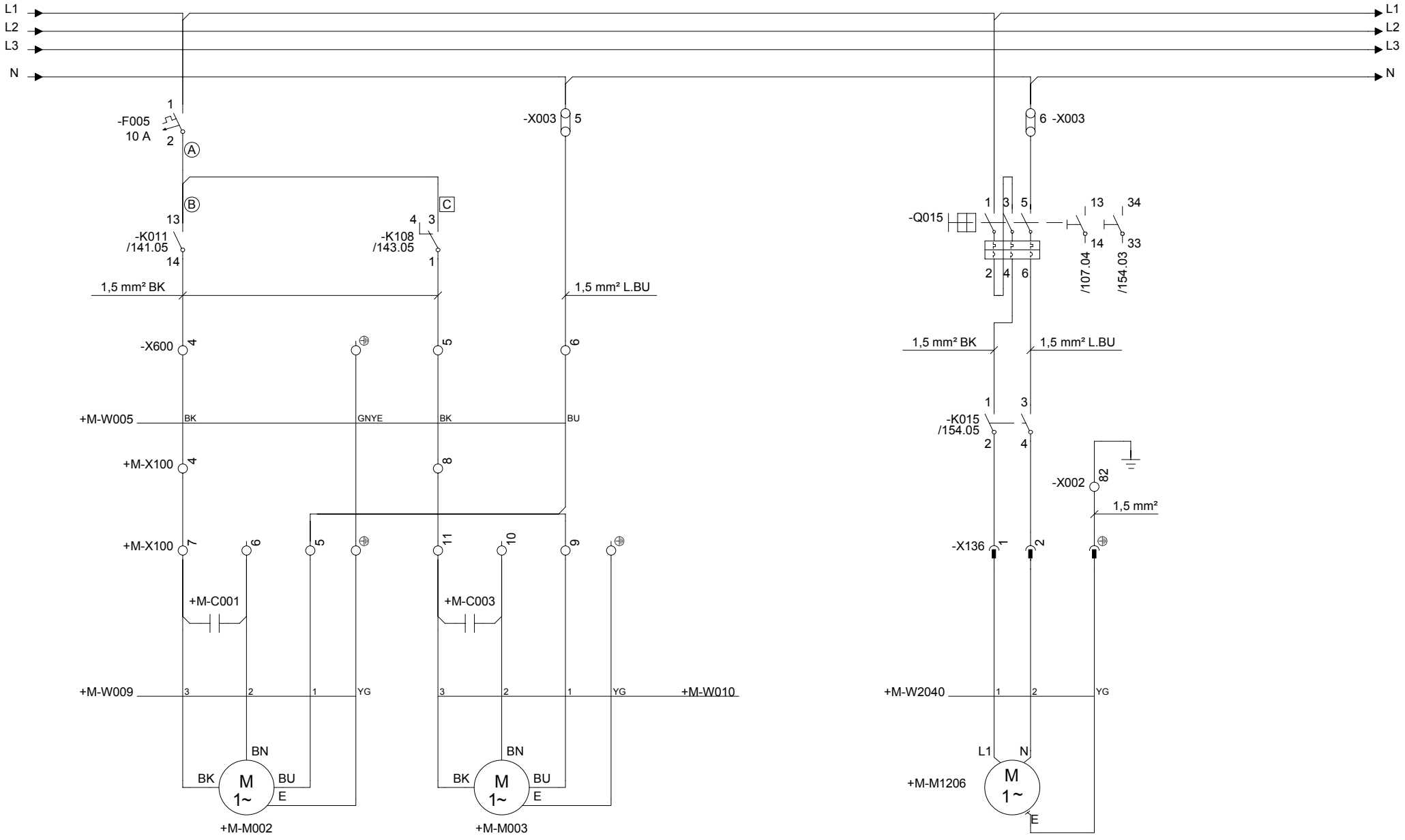

Drawing remarks	Tetra Pak	Designer BMI	Date 07/06/2004	Machine TBA/22-0500	
		ECM No 175296	Denomination CIRCUIT DIAGRAM	Page Type COOLING UNIT	
		Company Tetra Pak Carton Ambient S.p.A.	Document No. 2593852-0003	Doc. type ELD	Version AE	Page 026

This drawing must not without the consent of Tetra Pak be copied, transmitted or disclosed to any third party.

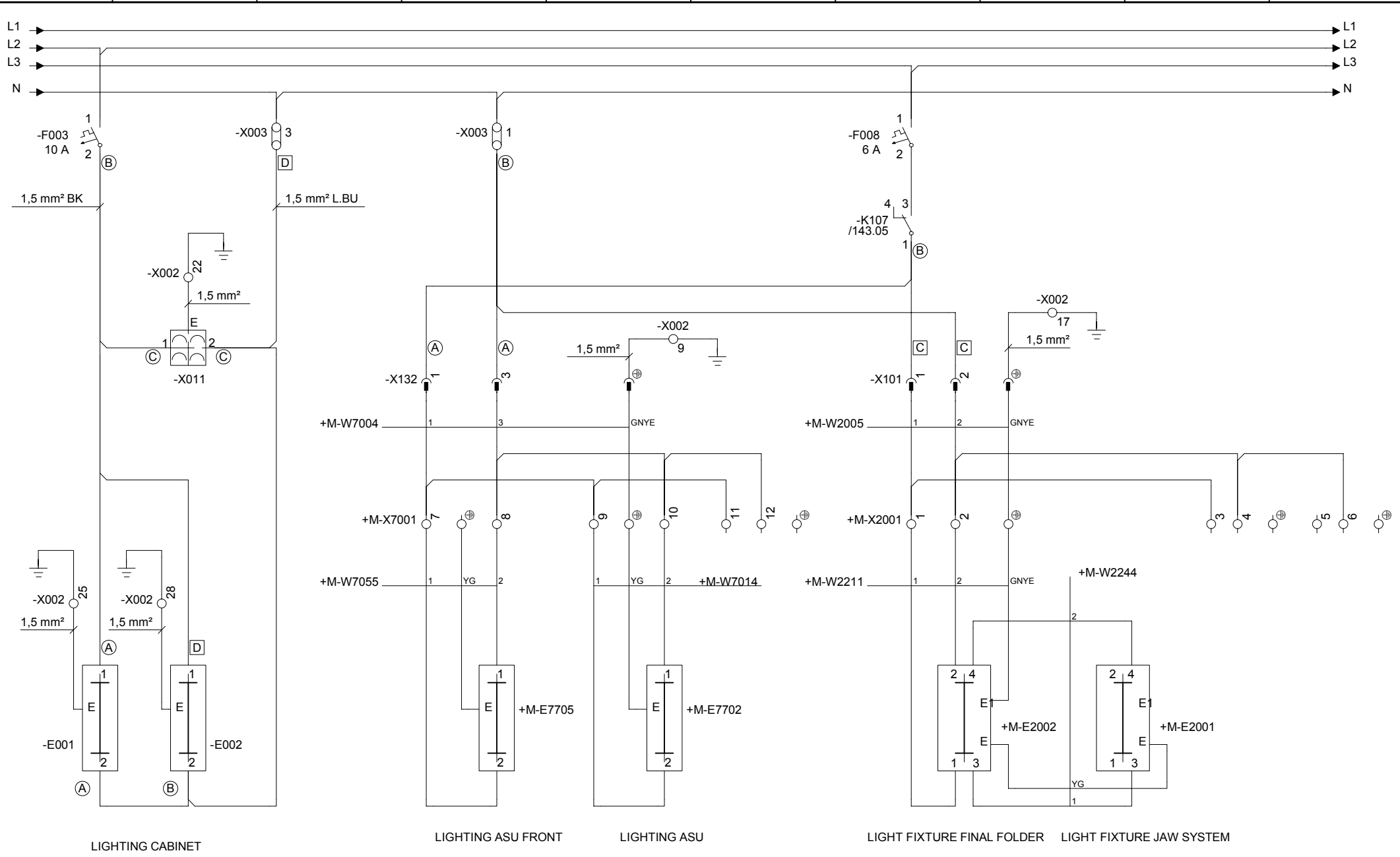

Drawing remarks	Tetra Pak	Designer BMI	Date 07/06/2004	Machine TBA/22-0500	
		ECM No 175296	Denomination CIRCUIT DIAGRAM	Page Type LIGHT FIXTURES	
		Company Tetra Pak Carton Ambient S.p.A.	Document No. 2593852-0003	Doc. type ELD	Version AE	Page 032

RELEASED

This drawing must not without the consent of Tetra Pak be copied, transmitted or disclosed to any third party.

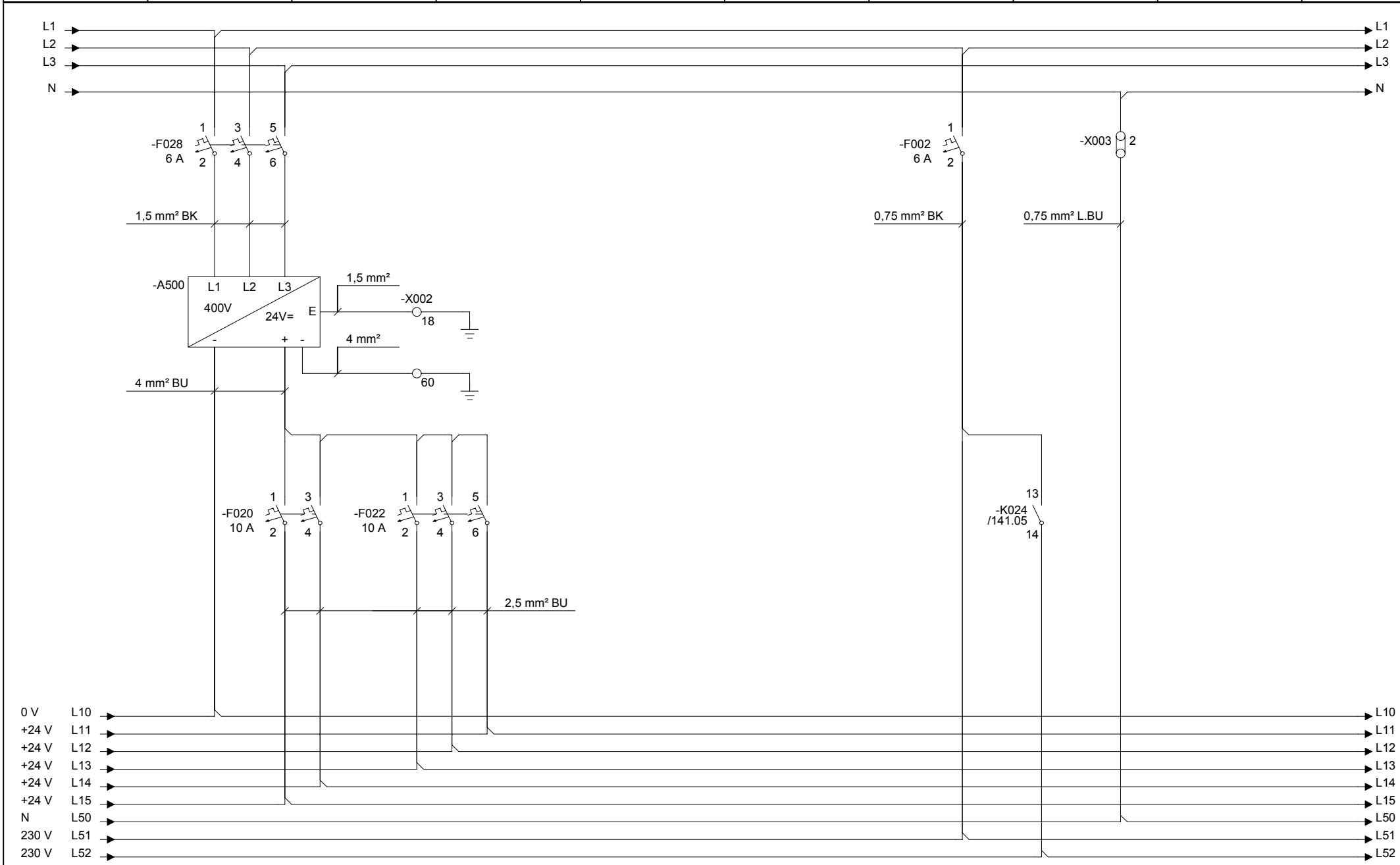

Drawing remarks	Tetra Pak	Designer BMI	Date 07/06/2004	Machine TBA/22-0500
		ECM No 175296	Denomination CIRCUIT DIAGRAM	Page Type CONTROL VOLTAGE
		Company Tetra Pak Carton Ambient S.p.A.	Document No. 2593852-0003	Doc. type ELD / Version AE / Page 034

RELEASED

This drawing must not without the consent of Tetra Pak be copied, transmitted or disclosed to any third party.

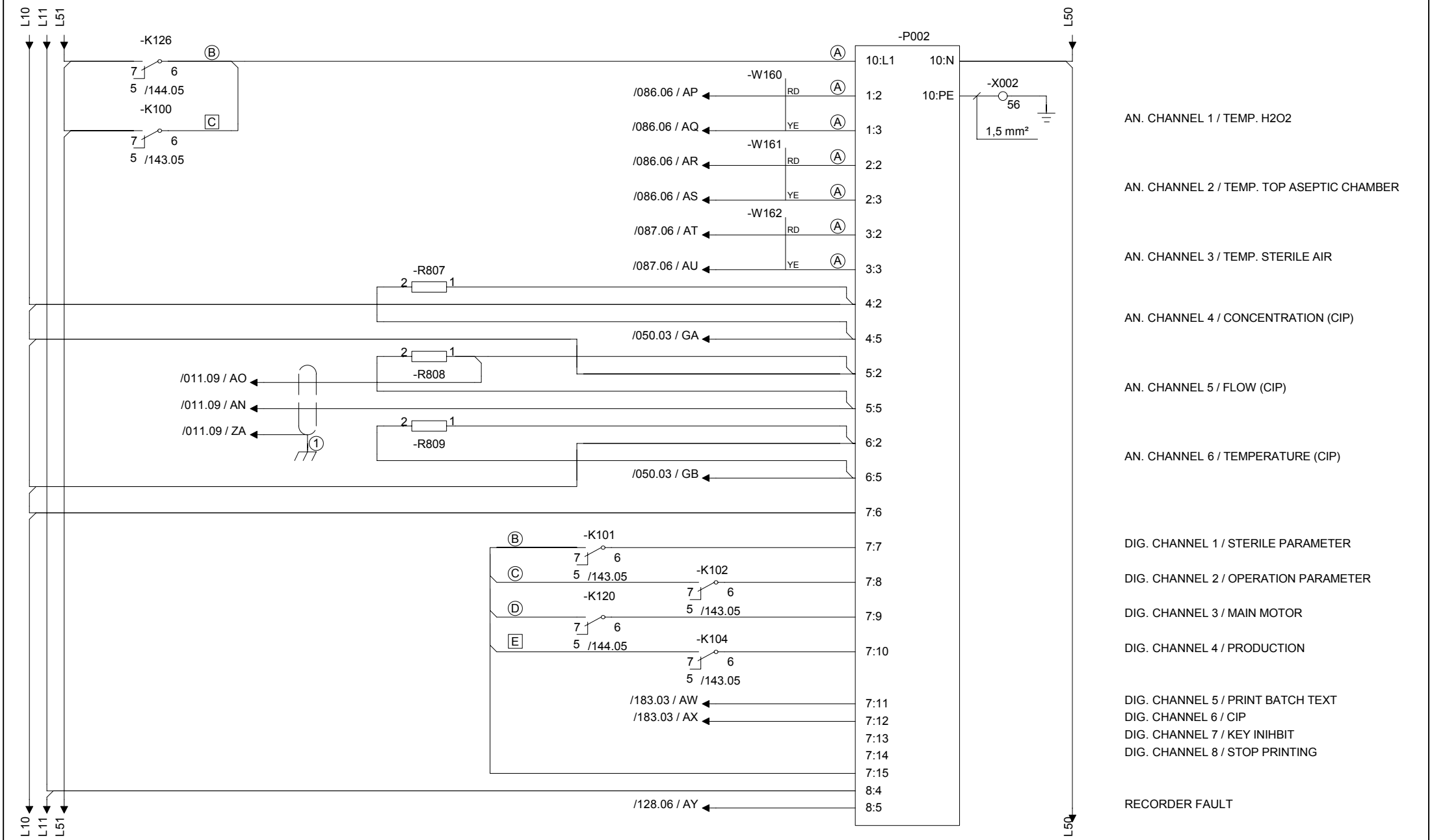

① CLAMPED IN THE SWING FRAME

Drawing remarks

Tetra Pak

Designer	Date	Machine
BMI	07/06/2004	TBA/22-0500

ECM No	Denomination	Page Type
175296	CIRCUIT DIAGRAM	RECORDER JUMO

Company	Document No.	Doc. type	Version	Page
Tetra Pak Carton Ambient S.p.A.	2593852-0003	ELD	AE	039

RELEASED

This drawing must not without the consent of Tetra Pak be copied, transmitted or disclosed to any third party.

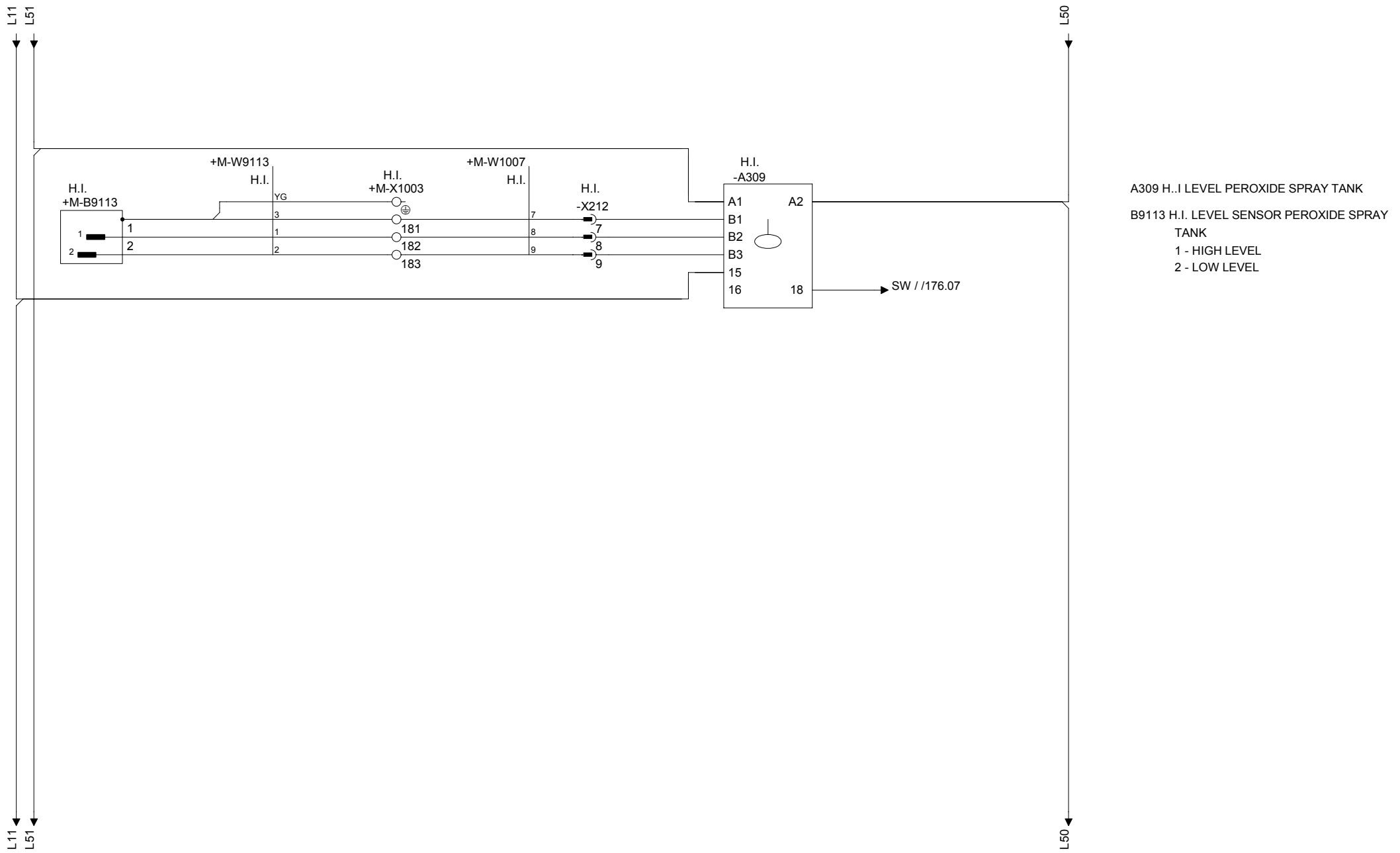

Drawing remarks	Tetra Pak	Designer BMI	Date 07/06/2004	Machine TBA/22-0500			
		ECM No 175296	Denomination CIRCUIT DIAGRAM	Page Type RECORDER HONEYWELL			
		Company Tetra Pak Carton Ambient S.p.A.		Document No. 2593852-0003	Doc. type ELD	Version AE	Page 045

RELEASED

This drawing must not without the consent of Tetra Pak be copied, transmitted or disclosed to any third party.

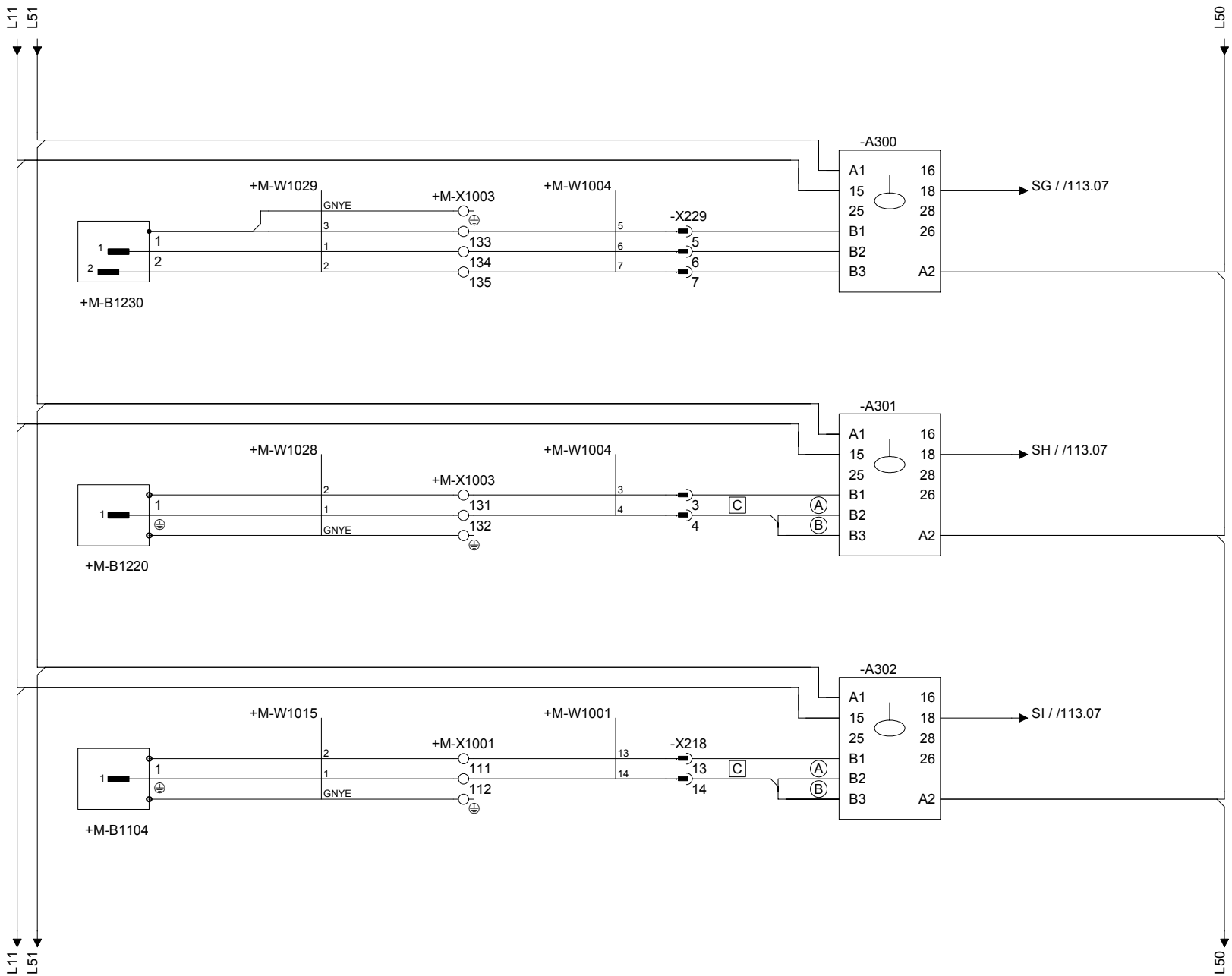

A300 HYDROGEN PEROXIDE SPRAY TANK

B1230 FILLING SPRAY TANK
1 HIGH LEVEL
2 LOW LEVEL

A301 HYDROGEN PEROXIDE BATH

B1220 FILLING PEROXIDE BATH

A302 WATER SEPARATOR

B1104 LEVEL SENSOR SEAL WATER

Drawing remarks	Tetra Pak	Designer BMI	Date 07/06/2004	Machine TBA/22-0500	
		ECM No 175296	Denomination CIRCUIT DIAGRAM	Page Type LEVEL RELAYS	
		Company Tetra Pak Carton Ambient S.p.A.	Document No. 2593852-0003	Doc. type ELD	Version AE	Page 046

RELEASED

This drawing must not without the consent of Tetra Pak be copied, transmitted or disclosed to any third party.

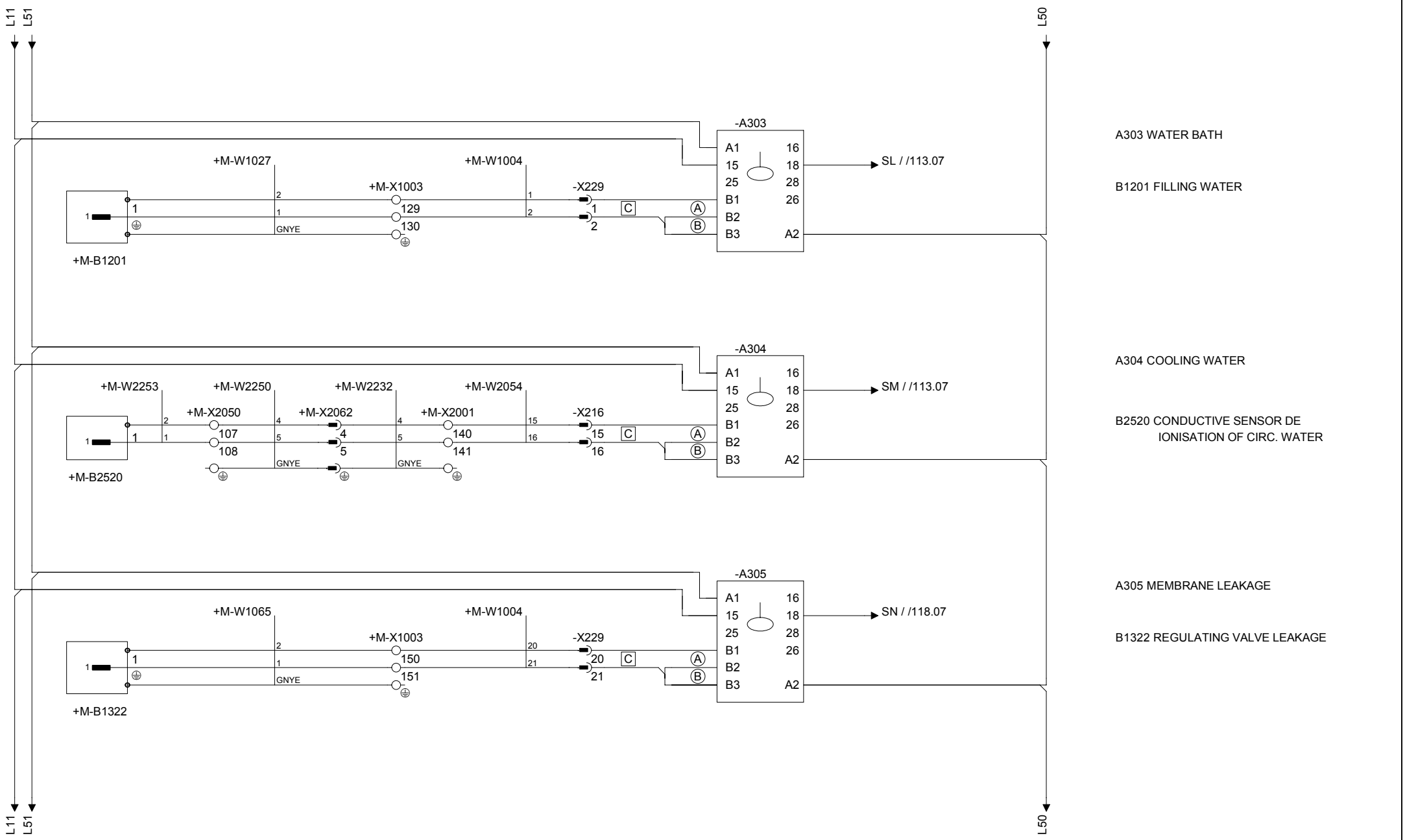

Drawing remarks	Tetra Pak	Designer BMI	Date 07/06/2004	Machine TBA/22-0500	
		ECM No 175296	Denomination CIRCUIT DIAGRAM	Page Type LEVEL RELAYS	
		Company Tetra Pak Carton Ambient S.p.A.	Document No. 2593852-0003	Doc. type ELD	Version AE	Page 047

RELEASED

This drawing must not without the consent of Tetra Pak be copied, transmitted or disclosed to any third party.

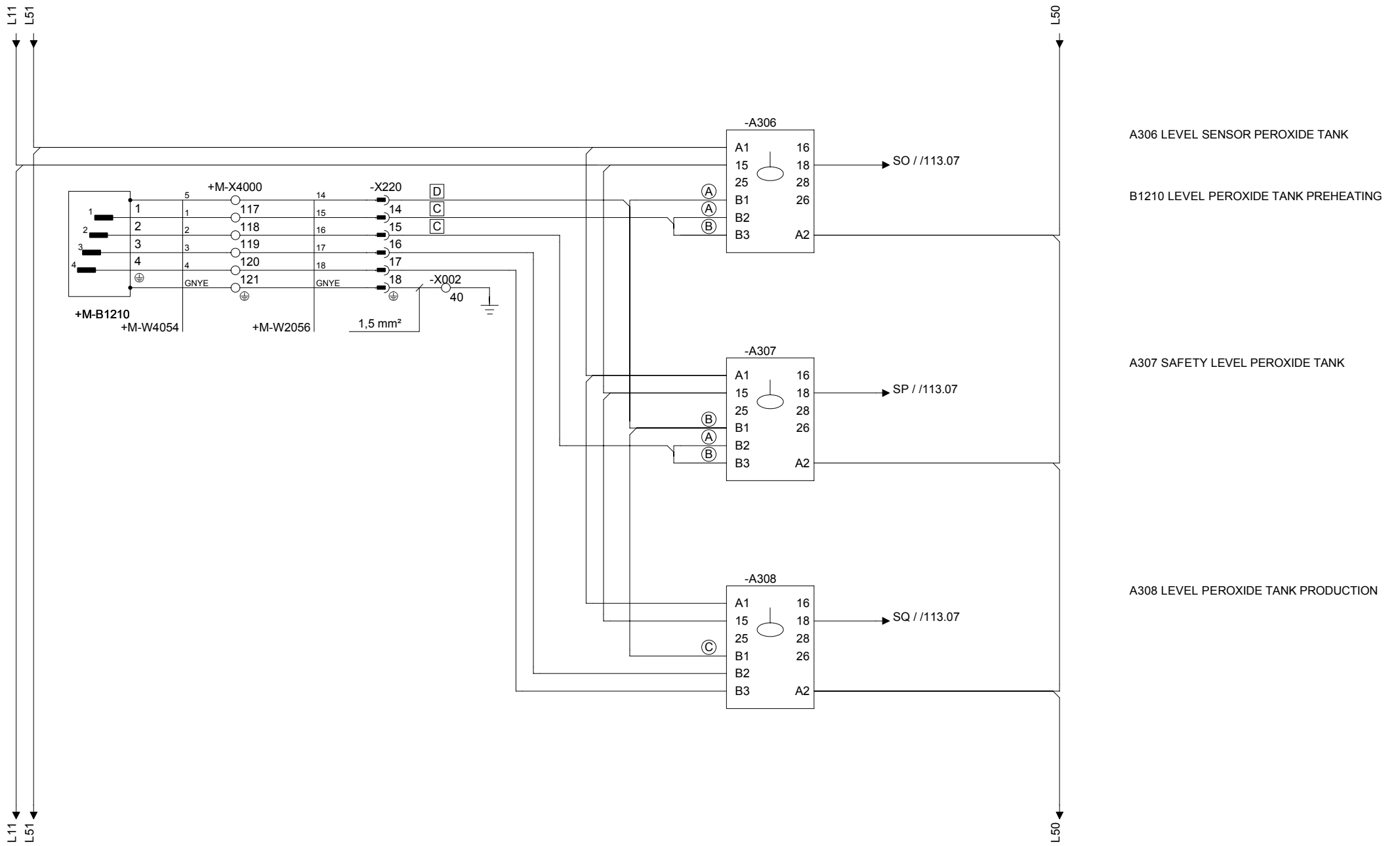

Drawing remarks	Tetra Pak	Designer BMI	Date 07/06/2004	Machine TBA/22-0500
		ECM No 175296	Denomination CIRCUIT DIAGRAM	Page Type LEVEL RELAYS
	Company Tetra Pak Carton Ambient S.p.A.	Document No. 2593852-0003	Doc. type ELD	Version AE / Page 048

This drawing must not without the consent of Tetra Pak
be copied, transmitted or disclosed to any third party.

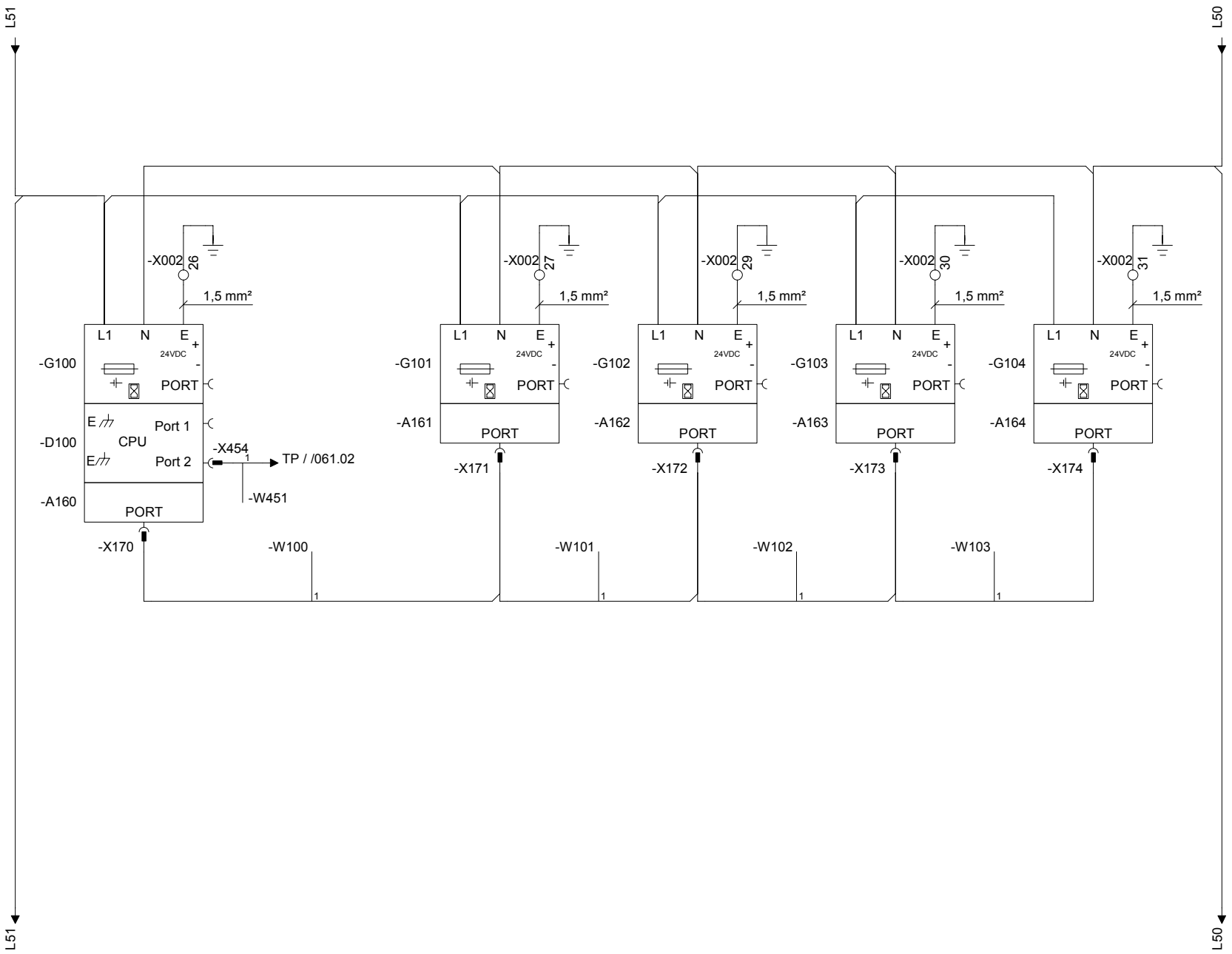

G100 PLC POWER SUPPLY
G100.1 FERRITE COIL
D100 PLC CPU
A160 PLC MAIN RACK

W100 EXPANSION CABLE

G101 PLC POWER SUPPLY
G101.1 FERRITE COIL
A161 PLC EXPANSION RACK

CONFIGURATION EXPANSION-RACK
OPEN CLOSE

W101 EXPANSION CABLE

G102 PLC POWER SUPPLY
G102.1 FERRITE COIL
A162 PLC EXPANSION RACK

CONFIGURATION EXPANSION-RACK
OPEN CLOSE

W102 EXPANSION CABLE

G103 PLC POWER SUPPLY
G103.1 FERRITE COIL
A163 PLC EXPANSION RACK

CONFIGURATION EXPANSION-RACK
OPEN CLOSE

W103 EXPANSION CABLE

G104 PLC POWER SUPPLY
G104.1 FERRITE COIL
A164 PLC EXPANSION RACK

CONFIGURATION EXPANSION-RACK
OPEN CLOSE

D100	A101	A102	A103	A104	A105	A106	A107	A108	A109
A110	A111	A112	A113	A114	A115	A116	A117	A118	A119
A120	A121	A122	A123	A124	A125	A126	A127	A128	A129
A130	A131	A132	A133	A134	A135	A136	A137	A138	A139
A140	A141	A142	A143		A145	A146	A147		

Drawing remarks

Tetra Pak

Designer BMI	Date 07/06/2004	Machine TBA/22-0500			
ECM No 175296	Denomination CIRCUIT DIAGRAM	Page Type POWER SUPPLY PLC			
Company Tetra Pak Carton Ambient S.p.A.	Document No. 2593852-0003	Doc. type ELD	Version AE	Page 049	

RELEASED

This drawing must not without the consent of Tetra Pak be copied, transmitted or disclosed to any third party.

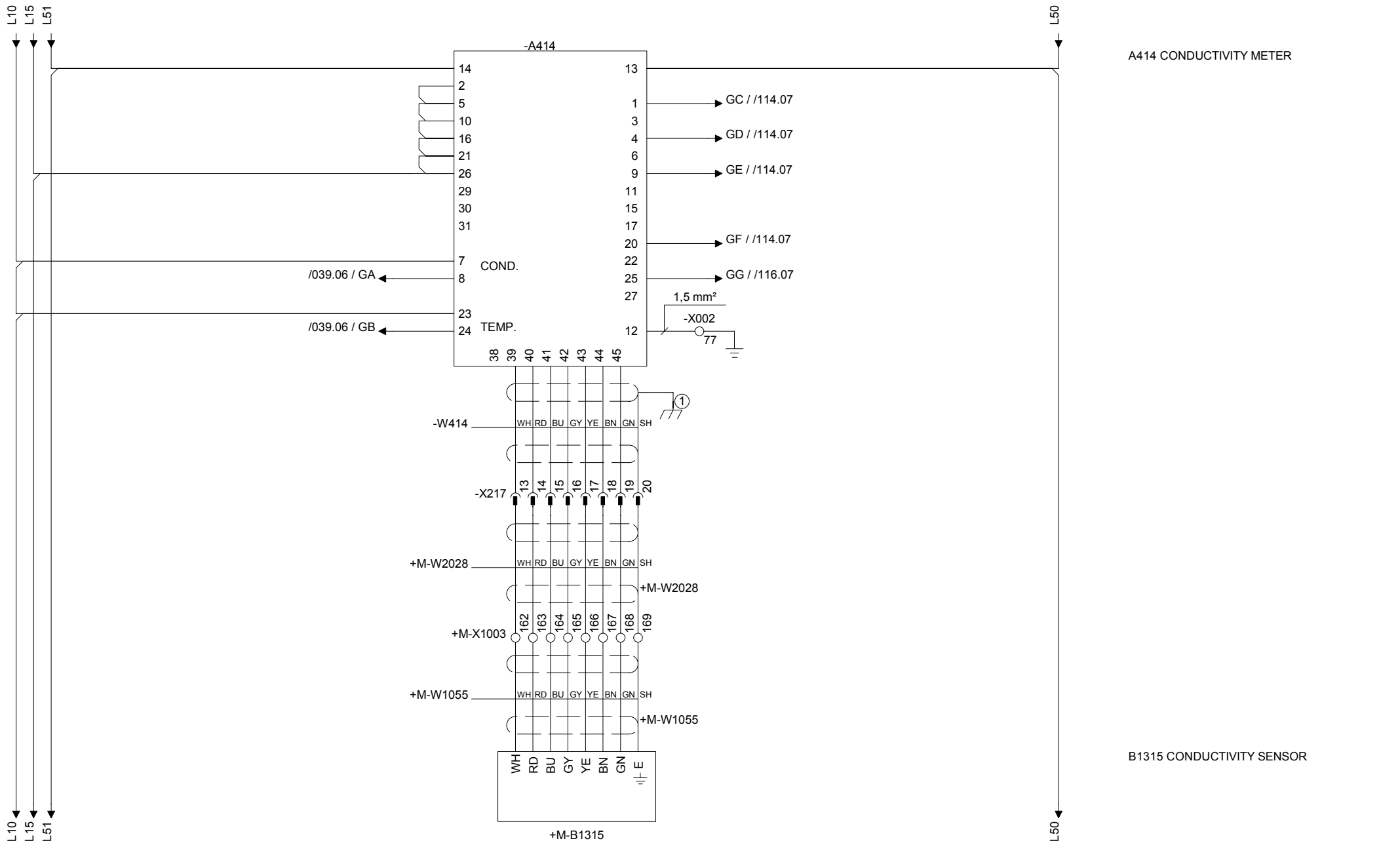

① CLAMPED IN THE SWING FRAME

Drawing remarks

Tetra Pak

Designer BMI	Date 07/06/2004	Machine TBA/22-0500			
ECM No 175296	Denomination CIRCUIT DIAGRAM	Page Type CONDUCTIVITY METER			
Company Tetra Pak Carton Ambient S.p.A.	Document No. 2593852-0003	Doc. type ELD	Version AE	Page 050	

RELEASED

This drawing must not without the consent of Tetra Pak
be copied, transmitted or disclosed to any third party.

1 2 3 4 5 6 7 8 9 10

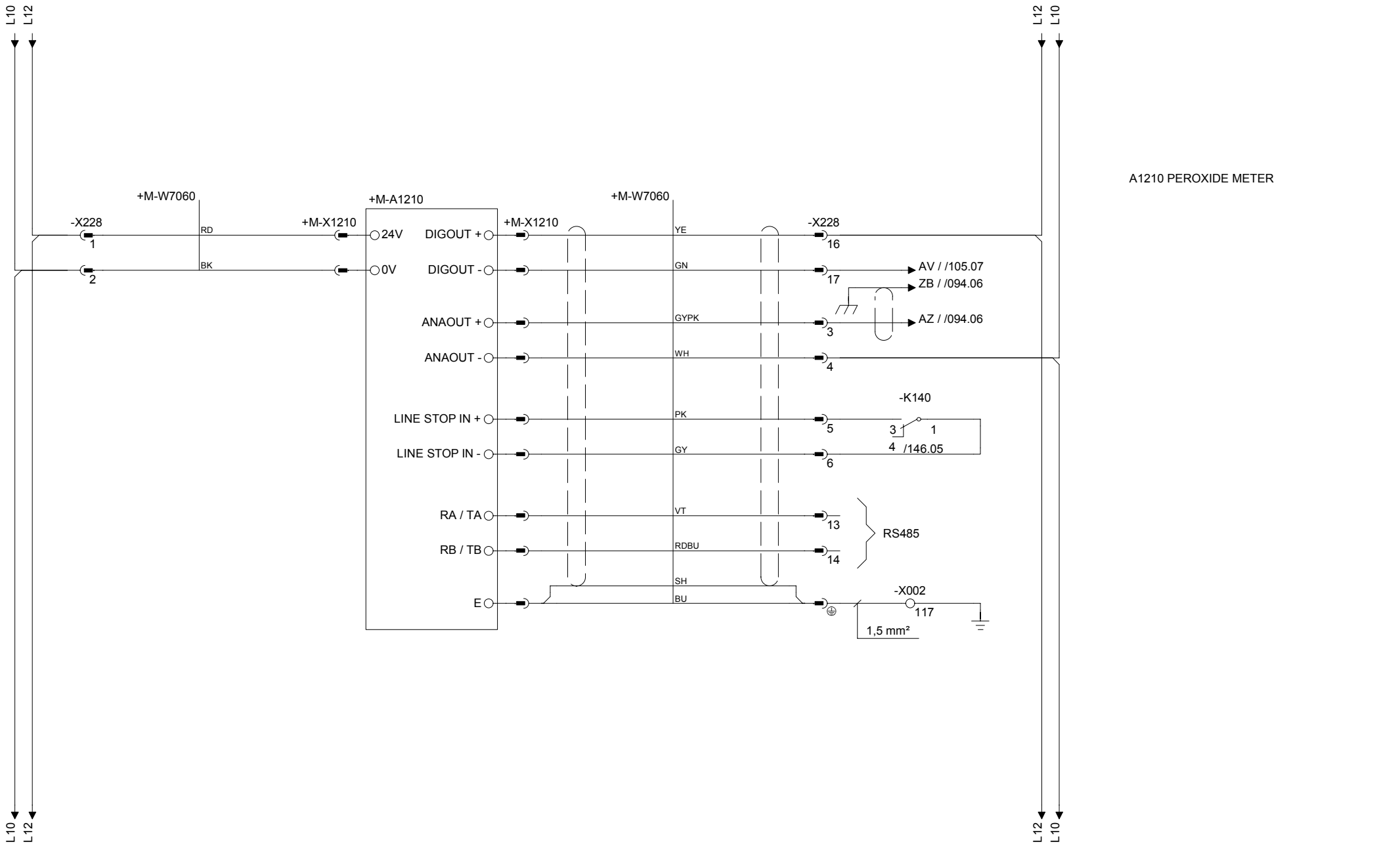

Drawing remarks	Tetra Pak	Designer BMI	Date 07/06/2004	Machine TBA/22-0500	
		ECM No 175296	Denomination CIRCUIT DIAGRAM	Page Type PEROXIDE METER	
		Company Tetra Pak Carton Ambient S.p.A.	Document No. 2593852-0003	Doc. type ELD	Version AE	Page 051

RELEASED

This drawing must not without the consent of Tetra Pak be copied, transmitted or disclosed to any third party.

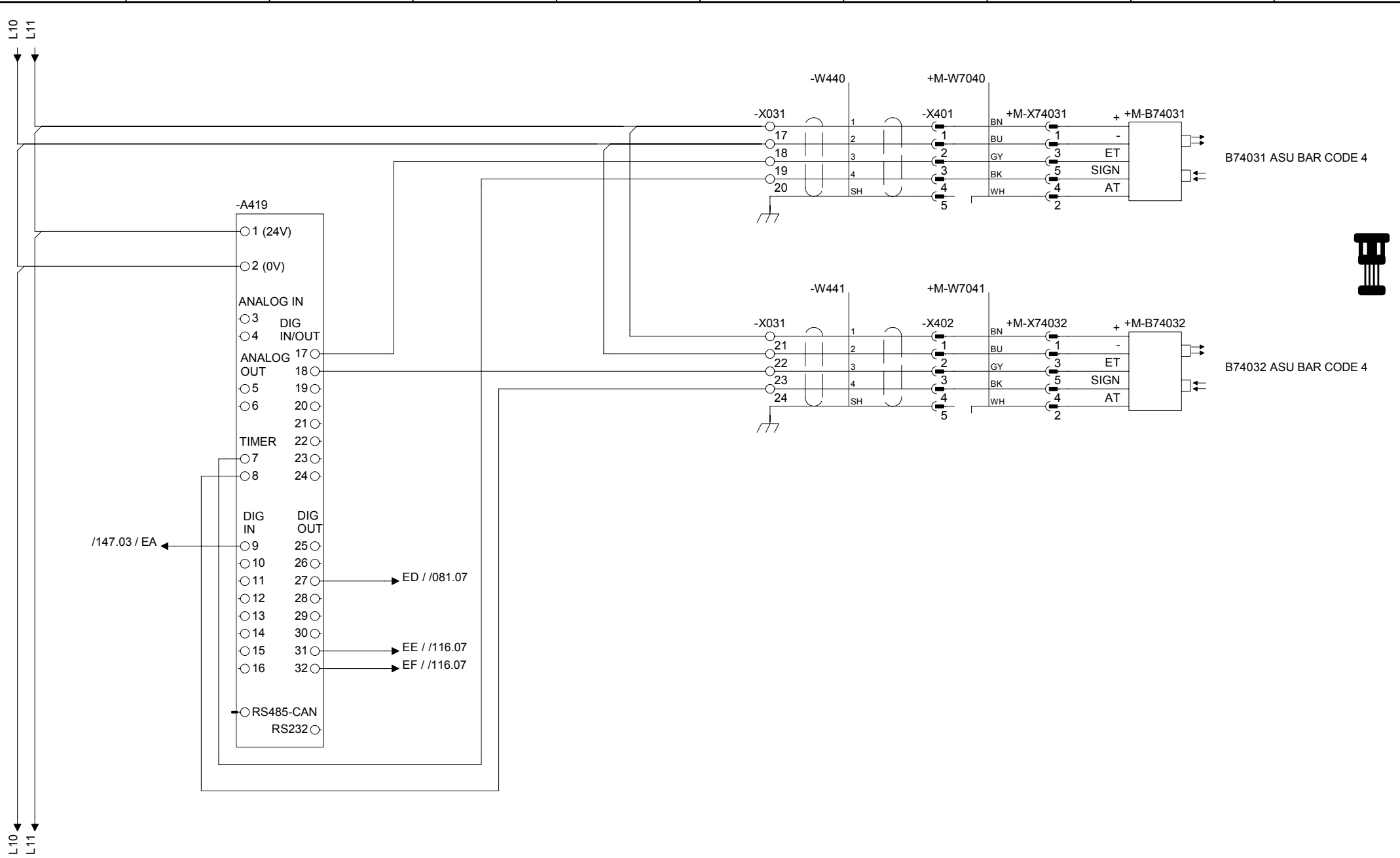

Drawing remarks	Tetra Pak	Designer BMI	Date 07/06/2004	Machine TBA/22-0500	
		ECM No 175296	Denomination CIRCUIT DIAGRAM	Page Type ASU BAR CODE	
		Company Tetra Pak Carton Ambient S.p.A.	Document No. 2593852-0003	Doc. type ELD	Version AE	Page 052

This drawing must not without the consent of Tetra Pak be copied, transmitted or disclosed to any third party.

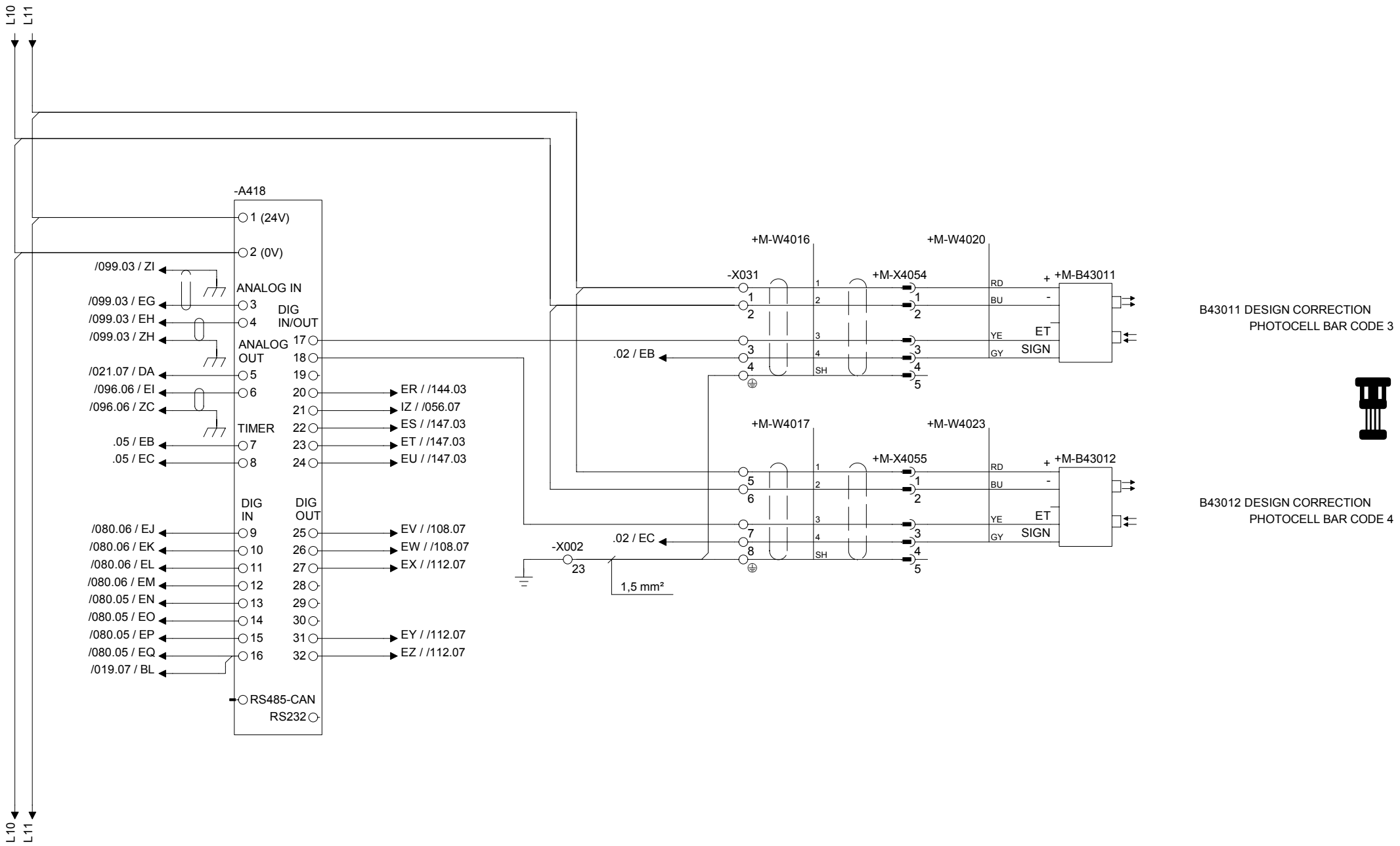

B43011 DESIGN CORRECTION
PHOTOCELL BAR CODE 3

B43012 DESIGN CORRECTION
PHOTOCELL BAR CODE 4

Drawing remarks

Tetra Pak

Designer: BMI	Date: 07/06/2004	Machine: TBA/22-0500	
ECM No: 175296	Denomination: CIRCUIT DIAGRAM	Page Type: DCS BAR CODE	
Company: Tetra Pak Carton Ambient S.p.A.	Document No.: 2593852-0003	Doc. type: ELD	Version: AE	Page: 053

RELEASED

This drawing must not without the consent of Tetra Pak be copied, transmitted or disclosed to any third party.

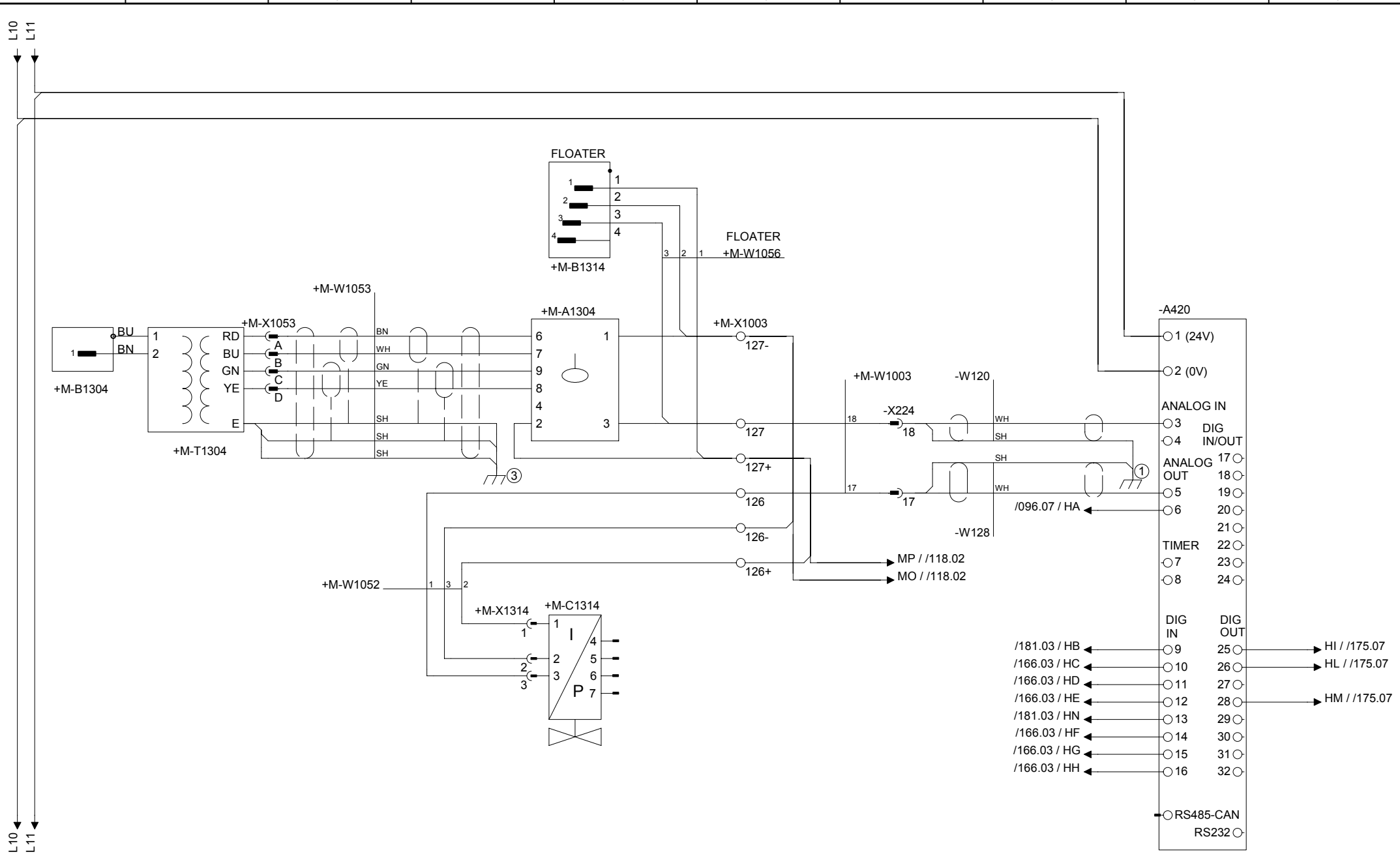

① CONNECTED TO PIN 2

② SCREWED TO THE AMPLIFIER CHASSY

Drawing remarks

Tetra Pak

Designer	Date	Machine
BMI	07/06/2004	TBA/22-0500

ECM No	Denomination	Page Type
175296	CIRCUIT DIAGRAM	TMCC FCS

Company	Document No.	Doc. type	Version	Page
Tetra Pak Carton Ambient S.p.A.	2593852-0003	ELD	AE	054

RELEASED

This drawing must not without the consent of Tetra Pak be copied, transmitted or disclosed to any third party.

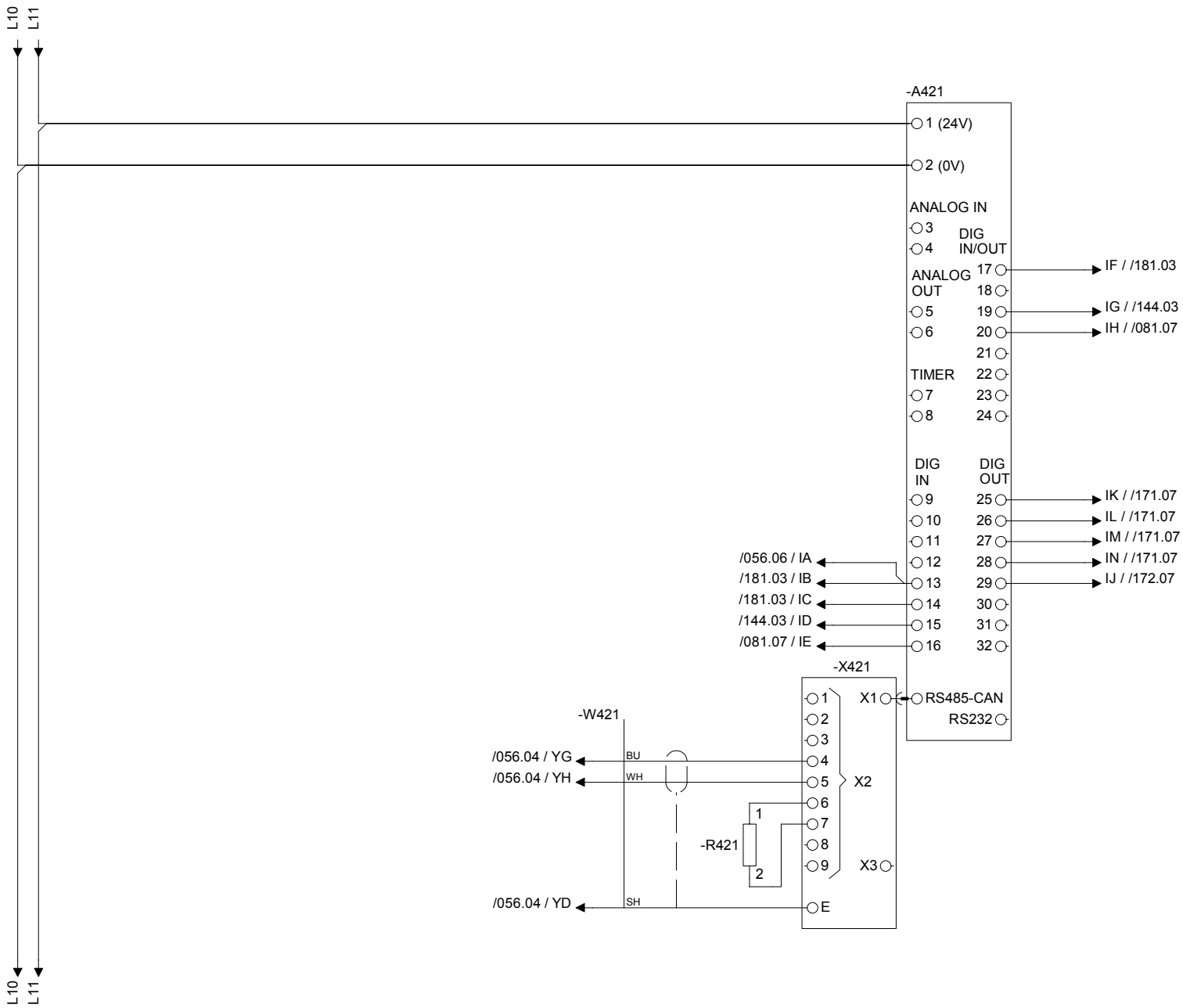

Drawing remarks	Tetra Pak	Designer BMI	Date 07/06/2004	Machine TBA/22-0500	
		ECM No 175296	Denomination CIRCUIT DIAGRAM	Page Type TMCC LSM	
		Company Tetra Pak Carton Ambient S.p.A.	Document No. 2593852-0003	Doc. type ELD	Version AE	Page 055

RELEASED

This drawing must not without the consent of Tetra Pak be copied, transmitted or disclosed to any third party.

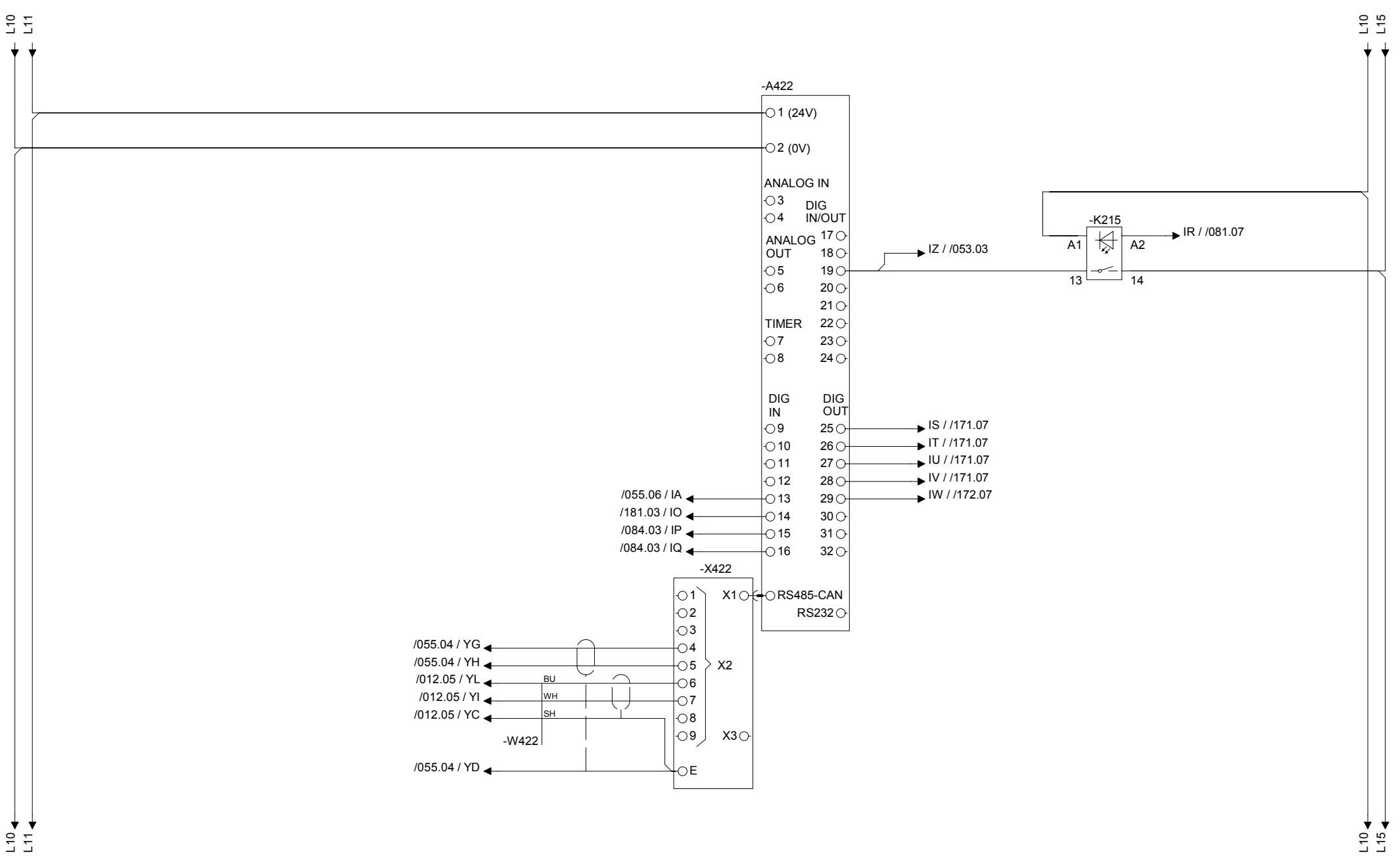

Drawing remarks	Tetra Pak	Designer BMI	Date 07/06/2004	Machine TBA/22-0500	
		ECM No 175296	Denomination CIRCUIT DIAGRAM	Page Type TMCC TSM	
		Company Tetra Pak Carton Ambient S.p.A.	Document No. 2593852-0003	Doc. type ELD	Version AE	Page 056

RELEASED

This drawing must not without the consent of Tetra Pak be copied, transmitted or disclosed to any third party.

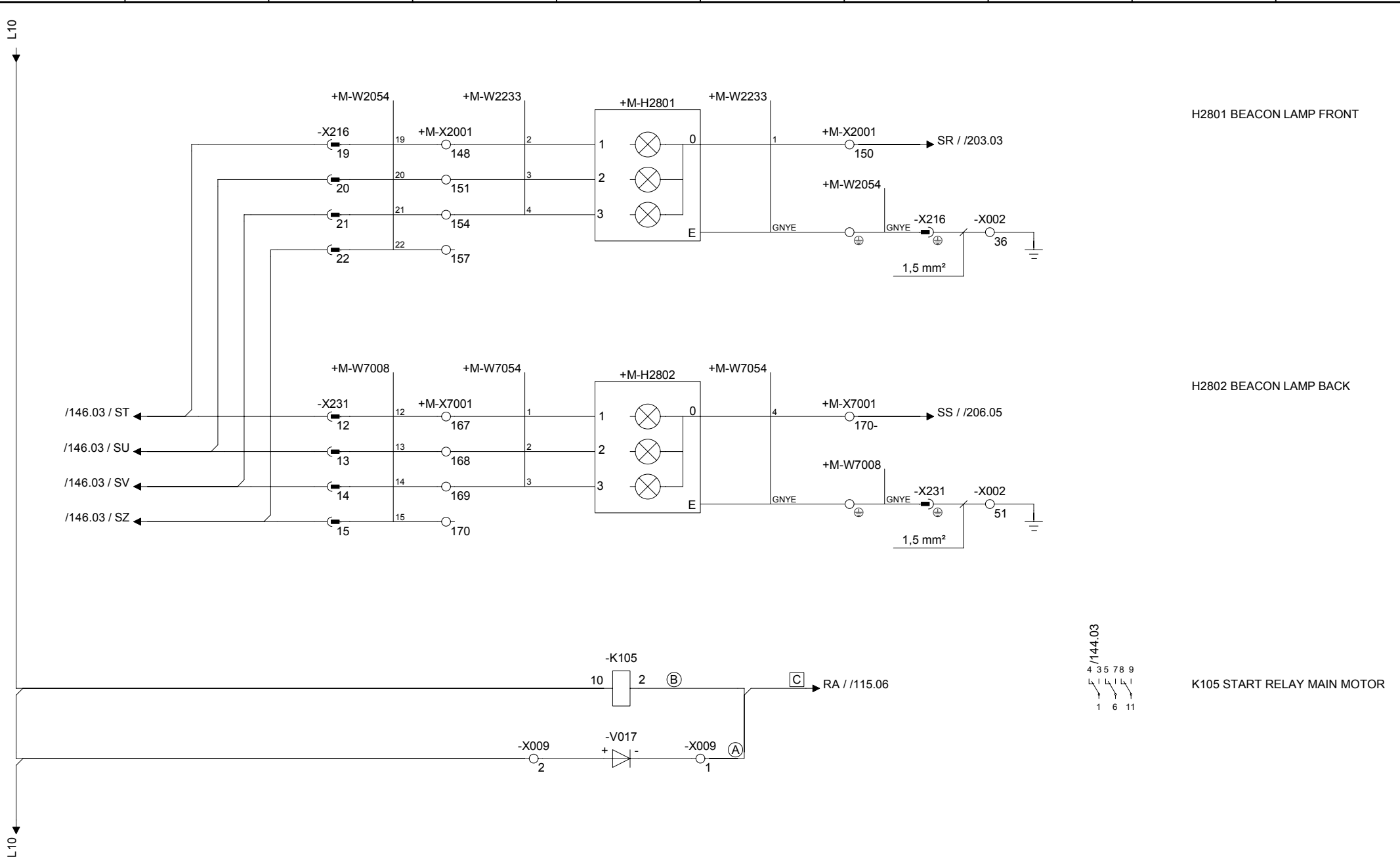

Drawing remarks	Tetra Pak	Designer BMI	Date 07/06/2004	Machine TBA/22-0500			
		ECM No 175296	Denomination CIRCUIT DIAGRAM	Page Type BEACON LAMPS			
	Company Tetra Pak Carton Ambient S.p.A.		Document No. 2593852-0003	Doc. type ELD	Version AE	Page 058	

RELEASED

This drawing must not without the consent of Tetra Pak be copied, transmitted or disclosed to any third party.

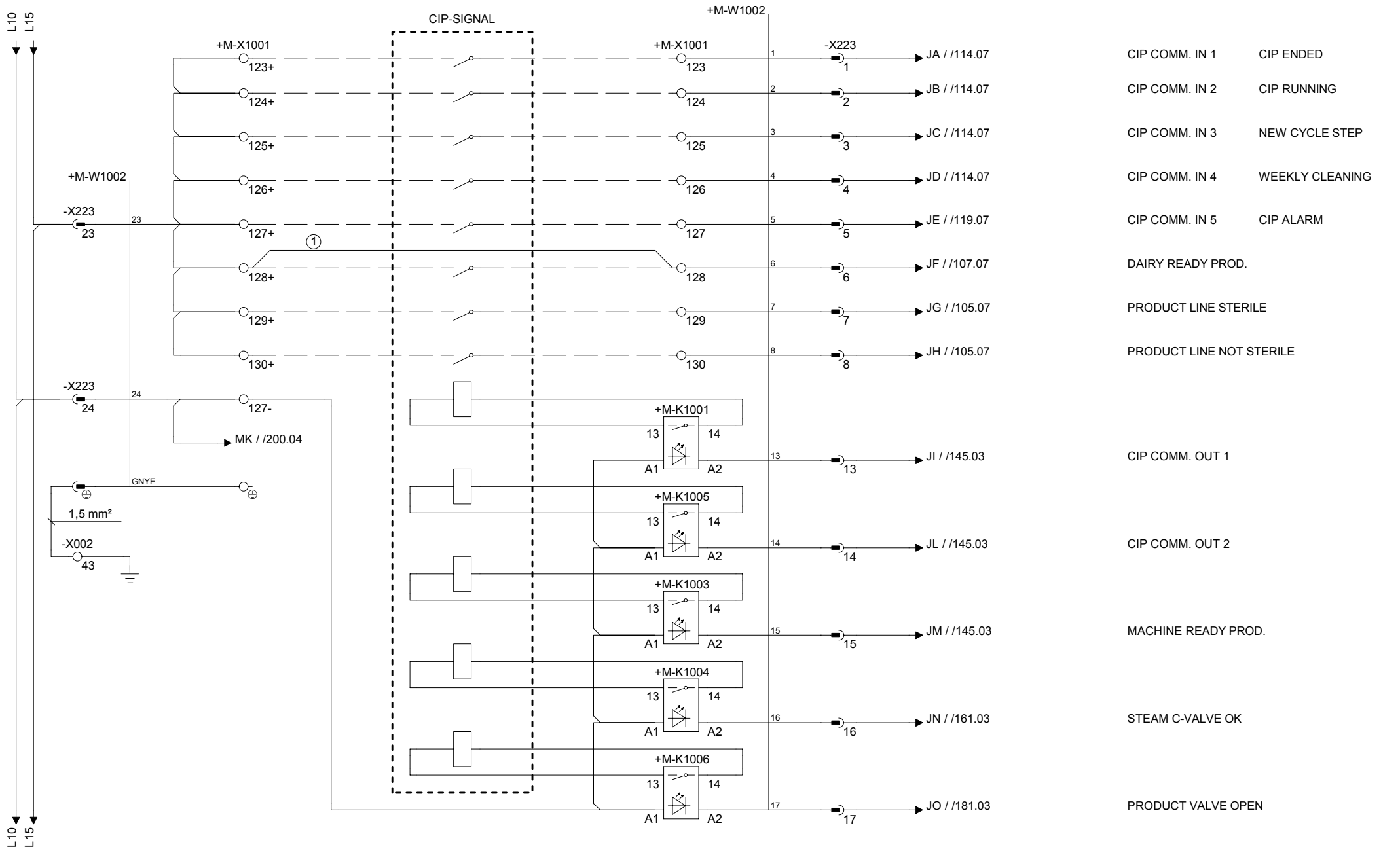

① TO BE REMOVED IF SIGNAL PRESENT FROM THE DAIRY

Drawing remarks

Tetra Pak

Designer BMI	Date 07/06/2004	Machine TBA/22-0500			
ECM No 175296	Denomination CIRCUIT DIAGRAM	Page Type DAIRY COMMUNICATION			
Company Tetra Pak Carton Ambient S.p.A.	Document No. 2593852-0003	Doc. type ELD	Version AE	Page 059	

This drawing must not without the consent of Tetra Pak be copied, transmitted or disclosed to any third party.

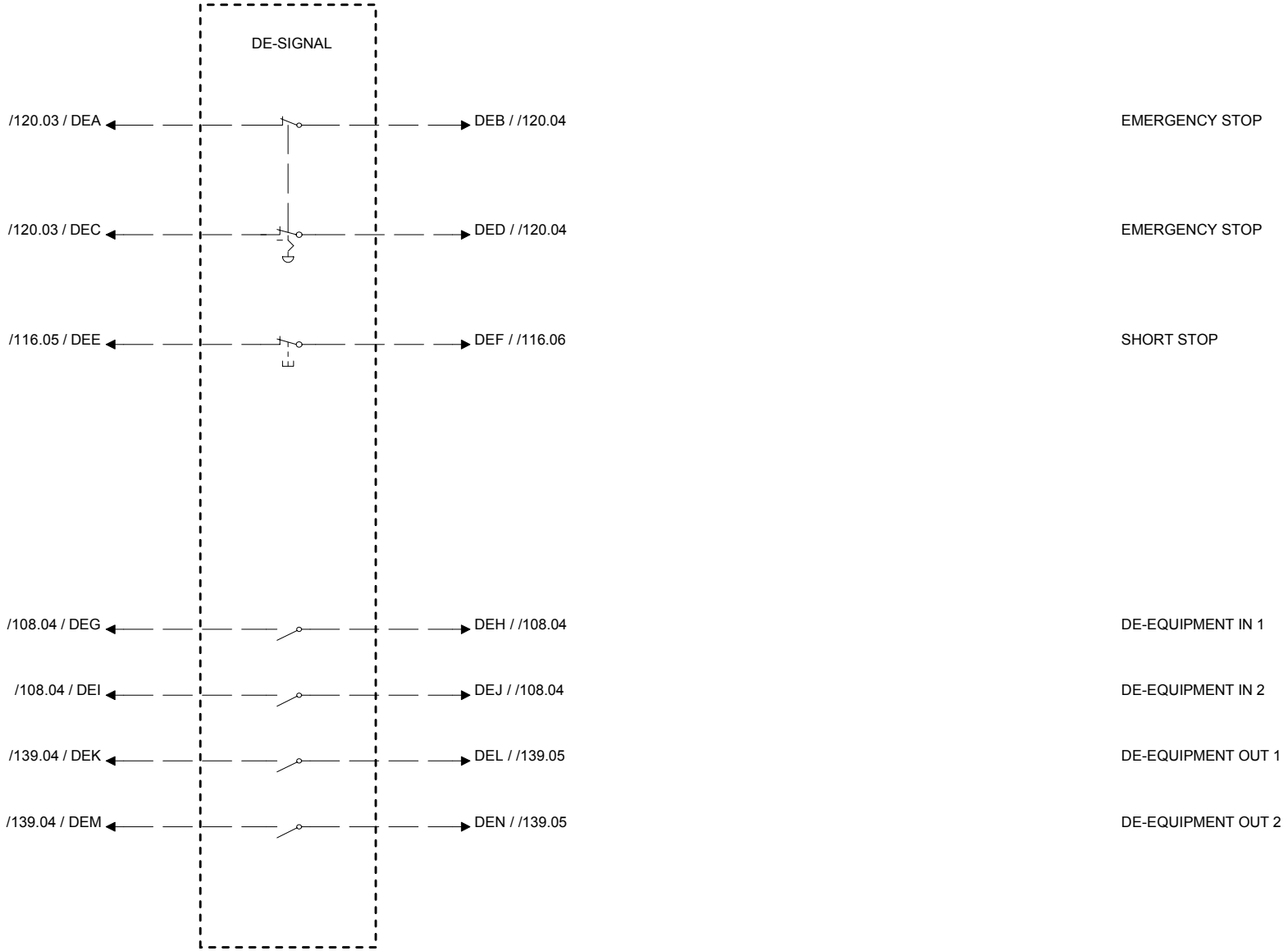

Drawing remarks

Tetra Pak

Designer	Date	Machine
BMI	07/06/2004	TBA/22-0500

ECM No	Denomination	Page Type
175296	CIRCUIT DIAGRAM	DE COMMUNICATION

Company	Document No.	Doc. type	Version	Page
Tetra Pak Carton Ambient S.p.A.	2593852-0003	ELD	AE	060

RELEASED

This drawing must not without the consent of Tetra Pak be copied, transmitted or disclosed to any third party.

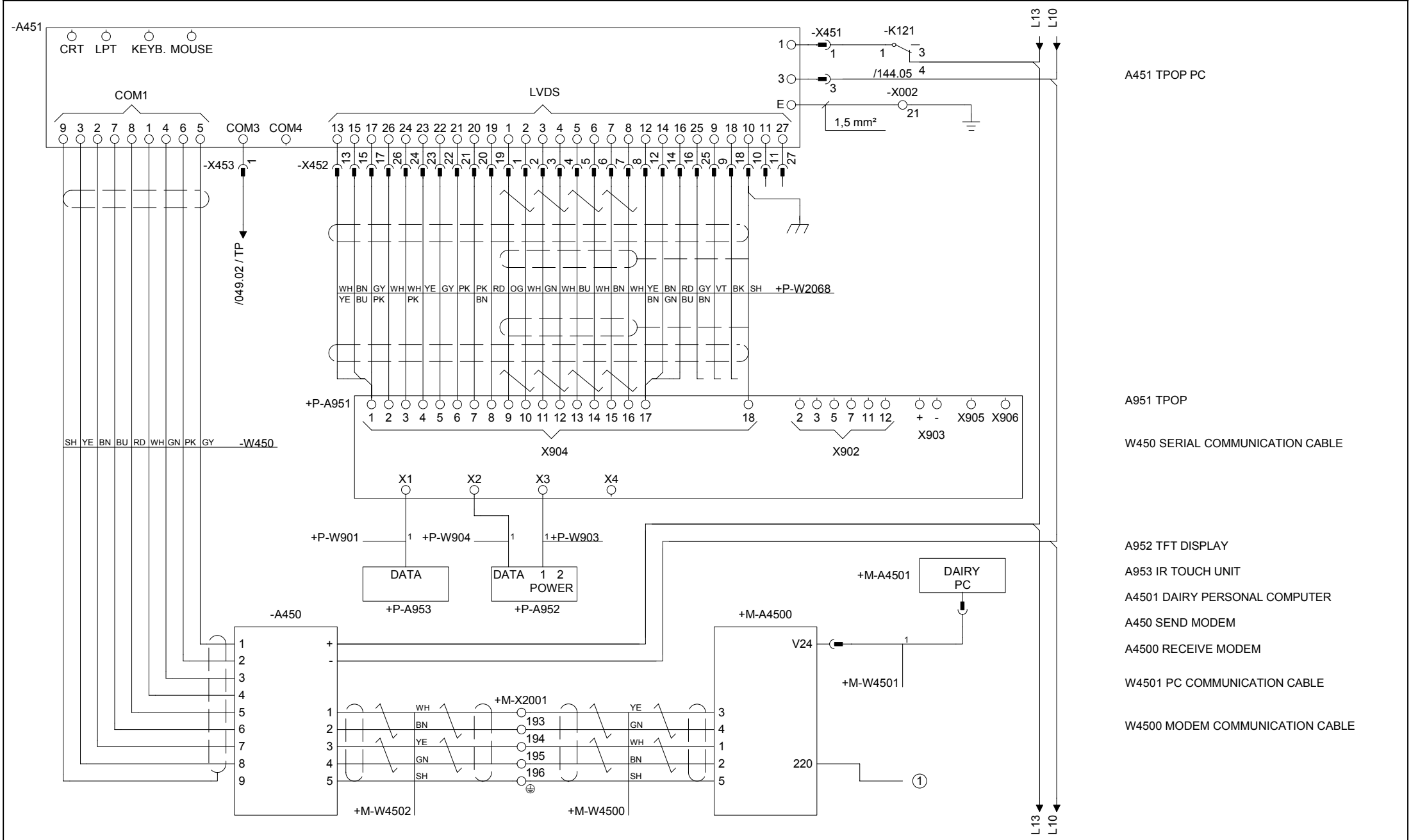

A451 TPOP PC

A951 TPOP

W450 SERIAL COMMUNICATION CABLE

A952 TFT DISPLAY

A953 IR TOUCH UNIT

A4501 DAIRY PERSONAL COMPUTER

A450 SEND MODEM

A4500 RECEIVE MODEM

W4501 PC COMMUNICATION CABLE

W4500 MODEM COMMUNICATION CABLE

① 110V / 220V SUPPLY FROM THE DAIRY

Drawing remarks

Tetra Pak

Designer BMI	Date 07/06/2004	Machine TBA/22-0500		
ECM No 175296	Denomination CIRCUIT DIAGRAM	Page Type TPOP COMMUNICATION		
Company Tetra Pak Carton Ambient S.p.A.	Document No. 2593852-0003	Doc. type ELD	Version AE	Page 061

RELEASED

This drawing must not without the consent of Tetra Pak be copied, transmitted or disclosed to any third party.

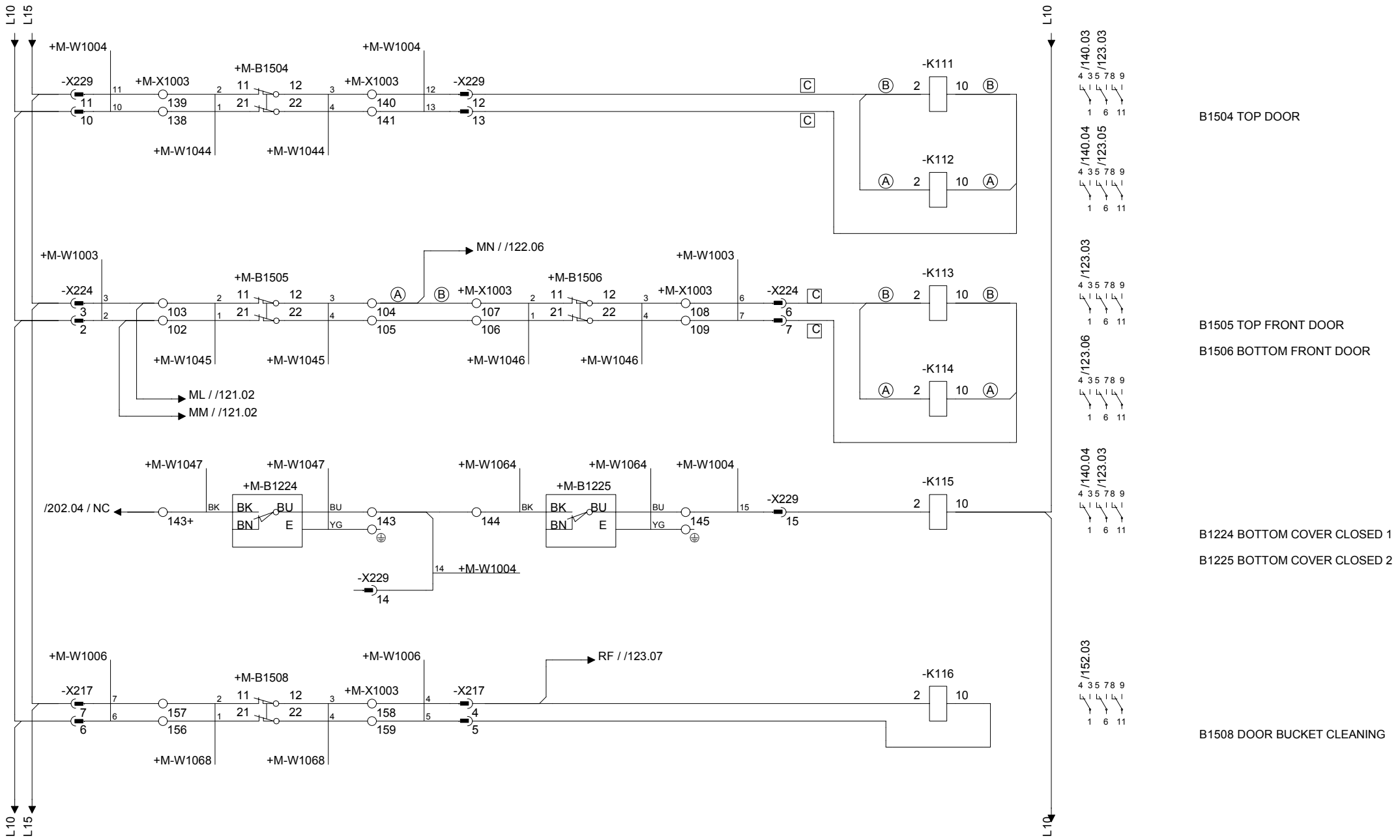

Drawing remarks	Tetra Pak	Designer BMI	Date 07/06/2004	Machine TBA/22-0500	
		ECM No 175296	Denomination CIRCUIT DIAGRAM	Page Type DOOR GUARDS	
		Company Tetra Pak Carton Ambient S.p.A.	Document No. 2593852-0003	Doc. type ELD	Version AE	Page 062

RELEASED

This drawing must not without the consent of Tetra Pak be copied, transmitted or disclosed to any third party.

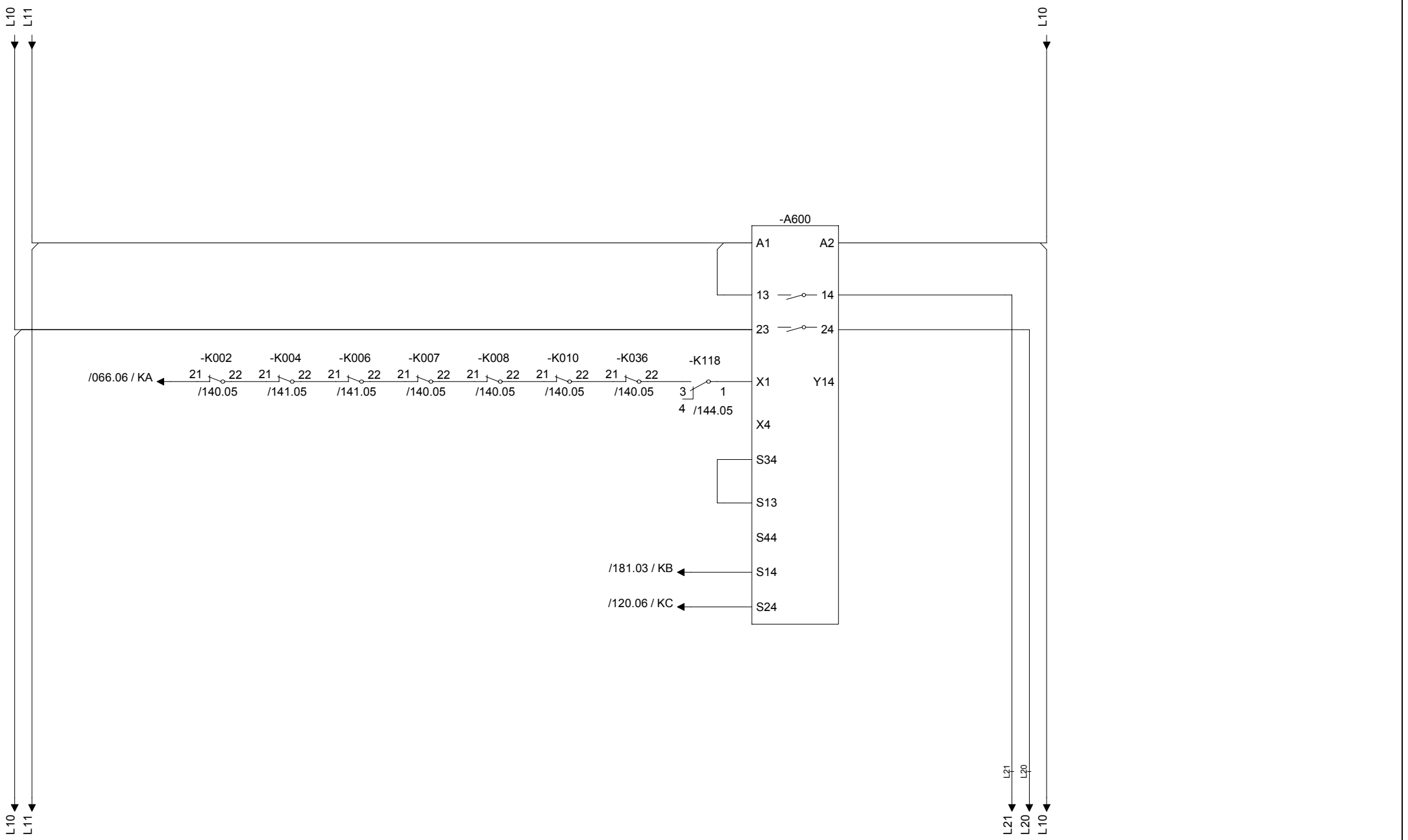

Drawing remarks	Tetra Pak	Designer BMI	Date 07/06/2004	Machine TBA/22-0500
		ECM No 175296	Denomination CIRCUIT DIAGRAM	Page Type EMERGENCY STOP CHAIN
		Company Tetra Pak Carton Ambient S.p.A.	Document No. 2593852-0003	Doc. type ELD / Version AE / Page 063

RELEASED

This drawing must not without the consent of Tetra Pak
be copied, transmitted or disclosed to any third party.

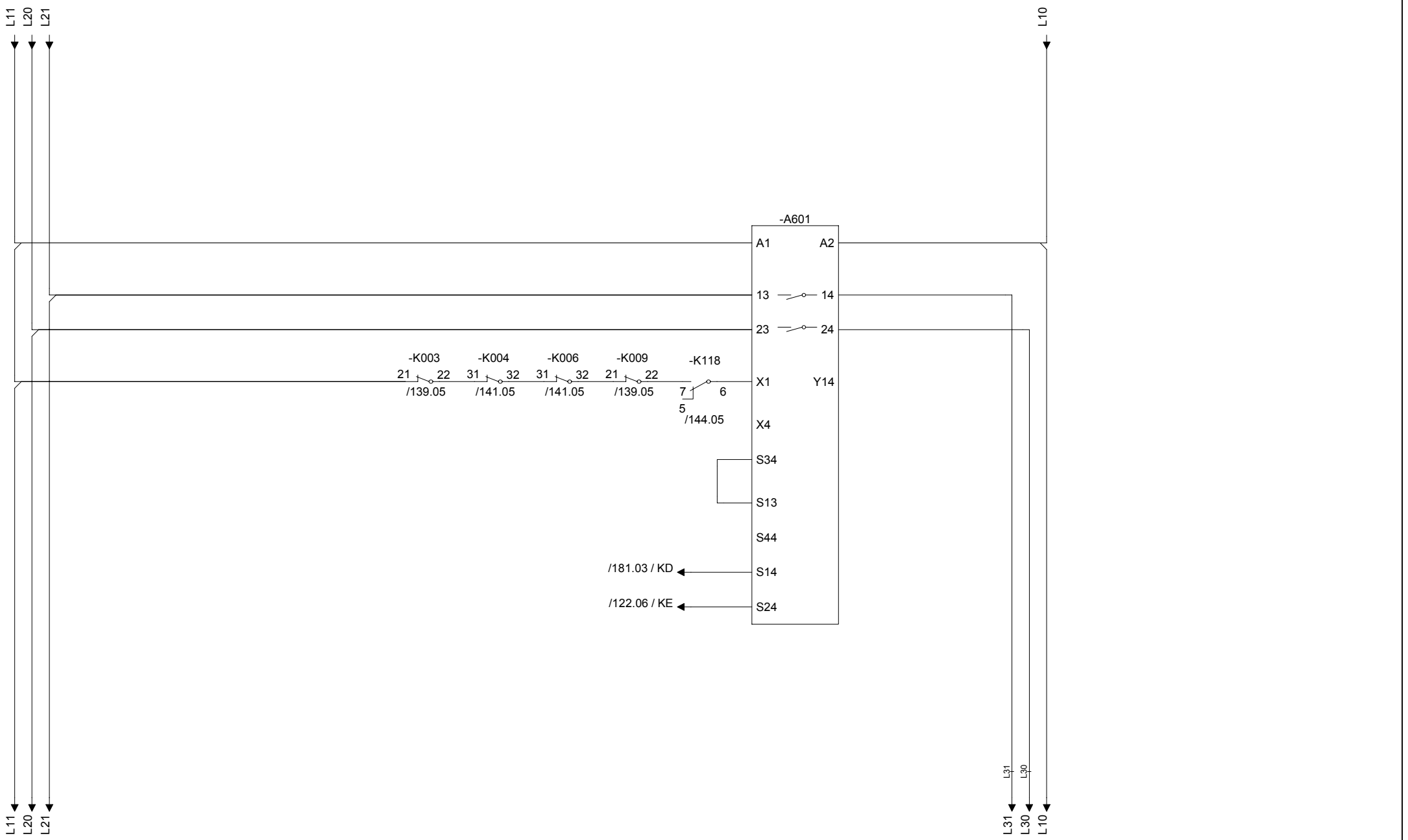

Drawing remarks	Tetra Pak	Designer BMI	Date 07/06/2004	Machine TBA/22-0500	
		ECM No 175296	Denomination CIRCUIT DIAGRAM	Page Type DOOR GUARDS CHAIN	
		Company Tetra Pak Carton Ambient S.p.A.	Document No. 2593852-0003	Doc. type ELD	Version AE	Page 064

RELEASED

This drawing must not without the consent of Tetra Pak be copied, transmitted or disclosed to any third party.

1 2 3 4 5 6 7 8 9 10

EMERGENCY STOP TIME RELAY

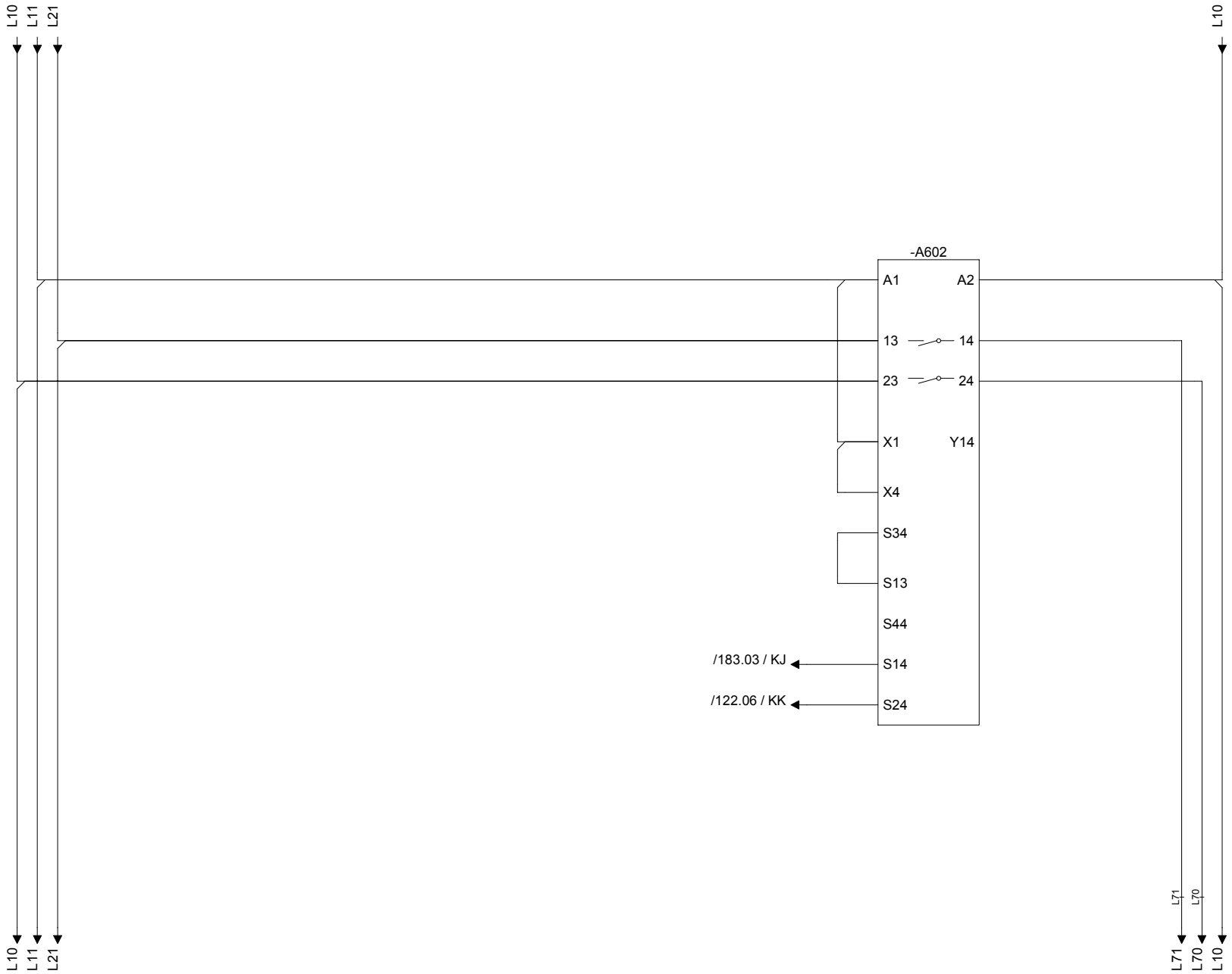

Drawing remarks	Tetra Pak	Designer BMI	Date 07/06/2004	Machine TBA/22-0500			
		ECM No 175296	Denomination CIRCUIT DIAGRAM	Page Type ASU DOOR GUARDS CHAIN			
		Company Tetra Pak Carton Ambient S.p.A.		Document No. 2593852-0003	Doc. type ELD	Version AE	Page 065

RELEASED

This drawing must not without the consent of Tetra Pak
be copied, transmitted or disclosed to any third party.

1 2 3 4 5 6 7 8 9 10

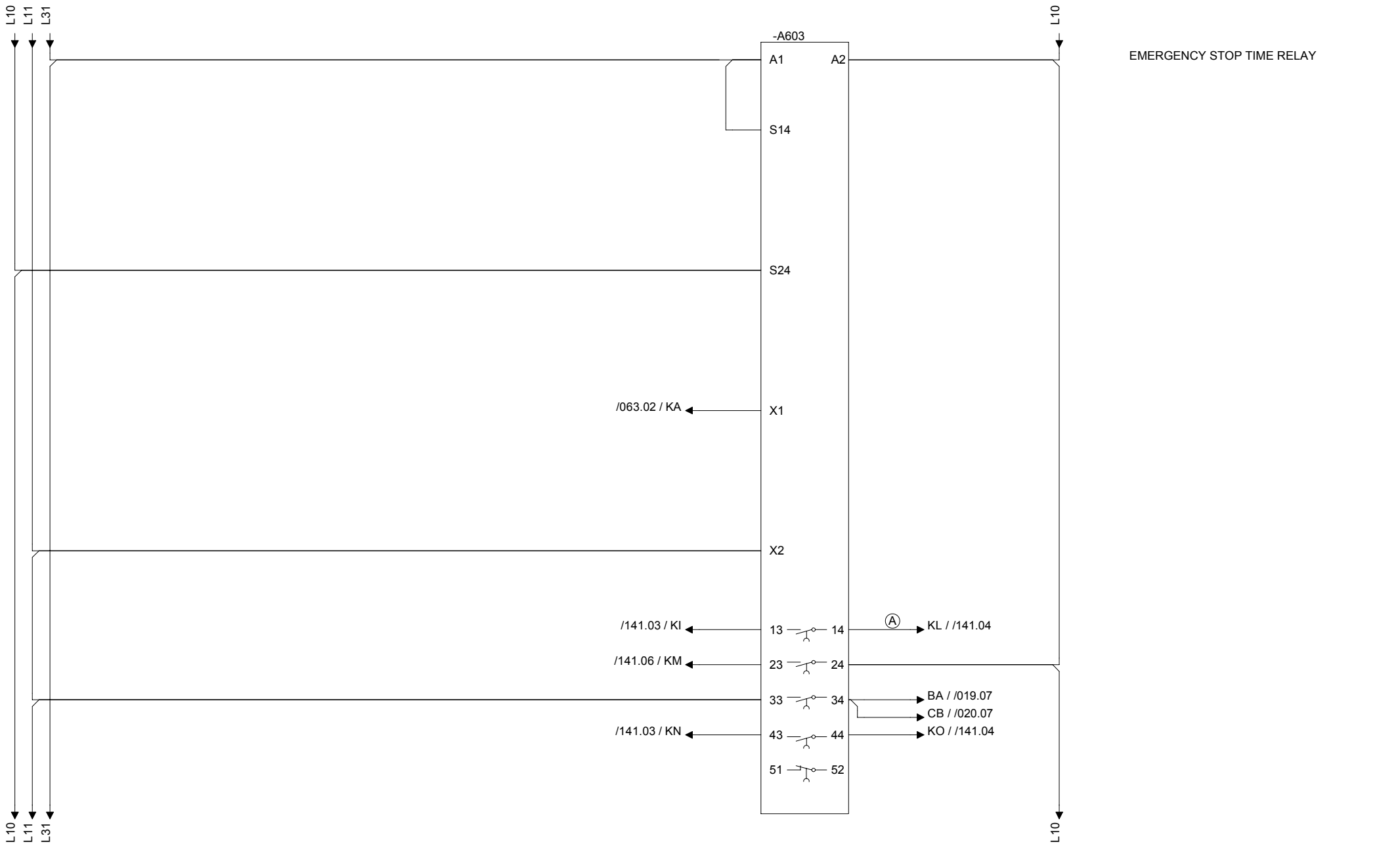

	Tetra Pak	Designer BMI	Date 07/06/2004	Machine TBA/22-0500			
		ECM No 175296	Denomination CIRCUIT DIAGRAM	Page Type SAFETY RELAY SERVO			
Drawing remarks		Company Tetra Pak Carton Ambient S.p.A.		Document No. 2593852-0003	Doc. type ELD	Version AE	Page 066

RELEASED

This drawing must not without the consent of Tetra Pak be copied, transmitted or disclosed to any third party.

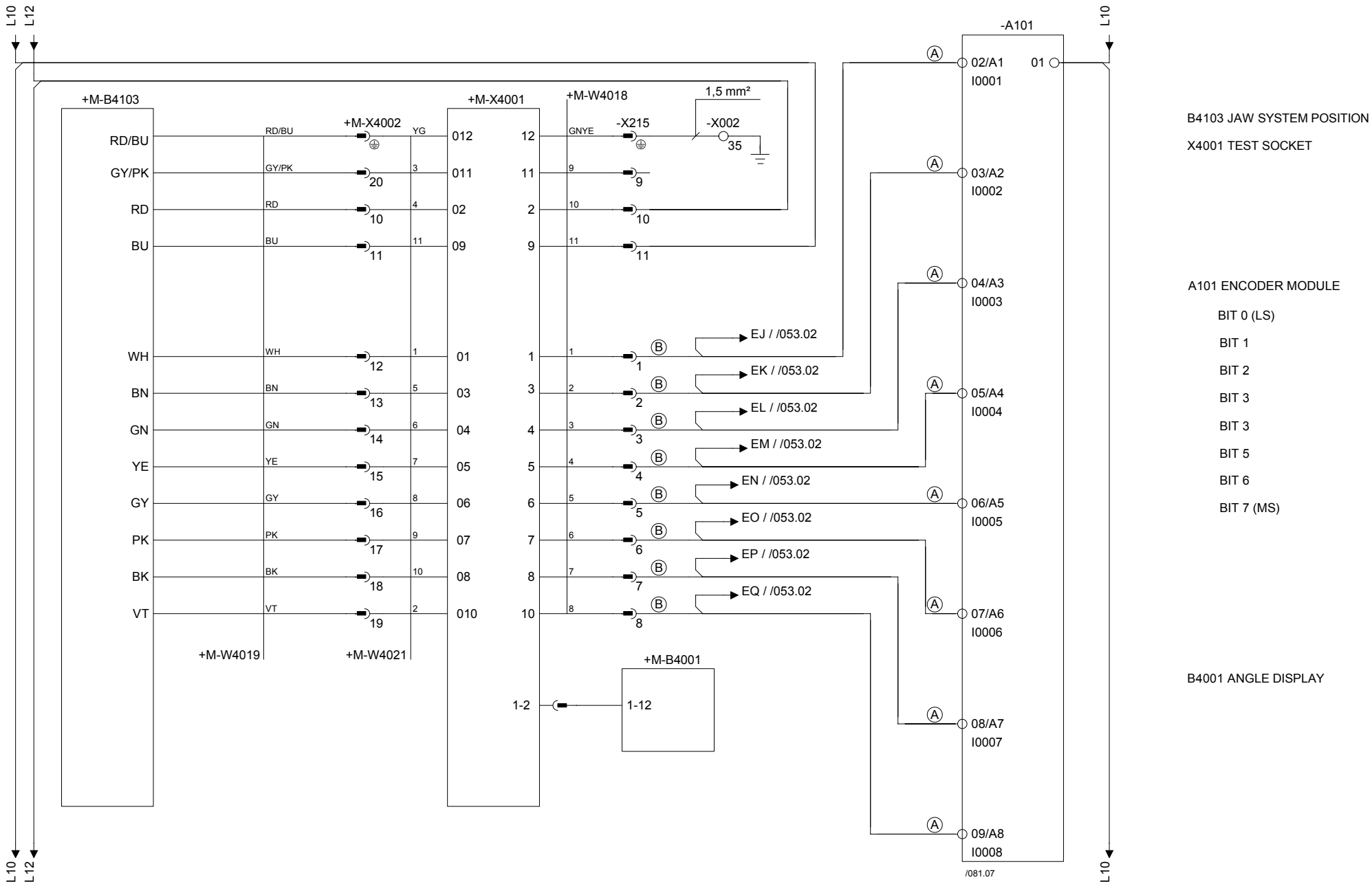

B4103 JAW SYSTEM POSITION

X4001 TEST SOCKET

A101 ENCODER MODULE

BIT 0 (LS)

BIT 1

BIT 2

BIT 3

BIT 3

BIT 5

BIT 6

BIT 7 (MS)

B4001 ANGLE DISPLAY

Drawing remarks	Tetra Pak	Designer BMI	Date 07/06/2004	Machine TBA/22-0500			
		ECM No 175296	Denomination CIRCUIT DIAGRAM	Page Type ANGLE ENCODER, MAIN MACHINE			
	Company Tetra Pak Carton Ambient S.p.A.		Document No. 2593852-0003	Doc. type ELD	Version AE	Page 080	

RELEASED

This drawing must not without the consent of Tetra Pak be copied, transmitted or disclosed to any third party.

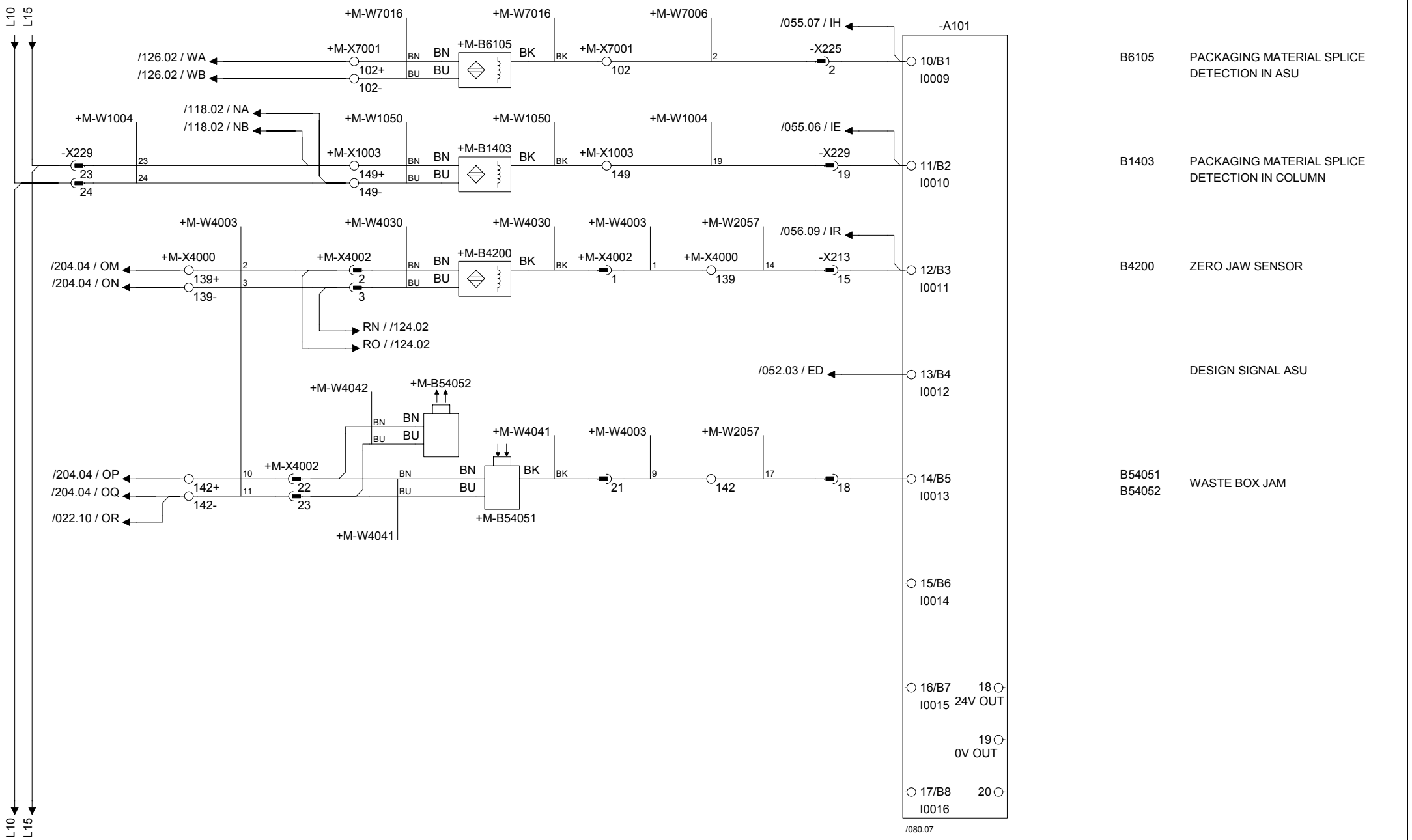

Drawing remarks	Tetra Pak	Designer BMI	Date 07/06/2004	Machine TBA/22-0500
		ECM No 175296	Denomination CIRCUIT DIAGRAM	Page Type PLC FAST INPUT
		Company Tetra Pak Carton Ambient S.p.A.	Document No. 2593852-0003	Doc. type ELD / Version AE / Page 081

This drawing must not without the consent of Tetra Pak be copied, transmitted or disclosed to any third party.

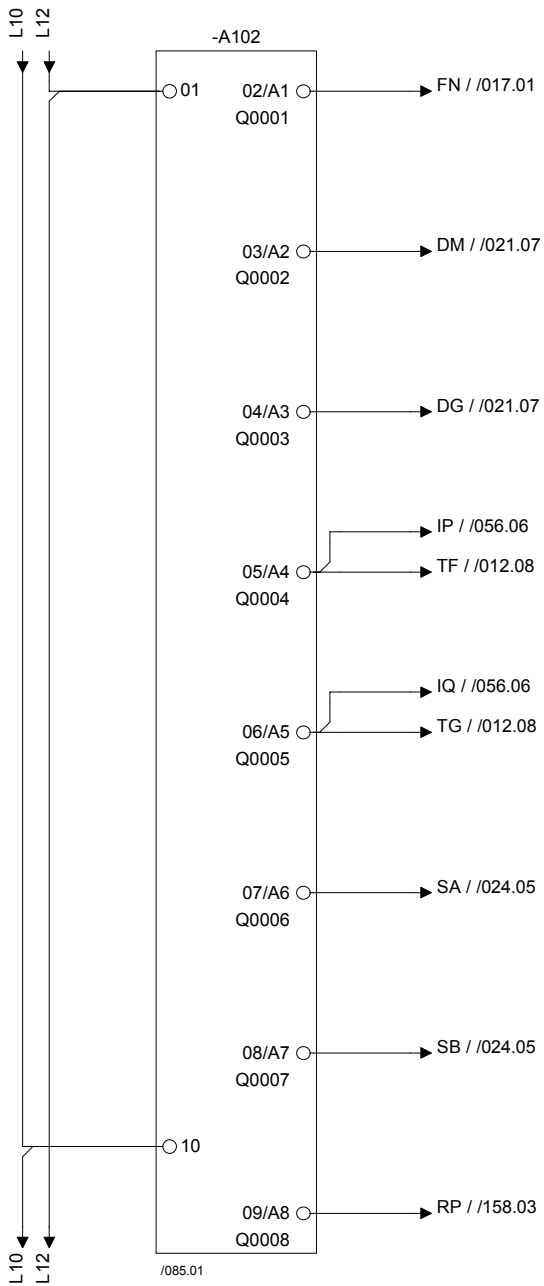

BRAKE DRIVE LOOP

START POSITION DCS

JAW IN MOVEMENT READY

SEALING PULSE TS

SIDE SELECTION TS

DIRECTION MOTOR VOLUME ADJUSTMENT

PULSE CLOCK MOTOR VOLUME ADJUSTMENT

WASTE BOX FFU

Drawing remarks

Tetra Pak

Designer BMI	Date 07/06/2004	Machine TBA/22-0500		
ECM No 175296	Denomination CIRCUIT DIAGRAM	Page Type PLC FAST OUTPUT		
Company Tetra Pak Carton Ambient S.p.A.	Document No. 2593852-0003	Doc. type ELD	Version AE	Page 084

This drawing must not without the consent of Tetra Pak be copied, transmitted or disclosed to any third party.

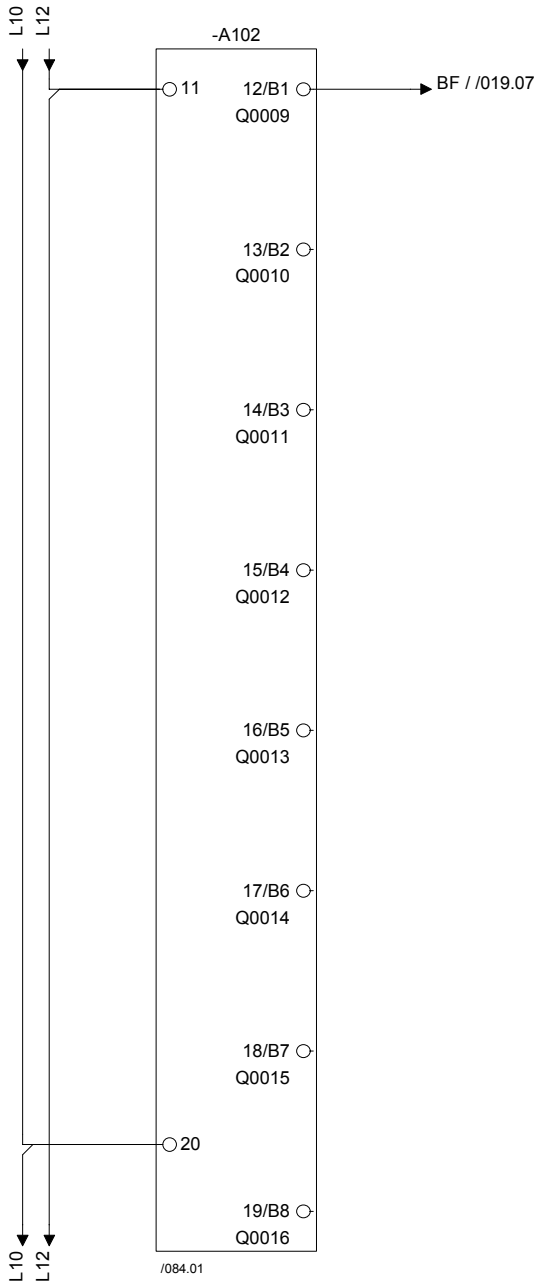

DMC MAIN MOTOR
POSITIONING GREASING

Drawing remarks

Tetra Pak

Designer BMI	Date 07/06/2004	Machine TBA/22-0500	
ECM No 175296	Denomination CIRCUIT DIAGRAM	Page Type PLC FAST OUTPUT	
Company Tetra Pak Carton Ambient S.p.A.	Document No. 2593852-0003	Doc. type ELD	Version AE	Page 085

RELEASED

This drawing must not without the consent of Tetra Pak be copied, transmitted or disclosed to any third party.

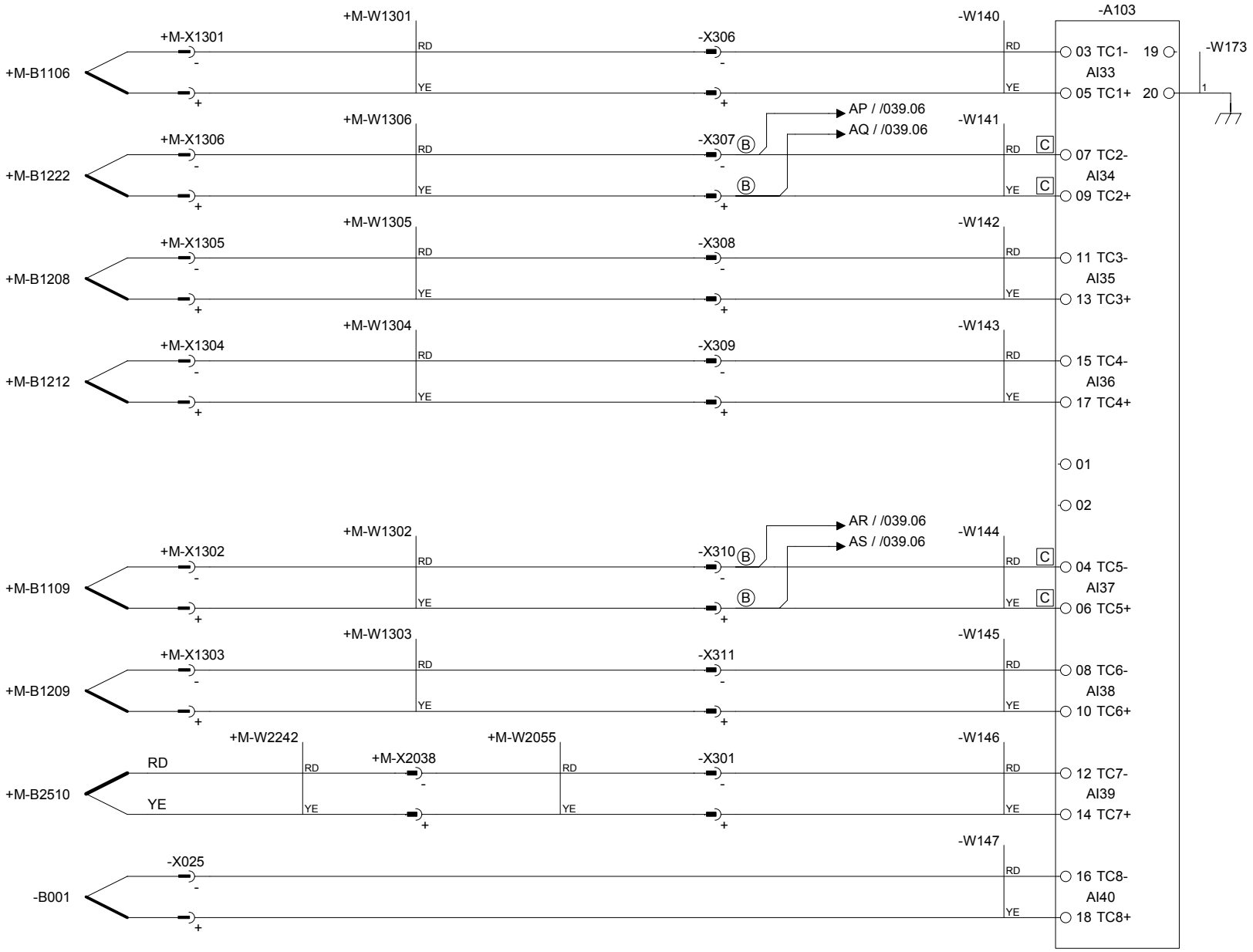

B1106	HEAT STERILIZATION
B1122	TEMP. HYDROGEN PEROXIDE BATH
B1208	TEMP. WATER H202 SYSTEM
B1212	TEMP. HYDROGEN PEROXIDE TANK
B1109	TEMP. GUARD TOP A.C.
B1209	TEMP. MONITOR WATER HEAT EXCHANGER
B2510	COOLING OF CIRC. WATER
B001	TEMP. EL. CABINET

Drawing remarks

Tetra Pak

Designer BMI	Date 07/06/2004	Machine TBA/22-0500			
ECM No 175296	Denomination CIRCUIT DIAGRAM	Page Type THERMOCOUPLE MODULE			
Company Tetra Pak Carton Ambient S.p.A.	Document No. 2593852-0003	Doc. type ELD	Version AE	Page 086	

RELEASED

This drawing must not without the consent of Tetra Pak be copied, transmitted or disclosed to any third party.

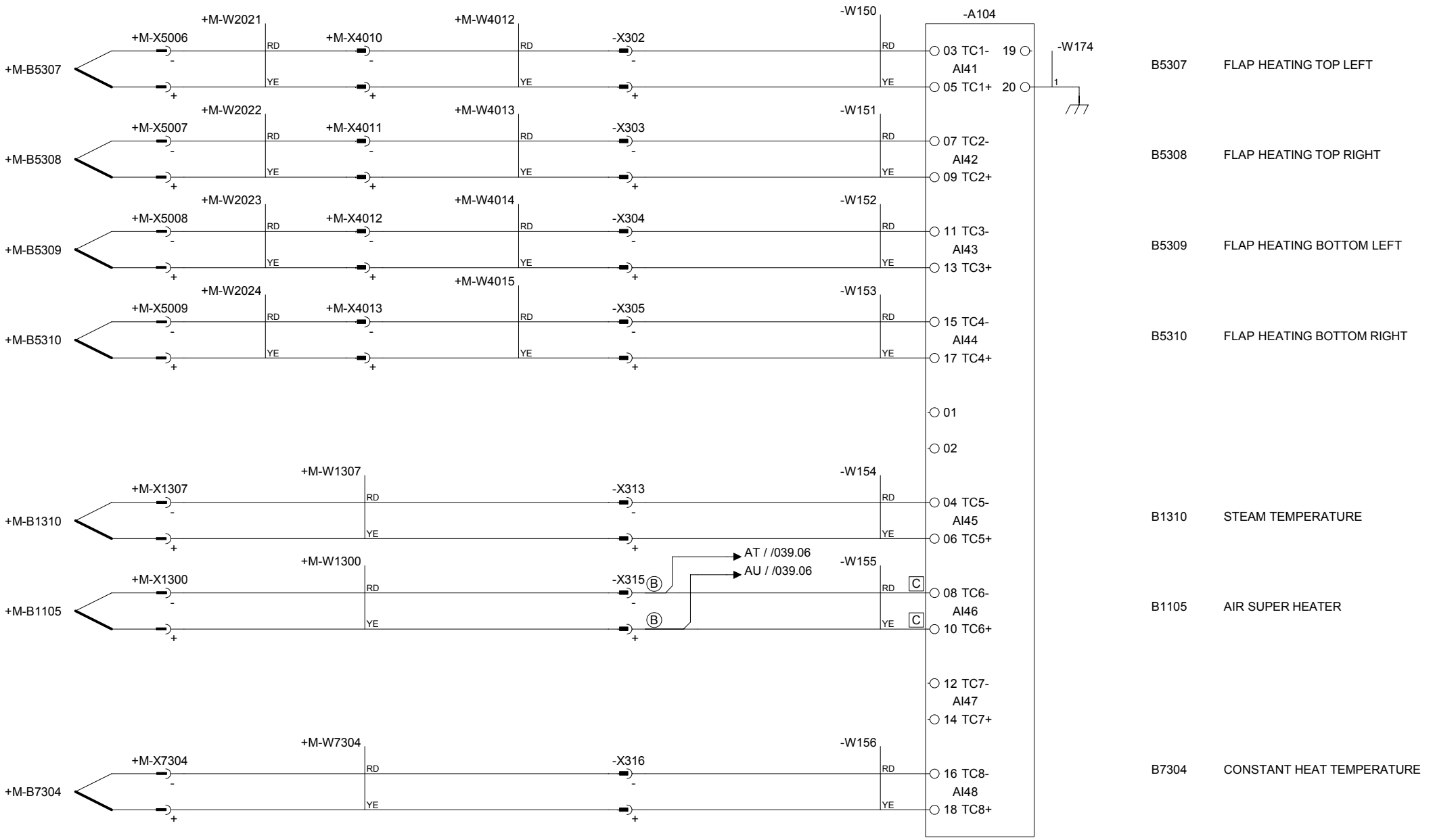

Drawing remarks	Tetra Pak	Designer BMI	Date 07/06/2004	Machine TBA/22-0500			
		ECM No 175296	Denomination CIRCUIT DIAGRAM	Page Type THERMOCOUPLE MODULE			
	Company Tetra Pak Carton Ambient S.p.A.		Document No. 2593852-0003	Doc. type ELD	Version AE	Page 087	

RELEASED

This drawing must not without the consent of Tetra Pak be copied, transmitted or disclosed to any third party.

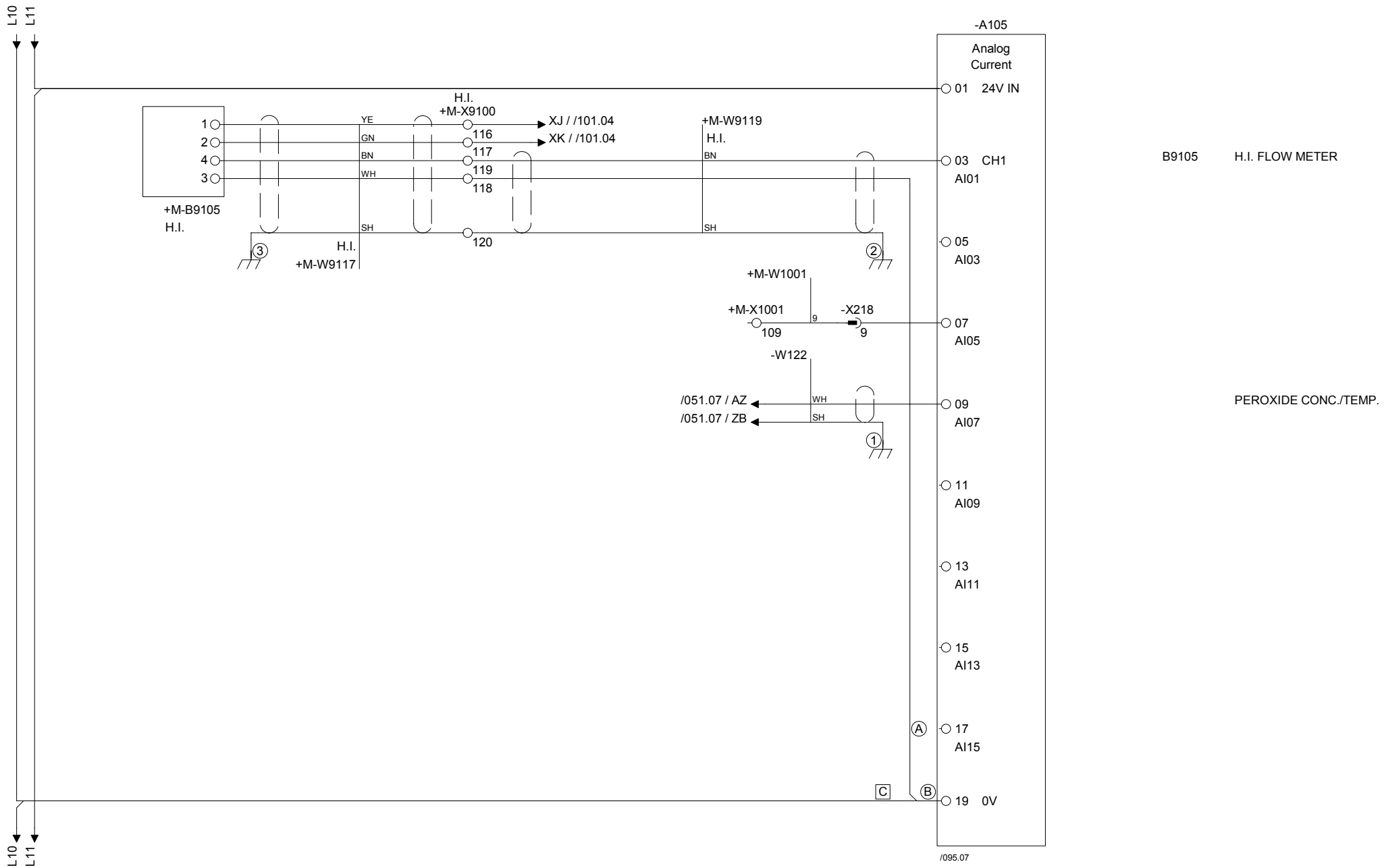

① CONNECTED TO PIN 20	Tetra Pak	Designer BMI	Date 07/06/2004	Machine TBA/22-0500	
② CLAMPED TO THE EL. CABINET CHASSIS		ECM No 175296	Denomination CIRCUIT DIAGRAM	Page Type PLC ANALOG IN CURRENT	
③ CONNECTED TO THE GLAND		Company Tetra Pak Carton Ambient S.p.A.	Document No. 2593852-0003	Doc. type ELD	Version AE	Page 094
Drawing remarks					

This drawing must not without the consent of Tetra Pak
be copied, transmitted or disclosed to any third party.

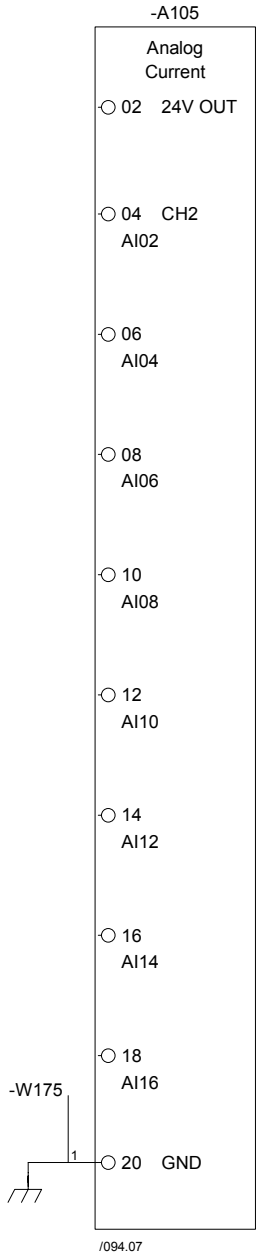

Drawing remarks

Tetra Pak

Designer BMI	Date 07/06/2004	Machine TBA/22-0500		
ECM No 175296	Denomination CIRCUIT DIAGRAM	Page Type PLC ANALOG IN CURRENT		
Company Tetra Pak Carton Ambient S.p.A.	Document No. 2593852-0003	Doc. type ELD	Version AE	Page 095

RELEASED

This drawing must not without the consent of Tetra Pak be copied, transmitted or disclosed to any third party.

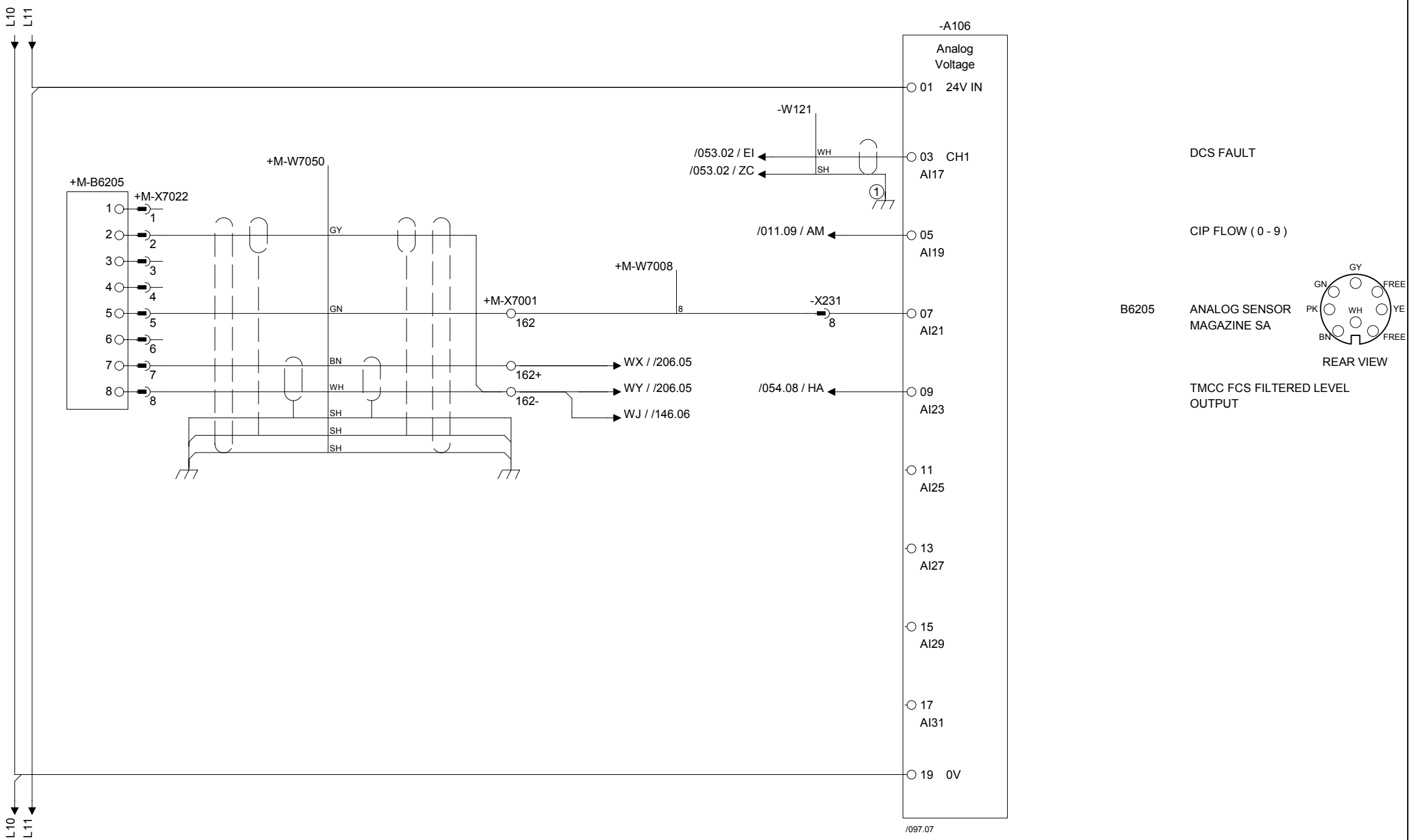

① CONNECT TO PIN 20

Drawing remarks

Tetra Pak

Designer BMI	Date 07/06/2004	Machine TBA/22-0500			
ECM No 175296	Denomination CIRCUIT DIAGRAM	Page Type PLC ANALOG IN VOLTAGE			
Company Tetra Pak Carton Ambient S.p.A.	Document No. 2593852-0003	Doc. type ELD	Version AE	Page 096	

This drawing must not without the consent of Tetra Pak
be copied, transmitted or disclosed to any third party.

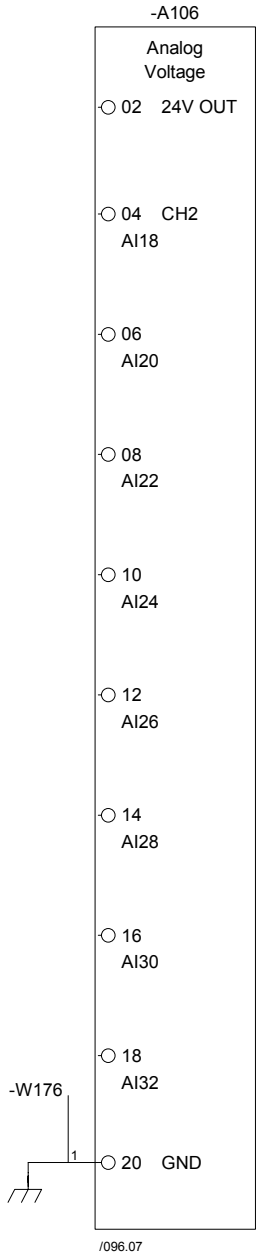

Drawing remarks

Tetra Pak

Designer BMI	Date 07/06/2004	Machine TBA/22-0500		
ECM No 175296	Denomination CIRCUIT DIAGRAM	Page Type PLC ANALOG IN VOLTAGE		
Company Tetra Pak Carton Ambient S.p.A.	Document No. 2593852-0003	Doc. type ELD	Version AE	Page 097

This drawing must not without the consent of Tetra Pak be copied, transmitted or disclosed to any third party.

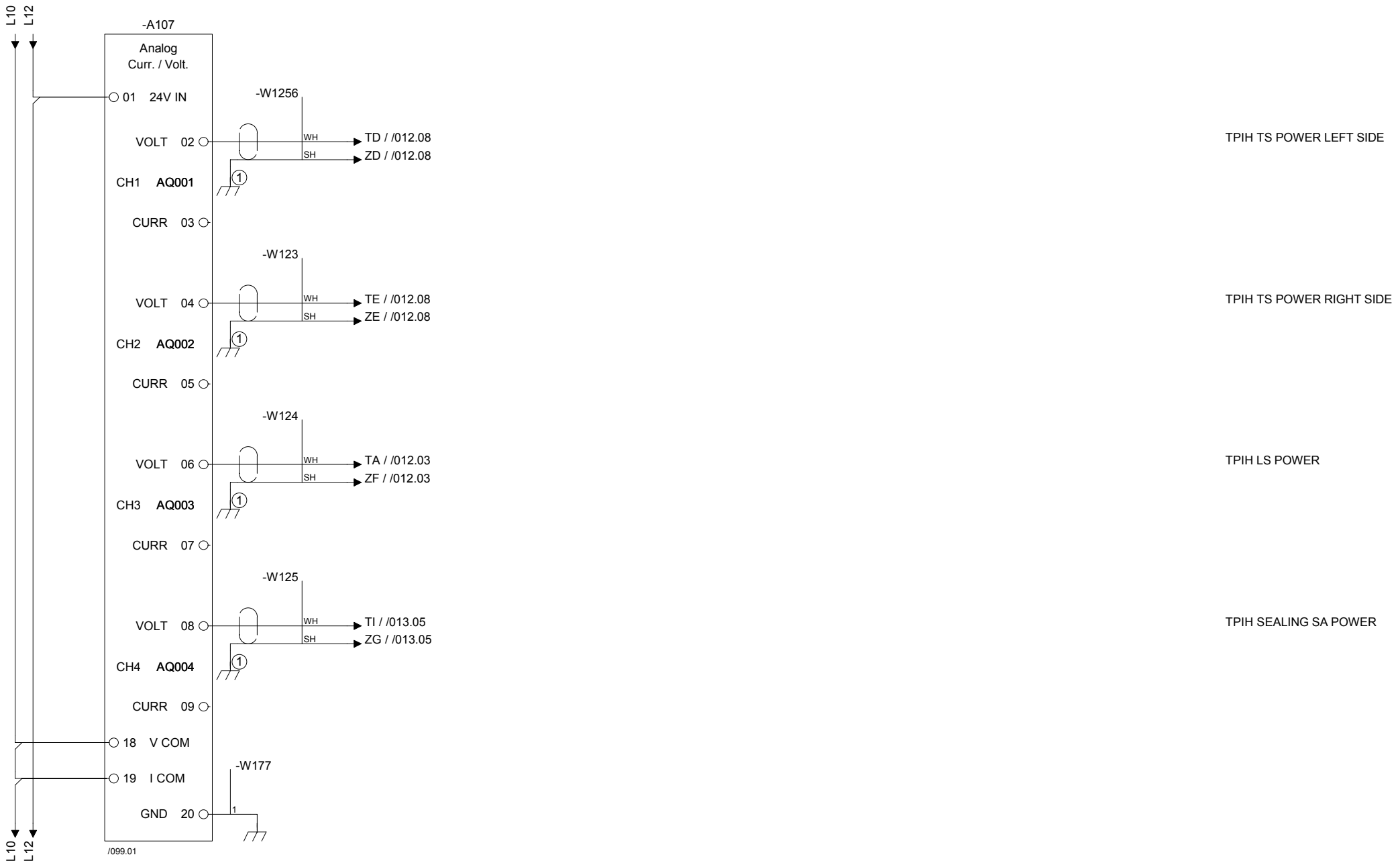

① CONNECT TO PIN 20

Drawing remarks

Designer BMI	Date 07/06/2004	Machine TBA/22-0500		
ECM No 175296	Denomination CIRCUIT DIAGRAM	Page Type PLC ANALOG OUTPUT C/V		
Company Tetra Pak Carton Ambient S.p.A.	Document No. 2593852-0003	Doc. type ELD	Version AE	Page 098

This drawing must not without the consent of Tetra Pak be copied, transmitted or disclosed to any third party.

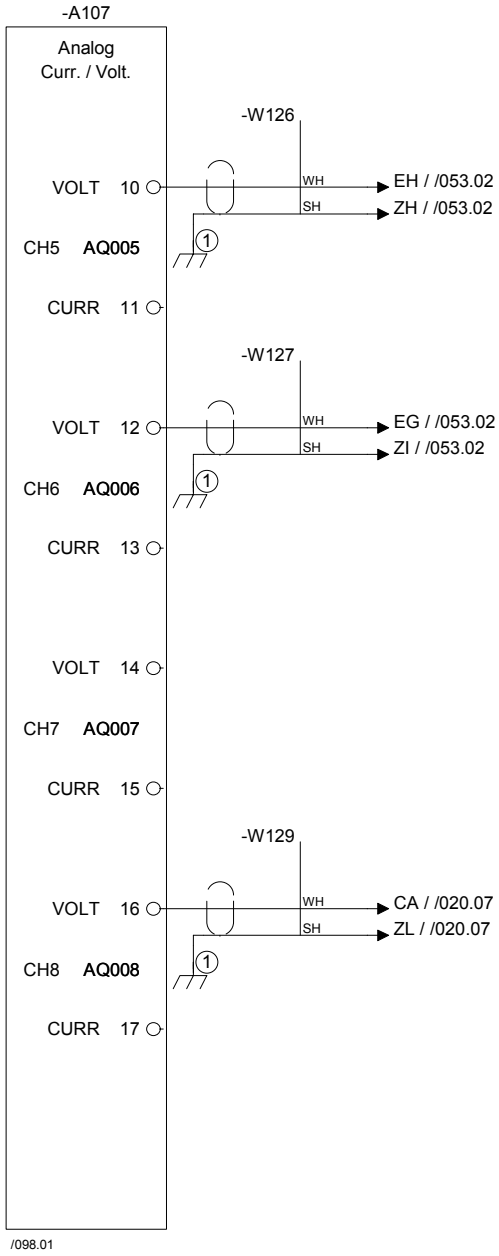

TMCC DCS 2nd ANALOG INPUT

DESIGN POSITION DCS

SERVO DMC FFU HOME POSITION

① CONNECT TO PIN 20

Drawing remarks

Tetra Pak

Designer BMI	Date 07/06/2004	Machine TBA/22-0500			
ECM No 175296	Denomination CIRCUIT DIAGRAM	Page Type PLC ANALOG OUTPUT C/V			
Company Tetra Pak Carton Ambient S.p.A.	Document No. 2593852-0003	Doc. type ELD	Version AE	Page 099	

RELEASED

This drawing must not without the consent of Tetra Pak be copied, transmitted or disclosed to any third party.

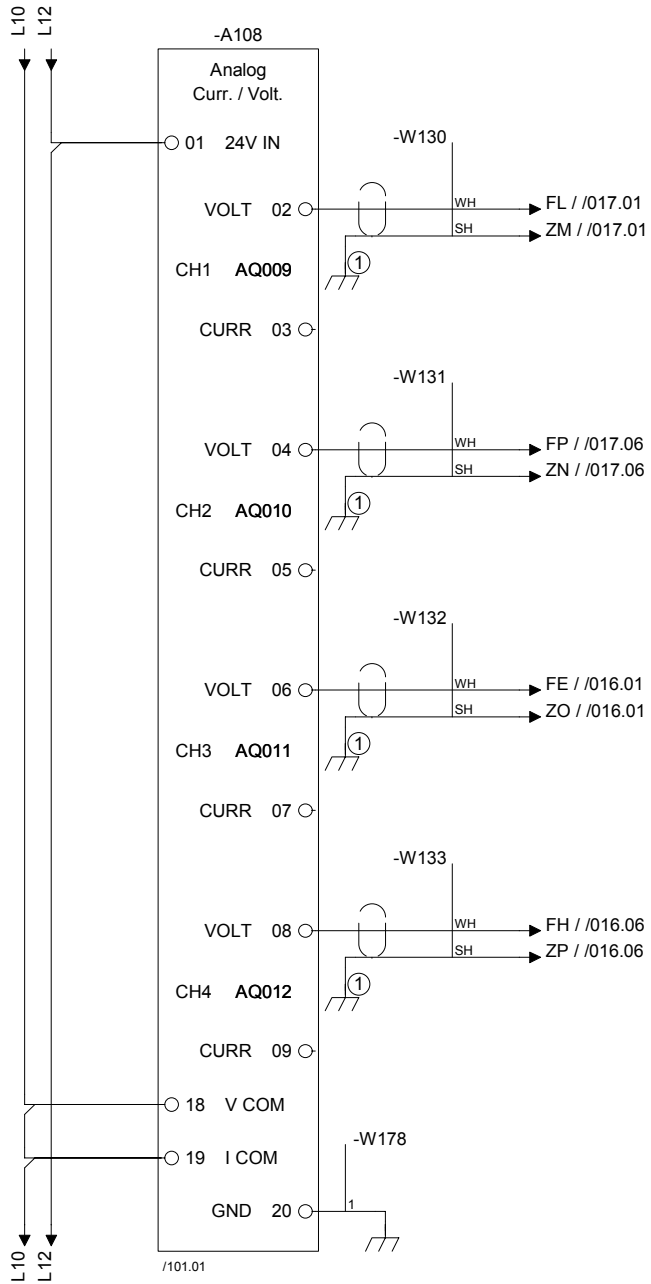

DRIVE ASU LOOP

DRIVE ASU MAGAZINE

DRIVE ROLLER

EXTERNAL CONVEYOR DE

① CONNECT TO PIN 20

Drawing remarks

Designer BMI	Date 07/06/2004	Machine TBA/22-0500		
ECM No 175296	Denomination CIRCUIT DIAGRAM	Page Type PLC ANALOG OUTPUT C/V		
Company Tetra Pak Carton Ambient S.p.A.	Document No. 2593852-0003	Doc. type ELD	Version AE	Page 100

RELEASED

This drawing must not without the consent of Tetra Pak be copied, transmitted or disclosed to any third party.

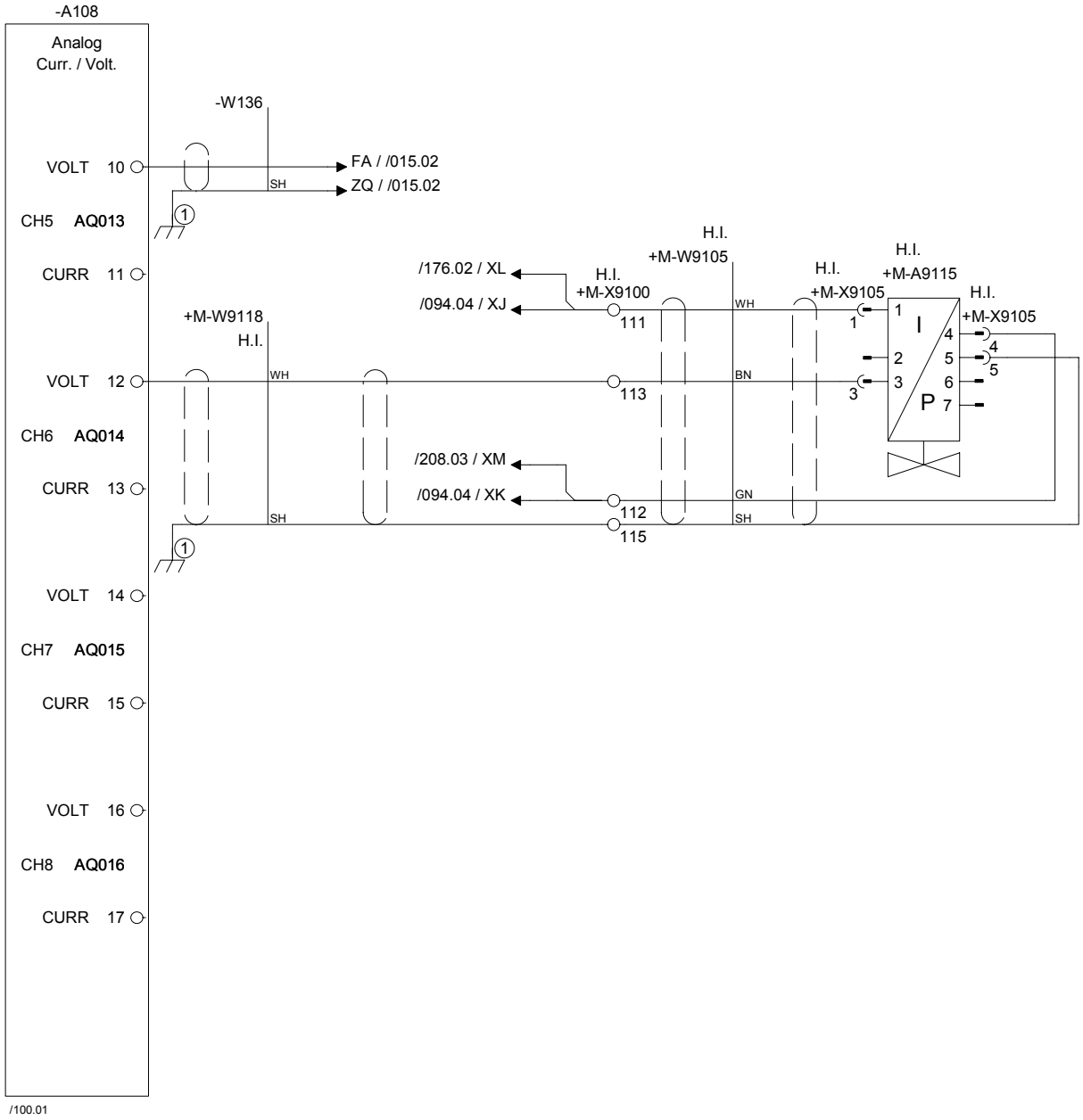

ASSU MOTOR

A9115 H.I. PRESSURE REGULATOR

① CONNECT TO PIN 20

Drawing remarks

Tetra Pak	Designer BMI	Date 07/06/2004	Machine TBA/22-0500		
	ECM No 175296	Denomination CIRCUIT DIAGRAM	Page Type PLC ANALOG OUTPUT C/V		
Company Tetra Pak Carton Ambient S.p.A.	Document No. 2593852-0003	Doc. type ELD	Version AE	Page 101	

RELEASED

This drawing must not without the consent of Tetra Pak be copied, transmitted or disclosed to any third party.

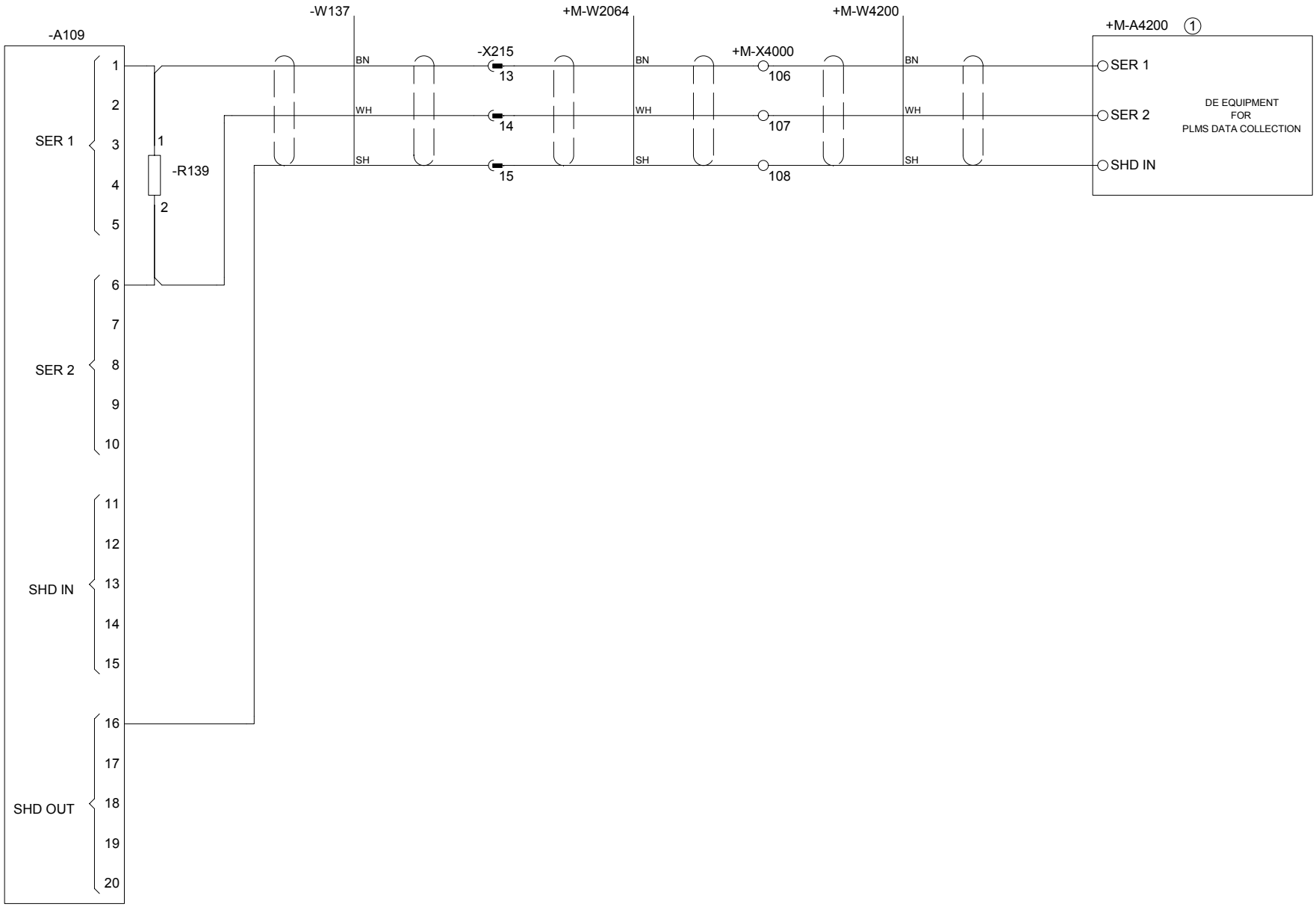

Ⓐ GENIUS MODULE IN THE NEXT DE CABINET (TX32)

Drawing remarks

Tetra Pak

Designer	Date	Machine
BMI	07/06/2004	TBA/22-0500

ECM No	Denomination	Page Type
175296	CIRCUIT DIAGRAM	PLC GENIUS MODULE

Company	Document No.	Doc. type	Version	Page
Tetra Pak Carton Ambient S.p.A.	2593852-0003	ELD	AE	102

RELEASED

This drawing must not without the consent of Tetra Pak be copied, transmitted or disclosed to any third party.

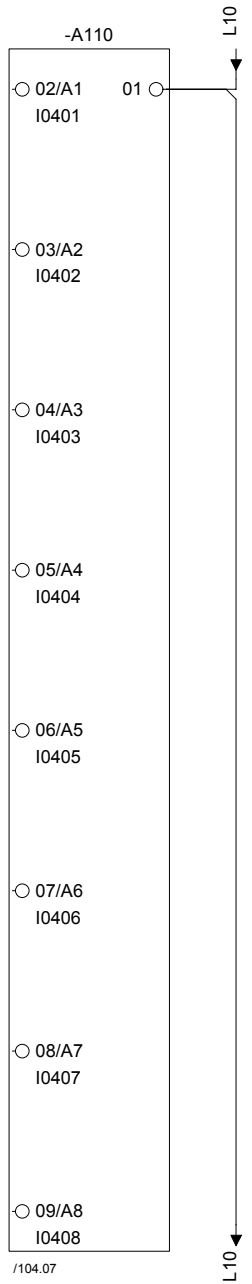

Drawing remarks

Tetra Pak

Designer BMI	Date 07/06/2004	Machine TBA/22-0500		
ECM No 175296	Denomination CIRCUIT DIAGRAM	Page Type PLC INPUT		
Company Tetra Pak Carton Ambient S.p.A.	Document No. 2593852-0003	Doc. type ELD	Version AE	Page 103

This drawing must not without the consent of Tetra Pak be copied, transmitted or disclosed to any third party.

1	2	3	4	5	6	7	8	9	10

-A110

- 10/B1 I0409
- 11/B2 I0410
- 12/B3 I0411
- 13/B4 I0412
- 14/B5 I0413
- 15/B6 I0414
- 16/B7 I0415
- 17/B8 I0416

/103.07

Drawing remarks

Tetra Pak

Designer BMI	Date 07/06/2004	Machine TBA/22-0500	
ECM No 175296	Denomination CIRCUIT DIAGRAM	Page Type PLC INPUT	
Company Tetra Pak Carton Ambient S.p.A.	Document No. 2593852-0003	Doc. type ELD	Version AE	Page 104

RELEASED

This drawing must not without the consent of Tetra Pak be copied, transmitted or disclosed to any third party.

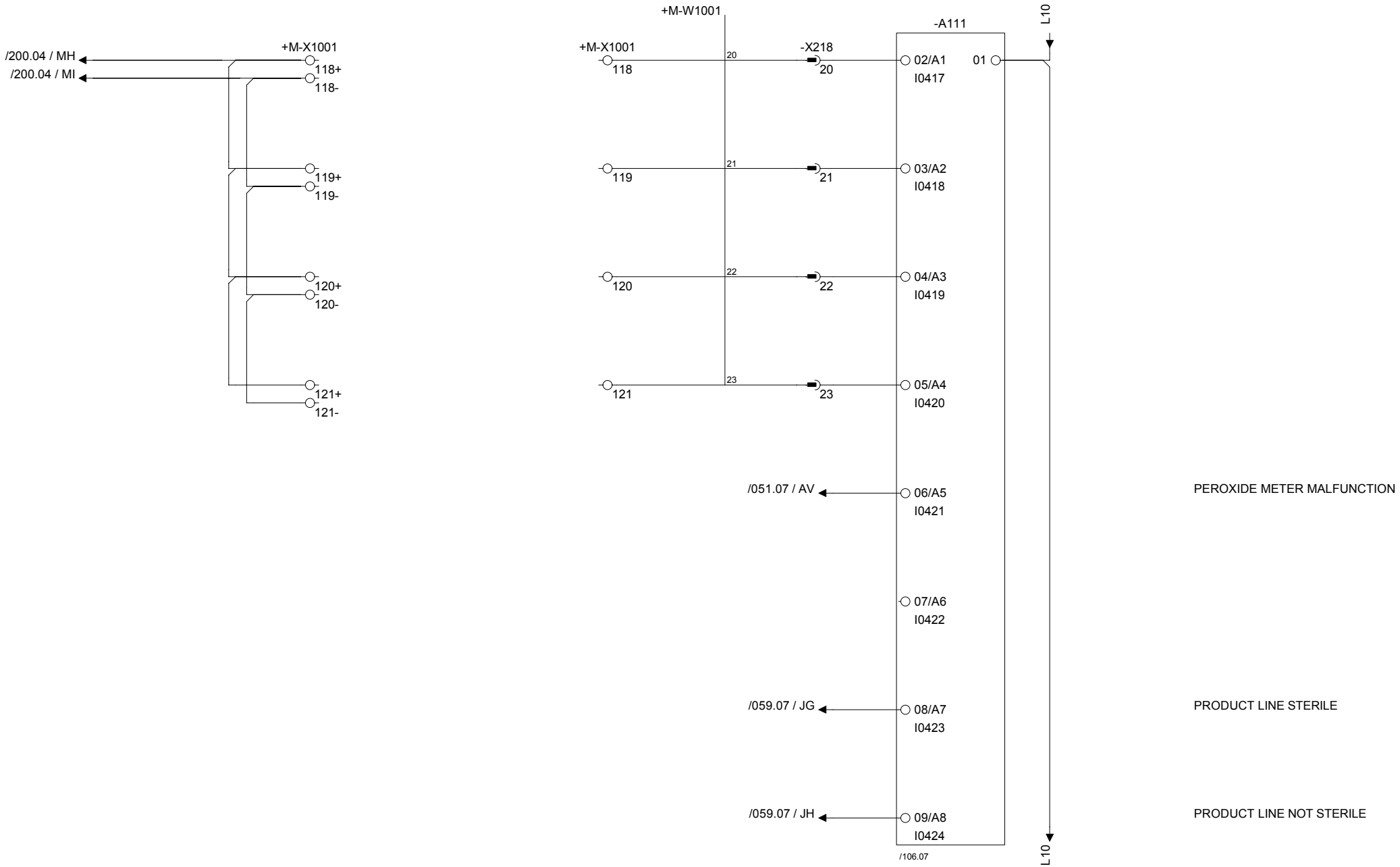

Drawing remarks	Tetra Pak	Designer BMI	Date 07/06/2004	Machine TBA/22-0500
		ECM No 175296	Denomination CIRCUIT DIAGRAM	Page Type PLC INPUT
		Company Tetra Pak Carton Ambient S.p.A.	Document No. 2593852-0003	Doc. type ELD / Version AE / Page 105

This drawing must not without the consent of Tetra Pak be copied, transmitted or disclosed to any third party.

1	2	3	4	5	6	7	8	9	10

-A111

- 10/B1 I0425
- 11/B2 I0426
- 12/B3 I0427
- 13/B4 I0428
- 14/B5 I0429
- 15/B6 I0430
- 16/B7 I0431
- 17/B8 I0432

/105.07

Drawing remarks

Tetra Pak

Designer BMI	Date 07/06/2004	Machine TBA/22-0500	
ECM No 175296	Denomination CIRCUIT DIAGRAM	Page Type PLC INPUT	
Company Tetra Pak Carton Ambient S.p.A.	Document No. 2593852-0003	Doc. type ELD	Version AE	Page 106

RELEASED

This drawing must not without the consent of Tetra Pak be copied, transmitted or disclosed to any third party.

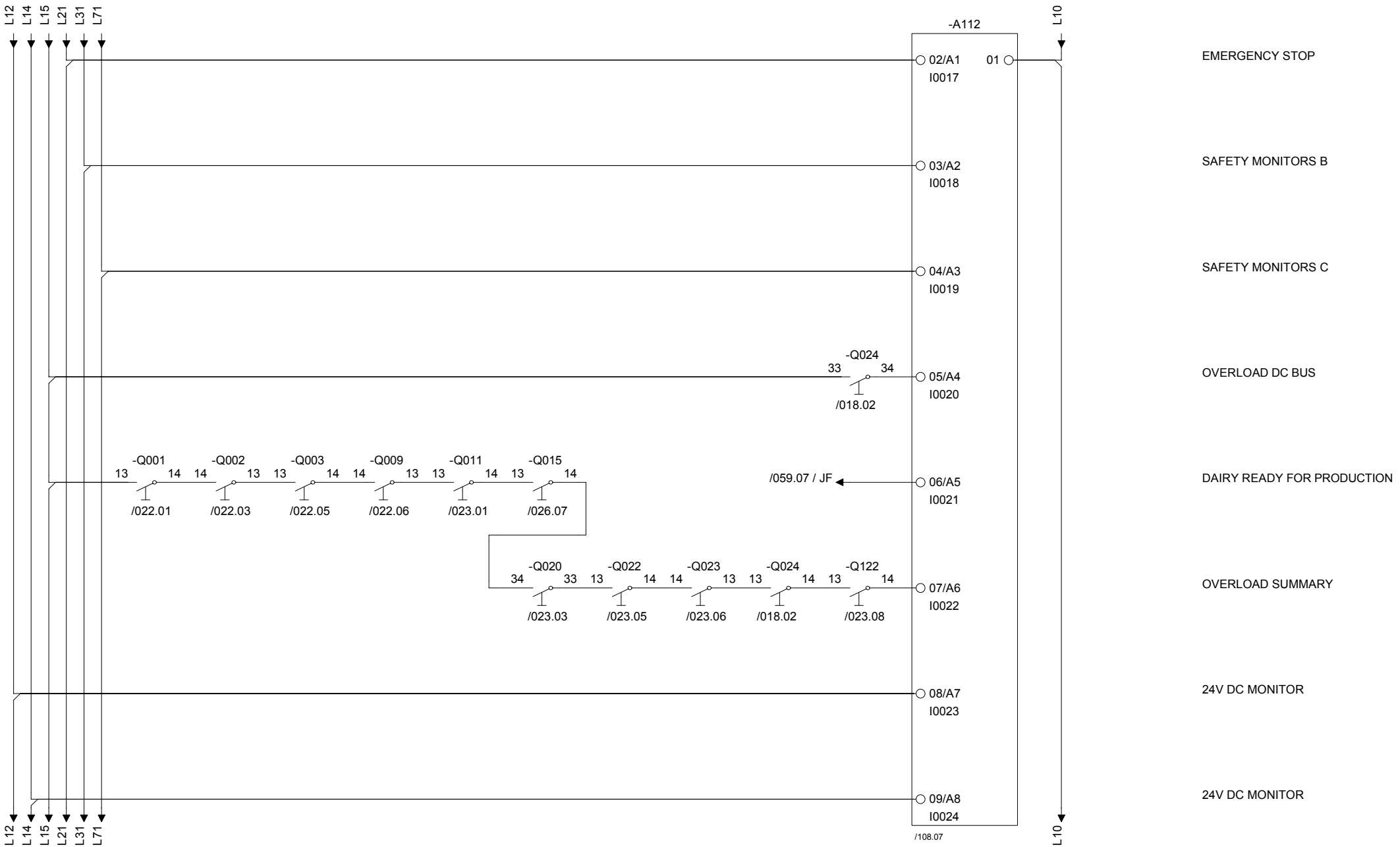

Tetra Pak	Designer BMI	Date 07/06/2004	Machine TBA/22-0500	
	ECM No 175296	Denomination CIRCUIT DIAGRAM	Page Type PLC INPUT	
Drawing remarks	Company Tetra Pak Carton Ambient S.p.A.	Document No. 2593852-0003	Doc. type ELD	Version AE	Page 107

RELEASED

This drawing must not without the consent of Tetra Pak be copied, transmitted or disclosed to any third party.

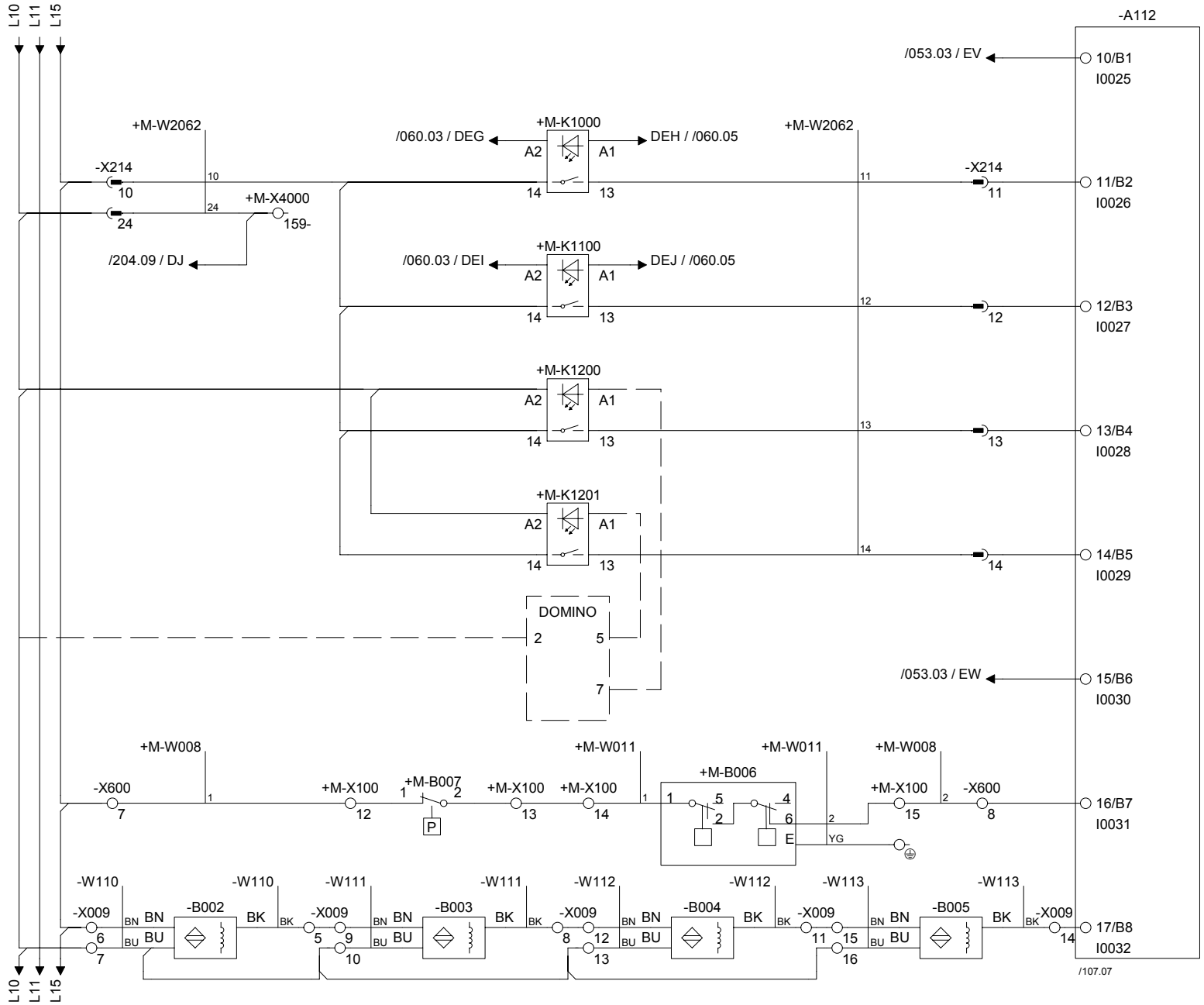

Drawing remarks	Tetra Pak	Designer BMI	Date 07/06/2004	Machine TBA/22-0500	
		ECM No 175296	Denomination CIRCUIT DIAGRAM	Page Type PLC INPUT	
		Company Tetra Pak Carton Ambient S.p.A.	Document No. 2593852-0003	Doc. type ELD	Version AE	Page 108

RELEASED

This drawing must not without the consent of Tetra Pak be copied, transmitted or disclosed to any third party.

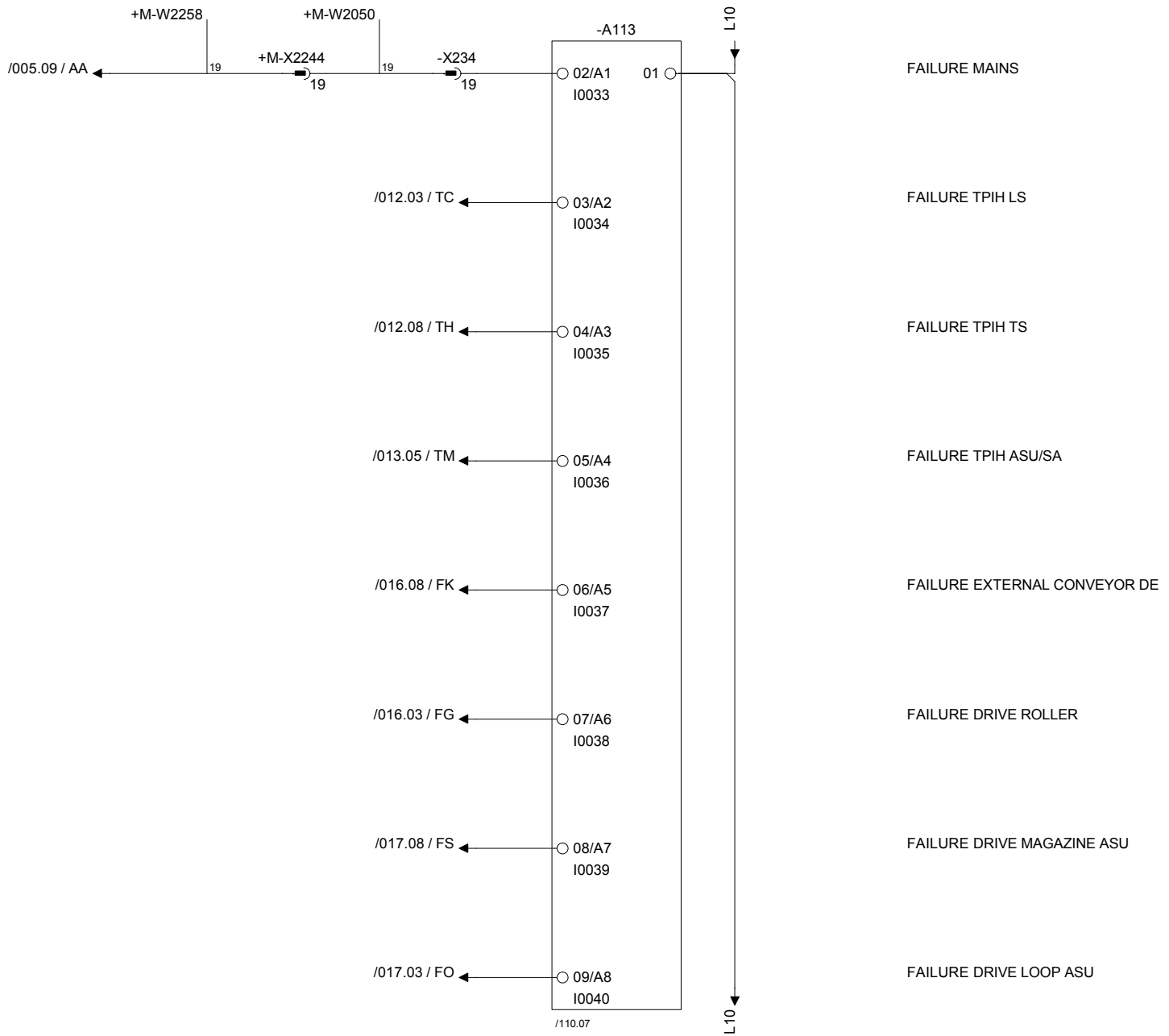

Drawing remarks	Tetra Pak	Designer BMI	Date 07/06/2004	Machine TBA/22-0500
		ECM No 175296	Denomination CIRCUIT DIAGRAM	Page Type PLC INPUT
		Company Tetra Pak Carton Ambient S.p.A.	Document No. 2593852-0003	Doc. type ELD / Version AE / Page 109

This drawing must not without the consent of Tetra Pak be copied, transmitted or disclosed to any third party.

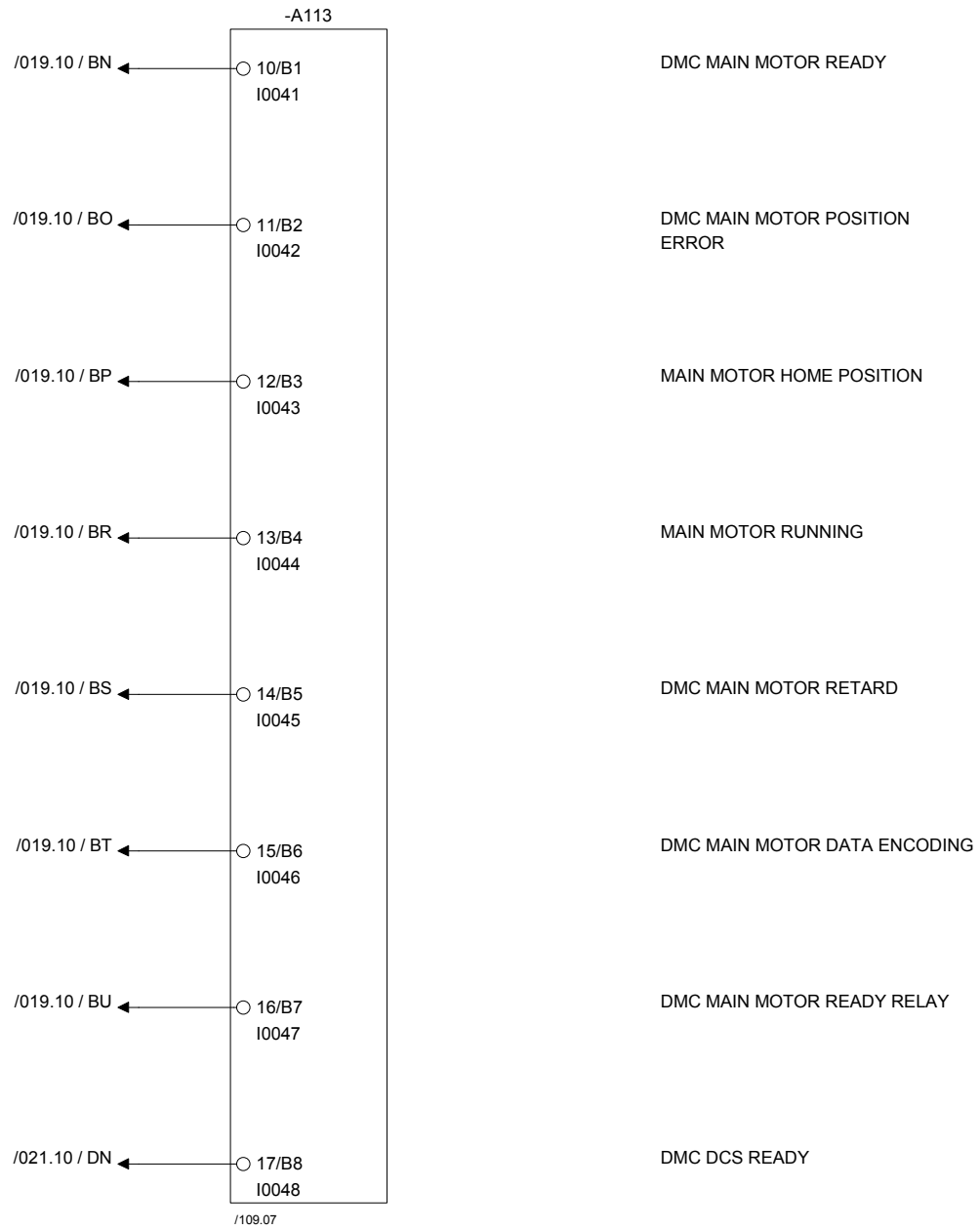

Drawing remarks

Tetra Pak

Designer BMI	Date 07/06/2004	Machine TBA/22-0500		
ECM No 175296	Denomination CIRCUIT DIAGRAM	Page Type PLC INPUT		
Company Tetra Pak Carton Ambient S.p.A.	Document No. 2593852-0003	Doc. type ELD	Version AE	Page 110

This drawing must not without the consent of Tetra Pak be copied, transmitted or disclosed to any third party.

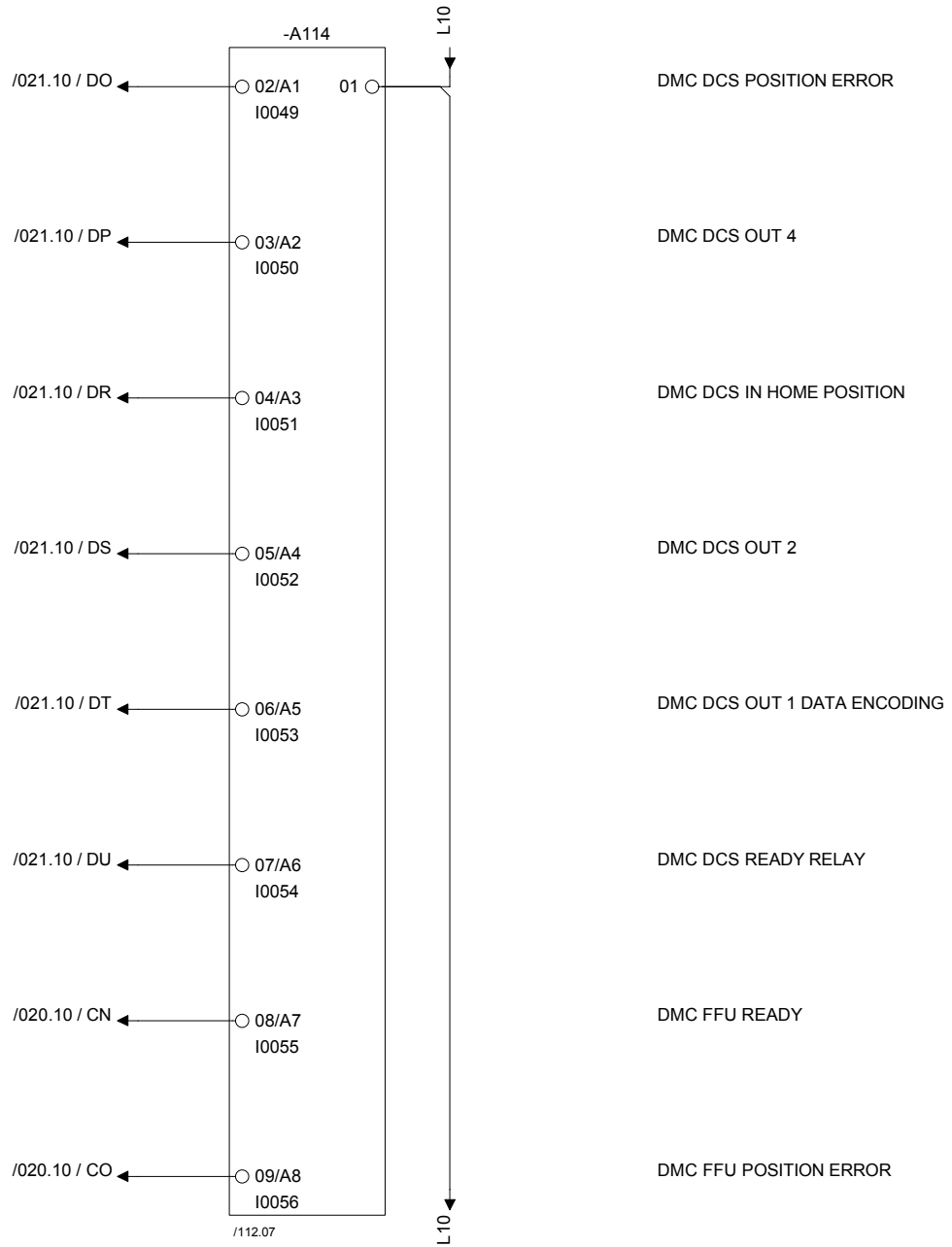

Drawing remarks	Tetra Pak	Designer BMI	Date 07/06/2004	Machine TBA/22-0500	
		ECM No 175296	Denomination CIRCUIT DIAGRAM	Page Type PLC INPUT	
		Company Tetra Pak Carton Ambient S.p.A.	Document No. 2593852-0003	Doc. type ELD	Version AE	Page 111

This drawing must not without the consent of Tetra Pak be copied, transmitted or disclosed to any third party.

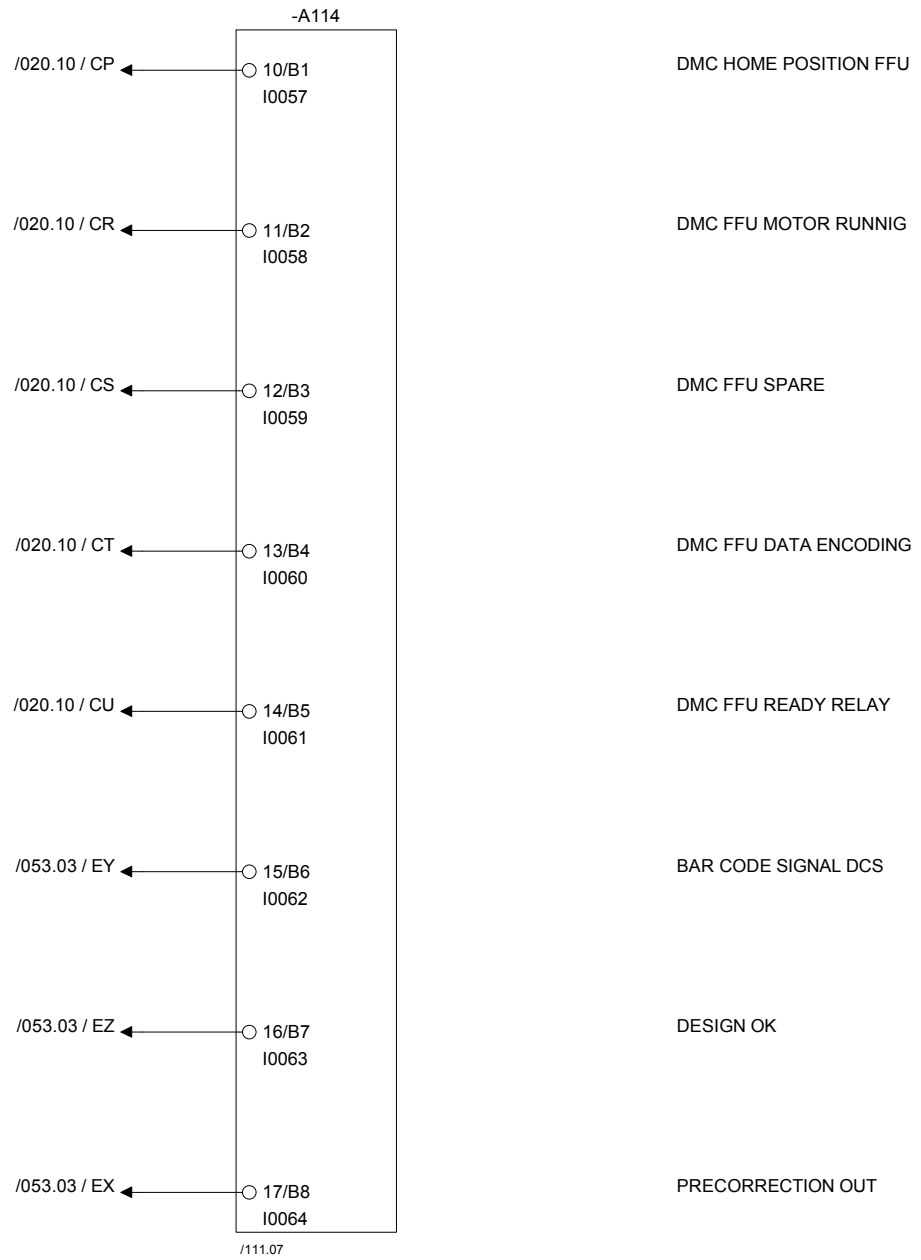

Drawing remarks

Tetra Pak

Designer BMI	Date 07/06/2004	Machine TBA/22-0500		
ECM No 175296	Denomination CIRCUIT DIAGRAM	Page Type PLC INPUT		
Company Tetra Pak Carton Ambient S.p.A.	Document No. 2593852-0003	Doc. type ELD	Version AE	Page 112

This drawing must not without the consent of Tetra Pak be copied, transmitted or disclosed to any third party.

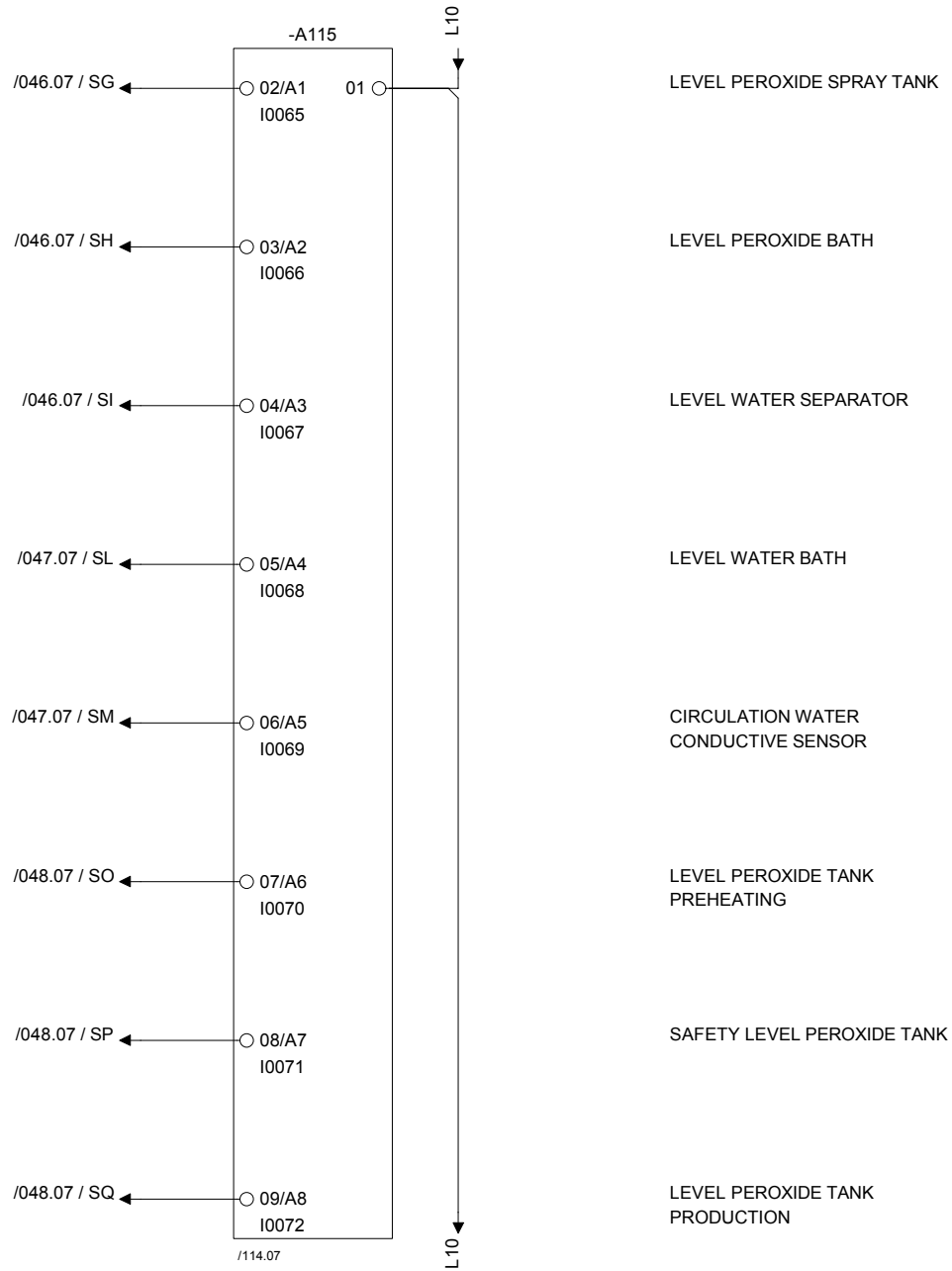

Drawing remarks	Tetra Pak	Designer BMI	Date 07/06/2004	Machine TBA/22-0500
		ECM No 175296	Denomination CIRCUIT DIAGRAM	Page Type PLC INPUT
	Company Tetra Pak Carton Ambient S.p.A.	Document No. 2593852-0003	Doc. type ELD	Version AE / Page 113

This drawing must not without the consent of Tetra Pak be copied, transmitted or disclosed to any third party.

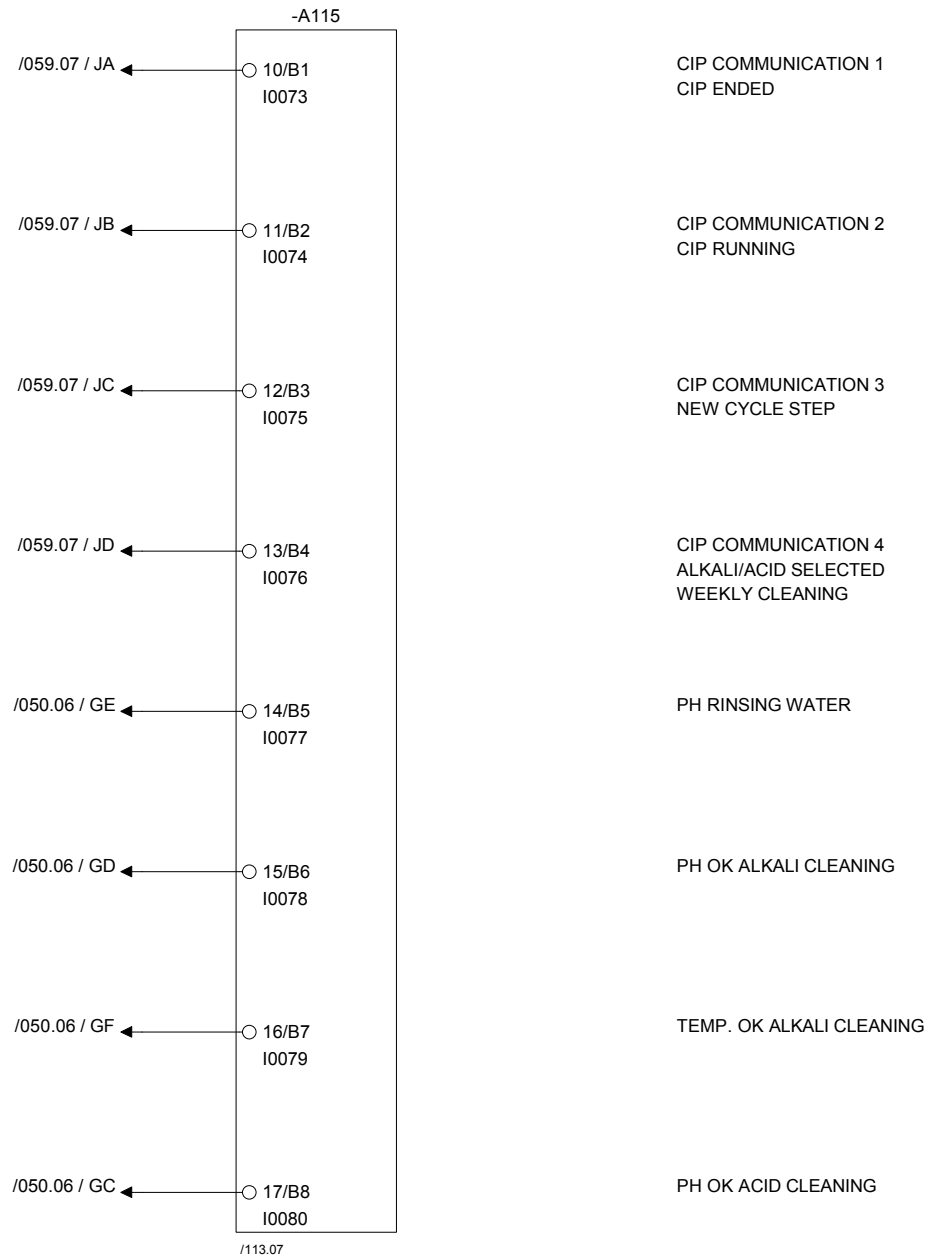

Drawing remarks

Tetra Pak

Designer BMI	Date 07/06/2004	Machine TBA/22-0500		
ECM No 175296	Denomination CIRCUIT DIAGRAM	Page Type PLC INPUT		
Company Tetra Pak Carton Ambient S.p.A.	Document No. 2593852-0003	Doc. type ELD	Version AE	Page 114

This drawing must not without the consent of Tetra Pak be copied, transmitted or disclosed to any third party.

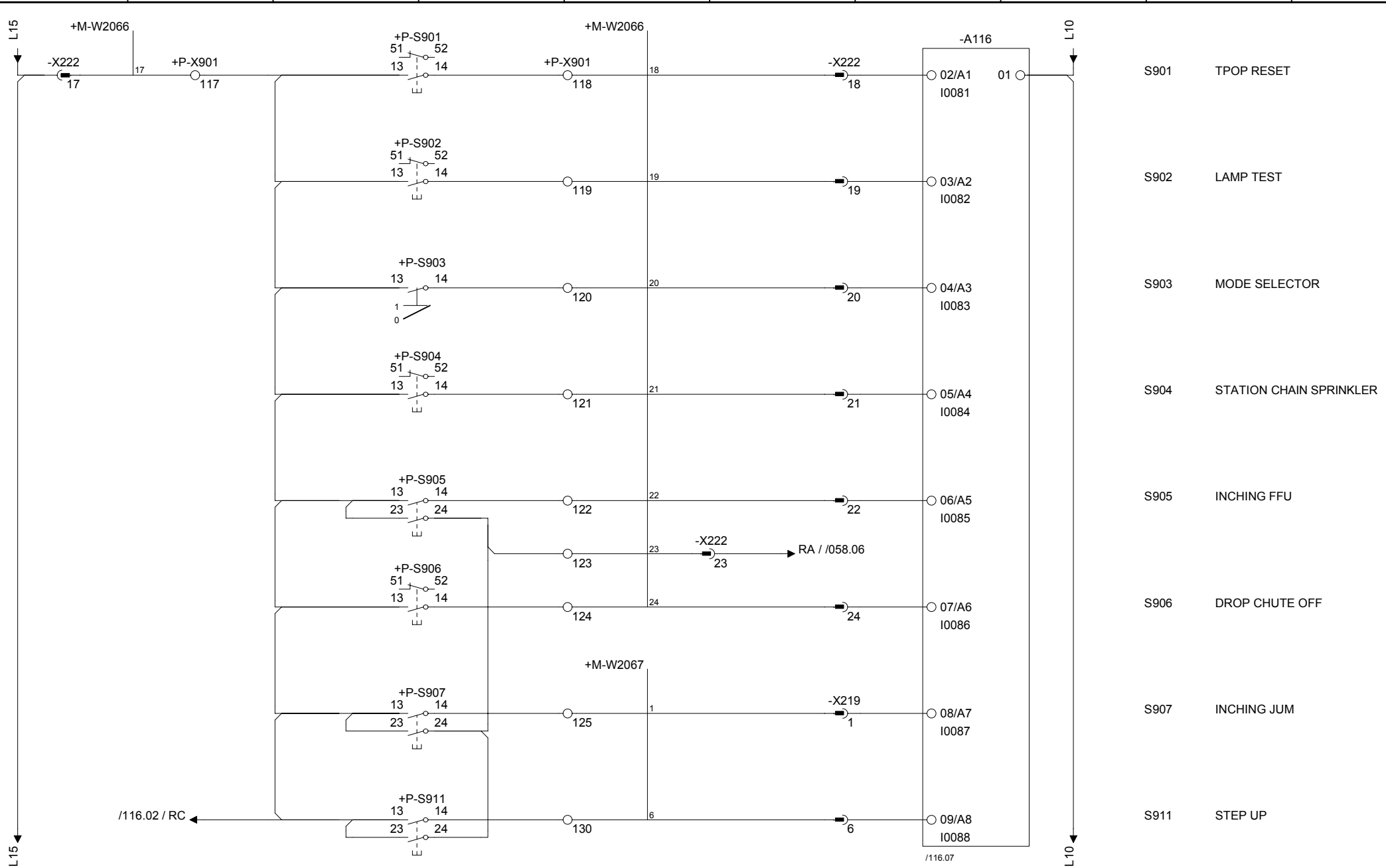

Drawing remarks	Tetra Pak	Designer BMI	Date 07/06/2004	Machine TBA/22-0500	
		ECM No 175296	Denomination CIRCUIT DIAGRAM	Page Type PLC INPUT	
		Company Tetra Pak Carton Ambient S.p.A.	Document No. 2593852-0003	Doc. type ELD	Version AE	Page 115

RELEASED

This drawing must not without the consent of Tetra Pak be copied, transmitted or disclosed to any third party.

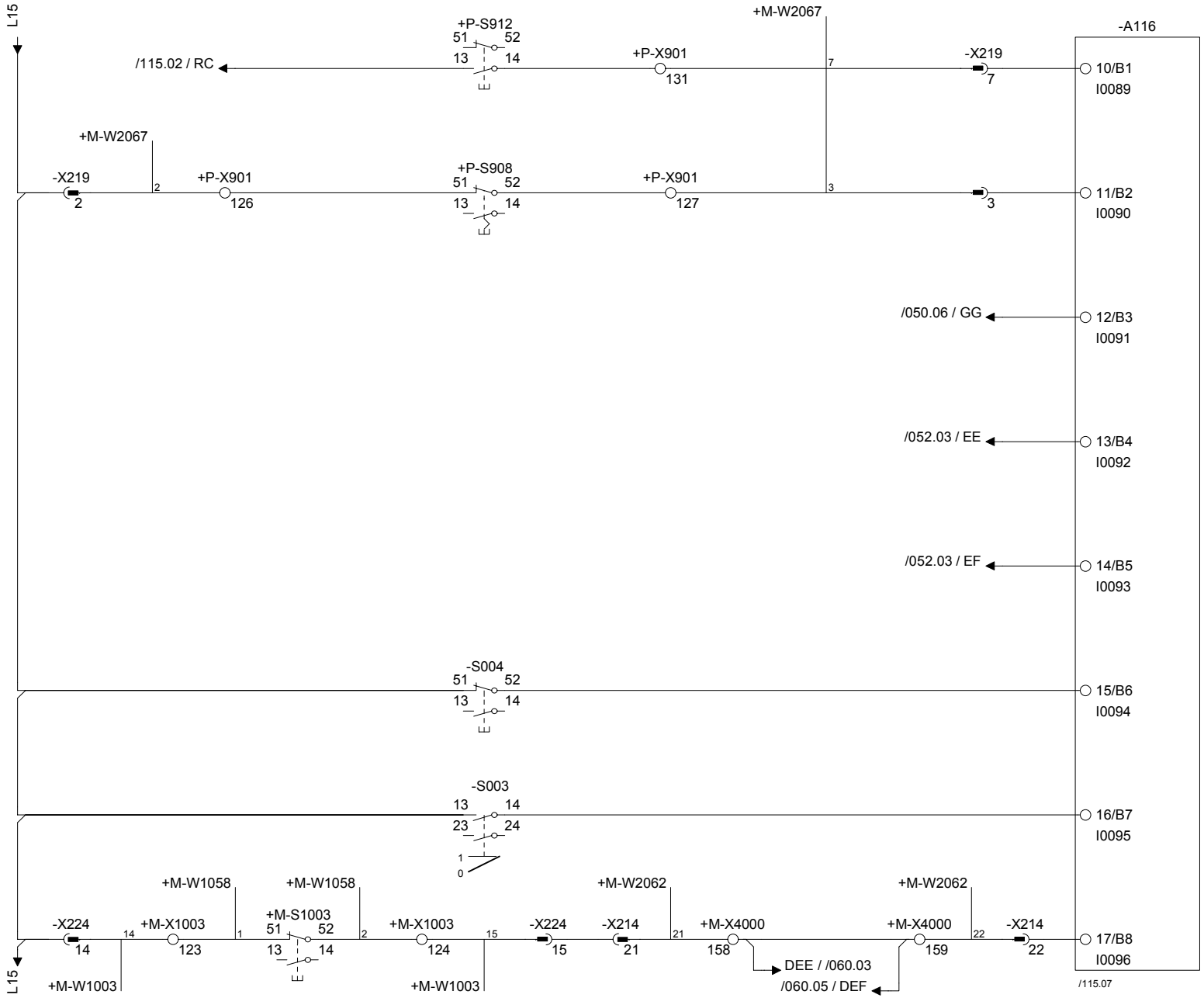

Tetra Pak	Designer BMI	Date 07/06/2004	Machine TBA/22-0500		
	ECM No 175296	Denomination CIRCUIT DIAGRAM	Page Type PLC INPUT		
Drawing remarks	Company Tetra Pak Carton Ambient S.p.A.	Document No. 2593852-0003	Doc. type ELD	Version AE	Page 116

RELEASED

This drawing must not without the consent of Tetra Pak be copied, transmitted or disclosed to any third party.

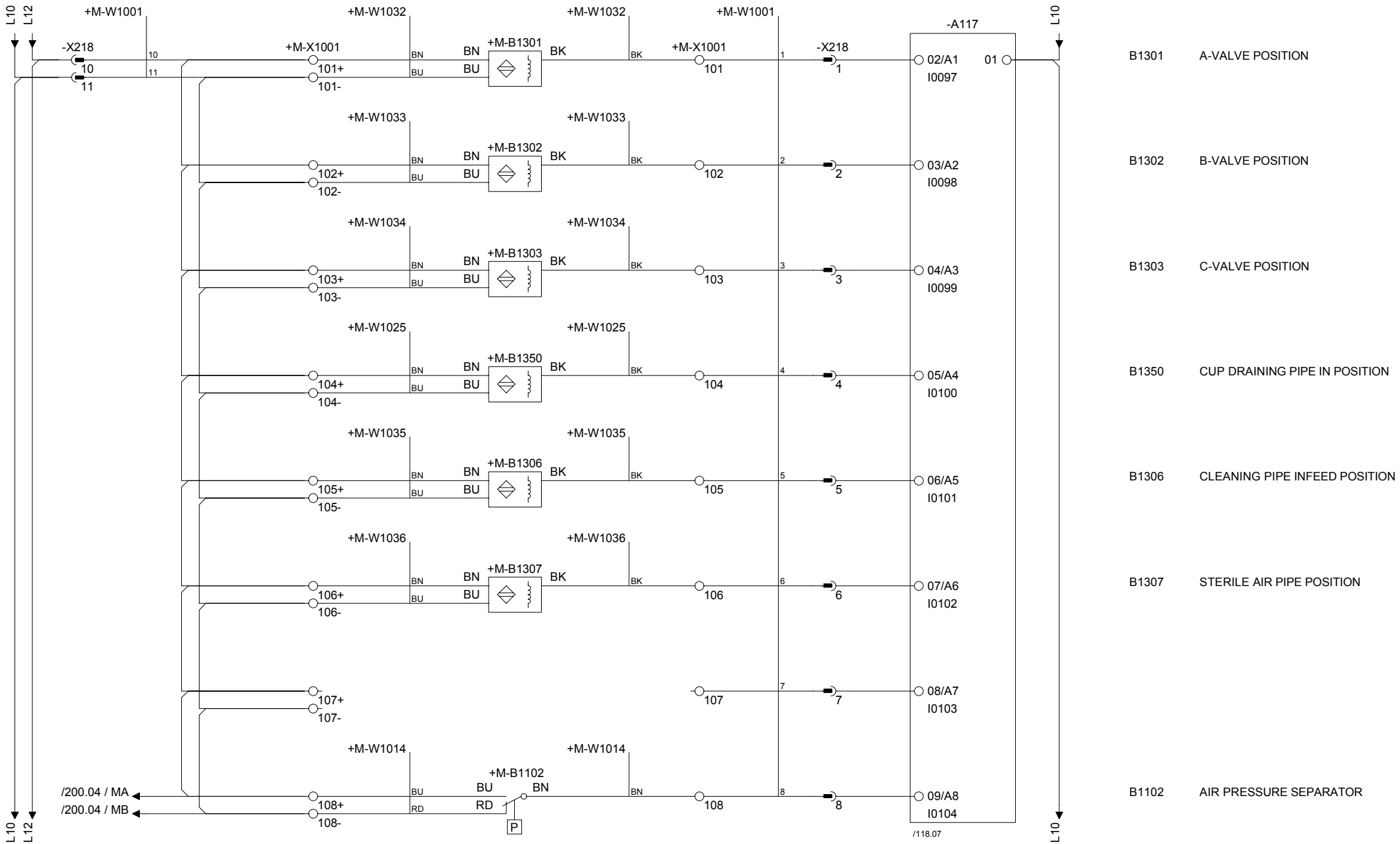

Drawing remarks	Tetra Pak	Designer BMI	Date 07/06/2004	Machine TBA/22-0500	
		ECM No 175296	Denomination CIRCUIT DIAGRAM	Page Type PLC INPUT	
		Company Tetra Pak Carton Ambient S.p.A.	Document No. 2593852-0003	Doc. type ELD	Version AE	Page 117

RELEASED

This drawing must not without the consent of Tetra Pak be copied, transmitted or disclosed to any third party.

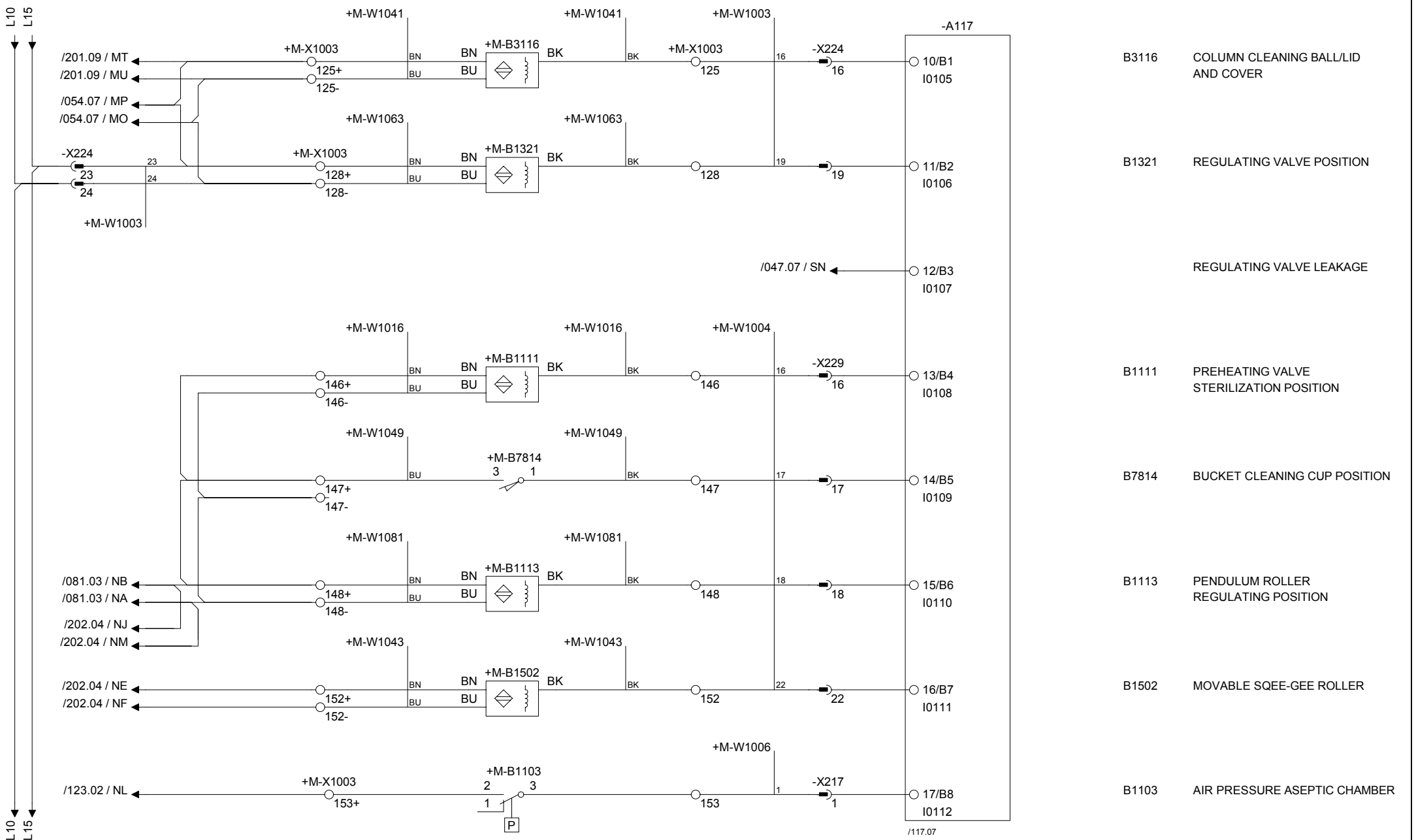

Drawing remarks	Tetra Pak	Designer BMI	Date 07/06/2004	Machine TBA/22-0500	
		ECM No 175296	Denomination CIRCUIT DIAGRAM	Page Type PLC INPUT	
		Company Tetra Pak Carton Ambient S.p.A.	Document No. 2593852-0003	Doc. type ELD	Version AE	Page 118

RELEASED

This drawing must not without the consent of Tetra Pak be copied, transmitted or disclosed to any third party.

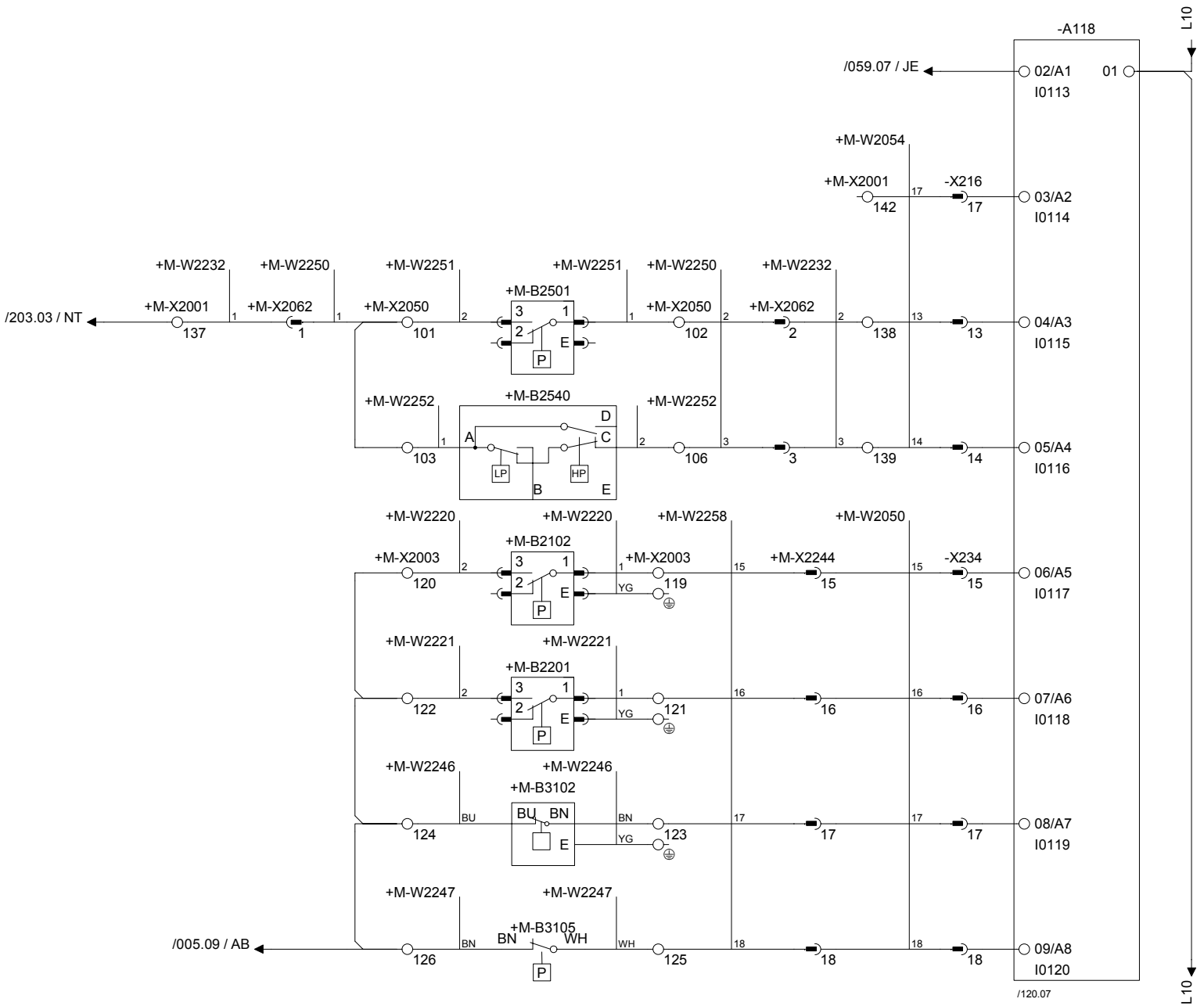

Drawing remarks	Tetra Pak	Designer BMI	Date 07/06/2004	Machine TBA/22-0500	
		ECM No 175296	Denomination CIRCUIT DIAGRAM	Page Type PLC INPUT	
		Company Tetra Pak Carton Ambient S.p.A.	Document No. 2593852-0003	Doc. type ELD	Version AE	Page 119

RELEASED

This drawing must not without the consent of Tetra Pak be copied, transmitted or disclosed to any third party.

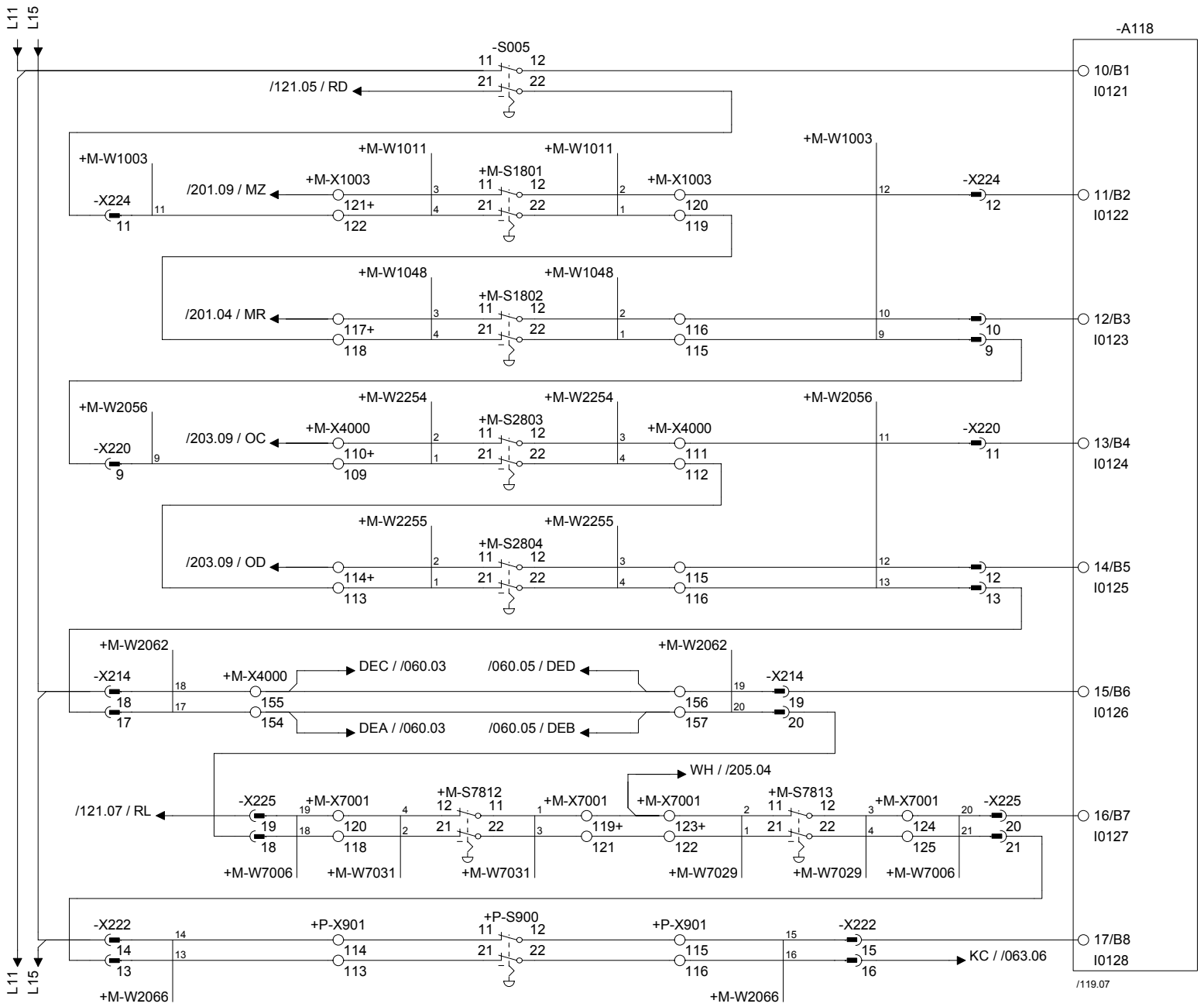

S005 EMERGENCY STOP CONTROL CABINET INSIDE

S1801 EMERCENCY STOP ASEPTIC AND HYGENIC FRONT

S1802 EMERCENCY STOP ASEPTIC AND HYGENIC TOP

S2803 EMERCENCY STOP RIGHT SIDE CABINET

S2804 EMERGENCY STOP LEFT SIDE CABINET

EMERGENCY STOP DE-EQUIPMENT

S7812 EMERGENCY STOP ASU

S7813 EMERGENCY STOP ASU INSIDE

S900 EMERGENCY STOP CONTROL PANEL

Drawing remarks

Tetra Pak

Designer BMI	Date 07/06/2004	Machine TBA/22-0500	
ECM No 175296	Denomination CIRCUIT DIAGRAM	Page Type PLC INPUT	
Company Tetra Pak Carton Ambient S.p.A.	Document No. 2593852-0003	Doc. type ELD	Version AE	Page 120

RELEASED

This drawing must not without the consent of Tetra Pak be copied, transmitted or disclosed to any third party.

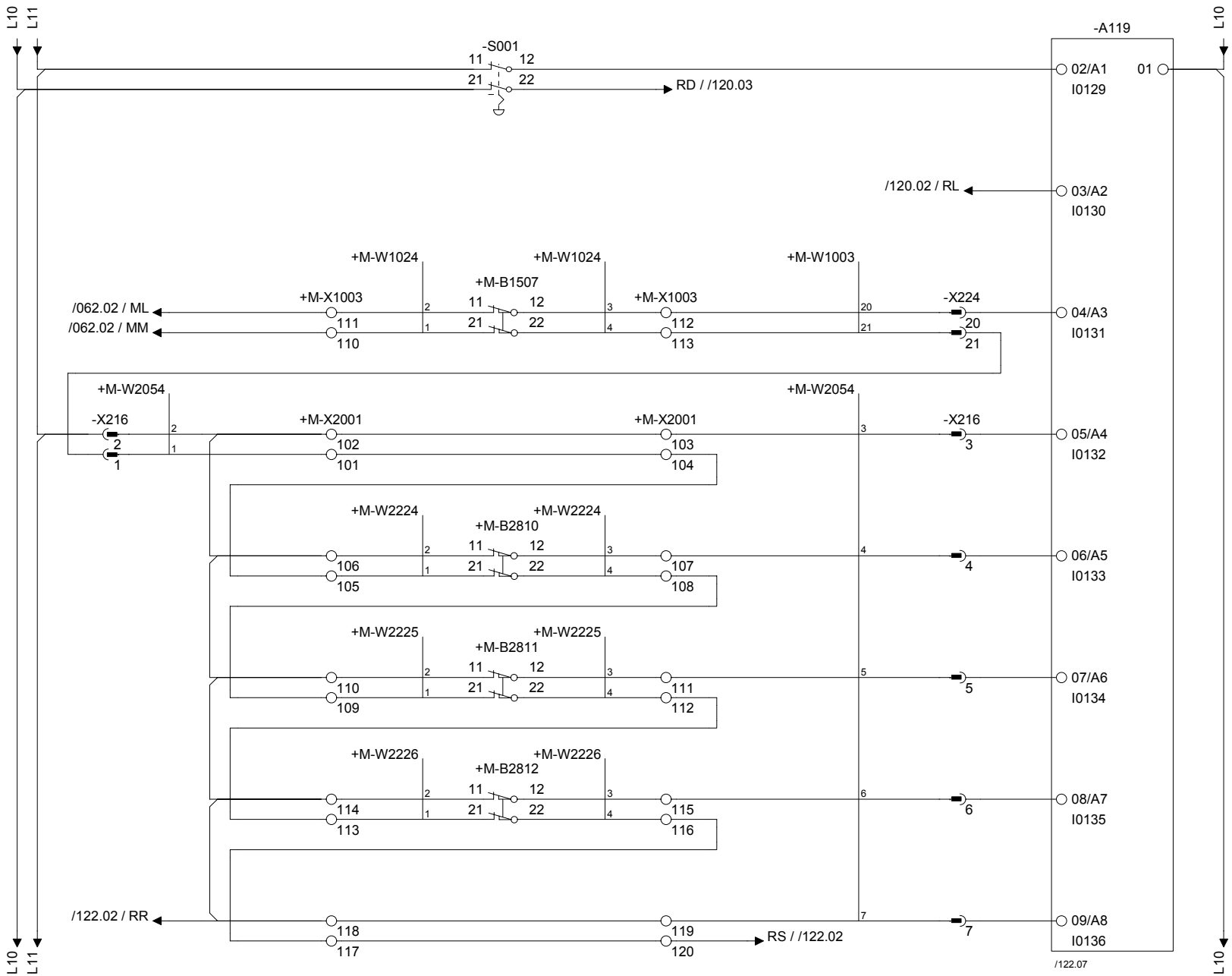

S001	EMERGENCY STOP CONTROL CABINET OUTSIDE
S7812	EMERGENCY STOP ASU OUTSIDE
B1507	BOTTOM SUPERSTRUCTURE
	SPARE DOOR
B2810	RIGHT SIDE DOOR GUARD 10
B2811	RIGHT SIDE DOOR GUARD 11
B2812	RIGHT SIDE DOOR GUARD 12
	SPARE DOOR

Drawing remarks

Tetra Pak

Designer BMI	Date 07/06/2004	Machine TBA/22-0500			
ECM No 175296	Denomination CIRCUIT DIAGRAM	Page Type PLC INPUT			
Company Tetra Pak Carton Ambient S.p.A.	Document No. 2593852-0003	Doc. type ELD	Version AE	Page 121	

This drawing must not without the consent of Tetra Pak be copied, transmitted or disclosed to any third party.

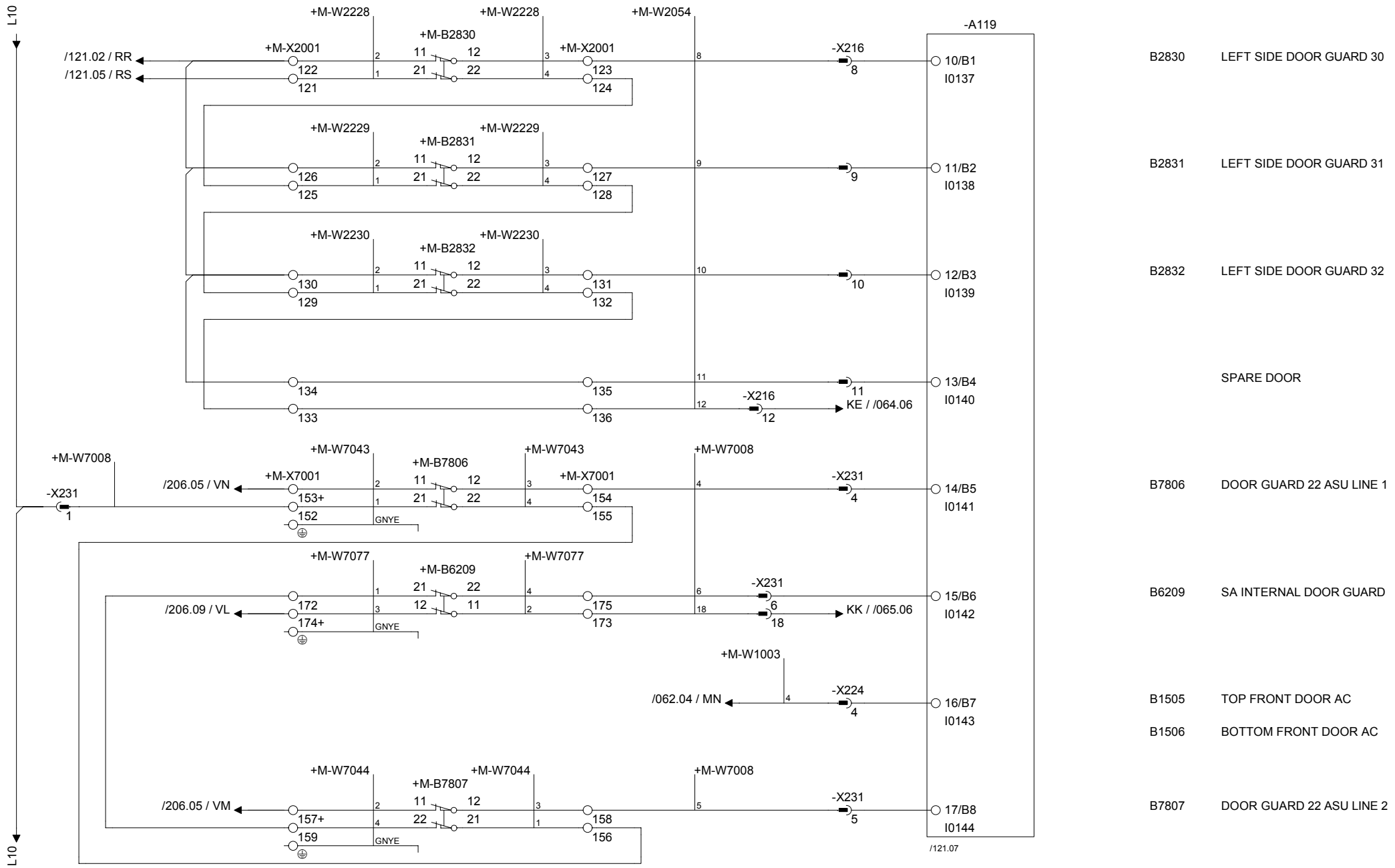

Drawing remarks	Tetra Pak	Designer BMI	Date 07/06/2004	Machine TBA/22-0500	
		ECM No 175296	Denomination CIRCUIT DIAGRAM	Page Type PLC INPUT	
		Company Tetra Pak Carton Ambient S.p.A.	Document No. 2593852-0003	Doc. type ELD	Version AE	Page 122

RELEASED

This drawing must not without the consent of Tetra Pak be copied, transmitted or disclosed to any third party.

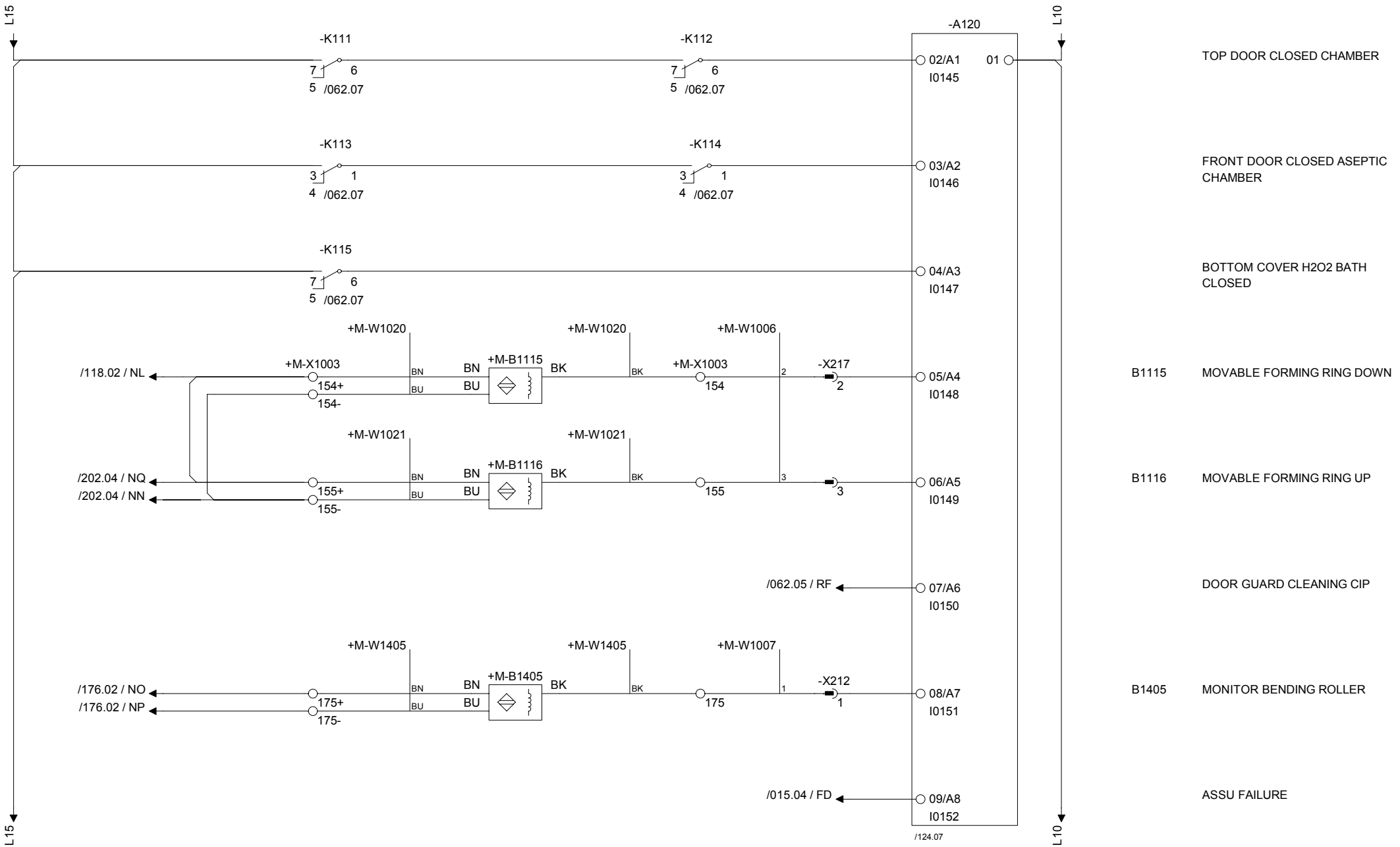

Drawing remarks	Tetra Pak	Designer BMI	Date 07/06/2004	Machine TBA/22-0500
		ECM No 175296	Denomination CIRCUIT DIAGRAM	Page Type PLC INPUT
	Company Tetra Pak Carton Ambient S.p.A.	Document No. 2593852-0003	Doc. type ELD	Version AE / Page 123

This drawing must not without the consent of Tetra Pak be copied, transmitted or disclosed to any third party.

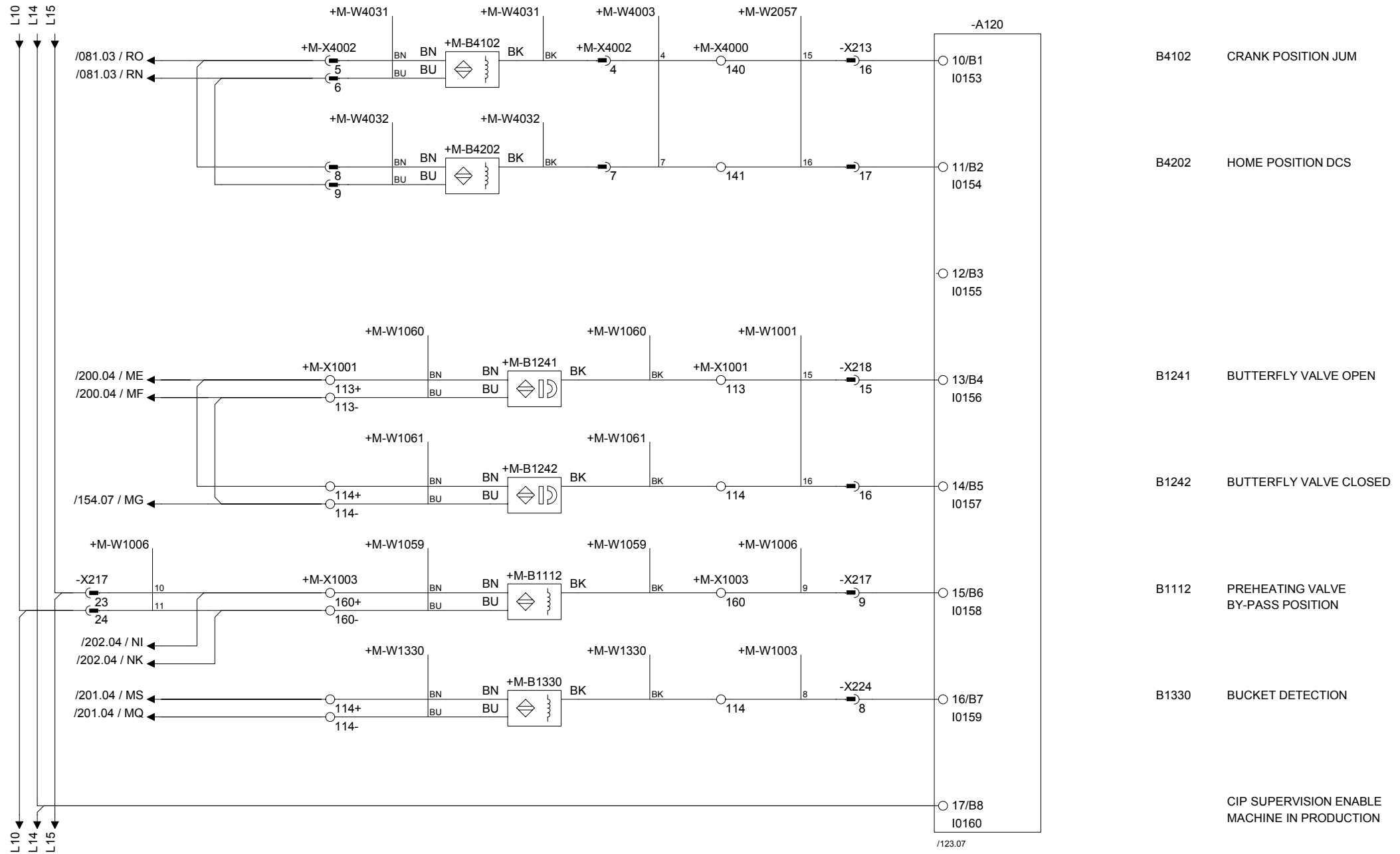

Drawing remarks	Tetra Pak	Designer BMI	Date 07/06/2004	Machine TBA/22-0500			
		ECM No 175296	Denomination CIRCUIT DIAGRAM	Page Type PLC INPUT			
		Company Tetra Pak Carton Ambient S.p.A.	Document No. 2593852-0003	Doc. type ELD	Version AE	Page 124	

RELEASED

This drawing must not without the consent of Tetra Pak be copied, transmitted or disclosed to any third party.

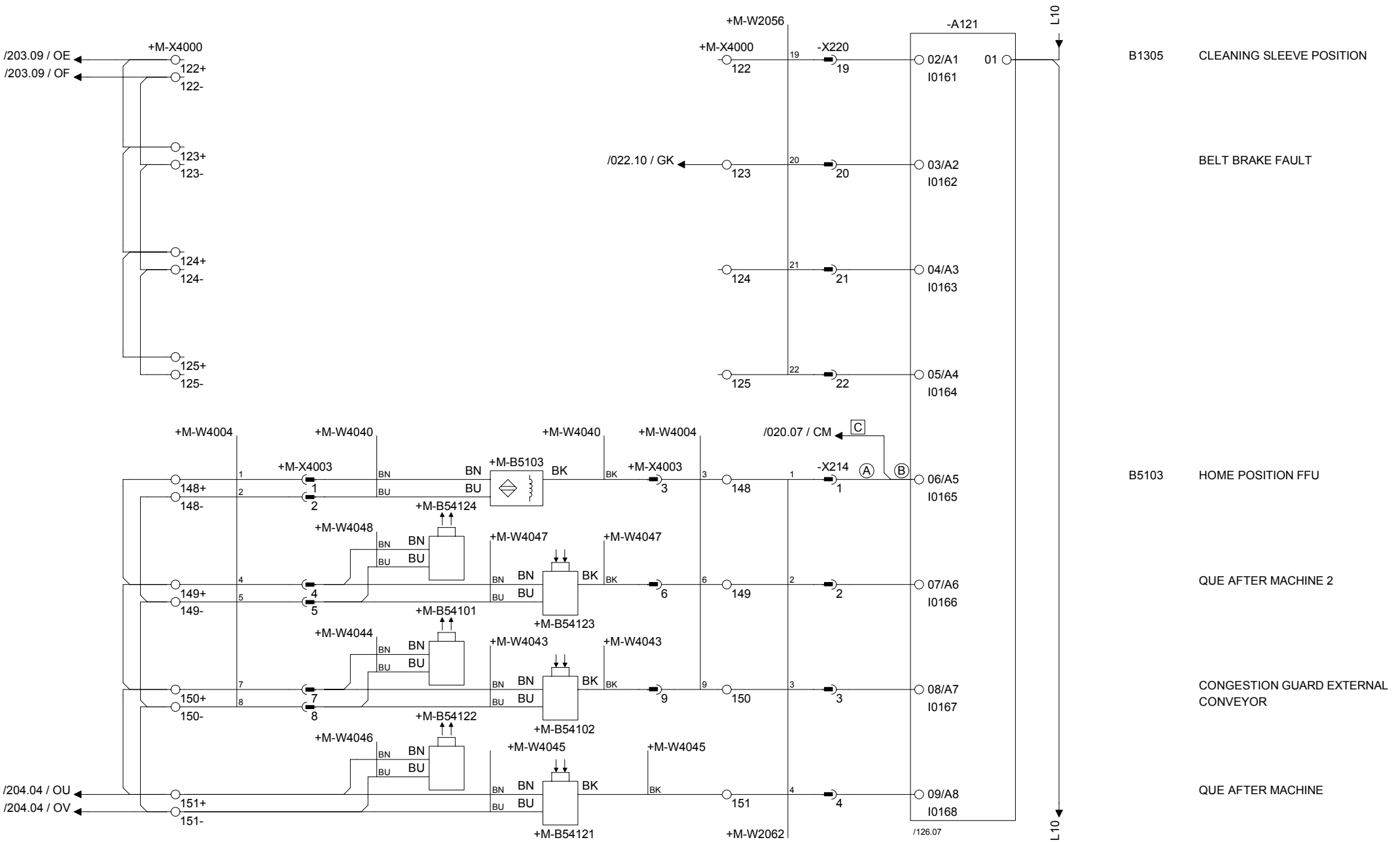

Drawing remarks	Tetra Pak	Designer BMI	Date 07/06/2004	Machine TBA/22-0500	
		ECM No 175296	Denomination CIRCUIT DIAGRAM	Page Type PLC INPUT	
		Company Tetra Pak Carton Ambient S.p.A.	Document No. 2593852-0003	Doc. type ELD	Version AE	Page 125

This drawing must not without the consent of Tetra Pak be copied, transmitted or disclosed to any third party.

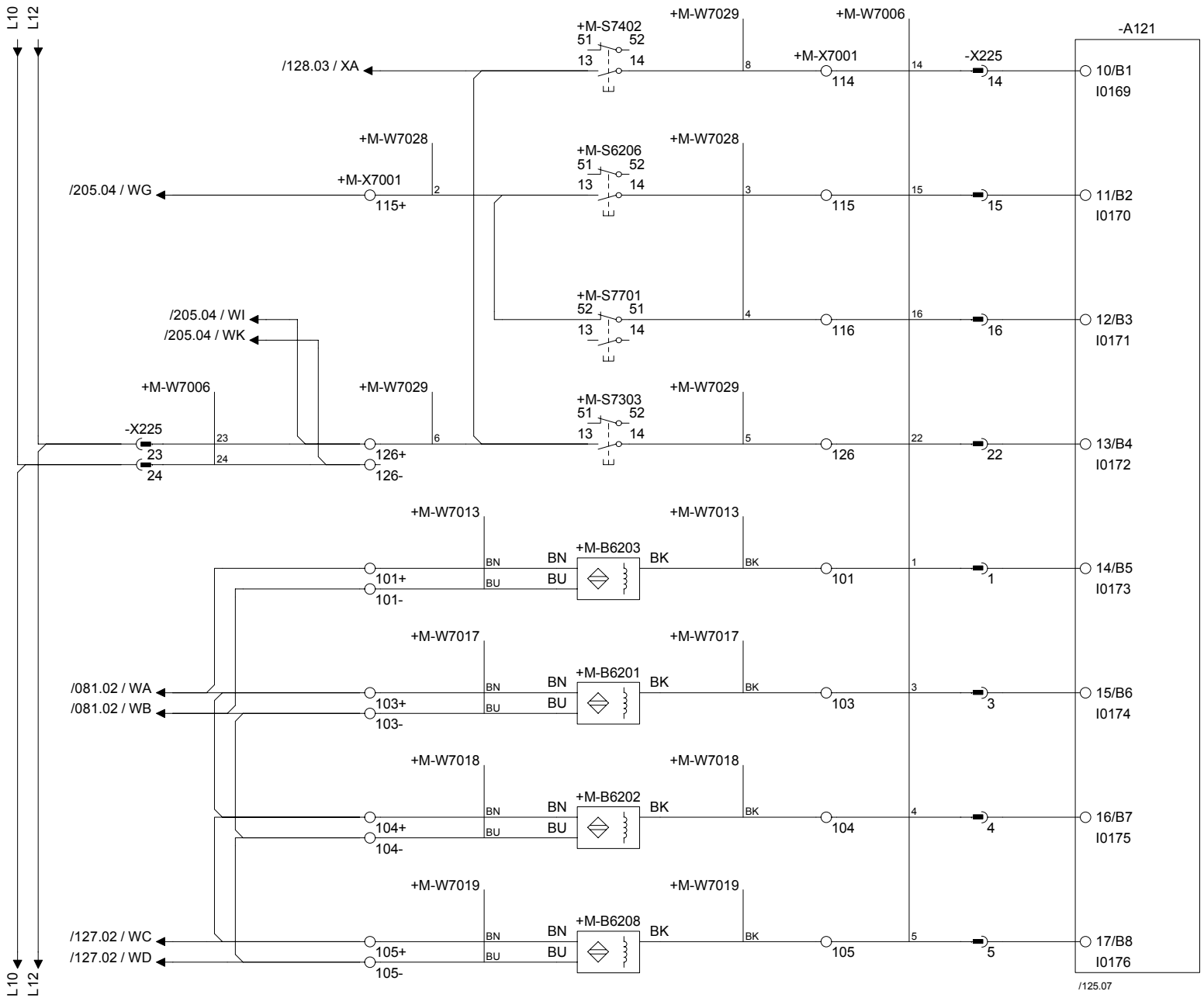

Drawing remarks	Tetra Pak	Designer BMI	Date 07/06/2004	Machine TBA/22-0500	
		ECM No 175296	Denomination CIRCUIT DIAGRAM	Page Type PLC INPUT	
		Company Tetra Pak Carton Ambient S.p.A.	Document No. 2593852-0003	Doc. type ELD	Version AE	Page 126

RELEASED

This drawing must not without the consent of Tetra Pak be copied, transmitted or disclosed to any third party.

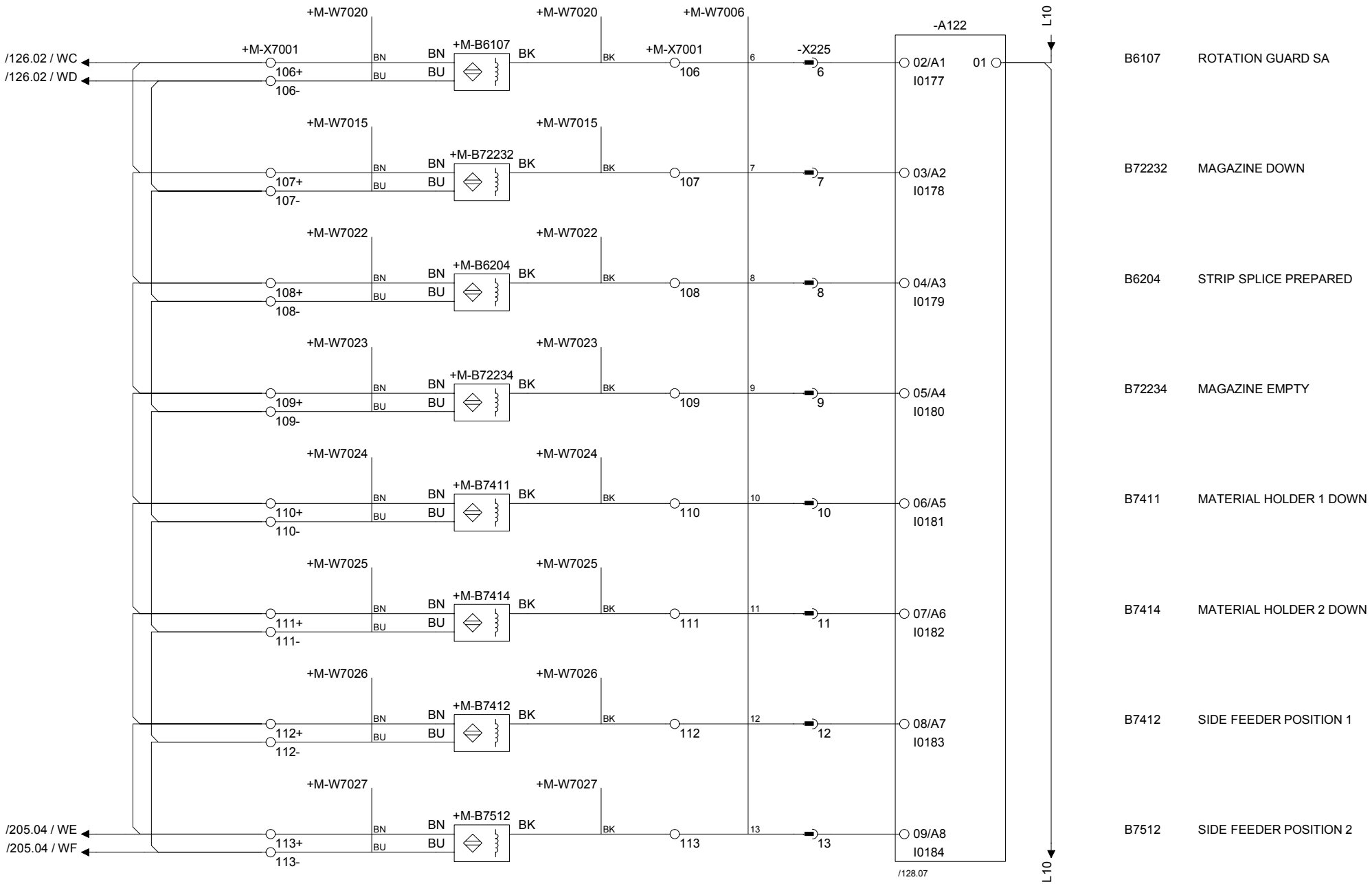

	Tetra Pak	Designer BMI	Date 07/06/2004	Machine TBA/22-0500				
		ECM No 175296	Denomination CIRCUIT DIAGRAM	Page Type PLC INPUT				
Drawing remarks		Company Tetra Pak Carton Ambient S.p.A.	Document No. 2593852-0003	Doc. type ELD	Version AE	Page 127		

RELEASED

This drawing must not without the consent of Tetra Pak be copied, transmitted or disclosed to any third party.

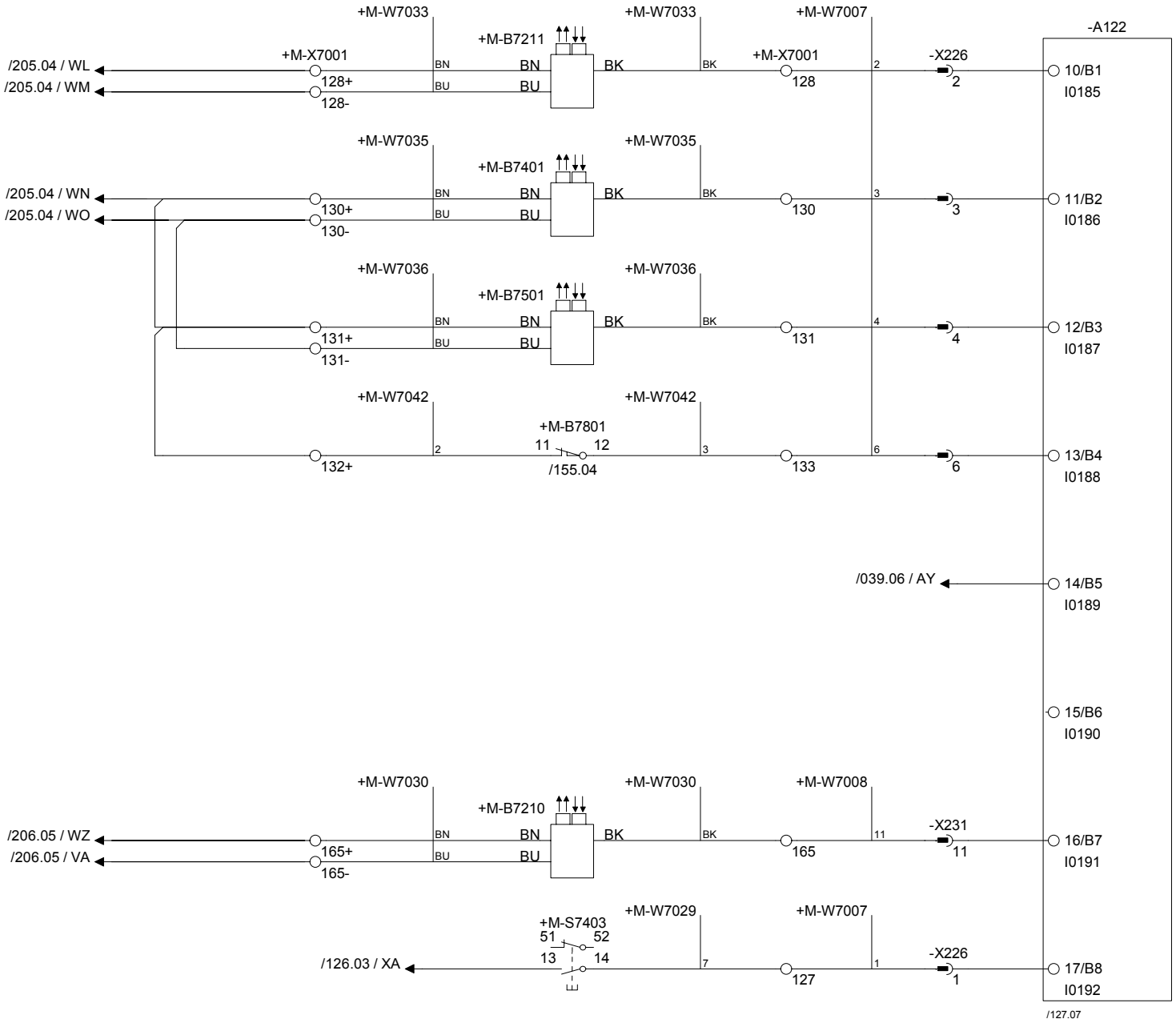

Drawing remarks	Tetra Pak	Designer BMI	Date 07/06/2004	Machine TBA/22-0500			
		ECM No 175296	Denomination CIRCUIT DIAGRAM	Page Type PLC INPUT			
		Company Tetra Pak Carton Ambient S.p.A.	Document No. 2593852-0003	Doc. type ELD	Version AE	Page 128	

RELEASED

This drawing must not without the consent of Tetra Pak be copied, transmitted or disclosed to any third party.

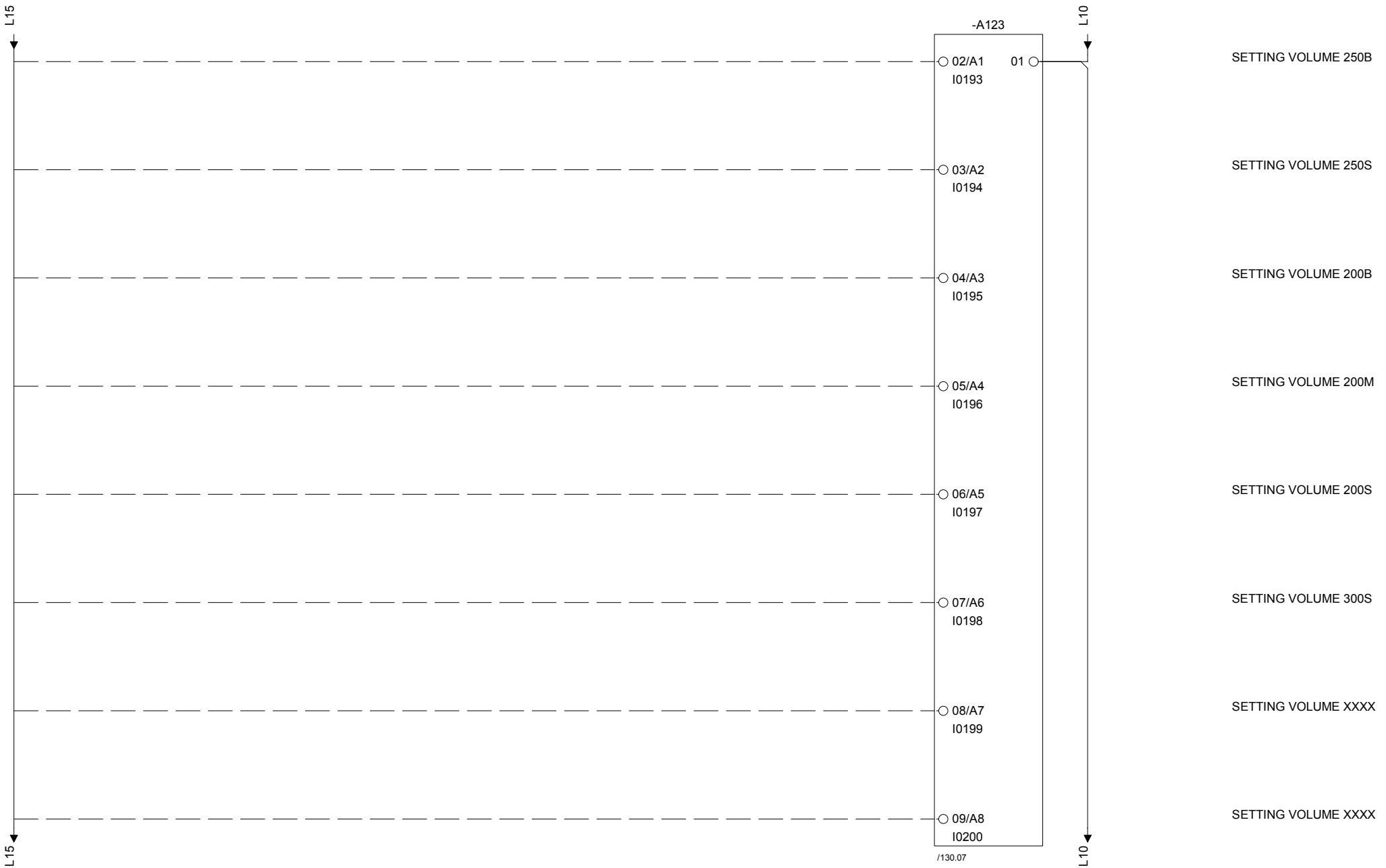

Drawing remarks	Tetra Pak	Designer BMI	Date 07/06/2004	Machine TBA/22-0500
		ECM No 175296	Denomination CIRCUIT DIAGRAM	Page Type PLC INPUT
		Company Tetra Pak Carton Ambient S.p.A.	Document No. 2593852-0003	Doc. type ELD / Version AE / Page 129

RELEASED

This drawing must not without the consent of Tetra Pak be copied, transmitted or disclosed to any third party.

1 2 3 4 5 6 7 8 9 10

L15

-A123

10/B1
I0201

11/B2
I0202

12/B3
I0203

13/B4
I0204

14/B5
I0205

15/B6
I0206

16/B7
I0207

17/B8
I0208

/129.07

L15

Drawing remarks	Tetra Pak	Designer BMI	Date 07/06/2004	Machine TBA/22-0500	
		ECM No 175296	Denomination CIRCUIT DIAGRAM	Page Type PLC INPUT	
		Company Tetra Pak Carton Ambient S.p.A.	Document No. 2593852-0003	Doc. type ELD	Version AE	Page 130

RELEASED

This drawing must not without the consent of Tetra Pak be copied, transmitted or disclosed to any third party.

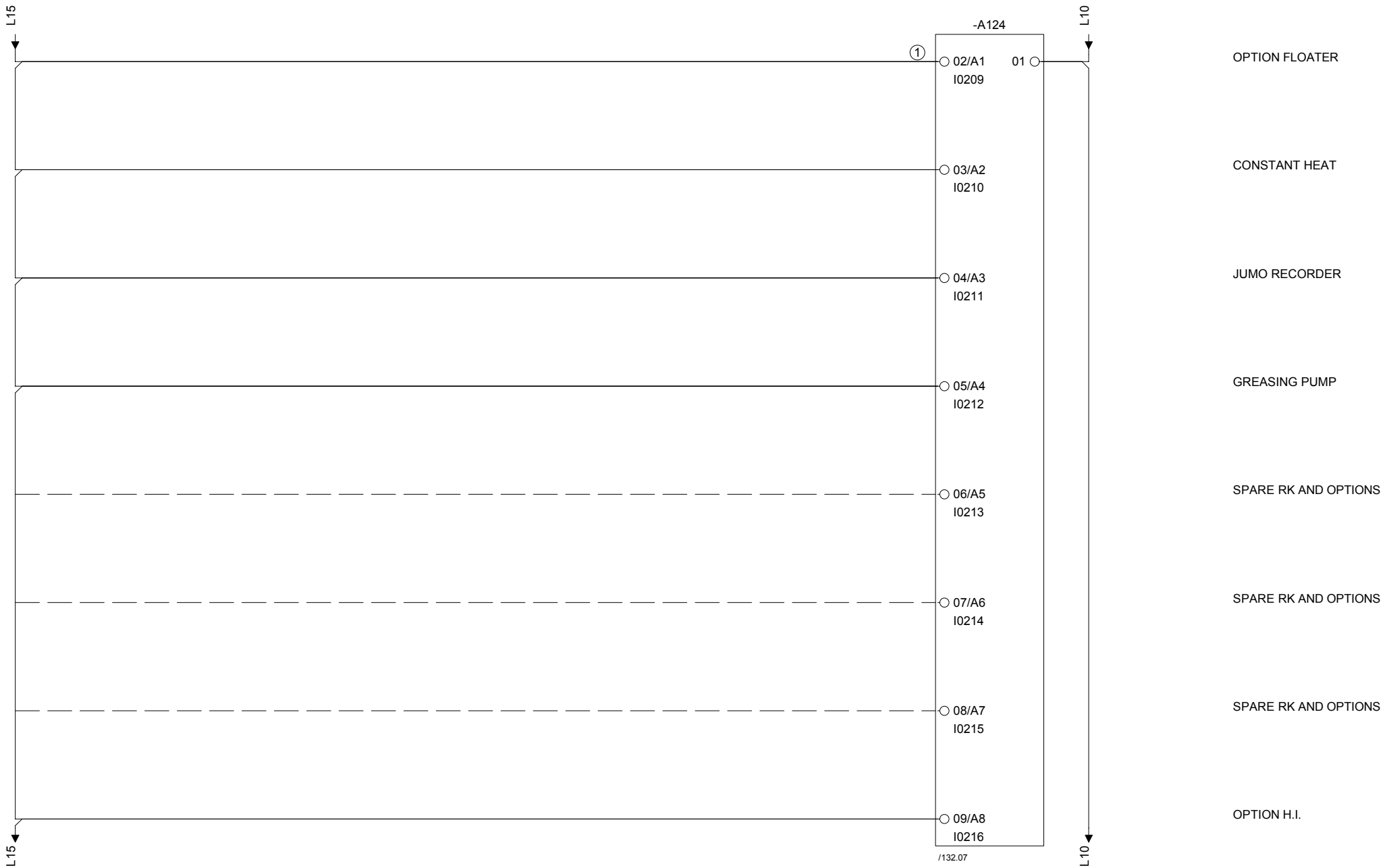

1 OPTION LEVEL CONTROL WITH FLOATER

Drawing remarks

Tetra Pak

Designer BMI	Date 07/06/2004	Machine TBA/22-0500			
ECM No 175296	Denomination CIRCUIT DIAGRAM	Page Type DE INPUT INTERFACE			
Company Tetra Pak Carton Ambient S.p.A.	Document No. 2593852-0003	Doc. type ELD	Version AE	Page 131	

RELEASED

This drawing must not without the consent of Tetra Pak be copied, transmitted or disclosed to any third party.

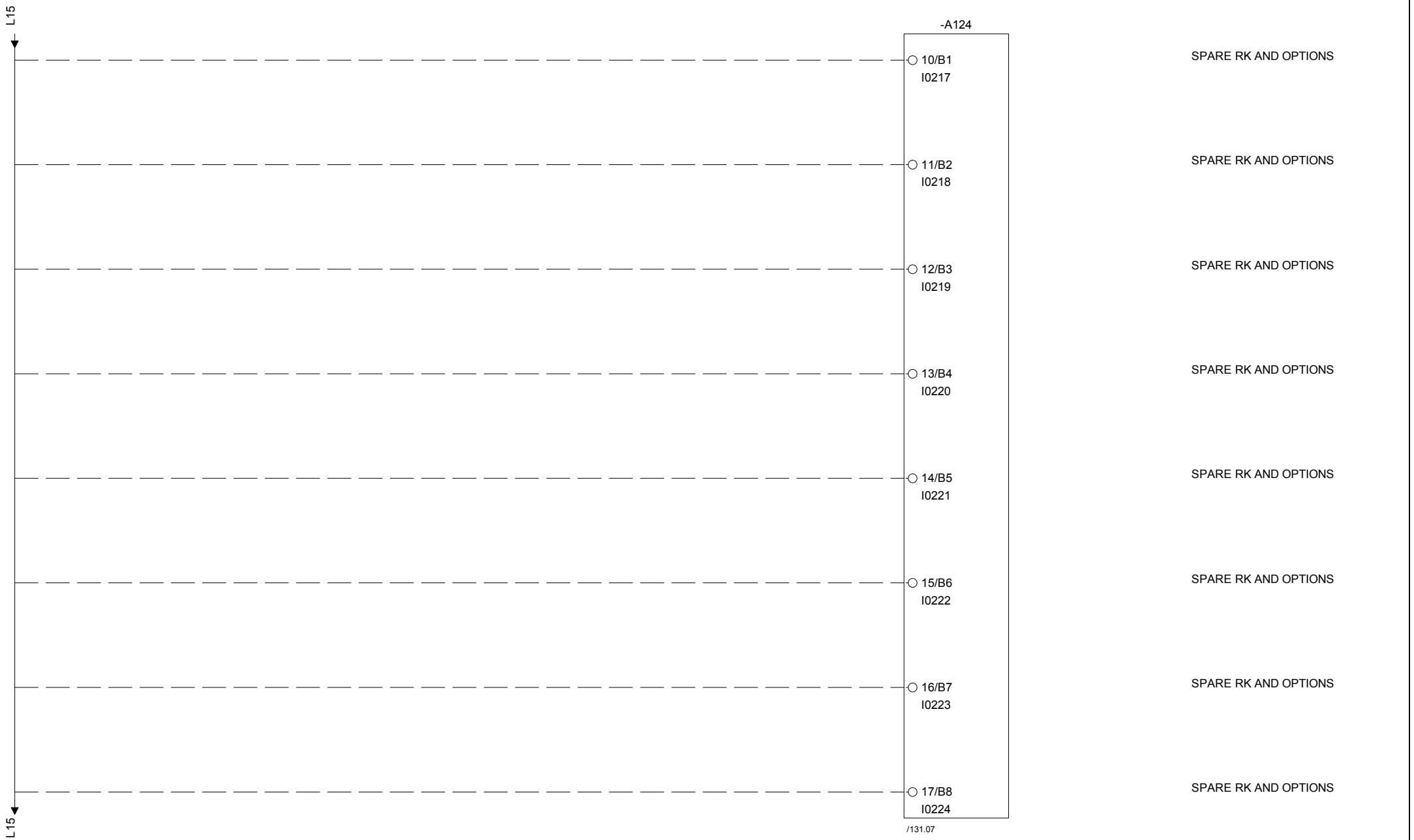

Drawing remarks	Tetra Pak	Designer BMI	Date 07/06/2004	Machine TBA/22-0500
		ECM No 175296	Denomination CIRCUIT DIAGRAM	Page Type DE INPUT INTERFACE
		Company Tetra Pak Carton Ambient S.p.A.	Document No. 2593852-0003	Doc. type ELD / Version AE / Page 132

This drawing must not without the consent of Tetra Pak be copied, transmitted or disclosed to any third party.

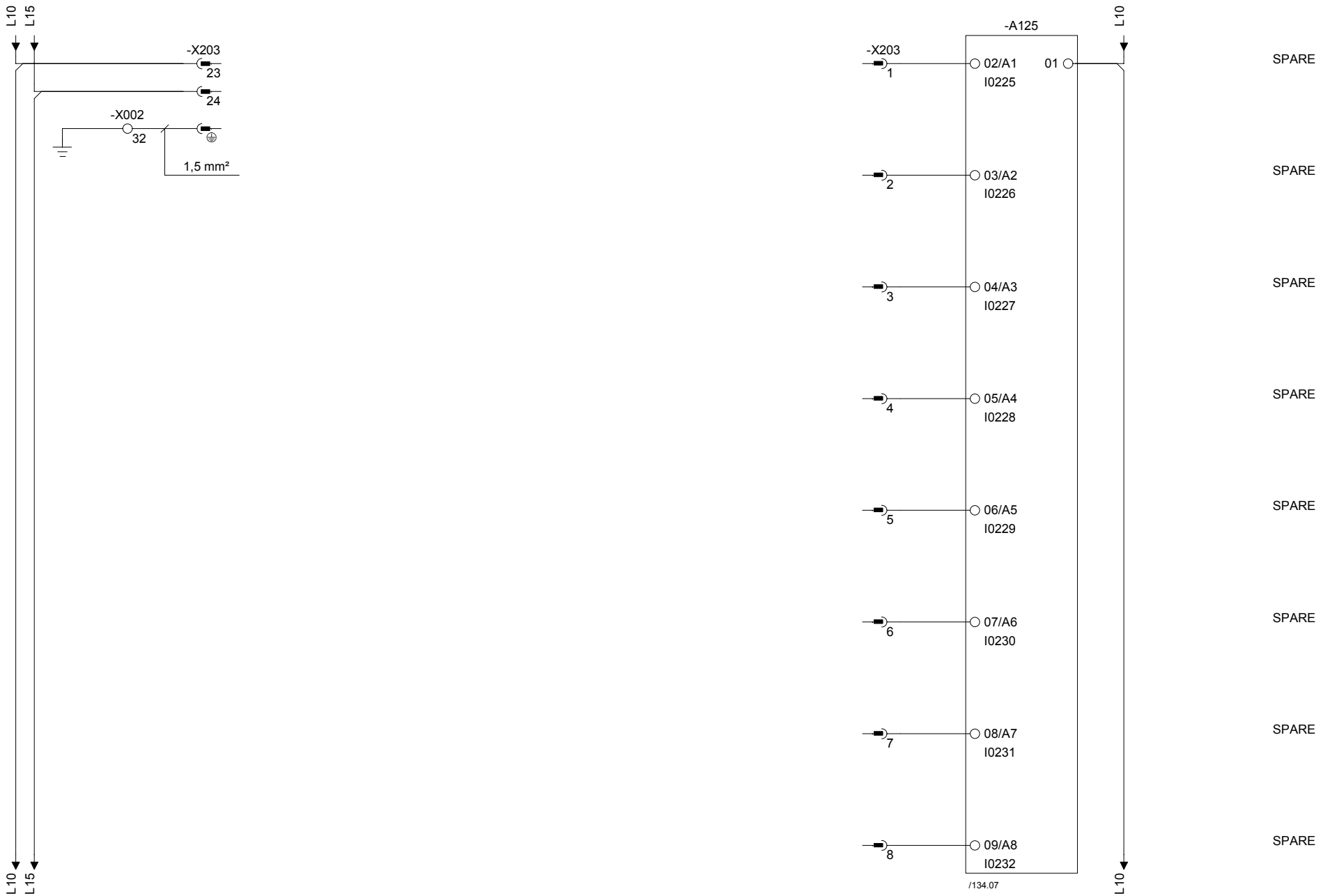

Drawing remarks	Tetra Pak	Designer BMI	Date 07/06/2004	Machine TBA/22-0500
		ECM No 175296	Denomination CIRCUIT DIAGRAM	Page Type DE INPUT INTERFACE
		Company Tetra Pak Carton Ambient S.p.A.	Document No. 2593852-0003	Doc. type ELD / Version AE / Page 133

This drawing must not without the consent of Tetra Pak be copied, transmitted or disclosed to any third party.

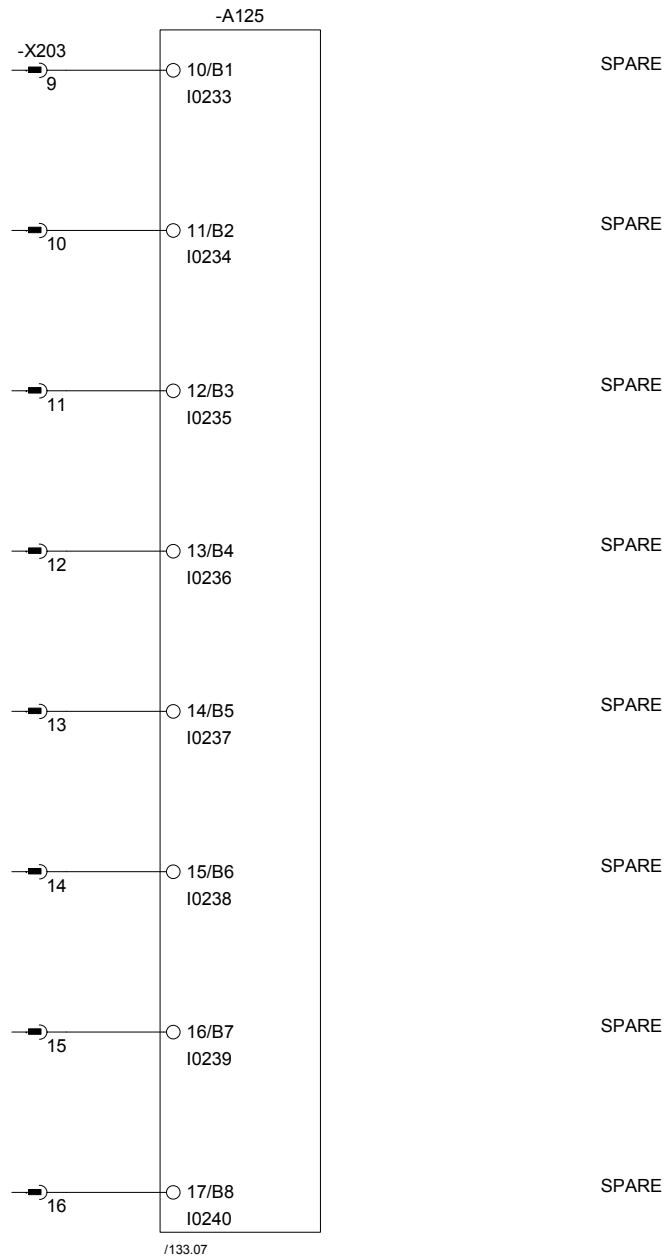

Drawing remarks

Tetra Pak

Designer BMI	Date 07/06/2004	Machine TBA/22-0500		
ECM No 175296	Denomination CIRCUIT DIAGRAM	Page Type DE INPUT INTERFACE		
Company Tetra Pak Carton Ambient S.p.A.	Document No. 2593852-0003	Doc. type ELD	Version AE	Page 134

RELEASED

This drawing must not without the consent of Tetra Pak be copied, transmitted or disclosed to any third party.

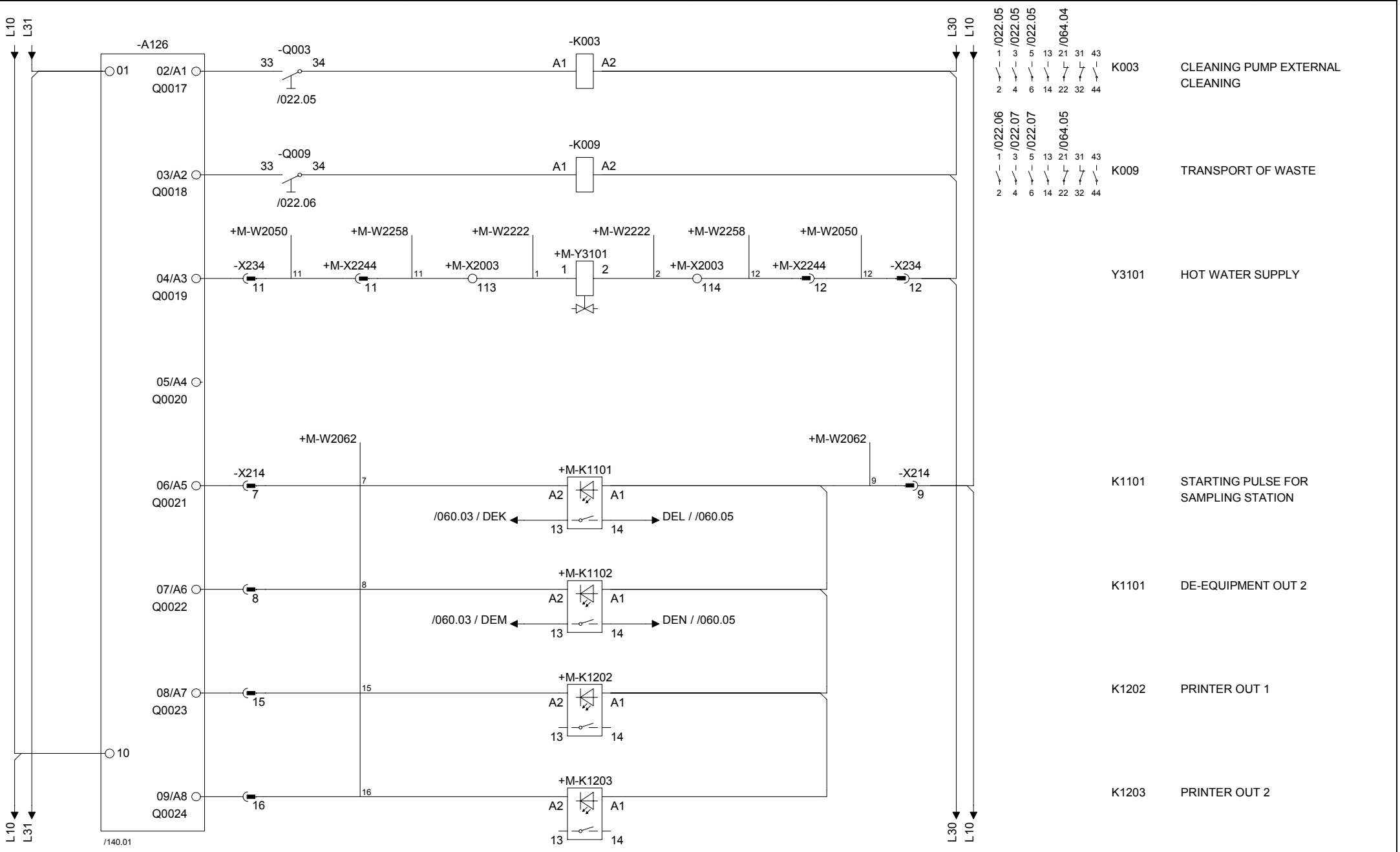

Drawing remarks	Tetra Pak	Designer BMI	Date 07/06/2004	Machine TBA/22-0500	
		ECM No 175296	Denomination CIRCUIT DIAGRAM	Page Type PLC OUTPUT	
		Company Tetra Pak Carton Ambient S.p.A.	Document No. 2593852-0003	Doc. type ELD	Version AE	Page 139

RELEASED

This drawing must not without the consent of Tetra Pak be copied, transmitted or disclosed to any third party.

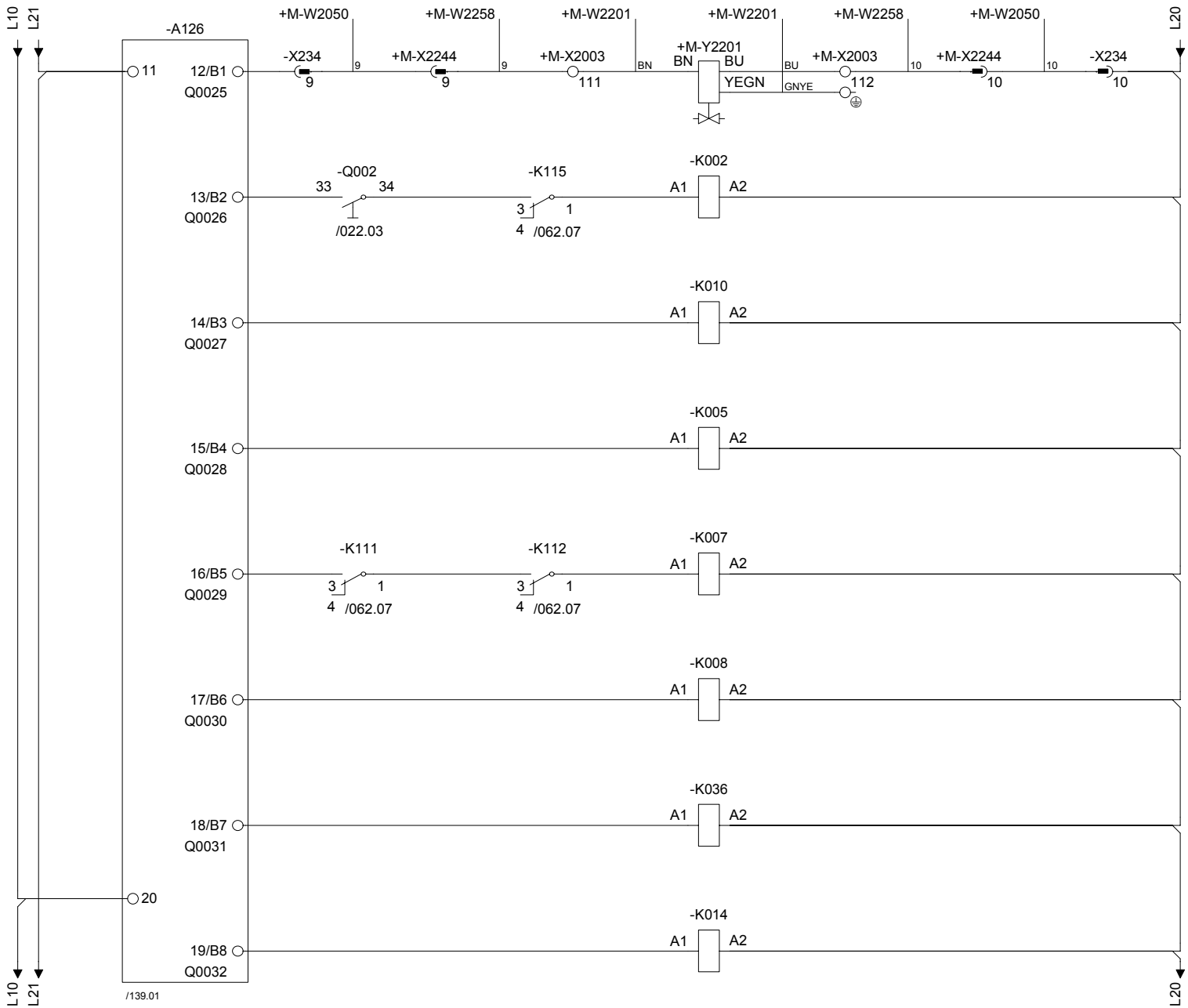

Y2201 AIR TREATMENT

Drawing remarks	Tetra Pak	Designer BMI	Date 07/06/2004	Machine TBA/22-0500		
		ECM No 175296	Denomination CIRCUIT DIAGRAM	Page Type PLC OUTPUT		
		Company Tetra Pak Carton Ambient S.p.A.	Document No. 2593852-0003	Doc. type ELD	Version AE	Page 140

RELEASED

This drawing must not without the consent of Tetra Pak be copied, transmitted or disclosed to any third party.

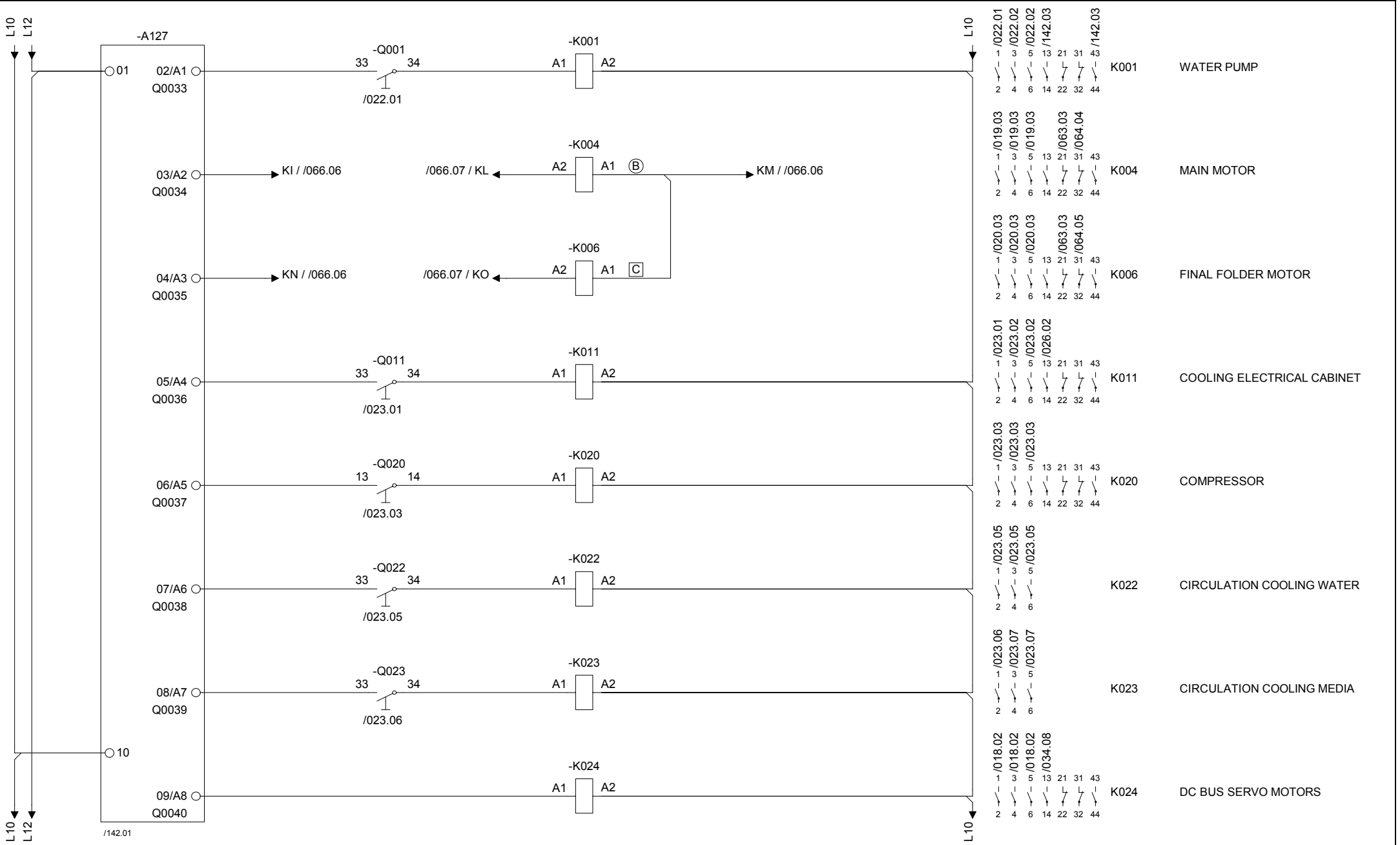

Drawing remarks

Tetra Pak

Designer BMI	Date 07/06/2004	Machine TBA/22-0500	
ECM No 175296	Denomination CIRCUIT DIAGRAM	Page Type PLC OUTPUT	
Company Tetra Pak Carton Ambient S.p.A.	Document No. 2593852-0003	Doc. type ELD	Version AE	Page 141

RELEASED

This drawing must not without the consent of Tetra Pak be copied, transmitted or disclosed to any third party.

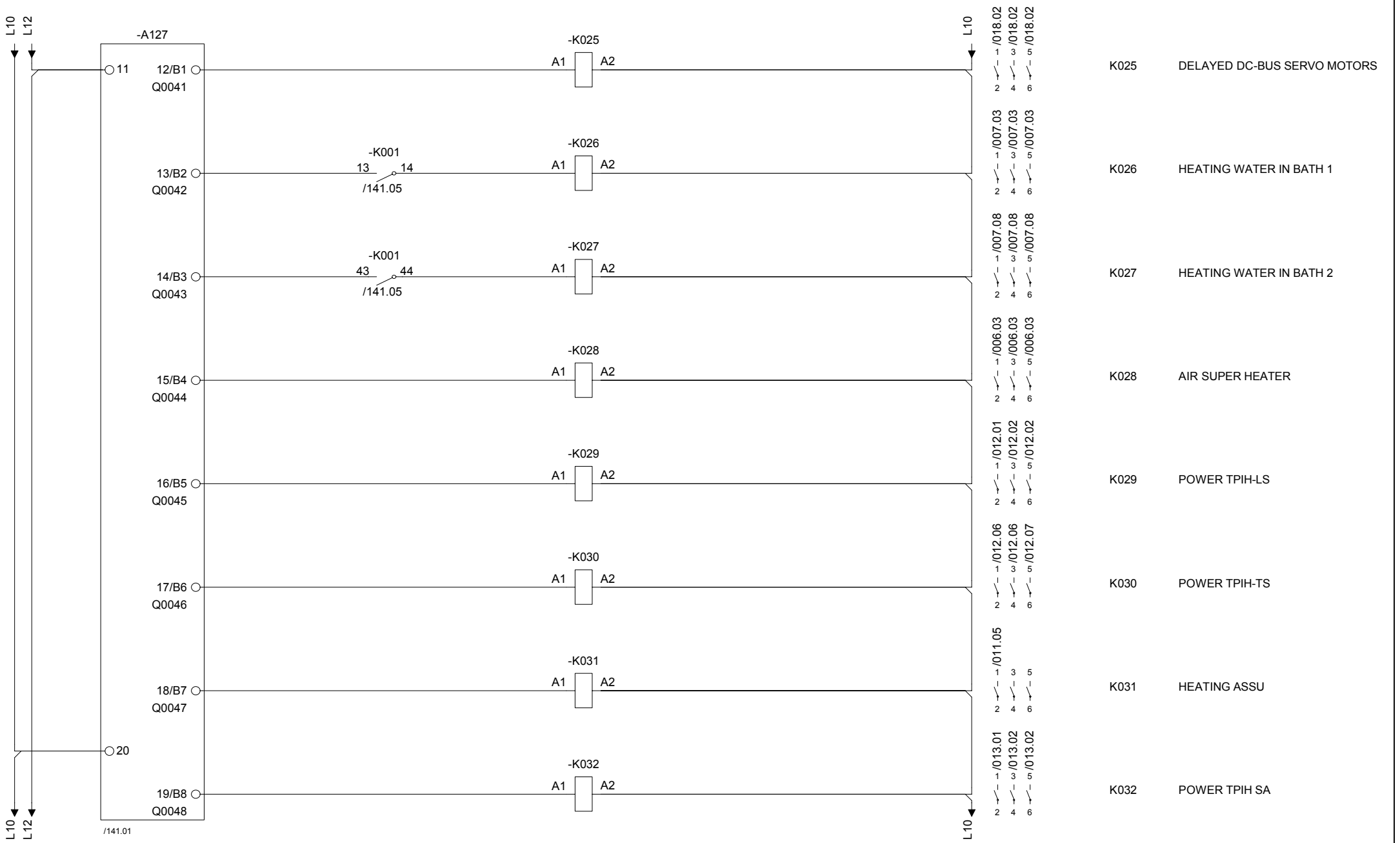

Drawing remarks	Tetra Pak	Designer BMI	Date 07/06/2004	Machine TBA/22-0500	
		ECM No 175296	Denomination CIRCUIT DIAGRAM	Page Type PLC OUTPUT	
		Company Tetra Pak Carton Ambient S.p.A.	Document No. 2593852-0003	Doc. type ELD	Version AE	Page 142

RELEASED

This drawing must not without the consent of Tetra Pak be copied, transmitted or disclosed to any third party.

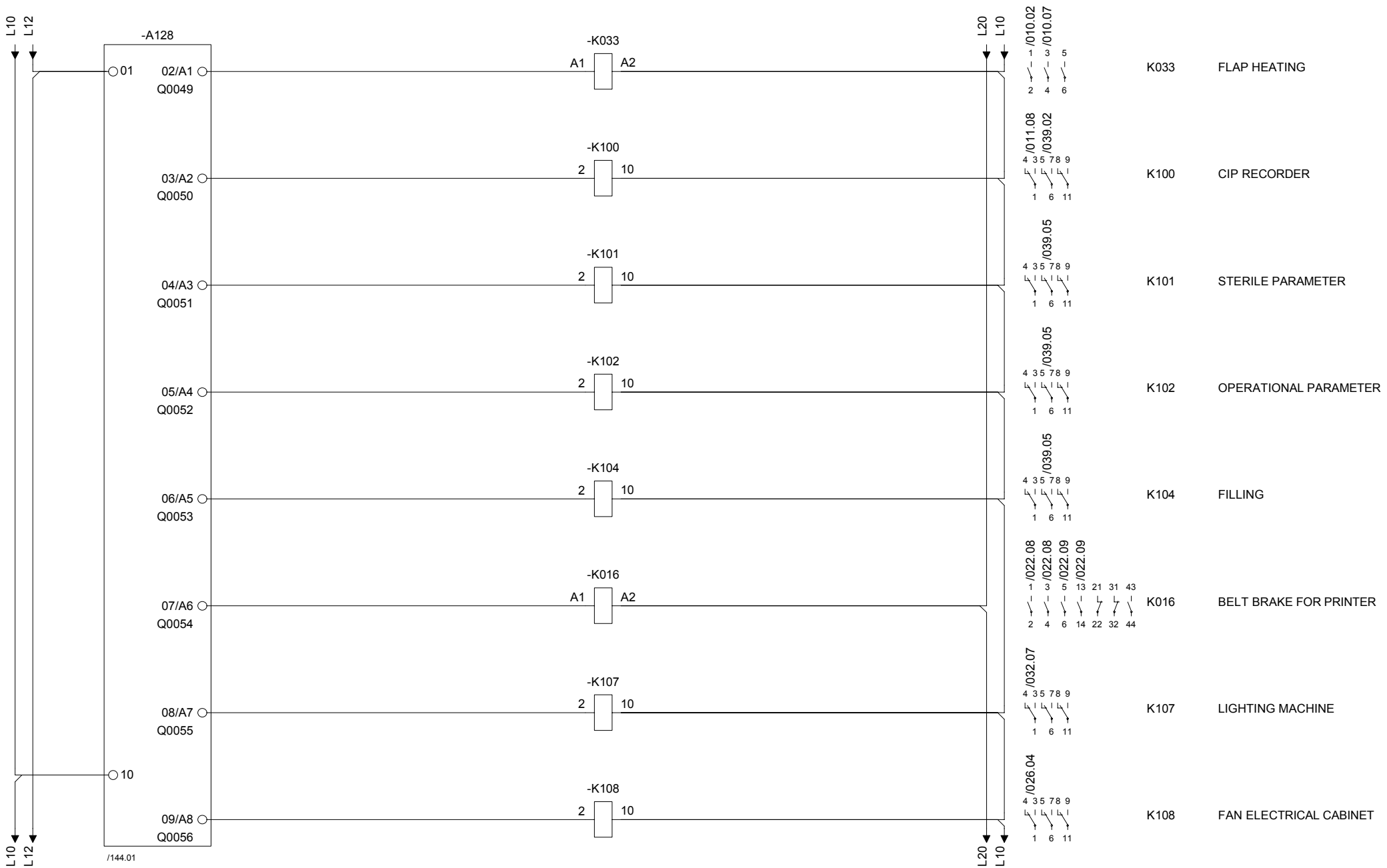

Drawing remarks	Tetra Pak	Designer BMI	Date 07/06/2004	Machine TBA/22-0500	
		ECM No 175296	Denomination CIRCUIT DIAGRAM	Page Type PLC OUTPUT	
		Company Tetra Pak Carton Ambient S.p.A.	Document No. 2593852-0003	Doc. type ELD	Version AE	Page 143

RELEASED

This drawing must not without the consent of Tetra Pak be copied, transmitted or disclosed to any third party.

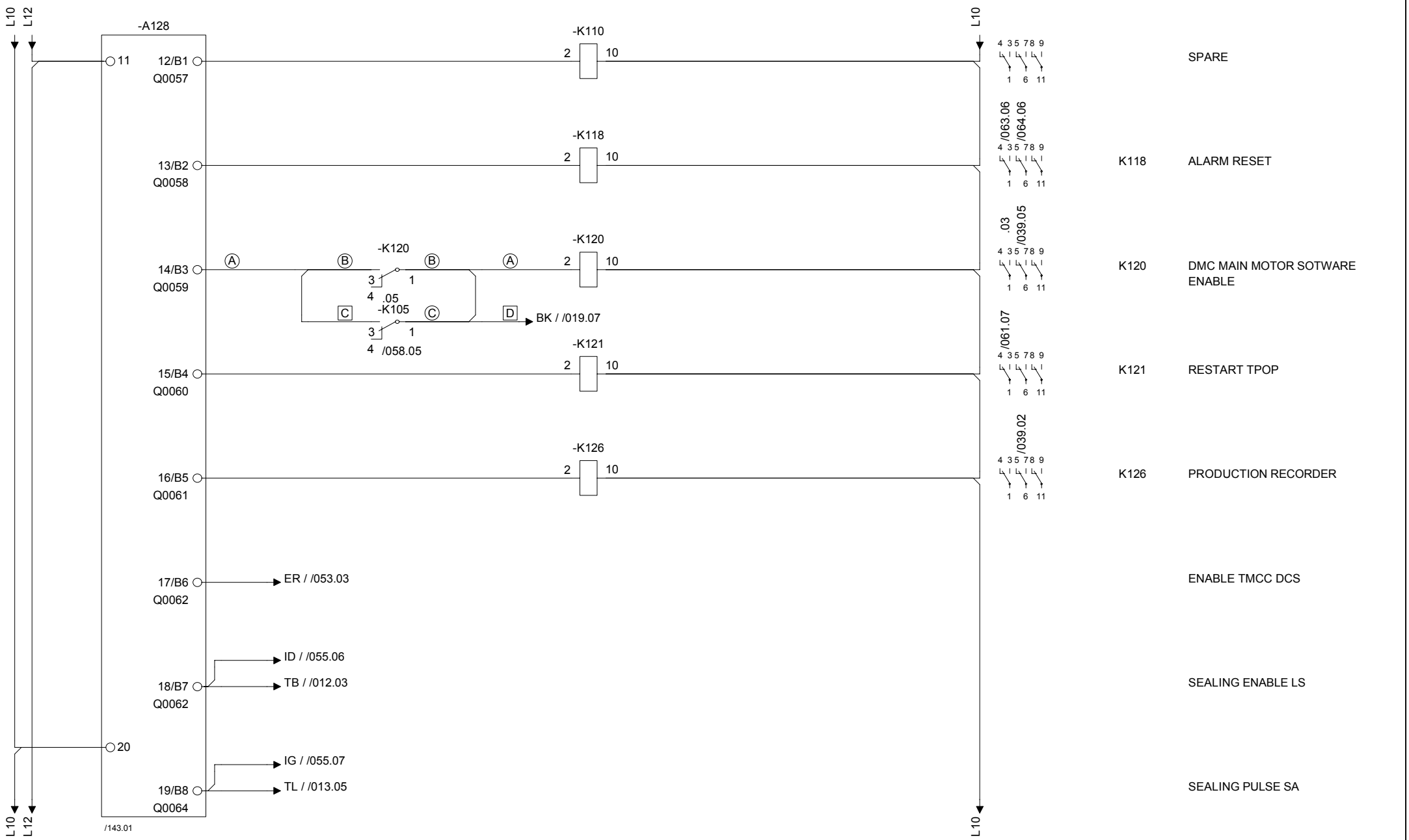

Drawing remarks	Tetra Pak	Designer BMI	Date 07/06/2004	Machine TBA/22-0500	
		ECM No 175296	Denomination CIRCUIT DIAGRAM	Page Type PLC OUTPUT	
		Company Tetra Pak Carton Ambient S.p.A.	Document No. 2593852-0003	Doc. type ELD	Version AE	Page 144

This drawing must not without the consent of Tetra Pak be copied, transmitted or disclosed to any third party.

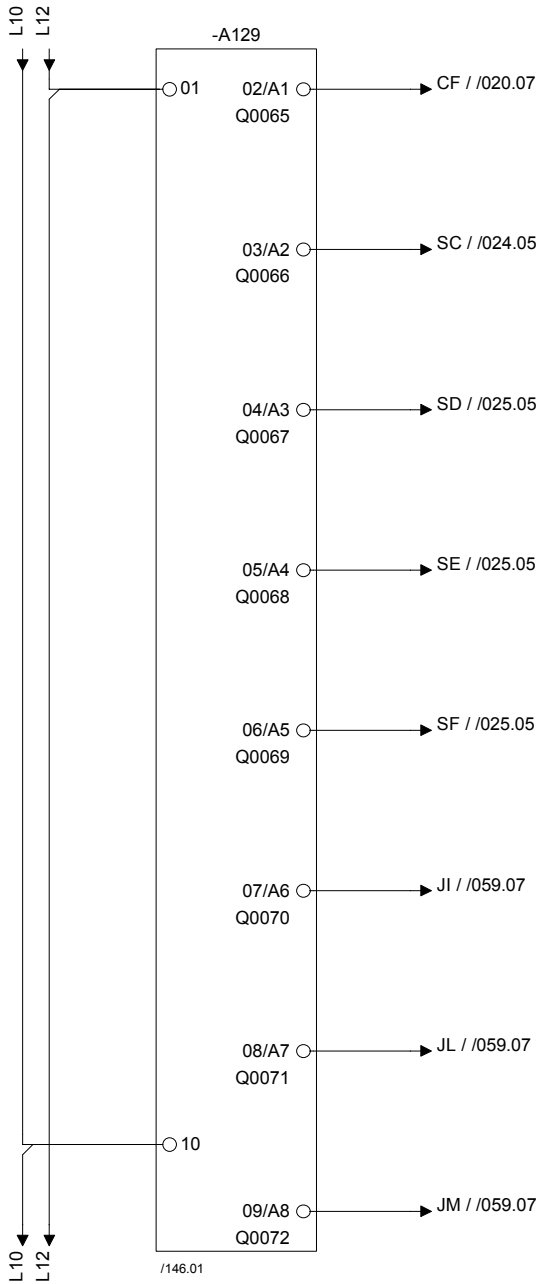

WAIT MAIN DMC

ENABLE MOTOR VOLUME ADJUSTMENT

DIRECTION MOTOR TUBE POSITIONING

PULSE CLOCK MOTOR TUBE POSITIONING

ENABLE MOTOR TUBE POSITIONING

CIP COMMUNICATION OUT 1

CIP COMMUNICATION OUT 2

MACHINE READY FOR PRODUCTION

Drawing remarks

Tetra Pak

Designer BMI	Date 07/06/2004	Machine TBA/22-0500		
ECM No 175296	Denomination CIRCUIT DIAGRAM	Page Type PLC OUTPUT		
Company Tetra Pak Carton Ambient S.p.A.	Document No. 2593852-0003	Doc. type ELD	Version AE	Page 145

RELEASED

This drawing must not without the consent of Tetra Pak be copied, transmitted or disclosed to any third party.

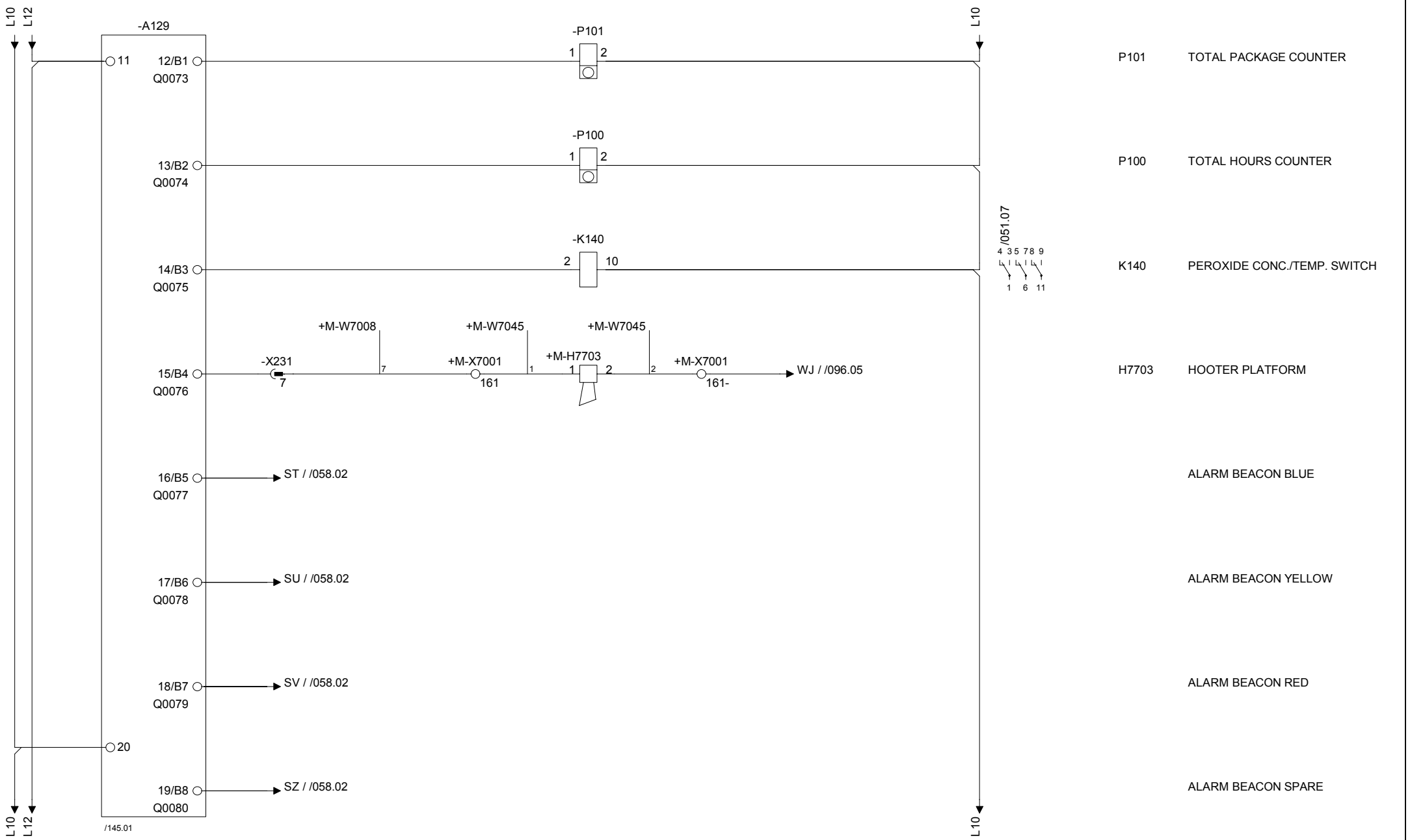

Drawing remarks	Tetra Pak	Designer BMI	Date 07/06/2004	Machine TBA/22-0500
		ECM No 175296	Denomination CIRCUIT DIAGRAM	Page Type PLC OUTPUT
		Company Tetra Pak Carton Ambient S.p.A.	Document No. 2593852-0003	Doc. type ELD / Version AE / Page 146

This drawing must not without the consent of Tetra Pak be copied, transmitted or disclosed to any third party.



Drawing remarks

Tetra Pak

Designer BMI	Date 07/06/2004	Machine TBA/22-0500			
ECM No 175296	Denomination CIRCUIT DIAGRAM	Page Type PLC OUTPUT			
Company Tetra Pak Carton Ambient S.p.A.	Document No. 2593852-0003	Doc. type ELD	Version AE	Page 147	

RELEASED

This drawing must not without the consent of Tetra Pak be copied, transmitted or disclosed to any third party.

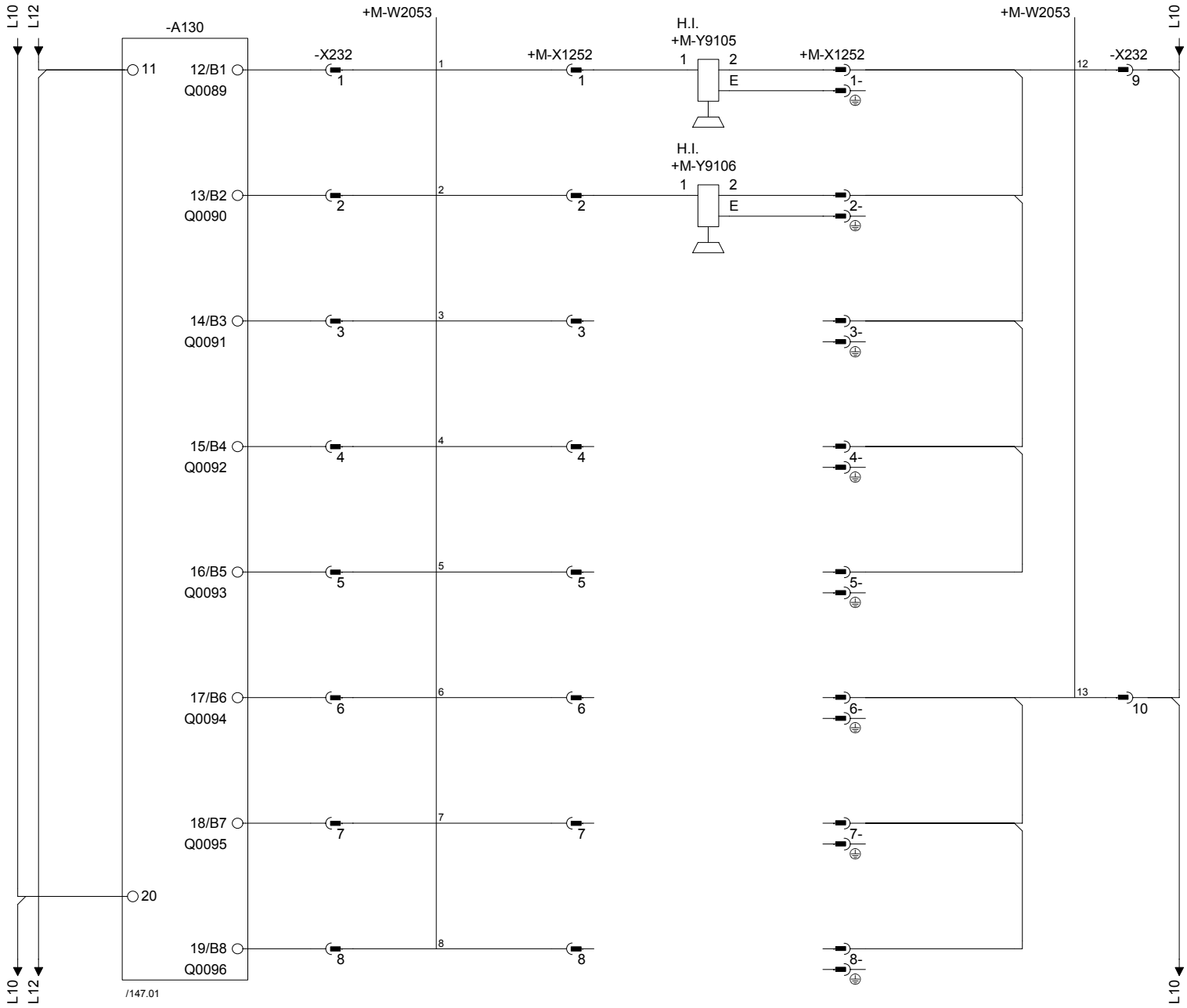

Y9105 H.I. INJECTION

Y9106 H.I SWITCH AIR INTO ASEPTIC CHAMBER

Drawing remarks	Tetra Pak	Designer BMI	Date 07/06/2004	Machine TBA/22-0500	
		ECM No 175296	Denomination CIRCUIT DIAGRAM	Page Type PLC OUTPUT	
		Company Tetra Pak Carton Ambient S.p.A.	Document No. 2593852-0003	Doc. type ELD	Version AE	Page 148

RELEASED

This drawing must not without the consent of Tetra Pak be copied, transmitted or disclosed to any third party.

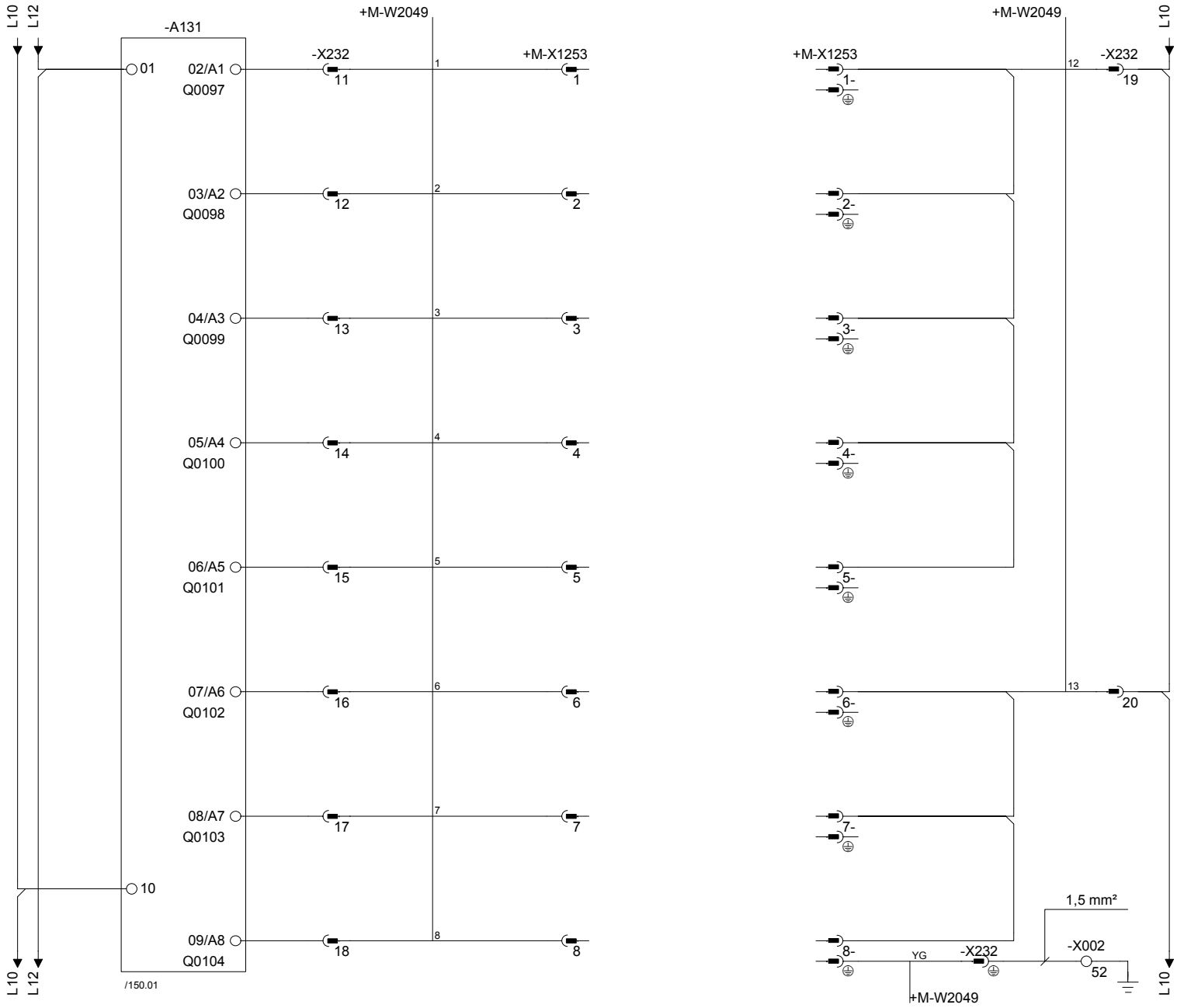

	Tetra Pak	Designer BMI	Date 07/06/2004	Machine TBA/22-0500	
		ECM No 175296	Denomination CIRCUIT DIAGRAM	Page Type PLC OUTPUT	
Drawing remarks		Company Tetra Pak Carton Ambient S.p.A.	Document No. 2593852-0003	Doc. type ELD	Version AE	Page 149

RELEASED

This drawing must not without the consent of Tetra Pak be copied, transmitted or disclosed to any third party.

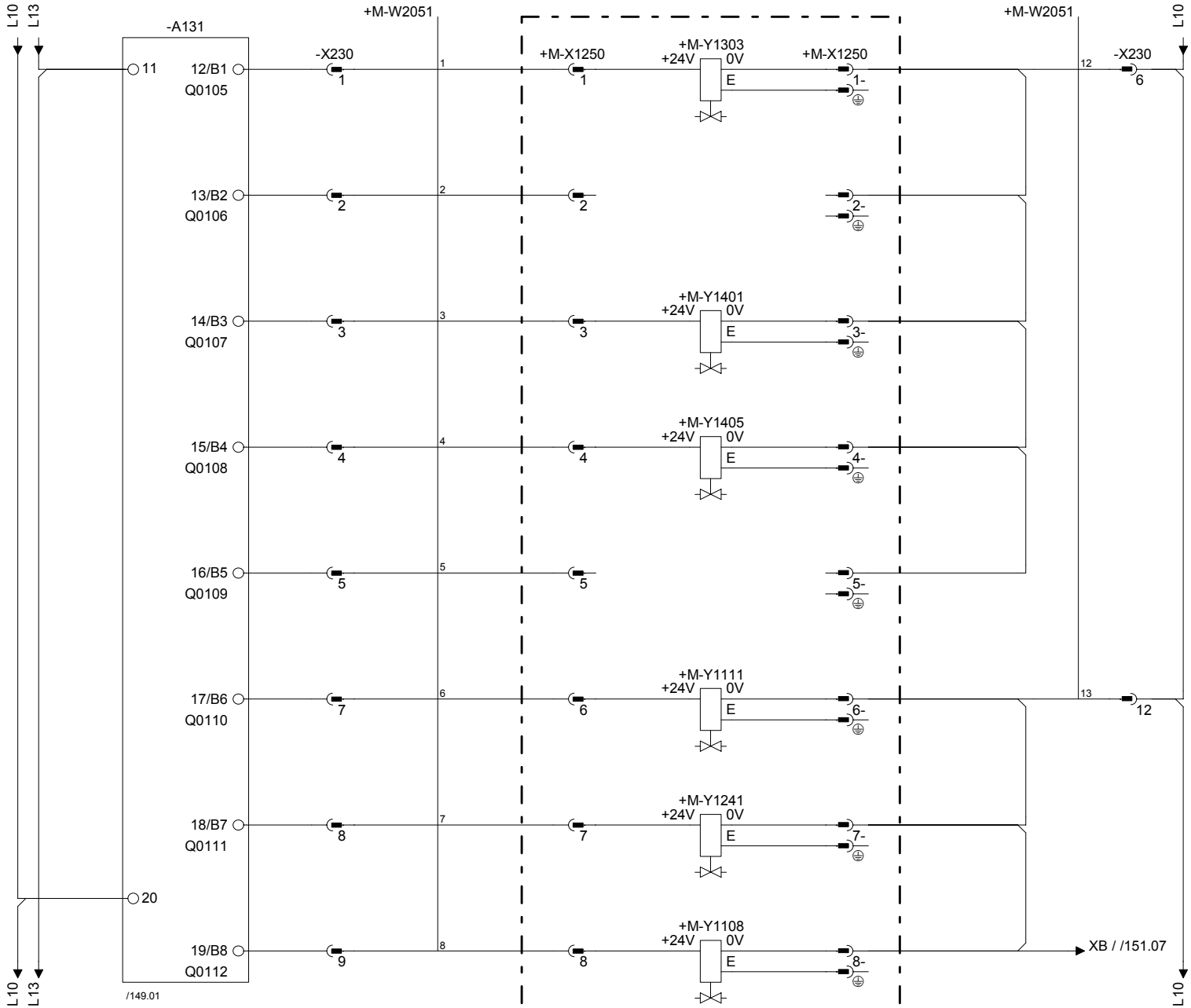

Y1303	C-VALVE OPEN
Y1401	MOVABLE LOWER FORMING RING
Y1405	BENDING ROLLER ROTATION
Y1111	PREHEATING VALVE
Y1241	BUTTERFLY VALVE
Y1108	HEAT EXCHANGER VALVE STEP 2

Drawing remarks

Tetra Pak

Designer	BMI	Date	07/06/2004	Machine	TBA/22-0500
ECM No	175296	Denomination	CIRCUIT DIAGRAM	Page Type	PLC OUTPUT
Company	Tetra Pak Carton Ambient S.p.A.	Document No.	2593852-0003	Doc. type	ELD
				Version	AE
				Page	150

RELEASED

This drawing must not without the consent of Tetra Pak be copied, transmitted or disclosed to any third party.

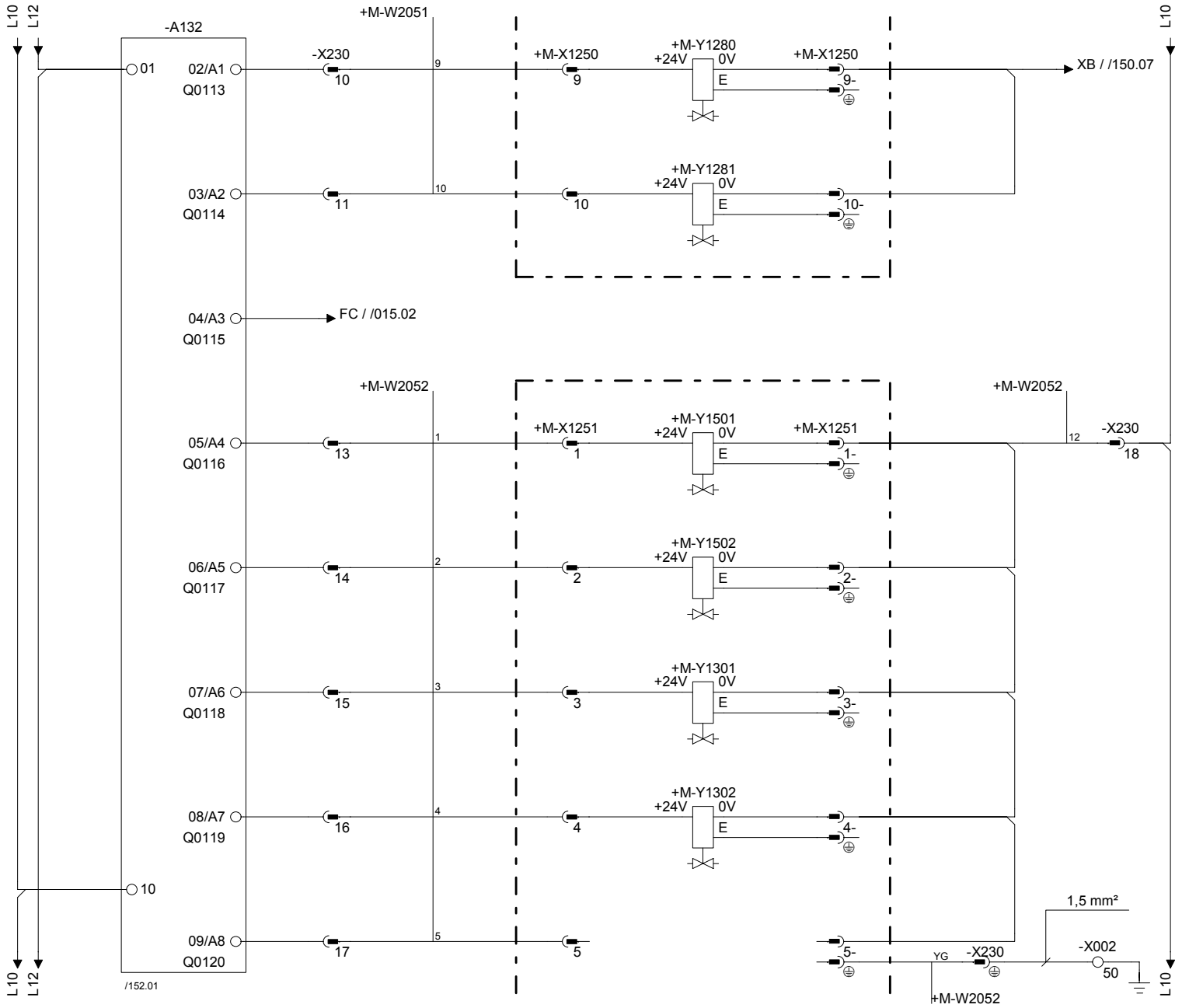

Y1280	STEAM TRAP
Y1281	TEMPERATURE CONTROLLED STEAM BARRIER
	STRIP MOTOR REVERSE
Y1501	FEED PACKAGING MATERIAL
Y1502	MOVABLE SQUEE-GEE ROLLER
Y1301	A-VALVE
Y1302	B-VALVE

Drawing remarks

Tetra Pak

Designer BMI	Date 07/06/2004	Machine TBA/22-0500	
ECM No 175296	Denomination CIRCUIT DIAGRAM	Page Type PLC OUTPUT	
Company Tetra Pak Carton Ambient S.p.A.	Document No. 2593852-0003	Doc. type ELD	Version AE	Page 151

This drawing must not without the consent of Tetra Pak be copied, transmitted or disclosed to any third party.

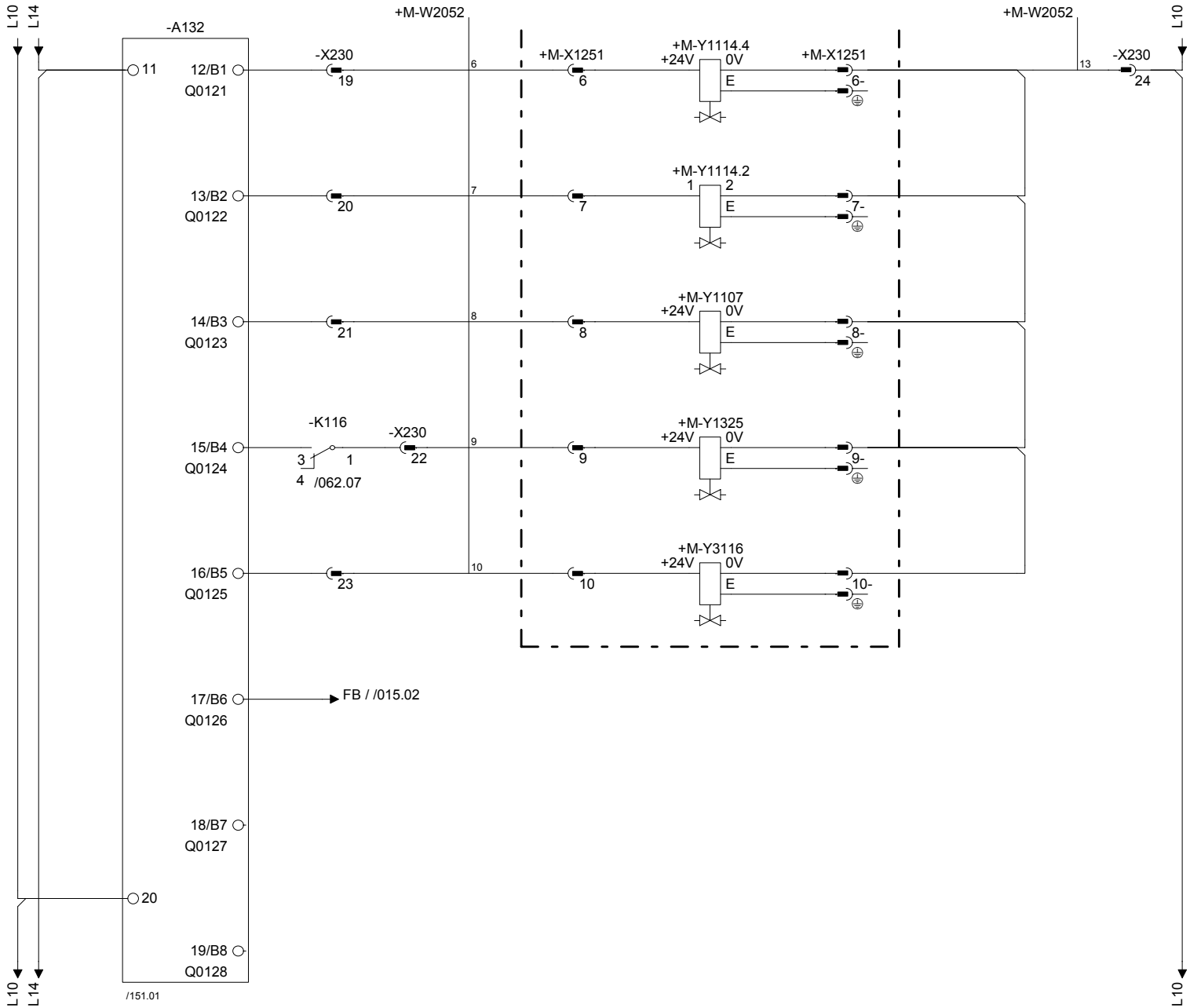

Y1114.4	PREHEATING VALVE STEP 1
Y1114.2	PREHEATING VALVE STEP 2
Y1107	HEAT EXCHANGER VALVE STEP 1
Y1325	CLEANING CUP DRAINING
Y3116	COLUMN CLEANING BALL/LID
	STRIP MOTOR ENABLE

Drawing remarks

Tetra Pak

Designer BMI	Date 07/06/2004	Machine TBA/22-0500			
ECM No 175296	Denomination CIRCUIT DIAGRAM	Page Type PLC OUTPUT			
Company Tetra Pak Carton Ambient S.p.A.	Document No. 2593852-0003	Doc. type ELD	Version AE	Page 152	

RELEASED

This drawing must not without the consent of Tetra Pak be copied, transmitted or disclosed to any third party.

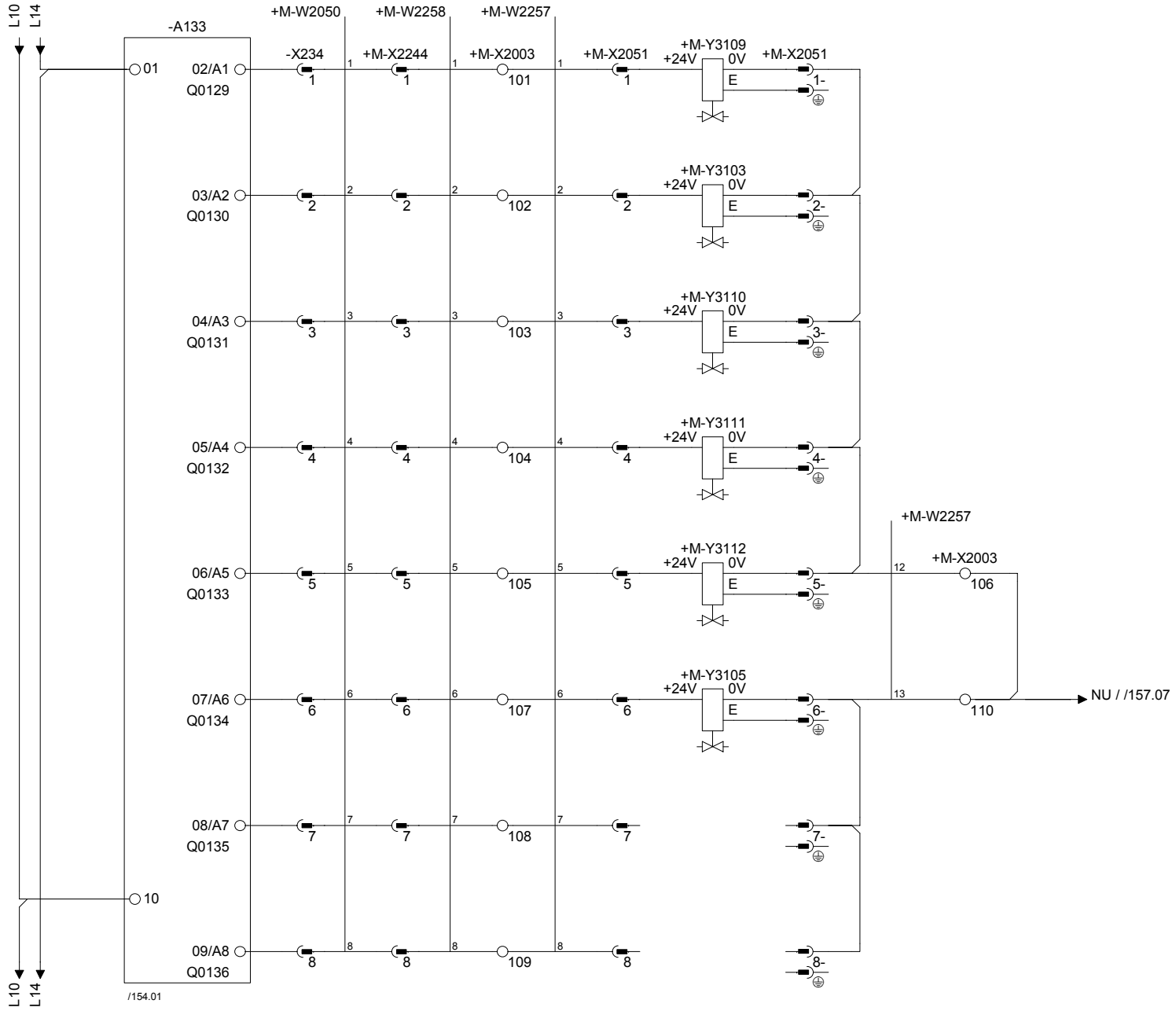

Y3109	FOAMING
Y3103	WARM RINSING
Y3110	COLUMN CLEANING
Y3111	JAW SYSTEM CLEANING
Y3112	FFU CLEANING
Y3105	DOSING CHEMICAL / TUBE FLUSHING

Drawing remarks

Tetra Pak

Designer BMI	Date 07/06/2004	Machine TBA/22-0500			
ECM No 175296	Denomination CIRCUIT DIAGRAM	Page Type PLC OUTPUT			
Company Tetra Pak Carton Ambient S.p.A.	Document No. 2593852-0003	Doc. type ELD	Version AE	Page 153	

RELEASED

This drawing must not without the consent of Tetra Pak be copied, transmitted or disclosed to any third party.

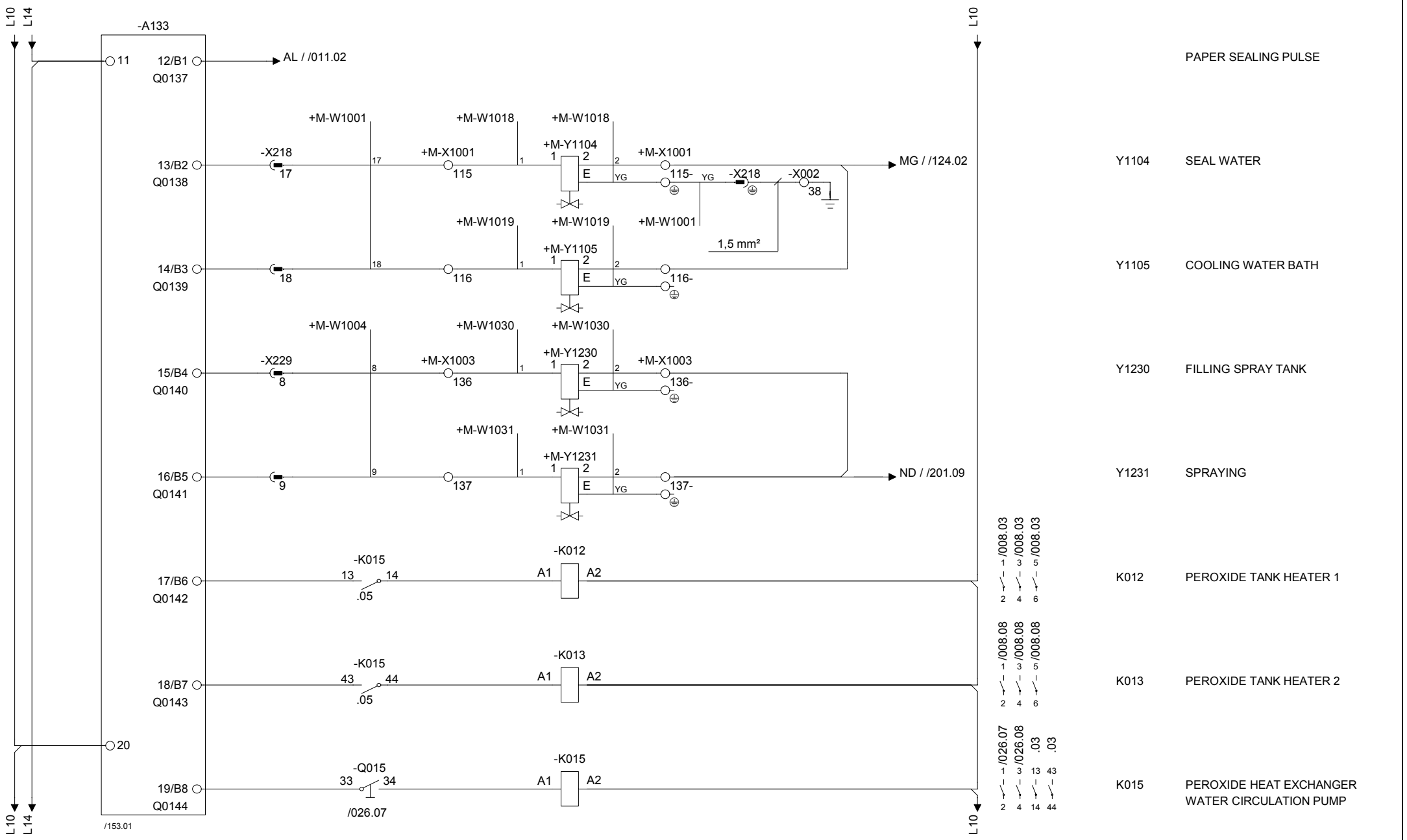

Drawing remarks	Tetra Pak	Designer BMI	Date 07/06/2004	Machine TBA/22-0500	
		ECM No 175296	Denomination CIRCUIT DIAGRAM	Page Type PLC OUTPUT	
		Company Tetra Pak Carton Ambient S.p.A.	Document No. 2593852-0003	Doc. type ELD	Version AE	Page 154

RELEASED

This drawing must not without the consent of Tetra Pak be copied, transmitted or disclosed to any third party.

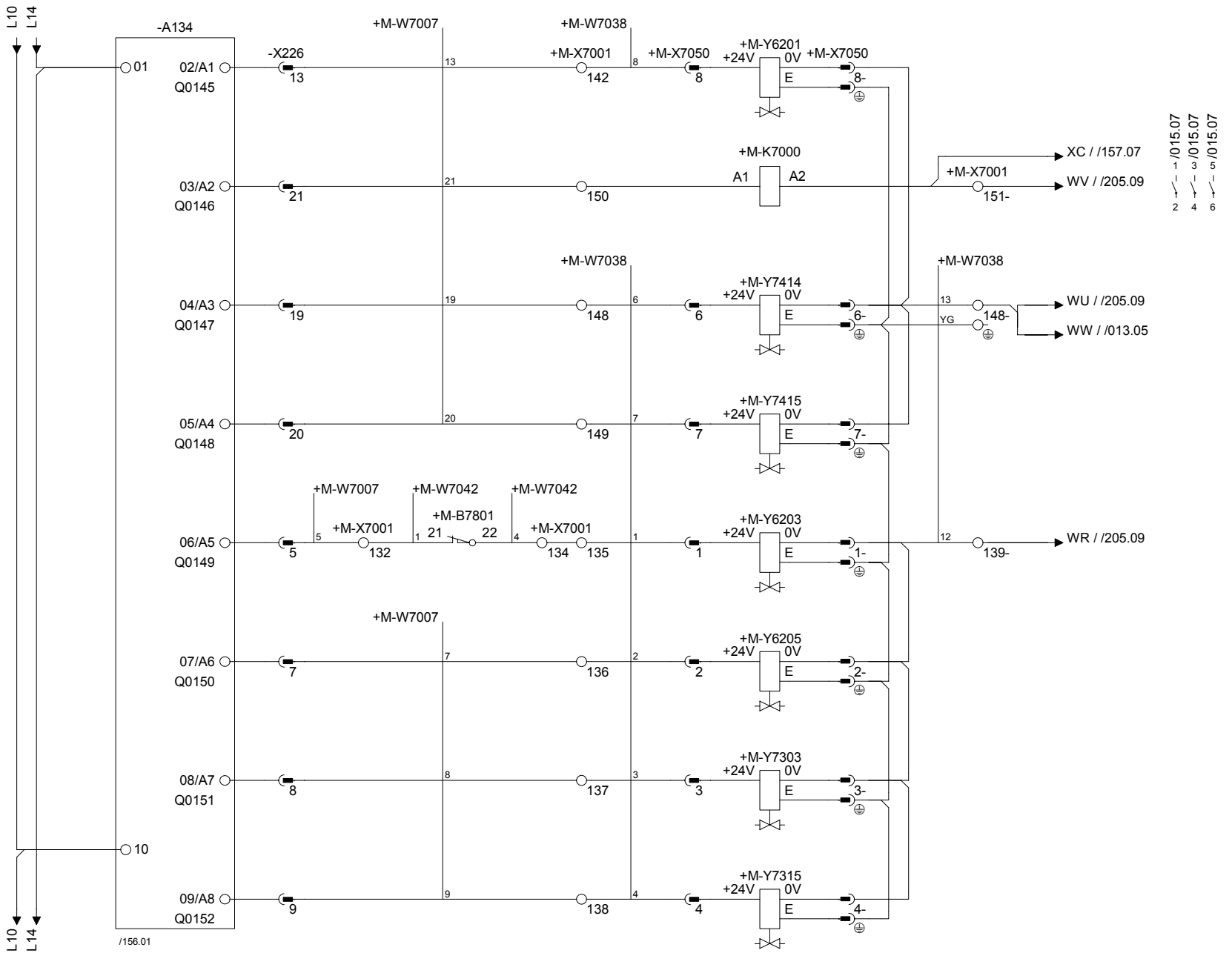

Y6201	SA COOLING
K7000	STRIP BOBBIN 1
Y7414	CUTTING TABLE 1
Y7415	CUTTING TABLE 2
Y6230	MOVING OF THE SPLICING HEAD
B7801	SA EXTERNAL DOOR GUARD
Y6205	COOL STRIP SEAL
Y7303	LOCK CYLINDER 1
Y7315	LOCK CYLINDER 2

Drawing remarks

Tetra Pak

Designer BMI	Date 07/06/2004	Machine TBA/22-0500			
ECM No 175296	Denomination CIRCUIT DIAGRAM	Page Type PLC OUTPUT			
Company Tetra Pak Carton Ambient S.p.A.	Document No. 2593852-0003	Doc. type ELD	Version AE	Page 155	

RELEASED

This drawing must not without the consent of Tetra Pak be copied, transmitted or disclosed to any third party.

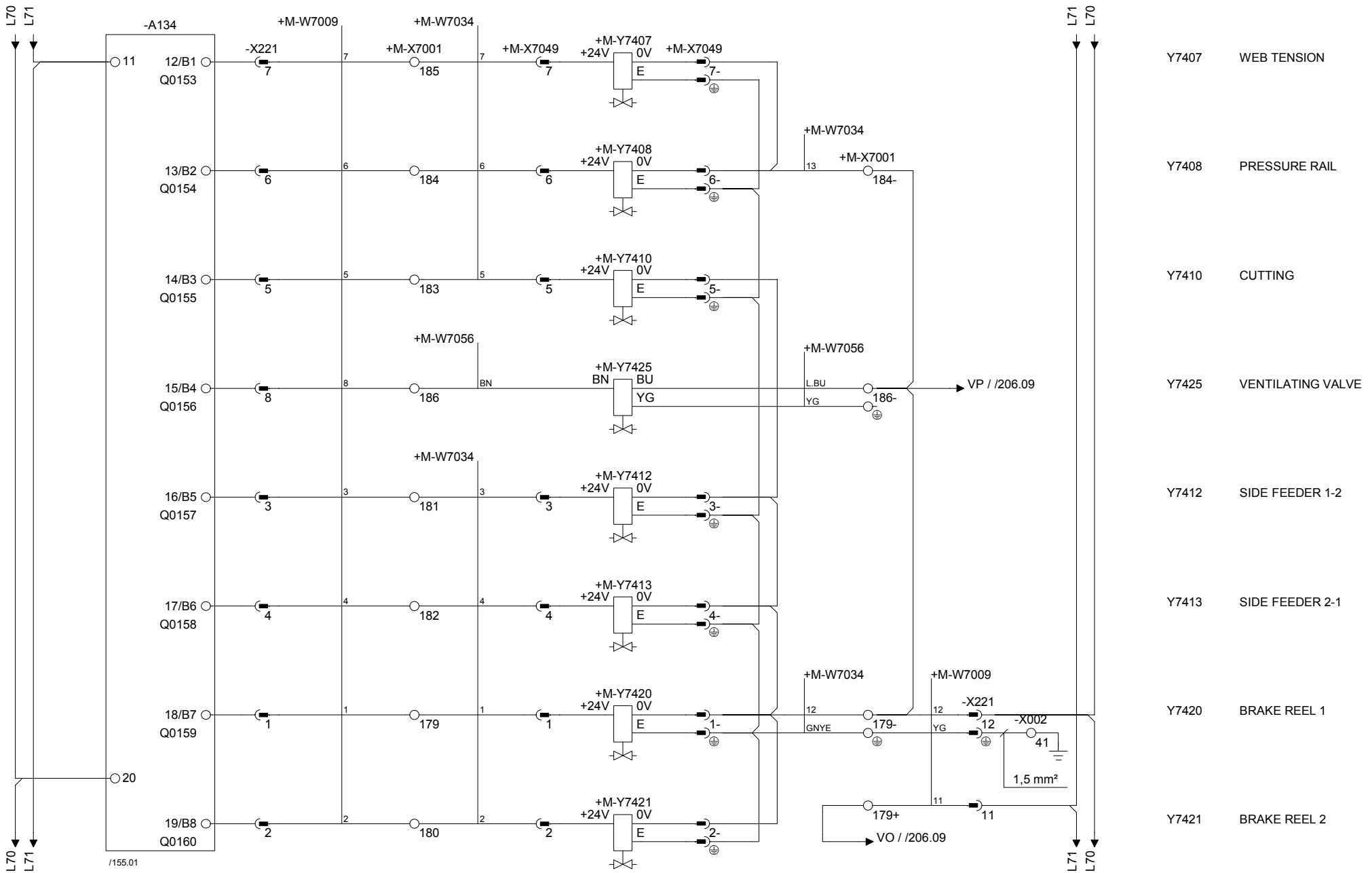

Y7407 WEB TENSION

Y7408 PRESSURE RAIL

Y7410 CUTTING

Y7425 VENTILATING VALVE

Y7412 SIDE FEEDER 1-2

Y7413 SIDE FEEDER 2-1

Y7420 BRAKE REEL 1

Y7421 BRAKE REEL 2

Drawing remarks	Tetra Pak	Designer BMI	Date 07/06/2004	Machine TBA/22-0500			
		ECM No 175296	Denomination CIRCUIT DIAGRAM	Page Type PLC OUTPUT			
		Company Tetra Pak Carton Ambient S.p.A.	Document No. 2593852-0003	Doc. type ELD	Version AE	Page 156	

RELEASED

This drawing must not without the consent of Tetra Pak be copied, transmitted or disclosed to any third party.

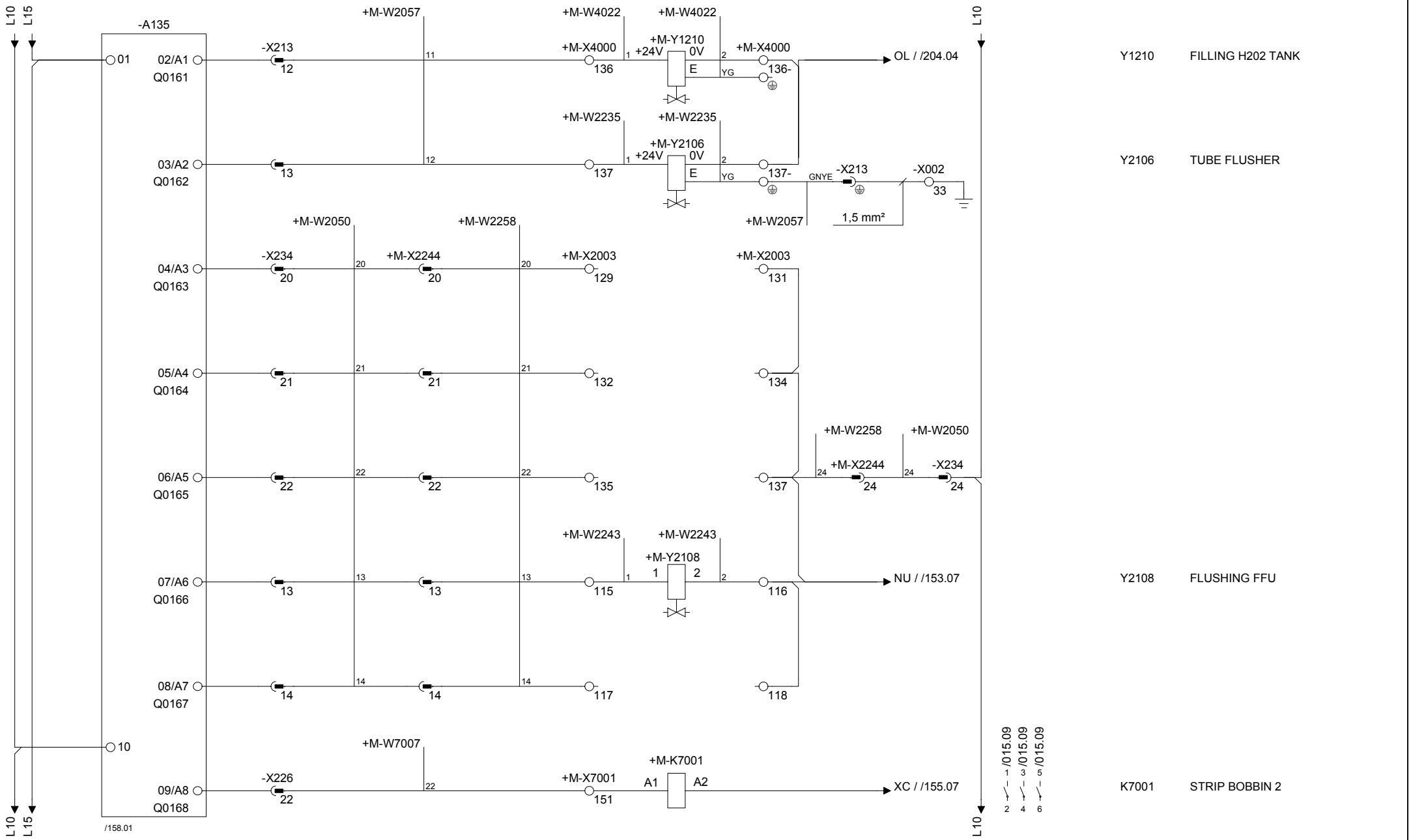

Y1210	FILLING H202 TANK
Y2106	TUBE FLUSHER
Y2108	FLUSHING FFU
K7001	STRIP BOBBIN 2

Drawing remarks	Tetra Pak	Designer BMI	Date 07/06/2004	Machine TBA/22-0500			
		ECM No 175296	Denomination CIRCUIT DIAGRAM	Page Type PLC OUTPUT			
		Company Tetra Pak Carton Ambient S.p.A.	Document No. 2593852-0003	Doc. type ELD	Version AE	Page 157	

This drawing must not without the consent of Tetra Pak be copied, transmitted or disclosed to any third party.

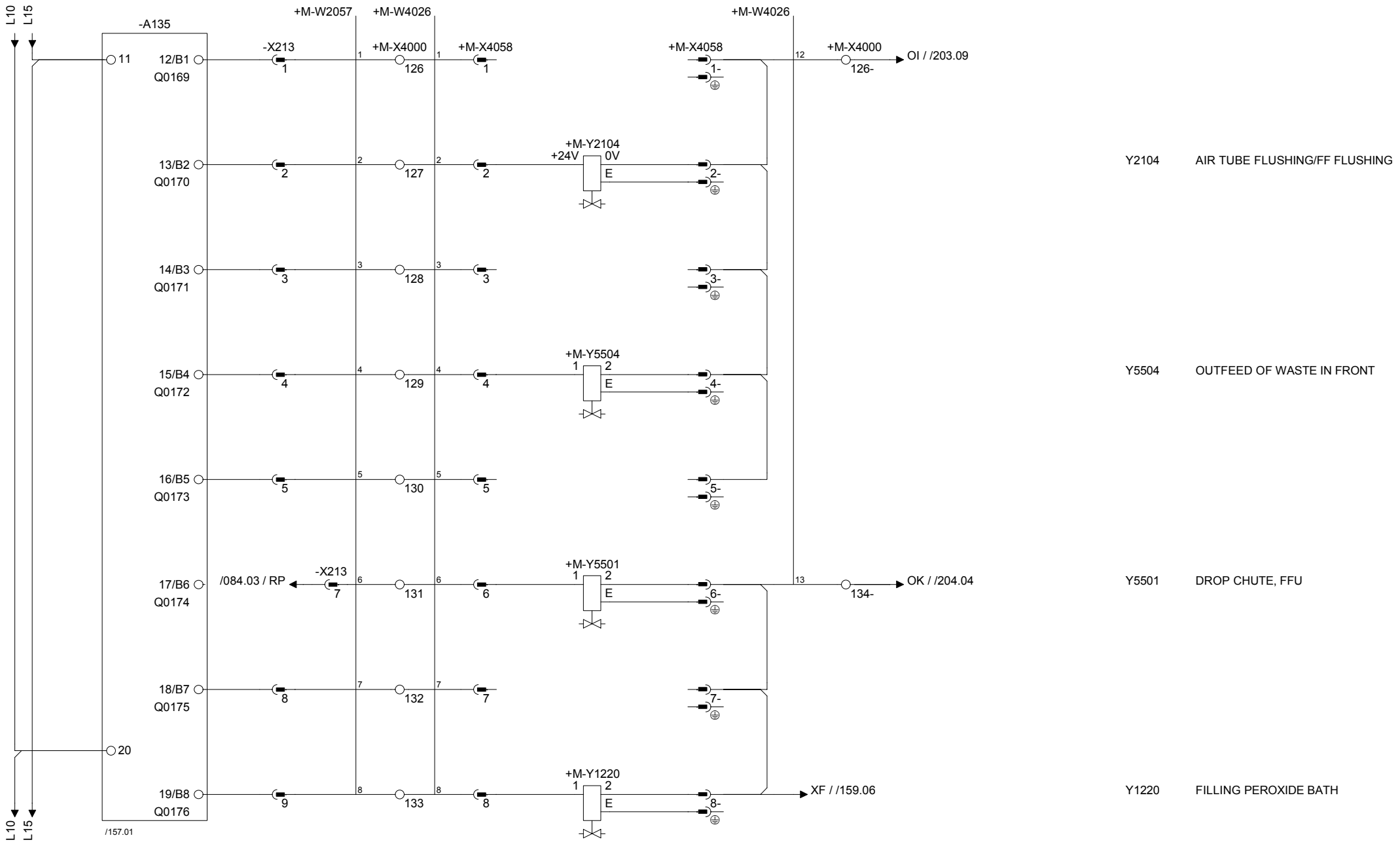

Y2104	AIR TUBE FLUSHING/FF FLUSHING
Y5504	OUTFEED OF WASTE IN FRONT
Y5501	DROP CHUTE, FFU
Y1220	FILLING PEROXIDE BATH

Drawing remarks

Tetra Pak

Designer: BMI	Date: 07/06/2004	Machine: TBA/22-0500	
ECM No: 175296	Denomination: CIRCUIT DIAGRAM	Page Type: PLC OUTPUT	
Company: Tetra Pak Carton Ambient S.p.A.	Document No.: 2593852-0003	Doc. type: ELD	Version: AE	Page: 158

RELEASED

This drawing must not without the consent of Tetra Pak be copied, transmitted or disclosed to any third party.

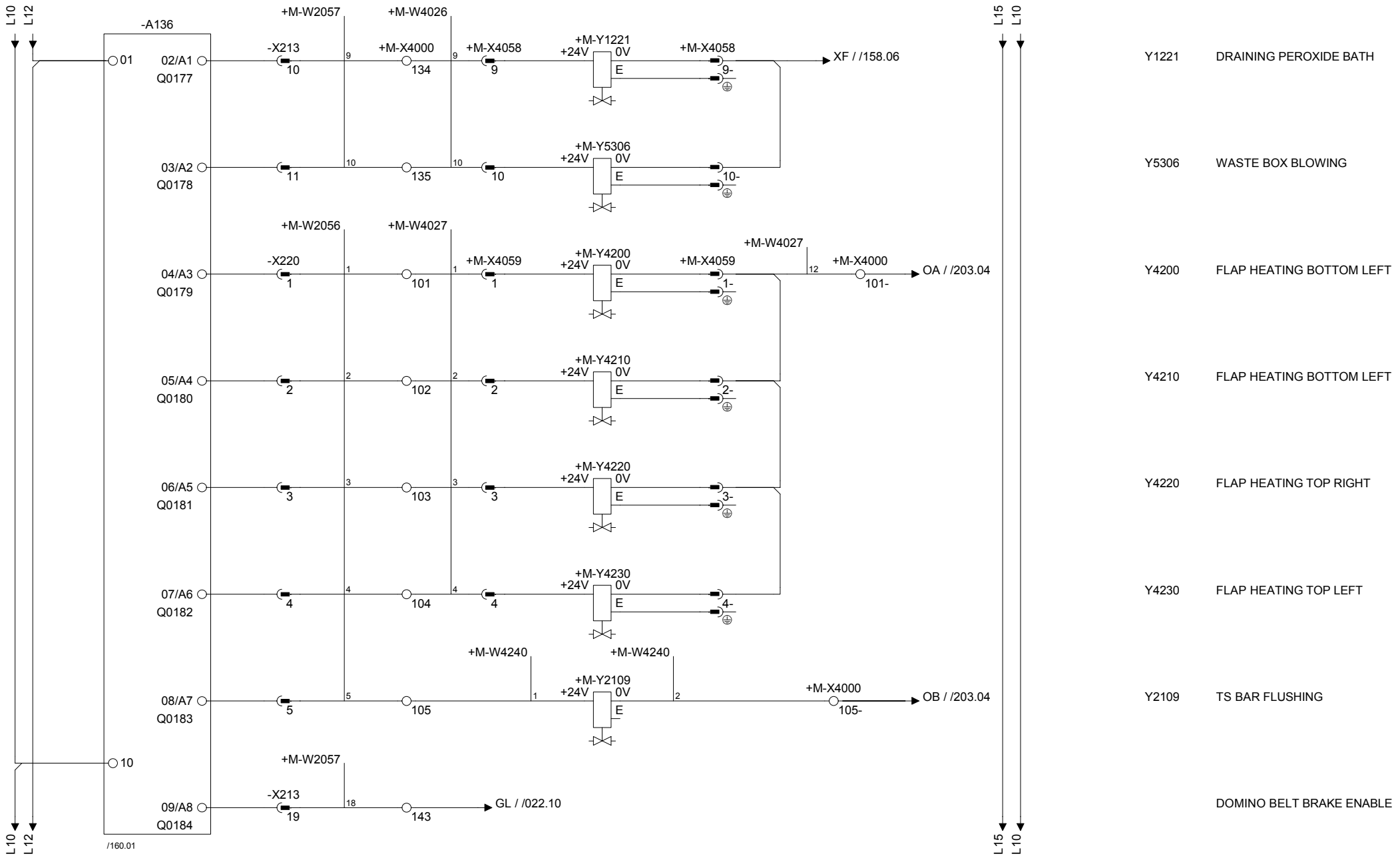

Y1221	DRAINING PEROXIDE BATH
Y5306	WASTE BOX BLOWING
Y4200	FLAP HEATING BOTTOM LEFT
Y4210	FLAP HEATING BOTTOM LEFT
Y4220	FLAP HEATING TOP RIGHT
Y4230	FLAP HEATING TOP LEFT
Y2109	TS BAR FLUSHING
	DOMINO BELT BRAKE ENABLE

Drawing remarks

Tetra Pak

Designer BMI	Date 07/06/2004	Machine TBA/22-0500			
ECM No 175296	Denomination CIRCUIT DIAGRAM	Page Type PLC OUTPUT			
Company Tetra Pak Carton Ambient S.p.A.	Document No. 2593852-0003	Doc. type ELD	Version AE	Page 159	

RELEASED

This drawing must not without the consent of Tetra Pak be copied, transmitted or disclosed to any third party.

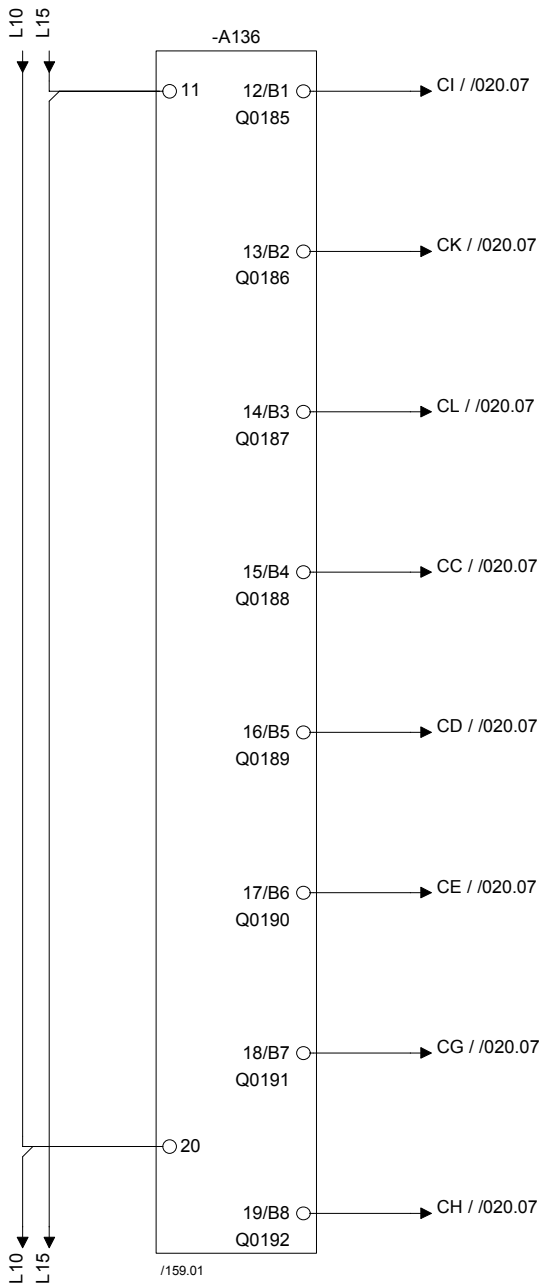

HIGH SPEED INCHING FFU

LOW SPEED INCHING FFU

SOFTWARE ENABLE FFU

SPARE FFU

SPARE FFU

SPARE FFU

FIND HOME POS. FFU

SYNCHROUNOUS DRIVE FFU

Drawing remarks

Tetra Pak

Designer BMI	Date 07/06/2004	Machine TBA/22-0500			
ECM No 175296	Denomination CIRCUIT DIAGRAM	Page Type PLC OUTPUT			
Company Tetra Pak Carton Ambient S.p.A.	Document No. 2593852-0003	Doc. type ELD	Version AE	Page 160	

RELEASED

This drawing must not without the consent of Tetra Pak be copied, transmitted or disclosed to any third party.

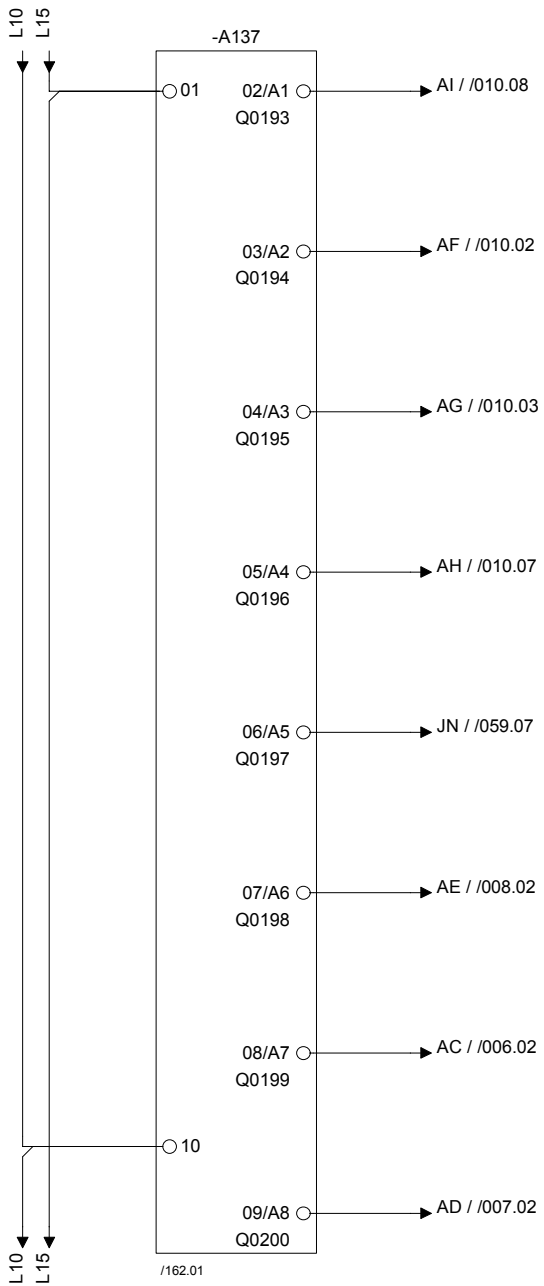

FLAP HEATING BOTTOM RIGHT

FLAP HEATING TOP LEFT

FLAP HEATING TOP RIGHT

FLAP HEATING BOTTOM LEFT

STEAM C-VALVE OK

PEROXIDE TANK HEATING EXCHANGE ELEMENT

AIR SUPER HEATER

HEATING WATER

Drawing remarks

Tetra Pak

Designer BMI	Date 07/06/2004	Machine TBA/22-0500		
ECM No 175296	Denomination CIRCUIT DIAGRAM	Page Type PLC OUTPUT		
Company Tetra Pak Carton Ambient S.p.A.	Document No. 2593852-0003	Doc. type ELD	Version AE	Page 161

This drawing must not without the consent of Tetra Pak be copied, transmitted or disclosed to any third party.

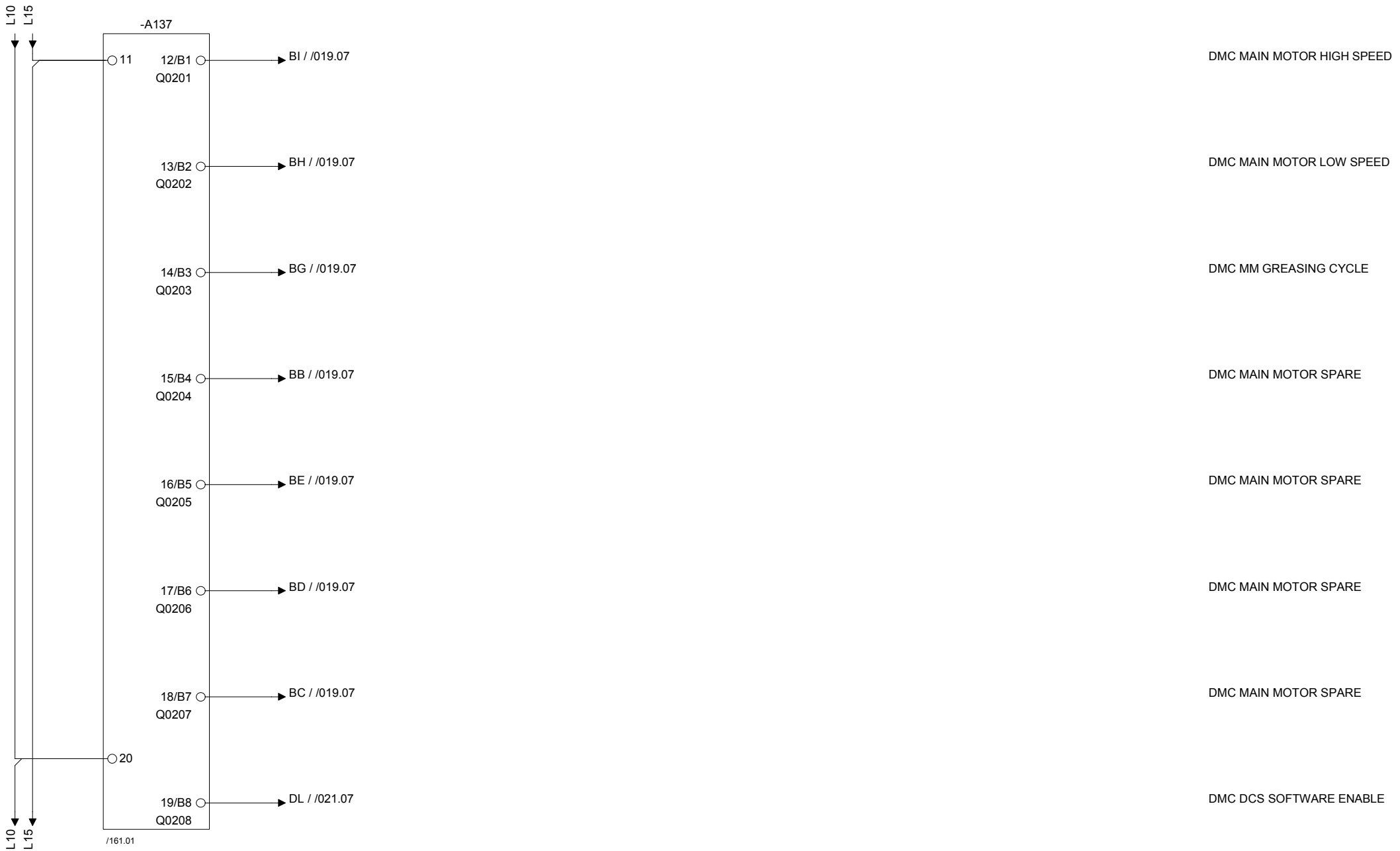

Drawing remarks

Tetra Pak

Designer BMI	Date 07/06/2004	Machine TBA/22-0500			
ECM No 175296	Denomination CIRCUIT DIAGRAM	Page Type PLC OUTPUT			
Company Tetra Pak Carton Ambient S.p.A.	Document No. 2593852-0003	Doc. type ELD	Version AE	Page 162	

RELEASED

This drawing must not without the consent of Tetra Pak be copied, transmitted or disclosed to any third party.

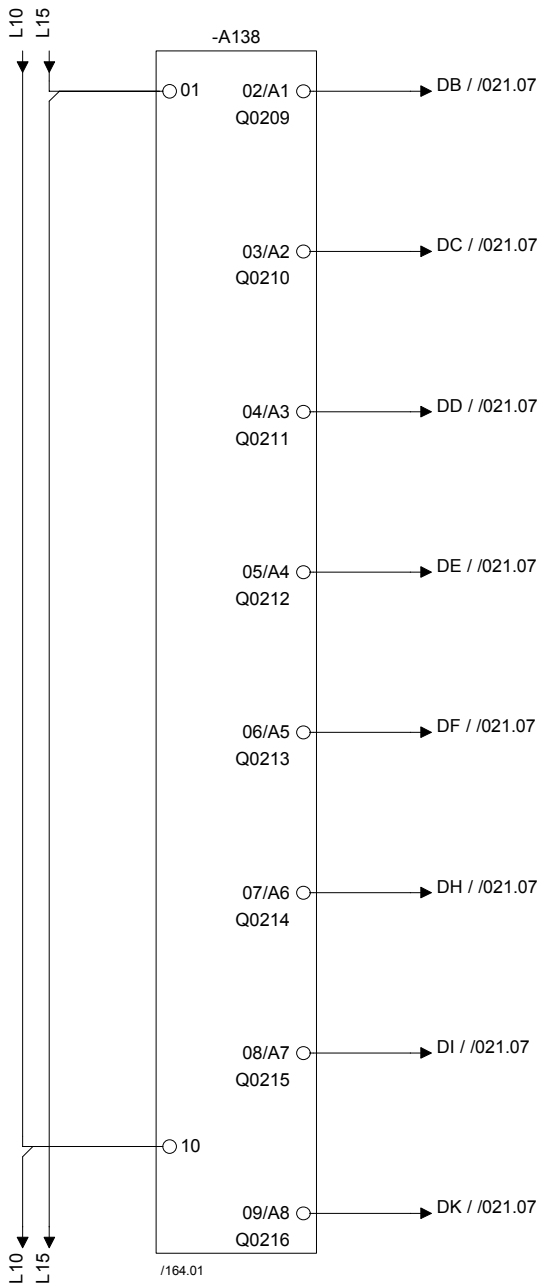

DMC DCS HARDWARE ENABLE

DMC DCS INPUT 10

DMC DCS INPUT 9

DMC DCS INPUT 8

DMC DCS CALIBRATE FF

DMC DCS FF-CALIBRATION

DMC DCS PRECORR 2

DMC DCS PRECORR 1

Drawing remarks

Tetra Pak

Designer BMI	Date 07/06/2004	Machine TBA/22-0500	
ECM No 175296	Denomination CIRCUIT DIAGRAM	Page Type PLC OUTPUT	
Company Tetra Pak Carton Ambient S.p.A.	Document No. 2593852-0003	Doc. type ELD	Version AE	Page 163

RELEASED

This drawing must not without the consent of Tetra Pak be copied, transmitted or disclosed to any third party.

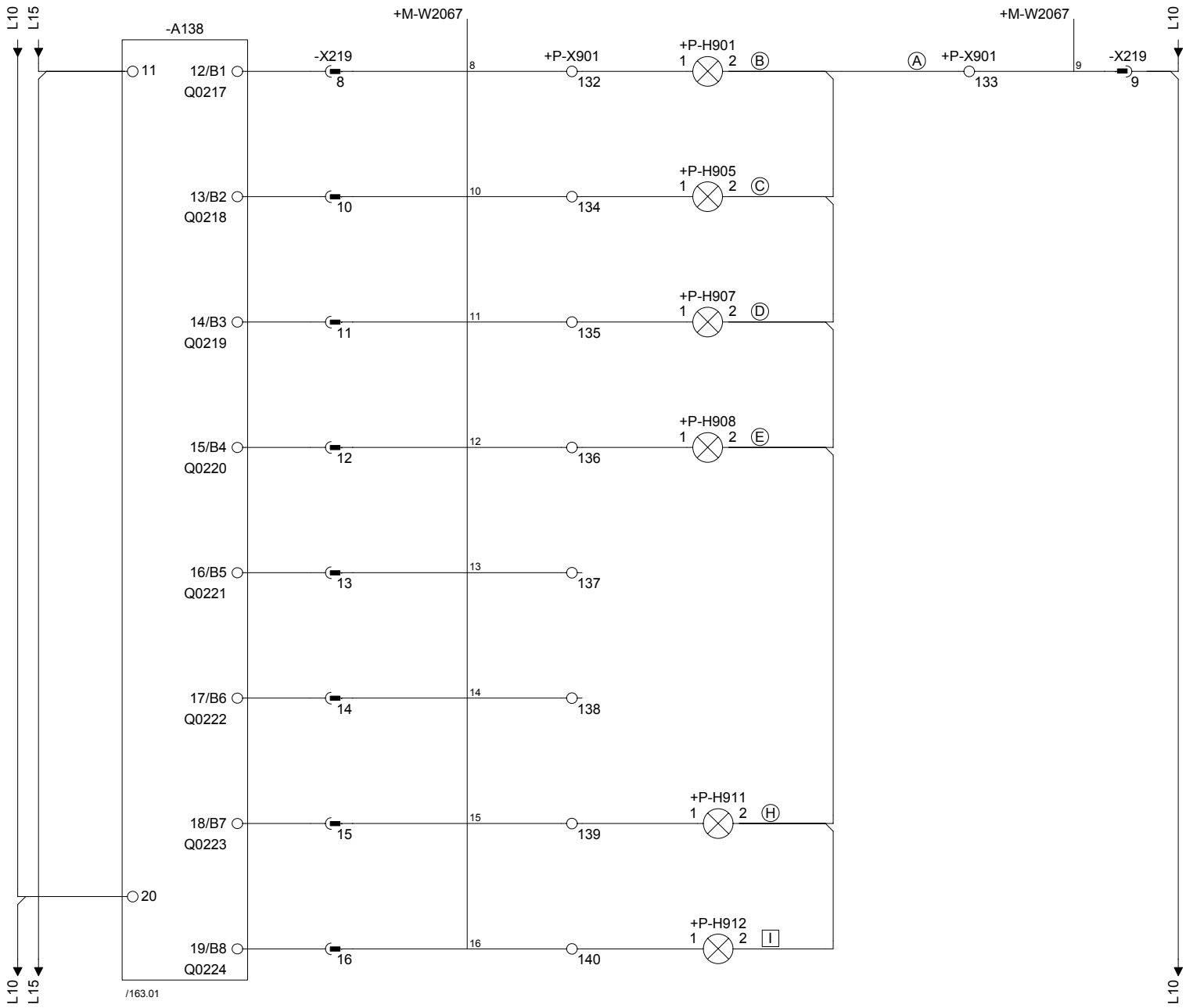

H901	TPOP RESET
H905	INCHING FFU
H907	INCHING JUM
H908	SPARE
H911	STEP UP
H912	STEP DOWN

Drawing remarks

Tetra Pak

Designer BMI	Date 07/06/2004	Machine TBA/22-0500			
ECM No 175296	Denomination CIRCUIT DIAGRAM	Page Type PLC OUTPUT			
Company Tetra Pak Carton Ambient S.p.A.	Document No. 2593852-0003	Doc. type ELD	Version AE	Page 164	

RELEASED

This drawing must not without the consent of Tetra Pak be copied, transmitted or disclosed to any third party.

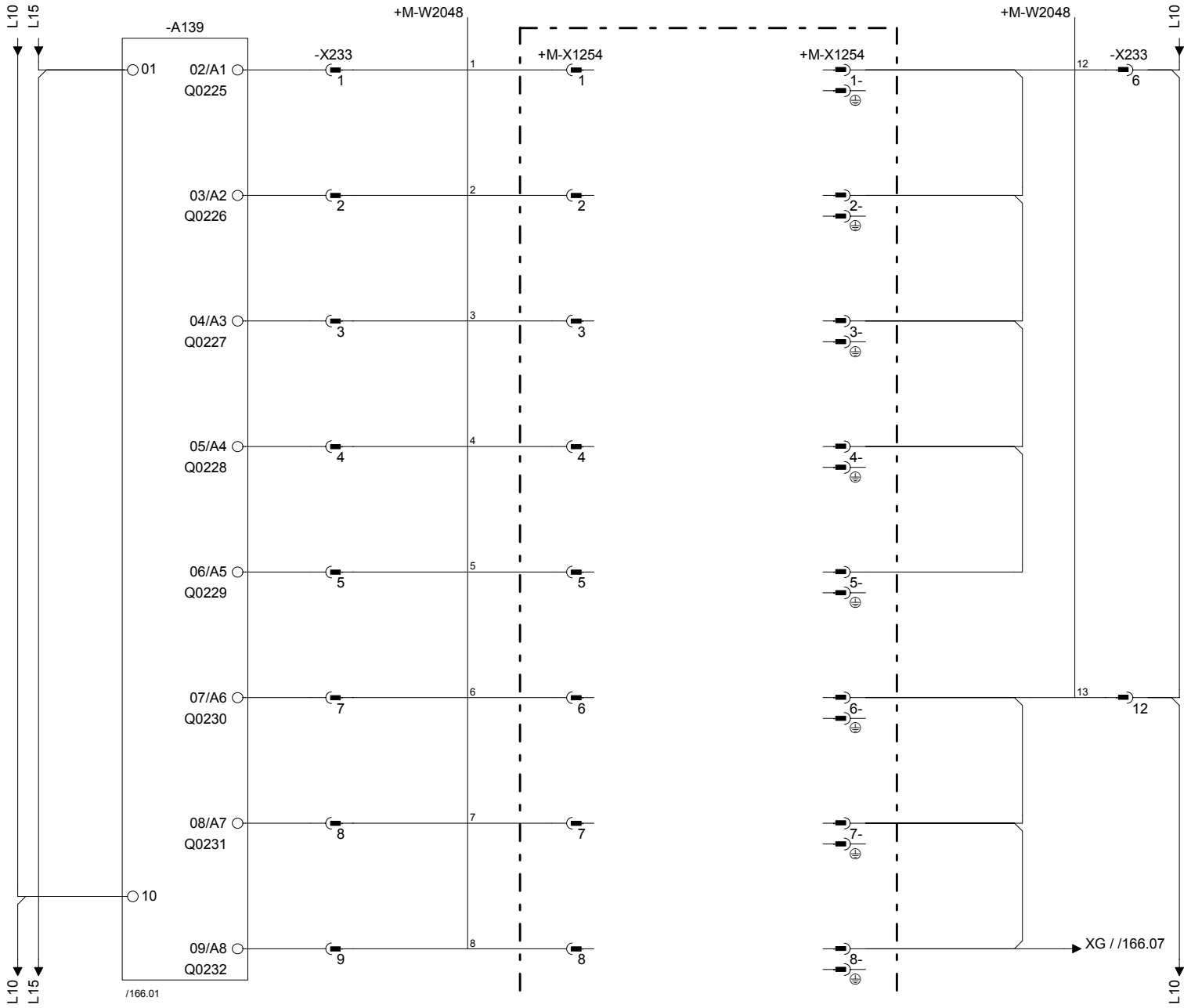

Drawing remarks	Tetra Pak	Designer BMI	Date 07/06/2004	Machine TBA/22-0500	
		ECM No 175296	Denomination CIRCUIT DIAGRAM	Page Type PLC OUTPUT	
		Company Tetra Pak Carton Ambient S.p.A.	Document No. 2593852-0003	Doc. type ELD	Version AE	Page 165

RELEASED

This drawing must not without the consent of Tetra Pak be copied, transmitted or disclosed to any third party.

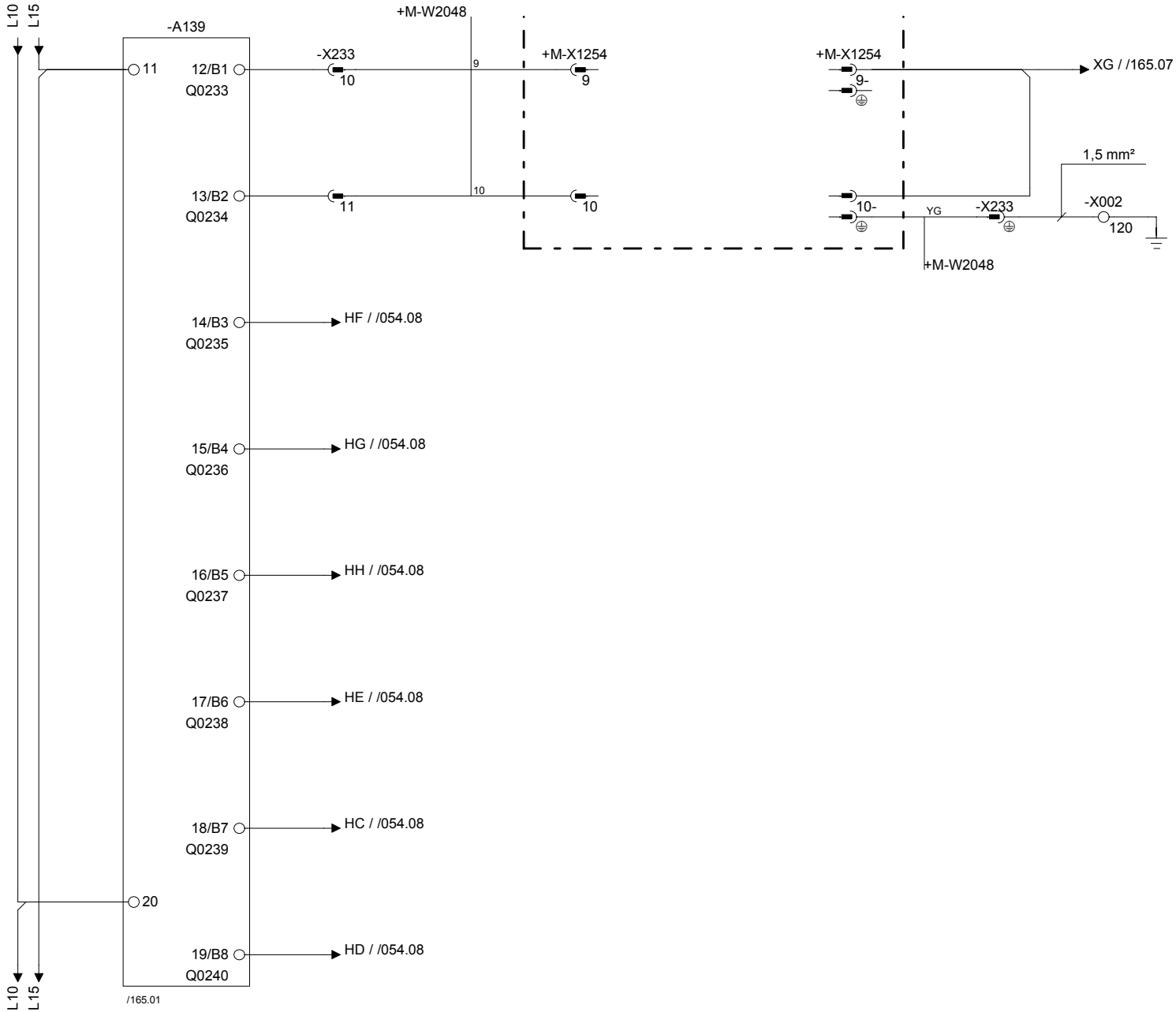

Drawing remarks	Tetra Pak	Designer BMI	Date 07/06/2004	Machine TBA/22-0500
		ECM No 175296	Denomination CIRCUIT DIAGRAM	Page Type PLC OUTPUT
		Company Tetra Pak Carton Ambient S.p.A.	Document No. 2593852-0003	Doc. type ELD / Version AE / Page 166

RELEASED

This drawing must not without the consent of Tetra Pak be copied, transmitted or disclosed to any third party.

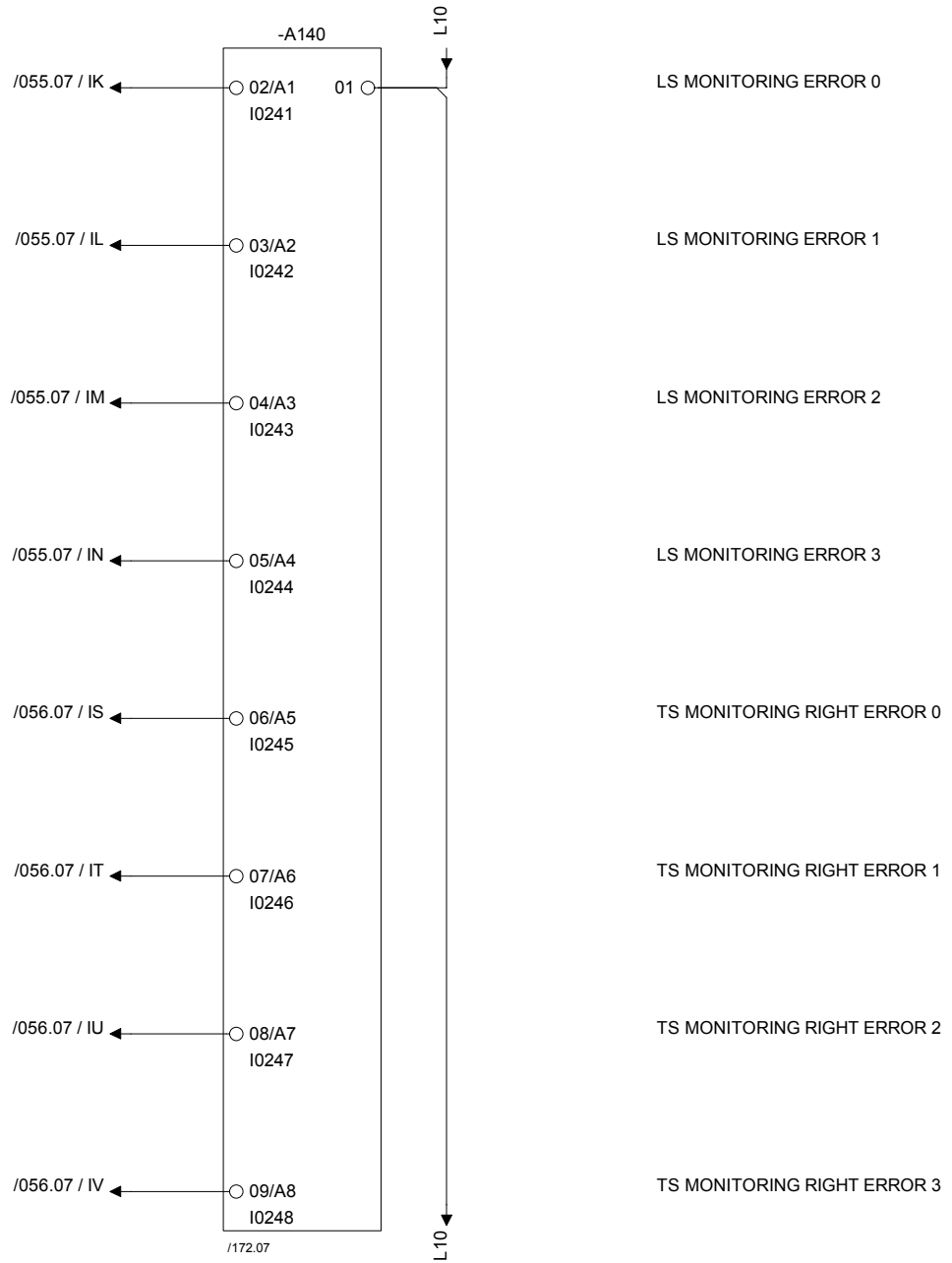

Drawing remarks	Tetra Pak	Designer BMI	Date 07/06/2004	Machine TBA/22-0500			
		ECM No 175296	Denomination CIRCUIT DIAGRAM	Page Type PLC INPUT			
		Company Tetra Pak Carton Ambient S.p.A.		Document No. 2593852-0003	Doc. type ELD	Version AE	Page 171

This drawing must not without the consent of Tetra Pak be copied, transmitted or disclosed to any third party.

1	2	3	4	5	6	7	8	9	10

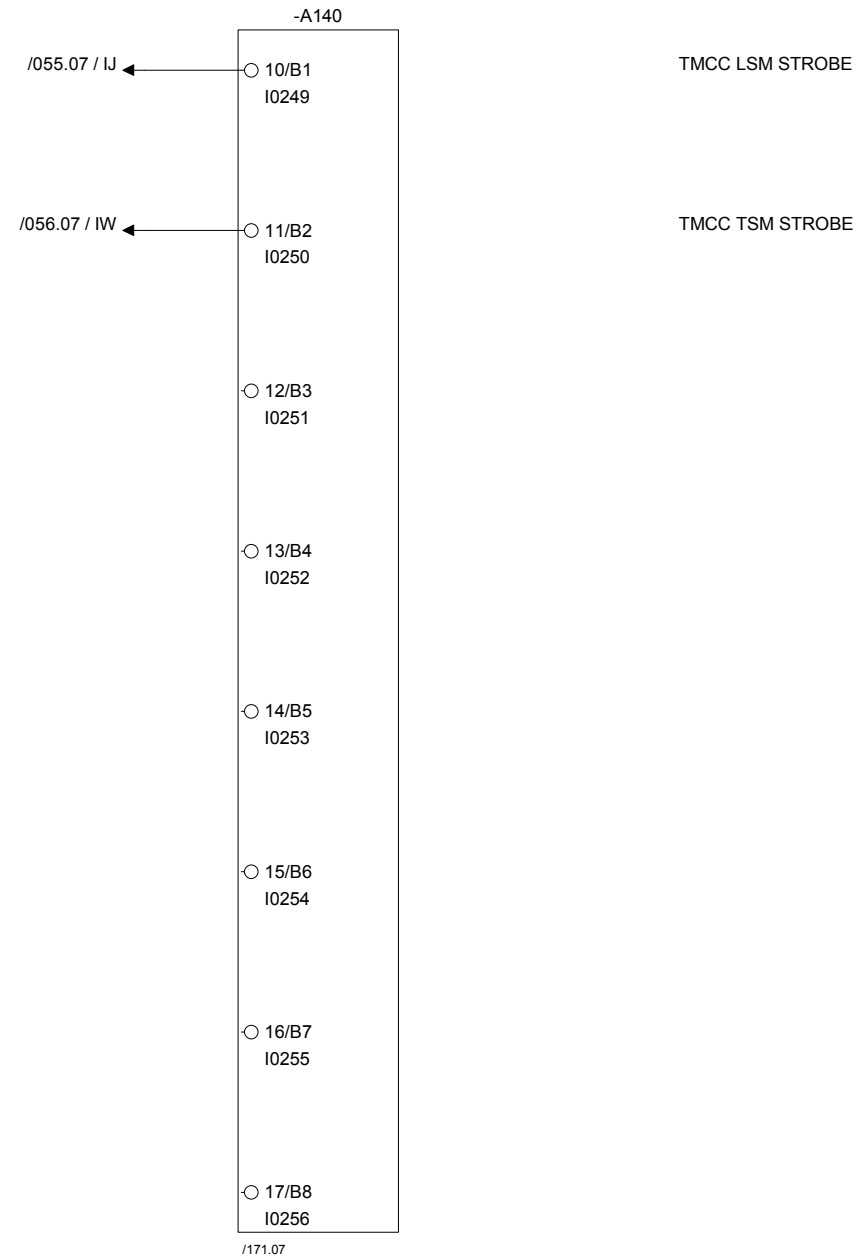

Drawing remarks

Tetra Pak

Designer	Date	Machine
BMI	07/06/2004	TBA/22-0500

ECM No	Denomination	Page Type
175296	CIRCUIT DIAGRAM	PLC INPUT

Company	Document No.	Doc. type	Version	Page
Tetra Pak Carton Ambient S.p.A.	2593852-0003	ELD	AE	172

RELEASED

This drawing must not without the consent of Tetra Pak be copied, transmitted or disclosed to any third party.

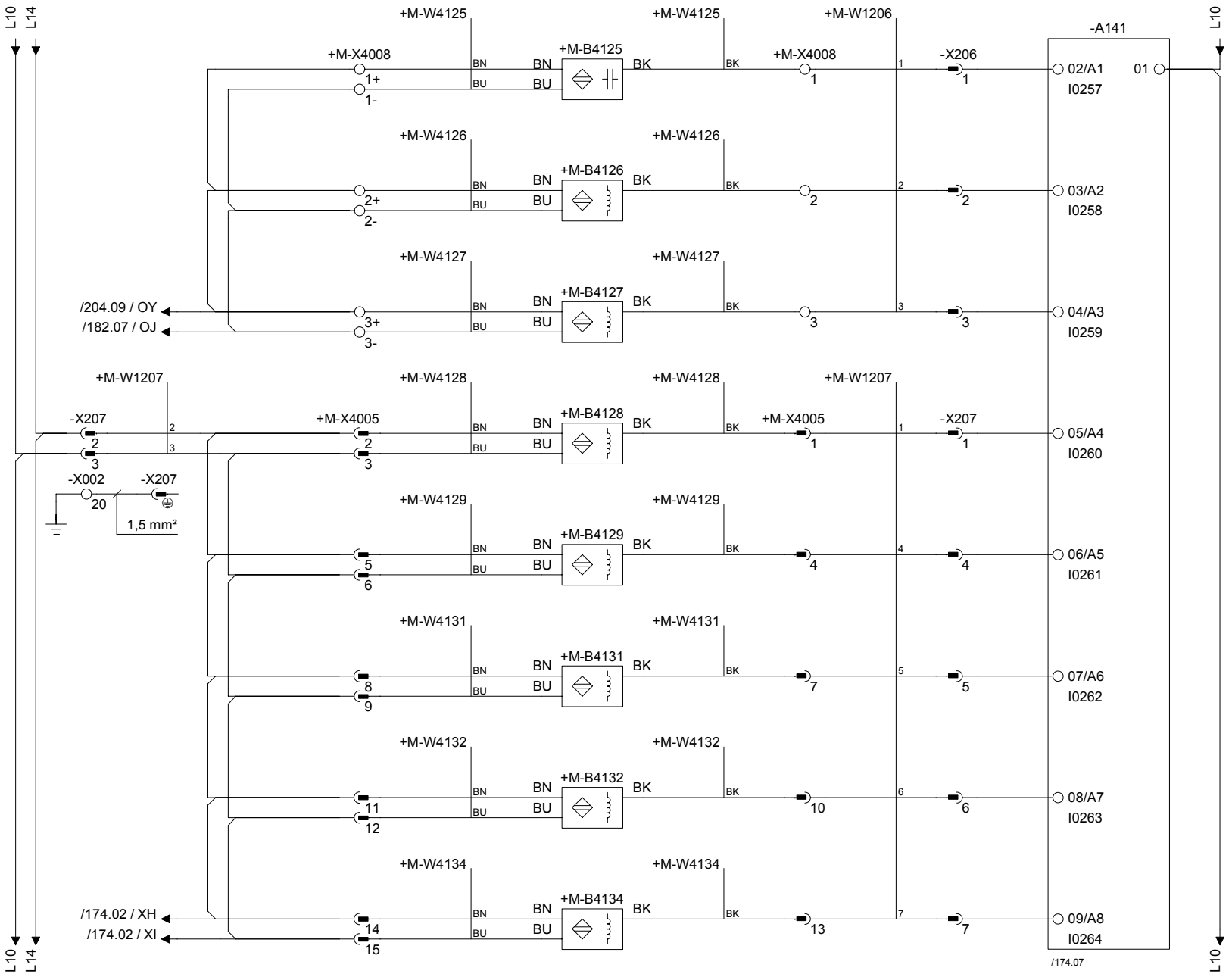

Drawing remarks	Tetra Pak	Designer BMI	Date 07/06/2004	Machine TBA/22-0500	
		ECM No 175296	Denomination CIRCUIT DIAGRAM	Page Type PLC INPUT	
		Company Tetra Pak Carton Ambient S.p.A.	Document No. 2593852-0003	Doc. type ELD	Version AE	Page 173

RELEASED

This drawing must not without the consent of Tetra Pak be copied, transmitted or disclosed to any third party.

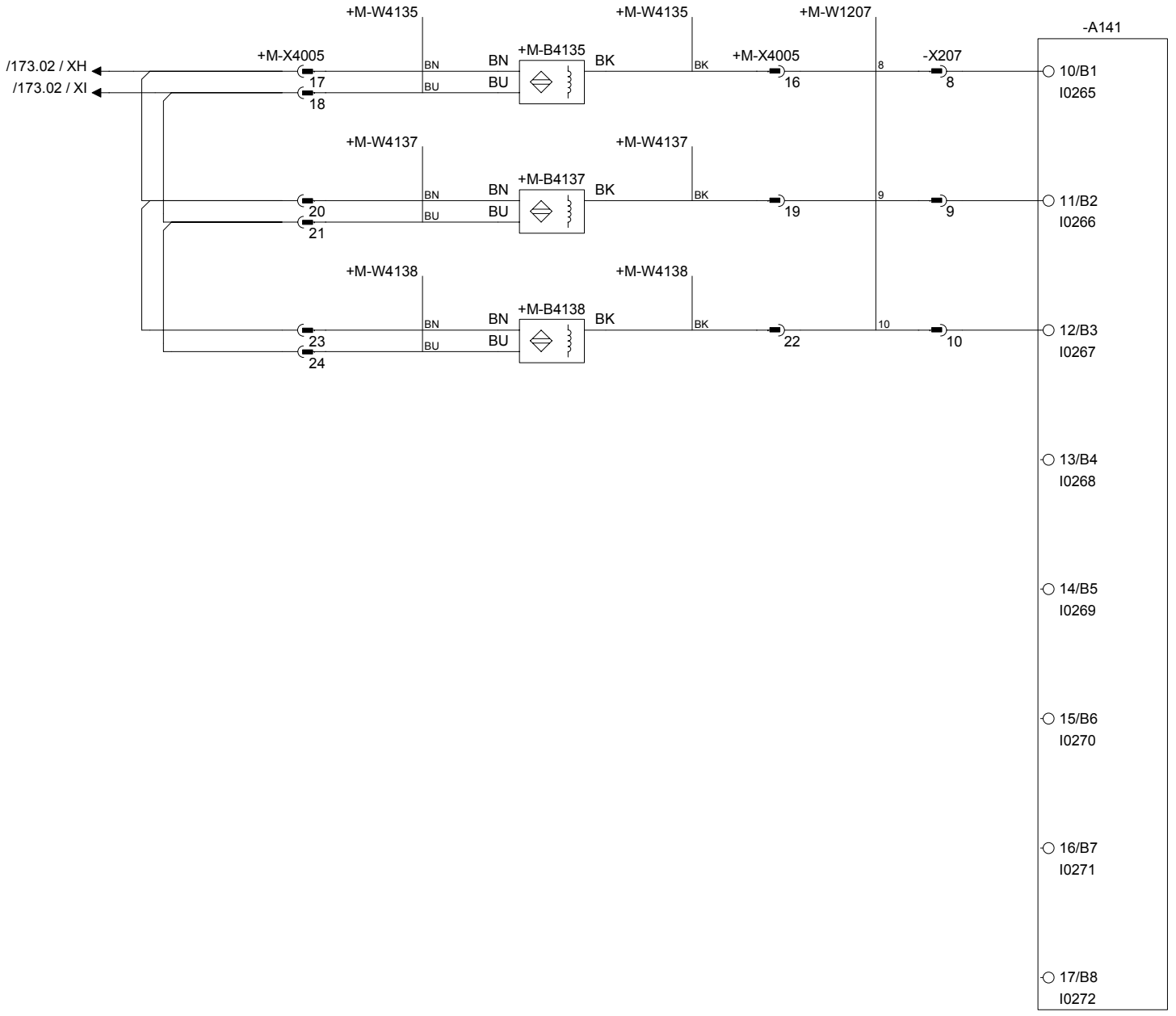

Drawing remarks	Tetra Pak	Designer BMI	Date 07/06/2004	Machine TBA/22-0500	
		ECM No 175296	Denomination CIRCUIT DIAGRAM	Page Type PLC INPUT	
		Company Tetra Pak Carton Ambient S.p.A.	Document No. 2593852-0003	Doc. type ELD	Version AE	Page 174

RELEASED

This drawing must not without the consent of Tetra Pak be copied, transmitted or disclosed to any third party.

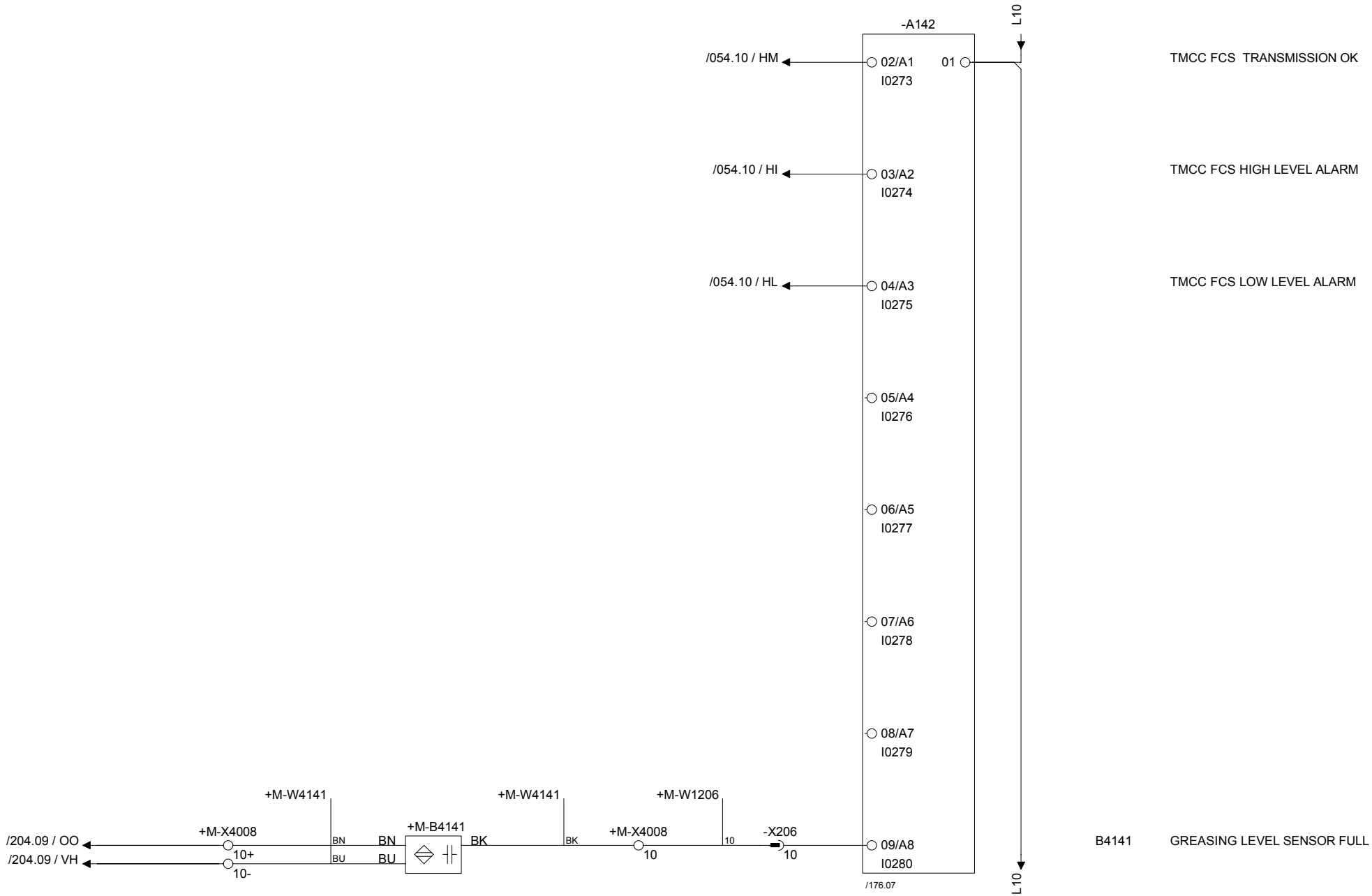

Drawing remarks	Tetra Pak	Designer BMI	Date 07/06/2004	Machine TBA/22-0500	
		ECM No 175296	Denomination CIRCUIT DIAGRAM	Page Type PLC INPUT	
		Company Tetra Pak Carton Ambient S.p.A.	Document No. 2593852-0003	Doc. type ELD	Version AE	Page 175

RELEASED

This drawing must not without the consent of Tetra Pak be copied, transmitted or disclosed to any third party.

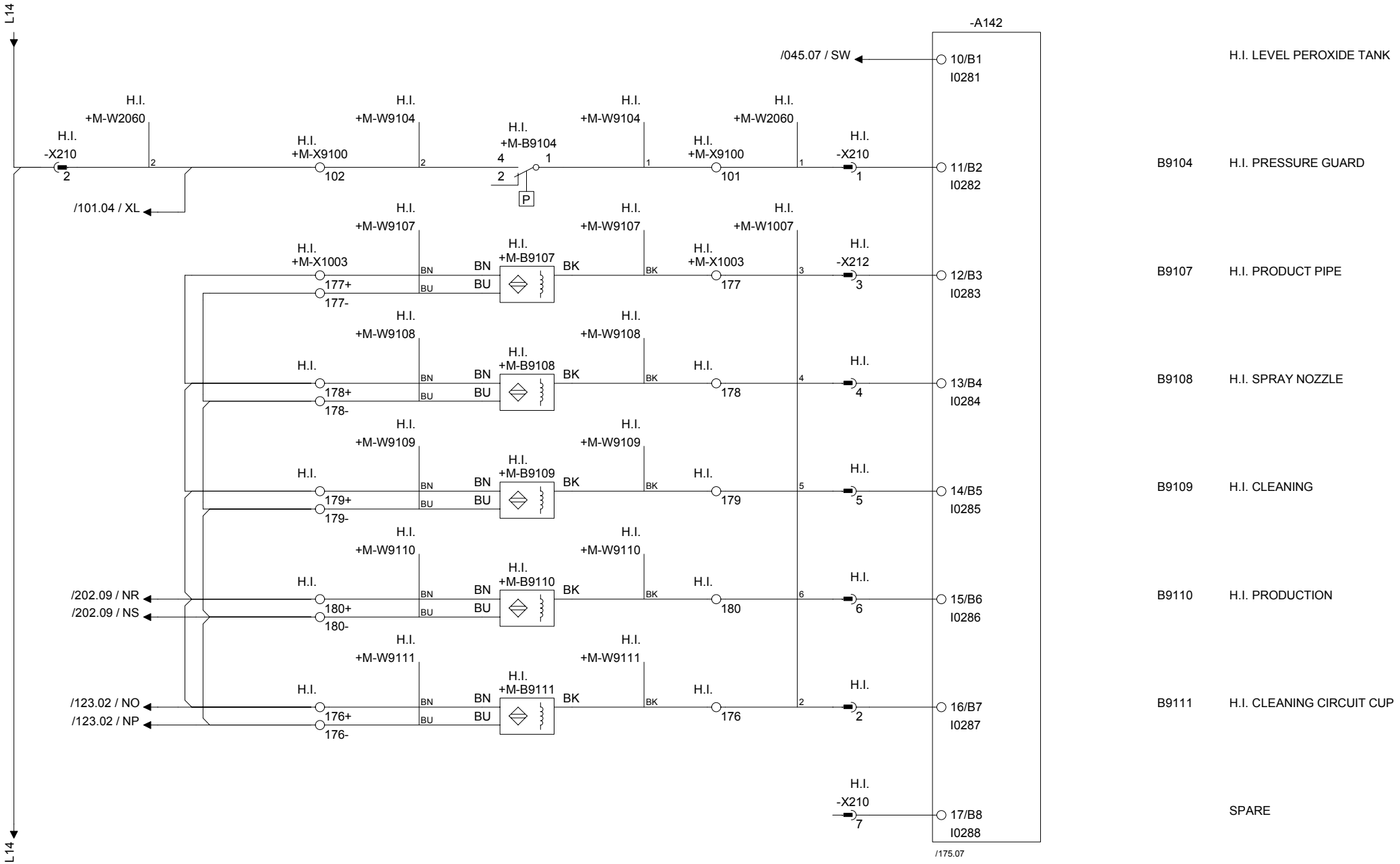

Drawing remarks	Tetra Pak	Designer BMI	Date 07/06/2004	Machine TBA/22-0500	
		ECM No 175296	Denomination CIRCUIT DIAGRAM	Page Type PLC INPUT	
		Company Tetra Pak Carton Ambient S.p.A.	Document No. 2593852-0003	Doc. type ELD	Version AE	Page 176

RELEASED

This drawing must not without the consent of Tetra Pak be copied, transmitted or disclosed to any third party.

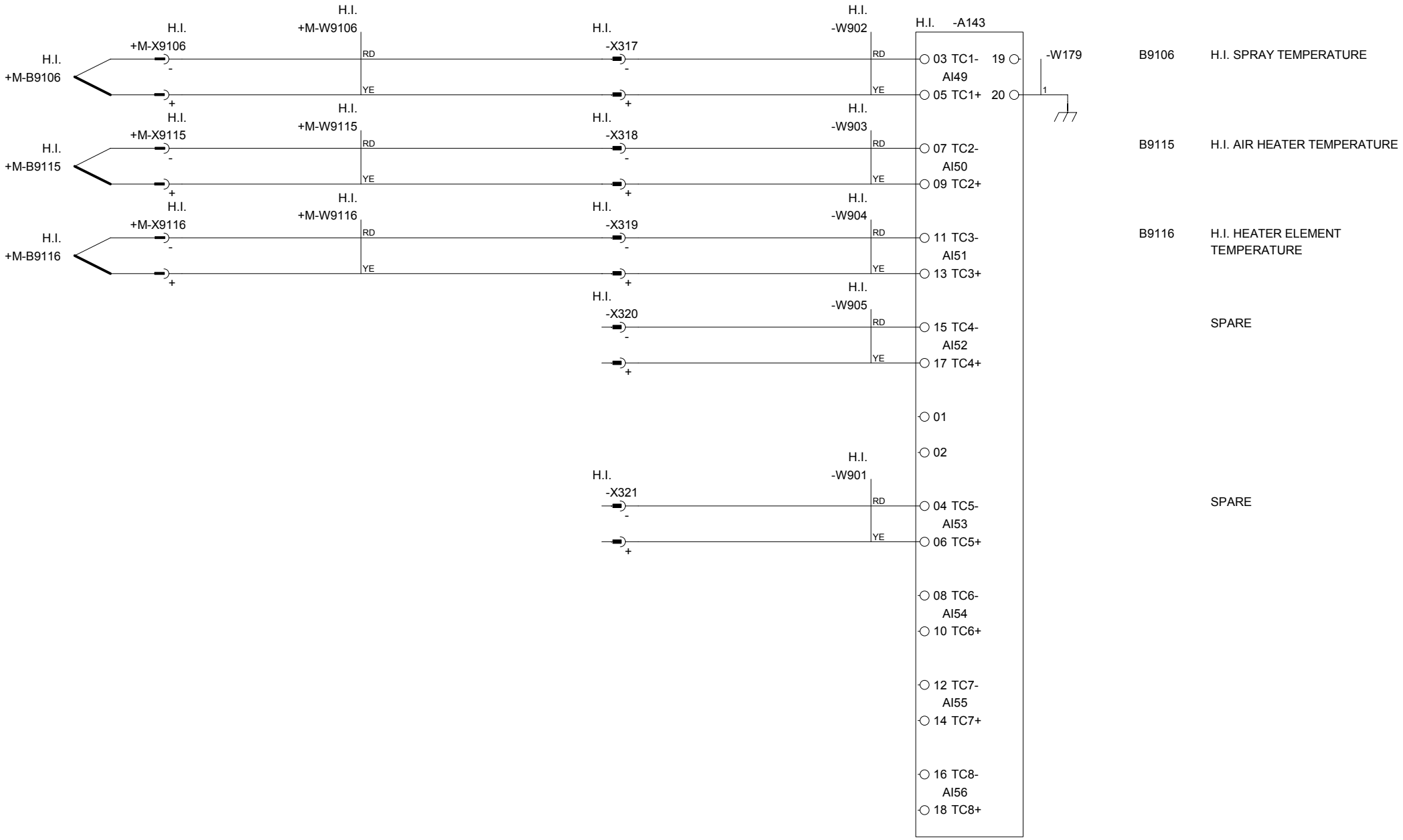

Drawing remarks	Tetra Pak	Designer BMI	Date 07/06/2004	Machine TBA/22-0500			
		ECM No 175296	Denomination CIRCUIT DIAGRAM	Page Type PLC INPUT			
		Company Tetra Pak Carton Ambient S.p.A.	Document No. 2593852-0003	Doc. type ELD	Version AE	Page 177	

RELEASED

This drawing must not without the consent of Tetra Pak be copied, transmitted or disclosed to any third party.



Drawing remarks	Tetra Pak	Designer BMI	Date 07/06/2004	Machine TBA/22-0500			
		ECM No 175296	Denomination CIRCUIT DIAGRAM	Page Type PLC OUTPUT			
		Company Tetra Pak Carton Ambient S.p.A.	Document No. 2593852-0003	Doc. type ELD	Version AE	Page 181	

RELEASED

This drawing must not without the consent of Tetra Pak be copied, transmitted or disclosed to any third party.

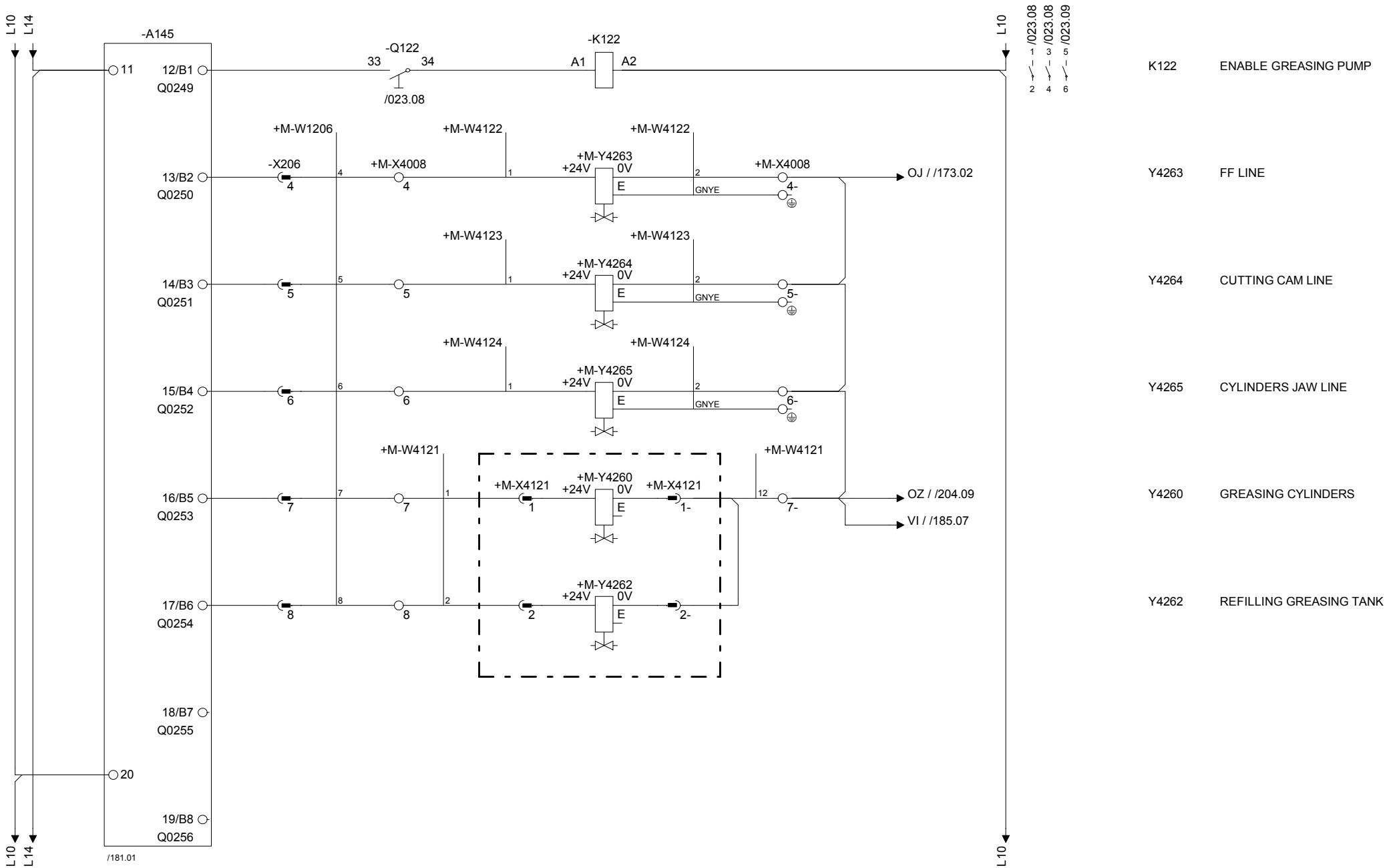

Drawing remarks	Tetra Pak	Designer BMI	Date 07/06/2004	Machine TBA/22-0500	
		ECM No 175296	Denomination CIRCUIT DIAGRAM	Page Type PLC OUTPUT	
		Company Tetra Pak Carton Ambient S.p.A.	Document No. 2593852-0003	Doc. type ELD	Version AE	Page 182

This drawing must not without the consent of Tetra Pak be copied, transmitted or disclosed to any third party.

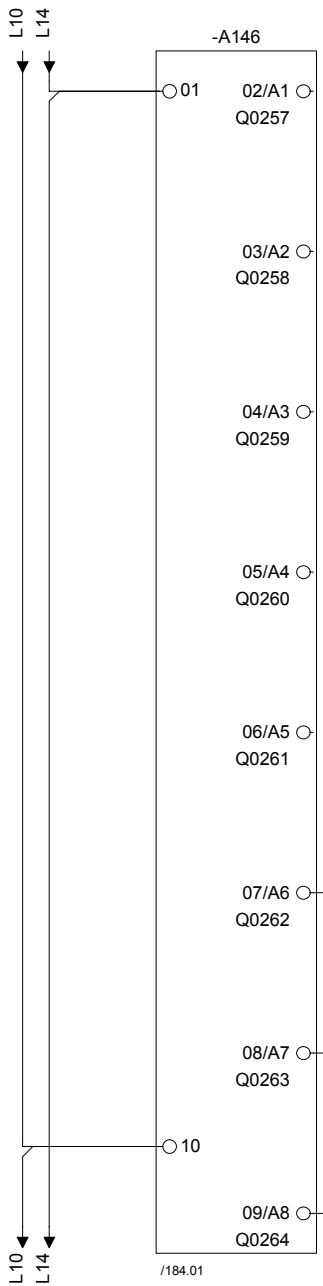

P002	PRINT BATCH TEXT
P002	CIP SETTING
	ASU DOORS CHAIN OK

Drawing remarks

Tetra Pak

Designer BMI	Date 07/06/2004	Machine TBA/22-0500			
ECM No 175296	Denomination CIRCUIT DIAGRAM	Page Type PLC OUTPUT			
Company Tetra Pak Carton Ambient S.p.A.	Document No. 2593852-0003	Doc. type ELD	Version AE	Page 183	

RELEASED

This drawing must not without the consent of Tetra Pak be copied, transmitted or disclosed to any third party.

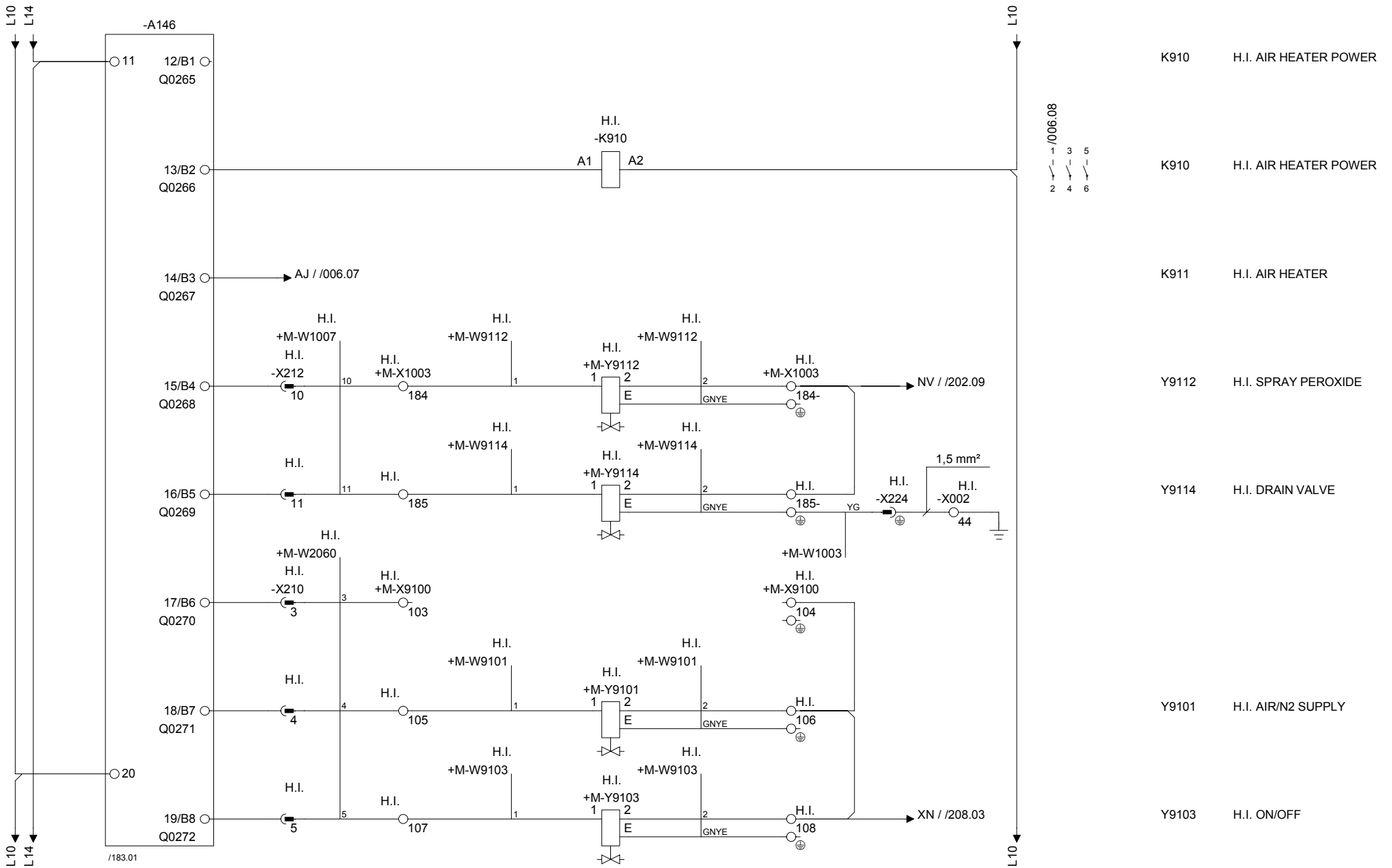

K910	H.I. AIR HEATER POWER
K910	H.I. AIR HEATER POWER
K911	H.I. AIR HEATER
Y9112	H.I. SPRAY PEROXIDE
Y9114	H.I. DRAIN VALVE
Y9101	H.I. AIR/N2 SUPPLY
Y9103	H.I. ON/OFF

Drawing remarks

Tetra Pak

Designer BMI	Date 07/06/2004	Machine TBA/22-0500			
ECM No 175296	Denomination CIRCUIT DIAGRAM	Page Type PLC OUTPUT			
Company Tetra Pak Carton Ambient S.p.A.	Document No. 2593852-0003	Doc. type ELD	Version AE	Page 184	

RELEASED

This drawing must not without the consent of Tetra Pak be copied, transmitted or disclosed to any third party.

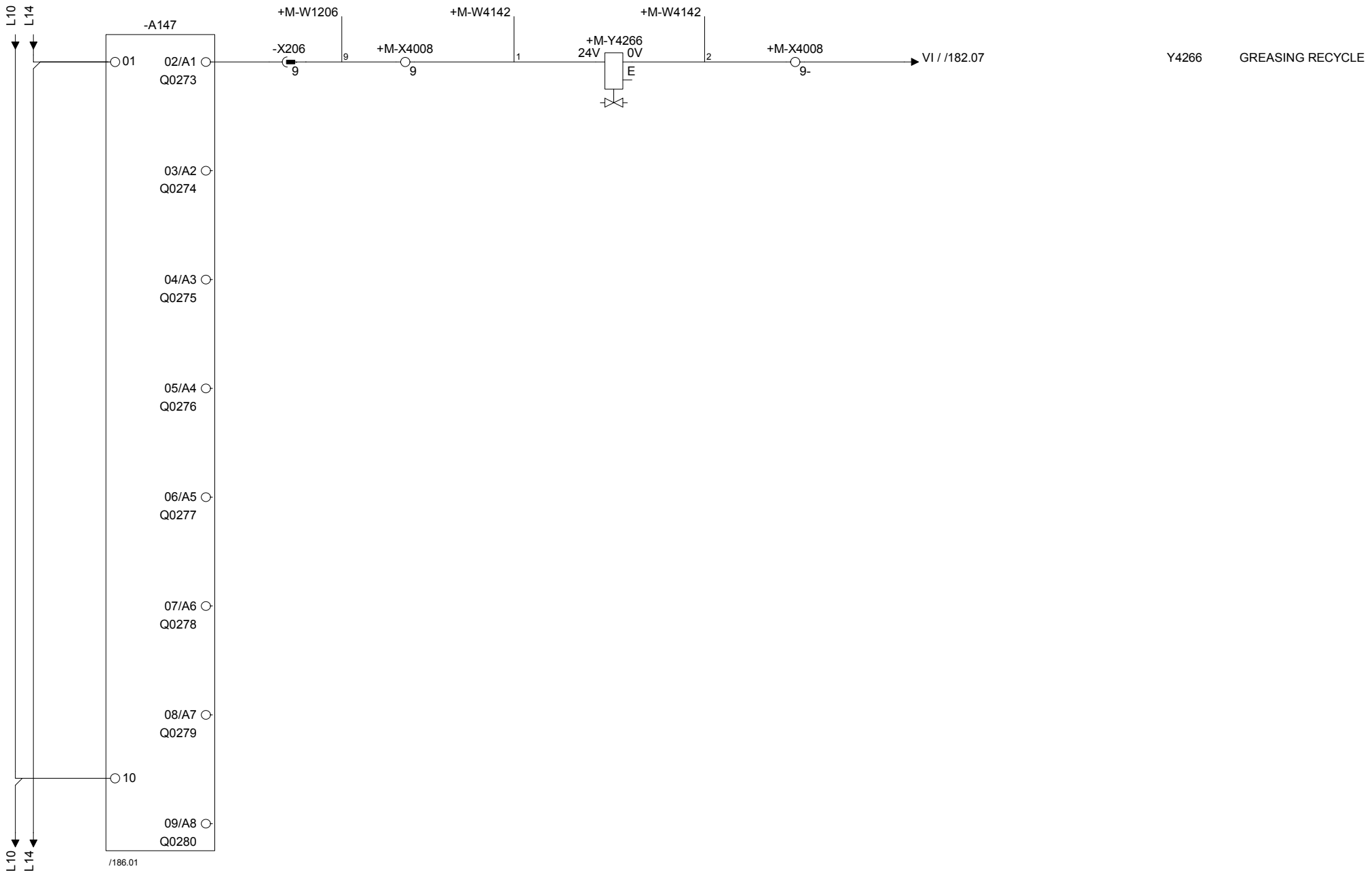

Drawing remarks	Tetra Pak	Designer BMI	Date 07/06/2004	Machine TBA/22-0500	
		ECM No 175296	Denomination CIRCUIT DIAGRAM	Page Type PLC OUTPUT	
		Company Tetra Pak Carton Ambient S.p.A.	Document No. 2593852-0003	Doc. type ELD	Version AE	Page 185

RELEASED

This drawing must not without the consent of Tetra Pak be copied, transmitted or disclosed to any third party.

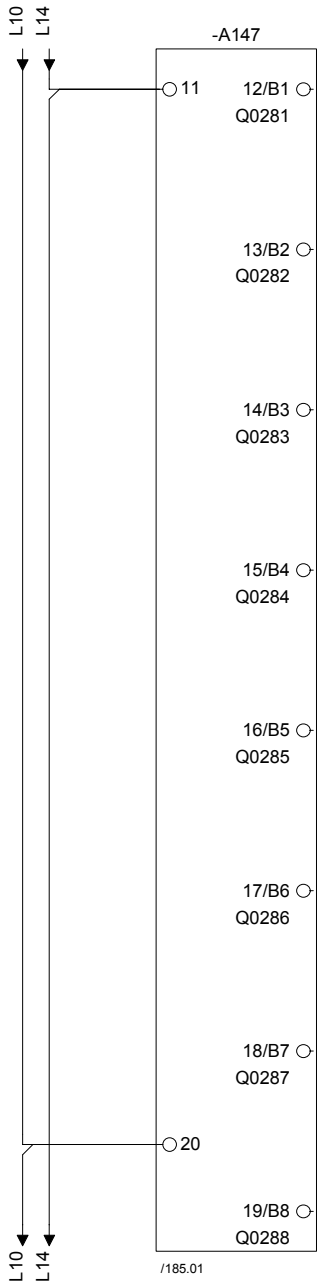

Drawing remarks

Tetra Pak

Designer BMI	Date 07/06/2004	Machine TBA/22-0500			
ECM No 175296	Denomination CIRCUIT DIAGRAM	Page Type PLC OUTPUT			
Company Tetra Pak Carton Ambient S.p.A.	Document No. 2593852-0003	Doc. type ELD	Version AE	Page 186	

RELEASED

This drawing must not without the consent of Tetra Pak be copied, transmitted or disclosed to any third party.

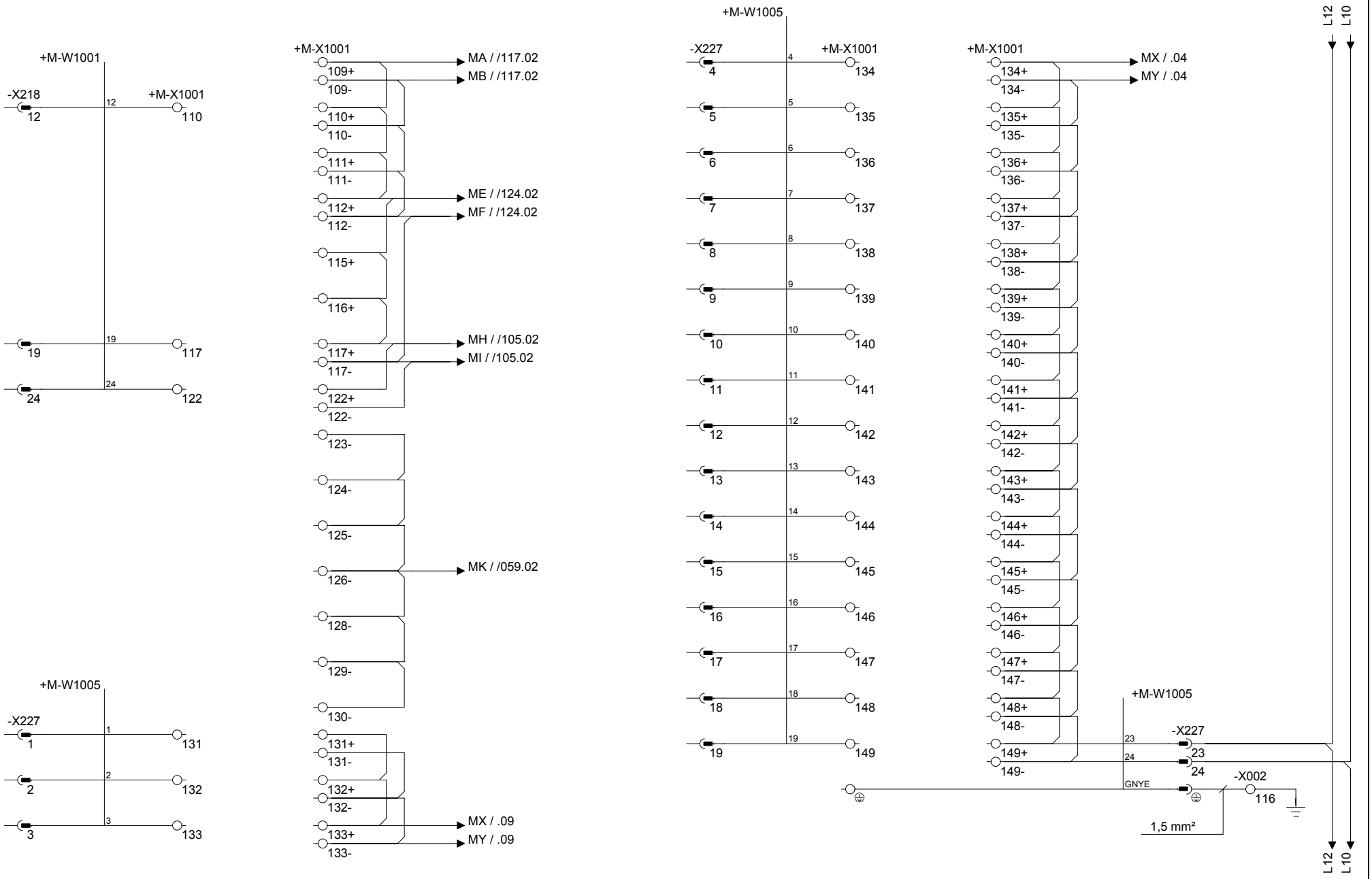

Drawing remarks	Tetra Pak	Designer BMI	Date 07/06/2004	Machine TBA/22-0500	
		ECM No 175296	Denomination CIRCUIT DIAGRAM	Page Type CIRCUIT DIAGRAM	
		Company Tetra Pak Carton Ambient S.p.A.	Document No. 2593852-0003	Doc. type ELD	Version AE	Page 200

This drawing must not without the consent of Tetra Pak be copied, transmitted or disclosed to any third party.

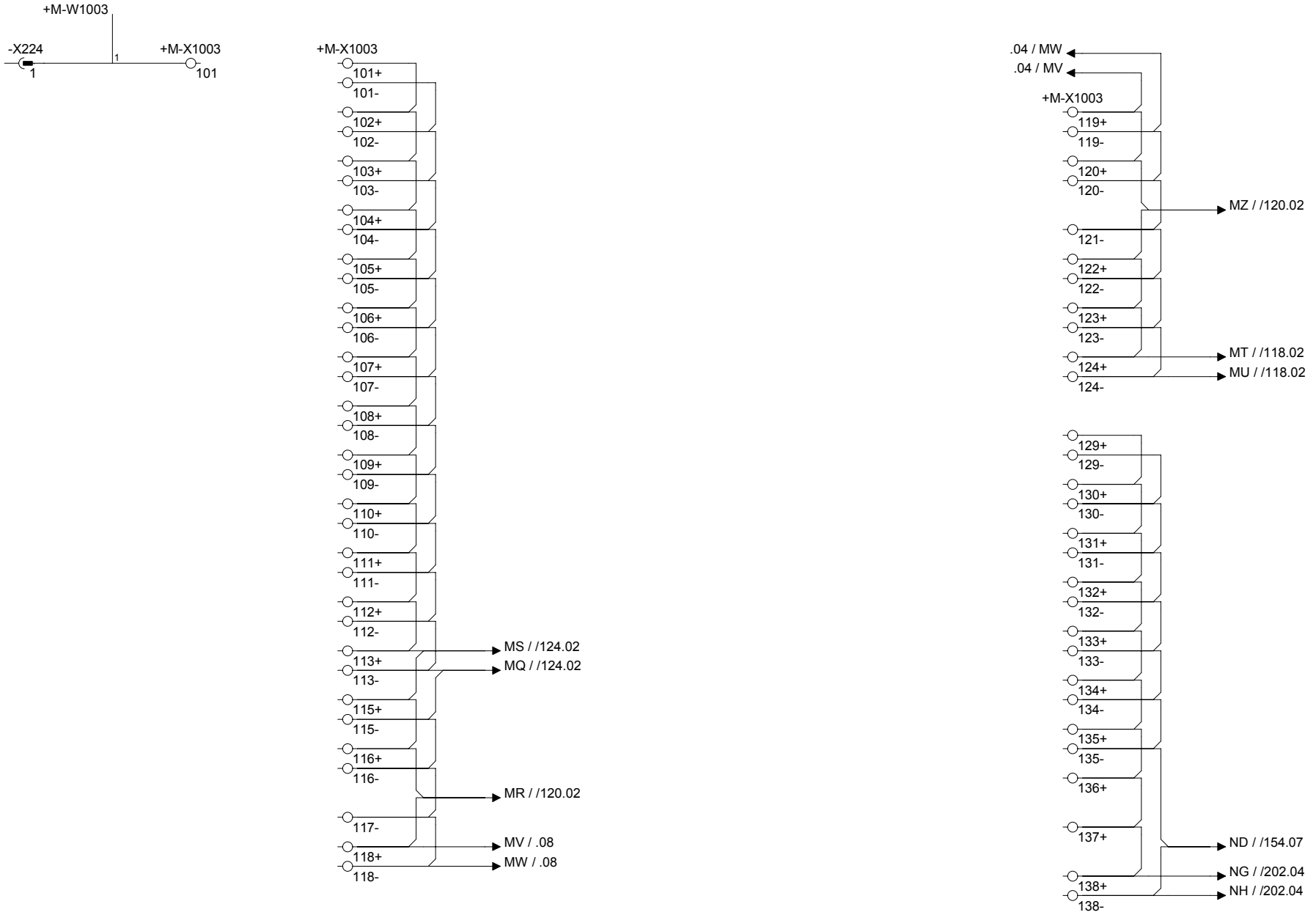

Drawing remarks	Tetra Pak	Designer BMI	Date 07/06/2004	Machine TBA/22-0500	
		ECM No 175296	Denomination CIRCUIT DIAGRAM	Page Type CIRCUIT DIAGRAM	
		Company Tetra Pak Carton Ambient S.p.A.	Document No. 2593852-0003	Doc. type ELD	Version AE	Page 201

This drawing must not without the consent of Tetra Pak be copied, transmitted or disclosed to any third party.

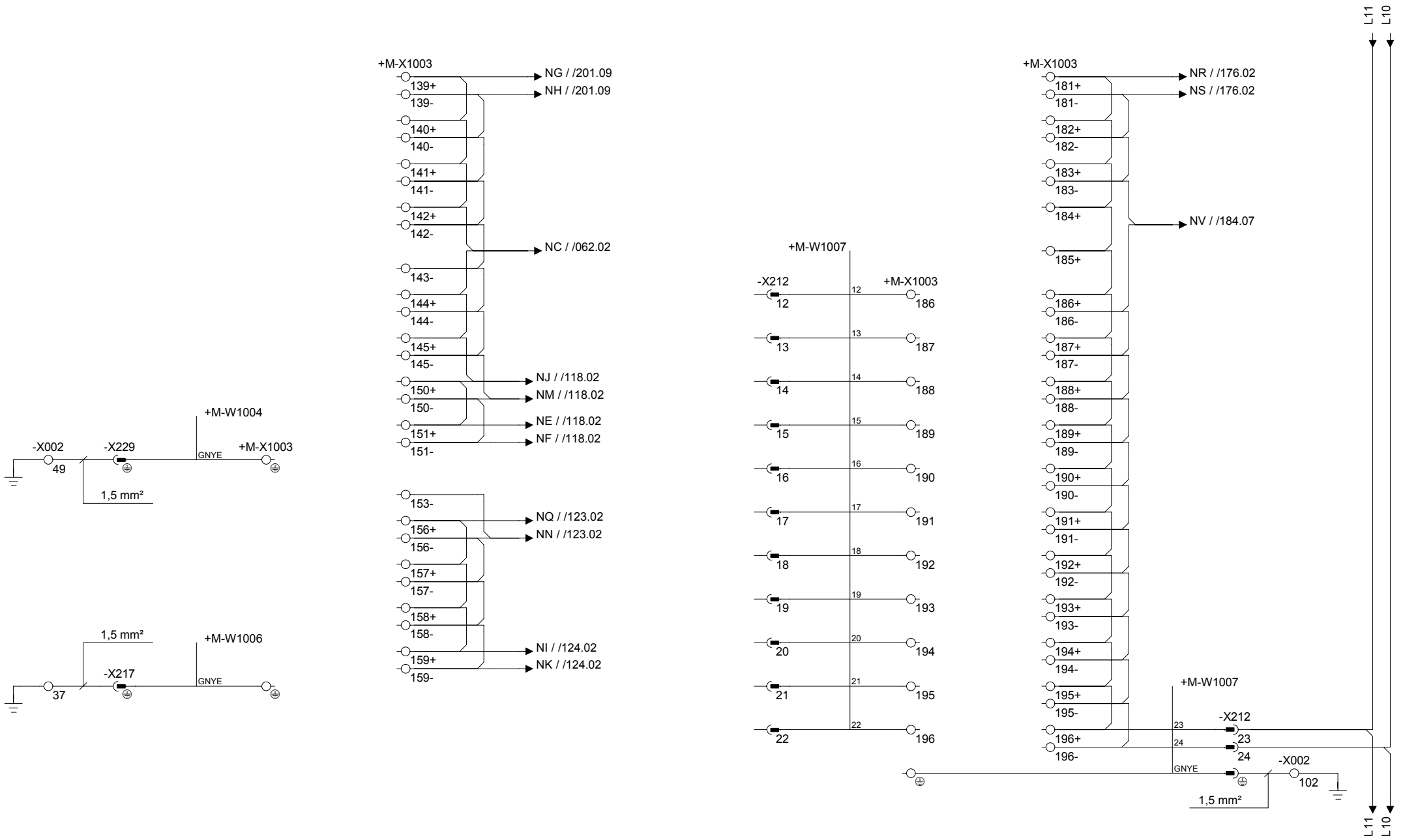

Drawing remarks	Tetra Pak	Designer BMI	Date 07/06/2004	Machine TBA/22-0500	
		ECM No 175296	Denomination CIRCUIT DIAGRAM	Page Type CIRCUIT DIAGRAM	
		Company Tetra Pak Carton Ambient S.p.A.	Document No. 2593852-0003	Doc. type ELD	Version AE	Page 202

RELEASED

This drawing must not without the consent of Tetra Pak be copied, transmitted or disclosed to any third party.

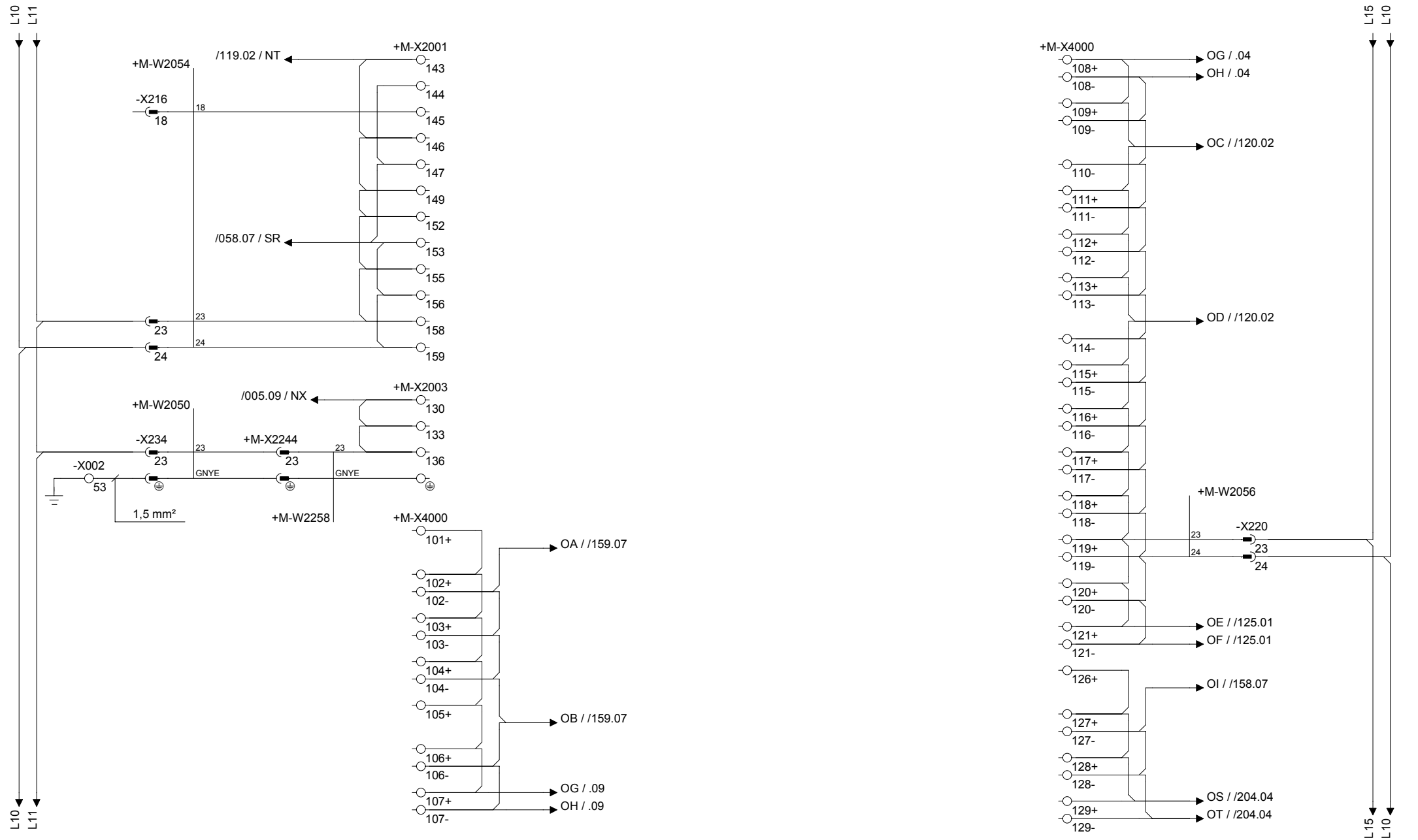

Drawing remarks	Tetra Pak	Designer BMI	Date 07/06/2004	Machine TBA/22-0500	
		ECM No 175296	Denomination CIRCUIT DIAGRAM	Page Type CIRCUIT DIAGRAM	
		Company Tetra Pak Carton Ambient S.p.A.	Document No. 2593852-0003	Doc. type ELD	Version AE	Page 203

This drawing must not without the consent of Tetra Pak be copied, transmitted or disclosed to any third party.

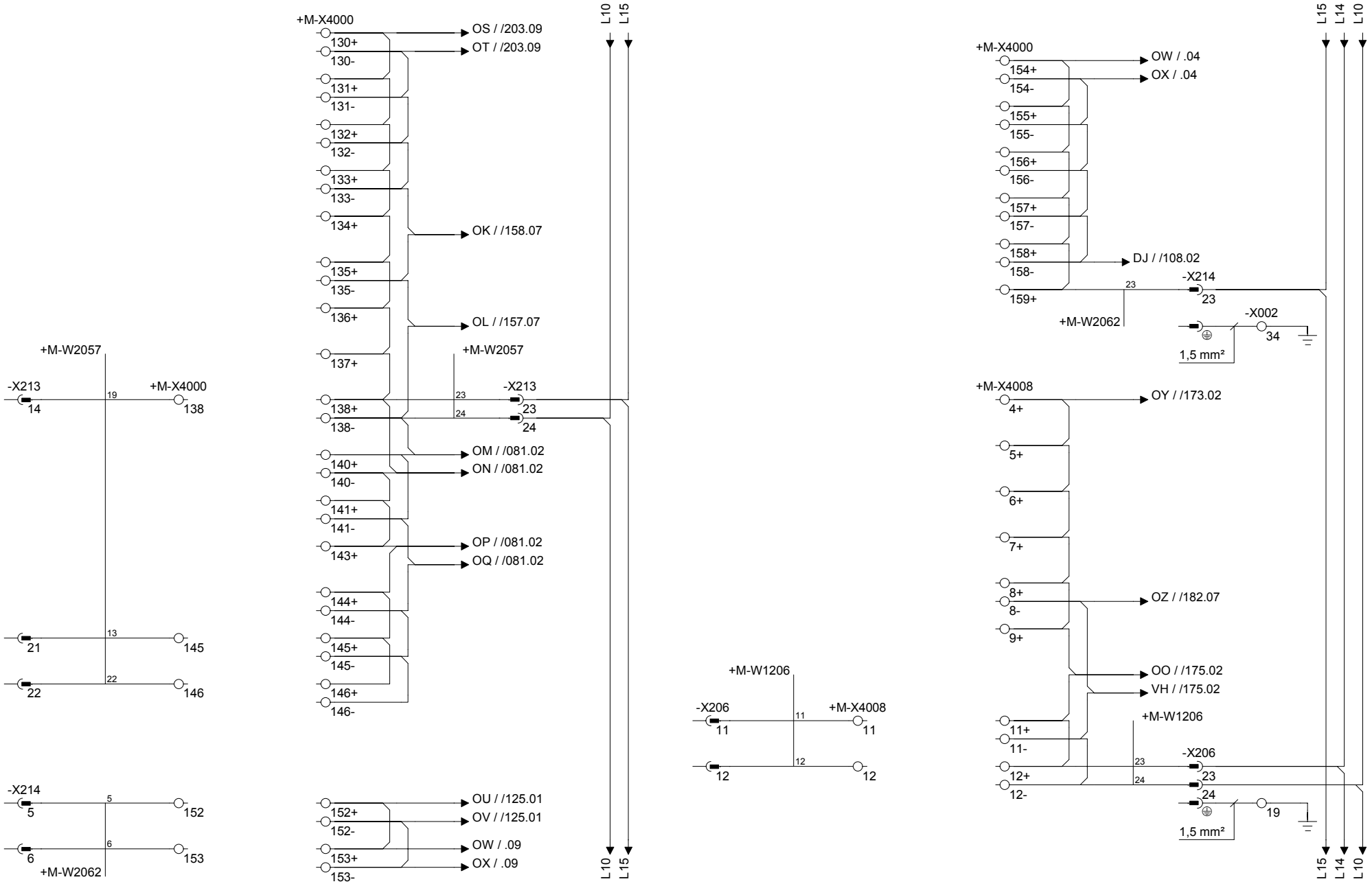

Drawing remarks	Tetra Pak	Designer: BMI	Date: 07/06/2004	Machine: TBA/22-0500	
		ECM No: 175296	Denomination: CIRCUIT DIAGRAM	Page Type: CIRCUIT DIAGRAM	
		Company: Tetra Pak Carton Ambient S.p.A.	Document No.: 2593852-0003	Doc. type: ELD	Version: AE / Page: 204

RELEASED

This drawing must not without the consent of Tetra Pak be copied, transmitted or disclosed to any third party.

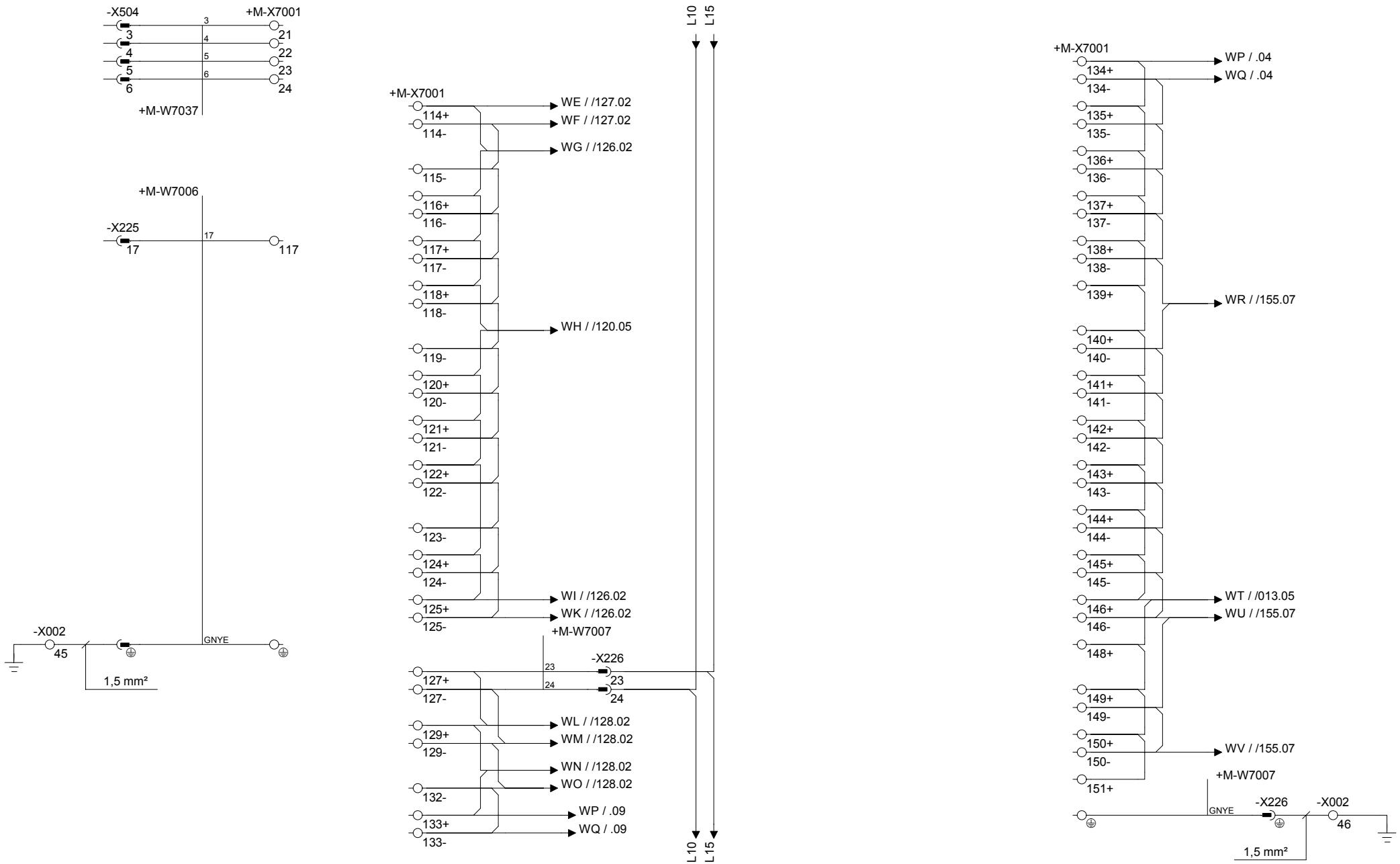

Drawing remarks	Tetra Pak	Designer: BMI	Date: 07/06/2004	Machine: TBA/22-0500	
		ECM No: 175296	Denomination: CIRCUIT DIAGRAM	Page Type: CIRCUIT DIAGRAM	
		Company: Tetra Pak Carton Ambient S.p.A.	Document No.: 2593852-0003	Doc. type: ELD	Version: AE	Page: 205

RELEASED

This drawing must not without the consent of Tetra Pak be copied, transmitted or disclosed to any third party.

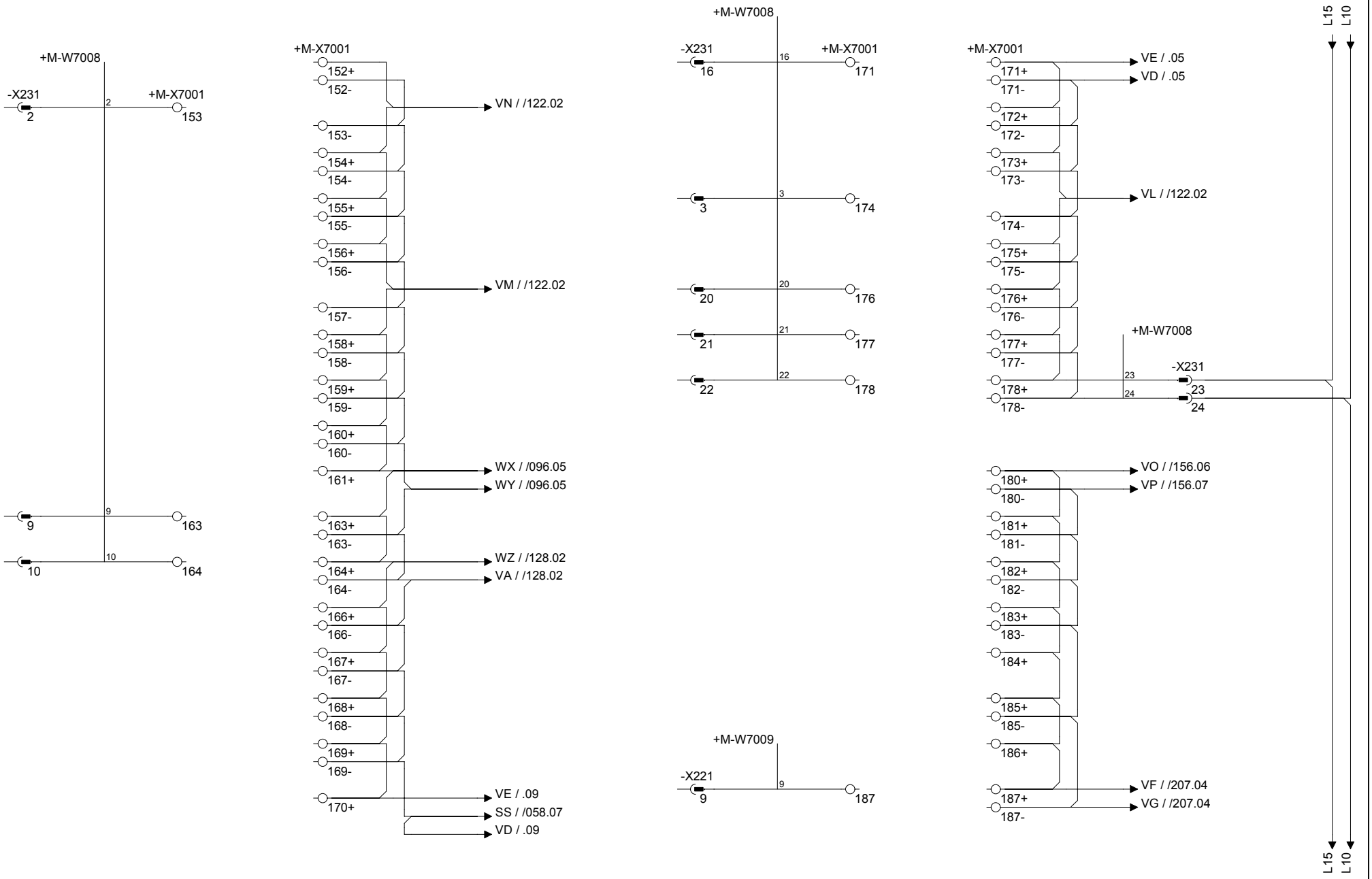

Drawing remarks	Tetra Pak	Designer BMI	Date 07/06/2004	Machine TBA/22-0500	
		ECM No 175296	Denomination CIRCUIT DIAGRAM	Page Type CIRCUIT DIAGRAM	
		Company Tetra Pak Carton Ambient S.p.A.	Document No. 2593852-0003	Doc. type ELD	Version AE	Page 206

This drawing must not without the consent of Tetra Pak be copied, transmitted or disclosed to any third party.

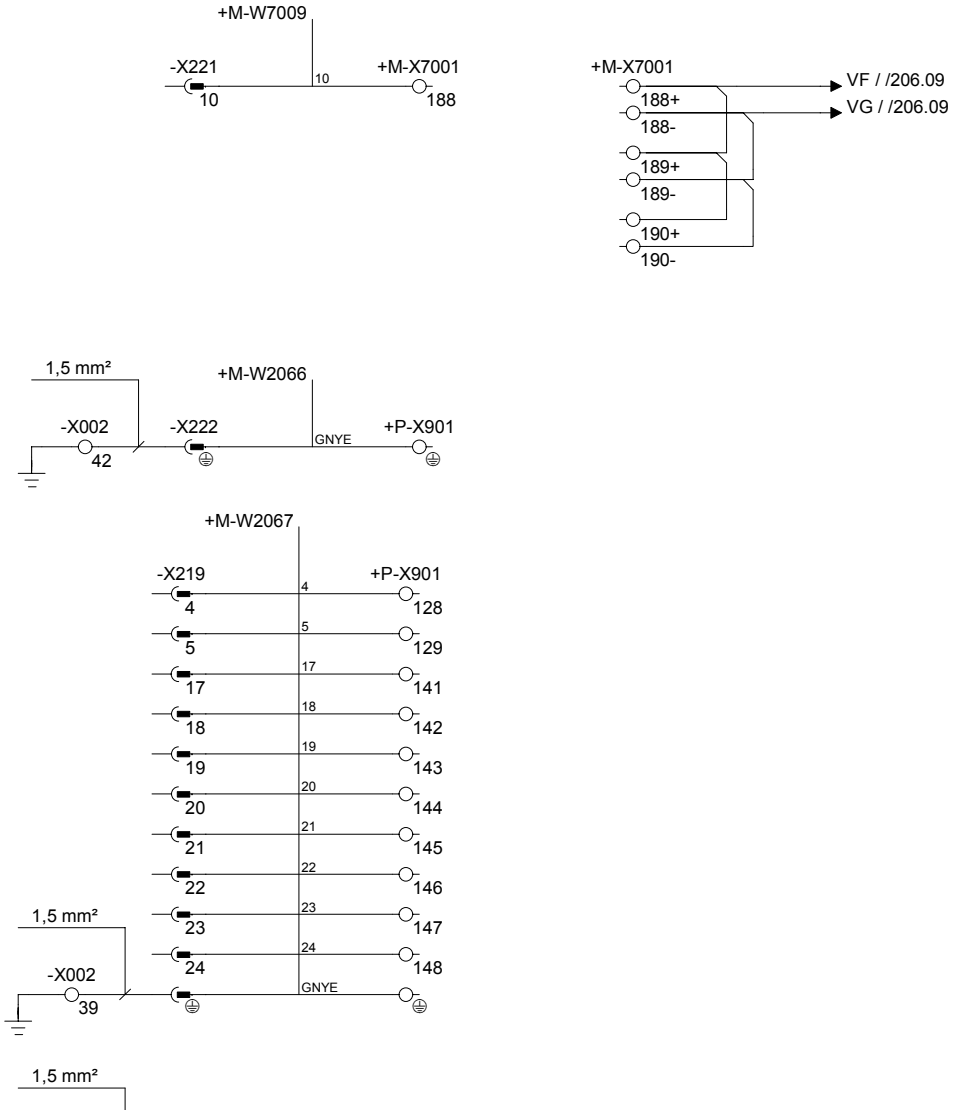

Drawing remarks	Tetra Pak	Designer BMI	Date 07/06/2004	Machine TBA/22-0500	
		ECM No 175296	Denomination CIRCUIT DIAGRAM	Page Type CIRCUIT DIAGRAM	
		Company Tetra Pak Carton Ambient S.p.A.	Document No. 2593852-0003	Doc. type ELD	Version AE	Page 207

This drawing must not without the consent of Tetra Pak
be copied, transmitted or disclosed to any third party.

1	2	3	4	5	6	7	8	9	10

L10

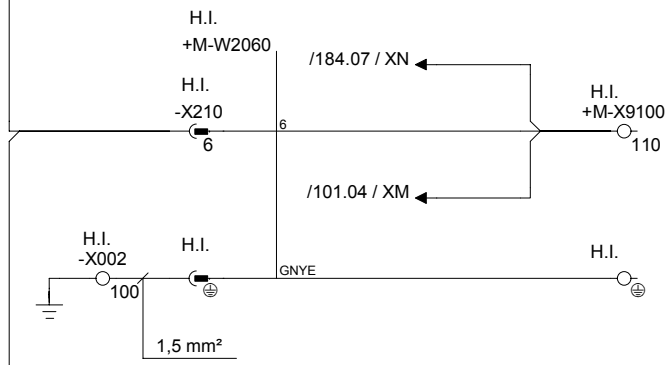

L10

Drawing remarks

Tetra Pak

Designer	Date	Machine
BMI	07/06/2004	TBA/22-0500

ECM No	Denomination	Page Type
175296	CIRCUIT DIAGRAM	CIRCUIT DIAGRAM

Company	Document No.	Doc. type	Version	Page
Tetra Pak Carton Ambient S.p.A.	2593852-0003	ELD	AE	208

RELEASED

This drawing must not without the consent of Tetra Pak
be copied, transmitted or disclosed to any third party.

1	2	3	4	5	6	7	8	9	10

Drawing remarks

Tetra Pak

Designer	Date	Machine
BMI	07/06/2004	TBA/22-0500

ECM No	Denomination	Page Type
175296	CIRCUIT DIAGRAM	CIRCUIT DIAGRAM

Company	Document No.	Doc. type	Version	Page
Tetra Pak Carton Ambient S.p.A.	2593852-0003	ELD	AE	209

This page left intentionally blank

6 Line Summary

TechPub_2614345_v3_DRAFT_ReleaseTB067677en.fm

Description

All connections inside the electrical cabinet are listed in this chapter.

TechPub_2614345_v3_DRAFT_ReleaseTB067677en.fm

This drawing must not without the consent of Tetra Pak
be copied, transmitted or disclosed to any third party.

Line summary of 2593852-0003

Line	From	Page.Col.	To	Page.Col.	Area/Color	Opt.
L10	+C-XL010:101	001 .1	+C-A500:-	034 .2	4.0 BU	
L10	+C-XL010:102	001 .1	+C-A101:01	080 .8	0,75 BU	
L10	+C-XL010:103	001 .2	+C-A102:10	084 .1	0,75 BU	
L10	+C-A102:10	084 .1	+C-A102:20	085 .1		
L10	+C-XL010:104	001 .2	+C-A105:19	094 .7	0,75 BU	
L10	+C-XL010:105	001 .2	+C-A106:19	096 .7	0,75 BU	
L10	+C-XL010:106	001 .2	+C-A107:18	098 .1	0,75 BU	
L10	+C-A107:18	098 .1	+C-A107:19	098 .1		
L10	+C-XL010:107	001 .3	+C-A108:18	100 .1	0,75 BU	
L10	+C-A108:18	100 .1	+C-A108:19	100 .1		
L10	+C-XL010:108	001 .3	+C-A110:01	103 .8	0,75 BU	
L10	+C-XL010:109	001 .3	+C-A111:01	105 .8	0,75 BU	
L10	+C-XL010:110	001 .3	+C-A112:01	107 .8	0,75 BU	
L10	+C-XL010:111	001 .4	+C-A113:01	109 .8	0,75 BU	
L10	+C-XL010:112	001 .4	+C-A114:01	111 .8	0,75 BU	
L10	+C-XL010:113	001 .4	+C-A115:01	113 .8	0,75 BU	
L10	+C-XL010:114	001 .4	+C-A116:01	115 .8	0,75 BU	
L10	+C-XL010:115	001 .5	+C-A117:01	117 .8	0,75 BU	
L10	+C-XL010:116	001 .5	+C-A118:01	119 .8	0,75 BU	
L10	+C-XL010:117	001 .5	+C-A119:01	121 .8	0,75 BU	
L10	+C-XL010:118	001 .5	+C-A120:01	123 .8	0,75 BU	
L10	+C-XL010:119	001 .6	+C-A121:01	125 .8	0,75 BU	
L10	+C-XL010:120	001 .6	+C-A122:01	127 .8	0,75 BU	
L10	+C-XL010:121	001 .6	+C-A123:01	129 .8	0,75 BU	
L10	+C-XL010:122	001 .6	+C-A124:01	131 .8	0,75 BU	
L10	+C-XL010:123	001 .7	+C-A125:01	133 .8	0,75 BU	
L10	+C-XL010:124	001 .7	+C-A126:10	139 .1	0,75 BU	
L10	+C-A126:10	139 .1	+C-A126:20	140 .1		

Line	From	Page.Col.	To	Page.Col.	Area/Color	Opt.
L10	+C-XL010:125	001 .7	+C-A127:10	141 .1	0,75 BU	
L10	+C-A127:10	141 .1	+C-A127:20	142 .1		
L10	+C-XL010:126	001 .7	+C-A128:10	143 .1	0,75 BU	
L10	+C-A128:10	143 .1	+C-A128:20	144 .1		
L10	+C-XL010:127	001 .8	+C-A129:10	145 .1	0,75 BU	
L10	+C-A129:10	145 .1	+C-A129:20	146 .1		
L10	+C-XL010:128	001 .8	+C-A130:10	147 .1	0,75 BU	
L10	+C-A130:10	147 .1	+C-A130:20	148 .1		
L10	+C-XL010:129	001 .8	+C-A131:10	149 .1	0,75 BU	
L10	+C-A131:10	149 .1	+C-A131:20	150 .1		
L10	+C-XL010:130	001 .8	+C-A132:10	151 .1	0,75 BU	
L10	+C-A132:10	151 .1	+C-A132:20	152 .1		
L10	+C-XL010:131	001 .9	+C-A133:10	153 .1	0,75 BU	
L10	+C-A133:10	153 .1	+C-A133:20	154 .1		
L10	+C-XL010:132	001 .9	+C-A134:10	155 .1	0,75 BU	
L10	+C-XL010:133	001 .9	+C-A135:10	157 .1	0,75 BU	
L10	+C-A135:10	157 .1	+C-A135:20	158 .1		
L10	+C-XL010:134	001 .9	+C-A136:10	159 .1	0,75 BU	
L10	+C-A136:10	159 .1	+C-A136:20	160 .1		
L10	+C-XL010:135	001 .10	+C-A137:10	161 .1	0,75 BU	
L10	+C-A137:10	161 .1	+C-A137:20	162 .1		
L10	+C-XL010:136	001 .1	+C-A138:10	163 .1	0,75 BU	
L10	+C-A138:10	163 .1	+C-A138:20	164 .1		
L10	+C-XL010:137	001 .2	+C-A139:10	165 .1	0,75 BU	
L10	+C-A139:10	165 .1	+C-A139:20	166 .1		
L10	+C-XL010:138	001 .2	+C-A140:01	171 .8	0,75 BU	
L10	+C-XL010:139	001 .2	+C-A141:01	173 .8	0,75 BU	
L10	+C-XL010:140	001 .2	+C-A142:01	175 .8	0,75 BU	

Drawing remarks

Tetra Pak

Designer	Date	Machine
BMI	07/06/2004	TBA/22-0500

ECM No	Denomination	Page Type
175296	LINE SUMMARY	LINE SUMMARY

Company	Document No.	Doc. type	Version	Page
Tetra Pak Carton Ambient S.p.A.	2593852-0004	ELD	AE	1

This drawing must not without the consent of Tetra Pak
be copied, transmitted or disclosed to any third party.

Line summary of 2593852-0003

Line	From	Page.Col.	To	Page.Col.	Area/Color	Opt.
L10	+C-XL010:141	001 .3	+C-K215:A1	056 .8	0,75 BU	
L10	+C-XL010:143	001 .3	+C-A145:10	181 .1	0,75 BU	
L10	+C-A145:10	181 .1	+C-A145:20	182 .1		
L10	+C-XL010:144	001 .3	+C-A146:10	183 .1	0,75 BU	
L10	+C-A146:10	183 .1	+C-A146:20	184 .1		
L10	+C-XL010:145	001 .4	+C-A147:10	185 .1	0,75 BU	
L10	+C-A147:10	185 .1	+C-A147:20	186 .1		
L10	+C-XL010:148	001 .4	+C-A414:7	050 .4	0,75 BU	
L10	+C-A414:7	050 .4	+C-A414:23	050 .4		
L10	+C-XL010:149	001 .5	+C-A410:2	016 .2	0,75 BU	
L10	+C-A410:2	016 .2	+C-A410:4	016 .2		
L10	+C-XL010:150	001 .5	+C-A411:2	015 .3	0,75 BU	
L10	+C-A411:2	015 .3	+C-A411:4	015 .3		
L10	+C-XL010:151	001 .5	+C-A412:2	017 .2	0,75 BU	
L10	+C-A412:2	017 .2	+C-A412:4	017 .2		
L10	+C-XL010:152	001 .5	+C-A413:2	017 .7	0,75 BU	
L10	+C-A413:2	017 .7	+C-A413:4	017 .7		
L10	+C-XL010:153	001 .6	+C-A415:2	016 .7	0,75 BU	
L10	+C-A415:2	016 .7	+C-A415:4	016 .7		
L10	+C-XL010:154	001 .6	+C-A421:2	055 .6	0,75 BU	
L10	+C-XL010:155	001 .6	+C-A422:2	056 .6	0,75 BU	
L10	+C-XL010:156	001 .6	+C-A424:18	024 .4	0,75 BU	
L10	+C-XL010:157	001 .7	+C-A425:18	025 .4	0,75 BU	
L10	+C-XL010:158	001 .7	+C-A420:2	054 .9	0,75 BU	
L10	+C-XL010:159	001 .7	+C-A418:2	053 .2	0,75 BU	
L10	+C-XL010:160	001 .7	+C-A419:2	052 .2	0,75 BU	
L10	+C-XL010:163	001 .8	+C-A450:-	061 .3	0,75 BU	
L10	+C-XL010:164	001 .8	+C-X451:3	061 .6	0,75 BU	

Line	From	Page.Col.	To	Page.Col.	Area/Color	Opt.
L10	+C-XL010:165	001 .9	+C-A501:309	012 .1	0,75 BU	
L10	+C-A501:309	012 .1	+C-A502:309	012 .6		
L10	+C-XL010:166	001 .9	+C-A506:7A05	019 .7	0,75 BU	
L10	+C-A506:7A05	019 .7	+C-A506:7B24	019 .7		
L10	+C-XL010:167	001 .9	+C-A507:7A04	020 .7	0,75 BU	
L10	+C-A507:7A04	020 .7	+C-A507:7A05	020 .7		
L10	+C-A507:7A05	020 .7	+C-A507:7B24	020 .7		
L10	+C-XL010:168	001 .9	+C-A508:7A02	021 .7	0,75 BU	
L10	+C-A508:7A02	021 .7	+C-A508:7A05	021 .7		
L10	+C-A508:7A05	021 .7	+C-A508:7B24	021 .7		
L10	+C-XL010:169	001 .10	+C-P002:7:6	039 .6	0,75 BU	
L10	+C-XL010:170	001 .1	+C-A600:23	063 .6	0,75 BU	
L10	+C-A600:23	063 .6	+C-A600:A2	063 .6		
L10	+C-A600:A2	063 .6	+C-A601:A2	064 .6		
L10	+C-A601:A2	064 .6	+C-A602:A2	065 .6		
L10	+C-A602:A2	065 .6	+C-A602:23	065 .6		
L10	+C-XL010:171	001 .2	+C-A603:24	066 .6	0,75 BU	
L10	+C-A603:24	066 .6	+C-A603:A2	066 .6		
L10	+C-A603:A2	066 .6	+C-A603:S24	066 .6		
L10	+C-XL010:173	001 .2	+C-S001:21	121 .3	0,75 BU	
L10	+C-XL010:174	001 .2	+C-P100:2	146 .5	0,75 BU	
L10	+C-XL010:175	001 .3	+C-P101:2	146 .5	0,75 BU	
L10	+C-XL010:176	001 .3	+C-P002:4:2	039 .6	0,75 BU	
L10	+C-XL010:177	001 .3	+C-P002:5:2	039 .6	0,75 BU	
L10	+C-XL010:178	001 .3	+C-P002:6:2	039 .6	0,75 BU	
L10	+C-XL010:179	001 .4	+C-K001:A2	141 .5	0,75 BU	
L10	+C-K001:A2	141 .5	+C-K011:A2	141 .5		
L10	+C-K011:A2	141 .5	+C-K020:A2	141 .5		

Drawing remarks

Tetra Pak

Designer	Date	Machine
BMI	07/06/2004	TBA/22-0500

ECM No	Denomination	Page Type
175296	LINE SUMMARY	LINE SUMMARY

Company	Document No.	Doc. type	Version	Page
Tetra Pak Carton Ambient S.p.A.	2593852-0004	ELD	AE	2

This drawing must not without the consent of Tetra Pak
be copied, transmitted or disclosed to any third party.

Line summary of 2593852-0003

Line	From	Page.Col.	To	Page.Col.	Area/Color	Opt.
L10	+C-XL010:180	001 .4	+C-K012:A2	154 .5	0,75 BU	
L10	+C-K012:A2	154 .5	+C-K013:A2	154 .5		
L10	+C-K013:A2	154 .5	+C-K015:A2	154 .5		
L10	+C-XL010:181	001 .4	+C-K022:A2	141 .5	0,75 BU	
L10	+C-K022:A2	141 .5	+C-K023:A2	141 .5		
L10	+C-K023:A2	141 .5	+C-K024:A2	141 .5		
L10	+C-K024:A2	141 .5	+C-K025:A2	142 .5		
L10	+C-XL010:182	001 .4	+C-K026:A2	142 .5	0,75 BU	
L10	+C-K026:A2	142 .5	+C-K027:A2	142 .5		
L10	+C-K027:A2	142 .5	+C-K028:A2	142 .5		
L10	+C-K028:A2	142 .5	+C-K031:A2	142 .5		
L10	+C-K031:A2	142 .5	+C-K033:A2	143 .5		
L10	+C-XL010:183	001 .5	+C-K029:A2	142 .5	0,75 BU	
L10	+C-K029:A2	142 .5	+C-K030:A2	142 .5		
L10	+C-K030:A2	142 .5	+C-K032:A2	142 .5		
L10	+C-K032:A2	142 .5	+C-K910:A2	184 .5		H.I.
L10	+C-XL010:185	001 .5	+C-K100:10	143 .5	0,75 BU	
L10	+C-K100:10	143 .5	+C-K101:10	143 .5		
L10	+C-K101:10	143 .5	+C-K102:10	143 .5		
L10	+C-K102:10	143 .5	+C-K104:10	143 .5		
L10	+C-XL010:186	001 .5	+C-K105:10	058 .5	0,75 BU	
L10	+C-K105:10	058 .5	+C-K107:10	143 .5		
L10	+C-K107:10	143 .5	+C-K108:10	143 .5		
L10	+C-K108:10	143 .5	+C-K110:10	144 .5		
L10	+C-XL010:187	001 .6	+C-K115:10	062 .7	0,75 BU	
L10	+C-K115:10	062 .7	+C-K118:10	144 .5		
L10	+C-K118:10	144 .5	+C-K120:10	144 .5		
L10	+C-K120:10	144 .5	+C-K121:10	144 .5		

Line	From	Page.Col.	To	Page.Col.	Area/Color	Opt.
L10	+C-K121:10	144 .5	+C-K122:A2	182 .5		
L10	+C-K122:A2	182 .5	+C-K126:10	144 .5		
L10	+C-K126:10	144 .5	+C-K140:10	146 .5		
L10	+C-XL010:189	001 .6	+C-K201:4	006 .3	0,75 BU	
L10	+C-K201:4	006 .3	+C-K203:4	007 .3		
L10	+C-K203:4	007 .3	+C-K205:4	007 .8		
L10	+C-K205:4	007 .8	+C-K207:4	008 .3		
L10	+C-XL010:190	001 .6	+C-K208:4	010 .2	0,75 BU	
L10	+C-K208:4	010 .2	+C-K209:4	010 .4		
L10	+C-K209:4	010 .4	+C-K210:4	010 .7		
L10	+C-K210:4	010 .7	+C-K211:4	010 .9		
L10	+C-XL010:191	001 .7	+C-K213:4	011 .2	0,75 BU	
L10	+C-K213:4	011 .2	+C-K911:4	006 .7		H.I.
L10	+C-XL010:193	001 .7	+C-X230:6	150 .7	0,75 BU	
L10	+M-K1200:A2	108 .4	+M-K1201:A2	108 .4		
L10	+C-X230:6	150 .7	+C-X230:12	150 .7		
L10	+C-X230:12	150 .7	+C-X230:18	151 .7		
L10	+C-X230:18	151 .7	+C-X230:24	152 .7		
L10	+C-XL010:194	001 .7	+C-X232:9	148 .7	0,75 BU	
L10	+C-X232:9	148 .7	+C-X232:10	148 .7		
L10	+C-X232:10	148 .7	+C-X232:19	149 .7		
L10	+C-X232:19	149 .7	+C-X232:20	149 .7		
L10	+C-XL010:195	001 .8	+C-X233:6	165 .7	0,75 BU	
L10	+C-X233:6	165 .7	+C-X233:12	165 .7		
L10	+C-XL010:196	001 .8	+C-X210:6	208 .2	0,75 BU	H.I.
L10	+C-XL010:197	001 .8	+C-X009:2	058 .4	0,75 BU	
L10	+C-XL010:198	001 .8	+C-X009:7	108 .1	0,75 BU	
L10	+C-XL010:199	001 .9	+C-X031:2	053 .6	0,75 BU	

Drawing remarks

Tetra Pak

Designer	Date	Machine
BMI	07/06/2004	TBA/22-0500

ECM No	Denomination	Page Type
175296	LINE SUMMARY	LINE SUMMARY

Company	Document No.	Doc. type	Version	Page
Tetra Pak Carton Ambient S.p.A.	2593852-0004	ELD	AE	3

This drawing must not without the consent of Tetra Pak
be copied, transmitted or disclosed to any third party.

Line summary of 2593852-0003

Line	From	Page.Col.	To	Page.Col.	Area/Color	Opt.
L10	+C-X031:2	053 .6	+C-X031:6	053 .6		
L10	+C-X031:6	053 .6	+C-X031:18	052 .6		
L10	+C-X031:18	052 .6	+C-X031:22	052 .6		
L10	+C-XL010:200	001 .9	+C-X212:24	202 .9	0,75 BU	
L10	+C-XL010:201	001 .9	+C-X213:24	204 .5	0,75 BU	
L10	+C-XL010:202	001 .9	+C-X214:9	139 .7	0,75 BU	
L10	+C-X214:9	139 .7	+C-X214:24	108 .1		
L10	+C-XL010:203	001 .10	+C-X215:11	080 .5	0,75 BU	
L10	+C-XL010:204	001 .1	+C-X216:24	203 .2	0,75 BU	
L10	+C-XL010:205	001 .2	+C-X217:6	062 .1	0,75 BU	
L10	+C-X217:6	062 .1	+C-X217:24	124 .1		
L10	+C-XL010:206	001 .2	+C-X218:11	117 .1	0,75 BU	
L10	+C-XL010:207	001 .2	+C-X219:9	164 .7	0,75 BU	
L10	+C-XL010:208	001 .2	+C-X220:24	203 .9	0,75 BU	
L10	+C-XL010:209	001 .3	+C-X223:24	059 .1	0,75 BU	
L10	+C-XL010:210	001 .3	+C-X224:2	062 .1	0,75 BU	
L10	+C-X224:2	062 .1	+C-X224:24	118 .1		
L10	+C-XL010:211	001 .3	+C-X225:24	126 .1	0,75 BU	
L10	+C-XL010:212	001 .3	+C-X226:24	205 .5	0,75 BU	
L10	+C-XL010:213	001 .4	+C-X228:2	051 .1	0,75 BU	
L10	+C-X228:2	051 .1	+C-X228:4	051 .6		
L10	+C-XL010:214	001 .4	+C-X229:10	062 .1	0,75 BU	
L10	+C-X229:10	062 .1	+C-X229:24	081 .1		
L10	+C-XL010:215	001 .4	+C-X231:24	206 .9	0,75 BU	
L10	+C-X231:24	206 .9	+C-X231:1	122 .1		
L10	+C-XL010:216	001 .4	+C-X234:24	157 .7	0,75 BU	
L10	+C-XL010:217	001 .5	+C-X206:24	204 .9	0,75 BU	
L10	+C-XL010:218	001 .5	+C-X207:3	173 .1	0,75 BU	

Line	From	Page.Col.	To	Page.Col.	Area/Color	Opt.
L10	+C-XL010:219	001 .5	+C-X203:23	133 .2	0,75 BU	
L10	+C-XL010:220	001 .5	+C-X227:24	200 .9	0,75 BU	
L11	+C-XL011:101	001 .1	+C-F022:6	034 .4	2,50 BU	
L11	+C-XL011:103	001 .2	+C-A105:01	094 .7	0,75 BU	
L11	+C-XL011:104	001 .2	+C-A106:01	096 .7	0,75 BU	
L11	+C-XL011:106	001 .2	+C-A410:20	016 .2	0,75 BU	
L11	+C-XL011:107	001 .3	+C-A411:20	015 .3	0,75 BU	
L11	+C-XL011:108	001 .3	+C-A412:20	017 .2	0,75 BU	
L11	+C-XL011:109	001 .3	+C-A413:20	017 .7	0,75 BU	
L11	+C-XL011:110	001 .3	+C-A415:20	016 .7	0,75 BU	
L11	+C-XL011:111	001 .4	+C-A421:1	055 .6	0,75 BU	
L11	+C-XL011:112	001 .4	+C-A422:1	056 .6	0,75 BU	
L11	+C-XL011:113	001 .4	+C-A418:1	053 .2	0,75BU	
L11	+C-XL011:114	001 .4	+C-A419:1	052 .2	0,75BU	
L11	+C-XL011:115	001 .5	+C-A420:1	054 .9	0,75 BU	
L11	+C-XL011:116	001 .5	+C-P002:8:4	039 .6	0,75 BU	
L11	+C-XL011:117	001 .5	+C-A424:17	024 .4	0,75 BU	
L11	+C-A424:17	024 .4	+C-A424:19	024 .4		
L11	+C-XL011:118	001 .5	+C-A425:17	025 .4	0,75 BU	
L11	+C-A425:17	025 .4	+C-A425:19	025 .4		
L11	+C-XL011:121	001 .6	+C-A300:15	046 .6	0,75 BU	
L11	+C-A300:15	046 .6	+C-A301:15	046 .6		
L11	+C-A301:15	046 .6	+C-A302:15	046 .6		
L11	+C-A302:15	046 .6	+C-A303:15	047 .6		
L11	+C-A303:15	047 .6	+C-A304:15	047 .6		
L11	+C-XL011:122	001 .6	+C-A305:15	047 .6	0,75 BU	
L11	+C-A305:15	047 .6	+C-A306:15	048 .6		
L11	+C-A306:15	048 .6	+C-A307:15	048 .6		

Drawing remarks

Tetra Pak

Designer	Date	Machine
BMI	07/06/2004	TBA/22-0500

ECM No	Denomination	Page Type
175296	LINE SUMMARY	LINE SUMMARY

Company	Document No.	Doc. type	Version	Page
Tetra Pak Carton Ambient S.p.A.	2593852-0004	ELD	AE	4

This drawing must not without the consent of Tetra Pak be copied, transmitted or disclosed to any third party.

Line summary of 2593852-0003

Line	From	Page.Col.	To	Page.Col.	Area/Color	Opt.
L11	+C-A307:15	048 .6	+C-A308:15	048 .6		
L11	+C-XL011:123	001 .7	+C-A309:15	045 .6	0,75 BU	H.I.
L11	+C-XL011:125	001 .7	+C-A506:7B25	019 .7	0,75 BU	
L11	+C-A506:7B25	019 .7	+C-A506:7B35	019 .7		
L11	+C-XL011:126	001 .7	+C-A507:7B25	020 .7	0,75 BU	
L11	+C-A507:7B25	020 .7	+C-A507:7B35	020 .7		
L11	+C-XL011:127	001 .8	+C-A508:7B25	021 .7	0,75 BU	
L11	+C-A508:7B25	021 .7	+C-A508:7B35	021 .7		
L11	+C-XL011:129	001 .8	+C-A600:A1	063 .6	0,75 BU	
L11	+C-A600:A1	063 .6	+C-A600:13	063 .6		
L11	+C-A600:13	063 .6	+C-A601:A1	064 .6		
L11	+C-A601:A1	064 .6	+C-A602:A1	065 .6		
L11	+C-A602:A1	065 .6	+C-A602:X1	065 .6		
L11	+C-A602:X1	065 .6	+C-A602:X4	065 .6		
L11	+C-XL011:130	001 .8	+C-A603:X2	066 .6	0,75 BU	
L11	+C-A603:X2	066 .6	+C-A603:33	066 .6		
L11	+C-XL011:132	001 .9	+C-K003:21	064 .4	0,75 BU	
L11	+C-XL011:133	001 .9	+C-X031:1	053 .6	0,75 BU	
L11	+C-X031:1	053 .6	+C-X031:5	053 .6		
L11	+C-X031:5	053 .6	+C-X031:17	052 .6		
L11	+C-X031:17	052 .6	+C-X031:21	052 .6		
L11	+C-XL011:137	001 .2	+C-X212:23	202 .9	0,75 BU	
L11	+C-XL011:138	001 .2	+C-X216:2	121 .1	0,75 BU	
L11	+C-X216:2	121 .1	+C-X216:23	203 .2		
L11	+C-XL011:139	001 .2	+C-X234:23	203 .2	0,75 BU	
L11	+C-XL011:140	001 .2	+C-S001:11	121 .3	0,75 BU	
L11	+C-S001:11	121 .3	+C-S005:11	120 .3		
L12	+C-XL012:101	002 .1	+C-F022:4	034 .4	2,50 BU	
L12	+C-XL012:103	002 .2	+C-A102:01	084 .1	0,75 BU	
L12	+C-A102:01	084 .1	+C-A102:11	085 .1		
L12	+C-XL012:104	002 .2	+C-A107:01	098 .1	0,75 BU	
L12	+C-XL012:105	002 .2	+C-A108:01	100 .1	0,75 BU	
L12	+C-XL012:106	002 .2	+C-A112:I0023	107 .7	0,75 BU	
L12	+C-XL012:108	002 .3	+C-A127:01	141 .1	0,75 BU	
L12	+C-A127:01	141 .1	+C-A127:11	142 .1		
L12	+C-XL012:109	002 .3	+C-A128:01	143 .1	0,75 BU	
L12	+C-A128:01	143 .1	+C-A128:11	144 .1		
L12	+C-XL012:110	002 .3	+C-A129:01	145 .1	0,75 BU	
L12	+C-A129:01	145 .1	+C-A129:11	146 .1		
L12	+C-XL012:111	002 .4	+C-A130:01	147 .1	0,75 BU	
L12	+C-A130:01	147 .1	+C-A130:11	148 .1		
L12	+C-XL012:112	002 .4	+C-A131:01	149 .1	0,75 BU	
L12	+C-XL012:113	002 .4	+C-A132:01	151 .1	0,75 BU	
L12	+C-XL012:114	002 .4	+C-A136:01	159 .1	0,75 BU	
L12	+C-XL012:115	002 .5	+C-X227:23	200 .9	0,75 BU	
L12	+C-XL012:116	002 .5	+C-X215:10	080 .5	0,75 BU	
L12	+C-XL012:117	002 .5	+C-X218:10	117 .1	0,75 BU	
L12	+C-XL012:119	002 .6	+C-X225:23	126 .1	0,75 BU	
L12	+C-XL012:120	002 .6	+C-X228:1	051 .1	0,75 BU	
L12	+C-X228:1	051 .1	+C-X228:16	051 .6		
L13	+C-XL013:101	002 .1	+C-F022:2	034 .3	2,50 BU	
L13	+C-XL013:105	002 .2	+C-A131:11	150 .1	0,75 BU	
L13	+C-XL013:110	002 .3	+C-A450:+	061 .3	0,75 BU	
L13	+C-XL013:111	002 .4	+C-K121:4	061 .7	0,75 BU	
L13	+C-XL013:112	002 .4	+C-K016:13	022 .9	0,75 BU	
L13	+C-XL013:114	002 .4	+C-A501:310	012 .1	1,50 BU	

Drawing remarks

Tetra Pak

Designer	Date	Machine
BMI	07/06/2004	TBA/22-0500

ECM No	Denomination	Page Type
175296	LINE SUMMARY	LINE SUMMARY

Company	Document No.	Doc. type	Version	Page
Tetra Pak Carton Ambient S.p.A.	2593852-0004	ELD	AE	5

This drawing must not without the consent of Tetra Pak
be copied, transmitted or disclosed to any third party.

Line summary of 2593852-0003

Line	From	Page.Col.	To	Page.Col.	Area/Color	Opt.
L13	+C-A501:310	012 .1	+C-A502:310	012 .6		
L14	+C-XL014:101	002 .1	+C-F020:4	034 .3	2,50 BU	
L14	+C-XL014:103	002 .2	+C-A132:11	152 .1	0,75 BU	
L14	+C-XL014:104	002 .2	+C-A133:01	153 .1	0,75 BU	
L14	+C-A133:01	153 .1	+C-A133:11	154 .1		
L14	+C-XL014:105	002 .2	+C-A134:01	155 .1	0,75 BU	
L14	+C-XL014:106	002 .2	+C-A145:01	181 .1	0,75 BU	
L14	+C-A145:01	181 .1	+C-A145:11	182 .1		
L14	+C-XL014:107	002 .3	+C-A146:01	183 .1	0,75 BU	
L14	+C-A146:01	183 .1	+C-A146:11	184 .1		
L14	+C-XL014:108	002 .3	+C-A147:01	185 .1	0,75 BU	
L14	+C-A147:01	185 .1	+C-A147:11	186 .1		
L14	+C-XL014:111	002 .4	+C-A112:I0024	107 .7	0,75 BU	
L14	+C-XL014:112	002 .4	+C-A120:I0160	124 .7		
L14	+C-XL014:114	002 .4	+C-X206:23	204 .9	0,75 BU	
L14	+C-XL014:115	002 .5	+C-X207:2	173 .1	0,75 BU	
L14	+C-XL014:116	002 .5	+C-X210:2	176 .1	0,75 BU	H.I.
L15	+C-XL015:101	002 .1	+C-F020:2	034 .2	2,50 BU	
L15	+C-XL015:102	002 .1	+C-A414:2	050 .4	0,75 BU	
L15	+C-A414:2	050 .4	+C-A414:5	050 .4		
L15	+C-A414:5	050 .4	+C-A414:10	050 .4		
L15	+C-A414:10	050 .4	+C-A414:16	050 .4		
L15	+C-A414:16	050 .4	+C-A414:21	050 .4		
L15	+C-A414:21	050 .4	+C-A414:26	050 .4		
L15	+C-XL015:103	002 .2	+C-A135:01	157 .1	0,75 BU	
L15	+C-A135:01	157 .1	+C-A135:11	158 .1		
L15	+C-XL015:104	002 .2	+C-A136:11	160 .1	0,75 BU	
L15	+C-XL015:105	002 .2	+C-A137:01	161 .1	0,75 BU	

Line	From	Page.Col.	To	Page.Col.	Area/Color	Opt.
L15	+C-A137:01	161 .1	+C-A137:11	162 .1		
L15	+C-XL015:106	002 .2	+C-A138:01	163 .1	0,75 BU	
L15	+C-A138:01	163 .1	+C-A138:11	164 .1		
L15	+C-XL015:107	002 .3	+C-A139:01	165 .1	0,75 BU	
L15	+C-A139:01	165 .1	+C-A139:11	166 .1		
L15	+C-XL015:108	002 .3	+C-A124:I0209	131 .7		
L15	+C-A124:I0209	131 .7	+C-A124:I0210	131 .7		
L15	+C-A124:I0210	131 .7	+C-A124:I0211	131 .7		
L15	+C-A124:I0211	131 .7	+C-A124:I0212	131 .7		
L15	+C-A124:I0212	131 .7	+C-A124:I0216	131 .7		
L15	+C-XL015:109	002 .3	+C-S003:13	116 .3	0,75 BU	
L15	+C-XL015:110	002 .3	+C-S004:51	116 .3	0,75 BU	
L15	+C-XL015:111	002 .4	+C-Q001:13	107 .2	0,75 BU	
L15	+C-XL015:112	002 .4	+C-Q024:33	107 .7	0,75 BU	
L15	+C-XL015:113	002 .4	+C-X009:6	108 .1	0,75 BU	
L15	+C-XL015:114	002 .4	+C-X203:24	133 .2	0,75 BU	
L15	+C-XL015:115	002 .5	+C-X213:23	204 .5	0,75 BU	
L15	+C-XL015:116	002 .5	+C-X214:10	108 .1	0,75 BU	
L15	+C-X214:10	108 .1	+C-X214:18	120 .1		
L15	+C-X214:18	120 .1	+C-X214:23	204 .9		
L15	+C-XL015:117	002 .5	+C-X217:7	062 .1	0,75 BU	
L15	+C-X217:7	062 .1	+C-X217:23	124 .1		
L15	+C-XL015:118	002 .5	+C-X219:2	116 .1	0,75 BU	
L15	+C-XL015:119	002 .6	+C-X220:23	203 .9	0,75 BU	
L15	+C-XL015:120	002 .6	+C-X222:14	120 .1	0,75 BU	
L15	+C-X222:14	120 .1	+C-X222:17	115 .1		
L15	+C-XL015:121	002 .6	+C-X223:23	059 .1	0,75 BU	
L15	+C-XL015:122	002 .6	+C-X224:3	062 .1	0,75 BU	

Drawing remarks

Tetra Pak

Designer	Date	Machine
BMI	07/06/2004	TBA/22-0500

ECM No	Denomination	Page Type
175296	LINE SUMMARY	LINE SUMMARY

Company	Document No.	Doc. type	Version	Page
Tetra Pak Carton Ambient S.p.A.	2593852-0004	ELD	AE	6

This drawing must not without the consent of Tetra Pak
be copied, transmitted or disclosed to any third party.

Line summary of 2593852-0003

Line	From	Page.Col.	To	Page.Col.	Area/Color	Opt.
L15	+C-X224:3	062 .1	+C-X224:14	116 .1		
L15	+C-X224:14	116 .1	+C-X224:23	118 .1		
L15	+C-XL015:123	002 .7	+C-X226:23	205 .5	0,75 BU	
L15	+C-XL015:124	002 .7	+C-X229:11	062 .1	0,75 BU	
L15	+C-X229:11	062 .1	+C-X229:23	081 .1		
L15	+C-XL015:125	002 .7	+C-X231:23	206 .9	0,75 BU	
L15	+C-XL015:126	002 .7	+C-X600:7	108 .1	0,75 BU	
L15	+C-XL015:127	002 .8	+C-K111:7	123 .3	0,75 BU	
L15	+C-XL015:128	002 .8	+C-K113:3	123 .3	0,75 BU	
L15	+C-XL015:129	002 .8	+C-K115:7	123 .3	0,75 BU	
L15	+C-K115:7	123 .3	+C-K215:14	056 .8		
L20	+C-A600:24	063 .6	+C-A601:23	064 .6		
L20	+C-A601:23	064 .6	+C-K002:A2	140 .5		
L20	+C-K002:A2	140 .5	+C-K005:A2	140 .5		
L20	+C-K005:A2	140 .5	+C-K007:A2	140 .5		
L20	+C-K007:A2	140 .5	+C-K008:A2	140 .5		
L20	+C-K008:A2	140 .5	+C-K010:A2	140 .5		
L20	+C-K010:A2	140 .5	+C-K014:A2	140 .5		
L20	+C-K014:A2	140 .5	+C-K016:A2	143 .5		
L20	+C-K016:A2	143 .5	+C-K036:A2	140 .5		
L20	+C-K036:A2	140 .5	+C-X234:10	140 .7		
L21	+C-A600:14	063 .6	+C-A601:13	064 .6		
L21	+C-A601:13	064 .6	+C-A602:13	065 .6		
L21	+C-A602:13	065 .6	+C-A126:11	140 .1		
L21	+C-A126:11	140 .1	+C-A112:I0017	107 .7		
L30	+C-A601:24	064 .6	+C-K003:A2	139 .5		
L30	+C-K003:A2	139 .5	+C-K009:A2	139 .5		
L30	+C-K009:A2	139 .5	+C-X234:12	139 .7		

Line	From	Page.Col.	To	Page.Col.	Area/Color	Opt.
L31	+C-A601:14	064 .6	+C-A603:A1	066 .6		
L31	+C-A603:A1	066 .6	+C-A603:S14	066 .6		
L31	+C-A603:S14	066 .6	+C-A126:01	139 .1		
L31	+C-A126:01	139 .1	+C-A112:I0018	107 .7		
L50	+C-XL050:1	003 .1	+C-X003:2	034 .8	0,75 LightBU	
L50	+C-XL050:2	003 .1	+C-A300:A2	046 .6	0,75 LightBU	
L50	+C-A300:A2	046 .6	+C-A301:A2	046 .6		
L50	+C-A301:A2	046 .6	+C-A302:A2	046 .6		
L50	+C-A302:A2	046 .6	+C-A303:A2	047 .6		
L50	+C-XL050:3	003 .2	+C-A304:A2	047 .6	0,75 LightBU	
L50	+C-A304:A2	047 .6	+C-A305:A2	047 .6		
L50	+C-A305:A2	047 .6	+C-A306:A2	048 .6		
L50	+C-A306:A2	048 .6	+C-A307:A2	048 .6		
L50	+C-A307:A2	048 .6	+C-A308:A2	048 .6		
L50	+C-XL050:4	003 .2	+C-G100:N	049 .1	0,75 LightBU	
L50	+C-G100:N	049 .1	+C-G101:N	049 .3		
L50	+C-G101:N	049 .3	+C-G102:N	049 .5		
L50	+C-G102:N	049 .5	+C-G103:N	049 .6		
L50	+C-G103:N	049 .6	+C-G104:N	049 .7		
L50	+C-XL050:5	003 .2	+C-P002:10:N	039 .7	0,75 LightBU	
L50	+C-XL050:6	003 .2	+C-A414:13	050 .4	0,75 LightBU	
L50	+C-XL050:7	003 .3	+C-A309:A2	045 .6	0,75 LightBU	H.I.
L51	+C-XL051:1	003 .1	+C-F002:2	034 .7	0,75 BK	
L51	+C-XL051:2	003 .1	+C-A300:A1	046 .6	0,75 BK	
L51	+C-A300:A1	046 .6	+C-A301:A1	046 .6		
L51	+C-A301:A1	046 .6	+C-A302:A1	046 .6		
L51	+C-A302:A1	046 .6	+C-A303:A1	047 .6		
L51	+C-XL051:3	003 .2	+C-A304:A1	047 .6	0,75 BK	

Drawing remarks

Tetra Pak

Designer	Date	Machine
BMI	07/06/2004	TBA/22-0500

ECM No	Denomination	Page Type
175296	LINE SUMMARY	LINE SUMMARY

Company	Document No.	Doc. type	Version	Page
Tetra Pak Carton Ambient S.p.A.	2593852-0004	ELD	AE	7

This drawing must not without the consent of Tetra Pak be copied, transmitted or disclosed to any third party.

Line summary of 2593852-0003

Line	From	Page.Col.	To	Page.Col.	Area/Color	Opt.
L51	+C-A304:A1	047 .6	+C-A305:A1	047 .6		
L51	+C-A305:A1	047 .6	+C-A306:A1	048 .6		
L51	+C-A306:A1	048 .6	+C-A307:A1	048 .6		
L51	+C-A307:A1	048 .6	+C-A308:A1	048 .6		
L51	+C-XL051:4	003 .2	+C-G100:L1	049 .1	0,75 BK	
L51	+C-G100:L1	049 .1	+C-G101:L1	049 .3		
L51	+C-G101:L1	049 .3	+C-G102:L1	049 .5		
L51	+C-G102:L1	049 .5	+C-G103:L1	049 .6		
L51	+C-G103:L1	049 .6	+C-G104:L1	049 .7		
L51	+C-XL051:5	003 .2	+C-A414:14	050 .4	0,75 BK	
L51	+C-XL051:6	003 .2	+C-K024:13	034 .8	0,75 BK	
L51	+C-XL051:7	003 .3	+C-K100:7	039 .2	0,75 BK	
L51	+C-XL051:9	003 .3	+C-K126:7	039 .2	0,75 BK	
L51	+C-XL051:14	003 .4	+C-A309:A1	045 .6	0,75 BK	H.I.
L52	+C-XL052:1	003 .1	+C-K024:14	034 .8	0,75 BK	
L70	+C-A602:24	065 .6	+C-A134:20	156 .1		
L70	+C-A134:20	156 .1	+C-X221:12	156 .7		
L71	+C-A602:14	065 .6	+C-A112:I0019	107 .7		
L71	+C-A112:I0019	107 .7	+C-A134:11	156 .1		
L71	+C-A134:11	156 .1	+C-X221:11	156 .7		

Line	From	Page.Col.	To	Page.Col.	Area/Color	Opt.

Drawing remarks

Tetra Pak

Designer BMI	Date 07/06/2004	Machine TBA/22-0500	
ECM No 175296	Denomination LINE SUMMARY	Page Type LINE SUMMARY	
Company Tetra Pak Carton Ambient S.p.A.	Document No. 2593852-0004	Doc. type ELD	Version AE	Page 8

7 Cabinet Terminal Summary

TechPub_2614345_v3_DRAFT_ReleaseTB077677en.fm

Description

All terminals inside the electrical cabinet are listed in this chapter. The field *Opt.* specifies if the terminal is reserved for an option.

TechPub_2614345_v3_DRAFT_ReleaseTB077677en.fm

RELEASED

This drawing must not without the consent of Tetra Pak be copied, transmitted or disclosed to any third party.

Cabinet terminal summary of 2593852-0003

Terminal	Page .Col.	Opt.
+C-X002:1	005 .9	
+C-X002:2	016 .3	
+C-X002:3	017 .3	
+C-X002:4	017 .8	
+C-X002:5	016 .8	
+C-X002:6	007 .4	
+C-X002:7	022 .8	
+C-X002:8	011 .6	
+C-X002:9	032 .5	
+C-X002:10	025 .3	
+C-X002:11		
+C-X002:12	011 .9	
+C-X002:13	013 .3	
+C-X002:14		
+C-X002:15	023 .9	
+C-X002:16	024 .3	
+C-X002:17	032 .8	
+C-X002:18	034 .3	
+C-X002:19	204 .10	
+C-X002:20	173 .1	
+C-X002:21	061 .7	
+C-X002:22	032 .2	
+C-X002:23	053 .5	
+C-X002:24	207 .1	
+C-X002:25	032 .1	
+C-X002:26	049 .2	
+C-X002:27	049 .4	
+C-X002:28	032 .2	

Terminal	Page .Col.	Opt.
+C-X002:29	049 .5	
+C-X002:30	049 .6	
+C-X002:31	049 .8	
+C-X002:32	133 .1	
+C-X002:33	157 .7	
+C-X002:34	204 .10	
+C-X002:35	080 .5	
+C-X002:36	058 .8	
+C-X002:37	202 .1	
+C-X002:38	154 .6	
+C-X002:39	207 .1	
+C-X002:40	048 .4	
+C-X002:41	156 .8	
+C-X002:42	207 .1	
+C-X002:43	059 .1	
+C-X002:44	184 .7	H.I.
+C-X002:45	205 .1	
+C-X002:46	205 .10	
+C-X002:47	021 .1	
+C-X002:48	020 .1	
+C-X002:49	202 .1	
+C-X002:50	151 .7	
+C-X002:51	058 .8	
+C-X002:52	149 .7	
+C-X002:53	203 .1	
+C-X002:54	012 .3	
+C-X002:55	012 .7	
+C-X002:56	039 .8	

Terminal	Page .Col.	Opt.
+C-X002:57		
+C-X002:58	023 .2	
+C-X002:59		
+C-X002:60	034 .3	
+C-X002:61		
+C-X002:62	007 .9	
+C-X002:63	010 .6	
+C-X002:64	010 .5	
+C-X002:65	022 .4	
+C-X002:66	019 .1	
+C-X002:67	006 .9	H.I.
+C-X002:68	022 .7	
+C-X002:69	022 .2	
+C-X002:70		
+C-X002:71		
+C-X002:72		
+C-X002:73		
+C-X002:74		
+C-X002:75		
+C-X002:76	015 .4	
+C-X002:77	050 .6	
+C-X002:78		
+C-X002:79		
+C-X002:80	008 .4	
+C-X002:81	008 .9	
+C-X002:82	026 .8	
+C-X002:83		
+C-X002:84		

Terminal	Page .Col.	Opt.
+C-X002:85		
+C-X002:86		
+C-X002:87		
+C-X002:88		
+C-X002:89		
+C-X002:90		
+C-X002:91		
+C-X002:92		
+C-X002:93		
+C-X002:94		
+C-X002:95		
+C-X002:96		
+C-X002:97		
+C-X002:98		
+C-X002:99		
+C-X002:100	208 .1	H.I.
+C-X002:102	202 .10	
+C-X002:103		
+C-X002:104		
+C-X002:105		
+C-X002:106		
+C-X002:107		
+C-X002:108		
+C-X002:109		
+C-X002:110		
+C-X002:111		
+C-X002:112		
+C-X002:113		

Drawing remarks

Tetra Pak

Designer: BMI	Date: 07/06/2004	Machine: TBA/22-0500	
ECM No: 175296	Denomination: CABINET TERMINAL SUMMARY	Page Type: CABINET TERMINAL SUMMARY	
Company: Tetra Pak Carton Ambient S.p.A.	Document No.: 2593852-0005	Doc. type: ELD	Version: AE	Page: 1

This drawing must not without the consent of Tetra Pak be copied, transmitted or disclosed to any third party.

Cabinet terminal summary of 2593852-0003

Terminal	Page .Col.	Opt.
+C-X002:114		
+C-X002:115		
+C-X002:116	200 .10	
+C-X002:117	051 .7	
+C-X002:118		
+C-X002:119		
+C-X002:120	166 .7	
+C-X002:121		
+C-X002:122		
+C-X002:123		
+C-X002:124		
+C-X002:125		
+C-X002:126		
+C-X002:127		
+C-X002:128		
+C-X002:129		
+C-X002:130		
+C-X002:131	023 .4	
+C-X002:132		
+C-X002:133	023 .7	
+C-X002:134	023 .5	
+C-X002:135	018 .3	
+C-X002:136	006 .4	
+C-X002:137		
+C-X002:138	022 .5	
+C-X002:139	011 .3	
+C-X002:140		
+C-X002:141		

Terminal	Page .Col.	Opt.
+C-X003:1	032 .4	
+C-X003:2	034 .8	
+C-X003:3	032 .3	
+C-X003:4	016 .3	
+C-X003:5	026 .5	
+C-X003:6	026 .8	
+C-X003:7	016 .8	
+C-X003:8	011 .3	
+C-X003:9		
+C-X003:10		
+C-X003:11	015 .4	
+C-X003:12		
+C-X003:13		
+C-X003:14		
+C-X003:15		
+C-X003:16	011 .8	
+C-X003:100	010 .5	
+C-X003:101	010 .3	
+C-X003:102	010 .8	
+C-X003:103	010 .10	
+C-X003:104		
+C-X003:105		
+C-X003:106		
+C-X003:107		
+C-X003:109	017 .3	
+C-X003:110	017 .8	
+C-X003:112	011 .6	
+C-X003:113	006 .8	H.I.

Terminal	Page .Col.	Opt.
+C-X003:114		
+C-X003:115		
+C-X004:1	005 .5	
+C-X004:2	005 .5	
+C-X009:1	058 .6	
+C-X009:2	058 .4	
+C-X009:3		
+C-X009:4		
+C-X009:5	108 .2	
+C-X009:6	108 .1	
+C-X009:7	108 .1	
+C-X009:8	108 .4	
+C-X009:9	108 .3	
+C-X009:10	108 .3	
+C-X009:11	108 .5	
+C-X009:12	108 .4	
+C-X009:13	108 .4	
+C-X009:14	108 .7	
+C-X009:15	108 .6	
+C-X009:16	108 .6	
+C-X009:17		
+C-X009:18		
+C-X009:19		
+C-X009:20		
+C-X009:21		
+C-X009:22		
+C-X009:⏚		
+C-X009:⏚		

Terminal	Page .Col.	Opt.
+C-X020:1	019 .2	
+C-X020:2	019 .2	
+C-X020:3	019 .2	
+C-X020:4	019 .2	
+C-X020:5		
+C-X020:7		
+C-X020:8		
+C-X020:9		
+C-X020:10		
+C-X020:11		
+C-X020:12		
+C-X020:13		
+C-X020:14		
+C-X020:15		
+C-X020:19		
+C-X020:20		
+C-X020:21		
+C-X020:22		
+C-X020:⏚	019 .2	
+C-X022:1	020 .1	
+C-X022:2	020 .1	
+C-X022:3	020 .2	
+C-X022:4	020 .2	
+C-X022:5		
+C-X022:6		
+C-X022:⏚	020 .2	
+C-X025:+	086 .2	
+C-X025:-	086 .2	

Drawing remarks

Tetra Pak

Designer	Date	Machine
BMI	07/06/2004	TBA/22-0500

ECM No	Denomination	Page Type
175296	CABINET TERMINAL SUMMARY	CABINET TERMINAL SUMMARY

Company	Document No.	Doc. type	Version	Page
Tetra Pak Carton Ambient S.p.A.	2593852-0005	ELD	AE	2

This drawing must not without the consent of Tetra Pak be copied, transmitted or disclosed to any third party.

Cabinet terminal summary of 2593852-0003

Terminal	Page .Col.	Opt.
+C-X031:1	053 .6	
+C-X031:2	053 .6	
+C-X031:3	053 .6	
+C-X031:4	053 .6	
+C-X031:5	053 .6	
+C-X031:6	053 .6	
+C-X031:7	053 .6	
+C-X031:8	053 .6	
+C-X031:9		
+C-X031:10		
+C-X031:11		
+C-X031:12		
+C-X031:13		
+C-X031:14		
+C-X031:15		
+C-X031:16		
+C-X031:17	052 .6	
+C-X031:18	052 .6	
+C-X031:19	052 .6	
+C-X031:20	052 .6	
+C-X031:21	052 .6	
+C-X031:22	052 .6	
+C-X031:23	052 .6	
+C-X031:24	052 .6	
+C-X031:⏚	053 .6	
+C-X031:⏚	053 .6	
+C-X101:1	032 .7	
+C-X101:2	032 .7	

Terminal	Page .Col.	Opt.
+C-X101:3		
+C-X101:4		
+C-X101:5		
+C-X101:6		
+C-X101:⏚	032 .8	
+C-X102:1	023 .5	
+C-X102:2	023 .5	
+C-X102:3	023 .5	
+C-X102:4		
+C-X102:5		
+C-X102:6		
+C-X102:⏚	023 .5	
+C-X103:1	023 .6	
+C-X103:2	023 .7	
+C-X103:3	023 .7	
+C-X103:4		
+C-X103:5		
+C-X103:6		
+C-X103:⏚	023 .7	
+C-X105:1	023 .3	
+C-X105:2	023 .3	
+C-X105:3	023 .3	
+C-X105:4		
+C-X105:5		
+C-X105:6		
+C-X105:⏚	023 .4	
+C-X107:1	021 .2	
+C-X107:2	021 .3	

Terminal	Page .Col.	Opt.
+C-X107:3	021 .3	
+C-X107:4	021 .2	
+C-X107:5	021 .2	
+C-X107:6	021 .2	
+C-X107:⏚	021 .1	
+C-X108:1	020 .3	
+C-X108:2	020 .3	
+C-X108:3	020 .3	
+C-X108:4	020 .2	
+C-X108:5	020 .2	
+C-X108:6	020 .2	
+C-X108:⏚	020 .1	
+C-X110:1	022 .1	
+C-X110:2	022 .2	
+C-X110:3	022 .2	
+C-X110:4		
+C-X110:5		
+C-X110:6		
+C-X110:⏚	022 .2	
+C-X111:1	022 .6	
+C-X111:2	022 .7	
+C-X111:3	022 .7	
+C-X111:4		
+C-X111:5		
+C-X111:6		
+C-X111:⏚	022 .7	
+C-X112:1	016 .9	
+C-X112:2	016 .9	

Terminal	Page .Col.	Opt.
+C-X112:3	016 .10	
+C-X112:4	016 .10	
+C-X112:5	016 .10	
+C-X112:6		
+C-X112:⏚		
+C-X113:1	019 .3	
+C-X113:2	019 .3	
+C-X113:3	019 .3	
+C-X113:4	019 .2	
+C-X113:5	019 .2	
+C-X113:6	019 .3	
+C-X113:⏚	019 .2	
+C-X115:1	022 .3	
+C-X115:2	022 .3	
+C-X115:3	022 .3	
+C-X115:4		
+C-X115:5		
+C-X115:6		
+C-X115:⏚	022 .4	
+C-X116:1	010 .2	
+C-X116:2	010 .3	
+C-X116:3	010 .4	
+C-X116:4	010 .5	
+C-X116:5		
+C-X116:6		
+C-X116:⏚	010 .5	
+C-X117:1	010 .7	
+C-X117:2	010 .8	

Drawing remarks

Tetra Pak

Designer BMI	Date 07/06/2004	Machine TBA/22-0500	
ECM No 175296	Denomination CABINET TERMINAL SUMMARY	Page Type CABINET TERMINAL SUMMARY	
Company Tetra Pak Carton Ambient S.p.A.	Document No. 2593852-0005	Doc. type ELD	Version AE	Page 3

This drawing must not without the consent of Tetra Pak be copied, transmitted or disclosed to any third party.

Cabinet terminal summary of 2593852-0003

Terminal	Page .Col.	Opt.
+C-X117:3	010 .9	
+C-X117:4	010 .10	
+C-X117:5		
+C-X117:6		
+C-X117:⏚	010 .6	
+C-X118:1	015 .6	
+C-X118:2	015 .6	
+C-X118:3	015 .6	
+C-X118:4	015 .6	
+C-X118:5	015 .6	
+C-X118:6		
+C-X118:⏚		
+C-X119:1	007 .8	
+C-X119:2	007 .8	
+C-X119:3	007 .8	
+C-X119:4		
+C-X119:5		
+C-X119:6		
+C-X119:⏚	007 .9	
+C-X122:1	023 .8	
+C-X122:2	023 .8	
+C-X122:3	023 .9	
+C-X122:4		
+C-X122:5		
+C-X122:6		
+C-X122:⏚	023 .9	
+C-X125:1	024 .2	
+C-X125:2	024 .3	

Terminal	Page .Col.	Opt.
+C-X125:3	024 .3	
+C-X125:4	024 .3	
+C-X125:5	024 .2	
+C-X125:6		
+C-X125:⏚	024 .3	
+C-X126:1	017 .5	
+C-X126:2	017 .5	
+C-X126:3	017 .5	
+C-X126:4	017 .5	
+C-X126:5	017 .5	
+C-X126:6		
+C-X126:⏚		
+C-X127:1	017 .9	
+C-X127:2	017 .9	
+C-X127:3	017 .10	
+C-X127:4	017 .10	
+C-X127:5	017 .10	
+C-X127:6		
+C-X127:⏚		
+C-X128:1	013 .1	
+C-X128:2	013 .2	
+C-X128:3	013 .2	
+C-X128:4		
+C-X128:5		
+C-X128:6		
+C-X128:⏚	013 .2	
+C-X129:1	011 .8	
+C-X129:2	011 .8	

Terminal	Page .Col.	Opt.
+C-X129:3	011 .8	
+C-X129:4	011 .8	
+C-X129:5	011 .8	
+C-X129:6		
+C-X129:⏚	011 .9	
+C-X130:1	016 .5	
+C-X130:2	016 .5	
+C-X130:3	016 .5	
+C-X130:4	016 .5	
+C-X130:5	016 .5	
+C-X130:6		
+C-X130:⏚		
+C-X131:1	025 .2	
+C-X131:2	025 .3	
+C-X131:3	025 .3	
+C-X131:4	025 .3	
+C-X131:5	025 .2	
+C-X131:6		
+C-X131:⏚	025 .3	
+C-X132:1	032 .4	
+C-X132:2		
+C-X132:3	032 .4	
+C-X132:4		
+C-X132:5		
+C-X132:6		
+C-X132:⏚	032 .5	
+C-X133:1	011 .5	
+C-X133:2	011 .6	

Terminal	Page .Col.	Opt.
+C-X133:3		
+C-X133:4		
+C-X133:5		
+C-X133:6		
+C-X133:⏚	011 .6	
+C-X134:1	022 .8	
+C-X134:2	022 .8	
+C-X134:3	022 .9	
+C-X134:4		
+C-X134:5		
+C-X134:6		
+C-X134:⏚	022 .8	
+C-X135:1	007 .3	
+C-X135:2	007 .3	
+C-X135:3	007 .3	
+C-X135:4		
+C-X135:5		
+C-X135:6		
+C-X135:⏚	007 .4	
+C-X136:1	026 .7	
+C-X136:2	026 .8	
+C-X136:3		
+C-X136:4		
+C-X136:5		
+C-X136:6		
+C-X136:⏚	026 .8	
+C-X137:1	008 .3	
+C-X137:2	008 .3	

Drawing remarks

Tetra Pak

Designer BMI	Date 07/06/2004	Machine TBA/22-0500	
ECM No 175296	Denomination CABINET TERMINAL SUMMARY	Page Type CABINET TERMINAL SUMMARY	
Company Tetra Pak Carton Ambient S.p.A.	Document No. 2593852-0005	Doc. type ELD	Version AE	Page 4

This drawing must not without the consent of Tetra Pak be copied, transmitted or disclosed to any third party.

Cabinet terminal summary of 2593852-0003

Terminal	Page .Col.	Opt.
+C-X137:3	008 .3	
+C-X137:4		
+C-X137:5		
+C-X137:6		
+C-X137:⏚	008 .4	
+C-X138:1	008 .8	
+C-X138:2	008 .8	
+C-X138:3	008 .8	
+C-X138:4		
+C-X138:5		
+C-X138:6		
+C-X138:⏚	008 .9	
+C-X170:1	049 .2	
+C-X171:1	049 .4	
+C-X172:1	049 .5	
+C-X173:1	049 .6	
+C-X174:1	049 .7	
+C-X203:1	133 .6	
+C-X203:2	133 .6	
+C-X203:3	133 .6	
+C-X203:4	133 .6	
+C-X203:5	133 .6	
+C-X203:6	133 .6	
+C-X203:7	133 .6	
+C-X203:8	133 .6	
+C-X203:9	134 .6	
+C-X203:10	134 .6	
+C-X203:11	134 .6	

Terminal	Page .Col.	Opt.
+C-X203:12	134 .6	
+C-X203:13	134 .6	
+C-X203:14	134 .6	
+C-X203:15	134 .6	
+C-X203:16	134 .6	
+C-X203:17		
+C-X203:18		
+C-X203:19		
+C-X203:20		
+C-X203:21		
+C-X203:22		
+C-X203:23	133 .2	
+C-X203:24	133 .2	
+C-X203:⏚	133 .2	
+C-X206:1	173 .6	
+C-X206:2	173 .6	
+C-X206:3	173 .6	
+C-X206:4	182 .3	
+C-X206:5	182 .3	
+C-X206:6	182 .3	
+C-X206:7	182 .3	
+C-X206:8	182 .3	
+C-X206:9	185 .3	
+C-X206:10	175 .6	
+C-X206:11	204 .6	
+C-X206:12	204 .6	
+C-X206:13		
+C-X206:14		

Terminal	Page .Col.	Opt.
+C-X206:15		
+C-X206:16		
+C-X206:17		
+C-X206:18		
+C-X206:19		
+C-X206:20		
+C-X206:21		
+C-X206:22		
+C-X206:23	204 .9	
+C-X206:24	204 .9	
+C-X206:⏚	204 .9	
+C-X207:1	173 .6	
+C-X207:2	173 .1	
+C-X207:3	173 .1	
+C-X207:4	173 .6	
+C-X207:5	173 .6	
+C-X207:6	173 .6	
+C-X207:7	173 .6	
+C-X207:8	174 .6	
+C-X207:9	174 .6	
+C-X207:10	174 .6	
+C-X207:11		
+C-X207:12		
+C-X207:13		
+C-X207:14		
+C-X207:15		
+C-X207:16		
+C-X207:17		

Terminal	Page .Col.	Opt.
+C-X207:18		
+C-X207:19		
+C-X207:20		
+C-X207:21		
+C-X207:22		
+C-X207:23		
+C-X207:24		
+C-X207:⏚	173 .2	
+C-X210:1	176 .6	H.I.
+C-X210:2	176 .1	H.I.
+C-X210:3	184 .3	H.I.
+C-X210:4	184 .3	H.I.
+C-X210:5	184 .3	H.I.
+C-X210:6	208 .2	H.I.
+C-X210:7	176 .6	H.I.
+C-X210:8		
+C-X210:9		
+C-X210:10		
+C-X210:11		
+C-X210:12		
+C-X210:13		
+C-X210:14		
+C-X210:15		
+C-X210:16		
+C-X210:17		
+C-X210:18		
+C-X210:19		
+C-X210:20		

Drawing remarks

Tetra Pak

Designer: BMI	Date: 07/06/2004	Machine: TBA/22-0500	
ECM No: 175296	Denomination: CABINET TERMINAL SUMMARY	Page Type: CABINET TERMINAL SUMMARY	
Company: Tetra Pak Carton Ambient S.p.A.	Document No.: 2593852-0005	Doc. type: ELD	Version: AE	Page: 5

This drawing must not without the consent of Tetra Pak be copied, transmitted or disclosed to any third party.

Cabinet terminal summary of 2593852-0003

Terminal	Page .Col.	Opt.
+C-X210:21		
+C-X210:22		
+C-X210:23		
+C-X210:24		
+C-X210:⏚	208 .2	H.I.
+C-X212:1	123 .6	
+C-X212:2	176 .6	H.I.
+C-X212:3	176 .6	H.I.
+C-X212:4	176 .6	H.I.
+C-X212:5	176 .6	H.I.
+C-X212:6	176 .6	H.I.
+C-X212:7	045 .5	H.I.
+C-X212:8	045 .5	H.I.
+C-X212:9	045 .5	H.I.
+C-X212:10	184 .3	H.I.
+C-X212:11	184 .3	H.I.
+C-X212:12	202 .6	
+C-X212:13	202 .6	
+C-X212:14	202 .6	
+C-X212:15	202 .6	
+C-X212:16	202 .6	
+C-X212:17	202 .6	
+C-X212:18	202 .6	
+C-X212:19	202 .6	
+C-X212:20	202 .6	
+C-X212:21	202 .6	
+C-X212:22	202 .6	
+C-X212:23	202 .9	

Terminal	Page .Col.	Opt.
+C-X212:24	202 .9	
+C-X212:⏚	202 .9	
+C-X213:1	158 .3	
+C-X213:2	158 .3	
+C-X213:3	158 .3	
+C-X213:4	158 .3	
+C-X213:5	158 .3	
+C-X213:6		
+C-X213:7	158 .3	
+C-X213:8	158 .3	
+C-X213:9	158 .3	
+C-X213:10	159 .3	
+C-X213:11	159 .3	
+C-X213:12	157 .3	
+C-X213:13	157 .3	
+C-X213:14	204 .1	
+C-X213:15	081 .6	
+C-X213:16	124 .6	
+C-X213:17	124 .6	
+C-X213:18	081 .6	
+C-X213:19	159 .3	
+C-X213:20	022 .9	
+C-X213:21	204 .1	
+C-X213:22	204 .1	
+C-X213:23	204 .5	
+C-X213:24	204 .5	
+C-X213:⏚	157 .7	
+C-X214:1	125 .6	

Terminal	Page .Col.	Opt.
+C-X214:2	125 .6	
+C-X214:3	125 .6	
+C-X214:4	125 .6	
+C-X214:5	204 .1	
+C-X214:6	204 .1	
+C-X214:7	139 .2	
+C-X214:8	139 .2	
+C-X214:9	139 .7	
+C-X214:10	108 .1	
+C-X214:11	108 .6	
+C-X214:12	108 .6	
+C-X214:13	108 .6	
+C-X214:14	108 .6	
+C-X214:15	139 .2	
+C-X214:16	139 .2	
+C-X214:17	120 .1	
+C-X214:18	120 .1	
+C-X214:19	120 .5	
+C-X214:20	120 .5	
+C-X214:21	116 .4	
+C-X214:22	116 .7	
+C-X214:23	204 .9	
+C-X214:24	108 .1	
+C-X214:⏚	204 .9	
+C-X215:1	080 .5	
+C-X215:2	080 .5	
+C-X215:3	080 .5	
+C-X215:4	080 .5	

Terminal	Page .Col.	Opt.
+C-X215:5	080 .5	
+C-X215:6	080 .5	
+C-X215:7	080 .5	
+C-X215:8	080 .5	
+C-X215:9	080 .5	
+C-X215:10	080 .5	
+C-X215:11	080 .5	
+C-X215:12		
+C-X215:13	102 .4	
+C-X215:14	102 .4	
+C-X215:15	102 .4	
+C-X215:16		
+C-X215:17		
+C-X215:18		
+C-X215:19		
+C-X215:20		
+C-X215:21		
+C-X215:22		
+C-X215:23		
+C-X215:24		
+C-X215:⏚	080 .5	
+C-X216:1	121 .1	
+C-X216:2	121 .1	
+C-X216:3	121 .6	
+C-X216:4	121 .6	
+C-X216:5	121 .6	
+C-X216:6	121 .6	
+C-X216:7	121 .6	

Drawing remarks

Tetra Pak

Designer	Date	Machine
BMI	07/06/2004	TBA/22-0500

ECM No	Denomination	Page Type
175296	CABINET TERMINAL SUMMARY	CABINET TERMINAL SUMMARY

Company	Document No.	Doc. type	Version	Page
Tetra Pak Carton Ambient S.p.A.	2593852-0005	ELD	AE	6

This drawing must not without the consent of Tetra Pak
be copied, transmitted or disclosed to any third party.

Cabinet terminal summary of 2593852-0003

Terminal	Page .Col.	Opt.
+C-X216:8	122 .6	
+C-X216:9	122 .6	
+C-X216:10	122 .6	
+C-X216:11	122 .6	
+C-X216:12	122 .6	
+C-X216:13	119 .7	
+C-X216:14	119 .7	
+C-X216:15	047 .5	
+C-X216:16	047 .5	
+C-X216:17	119 .7	
+C-X216:18	203 .2	
+C-X216:19	058 .3	
+C-X216:20	058 .3	
+C-X216:21	058 .3	
+C-X216:22	058 .3	
+C-X216:23	203 .2	
+C-X216:24	203 .2	
+C-X216:⏚	058 .7	
+C-X217:1	118 .6	
+C-X217:2	123 .6	
+C-X217:3	123 .6	
+C-X217:4	062 .4	
+C-X217:5	062 .4	
+C-X217:6	062 .1	
+C-X217:7	062 .1	
+C-X217:8		
+C-X217:9	124 .6	
+C-X217:10		

Terminal	Page .Col.	Opt.
+C-X217:11		
+C-X217:12		
+C-X217:13	050 .4	
+C-X217:14	050 .4	
+C-X217:15	050 .4	
+C-X217:16	050 .5	
+C-X217:17	050 .5	
+C-X217:18	050 .5	
+C-X217:19	050 .5	
+C-X217:20	050 .5	
+C-X217:21		
+C-X217:22		
+C-X217:23	124 .1	
+C-X217:24	124 .1	
+C-X217:⏚	202 .1	
+C-X218:1	117 .6	
+C-X218:2	117 .6	
+C-X218:3	117 .6	
+C-X218:4	117 .6	
+C-X218:5	117 .6	
+C-X218:6	117 .6	
+C-X218:7	117 .6	
+C-X218:8	117 .6	
+C-X218:9	094 .6	
+C-X218:10	117 .1	
+C-X218:11	117 .1	
+C-X218:12	200 .1	
+C-X218:13	046 .5	

Terminal	Page .Col.	Opt.
+C-X218:14	046 .5	
+C-X218:15	124 .6	
+C-X218:16	124 .6	
+C-X218:17	154 .3	
+C-X218:18	154 .3	
+C-X218:19	200 .1	
+C-X218:20	105 .6	
+C-X218:21	105 .6	
+C-X218:22	105 .6	
+C-X218:23	105 .6	
+C-X218:24	200 .1	
+C-X218:⏚	154 .6	
+C-X219:1	115 .6	
+C-X219:2	116 .1	
+C-X219:3	116 .6	
+C-X219:4	207 .1	
+C-X219:5	207 .1	
+C-X219:6	115 .6	
+C-X219:7	116 .6	
+C-X219:8	164 .3	
+C-X219:9	164 .7	
+C-X219:10	164 .3	
+C-X219:11	164 .3	
+C-X219:12	164 .3	
+C-X219:13	164 .3	
+C-X219:14	164 .3	
+C-X219:15	164 .3	
+C-X219:16	164 .3	

Terminal	Page .Col.	Opt.
+C-X219:17	207 .1	
+C-X219:18	207 .1	
+C-X219:19	207 .1	
+C-X219:20	207 .1	
+C-X219:21	207 .1	
+C-X219:22	207 .1	
+C-X219:23	207 .1	
+C-X219:24	207 .1	
+C-X219:⏚	207 .1	
+C-X220:1	159 .3	
+C-X220:2	159 .3	
+C-X220:3	159 .3	
+C-X220:4	159 .3	
+C-X220:5	159 .3	
+C-X220:6		
+C-X220:7		
+C-X220:8		
+C-X220:9	120 .1	
+C-X220:10		
+C-X220:11	120 .6	
+C-X220:12	120 .6	
+C-X220:13	120 .6	
+C-X220:14	048 .3	
+C-X220:15	048 .3	
+C-X220:16	048 .3	
+C-X220:17	048 .3	
+C-X220:18	048 .3	
+C-X220:19	125 .6	

Drawing remarks

Tetra Pak

Designer	BMI	Date	07/06/2004	Machine	TBA/22-0500
ECM No	175296	Denomination	CABINET TERMINAL SUMMARY	Page Type	CABINET TERMINAL SUMMARY
Company	Tetra Pak Carton Ambient S.p.A.	Document No.	2593852-0005	Doc. type	ELD
				Version	AE
				Page	7

This drawing must not without the consent of Tetra Pak be copied, transmitted or disclosed to any third party.

Cabinet terminal summary of 2593852-0003

Terminal	Page .Col.	Opt.
+C-X220:20	125 .6	
+C-X220:21	125 .6	
+C-X220:22	125 .6	
+C-X220:23	203 .9	
+C-X220:24	203 .9	
+C-X220:⏚	048 .3	
+C-X221:1	156 .2	
+C-X221:2	156 .2	
+C-X221:3	156 .2	
+C-X221:4	156 .2	
+C-X221:5	156 .2	
+C-X221:6	156 .2	
+C-X221:7	156 .2	
+C-X221:8	156 .2	
+C-X221:9	206 .6	
+C-X221:10	207 .1	
+C-X221:11	156 .7	
+C-X221:12	156 .7	
+C-X221:13		
+C-X221:14		
+C-X221:15		
+C-X221:16		
+C-X221:17		
+C-X221:18		
+C-X221:19		
+C-X221:20		
+C-X221:21		
+C-X221:22		

Terminal	Page .Col.	Opt.
+C-X221:23		
+C-X221:24		
+C-X221:⏚	156 .7	
+C-X222:1		
+C-X222:2		
+C-X222:3		
+C-X222:4		
+C-X222:5		
+C-X222:6		
+C-X222:7		
+C-X222:8		
+C-X222:9		
+C-X222:10		
+C-X222:11		
+C-X222:12		
+C-X222:13	120 .1	
+C-X222:14	120 .1	
+C-X222:15	120 .6	
+C-X222:16	120 .6	
+C-X222:17	115 .1	
+C-X222:18	115 .6	
+C-X222:19	115 .6	
+C-X222:20	115 .6	
+C-X222:21	115 .6	
+C-X222:22	115 .6	
+C-X222:23	115 .6	
+C-X222:24	115 .6	
+C-X222:⏚	207 .1	

Terminal	Page .Col.	Opt.
+C-X223:1	059 .6	
+C-X223:2	059 .6	
+C-X223:3	059 .6	
+C-X223:4	059 .6	
+C-X223:5	059 .6	
+C-X223:6	059 .6	
+C-X223:7	059 .6	
+C-X223:8	059 .6	
+C-X223:9		
+C-X223:10		
+C-X223:11		
+C-X223:12		
+C-X223:13	059 .6	
+C-X223:14	059 .6	
+C-X223:15	059 .6	
+C-X223:16	059 .6	
+C-X223:17	059 .6	
+C-X223:18		
+C-X223:19		
+C-X223:20		
+C-X223:21		
+C-X223:22		
+C-X223:23	059 .1	
+C-X223:24	059 .1	
+C-X223:⏚	059 .1	
+C-X224:1	201 .1	
+C-X224:2	062 .1	
+C-X224:3	062 .1	

Terminal	Page .Col.	Opt.
+C-X224:4	122 .6	
+C-X224:5		
+C-X224:6	062 .6	
+C-X224:7	062 .6	
+C-X224:8	124 .6	
+C-X224:9	120 .6	
+C-X224:10	120 .6	
+C-X224:11	120 .1	
+C-X224:12	120 .6	
+C-X224:13		
+C-X224:14	116 .1	
+C-X224:15	116 .4	
+C-X224:16	118 .6	
+C-X224:17	054 .7	
+C-X224:18	054 .7	
+C-X224:19	118 .6	
+C-X224:20	121 .6	
+C-X224:21	121 .6	
+C-X224:22		
+C-X224:23	118 .1	
+C-X224:24	118 .1	
+C-X224:⏚	184 .7	H.I.
+C-X225:1	126 .6	
+C-X225:2	081 .6	
+C-X225:3	126 .6	
+C-X225:4	126 .6	
+C-X225:5	126 .6	
+C-X225:6	127 .6	

Drawing remarks

Tetra Pak

Designer BMI	Date 07/06/2004	Machine TBA/22-0500	
ECM No 175296	Denomination CABINET TERMINAL SUMMARY	Page Type CABINET TERMINAL SUMMARY	
Company Tetra Pak Carton Ambient S.p.A.	Document No. 2593852-0005	Doc. type ELD	Version AE	Page 8

This drawing must not without the consent of Tetra Pak be copied, transmitted or disclosed to any third party.

Cabinet terminal summary of 2593852-0003

Terminal	Page .Col.	Opt.
+C-X225:7	127 .6	
+C-X225:8	127 .6	
+C-X225:9	127 .6	
+C-X225:10	127 .6	
+C-X225:11	127 .6	
+C-X225:12	127 .6	
+C-X225:13	127 .6	
+C-X225:14	126 .6	
+C-X225:15	126 .6	
+C-X225:16	126 .6	
+C-X225:17	205 .1	
+C-X225:18	120 .2	
+C-X225:19	120 .2	
+C-X225:20	120 .7	
+C-X225:21	120 .7	
+C-X225:22	126 .6	
+C-X225:23	126 .1	
+C-X225:24	126 .1	
+C-X225:⏚	205 .1	
+C-X226:1	128 .6	
+C-X226:2	128 .6	
+C-X226:3	128 .6	
+C-X226:4	128 .6	
+C-X226:5	155 .2	
+C-X226:6	128 .6	
+C-X226:7	155 .2	
+C-X226:8	155 .2	
+C-X226:9	155 .2	

Terminal	Page .Col.	Opt.
+C-X226:10		
+C-X226:11		
+C-X226:12		
+C-X226:13	155 .2	
+C-X226:14		
+C-X226:15		
+C-X226:16	013 .5	
+C-X226:17	013 .5	
+C-X226:18	013 .5	
+C-X226:19	155 .2	
+C-X226:20	155 .2	
+C-X226:21	155 .2	
+C-X226:22	157 .3	
+C-X226:23	205 .5	
+C-X226:24	205 .5	
+C-X226:⏚	205 .9	
+C-X227:1	200 .1	
+C-X227:2	200 .1	
+C-X227:3	200 .1	
+C-X227:4	200 .6	
+C-X227:5	200 .6	
+C-X227:6	200 .6	
+C-X227:7	200 .6	
+C-X227:8	200 .6	
+C-X227:9	200 .6	
+C-X227:10	200 .6	
+C-X227:11	200 .6	
+C-X227:12	200 .6	

Terminal	Page .Col.	Opt.
+C-X227:13	200 .6	
+C-X227:14	200 .6	
+C-X227:15	200 .6	
+C-X227:16	200 .6	
+C-X227:17	200 .6	
+C-X227:18	200 .6	
+C-X227:19	200 .6	
+C-X227:20		
+C-X227:21		
+C-X227:22		
+C-X227:23	200 .9	
+C-X227:24	200 .9	
+C-X227:⏚	200 .9	
+C-X228:1	051 .1	
+C-X228:2	051 .1	
+C-X228:3	051 .6	
+C-X228:4	051 .6	
+C-X228:5	051 .6	
+C-X228:6	051 .6	
+C-X228:7		
+C-X228:8		
+C-X228:9		
+C-X228:10		
+C-X228:11		
+C-X228:12		
+C-X228:13	051 .6	
+C-X228:14	051 .6	
+C-X228:15		

Terminal	Page .Col.	Opt.
+C-X228:16	051 .6	
+C-X228:17	051 .6	
+C-X228:18		
+C-X228:19		
+C-X228:20		
+C-X228:21		
+C-X228:22		
+C-X228:23		
+C-X228:24		
+C-X228:⏚	051 .6	
+C-X229:1	047 .5	
+C-X229:2	047 .5	
+C-X229:3	046 .5	
+C-X229:4	046 .5	
+C-X229:5	046 .5	
+C-X229:6	046 .5	
+C-X229:7	046 .5	
+C-X229:8	154 .3	
+C-X229:9	154 .3	
+C-X229:10	062 .1	
+C-X229:11	062 .1	
+C-X229:12	062 .4	
+C-X229:13	062 .4	
+C-X229:14	062 .3	
+C-X229:15	062 .6	
+C-X229:16	118 .6	
+C-X229:17	118 .6	
+C-X229:18	118 .6	

Drawing remarks

Tetra Pak

Designer	Date	Machine
BMI	07/06/2004	TBA/22-0500

ECM No	Denomination	Page Type
175296	CABINET TERMINAL SUMMARY	CABINET TERMINAL SUMMARY

Company	Document No.	Doc. type	Version	Page
Tetra Pak Carton Ambient S.p.A.	2593852-0005	ELD	AE	9

This drawing must not without the consent of Tetra Pak be copied, transmitted or disclosed to any third party.

Cabinet terminal summary of 2593852-0003

Terminal	Page .Col.	Opt.
+C-X229:19	081 .6	
+C-X229:20	047 .5	
+C-X229:21	047 .5	
+C-X229:22	118 .6	
+C-X229:23	081 .1	
+C-X229:24	081 .1	
+C-X229:⏚	202 .1	
+C-X230:1	150 .3	
+C-X230:2	150 .3	
+C-X230:3	150 .3	
+C-X230:4	150 .3	
+C-X230:5	150 .3	
+C-X230:6	150 .7	
+C-X230:7	150 .3	
+C-X230:8	150 .3	
+C-X230:9	150 .3	
+C-X230:10	151 .3	
+C-X230:11	151 .3	
+C-X230:12	150 .7	
+C-X230:13	151 .3	
+C-X230:14	151 .3	
+C-X230:15	151 .3	
+C-X230:16	151 .3	
+C-X230:17	151 .3	
+C-X230:18	151 .7	
+C-X230:19	152 .3	
+C-X230:20	152 .3	
+C-X230:21	152 .3	

Terminal	Page .Col.	Opt.
+C-X230:22	152 .3	
+C-X230:23	152 .3	
+C-X230:24	152 .7	
+C-X230:⏚	151 .6	
+C-X231:1	122 .1	
+C-X231:2	206 .1	
+C-X231:3	206 .6	
+C-X231:4	122 .6	
+C-X231:5	122 .6	
+C-X231:6	122 .6	
+C-X231:7	146 .3	
+C-X231:8	096 .6	
+C-X231:9	206 .1	
+C-X231:10	206 .1	
+C-X231:11	128 .6	
+C-X231:12	058 .3	
+C-X231:13	058 .3	
+C-X231:14	058 .3	
+C-X231:15	058 .3	
+C-X231:16	206 .6	
+C-X231:17		
+C-X231:18	122 .6	
+C-X231:19		
+C-X231:20	206 .6	
+C-X231:21	206 .6	
+C-X231:22	206 .6	
+C-X231:23	206 .9	
+C-X231:24	206 .9	

Terminal	Page .Col.	Opt.
+C-X231:⏚	058 .7	
+C-X232:1	148 .3	
+C-X232:2	148 .3	
+C-X232:3	148 .3	
+C-X232:4	148 .3	
+C-X232:5	148 .3	
+C-X232:6	148 .3	
+C-X232:7	148 .3	
+C-X232:8	148 .3	
+C-X232:9	148 .7	
+C-X232:10	148 .7	
+C-X232:11	149 .3	
+C-X232:12	149 .3	
+C-X232:13	149 .3	
+C-X232:14	149 .3	
+C-X232:15	149 .3	
+C-X232:16	149 .3	
+C-X232:17	149 .3	
+C-X232:18	149 .3	
+C-X232:19	149 .7	
+C-X232:20	149 .7	
+C-X232:21		
+C-X232:22		
+C-X232:23		
+C-X232:24		
+C-X232:⏚	149 .6	
+C-X233:1	165 .3	
+C-X233:2	165 .3	

Terminal	Page .Col.	Opt.
+C-X233:3	165 .3	
+C-X233:4	165 .3	
+C-X233:5	165 .3	
+C-X233:6	165 .7	
+C-X233:7	165 .3	
+C-X233:8	165 .3	
+C-X233:9	165 .3	
+C-X233:10	166 .3	
+C-X233:11	166 .3	
+C-X233:12	165 .7	
+C-X233:13		
+C-X233:14		
+C-X233:15		
+C-X233:16		
+C-X233:17		
+C-X233:18		
+C-X233:19		
+C-X233:20		
+C-X233:21		
+C-X233:22		
+C-X233:23		
+C-X233:24		
+C-X233:⏚	166 .6	
+C-X234:1	153 .2	
+C-X234:2	153 .2	
+C-X234:3	153 .2	
+C-X234:4	153 .2	
+C-X234:5	153 .2	

Drawing remarks

Tetra Pak

Designer BMI	Date 07/06/2004	Machine TBA/22-0500	
ECM No 175296	Denomination CABINET TERMINAL SUMMARY	Page Type CABINET TERMINAL SUMMARY	
Company Tetra Pak Carton Ambient S.p.A.	Document No. 2593852-0005	Doc. type ELD	Version AE	Page 10

This drawing must not without the consent of Tetra Pak be copied, transmitted or disclosed to any third party.

Cabinet terminal summary of 2593852-0003

Terminal	Page .Col.	Opt.
+C-X234:6	153 .2	
+C-X234:7	153 .2	
+C-X234:8	153 .2	
+C-X234:9	140 .2	
+C-X234:10	140 .7	
+C-X234:11	139 .2	
+C-X234:12	139 .7	
+C-X234:13	157 .3	
+C-X234:14	157 .3	
+C-X234:15	119 .7	
+C-X234:16	119 .7	
+C-X234:17	119 .7	
+C-X234:18	119 .7	
+C-X234:19	109 .6	
+C-X234:20	157 .3	
+C-X234:21	157 .3	
+C-X234:22	157 .3	
+C-X234:23	203 .2	
+C-X234:24	157 .7	
+C-X234:⏚	203 .2	
+C-X301:+	086 .5	
+C-X301:-	086 .5	
+C-X302:+	087 .5	
+C-X302:-	087 .5	
+C-X303:+	087 .5	
+C-X303:-	087 .5	
+C-X304:+	087 .5	
+C-X304:-	087 .5	

Terminal	Page .Col.	Opt.
+C-X305:+	087 .5	
+C-X305:-	087 .5	
+C-X306:+	086 .5	
+C-X306:-	086 .5	
+C-X307:+	086 .5	
+C-X307:-	086 .5	
+C-X308:+	086 .5	
+C-X308:-	086 .5	
+C-X309:+	086 .5	
+C-X309:-	086 .5	
+C-X310:+	086 .5	
+C-X310:-	086 .5	
+C-X311:+	086 .5	
+C-X311:-	086 .5	
+C-X313:+	087 .5	
+C-X313:-	087 .5	
+C-X315:+	087 .5	
+C-X315:-	087 .5	
+C-X316:+	087 .5	
+C-X316:-	087 .5	
+C-X317:+	177 .5	H.I.
+C-X317:-	177 .5	H.I.
+C-X318:+	177 .5	H.I.
+C-X318:-	177 .5	H.I.
+C-X319:+	177 .5	H.I.
+C-X319:-	177 .5	H.I.
+C-X320:+	177 .5	H.I.
+C-X320:-	177 .5	H.I.

Terminal	Page .Col.	Opt.
+C-X321:+	177 .5	H.I.
+C-X321:-	177 .5	H.I.
+C-X351:A	019 .4	
+C-X351:B	019 .4	
+C-X351:C	019 .4	
+C-X351:D	019 .4	
+C-X351:E	019 .4	
+C-X351:F	019 .4	
+C-X351:G	019 .3	
+C-X352:A	019 .4	
+C-X352:B	019 .4	
+C-X352:C	019 .4	
+C-X352:D	019 .4	
+C-X352:E	019 .4	
+C-X352:F	019 .4	
+C-X352:G	019 .3	
+C-X353:A	020 .4	
+C-X353:B	020 .4	
+C-X353:C	020 .4	
+C-X353:D	020 .4	
+C-X353:E	020 .4	
+C-X353:F	020 .4	
+C-X353:G	020 .5	
+C-X353:H	020 .5	
+C-X353:J	020 .5	
+C-X353:K	020 .5	
+C-X353:L	020 .3	
+C-X354:A	020 .4	

Terminal	Page .Col.	Opt.
+C-X354:B	020 .4	
+C-X354:C	020 .4	
+C-X354:D	020 .4	
+C-X354:E	020 .4	
+C-X354:F	020 .4	
+C-X354:G	020 .3	
+C-X355:A	021 .3	
+C-X355:B	021 .3	
+C-X355:C	021 .3	
+C-X355:D	021 .4	
+C-X355:E	021 .4	
+C-X355:F	021 .4	
+C-X355:G	021 .3	
+C-X356:A	021 .3	
+C-X356:B	021 .3	
+C-X356:C	021 .3	
+C-X356:D	021 .4	
+C-X356:E	021 .4	
+C-X356:F	021 .4	
+C-X356:G	021 .3	
+C-X401:1	052 .7	
+C-X401:2	052 .7	
+C-X401:3	052 .7	
+C-X401:4	052 .7	
+C-X401:5	052 .7	
+C-X402:1	052 .7	
+C-X402:2	052 .7	
+C-X402:3	052 .7	

Drawing remarks

Tetra Pak

Designer	Date	Machine
BMI	07/06/2004	TBA/22-0500

ECM No	Denomination	Page Type
175296	CABINET TERMINAL SUMMARY	CABINET TERMINAL SUMMARY

Company	Document No.	Doc. type	Version	Page
Tetra Pak Carton Ambient S.p.A.	2593852-0005	ELD	AE	11

This drawing must not without the consent of Tetra Pak be copied, transmitted or disclosed to any third party.

1 2 3 4 5 6 7 8 9 10

Cabinet terminal summary of 2593852-0003

Terminal	Page .Col.	Opt.
+C-X402:4	052 .7	
+C-X402:5	052 .7	
+C-X451:1	061 .6	
+C-X451:3	061 .6	
+C-X452:1	061 .4	
+C-X452:2	061 .4	
+C-X452:3	061 .4	
+C-X452:4	061 .4	
+C-X452:5	061 .5	
+C-X452:6	061 .5	
+C-X452:7	061 .5	
+C-X452:8	061 .5	
+C-X452:9	061 .6	
+C-X452:10	061 .6	
+C-X452:11	061 .6	
+C-X452:12	061 .5	
+C-X452:13	061 .3	
+C-X452:14	061 .5	
+C-X452:15	061 .3	
+C-X452:16	061 .5	
+C-X452:17	061 .3	
+C-X452:18	061 .6	
+C-X452:19	061 .4	
+C-X452:20	061 .4	
+C-X452:21	061 .4	
+C-X452:22	061 .4	
+C-X452:23	061 .3	
+C-X452:24	061 .3	

Terminal	Page .Col.	Opt.
+C-X452:25	061 .5	
+C-X452:26	061 .3	
+C-X452:27	061 .6	
+C-X453:1	061 .2	
+C-X454:1	049 .2	
+C-X501:1	006 .3	
+C-X501:2	006 .3	
+C-X501:3	006 .3	
+C-X501:4		
+C-X501:5		
+C-X501:6		
+C-X501:⏚	006 .4	
+C-X502:1	006 .8	H.I.
+C-X502:2	006 .8	H.I.
+C-X502:⏚	006 .9	H.I.
+C-X503:1	022 .5	
+C-X503:2	022 .5	
+C-X503:3	022 .5	
+C-X503:4		
+C-X503:5		
+C-X503:6		
+C-X503:⏚	022 .5	
+C-X504:1	011 .3	
+C-X504:2	011 .3	
+C-X504:3	205 .1	
+C-X504:4	205 .1	
+C-X504:5	205 .1	
+C-X504:6	205 .1	

Terminal	Page .Col.	Opt.
+C-X504:⏚	011 .3	
+C-X511:1	012 .2	
+C-X513:1	012 .6	
+C-X514:1	012 .7	
+C-X600:1	023 .1	
+C-X600:2	023 .2	
+C-X600:3	023 .2	
+C-X600:4	026 .2	
+C-X600:5	026 .4	
+C-X600:6	026 .5	
+C-X600:7	108 .1	
+C-X600:8	108 .6	
+C-X600:9		
+C-X600:10		
+C-X600:⏚	023 .2	
+C-X600:⏚	026 .3	
+C-X650:1		
+C-X650:2		
+C-X650:3		
+C-X650:4		
+C-X650:5		
+C-X650:6		
+C-X650:7		
+C-X650:8		

Terminal	Page .Col.	Opt.

Drawing remarks

Tetra Pak

Designer	Date	Machine
BMI	07/06/2004	TBA/22-0500

ECM No	Denomination	Page Type
175296	CABINET TERMINAL SUMMARY	CABINET TERMINAL SUMMARY

Company	Document No.	Doc. type	Version	Page
Tetra Pak Carton Ambient S.p.A.	2593852-0005	ELD	AE	12

8 Terminal Strip Overview

TechPub_2614345_v3_DRAFT_ReleaseTB087677en.fm

Description

All terminals used in the equipment except for those in the electrical cabinet are listed in this chapter.

TechPub_2614345_v3_DRAFT_ReleaseTB087677en.fm

This drawing must not without the consent of Tetra Pak be copied, transmitted or disclosed to any third party.

1 2 3 4 5 6 7 8 9 10

Terminal strip of 2593852-0003

+M-X001

From	Cable	Internal Jumper	Terminal	External Jumper	Cable	To	Page.Col.	Option	Function text
+C-F103:1			1		-W001:BN	+M-Z001:1	005 .8		
+C-F103:1			2		-W001:BN	+M-Z001:2	005 .8		
+C-F103:1			3		-W001:BN	+M-Z001:3	005 .8		
+C-X003:113			N		-W001:BU	+M-Z001:N	005 .8		
+C-X002:1			PE		-W001:GNYE	+M-Z001:E	005 .8		

Drawing remarks

Tetra Pak

Designer BMI	Date 07/06/2004	Machine TBA/22-0500	
ECM No 175296	Denomination TERMINAL STRIP OVERVIEW	Page Type TERMINAL STRIP OVERVIEW	
Company Tetra Pak Carton Ambient S.p.A.	Document No. 2593852-0006	Doc. type ELD	Version AE	Page 1

This drawing must not without the consent of Tetra Pak be copied, transmitted or disclosed to any third party.

1 2 3 4 5 6 7 8 9 10

Terminal strip of 2593852-0003

+M-X100

From	Cable	Internal Jumper	Terminal	External Jumper	Cable	To	Page.Col.	Option	Function text
+C-X600:1	-W006:1		1		-W007:1	+M-M001:U	023 .1		CIRCULATION COOLING MEDIA EL. CAB
+C-X600:2	-W006:2		2		-W007:2	+M-M001:V	023 .2		CIRCULATION COOLING MEDIA EL. CAB
+C-X600:3	-W006:3		3		-W007:3	+M-M001:W	023 .2		CIRCULATION COOLING MEDIA EL. CAB
+C-X600:4	-W005:BK		4				026 .2		
+C-X600:6	-W005:BU		5		-W009:1	+M-M002:BU	026 .3		FAN CONDENSER
			6		-W009:2	+M-M002:BN	026 .2		FAN CONDENSER
						+M-C001:			
			7		-W009:3	+M-M002:BK	026 .2		FAN CONDENSER
						+M-C001:			
+C-X600:5	-W005:BK		8				026 .4		
			9		-W010:1	+M-M003:BU	026 .5		FAN CIRCULATION AIR
			10		-W010:2	+M-M003:BN	026 .4		FAN CIRCULATION AIR
						+M-C003:			
			11		-W010:3	+M-M003:BK	026 .4		FAN CIRCULATION AIR
						+M-C003:			
+C-X600:7	-W008:1		12			+M-B007:1	108 .3		TEMP. COMRESSOR EL. CABINET
			13			+M-B007:2	108 .4		TEMP. COMRESSOR EL. CABINET
			14		-W011:1	+M-B006:1	108 .4		CIRC. COOLING MEDIA EL. CABINET
+C-X600:8	-W008:2		15		-W011:2	+M-B006:6	108 .6		CIRC. COOLING MEDIA EL. CABINET
+C-X600:⏚	-W006:YG		⏚		-W007:YG	+M-M001:E	023 .2		CIRCULATION COOLING MEDIA EL. CAB
+C-X600:⏚	-W005:GNYE		⏚		-W009:YG	+M-M002:E	026 .3		FAN CONDENSER
			⏚		-W010:YG	+M-M003:E	026 .5		FAN CIRCULATION AIR
			⏚		-W011:YG	+M-B006:E	108 .6		CIRC. COOLING MEDIA EL. CABINET

Drawing remarks

Tetra Pak

Designer BMI	Date 07/06/2004	Machine TBA/22-0500	
ECM No 175296	Denomination TERMINAL STRIP OVERVIEW	Page Type TERMINAL STRIP OVERVIEW	
Company Tetra Pak Carton Ambient S.p.A.	Document No. 2593852-0006	Doc. type ELD	Version AE	Page 2

This drawing must not without the consent of Tetra Pak
be copied, transmitted or disclosed to any third party.

1 2 3 4 5 6 7 8 9 10

Terminal strip of 2593852-0003

+M-X140

From	Cable	Internal Jumper	Terminal	External Jumper	Cable	To	Page.Col.	Option	Function text
+C-X511:1	-W501:1		1			+M-T1402:	012 .2		

This drawing must not without the consent of Tetra Pak be copied, transmitted or disclosed to any third party.

1 2 3 4 5 6 7 8 9 10

Terminal strip of 2593852-0003

+M-X1001

From	Cable	Internal Jumper	Terminal	External Jumper	Cable	To	Page.Col.	Option	Function text
+C-X218:1	-W1001:1		101		-W1032:BK	+M-B1301:BK	117 .6		A - VALVE POSITION
+C-X218:10	-W1001:10		101+		-W1032:BN	+M-B1301:BN	117 .3		A - VALVE POSITION
+C-X218:11	-W1001:11		101-		-W1032:BU	+M-B1301:BU	117 .3		A - VALVE POSITION
+C-X218:2	-W1001:2		102		-W1033:BK	+M-B1302:BK	117 .6		B - VALVE POSITION
			102+		-W1033:BN	+M-B1302:BN	117 .3		B - VALVE POSITION
			102-		-W1033:BU	+M-B1302:BU	117 .3		B - VALVE POSITION
+C-X218:3	-W1001:3		103		-W1034:BK	+M-B1303:BK	117 .6		C - VALVE POSITION
			103+		-W1034:BN	+M-B1303:BN	117 .3		C - VALVE POSITION
			103-		-W1034:BU	+M-B1303:BU	117 .3		C - VALVE POSITION
+C-X218:4	-W1001:4		104		-W1025:BK	+M-B1350:BK	117 .6		CUP DRAINING PIPE IN POSITION
			104+		-W1025:BN	+M-B1350:BN	117 .3		CUP DRAINING PIPE IN POSITION
			104-		-W1025:BU	+M-B1350:BU	117 .3		CUP DRAINING PIPE IN POSITION
+C-X218:5	-W1001:5		105		-W1035:BK	+M-B1306:BK	117 .6		CLEANING PIPE INFEED POSITION
			105+		-W1035:BN	+M-B1306:BN	117 .3		CLEANING PIPE INFEED POSITION
			105-		-W1035:BU	+M-B1306:BU	117 .3		CLEANING PIPE INFEED POSITION
+C-X218:6	-W1001:6		106		-W1036:BK	+M-B1307:BK	117 .6		STERILE AIR PIPE POSITION
			106+		-W1036:BN	+M-B1307:BN	117 .3		STERILE AIR PIPE POSITION
			106-		-W1036:BU	+M-B1307:BU	117 .3		STERILE AIR PIPE POSITION
+C-X218:7	-W1001:7		107				117 .6		
			107+				117 .3		
			107-				117 .3		
+C-X218:8	-W1001:8		108		-W1014:BN	+M-B1102:BN	117 .6		AIR PRESSURE SEPARATOR
			108+		-W1014:BU	+M-B1102:BU	117 .3		AIR PRESSURE SEPARATOR
			108-		-W1014:RD	+M-B1102:RD	117 .3		AIR PRESSURE SEPARATOR
+C-X218:9	-W1001:9		109				094 .6		
			109+				200 .3		
			109-				200 .3		
+C-X218:12	-W1001:12		110				200 .3		
			110+				200 .3		
			110-				200 .3		

Drawing remarks

Tetra Pak

Designer BMI	Date 07/06/2004	Machine TBA/22-0500	
ECM No 175296	Denomination TERMINAL STRIP OVERVIEW	Page Type TERMINAL STRIP OVERVIEW	
Company Tetra Pak Carton Ambient S.p.A.	Document No. 2593852-0006	Doc. type ELD	Version AE	Page 4

This drawing must not without the consent of Tetra Pak be copied, transmitted or disclosed to any third party.

1 2 3 4 5 6 7 8 9 10

Terminal strip of 2593852-0003

+M-X1001

From	Cable	Internal Jumper	Terminal	External Jumper	Cable	To	Page.Col.	Option	Function text
+C-X218:13	-W1001:13		111		-W1015:2	+M-B1104:	046 .3		LEVEL SENSOR SEAL WATER
			111+				200 .3		
			111-				200 .3		
+C-X218:14	-W1001:14		112		-W1015:1	+M-B1104:1	046 .3		LEVEL SENSOR SEAL WATER
			112+				200 .3		
			112-				200 .3		
+C-X218:15	-W1001:15		113		-W1060:BK	+M-B1241:BK	124 .6		BUTTERFLY VALVE OPEN
			113+		-W1060:BN	+M-B1241:BN	124 .3		BUTTERFLY VALVE OPEN
			113-		-W1060:BU	+M-B1241:BU	124 .3		BUTTERFLY VALVE OPEN
+C-X218:16	-W1001:16		114		-W1061:BK	+M-B1242:BK	124 .6		BUTTERFLY VALVE CLOSED
			114+		-W1061:BN	+M-B1242:BN	124 .3		BUTTERFLY VALVE CLOSED
			114-		-W1061:BU	+M-B1242:BU	124 .3		BUTTERFLY VALVE CLOSED
+C-X218:17	-W1001:17		115		-W1018:1	+M-Y1104:1	154 .4		SEAL WATER
			115+				200 .3		
			115-		-W1018:2	+M-Y1104:2	154 .5		SEAL WATER
+C-X218:18	-W1001:18		116		-W1019:1	+M-Y1105:1	154 .4		COOLING WATER BATH
			116+				200 .3		
			116-		-W1019:2	+M-Y1105:2	154 .5		COOLING WATER BATH
+C-X218:19	-W1001:19		117				200 .3		
			117+				200 .3		
			117-				200 .3		
+C-X218:20	-W1001:20		118				105 .5		
			118+				105 .3		
			118-				105 .3		
+C-X218:21	-W1001:21		119				105 .5		
			119+				105 .3		
			119-				105 .3		
+C-X218:22	-W1001:22		120				105 .5		
			120+				105 .3		
			120-				105 .3		

Drawing remarks

Tetra Pak

Designer BMI	Date 07/06/2004	Machine TBA/22-0500	
ECM No 175296	Denomination TERMINAL STRIP OVERVIEW	Page Type TERMINAL STRIP OVERVIEW	
Company Tetra Pak Carton Ambient S.p.A.	Document No. 2593852-0006	Doc. type ELD	Version AE	Page 5

This drawing must not without the consent of Tetra Pak
be copied, transmitted or disclosed to any third party.

1 2 3 4 5 6 7 8 9 10

Terminal strip of 2593852-0003

+M-X1001

From	Cable	Internal Jumper	Terminal	External Jumper	Cable	To	Page.Col.	Option	Function text
+C-X218:23	-W1001:23		121				105 .5		
			121+				105 .3		
			121-				105 .3		
+C-X218:24	-W1001:24		122				200 .3		
			122+				200 .3		
			122-				200 .3		
+C-X223:1	-W1002:1		123				059 .5		
			123+				059 .2		
			123-				200 .3		
+C-X223:2	-W1002:2		124				059 .5		
			124+				059 .2		
			124-				200 .3		
+C-X223:3	-W1002:3		125				059 .5		
			125+				059 .2		
			125-				200 .3		
+C-X223:4	-W1002:4		126				059 .5		
			126+				059 .2		
			126-				200 .3		
+C-X223:5	-W1002:5		127				059 .5		
+C-X223:23	-W1002:23		127+				059 .2		
+C-X223:24	-W1002:24		127-			+M-K1006:A1	059 .2		PRODUCT VALVE OPEN
+C-X223:6	-W1002:6		128				059 .5		
			128+				059 .2		
			128-				200 .3		
+C-X223:7	-W1002:7		129				059 .5		
			129+				059 .2		
			129-				200 .3		
+C-X223:8	-W1002:8		130				059 .5		
			130+				059 .2		
			130-				200 .3		

Drawing remarks

Tetra Pak

Designer BMI	Date 07/06/2004	Machine TBA/22-0500	
ECM No 175296	Denomination TERMINAL STRIP OVERVIEW	Page Type TERMINAL STRIP OVERVIEW	
Company Tetra Pak Carton Ambient S.p.A.	Document No. 2593852-0006	Doc. type ELD	Version AE	Page 6

This drawing must not without the consent of Tetra Pak
be copied, transmitted or disclosed to any third party.

1 2 3 4 5 6 7 8 9 10

Terminal strip of 2593852-0003

+M-X1001

From	Cable	Internal Jumper	Terminal	External Jumper	Cable	To	Page.Col.	Option	Function text
+C-X227:1	-W1005:1		131				200 .3		
			131+				200 .3		
			131-				200 .3		
+C-X227:2	-W1005:2		132				200 .3		
			132+				200 .3		
			132-				200 .3		
+C-X227:3	-W1005:3		133				200 .3		
			133+				200 .3		
			133-				200 .3		
+C-X227:4	-W1005:4		134				200 .7		
			134+				200 .8		
			134-				200 .8		
+C-X227:5	-W1005:5		135				200 .7		
			135+				200 .8		
			135-				200 .8		
+C-X227:6	-W1005:6		136				200 .7		
			136+				200 .8		
			136-				200 .8		
+C-X227:7	-W1005:7		137				200 .7		
			137+				200 .8		
			137-				200 .8		
+C-X227:8	-W1005:8		138				200 .7		
			138+				200 .8		
			138-				200 .8		
+C-X227:9	-W1005:9		139				200 .7		
			139+				200 .8		
			139-				200 .8		
+C-X227:10	-W1005:10		140				200 .7		
			140+				200 .8		
			140-				200 .8		

Drawing remarks

Tetra Pak

Designer BMI	Date 07/06/2004	Machine TBA/22-0500	
ECM No 175296	Denomination TERMINAL STRIP OVERVIEW	Page Type TERMINAL STRIP OVERVIEW	
Company Tetra Pak Carton Ambient S.p.A.	Document No. 2593852-0006	Doc. type ELD	Version AE	Page 7

This drawing must not without the consent of Tetra Pak
be copied, transmitted or disclosed to any third party.

1 2 3 4 5 6 7 8 9 10

Terminal strip of 2593852-0003

+M-X1001

From	Cable	Internal Jumper	Terminal	External Jumper	Cable	To	Page.Col.	Option	Function text
+C-X227:11	-W1005:11		141				200 .7		
			141+				200 .8		
			141-				200 .8		
+C-X227:12	-W1005:12		142				200 .7		
			142+				200 .8		
			142-				200 .8		
+C-X227:13	-W1005:13		143				200 .7		
			143+				200 .8		
			143-				200 .8		
+C-X227:14	-W1005:14		144				200 .7		
			144+				200 .8		
			144-				200 .8		
+C-X227:15	-W1005:15		145				200 .7		
			145+				200 .8		
			145-				200 .8		
+C-X227:16	-W1005:16		146				200 .7		
			146+				200 .8		
			146-				200 .8		
+C-X227:17	-W1005:17		147				200 .7		
			147+				200 .8		
			147-				200 .8		
+C-X227:18	-W1005:18		148				200 .7		
			148+				200 .8		
			148-				200 .8		
+C-X227:19	-W1005:19		149				200 .7		
+C-X227:23	-W1005:23		149+				200 .8		
+C-X227:24	-W1005:24		149-				200 .8		
			⏚		-W1015:GNYE	+M-B1104:⏚	046 .3		LEVEL SENSOR SEAL WATER
			⏚						
+C-X218:⏚	-W1001:YG		⏚		-W1018:YG	+M-Y1104:E	154 .5		SEAL WATER

Drawing remarks

Tetra Pak

Designer	Date	Machine
BMI	07/06/2004	TBA/22-0500

ECM No	Denomination	Page Type
175296	TERMINAL STRIP OVERVIEW	TERMINAL STRIP OVERVIEW

Company	Document No.	Doc. type	Version	Page
Tetra Pak Carton Ambient S.p.A.	2593852-0006	ELD	AE	8

This drawing must not without the consent of Tetra Pak
be copied, transmitted or disclosed to any third party.

1 | 2 | 3 | 4 | 5 | 6 | 7 | 8 | 9 | 10

Terminal strip of 2593852-0003

+M-X1001

From	Cable	Internal Jumper	Terminal	External Jumper	Cable	To	Page.Col.	Option	Function text
			⏚		-W1019:YG	+M-Y1105:E	154 .5		COOLING WATER BATH
+C-X223:⏚	-W1002:GNYE		⏚				059 .2		
+C-X227:⏚	-W1005:GNYE		⏚				200 .7		

Drawing remarks

Tetra Pak

Designer BMI	Date 07/06/2004	Machine TBA/22-0500	
ECM No 175296	Denomination TERMINAL STRIP OVERVIEW	Page Type TERMINAL STRIP OVERVIEW	
Company Tetra Pak Carton Ambient S.p.A.	Document No. 2593852-0006	Doc. type ELD	Version AE	Page 9

This drawing must not without the consent of Tetra Pak be copied, transmitted or disclosed to any third party.

1 2 3 4 5 6 7 8 9 10

Terminal strip of 2593852-0003

+M-X1003

From	Cable	Internal Jumper	Terminal	External Jumper	Cable	To	Page.Col.	Option	Function text
+C-X224:1	-W1003:1		101				201.3		
			101+				201.3		
			101-				201.3		
+C-X224:2	-W1003:2		102		-W1045:1	+M-B1505:21	062.2		
			102+				201.3		
			102-				201.3		
+C-X224:3	-W1003:3		103		-W1045:2	+M-B1505:11	062.2		
			103+				201.3		
			103-				201.3		
+C-X224:4	-W1003:4		104		-W1045:3	+M-B1505:12	062.3		TOP FRONT DOOR
			104+				201.3		
			104-				201.3		
			105		-W1045:4	+M-B1505:22	062.3		TOP FRONT DOOR
			105+				201.3		
			105-				201.3		
			106		-W1046:1	+M-B1506:21	062.4		
			106+				201.3		
			106-				201.3		
			107		-W1046:2	+M-B1506:11	062.4		
			107+				201.3		
			107-				201.3		
+C-X224:6	-W1003:6		108		-W1046:3	+M-B1506:12	062.5		BOTTOM FRONT DOOR
			108+				201.3		
			108-				201.3		
+C-X224:7	-W1003:7		109		-W1046:4	+M-B1506:22	062.5		BOTTOM FRONT DOOR
			109+				201.3		
			109-				201.3		
			110		-W1024:1	+M-B1507:21	121.3		
			110+				201.3		
			110-				201.3		

Drawing remarks

Tetra Pak

Designer BMI	Date 07/06/2004	Machine TBA/22-0500	
ECM No 175296	Denomination TERMINAL STRIP OVERVIEW	Page Type TERMINAL STRIP OVERVIEW	
Company Tetra Pak Carton Ambient S.p.A.	Document No. 2593852-0006	Doc. type ELD	Version AE	Page 10

This drawing must not without the consent of Tetra Pak be copied, transmitted or disclosed to any third party.

1 2 3 4 5 6 7 8 9 10

Terminal strip of 2593852-0003

+M-X1003

From	Cable	Internal Jumper	Terminal	External Jumper	Cable	To	Page.Col.	Option	Function text
			111		-W1024:2	+M-B1507:11	121 .3		
			111+				201 .3		
			111-				201 .3		
+C-X224:20	-W1003:20		112		-W1024:3	+M-B1507:12	121 .5		BOTTOM SUPERSTRUCTURE
			112+				201 .3		
			112-				201 .3		
+C-X224:21	-W1003:21		113		-W1024:4	+M-B1507:22	121 .5		BOTTOM SUPERSTRUCTURE
			113+				201 .3		
			113-				201 .3		
+C-X224:8	-W1003:8		114		-W1330:BK	+M-B1330:BK	124 .6		BUCKET DETECTION
			114+		-W1330:BN	+M-B1330:BN	124 .3		BUCKET DETECTION
			114-		-W1330:BU	+M-B1330:BU	124 .3		BUCKET DETECTION
+C-X224:9	-W1003:9		115		-W1048:1	+M-S1802:22	120 .5		EMERGENCY STOP ASEPTIC AND HYGENI
			115+				201 .3		
			115-				201 .3		
+C-X224:10	-W1003:10		116		-W1048:2	+M-S1802:12	120 .5		EMERGENCY STOP ASEPTIC AND HYGENI
			116+				201 .3		
			116-				201 .3		
			117						
			117+		-W1048:3	+M-S1802:11	120 .3		EMERGENCY STOP ASEPTIC AND HYGENI
			117-				201 .3		
			118		-W1048:4	+M-S1802:21	120 .3		
			118+				201 .3		
			118-				201 .3		
			119		-W1011:1	+M-S1801:22	120 .5		EMERGENCY STOP ASEPTIC AND HYGENI
			119+				201 .8		
			119-				201 .8		
+C-X224:12	-W1003:12		120		-W1011:2	+M-S1801:12	120 .5		EMERGENCY STOP ASEPTIC AND HYGENI
			120+				201 .8		
			120-				201 .8		

Drawing remarks

Tetra Pak

Designer BMI	Date 07/06/2004	Machine TBA/22-0500	
ECM No 175296	Denomination TERMINAL STRIP OVERVIEW	Page Type TERMINAL STRIP OVERVIEW	
Company Tetra Pak Carton Ambient S.p.A.	Document No. 2593852-0006	Doc. type ELD	Version AE	Page 11

This drawing must not without the consent of Tetra Pak be copied, transmitted or disclosed to any third party.

1 2 3 4 5 6 7 8 9 10

Terminal strip of 2593852-0003

+M-X1003

From	Cable	Internal Jumper	Terminal	External Jumper	Cable	To	Page.Col.	Option	Function text
			121						
			121+		-W1011:3	+M-S1801:11	120 .3		EMERGENCY STOP ASEPTIC AND HYGENI
			121-				201 .8		
+C-X224:11	-W1003:11		122		-W1011:4	+M-S1801:21	120 .3		EMERGENCY STOP ASEPTIC AND HYGENI
			122+				201 .8		
			122-				201 .8		
+C-X224:14	-W1003:14		123		-W1058:1	+M-S1003:51	116 .2		PUSH BUTTON STEP DOWN
			123+				201 .8		
			123-				201 .8		
+C-X224:15	-W1003:15		124		-W1058:2	+M-S1003:52	116 .3		PUSH BUTTON STEP DOWN
			124+				201 .8		
			124-				201 .8		
+C-X224:16	-W1003:16		125		-W1041:BK	+M-B3116:BK	118 .6		COLUMN CLEANING BALL/LID AND COVE
			125+		-W1041:BN	+M-B3116:BN	118 .3		COLUMN CLEANING BALL/LID AND COVE
			125-		-W1041:BU	+M-B3116:BU	118 .3		COLUMN CLEANING BALL/LID AND COVE
+C-X224:17	-W1003:17		126		-W1052:1	+M-X1314:3	054 .6		
			126+		-W1052:2	+M-X1314:1	054 .6		
			126-		-W1052:3	+M-X1314:2	054 .6		
+C-X224:18	-W1003:18		127			+M-A1304:3	054 .6		
					-W1056:3	+M-B1314:3			LEVEL CONTROL WITH FLOATER
			127+			+M-A1304:2	054 .6		
					-W1056:1	+M-B1314:1			LEVEL CONTROL WITH FLOATER
			127-			+M-A1304:1	054 .6		
					-W1056:2	+M-B1314:2			LEVEL CONTROL WITH FLOATER
+C-X224:19	-W1003:19		128		-W1063:BK	+M-B1321:BK	118 .6		REGULATING VALVE POSITION
+C-X224:23	-W1003:23		128+		-W1063:BN	+M-B1321:BN	118 .3		REGULATING VALVE POSITION
+C-X224:24	-W1003:24		128-		-W1063:BU	+M-B1321:BU	118 .3		REGULATING VALVE POSITION
+C-X229:1	-W1004:1		129		-W1027:2	+M-B1201:	047 .3		FILLING WATER
			129+				201 .8		
			129-				201 .8		

Drawing remarks

Tetra Pak

Designer BMI	Date 07/06/2004	Machine TBA/22-0500	
ECM No 175296	Denomination TERMINAL STRIP OVERVIEW	Page Type TERMINAL STRIP OVERVIEW	
Company Tetra Pak Carton Ambient S.p.A.	Document No. 2593852-0006	Doc. type ELD	Version AE	Page 12

This drawing must not without the consent of Tetra Pak be copied, transmitted or disclosed to any third party.

1 2 3 4 5 6 7 8 9 10

Terminal strip of 2593852-0003

+M-X1003

From	Cable	Internal Jumper	Terminal	External Jumper	Cable	To	Page.Col.	Option	Function text
+C-X229:2	-W1004:2		130		-W1027:1	+M-B1201:1	047 .3		FILLING WATER
			130+				201 .8		
			130-				201 .8		
+C-X229:3	-W1004:3		131		-W1028:2	+M-B1220:	046 .3		FILLING PEROXIDE BATH
			131+				201 .8		
			131-				201 .8		
+C-X229:4	-W1004:4		132		-W1028:1	+M-B1220:1	046 .3		FILLING PEROXIDE BATH
			132+				201 .8		
			132-				201 .8		
+C-X229:5	-W1004:5		133		-W1029:3	+M-B1230:	046 .3		FILLING SPRAY TANK
			133+				201 .8		
			133-				201 .8		
+C-X229:6	-W1004:6		134		-W1029:1	+M-B1230:1	046 .3		FILLING SPRAY TANK
			134+				201 .8		
			134-				201 .8		
+C-X229:7	-W1004:7		135		-W1029:2	+M-B1230:2	046 .3		FILLING SPRAY TANK
			135+				201 .8		
			135-				201 .8		
+C-X229:8	-W1004:8		136		-W1030:1	+M-Y1230:1	154 .4		FILLING SPRAY TANK
			136+				201 .8		
			136-		-W1030:2	+M-Y1230:2	154 .5		FILLING SPRAY TANK
+C-X229:9	-W1004:9		137		-W1031:1	+M-Y1231:1	154 .4		SPRAYING
			137+				201 .8		
			137-		-W1031:2	+M-Y1231:2	154 .5		SPRAYING
+C-X229:10	-W1004:10		138		-W1044:1	+M-B1504:21	062 .2		TOP DOOR
			138+				201 .8		
			138-				201 .8		
+C-X229:11	-W1004:11		139		-W1044:2	+M-B1504:11	062 .2		TOP DOOR
			139+				202 .3		
			139-				202 .3		

Drawing remarks

Tetra Pak

Designer BMI	Date 07/06/2004	Machine TBA/22-0500	
ECM No 175296	Denomination TERMINAL STRIP OVERVIEW	Page Type TERMINAL STRIP OVERVIEW	
Company Tetra Pak Carton Ambient S.p.A.	Document No. 2593852-0006	Doc. type ELD	Version AE	Page 13

This drawing must not without the consent of Tetra Pak
be copied, transmitted or disclosed to any third party.

1 2 3 4 5 6 7 8 9 10

Terminal strip of 2593852-0003

+M-X1003

From	Cable	Internal Jumper	Terminal	External Jumper	Cable	To	Page.Col.	Option	Function text
+C-X229:12	-W1004:12		140		-W1044:3	+M-B1504:12	062 .3		TOP DOOR
			140+				202 .3		
			140-				202 .3		
+C-X229:13	-W1004:13		141		-W1044:4	+M-B1504:22	062 .3		TOP DOOR
			141+				202 .3		
			141-				202 .3		
			142						
			142+				202 .3		
			142-				202 .3		
+C-X229:14	-W1004:14		143		-W1047:BU	+M-B1224:BU	062 .3		BOTTOM COVER CLOSED 1
			143+		-W1047:BK	+M-B1224:BK	062 .2		BOTTOM COVER CLOSED 1
			143-				202 .3		
			144		-W1064:BK	+M-B1225:BK	062 .4		
			144+				202 .3		
			144-				202 .3		
+C-X229:15	-W1004:15		145		-W1064:BU	+M-B1225:BU	062 .5		BOTTOM COVER CLOSED 2
			145+				202 .3		
			145-				202 .3		
+C-X229:16	-W1004:16		146		-W1016:BK	+M-B1111:BK	118 .6		PREHEATING VALVE STERILIZATION PO
			146+		-W1016:BN	+M-B1111:BN	118 .3		PREHEATING VALVE STERILIZATION PO
			146-		-W1016:BU	+M-B1111:BU	118 .3		PREHEATING VALVE STERILIZATION PO
+C-X229:17	-W1004:17		147		-W1049:BK	+M-B7814:1	118 .6		BUCKET CLEANING CUP POSITION
			147+		-W1049:BU	+M-B7814:3	118 .3		BUCKET CLEANING CUP POSITION
			147-				118 .3		
+C-X229:18	-W1004:18		148		-W1081:BK	+M-B1113:BK	118 .6		PENDULUM ROLLER REGULATING POSITI
			148+		-W1081:BN	+M-B1113:BN	118 .3		PENDULUM ROLLER REGULATING POSITI
			148-		-W1081:BU	+M-B1113:BU	118 .3		PENDULUM ROLLER REGULATING POSITI
+C-X229:19	-W1004:19		149		-W1050:BK	+M-B1403:BK	081 .5		PACK. MATERIAL SPLICE DETECTION I
+C-X229:23	-W1004:23		149+		-W1050:BN	+M-B1403:BN	081 .3		PACK. MATERIAL SPLICE DETECTION I
+C-X229:24	-W1004:24		149-		-W1050:BU	+M-B1403:BU	081 .3		PACK. MATERIAL SPLICE DETECTION I

Drawing remarks

Tetra Pak

Designer: BMI	Date: 07/06/2004	Machine: TBA/22-0500	
ECM No: 175296	Denomination: TERMINAL STRIP OVERVIEW	Page Type: TERMINAL STRIP OVERVIEW	
Company: Tetra Pak Carton Ambient S.p.A.	Document No.: 2593852-0006	Doc. type: ELD	Version: AE	Page: 14

This drawing must not without the consent of Tetra Pak be copied, transmitted or disclosed to any third party.

1 2 3 4 5 6 7 8 9 10

Terminal strip of 2593852-0003

+M-X1003

From	Cable	Internal Jumper	Terminal	External Jumper	Cable	To	Page.Col.	Option	Function text
+C-X229:20	-W1004:20		150		-W1065:2	+M-B1322:	047 .3		REGULATING VALVE LEAKAGE
			150+				202 .3		
			150-				202 .3		
+C-X229:21	-W1004:21		151		-W1065:1	+M-B1322:1	047 .3		REGULATING VALVE LEAKAGE
			151+				202 .3		
			151-				202 .3		
+C-X229:22	-W1004:22		152		-W1043:BK	+M-B1502:BK	118 .6		MOVABLE SQEE-GEE ROLLER
			152+		-W1043:BN	+M-B1502:BN	118 .3		MOVABLE SQEE-GEE ROLLER
			152-		-W1043:BU	+M-B1502:BU	118 .3		MOVABLE SQEE-GEE ROLLER
+C-X217:1	-W1006:1		153			+M-B1103:3	118 .6		AIR PRESSURE ASEPTIC CHAMBER
			153+			+M-B1103:2	118 .3		AIR PRESSURE ASEPTIC CHAMBER
			153-				202 .3		
+C-X217:2	-W1006:2		154		-W1020:BK	+M-B1115:BK	123 .6		MOVABLE FORMING RING DOWN
			154+		-W1020:BN	+M-B1115:BN	123 .3		MOVABLE FORMING RING DOWN
			154-		-W1020:BU	+M-B1115:BU	123 .3		MOVABLE FORMING RING DOWN
+C-X217:3	-W1006:3		155		-W1021:BK	+M-B1116:BK	123 .6		MOVABLE FORMING RING UP
			155+		-W1021:BN	+M-B1116:BN	123 .3		MOVABLE FORMING RING UP
			155-		-W1021:BU	+M-B1116:BU	123 .3		MOVABLE FORMING RING UP
+C-X217:6	-W1006:6		156		-W1068:1	+M-B1508:21	062 .2		DOOR BUCKET CLEANING
			156+				202 .3		
			156-				202 .3		
+C-X217:7	-W1006:7		157		-W1068:2	+M-B1508:11	062 .2		DOOR BUCKET CLEANING
			157+				202 .3		
			157-				202 .3		
+C-X217:4	-W1006:4		158		-W1068:3	+M-B1508:12	062 .3		DOOR BUCKET CLEANING
			158+				202 .3		
			158-				202 .3		
+C-X217:5	-W1006:5		159		-W1068:4	+M-B1508:22	062 .3		DOOR BUCKET CLEANING
			159+				202 .3		
			159-				202 .3		

Drawing remarks

Tetra Pak

Designer BMI	Date 07/06/2004	Machine TBA/22-0500	
ECM No 175296	Denomination TERMINAL STRIP OVERVIEW	Page Type TERMINAL STRIP OVERVIEW	
Company Tetra Pak Carton Ambient S.p.A.	Document No. 2593852-0006	Doc. type ELD	Version AE	Page 15

This drawing must not without the consent of Tetra Pak
be copied, transmitted or disclosed to any third party.

1 2 3 4 5 6 7 8 9 10

Terminal strip of 2593852-0003

+M-X1003

From	Cable	Internal Jumper	Terminal	External Jumper	Cable	To	Page.Col.	Option	Function text
+C-X217:9	-W1006:9		160		-W1059:BK	+M-B1112:BK	124 .6		PREHEATING VALVE BY-PASS POSITION
+C-X217:23	-W1006:10		160+		-W1059:BN	+M-B1112:BN	124 .3		PREHEATING VALVE BY-PASS POSITION
+C-X217:24	-W1006:11		160-		-W1059:BU	+M-B1112:BU	124 .3		PREHEATING VALVE BY-PASS POSITION
			161						
+C-X217:13	-W2028:WH		162		-W1055:WH	+M-B1315:WH	050 .4		CONDUCTIVITY SENSOR
+C-X217:14	-W2028:RD		163		-W1055:RD	+M-B1315:RD	050 .4		CONDUCTIVITY SENSOR
+C-X217:15	-W2028:BU		164		-W1055:BU	+M-B1315:BU	050 .4		CONDUCTIVITY SENSOR
+C-X217:16	-W2028:GY		165		-W1055:GY	+M-B1315:GY	050 .5		CONDUCTIVITY SENSOR
+C-X217:17	-W2028:YE		166		-W1055:YE	+M-B1315:YE	050 .5		CONDUCTIVITY SENSOR
+C-X217:18	-W2028:BN		167		-W1055:BN	+M-B1315:BN	050 .5		CONDUCTIVITY SENSOR
+C-X217:19	-W2028:GN		168		-W1055:GN	+M-B1315:GN	050 .5		CONDUCTIVITY SENSOR
+C-X217:20	-W2028:SH		169		-W1055:SH	+M-B1315:E	050 .5		CONDUCTIVITY SENSOR
+C-X131:1	-W1084:1		170		-W1083:BU	+M-M1504:BU	025 .2		TUBE POSITIONING
+C-X131:2	-W1084:2		171		-W1083:VT	+M-M1504:VT	025 .3		TUBE POSITIONING
+C-X131:3	-W1084:3		172		-W1083:GN	+M-M1504:GN	025 .3		TUBE POSITIONING
+C-X131:4	-W1084:4		173		-W1083:BN	+M-M1504:BN	025 .3		TUBE POSITIONING
+C-X131:5	-W1084:SH		174		-W1083:SH	GND:	025 .2		
+C-X212:1	-W1007:1		175		-W1405:BK	+M-B1405:BK	123 .6		MONITOR BENDING ROLLER
			175+		-W1405:BN	+M-B1405:BN	123 .3		MONITOR BENDING ROLLER
			175-		-W1405:BU	+M-B1405:BU	123 .3		MONITOR BENDING ROLLER
+C-X212:2	-W1007:2		176		-W9111:BK	+M-B9111:BK	176 .6	H.I.	H.I. CLEANING CIRCUIT CUP
			176+		-W9111:BN	+M-B9111:BN	176 .3	H.I.	H.I. CLEANING CIRCUIT CUP
			176-		-W9111:BU	+M-B9111:BU	176 .3	H.I.	H.I. CLEANING CIRCUIT CUP
+C-X212:3	-W1007:3		177		-W9107:BK	+M-B9107:BK	176 .6	H.I.	H.I. PRODUCT PIPE
			177+		-W9107:BN	+M-B9107:BN	176 .3	H.I.	H.I. PRODUCT PIPE
			177-		-W9107:BU	+M-B9107:BU	176 .3	H.I.	H.I. PRODUCT PIPE
+C-X212:4	-W1007:4		178		-W9108:BK	+M-B9108:BK	176 .6	H.I.	H.I. SPRAY NOZZLE
			178+		-W9108:BN	+M-B9108:BN	176 .3	H.I.	H.I. SPRAY NOZZLE
			178-		-W9108:BU	+M-B9108:BU	176 .3	H.I.	H.I. SPRAY NOZZLE
+C-X212:5	-W1007:5		179		-W9109:BK	+M-B9109:BK	176 .6	H.I.	H.I. CLEANING

Drawing remarks

Tetra Pak

Designer BMI	Date 07/06/2004	Machine TBA/22-0500	
ECM No 175296	Denomination TERMINAL STRIP OVERVIEW	Page Type TERMINAL STRIP OVERVIEW	
Company Tetra Pak Carton Ambient S.p.A.	Document No. 2593852-0006	Doc. type ELD	Version AE	Page 16

This drawing must not without the consent of Tetra Pak be copied, transmitted or disclosed to any third party.

1 2 3 4 5 6 7 8 9 10

Terminal strip of 2593852-0003

+M-X1003

From	Cable	Internal Jumper	Terminal	External Jumper	Cable	To	Page.Col.	Option	Function text
			179+		-W9109:BN	+M-B9109:BN	176 .3	H.I.	H.I. CLEANING
			179-		-W9109:BU	+M-B9109:BU	176 .3	H.I.	H.I. CLEANING
+C-X212:6	-W1007:6		180		-W9110:BK	+M-B9110:BK	176 .6	H.I.	H.I. PRODUCTION
			180+		-W9110:BN	+M-B9110:BN	176 .3	H.I.	H.I. PRODUCTION
			180-		-W9110:BU	+M-B9110:BU	176 .3	H.I.	H.I. PRODUCTION
+C-X212:7	-W1007:7		181		-W9113:3	+M-B9113:	045 .3	H.I.	H.I. LEVEL SENSOR PEROXIDE SPRAY
			181+				202 .8		
			181-				202 .8		
+C-X212:8	-W1007:8		182		-W9113:1	+M-B9113:1	045 .3	H.I.	H.I. LEVEL SENSOR PEROXIDE SPRAY
			182+				202 .8		
			182-				202 .8		
+C-X212:9	-W1007:9		183		-W9113:2	+M-B9113:2	045 .3	H.I.	H.I. LEVEL SENSOR PEROXIDE SPRAY
			183+				202 .8		
			183-				202 .8		
+C-X212:10	-W1007:10		184		-W9112:1	+M-Y9112:1	184 .3	H.I.	H.I. SPRAY PEROXIDE
			184+				202 .8		
			184-		-W9112:2	+M-Y9112:2	184 .6	H.I.	H.I. SPRAY PEROXIDE
+C-X212:11	-W1007:11		185		-W9114:1	+M-Y9114:1	184 .3	H.I.	H.I. DRAIN VALVE
			185+				202 .8		
			185-		-W9114:2	+M-Y9114:2	184 .6	H.I.	H.I. DRAIN VALVE
+C-X212:12	-W1007:12		186				202 .7		
			186+				202 .8		
			186-				202 .8		
+C-X212:13	-W1007:13		187				202 .7		
			187+				202 .8		
			187-				202 .8		
+C-X212:14	-W1007:14		188				202 .7		
			188+				202 .8		
			188-				202 .8		
+C-X212:15	-W1007:15		189				202 .7		

Drawing remarks

Tetra Pak

Designer BMI	Date 07/06/2004	Machine TBA/22-0500	
ECM No 175296	Denomination TERMINAL STRIP OVERVIEW	Page Type TERMINAL STRIP OVERVIEW	
Company Tetra Pak Carton Ambient S.p.A.	Document No. 2593852-0006	Doc. type ELD	Version AE	Page 17

This drawing must not without the consent of Tetra Pak
be copied, transmitted or disclosed to any third party.

1 2 3 4 5 6 7 8 9 10

Terminal strip of 2593852-0003

+M-X1003

From	Cable	Internal Jumper	Terminal	External Jumper	Cable	To	Page.Col.	Option	Function text
			189+				202 .8		
			189-				202 .8		
+C-X212:16	-W1007:16		190				202 .7		
			190+				202 .8		
			190-				202 .8		
+C-X212:17	-W1007:17		191				202 .7		
			191+				202 .8		
			191-				202 .8		
+C-X212:18	-W1007:18		192				202 .7		
			192+				202 .8		
			192-				202 .8		
+C-X212:19	-W1007:19		193				202 .7		
			193+				202 .8		
			193-				202 .8		
+C-X212:20	-W1007:20		194				202 .7		
			194+				202 .8		
			194-				202 .8		
+C-X212:21	-W1007:21		195				202 .7		
			195+				202 .8		
			195-				202 .8		
+C-X212:22	-W1007:22		196				202 .7		
+C-X212:23	-W1007:23		196+				202 .8		
+C-X212:24	-W1007:24		196-				202 .8		
			⏚						
			⏚						
+C-X217:⏚	-W1006:GNYE		⏚				202 .3		
			⏚						
+C-X131:⏚	-W1084:GNYE		⏚		-W1083:WH	+M-M1504:WH1	025 .3		TUBE POSITIONING
			⏚		-W9113:YG	+M-B9113:	045 .3	H.I.	H.I. LEVEL SENSOR PEROXIDE SPRAY
			⏚		-W9112:GNYE	+M-Y9112:E	184 .6	H.I.	H.I. SPRAY PEROXIDE

Drawing remarks

Tetra Pak

Designer	Date	Machine
BMI	07/06/2004	TBA/22-0500

ECM No	Denomination	Page Type
175296	TERMINAL STRIP OVERVIEW	TERMINAL STRIP OVERVIEW

Company	Document No.	Doc. type	Version	Page
Tetra Pak Carton Ambient S.p.A.	2593852-0006	ELD	AE	18

This drawing must not without the consent of Tetra Pak be copied, transmitted or disclosed to any third party.

1 2 3 4 5 6 7 8 9 10

Terminal strip of 2593852-0003

+M-X1003

From	Cable	Internal Jumper	Terminal	External Jumper	Cable	To	Page.Col.	Option	Function text
+C-X224:⏚	-W1003:YG		⏚		-W9114:GNYE	+M-Y9114:E	184 .6	H.I.	H.I. DRAIN VALVE
			⏚		-W1027:GNYE	+M-B1201:⏚	047 .3		FILLING WATER
			⏚		-W1028:GNYE	+M-B1220:⏚	046 .3		FILLING PEROXIDE BATH
			⏚		-W1029:GNYE	+M-B1230:	046 .3		FILLING SPRAY TANK
			⏚		-W1030:YG	+M-Y1230:E	154 .5		FILLING SPRAY TANK
			⏚		-W1031:YG	+M-Y1231:E	154 .5		SPRAYING
			⏚						
			⏚		-W1047:YG	+M-B1224:E	062 .3		BOTTOM COVER CLOSED 1
			⏚		-W1064:YG	+M-B1225:E	062 .5		BOTTOM COVER CLOSED 2
			⏚		-W1065:GNYE	+M-B1322:⏚	047 .3		REGULATING VALVE LEAKAGE
+C-X229:⏚	-W1004:GNYE		⏚				202 .3		
+C-X212:⏚	-W1007:GNYE		⏚				202 .7		

Drawing remarks

Tetra Pak

Designer BMI	Date 07/06/2004	Machine TBA/22-0500	
ECM No 175296	Denomination TERMINAL STRIP OVERVIEW	Page Type TERMINAL STRIP OVERVIEW	
Company Tetra Pak Carton Ambient S.p.A.	Document No. 2593852-0006	Doc. type ELD	Version AE	Page 19

This drawing must not without the consent of Tetra Pak be copied, transmitted or disclosed to any third party.

1 2 3 4 5 6 7 8 9 10

Terminal strip of 2593852-0003

+M-X1053

From	Cable	Internal Jumper	Terminal	External Jumper	Cable	To	Page.Col.	Option	Function text
+M-A1304:6	-W1053:BN		A			+M-T1304:RD	054 .3		
+M-A1304:7	-W1053:WH		B			+M-T1304:BU	054 .3		
+M-A1304:9	-W1053:GN		C			+M-T1304:GN	054 .3		
+M-A1304:8	-W1053:YE		D			+M-T1304:YE	054 .3		

Drawing remarks

Tetra Pak

Designer BMI	Date 07/06/2004	Machine TBA/22-0500	
ECM No 175296	Denomination TERMINAL STRIP OVERVIEW	Page Type TERMINAL STRIP OVERVIEW	
Company Tetra Pak Carton Ambient S.p.A.	Document No. 2593852-0006	Doc. type ELD	Version AE	Page 20

This drawing must not without the consent of Tetra Pak be copied, transmitted or disclosed to any third party.

1 2 3 4 5 6 7 8 9 10

Terminal strip of 2593852-0003

+M-X1210

From	Cable	Internal Jumper	Terminal	External Jumper	Cable	To	Page.Col.	Option	Function text
+C-X228:2	-W7060:BK		BK			+M-A1210:0V	051 .3		A1210 PEROXIDE METER
+C-X228:⏚	-W7060:BU		BU			+M-A1210:E	051 .4		A1210 PEROXIDE METER
+C-X228:⏚	-W7060:SH								
+C-X228:17	-W7060:GN		GN			+M-A1210:DIGOUT -	051 .4		A1210 PEROXIDE METER
+C-X228:6	-W7060:GY		GY			+M-A1210:LINE STOP IN -	051 .4		A1210 PEROXIDE METER
+C-X228:3	-W7060:GYPK		GYPK			+M-A1210:ANAOUT +	051 .4		A1210 PEROXIDE METER
+C-X228:5	-W7060:PK		PK			+M-A1210:LINE STOP IN +	051 .4		A1210 PEROXIDE METER
+C-X228:1	-W7060:RD		RD			+M-A1210:24V	051 .3		A1210 PEROXIDE METER
+C-X228:14	-W7060:RDBU		RDBU			+M-A1210:RB / TB	051 .4		A1210 PEROXIDE METER
+C-X228:13	-W7060:VT		VT			+M-A1210:RA / TA	051 .4		A1210 PEROXIDE METER
+C-X228:4	-W7060:WH		WH			+M-A1210:ANAOUT -	051 .4		A1210 PEROXIDE METER
+C-X228:16	-W7060:YE		YE			+M-A1210:DIGOUT +	051 .4		A1210 PEROXIDE METER

Drawing remarks

Tetra Pak

Designer BMI	Date 07/06/2004	Machine TBA/22-0500	
ECM No 175296	Denomination TERMINAL STRIP OVERVIEW	Page Type TERMINAL STRIP OVERVIEW	
Company Tetra Pak Carton Ambient S.p.A.	Document No. 2593852-0006	Doc. type ELD	Version AE	Page 21

This drawing must not without the consent of Tetra Pak be copied, transmitted or disclosed to any third party.

1 2 3 4 5 6 7 8 9 10

Terminal strip of 2593852-0003

+M-X1250

From	Cable	Internal Jumper	Terminal	External Jumper	Cable	To	Page.Col.	Option	Function text
+C-X230:1	-W2051:1		1			+M-Y1303:+24V	150 .4		C - VALVE OPEN
+C-X230:6	-W2051:12		1-			+M-Y1303:0V	150 .6		C - VALVE OPEN
+C-X230:2	-W2051:2		2				150 .4		
			2-				150 .6		
+C-X230:3	-W2051:3		3			+M-Y1401:+24V	150 .4		MOVABLE LOWER FORMING RING
			3-			+M-Y1401:0V	150 .6		MOVABLE LOWER FORMING RING
+C-X230:4	-W2051:4		4			+M-Y1405:+24V	150 .4		BENDING ROLLER ROTATION
			4-			+M-Y1405:0V	150 .6		BENDING ROLLER ROTATION
+C-X230:5	-W2051:5		5				150 .4		
			5-				150 .6		
+C-X230:7	-W2051:6		6			+M-Y1111:+24V	150 .4		PREHEATING VALVE
+C-X230:12	-W2051:13		6-			+M-Y1111:0V	150 .6		PREHEATING VALVE
+C-X230:8	-W2051:7		7			+M-Y1241:+24V	150 .4		BUTTERFLY VALVE
			7-			+M-Y1241:0V	150 .6		BUTTERFLY VALVE
+C-X230:9	-W2051:8		8			+M-Y1108:+24V	150 .4		HEAT EXCHANGER VALVE STEP 2
			8-			+M-Y1108:0V	150 .6		HEAT EXCHANGER VALVE STEP 2
+C-X230:10	-W2051:9		9			+M-Y1280:+24V	151 .4		STEAM TRAP
			9-			+M-Y1280:0V	151 .6		STEAM TRAP
+C-X230:11	-W2051:10		10			+M-Y1281:+24V	151 .4		TEMPERATURE CONTROLLED STEAM BARR
			10-			+M-Y1281:0V	151 .6		TEMPERATURE CONTROLLED STEAM BARR
			⏚			+M-Y1303:E	150 .6		C - VALVE OPEN
			⏚				150 .6		
			⏚			+M-Y1401:E	150 .6		MOVABLE LOWER FORMING RING
			⏚			+M-Y1405:E	150 .6		BENDING ROLLER ROTATION
			⏚				150 .6		
			⏚			+M-Y1111:E	150 .6		PREHEATING VALVE
			⏚			+M-Y1241:E	150 .6		BUTTERFLY VALVE
			⏚			+M-Y1108:E	150 .6		HEAT EXCHANGER VALVE STEP 2
			⏚			+M-Y1280:E	151 .6		STEAM TRAP
			⏚			+M-Y1281:E	151 .6		TEMPERATURE CONTROLLED STEAM BARR

Drawing remarks

Tetra Pak

Designer BMI	Date 07/06/2004	Machine TBA/22-0500	
ECM No 175296	Denomination TERMINAL STRIP OVERVIEW	Page Type TERMINAL STRIP OVERVIEW	
Company Tetra Pak Carton Ambient S.p.A.	Document No. 2593852-0006	Doc. type ELD	Version AE	Page 22

This drawing must not without the consent of Tetra Pak be copied, transmitted or disclosed to any third party.

1 2 3 4 5 6 7 8 9 10

Terminal strip of 2593852-0003

+M-X1251

From	Cable	Internal Jumper	Terminal	External Jumper	Cable	To	Page.Col.	Option	Function text
+C-X230:13	-W2052:1		1			+M-Y1501:+24V	151 .4		FEED PACKAGING MATERIAL
+C-X230:18	-W2052:12		1-			+M-Y1501:0V	151 .6		FEED PACKAGING MATERIAL
+C-X230:14	-W2052:2		2			+M-Y1502:+24V	151 .4		MOVABLE SQUEE-GEE ROLLER
			2-			+M-Y1502:0V	151 .6		MOVABLE SQUEE-GEE ROLLER
+C-X230:15	-W2052:3		3			+M-Y1301:+24V	151 .4		A - VALVE
			3-			+M-Y1301:0V	151 .6		A - VALVE
+C-X230:16	-W2052:4		4			+M-Y1302:+24V	151 .4		B - VALVE
			4-			+M-Y1302:0V	151 .6		B - VALVE
+C-X230:17	-W2052:5		5				151 .4		
			5-				151 .6		
+C-X230:19	-W2052:6		6			+M-Y1114.4:+24V	152 .4		PREHEATING VALVE STEP 1
+C-X230:24	-W2052:13		6-			+M-Y1114.4:0V	152 .6		PREHEATING VALVE STEP 1
+C-X230:20	-W2052:7		7			+M-Y1114.2:1	152 .4		PREHEATING VALVE STEP 2
			7-			+M-Y1114.2:2	152 .6		PREHEATING VALVE STEP 2
+C-X230:21	-W2052:8		8			+M-Y1107:+24V	152 .4		HEAT EXCHANGER VALVE STEP 1
			8-			+M-Y1107:0V	152 .6		HEAT EXCHANGER VALVE STEP 1
+C-X230:22	-W2052:9		9			+M-Y1325:+24V	152 .4		CLEANING CUP DRAINING
			9-			+M-Y1325:0V	152 .6		CLEANING CUP DRAINING
+C-X230:23	-W2052:10		10			+M-Y3116:+24V	152 .4		COLUMN CLEANING BALL / LID
			10-			+M-Y3116:0V	152 .6		COLUMN CLEANING BALL / LID
			⏚			+M-Y1501:E	151 .6		FEED PACKAGING MATERIAL
			⏚			+M-Y1502:E	151 .6		MOVABLE SQUEE-GEE ROLLER
			⏚			+M-Y1301:E	151 .6		A - VALVE
			⏚			+M-Y1302:E	151 .6		B - VALVE
+C-X230:⏚	-W2052:YG		⏚				151 .6		
			⏚			+M-Y1114.4:E	152 .6		PREHEATING VALVE STEP 1
			⏚			+M-Y1114.2:E	152 .6		PREHEATING VALVE STEP 2
			⏚			+M-Y1107:E	152 .6		HEAT EXCHANGER VALVE STEP 1
			⏚			+M-Y1325:E	152 .6		CLEANING CUP DRAINING
			⏚			+M-Y3116:E	152 .6		COLUMN CLEANING BALL / LID

Drawing remarks

Tetra Pak

Designer BMI	Date 07/06/2004	Machine TBA/22-0500	
ECM No 175296	Denomination TERMINAL STRIP OVERVIEW	Page Type TERMINAL STRIP OVERVIEW	
Company Tetra Pak Carton Ambient S.p.A.	Document No. 2593852-0006	Doc. type ELD	Version AE	Page 23

This drawing must not without the consent of Tetra Pak be copied, transmitted or disclosed to any third party.

1 2 3 4 5 6 7 8 9 10

Terminal strip of 2593852-0003

+M-X1252

From	Cable	Internal Jumper	Terminal	External Jumper	Cable	To	Page.Col.	Option	Function text
+C-X232:1	-W2053:1		1			+M-Y9105:1	148 .4		H.I. INJECTION
+C-X232:9	-W2053:12		1-			+M-Y9105:2	148 .6		H.I. INJECTION
+C-X232:2	-W2053:2		2			+M-Y9106:1	148 .4		H.I. SWITCH AIR INTO ASEPTIC CHAM
			2-			+M-Y9106:2	148 .6		H.I. SWITCH AIR INTO ASEPTIC CHAM
+C-X232:3	-W2053:3		3				148 .4		
			3-				148 .6		
+C-X232:4	-W2053:4		4				148 .4		
			4-				148 .6		
+C-X232:5	-W2053:5		5				148 .4		
			5-				148 .6		
+C-X232:6	-W2053:6		6				148 .4		
+C-X232:10	-W2053:13		6-				148 .6		
+C-X232:7	-W2053:7		7				148 .4		
			7-				148 .6		
+C-X232:8	-W2053:8		8				148 .4		
			8-				148 .6		
			⏚			+M-Y9105:E	148 .6		H.I. INJECTION
			⏚			+M-Y9106:E	148 .6		H.I. SWITCH AIR INTO ASEPTIC CHAM
			⏚				148 .6		
			⏚				148 .6		
			⏚				148 .6		
			⏚				148 .6		
			⏚				148 .6		
			⏚				148 .6		

Drawing remarks

Tetra Pak

Designer	Date	Machine
BMI	07/06/2004	TBA/22-0500

ECM No	Denomination	Page Type
175296	TERMINAL STRIP OVERVIEW	TERMINAL STRIP OVERVIEW

Company	Document No.	Doc. type	Version	Page
Tetra Pak Carton Ambient S.p.A.	2593852-0006	ELD	AE	24

This drawing must not without the consent of Tetra Pak be copied, transmitted or disclosed to any third party.

1 2 3 4 5 6 7 8 9 10

Terminal strip of 2593852-0003

+M-X1253

From	Cable	Internal Jumper	Terminal	External Jumper	Cable	To	Page.Col.	Option	Function text
+C-X232:11	-W2049:1		1				149 .4		
+C-X232:19	-W2049:12		1-				149 .6		
+C-X232:12	-W2049:2		2				149 .4		
			2-				149 .6		
+C-X232:13	-W2049:3		3				149 .4		
			3-				149 .6		
+C-X232:14	-W2049:4		4				149 .4		
			4-				149 .6		
+C-X232:15	-W2049:5		5				149 .4		
			5-				149 .6		
+C-X232:16	-W2049:6		6				149 .4		
+C-X232:20	-W2049:13		6-				149 .6		
+C-X232:17	-W2049:7		7				149 .4		
			7-				149 .6		
+C-X232:18	-W2049:8		8				149 .4		
			8-				149 .6		
			⏚				149 .6		
			⏚				149 .6		
			⏚				149 .6		
			⏚				149 .6		
			⏚				149 .6		
			⏚				149 .6		
			⏚				149 .6		
+C-X232:⏚	-W2049:YG		⏚				149 .6		

Drawing remarks

Tetra Pak

Designer BMI	Date 07/06/2004	Machine TBA/22-0500	
ECM No 175296	Denomination TERMINAL STRIP OVERVIEW	Page Type TERMINAL STRIP OVERVIEW	
Company Tetra Pak Carton Ambient S.p.A.	Document No. 2593852-0006	Doc. type ELD	Version AE	Page 25

This drawing must not without the consent of Tetra Pak
be copied, transmitted or disclosed to any third party.

1 2 3 4 5 6 7 8 9 10

Terminal strip of 2593852-0003

+M-X1254

From	Cable	Internal Jumper	Terminal	External Jumper	Cable	To	Page.Col.	Option	Function text
+C-X233:1	-W2048:1		1				165 .4		
+C-X233:6	-W2048:12		1-				165 .6		
+C-X233:2	-W2048:2		2				165 .4		
			2-				165 .6		
+C-X233:3	-W2048:3		3				165 .4		
			3-				165 .6		
+C-X233:4	-W2048:4		4				165 .4		
			4-				165 .6		
+C-X233:5	-W2048:5		5				165 .4		
			5-				165 .6		
+C-X233:7	-W2048:6		6				165 .4		
+C-X233:12	-W2048:13		6-				165 .6		
+C-X233:8	-W2048:7		7				165 .4		
			7-				165 .6		
+C-X233:9	-W2048:8		8				165 .4		
			8-				165 .6		
+C-X233:10	-W2048:9		9				166 .4		
			9-				166 .6		
+C-X233:11	-W2048:10		10				166 .4		
			10-				166 .6		
			⏚				165 .6		
			⏚				165 .6		
			⏚				165 .6		
			⏚				165 .6		
			⏚				165 .6		
			⏚				165 .6		
			⏚				165 .6		
			⏚				165 .6		
			⏚				165 .6		
			⏚				166 .6		
+C-X233:⏚	-W2048:YG		⏚				166 .6		

Drawing remarks

Tetra Pak

Designer	Date	Machine
BMI	07/06/2004	TBA/22-0500

ECM No	Denomination	Page Type
175296	TERMINAL STRIP OVERVIEW	TERMINAL STRIP OVERVIEW

Company	Document No.	Doc. type	Version	Page
Tetra Pak Carton Ambient S.p.A.	2593852-0006	ELD	AE	26

This drawing must not without the consent of Tetra Pak
be copied, transmitted or disclosed to any third party.

1 2 3 4 5 6 7 8 9 10

Terminal strip of 2593852-0003

+M-X1300

From	Cable	Internal Jumper	Terminal	External Jumper	Cable	To	Page.Col.	Option	Function text
+C-X315:+	-W1300:YE		+				087 .2		
+C-X315:-	-W1300:RD		-				087 .2		

Drawing remarks

Tetra Pak

Designer BMI	Date 07/06/2004	Machine TBA/22-0500	
ECM No 175296	Denomination TERMINAL STRIP OVERVIEW	Page Type TERMINAL STRIP OVERVIEW	
Company Tetra Pak Carton Ambient S.p.A.	Document No. 2593852-0006	Doc. type ELD	Version AE	Page 27

This drawing must not without the consent of Tetra Pak
be copied, transmitted or disclosed to any third party.

1 2 3 4 5 6 7 8 9 10

Terminal strip of 2593852-0003

+M-X1301

From	Cable	Internal Jumper	Terminal	External Jumper	Cable	To	Page.Col.	Option	Function text
+C-X306:+	-W1301:YE		+				086 .2		
+C-X306:-	-W1301:RD		-				086 .2		

Drawing remarks

Tetra Pak

Designer BMI	Date 07/06/2004	Machine TBA/22-0500	
ECM No 175296	Denomination TERMINAL STRIP OVERVIEW	Page Type TERMINAL STRIP OVERVIEW	
Company Tetra Pak Carton Ambient S.p.A.	Document No. 2593852-0006	Doc. type ELD	Version AE	Page 28

This drawing must not without the consent of Tetra Pak be copied, transmitted or disclosed to any third party.

1 2 3 4 5 6 7 8 9 10

Terminal strip of 2593852-0003

+M-X1302

From	Cable	Internal Jumper	Terminal	External Jumper	Cable	To	Page.Col.	Option	Function text
+C-X310:+	-W1302:YE		+				086 .2		
+C-X310:-	-W1302:RD		-				086 .2		

Drawing remarks

Tetra Pak

Designer BMI	Date 07/06/2004	Machine TBA/22-0500	
ECM No 175296	Denomination TERMINAL STRIP OVERVIEW	Page Type TERMINAL STRIP OVERVIEW	
Company Tetra Pak Carton Ambient S.p.A.	Document No. 2593852-0006	Doc. type ELD	Version AE	Page 29

This drawing must not without the consent of Tetra Pak
be copied, transmitted or disclosed to any third party.

1 2 3 4 5 6 7 8 9 10

Terminal strip of 2593852-0003

+M-X1303

From	Cable	Internal Jumper	Terminal	External Jumper	Cable	To	Page.Col.	Option	Function text
+C-X311:+	-W1303:YE		+				086 .2		
+C-X311:-	-W1303:RD		-				086 .2		

Drawing remarks

Tetra Pak

Designer BMI	Date 07/06/2004	Machine TBA/22-0500	
ECM No 175296	Denomination TERMINAL STRIP OVERVIEW	Page Type TERMINAL STRIP OVERVIEW	
Company Tetra Pak Carton Ambient S.p.A.	Document No. 2593852-0006	Doc. type ELD	Version AE	Page 30

This drawing must not without the consent of Tetra Pak
be copied, transmitted or disclosed to any third party.

1 2 3 4 5 6 7 8 9 10

Terminal strip of 2593852-0003

+M-X1304

From	Cable	Internal Jumper	Terminal	External Jumper	Cable	To	Page.Col.	Option	Function text
+C-X309:+	-W1304:YE		+				086 .2		
+C-X309:-	-W1304:RD		-				086 .2		

Drawing remarks

Tetra Pak

Designer BMI	Date 07/06/2004	Machine TBA/22-0500	
ECM No 175296	Denomination TERMINAL STRIP OVERVIEW	Page Type TERMINAL STRIP OVERVIEW	
Company Tetra Pak Carton Ambient S.p.A.	Document No. 2593852-0006	Doc. type ELD	Version AE	Page 31

This drawing must not without the consent of Tetra Pak be copied, transmitted or disclosed to any third party.

1 2 3 4 5 6 7 8 9 10

Terminal strip of 2593852-0003

+M-X1305

From	Cable	Internal Jumper	Terminal	External Jumper	Cable	To	Page.Col.	Option	Function text
+C-X308:+	-W1305:YE		+				086 .2		
+C-X308:-	-W1305:RD		-				086 .2		

Drawing remarks

Tetra Pak

Designer BMI	Date 07/06/2004	Machine TBA/22-0500	
ECM No 175296	Denomination TERMINAL STRIP OVERVIEW	Page Type TERMINAL STRIP OVERVIEW	
Company Tetra Pak Carton Ambient S.p.A.	Document No. 2593852-0006	Doc. type ELD	Version AE	Page 32

This drawing must not without the consent of Tetra Pak
be copied, transmitted or disclosed to any third party.

1 2 3 4 5 6 7 8 9 10

Terminal strip of 2593852-0003

+M-X1306

From	Cable	Internal Jumper	Terminal	External Jumper	Cable	To	Page.Col.	Option	Function text
+C-X307:+	-W1306:YE		+				086 .2		
+C-X307:-	-W1306:RD		-				086 .2		

Drawing remarks

Tetra Pak

Designer BMI	Date 07/06/2004	Machine TBA/22-0500	
ECM No 175296	Denomination TERMINAL STRIP OVERVIEW	Page Type TERMINAL STRIP OVERVIEW	
Company Tetra Pak Carton Ambient S.p.A.	Document No. 2593852-0006	Doc. type ELD	Version AE	Page 33

This drawing must not without the consent of Tetra Pak be copied, transmitted or disclosed to any third party.

1 2 3 4 5 6 7 8 9 10

Terminal strip of 2593852-0003

+M-X1307

From	Cable	Internal Jumper	Terminal	External Jumper	Cable	To	Page.Col.	Option	Function text
+C-X313:+	-W1307:YE		+				087 .2		
+C-X313:-	-W1307:RD		-				087 .2		

Drawing remarks

Tetra Pak

Designer BMI	Date 07/06/2004	Machine TBA/22-0500	
ECM No 175296	Denomination TERMINAL STRIP OVERVIEW	Page Type TERMINAL STRIP OVERVIEW	
Company Tetra Pak Carton Ambient S.p.A.	Document No. 2593852-0006	Doc. type ELD	Version AE	Page 34

This drawing must not without the consent of Tetra Pak be copied, transmitted or disclosed to any third party.

1 2 3 4 5 6 7 8 9 10

Terminal strip of 2593852-0003

+M-X1314

From	Cable	Internal Jumper	Terminal	External Jumper	Cable	To	Page.Col.	Option	Function text
+M-X1003:126+	-W1052:2		1				054 .4		
+M-X1003:126-	-W1052:3		2				054 .4		
+M-X1003:126	-W1052:1		3				054 .4		

Drawing remarks

Tetra Pak

Designer	Date	Machine
BMI	07/06/2004	TBA/22-0500

ECM No	Denomination	Page Type
175296	TERMINAL STRIP OVERVIEW	TERMINAL STRIP OVERVIEW

Company	Document No.	Doc. type	Version	Page
Tetra Pak Carton Ambient S.p.A.	2593852-0006	ELD	AE	35

This drawing must not without the consent of Tetra Pak be copied, transmitted or disclosed to any third party.

1 2 3 4 5 6 7 8 9 10

Terminal strip of 2593852-0003

+M-X1402

From	Cable	Internal Jumper	Terminal	External Jumper	Cable	To	Page.Col.	Option	Function text
+M-A7417:X004	-W7047:1		1			+M-T6101:	013 .2		

Drawing remarks

Tetra Pak

Designer BMI	Date 07/06/2004	Machine TBA/22-0500			
ECM No 175296	Denomination TERMINAL STRIP OVERVIEW	Page Type TERMINAL STRIP OVERVIEW			
Company Tetra Pak Carton Ambient S.p.A.	Document No. 2593852-0006	Doc. type ELD	Version AE	Page 36	

This drawing must not without the consent of Tetra Pak be copied, transmitted or disclosed to any third party.

1 | 2 | 3 | 4 | 5 | 6 | 7 | 8 | 9 | 10

Terminal strip of 2593852-0003

+M-X2001

From	Cable	Internal Jumper	Terminal	External Jumper	Cable	To	Page.Col.	Option	Function text
+C-X101:1	-W2005:1		1		-W2211:1	+M-E2002:1	032 .7		LIGHT FIXTURE FINAL FOLDER
+C-X101:2	-W2005:2		2		-W2211:2	+M-E2002:2	032 .7		LIGHT FIXTURE FINAL FOLDER
			3				032 .9		
			4				032 .9		
			5				032 .10		
			6				032 .10		
+C-X216:1	-W2054:1		101				121 .3		
+C-X216:2	-W2054:2		102				121 .3		
+C-X216:3	-W2054:3		103				121 .5		
			104				121 .5		
			105		-W2224:1	+M-B2810:21	121 .3		
									RIGHT SIDE DOOR GUARD 10
			106		-W2224:2	+M-B2810:11	121 .3		RIGHT SIDE DOOR GUARD 10
+C-X216:4	-W2054:4		107		-W2224:3	+M-B2810:12	121 .5		RIGHT SIDE DOOR GUARD 10
			108		-W2224:4	+M-B2810:22	121 .5		RIGHT SIDE DOOR GUARD 10
			109		-W2225:1	+M-B2811:21	121 .3		
									RIGHT SIDE DOOR GUARD 11
			110		-W2225:2	+M-B2811:11	121 .3		RIGHT SIDE DOOR GUARD 11
+C-X216:5	-W2054:5		111		-W2225:3	+M-B2811:12	121 .5		RIGHT SIDE DOOR GUARD 11
			112		-W2225:4	+M-B2811:22	121 .5		RIGHT SIDE DOOR GUARD 11
			113		-W2226:1	+M-B2812:21	121 .3		
									RIGHT SIDE DOOR GUARD 12
			114		-W2226:2	+M-B2812:11	121 .3		RIGHT SIDE DOOR GUARD 12
+C-X216:6	-W2054:6		115		-W2226:3	+M-B2812:12	121 .5		RIGHT SIDE DOOR GUARD 12
			116		-W2226:4	+M-B2812:22	121 .5		RIGHT SIDE DOOR GUARD 12
			117				121 .3		
			118				121 .3		

Drawing remarks

Tetra Pak

Designer BMI	Date 07/06/2004	Machine TBA/22-0500	
ECM No 175296	Denomination TERMINAL STRIP OVERVIEW	Page Type TERMINAL STRIP OVERVIEW	
Company Tetra Pak Carton Ambient S.p.A.	Document No. 2593852-0006	Doc. type ELD	Version AE	Page 37

This drawing must not without the consent of Tetra Pak be copied, transmitted or disclosed to any third party.

1 2 3 4 5 6 7 8 9 10

Terminal strip of 2593852-0003

+M-X2001

From	Cable	Internal Jumper	Terminal	External Jumper	Cable	To	Page.Col.	Option	Function text
+C-X216:7	-W2054:7		119				121 .5		
			120				121 .5		
			121		-W2228:1	+M-B2830:21	122 .3		
									LEFT SIDE DOOR GUARD 30
			122		-W2228:2	+M-B2830:11	122 .3		LEFT SIDE DOOR GUARD 30
+C-X216:8	-W2054:8		123		-W2228:3	+M-B2830:12	122 .5		LEFT SIDE DOOR GUARD 30
			124		-W2228:4	+M-B2830:22	122 .5		LEFT SIDE DOOR GUARD 30
			125		-W2229:1	+M-B2831:21	122 .3		
									LEFT SIDE DOOR GUARD 31
			126		-W2229:2	+M-B2831:11	122 .3		LEFT SIDE DOOR GUARD 31
+C-X216:9	-W2054:9		127		-W2229:3	+M-B2831:12	122 .5		LEFT SIDE DOOR GUARD 31
			128		-W2229:4	+M-B2831:22	122 .5		LEFT SIDE DOOR GUARD 31
			129		-W2230:1	+M-B2832:21	122 .3		
									LEFT SIDE DOOR GUARD 32
			130		-W2230:2	+M-B2832:11	122 .3		LEFT SIDE DOOR GUARD 32
+C-X216:10	-W2054:10		131		-W2230:3	+M-B2832:12	122 .5		LEFT SIDE DOOR GUARD 32
			132		-W2230:4	+M-B2832:22	122 .5		LEFT SIDE DOOR GUARD 32
			133				122 .3		
			134				122 .3		
+C-X216:11	-W2054:11		135				122 .5		
+C-X216:12	-W2054:12		136				122 .5		
			137		-W2232:1	+M-X2062:1	119 .2		
+C-X216:13	-W2054:13		138		-W2232:2	+M-X2062:2	119 .6		
+C-X216:14	-W2054:14		139		-W2232:3	+M-X2062:3	119 .6		
+C-X216:15	-W2054:15		140		-W2232:4	+M-X2062:4	047 .4		
+C-X216:16	-W2054:16		141		-W2232:5	+M-X2062:5	047 .4		
+C-X216:17	-W2054:17		142				119 .6		

Drawing remarks

Tetra Pak

Designer BMI	Date 07/06/2004	Machine TBA/22-0500	
ECM No 175296	Denomination TERMINAL STRIP OVERVIEW	Page Type TERMINAL STRIP OVERVIEW	
Company Tetra Pak Carton Ambient S.p.A.	Document No. 2593852-0006	Doc. type ELD	Version AE	Page 38

This drawing must not without the consent of Tetra Pak be copied, transmitted or disclosed to any third party.

1 2 3 4 5 6 7 8 9 10

Terminal strip of 2593852-0003

+M-X2001

From	Cable	Internal Jumper	Terminal	External Jumper	Cable	To	Page.Col.	Option	Function text
			143				203 .3		
			144				203 .3		
+C-X216:18	-W2054 :18		145				203 .3		
			146				203 .3		
			147				203 .3		
+C-X216:19	-W2054 :19		148		-W2233 :2	+M-H2801:1	058 .4		BEACON LAMP FRONT
			149				203 .3		
			150		-W2233 :1	+M-H2801:0	058 .7		BEACON LAMP FRONT
+C-X216:20	-W2054 :20		151		-W2233 :3	+M-H2801:2	058 .4		BEACON LAMP FRONT
			152				203 .3		
			153				203 .3		
+C-X216:21	-W2054 :21		154		-W2233 :4	+M-H2801:3	058 .4		BEACON LAMP FRONT
			155				203 .3		
			156				203 .3		
+C-X216:22	-W2054 :22		157				058 .4		
+C-X216:23	-W2054 :23		158				203 .3		
+C-X216:24	-W2054 :24		159				203 .3		
			160						
			161						
			162						
			163						
			164						
			165						
			166						
			167						
			168						
			169						
			170						
			171						

Drawing remarks

Tetra Pak

Designer BMI	Date 07/06/2004	Machine TBA/22-0500	
ECM No 175296	Denomination TERMINAL STRIP OVERVIEW	Page Type TERMINAL STRIP OVERVIEW	
Company Tetra Pak Carton Ambient S.p.A.	Document No. 2593852-0006	Doc. type ELD	Version AE	Page 39

This drawing must not without the consent of Tetra Pak
be copied, transmitted or disclosed to any third party.

1 2 3 4 5 6 7 8 9 10

Terminal strip of 2593852-0003

+M-X2001

From	Cable	Internal Jumper	Terminal	External Jumper	Cable	To	Page.Col.	Option	Function text
			172						
			173						
			174						
			175						
			176						
			177						
			178						
			179						
			180						
			181						
			182						
			183						
			184						
			185						
			186						
			187						
			188						
			189						
			190						
			191						
			192						
+C-A450:1	-W4502:WH		193		-W4500:YE	+M-A4500:3	061 .4		RECEIVE MODEM
+C-A450:2	-W4502:BN		194		-W4500:GN	+M-A4500:4	061 .4		RECEIVE MODEM
+C-A450:3	-W4502:YE		195		-W4500:WH	+M-A4500:1	061 .4		RECEIVE MODEM
+C-A450:4	-W4502:GN		196		-W4500:BN	+M-A4500:2	061 .4		RECEIVE MODEM
			197						
			198						
+C-X101:⏚	-W2005:GNYE		⏚		-W2211:GNYE	+M-E2002:E1	032 .8		LIGHT FIXTURE FINAL FOLDER
			⏚				032 .10		
			⏚				032 .10		

Drawing remarks

Tetra Pak

Designer BMI	Date 07/06/2004	Machine TBA/22-0500	
ECM No 175296	Denomination TERMINAL STRIP OVERVIEW	Page Type TERMINAL STRIP OVERVIEW	
Company Tetra Pak Carton Ambient S.p.A.	Document No. 2593852-0006	Doc. type ELD	Version AE	Page 40

This drawing must not without the consent of Tetra Pak be copied, transmitted or disclosed to any third party.

1 2 3 4 5 6 7 8 9 10

Terminal strip of 2593852-0003

+M-X2001

From	Cable	Internal Jumper	Terminal	External Jumper	Cable	To	Page.Col.	Option	Function text
			⏚		-W2232:GNYE	+M-X2062:⏚	047 .4		
+C-X216:⏚	-W2054:GNYE		⏚		-W2233:GNYE	+M-H2801:E	058 .7		BEACON LAMP FRONT
+C-A450:5	-W4502:SH		⏚		-W4500:SH	+M-A4500:5	061 .4		RECEIVE MODEM

Drawing remarks

Tetra Pak

Designer	Date	Machine
BMI	07/06/2004	TBA/22-0500

ECM No	Denomination	Page Type
175296	TERMINAL STRIP OVERVIEW	TERMINAL STRIP OVERVIEW

Company	Document No.	Doc. type	Version	Page
Tetra Pak Carton Ambient S.p.A.	2593852-0006	ELD	AE	41

This drawing must not without the consent of Tetra Pak be copied, transmitted or disclosed to any third party.

1 2 3 4 5 6 7 8 9 10

Terminal strip of 2593852-0003

+M-X2003

From	Cable	Internal Jumper	Terminal	External Jumper	Cable	To	Page.Col.	Option	Function text
+M-X2244:1	-W2258:1		101		-W2257:1	+M-X2051:1	153 .4		
+M-X2244:2	-W2258:2		102		-W2257:2	+M-X2051:2	153 .4		
+M-X2244:3	-W2258:3		103		-W2257:3	+M-X2051:3	153 .4		
+M-X2244:4	-W2258:4		104		-W2257:4	+M-X2051:4	153 .4		
+M-X2244:5	-W2258:5		105		-W2257:5	+M-X2051:5	153 .4		
			106		-W2257:12	+M-X2051:5-	153 .6		
+M-X2244:6	-W2258:6		107		-W2257:6	+M-X2051:6	153 .4		
+M-X2244:7	-W2258:7		108		-W2257:7	+M-X2051:7	153 .4		
+M-X2244:8	-W2258:8		109		-W2257:8	+M-X2051:8	153 .4		
			110		-W2257:13	+M-X2051:6-	153 .6		
+M-X2244:9	-W2258:9		111		-W2201:BN	+M-Y2201:BN	140 .4		AIR TREATMENT
+M-X2244:10	-W2258:10		112		-W2201:BU	+M-Y2201:BU	140 .6		AIR TREATMENT
+M-X2244:11	-W2258:11		113		-W2222:1	+M-Y3101:1	139 .4		HOT WATER SUPPLY
+M-X2244:12	-W2258:12		114		-W2222:2	+M-Y3101:2	139 .6		HOT WATER SUPPLY
+M-X2244:13	-W2258:13		115		-W2243:1	+M-Y2108:1	157 .5		FLUSHING FFU
			116		-W2243:2	+M-Y2108:2	157 .6		FLUSHING FFU
+M-X2244:14	-W2258:14		117				157 .5		
			118				157 .6		
+M-X2244:15	-W2258:15		119		-W2220:1	+M-B2102:1	119 .5		COLD WATER PRESSURE
			120		-W2220:2	+M-B2102:3	119 .3		COLD WATER PRESSURE
+M-X2244:16	-W2258:16		121		-W2221:1	+M-B2201:1	119 .5		MAIN AIR SUPPLY PRESSURE
			122		-W2221:2	+M-B2201:3	119 .3		MAIN AIR SUPPLY PRESSURE
+M-X2244:17	-W2258:17		123		-W2246:BN	+M-B3102:BN	119 .5		PUMPING WATER GUARD
			124		-W2246:BU	+M-B3102:BU	119 .3		PUMPING WATER GUARD
+M-X2244:18	-W2258:18		125		-W2247:WH	+M-B3105:WH	119 .5		DOSING CHEMICAL
			126		-W2247:BN	+M-B3105:BN	119 .3		DOSING CHEMICAL
+M-X2244:19	-W2258:19		127		-W2027:1	+M-Z004:4	005 .8		
			128		-W2027:2	+M-Z004:3	005 .8		
+M-X2244:20	-W2258:20		129				157 .5		
			130				203 .3		

Drawing remarks

Tetra Pak

Designer BMI	Date 07/06/2004	Machine TBA/22-0500	
ECM No 175296	Denomination TERMINAL STRIP OVERVIEW	Page Type TERMINAL STRIP OVERVIEW	
Company Tetra Pak Carton Ambient S.p.A.	Document No. 2593852-0006	Doc. type ELD	Version AE	Page 42

This drawing must not without the consent of Tetra Pak
be copied, transmitted or disclosed to any third party.

1 | 2 | 3 | 4 | 5 | 6 | 7 | 8 | 9 | 10

Terminal strip of 2593852-0003

+M-X2003

From	Cable	Internal Jumper	Terminal	External Jumper	Cable	To	Page.Col.	Option	Function text
			131				157 .6		
+M-X2244:21	-W2258 :21		132				157 .5		
			133				203 .3		
			134				157 .6		
+M-X2244:22	-W2258 :22		135				157 .5		
+M-X2244:23	-W2258 :23		136				203 .3		
+M-X2244:24	-W2258 :24		137				157 .6		
+M-X2244:⏚	-W2258 :GNYE		⏚				203 .3		
			⏚		-W2201 :GNYE	+M-Y2201:YEGN	140 .6		AIR TREATMENT
			⏚						
			⏚						
			⏚						
			⏚		-W2220 :YG	+M-B2102:E	119 .5		COLD WATER PRESSURE
			⏚		-W2221 :YG	+M-B2201:E	119 .5		MAIN AIR SUPPLY PRESSURE
			⏚		-W2246 :YG	+M-B3102:E	119 .5		PUMPING WATER GUARD
			⏚						
			⏚						

Drawing remarks

Tetra Pak

Designer BMI	Date 07/06/2004	Machine TBA/22-0500		
ECM No 175296	Denomination TERMINAL STRIP OVERVIEW	Page Type TERMINAL STRIP OVERVIEW		
Company Tetra Pak Carton Ambient S.p.A.	Document No. 2593852-0006	Doc. type ELD	Version AE	Page 43

This drawing must not without the consent of Tetra Pak
be copied, transmitted or disclosed to any third party.

1 2 3 4 5 6 7 8 9 10

Terminal strip of 2593852-0003

+M-X2038

From	Cable	Internal Jumper	Terminal	External Jumper	Cable	To	Page.Col.	Option	Function text
+C-X301:+	-W2055:YE		+		-W2242:YE	+M-B2510:YE	086 .3		TEMP. OF CIRCULATION WATER
+C-X301:-	-W2055:RD		-		-W2242:RD	+M-B2510:RD	086 .3		TEMP. OF CIRCULATION WATER

Drawing remarks

Tetra Pak

Designer BMI	Date 07/06/2004	Machine TBA/22-0500	
ECM No 175296	Denomination TERMINAL STRIP OVERVIEW	Page Type TERMINAL STRIP OVERVIEW	
Company Tetra Pak Carton Ambient S.p.A.	Document No. 2593852-0006	Doc. type ELD	Version AE	Page 44

This drawing must not without the consent of Tetra Pak
be copied, transmitted or disclosed to any third party.

1 2 3 4 5 6 7 8 9 10

Terminal strip of 2593852-0003

+M-X2050

From	Cable	Internal Jumper	Terminal	External Jumper	Cable	To	Page.Col.	Option	Function text
+M-X2062:1	-W2250:1		101		-W2251:2	+M-B2501:3	119 .3		CIRCULATION COOLING WATER
+M-X2062:2	-W2250:2		102		-W2251:1	+M-B2501:1	119 .5		CIRCULATION COOLING WATER
			103		-W2252:1	+M-B2540:A	119 .3		CIRCULATION COOLING MEDIA LOW PRE
			104						
			105						
+M-X2062:3	-W2250:3		106		-W2252:2	+M-B2540:C	119 .5		CIRCULATION COOLING MEDIA LOW PRE
+M-X2062:4	-W2250:4		107		-W2253:2	+M-B2520:	047 .2		CONDUCTIVE SENSOR DE IONISATION O
+M-X2062:5	-W2250:5		108		-W2253:1	+M-B2520:1	047 .2		CONDUCTIVE SENSOR DE IONISATION O
+M-X2062:⏚	-W2250:GNYE		⏚				047 .2		

Drawing remarks

Tetra Pak

Designer BMI	Date 07/06/2004	Machine TBA/22-0500		
ECM No 175296	Denomination TERMINAL STRIP OVERVIEW	Page Type TERMINAL STRIP OVERVIEW		
Company Tetra Pak Carton Ambient S.p.A.	Document No. 2593852-0006	Doc. type ELD	Version AE	Page 45

This drawing must not without the consent of Tetra Pak
be copied, transmitted or disclosed to any third party.

1 2 3 4 5 6 7 8 9 10

Terminal strip of 2593852-0003

+M-X2051

From	Cable	Internal Jumper	Terminal	External Jumper	Cable	To	Page.Col.	Option	Function text
+M-X2003:101	-W2257:1		1			+M-Y3109:+24V	153 .4		FOAMING
			1-			+M-Y3109:0V	153 .5		FOAMING
+M-X2003:102	-W2257:2		2			+M-Y3103:+24V	153 .4		WARM RINSING
			2-			+M-Y3103:0V	153 .5		WARM RINSING
+M-X2003:103	-W2257:3		3			+M-Y3110:+24V	153 .4		COLUMN CLEANING
			3-			+M-Y3110:0V	153 .5		COLUMN CLEANING
+M-X2003:104	-W2257:4		4			+M-Y3111:+24V	153 .4		JAW SYSTEM CLEANING
			4-			+M-Y3111:0V	153 .5		JAW SYSTEM CLEANING
+M-X2003:105	-W2257:5		5			+M-Y3112:+24V	153 .4		FFU CLEANING
+M-X2003:106	-W2257:12		5-			+M-Y3112:0V	153 .5		FFU CLEANING
+M-X2003:107	-W2257:6		6			+M-Y3105:+24V	153 .4		DOSING CHEMICAL / TUBE FLUSHING
+M-X2003:110	-W2257:13		6-			+M-Y3105:0V	153 .5		DOSING CHEMICAL / TUBE FLUSHING
+M-X2003:108	-W2257:7		7				153 .4		
			7-				153 .5		
+M-X2003:109	-W2257:8		8				153 .4		
			8-				153 .5		
			⏚			+M-Y3109:E	153 .5		FOAMING
			⏚			+M-Y3103:E	153 .5		WARM RINSING
			⏚			+M-Y3110:E	153 .5		COLUMN CLEANING
			⏚			+M-Y3111:E	153 .5		JAW SYSTEM CLEANING
			⏚			+M-Y3112:E	153 .5		FFU CLEANING
			⏚			+M-Y3105:E	153 .5		DOSING CHEMICAL / TUBE FLUSHING
			⏚				153 .5		
			⏚				153 .5		

Drawing remarks

Tetra Pak

Designer BMI	Date 07/06/2004	Machine TBA/22-0500	
ECM No 175296	Denomination TERMINAL STRIP OVERVIEW	Page Type TERMINAL STRIP OVERVIEW	
Company Tetra Pak Carton Ambient S.p.A.	Document No. 2593852-0006	Doc. type ELD	Version AE	Page 46

This drawing must not without the consent of Tetra Pak be copied, transmitted or disclosed to any third party.

1 2 3 4 5 6 7 8 9 10

Terminal strip of 2593852-0003

+M-X2062

From	Cable	Internal Jumper	Terminal	External Jumper	Cable	To	Page.Col.	Option	Function text
+M-X2001:137	-W2232:1		1		-W2250:1	+M-X2050:101	119 .3		
+M-X2001:138	-W2232:2		2		-W2250:2	+M-X2050:102	119 .6		
+M-X2001:139	-W2232:3		3		-W2250:3	+M-X2050:106	119 .6		
+M-X2001:140	-W2232:4		4		-W2250:4	+M-X2050:107	047 .3		
+M-X2001:141	-W2232:5		5		-W2250:5	+M-X2050:108	047 .3		
			6						
+M-X2001:⏚	-W2232:GNYE		⏚		-W2250:GNYE	+M-X2050:⏚	047 .3		

Drawing remarks

Tetra Pak

Designer BMI	Date 07/06/2004	Machine TBA/22-0500	
ECM No 175296	Denomination TERMINAL STRIP OVERVIEW	Page Type TERMINAL STRIP OVERVIEW	
Company Tetra Pak Carton Ambient S.p.A.	Document No. 2593852-0006	Doc. type ELD	Version AE	Page 47

This drawing must not without the consent of Tetra Pak be copied, transmitted or disclosed to any third party.

1 2 3 4 5 6 7 8 9 10

Terminal strip of 2593852-0003

+M-X2241

From	Cable	Internal Jumper	Terminal	External Jumper	Cable	To	Page.Col.	Option	Function text
+C-X102:1	-W2007:1		1		-W2213:1	+M-M2501:U	023 .5		CIRCULATION COOLING WATER
+C-X102:2	-W2007:2		2		-W2213:2	+M-M2501:V	023 .5		CIRCULATION COOLING WATER
+C-X102:3	-W2007:3		3		-W2213:3	+M-M2501:W	023 .5		CIRCULATION COOLING WATER
			4						
			5						
			6						
+C-X102:⏚	-W2007:YG		⏚		-W2213:YG	+M-M2501:E	023 .5		CIRCULATION COOLING WATER

Drawing remarks

Tetra Pak

Designer BMI	Date 07/06/2004	Machine TBA/22-0500	
ECM No 175296	Denomination TERMINAL STRIP OVERVIEW	Page Type TERMINAL STRIP OVERVIEW	
Company Tetra Pak Carton Ambient S.p.A.	Document No. 2593852-0006	Doc. type ELD	Version AE	Page 48

This drawing must not without the consent of Tetra Pak be copied, transmitted or disclosed to any third party.

1 2 3 4 5 6 7 8 9 10

Terminal strip of 2593852-0003

+M-X2242

From	Cable	Internal Jumper	Terminal	External Jumper	Cable	To	Page.Col.	Option	Function text
+C-X103:1	-W2008:1		1		-W2214:1	+M-M2540:U	023 .6		CIRCULATION COOLING MEDIA
+C-X103:2	-W2008:2		2		-W2214:2	+M-M2540:V	023 .7		CIRCULATION COOLING MEDIA
+C-X103:3	-W2008:3		3		-W2214:3	+M-M2540:W	023 .7		CIRCULATION COOLING MEDIA
			4						
			5						
			6						
+C-X103:⏚	-W2008:YG		⏚		-W2214:YG	+M-M2540:E	023 .7		CIRCULATION COOLING MEDIA

Drawing remarks

Tetra Pak

Designer BMI	Date 07/06/2004	Machine TBA/22-0500	
ECM No 175296	Denomination TERMINAL STRIP OVERVIEW	Page Type TERMINAL STRIP OVERVIEW	
Company Tetra Pak Carton Ambient S.p.A.	Document No. 2593852-0006	Doc. type ELD	Version AE	Page 49

This drawing must not without the consent of Tetra Pak be copied, transmitted or disclosed to any third party.

1 2 3 4 5 6 7 8 9 10

Terminal strip of 2593852-0003

+M-X2243

From	Cable	Internal Jumper	Terminal	External Jumper	Cable	To	Page.Col.	Option	Function text
+C-X503:1	-W2003:1		1		-W2256:1	+M-M3102:U	022 .5		CLEANING PUMP EXTERNAL CLEANING
+C-X503:2	-W2003:2		2		-W2256:2	+M-M3102:V	022 .5		CLEANING PUMP EXTERNAL CLEANING
+C-X503:3	-W2003:3		3		-W2256:3	+M-M3102:W	022 .5		CLEANING PUMP EXTERNAL CLEANING
			4						
			5						
			6						
+C-X503:⏚	-W2003:YG		⏚		-W2256:YG	+M-M3102:E	022 .5		CLEANING PUMP EXTERNAL CLEANING

Drawing remarks

Tetra Pak

Designer BMI	Date 07/06/2004	Machine TBA/22-0500	
ECM No 175296	Denomination TERMINAL STRIP OVERVIEW	Page Type TERMINAL STRIP OVERVIEW	
Company Tetra Pak Carton Ambient S.p.A.	Document No. 2593852-0006	Doc. type ELD	Version AE	Page 50

This drawing must not without the consent of Tetra Pak be copied, transmitted or disclosed to any third party.

1 | 2 | 3 | 4 | 5 | 6 | 7 | 8 | 9 | 10

Terminal strip of 2593852-0003

+M-X2244

From	Cable	Internal Jumper	Terminal	External Jumper	Cable	To	Page.Col.	Option	Function text
+C-X234:1	-W2050:1		1		-W2258:1	+M-X2003:101	153 .3		
+C-X234:2	-W2050:2		2		-W2258:2	+M-X2003:102	153 .3		
+C-X234:3	-W2050:3		3		-W2258:3	+M-X2003:103	153 .3		
+C-X234:4	-W2050:4		4		-W2258:4	+M-X2003:104	153 .3		
+C-X234:5	-W2050:5		5		-W2258:5	+M-X2003:105	153 .3		
+C-X234:6	-W2050:6		6		-W2258:6	+M-X2003:107	153 .3		
+C-X234:7	-W2050:7		7		-W2258:7	+M-X2003:108	153 .3		
+C-X234:8	-W2050:8		8		-W2258:8	+M-X2003:109	153 .3		
+C-X234:9	-W2050:9		9		-W2258:9	+M-X2003:111	140 .3		
+C-X234:10	-W2050:10		10		-W2258:10	+M-X2003:112	140 .6		
+C-X234:11	-W2050:11		11		-W2258:11	+M-X2003:113	139 .3		
+C-X234:12	-W2050:12		12		-W2258:12	+M-X2003:114	139 .6		
+C-X234:13	-W2050:13		13		-W2258:13	+M-X2003:115	157 .4		
+C-X234:14	-W2050:14		14		-W2258:14	+M-X2003:117	157 .4		
+C-X234:15	-W2050:15		15		-W2258:15	+M-X2003:119	119 .6		
+C-X234:16	-W2050:16		16		-W2258:16	+M-X2003:121	119 .6		
+C-X234:17	-W2050:17		17		-W2258:17	+M-X2003:123	119 .6		
+C-X234:18	-W2050:18		18		-W2258:18	+M-X2003:125	119 .6		
+C-X234:19	-W2050:19		19		-W2258:19	+M-X2003:127	109 .6		
+C-X234:20	-W2050:20		20		-W2258:20	+M-X2003:129	157 .4		
+C-X234:21	-W2050:21		21		-W2258:21	+M-X2003:132	157 .4		
+C-X234:22	-W2050:22		22		-W2258:22	+M-X2003:135	157 .4		
+C-X234:23	-W2050:23		23		-W2258:23	+M-X2003:136	203 .3		
+C-X234:24	-W2050:24		24		-W2258:24	+M-X2003:137	157 .7		
+C-X234:⏚	-W2050:GNYE		⏚		-W2258:GNYE	+M-X2003:⏚	203 .3		

Drawing remarks

Tetra Pak

Designer BMI	Date 07/06/2004	Machine TBA/22-0500	
ECM No 175296	Denomination TERMINAL STRIP OVERVIEW	Page Type TERMINAL STRIP OVERVIEW	
Company Tetra Pak Carton Ambient S.p.A.	Document No. 2593852-0006	Doc. type ELD	Version AE	Page 51

This drawing must not without the consent of Tetra Pak
be copied, transmitted or disclosed to any third party.

1 | 2 | 3 | 4 | 5 | 6 | 7 | 8 | 9 | 10

Terminal strip of 2593852-0003

+M-X4000

From	Cable	Internal Jumper	Terminal	External Jumper	Cable	To	Page.Col.	Option	Function text
+C-X125:1	-W2004:1		1		-W4033:BU	+M-M1503:BU	024 .2		TUBE POSITIONING
+C-X125:2	-W2004:2		2		-W4033:VT	+M-M1503:VT	024 .3		TUBE POSITIONING
+C-X125:3	-W2004:3		3		-W4033:GN	+M-M1503:GN	024 .3		TUBE POSITIONING
+C-X125:4	-W2004:4		4		-W4033:BN	+M-M1503:BN	024 .3		TUBE POSITIONING
+C-X125:5	-W2004:SH		5		-W4033:SH	GND:	024 .2		
+C-X220:1	-W2056:1		101		-W4027:1	+M-X4059:1	159 .3		
			101+				203 .3		
			101-		-W4027:12	+M-X4059:1-	159 .7		
+C-X220:2	-W2056:2		102		-W4027:2	+M-X4059:2	159 .3		
			102+				203 .3		
			102-				203 .3		
+C-X220:3	-W2056:3		103		-W4027:3	+M-X4059:3	159 .3		
			103+				203 .3		
			103-				203 .3		
+C-X220:4	-W2056:4		104		-W4027:4	+M-X4059:4	159 .3		
			104+				203 .3		
			104-				203 .3		
+C-X220:5	-W2056:5		105		-W4240:1	+M-Y2109:+24V	159 .3		TS BAR FLUSHING
			105+				203 .3		
			105-		-W4240:2	+M-Y2109:0V	159 .6		TS BAR FLUSHING
+C-X215:13	-W2064:BN		106		-W4200:BN	+M-A4200:SER 1	102 .6		
			106+				203 .3		
			106-				203 .3		
+C-X215:14	-W2064:WH		107		-W4200:WH	+M-A4200:SER 2	102 .6		
			107+				203 .3		
			107-				203 .3		
+C-X215:15	-W2064:SH		108		-W4200:SH	+M-A4200:SHD IN	102 .6		
			108+				203 .8		
			108-				203 .8		
+C-X220:9	-W2056:9		109		-W2254:1	+M-S2803:21	120 .3		EMERGENCY STOP RIGHT SIDE CABINET

Drawing remarks

Tetra Pak

Designer: BMI	Date: 07/06/2004	Machine: TBA/22-0500	
ECM No: 175296	Denomination: TERMINAL STRIP OVERVIEW	Page Type: TERMINAL STRIP OVERVIEW	
Company: Tetra Pak Carton Ambient S.p.A.	Document No.: 2593852-0006	Doc. type: ELD	Version: AE	Page: 52

This drawing must not without the consent of Tetra Pak
be copied, transmitted or disclosed to any third party.

1 2 3 4 5 6 7 8 9 10

Terminal strip of 2593852-0003

+M-X4000

From	Cable	Internal Jumper	Terminal	External Jumper	Cable	To	Page.Col.	Option	Function text
			109+				203 .8		
			109-				203 .8		
			110						
			110+		-W2254 :2	+M-S2803:11	120 .3		EMERGENCY STOP RIGHT SIDE CABINET
			110-				203 .8		
+C-X220:11	-W2056 :11		111		-W2254 :3	+M-S2803:12	120 .5		EMERGENCY STOP RIGHT SIDE CABINET
			111+				203 .8		
			111-				203 .8		
			112		-W2254 :4	+M-S2803:22	120 .5		EMERGENCY STOP RIGHT SIDE CABINET
			112+				203 .8		
			112-				203 .8		
			113		-W2255 :1	+M-S2804:21	120 .3		
			113+				203 .8		
			113-				203 .8		
			114						
			114+		-W2255 :2	+M-S2804:11	120 .3		EMERGENCY STOP LEFT SIDE CABINET
			114-				203 .8		
+C-X220:12	-W2056 :12		115		-W2255 :3	+M-S2804:12	120 .5		EMERGENCY STOP LEFT SIDE CABINET
			115+				203 .8		
			115-				203 .8		
+C-X220:13	-W2056 :13		116		-W2255 :4	+M-S2804:22	120 .5		EMERGENCY STOP LEFT SIDE CABINET
			116+				203 .8		
			116-				203 .8		
+C-X220:14	-W2056 :14		117		-W4054 :5	+M-B1210:	048 .2		LEVEL PEROXIDE TANK PREHEATING
			117+				203 .8		
			117-				203 .8		
+C-X220:15	-W2056 :15		118		-W4054 :1	+M-B1210:1	048 .2		LEVEL PEROXIDE TANK PREHEATING
			118+				203 .8		
			118-				203 .8		
+C-X220:16	-W2056 :16		119		-W4054 :2	+M-B1210:2	048 .2		LEVEL PEROXIDE TANK PREHEATING

Drawing remarks

Tetra Pak

Designer	Date	Machine
BMI	07/06/2004	TBA/22-0500

ECM No	Denomination	Page Type
175296	TERMINAL STRIP OVERVIEW	TERMINAL STRIP OVERVIEW

Company	Document No.	Doc. type	Version	Page
Tetra Pak Carton Ambient S.p.A.	2593852-0006	ELD	AE	53

This drawing must not without the consent of Tetra Pak be copied, transmitted or disclosed to any third party.

1 2 3 4 5 6 7 8 9 10

Terminal strip of 2593852-0003

+M-X4000

From	Cable	Internal Jumper	Terminal	External Jumper	Cable	To	Page.Col.	Option	Function text
+C-X220:23	-W2056:23		119+				203 .8		
+C-X220:24	-W2056:24		119-				203 .8		
+C-X220:17	-W2056:17		120		-W4054:3	+M-B1210:3	048 .2		LEVEL PEROXIDE TANK PREHEATING
			120+				203 .8		
			120-				203 .8		
+C-X220:18	-W2056:18		121		-W4054:4	+M-B1210:4	048 .2		LEVEL PEROXIDE TANK PREHEATING
			121+				203 .8		
			121-				203 .8		
+C-X220:19	-W2056:19		122				125 .6		
			122+				125 .2		
			122-				125 .2		
+C-X220:20	-W2056:20		123		-W4431:4	+M-M5430:K1B	125 .6		BELT BRAKE
			123+				125 .2		
			123-				125 .2		
+C-X220:21	-W2056:21		124				125 .6		
			124+				125 .2		
			124-				125 .2		
+C-X220:22	-W2056:22		125				125 .6		
			125+				125 .2		
			125-				125 .2		
+C-X213:1	-W2057:1		126		-W4026:1	+M-X4058:1	158 .3		
			126+				203 .8		
			126-		-W4026:12	+M-X4058:1-	158 .7		
+C-X213:2	-W2057:2		127		-W4026:2	+M-X4058:2	158 .3		
			127+				203 .8		
			127-				203 .8		
+C-X213:3	-W2057:3		128		-W4026:3	+M-X4058:3	158 .3		
			128+				203 .8		
			128-				203 .8		
+C-X213:4	-W2057:4		129		-W4026:4	+M-X4058:4	158 .3		

Drawing remarks

Tetra Pak

Designer: BMI	Date: 07/06/2004	Machine: TBA/22-0500	
ECM No: 175296	Denomination: TERMINAL STRIP OVERVIEW	Page Type: TERMINAL STRIP OVERVIEW	
Company: Tetra Pak Carton Ambient S.p.A.	Document No.: 2593852-0006	Doc. type: ELD	Version: AE	Page: 54

This drawing must not without the consent of Tetra Pak be copied, transmitted or disclosed to any third party.

1 2 3 4 5 6 7 8 9 10

Terminal strip of 2593852-0003

+M-X4000

From	Cable	Internal Jumper	Terminal	External Jumper	Cable	To	Page.Col.	Option	Function text
			129+				203 .8		
			129-				203 .8		
+C-X213:5	-W2057 :5		130		-W4026 :5	+M-X4058:5	158 .3		
			130+				204 .3		
			130-				204 .3		
+C-X213:7	-W2057 :6		131		-W4026 :6	+M-X4058:6	158 .3		
			131+				204 .3		
			131-				204 .3		
+C-X213:8	-W2057 :7		132		-W4026 :7	+M-X4058:7	158 .3		
			132+				204 .3		
			132-				204 .3		
+C-X213:9	-W2057 :8		133		-W4026 :8	+M-X4058:8	158 .3		
			133+				204 .3		
			133-				204 .3		
+C-X213:10	-W2057 :9		134		-W4026 :9	+M-X4058:9	159 .3		
			134+				204 .3		
			134-		-W4026 :13	+M-X4058:6-	158 .7		
+C-X213:11	-W2057 :10		135		-W4026 :10	+M-X4058:10	159 .3		
			135+				204 .3		
			135-				204 .3		
+C-X213:12	-W2057 :11		136		-W4022 :1	+M-Y1210:+24V	157 .5		FILLING H2O2
			136+				204 .3		
			136-		-W4022 :2	+M-Y1210:0V	157 .6		FILLING H2O2
+C-X213:13	-W2057 :12		137		-W2235 :1	+M-Y2106:+24V	157 .5		TUBE FLUSHER
			137+				204 .3		
			137-		-W2235 :2	+M-Y2106:0V	157 .6		TUBE FLUSHER
+C-X213:14	-W2057 :19		138				204 .3		
+C-X213:23	-W2057 :23		138+				204 .3		
+C-X213:24	-W2057 :24		138-				204 .3		
+C-X213:15	-W2057 :14		139		-W4003 :1	+M-X4002:1	081 .6		

Drawing remarks

Tetra Pak

Designer BMI	Date 07/06/2004	Machine TBA/22-0500	
ECM No 175296	Denomination TERMINAL STRIP OVERVIEW	Page Type TERMINAL STRIP OVERVIEW	
Company Tetra Pak Carton Ambient S.p.A.	Document No. 2593852-0006	Doc. type ELD	Version AE	Page 55

This drawing must not without the consent of Tetra Pak be copied, transmitted or disclosed to any third party.

1 2 3 4 5 6 7 8 9 10

Terminal strip of 2593852-0003

+M-X4000

From	Cable	Internal Jumper	Terminal	External Jumper	Cable	To	Page.Col.	Option	Function text
			139+		-W4003:2	+M-X4002:2	081 .2		
			139-		-W4003:3	+M-X4002:3	081 .2		
+C-X213:16	-W2057:15		140		-W4003:4	+M-X4002:4	124 .6		
			140+				204 .3		
			140-				204 .3		
+C-X213:17	-W2057:16		141		-W4003:7	+M-X4002:7	124 .6		
			141+				204 .3		
			141-				204 .3		
+C-X213:18	-W2057:17		142		-W4003:9	+M-X4002:21	081 .6		
			142+		-W4003:10	+M-X4002:22	081 .2		
			142-		-W4003:11	+M-X4002:23	081 .2		
+C-X213:19	-W2057:18		143		-W4431:1	+M-M5430:R	159 .3		BELT BRAKE
			143+				204 .3		
			143-		-W4431:3	+M-M5430:T	022 .9		BELT BRAKE
+C-X213:20	-W2057:20		144		-W4431:2	+M-M5430:24V	022 .9		BELT BRAKE
			144+				204 .3		
			144-				204 .3		
+C-X213:21	-W2057:13		145				204 .3		
			145+				204 .3		
			145-				204 .3		
+C-X213:22	-W2057:22		146				204 .3		
			146+				204 .3		
			146-				204 .3		
			147						
			147+						
			147-						
+C-X214:1	-W2062:1		148		-W4004:3	+M-X4003:3	125 .6		
			148+		-W4004:1	+M-X4003:1	125 .2		
			148-		-W4004:2	+M-X4003:2	125 .2		
+C-X214:2	-W2062:2		149		-W4004:6	+M-X4003:6	125 .6		

Drawing remarks

Tetra Pak

Designer: BMI	Date: 07/06/2004	Machine: TBA/22-0500	
ECM No: 175296	Denomination: TERMINAL STRIP OVERVIEW	Page Type: TERMINAL STRIP OVERVIEW	
Company: Tetra Pak Carton Ambient S.p.A.	Document No.: 2593852-0006	Doc. type: ELD	Version: AE	Page: 56

This drawing must not without the consent of Tetra Pak be copied, transmitted or disclosed to any third party.

1 2 3 4 5 6 7 8 9 10

Terminal strip of 2593852-0003

+M-X4000

From	Cable	Internal Jumper	Terminal	External Jumper	Cable	To	Page.Col.	Option	Function text
			149+		-W4004:4	+M-X4003:4	125 .2		
			149-		-W4004:5	+M-X4003:5	125 .2		
+C-X214:3	-W2062:3		150		-W4004:9	+M-X4003:9	125 .6		
			150+		-W4004:7	+M-X4003:7	125 .2		
			150-		-W4004:8	+M-X4003:8	125 .2		
+C-X214:4	-W2062:4		151		-W4045:BK	+M-B54121:BK	125 .6		RECEIVER QUE AFTER MACHINE
			151+		-W4045:BN	+M-B54121:BN	125 .2		RECEIVER QUE AFTER MACHINE
					-W4046:BN	+M-B54122:BN			EMITTER QUE AFTER MACHINE
			151-		-W4045:BU	+M-B54121:BU	125 .2		RECEIVER QUE AFTER MACHINE
					-W4046:BU	+M-B54122:BU			EMITTER QUE AFTER MACHINE
+C-X214:5	-W2062:5		152				204 .3		
			152+				204 .3		
			152-				204 .3		
+C-X214:6	-W2062:6		153				204 .3		
			153+				204 .3		
			153-				204 .3		
+C-X214:17	-W2062:17		154				120 .2		
			154+				204 .8		
			154-				204 .8		
+C-X214:18	-W2062:18		155				120 .2		
			155+				204 .8		
			155-				204 .8		
+C-X214:19	-W2062:19		156				120 .5		
			156+				204 .8		
			156-				204 .8		
+C-X214:20	-W2062:20		157				120 .5		
			157+				204 .8		
			157-				204 .8		
+C-X214:21	-W2062:21		158				116 .5		
			158+				204 .8		

Drawing remarks

Tetra Pak

Designer BMI	Date 07/06/2004	Machine TBA/22-0500	
ECM No 175296	Denomination TERMINAL STRIP OVERVIEW	Page Type TERMINAL STRIP OVERVIEW	
Company Tetra Pak Carton Ambient S.p.A.	Document No. 2593852-0006	Doc. type ELD	Version AE	Page 57

This drawing must not without the consent of Tetra Pak be copied, transmitted or disclosed to any third party.

1 2 3 4 5 6 7 8 9 10

Terminal strip of 2593852-0003

+M-X4000

From	Cable	Internal Jumper	Terminal	External Jumper	Cable	To	Page.Col.	Option	Function text
			158-				204 .8		
+C-X214:22	-W2062:22		159				116 .6		
+C-X214:23	-W2062:23		159+				204 .8		
+C-X214:24	-W2062:24		159-				108 .2		
+C-X125:⏚	-W2004:GNYE		⏚		-W4033:WH	+M-M1503:WH1	024 .3		TUBE POSITIONING
			⏚		-W4022:YG	+M-Y1210:E	157 .6		FILLING H2O2
+C-X213:⏚	-W2057:GNYE		⏚		-W2235:YG	+M-Y2106:E	157 .6		TUBE FLUSHER
			⏚						
			⏚						
			⏚						
			⏚						
			⏚						
			⏚						
+C-X220:⏚	-W2056:GNYE		⏚		-W4054:GNYE	+M-B1210:⏚	048 .2		LEVEL PEROXIDE TANK PREHEATING

Drawing remarks

Tetra Pak

Designer BMI	Date 07/06/2004	Machine TBA/22-0500	
ECM No 175296	Denomination TERMINAL STRIP OVERVIEW	Page Type TERMINAL STRIP OVERVIEW	
Company Tetra Pak Carton Ambient S.p.A.	Document No. 2593852-0006	Doc. type ELD	Version AE	Page 58

This drawing must not without the consent of Tetra Pak
be copied, transmitted or disclosed to any third party.

1 | 2 | 3 | 4 | 5 | 6 | 7 | 8 | 9 | 10

Terminal strip of 2593852-0003

+M-X4002

From	Cable	Internal Jumper	Terminal	External Jumper	Cable	To	Page.Col.	Option	Function text
+M-X4000:139	-W4003:1		1		-W4030:BK	+M-B4200:BK	081 .5		ZERO JAW SENSOR
+M-X4000:139+	-W4003:2		2		-W4030:BN	+M-B4200:BN	081 .3		
									ZERO JAW SENSOR
+M-X4000:139-	-W4003:3		3		-W4030:BU	+M-B4200:BU	081 .3		
									ZERO JAW SENSOR
+M-X4000:140	-W4003:4		4		-W4031:BK	+M-B4102:BK	124 .5		CRANK POSITION JUM
			5		-W4031:BN	+M-B4102:BN	124 .3		
									CRANK POSITION JUM
			6		-W4031:BU	+M-B4102:BU	124 .3		
									CRANK POSITION JUM
+M-X4000:141	-W4003:7		7		-W4032:BK	+M-B4202:BK	124 .5		HOME POSITION DCS
			8		-W4032:BN	+M-B4202:BN	124 .3		
									HOME POSITION DCS
			9		-W4032:BU	+M-B4202:BU	124 .3		
									HOME POSITION DCS
+M-X4001:02	-W4021:4		10		-W4019:RD	+M-B4103:RD	080 .3		B4103 JAW SYSTEM POSITION
+M-X4001:09	-W4021:11		11		-W4019:BU	+M-B4103:BU	080 .3		B4103 JAW SYSTEM POSITION
+M-X4001:01	-W4021:1		12		-W4019:WH	+M-B4103:WH	080 .3		B4103 JAW SYSTEM POSITION
+M-X4001:03	-W4021:5		13		-W4019:BN	+M-B4103:BN	080 .3		B4103 JAW SYSTEM POSITION
+M-X4001:04	-W4021:6		14		-W4019:GN	+M-B4103:GN	080 .3		B4103 JAW SYSTEM POSITION
+M-X4001:05	-W4021:7		15		-W4019:YE	+M-B4103:YE	080 .3		B4103 JAW SYSTEM POSITION
+M-X4001:06	-W4021:8		16		-W4019:GY	+M-B4103:GY	080 .3		B4103 JAW SYSTEM POSITION
+M-X4001:07	-W4021:9		17		-W4019:PK	+M-B4103:PK	080 .3		B4103 JAW SYSTEM POSITION
+M-X4001:08	-W4021:10		18		-W4019:BK	+M-B4103:BK	080 .3		B4103 JAW SYSTEM POSITION
+M-X4001:010	-W4021:2		19		-W4019:VT	+M-B4103:VT	080 .3		B4103 JAW SYSTEM POSITION
+M-X4001:011	-W4021:3		20		-W4019:GY/PK	+M-B4103:GY/PK	080 .3		B4103 JAW SYSTEM POSITION
+M-X4000:142	-W4003:9		21		-W4041:BK	+M-B54051:BK	081 .5		RECEIVER WASTE BOX JAM

Drawing remarks

Tetra Pak

Designer: BMI	Date: 07/06/2004	Machine: TBA/22-0500	
ECM No: 175296	Denomination: TERMINAL STRIP OVERVIEW	Page Type: TERMINAL STRIP OVERVIEW	
Company: Tetra Pak Carton Ambient S.p.A.	Document No.: 2593852-0006	Doc. type: ELD	Version: AE	Page: 59

This drawing must not without the consent of Tetra Pak be copied, transmitted or disclosed to any third party.

1 2 3 4 5 6 7 8 9 10

Terminal strip of 2593852-0003

+M-X4002

From	Cable	Internal Jumper	Terminal	External Jumper	Cable	To	Page.Col.	Option	Function text
+M-X4000:142+	-W4003:10		22		-W4041:BN	+M-B54051:BN	081 .3		RECEIVER WASTE BOX JAM
					-W4042:BN	+M-B54052:BN			EMITTER WASTE BOX JAM
+M-X4000:142-	-W4003:11		23		-W4041:BU	+M-B54051:BU	081 .3		RECEIVER WASTE BOX JAM
					-W4042:BU	+M-B54052:BU			EMITTER WASTE BOX JAM
			24						
+M-X4001:012	-W4021:YG		⏚		-W4019:RD/BU	+M-B4103:RD/BU	080 .3		B4103 JAW SYSTEM POSITION

Drawing remarks

Tetra Pak

Designer BMI	Date 07/06/2004	Machine TBA/22-0500	
ECM No 175296	Denomination TERMINAL STRIP OVERVIEW	Page Type TERMINAL STRIP OVERVIEW	
Company Tetra Pak Carton Ambient S.p.A.	Document No. 2593852-0006	Doc. type ELD	Version AE	Page 60

This drawing must not without the consent of Tetra Pak be copied, transmitted or disclosed to any third party.

1 2 3 4 5 6 7 8 9 10

Terminal strip of 2593852-0003

+M-X4003

From	Cable	Internal Jumper	Terminal	External Jumper	Cable	To	Page.Col.	Option	Function text
+M-X4000:148+	-W4004:1		1		-W4040:BN	+M-B5103:BN	125 .3		HOME POSITION FFU
+M-X4000:148-	-W4004:2		2		-W4040:BU	+M-B5103:BU	125 .3		HOME POSITION FFU
+M-X4000:148	-W4004:3		3		-W4040:BK	+M-B5103:BK	125 .5		HOME POSITION FFU
+M-X4000:149+	-W4004:4		4		-W4047:BN	+M-B54123:BN	125 .3		RECEIVER QUE AFTER MACHINE 2
					-W4048:BN	+M-B54124:BN			EMITTER QUE AFTER MACHINE 2
+M-X4000:149-	-W4004:5		5		-W4047:BU	+M-B54123:BU	125 .3		RECEIVER QUE AFTER MACHINE 2
					-W4048:BU	+M-B54124:BU			EMITTER QUE AFTER MACHINE 2
+M-X4000:149	-W4004:6		6		-W4047:BK	+M-B54123:BK	125 .5		RECEIVER QUE AFTER MACHINE 2
+M-X4000:150+	-W4004:7		7		-W4043:BN	+M-B54102:BN	125 .3		RECEIVER CONGESTION GUARD EXT. CO
					-W4044:BN	+M-B54101:BN			EMITTER CONGESTION GUARD EXT. CON
+M-X4000:150-	-W4004:8		8		-W4043:BU	+M-B54102:BU	125 .3		RECEIVER CONGESTION GUARD EXT. CO
					-W4044:BU	+M-B54101:BU			EMITTER CONGESTION GUARD EXT. CON
+M-X4000:150	-W4004:9		9		-W4043:BK	+M-B54102:BK	125 .5		RECEIVER CONGESTION GUARD EXT. CO
			10						
			11						
			12						
			13						
			14						
			15						
			16						
			17						
			18						
			19						
			20						
			21						
			22						
			23						
			24						
			⏚						

Drawing remarks

Tetra Pak

Designer BMI	Date 07/06/2004	Machine TBA/22-0500	
ECM No 175296	Denomination TERMINAL STRIP OVERVIEW	Page Type TERMINAL STRIP OVERVIEW	
Company Tetra Pak Carton Ambient S.p.A.	Document No. 2593852-0006	Doc. type ELD	Version AE	Page 61

This drawing must not without the consent of Tetra Pak
be copied, transmitted or disclosed to any third party.

1 2 3 4 5 6 7 8 9 10

Terminal strip of 2593852-0003

+M-X4004

From	Cable	Internal Jumper	Terminal	External Jumper	Cable	To	Page.Col.	Option	Function text
+C-X116:1	-W4005:1		1		-W2017:1	+M-X5002:1	010 .2		
+C-X116:2	-W4005:2		2		-W2017:2	+M-X5002:2	010 .3		
+C-X116:3	-W4005:3		3		-W2017:3	+M-X5003:1	010 .4		
+C-X116:4	-W4005:4		4		-W2017:4	+M-X5003:2	010 .5		
			5						
			6						
			7						
			8						
			9						
			10						
			11						
			12						
			13						
			14						
			15						
+C-X117:1	-W4006:1		16		-W2018:1	+M-X5004:1	010 .7		
+C-X117:2	-W4006:2		17		-W2018:2	+M-X5004:2	010 .8		
+C-X117:3	-W4006:3		18		-W2018:3	+M-X5005:1	010 .9		
+C-X117:4	-W4006:4		19		-W2018:4	+M-X5005:2	010 .10		
			20						
			21						
			22						
			23						
			24						
+C-X116:⏚	-W4005:GNYE		⏚		-W2018:GNYE	GND:	010 .6		
+C-X117:⏚	-W4006:GNYE				-W2017:GNYE	GND:			

Drawing remarks

Tetra Pak

Designer BMI	Date 07/06/2004	Machine TBA/22-0500	
ECM No 175296	Denomination TERMINAL STRIP OVERVIEW	Page Type TERMINAL STRIP OVERVIEW	
Company Tetra Pak Carton Ambient S.p.A.	Document No. 2593852-0006	Doc. type ELD	Version AE	Page 62

This drawing must not without the consent of Tetra Pak be copied, transmitted or disclosed to any third party.

1 2 3 4 5 6 7 8 9 10

Terminal strip of 2593852-0003

+M-X4005

From	Cable	Internal Jumper	Terminal	External Jumper	Cable	To	Page.Col.	Option	Function text
+C-X207:1	-W1207:1		1		-W4128:BK	+M-B4128:BK	173 .6		START POSITION C1
+C-X207:2	-W1207:2		2		-W4128:BN	+M-B4128:BN	173 .3		START POSITION C1
+C-X207:3	-W1207:3		3		-W4128:BU	+M-B4128:BU	173 .3		START POSITION C1
+C-X207:4	-W1207:4		4		-W4129:BK	+M-B4129:BK	173 .6		END POSITION C1
			5		-W4129:BN	+M-B4129:BN	173 .3		END POSITION C1
			6		-W4129:BU	+M-B4129:BU	173 .3		END POSITION C1
+C-X207:5	-W1207:5		7		-W4131:BK	+M-B4131:BK	173 .6		START POSITION C2
			8		-W4131:BN	+M-B4131:BN	173 .3		START POSITION C2
			9		-W4131:BU	+M-B4131:BU	173 .3		START POSITION C2
+C-X207:6	-W1207:6		10		-W4132:BK	+M-B4132:BK	173 .6		END POSITION C2
			11		-W4132:BN	+M-B4132:BN	173 .3		END POSITION C2
			12		-W4132:BU	+M-B4132:BU	173 .3		END POSITION C2
+C-X207:7	-W1207:7		13		-W4134:BK	+M-B4134:BK	173 .6		START POSITION C3
			14		-W4134:BN	+M-B4134:BN	173 .3		START POSITION C3
			15		-W4134:BU	+M-B4134:BU	173 .3		START POSITION C3
+C-X207:8	-W1207:8		16		-W4135:BK	+M-B4135:BK	174 .6		END POSITION C3
			17		-W4135:BN	+M-B4135:BN	174 .3		END POSITION C3
			18		-W4135:BU	+M-B4135:BU	174 .3		END POSITION C3
+C-X207:9	-W1207:9		19		-W4137:BK	+M-B4137:BK	174 .6		START POSITION C4
			20		-W4137:BN	+M-B4137:BN	174 .3		START POSITION C4
			21		-W4137:BU	+M-B4137:BU	174 .3		START POSITION C4
+C-X207:10	-W1207:10		22		-W4138:BK	+M-B4138:BK	174 .6		END POSITION C4
			23		-W4138:BN	+M-B4138:BN	174 .3		END POSITION C4
			24		-W4138:BU	+M-B4138:BU	174 .3		END POSITION C4

Drawing remarks

Tetra Pak

Designer BMI	Date 07/06/2004	Machine TBA/22-0500	
ECM No 175296	Denomination TERMINAL STRIP OVERVIEW	Page Type TERMINAL STRIP OVERVIEW	
Company Tetra Pak Carton Ambient S.p.A.	Document No. 2593852-0006	Doc. type ELD	Version AE	Page 63

This drawing must not without the consent of Tetra Pak be copied, transmitted or disclosed to any third party.

1 2 3 4 5 6 7 8 9 10

Terminal strip of 2593852-0003

+M-X4008

From	Cable	Internal Jumper	Terminal	External Jumper	Cable	To	Page.Col.	Option	Function text
+C-X206:1	-W1206:1		1		-W4125:BK	+M-B4125:BK	173 .6		GREASING LEVEL SENSOR LOW
			1+		-W4125:BN	+M-B4125:BN	173 .3		GREASING LEVEL SENSOR LOW
			1-		-W4125:BU	+M-B4125:BU	173 .3		GREASING LEVEL SENSOR LOW
+C-X206:2	-W1206:2		2		-W4126:BK	+M-B4126:BK	173 .6		FF GREASING SENSOR
			2+		-W4126:BN	+M-B4126:BN	173 .3		FF GREASING SENSOR
			2-		-W4126:BU	+M-B4126:BU	173 .3		FF GREASING SENSOR
+C-X206:3	-W1206:3		3		-W4127:BK	+M-B4127:BK	173 .6		CUTTING CAM GREASING SENSOR
			3+		-W4127:BN	+M-B4127:BN	173 .3		CUTTING CAM GREASING SENSOR
			3-		-W4127:BU	+M-B4127:BU	173 .3		CUTTING CAM GREASING SENSOR
+C-X206:4	-W1206:4		4		-W4122:1	+M-Y4263:+24V	182 .3		FF LINE
			4+				204 .8		
			4-		-W4122:2	+M-Y4263:0V	182 .6		FF LINE
+C-X206:5	-W1206:5		5		-W4123:1	+M-Y4264:+24V	182 .3		CUTTING CAM LINE
			5+				204 .8		
			5-		-W4123:2	+M-Y4264:0V	182 .6		CUTTING CAM LINE
+C-X206:6	-W1206:6		6		-W4124:1	+M-Y4265:+24V	182 .3		CYLINDERS JAW LINE
			6+				204 .8		
			6-		-W4124:2	+M-Y4265:0V	182 .6		CYLINDERS JAW LINE
+C-X206:7	-W1206:7		7		-W4121:1	+M-X4121:1	182 .3		
			7+				204 .8		
			7-		-W4121:12	+M-X4121:1-	182 .6		
+C-X206:8	-W1206:8		8		-W4121:2	+M-X4121:2	182 .3		
			8+				204 .8		
			8-				204 .8		
+C-X206:9	-W1206:9		9		-W4142:1	+M-Y4266:24V	185 .3		GREASING RECYCLE
			9+				204 .8		
			9-		-W4142:2	+M-Y4266:0V	185 .6		GREASING RECYCLE
+C-X206:10	-W1206:10		10		-W4141:BK	+M-B4141:BK	175 .6		GREASING LEVEL SENSOR FULL
			10+		-W4141:BN	+M-B4141:BN	175 .3		GREASING LEVEL SENSOR FULL
			10-		-W4141:BU	+M-B4141:BU	175 .3		GREASING LEVEL SENSOR FULL

Drawing remarks

Tetra Pak

Designer BMI	Date 07/06/2004	Machine TBA/22-0500	
ECM No 175296	Denomination TERMINAL STRIP OVERVIEW	Page Type TERMINAL STRIP OVERVIEW	
Company Tetra Pak Carton Ambient S.p.A.	Document No. 2593852-0006	Doc. type ELD	Version AE	Page 64

This drawing must not without the consent of Tetra Pak be copied, transmitted or disclosed to any third party.

1 2 3 4 5 6 7 8 9 10

Terminal strip of 2593852-0003

+M-X4008

From	Cable	Internal Jumper	Terminal	External Jumper	Cable	To	Page.Col.	Option	Function text
+C-X206:11	-W1206:11		11				204 .7		
			11+				204 .8		
			11-				204 .8		
+C-X206:12	-W1206:12		12				204 .7		
+C-X206:23	-W1206:23		12+				204 .8		
+C-X206:24	-W1206:24		12-				204 .8		
			20						
			21						
			⏚						
			⏚		-W4122:GNYE	+M-Y4263:E	182 .6		FF LINE
			⏚		-W4123:GNYE	+M-Y4264:E	182 .6		CUTTING CAM LINE
			⏚		-W4124:GNYE	+M-Y4265:E	182 .6		CYLINDERS JAW LINE

Drawing remarks

Tetra Pak

Designer BMI	Date 07/06/2004	Machine TBA/22-0500	
ECM No 175296	Denomination TERMINAL STRIP OVERVIEW	Page Type TERMINAL STRIP OVERVIEW	
Company Tetra Pak Carton Ambient S.p.A.	Document No. 2593852-0006	Doc. type ELD	Version AE	Page 65

This drawing must not without the consent of Tetra Pak be copied, transmitted or disclosed to any third party.

1 2 3 4 5 6 7 8 9 10

Terminal strip of 2593852-0003

+M-X4010

From	Cable	Internal Jumper	Terminal	External Jumper	Cable	To	Page.Col.	Option	Function text
+C-X302:+	-W4012:YE		+		-W2021:YE	+M-X5006:+	087 .3		
+C-X302:-	-W4012:RD		-		-W2021:RD	+M-X5006:-	087 .3		

Drawing remarks

Tetra Pak

Designer BMI	Date 07/06/2004	Machine TBA/22-0500	
ECM No 175296	Denomination TERMINAL STRIP OVERVIEW	Page Type TERMINAL STRIP OVERVIEW	
Company Tetra Pak Carton Ambient S.p.A.	Document No. 2593852-0006	Doc. type ELD	Version AE	Page 66

This drawing must not without the consent of Tetra Pak
be copied, transmitted or disclosed to any third party.

1 2 3 4 5 6 7 8 9 10

Terminal strip of 2593852-0003

+M-X4011

From	Cable	Internal Jumper	Terminal	External Jumper	Cable	To	Page.Col.	Option	Function text
+C-X303:+	-W4013:YE		+		-W2022:YE	+M-X5007:+	087 .3		
+C-X303:-	-W4013:RD		-		-W2022:RD	+M-X5007:-	087 .3		

Drawing remarks

Tetra Pak

Designer BMI	Date 07/06/2004	Machine TBA/22-0500	
ECM No 175296	Denomination TERMINAL STRIP OVERVIEW	Page Type TERMINAL STRIP OVERVIEW	
Company Tetra Pak Carton Ambient S.p.A.	Document No. 2593852-0006	Doc. type ELD	Version AE	Page 67

This drawing must not without the consent of Tetra Pak be copied, transmitted or disclosed to any third party.

1 2 3 4 5 6 7 8 9 10

Terminal strip of 2593852-0003

+M-X4012

From	Cable	Internal Jumper	Terminal	External Jumper	Cable	To	Page.Col.	Option	Function text
+C-X304:+	-W4014:YE		+		-W2023:YE	+M-X5008:+	087 .3		
+C-X304:-	-W4014:RD		-		-W2023:RD	+M-X5008:-	087 .3		

Drawing remarks

Tetra Pak

Designer BMI	Date 07/06/2004	Machine TBA/22-0500	
ECM No 175296	Denomination TERMINAL STRIP OVERVIEW	Page Type TERMINAL STRIP OVERVIEW	
Company Tetra Pak Carton Ambient S.p.A.	Document No. 2593852-0006	Doc. type ELD	Version AE	Page 68

This drawing must not without the consent of Tetra Pak be copied, transmitted or disclosed to any third party.

1 2 3 4 5 6 7 8 9 10

Terminal strip of 2593852-0003

+M-X4013

From	Cable	Internal Jumper	Terminal	External Jumper	Cable	To	Page.Col.	Option	Function text
+C-X305:+	-W4015:YE		+		-W2024:YE	+M-X5009:+	087 .3		
+C-X305:-	-W4015:RD		-		-W2024:RD	+M-X5009:-	087 .3		

Drawing remarks

Tetra Pak

Designer BMI	Date 07/06/2004	Machine TBA/22-0500	
ECM No 175296	Denomination TERMINAL STRIP OVERVIEW	Page Type TERMINAL STRIP OVERVIEW	
Company Tetra Pak Carton Ambient S.p.A.	Document No. 2593852-0006	Doc. type ELD	Version AE	Page 69

This drawing must not without the consent of Tetra Pak
be copied, transmitted or disclosed to any third party.

1 2 3 4 5 6 7 8 9 10

Terminal strip of 2593852-0003

+M-X4050

From	Cable	Internal Jumper	Terminal	External Jumper	Cable	To	Page.Col.	Option	Function text
+C-X356:A	-W4011:PK		1			+M-M4302:A	021 .3		DESIGN CORRECTION MOTOR
+C-X356:B	-W4011:GY		2			+M-M4302:B	021 .3		DESIGN CORRECTION MOTOR
+C-X356:C	-W4011:YE		3			+M-M4302:C	021 .3		DESIGN CORRECTION MOTOR
+C-X356:D	-W4011:GN		4			+M-M4302:D	021 .4		DESIGN CORRECTION MOTOR
+C-X356:E	-W4011:WH		5			+M-M4302:E	021 .4		DESIGN CORRECTION MOTOR
+C-X356:F	-W4011:BN		6			+M-M4302:F	021 .4		DESIGN CORRECTION MOTOR
+C-X356:G	-W4011:SH		⏚			+M-M4302:H	021 .3		DESIGN CORRECTION MOTOR
+C-X356:G	-W4011:SH								
+C-X356:G	-W4011:SH								

Drawing remarks

Tetra Pak

Designer BMI	Date 07/06/2004	Machine TBA/22-0500	
ECM No 175296	Denomination TERMINAL STRIP OVERVIEW	Page Type TERMINAL STRIP OVERVIEW	
Company Tetra Pak Carton Ambient S.p.A.	Document No. 2593852-0006	Doc. type ELD	Version AE	Page 70

This drawing must not without the consent of Tetra Pak
be copied, transmitted or disclosed to any third party.

1 2 3 4 5 6 7 8 9 10

Terminal strip of 2593852-0003

+M-X4051

From	Cable	Internal Jumper	Terminal	External Jumper	Cable	To	Page.Col.	Option	Function text
+C-X354:A	-W4010:PK		1			+M-M4304:A	020 .4		FFU MOTOR
+C-X354:B	-W4010:GY		2			+M-M4304:B	020 .4		FFU MOTOR
+C-X354:C	-W4010:YE		3			+M-M4304:C	020 .4		FFU MOTOR
+C-X354:D	-W4010:GN		4			+M-M4304:D	020 .4		FFU MOTOR
+C-X354:E	-W4010:WH		5			+M-M4304:E	020 .4		FFU MOTOR
+C-X354:F	-W4010:BN		6			+M-M4304:F	020 .4		FFU MOTOR
+C-X354:G	-W4010:SH		⏚			+M-M4304:H	020 .3		FFU MOTOR
+C-X354:G	-W4010:SH								
+C-X354:G	-W4010:SH								

Drawing remarks

Tetra Pak

Designer BMI	Date 07/06/2004	Machine TBA/22-0500	
ECM No 175296	Denomination TERMINAL STRIP OVERVIEW	Page Type TERMINAL STRIP OVERVIEW	
Company Tetra Pak Carton Ambient S.p.A.	Document No. 2593852-0006	Doc. type ELD	Version AE	Page 71

This drawing must not without the consent of Tetra Pak be copied, transmitted or disclosed to any third party.

1 2 3 4 5 6 7 8 9 10

Terminal strip of 2593852-0003

+M-X4054

From	Cable	Internal Jumper	Terminal	External Jumper	Cable	To	Page.Col.	Option	Function text
+C-X031:1	-W4016:1		1		-W4020:RD	+M-B43011:+	053 .7		DESIGN CORRECTION PHOTOCELL BAR C
+C-X031:2	-W4016:2		2		-W4020:BU	+M-B43011:-	053 .7		DESIGN CORRECTION PHOTOCELL BAR C
+C-X031:3	-W4016:3		3		-W4020:YE	+M-B43011:ET	053 .7		DESIGN CORRECTION PHOTOCELL BAR C
+C-X031:4	-W4016:4		4		-W4020:GY	+M-B43011:SIGN	053 .7		DESIGN CORRECTION PHOTOCELL BAR C
+C-X031:⏚	-W4016:SH		5				053 .7		

Drawing remarks

Tetra Pak

Designer	Date	Machine
BMI	07/06/2004	TBA/22-0500

ECM No	Denomination	Page Type
175296	TERMINAL STRIP OVERVIEW	TERMINAL STRIP OVERVIEW

Company	Document No.	Doc. type	Version	Page
Tetra Pak Carton Ambient S.p.A.	2593852-0006	ELD	AE	72

This drawing must not without the consent of Tetra Pak be copied, transmitted or disclosed to any third party.

1 2 3 4 5 6 7 8 9 10

Terminal strip of 2593852-0003

+M-X4055

From	Cable	Internal Jumper	Terminal	External Jumper	Cable	To	Page.Col.	Option	Function text
+C-X031:5	-W4017:1		1		-W4023:RD	+M-B43012:+	053 .7		DESIGN CORRECTION PHOTOCELL BAR C
+C-X031:6	-W4017:2		2		-W4023:BU	+M-B43012:-	053 .7		DESIGN CORRECTION PHOTOCELL BAR C
+C-X031:7	-W4017:3		3		-W4023:YE	+M-B43012:ET	053 .7		DESIGN CORRECTION PHOTOCELL BAR C
+C-X031:8	-W4017:4		4		-W4023:GY	+M-B43012:SIGN	053 .7		DESIGN CORRECTION PHOTOCELL BAR C
+C-X031:⏚	-W4017:SH		5				053 .7		

Drawing remarks

Tetra Pak

Designer BMI	Date 07/06/2004	Machine TBA/22-0500		
ECM No 175296	Denomination TERMINAL STRIP OVERVIEW	Page Type TERMINAL STRIP OVERVIEW		
Company Tetra Pak Carton Ambient S.p.A.	Document No. 2593852-0006	Doc. type ELD	Version AE	Page 73

This drawing must not without the consent of Tetra Pak be copied, transmitted or disclosed to any third party.

1 2 3 4 5 6 7 8 9 10

Terminal strip of 2593852-0003

+M-X4056

From	Cable	Internal Jumper	Terminal	External Jumper	Cable	To	Page.Col.	Option	Function text
+C-X352:A	-W4081:PK		1			+M-M4105:A	019 .4		MAIN-MOTOR
+C-X352:B	-W4081:GY		2			+M-M4105:B	019 .4		MAIN-MOTOR
+C-X352:C	-W4081:YE		3			+M-M4105:C	019 .4		MAIN-MOTOR
+C-X352:D	-W4081:GN		4			+M-M4105:D	019 .4		MAIN-MOTOR
+C-X352:E	-W4081:WH		5			+M-M4105:E	019 .4		MAIN-MOTOR
+C-X352:F	-W4081:BN		6			+M-M4105:F	019 .4		MAIN-MOTOR
+C-X352:G	-W4081:SH		⏚			+M-M4105:H	019 .3		MAIN-MOTOR
+C-X352:G	-W4081:SH								
+C-X352:G	-W4081:SH								

Drawing remarks

Tetra Pak

Designer BMI	Date 07/06/2004	Machine TBA/22-0500	
ECM No 175296	Denomination TERMINAL STRIP OVERVIEW	Page Type TERMINAL STRIP OVERVIEW	
Company Tetra Pak Carton Ambient S.p.A.	Document No. 2593852-0006	Doc. type ELD	Version AE	Page 74

This drawing must not without the consent of Tetra Pak be copied, transmitted or disclosed to any third party.

Terminal strip of 2593852-0003

+M-X4058

From	Cable	Internal Jumper	Terminal	External Jumper	Cable	To	Page.Col.	Option	Function text
+M-X4000:126	-W4026:1		1				158 .4		
+M-X4000:126-	-W4026:12		1-				158 .6		
+M-X4000:127	-W4026:2		2			+M-Y2104:+24V	158 .4		AIR TUBE FLUSHING / FF FLUSHING
			2-			+M-Y2104:0V	158 .6		AIR TUBE FLUSHING / FF FLUSHING
+M-X4000:128	-W4026:3		3				158 .4		
			3-				158 .6		
+M-X4000:129	-W4026:4		4			+M-Y5504:1	158 .4		OUT FEED OF WASTE IN FRONT
			4-			+M-Y5504:2	158 .6		OUT FEED OF WASTE IN FRONT
+M-X4000:130	-W4026:5		5				158 .4		
			5-				158 .6		
+M-X4000:131	-W4026:6		6			+M-Y5501:1	158 .4		DROP CHUTE, FFU
+M-X4000:134-	-W4026:13		6-			+M-Y5501:2	158 .6		DROP CHUTE, FFU
+M-X4000:132	-W4026:7		7				158 .4		
			7-				158 .6		
+M-X4000:133	-W4026:8		8			+M-Y1220:1	158 .4		FILLING PEROXIDE BATH
			8-			+M-Y1220:2	158 .6		FILLING PEROXIDE BATH
+M-X4000:134	-W4026:9		9			+M-Y1221:+24V	159 .4		DRAINING PEROXIDE BATH
			9-			+M-Y1221:0V	159 .6		DRAINING PEROXIDE BATH
+M-X4000:135	-W4026:10		10			+M-Y5306:+24V	159 .4		WASTE BOX BLOWING
			10-			+M-Y5306:0V	159 .6		WASTE BOX BLOWING
			⏚				158 .6		
			⏚			+M-Y2104:E	158 .6		AIR TUBE FLUSHING / FF FLUSHING
			⏚				158 .6		
			⏚			+M-Y5504:E	158 .6		OUT FEED OF WASTE IN FRONT
			⏚				158 .6		
			⏚			+M-Y5501:E	158 .6		DROP CHUTE, FFU
			⏚				158 .6		
			⏚			+M-Y1220:E	158 .6		FILLING PEROXIDE BATH
			⏚			+M-Y1221:E	159 .6		DRAINING PEROXIDE BATH
			⏚			+M-Y5306:E	159 .6		WASTE BOX BLOWING

Drawing remarks

Tetra Pak

Designer: BMI	Date: 07/06/2004	Machine: TBA/22-0500	
ECM No: 175296	Denomination: TERMINAL STRIP OVERVIEW	Page Type: TERMINAL STRIP OVERVIEW	
Company: Tetra Pak Carton Ambient S.p.A.	Document No.: 2593852-0006	Doc. type: ELD	Version: AE / Page: 75

This drawing must not without the consent of Tetra Pak
be copied, transmitted or disclosed to any third party.

1 2 3 4 5 6 7 8 9 10

Terminal strip of 2593852-0003

+M-X4059

From	Cable	Internal Jumper	Terminal	External Jumper	Cable	To	Page.Col.	Option	Function text
+M-X4000:101	-W4027:1		1			+M-Y4200:+24V	159 .4		FLAP HEATING BOTTOM LEFT
+M-X4000:101-	-W4027:12		1-			+M-Y4200:0V	159 .6		FLAP HEATING BOTTOM LEFT
+M-X4000:102	-W4027:2		2			+M-Y4210:+24V	159 .4		FLAP HEATING BOTTOM LEFT
			2-			+M-Y4210:0V	159 .6		FLAP HEATING BOTTOM LEFT
+M-X4000:103	-W4027:3		3			+M-Y4220:+24V	159 .4		FLAP HEATING TOP RIGHT
			3-			+M-Y4220:0V	159 .6		FLAP HEATING TOP RIGHT
+M-X4000:104	-W4027:4		4			+M-Y4230:+24V	159 .4		FLAP HEATING TOP LEFT
			4-			+M-Y4230:0V	159 .6		FLAP HEATING TOP LEFT
			⏚			+M-Y4200:E	159 .6		FLAP HEATING BOTTOM LEFT
			⏚			+M-Y4210:E	159 .6		FLAP HEATING BOTTOM LEFT
			⏚			+M-Y4220:E	159 .6		FLAP HEATING TOP RIGHT
			⏚			+M-Y4230:E	159 .6		FLAP HEATING TOP LEFT

Drawing remarks

Tetra Pak

Designer BMI	Date 07/06/2004	Machine TBA/22-0500	
ECM No 175296	Denomination TERMINAL STRIP OVERVIEW	Page Type TERMINAL STRIP OVERVIEW	
Company Tetra Pak Carton Ambient S.p.A.	Document No. 2593852-0006	Doc. type ELD	Version AE	Page 76

This drawing must not without the consent of Tetra Pak be copied, transmitted or disclosed to any third party.

1 2 3 4 5 6 7 8 9 10

Terminal strip of 2593852-0003

+M-X4071

From	Cable	Internal Jumper	Terminal	External Jumper	Cable	To	Page.Col.	Option	Function text
+C-X513:1	-W503:1		1			+M-T4309:	012 .6		

Drawing remarks

Tetra Pak

Designer BMI	Date 07/06/2004	Machine TBA/22-0500		
ECM No 175296	Denomination TERMINAL STRIP OVERVIEW	Page Type TERMINAL STRIP OVERVIEW		
Company Tetra Pak Carton Ambient S.p.A.	Document No. 2593852-0006	Doc. type ELD	Version AE	Page 77

This drawing must not without the consent of Tetra Pak
be copied, transmitted or disclosed to any third party.

1 2 3 4 5 6 7 8 9 10

Terminal strip of 2593852-0003

+M-X4073

From	Cable	Internal Jumper	Terminal	External Jumper	Cable	To	Page.Col.	Option	Function text
+C-X514:1	-W504:1		1			+M-T4310:	012 .7		

Drawing remarks

Tetra Pak

Designer BMI	Date 07/06/2004	Machine TBA/22-0500	
ECM No 175296	Denomination TERMINAL STRIP OVERVIEW	Page Type TERMINAL STRIP OVERVIEW	
Company Tetra Pak Carton Ambient S.p.A.	Document No. 2593852-0006	Doc. type ELD	Version AE	Page 78

This drawing must not without the consent of Tetra Pak be copied, transmitted or disclosed to any third party.

1 2 3 4 5 6 7 8 9 10

Terminal strip of 2593852-0003

+M-X4121

From	Cable	Internal Jumper	Terminal	External Jumper	Cable	To	Page.Col.	Option	Function text
+M-X4008:7	-W4121:1		1			+M-Y4260:+24V	182 .4		GREASING CYLINDERS
+M-X4008:7-	-W4121:12		1-			+M-Y4260:0V	182 .5		GREASING CYLINDERS
+M-X4008:8	-W4121:2		2			+M-Y4262:+24V	182 .4		REFILLING GREASING TANK
			2-			+M-Y4262:0V	182 .5		REFILLING GREASING TANK
			3						
			3-						

Drawing remarks

Tetra Pak

Designer BMI	Date 07/06/2004	Machine TBA/22-0500	
ECM No 175296	Denomination TERMINAL STRIP OVERVIEW	Page Type TERMINAL STRIP OVERVIEW	
Company Tetra Pak Carton Ambient S.p.A.	Document No. 2593852-0006	Doc. type ELD	Version AE	Page 79

This drawing must not without the consent of Tetra Pak be copied, transmitted or disclosed to any third party.

1 2 3 4 5 6 7 8 9 10

Terminal strip of 2593852-0003

+M-X5002

From	Cable	Internal Jumper	Terminal	External Jumper	Cable	To	Page.Col.	Option	Function text
+M-X4004:1	-W2017:1		1			+M-R5307:1	010 .2		TOP LEFT
+M-X4004:2	-W2017:2		2			+M-R5307:2	010 .3		TOP LEFT

Drawing remarks

Tetra Pak

Designer BMI	Date 07/06/2004	Machine TBA/22-0500	
ECM No 175296	Denomination TERMINAL STRIP OVERVIEW	Page Type TERMINAL STRIP OVERVIEW	
Company Tetra Pak Carton Ambient S.p.A.	Document No. 2593852-0006	Doc. type ELD	Version AE	Page 80

This drawing must not without the consent of Tetra Pak
be copied, transmitted or disclosed to any third party.

1 | 2 | 3 | 4 | 5 | 6 | 7 | 8 | 9 | 10

Terminal strip of 2593852-0003

+M-X5003

From	Cable	Internal Jumper	Terminal	External Jumper	Cable	To	Page.Col.	Option	Function text
+M-X4004:3	-W2017:3		1			+M-R5308:1	010 .4		TOP RIGHT
+M-X4004:4	-W2017:4		2			+M-R5308:2	010 .5		TOP RIGHT

Drawing remarks

Tetra Pak

Designer BMI	Date 07/06/2004	Machine TBA/22-0500	
ECM No 175296	Denomination TERMINAL STRIP OVERVIEW	Page Type TERMINAL STRIP OVERVIEW	
Company Tetra Pak Carton Ambient S.p.A.	Document No. 2593852-0006	Doc. type ELD	Version AE	Page 81

This drawing must not without the consent of Tetra Pak be copied, transmitted or disclosed to any third party.

1 2 3 4 5 6 7 8 9 10

Terminal strip of 2593852-0003

+M-X5004

From	Cable	Internal Jumper	Terminal	External Jumper	Cable	To	Page.Col.	Option	Function text
+M-X4004:16	-W2018:1		1			+M-R5309:1	010 .7		BOTTOM LEFT
+M-X4004:17	-W2018:2		2			+M-R5309:2	010 .8		BOTTOM LEFT

Drawing remarks

Tetra Pak

Designer BMI	Date 07/06/2004	Machine TBA/22-0500	
ECM No 175296	Denomination TERMINAL STRIP OVERVIEW	Page Type TERMINAL STRIP OVERVIEW	
Company Tetra Pak Carton Ambient S.p.A.	Document No. 2593852-0006	Doc. type ELD	Version AE	Page 82

This drawing must not without the consent of Tetra Pak
be copied, transmitted or disclosed to any third party.

1 2 3 4 5 6 7 8 9 10

Terminal strip of 2593852-0003

+M-X5005

From	Cable	Internal Jumper	Terminal	External Jumper	Cable	To	Page.Col.	Option	Function text
+M-X4004:18	-W2018:3		1			+M-R5310:1	010 .9		BOTTOM RIGHT
+M-X4004:19	-W2018:4		2			+M-R5310:2	010 .10		BOTTOM RIGHT

Drawing remarks

Tetra Pak

Designer BMI	Date 07/06/2004	Machine TBA/22-0500	
ECM No 175296	Denomination TERMINAL STRIP OVERVIEW	Page Type TERMINAL STRIP OVERVIEW	
Company Tetra Pak Carton Ambient S.p.A.	Document No. 2593852-0006	Doc. type ELD	Version AE	Page 83

This drawing must not without the consent of Tetra Pak
be copied, transmitted or disclosed to any third party.

1 2 3 4 5 6 7 8 9 10

Terminal strip of 2593852-0003

+M-X5006

From	Cable	Internal Jumper	Terminal	External Jumper	Cable	To	Page.Col.	Option	Function text
+M-X4010:+	-W2021:YE		+				087 .2		
+M-X4010:-	-W2021:RD		-				087 .2		

Drawing remarks

Tetra Pak

Designer BMI	Date 07/06/2004	Machine TBA/22-0500	
ECM No 175296	Denomination TERMINAL STRIP OVERVIEW	Page Type TERMINAL STRIP OVERVIEW	
Company Tetra Pak Carton Ambient S.p.A.	Document No. 2593852-0006	Doc. type ELD	Version AE	Page 84

This drawing must not without the consent of Tetra Pak
be copied, transmitted or disclosed to any third party.

1 2 3 4 5 6 7 8 9 10

Terminal strip of 2593852-0003

+M-X5007

From	Cable	Internal Jumper	Terminal	External Jumper	Cable	To	Page.Col.	Option	Function text
+M-X4011:+	-W2022:YE		+				087 .2		
+M-X4011:-	-W2022:RD		-				087 .2		

Drawing remarks

Tetra Pak

Designer BMI	Date 07/06/2004	Machine TBA/22-0500	
ECM No 175296	Denomination TERMINAL STRIP OVERVIEW	Page Type TERMINAL STRIP OVERVIEW	
Company Tetra Pak Carton Ambient S.p.A.	Document No. 2593852-0006	Doc. type ELD	Version AE	Page 85

This drawing must not without the consent of Tetra Pak
be copied, transmitted or disclosed to any third party.

1 2 3 4 5 6 7 8 9 10

Terminal strip of 2593852-0003

+M-X5008

From	Cable	Internal Jumper	Terminal	External Jumper	Cable	To	Page.Col.	Option	Function text
+M-X4012:+	-W2023:YE		+				087 .2		
+M-X4012:-	-W2023:RD		-				087 .2		

Drawing remarks

Tetra Pak

Designer BMI	Date 07/06/2004	Machine TBA/22-0500	
ECM No 175296	Denomination TERMINAL STRIP OVERVIEW	Page Type TERMINAL STRIP OVERVIEW	
Company Tetra Pak Carton Ambient S.p.A.	Document No. 2593852-0006	Doc. type ELD	Version AE	Page 86

This drawing must not without the consent of Tetra Pak
be copied, transmitted or disclosed to any third party.

1 2 3 4 5 6 7 8 9 10

Terminal strip of 2593852-0003

+M-X5009

From	Cable	Internal Jumper	Terminal	External Jumper	Cable	To	Page.Col.	Option	Function text
+M-X4013:+	-W2024:YE		+				087 .2		
+M-X4013:-	-W2024:RD		-				087 .2		

Drawing remarks

Tetra Pak

Designer BMI	Date 07/06/2004	Machine TBA/22-0500	
ECM No 175296	Denomination TERMINAL STRIP OVERVIEW	Page Type TERMINAL STRIP OVERVIEW	
Company Tetra Pak Carton Ambient S.p.A.	Document No. 2593852-0006	Doc. type ELD	Version AE	Page 87

This drawing must not without the consent of Tetra Pak be copied, transmitted or disclosed to any third party.

1 2 3 4 5 6 7 8 9 10

Terminal strip of 2593852-0003

+M-X7001

From	Cable	Internal Jumper	Terminal	External Jumper	Cable	To	Page.Col.	Option	Function text
+C-X128:1	-W7003:1		1		-W7012:1	+M-A7417:101	013 .1		
+C-X128:2	-W7003:2		2		-W7012:2	+M-A7417:102	013 .2		
+C-X128:3	-W7003:3		3		-W7012:3	+M-A7417:103	013 .2		
			4						
			5						
			6						
+C-X132:1	-W7004:1		7		-W7055:1	+M-E7705:2	032 .4		LIGHTING AU FRONT
+C-X132:3	-W7004:3		8		-W7055:2	+M-E7705:1	032 .4		LIGHTING AU FRONT
			9		-W7014:1	+M-E7702:2	032 .5		LIGHTING ASU
			10		-W7014:2	+M-E7702:1	032 .5		LIGHTING ASU
			11				032 .6		
			12				032 .6		
+C-X504:1	-W7037:1		13		-W7305:1	+M-R7304:1	011 .3		ASU CONSTANT HEAT BAR
+C-X504:2	-W7037:2		14		-W7305:2	+M-R7304:2	011 .3		ASU CONSTANT HEAT BAR
+C-X133:1	-W7005:1		15			+M-T6203:220	011 .5		
+C-X133:2	-W7005:2		16			+M-T6203:0	011 .6		
+M-T6203:12			17		-W7046:1	+M-R6203:1	011 .5		SPLICER ASSU
			18		-W7046:2	+M-R6203:2	011 .5		SPLICER ASSU
			19		-W7049:1	+M-R6204:1	011 .6		SPLICER ASSU
+M-T6203:0			20		-W7049:2	+M-R6204:2	011 .7		SPLICER ASSU
+C-X504:3	-W7037:3		21				205 .3		
+C-X504:4	-W7037:4		22				205 .3		
+C-X504:5	-W7037:5		23				205 .3		
+C-X504:6	-W7037:6		24				205 .3		
+C-X225:1	-W7006:1		101		-W7013:BK	+M-B6203:BK	126 .6		SA PRESSURE ROLLER
			101+		-W7013:BN	+M-B6203:BN	126 .3		SA PRESSURE ROLLER
			101-		-W7013:BU	+M-B6203:BU	126 .3		SA PRESSURE ROLLER
+C-X225:2	-W7006:2		102		-W7016:BK	+M-B6105:BK	081 .5		PACK. MATERIAL SPLICE DETECTION I
			102+		-W7016:BN	+M-B6105:BN	081 .3		PACK. MATERIAL SPLICE DETECTION I
			102-		-W7016:BU	+M-B6105:BU	081 .3		PACK. MATERIAL SPLICE DETECTION I

Drawing remarks

Tetra Pak

Designer BMI	Date 07/06/2004	Machine TBA/22-0500	
ECM No 175296	Denomination TERMINAL STRIP OVERVIEW	Page Type TERMINAL STRIP OVERVIEW	
Company Tetra Pak Carton Ambient S.p.A.	Document No. 2593852-0006	Doc. type ELD	Version AE	Page 88

This drawing must not without the consent of Tetra Pak
be copied, transmitted or disclosed to any third party.

1 | 2 | 3 | 4 | 5 | 6 | 7 | 8 | 9 | 10

Terminal strip of 2593852-0003

+M-X7001

From	Cable	Internal Jumper	Terminal	External Jumper	Cable	To	Page.Col.	Option	Function text
+C-X225:3	-W7006:3		103		-W7017:BK	+M-B6201:BK	126 .6		INDICATE STRIP END BOBBIN 1
			103+		-W7017:BN	+M-B6201:BN	126 .3		INDICATE STRIP END BOBBIN 1
			103-		-W7017:BU	+M-B6201:BU	126 .3		INDICATE STRIP END BOBBIN 1
+C-X225:4	-W7006:4		104		-W7018:BK	+M-B6202:BK	126 .6		INDICATE STRIP END BOBBIN 2
			104+		-W7018:BN	+M-B6202:BN	126 .3		INDICATE STRIP END BOBBIN 2
			104-		-W7018:BU	+M-B6202:BU	126 .3		INDICATE STRIP END BOBBIN 2
+C-X225:5	-W7006:5		105		-W7019:BK	+M-B6208:BK	126 .6		ROTATION MONITOR SA
			105+		-W7019:BN	+M-B6208:BN	126 .3		ROTATION MONITOR SA
			105-		-W7019:BU	+M-B6208:BU	126 .3		ROTATION MONITOR SA
+C-X225:6	-W7006:6		106		-W7020:BK	+M-B6107:BK	127 .6		ROTATION GUARD SA
			106+		-W7020:BN	+M-B6107:BN	127 .3		ROTATION GUARD SA
			106-		-W7020:BU	+M-B6107:BU	127 .3		ROTATION GUARD SA
+C-X225:7	-W7006:7		107		-W7015:BK	+M-B72232:BK	127 .6		MAGAZINE DOWN
			107+		-W7015:BN	+M-B72232:BN	127 .3		MAGAZINE DOWN
			107-		-W7015:BU	+M-B72232:BU	127 .3		MAGAZINE DOWN
+C-X225:8	-W7006:8		108		-W7022:BK	+M-B6204:BK	127 .6		STRIP SPLICE PREPARED
			108+		-W7022:BN	+M-B6204:BN	127 .3		STRIP SPLICE PREPARED
			108-		-W7022:BU	+M-B6204:BU	127 .3		STRIP SPLICE PREPARED
+C-X225:9	-W7006:9		109		-W7023:BK	+M-B72234:BK	127 .6		MAGAZINE EMPTY
			109+		-W7023:BN	+M-B72234:BN	127 .3		MAGAZINE EMPTY
			109-		-W7023:BU	+M-B72234:BU	127 .3		MAGAZINE EMPTY
+C-X225:10	-W7006:10		110		-W7024:BK	+M-B7411:BK	127 .6		MATERIAL HOLDER 1 DOWN
			110+		-W7024:BN	+M-B7411:BN	127 .3		MATERIAL HOLDER 1 DOWN
			110-		-W7024:BU	+M-B7411:BU	127 .3		MATERIAL HOLDER 1 DOWN
+C-X225:11	-W7006:11		111		-W7025:BK	+M-B7414:BK	127 .6		MATERIAL HOLDER 2 DOWN
			111+		-W7025:BN	+M-B7414:BN	127 .3		MATERIAL HOLDER 2 DOWN
			111-		-W7025:BU	+M-B7414:BU	127 .3		MATERIAL HOLDER 2 DOWN
+C-X225:12	-W7006:12		112		-W7026:BK	+M-B7412:BK	127 .6		SIDE FEEDER POSITION 1
			112+		-W7026:BN	+M-B7412:BN	127 .3		SIDE FEEDER POSITION 1
			112-		-W7026:BU	+M-B7412:BU	127 .3		SIDE FEEDER POSITION 1

Drawing remarks

Tetra Pak

Designer: BMI	Date: 07/06/2004	Machine: TBA/22-0500	
ECM No: 175296	Denomination: TERMINAL STRIP OVERVIEW	Page Type: TERMINAL STRIP OVERVIEW	
Company: Tetra Pak Carton Ambient S.p.A.	Document No.: 2593852-0006	Doc. type: ELD	Version: AE	Page: 89

This drawing must not without the consent of Tetra Pak
be copied, transmitted or disclosed to any third party.

1 2 3 4 5 6 7 8 9 10

Terminal strip of 2593852-0003

+M-X7001

From	Cable	Internal Jumper	Terminal	External Jumper	Cable	To	Page.Col.	Option	Function text
+C-X225:13	-W7006:13		113		-W7027:BK	+M-B7512:BK	127 .6		SIDE FEEDER POSITION 2
			113+		-W7027:BN	+M-B7512:BN	127 .3		SIDE FEEDER POSITION 2
			113-		-W7027:BU	+M-B7512:BU	127 .3		SIDE FEEDER POSITION 2
+C-X225:14	-W7006:14		114		-W7029:8	+M-S7402:14	126 .6		PUSH BUTTON MANUAL START ASU
			114+				205 .3		
			114-				205 .3		
+C-X225:15	-W7006:15		115		-W7028:3	+M-S6206:14	126 .6		PUSH BUTTON MANUAL START ASSU
			115+		-W7028:2	+M-S6206:13	126 .3		PUSH BUTTON MANUAL START ASSU
			115-				205 .3		
+C-X225:16	-W7006:16		116		-W7028:4	+M-S7701:51	126 .6		PUSH BUTTON SHORT STOP
			116+				205 .3		
			116-				205 .3		
+C-X225:17	-W7006:17		117				205 .3		
			117+				205 .3		
			117-				205 .3		
+C-X225:18	-W7006:18		118		-W7031:2	+M-S7812:21	120 .3		EMERGENCY STOP ASU
			118+				205 .3		
			118-				205 .3		
			119						
			119+		-W7031:1	+M-S7812:11	120 .4		EMERGENCY STOP ASU
			119-				205 .3		
+C-X225:19	-W7006:19		120		-W7031:4	+M-S7812:12	120 .3		EMERGENCY STOP ASU
			120+				205 .3		
			120-				205 .3		
			121		-W7031:3	+M-S7812:22	120 .4		EMERGENCY STOP ASU
			121+				205 .3		
			121-				205 .3		
			122		-W7029:1	+M-S7813:21	120 .5		
									EMERGENCY STOP ASU INSIDE

Drawing remarks

Tetra Pak

Designer	Date	Machine
BMI	07/06/2004	TBA/22-0500

ECM No	Denomination	Page Type
175296	TERMINAL STRIP OVERVIEW	TERMINAL STRIP OVERVIEW

Company	Document No.	Doc. type	Version	Page
Tetra Pak Carton Ambient S.p.A.	2593852-0006	ELD	AE	90

This drawing must not without the consent of Tetra Pak
be copied, transmitted or disclosed to any third party.

1 2 3 4 5 6 7 8 9 10

Terminal strip of 2593852-0003

+M-X7001

From	Cable	Internal Jumper	Terminal	External Jumper	Cable	To	Page.Col.	Option	Function text
			122+				205 .3		
			122-				205 .3		
			123						
			123+		-W7029:2	+M-S7813:11	120 .5		EMERGENCY STOP ASU INSIDE
			123-				205 .3		
+C-X225:20	-W7006:20		124		-W7029:3	+M-S7813:12	120 .6		EMERGENCY STOP ASU INSIDE
			124+				205 .3		
			124-				205 .3		
+C-X225:21	-W7006:21		125		-W7029:4	+M-S7813:22	120 .6		EMERGENCY STOP ASU INSIDE
			125+				205 .3		
			125-				205 .3		
+C-X225:22	-W7006:22		126		-W7029:5	+M-S7303:14	126 .6		PUSH BUTTON MATERIAL LOCK
+C-X225:23	-W7006:23		126+		-W7029:6	+M-S7303:13	126 .3		PUSH BUTTON MATERIAL LOCK
+C-X225:24	-W7006:24		126-				126 .3		
+C-X226:1	-W7007:1		127		-W7029:7	+M-S7403:14	128 .6		CUTTING TABLE MOVEMENT
+C-X226:23	-W7007:23		127+				205 .3		
+C-X226:24	-W7007:24		127-				205 .3		
+C-X226:2	-W7007:2		128		-W7033:BK	+M-B7211:BK	128 .6		ADJUSTMENT LOOP
			128+		-W7033:BN	+M-B7211:BN	128 .3		ADJUSTMENT LOOP
			128-		-W7033:BU	+M-B7211:BU	128 .3		ADJUSTMENT LOOP
			129						
			129+				205 .3		
			129-				205 .3		
+C-X226:3	-W7007:3		130		-W7035:BK	+M-B7401:BK	128 .6		PACKAGING MATERIAL REEL 1 EMPTY
			130+		-W7035:BN	+M-B7401:BN	128 .3		PACKAGING MATERIAL REEL 1 EMPTY
			130-		-W7035:BU	+M-B7401:BU	128 .3		PACKAGING MATERIAL REEL 1 EMPTY
+C-X226:4	-W7007:4		131		-W7036:BK	+M-B7501:BK	128 .6		PACKAGING MATERIAL REEL 2 EMPTY
			131+		-W7036:BN	+M-B7501:BN	128 .3		PACKAGING MATERIAL REEL 2 EMPTY
			131-		-W7036:BU	+M-B7501:BU	128 .3		PACKAGING MATERIAL REEL 2 EMPTY
+C-X226:5	-W7007:5		132		-W7042:1	+M-B7801:21	155 .3		SA EXTERNAL DOOR GUARD

Drawing remarks

Tetra Pak

Designer	Date	Machine
BMI	07/06/2004	TBA/22-0500

ECM No	Denomination	Page Type
175296	TERMINAL STRIP OVERVIEW	TERMINAL STRIP OVERVIEW

Company	Document No.	Doc. type	Version	Page
Tetra Pak Carton Ambient S.p.A.	2593852-0006	ELD	AE	91

This drawing must not without the consent of Tetra Pak be copied, transmitted or disclosed to any third party.

1 2 3 4 5 6 7 8 9 10

Terminal strip of 2593852-0003

+M-X7001

From	Cable	Internal Jumper	Terminal	External Jumper	Cable	To	Page.Col.	Option	Function text
			132+		-W7042:2	+M-B7801:11	128 .3		SA EXTERNAL DOOR GUARD
			132-				205 .3		
+C-X226:6	-W7007:6		133		-W7042:3	+M-B7801:12	128 .6		SA EXTERNAL DOOR GUARD
			133+				205 .3		
			133-				205 .3		
			134		-W7042:4	+M-B7801:22	155 .4		SA EXTERNAL DOOR GUARD
			134+				205 .8		
			134-				205 .8		
			135		-W7038:1	+M-X7050:1	155 .4		
			135+				205 .8		
			135-				205 .8		
+C-X226:7	-W7007:7		136		-W7038:2	+M-X7050:2	155 .4		
			136+				205 .8		
			136-				205 .8		
+C-X226:8	-W7007:8		137		-W7038:3	+M-X7050:3	155 .4		
			137+				205 .8		
			137-				205 .8		
+C-X226:9	-W7007:9		138		-W7038:4	+M-X7050:4	155 .4		
			138+				205 .8		
			138-				205 .8		
			139						
			139+				205 .8		
			139-		-W7038:12	+M-X7050:1-	155 .7		
			140						
			140+				205 .8		
			140-				205 .8		
			141						
			141+				205 .8		
			141-				205 .8		

Drawing remarks

Tetra Pak

Designer BMI	Date 07/06/2004	Machine TBA/22-0500	
ECM No 175296	Denomination TERMINAL STRIP OVERVIEW	Page Type TERMINAL STRIP OVERVIEW	
Company Tetra Pak Carton Ambient S.p.A.	Document No. 2593852-0006	Doc. type ELD	Version AE	Page 92

This drawing must not without the consent of Tetra Pak be copied, transmitted or disclosed to any third party.

1 2 3 4 5 6 7 8 9 10

Terminal strip of 2593852-0003

+M-X7001

From	Cable	Internal Jumper	Terminal	External Jumper	Cable	To	Page.Col.	Option	Function text
+C-X226:13	-W7007:13		142		-W7038:8	+M-X7050:8	155 .4		
			142+				205 .8		
			142-				205 .8		
			143						
			143+				205 .8		
			143-				205 .8		
			144						
			144+				205 .8		
			144-				205 .8		
+C-X226:16	-W7007:16		145		-W7039:1	+M-A7417:301	013 .4		
			145+				205 .8		
			145-				205 .8		
+C-X226:17	-W7007:17		146		-W7039:2	+M-A7417:304	013 .4		
			146+				205 .8		
			146-				205 .8		
+C-X226:18	-W7007:18		147		-W7039:3	+M-A7417:306	013 .4		
			147+		-W7039:4	+M-A7417:310	013 .4		
			147-		-W7039:5	+M-A7417:309	013 .4		
+C-X226:19	-W7007:19		148		-W7038:6	+M-X7050:6	155 .4		
			148+				205 .8		
			148-		-W7038:13	+M-X7050:6-	155 .7		
+C-X226:20	-W7007:20		149		-W7038:7	+M-X7050:7	155 .4		
			149+				205 .8		
			149-				205 .8		
+C-X226:21	-W7007:21		150			+M-K7000:A1	155 .4		STRIP BOBBIN 1
			150+				205 .8		
			150-				205 .8		
+C-X226:22	-W7007:22		151			+M-K7001:A1	157 .5		STRIP BOBBIN 2
			151+				205 .8		
			151-			+M-K7000:A2	155 .7		STRIP BOBBIN 1

Drawing remarks

Tetra Pak

Designer BMI	Date 07/06/2004	Machine TBA/22-0500	
ECM No 175296	Denomination TERMINAL STRIP OVERVIEW	Page Type TERMINAL STRIP OVERVIEW	
Company Tetra Pak Carton Ambient S.p.A.	Document No. 2593852-0006	Doc. type ELD	Version AE	Page 93

This drawing must not without the consent of Tetra Pak
be copied, transmitted or disclosed to any third party.

1 2 3 4 5 6 7 8 9 10

Terminal strip of 2593852-0003

+M-X7001

From	Cable	Internal Jumper	Terminal	External Jumper	Cable	To	Page.Col.	Option	Function text
+C-X231:1	-W7008:1		152		-W7043:1	+M-B7806:21	122 .3		DOOR GUARD 22 ASU LINE 1
			152+				206 .3		
			152-				206 .3		
+C-X231:2	-W7008:2		153				206 .3		
			153+		-W7043:2	+M-B7806:11	122 .3		DOOR GUARD 22 ASU LINE 1
			153-				206 .3		
+C-X231:4	-W7008:4		154		-W7043:3	+M-B7806:12	122 .5		DOOR GUARD 22 ASU LINE 1
			154+				206 .3		
			154-				206 .3		
			155		-W7043:4	+M-B7806:22	122 .5		DOOR GUARD 22 ASU LINE 1
			155+				206 .3		
			155-				206 .3		
			156		-W7044:1	+M-B7807:21	122 .5		DOOR GUARD 22 ASU LINE 2
			156+				206 .3		
			156-				206 .3		
			157						
			157+		-W7044:2	+M-B7807:11	122 .3		DOOR GUARD 22 ASU LINE 2
			157-				206 .3		
+C-X231:5	-W7008:5		158		-W7044:3	+M-B7807:12	122 .5		DOOR GUARD 22 ASU LINE 2
			158+				206 .3		
			158-				206 .3		
			159		-W7044:4	+M-B7807:22	122 .3		
			159+				206 .3		
			159-				206 .3		
			160						
			160+				206 .3		
			160-				206 .3		
+C-X231:7	-W7008:7		161		-W7045:1	+M-H7703:1	146 .4		HOOTER PLATFORM

Drawing remarks

Tetra Pak

Designer BMI	Date 07/06/2004	Machine TBA/22-0500	
ECM No 175296	Denomination TERMINAL STRIP OVERVIEW	Page Type TERMINAL STRIP OVERVIEW	
Company Tetra Pak Carton Ambient S.p.A.	Document No. 2593852-0006	Doc. type ELD	Version AE	Page 94

This drawing must not without the consent of Tetra Pak be copied, transmitted or disclosed to any third party.

1 2 3 4 5 6 7 8 9 10

Terminal strip of 2593852-0003

+M-X7001

From	Cable	Internal Jumper	Terminal	External Jumper	Cable	To	Page.Col.	Option	Function text
			161+				206 .3		
			161-		-W7045:2	+M-H7703:2	146 .6		HOOTER PLATFORM
+C-X231:8	-W7008:8		162		-W7050:GN	+M-X7022:5	096 .4		
			162+		-W7050:BN	+M-X7022:7	096 .4		
			162-		-W7050:WH	+M-X7022:8	096 .4		
					-W7050:GY	+M-X7022:2			
+C-X231:9	-W7008:9		163				206 .3		
			163+				206 .3		
			163-				206 .3		
+C-X231:10	-W7008:10		164				206 .3		
			164+				206 .3		
			164-				206 .3		
+C-X231:11	-W7008:11		165		-W7030:BK	+M-B7210:BK	128 .6		LOOP EMPTY
			165+		-W7030:BN	+M-B7210:BN	128 .3		LOOP EMPTY
			165-		-W7030:BU	+M-B7210:BU	128 .3		LOOP EMPTY
			166						
			166+				206 .3		
			166-				206 .3		
+C-X231:12	-W7008:12		167		-W7054:1	+M-H2802:1	058 .4		BEACON LAMP BACK
			167+				206 .3		
			167-				206 .3		
+C-X231:13	-W7008:13		168		-W7054:2	+M-H2802:2	058 .4		BEACON LAMP BACK
			168+				206 .3		
			168-				206 .3		
+C-X231:14	-W7008:14		169		-W7054:3	+M-H2802:3	058 .4		BEACON LAMP BACK
			169+				206 .3		
			169-				206 .3		
+C-X231:15	-W7008:15		170				058 .4		
			170+				206 .3		
			170-		-W7054:4	+M-H2802:0	058 .7		BEACON LAMP BACK

Drawing remarks

Tetra Pak

Designer	Date	Machine
BMI	07/06/2004	TBA/22-0500

ECM No	Denomination	Page Type
175296	TERMINAL STRIP OVERVIEW	TERMINAL STRIP OVERVIEW

Company	Document No.	Doc. type	Version	Page
Tetra Pak Carton Ambient S.p.A.	2593852-0006	ELD	AE	95

This drawing must not without the consent of Tetra Pak be copied, transmitted or disclosed to any third party.

1 2 3 4 5 6 7 8 9 10

Terminal strip of 2593852-0003

+M-X7001

From	Cable	Internal Jumper	Terminal	External Jumper	Cable	To	Page.Col.	Option	Function text
+C-X231:16	-W7008:16		171				206 .7		
			171+				206 .8		
			171-				206 .8		
			172		-W7077:1	+M-B6209:21	122 .3		
			172+				206 .8		
			172-				206 .8		
+C-X231:18	-W7008:18		173		-W7077:2	+M-B6209:11	122 .5		SA INTERNAL DOOR GUARD
			173+				206 .8		
			173-				206 .8		
+C-X231:3	-W7008:3		174				206 .7		
			174+		-W7077:3	+M-B6209:12	122 .3		SA INTERNAL DOOR GUARD
			174-				206 .8		
+C-X231:6	-W7008:6		175		-W7077:4	+M-B6209:22	122 .5		SA INTERNAL DOOR GUARD
			175+				206 .8		
			175-				206 .8		
+C-X231:20	-W7008:20		176				206 .7		
			176+				206 .8		
			176-				206 .8		
+C-X231:21	-W7008:21		177				206 .7		
			177+				206 .8		
			177-				206 .8		
+C-X231:22	-W7008:22		178				206 .7		
+C-X231:23	-W7008:23		178+				206 .8		
+C-X231:24	-W7008:24		178-				206 .8		
+C-X221:1	-W7009:1		179		-W7034:1	+M-X7049:1	156 .3		
+C-X221:11	-W7009:11		179+				156 .6		
+C-X221:12	-W7009:12		179-		-W7034:12	+M-X7049:1-	156 .6		
+C-X221:2	-W7009:2		180		-W7034:2	+M-X7049:2	156 .3		
			180+				206 .8		
			180-				206 .8		

Drawing remarks

Tetra Pak

Designer BMI	Date 07/06/2004	Machine TBA/22-0500	
ECM No 175296	Denomination TERMINAL STRIP OVERVIEW	Page Type TERMINAL STRIP OVERVIEW	
Company Tetra Pak Carton Ambient S.p.A.	Document No. 2593852-0006	Doc. type ELD	Version AE	Page 96

This drawing must not without the consent of Tetra Pak be copied, transmitted or disclosed to any third party.

1 2 3 4 5 6 7 8 9 10

Terminal strip of 2593852-0003

+M-X7001

From	Cable	Internal Jumper	Terminal	External Jumper	Cable	To	Page.Col.	Option	Function text
+C-X221:3	-W7009:3		181		-W7034:3	+M-X7049:3	156 .3		
			181+				206 .8		
			181-				206 .8		
+C-X221:4	-W7009:4		182		-W7034:4	+M-X7049:4	156 .3		
			182+				206 .8		
			182-				206 .8		
+C-X221:5	-W7009:5		183		-W7034:5	+M-X7049:5	156 .3		
			183+				206 .8		
			183-				206 .8		
+C-X221:6	-W7009:6		184		-W7034:6	+M-X7049:6	156 .3		
			184+				206 .8		
			184-		-W7034:13	+M-X7049:6-	156 .6		
+C-X221:7	-W7009:7		185		-W7034:7	+M-X7049:7	156 .3		
			185+				206 .8		
			185-				206 .8		
+C-X221:8	-W7009:8		186		-W7056:BN	+M-Y7425:BN	156 .3		VENTILATING VALVE
			186+				206 .8		
			186-		-W7056:L.BU	+M-Y7425:BU	156 .6		VENTILATING VALVE
+C-X221:9	-W7009:9		187				206 .7		
			187+				206 .8		
			187-				206 .8		
+C-X221:10	-W7009:10		188				207 .3		
			188+				207 .3		
			188-				207 .3		
			189						
			189+				207 .3		
			189-				207 .3		
			190						
			190+				207 .3		
			190-				207 .3		

Drawing remarks

Tetra Pak

Designer BMI	Date 07/06/2004	Machine TBA/22-0500	
ECM No 175296	Denomination TERMINAL STRIP OVERVIEW	Page Type TERMINAL STRIP OVERVIEW	
Company Tetra Pak Carton Ambient S.p.A.	Document No. 2593852-0006	Doc. type ELD	Version AE	Page 97

This drawing must not without the consent of Tetra Pak be copied, transmitted or disclosed to any third party.

1 2 3 4 5 6 7 8 9 10

Terminal strip of 2593852-0003

+M-X7001

From	Cable	Internal Jumper	Terminal	External Jumper	Cable	To	Page.Col.	Option	Function text
+C-X128:⏚	-W7003:YG		⏚		-W7012:YG	+M-A7417:104	013 .2		
			⏚						
			⏚		-W7055:YG	+M-E7705:E	032 .4		LIGHTING AU FRONT
+C-X132:⏚	-W7004:GNYE		⏚		-W7014:YG	+M-E7702:E	032 .5		LIGHTING ASU
			⏚				032 .6		
+C-X504:⏚	-W7037:GNYE		⏚		-W7305:GNYE	+M-R7304:E	011 .3		ASU CONSTANT HEAT BAR
+C-X133:⏚	-W7005:GNYE		⏚			+M-T6203:E	011 .6		
			⏚		-W7049:GNYE	+M-R6204:E	011 .7		SPLICER ASSU
			⏚						
			⏚						
+C-X225:⏚	-W7006:GNYE		⏚				205 .3		
			⏚						
			⏚				122 .3		
+C-X226:⏚	-W7007:GNYE		⏚				205 .8		
			⏚				122 .3		
			⏚				122 .3		
			⏚		-W7038:YG	+M-X7050:⏚	155 .7		
+C-X231:⏚	-W7008:GNYE		⏚		-W7054:GNYE	+M-H2802:E	058 .7		BEACON LAMP BACK
			⏚		-W7056:YG	+M-Y7425:YG	156 .6		VENTILATING VALVE
+C-X221:⏚	-W7009:YG		⏚		-W7034:GNYE	+M-X7049:⏚	156 .6		

Drawing remarks

Tetra Pak

Designer BMI	Date 07/06/2004	Machine TBA/22-0500	
ECM No 175296	Denomination TERMINAL STRIP OVERVIEW	Page Type TERMINAL STRIP OVERVIEW	
Company Tetra Pak Carton Ambient S.p.A.	Document No. 2593852-0006	Doc. type ELD	Version AE	Page 98

This drawing must not without the consent of Tetra Pak
be copied, transmitted or disclosed to any third party.

1 2 3 4 5 6 7 8 9 10

Terminal strip of 2593852-0003

+M-X7010

From	Cable	Internal Jumper	Terminal	External Jumper	Cable	To	Page.Col.	Option	Function text
+C-X118:4	-W7076:SH		1		-W7072:SH	GND:	015 .8		
+M-X7011:1									
+C-X118:5	-W7076:YG		2		-W7072:GNYE	+M-M6201:⏚	015 .7		STRIP BOBBIN 1
+M-X7011:2									

Drawing remarks

Tetra Pak

Designer BMI	Date 07/06/2004	Machine TBA/22-0500	
ECM No 175296	Denomination TERMINAL STRIP OVERVIEW	Page Type TERMINAL STRIP OVERVIEW	
Company Tetra Pak Carton Ambient S.p.A.	Document No. 2593852-0006	Doc. type ELD	Version AE	Page 99

This drawing must not without the consent of Tetra Pak
be copied, transmitted or disclosed to any third party.

1 2 3 4 5 6 7 8 9 10

Terminal strip of 2593852-0003

+M-X7011

From	Cable	Internal Jumper	Terminal	External Jumper	Cable	To	Page.Col.	Option	Function text
			1			+M-X7010:1	015 .10		
					-W7073:SH	GND:			
			2			+M-X7010:2	015 .9		
					-W7073:GNYE	+M-M6202:⏚			STRIP BOBBIN 2

Drawing remarks

Tetra Pak

Designer BMI	Date 07/06/2004	Machine TBA/22-0500	
ECM No 175296	Denomination TERMINAL STRIP OVERVIEW	Page Type TERMINAL STRIP OVERVIEW	
Company Tetra Pak Carton Ambient S.p.A.	Document No. 2593852-0006	Doc. type ELD	Version AE	Page 100

This drawing must not without the consent of Tetra Pak be copied, transmitted or disclosed to any third party.

1 2 3 4 5 6 7 8 9 10

Terminal strip of 2593852-0003

+M-X7022

From	Cable	Internal Jumper	Terminal	External Jumper	Cable	To	Page.Col.	Option	Function text
			1			+M-B6205:1	096 .2		
+M-X7001:162-	-W7050:GY		2			+M-B6205:2	096 .2		
			3			+M-B6205:3	096 .2		
			4			+M-B6205:4	096 .2		
+M-X7001:162	-W7050:GN		5			+M-B6205:5	096 .2		
			6			+M-B6205:6	096 .2		
+M-X7001:162+	-W7050:BN		7			+M-B6205:7	096 .2		
+M-X7001:162-	-W7050:WH		8			+M-B6205:8	096 .2		

Drawing remarks

Tetra Pak

Designer BMI	Date 07/06/2004	Machine TBA/22-0500	
ECM No 175296	Denomination TERMINAL STRIP OVERVIEW	Page Type TERMINAL STRIP OVERVIEW	
Company Tetra Pak Carton Ambient S.p.A.	Document No. 2593852-0006	Doc. type ELD	Version AE	Page 101

This drawing must not without the consent of Tetra Pak
be copied, transmitted or disclosed to any third party.

1 2 3 4 5 6 7 8 9 10

Terminal strip of 2593852-0003

+M-X7049

From	Cable	Internal Jumper	Terminal	External Jumper	Cable	To	Page.Col.	Option	Function text
+M-X7001:179	-W7034:1		1			+M-Y7420:+24V	156 .4		BRAKE REEL 1
+M-X7001:179-	-W7034:12		1-			+M-Y7420:0V	156 .5		BRAKE REEL 1
+M-X7001:180	-W7034:2		2			+M-Y7421:+24V	156 .4		BRAKE REEL 2
			2-			+M-Y7421:0V	156 .5		BRAKE REEL 2
+M-X7001:181	-W7034:3		3			+M-Y7412:+24V	156 .4		SIDE FEEDER 1-2
			3-			+M-Y7412:0V	156 .5		SIDE FEEDER 1-2
+M-X7001:182	-W7034:4		4			+M-Y7413:+24V	156 .4		SIDE FEEDER 2-1
			4-			+M-Y7413:0V	156 .5		SIDE FEEDER 2-1
+M-X7001:183	-W7034:5		5			+M-Y7410:+24V	156 .4		CUTTING
			5-			+M-Y7410:0V	156 .5		CUTTING
+M-X7001:184	-W7034:6		6			+M-Y7408:+24V	156 .4		PRESSURE RAIL
+M-X7001:184-	-W7034:13		6-			+M-Y7408:0V	156 .5		PRESSURE RAIL
+M-X7001:185	-W7034:7		7			+M-Y7407:+24V	156 .4		WEB TENSION
			7-			+M-Y7407:0V	156 .5		WEB TENSION
			8						
			8-						
+M-X7001:⏚	-W7034:GNYE		⏚			+M-Y7420:E	156 .5		BRAKE REEL 1
			⏚			+M-Y7421:E	156 .5		BRAKE REEL 2
			⏚			+M-Y7412:E	156 .5		SIDE FEEDER 1-2
			⏚			+M-Y7413:E	156 .5		SIDE FEEDER 2-1
			⏚			+M-Y7410:E	156 .5		CUTTING
			⏚			+M-Y7408:E	156 .5		PRESSURE RAIL
			⏚			+M-Y7407:E	156 .5		WEB TENSION
			⏚						

Drawing remarks

Tetra Pak

Designer BMI	Date 07/06/2004	Machine TBA/22-0500	
ECM No 175296	Denomination TERMINAL STRIP OVERVIEW	Page Type TERMINAL STRIP OVERVIEW	
Company Tetra Pak Carton Ambient S.p.A.	Document No. 2593852-0006	Doc. type ELD	Version AE	Page 102

This drawing must not without the consent of Tetra Pak be copied, transmitted or disclosed to any third party.

1 2 3 4 5 6 7 8 9 10

Terminal strip of 2593852-0003

+M-X7050

From	Cable	Internal Jumper	Terminal	External Jumper	Cable	To	Page.Col.	Option	Function text
+M-X7001:135	-W7038:1		1			+M-Y6203:+24V	155 .5		MOVING OF THE SPLICING HEAD
+M-X7001:139-	-W7038:12		1-			+M-Y6203:0V	155 .6		MOVING OF THE SPLICING HEAD
+M-X7001:136	-W7038:2		2			+M-Y6205:+24V	155 .5		COOL STRIP SEAL
			2-			+M-Y6205:0V	155 .6		COOL STRIP SEAL
+M-X7001:137	-W7038:3		3			+M-Y7303:+24V	155 .5		LOCK CYLINDER 1
			3-			+M-Y7303:0V	155 .6		LOCK CYLINDER 1
+M-X7001:138	-W7038:4		4			+M-Y7315:+24V	155 .5		LOCK CYLINDER 2
			4-			+M-Y7315:0V	155 .6		LOCK CYLINDER 2
			5						
			5-						
+M-X7001:148	-W7038:6		6			+M-Y7414:+24V	155 .5		CUTTING TABLE 1
+M-X7001:148-	-W7038:13		6-			+M-Y7414:0V	155 .6		CUTTING TABLE 1
+M-X7001:149	-W7038:7		7			+M-Y7415:+24V	155 .5		CUTTING TABLE 2
			7-			+M-Y7415:0V	155 .6		CUTTING TABLE 2
+M-X7001:142	-W7038:8		8			+M-Y6201:+24V	155 .5		SA COOLING
			8-			+M-Y6201:0V	155 .6		SA COOLING
			9						
			9-						
			10						
			10-						
			⏚			+M-Y6203:E	155 .6		MOVING OF THE SPLICING HEAD
			⏚			+M-Y6205:E	155 .6		COOL STRIP SEAL
			⏚			+M-Y7303:E	155 .6		LOCK CYLINDER 1
			⏚			+M-Y7315:E	155 .6		LOCK CYLINDER 2
			⏚						
+M-X7001:⏚	-W7038:YG		⏚			+M-Y7414:E	155 .6		CUTTING TABLE 1
			⏚			+M-Y7415:E	155 .6		CUTTING TABLE 2
			⏚			+M-Y6201:E	155 .6		SA COOLING
			⏚						
			⏚						

Drawing remarks

Tetra Pak

Designer BMI	Date 07/06/2004	Machine TBA/22-0500	
ECM No 175296	Denomination TERMINAL STRIP OVERVIEW	Page Type TERMINAL STRIP OVERVIEW	
Company Tetra Pak Carton Ambient S.p.A.	Document No. 2593852-0006	Doc. type ELD	Version AE	Page 103

This drawing must not without the consent of Tetra Pak
be copied, transmitted or disclosed to any third party.

1 2 3 4 5 6 7 8 9 10

Terminal strip of 2593852-0003

+M-X7304

From	Cable	Internal Jumper	Terminal	External Jumper	Cable	To	Page.Col.	Option	Function text
+C-X316:+	-W7304 :YE		+				087 .2		
+C-X316:-	-W7304 :RD		-				087 .2		

Drawing remarks

Tetra Pak

Designer BMI	Date 07/06/2004	Machine TBA/22-0500	
ECM No 175296	Denomination TERMINAL STRIP OVERVIEW	Page Type TERMINAL STRIP OVERVIEW	
Company Tetra Pak Carton Ambient S.p.A.	Document No. 2593852-0006	Doc. type ELD	Version AE	Page 104

This drawing must not without the consent of Tetra Pak be copied, transmitted or disclosed to any third party.

1 2 3 4 5 6 7 8 9 10

Terminal strip of 2593852-0003

+M-X9100

From	Cable	Internal Jumper	Terminal	External Jumper	Cable	To	Page.Col.	Option	Function text
+C-X210:1	-W2060:1		101		-W9104:1	+M-B9104:1	176 .6	H.I.	H.I. PRESSURE GUARD
+C-X210:2	-W2060:2		102		-W9104:2	+M-B9104:4	176 .3	H.I.	H.I. PRESSURE GUARD
+C-X210:3	-W2060:3		103				184 .3	H.I.	
			104				184 .6	H.I.	
+C-X210:4	-W2060:4		105		-W9101:1	+M-Y9101:1	184 .3	H.I.	H.I. AIR/N2 SUPPLY
			106		-W9101:2	+M-Y9101:2	184 .6	H.I.	H.I. AIR/N2 SUPPLY
+C-X210:5	-W2060:5		107		-W9103:1	+M-Y9103:1	184 .3	H.I.	H.I. ON/OFF
			108		-W9103:2	+M-Y9103:2	184 .6	H.I.	H.I. ON/OFF
			109						
+C-X210:6	-W2060:6		110				208 .3	H.I.	
			111		-W9105:WH	+M-X9105:1	101 .4	H.I.	
			112		-W9105:GN	+M-X9105:4	101 .4	H.I.	
+C-A108:AQ014	-W9118:WH		113		-W9105:BN	+M-X9105:3	101 .4	H.I.	
			114						
GND:	-W9118:SH		115		-W9105:SH	+M-X9105:5	101 .4	H.I.	
			116		-W9117:YE	+M-B9105:1	094 .4	H.I.	H.I. FLOW METER
			117		-W9117:GN	+M-B9105:2	094 .4	H.I.	H.I. FLOW METER
+C-A105:19	-W9119:WH		118		-W9117:WH	+M-B9105:3	094 .4	H.I.	H.I. FLOW METER
+C-A105:AI01	-W9119:BN		119		-W9117:BN	+M-B9105:4	094 .4	H.I.	H.I. FLOW METER
GND:	-W9119:SH		120		-W9117:SH	GND:	094 .4	H.I.	
+C-X210:⏚	-W2060:GNYE		⏚				208 .3	H.I.	
			⏚				184 .6	H.I.	
			⏚		-W9101:GNYE	+M-Y9101:E	184 .6	H.I.	H.I. AIR/N2 SUPPLY
			⏚		-W9103:GNYE	+M-Y9103:E	184 .6	H.I.	H.I. ON/OFF

Drawing remarks

Tetra Pak

Designer BMI | Date 07/06/2004 | Machine TBA/22-0500

ECM No 175296 | Denomination TERMINAL STRIP OVERVIEW | Page Type TERMINAL STRIP OVERVIEW

Company Tetra Pak Carton Ambient S.p.A. | Document No. 2593852-0006 | Doc. type ELD | Version AE | Page 105

This drawing must not without the consent of Tetra Pak be copied, transmitted or disclosed to any third party.

1 2 3 4 5 6 7 8 9 10

Terminal strip of 2593852-0003

+M-X9105

From	Cable	Internal Jumper	Terminal	External Jumper	Cable	To	Page.Col.	Option	Function text
+M-X9100:111	-W9105:WH		1				101 .6	H.I.	
+M-X9100:113	-W9105:BN		3				101 .6	H.I.	
+M-X9100:112	-W9105:GN		4				101 .6	H.I.	
+M-X9100:115	-W9105:SH		5				101 .6	H.I.	

Drawing remarks

Tetra Pak

Designer BMI	Date 07/06/2004	Machine TBA/22-0500	
ECM No 175296	Denomination TERMINAL STRIP OVERVIEW	Page Type TERMINAL STRIP OVERVIEW	
Company Tetra Pak Carton Ambient S.p.A.	Document No. 2593852-0006	Doc. type ELD	Version AE / Page 106

This drawing must not without the consent of Tetra Pak be copied, transmitted or disclosed to any third party.

1 2 3 4 5 6 7 8 9 10

Terminal strip of 2593852-0003

+M-X9106

From	Cable	Internal Jumper	Terminal	External Jumper	Cable	To	Page.Col.	Option	Function text
+C-X317:+	-W9106:YE		+				177 .2	H.I.	
+C-X317:-	-W9106:RD		-				177 .2	H.I.	

Drawing remarks

Tetra Pak

Designer BMI	Date 07/06/2004	Machine TBA/22-0500	
ECM No 175296	Denomination TERMINAL STRIP OVERVIEW	Page Type TERMINAL STRIP OVERVIEW	
Company Tetra Pak Carton Ambient S.p.A.	Document No. 2593852-0006	Doc. type ELD	Version AE	Page 107

This drawing must not without the consent of Tetra Pak be copied, transmitted or disclosed to any third party.

1 2 3 4 5 6 7 8 9 10

Terminal strip of 2593852-0003

+M-X9115

From	Cable	Internal Jumper	Terminal	External Jumper	Cable	To	Page.Col.	Option	Function text
+C-X318:+	-W9115:YE		+				177 .2	H.I.	
+C-X318:-	-W9115:RD		-				177 .2	H.I.	

Drawing remarks

Tetra Pak

Designer BMI	Date 07/06/2004	Machine TBA/22-0500	
ECM No 175296	Denomination TERMINAL STRIP OVERVIEW	Page Type TERMINAL STRIP OVERVIEW	
Company Tetra Pak Carton Ambient S.p.A.	Document No. 2593852-0006	Doc. type ELD	Version AE	Page 108

This drawing must not without the consent of Tetra Pak
be copied, transmitted or disclosed to any third party.

1 2 3 4 5 6 7 8 9 10

Terminal strip of 2593852-0003

+M-X9116

From	Cable	Internal Jumper	Terminal	External Jumper	Cable	To	Page.Col.	Option	Function text
+C-X319:+	-W9116:YE		+				177 .2	H.I.	
+C-X319:-	-W9116:RD		-				177 .2	H.I.	

Drawing remarks

Tetra Pak

Designer BMI	Date 07/06/2004	Machine TBA/22-0500	
ECM No 175296	Denomination TERMINAL STRIP OVERVIEW	Page Type TERMINAL STRIP OVERVIEW	
Company Tetra Pak Carton Ambient S.p.A.	Document No. 2593852-0006	Doc. type ELD	Version AE	Page 109

This drawing must not without the consent of Tetra Pak be copied, transmitted or disclosed to any third party.

1 2 3 4 5 6 7 8 9 10

Terminal strip of 2593852-0003

+M-X74031

From	Cable	Internal Jumper	Terminal	External Jumper	Cable	To	Page.Col.	Option	Function text
+C-X401:1	-W7040:BN		1			+M-B74031:+	052 .8		ASU BAR CODE 3
			2			+M-B74031:AT	052 .8		ASU BAR CODE 3
+C-X401:2	-W7040:BU		3			+M-B74031:-	052 .8		ASU BAR CODE 3
+C-X401:4	-W7040:BK		4			+M-B74031:SIGN	052 .8		ASU BAR CODE 3
+C-X401:3	-W7040:GY		5			+M-B74031:ET	052 .8		ASU BAR CODE 3

Drawing remarks

Tetra Pak

Designer BMI	Date 07/06/2004	Machine TBA/22-0500	
ECM No 175296	Denomination TERMINAL STRIP OVERVIEW	Page Type TERMINAL STRIP OVERVIEW	
Company Tetra Pak Carton Ambient S.p.A.	Document No. 2593852-0006	Doc. type ELD	Version AE	Page 110

This drawing must not without the consent of Tetra Pak be copied, transmitted or disclosed to any third party.

1 2 3 4 5 6 7 8 9 10

Terminal strip of 2593852-0003

+M-X74032

From	Cable	Internal Jumper	Terminal	External Jumper	Cable	To	Page.Col.	Option	Function text
+C-X402:1	-W7041:BN		1			+M-B74032:+	052 .8		ASU BAR CODE 4
			2			+M-B74032:AT	052 .8		ASU BAR CODE 4
+C-X402:2	-W7041:BU		3			+M-B74032:-	052 .8		ASU BAR CODE 4
+C-X402:4	-W7041:BK		4			+M-B74032:SIGN	052 .8		ASU BAR CODE 4
+C-X402:3	-W7041:GY		5			+M-B74032:ET	052 .8		ASU BAR CODE 4

Drawing remarks

Tetra Pak

Designer BMI	Date 07/06/2004	Machine TBA/22-0500	
ECM No 175296	Denomination TERMINAL STRIP OVERVIEW	Page Type TERMINAL STRIP OVERVIEW	
Company Tetra Pak Carton Ambient S.p.A.	Document No. 2593852-0006	Doc. type ELD	Version AE / Page 111

This drawing must not without the consent of Tetra Pak be copied, transmitted or disclosed to any third party.

1 2 3 4 5 6 7 8 9 10

Terminal strip of 2593852-0003

+P-X901

From	Cable	Internal Jumper	Terminal	External Jumper	Cable	To	Page.Col.	Option	Function text
			101						
			102						
			103						
			104						
			105						
			106						
			107						
			108						
			109						
			110						
			111						
			112						
+C-X222:13	-W2066:13		113			+P-S900:21	120 .3		EMERGENCY STOP CONTROL PANEL
+C-X222:14	-W2066:14		114			+P-S900:11	120 .3		EMERGENCY STOP CONTROL PANEL
+C-X222:15	-W2066:15		115			+P-S900:12	120 .5		EMERGENCY STOP CONTROL PANEL
+C-X222:16	-W2066:16		116			+P-S900:22	120 .5		EMERGENCY STOP CONTROL PANEL
+C-X222:17	-W2066:17		117			+P-S901:13	115 .2		TPOP RESET
+C-X222:18	-W2066:18		118			+P-S901:14	115 .5		TPOP RESET
+C-X222:19	-W2066:19		119			+P-S902:14	115 .5		LAMP TEST
+C-X222:20	-W2066:20		120			+P-S903:14	115 .5		MODE SELECTOR
+C-X222:21	-W2066:21		121			+P-S904:14	115 .5		STATION CHAIN SPRINKLER
+C-X222:22	-W2066:22		122			+P-S905:14	115 .5		INCHING FFU
+C-X222:23	-W2066:23		123			+P-S905:24	115 .5		INCHING FFU
+C-X222:24	-W2066:24		124			+P-S906:14	115 .5		DROP CHUTE OFF
+C-X219:1	-W2067:1		125			+P-S907:14	115 .5		INCHING JUM
+C-X219:2	-W2067:2		126			+P-S908:51	116 .2		FREE BUTTON
+C-X219:3	-W2067:3		127			+P-S908:52	116 .5		FREE BUTTON
+C-X219:4	-W2067:4		128				207 .2		
+C-X219:5	-W2067:5		129				207 .2		
+C-X219:6	-W2067:6		130			+P-S911:14	115 .5		STEP UP

Drawing remarks

Tetra Pak

Designer BMI	Date 07/06/2004	Machine TBA/22-0500	
ECM No 175296	Denomination TERMINAL STRIP OVERVIEW	Page Type TERMINAL STRIP OVERVIEW	
Company Tetra Pak Carton Ambient S.p.A.	Document No. 2593852-0006	Doc. type ELD	Version AE	Page 112

This drawing must not without the consent of Tetra Pak
be copied, transmitted or disclosed to any third party.

1 | 2 | 3 | 4 | 5 | 6 | 7 | 8 | 9 | 10

Terminal strip of 2593852-0003

+P-X901

From	Cable	Internal Jumper	Terminal	External Jumper	Cable	To	Page.Col.	Option	Function text
+C-X219:7	-W2067:7		131			+P-S912:14	116 .5		STEP DOWN
+C-X219:8	-W2067:8		132			+P-H901:1	164 .4		TPOP RESET
+C-X219:9	-W2067:9		133			+P-H901:2	164 .6		TPOP RESET
+C-X219:10	-W2067:10		134			+P-H905:1	164 .4		INCHING FFU
+C-X219:11	-W2067:11		135			+P-H907:1	164 .4		INCHING JUM
+C-X219:12	-W2067:12		136			+P-H908:1	164 .4		
+C-X219:13	-W2067:13		137				164 .4		
+C-X219:14	-W2067:14		138				164 .4		
+C-X219:15	-W2067:15		139			+P-H911:1	164 .4		STEP UP
+C-X219:16	-W2067:16		140			+P-H912:1	164 .4		STEP DOWN
+C-X219:17	-W2067:17		141				207 .2		
+C-X219:18	-W2067:18		142				207 .2		
+C-X219:19	-W2067:19		143				207 .2		
+C-X219:20	-W2067:20		144				207 .2		
+C-X219:21	-W2067:21		145				207 .2		
+C-X219:22	-W2067:22		146				207 .2		
+C-X219:23	-W2067:23		147				207 .2		
+C-X219:24	-W2067:24		148				207 .2		
			149						
			150						
+C-X222:⏚	-W2066:GNYE		⏚				207 .3		
+C-X219:⏚	-W2067:GNYE		⏚				207 .2		

Drawing remarks

Tetra Pak

Designer BMI	Date 07/06/2004	Machine TBA/22-0500	
ECM No 175296	Denomination TERMINAL STRIP OVERVIEW	Page Type TERMINAL STRIP OVERVIEW	
Company Tetra Pak Carton Ambient S.p.A.	Document No. 2593852-0006	Doc. type ELD	Version AE	Page 113

This page left intentionally blank

9 Cable Connection List

TechPub_2614345_v3_DRAFT_ReleaseTB097677en.fm

Description

All cable connections used in the equipment are listed in this chapter.

TechPub_2614345_v3_DRAFT_ReleaseTB097677en.fm

This drawing must not without the consent of Tetra Pak be copied, transmitted or disclosed to any third party.

Cable Connection List of 2593852-0003

Cable	Core	From	To	Page.Col.	Option
+M-W001	BN	+M-X001:1	+M-Z001:1	005 .8	
+M-W001	BN	+M-X001:2	+M-Z001:2	005 .8	
+M-W001	BN	+M-X001:3	+M-Z001:3	005 .8	
+M-W001	BU	+M-X001:N	+M-Z001:N	005 .8	
+M-W001	GNYE	+M-X001:PE	+M-Z001:E	005 .8	
+M-W005	BK	+C-X600:4	+M-X100:4	026 .2	
+M-W005	BK	+C-X600:5	+M-X100:8	026 .4	
+M-W005	BU	+C-X600:6	+M-X100:5	026 .5	
+M-W005	GNYE	+C-X600:⏚	+M-X100:⏚	026 .3	
+M-W006	1	+C-X600:1	+M-X100:1	023 .1	
+M-W006	2	+C-X600:2	+M-X100:2	023 .2	
+M-W006	3	+C-X600:3	+M-X100:3	023 .2	
+M-W006	YG	+C-X600:⏚	+M-X100:⏚	023 .2	
+M-W007	1	+M-X100:1	+M-M001:U	023 .1	
+M-W007	2	+M-X100:2	+M-M001:V	023 .2	
+M-W007	3	+M-X100:3	+M-M001:W	023 .2	
+M-W007	YG	+M-X100:⏚	+M-M001:E	023 .2	
+M-W008	1	+C-X600:7	+M-X100:12	108 .3	
+M-W008	2	+C-X600:8	+M-X100:15	108 .6	
+M-W009	1	+M-X100:5	+M-M002:BU	026 .3	
+M-W009	2	+M-X100:6	+M-M002:BN	026 .2	
+M-W009	3	+M-X100:7	+M-M002:BK	026 .2	
+M-W009	YG	+M-X100:⏚	+M-M002:E	026 .3	
+M-W010	1	+M-X100:9	+M-M003:BU	026 .5	
+M-W010	2	+M-X100:10	+M-M003:BN	026 .4	
+M-W010	3	+M-X100:11	+M-M003:BK	026 .4	
+M-W010	YG	+M-X100:⏚	+M-M003:E	026 .5	

Cable	Core	From	To	Page.Col.	Option
+M-W011	1	+M-X100:14	+M-B006:1	108 .5	
+M-W011	2	+M-X100:15	+M-B006:6	108 .6	
+M-W011	YG	+M-X100:⏚	+M-B006:E	108 .6	
+C-W100	1	+C-X170:1	+C-X171:1	049 .4	
+C-W101	1	+C-X171:1	+C-X172:1	049 .5	
+C-W102	1	+C-X172:1	+C-X173:1	049 .6	
+C-W103	1	+C-X173:1	+C-X174:1	049 .7	
+C-W110	BK	+C-X009:5	+C-B002:BK	108 .2	
+C-W110	BN	+C-X009:6	+C-B002:BN	108 .2	
+C-W110	BU	+C-X009:7	+C-B002:BU	108 .2	
+C-W111	BK	+C-X009:8	+C-B003:BK	108 .4	
+C-W111	BN	+C-X009:9	+C-B003:BN	108 .4	
+C-W111	BU	+C-X009:10	+C-B003:BU	108 .4	
+C-W112	BK	+C-X009:11	+C-B004:BK	108 .5	
+C-W112	BN	+C-X009:12	+C-B004:BN	108 .5	
+C-W112	BU	+C-X009:13	+C-B004:BU	108 .5	
+C-W113	BK	+C-X009:14	+C-B005:BK	108 .7	
+C-W113	BN	+C-X009:15	+C-B005:BN	108 .7	
+C-W113	BU	+C-X009:16	+C-B005:BU	108 .7	
	BN				
+C-W120	SH	+C-X224:18	GND:	054 .7	
+C-W120	WH	+C-X224:18	+C-A420:3	054 .9	
	BN				
+C-W121	SH	GND:	GND:	096 .2	
+C-W121	WH	+C-A418:6	+C-A106:AI17	096 .2	
	BN				
+C-W122	SH	GND:	GND:	094 .7	

Drawing remarks

Tetra Pak

Designer	Date	Machine
BMI	07/06/2004	TBA/22-0500

ECM No	Denomination	Page Type
175296	CABLE CONNECTION LIST	CABLE CONNECTION LIST

Company	Document No.	Doc. type	Version	Page
Tetra Pak Carton Ambient S.p.A.	2593852-0007	ELD	AE	1

This drawing must not without the consent of Tetra Pak be copied, transmitted or disclosed to any third party.

1 2 3 4 5 6 7 8 9 10

Cable Connection List of 2593852-0003

Cable	Core	From	To	Page.Col.	Option
+C-W122	WH	+C-X228:3	+C-A105:AI07	051 .7	
	BN				
+C-W123	SH	+C-W123:	GND:	098 .8	
+C-W123	WH	+C-A107:AQ002	+C-A502:302	012 .2	
	BN				
+C-W124	SH	+C-W124:	GND:	098 .3	
+C-W124	WH	+C-A501:301	+C-A107:AQ003	098 .1	
	BN				
+C-W125	SH	GND:	+C-W125:	098 .5	
+C-W125	WH	+C-X226:16	+C-A107:AQ004	013 .2	
	BN				
+C-W126	SH	GND:	GND:	099 .2	
+C-W126	WH	+C-A418:4	+C-A107:AQ005	099 .2	
	BN				
+C-W127	SH	GND:	GND:	099 .2	
+C-W127	WH	+C-A418:3	+C-A107:AQ006	099 .2	
	BN				
+C-W128	SH	+C-X224:17	GND:	054 .7	
+C-W128	WH	+C-X224:17	+C-A420:5	054 .9	
	BN				
+C-W129	SH	GND:	GND:	099 .7	
+C-W129	WH	+C-A507:7A03	+C-A107:AQ008	099 .7	
	BN				
+C-W130	SH	GND:	GND:	100 .2	
+C-W130	WH	+C-A412:3	+C-A108:AQ009	100 .2	
	BN				
+C-W131	SH	GND:	GND:	017 .2	

Cable	Core	From	To	Page.Col.	Option
+C-W131	WH	+C-A108:AQ010	+C-A413:3	100 .7	
	BN				
+C-W132	SH	GND:	GND:	100 .2	
+C-W132	WH	+C-A410:3	+C-A108:AQ011	100 .2	
	BN				
+C-W133	SH	GND:	GND:	100 .7	
+C-W133	WH	+C-A415:3	+C-A108:AQ012	100 .7	
+C-W134	BN	+C-X129:3	+C-P002:5:5	011 .6	
+C-W134	SH	+C-X129:5	GND:	039 .8	
+C-W134	WH	+C-X129:4	+C-R808:1	011 .3	
	BN				
+C-W136	SH	GND:	GND:	101 .2	
	WH				
+C-W137	BN	+C-X215:13	+C-R139:1	102 .4	
	GN				
	SH				
+C-W137	SH	+C-X215:15	+C-A109:16	102 .4	
	SH				
+C-W137	WH	+C-X215:14	+C-R139:2	102 .4	
	YE				
+C-W140	RD	+C-X306:-	+C-A103:AI33	086 .7	
+C-W140	YE	+C-X306:+	+C-A103:05	086 .7	
+C-W141	RD	+C-X307:-	+C-A103:AI34	086 .7	
+C-W141	YE	+C-X307:+	+C-A103:09	086 .7	
+C-W142	RD	+C-X308:-	+C-A103:AI35	086 .7	
+C-W142	YE	+C-X308:+	+C-A103:13	086 .7	
+C-W143	RD	+C-X309:-	+C-A103:AI36	086 .7	

Drawing remarks

Tetra Pak

Designer	Date	Machine
BMI	07/06/2004	TBA/22-0500

ECM No	Denomination	Page Type
175296	CABLE CONNECTION LIST	CABLE CONNECTION LIST

Company	Document No.	Doc. type	Version	Page
Tetra Pak Carton Ambient S.p.A.	2593852-0007	ELD	AE	2

This drawing must not without the consent of Tetra Pak
be copied, transmitted or disclosed to any third party.

Cable Connection List of 2593852-0003

Cable	Core	From	To	Page.Col.	Option
+C-W143	YE	+C-X309:+	+C-A103:17	086 .7	
+C-W144	RD	+C-X310:-	+C-A103:AI37	086 .7	
+C-W144	YE	+C-X310:+	+C-A103:06	086 .7	
+C-W145	RD	+C-X311:-	+C-A103:AI38	086 .7	
+C-W145	YE	+C-X311:+	+C-A103:10	086 .7	
+C-W146	RD	+C-X301:-	+C-A103:AI39	086 .7	
+C-W146	YE	+C-X301:+	+C-A103:14	086 .7	
+C-W147	RD	+C-X025:-	+C-A103:AI40	086 .7	
+C-W147	YE	+C-X025:+	+C-A103:18	086 .7	
+C-W150	RD	+C-X302:-	+C-A104:AI41	087 .7	
+C-W150	YE	+C-X302:+	+C-A104:05	087 .7	
+C-W151	RD	+C-X303:-	+C-A104:AI42	087 .7	
+C-W151	YE	+C-X303:+	+C-A104:09	087 .7	
+C-W152	RD	+C-X304:-	+C-A104:AI43	087 .7	
+C-W152	YE	+C-X304:+	+C-A104:13	087 .7	
+C-W153	RD	+C-X305:-	+C-A104:AI44	087 .7	
+C-W153	YE	+C-X305:+	+C-A104:17	087 .7	
+C-W154	RD	+C-X313:-	+C-A104:AI45	087 .7	
+C-W154	YE	+C-X313:+	+C-A104:06	087 .7	
+C-W155	RD	+C-X315:-	+C-A104:AI46	087 .7	
+C-W155	YE	+C-X315:+	+C-A104:10	087 .7	
+C-W156	RD	+C-X316:-	+C-A104:AI48	087 .7	
+C-W156	YE	+C-X316:+	+C-A104:18	087 .7	
+C-W160	RD	+C-X307:-	+C-P002:1:2	086 .6	
+C-W160	YE	+C-X307:+	+C-P002:1:3	086 .6	
+C-W161	RD	+C-X310:-	+C-P002:2:2	086 .6	
+C-W161	YE	+C-X310:+	+C-P002:2:3	086 .6	

Cable	Core	From	To	Page.Col.	Option
+C-W162	RD	+C-X315:-	+C-P002:3:2	087 .6	
+C-W162	YE	+C-X315:+	+C-P002:3:3	087 .6	
+C-W173	1	+C-A103:20	GND:	086 .8	
+C-W174	1	+C-A104:20	GND:	087 .8	
+C-W175	1	GND:	+C-A105:20	095 .7	
+C-W176	1	GND:	+C-A106:20	097 .7	
+C-W177	1	+C-A107:20	GND:	098 .2	
+C-W178	1	+C-A108:20	GND:	100 .2	
+C-W179	1	+C-A143:20	GND:	177 .8	
+C-W201	1	+C-X130:1	+C-A410:U	016 .2	
+C-W201	2	+C-X130:2	+C-A410:V	016 .2	
+C-W201	3	+C-X130:3	+C-A410:W	016 .2	
	4				
+C-W201	GNYE	+C-X130:5	+C-A410:E	016 .2	
+C-W201	SH	+C-X130:4	GND:	016 .4	
+C-W202	1	+C-X112:1	+C-A415:U	016 .7	
+C-W202	2	+C-X112:2	+C-A415:V	016 .7	
+C-W202	3	+C-X112:3	+C-A415:W	016 .7	
	4				
+C-W202	GNYE	+C-X112:5	+C-A415:E	016 .7	
+C-W202	SH	+C-X112:4	GND:	016 .9	
+C-W203	1	+C-X126:1	+C-A412:U	017 .2	
+C-W203	2	+C-X126:2	+C-A412:V	017 .2	
+C-W203	3	+C-X126:3	+C-A412:W	017 .2	
	4				
+C-W203	GNYE	+C-X126:5	+C-A412:E	017 .2	
+C-W203	SH	+C-X126:4	GND:	017 .4	

Drawing remarks

Tetra Pak

Designer	Date	Machine
BMI	07/06/2004	TBA/22-0500

ECM No	Denomination	Page Type
175296	CABLE CONNECTION LIST	CABLE CONNECTION LIST

Company	Document No.	Doc. type	Version	Page
Tetra Pak Carton Ambient S.p.A.	2593852-0007	ELD	AE	3

This drawing must not without the consent of Tetra Pak be copied, transmitted or disclosed to any third party.

Cable Connection List of 2593852-0003

Cable	Core	From	To	Page.Col.	Option
+C-W204	1	+C-X127:1	+C-A413:U	017 .7	
+C-W204	2	+C-X127:2	+C-A413:V	017 .7	
+C-W204	3	+C-X127:3	+C-A413:W	017 .7	
	4				
+C-W204	GNYE	+C-X127:5	+C-A413:E	017 .7	
+C-W204	SH	+C-X127:4	GND:	017 .8	
+C-W205	1	+C-X118:1	+C-A411:U	015 .6	
+C-W205	2	+C-X118:2	+C-A411:V	015 .6	
+C-W205	3	+C-X118:3	+C-A411:W	015 .6	
	4				
+C-W205	GNYE	+C-X118:5	+C-A411:E	015 .6	
+C-W205	SH	+C-X118:4	GND:	015 .6	
+C-W400	1	+C-A506:X4	+C-A507:X5	020 .7	
+C-W414	BN	+C-X217:18	+C-A414:44	050 .4	
+C-W414	BU	+C-X217:15	+C-A414:41	050 .4	
+C-W414	GN	+C-X217:19	+C-A414:45	050 .4	
+C-W414	GY	+C-X217:16	+C-A414:42	050 .4	
+C-W414	RD	+C-X217:14	+C-A414:40	050 .4	
+C-W414	SH	+C-X217:20	GND:	050 .5	
+C-W414	WH	+C-X217:13	+C-A414:39	050 .4	
+C-W414	YE	+C-X217:17	+C-A414:43	050 .4	
+C-W421	BU	+C-X421:4	+C-X422:4	055 .5	
+C-W421	SH	+C-X421:E	+C-X422:E	055 .5	
+C-W421	WH	+C-X421:5	+C-X422:5	055 .5	
+C-W422	BU	+C-X423:A	+C-X422:6	012 .5	
+C-W422	SH	+C-X423:E	+C-X422:E	012 .5	
+C-W422	WH	+C-X423:B	+C-X422:7	012 .5	

Cable	Core	From	To	Page.Col.	Option
+C-W423	BU	+C-X423:A	+C-X424:A	012 .4	
+C-W423	SH	+C-X423:E	+C-X424:E	012 .4	
+C-W423	WH	+C-X423:B	+C-X424:B	012 .4	
+C-W424	1	+C-X125:1	+C-A424:21	024 .4	
+C-W424	2	+C-X125:2	+C-A424:22	024 .4	
+C-W424	3	+C-X125:3	+C-A424:24	024 .4	
+C-W424	4	+C-X125:4	+C-A424:23	024 .4	
	GNYE				
+C-W424	SH	+C-X125:5	+C-A424:20	024 .4	
+C-W425	1	+C-X131:1	+C-A425:21	025 .4	
+C-W425	2	+C-X131:2	+C-A425:22	025 .4	
+C-W425	3	+C-X131:3	+C-A425:24	025 .4	
+C-W425	4	+C-X131:4	+C-A425:23	025 .4	
	GNYE				
+C-W425	SH	+C-X131:5	+C-A425:20	025 .4	
+C-W440	1	+C-X401:1	+C-X031:17	052 .7	
+C-W440	2	+C-X401:2	+C-X031:18	052 .7	
+C-W440	3	+C-X401:3	+C-X031:19	052 .7	
+C-W440	4	+C-X401:4	+C-X031:20	052 .7	
	GNYE				
+C-W440	SH	+C-X401:5	GND:	052 .7	
+C-W441	1	+C-X402:1	+C-X031:21	052 .7	
+C-W441	2	+C-X402:2	+C-X031:22	052 .7	
+C-W441	3	+C-X402:3	+C-X031:23	052 .7	
+C-W441	4	+C-X402:4	+C-X031:24	052 .7	
	GNYE				
+C-W441	SH	+C-X402:5	GND:	052 .7	

Drawing remarks

Tetra Pak

Designer	Date	Machine
BMI	07/06/2004	TBA/22-0500

ECM No	Denomination	Page Type
175296	CABLE CONNECTION LIST	CABLE CONNECTION LIST

Company	Document No.	Doc. type	Version	Page
Tetra Pak Carton Ambient S.p.A.	2593852-0007	ELD	AE	4

This drawing must not without the consent of Tetra Pak be copied, transmitted or disclosed to any third party.

1 2 3 4 5 6 7 8 9 10

Cable Connection List of 2593852-0003

Cable	Core	From	To	Page.Col.	Option
+C-W450	BN	+C-A451:2	+C-A450:7	061 .1	
+C-W450	BU	+C-A451:7	+C-A450:6	061 .1	
+C-W450	GN	+C-A451:4	+C-A450:3	061 .2	
+C-W450	GY	+C-A451:5	+C-A450:1	061 .2	
+C-W450	PK	+C-A451:6	+C-A450:2	061 .2	
+C-W450	RD	+C-A451:8	+C-A450:5	061 .1	
+C-W450	SH	+C-A451:9	+C-W450:	061 .2	
+C-W450	WH	+C-A451:1	+C-A450:4	061 .2	
+C-W450	YE	+C-A451:3	+C-A450:8	061 .1	
+C-W451	1	+C-X454:1	+C-X453:1	049 .2	
+M-W501	1	+C-X511:1	+M-X140:1	012 .2	
+M-W503	1	+C-X513:1	+M-X4071:1	012 .6	
+M-W504	1	+C-X514:1	+M-X4073:1	012 .7	
+C-W549	1	+C-K004:1	+C-A506:2104	019 .1	
+C-W549	2	+C-K004:3	+C-A506:2106	019 .1	
+C-W549	3	+C-K004:5	+C-A506:2108	019 .1	
+C-W549	BN	+C-X020:3	+C-A506:2304	019 .1	
	GN				
+C-W549	SH	+C-X020:1	GND:	019 .1	
+C-W549	SH	+C-X020:2	GND:	019 .1	
	SH				
+C-W549	WH	+C-X020:4	+C-A506:2305	019 .1	
	YE				
+C-W549	YG	+C-X020:⏚	PE:	019 .2	
+C-W550	1	+C-X113:1	+C-K004:2	019 .3	
+C-W550	2	+C-X113:2	+C-K004:4	019 .3	
+C-W550	3	+C-X113:3	+C-K004:6	019 .3	

Cable	Core	From	To	Page.Col.	Option
+C-W550	BN	+C-X113:4	+C-X020:3	019 .2	
	GN				
+C-W550	SH	+C-X113:⏚	+C-X020:1	019 .2	
+C-W550	SH	+C-X113:⏚	+C-X020:2	019 .2	
	SH				
+C-W550	WH	+C-X113:5	+C-X020:4	019 .2	
	YE				
+C-W550	YG	+C-X113:6	+C-X020:⏚	019 .2	
+C-W551	1	+C-K006:1	+C-A507:2104	020 .1	
+C-W551	2	+C-K006:3	+C-A507:2106	020 .1	
+C-W551	3	+C-K006:5	+C-A507:2108	020 .1	
+C-W551	BN	+C-X022:3	+C-A507:2304	020 .1	
	GN				
+C-W551	SH	+C-X022:1	GND:	020 .1	
+C-W551	SH	+C-X022:2	GND:	020 .1	
	SH				
+C-W551	WH	+C-X022:4	+C-A507:2305	020 .1	
	YE				
+C-W551	YG	+C-X022:⏚	PE:	020 .2	
+C-W552	1	+C-X108:1	+C-K006:2	020 .3	
+C-W552	2	+C-X108:2	+C-K006:4	020 .3	
+C-W552	3	+C-X108:3	+C-K006:6	020 .3	
+C-W552	BN	+C-X108:4	+C-X022:3	020 .2	
	GN				
+C-W552	SH	+C-X108:⏚	+C-X022:1	020 .1	
+C-W552	SH	+C-X108:⏚	+C-X022:2	020 .1	
	SH				

Drawing remarks

Tetra Pak

Designer	Date	Machine
BMI	07/06/2004	TBA/22-0500

ECM No	Denomination	Page Type
175296	CABLE CONNECTION LIST	CABLE CONNECTION LIST

Company	Document No.	Doc. type	Version	Page
Tetra Pak Carton Ambient S.p.A.	2593852-0007	ELD	AE	5

This drawing must not without the consent of Tetra Pak be copied, transmitted or disclosed to any third party.

1 2 3 4 5 6 7 8 9 10

Cable Connection List of 2593852-0003

Cable	Core	From	To	Page.Col.	Option
+C-W552	WH	+C-X108:5	+C-X022:4	020 .2	
	YE				
+C-W552	YG	+C-X108:6	+C-X022:⏚	020 .2	
+C-W553	1	+C-X107:1	+C-A508:1103	021 .2	
+C-W553	2	+C-X107:2	+C-A508:1104	021 .2	
+C-W553	3	+C-X107:3	+C-A508:1105	021 .2	
+C-W553	BN	+C-X107:4	+C-A508:1404	021 .2	
	GN				
+C-W553	SH	+C-X107:⏚	+C-A508:1101	021 .2	
+C-W553	SH	+C-X107:⏚	+C-A508:1101	021 .2	
	SH				
+C-W553	WH	+C-X107:5	+C-A508:1405	021 .2	
	YE				
+C-W553	YG	+C-X107:6	PE:	021 .2	
+C-W554	BN	+C-X351:D	+C-A506:6005	019 .1	
+C-W554	GN	+C-X351:F	+C-A506:6009	019 .1	
+C-W554	GY	+C-X351:A	+C-A506:6002	019 .1	
+C-W554	PK	+C-X351:B	+C-A506:6003	019 .1	
+C-W554	SH	+C-X351:G	+C-A506:6001	019 .1	
+C-W554	SH	+C-X351:G	+C-A506:6001	019 .1	
+C-W554	SH	+C-X351:G	+C-A506:6001	019 .1	
+C-W554	SH	GND:	GND:	019 .5	
+C-W554	WH	+C-X351:C	+C-A506:6004	019 .1	
+C-W554	YE	+C-X351:E	+C-A506:6007	019 .1	
+C-W555	BN	+C-X353:J	+C-A507:6012	020 .1	
+C-W555	BU	+C-X353:D	+C-A507:6005	020 .1	
+C-W555	GN	+C-X353:G	+C-A507:6010	020 .1	

Cable	Core	From	To	Page.Col.	Option
+C-W555	GY	+C-X353:F	+C-A507:6009	020 .1	
+C-W555	GYPK	+C-X353:A	+C-A507:6002	020 .1	
	GY-PK				
+C-W555	PK	+C-X353:E	+C-A507:6007	020 .1	
+C-W555	RD	+C-X353:C	+C-A507:6004	020 .1	
+C-W555	RDBU	+C-X353:B	+C-A507:6003	020 .1	
	RD-BU				
+C-W555	SH	+C-X353:L	+C-A507:6001	020 .1	
+C-W555	SH	+C-X353:L	+C-A507:6001	020 .1	
+C-W555	SH	+C-X353:L	+C-A507:6001	020 .1	
+C-W555	SH	+C-X353:L	+C-A507:6001	020 .1	
+C-W555	SH	+C-X353:L	+C-A507:6001	020 .1	
+C-W555	SH	GND:	GND:	020 .5	
	SH				
+C-W555	WH	+C-X353:K	+C-A507:6013	020 .1	
+C-W555	YE	+C-X353:H	+C-A507:6011	020 .1	
+C-W556	BN	+C-X355:D	+C-A508:6005	021 .2	
+C-W556	GN	+C-X355:F	+C-A508:6009	021 .2	
+C-W556	GY	+C-X355:A	+C-A508:6002	021 .2	
+C-W556	PK	+C-X355:B	+C-A508:6003	021 .2	
+C-W556	SH	+C-X355:G	+C-A508:6001	021 .2	
+C-W556	SH	GND:	GND:	021 .4	
+C-W556	SH	+C-X355:G	+C-A508:6001	021 .2	
+C-W556	SH	+C-X355:G	+C-A508:6001	021 .2	
+C-W556	WH	+C-X355:C	+C-A508:6004	021 .2	
+C-W556	YE	+C-X355:E	+C-A508:6007	021 .2	
+C-W901	RD	+C-X321:-	+C-A143:AI53	177 .7	H.I.

Drawing remarks

Tetra Pak

Designer	Date	Machine
BMI	07/06/2004	TBA/22-0500

ECM No	Denomination	Page Type
175296	CABLE CONNECTION LIST	CABLE CONNECTION LIST

Company	Document No.	Doc. type	Version	Page
Tetra Pak Carton Ambient S.p.A.	2593852-0007	ELD	AE	6

This drawing must not without the consent of Tetra Pak be copied, transmitted or disclosed to any third party.

1 2 3 4 5 6 7 8 9 10

Cable Connection List of 2593852-0003

Cable	Core	From	To	Page.Col.	Option
+C-W901	YE	+C-X321:+	+C-A143:06	177 .7	H.I.
+P-W901	1	+P-A951:X1	+P-A953:DATA	061 .3	
+C-W902	RD	+C-X317:-	+C-A143:AI49	177 .7	H.I.
+C-W902	YE	+C-X317:+	+C-A143:05	177 .7	H.I.
+C-W903	RD	+C-X318:-	+C-A143:AI50	177 .7	H.I.
+C-W903	YE	+C-X318:+	+C-A143:09	177 .7	H.I.
+P-W903	1	+P-A951:X3	+P-A952:1	061 .4	
+C-W904	RD	+C-X319:-	+C-A143:AI51	177 .7	H.I.
+C-W904	YE	+C-X319:+	+C-A143:13	177 .7	H.I.
+P-W904	1	+P-A951:X2	+P-A952:DATA	061 .4	
+C-W905	RD	+C-X320:-	+C-A143:AI52	177 .7	H.I.
+C-W905	YE	+C-X320:+	+C-A143:17	177 .7	H.I.
+M-W1001	1	+M-X1001:101	+C-X218:1	117 .6	
+M-W1001	2	+M-X1001:102	+C-X218:2	117 .6	
+M-W1001	3	+M-X1001:103	+C-X218:3	117 .6	
+M-W1001	4	+M-X1001:104	+C-X218:4	117 .6	
+M-W1001	5	+M-X1001:105	+C-X218:5	117 .6	
+M-W1001	6	+M-X1001:106	+C-X218:6	117 .6	
+M-W1001	7	+M-X1001:107	+C-X218:7	117 .6	
+M-W1001	8	+M-X1001:108	+C-X218:8	117 .6	
+M-W1001	9	+M-X1001:109	+C-X218:9	094 .6	
+M-W1001	10	+M-X1001:101+	+C-X218:10	117 .3	
+M-W1001	11	+M-X1001:101-	+C-X218:11	117 .3	
+M-W1001	12	+M-X1001:110	+C-X218:12	200 .3	
+M-W1001	13	+M-X1001:111	+C-X218:13	046 .5	
+M-W1001	14	+M-X1001:112	+C-X218:14	046 .5	
+M-W1001	15	+M-X1001:113	+C-X218:15	124 .6	

Cable	Core	From	To	Page.Col.	Option
+M-W1001	16	+M-X1001:114	+C-X218:16	124 .6	
+M-W1001	17	+M-X1001:115	+C-X218:17	154 .4	
+M-W1001	18	+M-X1001:116	+C-X218:18	154 .4	
+M-W1001	19	+M-X1001:117	+C-X218:19	200 .3	
+M-W1001	20	+M-X1001:118	+C-X218:20	105 .6	
+M-W1001	21	+M-X1001:119	+C-X218:21	105 .6	
+M-W1001	22	+M-X1001:120	+C-X218:22	105 .6	
+M-W1001	23	+M-X1001:121	+C-X218:23	105 .6	
+M-W1001	24	+M-X1001:122	+C-X218:24	200 .3	
+M-W1001	YG	+M-X1001:⏚	+C-X218:⏚	154 .6	
+M-W1002	1	+C-X223:1	+M-X1001:123	059 .6	
+M-W1002	2	+C-X223:2	+M-X1001:124	059 .6	
+M-W1002	3	+C-X223:3	+M-X1001:125	059 .6	
+M-W1002	4	+C-X223:4	+M-X1001:126	059 .6	
+M-W1002	5	+C-X223:5	+M-X1001:127	059 .6	
+M-W1002	6	+C-X223:6	+M-X1001:128	059 .6	
+M-W1002	7	+C-X223:7	+M-X1001:129	059 .6	
+M-W1002	8	+C-X223:8	+M-X1001:130	059 .6	
	9				
	10				
	11				
	12				
+M-W1002	13	+C-X223:13	+M-K1001:A2	059 .6	
+M-W1002	14	+C-X223:14	+M-K1005:A2	059 .6	
+M-W1002	15	+C-X223:15	+M-K1003:A2	059 .6	
+M-W1002	16	+C-X223:16	+M-K1004:A2	059 .6	
+M-W1002	17	+C-X223:17	+M-K1006:A2	059 .6	

Drawing remarks

Tetra Pak

Designer	Date	Machine
BMI	07/06/2004	TBA/22-0500

ECM No	Denomination	Page Type
175296	CABLE CONNECTION LIST	CABLE CONNECTION LIST

Company	Document No.	Doc. type	Version	Page
Tetra Pak Carton Ambient S.p.A.	2593852-0007	ELD	AE	7

This drawing must not without the consent of Tetra Pak be copied, transmitted or disclosed to any third party.

Cable Connection List of 2593852-0003

Cable	Core	From	To	Page.Col.	Option
	18				
	19				
	20				
	21				
	22				
+M-W1002	23	+C-X223:23	+M-X1001:127+	059 .2	
+M-W1002	24	+C-X223:24	+M-X1001:127-	059 .2	
+M-W1002	GNYE	+C-X223:⏚	+M-X1001:⏚	059 .2	
+M-W1003	1	+M-X1003:101	+C-X224:1	201 .3	
+M-W1003	2	+M-X1003:102	+C-X224:2	062 .2	
+M-W1003	3	+M-X1003:103	+C-X224:3	062 .2	
+M-W1003	4	+M-X1003:104	+C-X224:4	062 .6	
	5				
+M-W1003	6	+M-X1003:108	+C-X224:6	062 .6	
+M-W1003	7	+M-X1003:109	+C-X224:7	062 .6	
+M-W1003	8	+M-X1003:114	+C-X224:8	124 .6	
+M-W1003	9	+M-X1003:115	+C-X224:9	120 .6	
+M-W1003	10	+M-X1003:116	+C-X224:10	120 .6	
+M-W1003	11	+M-X1003:122	+C-X224:11	120 .3	
+M-W1003	12	+M-X1003:120	+C-X224:12	120 .6	
	13				
+M-W1003	14	+M-X1003:123	+C-X224:14	116 .2	
+M-W1003	15	+M-X1003:124	+C-X224:15	116 .4	
+M-W1003	16	+M-X1003:125	+C-X224:16	118 .6	
+M-W1003	17	+M-X1003:126	+C-X224:17	054 .7	
+M-W1003	18	+M-X1003:127	+C-X224:18	054 .7	
+M-W1003	19	+M-X1003:128	+C-X224:19	118 .6	
+M-W1003	20	+M-X1003:112	+C-X224:20	121 .6	
+M-W1003	21	+M-X1003:113	+C-X224:21	121 .6	
	22				
+M-W1003	23	+M-X1003:128+	+C-X224:23	118 .3	
+M-W1003	24	+M-X1003:128-	+C-X224:24	118 .3	
+M-W1003	YG	+M-X1003:⏚	+C-X224:⏚	184 .7	
+M-W1004	1	+M-X1003:129	+C-X229:1	047 .5	
+M-W1004	2	+M-X1003:130	+C-X229:2	047 .5	
+M-W1004	3	+M-X1003:131	+C-X229:3	046 .5	
+M-W1004	4	+M-X1003:132	+C-X229:4	046 .5	
+M-W1004	5	+M-X1003:133	+C-X229:5	046 .5	
+M-W1004	6	+M-X1003:134	+C-X229:6	046 .5	
+M-W1004	7	+M-X1003:135	+C-X229:7	046 .5	
+M-W1004	8	+M-X1003:136	+C-X229:8	154 .4	
+M-W1004	9	+M-X1003:137	+C-X229:9	154 .4	
+M-W1004	10	+M-X1003:138	+C-X229:10	062 .2	
+M-W1004	11	+M-X1003:139	+C-X229:11	062 .2	
+M-W1004	12	+M-X1003:140	+C-X229:12	062 .4	
+M-W1004	13	+M-X1003:141	+C-X229:13	062 .4	
+M-W1004	14	+M-X1003:143	+C-X229:14	062 .3	
+M-W1004	15	+M-X1003:145	+C-X229:15	062 .6	
+M-W1004	16	+M-X1003:146	+C-X229:16	118 .6	
+M-W1004	17	+M-X1003:147	+C-X229:17	118 .6	
+M-W1004	18	+M-X1003:148	+C-X229:18	118 .6	
+M-W1004	19	+M-X1003:149	+C-X229:19	081 .6	
+M-W1004	20	+M-X1003:150	+C-X229:20	047 .5	
+M-W1004	21	+M-X1003:151	+C-X229:21	047 .5	

Drawing remarks

Tetra Pak

Designer	Date	Machine
BMI	07/06/2004	TBA/22-0500

ECM No	Denomination	Page Type
175296	CABLE CONNECTION LIST	CABLE CONNECTION LIST

Company	Document No.	Doc. type	Version	Page
Tetra Pak Carton Ambient S.p.A.	2593852-0007	ELD	AE	8

This drawing must not without the consent of Tetra Pak be copied, transmitted or disclosed to any third party.

1 2 3 4 5 6 7 8 9 10

Cable Connection List of 2593852-0003

Cable	Core	From	To	Page.Col.	Option
+M-W1004	22	+M-X1003:152	+C-X229:22	118 .6	
+M-W1004	23	+M-X1003:149+	+C-X229:23	081 .3	
+M-W1004	24	+M-X1003:149-	+C-X229:24	081 .3	
+M-W1004	GNYE	+M-X1003:⏚	+C-X229:⏚	202 .3	
+M-W1005	1	+C-X227:1	+M-X1001:131	200 .3	
+M-W1005	2	+C-X227:2	+M-X1001:132	200 .3	
+M-W1005	3	+C-X227:3	+M-X1001:133	200 .3	
+M-W1005	4	+C-X227:4	+M-X1001:134	200 .7	
+M-W1005	5	+C-X227:5	+M-X1001:135	200 .7	
+M-W1005	6	+C-X227:6	+M-X1001:136	200 .7	
+M-W1005	7	+C-X227:7	+M-X1001:137	200 .7	
+M-W1005	8	+C-X227:8	+M-X1001:138	200 .7	
+M-W1005	9	+C-X227:9	+M-X1001:139	200 .7	
+M-W1005	10	+C-X227:10	+M-X1001:140	200 .7	
+M-W1005	11	+C-X227:11	+M-X1001:141	200 .7	
+M-W1005	12	+C-X227:12	+M-X1001:142	200 .7	
+M-W1005	13	+C-X227:13	+M-X1001:143	200 .7	
+M-W1005	14	+C-X227:14	+M-X1001:144	200 .7	
+M-W1005	15	+C-X227:15	+M-X1001:145	200 .7	
+M-W1005	16	+C-X227:16	+M-X1001:146	200 .7	
+M-W1005	17	+C-X227:17	+M-X1001:147	200 .7	
+M-W1005	18	+C-X227:18	+M-X1001:148	200 .7	
+M-W1005	19	+C-X227:19	+M-X1001:149	200 .7	
	20				
	21				
	22				
+M-W1005	23	+C-X227:23	+M-X1001:149+	200 .9	

Cable	Core	From	To	Page.Col.	Option
+M-W1005	24	+C-X227:24	+M-X1001:149-	200 .9	
+M-W1005	GNYE	+C-X227:⏚	+M-X1001:⏚	200 .9	
+M-W1006	1	+C-X217:1	+M-X1003:153	118 .6	
+M-W1006	2	+C-X217:2	+M-X1003:154	123 .6	
+M-W1006	3	+C-X217:3	+M-X1003:155	123 .6	
+M-W1006	4	+C-X217:4	+M-X1003:158	062 .4	
+M-W1006	5	+C-X217:5	+M-X1003:159	062 .4	
+M-W1006	6	+C-X217:6	+M-X1003:156	062 .2	
+M-W1006	7	+C-X217:7	+M-X1003:157	062 .2	
	8				
+M-W1006	9	+C-X217:9	+M-X1003:160	124 .6	
+M-W1006	10	+C-X217:23	+M-X1003:160+	124 .3	
+M-W1006	11	+C-X217:24	+M-X1003:160-	124 .3	
+M-W1006	GNYE	+C-X217:⏚	+M-X1003:⏚	202 .3	
+M-W1007	1	+M-X1003:175	+C-X212:1	123 .6	H.I.
+M-W1007	2	+M-X1003:176	+C-X212:2	176 .6	H.I.
+M-W1007	3	+M-X1003:177	+C-X212:3	176 .6	H.I.
+M-W1007	4	+M-X1003:178	+C-X212:4	176 .6	H.I.
+M-W1007	5	+M-X1003:179	+C-X212:5	176 .6	H.I.
+M-W1007	6	+M-X1003:180	+C-X212:6	176 .6	H.I.
+M-W1007	7	+M-X1003:181	+C-X212:7	045 .5	H.I.
+M-W1007	8	+M-X1003:182	+C-X212:8	045 .5	H.I.
+M-W1007	9	+M-X1003:183	+C-X212:9	045 .5	H.I.
+M-W1007	10	+M-X1003:184	+C-X212:10	184 .3	H.I.
+M-W1007	11	+M-X1003:185	+C-X212:11	184 .3	H.I.
+M-W1007	12	+M-X1003:186	+C-X212:12	202 .7	H.I.
+M-W1007	13	+M-X1003:187	+C-X212:13	202 .7	

Drawing remarks

Tetra Pak

Designer	Date	Machine
BMI	07/06/2004	TBA/22-0500

ECM No	Denomination	Page Type
175296	CABLE CONNECTION LIST	CABLE CONNECTION LIST

Company	Document No.	Doc. type	Version	Page
Tetra Pak Carton Ambient S.p.A.	2593852-0007	ELD	AE	9

This drawing must not without the consent of Tetra Pak be copied, transmitted or disclosed to any third party.

1 2 3 4 5 6 7 8 9 10

Cable Connection List of 2593852-0003

Cable	Core	From	To	Page.Col.	Option
+M-W1007	14	+M-X1003:188	+C-X212:14	202 .7	
+M-W1007	15	+M-X1003:189	+C-X212:15	202 .7	
+M-W1007	16	+M-X1003:190	+C-X212:16	202 .7	
+M-W1007	17	+M-X1003:191	+C-X212:17	202 .7	
+M-W1007	18	+M-X1003:192	+C-X212:18	202 .7	
+M-W1007	19	+M-X1003:193	+C-X212:19	202 .7	
+M-W1007	20	+M-X1003:194	+C-X212:20	202 .7	
+M-W1007	21	+M-X1003:195	+C-X212:21	202 .7	
+M-W1007	22	+M-X1003:196	+C-X212:22	202 .7	
+M-W1007	23	+M-X1003:196+	+C-X212:23	202 .9	
+M-W1007	24	+M-X1003:196-	+C-X212:24	202 .9	
+M-W1007	GNYE	+M-X1003:⏚	+C-X212:⏚	202 .9	
+M-W1011	1	+M-X1003:119	+M-S1801:22	120 .5	
+M-W1011	2	+M-X1003:120	+M-S1801:12	120 .5	
+M-W1011	3	+M-X1003:121+	+M-S1801:11	120 .3	
+M-W1011	4	+M-X1003:122	+M-S1801:21	120 .3	
	GNYE				
+M-W1014	BN	+M-X1001:108	+M-B1102:BN	117 .6	
+M-W1014	BU	+M-X1001:108+	+M-B1102:BU	117 .4	
+M-W1014	RD	+M-X1001:108-	+M-B1102:RD	117 .4	
+M-W1015	1	+M-X1001:112	+M-B1104:1	046 .3	
+M-W1015	2	+M-X1001:111	+M-B1104:	046 .3	
+M-W1015	GNYE	+M-X1001:⏚	+M-B1104:⏚	046 .3	
+M-W1016	BK	+M-X1003:146	+M-B1111:BK	118 .6	
+M-W1016	BN	+M-X1003:146+	+M-B1111:BN	118 .5	
+M-W1016	BU	+M-X1003:146-	+M-B1111:BU	118 .5	
+M-W1018	1	+M-X1001:115	+M-Y1104:1	154 .5	

Cable	Core	From	To	Page.Col.	Option
+M-W1018	2	+M-X1001:115-	+M-Y1104:2	154 .5	
+M-W1018	YG	+M-X1001:⏚	+M-Y1104:E	154 .5	
+M-W1019	1	+M-X1001:116	+M-Y1105:1	154 .5	
+M-W1019	2	+M-X1001:116-	+M-Y1105:2	154 .5	
+M-W1019	YG	+M-X1001:⏚	+M-Y1105:E	154 .5	
+M-W1020	BK	+M-X1003:154	+M-B1115:BK	123 .6	
+M-W1020	BN	+M-X1003:154+	+M-B1115:BN	123 .5	
+M-W1020	BU	+M-X1003:154-	+M-B1115:BU	123 .5	
+M-W1021	BK	+M-X1003:155	+M-B1116:BK	123 .6	
+M-W1021	BN	+M-X1003:155+	+M-B1116:BN	123 .5	
+M-W1021	BU	+M-X1003:155-	+M-B1116:BU	123 .5	
+M-W1024	1	+M-X1003:110	+M-B1507:21	121 .4	
+M-W1024	2	+M-X1003:111	+M-B1507:11	121 .4	
+M-W1024	3	+M-X1003:112	+M-B1507:12	121 .5	
+M-W1024	4	+M-X1003:113	+M-B1507:22	121 .5	
	GNYE				
+M-W1025	BK	+M-X1001:104	+M-B1350:BK	117 .6	
+M-W1025	BN	+M-X1001:104+	+M-B1350:BN	117 .5	
+M-W1025	BU	+M-X1001:104-	+M-B1350:BU	117 .5	
+M-W1027	1	+M-X1003:130	+M-B1201:1	047 .3	
+M-W1027	2	+M-X1003:129	+M-B1201:	047 .3	
+M-W1027	GNYE	+M-X1003:⏚	+M-B1201:⏚	047 .3	
+M-W1028	1	+M-X1003:132	+M-B1220:1	046 .3	
+M-W1028	2	+M-X1003:131	+M-B1220:	046 .3	
+M-W1028	GNYE	+M-X1003:⏚	+M-B1220:⏚	046 .3	
+M-W1029	1	+M-X1003:134	+M-B1230:1	046 .3	
+M-W1029	2	+M-X1003:135	+M-B1230:2	046 .3	

Drawing remarks

Tetra Pak

Designer	Date	Machine
BMI	07/06/2004	TBA/22-0500

ECM No	Denomination	Page Type
175296	CABLE CONNECTION LIST	CABLE CONNECTION LIST

Company	Document No.	Doc. type	Version	Page
Tetra Pak Carton Ambient S.p.A.	2593852-0007	ELD	AE	10

This drawing must not without the consent of Tetra Pak be copied, transmitted or disclosed to any third party.

Cable Connection List of 2593852-0003

Cable	Core	From	To	Page.Col.	Option
+M-W1029	3	+M-X1003:133	+M-B1230:	046 .3	
+M-W1029	GNYE	+M-X1003:⏚	+M-B1230:	046 .3	
+M-W1030	1	+M-X1003:136	+M-Y1230:1	154 .5	
+M-W1030	2	+M-X1003:136-	+M-Y1230:2	154 .5	
+M-W1030	YG	+M-X1003:⏚	+M-Y1230:E	154 .5	
+M-W1031	1	+M-X1003:137	+M-Y1231:1	154 .5	
+M-W1031	2	+M-X1003:137-	+M-Y1231:2	154 .5	
+M-W1031	YG	+M-X1003:⏚	+M-Y1231:E	154 .5	
+M-W1032	BK	+M-X1001:101	+M-B1301:BK	117 .6	
+M-W1032	BN	+M-X1001:101+	+M-B1301:BN	117 .5	
+M-W1032	BU	+M-X1001:101-	+M-B1301:BU	117 .5	
+M-W1033	BK	+M-X1001:102	+M-B1302:BK	117 .6	
+M-W1033	BN	+M-X1001:102+	+M-B1302:BN	117 .5	
+M-W1033	BU	+M-X1001:102-	+M-B1302:BU	117 .5	
+M-W1034	BK	+M-X1001:103	+M-B1303:BK	117 .6	
+M-W1034	BN	+M-X1001:103+	+M-B1303:BN	117 .5	
+M-W1034	BU	+M-X1001:103-	+M-B1303:BU	117 .5	
+M-W1035	BK	+M-X1001:105	+M-B1306:BK	117 .6	
+M-W1035	BN	+M-X1001:105+	+M-B1306:BN	117 .5	
+M-W1035	BU	+M-X1001:105-	+M-B1306:BU	117 .5	
+M-W1036	BK	+M-X1001:106	+M-B1307:BK	117 .6	
+M-W1036	BN	+M-X1001:106+	+M-B1307:BN	117 .5	
+M-W1036	BU	+M-X1001:106-	+M-B1307:BU	117 .5	
+M-W1041	BK	+M-X1003:125	+M-B3116:BK	118 .6	
+M-W1041	BN	+M-X1003:125+	+M-B3116:BN	118 .5	
+M-W1041	BU	+M-X1003:125-	+M-B3116:BU	118 .5	
+M-W1043	BK	+M-X1003:152	+M-B1502:BK	118 .6	
+M-W1043	BN	+M-X1003:152+	+M-B1502:BN	118 .5	
+M-W1043	BU	+M-X1003:152-	+M-B1502:BU	118 .5	
+M-W1044	1	+M-X1003:138	+M-B1504:21	062 .3	
+M-W1044	2	+M-X1003:139	+M-B1504:11	062 .3	
+M-W1044	3	+M-X1003:140	+M-B1504:12	062 .3	
+M-W1044	4	+M-X1003:141	+M-B1504:22	062 .3	
	GNYE				
+M-W1045	1	+M-X1003:102	+M-B1505:21	062 .3	
+M-W1045	2	+M-X1003:103	+M-B1505:11	062 .3	
+M-W1045	3	+M-X1003:104	+M-B1505:12	062 .3	
+M-W1045	4	+M-X1003:105	+M-B1505:22	062 .3	
	GNYE				
+M-W1046	1	+M-X1003:106	+M-B1506:21	062 .5	
+M-W1046	2	+M-X1003:107	+M-B1506:11	062 .5	
+M-W1046	3	+M-X1003:108	+M-B1506:12	062 .5	
+M-W1046	4	+M-X1003:109	+M-B1506:22	062 .5	
	GNYE				
+M-W1047	BK	+M-X1003:143+	+M-B1224:BK	062 .3	
	BN				
+M-W1047	BU	+M-X1003:143	+M-B1224:BU	062 .3	
+M-W1047	YG	+M-X1003:⏚	+M-B1224:E	062 .3	
+M-W1048	1	+M-X1003:115	+M-S1802:22	120 .5	
+M-W1048	2	+M-X1003:116	+M-S1802:12	120 .5	
+M-W1048	3	+M-X1003:117+	+M-S1802:11	120 .3	
+M-W1048	4	+M-X1003:118	+M-S1802:21	120 .3	
	GNYE				
+M-W1049	BK	+M-X1003:147	+M-B7814:1	118 .6	

Drawing remarks

Tetra Pak

Designer	Date	Machine
BMI	07/06/2004	TBA/22-0500

ECM No	Denomination	Page Type
175296	CABLE CONNECTION LIST	CABLE CONNECTION LIST

Company	Document No.	Doc. type	Version	Page
Tetra Pak Carton Ambient S.p.A.	2593852-0007	ELD	AE	11

This drawing must not without the consent of Tetra Pak be copied, transmitted or disclosed to any third party.

Cable Connection List of 2593852-0003

Cable	Core	From	To	Page.Col.	Option
+M-W1049	BU	+M-X1003:147+	+M-B7814:3	118 .4	
+M-W1050	BK	+M-X1003:149	+M-B1403:BK	081 .5	
+M-W1050	BN	+M-X1003:149+	+M-B1403:BN	081 .4	
+M-W1050	BU	+M-X1003:149-	+M-B1403:BU	081 .4	
+M-W1051	BN	+C-X129:4	+M-B1316:32	011 .8	
	GN				
	GY				
	PK				
+M-W1051	SH	+C-X129:5	+M-B1316:PE	011 .8	
	SH				
	SH				
+M-W1051	WH	+C-X129:3	+M-B1316:31	011 .8	
	YE				
+M-W1052	1	+M-X1314:3	+M-X1003:126	054 .6	
+M-W1052	2	+M-X1314:1	+M-X1003:126+	054 .6	
+M-W1052	3	+M-X1314:2	+M-X1003:126-	054 .6	
	GNYE				
+M-W1053	BN	+M-X1053:A	+M-A1304:6	054 .4	
+M-W1053	GN	+M-X1053:C	+M-A1304:9	054 .4	
	GY				
	PK				
+M-W1053	SH	GND:	+M-T1304:E	054 .2	
+M-W1053	SH	GND:	+M-T1304:E	054 .2	
+M-W1053	SH	GND:	+M-T1304:E	054 .2	
	SH				
+M-W1053	WH	+M-X1053:B	+M-A1304:7	054 .4	
+M-W1053	YE	+M-X1053:D	+M-A1304:8	054 .4	

Cable	Core	From	To	Page.Col.	Option
+M-W1055	BN	+M-X1003:167	+M-B1315:BN	050 .5	
+M-W1055	BU	+M-X1003:164	+M-B1315:BU	050 .4	
+M-W1055	GN	+M-X1003:168	+M-B1315:GN	050 .5	
+M-W1055	GY	+M-X1003:165	+M-B1315:GY	050 .5	
+M-W1055	RD	+M-X1003:163	+M-B1315:RD	050 .4	
+M-W1055	SH	+M-X1003:169	+M-B1315:E	050 .5	
+M-W1055	WH	+M-X1003:162	+M-B1315:WH	050 .4	
+M-W1055	YE	+M-X1003:166	+M-B1315:YE	050 .5	
+M-W1056	1	+M-X1003:127+	+M-B1314:1	054 .6	FLOATER
+M-W1056	2	+M-X1003:127-	+M-B1314:2	054 .6	FLOATER
+M-W1056	3	+M-X1003:127	+M-B1314:3	054 .6	FLOATER
	GNYE				
+M-W1058	1	+M-X1003:123	+M-S1003:51	116 .2	
+M-W1058	2	+M-X1003:124	+M-S1003:52	116 .3	
	GNYE				
+M-W1059	BK	+M-X1003:160	+M-B1112:BK	124 .6	
+M-W1059	BN	+M-X1003:160+	+M-B1112:BN	124 .5	
+M-W1059	BU	+M-X1003:160-	+M-B1112:BU	124 .5	
+M-W1060	BK	+M-X1001:113	+M-B1241:BK	124 .6	
+M-W1060	BN	+M-X1001:113+	+M-B1241:BN	124 .5	
+M-W1060	BU	+M-X1001:113-	+M-B1241:BU	124 .5	
+M-W1061	BK	+M-X1001:114	+M-B1242:BK	124 .6	
+M-W1061	BN	+M-X1001:114+	+M-B1242:BN	124 .5	
+M-W1061	BU	+M-X1001:114-	+M-B1242:BU	124 .5	
+M-W1063	BK	+M-X1003:128	+M-B1321:BK	118 .6	
+M-W1063	BN	+M-X1003:128+	+M-B1321:BN	118 .5	
+M-W1063	BU	+M-X1003:128-	+M-B1321:BU	118 .5	

Drawing remarks

Tetra Pak

Designer	Date	Machine
BMI	07/06/2004	TBA/22-0500

ECM No	Denomination	Page Type
175296	CABLE CONNECTION LIST	CABLE CONNECTION LIST

Company	Document No.	Doc. type	Version	Page
Tetra Pak Carton Ambient S.p.A.	2593852-0007	ELD	AE	12

This drawing must not without the consent of Tetra Pak be copied, transmitted or disclosed to any third party.

Cable Connection List of 2593852-0003

Cable	Core	From	To	Page.Col.	Option
+M-W1064	BK	+M-X1003:144	+M-B1225:BK	062 .5	
	BN				
+M-W1064	BU	+M-X1003:145	+M-B1225:BU	062 .5	
+M-W1064	YG	+M-X1003:⏚	+M-B1225:E	062 .5	
+M-W1065	1	+M-X1003:151	+M-B1322:1	047 .3	
+M-W1065	2	+M-X1003:150	+M-B1322:	047 .3	
+M-W1065	GNYE	+M-X1003:⏚	+M-B1322:⏚	047 .3	
+M-W1068	1	+M-X1003:156	+M-B1508:21	062 .3	
+M-W1068	2	+M-X1003:157	+M-B1508:11	062 .3	
+M-W1068	3	+M-X1003:158	+M-B1508:12	062 .3	
+M-W1068	4	+M-X1003:159	+M-B1508:22	062 .3	
	GNYE				
+M-W1081	BK	+M-X1003:148	+M-B1113:BK	118 .6	
+M-W1081	BN	+M-X1003:148+	+M-B1113:BN	118 .5	
+M-W1081	BU	+M-X1003:148-	+M-B1113:BU	118 .5	
+M-W1083	BN	+M-X1003:173	+M-M1504:BN	025 .3	
+M-W1083	BU	+M-X1003:170	+M-M1504:BU	025 .2	
+M-W1083	GN	+M-X1003:172	+M-M1504:GN	025 .3	
+M-W1083	SH	+M-X1003:174	GND:	025 .2	
+M-W1083	VT	+M-X1003:171	+M-M1504:VT	025 .3	
+M-W1083	WH	+M-X1003:⏚	+M-M1504:WH1	025 .3	
+M-W1084	1	+C-X131:1	+M-X1003:170	025 .2	
+M-W1084	2	+C-X131:2	+M-X1003:171	025 .3	
+M-W1084	3	+C-X131:3	+M-X1003:172	025 .3	
+M-W1084	4	+C-X131:4	+M-X1003:173	025 .3	
+M-W1084	GNYE	+C-X131:⏚	+M-X1003:⏚	025 .3	
+M-W1084	SH	+C-X131:5	+M-X1003:174	025 .2	

Cable	Core	From	To	Page.Col.	Option
+M-W1206	1	+M-X4008:1	+C-X206:1	173 .6	
+M-W1206	2	+M-X4008:2	+C-X206:2	173 .6	
+M-W1206	3	+M-X4008:3	+C-X206:3	173 .6	
+M-W1206	4	+M-X4008:4	+C-X206:4	182 .3	
+M-W1206	5	+M-X4008:5	+C-X206:5	182 .3	
+M-W1206	6	+M-X4008:6	+C-X206:6	182 .3	
+M-W1206	7	+M-X4008:7	+C-X206:7	182 .3	
+M-W1206	8	+M-X4008:8	+C-X206:8	182 .3	
+M-W1206	9	+M-X4008:9	+C-X206:9	185 .3	
+M-W1206	10	+M-X4008:10	+C-X206:10	175 .6	
+M-W1206	11	+M-X4008:11	+C-X206:11	204 .7	
+M-W1206	12	+M-X4008:12	+C-X206:12	204 .7	
	13				
	14				
	15				
	16				
	17				
	18				
	19				
	20				
	21				
	22				
+M-W1206	23	+M-X4008:12+	+C-X206:23	204 .9	
+M-W1206	24	+M-X4008:12-	+C-X206:24	204 .9	
	GNYE				
+M-W1207	1	+C-X207:1	+M-X4005:1	173 .6	
+M-W1207	2	+C-X207:2	+M-X4005:2	173 .3	

Drawing remarks

Tetra Pak

Designer	Date	Machine
BMI	07/06/2004	TBA/22-0500

ECM No	Denomination	Page Type
175296	CABLE CONNECTION LIST	CABLE CONNECTION LIST

Company	Document No.	Doc. type	Version	Page
Tetra Pak Carton Ambient S.p.A.	2593852-0007	ELD	AE	13

This drawing must not without the consent of Tetra Pak be copied, transmitted or disclosed to any third party.

Cable Connection List of 2593852-0003

Cable	Core	From	To	Page.Col.	Option
+M-W1207	3	+C-X207:3	+M-X4005:3	173 .3	
+M-W1207	4	+C-X207:4	+M-X4005:4	173 .6	
+M-W1207	5	+C-X207:5	+M-X4005:7	173 .6	
+M-W1207	6	+C-X207:6	+M-X4005:10	173 .6	
+M-W1207	7	+C-X207:7	+M-X4005:13	173 .6	
+M-W1207	8	+C-X207:8	+M-X4005:16	174 .6	
+M-W1207	9	+C-X207:9	+M-X4005:19	174 .6	
+M-W1207	10	+C-X207:10	+M-X4005:22	174 .6	
	11				
	GNYE				
	BN				
+C-W1256	SH	+C-W1256:	GND:	098 .8	
+C-W1256	WH	+C-A107:AQ001	+C-A502:301	012 .2	
+M-W1300	RD	+M-X1300:-	+C-X315:-	087 .5	
+M-W1300	YE	+M-X1300:+	+C-X315:+	087 .5	
+M-W1301	RD	+M-X1301:-	+C-X306:-	086 .5	
+M-W1301	YE	+M-X1301:+	+C-X306:+	086 .5	
+M-W1302	RD	+M-X1302:-	+C-X310:-	086 .5	
+M-W1302	YE	+M-X1302:+	+C-X310:+	086 .5	
+M-W1303	RD	+M-X1303:-	+C-X311:-	086 .5	
+M-W1303	YE	+M-X1303:+	+C-X311:+	086 .5	
+M-W1304	RD	+M-X1304:-	+C-X309:-	086 .5	
+M-W1304	YE	+M-X1304:+	+C-X309:+	086 .5	
+M-W1305	RD	+M-X1305:-	+C-X308:-	086 .5	
+M-W1305	YE	+M-X1305:+	+C-X308:+	086 .5	
+M-W1306	RD	+M-X1306:-	+C-X307:-	086 .5	
+M-W1306	YE	+M-X1306:+	+C-X307:+	086 .5	

Cable	Core	From	To	Page.Col.	Option
+M-W1307	RD	+M-X1307:-	+C-X313:-	087 .5	
+M-W1307	YE	+M-X1307:+	+C-X313:+	087 .5	
+M-W1330	BK	+M-X1003:114	+M-B1330:BK	124 .6	
+M-W1330	BN	+M-X1003:114+	+M-B1330:BN	124 .5	
+M-W1330	BU	+M-X1003:114-	+M-B1330:BU	124 .5	
+M-W1402	1	+M-T1402:	+M-L1402:	012 .2	
+M-W1405	BK	+M-X1003:175	+M-B1405:BK	123 .6	
+M-W1405	BN	+M-X1003:175+	+M-B1405:BN	123 .5	
+M-W1405	BU	+M-X1003:175-	+M-B1405:BU	123 .5	
+M-W1500	1	+C-X105:1	+M-M1101:U	023 .3	
+M-W1500	2	+C-X105:2	+M-M1101:V	023 .3	
+M-W1500	3	+C-X105:3	+M-M1101:W	023 .3	
+M-W1500	YG	+C-X105:⏚	+M-M1101:E	023 .4	
+M-W1501	BK	+C-X501:1	+M-R1105:1	006 .3	
+M-W1501	BN	+C-X501:2	+M-R1105:2	006 .3	
+M-W1501	GNYE	+C-X501:⏚	+M-R1105:E	006 .4	
+M-W1501	L.BU	+C-X501:3	+M-R1105:3	006 .3	
+M-W1502	BK	+C-X135:1	+M-R1206:Z	007 .3	
+M-W1502	BN	+C-X135:2	+M-R1206:X	007 .3	
+M-W1502	GNYE	+C-X135:⏚	+M-R1206:E	007 .4	
+M-W1502	L.BU	+C-X135:3	+M-R1206:Y	007 .3	
+M-W1503	BK	+C-X119:1	+M-R1207:Z	007 .8	
+M-W1503	BN	+C-X119:2	+M-R1207:X	007 .8	
+M-W1503	GNYE	+C-X119:⏚	+M-R1207:E	007 .9	
+M-W1503	L.BU	+C-X119:3	+M-R1207:Y	007 .8	
+M-W2001	1	+C-X110:1	+M-M1205:V	022 .1	
+M-W2001	2	+C-X110:2	+M-M1205:U	022 .2	

Drawing remarks

Tetra Pak

Designer	Date	Machine
BMI	07/06/2004	TBA/22-0500

ECM No	Denomination	Page Type
175296	CABLE CONNECTION LIST	CABLE CONNECTION LIST

Company	Document No.	Doc. type	Version	Page
Tetra Pak Carton Ambient S.p.A.	2593852-0007	ELD	AE	14

This drawing must not without the consent of Tetra Pak be copied, transmitted or disclosed to any third party.

Cable Connection List of 2593852-0003

Cable	Core	From	To	Page.Col.	Option
+M-W2001	3	+C-X110:3	+M-M1205:W	022 .2	
+M-W2001	YG	+C-X110:⏚	+M-M1205:E	022 .2	
+M-W2002	1	+C-X115:1	+M-M1213:V	022 .3	
+M-W2002	2	+C-X115:2	+M-M1213:U	022 .3	
+M-W2002	3	+C-X115:3	+M-M1213:W	022 .3	
+M-W2002	YG	+C-X115:⏚	+M-M1213:E	022 .4	
+M-W2003	1	+C-X503:1	+M-X2243:1	022 .5	
+M-W2003	2	+C-X503:2	+M-X2243:2	022 .5	
+M-W2003	3	+C-X503:3	+M-X2243:3	022 .5	
+M-W2003	YG	+C-X503:⏚	+M-X2243:⏚	022 .5	
+M-W2004	1	+C-X125:1	+M-X4000:1	024 .2	
+M-W2004	2	+C-X125:2	+M-X4000:2	024 .3	
+M-W2004	3	+C-X125:3	+M-X4000:3	024 .3	
+M-W2004	4	+C-X125:4	+M-X4000:4	024 .3	
+M-W2004	GNYE	+C-X125:⏚	+M-X4000:⏚	024 .3	
+M-W2004	SH	+C-X125:5	+M-X4000:5	024 .2	
+M-W2005	1	+C-X101:1	+M-X2001:1	032 .7	
+M-W2005	2	+C-X101:2	+M-X2001:2	032 .7	
+M-W2005	GNYE	+C-X101:⏚	+M-X2001:⏚	032 .8	
+M-W2007	1	+C-X102:1	+M-X2241:1	023 .5	
+M-W2007	2	+C-X102:2	+M-X2241:2	023 .5	
+M-W2007	3	+C-X102:3	+M-X2241:3	023 .5	
+M-W2007	YG	+C-X102:⏚	+M-X2241:⏚	023 .5	
+M-W2008	1	+C-X103:1	+M-X2242:1	023 .6	
+M-W2008	2	+C-X103:2	+M-X2242:2	023 .7	
+M-W2008	3	+C-X103:3	+M-X2242:3	023 .7	
+M-W2008	YG	+C-X103:⏚	+M-X2242:⏚	023 .7	

Cable	Core	From	To	Page.Col.	Option
+M-W2014	1	+C-X111:1	+M-M5503:U	022 .6	
+M-W2014	2	+C-X111:2	+M-M5503:V	022 .7	
+M-W2014	3	+C-X111:3	+M-M5503:W	022 .7	
+M-W2014	YG	+C-X111:⏚	+M-M5503:E	022 .7	
+M-W2015	1	+C-X112:1	+M-M5406:U	016 .9	
+M-W2015	2	+C-X112:2	+M-M5406:V	016 .9	
+M-W2015	3	+C-X112:3	+M-M5406:W	016 .10	
+M-W2015	GNYE	+C-X112:5	+M-M5406:⏚	016 .10	
+M-W2015	SH	+C-X112:4	GND:	016 .10	
+M-W2017	1	+M-X4004:1	+M-X5002:1	010 .2	
+M-W2017	2	+M-X4004:2	+M-X5002:2	010 .3	
+M-W2017	3	+M-X4004:3	+M-X5003:1	010 .4	
+M-W2017	4	+M-X4004:4	+M-X5003:2	010 .5	
+M-W2017	GNYE	+M-X4004:⏚	GND:	010 .6	
+M-W2018	1	+M-X4004:16	+M-X5004:1	010 .7	
+M-W2018	2	+M-X4004:17	+M-X5004:2	010 .8	
+M-W2018	3	+M-X4004:18	+M-X5005:1	010 .9	
+M-W2018	4	+M-X4004:19	+M-X5005:2	010 .10	
+M-W2018	GNYE	+M-X4004:⏚	GND:	010 .6	
+M-W2021	RD	+M-X5006:-	+M-X4010:-	087 .3	
+M-W2021	YE	+M-X5006:+	+M-X4010:+	087 .3	
+M-W2022	RD	+M-X5007:-	+M-X4011:-	087 .3	
+M-W2022	YE	+M-X5007:+	+M-X4011:+	087 .3	
+M-W2023	RD	+M-X5008:-	+M-X4012:-	087 .3	
+M-W2023	YE	+M-X5008:+	+M-X4012:+	087 .3	
+M-W2024	RD	+M-X5009:-	+M-X4013:-	087 .3	
+M-W2024	YE	+M-X5009:+	+M-X4013:+	087 .3	

Drawing remarks

Tetra Pak

Designer	Date	Machine
BMI	07/06/2004	TBA/22-0500

ECM No	Denomination	Page Type
175296	CABLE CONNECTION LIST	CABLE CONNECTION LIST

Company	Document No.	Doc. type	Version	Page
Tetra Pak Carton Ambient S.p.A.	2593852-0007	ELD	AE	15

This drawing must not without the consent of Tetra Pak be copied, transmitted or disclosed to any third party.

Cable Connection List of 2593852-0003

Cable	Core	From	To	Page.Col.	Option
+M-W2027	1	+M-X2003:127	+M-Z004:4	005 .8	
+M-W2027	2	+M-X2003:128	+M-Z004:3	005 .8	
	GNYE				
+M-W2027	SH	PE:	PE:	005 .7	
+M-W2028	BN	+C-X217:18	+M-X1003:167	050 .5	
+M-W2028	BU	+C-X217:15	+M-X1003:164	050 .4	
+M-W2028	GN	+C-X217:19	+M-X1003:168	050 .5	
+M-W2028	GY	+C-X217:16	+M-X1003:165	050 .5	
+M-W2028	RD	+C-X217:14	+M-X1003:163	050 .4	
+M-W2028	SH	+C-X217:20	+M-X1003:169	050 .5	
+M-W2028	WH	+C-X217:13	+M-X1003:162	050 .4	
+M-W2028	YE	+C-X217:17	+M-X1003:166	050 .5	
+M-W2029	1	+C-X130:1	+M-M1501:U	016 .5	
+M-W2029	2	+C-X130:2	+M-M1501:V	016 .5	
+M-W2029	3	+C-X130:3	+M-M1501:W	016 .5	
+M-W2029	SH	+C-X130:4	GND:	016 .5	
+M-W2029	YG	+C-X130:5	+M-M1501:⏚	016 .5	
+M-W2031	1	+C-X129:1	+M-B1316:1	011 .8	
+M-W2031	2	+C-X129:2	+M-B1316:2	011 .8	
+M-W2031	YG	+C-X129:⏚	+M-B1316:PE	011 .9	
+M-W2040	1	+C-X136:1	+M-M1206:L1	026 .7	
+M-W2040	2	+C-X136:2	+M-M1206:N	026 .8	
+M-W2040	YG	+C-X136:⏚	+M-M1206:E	026 .8	
+M-W2041	BK	+C-X138:1	+M-R1209:Z	008 .8	
+M-W2041	BN	+C-X138:2	+M-R1209:X	008 .8	
+M-W2041	GNYE	+C-X138:⏚	+M-R1209:E	008 .9	
+M-W2041	L.BU	+C-X138:3	+M-R1209:Y	008 .8	

Cable	Core	From	To	Page.Col.	Option
+M-W2042	BK	+C-X137:1	+M-R1208:Z	008 .3	
+M-W2042	BN	+C-X137:2	+M-R1208:X	008 .3	
+M-W2042	GNYE	+C-X137:⏚	+M-R1208:E	008 .4	
+M-W2042	L.BU	+C-X137:3	+M-R1208:Y	008 .3	
+M-W2048	1	+C-X233:1	+M-X1254:1	165 .4	
+M-W2048	2	+C-X233:2	+M-X1254:2	165 .4	
+M-W2048	3	+C-X233:3	+M-X1254:3	165 .4	
+M-W2048	4	+C-X233:4	+M-X1254:4	165 .4	
+M-W2048	5	+C-X233:5	+M-X1254:5	165 .4	
+M-W2048	6	+C-X233:7	+M-X1254:6	165 .4	
+M-W2048	7	+C-X233:8	+M-X1254:7	165 .4	
+M-W2048	8	+C-X233:9	+M-X1254:8	165 .4	
+M-W2048	9	+C-X233:10	+M-X1254:9	166 .4	
+M-W2048	10	+C-X233:11	+M-X1254:10	166 .4	
	11				
+M-W2048	12	+C-X233:6	+M-X1254:1-	165 .7	
+M-W2048	13	+C-X233:12	+M-X1254:6-	165 .7	
+M-W2048	YG	+C-X233:⏚	+M-X1254:⏚	166 .6	
+M-W2049	1	+C-X232:11	+M-X1253:1	149 .4	
+M-W2049	2	+C-X232:12	+M-X1253:2	149 .4	
+M-W2049	3	+C-X232:13	+M-X1253:3	149 .4	
+M-W2049	4	+C-X232:14	+M-X1253:4	149 .4	
+M-W2049	5	+C-X232:15	+M-X1253:5	149 .4	
+M-W2049	6	+C-X232:16	+M-X1253:6	149 .4	
+M-W2049	7	+C-X232:17	+M-X1253:7	149 .4	
+M-W2049	8	+C-X232:18	+M-X1253:8	149 .4	
	9				

Drawing remarks

Tetra Pak

Designer	Date	Machine
BMI	07/06/2004	TBA/22-0500

ECM No	Denomination	Page Type
175296	CABLE CONNECTION LIST	CABLE CONNECTION LIST

Company	Document No.	Doc. type	Version	Page
Tetra Pak Carton Ambient S.p.A.	2593852-0007	ELD	AE	16

This drawing must not without the consent of Tetra Pak be copied, transmitted or disclosed to any third party.

Cable Connection List of 2593852-0003

Cable	Core	From	To	Page.Col.	Option
	10				
	11				
+M-W2049	12	+C-X232:19	+M-X1253:1-	149 .7	
+M-W2049	13	+C-X232:20	+M-X1253:6-	149 .7	
+M-W2049	YG	+C-X232:⏚	+M-X1253:⏚	149 .6	
+M-W2050	1	+M-X2244:1	+C-X234:1	153 .3	
+M-W2050	2	+M-X2244:2	+C-X234:2	153 .3	
+M-W2050	3	+M-X2244:3	+C-X234:3	153 .3	
+M-W2050	4	+M-X2244:4	+C-X234:4	153 .3	
+M-W2050	5	+M-X2244:5	+C-X234:5	153 .3	
+M-W2050	6	+M-X2244:6	+C-X234:6	153 .3	
+M-W2050	7	+M-X2244:7	+C-X234:7	153 .3	
+M-W2050	8	+M-X2244:8	+C-X234:8	153 .3	
+M-W2050	9	+M-X2244:9	+C-X234:9	140 .3	
+M-W2050	10	+M-X2244:10	+C-X234:10	140 .7	
+M-W2050	11	+M-X2244:11	+C-X234:11	139 .3	
+M-W2050	12	+M-X2244:12	+C-X234:12	139 .7	
+M-W2050	13	+M-X2244:13	+C-X234:13	157 .4	
+M-W2050	14	+M-X2244:14	+C-X234:14	157 .4	
+M-W2050	15	+M-X2244:15	+C-X234:15	119 .7	
+M-W2050	16	+M-X2244:16	+C-X234:16	119 .7	
+M-W2050	17	+M-X2244:17	+C-X234:17	119 .7	
+M-W2050	18	+M-X2244:18	+C-X234:18	119 .7	
+M-W2050	19	+M-X2244:19	+C-X234:19	109 .6	
+M-W2050	20	+M-X2244:20	+C-X234:20	157 .4	
+M-W2050	21	+M-X2244:21	+C-X234:21	157 .4	
+M-W2050	22	+M-X2244:22	+C-X234:22	157 .4	
+M-W2050	23	+M-X2244:23	+C-X234:23	203 .3	
+M-W2050	24	+M-X2244:24	+C-X234:24	157 .7	
+M-W2050	GNYE	+M-X2244:⏚	+C-X234:⏚	203 .3	
+M-W2051	1	+C-X230:1	+M-X1250:1	150 .4	
+M-W2051	2	+C-X230:2	+M-X1250:2	150 .4	
+M-W2051	3	+C-X230:3	+M-X1250:3	150 .4	
+M-W2051	4	+C-X230:4	+M-X1250:4	150 .4	
+M-W2051	5	+C-X230:5	+M-X1250:5	150 .4	
+M-W2051	6	+C-X230:7	+M-X1250:6	150 .4	
+M-W2051	7	+C-X230:8	+M-X1250:7	150 .4	
+M-W2051	8	+C-X230:9	+M-X1250:8	150 .4	
+M-W2051	9	+C-X230:10	+M-X1250:9	151 .4	
+M-W2051	10	+C-X230:11	+M-X1250:10	151 .4	
	11				
+M-W2051	12	+C-X230:6	+M-X1250:1-	150 .7	
+M-W2051	13	+C-X230:12	+M-X1250:6-	150 .7	
	GNYE				
+M-W2052	1	+C-X230:13	+M-X1251:1	151 .4	
+M-W2052	2	+C-X230:14	+M-X1251:2	151 .4	
+M-W2052	3	+C-X230:15	+M-X1251:3	151 .4	
+M-W2052	4	+C-X230:16	+M-X1251:4	151 .4	
+M-W2052	5	+C-X230:17	+M-X1251:5	151 .4	
+M-W2052	6	+C-X230:19	+M-X1251:6	152 .4	
+M-W2052	7	+C-X230:20	+M-X1251:7	152 .4	
+M-W2052	8	+C-X230:21	+M-X1251:8	152 .4	
+M-W2052	9	+C-X230:22	+M-X1251:9	152 .4	
+M-W2052	10	+C-X230:23	+M-X1251:10	152 .4	

Drawing remarks

Tetra Pak

Designer	Date	Machine
BMI	07/06/2004	TBA/22-0500

ECM No	Denomination	Page Type
175296	CABLE CONNECTION LIST	CABLE CONNECTION LIST

Company	Document No.	Doc. type	Version	Page
Tetra Pak Carton Ambient S.p.A.	2593852-0007	ELD	AE	17

This drawing must not without the consent of Tetra Pak be copied, transmitted or disclosed to any third party.

1 2 3 4 5 6 7 8 9 10

Cable Connection List of 2593852-0003

Cable	Core	From	To	Page.Col.	Option
	11				
+M-W2052	12	+C-X230:18	+M-X1251:1-	151 .7	
+M-W2052	13	+C-X230:24	+M-X1251:6-	152 .7	
+M-W2052	YG	+C-X230:⏚	+M-X1251:⏚	151 .6	
+M-W2053	1	+C-X232:1	+M-X1252:1	148 .4	
+M-W2053	2	+C-X232:2	+M-X1252:2	148 .4	
+M-W2053	3	+C-X232:3	+M-X1252:3	148 .4	
+M-W2053	4	+C-X232:4	+M-X1252:4	148 .4	
+M-W2053	5	+C-X232:5	+M-X1252:5	148 .4	
+M-W2053	6	+C-X232:6	+M-X1252:6	148 .4	
+M-W2053	7	+C-X232:7	+M-X1252:7	148 .4	
+M-W2053	8	+C-X232:8	+M-X1252:8	148 .4	
	9				
	10				
	11				
+M-W2053	12	+C-X232:9	+M-X1252:1-	148 .7	
+M-W2053	13	+C-X232:10	+M-X1252:6-	148 .7	
	GNYE				
+M-W2054	1	+M-X2001:101	+C-X216:1	121 .3	
+M-W2054	2	+M-X2001:102	+C-X216:2	121 .3	
+M-W2054	3	+M-X2001:103	+C-X216:3	121 .6	
+M-W2054	4	+M-X2001:107	+C-X216:4	121 .6	
+M-W2054	5	+M-X2001:111	+C-X216:5	121 .6	
+M-W2054	6	+M-X2001:115	+C-X216:6	121 .6	
+M-W2054	7	+M-X2001:119	+C-X216:7	121 .6	
+M-W2054	8	+M-X2001:123	+C-X216:8	122 .6	
+M-W2054	9	+M-X2001:127	+C-X216:9	122 .6	

Cable	Core	From	To	Page.Col.	Option
+M-W2054	10	+M-X2001:131	+C-X216:10	122 .6	
+M-W2054	11	+M-X2001:135	+C-X216:11	122 .6	
+M-W2054	12	+M-X2001:136	+C-X216:12	122 .6	
+M-W2054	13	+M-X2001:138	+C-X216:13	119 .7	
+M-W2054	14	+M-X2001:139	+C-X216:14	119 .7	
+M-W2054	15	+M-X2001:140	+C-X216:15	047 .5	
+M-W2054	16	+M-X2001:141	+C-X216:16	047 .5	
+M-W2054	17	+M-X2001:142	+C-X216:17	119 .7	
+M-W2054	18	+M-X2001:145	+C-X216:18	203 .3	
+M-W2054	19	+M-X2001:148	+C-X216:19	058 .4	
+M-W2054	20	+M-X2001:151	+C-X216:20	058 .4	
+M-W2054	21	+M-X2001:154	+C-X216:21	058 .4	
+M-W2054	22	+M-X2001:157	+C-X216:22	058 .4	
+M-W2054	23	+M-X2001:158	+C-X216:23	203 .3	
+M-W2054	24	+M-X2001:159	+C-X216:24	203 .3	
+M-W2054	GNYE	+M-X2001:⏚	+C-X216:⏚	058 .7	
+M-W2055	RD	+M-X2038:-	+C-X301:-	086 .5	
+M-W2055	YE	+M-X2038:+	+C-X301:+	086 .5	
+M-W2056	1	+M-X4000:101	+C-X220:1	159 .3	
+M-W2056	2	+M-X4000:102	+C-X220:2	159 .3	
+M-W2056	3	+M-X4000:103	+C-X220:3	159 .3	
+M-W2056	4	+M-X4000:104	+C-X220:4	159 .3	
+M-W2056	5	+M-X4000:105	+C-X220:5	159 .3	
	6				
	7				
	8				
+M-W2056	9	+M-X4000:109	+C-X220:9	120 .3	

Drawing remarks

Tetra Pak

Designer	Date	Machine
BMI	07/06/2004	TBA/22-0500

ECM No	Denomination	Page Type
175296	CABLE CONNECTION LIST	CABLE CONNECTION LIST

Company	Document No.	Doc. type	Version	Page
Tetra Pak Carton Ambient S.p.A.	2593852-0007	ELD	AE	18

This drawing must not without the consent of Tetra Pak be copied, transmitted or disclosed to any third party.

Cable Connection List of 2593852-0003

Cable	Core	From	To	Page.Col.	Option
	10				
+M-W2056	11	+M-X4000:111	+C-X220:11	120 .6	
+M-W2056	12	+M-X4000:115	+C-X220:12	120 .6	
+M-W2056	13	+M-X4000:116	+C-X220:13	120 .6	
+M-W2056	14	+M-X4000:117	+C-X220:14	048 .3	
+M-W2056	15	+M-X4000:118	+C-X220:15	048 .3	
+M-W2056	16	+M-X4000:119	+C-X220:16	048 .3	
+M-W2056	17	+M-X4000:120	+C-X220:17	048 .3	
+M-W2056	18	+M-X4000:121	+C-X220:18	048 .3	
+M-W2056	19	+M-X4000:122	+C-X220:19	125 .6	
+M-W2056	20	+M-X4000:123	+C-X220:20	125 .6	
+M-W2056	21	+M-X4000:124	+C-X220:21	125 .6	
+M-W2056	22	+M-X4000:125	+C-X220:22	125 .6	
+M-W2056	23	+M-X4000:119+	+C-X220:23	203 .9	
+M-W2056	24	+M-X4000:119-	+C-X220:24	203 .9	
+M-W2056	GNYE	+M-X4000:⏚	+C-X220:⏚	048 .3	
+M-W2057	1	+C-X213:1	+M-X4000:126	158 .3	
+M-W2057	2	+C-X213:2	+M-X4000:127	158 .3	
+M-W2057	3	+C-X213:3	+M-X4000:128	158 .3	
+M-W2057	4	+C-X213:4	+M-X4000:129	158 .3	
+M-W2057	5	+C-X213:5	+M-X4000:130	158 .3	
+M-W2057	6	+C-X213:7	+M-X4000:131	158 .3	
+M-W2057	7	+C-X213:8	+M-X4000:132	158 .3	
+M-W2057	8	+C-X213:9	+M-X4000:133	158 .3	
+M-W2057	9	+C-X213:10	+M-X4000:134	159 .3	
+M-W2057	10	+C-X213:11	+M-X4000:135	159 .3	
+M-W2057	11	+C-X213:12	+M-X4000:136	157 .5	

Cable	Core	From	To	Page.Col.	Option
+M-W2057	12	+C-X213:13	+M-X4000:137	157 .5	
+M-W2057	13	+C-X213:21	+M-X4000:145	204 .3	
+M-W2057	14	+C-X213:15	+M-X4000:139	081 .6	
+M-W2057	15	+C-X213:16	+M-X4000:140	124 .6	
+M-W2057	16	+C-X213:17	+M-X4000:141	124 .6	
+M-W2057	17	+C-X213:18	+M-X4000:142	081 .6	
+M-W2057	18	+C-X213:19	+M-X4000:143	159 .3	
+M-W2057	19	+C-X213:14	+M-X4000:138	204 .3	
+M-W2057	20	+C-X213:20	+M-X4000:144	022 .9	
	21				
+M-W2057	22	+C-X213:22	+M-X4000:146	204 .3	
+M-W2057	23	+C-X213:23	+M-X4000:138+	204 .5	
+M-W2057	24	+C-X213:24	+M-X4000:138-	204 .5	
+M-W2057	GNYE	+C-X213:⏚	+M-X4000:⏚	157 .7	
+M-W2060	1	+C-X210:1	+M-X9100:101	176 .6	H.I.
+M-W2060	2	+C-X210:2	+M-X9100:102	176 .3	H.I.
+M-W2060	3	+C-X210:3	+M-X9100:103	184 .3	H.I.
+M-W2060	4	+C-X210:4	+M-X9100:105	184 .3	H.I.
+M-W2060	5	+C-X210:5	+M-X9100:107	184 .3	H.I.
+M-W2060	6	+C-X210:6	+M-X9100:110	208 .3	H.I.
	7				
	8				
	9				
	10				
	11				
	12				
	13				

Drawing remarks

Tetra Pak

Designer BMI	Date 07/06/2004	Machine TBA/22-0500	
ECM No 175296	Denomination CABLE CONNECTION LIST	Page Type CABLE CONNECTION LIST	
Company Tetra Pak Carton Ambient S.p.A.	Document No. 2593852-0007	Doc. type ELD	Version AE	Page 19

This drawing must not without the consent of Tetra Pak be copied, transmitted or disclosed to any third party.

Cable Connection List of 2593852-0003

Cable	Core	From	To	Page.Col.	Option
	14				
	15				
	16				
	17				
	18				
	19				
	20				
	21				
	22				
	23				
	24				
+M-W2060	GNYE	+C-X210:⏚	+M-X9100:⏚	208 .3	H.I.
+M-W2062	1	+C-X214:1	+M-X4000:148	125 .6	
+M-W2062	2	+C-X214:2	+M-X4000:149	125 .6	
+M-W2062	3	+C-X214:3	+M-X4000:150	125 .6	
+M-W2062	4	+C-X214:4	+M-X4000:151	125 .6	
+M-W2062	5	+C-X214:5	+M-X4000:152	204 .3	
+M-W2062	6	+C-X214:6	+M-X4000:153	204 .3	
+M-W2062	7	+C-X214:7	+M-K1101:A2	139 .5	
+M-W2062	8	+C-X214:8	+M-K1102:A2	139 .5	
+M-W2062	9	+C-X214:9	+M-K1101:A1	139 .7	
+M-W2062	10	+C-X214:10	+M-K1000:14	108 .4	
+M-W2062	11	+C-X214:11	+M-K1000:13	108 .6	
+M-W2062	12	+C-X214:12	+M-K1100:13	108 .6	
+M-W2062	13	+C-X214:13	+M-K1200:13	108 .6	
+M-W2062	14	+C-X214:14	+M-K1201:13	108 .6	
+M-W2062	15	+C-X214:15	+M-K1202:A2	139 .5	

Cable	Core	From	To	Page.Col.	Option
+M-W2062	16	+C-X214:16	+M-K1203:A2	139 .5	
+M-W2062	17	+C-X214:17	+M-X4000:154	120 .2	
+M-W2062	18	+C-X214:18	+M-X4000:155	120 .2	
+M-W2062	19	+C-X214:19	+M-X4000:156	120 .5	
+M-W2062	20	+C-X214:20	+M-X4000:157	120 .5	
+M-W2062	21	+C-X214:21	+M-X4000:158	116 .5	
+M-W2062	22	+C-X214:22	+M-X4000:159	116 .7	
+M-W2062	23	+C-X214:23	+M-X4000:159+	204 .9	
+M-W2062	24	+C-X214:24	+M-X4000:159-	108 .2	
	GNYE				
+M-W2064	BN	+C-X215:13	+M-X4000:106	102 .6	
	GN				
	SH				
+M-W2064	SH	+C-X215:15	+M-X4000:108	102 .6	
	SH				
+M-W2064	WH	+C-X215:14	+M-X4000:107	102 .6	
	YE				
	1				
	2				
	3				
	4				
	5				
	6				
	7				
	8				
	9				
	10				

Drawing remarks

Tetra Pak

Designer	Date	Machine
BMI	07/06/2004	TBA/22-0500

ECM No	Denomination	Page Type
175296	CABLE CONNECTION LIST	CABLE CONNECTION LIST

Company	Document No.	Doc. type	Version	Page
Tetra Pak Carton Ambient S.p.A.	2593852-0007	ELD	AE	20

This drawing must not without the consent of Tetra Pak be copied, transmitted or disclosed to any third party.

Cable Connection List of 2593852-0003

Cable	Core	From	To	Page.Col.	Option
	11				
	12				
+M-W2066	13	+C-X222:13	+P-X901:113	120 .3	
+M-W2066	14	+C-X222:14	+P-X901:114	120 .3	
+M-W2066	15	+C-X222:15	+P-X901:115	120 .6	
+M-W2066	16	+C-X222:16	+P-X901:116	120 .6	
+M-W2066	17	+C-X222:17	+P-X901:117	115 .2	
+M-W2066	18	+C-X222:18	+P-X901:118	115 .6	
+M-W2066	19	+C-X222:19	+P-X901:119	115 .6	
+M-W2066	20	+C-X222:20	+P-X901:120	115 .6	
+M-W2066	21	+C-X222:21	+P-X901:121	115 .6	
+M-W2066	22	+C-X222:22	+P-X901:122	115 .6	
+M-W2066	23	+C-X222:23	+P-X901:123	115 .6	
+M-W2066	24	+C-X222:24	+P-X901:124	115 .6	
+M-W2066	GNYE	+C-X222:⏚	+P-X901:⏚	207 .3	
+M-W2067	1	+P-X901:125	+C-X219:1	115 .6	
+M-W2067	2	+P-X901:126	+C-X219:2	116 .2	
+M-W2067	3	+P-X901:127	+C-X219:3	116 .6	
+M-W2067	4	+P-X901:128	+C-X219:4	207 .2	
+M-W2067	5	+P-X901:129	+C-X219:5	207 .2	
+M-W2067	6	+P-X901:130	+C-X219:6	115 .6	
+M-W2067	7	+P-X901:131	+C-X219:7	116 .6	
+M-W2067	8	+P-X901:132	+C-X219:8	164 .4	
+M-W2067	9	+P-X901:133	+C-X219:9	164 .7	
+M-W2067	10	+P-X901:134	+C-X219:10	164 .4	
+M-W2067	11	+P-X901:135	+C-X219:11	164 .4	
+M-W2067	12	+P-X901:136	+C-X219:12	164 .4	

Cable	Core	From	To	Page.Col.	Option
+M-W2067	13	+P-X901:137	+C-X219:13	164 .4	
+M-W2067	14	+P-X901:138	+C-X219:14	164 .4	
+M-W2067	15	+P-X901:139	+C-X219:15	164 .4	
+M-W2067	16	+P-X901:140	+C-X219:16	164 .4	
+M-W2067	17	+P-X901:141	+C-X219:17	207 .2	
+M-W2067	18	+P-X901:142	+C-X219:18	207 .2	
+M-W2067	19	+P-X901:143	+C-X219:19	207 .2	
+M-W2067	20	+P-X901:144	+C-X219:20	207 .2	
+M-W2067	21	+P-X901:145	+C-X219:21	207 .2	
+M-W2067	22	+P-X901:146	+C-X219:22	207 .2	
+M-W2067	23	+P-X901:147	+C-X219:23	207 .2	
+M-W2067	24	+P-X901:148	+C-X219:24	207 .2	
+M-W2067	GNYE	+P-X901:⏚	+C-X219:⏚	207 .2	
+P-W2068	BK	+C-X452:18		.6	
+P-W2068	BN	+C-X452:7	+P-A951:15	061 .5	
+P-W2068	BNBU	+C-X452:15	+P-A951:1	061 .3	
+P-W2068	BNGN	+C-X452:14	+P-A951:17	061 .5	
+P-W2068	BU	+C-X452:5	+P-A951:13	061 .5	
+P-W2068	GN	+C-X452:3	+P-A951:11	061 .4	
+P-W2068	GY	+C-X452:22	+P-A951:5	061 .4	
+P-W2068	GYBN	+C-X452:25		.5	
+P-W2068	GYPK	+C-X452:17	+P-A951:1	061 .3	
	GY/GN				
+P-W2068	OG	+C-X452:1	+P-A951:9	061 .4	
+P-W2068	PK	+C-X452:21	+P-A951:6	061 .4	
+P-W2068	PKBN	+C-X452:20	+P-A951:7	061 .4	
+P-W2068	RD	+C-X452:19	+P-A951:8	061 .4	

Drawing remarks

Tetra Pak

Designer	Date	Machine
BMI	07/06/2004	TBA/22-0500

ECM No	Denomination	Page Type
175296	CABLE CONNECTION LIST	CABLE CONNECTION LIST

Company	Document No.	Doc. type	Version	Page
Tetra Pak Carton Ambient S.p.A.	2593852-0007	ELD	AE	21

This drawing must not without the consent of Tetra Pak be copied, transmitted or disclosed to any third party.

Cable Connection List of 2593852-0003

Cable	Core	From	To	Page.Col.	Option
+P-W2068	RDBU	+C-X452:16	+P-A951:17	061 .5	
+P-W2068	SH	+C-X452:10	+P-A951:18	061 .6	
+P-W2068	VT	+C-X452:9		.6	
+P-W2068	WH	+C-X452:26	+P-A951:2	061 .3	
+P-W2068	WH	+C-X452:2	+P-A951:10	061 .4	
+P-W2068	WH	+C-X452:4	+P-A951:12	061 .4	
+P-W2068	WH	+C-X452:6	+P-A951:14	061 .5	
+P-W2068	WH	+C-X452:8	+P-A951:16	061 .5	
+P-W2068	WHPK	+C-X452:24	+P-A951:3	061 .3	
+P-W2068	WHYE	+C-X452:13	+P-A951:1	061 .3	
+P-W2068	YE	+C-X452:23	+P-A951:4	061 .3	
+P-W2068	YEBN	+C-X452:12	+P-A951:17	061 .5	
+M-W2201	BN	+M-X2003:111	+M-Y2201:BN	140 .5	
+M-W2201	BU	+M-X2003:112	+M-Y2201:BU	140 .6	
+M-W2201	GNYE	+M-X2003:⏚	+M-Y2201:YEGN	140 .6	
+M-W2211	1	+M-X2001:1	+M-E2002:1	032 .7	
+M-W2211	2	+M-X2001:2	+M-E2002:2	032 .7	
+M-W2211	GNYE	+M-X2001:⏚	+M-E2002:E1	032 .8	
+M-W2213	1	+M-X2241:1	+M-M2501:U	023 .5	
+M-W2213	2	+M-X2241:2	+M-M2501:V	023 .5	
+M-W2213	3	+M-X2241:3	+M-M2501:W	023 .5	
+M-W2213	YG	+M-X2241:⏚	+M-M2501:E	023 .5	
+M-W2214	1	+M-X2242:1	+M-M2540:U	023 .6	
+M-W2214	2	+M-X2242:2	+M-M2540:V	023 .7	
+M-W2214	3	+M-X2242:3	+M-M2540:W	023 .7	
+M-W2214	YG	+M-X2242:⏚	+M-M2540:E	023 .7	
+M-W2220	1	+M-X2003:119	+M-B2102:1	119 .5	
+M-W2220	2	+M-X2003:120	+M-B2102:3	119 .4	
+M-W2220	YG	+M-X2003:⏚	+M-B2102:E	119 .5	
+M-W2221	1	+M-X2003:121	+M-B2201:1	119 .5	
+M-W2221	2	+M-X2003:122	+M-B2201:3	119 .4	
+M-W2221	YG	+M-X2003:⏚	+M-B2201:E	119 .5	
+M-W2222	1	+M-X2003:113	+M-Y3101:1	139 .5	
+M-W2222	2	+M-X2003:114	+M-Y3101:2	139 .6	
+M-W2224	1	+M-X2001:105	+M-B2810:21	121 .4	
+M-W2224	2	+M-X2001:106	+M-B2810:11	121 .4	
+M-W2224	3	+M-X2001:107	+M-B2810:12	121 .5	
+M-W2224	4	+M-X2001:108	+M-B2810:22	121 .5	
	GNYE				
+M-W2225	1	+M-X2001:109	+M-B2811:21	121 .4	
+M-W2225	2	+M-X2001:110	+M-B2811:11	121 .4	
+M-W2225	3	+M-X2001:111	+M-B2811:12	121 .5	
+M-W2225	4	+M-X2001:112	+M-B2811:22	121 .5	
	GNYE				
+M-W2226	1	+M-X2001:113	+M-B2812:21	121 .4	
+M-W2226	2	+M-X2001:114	+M-B2812:11	121 .4	
+M-W2226	3	+M-X2001:115	+M-B2812:12	121 .5	
+M-W2226	4	+M-X2001:116	+M-B2812:22	121 .5	
	GNYE				
+M-W2228	1	+M-X2001:121	+M-B2830:21	122 .4	
+M-W2228	2	+M-X2001:122	+M-B2830:11	122 .4	
+M-W2228	3	+M-X2001:123	+M-B2830:12	122 .5	
+M-W2228	4	+M-X2001:124	+M-B2830:22	122 .5	
	GNYE				

Drawing remarks

Tetra Pak

Designer	Date	Machine
BMI	07/06/2004	TBA/22-0500

ECM No	Denomination	Page Type
175296	CABLE CONNECTION LIST	CABLE CONNECTION LIST

Company	Document No.	Doc. type	Version	Page
Tetra Pak Carton Ambient S.p.A.	2593852-0007	ELD	AE	22

This drawing must not without the consent of Tetra Pak be copied, transmitted or disclosed to any third party.

Cable Connection List of 2593852-0003

Cable	Core	From	To	Page.Col.	Option
+M-W2229	1	+M-X2001:125	+M-B2831:21	122 .4	
+M-W2229	2	+M-X2001:126	+M-B2831:11	122 .4	
+M-W2229	3	+M-X2001:127	+M-B2831:12	122 .5	
+M-W2229	4	+M-X2001:128	+M-B2831:22	122 .5	
	GNYE				
+M-W2230	1	+M-X2001:129	+M-B2832:21	122 .4	
+M-W2230	2	+M-X2001:130	+M-B2832:11	122 .4	
+M-W2230	3	+M-X2001:131	+M-B2832:12	122 .5	
+M-W2230	4	+M-X2001:132	+M-B2832:22	122 .5	
	GNYE				
+M-W2232	1	+M-X2062:1	+M-X2001:137	119 .3	
+M-W2232	2	+M-X2062:2	+M-X2001:138	119 .6	
+M-W2232	3	+M-X2062:3	+M-X2001:139	119 .6	
+M-W2232	4	+M-X2062:4	+M-X2001:140	047 .4	
+M-W2232	5	+M-X2062:5	+M-X2001:141	047 .4	
	6				
+M-W2232	GNYE	+M-X2062:⏚	+M-X2001:⏚	047 .4	
+M-W2233	1	+M-X2001:150	+M-H2801:0	058 .7	
+M-W2233	2	+M-X2001:148	+M-H2801:1	058 .5	
+M-W2233	3	+M-X2001:151	+M-H2801:2	058 .5	
+M-W2233	4	+M-X2001:154	+M-H2801:3	058 .5	
	5				
	6				
+M-W2233	GNYE	+M-X2001:⏚	+M-H2801:E	058 .7	
+M-W2235	1	+M-X4000:137	+M-Y2106:+24V	157 .5	
+M-W2235	2	+M-X4000:137-	+M-Y2106:0V	157 .6	
+M-W2235	YG	+M-X4000:⏚	+M-Y2106:E	157 .6	

Cable	Core	From	To	Page.Col.	Option
+M-W2242	RD	+M-X2038:-	+M-B2510:RD	086 .3	
+M-W2242	YE	+M-X2038:+	+M-B2510:YE	086 .3	
+M-W2243	1	+M-X2003:115	+M-Y2108:1	157 .5	
+M-W2243	2	+M-X2003:116	+M-Y2108:2	157 .6	
+M-W2244	1	+M-E2002:3	+M-E2001:3	032 .8	
+M-W2244	2	+M-E2002:4	+M-E2001:4	032 .7	
+M-W2244	YG	+M-E2002:E	+M-E2001:E	032 .8	
+M-W2246	BN	+M-X2003:123	+M-B3102:BN	119 .5	
+M-W2246	BU	+M-X2003:124	+M-B3102:BU	119 .4	
+M-W2246	YG	+M-X2003:⏚	+M-B3102:E	119 .5	
+M-W2247	BN	+M-X2003:126	+M-B3105:BN	119 .4	
+M-W2247	WH	+M-X2003:125	+M-B3105:WH	119 .5	
+M-W2250	1	+M-X2050:101	+M-X2062:1	119 .3	
+M-W2250	2	+M-X2050:102	+M-X2062:2	119 .6	
+M-W2250	3	+M-X2050:106	+M-X2062:3	119 .6	
+M-W2250	4	+M-X2050:107	+M-X2062:4	047 .3	
+M-W2250	5	+M-X2050:108	+M-X2062:5	047 .3	
	6				
+M-W2250	GNYE	+M-X2050:⏚	+M-X2062:⏚	047 .3	
+M-W2251	1	+M-X2050:102	+M-B2501:1	119 .5	
+M-W2251	2	+M-X2050:101	+M-B2501:3	119 .4	
	3				
	GNYE				
+M-W2252	1	+M-X2050:103	+M-B2540:A	119 .4	
+M-W2252	2	+M-X2050:106	+M-B2540:C	119 .5	
	3				
	GNYE				

Drawing remarks

Tetra Pak

Designer	Date	Machine
BMI	07/06/2004	TBA/22-0500

ECM No	Denomination	Page Type
175296	CABLE CONNECTION LIST	CABLE CONNECTION LIST

Company	Document No.	Doc. type	Version	Page
Tetra Pak Carton Ambient S.p.A.	2593852-0007	ELD	AE	23

This drawing must not without the consent of Tetra Pak be copied, transmitted or disclosed to any third party.

Cable Connection List of 2593852-0003

Cable	Core	From	To	Page.Col.	Option
+M-W2253	1	+M-X2050:108	+M-B2520:1	047 .2	
+M-W2253	2	+M-X2050:107	+M-B2520:	047 .2	
+M-W2254	1	+M-X4000:109	+M-S2803:21	120 .3	
+M-W2254	2	+M-X4000:110+	+M-S2803:11	120 .3	
+M-W2254	3	+M-X4000:111	+M-S2803:12	120 .5	
+M-W2254	4	+M-X4000:112	+M-S2803:22	120 .5	
	GNYE				
+M-W2255	1	+M-X4000:113	+M-S2804:21	120 .3	
+M-W2255	2	+M-X4000:114+	+M-S2804:11	120 .3	
+M-W2255	3	+M-X4000:115	+M-S2804:12	120 .5	
+M-W2255	4	+M-X4000:116	+M-S2804:22	120 .5	
	GNYE				
+M-W2256	1	+M-X2243:1	+M-M3102:U	022 .5	
+M-W2256	2	+M-X2243:2	+M-M3102:V	022 .5	
+M-W2256	3	+M-X2243:3	+M-M3102:W	022 .5	
+M-W2256	YG	+M-X2243:⏚	+M-M3102:E	022 .5	
+M-W2257	1	+M-X2003:101	+M-X2051:1	153 .4	
+M-W2257	2	+M-X2003:102	+M-X2051:2	153 .4	
+M-W2257	3	+M-X2003:103	+M-X2051:3	153 .4	
+M-W2257	4	+M-X2003:104	+M-X2051:4	153 .4	
+M-W2257	5	+M-X2003:105	+M-X2051:5	153 .4	
+M-W2257	6	+M-X2003:107	+M-X2051:6	153 .4	
+M-W2257	7	+M-X2003:108	+M-X2051:7	153 .4	
+M-W2257	8	+M-X2003:109	+M-X2051:8	153 .4	
	9				
	10				
	11				

Cable	Core	From	To	Page.Col.	Option
+M-W2257	12	+M-X2003:106	+M-X2051:5-	153 .6	
+M-W2257	13	+M-X2003:110	+M-X2051:6-	153 .6	
	GNYE				
+M-W2258	1	+M-X2003:101	+M-X2244:1	153 .4	
+M-W2258	2	+M-X2003:102	+M-X2244:2	153 .4	
+M-W2258	3	+M-X2003:103	+M-X2244:3	153 .4	
+M-W2258	4	+M-X2003:104	+M-X2244:4	153 .4	
+M-W2258	5	+M-X2003:105	+M-X2244:5	153 .4	
+M-W2258	6	+M-X2003:107	+M-X2244:6	153 .4	
+M-W2258	7	+M-X2003:108	+M-X2244:7	153 .4	
+M-W2258	8	+M-X2003:109	+M-X2244:8	153 .4	
+M-W2258	9	+M-X2003:111	+M-X2244:9	140 .4	
+M-W2258	10	+M-X2003:112	+M-X2244:10	140 .6	
+M-W2258	11	+M-X2003:113	+M-X2244:11	139 .4	
+M-W2258	12	+M-X2003:114	+M-X2244:12	139 .6	
+M-W2258	13	+M-X2003:115	+M-X2244:13	157 .5	
+M-W2258	14	+M-X2003:117	+M-X2244:14	157 .5	
+M-W2258	15	+M-X2003:119	+M-X2244:15	119 .6	
+M-W2258	16	+M-X2003:121	+M-X2244:16	119 .6	
+M-W2258	17	+M-X2003:123	+M-X2244:17	119 .6	
+M-W2258	18	+M-X2003:125	+M-X2244:18	119 .6	
+M-W2258	19	+M-X2003:127	+M-X2244:19	005 .6	
+M-W2258	20	+M-X2003:129	+M-X2244:20	157 .5	
+M-W2258	21	+M-X2003:132	+M-X2244:21	157 .5	
+M-W2258	22	+M-X2003:135	+M-X2244:22	157 .5	
+M-W2258	23	+M-X2003:136	+M-X2244:23	203 .3	
+M-W2258	24	+M-X2003:137	+M-X2244:24	157 .7	

Drawing remarks

Tetra Pak

Designer	Date	Machine
BMI	07/06/2004	TBA/22-0500

ECM No	Denomination	Page Type
175296	CABLE CONNECTION LIST	CABLE CONNECTION LIST

Company	Document No.	Doc. type	Version	Page
Tetra Pak Carton Ambient S.p.A.	2593852-0007	ELD	AE	24

This drawing must not without the consent of Tetra Pak be copied, transmitted or disclosed to any third party.

1 2 3 4 5 6 7 8 9 10

Cable Connection List of 2593852-0003

Cable	Core	From	To	Page.Col.	Option
+M-W2258	GNYE	+M-X2003:⏚	+M-X2244:⏚	203 .3	
+M-W4000	1	+C-X108:1	+M-M4304:U	020 .3	
+M-W4000	2	+C-X108:2	+M-M4304:V	020 .3	
+M-W4000	3	+C-X108:3	+M-M4304:W	020 .3	
	BN				
+M-W4000	GN	+C-X108:4	+M-M4304:1	020 .2	
+M-W4000	GNYE	+C-X108:6	+M-M4304:⏚	020 .2	
+M-W4000	SH	+C-X108:⏚	GND:	020 .1	
+M-W4000	SH	+C-X108:⏚	GND:	020 .1	
	SH				
	WH				
+M-W4000	YE	+C-X108:5	+M-M4304:2	020 .2	
+M-W4001	1	+C-X107:1	+M-M4302:U	021 .2	
+M-W4001	2	+C-X107:2	+M-M4302:V	021 .3	
+M-W4001	3	+C-X107:3	+M-M4302:W	021 .3	
	BN				
+M-W4001	GN	+C-X107:4	+M-M4302:1	021 .2	
+M-W4001	SH	+C-X107:⏚	GND:	021 .1	
+M-W4001	SH	+C-X107:⏚	GND:	021 .1	
	SH				
	WH				
+M-W4001	YE	+C-X107:5	+M-M4302:2	021 .2	
+M-W4001	YG	+C-X107:6	+M-M4302:E1	021 .2	
+M-W4002	1	+C-X113:1	+M-M4105:U	019 .3	
+M-W4002	2	+C-X113:2	+M-M4105:V	019 .3	
+M-W4002	3	+C-X113:3	+M-M4105:W	019 .3	
	BN				

Cable	Core	From	To	Page.Col.	Option
+M-W4002	GN	+C-X113:4	+M-M4105:1	019 .2	
+M-W4002	SH	+C-X113:⏚	GND:	019 .2	
+M-W4002	SH	+C-X113:⏚	GND:	019 .2	
	SH				
	WH				
+M-W4002	YE	+C-X113:5	+M-M4105:2	019 .2	
+M-W4002	YG	+C-X113:6	+M-M4105:E1	019 .3	
+M-W4003	1	+M-X4000:139	+M-X4002:1	081 .6	
+M-W4003	2	+M-X4000:139+	+M-X4002:2	081 .3	
+M-W4003	3	+M-X4000:139-	+M-X4002:3	081 .3	
+M-W4003	4	+M-X4000:140	+M-X4002:4	124 .6	
	5				
	6				
+M-W4003	7	+M-X4000:141	+M-X4002:7	124 .6	
	8				
+M-W4003	9	+M-X4000:142	+M-X4002:21	081 .6	
+M-W4003	10	+M-X4000:142+	+M-X4002:22	081 .3	
+M-W4003	11	+M-X4000:142-	+M-X4002:23	081 .3	
	GNYE				
+M-W4004	1	+M-X4000:148+	+M-X4003:1	125 .3	
+M-W4004	2	+M-X4000:148-	+M-X4003:2	125 .3	
+M-W4004	3	+M-X4000:148	+M-X4003:3	125 .6	
+M-W4004	4	+M-X4000:149+	+M-X4003:4	125 .3	
+M-W4004	5	+M-X4000:149-	+M-X4003:5	125 .3	
+M-W4004	6	+M-X4000:149	+M-X4003:6	125 .6	
+M-W4004	7	+M-X4000:150+	+M-X4003:7	125 .3	
+M-W4004	8	+M-X4000:150-	+M-X4003:8	125 .3	

Drawing remarks

Tetra Pak

Designer	Date	Machine
BMI	07/06/2004	TBA/22-0500

ECM No	Denomination	Page Type
175296	CABLE CONNECTION LIST	CABLE CONNECTION LIST

Company	Document No.	Doc. type	Version	Page
Tetra Pak Carton Ambient S.p.A.	2593852-0007	ELD	AE	25

This drawing must not without the consent of Tetra Pak be copied, transmitted or disclosed to any third party.

Cable Connection List of 2593852-0003

Cable	Core	From	To	Page.Col.	Option
+M-W4004	9	+M-X4000:150	+M-X4003:9	125 .6	
	10				
	11				
	12				
	13				
	14				
	15				
	16				
	17				
	18				
	19				
	20				
	21				
	22				
	23				
	24				
	GNYE				
+M-W4005	1	+C-X116:1	+M-X4004:1	010 .2	
+M-W4005	2	+C-X116:2	+M-X4004:2	010 .3	
+M-W4005	3	+C-X116:3	+M-X4004:3	010 .4	
+M-W4005	4	+C-X116:4	+M-X4004:4	010 .5	
+M-W4005	GNYE	+C-X116:⏚	+M-X4004:⏚	010 .5	
+M-W4006	1	+M-X4004:16	+C-X117:1	010 .7	
+M-W4006	2	+M-X4004:17	+C-X117:2	010 .8	
+M-W4006	3	+M-X4004:18	+C-X117:3	010 .9	
+M-W4006	4	+M-X4004:19	+C-X117:4	010 .10	
+M-W4006	GNYE	+M-X4004:⏚	+C-X117:⏚	010 .6	

Cable	Core	From	To	Page.Col.	Option
+M-W4010	BN	+C-X354:F	+M-X4051:6	020 .4	
+M-W4010	GN	+C-X354:D	+M-X4051:4	020 .4	
+M-W4010	GY	+C-X354:B	+M-X4051:2	020 .4	
+M-W4010	PK	+C-X354:A	+M-X4051:1	020 .4	
+M-W4010	SH	+C-X354:G	+M-X4051:⏚	020 .3	
+M-W4010	SH	+C-X354:G	+M-X4051:⏚	020 .3	
+M-W4010	SH	+C-X354:G	+M-X4051:⏚	020 .3	
+M-W4010	SH	GND:	GND:	020 .5	
+M-W4010	WH	+C-X354:E	+M-X4051:5	020 .4	
+M-W4010	YE	+C-X354:C	+M-X4051:3	020 .4	
+M-W4011	BN	+C-X356:F	+M-X4050:6	021 .4	
+M-W4011	GN	+C-X356:D	+M-X4050:4	021 .4	
+M-W4011	GY	+C-X356:B	+M-X4050:2	021 .3	
+M-W4011	PK	+C-X356:A	+M-X4050:1	021 .3	
+M-W4011	SH	+C-X356:G	+M-X4050:⏚	021 .3	
+M-W4011	SH	+C-X356:G	+M-X4050:⏚	021 .3	
+M-W4011	SH	+C-X356:G	+M-X4050:⏚	021 .3	
+M-W4011	SH	GND:	GND:	021 .4	
+M-W4011	WH	+C-X356:E	+M-X4050:5	021 .4	
+M-W4011	YE	+C-X356:C	+M-X4050:3	021 .3	
+M-W4012	RD	+M-X4010:-	+C-X302:-	087 .5	
+M-W4012	YE	+M-X4010:+	+C-X302:+	087 .5	
+M-W4013	RD	+M-X4011:-	+C-X303:-	087 .5	
+M-W4013	YE	+M-X4011:+	+C-X303:+	087 .5	
+M-W4014	RD	+M-X4012:-	+C-X304:-	087 .5	
+M-W4014	YE	+M-X4012:+	+C-X304:+	087 .5	
+M-W4015	RD	+M-X4013:-	+C-X305:-	087 .5	

Drawing remarks

Tetra Pak

Designer	Date	Machine
BMI	07/06/2004	TBA/22-0500

ECM No	Denomination	Page Type
175296	CABLE CONNECTION LIST	CABLE CONNECTION LIST

Company	Document No.	Doc. type	Version	Page
Tetra Pak Carton Ambient S.p.A.	2593852-0007	ELD	AE	26

This drawing must not without the consent of Tetra Pak be copied, transmitted or disclosed to any third party.

Cable Connection List of 2593852-0003

Cable	Core	From	To	Page.Col.	Option
+M-W4015	YE	+M-X4013:+	+C-X305:+	087 .5	
+M-W4016	1	+C-X031:1	+M-X4054:1	053 .7	
+M-W4016	2	+C-X031:2	+M-X4054:2	053 .7	
+M-W4016	3	+C-X031:3	+M-X4054:3	053 .7	
+M-W4016	4	+C-X031:4	+M-X4054:4	053 .7	
	GNYE				
+M-W4016	SH	+C-X031:⏚	+M-X4054:5	053 .7	
+M-W4017	1	+C-X031:5	+M-X4055:1	053 .7	
+M-W4017	2	+C-X031:6	+M-X4055:2	053 .7	
+M-W4017	3	+C-X031:7	+M-X4055:3	053 .7	
+M-W4017	4	+C-X031:8	+M-X4055:4	053 .7	
	GNYE				
+M-W4017	SH	+C-X031:⏚	+M-X4055:5	053 .7	
+M-W4018	1	+C-X215:1	+M-X4001:1	080 .5	
+M-W4018	2	+C-X215:2	+M-X4001:3	080 .5	
+M-W4018	3	+C-X215:3	+M-X4001:4	080 .5	
+M-W4018	4	+C-X215:4	+M-X4001:5	080 .5	
+M-W4018	5	+C-X215:5	+M-X4001:6	080 .5	
+M-W4018	6	+C-X215:6	+M-X4001:7	080 .5	
+M-W4018	7	+C-X215:7	+M-X4001:8	080 .5	
+M-W4018	8	+C-X215:8	+M-X4001:10	080 .5	
+M-W4018	9	+C-X215:9	+M-X4001:11	080 .5	
+M-W4018	10	+C-X215:10	+M-X4001:2	080 .5	
+M-W4018	11	+C-X215:11	+M-X4001:9	080 .5	
+M-W4018	GNYE	+C-X215:⏚	+M-X4001:12	080 .5	
+M-W4019	BK	+M-X4002:18	+M-B4103:BK	080 .3	
+M-W4019	BN	+M-X4002:13	+M-B4103:BN	080 .3	

Cable	Core	From	To	Page.Col.	Option
+M-W4019	BU	+M-X4002:11	+M-B4103:BU	080 .3	
+M-W4019	GN	+M-X4002:14	+M-B4103:GN	080 .3	
+M-W4019	GY	+M-X4002:16	+M-B4103:GY	080 .3	
+M-W4019	GY/PK	+M-X4002:20	+M-B4103:GY/PK	080 .3	
+M-W4019	PK	+M-X4002:17	+M-B4103:PK	080 .3	
+M-W4019	RD	+M-X4002:10	+M-B4103:RD	080 .3	
+M-W4019	RD/BU	+M-X4002:⏚	+M-B4103:RD/BU	080 .3	
+M-W4019	VT	+M-X4002:19	+M-B4103:VT	080 .3	
+M-W4019	WH	+M-X4002:12	+M-B4103:WH	080 .3	
+M-W4019	YE	+M-X4002:15	+M-B4103:YE	080 .3	
+M-W4020	BU	+M-X4054:2	+M-B43011:-	053 .8	
+M-W4020	GY	+M-X4054:4	+M-B43011:SIGN	053 .8	
+M-W4020	RD	+M-X4054:1	+M-B43011:+	053 .8	
+M-W4020	YE	+M-X4054:3	+M-B43011:ET	053 .8	
+M-W4021	1	+M-X4002:12	+M-X4001:01	080 .4	
+M-W4021	2	+M-X4002:19	+M-X4001:010	080 .4	
+M-W4021	3	+M-X4002:20	+M-X4001:011	080 .4	
+M-W4021	4	+M-X4002:10	+M-X4001:02	080 .4	
+M-W4021	5	+M-X4002:13	+M-X4001:03	080 .4	
+M-W4021	6	+M-X4002:14	+M-X4001:04	080 .4	
+M-W4021	7	+M-X4002:15	+M-X4001:05	080 .4	
+M-W4021	8	+M-X4002:16	+M-X4001:06	080 .4	
+M-W4021	9	+M-X4002:17	+M-X4001:07	080 .4	
+M-W4021	10	+M-X4002:18	+M-X4001:08	080 .4	
+M-W4021	11	+M-X4002:11	+M-X4001:09	080 .4	
+M-W4021	YG	+M-X4002:⏚	+M-X4001:012	080 .4	
+M-W4022	1	+M-X4000:136	+M-Y1210:+24V	157 .5	

Drawing remarks

Tetra Pak

Designer	Date	Machine
BMI	07/06/2004	TBA/22-0500

ECM No	Denomination	Page Type
175296	CABLE CONNECTION LIST	CABLE CONNECTION LIST

Company	Document No.	Doc. type	Version	Page
Tetra Pak Carton Ambient S.p.A.	2593852-0007	ELD	AE	27

This drawing must not without the consent of Tetra Pak be copied, transmitted or disclosed to any third party.

1 2 3 4 5 6 7 8 9 10

Cable Connection List of 2593852-0003

Cable	Core	From	To	Page.Col.	Option
+M-W4022	2	+M-X4000:136-	+M-Y1210:0V	157 .6	
+M-W4022	YG	+M-X4000:⏚	+M-Y1210:E	157 .6	
+M-W4023	BU	+M-X4055:2	+M-B43012:-	053 .8	
+M-W4023	GY	+M-X4055:4	+M-B43012:SIGN	053 .8	
+M-W4023	RD	+M-X4055:1	+M-B43012:+	053 .8	
+M-W4023	YE	+M-X4055:3	+M-B43012:ET	053 .8	
+M-W4026	1	+M-X4000:126	+M-X4058:1	158 .4	
+M-W4026	2	+M-X4000:127	+M-X4058:2	158 .4	
+M-W4026	3	+M-X4000:128	+M-X4058:3	158 .4	
+M-W4026	4	+M-X4000:129	+M-X4058:4	158 .4	
+M-W4026	5	+M-X4000:130	+M-X4058:5	158 .4	
+M-W4026	6	+M-X4000:131	+M-X4058:6	158 .4	
+M-W4026	7	+M-X4000:132	+M-X4058:7	158 .4	
+M-W4026	8	+M-X4000:133	+M-X4058:8	158 .4	
+M-W4026	9	+M-X4000:134	+M-X4058:9	159 .4	
+M-W4026	10	+M-X4000:135	+M-X4058:10	159 .4	
	11				
+M-W4026	12	+M-X4000:126-	+M-X4058:1-	158 .7	
+M-W4026	13	+M-X4000:134-	+M-X4058:6-	158 .7	
	GNYE				
+M-W4027	1	+M-X4000:101	+M-X4059:1	159 .4	
+M-W4027	2	+M-X4000:102	+M-X4059:2	159 .4	
+M-W4027	3	+M-X4000:103	+M-X4059:3	159 .4	
+M-W4027	4	+M-X4000:104	+M-X4059:4	159 .4	
	5				
	6				
	7				
	8				
	9				
	10				
	11				
+M-W4027	12	+M-X4000:101-	+M-X4059:1-	159 .7	
	13				
	GNYE				
+M-W4030	BK	+M-X4002:1	+M-B4200:BK	081 .5	
+M-W4030	BN	+M-X4002:2	+M-B4200:BN	081 .4	
+M-W4030	BU	+M-X4002:3	+M-B4200:BU	081 .4	
+M-W4031	BK	+M-X4002:4	+M-B4102:BK	124 .5	
+M-W4031	BN	+M-X4002:5	+M-B4102:BN	124 .4	
+M-W4031	BU	+M-X4002:6	+M-B4102:BU	124 .4	
+M-W4032	BK	+M-X4002:7	+M-B4202:BK	124 .5	
+M-W4032	BN	+M-X4002:8	+M-B4202:BN	124 .4	
+M-W4032	BU	+M-X4002:9	+M-B4202:BU	124 .4	
+M-W4033	BN	+M-X4000:4	+M-M1503:BN	024 .3	
+M-W4033	BU	+M-X4000:1	+M-M1503:BU	024 .2	
+M-W4033	GN	+M-X4000:3	+M-M1503:GN	024 .3	
+M-W4033	SH	+M-X4000:5	GND:	024 .2	
+M-W4033	VT	+M-X4000:2	+M-M1503:VT	024 .3	
+M-W4033	WH	+M-X4000:⏚	+M-M1503:WH1	024 .3	
+M-W4040	BK	+M-X4003:3	+M-B5103:BK	125 .5	
+M-W4040	BN	+M-X4003:1	+M-B5103:BN	125 .5	
+M-W4040	BU	+M-X4003:2	+M-B5103:BU	125 .5	
+M-W4041	BK	+M-X4002:21	+M-B54051:BK	081 .5	
+M-W4041	BN	+M-X4002:22	+M-B54051:BN	081 .4	

Drawing remarks

Tetra Pak

Designer	Date	Machine
BMI	07/06/2004	TBA/22-0500

ECM No	Denomination	Page Type
175296	CABLE CONNECTION LIST	CABLE CONNECTION LIST

Company	Document No.	Doc. type	Version	Page
Tetra Pak Carton Ambient S.p.A.	2593852-0007	ELD	AE	28

This drawing must not without the consent of Tetra Pak be copied, transmitted or disclosed to any third party.

1 2 3 4 5 6 7 8 9 10

Cable Connection List of 2593852-0003

Cable	Core	From	To	Page.Col.	Option
+M-W4041	BU	+M-X4002:23	+M-B54051:BU	081 .4	
+M-W4042	BN	+M-X4002:22	+M-B54052:BN	081 .4	
+M-W4042	BU	+M-X4002:23	+M-B54052:BU	081 .4	
+M-W4043	BK	+M-X4003:9	+M-B54102:BK	125 .5	
+M-W4043	BN	+M-X4003:7	+M-B54102:BN	125 .5	
+M-W4043	BU	+M-X4003:8	+M-B54102:BU	125 .5	
+M-W4044	BN	+M-X4003:7	+M-B54101:BN	125 .4	
+M-W4044	BU	+M-X4003:8	+M-B54101:BU	125 .4	
+M-W4045	BK	+M-X4000:151	+M-B54121:BK	125 .6	
+M-W4045	BN	+M-X4000:151+	+M-B54121:BN	125 .5	
+M-W4045	BU	+M-X4000:151-	+M-B54121:BU	125 .5	
+M-W4046	BN	+M-X4000:151+	+M-B54122:BN	125 .4	
+M-W4046	BU	+M-X4000:151-	+M-B54122:BU	125 .4	
+M-W4047	BK	+M-X4003:6	+M-B54123:BK	125 .5	
+M-W4047	BN	+M-X4003:4	+M-B54123:BN	125 .5	
+M-W4047	BU	+M-X4003:5	+M-B54123:BU	125 .5	
+M-W4048	BN	+M-X4003:4	+M-B54124:BN	125 .4	
+M-W4048	BU	+M-X4003:5	+M-B54124:BU	125 .4	
+M-W4054	1	+M-X4000:118	+M-B1210:1	048 .2	
+M-W4054	2	+M-X4000:119	+M-B1210:2	048 .2	
+M-W4054	3	+M-X4000:120	+M-B1210:3	048 .2	
+M-W4054	4	+M-X4000:121	+M-B1210:4	048 .2	
+M-W4054	5	+M-X4000:117	+M-B1210:	048 .2	
+M-W4054	GNYE	+M-X4000:⏚	+M-B1210:⏚	048 .2	
+M-W4081	BN	+C-X352:F	+M-X4056:6	019 .4	
+M-W4081	GN	+C-X352:D	+M-X4056:4	019 .4	
+M-W4081	GY	+C-X352:B	+M-X4056:2	019 .4	

Cable	Core	From	To	Page.Col.	Option
+M-W4081	PK	+C-X352:A	+M-X4056:1	019 .4	
+M-W4081	SH	+C-X352:G	+M-X4056:⏚	019 .3	
+M-W4081	SH	+C-X352:G	+M-X4056:⏚	019 .3	
+M-W4081	SH	+C-X352:G	+M-X4056:⏚	019 .3	
+M-W4081	SH	GND:	GND:	019 .5	
+M-W4081	WH	+C-X352:E	+M-X4056:5	019 .4	
+M-W4081	YE	+C-X352:C	+M-X4056:3	019 .4	
+M-W4120	1	+C-X122:1	+M-M1122:U	023 .8	
+M-W4120	2	+C-X122:2	+M-M1122:V	023 .8	
+M-W4120	3	+C-X122:3	+M-M1122:W	023 .9	
+M-W4120	YG	+C-X122:⏚	+M-M1122:⏚	023 .9	
+M-W4121	1	+M-X4008:7	+M-X4121:1	182 .4	
+M-W4121	2	+M-X4008:8	+M-X4121:2	182 .4	
	3				
	4				
	5				
	6				
	7				
	8				
	9				
	10				
	11				
+M-W4121	12	+M-X4008:7-	+M-X4121:1-	182 .6	
	13				
	GNYE				
+M-W4122	1	+M-X4008:4	+M-Y4263:+24V	182 .5	
+M-W4122	2	+M-X4008:4-	+M-Y4263:0V	182 .6	

Drawing remarks

Tetra Pak

Designer	Date	Machine
BMI	07/06/2004	TBA/22-0500

ECM No	Denomination	Page Type
175296	CABLE CONNECTION LIST	CABLE CONNECTION LIST

Company	Document No.	Doc. type	Version	Page
Tetra Pak Carton Ambient S.p.A.	2593852-0007	ELD	AE	29

This drawing must not without the consent of Tetra Pak be copied, transmitted or disclosed to any third party.

Cable Connection List of 2593852-0003

Cable	Core	From	To	Page.Col.	Option
+M-W4122	GNYE	+M-X4008:⏚	+M-Y4263:E	182 .6	
+M-W4123	1	+M-X4008:5	+M-Y4264:+24V	182 .5	
+M-W4123	2	+M-X4008:5-	+M-Y4264:0V	182 .6	
+M-W4123	GNYE	+M-X4008:⏚	+M-Y4264:E	182 .6	
+M-W4124	1	+M-X4008:6	+M-Y4265:+24V	182 .5	
+M-W4124	2	+M-X4008:6-	+M-Y4265:0V	182 .6	
+M-W4124	GNYE	+M-X4008:⏚	+M-Y4265:E	182 .6	
+M-W4125	BK	+M-X4008:1	+M-B4125:BK	173 .6	
+M-W4125	BN	+M-X4008:1+	+M-B4125:BN	173 .5	
+M-W4125	BU	+M-X4008:1-	+M-B4125:BU	173 .5	
+M-W4126	BK	+M-X4008:2	+M-B4126:BK	173 .6	
+M-W4126	BN	+M-X4008:2+	+M-B4126:BN	173 .5	
+M-W4126	BU	+M-X4008:2-	+M-B4126:BU	173 .5	
+M-W4127	BK	+M-X4008:3	+M-B4127:BK	173 .6	
+M-W4127	BN	+M-X4008:3+	+M-B4127:BN	173 .5	
+M-W4127	BU	+M-X4008:3-	+M-B4127:BU	173 .5	
+M-W4128	BK	+M-X4005:1	+M-B4128:BK	173 .6	
+M-W4128	BN	+M-X4005:2	+M-B4128:BN	173 .5	
+M-W4128	BU	+M-X4005:3	+M-B4128:BU	173 .5	
+M-W4129	BK	+M-X4005:4	+M-B4129:BK	173 .6	
+M-W4129	BN	+M-X4005:5	+M-B4129:BN	173 .5	
+M-W4129	BU	+M-X4005:6	+M-B4129:BU	173 .5	
+M-W4131	BK	+M-X4005:7	+M-B4131:BK	173 .6	
+M-W4131	BN	+M-X4005:8	+M-B4131:BN	173 .5	
+M-W4131	BU	+M-X4005:9	+M-B4131:BU	173 .5	
+M-W4132	BK	+M-X4005:10	+M-B4132:BK	173 .6	
+M-W4132	BN	+M-X4005:11	+M-B4132:BN	173 .5	

Cable	Core	From	To	Page.Col.	Option
+M-W4132	BU	+M-X4005:12	+M-B4132:BU	173 .5	
+M-W4134	BK	+M-X4005:13	+M-B4134:BK	173 .6	
+M-W4134	BN	+M-X4005:14	+M-B4134:BN	173 .5	
+M-W4134	BU	+M-X4005:15	+M-B4134:BU	173 .5	
+M-W4135	BK	+M-X4005:16	+M-B4135:BK	174 .6	
+M-W4135	BN	+M-X4005:17	+M-B4135:BN	174 .5	
+M-W4135	BU	+M-X4005:18	+M-B4135:BU	174 .5	
+M-W4137	BK	+M-X4005:19	+M-B4137:BK	174 .6	
+M-W4137	BN	+M-X4005:20	+M-B4137:BN	174 .5	
+M-W4137	BU	+M-X4005:21	+M-B4137:BU	174 .5	
+M-W4138	BK	+M-X4005:22	+M-B4138:BK	174 .6	
+M-W4138	BN	+M-X4005:23	+M-B4138:BN	174 .5	
+M-W4138	BU	+M-X4005:24	+M-B4138:BU	174 .5	
+M-W4141	BK	+M-X4008:10	+M-B4141:BK	175 .6	
+M-W4141	BN	+M-X4008:10+	+M-B4141:BN	175 .4	
+M-W4141	BU	+M-X4008:10-	+M-B4141:BU	175 .4	
+M-W4142	1	+M-X4008:9	+M-Y4266:24V	185 .5	
+M-W4142	2	+M-X4008:9-	+M-Y4266:0V	185 .6	
+M-W4200	BN	+M-X4000:106	+M-A4200:SER 1	102 .8	
	GN				
+M-W4200	SH	+M-X4000:108	+M-A4200:SHD IN	102 .8	
	SH				
	SH				
+M-W4200	WH	+M-X4000:107	+M-A4200:SER 2	102 .8	
	YE				
+M-W4240	1	+M-X4000:105	+M-Y2109:+24V	159 .5	
+M-W4240	2	+M-X4000:105-	+M-Y2109:0V	159 .6	

Drawing remarks

Tetra Pak

Designer	Date	Machine
BMI	07/06/2004	TBA/22-0500

ECM No	Denomination	Page Type
175296	CABLE CONNECTION LIST	CABLE CONNECTION LIST

Company	Document No.	Doc. type	Version	Page
Tetra Pak Carton Ambient S.p.A.	2593852-0007	ELD	AE	30

This drawing must not without the consent of Tetra Pak be copied, transmitted or disclosed to any third party.

Cable Connection List of 2593852-0003

Cable	Core	From	To	Page.Col.	Option
+M-W4309	1	+M-T4309:	+M-L4309:	012 .6	
+M-W4310	1	+M-T4310:	+M-L4310:	012 .7	
+M-W4430	1	+C-X134:1	+M-M5430:1	022 .8	
+M-W4430	2	+C-X134:2	+M-M5430:3	022 .8	
+M-W4430	3	+C-X134:3	+M-M5430:5	022 .9	
	GNYE				
+M-W4431	1	+M-X4000:143	+M-M5430:R	022 .3	
+M-W4431	2	+M-X4000:144	+M-M5430:24V	022 .9	
+M-W4431	3	+M-X4000:143-	+M-M5430:T	022 .9	
+M-W4431	4	+M-X4000:123	+M-M5430:K1B	022 .6	
	GNYE				
+M-W4500	BN	+M-X2001:196	+M-A4500:2	061 .6	
+M-W4500	GN	+M-X2001:194	+M-A4500:4	061 .6	
+M-W4500	SH	+M-X2001:⏚	+M-A4500:5	061 .6	
+M-W4500	WH	+M-X2001:195	+M-A4500:1	061 .6	
+M-W4500	YE	+M-X2001:193	+M-A4500:3	061 .6	
+M-W4501	1	+M-A4500:V24	+M-A4501:PC	061 .7	
+M-W4502	BN	+M-X2001:194	+C-A450:2	061 .4	
+M-W4502	GN	+M-X2001:196	+C-A450:4	061 .4	
+M-W4502	SH	+M-X2001:⏚	+C-A450:5	061 .4	
+M-W4502	WH	+M-X2001:193	+C-A450:1	061 .4	
+M-W4502	YE	+M-X2001:195	+C-A450:3	061 .4	
+M-W6101	1	+M-T6101:	+M-L6101:	013 .2	
+M-W7003	1	+C-X128:1	+M-X7001:1	013 .1	
+M-W7003	2	+C-X128:2	+M-X7001:2	013 .2	
+M-W7003	3	+C-X128:3	+M-X7001:3	013 .2	
	4				
	5				
	6				
+M-W7003	YG	+C-X128:⏚	+M-X7001:⏚	013 .2	
+M-W7004	1	+C-X132:1	+M-X7001:7	032 .4	
	2				
+M-W7004	3	+C-X132:3	+M-X7001:8	032 .4	
+M-W7004	GNYE	+C-X132:⏚	+M-X7001:⏚	032 .5	
+M-W7005	1	+C-X133:1	+M-X7001:15	011 .5	
+M-W7005	2	+C-X133:2	+M-X7001:16	011 .6	
+M-W7005	GNYE	+C-X133:⏚	+M-X7001:⏚	011 .6	
+M-W7006	1	+M-X7001:101	+C-X225:1	126 .6	
+M-W7006	2	+M-X7001:102	+C-X225:2	081 .6	
+M-W7006	3	+M-X7001:103	+C-X225:3	126 .6	
+M-W7006	4	+M-X7001:104	+C-X225:4	126 .6	
+M-W7006	5	+M-X7001:105	+C-X225:5	126 .6	
+M-W7006	6	+M-X7001:106	+C-X225:6	127 .6	
+M-W7006	7	+M-X7001:107	+C-X225:7	127 .6	
+M-W7006	8	+M-X7001:108	+C-X225:8	127 .6	
+M-W7006	9	+M-X7001:109	+C-X225:9	127 .6	
+M-W7006	10	+M-X7001:110	+C-X225:10	127 .6	
+M-W7006	11	+M-X7001:111	+C-X225:11	127 .6	
+M-W7006	12	+M-X7001:112	+C-X225:12	127 .6	
+M-W7006	13	+M-X7001:113	+C-X225:13	127 .6	
+M-W7006	14	+M-X7001:114	+C-X225:14	126 .6	
+M-W7006	15	+M-X7001:115	+C-X225:15	126 .6	
+M-W7006	16	+M-X7001:116	+C-X225:16	126 .6	
+M-W7006	17	+M-X7001:117	+C-X225:17	205 .3	

Drawing remarks

Tetra Pak

Designer BMI	Date 07/06/2004	Machine TBA/22-0500	
ECM No 175296	Denomination CABLE CONNECTION LIST	Page Type CABLE CONNECTION LIST	
Company Tetra Pak Carton Ambient S.p.A.	Document No. 2593852-0007	Doc. type ELD	Version AE	Page 31

This drawing must not without the consent of Tetra Pak be copied, transmitted or disclosed to any third party.

1 2 3 4 5 6 7 8 9 10

Cable Connection List of 2593852-0003

Cable	Core	From	To	Page.Col.	Option
+M-W7006	18	+M-X7001:118	+C-X225:18	120 .3	
+M-W7006	19	+M-X7001:120	+C-X225:19	120 .3	
+M-W7006	20	+M-X7001:124	+C-X225:20	120 .7	
+M-W7006	21	+M-X7001:125	+C-X225:21	120 .7	
+M-W7006	22	+M-X7001:126	+C-X225:22	126 .6	
+M-W7006	23	+M-X7001:126+	+C-X225:23	126 .3	
+M-W7006	24	+M-X7001:126-	+C-X225:24	126 .3	
+M-W7006	GNYE	+M-X7001:⏚	+C-X225:⏚	205 .3	
+M-W7007	1	+M-X7001:127	+C-X226:1	128 .6	
+M-W7007	2	+M-X7001:128	+C-X226:2	128 .6	
+M-W7007	3	+M-X7001:130	+C-X226:3	128 .6	
+M-W7007	4	+M-X7001:131	+C-X226:4	128 .6	
+M-W7007	5	+M-X7001:132	+C-X226:5	155 .3	
+M-W7007	6	+M-X7001:133	+C-X226:6	128 .6	
+M-W7007	7	+M-X7001:136	+C-X226:7	155 .4	
+M-W7007	8	+M-X7001:137	+C-X226:8	155 .4	
+M-W7007	9	+M-X7001:138	+C-X226:9	155 .4	
	10				
	11				
	12				
+M-W7007	13	+M-X7001:142	+C-X226:13	155 .4	
	14				
	15				
+M-W7007	16	+M-X7001:145	+C-X226:16	013 .5	
+M-W7007	17	+M-X7001:146	+C-X226:17	013 .5	
+M-W7007	18	+M-X7001:147	+C-X226:18	013 .5	
+M-W7007	19	+M-X7001:148	+C-X226:19	155 .4	

Cable	Core	From	To	Page.Col.	Option
+M-W7007	20	+M-X7001:149	+C-X226:20	155 .4	
+M-W7007	21	+M-X7001:150	+C-X226:21	155 .4	
+M-W7007	22	+M-X7001:151	+C-X226:22	157 .5	
+M-W7007	23	+M-X7001:127+	+C-X226:23	205 .5	
+M-W7007	24	+M-X7001:127-	+C-X226:24	205 .5	
+M-W7007	GNYE	+M-X7001:⏚	+C-X226:⏚	205 .9	
+M-W7008	1	+C-X231:1	+M-X7001:152	122 .3	
+M-W7008	2	+C-X231:2	+M-X7001:153	206 .3	
+M-W7008	3	+C-X231:3	+M-X7001:174	206 .7	
+M-W7008	4	+C-X231:4	+M-X7001:154	122 .6	
+M-W7008	5	+C-X231:5	+M-X7001:158	122 .6	
+M-W7008	6	+C-X231:6	+M-X7001:175	122 .6	
+M-W7008	7	+C-X231:7	+M-X7001:161	146 .4	
+M-W7008	8	+C-X231:8	+M-X7001:162	096 .6	
+M-W7008	9	+C-X231:9	+M-X7001:163	206 .3	
+M-W7008	10	+C-X231:10	+M-X7001:164	206 .3	
+M-W7008	11	+C-X231:11	+M-X7001:165	128 .6	
+M-W7008	12	+C-X231:12	+M-X7001:167	058 .4	
+M-W7008	13	+C-X231:13	+M-X7001:168	058 .4	
+M-W7008	14	+C-X231:14	+M-X7001:169	058 .4	
+M-W7008	15	+C-X231:15	+M-X7001:170	058 .4	
+M-W7008	16	+C-X231:16	+M-X7001:171	206 .7	
	17				
+M-W7008	18	+C-X231:18	+M-X7001:173	122 .6	
	19				
+M-W7008	20	+C-X231:20	+M-X7001:176	206 .7	
+M-W7008	21	+C-X231:21	+M-X7001:177	206 .7	

Drawing remarks

Tetra Pak

Designer	Date	Machine
BMI	07/06/2004	TBA/22-0500

ECM No	Denomination	Page Type
175296	CABLE CONNECTION LIST	CABLE CONNECTION LIST

Company	Document No.	Doc. type	Version	Page
Tetra Pak Carton Ambient S.p.A.	2593852-0007	ELD	AE	32

This drawing must not without the consent of Tetra Pak be copied, transmitted or disclosed to any third party.

Cable Connection List of 2593852-0003

Cable	Core	From	To	Page.Col.	Option
+M-W7008	22	+C-X231:22	+M-X7001:178	206 .7	
+M-W7008	23	+C-X231:23	+M-X7001:178+	206 .9	
+M-W7008	24	+C-X231:24	+M-X7001:178-	206 .9	
+M-W7008	GNYE	+C-X231:⏚	+M-X7001:⏚	058 .7	
+M-W7009	1	+C-X221:1	+M-X7001:179	156 .3	
+M-W7009	2	+C-X221:2	+M-X7001:180	156 .3	
+M-W7009	3	+C-X221:3	+M-X7001:181	156 .3	
+M-W7009	4	+C-X221:4	+M-X7001:182	156 .3	
+M-W7009	5	+C-X221:5	+M-X7001:183	156 .3	
+M-W7009	6	+C-X221:6	+M-X7001:184	156 .3	
+M-W7009	7	+C-X221:7	+M-X7001:185	156 .3	
+M-W7009	8	+C-X221:8	+M-X7001:186	156 .3	
+M-W7009	9	+C-X221:9	+M-X7001:187	206 .7	
+M-W7009	10	+C-X221:10	+M-X7001:188	207 .3	
+M-W7009	11	+C-X221:11	+M-X7001:179+	156 .7	
+M-W7009	12	+C-X221:12	+M-X7001:179-	156 .7	
	13				
	14				
	15				
	16				
	17				
+M-W7009	YG	+C-X221:⏚	+M-X7001:⏚	156 .7	
+M-W7010	1	+C-X126:1	+M-M7208:U	017 .5	
+M-W7010	2	+C-X126:2	+M-M7208:V	017 .5	
+M-W7010	3	+C-X126:3	+M-M7208:W	017 .5	
+M-W7010	SH	+C-X126:4	GND:	017 .5	
+M-W7010	YG	+C-X126:5	+M-M7208:⏚	017 .5	

Cable	Core	From	To	Page.Col.	Option
+M-W7011	1	+C-X127:1	+M-M7217:U	017 .9	
+M-W7011	2	+C-X127:2	+M-M7217:V	017 .9	
+M-W7011	3	+C-X127:3	+M-M7217:W	017 .10	
+M-W7011	SH	+C-X127:4	GND:	017 .10	
+M-W7011	YG	+C-X127:5	+M-M7217:⏚	017 .10	
+M-W7012	1	+M-X7001:1	+M-A7417:101	013 .1	
+M-W7012	2	+M-X7001:2	+M-A7417:102	013 .2	
+M-W7012	3	+M-X7001:3	+M-A7417:103	013 .2	
	SH				
+M-W7012	YG	+M-X7001:⏚	+M-A7417:104	013 .2	
+M-W7013	BK	+M-X7001:101	+M-B6203:BK	126 .6	
+M-W7013	BN	+M-X7001:101+	+M-B6203:BN	126 .5	
+M-W7013	BU	+M-X7001:101-	+M-B6203:BU	126 .5	
+M-W7014	1	+M-X7001:9	+M-E7702:2	032 .5	
+M-W7014	2	+M-X7001:10	+M-E7702:1	032 .5	
+M-W7014	YG	+M-X7001:⏚	+M-E7702:E	032 .5	
+M-W7015	BK	+M-X7001:107	+M-B72232:BK	127 .6	
+M-W7015	BN	+M-X7001:107+	+M-B72232:BN	127 .5	
+M-W7015	BU	+M-X7001:107-	+M-B72232:BU	127 .5	
+M-W7016	BK	+M-X7001:102	+M-B6105:BK	081 .5	
+M-W7016	BN	+M-X7001:102+	+M-B6105:BN	081 .4	
+M-W7016	BU	+M-X7001:102-	+M-B6105:BU	081 .4	
+M-W7017	BK	+M-X7001:103	+M-B6201:BK	126 .6	
+M-W7017	BN	+M-X7001:103+	+M-B6201:BN	126 .5	
+M-W7017	BU	+M-X7001:103-	+M-B6201:BU	126 .5	
+M-W7018	BK	+M-X7001:104	+M-B6202:BK	126 .6	
+M-W7018	BN	+M-X7001:104+	+M-B6202:BN	126 .5	

Drawing remarks

Tetra Pak

Designer	Date	Machine
BMI	07/06/2004	TBA/22-0500

ECM No	Denomination	Page Type
175296	CABLE CONNECTION LIST	CABLE CONNECTION LIST

Company	Document No.	Doc. type	Version	Page
Tetra Pak Carton Ambient S.p.A.	2593852-0007	ELD	AE	33

This drawing must not without the consent of Tetra Pak be copied, transmitted or disclosed to any third party.

Cable Connection List of 2593852-0003

Cable	Core	From	To	Page.Col.	Option
+M-W7018	BU	+M-X7001:104-	+M-B6202:BU	126 .5	
+M-W7019	BK	+M-X7001:105	+M-B6208:BK	126 .6	
+M-W7019	BN	+M-X7001:105+	+M-B6208:BN	126 .5	
+M-W7019	BU	+M-X7001:105-	+M-B6208:BU	126 .5	
+M-W7020	BK	+M-X7001:106	+M-B6107:BK	127 .6	
+M-W7020	BN	+M-X7001:106+	+M-B6107:BN	127 .5	
+M-W7020	BU	+M-X7001:106-	+M-B6107:BU	127 .5	
+M-W7022	BK	+M-X7001:108	+M-B6204:BK	127 .6	
+M-W7022	BN	+M-X7001:108+	+M-B6204:BN	127 .5	
+M-W7022	BU	+M-X7001:108-	+M-B6204:BU	127 .5	
+M-W7023	BK	+M-X7001:109	+M-B72234:BK	127 .6	
+M-W7023	BN	+M-X7001:109+	+M-B72234:BN	127 .5	
+M-W7023	BU	+M-X7001:109-	+M-B72234:BU	127 .5	
+M-W7024	BK	+M-X7001:110	+M-B7411:BK	127 .6	
+M-W7024	BN	+M-X7001:110+	+M-B7411:BN	127 .5	
+M-W7024	BU	+M-X7001:110-	+M-B7411:BU	127 .5	
+M-W7025	BK	+M-X7001:111	+M-B7414:BK	127 .6	
+M-W7025	BN	+M-X7001:111+	+M-B7414:BN	127 .5	
+M-W7025	BU	+M-X7001:111-	+M-B7414:BU	127 .5	
+M-W7026	BK	+M-X7001:112	+M-B7412:BK	127 .6	
+M-W7026	BN	+M-X7001:112+	+M-B7412:BN	127 .5	
+M-W7026	BU	+M-X7001:112-	+M-B7412:BU	127 .5	
+M-W7027	BK	+M-X7001:113	+M-B7512:BK	127 .6	
+M-W7027	BN	+M-X7001:113+	+M-B7512:BN	127 .5	
+M-W7027	BU	+M-X7001:113-	+M-B7512:BU	127 .5	
	1				
+M-W7028	2	+M-X7001:115+	+M-S6206:13	126 .4	

Cable	Core	From	To	Page.Col.	Option
+M-W7028	3	+M-X7001:115	+M-S6206:14	126 .6	
+M-W7028	4	+M-X7001:116	+M-S7701:51	126 .6	
	5				
	6				
	7				
	8				
	9				
	10				
	11				
	GNYE				
+M-W7029	1	+M-X7001:122	+M-S7813:21	120 .5	
+M-W7029	2	+M-X7001:123+	+M-S7813:11	120 .5	
+M-W7029	3	+M-X7001:124	+M-S7813:12	120 .6	
+M-W7029	4	+M-X7001:125	+M-S7813:22	120 .6	
+M-W7029	5	+M-X7001:126	+M-S7303:14	126 .6	
+M-W7029	6	+M-X7001:126+	+M-S7303:13	126 .4	
+M-W7029	7	+M-X7001:127	+M-S7403:14	128 .6	
+M-W7029	8	+M-X7001:114	+M-S7402:14	126 .6	
	9				
	10				
	11				
	GNYE				
+M-W7030	BK	+M-X7001:165	+M-B7210:BK	128 .6	
+M-W7030	BN	+M-X7001:165+	+M-B7210:BN	128 .4	
+M-W7030	BU	+M-X7001:165-	+M-B7210:BU	128 .4	
+M-W7031	1	+M-X7001:119+	+M-S7812:11	120 .4	
+M-W7031	2	+M-X7001:118	+M-S7812:21	120 .3	

Drawing remarks

Tetra Pak

Designer	Date	Machine
BMI	07/06/2004	TBA/22-0500

ECM No	Denomination	Page Type
175296	CABLE CONNECTION LIST	CABLE CONNECTION LIST

Company	Document No.	Doc. type	Version	Page
Tetra Pak Carton Ambient S.p.A.	2593852-0007	ELD	AE	34

This drawing must not without the consent of Tetra Pak
be copied, transmitted or disclosed to any third party.

Cable Connection List of 2593852-0003

Cable	Core	From	To	Page.Col.	Option
+M-W7031	3	+M-X7001:121	+M-S7812:22	120 .4	
+M-W7031	4	+M-X7001:120	+M-S7812:12	120 .3	
	GNYE				
+M-W7033	BK	+M-X7001:128	+M-B7211:BK	128 .6	
+M-W7033	BN	+M-X7001:128+	+M-B7211:BN	128 .4	
+M-W7033	BU	+M-X7001:128-	+M-B7211:BU	128 .4	
+M-W7034	1	+M-X7001:179	+M-X7049:1	156 .4	
+M-W7034	2	+M-X7001:180	+M-X7049:2	156 .4	
+M-W7034	3	+M-X7001:181	+M-X7049:3	156 .4	
+M-W7034	4	+M-X7001:182	+M-X7049:4	156 .4	
+M-W7034	5	+M-X7001:183	+M-X7049:5	156 .4	
+M-W7034	6	+M-X7001:184	+M-X7049:6	156 .4	
+M-W7034	7	+M-X7001:185	+M-X7049:7	156 .4	
	8				
	9				
	10				
	11				
+M-W7034	12	+M-X7001:179-	+M-X7049:1-	156 .6	
+M-W7034	13	+M-X7001:184-	+M-X7049:6-	156 .6	
+M-W7034	GNYE	+M-X7001:⏚	+M-X7049:⏚	156 .6	
+M-W7035	BK	+M-X7001:130	+M-B7401:BK	128 .6	
+M-W7035	BN	+M-X7001:130+	+M-B7401:BN	128 .4	
+M-W7035	BU	+M-X7001:130-	+M-B7401:BU	128 .4	
+M-W7036	BK	+M-X7001:131	+M-B7501:BK	128 .6	
+M-W7036	BN	+M-X7001:131+	+M-B7501:BN	128 .4	
+M-W7036	BU	+M-X7001:131-	+M-B7501:BU	128 .4	
+M-W7037	1	+C-X504:1	+M-X7001:13	011 .3	

Cable	Core	From	To	Page.Col.	Option
+M-W7037	2	+C-X504:2	+M-X7001:14	011 .3	
+M-W7037	3	+C-X504:3	+M-X7001:21	205 .3	
+M-W7037	4	+C-X504:4	+M-X7001:22	205 .3	
+M-W7037	5	+C-X504:5	+M-X7001:23	205 .3	
+M-W7037	6	+C-X504:6	+M-X7001:24	205 .3	
+M-W7037	GNYE	+C-X504:⏚	+M-X7001:⏚	011 .3	
+M-W7038	1	+M-X7001:135	+M-X7050:1	155 .5	
+M-W7038	2	+M-X7001:136	+M-X7050:2	155 .5	
+M-W7038	3	+M-X7001:137	+M-X7050:3	155 .5	
+M-W7038	4	+M-X7001:138	+M-X7050:4	155 .5	
	5				
+M-W7038	6	+M-X7001:148	+M-X7050:6	155 .5	
+M-W7038	7	+M-X7001:149	+M-X7050:7	155 .5	
+M-W7038	8	+M-X7001:142	+M-X7050:8	155 .5	
	9				
	10				
	11				
+M-W7038	12	+M-X7001:139-	+M-X7050:1-	155 .7	
+M-W7038	13	+M-X7001:148-	+M-X7050:6-	155 .7	
+M-W7038	YG	+M-X7001:⏚	+M-X7050:⏚	155 .7	
+M-W7039	1	+M-X7001:145	+M-A7417:301	013 .4	
+M-W7039	2	+M-X7001:146	+M-A7417:304	013 .4	
+M-W7039	3	+M-X7001:147	+M-A7417:306	013 .4	
+M-W7039	4	+M-X7001:147+	+M-A7417:310	013 .4	
+M-W7039	5	+M-X7001:147-	+M-A7417:309	013 .4	
	6				
	7				

Drawing remarks

Tetra Pak

Designer BMI	Date 07/06/2004	Machine TBA/22-0500	
ECM No 175296	Denomination CABLE CONNECTION LIST	Page Type CABLE CONNECTION LIST	
Company Tetra Pak Carton Ambient S.p.A.	Document No. 2593852-0007	Doc. type ELD	Version AE	Page 35

This drawing must not without the consent of Tetra Pak be copied, transmitted or disclosed to any third party.

1 2 3 4 5 6 7 8 9 10

Cable Connection List of 2593852-0003

Cable	Core	From	To	Page.Col.	Option
	8				
	9				
	10				
	11				
	GNYE				
	SH				
+M-W7040	BK	+C-X401:4	+M-X74031:4	052 .8	
+M-W7040	BN	+C-X401:1	+M-X74031:1	052 .8	
+M-W7040	BU	+C-X401:2	+M-X74031:3	052 .8	
+M-W7040	GY	+C-X401:3	+M-X74031:5	052 .8	
+M-W7040	WH		+M-X74031:2	.8	
+M-W7041	BK	+C-X402:4	+M-X74032:4	052 .8	
+M-W7041	BN	+C-X402:1	+M-X74032:1	052 .8	
+M-W7041	BU	+C-X402:2	+M-X74032:3	052 .8	
+M-W7041	GY	+C-X402:3	+M-X74032:5	052 .8	
+M-W7041	WH		+M-X74032:2	.8	
+M-W7042	1	+M-X7001:132	+M-B7801:21	155 .4	
+M-W7042	2	+M-X7001:132+	+M-B7801:11	128 .4	
+M-W7042	3	+M-X7001:133	+M-B7801:12	128 .6	
+M-W7042	4	+M-X7001:134	+M-B7801:22	155 .4	
	GNYE				
+M-W7043	1	+M-X7001:152	+M-B7806:21	122 .4	
+M-W7043	2	+M-X7001:153+	+M-B7806:11	122 .4	
+M-W7043	3	+M-X7001:154	+M-B7806:12	122 .5	
+M-W7043	4	+M-X7001:155	+M-B7806:22	122 .5	
+M-W7043	GNYE	+M-X7001:⏚		122	
+M-W7044	1	+M-X7001:156	+M-B7807:21	122 .5	
+M-W7044	2	+M-X7001:157+	+M-B7807:11	122 .4	
+M-W7044	3	+M-X7001:158	+M-B7807:12	122 .5	
+M-W7044	4	+M-X7001:159	+M-B7807:22	122 .4	
+M-W7044	GNYE		+M-X7001:⏚	122	
+M-W7045	1	+M-X7001:161	+M-H7703:1	146 .5	
+M-W7045	2	+M-X7001:161-	+M-H7703:2	146 .6	
+M-W7046	1	+M-X7001:17	+M-R6203:1	011 .5	
+M-W7046	2	+M-X7001:18	+M-R6203:2	011 .5	
+M-W7047	1	+M-X1402:1	+M-A7417:X004	013 .1	
+M-W7049	1	+M-X7001:19	+M-R6204:1	011 .6	
+M-W7049	2	+M-X7001:20	+M-R6204:2	011 .7	
+M-W7049	GNYE	+M-X7001:⏚	+M-R6204:E	011 .7	
+M-W7050	BN	+M-X7022:7	+M-X7001:162+	096 .4	
+M-W7050	GN	+M-X7022:5	+M-X7001:162	096 .4	
+M-W7050	GY	+M-X7022:2	+M-X7001:162-	096 .2	
	PK				
+M-W7050	SH	GND:	GND:	096 .4	
+M-W7050	SH	GND:	GND:	096 .4	
+M-W7050	SH	GND:	GND:	096 .2	
	SH				
+M-W7050	WH	+M-X7022:8	+M-X7001:162-	096 .4	
	YE				
+M-W7054	1	+M-X7001:167	+M-H2802:1	058 .5	
+M-W7054	2	+M-X7001:168	+M-H2802:2	058 .5	
+M-W7054	3	+M-X7001:169	+M-H2802:3	058 .5	
+M-W7054	4	+M-X7001:170-	+M-H2802:0	058 .7	
	5				

Drawing remarks

Tetra Pak

Designer	Date	Machine
BMI	07/06/2004	TBA/22-0500

ECM No	Denomination	Page Type
175296	CABLE CONNECTION LIST	CABLE CONNECTION LIST

Company	Document No.	Doc. type	Version	Page
Tetra Pak Carton Ambient S.p.A.	2593852-0007	ELD	AE	36

This drawing must not without the consent of Tetra Pak be copied, transmitted or disclosed to any third party.

1 2 3 4 5 6 7 8 9 10

Cable Connection List of 2593852-0003

Cable	Core	From	To	Page.Col.	Option
	6				
+M-W7054	GNYE	+M-X7001:⏚	+M-H2802:E	058 .7	
+M-W7055	1	+M-X7001:7	+M-E7705:2	032 .4	
+M-W7055	2	+M-X7001:8	+M-E7705:1	032 .4	
+M-W7055	YG	+M-X7001:⏚	+M-E7705:E	032 .4	
+M-W7056	BN	+M-X7001:186	+M-Y7425:BN	156 .5	
+M-W7056	L.BU	+M-X7001:186-	+M-Y7425:BU	156 .6	
+M-W7056	YG	+M-X7001:⏚	+M-Y7425:YG	156 .6	
	11				
+M-W7060	BK	+C-X228:2	+M-X1210:BK	051 .3	
+M-W7060	BU	+C-X228:⏚	+M-X1210:BU	051 .6	
+M-W7060	GN	+C-X228:17	+M-X1210:GN	051 .6	
+M-W7060	GY	+C-X228:6	+M-X1210:GY	051 .6	
+M-W7060	GYPK	+C-X228:3	+M-X1210:GYPK	051 .6	
+M-W7060	PK	+C-X228:5	+M-X1210:PK	051 .6	
+M-W7060	RD	+C-X228:1	+M-X1210:RD	051 .3	
+M-W7060	RDBU	+C-X228:14	+M-X1210:RDBU	051 .6	
+M-W7060	SH	+C-X228:⏚	+M-X1210:BU	051 .6	
+M-W7060	VT	+C-X228:13	+M-X1210:VT	051 .6	
+M-W7060	WH	+C-X228:4	+M-X1210:WH	051 .6	
+M-W7060	YE	+C-X228:16	+M-X1210:YE	051 .6	
+M-W7072	1	+M-K7000:2	+M-M6201:U	015 .7	
+M-W7072	2	+M-K7000:4	+M-M6201:V	015 .7	
+M-W7072	3	+M-K7000:6	+M-M6201:W	015 .7	
+M-W7072	GNYE	+M-X7010:2	+M-M6201:⏚	015 .7	
+M-W7072	SH	+M-X7010:1	GND:	015 .8	
+M-W7073	1	+M-K7001:2	+M-M6202:U	015 .9	

Cable	Core	From	To	Page.Col.	Option
+M-W7073	2	+M-K7001:4	+M-M6202:V	015 .9	
+M-W7073	3	+M-K7001:6	+M-M6202:W	015 .9	
+M-W7073	GNYE	+M-X7011:2	+M-M6202:⏚	015 .9	
+M-W7073	SH	+M-X7011:1	GND:	015 .10	
+M-W7076	1	+C-X118:1	+M-K7000:1	015 .6	
+M-W7076	2	+C-X118:2	+M-K7000:3	015 .6	
+M-W7076	3	+C-X118:3	+M-K7000:5	015 .6	
+M-W7076	SH	+C-X118:4	+M-X7010:1	015 .6	
+M-W7076	YG	+C-X118:5	+M-X7010:2	015 .6	
+M-W7077	1	+M-X7001:172	+M-B6209:21	122 .4	
+M-W7077	2	+M-X7001:173	+M-B6209:11	122 .5	
+M-W7077	3	+M-X7001:174+	+M-B6209:12	122 .4	
+M-W7077	4	+M-X7001:175	+M-B6209:22	122 .5	
+M-W7077	GNYE		+M-X7001:⏚	122	
+M-W7304	RD	+M-X7304:-	+C-X316:-	087 .5	
+M-W7304	YE	+M-X7304:+	+C-X316:+	087 .5	
+M-W7305	1	+M-X7001:13	+M-R7304:1	011 .3	
+M-W7305	2	+M-X7001:14	+M-R7304:2	011 .3	
+M-W7305	GNYE	+M-X7001:⏚	+M-R7304:E	011 .3	
+M-W7414	BU	+C-X424:A	+M-X7417:A	013 .8	
+M-W7414	SH	+C-X424:E	+M-X7417:E	013 .8	
+M-W7414	WH	+C-X424:B	+M-X7417:B	013 .8	
+M-W9100	BK	+C-X502:1	+M-R9100:1	006 .8	H.I.
+M-W9100	BK	+C-X502:2	+M-R9100:2	006 .8	H.I.
+M-W9100	GNYE	+C-X502:⏚	+M-R9100:E	006 .9	H.I.
+M-W9101	1	+M-X9100:105	+M-Y9101:1	184 .5	H.I.
+M-W9101	2	+M-X9100:106	+M-Y9101:2	184 .6	H.I.

Drawing remarks

Tetra Pak

Designer	Date	Machine
BMI	07/06/2004	TBA/22-0500

ECM No	Denomination	Page Type
175296	CABLE CONNECTION LIST	CABLE CONNECTION LIST

Company	Document No.	Doc. type	Version	Page
Tetra Pak Carton Ambient S.p.A.	2593852-0007	ELD	AE	37

This drawing must not without the consent of Tetra Pak be copied, transmitted or disclosed to any third party.

Cable Connection List of 2593852-0003

Cable	Core	From	To	Page.Col.	Option
+M-W9101	GNYE	+M-X9100:⏚	+M-Y9101:E	184 .6	H.I.
+M-W9103	1	+M-X9100:107	+M-Y9103:1	184 .5	H.I.
+M-W9103	2	+M-X9100:108	+M-Y9103:2	184 .6	H.I.
+M-W9103	GNYE	+M-X9100:⏚	+M-Y9103:E	184 .6	H.I.
+M-W9104	1	+M-X9100:101	+M-B9104:1	176 .6	H.I.
+M-W9104	2	+M-X9100:102	+M-B9104:4	176 .4	H.I.
+M-W9105	BN	+M-X9100:113	+M-X9105:3	101 .6	H.I.
+M-W9105	GN	+M-X9100:112	+M-X9105:4	101 .6	H.I.
+M-W9105	SH	+M-X9100:115	+M-X9105:5	101 .6	H.I.
+M-W9105	WH	+M-X9100:111	+M-X9105:1	101 .6	H.I.
	YE				
+M-W9106	RD	+M-X9106:-	+C-X317:-	177 .5	H.I.
+M-W9106	YE	+M-X9106:+	+C-X317:+	177 .5	H.I.
+M-W9107	BK	+M-X1003:177	+M-B9107:BK	176 .6	H.I.
+M-W9107	BN	+M-X1003:177+	+M-B9107:BN	176 .5	H.I.
+M-W9107	BU	+M-X1003:177-	+M-B9107:BU	176 .5	H.I.
+M-W9108	BK	+M-X1003:178	+M-B9108:BK	176 .6	H.I.
+M-W9108	BN	+M-X1003:178+	+M-B9108:BN	176 .5	H.I.
+M-W9108	BU	+M-X1003:178-	+M-B9108:BU	176 .5	H.I.
+M-W9109	BK	+M-X1003:179	+M-B9109:BK	176 .6	H.I.
+M-W9109	BN	+M-X1003:179+	+M-B9109:BN	176 .5	H.I.
+M-W9109	BU	+M-X1003:179-	+M-B9109:BU	176 .5	H.I.
+M-W9110	BK	+M-X1003:180	+M-B9110:BK	176 .6	H.I.
+M-W9110	BN	+M-X1003:180+	+M-B9110:BN	176 .5	H.I.
+M-W9110	BU	+M-X1003:180-	+M-B9110:BU	176 .5	H.I.
+M-W9111	BK	+M-X1003:176	+M-B9111:BK	176 .6	H.I.
+M-W9111	BN	+M-X1003:176+	+M-B9111:BN	176 .5	H.I.

Cable	Core	From	To	Page.Col.	Option
+M-W9111	BU	+M-X1003:176-	+M-B9111:BU	176 .5	H.I.
+M-W9112	1	+M-X1003:184	+M-Y9112:1	184 .5	H.I.
+M-W9112	2	+M-X1003:184-	+M-Y9112:2	184 .6	H.I.
+M-W9112	GNYE	+M-X1003:⏚	+M-Y9112:E	184 .6	H.I.
+M-W9113	1	+M-X1003:182	+M-B9113:1	045 .3	H.I.
+M-W9113	2	+M-X1003:183	+M-B9113:2	045 .3	H.I.
+M-W9113	3	+M-X1003:181	+M-B9113:	045 .3	H.I.
+M-W9113	YG	+M-X1003:⏚	+M-B9113:	045 .3	H.I.
+M-W9114	1	+M-X1003:185	+M-Y9114:1	184 .5	H.I.
+M-W9114	2	+M-X1003:185-	+M-Y9114:2	184 .6	H.I.
+M-W9114	GNYE	+M-X1003:⏚	+M-Y9114:E	184 .6	H.I.
+M-W9115	RD	+M-X9115:-	+C-X318:-	177 .5	H.I.
+M-W9115	YE	+M-X9115:+	+C-X318:+	177 .5	H.I.
+M-W9116	RD	+M-X9116:-	+C-X319:-	177 .5	H.I.
+M-W9116	YE	+M-X9116:+	+C-X319:+	177 .5	H.I.
+M-W9117	BN	+M-X9100:119	+M-B9105:4	094 .4	H.I.
+M-W9117	GN	+M-X9100:117	+M-B9105:2	094 .4	H.I.
+M-W9117	SH	+M-X9100:120	GND:	094 .4	H.I.
+M-W9117	WH	+M-X9100:118	+M-B9105:3	094 .4	H.I.
+M-W9117	YE	+M-X9100:116	+M-B9105:1	094 .4	H.I.
	BN				
+M-W9118	SH	+M-X9100:115	GND:	101 .4	H.I.
+M-W9118	WH	+M-X9100:113	+C-A108:AQ014	101 .4	H.I.
+M-W9119	BN	+M-X9100:119	+C-A105:AI01	094 .7	H.I.
+M-W9119	SH	+M-X9100:120	GND:	094 .4	H.I.
+M-W9119	WH	+M-X9100:118	+C-A105:19	094 .7	H.I.

Drawing remarks

Tetra Pak

Designer	Date	Machine
BMI	07/06/2004	TBA/22-0500

ECM No	Denomination	Page Type
175296	CABLE CONNECTION LIST	CABLE CONNECTION LIST

Company	Document No.	Doc. type	Version	Page
Tetra Pak Carton Ambient S.p.A.	2593852-0007	ELD	AE	38

10 Mains Connections

TechPub_2614345_v3_DRAFT_ReleaseTB107677en.fm

Description

The drawings that show the connection from the mains power to the electrical cabinet are included in this chapter.

TechPub_2614345_v3_DRAFT_ReleaseTB107677en.fm

This drawing must not without the consent of Tetra Pak
be copied, transmitted or disclosed to any third party.

MAIN VOLTAGE 205-600V EXCEPT 400/230V

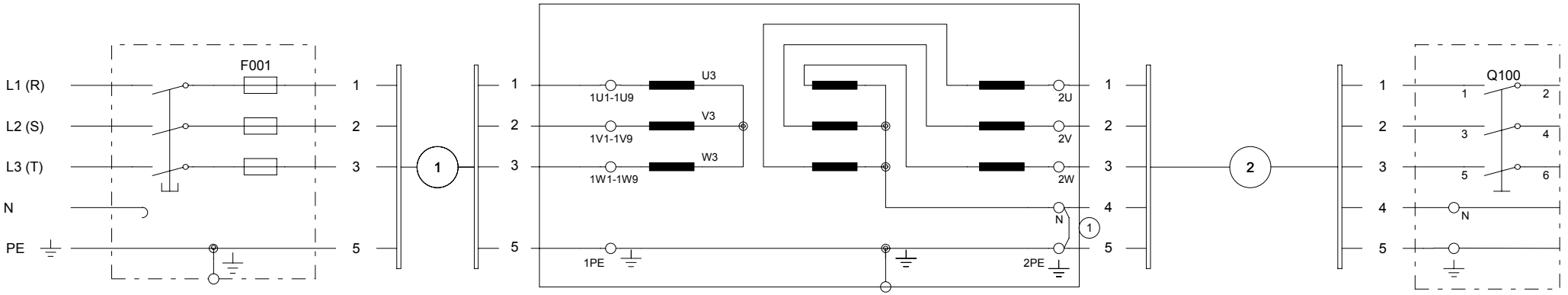

MAINS CUSTOMER'S FUSE BOX

MATCHING TRANSFORMER CONNECTION
ACCORDING TO DIAGRAM 2593852-0008:002

FILLING MACHINE CONNECTION
ACCORDING TO DIAGRAM "MAINS"

MAIN VOLTAGE 400/230V

AREA TO CABLE 4x25/16mm AND SETTING VALUE
OF Q100= 63/400 - SIZE OF F001=100A. (slow)

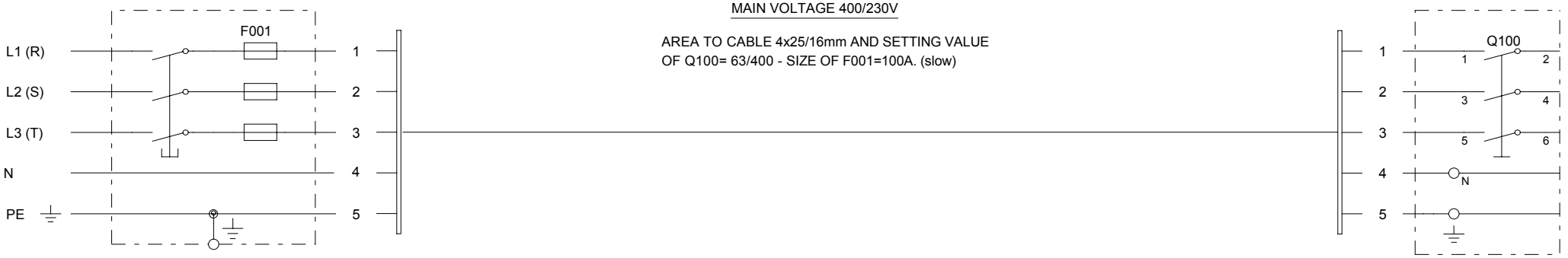

MAINS CUSTOMER'S FUSE BOX

ATTENTION: THIS IS A RECOMMANDATION TO ACHIEVE SELECTIVITY;
THE DIMENSIONING OF THE MAIN CABLE AND PROTECTIVE GROUNDING
HAS TO BE CARRIED OUT ACCORDING TO CURRENT LOCAL REGULATIONS.

FILLING MACHINE CONNECTION
ACCORDING TO DIAGRAM "MAINS"

CAUTION THE PROTECTIVE EARTH CONNECTION MUST BE DONE
ACCORDING TO THE LOCAL RULES

(1) MAKE THE BRIDGE USING A CONN. AREA NOT SMALLER THEN 16mm

Drawing remarks

Tetra Pak

Designer	Date	Machine
BMI	07/06/2004	TBA/22-0500

ECM No	Denomination	Page Type
175296	MAINS CONNECTION	MAINS CONNECTION

Company	Document No.	Doc. type	Version	Page
Tetra Pak Carton Ambient S.p.A.	2593852-0008	ELD	AE	1

RELEASED

This drawing must not without the consent of Tetra Pak be copied, transmitted or disclosed to any third party.

MAIN VOLTAGE	FUSES (SLOW) ① F001	AREA TO CU CABLES NO. 1	AREA TO CU CABLES NO. 2	SETTING VALUE Q100	CONNECTIONS ON MATCHING TRANSFORMER			
V	A	mm^2	mm^2	A	MAINS		TAP	CONNECT
600/347 3x600	100	3x25/16	4x25/16	63/400	PHASE PHASE PHASE N GROUND	L1 L2 L3 N PE	1U9 1V9 1W9 N	1U3 - U4 1V3 - V4 1W3 - W4
550/318 3x550	125	3x25/16	4x25/16	63/400	PHASE PHASE PHASE N GROUND	L1 L2 L3 N PE	1U8 1V8 1W8 N	1U3 - U4 1V3 - V4 1W3 - W4
500/289 3x500	125	3x25/16	4x25/16	63/400	PHASE PHASE PHASE N GROUND	L1 L2 L3 N PE	1U7 1V7 1W7 N	1U3 - U4 1V3 - V4 1W3 - W4
480/277 3x480	125	3x35/16	4x25/16	63/400	PHASE PHASE PHASE N GROUND	L1 L2 L3 N PE	1U6 1V6 1W6 N	1U3 - U4 1V3 - V4 1W3 - W4
440/254 3x440	160	3x35/16	4x25/16	63/400	PHASE PHASE PHASE N GROUND	L1 L2 L3 N PE	1U5 1V5 1W5 N	1U2 - U4 1V2 - V4 1W2 - W4
415/240 3x415	160	3x35/16	4x25/16	63/400	PHASE PHASE PHASE N GROUND	L1 L2 L3 N PE	1U5 1V5 1W5 N	1U1 - U4 1V1 - V4 1W1 - W4
3x400	160	3x50/25	4x25/16	63/400	PHASE PHASE PHASE N GROUND	L1 L2 L3 N PE	1U4 1V4 1W4 N	1U1 - U4 1V1 - V4 1W1 - W4
240/140 3x240	250	3x95/50	4x25/16	63/400	PHASE PHASE PHASE N GROUND	L1 L2 L3 N PE	1U3 1V3 1W3 N	U3 - U4 V3 - V4 W3 - W4 1U3-1U6 1V3-1V6 1W3-1W6
220/127 3x220	315	3x95/50	4x25/16	63/400	PHASE PHASE PHASE N GROUND	L1 L2 L3 N PE	1U2 1V2 1W2 N	U3 - U4 V3 - V4 W3 - W4 1U2-1U5 1V2-1V5 1W2-1W5
200/115 3x200	315	3x120/70	4x25/16	63/400	PHASE PHASE PHASE N GROUND	L1 L2 L3 N PE	1U1 1V1 1W1 N	U3 - U4 V3 - V4 W3 - W4 1U1-1U4 1V1-1V4 1W1-1W4

MATCHING TRANSFORMER
90245-0024

Y/Z II-WIRED

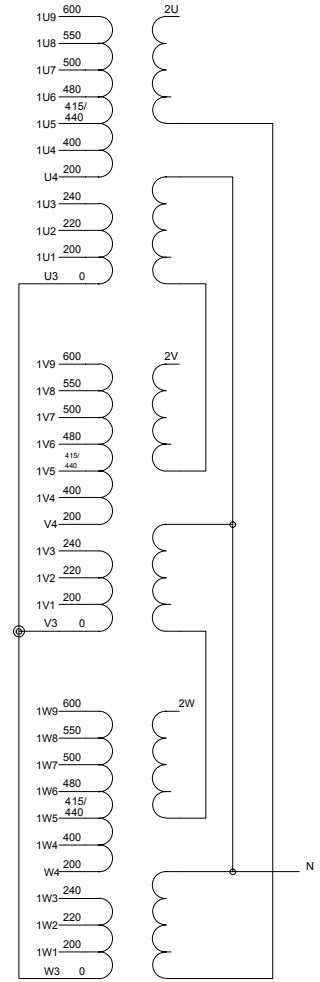

① RECOMMENDED MAIN FUSE TO ACHIEVE SELECTIVITY

Drawing remarks

Tetra Pak

Designer	Date	Machine
BMI	07/06/2004	TBA/22-0500

ECM No	Denomination	Page Type
175296	MAINS CONNECTION	MAINS CONNECTION

Company	Document No.	Doc. type	Version	Page
Tetra Pak Carton Ambient S.p.A.	2593852-0008	ELD	AE	2

11 Program Documents

TechPub_2614345_v3_DRAFT_ReleaseTB1117677en.fm

Description

The complete program for each programmable system used in the machine or equipment, such as a programmable logic controller, is included in this chapter.

TechPub_2614345_v3_DRAFT_ReleaseTB117677en.fm

TP no: 39912-0006
ECM: **153152 (L 153153)**
File name: **39912-1006**
Machine: **TBA/22**
Date / Sign: **2004-04-16 / MANO**
Prg. name: **AF39912**

Tetra Pak Carton Ambient

TP no: 39912-0006
ECM: **153152 (L 153153)**
File name: **39912-1006**
Machine: **TBA/22**
Date / Sign: **2004-04-16 / MANO**
Prg. name: **AF39912**

Tetra Pak Carton Ambient

TP no: 39912-0006
ECM: **153152 (L 153153)**
File name: **39912-1006**
Machine: **TBA/22**
Date / Sign: **2004-04-16 / MANO**
Prg. name: **AF39912**

Tetra Pak Carton Ambient

TP no: 39912-0006
ECM: **153152 (L 153153)**
File name: **39912-1006**
Machine: **TBA/22**
Date / Sign: **2004-04-16 / MANO**
Prg. name: **AF39912**

Tetra Pak Carton Ambient

TP no: 39912-0006
ECM: **153152 (L 153153)**
File name: **39912-1006**
Machine: **TBA/22**
Date / Sign: **2004-04-16 / MANO**
Prg. name: **AF39912**

Tetra Pak Carton Ambient

TP no: 39912-0006
ECM: **153152 (L 153153)**
File name: **39912-1006**
Machine: **TBA/22**
Date / Sign: **2004-04-16 / MANO**
Prg. name: **AF39912**

Tetra Pak Carton Ambient

TP no: 39912-0006
ECM: **153152 (L 153153)**
File name: **39912-1006**
Machine: **TBA/22**
Date / Sign: **2004-04-16 / MANO**
Prg. name: **AF39912**

Tetra Pak Carton Ambient

TP no: 39912-0006
ECM: **153152 (L 153153)**
File name: **39912-1006**
Machine: **TBA/22**
Date / Sign: **2004-04-16 / MANO**
Prg. name: **AF39912**

Tetra Pak Carton Ambient

TP no: 39912-0006
ECM: **153152 (L 153153)**
File name: **39912-1006**
Machine: **TBA/22**
Date / Sign: **2004-04-16 / MANO**
Prg. name: **AF39912**

Tetra Pak Carton Ambient

This page left intentionally blank

```
|[  START OF LD  PROGRAM AF39912  ]       (* TBA/22 0500V AF39912 ECM 153152  *)
|
|[     VARIABLE DECLARATIONS      ]
|
|[       BLOCK DECLARATIONS       ]

              +-------+
       SUBR  1 |MACHLAD|       LANG: LD  (* Machine sequencer               *)
              +-------+

              +-------+
       SUBR  2 |LADFUNC|       LANG: LD  (* Ladder deconding & symbols       *)
              +-------+

              +-------+
       SUBR  3 |TPOPLAD|       LANG: LD  (* Ladder signals to TPOP           *)
              +-------+

              +-------+
       SUBR  4 | TPOP  |       LANG: LD  (* Signals to/from TPOP             *)
              +-------+

              +-------+
       SUBR  5 |SUPPLY |       LANG: LD  (* Power suppies,generic functions  *)
              +-------+

              +-------+
       SUBR  6 |MMOTOR |       LANG: LD  (* Control servo Main motor         *)
              +-------+

              +-------+
       SUBR  7 |FFU_MOT|       LANG: LD  (* Control servo FFU motor          *)
              +-------+

              +-------+
       SUBR  8 |  DCS  |       LANG: LD  (* Control servo DCS motor          *)
              +-------+

              +-------+
       SUBR  9 | TUBE  |       LANG: LD  (* Tube sealing (tight tube)        *)
              +-------+

              +-------+
       SUBR 10 |ASEPTIC|       LANG: LD  (* Sterile air and peroxid system   *)
              +-------+

              +-------+
       SUBR 11 | A_B_C |       LANG: LD  (* Control of AP-valves             *)
              +-------+

              +-------+
       SUBR 12 |ST_SEQ |       LANG: LD  (* Start sequencer                 *)
              +-------+

              +-------+
       SUBR 13 |P_FEED |       LANG: LD  (* Drive roller aseptic chamber     *)
              +-------+

              +-------+
       SUBR 14 |LS_SEAL|       LANG: LD  (* Longitudinal sealing            *)
              +-------+

              +-------+
       SUBR 15 | RAMPS |       LANG: LD  (* TPIH ramps LS and SA             *)
              +-------+

              +-------+
       SUBR 16 |LEV_CON|       LANG: LD  (* Level controller                *)
              +-------+

              +-------+
       SUBR 18 |TEMPREG|       LANG: LD  (* Temperature controllers          *)
              +-------+
```

```
        +-------+
SUBR 19 |DEFAULT|      LANG: LD  (* Default values temp controllers  *)
        +-------+

        +-------+
SUBR 20 |  PWM  |      LANG: LD  (* Output control temperature       *)
        +-------+

        +-------+
SUBR 21 |  ASU  |      LANG: LD  (* Automatic splicing unit          *)
        +-------+

        +-------+
SUBR 22 |ASU_MOT|      LANG: LD  (* Drive rollers ASU               *)
        +-------+

        +-------+
SUBR 23 |PAPERSP|      LANG: LD  (* Paper splice sequence           *)
        +-------+

        +-------+
SUBR 24 |STRIPSP|      LANG: LD  (* Strip splice sequence           *)
        +-------+

        +-------+
SUBR 25 |STRSEL |      LANG: LD  (* Strip sealing control           *)
        +-------+

        +-------+
SUBR 26 |VOL_CAM|      LANG: LD  (* Stepper motor volume cams       *)
        +-------+

        +-------+
SUBR 27 |TUBEPOS|      LANG: LD  (* Stepper motor tube positioning  *)
        +-------+

        +-------+
SUBR 28 | WASTE |      LANG: LD  (* Dumping of packages             *)
        +-------+

        +-------+
SUBR 30 |AL_LOCK|      LANG: LD  (* First alarm lock                *)
        +-------+

        +-------+
SUBR 32 |SAFETY1|      LANG: LD  (* Alarms in window safety 1       *)
        +-------+

        +-------+
SUBR 33 |SAFETY2|      LANG: LD  (* Alarms in window safety 2       *)
        +-------+

        +-------+
SUBR 34 |  JUM  |      LANG: LD  (* Alarms in window JUM             *)
        +-------+

        +-------+
SUBR 35 |  FFU  |      LANG: LD  (* Alarms in window FFU             *)
        +-------+

        +-------+
SUBR 36 |SA_UNIT|      LANG: LD  (* Alarms in window SA              *)
        +-------+

        +-------+
SUBR 37 |FIL_DCS|      LANG: LD  (* Alarms in window filling&DCS     *)
        +-------+

        +-------+
SUBR 38 |SERVIC1|      LANG: LD  (* Alarms in window service         *)
        +-------+

        +-------+
SUBR 39 |STERIL |      LANG: LD  (* Alarms in window steril system   *)
        +-------+
```

```
          +-------+
SUBR 46 |SST_AL |      LANG: LD  (* Alarms superstructure           *)
          +-------+

          +-------+
SUBR 40 |PEROXID|      LANG: LD  (* Alarms in window H2O2 system    *)
          +-------+

          +-------+
SUBR 41 |ASU_AL |      LANG: LD  (* Alarms in window ASU           *)
          +-------+

          +-------+
SUBR 42 |CIP_AL |      LANG: LD  (* Alarms in window CIP/HC        *)
          +-------+

          +-------+
SUBR 43 |  CIP  |      LANG: LD  (* Cleaning in place              *)
          +-------+

          +-------+
SUBR 44 |  HC   |      LANG: LD  (* Hygienic cleaning              *)
          +-------+

          +-------+
SUBR 45 |DEF_PAR|      LANG: LD  (* Default parameters            *)
          +-------+

          +-------+
SUBR 48 |PLMSLA4|      LANG: LD  (* Distribution equipment        *)
          +-------+

          +-------+
.001 INTR 0001 |1T0001 |      LANG: LD  (* Fast scan                  *)
          +-------+

          +-------+
SUBR 52 |CUSTOM |      LANG: LD  (* Signals for customer          *)
          +-------+

          +-------+
SUBR 49 |S__250B|      LANG: LD  (* Setting values 250B           *)
          +-------+

          +-------+
SUBR 50 |S__200B|      LANG: LD  (* Setting values 200B           *)
          +-------+

          +-------+
SUBR 53 |S__200M|      LANG: LD  (* Setting values 200M           *)
          +-------+

          +-------+
SUBR 56 |S__200S|      LANG: LD  (* Setting values 200S           *)
          +-------+

          +-------+
SUBR 54 |S__250S|      LANG: LD  (* Setting values 250S           *)
          +-------+

          +-------+
SUBR 55 |S__300S|      LANG: LD  (* Setting values 300S           *)
          +-------+

          +-------+
SUBR 47 |STRIPOK|      LANG: LD  (* Strip bobbin test            *)
          +-------+

          +-------+
SUBR 17 |BRAKES |      LANG: LD  (* Asu jumbo reel brakes management *)
          +-------+

          +-------+
SUBR 57 |IH_MON |      LANG: LD  (* TPIH monitoring               *)
          +-------+
```

```
        +-------+
SUBR 58 |  HI   |      LANG: LD  (* HI: Option Kit                *)
        +-------+

        +-------+
SUBR 59 |GRE_FFU|      LANG: LD  (* Greasing of FFU              *)
        +-------+

        +-------+
SUBR 60 |GRE_JUM|      LANG: LD  (* Greasing of JUM              *)
        +-------+

|[     START OF PROGRAM LOGIC     ]
|
| (*************************************************************************)
| (* Signal manual step down (the machine has 3 step-down buttons)        *)
| (*************************************************************************)
|
| S912                                                          ST_DWN   << RUNG 6  STEP #0003 >>
|%I0089                                                         %M0101
+--] [----------+-------------------------------------------------( )-- (* Pushbuttons step down          *)
|               |
| S1003  A506_32|
|%I0096  %I0044 |
+--]/[--+--] [--+
|       |
| S7701 |
|%I0171 |
+--]/[--+
|
| S912                                                          STD_DEL  << RUNG 7  STEP #0009 >>
|%I0089  +-----+                                                %M0084
+--] [---+ TMR +-------------------------------------------------------( )-- (* Step_down button delay          *)
|        |0.10s|
|        |     |
| CONST -+PV   |
| +00050 |     |
|        +-----+
|        DEL_STD
|        %R0110
|
| (*************************************************************************)
| (* Creation of pulses for general purpose.                               *)
| (*************************************************************************)
|
| A7417                                                         P_TPIHF  << RUNG 9  STEP #0013 >>
|%I0036                                                         %M1555
+--]/[-----------------------------------------------------------------(^)-- (* TPIH failure positive pulse     *)
|
|NOSTRIP                                                        P_STRBK  << RUNG 10  STEP #0015 >>
|%M0793                                                         %M1554
+--] [-----------------------------------------------------------------(^)-- (* Strip break positive pulse      *)
|
|A419_27                                                        BCDASUP  << RUNG 11  STEP #0017 >>
|%I0012                                                         %M1202
+--] [-----------------------------------------------------------------(^)-- (* Bar code ASU positive pulse     *)
|
| S911                                                          P+STUP   << RUNG 12  STEP #0019 >>
|%I0088                                                         %M0014
+--] [-----------------------------------------------------------------(^)-- (* Step up positive pulse          *)
|
|ST_DWN                                                         P+STDWN  << RUNG 13  STEP #0021 >>
|%M0101                                                         %M0015
+--] [-----------------------------------------------------------------(^)-- (* Step down positive pulse        *)
|
```

REFERENCE	NICKNAME	REFERENCE DESCRIPTION	REFERENCE	NICKNAME	REFERENCE DESCRIPTION
%I0012	A419_27	Design signal ASU (Barcode)	%M1554	P_STRBK	Strip break positive pulse
%I0044	A506_32	DMC Main motor running	%M1555	P_TPIHF	TPIH failure positive pulse
%I0036	A7417	Failure TPIH SA	%I0096	S1003	Push button step down
%M1202	BCDASUP	Bar code ASU positive pulse	%I0171	S7701	Push button step down
%R0110	DEL_STD	Delay time step down button	%I0088	S911	Push button step up
%M0793	NOSTRIP	Strip general alarm	%I0089	S912	Push button step down
%M0015	P+STDWN	Step down positive pulse	%M0084	STD_DEL	Step_down button delay
%M0014	P+STUP	Step up positive pulse	%M0101	ST_DWN	Pushbuttons step down

```
| S911                                                                  P-STUP   << RUNG 14  STEP #0023 >>
|%I0088                                                                %M0016
+--] [-------------------------------------------------------------------(v)-- (* Step up negative pulse          *)
|
|JUMP_1                                                                 P-JMP1   << RUNG 15  STEP #0025 >>
|%M0050                                                                %M0017
+--] [-------------------------------------------------------------------(v)-- (* Jump pos 1 negative pulse       *)
|
|JUMP_6                                                                 P-JMP6   << RUNG 16  STEP #0027 >>
|%M0051                                                                %M0018
+--] [-------------------------------------------------------------------(v)-- (* Jump pos 6 Negative pulse       *)
|
|JMP6_FF                                                               P+FS_FF  << RUNG 17  STEP #0029 >>
|%M0058                                                                %M0049
+--] [-------------------------------------------------------------------(^)-- (* Pulse pos edge fast stop FFU    *)
|
|A418_31                                                               P+DESP   << RUNG 18  STEP #0031 >>
|%I0062                                                                %M0019
+--] [-------------------------------------------------------------------(^)-- (* Barcode signal positive pulse   *)
|
|ANGENC7                                                               JAWP_NS  << RUNG 19  STEP #0033 >>
|%I0008                                                                %M0021
+--] [-------------------------------------------------------------------(v)-- (* Jawpulse Normal scan           *)
|
|A502305                                                               P-TSERR  << RUNG 20  STEP #0035 >>
|%I0035                                                                %M0022
+--] [----------+--------------------------------------------------------(v)-- (* TS-error negative pulse        *)
|               |
|TSFAULT JAWP_NS|
|%M0764  %M0021 |
+--] [-----] [--+
|
|A502305 STEP_10                                                       TSFAULT  << RUNG 21  STEP #0040 >>
|%I0035  %G0010  +-----+                                               %M0764
+--]/[-----] [---+ TMR +-------------------------------------------------( )-- (* TPIH TS constant fault         *)
|               |0.10s|
|               |     |
|         CONST -+PV   |
|         +00020 |     |
|                +-----+
|                TS_FAUL
|                %R1910
|
| (*************************************************************************)
| (* If the service switch position is changed when the machine is sterile   *)
| (* the machine will be reseted to step 1. These are the pulses to check    *)
| (* that and the logic is in Sub "SAFETY1"                                  *)
| (*************************************************************************)
|
| S003                                                                 P+S_SW   << RUNG 23  STEP #0045 >>
|%I0095                                                                %M0023
+--] [-------------------------------------------------------------------(^)-- (* Service switch positive pulse   *)
|
| S003                                                                 P-S_SW   << RUNG 24  STEP #0047 >>
|%I0095                                                                %M0024
+--] [-------------------------------------------------------------------(v)-- (* Service switch negative pulse   *)
|
|A506_14                                                               P+PROD   << RUNG 25  STEP #0049 >>
|%Q0201                                                                %M1209
+--] [-------------------------------------------------------------------(^)-- (* Production on positive pulse    *)
|
```

REFERENCE	NICKNAME	REFERENCE DESCRIPTION	REFERENCE	NICKNAME	REFERENCE DESCRIPTION
%I0062	A418_31	Bar code signal DCS	%M0023	P+S_SW	Service switch positive pulse
%I0035	A502305	Failure TPIH TS	%M0017	P-JMP1	Jump pos 1 negative pulse
%Q0201	A506_14	DMC Main Motor High speed	%M0018	P-JMP6	Jump pos 6 Negative pulse
%I0008	ANGENC7	Angle encoder module bit 7	%M0016	P-STUP	Step up negative pulse
%M0021	JAWP_NS	Jawpulse Normal scan	%M0024	P-S_SW	Service switch negative pulse
%M0058	JMP6_FF	Fast stop Final Folder	%M0022	P-TSERR	TS-error negative pulse
%M0050	JUMP_1	Jump to pos 1 (Emergency stop)	%I0095	S003	Service switch
%M0051	JUMP_6	Jump to pos 6 (Fast stop)	%I0088	S911	Push button step up
%M0019	P+DESP	Barcode signal positive pulse	%G0010	STEP_10	PRODUCTION
%M0049	P+FS_FF	Pulse pos edge fast stop FFU	%M0764	TSFAULT	TPIH TS constant fault
%M1209	P+PROD	Production on positive pulse	%R1910	TS_FAUL	TMR TPIH TS constant fault

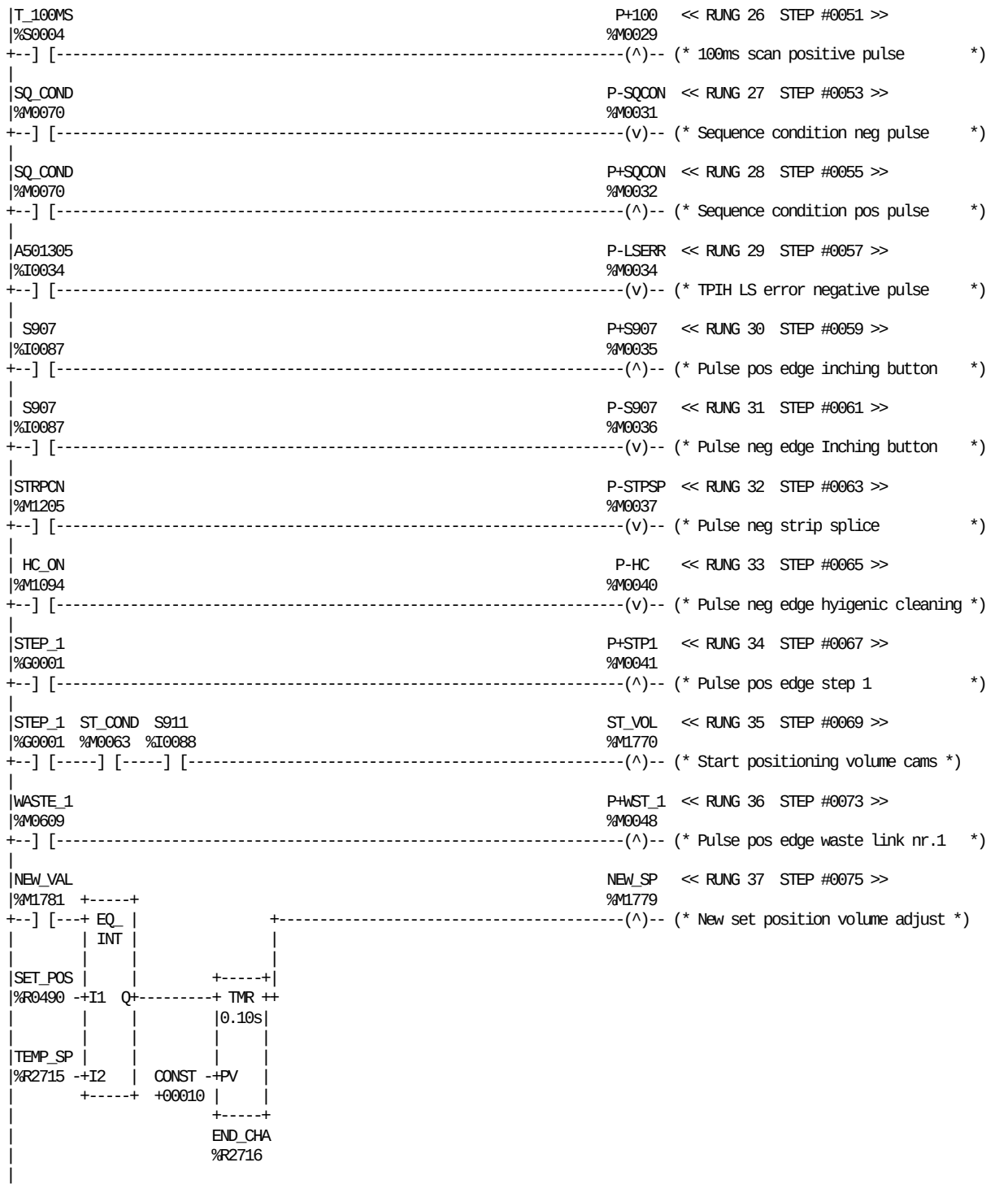

REFERENCE	NICKNAME	REFERENCE DESCRIPTION	REFERENCE	NICKNAME	REFERENCE DESCRIPTION
%I0034	A501305	Failure TPIH LS	%M0031	P-SQCON	Sequence condition neg pulse
%R2716	END_CHA	TMR checking end of change	%M0037	P-STPSP	Pulse neg strip splice
%M1094	HC_ON	Hygienic cleaning going on	%I0087	S907	Push button inching JUM
%M1779	NEW_SP	New set position volume adjust	%I0088	S911	Push button step up
%M1781	NEW_VAL	New value set position	%R0490	SET_POS	Set position volume adjustment
%M0029	P+100	100ms scan positive pulse	%M0070	SQ_COND	Start sequence conditions
%M0035	P+S907	Pulse pos edge inching button	%G0001	STEP_1	STANDBY
%M0032	P+SQCON	Sequence condition pos pulse	%M1205	STRPCN	Start strip splice
%M0041	P+STP1	Pulse pos edge step 1	%M0063	ST_COND	Step up conditions
%M0048	P+WST_1	Pulse pos edge waste link nr.1	%M1770	ST_VOL	Start positioning volume cams
%M0040	P-HC	Pulse neg edge hyigenic cleaning	%R2715	TEMP_SP	Temporary register set position
%M0034	P-LSERR	TPIH LS error negative pulse	%S0004	T_100MS	
%M0036	P-S907	Pulse neg edge Inching button	%M0609	WASTE_1	Waste of the pack nr 1

```
|STEP_1  ST_COND  S911                                                ST_TUBE  << RUNG 38  STEP #0079 >>
|%G0001  %M0063  %I0088                                              %M1820
+--] [-----] [-----] [--------------------------------------------------(^)-- (* Start tube positioning          *)
|
|STEP_1  HC_SEL                                                       CH_PBUP  << RUNG 39  STEP #0083 >>
|%G0001  %M0713                                                       %M0100
+--] [-----]/[--------------------------------------------------------(S)-- (* Check pushbutton step up        *)
|
|STEP_2   S911                                                        CH_PBUP  << RUNG 40  STEP #0086 >>
|%G0002  %I0088                                                       %M0100
+--] [-----]/[--------------------------------------------------------(R)-- (* Check pushbutton step up        *)
|
|A506_29 A508_29 A507_29                                              ALLDMC   << RUNG 41  STEP #0089 >>
|%I0041  %I0048  %I0055                                               %M0080
+--] [-----] [-----] [--------------------------------------------------( )-- (* All DMC ok                       *)
|
| (*************************************************************************)
| (* JUMP_1 is activated when a serios error (unsterility or an emergency    *)
| (* stop is activated). It is also activated on the last scan so if         *)
| (* someone is stopping the processor while the machine is running, when    *)
| (* restarting the PLC the machine will be in step 1 with everything off,   *)
| (* it is also important that when starting the DC-bus the in rush          *)
| (* resistors is used otherwise the power supply for the DMC will most      *)
| (* likely burn.                                                           *)
| (*                                                                       *)
| (*                                                                       *)
| (*   * * * * * * *      A T T E N T I O N      * * * * * * * *           *)
| (*                                                                       *)
| (*      -  DO NOT REMOVE THE LST_SCN INSTRUCTION IN THIS RUNG            *)
| (*      -  DO NOT MOVE THIS RUNG TO ANY OTHER PLACE DOWN IN THE          *)
| (*         PROGRAM                                                       *)
| (*                                                                       *)
| (*************************************************************************)
|
|A600_14 LST_SCN S_SW_0  AIR_SUP PRES_AS LEV_SEP SUPER_H DAC_CHK                << RUNG 43  STEP #0094 >>
|%I0017  %S0002  %M0318  %M0402  %M0433  %M0436  %M0437  %M0144
+--] [-----] [-----]/[-----]/[--+--]/[-----]/[-----]/[-----] [--+------------<+>
|                              |                              |
|                              | S003                         |
|                              |%I0095                        |
|                              +--] [--------------------------+
|
|       JUM_MOV TEMP_AC         HIJP_1                                  JUMP_1   << RUNG 44  STEP #0105 >>
|       %M0432  %M0447          %M1902                                  %M0050
+<+>----+--]/[--+--]/[----------+--] [--+-----------------------------------( )-- (* Jump to pos 1 (Emergency stop)   *)
|       |       |               |       |
|       |STER_ON|STEP_3  STEP_4 |A124_09|
|       |%M0803 |%G0003  %G0004 |%I0216 |
|       +--]/[--+--]/[-----]/[--+--]/[--+
|
| (*************************************************************************)
| (* JUMP_6 is use as fast stop when there are errors that must stop the     *)
| (* machine, but not unsterility or emergency stop problems.               *)
| (*************************************************************************)
|
```

REFERENCE	NICKNAME	REFERENCE DESCRIPTION	REFERENCE	NICKNAME	REFERENCE DESCRIPTION
%I0216	A124_09	HI Option	%S0002	LST_SCN	
%I0041	A506_29	DMC Main motor ready	%M0433	PRES_AS	Pressure aseptic chamber
%I0055	A507_29	DMC FFU ready	%I0095	S003	Service switch
%I0048	A508_29	DMC DCS ready	%I0088	S911	Push button step up
%I0017	A600_14	Emergency stop	%G0001	STEP_1	STANDBY
%M0402	AIR_SUP	Air supply	%G0002	STEP_2	PREPARATION (3 MIN.)
%M0080	ALLDMC	All DMC ok	%G0003	STEP_3	TUBE SEALING
%M0100	CH_PBUP	Check pushbutton step up	%G0004	STEP_4	HEAT STERILIZATION
%M0144	DAC_CHK	Doors AC closed when mach ster.	%M0803	STER_ON	Steril system on
%M0713	HC_SEL	Hygienic cleaning selection ok	%M0063	ST_COND	Step up conditions
%M1902	HIJP_1	HI, Jump to position 1	%M1820	ST_TUBE	Start tube positioning
%M0050	JUMP_1	Jump to pos 1 (Emergency stop)	%M0437	SUPER_H	Temperature super heater
%M0432	JUM_MOV	Jaw unit moved when machine stop	%M0318	S_SW_0	Service switch jump to 0
%M0436	LEV_SEP	Level separator	%M0447	TEMP_AC	AC temperature too high

```
|A601_14 DCS_HOM DCS_MOT MAIN_MO FOINJUM HATCHH2 POSPRVA POSBVAL SQUEEGE         << RUNG 46  STEP #0119 >>
|%I0018  %M0427  %M0431  %M0430  %M1808  %M0317  %M0438  %M0435  %M0482
+--] [-----]/[-----]/[-----]/[--+--]/[--+--]/[-----]/[-----]/[-----]/[-------<+>
|                              |     |
|                              |STEP_1 |
|                              |%G0001 |
|                              +--] [--+
|
|       SA_DOOR MFR_POS CRANK_J SA_ROLL BROKENP GR_STR  GR_CYLI HIJP_6  JMP6_MM  << RUNG 47  STEP #0131 >>
|       %M0783  %M0485  %M0319  %M0378  %M0445  %M0422  %M0421  %M1903  %M0057
+<+>-------]/[-----]/[-----]/[--+--]/[--+--]/[-----]/[-----]/[--+--] [--+--(/)-- (* Fast stop Main Motor            *)
|                              |     |                     |     |
|                              |INCH_SA|                   |A124_09|
|                              |%M0786 |                   |%I0216 |
|                              +--]/[--+                   +--]/[--+
|
|A601_14 ERR_HOM MOT_FFU Q24_34  OUTQFFU DT_RDY  Q24_14  WBOXJAM QUE_BBR JMP6_FF  << RUNG 48  STEP #0145 >>
|%I0018  %M0356  %M0353  %I0020  %M0359  %M0354  %I0022  %M0365  %M0890  %M0058
+--] [-----]/[-----]/[-----] [-----]/[--+--]/[--+--] [-----]/[-----]/[-----(/)-- (* Fast stop Final Folder          *)
|                                     |     |
|                                     |ST_9-10|
|                                     |%G0026 |
|                                     +--]/[--+
|
|JMP6_MM JMP6_FF                                                  JUMP_6   << RUNG 49  STEP #0157 >>
|%M0057  %M0058                                                   %M0051
+--]/[-----]/[-----------------------------------------------------------( )-- (* Jump to pos 6 (Fast stop)       *)
|
| (*************************************************************************)
| (* The following rungs are used to create the step-up condition memorycells *)
| (* that, used in the different parts of the program, allowed the machine    *)
| (* to step-up in the different steps and part of the logic.                 *)
| (*                                                                         *)
| (*************************************************************************)
|
```

REFERENCE	NICKNAME	REFERENCE DESCRIPTION
%I0216	A124_09	HI Option
%I0018	A601_14	Safety monitors B
%M0445	BROKENP	Paper broken (bending monitor)
%M0319	CRANK_J	Crank guard JUM
%M0427	DCS_HOM	DCS servo motor wrong home pos
%M0431	DCS_MOT	DCS servo motor fault
%M0354	DT_RDY	Date unit not ready
%M0356	ERR_HOM	Home position fault servo FFU
%M1808	FOINJUM	Force inching after LS alarm
%M0421	GR_CYLI	Greasing cylinders wrong pos.
%M0422	GR_STR	Greasing stroke not completed
%M0317	HATCHH2	Hatch under H2O2 bath
%M1903	HIJP_6	HI, Jump to position 6
%M0786	INCH_SA	SA forced inching for strip fail
%M0058	JMP6_FF	Fast stop Final Folder
%M0057	JMP6_MM	Fast stop Main Motor

REFERENCE	NICKNAME	REFERENCE DESCRIPTION
%M0051	JUMP_6	Jump to pos 6 (Fast stop)
%M0430	MAIN_MO	Main servo motor fault
%M0485	MFR_POS	Movable forming ring position
%M0353	MOT_FFU	FFU servo motor fault
%M0359	OUTQFFU	Queue in outfeed FFU
%M0435	POSBVAL	B-valve in wrong position
%M0438	POSPRVA	Preheating valve in wrong pos
%I0022	Q24_14	Overload summary
%I0020	Q24_34	Overload DC-BUS
%M0890	QUE_BBR	Queue after belt brake
%M0783	SA_DOOR	SA internal door open
%M0378	SA_ROLL	SA pressure roller alarm
%M0482	SQUEEGE	Squee gee roller position
%G0001	STEP_1	STANDBY
%G0026	ST_9-10	Ladder position 9-10
%M0365	WBOXJAM	Waste box jam

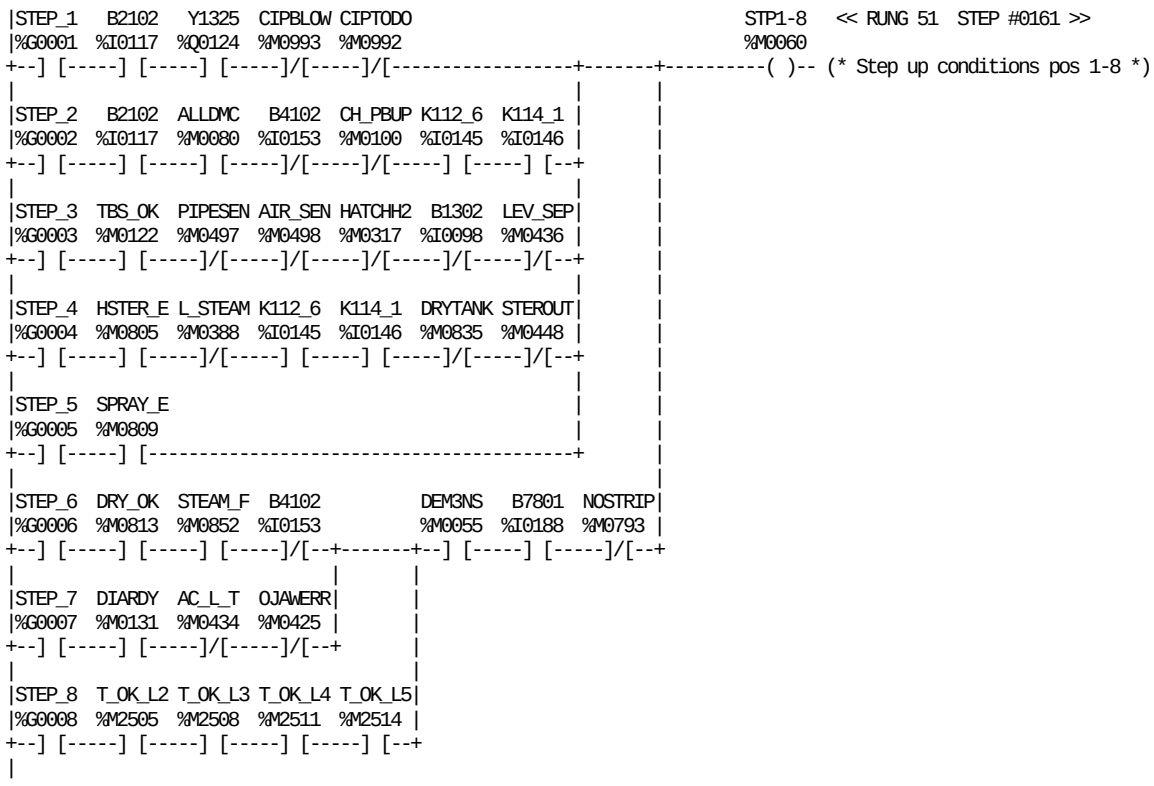

REFERENCE	NICKNAME	REFERENCE DESCRIPTION
%M0434	AC_L_T	Aseptic chamber temp alarm
%M0498	AIR_SEN	CIP steril air sensor
%M0080	ALLDMC	All DMC ok
%I0098	B1302	B-valve position sensor
%I0117	B2102	Cold water pressure
%I0153	B4102	Crank guard JUM
%I0188	B7801	Door guard strip applicator (17)
%M0100	CH_PBUP	Check pushbutton step up
%M0993	CIPBLOW	CIP blowing must be done
%M0992	CIPTODO	CIP must be done
%M0055	DEM3NS	Demand 3 normal stop
%M0131	DIARDY	Diary ready for production
%M0835	DRYTANK	Drain spray tank
%M0813	DRY_OK	Drying ready
%M0317	HATCHH2	Hatch under H2O2 bath
%M0805	HSTER_E	Heat sterilizing end
%I0145	K112_6	Top door closed aseptic chamber
%I0146	K114_1	Front doors closed AC
%M0436	LEV_SEP	Level separator
%M0388	L_STEAM	Low temperature steam C-valve
%M0793	NOSTRIP	Strip general alarm

REFERENCE	NICKNAME	REFERENCE DESCRIPTION
%M0425	OJAWERR	Zero jaw not detected
%M0497	PIPESEN	CIP pipe sensor
%M0809	SPRAY_E	Spray end
%M0852	STEAM_F	steam timer finish
%G0001	STEP_1	STANDBY
%G0002	STEP_2	PREPARATION (3 MIN.)
%G0003	STEP_3	TUBE SEALING
%G0004	STEP_4	HEAT STERILIZATION
%G0005	STEP_5	SPRAYING
%G0006	STEP_6	DRYING + STEAM CLEANING
%G0007	STEP_7	SIGNAL TO STERILIZER
%G0008	STEP_8	FLAPS + H2O2 TEMPERATURE
%M0448	STEROUT	Steril temperature timeout
%M0060	STP1-8	Step up conditions pos 1-8
%M0122	TBS_OK	Tube sealing ok
%M2505	T_OK_L2	Temp ok Loop 2
%M2508	T_OK_L3	Temp ok Loop 3
%M2511	T_OK_L4	Temp ok Loop 4
%M2514	T_OK_L5	Temp ok Loop 5
%Q0124	Y1325	Cleaning cup draining

TBA/22-050V
BLOCK MAIN

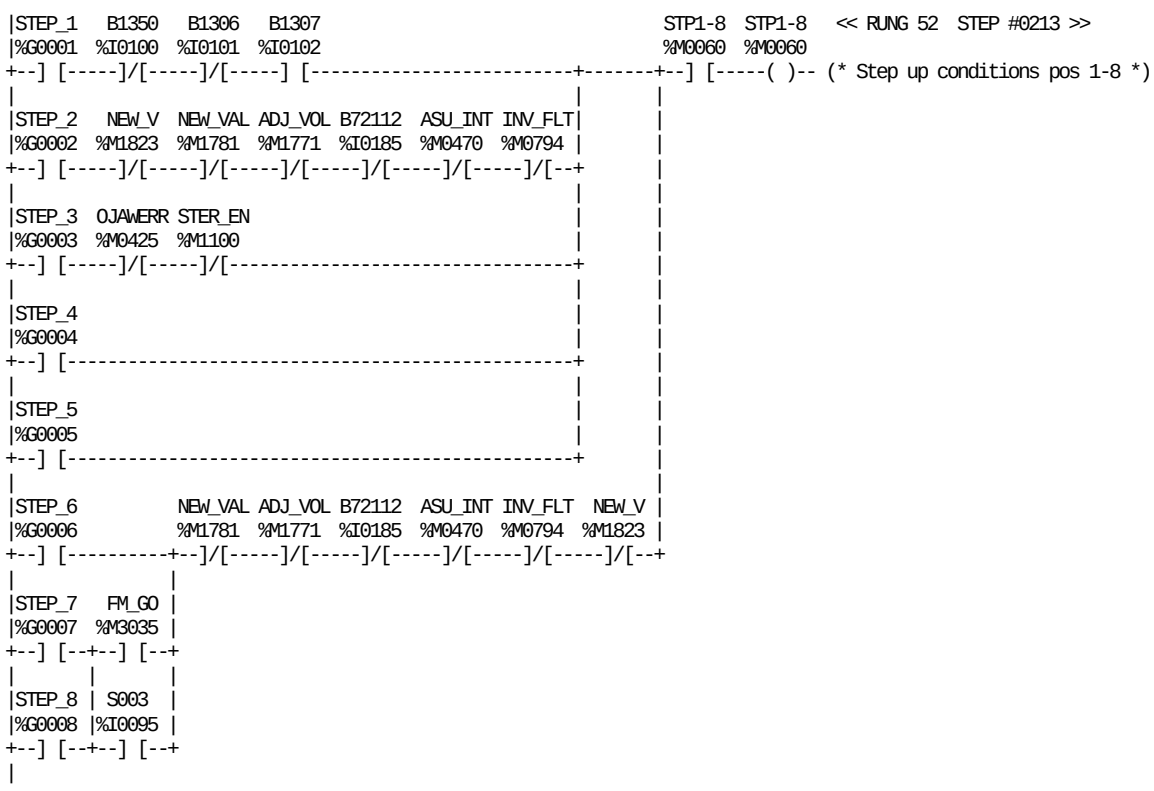

REFERENCE	NICKNAME	REFERENCE DESCRIPTION
%M1771	ADJ_VOL	Volume adjustment going on
%M0470	ASU_INT	Splice sequence ASU interrupted
%I0101	B1306	Cleaning pipe sensor
%I0102	B1307	Steril air pipe sensor
%I0100	B1350	Cup draining pipe in position
%I0185	B72112	Adjustment loop photocell
%M3035	FM_GO	FM can start (from DE)
%M0794	INV_FLT	General inverter fault
%M1823	NEW_V	New value set positioning tube
%M1781	NEW_VAL	New value set position
%M0425	OJAWERR	Zero jaw not detected

REFERENCE	NICKNAME	REFERENCE DESCRIPTION
%I0095	S003	Service switch
%G0001	STEP_1	STANDBY
%G0002	STEP_2	PREPARATION (3 MIN.)
%G0003	STEP_3	TUBE SEALING
%G0004	STEP_4	HEAT STERILIZATION
%G0005	STEP_5	SPRAYING
%G0006	STEP_6	DRYING + STEAM CLEANING
%G0007	STEP_7	SIGNAL TO STERILIZER
%G0008	STEP_8	FLAPS + H2O2 TEMPERATURE
%M1100	STER_EN	CIP, Sterilization not enabled
%M0060	STP1-8	Step up conditions pos 1-8

TBA/22-050V
BLOCK MAIN

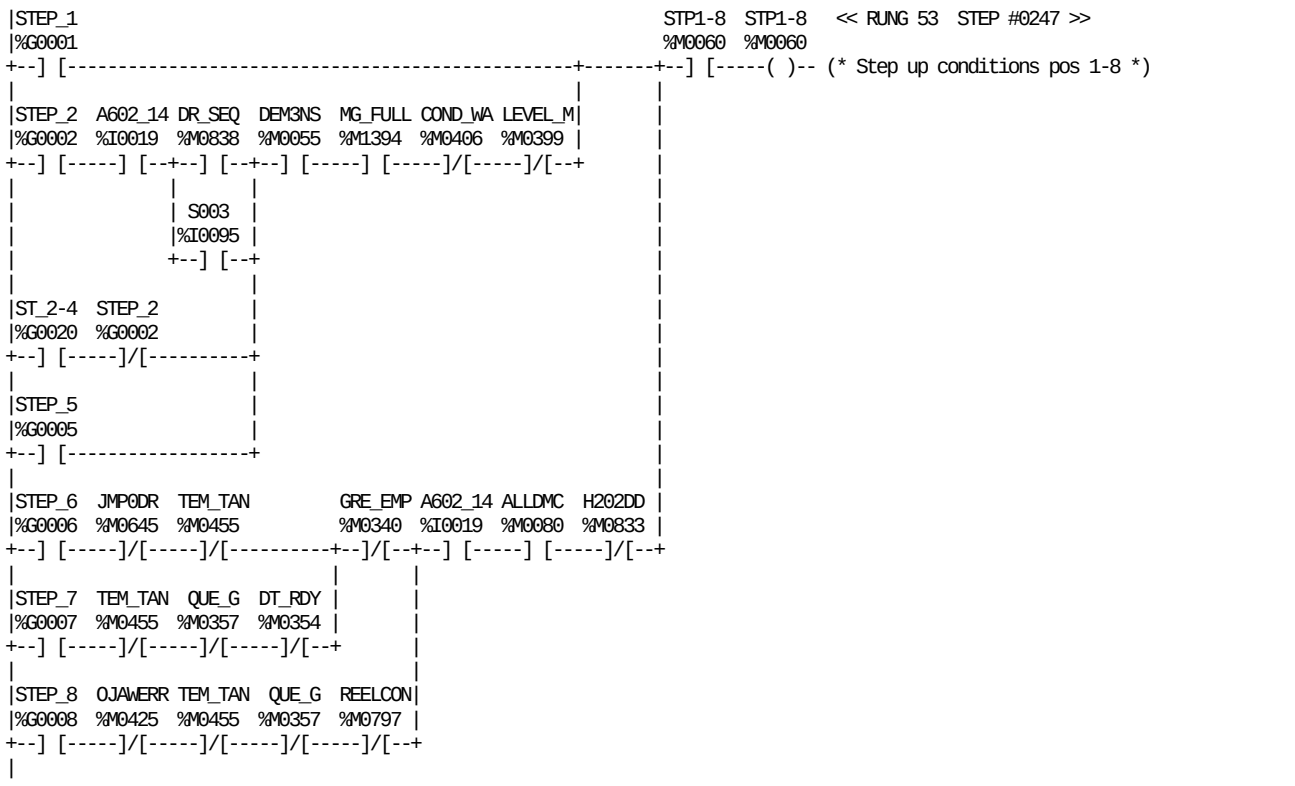

REFERENCE	NICKNAME	REFERENCE DESCRIPTION
%I0019	A602_14	Safety monitors C
%M0080	ALLDMC	All DMC ok
%M0406	COND_WA	Conductivity water circulation
%M0055	DEM3NS	Demand 3 normal stop
%M0838	DR_SEQ	Draning sequence filling circuit
%M0354	DT_RDY	Date unit not ready
%M0340	GRE_EMP	Greasing tank empty (stop)
%M0833	H202DD	Peroxide bath drying delay
%M0645	JMP0DR	Jump to 0 while drying (To TPOP)
%M0399	LEVEL_M	Level reading system malfunction
%M1394	MG_FULL	ASU, DR mag. full
%M0425	OJAWERR	Zero jaw not detected

REFERENCE	NICKNAME	REFERENCE DESCRIPTION
%M0357	QUE_G	Congestion guard outfeed (queue)
%M0797	REELCON	ASU, step up reel condition
%I0095	S003	Service switch
%G0001	STEP_1	STANDBY
%G0002	STEP_2	PREPARATION (3 MIN.)
%G0005	STEP_5	SPRAYING
%G0006	STEP_6	DRYING + STEAM CLEANING
%G0007	STEP_7	SIGNAL TO STERILIZER
%G0008	STEP_8	FLAPS + H2O2 TEMPERATURE
%M0060	STP1-8	Step up conditions pos 1-8
%G0020	ST_2-4	Ladder position 2-4
%M0455	TEM_TAN	Peroxide tank low temperature

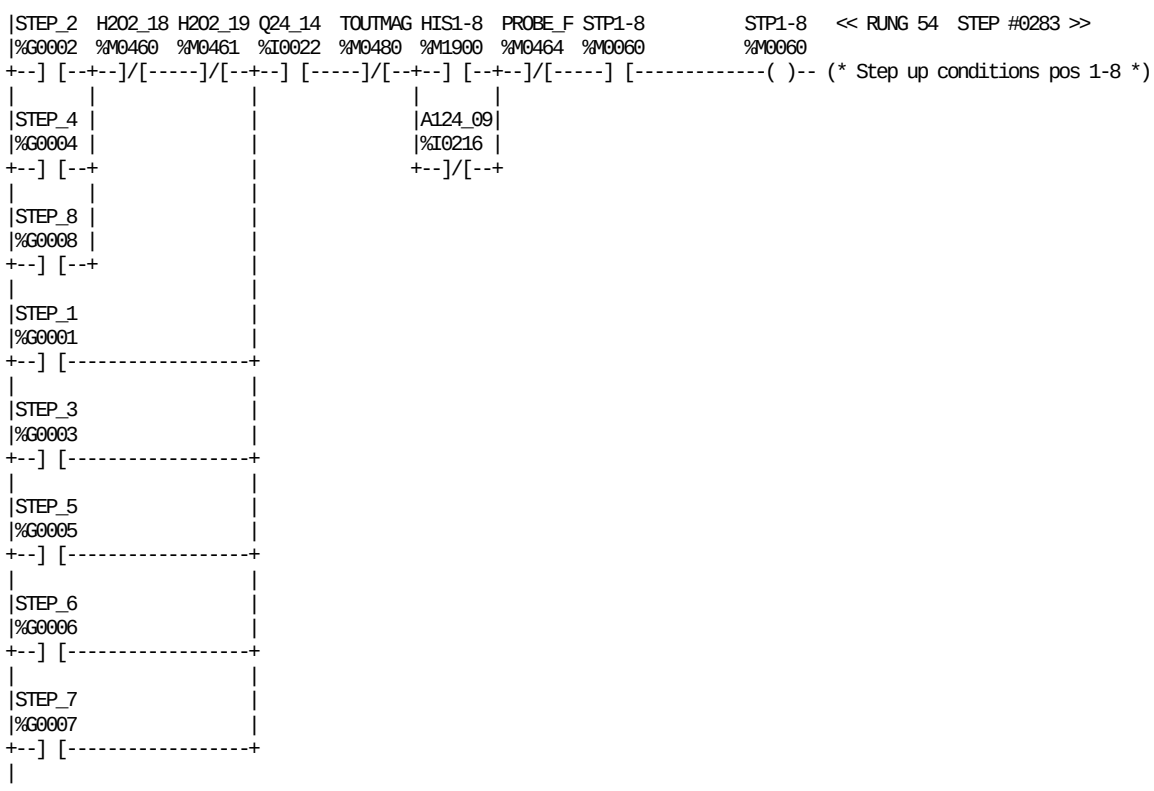

REFERENCE	NICKNAME	REFERENCE DESCRIPTION
%I0216	A124_09	HI Option
%M0460	H2O2_18	H2O2 meter malfunction
%M0461	H2O2_19	H2O2 meter wrong concentration
%M1900	HIS1-8	HI, Step up conditions pos 1-8
%M0464	PROBE_F	Level probe fault H2O2 tank
%I0022	Q24_14	Overload summary
%G0001	STEP_1	STANDBY
%G0002	STEP_2	PREPARATION (3 MIN.)
%G0003	STEP_3	TUBE SEALING
%G0004	STEP_4	HEAT STERILIZATION
%G0005	STEP_5	SPRAYING
%G0006	STEP_6	DRYING + STEAM CLEANING
%G0007	STEP_7	SIGNAL TO STERILIZER
%G0008	STEP_8	FLAPS + H2O2 TEMPERATURE
%M0060	STP1-8	Step up conditions pos 1-8
%M0480	TOUTMAG	Magazine timeout expired

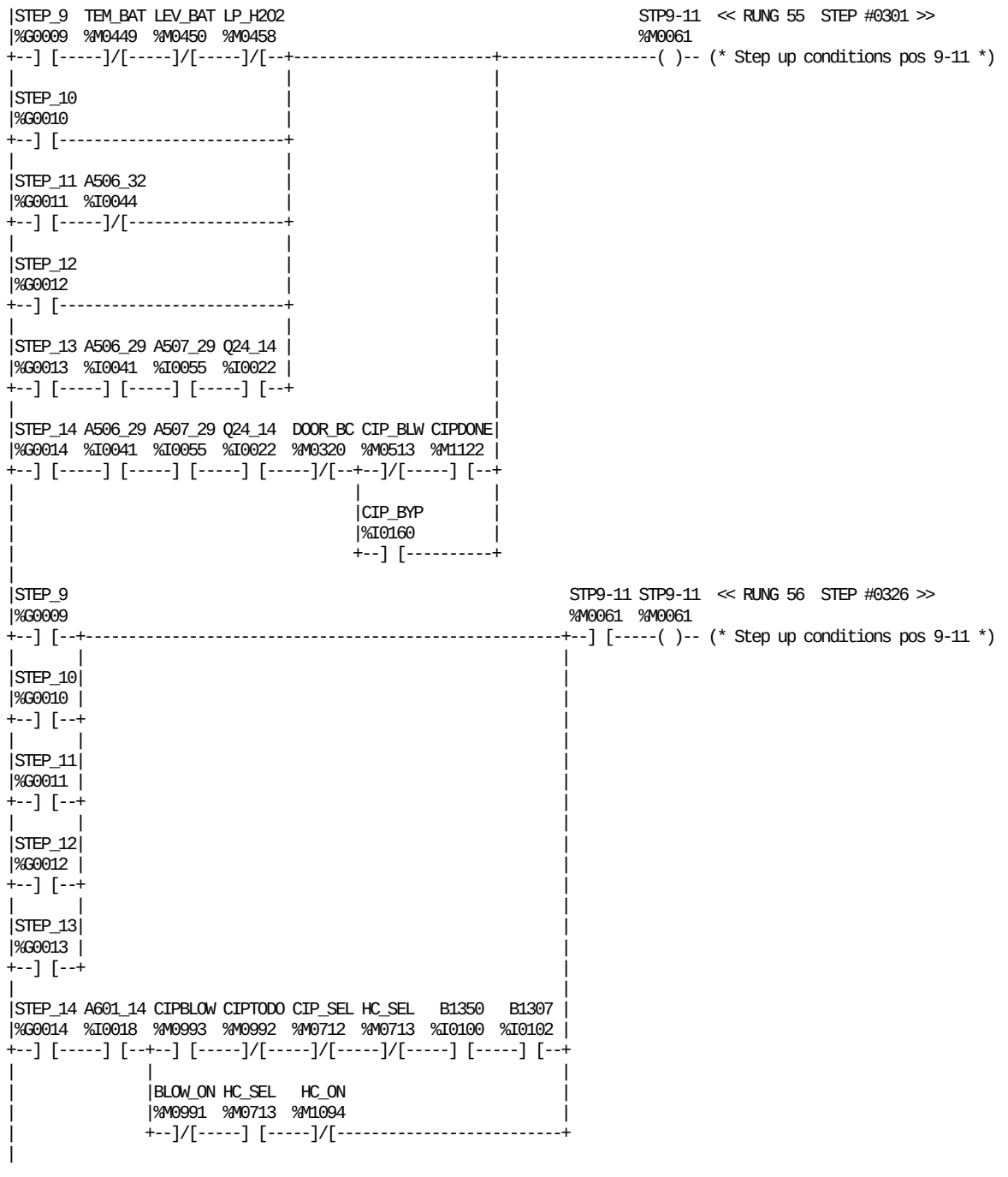

REFERENCE	NICKNAME	REFERENCE DESCRIPTION
%I0041	A506_29	DMC Main motor ready
%I0044	A506_32	DMC Main motor running
%I0055	A507_29	DMC FFU ready
%I0018	A601_14	Safety monitors B
%I0102	B1307	Steril air pipe sensor
%I0100	B1350	Cup draining pipe in position
%M0991	BLOW_ON	CIP blowing going on
%M0993	CIPBLOW	CIP blowing must be done
%M1122	CIPDONE	CIP, Enable step up condition
%M0992	CIPTODO	CIP must be done
%M0513	CIP_BLW	CIP_AL, max delay CIP-Blowing
%I0160	CIP_BYP	CIP done condition, By-pass
%M0712	CIP_SEL	CIP select from TPOP
%M0320	DOOR_BC	Door guard bucket cleaning

REFERENCE	NICKNAME	REFERENCE DESCRIPTION
%M1094	HC_ON	Hygienic cleaning going on
%M0713	HC_SEL	Hygienic cleaning selection ok
%M0450	LEV_BAT	Level peroxide bath
%M0458	LP_H2O2	Level probe H2O2 bath
%I0022	Q24_14	Overload summary
%G0010	STEP_10	PRODUCTION
%G0011	STEP_11	END OF PRODUCTION
%G0012	STEP_12	VENTING
%G0013	STEP_13	OPEN DOORS, CUT TUBE
%G0014	STEP_14	CIP / HC
%G0009	STEP_9	MOTOR START
%M0061	STP9-11	Step up conditions pos 9-11
%M0449	TEM_BAT	Temperature peroxide bath

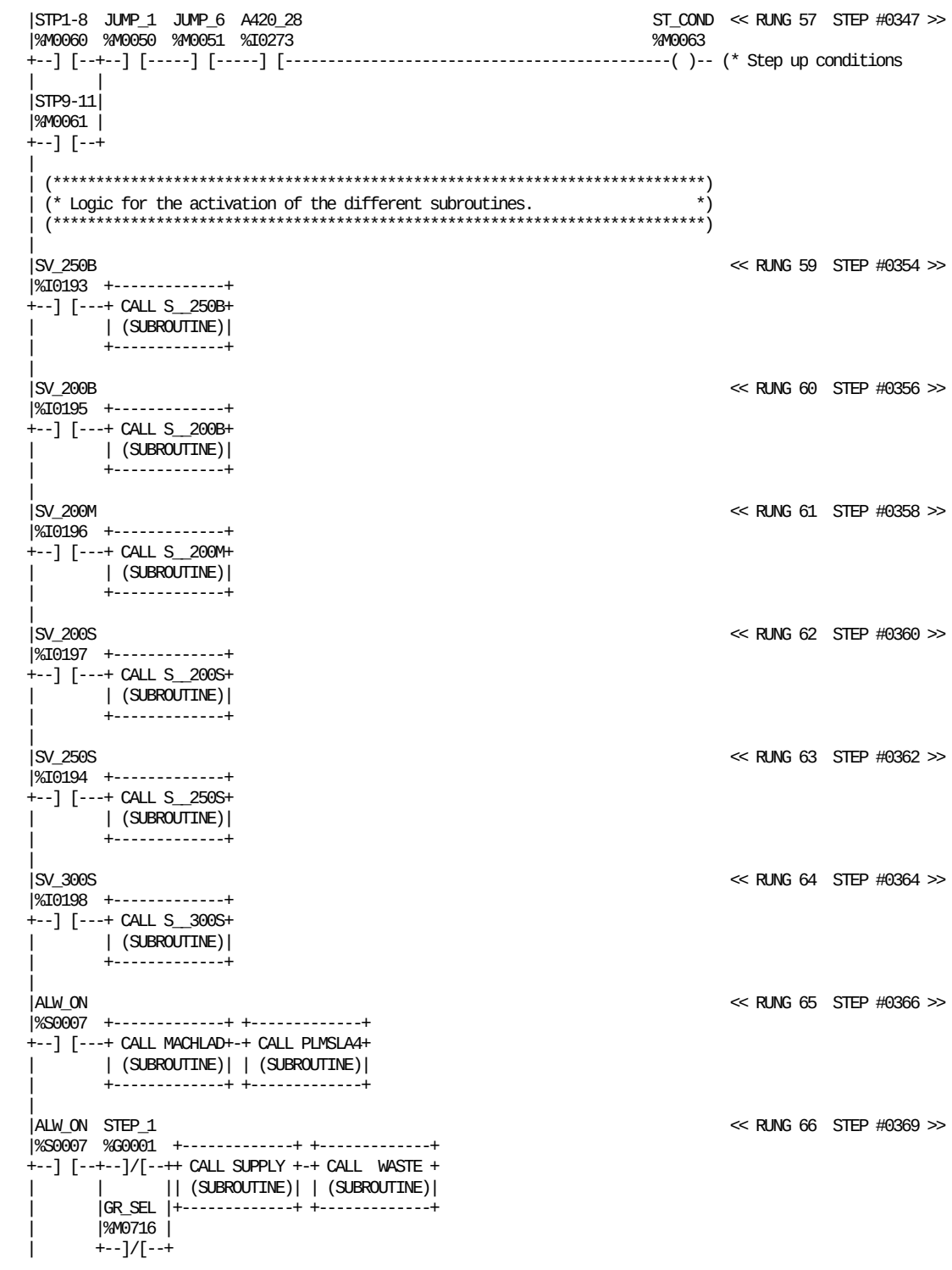

REFERENCE	NICKNAME	REFERENCE DESCRIPTION
%I0273	A420_28	TMCC FCS transmission OK
%S0007	ALW_ON	
%M0716	GR_SEL	Greasing selected
%M0050	JUMP_1	Jump to pos 1 (Emergency stop)
%M0051	JUMP_6	Jump to pos 6 (Fast stop)
	MACHLAD	Machine sequencer
	PLMSLA4	Distribution equipment
%G0001	STEP_1	STANDBY
%M0060	STP1-8	Step up conditions pos 1-8
%M0061	STP9-11	Step up conditions pos 9-11
%M0063	ST_COND	Step up conditions
	SUPPLY	Power suppies,generic functions
%I0195	SV_200B	Setting volume 200B
%I0196	SV_200M	Setting volume 200M
%I0197	SV_200S	Setting volume 200S
%I0193	SV_250B	Setting volume 250B
%I0194	SV_250S	Setting volume 250S
%I0198	SV_300S	Setting volume 300S
	S__200B	Setting values 200B
	S__200M	Setting values 200M
	S__200S	Setting values 200S
	S__250B	Setting values 250B
	S__250S	Setting values 250S
	S__300S	Setting values 300S
	WASTE	Dumping of packages

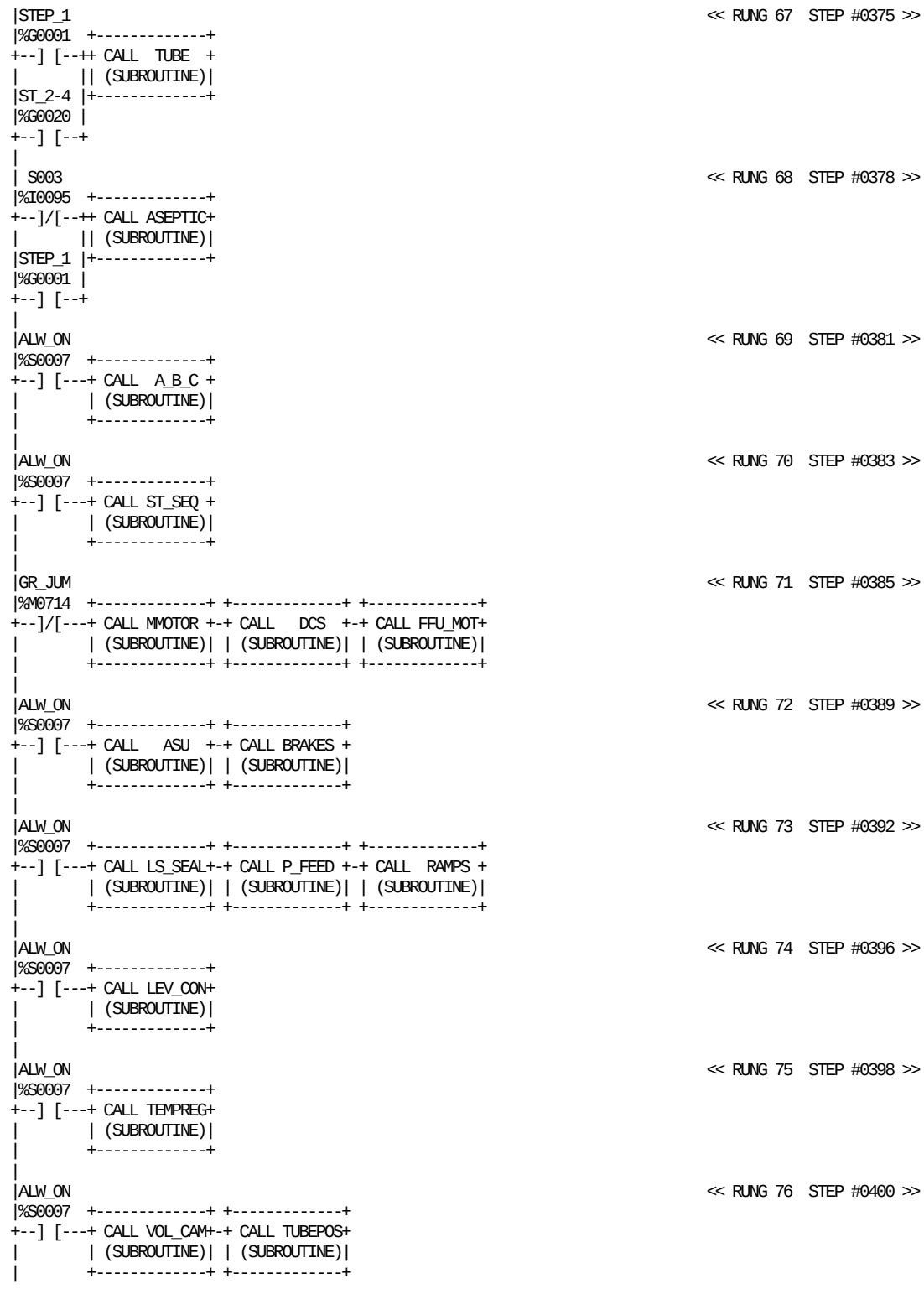

REFERENCE	NICKNAME	REFERENCE DESCRIPTION
%S0007	ALW_ON	
	ASEPTIC	Sterile air and peroxid system
	ASU	Automatic splicing unit
	A_B_C	Control of AP-valves
	BRAKES	Asu jumbo reel brakes management
	DCS	Control servo DCS motor
	FFU_MOT	Control servo FFU motor
%M0714	GR_JUM	Greasing JUM
	LEV_CON	Level controller
	LS_SEAL	Longitudinal sealing
	MMOTOR	Control servo Main motor

REFERENCE	NICKNAME	REFERENCE DESCRIPTION
	P_FEED	Drive roller aseptic chamber
	RAMPS	TPIH ramps LS and SA
%I0095	S003	Service switch
%G0001	STEP_1	STANDBY
%G0020	ST_2-4	Ladder position 2-4
	ST_SEQ	Start sequencer
	TEMPREG	Temperature controllers
	TUBE	Tube sealing (tight tube)
	TUBEPOS	Stepper motor tube positioning
	VOL_CAM	Stepper motor volume cams

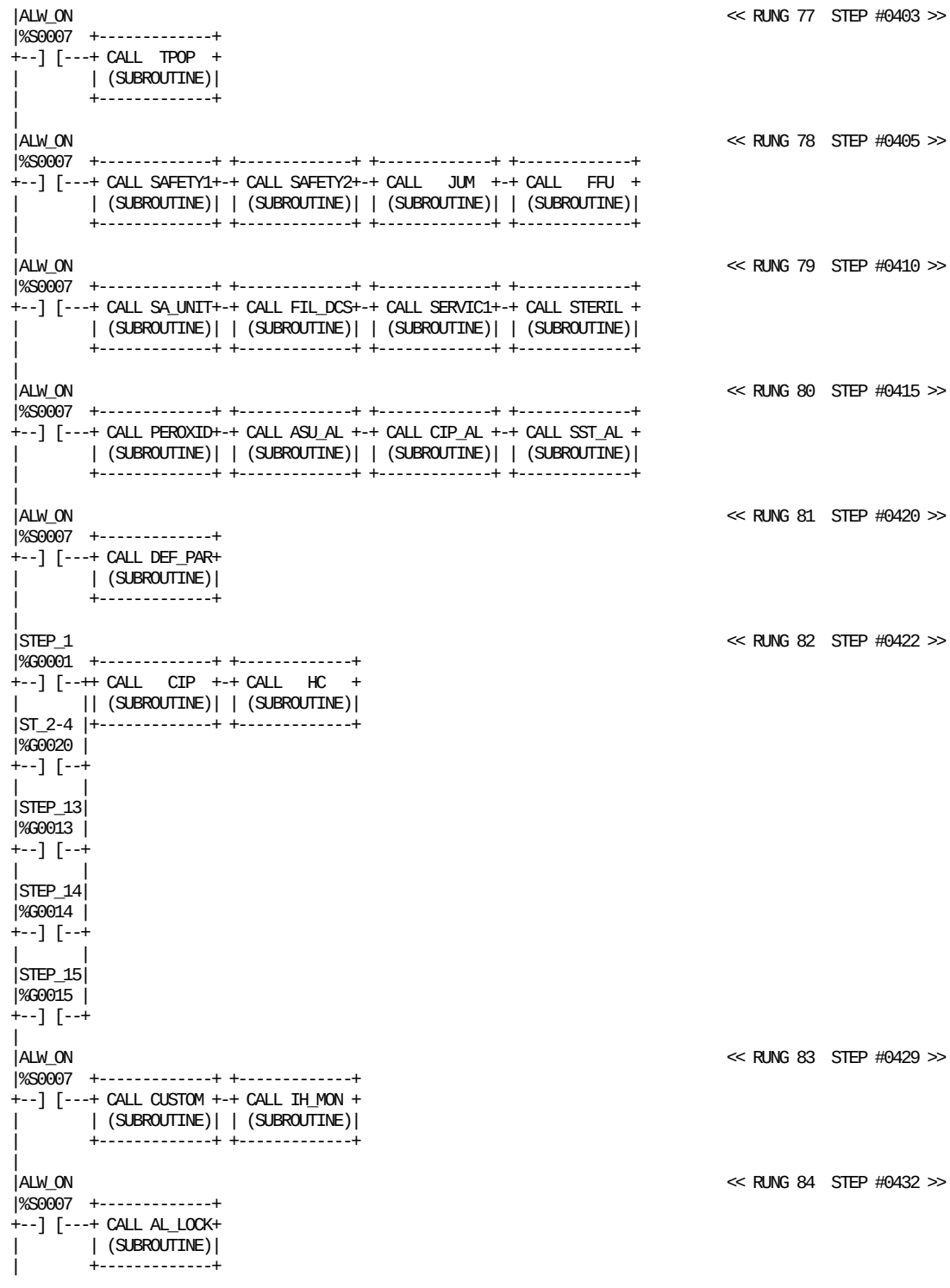

REFERENCE	NICKNAME	REFERENCE DESCRIPTION
%S0007	ALW_ON	
	AL_LOCK	First alarm lock
	ASU_AL	Alarms in window ASU
	CIP	Cleaning in place
	CIP_AL	Alarms in window CIP/HC
	CUSTOM	Signals for customer
	DEF_PAR	Default parameters
	FFU	Alarms in window FFU
	FIL_DCS	Alarms in window filling&DCS
	HC	Hygienic cleaning
	IH_MON	TPIH monitoring
	JUM	Alarms in window JUM
	PEROXID	Alarms in window H2O2 system

REFERENCE	NICKNAME	REFERENCE DESCRIPTION
	SAFETY1	Alarms in window safety 1
	SAFETY2	Alarms in window safety 2
	SA_UNIT	Alarms in window SA
	SERVIC1	Alarms in window service
	SST_AL	Alarms superstructure
%G0001	STEP_1	STANDBY
%G0013	STEP_13	OPEN DOORS, CUT TUBE
%G0014	STEP_14	CIP / HC
%G0015	STEP_15	BLOWING
	STERIL	Alarms in window steril system
%G0020	ST_2-4	Ladder position 2-4
	TPOP	Signals to/from TPOP

```
| (*************************************************************************)
| (* CIP safety forcing.                                                   *)
| (*************************************************************************)
|
| Y1301   S003                                                  CIP_REQ  << RUNG 86  STEP #0435 >>
|%Q0118  %I0095                                                 %M0988
+--] [-----]/[-------------------------------------------------------(SM)- (* CIP requested for A valve opened *)
|
|STEP_1  CIP_REQ                                                CIPTODO  << RUNG 87  STEP #0438 >>
|%G0001  %M0988                                                 %M0992
+--] [-----] [--+---------------------------------------------------(SM)- (* CIP must be done               *)
|               |
|P-S_SW         |
|%M0024         |
+--] [----------+
|
| S003                                                          CIP_REQ  << RUNG 88  STEP #0442 >>
|%I0095                                                         %M0988
+--] [--+---------------------------------------------------------(RM)- (* CIP requested for A valve opened *)
|       |
|       |                                                       CIPTODO
|       |                                                       %M0992
|       +---------------------------------------------------------(RM)- (* CIP must be done               *)
|
| (*************************************************************************)
| (* Time pulse creation.                                                 *)
| (*************************************************************************)
|
| T_MIN                                                         BASE_1M  << RUNG 90  STEP #0446 >>
|%S0006                                                         %M1113
+--] [-----------------------------------------------------------(^)-- (* Base 1 minute                  *)
|
| T_SEC                                                         BASE_1S  << RUNG 91  STEP #0448 >>
|%S0005                                                         %M1006
+--] [-----------------------------------------------------------(^)-- (* Base 1 sec. positive pulse      *)
|
| (*************************************************************************)
| (* Reset memory cells for the paper splice detection and jaw counter.    *)
| (*************************************************************************)
|
|ALW_ON                                                         SPDC_S   << RUNG 93  STEP #0451 >>
|%S0007                                                         %M0135
+--] [--+---------------------------------------------------------(R)-- (* Splice detection in columm set  *)
|       |
|       |                                                       SPDA_S
|       |                                                       %M0136
|       +---------------------------------------------------------(R)-- (* Splice detection in ASU set *)
|       |
|       |                                                       ZEROSET
|       |                                                       %M0137
|       +---------------------------------------------------------(R)-- (* Zero jaw fast scan set          *)
|
|CL_JAW  JAWP_NS                                                CL_JAW   << RUNG 94  STEP #0455 >>
|%M0134  %M0021                                                 %M0134
+--] [-----] [---------------------------------------------------(R)-- (* Reset Jaw counter               *)
|
| (*************************************************************************)
| (* Test for the TPOP panel lamps.                                       *)
| (*************************************************************************)
|
|ALW_OFF                                                         H908    << RUNG 96  STEP #0459 >>
|%S0008                                                         %Q0220
+--] [-----------------------------------------------------------( )-- (* Symbol S P A R E               *)
|
```

REFERENCE	NICKNAME	REFERENCE DESCRIPTION	REFERENCE	NICKNAME	REFERENCE DESCRIPTION
%S0008	ALW_OFF		%M0024	P-S_SW	Service switch negative pulse
%S0007	ALW_ON		%I0095	S003	Service switch
%M1113	BASE_1M	Base 1 minute	%M0136	SPDA_S	Splice detection in ASU set
%M1006	BASE_1S	Base 1 sec. positive pulse	%M0135	SPDC_S	Splice detection in columm set
%M0992	CIPTODO	CIP must be done	%G0001	STEP_1	STANDBY
%M0988	CIP_REQ	CIP requested for A valve opened	%S0006	T_MIN	
%M0134	CL_JAW	Reset Jaw counter	%S0005	T_SEC	
%Q0220	H908	Symbol S P A R E	%Q0118	Y1301	A-valve
%M0021	JAWP_NS	Jawpulse Normal scan	%M0137	ZEROSET	Zero jaw fast scan set

```
| S902                                                                    << RUNG 97  STEP #0461 >>
|%I0082  +-----+
+--] [---+ OR_ +-
|        | WORD|
|        |     |
| H901   |     |  H901
|%Q0217 -+I1  Q+-%Q0217
|        |     |
| CONST -+I2   |
|   00FF +-----+
|
| (*************************************************************************)
| (* Greasing subroutines                                                  *)
| (*************************************************************************)
|
|ALW_ON                                                                   << RUNG 99  STEP #0464 >>
|%S0007  +-------------+
+--] [---+ CALL GRE_FFU+
|        | (SUBROUTINE)|
|        +-------------+
|
| (*************************************************************************)
| (* Greasing subroutines                                                  *)
| (*************************************************************************)
|
| B4125  GR_JUM  A506_32 STEP_1  HC_SEL  CIP_SEL BEKAGRE                  << RUNG 101  STEP #0467 >>
|%I0257  %M0714  %I0044  %G0001  %M0713  %M0712  %I0212  +-------------+
+--] [-----] [-----]/[-----] [-----]/[-----]/[--+--] [---+ CALL GRE_JUM+
|                                               |       | (SUBROUTINE)|
|GREA_GO                                        |       +-------------+
|%M3600                                         |
+--] [-----------------------------------------+
|                                               |
| Y4264                                         |
|%Q0251                                         |
+--] [-----------------------------------------+
|
| (*************************************************************************)
| (* HI Option Kit Subroutine.                                            *)
| (*************************************************************************)
|
|A124_09                                                                  << RUNG 103  STEP #0478 >>
|%I0216  +-------------+
+--] [---+ CALL   HI   +
|        | (SUBROUTINE)|
|        +-------------+
|
|[      END OF PROGRAM LOGIC      ]
|
```

REFERENCE	NICKNAME	REFERENCE DESCRIPTION
%I0216	A124_09	HI Option
%I0044	A506_32	DMC Main motor running
%S0007	ALW_ON	
%I0257	B4125	Greasing level sensor empty
%I0212	BEKAGRE	Option BEKA Greasing KIT
%M0712	CIP_SEL	CIP select from TPOP
%M3600	GREA_GO	Greasing cycle JUM going on
	GRE_FFU	Greasing of FFU

REFERENCE	NICKNAME	REFERENCE DESCRIPTION
	GRE_JUM	Greasing of JUM
%M0714	GR_JUM	Greasing JUM
%Q0217	H901	Symbol TPOP reset
%M0713	HC_SEL	Hygienic cleaning selection ok
	HI	HI: Option Kit
%I0082	S902	Push button lamp test
%G0001	STEP_1	STANDBY
%Q0251	Y4264	Cutting cam grease line

GLOBAL (%G) GLOBAL CROSS REFERENCES

REF.	BLOCK	NICKNAME	REF. DESCRIPTION / CROSS REFERENCES
%G0001	_MAIN	STEP_1	STANDBY
			-] [- 34,35,38,39,46,51,52,53,54,67,68,82,87,101
			-]/[- 66
	MACHLAD		-] [- 9,44,46
	LADFUNC		-] [- 7,8
			-(M) 10
	TPOPLAD		-] [- 5,6,26,28
	TPOP		-] [- 24,31,36
	SUPPLY		-]/[- 5,8
	FFU_MOT		-]/[- 35,45
	DCS		-] [- 12,31,37
	TUBE		-] [- 9
	ASEPTIC		-] [- 8,16,56,130
	P_FEED		-] [- 15,25
			-]/[- 21
	LS_SEAL		-] [- 5
	LEV_CON		-] [- 11,33,35,62
	ASU		-]/[- 23,25
	ASU_MOT		-] [- 7,8
	STRIPSP		-] [- 44
	SAFETY1		-] [- 13
			-]/[- 16
	JUM		-] [- 32,56,59
			-]/[- 27,58,69
	FFU		-] [- 24
	SA_UNIT		-]/[- 8,17
	FIL_DCS		-] [- 9,33
			-]/[- 14
	SERVIC1		-] [- 17
			-]/[- 19
	STERIL		-]/[- 14,17,18
	SST_AL		-] [- 6,28,29,32
			-]/[- 21
	PEROXID		-] [- 38,39,45,47
	ASU_AL		-] [- 18
			-]/[- 45
	CIP_AL		-] [- 25
	CIP		-] [- 46
	HC		-] [- 9,13,31
	DEF_PAR		-] [- 10,45,49,51,52
	PLMSLA4		-] [- 66,70,74,78,82,88,136,204
	1T0001		-] [- 37,38
			-]/[- 35,80,81
	CUSTOM		-] [- 25
	S__250B		-] [- 5,6,8,9,11,12,14,15,17,18,20,21,22,23,24,25,26,28,34,36,38,40,41,43,45,46,47,49,50,51,52,53,54,56, 57,58,59,60,61,63,65,66,68
	S__200B		-] [- 5,6,8,9,11,12,14,15,17,18,20,21,22,23,24,25,26,28,34,36,38,40,41,43,45,46,47,49,50,51,52,53,54,56, 57,58,59,60,61,63,65,66,68
	S__200M		-] [- 5,6,8,9,11,12,14,15,17,18,20,21,22,23,24,25,26,28,34,36,38,40,41,43,45,46,47,49,50,51,52,53,54,56, 57,58,59,60,61,63,65,66,68
	S__200S		-] [- 5,6,8,9,11,12,14,15,17,18,20,21,22,23,24,25,26,28,34,36,38,40,41,43,45,46,47,49,50,51,52,53,54,56, 57,58,59,60,61,63,65,66,68
	S__250S		-] [- 5,6,8,9,11,12,14,15,17,18,20,21,22,23,24,25,26,28,34,36,38,40,41,43,45,46,47,49,50,51,52,53,54,56, 57,58,59,60,61,63,65,66,68
	S__300S		-] [- 5,6,8,9,11,12,14,15,17,18,20,21,22,23,24,25,26,28,34,36,38,40,41,43,45,46,47,49,50,51,52,53,54,56, 57,58,59,60,61,63,65,66,68
	STRIPOK		-] [- 24,25
	IH_MON		-]/[- 5
	HI		-] [- 7,8,9,10,11,18,54,63
%G0002	_MAIN	STEP_2	PREPARATION (3 MIN.)
			-] [- 40,51,52,53,54
			-]/[- 53
	MACHLAD		-] [- 7,14
	LADFUNC		-(M) 11
	TPOPLAD		-] [- 7,8
	TPOP		-] [- 28,36
	MMOTOR		-] [- 25,27
			-]/[- 8
	FFU_MOT		-] [- 22,25
	DCS		-] [- 12,39
	TUBE		-] [- 9,10

REF.	BLOCK	NICKNAME	REF. DESCRIPTION / CROSS REFERENCES
	ASEPTIC		-] [- 6,7,9,13,14,16,23,32,56,71,130,140,141,143
	A_B_C		-] [- 17
	P_FEED		-] [- 11,15
	LS_SEAL		-] [- 7,12,13
			-]/[- 9
	LEV_CON		-] [- 5,6,7,8,33,34,35
	TEMPREG		-] [- 8,80
	ASU_MOT		-] [- 5,6
	VOL_CAM		-] [- 5,9,10
	TUBEPOS		-] [- 5,9,11
	WASTE		-] [- 5,45
	AL_LOCK		-] [- 29
	JUM		-] [- 32,59
			-]/[- 58
	SA_UNIT		-] [- 17
	FIL_DCS		-] [- 34,35,37,43,46
	SERVIC1		-] [- 17
			-]/[- 25
	STERIL		-] [- 11,25
			-]/[- 14
	ASU_AL		-] [- 6,60
	CIP_AL		-] [- 21
	CIP		-] [- 46,113
	HC		-] [- 11
	BRAKES		-] [- 5
	HI		-] [- 7,8,9,10,11,19,50,52,54
%G0003	_MAIN	STEP_3	TUBE SEALING
			-] [- 51,52,54
			-]/[- 44
	MACHLAD		-] [- 9,16,28
	LADFUNC		-(M) 12
	TPOPLAD		-] [- 8,9,10,17
	TPOP		-] [- 36,91,92,93,96,123
			-]/[- 91,92,93,96,123
	FFU_MOT		-] [- 22,25,47
	TUBE		-] [- 10
	ASEPTIC		-] [- 23,56,71,130
	LEV_CON		-] [- 34
	VOL_CAM		-] [- 17
	TUBEPOS		-] [- 26
	WASTE		-] [- 45
	AL_LOCK		-] [- 29
	JUM		-] [- 59
			-]/[- 58
	FIL_DCS		-] [- 45
	STERIL		-] [- 5
			-]/[- 6
	SST_AL		-] [- 12,14,16
	ASU_AL		-] [- 20
	CIP		-] [- 46
	1T0001		-] [- 42
	HI		-] [- 54
%G0004	_MAIN	STEP_4	HEAT STERILIZATION
			-] [- 51,52,54
			-]/[- 44
	MACHLAD		-] [- 9,10,12,13,18
	LADFUNC		-(M) 13
	TPOPLAD		-] [- 11,12
	TUBE		-] [- 9
	ASEPTIC		-] [- 11,20,21,22,24,25,27,48,52,53,71,79,82,99,100,105
			-]/[- 101
	A_B_C		-] [- 26
	ST_SEQ		-] [- 11,17
	P_FEED		-] [- 12
	LEV_CON		-] [- 34
	TEMPREG		-] [- 94
	PWM		-] [- 9
	WASTE		-] [- 24
	STERIL		-] [- 26
			-]/[- 27
	PEROXID		-] [- 21,42
	CIP		-] [- 32,37,42,44,46,48,49
	PLMSLA4		-] [- 205
	HI		-] [- 19,21,31,32,38,51,54

```
REF.     BLOCK    NICKNAME  REF. DESCRIPTION / CROSS REFERENCES
-------  -------  --------  -----------------------------------
                            -]/[- 38
%G0005   _MAIN    STEP_5    SPRAYING
                            -] [- 51,52,53,54
         MACHLAD            -] [- 14,20
         LADFUNC            -]/[- 7
                            -(M)  14
         TPOPLAD            -] [- 13
         TPOP               -] [- 21
         ASEPTIC            -] [- 11,47,49,51,54,55,57,58,71,82,105,106,117,125,128,129,160,161
                            -]/[- 126,127,129
         A_B_C              -] [- 27
         P_FEED             -] [- 5
                            -]/[- 24
         PWM                -] [- 9
         WASTE              -] [- 6
         STERIL             -] [- 40
         PEROXID            -] [- 13,14,16,17,34,35,36,37
         PLMSLA4            -] [- 139
         HI                 -] [- 26,29,42,48,54
                            -]/[- 38
%G0006   _MAIN    STEP_6    DRYING + STEAM CLEANING
                            -] [- 51,52,53,54
         MACHLAD            -] [- 12,23,24,26,34,36
         LADFUNC            -(M)  15
         TPOPLAD            -] [- 14,15
         TPOP               -] [- 21,53,54,55,56
         MMOTOR             -] [- 27
         FFU_MOT            -] [- 22,25
         DCS                -] [- 16
         ASEPTIC            -] [- 30,35,56,62,63,64,65,66,67,69,71,90,105,107,114,118,119,120,121
                            -]/[- 72
         A_B_C              -] [- 22,23,24,25,27
         ST_SEQ             -] [- 5,10
         P_FEED             -] [- 16
                            -]/[- 24
         LS_SEAL            -] [- 24,25,35
         LEV_CON            -] [- 35,54,62
         TEMPREG            -] [- 9,95
         WASTE              -] [- 6
         AL_LOCK            -] [- 29
         FFU                -] [- 22
         SA_UNIT            -]/[- 7
         FIL_DCS            -] [- 26,31
         SERVIC1            -] [- 13,15,30
         SST_AL             -] [- 13,14
                            -]/[- 7
         PEROXID            -] [- 23,43
                            -]/[- 44
         BRAKES             -] [- 5
         HI                 -] [- 15,19,21,30,35,36,37,42,49,51,54
%G0007   _MAIN    STEP_7    SIGNAL TO STERILIZER
                            -] [- 51,52,53,54
         MACHLAD            -] [- 12,20,23,28,36
         LADFUNC            -(M)  16
         TPOPLAD            -] [- 16,17
         TPOP               -] [- 53,54,55,56
         MMOTOR             -] [- 27
         FFU_MOT            -] [- 22,25
         ASEPTIC            -] [- 30,35
         A_B_C              -] [- 14,15
         ST_SEQ             -] [- 5,10
                            -]/[- 25,26
         P_FEED             -] [- 16
         LS_SEAL            -] [- 24,25,35
         LEV_CON            -] [- 62
         TEMPREG            -] [- 27,36,45,54
         FFU                -] [- 22
         FIL_DCS            -] [- 26,31
         SST_AL             -] [- 13,14
         PEROXID            -] [- 23
         BRAKES             -] [- 5
         HI                 -] [- 15,51,54
%G0008   _MAIN    STEP_8    FLAPS + H2O2 TEMPERATURE
                            -] [- 51,52,53,54
```

REF.	BLOCK	NICKNAME	REF. DESCRIPTION / CROSS REFERENCES
	MACHLAD		-] [- 12,20,26,30,36
	LADFUNC		-(M) 17
	TPOPLAD		-] [- 18,19
	TPOP		-]/[- 34
	SUPPLY		-] [- 54
	MMOTOR		-] [- 27
	FFU_MOT		-] [- 37
	DCS		-] [- 27
	ASEPTIC		-] [- 31,35
	ST_SEQ		-] [- 5
	P_FEED		-] [- 12,16
	LS_SEAL		-] [- 15,24,25,35
	TEMPREG		-] [- 79
	VOL_CAM		-] [- 17
	TUBEPOS		-] [- 26
	FFU		-] [- 22
	FIL_DCS		-] [- 31
	SST_AL		-] [- 13,14
	PEROXID		-] [- 9,23
	ASU_AL		-] [- 60
	BRAKES		-] [- 5
	HI		-] [- 51,54
%G0009	_MAIN	STEP_9	MOTOR START
			-] [- 55,56
	MACHLAD		-] [- 28,32
	LADFUNC		-(M) 18
	TPOPLAD		-] [- 20
	DCS		-] [- 6
	A_B_C		-] [- 7
	ST_SEQ		-] [- 35
	LEV_CON		-] [- 67,68
			-]/[- 38,65
	STRSEL		-]/[- 9
	FFU		-] [- 21
	FIL_DCS		-] [- 31
	PEROXID		-] [- 9
	HI		-] [- 41,42,51
%G0010	_MAIN	STEP_10	PRODUCTION
			-] [- 21,55,56
	MACHLAD		-] [- 20,34
	LADFUNC		-(M) 19
	TPOPLAD		-] [- 21
	SUPPLY		-] [- 36,39
	ASEPTIC		-] [- 72,130
	ST_SEQ		-] [- 5,33
	LEV_CON		-] [- 58,59,60,61,67,68
			-]/[- 65
	TEMPREG		-] [- 81
	FFU		-] [- 21
	FIL_DCS		-] [- 31
	PEROXID		-] [- 24
	ASU_AL		-] [- 20
	CUSTOM		-]/[- 23
	HI		-] [- 40,42,44
%G0011	_MAIN	STEP_11	END OF PRODUCTION
			-] [- 55,56
	MACHLAD		-] [- 12,20,36,37
	LADFUNC		-] [- 7
			-(M) 20
	TPOPLAD		-] [- 22,23
	DCS		-] [- 5,6
	ST_SEQ		-] [- 5,33
	LEV_CON		-] [- 40,62
	SAFETY1		-] [- 18
	JUM		-] [- 53,54,55
			-]/[- 42
	BRAKES		-] [- 9
	HI		-] [- 51
%G0012	_MAIN	STEP_12	VENTING
			-] [- 55,56
	MACHLAD		-] [- 39,41,42
	LADFUNC		-]/[- 7
			-(M) 21
	TPOPLAD		-] [- 24

```
REF.     BLOCK    NICKNAME   REF. DESCRIPTION / CROSS REFERENCES
-------  -------  --------  -----------------------------------
         TPOP              -] [- 32
         SUPPLY            -] [- 41
         ASEPTIC           -] [- 11,97,130
                           -]/[- 17,40,45
         A_B_C             -] [- 19
         LS_SEAL           -] [- 5
         LEV_CON           -] [- 40
         JUM               -]/[- 42
         STERIL            -]/[- 24
         PLMSLA4           -] [- 136
         IH_MON            -]/[- 5
         HI                -] [- 22,43,51
                           -]/[- 20,24,34
%G0013   _MAIN    STEP_13   OPEN DOORS, CUT TUBE
                           -] [- 55,56,82
         MACHLAD           -] [- 7,44
         LADFUNC           -(M)  22
         TPOPLAD           -] [- 25,26,28
         SUPPLY            -] [- 52
         MMOTOR            -] [- 25,27
         ASEPTIC           -]/[- 129
         P_FEED            -] [- 6,23,24
                           -]/[- 20
         LS_SEAL           -]/[- 9
         LEV_CON           -] [- 40,62
         ASU_MOT           -] [- 72
         STRIPSP           -] [- 27,44
                           -]/[- 14,42,45
         JUM               -] [- 59
                           -]/[- 42,58
         SA_UNIT           -]/[- 21
         STERIL            -]/[- 24
         PEROXID           -] [- 47
         ASU_AL            -] [- 52
                           -]/[- 51
         PLMSLA4           -] [- 204
         IH_MON            -]/[- 5
         HI                -] [- 63
%G0014   _MAIN    STEP_14   CIP / HC
                           -] [- 55,56,82
         MACHLAD           -] [- 7,46
         LADFUNC           -(M)  23
         TPOPLAD           -] [- 26,27,28,29,30
         TPOP              -] [- 36
         ASEPTIC           -] [- 16
                           -]/[- 129
         P_FEED            -]/[- 20
         LS_SEAL           -]/[- 9
         LEV_CON           -] [- 40
         ASU_MOT           -] [- 72
         STRIPSP           -] [- 44
                           -]/[- 42,45
         FIL_DCS           -]/[- 8
         ASU_AL            -] [- 52
         HC                -] [- 31
         IH_MON            -]/[- 5
         HI                -] [- 63
%G0015   _MAIN    STEP_15   BLOWING
                           -] [- 82
         MACHLAD           -] [- 7
         LADFUNC           -(M)  24
         TPOPLAD           -] [- 28,30,31
         TPOP              -] [- 36
         ASEPTIC           -] [- 16,97
         LEV_CON           -] [- 40
         SERVIC1           -] [- 25
         CIP               -] [- 46,101,106
         PLMSLA4           -] [- 136
         IH_MON            -]/[- 5
%G0020   _MAIN    ST_2-4    Ladder position 2-4
                           -] [- 53,67,82
         LADFUNC           -(M)  25
         TPOP              -]/[- 23
         ASEPTIC           -] [- 160
```

REF.	BLOCK	NICKNAME	REF. DESCRIPTION / CROSS REFERENCES
	ST_SEQ		-] [- 26
	HI		-] [- 42
%G0021	LADFUNC	ST_2-12	Ladder position 2-12
			-] [- 7
			-(M) 26
	SUPPLY		-] [- 37,52
			-]/[- 41
	ASEPTIC		-] [- 34
	P_FEED		-] [- 6,23,24
	ASU		-] [- 4
	STRIPSP		-] [- 4
	SAFETY2		-] [- 11
	FIL_DCS		-] [- 37,39,41
	SERVIC1		-] [- 25
	SST_AL		-] [- 5
	ASU_AL		-] [- 15
	HI		-] [- 38
%G0022	LADFUNC	ST_2-13	Ladder position 2-13
			-(M) 27
%G0023	LADFUNC	ST_3-10	Ladder position 3-10
			-(M) 28
	TPOP		-] [- 28,35
	DCS		-] [- 5,6
	ASEPTIC		-] [- 29,33
	TEMPREG		-] [- 86,87
	VOL_CAM		-] [- 5,10
	TUBEPOS		-] [- 5,11
	SAFETY1		-] [- 18
	JUM		-] [- 53,54,55
%G0024	MACHLAD	ST_6-10	Ladder position 6-10
			-] [- 20
	LADFUNC		-(M) 29
	ASEPTIC		-] [- 40,43,72
	ST_SEQ		-] [- 42
	STRSEL		-] [- 6
	FFU		-] [- 9,11
	FIL_DCS		-] [- 22,23
			-]/[- 23
	ASU_AL		-] [- 60
	CUSTOM		-] [- 21,23
	HI		-] [- 24
%G0025	LADFUNC	ST_6-11	Ladder position 6-11
			-(M) 30
	SUPPLY		-] [- 16,19
			-]/[- 18
	ASEPTIC		-] [- 11,89,96,97,160,161
			-]/[- 91
	P_FEED		-]/[- 24
	LS_SEAL		-] [- 7,33
	TEMPREG		-] [- 93
	JUM		-] [- 14
			-]/[- 15
	FFU		-] [- 22
	SERVIC1		-] [- 12,14,16
	STERIL		-]/[- 9
	PEROXID		-] [- 44
	ASU_AL		-] [- 55
	PLMSLA4		-] [- 206
			-]/[- 207
	1T0001		-] [- 42
	CUSTOM		-] [- 9
%G0026	_MAIN	ST_9-10	Ladder position 9-10
			-]/[- 48
	MACHLAD		-] [- 12
	LADFUNC		-]/[- 7
			-(M) 31
	TPOP		-] [- 107,109,111,113,115,117,119,121
	FFU_MOT		-] [- 31,32,37
	DCS		-] [- 10,15,16,32,33,34,35
	ASEPTIC		-] [- 43,46
	A_B_C		-]/[- 9,19
	ST_SEQ		-] [- 5
	VOL_CAM		-] [- 17
	TUBEPOS		-] [- 26

```
REF.     BLOCK    NICKNAME   REF. DESCRIPTION / CROSS REFERENCES
-------  -------  --------  -----------------------------------
         WASTE              -] [- 7,33
         AL_LOCK            -] [- 29
         JUM                -] [- 45,48
         FFU                -] [- 6
         FIL_DCS            -] [- 24
         SST_AL             -] [- 12,14,19
         DEF_PAR            -]/[- 28,31,33
         PLMSLA4            -] [- 206
                            -]/[- 207
         CUSTOM             -] [- 19
         IH_MON             -] [- 7
%G0027   LADFUNC  ST13-14   Ladder position 13-14
                            -(M)  32
         WASTE              -] [- 45
         PLMSLA4            -] [- 136
%G0028   LADFUNC  ST_8-10   Ladder position 8-10
                            -(M)  33
         SUPPLY             -] [- 56,57
         A_B_C              -] [- 14,15,20
         ST_SEQ             -]/[- 25,26
         TEMPREG            -] [- 34,43,52,61
         FFU                -] [- 25,26,28,31
         SERVIC1            -] [- 26
         HI                 -] [- 39
%G0029   LADFUNC  ST_4-7    Ladder position 4-7
                            -(M)  34
         VOL_CAM            -] [- 9
         TUBEPOS            -] [- 9
%G0097   FFU_MOT  DE_STOP   DE not ready for production
                            -]/[- 40
         ST_SEQ             -] [- 26
         FFU                -]/[- 22
         PLMSLA4            -] [- 87
                            -(M)  85
```

INPUT (%I) GLOBAL CROSS REFERENCES

```
REF.     BLOCK    NICKNAME   REF. DESCRIPTION / CROSS REFERENCES
-------  -------  --------  -----------------------------------
%I0001   1T0001   ANGENC0   Angle encoder module bit 0
                            -] [- 14,21
                            -]/[- 14,22
                            FBIO  5
%I0002   1T0001   ANGENC1   Angle encoder module bit 1
                            -] [- 13,21
                            -]/[- 13,22
%I0003   1T0001   ANGENC2   Angle encoder module bit 2
                            -] [- 12,21
                            -]/[- 12,22
%I0004   1T0001   ANGENC3   Angle encoder module bit 3
                            -] [- 11,21
                            -]/[- 11,22
%I0005   1T0001   ANGENC4   Angle encoder module bit 4
                            -] [- 10,21
                            -]/[- 10,22
%I0006   1T0001   ANGENC5   Angle encoder module bit 5
                            -] [- 9,21
                            -]/[- 9,22
%I0007   1T0001   ANGENC6   Angle encoder module bit 6
                            -] [- 8,17,18,21
                            -]/[- 8,16,19,22
%I0008   _MAIN    ANGENC7   Angle encoder module bit 7
                            -] [- 19
         1T0001             -] [- 7,18,19,21,29
                            -]/[- 16,17,22
%I0009   STRIPSP  B6105     Splice detection in ASU
                            -] [- 51
         1T0001             -]/[- 78
%I0010   1T0001   B1403     Splice detection in Column
                            -]/[- 77
         CUSTOM             -]/[- 31
%I0011   JUM      B4200     Zero jaw sensor
                            -] [- 31
```

```
REF.     BLOCK    NICKNAME   REF. DESCRIPTION / CROSS REFERENCES
-------  -------  --------  -----------------------------------
         1T0001             -] [- 37,44,85
         GRE_JUM            -] [- 22
%I0012   _MAIN    A419_27   Design signal ASU (Barcode)
                             -] [- 11
         ASU_AL             -]/[- 10
         1T0001             -] [- 65
%I0013   1T0001   B54052    Waste box photocell
                             -] [- 80,81
                             -]/[- 80,81
%I0016   1T0001             FBIO  5
%I0017   _MAIN    A600_14   Emergency stop
                             -] [- 43
         LADFUNC            -] [- 38
                             -]/[- 36
         TPOP               -]/[- 14
         SUPPLY             -] [- 7
         SAFETY1            -] [- 8
                             -]/[- 13
         SAFETY2            -] [- 9
         DEF_PAR            -]/[- 28,31,33
%I0018   _MAIN    A601_14   Safety monitors B
                             -] [- 46,48,56
         LADFUNC            -] [- 7,38
                             -]/[- 36
         TPOP               -]/[- 15
         SUPPLY             -] [- 51,61
         FFU_MOT            -] [- 38
         WASTE              -]/[- 46
         SAFETY1            -] [- 8
                             -]/[- 13
         SAFETY2            -] [- 9
         JUM                -] [- 42,56
         CIP                -] [- 11,97
                             -]/[- 21,99,109
%I0019   _MAIN    A602_14   Safety monitors C
                             -] [- 53
         MMOTOR             -] [- 25,27
         ST_SEQ             -] [- 5
         ASU                -] [- 5,18,29,32,33
                             -]/[- 12,13,14,15,20,23,25,27,28,33
         ASU_MOT            -] [- 61,76
                             -]/[- 26,62
         PAPERSP            -] [- 25,27,28,32
         SAFETY1            -]/[- 13
         ASU_AL             -] [- 17,18,19,45,54,56,57
                             -]/[- 30,32,60
         BRAKES             -] [- 14
%I0020   _MAIN    Q24_34    Overload DC-BUS
                             -] [- 48
         SUPPLY             -] [- 5
         SERVIC1            -]/[- 10
%I0021   FIL_DCS  DIA_RDY   Diary ready for production
                             -]/[- 21
         CUSTOM             -] [- 8
%I0022   _MAIN    Q24_14    Overload summary
                             -] [- 48,54,55
         SERVIC1            -]/[- 10
         HC                 -] [- 5
                             -]/[- 7
%I0023   SERVIC1  L12       Supervision voltage line1 24V DC
                             -]/[- 34
%I0024   SERVIC1  L14       Supervision voltage line2 24V DC
                             -]/[- 34
%I0025   DCS      A418_25   TMCC Data request
                             -]/[- 40
%I0028   FFU      K1200     Date unit ready signal
                             -] [- 10
                             -]/[- 9
         CUSTOM             -] [- 4
%I0029   FFU      K1201     Date unit supply low signal
                             -]/[- 11
         CUSTOM             -] [- 5
%I0031   SUPPLY   B006      Press. and temp. cooling EL_cab.
                             -] [- 11
```

```
REF.     BLOCK    NICKNAME   REF. DESCRIPTION / CROSS REFERENCES
-------  -------  --------  -------------------------------------
                            -]/[- 12
%I0032   SUPPLY   B005      Electrical cabinet doors
                            -] [- 11
                            -]/[- 12
%I0033   SERVIC1  Z002_11   Failure mains (transient)
                            -]/[- 35
%I0034   _MAIN    A501305   Failure TPIH LS
                            -] [- 29
         SST_AL             -]/[- 5
%I0035   _MAIN    A502305   Failure TPIH TS
                            -] [- 20
                            -]/[- 21
         JUM                -] [- 8
%I0036   _MAIN    A7417     Failure TPIH SA
                            -]/[- 9
         SA_UNIT            -]/[- 6
%I0037   FFU_MOT  A415_19   Failure external conveyor DE
                            -]/[- 35
%I0038   P_FEED   A410_19   Failure drive roller
                            -]/[- 8
%I0039   ASU_AL   A413_19   Failure drive magazine ASU
                            -]/[- 40
%I0040   ASU_AL   A412_19   Failure drive loop ASU
                            -]/[- 39
%I0041   _MAIN    A506_29   DMC Main motor ready
                            -] [- 41,55
         LADFUNC            -] [- 7
         MMOTOR             -] [- 25,28
         FFU_MOT            -]/[- 6
         JUM                -] [- 46
                            -]/[- 43,44
%I0042   JUM      A506_30   DMC Main motor position error
                            -] [- 45
%I0044   _MAIN    A506_32   DMC Main motor running
                            -] [- 6
                            -]/[- 55,101
         MACHLAD            -]/[- 7,12,34
         LADFUNC            -]/[- 7
         TPOPLAD            -]/[- 8
         TPOP               -] [- 48,49
         SUPPLY             -] [- 29,51,59
                            -]/[- 27
         MMOTOR             -] [- 16
                            -]/[- 15,25,27,30
         DCS                -] [- 10
                            -]/[- 16
         TUBE               -] [- 10
                            -]/[- 9
         ASEPTIC            -] [- 92
         A_B_C              -]/[- 9
         ST_SEQ             -] [- 5
                            -]/[- 6,32
         P_FEED             -] [- 13,16,20,29,30
                            -]/[- 23,24
         LS_SEAL            -] [- 9,30,33
         RAMPS              -]/[- 18
         ASU                -]/[- 28
         ASU_MOT            -] [- 37,82,90,91
         STRIPSP            -] [- 45
                            -]/[- 45
         STRSEL             -]/[- 6
         WASTE              -]/[- 12,14,45
         SAFETY1            -] [- 20
                            -]/[- 14
         JUM                -] [- 6,7,10,11,31,34,69,72
                            -]/[- 8,12,44,46
         SA_UNIT            -] [- 7
         FIL_DCS            -] [- 24
                            -]/[- 9
         SST_AL             -] [- 7,12,14
                            -]/[- 6
         ASU_AL             -] [- 45,55,58
                            -]/[- 26,60
         1T0001             -] [- 25,27,41,57,58,59
```

```
REF.     BLOCK    NICKNAME   REF. DESCRIPTION / CROSS REFERENCES
-------  -------  --------  -----------------------------------
                            -]/[- 26,61
         CUSTOM             -] [- 11,12,13,14
         BRAKES             -]/[- 12
         IH_MON             -] [- 6
%I0045   RAMPS    A506_33   DMC Main motor retard
                            -] [- 20,21
                            -]/[- 15,17
%I0046   JUM      A506_34   DMC Main motor error code
                            -] [- 88,94
%I0048   _MAIN    A508_29   DMC DCS ready
                            -] [- 41
         LADFUNC            -] [- 7
         JUM                -] [- 47
                            -]/[- 43
%I0049   JUM      A508_30   DMC DCS Position error
                            -] [- 48
%I0051   DCS      A508_32   DMC DCS in home position
                            -] [- 11
         JUM                -] [- 27
%I0053   JUM      A508_34   DMC DCS motor error code
                            -] [- 96,102
%I0055   _MAIN    A507_29   DMC FFU ready
                            -] [- 41,55
         LADFUNC            -] [- 7
         JUM                -]/[- 43
         FFU                -] [- 7
                            -]/[- 5
%I0056   FFU      A507_30   DMC FFU Position error
                            -] [- 6
%I0057   SUPPLY   A507_31   DMC FFU Home position
                            -]/[- 27
         FFU_MOT            -] [- 32
         A_B_C              -] [- 6
         FFU                -]/[- 15
%I0058   TPOP     A507_32   DMC FFU motor running
                            -]/[- 13
         SUPPLY             -] [- 31
                            -]/[- 27
         FFU_MOT            -] [- 15,37,38
                            -]/[- 14,22,25
         ST_SEQ             -]/[- 45
         SAFETY1            -]/[- 21
         JUM                -]/[- 19,23,40
         FFU                -] [- 25,26,39
                            -]/[- 7,10,19,24,25,26
         SERVIC1            -]/[- 6
         SST_AL             -]/[- 22
         GRE_FFU            -] [- 5,8
%I0060   FFU      A507_34   DMC FFU motor error code
                            -] [- 42,48
%I0062   _MAIN    A418_31   Bar code signal DCS
                            -] [- 18
         DCS                -] [- 15,16
         FIL_DCS            -]/[- 8
%I0063   DCS      A418_32   Design ok signal DCS
                            -] [- 16,23,33
                            -]/[- 15
%I0064   DCS      A418_27   TMCC precorrection out-signal
                            -] [- 10,13
%I0065   ASEPTIC  A300_18   Level peroxide spray tank
                            -]/[- 143
         PEROXID            -] [- 13,17
                            -]/[- 14,16
%I0066   ASEPTIC  A301_18   Level peroxide bath
                            -]/[- 41
         PEROXID            -] [- 9
                            -]/[- 8
%I0067   ASEPTIC  A302_18   Level water separator
                            -]/[- 14,15
         STERIL             -] [- 21
%I0068   PEROXID  A303_18   Level water bath
                            -]/[- 29
%I0069   SERVIC1  A304_18   Circulation water cond. sensor
                            -] [- 17
```

REF.	BLOCK	NICKNAME	REF. DESCRIPTION / CROSS REFERENCES
			-]/[- 17
%I0070	ASEPTIC	A306_18	Level peroxide tank preheating
			-]/[- 71,72
	PEROXID		-] [- 25
%I0071	ASEPTIC	A307_18	Safety level peroxide tank
			-] [- 46,138
			-]/[- 72
	PEROXID		-] [- 22,24,25
			-]/[- 21,25
%I0072	ASEPTIC	A308_18	Level peroxide tank production
			-] [- 46
			-]/[- 72,140
	PEROXID		-]/[- 25
%I0073	CIP	X223-14	CIP comm. 1 CIP ended
			-] [- 17,27,77
%I0074	CIP	X223_1	CIP comm. 2 CIP running
			-] [- 18,26
			-]/[- 65,66,68,69,71,72,77
	CUSTOM		-] [- 16,19
%I0075	CIP	X223_2	CIP comm. 3 CIP new cycle step
			-] [- 27
%I0076	CIP	X223_4	CIP comm. 4 CIP weekly cleaning
			-] [- 57
			-]/[- 57
%I0077	CIP	A414_9	CIP, PH OK rinsing water
			-]/[- 62,71,72
%I0078	CIP	A414_4	CIP, PH OK alkali cleaning
			-] [- 62,71,72
			-]/[- 62,71,72
%I0079	CIP	A414_20	CIP, temper OK alkali cleaning
			-] [- 62,68,69
%I0080	CIP	A414_1	CIP, PH OK acid cleaning
			-] [- 62,71,72
			-]/[- 62,71,72
%I0081	TPOP	S901	Push button TPOP reset
			-] [- 8,9
	AL_LOCK		-] [- 37
	JUM		-] [- 12
	CIP_AL		-] [- 16,18
%I0082	_MAIN	S902	Push button lamp test
			-] [- 97
	TPOP		-] [- 58,59,60,61,62
			-]/[- 63,65,66,67
%I0083	FFU_MOT	S903	Mode selector switch
			-] [- 22
			-]/[- 22,25
	CUSTOM		-]/[- 11
%I0084	SUPPLY	S904	Station chain sprinkler
			-] [- 61
	CUSTOM		-] [- 11
%I0085	SUPPLY	S905	Push button inching FFU
			-]/[- 31
	MMOTOR		-]/[- 25,27
	FFU_MOT		-] [- 22,25,38
			-]/[- 22
%I0086	TPOP	S906	Push button drop chute off
			-] [- 117
	WASTE		-] [- 39
%I0087	_MAIN	S907	Push button inching JUM
			-] [- 30,31
	MACHLAD		-] [- 24
	SUPPLY		-] [- 23
	MMOTOR		-] [- 26
			-]/[- 28,31
	FFU_MOT		-]/[- 22,25
	DCS		-]/[- 13
	ASEPTIC		-] [- 46,127
	ST_SEQ		-] [- 5,11,34,42
			-]/[- 43
	P_FEED		-] [- 16
	LS_SEAL		-] [- 24,25,35
	RAMPS		-]/[- 17
	LEV_CON		-] [- 57
			-]/[- 37,48

REF.	BLOCK	NICKNAME	REF. DESCRIPTION / CROSS REFERENCES
	ASU_MOT		-] [- 84,86
	WASTE		-] [- 6,31,45
	JUM		-] [- 32
			-]/[- 37
	FFU		-]/[- 15
	SA_UNIT		-] [- 7
	FIL_DCS		-] [- 6
	SST_AL		-] [- 7,13,14
	ASU_AL		-] [- 58
	BRAKES		-] [- 5
			-]/[- 6
%I0088	_MAIN	S911	Push button step up
			-] [- 12,14,35,38
			-]/[- 40
	MACHLAD		-] [- 14,24
			-]/[- 9,28
	TPOP		-] [- 29
	SUPPLY		-] [- 27
	MMOTOR		-]/[- 25,27
	FFU_MOT		-]/[- 22,25
	TUBE		-] [- 10
	A_B_C		-] [- 13
	ST_SEQ		-] [- 5
	JUM		-] [- 19,23
	HC		-] [- 6
	GRE_JUM		-] [- 5,7,12
%I0089	_MAIN	S912	Push button step down
			-] [- 6,7
	1T0001		-]/[- 89
	GRE_JUM		-] [- 26,37,45
%I0090	SUPPLY	S908	Push button S P A R E
			-]/[- 51
	FFU_MOT		-]/[- 37,41
%I0091	CIP	A414_25	CIP, Temper OK Warm Rinsing-Acid
			-] [- 62,68,69
			-]/[- 62,68,69
%I0094	CIP	S004	Clean steam barrier space switch
			-]/[- 5,6
%I0095	_MAIN	S003	Service switch
			-] [- 23,24,43,52,53,88
			-]/[- 68,86
	MACHLAD		-] [- 12,28
			-]/[- 16,20,26
	TPOPLAD		-] [- 17
			-]/[- 10
	TPOP		-] [- 20
			-]/[- 35
	SUPPLY		-]/[- 39
	FFU_MOT		-] [- 22,25
	ASEPTIC		-]/[- 108,109,110,111,143
	A_B_C		-] [- 19
			-]/[- 19
	ST_SEQ		-] [- 21
	P_FEED		-] [- 12
	LS_SEAL		-] [- 20,24,26
			-]/[- 21,25,27
	RAMPS		-] [- 14,15
			-]/[- 16,17
	LEV_CON		-]/[- 34
	SAFETY2		-]/[- 13,14
	FFU		-]/[- 9
	STERIL		-] [- 29,30,31
			-]/[- 10,21,37
	PEROXID		-]/[- 6,8,9,23,24,29
	HI		-] [- 24,57
			-]/[- 34,39
%I0096	_MAIN	S1003	Push button step down
			-]/[- 6
%I0097	FIL_DCS	B1301	A-valve position sensor
			-] [- 12
%I0098	_MAIN	B1302	B-valve position sensor
			-]/[- 51
	STERIL		-] [- 17
			-]/[- 18

REF.	BLOCK	NICKNAME	REF. DESCRIPTION / CROSS REFERENCES
	CIP_AL		-]/[- 12
	CIP		-] [- 13
%I0099	FIL_DCS	B1303	C-valve position sensor
			-] [- 17
			-]/[- 18
	CIP_AL		-] [- 19
			-]/[- 19
%I0100	_MAIN	B1350	Cup draining pipe in position
			-] [- 56
			-]/[- 52
	MACHLAD		-] [- 46
	CIP_AL		-] [- 9
			-]/[- 9
	CIP		-] [- 11,96
			-]/[- 99
%I0101	_MAIN	B1306	Cleaning pipe sensor
			-]/[- 52
	CIP_AL		-]/[- 5
	CIP		-] [- 10,11
			-]/[- 21
%I0102	_MAIN	B1307	Steril air pipe sensor
			-] [- 52,56
	MACHLAD		-] [- 46
	CIP_AL		-]/[- 6
	CIP		-] [- 10,96
			-]/[- 99
%I0104	ASEPTIC	B1102	Air pressure separator
			-] [- 17
			-]/[- 82
	STERIL		-]/[- 37
%I0105	CIP_AL	B3116	Column ball and cover position
			-]/[- 17
%I0106	STERIL	B1321	Regulating valve position
			-] [- 41
	CIP_AL		-] [- 11
			-]/[- 11
	CIP		-] [- 13
%I0107	FIL_DCS	A305_18	Regulating valve leakage
			-] [- 14
			-]/[- 15
	CIP		-]/[- 11
%I0108	STERIL	B1111	Preheating valve steriliz.pos.
			-] [- 29
			-]/[- 30,31
%I0109	CIP_AL	B7814	Bucket cleaning cup position
			-]/[- 8
	CIP		-] [- 12,16,96
			-]/[- 99
%I0110	P_FEED	B1113	Pendulum roller regulat position
			-] [- 19,20,24,28,30,32,33,36
			-]/[- 13,25,27,29,35
	SST_AL		-] [- 14
			-]/[- 15
%I0111	SUPPLY	B1502	Movable squee-gee roller
			-]/[- 39
	SST_AL		-] [- 10
			-]/[- 9
%I0112	STERIL	B1103	Air pressure aseptic chamber
			-]/[- 10
%I0113	CIP	X218_5	CIP comm. 5 SCU in alarm
			-] [- 43
%I0115	SUPPLY	B2501	Circulation cooling water
			-]/[- 18
	SERVIC1		-] [- 13
			-]/[- 12
%I0116	SUPPLY	B2541	Coooling media pressures
			-]/[- 18
	SERVIC1		-]/[- 16
%I0117	_MAIN	B2102	Cold water pressure
			-] [- 51
	TPOPLAD		-] [- 26,28
	ASEPTIC		-] [- 14,15
	SERVIC1		-] [- 6
			-]/[- 5

REF.	BLOCK	NICKNAME	REF. DESCRIPTION / CROSS REFERENCES
%I0118	TPOPLAD	B2201	Main air supply pressure
			-] [- 26,28
	SUPPLY		-] [- 57
	P_FEED		-] [- 20
	SERVIC1		-] [- 8
			-]/[- 7
	SST_AL		-] [- 9
	HC		-] [- 5
			-]/[- 7
	HI		-] [- 19
%I0119	CIP_AL	B3102	Pumping water guard
			-]/[- 15
%I0120	HC	B3105	Dosing chemical flow counter
			-] [- 101
%I0121	SAFETY2	S005	Em.stop control cabinet inside
			-] [- 24
			-]/[- 20
%I0122	SAFETY2	S1801	Em.stop aseptic module top
			-] [- 24
			-]/[- 19
%I0123	SAFETY1	S1802	Em.stop aseptic chamber
			-]/[- 10
	SAFETY2		-] [- 24
%I0124	SAFETY2	S2803	Em.stop right side cabinet
			-] [- 24
			-]/[- 18
%I0125	SAFETY1	S2804	Emergency stop left side cabinet
			-]/[- 9
	SAFETY2		-] [- 24
%I0126	SAFETY2	SXXXX	Emergency stop DE-Equipment
			-] [- 24
%I0127	SAFETY2	S7813	Emergency stop ASU inside
			-] [- 24
			-]/[- 17
%I0128	SAFETY2	S900	Emergency stop control panel
			-] [- 25
			-]/[- 15
%I0129	SAFETY2	S001	Em.stop control cabinet outside
			-] [- 24
			-]/[- 21
%I0130	SAFETY2	S7812	Emergency stop ASU outside
			-] [- 24
			-]/[- 16
%I0131	SAFETY1	B1507	Bottom door superstructure
			-]/[- 11
	SAFETY2		-] [- 26
%I0132	SAFETY2	DG_SP01	Door guard spare 01
			-] [- 26
%I0133	SAFETY2	B2810	Door guard right side door(10)
			-] [- 26
			-]/[- 5
%I0134	SAFETY2	B2811	Door guard right side door(11)
			-] [- 26
			-]/[- 6
%I0135	SAFETY2	B2812	Door guard right side door(12)
			-] [- 26
			-]/[- 7
%I0136	SAFETY2	DG_SP02	Door guard spare 02
			-] [- 26
%I0137	SAFETY1	B2830	Door guard left side door(30)
			-]/[- 5
	SAFETY2		-] [- 26
%I0138	SAFETY1	B2831	Door guard left side door(31)
			-]/[- 6
	SAFETY2		-] [- 26
%I0139	SAFETY1	B2832	Door guard left side door(32)
			-]/[- 7
	SAFETY2		-] [- 26
%I0140	SAFETY2	DG_SP03	Door guard spare 03
			-] [- 27
%I0141	SAFETY2	B7806	Door guard 22 ASU line 1
			-] [- 28
			-]/[- 9
%I0142	P_FEED	B6209	Internal door SA

```
REF.     BLOCK    NICKNAME   REF. DESCRIPTION / CROSS REFERENCES
-------  -------  --------  -------------------------------------
                            -] [- 20
                            -]/[- 25
         SAFETY2            -] [- 12,28
                            -]/[- 10,11
%I0143   SAFETY2  B1505     Top front door AC
                            -] [- 22
                            -]/[- 13
         STERIL             -] [- 6
                            -]/[- 5
%I0144   SAFETY1  B7807     Door guard 22 ASU line 2
                            -]/[- 8
         SAFETY2            -] [- 28
%I0145   _MAIN    K112_6    Top door closed aseptic chamber
                            -] [- 51
         MACHLAD            -] [- 18
         ASEPTIC            -] [- 27
         P_FEED             -] [- 18,21,24
         SAFETY2            -] [- 13,22
                            -]/[- 14
         STERIL             -] [- 6
                            -]/[- 5
         SST_AL             -] [- 9
%I0146   _MAIN    K114_1    Front doors closed AC
                            -] [- 51
         MACHLAD            -] [- 18
         LADFUNC            -] [- 7
         TPOPLAD            -] [- 28
         ASEPTIC            -] [- 27
         SAFETY2            -]/[- 13,22
         STERIL             -] [- 6
                            -]/[- 5
         CIP                -] [- 11
                            -]/[- 21
         HC                 -] [- 5
                            -]/[- 7
%I0147   ASEPTIC  K115_6    Bottom cover H2O2-bath closed
                            -] [- 46
                            -]/[- 140
         SAFETY1            -] [- 17
                            -]/[- 16
%I0148   SST_AL   B1115     Movable forming ring DOWN
                            -] [- 25
                            -]/[- 24
%I0149   SST_AL   B1116     Movable forming ring UP
                            -] [- 24
                            -]/[- 25
%I0150   MACHLAD  B1508     Bucket cleaning door guard
                            -] [- 46
         SAFETY1            -]/[- 12
         CIP                -] [- 11,16,96
                            -]/[- 99,105
%I0151   ASEPTIC  B1405     Monitor bending roller
                            -] [- 123,124
%I0152   ASU_AL   A411_19   Failure drive strip motor ASU
                            -]/[- 41
%I0153   _MAIN    B4102     Crank guard JUM
                            -]/[- 51
         MMOTOR             -]/[- 25,28
         STRIPSP            -] [- 44
         STRSEL             -] [- 6
         SAFETY1            -] [- 20
                            -]/[- 21
         JUM                -] [- 32
%I0154   JUM      B4202     Home position sensor DCS
                            -]/[- 28
%I0156   STERIL   B1241     Butterfly valve open
                            -]/[- 34
%I0157   STERIL   B1242     Butterfly valve closed
                            -]/[- 34
%I0158   STERIL   B1112     Preheating valve in bypass pos.
                            -] [- 30
                            -]/[- 29,31
%I0159   CIP_AL   B1330     Bucket cleaning pipe sensor
                            -]/[- 8
```

REF.	BLOCK	NICKNAME	REF. DESCRIPTION / CROSS REFERENCES
	CIP		-] [- 12,96
%I0160	_MAIN	CIP_BYP	CIP done condition, By-pass
			-] [- 55
	TPOP		-] [- 36
	CIP		-] [- 97
			-]/[- 47
%I0162	FFU_MOT	G5430K1	Belt brake inverter fault
			-] [- 43
			-]/[- 45
%I0166	FFU	B54123	Congestion guard outfeed photoc.
			-] [- 26
			-]/[- 26
%I0167	SUPPLY	B54102	Congestion guard ext.conveyor
			-] [- 31
	FFU		-] [- 25
			-]/[- 25,29
%I0168	FFU	B54121	Que guard after machine
			-] [- 18
			-]/[- 19
%I0169	ASU	S7402	Push button manual start ASU
			-] [- 28,30
%I0170	STRIPSP	S6206	Push button manual start ASSU
			-] [- 30,31
%I0171	_MAIN	S7701	Push button step down
			-]/[- 6
%I0172	ASU	S7303	Push button material lock
			-] [- 10,11
%I0173	ASU_AL	B6203	SA pressure roller
			-] [- 56,57
			-]/[- 54
%I0174	STRIPSP	B6201	Strip bobbin 1 empty
			-] [- 8,29,30,31
			-]/[- 7
%I0175	STRIPSP	B6202	Strip bobbin 2 empty
			-] [- 8,29,30,31
			-]/[- 7
%I0176	SA_UNIT	B6208	Rotation monitoring SA
			-] [- 19,20
%I0177	ASU_AL	B6107	Rotation guard SA
			-] [- 48,49
%I0178	ASU_MOT	B72232	Magazine down
			-] [- 26,39,50,71,72,86,91
			-]/[- 67,87,90,98
	ASU_AL		-]/[- 60
%I0179	STRIPSP	B6204	Strip splice prepared
			-]/[- 8,30,31
	SA_UNIT		-] [- 10
	STRIPOK		-] [- 7,15
			-]/[- 5,14
%I0180	ASU_MOT	B72234	Magazine empty
			-] [- 68
	ASU_AL		-] [- 24
%I0181	ASU	B7411	Material holder 1 down
			-] [- 27
	PAPERSP		-] [- 25
	ASU_AL		-] [- 19
			-]/[- 17,18,19
%I0182	ASU	B7414	Material holder 2 down
			-] [- 27
	PAPERSP		-] [- 25
	ASU_AL		-] [- 19
			-]/[- 17,18,19
%I0183	ASU	B7412	Side feeder position 1
			-] [- 14,15,22,23,27,30,32
			-]/[- 25
	ASU_MOT		-] [- 19
	PAPERSP		-] [- 25,30,40
			-]/[- 28
	ASU_AL		-] [- 18,60
			-]/[- 20
	BRAKES		-] [- 14
%I0184	ASU	B7512	Side feeder position 2
			-] [- 12,13,24,25,27,30,32
			-]/[- 23

REF.	BLOCK	NICKNAME	REF. DESCRIPTION / CROSS REFERENCES
	ASU_MOT		-] [- 19
	PAPERSP		-] [- 25,30,40
			-]/[- 27
	ASU_AL		-] [- 18,60
			-]/[- 20
	BRAKES		-] [- 14
%I0185	_MAIN	B72112	Adjustment loop photocell
			-]/[- 52
	ASU_MOT		-] [- 23,44,46,49,50,53
			-]/[- 13,14,16,22,43,47,52,54,58
%I0186	ASU	B7401	Material reel 1 empty
			-] [- 30
			-]/[- 32
	ASU_AL		-] [- 19
			-]/[- 18,60
	BRAKES		-] [- 14
%I0187	ASU	B7501	Material reel 2 epmty
			-] [- 30
			-]/[- 32
	ASU_AL		-] [- 19
			-]/[- 18,60
	BRAKES		-] [- 14
%I0188	_MAIN	B7801	Door guard strip applicator (17)
			-] [- 51
	STRIPSP		-] [- 8,24,30
			-]/[- 31
	WASTE		-] [- 16
	SAFETY2		-]/[- 8
	SA_UNIT		-] [- 8,13
			-]/[- 11,12
%I0189	SUPPLY	REC_FLT	Recorder fault
			-] [- 46
	SERVIC1		-]/[- 29
	CIP		-] [- 119
%I0191	ASU_MOT	B72102	Loop empty
			-] [- 97
			-]/[- 78
	ASU_AL		-] [- 45
			-]/[- 60
%I0192	ASU	S7403	ASU, cutting tablemove button
			-] [- 26
%I0193	_MAIN	SV_250B	Setting volume 250B
			-] [- 59
	1T0001		-] [- 39,57,58,87,88
%I0194	_MAIN	SV_250S	Setting volume 250S
			-] [- 63
	1T0001		-] [- 39,57,58,87,88
%I0195	_MAIN	SV_200B	Setting volume 200B
			-] [- 60
	1T0001		-] [- 39,57,58,87,88
%I0196	_MAIN	SV_200M	Setting volume 200M
			-] [- 61
	1T0001		-] [- 39,57,58,87,88
%I0197	_MAIN	SV_200S	Setting volume 200S
			-] [- 62
	1T0001		-] [- 39,57,58,87,88
%I0198	_MAIN	SV_300S	Setting volume 300S
			-] [- 64
	1T0001		-] [- 39,57,58,87,88
%I0209	TPOP	FLOATER	Option for level with floater
			FBIO 7
	S__250B		-] [- 49,50,51,56,57,58,65
			-]/[- 52,53,54,59,60,61,66
	S__200B		-] [- 49,50,51,56,57,58,65
			-]/[- 52,53,54,59,60,61,66
	S__200M		-] [- 49,50,51,56,57,58,65
			-]/[- 52,53,54,59,60,61,66
	S__200S		-] [- 49,50,51,56,57,58,65
			-]/[- 52,53,54,59,60,61,66
	S__250S		-] [- 49,50,51,56,57,58,65
			-]/[- 52,53,54,59,60,61,66
	S__300S		-] [- 49,50,51,56,57,58,65
			-]/[- 52,53,54,59,60,61,66
%I0211	SUPPLY	JUMOREC	Option Jumo recorder

REF.	BLOCK	NICKNAME	REF. DESCRIPTION / CROSS REFERENCES
			-] [- 42,43,45,47
			-]/[- 42
	SERVIC1		-] [- 29
	CIP		-] [- 117,118
%I0212	_MAIN	BEKAGRE	Option BEKA Greasing KIT
			-] [- 101
	TPOP		-]/[- 101,102,103
	JUM		-] [- 67,69,70,74,85
	GRE_FFU		-] [- 15
			-]/[- 15
%I0216	_MAIN	A124_09	HI Option
			-] [- 103
			-]/[- 44,47,54
	ST_SEQ		-]/[- 25
	TEMPREG		-] [- 101,104
	SERVIC1		-] [- 23
	CIP_AL		-] [- 21,22,23,26,27,28
	CIP		-] [- 99
			-]/[- 12,97
	HI		-] [- 13
			-]/[- 55,58,59
%I0241	IH_MON	A421_25	TMCC SM LS-SA Error Bit 0
			FBIO 9
%I0249	IH_MON	A421_29	TMCC SM LS-SA Strobe impulse
			-]/[- 9,12,14,17,20,23,26,29,32,35,38,41,44,47,50,53,56,59
%I0250	IH_MON	A422_29	TMCC SM TS Strobe impulse
			-]/[- 9,10,11,15,64,69,72,75,78,81,86,89,92,95,98,101,104
%I0251	WASTE	B101_SU	Photocell sampling chute 1
			-] [- 62
			-]/[- 61
%I0252	WASTE	B102_SU	Photocell sampling chute 2
			-] [- 67
%I0253	WASTE	B103_SU	Sampling chutes occupied
			-]/[- 53
%I0257	_MAIN	B4125	Greasing level sensor empty
			-] [- 101
	JUM		-] [- 79,81
			-]/[- 78,79
%I0258	GRE_FFU	B4126	FFU greasing sensor
			-] [- 9,10
%I0259	JUM	B4127	Cutting cam greasing sensor
			-] [- 83,84
%I0260	JUM	B4128	Cylinder 1 start position
			-] [- 63
%I0261	JUM	B4129	Cylinder 1 end position
			-] [- 62
%I0262	JUM	B4131	Cylinder 2 start position
			-] [- 63
%I0263	JUM	B4132	Cylinder 2 end position
			-] [- 62
%I0264	JUM	B4134	Cylinder 3 start position
			-] [- 63
%I0265	JUM	B4135	Cylinder 3 end position
			-] [- 62
%I0266	JUM	B4137	Cylinder 4 start position
			-] [- 63
%I0267	JUM	B4138	Cylinder 4 end position
			-] [- 62
%I0273	_MAIN	A420_28	TMCC FCS transmission OK
			-] [- 57
	LEV_CON		-]/[- 16,22
%I0274	LEV_CON	A420_25	TMCC FCS high level alarm
			-] [- 53
%I0275	A_B_C	A420_26	TMCC FCS low level alarm
			-]/[- 8
	LEV_CON		-]/[- 38
%I0280	JUM	B4141	Greasing tank full
			-] [- 80
	GRE_FFU		-]/[- 14
%I0281	PEROXID	A309_18	HI, Level peroxide tank
			-] [- 34,37
			-]/[- 35,36
%I0282	FIL_DCS	B9104	HI, Pressure guard
			-] [- 34

REF.	BLOCK	NICKNAME	REF. DESCRIPTION / CROSS REFERENCES
	SERVIC1		-]/[- 25,26
%I0283	FIL_DCS	B9107	HI, Product pipe position
			-] [- 37,41
			-]/[- 37
	CIP_AL		-] [- 22,24,26,27,28
			-]/[- 22,23,27
	HI		-] [- 66
%I0284	FIL_DCS	B9108	HI, Spray nozzle pipe position
			-] [- 40
			-]/[- 39
	CIP_AL		-]/[- 28
	HI		-] [- 43
			-]/[- 63,67
%I0285	CIP_AL	B9109	HI, Cleaning configuration
			-] [- 22
			-]/[- 22
	HI		-] [- 42
%I0286	FIL_DCS	B9110	HI, Production configuration
			-] [- 42
			-]/[- 41
	HI		-]/[- 42
%I0287	CIP_AL	B9111	HI, Cleaning circuit cup
			-]/[- 23
%I0421	ASEPTIC	H2O2FLT	H2O2 meter fault
			-] [- 165
%I0423	ST_SEQ	A111_08	Product line sterile
			-]/[- 29
	FIL_DCS		-] [- 23,29
			-]/[- 22,24,26
%I0424	CIP	A111_09	Product line not sterile
			-] [- 5
			-]/[- 6
%I1001	SERVIC1	BROKWM1	Broken wire Mon1 (Heat Ster)
			-] [- 21
%I1002	PWM	BROKWM2	Broken wire Mon2 (H2O2 bath)
			-]/[- 8
	SERVIC1		-] [- 21
%I1003	SERVIC1	BROKWM3	Broken wire Mon3 (Water bath)
			-] [- 21
%I1004	ASEPTIC	BROK_W1	Broken wire loop 1(Water bath)
			-] [- 149
	PWM		-]/[- 8
	SERVIC1		-] [- 21
%I1005	SERVIC1	BROKWM4	Broken wire Mon4 (Top AC)
			-] [- 21
%I1006	PWM	BROKWM5	Broken wire Mon5 (Bottom AC)
			-]/[- 37
	SERVIC1		-] [- 21
%I1007	SERVIC1	BROKWM6	Broken wire Mon6 (Cool water)
			-] [- 21
%I1008	SERVIC1	BROKWM7	Broken wire Mon7 (El cabinet)
			-] [- 21
%I1017	PWM	BROK_W2	Broken wire loop 2 (FFU T.L)
			-]/[- 15
	SERVIC1		-] [- 22
%I1018	PWM	BROK_W3	Broken wire loop 3 (FFU T.R)
			-]/[- 19
	SERVIC1		-] [- 22
%I1019	PWM	BROK_W4	Broken wire loop 4 (FFU B.L)
			-]/[- 23
	SERVIC1		-] [- 22
%I1020	PWM	BROK_W5	Broken wire loop 5 (FFU B.R)
			-]/[- 27
	SERVIC1		-] [- 22
%I1021	SERVIC1	BROKWM8	Broken wire Mon8 (Steam C)
			-] [- 22
%I1022	PWM	BROK_W6	Broken wire loop 6 (Air super)
			-]/[- 32
	SERVIC1		-] [- 22
%I1024	TEMPREG	BW_7304	Broken wire ASU Const. Heat bar
			-]/[- 115
	PWM		-]/[- 49
	SERVIC1		-] [- 22
%I1145	SERVIC1	BROKWM9	Broken wire Mon9 (HIspray-B9106)

```
REF.     BLOCK    NICKNAME   REF. DESCRIPTION / CROSS REFERENCES
-------  -------  --------  -------------------------------------
                            -] [- 23
         PEROXID            -]/[- 40
         CIP_AL             -]/[- 24
%I1146   PWM      BROK_W8   Broken wire loop 8 (HI Ster.Air)
                            -]/[- 43
         SERVIC1            -] [- 23
%I1147   PWM      BROKW10   Broken wire Mon10 (HIheat-B9116)
                            -]/[- 43
         SERVIC1            -] [- 23
         PEROXID            -]/[- 46
```

========= OUTPUT (%Q) GLOBAL CROSS REFERENCES

```
REF.     BLOCK    NICKNAME   REF. DESCRIPTION / CROSS REFERENCES
-------  -------  --------  -------------------------------------
%Q0001   1T0001   A412_7    DC-brake drive loop motor
                            FBIO  90
%Q0002   1T0001   A508_16   Start positioning DCS
                            -( )  25
%Q0003   1T0001   A508_11   Jaw inmovement ready
                            -( )  28
%Q0004   1T0001   A502304   TS Sealing pulse
                            -] [- 41,42
                            -( )  42
%Q0005   1T0001   A504_08   Side selection TS
                            -( )  43
%Q0006   1T0001   A424_28   Direction motor volume adjust
                            -( )  46
%Q0007   1T0001   A424_31   Pulse clock motor volume adjust
                            -( )  55
%Q0008   TPOP     Y5501     Waste box FFU
                            -]/[- 96,107,109,117,123
         SUPPLY             -]/[- 51
         FFU                -] [- 28
         1T0001             -] [- 59
                            -( )  59
%Q0009   1T0001   ST_POS    Start positioning Greasing
                            -] [- 87,88,89
                            -( )  89
         GRE_JUM            -] [- 31
%Q0016   1T0001             FBIO  90
%Q0017   CIP_AL   K003      Cleaning pump external cleaning
                            -] [- 15
                            -]/[- 16
         HC                 -( )  97
%Q0018   SUPPLY   K009      Transport of waste
                            -] [- 52
                            -( )  51
%Q0019   HC       Y3101     Hot water supply
                            -( )  96
%Q0021   WASTE    K1101     Start pulse for sampling station
                            -( )  51
%Q0025   SUPPLY   Y2201     Air treatment
                            -( )  7
%Q0026   ASEPTIC  K002      Hydrogen peroxide pump
                            -] [- 33,40,46,144
                            -( )  46
%Q0027   FFU_MOT  K010      External conveyor
                            -] [- 34,38,47
                            -( )  37
%Q0028   STRIPSP  K005      Power inverter strip bobbin
                            -( )  5
%Q0029   P_FEED   K007      Drive roller
                            -] [- 7
                            -( )  6
%Q0030   ASU      K008      ASU, Drive loop
                            -] [- 30,32
         ASU_MOT            -] [- 10
                            -(S)  6
                            -(R)  8
%Q0031   ASU_MOT  K036      ASU, Drive magazine
                            -] [- 10
                            -(S)  5
```

REF.	BLOCK	NICKNAME	REF. DESCRIPTION / CROSS REFERENCES
			-(R) 7
%Q0032	TEMPREG	K014	ASU, Power Constant Heat
			-] [- 116
	ASU		-( ) 4
%Q0033	ASEPTIC	K001	Water pump
			-( ) 40
%Q0034	MMOTOR	K004	Contactor main motor
			-] [- 13
			-]/[- 18
			-(S) 11
			-(R) 12
	GRE_JUM		-] [- 14,38
			-]/[- 16
			-(S) 7
			-(R) 15
%Q0035	FFU_MOT	K006	Contactor FFU motor
			-] [- 11
			-]/[- 20
			-(S) 10
			-(R) 19
%Q0036	SUPPLY	K011	Compressor cooling el-cabinet
			-(S) 11
			-(R) 12,13
%Q0037	ASEPTIC	K020	Air system compressor
			-] [- 17
			-(S) 14,15
			-(R) 16
	STERIL		-] [- 37
	CIP		-]/[- 110
%Q0038	SUPPLY	K022	Circulation cooling water
			-] [- 17
			-( ) 16
%Q0039	SUPPLY	K023	Circulation cooling media
			-(S) 17
			-(R) 18,19
%Q0040	SUPPLY	K024	DC-bus servo motors
			-] [- 6
			-( ) 5
	GRE_JUM		-] [- 13
			-(S) 12
			-(R) 11
%Q0041	SUPPLY	K025	Delayed DC-bus servo motors
			-( ) 6
	JUM		-] [- 42,44
	FFU		-] [- 5
	GRE_JUM		-( ) 13
%Q0042	ASEPTIC	K026	Heating water in bath 1
			-( ) 40
%Q0043	ASEPTIC	K027	Heating water in bath 2
			-( ) 40
%Q0044	ASEPTIC	K028	Air super heater
			-( ) 17
	CIP		-]/[- 110
%Q0045	SUPPLY	K029	Power TPIH LS
			-( ) 8
%Q0046	SUPPLY	K030	Power TPIH TS
			-( ) 8
%Q0047	STRIPSP	K031	Heating ASSU
			-( ) 38
%Q0048	STRIPSP	K032	Power TPOP bar
			-( ) 5
	SA_UNIT		-] [- 5
%Q0049	SUPPLY	K033	FFU flap heating
			-] [- 56
			-( ) 57
	TEMPREG		-] [- 34,43,52,61
	PWM		-] [- 15,19,23,27
%Q0050	SERVIC1	K100	CIP recorder
			-] [- 29
	CIP		-] [- 118,120
			-]/[- 117
			-( ) 116
%Q0051	SUPPLY	K101	Sterile parameters
			-] [- 47

REF.	BLOCK	NICKNAME	REF. DESCRIPTION / CROSS REFERENCES
			-( ) 42
%Q0052	SUPPLY	K102	Operational parameters
			-( ) 39
%Q0053	SUPPLY	K104	Filling
			-( ) 36
%Q0054	FFU_MOT	K016	Belt brake inverter supplies
			-] [- 44
			-( ) 47
%Q0055	TPOP	K107	Lighting machine
			-( ) 43
%Q0056	SUPPLY	K108	Fan electrical cabinet
			-( ) 10
%Q0058	LADFUNC	K118	Alarm reset relay
			-] [- 45
			-( ) 47
%Q0059	MMOTOR	K120	Software enable main motor
			-( ) 13
	JUM		-]/[- 42
	GRE_JUM		-] [- 19
			-( ) 14
%Q0060	TPOP	K121	Restart TPOP
			-] [- 73
			-( ) 9
%Q0061	SUPPLY	K126	Production recorder
			-] [- 40,41,45,47
			-]/[- 41,44
			-( ) 37
	SERVIC1		-] [- 29
%Q0062	DCS	A418_20	Enable TMCC DCS
			-( ) 5
%Q0063	LS_SEAL	A501_8	Start TPIH LS
			-( ) 9
%Q0064	STRIPSP	A7417_8	Sealing pulse SA
			-] [- 47
			-( ) 45
%Q0065	FFU_MOT	A507_10	Wait main DMC
			-( ) 6
%Q0066	VOL_CAM	A424_27	Enable motor volume adjustment
			-( ) 10
%Q0067	TUBEPOS	A425_28	Direction motor tube positioning
			-( ) 13
%Q0068	TUBEPOS	A425_31	Pulse clock motor tube position
			-( ) 22
%Q0069	TUBEPOS	A425_27	Enable motor tube positioning
			-( ) 11
%Q0070	CIP	K1001	CIP communication output 1
			-( ) 94
%Q0072	A_B_C	K1003	Machine ready for production
			-( ) 15
%Q0073	SUPPLY	P101	Total package counter
			-] [- 32
			-( ) 31
%Q0074	SUPPLY	P100	Total hours counter
			-( ) 29
%Q0075	ASEPTIC	K140	H2O2 concentration/temp. switch
			-] [- 147
			-]/[- 152
			-( ) 146
%Q0076	SUPPLY	H7703	Hooter
			-( ) 27
	GRE_JUM		-( ) 5
%Q0077	TPOP	H2802_1	Alarm beacom (Blue)
			-( ) 65
%Q0078	TPOP	H2802_2	Alarm beacom (Yellow)
			-( ) 66
%Q0079	TPOP	H2802_3	Alarm beacom (Red)
			-( ) 67
%Q0081	FFU_MOT	A415_5	Enable external conveyor
			-] [- 38,47,48
			-( ) 38
	WASTE		-] [- 57
	FFU		-] [- 18
	PLMSLA4		-] [- 206
			-]/[- 207

REF.	BLOCK	NICKNAME	REF. DESCRIPTION / CROSS REFERENCES
%Q0083	P_FEED	A410_5	Enable drive roller
			-( ) 20
	STRIPSP		-] [- 45
	ASU_AL		-] [- 51
%Q0084	ASU	A412_5	Enable drive loop
			-] [- 23,25
	ASU_MOT		-] [- 71
			-]/[- 35,37
			-( ) 20
	ASU_AL		-] [- 7,8
%Q0085	ASU	A413_5	Enable drive magazine
			-] [- 9
	ASU_MOT		-] [- 14,71
			-]/[- 13,81,82
			-( ) 79
	ASU_AL		-] [- 26
%Q0086	DCS	A418_22	TMCC DCS enable
			-]/[- 37
			-( ) 41
%Q0087	DCS	A418_23	TMCC DCS clock
			-] [- 44,45
			-(S) 45
			-(R) 38,44
%Q0088	DCS	A418_24	TMCC DCS data
			-(S) 47
			-(R) 38,46
%Q0089	HI	Y9105	HI, Injection
			-] [- 24
			-]/[- 20,51
			-( ) 43
%Q0090	FIL_DCS	Y9106	HI, Switch air in aseptic chamb.
			-]/[- 35,43
	SERVIC1		-]/[- 25
	HI		-] [- 21,22
			-]/[- 19
			-( ) 52
%Q0105	ASEPTIC	Y1303	C-valve open
			-] [- 132
	A_B_C		-(S) 20
			-(R) 19
	FIL_DCS		-] [- 17,18
			-]/[- 17,18,27
	CUSTOM		-] [- 16
			-]/[- 19
%Q0107	LS_SEAL	Y1401	Movable lower forming ring
			-(S) 5
			-(R) 6,7
%Q0108	ASEPTIC	Y1405	Bending roller valve
			-( ) 117
			-(S) 118,119,120,121
%Q0110	ASEPTIC	Y1111	Preheating valve
			-( ) 79
	STERIL		-] [- 31
			-]/[- 30,31
%Q0111	A_B_C	Y1241	Butterfly valve
			-( ) 27
	STERIL		-] [- 34
			-]/[- 34
%Q0112	ASEPTIC	Y1108	Heat exchanger valve step 2
			-] [- 84
			-( ) 96
%Q0113	ASEPTIC	Y1280	Steam trap valve
			-(S) 135,136
			-(R) 134
%Q0114	ASEPTIC	Y1281	TCSB valve
			-] [- 110,111,133
			-]/[- 108,109
			-( ) 105
	DEF_PAR		-] [- 47
			-]/[- 48
%Q0115	STRIPSP	G5_6	SA, reverse enable strip motors
			-] [- 11,25,26
			-( ) 15
%Q0116	P_FEED	Y1501	Feed packaging material

REF.	BLOCK	NICKNAME	REF. DESCRIPTION / CROSS REFERENCES
			-] [- 24
			-( ) 6
%Q0117	P_FEED	Y1502	Movable squee-gee rollers
			-( ) 18
	JUM		-]/[- 53,54,55
	SST_AL		-] [- 9
			-]/[- 10
%Q0118	_MAIN	Y1301	A-valve
			-] [- 86
	A_B_C		-] [- 11
			-(S) 6,7
			-(R) 8,9
	LEV_CON		-] [- 44
			-]/[- 45
	FIL_DCS		-] [- 12
			-]/[- 11,12
	CIP		-] [- 92
	HI		-] [- 40,42,61,62
%Q0119	A_B_C	Y1302	B-valve
			-( ) 17
	STERIL		-] [- 17
			-]/[- 18
%Q0121	ASEPTIC	Y1114_4	Preheating valve step 1
			-]/[- 81
			-( ) 82
	STERIL		-] [- 29,30,31
			-]/[- 29,30,31
%Q0122	ASEPTIC	Y1114_2	Preheating valve step 2
			-( ) 81
%Q0123	ASEPTIC	Y1107	Heat exchanger valve Step 1
			-( ) 97
%Q0124	_MAIN	Y1325	Cleaning cup draining
			-] [- 51
	LEV_CON		-] [- 33,35
	CIP		-(/) 105
%Q0125	CIP_AL	Y3116	Column cleaning ball/lid
			-] [- 17
			-]/[- 18
	HC		-( ) 37
%Q0126	STRIPSP	G5_5	SA, forward enable strip motors
			-] [- 25
			-( ) 15
%Q0129	HC	Y3109	Foaming / Drain(air) valve
			-( ) 98
%Q0130	HC	Y3103	Warm rinsing valve
			-] [- 92,94
			-( ) 95
%Q0131	HC	Y3110	Column cleaning valve
			-] [- 92,94
			-( ) 90
%Q0132	HC	Y3111	JAW system cleaning valve
			-( ) 92
%Q0133	HC	Y3112	FFU cleaning valve
			-( ) 94
%Q0134	HC	Y3105	Dosing chemical/tube flushing
			-] [- 101
			-( ) 102
%Q0137	PWM	K213	TPO bar pulse
			-( ) 49
%Q0138	ASEPTIC	Y1104	Seal water
			-(S) 13,15
			-(R) 16
%Q0139	ASEPTIC	Y1105	Cooling water bath
			-( ) 36
%Q0140	ASEPTIC	Y1230	Filling spray tank
			-( ) 50
%Q0141	ASEPTIC	Y1231	Spraying
			-( ) 52
%Q0142	ASEPTIC	K012	Peroxide tank heater 1
			-( ) 33
%Q0143	ASEPTIC	K013	Peroxide tank heater 2
			-( ) 33
%Q0144	ASEPTIC	K015	Water pump H2O2 heat exchanger
			-( ) 34

REF.	BLOCK	NICKNAME	REF. DESCRIPTION / CROSS REFERENCES
%Q0145	STRIPSP	Y6201	Strip inductor cooling
			-( ) 48
%Q0146	STRIPSP	K7000	SA Bobbin 1 running
			-] [- 7,8,12,30,31
			-( ) 12
%Q0147	ASU	Y7414	Cutting table movement 1
			-] [- 27
			-]/[- 27
			-(S) 27
			-(R) 27
%Q0148	ASU	Y7415	Cutting table movement 2
			-] [- 27
			-]/[- 27
			-(S) 27
			-(R) 27
%Q0149	STRIPSP	Y6203	Moving of the splice head
			-( ) 37
%Q0150	STRIPSP	Y6205	Cool strip seal (Blow air)
			-( ) 39
%Q0151	ASU	Y7303	Lock cylinder 1
			-] [- 12
			-]/[- 13
			-(S) 22
			-(R) 23
%Q0152	ASU	Y7315	Lock cylinder 2
			-] [- 14
			-]/[- 15
			-(S) 24
			-(R) 25
%Q0153	PAPERSP	Y7407	Web tension
			-(S) 15
			-(R) 16
%Q0154	PAPERSP	Y7408	Pressure rail
			-( ) 40
%Q0155	ASU	Y7410	Cutting
			-] [- 22,24
	PAPERSP		-( ) 22
%Q0156	ASU	Y7425	Ventilating valve
			-( ) 5
%Q0157	PAPERSP	Y7412	Side feeder 1 to 2
			-( ) 27
%Q0158	PAPERSP	Y7413	Side feeder 2 to 1
			-( ) 28
%Q0159	BRAKES	Y7420	ASU, Reel brake line 1
			-( ) 14
%Q0160	BRAKES	Y7421	ASU, Reel brake line 2
			-( ) 14
%Q0161	ASEPTIC	Y1210	Filling H2O2 tank
			-] [- 139
			-( ) 75
%Q0162	SUPPLY	Y2106	Tube flusher
			-( ) 59
%Q0166	SUPPLY	Y2108	Flushing FFU
			-( ) 61
%Q0168	STRIPSP	K7001	SA Bobbin 2 running
			-] [- 7,8,12,30,31
			-(/) 12
%Q0170	SUPPLY	Y2104	Air tube flushing/conveyor
			-( ) 63
%Q0172	SUPPLY	Y5504	Outfeed of waste in front
			-( ) 52
%Q0176	ASEPTIC	Y1220	Filling peroxide bath
			-] [- 144
			-( ) 42
%Q0177	ASEPTIC	Y1221	Draining peroxide bath
			-( ) 45
%Q0178	MMOTOR	Y5306	Blowing waste box
			-( ) 22
%Q0179	SUPPLY	Y4200	Flap heating bottom left
			-]/[- 57
			-(/) 56
%Q0180	SUPPLY	Y4210	Flap heating bottom right
			-(/) 56
%Q0181	SUPPLY	Y4220	Flap heating top right

REF.	BLOCK	NICKNAME	REF. DESCRIPTION / CROSS REFERENCES
			-(/) 56
%Q0182	SUPPLY	Y4230	Flap heating top left
			-(/) 56
%Q0183	CUSTOM	Y2109	Valve TS flushing
			-]/[- 14
			-( ) 13
%Q0184	FFU_MOT	G5430R	Enable belt brake
			-] [- 44
			-( ) 48
%Q0185	FFU_MOT	A507_13	High speed inching FFU
			-] [- 28
			-( ) 28
	FFU		-] [- 5
%Q0186	FFU_MOT	A507_14	Low speed inching FFU
			-] [- 29
			-( ) 29
	FFU		-] [- 5
%Q0187	FFU_MOT	A507_15	Software enable FFU
			-( ) 12
	JUM		-]/[- 42
%Q0191	FFU_MOT	A507_11	Find home position FFU
			-] [- 32,38
			-( ) 31
%Q0192	FFU_MOT	A507_12	Synchrounous drive FFU
			-( ) 32
	FFU		-] [- 5
%Q0193	PWM	K211	Flap heating bottom right
			-( ) 27
%Q0194	PWM	K208	Flap heating top left
			-( ) 15
%Q0195	PWM	K209	Flap heating top right
			-( ) 19
%Q0196	PWM	K210	Flap heating bottom left
			-( ) 23
%Q0198	PWM	K206	Peroxide tank heaters
			-( ) 37
%Q0199	PWM	K200	Air super heater
			-( ) 32
%Q0200	PWM	K202	Heating water
			-( ) 9
%Q0201	_MAIN	A506_14	DMC Main Motor High speed
			-] [- 25
	TPOP		-] [- 90
	MMOTOR		-] [- 6,8
			-( ) 23
	ASEPTIC		-] [- 126,127,128
	P_FEED		-] [- 34
	RAMPS		-] [- 7,11
	ASU		-] [- 7
	STRIPSP		-]/[- 7
	STRSEL		-] [- 15
	WASTE		-] [- 8
	JUM		-] [- 44
	FIL_DCS		-] [- 5,6
	SST_AL		-] [- 28,29
	ASU_AL		-] [- 5,58
	BRAKES		-] [- 10
%Q0202	TPOP	A506_13	DMC Main Motor Low speed
			-] [- 90
	MMOTOR		-] [- 6,8
			-( ) 22
	ASEPTIC		-] [- 127,128
	P_FEED		-] [- 20,27,28
	LS_SEAL		-] [- 12,13
	RAMPS		-] [- 7,10
	ASU		-] [- 6
	STRIPSP		-]/[- 7
	STRSEL		-] [- 9,17
	WASTE		-] [- 8
	JUM		-] [- 44
	FIL_DCS		-] [- 7
	SST_AL		-] [- 28,29
	ASU_AL		-] [- 6,52
	BRAKES		-] [- 10

REF.	BLOCK	NICKNAME	REF. DESCRIPTION / CROSS REFERENCES
%Q0203	1T0001	A506_12	DMC Main Motor Greasing cycle
			-]/[- 89
	GRE_JUM		-] [- 24
			-(S) 20
			-(R) 21,25,26
%Q0208	DCS	A508_15	DMC DCS software enable
			-] [- 8
			-( ) 7
%Q0209	DCS	A508_6	DMC DCS hardware enable
			-] [- 7
			-( ) 6
	JUM		-]/[- 29
	1T0001		-] [- 26
%Q0215	DCS	A508_13	DMC DCS precorrection 2
			-( ) 13
%Q0216	DCS	A508_14	DMC DCS precorrection 1
			-] [- 13
			-(S) 10,11
			-(R) 12
	JUM		-]/[- 27
%Q0217	_MAIN	H901	Symbol TPOP reset
			FBIO 97
	TPOP		-( ) 75
%Q0218	FFU_MOT	H905	Symbol inching FFU
			-( ) 22
%Q0219	MMOTOR	H907	Symbol inching JUM
			-( ) 28
%Q0220	_MAIN	H908	Symbol S P A R E
			-( ) 96
%Q0223	LADFUNC	H911	Symbol step up
			-( ) 7
%Q0224	LADFUNC	H912	Symbol step down
			-( ) 8
%Q0235	LEV_CON	A520_14	TMCC FCS Enable
			-]/[- 19
			-( ) 23
%Q0236	LEV_CON	A520_15	TMCC FCS Clock
			-] [- 26,27
			-(S) 27
			-(R) 21,26
%Q0237	LEV_CON	A520_16	TMCC FCS Data
			-(S) 29
			-(R) 21,28
%Q0238	LEV_CON	A520_12	TMCC FCS Prefilling
			-(S) 37
			-(R) 33,38
	STERIL		-] [- 40
%Q0239	LEV_CON	A520_10	TMCC FCS Production
			-(S) 44,47
			-(R) 33,45,67
	STERIL		-] [- 40
%Q0240	LEV_CON	A520_11	TMCC FCS Cleaning
			-( ) 40
	STERIL		-] [- 40
%Q0241	IH_MON	A421_13	Enable sealing monitoring
			-] [- 9
			-( ) 5
%Q0242	IH_MON	A421_17	Motor run sealing monitoring
			-( ) 6
%Q0243	IH_MON	A421_14	Production for sealing monitorin
			-( ) 7
%Q0244	LEV_CON	A420_09	TMCC FCS sterilisation
			-(S) 34
			-(R) 35
	STERIL		-] [- 40
%Q0245	A_B_C	K1006	Product valve open
			-( ) 11
%Q0246	LEV_CON	A420_13	TMCC FCS forced download param.
			-] [- 18,22
			-(S) 17
			-(R) 16
%Q0247	LADFUNC	A600S14	Emergency stop chain OK
			-] [- 39
	SAFETY2		-( ) 25

```
REF.     BLOCK    NICKNAME   REF. DESCRIPTION / CROSS REFERENCES
-------  -------  --------  -------------------------------------
%Q0248   LADFUNC  A601S14   Doors chain OK
                            -] [- 39
         SAFETY2           -( )  27
%Q0249   GRE_FFU  K122      Enable greasing pump
                            -(S)  8
                            -(R)  12
         GRE_JUM           -(S)  10,41
                            -(R)  42,44,45
%Q0250   GRE_FFU  Y4263     FFU grease line
                            -( )  8
%Q0251   _MAIN    Y4264     Cutting cam grease line
                            -] [- 101
         JUM               -] [- 85
         GRE_JUM           -] [- 42
                            -(S)  41
                            -(R)  42,44
%Q0252   GRE_JUM  Y4265     Cylinders JUM grease line
                            -( )  8
%Q0253   JUM      Y4260     Greasing cylinders
                            -] [- 64
                            -]/[- 66
         GRE_JUM           -(S)  33
                            -(R)  35
%Q0254   GRE_FFU  Y4262_B   Refilling greasing tank BEKA
                            -( )  15
%Q0255   GRE_FFU  Y4262_D   Refilling greasing tank DROPSA
                            -( )  15
%Q0257   WASTE    Y101_SU   Valve sampling chute 1
                            -]/[- 61
                            -( )  64
%Q0258   WASTE    Y102_SU   Valve sampling chute 2
                            -]/[- 61
                            -( )  69
%Q0262   SUPPLY   PRC_PRT   Process recorder text print
                            -( )  43
%Q0263   CIP      CIP_PRT   CIP recorder text print
                            -( )  120
%Q0264   SAFETY2  A602S14   Doors chain ASU OK
                            -( )  28
%Q0266   HI       K910      HI, Air heater power
                            -( )  34
%Q0267   PWM      K911      HI, Air heater control
                            -( )  43
%Q0268   HI       Y9112     HI, Filling spray tank
                            -( )  27
%Q0269   HI       Y9114     HI, Spraying
                            -( )  32
%Q0271   SERVIC1  Y9101     HI, Air/N2 supply
                            -] [- 25
                            -]/[- 26
         HI                -(/)  39
%Q0272   HI       Y9103     HI, On/Off air
                            -( )  38
%Q0273   GRE_FFU  Y4266     Greasing recycle
                            -(S)  8
                            -(R)  12
         GRE_JUM           -(S)  10,41
                            -(R)  42,44,45
%Q2033   CUSTOM   K1006_0   Signal to UHT "Filler steril"
                            -( )  9
%Q2035   CUSTOM   K1007_0   Signal to UHT "Filler unsteril"
                            -(/)  9
%Q2041   CUSTOM   P007-11   Production+CIP for Logoscreen
                            -( )  19
%Q2042   CUSTOM   P007-10   Steril signal for Logoscreen
                            -( )  21
%Q2043   CUSTOM   P007-09   Stop signal for Logoscreen
                            -(SM) 24
                            -(RM) 25
%Q2044   CUSTOM   P007-08   Splice signal for Logoscreen
                            -( )  33
```

INTERNAL (%M) GLOBAL CROSS REFERENCES

REF.	BLOCK	NICKNAME	REF. DESCRIPTION / CROSS REFERENCES
%M0001	1T0001	BIN_0	Angle encoder binary bit 0
			-( ) 14
			FBIO 23
%M0002	1T0001	BIN_1	Angle encoder binary bit 1
			-] [- 14
			-]/[- 14
			-( ) 13
%M0003	1T0001	BIN_2	Angle encoder binary bit 2
			-] [- 13
			-]/[- 13
			-( ) 12
%M0004	1T0001	BIN_3	Angle encoder binary bit 3
			-] [- 12
			-]/[- 12
			-( ) 11
%M0005	1T0001	BIN_4	Angle encoder binary bit 4
			-] [- 11
			-]/[- 11
			-( ) 10
%M0006	1T0001	BIN_5	Angle encoder binary bit 5
			-] [- 10
			-]/[- 10
			-( ) 9
%M0007	1T0001	BIN_6	Angle encoder binary bit 6
			-] [- 9
			-]/[- 9
			-( ) 8
%M0008	1T0001	BIN_7	Angle encoder binary bit 7
			-] [- 8
			-]/[- 8
			-( ) 7
%M0010	DCS	SECT_0	Angle sector 0 (0-77 oct)
			-] [- 10
	1T0001		-] [- 39,88
			-( ) 16
%M0011	1T0001	SECT_1	Angle sector 1 (100-177 oct)
			-] [- 27,83,87,88
			-( ) 17
%M0012	1T0001	SECT_2	Angle sector 2 (200-277 oct)
			-] [- 25,57,58,84,87
			-( ) 18
%M0013	LEV_CON	SECT_3	Angle sector 3 (300-377 oct)
			-] [- 49
	1T0001		-] [- 35,39,57,58,87,88
			-( ) 19
%M0014	_MAIN	P+STUP	Step up positive pulse
			-(^) 12
	MACHLAD		-] [- 9,16,18,26,28,30,34,36,46
	TPOP		-] [- 12
	ST_SEQ		-] [- 29,30
	P_FEED		-] [- 11
	LS_SEAL		-] [- 12,13,15
	WASTE		-] [- 37
	PEROXID		-] [- 9
	CIP		-] [- 14,98
	GRE_JUM		-] [- 25
%M0015	_MAIN	P+STDWN	Step down positive pulse
			-(^) 13
	MACHLAD		-] [- 7,9,12,20
	TUBE		-] [- 9
	ST_SEQ		-] [- 28,30,41
	WASTE		-] [- 35
	FFU		-] [- 21
	CIP		-] [- 19,20
	HC		-] [- 8
%M0016	_MAIN	P-STUP	Step up negative pulse
			-(v) 14
	MACHLAD		-] [- 9
%M0017	_MAIN	P-JMP1	Jump pos 1 negative pulse
			-(v) 15
	SUPPLY		-] [- 38

REF.	BLOCK	NICKNAME	REF. DESCRIPTION / CROSS REFERENCES
	MMOTOR		-] [- 17
	FFU_MOT		-] [- 16
	GRE_JUM		-] [- 37,45
%M0018	_MAIN	P-JMP6	Jump pos 6 Negative pulse
			-(v) 16
	MMOTOR		-] [- 17
	ASEPTIC		-] [- 43
	GRE_JUM		-] [- 37,45
%M0019	_MAIN	P+DESP	Barcode signal positive pulse
			-(^) 18
	TPOP		-] [- 91,92,93,96,123
	DCS		-] [- 23
	LEV_CON		-] [- 49
	WASTE		-]/[- 8
%M0021	_MAIN	JAWP_NS	Jawpulse Normal scan
			-] [- 20,94
			-(v) 19
	TPOP		-] [- 91,92,93,96,107,109,117,123
	MMOTOR		-] [- 33,34
	DCS		-] [- 15,17,32,33
	TUBE		-] [- 5
	LS_SEAL		-] [- 29
	WASTE		-] [- 27,39,43,44,45
	JUM		-] [- 24,25
%M0022	_MAIN	P-TSERR	TS-error negative pulse
			-(v) 20
	TPOP		-] [- 119,121
	WASTE		-] [- 29
	JUM		-] [- 6,7,16,20
	CUSTOM		-] [- 11
%M0023	_MAIN	P+S_SW	Service switch positive pulse
			-(^) 23
	ST_SEQ		-] [- 17
	SAFETY1		-] [- 18
%M0024	_MAIN	P-S_SW	Service switch negative pulse
			-] [- 87
			-(v) 24
	SAFETY1		-] [- 18
%M0029	_MAIN	P+100	100ms scan positive pulse
			-(^) 26
	VOL_CAM		-] [- 5
	TUBEPOS		-] [- 5
%M0031	_MAIN	P-SQCON	Sequence condition neg pulse
			-(v) 27
	TPOP		-] [- 33
	ASEPTIC		-] [- 43
	A_B_C		-] [- 19
%M0032	_MAIN	P+SQCON	Sequence condition pos pulse
			-(^) 28
	LEV_CON		-] [- 37
	WASTE		-] [- 10
	1T0001		-]/[- 59
%M0034	_MAIN	P-LSERR	TPIH LS error negative pulse
			-(v) 29
	WASTE		-] [- 33
%M0035	_MAIN	P+S907	Pulse pos edge inching button
			-(^) 30
	P_FEED		-] [- 26
%M0036	_MAIN	P-S907	Pulse neg edge Inching button
			-(v) 31
	DEF_PAR		-] [- 28,31,33
%M0037	_MAIN	P-STPSP	Pulse neg strip splice
			-(v) 32
	SA_UNIT		-] [- 10
%M0040	_MAIN	P-HC	Pulse neg edge hyigenic cleaning
			-(v) 33
	FFU_MOT		-] [- 16
%M0041	_MAIN	P+STP1	Pulse pos edge step 1
			-(^) 34
	MACHLAD		-] [- 6
%M0043	JUM	P+JAW_S	Pulse pos jaw sensor
			-]/[- 34
			-(R) 35
	1T0001		-(S) 85

```
REF.     BLOCK    NICKNAME   REF. DESCRIPTION / CROSS REFERENCES
-------  -------  --------  -----------------------------------
%M0048   _MAIN    P+WST_1   Pulse pos edge waste link nr.1
                             -(^)  36
         WASTE               -] [- 49
%M0049   _MAIN    P+FS_FF   Pulse pos edge fast stop FFU
                             -(^)  17
         FFU_MOT             -] [- 16
%M0050   _MAIN    JUMP_1    Jump to pos 1 (Emergency stop)
                             -] [- 15,57
                             -( )  44
         MACHLAD             -] [- 20
                             -]/[- 7
         SUPPLY              -] [- 5,51
         MMOTOR              -] [- 13,26,28
         FFU_MOT             -] [- 12,23,26
         DCS                 -] [- 6
                             -]/[- 12
         TUBE                -] [- 10
         ASEPTIC             -] [- 45
         ST_SEQ              -] [- 5
         RAMPS               -]/[- 5
         ASU                 -] [- 5
         ASU_MOT             -] [- 20,79
         STRIPSP             -] [- 5,15
         AL_LOCK             -]/[- 5
         CIP                 -] [- 97
                             -]/[- 99,109
         HC                  -]/[- 31
         1T0001              -] [- 89
         BRAKES              -]/[- 11
         GRE_JUM             -] [- 14
                             -]/[- 11,26
%M0051   _MAIN    JUMP_6    Jump to pos 6 (Fast stop)
                             -] [- 16,57
                             -( )  49
         MACHLAD             -]/[- 9,12,20
         MMOTOR              -] [- 26,28
         TUBE                -] [- 10
         A_B_C               -]/[- 9
         ST_SEQ              -] [- 5
         RAMPS               -]/[- 5
         AL_LOCK             -]/[- 5
         FFU                 -] [- 29
                             -]/[- 21
         CIP                 -] [- 97
         HC                  -] [- 5
                             -]/[- 7
         1T0001              -] [- 89
         BRAKES              -]/[- 11
         GRE_JUM             -]/[- 26
%M0053   ST_SEQ   DEM1NS    Demand 1 normal stop
                             -] [- 21
                             -( )  20
%M0054   ST_SEQ   DEM2NS    Demand 2 normal stop
                             -] [- 23
                             -( )  22
%M0055   _MAIN    DEM3NS    Demand 3 normal stop
                             -] [- 51,53
         MACHLAD             -]/[- 9
         TPOP                -]/[- 10
         A_B_C               -] [- 15
         ST_SEQ              -] [- 27
                             -]/[- 28,30
                             -( )  25
         RAMPS               -]/[- 5
         AL_LOCK             -]/[- 5
         FFU                 -]/[- 21
%M0056   A_B_C    DEM4NS    Demand 4 normal stop (only DE)
                             -] [- 15
         ST_SEQ              -] [- 27
                             -]/[- 28,30
                             -( )  26
         RAMPS               -]/[- 5
         AL_LOCK             -]/[- 5
%M0057   _MAIN    JMP6_MM   Fast stop Main Motor
```

REF.	BLOCK	NICKNAME	REF. DESCRIPTION / CROSS REFERENCES
			-]/[- 49
			-(/) 47
%M0058	_MAIN	JMP6_FF	Fast stop Final Folder
			-] [- 17
			-]/[- 49
			-(/) 48
	FFU_MOT		-]/[- 23,26
%M0059	ST_SEQ	P-NS	Normal stop negative pulse
			-(v) 27
	WASTE		-] [- 35
	BRAKES		-] [- 11
%M0060	_MAIN	STP1-8	Step up conditions pos 1-8
			-] [- 52,53,54,57
			-( ) 51,52,53,54
	MMOTOR		-] [- 27
	ST_SEQ		-] [- 5
%M0061	_MAIN	STP9-11	Step up conditions pos 9-11
			-] [- 56,57
			-( ) 55,56
	TPOPLAD		-] [- 23
%M0063	_MAIN	ST_COND	Step up conditions
			-] [- 35,38
			-( ) 57
	MACHLAD		-] [- 9,14,16,18,26,28,30,32,34,36,46
			-]/[- 28
	LADFUNC		-] [- 5,7
			-]/[- 8
	TPOPLAD		-] [- 6,8,10,12,15,17,19
	TPOP		-] [- 33
	SUPPLY		-] [- 27
	MMOTOR		-] [- 27
	FFU_MOT		-] [- 22,25
	TUBE		-] [- 10
	ST_SEQ		-] [- 5
	ASU_AL		-] [- 60
	GRE_JUM		-] [- 5,7
%M0065	ST_SEQ	P-START	Pulse - Start production
			-] [- 8
			-(^) 7
%M0066	TUBE	P+TUBE	Pulse + Tight tube cmpleted
			-(^) 6
	PLMSLA4		-] [- 118,119,120,121
%M0067	ST_SEQ	STARTOK	Production start OK
			-] [- 8
			-(S) 9
			-(R) 8,10,11
	S__250B		-] [- 32,33
	S__200B		-] [- 32,33
	S__200M		-] [- 32,33
	S__200S		-] [- 32,33
	S__250S		-] [- 32,33
	S__300S		-] [- 32,33
%M0070	_MAIN	SQ_COND	Start sequence conditions
			-] [- 27,28
	TPOP		-] [- 115
	SUPPLY		-] [- 27
	MMOTOR		-] [- 5
	FFU_MOT		-] [- 8,31
	DCS		-] [- 11
	ASEPTIC		-] [- 45
			-]/[- 72,78
	A_B_C		-] [- 6
	ST_SEQ		-] [- 5,6,9,13
			-]/[- 7,14
			-( ) 5
	P_FEED		-] [- 17
	LS_SEAL		-] [- 5
			-]/[- 7
	LEV_CON		-]/[- 51
	TEMPREG		-] [- 20
	WASTE		-] [- 24
	JUM		-] [- 44
	FFU		-] [- 13
	SST_AL		-] [- 24

REF.	BLOCK	NICKNAME	REF. DESCRIPTION / CROSS REFERENCES
	PEROXID		-]/[- 23
%M0071	MACHLAD	SQ_END	Start sequence ended
			-] [- 32
			-]/[- 28
	TPOP		-] [- 12
	SUPPLY		-] [- 23
	MMOTOR		-] [- 7,9,23
	DCS		-] [- 24
	ASEPTIC		-] [- 5
			-]/[- 35,41
	ST_SEQ		-] [- 26,28,29,30
			-]/[- 6,32
			-(S) 13
			-(R) 14
	P_FEED		-] [- 16,29,30
	LS_SEAL		-] [- 6,9,17,20,21,22,35
			-]/[- 5
	RAMPS		-] [- 14,16
			-]/[- 20,21
	LEV_CON		-] [- 44,57
			-]/[- 45
	TEMPREG		-] [- 17,20,21,23,27,36,45,54
			-]/[- 18
	PWM		-] [- 9
	WASTE		-] [- 29,35,37,39
	SST_AL		-] [- 25
	PEROXID		-] [- 6,8
			-]/[- 7
%M0072	TPOP	SQGOING	Start sequence going on
			-] [- 29
	DCS		-] [- 6
	ASEPTIC		-] [- 80
			-]/[- 35
	A_B_C		-] [- 7
			-]/[- 9
	ST_SEQ		-] [- 15
			-( ) 6
	PWM		-] [- 9
	FFU		-] [- 5
	CUSTOM		-] [- 25
%M0073	MACHLAD	RES_TB	Reset timebar stop cleaning
			-( ) 6
	TPOPLAD		-]/[- 26,28
%M0074	ST_SEQ	FILL_SE	Fillsector (Only active 1 start)
			-] [- 18
	LEV_CON		-] [- 47,50
			-(S) 49
			-(R) 50,51
	WASTE		-] [- 46
%M0075	LADFUNC	RES_SAF	Reset safety relay automatic
			-] [- 47
	SAFETY1		-( ) 15
%M0076	SAFETY1	NO_SAFA	NO alarms safety
			-] [- 13
			-( ) 14
%M0080	_MAIN	ALLDMC	All DMC ok
			-] [- 51,53
			-( ) 41
%M0081	TPOP	TEST_B1	Test Beacon lamps 1
			-] [- 65
			-( ) 59
%M0082	TPOP	TEST_B2	Test Beacon lamps 2
			-] [- 66
			-( ) 60
%M0083	TPOP	TEST_B3	Test Beacon lamps 3
			-] [- 67
			-( ) 61
%M0084	_MAIN	STD_DEL	Step_down button delay
			-( ) 7
	MACHLAD		-] [- 34
%M0090	SUPPLY	NS1	Normal stop step 1
			-] [- 63
	FFU_MOT		-]/[- 31
	A_B_C		-] [- 9

```
REF.     BLOCK    NICKNAME   REF. DESCRIPTION / CROSS REFERENCES
-------  -------  --------  -------------------------------------
         ST_SEQ             -] [- 31,33
                            -(S)  30
                            -(R)  32
%M0091   MACHLAD  NS2       Normal stop step 2
                            -] [- 20
         ASEPTIC            -] [- 43
         ST_SEQ             -]/[- 5
                            -( )  31
         RAMPS              -]/[- 13
         FIL_DCS            -] [- 25
%M0092   ST_SEQ   JAW_STP   Stop jaw on defined jaw_nr
                            -] [- 30
                            -(^)  44
%M0093   ST_SEQ   EN_JWST   Enable jaw stop function
                            -] [- 39,40,42,44
                            -]/[- 30
                            -(S)  38
                            -(R)  45
%M0094   ST_SEQ   J_ST_EN   Stop sequence jaw_nr started
                            -] [- 44
                            -(S)  41
                            -(R)  45
         WASTE              -] [- 46
%M0095   ST_SEQ   J_ST_IN   Stop sequence jaw_nr (inching)
                            -] [- 44
                            -]/[- 13
                            -(S)  42
                            -(R)  43
%M0100   _MAIN    CH_PBUP   Check pushbutton step up
                            -]/[- 51
                            -(S)  39
                            -(R)  40
         TUBE               -]/[- 10
%M0101   _MAIN    ST_DWN    Pushbuttons step down
                            -] [- 13
                            -( )  6
         TPOP               -] [- 12
         A_B_C              -] [- 14
         ASU_MOT            -] [- 26
         WASTE              -] [- 12,14
         BRAKES             -] [- 11
%M0116   ASEPTIC  ENDRAIN   Draining filpipe enabled
                            -] [- 7,8,9
                            -(S)  5
                            -(R)  6
%M0120   MACHLAD  TBSEA     Tube sealing
                            -] [- 9,14
         SUPPLY             -] [- 27
         MMOTOR             -] [- 5
         FFU_MOT            -] [- 8
         DCS                -] [- 10
         TUBE               -] [- 11,12
                            -( )  10
         A_B_C              -] [- 17
         P_FEED             -] [- 17
         JUM                -] [- 44
         FFU                -] [- 5
%M0121   MACHLAD  TUBESGO   Tube sealing going on
                            -]/[- 9
         TPOPLAD            -] [- 8
         SUPPLY             -]/[- 27
         MMOTOR             -] [- 22
         FFU_MOT            -] [- 29
         TUBE               -] [- 10
                            -( )  11
         P_FEED             -] [- 16
         BRAKES             -] [- 8
%M0122   _MAIN    TBS_OK    Tube sealing ok
                            -] [- 51
         SUPPLY             -]/[- 23
         DCS                -] [- 13
         TUBE               -] [- 6
                            -]/[- 10
                            -(S)  5
```

REF.	BLOCK	NICKNAME	REF. DESCRIPTION / CROSS REFERENCES
			-(R) 9
	JUM		-] [- 37
	FIL_DCS		-] [- 45
%M0123	SUPPLY	MINTIME	Minimum time for tight tube
			-] [- 23
	TUBE		-] [- 5
			-]/[- 5,10
			-(S) 11
			-(R) 9
	1T0001		-] [- 42
%M0124	TUBE	CHK_MM	Check main motor running Tight
			-]/[- 10
			-( ) 12
	JUM		-] [- 44
			-]/[- 46
%M0125	MMOTOR	CHK_MMI	Check main motor running inching
			-]/[- 26
			-(S) 30
			-(R) 31
	JUM		-] [- 44
			-]/[- 46
%M0130	FFU	CHKHEAT	Check temperature FFU heaters
			-] [- 32,33,34,35
			-( ) 31
%M0131	_MAIN	DIARDY	Diary ready for production
			-] [- 51
	CUSTOM		-( ) 8
%M0132	MACHLAD	ST_HEAT	Stop heaters FFU
			-] [- 12,26
	SUPPLY		-( ) 54
%M0133	A_B_C	TUB_EMP	Tube empty (after inching)
			-] [- 19
	ST_SEQ		-(S) 33,34
			-(R) 35
	FIL_DCS		-]/[- 26
%M0134	_MAIN	CL_JAW	Reset Jaw counter
			-] [- 94
			-(R) 94
	MMOTOR		-] [- 34
	1T0001		-(S) 44
%M0135	_MAIN	SPDC_S	Splice detection in columm set
			-(R) 93
	TPOP		-] [- 19,111
	LS_SEAL		-] [- 29,31
	SST_AL		-] [- 19,21,28
			-]/[- 20,22
	1T0001		-(S) 77
%M0136	_MAIN	SPDA_S	Splice detection in ASU set
			-(R) 93
	STRIPSP		-] [- 50
	SST_AL		-] [- 29
	1T0001		-(S) 78
%M0137	_MAIN	ZEROSET	Zero jaw fast scan set
			-(R) 93
	WASTE		-] [- 47
	1T0001		-(S) 44
%M0138	MACHLAD	LONG_ST	To long stop in sterile mode
			-]/[- 23
			-(S) 23
			-(R) 24
	ASEPTIC		-] [- 79,80,87
			-]/[- 92
	A_B_C		-] [- 13
	STERIL		-]/[- 13
%M0139	TPOP	FIRSTST	First start after sterilization
			-] [- 33
	DCS		-] [- 26
			-]/[- 25
	ST_SEQ		-] [- 15
			-(S) 17
			-(R) 18
	LEV_CON		-] [- 48
			-]/[- 37,44
	WASTE		-] [- 46

```
REF.     BLOCK    NICKNAME   REF. DESCRIPTION / CROSS REFERENCES
-------  -------  --------  -------------------------------------
         FIL_DCS           -] [- 6
                           -]/[- 5,26
%M0142   STERIL   CHK_ACP   Check aseptic chamber pressure
                           -] [- 10
                           -(S)  8
                           -(R)  9
%M0143   JUM      ENC_CHK   Angle encoder check
                           -] [- 11
                           -]/[- 10
         1T0001            -(S)  21
                           -(R)  22
%M0144   _MAIN    DAC_CHK   Doors AC closed when mach ster.
                           -] [- 43
         STERIL            -]/[- 6
                           -(S)  6
                           -(R)  5
%M0145   WASTE    WST_NR1   Waste package nr.1
                           -] [- 47,50,53
                           -(S)  49
                           -(R)  47
%M0146   WASTE    TMR_SAM   Sampling station consent time
                           -] [- 51
                           -( )  50
%M0147   ASEPTIC  CHK_PRE   Check pressure in start sequence
                           -] [- 79
                           -(S)  77
                           -(R)  78
%M0200   TPOP     AL_BLK    Alarm block active (From TPOP)
                           -( )  88
         SAFETY1           -]/[- 8,20
         SAFETY2           -]/[- 8,9,13,14,22
         PEROXID           -]/[- 20,24
         CIP_AL            -]/[- 8
%M0273   TPOPLAD  FLSH1     Ladderposition 1 flashing
                           FBIO  33
%M0274   TPOPLAD  FLSH2     Ladderposition 2 flashing
                           -( )  6
%M0275   TPOPLAD  FLSH3     Ladderposition 3 flashing
                           -( )  8
%M0276   TPOPLAD  FLSH4     Ladderposition 4 flashing
                           -( )  10
         CUSTOM            -]/[- 23
%M0277   TPOPLAD  FLSH5     Ladderposition 5 flashing
                           -( )  12
%M0279   TPOPLAD  FLSH7     Ladderposition 7 flashing
                           -( )  15
%M0280   TPOPLAD  FLSH8     Ladderposition 8 flashing
                           -( )  17
%M0281   TPOPLAD  FLSH9     Ladderposition 9 flashing
                           -( )  19
%M0284   TPOPLAD  FLSH12    Ladderposition 12 flashing
                           -( )  23
%M0286   TPOPLAD  FLS14_1   Ladderposition 13 flashing
                           -( )  26
%M0287   TPOPLAD  FLS14_2   Ladderposition 14 flashing
                           -( )  28
%M0288   TPOPLAD  FLSH15    Ladderposition 15 flashing
                           -( )  30
%M0289   TPOPLAD  FIX1      Ladderposition 1 fixed
                           -( )  5
                           FBIO  32
%M0290   TPOPLAD  FIX2      Ladderposition 2 fixed
                           -( )  7
%M0291   TPOPLAD  FIX3      Ladderposition 3 fixed
                           -( )  9
%M0292   TPOPLAD  FIX4      Ladderposition 4 fixed
                           -( )  11
%M0293   TPOPLAD  FIX5      Ladderposition 5 fixed
                           -( )  13
%M0294   TPOPLAD  FIX6      Ladderposition 6 fixed
                           -( )  14
%M0295   TPOPLAD  FIX7      Ladderposition 7 fixed
                           -( )  16
%M0296   TPOPLAD  FIX8      Ladderposition 8 fixed
```

```
REF.     BLOCK    NICKNAME   REF. DESCRIPTION / CROSS REFERENCES
-------  -------  --------  -------------------------------------
                            -( )  18
%M0297   TPOPLAD  FIX9      Ladderposition 9 fixed
                            -( )  20
%M0298   TPOPLAD  FIX10     Ladderposition 10 fixed
                            -( )  21
%M0299   TPOPLAD  FIX11     Ladderposition 11 fixed
                            -( )  22
%M0300   TPOPLAD  FIX12     Ladderposition 12 fixed
                            -( )  24
%M0301   TPOPLAD  FIX13     Ladderposition 13 fixed
                            -( )  25
%M0302   TPOPLAD  FIX14_1   Ladderposition 14 fixed
                            -( )  27
%M0303   TPOPLAD  FIX14_2   Ladderposition 14_2 fixed
                            -( )  29
%M0304   TPOPLAD  FIX15     Ladderposition 15 fixed
                            -( )  31
%M0305   AL_LOCK  DOOR_FL   Door guard front left
                            FBIO  6
         SAFETY1            -( )  5
%M0306   SAFETY1  DOORFFU   Door guard FFU left
                            -( )  6
%M0307   SAFETY1  DOORJUM   Door guard JUM left
                            -( )  7
%M0309   SAFETY1  DOORASL   Door guard ASU left
                            -( )  8
%M0312   SAFETY2  ESTOIAS   Emergency stop inside ASU
                            -( )  17
%M0313   SAFETY1  ESTOPBL   Emergency stop bottom left
                            -( )  9
%M0314   SAFETY2  ESTOPSS   Emergency stop aseptic chamber
                            -( )  19
%M0315   SAFETY1  DOORBSS   Door bottom superstructure
                            -( )  11
%M0316   SAFETY1  SAF_REL   Safety relay is not enabled
                            -( )  13
%M0317   _MAIN    HATCHH2   Hatch under H2O2 bath
                            -]/[- 46,51
         SAFETY1            -(S)  16
                            -(R)  17
%M0318   _MAIN    S_SW_0    Service switch jump to 0
                            -]/[- 43
         SAFETY1            -(S)  18
                            -(R)  19
%M0319   _MAIN    CRANK_J   Crank guard JUM
                            -]/[- 47
         SAFETY1            -(S)  20
                            -(R)  21
%M0320   _MAIN    DOOR_BC   Door guard bucket cleaning
                            -]/[- 55
         SAFETY1            -( )  12
%M0321   AL_LOCK  DOOR_FR   Door guard front right
                            FBIO  7
         SAFETY2            -( )  5
%M0322   SAFETY2  DOORFFR   Door guard FFU right
                            -( )  6
%M0323   SAFETY2  DOOR_JR   Door guard JUM right
                            -( )  7
%M0324   SAFETY2  DOORINT   Internal door guard SA
                            -( )  10
%M0325   SAFETY2  DOOR_SA   Door guard SA
                            -( )  8
%M0326   SAFETY2  DOORASR   Door guard ASU right
                            -( )  9
%M0327   SAFETY2  DOORATF   Door aseptic chamber top front
                            -] [- 13
                            -( )  13
%M0328   SAFETY2  DOORAT    Door guard aseptic chamber top
                            -] [- 14
                            -( )  14
%M0329   SAFETY2  ESTOPCP   Emergency stop control panel
                            -( )  15
%M0330   SAFETY2  ESTOOAS   Emergency stop outside ASU
                            -( )  16
```

```
REF.     BLOCK    NICKNAME   REF. DESCRIPTION / CROSS REFERENCES
-------  -------  --------  -----------------------------------
%M0331   SAFETY2  ESTOPBR  Emergency stop bottom right
                           -( )  18
%M0332   SAFETY1  ESTOPAC  Emergency stop steril air system
                           -( )  10
%M0333   SAFETY2  ESTOPCC  Em.stop control cabinet outside
                           -( )  21
%M0334   SAFETY2  DOOR_AC  Door asepticchamber bottom front
                           -( )  22
%M0335   SAFETY2  ESTOPCI  Em.stop control cabinet inside
                           -( )  20
%M0337   AL_LOCK  G_EMPTY  Greasing tank empty
                           FBIO  8
         JUM               -(S)  78
                           -(R)  80
%M0339   JUM      JUM_GRE  Perform greasing cycle JUM
                           -(S)  74,75
                           -(R)  76
%M0340   _MAIN    GRE_EMP  Greasing tank empty (stop)
                           -]/[- 53
         ST_SEQ            -]/[- 22
         JUM               -(S)  79
                           -(R)  81
%M0353   _MAIN    MOT_FFU  FFU servo motor fault
                           -]/[- 48
         AL_LOCK           -] [- 28,29
                           FBIO  9
         JUM               -]/[- 44
                           -(S)  43
         FFU               -(S)  5,6
                           -(R)  7
%M0354   _MAIN    DT_RDY   Date unit not ready
                           -]/[- 48,53
         MMOTOR            -] [- 27
         FFU_MOT           -]/[- 38
         ST_SEQ            -] [- 5
         FFU               -(S)  9
                           -(R)  10
         CUSTOM            -]/[- 23
%M0355   FFU      DT_SUP   External date unit supply
                           -( )  11
%M0356   _MAIN    ERR_HOM  Home position fault servo FFU
                           -]/[- 48
         FFU               -(S)  15
                           -(R)  14
%M0357   _MAIN    QUE_G    Congestion guard outfeed (queue)
                           -]/[- 53
         FFU               -( )  17
%M0358   FFU      DE_OUT   DE not in production
                           -( )  22
%M0359   _MAIN    OUTQFFU  Queue in outfeed FFU
                           -]/[- 48
         FFU_MOT           -]/[- 38
         FFU               -(S)  25,29
                           -(R)  24
%M0360   FFU      TFLAPBL  T_flap sealing bottom left
                           -( )  32
%M0361   FFU      TFLAPBR  T_flap sealing bottom right
                           -( )  33
%M0362   FFU      TFLAPTL  T_flap sealing top left
                           -( )  34
%M0363   FFU      TFLAPTR  T_flap sealing top right
                           -( )  35
%M0364   FFU_MOT  BELT_AL  Belt brake inverter alarm
                           -]/[- 47,48
                           -(S)  45
                           -(R)  46
         ASU_AL            -] [- 42
%M0365   _MAIN    WBOXJAM  Waste box jam
                           -]/[- 48
         1T0001            -] [- 80,81
                           -(S)  80,81
                           -(R)  82
%M0367   FFU      AL_GREA  Greasing pump alarm
                           -(S)  39
```

REF.	BLOCK	NICKNAME	REF. DESCRIPTION / CROSS REFERENCES
			-(R) 40
%M0368	FFU_MOT	EXT_FAI	External conveyor inverter fault
			-(S) 35
			-(R) 36
	ASU_AL		-] [- 42
%M0369	MACHLAD	SEAL_SA	Sealing strip applicator
			-]/[- 26
	LADFUNC		-]/[- 6
	TPOPLAD		-]/[- 15
	MMOTOR		-]/[- 25
	AL_LOCK		FBIO 10
	SA_UNIT		-(S) 6
			-(R) 7
%M0370	SA_UNIT	SA_EMPT	Strip applicator supply empty
			-] [- 8
			-(S) 10
			-(R) 11
%M0371	SA_UNIT	SABREAK	Strip applicator break
			-] [- 24
			-(S) 21
			-(R) 16
%M0372	ST_SEQ	SA_END	Strip end with open door
			-]/[- 21
	STRIPSP		-(S) 31
	SA_UNIT		-(S) 12
			-(R) 13
%M0373	ST_SEQ	STR_NP	Strip not prepared
			-]/[- 24
	SA_UNIT		-] [- 24
			-(S) 8
			-(R) 9
	CUSTOM		-]/[- 23
%M0374	SA_UNIT	STR_EMP	Strip magazine empty
			-] [- 24
			-(S) 23
			-(R) 16
	STRIPOK		-]/[- 26
%M0375	SA_UNIT	STR_FUL	Strip magazine too full
			-] [- 24
			-(S) 22
			-(R) 16
%M0376	STRIPSP	STR_FLT	Strip inverter fault
			-]/[- 15
	ASU_AL		-] [- 42
			-(S) 41
			-(R) 43
%M0377	SA_UNIT	STR_TST	Strip bobbin test failed
			-] [- 24
			-(R) 16
	STRIPOK		-(S) 20,21
%M0378	_MAIN	SA_ROLL	SA pressure roller alarm
			-]/[- 47
	ASU_AL		-] [- 55
			-(S) 54
			-(R) 56,57
%M0379	LADFUNC	SA_INCH	SA strip not sealed inching
			-]/[- 6
	MMOTOR		-] [- 27
	ST_SEQ		-] [- 5
	ASU_AL		-] [- 58
			-(S) 57
			-(R) 58
%M0385	MACHLAD	PH_DCS	Malfunction photocells DCS
			-] [- 9
	DCS		-] [- 27
	ST_SEQ		-]/[- 23
	WASTE		-] [- 27
	AL_LOCK		FBIO 11
	FIL_DCS		-(S) 8
			-(R) 9
%M0386	DCS	OUT_DCS	Machine out of design
			-]/[- 5
	ST_SEQ		-]/[- 23
	JUM		-(S) 39

REF.	BLOCK	NICKNAME	REF. DESCRIPTION / CROSS REFERENCES
			-(R) 40
%M0387	ST_SEQ	A-VALVE	A-valve position
			-]/[- 24
	FIL_DCS		-(S) 12
			-(R) 11
%M0388	_MAIN	L_STEAM	Low temperature steam C-valve
			-]/[- 51
	ASEPTIC		-]/[- 112
			-(S) 113,114
			-(R) 115
	ST_SEQ		-]/[- 21
	CIP		-]/[- 11
%M0389	ST_SEQ	LEAKAGE	Regulating valve leakage
			-]/[- 23
	FIL_DCS		-(S) 14
			-(R) 15
	CIP		-] [- 21
%M0390	ASEPTIC	H_STEAM	High temperature steam C-valve
			-]/[- 107
			-( ) 112
	CIP		-]/[- 11
%M0391	FIL_DCS	HI_FIL1	HI, Alarm Low flow
			-(S) 36
			-(R) 38
	HI		-]/[- 54,59
%M0392	FIL_DCS	HI_FIL2	HI, Alarm production pipe posit.
			-(S) 37
			-(R) 38
	HI		-]/[- 55,59
%M0393	FIL_DCS	HI_FIL3	HI, Alarm nozzle pipe position
			-(S) 39
			-(R) 40
	HI		-]/[- 55,59
%M0394	FIL_DCS	C_V_POS	C-valve position
			-( ) 19
%M0395	FIL_DCS	HI_FIL4	HI, Alarm cleaning pipe position
			-(S) 41
			-(R) 42
	HI		-]/[- 55,59,65
%M0396	ST_SEQ	NOPR_AL	No product at the machine ALARM
			-] [- 11
			-]/[- 25
	FIL_DCS		-(S) 22
			-(R) 23
%M0397	A_B_C	LEVEL	Level not OK
			-] [- 9
	LEV_CON		-] [- 55
			-(S) 53
			-(R) 54
%M0398	FIL_DCS	HI_FIL5	HI, Alarm High flow
			-(S) 43
			-(R) 38
	HI		-]/[- 54,59
%M0399	_MAIN	LEVEL_M	Level reading system malfunction
			-]/[- 53
	FIL_DCS		-(S) 45
			-(R) 46
%M0400	JUM	OUT_2	Machine out of design(blue)
			-( ) 50
%M0401	ASEPTIC	WATER_S	Water supply
			-] [- 16
	ST_SEQ		-]/[- 24
	AL_LOCK		FBIO 12
	SERVIC1		-(S) 5
			-(R) 6
%M0402	_MAIN	AIR_SUP	Air supply
			-]/[- 43
	SERVIC1		-] [- 8
			-(S) 7
			-(R) 8
%M0403	SERVIC1	OVERLO	Tripped motor overload protectio
			-( ) 10
%M0404	SUPPLY	PRES_WA	Pressure water circulation
			-]/[- 16

REF.	BLOCK	NICKNAME	REF. DESCRIPTION / CROSS REFERENCES
	ST_SEQ		-]/[- 22
	SERVIC1		-(S) 12
			-(R) 13
%M0405	ST_SEQ	TEMP_WA	Temperature water circulation
			-]/[- 22
	SERVIC1		-(S) 14
			-(R) 15
%M0406	_MAIN	COND_WA	Conductivity water circulation
			-]/[- 53
	SERVIC1		-(S) 17
			-(R) 17
%M0407	SERVIC1	TEMPCAB	High temp.electrical cabinet
			-( ) 19
%M0408	SERVIC1	BR_WIRE	Monitor broken wire termocouple
			-( ) 23
%M0409	ST_SEQ	REC_ALM	Recorder alarm
			-]/[- 23
	SERVIC1		-( ) 31
%M0411	SERVIC1	HI_SER1	HI, Alarm low air pressure
			-(S) 25
			-(R) 27
%M0412	SERVIC1	HI_SER2	HI, Alarm low N2 pressure
			-(S) 26
			-(R) 27
	HI		-]/[- 58
%M0413	SERVIC1	BAT_PLC	PLC memory battery low
			-( ) 33
%M0414	SERVIC1	VOLTAGE	Supervision control voltage
			-( ) 34
%M0415	SUPPLY	COOL_PR	Cooling media pressure
			-]/[- 17
	SERVIC1		-( ) 16
%M0416	SERVIC1	TRAN_MS	Transient failure main supply
			-( ) 35
%M0417	AL_LOCK	JAWNR	Show jaw number display
			FBIO 13
	JUM		-( ) 5
%M0418	JUM	TS_LEFT	TS left jaws
			-] [- 5
			-(S) 7
			-(R) 8
%M0419	JUM	TSRIGHT	TS right jaws
			-] [- 5
			-(S) 7
			-(R) 8
%M0420	ST_SEQ	ANG_ERR	Angle encoder error
			-]/[- 20
	JUM		-(S) 10,11
			-(R) 12
%M0421	_MAIN	GR_CYLI	Greasing cylinders wrong pos.
			-]/[- 47
	MMOTOR		-] [- 17
	JUM		-(S) 69,70
			-(R) 68
%M0422	_MAIN	GR_STR	Greasing stroke not completed
			-]/[- 47
	ST_SEQ		-]/[- 23
	JUM		-(S) 67
			-(R) 68
%M0423	ST_SEQ	TS_L_3	TS-error 3 packs left
			-]/[- 24
	JUM		-] [- 8
			-(S) 22
			-(R) 23
%M0424	ST_SEQ	TS_R_3	TS-error 3 packs right
			-]/[- 24
	JUM		-] [- 8
			-(S) 18
			-(R) 19
%M0425	_MAIN	OJAWERR	Zero jaw not detected
			-]/[- 51,52,53
	SAFETY1		-] [- 13
	JUM		-( ) 37
%M0426	JUM	CCAMGRE	Cutting cam greasing flow alarm

REF.	BLOCK	NICKNAME	REF. DESCRIPTION / CROSS REFERENCES
			-(S) 85
			-(R) 86
	GRE_JUM		-] [- 43
%M0427	_MAIN	DCS_HOM	DCS servo motor wrong home pos
			-]/[- 46
	DCS		-]/[- 6
	JUM		-(S) 28
			-(R) 29
%M0428	ST_SEQ	JAW_AL	Jaw sensor timeout
			-]/[- 22
	JUM		-(S) 34
			-(R) 36
%M0430	_MAIN	MAIN_MO	Main servo motor fault
			-]/[- 46
	AL_LOCK		-] [- 26,29
	JUM		-(S) 43,44,45
			-(R) 46
	FFU		-]/[- 5
%M0431	_MAIN	DCS_MOT	DCS servo motor fault
			-]/[- 46
	DCS		-] [- 6,12
			-]/[- 6
	AL_LOCK		-] [- 27,29
	JUM		-(S) 43,48
			-(R) 47
%M0432	_MAIN	JUM_MOV	Jaw unit moved when machine stop
			-]/[- 44
	JUM		-(S) 54,55
			-(R) 56
%M0433	_MAIN	PRES_AS	Pressure aseptic chamber
			-]/[- 43
	AL_LOCK		FBIO 14
	STERIL		-(S) 10
			-(R) 11
%M0434	_MAIN	AC_L_T	Aseptic chamber temp alarm
			-]/[- 51
	STERIL		-( ) 13
%M0435	_MAIN	POSBVAL	B-valve in wrong position
			-]/[- 46
	MACHLAD		-] [- 21
	TPOP		-] [- 21
	STERIL		-(S) 17,18
			-(R) 19
%M0436	_MAIN	LEV_SEP	Level separator
			-]/[- 43,51
	ASEPTIC		-] [- 16
	STERIL		-(S) 21
			-(R) 22
%M0437	_MAIN	SUPER_H	Temperature super heater
			-]/[- 43
	STERIL		-(S) 24
			-(R) 25
%M0438	_MAIN	POSPRVA	Prehaeting valve in wrong pos
			-]/[- 46
	MACHLAD		-] [- 21
	TPOP		-] [- 21
	STERIL		-(S) 29,30,31
			-(R) 32
%M0439	MACHLAD	AIR_SEP	Air pressure separator
			-] [- 12
	STERIL		-(S) 37
			-(R) 38
	CIP		-] [- 109
%M0440	MACHLAD	REG_VAL	Regulating valve
			-] [- 21
	TPOP		-] [- 21
	ST_SEQ		-]/[- 24
	STERIL		-(S) 41
			-(R) 42
%M0441	TPOP	POS_BUT	Butterfly valve wrong position
			-] [- 21
	ST_SEQ		-]/[- 24
	STERIL		-(S) 34
			-(R) 35

REF.	BLOCK	NICKNAME	REF. DESCRIPTION / CROSS REFERENCES
%M0442	ASEPTIC	BEND_AL	Bending roller monitor alarm
			-(S) 129
			-(R) 130
%M0443	P_FEED	PEN_FAI	Pendulum roller inverter fail
			-(S) 8
			-(R) 9
	ASU_AL		-] [- 42
%M0444	LADFUNC	C-OFF	Steam barrier disabled
			-]/[- 6
	MMOTOR		-] [- 27
	A_B_C		-(R) 19
	ST_SEQ		-] [- 5,34
			-]/[- 5
	FIL_DCS		-(S) 26
			-(R) 27
%M0445	_MAIN	BROKENP	Paper broken (bending monitor)
			-]/[- 47
	ASEPTIC		-(S) 129
			-(R) 130
%M0446	A_B_C	NO_C_CL	C valve cleaning disabled
			-]/[- 20
	CIP		-(S) 6
			-(R) 7
%M0447	_MAIN	TEMP_AC	AC temperature too high
			-]/[- 44
	MACHLAD		-] [- 36
	TPOP		-] [- 21
	ST_SEQ		-] [- 29
			-]/[- 20
	STERIL		-(S) 14
			-(R) 15
%M0448	_MAIN	STEROUT	Steril temperature timeout
			-]/[- 51
	STERIL		-]/[- 26
			-(S) 26
			-(R) 27
%M0449	_MAIN	TEM_BAT	Temperature peroxide bath
			-]/[- 55
	SUPPLY		-] [- 39
	ST_SEQ		-]/[- 21
	AL_LOCK		FBIO 15
	PEROXID		-(S) 6
			-(R) 7
%M0450	_MAIN	LEV_BAT	Level peroxide bath
			-]/[- 55
	SUPPLY		-] [- 39
	ST_SEQ		-]/[- 21
	PEROXID		-(S) 8
			-(R) 7
%M0451	ASEPTIC	LEV_WAT	Level water bath
			-]/[- 33,40
	PEROXID		-( ) 29
%M0452	MACHLAD	FILSLOW	Filling spray tank slow
			-] [- 14
	PEROXID		-(S) 14
			-(R) 18
%M0453	MACHLAD	SPRSLOW	Spray slow --> go to Venting
			-] [- 20
	TPOP		-] [- 21
	PEROXID		-(S) 17
			-(R) 18
%M0454	PEROXID	LEV_TAN	Low level peroxide tank
			-( ) 20
%M0455	_MAIN	TEM_TAN	Peroxide tank low temperature
			-]/[- 53
	PEROXID		-( ) 23
%M0456	PEROXID	TEM_WAT	Water bath high temperature
			-( ) 32
%M0457	ASEPTIC	HLEV_PE	Peroxide tank high level,product
			-]/[- 71,72
	PEROXID		-( ) 24
%M0458	_MAIN	LP_H2O2	Level probe H2O2 bath
			-]/[- 55
	PEROXID		-(S) 9

REF.	BLOCK	NICKNAME	REF. DESCRIPTION / CROSS REFERENCES
			-(R) 10
%M0459	MACHLAD	TANLEVS	Low level H2O2 tank for spray
			-] [- 13
	ASEPTIC		-]/[- 27
	PEROXID		-(S) 21
			-(R) 22
%M0460	_MAIN	H2O2_18	H2O2 meter malfunction
			-]/[- 54
	MACHLAD		-] [- 10
	ASEPTIC		-( ) 162
	ST_SEQ		-]/[- 25
%M0461	_MAIN	H2O2_19	H2O2 meter wrong concentration
			-]/[- 54
	MACHLAD		-] [- 10
	ASEPTIC		-( ) 163
	ST_SEQ		-]/[- 25
%M0462	ASEPTIC	H2O2_23	H2O2 meter conc. close to limits
			-( ) 164
%M0463	ASEPTIC	H2O2_24	H2O2 meter malfunction warning
			-( ) 165
%M0464	_MAIN	PROBE_F	Level probe fault H2O2 tank
			-]/[- 54
	MACHLAD		-] [- 13
	ASEPTIC		-]/[- 75
	ST_SEQ		-]/[- 22
	PEROXID		-(S) 25
			-(R) 26
%M0465	AL_LOCK	MON_BAR	Rotation monitor barcode ASU
			FBIO 18
	ASU_AL		-(S) 10,14
			-(R) 9
%M0466	ASU	REELCHG	ASU, make splice with new reel
			-] [- 30
	ASU_MOT		-]/[- 19
	ASU_AL		-] [- 63,67
			-]/[- 18
			-(S) 62
			-(R) 63,65
%M0467	ASU	SPL_TMP	Paper sp temperature not correct
			-] [- 33
			-]/[- 30,32
	ASU_AL		-( ) 15
%M0468	ASU	PAC_MAT	Packaging ma splice not prepared
			-] [- 33
			-]/[- 30,32,33
	ASU_AL		-]/[- 17
			-(S) 18
			-(R) 19
%M0469	ST_SEQ	MAG_EMP	Magazine ASU empty
			-]/[- 20
	ASU_MOT		-]/[- 79
	ASU_AL		-(S) 24
			-(R) 23
%M0470	_MAIN	ASU_INT	Splice sequence ASU interrupted
			-]/[- 52
	ST_SEQ		-]/[- 20
	ASU		-]/[- 5
	ASU_MOT		-]/[- 20,76
	PAPERSP		-] [- 16
	ASU_AL		-] [- 29,31,32
			-(S) 30
			-(R) 29
%M0472	ASU	NOSPLTP	Pack mat end + temp not correct
			-] [- 35
			-(S) 33
	ASU_AL		-(R) 64
%M0473	ST_SEQ	NO_PREP	ASU, Pkg mat end+not prepared
			-]/[- 20
	ASU		-] [- 35
			-(S) 33
	ASU_MOT		-] [- 58
			-]/[- 19,79
	ASU_AL		-(R) 64
	CUSTOM		-]/[- 24

```
REF.     BLOCK    NICKNAME   REF. DESCRIPTION / CROSS REFERENCES
-------  -------  --------  -----------------------------------
%M0474   ASU_AL   ROLLER3   Overload motor drive roller 3
                            -] [- 42
                            -(S)  39
                            -(R)  43
%M0475   ASU_AL   ROLLER7   Overload motor drive roller 7
                            -] [- 42
                            -(S)  40
                            -(R)  43
%M0476   MMOTOR   WEB_B     ASU, Broken web at magazine
                            -]/[- 26
         ST_SEQ             -]/[- 21,25
         ASU_MOT            -]/[- 19,78
         STRIPSP            -]/[- 45
         ASU_AL             -(S)  51,52
                            -(R)  50
         HC                 -] [- 8
%M0477   ST_SEQ   DOOR_OP   Pack mat ended and doors open
                            -]/[- 20
         ASU                -] [- 35
                            -(S)  33
         ASU_AL             -(R)  64
         CUSTOM             -]/[- 24
%M0478   MMOTOR   LOOP_EM   Loop empty
                            -]/[- 26
         ST_SEQ             -]/[- 20
         ASU_MOT            -]/[- 19,78
         ASU_AL             -(S)  45
                            -(R)  46
         DEF_PAR            -] [- 28,31
%M0479   ST_SEQ   ASUSFIN   ASU, Side feeder position alarm
                            -]/[- 22
         ASU_AL             -(S)  20
                            -(R)  21
%M0480   _MAIN    TOUTMAG   Magazine timeout expired
                            -]/[- 54
         ST_SEQ             -]/[- 20
         ASU_AL             -(S)  26
                            -(R)  27
%M0481   MACHLAD  TPIH_LS   LS TPIH fault
                            -]/[- 26
         LADFUNC            -]/[- 6
         TPOPLAD            -]/[- 15
         AL_LOCK            FBIO  19
         SST_AL             -(S)  5
                            -(R)  7
%M0482   _MAIN    SQUEEGE   Squee gee roller position
                            -]/[- 46
         SST_AL             -(S)  9
                            -(R)  10
%M0483   ST_SEQ   PEND_UP   Pendulum roller in upper pos
                            -]/[- 21
         P_FEED             -] [- 17,19,20
                            -]/[- 19
         SST_AL             -(S)  14
                            -(R)  15
%M0484   ST_SEQ   SP_ERR    Splice guard error
                            -]/[- 23
         SST_AL             -(S)  19,21
                            -(R)  22
%M0485   _MAIN    MFR_POS   Movable forming ring position
                            -]/[- 47
         SST_AL             -(S)  24,25
                            -(R)  26
%M0486   ST_SEQ   PEND_LO   Pendulum roller in low position
                            -]/[- 22
         SST_AL             -(S)  16
                            -(R)  17
%M0487   ST_SEQ   SPL_SEN   Supervision of P.M. splice sens.
                            -]/[- 23
         SST_AL             -] [- 28,29,32
                            -(S)  30,31
                            -(R)  32
%M0497   _MAIN    PIPESEN   CIP pipe sensor
                            -]/[- 51
```

REF.	BLOCK	NICKNAME	REF. DESCRIPTION / CROSS REFERENCES
	AL_LOCK		FBIO 20
	CIP_AL		-(S) 5
			-(R) 13
%M0498	_MAIN	AIR_SEN	CIP steril air sensor
			-]/[- 51
	CIP_AL		-(S) 6
			-(R) 13
%M0499	CIP_AL	CUP_BC	Cup position bucket cleaning
			-( ) 8
%M0500	CIP_AL	BUCK_BC	Bucket not present in clean unit
			-( ) 8
%M0501	CIP_AL	HI_CIP1	HI, Alarm nozzle wrong position
			-( ) 21
	HI		-]/[- 64
%M0502	CIP_AL	HI_CIP2	HI, Alarm cleaning pipe position
			-( ) 22
	HI		-]/[- 64
%M0503	CIP_AL	HI_CIP3	HI, Cleaning disabled(plug pipe)
			-( ) 23
	HI		-]/[- 64,65
%M0504	CIP_AL	HI_CIP4	HI, CIP sequence not correct
			-( ) 26
%M0505	CIP_AL	REG_VPO	Regulating valve position at CIP
			-(S) 11
			-(R) 13
%M0506	CIP_AL	B_V_CIP	B-valve pos during CIP
			-(S) 12
			-(R) 13
%M0507	CIP_AL	NO_WATE	No water hygienic cleaning
			-(S) 15
			-(R) 16
	HC		-] [- 7
			-]/[- 5
%M0508	CIP_AL	COL_COV	Column cover cleaning position
			-(S) 17
			-(R) 18
	HC		-] [- 7
			-]/[- 5
%M0509	CIP_AL	C-VAL_P	C-valve wrong pos during CIP
			-(S) 19
			-(R) 13
	CIP		-] [- 21
%M0510	CIP_AL	DR_PIPE	Draining pipe pos during cip
			-( ) 9
	CIP		-] [- 21
%M0511	CIP_AL	HI_CIP5	HI, Alarm product pipe position
			-( ) 27
	HI		-]/[- 64,65
%M0512	CIP_AL	HI_CIP6	HI, Alarm nozzle pipe position
			-( ) 28
	HI		-]/[- 64,65
%M0513	_MAIN	CIP_BLW	CIP_AL, max delay CIP-Blowing
			-]/[- 55
	AL_LOCK		FBIO 21
	CIP		-]/[- 97
			-(SM) 44
			-(RM) 49
%M0514	CIP	CIP_STE	CIP_AL, max delay CIP-Steriliz.
			-] [- 47
			-(SM) 45,46
			-(RM) 49
%M0515	CIP	CIP_TOT	CIP_AL, too long time for CIP
			-] [- 92
			-]/[- 91
			-(SM) 48
			-(RM) 49
%M0519	CIP	SCU_AL	CIP_AL, SCU alarm
			-( ) 43
%M0520	CIP	WT_FLOW	CIP_AL, water flow
			-(SM) 29
			-(RM) 32
%M0521	CIP	WT_TEMP	CIP_AL, water temperature
			-(SM) 30
			-(RM) 32

```
REF.     BLOCK    NICKNAME   REF. DESCRIPTION / CROSS REFERENCES
-------  -------  --------  -----------------------------------
%M0522   CIP      WT_CONC   CIP_AL, water concentration
                             -(SM) 31
                             -(RM) 32
%M0523   CIP      AK_FLOW   CIP_AL, alkali flow
                             -(SM) 33,36
                             -(RM) 37
%M0524   CIP      AK_TEMP   CIP_AL, alkali temperature
                             -(SM) 34,36
                             -(RM) 37
%M0525   CIP      AL_CONC   CIP_AL, alkali concentration
                             -(SM) 35,36
                             -(RM) 37
%M0526   CIP      AC_FLOW   CIP_AL, acid flow
                             -(SM) 38,41
                             -(RM) 42
%M0527   CIP      AC_TEMP   CIP_AL, acid temperature
                             -(SM) 39,41
                             -(RM) 42
%M0528   CIP      AC_CONC   CIP_AL, acid concentration
                             -(SM) 40,41
                             -(RM) 42
%M0529   MACHLAD  HI_PER1   HI, Spray tank slow filling
                             -] [- 14
         AL_LOCK             FBIO  16,17
         PEROXID             -(S)  35
                             -(R)  38
%M0530   TPOP     HI_PER2   HI, Spray tank slow emptying
                             -] [- 23
         PEROXID             -(S)  37
                             -(R)  38
%M0531   TPOP     HI_PER3   HI, Low temperature during spray
                             -] [- 23
         PEROXID             -(S)  41
                             -(R)  47
         HI                  -]/[- 59
%M0532   MACHLAD  HI_PER4   HI, Heater steril air temp.
                             -] [- 9
         TPOP                -] [- 23
         PEROXID             -(S)  42,43,44
                             -(R)  45
         HI                  -]/[- 34,59
%M0533   MACHLAD  HI_PER5   HI, Spray tank fast filling
                             -] [- 14
         PEROXID             -(S)  34
                             -(R)  38
%M0534   TPOP     HI_PER6   HI, Spray tank fast emptying
                             -] [- 23
         PEROXID             -(S)  36
                             -(R)  38
%M0535   TPOP     HI_PER7   HI, Heater element temperature
                             -] [- 23
         PEROXID             -(S)  46
                             -(R)  47
         HI                  -]/[- 34,59
%M0536   MACHLAD  FILFAST   Filling spray tank fast
                             -] [- 14
         PEROXID             -(S)  13
                             -(R)  18
%M0537   MACHLAD  SPRFAST   Spary fast --> go to Venting
                             -] [- 20
         TPOP                -] [- 21
         PEROXID             -(S)  16
                             -(R)  18
%M0545   TPOP     STCHOP    Start check TPOP comm
                             -]/[- 74
                             -( )  73
%M0546   TPOP     P+WDOG    Watchdog positive pulse
                             -] [- 74
                             -(^)  71
%M0547   TPOP     P-WDOG    Watchdog negative pulse
                             -] [- 74
                             -(v)  72
%M0548   TPOP     COMERR    Communication error TPOP
                             -] [- 9,75
```

```
REF.     BLOCK    NICKNAME   REF. DESCRIPTION / CROSS REFERENCES
-------  -------  --------  -------------------------------------
                            -]/[- 8
                            -( )  74
%M0561   AL_LOCK  SM_AL01   SM LS-SA Generator not detected
                            FBIO  22
         IH_MON             -] [- 18
                            -( )  18
%M0562   IH_MON   SM_AL02   SM LS Power error
                            -] [- 21
                            -( )  21
%M0563   IH_MON   SM_AL03   SM LS Phase error +
                            -] [- 24
                            -( )  24
%M0564   IH_MON   SM_AL04   SM LS Phase error -
                            -] [- 27
                            -( )  27
%M0565   IH_MON   SM_AL05   SM LS Phase shift too high
                            -] [- 30
                            -( )  30
%M0566   IH_MON   SM_AL06   SM LS Impedance error +
                            -] [- 33
                            -( )  33
%M0567   IH_MON   SM_AL07   SM LS Impedance error -
                            -] [- 36
                            -( )  36
%M0568   IH_MON   SM_AL08   SM LS Impedance shift too high
                            -] [- 39
                            -( )  39
%M0569   IH_MON   SM_AL09   SM SA Power error
                            -] [- 42
                            -( )  42
%M0570   IH_MON   SM_AL10   SM SA Phase error +
                            -] [- 45
                            -( )  45
%M0571   IH_MON   SM_AL11   SM SA Phase error -
                            -] [- 48
                            -( )  48
%M0572   IH_MON   SM_AL12   SM SA Phase shift too high
                            -] [- 51
                            -( )  51
%M0573   IH_MON   SM_AL13   SM SA Impedance error +
                            -] [- 54
                            -( )  54
%M0574   IH_MON   SM_AL14   SM SA Impedance error -
                            -] [- 57
                            -( )  57
%M0575   IH_MON   SM_AL15   SM SA Impedance shift too high
                            -] [- 60
                            -( )  60
%M0576   IH_MON   SM_AL16   SM LS-SA Free alarm
                            -( )  62
%M0577   AL_LOCK  SM_AL17   SM TS Generator not detected
                            FBIO  23
         IH_MON             -] [- 65
                            -( )  65
%M0578   IH_MON   SM_AL18   SM TS Free alarm
                            -( )  67
%M0579   IH_MON   SM_AL19   SM TS Product temperature error
                            -] [- 70
                            -( )  70
%M0580   IH_MON   SM_AL20   SM TS Phase change too low
                            -] [- 73
                            -( )  73
%M0581   IH_MON   SM_AL21   SM TS Phase change too high
                            -] [- 76
                            -( )  76
%M0582   IH_MON   SM_AL22   SM TS Phase far from average
                            -] [- 79
                            -( )  79
%M0583   IH_MON   SM_AL23   SM TS Imped too far from average
                            -] [- 82
                            -( )  82
%M0584   IH_MON   SM_AL24   SM TS Free alarm
                            -( )  84
%M0585   IH_MON   SM_AL25   SM TS Impedance too low
```

```
REF.     BLOCK    NICKNAME   REF. DESCRIPTION / CROSS REFERENCES
-------  -------  --------  -------------------------------------
                            -] [- 87
                            -( )  87
%M0586   IH_MON   SM_AL26   SM TS Impedance too high
                            -] [- 90
                            -( )  90
%M0587   IH_MON   SM_AL27   SM TS Phase too high
                            -] [- 93
                            -( )  93
%M0588   IH_MON   SM_AL28   SM TS Phase too low
                            -] [- 96
                            -( )  96
%M0589   IH_MON   SM_AL29   SM TS Power low
                            -] [- 99
                            -( )  99
%M0590   IH_MON   SM_AL30   SM TS Power high
                            -] [- 102
                            -( )  102
%M0591   IH_MON   SM_AL31   SM TS Time error
                            -] [- 105
                            -( )  105
%M0592   IH_MON   SM_AL32   SM TS Free alarm
                            -( )  107
%M0600   LADFUNC  AL_RES    Alarm reset (From TPOP)
                            -] [- 47
         TPOP               -( )  40
         FFU_MOT            -] [- 36,46
         ASEPTIC            -] [- 115,130
         P_FEED             -] [- 9,20
         LEV_CON            -] [- 54
         TEMPREG            -] [- 114
         ASU_MOT            -] [- 35,81
         STRIPSP            -] [- 8
         AL_LOCK            -] [- 33,34,35,37
         SAFETY1            -] [- 17,19,21
         SAFETY2            -] [- 12
         JUM                -] [- 8,12,19,23,29,36,40,46,47,56,68,86
         FFU                -] [- 7,10,14,19,24,25,26
         SA_UNIT            -] [- 9,13,16,21
         FIL_DCS            -] [- 9,11,15,23,38,42,46
         SERVIC1            -] [- 6,13,15,17,27
         STERIL             -] [- 6,11,15,19,22,25,27,32,35,38,42
         SST_AL             -] [- 6,10,15,17,22,26,28,29,32
         PEROXID            -] [- 7,10,18,26,38,45
         ASU_AL             -] [- 9,21,23,27,29,43,46,50,51,56,57,62,64,66
         CIP_AL             -] [- 11,13,16,18
         1T0001             -] [- 82
%M0601   TPOP     W_DOG     Watch-dog TPOP-GE (From TPOP)
                            -] [- 70,71,72
                            -]/[- 69
                            -( )  41
%M0603   TPOP     BE_FLAS   Beacon lamp flashing (from TPOP)
                            -] [- 65,66,67
                            -]/[- 65,66,67
                            -( )  42
         AL_LOCK            -]/[- 38
         SAFETY1            -]/[- 13
%M0605   TPOP     RES_P_C   Reset partial package counter
                            -( )  44
         SUPPLY             -] [- 34
%M0606   TPOP     BE_BLUE   Beacon lamp BLUE (From TPOP)
                            -] [- 65
                            -( )  45
%M0607   TPOP     BE_YELL   Beacon lamp YELLOW (From TPOP)
                            -] [- 66
                            -( )  46
         SAFETY1            -]/[- 13
         CUSTOM             -] [- 23
%M0608   TPOP     BE_RED    Beacon lamp RED (From TPOP)
                            -] [- 67
                            -( )  47
         SAFETY1            -]/[- 13
%M0609   _MAIN    WASTE_1   Waste of the pack nr 1
                            -] [- 36
         TPOP               -( )  48
```

```
REF.     BLOCK    NICKNAME  REF. DESCRIPTION / CROSS REFERENCES
-------  -------  --------  -----------------------------------
%M0610   TPOP     REFILL    Refilling of bucket
                             -( )  49
         LEV_CON             -] [- 64
%M0611   TPOP     RES_WAS   Reset waste counter
                             -] [- 124
                             -( )  50
%M0612   TPOP     ATT_ON    Attendence on (PLMS)
                             -] [- 28
                             -]/[- 30
                             -( )  51
%M0614   TPOP     PLMS_WD   Watchdog PLMS
                             -]/[- 9,75
                             -( )  52
%M0615   PLMSLA4  PRODEND   Production phase ended
                             -] [- 138
                             -(S)  136
                             -(R)  137
%M0616   PLMSLA4  PCOLDNO   Line Packages count not enabled
                             -] [- 208
                             -]/[- 148,153,158,161,163,168,170,171,173,175,178,181,209
                             -( )  138
%M0620   AL_LOCK  A_ALARM   A-alarm present
                             -] [- 39,40
                             -( )  5
%M0621   AL_LOCK  A_AL_EX   Old A-alarm exists
                             -]/[- 39
                             -( )  40
%M0622   AL_LOCK  LOCK_AL   Alarm lock
                             -] [- 38
                             -]/[- 6,7,8,9,10,11,12,13,14,15,16,17,18,19,20,21,22,23,24,29
                             -(S)  39
                             -(R)  37,38
%M0633   TPOP     ALRESSQ   Alarm reset reset (To TPOP)
                             FBIO  5
%M0634   TPOP     WDOG2     Watch dog (To TPOP)
                             -(S)  69
                             -(R)  70
%M0635   TPOP     RESTPOP   TPOP reset (To TPOP)
                             -( )  8
%M0636   TPOP     M-STOP    Machine stop (To TPOP)
                             -( )  10
         CUSTOM              -] [- 23
%M0637   TPOP     CLEANIN   Cleaing going on (To TPOP)
                             -( )  11
%M0638   TPOP     NORM_ST   Normal stop (To TPOP)
                             -(S)  12
                             -(R)  13
%M0639   TPOP     EM_ST     Emergency stop (To TPOP)
                             -( )  14
%M0640   TPOP     DOORS     Door guards (To TPOP)
                             -( )  15
%M0641   TPOP     CLANSB    Clean Steam barrier (To TPOP)
                             -( )  16
%M0642   TPOP     STSPL     Striplice (To TPOP)
                             -( )  17
%M0643   TPOP     PSPL      Paper splice (To TPOP)
                             -( )  18
%M0644   TPOP     SERSW     Service switch (To TPOP)
                             -( )  20
%M0645   _MAIN    JMP0DR    Jump to 0 while drying (To TPOP)
                             -]/[- 53
         MACHLAD             -] [- 36,41
                             -]/[- 34,39
         TPOP                -(S)  21,23
                             -(R)  24
%M0647   TPOP     PSPLDET   Paper splice detection (To TPOP)
                             -( )  19
%M0649   TPOP     BL_ASEP   Block alarms aseptic
                             -] [- 88
                             -( )  82
%M0650   TPOP     BL_ASU    Block alarms ASU
                             -] [- 88
                             -( )  83
%M0651   TPOP     BL_FFU    Block alarms FFU
```

REF.	BLOCK	NICKNAME	REF. DESCRIPTION / CROSS REFERENCES
			-] [- 88
			-( ) 84
%M0652	TPOP	BL_SST	Block alarms sst
			-] [- 88
			-( ) 85
%M0653	TPOP	BL_JUM	Block alarms JUM
			-] [- 88
			-( ) 86
%M0654	TPOP	BL_SER	Block alarms service
			-] [- 88
			-( ) 87
%M0657	AL_LOCK	CUST_01	Customer alarm 1 (down time)
			FBIO 24
%M0698	FFU_MOT	HP_MODE	FFU inching button home pos mode
			-] [- 31
			-]/[- 28,29
%M0699	TPOP	RESPIN	Reset packages in to TPOP
			-] [- 94
%M0705	TPOP	FF_JAW	FFU+JAW selection
			FBIO 99
	HC		-] [- 15,16,17,18,19,20,21,22,23,24,25,26,27,28,29,33
			-]/[- 32,37
%M0706	HC	FF_J_SS	FFU+JAW+SST selection
			-] [- 32,37
			-]/[- 15,16,17,18,19,20,21,22,23,24,25,26,27,28,29,33
%M0707	LADFUNC	HC_STOP	Stop hygienic cleaning
			-] [- 8
	HC		-] [- 8
%M0711	LADFUNC	CIP_STO	CIP stop from TPOP
			-] [- 8
	CIP		-] [- 19,20
%M0712	_MAIN	CIP_SEL	CIP select from TPOP
			-]/[- 56,101
	MACHLAD		-] [- 44
			-]/[- 9,46
	LADFUNC		-] [- 7
			-]/[- 7,8
	TPOPLAD		-] [- 28
			-]/[- 6,30
	TPOP		-(S) 100
	ASEPTIC		-] [- 105
	A_B_C		-] [- 20
	SAFETY1		-] [- 12
	FIL_DCS		-] [- 42
			-]/[- 41
	CIP_AL		-] [- 5,8,9,21,22,23,27,28
			-]/[- 6,9,23
	CIP		-] [- 11,14
			-]/[- 8,96
	HI		-] [- 64
			-]/[- 65
%M0713	_MAIN	HC_SEL	Hygienic cleaning selection ok
			-] [- 56
			-]/[- 39,56,101
	MACHLAD		-] [- 44
			-]/[- 7,9,46
	LADFUNC		-] [- 7
			-]/[- 8
	TPOPLAD		-] [- 26
			-]/[- 6,30
	TPOP		-]/[- 90
	SUPPLY		-] [- 27
	A_B_C		-] [- 27
	WASTE		-]/[- 8
	AL_LOCK		-] [- 29
	CIP		-]/[- 96
	HC		-] [- 6
%M0714	_MAIN	GR_JUM	Greasing JUM
			-] [- 101
			-]/[- 71
	LADFUNC		-] [- 7
	TPOP		-(R) 101
	GRE_JUM		-] [- 5
%M0715	GRE_FFU	GR_FFU	Greasing FFU

```
REF.     BLOCK    NICKNAME   REF. DESCRIPTION / CROSS REFERENCES
-------  -------  --------  -------------------------------------
                            -] [- 6,11
%M0716   _MAIN    GR_SEL    Greasing selected
                            -]/[- 66
         MACHLAD            -]/[- 9
         LADFUNC            -]/[- 7
         TPOPLAD            -] [- 26
                            -]/[- 6,28
         TPOP               -(R)  102
         HC                 -]/[- 5,6
%M0717   LADFUNC  STOP_GR   Stop greasing cycle JUM
                            -] [- 8
         TPOP               -(R)  103
         1T0001             -]/[- 89
         GRE_JUM            -] [- 26,37,45
%M0718   TPOP     HI_ON     HI, system setting with HI
                            -] [- 25
         ASEPTIC            -] [- 24,60,64
                            -]/[- 25,61,63
         TEMPREG            -] [- 98,99
                            -]/[- 97
         FIL_DCS            -] [- 31,32,34,35,37,39,41,43
                            -]/[- 33,37,40
         SERVIC1            -] [- 25,26
         PEROXID            -] [- 34,35,36,37,40,41,42,43,44,46
         HI                 -] [- 5,6,19,20,21,22,24,27,32,34,38,39,40,43,52,61,66
                            -]/[- 18,58,59,62
%M0719   PLMSLA4  R_DE      Reset DE configuration
                            -] [- 123,124,125,126
%M0720   TPOP     RECAOFF   Recorder alarm disabled
                            -( )  105
         SERVIC1            -]/[- 29
%M0721   TPOP     PRE_PH    Preparation phase (to PLMS)
                            -] [- 29
                            -]/[- 35
                            -( )  28
                            FBIO  6
%M0722   TPOP     PRO_PH    Production phase (to PLMS)
                            -] [- 31,32
                            -]/[- 28,35
                            -(S)  29
                            -(R)  30
         PLMSLA4            -] [- 137
%M0723   TPOP     PRO_END   Production end zero (to PLMS)
                            -( )  31
%M0724   TPOP     SQ_INT1   First st_seq interupted (to PLMS
                            -(S)  33
                            -(R)  34
%M0725   TPOP     FIN_CIP   CIP Final cleaning (To PLMS)
                            -( )  26
%M0726   TPOP     INT_CIP   CIP Intermediate (To PLMS)
                            -( )  27
%M0727   TPOP     PRO_VET   Production end venting TO PLMS
                            -( )  32
%M0728   TPOP     ST_ATT    Start Attendence (to plms)
                            -( )  35
%M0729   TPOP     HI_NBLD   HI, Enabled to PLMS
                            -( )  25
%M0733   TPOP     CIPBYPS   CIP Supervision Bypass (To PLMS)
                            -( )  36
%M0734   TPOP     BLOWPLM   Blowing (To PLMS)
                            -( )  37
%M0735   TPOP     CIP_INT   CIP interrupted (To PLMS)
                            -( )  38
%M0736   TPOP     CIP_OK    CIP Finish OK (To PLMS)
                            -( )  39
%M0740   A_B_C    STERDIS   Disable to sterilizer
                            -]/[- 15
                            -(S)  14
                            -(R)  13
%M0764   _MAIN    TSFAULT   TPIH TS constant fault
                            -] [- 20
                            -( )  21
%M0765   LADFUNC  CIP_HC    CIP/HC step up condition
                            -] [- 7
```

REF.	BLOCK	NICKNAME	REF. DESCRIPTION / CROSS REFERENCES
			-( ) 5
%M0766	LADFUNC	HC_CON	HC start condition
			-] [- 5
	ASU_AL		-]/[- 60
	HC		-] [- 6
			-( ) 5
%M0767	HC	JAW_9	Jaw out control 9
			-] [- 92
			-( ) 78
%M0768	HC	COL_13	Column out control 13
			-] [- 89
			-( ) 79
%M0769	HC	COL_12	Column out control 12
			-] [- 89
			-( ) 77
%M0770	HC	COL_11	Column out control 11
			-] [- 89
			-( ) 75
%M0771	HC	FFU_7	FFU out control 7
			-] [- 93
			-( ) 76
%M0772	HC	JAW_8	Jaw out control 8
			-] [- 91
			-( ) 74
%M0773	HC	COL_10	Column out control 10
			-] [- 89
			-( ) 73
%M0774	HC	COL_9	Column out control 9
			-] [- 89
			-( ) 71
%M0775	HC	COL_8	Column out control 8
			-] [- 88
			-( ) 70
%M0776	HC	COL_7	Column out control 7
			-] [- 88
			-( ) 68
%M0777	FFU	DE_FILT	Filter to lock DE stop
			-]/[- 22
			-( ) 21
%M0778	ST_SEQ	NOPROD	No product at the machine
			-] [- 29
	FIL_DCS		-] [- 22,24,26
			-]/[- 23
			-( ) 21
	CUSTOM		-]/[- 23
%M0779	FFU_MOT	EN_BELT	Belt brake management enabled
			-] [- 44,45,47,48
			-(S) 43
%M0780	ST_SEQ	EN_STER	Sterile/not sterile enabled
			-] [- 29
			-]/[- 29
	FIL_DCS		-] [- 22,24,26
			-]/[- 23,24
			-(SM) 29
	CIP		-] [- 6
			-]/[- 5
%M0781	CUSTOM	TS_FLS1	TS flushing enable 1
			-] [- 13
			-( ) 11
%M0782	CUSTOM	TS_FLS2	TS flushing enable 2
			-] [- 13
			-( ) 12
%M0783	_MAIN	SA_DOOR	SA internal door open
			-]/[- 47
	TPOP		-] [- 15
	SAFETY2		-(S) 11
			-(R) 12
%M0784	ASEPTIC	P+PAPBR	Pulse + paper broken
			-] [- 129
			-(^) 128
%M0785	STRIPSP	SENS_ON	SA strip prepared sensor detect.
			-] [- 26
			-]/[- 25
	STRIPOK		-] [- 7

REF.	BLOCK	NICKNAME	REF. DESCRIPTION / CROSS REFERENCES
			-]/[- 15
			-(S) 5
			-(R) 11,13,14,24
%M0786	_MAIN	INCH_SA	SA forced inching for strip fail
			-]/[- 47
	ST_SEQ		-]/[- 25
	ASU_AL		-] [- 57
			-]/[- 56
			-(S) 55
			-(R) 57
%M0787	FFU_MOT	BELT_ON	Belt brake ON delayed
			-] [- 45
			-( ) 44
%M0788	ST_SEQ	QUE_DE	Queue due to DE
			-]/[- 23
	FFU		-] [- 17,19
			-(S) 18
			-(R) 19
%M0789	WASTE	PROD_NO	No product signal in production
			-] [- 41
	FIL_DCS		-(S) 24
			-(R) 25
%M0790	P_FEED	POW_PEN	Power on to pendulum inverter
			-] [- 8
			-( ) 7
%M0791	FFU_MOT	POW_EXT	Power on to ext.conv.inverter
			-] [- 35
			-( ) 34
%M0793	_MAIN	NOSTRIP	Strip general alarm
			-] [- 10
			-]/[- 51
	MMOTOR		-]/[- 26
	ST_SEQ		-]/[- 21
	STRIPSP		-] [- 27
			-]/[- 15,24,30,31
	SA_UNIT		-] [- 16
			-]/[- 17
			-( ) 24
	STRIPOK		-] [- 23,24,26
			-]/[- 4
%M0794	_MAIN	INV_FLT	General inverter fault
			-]/[- 52
	ST_SEQ		-]/[- 20
	ASU_AL		-( ) 42
%M0795	ASEPTIC	DRY_DIS	Drying time display
			-]/[- 67
			-( ) 66
%M0796	ASU_AL	NEWREEL	ASU, finish splice with new reel
			-] [- 67
			-]/[- 18
			-(S) 63
			-(R) 66
%M0797	_MAIN	REELCON	ASU, step up reel condition
			-]/[- 53
	MMOTOR		-]/[- 26
	ASU_MOT		-]/[- 79
	ASU_AL		-( ) 67
%M0798	TEMPREG	ST1H2O2	First start temp.control H2O2
			-]/[- 82
			-(S) 81
			-(R) 80
%M0799	TEMPREG	ST1H2O	First start temp.control H2O
			-] [- 10
			-]/[- 11
			-(S) 9
			-(R) 8
%M0800	ASEPTIC	TAC_HT	Top aseptic chamber high temp
			-] [- 96
			-(S) 89
			-(R) 90
%M0801	ASEPTIC	ASH_LOW	Temp air super heater low
			-] [- 82
			-( ) 21
%M0802	ASEPTIC	HEP1_P-	Heat exchanger valve open pulse

```
REF.     BLOCK    NICKNAME   REF. DESCRIPTION / CROSS REFERENCES
-------  -------  --------  -------------------------------------
                            -] [- 95
                            -(v)  84
%M0803   _MAIN    STER_ON   Steril system on
                            -]/[- 44
         MACHLAD            -]/[- 24
         SUPPLY             -] [- 38
         ASEPTIC            -] [- 12,13,15,17,33,40,41,42,45,46
                            -]/[- 68
                            -( )  11
         A_B_C              -]/[- 19
         STERIL             -] [- 5,8
                            -]/[- 6
         PEROXID            -] [- 30
         HI                 -] [- 34
%M0804   ASEPTIC  HEXV_CK   Heat exchanger valve clock
                            -] [- 96,97
                            -( )  95
%M0805   _MAIN    HSTER_E   Heat sterilizing end
                            -] [- 51
         MACHLAD            -] [- 13
         ASEPTIC            -] [- 27
                            -(S)  22
                            -(R)  23
         STERIL             -] [- 27
%M0809   _MAIN    SPRAY_E   Spray end
                            -] [- 51
         MACHLAD            -] [- 20
         ASEPTIC            -( )  58
         PEROXID            -] [- 41
%M0810   ASEPTIC  PREH_C2   Preheating valve on condition 2
                            -]/[- 82
                            -( )  57
%M0811   MACHLAD  SPRAYON   Spray on
                            -] [- 21
         ASEPTIC            -] [- 52
                            -( )  51
%M0812   ASEPTIC  H2O2_TL   Peroxide temp.fine tuning
                            -] [- 40
                            -]/[- 33
                            -(S)  29
                            -(R)  30,31,32
%M0813   _MAIN    DRY_OK    Drying ready
                            -] [- 51
         MACHLAD            -] [- 23,34,36
         TPOP               -]/[- 21
         SUPPLY             -] [- 39,40
         ASEPTIC            -] [- 30,46,90
                            -]/[- 63,64,66,67,69,88,105,118,119,120,121
                            -(S)  62
                            -(R)  68
         A_B_C              -]/[- 27
         ST_SEQ             -] [- 10
                            -]/[- 11
         P_FEED             -] [- 24
         LEV_CON            -] [- 35,62
                            -]/[- 57
         WASTE              -] [- 6
         FIL_DCS            -] [- 21,22,23,31
         STERIL             -] [- 12,13
         PEROXID            -] [- 23
         PLMSLA4            -] [- 137
         CUSTOM             -] [- 9
         HI                 -] [- 15,20,24,51
                            -]/[- 19,21,36,37,42,49
%M0815   ASEPTIC  B-VAL     Open B-valve during Mach.ster.
                            -(S)  53,54
                            -(R)  55,56
         A_B_C              -] [- 17
%M0816   STERIL   REGV_O    Regulating valve open
                            -] [- 41
                            -]/[- 42
                            -( )  40
%M0818   ASEPTIC  W_COOL    Bath cooling set point
                            -(S)  37
```

REF.	BLOCK	NICKNAME	REF. DESCRIPTION / CROSS REFERENCES
			-(R) 39
	PWM		-] [- 9
%M0823	FIL_DCS	C-ON_ER	C-valve open error
			-] [- 19
			-( ) 17
%M0824	FIL_DCS	C-OF_ER	C-valve close error
			-] [- 19
			-( ) 18
%M0830	ASEPTIC	FILLBAT	Filling of H2O2-bath
			-] [- 77
			-]/[- 42
			-( ) 41
%M0831	ASEPTIC	P-HE_HE	Preh. valve control in heat ster
			-] [- 82
			-( ) 20
%M0832	ASEPTIC	TAC_LT	Top AC low temperature
			-] [- 90,94
			-]/[- 88
			-(S) 89
			-(R) 91,92
	TEMPREG		-] [- 72
			-]/[- 73
%M0833	_MAIN	H202DD	Peroxide bath drying delay
			-]/[- 53
	ASEPTIC		-] [- 40,44
			-]/[- 45,46,72
			-(S) 43
			-(R) 44
%M0834	ASEPTIC	SW3STVA	First switch 3 step valve
			-] [- 96,97
			-( ) 94
%M0835	_MAIN	DRYTANK	Drain spray tank
			-]/[- 51
	ASEPTIC		-] [- 50
			-]/[- 27,46,52
			-( ) 48
	HI		-] [- 27,38
			-]/[- 32
%M0836	ASEPTIC	FILTANK	Filling spray_tank
			-] [- 50
			-( ) 49
%M0837	ASEPTIC	P-STER	Sterile system on neg pulse
			-] [- 16
			-(v) 12
%M0838	_MAIN	DR_SEQ	Draning sequence filling circuit
			-] [- 53
	ASEPTIC		-] [- 6,16
			-]/[- 9
			-(S) 7
			-(R) 8
	LEV_CON		-] [- 33,35
			-]/[- 34
%M0839	ASEPTIC	PREH_CL	Preheating valve clock
			-]/[- 81
			-( ) 80
%M0840	MACHLAD	AUT_SPR	Automatic spray function
			-] [- 18
	ASEPTIC		-]/[- 27
			-(^) 27
%M0841	ASEPTIC	TEMP_W1	High temperature water bath
			-]/[- 40
	PEROXID		-] [- 32
			-( ) 30
%M0842	ASEPTIC	TEMP_W2	High temperature water heat exc.
			-]/[- 33
	PEROXID		-] [- 32
			-( ) 31
%M0843	ASEPTIC	COOL_WB	Cooling water bath
			-] [- 36,37,38
			-]/[- 39
			-( ) 35
%M0847	P_FEED	PENDSPR	Pendulum valve spraying time
			-] [- 18
			-]/[- 6

```
REF.     BLOCK    NICKNAME   REF. DESCRIPTION / CROSS REFERENCES
-------  -------  --------  -------------------------------------
                            -( )  5
%M0848   ASEPTIC  P_STEAM   Pulse - TCSB valve
                            -] [- 136
                            -(v)  133
%M0849   ASEPTIC  P+C_VAL   Pulse + C valve
                            -] [- 135
                            -(^)  132
%M0850   ASEPTIC  P+BEND    Pulse + bending roller sensor
                            -]/[- 128
                            -(^)  123
%M0851   ASEPTIC  P-BEND    Pulse - bending roller sensor
                            -]/[- 128
                            -(v)  124
%M0852   _MAIN    STEAM_F   steam timer finish
                            -] [- 51
         ASEPTIC            -]/[- 65,66,67,105,114
                            -(S)  107
                            -(R)  106
%M0853   ASEPTIC  STEAMLL   Steam low temp low pressure
                            -] [- 112,113
                            -]/[- 115
                            -( )  108
%M0854   ASEPTIC  STEAMHL   Steam high temp low pressure
                            -] [- 112
                            -( )  109
%M0855   ASEPTIC  STEAMLH   Steam low temp high pressure
                            -] [- 114
                            -( )  110
%M0856   ASEPTIC  STAEMHH   Steam high temp high pressure
                            -] [- 112
                            -( )  111
%M0857   ASEPTIC  P+H2O2    Pulse + H2O2 tank safety level
                            -] [- 142
                            -(^)  138
%M0858   ASEPTIC  P-H2O2    Pulse - fill H2O2 tank
                            -] [- 142
                            -(v)  139
%M0859   ASEPTIC  PCM_WAI   H2O2 meter wait after pmp stop
                            -]/[- 143
                            -( )  140
%M0860   ASEPTIC  PCM_PMP   H2O2 meter run H2O2 pump
                            -] [- 42,46
                            -]/[- 45
                            -( )  143
%M0861   ASEPTIC  PCM_CHK   H2O2 meter check temp./conc.
                            -] [- 145,146,147,152,158,159,165
                            -]/[- 149,153,156
                            -( )  144
%M0862   ASEPTIC  PCM_CYC   H2O2 meter temp./conc. cycle
                            -]/[- 145
                            -( )  145
%M0863   ASEPTIC  TMP_CHK   H2O2 meter check H2O2 temp.
                            -] [- 150
                            -]/[- 151
                            -(S)  148
                            -(R)  149
%M0864   ASEPTIC  NO_FLOW   H2O2 meter flow stopped
                            -] [- 155,156
                            -(/)  151
%M0865   ASEPTIC  CON_CHK   H2O2 meter check concentration
                            -] [- 154,160,161
                            -(S)  152
                            -(R)  153
%M0866   ASEPTIC  PCM_MLF   H2O2 meter malfunction
                            -] [- 142,162
                            -]/[- 161
                            -( )  155
%M0867   ASEPTIC  PCM_SPR   H2O2 conc. Ok for spraying
                            -]/[- 160,161
                            -( )  158
%M0868   ASEPTIC  PCM_PRO   H2O2 conc. OK for production
                            -]/[- 160
                            -( )  159
%M0869   ASEPTIC  PCM_CON   H2O2 conc. out of range
```

REF.	BLOCK	NICKNAME	REF. DESCRIPTION / CROSS REFERENCES
			-] [- 142,163
			-( ) 160
%M0870	ASEPTIC	PCM_LIM	H2O2 conc.close to limits
			-] [- 164
			-( ) 161
%M0871	ASEPTIC	P+STEP2	Pulse + entering in step_2
			-] [- 142
			-(^) 141
%M0874	A_B_C	BUT_CL	Close butterfly valve
			-] [- 27
			-( ) 26
%M0875	ASEPTIC	DRY_B-V	Active B-valve in drying time
			-( ) 69
	A_B_C		-] [- 17
%M0876	A_B_C	BUTSTP1	Butterfly valve 1'closing time
			-] [- 27
			-( ) 22
%M0877	A_B_C	BUTSTP2	Butterfly valve 2'closing time
			-] [- 27
			-( ) 23
%M0878	A_B_C	BUTSTP3	Butterfly valve 3'closing time
			-] [- 27
			-( ) 24
%M0879	A_B_C	BUTSTP4	Butterfly valve 4'closing time
			-] [- 27
			-( ) 25
%M0880	ASEPTIC	PREP_RF	Refilling command in preparation
			-] [- 75
			-( ) 71
	PEROXID		-] [- 20
%M0881	ASEPTIC	PROD_RF	Refilling command in production
			-] [- 75
			-( ) 74
%M0882	ASEPTIC	RF_COND	Refilling condition in prod.
			-] [- 73,75
			-( ) 72
	PEROXID		-] [- 20
%M0883	ASEPTIC	RF_CYCL	Refilling cycle in production
			-] [- 74
			-]/[- 73
			-( ) 73
%M0890	_MAIN	QUE_BBR	Queue after belt brake
			-]/[- 48
	FFU_MOT		-]/[- 38
	FFU		-] [- 17
			-(S) 26
			-(R) 24
%M0911	ASU	SLW_WEB	Paper web slow speed
			-] [- 32
			-]/[- 22,24
			-( ) 6
	ASU_MOT		-] [- 13,15,22,37,39,40,42,46,47,53,54,58,68,78,82,84,85,90,91
			-]/[- 13,26,35,39,53,59,62,72,81,98
	STRIPSP		-] [- 14,23,30,31,42,45
			-]/[- 14,25
	SA_UNIT		-] [- 15,21
			-]/[- 21
	ASU_AL		-] [- 24,51
			-]/[- 51
%M0912	ASU	FST_WEB	Paper web fast speed
			-] [- 32
			-]/[- 22,24
			-( ) 7
	ASU_MOT		-] [- 13,15,22,39,40,42,46,47,58,68,78,84,85,90,91,93
			-]/[- 13,25,26,39,59,62,72,78,98
	STRIPSP		-] [- 14,23,30,31,43,45,54
			-]/[- 14,25
	SA_UNIT		-] [- 15,21
			-]/[- 21
	ASU_AL		-] [- 18,24,51
			-]/[- 51
%M0988	_MAIN	CIP_REQ	CIP requested for A valve opened
			-] [- 87
			-(SM) 86

```
REF.     BLOCK    NICKNAME   REF. DESCRIPTION / CROSS REFERENCES
-------  -------  --------  -------------------------------------
                            -(RM) 88
         CIP                -(RM) 14
%M0989   LADFUNC  BLOWCON   Blow condition for step up light
                            -] [- 7
         CIP                -] [- 98
                            -( )  97
%M0990   ASEPTIC  BLWTEMP   Blowing temperature control
                            -] [- 97
         CIP                -( )  101
%M0991   _MAIN    BLOW_ON   CIP blowing going on
                            -]/[- 56
         TPOPLAD            -] [- 31
                            -]/[- 26,30
         TPOP               -] [- 37
         ASEPTIC            -] [- 17
                            -]/[- 16
         A_B_C              -] [- 27
         TEMPREG            -] [- 66,67
         CIP_AL             -]/[- 8
         CIP                -] [- 100,106,112,114
                            -]/[- 44,96,107,109
                            -(S)  98
                            -(R)  99,100,103,110
         HI                 -] [- 21,38,42,66
%M0992   _MAIN    CIPTODO   CIP must be done
                            -]/[- 51,56
                            -(SM) 87
                            -(RM) 88
         MACHLAD            -]/[- 7
         LADFUNC            -]/[- 8
         TPOPLAD            -] [- 28
                            -]/[- 30
         TPOP               -] [- 38,100
         CIP_AL             -]/[- 6
         CIP                -] [- 105
                            -(SM) 14
                            -(RM) 19
%M0993   _MAIN    CIPBLOW   CIP blowing must be done
                            -] [- 56
                            -]/[- 51
         MACHLAD            -] [- 46
                            -]/[- 7
         LADFUNC            -] [- 7
         TPOP               -] [- 11,39
         ASEPTIC            -] [- 96
                            -]/[- 16
         A_B_C              -] [- 17
         SAFETY1            -] [- 12
         FIL_DCS            -] [- 41
         CIP_AL             -] [- 6,8,9,23,26
                            -]/[- 9,25
         CIP                -] [- 44,46,98,100,102,104,105
                            -(SM) 19
                            -(RM) 100,103
         HI                 -] [- 65
%M0994   A_B_C    B_VCIP    B-valve control CIP
                            -] [- 17
         CIP                -( )  15
%M0995   ASEPTIC  PREVCL    Presterilising valve close CIP
                            -] [- 82
                            -]/[- 96
         CIP                -(S)  111
                            -(R)  112,113
%M0996   ASEPTIC  CIPHEAT   Heating during CIP draining
                            -] [- 17
         CIP                -] [- 110
                            -]/[- 98
                            -(S)  108
                            -(R)  109
%M0997   ASEPTIC  ST_CMP    Start compressor after CIP
                            -] [- 15
         CIP                -( )  108
%M0998   A_B_C    CHK_DRA   Check CIP drainig on
                            -]/[- 19
```

```
REF.     BLOCK    NICKNAME   REF. DESCRIPTION / CROSS REFERENCES
-------  -------  --------  -------------------------------------
         CIP                -(S)  9
                            -(R)  10
%M0999   CIP      CIP_OFF   Pulse neg edge CIP_ON
                            -] [- 23,111
                            -(v)  22
%M1000   MACHLAD  CIP_ON    CIP going on
                            -] [- 44
         LADFUNC            -] [- 8
                            -]/[- 7
         TPOPLAD            -] [- 29
                            -]/[- 28
         TPOP               -] [- 11,26,27
                            -]/[- 38
         ASEPTIC            -] [- 5
         LEV_CON            -] [- 33,35
         CIP_AL             -] [- 24
                            -]/[- 8
         CIP                -] [- 6,9,11,12,15,19,20,22,24,27,48,59,78,80,82,84,86,88,94,103,116
                            -]/[- 5,7,13,105
                            -(S)  14
                            -(R)  20,21
         HI                 -] [- 18,42
%M1001   TPOP     CL_BARR   Cleaning barrier space
                            -] [- 16,26
                            -]/[- 27
         A_B_C              -] [- 20
         CIP_AL             -] [- 19
                            -]/[- 19
         CIP                -] [- 9,11
                            -]/[- 10
                            -(S)  5
                            -(R)  8
%M1002   LADFUNC  CIP_RDY   CIP ready to start
                            -] [- 7
         CIP                -] [- 13,14
                            -( )  12
%M1003   CIP      CIP_STP   Stop of CIP
                            -] [- 16
                            -( )  13
%M1004   CIP      ST_PULS   Stop cip negative pulse
                            -] [- 20
                            -(v)  16
%M1005   CIP_AL   CHK_CIP   Check valves during CIP
                            -] [- 11,12,19
         CIP                -( )  24
%M1006   _MAIN    BASE_1S   Base 1 sec. positive pulse
                            -(^)  91
         TPOP               -] [- 58
         CIP                -] [- 48,114
         HC                 -] [- 11,34
%M1007   HC       COL_1     Column out control 1
                            -] [- 88
                            -( )  38
%M1008   HC       JAW_1     Jaw out control 1
                            -] [- 91
                            -( )  41
%M1009   HC       FFU_1     FFU out control 1
                            -] [- 93
                            -( )  42
%M1010   HC       RINS_1    Warm rinsing control 1
                            -] [- 95
                            -( )  39
%M1011   HC       WATER_1   Hot water control 1
                            -] [- 96
                            -( )  40
%M1012   HC       PUMP_1    Pump control 1
                            -] [- 97
                            -( )  40
%M1013   HC       JAW_2     Jaw out control 2
                            -] [- 91
                            -( )  44
%M1014   HC       ALKAL_1   Alkali control 1
                            -] [- 101
                            -( )  45
```

REF.	BLOCK	NICKNAME	REF. DESCRIPTION / CROSS REFERENCES
%M1015	HC	FOAM_1	Foaming control 1
			-] [- 98
			-( ) 46
%M1016	HC	COL_2	Column out control 2
			-] [- 88
			-( ) 47
%M1017	HC	JAW_3	Jaw out control 3
			-] [- 91
			-( ) 48
%M1018	HC	FFU_2	FFU out control 2
			-] [- 93
			-( ) 49
%M1019	HC	STOPM_1	Stop motors control 1
			-] [- 99
			-( ) 50
%M1020	HC	WATER_2	Hot water control 2
			-] [- 96
			-( ) 51
%M1021	HC	PUMP_2	Pump control 2
			-] [- 97
			-( ) 51
%M1022	HC	ALKAL_2	Alkali control 2
			-] [- 101
			-( ) 51
%M1023	HC	FOAM_2	Foaming control 2
			-] [- 98
			-( ) 51
%M1024	HC	COL_3	Column out control 3
			-] [- 88
			-( ) 52
%M1025	HC	JAW_4	Jaw out control 4
			-] [- 91
			-( ) 53
%M1026	HC	FFU_3	FFU out control 3
			-] [- 93
			-( ) 54
%M1027	HC	STOPM_2	Stop motors control 2
			-] [- 99
			-( ) 55
%M1028	HC	WATER_3	Hot water control 3
			-] [- 96
			-( ) 56
%M1029	HC	PUMP_3	Pump control 3
			-] [- 97
			-( ) 56
%M1030	HC	ALKAL_3	Alkali control 3
			-] [- 101
			-( ) 56
%M1031	HC	FOAM_3	Foaming control 3
			-] [- 98
			-( ) 56
%M1032	HC	COL_4	Column out control 4
			-] [- 88
			-( ) 57
%M1033	HC	JAW_5	Jaw out control 5
			-] [- 91
			-( ) 58
%M1034	HC	FFU_4	FFU out control 4
			-] [- 93
			-( ) 59
%M1035	HC	STOPM_3	Stop motors control 3
			-] [- 99
			-( ) 60
%M1036	HC	WATER_4	Hot water control 4
			-] [- 96
			-( ) 61
%M1037	HC	PUMP_4	Pump control 4
			-] [- 97
			-( ) 61
%M1038	HC	FFU_5	FFU out control 5
			-] [- 93
			-( ) 67
%M1040	HC	RINS_2	Warm rinsing control 2
			-] [- 95

```
REF.     BLOCK    NICKNAME   REF. DESCRIPTION / CROSS REFERENCES
-------  -------  --------  -------------------------------------
                            -( )  63
%M1041   HC       COL_5     Column out control 5
                            -] [- 88
                            -( )  64
%M1042   HC       JAW_6     Jaw out control 6
                            -] [- 91
                            -( )  65
%M1043   HC       FFU_6     FFU out control 6
                            -] [- 93
                            -( )  72
%M1044   HC       COL_6     Column out control 6
                            -] [- 88
                            -( )  66
%M1045   HC       JAW_7     Jaw out control 7
                            -] [- 91
                            -( )  69
%M1046   HC       FFU_8     FFU out control 8
                            -] [- 93
                            -( )  83
%M1047   HC       JAW_10    Jaw out control 10
                            -] [- 92
                            -( )  82
%M1048   HC       COL_14    Column out control 14
                            -] [- 89
                            -( )  81
%M1049   HC       JAW_11    Jaw out control 11
                            -] [- 92
                            -( )  85
%M1050   HC       FFU_9     FFU out control 9
                            -] [- 94
                            -( )  86
%M1051   HC       STOPM_4   Stop motors control 4
                            -] [- 99
                            -( )  87
%M1057   HC       COL_15    Column out control 15
                            -] [- 89
                            -( )  84
%M1060   HC       COL_16    Column out control 16
                            -] [- 90
                            -( )  43
%M1061   HC       FFU_10    FFU out control 10
                            -] [- 94
                            -( )  62
%M1077   HC       DRAIN     Draining air
                            -] [- 98
                            -( )  80
%M1081   HC       HELP_C2   Help cell column out 2
                            -] [- 90
                            -( )  89
%M1083   HC       HELP_C1   Help cell column out 1
                            -] [- 89
                            -( )  88
%M1084   HC       HELP_J1   Help cell JAW out 1
                            -] [- 92
                            -( )  91
%M1086   HC       HELP_F1   Help cell FFU out 1
                            -] [- 94
                            -( )  93
%M1088   MMOTOR   STOPMOT   Stop motors during HC
                            -]/[- 22
         FFU_MOT            -]/[- 13,15,29
         HC                 -( )  99
%M1089   HC       DOS_ON    Dosing valve on
                            -] [- 102
                            -( )  101
%M1092   MACHLAD  HC_DONE   Hygienic cleaning completed
                            -] [- 7
         JUM                -] [- 75
         HC                 -] [- 7,11,12,31
                            -]/[- 5
                            -(S)  11
                            -(R)  13
         GRE_FFU            -] [- 7,11
%M1093   HC       HC_PULS   HC start positive pulse
```

```
REF.     BLOCK    NICKNAME   REF. DESCRIPTION / CROSS REFERENCES
-------  -------  --------  -------------------------------------
                            -] [- 32,33
                            -(^)  10
%M1094   _MAIN    HC_ON     Hygienic cleaning going on
                            -] [- 33
                            -]/[- 56
         MACHLAD            -] [- 44
                            -]/[- 7,46
         LADFUNC            -] [- 8
                            -]/[- 7
         TPOPLAD            -] [- 27
                            -]/[- 30
         SUPPLY             -]/[- 27
         MMOTOR             -] [- 5
                            -]/[- 17,22
         FFU_MOT            -] [- 8
                            -]/[- 16
         ASEPTIC            -] [- 82
         CIP                -]/[- 96
         HC                 -] [- 7,8,10,11,34,36,37,38,39,40,41,42,43,44,45,46,47,48,49,50,51,52,53,54,55,56,57,58,59,60,61,62,63,
                                  64,65,66,67,68,69,70,71,72,73,74,75,76,77,78,79,80,81,82,83,84,85,86,87
                            -]/[- 5,31
                            -(S)  6
                            -(R)  7,8
         1T0001             -]/[- 80,81
         GRE_FFU            -]/[- 5
%M1095   MMOTOR   MOT_ST    Start motors JUM and FFU
                            -] [- 22
         FFU_MOT            -] [- 29
         HC                 -( )  36
%M1096   HC       HC_RDYR   HC ready reset
                            -] [- 13
                            -( )  12
%M1100   _MAIN    STER_EN   CIP, Sterilization not enabled
                            -]/[- 52
         CIP                -( )  47
%M1101   CIP      CIPSUP1   CIP Superv.Step 1-Cold rinsing
                            -] [- 29,30,31,36,41,51,62,65,66,68,69,71,72
                            -( )  79
%M1102   CIP      CIPSUP2   CIP Superv.Step 2-Warm rinsing
                            -] [- 29,30,31,36,41,52,62,65,66,68,69,71,72
                            -( )  81
%M1103   CIP      CIPSUP3   CIP Superv.Step 3-Alkali clean.
                            -] [- 33,34,35,36,41,53,62,65,66,68,69,71,72
                            -( )  83
%M1104   CIP      CIPSUP4   CIP Superv.Step 4-Alkali rinsing
                            -] [- 29,30,31,41,54,62,65,66,68,69,71,72
                            -( )  85
%M1105   CIP      CIPSUP5   CIP Superv.Step 5-Acid cleaning
                            -] [- 38,39,40,41,55,62,65,66,68,69,71,72
                            -( )  87
%M1106   CIP      CIPSUP6   CIP Superv.Step 6-Final rinsing
                            -] [- 29,30,31,56,62,65,66,68,69,71,72
                            -( )  89
%M1107   CIP      FLOW_OK   CIP, Flow OK
                            -] [- 51,52,53,54,55,56
                            -]/[- 29,33,38,74
                            -(S)  65
                            -(R)  75
%M1108   CIP      TEMP_OK   CIP, Temperature OK
                            -] [- 51,52,53,54,55,56
                            -]/[- 30,34,39,74
                            -(S)  68
                            -(R)  75
%M1109   CIP      CONC_OK   CIP, Concentration OK
                            -] [- 51,52,53,54,55,56
                            -]/[- 31,35,40,74
                            -(S)  71
                            -(R)  75
%M1110   CIP      CIPFLOW   CIP, selected flow OK
                            -] [- 62,65,66
                            -(S)  59
                            -(R)  60
%M1111   MACHLAD  CIP_END   CIP, Ended pulse
                            -] [- 7
```

```
REF.     BLOCK    NICKNAME   REF. DESCRIPTION / CROSS REFERENCES
-------  -------  --------  -----------------------------------
         CIP               -] [- 19,20,91
                           -(^)  17
%M1112   CIP      CIP_STR   CIP, Started pulse
                           -] [- 32,37,42,44,46,48,49,57,92
                           -(^)  26
%M1113   _MAIN    BASE_1M   Base 1 minute
                           -(^)  90
         LEV_CON           -] [- 58
         CIP               -] [- 44,46
%M1114   CIP      NEW_STP   CIP, new cleaning step pulse
                           -] [- 29,30,31,33,34,35,38,39,40,51,52,53,54,55,56,63,65,66,68,69,71,72,75,77
                           -(^)  27
%M1115   CIP      STP1_OK   CIP, Step 1 done
                           -] [- 91
                           -(S)  51
                           -(R)  57
%M1116   CIP      STP2_OK   CIP, Step 2 done
                           -] [- 91
                           -(S)  52
                           -(R)  57
%M1117   CIP      STP3_OK   CIP, Step 3 done
                           -] [- 91
                           -(S)  53
                           -(R)  57
%M1118   CIP      STP4_OK   CIP, Step 4 done
                           -] [- 91
                           -(S)  54
                           -(R)  57
%M1119   CIP      STP5_OK   CIP, Step 5 done
                           -] [- 91
                           -(S)  55
                           -(R)  57
%M1120   CIP      STP6_OK   CIP, Step 6 done
                           -] [- 91
                           -(S)  56
                           -(R)  57
%M1121   CIP      WEEKCIP   CIP, Weekly cleaning
                           -] [- 41
                           -]/[- 55,56
                           -(S)  57
                           -(R)  57
%M1122   _MAIN    CIPDONE   CIP, Enable step up condition
                           -] [- 55
         TPOP              -] [- 39
         CIP               -] [- 97
                           -(S)  91
                           -(R)  92
%M1123   CIP      CHKCOND   CIP, Check condition
                           -] [- 65,68,71
                           -(S)  62
                           -(R)  63
%M1124   CIP      AL_SWIT   CIP, Alarm set switch
                           -] [- 29,30,31,33,34,35,38,39,40
                           -]/[- 29,30,31,33,34,35,38,39,40
                           -( )  74
%M1125   CIP      FLOW_CT   CIP, Flow control alarm
                           -]/[- 29,33,38
                           -(S)  66
                           -(R)  75
%M1126   CIP      TEMP_CT   CIP, Temperature control alarm
                           -]/[- 30,34,39
                           -(S)  69
                           -(R)  75
%M1127   CIP      CONC_CT   CIP, Concentration control alarm
                           -]/[- 31,35,40
                           -(S)  72
                           -(R)  75
%M1128   CIP      CIP_ERP   CIP, End running pulse
                           -] [- 36,41
                           -(v)  18
%M1202   _MAIN    BCDASUP   Bar code ASU positive pulse
                           -(^)  11
%M1205   _MAIN    STRPCN    Start strip splice
                           -] [- 32
```

REF.	BLOCK	NICKNAME	REF. DESCRIPTION / CROSS REFERENCES
	TPOP		-] [- 17
	STRIPSP		-] [- 33
			-(S) 32
			-(R) 40
	SA_UNIT		-] [- 12
	CUSTOM		-] [- 27
%M1206	TPOP	STR_ON	Strip on condition pos. pulse
			-] [- 113
	STRIPSP		-(^) 33
	WASTE		-] [- 14
%M1209	_MAIN	P+PROD	Production on positive pulse
			-(^) 25
	TPOP		-] [- 115
	STRSEL		-] [- 7
	WASTE		-] [- 24
	JUM		-] [- 32
%M1210	RAMPS	RAMP_SA	Acceleration ramp SA
			-] [- 7
			-]/[- 10,11
			-(R) 5,7
	STRSEL		-] [- 11
			-(S) 7,10
%M1211	STRSEL	PROD_NG	Production on negative pulse
			-] [- 16
			-(v) 15
%M1213	RAMPS	STDLRM	Deceleration ramp stop
			-] [- 9
			-]/[- 10,11
			-(R) 9
	STRSEL		-] [- 20
			-]/[- 6
			-(S) 16,18
%M1215	ASU_MOT	POW_ON	Power on to inverter
			-] [- 20,78
			-( ) 10
	STRIPSP		-] [- 9,10,15
	SA_UNIT		-] [- 17
	SST_AL		-] [- 5
	ASU_AL		-] [- 39,40
	STRIPOK		-] [- 7,8
%M1216	STRSEL	P+R_SA	Ramp up SA positive pulse
			-] [- 13
			-(^) 11
%M1217	STRSEL	P+DR_SA	Down ramp SA positive pulse
			-] [- 21
			-(^) 20
%M1270	BRAKES	P-INCH	Pulse - inching push-button
			-] [- 7,12
			-(^) 6
%M1271	BRAKES	P-STP11	Pulse - step_11
			-] [- 12
			-(v) 9
%M1272	1T0001	BCASUF	Bar code ASU fast scan
			-] [- 66,71
			-(^) 65
%M1280	ASU	LP_RDY	Loop ready
			-(R) 38
	ASU_AL		-]/[- 14
	1T0001		-] [- 72
			-(S) 71
%M1284	STRSEL	P+MLS	Magazine low speed pos. pulse
			-] [- 10
			-(^) 9
%M1285	STRSEL	P-MLS	Magazine low speed neg. pulse
			-] [- 18
			-(v) 17
%M1292	ASU_AL	SPL_MON	ASU,Splice sequence monitor
			-] [- 30,35
			-(S) 33
			-(R) 34
%M1293	1T0001	SPL_1P	ASU, splice position after 1 pck
			-] [- 69,71
			-( ) 61
%M1294	ASU_AL	WEB+	ASU, Web monitor pulse +

REF.	BLOCK	NICKNAME	REF. DESCRIPTION / CROSS REFERENCES
			-] [- 51,52
			-]/[- 51
			-(^) 48
%M1295	ASU_AL	WEB-	ASU, Web monitor pulse -
			-] [- 51,52
			-]/[- 51
			-(v) 49
%M1296	ASU_AL	SPL_0P	ASU, splice position after 0 pck
			-(S) 14,62
	1T0001		-] [- 73
			-(R) 74
%M1297	TPOP	IN_ENAB	Package in counter enable
			-] [- 91,92,93,96,123
			-( ) 90
%M1299	ASU_AL	CKACMOT	Check fault frequency converter
			-] [- 41
			-( ) 38
%M1301	TPOP	DC_CLK	Bar code DCS clock
			-] [- 91,92,93,96,123
	WASTE		-]/[- 8
			-( ) 8
%M1302	ASU_AL	DEL_LP	Loop motor enable (delayed)
			-] [- 10,14
			-( ) 7
%M1303	SA_UNIT	SA_WAIT	SA, strip break alarm by-pass
			-] [- 17,18
			-]/[- 23
			-(S) 16
			-(R) 18
%M1304	SA_UNIT	SM_STOP	SA, strip magazine stop
			-] [- 21
			-( ) 15
%M1305	SA_UNIT	STRIP+	SA, rotation guard strip +
			-] [- 21
			-(^) 19
%M1306	SA_UNIT	STRIP-	SA, rotation guard strip -
			-] [- 21
			-(v) 20
%M1307	ASU	DELLPST	Loop motor enable (stop delayed)
			-]/[- 22,24
	ASU_AL		-( ) 8
%M1308	BRAKES	P+BRK	Pulse + apply brake
			-] [- 13
			-(^) 12
%M1309	ASU_AL	SPL_OUT	ASU, splice sequence timeout
			-] [- 30
			-( ) 35
%M1310	ASU	P+EN_MG	Pulse + enable drive magazine
			-(^) 9
	ASU_MOT		-] [- 15
%M1311	ASU	P+LOCK	Pulse + material locking ASU
			-] [- 12,13,14,15,16
			-(v) 10
%M1312	ASU	P+UNLK1	Pulse + unlock material reel 1
			-] [- 23
			-(^) 12
	ASU_AL		-] [- 18
%M1313	ASU	P+LOCK1	Pulse + lock material reel 1
			-] [- 22
			-(^) 13
	ASU_AL		-] [- 19
%M1314	ASU	P+UNLK2	Pulse + unlock material reel 2
			-] [- 25
			-(^) 14
	ASU_AL		-] [- 18
%M1315	ASU	P+LOCK2	Pulse + lock material reel 2
			-] [- 24
			-(^) 15
	ASU_AL		-] [- 19
%M1316	ASU	P+ASUON	Pulse + ASU splice going on
			-(^) 34
	PAPERSP		-] [- 15,49
	ASU_AL		-] [- 33
	BRAKES		-] [- 12

```
REF.     BLOCK    NICKNAME   REF. DESCRIPTION / CROSS REFERENCES
-------  -------  --------  -----------------------------------
%M1317   ASU      P+ASUSP   Pulse + ASU splice speed
                            -(^)  36
         ASU_AL             -]/[- 14
%M1319   ASU      P+ASUMN   Pulse + ASU manual start splice
                            -] [- 32
                            -(^)  30
         ASU_AL             -] [- 63
%M1323   ASU_MOT  P+DONE    Pulse + ASU paper splice done
                            -] [- 35,37,81,82
                            -(^)  34
%M1324   ASU_MOT  P+LONG    Pulse + ASU reset loop too long
                            -] [- 24,35
                            -(^)  23
%M1326   ASU      P+UPTAB   Pulse + ASU move cutting table
                            -] [- 27
                            -(^)  26
%M1327   ASU_MOT  P+HISPD   Pulse + ASU high speed after spl
                            -] [- 29
                            -(^)  28
%M1328   ASU_MOT  P+LWSPD   Pulse + ASU low restart after sp
                            -] [- 32
                            -(^)  31
         BRAKES             -] [- 12
%M1329   STRIPSP  P+ENSTR   Pulse + ASU end strip splice
                            -] [- 59,61,63
                            -(v)  34
         1T0001             -] [- 31
%M1330   STRIPSP  SA_ON     Strip magazine and SA heater ON
                            -] [- 5,12,15,23,30,31,45
                            -( )  4
         SA_UNIT            -] [- 21,22,23
         ASU_AL             -] [- 38
                            -]/[- 38
%M1332   STRIPSP  BOB_CHG   SA, bobbin change during splice
                            -] [- 12
                            -]/[- 12
                            -(^)  11
%M1333   STRIPSP  SM_RUN    Strip magazine running
                            -] [- 14,25
                            -( )  24
%M1334   STRIPSP  SM_REV    SA, motor reverse during spl.seq
                            -] [- 15
                            -]/[- 15
                            -( )  39
%M1335   STRIPSP  SS_CON    SA, motor enable stop during sp.
                            -]/[- 15
                            -(S)  35
                            -(R)  40
%M1336   STRIPSP  P-SAPUL   SA, pulse - strip sealing pulse
                            -] [- 48
                            -(v)  47
%M1337   STRIPSP  SA_SPL    SA, splice going on
                            -] [- 34,35,36,37,38,39,40
                            -]/[- 23,26,32
                            -(S)  32
                            -(R)  40
%M1338   STRIPSP  STRIPEM   SA, one strip bobbin empty
                            -] [- 30,31
                            -( )  29
         SA_UNIT            -] [- 8
%M1339   STRIPSP  P+STRIP   Pulse + SA start strip splice
                            -] [- 32
                            -(^)  30
%M1340   RAMPS    SAEXPOW   SA, extra power for splice in SA
                            -]/[- 11
         STRIPSP            -]/[- 54
                            -(S)  54
                            -(R)  55
%M1341   STRIPSP  SA_DTCT   SA, detect pkg mat splice in SA
                            -] [- 54
                            -]/[- 55
                            -( )  53
%M1344   STRIPSP  PKGCONT   SA, counting pkg after strip sp
                            -(S)  63
```

REF.	BLOCK	NICKNAME	REF. DESCRIPTION / CROSS REFERENCES
	WASTE		-] [- 14
			-(R) 15
	1T0001		-] [- 31
			-(R) 33
%M1345	1T0001	P+OKPKG	Pulse + SA pkg counter = 0
			-] [- 32
			-( ) 31
%M1346	1T0001	COUNTOK	SA, package counter = 0
			-] [- 33
			-(^) 32
%M1347	WASTE	WASTEPK	SA, waste pkg with strip splice
			-] [- 11,12
			-(R) 12
	1T0001		-(S) 33
%M1348	ASU_MOT	MG_CTRL	ASU, DR mag. speed control
			-] [- 85
			-( ) 84
%M1349	ASU_MOT	MG_CNTR	ASU, magazine control reset
			-] [- 86,87
			-( ) 85
%M1350	ASU_MOT	MG_SUB	ASU, magazine roller dpeed sub
			-] [- 85
			-( ) 86
%M1351	ASU_MOT	MG_ADD	ASU, magazine roller speed add
			-] [- 85
			-( ) 87
%M1354	ASU	POS_OK	ASU, position OK to complete
			-] [- 38
			-(^) 37
	ASU_MOT		-] [- 64
	PAPERSP		-] [- 18
%M1357	ASU	LOCKFOR	ASU, lock cylinders forcing
			-] [- 19,23,25
			-(S) 19,20
			-(R) 18
%M1360	BRAKES	BRAKDEL	ASU, brake delay consent
			-] [- 11
			-( ) 10
%M1361	BRAKES	GEN_BRK	ASU, gen.stop reel brake
			-] [- 12
			-(^) 11
%M1362	BRAKES	INCHDEL	ASU, inching button delayed
			-] [- 6
			-(S) 5
			-(R) 7
%M1363	BRAKES	BRK_ACT	ASU, brake active
			-] [- 14
			-( ) 13
%M1371	ASU_MOT	LP_CNTR	ASU, loop control reset
			-] [- 43,44
			-( ) 42
%M1372	ASU_MOT	LP_SUB	ASU, loop roller speed sub
			-] [- 42
			-( ) 43
%M1373	ASU_MOT	LP_ADD	ASU, loop roller speed add
			-] [- 42
			-( ) 44
%M1374	ASU	SPL_RES	ASU, splice sequence reset
			-] [- 38
	PAPERSP		-] [- 5
	ASU_AL		-] [- 34
			-( ) 32
%M1375	PAPERSP	SPL_MOV	ASU, side feeder allowed moving
			-( ) 23
	ASU_AL		-] [- 18
%M1376	PAPERSP	CUTPRES	ASU, press.rail during cut seq.
			-] [- 40
			-( ) 20
%M1380	ASU_MOT	LP_FULL	ASU, loop full
			-] [- 58
			-]/[- 19
			-(S) 13,14,16
			-(R) 12,17
%M1383	ASU_MOT	LP_LONG	ASU, high speed too long time

```
REF.     BLOCK    NICKNAME   REF. DESCRIPTION / CROSS REFERENCES
-------  -------  --------  -------------------------------------
                            -] [- 23,58
                            -]/[- 40
                            -(S)  22
                            -(R)  24
%M1384   ASU_MOT  ASUCORR   ASU, delay speed correction
                            -] [- 14,40,84
                            -( )  39
%M1386   ASU      SPL_SRC   ASU, splice position search
                            -(R)  38
         ASU_AL             -] [- 14
         1T0001             -] [- 67,68,69,70,71,73
                            -(S)  64
%M1387   ASU_MOT  SPL_TM3   ASU, splice sequence (2,55-2,65)
                            -] [- 65
         PAPERSP            -( )  38
         ASU_AL             -] [- 34,64,66
%M1388   PAPERSP  SPLPRES   ASU, pres.rail during splice
                            -] [- 40
                            -( )  35
%M1389   TPOP     SPL_ON    ASU, splice sequence going on
                            -] [- 18
         ASU                -] [- 34
                            -]/[- 33,38
                            -(S)  32
         ASU_MOT            -]/[- 13,58,65
         PAPERSP            -] [- 6,7,8,9,10,11,12,13
                            -(R)  5
         ASU_AL             -] [- 6,12,13,14
                            -]/[- 10,39,61
         1T0001             -] [- 62,65,66
         CUSTOM             -] [- 29
%M1390   ASU_MOT  ASUDOOR   ASU, doors open
                            -]/[- 20,78
                            -(S)  62
                            -(R)  61
%M1391   ASU      ASU_SPD   ASU, high speed after splice
                            -]/[- 30
         ASU_MOT            -] [- 19,25,26,28,34,49,50,52,53,54,78,93
                            -]/[- 13,14,15,19,42,58,85,98
                            -(R)  26
         PAPERSP            -(S)  42
%M1392   ASU_MOT  MG_SPLC   ASU, DR mag.move during splice
                            -] [- 97
                            -(S)  64
                            -(R)  65
%M1393   ASU_MOT  MG_STRT   ASU, DR mag. start
                            -] [- 79
                            -(S)  67
                            -(R)  68
%M1394   _MAIN    MG_FULL   ASU, DR mag. full
                            -] [- 53
         ASU_MOT            -] [- 58
                            -]/[- 78
                            -(S)  71,72
                            -(R)  70
%M1395   ASU      SPL_SPD   ASU, low speed before splice
                            -] [- 36
                            -(R)  38
         ASU_MOT            -] [- 19,57,64,96
                            -]/[- 56,58,95
         ASU_AL             -] [- 6
                            -]/[- 13
         1T0001             -(S)  69
%M1396   ASU_MOT  LP_CTRL   ASU, DR loop speed control
                            -] [- 42
                            -( )  40
%M1397   ASU_MOT  SLWRST    ASU, slow restart after splice
                            -] [- 30,53
                            -]/[- 31
                            -(S)  29
                            -(R)  30
         ASU_AL             -]/[- 10
%M1398   ASU      LOOPSLW   ASU, loop slow speed barcode cnt
                            -(R)  38
```

REF.	BLOCK	NICKNAME	REF. DESCRIPTION / CROSS REFERENCES
	ASU_MOT		-] [- 56,95
	ASU_AL		-]/[- 13
	1T0001		-(S) 67
%M1399	ASU_MOT	SPL_HIG	ASU, forced loop after splice
			-] [- 17,20,59
			-( ) 25
%M1401	ASU_MOT	SLWDONE	ASU, slow restart done
			-] [- 26
			-(S) 32
			-(R) 26
%M1402	STRIPSP	DEL_EXT	SA, delay extra power
			-] [- 51
			-]/[- 52
			-(S) 50
			-(R) 51
%M1403	STRIPSP	P+EXTRA	SA, pulse + start extra power
			-] [- 53
			-(^) 52
%M1404	ASU_MOT	P+ASUIN	ASU, pulse + splice interrupted
			-] [- 74
	ASU_AL		-(^) 31
%M1405	ASU_MOT	MAGZERO	ASU, mag.zero freq.after asu_int
			-] [- 75,79,99
			-(S) 74
			-(R) 75
%M1406	SA_UNIT	TPIHDEL	ASU, TPIH SA power delayed
			-] [- 6
			-( ) 5
%M1407	STRIPSP	SA_FORC	SA, stripsplice forced
			-] [- 30,31
			-(S) 8
			-(R) 31,32
%M1410	PAPERSP	GOSIDE2	ASU, go to side 2
			-] [- 26,27,30
			-(SM) 25
			-(RM) 31
%M1411	PAPERSP	GOSIDE1	ASU, go to side 1
			-] [- 26,28,30
			-(SM) 25
			-(RM) 31
%M1412	PAPERSP	TOUT_HT	ASU, time out heat translation
			-( ) 32
	ASU_AL		-] [- 20,30
%M1413	PAPERSP	SPLSTUP	Splice step up condition
			-] [- 46
			-( ) 44
%M1414	1T0001	P+ASUGF	Pulse + fast ppr splice going on
			-] [- 63,64
			-(^) 62
%M1415	ASU_AL	ASUSTFH	ASU, splice table forgotten high
			-] [- 19
			-(S) 17
			-(R) 19
%M1416	ASU_AL	WEB_RCV	ASU, Paper web recovering
			-] [- 62
			-(^) 61
%M1418	ASU	POSOKFS	ASU, pps spl pos OK fast scan
			-] [- 37
			-(R) 38
	1T0001		-] [- 74,75
			-(S) 73
%M1419	ASU	SPLNPBL	Paper splice was not possible
			-( ) 35
	ASU_AL		-] [- 62
%M1420	ASU	STP1-5	Paper splice between step 1 to 5
			-] [- 30,32
	ASU_MOT		-]/[- 20,76
	PAPERSP		-( ) 47
	ASU_AL		-] [- 60
			-]/[- 20
%M1422	ASU	RESTASU	ASU, total reset sequence
			-( ) 28
	PAPERSP		-] [- 31,43
%M1423	ASU	A602DEL	ASU, A602_34 delayed

```
REF.     BLOCK    NICKNAME   REF. DESCRIPTION / CROSS REFERENCES
-------  -------  --------  -------------------------------------
                            -] [- 30
                            -( )  29
%M1424   TEMPREG  CHT>250   ASU, Constant Heat temp. (>250)
                            -(S)  115
                            -(R)  114
         ASU                -]/[- 4
         ASU_AL             -] [- 15
%M1425   TEMPREG  CHTRCHK   ASU, CH bar Temp. raise CHK fail
                            -(S)  119
                            -(R)  114
         ASU                -]/[- 4
         ASU_AL             -] [- 15
%M1426   TEMPREG  CHBTCHK   ASU, CH bar Temp. raise Check
                            -] [- 117,119
                            -( )  116
%M1427   TEMPREG  P+CHBTC   ASU, Pulse + Temp. Reise chk
                            -] [- 118
                            -(^)  117
%M1429   ASU      PLOCK_R   ASU, spl head paper lock release
                            -] [- 20
                            -]/[- 12,13,14,15
                            -(S)  11
                            -(R)  16
%M1431   CIP      AUX3PRT   CIP rec, aux. cond. print
                            -] [- 120
                            -]/[- 118
                            -(S)  119
                            -(R)  117
%M1432   SUPPLY   BTC1PRT   Process rec, batch text 1 print
                            -] [- 43
                            -( )  46
%M1433   SUPPLY   BTC2PRT   Precess rec, batch text 2 print
                            -] [- 43
                            -( )  49
%M1434   SUPPLY   AUX2PRT   Process rec, aux. cond. print
                            -]/[- 45
                            -(S)  46
                            -(R)  44
%M1435   SUPPLY   AUX1PRT   Process rec, aux. cond. print
                            -] [- 49
                            -(S)  48
                            -(R)  44
%M1436   SUPPLY   P-P002    Process rec, pulse - cond. print
                            -] [- 48
                            -(v)  47
%M1438   SUPPLY   K101HON   K101 relay for Honeywell rec.
                            -] [- 42
                            -( )  38
%M1439   SUPPLY   K101JUM   K101 relay for JUMO recorder.
                            -] [- 42
                            -(S)  40
                            -(R)  41
%M1440   SERVIC1  AUXRECA   Recorder, aux. cond. rec. alarm
                            -] [- 30,31
                            -( )  29
%M1450   SUPPLY   LOW_INC   Low speed inch servo motor FFU
                            -] [- 27
         FFU_MOT            -] [- 8,25,26,27
                            -]/[- 23
                            -( )  25,26
%M1451   SUPPLY   HI_INCH   High speed inch servo motor FFU
                            -] [- 27
         FFU_MOT            -] [- 8,22,23,24
                            -]/[- 26
                            -( )  22,23
%M1452   FFU_MOT  STAR_RE   Start reason servo motor FFU
                            -] [- 10,13,37
                            -( )  8
%M1453   FFU_MOT  EN_SET    Set enable servo motor FFU
                            -] [- 12
                            -( )  11
%M1454   FFU_MOT  EN_RESE   Reset enable servo motor FFU
                            -]/[- 12
                            -( )  17
```

```
REF.     BLOCK    NICKNAME   REF. DESCRIPTION / CROSS REFERENCES
-------  -------  --------  -----------------------------------
%M1455   FFU_MOT  ST_INTP   Start interupt negative pulse
                            -] [- 14
                            -(v)  13
%M1456   FFU_MOT  FFU_INT   Start interupt servo motor FFU
                            -] [- 16
                            -( )  14
%M1457   FFU_MOT  STOP_SM   Servo motor FFU stop running
                            -] [- 16
                            -(v)  15
%M1458   FFU_MOT  GEN_RES   General reset servo motor FFU
                            -] [- 17,18
                            -(S)  16
                            -(R)  20
%M1459   FFU_MOT  CON_RES   Reset contactor servo motor FFU
                            -] [- 19
                            -( )  18
%M1460   FFU_MOT  THSINCH   Timer high speed inch motor FFU
                            -] [- 28,31
                            -( )  24
%M1461   FFU_MOT  TLSINCH   Timer low speed inch motor FFU
                            -] [- 29,31
                            -( )  27
%M1462   FFU      HP_CONT   Home position control pos pulse
                            -] [- 15
                            -(^)  13
%M1464   FFU_MOT  ST_EX_C   Start external conveyor
                            -] [- 38
                            -( )  41
%M1465   FFU      PAC_FFU   Packages in FFU
                            -] [- 29
                            -( )  28
%M1473   STRIPSP  SEARCH    SA, bobbin research going on
                            -] [- 9,10,11,25,26
                            -]/[- 11
                            -(S)  7
                            -(R)  8
         SA_UNIT            -] [- 11
                            -]/[- 10,22
         STRIPOK            -] [- 4,7,8,21,24
                            -]/[- 20
                            -(R)  24
%M1474   STRIPOK  P+SEARC   SA, pulse + bobbin research
                            -] [- 5,6
                            -(^)  4
%M1475   STRIPSP  ENDFORW   SA, end forward bobbin research
                            -]/[- 9
         STRIPOK            -] [- 9
                            -]/[- 7,8
                            -(S)  7,8
                            -(R)  19,23
%M1476   STRIPOK  P+VERIF   SA, pulse + bobbin determination
                            -] [- 10,11
                            -(^)  9
%M1477   STRIPSP  REVERSE   SA, reverse moved bobbin
                            -] [- 10
                            -]/[- 9
         STRIPOK            -] [- 12,13,14,15
                            -(S)  10
                            -(R)  12,13,14,15
%M1478   STRIPSP  BOBB_OK   SA, strip bobbin OK
                            -] [- 25
                            -]/[- 25,26
         STRIPOK            -] [- 12,22,23
                            -]/[- 13,14,15,16,17
                            -(S)  11
                            -(R)  23
%M1479   STRIPOK  END_REV   SA, end reverse bobbin research
                            -] [- 16,22,23
                            -]/[- 12,13,14,15
                            -(S)  12,13,14,15
                            -(R)  17,23
%M1480   MMOTOR   TESTOK    SA, bobbin research OK
                            -] [- 25,27
         ST_SEQ             -] [- 25
```

```
REF.     BLOCK    NICKNAME   REF. DESCRIPTION / CROSS REFERENCES
-------  -------  --------  -------------------------------------
         STRIPSP            -] [- 24
                            -]/[- 7,8,9,10
                            -(S)  8
         SA_UNIT            -]/[- 17
         STRIPOK            -] [- 24
                            -]/[- 5
                            -(S)  22
                            -(R)  26
         BRAKES             -] [- 5
%M1481   STRIPSP  P+ENREV   SA, pulse + end reverse bobbin
                            -] [- 9
         STRIPOK            -] [- 4,19,20
                            -]/[- 18
                            -(^)  18
%M1482   STRIPSP  SECOND    SA, second bobbin research
                            -] [- 11
         STRIPOK            -] [- 18
                            -]/[- 5
                            -(S)  17
                            -(R)  11,19,23
%M1483   STRIPSP  EN_FORW   SA, enable forward bobbin search
                            -] [- 15
                            -( )  9
%M1484   STRIPSP  EN_REV    SA, enable reverse bobbin serch
                            -] [- 15
                            -]/[- 15
                            -( )  10
%M1485   STRIPOK  DEL_SEC   SA, delay before second reseach
                            -] [- 17
                            -]/[- 16
                            -(S)  16
                            -(R)  17,23
%M1486   STRIPOK  P+SARES   SA, pulse + reset strip bobbin
                            -] [- 26
                            -(^)  25
%M1487   STRIPSP  P+SABOB   SA, pulse + strip bobbin researh
                            -] [- 7
         SA_UNIT            -(^)  17
%M1488   BRAKES   P-TUBE    Pulse - tube sealing
                            -] [- 12
                            -(v)  8
%M1530   LADFUNC  SAFREL1   SRV, Saf. relay A600,601 off
                            -] [- 37
                            -(S)  36
                            -(R)  38
%M1531   LADFUNC  SAF1ACK   SRV, Saf. relay A600,601 acknow.
                            -] [- 38,39,40
                            -(S)  37
                            -(R)  38
%M1532   LADFUNC  SAF_PER   SRV, Safety relay rest period
                            -] [- 43
                            -]/[- 42
                            -( )  42
%M1533   LADFUNC  SAF_RES   SRV, Sadety relay reset
                            -] [- 44
                            -( )  43
%M1535   LADFUNC  CIRC_OK   SRV, Circ.OK, relays not reset
                            -] [- 41,42,44
                            -]/[- 45
                            -( )  39
%M1536   LADFUNC  PLS_SAF   SRV, Circuits OK pulse
                            -] [- 45
                            -(^)  41
%M1537   LADFUNC  SAF_ALM   SRV, Safety relays malfunction
                            -( )  45
%M1538   LADFUNC  SAF_NOA   SRV, No alarms in safety windows
                            -] [- 47
                            -( )  44
%M1539   LADFUNC  SEL_ACK   SRV, Delay safety alarm acknowl.
                            -( )  40
%M1549   ST_SEQ   WARMBOX   Warm-up waste box
                            -( )  15
         1T0001             -] [- 59
%M1550   WASTE    SH_OUT    Output shiftregister %R2750
```

REF.	BLOCK	NICKNAME	REF. DESCRIPTION / CROSS REFERENCES
			-] [- 44
			-]/[- 45
			-( ) 43
%M1551	WASTE	PCKDMP	Dumping of packages
			-(S) 44
			-(R) 45,46
	1T0001		-] [- 59
%M1552	1T0001	WB_ON	Sector waste box on (Production)
			-] [- 59
			-( ) 57
%M1553	1T0001	WB_OFF	Sector waste box off (Waste)
			-]/[- 59
			-( ) 58
%M1554	_MAIN	P_STRBK	Strip break positive pulse
			-(^) 10
	WASTE		-] [- 16
%M1555	_MAIN	P_TPIHF	TPIH failure positive pulse
			-(^) 9
	WASTE		-] [- 18
%M1697	MMOTOR	ACC_01S	1 sec. acceleration main motor
			-( ) 6
	ASEPTIC		-] [- 126
			-]/[- 127
	1T0001		-] [- 80,81
%M1698	MMOTOR	ACC_10S	10 sec.acceleration main motor
			-( ) 9
	TEMPREG		-]/[- 21
%M1699	TPOP	ACC_02S	2 sec. acceleration main motor
			-] [- 91,92,93,96,123
			-]/[- 91,92,93,96,123
	MMOTOR		-( ) 7
	DCS		-] [- 23
	WASTE		-] [- 8
%M1700	MMOTOR	ACC_05S	5 sec. acceleration main motor
			-( ) 8
	ASEPTIC		-] [- 78
	ST_SEQ		-]/[- 26
	P_FEED		-] [- 14,34
	JUM		-] [- 10,11,16,18,20,22
	FIL_DCS		-] [- 8
%M1701	MMOTOR	ST_REAS	Start reasons main motor
			-] [- 11,14
			-( ) 5
%M1702	MMOTOR	RES_EN	Reset enable signal
			-] [- 19,20,21
			-]/[- 28
			-(S) 17
			-(R) 18
%M1703	MMOTOR	RES_EN2	Reset enable step 2
			-]/[- 13
			-( ) 20
%M1704	MMOTOR	CHK_ST	Check start of motors
			-] [- 15
			-(v) 14
%M1705	MMOTOR	ST_INT	Start interrupt
			-] [- 17
			-( ) 15
%M1706	MMOTOR	P-MRUN	MMRUN signal negative pulse
			-] [- 17
			-(v) 16
%M1707	MMOTOR	RES_CON	Reset contactor main motor
			-] [- 12
			-( ) 21
%M1708	MMOTOR	INCH_MM	Inching main motor
			-] [- 22,25,27,30
			-( ) 29
%M1709	SUPPLY	IN_COND	Inching conditions main motor
			-] [- 27
	MMOTOR		-] [- 5,29
			-( ) 26
%M1711	JUM	O_JAW_D	Zero jaw detected
			-]/[- 37
			-(S) 31
			-(R) 32

```
REF.     BLOCK    NICKNAME   REF. DESCRIPTION / CROSS REFERENCES
-------  -------  --------  -----------------------------------
         1T0001             -] [- 36,37,42,43,59
                            -]/[- 37
%M1712   JUM      LEFTTS    Sealing side TS (for alarm)
                            -] [- 7,20
                            -]/[- 7,16
                            -(S)  24
                            -(R)  25
%M1713   TPOP     TS_EVEN   Ts sealing even Jaw
                            -] [- 119
                            -]/[- 121
         JUM                -] [- 25
                            -]/[- 24
         1T0001             -] [- 37,43
                            -]/[- 36
                            -(S)  36
                            -(R)  37
%M1714   1T0001   TS_ODD    TS sealing odd jaw
                            -]/[- 37
                            -(S)  36
                            -(R)  38
%M1715   1T0001   JAWP_FS   Jawpulse fast scan
                            -] [- 31
                            -(v)  29
%M1716   SUPPLY   INCH_HS   Inching at high speed
                            -] [- 24,25
                            -]/[- 22
                            -( )  23
         DEF_PAR            -]/[- 8
%M1717   1T0001   ANG-SYN   Negative filter sector jaw sens
                            -] [- 85
                            -( )  83
%M1718   1T0001   ANG+SYN   Positive filter sector jaw sens
                            -] [- 85
                            -( )  84
%M1720   JUM      CLK_MM    Sample front DMC MM
                            -] [- 91,94
                            -( )  90
%M1721   JUM      END_MM    Transmission completed DMC MM
                            -] [- 93
                            -]/[- 94
                            -( )  92
%M1722   AL_LOCK  TON_MM    Transmission in progress DMC MM
                            -]/[- 26
         JUM                -] [- 89,90,91,94
                            -(S)  88
                            -(R)  93
%M1723   AL_LOCK  LCK_MM    Error register lock DMC MM
                            -] [- 32
                            -(S)  29
                            -(R)  33
%M1724   JUM      CLK_DCS   Sample front DMC DCS
                            -] [- 99,102
                            -( )  98
%M1725   JUM      END_DCS   Transmission completed DMC DCS
                            -] [- 101
                            -]/[- 102
                            -( )  100
%M1726   AL_LOCK  TON_DCS   Transmission in progress DMC DCS
                            -]/[- 27
         JUM                -] [- 97,98,99,102
                            -(S)  96
                            -(R)  101
%M1727   AL_LOCK  LCK_DCS   Error register lock DMC DCS
                            -] [- 30
                            -(S)  29
                            -(R)  33
%M1728   FFU      CLK_FF    Sample front DMC FF
                            -] [- 45,48
                            -( )  44
%M1729   FFU      END_FF    Transmission completed DMC FF
                            -] [- 47
                            -]/[- 48
                            -( )  46
%M1730   AL_LOCK  TON_FF    Transmission in progress DMC FF
```

```
REF.     BLOCK    NICKNAME   REF. DESCRIPTION / CROSS REFERENCES
-------  -------  --------  -----------------------------------
                            -]/[- 28
         FFU                -] [- 43,44,45,48
                            -(S)  42
                            -(R)  47
%M1731   AL_LOCK  LCK_FF    Error register lock DMC FF
                            -] [- 31
                            -(S)  29
                            -(R)  33
%M1748   DCS      P+2PACK   Machine out of design pos pulse
                            -(^)  22
         WASTE              -] [- 22
%M1749   DCS      P-DCSEN   Pulse neg edge Enable DCS
                            -(v)  8
         JUM                -]/[- 42
%M1751   JUM      CHK_HP    Check home position DCS
                            -] [- 28
                            -( )  27
%M1752   1T0001   TSSHIFT   Shift side TS
                            -] [- 36,37,38
                            -(^)  35
%M1753   DCS      PACK_2    2 packages out of design
                            -] [- 22,27
                            -( )  19
         JUM                -] [- 50
%M1754   DCS      PACK100   100 packages out of design
                            -( )  21
         JUM                -] [- 39
                            -]/[- 50
%M1755   MACHLAD  M_IN_DS   Machine in design
                            -] [- 32
         TPOP               -]/[- 109
         DCS                -(S)  24
                            -(R)  27
         WASTE              -]/[- 27,46
%M1756   1T0001   S_JRDY    Keep jaw ready signal
                            -] [- 28
                            -( )  26
%M1757   1T0001   D_JRDY    Jaw movement ready
                            -] [- 28
                            -( )  27
%M1758   DCS      CALCDCS   Move value % in design to TPOP
                            -] [- 35
                            -(^)  34
%M1760   DCS      STCOUNT   Start count packages out of des
                            -] [- 17,19,21
                            -]/[- 17
                            -(S)  15
                            -(R)  16
%M1763   DCS      TMC_RDY   TMCC ready for transfer
                            -]/[- 40
                            -( )  49
%M1765   DCS      HELP_CK   Help clock cell
                            -] [- 40,42,43
                            -(/)  40
%M1766   DCS      CLK_POS   Help clock pos pulse
                            -] [- 44,45
                            -(^)  42
%M1767   DCS      CLK_NEG   Help clock neg pulse
                            -] [- 46,47,48
                            -(v)  43
%M1768   DCS      P+ST_2    Step 2 pos pulse
                            -] [- 40
                            -(^)  39
         LEV_CON            -] [- 22
%M1770   _MAIN    ST_VOL    Start positioning volume cams
                            -(^)  35
         VOL_CAM            -] [- 15
         1T0001             -] [- 49,51
%M1771   _MAIN    ADJ_VOL   Volume adjustment going on
                            -]/[- 52
         TPOP               -] [- 77
                            -]/[- 78
         VOL_CAM            -] [- 6,10,11,12
                            -]/[- 5
```

```
REF.     BLOCK    NICKNAME   REF. DESCRIPTION / CROSS REFERENCES
-------  -------  --------  -------------------------------------
                            -(S)  15
                            -(R)  14
         DEF_PAR            -]/[- 5
         1T0001             -] [- 51,55
                            -]/[- 49,51
%M1772   VOL_CAM  VOL_DIR   Delayed motor direction
                            -( )  11
         1T0001             -] [- 46
%M1774   1T0001   CLOCK     Clock for stepper motor volume
                            -] [- 49,51,54,55,80,81
                            -]/[- 47
                            -( )  47
%M1775   VOL_CAM  CLK_DEL   Delay start clock pulse
                            -( )  12
         1T0001             -] [- 49,55
%M1776   VOL_CAM  HOME_P    Home position reached
                            -] [- 13,14
         1T0001             -] [- 52
                            -]/[- 46,49,55
                            -( )  49
%M1777   VOL_CAM  HOM_DEL   Delay home position
                            -( )  13
         1T0001             -] [- 51,55
%M1778   VOL_CAM  END_POS   End positioning volume adjust
                            -] [- 7,14
         1T0001             -]/[- 51,55
                            -( )  52
%M1779   _MAIN    NEW_SP    New set position volume adjust
                            -(^)  37
         VOL_CAM            -] [- 15
         1T0001             -] [- 49,51
%M1780   VOL_CAM  END_PP    End positioning positive pulse
                            -] [- 8
                            -(^)  7
%M1781   _MAIN    NEW_VAL   New value set position
                            -] [- 37
                            -]/[- 52
         VOL_CAM            -] [- 5
                            -(S)  9
                            -(R)  8
%M1782   VOL_CAM  END_MO    End movement volume cam
                            -] [- 18
         1T0001             -]/[- 54,55
                            -( )  54
%M1784   VOL_CAM  CHANGEV   Change set position volume cam
                            -] [- 5,19,20,21
                            -]/[- 17
                            -(S)  17
                            -(R)  18,19
         1T0001             -]/[- 54
%M1785   VOL_CAM  SETDIR    Set direction volume cam
                            -(S)  23
                            -(R)  18,19
         1T0001             -] [- 46
%M1786   TPOP     CHAN_G    Change set pos volume going on
                            -] [- 77
                            -]/[- 78
         VOL_CAM            -] [- 6,10,25
                            -]/[- 5
                            -(S)  24
                            -(R)  18,19
         1T0001             -]/[- 54
%M1787   VOL_CAM  CHAN_VP   Change value volume pos pulse
                            -] [- 22
                            -(^)  20
%M1788   VOL_CAM  ST_CHA    Start volume change pos pulse
                            -] [- 23,24
                            -(^)  21
%M1789   VOL_CAM  DEL_STA   Delay start positioning volume
                            -( )  25
         1T0001             -] [- 54,55
%M1791   1T0001   POS_RVC   Position reachead vloume cams
                            -] [- 52
                            -( )  51
```

```
REF.     BLOCK    NICKNAME   REF. DESCRIPTION / CROSS REFERENCES
-------  -------  --------  -------------------------------------
%M1795   1T0001   STPSEAL   Start pulse TS sealing
                             -] [- 40
                             -(^)  39
%M1800   MMOTOR   ST_MOT    Start main motor
                             -] [- 23
         LS_SEAL             -]/[- 20,21,22
                             -( )  17
         RAMPS               -] [- 13
%M1804   LS_SEAL  RAMP_OK   LS-Ramp (up) ready
                             -] [- 26,27,35
         RAMPS               -] [- 15,17
                             -]/[- 13,14,16
                             -(S)  14,16
                             -(R)  18
%M1807   LADFUNC  FORCEIN   Force inching memory
                             -] [- 7
                             -( )  6
%M1808   _MAIN    FOINJUM   Force inching after LS alarm
                             -]/[- 46
         MMOTOR              -]/[- 13,27
         ST_SEQ              -]/[- 21
         P_FEED              -]/[- 20
         SA_UNIT             -(S)  6
         SST_AL              -(S)  5
                             -(R)  6
%M1809   P_FEED   PND_STP   Pendulum stop when empty
                             -]/[- 20
                             -( )  19
%M1810   P_FEED   PENDDEL   Delay start pendulum roller
                             -] [- 20
                             -( )  16
%M1811   P_FEED   HELPEND   Help when paperweb is threaded
                             -] [- 17,20,25
                             -(S)  24
                             -(R)  25
%M1812   P_FEED   CTR_PR    Control pendulum roller speed
                             -] [- 35,36
                             -( )  34
%M1813   P_FEED   PENDDWN   Pendulum roller down position
                             -]/[- 14,16
                             -( )  13
%M1814   P_FEED   P+PEND    Nominal position pendulum +pulse
                             -] [- 34
                             -(^)  32
%M1815   P_FEED   P-PEND    Nominal position pendulum -pulse
                             -] [- 34
                             -(v)  33
%M1816   P_FEED   PENDSUB   Pendulum roller speed subtract
                             -] [- 34
                             -( )  35
%M1817   P_FEED   PENDADD   Pendulum roller speed add
                             -] [- 34
                             -( )  36
%M1818   P_FEED   FQ_ON     Frequency convereter on
                             -] [- 20
                             -( )  21
%M1819   P_FEED   STLSTT    Start ls tight tube
                             -(S)  14
                             -(R)  15
         LS_SEAL             -] [- 9
         SST_AL              -] [- 14
                             -]/[- 16
%M1820   _MAIN    ST_TUBE   Start tube positioning
                             -(^)  38
         TUBEPOS             -] [- 17,20,24
%M1821   TUBEPOS  END_PO    End tube positioning
                             -] [- 7,23
                             -]/[- 20,22
                             -( )  21
%M1822   TUBEPOS  END_P     End tube positioning pos pulse
                             -] [- 8
                             -(^)  7
%M1823   _MAIN    NEW_V     New value set positioning tube
                             -]/[- 52
```

```
REF.     BLOCK    NICKNAME   REF. DESCRIPTION / CROSS REFERENCES
-------  -------  --------  -------------------------------------
         TUBEPOS            -] [- 5,10
                            -(S)  9
                            -(R)  8
%M1824   TUBEPOS  NEW_SET   New set position tube position
                            -] [- 17,20,24
                            -(^)  10
%M1825   TPOP      TUB_POS   Tube positioning going on
                            -] [- 79
                            -]/[- 80
         TUBEPOS            -] [- 6,12,15,20,22
                            -]/[- 5,17,20
                            -(S)  24
                            -(R)  23
%M1826   TUBEPOS  POS_DIR   Delayed motor direction
                            -] [- 13
                            -( )  12
%M1827   TUBEPOS  HOME_PO   Home position reached
                            -] [- 18,21
                            -]/[- 13,17,22
                            -( )  17
%M1828   TUBEPOS  CLOCK_T   Clock for stepper motor tube pos
                            -] [- 17,20,22,34
                            -]/[- 14
                            -( )  14
%M1829   TUBEPOS  CLK_D     Delay start clock pulse
                            -] [- 17,22
                            -( )  15
%M1830   TUBEPOS  DEL_HOM   Delay home position tube
                            -] [- 20,22
                            -( )  18
%M1831   TUBEPOS  CHANGE    Change set position tube
                            -] [- 5,28,29
                            -]/[- 26,34
                            -(S)  26
                            -(R)  27
%M1832   TUBEPOS  ST_CHAN   Start changing positive pulse
                            -] [- 31,32
                            -(^)  29
%M1833   TUBEPOS  CHANGEP   Change value positive pulse
                            -] [- 30
                            -(^)  28
%M1834   TUBEPOS  SET_DIR   Set direction tube positioning
                            -] [- 13
                            -(S)  31
                            -(R)  27
%M1835   TPOP      CHAN_GO   Change set position going on
                            -] [- 79
                            -]/[- 80
         TUBEPOS            -] [- 6,33
                            -]/[- 5,34
                            -(S)  32
                            -(R)  27
%M1836   TUBEPOS  DEL_STR   Delayed start positioning
                            -] [- 22,34
                            -( )  33
%M1837   TUBEPOS  END_MOV   End move tube positioning
                            -] [- 27
                            -]/[- 22,34
                            -( )  34
%M1839   TUBEPOS  POS_REA   Tube position reached
                            -] [- 21
                            -( )  20
%M1840   TUBE      P+PSP_C   Splice guard column pos pulse
                            -] [- 8
         LS_SEAL            -] [- 32
                            -(^)  31
         WASTE              -] [- 20
%M1841   LS_SEAL  SPPOWLS   Extra power LS paper splice
                            -]/[- 35
                            -( )  33
         RAMPS              -]/[- 15,17
%M1850   LS_SEAL  HOT_TT    Tight tube with hot machine
                            -] [- 13
                            -]/[- 12
```

REF.	BLOCK	NICKNAME	REF. DESCRIPTION / CROSS REFERENCES
			-( ) 11
%M1900	_MAIN	HIS1-8	HI, Step up conditions pos 1-8
			-] [- 54
	HI		-] [- 55
			-( ) 54,55
%M1901	HI	HIS9-11	HI, Step up conditions pos 9-11
			-( ) 56
%M1902	_MAIN	HIJP_1	HI, Jump to position 1
			-] [- 44
	HI		-( ) 57
%M1903	_MAIN	HIJP_6	HI, Jump to position 6
			-] [- 47
	HI		-( ) 58
%M1904	ST_SEQ	HIDEMNS	HI, Demand normal stop
			-] [- 25
	HI		-( ) 59
%M1905	HI	HIFILTK	HI, Filling spray tank
			-] [- 27,52
			-( ) 26
%M1906	HI	HISPRTK	HI, Spray on
			-] [- 32
			-( ) 29
%M1907	HI	HINOSPR	HI, stop spray air
			-] [- 38
			-]/[- 32
			-( ) 31
%M1908	HI	HIPAUSE	HI, Drying pause
			-( ) 35
%M1909	HI	HIOPENA	HI, Advanced opening on A valve
			-] [- 42
			-( ) 41
%M1910	HI	HISW2S6	HI, Switch valve pulse in step 6
			-] [- 19,52
			-]/[- 21
			-( ) 36
%M1911	CIP_AL	NOZ_ON	HI, Nozzle on before CIP
			-] [- 21
	HI		-(SM) 61
			-(RM) 63
%M1912	CIP	HICIPRD	HI, HI system ready for CIP
			-] [- 12,16
	HI		-( ) 64
%M1913	CIP	HICIPDR	HI, HI system ready for CIP dry
			-] [- 97
			-]/[- 99
	HI		-( ) 65
%M1914	CIP_AL	NOZ_OFF	HI, Nozzle off after CIP dry
			-] [- 21
	HI		-]/[- 54
			-(SM) 66
			-(RM) 67
%M1915	ASEPTIC	HEXCSWT	HI, Heat exchanger valve switch
			-] [- 97
			-(S) 99
			-(R) 100,101
%M1916	FIL_DCS	FLOWCHK	HI, Flow check for alarm
			-] [- 36
			-( ) 35
%M1917	PEROXID	HI_SPOK	HI, Spray temperature OK
			-]/[- 41
			-(S) 40
			-(R) 39
%M1918	ASEPTIC	HSTERHI	HI, Heat sterilzing end
			-] [- 27
			-(S) 24,25
			-(R) 23
	HI		-] [- 54
%M1919	HI	HISW1S2	HI, Switch valve pulse in step 2
			-]/[- 52
			-( ) 50
%M1920	HI	N2DELAY	HI, Delay off for Y9101 & Y9105
			-] [- 42
			-]/[- 52
			-( ) 40

```
REF.     BLOCK    NICKNAME   REF. DESCRIPTION / CROSS REFERENCES
-------  -------  --------  -----------------------------------
%M1921   HI       HIPULCY   HI, Stop impulse cycle I/P trans
                            -] [- 16
                            -]/[- 15
                            -( )  15
%M1922   HI       HISTPUL   HI, Impulse on I/P trans in stop
                            -] [- 19
                            -]/[- 20
                            -( )  16
%M1923   FIL_DCS  HI_FLCK   HI, Flow check
                            -] [- 35,43
                            -( )  34
%M1924   HI       SWY9114   HI, Switch valve pulse in step 6
                            -] [- 32
                            -( )  30
%M1925   HI       SWY9103   HI, Switch valve pulse in step 3
                            -]/[- 21,38
                            -( )  37
%M1926   HI       HISTIMP   HI, Injection impulse on stop
                            -] [- 19,43
                            -]/[- 24
                            -( )  47
%M1927   HI       HISTINS   HI, FDS Injection imp. on stop
                            -] [- 45,46
                            -(v)  44
%M1928   HI       HISTIN1   HI, Injection impulse 1 on stop
                            -]/[- 47
                            -( )  45
%M1929   HI       HISTIN2   HI, Injection impulse 2 on stop
                            -] [- 39,47
                            -( )  46
%M1930   TEMPREG  HEAT_SW   HI, Heating element switch
                            -(S)  98
                            -(R)  97,99
         PWM                -]/[- 43
%M1931   FIL_DCS  PR+CLHI   HI, Production+clean with HI
                            -]/[- 41
         CIP_AL             -] [- 21,22,24,27,28
                            -]/[- 22,23,28
         CIP                -(RM) 100
         HI                 -(SM) 61
                            -(RM) 62
%M1932   CIP_AL   HI_CLOK   HI, Cleaning OK
                            -]/[- 26
                            -(S)  24
                            -(R)  25
%M1933   FIL_DCS  PR+CLNH   HI, Production+clean without HI
                            -]/[- 41
         CIP_AL             -] [- 22,23,27
                            -]/[- 22,23,28
         CIP                -(RM) 100
         HI                 -(SM) 62
                            -(RM) 61
%M1934   HI       HISW1S5   HI, Switch valve pulse in step 5
                            -] [- 52
                            -( )  48
%M1935   TEMPREG  HISW1S6   HI, Switch valve pulse in step 6
                            -] [- 95
         HI                 -] [- 52
                            -( )  49
%M1936   FIL_DCS  HI_FLOW   HI, Alarm no flow during prod.
                            -] [- 36
                            -(S)  31
                            -(R)  32,33
%M1937   HI       HINOZ01   HI, Nozzle selection 0.3
                            -] [- 7
                            FBIO  5
%M1938   HI       HINOZ02   HI, Nozzle selection 0.4
                            -] [- 8
%M1939   HI       HINOZ03   HI, Nozzle selection 0.5
                            -] [- 9
%M1940   HI       HINOZ04   HI, Nozzle selection 0.6
                            -] [- 10
%M1941   HI       HINOZ05   HI, Nozzle selection 4x0.2
                            -] [- 11
```

```
REF.     BLOCK    NICKNAME   REF. DESCRIPTION / CROSS REFERENCES
-------  -------  --------  -----------------------------------
%M2100   TPOP     DEFFCST   Request default Start Flow TPOP
                             -( )  53
         LEV_CON             -] [- 9,15,17
%M2101   TPOP     NEWFCST   Request new value StartFlow TPOP
                             -( )  54
         LEV_CON             -] [- 12,15,17
%M2102   TPOP     DEFFCPR   Request default Prod Flow TPOP
                             -( )  55
         LEV_CON             -] [- 10,14,15,17
%M2103   TPOP     NEWFCPR   Request new value Prod Flow TPOP
                             -( )  56
         LEV_CON             -] [- 13,14,15,17
%M2180   LEV_CON  BUCKETF   Refill bucket with air
                             -] [- 57,66
                             -(S)  67
                             -(R)  65,66
%M2181   LEV_CON  P+REFIL   Pulse pos edge refill button
                             -] [- 67,68
                             -(^)  64
%M2182   LEV_CON  AUT_REF   Automatic refilling
                             -] [- 67,68
                             -(^)  58
%M2183   DCS      REF_BLK   Block alarm while refilling
                             -]/[- 21
         LEV_CON             -] [- 69
                             -( )  68

         FIL_DCS             -]/[- 8
%M2184   ST_SEQ   LEVEL_D   Level not OK delayed stop
                             -]/[- 24
         LEV_CON             -( )  55
%M2185   TPOP     REF_WAS   Minimum waste during refilling
                             -] [- 107
                             -]/[- 109
         LEV_CON             -( )  69
         WASTE               -] [- 46
%M2240   CUSTOM   P007_FC   Final CIP for Logoscreen
                             -] [- 19
                             -( )  18
%M2241   CUSTOM   CIP_R_L   Final CIP running (Logoscreen)
                             -] [- 17,18
                             -( )  16
%M2242   CUSTOM   FC_T_I    Final CIP Timer Interrupt Logos.
                             -]/[- 17
                             -( )  17
%M2244   CUSTOM   ASU_S     ASU splice signal for Logoscreen
                             -] [- 30,33
                             -]/[- 31
                             -(SM) 29
                             -(RM) 30
%M2245   CUSTOM   STRIP_S   Strip signal for Logoscreen
                             -] [- 28,33
                             -(SM) 27
                             -(RM) 28
%M2246   CUSTOM   FACTO_S   Factory splice for Logoscreen
                             -] [- 32,33
                             -(SM) 31
                             -(RM) 32
%M2500   TEMPREG  LOOP_1    Loop 1 active
                             -( )  25
         PWM                 -] [- 5,8,10
%M2503   TEMPREG  LOOP_2    Loop 2 active
                             -( )  34
         PWM                 -] [- 12,16
%M2505   _MAIN    T_OK_L2   Temp ok Loop 2
                             -] [- 51
         TEMPREG             -(S)  29
                             -(R)  27
         FFU                 -]/[- 34
%M2506   TEMPREG  LOOP_3    Loop 3 active
                             -( )  43
         PWM                 -] [- 12,20
%M2508   _MAIN    T_OK_L3   Temp ok Loop 3
                             -] [- 51
         TEMPREG             -(S)  38
```

```
REF.     BLOCK    NICKNAME   REF. DESCRIPTION / CROSS REFERENCES
-------  -------  --------  -------------------------------------
                            -(R)  36
         FFU                -]/[- 35
%M2509   TEMPREG  LOOP_4    Loop 4 active
                            -( )  52
         PWM                -] [- 12,24
%M2511   _MAIN    T_OK_L4   Temp ok Loop 4
                            -] [- 51
         TEMPREG            -(S)  47
                            -(R)  45
         FFU                -]/[- 32
%M2512   TEMPREG  LOOP_5    Loop 5 active
                            -( )  61
         PWM                -] [- 12,28
%M2514   _MAIN    T_OK_L5   Temp ok Loop 5
                            -] [- 51
         TEMPREG            -(S)  56
                            -(R)  54
         FFU                -]/[- 33
%M2515   TEMPREG  LOOP_6    Loop 6 active
                            -( )  75
         PWM                -] [- 29,32,33
%M2517   TEMPREG  T_OK_L6   Temp ok Loop 6
                            -(S)  65
                            -(R)  63
         STERIL             -]/[- 24
%M2518   ASEPTIC  L1_MAN    Loop 1 in manual mode
                            -] [- 31
         TEMPREG            -] [- 22,25,79
                            -]/[- 23
                            -( )  21
%M2519   TEMPREG  LOOP_7    Loop 7 active
                            -( )  89
         PWM                -] [- 34,37,38
%M2521   TEMPREG  HILOOP8   HI,Loop 8 active
                            -( )  104
         PWM                -] [- 40,43,44
%M2522   TEMPREG  T1OK_L8   HI,Air heater Temp OK Loop 8
                            -(S)  93,94
                            -(R)  91
         PEROXID            -]/[- 42,43,44
%M2523   TEMPREG  T2OK_L8   HI,Heater element Temp OK Loop 8
                            -(S)  96
                            -(R)  91
         PEROXID            -]/[- 46
%M2529   TEMPREG  LOOP_9    Loop 9 active
                            -( )  113
         PWM                -] [- 46,49,50
%M2530   TEMPREG  T_OKL9    Temp ok Loop 9
                            -(SM) 108
                            -(RM) 106
         ASU_AL             -]/[- 15
%M2531   ASU_MOT  OK_LPXH   OK for extra high speed
                            -] [- 51
                            -]/[- 49
                            -( )  50
%M2532   ASU_MOT  MG_ASUI   ASU, Mag no run after splice int
                            -]/[- 79
                            -(S)  74
                            -(R)  76
%M2533   PAPERSP  RES_WT    ASU, reset web tension output
                            -] [- 16
                            -( )  36
%M2534   PAPERSP  ST0_ST    Position 0 ended
                            -] [- 44
                            -( )  18
%M2535   PAPERSP  ST1_ST    Position 1 ended
                            -] [- 31,44
                            -( )  23
%M2536   PAPERSP  ST2_ST    Position 2 ended
                            -] [- 44
                            -( )  26
%M2537   PAPERSP  ST3_ST    Position 3 ended
                            -] [- 31,44
                            -( )  30
```

```
REF.     BLOCK    NICKNAME   REF. DESCRIPTION / CROSS REFERENCES
-------  -------  --------  -------------------------------------
%M2538   PAPERSP  ST4_ST    Position 4 ended
                            -] [- 44
                            -( )  37
%M2539   PAPERSP  ST5_ST    Position 5 ended
                            -] [- 44
                            -( )  38
%M2540   PAPERSP  ST6_ST    Position 6 ended
                            -] [- 44
                            -( )  42
%M2541   PAPERSP  ST7_ST    Position 7 ended
                            -] [- 44
%M2542   PAPERSP  STP0      Paper splice in position 0
                            -] [- 18,44
                            -( )  6
%M2543   PAPERSP  STP1      Paper splice in position 1
                            -] [- 20,22,23,44
                            -( )  7
%M2544   PAPERSP  STP2      Paper splice in position 2
                            -] [- 25,26,44
                            -( )  8
%M2545   PAPERSP  STP3      Paper splice in position 3
                            -] [- 30,32,44
                            -( )  9
%M2546   PAPERSP  STP4      Paper splice in position 4
                            -] [- 34,35,36,37,44
                            -( )  10
%M2547   PAPERSP  STP5      Paper splice in position 5
                            -] [- 38,44
                            -( )  11
%M2548   PAPERSP  STP6      Paper splice in position 6
                            -] [- 42,44
                            -( )  12
%M2549   ASU      STP7      Paper splice in position 7
                            -] [- 27
         PAPERSP             -] [- 5,43,44
                            -( )  13
%M2550   DEFAULT  DEF_L1    Move default values Loop 1
                            -] [- 6,7,8,9,42,43,44
                            -( )  5
%M2551   DEFAULT  DEF_L2    Move default values Loop 2
                            -] [- 12,13,14,15
                            -( )  11
%M2552   DEFAULT  DEF_L3    Move default values Loop 3
                            -] [- 18,19,20,21
                            -( )  17
%M2553   DEFAULT  DEF_L4    Move default values Loop 4
                            -] [- 24,25,26,27
                            -( )  23
%M2554   DEFAULT  DEF_L5    Move default values Loop 5
                            -] [- 30,31,32,33
                            -( )  29
%M2555   DEFAULT  DEF_L6    Move default values Loop 6
                            -] [- 36,37,38,39
                            -( )  35
%M2557   DEFAULT  DEF_L8    Move default values Loop 8
                            -] [- 47,48,49,50
                            -( )  46
%M2558   DEFAULT  DEF_L9    Move default values Loop 9
                            -] [- 53,54,55,56
                            -( )  52
%M2600   PWM      PWM_1     PWM timer 1 active
                            -] [- 7
                            -]/[- 5
                            -(^)  5
%M2601   PWM      PWM_2     PWM timer 2 active
                            -] [- 14,18,22,26
                            -]/[- 12
                            -(^)  12
%M2602   PWM      PWM_3     PWM timer 3 active
                            -] [- 31
                            -]/[- 29
                            -(^)  29
%M2606   PWM      PWM_7     PWM timer 7 active
                            -] [- 36
```

REF.	BLOCK	NICKNAME	REF. DESCRIPTION / CROSS REFERENCES
			-]/[- 34
			-(^) 34
%M2607	PWM	PWM_8	PWM timer 8 active
			-] [- 42
			-]/[- 40
			-(^) 40
%M2608	PWM	PWM_9	PWM timer 9 active
			-] [- 48
			-]/[- 46
			-(^) 46
%M2650	TPOP	PACK_-P	Package counted neg. pulse
			-] [- 95
	SUPPLY		-] [- 33
			-(v) 32
%M2951	LEV_CON	FCS_RDY	TMCC FCS Ready for transfre
			-] [- 16
			-]/[- 22
			-( ) 31
%M2952	LEV_CON	FCS_CLK	TMCC FCS Help clock cell
			-] [- 22,24,25
			-(/) 22
%M2953	LEV_CON	FCS_EN	TMCC FCS Help enable cell
			-] [- 23
			-( ) 22
%M2954	LEV_CON	FCS_POS	TMCC FCS Help clock pos.pulse
			-] [- 26,27
			-(^) 24
%M2955	LEV_CON	FCS_NEG	TMCC FCS Help clock neg.pulse#
			-] [- 28,29,30
			-(v) 25
%M3002	PLMSLA4	TSA22_S	Ready/stopsignal TSA22
			-] [- 69,71,94,193,198,200
			-( ) 13
%M3003	PLMSLA4	CBP71_S	Ready/stopsignal TCBP71
			-] [- 81,83,106,193
			-( ) 30
%M3005	PLMSLA4	THX22_S	Ready/stopsignal THx22
			-] [- 65,67,93,193,196,198,200
			-( ) 7
%M3007	PLMSLA4	TTS51_S	Ready/stopsignal TTS51
			-] [- 111,193
			-( ) 39
%M3008	PLMSLA4	MFW_S	Ready/stopsignal Meurer FW
			-] [- 73,75,99,193,200
			-( ) 19
%M3010	PLMSLA4	GFW_S	Ready/stopsignal Generic FW
			-] [- 73,75,100,193,200
			-( ) 20
%M3011	PLMSLA4	GCBP_S	Ready/stopsignal Generic CBP
			-] [- 81,83,107,193
			-( ) 32
%M3012	PLMSLA4	GTS_S	Ready/stopsignal Generic TS
			-] [- 112,193
			-( ) 40
%M3013	PLMSLA4	CPB22_S	Ready/stopsignal TCBP22
			-] [- 81,83,108,193
			-( ) 34
%M3014	PLMSLA4	THA32_S	Ready/stopsignal THA32
			-] [- 77,79,104,193,200
			-( ) 27
%M3015	PLMSLA4	GKM_S	Ready/stopsignal GKM
			-] [- 73,75,101,193,200
			-( ) 21
%M3016	PLMSLA4	FW68L_S	Ready/stopsignal FW68 Left
			-] [- 73,75,102,193,200
			-( ) 22
%M3017	PLMSLA4	FW68R_S	Ready/stopsignal FW68 Right
			-] [- 103
			-( ) 24
%M3019	PLMSLA4	CP21L_S	Ready/stopsignal TCAP21 Left
			-] [- 95
			-( ) 14
%M3020	PLMSLA4	CP21R_S	Ready/stopsignal TCAP21 Right
			-] [- 96

REF.	BLOCK	NICKNAME	REF. DESCRIPTION / CROSS REFERENCES
			-( ) 15
%M3021	PLMSLA4	GCAPL_S	Ready/stopsignal Gen. TCAP Left
			-] [- 97
			-( ) 16
%M3022	PLMSLA4	GCAPR_S	Ready/stopsignal Gen. TCAP Right
			-] [- 98
			-( ) 17
%M3023	PLMSLA4	AS21_S	Ready/stopsignal AS21
			-] [- 116
			-( ) 49
%M3024	PLMSLA4	AS12_S	Ready/stopsignal AS12
			-] [- 69,71,73,75,81,83,115,196,198,200
			-( ) 46
%M3025	PLMSLA4	CB70L_S	Ready/stopsignal TCBP70 Left
			-] [- 81,83,109,193
			-( ) 36
%M3026	PLMSLA4	CB70R_S	Ready/stopsignal TCBP70 Right
			-] [- 110
			-( ) 37
%M3027	PLMSLA4	TPL10_S	Ready/stopsignal TPL10
			-] [- 114,193
			-( ) 44
%M3028	PLMSLA4	TE10_S	Ready/stopsignal TE10
			-] [- 113,193
			-( ) 42
%M3029	PLMSLA4	GENHA_S	Ready/stopsignal Generic HA
			-] [- 77,79,105,193,200
			-( ) 28
%M3032	PLMSLA4	AS21RRD	AS21 input right delay
			-] [- 49
			-( ) 47
%M3033	PLMSLA4	AS21LRD	AS21 input left ready
			-] [- 49
			-( ) 48
%M3035	_MAIN	FM_GO	FM can start (from DE)
			-] [- 52
	MMOTOR		-] [- 27
	FFU		-]/[- 22
	PLMSLA4		-( ) 202
%M3036	PLMSLA4	FM_GO_1	FM_GO (AS12 not installed)
			-] [- 202
			-( ) 194
%M3037	PLMSLA4	FM_GO_2	FM_GO (AS12 before Level 20)
			-] [- 202
			-( ) 196
%M3038	PLMSLA4	FM_GO_3	FM_GO (AS12 before Level 30)
			-] [- 202
			-( ) 198
%M3039	PLMSLA4	FM_GO_4	FM_GO (AS12 before Level 50)
			-] [- 202
			-( ) 200
%M3040	PLMSLA4	LEV10	DE level 10
			-] [- 67,70,74,78,82
			-]/[- 69,73,77,81,136
			-(S) 65
			-(R) 66
%M3041	PLMSLA4	LEV20	DE level 20
			-] [- 71,74,78,82
			-]/[- 73,77,81
			-(S) 69
			-(R) 70
%M3042	PLMSLA4	LEV30	DE level 30
			-] [- 75,78,82
			-]/[- 77,81
			-(S) 73
			-(R) 74
%M3043	PLMSLA4	LEV40	DE level 40
			-] [- 79,82
			-]/[- 81
			-(S) 77
			-(R) 78
%M3044	PLMSLA4	LEV50	DE level 50
			-] [- 83
			-(S) 81

REF.	BLOCK	NICKNAME	REF. DESCRIPTION / CROSS REFERENCES
			-(R) 82
%M3050	PLMSLA4	STLEV10	DE stopsignal level 10
			-] [- 85
			-( ) 67
%M3051	PLMSLA4	STLEV20	DE stopsignal level 20
			-] [- 85
			-( ) 71
%M3052	PLMSLA4	STLEV30	DE stopsignal level 30
			-] [- 85
			-( ) 75
%M3053	PLMSLA4	STLEV40	DE stopsignal level 40
			-] [- 85
			-( ) 79
%M3054	PLMSLA4	STLEV50	De stopsignal level 50
			-] [- 85
			-( ) 83
%M3063	PLMSLA4	DELEV10	Level 10 present
			-]/[- 193,196,198,200
			-( ) 184
%M3064	PLMSLA4	DELEV20	Level 20 present
			-] [- 150
			-]/[- 147,177,193,198,200
			-( ) 185
%M3065	PLMSLA4	DELEV30	Level 30 present
			-] [- 155
			-]/[- 147,150,177,180,193,200
			-( ) 186
%M3066	PLMSLA4	DELEV40	Level 40 present
			-]/[- 147,150,155,177,180,193,200
			-( ) 187
%M3067	PLMSLA4	DELEV50	Level 50 present
			-] [- 165
			-]/[- 147,150,155,160,162,177,180,193
			-( ) 188
%M3068	PLMSLA4	DELEV60	Level 60 present
			-]/[- 133,147,150,155,160,162,165,177,180,193
			-( ) 189
%M3069	PLMSLA4	DELEV70	Level 70 present
			-]/[- 133,147,150,155,160,162,165,170,171,177,180,193
			-( ) 190
%M3070	PLMSLA4	DELEV80	Level 80 present
			-]/[- 133,147,150,155,160,162,165,170,171,173,177,180,193
			-( ) 191
%M3100	FFU	THX_FS	Stop Signal from THx22 in bypass
			-] [- 18
			-]/[- 19
	PLMSLA4		-]/[- 193,196,198,200
			-( ) 8
%M3101	PLMSLA4	THX_BP	THx22 in bypass
			-] [- 8,10,66
			-( ) 9
%M3102	PLMSLA4	P_TH_BP	Positive pulse THx22 in bypass
			-] [- 117
			-(^) 10
%M3103	PLMSLA4	THX_EMP	THx22 empty
			-] [- 136
			-( ) 11
%M3104	PLMSLA4	FW68RDI	FW68 Right Double infeed
			-]/[- 56
			-( ) 25
%M3105	PLMSLA4		N.2 TCAP21 or TCAP47 present
			-] [- 57,62
			-]/[- 52,58,59
			-( ) 51
%M3106	PLMSLA4		MFW or GFW or GKM present
			-] [- 59
			-]/[- 58,59
			-( ) 52
%M3107	PLMSLA4		FW68 not present
			-] [- 59
			-( ) 53
%M3108	PLMSLA4		N.1 FW68 present (Single Infeed)
			-] [- 59
			-( ) 54

REF.	BLOCK	NICKNAME	REF. DESCRIPTION / CROSS REFERENCES
%M3109	PLMSLA4		N.1 Fw68 present (Double Infeed)
			-] [- 58
			-( ) 55
%M3110	PLMSLA4		N.2 Fw68 present (Single Infeed)
			-] [- 58,61
			-]/[- 62
			-( ) 56
%M3112	PLMSLA4	AS12#20	AS12 before Cap Applicator
			-] [- 69,71,130,150,155,160,162,177,196
			-]/[- 128,129
			-( ) 57
%M3113	PLMSLA4	AS12#30	AS12 before Fw68
			-] [- 69,71,73,75,128,155,160,162,177,198
			-]/[- 130,180
			-( ) 58
%M3114	PLMSLA4	AS12#50	AS12 before Lev50 (CBP)
			-] [- 69,71,73,75,81,83,129,177,200
			-]/[- 128,130,180
			-( ) 59
%M3117	PLMSLA4	AS21#20	AS21 after Cap Applicator
			-] [- 132,155,160,162,180
			-]/[- 131
			-( ) 62
%M3118	PLMSLA4	AS21#30	AS21 after Fw68
			-] [- 131,160,162,180
			-]/[- 132
			-( ) 61
%M3130	PLMSLA4	COU_L20	Enable counter Level 20
			-] [- 151,153
			-( ) 150
%M3131	PLMSLA4	COU_L30	Enable counter Level 30
			-] [- 156,158
			-( ) 155
%M3133	PLMSLA4	COU_L50	Enable counter Level 50
			-] [- 166,168
			-( ) 165
%M3140	PLMSLA4	CBP71#R	TCBP71 in right position
			-] [- 106
			-]/[- 81,83,106
			-( ) 31
%M3141	PLMSLA4	GCBP#R	Generic CBP in right position
			-] [- 107
			-]/[- 81,83,107
			-( ) 33
%M3142	PLMSLA4	CBP22#R	TCBP22 in right position
			-] [- 108
			-]/[- 81,83,108
			-( ) 35
%M3150	PLMSLA4	P_DE_BP	Positive pulse DE in bypass
			-] [- 118,119,120,121
			-(^) 117
%M3201	PLMSLA4		Spare DE present ID=0
			FBIO 127
%M3203	PLMSLA4	TSA_PRE	TSA22 present
			-(SM) 94
			-(RM) 123
%M3204	PLMSLA4	CBP71PL	TCBP71 present left side
			-(SM) 106
			-(RM) 125
%M3206	PLMSLA4	THX_PRE	THx22 present
			-(SM) 93
			-(RM) 123
%M3208	PLMSLA4	TTS51PR	TTS51 present
			-(SM) 111
			-(RM) 126
%M3209	PLMSLA4	MFW_PRE	Meurer FW present
			-] [- 52
			-(SM) 99
			-(RM) 124
%M3211	PLMSLA4	GFW_PRE	Generic FW present
			-] [- 52
			-(SM) 100
			-(RM) 124
%M3212	PLMSLA4	GCBP_PL	Generic CBP present left side

REF.	BLOCK	NICKNAME	REF. DESCRIPTION / CROSS REFERENCES
			-(SM) 107
			-(RM) 125
%M3213	PLMSLA4	GTS_PRE	Generic TS present
			-(SM) 112
			-(RM) 126
%M3214	PLMSLA4	CBP22PL	TCBP22 present left side
			-(SM) 108
			-(RM) 125
%M3215	PLMSLA4	THA_PRE	THA32 present
			-(SM) 104
			-(RM) 124
%M3216	PLMSLA4	GKM_PRE	GKM present
			-] [- 52
			-(SM) 101
			-(RM) 124
%M3217	PLMSLA4	FW68L_P	FW68 Left present
			-] [- 54,55,56
			-]/[- 53
			-(SM) 102
			-(RM) 124
%M3218	PLMSLA4	FW68R_P	FW68 Right present
			-] [- 56
			-]/[- 53,54,55
			-(SM) 103
			-(RM) 124
%M3220	PLMSLA4	CA21L_P	TCAP21 Left present
			-] [- 51
			-(SM) 95
			-(RM) 123
%M3221	PLMSLA4	CA21R_P	TCAP21 Right present
			-] [- 51
			-(SM) 96
			-(RM) 123
%M3222	PLMSLA4	GCAPL_P	Generic TCAP Left present
			-] [- 51
			-(SM) 97
			-(RM) 123
%M3223	PLMSLA4	GCAPR_P	Generic TCAP Right present
			-] [- 51
			-(SM) 98
			-(RM) 123
%M3224	PLMSLA4	AS21_PR	AS21 present
			-] [- 61,62
			-(SM) 116
			-(RM) 126
%M3225	PLMSLA4	AS12_PR	AS12 present
			-] [- 57,58,59
			-(SM) 115
			-(RM) 126
%M3226	PLMSLA4	CB70L_P	TCBP70 Left present
			-(SM) 109
			-(RM) 125
%M3227	PLMSLA4	CB70R_P	TCBP70 Right present
			-(SM) 110
			-(RM) 125
%M3228	PLMSLA4	TPL10PR	TPL10 present
			-(SM) 114
			-(RM) 126
%M3229	PLMSLA4	TE10_PR	TE10 present
			-(SM) 113
			-(RM) 126
%M3230	PLMSLA4	GHA_PRE	GHA present
			-(SM) 105
			-(RM) 124
%M3235	PLMSLA4	TSA_CON	TSA22 connected
			-] [- 185
			-(S) 94
			-(R) 118
%M3236	PLMSLA4	CBP71CN	TCBP71 connected
			-] [- 188
			-(S) 106
			-(R) 120
%M3238	PLMSLA4	THX_CON	THx22 connected
			-] [- 148,184

REF.	BLOCK	NICKNAME	REF. DESCRIPTION / CROSS REFERENCES
			-(S) 93
			-(R) 118
%M3240	PLMSLA4	TTS51CN	TTS51 connected
			-] [- 170,189
			-(S) 111
			-(R) 121
%M3241	PLMSLA4	MFW_CON	Meurer FW connected
			-] [- 186
			-(S) 99
			-(R) 119
%M3243	PLMSLA4	GFW_CON	Generic FW connected
			-] [- 186
			-(S) 100
			-(R) 119
%M3244	PLMSLA4	GCBP_CN	Generic CBP connected
			-] [- 188
			-(S) 107
			-(R) 120
%M3245	PLMSLA4	GTS_CON	Generic TS connected
			-] [- 171,189
			-(S) 112
			-(R) 121
%M3246	PLMSLA4	CPB22CN	TCBP22 connected
			-] [- 188
			-(S) 108
			-(R) 120
%M3247	PLMSLA4	THA_CON	THA32 connected
			-] [- 160,187
			-(S) 104
			-(R) 119
%M3248	PLMSLA4	GKM_CON	GKM connected
			-] [- 186
			-(S) 101
			-(R) 119
%M3249	PLMSLA4	FW68L_C	FW68 Left connected
			-] [- 186
			-(S) 102
			-(R) 119
%M3250	PLMSLA4	FW68R_C	FW68 Right connected
			-] [- 186
			-(S) 103
			-(R) 119
%M3252	PLMSLA4	CA21L_C	TCAP21 Left connected
			-] [- 185
			-(S) 95
			-(R) 118
%M3253	PLMSLA4	CA21R_C	TCAP21 Right connected
			-] [- 185
			-(S) 96
			-(R) 118
%M3254	PLMSLA4	GCAPL_C	Generic TCAP Left connected
			-] [- 185
			-(S) 97
			-(R) 118
%M3255	PLMSLA4	GCAPR_C	Generic TCAP Right connected
			-] [- 185
			-(S) 98
			-(R) 118
%M3256	PLMSLA4	AS21_CN	AS21 connected
			-]/[- 147,150,155,160,162,177,194
			-(S) 116
			-(R) 121
%M3257	PLMSLA4	AS12_CN	AS12 connected
			-]/[- 69,71,73,75,81,83,147,150,155,160,162,194
			-(S) 115
			-(R) 121
%M3258	PLMSLA4	CB70L_C	TCBP70 connected
			-] [- 188
			-(S) 109
			-(R) 120
%M3259	PLMSLA4	CB70R_C	TCBP70 connected
			-] [- 188
			-(S) 110
			-(R) 120

```
REF.     BLOCK    NICKNAME   REF. DESCRIPTION / CROSS REFERENCES
-------  -------  --------  -------------------------------------
%M3260   PLMSLA4  TPL10CN   TPL10 connected
                            -] [- 175,191
                            -(S)  114
                            -(R)  121
%M3261   PLMSLA4  TE10_CN   TE10 connected
                            -] [- 173,190
                            -(S)  113
                            -(R)  121
%M3262   PLMSLA4  GHA_CON   GHA connected
                            -] [- 162,187
                            -(S)  105
                            -(R)  119
%M3265   PLMSLA4            Spare DE present ID=0 right side
                            FBIO  127
%M3268   PLMSLA4  CBP71PR   TCBP71 present right side
                            -(SM) 106
                            -(RM) 125
%M3276   PLMSLA4  GCBP_PR   Generic CBP present right side
                            -(SM) 107
                            -(RM) 125
%M3278   PLMSLA4  CBP22PR   TCBP22 present right side
                            -(SM) 108
                            -(RM) 125
%M3297   PLMSLA4  AS12_P1   AS12 in position 1
                            -( )  128
                            FBIO  134
%M3299   PLMSLA4  AS12_P3   AS12 in position 3
                            -( )  129
%M3301   PLMSLA4  AS12_P5   AS12 in position 5
                            -( )  130
%M3304   PLMSLA4  FW68LDI   Fw68 Left Double infeed
                            -] [- 55
                            -]/[- 54,56,73,75
                            -( )  23
%M3305   PLMSLA4  AS21_P1   AS21 in position 1
                            -( )  132
%M3306   PLMSLA4  AS21_P2   AS21 in position 2
                            -( )  131
%M3312   PLMSLA4  NODEACP   No DE after cardboard packer
                            -( )  133
%M3401   IH_MON   AX_AL01   Auxiliary SM Alarm 01
                            -] [- 18
                            -( )  17
%M3402   IH_MON   AX_AL02   Auxiliary SM Alarm 02
                            -] [- 21
                            -( )  20
%M3403   IH_MON   AX_AL03   Auxiliary SM Alarm 03
                            -] [- 24
                            -( )  23
%M3404   IH_MON   AX_AL04   Auxiliary SM Alarm 04
                            -] [- 27
                            -( )  26
%M3405   IH_MON   AX_AL05   Auxiliary SM Alarm 05
                            -] [- 30
                            -( )  29
%M3406   IH_MON   AX_AL06   Auxiliary SM Alarm 06
                            -] [- 33
                            -( )  32
%M3407   IH_MON   AX_AL07   Auxiliary SM Alarm 07
                            -] [- 36
                            -( )  35
%M3408   IH_MON   AX_AL08   Auxiliary SM Alarm 08
                            -] [- 39
                            -( )  38
%M3409   IH_MON   AX_AL09   Auxiliary SM Alarm 09
                            -] [- 42
                            -( )  41
%M3410   IH_MON   AX_AL10   Auxiliary SM Alarm 10
                            -] [- 45
                            -( )  44
%M3411   IH_MON   AX_AL11   Auxiliary SM Alarm 11
                            -] [- 48
                            -( )  47
%M3412   IH_MON   AX_AL12   Auxiliary SM Alarm 12
```

```
REF.     BLOCK    NICKNAME   REF. DESCRIPTION / CROSS REFERENCES
-------  -------  --------  -------------------------------------
                            -] [- 51
                            -( )  50
%M3413   IH_MON   AX_AL13   Auxiliary SM Alarm 13
                            -] [- 54
                            -( )  53
%M3414   IH_MON   AX_AL14   Auxiliary SM Alarm 14
                            -] [- 57
                            -( )  56
%M3415   IH_MON   AX_AL15   Auxiliary SM Alarm 15
                            -] [- 60
                            -( )  59
%M3417   IH_MON   AX_AL17   Auxiliary SM Alarm 17
                            -] [- 65
                            -( )  64
%M3419   IH_MON   AX_AL19   Auxiliary SM Alarm 19
                            -] [- 70
                            -( )  69
%M3420   IH_MON   AX_AL20   Auxiliary SM Alarm 20
                            -] [- 73
                            -( )  72
%M3421   IH_MON   AX_AL21   Auxiliary SM Alarm 21
                            -] [- 76
                            -( )  75
%M3422   IH_MON   AX_AL22   Auxiliary SM Alarm 22
                            -] [- 79
                            -( )  78
%M3423   IH_MON   AX_AL23   Auxiliary SM Alarm 23
                            -] [- 82
                            -( )  81
%M3425   IH_MON   AX_AL25   Auxiliary SM Alarm 25
                            -] [- 87
                            -( )  86
%M3426   IH_MON   AX_AL26   Auxiliary SM Alarm 26
                            -] [- 90
                            -( )  89
%M3427   IH_MON   AX_AL27   Auxiliary SM Alarm 27
                            -] [- 93
                            -( )  92
%M3428   IH_MON   AX_AL28   Auxiliary SM Alarm 28
                            -] [- 96
                            -( )  95
%M3429   IH_MON   AX_AL29   Auxiliary SM Alarm 29
                            -] [- 99
                            -( )  98
%M3430   IH_MON   AX_AL30   Auxiliary SM Alarm 30
                            -] [- 102
                            -( )  101
%M3431   IH_MON   AX_AL31   Auxiliary SM Alarm 31
                            -] [- 105
                            -( )  104
%M3433   IH_MON   LS_HOLD   SM Hold LS-SA alarms
                            -] [- 18,21,24,27,30,33,36,39,42,45,48,51,54,57,60
                            -( )  14
%M3434   IH_MON   TS_HOLD   SM Hold TS alarms
                            -] [- 65,70,73,76,79,82,87,90,93,96,99,102,105
                            -( )  15
%M3551   CUSTOM   FLUSHUP   Pulse + TS flushing in product.
                            -] [- 12
                            -(^)  14
%M3600   _MAIN    GREA_GO   Greasing cycle JUM going on
                            -] [- 101
         LADFUNC            -] [- 8
                            -]/[- 7
         JUM                -] [- 44
         1T0001             -] [- 87,88
         GRE_JUM            -] [- 8,9,40
                            -]/[- 5,7,11,29
                            -(S)  7
                            -(R)  6
%M3601   GRE_JUM  RES_GR    Reset greasing going on
                            -] [- 6
                            -(v)  38
%M3602   GRE_JUM  RESET     Reset enable main motor
                            -]/[- 14
```

```
REF.     BLOCK    NICKNAME   REF. DESCRIPTION / CROSS REFERENCES
-------  -------  --------  -------------------------------------
                            -( )  17
%M3603   GRE_JUM  RESCON    Reset Contactor Main Motor
                            -] [- 15
                            -( )  18
%M3604   GRE_JUM  RESEN     Reset enable main motor
                            -] [- 17,18,35
                            -(S)  37
                            -(R)  16
%M3605   GRE_JUM  SEARCHZ   Start search zero JAW
                            -] [- 20
                            -(^)  19
%M3606   1T0001   ZERO_SE   Zero sensor detected
                            -] [- 89
         GRE_JUM            -] [- 21,25,30
                            -]/[- 37
                            -(S)  23
                            -(R)  25,26
%M3607   1T0001   ZERONEG   Zero jaw detected neg pulse
                            -] [- 89
         GRE_JUM            -(v)  24
%M3608   1T0001   STOP_1    Stop sector JAW system
                            -]/[- 89
                            -(S)  87
         GRE_JUM            -] [- 25,30
                            -(R)  46
%M3609   1T0001   STOP_2    Stop sector JAW system
                            -]/[- 89
                            -(S)  88
         GRE_JUM            -] [- 25,30
                            -(R)  46
%M3610   GRE_JUM  ST_D_P    End stroke delay pos pulse
                            -] [- 35,37
                            -(^)  34
%M3611   1T0001   INT_STP   Interrupt stop (Cycle not ended)
                            -] [- 89
         GRE_JUM            -] [- 27,30
                            -]/[- 30
                            -(S)  45
                            -(R)  30
%M3612   GRE_JUM  INT_PUL   Interrupt pos pulse
                            -] [- 28
                            -(^)  27
%M3613   GRE_JUM  JUM_OK    Jum in right position
                            -] [- 32
                            -(v)  31
%M3614   JUM      ST_GREA   Start greasing stroke
                            -] [- 64
                            -]/[- 66
         GRE_JUM            -] [- 33,34
                            -]/[- 36
                            -(S)  32
                            -(R)  35
%M3615   JUM      CYC_POS   Cylinders in position
                            -]/[- 64
                            -( )  62
         GRE_JUM            -] [- 34
%M3617   1T0001   GR_PULS   Greasing cycle neg pulse
                            -] [- 89
         GRE_JUM            -(^)  36
%M3618   JUM      CYC_STR   Cylinder start position
                            -]/[- 66,69
                            -( )  63
         1T0001             -] [- 89
         GRE_JUM            -] [- 36
%M3619   FFU      GR_GOIN   FFU greasing going on
                            -] [- 39
         GRE_FFU            -] [- 5,8,12
                            -(S)  6,7
                            -(R)  12
%M3620   GRE_FFU  ST_GRES   Start greasing FFU
                            -] [- 6,11
                            -( )  5
%M3621   GRE_JUM  CAM_PUL   Greasing cutting cam neg pulse
                            -] [- 44
```

```
REF.     BLOCK    NICKNAME   REF. DESCRIPTION / CROSS REFERENCES
-------  -------  --------  -------------------------------------
                            -(^)  43
%M3622   FFU      FFU_PP    FFU greasing sensor pos pulse
                            -] [- 40
                            -]/[- 39
         GRE_FFU            -] [- 11
                            -(^)  9
%M3623   FFU      FFU_NP    FFU greasing sensor neg pulse
                            -] [- 40
                            -]/[- 39
         GRE_FFU            -] [- 11
                            -(v)  10
%M3625   JUM      CYL_PO    GreasCylinder positioning alarm
                            -] [- 67
                            -( )  64
%M3627   JUM      POS_AL    Cylinders position alarm
                            -] [- 70
                            -( )  66
%M3628   GRE_FFU  FF_END    FFU end stroke
                            -] [- 11,12
                            -( )  11
%M3629   JUM      TIME_GR   Pulse timer greasing JUM
                            -] [- 74
                            -(^)  72
%M3630   JUM      JUM_RES   Reset greasing cycle JUM count
                            -] [- 73
         GRE_JUM            -] [- 41
                            -( )  25
%M3631   JUM      JUM_PUL   Reset greasing JUM pulse pos
                            -] [- 74,76
                            -(^)  73
%M3632   JUM      CAM_PP    Cam greasing sensor pos pulse
                            -] [- 86
                            -]/[- 85
                            -(^)  83
         GRE_JUM            -] [- 42
%M3633   JUM      CAM_NP    Cam greasing sensor neg pulse
                            -] [- 86
                            -]/[- 85
                            -(v)  84
         GRE_JUM            -] [- 42
%M3634   GRE_JUM  GRGO_PP   Gresing going on positive pulse
                            -] [- 10,42
                            -(^)  9
%M3635   GRE_JUM  GRGO_NP   Gresing going on negative pulse
                            -] [- 41,42
                            -(v)  40
%M3636   GRE_JUM  ZERO_PP   Zero JAW pos pulse
                            -] [- 23
                            -(^)  22
%M3700   WASTE    SAMP_ST   Start sampling sequence
                            -] [- 57
                            -(^)  56
%M3701   WASTE    DONE1-5   Sampling packs 1-5 done
                            -] [- 63
                            -]/[- 60
                            -( )  63
%M3702   WASTE    SAMPRUN   Sampling sequence on going
                            -] [- 57,58,60,61,66
                            -( )  57
%M3703   WASTE    DONE6-0   Sampling packs 6-10 done
                            -] [- 68
                            -]/[- 57,66
                            -( )  68
%M3704   WASTE    SAMPL_1   Sampling packs 1-5 on going
                            -] [- 60,63,64
                            -]/[- 61,63
                            -( )  60
%M3705   WASTE    SAMPOUT   Timeout sampling sequence
                            -]/[- 57
                            -( )  58
%M3706   WASTE    SAM_TMR   Integrated SU consent time
                            -] [- 56
                            -( )  53
%M3707   WASTE    PULSE15   Sampling packs 1-5 start
```

REF.	BLOCK	NICKNAME	REF. DESCRIPTION / CROSS REFERENCES
			-] [- 60
			-( ) 61
%M3708	WASTE	P+CHUT1	Pulse + photocell chute 1
			-] [- 63
			-(^) 62
%M3710	WASTE	SAMPL_2	Sampling packs 6-10 on going
			-] [- 66,68,69
			-]/[- 61,68
			-( ) 66
%M3713	WASTE	PULSE60	Sampling packs 6-10 start
			-] [- 66
			-( ) 63
%M3714	WASTE	P+CHUT2	Pulse + photocell chute 2
			-] [- 68
			-(^) 67
%M4001	FFU_MOT	DE_CONN	DE communication connected
			-] [- 40
	ST_SEQ		-]/[- 26
	FFU		-] [- 22
	PLMSLA4		-(S) 87
			-(R) 88
%M4002	FFU	DT1_CON	Date unit signal 1 connected
			-] [- 9
	CUSTOM		-(S) 4
			-(R) 6
%M4003	FFU	DT2_CON	Date unit signal 2 connected
			-] [- 11
	CUSTOM		-(S) 5
			-(R) 6
%M4004	DCS	HELP_EN	Help cell enable
			-] [- 41
			-( ) 40

========= REGISTER (%R) GLOBAL CROSS REFERENCES

REF.	BLOCK	NICKNAME	REF. DESCRIPTION / CROSS REFERENCES
%R0001	MACHLAD	LADDER	Machine ladder position
			FBIO 7,9,10,12,13,14,16,18,20,21,23,26,28,30,32,34,36,37,39,41,44,47
	LADFUNC		FBIO 10,11,12,13,14,15,16,17,18,19,20,21,22,23,24,25,26,27,28,29,30,31,32,33,34
%R0002	MACHLAD	REGTIME	Regression time end of prod
			FBIO 37
%R0005	MACHLAD	VENTING	Timer venting
			FBIO 39
%R0008	MACHLAD	T_PR_OK	Timer max time signals process
			FBIO 23
%R0011	MACHLAD	VENT_2	Venting timer 2
			FBIO 41
%R0017	TPOP	LAMP_T	Lamp test Baecon counter
			FBIO 58,59,60,61,62,63
%R0018	AL_LOCK	AL_CHK	Timer check Alarm-lock failure
			FBIO 38
%R0021	AL_LOCK	DELTPOP	Delay for alarm to TPOP
			FBIO 5
%R0050	DCS	SECTOR	Angle sector (0-63 Dec)
			FBIO 10
	LEV_CON		FBIO 49
	JUM		FBIO 52,54,55
	1T0001		FBIO 23,25,27,35,39,57,58,83,84,87,88
%R0100	ASEPTIC	SQ_TMR	Start sequense timer
			FBIO 41
	A_B_C		FBIO 6,8
	ST_SEQ		FBIO 8,9,13,15,34,35,42
	LEV_CON		FBIO 48
	TEMPREG		FBIO 20
	SST_AL		FBIO 24
	HI		FBIO 41
%R0103	ST_SEQ	NS-TIME	Normal stop time
			FBIO 28,29,31,33
%R0104	ST_SEQ	NS_TMR	Normal stop timer
			FBIO 31
%R0107	MACHLAD	RES_TIM	Reset timeleft timebar
			FBIO 6

REF.	BLOCK	NICKNAME	REF. DESCRIPTION / CROSS REFERENCES
%R0110	_MAIN	DEL_STD	Delay time step down button
			FBIO 7
%R0113	ST_SEQ	STOP_JW	Stop on jaw nr
			FBIO 39,40,44
%R0115	ST_SEQ	TOOLONG	TMR production stop too long
			FBIO 10
%R0120	SST_AL	PENDAUX	Pendulum roller low aux register
			FBIO 16
%R0121	TUBE	TUBTMR	Tube sealing timer
			FBIO 11,12
%R0124	SST_AL	PENDALM	Timing for pendulum alarm
			FBIO 12,13,14
%R0125	MMOTOR	INCHALM	Delay for MM inching alarm
			FBIO 30
%R0128	TPOP	TUB_CHG	Reset bit arrowblock tubepos
			FBIO 80
%R0223	LS_SEAL	MEM_LSP	Store LS power value (splice)
			FBIO 30
%R0224	LS_SEAL	SP_POW	Increase power splice
			FBIO 29,30,33
%R0227	SUPPLY	DEL_WC	Offdelay waste conveyor
			FBIO 51
%R0233	SERVIC1	P_H2O	Delay alarm cold water pressure
			FBIO 5
%R0236	FFU	DELHEAT	Delay check of FFU heaters
			FBIO 31
%R0239	SUPPLY	T_FFU_H	Time out check FFU heatesr
			FBIO 54
%R0242	SUPPLY	REC_DEL	Delay production recorder off
			FBIO 37
%R0254	SUPPLY	DELREC2	Delay off recorder 2
			FBIO 38
%R0257	SUPPLY	DELREC3	delay off recorder 3
			FBIO 39
%R0260	SERVIC1	DEL_CWP	Delay alarm cooling water Press.
			FBIO 12
%R0263	SERVIC1	DEL_CMP	Delay alarm cooling media press.
			FBIO 16
%R0266	SERVIC1	DEL_AIR	Delay alarm reset air pressure
			FBIO 8
%R0269	SERVIC1	DEL_CWT	Delay alarm circul. water temper
			FBIO 14
%R0310	TPOP	CHWDOG	Control watchdog timer
			FBIO 74
%R0313	TPOP	W_DOGON	Watchdog timer on
			FBIO 69
%R0316	TPOP	WDOGOFF	watch dog timer off
			FBIO 70
%R0319	TPOP	OP_RES	TPOP reset timer
			FBIO 9
%R0322	TPOP	STCHCOM	Dealy start comm check TPOP-GE
			FBIO 73
%R0327	TPOP	WREFILL	Waste bucket refill. for PLMS
			FBIO 107,108
%R0328	TPOP	WDCS	Waste DCS for PLMS
			FBIO 109,110
%R0329	TPOP	WPSP	Waste papersplice for PLMS
			FBIO 111,112
%R0330	TPOP	WSTRSP	Waste stripsplice for PLMS
			FBIO 113,114
%R0331	TPOP	WSA	Waste SA stop for PLMS
			FBIO 115,116
%R0332	TPOP	WMAN	Waste manual button for PLMS
			FBIO 117,118
%R0333	TPOP	WTSR	Waste TS right for PLMS
			FBIO 119,120
%R0334	TPOP	WTSL	Waste TS left for PLMS
			FBIO 121,122
%R0335	TPOP	W_TOT	Waste Total in production
			FBIO 123,124
%R0340	AL_LOCK	AL_SAF1	Alarms satety 1
			FBIO 6
	SAFETY1		FBIO 14
%R0341	AL_LOCK	AL_SAF2	Alarms safety 2

REF.	BLOCK	NICKNAME	REF. DESCRIPTION / CROSS REFERENCES
			FBIO 7
%R0342	AL_LOCK	AL_JUM2	Alarms JUM 2
			FBIO 8
%R0343	AL_LOCK	AL_FFU	Alarms FFU
			FBIO 9
%R0344	AL_LOCK	AL_SA	Alarms SA/magazine
			FBIO 10
%R0345	AL_LOCK	AL-FILL	Alarms filling system
			FBIO 11
%R0346	AL_LOCK	AL_SER1	Alarms service unit 1
			FBIO 12
%R0347	AL_LOCK	AL_JUM1	Alarms JUM 1
			FBIO 13
%R0348	AL_LOCK	AL_STER	Alarms sterile air system
			FBIO 14
%R0349	AL_LOCK	AL_PER1	Alarms peroxide system reg.1
			FBIO 15
%R0350	AL_LOCK	AL_ASU	Alarms ASU
			FBIO 18
%R0351	AL_LOCK	AL_SST	Alarms superstructure
			FBIO 19
%R0352	AL_LOCK	ALCLEAN	Alarms cleaning
			FBIO 20
%R0353	AL_LOCK	AL_CSUP	Alarms CIP Supervision
			FBIO 21
%R0354	TPOP	OPTION	Option KIT (TPOP)
			FBIO 7
%R0355	AL_LOCK	AL_PER2	Alarms peroxide system reg.2
			FBIO 16,17
%R0356	AL_LOCK	AL_SM1	Alarms Sealing Monitoring reg.1
			FBIO 22
%R0357	AL_LOCK	AL_SM2	Alarms Sealing Monitoring reg.2
			FBIO 23
%R0358	TPOPLAD	LADFIX	TPOP ladder fixed indication
			FBIO 32
%R0359	TPOPLAD	LADFLSH	Ladder flash indication
			FBIO 33
%R0360	TPOP	L_CIP	Cleaning signals (TPOP)
			FBIO 99,101,102,103
	CIP		FBIO 23
%R0361	TPOP	TOTPOP2	Signals to TPOP reg 2
			FBIO 6
%R0362	AL_LOCK	AL_CUST	Alarms Customer page
			FBIO 24
%R0363	MACHLAD	HC_TIME	HC timer to the TPOP
			FBIO 39,41,42
	ASEPTIC		FBIO 9,66,67
	LEV_CON		FBIO 61,62
	CIP		FBIO 106
	HC		FBIO 31,32,33,34
%R0364	TPOP	ALBLOCK	Alarm block from TPOP
			FBIO 82,83,84,85,86,87
%R0365	TPOP	RESETS	Alarm resets from TPOP
			FBIO 40
%R0366	ST_SEQ	STOPJAW	Stop jaw system link nr
			FBIO 37,38,39,40
%R0367	STRIPSP	SP_PTIM	Strip splice pulse time
			FBIO 36,37,38
	DEF_PAR		FBIO 23,25,26
%R0368	TPOP	TO-TPOP	From GE_fanuc to TPOP
			FBIO 5
%R0369	TPOP	FRTPOP	Signals from TPOP
			FBIO 41,42,43,44,45,46,47,48,49,50,51,52
%R0370	TPOP	PACK_IN	Packages in to filler (PLMS)
			FBIO 92
%R0371	TPOP	PACKOUT	Packages out of filler(PLMS)
			FBIO 95
	PLMSLA4		FBIO 148
%R0372	TPOP	P_WASTE	Packages to waste (PLMS)
			FBIO 97
%R0373	PLMSLA4	P_COLD	Packs to cold store (PLMS)
			FBIO 148,153,158,161,163,168,170,171,173,175,178,181
%R0378	PLMSLA4	TSA22_4	TSA22 Packs OUT
			FBIO 140

REF.	BLOCK	NICKNAME	REF. DESCRIPTION / CROSS REFERENCES
%R0379	PLMSLA4	TSA22_5	TSA22 Signals
			FBIO 13
%R0381	PLMSLA4	CBP71_2	TCBP71 Signals
			FBIO 30,31
%R0383	PLMSLA4	CBP71_4	TCBP71 Packs OUT
			FBIO 144
%R0390	LEV_CON	LEVTPOP	Level signal to TPOP
			FBIO 42
%R0393	DEF_PAR	DEF_JUM	Default values JUM
			FBIO 5,6
%R0394	DEF_PAR	DEF_FFU	Default values FFU
			FBIO 11,27
%R0395	DEF_PAR	DEF_ASU	Default values ASU
			FBIO 12,19,23
%R0396	DEF_PAR	DEF_MON	Deafult values temp. monitor
			FBIO 46,50,53
%R0397	TPOP	DE_SST	Deafults super structure func.
			FBIO 53,54,55,56
	DEF_PAR		FBIO 34,35,36
%R0398	TEMPREG	DEFREG1	Activate default setvalues
			FBIO 6
	DEFAULT		FBIO 5,11,17,23,29,35,41,46,52
%R0400	TEMPREG	L2_SV1	Loop 2 setvalue 1 TPOP <-->
			FBIO 28,29
	DEFAULT		FBIO 12
%R0402	TEMPREG	AL1H_L2	Activate default values
			FBIO 28
	DEFAULT		FBIO 13
%R0403	TEMPREG	AL1L_L2	Alarm SV1 low loop 2
			FBIO 28
%R0406	TEMPREG	L2SAMP	Sample value loop 2 TPOP <-->
			FBIO 31
%R0407	TEMPREG	L2PGAIN	P gain value loop 2 TPOP <-->
			FBIO 32
%R0408	TEMPREG	L2IGAIN	I gain value loop 2 TPOP <-->
			FBIO 32
%R0409	TEMPREG	L2DGAIN	D gain value loop 2 TPOP <-->
			FBIO 32
	DEFAULT		FBIO 13
%R0410	PWM	OUTL2	Output loop 2 <--> TPOP
			FBIO 16
%R0411	TEMPREG	L2_PV	Process value loop 2 TPOP <-->
			FBIO 29,31
%R0412	TEMPREG	L3_SV1	Loop 3 setvalue 1 TPOP <-->
			FBIO 37,38
	DEFAULT		FBIO 18
%R0414	TEMPREG	AL1H_L3	Alarm SV1 high loop 3
			FBIO 37
	DEFAULT		FBIO 19
%R0415	TEMPREG	AL1L_L3	Alarm SV1 low loop 3
			FBIO 37
%R0418	TEMPREG	L3SAMP	Sample value loop 3 TPOP <-->
			FBIO 40
%R0419	TEMPREG	L3PGAIN	P gain value loop 3 TPOP <-->
			FBIO 41
%R0420	TEMPREG	L3IGAIN	I gain value loop 3 TPOP <-->
			FBIO 41
%R0421	TEMPREG	L3DGAIN	D gain value loop 3 TPOP <-->
			FBIO 41
	DEFAULT		FBIO 19
%R0422	PWM	OUTL3	Output loop 3 <--> TPOP
			FBIO 20
%R0423	TEMPREG	L3_PV	Process value loop 3 TPOP <-->
			FBIO 38,40
%R0424	TEMPREG	L4_SV1	Loop 4 setvalue 1 TPOP <-->
			FBIO 46,47
	DEFAULT		FBIO 24
%R0426	TEMPREG	AL1H_L4	Alarm SV1 high loop 4
			FBIO 46
	DEFAULT		FBIO 25
%R0427	TEMPREG	AL1L_L4	Alarm SV1 low loop 4
			FBIO 46
%R0430	TEMPREG	L4SAMP	Sample value loop 4 TPOP <-->
			FBIO 49

REF.	BLOCK	NICKNAME	REF. DESCRIPTION / CROSS REFERENCES
%R0431	TEMPREG	L4PGAIN	P gain value loop 4 TPOP <-->
			FBIO 50
%R0432	TEMPREG	L4IGAIN	I gain value loop 4 TPOP <-->
			FBIO 50
%R0433	TEMPREG	L4DGAIN	D gain value loop 4 TPOP <-->
			FBIO 50
	DEFAULT		FBIO 25
%R0434	PWM	OUTL4	Output loop 4 <--> TPOP
			FBIO 24
%R0435	TEMPREG	L4_PV	Process value loop 4 TPOP <-->
			FBIO 47,49
%R0436	TEMPREG	L5_SV1	Loop 5 setvalue 1 TPOP <-->
			FBIO 55,56
	DEFAULT		FBIO 30
%R0438	TEMPREG	AL1H_L5	Alarm SV1 high loop 5
			FBIO 55
	DEFAULT		FBIO 31
%R0439	TEMPREG	AL1L_L5	Alarm SV1 low loop 5
			FBIO 55
%R0442	TEMPREG	L5SAMP	Sample value loop 5 TPOP <-->
			FBIO 58
%R0443	TEMPREG	L5PGAIN	P gain value loop 5 TPOP <-->
			FBIO 59
%R0444	TEMPREG	L5IGAIN	I gain value loop 5 TPOP <-->
			FBIO 59
%R0445	TEMPREG	L5DGAIN	D gain value loop 5 TPOP <-->
			FBIO 59
	DEFAULT		FBIO 31
%R0446	PWM	OUTL5	Output loop 5 <--> TPOP
			FBIO 28
%R0447	TEMPREG	L5_PV	Process value loop 5 TPOP <-->
			FBIO 56,58
%R0448	TEMPREG	L1_SV1	Loop 1 setvalue 1 TPOP <-->
			FBIO 10,11,12,13
	DEFAULT		FBIO 6
%R0450	TEMPREG	AL1H_L1	Alarm SV1 high loop 1
			FBIO 12
	DEFAULT		FBIO 7
%R0451	TEMPREG	AL1L_L1	Alarm SV1 low loop 1
			FBIO 12
%R0454	TEMPREG	L1SAMP	Sample value loop 1 TPOP <-->
			FBIO 15
%R0455	TEMPREG	L1PGAIN	P gain value loop 1 TPOP <-->
			FBIO 16
%R0456	TEMPREG	L1IGAIN	I gain value loop 1 TPOP <-->
			FBIO 16
%R0457	TEMPREG	L1DGAIN	D gain value loop1 TPOP <-->
			FBIO 16
	DEFAULT		FBIO 7
%R0458	PWM	OUTL1	Output loop 1 <--> TPOP
			FBIO 10
%R0459	TEMPREG	L1_PV	Process value loop 1 TPOP <-->
			FBIO 15
%R0460	PLMSLA4	DE_PRE1	DE present word_1
			FBIO 127
%R0462	PLMSLA4	DE_CON1	DE connected word_1
			FBIO 127
%R0464	PLMSLA4	DE_AS_P	DE Automatic switch present
			FBIO 134
%R0472	TEMPREG	L6_SV1	Loop 6 setvalue 1 TPOP <-->
			FBIO 69
%R0474	TEMPREG	AL1H_L6	Alarm SV1 high loop 6
			FBIO 64
	DEFAULT		FBIO 37
%R0475	TEMPREG	AL1L_L6	Alarm SV1 low loop 6
			FBIO 64
%R0478	TEMPREG	L6SAMP	Sample value loop 6 TPOP <-->
			FBIO 69
%R0479	TEMPREG	L6PGAIN	P gain value loop 6 TPOP <-->
			FBIO 70
%R0480	TEMPREG	L6IGAIN	I gain value loop 6 TPOP <-->
			FBIO 70
%R0481	TEMPREG	L6DGAIN	D gain value loop 6 TPOP <-->
			FBIO 70

REF.	BLOCK	NICKNAME	REF. DESCRIPTION / CROSS REFERENCES
	DEFAULT		FBIO 37
%R0482	PWM	OUTL6	Output loop 6 <--> TPOP
			FBIO 33
%R0483	TEMPREG	L6_PV	Process value loop 6 TPOP <-->
			FBIO 65,69
%R0484	TPOP	LCKCH	Lock change tube pos and vol cam
			FBIO 77,78,79,80
%R0488	AL_LOCK	PLMSDMC	DMC error code to PLMS
			FBIO 30,31,32,35
%R0490	_MAIN	SET_POS	Set position volume adjustment
			FBIO 37
	VOL_CAM		FBIO 5,6,9,17,21,23
	DEF_PAR		FBIO 5
	1T0001		FBIO 51
%R0491	SUPPLY	TS_POW	TS-Power setting (TPOP)
			FBIO 22,24
	DEF_PAR		FBIO 6,8,9
%R0493	HI	HINOZZL	HI, Nozzle selection from TPOP
			FBIO 5,6
%R0494	HI	HIPRESS	HI, Pressure value from TPOP
			FBIO 24
%R0495	LEV_CON	REFTIME	Refilling interval from TPOP
			FBIO 57,59,63
%R0496	HI	HIFLOW	HI, N2/Air flow for TPOP
			FBIO 13
%R0497	JUM	JAW_NR	Jaw nr --> TPOP
			FBIO 6
%R0498	ASEPTIC	POX_CON	H2O2 meter peroxide concentr.
			FBIO 152,154,156,158,159
%R0499	ASEPTIC	PCM_TMP	H2O2 meter peroxide temperature
			FBIO 147,156
%R0500	FFU	ST_FFU	Stop position FFU (TPOP)
			FBIO 37
	DEF_PAR		FBIO 11
%R0501	DEF_PAR	SPL_PO	Splice pos changed from TPOP
			FBIO 27
	1T0001		FBIO 72
%R0502	AL_LOCK	MM_ERR	Error code DMC MM
			FBIO 26,32,34
%R0503	AL_LOCK	DCS_ERR	Error code DMC DCS
			FBIO 27,30,34
%R0504	AL_LOCK	FF_ERR	Error code DMC FF
			FBIO 28,31,34
%R0505	RAMPS	SAPOW1	Power SA low speed (TPOP)
			FBIO 10
	STRSEL		FBIO 6,10,18
	DEF_PAR		FBIO 12,16,17
%R0506	RAMPS	SAPOW2	Power SA production speed (TPOP)
			FBIO 11
	STRSEL		FBIO 7,16
	DEF_PAR		FBIO 12,14,15,18
%R0507	DEF_PAR	SAPOW3	Power SA extra high speed (TPOP)
			FBIO 18
%R0508	DEF_PAR	TMR_ASU	Paper splice timing (TPOP)
			FBIO 19,21,22
%R0521	LEV_CON	ST_FLOW	Start flow value (TPOP)
			FBIO 12
%R0522	LEV_CON	FLOWOFF	Flow offset value (TPOP)
			FBIO 13
%R0523	LEV_CON	TXSFLOW	Last transf value StrtFlow(TPOP)
			FBIO 18
%R0524	LEV_CON	TXFLOWO	Last transf value FlowOff(TPOP)
			FBIO 18
%R0525	ASEPTIC	PV_T_AC	Process value top AC (TPOP)
			FBIO 85
%R0526	ASEPTIC	A_H_TAC	Alarm level high top AC (TPOP)
			FBIO 86,87
	DEF_PAR		FBIO 45
%R0527	DEF_PAR	A_L_TAC	Alarm level low top AC (TPOP)
			FBIO 45
%R0529	DEF_PAR	A_H_BAC	Alarm level high bottom AC(TPOP)
			FBIO 46
%R0530	DEF_PAR	A_L_BAC	Alarm level low bottom AC (TPOP)
			FBIO 46

REF.	BLOCK	NICKNAME	REF. DESCRIPTION / CROSS REFERENCES
%R0531	ASEPTIC	PV_T_CV	Process value temp C-valve(TPOP)
			FBIO 103
%R0532	DEF_PAR	A_H_CV	Alarmlev high temp C-valve(TPOP)
			FBIO 47,48
%R0533	DEF_PAR	A_L_CV	Alarmlev low temp C-valve (TPOP)
			FBIO 47,48
%R0534	ASEPTIC	PV_HST	Process value heat st. (TPOP)
			FBIO 18
%R0535	DEF_PAR	A_H_HST	Alarm level high heat st. (TPOP)
			FBIO 49
%R0536	ASEPTIC	A_L_HST	Alarm level low heat st. (TPOP)
			FBIO 22
	DEF_PAR		FBIO 49
%R0537	SUPPLY	PV_H20	PV cooling water (TPOP)
			FBIO 20
%R0538	SUPPLY	H2O_HI	Cooling water temp high limit
			FBIO 17
	DEF_PAR		FBIO 50
%R0539	SUPPLY	H2O_LO	Cooling water temp low limit
			FBIO 19
	DEF_PAR		FBIO 50
%R0540	PEROXID	H20_PV	Temperature water bath (TPOP)
			FBIO 28,30
%R0541	PEROXID	A_H_H20	Alarm high temp water bath(TPOP)
			FBIO 30
	DEF_PAR		FBIO 51
%R0542	DEF_PAR	A_L_H2O	Alarm low temp water bath (TPOP)
			FBIO 51
%R0543	PEROXID	PVH2O2B	Temperature H2O2 bath (TPOP)
			FBIO 5
%R0544	DEF_PAR	A_H_PB	Alarm high temp. H2O2 bath(TPOP)
			FBIO 52
%R0545	PEROXID	A_L_PB	Alarm low temp. H2O2 bath (TPOP)
			FBIO 6
	DEF_PAR		FBIO 52
%R0546	SUPPLY	PV_T_EL	PV temperature EL_cabinet (TPOP)
			FBIO 14
%R0547	SUPPLY	EL_C_HI	Temp limit EL_cabinet high
			FBIO 11
	DEF_PAR		FBIO 53
%R0548	SUPPLY	EL_C_LO	Temp limit EL-cabinet low
			FBIO 13
	DEF_PAR		FBIO 53
%R0550	DCS	OFF_DCS	Offset value DCS
			FBIO 29
	DEF_PAR		FBIO 34
%R0551	DCS	INDES2	Percent in design (TPOP)
			FBIO 31,35
%R0554	TUBEPOS	SET_PO	Set position tube positioning
			FBIO 5,6,9,10,20,26,29,31
	DEF_PAR		FBIO 35
%R0555	LS_SEAL	LS_POW1	LS power low speed (TPOP)
			FBIO 12,13,15
	DEF_PAR		FBIO 36,39,40
%R0556	LS_SEAL	LS_POW2	LS power production (TPOP)
			FBIO 25,27,35
	RAMPS		FBIO 16,17
	DEF_PAR		FBIO 36,41,42
%R0557	LS_SEAL	LS_POW3	LS power service switch (TPOP)
			FBIO 24,26
	RAMPS		FBIO 14,15
	DEF_PAR		FBIO 37,43,44
%R0558	SUPPLY	COUNTP1	Partial package counter Reg.1
			FBIO 33,34
%R0560	TPOP	PACKIN	Packages in to TPOP reg 1
			FBIO 93,94
%R0569	PLMSLA4	TBA22_1	TBA22 signals
			FBIO 204,205,206,207,208,209
%R0576	PLMSLA4	MFW_2	Meurer FW Packs OUT
			FBIO 142
%R0578	PLMSLA4	MFW_4	Meurer FW Signals
			FBIO 19
%R0596	PLMSLA4	TPL10_2	TPL10 Packs OUT
			FBIO 175

REF.	BLOCK	NICKNAME	REF. DESCRIPTION / CROSS REFERENCES
%R0598	PLMSLA4	TPL10_4	TPL10 Signals
			FBIO 44
%R0601	PLMSLA4	TE10_2	TE10 Packs OUT
			FBIO 173
%R0603	PLMSLA4	TE10_4	TE10 Signals
			FBIO 42
%R0626	PLMSLA4	GKM_2	GKM Packs OUT (Not available)
			FBIO 142
%R0628	PLMSLA4	GKM_4	GKM Signals
			FBIO 21
%R0631	PLMSLA4	CB70L_2	TCBP70 (Left) Packs OUT
			FBIO 145
%R0633	PLMSLA4	CB70L_4	TCBP70 (Left) Signals
			FBIO 36
%R0638	PLMSLA4	CB70R_2	TCBP70 (Right) Packs OUT
			FBIO 145
%R0640	PLMSLA4	CB70R_4	TCBP70 (Right) Signals
			FBIO 37
%R0651	PLMSLA4	AS12_2	AS12 Packs OUT
			FBIO 178
%R0653	PLMSLA4	AS12_4	AS12 Signals
			FBIO 46
%R0663	PLMSLA4	THX22_4	THx22 Signals
			FBIO 7,8,9,11
%R0676	PLMSLA4	TTS51_2	TTS51 Packs OUT
			FBIO 170
%R0678	PLMSLA4	TTS51_4	TTS51 Signals
			FBIO 39
%R0681	PLMSLA4	CBP22_2	TCBP22 Packs OUT
			FBIO 144
%R0683	PLMSLA4	CBP22_4	TCBP22 Signals
			FBIO 34,35
%R0696	PLMSLA4	THA32_2	THA32 Packs OUT
			FBIO 161
%R0698	PLMSLA4	THA32_4	THA32 Signals
			FBIO 27
%R0700	TEMPREG	L7_SV1	Loop 7 setvalue 1 TPOP<-->
			FBIO 84
%R0702	TEMPREG	AL1H_L7	Alarm SV1 high loop 7
			FBIO 77
	DEFAULT		FBIO 42
%R0703	TEMPREG	AL1L_L7	Alarm SV1 low loop 7
			FBIO 77
%R0706	TEMPREG	L7SAMP	Sample value loop 7 TPOP<-->
			FBIO 84
%R0707	TEMPREG	L7PGAIN	P gain value loop 7 TPOP<-->
			FBIO 85
%R0708	TEMPREG	L7IGAIN	I gain value loop 7 TPOP<-->
			FBIO 85
%R0709	TEMPREG	L7DGAIN	D gain value loop 7 TPOP<-->
			FBIO 85
	DEFAULT		FBIO 42
%R0710	PWM	OUTL7	Output loop 7 <--> TPOP
			FBIO 38
%R0711	TEMPREG	L7_PV	Process value loop 7 TPOP<-->
			FBIO 84
	PEROXID		FBIO 23
%R0720	PEROXID	PVSH2O2	Separate peroxide water (TPOP)
			FBIO 5
%R0721	PEROXID	A_H_SPH	Alarm high temp.sep.water(TPOP)
			FBIO 31
	DEF_PAR		FBIO 10
%R0725	TEMPREG	L8_SV1	Loop 8 setvalue 1 TPOP <-->
			FBIO 92
	DEFAULT		FBIO 47
%R0727	TEMPREG	AL1H_L8	Alarm SV1 high loop 8
			FBIO 92
	DEFAULT		FBIO 48
%R0728	TEMPREG	AL1L_L8	Alarm SV1 low loop 8
			FBIO 92
%R0731	TEMPREG	L8SAMP	Sample value loop 8 TPOP <-->
			FBIO 101
%R0732	TEMPREG	L8PGAIN	P gain value loop 8 TPOP <-->
			FBIO 102

REF.	BLOCK	NICKNAME	REF. DESCRIPTION / CROSS REFERENCES
%R0733	TEMPREG	L8IGAIN	I gain value loop 8 TPOP <-->
			FBIO 102
%R0734	TEMPREG	L8DGAIN	D gain value loop 8 TPOP <-->
			FBIO 102
	DEFAULT		FBIO 48
%R0735	PWM	OUTL8	Output loop 8 <--> TPOP
			FBIO 44
%R0736	TEMPREG	L8_PV	Process value loop 8 TPOP <-->
			FBIO 93,94,101
%R0737	HI	L8_PV2	HI, Process value spray temp.
			FBIO 13
%R0740	TEMPREG	L9_SV1	Loop 9 setvalue 1 TPOP <-->
			FBIO 107,108
	DEFAULT		FBIO 53
%R0742	TEMPREG	AL1H_L9	Alarm SV1 high loop 9
			FBIO 107
	DEFAULT		FBIO 54
%R0743	TEMPREG	AL1L_L9	Alarm SV1 low loop 9
			FBIO 107
%R0746	TEMPREG	L9SAMP	Sample value loop 9 TPOP <-->
			FBIO 110
%R0747	TEMPREG	L9PGAIN	P gain value loop 9 TPOP <-->
			FBIO 111
%R0748	TEMPREG	L9IGAIN	I gain value loop 9 TPOP <-->
			FBIO 111
%R0749	TEMPREG	L9DGAIN	D gain value loop 9 TPOP <-->
			FBIO 111
	DEFAULT		FBIO 54
%R0750	TEMPREG	OUTL9	Output loop 9 <--> TPOP
			FBIO 116
	PWM		FBIO 50
%R0751	TEMPREG	L9_PV	Process value loop 9 TPOP <-->
			FBIO 108,110
%R0771	PLMSLA4	AS21_2	AS21 Packs OUT
			FBIO 181
%R0773	PLMSLA4	AS21_4	AS21 Signal
			FBIO 47,48
%R0781	PLMSLA4	FW68L_2	Fw68 (Left) Packs OUT
			FBIO 143
%R0783	PLMSLA4	FW68L_4	Fw68 (Left) Signals
			FBIO 22,23
%R0787	PLMSLA4	FW68R_2	Fw68 (Right) Packs OUT
			FBIO 143
%R0789	PLMSLA4	FW68R_4	Fw68 (Right) Signals
			FBIO 24,25
%R0807	PLMSLA4	GENFW_2	Generic FW Packs OUT
			FBIO 142
%R0809	PLMSLA4	GENFW_4	Generic FW Signals
			FBIO 20
%R0813	PLMSLA4	GECBP_2	Generic CBP Packs OUT
			FBIO 144
%R0815	PLMSLA4	GECBP_4	Generic CBP Signals
			FBIO 32,33
%R0819	PLMSLA4	GENTS_2	Generic TS Packs OUT
			FBIO 171
%R0821	PLMSLA4	GENTS_4	Generic TS Signals
			FBIO 40
%R0831	PLMSLA4	CP21L_2	TCAP21 (Left) Packs OUT
			FBIO 140
%R0833	PLMSLA4	CP21L_4	TCAP21 (Left) Signals
			FBIO 14
%R0838	PLMSLA4	CP21R_2	TCAP21 (Right) Packs OUT
			FBIO 140
%R0840	PLMSLA4	CP21R_4	TCAP21 (Right) Signals
			FBIO 15
%R0845	PLMSLA4	TCAP_L2	Generic TCAP (Left) Packs OUT
			FBIO 141
%R0847	PLMSLA4	TCAP_L4	Generic TCAP (Left) Signals
			FBIO 16
%R0852	PLMSLA4	TCAP_R2	Generic TCAP (Right) Packs OUT
			FBIO 141
%R0854	PLMSLA4	TCAP_R4	Generic TCAP (Right) Signals
			FBIO 17
%R0861	PLMSLA4	GENHA_2	Generic HA Packs OUT

REF.	BLOCK	NICKNAME	REF. DESCRIPTION / CROSS REFERENCES
			FBIO 163
%R0863	PLMSLA4	GENHA_4	Generic HA Signals
			FBIO 28
%R0940	TPOP	PIN_DI1	Package in counter Dint 1
			FBIO 91,92
%R0942	TPOP	POUTDI1	Package out counter Dint 1
			FBIO 95
%R0944	TPOP	PW_DI1	Packages to waste Dint 1
			FBIO 96,97
%R1000	ASEPTIC	HEATS_T	Heat sterilizing timer
			FBIO 11,48
	STERIL		FBIO 24
	PEROXID		FBIO 42
	HI		FBIO 31
%R1003	ASEPTIC	HEXV_T	Heat exchanger valve timer
			FBIO 95
%R1006	ASEPTIC	SPRAY_T	Spray sequence timer
			FBIO 47,49,51,54,55,57,58
	P_FEED		FBIO 5
	PEROXID		FBIO 13,14,16,17,34,35,36,37
	HI		FBIO 26,29,48
%R1009	STERIL	DEL_ON	Preheating valve on delay
			FBIO 29
%R1012	STERIL	BVAL_T	B-valve check position timer
			FBIO 17
%R1015	ASEPTIC	DRY_T	Draying timer
			FBIO 62,63,64,69,118,119,120,121
	A_B_C		FBIO 22,23,24,25
	STERIL		FBIO 8
	PEROXID		FBIO 43
	HI		FBIO 30,35,36,37,49
%R1018	PEROXID	TBDELAY	Temperature peroxide bath delay
			FBIO 6
%R1021	STERIL	REGV_CK	Regulating valve open timer
			FBIO 41
%R1024	PEROXID	LVL_FIL	H2O2 tank level filter
			FBIO 22
%R1027	PEROXID	LVL_FLT	H2O2 tank probe fault filter
			FBIO 25
%R1030	ASEPTIC	BYPASS	Timer valve switch Bypass pos.
			FBIO 79,80
%R1033	FIL_DCS	AV_CHK	Check A-valve position
			FBIO 12
%R1036	FIL_DCS	C-ON_CK	C-valve open position control
			FBIO 17
%R1039	FIL_DCS	C-OF_CK	C-valve close position control
			FBIO 18
%R1046	PEROXID	CHK_RC	Check ringcontainer empty
			FBIO 20
%R1049	ASEPTIC	DH202DL	Drying h202 bath delay
			FBIO 44
%R1052	ASEPTIC	SW_3ST	delay 1:st switch 3-step
			FBIO 94
%R1056	ASEPTIC	S1TOPAC	Setvalue 1 top aseptic chamber
			FBIO 86,87,88,89
%R1057	ASEPTIC	S2TOPAC	Setvalue 2 top aseptic chamber
			FBIO 86,87,90
	STERIL		FBIO 12
%R1058	ASEPTIC	DRYLEFT	Drying time left (seconds)
			FBIO 9,63,64
	CIP		FBIO 106
%R1059	ASEPTIC	DR_TIME	Draining time filling circuit
			FBIO 7,9,14
%R1062	PEROXID	OFILL_D	Overfilling per.tank in prod.
			FBIO 24
%R1065	PEROXID	PER_DEL	Dealy alarm peroxide tank
			FBIO 23
%R1068	STERIL	T_AC_AL	Top aseptic chamber low limit
			FBIO 12,13
%R1069	STERIL	T_AC_AH	Top aseptic chamber high limit
			FBIO 12
%R1070	ASEPTIC	OFF_3ST	Delay 3 step valve to bypass
			FBIO 94
%R1073	ASEPTIC	OFF_PER	Off dely peroxide bath filling

REF.	BLOCK	NICKNAME	REF. DESCRIPTION / CROSS REFERENCES
			FBIO 41
%R1076	STERIL	BVALOFF	B_valve off offdelay
			FBIO 18
%R1080	ASEPTIC	TMR_ASP	TMR delay for automatic spray
			FBIO 27
%R1083	STERIL	DEL_OFF	Preheating valve off delay
			FBIO 30
%R1086	ASEPTIC	PRE_DEL	Hysterisis temp AC prester.
			FBIO 20
%R1089	ASEPTIC	DEL1089	TMR H2O2 timer 1
			FBIO 140
%R1092	ASEPTIC	DEL1092	TMR H2O2 timer 2
			FBIO 142
%R1095	ASEPTIC	DEL1095	TMR H2O2 timer 3
			FBIO 144
%R1098	ASEPTIC	DEL1098	TMR H2O2 timer 4
			FBIO 145,146
%R1101	ASEPTIC	DEL1101	TMR H2O2 timer 5
			FBIO 147
%R1104	ASEPTIC	DEL1104	TMR H2O2 timer 6
			FBIO 152
%R1107	ASEPTIC	DEL1107	TMR H2O2 timer 7
			FBIO 160
%R1110	ASEPTIC	CHK_TMP	H2O2 temperature control
			FBIO 148
%R1111	ASEPTIC	PCM_DIF	H2O2 meter pox temp.difference
			FBIO 148,150
%R1113	STERIL	DEL_BUT	TMR butterfly valve alarm
			FBIO 34
%R1116	ASEPTIC	DELTRAP	TMR steam trap time
			FBIO 135
%R1120	ASEPTIC	DELBEND	TMR delay for bending roller
			FBIO 128
%R1123	MACHLAD	TMR_5_M	TMR wait 5min then STEP_1
			FBIO 10
%R1126	STERIL	LONG_HT	TMR heating phase too long
			FBIO 26
%R1130	ASEPTIC	TCSB_T1	TCSB alarm timer 1
			FBIO 112
%R1136	ASEPTIC	TCSB_T4	TCSB alarm timer 4
			FBIO 65,107
%R1139	ASEPTIC	SB_LEFT	Steam time left (seconds)
			FBIO 65
%R1140	ASEPTIC	DELTCSB	TMR steam trap time TCSB
			FBIO 136
%R1143	ASEPTIC	TCSB_R1	TCSB remaining drying time 1
			FBIO 63,64,66
%R1144	ASEPTIC	TCSB_R2	TCSB remaining drying time 2
			FBIO 65,66,67
%R1145	ASEPTIC	TCSB_T2	TCSB alarm timer 2
			FBIO 113
%R1149	WASTE	DEL_SAM	TMR sampling station consent
			FBIO 50,51
%R1152	FFU_MOT	TMR_EXT	Delay for ext.conv.fault detect
			FBIO 34
%R1155	P_FEED	TMR_PEN	Delay for pend.conv.falut detect
			FBIO 7
%R1158	STERIL	DEL_BYP	Preheating valve bypass delay
			FBIO 31
%R1161	TPOP	ENAB_IN	TMR enabling package in counter
			FBIO 90
%R1170	CIP	DEL1170	TMR delay for JUMO recorder kit
			FBIO 118
%R1176	SUPPLY	DEL1176	TMR delay for JUMO recorder kit
			FBIO 43
%R1179	PAPERSP	PSP_RG1	Paper splice register position
			FBIO 6,7,8,9,10,11,12,13,43,46,47
%R1180	PAPERSP	SPHE_TM	ASU, Splic. Head Bouncing Timer
			FBIO 34,35
%R1181	PAPERSP	CHSEALT	ASU, CH Sealing Time (TPOP)
			FBIO 34,51
%R1182	PAPERSP	CHSLGOF	ASU, CH Sealing OFF (Pres. Rail)
			FBIO 34,35,36
%R1183	PAPERSP	LP_UNST	ASU, Loop Drive Unstick Pulse

REF.	BLOCK	NICKNAME	REF. DESCRIPTION / CROSS REFERENCES
			FBIO 34,36,37
%R1184	PAPERSP	SPL_CNT	ASU, material splice counter
			FBIO 49
%R1185	SERVIC1	DEL1185	TMR delay for JUMO recorder kit
			FBIO 29
%R1188	SERVIC1	DEL1188	TMR delay for JUMO recorder kit
			FBIO 30
%R1194	SUPPLY	DEL1194	TMR delay for JUMO recorder kit
			FBIO 45
%R1197	SUPPLY	DEL1197	TMR delay for JUMO recorder kit
			FBIO 49
%R1300	CIP	DEL_DEF	TMR delay for D,E,F valves
			FBIO 13
%R1306	CIP	CIP_REC	Delay off,for CIP recorder
			FBIO 116
%R1309	CIP	CIP_CHK	Check valves during CIP
			FBIO 24
%R1312	HC	HELPHCC	Help HC counter
			FBIO 9,11,15,16,17,18,19,20,21,22,23,24,25,26,27,28,29,32,33,37,38,39,40,41,42,43,44,45,46,47,48,49,50, 51,52,53,54,55,56,57,58,59,60,61,62,63,64,65,66,67,68,69,70,71,72,73,74,75,76,77,78,79,80,81,82,83, 84,85,86,87
%R1315	HC	DOS_COU	Dosing chemical counter
			FBIO 101
%R1318	HC	DEL_DOS	TMR delay off dosing chem. valve
			FBIO 102
%R1321	CIP_AL	PUMP_PR	Check waterpressure cleaning
			FBIO 15
%R1324	CIP_AL	COV_CHK	Check column cover position
			FBIO 17
%R1327	HC	ST_HC	Start timer Hygienic cleaning
			FBIO 6
%R1330	HC	WAIT_MM	Delay start of motors
			FBIO 36
%R1333	CIP	BLOWING	Blowing time
			FBIO 100,104,106,114
%R1336	CIP	DR_TPOP	Draining bar for TPOP
			FBIO 102
%R1339	STERIL	COPM_AL	Compressor flow alarm
			FBIO 37
%R1342	CIP	DCPDROK	Cleaning cup draining ok
			FBIO 10
%R1345	TEMPREG	TEMP_CP	Temp reg CIP drain time calc.
			FBIO 66,67
	CIP		FBIO 107,108,112,114
%R1350	HC	HCRDYDL	TMR delay HC ready signal
			FBIO 12
%R1353	CIP	DELBCIP	Delay open B-valve in CIP
			FBIO 15
%R1363	CIP	FLOW_AL	CIP, Flow alarm timer
			FBIO 65
%R1366	CIP	TEMP_AL	CIP, Temperature alarm timer
			FBIO 68
%R1369	CIP	CONC_AL	CIP, Concentration alarm timer
			FBIO 71
%R1372	CIP	CIP_POS	CIP, Cycle position
			FBIO 77,78,80,82,84,86,88
%R1375	CIP	MAX_CIP	CIP, Max.time to complete
			FBIO 44
%R1378	CIP	MAX_BLW	CIP, Max.time to Blow
			FBIO 48
%R1381	CIP	MAX_STE	CIP, Max.time to Sterilize
			FBIO 46
%R1384	CIP	DEL_CIP	CIP, Delay for signal CIP ON
			FBIO 94
%R1387	CIP	STP_TMR	CIP, Step time register
			FBIO 65,66,68,69,71,72,78,80,82,84,86,88
%R1388	CIP	FLOW_CN	CIP, Flow control timer
			FBIO 66
%R1391	CIP	TEMP_CN	CIP, Temperature control timer
			FBIO 69
%R1394	CIP	CONC_CN	CIP, Concentration control timer
			FBIO 72
%R1400	CIP	FLOW_HI	CIP, Flow switch high
			FBIO 59,79,81,83,85,87,89

REF.	BLOCK	NICKNAME	REF. DESCRIPTION / CROSS REFERENCES
%R1401	CIP	FLOW_LO	CIP, Flow switch low
			FBIO 60,79,81,83,85,87,89
%R1588	ASEPTIC	H2O2_CM	H2O2 refilling command
			FBIO 74
%R1591	ASEPTIC	H2O2_CY	H2O2 refilling cycle
			FBIO 73
%R1594	ASEPTIC	RF_PROD	H2O2 refilling delay production
			FBIO 72
%R1597	ASEPTIC	RF_PREP	H2O2 refilling delay preparation
			FBIO 71
%R1603	ASU_MOT	DEL1603	ASU loop delay
			FBIO 14
%R1606	STRIPSP	ASSUTMR	ASSU splice timer
			FBIO 32,35,37,38,39,40
%R1609	STRIPSP	SELASUT	Sealing ASU timer
			FBIO 29
%R1612	RAMPS	TPIHRMP	TPIH power ramp register
			FBIO 7,9,10,11
	STRIPSP		FBIO 54,57
	STRSEL		FBIO 6,7,10,13,16,18,21
%R1613	RAMPS	MAXPWR	TPIH power upper limit
			FBIO 7
	STRSEL		FBIO 7,10,13
%R1614	RAMPS	MINPWR	TPIH power lower limit
			FBIO 9
	STRSEL		FBIO 16,18,21
%R1618	STRSEL	DIFF_SA	Difference max-min power SA ramp
			FBIO 13,21
%R1620	RAMPS	PWR_INC	Power increment SA
			FBIO 7,9
	STRSEL		FBIO 13,21
%R1622	ASU_MOT	POWONRG	Power on register
			FBIO 10
%R1646	1T0001	DECODL	Design correction delay
			FBIO 63,72,75
%R1655	ASU_AL	RMBCD	Bar code monitor register
			FBIO 10
%R1658	STRSEL	MIN_PWR	Start power TPIH ramp SA
			FBIO 4,7,16,18
%R1659	ASU_AL	T_RMBCD	Time base barcode check ASU
			FBIO 5,6,10
%R1664	1T0001	BCDEL	Barcode delay ASU splice
			FBIO 63,66,67,68,70,74
%R1667	ASU_AL	DEL_LPE	Delay loop empty alarm
			FBIO 45
%R1670	SST_AL	CSPL_CO	Counter splice detection Column
			FBIO 28,30
%R1673	LS_SEAL	TEMP1LS	Temporary register 1 LS
			FBIO 32
%R1674	LS_SEAL	EXPOWLS	Extra power LS paper splice
			FBIO 32,33
%R1675	ASU_AL	FOR_SPL	Forced paper splice timing
			FBIO 12,13,14
%R1678	SST_AL	TO_SPCT	Timeout splice guard monitor
			FBIO 20
%R1681	SST_AL	CT_SP	Counter splice pulses
			FBIO 19,20
%R1682	SST_AL	SP_MAX	Max time splice guard on
			FBIO 21
%R1685	ASU_AL	TOUT_SP	Timeout splice in design
			FBIO 14
%R1688	TPOP	SP_TPOP	Splice detection timer for TPOP
			FBIO 19
%R1691	LS_SEAL	HLP_LSP	Help reg LS-power hot machine
			FBIO 13,14
%R1692	SST_AL	CSPL_SA	Counter splice detection SA
			FBIO 29,30
%R1695	ASU_AL	MAGTOUT	Magazine motor timeout
			FBIO 26
%R1698	SST_AL	SPL_CMP	Pckg.Mtrl. splice comparision
			FBIO 30,31
%R1700	ASU_MOT	HSPLPH	High speed loop high
			FBIO 35
	DEF_PAR		FBIO 28

REF.	BLOCK	NICKNAME	REF. DESCRIPTION / CROSS REFERENCES
%R1701	ASU_MOT	HSPLPL	High speed loop low
			FBIO 35
	DEF_PAR		FBIO 28
%R1702	ASU_MOT	LSPLPH	Low speed loop high
			FBIO 37
	DEF_PAR		FBIO 29
%R1703	ASU_MOT	LSPLPL	Low speed loop low
			FBIO 37
	DEF_PAR		FBIO 30
%R1704	ASU_MOT	SPL_EHH	Loop extra high speed high(TPOP)
			FBIO 35
	DEF_PAR		FBIO 29
%R1705	ASU_MOT	SPL_EHL	Loop extra high speed low (TPOP)
			FBIO 36
	DEF_PAR		FBIO 29
%R1706	ASU_MOT	HSPMGH	High speed magazine high
			FBIO 81
	DEF_PAR		FBIO 31
%R1707	ASU_MOT	HSPMGL	High speed magazine low
			FBIO 81
	DEF_PAR		FBIO 31
%R1708	ASU_MOT	LSPMGH	Low speed magazine high
			FBIO 82
	DEF_PAR		FBIO 32
%R1709	ASU_MOT	SPM_EHH	Extra high speep mag high (TPOP)
			FBIO 81
	DEF_PAR		FBIO 32
%R1715	BRAKES	INCH_12	TMR 12 sec.inching button
			FBIO 5
%R1719	STRIPSP	DECELSA	SA power pulse in deceleration
			FBIO 42,43,44,45
%R1727	PAPERSP	TMR_11	TMR 11, ASU cut sequence (0.01S)
			FBIO 20,22,23
%R1730	PAPERSP	TMR_12	TMR 12, ASU splice seq. (0.01s)
			FBIO 35,36,37
%R1733	ASU	TMR_13	TMR 13, ASU lock cylinder forced
			FBIO 19
%R1736	STRIPSP	TMR_17	TMR 17,timer extra power
			FBIO 53
%R1742	BRAKES	TMR_15	ASU, delay FST_WEB off for brake
			FBIO 10
%R1745	ASU_AL	DEL1745	Broken Web at Magazine Timer
			FBIO 51
%R1749	WASTE	TB_DCCK	Time-base dcs photocell pulse
			FBIO 5,6,7,8
%R1753	WASTE	BCDC_C	Bar code DCS clock timer
			FBIO 8
%R1756	ASU_AL	LP_DEL	Timer delayed signal Loop enable
			FBIO 7
%R1759	ASU_AL	DEL1759	ASU, delay
			FBIO 8
%R1762	ASU_AL	DEL1762	ASU, delay
			FBIO 35
%R1765	ASU_MOT	DEL1765	ASU, delay
			FBIO 25
%R1768	ASU_MOT	DEL1768	ASU, delay
			FBIO 30
%R1771	STRIPOK	DEL1771	SA, delay
			FBIO 21
%R1774	ASU_MOT	DEL1774	ASU, loop delay
			FBIO 15
%R1777	ASU_MOT	DEL1777	ASU, loop delay
			FBIO 16
%R1783	ASU_MOT	DEL1783	check status safety relay
			FBIO 22
%R1786	ASU_MOT	DEL1786	ASU, loop delay
			FBIO 39
%R1789	ASU_MOT	DEL1789	ASU, loop delay
			FBIO 42
%R1792	ASU_MOT	DEL1792	ASU, magazine delay
			FBIO 71
%R1795	ASU_MOT	DEL1795	ASU, magazine delay
			FBIO 85
%R1798	STRIPOK	DEL1798	Delay enable timer

REF.	BLOCK	NICKNAME	REF. DESCRIPTION / CROSS REFERENCES
			FBIO 20
%R1801	STRIPSP	DEL1801	SA, delay
			FBIO 45
%R1804	STRIPSP	SA_AUX1	SA, Aux 1 waste strip splice
			FBIO 61,63
%R1805	STRIPSP	SA_WAST	SA, waiting pkg before waste
			FBIO 63
	1T0001		FBIO 31
%R1809	STRIPSP	DEL1809	SA, delay before extra power
			FBIO 51
%R1812	SA_UNIT	DEL1812	SA, TPIH power delay
			FBIO 5
%R1815	STRIPSP	DEL1815	SA, delay
			FBIO 48
%R1818	SA_UNIT	DEL1818	SA, delay
			FBIO 21
%R1821	SA_UNIT	DEL1821	SA, Force inching on TPIH alarm
			FBIO 7
%R1824	SA_UNIT	DEL1824	SA, delay
			FBIO 15
%R1833	ASU	DEL1833	ASU, delay
			FBIO 11
%R1836	SA_UNIT	DEL1836	SA, delay
			FBIO 22
%R1839	1T0001	CNT1839	Strip waste delay counter
			FBIO 31
%R1842	BRAKES	BRK_TMR	ASU, reel brake timer
			FBIO 13
%R1848	STRIPSP	SA_1	Strip seal cooling start delay
			FBIO 36,39
%R1851	STRIPSP	SA_2	Strip seal cooling stop delay
			FBIO 36,39,40
%R1854	STRIPOK	DEL1854	SA, delay
			FBIO 15
%R1857	ASU_MOT	LP_SLOW	ASU, loop slow speed
			FBIO 35,37,43,44,47,56,57,59
%R1858	ASU_MOT	LP_HIGH	ASU, loop high speed
			FBIO 35,37,43,44,46
%R1859	ASU_MOT	LPXHIGH	ASU, loop extra high sp after sp
			FBIO 35,51,53,54
%R1860	ASU_MOT	LPXSLOW	ASU, loop extra slow sp after sp
			FBIO 36,49,52
%R1862	ASU_MOT	MG_SLOW	ASU, magazine roller slow speed
			FBIO 81,82,86,87,91,95,96
%R1863	ASU_MOT	MG_HIGH	ASU, magazine roller high speed
			FBIO 81,82,86,87,90
%R1864	ASU_MOT	MGXHIGH	ASU, high speed after splice
			FBIO 81,93
%R1865	ASU_MOT	ZEROMAG	ASU, TMR mag.frequence = 0
			FBIO 75
%R1868	STRIPOK	ANAL_1	SA, first pos.analog sensor
			FBIO 6,11
%R1871	STRIPOK	ANAL_2	SA, second pos.analog sensor
			FBIO 10,11
%R1874	STRIPOK	DEL1874	SA, time forward research bobbin
			FBIO 8
%R1877	TPOP	STRIPWS	SA, strip waste packages (PLMS)
			FBIO 115
	S__250B		FBIO 47
	S__200B		FBIO 47
	S__200M		FBIO 47
	S__200S		FBIO 47
	S__250S		FBIO 47
	S__300S		FBIO 47
%R1878	STRIPSP	DELEXSA	SA, delay start extra power SA
			FBIO 51
	S__250B		FBIO 6
	S__200B		FBIO 6
	S__200M		FBIO 6
	S__200S		FBIO 6
	S__250S		FBIO 6
	S__300S		FBIO 6
%R1879	STRIPSP	EXTRASA	SA, time extra power SA
			FBIO 53

REF.	BLOCK	NICKNAME	REF. DESCRIPTION / CROSS REFERENCES
	S__250B		FBIO 6
	S__200B		FBIO 6
	S__200M		FBIO 6
	S__200S		FBIO 6
	S__250S		FBIO 6
	S__300S		FBIO 6
%R1880	STRIPOK	DEL1880	SA, time reverse research bobbin
			FBIO 12
%R1883	STRIPOK	DEL1883	SA, delay bobbin switch
			FBIO 18
%R1886	STRIPOK	DEL1886	SA, delay strip reseach
			FBIO 16
%R1889	STRIPOK	DEL1889	SA, delay strip research end
			FBIO 24
%R1892	STRIPSP	PKG_LGH	SA, package paper lenght
			FBIO 63
	S__250B		FBIO 47
	S__200B		FBIO 47
	S__200M		FBIO 47
	S__200S		FBIO 47
	S__250S		FBIO 47
	S__300S		FBIO 47
%R1895	STRIPSP	PEREXSA	SA, percentage extra sa power
			FBIO 54
	S__250B		FBIO 6
	S__200B		FBIO 6
	S__200M		FBIO 6
	S__200S		FBIO 6
	S__250S		FBIO 6
	S__300S		FBIO 6
%R1898	JUM	JAWSENS	TMR jaw sensor timeout
			FBIO 34,35
%R1901	STRIPOK	BOB_REV	TMR slow reverse bobbin research
			FBIO 13
%R1904	CIP	DEL1904	TMR delay for blowing stop
			FBIO 110
%R1907	FFU	DE_DEL	TMR filter to lock DE stop
			FBIO 21
%R1910	_MAIN	TS_FAUL	TMR TPIH TS constant fault
			FBIO 21
%R1913	PLMSLA4	TMRPROD	TMR Delay Production phase ended
			FBIO 138
%R1920	ASU	TRESASU	ASU, time for total reset sequen
			FBIO 28
%R1923	ASU	DELSASU	ASU, timer delay safety raley A
			FBIO 29
%R1926	PAPERSP	TOHEADT	ASU, timeout head translation
			FBIO 32
%R1929	ASU_MOT	DE_LPXH	Delay loop extra high speed
			FBIO 50
%R1932	TEMPREG	TCHKTIM	ASU, CH BAR Temp. Check time
			FBIO 119
%R1935	TEMPREG	TCHKVAL	ASU, CH BAR Temp. Check value
			FBIO 118,119
%R2000	SST_AL	LS_UP	Delay LS inductor up
			FBIO 25
%R2003	LS_SEAL	UP_LS	LS inductor up
			FBIO 6
%R2006	LS_SEAL	LSRAMP1	LS short stop ramp part 1
			FBIO 17,22
%R2009	SST_AL	FOINDEL	Force inching reset timer
			FBIO 7
%R2012	LS_SEAL	LO_SHPW	Low power short stop pulse
			FBIO 19,22,24,25,26,27
	RAMPS		FBIO 21
%R2013	LS_SEAL	POWMUL	Power multipel short stop ramp
			FBIO 24,25,26,27
	RAMPS		FBIO 13,20
%R2017	SAFETY1	CHKSREL	Check status safety relay
			FBIO 13,15
%R2020	SST_AL	DELSQUE	Delay alarm on Squee gee roller
			FBIO 9
%R2023	P_FEED	SQUEOFF	Off delay squee gee roller
			FBIO 17

REF.	BLOCK	NICKNAME	REF. DESCRIPTION / CROSS REFERENCES
	JUM		FBIO 52
%R2027	P_FEED	DEL_ENP	Delay enable signal pend.roller
			FBIO 21
%R2030	P_FEED	DELPEND	Start delay pendulum roller
			FBIO 16
%R2033	P_FEED	PRLSPD	Pendulum roller prod low speed
			FBIO 26,29,35,36
	DEF_PAR		FBIO 33
%R2034	P_FEED	PRHSPD	Pendulum roller prod high speed
			FBIO 26,30,35,36
	DEF_PAR		FBIO 33
%R2037	P_FEED	P_C_TMR	Pend speed check timer
			FBIO 34
%R2041	SST_AL	PENDMON	Timedelay pendulum up alarm
			FBIO 14
%R2044	P_FEED	W_PEND	Start delay pendulum roller
			FBIO 11,12,16
%R2045	P_FEED	PENDPOS	Check pendulum down
			FBIO 13
%R2050	TUBEPOS	TEMP_SE	Temporary register set position
			FBIO 5,6,9,10,26,29,30
%R2051	TUBEPOS	END_CH	TMR check end of change tube pos
			FBIO 10
%R2054	TUBEPOS	DIR	TMR delay for the direction
			FBIO 12
%R2057	TUBEPOS	CLK_PUL	TMR delay start clock pulse
			FBIO 15
%R2060	TUBEPOS	HOME_PS	Counter home position tube
			FBIO 17
%R2063	TUBEPOS	HOME_D	TMR delay home position tube
			FBIO 18
%R2066	TUBEPOS	SETPOS	Counter set position tube
			FBIO 20
%R2069	TUBEPOS	CHAN_D	TMR delay change
			FBIO 29
%R2072	TUBEPOS	OLD_VAL	Old value tube position
			FBIO 30,31
%R2073	TUBEPOS	MOVE_V	Moving value tube position
			FBIO 31,34
%R2074	TUBEPOS	DEL_ST	TMR delay start positioning
			FBIO 33
%R2077	TUBEPOS	MOVE_CO	Move tube positioning counter
			FBIO 34
%R2086	P_FEED	PND_DEL	TMR delay pendulum stop
			FBIO 19
%R2089	ASU_AL	SA_F_IN	TMR forced inching for SA fail
			FBIO 58
%R2092	ASEPTIC	PAPERBR	Timing for paper tube broken
			FBIO 125,126,127,128
%R2100	SUPPLY	DC_BUS	Delay DC-bus
			FBIO 6
	ASU_MOT		FBIO 5,6
%R2103	LEV_CON	REF_TMR	Refill bucket timer
			FBIO 67
%R2106	LEV_CON	REF_CTR	Refilling counter
			FBIO 57,58,59,63
%R2107	LEV_CON	BLK_REF	Time block alarm (Refilling)
			FBIO 68,69
%R2110	LEV_CON	REFAUX1	Refilling register aux 1
			FBIO 59,60,61
%R2113	LEV_CON	REFAUX2	Refilling register aux 2
			FBIO 59,60
%R2115	LEV_CON	LEVEL_T	Delay for product level stop
			FBIO 55
%R2200	FFU_MOT	DEL_SOF	Delay for soft enable servo FFU
			FBIO 11
%R2203	FFU_MOT	DEL_G_R	Delay general reset servo FFU
			FBIO 17
%R2206	FFU_MOT	TMR_CON	TMR reset contactor motor
			FBIO 18
%R2209	FFU_MOT	TMR_HIG	TMR high speed inching
			FBIO 24
%R2212	FFU_MOT	TMR_LOW	TMR low speed inching
			FBIO 27

REF.	BLOCK	NICKNAME	REF. DESCRIPTION / CROSS REFERENCES
%R2215	FFU	TMR_HOM	TMR check home position FFU
			FBIO 13
%R2218	FFU_MOT	DEL_DE	Delay off for DE-motor contactor
			FBIO 37
%R2221	FFU_MOT	EXC_DEL	Delay enable external conveyor
			FBIO 41
%R2224	FFU_MOT	TMB_EXC	Timebase offdelay external conv
			FBIO 37,39,40
%R2230	FFU	WB_OFF_	Waste box off timer
			FBIO 28
%R2233	FFU	WB_ON_	Waste box on timer
			FBIO 28
%R2236	FFU	EX_CONV	TMR for congestion ext.conveyor
			FBIO 25
%R2239	FFU	OUT_CON	TMR for congestion outfeed
			FBIO 26
%R2245	FFU	JAM_FFU	Check pakage jam FFU
			FBIO 29
%R2248	FFU_MOT	BELTDEL	Delay alarm belt brake fault
			FBIO 44
%R2251	FFU	QUE_TMR	Que after machine delay
			FBIO 18
%R2254	PLMSLA4	STOP_DE	TMR delay on detection DE stop
			FBIO 85
%R2258	JUM	WBOXVAL	Waste box alarm value
			FBIO 58,59
	1T0001		FBIO 80,81
%R2600	MMOTOR	ACC_TMR	Acceleration main motor
			FBIO 6,7,8,9
%R2603	MMOTOR	EN_DEL	Delay enable signal ON
			FBIO 13
%R2606	MMOTOR	EN_RES	Reset timer main motor
			FBIO 19,20,21
%R2609	MMOTOR	IN_TMR	Timer inching main motor
			FBIO 29
%R2612	1T0001	SEALTMR	Sealing timer
			FBIO 40,41,42
%R2613	MMOTOR	JAW_CTR	Jaw counter
			FBIO 33,34,35
	ST_SEQ		FBIO 44
	JUM		FBIO 6
%R2615	JUM	EN_CHK	Angle encoder check
			FBIO 10
%R2618	JUM	TSR_TMR	Timeout TS error right side
			FBIO 17
%R2621	JUM	TSL_TMR	Timeout TS error left side
			FBIO 21
%R2624	JUM	CTR_TSR	Counter TS error right
			FBIO 16,17,18
%R2625	JUM	CTR_TSL	Counter TS error left
			FBIO 20,21,22
%R2626	JUM	T_TSCHK	Timebase TS-check
			FBIO 14,15,17,21
%R2627	JUM	ANG_CHK	Check angle-encoder machine stop
			FBIO 52,53
%R2628	JUM	ANG_PS+	Angle encoder stop pos plus chk
			FBIO 53,54
%R2629	JUM	ANG_PS-	Angle encoder stop pos min chk
			FBIO 53,55
%R2630	JUM	ANG_CH2	Angle encoder check 2
			FBIO 11
%R2633	JUM	SAM_MM	Sample DMC MM
			FBIO 89,90
%R2634	JUM	CNT_MM	Received bit counter DMC MM
			FBIO 91,92,93
%R2635	JUM	SCN_MM	Scansion counter DMC MM
			FBIO 89,93
%R2636	AL_LOCK	ERR_MM	Error code DMC MM
			FBIO 26,33
	JUM		FBIO 94
%R2637	JUM	SAM_DCS	Sample DMC DCS
			FBIO 97,98
%R2638	JUM	CNT_DCS	Received bit counter DMC DCS
			FBIO 99,100,101

REF.	BLOCK	NICKNAME	REF. DESCRIPTION / CROSS REFERENCES
%R2639	JUM	SCN_DCS	Scansion counter DMC DCS
			FBIO 97,101
%R2640	AL_LOCK	ERR_DCS	Error code DMC DCS
			FBIO 27,33
	JUM		FBIO 102
%R2641	FFU	SAM_FF	Sample DMC FF
			FBIO 43,44
%R2642	FFU	CNT_FF	Received bit counter DMC FF
			FBIO 45,46,47
%R2643	FFU	SCN_FF	Scansion counter DMC FF
			FBIO 43,47
%R2644	AL_LOCK	ERR_FF	Error code DMC FF
			FBIO 28,33
	FFU		FBIO 48
%R2663	JUM	HP_CHK	Home position check timer
			FBIO 27
%R2666	JUM	DC_DMC	Check DMC_OK DCS
			FBIO 42
%R2669	DCS	DES_OUT	Packages out of design
			FBIO 17,19,21
%R2672	DCS	IN_DES	Count packages in design
			FBIO 23,24,27
%R2673	DCS	CHK_DCS	Count packages in design
			FBIO 24,25,26
%R2675	FIL_DCS	BCD_CHK	Time base for barcode control
			FBIO 5,6,7,8
%R2676	FIL_DCS	BCD_MON	Timer for barcode monitoring
			FBIO 8
%R2679	DCS	MEANDCS	Mean counter DCS
			FBIO 31,32,34,35
%R2680	DCS	INDES	Percent in design (one decimal)
			FBIO 31,33,35
%R2684	DCS	TR_RPTL	Data transfer Repeat length
			FBIO 37,47
%R2685	DCS	TR_ANGL	Data transfer Production angle
			FBIO 37
%R2686	DCS	DCS_ENB	TMR delay DCS software enable
			FBIO 7
%R2690	DCS	TR_CNTR	Data transfer counter
			FBIO 48
%R2691	DCS	DEL_TRN	TMR delay end data transfer
			FBIO 49
%R2694	DCS	TMCC_CK	TMCC clok generator
			FBIO 37,45
%R2700	VOL_CAM	DIRECT	TMR delay for the direction
			FBIO 11
%R2703	VOL_CAM	CLPULSE	TMR delay start clock pulse
			FBIO 12
%R2706	1T0001	HOME	Counter home position
			FBIO 49
%R2709	VOL_CAM	HOMEDEL	TMR delay home position
			FBIO 13
%R2712	1T0001	SET_P	Counter set position
			FBIO 51
%R2715	_MAIN	TEMP_SP	Temporary register set position
			FBIO 37
	VOL_CAM		FBIO 5,6,9,17,21,22
%R2716	_MAIN	END_CHA	TMR checking end of change
			FBIO 37
%R2719	VOL_CAM	CHA_D	TMR change delay (volume)
			FBIO 21
%R2722	VOL_CAM	OLD_VA	Old value volume cam
			FBIO 22,23
%R2723	VOL_CAM	MOVE_VA	Moving value volume cam
			FBIO 23
	1T0001		FBIO 54
%R2724	VOL_CAM	DEL_S	TRM delay start positioning
			FBIO 25
%R2727	1T0001	MOVE_C	Move volume cam counter
			FBIO 54
%R2730	VOL_CAM	RES_ARR	Reset arrows volume cam TPOP
			FBIO 19
%R2750	WASTE	WH_REG1	Waste handeling register1 (out)
			FBIO 22,24,27,29,31,33,35,37,39,41,43,47

```
REF.     BLOCK    NICKNAME   REF. DESCRIPTION / CROSS REFERENCES
-------  -------  --------  -----------------------------------
%R2751   WASTE    WH_REG2   Waste handeling register2
                             FBIO  24,33,37
%R2752   WASTE    WH_REG3   Waste handeling register3
                             FBIO  25
%R2753   WASTE    WH_REG4   Waste handeling register4
                             FBIO  20,25
%R2754   WASTE    WH_REG5   Waste handeling register5
                             FBIO  10,11,14,16,18,20,25
%R2755   WASTE    WH_REG6   Waste handeling register6
                             FBIO  10,11,14,16,18
%R2756   WASTE    WH_REG7   Waste handeling register7
                             FBIO  10,11,15,16,18
%R2757   WASTE    WH_REG8   Waste handeling register8
                             FBIO  15,17
%R2758   WASTE    WH_REG9   Waste handeling register9
                             FBIO  15,17
%R2759   WASTE    WHREG10   Waste handeling register10
                             FBIO  17
%R2951   LEV_CON  VOLREG1   TMCC FCS Register 1
                             FBIO  19,29
%R2952   LEV_CON  VOLREG2   TMCC FCS Register 2
                             FBIO  19
%R2953   LEV_CON  VOLREG3   TMCC FCS Register 3
                             FBIO  19
%R2954   LEV_CON  VOLREG4   TMCC FCS Register 4
                             FBIO  20
%R2955   LEV_CON  VOLREG5   TMCC FCS Register 5
                             FBIO  20
%R2956   LEV_CON  VOLREG6   TMCC FCS Register 6
                             FBIO  20
%R2957   LEV_CON  VOLREG7   TMCC FCS Register 7
                             FBIO  21
%R2958   LEV_CON  VOL_ENA   TMCC FCS Delay enable TX timer
                             FBIO  23
%R2961   LEV_CON  VOL_CLK   TMCC FCS Clock generator counter
                             FBIO  27
%R2964   LEV_CON  VOL_DEL   TMCC FCS Delay end TX data timer
                             FBIO  31
%R2967   LEV_CON  VOL_CNT   TMCC FCS Data transfer counter
                             FBIO  30
%R2970   LEV_CON  FCSREG1   TMCC FCS Default register 1
                             FBIO  5,11,17,19
         S__250B             FBIO  56,59
         S__200B             FBIO  56,59
         S__200M             FBIO  56,59
         S__200S             FBIO  56,59
         S__250S             FBIO  56,59
         S__300S             FBIO  56,59
%R2971   LEV_CON  FCSREG2   TMCC FCS Default register 2
                             FBIO  19
         S__250B             FBIO  56,59
         S__200B             FBIO  56,59
         S__200M             FBIO  56,59
         S__200S             FBIO  56,59
         S__250S             FBIO  56,59
         S__300S             FBIO  56,59
%R2972   LEV_CON  FCSREG3   TMCC FCS Default register 3
                             FBIO  19
         S__250B             FBIO  56,59
         S__200B             FBIO  56,59
         S__200M             FBIO  56,59
         S__200S             FBIO  56,59
         S__250S             FBIO  56,59
         S__300S             FBIO  56,59
%R2973   LEV_CON  FCSREG4   TMCC FCS Default register 4
                             FBIO  20
         S__250B             FBIO  57,60
         S__200B             FBIO  57,60
         S__200M             FBIO  57,60
         S__200S             FBIO  57,60
         S__250S             FBIO  57,60
         S__300S             FBIO  57,60
%R2974   LEV_CON  FCSREG5   TMCC FCS Default register 5
                             FBIO  20
```

REF.	BLOCK	NICKNAME	REF. DESCRIPTION / CROSS REFERENCES
	S__250B		FBIO 57,60
	S__200B		FBIO 57,60
	S__200M		FBIO 57,60
	S__200S		FBIO 57,60
	S__250S		FBIO 57,60
	S__300S		FBIO 57,60
%R2975	LEV_CON	FCSREG6	TMCC FCS Default register 6
			FBIO 20
	S__250B		FBIO 57,60
	S__200B		FBIO 57,60
	S__200M		FBIO 57,60
	S__200S		FBIO 57,60
	S__250S		FBIO 57,60
	S__300S		FBIO 57,60
%R2976	LEV_CON	FCSREG7	TMCC FCS Default register 7
			FBIO 21
	S__250B		FBIO 58,61
	S__200B		FBIO 58,61
	S__200M		FBIO 58,61
	S__200S		FBIO 58,61
	S__250S		FBIO 58,61
	S__300S		FBIO 58,61
%R2980	LEV_CON	TPOPVAL	Register to transfer new param.
			FBIO 11,15,17
%R2981	LEV_CON	SFLTPOP	Start Flow value from TPOP
			FBIO 9,12,15,18
%R2982	LEV_CON	PFLTPOP	Prod Flow value from TPOP
			FBIO 10,13,14,18
%R2983	LEV_CON	BYTE_H	Move Prod Flow to the high Byte
			FBIO 14,15
%R2984	LEV_CON	DEF_FCS	Default value FCS parameters
			FBIO 5,6,7
%R2985	LEV_CON	DEFFCSF	Default value FCS Start Flow
			FBIO 6,9
%R2986	LEV_CON	DEFFCPF	Default value FCS Prod Flow
			FBIO 8,10
%R2987	LEV_CON	BITMOVE	Default move from Byte H to Low
			FBIO 7,8
%R3000	TEMPREG	LOOP1	Loop 1 peroxide tank
			FBIO 25
	DEFAULT		FBIO 7
%R3002	TEMPREG	SAMP_L1	Sample loop 1 (1=10ms)
			FBIO 15
%R3003	DEFAULT	DBP_L1	Dead band+ loop1(0-32000=0-100%)
			FBIO 9
%R3004	DEFAULT	DBN_L1	Dead band- loop1(0-32000=0-100%)
			FBIO 9
%R3005	TEMPREG	PGAINL1	P-gain loop 1 0-327,67 %
			FBIO 16
%R3006	TEMPREG	DGAINL1	D-gain loop 1 0-327,67 Sec
			FBIO 16
%R3007	TEMPREG	IGAINL1	I-Gain loop 1 0-32.767 repeats/s
			FBIO 16
%R3008	TEMPREG	BIAS_L1	Bias loop 1 -100/+100 %
			FBIO 22,23
	DEFAULT		FBIO 8
%R3009	DEFAULT	UCL_L1	Upper clamp loop 1 (32000)
			FBIO 8
%R3010	DEFAULT	LCL_L1	Lower clamp loop 1 (0)
			FBIO 8
%R3011	DEFAULT	SL_T_L1	Min slew time loop 1 (0)
			FBIO 9
%R3013	TEMPREG	MAN_L1	Manual command value loop 1
			FBIO 20
%R3040	TEMPREG	LOOP2	Loop 2 top flap left
			FBIO 34
	DEFAULT		FBIO 13
%R3042	TEMPREG	SAMP_L2	Sample loop 2 (1=10ms)
			FBIO 31
%R3043	DEFAULT	DBP_L2	Dead band+ loop2(0-32000=0-100%)
			FBIO 15
%R3044	DEFAULT	DBN_L2	Dead band- loop2(0-32000=0-100%)
			FBIO 15
%R3045	TEMPREG	PGAINL2	P-gain loop 2 0-327,67%

REF.	BLOCK	NICKNAME	REF. DESCRIPTION / CROSS REFERENCES
			FBIO 32
%R3046	TEMPREG	DGAINL2	D-gain loop 2 0-327,67 Sec
			FBIO 32
%R3047	TEMPREG	IGAINL2	I-gain loop 2 0-32.767 repeats/s
			FBIO 32
%R3048	DEFAULT	BIAS_L2	Bias loop 2 -100/+100 %
			FBIO 14
%R3049	DEFAULT	UCL_L2	Upper clamp loop 2 (32000)
			FBIO 14
%R3050	DEFAULT	LCL_L2	Lower clamp loop 2 (0)
			FBIO 14
%R3051	DEFAULT	SL_T_L2	Min slew time loop 2 (0)
			FBIO 15
%R3080	TEMPREG	LOOP3	Loop 3 top flap right
			FBIO 43
	DEFAULT		FBIO 19
%R3082	TEMPREG	SAMP_L3	Sample loop 3 (1=10ms)
			FBIO 40
%R3083	DEFAULT	DBP_L3	Dead band+ loop3(0-32000=0-100%)
			FBIO 21
%R3084	DEFAULT	DBN_L3	Dead band- loop3(0-32000=0-100%)
			FBIO 21
%R3085	TEMPREG	PGAINL3	P-gain loop 3 0-327,67%
			FBIO 41
%R3086	TEMPREG	DGAINL3	D-gain loop 3 0-327,67 Sec
			FBIO 41
%R3087	TEMPREG	IGAINL3	I-gain loop 3 0-32.767 repeats/s
			FBIO 41
%R3088	DEFAULT	BIAS_L3	Bias loop 3 -100/+100 %
			FBIO 20
%R3089	DEFAULT	UCL_L3	Upper clamp loop 3 (32000)
			FBIO 20
%R3090	DEFAULT	LCL_L3	Lower clamp loop 3 (0)
			FBIO 20
%R3091	DEFAULT	SL_T_L3	Min slew time loop 3 (0)
			FBIO 21
%R3120	TEMPREG	LOOP4	Loop 4 bottom flap left
			FBIO 52
	DEFAULT		FBIO 25
%R3122	TEMPREG	SAMP_L4	Sample loop 4 (1=10ms)
			FBIO 49
%R3123	DEFAULT	DBP_L4	Dead band+ loop4(0-32000=0-100%)
			FBIO 27
%R3124	DEFAULT	DBN_L4	Dead band- loop4(0-32000=0-100%)
			FBIO 27
%R3125	TEMPREG	PGAINL4	P-gain loop 4 0-327,67%
			FBIO 50
%R3126	TEMPREG	DGAINL4	D-gain loop 4 0-327,67 Sec
			FBIO 50
%R3127	TEMPREG	IGAINL4	I-gain loop 4 0-32.767 repeats/s
			FBIO 50
%R3128	DEFAULT	BIAS_L4	Bias loop 4 -100/+100 %
			FBIO 26
%R3129	DEFAULT	UCL_L4	Upper clamp loop 4 (32000)
			FBIO 26
%R3130	DEFAULT	LCL_L4	Lower clamp loop 4 (0)
			FBIO 26
%R3131	DEFAULT	SL_T_L4	Min slew time loop 4 (0)
			FBIO 27
%R3160	TEMPREG	LOOP5	Loop 5 bottom flap right
			FBIO 61
	DEFAULT		FBIO 31
%R3162	TEMPREG	SAMP_L5	Sample loop 5 (1=10ms)
			FBIO 58
%R3163	DEFAULT	DBP_L5	Dead band+ loop5(0-32000=0-100%)
			FBIO 33
%R3164	DEFAULT	DBN_L5	Dead band- loop5(0-32000=0-100%)
			FBIO 33
%R3165	TEMPREG	PGAINL5	P-gain loop 5 0-327,67 %
			FBIO 59
%R3166	TEMPREG	DGAINL5	D-gain loop 5 0-327,67 Sec
			FBIO 59
%R3167	TEMPREG	IGAINL5	I-gain loop 5 0-32.767 repeats/s
			FBIO 59

REF.	BLOCK	NICKNAME	REF. DESCRIPTION / CROSS REFERENCES
%R3168	DEFAULT	BIAS_L5	Bias loop 5 -100/+100 %
			FBIO 32
%R3169	DEFAULT	UCL_L5	Upper clamp loop 5 (32000)
			FBIO 32
%R3170	DEFAULT	LCL_L5	Lower clamp loop 5 (0)
			FBIO 32
%R3171	DEFAULT	SL_T_L5	Min slew time loop 5 (0)
			FBIO 33
%R3200	TEMPREG	LOOP6	Loop 6 air super heater
			FBIO 75
	DEFAULT		FBIO 37
%R3202	TEMPREG	SAMP_L6	Sample loop 6 (1=10ms)
			FBIO 69
%R3203	DEFAULT	DBP_L6	Dead band+ loop6(0-32000=0-100%)
			FBIO 39
%R3204	DEFAULT	DBN_L6	Dead band- loop6(0-32000=0-100%)
			FBIO 39
%R3205	TEMPREG	PGAINL6	P-gain loop 6 0-327,67 %
			FBIO 70
%R3206	TEMPREG	DGAINL6	D-gain loop6 0-327,67 Sec
			FBIO 70
%R3207	TEMPREG	IGAINL6	I-gain loop 6 0-32.767 repeats/s
			FBIO 70
%R3208	TEMPREG	BIAS_L6	Bias loop 6 -100/+100 %
			FBIO 72,73
	DEFAULT		FBIO 38
%R3209	DEFAULT	UCL_L6	Upper clamp loop 6 (32000)
			FBIO 38
%R3210	DEFAULT	LCL_L6	Lower clamp loop 6 (0)
			FBIO 38
%R3211	DEFAULT	SL_T_L6	Min slew time loop 6 (0)
			FBIO 39
%R3240	TEMPREG	LOOP7	Loop 7 external heating
			FBIO 89
	DEFAULT		FBIO 42
%R3242	TEMPREG	SAMP_L7	Sample loop 7 (1=10ms)
			FBIO 84
%R3243	DEFAULT	DBP_L7	Dead band+loop7(0-32000=0-100%)
			FBIO 44
%R3244	DEFAULT	DBN_L7	dead band-loop7(0-32000=0-100%)
			FBIO 44
%R3245	TEMPREG	PGAINL7	P-gain loop 7 0-327,67%
			FBIO 85
%R3246	TEMPREG	DGAINL7	D-gain loop 7 0-327,67 sec.
			FBIO 85
%R3247	TEMPREG	IGAINL7	I-gain loop 7 0-32.767 repeats/s
			FBIO 85
%R3248	TEMPREG	BIAS_L7	Bias loop 7 -100/+100 %
			FBIO 86,87
	DEFAULT		FBIO 43
%R3249	DEFAULT	UCL_L7	Upper clamp loop 7 (32000)
			FBIO 43
%R3250	DEFAULT	LCL_L7	Lower clamp loop 7 (0)
			FBIO 43
%R3251	DEFAULT	SL_T_L7	Min slew time loop 7 (0)
			FBIO 44
%R3280	TEMPREG	LOOP8	Loop 8 HI heater
			FBIO 104
	DEFAULT		FBIO 48
%R3282	TEMPREG	SAMP_L8	Sample loop 8 (1=10ms)
			FBIO 101
%R3283	DEFAULT	DBP_L8	Deab band+ loop8(0-32000=0-100)
			FBIO 50
%R3284	DEFAULT	DBN_L8	Dead band- loop8(0-32000=0-100)
			FBIO 50
%R3285	TEMPREG	PGAINL8	P-gain loop 8 0-327,67%
			FBIO 102
%R3286	TEMPREG	DGAINL8	D-gain loop 8 0-327,67 Sec
			FBIO 102
%R3287	TEMPREG	IGAINL8	I-gain loop 8 0-32.767 repeats/s
			FBIO 102
%R3288	DEFAULT	BIAS_L8	Bias loop 8 -100/+100
			FBIO 49
%R3289	DEFAULT	UCL_L8	Upper clamp loop 8 (32000)

REF.	BLOCK	NICKNAME	REF. DESCRIPTION / CROSS REFERENCES
			FBIO 49
%R3290	DEFAULT	LCL_L8	Lower clamp loop 8 (0)
			FBIO 49
%R3291	DEFAULT	SL_T_L8	Min slew time loop 8 (0)
			FBIO 50
%R3340	TEMPREG	LOOP9	Loop 9 ASu Constant Heat
			FBIO 113
	DEFAULT		FBIO 54
%R3342	TEMPREG	SAMP_L9	Sample loop 9 (1=10ms)
			FBIO 110
%R3343	DEFAULT	DBP_L9	Deab band+ loop9(0-32000=0-100)
			FBIO 56
%R3344	DEFAULT	DBN_L9	Dead band- loop9(0-32000=0-100)
			FBIO 56
%R3345	TEMPREG	PGAINL9	P-gain loop 9 0-327,67%
			FBIO 111
%R3346	TEMPREG	DGAINL9	D-gain loop 9 0-327,67 Sec
			FBIO 111
%R3347	TEMPREG	IGAINL9	I-gain loop 9 0-32.767 repeats/s
			FBIO 111
%R3348	DEFAULT	BIAS_L9	Bias loop 9 -100/+100
			FBIO 55
%R3349	DEFAULT	UCL_L9	Upper clamp loop 9 (32000)
			FBIO 55
%R3350	DEFAULT	LCL_L9	Lower clamp loop 9 (0)
			FBIO 55
%R3351	DEFAULT	SL_T_L9	Min slew time loop 9 (0)
			FBIO 56
%R3399	TEMPREG	LOOP1PV	Process value loop 1
			FBIO 17,18,20,25
%R3400	TEMPREG	SV_L1	Setvalue loop 1
			FBIO 13,25
%R3401	TEMPREG	CV_L1	Control value loop 1
			FBIO 25
	PWM		FBIO 7
%R3402	PWM	SSR1TM	Time to activate SSR 1
			FBIO 7,8,10
%R3403	TEMPREG	SV_L2	Setvalue loop 2
			FBIO 29,34
%R3404	TEMPREG	CV_L2	Control value loop 2
			FBIO 34
	PWM		FBIO 14
%R3405	PWM	SSR2TM	Time to activate SSR 2
			FBIO 14,15,16
%R3406	TEMPREG	SV_L3	Setvalue loop 3
			FBIO 38,43
%R3407	TEMPREG	CV_L3	Control value loop 3
			FBIO 43
	PWM		FBIO 18
%R3408	PWM	SSR3TM	Time to activate SSR 3
			FBIO 18,19,20
%R3409	TEMPREG	SV_L4	Setvalue loop 4
			FBIO 47,52
%R3410	TEMPREG	CV_L4	Control value loop 4
			FBIO 52
	PWM		FBIO 22
%R3411	PWM	SSR4TM	Time to activate SSR 4
			FBIO 22,23,24
%R3412	TEMPREG	SV_L5	Setvalue loop 5
			FBIO 56,61
%R3413	TEMPREG	CV_L5	Control value loop 5
			FBIO 61
	PWM		FBIO 26
%R3414	PWM	SSR5TM	Time to activate SSR 5
			FBIO 26,27,28
%R3415	TEMPREG	SV_L6	Setvalue loop 6
			FBIO 65,66,67,69,75
%R3416	TEMPREG	CV_L6	Control value loop 6
			FBIO 75
	PWM		FBIO 31
%R3417	PWM	SSR6TM	Time to activate SSR 6
			FBIO 31,32,33
%R3418	ASEPTIC	SV_L7	Setvalue loop 7
			FBIO 31

REF.	BLOCK	NICKNAME	REF. DESCRIPTION / CROSS REFERENCES
	TEMPREG		FBIO 78,79,82,84,86,87,89
%R3419	TEMPREG	CV_L7	Control value loop 7
			FBIO 89
	PWM		FBIO 36
%R3420	PWM	SSR7TM	Time to active SSR 7
			FBIO 36,37,38
%R3421	TEMPREG	SV_L8	Setvalue loop 8
			FBIO 92,95,104
%R3422	TEMPREG	CV_L8	Control value loop 8
			FBIO 104
	PWM		FBIO 42
%R3423	PWM	SSR8TM	Time to active SSR 8
			FBIO 42,43,44
%R3424	TEMPREG	PV_L8	Process value loop 8
			FBIO 101,104
%R3425	TEMPREG	SV_L9	Setvalue loop 9
			FBIO 108,113
%R3426	TEMPREG	CV_L9	Control value loop 9
			FBIO 113
	PWM		FBIO 48
%R3427	PWM	SSR9TM	Time to active SSR 9
			FBIO 48,49,50
%R3450	TEMPREG	CAL1_1H	Calc val AL_Lim Loop 1 SV1 High
			FBIO 12,20
%R3451	TEMPREG	CAL1_1L	Calc val AL_Lim Loop 1 SV1 Low
			FBIO 12
%R3454	TEMPREG	CAL2_1H	Calc val AL_Lim Loop 2 SV1 High
			FBIO 28,29
%R3455	TEMPREG	CAL2_1L	Calc val AL_Lim Loop 2 SV1 Low
			FBIO 28,29
%R3458	TEMPREG	CAL3_1H	Calc val AL_Lim Loop 3 SV1 High
			FBIO 37,38
%R3459	TEMPREG	CAL3_1L	Calc val AL_Lim Loop 3 SV1 Low
			FBIO 37,38
%R3463	TEMPREG	CAL4_1H	Calc val AL_Lim Loop 4 SV1 High
			FBIO 46,47
%R3464	TEMPREG	CAL4_1L	Calc val AL_Lim Loop 4 SV1 Low
			FBIO 46,47
%R3467	TEMPREG	CAL5_1H	Calc val AL_Lim Loop 5 SV1 High
			FBIO 55,56
%R3468	TEMPREG	CAL5_1L	Calc val AL_Lim Loop 5 SV1 Low
			FBIO 55,56
%R3471	TEMPREG	CAL6_1H	Calc val AL_Lim Loop 6 SV1 High
			FBIO 64,65
%R3472	TEMPREG	CAL6_1L	Calc val AL_Lim Loop 6 SV1 Low
			FBIO 64,65
%R3475	TEMPREG	CAL7_1H	Calc val AL_Lim loop 7 SV1 High
			FBIO 77
%R3476	ASEPTIC	CAL7_1L	Calc val Al_Lim loop 7 SV1 Low
			FBIO 30
	TEMPREG		FBIO 77
	PEROXID		FBIO 23
%R3479	TEMPREG	CAL8_1H	Calc val AL_Lim loop 8 SV1 High
			FBIO 92,93
%R3480	TEMPREG	CAL8_1L	Calc val Al_Lim loop 8 SV1 Low
			FBIO 92,93
%R3481	TEMPREG	CAL9_1H	Calc val AL_Lim loop 9 SV1 High
			FBIO 107,108
%R3482	TEMPREG	CAL9_1L	Calc val Al_Lim loop 9 SV1 Low
			FBIO 107,108
%R3496	TEMPREG	AUX_L6	Aux register Loop 6
			FBIO 64,65
	DEFAULT		FBIO 36
%R3497	TEMPREG	AUX_L7	Aux register Loop 7
			FBIO 77,78
	DEFAULT		FBIO 41
%R3500	PWM	PWMTMR1	PWM timer 1 timebase 10 sec
			FBIO 5,8
%R3503	PWM	PWMTMR2	PWM timer 1 timebase 100 Msec
			FBIO 12,15,19,23,27
%R3506	PWM	PWMTMR3	PWM timer 3 time base 1 sec
			FBIO 29,32
%R3509	PWM	PWMTMR7	PWM timer 7 time base 10 sec
			FBIO 34,37

REF.	BLOCK	NICKNAME	REF. DESCRIPTION / CROSS REFERENCES
%R3512	PWM	PWMTMR8	PWM timer 8 time base 0.5 sec
			FBIO 40,43
%R3515	PWM	PWMTMR9	PWM timer 9 time base 10 sec
			FBIO 46,49
%R3520	SUPPLY	COOLAIR	Cooling of FFU heaters
			FBIO 56
%R3523	SUPPLY	HEATFFU	Delay heaters FFU
			FBIO 57
%R3526	SUPPLY	HEATOFF	Delay ffu heaters off
			FBIO 57
%R3600	GRE_JUM	CONT_MM	Delay for contactor main motor
			FBIO 7
%R3603	GRE_JUM	DC_BUSG	Delay DC_BUS on during greasing
			FBIO 13
%R3606	GRE_JUM	EN_MMOT	Delay software enable main motor
			FBIO 14
%R3609	GRE_JUM	RES_ENB	Delay reset enable main motor
			FBIO 17
%R3612	GRE_JUM	RES_CO	Delay reset contactor mmotor
			FBIO 18
%R3615	GRE_JUM	DEL_ZER	Delay for start search zero JAW
			FBIO 19
%R3618	GRE_JUM	GREAS_C	Counter of greasing strokes
			FBIO 25,28,29
%R3621	GRE_JUM	GR_MADE	Greasing strokes made
			FBIO 28,29,30
%R3622	GRE_JUM	INT_CTR	Interrupt counter
			FBIO 30
%R3625	GRE_JUM	DEL_CYL	TMR delay for cylinders
			FBIO 33
%R3628	GRE_JUM	TD_STRO	TMR delay end stroke
			FBIO 34
%R3631	GRE_JUM	DEL_CYC	TMR delay start greasing cycle
			FBIO 36
%R3634	GRE_FFU	TMR_FFG	TMR for greasing FFU
			FBIO 5
%R3640	GRE_JUM	CAM_GRE	TMR cutting cam greasing
			FBIO 42
%R3643	GRE_FFU	GR_RFTK	TMR delay refilling tank
			FBIO 14
%R3646	JUM	DEL_POS	TMR alarm cutting CAM
			FBIO 64
%R3652	JUM	POS_CYL	TMR alarm cutting CAM
			FBIO 66
%R3655	FFU	FLOW_FF	TMR greasing flow FFU
			FBIO 39
%R3658	GRE_FFU	FF_COUN	FFU pulse counter
			FBIO 11
%R3661	JUM	GRECOUN	Greasing pulse counter
			FBIO 74
%R3664	JUM	EMPCOUN	Greasing tank empty stop
			FBIO 79
%R3667	GRE_FFU	FF_GR_C	FFU greasing pulse counter
			FBIO 6,7,11
%R3668	JUM	TMR_CAM	TMR alarm cutting CAM
			FBIO 85
%R3671	1T0001	GR_SEC1	Greasing stop sector STOP 1
			FBIO 87
	S__250B		FBIO 68
	S__200B		FBIO 68
	S__200M		FBIO 68
	S__200S		FBIO 68
	S__250S		FBIO 68
	S__300S		FBIO 68
%R3672	1T0001	GR_SEC2	Greasing stop sector STOP 2
			FBIO 88
	S__250B		FBIO 68
	S__200B		FBIO 68
	S__200M		FBIO 68
	S__200S		FBIO 68
	S__250S		FBIO 68
	S__300S		FBIO 68
%R3700	WASTE	SPACE	Space between packs
			FBIO 54,61

REF.	BLOCK	NICKNAME	REF. DESCRIPTION / CROSS REFERENCES
%R3701	WASTE	STORE_1	Number of packs for chute 1
			FBIO 54
%R3702	WASTE	STORE_2	Number of packs for chute 2
			FBIO 54
%R3703	WASTE	TMRHOLE	TMR hole between packs
			FBIO 61
%R3706	WASTE	DELSAM1	TMR delayed blowing for chute 1
			FBIO 64
%R3709	WASTE	COUNT_1	Packs counting for chute 1
			FBIO 55,63
%R3712	WASTE	SAM_OUT	TMR timeout sampling sequence
			FBIO 58
%R3715	WASTE	DELSAM2	TMR delayed blowing for chute 2
			FBIO 69
%R3718	WASTE	COUNT_2	Packs counting for chute 2
			FBIO 55,68
%R3721	WASTE	SAM_DEL	TMR delay integrated SU
			FBIO 53
%R4000	DEF_PAR	SA_PRO	Power SA production speed
			FBIO 12,14,15
	S__250B		FBIO 5
	S__200B		FBIO 5
	S__200M		FBIO 5
	S__200S		FBIO 5
	S__250S		FBIO 5
	S__300S		FBIO 5
%R4001	DEF_PAR	SA_LOW	Power SA low speed
			FBIO 12,16,17
	S__250B		FBIO 5
	S__200B		FBIO 5
	S__200M		FBIO 5
	S__200S		FBIO 5
	S__250S		FBIO 5
	S__300S		FBIO 5
%R4002	DEF_PAR	SA_EXT	Power SA extra high speed
			FBIO 18
	S__250B		FBIO 5
	S__200B		FBIO 5
	S__200M		FBIO 5
	S__200S		FBIO 5
	S__250S		FBIO 5
	S__300S		FBIO 5
%R4003	DEF_PAR	PR_PROL	Pendulum roller prod speed Low
			FBIO 33
	S__250B		FBIO 17
	S__200B		FBIO 17
	S__200M		FBIO 17
	S__200S		FBIO 17
	S__250S		FBIO 17
	S__300S		FBIO 17
%R4004	DEF_PAR	PR_PROH	Pendulum roller prod speed high
			FBIO 33
	S__250B		FBIO 17
	S__200B		FBIO 17
	S__200M		FBIO 17
	S__200S		FBIO 17
	S__250S		FBIO 17
	S__300S		FBIO 17
%R4005	P_FEED	PR_MANU	PendRoll Manual paper feed speed
			FBIO 23
	S__250B		FBIO 17
	S__200B		FBIO 17
	S__200M		FBIO 17
	S__200S		FBIO 17
	S__250S		FBIO 17
	S__300S		FBIO 17
%R4006	P_FEED	PR_INCH	Pendulum Roller Inching speed
			FBIO 26
	S__250B		FBIO 18
	S__200B		FBIO 18
	S__200M		FBIO 18
	S__200S		FBIO 18
	S__250S		FBIO 18
	S__300S		FBIO 18

REF.	BLOCK	NICKNAME	REF. DESCRIPTION / CROSS REFERENCES
%R4007	P_FEED	PR_LOWL	Pendulum Roller Low speed Low
			FBIO 27
	S__250B		FBIO 18
	S__200B		FBIO 18
	S__200M		FBIO 18
	S__200S		FBIO 18
	S__250S		FBIO 18
	S__300S		FBIO 18
%R4008	P_FEED	PR_LOWH	Pendulum Roller Low speed High
			FBIO 28
	S__250B		FBIO 18
	S__200B		FBIO 18
	S__200M		FBIO 18
	S__200S		FBIO 18
	S__250S		FBIO 18
	S__300S		FBIO 18
%R4009	DEF_PAR	LOOP_HL	High speed loop Low
			FBIO 28
	S__250B		FBIO 8
	S__200B		FBIO 8
	S__200M		FBIO 8
	S__200S		FBIO 8
	S__250S		FBIO 8
	S__300S		FBIO 8
%R4010	DEF_PAR	LOOP_HH	High speed loop High
			FBIO 28
	S__250B		FBIO 8
	S__200B		FBIO 8
	S__200M		FBIO 8
	S__200S		FBIO 8
	S__250S		FBIO 8
	S__300S		FBIO 8
%R4011	DEF_PAR	LOOP_LH	Low speed loop High
			FBIO 29
	S__250B		FBIO 8
	S__200B		FBIO 8
	S__200M		FBIO 8
	S__200S		FBIO 8
	S__250S		FBIO 8
	S__300S		FBIO 8
%R4012	DEF_PAR	LOOPEHL	Extra High speed loop Low
			FBIO 29
	S__250B		FBIO 9
	S__200B		FBIO 9
	S__200M		FBIO 9
	S__200S		FBIO 9
	S__250S		FBIO 9
	S__300S		FBIO 9
%R4013	DEF_PAR	LOOPEHH	Extra High speed loop High
			FBIO 29
	S__250B		FBIO 9
	S__200B		FBIO 9
	S__200M		FBIO 9
	S__200S		FBIO 9
	S__250S		FBIO 9
	S__300S		FBIO 9
%R4014	S__250B	LOOPSPL	Loop speed during paper splice
			FBIO 9
	S__200B		FBIO 9
	S__200M		FBIO 9
	S__200S		FBIO 9
	S__250S		FBIO 9
	S__300S		FBIO 9
%R4015	DEF_PAR	MAG_HL	High speed magazine Low
			FBIO 31
	S__250B		FBIO 11
	S__200B		FBIO 11
	S__200M		FBIO 11
	S__200S		FBIO 11
	S__250S		FBIO 11
	S__300S		FBIO 11
%R4016	DEF_PAR	MAG_HH	High speed magazine High
			FBIO 31
	S__250B		FBIO 11

REF.	BLOCK	NICKNAME	REF. DESCRIPTION / CROSS REFERENCES
	S__200B		FBIO 11
	S__200M		FBIO 11
	S__200S		FBIO 11
	S__250S		FBIO 11
	S__300S		FBIO 11
%R4017	DEF_PAR	MAG_LH	Low speed magazine High
			FBIO 32
	S__250B		FBIO 11
	S__200B		FBIO 11
	S__200M		FBIO 11
	S__200S		FBIO 11
	S__250S		FBIO 11
	S__300S		FBIO 11
%R4018	DEF_PAR	MAG_EHH	Extra High speed magazine High
			FBIO 32
	S__250B		FBIO 12
	S__200B		FBIO 12
	S__200M		FBIO 12
	S__200S		FBIO 12
	S__250S		FBIO 12
	S__300S		FBIO 12
%R4019	DEF_PAR	LS_PROD	LS power production
			FBIO 36,41,42
	S__250B		FBIO 14
	S__200B		FBIO 14
	S__200M		FBIO 14
	S__200S		FBIO 14
	S__250S		FBIO 14
	S__300S		FBIO 14
%R4020	DEF_PAR	LS_LOW	LS power low speed
			FBIO 36,39,40
	S__250B		FBIO 14
	S__200B		FBIO 14
	S__200M		FBIO 14
	S__200S		FBIO 14
	S__250S		FBIO 14
	S__300S		FBIO 14
%R4021	DEF_PAR	LS_SERV	LS power service switch
			FBIO 37,43,44
	S__250B		FBIO 14
	S__200B		FBIO 14
	S__200M		FBIO 14
	S__200S		FBIO 14
	S__250S		FBIO 14
	S__300S		FBIO 14
%R4022	FFU	EXT_CON	External conv timer value
			FBIO 29
	S__250B		FBIO 46
	S__200B		FBIO 46
	S__200M		FBIO 46
	S__200S		FBIO 46
	S__250S		FBIO 46
	S__300S		FBIO 46
%R4023	WASTE	W_1PACK	Waste of package Nr 1
			FBIO 47
	S__250B		FBIO 46
	S__200B		FBIO 46
	S__200M		FBIO 46
	S__200S		FBIO 46
	S__250S		FBIO 46
	S__300S		FBIO 46
%R4025	WASTE	WSTRS1	Waste start strip register 1
			FBIO 10
	S__250B		FBIO 20
	S__200B		FBIO 20
	S__200M		FBIO 20
	S__200S		FBIO 20
	S__250S		FBIO 20
	S__300S		FBIO 20
%R4026	WASTE	WSTRS2	Waste start strip register 2
			FBIO 10
	S__250B		FBIO 20
	S__200B		FBIO 20
	S__200M		FBIO 20

REF.	BLOCK	NICKNAME	REF. DESCRIPTION / CROSS REFERENCES
	S__200S		FBIO 20
	S__250S		FBIO 20
	S__300S		FBIO 20
%R4027	WASTE	WSTRS3	Waste start strip register 3
			FBIO 10
	S__250B		FBIO 20
	S__200B		FBIO 20
	S__200M		FBIO 20
	S__200S		FBIO 20
	S__250S		FBIO 20
	S__300S		FBIO 20
%R4028	WASTE	WSSPL1	Waste strip splice register 1
			FBIO 11
	S__250B		FBIO 21
	S__200B		FBIO 21
	S__200M		FBIO 21
	S__200S		FBIO 21
	S__250S		FBIO 21
	S__300S		FBIO 21
%R4029	WASTE	WSSPL2	Waste strip splice register 2
			FBIO 11
	S__250B		FBIO 21
	S__200B		FBIO 21
	S__200M		FBIO 21
	S__200S		FBIO 21
	S__250S		FBIO 21
	S__300S		FBIO 21
%R4030	WASTE	WSSPL3	Waste strip splice register 3
			FBIO 11
	S__250B		FBIO 21
	S__200B		FBIO 21
	S__200M		FBIO 21
	S__200S		FBIO 21
	S__250S		FBIO 21
	S__300S		FBIO 21
%R4031	WASTE	WSBRK1	Waste strip break register 1
			FBIO 16
	S__250B		FBIO 22
	S__200B		FBIO 22
	S__200M		FBIO 22
	S__200S		FBIO 22
	S__250S		FBIO 22
	S__300S		FBIO 22
%R4032	WASTE	WSBRK2	Waste strip break register 2
			FBIO 16
	S__250B		FBIO 22
	S__200B		FBIO 22
	S__200M		FBIO 22
	S__200S		FBIO 22
	S__250S		FBIO 22
	S__300S		FBIO 22
%R4033	WASTE	WSBRK3	Waste strip break register 3
			FBIO 16
	S__250B		FBIO 22
	S__200B		FBIO 22
	S__200M		FBIO 22
	S__200S		FBIO 22
	S__250S		FBIO 22
	S__300S		FBIO 22
%R4034	WASTE	WSBRK4	Waste strip break register 4
			FBIO 17
	S__250B		FBIO 23
	S__200B		FBIO 23
	S__200M		FBIO 23
	S__200S		FBIO 23
	S__250S		FBIO 23
	S__300S		FBIO 23
%R4035	WASTE	WSBRK5	Waste strip break register 5
			FBIO 17
	S__250B		FBIO 23
	S__200B		FBIO 23
	S__200M		FBIO 23
	S__200S		FBIO 23
	S__250S		FBIO 23

REF.	BLOCK	NICKNAME	REF. DESCRIPTION / CROSS REFERENCES
	S__300S		FBIO 23
%R4036	WASTE	WSBRK6	Waste strip break register 6
			FBIO 17
	S__250B		FBIO 23
	S__200B		FBIO 23
	S__200M		FBIO 23
	S__200S		FBIO 23
	S__250S		FBIO 23
	S__300S		FBIO 23
%R4037	WASTE	WSTPIH1	Waste strip TPIH fail register 1
			FBIO 18
	S__250B		FBIO 24
	S__200B		FBIO 24
	S__200M		FBIO 24
	S__200S		FBIO 24
	S__250S		FBIO 24
	S__300S		FBIO 24
%R4038	WASTE	WSTPIH2	Waste strip TPIH fail register 2
			FBIO 18
	S__250B		FBIO 24
	S__200B		FBIO 24
	S__200M		FBIO 24
	S__200S		FBIO 24
	S__250S		FBIO 24
	S__300S		FBIO 24
%R4039	WASTE	WSTPIH3	Waste strip TPIH fail register 3
			FBIO 18
	S__250B		FBIO 24
	S__200B		FBIO 24
	S__200M		FBIO 24
	S__200S		FBIO 24
	S__250S		FBIO 24
	S__300S		FBIO 24
%R4040	WASTE	WPSPLC1	Waste paper spl detection column
			FBIO 20
	S__250B		FBIO 28
	S__200B		FBIO 28
	S__200M		FBIO 28
	S__200S		FBIO 28
	S__250S		FBIO 28
	S__300S		FBIO 28
%R4041	WASTE	WPSPLC2	Waste paper spl detection column
			FBIO 20
	S__250B		FBIO 28
	S__200B		FBIO 28
	S__200M		FBIO 28
	S__200S		FBIO 28
	S__250S		FBIO 28
	S__300S		FBIO 28
%R4042	WASTE	WSSTR_1	Waste startup reg 1
			FBIO 24
	S__250B		FBIO 30,32
	S__200B		FBIO 30,32
	S__200M		FBIO 30,32
	S__200S		FBIO 30,32
	S__250S		FBIO 30,32
	S__300S		FBIO 30,32
%R4043	WASTE	WSSTR_2	Waste startup reg 2
			FBIO 24
	S__250B		FBIO 30,32
	S__200B		FBIO 30,32
	S__200M		FBIO 30,32
	S__200S		FBIO 30,32
	S__250S		FBIO 30,32
	S__300S		FBIO 30,32
%R4044	WASTE	WSSTR_3	Waste startup reg 3
			FBIO 25
	S__250B		FBIO 30,32
	S__200B		FBIO 30,32
	S__200M		FBIO 30,32
	S__200S		FBIO 30,32
	S__250S		FBIO 30,32
	S__300S		FBIO 30,32
%R4045	WASTE	WSSTR_4	Waste startup reg 4

REF.	BLOCK	NICKNAME	REF. DESCRIPTION / CROSS REFERENCES
			FBIO 25
	S__250B		FBIO 31,33
	S__200B		FBIO 31,33
	S__200M		FBIO 31,33
	S__200S		FBIO 31,33
	S__250S		FBIO 31,33
	S__300S		FBIO 31,33
%R4046	WASTE	WSSTR_5	Waste startup reg 5
			FBIO 25
	S__250B		FBIO 31,33
	S__200B		FBIO 31,33
	S__200M		FBIO 31,33
	S__200S		FBIO 31,33
	S__250S		FBIO 31,33
	S__300S		FBIO 31,33
%R4047	WASTE	WLSERR1	Waste LS error reg 1
			FBIO 33
	S__250B		FBIO 31
	S__200B		FBIO 31
	S__200M		FBIO 31
	S__200S		FBIO 31
	S__250S		FBIO 31
	S__300S		FBIO 31
%R4048	WASTE	WLSERR2	Waste LS error reg 2
			FBIO 33
	S__250B		FBIO 34
	S__200B		FBIO 34
	S__200M		FBIO 34
	S__200S		FBIO 34
	S__250S		FBIO 34
	S__300S		FBIO 34
%R4049	TUBE	WSTUBE	Waste pkgs tight sealing tube
			FBIO 5
	SST_AL		FBIO 16
	S__250B		FBIO 63
	S__200B		FBIO 63
	S__200M		FBIO 63
	S__200S		FBIO 63
	S__250S		FBIO 63
	S__300S		FBIO 63
%R4050	TUBE	TUBECNT	Pkgs counter for tight tube
			FBIO 5,8
	SST_AL		FBIO 16
%R4053	TUBE	SPLTUBE	Pkgs from jaw to splice detector
			FBIO 8
	S__250B		FBIO 63
	S__200B		FBIO 63
	S__200M		FBIO 63
	S__200S		FBIO 63
	S__250S		FBIO 63
	S__300S		FBIO 63
%R4054	1T0001	TSSH_S1	TS Shift sector window 1
			FBIO 35
	S__250B		FBIO 36
	S__200B		FBIO 36
	S__200M		FBIO 36
	S__200S		FBIO 36
	S__250S		FBIO 36
	S__300S		FBIO 36
%R4055	1T0001	TSSH_S2	TS Shift sector window 2
			FBIO 35
	S__250B		FBIO 36
	S__200B		FBIO 36
	S__200M		FBIO 36
	S__200S		FBIO 36
	S__250S		FBIO 36
	S__300S		FBIO 36
%R4056	1T0001	SSEALW1	Start sealing sect window 1
			FBIO 39
	S__250B		FBIO 38
	S__200B		FBIO 38
	S__200M		FBIO 38
	S__200S		FBIO 38
	S__250S		FBIO 38

REF.	BLOCK	NICKNAME	REF. DESCRIPTION / CROSS REFERENCES
	S__300S		FBIO 38
%R4057	1T0001	SSEALW2	Start sealing sect window 2
			FBIO 39
	S__250B		FBIO 38
	S__200B		FBIO 38
	S__200M		FBIO 38
	S__200S		FBIO 38
	S__250S		FBIO 38
	S__300S		FBIO 38
%R4058	1T0001	WB_ONW1	Waste box on window 1
			FBIO 57
	S__250B		FBIO 40
	S__200B		FBIO 40
	S__200M		FBIO 40
	S__200S		FBIO 40
	S__250S		FBIO 40
	S__300S		FBIO 40
%R4059	1T0001	WB_ONW2	Waste box on window 2
			FBIO 57
	S__250B		FBIO 40
	S__200B		FBIO 40
	S__200M		FBIO 40
	S__200S		FBIO 40
	S__250S		FBIO 40
	S__300S		FBIO 40
%R4060	1T0001	WB_OFW1	Waste box off window 1
			FBIO 58
	S__250B		FBIO 41
	S__200B		FBIO 41
	S__200M		FBIO 41
	S__200S		FBIO 41
	S__250S		FBIO 41
	S__300S		FBIO 41
%R4061	1T0001	WB_OFW2	Waste box off window 2
			FBIO 58
	S__250B		FBIO 41
	S__200B		FBIO 41
	S__200M		FBIO 41
	S__200S		FBIO 41
	S__250S		FBIO 41
	S__300S		FBIO 41
%R4062	DCS	REP_LEN	Repeat length TMCC
			FBIO 37
	S__250B		FBIO 43
	S__200B		FBIO 43
	S__200M		FBIO 43
	S__200S		FBIO 43
	S__250S		FBIO 43
	S__300S		FBIO 43
%R4063	DCS	ANG_SEC	Angle sector TMCC
			FBIO 37
	S__250B		FBIO 43
	S__200B		FBIO 43
	S__200M		FBIO 43
	S__200S		FBIO 43
	S__250S		FBIO 43
	S__300S		FBIO 43
%R4067	DEF_PAR	SP_POS	Splice position preset
			FBIO 27
	S__250B		FBIO 45
	S__200B		FBIO 45
	S__200M		FBIO 45
	S__200S		FBIO 45
	S__250S		FBIO 45
	S__300S		FBIO 45
%R4068	LS_SEAL	EXPOW1	Extra power ls range 1
			FBIO 33
	S__250B		FBIO 15
	S__200B		FBIO 15
	S__200M		FBIO 15
	S__200S		FBIO 15
	S__250S		FBIO 15
	S__300S		FBIO 15
%R4069	LS_SEAL	EXPOW2	Extra power ls range 2

REF.	BLOCK	NICKNAME	REF. DESCRIPTION / CROSS REFERENCES
			FBIO 33
	S__250B		FBIO 15
	S__200B		FBIO 15
	S__200M		FBIO 15
	S__200S		FBIO 15
	S__250S		FBIO 15
	S__300S		FBIO 15
%R4071	DEF_PAR	STPPFFU	Stop position FFU delault value
			FBIO 11
	S__250B		FBIO 46
	S__200B		FBIO 46
	S__200M		FBIO 46
	S__200S		FBIO 46
	S__250S		FBIO 46
	S__300S		FBIO 46
%R4072	WASTE	TS_FAIL	Waste for TS load error
			FBIO 29
	S__250B		FBIO 34
	S__200B		FBIO 34
	S__200M		FBIO 34
	S__200S		FBIO 34
	S__250S		FBIO 34
	S__300S		FBIO 34
%R4073	A_B_C	STP1_OP	Butterfly step 1 open time
			FBIO 22
	S__250B		FBIO 49,52
	S__200B		FBIO 49,52
	S__200M		FBIO 49,52
	S__200S		FBIO 49,52
	S__250S		FBIO 49,52
	S__300S		FBIO 49,52
%R4074	A_B_C	STP2_CL	Butterfly step 2 close time
			FBIO 23
	S__250B		FBIO 49,52
	S__200B		FBIO 49,52
	S__200M		FBIO 49,52
	S__200S		FBIO 49,52
	S__250S		FBIO 49,52
	S__300S		FBIO 49,52
%R4075	A_B_C	STP2_OP	Butterfly step 2 open time
			FBIO 23
	S__250B		FBIO 49,52
	S__200B		FBIO 49,52
	S__200M		FBIO 49,52
	S__200S		FBIO 49,52
	S__250S		FBIO 49,52
	S__300S		FBIO 49,52
%R4076	A_B_C	STP3_CL	Butterfly step 3 close time
			FBIO 24
	S__250B		FBIO 50,53
	S__200B		FBIO 50,53
	S__200M		FBIO 50,53
	S__200S		FBIO 50,53
	S__250S		FBIO 50,53
	S__300S		FBIO 50,53
%R4077	A_B_C	STP3_OP	Butterfly step 3 open time
			FBIO 24
	S__250B		FBIO 50,53
	S__200B		FBIO 50,53
	S__200M		FBIO 50,53
	S__200S		FBIO 50,53
	S__250S		FBIO 50,53
	S__300S		FBIO 50,53
%R4078	A_B_C	STP4_CL	Butterfly step 4 close time
			FBIO 25
	S__250B		FBIO 51,54
	S__200B		FBIO 51,54
	S__200M		FBIO 51,54
	S__200S		FBIO 51,54
	S__250S		FBIO 51,54
	S__300S		FBIO 51,54
%R4079	A_B_C	STP4_OP	Butterfly step 4 open time
			FBIO 25
	S__250B		FBIO 51,54

REF.	BLOCK	NICKNAME	REF. DESCRIPTION / CROSS REFERENCES
	S__200B		FBIO 51,54
	S__200M		FBIO 51,54
	S__200S		FBIO 51,54
	S__250S		FBIO 51,54
	S__300S		FBIO 51,54
%R4080	WASTE	WSINT1	Waste strip refill.inter.reg.1
			FBIO 14
	S__250B		FBIO 25
	S__200B		FBIO 25
	S__200M		FBIO 25
	S__200S		FBIO 25
	S__250S		FBIO 25
	S__300S		FBIO 25
%R4081	WASTE	WSINT2	Waste strip refill.inter.reg.2
			FBIO 14
	S__250B		FBIO 25
	S__200B		FBIO 25
	S__200M		FBIO 25
	S__200S		FBIO 25
	S__250S		FBIO 25
	S__300S		FBIO 25
%R4082	WASTE	WSINT3	Waste strip refill.inter.reg.3
			FBIO 15
	S__250B		FBIO 25
	S__200B		FBIO 25
	S__200M		FBIO 25
	S__200S		FBIO 25
	S__250S		FBIO 25
	S__300S		FBIO 25
%R4083	WASTE	WSINT4	Waste strip refill.inter.reg.4
			FBIO 15
	S__250B		FBIO 26
	S__200B		FBIO 26
	S__200M		FBIO 26
	S__200S		FBIO 26
	S__250S		FBIO 26
	S__300S		FBIO 26
%R4084	WASTE	WSINT5	Waste strip refill.inter.reg.5
			FBIO 15
	S__250B		FBIO 26
	S__200B		FBIO 26
	S__200M		FBIO 26
	S__200S		FBIO 26
	S__250S		FBIO 26
	S__300S		FBIO 26
%R4085	LEV_CON	WASTERE	Start waste for refilling
			FBIO 69
	S__250B		FBIO 43
	S__200B		FBIO 43
	S__200M		FBIO 43
	S__200S		FBIO 43
	S__250S		FBIO 43
	S__300S		FBIO 43
%R4099	ASEPTIC	STER_AC	AC sterilizing temperature
			FBIO 20
	S__250B		FBIO 65,66
	S__200B		FBIO 65,66
	S__200M		FBIO 65,66
	S__200S		FBIO 65,66
	S__250S		FBIO 65,66
	S__300S		FBIO 65,66
%R4100	IH_MON	SM_CODE	SM Error Code
			FBIO 9,10,12
%R4101	IH_MON	LS_CODE	SM LS-SA Error Code
			FBIO 12,17,20,23,26,29,32,35,38,41,44,47,50,53,56,59
%R4102	IH_MON	TS_CODE	SM TS Error Code
			FBIO 11,64,69,72,75,78,81,86,89,92,95,98,101,104
%R4103	IH_MON	SM_TEMP	SM Temp. register
			FBIO 10,11
%R4104	IH_MON	HOLD_LS	SM Hold LS-SA alarms
			FBIO 14
%R4107	IH_MON	HOLD_TS	SM Hold TS alarms
			FBIO 15
%R4200	ASU_AL	CKALINV	Delay to check inverter bobbin

REF.	BLOCK	NICKNAME	REF. DESCRIPTION / CROSS REFERENCES
			FBIO 38
%R5000	CUSTOM	FLUSH_1	TS flushing time 1
			FBIO 11
%R5003	CUSTOM	FLUSH_2	TS flushing time 2
			FBIO 12
%R5006	CUSTOM	FLUSHDC	TS flushing pulse generation
			FBIO 14
%R5010	CIP_AL	DELRVAL	Delay regulating valve pos alarm
			FBIO 11
%R5050	SUPPLY	TS_INCH	TS power at high speed inching
			FBIO 24,25
%R5100	PLMSLA4	MFW_OUT	Packs out MFW (D_INT)
			FBIO 139,142,156
%R5102	PLMSLA4	GFW_OUT	Packs out GFW (D_INT)
			FBIO 142,156
%R5104	PLMSLA4	GKM_OUT	Packs out GKM (D_INT)
			FBIO 142,156
%R5106	PLMSLA4	FW68L_O	Packs out TFW68 left (D_INT)
			FBIO 143,157
%R5108	PLMSLA4	FW68R_O	Packs out TFW68 right (D_INT)
			FBIO 143,157
%R5110	PLMSLA4	CB71OUT	Packs out TCBP71 (D_INT)
			FBIO 144,166
%R5112	PLMSLA4	GCBPOUT	Packs out Generic CBP (D_INT)
			FBIO 144,166
%R5114	PLMSLA4	CB22OUT	Packs out TCBP22 (D_INT)
			FBIO 144,166
%R5116	PLMSLA4	CB70L_O	Packs out TCBP70 left (D_INT)
			FBIO 145,167
%R5118	PLMSLA4	CB70R_O	Packs out TCBP70 right (D_INT)
			FBIO 145,167
%R5120	PLMSLA4	CP21L_O	Packs out TCAP21 left (D_INT)
			FBIO 140,151
%R5122	PLMSLA4	CP21R_O	Packs out TCAP21 right (D_INT)
			FBIO 140,151
%R5124	PLMSLA4	CP47L_O	Packs out TCAP47 left (D_INT)
			FBIO 141,151
%R5126	PLMSLA4	CP47R_O	Packs out TCAP47 right (D_INT)
			FBIO 141,152
%R5128	PLMSLA4	TSA22_O	Packs out TSA22 (D_INT)
			FBIO 140,152
%R5200	PLMSLA4	C_L20_1	Auxiliary counter Level 20 #1
			FBIO 151
%R5202	PLMSLA4	C_L20_2	Auxiliary counter Level 20 #2
			FBIO 151,152
%R5204	PLMSLA4	C_L20_3	Auxiliary counter Level 20 #3
			FBIO 152
%R5206	PLMSLA4	C_L20_4	Auxiliary counter Level 20 #4
			FBIO 152,153
%R5210	PLMSLA4	C_L30_1	Auxiliary counter Level 30 #1
			FBIO 156
%R5212	PLMSLA4	C_L30_2	Auxiliary counter Level 30 #2
			FBIO 156,157
%R5214	PLMSLA4	C_L30_3	Auxiliary counter Level 30 #3
			FBIO 157
%R5216	PLMSLA4	C_L30_4	Auxiliary counter Level 30 #4
			FBIO 157,158
%R5220	PLMSLA4	C_L50_1	Auxiliary counter Level 50 #1
			FBIO 166
%R5222	PLMSLA4	C_L50_2	Auxiliary counter Level 50 #2
			FBIO 166,167
%R5224	PLMSLA4	C_L50_3	Auxiliary counter Level 50 #3
			FBIO 167
%R5226	PLMSLA4	C_L50_4	Auxiliary counter Level 50 #4
			FBIO 167,168
%R5521	LADFUNC	DEL5521	Safety alarm acknowledge delay
			FBIO 40
%R5524	LADFUNC	CNT5524	Safety relay malfunction counter
			FBIO 44,45
%R5554	LADFUNC	DEL5554	Safety relay reset delay
			FBIO 43
%R5557	LADFUNC	DEL5557	Safety realy reset period
			FBIO 42
%R6501	FIL_DCS	FLWALLO	HI, Flow alarm low level

REF.	BLOCK	NICKNAME	REF. DESCRIPTION / CROSS REFERENCES
			FBIO 35
	HI		FBIO 7,8,9,10,11
%R6502	FIL_DCS	FLWALHI	HI, Flow alarm high level
			FBIO 43
	HI		FBIO 7,8,9,10,11
%R6503	CIP_AL	CLNTIME	HI, Cleaning temperature timer
			FBIO 24
%R6506	FIL_DCS	FLW_CHK	HI, Delay flow check
			FBIO 34
%R6509	FIL_DCS	NO_FLW	HI, Delay no flow alarm
			FBIO 31
%R6512	FIL_DCS	NOFLWPR	HI, Delay no flow during prod.
			FBIO 32
%R6515	HI	DELAYN2	HI, Delay off for Y9101 & Y9105
			FBIO 40
%R6518	SERVIC1	AIRALDL	HI, Air pressure alarm delay
			FBIO 25
%R6521	SERVIC1	N2ALDL	HI, N2 pressure alarm delay
			FBIO 26
%R6524	FIL_DCS	HIFLOWL	HI, Low flow alarm delay
			FBIO 35
%R6527	HI	HIST1IM	HI, Injection stop impulse timer
			FBIO 45
%R6530	HI	HIST2IM	HI, Injection stop impulse timer
			FBIO 46
%R6533	HI	HIPULCT	HI, Stop impulse cycle timer
			FBIO 15
%R6536	HI	HIPULT	HI, Stop impulse timer
			FBIO 16
%R6539	ASEPTIC	DRYTIME	Drying time
			FBIO 60,61,62
%R6540	ASEPTIC	BVO_DRY	B valve open in drying
			FBIO 60,61,69
%R6541	FIL_DCS	HIFLOWH	HI, High flow alarm delay
			FBIO 43
%R6544	HI	HIY9106	HI, Y9106 on in step 2
			FBIO 50
%R7140	CUSTOM	FCIPLOG	Final CIP Timer Interrupt Logos.
			FBIO 17,18
%R7143	CUSTOM	STRIP_T	Strip splice timer Logoscreen
			FBIO 28
%R7146	CUSTOM	ASU_T	ASU splice timer Logoscreen
			FBIO 30
%R7149	CUSTOM	FACTO_T	Factory splice timer Logoscreen
			FBIO 32
%R9005	DCS	DEL_ENA	TMR delay enable tx TMCC
			FBIO 41
%R9008	CIP_AL	DEL_AL	Delay alarms on TPOP
			FBIO 13
%R9011	1T0001	WBOXFI1	Waste box photocell filter busy
			FBIO 80
%R9014	1T0001	WBOXFI2	Waste box photocell filter free
			FBIO 81
%R9500	STRIPSP	SA_AUX0	SA, Aux 0 waste strip splice
			FBIO 59,61
%R9700	STRIPSP	LOOP_SA	SA strip motor PID registers
			FBIO 19,23
%R9702	STRIPSP	SAMP_SA	Sample loop SA (1=10ms)
			FBIO 19
%R9703	STRIPSP	DBP_SA	Dead band+loopSA(0-32000=0-100%)
			FBIO 19
%R9704	STRIPSP	DBN_SA	Dead band-loopSA(0-32000=0-100%)
			FBIO 20
%R9705	STRIPSP	PGAINSA	P-gain loop SA 0-327,67 %
			FBIO 20
%R9706	STRIPSP	DGAINSA	D-gain loop SA 0-327,67 Sec
			FBIO 20
%R9707	STRIPSP	IGAINSA	I-Gain loop SA 0-32.767 repeat/s
			FBIO 21
%R9708	STRIPSP	BIAS_SA	Bias loop SA -100/+100 %
			FBIO 21
%R9709	STRIPSP	UCL_SA	Upper clamp loop SA (32000)
			FBIO 21
%R9710	STRIPSP	LCL_SA	Lower clamp loop SA (0)

REF.	BLOCK	NICKNAME	REF. DESCRIPTION / CROSS REFERENCES
			FBIO 22
%R9711	STRIPSP	SL_T_SA	Min slew time loop SA (0)
			FBIO 22

ANALOG INPUT (%AI) GLOBAL CROSS REFERENCES

REF.	BLOCK	NICKNAME	REF. DESCRIPTION / CROSS REFERENCES
%AI0001	FIL_DCS	A9105	HI, Flow meter
			FBIO 31,32,35,43
	HI		FBIO 13
%AI0007	ASEPTIC	A105_09	H2O2 concentration/temperature
			FBIO 147,148,152
%AI0019	CIP	B1316	CIP flow
			FBIO 59,60
%AI0021	STRIPSP	ANALOG	SA, Analog sensor strip magazine
			FBIO 23,24,59
	SA_UNIT		FBIO 18,22,23
	STRIPOK		FBIO 6,10
%AI0023	A_B_C	A509_06	TMCC FCS Filtered level
			FBIO 7
	LEV_CON		FBIO 42,50,66
	FIL_DCS		FBIO 45,46
%AI0033	ASEPTIC	B1106	Heat sterilization
			FBIO 18,22,99,100
	A_B_C		FBIO 26
	CIP		FBIO 101
%AI0034	TEMPREG	B1222	Peroxide bath temperature
			FBIO 15,17
	PEROXID		FBIO 5,6
%AI0035	ASEPTIC	B1208	Water temperature
			FBIO 36,37,38
	TEMPREG		FBIO 18
	PEROXID		FBIO 28
%AI0036	ASEPTIC	B1212	Temp monitor H2O2 tank
			FBIO 29,30,31,148
	TEMPREG		FBIO 84,86,87,89
%AI0037	ASEPTIC	B1109	Temp top Aseptic Chamber
			FBIO 20,85,89,90,92
	LS_SEAL		FBIO 11
	STERIL		FBIO 13,14
%AI0038	PEROXID	B1209	Separate peroxide water
			FBIO 5,31
%AI0039	SUPPLY	B2510	Cooling water temperature
			FBIO 17,19,20
	SERVIC1		FBIO 14,15
%AI0040	SUPPLY	B0001	Temperature electrical cabinet
			FBIO 11,13,14
	SERVIC1		FBIO 19
%AI0041	TEMPREG	B5307	Flap heating Top Left
			FBIO 31,34
%AI0042	TEMPREG	B5308	Flap heating Top Right
			FBIO 40,43
%AI0043	TEMPREG	B5309	Flap heating Bottom Left
			FBIO 49,52
%AI0044	TEMPREG	B5310	Flap heating Bottom Right
			FBIO 58,61
%AI0045	ASEPTIC	B1310	Steam temperature
			FBIO 103,108,109,110,111
%AI0046	ASEPTIC	B1105	Air super heater
			FBIO 21
	TEMPREG		FBIO 69,75
%AI0048	TEMPREG	B7304	Temp. ASU Constant Heat element
			FBIO 110,113,115,118,119
%AI0049	PEROXID	B9106	HI, Temp. monitor spray
			FBIO 40
	CIP_AL		FBIO 24
	HI		FBIO 13
%AI0050	ASEPTIC	B9115	HI, Air heater temperature
			FBIO 24
	TEMPREG		FBIO 101
%AI0051	TEMPREG	B9116	HI, Heater element temperature
			FBIO 96,98,99

ANALOG OUTPUT (%AQ) GLOBAL CROSS REFERENCES

REF.	BLOCK	NICKNAME	REF. DESCRIPTION / CROSS REFERENCES
%AQ001	SUPPLY	A504_23	TPIH TS-Power left side
			FBIO 22,25
%AQ002	SUPPLY	A504_24	TPIH TS-Power right side
			FBIO 22,25
%AQ003	LS_SEAL	A501_22	TPIH LS-Power
			FBIO 12,14,15,20,21,22,30,32,33,35
	RAMPS		FBIO 13,14,15,16,17,20,21
%AQ004	STRIPSP	A7417_	TPIH Sealing ASU/SA power
			FBIO 57
%AQ006	DCS	A418_3	Design position DCS
			FBIO 29
%AQ008	FFU	A507_3	Home position setting FFU
			FBIO 37
%AQ009	ASU_MOT	A412_3	Drive ASU loop
			FBIO 45,46,47,49,51,52,53,54,56,57,58,59
	1T0001		FBIO 75
%AQ010	ASU_MOT	A413_3	Drive ASU magazine
			FBIO 89,90,91,93,95,96,97,98,99
%AQ011	P_FEED	A410_3	Drive roller
			FBIO 23,27,28,29,30
%AQ012	FFU_MOT	A415_3	Speed control of ext conveyor DE
			FBIO 39
%AQ013	STRIPSP	G5	SA, strip motor speed
			FBIO 23,25,26,27
%AQ014	HI	HI_PRES	HI, Pressure regulator
			FBIO 18,19,20,21,22,24

SYSTEM REFERENCE (%S) GLOBAL CROSS REFERENCES

REF.	BLOCK	NICKNAME	REF. DESCRIPTION / CROSS REFERENCES
%S0001	LADFUNC	FST_SCN	-] [- 37
	TPOP	FST_SCN	-] [- 73
	SUPPLY	FST_SCN	-]/[- 5
	ASEPTIC	FST_SCN	-] [- 5
	ST_SEQ	FST_SCN	-] [- 11,37
	LS_SEAL	FST_SCN	-] [- 19
	ASU_MOT	FST_SCN	-] [- 26
	STRIPSP	FST_SCN	-] [- 19,20,21,22
	STRSEL	FST_SCN	-] [- 4
	WASTE	FST_SCN	-] [- 54,55,63,68
	ASU_AL	FST_SCN	-] [- 32,65,66
	CIP	FST_SCN	-] [- 45
	HC	FST_SCN	-] [- 7
	DEF_PAR	FST_SCN	-] [- 28,31,33
	CUSTOM	FST_SCN	-] [- 6
	STRIPOK	FST_SCN	-] [- 26
	GRE_JUM	FST_SCN	-] [- 11
%S0002	_MAIN	LST_SCN	-] [- 43
%S0004	_MAIN	T_100MS	-] [- 26
	FFU_MOT	T_100MS	-] [- 22
%S0005	_MAIN	T_SEC	-] [- 91
	LADFUNC	T_SEC	-] [- 7,8
	TPOP	T_SEC	-] [- 65,66,67,75
	MMOTOR	T_SEC	-] [- 28
	FFU_MOT	T_SEC	-] [- 22
	ASEPTIC	T_SEC	-] [- 117
	SAFETY1	T_SEC	-] [- 15
	JUM	T_SEC	-] [- 79
	1T0001	T_SEC	-] [- 59
%S0006	_MAIN	T_MIN	-] [- 90
	JUM	T_MIN	-] [- 72
	CUSTOM	T_MIN	-] [- 19
%S0007	_MAIN	ALW_ON	-] [- 65,66,69,70,72,73,74,75,76,77,78,79,80,81,83,84,93,99
	MACHLAD	ALW_ON	-] [- 48,49
	LADFUNC	ALW_ON	-] [- 10,11,12,13,14,15,16,17,18,19,20,21,22,23,24,25,26,27,28,29,30,31,32,33,34
	TPOPLAD	ALW_ON	-] [- 32,33
	TPOP	ALW_ON	-] [- 5,6,7,40,41,42,43,44,45,46,47,50,51,52,82,83,84,85,86,87,97,99,108,110,112,114,116,118,120,122
	SUPPLY	ALW_ON	-] [- 10,13,14,20
	MMOTOR	ALW_ON	-] [- 35

```
REF.     BLOCK    NICKNAME   REF. DESCRIPTION / CROSS REFERENCES
-------  -------  -------- -----------------------------------
         FFU_MOT  ALW_ON   -] [- 39
         DCS      ALW_ON   -] [- 29
         ASEPTIC  ALW_ON   -] [- 18,85,86,95,103,134
         ST_SEQ   ALW_ON   -] [- 38
         LS_SEAL  ALW_ON   -] [- 11
         LEV_CON  ALW_ON   -] [- 42,63
         TEMPREG  ALW_ON   -] [- 6,12,13,15,16,25,28,29,31,32,34,37,38,40,41,43,46,47,49,50,52,55,56,58,59,61,63,64,65,69,70,75,77,
                                 78,84,85,89,91,92,96,102,106,107,108,110,111,113,120
         DEFAULT  ALW_ON   -] [- 5,11,17,23,29,35,41,46,52
         PWM      ALW_ON   -] [- 43
         ASU      ALW_ON   -] [- 39,40,41
         ASU_MOT  ALW_ON   -] [- 12,45,70,89
         PAPERSP  ALW_ON   -] [- 47,51
         STRIPSP  ALW_ON   -] [- 57
         WASTE    ALW_ON   -] [- 43
         JUM      ALW_ON   -] [- 17,21,35,52,92,100
         FFU      ALW_ON   -] [- 37,46
         SST_AL   ALW_ON   -] [- 30,31
         PEROXID  ALW_ON   -] [- 5,28,31
         CIP      ALW_ON   -] [- 60,108
         DEF_PAR  ALW_ON   -] [- 6,9,11,12,14,15,16,17,18,19,21,22,23,25,26,27,34,35,36,39,40,41,42,43,44,46,50,53
         PLMSLA4  ALW_ON   -] [- 7,9,11,13,14,15,16,17,19,20,21,22,23,24,25,27,28,30,31,32,33,34,35,36,37,39,40,42,44,46,47,48,127,
                                 134,140,141,142,143,144,145
         1T0001   ALW_ON   -] [- 5,23,90
         S__250B  ALW_ON   -] [- 30,31
         S__200B  ALW_ON   -] [- 30,31
         S__200M  ALW_ON   -] [- 30,31
         S__200S  ALW_ON   -] [- 30,31
         S__250S  ALW_ON   -] [- 30,31
         S__300S  ALW_ON   -] [- 30,31
         HI       ALW_ON   -] [- 56,57
         GRE_JUM  ALW_ON   -] [- 46
%S0008   _MAIN    ALW_OFF  -] [- 96
         TPOP     ALW_OFF  -] [- 105
         DCS      ALW_OFF  -] [- 47
         LEV_CON  ALW_OFF  -] [- 29
         TEMPREG  ALW_OFF  -] [- 25,34,43,52,61,75,89,104,113
         STRIPSP  ALW_OFF  -] [- 23
         WASTE    ALW_OFF  -] [- 45,46
         JUM      ALW_OFF  -] [- 75
         PLMSLA4  ALW_OFF  -] [- 8
         IH_MON   ALW_OFF  -] [- 11,62,67,84,107
%S0014   SERVIC1  PLC_BAT  -] [- 33
```

IDENTIFIER NAME GLOBAL CROSS REFERENCES

```
IDENTIFIER   BLOCK    REF. DESCRIPTION / CROSS REFERENCES
----------   -------  -----------------------------------
MACHLAD      _MAIN    Machine sequencer
                      CALL  65
LADFUNC      MACHLAD  Ladder deconding & symbols
                      CALL  49
TPOPLAD      MACHLAD  Ladder signals to TPOP
                      CALL  48
TPOP         _MAIN    Signals to/from TPOP
                      CALL  77
SUPPLY       _MAIN    Power suppies,generic functions
                      CALL  66
MMOTOR       _MAIN    Control servo Main motor
                      CALL  71
FFU_MOT      _MAIN    Control servo FFU motor
                      CALL  71
DCS          _MAIN    Control servo DCS motor
                      CALL  71
TUBE         _MAIN    Tube sealing (tight tube)
                      CALL  67
ASEPTIC      _MAIN    Sterile air and peroxid system
                      CALL  68
A_B_C        _MAIN    Control of AP-valves
                      CALL  69
ST_SEQ       _MAIN    Start sequencer
                      CALL  70
P_FEED       _MAIN    Drive roller aseptic chamber
```

IDENTIFIER	BLOCK	REF. DESCRIPTION / CROSS REFERENCES
		CALL 73
LS_SEAL	_MAIN	Longitudinal sealing
		CALL 73
RAMPS	_MAIN	TPIH ramps LS and SA
		CALL 73
LEV_CON	_MAIN	Level controller
		CALL 74
BRAKES	_MAIN	Asu jumbo reel brakes management
		CALL 72
TEMPREG	_MAIN	Temperature controllers
		CALL 75
DEFAULT	TEMPREG	Default values temp controllers
		CALL 6
PWM	TEMPREG	Output control temperature
		CALL 120
ASU	_MAIN	Automatic splicing unit
		CALL 72
ASU_MOT	ASU	Drive rollers ASU
		CALL 39
PAPERSP	ASU	Paper splice sequence
		CALL 39
STRIPSP	ASU	Strip splice sequence
		CALL 40
STRSEL	ASU	Strip sealing control
		CALL 40
VOL_CAM	_MAIN	Stepper motor volume cams
		CALL 76
TUBEPOS	_MAIN	Stepper motor tube positioning
		CALL 76
WASTE	_MAIN	Dumping of packages
		CALL 66
AL_LOCK	_MAIN	First alarm lock
		CALL 84
SAFETY1	_MAIN	Alarms in window safety 1
		CALL 78
SAFETY2	_MAIN	Alarms in window safety 2
		CALL 78
JUM	_MAIN	Alarms in window JUM
		CALL 78
FFU	_MAIN	Alarms in window FFU
		CALL 78
SA_UNIT	_MAIN	Alarms in window SA
		CALL 79
FIL_DCS	_MAIN	Alarms in window filling&DCS
		CALL 79
SERVIC1	_MAIN	Alarms in window service
		CALL 79
STERIL	_MAIN	Alarms in window steril system
		CALL 79
PEROXID	_MAIN	Alarms in window H2O2 system
		CALL 80
ASU_AL	_MAIN	Alarms in window ASU
		CALL 80
CIP_AL	_MAIN	Alarms in window CIP/HC
		CALL 80
CIP	_MAIN	Cleaning in place
		CALL 82
HC	_MAIN	Hygienic cleaning
		CALL 82
DEF_PAR	_MAIN	Default parameters
		CALL 81
SST_AL	_MAIN	Alarms superstructure
		CALL 80
STRIPOK	ASU	Strip bobbin test
		CALL 41
PLMSLA4	_MAIN	Distribution equipment
		CALL 65
S__250B	_MAIN	Setting values 250B
		CALL 59
S__200B	_MAIN	Setting values 200B
		CALL 60
CUSTOM	_MAIN	Signals for customer
		CALL 83
S__200M	_MAIN	Setting values 200M

IDENTIFIER	BLOCK	REF. DESCRIPTION / CROSS REFERENCES
		CALL 61
S__250S	_MAIN	Setting values 250S
		CALL 63
S__300S	_MAIN	Setting values 300S
		CALL 64
S__200S	_MAIN	Setting values 200S
		CALL 62
IH_MON	_MAIN	TPIH monitoring
		CALL 83
HI	_MAIN	HI: Option Kit
		CALL 103
GRE_FFU	_MAIN	Greasing of FFU
		CALL 99
GRE_JUM	_MAIN	Greasing of JUM
		CALL 101

```
|[  START LD SUBROUTINE  1T0001   ]
|
|[     VARIABLE DECLARATIONS      ]
|
|[   START OF SUBROUTINE LOGIC    ]
|
| (*************************************************************************)
| (* Activation of the fast input.                                         *)
| (*************************************************************************)
|
|ALW_ON                                                          << RUNG 5  STEP #0003 >>
|%S0007  +-----+
+--] [---+DO_IO+-
|        |     |
|ANGENC0 |     |
|%I0001 -+ST   |
|        |     |
|%I0016 -+END  |
|        |     |
| CONST -+ALT  |
|   0002 +-----+
|
| (*************************************************************************)
| (* Decoding of the angle encoder bits.                                   *)
| (*************************************************************************)
|
|ANGENC7                                                          BIN_7   << RUNG 7  STEP #0006 >>
|%I0008                                                          %M0008
+--] [-----------------------------------------------------------------( )-- (* Angle encoder binary bit 7 *)
|
| BIN_7  ANGENC6                                                  BIN_6   << RUNG 8  STEP #0008 >>
|%M0008  %I0007                                                  %M0007
+--] [-----]/[--+-------------------------------------------------------( )-- (* Angle encoder binary bit 6      *)
|              |
| BIN_7  ANGENC6|
|%M0008  %I0007 |
+--]/[-----] [--+
|
| BIN_6  ANGENC5                                                  BIN_5   << RUNG 9  STEP #0014 >>
|%M0007  %I0006                                                  %M0006
+--] [-----]/[--+-------------------------------------------------------( )-- (* Angle encoder binary bit 5 *)
|              |
| BIN_6  ANGENC5|
|%M0007  %I0006 |
+--]/[-----] [--+
|
| BIN_5  ANGENC4                                                  BIN_4   << RUNG 10  STEP #0020 >>
|%M0006  %I0005                                                  %M0005
+--] [-----]/[--+-------------------------------------------------------( )-- (* Angle encoder binary bit 4 *)
|              |
| BIN_5  ANGENC4|
|%M0006  %I0005 |
+--]/[-----] [--+
|
| BIN_4  ANGENC3                                                  BIN_3   << RUNG 11  STEP #0026 >>
|%M0005  %I0004                                                  %M0004
+--] [-----]/[--+-------------------------------------------------------( )-- (* Angle encoder binary bit 3 *)
|              |
| BIN_4  ANGENC3|
|%M0005  %I0004 |
+--]/[-----] [--+
|
```

REFERENCE	NICKNAME	REFERENCE DESCRIPTION
%I0016		
%S0007	ALW_ON	
%I0001	ANGENC0	Angle encoder module bit 0
%I0004	ANGENC3	Angle encoder module bit 3
%I0005	ANGENC4	Angle encoder module bit 4
%I0006	ANGENC5	Angle encoder module bit 5
%I0007	ANGENC6	Angle encoder module bit 6

REFERENCE	NICKNAME	REFERENCE DESCRIPTION
%I0008	ANGENC7	Angle encoder module bit 7
%M0004	BIN_3	Angle encoder binary bit 3
%M0005	BIN_4	Angle encoder binary bit 4
%M0006	BIN_5	Angle encoder binary bit 5
%M0007	BIN_6	Angle encoder binary bit 6
%M0008	BIN_7	Angle encoder binary bit 7

```
| BIN_3  ANGENC2                                                    BIN_2   << RUNG 12  STEP #0032 >>
|%M0004  %I0003                                                   %M0003
+--] [-----]/[--+-------------------------------------------------------( )-- (* Angle encoder binary bit 2 *)
|               |
| BIN_3  ANGENC2|
|%M0004  %I0003 |
+--]/[-----] [--+
|
| BIN_2  ANGENC1                                                    BIN_1   << RUNG 13  STEP #0038 >>
|%M0003  %I0002                                                   %M0002
+--] [-----]/[--+-------------------------------------------------------( )-- (* Angle encoder binary bit 1 *)
|               |
| BIN_2  ANGENC1|
|%M0003  %I0002 |
+--]/[-----] [--+
|
| BIN_1  ANGENC0                                                    BIN_0   << RUNG 14  STEP #0044 >>
|%M0002  %I0001                                                   %M0001
+--] [-----]/[--+-------------------------------------------------------( )-- (* Angle encoder binary bit 0 *)
|               |
| BIN_1  ANGENC0|
|%M0002  %I0001 |
+--]/[-----] [--+
|
| (*************************************************************************)
| (* Creation of the angle sectors.                                        *)
| (*************************************************************************)
|
|ANGENC6 ANGENC7                                                    SECT_0   << RUNG 16  STEP #0051 >>
|%I0007  %I0008                                                   %M0010
+--]/[-----]/[-------------------------------------------------------( )-- (* Angle sector 0 (0-77 oct)       *)
|
|ANGENC6 ANGENC7                                                    SECT_1   << RUNG 17  STEP #0054 >>
|%I0007  %I0008                                                   %M0011
+--] [-----]/[-------------------------------------------------------( )-- (* Angle sector 1 (100-177 oct)    *)
|
|ANGENC6 ANGENC7                                                    SECT_2   << RUNG 18  STEP #0057 >>
|%I0007  %I0008                                                   %M0012
+--] [-----] [-------------------------------------------------------( )-- (* Angle sector 2 (200-277 oct)    *)
|
|ANGENC6 ANGENC7                                                    SECT_3   << RUNG 19  STEP #0060 >>
|%I0007  %I0008                                                   %M0013
+--]/[-----] [-------------------------------------------------------( )-- (* Angle sector 3 (300-377 oct)    *)
|
| (*************************************************************************)
| (* Check angle encoder all bits present.                                 *)
| (*************************************************************************)
|
|ANGENC0 ANGENC1 ANGENC2 ANGENC3 ANGENC4 ANGENC5 ANGENC6 ANGENC7    ENC_CHK  << RUNG 21  STEP #0064 >>
|%I0001  %I0002  %I0003  %I0004  %I0005  %I0006  %I0007  %I0008    %M0143
+--] [-----] [-----] [-----] [-----] [-----] [-----] [-----] [-------------(S)-- (* Angle encoder check            *)
|
|ANGENC0 ANGENC1 ANGENC2 ANGENC3 ANGENC4 ANGENC5 ANGENC6 ANGENC7    ENC_CHK  << RUNG 22  STEP #0073 >>
|%I0001  %I0002  %I0003  %I0004  %I0005  %I0006  %I0007  %I0008    %M0143
+--]/[-----]/[-----]/[-----]/[-----]/[-----]/[-----]/[-----]/[-------------(R)-- (* Angle encoder check            *)
|
```

REFERENCE	NICKNAME	REFERENCE DESCRIPTION	REFERENCE	NICKNAME	REFERENCE DESCRIPTION
%I0001	ANGENC0	Angle encoder module bit 0	%M0002	BIN_1	Angle encoder binary bit 1
%I0002	ANGENC1	Angle encoder module bit 1	%M0003	BIN_2	Angle encoder binary bit 2
%I0003	ANGENC2	Angle encoder module bit 2	%M0004	BIN_3	Angle encoder binary bit 3
%I0004	ANGENC3	Angle encoder module bit 3	%M0143	ENC_CHK	Angle encoder check
%I0005	ANGENC4	Angle encoder module bit 4	%M0010	SECT_0	Angle sector 0 (0-77 oct)
%I0006	ANGENC5	Angle encoder module bit 5	%M0011	SECT_1	Angle sector 1 (100-177 oct)
%I0007	ANGENC6	Angle encoder module bit 6	%M0012	SECT_2	Angle sector 2 (200-277 oct)
%I0008	ANGENC7	Angle encoder module bit 7	%M0013	SECT_3	Angle sector 3 (300-377 oct)
%M0001	BIN_0	Angle encoder binary bit 0			

```
|ALW_ON                                                                << RUNG 23  STEP #0082 >>
|%S0007  +-----+
+--] [---+ AND_+-
|        | WORD|
|        |     |
| BIN_0  |     | SECTOR
|%M0001 -+I1  Q+-%R0050
|        |     |
| CONST -+I2   |
|   003F +-----+
|
| (*************************************************************************)
| (* The following 4 rungs is the logic to synhcronize the folding flaps     *)
| (* movement with the position of the jaws.                                 *)
| (* ST_POS is to ensure that the folding flap rollers is on the cams before  *)
| (* start moving.                                                           *)
| (* JRDY (Jaw movment ready) controls when it is OK to set IGain parameter   *)
| (* in DMC program to 0. This is important when the machine stops in        *)
| (* production stop. Then Igain must be 0 to prevent the I-part in the DMC   *)
| (* to intergrate up the current. If it is not 0 the motor could be burned.  *)
| (*************************************************************************)
|
|A506_32 SECT_2                                                        A508_16  << RUNG 25  STEP #0085 >>
|%I0044  %M0012  +-----+                                               %Q0002
+--] [-----] [---+RANGE|+-----------------------------------------------( )-- (* Start positioning DCS           *)
|                | INT ||
|                |     ||
|         CONST -+L1  Q++
|         +00026 |     |
|                |     |
|         CONST -+L2   |
|         +00040 |     |
|                |     |
|        SECTOR  |     |
|        %R0050 -+IN   |
|                +-----+
|
|A508_6  A506_32                                                       S_JRDY   << RUNG 26  STEP #0089 >>
|%Q0209  %I0044                                                        %M1756
+--] [-----]/[-------------------------------------------------------------( )-- (* Keep jaw ready signal           *)
|
|A506_32 SECT_1                                                        D_JRDY   << RUNG 27  STEP #0092 >>
|%I0044  %M0011  +-----+                                               %M1757
+--] [-----] [---+RANGE|+-----------------------------------------------( )-- (* Jaw movement ready              *)
|                | INT ||
|                |     ||
|         CONST -+L1  Q++
|         +00055 |     |
|                |     |
|         CONST -+L2   |
|         +00063 |     |
|                |     |
|        SECTOR  |     |
|        %R0050 -+IN   |
|                +-----+
|
|S_JRDY                                                                A508_11  << RUNG 28  STEP #0096 >>
|%M1756                                                                %Q0003
+--] [--+-------------------------------------------------------------( )-- (* Jaw inmovement ready            *)
|       |
|D_JRDY |
|%M1757 |
+--] [--+
|
|ANGENC7                                                               JAWP_FS  << RUNG 29  STEP #0099 >>
|%I0008                                                                %M1715
+--] [-------------------------------------------------------------------(v)-- (* Jawpulse fast scan              *)
```

REFERENCE	NICKNAME	REFERENCE DESCRIPTION	REFERENCE	NICKNAME	REFERENCE DESCRIPTION
%I0044	A506_32	DMC Main motor running	%M1757	D_JRDY	Jaw movement ready
%Q0003	A508_11	Jaw inmovement ready	%M1715	JAWP_FS	Jawpulse fast scan
%Q0002	A508_16	Start positioning DCS	%R0050	SECTOR	Angle sector (0-63 Dec)
%Q0209	A508_6	DMC DCS hardware enable	%M0011	SECT_1	Angle sector 1 (100-177 oct)
%S0007	ALW_ON		%M0012	SECT_2	Angle sector 2 (200-277 oct)
%I0008	ANGENC7	Angle encoder module bit 7	%M1756	S_JRDY	Keep jaw ready signal
%M0001	BIN_0	Angle encoder binary bit 0			

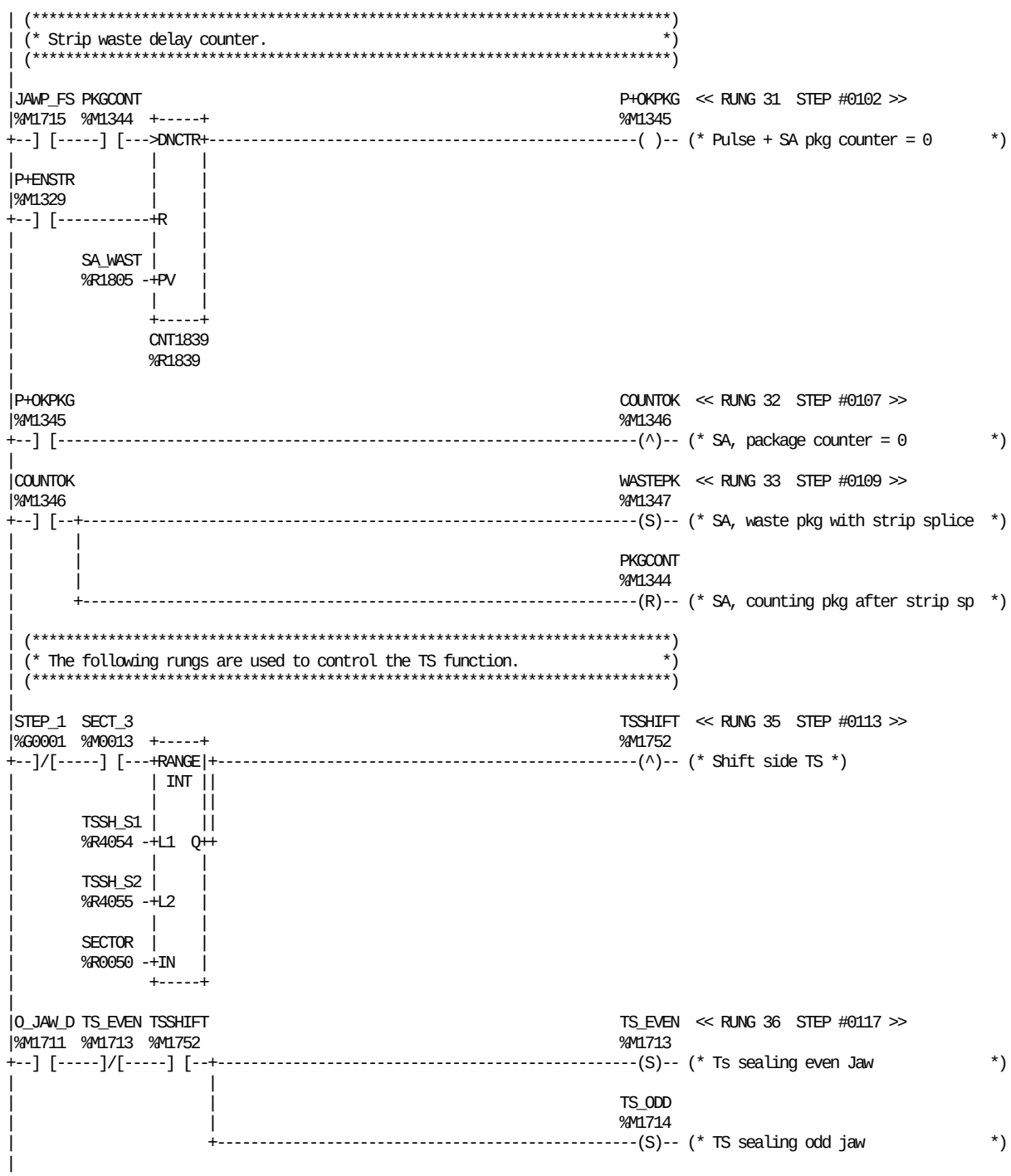

REFERENCE	NICKNAME	REFERENCE DESCRIPTION	REFERENCE	NICKNAME	REFERENCE DESCRIPTION
%R1839	CNT1839	Strip waste delay counter	%M0013	SECT_3	Angle sector 3 (300-377 oct)
%M1346	COUNTOK	SA, package counter = 0	%G0001	STEP_1	STANDBY
%M1715	JAWP_FS	Jawpulse fast scan	%M1752	TSSHIFT	Shift side TS
%M1711	O_JAW_D	Zero jaw detected	%R4054	TSSH_S1	TS Shift sector window 1
%M1329	P+ENSTR	Pulse + ASU end strip splice	%R4055	TSSH_S2	TS Shift sector window 2
%M1345	P+OKPKG	Pulse + SA pkg counter = 0	%M1713	TS_EVEN	Ts sealing even Jaw
%M1344	PKGCONT	SA, counting pkg after strip sp	%M1714	TS_ODD	TS sealing odd jaw
%R1805	SA_WAST	SA, waiting pkg before waste	%M1347	WASTEPK	SA, waste pkg with strip splice
%R0050	SECTOR	Angle sector (0-63 Dec)			

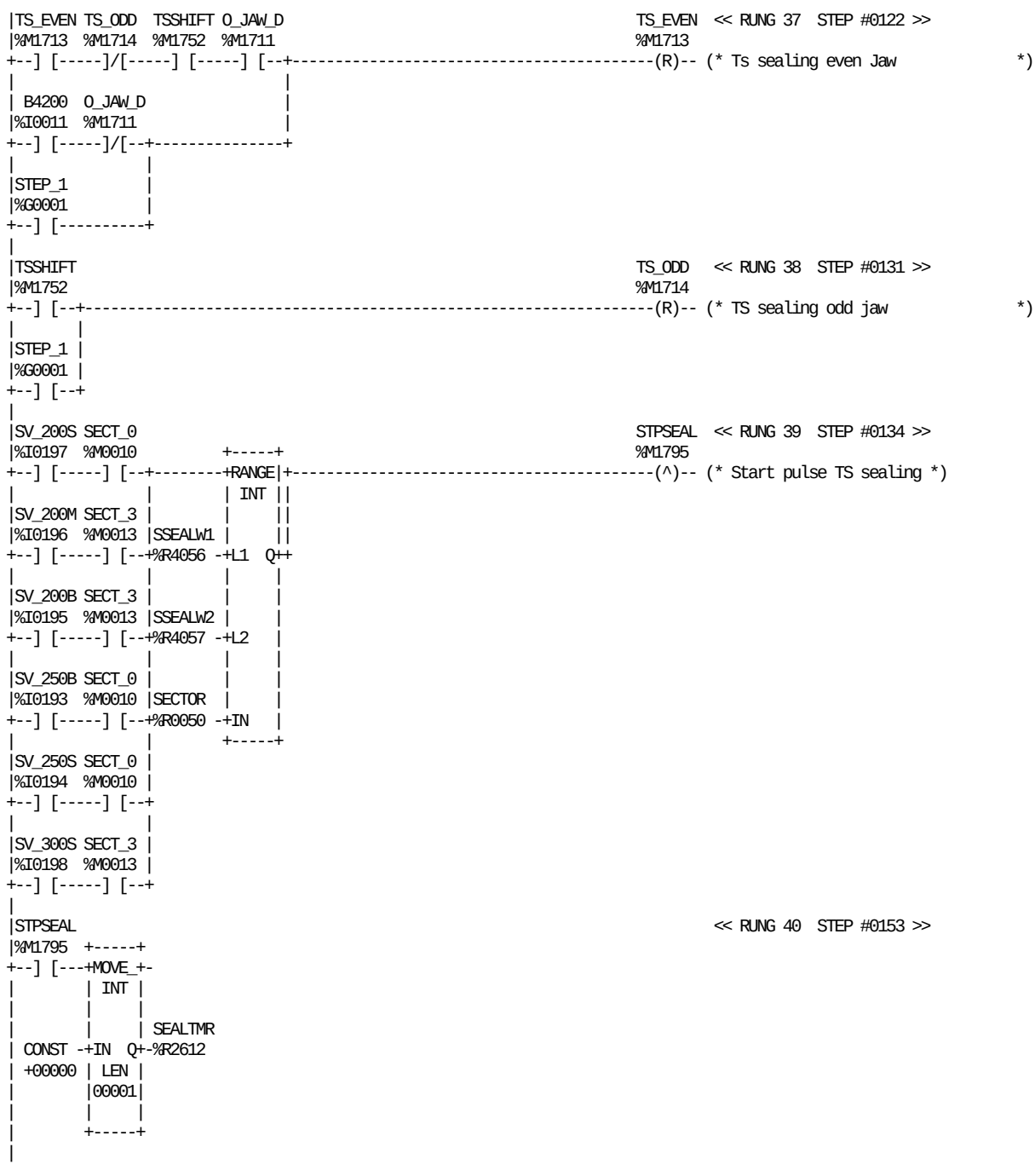

REFERENCE	NICKNAME	REFERENCE DESCRIPTION	REFERENCE	NICKNAME	REFERENCE DESCRIPTION
%I0011	B4200	Zero jaw sensor	%I0195	SV_200B	Setting volume 200B
%M1711	O_JAW_D	Zero jaw detected	%I0196	SV_200M	Setting volume 200M
%R2612	SEALTMR	Sealing timer	%I0197	SV_200S	Setting volume 200S
%R0050	SECTOR	Angle sector (0-63 Dec)	%I0193	SV_250B	Setting volume 250B
%M0010	SECT_0	Angle sector 0 (0-77 oct)	%I0194	SV_250S	Setting volume 250S
%M0013	SECT_3	Angle sector 3 (300-377 oct)	%I0198	SV_300S	Setting volume 300S
%R4056	SSEALW1	Start sealing sect window 1	%M1752	TSSHIFT	Shift side TS
%R4057	SSEALW2	Start sealing sect window 2	%M1713	TS_EVEN	Ts sealing even Jaw
%G0001	STEP_1	STANDBY	%M1714	TS_ODD	TS sealing odd jaw
%M1795	STPSEAL	Start pulse TS sealing			

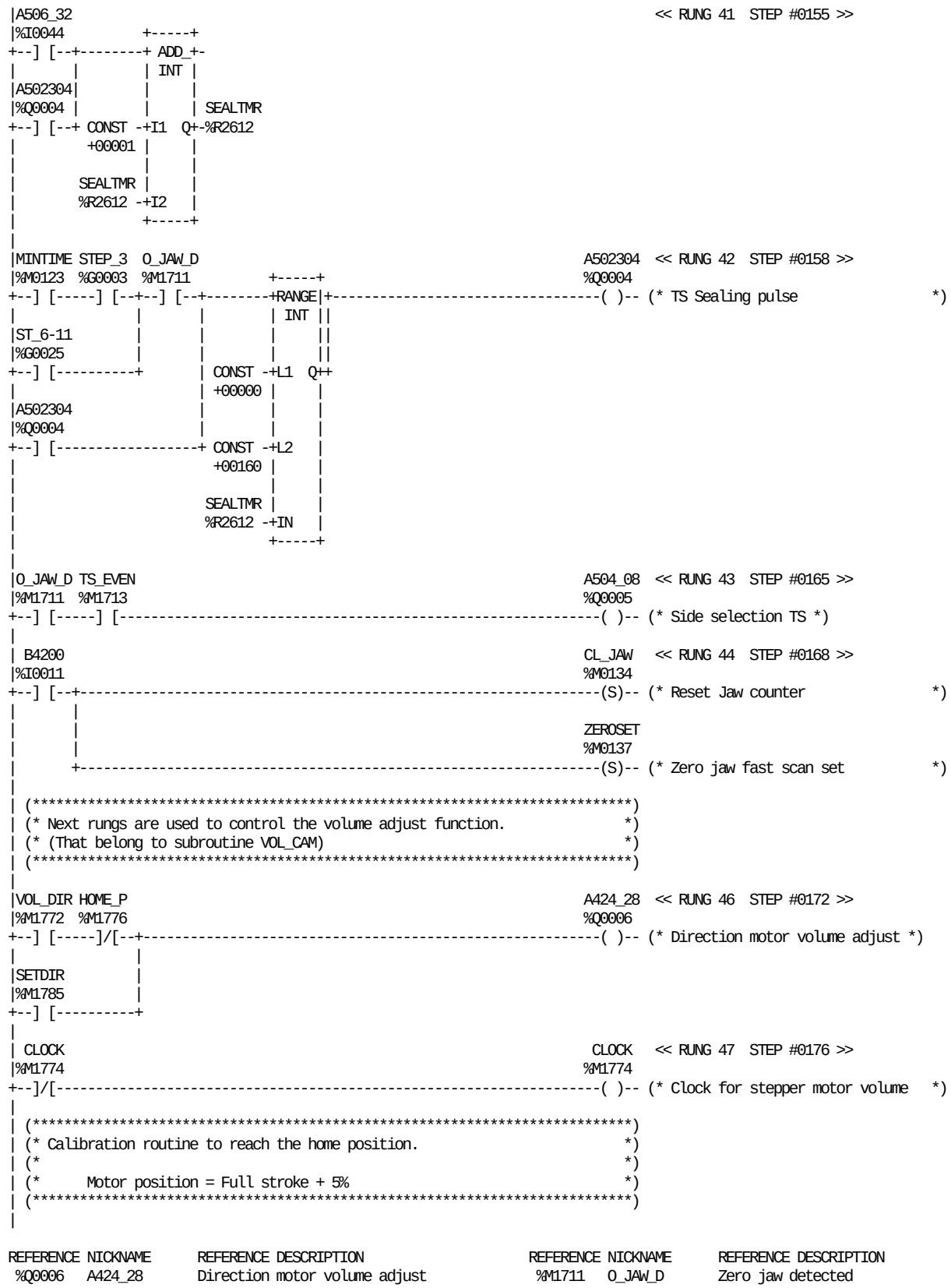

REFERENCE	NICKNAME	REFERENCE DESCRIPTION	REFERENCE	NICKNAME	REFERENCE DESCRIPTION
%Q0006	A424_28	Direction motor volume adjust	%M1711	O_JAW_D	Zero jaw detected
%Q0004	A502304	TS Sealing pulse	%R2612	SEALTMR	Sealing timer
%Q0005	A504_08	Side selection TS	%M1785	SETDIR	Set direction volume cam
%I0044	A506_32	DMC Main motor running	%G0003	STEP_3	TUBE SEALING
%I0011	B4200	Zero jaw sensor	%G0025	ST_6-11	Ladder position 6-11
%M1774	CLOCK	Clock for stepper motor volume	%M1713	TS_EVEN	Ts sealing even Jaw
%M0134	CL_JAW	Reset Jaw counter	%M1772	VOL_DIR	Delayed motor direction
%M1776	HOME_P	Home position reached	%M0137	ZEROSET	Zero jaw fast scan set
%M0123	MINTIME	Minimum time for tight tube			

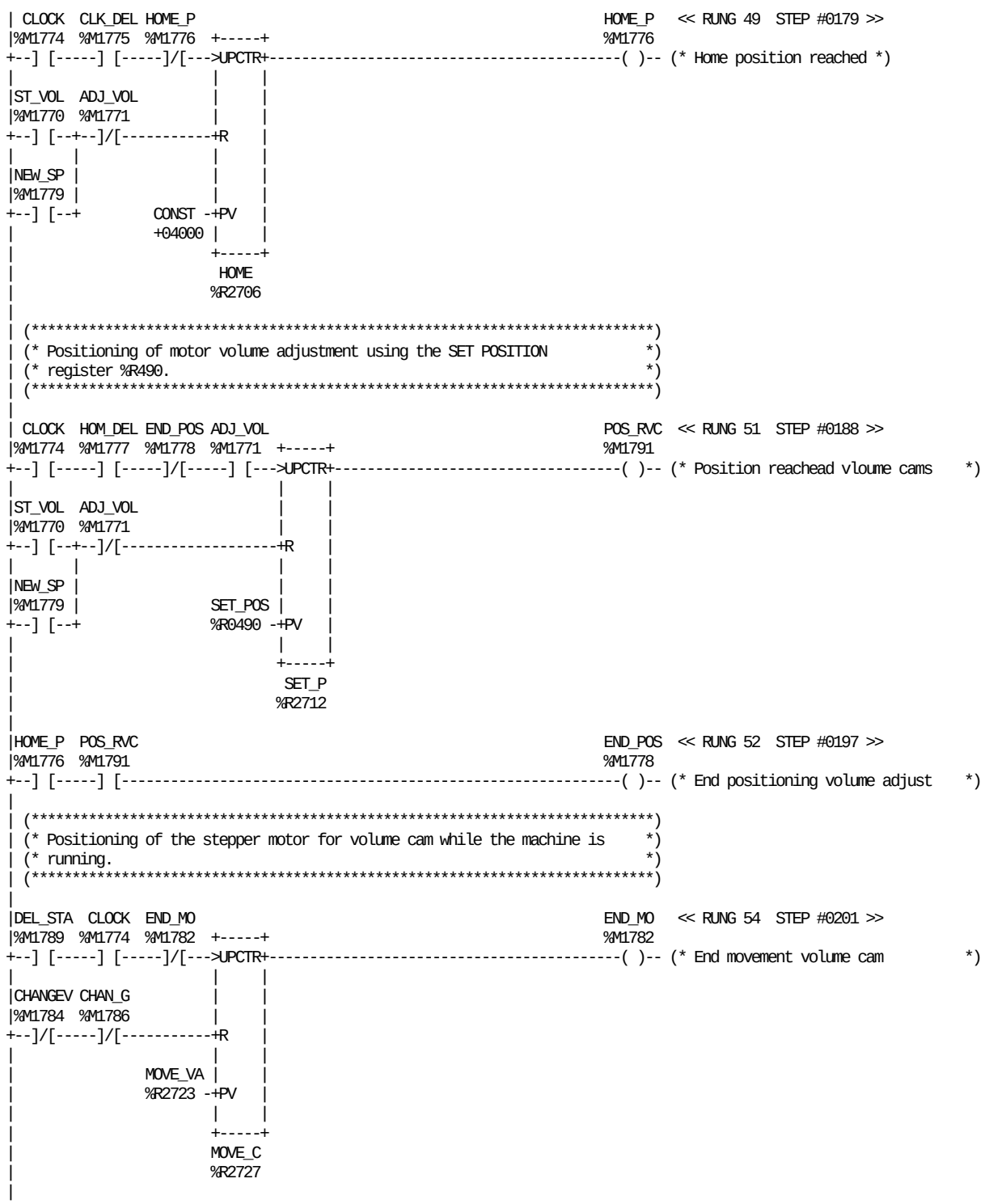

REFERENCE	NICKNAME	REFERENCE DESCRIPTION	REFERENCE	NICKNAME	REFERENCE DESCRIPTION
%M1771	ADJ_VOL	Volume adjustment going on	%M1776	HOME_P	Home position reached
%M1784	CHANGEV	Change set position volume cam	%M1777	HOM_DEL	Delay home position
%M1786	CHAN_G	Change set pos volume going on	%R2727	MOVE_C	Move volume cam counter
%M1775	CLK_DEL	Delay start clock pulse	%R2723	MOVE_VA	Moving value volume cam
%M1774	CLOCK	Clock for stepper motor volume	%M1779	NEW_SP	New set position volume adjust
%M1789	DEL_STA	Delay start positioning volume	%M1791	POS_RVC	Position reachead vloume cams
%M1782	END_MO	End movement volume cam	%R2712	SET_P	Counter set position
%M1778	END_POS	End positioning volume adjust	%R0490	SET_POS	Set position volume adjustment
%R2706	HOME	Counter home position	%M1770	ST_VOL	Start positioning volume cams

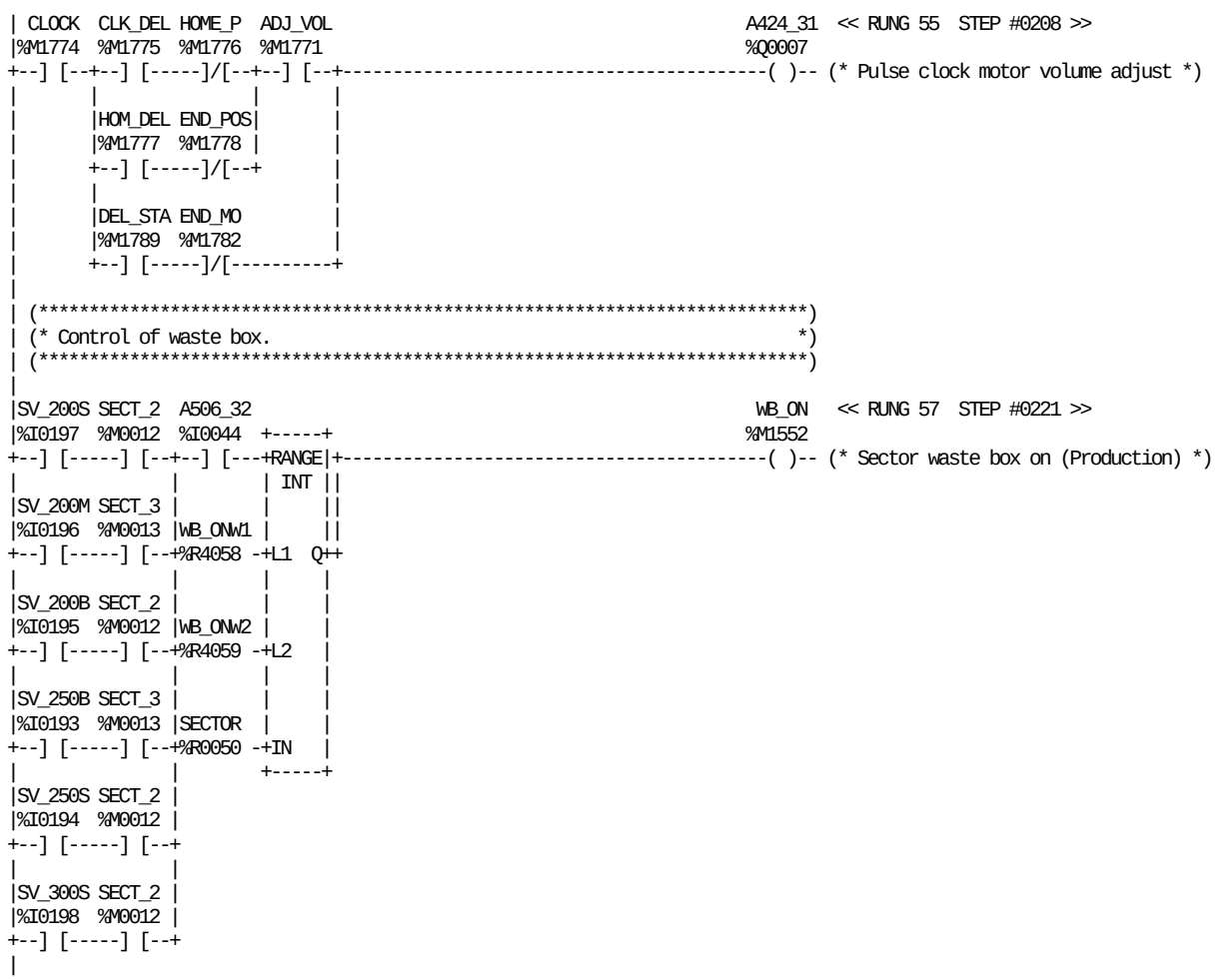

REFERENCE	NICKNAME	REFERENCE DESCRIPTION	REFERENCE	NICKNAME	REFERENCE DESCRIPTION
%Q0007	A424_31	Pulse clock motor volume adjust	%M0012	SECT_2	Angle sector 2 (200-277 oct)
%I0044	A506_32	DMC Main motor running	%M0013	SECT_3	Angle sector 3 (300-377 oct)
%M1771	ADJ_VOL	Volume adjustment going on	%I0195	SV_200B	Setting volume 200B
%M1775	CLK_DEL	Delay start clock pulse	%I0196	SV_200M	Setting volume 200M
%M1774	CLOCK	Clock for stepper motor volume	%I0197	SV_200S	Setting volume 200S
%M1789	DEL_STA	Delay start positioning volume	%I0193	SV_250B	Setting volume 250B
%M1782	END_MO	End movement volume cam	%I0194	SV_250S	Setting volume 250S
%M1778	END_POS	End positioning volume adjust	%I0198	SV_300S	Setting volume 300S
%M1776	HOME_P	Home position reached	%M1552	WB_ON	Sector waste box on (Production)
%M1777	HOM_DEL	Delay home position	%R4058	WB_ONW1	Waste box on window 1
%R0050	SECTOR	Angle sector (0-63 Dec)	%R4059	WB_ONW2	Waste box on window 2

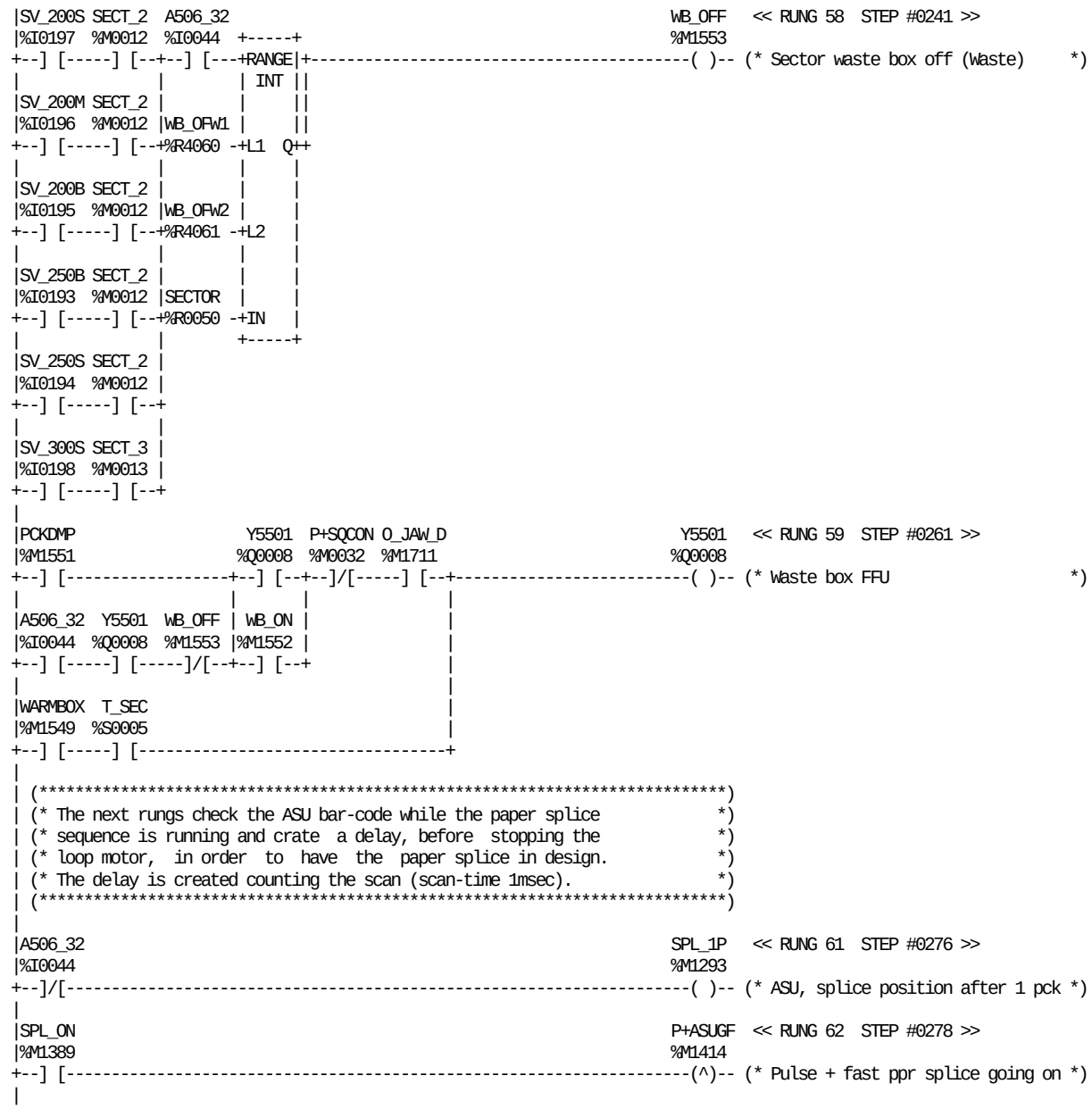

REFERENCE	NICKNAME	REFERENCE DESCRIPTION
%I0044	A506_32	DMC Main motor running
%M1711	O_JAW_D	Zero jaw detected
%M1414	P+ASUGF	Pulse + fast ppr splice going on
%M0032	P+SQCON	Sequence condition pos pulse
%M1551	PCKDMP	Dumping of packages
%R0050	SECTOR	Angle sector (0-63 Dec)
%M0012	SECT_2	Angle sector 2 (200-277 oct)
%M0013	SECT_3	Angle sector 3 (300-377 oct)
%M1293	SPL_1P	ASU, splice position after 1 pck
%M1389	SPL_ON	ASU, splice sequence going on
%I0195	SV_200B	Setting volume 200B
%I0196	SV_200M	Setting volume 200M
%I0197	SV_200S	Setting volume 200S
%I0193	SV_250B	Setting volume 250B
%I0194	SV_250S	Setting volume 250S
%I0198	SV_300S	Setting volume 300S
%S0005	T_SEC	
%M1549	WARMBOX	Warm-up waste box
%M1553	WB_OFF	Sector waste box off (Waste)
%R4060	WB_OFW1	Waste box off window 1
%R4061	WB_OFW2	Waste box off window 2
%M1552	WB_ON	Sector waste box on (Production)
%Q0008	Y5501	Waste box FFU

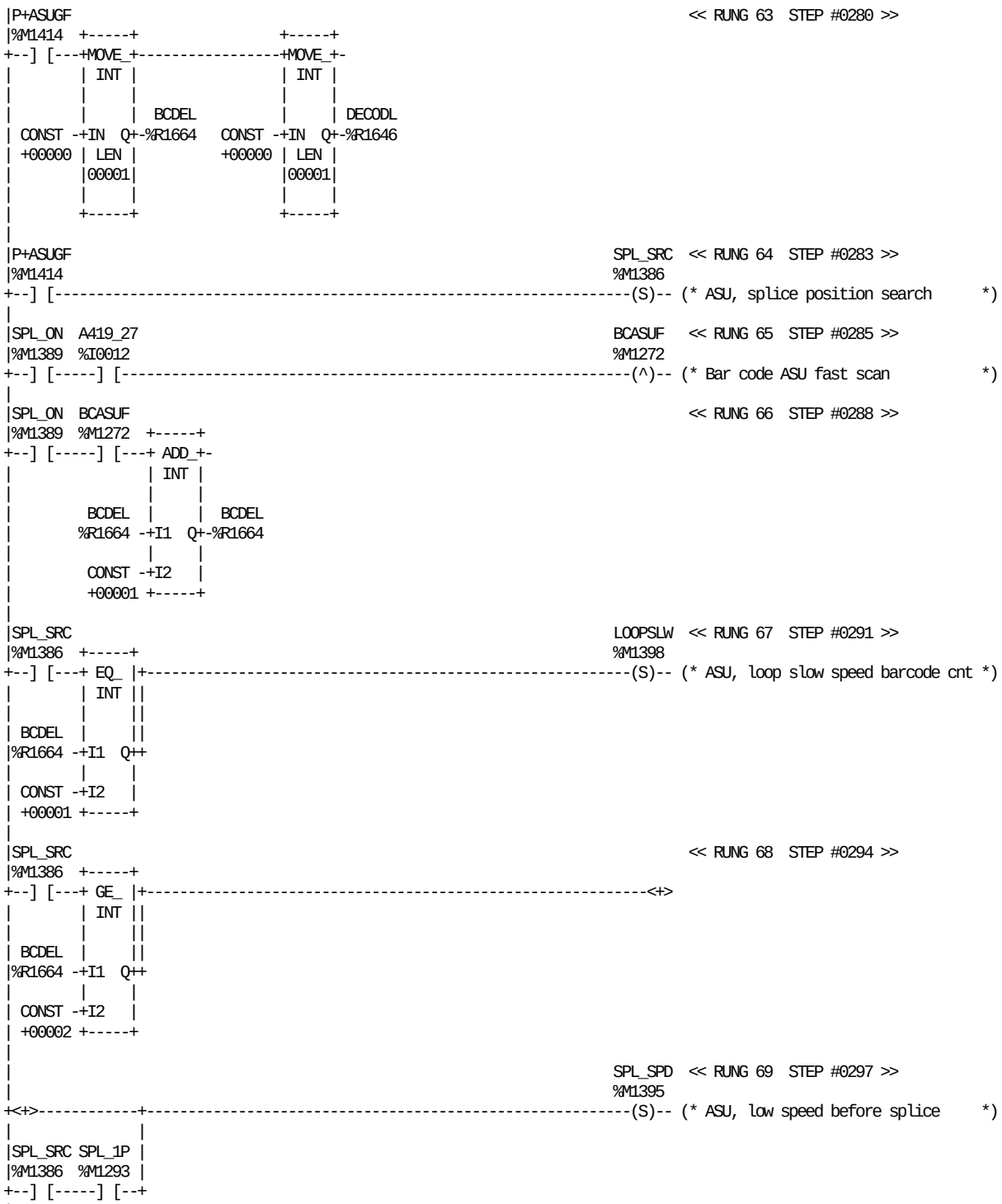

REFERENCE	NICKNAME	REFERENCE DESCRIPTION	REFERENCE	NICKNAME	REFERENCE DESCRIPTION
%I0012	A419_27	Design signal ASU (Barcode)	%M1414	P+ASUGF	Pulse + fast ppr splice going on
%M1272	BCASUF	Bar code ASU fast scan	%M1293	SPL_1P	ASU, splice position after 1 pck
%R1664	BCDEL	Barcode delay ASU splice	%M1389	SPL_ON	ASU, splice sequence going on
%R1646	DECODL	Design correction delay	%M1395	SPL_SPD	ASU, low speed before splice
%M1398	LOOPSLW	ASU, loop slow speed barcode cnt	%M1386	SPL_SRC	ASU, splice position search

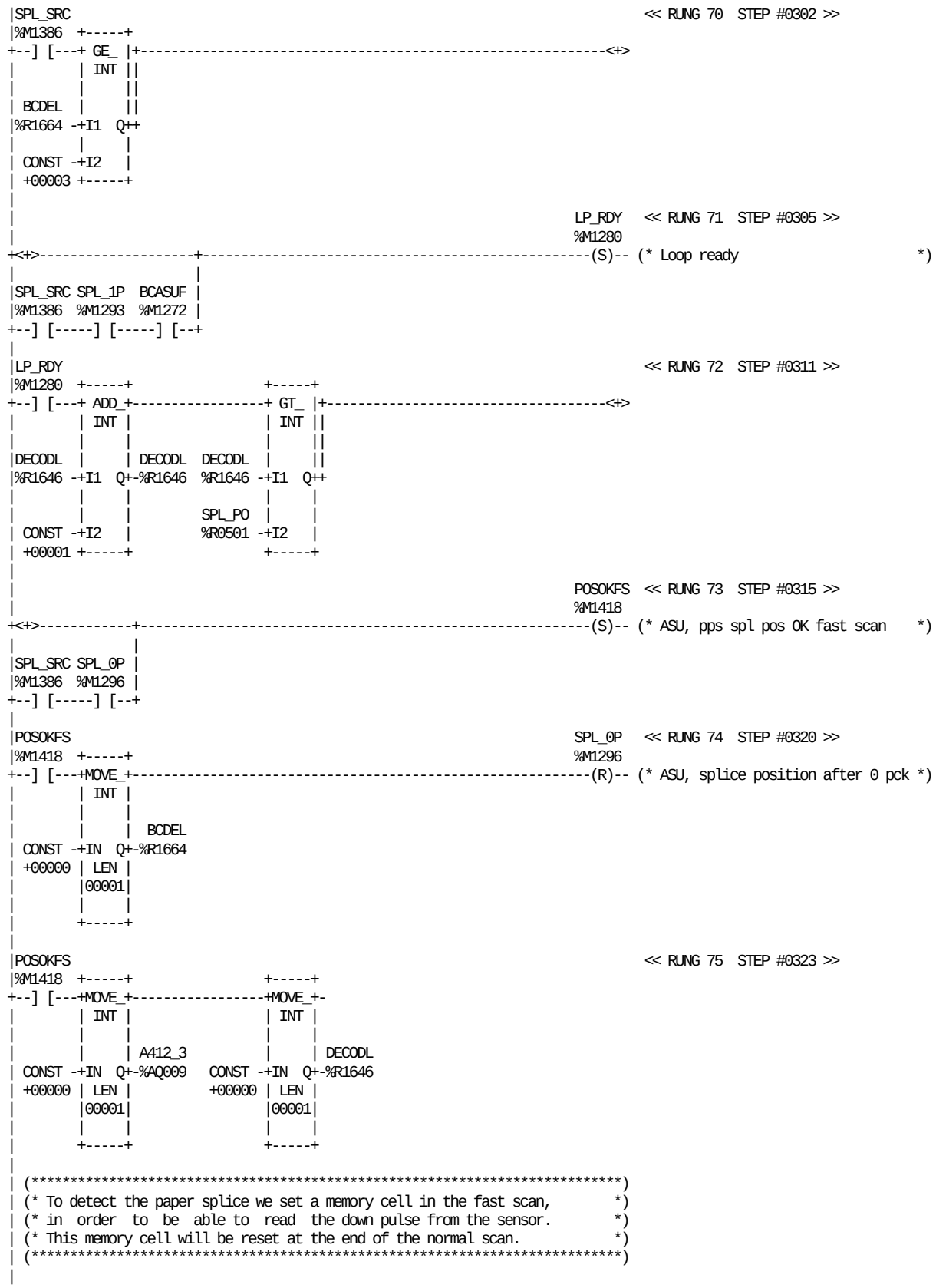

REFERENCE	NICKNAME	REFERENCE DESCRIPTION	REFERENCE	NICKNAME	REFERENCE DESCRIPTION
%AQ009	A412_3	Drive ASU loop	%M1418	POSOKFS	ASU, pps spl pos OK fast scan
%M1272	BCASUF	Bar code ASU fast scan	%M1296	SPL_0P	ASU, splice position after 0 pck
%R1664	BCDEL	Barcode delay ASU splice	%M1293	SPL_1P	ASU, splice position after 1 pck
%R1646	DECODL	Design correction delay	%R0501	SPL_PO	Splice pos changed from TPOP
%M1280	LP_RDY	Loop ready	%M1386	SPL_SRC	ASU, splice position search

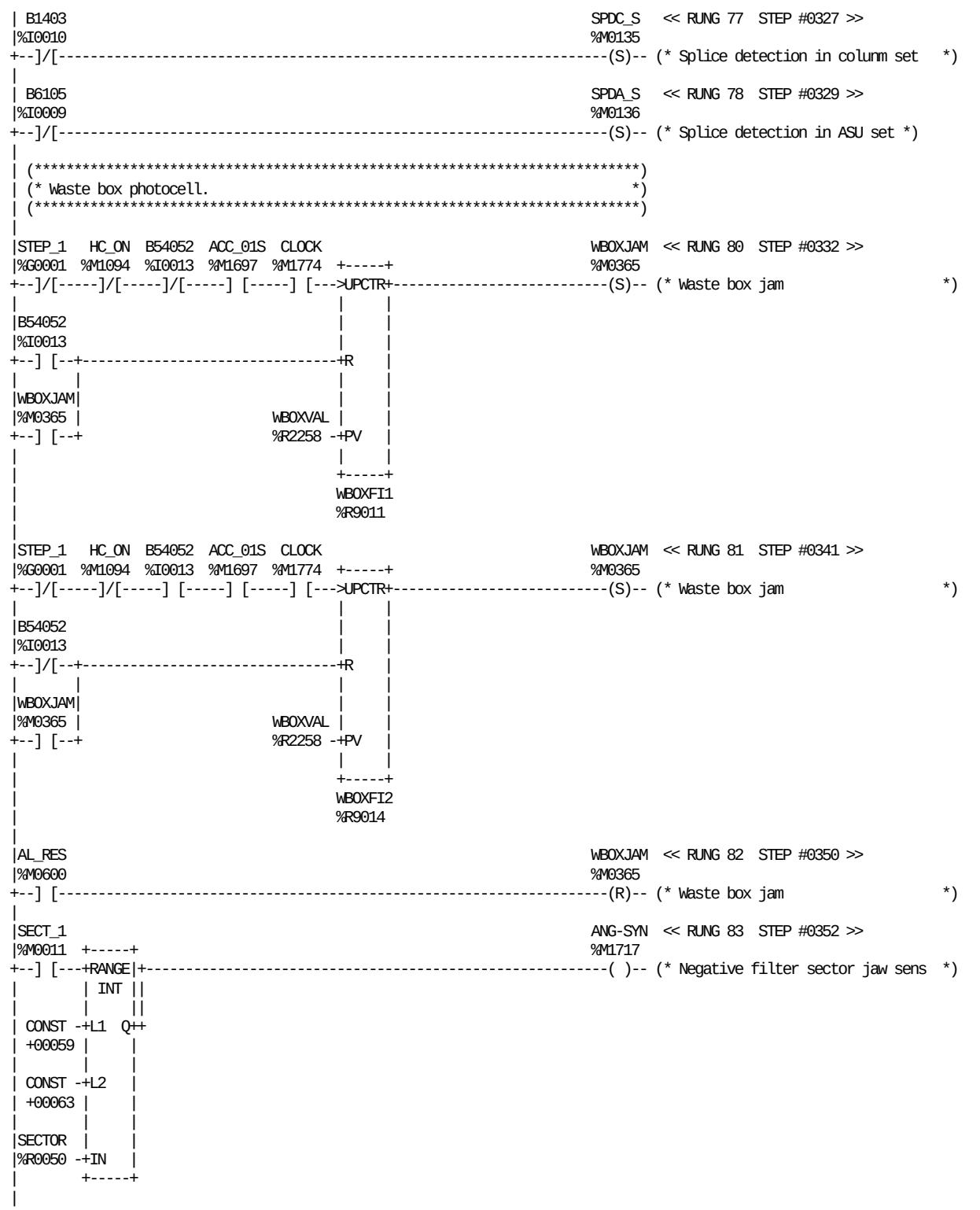

REFERENCE	NICKNAME	REFERENCE DESCRIPTION	REFERENCE	NICKNAME	REFERENCE DESCRIPTION
%M1697	ACC_01S	1 sec. acceleration main motor	%M0011	SECT_1	Angle sector 1 (100-177 oct)
%M0600	AL_RES	Alarm reset (From TPOP)	%M0136	SPDA_S	Splice detection in ASU set
%M1717	ANG-SYN	Negative filter sector jaw sens	%M0135	SPDC_S	Splice detection in columm set
%I0010	B1403	Splice detection in Column	%G0001	STEP_1	STANDBY
%I0013	B54052	Waste box photocell	%R9011	WBOXFI1	Waste box photocell filter busy
%I0009	B6105	Splice detection in ASU	%R9014	WBOXFI2	Waste box photocell filter free
%M1774	CLOCK	Clock for stepper motor volume	%M0365	WBOXJAM	Waste box jam
%M1094	HC_ON	Hygienic cleaning going on	%R2258	WBOXVAL	Waste box alarm value
%R0050	SECTOR	Angle sector (0-63 Dec)			

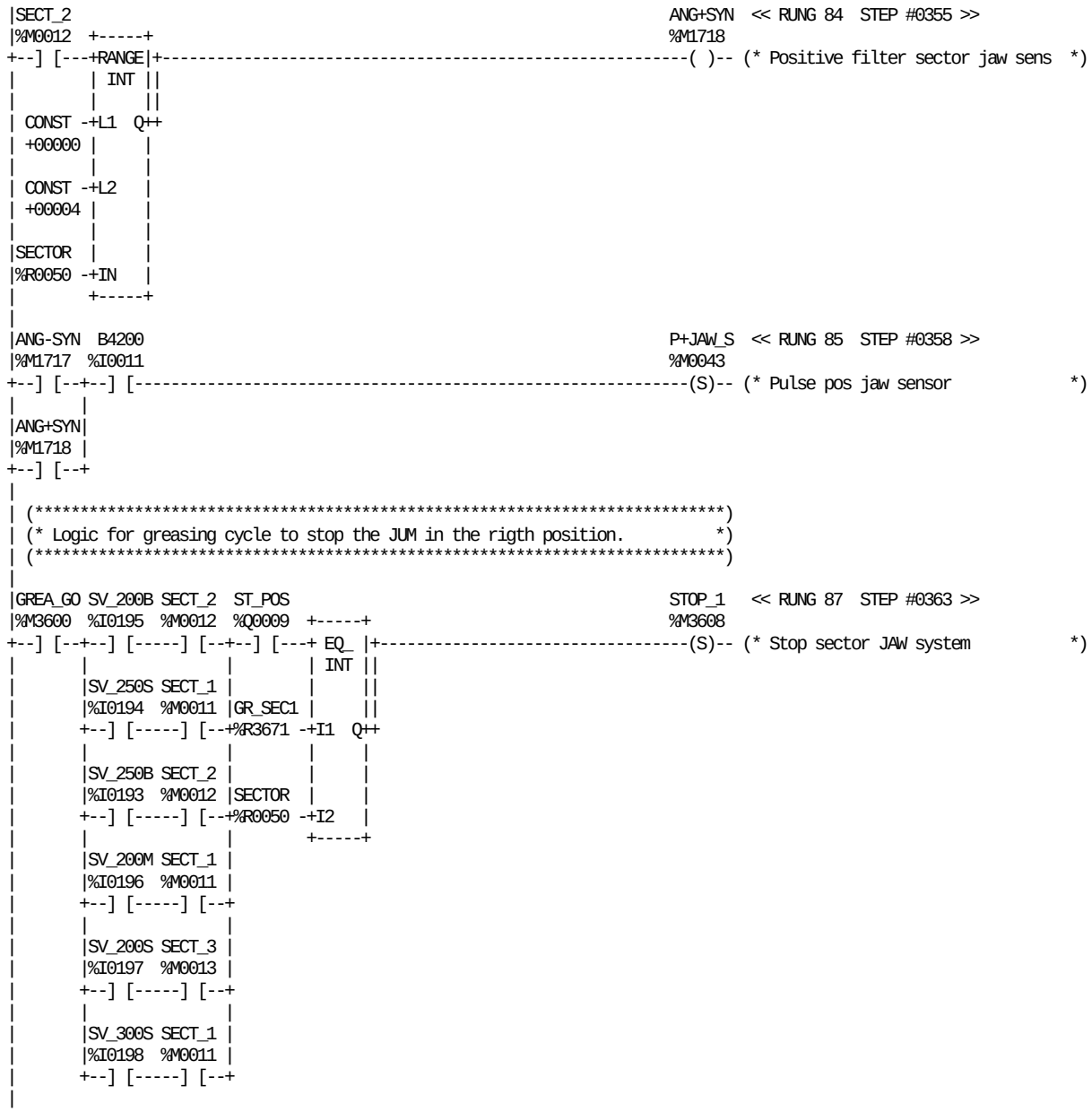

REFERENCE	NICKNAME	REFERENCE DESCRIPTION	REFERENCE	NICKNAME	REFERENCE DESCRIPTION
%M1718	ANG+SYN	Positive filter sector jaw sens	%M0013	SECT_3	Angle sector 3 (300-377 oct)
%M1717	ANG-SYN	Negative filter sector jaw sens	%M3608	STOP_1	Stop sector JAW system
%I0011	B4200	Zero jaw sensor	%Q0009	ST_POS	Start positioning Greasing
%M3600	GREA_GO	Greasing cycle JUM going on	%I0195	SV_200B	Setting volume 200B
%R3671	GR_SEC1	Greasing stop sector STOP 1	%I0196	SV_200M	Setting volume 200M
%M0043	P+JAW_S	Pulse pos jaw sensor	%I0197	SV_200S	Setting volume 200S
%R0050	SECTOR	Angle sector (0-63 Dec)	%I0193	SV_250B	Setting volume 250B
%M0011	SECT_1	Angle sector 1 (100-177 oct)	%I0194	SV_250S	Setting volume 250S
%M0012	SECT_2	Angle sector 2 (200-277 oct)	%I0198	SV_300S	Setting volume 300S

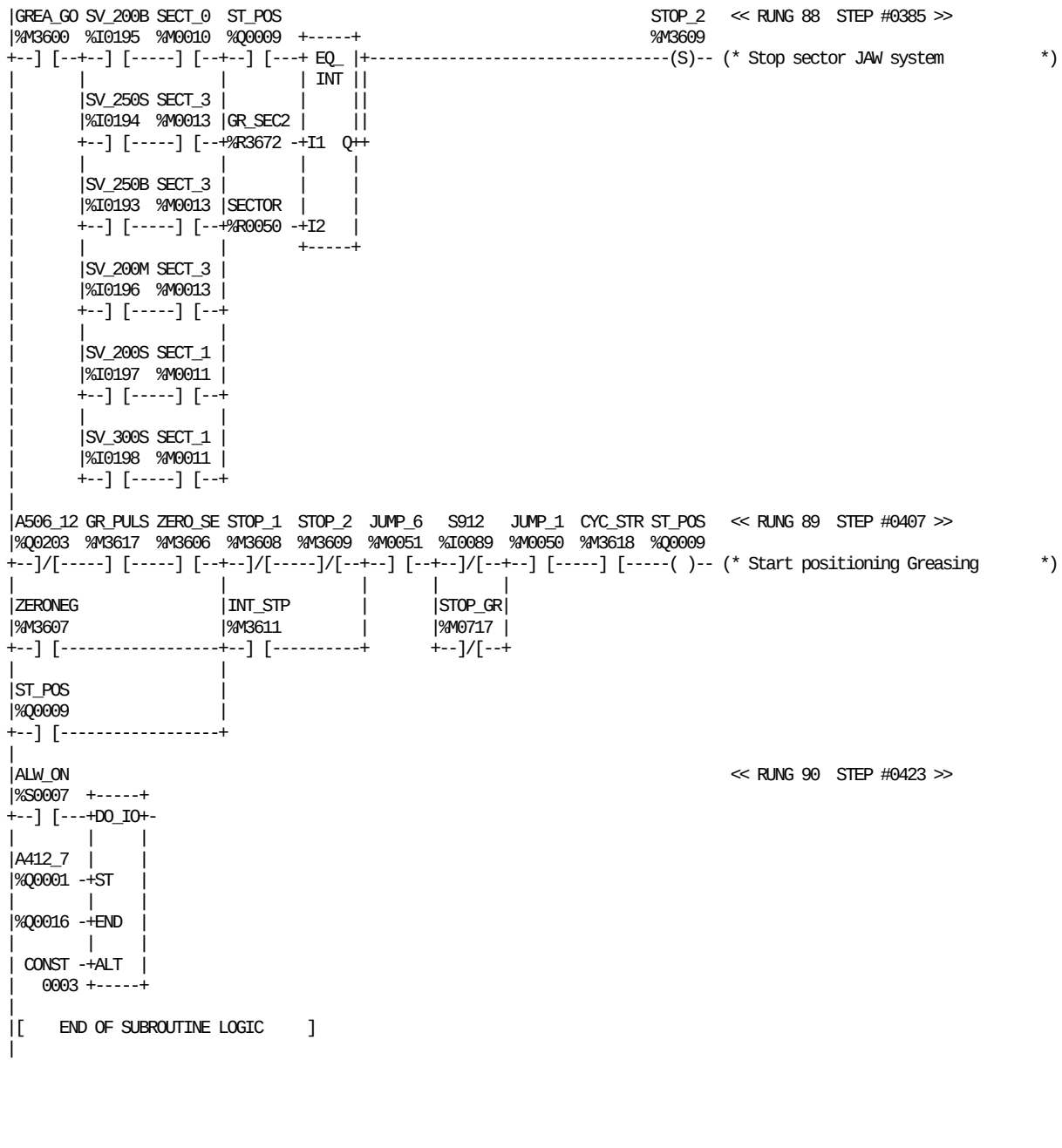

REFERENCE	NICKNAME	REFERENCE DESCRIPTION
%Q0016		
%Q0001	A412_7	DC-brake drive loop motor
%Q0203	A506_12	DMC Main Motor Greasing cycle
%S0007	ALW_ON	
%M3618	CYC_STR	Cylinder start position
%M3600	GREA_GO	Greasing cycle JUM going on
%M3617	GR_PULS	Greasing cycle neg pulse
%R3672	GR_SEC2	Greasing stop sector STOP 2
%M3611	INT_STP	Interrupt stop (Cycle not ended)
%M0050	JUMP_1	Jump to pos 1 (Emergency stop)
%M0051	JUMP_6	Jump to pos 6 (Fast stop)
%I0089	S912	Push button step down
%R0050	SECTOR	Angle sector (0-63 Dec)
%M0010	SECT_0	Angle sector 0 (0-77 oct)

REFERENCE	NICKNAME	REFERENCE DESCRIPTION
%M0011	SECT_1	Angle sector 1 (100-177 oct)
%M0013	SECT_3	Angle sector 3 (300-377 oct)
%M3608	STOP_1	Stop sector JAW system
%M3609	STOP_2	Stop sector JAW system
%M0717	STOP_GR	Stop greasing cycle JUM
%Q0009	ST_POS	Start positioning Greasing
%I0195	SV_200B	Setting volume 200B
%I0196	SV_200M	Setting volume 200M
%I0197	SV_200S	Setting volume 200S
%I0193	SV_250B	Setting volume 250B
%I0194	SV_250S	Setting volume 250S
%I0198	SV_300S	Setting volume 300S
%M3607	ZERONEG	Zero jaw detected neg pulse
%M3606	ZERO_SE	Zero sensor detected

```
|[  START LD SUBROUTINE  MACHLAD  ]
|
|[     VARIABLE DECLARATIONS      ]
|
|[   START OF SUBROUTINE LOGIC    ]
|
| (*************************************************************************)
| (* The logic in this subroutine is used to handling the machine ladder.  *)
| (* The present step of the machine is always put in the register %R0001   *)
| (* with a MOVE instruction.                                               *)
| (*************************************************************************)
|
| (*************************************************************************)
| (* Step "OFF"                                                            *)
| (*************************************************************************)
|
|P+STP1                                                          RES_TB   << RUNG 6  STEP #0004 >>
|%M0041  +-----+                                                 %M0073
+--] [---+OFDT +-----------------------------------------------------( )-- (* Reset timebar stop cleaning      *)
|        |0.10s|
|        |     |
| CONST -+PV   |
| +00020 |     |
|        +-----+
|        RES_TIM
|        %R0107
|
|STEP_2  P+STDWN                                                       << RUNG 7  STEP #0007 >>
|%G0002  %M0015                          +-----+
+--] [-----] [--+----------------------+--------+MOVE_+-
|               |                      |        | WORD|
|JUMP_1  CIPBLOW|                      |        |     |
|%M0050  %M0993 |                      |        |     | LADDER
+--]/[-----]/[--+                      | CONST -+IN  Q+-%R0001
|               |                      |   0001 | LEN |
|STEP_13 P+STDWN|                      |        |00001|
|%G0013  %M0015 |                      |        |     |
+--] [-----] [--+                      |        +-----+
|                                      |
|STEP_14 CIPTODO CIPBLOW HC_DONE A506_32|
|%G0014  %M0992  %M0993  %M1092  %I0044 |
+--] [-----]/[-----]/[--+--] [-----]/[--+
|                       |              |
|                       | HC_ON  P+STDWN|
|                       |%M1094  %M0015 |
|                       +--]/[--+--] [--+
|                               |      |
|                               |CIP_END|
|                               |%M1111 |
|                               +--] [--+
|                               |      |
|                               |HC_SEL |
|                               |%M0713 |
|                               +--]/[--+
|                                      |
|STEP_15 CIPBLOW                       |
|%G0015  %M0993                        |
+--] [-----]/[-------------------------+
|
| (*************************************************************************)
| (* Step "Preparation"                                                    *)
| (*************************************************************************)
|
```

REFERENCE	NICKNAME	REFERENCE DESCRIPTION	REFERENCE	NICKNAME	REFERENCE DESCRIPTION
%I0044	A506_32	DMC Main motor running	%M0015	P+STDWN	Step down positive pulse
%M0993	CIPBLOW	CIP blowing must be done	%M0041	P+STP1	Pulse pos edge step 1
%M0992	CIPTODO	CIP must be done	%M0073	RES_TB	Reset timebar stop cleaning
%M1111	CIP_END	CIP, Ended pulse	%R0107	RES_TIM	Reset timeleft timebar
%M1092	HC_DONE	Hygienic cleaning completed	%G0013	STEP_13	OPEN DOORS, CUT TUBE
%M1094	HC_ON	Hygienic cleaning going on	%G0014	STEP_14	CIP / HC
%M0713	HC_SEL	Hygienic cleaning selection ok	%G0015	STEP_15	BLOWING
%M0050	JUMP_1	Jump to pos 1 (Emergency stop)	%G0002	STEP_2	PREPARATION (3 MIN.)
%R0001	LADDER	Machine ladder position			

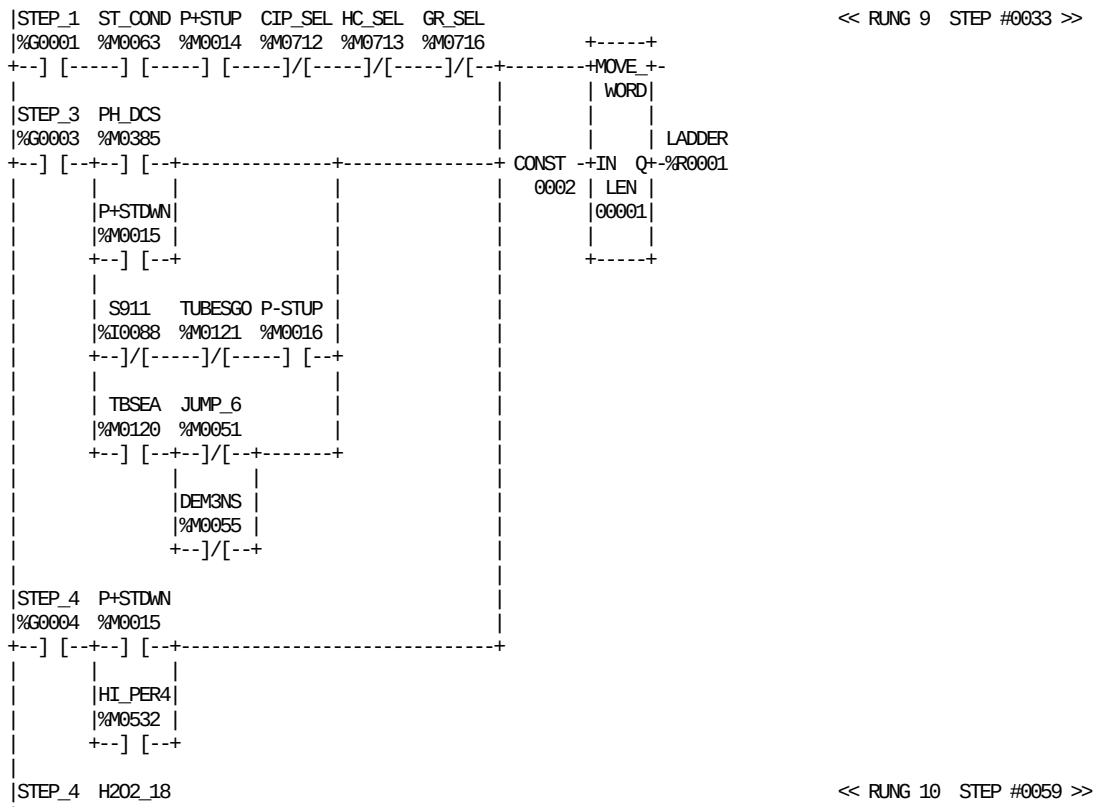

REFERENCE	NICKNAME	REFERENCE DESCRIPTION
%M0712	CIP_SEL	CIP select from TPOP
%M0055	DEM3NS	Demand 3 normal stop
%M0716	GR_SEL	Greasing selected
%M0460	H2O2_18	H2O2 meter malfunction
%M0461	H2O2_19	H2O2 meter wrong concentration
%M0713	HC_SEL	Hygienic cleaning selection ok
%M0532	HI_PER4	HI, Heater steril air temp.
%M0051	JUMP_6	Jump to pos 6 (Fast stop)
%R0001	LADDER	Machine ladder position
%M0015	P+STDWN	Step down positive pulse
%M0014	P+STUP	Step up positive pulse

REFERENCE	NICKNAME	REFERENCE DESCRIPTION
%M0016	P-STUP	Step up negative pulse
%M0385	PH_DCS	Malfunction photocells DCS
%I0088	S911	Push button step up
%G0001	STEP_1	STANDBY
%G0003	STEP_3	TUBE SEALING
%G0004	STEP_4	HEAT STERILIZATION
%M0063	ST_COND	Step up conditions
%M0120	TBSEA	Tube sealing
%R1123	TMR_5_M	TMR wait 5min then STEP_1
%M0121	TUBESGO	Tube sealing going on

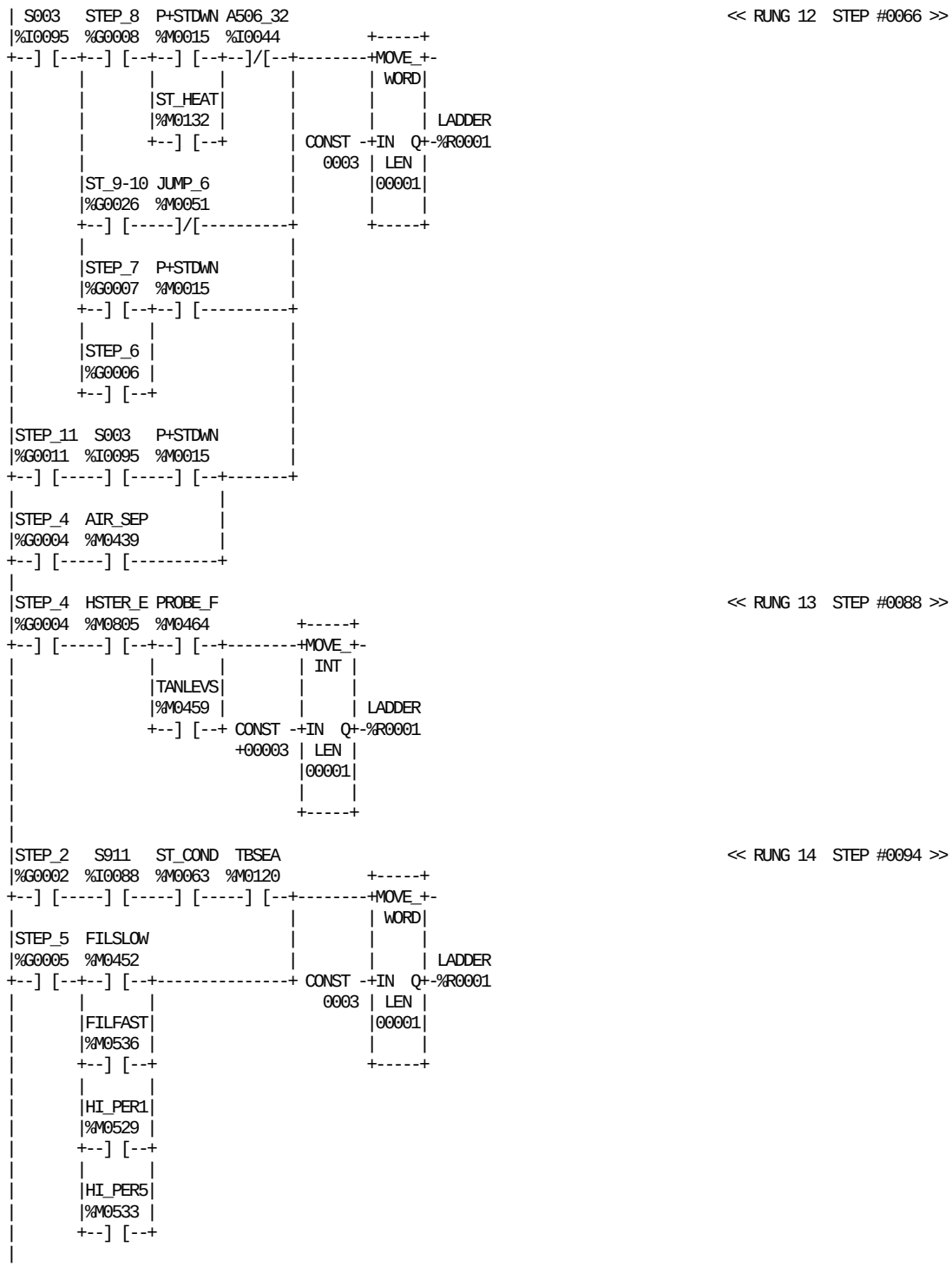

REFERENCE	NICKNAME	REFERENCE DESCRIPTION
%I0044	A506_32	DMC Main motor running
%M0439	AIR_SEP	Air pressure separator
%M0536	FILFAST	Filling spray tank fast
%M0452	FILSLOW	Filling spray tank slow
%M0529	HI_PER1	HI, Spray tank slow filling
%M0533	HI_PER5	HI, Spray tank fast filling
%M0805	HSTER_E	Heat sterilizing end
%M0051	JUMP_6	Jump to pos 6 (Fast stop)
%R0001	LADDER	Machine ladder position
%M0015	P+STDWN	Step down positive pulse
%M0464	PROBE_F	Level probe fault H2O2 tank
%I0095	S003	Service switch
%I0088	S911	Push button step up

REFERENCE	NICKNAME	REFERENCE DESCRIPTION
%G0011	STEP_11	END OF PRODUCTION
%G0002	STEP_2	PREPARATION (3 MIN.)
%G0004	STEP_4	HEAT STERILIZATION
%G0005	STEP_5	SPRAYING
%G0006	STEP_6	DRYING + STEAM CLEANING
%G0007	STEP_7	SIGNAL TO STERILIZER
%G0008	STEP_8	FLAPS + H2O2 TEMPERATURE
%G0026	ST_9-10	Ladder position 9-10
%M0063	ST_COND	Step up conditions
%M0132	ST_HEAT	Stop heaters FFU
%M0459	TANLEVS	Low level H2O2 tank for spray
%M0120	TBSEA	Tube sealing

```
| (*************************************************************************)
| (* Step "Heat sterilizing"                                               *)
| (*************************************************************************)
|
|STEP_3   S003   P+STUP  ST_COND                                  << RUNG 16  STEP #0107 >>
|%G0003  %I0095  %M0014  %M0063  +-----+
+--] [-----]/[-----] [-----] [---+MOVE_+-
|                                | WORD|
|                                |     |
|                                |     | LADDER
|                          CONST -+IN  Q+-%R0001
|                            0004 | LEN |
|                                 |00001|
|                                 |     |
|                                 +-----+
|
| (*************************************************************************)
| (* Step "Spraying"                                                      *)
| (*************************************************************************)
|
|STEP_4  K112_6  K114_1  ST_COND P+STUP                           << RUNG 18  STEP #0113 >>
|%G0004  %I0145  %I0146  %M0063  %M0014         +-----+
+--] [-----] [-----] [-----] [--+--] [--+--------+MOVE_+-
|                               |       |        | WORD|
|                               |AUT_SPR|        |     |
|                               |%M0840 |        |     | LADDER
|                               +--] [--+ CONST -+IN  Q+-%R0001
|                                         0005 | LEN |
|                                              |00001|
|                                              |     |
|                                              +-----+
|
| (*************************************************************************)
| (* Step "Drying"                                                        *)
| (*************************************************************************)
|
```

REFERENCE	NICKNAME	REFERENCE DESCRIPTION	REFERENCE	NICKNAME	REFERENCE DESCRIPTION
%M0840	AUT_SPR	Automatic spray function	%I0095	S003	Service switch
%I0145	K112_6	Top door closed aseptic chamber	%G0003	STEP_3	TUBE SEALING
%I0146	K114_1	Front doors closed AC	%G0004	STEP_4	HEAT STERILIZATION
%R0001	LADDER	Machine ladder position	%M0063	ST_COND	Step up conditions
%M0014	P+STUP	Step up positive pulse			

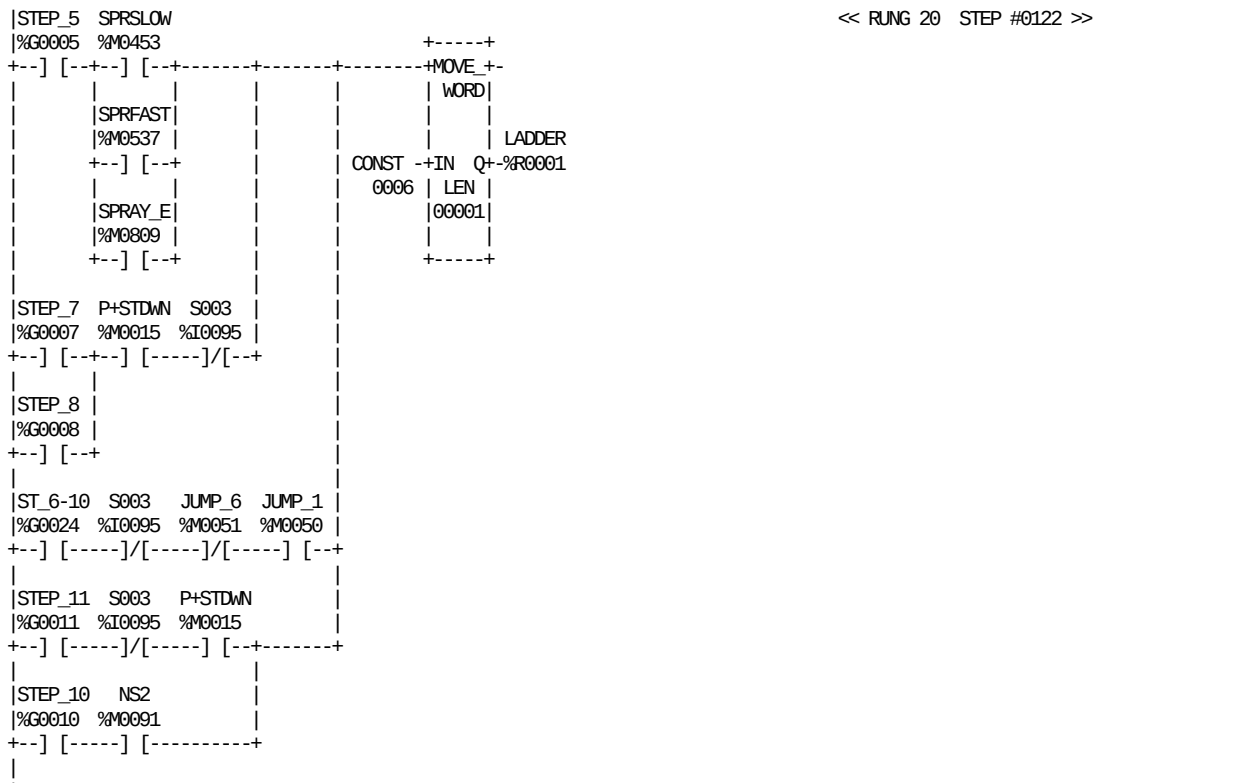

REFERENCE	NICKNAME	REFERENCE DESCRIPTION
%M0813	DRY_OK	Drying ready
%M0050	JUMP_1	Jump to pos 1 (Emergency stop)
%M0051	JUMP_6	Jump to pos 6 (Fast stop)
%R0001	LADDER	Machine ladder position
%M0138	LONG_ST	To long stop in sterile mode
%M0091	NS2	Normal stop step 2
%M0015	P+STDWN	Step down positive pulse
%M0435	POSBVAL	B-valve in wrong position
%M0438	POSPRVA	Prehaeting valve in wrong pos
%M0440	REG_VAL	Regulating valve
%I0095	S003	Service switch
%M0811	SPRAYON	Spray on

REFERENCE	NICKNAME	REFERENCE DESCRIPTION
%M0809	SPRAY_E	Spray end
%M0537	SPRFAST	Spary fast --> go to Venting
%M0453	SPRSLOW	Spray slow --> go to Venting
%G0010	STEP_10	PRODUCTION
%G0011	STEP_11	END OF PRODUCTION
%G0005	STEP_5	SPRAYING
%G0006	STEP_6	DRYING + STEAM CLEANING
%G0007	STEP_7	SIGNAL TO STERILIZER
%G0008	STEP_8	FLAPS + H2O2 TEMPERATURE
%G0024	ST_6-10	Ladder position 6-10
%R0008	T_PR_OK	Timer max time signals process

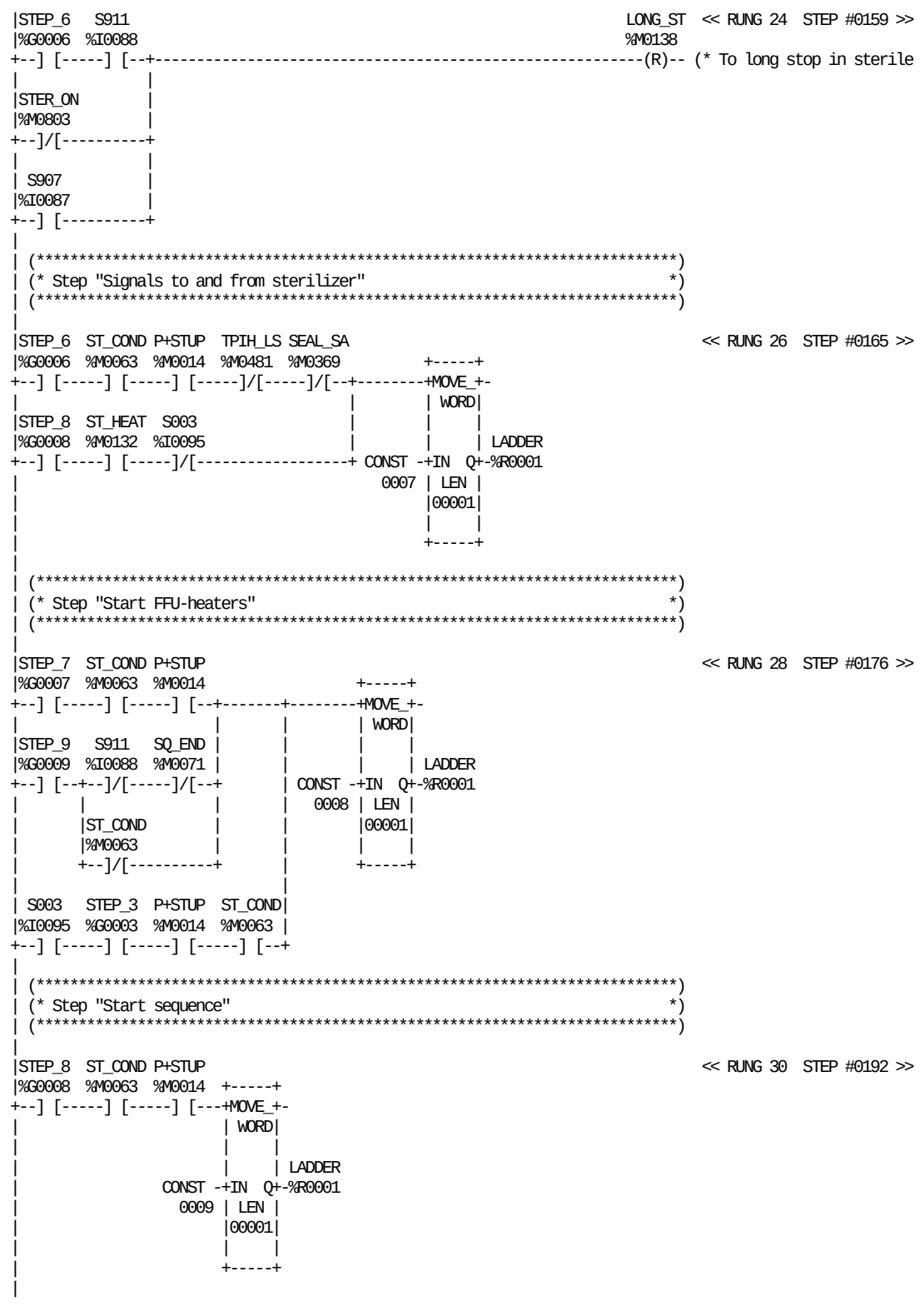

REFERENCE	NICKNAME	REFERENCE DESCRIPTION	REFERENCE	NICKNAME	REFERENCE DESCRIPTION
%R0001	LADDER	Machine ladder position	%G0006	STEP_6	DRYING + STEAM CLEANING
%M0138	LONG_ST	To long stop in sterile mode	%G0007	STEP_7	SIGNAL TO STERILIZER
%M0014	P+STUP	Step up positive pulse	%G0008	STEP_8	FLAPS + H2O2 TEMPERATURE
%I0095	S003	Service switch	%G0009	STEP_9	MOTOR START
%I0087	S907	Push button inching JUM	%M0803	STER_ON	Steril system on
%I0088	S911	Push button step up	%M0063	ST_COND	Step up conditions
%M0369	SEAL_SA	Sealing strip applicator	%M0132	ST_HEAT	Stop heaters FFU
%M0071	SQ_END	Start sequence ended	%M0481	TPIH_LS	LS TPIH fault
%G0003	STEP_3	TUBE SEALING			

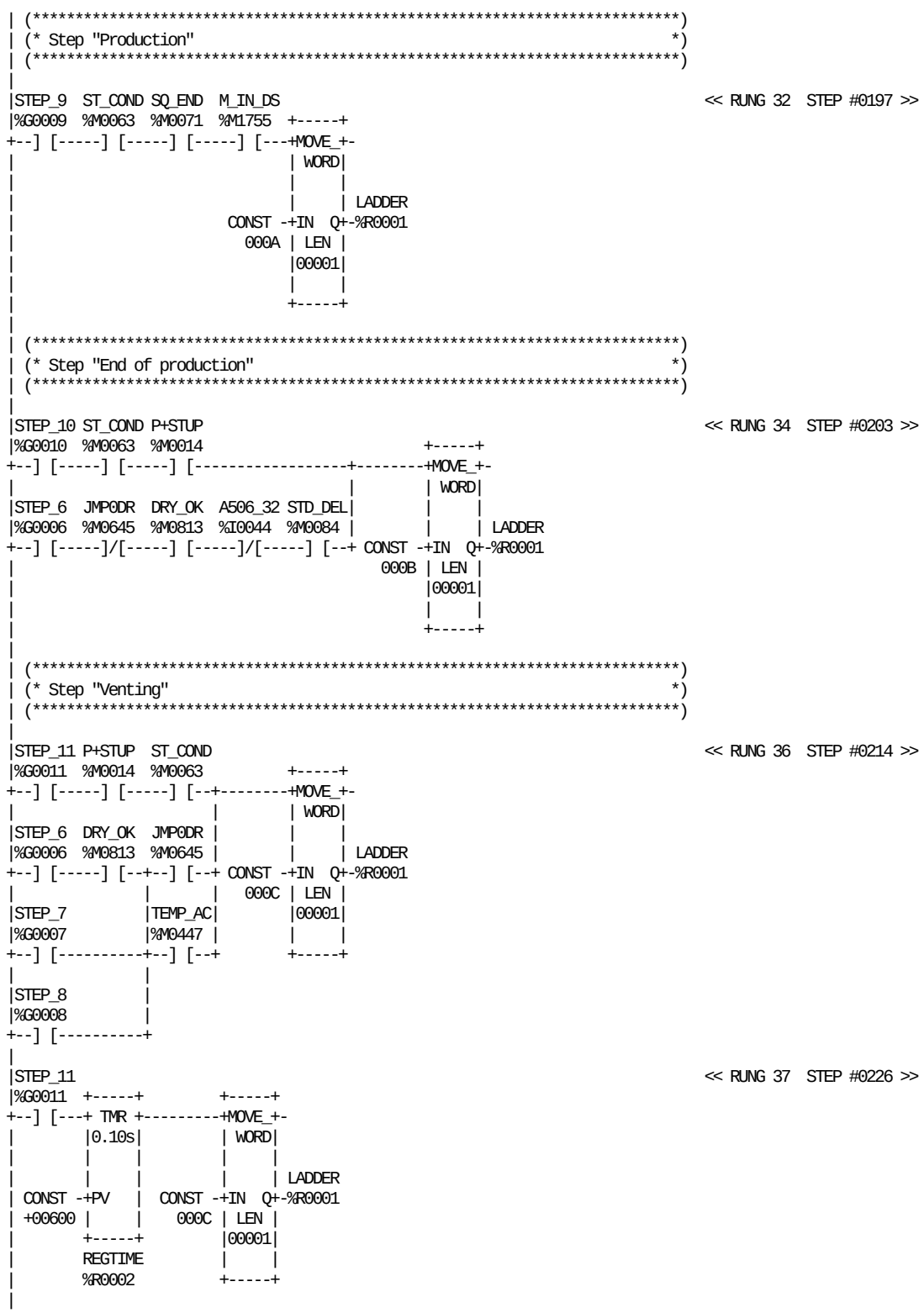

REFERENCE	NICKNAME	REFERENCE DESCRIPTION
%I0044	A506_32	DMC Main motor running
%M0813	DRY_OK	Drying ready
%M0645	JMP0DR	Jump to 0 while drying (To TPOP)
%R0001	LADDER	Machine ladder position
%M1755	M_IN_DS	Machine in design
%M0014	P+STUP	Step up positive pulse
%R0002	REGTIME	Regression time end of prod
%M0071	SQ_END	Start sequence ended
%M0084	STD_DEL	Step_down button delay

REFERENCE	NICKNAME	REFERENCE DESCRIPTION
%G0010	STEP_10	PRODUCTION
%G0011	STEP_11	END OF PRODUCTION
%G0006	STEP_6	DRYING + STEAM CLEANING
%G0007	STEP_7	SIGNAL TO STERILIZER
%G0008	STEP_8	FLAPS + H2O2 TEMPERATURE
%G0009	STEP_9	MOTOR START
%M0063	ST_COND	Step up conditions
%M0447	TEMP_AC	AC temperature too high

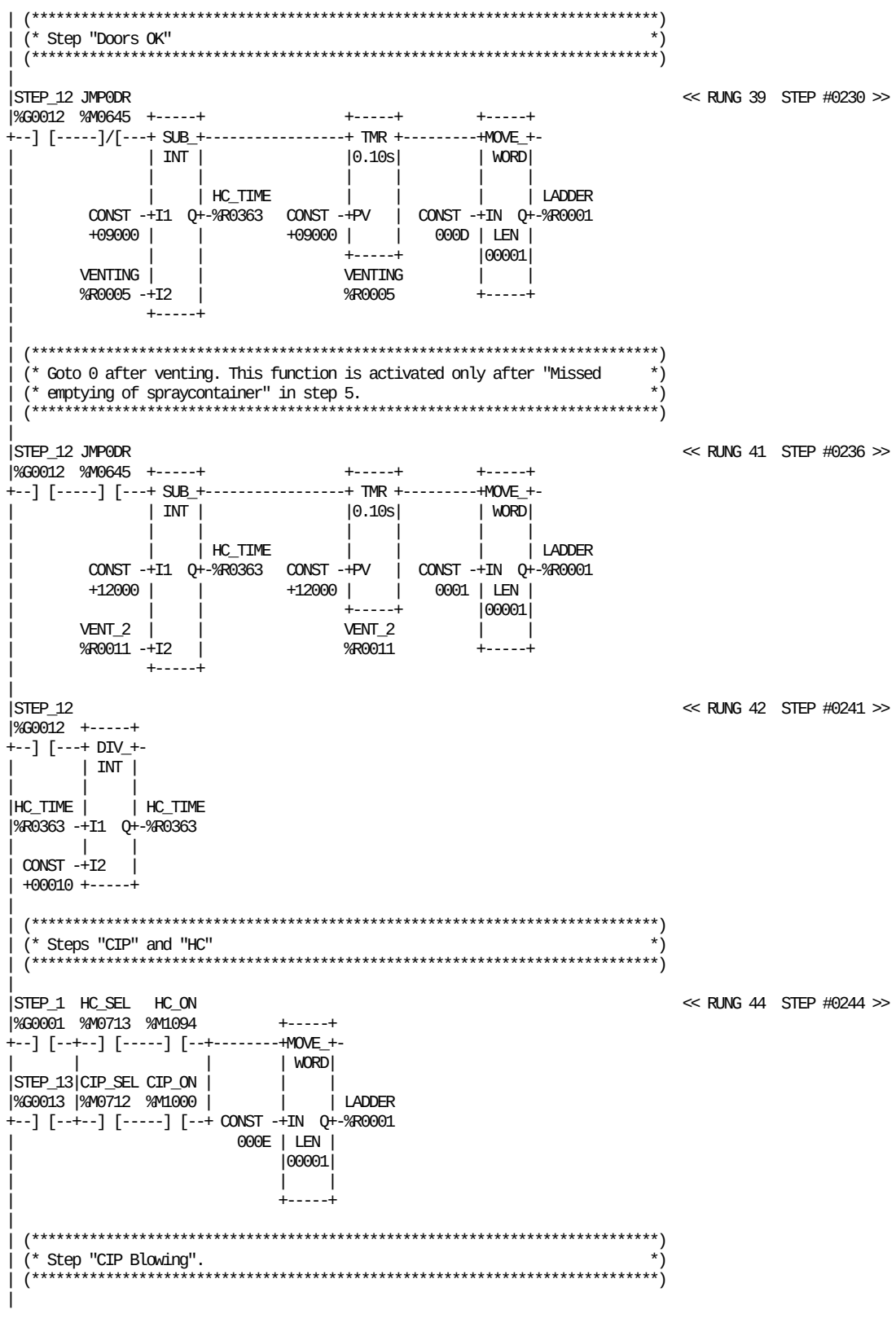

REFERENCE	NICKNAME	REFERENCE DESCRIPTION	REFERENCE	NICKNAME	REFERENCE DESCRIPTION
%M1000	CIP_ON	CIP going on	%R0001	LADDER	Machine ladder position
%M0712	CIP_SEL	CIP select from TPOP	%G0001	STEP_1	STANDBY
%M1094	HC_ON	Hygienic cleaning going on	%G0012	STEP_12	VENTING
%M0713	HC_SEL	Hygienic cleaning selection ok	%G0013	STEP_13	OPEN DOORS, CUT TUBE
%R0363	HC_TIME	HC timer to the TPOP	%R0005	VENTING	Timer venting
%M0645	JMP0DR	Jump to 0 while drying (To TPOP)	%R0011	VENT_2	Venting timer 2

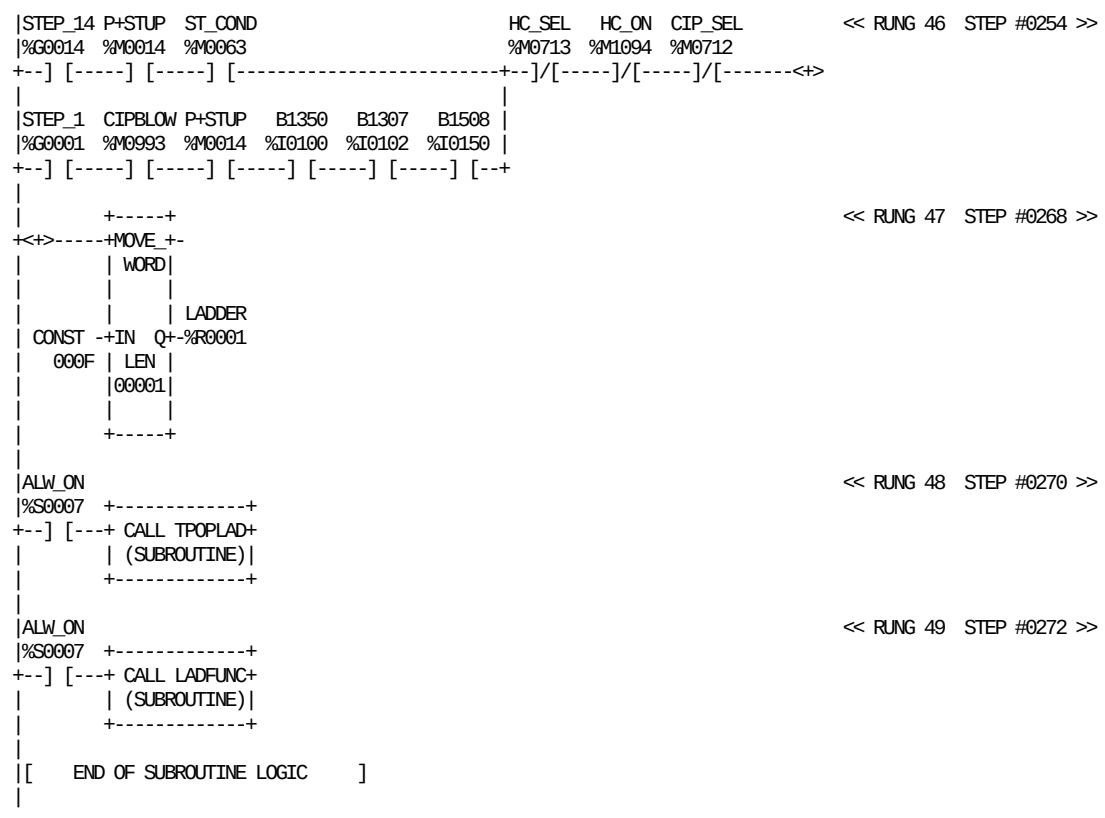

REFERENCE	NICKNAME	REFERENCE DESCRIPTION
%S0007	ALW_ON	
%I0102	B1307	Steril air pipe sensor
%I0100	B1350	Cup draining pipe in position
%I0150	B1508	Bucket cleaning door guard
%M0993	CIPBLOW	CIP blowing must be done
%M0712	CIP_SEL	CIP select from TPOP
%M1094	HC_ON	Hygienic cleaning going on
%M0713	HC_SEL	Hygienic cleaning selection ok

REFERENCE	NICKNAME	REFERENCE DESCRIPTION
%R0001	LADDER	Machine ladder position
	LADFUNC	Ladder deconding & symbols
%M0014	P+STUP	Step up positive pulse
%G0001	STEP_1	STANDBY
%G0014	STEP_14	CIP / HC
%M0063	ST_COND	Step up conditions
	TPOPLAD	Ladder signals to TPOP

This page left intentionally blank

```
|[  START LD SUBROUTINE  LADFUNC  ]
|
|[     VARIABLE DECLARATIONS      ]
|
|[   START OF SUBROUTINE LOGIC    ]
|
| (*************************************************************************)
| (* The three rungs below control the lamp inside the STEP-UP pushbutton     *)
| (* and the STEP-DOWN pushbutton.                                            *)
| (*************************************************************************)
|
|ST_COND                                                          CIP_HC   << RUNG 5  STEP #0003 >>
|%M0063                                                           %M0765
+--] [--+-------------------------------------------------------------( )-- (* CIP/HC step up condition        *)
|       |
|HC_CON |
|%M0766 |
+--] [--+
|
|SA_INCH  C-OFF  TPIH_LS SEAL_SA                                  FORCEIN  << RUNG 6  STEP #0006 >>
|%M0379  %M0444  %M0481  %M0369                                   %M1807
+--]/[-----]/[-----]/[-----]/[-----------------------------------------( )-- (* Force inching memory            *)
|
|ST_COND A506_32 STEP_1  GR_JUM  CIP_SEL GREA_GO         T_SEC          H911    << RUNG 7  STEP #0011 >>
|%M0063  %I0044  %G0001  %M0714  %M0712  %M3600         %S0005         %Q0223
+--] [-----]/[--+--] [--+--] [--+--]/[-----]/[----------+--] [-------------( )-- (* Symbol step up                 *)
|               |       |      |                     |
|               |       |GR_SEL |                     |
|               |       |%M0716 |                     |
|               |       +--]/[--+                     |
|               |                                     |
|               |STEP_5  STEP_12 ST_9-10 ST_2-12 FORCEIN|
|               |%G0005  %G0012  %G0026  %G0021  %M1807 |
|               +--]/[-----]/[-----]/[-----] [-----] [--+
|                                                     |
|HC_SEL  A506_29 A507_29 A508_29 ST_COND              |
|%M0713  %I0041  %I0055  %I0048  %M0063               |
+--] [-----] [-----] [-----] [-----] [--+--------------+
|                                       |
|CIP_SEL CIP_ON  CIP_RDY A601_14 K114_1 |
|%M0712  %M1000  %M1002  %I0018  %I0146 |
+--] [-----]/[-----] [-----] [-----] [--+
|                                       |
|CIP_HC   HC_ON  HC_SEL                 |
|%M0765  %M1094  %M0713                 |
+--] [-----]/[-----] [-----------------+
|                                       |
|CIPBLOW BLOWCON                        |
|%M0993  %M0989                         |
+--] [-----] [-------------------------+
|                                       |
|STEP_11 A506_32                        |
|%G0011  %I0044                         |
+--] [-----]/[-------------------------+
|
```

REFERENCE	NICKNAME	REFERENCE DESCRIPTION
%I0041	A506_29	DMC Main motor ready
%I0044	A506_32	DMC Main motor running
%I0055	A507_29	DMC FFU ready
%I0048	A508_29	DMC DCS ready
%I0018	A601_14	Safety monitors B
%M0989	BLOWCON	Blow condition for step up light
%M0444	C-OFF	Steam barrier disabled
%M0993	CIPBLOW	CIP blowing must be done
%M0765	CIP_HC	CIP/HC step up condition
%M1000	CIP_ON	CIP going on
%M1002	CIP_RDY	CIP ready to start
%M0712	CIP_SEL	CIP select from TPOP
%M1807	FORCEIN	Force inching memory
%M3600	GREA_GO	Greasing cycle JUM going on
%M0714	GR_JUM	Greasing JUM
%M0716	GR_SEL	Greasing selected

REFERENCE	NICKNAME	REFERENCE DESCRIPTION
%Q0223	H911	Symbol step up
%M0766	HC_CON	HC start condition
%M1094	HC_ON	Hygienic cleaning going on
%M0713	HC_SEL	Hygienic cleaning selection ok
%I0146	K114_1	Front doors closed AC
%M0379	SA_INCH	SA strip not sealed inching
%M0369	SEAL_SA	Sealing strip applicator
%G0001	STEP_1	STANDBY
%G0011	STEP_11	END OF PRODUCTION
%G0012	STEP_12	VENTING
%G0005	STEP_5	SPRAYING
%G0021	ST_2-12	Ladder position 2-12
%G0026	ST_9-10	Ladder position 9-10
%M0063	ST_COND	Step up conditions
%M0481	TPIH_LS	LS TPIH fault
%S0005	T_SEC	

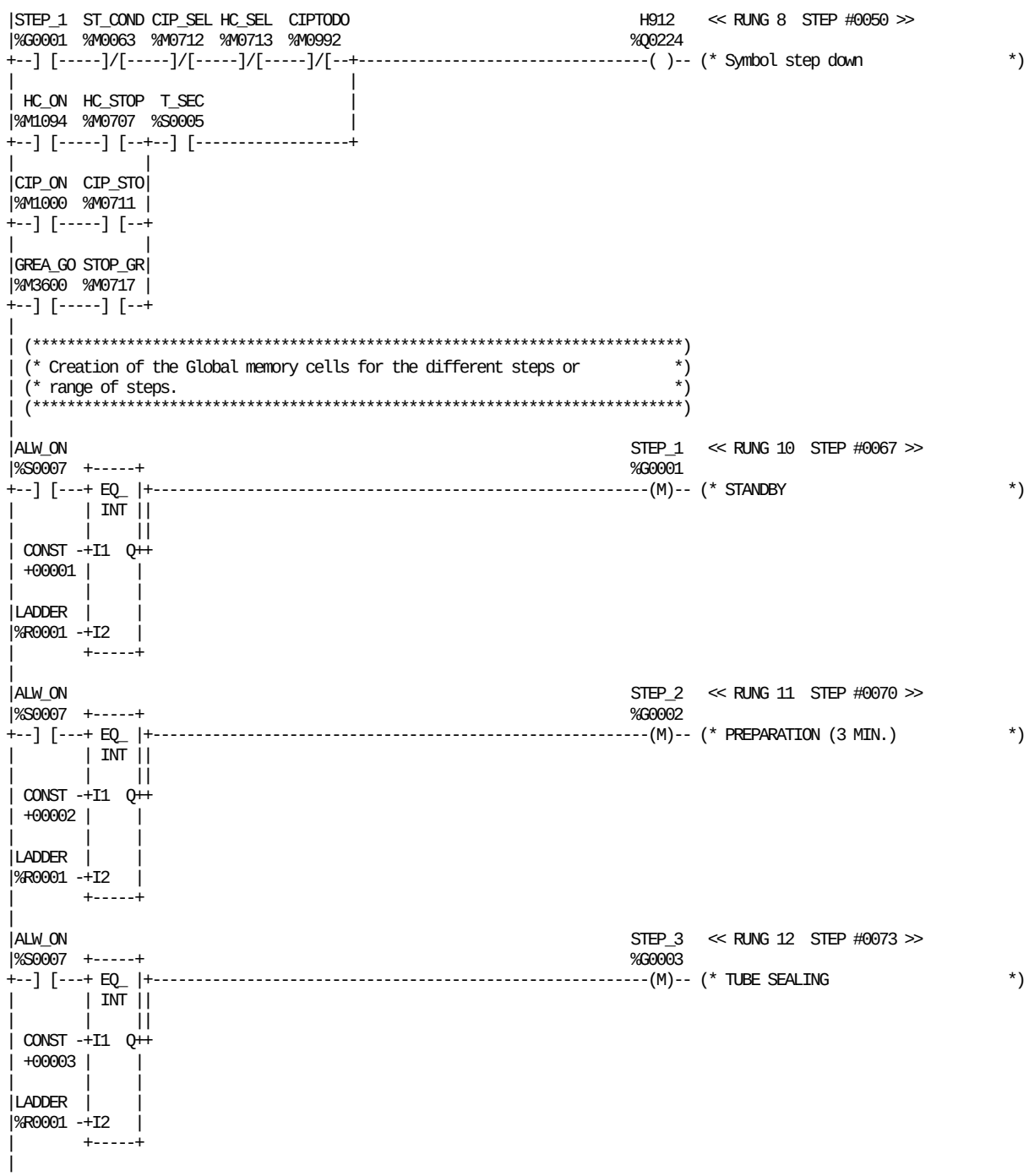

REFERENCE	NICKNAME	REFERENCE DESCRIPTION
%S0007	ALW_ON	
%M0992	CIPTODO	CIP must be done
%M1000	CIP_ON	CIP going on
%M0712	CIP_SEL	CIP select from TPOP
%M0711	CIP_STO	CIP stop from TPOP
%M3600	GREA_GO	Greasing cycle JUM going on
%Q0224	H912	Symbol step down
%M1094	HC_ON	Hygienic cleaning going on
%M0713	HC_SEL	Hygienic cleaning selection ok
%M0707	HC_STOP	Stop hygienic cleaning
%R0001	LADDER	Machine ladder position
%G0001	STEP_1	STANDBY
%G0002	STEP_2	PREPARATION (3 MIN.)
%G0003	STEP_3	TUBE SEALING
%M0717	STOP_GR	Stop greasing cycle JUM
%M0063	ST_COND	Step up conditions
%S0005	T_SEC	

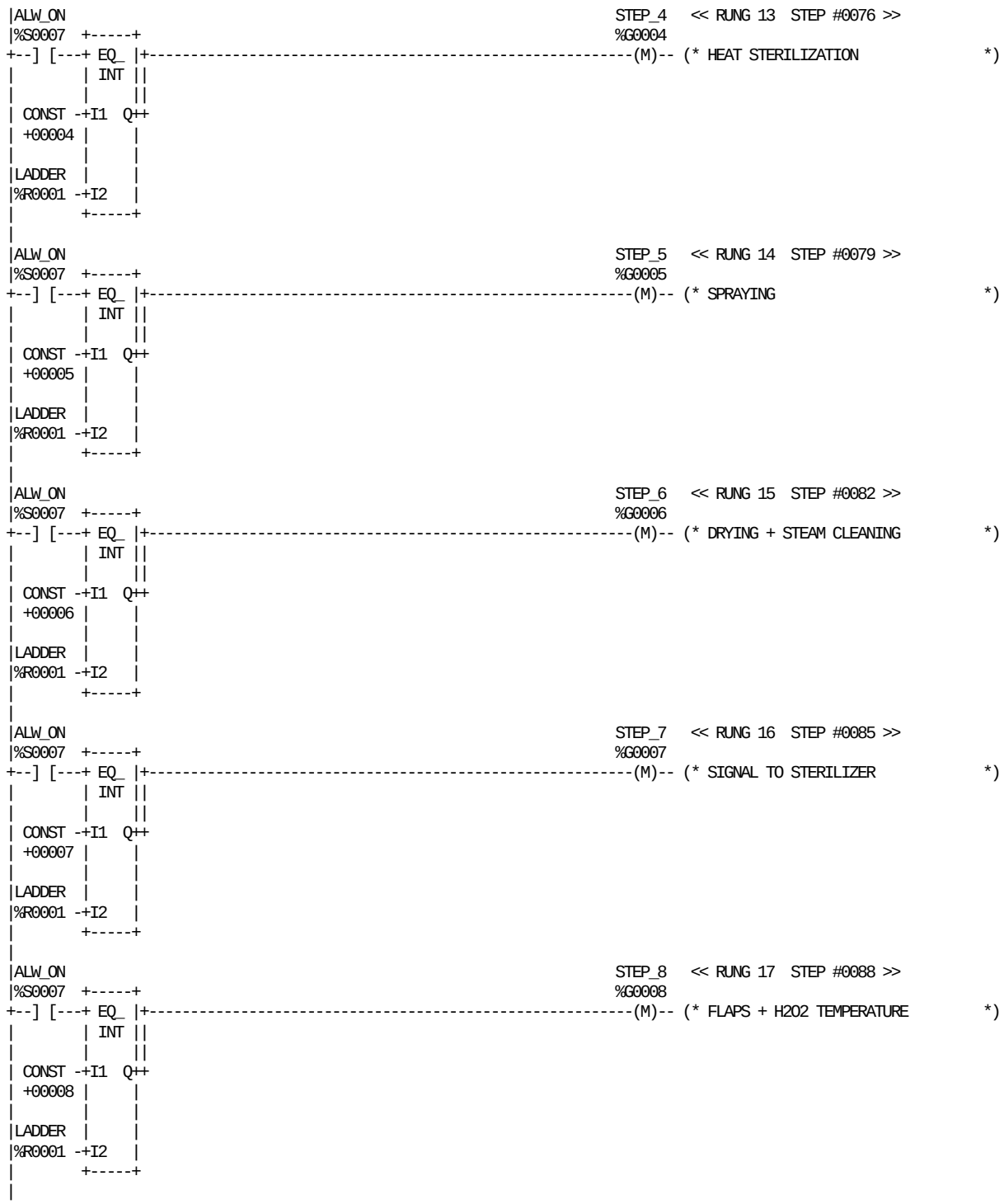

REFERENCE	NICKNAME	REFERENCE DESCRIPTION
%S0007	ALW_ON	
%R0001	LADDER	Machine ladder position
%G0004	STEP_4	HEAT STERILIZATION
%G0005	STEP_5	SPRAYING
%G0006	STEP_6	DRYING + STEAM CLEANING
%G0007	STEP_7	SIGNAL TO STERILIZER
%G0008	STEP_8	FLAPS + H2O2 TEMPERATURE

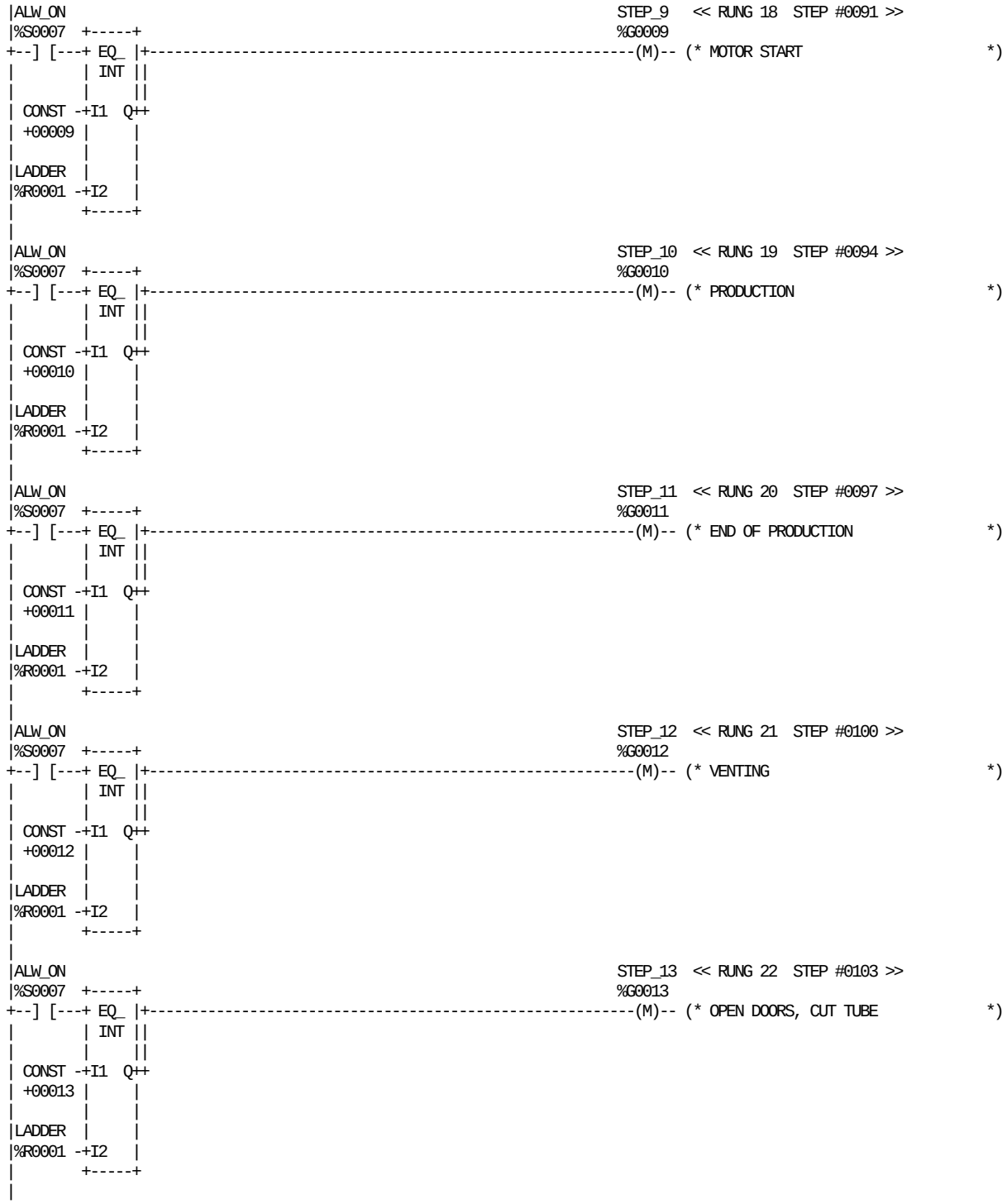

REFERENCE	NICKNAME	REFERENCE DESCRIPTION
%S0007	ALW_ON	
%R0001	LADDER	Machine ladder position
%G0010	STEP_10	PRODUCTION
%G0011	STEP_11	END OF PRODUCTION
%G0012	STEP_12	VENTING
%G0013	STEP_13	OPEN DOORS, CUT TUBE
%G0009	STEP_9	MOTOR START

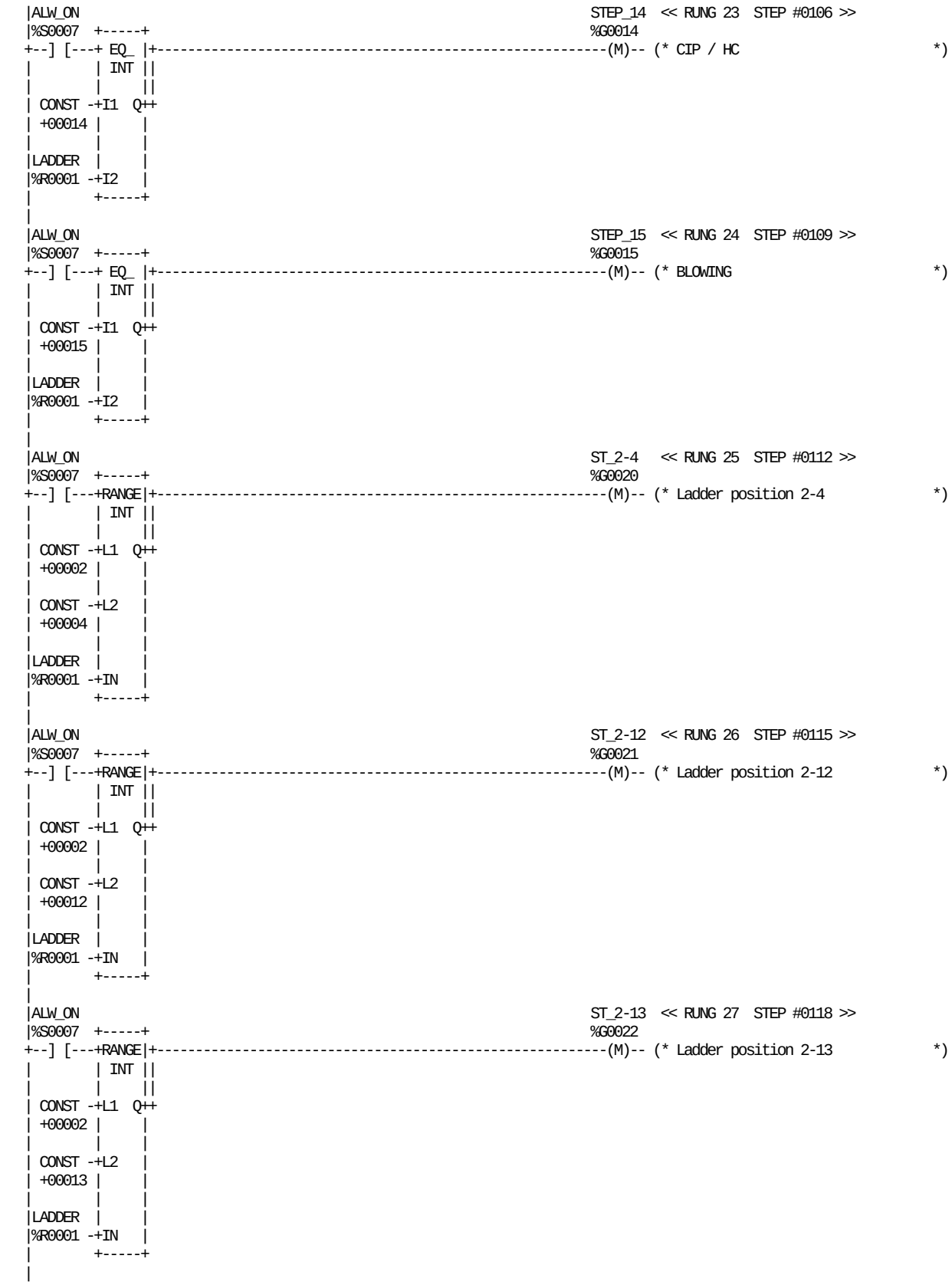

REFERENCE	NICKNAME	REFERENCE DESCRIPTION
%S0007	ALW_ON	
%R0001	LADDER	Machine ladder position
%G0014	STEP_14	CIP / HC
%G0015	STEP_15	BLOWING

REFERENCE	NICKNAME	REFERENCE DESCRIPTION
%G0021	ST_2-12	Ladder position 2-12
%G0022	ST_2-13	Ladder position 2-13
%G0020	ST_2-4	Ladder position 2-4

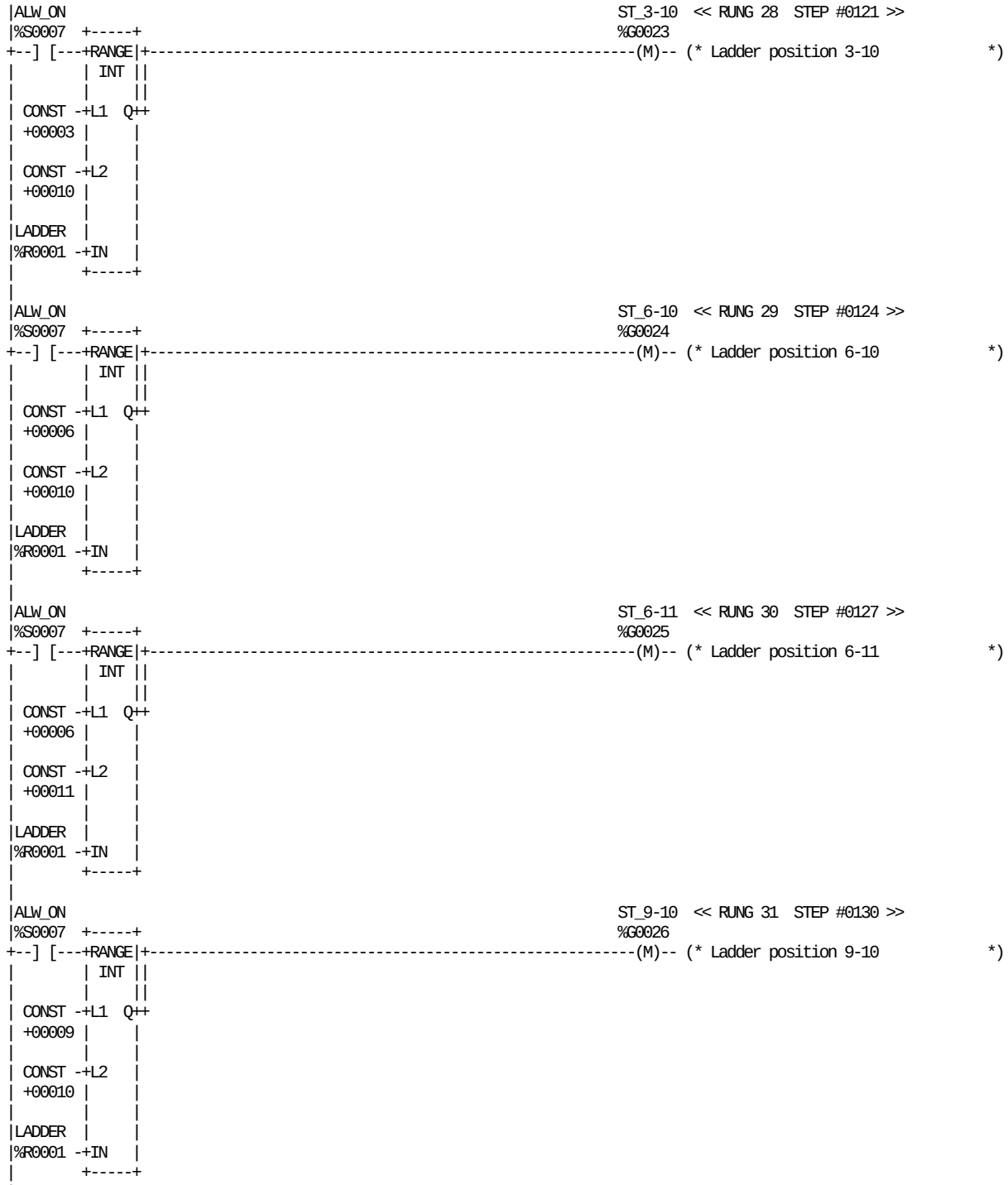

REFERENCE	NICKNAME	REFERENCE DESCRIPTION	REFERENCE	NICKNAME	REFERENCE DESCRIPTION
%S0007	ALW_ON		%G0024	ST_6-10	Ladder position 6-10
%R0001	LADDER	Machine ladder position	%G0025	ST_6-11	Ladder position 6-11
%G0023	ST_3-10	Ladder position 3-10	%G0026	ST_9-10	Ladder position 9-10

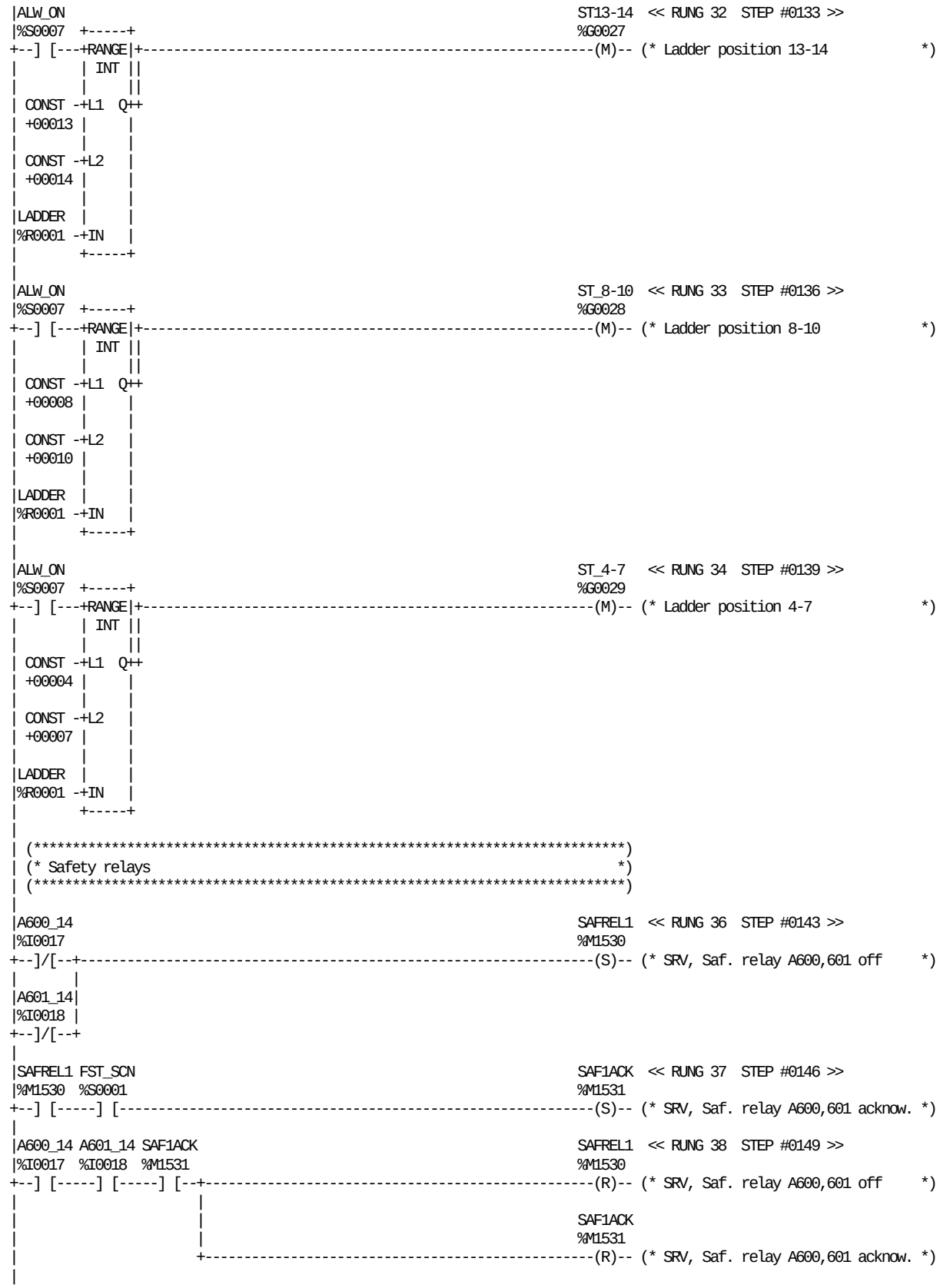

REFERENCE	NICKNAME	REFERENCE DESCRIPTION	REFERENCE	NICKNAME	REFERENCE DESCRIPTION
%I0017	A600_14	Emergency stop	%M1531	SAF1ACK	SRV, Saf. relay A600,601 acknow.
%I0018	A601_14	Safety monitors B	%M1530	SAFREL1	SRV, Saf. relay A600,601 off
%S0007	ALW_ON		%G0027	ST13-14	Ladder position 13-14
%S0001	FST_SCN		%G0029	ST_4-7	Ladder position 4-7
%R0001	LADDER	Machine ladder position	%G0028	ST_8-10	Ladder position 8-10

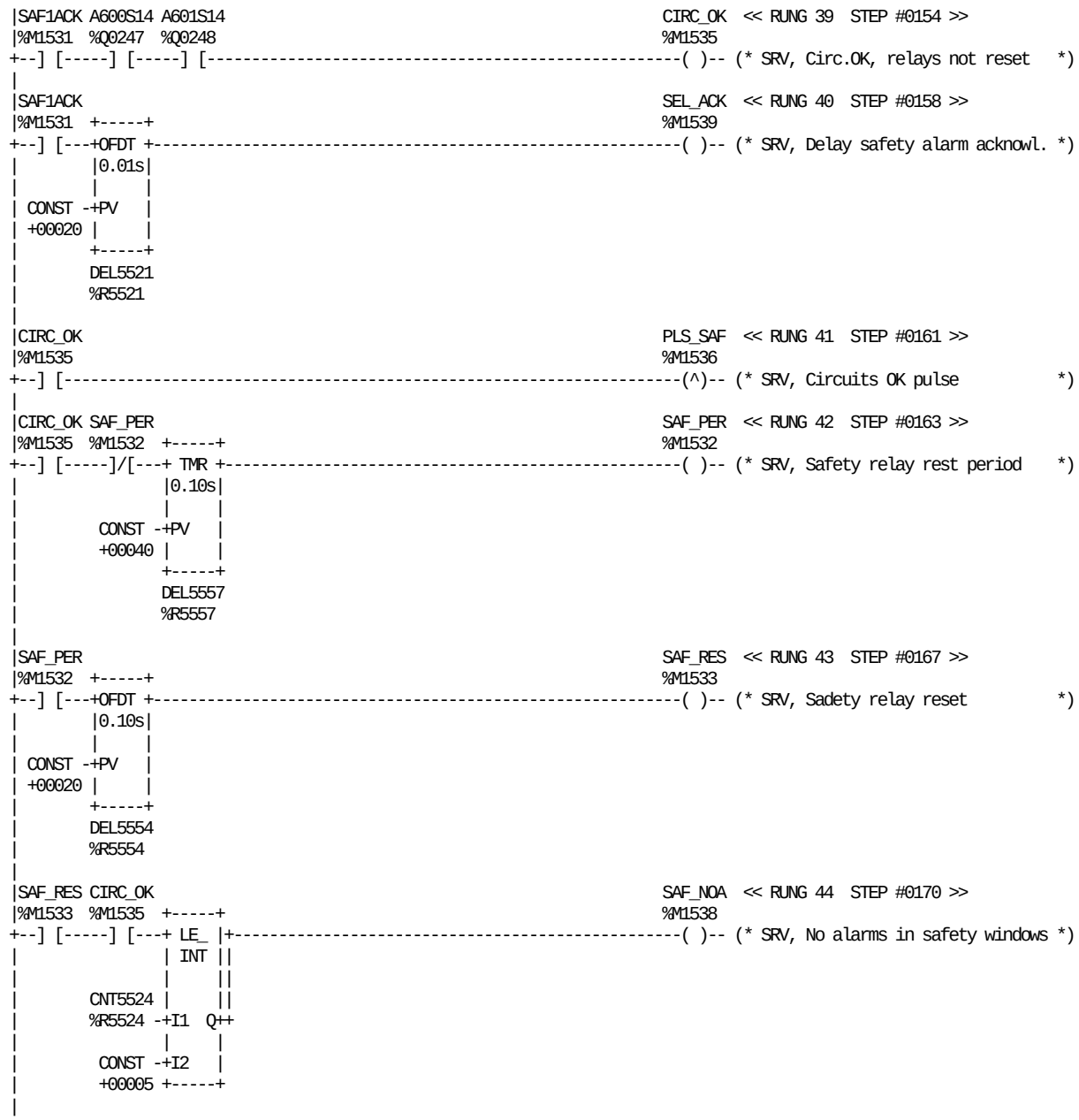

REFERENCE	NICKNAME	REFERENCE DESCRIPTION	REFERENCE	NICKNAME	REFERENCE DESCRIPTION
%Q0247	A600S14	Emergency stop chain OK	%M1536	PLS_SAF	SRV, Circuits OK pulse
%Q0248	A601S14	Doors chain OK	%M1531	SAF1ACK	SRV, Saf. relay A600,601 acknow.
%M1535	CIRC_OK	SRV, Circ.OK, relays not reset	%M1538	SAF_NOA	SRV, No alarms in safety windows
%R5524	CNT5524	Safety relay malfunction counter	%M1532	SAF_PER	SRV, Safety relay rest period
%R5521	DEL5521	Safety alarm acknowledge delay	%M1533	SAF_RES	SRV, Sadety relay reset
%R5554	DEL5554	Safety relay reset delay	%M1539	SEL_ACK	SRV, Delay safety alarm acknowl.
%R5557	DEL5557	Safety realy reset period			

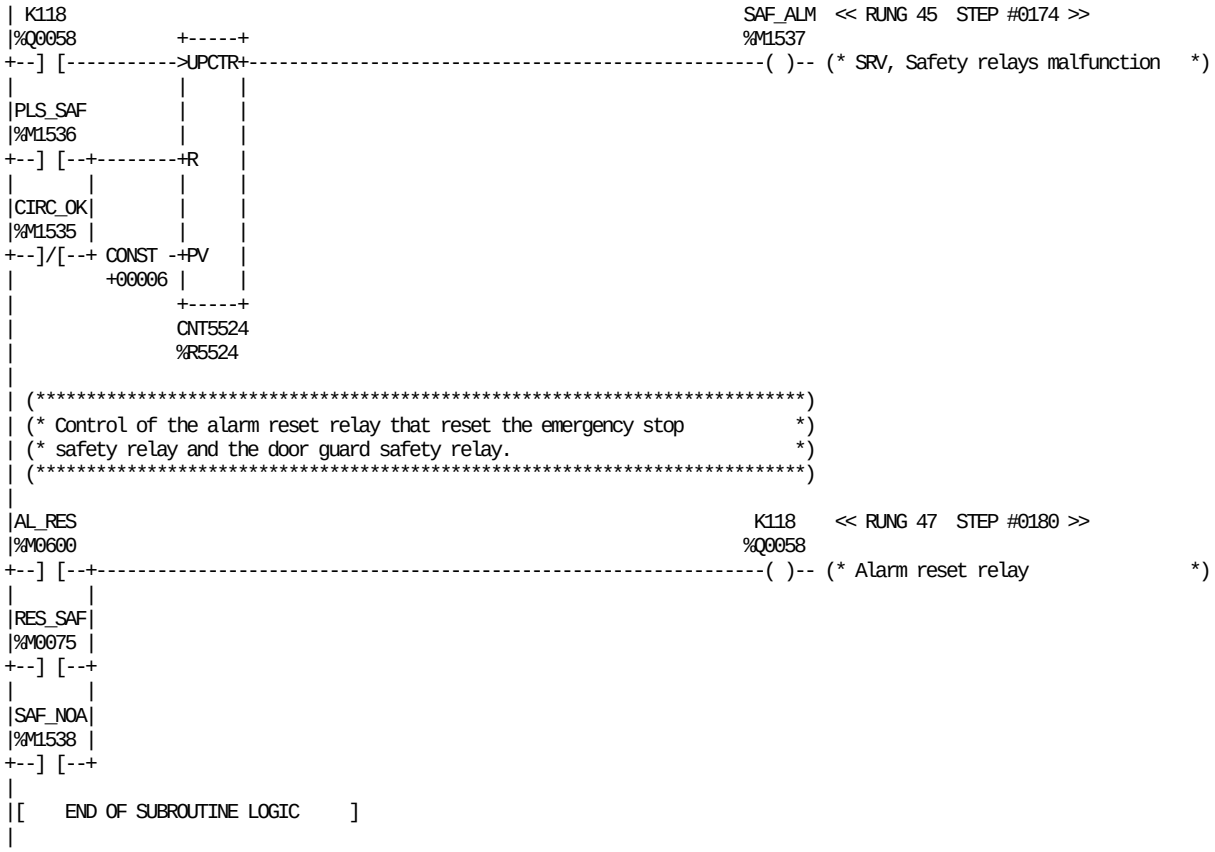

REFERENCE	NICKNAME	REFERENCE DESCRIPTION	REFERENCE	NICKNAME	REFERENCE DESCRIPTION
%M0600	AL_RES	Alarm reset (From TPOP)	%M1536	PLS_SAF	SRV, Circuits OK pulse
%M1535	CIRC_OK	SRV, Circ.OK, relays not reset	%M0075	RES_SAF	Reset safety relay automatic
%R5524	CNT5524	Safety relay malfunction counter	%M1537	SAF_ALM	SRV, Safety relays malfunction
%Q0058	K118	Alarm reset relay	%M1538	SAF_NOA	SRV, No alarms in safety windows

This page left intentionally blank

```
|[  START LD SUBROUTINE  TPOPLAD  ]
|
|[     VARIABLE DECLARATIONS      ]
|
|[   START OF SUBROUTINE LOGIC    ]
|
| (*************************************************************************)
| (* This  subroutine sends  signals  to the TPOP  for the  machine  ladder  *)
| (* position. The PLC must inform when to light up the symbols in the TPOP.  *)
| (* This is valid both for fixed and for flashing indacations in the machine *)
| (* ladder. The TPOP will activate  exactly  as  the  PLC  tells  to it.     *)
| (* Two registers will be read by the TPOP and the information  in these     *)
| (* registers will be executed. The registers are R358 for fixed light and   *)
| (* R359 for flashing. The representation will be on Bit-level(Not binary).  *)
| (* This is important: bit 1 in the registers equals step 1, bit 2 step 2    *)
| (* and so on. Because of that memorycells has to be set as helpbits.        *)
| (* M273-M288 represents flashing ladderindications and M289-M304           *)
| (* represents fixed.                                                       *)
| (*************************************************************************)
|
|STEP_1                                                          FIX1    << RUNG 5  STEP #0003 >>
|%G0001                                                         %M0289
+--] [-------------------------------------------------------------------( )-- (* Ladderposition 1 fixed *)
|
|STEP_1  ST_COND GR_SEL  CIP_SEL HC_SEL                          FLSH2   << RUNG 6  STEP #0005 >>
|%G0001  %M0063  %M0716  %M0712  %M0713                         %M0274
+--] [-----] [-----]/[-----]/[-----]/[-----------------------------------( )-- (* Ladderposition 2 flashing       *)
|
|STEP_2                                                          FIX2    << RUNG 7  STEP #0011 >>
|%G0002                                                         %M0290
+--] [-------------------------------------------------------------------( )-- (* Ladderposition 2 fixed *)
|
|STEP_2  ST_COND                                                 FLSH3   << RUNG 8  STEP #0013 >>
|%G0002  %M0063                                                 %M0275
+--] [-----] [----------+-------------------------------------------------( )-- (* Ladderposition 3 flashing       *)
|                       |
|STEP_3  TUBESGO A506_32|
|%G0003  %M0121  %I0044 |
+--] [-----] [-----]/[--+
|
|STEP_3                                                          FIX3    << RUNG 9  STEP #0020 >>
|%G0003                                                         %M0291
+--] [-------------------------------------------------------------------( )-- (* Ladderposition 3 fixed *)
|
|STEP_3  ST_COND  S003                                           FLSH4   << RUNG 10  STEP #0022 >>
|%G0003  %M0063  %I0095                                         %M0276
+--] [-----] [-----]/[-------------------------------------------------( )-- (* Ladderposition 4 flashing       *)
|
|STEP_4                                                          FIX4    << RUNG 11  STEP #0026 >>
|%G0004                                                         %M0292
+--] [-------------------------------------------------------------------( )-- (* Ladderposition 4 fixed *)
|
|STEP_4  ST_COND                                                 FLSH5   << RUNG 12  STEP #0028 >>
|%G0004  %M0063                                                 %M0277
+--] [-----] [-----------------------------------------------------------( )-- (* Ladderposition 5 flashing *)
|
|STEP_5                                                          FIX5    << RUNG 13  STEP #0031 >>
|%G0005                                                         %M0293
+--] [-------------------------------------------------------------------( )-- (* Ladderposition 5 fixed *)
|
```

REFERENCE	NICKNAME	REFERENCE DESCRIPTION
%I0044	A506_32	DMC Main motor running
%M0712	CIP_SEL	CIP select from TPOP
%M0289	FIX1	Ladderposition 1 fixed
%M0290	FIX2	Ladderposition 2 fixed
%M0291	FIX3	Ladderposition 3 fixed
%M0292	FIX4	Ladderposition 4 fixed
%M0293	FIX5	Ladderposition 5 fixed
%M0274	FLSH2	Ladderposition 2 flashing
%M0275	FLSH3	Ladderposition 3 flashing
%M0276	FLSH4	Ladderposition 4 flashing
%M0277	FLSH5	Ladderposition 5 flashing

REFERENCE	NICKNAME	REFERENCE DESCRIPTION
%M0716	GR_SEL	Greasing selected
%M0713	HC_SEL	Hygienic cleaning selection ok
%I0095	S003	Service switch
%G0001	STEP_1	STANDBY
%G0002	STEP_2	PREPARATION (3 MIN.)
%G0003	STEP_3	TUBE SEALING
%G0004	STEP_4	HEAT STERILIZATION
%G0005	STEP_5	SPRAYING
%M0063	ST_COND	Step up conditions
%M0121	TUBESGO	Tube sealing going on

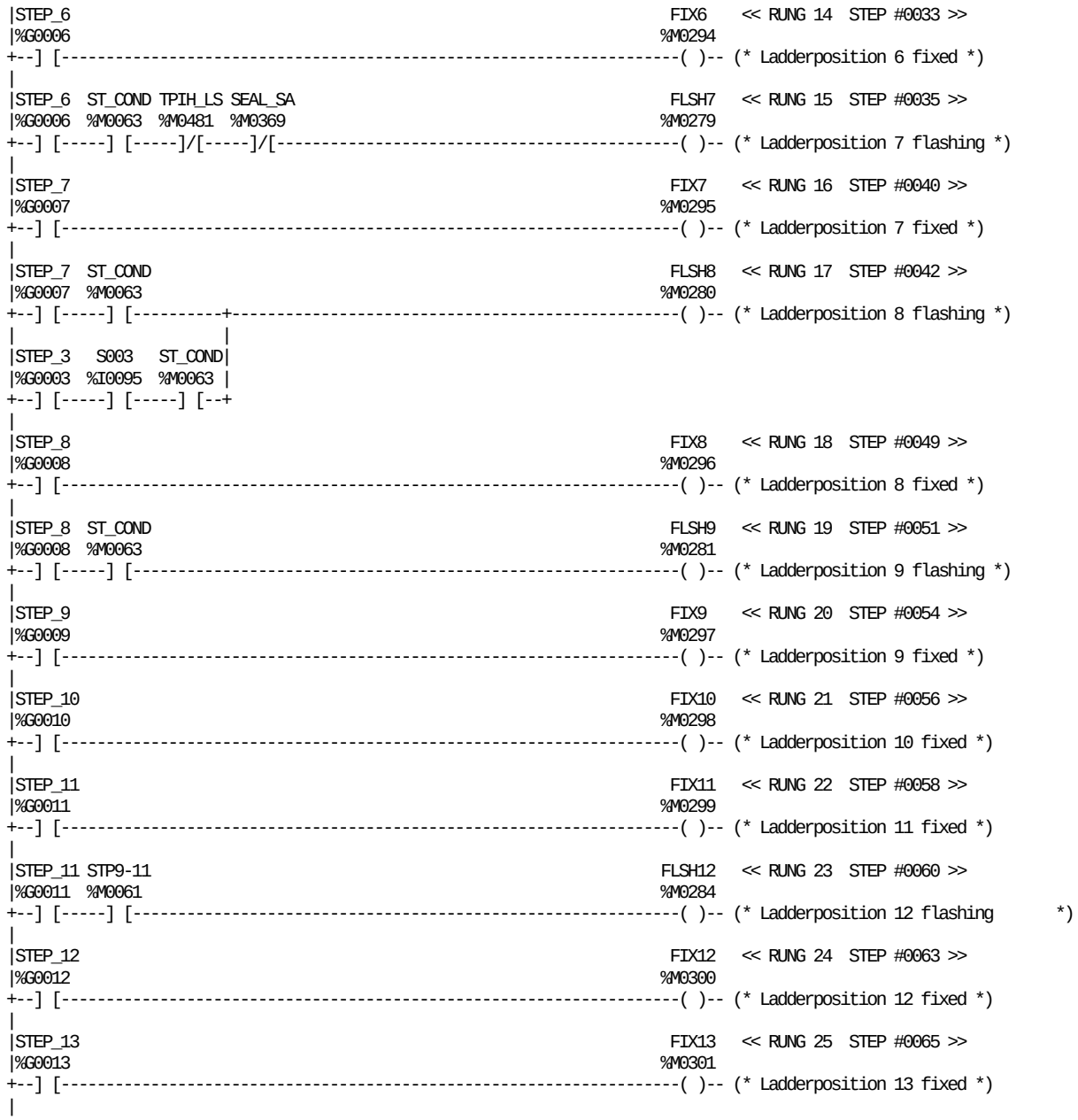

REFERENCE	NICKNAME	REFERENCE DESCRIPTION
%M0298	FIX10	Ladderposition 10 fixed
%M0299	FIX11	Ladderposition 11 fixed
%M0300	FIX12	Ladderposition 12 fixed
%M0301	FIX13	Ladderposition 13 fixed
%M0294	FIX6	Ladderposition 6 fixed
%M0295	FIX7	Ladderposition 7 fixed
%M0296	FIX8	Ladderposition 8 fixed
%M0297	FIX9	Ladderposition 9 fixed
%M0284	FLSH12	Ladderposition 12 flashing
%M0279	FLSH7	Ladderposition 7 flashing
%M0280	FLSH8	Ladderposition 8 flashing
%M0281	FLSH9	Ladderposition 9 flashing
%I0095	S003	Service switch
%M0369	SEAL_SA	Sealing strip applicator
%G0010	STEP_10	PRODUCTION
%G0011	STEP_11	END OF PRODUCTION
%G0012	STEP_12	VENTING
%G0013	STEP_13	OPEN DOORS, CUT TUBE
%G0003	STEP_3	TUBE SEALING
%G0006	STEP_6	DRYING + STEAM CLEANING
%G0007	STEP_7	SIGNAL TO STERILIZER
%G0008	STEP_8	FLAPS + H2O2 TEMPERATURE
%G0009	STEP_9	MOTOR START
%M0061	STP9-11	Step up conditions pos 9-11
%M0063	ST_COND	Step up conditions
%M0481	TPIH_LS	LS TPIH fault

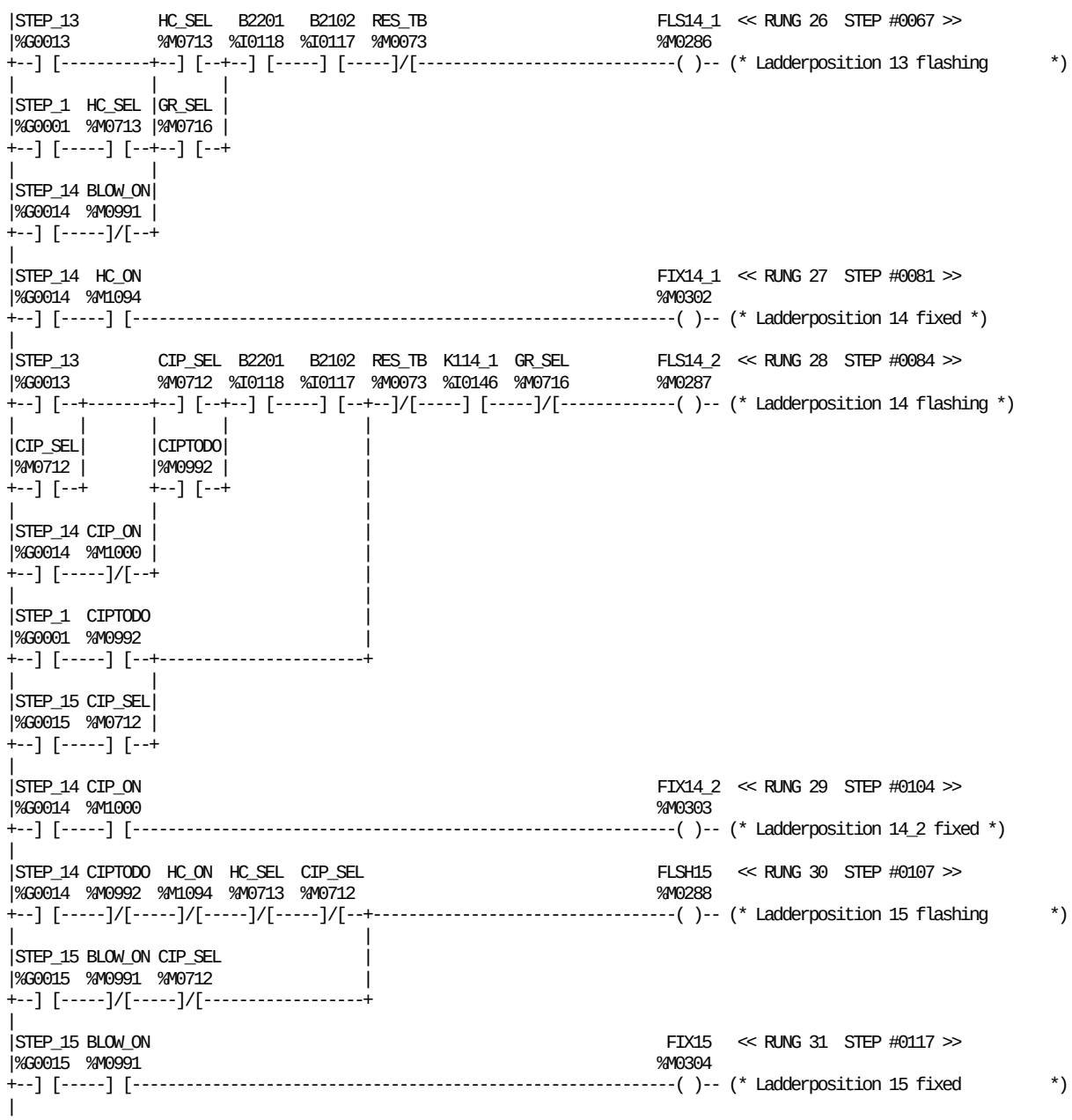

REFERENCE	NICKNAME	REFERENCE DESCRIPTION
%I0117	B2102	Cold water pressure
%I0118	B2201	Main air supply pressure
%M0991	BLOW_ON	CIP blowing going on
%M0992	CIPTODO	CIP must be done
%M1000	CIP_ON	CIP going on
%M0712	CIP_SEL	CIP select from TPOP
%M0302	FIX14_1	Ladderposition 14 fixed
%M0303	FIX14_2	Ladderposition 14_2 fixed
%M0304	FIX15	Ladderposition 15 fixed
%M0286	FLS14_1	Ladderposition 13 flashing
%M0287	FLS14_2	Ladderposition 14 flashing
%M0288	FLSH15	Ladderposition 15 flashing
%M0716	GR_SEL	Greasing selected
%M1094	HC_ON	Hygienic cleaning going on
%M0713	HC_SEL	Hygienic cleaning selection ok
%I0146	K114_1	Front doors closed AC
%M0073	RES_TB	Reset timebar stop cleaning
%G0001	STEP_1	STANDBY
%G0013	STEP_13	OPEN DOORS, CUT TUBE
%G0014	STEP_14	CIP / HC
%G0015	STEP_15	BLOWING

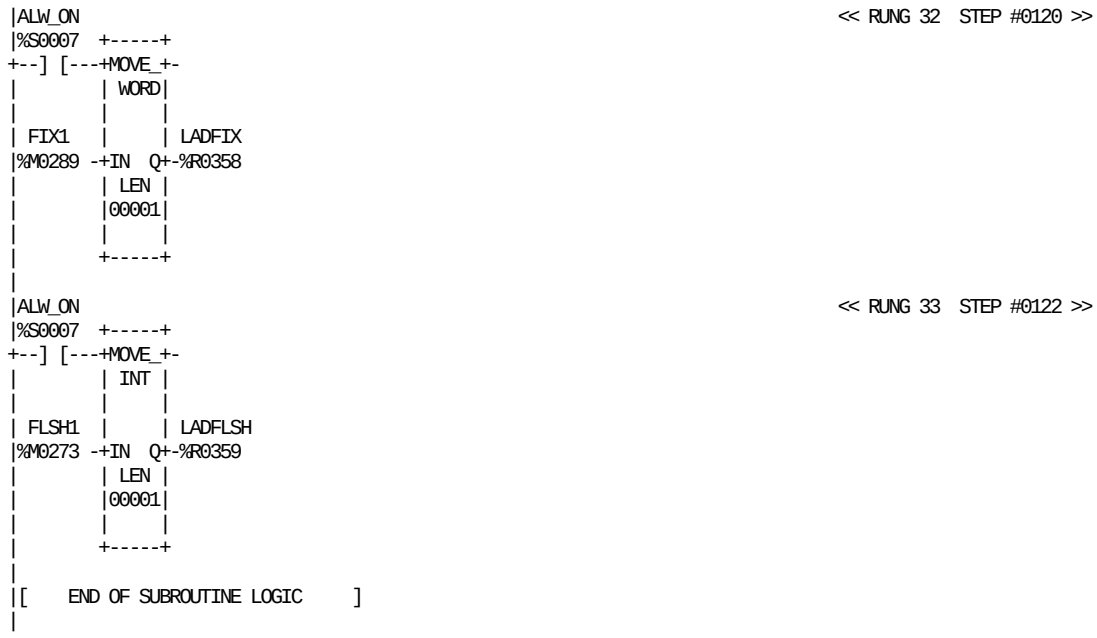

REFERENCE	NICKNAME	REFERENCE DESCRIPTION
%S0007	ALW_ON	
%M0289	FIX1	Ladderposition 1 fixed
%M0273	FLSH1	Ladderposition 1 flashing

REFERENCE	NICKNAME	REFERENCE DESCRIPTION
%R0358	LADFIX	TPOP ladder fixed indication
%R0359	LADFLSH	Ladder flash indication

```
|[  START LD SUBROUTINE   TPOP    ]
|
|[     VARIABLE DECLARATIONS      ]
|
|[   START OF SUBROUTINE LOGIC    ]
|
| (*************************************************************************)
| (* This subroutine take care of the comunication between PLC and TPOP.   *)
| (* The first part controls signals to and from TPOP.                      *)
| (*************************************************************************)
|
|ALW_ON                                                          << RUNG 5  STEP #0003 >>
|%S0007  +-----+
+--] [---+MOVE_+-
|        | WORD|
|        |     |
|ALRESSQ |     | TO-TPOP
|%M0633 -+IN  Q+-%R0368
|        | LEN |
|        |00001|
|        |     |
|        +-----+
|
|ALW_ON                                                          << RUNG 6  STEP #0005 >>
|%S0007  +-----+
+--] [---+MOVE_+-
|        | INT |
|        |     |
|PRE_PH  |     | TOTPOP2
|%M0721 -+IN  Q+-%R0361
|        | LEN |
|        |00001|
|        |     |
|        +-----+
|
|ALW_ON                                                          << RUNG 7  STEP #0007 >>
|%S0007  +-----+
+--] [---+MOVE_+-
|        | WORD|
|        |     |
|FLOATER |     | OPTION
|%I0209 -+IN  Q+-%R0354
|        | LEN |
|        |00001|
|        |     |
|        +-----+
|
| S901   COMERR                                                  RESTPOP  << RUNG 8  STEP #0009 >>
|%I0081  %M0548                                                  %M0635
+--] [-----]/[-----------------------------------------------------------( )-- (* TPOP reset (To TPOP)            *)
|
| S901   COMERR                                                   K121    << RUNG 9  STEP #0012 >>
|%I0081  %M0548          +-----+                                 %Q0060
+--] [--+--] [--+--------+OFDT +-----------------------------------------( )-- (* Restart TPOP *)
|       |       |        |0.10s|
|       |PLMS_WD|        |     |
|       |%M0614 |        |     |
|       +--]/[--+ CONST -+PV   |
|                 +00050 |     |
|                        +-----+
|                        OP_RES
|                        %R0319
|
|DEM3NS                                                          M-STOP   << RUNG 10  STEP #0018 >>
|%M0055                                                          %M0636
+--]/[-----------------------------------------------------------------( )-- (* Machine stop (To TPOP)          *)
```

REFERENCE	NICKNAME	REFERENCE DESCRIPTION	REFERENCE	NICKNAME	REFERENCE DESCRIPTION
%M0633	ALRESSQ	Alarm reset reset (To TPOP)	%R0319	OP_RES	TPOP reset timer
%S0007	ALW_ON		%M0614	PLMS_WD	Watchdog PLMS
%M0548	COMERR	Communication error TPOP	%M0721	PRE_PH	Preparation phase (to PLMS)
%M0055	DEM3NS	Demand 3 normal stop	%M0635	RESTPOP	TPOP reset (To TPOP)
%I0209	FLOATER	Option for level with floater	%I0081	S901	Push button TPOP reset
%Q0060	K121	Restart TPOP	%R0368	TO-TPOP	From GE_fanuc to TPOP
%M0636	M-STOP	Machine stop (To TPOP)	%R0361	TOTPOP2	Signals to TPOP reg 2
%R0354	OPTION	Option KIT (TPOP)			

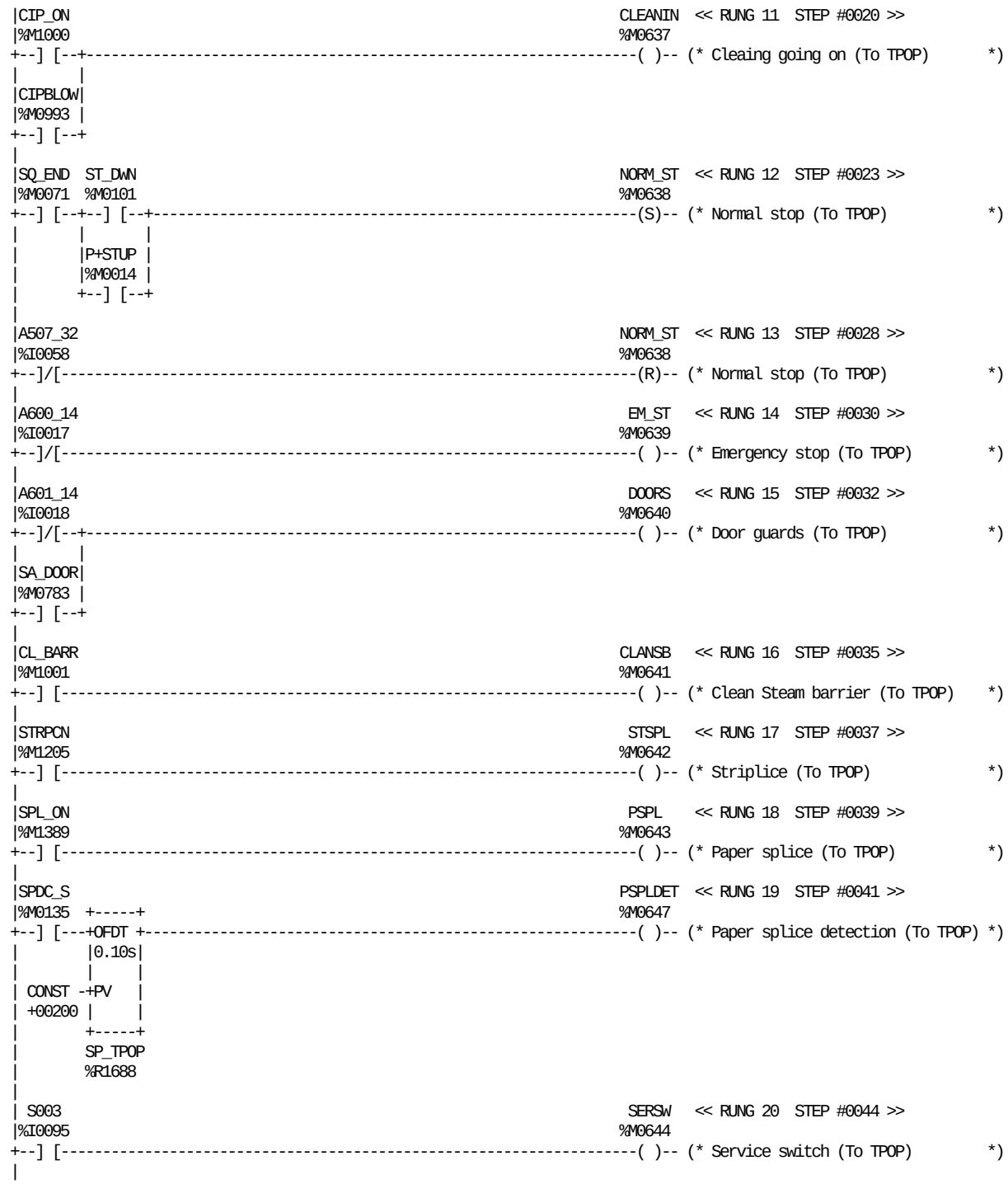

REFERENCE	NICKNAME	REFERENCE DESCRIPTION
%I0058	A507_32	DMC FFU motor running
%I0017	A600_14	Emergency stop
%I0018	A601_14	Safety monitors B
%M0993	CIPBLOW	CIP blowing must be done
%M1000	CIP_ON	CIP going on
%M0641	CLANSB	Clean Steam barrier (To TPOP)
%M0637	CLEANIN	Cleaing going on (To TPOP)
%M1001	CL_BARR	Cleaning barrier space
%M0640	DOORS	Door guards (To TPOP)
%M0639	EM_ST	Emergency stop (To TPOP)
%M0638	NORM_ST	Normal stop (To TPOP)
%M0014	P+STUP	Step up positive pulse

REFERENCE	NICKNAME	REFERENCE DESCRIPTION
%M0643	PSPL	Paper splice (To TPOP)
%M0647	PSPLDET	Paper splice detection (To TPOP)
%I0095	S003	Service switch
%M0783	SA_DOOR	SA internal door open
%M0644	SERSW	Service switch (To TPOP)
%M0135	SPDC_S	Splice detection in columm set
%M1389	SPL_ON	ASU, splice sequence going on
%R1688	SP_TPOP	Splice detection timer for TPOP
%M0071	SQ_END	Start sequence ended
%M1205	STRPCN	Start strip splice
%M0642	STSPL	Striplice (To TPOP)
%M0101	ST_DWN	Pushbuttons step down

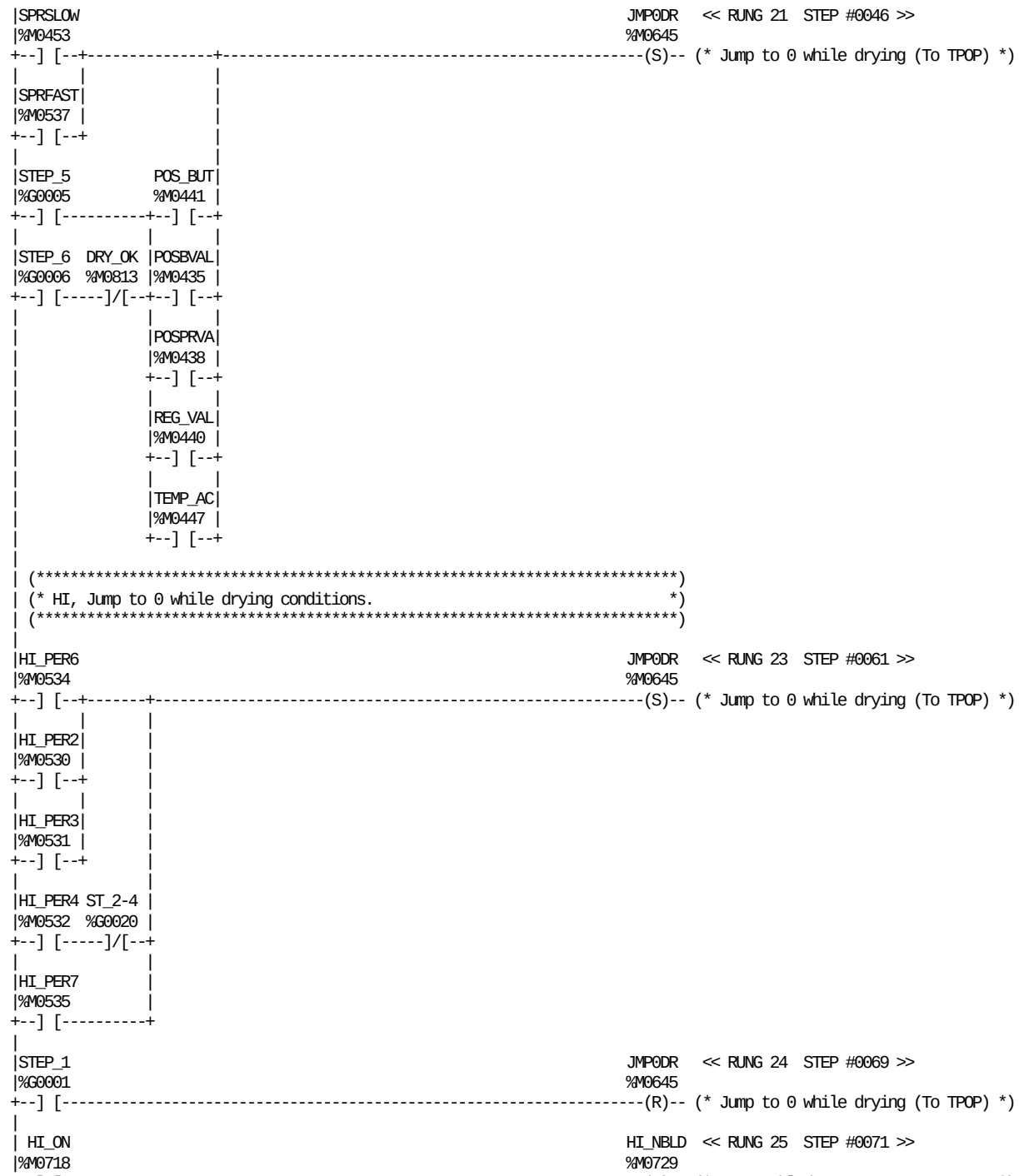

REFERENCE	NICKNAME	REFERENCE DESCRIPTION	REFERENCE	NICKNAME	REFERENCE DESCRIPTION
%M0813	DRY_OK	Drying ready	%M0438	POSPRVA	Prehaeting valve in wrong pos
%M0729	HI_NBLD	HI, Enabled to PLMS	%M0441	POS_BUT	Butterfly valve wrong position
%M0718	HI_ON	HI, system setting with HI	%M0440	REG_VAL	Regulating valve
%M0530	HI_PER2	HI, Spray tank slow emptying	%M0537	SPRFAST	Spary fast --> go to Venting
%M0531	HI_PER3	HI, Low temperature during spray	%M0453	SPRSLOW	Spray slow --> go to Venting
%M0532	HI_PER4	HI, Heater steril air temp.	%G0001	STEP_1	STANDBY
%M0534	HI_PER6	HI, Spray tank fast emptying	%G0005	STEP_5	SPRAYING
%M0535	HI_PER7	HI, Heater element temperature	%G0006	STEP_6	DRYING + STEAM CLEANING
%M0645	JMP0DR	Jump to 0 while drying (To TPOP)	%G0020	ST_2-4	Ladder position 2-4
%M0435	POSBVAL	B-valve in wrong position	%M0447	TEMP_AC	AC temperature too high

```
|CIP_ON  CL_BARR                                                    FIN_CIP  << RUNG 26  STEP #0073 >>
|%M1000  %M1001                                                    %M0725
+--] [-----] [-------------------------------------------------------( )-- (* CIP Final cleaning (To PLMS)     *)
|
|CIP_ON  CL_BARR                                                    INT_CIP  << RUNG 27  STEP #0076 >>
|%M1000  %M1001                                                    %M0726
+--] [-----]/[------------------------------------------------------( )-- (* CIP Intermediate (To PLMS)       *)
|
|STEP_2  ATT_ON  PRO_PH                                             PRE_PH   << RUNG 28  STEP #0079 >>
|%G0002  %M0612  %M0722                                             %M0721
+--] [--+--] [-----]/[---------------------------------------------( )-- (* Preparation phase (to PLMS)      *)
|       |
|ST_3-10|
|%G0023 |
+--] [--+
|
|PRE_PH  SQGOING  S911                                              PRO_PH   << RUNG 29  STEP #0084 >>
|%M0721  %M0072  %I0088                                             %M0722
+--] [-----] [-----] [-----------------------------------------------(S)-- (* Production phase (to PLMS)       *)
|
|ATT_ON                                                             PRO_PH   << RUNG 30  STEP #0088 >>
|%M0612                                                             %M0722
+--]/[-----------------------------------------------------------------(R)-- (* Production phase (to PLMS)       *)
|
|PRO_PH  STEP_1                                                     PRO_END  << RUNG 31  STEP #0090 >>
|%M0722  %G0001                                                     %M0723
+--] [-----] [-------------------------------------------------------( )-- (* Production end zero (to PLMS)    *)
|
|PRO_PH  STEP_12                                                    PRO_VET  << RUNG 32  STEP #0093 >>
|%M0722  %G0012                                                     %M0727
+--] [-----] [-------------------------------------------------------( )-- (* Production end venting TO PLMS   *)
|
|FIRSTST ST_COND P-SQCON                                            SQ_INT1  << RUNG 33  STEP #0096 >>
|%M0139  %M0063  %M0031                                             %M0724
+--] [-----] [-----] [-----------------------------------------------(S)-- (* First st_seq interupted (to PLMS *)
|
|STEP_8                                                             SQ_INT1  << RUNG 34  STEP #0100 >>
|%G0008                                                             %M0724
+--]/[-----------------------------------------------------------------(R)-- (* First st_seq interupted (to PLMS *)
|
|ST_3-10  S003   PRE_PH  PRO_PH                                     ST_ATT   << RUNG 35  STEP #0102 >>
|%G0023  %I0095  %M0721  %M0722                                     %M0728
+--] [-----]/[-----]/[-----]/[-----------------------------------------( )-- (* Start Attendence (to plms)       *)
|
```

REFERENCE	NICKNAME	REFERENCE DESCRIPTION
%M0612	ATT_ON	Attendence on (PLMS)
%M1000	CIP_ON	CIP going on
%M1001	CL_BARR	Cleaning barrier space
%M0725	FIN_CIP	CIP Final cleaning (To PLMS)
%M0139	FIRSTST	First start after sterilization
%M0726	INT_CIP	CIP Intermediate (To PLMS)
%M0031	P-SQCON	Sequence condition neg pulse
%M0721	PRE_PH	Preparation phase (to PLMS)
%M0723	PRO_END	Production end zero (to PLMS)
%M0722	PRO_PH	Production phase (to PLMS)
%M0727	PRO_VET	Production end venting TO PLMS

REFERENCE	NICKNAME	REFERENCE DESCRIPTION
%I0095	S003	Service switch
%I0088	S911	Push button step up
%M0072	SQGOING	Start sequence going on
%M0724	SQ_INT1	First st_seq interupted (to PLMS
%G0001	STEP_1	STANDBY
%G0012	STEP_12	VENTING
%G0002	STEP_2	PREPARATION (3 MIN.)
%G0008	STEP_8	FLAPS + H2O2 TEMPERATURE
%G0023	ST_3-10	Ladder position 3-10
%M0728	ST_ATT	Start Attendence (to plms)
%M0063	ST_COND	Step up conditions

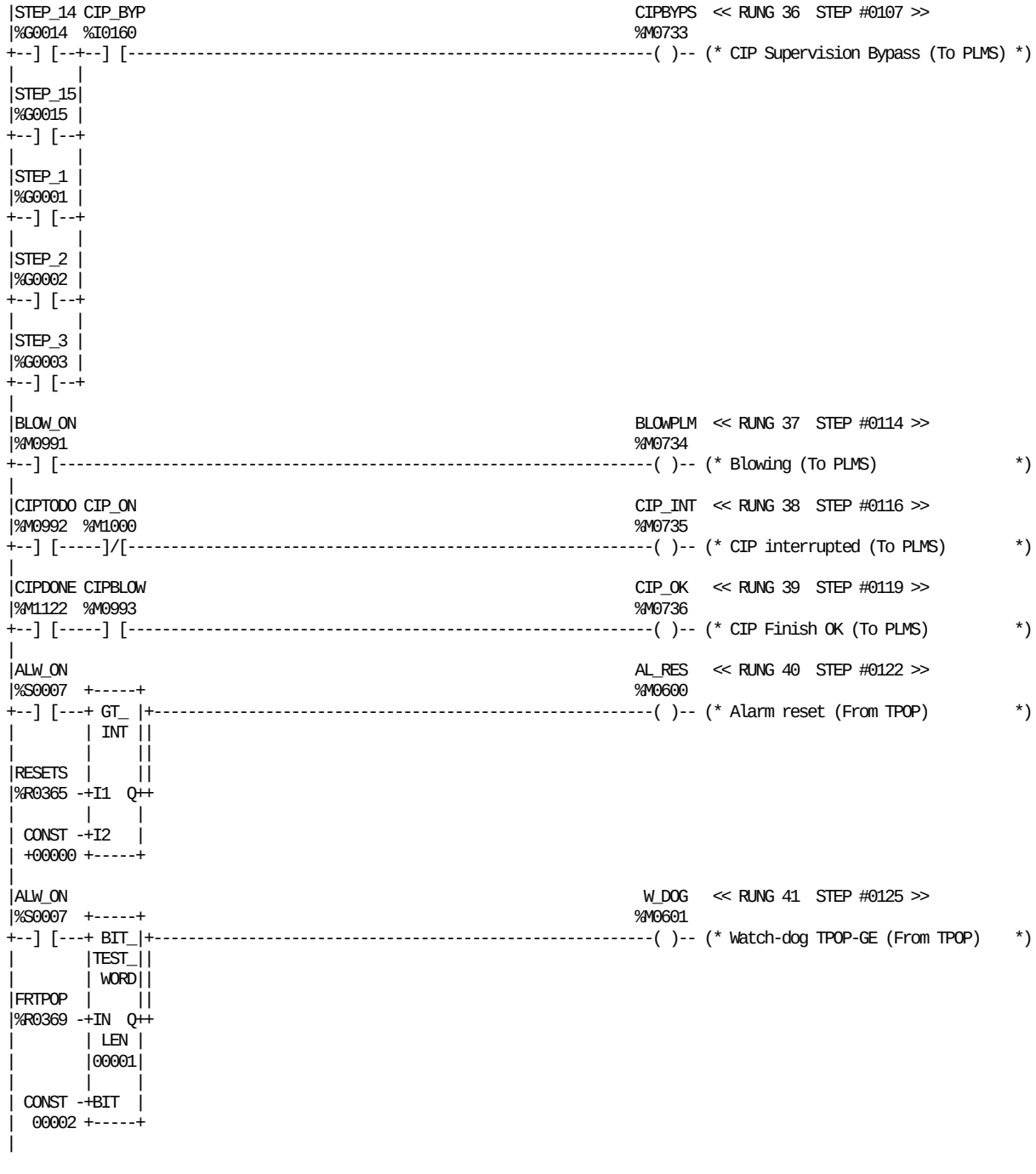

REFERENCE	NICKNAME	REFERENCE DESCRIPTION	REFERENCE	NICKNAME	REFERENCE DESCRIPTION
%S0007	ALW_ON		%M0736	CIP_OK	CIP Finish OK (To PLMS)
%M0600	AL_RES	Alarm reset (From TPOP)	%M1000	CIP_ON	CIP going on
%M0734	BLOWPLM	Blowing (To PLMS)	%R0369	FRTPOP	Signals from TPOP
%M0991	BLOW_ON	CIP blowing going on	%R0365	RESETS	Alarm resets from TPOP
%M0993	CIPBLOW	CIP blowing must be done	%G0001	STEP_1	STANDBY
%M0733	CIPBYPS	CIP Supervision Bypass (To PLMS)	%G0014	STEP_14	CIP / HC
%M1122	CIPDONE	CIP, Enable step up condition	%G0015	STEP_15	BLOWING
%M0992	CIPTODO	CIP must be done	%G0002	STEP_2	PREPARATION (3 MIN.)
%I0160	CIP_BYP	CIP done condition, By-pass	%G0003	STEP_3	TUBE SEALING
%M0735	CIP_INT	CIP interrupted (To PLMS)	%M0601	W_DOG	Watch-dog TPOP-GE (From TPOP)

TBA/22-050V
BLOCK 4 TPOP SIGNALS

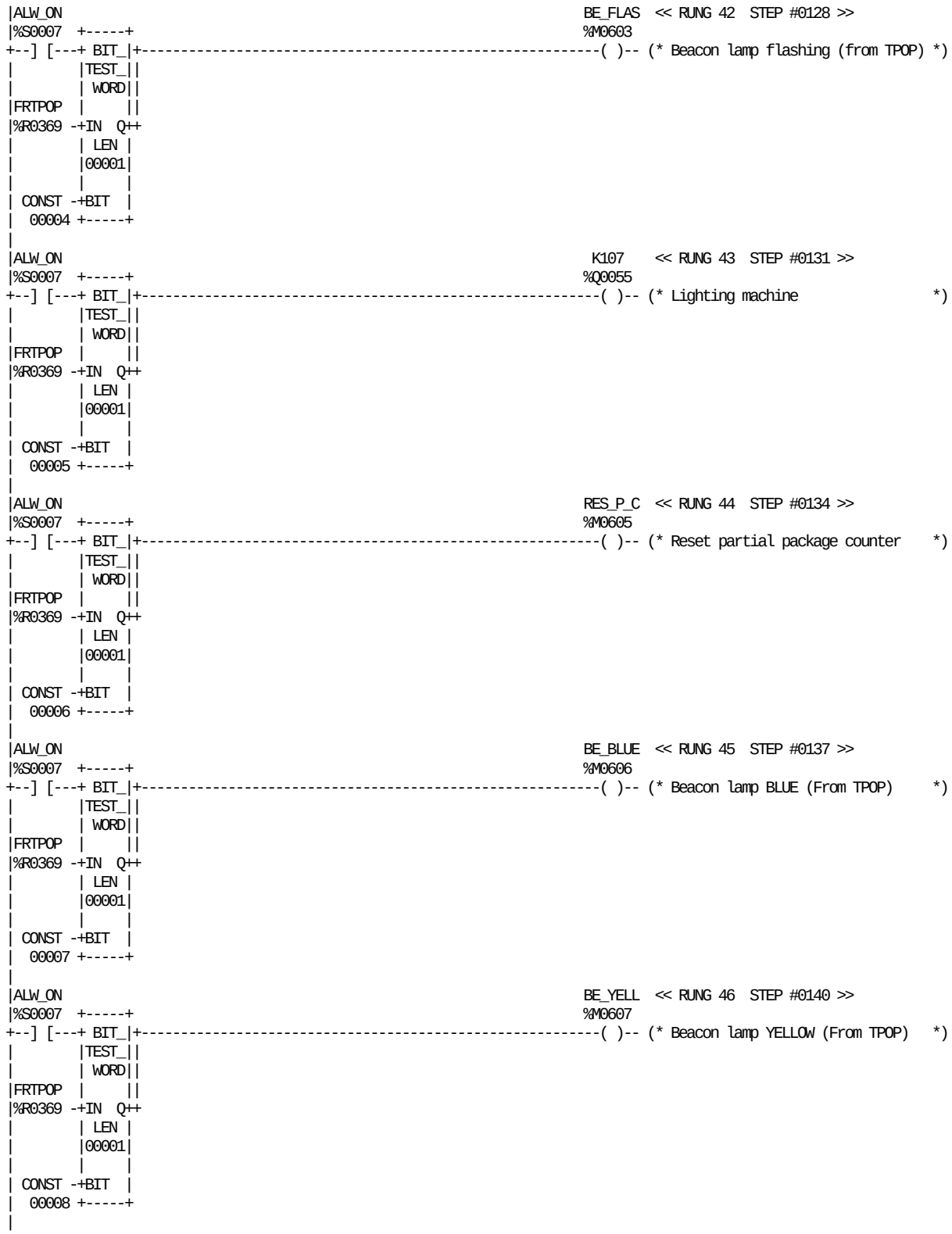

REFERENCE	NICKNAME	REFERENCE DESCRIPTION	REFERENCE	NICKNAME	REFERENCE DESCRIPTION
%S0007	ALW_ON		%R0369	FRTPOP	Signals from TPOP
%M0606	BE_BLUE	Beacon lamp BLUE (From TPOP)	%Q0055	K107	Lighting machine
%M0603	BE_FLAS	Beacon lamp flashing (from TPOP)	%M0605	RES_P_C	Reset partial package counter
%M0607	BE_YELL	Beacon lamp YELLOW (From TPOP)			

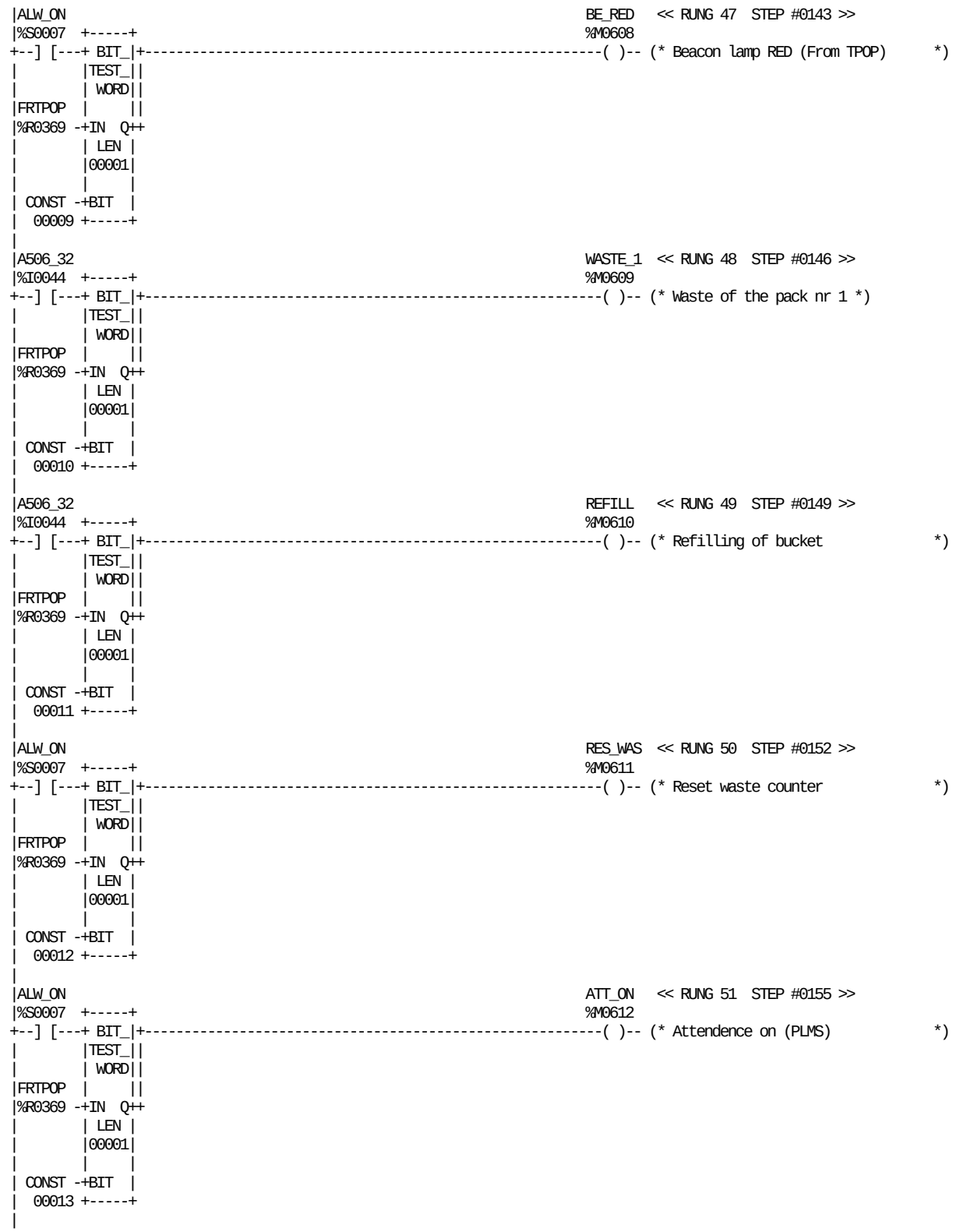

REFERENCE	NICKNAME	REFERENCE DESCRIPTION	REFERENCE	NICKNAME	REFERENCE DESCRIPTION
%I0044	A506_32	DMC Main motor running	%R0369	FRTPOP	Signals from TPOP
%S0007	ALW_ON		%M0610	REFILL	Refilling of bucket
%M0612	ATT_ON	Attendence on (PLMS)	%M0611	RES_WAS	Reset waste counter
%M0608	BE_RED	Beacon lamp RED (From TPOP)	%M0609	WASTE_1	Waste of the pack nr 1

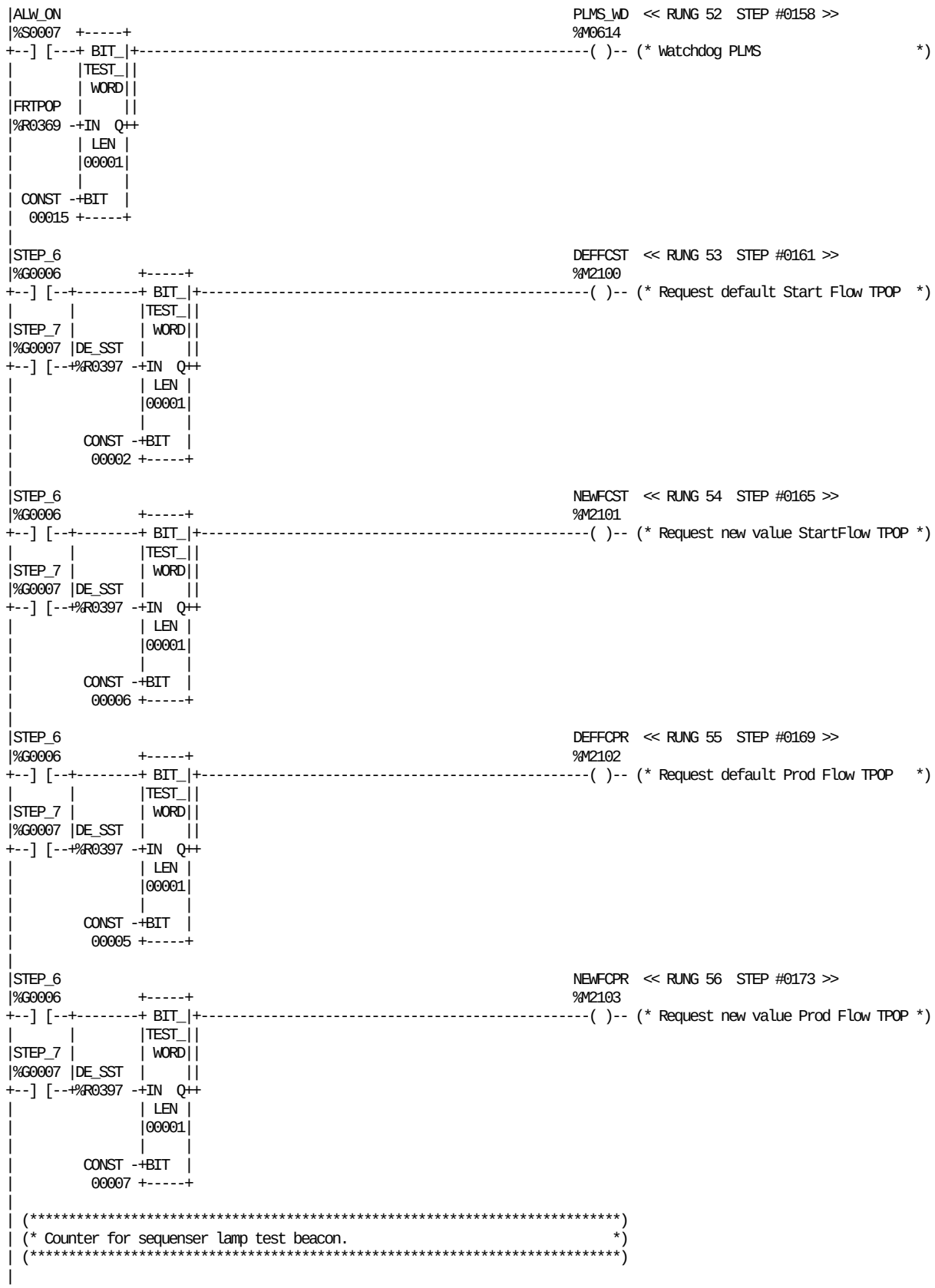

REFERENCE	NICKNAME	REFERENCE DESCRIPTION	REFERENCE	NICKNAME	REFERENCE DESCRIPTION
%S0007	ALW_ON		%M2103	NEWFCPR	Request new value Prod Flow TPOP
%M2102	DEFFCPR	Request default Prod Flow TPOP	%M2101	NEWFCST	Request new value StartFlow TPOP
%M2100	DEFFCST	Request default Start Flow TPOP	%M0614	PLMS_WD	Watchdog PLMS
%R0397	DE_SST	Deafults super structure func.	%G0006	STEP_6	DRYING + STEAM CLEANING
%R0369	FRTPOP	Signals from TPOP	%G0007	STEP_7	SIGNAL TO STERILIZER

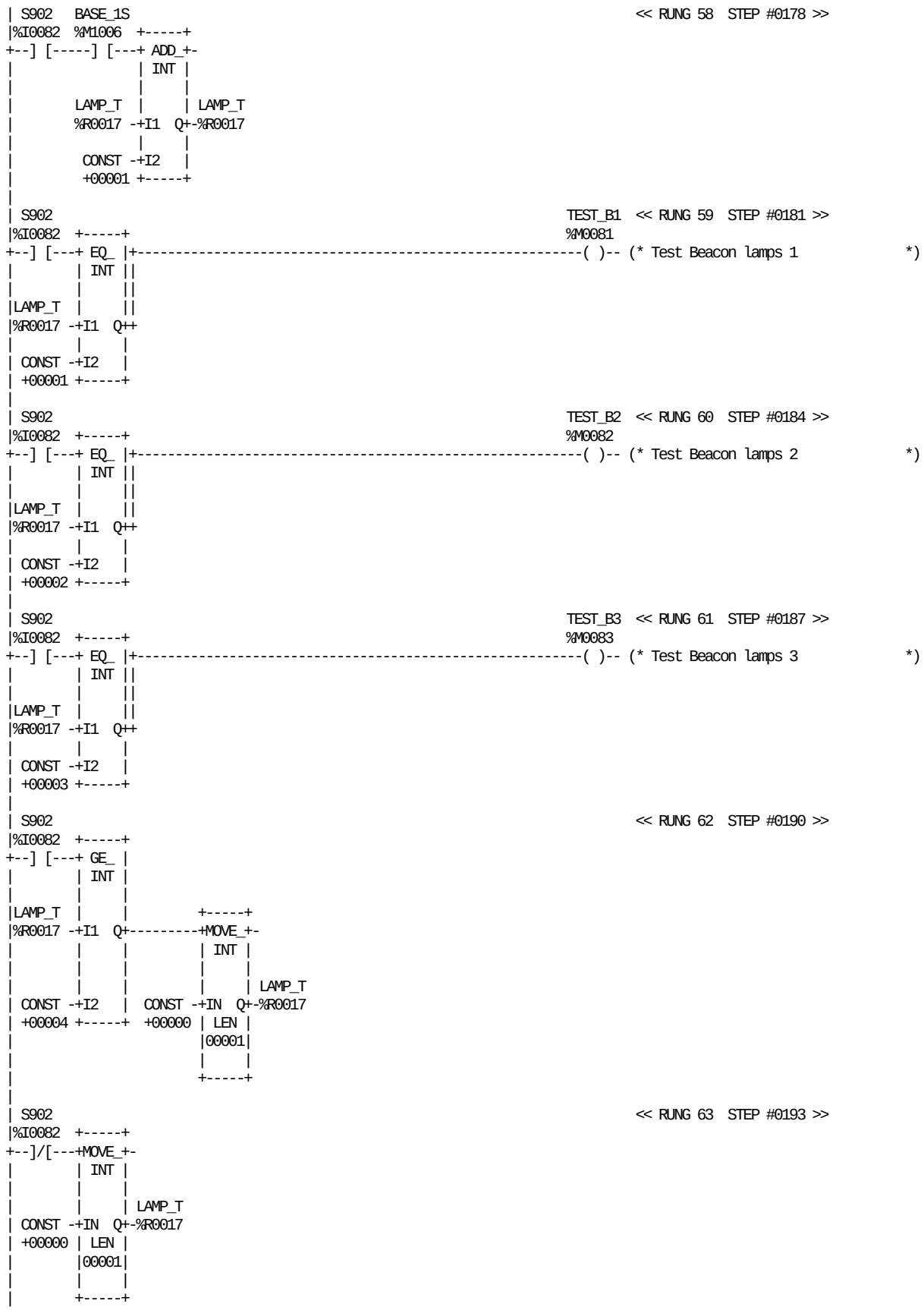

REFERENCE	NICKNAME	REFERENCE DESCRIPTION	REFERENCE	NICKNAME	REFERENCE DESCRIPTION
%M1006	BASE_1S	Base 1 sec. positive pulse	%M0081	TEST_B1	Test Beacon lamps 1
%R0017	LAMP_T	Lamp test Baecon counter	%M0082	TEST_B2	Test Beacon lamps 2
%I0082	S902	Push button lamp test	%M0083	TEST_B3	Test Beacon lamps 3

```
| (*************************************************************************)
| (* The following rung controls the alarm beacom lamps.                   *)
| (*************************************************************************)
|
|BE_BLUE BE_FLAS  T_SEC   S902                                    H2802_1  << RUNG 65  STEP #0196 >>
|%M0606  %M0603  %S0005  %I0082                                   %Q0077
+--] [--+--] [-----] [--+--]/[--+-----------------------------------( )-- (* Alarm beacom (Blue)             *)
|       |              |       |
|       |BE_FLAS       |       |
|       |%M0603        |       |
|       +--]/[---------+       |
|                              |
|TEST_B1                       |
|%M0081                        |
+--] [-------------------------+
|
|BE_YELL BE_FLAS  T_SEC   S902                                    H2802_2  << RUNG 66  STEP #0204 >>
|%M0607  %M0603  %S0005  %I0082                                   %Q0078
+--] [--+--] [-----] [--+--]/[--+-----------------------------------( )-- (* Alarm beacom (Yellow)           *)
|       |              |       |
|       |BE_FLAS       |       |
|       |%M0603        |       |
|       +--]/[---------+       |
|                              |
|TEST_B2                       |
|%M0082                        |
+--] [-------------------------+
|
|BE_RED  BE_FLAS  T_SEC   S902                                    H2802_3  << RUNG 67  STEP #0212 >>
|%M0608  %M0603  %S0005  %I0082                                   %Q0079
+--] [--+--] [-----] [--+--]/[--+-----------------------------------( )-- (* Alarm beacom (Red)              *)
|       |              |       |
|       |BE_FLAS       |       |
|       |%M0603        |       |
|       +--]/[---------+       |
|                              |
|TEST_B3                       |
|%M0083                        |
+--] [-------------------------+
|
| (*************************************************************************)
| (* Supervision of the TPOP communication.                               *)
| (*                                                                       *)
| (*************************************************************************)
|
| W_DOG                                                            WDOG2   << RUNG 69  STEP #0221 >>
|%M0601  +-----+                                                   %M0634
+--]/[---+ TMR +-----------------------------------------------------(S)-- (* Watch dog (To TPOP)           *)
|        |0.10s|
|        |     |
| CONST -+PV   |
| +00010 |     |
|        +-----+
|        W_DOGON
|        %R0313
|
```

REFERENCE	NICKNAME	REFERENCE DESCRIPTION	REFERENCE	NICKNAME	REFERENCE DESCRIPTION
%M0606	BE_BLUE	Beacon lamp BLUE (From TPOP)	%M0081	TEST_B1	Test Beacon lamps 1
%M0603	BE_FLAS	Beacon lamp flashing (from TPOP)	%M0082	TEST_B2	Test Beacon lamps 2
%M0608	BE_RED	Beacon lamp RED (From TPOP)	%M0083	TEST_B3	Test Beacon lamps 3
%M0607	BE_YELL	Beacon lamp YELLOW (From TPOP)	%S0005	T_SEC	
%Q0077	H2802_1	Alarm beacom (Blue)	%M0634	WDOG2	Watch dog (To TPOP)
%Q0078	H2802_2	Alarm beacom (Yellow)	%M0601	W_DOG	Watch-dog TPOP-GE (From TPOP)
%Q0079	H2802_3	Alarm beacom (Red)	%R0313	W_DOGON	Watchdog timer on
%I0082	S902	Push button lamp test			

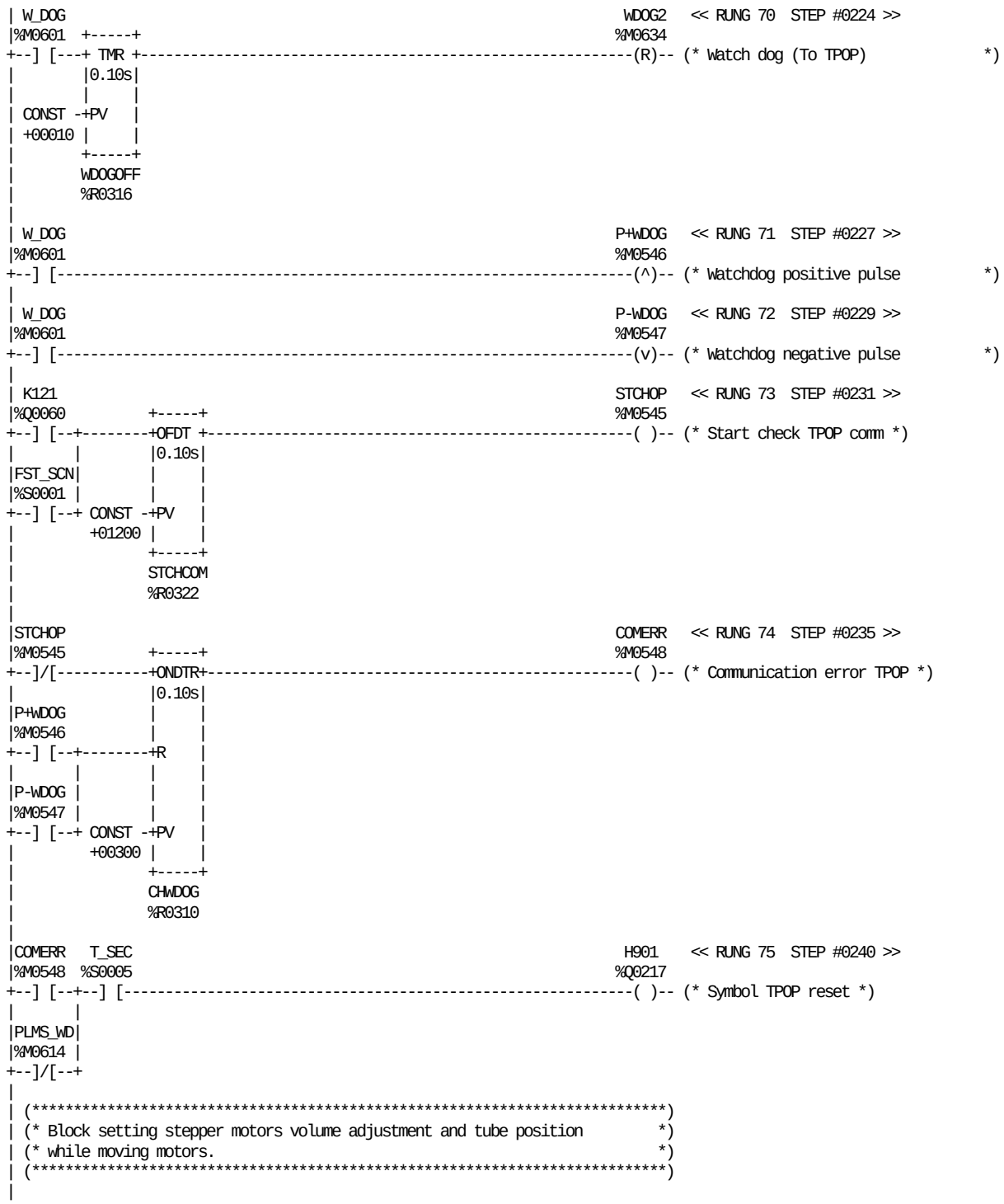

REFERENCE	NICKNAME	REFERENCE DESCRIPTION	REFERENCE	NICKNAME	REFERENCE DESCRIPTION
%R0310	CHWDOG	Control watchdog timer	%M0614	PLMS_WD	Watchdog PLMS
%M0548	COMERR	Communication error TPOP	%R0322	STCHCOM	Dealy start comm check TPOP-GE
%S0001	FST_SCN		%M0545	STCHOP	Start check TPOP comm
%Q0217	H901	Symbol TPOP reset	%S0005	T_SEC	
%Q0060	K121	Restart TPOP	%M0634	WDOG2	Watch dog (To TPOP)
%M0546	P+WDOG	Watchdog positive pulse	%R0316	WDOGOFF	watch dog timer off
%M0547	P-WDOG	Watchdog negative pulse	%M0601	W_DOG	Watch-dog TPOP-GE (From TPOP)

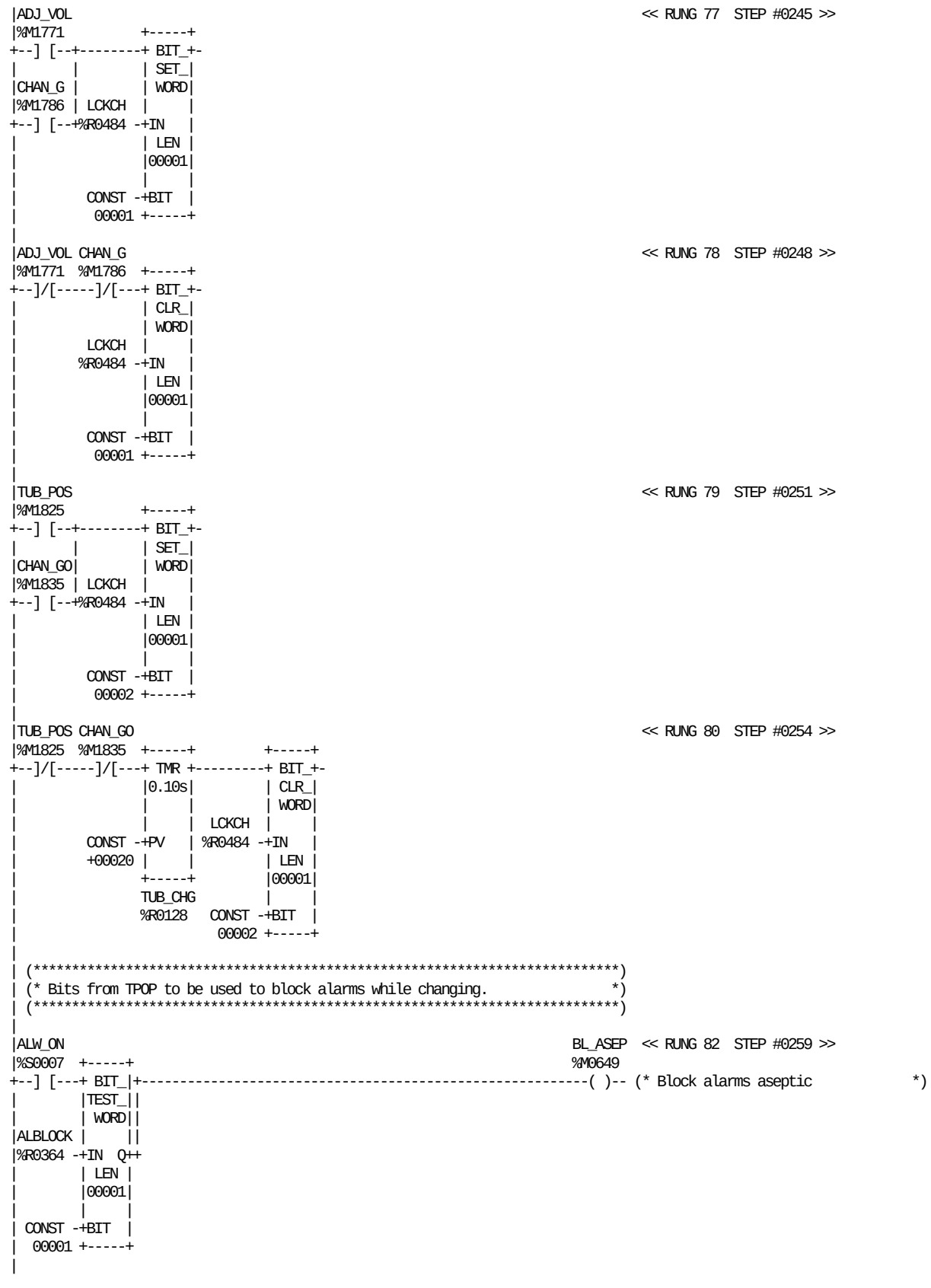

REFERENCE	NICKNAME	REFERENCE DESCRIPTION	REFERENCE	NICKNAME	REFERENCE DESCRIPTION
%M1771	ADJ_VOL	Volume adjustment going on	%M1835	CHAN_GO	Change set position going on
%R0364	ALBLOCK	Alarm block from TPOP	%R0484	LCKCH	Lock change tube pos and vol cam
%S0007	ALW_ON		%R0128	TUB_CHG	Reset bit arrowblock tubepos
%M0649	BL_ASEP	Block alarms aseptic	%M1825	TUB_POS	Tube positioning going on
%M1786	CHAN_G	Change set pos volume going on			

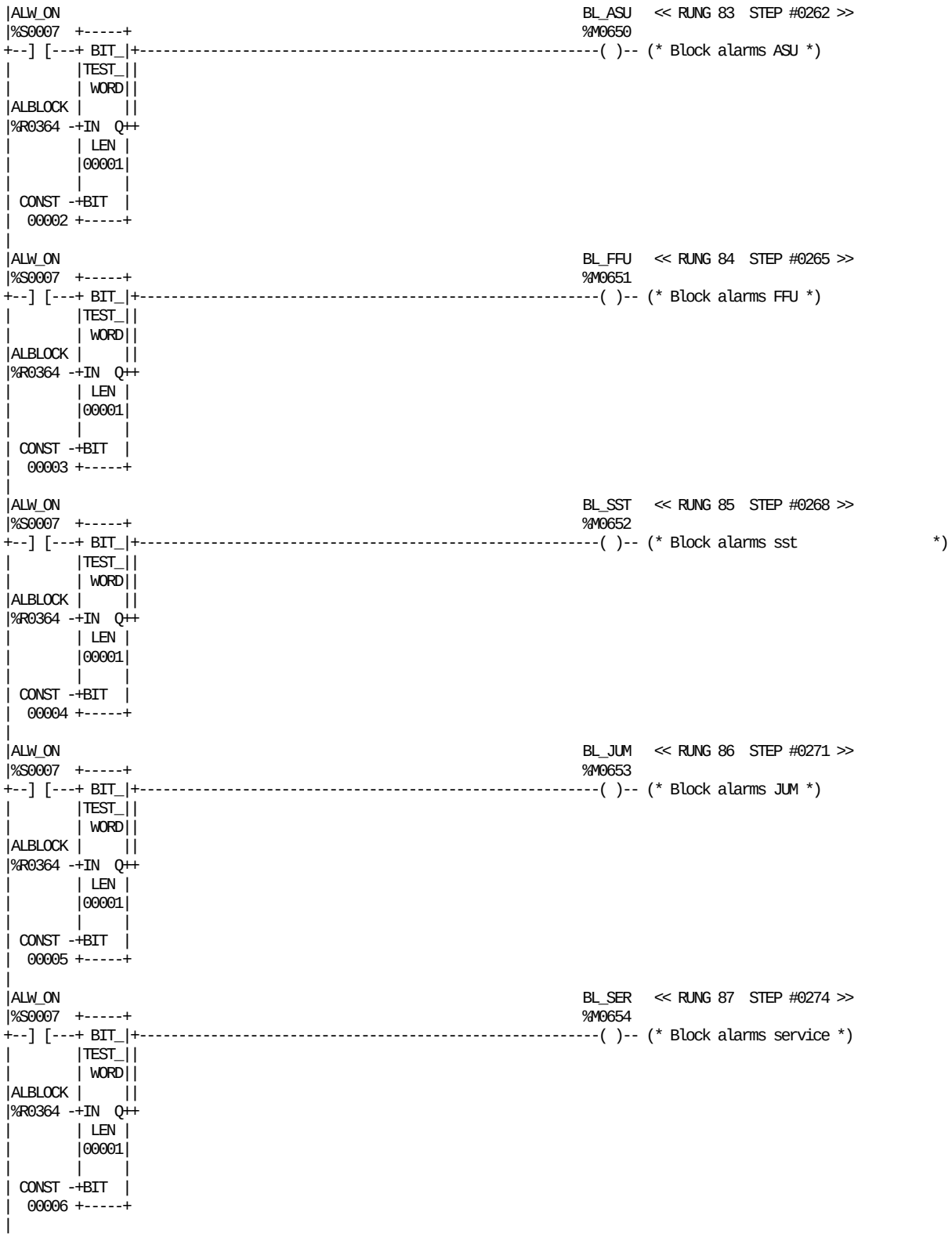

REFERENCE	NICKNAME	REFERENCE DESCRIPTION	REFERENCE	NICKNAME	REFERENCE DESCRIPTION
%R0364	ALBLOCK	Alarm block from TPOP	%M0653	BL_JUM	Block alarms JUM
%S0007	ALW_ON		%M0654	BL_SER	Block alarms service
%M0650	BL_ASU	Block alarms ASU	%M0652	BL_SST	Block alarms sst
%M0651	BL_FFU	Block alarms FFU			

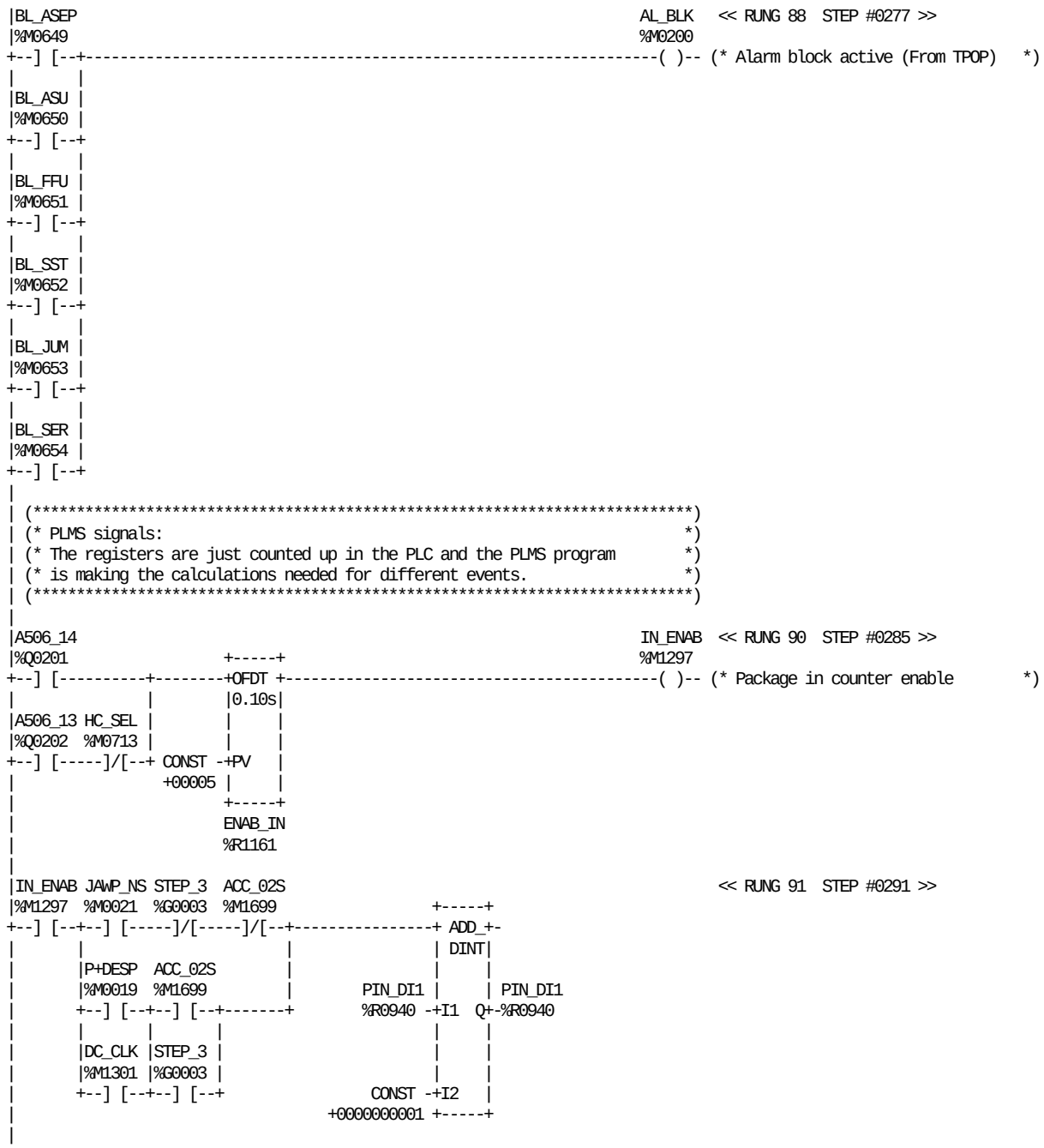

REFERENCE	NICKNAME	REFERENCE DESCRIPTION	REFERENCE	NICKNAME	REFERENCE DESCRIPTION
%Q0202	A506_13	DMC Main Motor Low speed	%M0652	BL_SST	Block alarms sst
%Q0201	A506_14	DMC Main Motor High speed	%M1301	DC_CLK	Bar code DCS clock
%M1699	ACC_02S	2 sec. acceleration main motor	%R1161	ENAB_IN	TMR enabling package in counter
%M0200	AL_BLK	Alarm block active (From TPOP)	%M0713	HC_SEL	Hygienic cleaning selection ok
%M0649	BL_ASEP	Block alarms aseptic	%M1297	IN_ENAB	Package in counter enable
%M0650	BL_ASU	Block alarms ASU	%M0021	JAWP_NS	Jawpulse Normal scan
%M0651	BL_FFU	Block alarms FFU	%M0019	P+DESP	Barcode signal positive pulse
%M0653	BL_JUM	Block alarms JUM	%R0940	PIN_DI1	Package in counter Dint 1
%M0654	BL_SER	Block alarms service	%G0003	STEP_3	TUBE SEALING

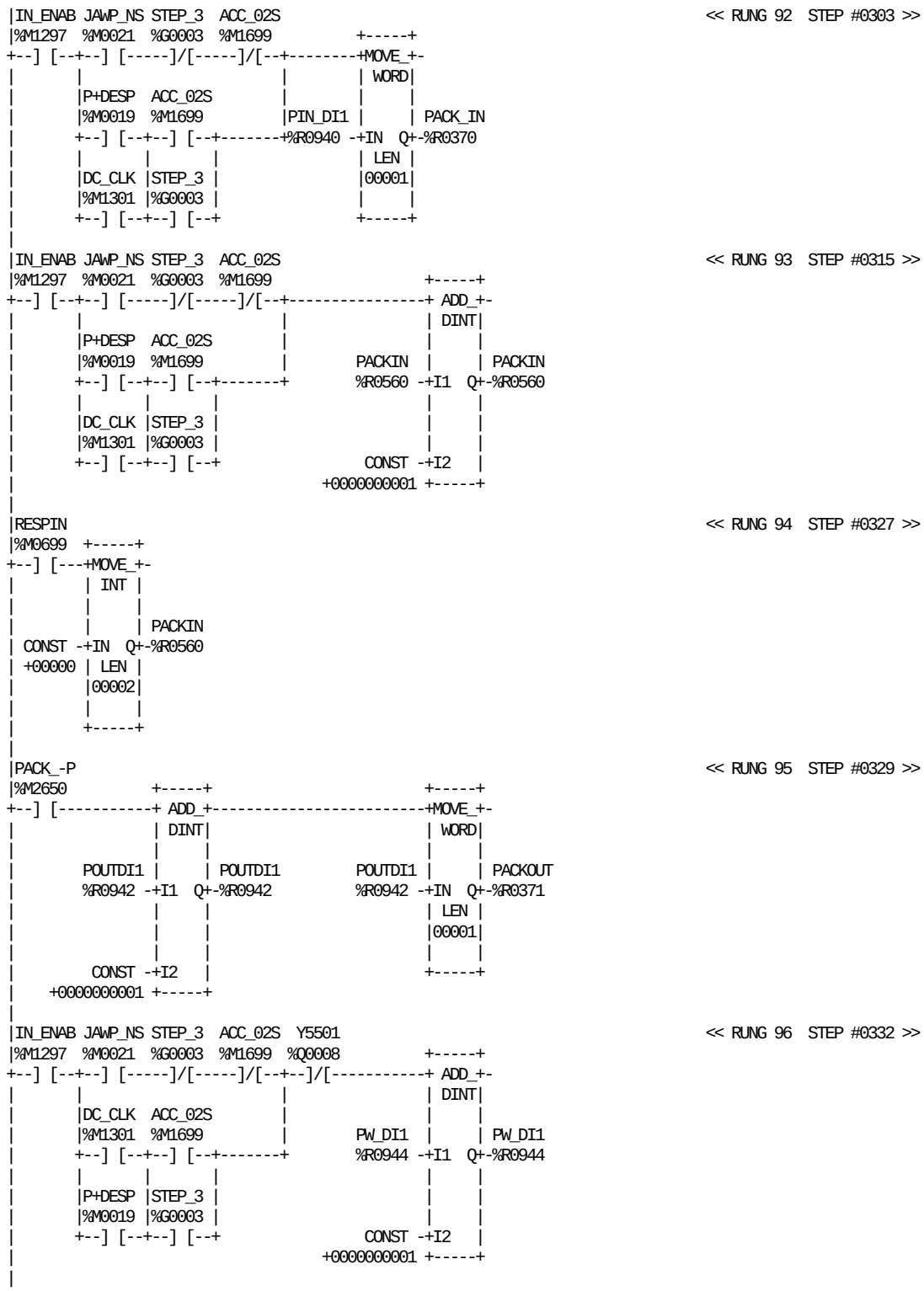

REFERENCE	NICKNAME	REFERENCE DESCRIPTION
%M1699	ACC_02S	2 sec. acceleration main motor
%M1301	DC_CLK	Bar code DCS clock
%M1297	IN_ENAB	Package in counter enable
%M0021	JAWP_NS	Jawpulse Normal scan
%M0019	P+DESP	Barcode signal positive pulse
%R0560	PACKIN	Packages in to TPOP reg 1
%R0371	PACKOUT	Packages out of filler(PLMS)
%M2650	PACK_-P	Package counted neg. pulse

REFERENCE	NICKNAME	REFERENCE DESCRIPTION
%R0370	PACK_IN	Packages in to filler (PLMS)
%R0940	PIN_DI1	Package in counter Dint 1
%R0942	POUTDI1	Package out counter Dint 1
%R0944	PW_DI1	Packages to waste Dint 1
%M0699	RESPIN	Reset packages in to TPOP
%G0003	STEP_3	TUBE SEALING
%Q0008	Y5501	Waste box FFU

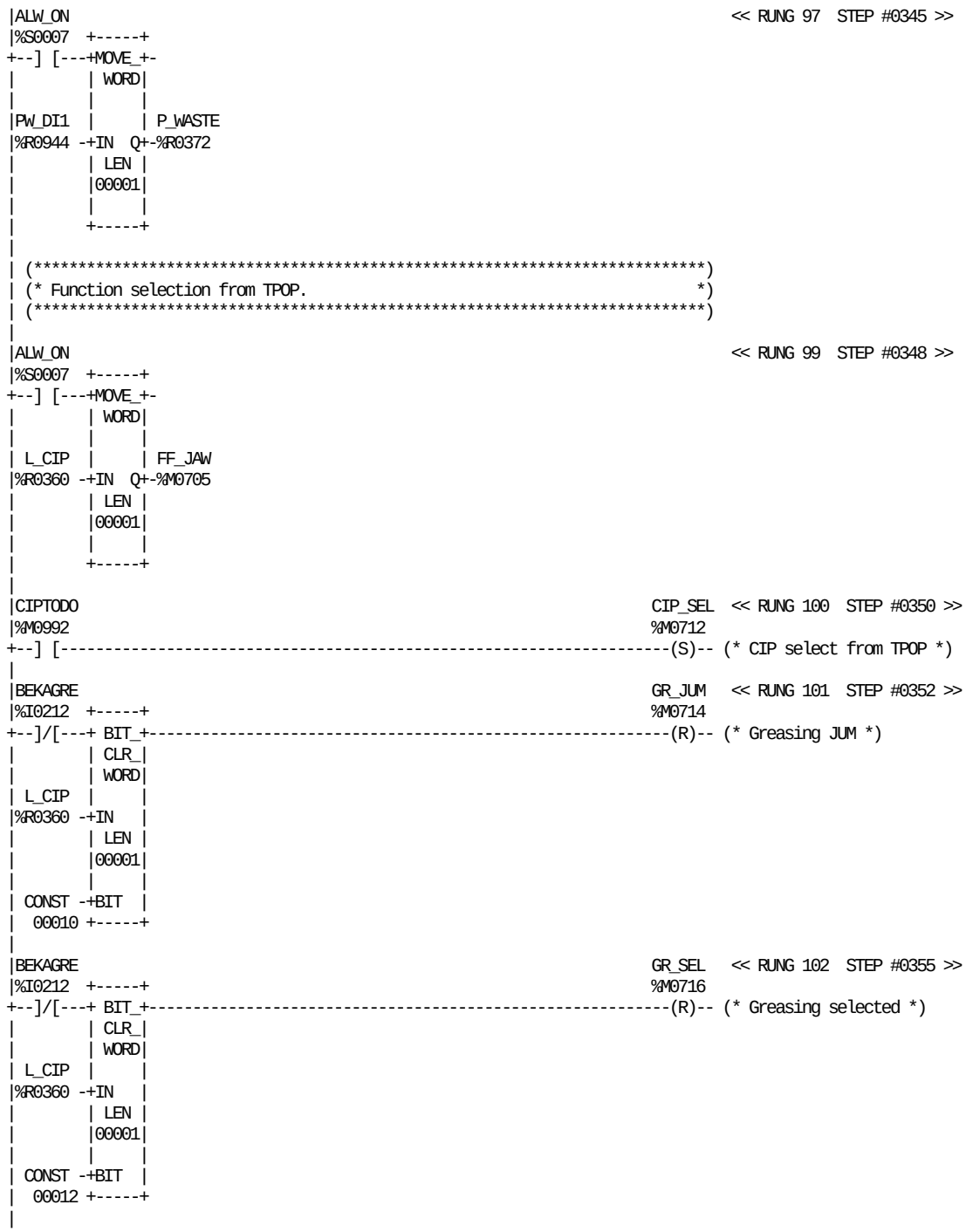

REFERENCE	NICKNAME	REFERENCE DESCRIPTION	REFERENCE	NICKNAME	REFERENCE DESCRIPTION
%S0007	ALW_ON		%M0714	GR_JUM	Greasing JUM
%I0212	BEKAGRE	Option BEKA Greasing KIT	%M0716	GR_SEL	Greasing selected
%M0992	CIPTODO	CIP must be done	%R0360	L_CIP	Cleaning signals (TPOP)
%M0712	CIP_SEL	CIP select from TPOP	%R0944	PW_DI1	Packages to waste Dint 1
%M0705	FF_JAW	FFU+JAW selection	%R0372	P_WASTE	Packages to waste (PLMS)

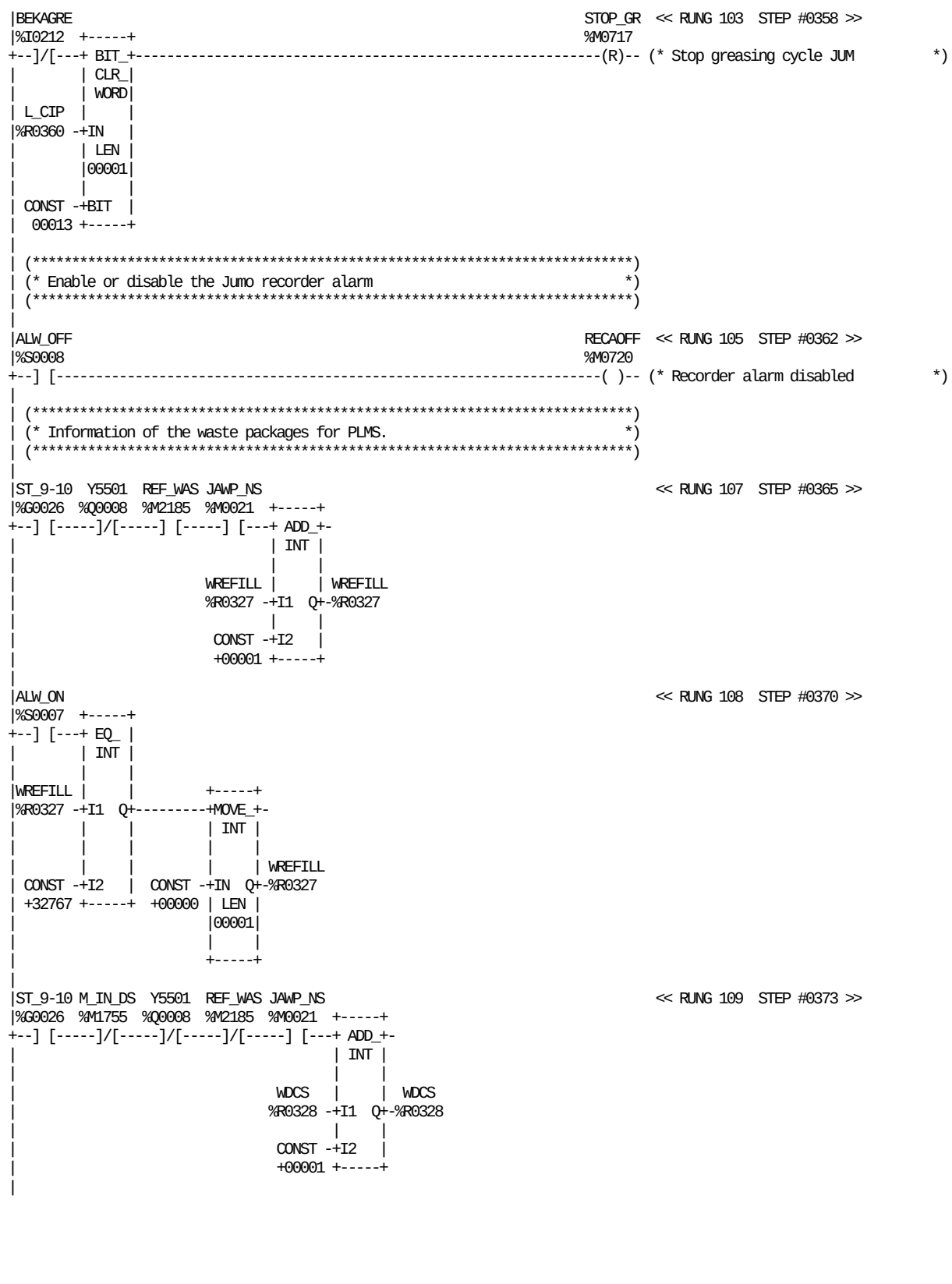

REFERENCE	NICKNAME	REFERENCE DESCRIPTION
%S0008	ALW_OFF	
%S0007	ALW_ON	
%I0212	BEKAGRE	Option BEKA Greasing KIT
%M0021	JAWP_NS	Jawpulse Normal scan
%R0360	L_CIP	Cleaning signals (TPOP)
%M1755	M_IN_DS	Machine in design
%M0720	RECAOFF	Recorder alarm disabled

REFERENCE	NICKNAME	REFERENCE DESCRIPTION
%M2185	REF_WAS	Minimum waste during refilling
%M0717	STOP_GR	Stop greasing cycle JUM
%G0026	ST_9-10	Ladder position 9-10
%R0328	WDCS	Waste DCS for PLMS
%R0327	WREFILL	Waste bucket refill. for PLMS
%Q0008	Y5501	Waste box FFU

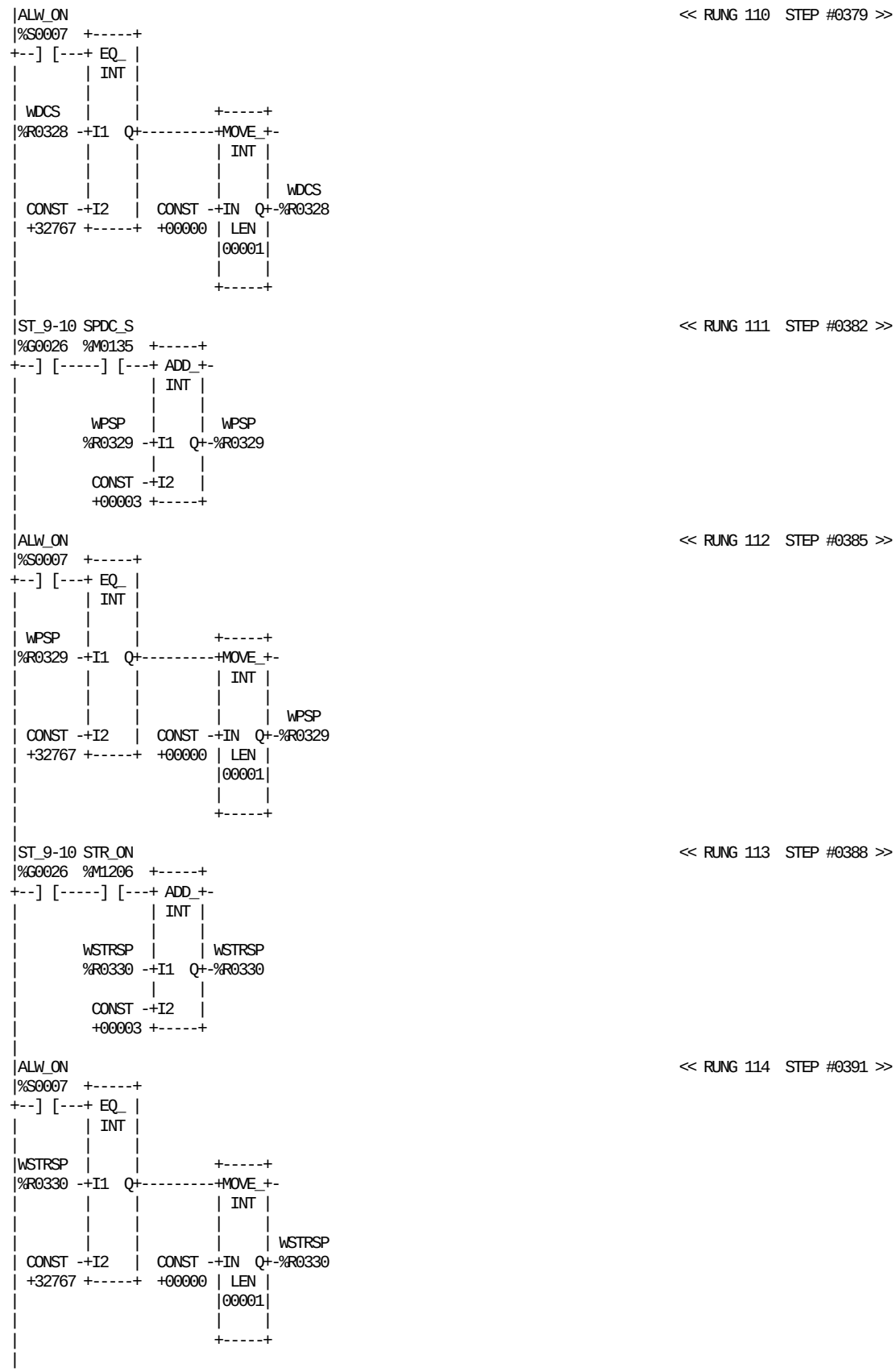

REFERENCE	NICKNAME	REFERENCE DESCRIPTION	REFERENCE	NICKNAME	REFERENCE DESCRIPTION
%S0007	ALW_ON		%R0328	WDCS	Waste DCS for PLMS
%M0135	SPDC_S	Splice detection in columm set	%R0329	WPSP	Waste papersplice for PLMS
%M1206	STR_ON	Strip on condition pos. pulse	%R0330	WSTRSP	Waste stripsplice for PLMS
%G0026	ST_9-10	Ladder position 9-10			

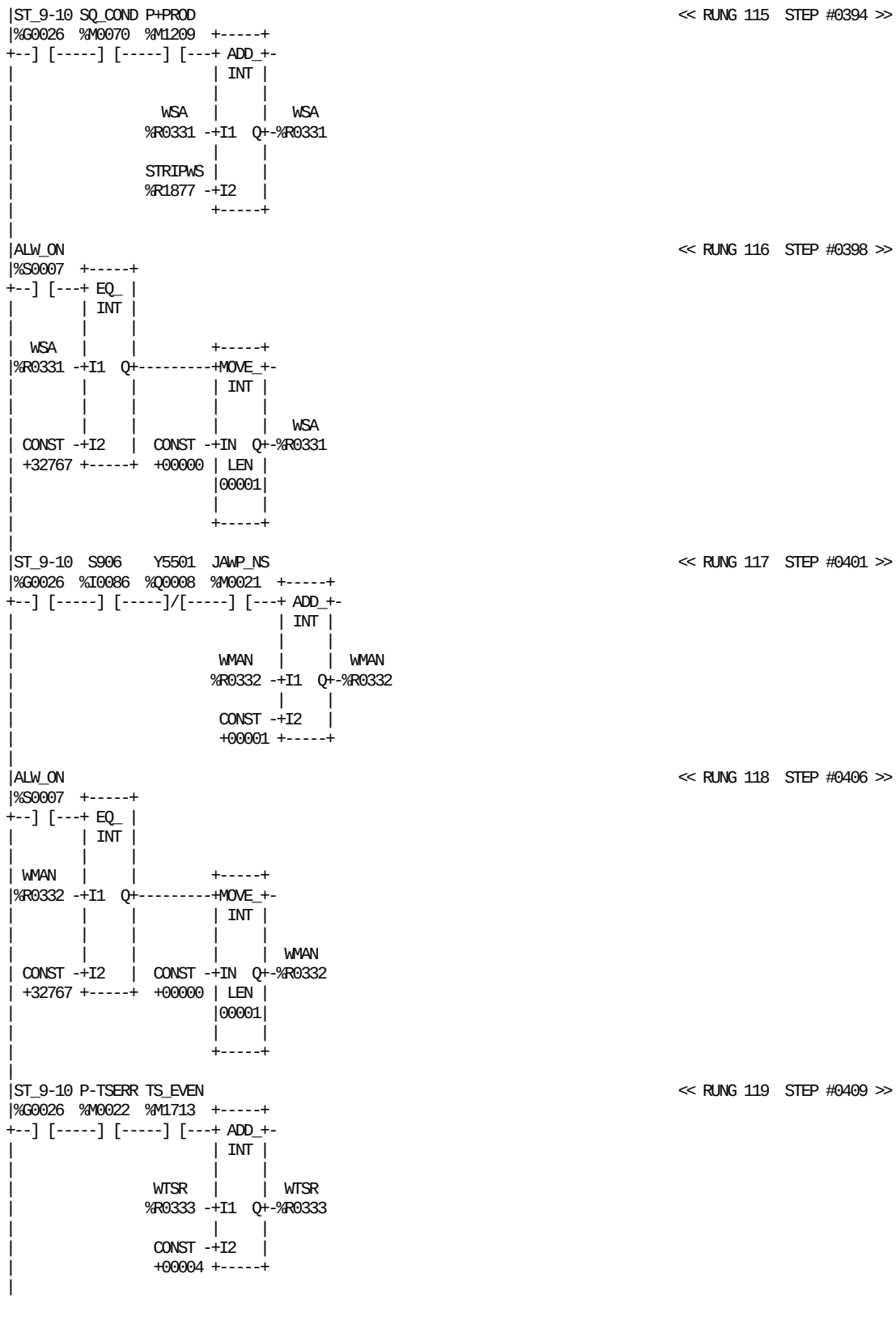

REFERENCE	NICKNAME	REFERENCE DESCRIPTION
%S0007	ALW_ON	
%M0021	JAWP_NS	Jawpulse Normal scan
%M1209	P+PROD	Production on positive pulse
%M0022	P-TSERR	TS-error negative pulse
%I0086	S906	Push button drop chute off
%M0070	SQ_COND	Start sequence conditions
%R1877	STRIPWS	SA, strip waste packages (PLMS)

REFERENCE	NICKNAME	REFERENCE DESCRIPTION
%G0026	ST_9-10	Ladder position 9-10
%M1713	TS_EVEN	Ts sealing even Jaw
%R0332	WMAN	Waste manual button for PLMS
%R0331	WSA	Waste SA stop for PLMS
%R0333	WTSR	Waste TS right for PLMS
%Q0008	Y5501	Waste box FFU

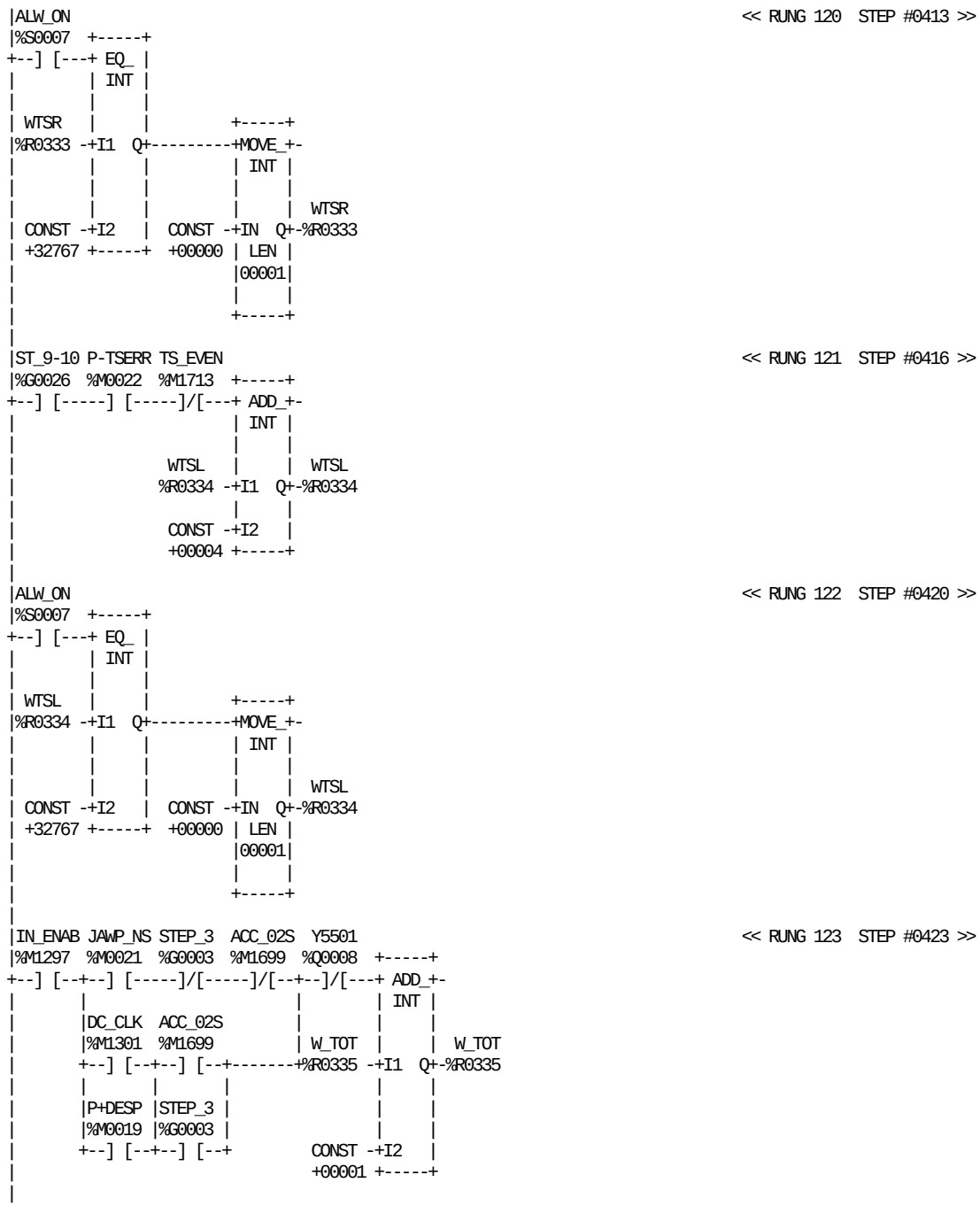

REFERENCE	NICKNAME	REFERENCE DESCRIPTION
%M1699	ACC_02S	2 sec. acceleration main motor
%S0007	ALW_ON	
%M1301	DC_CLK	Bar code DCS clock
%M1297	IN_ENAB	Package in counter enable
%M0021	JAWP_NS	Jawpulse Normal scan
%M0019	P+DESP	Barcode signal positive pulse
%M0022	P-TSERR	TS-error negative pulse

REFERENCE	NICKNAME	REFERENCE DESCRIPTION
%G0003	STEP_3	TUBE SEALING
%G0026	ST_9-10	Ladder position 9-10
%M1713	TS_EVEN	Ts sealing even Jaw
%R0334	WTSL	Waste TS left for PLMS
%R0333	WTSR	Waste TS right for PLMS
%R0335	W_TOT	Waste Total in production
%Q0008	Y5501	Waste box FFU



REFERENCE NICKNAME		REFERENCE DESCRIPTION	REFERENCE NICKNAME		REFERENCE DESCRIPTION
%M0611	RES_WAS	Reset waste counter	%R0335	W_TOT	Waste Total in production

This page left intentionally blank

```
|[  START LD SUBROUTINE  SUPPLY   ]
|
|[     VARIABLE DECLARATIONS      ]
|
|[   START OF SUBROUTINE LOGIC    ]
|
| (*************************************************************************)
| (* This subroutine control all the supplies (air,power,ect.)             *)
| (* to the machine and to the machine groups.                              *)
| (*************************************************************************)
|
|STEP_1  JUMP_1  FST_SCN Q24_34                                    K024    << RUNG 5  STEP #0003 >>
|%G0001  %M0050  %S0001  %I0020                                   %Q0040
+--]/[-----] [-----]/[-----] [-----------------------------------------( )-- (* DC-bus servo motors             *)
|
| K024                                                             K025    << RUNG 6  STEP #0008 >>
|%Q0040  +-----+                                                  %Q0041
+--] [---+ TMR +-----------------------------------------------------( )-- (* Delayed DC-bus servo motors     *)
|        |0.10s|
|        |     |
| CONST -+PV   |
| +00020 |     |
|        +-----+
|        DC_BUS
|        %R2100
|
|A600_14                                                           Y2201   << RUNG 7  STEP #0011 >>
|%I0017                                                           %Q0025
+--] [-----------------------------------------------------------------( )-- (* Air treatment                  *)
|
|STEP_1                                                            K030    << RUNG 8  STEP #0013 >>
|%G0001                                                           %Q0046
+--]/[--+-------------------------------------------------------------( )-- (* Power TPIH TS *)
|       |
|       |                                                          K029
|       |                                                         %Q0045
|       +-------------------------------------------------------------( )-- (* Power TPIH LS *)
|
| (*************************************************************************)
| (* Temperature control electrical cabinet:                              *)
| (* Low and high temperature limit (Hysterises) is set by the operator    *)
| (* from the TPOP ( also the alarm limit ).                              *)
| (* The default values can reached from the TPOP ( by pressing the deafult  *)
| (* button on the TPOP controller. The values are stored in the subroutine  *)
| (* "DEF_PAR".                                                           *)
| (*************************************************************************)
|
|ALW_ON                                                            K108    << RUNG 10  STEP #0017 >>
|%S0007                                                           %Q0056
+--] [-----------------------------------------------------------------( )-- (* Fan electrical cabinet *)
|
| B006    B005                                                     K011    << RUNG 11  STEP #0019 >>
|%I0031  %I0032  +-----+                                          %Q0036
+--] [-----] [---+ GE_ |+-------------------------------------------------(S)-- (* Compressor cooling el-cabinet *)
|               | INT ||
|               |     ||
|        B0001  |     ||
|       %AI0040-+I1  Q++
|               |     |
|       EL_C_HI |     |
|       %R0547 -+I2   |
|               +-----+
|
```

REFERENCE	NICKNAME	REFERENCE DESCRIPTION	REFERENCE	NICKNAME	REFERENCE DESCRIPTION
%I0017	A600_14	Emergency stop	%Q0036	K011	Compressor cooling el-cabinet
%S0007	ALW_ON		%Q0040	K024	DC-bus servo motors
%AI0040	B0001	Temperature electrical cabinet	%Q0041	K025	Delayed DC-bus servo motors
%I0032	B005	Electrical cabinet doors	%Q0045	K029	Power TPIH LS
%I0031	B006	Press. and temp. cooling EL_cab.	%Q0046	K030	Power TPIH TS
%R2100	DC_BUS	Delay DC-bus	%Q0056	K108	Fan electrical cabinet
%R0547	EL_C_HI	Temp limit EL_cabinet high	%I0020	Q24_34	Overload DC-BUS
%S0001	FST_SCN		%G0001	STEP_1	STANDBY
%M0050	JUMP_1	Jump to pos 1 (Emergency stop)	%Q0025	Y2201	Air treatment

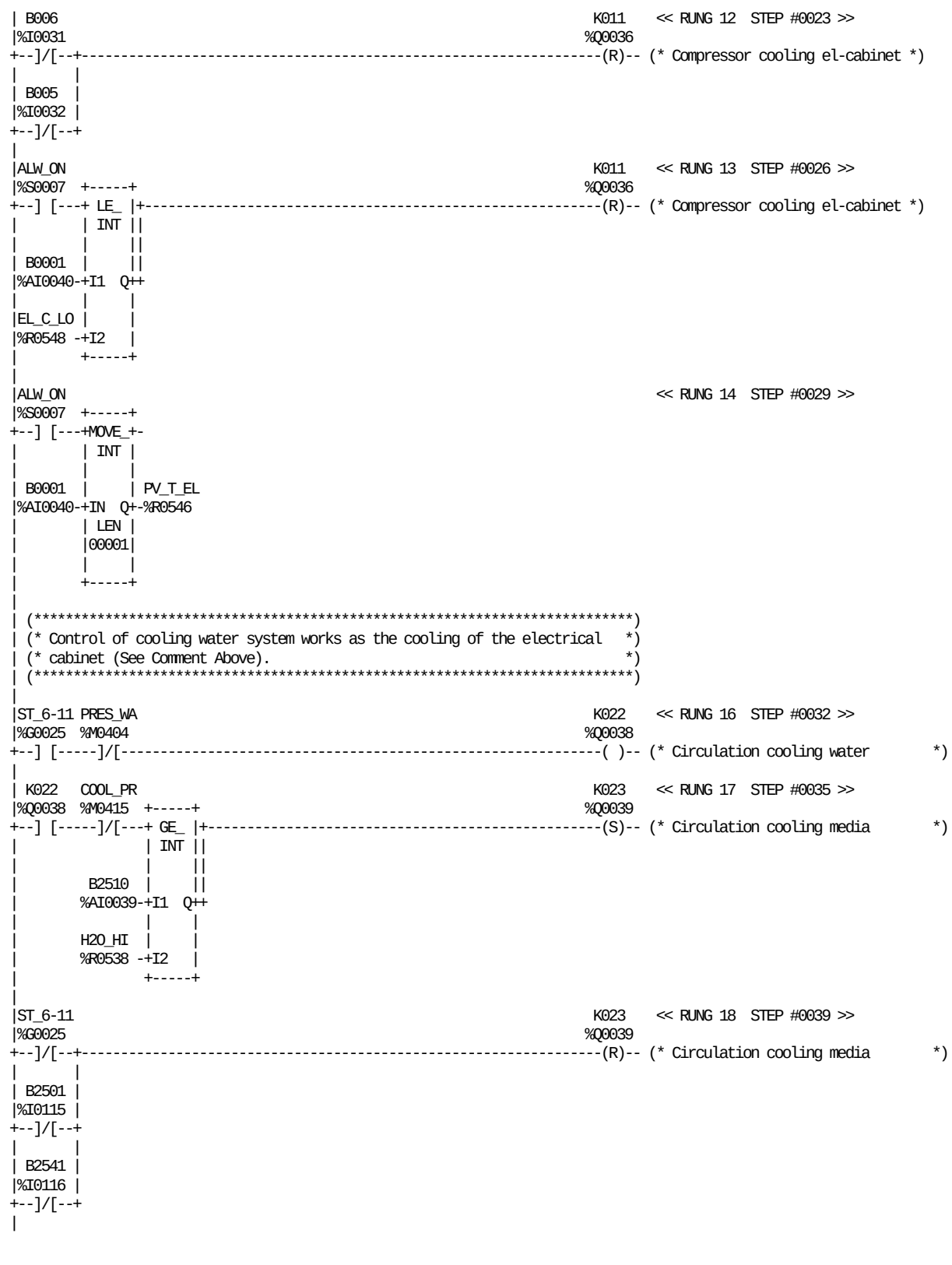

REFERENCE	NICKNAME	REFERENCE DESCRIPTION	REFERENCE	NICKNAME	REFERENCE DESCRIPTION
%S0007	ALW_ON		%R0548	EL_C_LO	Temp limit EL-cabinet low
%AI0040	B0001	Temperature electrical cabinet	%R0538	H2O_HI	Cooling water temp high limit
%I0032	B005	Electrical cabinet doors	%Q0036	K011	Compressor cooling el-cabinet
%I0031	B006	Press. and temp. cooling EL_cab.	%Q0038	K022	Circulation cooling water
%I0115	B2501	Circulation cooling water	%Q0039	K023	Circulation cooling media
%AI0039	B2510	Cooling water temperature	%M0404	PRES_WA	Pressure water circulation
%I0116	B2541	Coooling media pressures	%R0546	PV_T_EL	PV temperature EL_cabinet (TPOP)
%M0415	COOL_PR	Cooling media pressure	%G0025	ST_6-11	Ladder position 6-11

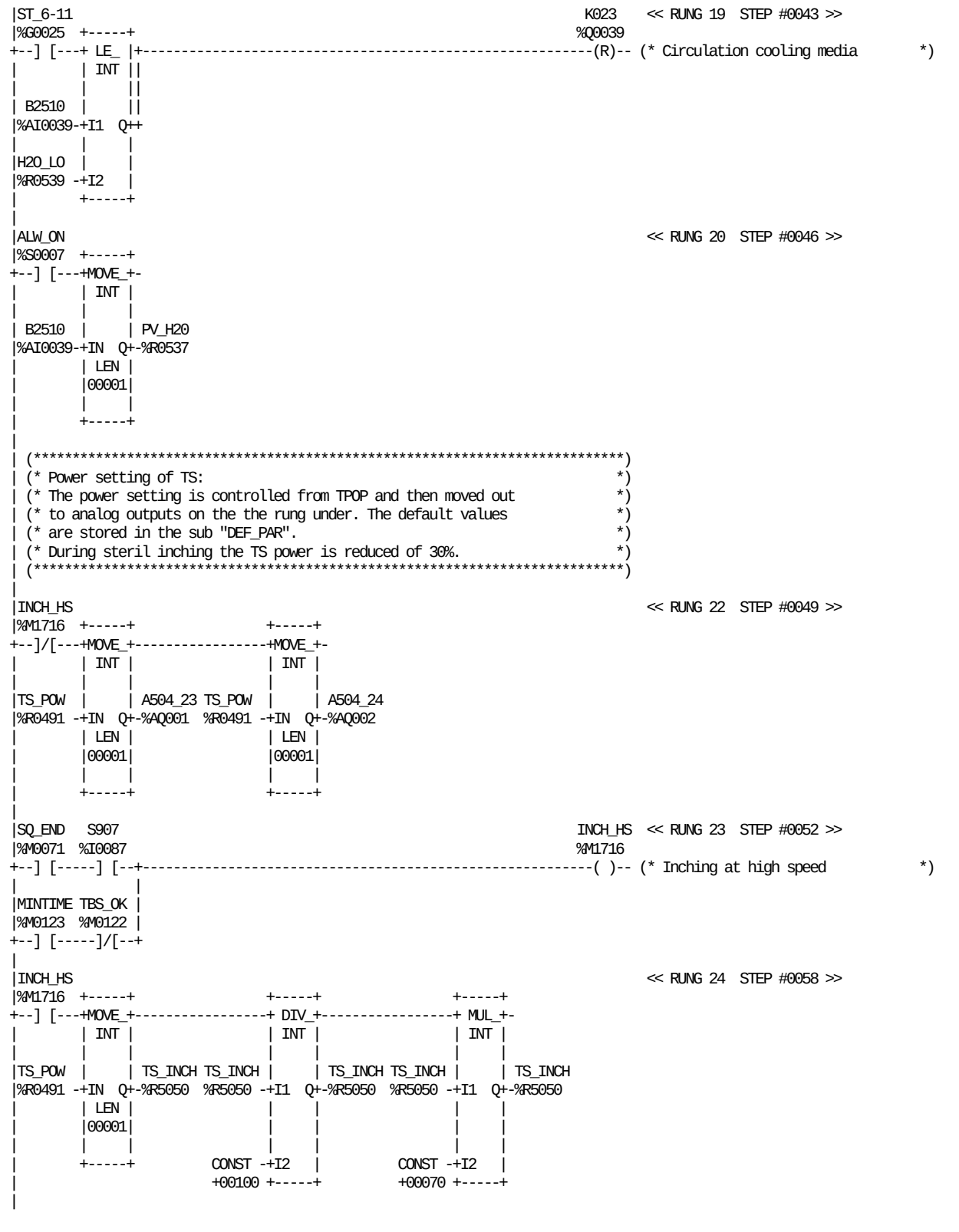

REFERENCE	NICKNAME	REFERENCE DESCRIPTION	REFERENCE	NICKNAME	REFERENCE DESCRIPTION
%AQ001	A504_23	TPIH TS-Power left side	%R0537	PV_H20	PV cooling water (TPOP)
%AQ002	A504_24	TPIH TS-Power right side	%I0087	S907	Push button inching JUM
%S0007	ALW_ON		%M0071	SQ_END	Start sequence ended
%AI0039	B2510	Cooling water temperature	%G0025	ST_6-11	Ladder position 6-11
%R0539	H2O_LO	Cooling water temp low limit	%M0122	TBS_OK	Tube sealing ok
%M1716	INCH_HS	Inching at high speed	%R5050	TS_INCH	TS power at high speed inching
%Q0039	K023	Circulation cooling media	%R0491	TS_POW	TS-Power setting (TPOP)
%M0123	MINTIME	Minimum time for tight tube			

```
|INCH_HS                                                          << RUNG 25  STEP #0062 >>
|%M1716  +-----+                +-----+
+--] [---+MOVE_+----------------+MOVE_+-
|        | INT |                | INT |
|        |     |                |     |
|TS_INCH |     | A504_23 TS_INCH |     | A504_24
|%R5050 -+IN  Q+-%AQ001  %R5050 -+IN  Q+-%AQ002
|        | LEN |                | LEN |
|        |00001|                |00001|
|        |     |                |     |
|        +-----+                +-----+
|
| (*************************************************************************)
| (* Control of the Hooter.                                                *)
| (*************************************************************************)
|
|IN_COND A506_32                                                   H7703   << RUNG 27  STEP #0066 >>
|%M1709  %I0044                                                   %Q0076
+--] [--+--]/[----------+-------+----------------------------------------( )-- (* Hooter *)
|       |               |       |
|SQ_COND|               |       |
|%M0070 |               |       |
+--] [--+               |       |
|                        |       |
|LOW_INC A507_32 A507_31|       |
|%M1450  %I0058  %I0057 |       |
+--] [--+--]/[-----]/[--+       |
|       |                        |
|HI_INCH|                        |
|%M1451 |                        |
+--] [--+                        |
|                                |
|HC_SEL  ST_COND  S911    HC_ON |
|%M0713  %M0063  %I0088  %M1094 |
+--] [-----] [-----] [-----]/[--+
|                                |
| TBSEA   S911   TUBESGO         |
|%M0120  %I0088  %M0121          |
+--] [-----] [-----]/[----------+
|
| (*************************************************************************)
| (* Hour meter counts the hours the Jaw system has been running.          *)
| (*************************************************************************)
|
|A506_32                                                            P100    << RUNG 29  STEP #0085 >>
|%I0044                                                            %Q0074
+--] [-----------------------------------------------------------------( )-- (* Total hours counter             *)
|
| (*************************************************************************)
| (* Package counter counts the number of packages produced out to the     *)
| (* final folder. The first rung manages the total package counter and     *)
| (* the others control a partial package counter resetable from TPOP and  *)
| (* display on it.                                                         *)
| (*************************************************************************)
|
|A507_32 B54102   S905                                              P101    << RUNG 31  STEP #0088 >>
|%I0058  %I0167  %I0085                                            %Q0073
+--] [-----] [-----]/[-------------------------------------------------( )-- (* Total package counter           *)
|
| P101                                                             PACK_-P  << RUNG 32  STEP #0092 >>
|%Q0073                                                            %M2650
+--] [-----------------------------------------------------------------(v)-- (* Package counted neg. pulse *)
```

REFERENCE	NICKNAME	REFERENCE DESCRIPTION	REFERENCE	NICKNAME	REFERENCE DESCRIPTION
%AQ001	A504_23	TPIH TS-Power left side	%M1450	LOW_INC	Low speed inch servo motor FFU
%AQ002	A504_24	TPIH TS-Power right side	%Q0074	P100	Total hours counter
%I0044	A506_32	DMC Main motor running	%Q0073	P101	Total package counter
%I0057	A507_31	DMC FFU Home position	%M2650	PACK_-P	Package counted neg. pulse
%I0058	A507_32	DMC FFU motor running	%I0085	S905	Push button inching FFU
%I0167	B54102	Congestion guard ext.conveyor	%I0088	S911	Push button step up
%Q0076	H7703	Hooter	%M0070	SQ_COND	Start sequence conditions
%M1094	HC_ON	Hygienic cleaning going on	%M0063	ST_COND	Step up conditions
%M0713	HC_SEL	Hygienic cleaning selection ok	%M0120	TBSEA	Tube sealing
%M1451	HI_INCH	High speed inch servo motor FFU	%R5050	TS_INCH	TS power at high speed inching
%M1716	INCH_HS	Inching at high speed	%M0121	TUBESGO	Tube sealing going on
%M1709	IN_COND	Inching conditions main motor			

```
|PACK_-P                                                          << RUNG 33  STEP #0094 >>
|%M2650          +-----+
+--] [-----------+ ADD_+-
|                | DINT|
|                |     |
|                |     | COUNTP1
|         CONST -+I1  Q+-%R0558
|    +0000000001 |     |
|                |     |
|        COUNTP1 |     |
|        %R0558 -+I2   |
|                +-----+
|
|RES_P_C                                                          << RUNG 34  STEP #0096 >>
|%M0605  +-----+
+--] [---+MOVE_+-
|        | INT |
|        |     |
|        |     | COUNTP1
| CONST -+IN  Q+-%R0558
| +00000 | LEN |
|        |00002|
|        |     |
|        +-----+
|
| (*************************************************************************)
| (* Honeywell or JUMO process recorder.                                   *)
| (*************************************************************************)
|
|STEP_10                                                           K104    << RUNG 36  STEP #0099 >>
|%G0010                                                           %Q0053
+--] [-----------------------------------------------------------------( )-- (* Filling                          *)
|
|ST_2-12                                                           K126    << RUNG 37  STEP #0101 >>
|%G0021  +-----+                                                  %Q0061
+--] [---+OFDT +-----------------------------------------------------( )-- (* Production recorder *)
|        |0.10s|
|        |     |
| CONST -+PV   |
| +02600 |     |
|        +-----+
|        REC_DEL
|        %R0242
|
|STER_ON P-JMP1                                                   K101HON  << RUNG 38  STEP #0104 >>
|%M0803  %M0017  +-----+                                          %M1438
+--] [-----] [---+OFDT +-------------------------------------------( )-- (* K101 relay for Honeywell rec.    *)
|                |0.10s|
|                |     |
|         CONST -+PV   |
|         +03000 |     |
|                +-----+
|                DELREC2
|                %R0254
|
```

REFERENCE	NICKNAME	REFERENCE DESCRIPTION	REFERENCE	NICKNAME	REFERENCE DESCRIPTION
%R0558	COUNTP1	Partial package counter Reg.1	%M2650	PACK_-P	Package counted neg. pulse
%R0254	DELREC2	Delay off recorder 2	%R0242	REC_DEL	Delay production recorder off
%M1438	K101HON	K101 relay for Honeywell rec.	%M0605	RES_P_C	Reset partial package counter
%Q0053	K104	Filling	%G0010	STEP_10	PRODUCTION
%Q0061	K126	Production recorder	%M0803	STER_ON	Steril system on
%M0017	P-JMP1	Jump pos 1 negative pulse	%G0021	ST_2-12	Ladder position 2-12

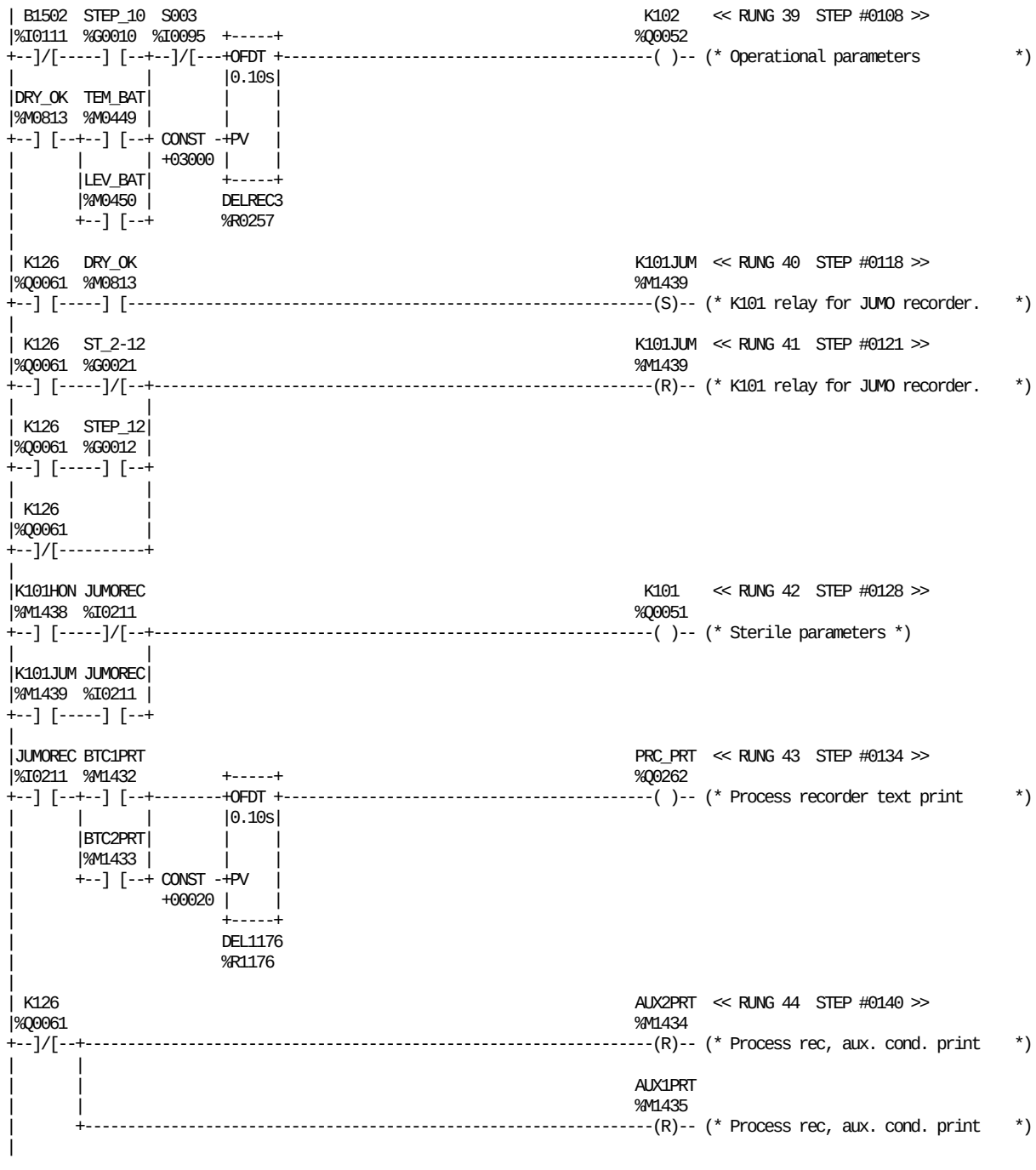

REFERENCE	NICKNAME	REFERENCE DESCRIPTION
%M1435	AUX1PRT	Process rec, aux. cond. print
%M1434	AUX2PRT	Process rec, aux. cond. print
%I0111	B1502	Movable squee-gee roller
%M1432	BTC1PRT	Process rec, batch text 1 print
%M1433	BTC2PRT	Precess rec, batch text 2 print
%R1176	DEL1176	TMR delay for JUMO recorder kit
%R0257	DELREC3	delay off recorder 3
%M0813	DRY_OK	Drying ready
%I0211	JUMOREC	Option Jumo recorder
%Q0051	K101	Sterile parameters
%M1438	K101HON	K101 relay for Honeywell rec.
%M1439	K101JUM	K101 relay for JUMO recorder.
%Q0052	K102	Operational parameters
%Q0061	K126	Production recorder
%M0450	LEV_BAT	Level peroxide bath
%Q0262	PRC_PRT	Process recorder text print
%I0095	S003	Service switch
%G0010	STEP_10	PRODUCTION
%G0012	STEP_12	VENTING
%G0021	ST_2-12	Ladder position 2-12
%M0449	TEM_BAT	Temperature peroxide bath

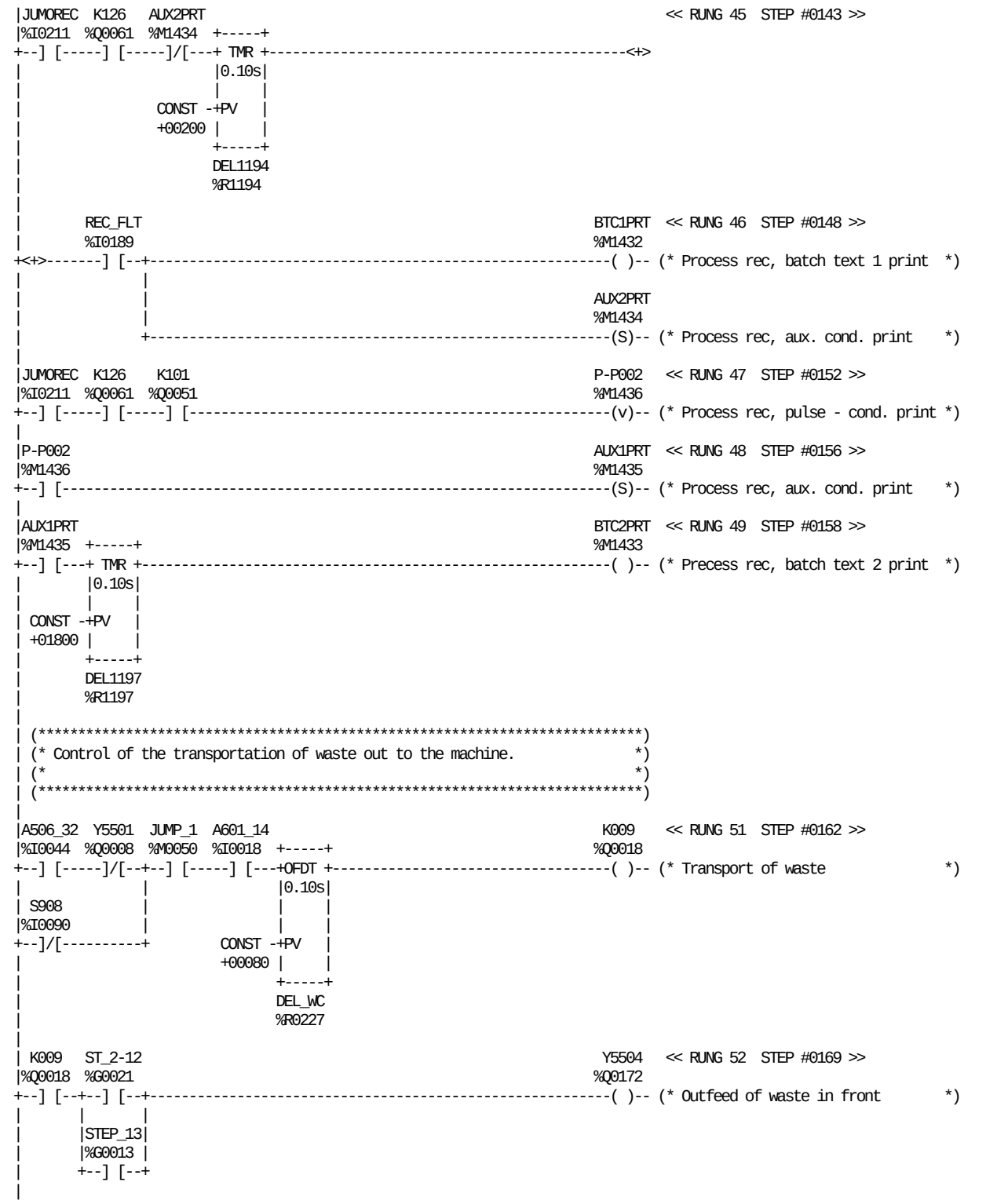

REFERENCE	NICKNAME	REFERENCE DESCRIPTION	REFERENCE	NICKNAME	REFERENCE DESCRIPTION
%I0044	A506_32	DMC Main motor running	%Q0018	K009	Transport of waste
%I0018	A601_14	Safety monitors B	%Q0051	K101	Sterile parameters
%M1435	AUX1PRT	Process rec, aux. cond. print	%Q0061	K126	Production recorder
%M1434	AUX2PRT	Process rec, aux. cond. print	%M1436	P-P002	Process rec, pulse - cond. print
%M1432	BTC1PRT	Process rec, batch text 1 print	%I0189	REC_FLT	Recorder fault
%M1433	BTC2PRT	Precess rec, batch text 2 print	%I0090	S908	Push button S P A R E
%R1194	DEL1194	TMR delay for JUMO recorder kit	%G0013	STEP_13	OPEN DOORS, CUT TUBE
%R1197	DEL1197	TMR delay for JUMO recorder kit	%G0021	ST_2-12	Ladder position 2-12
%R0227	DEL_WC	Offdelay waste conveyor	%Q0008	Y5501	Waste box FFU
%I0211	JUMOREC	Option Jumo recorder	%Q0172	Y5504	Outfeed of waste in front
%M0050	JUMP_1	Jump to pos 1 (Emergency stop)			

```
| (*************************************************************************)
| (* When the machine arrives to step 8 (Normal stop from production or step  *)
| (* up from start heaters the machine must be started within 1 minute and    *)
| (* 30 seconds to avoid heating up of the FFU stations, if not the machine   *)
| (* will automatically step down to step 6 "Drying".                         *)
| (*************************************************************************)
|
|STEP_8                                                          ST_HEAT  << RUNG 54  STEP #0175 >>
|%G0008  +-----+                                                 %M0132
+--] [---+ TMR +-----------------------------------------------------( )-- (* Stop heaters FFU *)
|        |0.10s|
|        |     |
| CONST -+PV   |
| +00900 |     |
|        +-----+
|        T_FFU_H
|        %R0239
|
| (*************************************************************************)
| (* Air for FFU heaters. Offdelay is used to cool down teh heaters and      *)
| (* ondelay is used to blow out water.                                      *)
| (*************************************************************************)
|
|ST_8-10                                                          Y4200   << RUNG 56  STEP #0179 >>
|%G0028          +-----+                                         %Q0179
+--] [--+--------+OFDT ++-------------------------------------------------(/)-- (* Flap heating bottom left        *)
|       |        |0.10s||
| K033  |        |     ||                                          Y4210
|%Q0049 |        |     ||                                         %Q0180
+--] [--+ CONST -+PV   |+-------------------------------------------------(/)-- (* Flap heating bottom right       *)
|         +00500 |     ||
|                +-----+|                                          Y4220
|                COOLAIR|                                         %Q0181
|                %R3520 +-------------------------------------------------(/)-- (* Flap heating top right          *)
|                       |
|                       |                                         Y4230
|                       |                                         %Q0182
|                       +-------------------------------------------------(/)-- (* Flap heating top left          *)
|
|ST_8-10  Y4200   B2201                                           K033    << RUNG 57  STEP #0186 >>
|%G0028  %Q0179  %I0118  +-----+         +-----+                 %Q0049
+--] [-----]/[-----] [---+ TMR +---------+OFDT +-------------------------( )-- (* FFU flap heating               *)
|                        |0.10s|         |0.10s|
|                        |     |         |     |
|                 CONST -+PV   |  CONST -+PV   |
|                 +00030 |     |  +00040 |     |
|                        +-----+         +-----+
|                        HEATFFU         HEATOFF
|                        %R3523          %R3526
|
| (*************************************************************************)
| (* Supply of water for the lubrification of paper tube in the JUM and     *)
| (* for FFU conveyor below the jaw system.                                  *)
| (*************************************************************************)
|
|A506_32                                                          Y2106   << RUNG 59  STEP #0193 >>
|%I0044                                                          %Q0162
+--] [-----------------------------------------------------------------( )-- (* Tube flusher *)
|
| (*************************************************************************)
| (* Activation of manual flushing for FFU.                                  *)
| (*************************************************************************)
|
```

REFERENCE	NICKNAME	REFERENCE DESCRIPTION	REFERENCE	NICKNAME	REFERENCE DESCRIPTION
%I0044	A506_32	DMC Main motor running	%M0132	ST_HEAT	Stop heaters FFU
%I0118	B2201	Main air supply pressure	%R0239	T_FFU_H	Time out check FFU heatesr
%R3520	COOLAIR	Cooling of FFU heaters	%Q0162	Y2106	Tube flusher
%R3523	HEATFFU	Delay heaters FFU	%Q0179	Y4200	Flap heating bottom left
%R3526	HEATOFF	Delay ffu heaters off	%Q0180	Y4210	Flap heating bottom right
%Q0049	K033	FFU flap heating	%Q0181	Y4220	Flap heating top right
%G0008	STEP_8	FLAPS + H2O2 TEMPERATURE	%Q0182	Y4230	Flap heating top left
%G0028	ST_8-10	Ladder position 8-10			

```
| S904   A601_14                                                    Y2108   << RUNG 61  STEP #0196 >>
|%I0084  %I0018                                                   %Q0166
+--] [-----] [-------------------------------------------------------( )-- (* Flushing FFU                    *)
|
| (*************************************************************************)
| (* Injection off air in the the flushing systems, at the every           *)
| (* normal stop, to avoid closing of eject hoses.                          *)
| (*************************************************************************)
|
|  NS1                                                              Y2104   << RUNG 63  STEP #0200 >>
|%M0090                                                            %Q0170
+--] [-------------------------------------------------------------------( )-- (* Air tube flushing/conveyor    *)
|
|[    END OF SUBROUTINE LOGIC     ]
|
```

REFERENCE	NICKNAME	REFERENCE DESCRIPTION	REFERENCE	NICKNAME	REFERENCE DESCRIPTION
%I0018	A601_14	Safety monitors B	%Q0170	Y2104	Air tube flushing/conveyor
%M0090	NS1	Normal stop step 1	%Q0166	Y2108	Flushing FFU
%I0084	S904	Station chain sprinkler			

This page left intentionally blank

```
|[  START LD SUBROUTINE  MMOTOR   ]
|
|[     VARIABLE DECLARATIONS      ]
|
|[   START OF SUBROUTINE LOGIC    ]
|
| (*****************************************************************************)
| (* The following subroutine take care of the control for the Main servo     *)
| (* motor.                                                                    *)
| (*****************************************************************************)
|
|SQ_COND                                                          ST_REAS  << RUNG 5  STEP #0003 >>
|%M0070                                                           %M1701
+--] [--+-------------------------------------------------------------( )-- (* Start reasons main motor        *)
|       |
|IN_COND|
|%M1709 |
+--] [--+
|       |
| TBSEA |
|%M0120 |
+--] [--+
|       |
| HC_ON |
|%M1094 |
+--] [--+
|
|A506_13                                                          ACC_01S  << RUNG 6  STEP #0008 >>
|%Q0202          +-----+                                          %M1697
+--] [--+--------+ GE_ |+-------------------------------------------------( )-- (* 1 sec. acceleration main motor   *)
|       |        | INT ||
|A506_14|        |     ||
|%Q0201 |ACC_TMR |     ||
+--] [--+%R2600 -+I1  Q++
|                |     |
|         CONST -+I2   |
|         +00010 +-----+
|
|SQ_END                                                           ACC_02S  << RUNG 7  STEP #0012 >>
|%M0071  +-----+                                                  %M1699
+--] [---+ GE_ |+-------------------------------------------------------( )-- (* 2 sec. acceleration main motor   *)
|        | INT ||
|        |     ||
|ACC_TMR |     ||
|%R2600 -+I1  Q++
|        |     |
| CONST -+I2   |
| +00020 +-----+
|
|A506_14                                                          ACC_05S  << RUNG 8  STEP #0015 >>
|%Q0201                  +-----+                                  %M1700
+--] [----------+--------+ TMR +-----------------------------------------( )-- (* 5 sec. acceleration main motor   *)
|               |        |0.10s|
|A506_13 STEP_2 |        |     |
|%Q0202  %G0002 |        |     |
+--] [-----]/[--+ CONST -+PV   |
|               +00050 |     |
|                       +-----+
|                       ACC_TMR
|                       %R2600
|
```

REFERENCE	NICKNAME	REFERENCE DESCRIPTION	REFERENCE	NICKNAME	REFERENCE DESCRIPTION
%Q0202	A506_13	DMC Main Motor Low speed	%M1709	IN_COND	Inching conditions main motor
%Q0201	A506_14	DMC Main Motor High speed	%M0070	SQ_COND	Start sequence conditions
%M1697	ACC_01S	1 sec. acceleration main motor	%M0071	SQ_END	Start sequence ended
%M1699	ACC_02S	2 sec. acceleration main motor	%G0002	STEP_2	PREPARATION (3 MIN.)
%M1700	ACC_05S	5 sec. acceleration main motor	%M1701	ST_REAS	Start reasons main motor
%R2600	ACC_TMR	Acceleration main motor	%M0120	TBSEA	Tube sealing
%M1094	HC_ON	Hygienic cleaning going on			

```
|SQ_END                                                                ACC_10S  << RUNG 9  STEP #0021 >>
|%M0071  +-----+                                                      %M1698
+--] [---+ GE_ |+-----------------------------------------------------( )-- (* 10 sec.acceleration main motor   *)
|        | INT ||
|        |     ||
|ACC_TMR |     ||
|%R2600 -+I1  Q++
|        |     |
| CONST -+I2   |
| +00100 +-----+
|
| (*************************************************************************)
| (* Between the main motor servo-amplifier and the servo motor there is a    *)
| (* contactor which is open when the machine is standing still. This is put  *)
| (* there to prevent unwantented movements when the machine is not running.  *)
| (* This must always be activated when the motor is running.                 *)
| (*************************************************************************)
|
|ST_REAS                                                                K004    << RUNG 11  STEP #0025 >>
|%M1701                                                                %Q0034
+--] [-----------------------------------------------------------------(S)-- (* Contactor main motor *)
|
|RES_CON                                                                K004    << RUNG 12  STEP #0027 >>
|%M1707                                                                %Q0034
+--] [-----------------------------------------------------------------(R)-- (* Contactor main motor *)
|
| K004   RES_EN2 FOINJUM JUMP_1                                        K120    << RUNG 13  STEP #0029 >>
|%Q0034  %M1703  %M1808  %M0050  +-----+                               %Q0059
+--] [-----]/[-----]/[-----] [---+ TMR +-----------------------------------( )-- (* Software enable main motor *)
|                               |0.10s|
|                               |     |
|                         CONST -+PV   |
|                         +00006 |     |
|                               +-----+
|                               EN_DEL
|                               %R2603
|
|ST_REAS                                                               CHK_ST   << RUNG 14  STEP #0035 >>
|%M1701                                                                %M1704
+--] [-----------------------------------------------------------------(v)-- (* Check start of motors *)
|
|A506_32 CHK_ST                                                        ST_INT   << RUNG 15  STEP #0037 >>
|%I0044  %M1704                                                        %M1705
+--]/[-----] [---------------------------------------------------------( )-- (* Start interrupt *)
|
|A506_32                                                               P-MRUN   << RUNG 16  STEP #0040 >>
|%I0044                                                                %M1706
+--] [-----------------------------------------------------------------(v)-- (* MMRUN signal negative pulse      *)
|
```

REFERENCE	NICKNAME	REFERENCE DESCRIPTION	REFERENCE	NICKNAME	REFERENCE DESCRIPTION
%I0044	A506_32	DMC Main motor running	%Q0059	K120	Software enable main motor
%M1698	ACC_10S	10 sec.acceleration main motor	%M1706	P-MRUN	MMRUN signal negative pulse
%R2600	ACC_TMR	Acceleration main motor	%M1707	RES_CON	Reset contactor main motor
%M1704	CHK_ST	Check start of motors	%M1703	RES_EN2	Reset enable step 2
%R2603	EN_DEL	Delay enable signal ON	%M0071	SQ_END	Start sequence ended
%M1808	FOINJUM	Force inching after LS alarm	%M1705	ST_INT	Start interrupt
%M0050	JUMP_1	Jump to pos 1 (Emergency stop)	%M1701	ST_REAS	Start reasons main motor
%Q0034	K004	Contactor main motor			

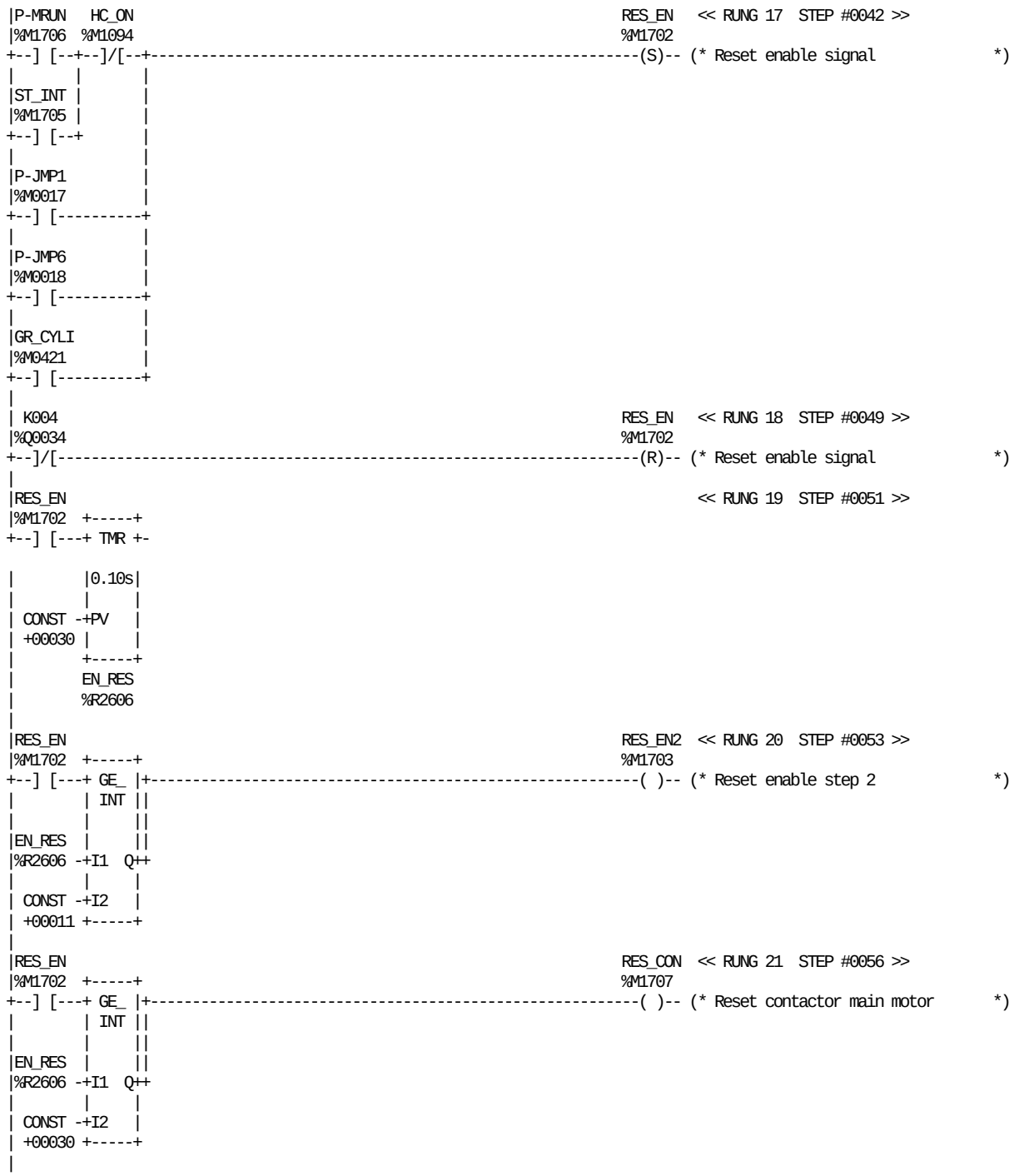

REFERENCE	NICKNAME	REFERENCE DESCRIPTION	REFERENCE	NICKNAME	REFERENCE DESCRIPTION
%R2606	EN_RES	Reset timer main motor	%M1706	P-MRUN	MMRUN signal negative pulse
%M0421	GR_CYLI	Greasing cylinders wrong pos.	%M1707	RES_CON	Reset contactor main motor
%M1094	HC_ON	Hygienic cleaning going on	%M1702	RES_EN	Reset enable signal
%Q0034	K004	Contactor main motor	%M1703	RES_EN2	Reset enable step 2
%M0017	P-JMP1	Jump pos 1 negative pulse	%M1705	ST_INT	Start interrupt
%M0018	P-JMP6	Jump pos 6 Negative pulse			

```
|INCH_MM                                                          A506_13  << RUNG 22  STEP #0059 >>
|%M1708                                                          %Q0202
+--] [--+-------+-----------------------------------------------------( )-- (* DMC Main Motor Low speed        *)
|       |       |
|TUBESGO|       | HC_ON                                            Y5306
|%M0121 |       |%M1094                                           %Q0178
+--] [--+       +--]/[-----------------------------------------------( )-- (* Blowing waste box               *)
|               |
|MOT_ST  STOPMOT|
|%M1095  %M1088 |
+--] [-----]/[--+
|
|SQ_END  ST_MOT                                                   A506_14  << RUNG 23  STEP #0069 >>
|%M0071  %M1800                                                   %Q0201
+--] [-----] [-----------------------------------------------------( )-- (* DMC Main Motor High speed       *)
|
| (*************************************************************************)
| (* The following rungs are used to control the inching of the jaw system.   *)
| (*************************************************************************)
|
|STEP_2  SEAL_SA TESTOK  A602_14 A506_32  S911    S905    B4102  A506_29         << RUNG 25  STEP #0073 >>
|%G0002  %M0369  %M1480  %I0019  %I0044  %I0088  %I0085  %I0153  %I0041
+--] [-----]/[-----] [-----] [--+--]/[-----]/[-----]/[--+--]/[-----] [-------<+>
|                               |                     |
|STEP_13                        |INCH_MM              |
|%G0013                         |%M1708               |
+--] [---------------------------+--] [-----------------+
|
|        S907   NOSTRIP LOOP_EM REELCON  WEB_B  JUMP_1  JUMP_6  CHK_MMI IN_COND  << RUNG 26  STEP #0086 >>
|       %I0087  %M0793  %M0478  %M0797  %M0476  %M0050  %M0051  %M0125  %M1709
+<+>-------] [-----]/[-----]/[-----]/[-----]/[-----] [-----] [-----]/[-----( )-- (* Inching conditions main motor    *)
|
```

REFERENCE	NICKNAME	REFERENCE DESCRIPTION
%Q0202	A506_13	DMC Main Motor Low speed
%Q0201	A506_14	DMC Main Motor High speed
%I0041	A506_29	DMC Main motor ready
%I0044	A506_32	DMC Main motor running
%I0019	A602_14	Safety monitors C
%I0153	B4102	Crank guard JUM
%M0125	CHK_MMI	Check main motor running inching
%M1094	HC_ON	Hygienic cleaning going on
%M1708	INCH_MM	Inching main motor
%M1709	IN_COND	Inching conditions main motor
%M0050	JUMP_1	Jump to pos 1 (Emergency stop)
%M0051	JUMP_6	Jump to pos 6 (Fast stop)
%M0478	LOOP_EM	Loop empty
%M1095	MOT_ST	Start motors JUM and FFU
%M0793	NOSTRIP	Strip general alarm

REFERENCE	NICKNAME	REFERENCE DESCRIPTION
%M0797	REELCON	ASU, step up reel condition
%I0085	S905	Push button inching FFU
%I0087	S907	Push button inching JUM
%I0088	S911	Push button step up
%M0369	SEAL_SA	Sealing strip applicator
%M0071	SQ_END	Start sequence ended
%G0013	STEP_13	OPEN DOORS, CUT TUBE
%G0002	STEP_2	PREPARATION (3 MIN.)
%M1088	STOPMOT	Stop motors during HC
%M1800	ST_MOT	Start main motor
%M1480	TESTOK	SA, bobbin research OK
%M0121	TUBESGO	Tube sealing going on
%M0476	WEB_B	ASU, Broken web at magazine
%Q0178	Y5306	Blowing waste box

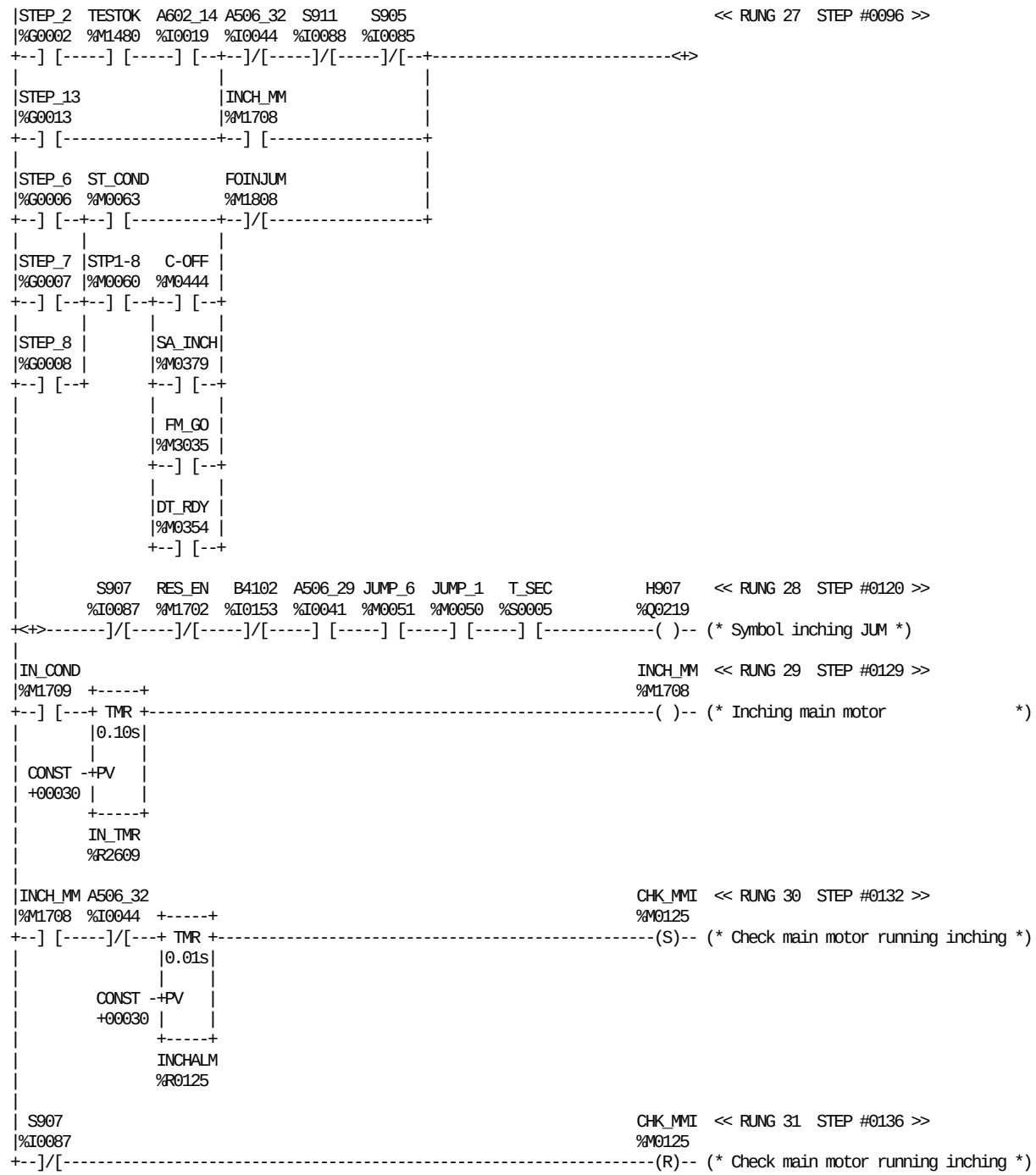

REFERENCE	NICKNAME	REFERENCE DESCRIPTION	REFERENCE	NICKNAME	REFERENCE DESCRIPTION
%I0041	A506_29	DMC Main motor ready	%M0051	JUMP_6	Jump to pos 6 (Fast stop)
%I0044	A506_32	DMC Main motor running	%M1702	RES_EN	Reset enable signal
%I0019	A602_14	Safety monitors C	%I0085	S905	Push button inching FFU
%I0153	B4102	Crank guard JUM	%I0087	S907	Push button inching JUM
%M0444	C-OFF	Steam barrier disabled	%I0088	S911	Push button step up
%M0125	CHK_MMI	Check main motor running inching	%M0379	SA_INCH	SA strip not sealed inching
%M0354	DT_RDY	Date unit not ready	%G0013	STEP_13	OPEN DOORS, CUT TUBE
%M3035	FM_GO	FM can start (from DE)	%G0002	STEP_2	PREPARATION (3 MIN.)
%M1808	FOINJUM	Force inching after LS alarm	%G0006	STEP_6	DRYING + STEAM CLEANING
%Q0219	H907	Symbol inching JUM	%G0007	STEP_7	SIGNAL TO STERILIZER
%R0125	INCHALM	Delay for MM inching alarm	%G0008	STEP_8	FLAPS + H2O2 TEMPERATURE
%M1708	INCH_MM	Inching main motor	%M0060	STP1-8	Step up conditions pos 1-8
%M1709	IN_COND	Inching conditions main motor	%M0063	ST_COND	Step up conditions
%R2609	IN_TMR	Timer inching main motor	%M1480	TESTOK	SA, bobbin research OK
%M0050	JUMP_1	Jump to pos 1 (Emergency stop)	%S0005	T_SEC	

```
| (*************************************************************************)
| (* Register %R2613 is the jaw counter. It will keep count of the jaws when  *)
| (* the machine is running. It is reseted by the zerojaw sensor and that is  *)
| (* made in the Fast Scan since the pulse is rather short.                   *)
| (*************************************************************************)
|
|JAWP_NS                                                          << RUNG 33  STEP #0139 >>
|%M0021  +-----+
+--] [---+ ADD_+-
|        | INT |
|        |     |
|        |     | JAW_CTR
| CONST -+I1  Q+-%R2613
| +00001 |     |
|        |     |
|JAW_CTR |     |
|%R2613 -+I2   |
|        +-----+
|
|CL_JAW  JAWP_NS                                                  << RUNG 34  STEP #0141 >>
|%M0134  %M0021  +-----+
+--] [-----] [---+MOVE_+-
|                | INT |
|                |     |
|                |     | JAW_CTR
|         CONST -+IN  Q+-%R2613
|         +00010 | LEN |
|                |00001|
|                |     |
|                +-----+
|
|ALW_ON                                                           << RUNG 35  STEP #0144 >>
|%S0007  +-----+
+--] [---+ GT_ |
|        | INT |
|        |     |
|JAW_CTR |     |         +-----+
|%R2613 -+I1  Q+---------+MOVE_+-
|        |     |         | INT |
|        |     |         |     |
|        |     |         |     | JAW_CTR
| CONST -+I2   |  CONST -+IN  Q+-%R2613
| +00010 +-----+  +00001 | LEN |
|                        |00001|
|                        |     |
|                        +-----+
|
|[    END OF SUBROUTINE LOGIC     ]
|
```

REFERENCE	NICKNAME	REFERENCE DESCRIPTION	REFERENCE	NICKNAME	REFERENCE DESCRIPTION
%S0007	ALW_ON		%M0021	JAWP_NS	Jawpulse Normal scan
%M0134	CL_JAW	Reset Jaw counter	%R2613	JAW_CTR	Jaw counter

```
|[  START LD SUBROUTINE  FFU_MOT  ]
|
|[     VARIABLE DECLARATIONS      ]
|
|[   START OF SUBROUTINE LOGIC    ]
|
| (*************************************************************************)
| (* The following subroutine take care of the control for the FFU servo   *)
| (* motor.                                                                *)
| (*************************************************************************)
|
| (*************************************************************************)
| (* To be able to synchronize the 2 DMC units in the right way the Main   *)
| (* DMC must be ready, with its boot up sequence, before the FFU DMC      *)
| (* motor starts. The rung below takes care of that.                      *)
| (*************************************************************************)
|
|A506_29                                                          A507_10  << RUNG 6  STEP #0004 >>
|%I0041                                                           %Q0065
+--]/[-----------------------------------------------------------------( )-- (* Wait main DMC                 *)
|
| (*************************************************************************)
| (* Start reason for FFU motor runing                                     *)
| (*************************************************************************)
|
|SQ_COND                                                          STAR_RE  << RUNG 8  STEP #0007 >>
|%M0070                                                           %M1452
+--] [--+--------------------------------------------------------------( )-- (* Start reason servo motor FFU   *)
|       |
|LOW_INC|
|%M1450 |
+--] [--+
|       |
|HI_INCH|
|%M1451 |
+--] [--+
|       |
| TBSEA |
|%M0120 |
+--] [--+
|       |
| HC_ON |
|%M1094 |
+--] [--+
|
| (*************************************************************************)
| (* General sequence for drive the FFU servo motor : for the start and    *)
| (* the stop.                                                             *)
| (*************************************************************************)
|
|STAR_RE                                                           K006    << RUNG 10  STEP #0014 >>
|%M1452                                                           %Q0035
+--] [-----------------------------------------------------------------(S)-- (* Contactor FFU motor           *)
|
| K006                                                            EN_SET   << RUNG 11  STEP #0016 >>
|%Q0035  +-----+                                                  %M1453
+--] [---+ TMR +--------------------------------------------------------( )-- (* Set enable servo motor FFU    *)
|        |0.10s|
|        |     |
| CONST -+PV   |
| +00006 |     |
|        +-----+
|        DEL_SOF
|        %R2200
|
```

REFERENCE	NICKNAME	REFERENCE DESCRIPTION	REFERENCE	NICKNAME	REFERENCE DESCRIPTION
%I0041	A506_29	DMC Main motor ready	%Q0035	K006	Contactor FFU motor
%Q0065	A507_10	Wait main DMC	%M1450	LOW_INC	Low speed inch servo motor FFU
%R2200	DEL_SOF	Delay for soft enable servo FFU	%M0070	SQ_COND	Start sequence conditions
%M1453	EN_SET	Set enable servo motor FFU	%M1452	STAR_RE	Start reason servo motor FFU
%M1094	HC_ON	Hygienic cleaning going on	%M0120	TBSEA	Tube sealing
%M1451	HI_INCH	High speed inch servo motor FFU			

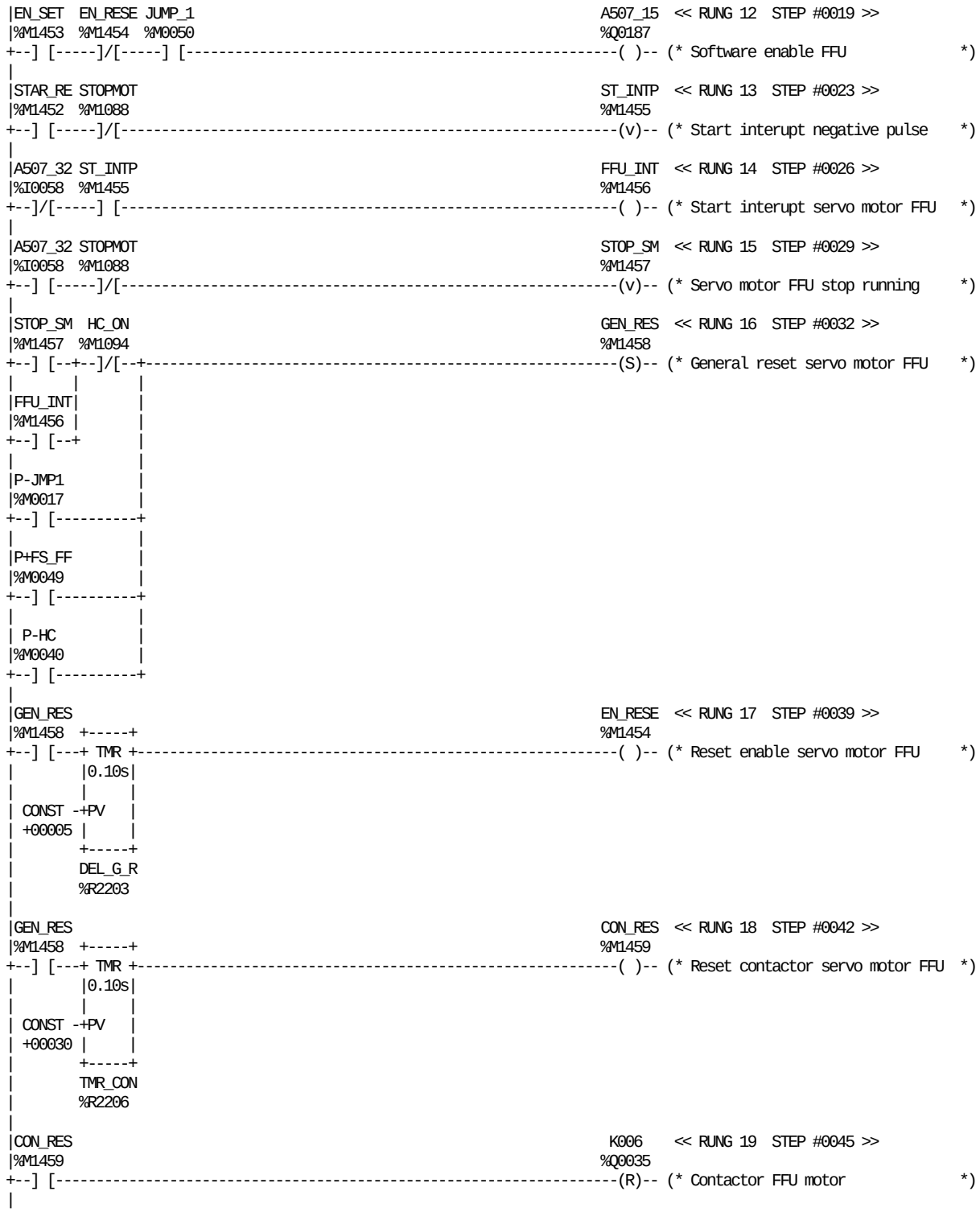

REFERENCE	NICKNAME	REFERENCE DESCRIPTION
%Q0187	A507_15	Software enable FFU
%I0058	A507_32	DMC FFU motor running
%M1459	CON_RES	Reset contactor servo motor FFU
%R2203	DEL_G_R	Delay general reset servo FFU
%M1454	EN_RESE	Reset enable servo motor FFU
%M1453	EN_SET	Set enable servo motor FFU
%M1456	FFU_INT	Start interupt servo motor FFU
%M1458	GEN_RES	General reset servo motor FFU
%M1094	HC_ON	Hygienic cleaning going on
%M0050	JUMP_1	Jump to pos 1 (Emergency stop)

REFERENCE	NICKNAME	REFERENCE DESCRIPTION
%Q0035	K006	Contactor FFU motor
%M0049	P+FS_FF	Pulse pos edge fast stop FFU
%M0040	P-HC	Pulse neg edge hyigenic cleaning
%M0017	P-JMP1	Jump pos 1 negative pulse
%M1452	STAR_RE	Start reason servo motor FFU
%M1088	STOPMOT	Stop motors during HC
%M1457	STOP_SM	Servo motor FFU stop running
%M1455	ST_INTP	Start interupt negative pulse
%R2206	TMR_CON	TMR reset contactor motor

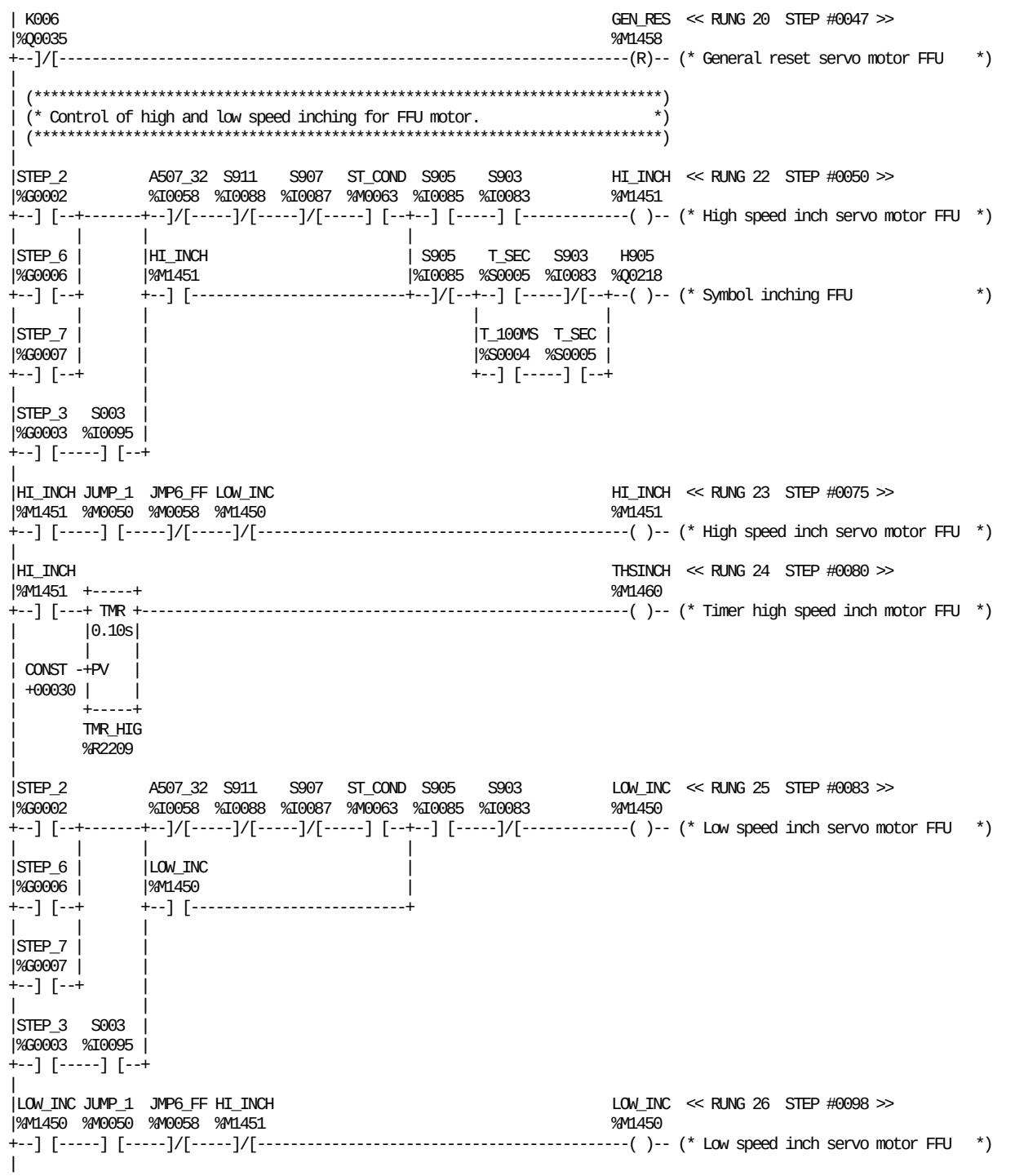

REFERENCE	NICKNAME	REFERENCE DESCRIPTION
%I0058	A507_32	DMC FFU motor running
%M1458	GEN_RES	General reset servo motor FFU
%Q0218	H905	Symbol inching FFU
%M1451	HI_INCH	High speed inch servo motor FFU
%M0058	JMP6_FF	Fast stop Final Folder
%M0050	JUMP_1	Jump to pos 1 (Emergency stop)
%Q0035	K006	Contactor FFU motor
%M1450	LOW_INC	Low speed inch servo motor FFU
%I0095	S003	Service switch
%I0083	S903	Mode selector switch
%I0085	S905	Push button inching FFU
%I0087	S907	Push button inching JUM
%I0088	S911	Push button step up
%G0002	STEP_2	PREPARATION (3 MIN.)
%G0003	STEP_3	TUBE SEALING
%G0006	STEP_6	DRYING + STEAM CLEANING
%G0007	STEP_7	SIGNAL TO STERILIZER
%M0063	ST_COND	Step up conditions
%M1460	THSINCH	Timer high speed inch motor FFU
%R2209	TMR_HIG	TMR high speed inching
%S0004	T_100MS	
%S0005	T_SEC	

```
|LOW_INC                                                          TLSINCH  << RUNG 27  STEP #0103 >>
|%M1450  +-----+                                                  %M1461
+--] [---+ TMR +-----------------------------------------------------( )-- (* Timer low speed inch motor FFU   *)
|        |0.10s|
|        |     |
| CONST -+PV   |
| +00030 |     |
|        +-----+
|        TMR_LOW
|        %R2212
|
|THSINCH HP_MODE                                                  A507_13  << RUNG 28  STEP #0106 >>
|%M1460  %M0698                                                   %Q0185
+--] [--+--]/[--+-----------------------------------------------------( )-- (* High speed inching FFU          *)
|       |       |
|       |A507_13|
|       |%Q0185 |
|       +--] [--+
|
|TLSINCH HP_MODE                                                  A507_14  << RUNG 29  STEP #0111 >>
|%M1461  %M0698                                                   %Q0186
+--] [--+--]/[--+-----------------------------------------------------( )-- (* Low speed inching FFU           *)
|       |       |
|       |A507_14|
|       |%Q0186 |
|       +--] [--+
|               |
|TUBESGO        |
|%M0121         |
+--] [----------+
|               |
|MOT_ST  STOPMOT|
|%M1095  %M1088 |
+--] [-----]/[--+
|
| (*************************************************************************)
| (* The following rungs give the signals to the servo motor FFU for       *)
| (* home position search and for drive synchrounous.                       *)
| (*************************************************************************)
|
|SQ_COND   NS1   ST_9-10                                          A507_11  << RUNG 31  STEP #0121 >>
|%M0070  %M0090  %G0026                                           %Q0191
+--] [-----]/[-----] [--+-----------------------------------------------( )-- (* Find home position FFU          *)
|                       |
|THSINCH HP_MODE        |
|%M1460  %M0698         |
+--] [--+--] [----------+
|       |
|TLSINCH|
|%M1461 |
+--] [--+
|
|ST_9-10 A507_11 A507_31                                          A507_12  << RUNG 32  STEP #0129 >>
|%G0026  %Q0191  %I0057                                           %Q0192
+--] [-----] [-----] [-------------------------------------------------( )-- (* Synchrounous drive FFU          *)
|
| (*************************************************************************)
| (* Logic for control the external conveyor DE motor.                     *)
| (*************************************************************************)
|
```

REFERENCE	NICKNAME	REFERENCE DESCRIPTION	REFERENCE	NICKNAME	REFERENCE DESCRIPTION
%Q0191	A507_11	Find home position FFU	%M0090	NS1	Normal stop step 1
%Q0192	A507_12	Synchrounous drive FFU	%M0070	SQ_COND	Start sequence conditions
%Q0185	A507_13	High speed inching FFU	%M1088	STOPMOT	Stop motors during HC
%Q0186	A507_14	Low speed inching FFU	%G0026	ST_9-10	Ladder position 9-10
%I0057	A507_31	DMC FFU Home position	%M1460	THSINCH	Timer high speed inch motor FFU
%M0698	HP_MODE	FFU inching button home pos mode	%M1461	TLSINCH	Timer low speed inch motor FFU
%M1450	LOW_INC	Low speed inch servo motor FFU	%R2212	TMR_LOW	TMR low speed inching
%M1095	MOT_ST	Start motors JUM and FFU	%M0121	TUBESGO	Tube sealing going on

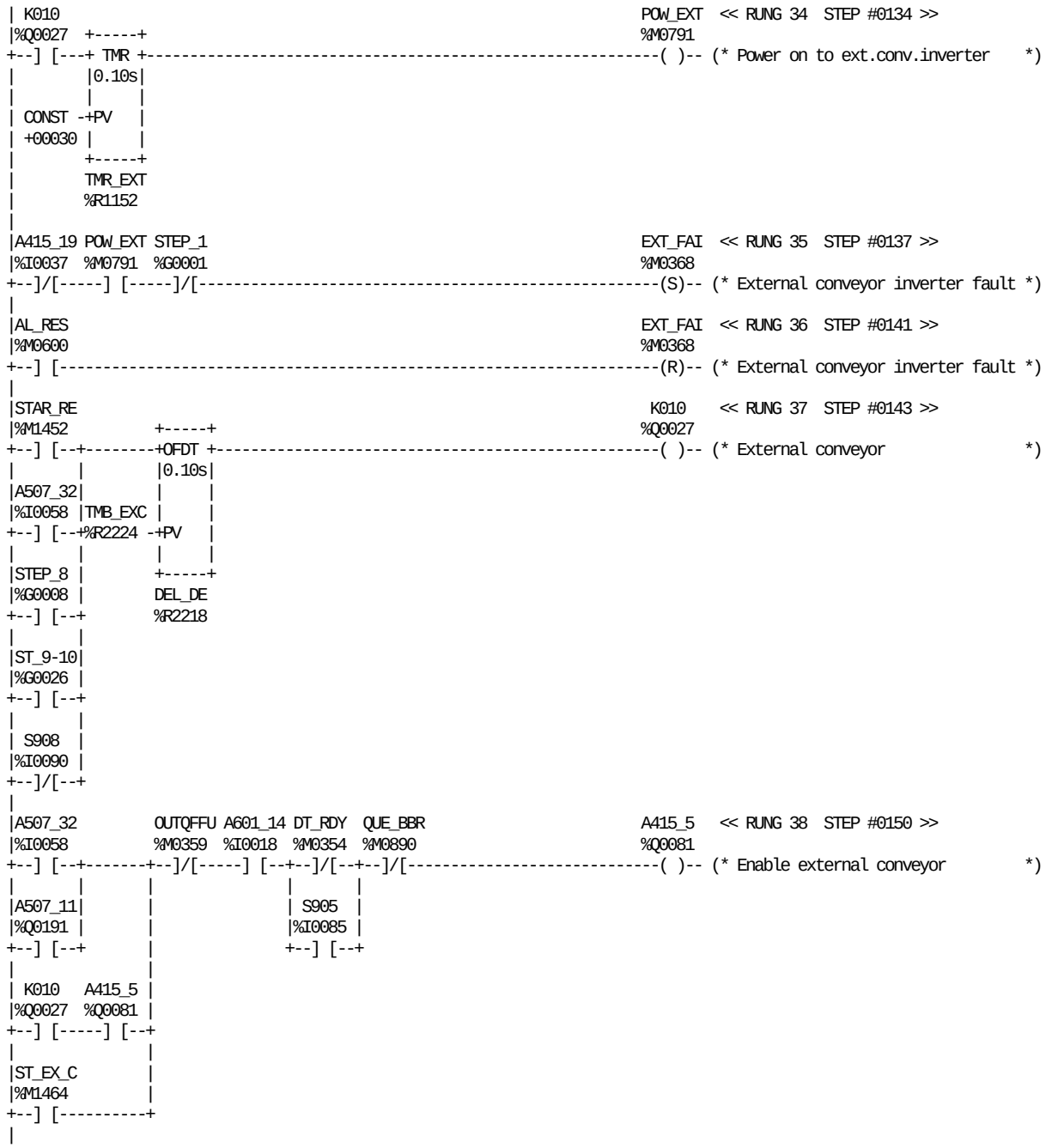

REFERENCE	NICKNAME	REFERENCE DESCRIPTION	REFERENCE	NICKNAME	REFERENCE DESCRIPTION
%I0037	A415_19	Failure external conveyor DE	%M0791	POW_EXT	Power on to ext.conv.inverter
%Q0081	A415_5	Enable external conveyor	%M0890	QUE_BBR	Queue after belt brake
%Q0191	A507_11	Find home position FFU	%I0085	S905	Push button inching FFU
%I0058	A507_32	DMC FFU motor running	%I0090	S908	Push button S P A R E
%I0018	A601_14	Safety monitors B	%M1452	STAR_RE	Start reason servo motor FFU
%M0600	AL_RES	Alarm reset (From TPOP)	%G0001	STEP_1	STANDBY
%R2218	DEL_DE	Delay off for DE-motor contactor	%G0008	STEP_8	FLAPS + H2O2 TEMPERATURE
%M0354	DT_RDY	Date unit not ready	%G0026	ST_9-10	Ladder position 9-10
%M0368	EXT_FAI	External conveyor inverter fault	%M1464	ST_EX_C	Start external conveyor
%Q0027	K010	External conveyor	%R2224	TMB_EXC	Timebase offdelay external conv
%M0359	OUTQFFU	Queue in outfeed FFU	%R1152	TMR_EXT	Delay for ext.conv.fault detect

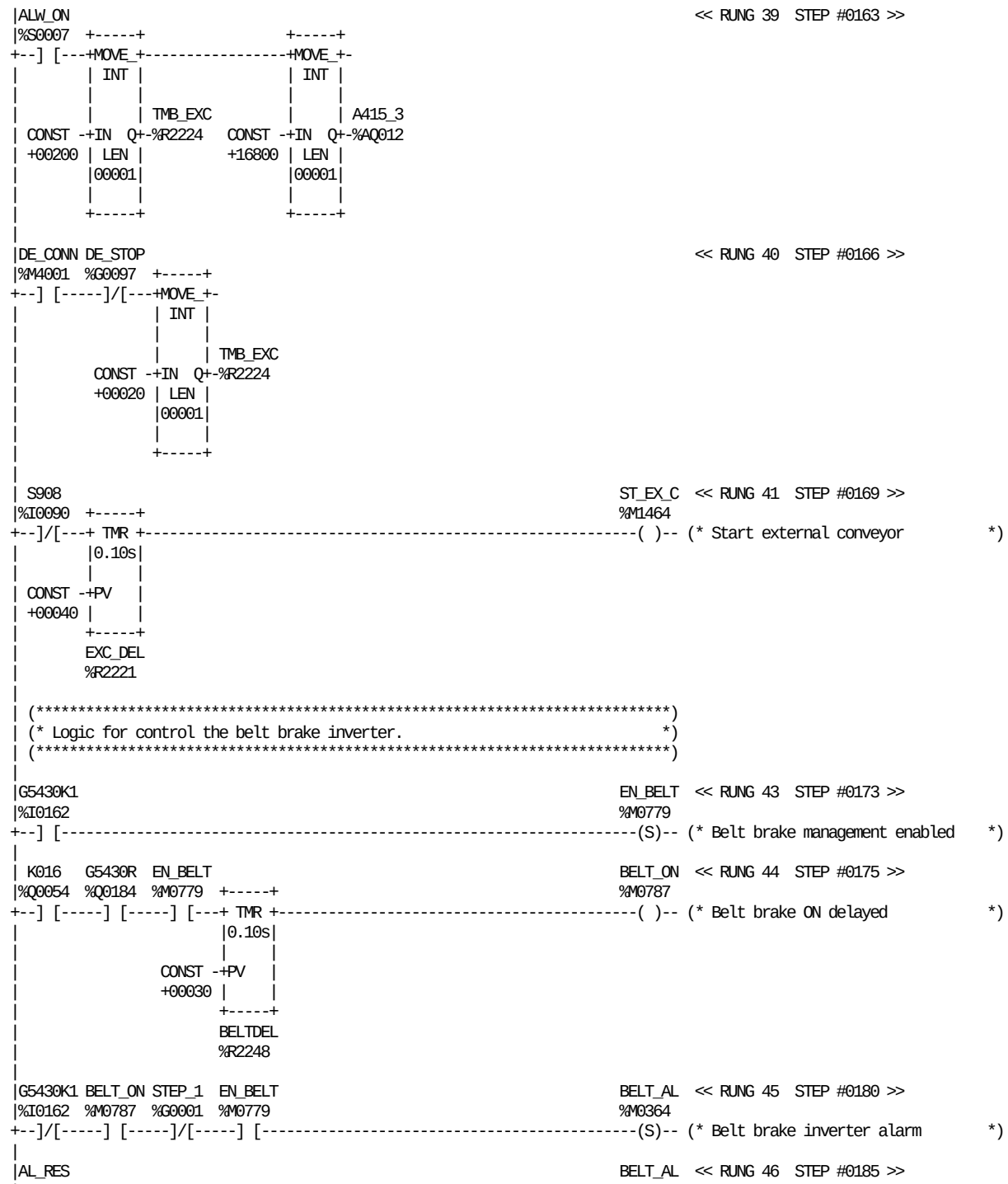

REFERENCE	NICKNAME	REFERENCE DESCRIPTION	REFERENCE	NICKNAME	REFERENCE DESCRIPTION
%AQ012	A415_3	Speed control of ext conveyor DE	%R2221	EXC_DEL	Delay enable external conveyor
%S0007	ALW_ON		%I0162	G5430K1	Belt brake inverter fault
%M0600	AL_RES	Alarm reset (From TPOP)	%Q0184	G5430R	Enable belt brake
%R2248	BELTDEL	Delay alarm belt brake fault	%Q0054	K016	Belt brake inverter supplies
%M0364	BELT_AL	Belt brake inverter alarm	%I0090	S908	Push button S P A R E
%M0787	BELT_ON	Belt brake ON delayed	%G0001	STEP_1	STANDBY
%M4001	DE_CONN	DE communication connected	%M1464	ST_EX_C	Start external conveyor
%G0097	DE_STOP	DE not ready for production	%R2224	TMB_EXC	Timebase offdelay external conv
%M0779	EN_BELT	Belt brake management enabled			

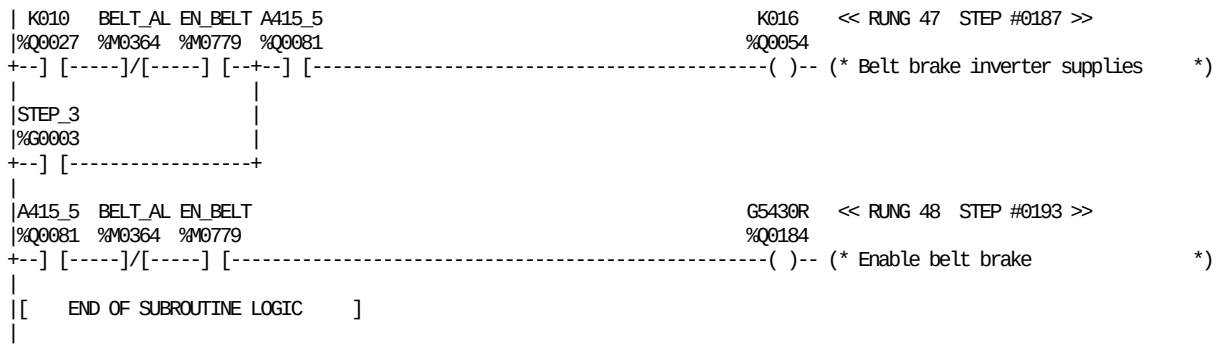

REFERENCE	NICKNAME	REFERENCE DESCRIPTION	REFERENCE	NICKNAME	REFERENCE DESCRIPTION
%Q0081	A415_5	Enable external conveyor	%Q0027	K010	External conveyor
%M0364	BELT_AL	Belt brake inverter alarm	%Q0054	K016	Belt brake inverter supplies
%M0779	EN_BELT	Belt brake management enabled	%G0003	STEP_3	TUBE SEALING
%Q0184	G5430R	Enable belt brake			

This page left intentionally blank

```
|[  START LD SUBROUTINE    DCS    ]
|
|[     VARIABLE DECLARATIONS      ]
|
|[   START OF SUBROUTINE LOGIC    ]
|
| (*************************************************************************)
| (* The following subroutine take care of the control for the DCS servo     *)
| (* motor and for the DCS TMCC card.                                         *)
| (*************************************************************************)
|
|ST_3-10 OUT_DCS                                                  A418_20  << RUNG 5  STEP #0003 >>
|%G0023  %M0386                                                   %Q0062
+--] [--+--]/[-----------------------------------------------------( )-- (* Enable TMCC DCS  *)
|       |
|STEP_11|
|%G0011 |
+--] [--+
|
|ST_3-10        DCS_HOM DCS_MOT JUMP_1                            A508_6   << RUNG 6  STEP #0007 >>
|%G0023         %M0427  %M0431  %M0050                            %Q0209
+--] [--+-------+--]/[-----]/[-----] [-------------------------------------( )-- (* DMC DCS hardware enable         *)
|       |       |
|STEP_11|       |
|%G0011 |       |
+--] [--+       |
|               |
|DCS_MOT SQGOING|
|%M0431  %M0072 |
+--] [--+--] [--+
|       |
|STEP_9 |
|%G0009 |
+--] [--+
|
|A508_6                                                           A508_15  << RUNG 7  STEP #0017 >>
|%Q0209  +-----+                                                  %Q0208
+--] [---+ TMR +-----------------------------------------------------------( )-- (* DMC DCS software enable         *)
|        |0.10s|
|        |     |
| CONST -+PV   |
| +00006 |     |
|        +-----+
|        DCS_ENB
|        %R2686
|
|A508_15                                                          P-DCSEN  << RUNG 8  STEP #0020 >>
|%Q0208                                                           %M1749
+--] [-----------------------------------------------------------------(v)-- (* Pulse neg edge Enable DCS       *)
|
| (*************************************************************************)
| (* Precorrection 1 and 2 is mainly used during tube sealing. But also if   *)
| (* the machine stops out of design (especially after sterile inching       *)
| (* the machine will stop out of design).                                   *)
| (*************************************************************************)
|
```

REFERENCE	NICKNAME	REFERENCE DESCRIPTION	REFERENCE	NICKNAME	REFERENCE DESCRIPTION
%Q0062	A418_20	Enable TMCC DCS	%M0386	OUT_DCS	Machine out of design
%Q0208	A508_15	DMC DCS software enable	%M1749	P-DCSEN	Pulse neg edge Enable DCS
%Q0209	A508_6	DMC DCS hardware enable	%M0072	SQGOING	Start sequence going on
%R2686	DCS_ENB	TMR delay DCS software enable	%G0011	STEP_11	END OF PRODUCTION
%M0427	DCS_HOM	DCS servo motor wrong home pos	%G0009	STEP_9	MOTOR START
%M0431	DCS_MOT	DCS servo motor fault	%G0023	ST_3-10	Ladder position 3-10
%M0050	JUMP_1	Jump to pos 1 (Emergency stop)			

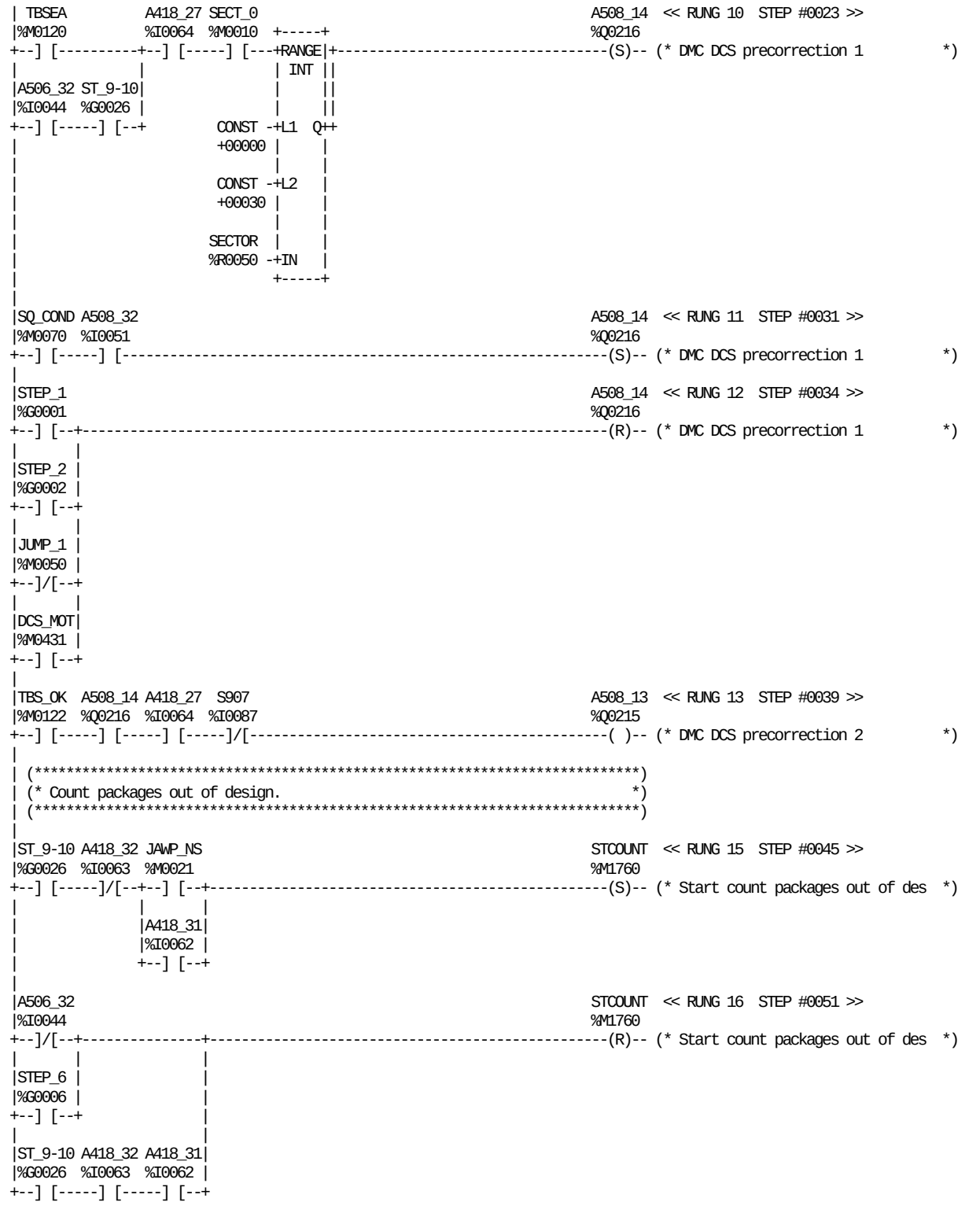

REFERENCE	NICKNAME	REFERENCE DESCRIPTION	REFERENCE	NICKNAME	REFERENCE DESCRIPTION
%I0064	A418_27	TMCC precorrection out-signal	%R0050	SECTOR	Angle sector (0-63 Dec)
%I0062	A418_31	Bar code signal DCS	%M0010	SECT_0	Angle sector 0 (0-77 oct)
%I0063	A418_32	Design ok signal DCS	%M0070	SQ_COND	Start sequence conditions
%I0044	A506_32	DMC Main motor running	%M1760	STCOUNT	Start count packages out of des
%Q0215	A508_13	DMC DCS precorrection 2	%G0001	STEP_1	STANDBY
%Q0216	A508_14	DMC DCS precorrection 1	%G0002	STEP_2	PREPARATION (3 MIN.)
%I0051	A508_32	DMC DCS in home position	%G0006	STEP_6	DRYING + STEAM CLEANING
%M0431	DCS_MOT	DCS servo motor fault	%G0026	ST_9-10	Ladder position 9-10
%M0021	JAWP_NS	Jawpulse Normal scan	%M0120	TBSEA	Tube sealing
%M0050	JUMP_1	Jump to pos 1 (Emergency stop)	%M0122	TBS_OK	Tube sealing ok
%I0087	S907	Push button inching JUM			

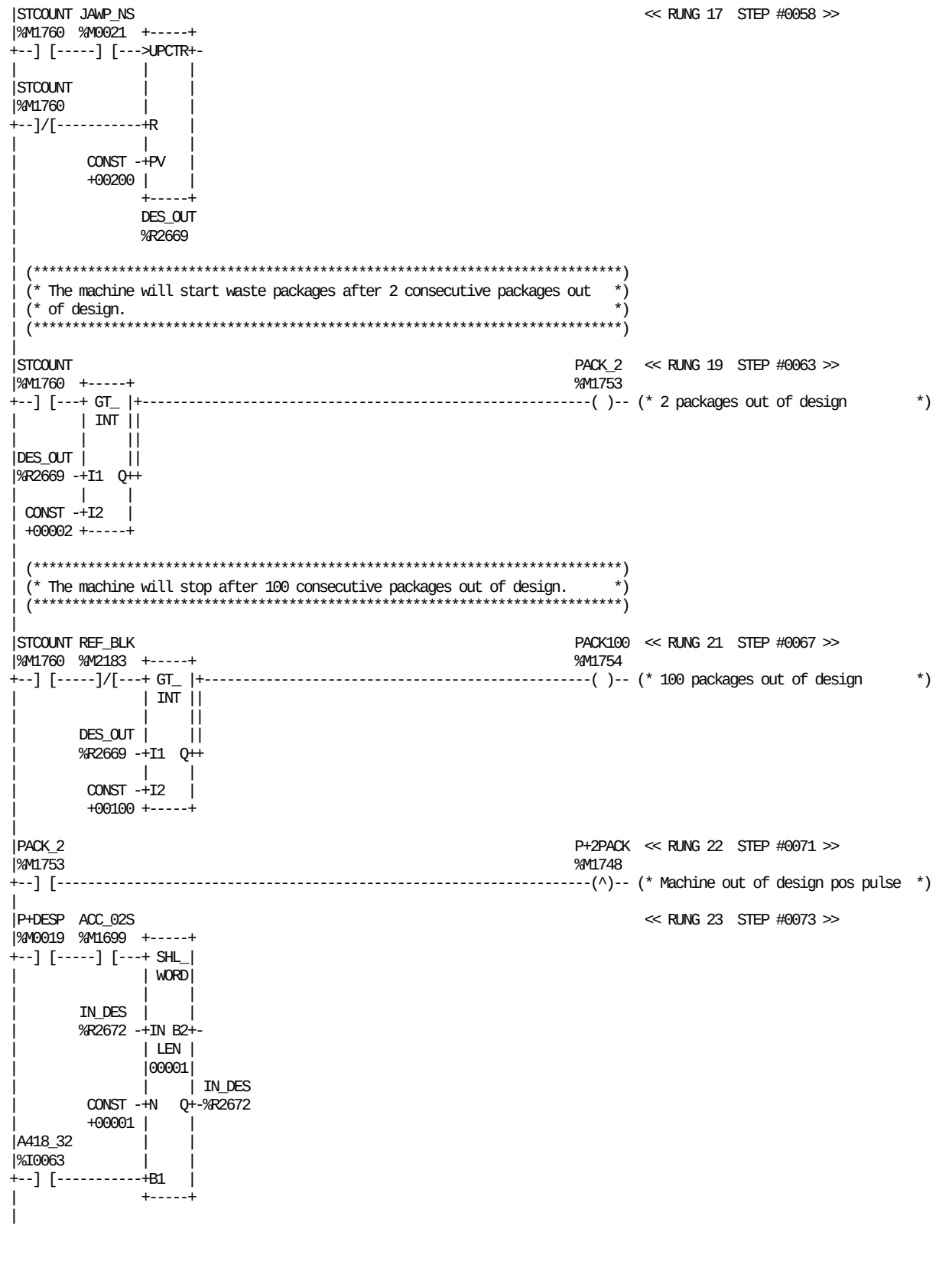

REFERENCE	NICKNAME	REFERENCE DESCRIPTION	REFERENCE	NICKNAME	REFERENCE DESCRIPTION
%I0063	A418_32	Design ok signal DCS	%M0019	P+DESP	Barcode signal positive pulse
%M1699	ACC_02S	2 sec. acceleration main motor	%M1754	PACK100	100 packages out of design
%R2669	DES_OUT	Packages out of design	%M1753	PACK_2	2 packages out of design
%R2672	IN_DES	Count packages in design	%M2183	REF_BLK	Block alarm while refilling
%M0021	JAWP_NS	Jawpulse Normal scan	%M1760	STCOUNT	Start count packages out of des
%M1748	P+2PACK	Machine out of design pos pulse			

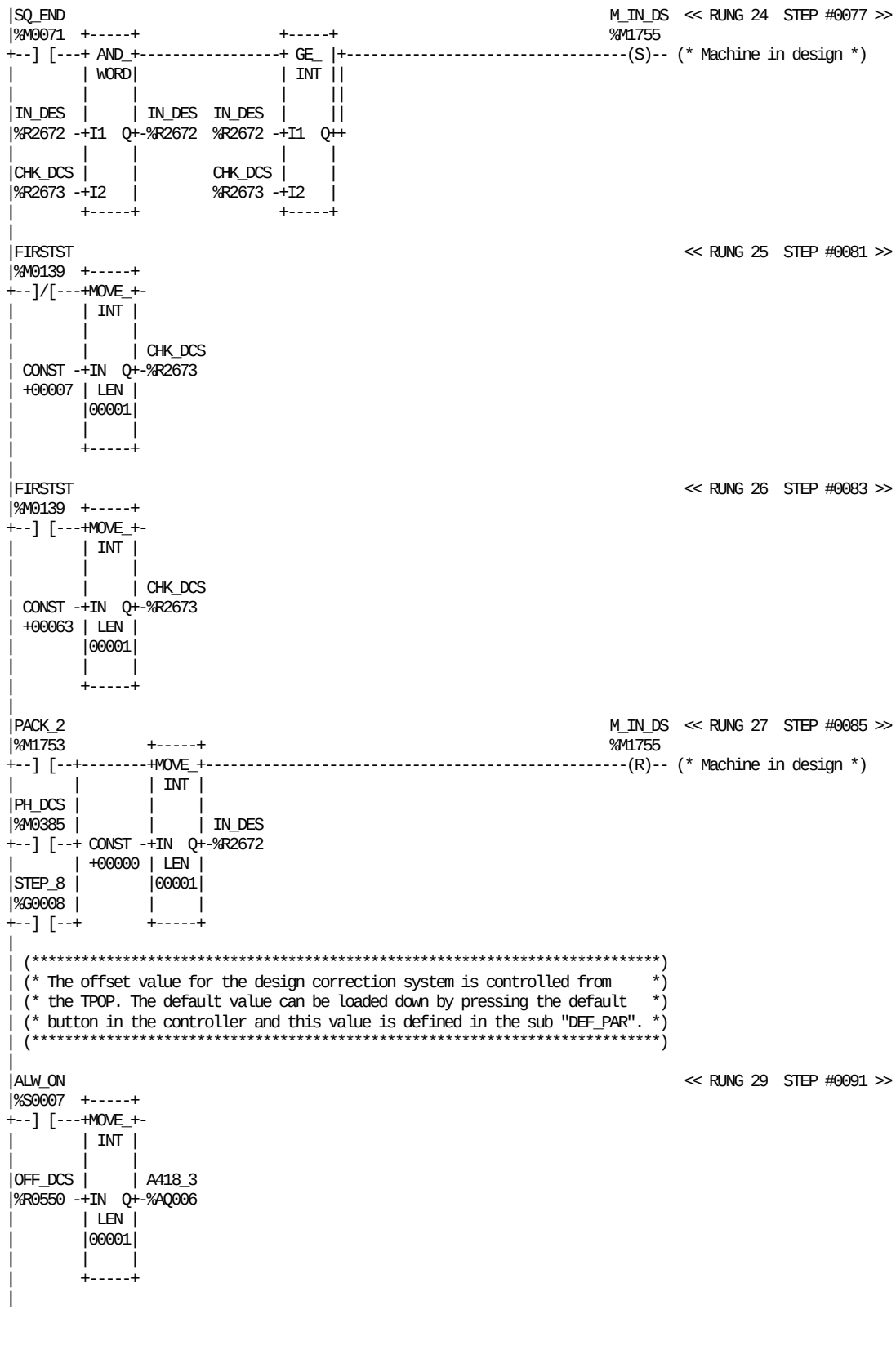

REFERENCE	NICKNAME	REFERENCE DESCRIPTION	REFERENCE	NICKNAME	REFERENCE DESCRIPTION
%AQ006	A418_3	Design position DCS	%R0550	OFF_DCS	Offset value DCS
%S0007	ALW_ON		%M1753	PACK_2	2 packages out of design
%R2673	CHK_DCS	Count packages in design	%M0385	PH_DCS	Malfunction photocells DCS
%M0139	FIRSTST	First start after sterilization	%M0071	SQ_END	Start sequence ended
%R2672	IN_DES	Count packages in design	%G0008	STEP_8	FLAPS + H2O2 TEMPERATURE
%M1755	M_IN_DS	Machine in design			

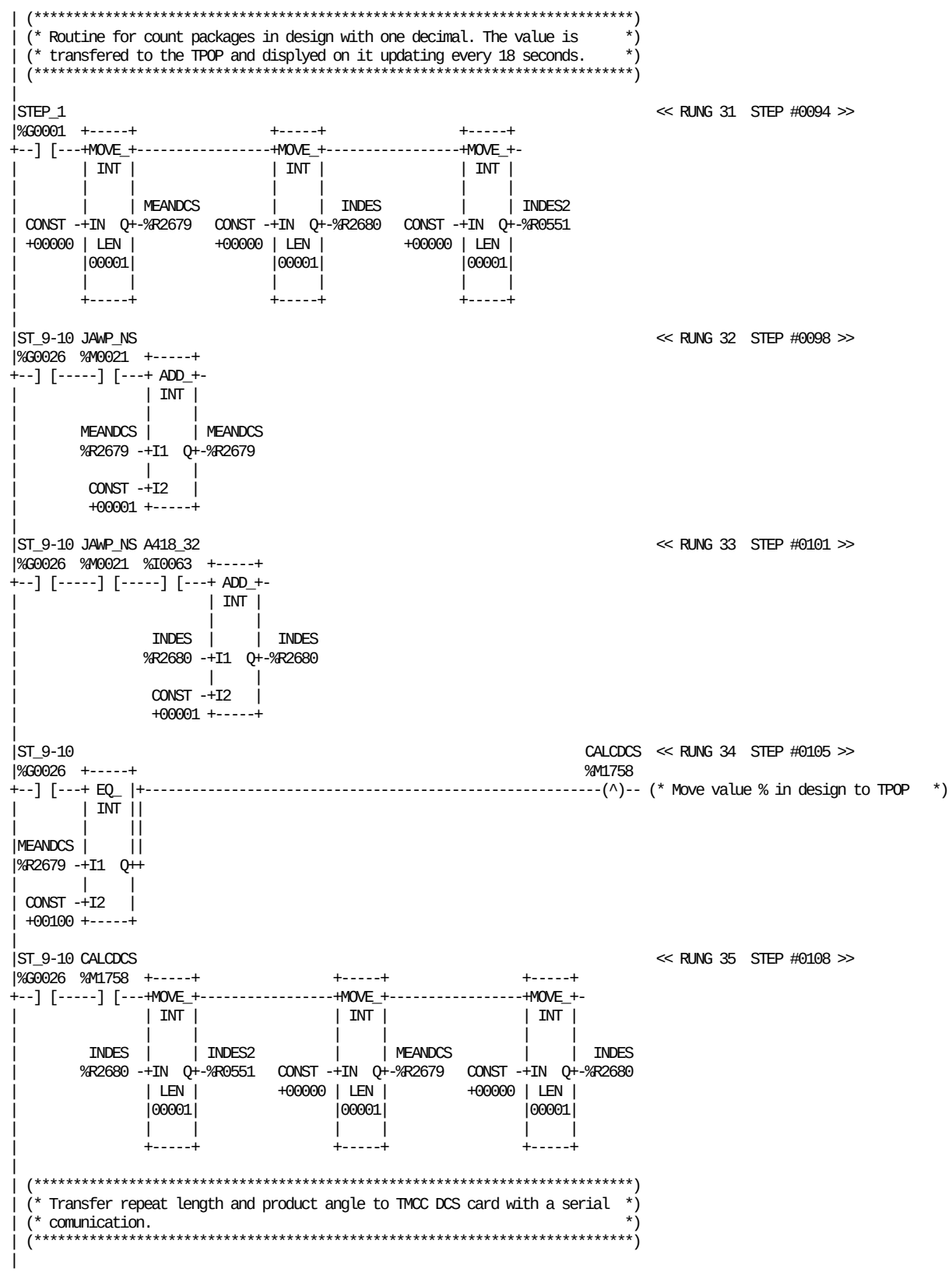

REFERENCE	NICKNAME	REFERENCE DESCRIPTION	REFERENCE	NICKNAME	REFERENCE DESCRIPTION
%I0063	A418_32	Design ok signal DCS	%M0021	JAWP_NS	Jawpulse Normal scan
%M1758	CALCDCS	Move value % in design to TPOP	%R2679	MEANDCS	Mean counter DCS
%R2680	INDES	Percent in design (one decimal)	%G0001	STEP_1	STANDBY
%R0551	INDES2	Percent in design (TPOP)	%G0026	ST_9-10	Ladder position 9-10

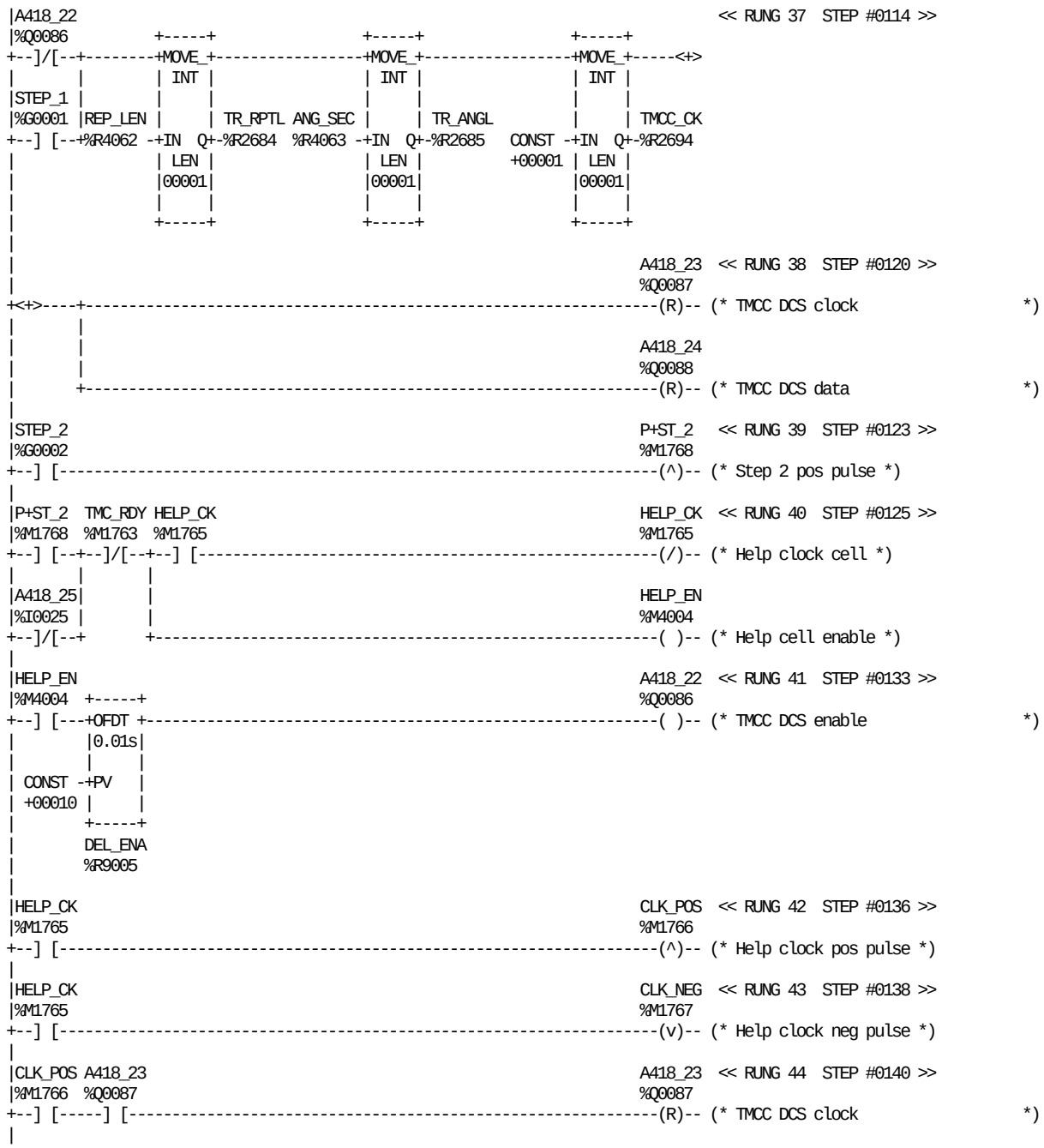

REFERENCE	NICKNAME	REFERENCE DESCRIPTION	REFERENCE	NICKNAME	REFERENCE DESCRIPTION
%Q0086	A418_22	TMCC DCS enable	%M4004	HELP_EN	Help cell enable
%Q0087	A418_23	TMCC DCS clock	%M1768	P+ST_2	Step 2 pos pulse
%Q0088	A418_24	TMCC DCS data	%R4062	REP_LEN	Repeat length TMCC
%I0025	A418_25	TMCC Data request	%G0001	STEP_1	STANDBY
%R4063	ANG_SEC	Angle sector TMCC	%G0002	STEP_2	PREPARATION (3 MIN.)
%M1767	CLK_NEG	Help clock neg pulse	%R2694	TMCC_CK	TMCC clok generator
%M1766	CLK_POS	Help clock pos pulse	%M1763	TMC_RDY	TMCC ready for transfer
%R9005	DEL_ENA	TMR delay enable tx TMCC	%R2685	TR_ANGL	Data transfer Production angle
%M1765	HELP_CK	Help clock cell	%R2684	TR_RPTL	Data transfer Repeat length

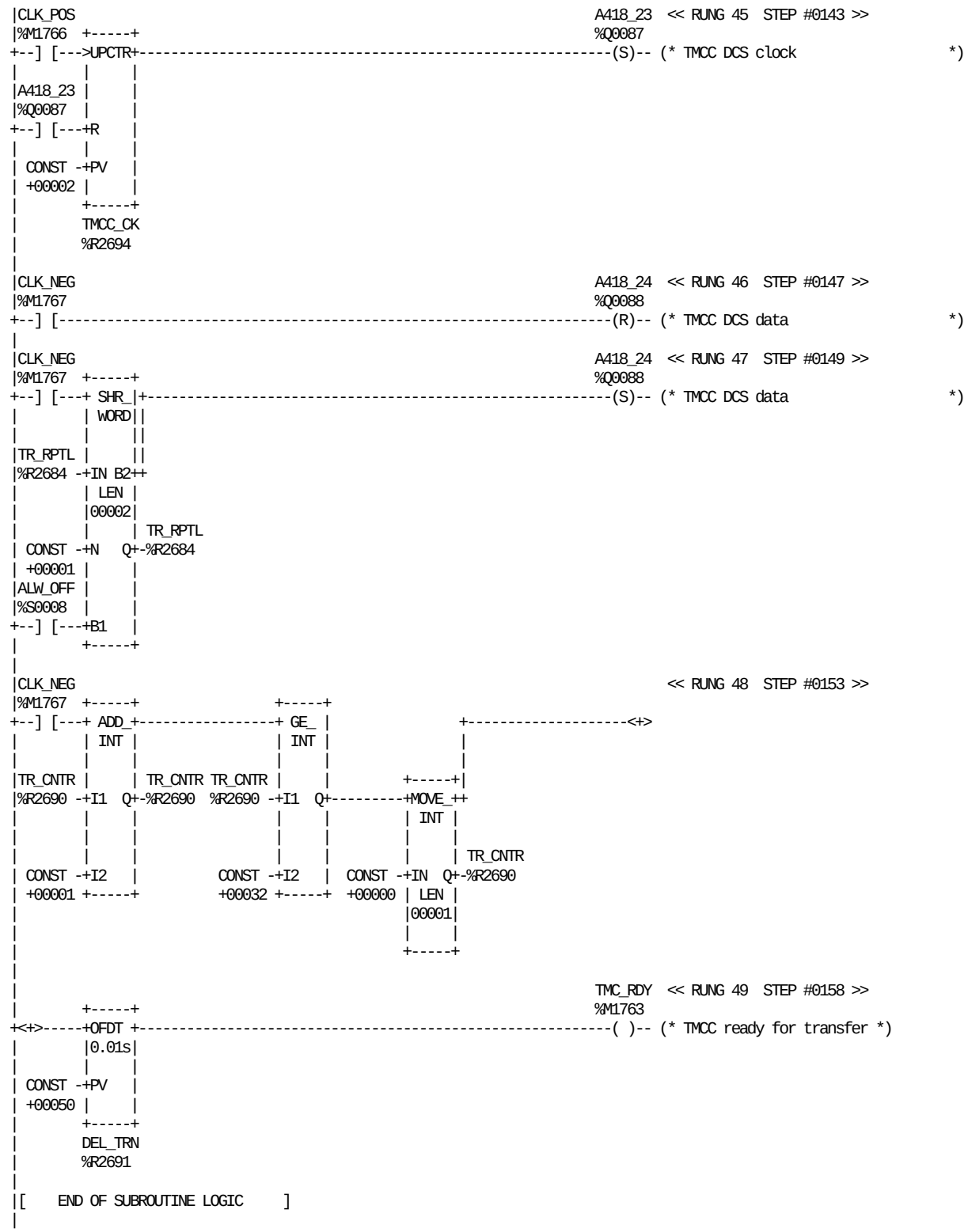

REFERENCE	NICKNAME	REFERENCE DESCRIPTION	REFERENCE	NICKNAME	REFERENCE DESCRIPTION
%Q0087	A418_23	TMCC DCS clock	%R2691	DEL_TRN	TMR delay end data transfer
%Q0088	A418_24	TMCC DCS data	%R2694	TMCC_CK	TMCC clok generator
%S0008	ALW_OFF		%M1763	TMC_RDY	TMCC ready for transfer
%M1767	CLK_NEG	Help clock neg pulse	%R2690	TR_CNTR	Data transfer counter
%M1766	CLK_POS	Help clock pos pulse	%R2684	TR_RPTL	Data transfer Repeat length

This page left intentionally blank

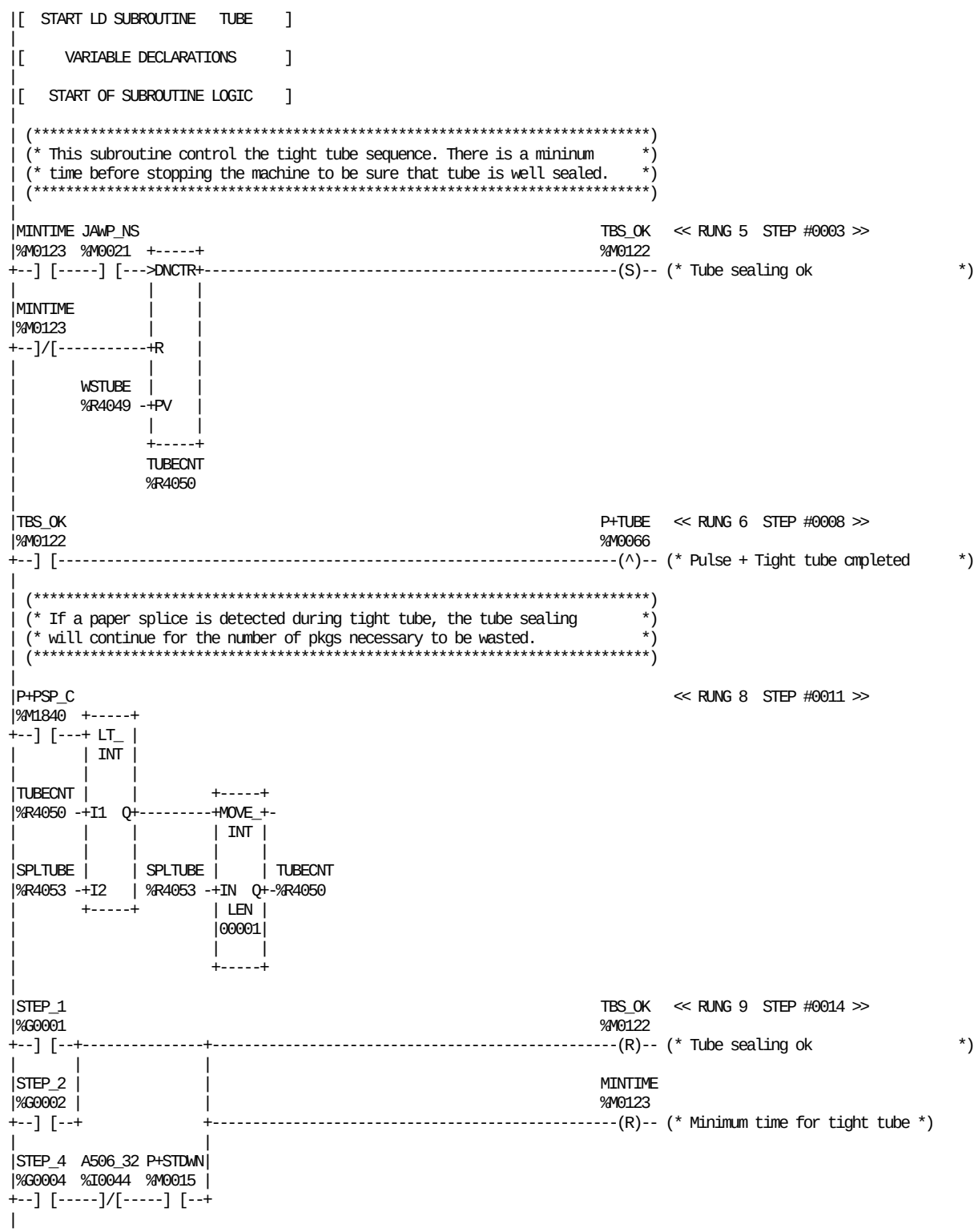

REFERENCE	NICKNAME	REFERENCE DESCRIPTION	REFERENCE	NICKNAME	REFERENCE DESCRIPTION
%I0044	A506_32	DMC Main motor running	%G0001	STEP_1	STANDBY
%M0021	JAWP_NS	Jawpulse Normal scan	%G0002	STEP_2	PREPARATION (3 MIN.)
%M0123	MINTIME	Minimum time for tight tube	%G0004	STEP_4	HEAT STERILIZATION
%M1840	P+PSP_C	Splice guard column pos pulse	%M0122	TBS_OK	Tube sealing ok
%M0015	P+STDWN	Step down positive pulse	%R4050	TUBECNT	Pkgs counter for tight tube
%M0066	P+TUBE	Pulse + Tight tube cmpleted	%R4049	WSTUBE	Waste pkgs tight sealing tube
%R4053	SPLTUBE	Pkgs from jaw to splice detector			

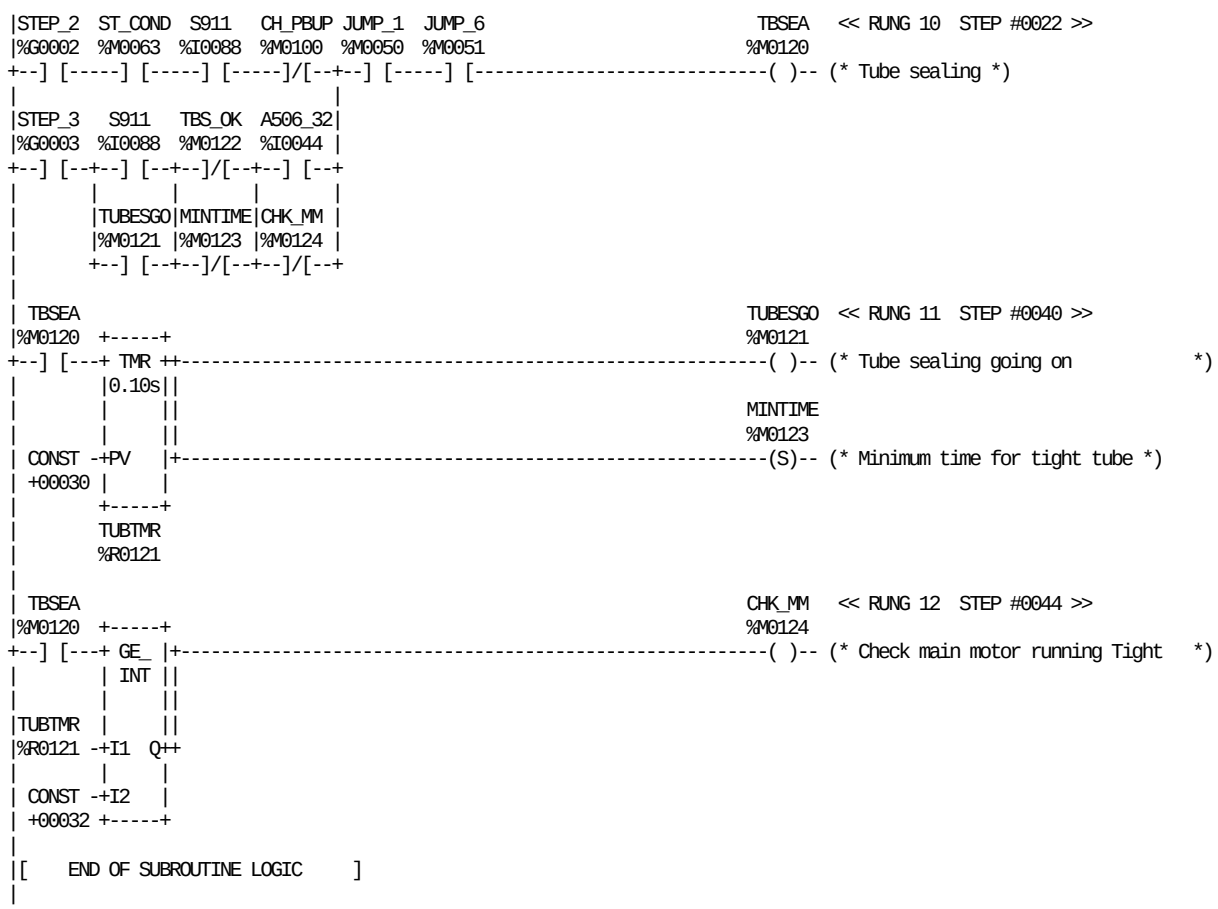

REFERENCE	NICKNAME	REFERENCE DESCRIPTION	REFERENCE	NICKNAME	REFERENCE DESCRIPTION
%I0044	A506_32	DMC Main motor running	%G0002	STEP_2	PREPARATION (3 MIN.)
%M0124	CHK_MM	Check main motor running Tight	%G0003	STEP_3	TUBE SEALING
%M0100	CH_PBUP	Check pushbutton step up	%M0063	ST_COND	Step up conditions
%M0050	JUMP_1	Jump to pos 1 (Emergency stop)	%M0120	TBSEA	Tube sealing
%M0051	JUMP_6	Jump to pos 6 (Fast stop)	%M0122	TBS_OK	Tube sealing ok
%M0123	MINTIME	Minimum time for tight tube	%M0121	TUBESGO	Tube sealing going on
%I0088	S911	Push button step up	%R0121	TUBTMR	Tube sealing timer

```
|[  START LD SUBROUTINE  ASEPTIC  ]
|
|[     VARIABLE DECLARATIONS      ]
|
|[   START OF SUBROUTINE LOGIC    ]
|
| (*************************************************************************)
| (* To be sure that the filling circuit is properly drained, air is blown    *)
| (* through that circuit for 3 minutes after that the machine has been       *)
| (* stepped up to step 2. The sequence is enabled each time the machine      *)
| (* goes in production and it is disabled when the machine is drained once.  *)
| (*************************************************************************)
|
|SQ_END                                                          ENDRAIN  << RUNG 5  STEP #0003 >>
|%M0071                                                          %M0116
+--] [--+-------------------------------------------------------------(S)-- (* Draining filpipe enabled        *)
|       |
|CIP_ON |
|%M1000 |
+--] [--+
|       |
|FST_SCN|
|%S0001 |
+--] [--+
|
|STEP_2  DR_SEQ                                                  ENDRAIN  << RUNG 6  STEP #0007 >>
|%G0002  %M0838                                                  %M0116
+--] [-----] [-------------------------------------------------------------(R)-- (* Draining filpipe enabled        *)
|
|STEP_2  ENDRAIN                                                 DR_SEQ   << RUNG 7  STEP #0010 >>
|%G0002  %M0116  +-----+                                         %M0838
+--] [-----] [---+ TMR +-----------------------------------------------(S)-- (* Draning sequence filling circuit *)
|               |0.10s|
|               |     |
|        CONST -+PV   |
|        +01800 |     |
|               +-----+
|               DR_TIME
|               %R1059
|
|STEP_1  ENDRAIN                                                 DR_SEQ   << RUNG 8  STEP #0014 >>
|%G0001  %M0116                                                  %M0838
+--] [-----] [-------------------------------------------------------------(R)-- (* Draning sequence filling circuit *)
|
|STEP_2  ENDRAIN DR_SEQ                                                    << RUNG 9  STEP #0017 >>
|%G0002  %M0116  %M0838  +-----+                +-----+
+--] [-----] [-----]/[---+ DIV_+----------------+ SUB_+-
|                        | INT |                | INT |

|                        |     |                |     |
|                DR_TIME |     | DRYLEFT        |     | HC_TIME
|                %R1059 -+I1  Q+-%R1058   CONST -+I1  Q+-%R0363
|                        |     |          +00179 |     |
|                        |     |                 |     |
|                        |     |         DRYLEFT |     |
|                 CONST -+I2   |         %R1058 -+I2   |
|                 +00010 +-----+                 +-----+
|
| (*************************************************************************)
| (* Air control in Heat Sterilizing.                                       *)
| (* We open the Seal-water valve and after 6 sec. we start the compressor.  *)
| (* When we reach the right pressure on the Air separator we start the Air  *)
| (* superheater and when is reach 280øC on the Heat Sterilizition point we  *)
| (* have step_up conditions for spraying.                                  *)
| (*************************************************************************)
|
```

REFERENCE	NICKNAME	REFERENCE DESCRIPTION	REFERENCE	NICKNAME	REFERENCE DESCRIPTION
%M1000	CIP_ON	CIP going on	%S0001	FST_SCN	
%R1058	DRYLEFT	Drying time left (seconds)	%R0363	HC_TIME	HC timer to the TPOP
%M0838	DR_SEQ	Draning sequence filling circuit	%M0071	SQ_END	Start sequence ended
%R1059	DR_TIME	Draining time filling circuit	%G0001	STEP_1	STANDBY
%M0116	ENDRAIN	Draining filpipe enabled	%G0002	STEP_2	PREPARATION (3 MIN.)

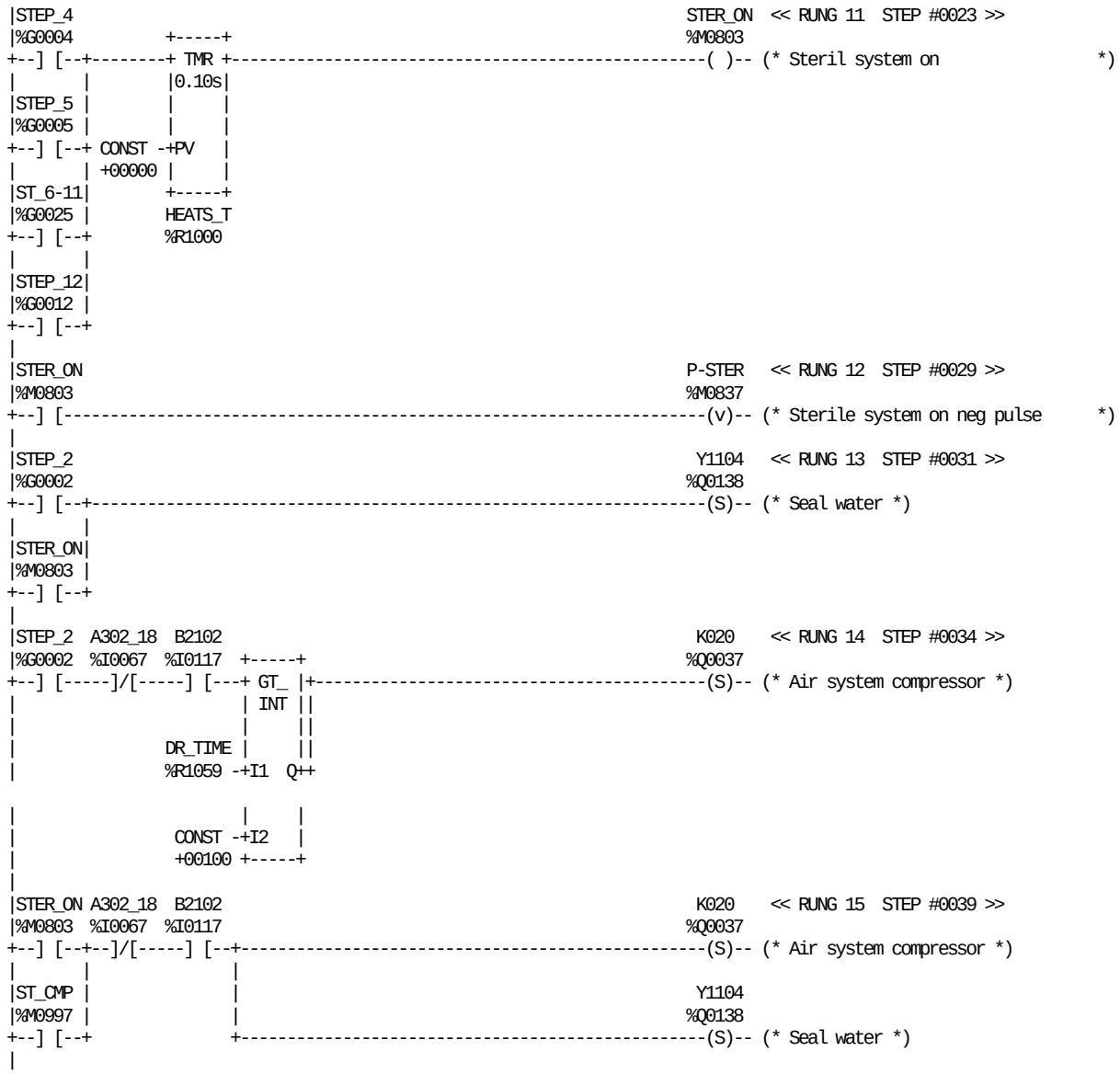

REFERENCE	NICKNAME	REFERENCE DESCRIPTION	REFERENCE	NICKNAME	REFERENCE DESCRIPTION
%I0067	A302_18	Level water separator	%G0002	STEP_2	PREPARATION (3 MIN.)
%I0117	B2102	Cold water pressure	%G0004	STEP_4	HEAT STERILIZATION
%R1059	DR_TIME	Draining time filling circuit	%G0005	STEP_5	SPRAYING
%R1000	HEATS_T	Heat sterilizing timer	%M0803	STER_ON	Steril system on
%Q0037	K020	Air system compressor	%G0025	ST_6-11	Ladder position 6-11
%M0837	P-STER	Sterile system on neg pulse	%M0997	ST_CMP	Start compressor after CIP
%G0012	STEP_12	VENTING	%Q0138	Y1104	Seal water

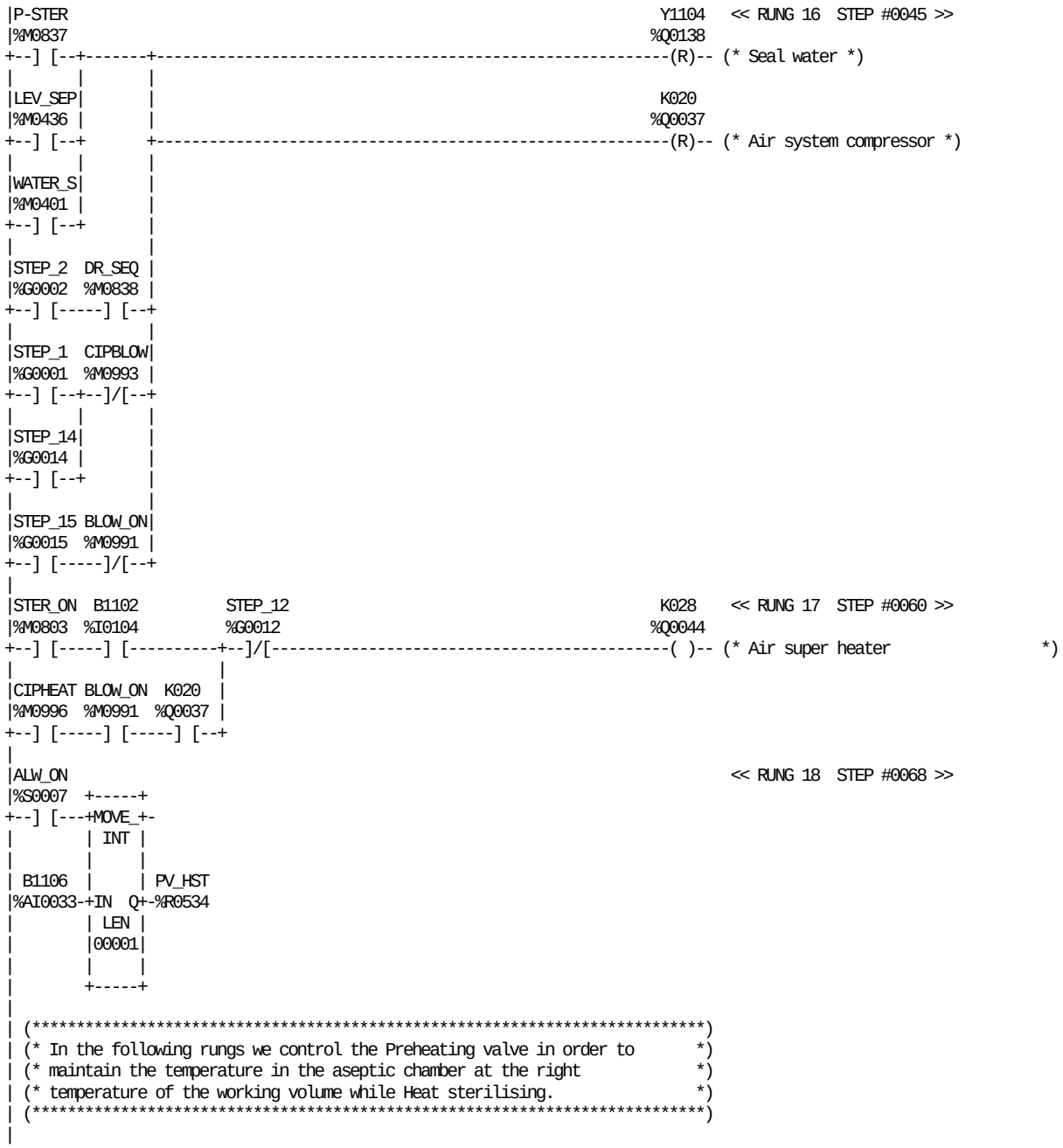

REFERENCE	NICKNAME	REFERENCE DESCRIPTION
%S0007	ALW_ON	
%I0104	B1102	Air pressure separator
%AI0033	B1106	Heat sterilization
%M0991	BLOW_ON	CIP blowing going on
%M0993	CIPBLOW	CIP blowing must be done
%M0996	CIPHEAT	Heating during CIP draining
%M0838	DR_SEQ	Draning sequence filling circuit
%Q0037	K020	Air system compressor
%Q0044	K028	Air super heater
%M0436	LEV_SEP	Level separator
%M0837	P-STER	Sterile system on neg pulse
%R0534	PV_HST	Process value heat st. (TPOP)
%G0001	STEP_1	STANDBY
%G0012	STEP_12	VENTING
%G0014	STEP_14	CIP / HC
%G0015	STEP_15	BLOWING
%G0002	STEP_2	PREPARATION (3 MIN.)
%M0803	STER_ON	Steril system on
%M0401	WATER_S	Water supply
%Q0138	Y1104	Seal water

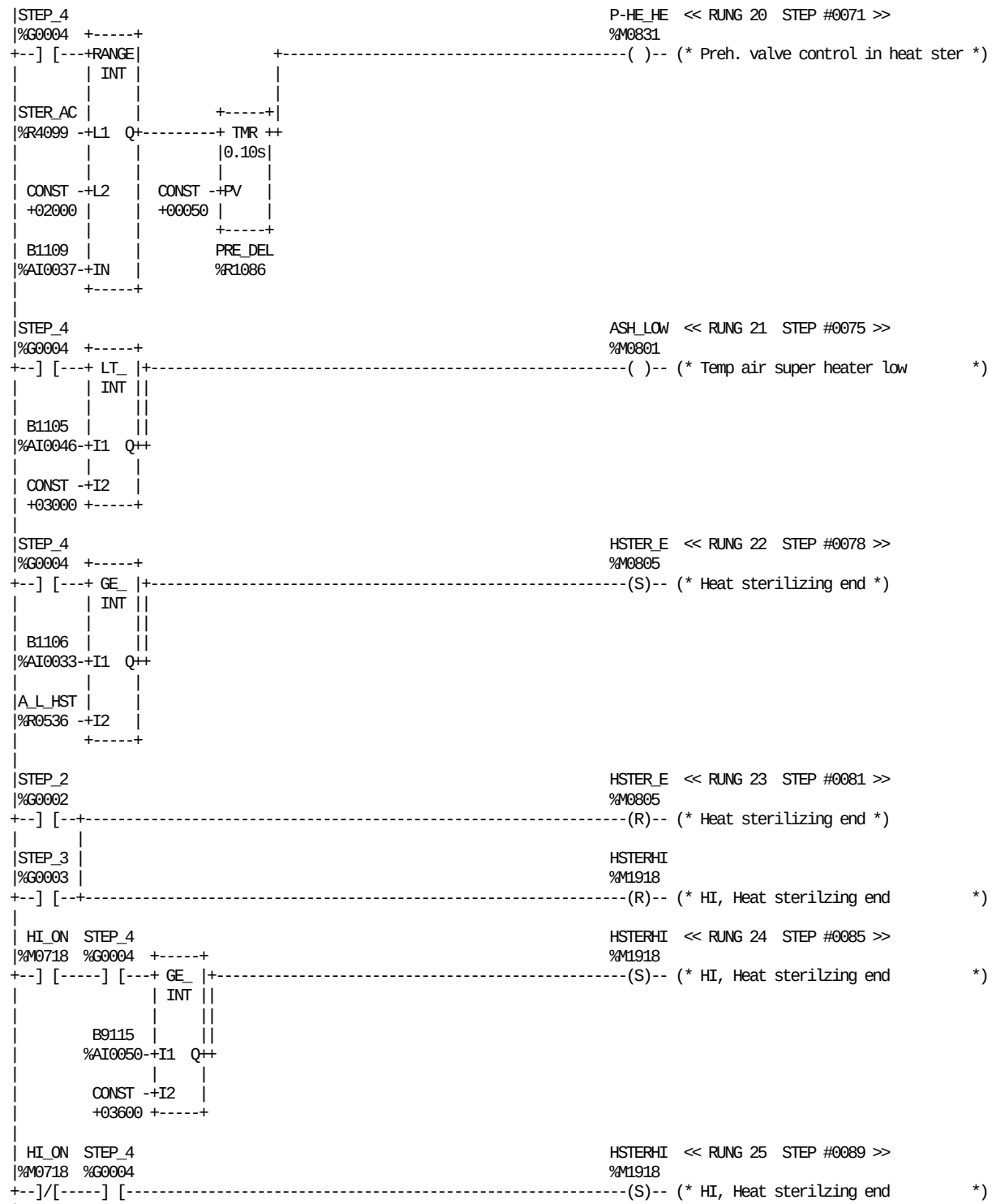

REFERENCE	NICKNAME	REFERENCE DESCRIPTION	REFERENCE	NICKNAME	REFERENCE DESCRIPTION
%M0801	ASH_LOW	Temp air super heater low	%M0805	HSTER_E	Heat sterilizing end
%R0536	A_L_HST	Alarm level low heat st. (TPOP)	%M0831	P-HE_HE	Preh. valve control in heat ster
%AI0046	B1105	Air super heater	%R1086	PRE_DEL	Hysterisis temp AC prester.
%AI0033	B1106	Heat sterilization	%G0002	STEP_2	PREPARATION (3 MIN.)
%AI0037	B1109	Temp top Aseptic Chamber	%G0003	STEP_3	TUBE SEALING
%AI0050	B9115	HI, Air heater temperature	%G0004	STEP_4	HEAT STERILIZATION
%M0718	HI_ON	HI, system setting with HI	%R4099	STER_AC	AC sterilizing temperature
%M1918	HSTERHI	HI, Heat sterilzing end			

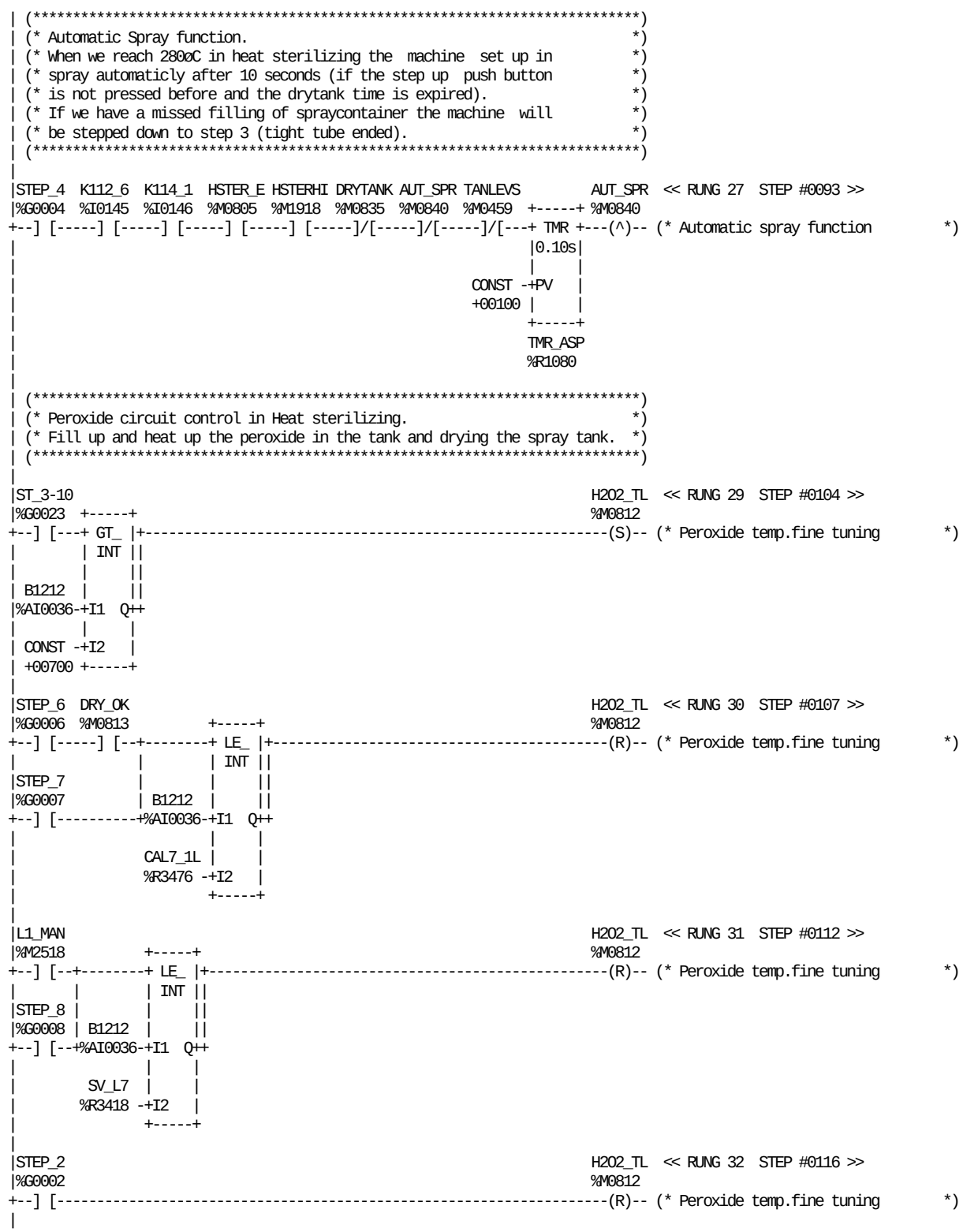

REFERENCE	NICKNAME	REFERENCE DESCRIPTION	REFERENCE	NICKNAME	REFERENCE DESCRIPTION
%M0840	AUT_SPR	Automatic spray function	%M2518	L1_MAN	Loop 1 in manual mode
%AI0036	B1212	Temp monitor H2O2 tank	%G0002	STEP_2	PREPARATION (3 MIN.)
%R3476	CAL7_1L	Calc val Al_Lim loop 7 SV1 Low	%G0004	STEP_4	HEAT STERILIZATION
%M0835	DRYTANK	Drain spray tank	%G0006	STEP_6	DRYING + STEAM CLEANING
%M0813	DRY_OK	Drying ready	%G0007	STEP_7	SIGNAL TO STERILIZER
%M0812	H2O2_TL	Peroxide temp.fine tuning	%G0008	STEP_8	FLAPS + H2O2 TEMPERATURE
%M1918	HSTERHI	HI, Heat sterilzing end	%G0023	ST_3-10	Ladder position 3-10
%M0805	HSTER_E	Heat sterilizing end	%R3418	SV_L7	Setvalue loop 7
%I0145	K112_6	Top door closed aseptic chamber	%M0459	TANLEVS	Low level H2O2 tank for spray
%I0146	K114_1	Front doors closed AC	%R1080	TMR_ASP	TMR delay for automatic spray

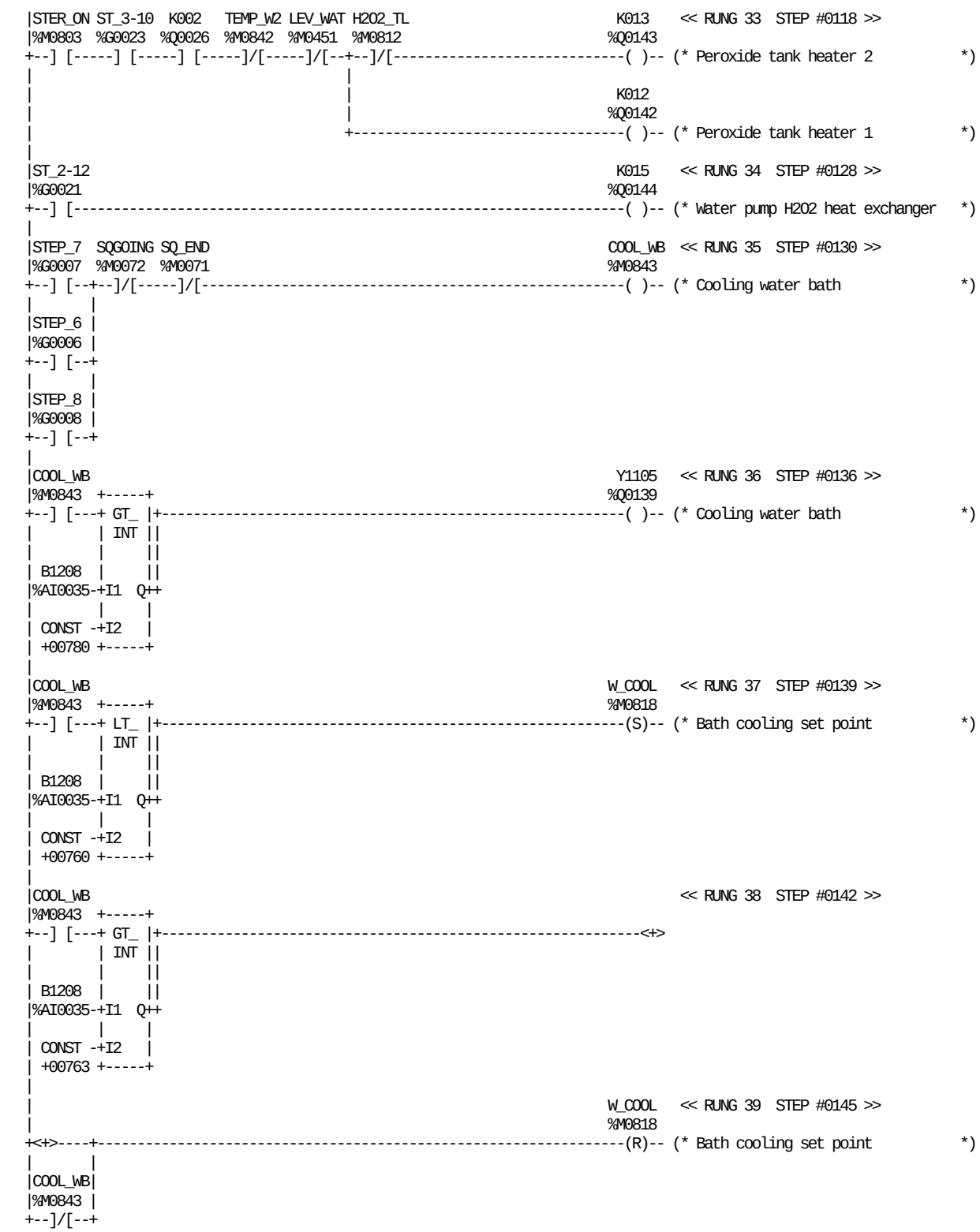

REFERENCE	NICKNAME	REFERENCE DESCRIPTION	REFERENCE	NICKNAME	REFERENCE DESCRIPTION
%AI0035	B1208	Water temperature	%G0006	STEP_6	DRYING + STEAM CLEANING
%M0843	COOL_WB	Cooling water bath	%G0007	STEP_7	SIGNAL TO STERILIZER
%M0812	H2O2_TL	Peroxide temp.fine tuning	%G0008	STEP_8	FLAPS + H2O2 TEMPERATURE
%Q0026	K002	Hydrogen peroxide pump	%M0803	STER_ON	Steril system on
%Q0142	K012	Peroxide tank heater 1	%G0021	ST_2-12	Ladder position 2-12
%Q0143	K013	Peroxide tank heater 2	%G0023	ST_3-10	Ladder position 3-10
%Q0144	K015	Water pump H2O2 heat exchanger	%M0842	TEMP_W2	High temperature water heat exc.
%M0451	LEV_WAT	Level water bath	%M0818	W_COOL	Bath cooling set point
%M0072	SQGOING	Start sequence going on	%Q0139	Y1105	Cooling water bath
%M0071	SQ_END	Start sequence ended			

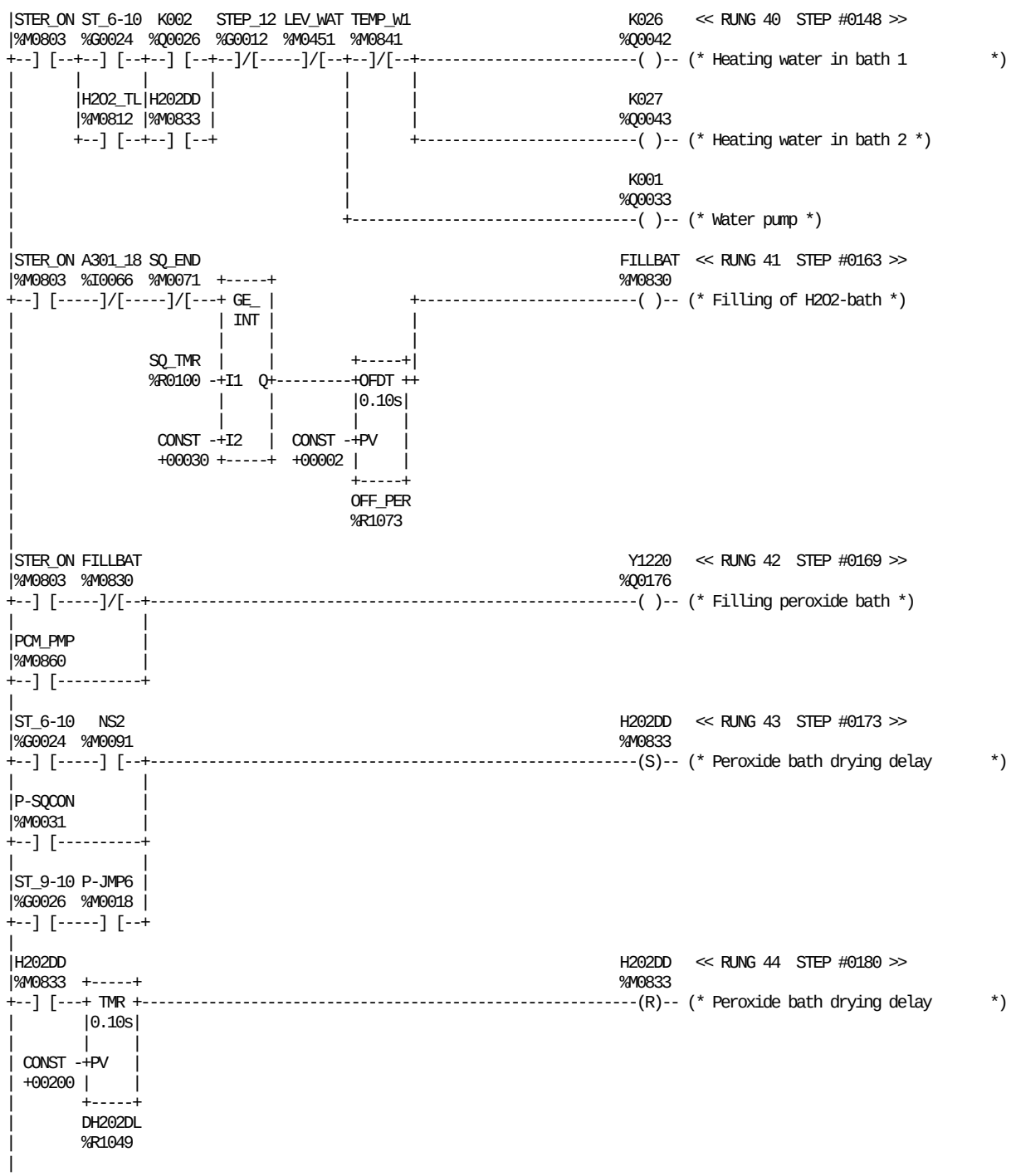

REFERENCE	NICKNAME	REFERENCE DESCRIPTION
%I0066	A301_18	Level peroxide bath
%R1049	DH202DL	Drying h202 bath delay
%M0830	FILLBAT	Filling of H2O2-bath
%M0833	H202DD	Peroxide bath drying delay
%M0812	H2O2_TL	Peroxide temp.fine tuning
%Q0033	K001	Water pump
%Q0026	K002	Hydrogen peroxide pump
%Q0042	K026	Heating water in bath 1
%Q0043	K027	Heating water in bath 2
%M0451	LEV_WAT	Level water bath
%M0091	NS2	Normal stop step 2
%R1073	OFF_PER	Off dely peroxide bath filling

REFERENCE	NICKNAME	REFERENCE DESCRIPTION
%M0018	P-JMP6	Jump pos 6 Negative pulse
%M0031	P-SQCON	Sequence condition neg pulse
%M0860	PCM_PMP	H2O2 meter run H2O2 pump
%M0071	SQ_END	Start sequence ended
%R0100	SQ_TMR	Start sequense timer
%G0012	STEP_12	VENTING
%M0803	STER_ON	Steril system on
%G0024	ST_6-10	Ladder position 6-10
%G0026	ST_9-10	Ladder position 9-10
%M0841	TEMP_W1	High temperature water bath
%Q0176	Y1220	Filling peroxide bath

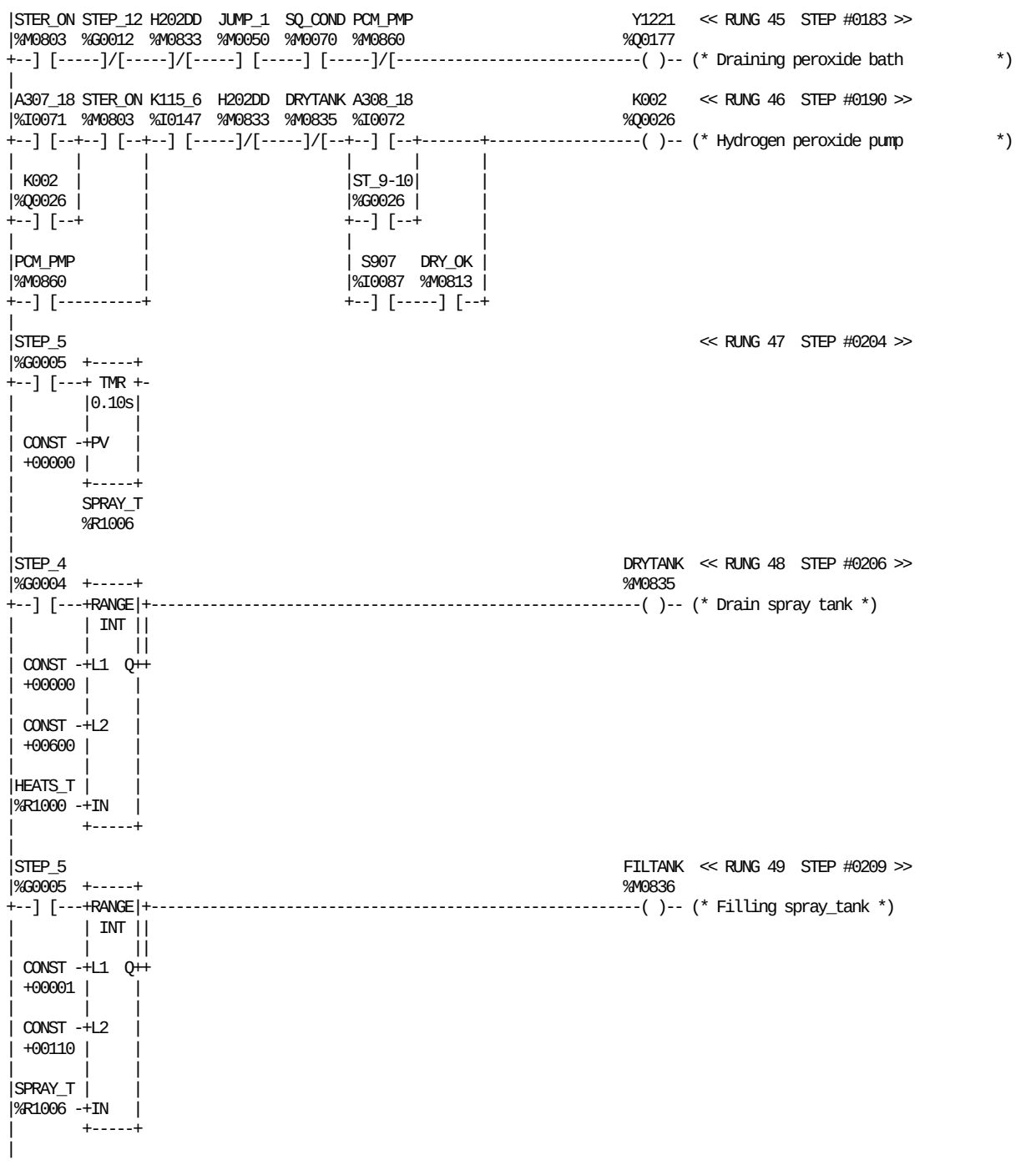

REFERENCE	NICKNAME	REFERENCE DESCRIPTION	REFERENCE	NICKNAME	REFERENCE DESCRIPTION
%I0071	A307_18	Safety level peroxide tank	%M0860	PCM_PMP	H2O2 meter run H2O2 pump
%I0072	A308_18	Level peroxide tank production	%I0087	S907	Push button inching JUM
%M0835	DRYTANK	Drain spray tank	%R1006	SPRAY_T	Spray sequence timer
%M0813	DRY_OK	Drying ready	%M0070	SQ_COND	Start sequence conditions
%M0836	FILTANK	Filling spray_tank	%G0012	STEP_12	VENTING
%M0833	H202DD	Peroxide bath drying delay	%G0004	STEP_4	HEAT STERILIZATION
%R1000	HEATS_T	Heat sterilizing timer	%G0005	STEP_5	SPRAYING
%M0050	JUMP_1	Jump to pos 1 (Emergency stop)	%M0803	STER_ON	Steril system on
%Q0026	K002	Hydrogen peroxide pump	%G0026	ST_9-10	Ladder position 9-10
%I0147	K115_6	Bottom cover H2O2-bath closed	%Q0177	Y1221	Draining peroxide bath

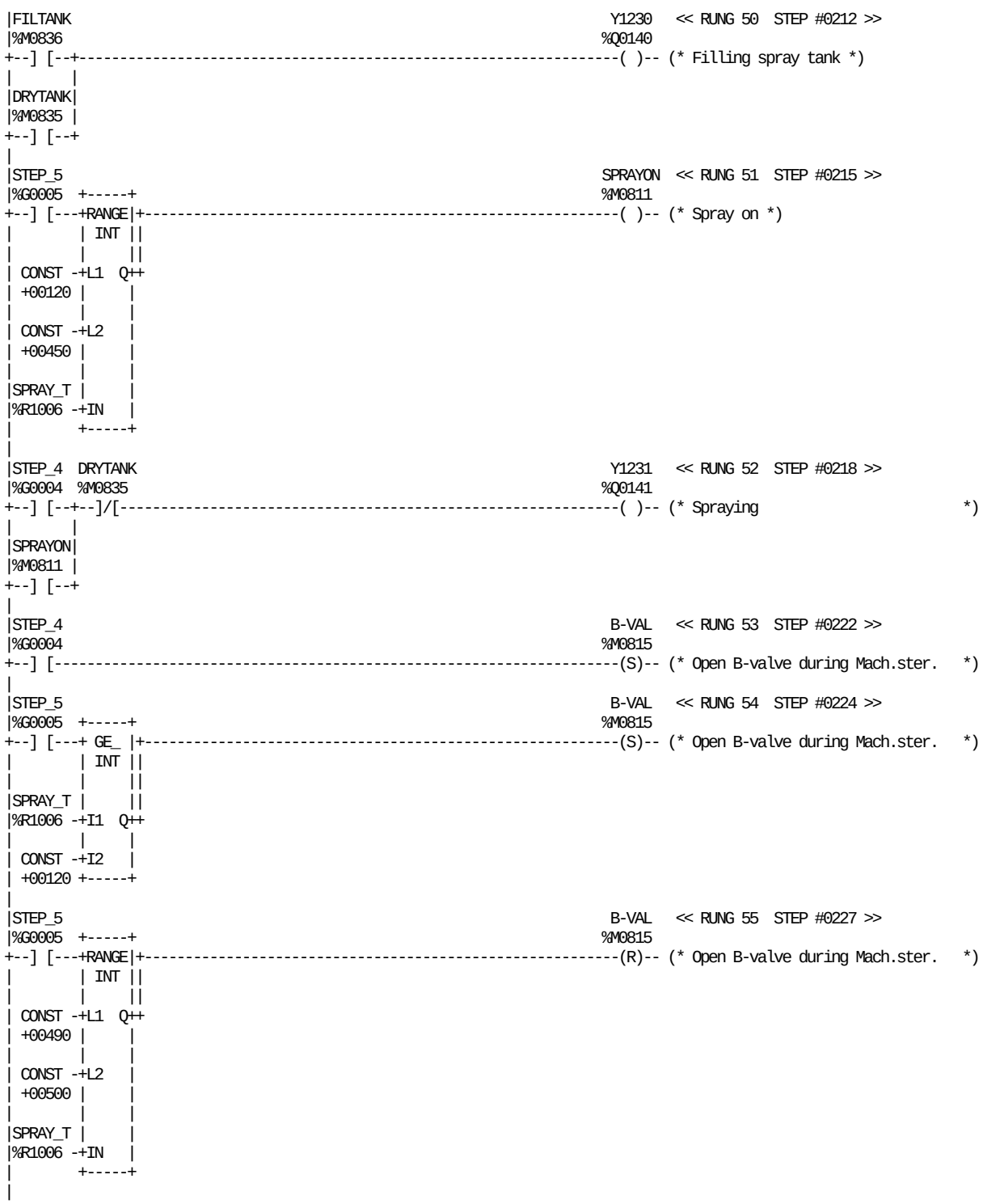

REFERENCE	NICKNAME	REFERENCE DESCRIPTION	REFERENCE	NICKNAME	REFERENCE DESCRIPTION
%M0815	B-VAL	Open B-valve during Mach.ster.	%G0004	STEP_4	HEAT STERILIZATION
%M0835	DRYTANK	Drain spray tank	%G0005	STEP_5	SPRAYING
%M0836	FILTANK	Filling spray_tank	%Q0140	Y1230	Filling spray tank
%M0811	SPRAYON	Spray on	%Q0141	Y1231	Spraying
%R1006	SPRAY_T	Spray sequence timer			

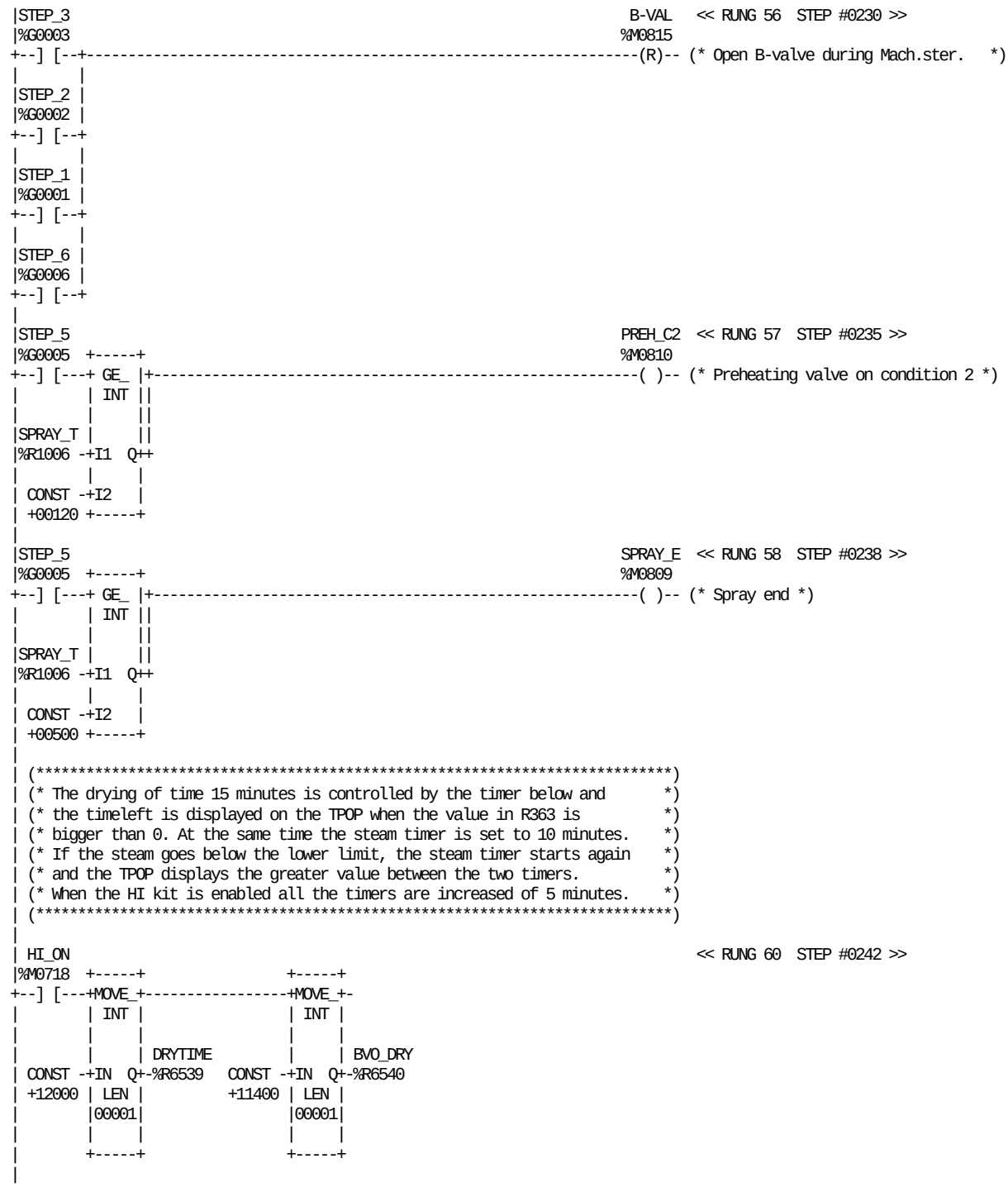

REFERENCE	NICKNAME	REFERENCE DESCRIPTION	REFERENCE	NICKNAME	REFERENCE DESCRIPTION
%M0815	B-VAL	Open B-valve during Mach.ster.	%R1006	SPRAY_T	Spray sequence timer
%R6540	BVO_DRY	B valve open in drying	%G0001	STEP_1	STANDBY
%R6539	DRYTIME	Drying time	%G0002	STEP_2	PREPARATION (3 MIN.)
%M0718	HI_ON	HI, system setting with HI	%G0003	STEP_3	TUBE SEALING
%M0810	PREH_C2	Preheating valve on condition 2	%G0005	STEP_5	SPRAYING
%M0809	SPRAY_E	Spray end	%G0006	STEP_6	DRYING + STEAM CLEANING

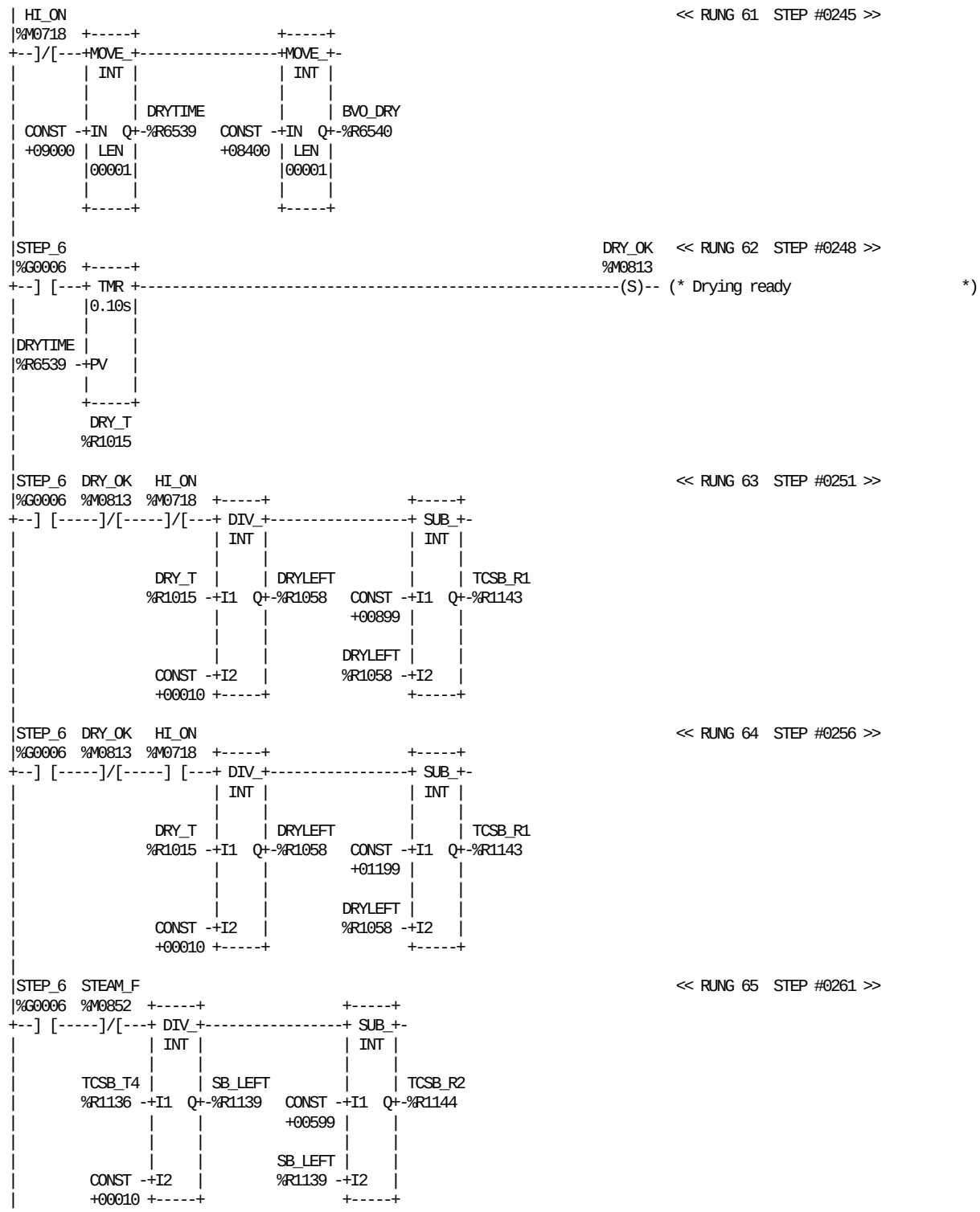

REFERENCE	NICKNAME	REFERENCE DESCRIPTION	REFERENCE	NICKNAME	REFERENCE DESCRIPTION
%R6540	BVO_DRY	B valve open in drying	%R1139	SB_LEFT	Steam time left (seconds)
%R1058	DRYLEFT	Drying time left (seconds)	%M0852	STEAM_F	steam timer finish
%R6539	DRYTIME	Drying time	%G0006	STEP_6	DRYING + STEAM CLEANING
%M0813	DRY_OK	Drying ready	%R1143	TCSB_R1	TCSB remaining drying time 1
%R1015	DRY_T	Draying timer	%R1144	TCSB_R2	TCSB remaining drying time 2
%M0718	HI_ON	HI, system setting with HI	%R1136	TCSB_T4	TCSB alarm timer 4

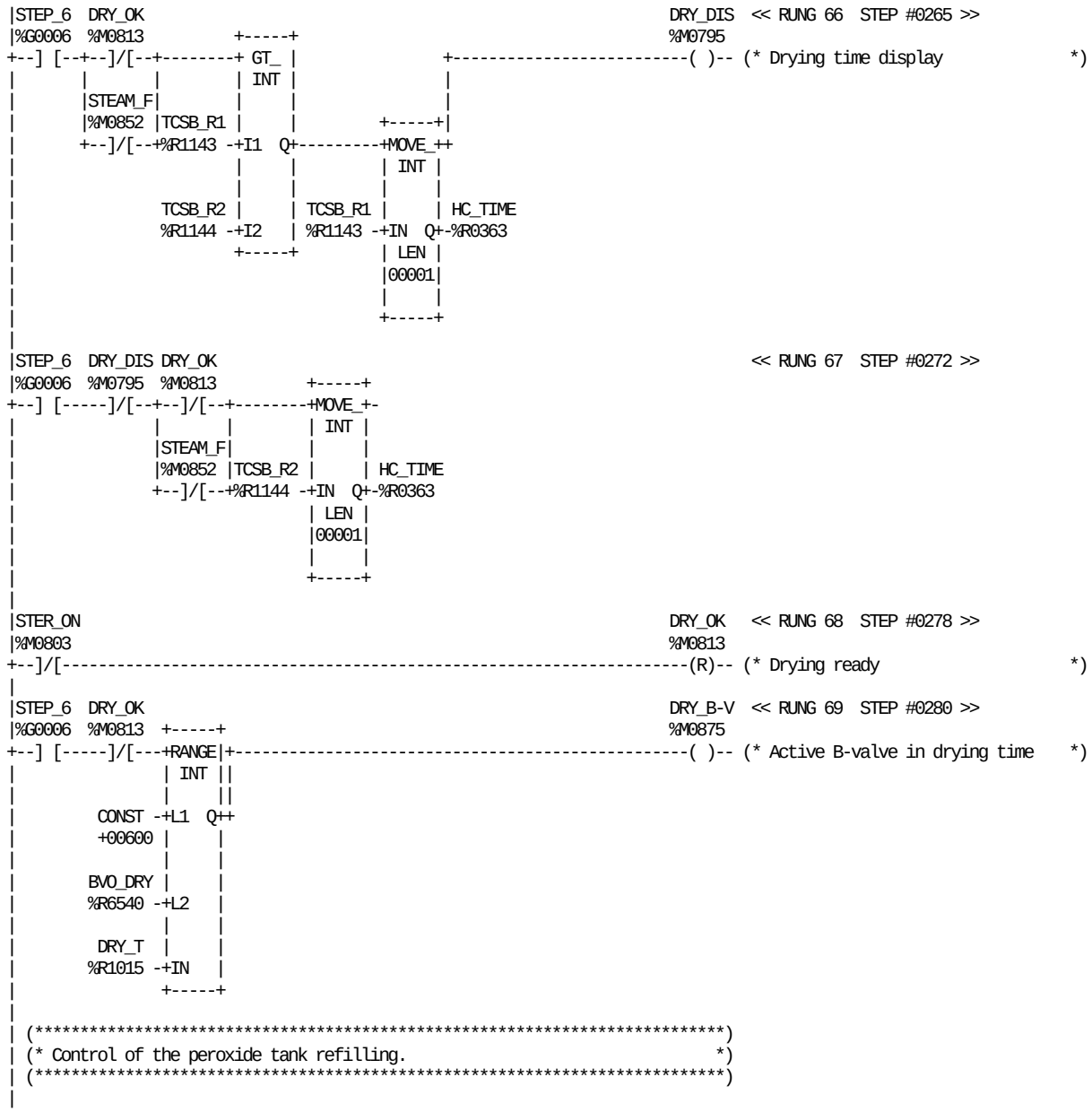

REFERENCE	NICKNAME	REFERENCE DESCRIPTION	REFERENCE	NICKNAME	REFERENCE DESCRIPTION
%R6540	BVO_DRY	B valve open in drying	%M0852	STEAM_F	steam timer finish
%M0875	DRY_B-V	Active B-valve in drying time	%G0006	STEP_6	DRYING + STEAM CLEANING
%M0795	DRY_DIS	Drying time display	%M0803	STER_ON	Steril system on
%M0813	DRY_OK	Drying ready	%R1143	TCSB_R1	TCSB remaining drying time 1
%R1015	DRY_T	Draying timer	%R1144	TCSB_R2	TCSB remaining drying time 2
%R0363	HC_TIME	HC timer to the TPOP			

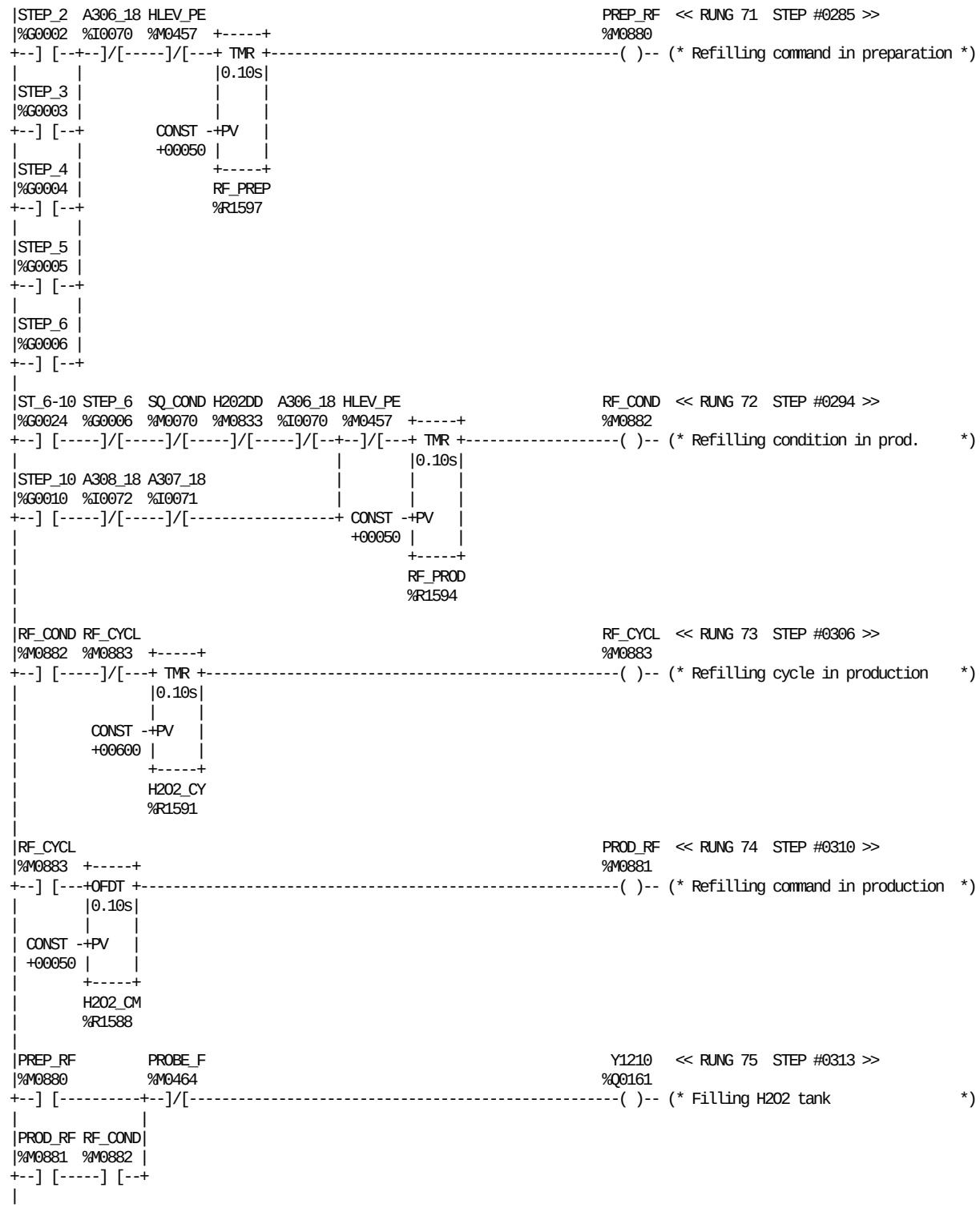

REFERENCE	NICKNAME	REFERENCE DESCRIPTION	REFERENCE	NICKNAME	REFERENCE DESCRIPTION
%I0070	A306_18	Level peroxide tank preheating	%R1597	RF_PREP	H2O2 refilling delay preparation
%I0071	A307_18	Safety level peroxide tank	%R1594	RF_PROD	H2O2 refilling delay production
%I0072	A308_18	Level peroxide tank production	%M0070	SQ_COND	Start sequence conditions
%M0833	H202DD	Peroxide bath drying delay	%G0010	STEP_10	PRODUCTION
%R1588	H2O2_CM	H2O2 refilling command	%G0002	STEP_2	PREPARATION (3 MIN.)
%R1591	H2O2_CY	H2O2 refilling cycle	%G0003	STEP_3	TUBE SEALING
%M0457	HLEV_PE	Peroxide tank high level,product	%G0004	STEP_4	HEAT STERILIZATION
%M0880	PREP_RF	Refilling command in preparation	%G0005	STEP_5	SPRAYING
%M0464	PROBE_F	Level probe fault H2O2 tank	%G0006	STEP_6	DRYING + STEAM CLEANING
%M0881	PROD_RF	Refilling command in production	%G0024	ST_6-10	Ladder position 6-10
%M0882	RF_COND	Refilling condition in prod.	%Q0161	Y1210	Filling H2O2 tank
%M0883	RF_CYCL	Refilling cycle in production			

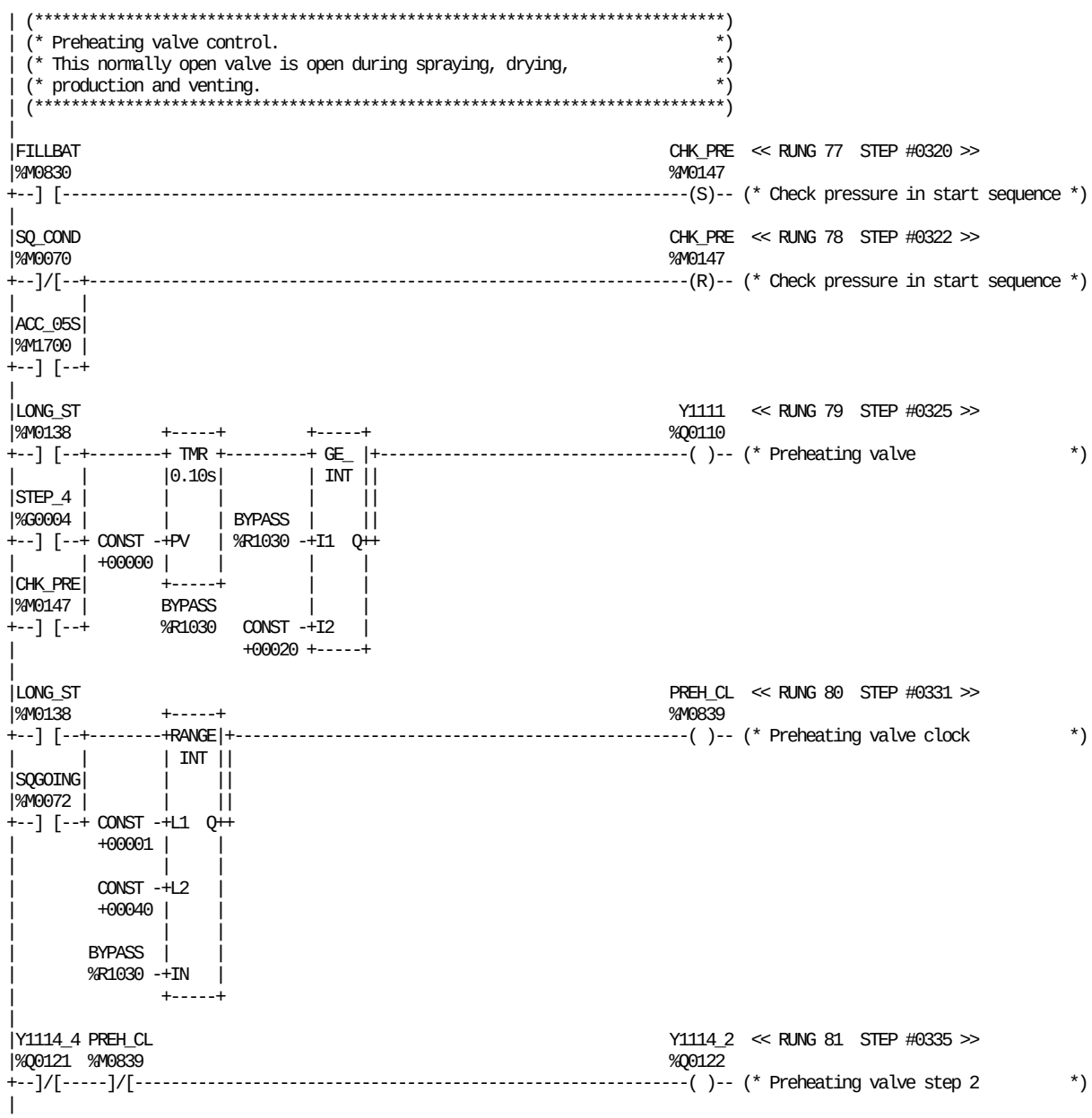

REFERENCE	NICKNAME	REFERENCE DESCRIPTION	REFERENCE	NICKNAME	REFERENCE DESCRIPTION
%M1700	ACC_05S	5 sec. acceleration main motor	%M0072	SQGOING	Start sequence going on
%R1030	BYPASS	Timer valve switch Bypass pos.	%M0070	SQ_COND	Start sequence conditions
%M0147	CHK_PRE	Check pressure in start sequence	%G0004	STEP_4	HEAT STERILIZATION
%M0830	FILLBAT	Filling of H2O2-bath	%Q0110	Y1111	Preheating valve
%M0138	LONG_ST	To long stop in sterile mode	%Q0122	Y1114_2	Preheating valve step 2
%M0839	PREH_CL	Preheating valve clock	%Q0121	Y1114_4	Preheating valve step 1

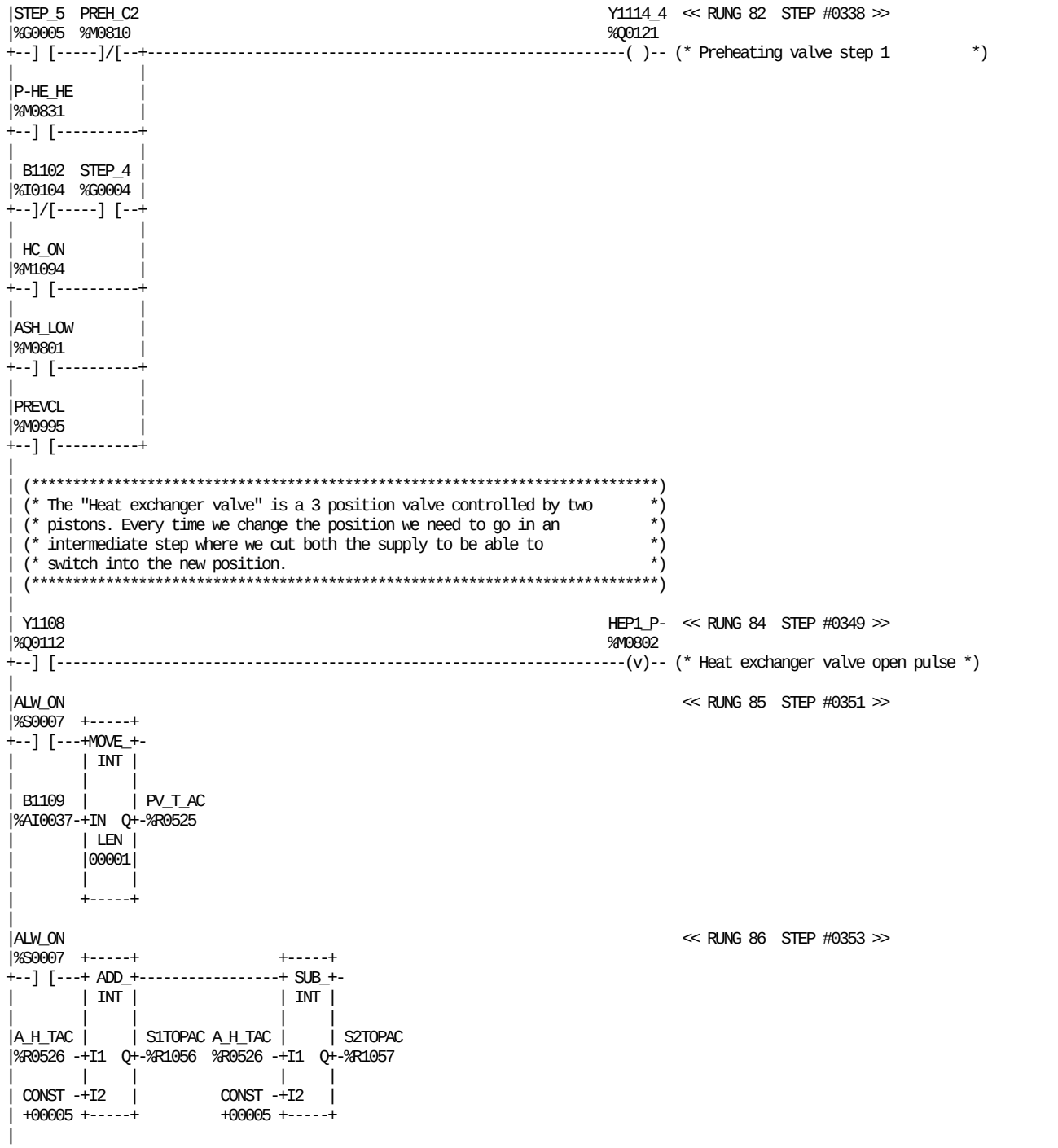

REFERENCE	NICKNAME	REFERENCE DESCRIPTION	REFERENCE	NICKNAME	REFERENCE DESCRIPTION
%S0007	ALW_ON		%M0995	PREVCL	Presterilising valve close CIP
%M0801	ASH_LOW	Temp air super heater low	%R0525	PV_T_AC	Process value top AC (TPOP)
%R0526	A_H_TAC	Alarm level high top AC (TPOP)	%R1056	S1TOPAC	Setvalue 1 top aseptic chamber
%I0104	B1102	Air pressure separator	%R1057	S2TOPAC	Setvalue 2 top aseptic chamber
%AI0037	B1109	Temp top Aseptic Chamber	%G0004	STEP_4	HEAT STERILIZATION
%M1094	HC_ON	Hygienic cleaning going on	%G0005	STEP_5	SPRAYING
%M0802	HEP1_P-	Heat exchanger valve open pulse	%Q0112	Y1108	Heat exchanger valve step 2
%M0831	P-HE_HE	Preh. valve control in heat ster	%Q0121	Y1114_4	Preheating valve step 1
%M0810	PREH_C2	Preheating valve on condition 2			

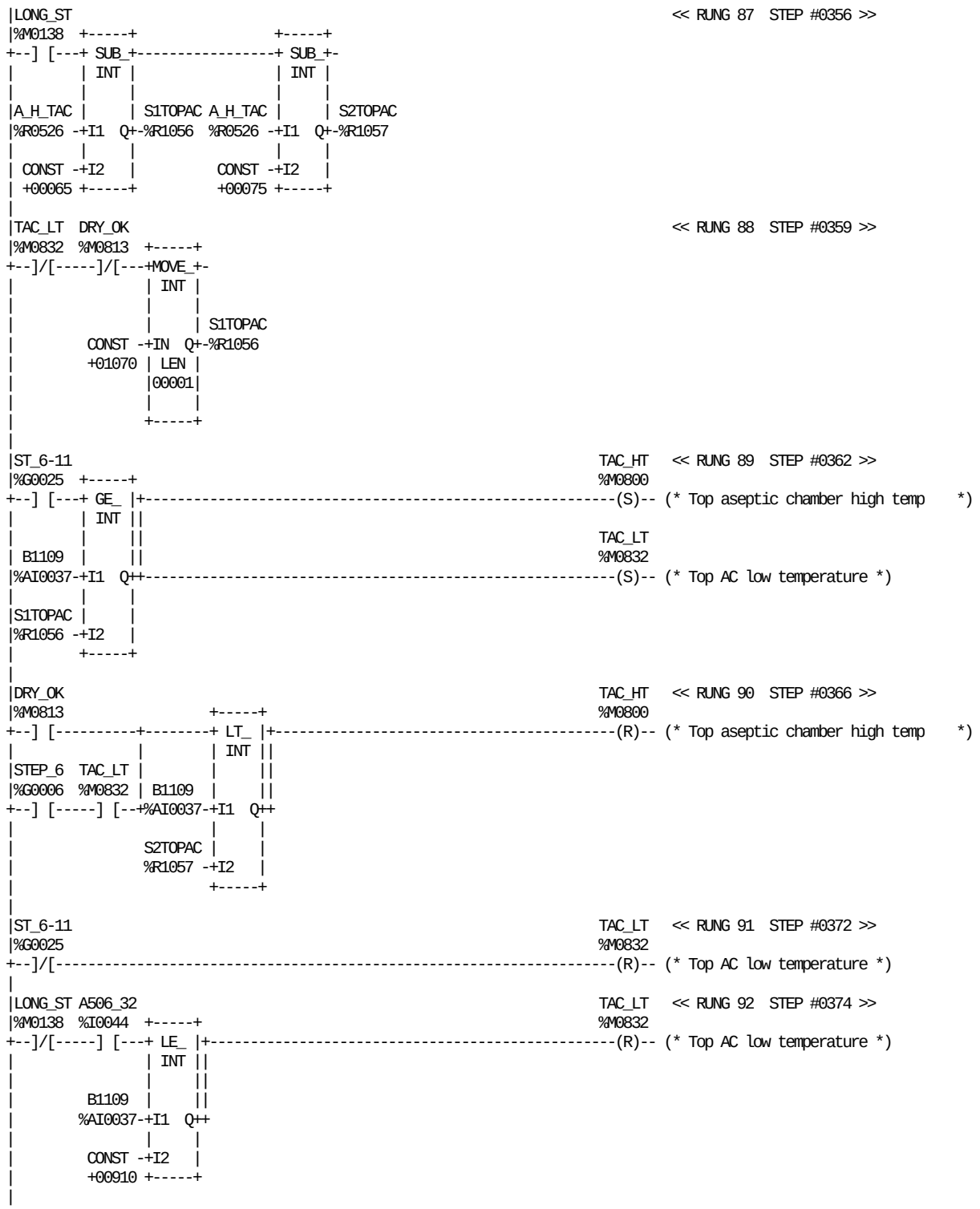

REFERENCE	NICKNAME	REFERENCE DESCRIPTION	REFERENCE	NICKNAME	REFERENCE DESCRIPTION
%I0044	A506_32	DMC Main motor running	%R1057	S2TOPAC	Setvalue 2 top aseptic chamber
%R0526	A_H_TAC	Alarm level high top AC (TPOP)	%G0006	STEP_6	DRYING + STEAM CLEANING
%AI0037	B1109	Temp top Aseptic Chamber	%G0025	ST_6-11	Ladder position 6-11
%M0813	DRY_OK	Drying ready	%M0800	TAC_HT	Top aseptic chamber high temp
%M0138	LONG_ST	To long stop in sterile mode	%M0832	TAC_LT	Top AC low temperature
%R1056	S1TOPAC	Setvalue 1 top aseptic chamber			

```
| (*************************************************************************)
| (* The following rungs are used to delay the switch from maximum heating    *)
| (* to regulating position on the 3 step valve. This because the feed        *)
| (* forward control, on the temperature controller for the Air super heater, *)
| (* must have the time to take down the output before the preheated air is   *)
| (* put into the air super heater.                                           *)
| (*************************************************************************)
|
|TAC_LT                                                          SW3STVA  << RUNG 94  STEP #0379 >>
|%M0832  +-----+        +-----+                                   %M0834
+--] [---+ TMR +--------+OFDT +-----------------------------------------( )-- (* First switch 3 step valve       *)
|        |0.10s|        |0.10s|
|        |     |        |     |
| CONST -+PV   |  CONST -+PV   |
| +00100 |     |  +00100 |     |
|        +-----+        +-----+
|        SW_3ST         OFF_3ST
|        %R1052         %R1070
|
|ALW_ON                                                          HEXV_CK  << RUNG 95  STEP #0383 >>
|%S0007  +-----+                                                 %M0804
+--] [---+ONDTR+-----------------------------------------------------------( )-- (* Heat exchanger valve clock *)
|        |0.10s|
|HEP1_P- |     |
|%M0802  |     |
+--] [---+R    |
|        |     |
| CONST -+PV   |
| +00002 |     |
|        +-----+
|        HEXV_T
|        %R1003
|
|ST_6-11 TAC_HT  SW3STVA HEXV_CK                                  Y1108   << RUNG 96  STEP #0387 >>
|%G0025  %M0800  %M0834  %M0804                                   %Q0112
+--] [-----] [-----] [-----] [--+-----------------------------------------( )-- (* Heat exchanger valve step 2      *)
|                               |
|CIPBLOW PREVCL                 |
|%M0993  %M0995                 |
+--] [-----]/[------------------+
|
|ST_6-11 HEXV_CK SW3STVA                                          Y1107   << RUNG 97  STEP #0395 >>
|%G0025  %M0804  %M0834                                           %Q0123
+--] [-----] [-----] [--+-----------------------------------------------( )-- (* Heat exchanger valve Step 1      *)
|                       |
|STEP_12                |
|%G0012                 |
+--] [-----------------+
|                       |
|STEP_15 BLWTEMP        |
|%G0015  %M0990         |
+--] [-----] [----------+
|                       |
|HEXCSWT                |
|%M1915                 |
+--] [-----------------+
|
| (*************************************************************************)
| (* HI, Switch Y1107 valve.                                                 *)
| (*************************************************************************)
|
```

REFERENCE	NICKNAME	REFERENCE DESCRIPTION	REFERENCE	NICKNAME	REFERENCE DESCRIPTION
%S0007	ALW_ON		%G0012	STEP_12	VENTING
%M0990	BLWTEMP	Blowing temperature control	%G0015	STEP_15	BLOWING
%M0993	CIPBLOW	CIP blowing must be done	%G0025	ST_6-11	Ladder position 6-11
%M0802	HEP1_P-	Heat exchanger valve open pulse	%M0834	SW3STVA	First switch 3 step valve
%M1915	HEXCSWT	HI, Heat exchanger valve switch	%R1052	SW_3ST	delay 1:st switch 3-step
%M0804	HEXV_CK	Heat exchanger valve clock	%M0800	TAC_HT	Top aseptic chamber high temp
%R1003	HEXV_T	Heat exchanger valve timer	%M0832	TAC_LT	Top AC low temperature
%R1070	OFF_3ST	Delay 3 step valve to bypass	%Q0123	Y1107	Heat exchanger valve Step 1
%M0995	PREVCL	Presterilising valve close CIP	%Q0112	Y1108	Heat exchanger valve step 2

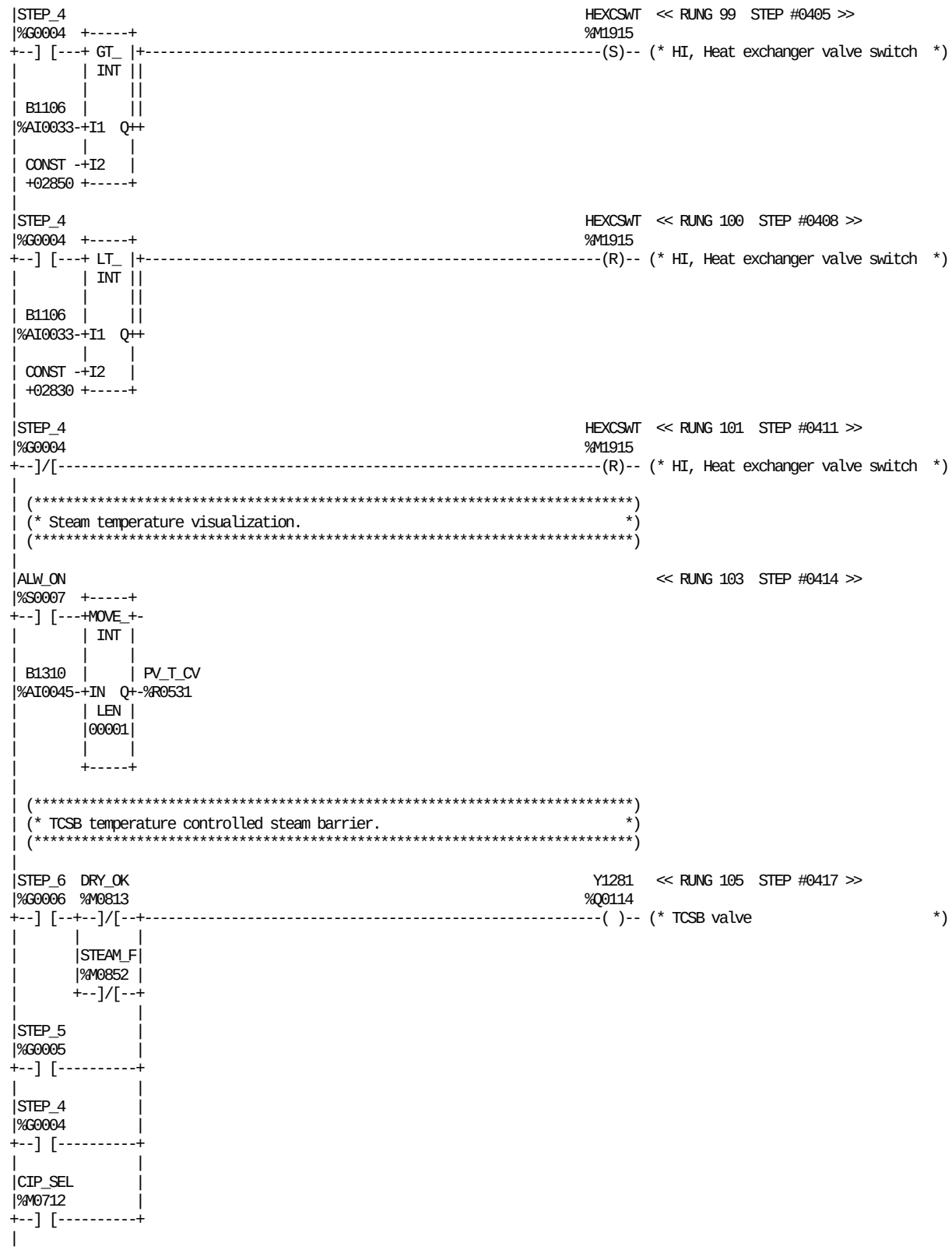

REFERENCE	NICKNAME	REFERENCE DESCRIPTION	REFERENCE	NICKNAME	REFERENCE DESCRIPTION
%S0007	ALW_ON		%R0531	PV_T_CV	Process value temp C-valve(TPOP)
%AI0033	B1106	Heat sterilization	%M0852	STEAM_F	steam timer finish
%AI0045	B1310	Steam temperature	%G0004	STEP_4	HEAT STERILIZATION
%M0712	CIP_SEL	CIP select from TPOP	%G0005	STEP_5	SPRAYING
%M0813	DRY_OK	Drying ready	%G0006	STEP_6	DRYING + STEAM CLEANING
%M1915	HEXCSWT	HI, Heat exchanger valve switch	%Q0114	Y1281	TCSB valve

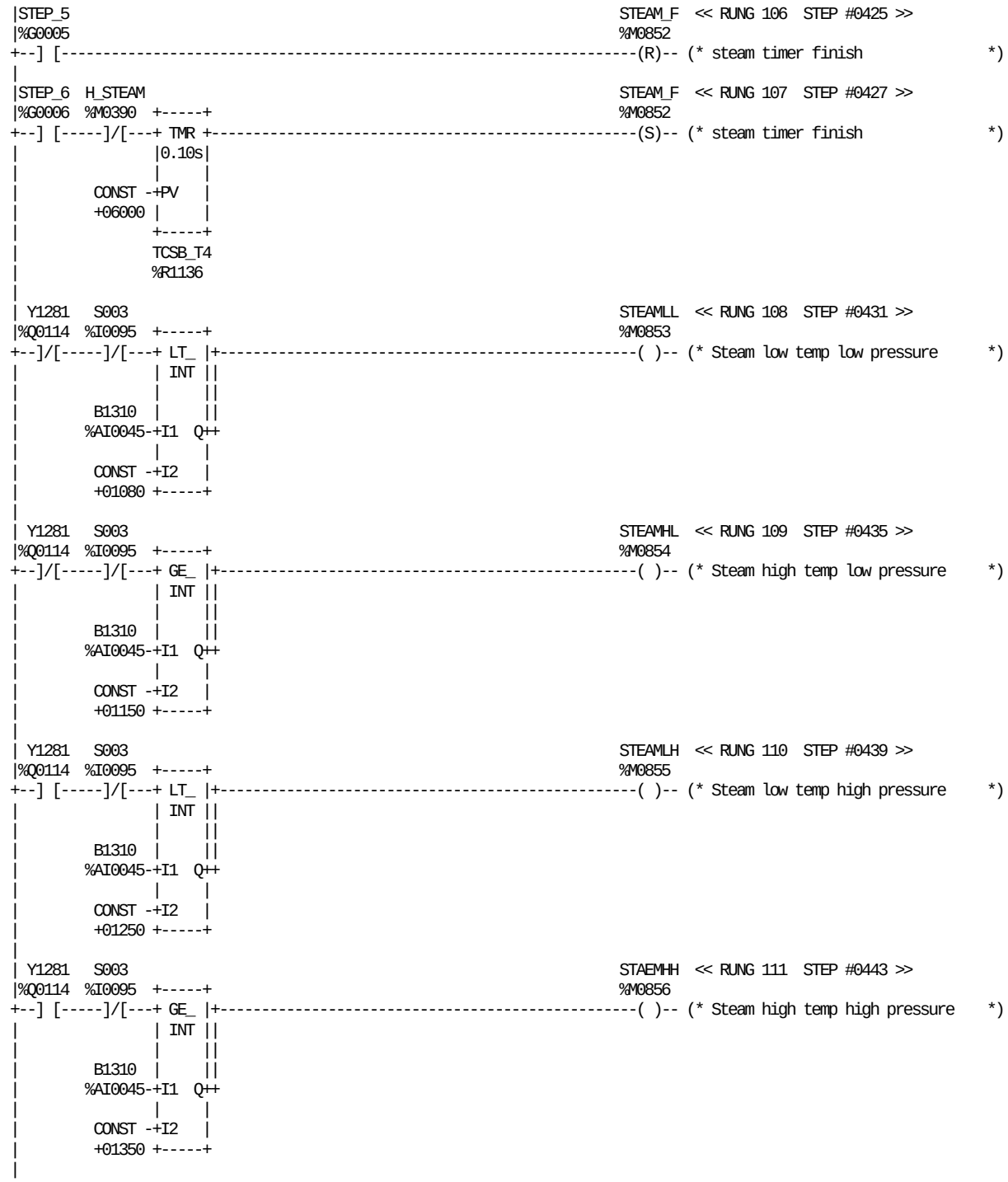

REFERENCE	NICKNAME	REFERENCE DESCRIPTION	REFERENCE	NICKNAME	REFERENCE DESCRIPTION
%AI0045	B1310	Steam temperature	%M0853	STEAMLL	Steam low temp low pressure
%M0390	H_STEAM	High temperature steam C-valve	%M0852	STEAM_F	steam timer finish
%I0095	S003	Service switch	%G0005	STEP_5	SPRAYING
%M0856	STAEMHH	Steam high temp high pressure	%G0006	STEP_6	DRYING + STEAM CLEANING
%M0854	STEAMHL	Steam high temp low pressure	%R1136	TCSB_T4	TCSB alarm timer 4
%M0855	STEAMLH	Steam low temp high pressure	%Q0114	Y1281	TCSB valve

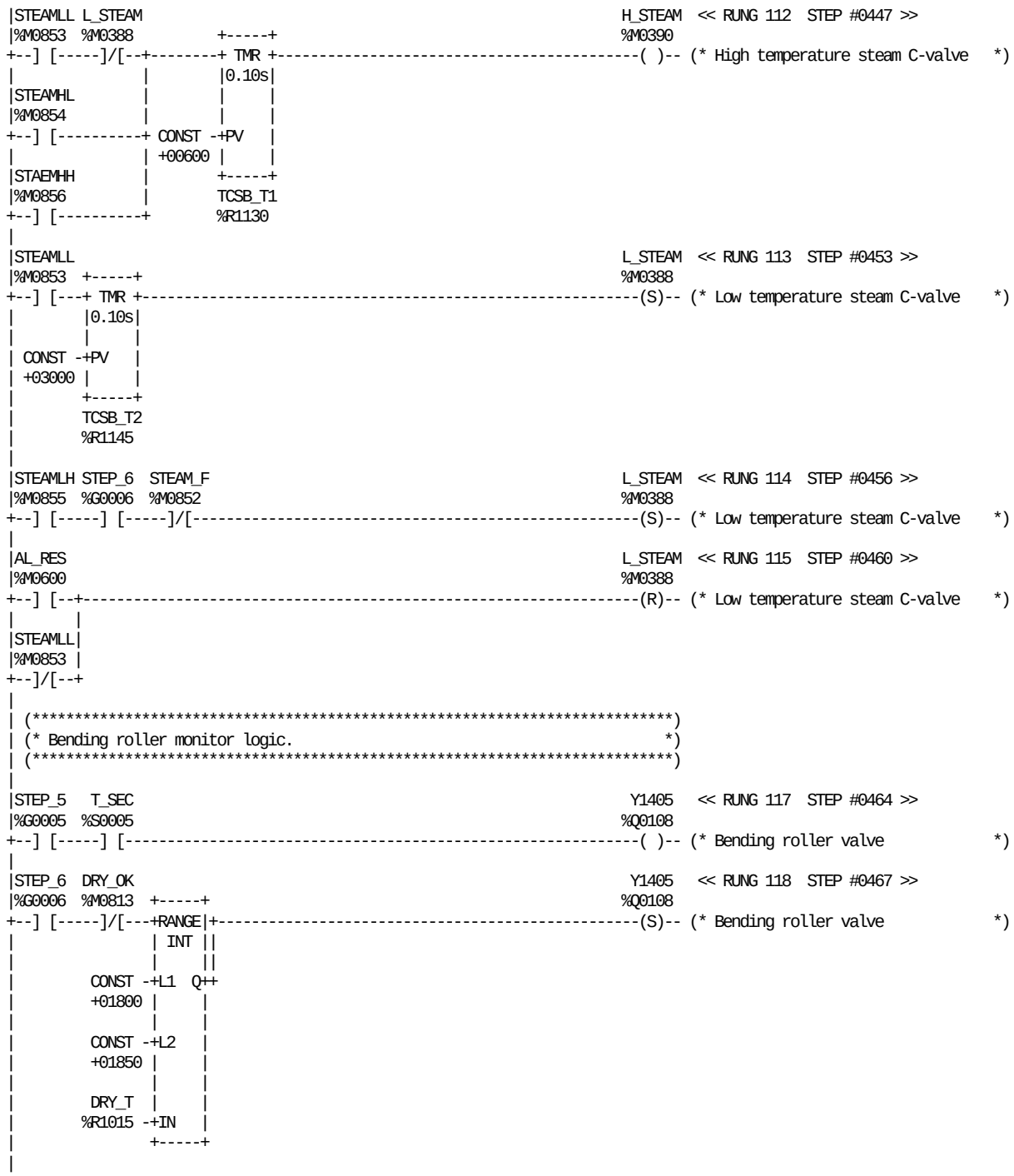

REFERENCE	NICKNAME	REFERENCE DESCRIPTION	REFERENCE	NICKNAME	REFERENCE DESCRIPTION
%M0600	AL_RES	Alarm reset (From TPOP)	%M0853	STEAMLL	Steam low temp low pressure
%M0813	DRY_OK	Drying ready	%M0852	STEAM_F	steam timer finish
%R1015	DRY_T	Draying timer	%G0005	STEP_5	SPRAYING
%M0390	H_STEAM	High temperature steam C-valve	%G0006	STEP_6	DRYING + STEAM CLEANING
%M0388	L_STEAM	Low temperature steam C-valve	%R1130	TCSB_T1	TCSB alarm timer 1
%M0856	STAEMHH	Steam high temp high pressure	%R1145	TCSB_T2	TCSB alarm timer 2
%M0854	STEAMHL	Steam high temp low pressure	%S0005	T_SEC	
%M0855	STEAMLH	Steam low temp high pressure	%Q0108	Y1405	Bending roller valve

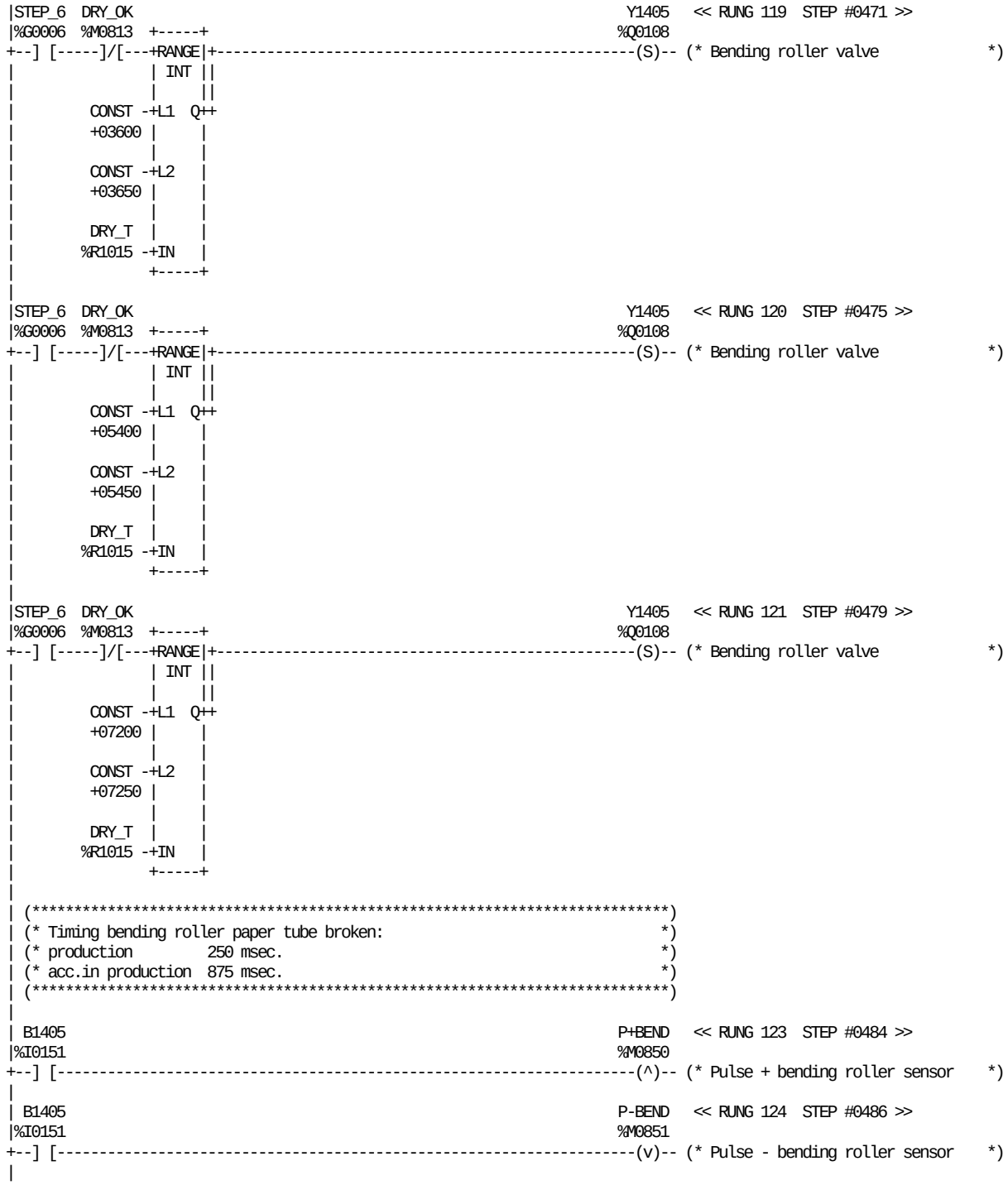

REFERENCE	NICKNAME	REFERENCE DESCRIPTION	REFERENCE	NICKNAME	REFERENCE DESCRIPTION
%I0151	B1405	Monitor bending roller	%M0851	P-BEND	Pulse - bending roller sensor
%M0813	DRY_OK	Drying ready	%G0006	STEP_6	DRYING + STEAM CLEANING
%R1015	DRY_T	Draying timer	%Q0108	Y1405	Bending roller valve
%M0850	P+BEND	Pulse + bending roller sensor			

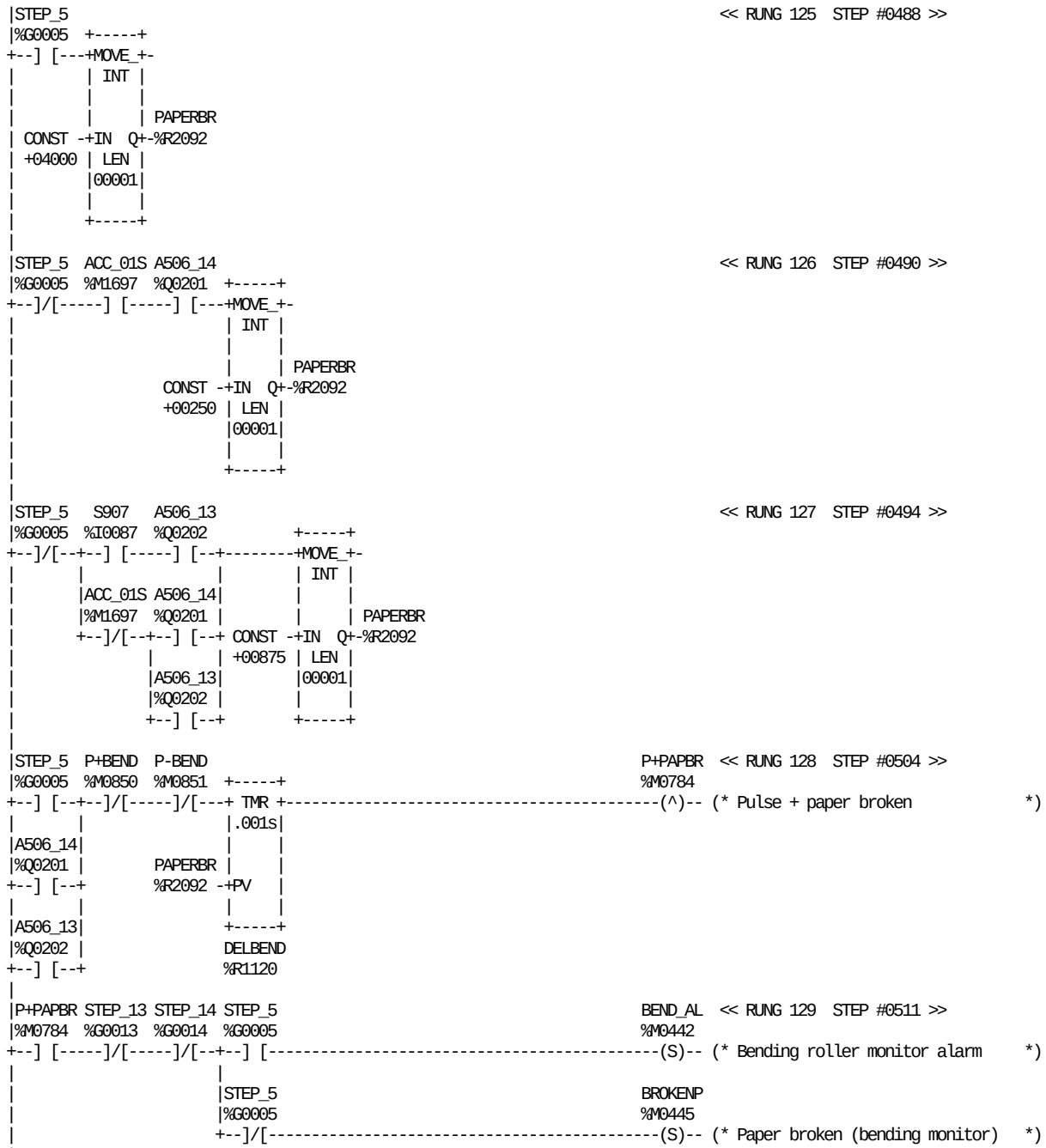

REFERENCE	NICKNAME	REFERENCE DESCRIPTION	REFERENCE	NICKNAME	REFERENCE DESCRIPTION
%Q0202	A506_13	DMC Main Motor Low speed	%M0784	P+PAPBR	Pulse + paper broken
%Q0201	A506_14	DMC Main Motor High speed	%M0851	P-BEND	Pulse - bending roller sensor
%M1697	ACC_01S	1 sec. acceleration main motor	%R2092	PAPERBR	Timing for paper tube broken
%M0442	BEND_AL	Bending roller monitor alarm	%I0087	S907	Push button inching JUM
%M0445	BROKENP	Paper broken (bending monitor)	%G0013	STEP_13	OPEN DOORS, CUT TUBE
%R1120	DELBEND	TMR delay for bending roller	%G0014	STEP_14	CIP / HC
%M0850	P+BEND	Pulse + bending roller sensor	%G0005	STEP_5	SPRAYING

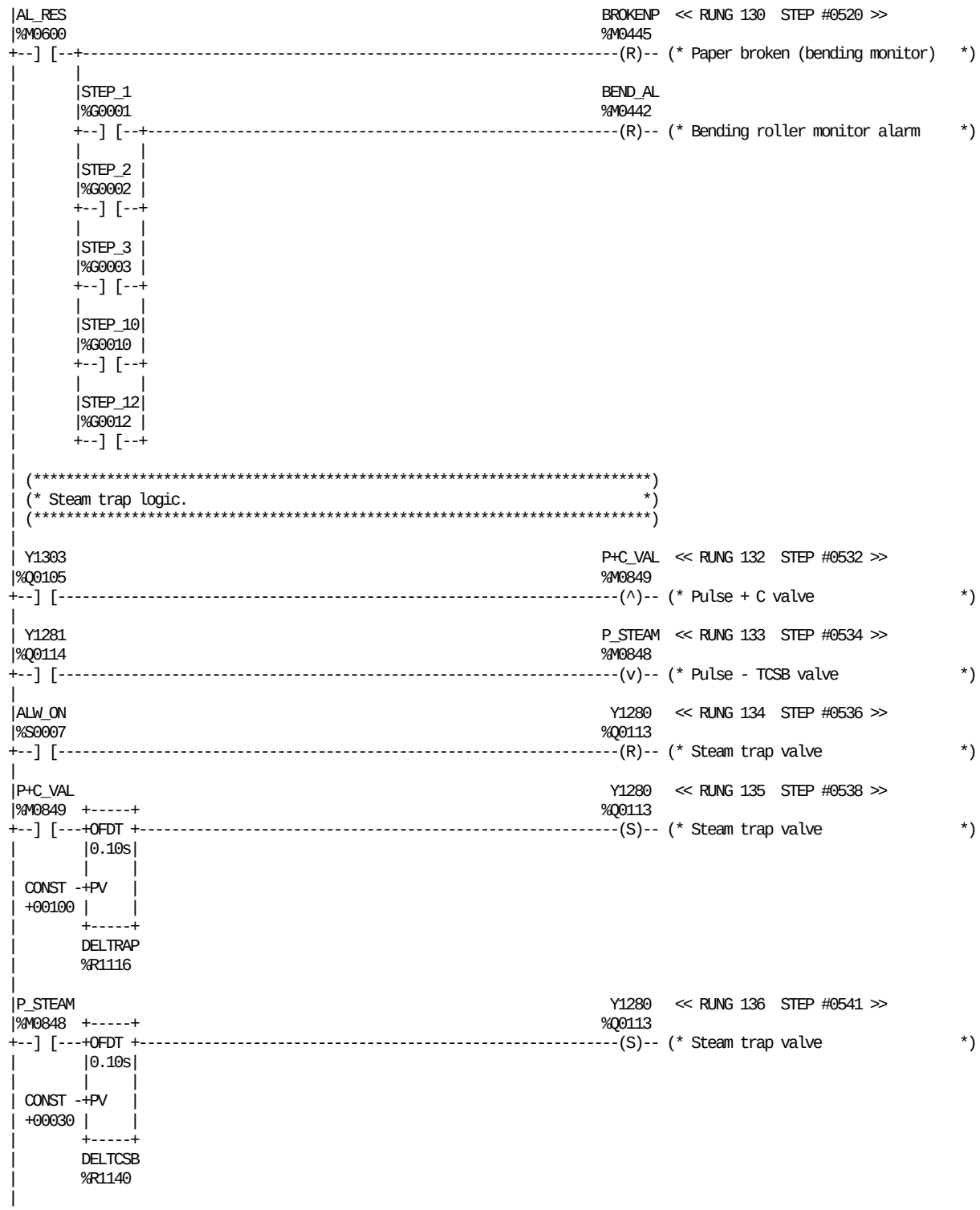

REFERENCE	NICKNAME	REFERENCE DESCRIPTION	REFERENCE	NICKNAME	REFERENCE DESCRIPTION
%S0007	ALW_ON		%G0001	STEP_1	STANDBY
%M0600	AL_RES	Alarm reset (From TPOP)	%G0010	STEP_10	PRODUCTION
%M0442	BEND_AL	Bending roller monitor alarm	%G0012	STEP_12	VENTING
%M0445	BROKENP	Paper broken (bending monitor)	%G0002	STEP_2	PREPARATION (3 MIN.)
%R1140	DELTCSB	TMR steam trap time TCSB	%G0003	STEP_3	TUBE SEALING
%R1116	DELTRAP	TMR steam trap time	%Q0113	Y1280	Steam trap valve
%M0849	P+C_VAL	Pulse + C valve	%Q0114	Y1281	TCSB valve
%M0848	P_STEAM	Pulse - TCSB valve	%Q0105	Y1303	C-valve open

```
| (*************************************************************************)
| (* PEROXIDE CONCENTRATION METER                                          *)
| (*                                                                       *)
| (* Measures H2O2 concentration in the tank. One analog input to the PLC  *)
| (* (0..32000) receives the concentration (0%..60%) or the temperature    *)
| (* of the peroxide inside the meter (0..100C). When the input reads a    *)
| (* negative value, some fault is on the meter.                          *)
| (*************************************************************************)
|
|A307_18                                                    P+H2O2   << RUNG 138  STEP #0545 >>
|%I0071                                                     %M0857
+--] [-----------------------------------------------------------------(^)-- (* Pulse + H2O2 tank safety level   *)
|
| Y1210                                                     P-H2O2   << RUNG 139  STEP #0547 >>
|%Q0161                                                     %M0858
+--] [-----------------------------------------------------------------(v)-- (* Pulse - fill H2O2 tank          *)
|
|K115_6  STEP_2                                             PCM_WAI  << RUNG 140  STEP #0549 >>
|%I0147  %G0002  +-----+                                    %M0859
+--]/[--+--] [---+OFDT +-------------------------------------------( )-- (* H2O2 meter wait after pmp stop   *)
|       |        |0.10s|
|A308_18|        |     |
|%I0072 |        |     |
+--]/[--+ CONST -+PV   |
|         +00300 |     |
|                +-----+
|                DEL1089
|                %R1089
|
|STEP_2                                                     P+STEP2  << RUNG 141  STEP #0554 >>
|%G0002                                                     %M0871
+--] [-----------------------------------------------------------------(^)-- (* Pulse + entering in step_2      *)
|
|P+STEP2                                                            << RUNG 142  STEP #0556 >>
|%M0871          +-----+
+--] [--+--------+OFDT +-------------------------------------------------<+>
|       |        |0.10s|
|P+H2O2 |        |     |
|%M0857 |        |     |
+--] [--+ CONST -+PV   |
|       | +06000 |     |
|P-H2O2 |        +-----+
|%M0858 |        DEL1092
+--] [--+        %R1092
|       |
|PCM_MLF|
|%M0866 |
+--] [--+
|       |
|PCM_CON|
|%M0869 |
+--] [--+
|
|        S003   STEP_2  PCM_WAI A300_18                      PCM_PMP  << RUNG 143  STEP #0563 >>
|       %I0095  %G0002  %M0859  %I0065                      %M0860
+<+>------]/[-----] [-----]/[-----]/[-------------------------------------( )-- (* H2O2 meter run H2O2 pump        *)
|
```

REFERENCE	NICKNAME	REFERENCE DESCRIPTION	REFERENCE	NICKNAME	REFERENCE DESCRIPTION
%I0065	A300_18	Level peroxide spray tank	%M0858	P-H2O2	Pulse - fill H2O2 tank
%I0071	A307_18	Safety level peroxide tank	%M0869	PCM_CON	H2O2 conc. out of range
%I0072	A308_18	Level peroxide tank production	%M0866	PCM_MLF	H2O2 meter malfunction
%R1089	DEL1089	TMR H2O2 timer 1	%M0860	PCM_PMP	H2O2 meter run H2O2 pump
%R1092	DEL1092	TMR H2O2 timer 2	%M0859	PCM_WAI	H2O2 meter wait after pmp stop
%I0147	K115_6	Bottom cover H2O2-bath closed	%I0095	S003	Service switch
%M0857	P+H2O2	Pulse + H2O2 tank safety level	%G0002	STEP_2	PREPARATION (3 MIN.)
%M0871	P+STEP2	Pulse + entering in step_2	%Q0161	Y1210	Filling H2O2 tank

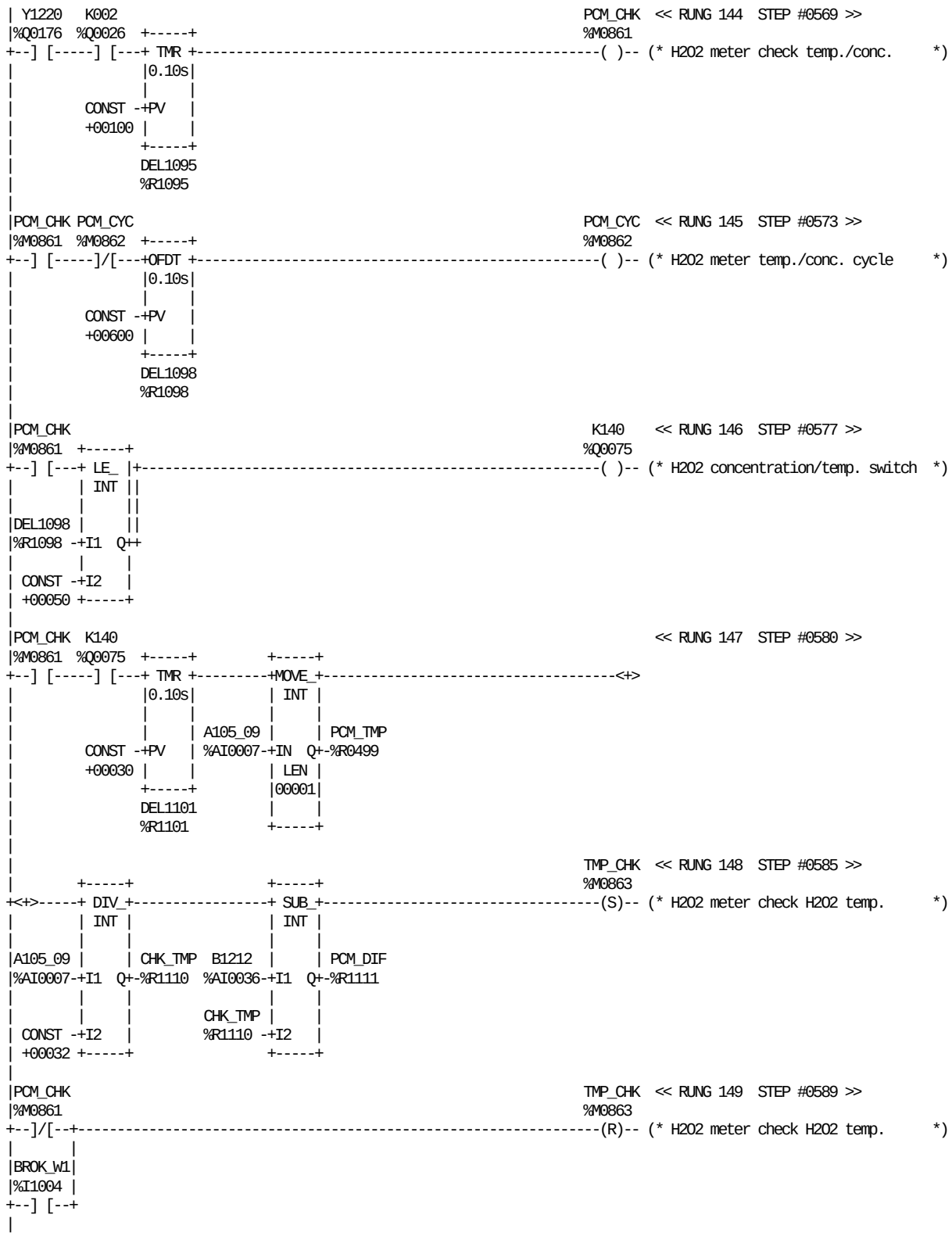

REFERENCE	NICKNAME	REFERENCE DESCRIPTION
%AI0007	A105_09	H2O2 concentration/temperature
%AI0036	B1212	Temp monitor H2O2 tank
%I1004	BROK_W1	Broken wire loop 1(Water bath)
%R1110	CHK_TMP	H2O2 temperature control
%R1095	DEL1095	TMR H2O2 timer 3
%R1098	DEL1098	TMR H2O2 timer 4
%R1101	DEL1101	TMR H2O2 timer 5
%Q0026	K002	Hydrogen peroxide pump
%Q0075	K140	H2O2 concentration/temp. switch
%M0861	PCM_CHK	H2O2 meter check temp./conc.
%M0862	PCM_CYC	H2O2 meter temp./conc. cycle
%R1111	PCM_DIF	H2O2 meter pox temp.difference
%R0499	PCM_TMP	H2O2 meter peroxide temperature
%M0863	TMP_CHK	H2O2 meter check H2O2 temp.
%Q0176	Y1220	Filling peroxide bath

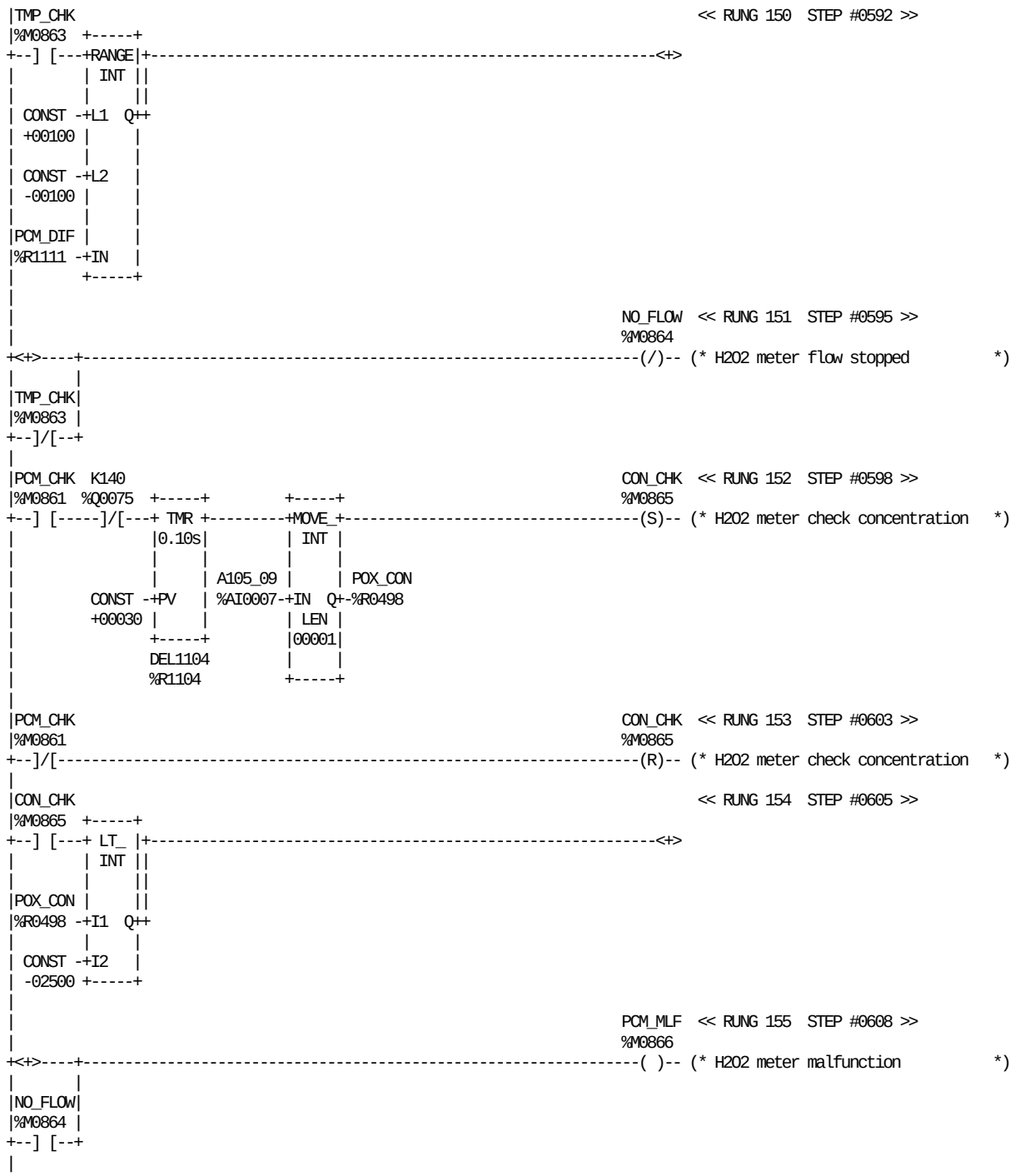

REFERENCE	NICKNAME	REFERENCE DESCRIPTION	REFERENCE	NICKNAME	REFERENCE DESCRIPTION
%AI0007	A105_09	H2O2 concentration/temperature	%M0861	PCM_CHK	H2O2 meter check temp./conc.
%M0865	CON_CHK	H2O2 meter check concentration	%R1111	PCM_DIF	H2O2 meter pox temp.difference
%R1104	DEL1104	TMR H2O2 timer 6	%M0866	PCM_MLF	H2O2 meter malfunction
%Q0075	K140	H2O2 concentration/temp. switch	%R0498	POX_CON	H2O2 meter peroxide concentr.
%M0864	NO_FLOW	H2O2 meter flow stopped	%M0863	TMP_CHK	H2O2 meter check H2O2 temp.

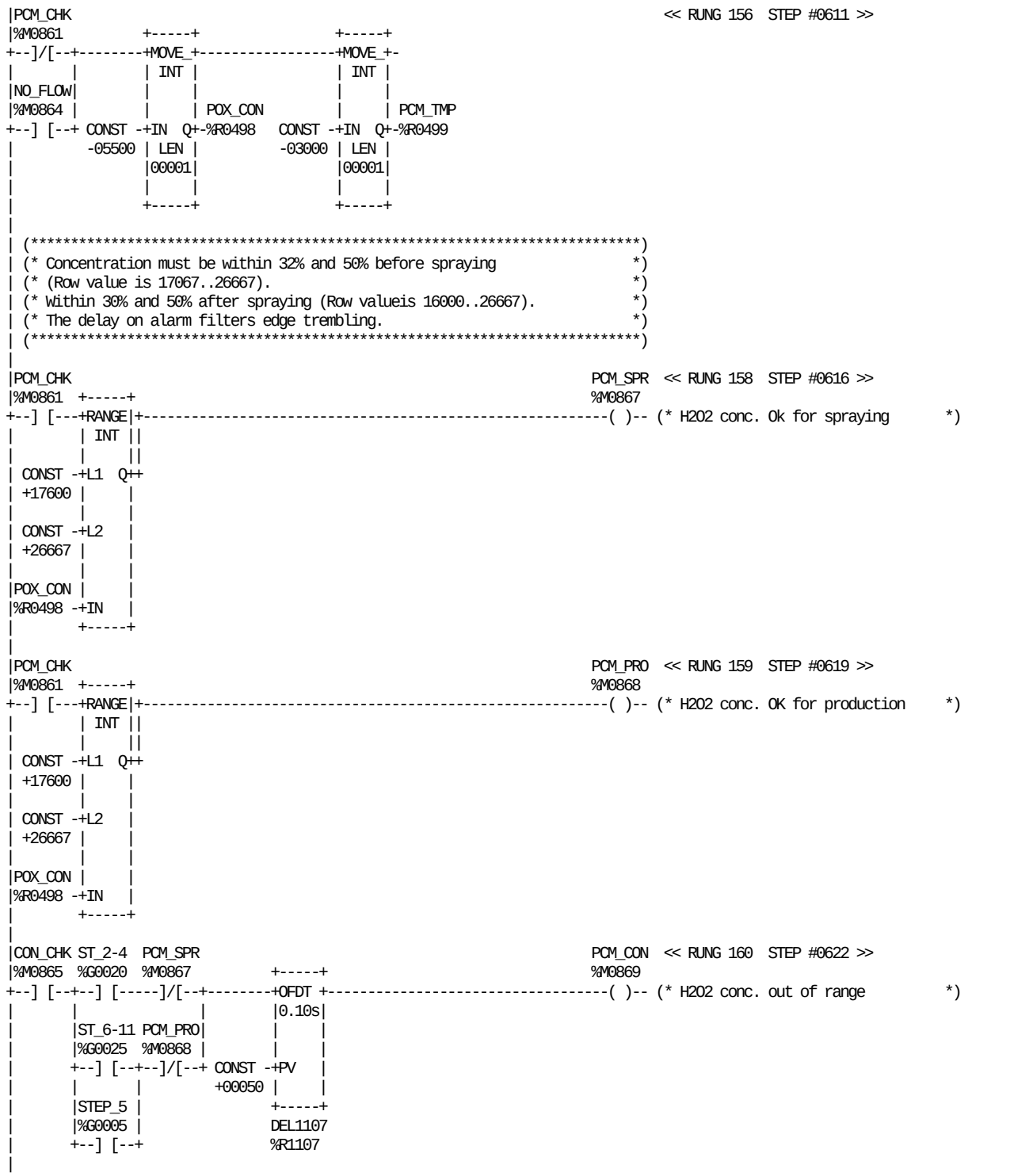

REFERENCE	NICKNAME	REFERENCE DESCRIPTION	REFERENCE	NICKNAME	REFERENCE DESCRIPTION
%M0865	CON_CHK	H2O2 meter check concentration	%M0867	PCM_SPR	H2O2 conc. Ok for spraying
%R1107	DEL1107	TMR H2O2 timer 7	%R0499	PCM_TMP	H2O2 meter peroxide temperature
%M0864	NO_FLOW	H2O2 meter flow stopped	%R0498	POX_CON	H2O2 meter peroxide concentr.
%M0861	PCM_CHK	H2O2 meter check temp./conc.	%G0005	STEP_5	SPRAYING
%M0869	PCM_CON	H2O2 conc. out of range	%G0020	ST_2-4	Ladder position 2-4
%M0868	PCM_PRO	H2O2 conc. OK for production	%G0025	ST_6-11	Ladder position 6-11

```
|CON_CHK ST_6-11 PCM_SPR PCM_MLF                                        PCM_LIM  << RUNG 161  STEP #0632 >>
|%M0865  %G0025  %M0867  %M0866                                        %M0870
+--] [--+--] [--+--]/[-----]/[-----------------------------------------( )-- (* H2O2 conc.close to limits       *)
|       |       |
|       |STEP_5 |
|       |%G0005 |
|       +--] [--+
|
|PCM_MLF                                                               H2O2_18  << RUNG 162  STEP #0639 >>
|%M0866                                                                %M0460
+--] [-----------------------------------------------------------------( )-- (* H2O2 meter malfunction          *)
|
|PCM_CON                                                               H2O2_19  << RUNG 163  STEP #0641 >>
|%M0869                                                                %M0461
+--] [-----------------------------------------------------------------( )-- (* H2O2 meter wrong concentration  *)
|
|PCM_LIM                                                               H2O2_23  << RUNG 164  STEP #0643 >>
|%M0870                                                                %M0462
+--] [-----------------------------------------------------------------( )-- (* H2O2 meter conc. close to limits *)
|
|H2O2FLT PCM_CHK                                                       H2O2_24  << RUNG 165  STEP #0645 >>
|%I0421  %M0861                                                        %M0463
+--] [-----] [---------------------------------------------------------( )-- (* H2O2 meter malfunction warning  *)
|
|[    END OF SUBROUTINE LOGIC     ]
|
```

REFERENCE	NICKNAME	REFERENCE DESCRIPTION	REFERENCE	NICKNAME	REFERENCE DESCRIPTION
%M0865	CON_CHK	H2O2 meter check concentration	%M0869	PCM_CON	H2O2 conc. out of range
%I0421	H2O2FLT	H2O2 meter fault	%M0870	PCM_LIM	H2O2 conc.close to limits
%M0460	H2O2_18	H2O2 meter malfunction	%M0866	PCM_MLF	H2O2 meter malfunction
%M0461	H2O2_19	H2O2 meter wrong concentration	%M0867	PCM_SPR	H2O2 conc. Ok for spraying
%M0462	H2O2_23	H2O2 meter conc. close to limits	%G0005	STEP_5	SPRAYING
%M0463	H2O2_24	H2O2 meter malfunction warning	%G0025	ST_6-11	Ladder position 6-11
%M0861	PCM_CHK	H2O2 meter check temp./conc.			

```
|[  START LD SUBROUTINE   A_B_C   ]
|
|[     VARIABLE DECLARATIONS      ]
|
|[   START OF SUBROUTINE LOGIC    ]
|
| (*****************************************************************************)
| (* This subroutine is used to control the A-B-C valve group.                *)
| (*****************************************************************************)
|
| (*****************************************************************************)
| (* The machine is always starting with the tube prefilled so the A-valve    *)
| (* control is different if the tube is empty or if it's filled.             *)
| (*                                                                           *)
| (* When the tube is filled (after a normal stop):                           *)
| (* The A-valve is opened during the startsequnce when the following 2       *)
| (* conditions have been fullfilled:                                         *)
| (*                          1 The startsequence has been going on for 12sec *)
| (*                          2 the FFU-motor is in its home position.        *)
| (*                                                                           *)
| (* When the tube is empty (first start after tubesealing or after an       *)
| (* inching):                                                                *)
| (*                          The A-valve is opened as soon the               *)
| (*                          startsequence starts.                           *)
| (*****************************************************************************)
|
|SQ_COND A507_31                                                 Y1301   << RUNG 6  STEP #0004 >>
|%M0070  %I0057  +-----+                                        %Q0118
+--] [-----] [---+ GE_ |+-----------------------------------------------(S)-- (* A-valve                        *)
|                | INT ||
|                |     ||
|       SQ_TMR   |     ||
|       %R0100 -+I1  Q++
|                |     |
|        CONST -+I2   |
|        +00120 +-----+
|
|SQGOING STEP_9                                                  Y1301   << RUNG 7  STEP #0008 >>
|%M0072  %G0009  +-----+                                        %Q0118
+--] [-----] [---+ LT_ |+-----------------------------------------------(S)-- (* A-valve                        *)
|                | INT ||
|                |     ||
|       A509_06  |     ||
|       %AI0023-+I1  Q++
|                |     |
|        CONST -+I2   |
|        +08000 +-----+
|
|A420_26                                                         Y1301   << RUNG 8  STEP #0012 >>
|%I0275  +-----+                                                %Q0118
+--]/[---+ LT_ |+-----------------------------------------------------(R)-- (* A-valve                        *)
|        | INT ||
|        |     ||
|SQ_TMR  |     ||
|%R0100 -+I1  Q++
|        |     |
| CONST -+I2   |
| +00120 +-----+
|
```

REFERENCE	NICKNAME	REFERENCE DESCRIPTION	REFERENCE	NICKNAME	REFERENCE DESCRIPTION
%I0275	A420_26	TMCC FCS low level alarm	%M0070	SQ_COND	Start sequence conditions
%I0057	A507_31	DMC FFU Home position	%R0100	SQ_TMR	Start sequense timer
%AI0023	A509_06	TMCC FCS Filtered level	%G0009	STEP_9	MOTOR START
%M0072	SQGOING	Start sequence going on	%Q0118	Y1301	A-valve

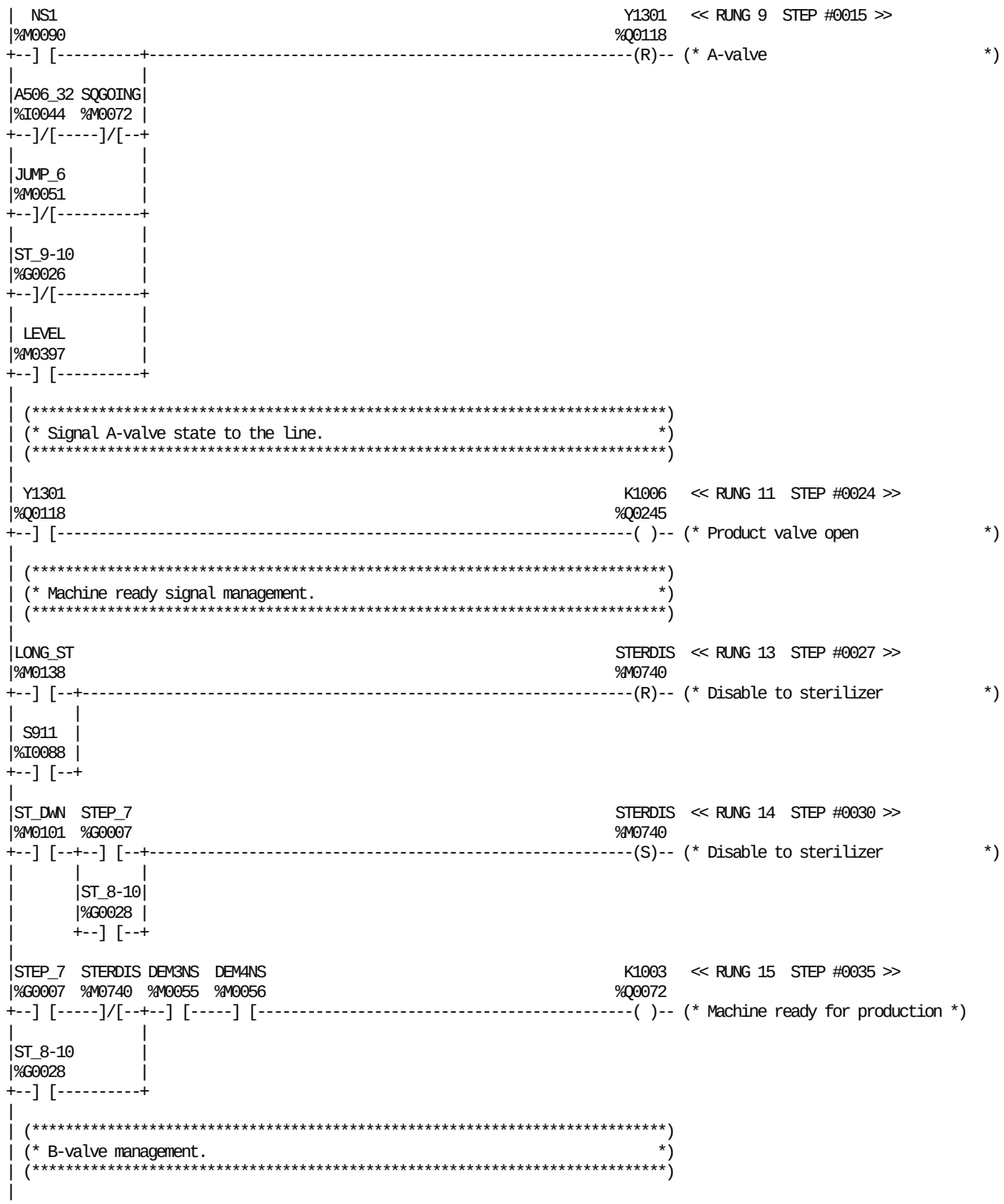

REFERENCE	NICKNAME	REFERENCE DESCRIPTION	REFERENCE	NICKNAME	REFERENCE DESCRIPTION
%I0044	A506_32	DMC Main motor running	%I0088	S911	Push button step up
%M0055	DEM3NS	Demand 3 normal stop	%M0072	SQGOING	Start sequence going on
%M0056	DEM4NS	Demand 4 normal stop (only DE)	%G0007	STEP_7	SIGNAL TO STERILIZER
%M0051	JUMP_6	Jump to pos 6 (Fast stop)	%M0740	STERDIS	Disable to sterilizer
%Q0072	K1003	Machine ready for production	%G0028	ST_8-10	Ladder position 8-10
%Q0245	K1006	Product valve open	%G0026	ST_9-10	Ladder position 9-10
%M0397	LEVEL	Level not OK	%M0101	ST_DWN	Pushbuttons step down
%M0138	LONG_ST	To long stop in sterile mode	%Q0118	Y1301	A-valve
%M0090	NS1	Normal stop step 1			

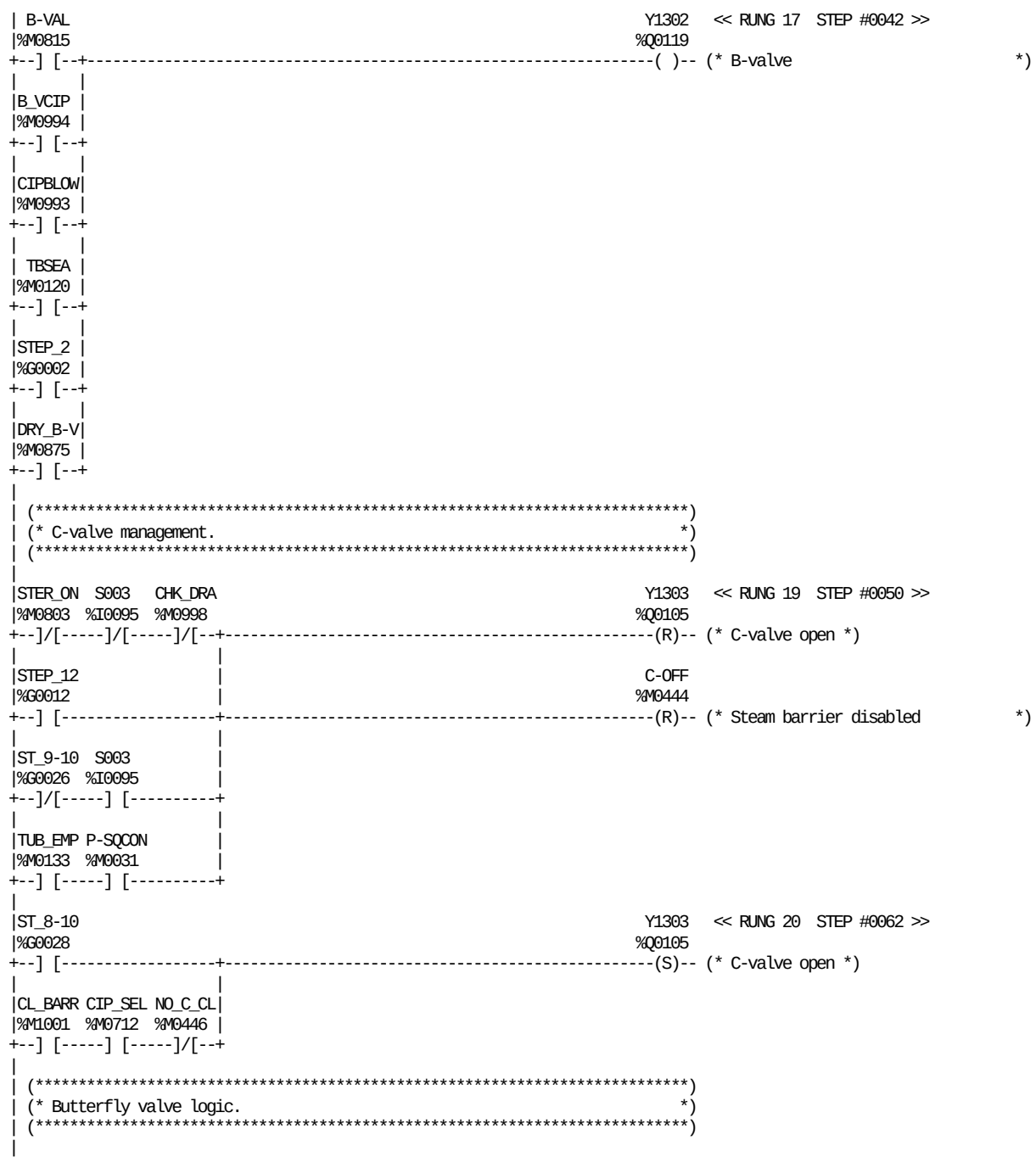

REFERENCE	NICKNAME	REFERENCE DESCRIPTION	REFERENCE	NICKNAME	REFERENCE DESCRIPTION
%M0815	B-VAL	Open B-valve during Mach.ster.	%I0095	S003	Service switch
%M0994	B_VCIP	B-valve control CIP	%G0012	STEP_12	VENTING
%M0444	C-OFF	Steam barrier disabled	%G0002	STEP_2	PREPARATION (3 MIN.)
%M0998	CHK_DRA	Check CIP drainig on	%M0803	STER_ON	Steril system on
%M0993	CIPBLOW	CIP blowing must be done	%G0028	ST_8-10	Ladder position 8-10
%M0712	CIP_SEL	CIP select from TPOP	%G0026	ST_9-10	Ladder position 9-10
%M1001	CL_BARR	Cleaning barrier space	%M0120	TBSEA	Tube sealing
%M0875	DRY_B-V	Active B-valve in drying time	%M0133	TUB_EMP	Tube empty (after inching)
%M0446	NO_C_CL	C valve cleaning disabled	%Q0119	Y1302	B-valve
%M0031	P-SQCON	Sequence condition neg pulse	%Q0105	Y1303	C-valve open

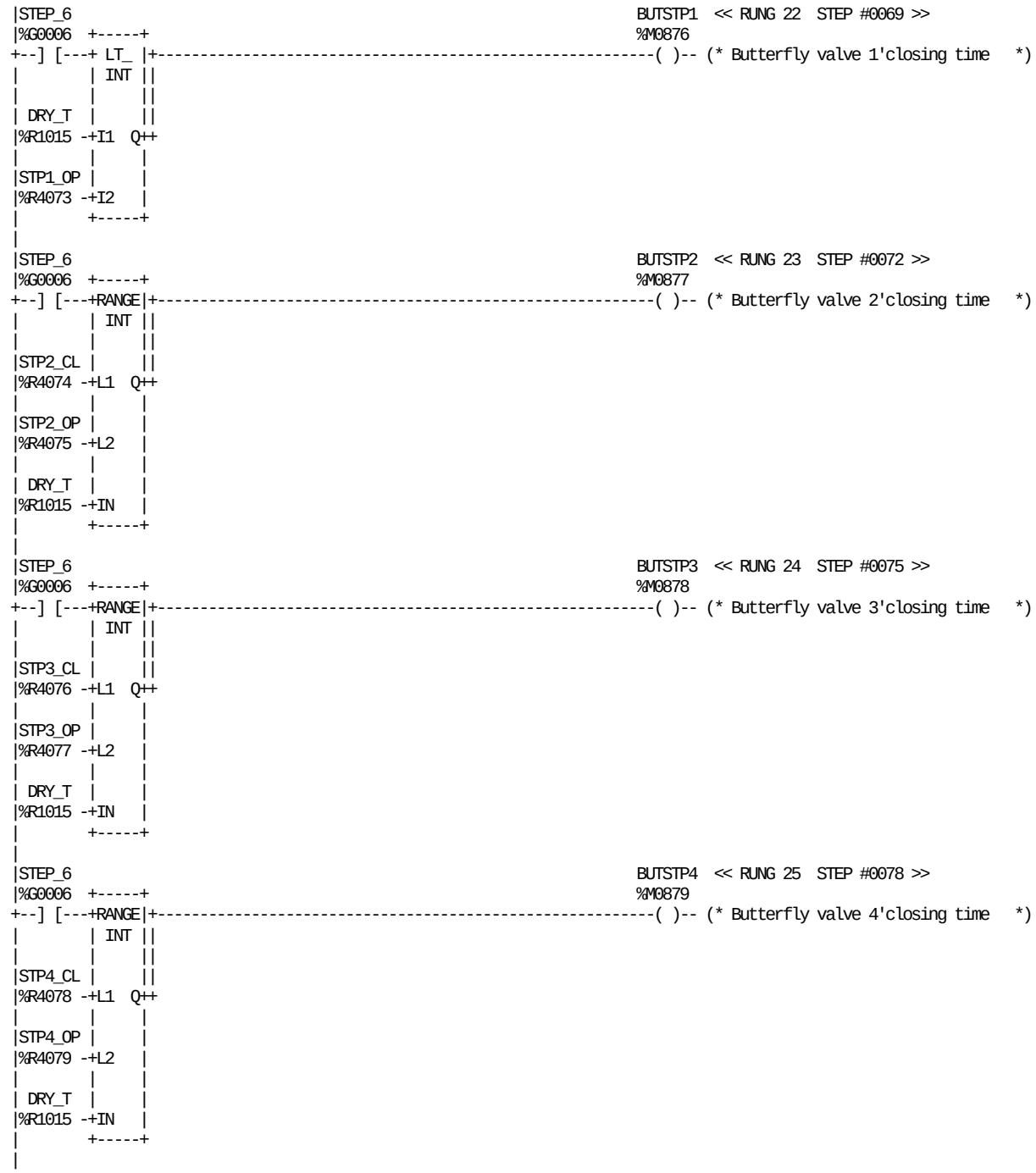

REFERENCE	NICKNAME	REFERENCE DESCRIPTION	REFERENCE	NICKNAME	REFERENCE DESCRIPTION
%M0876	BUTSTP1	Butterfly valve 1'closing time	%R4074	STP2_CL	Butterfly step 2 close time
%M0877	BUTSTP2	Butterfly valve 2'closing time	%R4075	STP2_OP	Butterfly step 2 open time
%M0878	BUTSTP3	Butterfly valve 3'closing time	%R4076	STP3_CL	Butterfly step 3 close time
%M0879	BUTSTP4	Butterfly valve 4'closing time	%R4077	STP3_OP	Butterfly step 3 open time
%R1015	DRY_T	Draying timer	%R4078	STP4_CL	Butterfly step 4 close time
%G0006	STEP_6	DRYING + STEAM CLEANING	%R4079	STP4_OP	Butterfly step 4 open time
%R4073	STP1_OP	Butterfly step 1 open time			

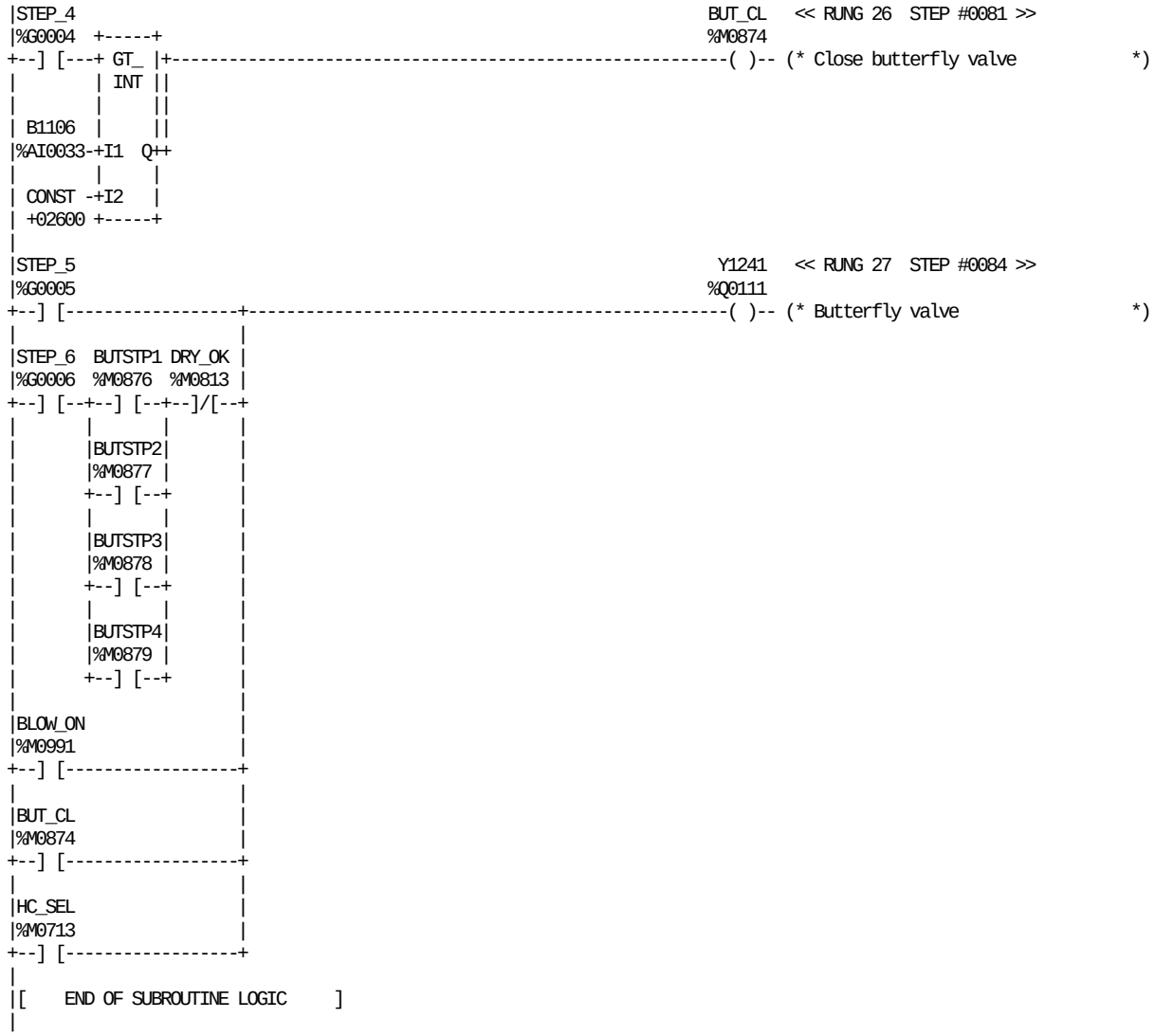

REFERENCE	NICKNAME	REFERENCE DESCRIPTION	REFERENCE	NICKNAME	REFERENCE DESCRIPTION
%AI0033	B1106	Heat sterilization	%M0813	DRY_OK	Drying ready
%M0991	BLOW_ON	CIP blowing going on	%M0713	HC_SEL	Hygienic cleaning selection ok
%M0876	BUTSTP1	Butterfly valve 1'closing time	%G0004	STEP_4	HEAT STERILIZATION
%M0877	BUTSTP2	Butterfly valve 2'closing time	%G0005	STEP_5	SPRAYING
%M0878	BUTSTP3	Butterfly valve 3'closing time	%G0006	STEP_6	DRYING + STEAM CLEANING
%M0879	BUTSTP4	Butterfly valve 4'closing time	%Q0111	Y1241	Butterfly valve
%M0874	BUT_CL	Close butterfly valve			

This page left intentionally blank

```
|[  START LD SUBROUTINE  ST_SEQ   ]
|
|[     VARIABLE DECLARATIONS      ]
|
|[   START OF SUBROUTINE LOGIC    ]
|
| (*************************************************************************)
| (* This subruotine control the normal start and stop of the machine.     *)
| (* The the first part of the rungs take care of the sequence during the  *)
| (* start of the machine. The second part is used for the normal stop     *)
| (* routine.                                                              *)
| (*************************************************************************)
|
|ST_9-10 ST_COND  S911   A602_14 ST_9-10   NS2   JUMP_1  JUMP_6          SQ_COND  << RUNG 5  STEP #0003 >>
|%G0026  %M0063  %I0088  %I0019  %G0026  %M0091  %M0050  %M0051          %M0070
+--] [-----] [-----] [--+--] [--+--] [--+--]/[-----] [-----] [-------------( )-- (* Start sequence conditions       *)
|                       |       |       |
|                       |STEP_10| S907  |
|                       |%G0010 |%I0087 |
|                       +--] [--+--] [--+
|                                |       |
|STEP_6  ST_COND  C-OFF   S907  |STEP_11|
|%G0006  %M0063  %M0444  %I0087 |%G0011 |
+--] [--+--] [-----]/[--+--] [--+--] [--+
|       |              |       |
|STEP_7 |STP1-8   C-OFF |       |
|%G0007 |%M0060  %M0444 |       |
+--] [--+--] [--+--] [--+       |
|       |      |       |       |
|STEP_8 |      |SA_INCH|       |
|%G0008 |      |%M0379 |       |
+--] [--+      +--] [--+       |
|               |       |       |
|               |DT_RDY |       |
|               |%M0354 |       |
|               +--] [--+       |
|                               |
|SQ_COND A506_32                |
|%M0070  %I0044                 |
+--] [-----] [------------------+
|
|SQ_COND SQ_END                                                    SQGOING  << RUNG 6  STEP #0034 >>
|%M0070  %M0071                                                    %M0072
+--] [--+--]/[--+-------------------------------------------------------( )-- (* Start sequence going on         *)
|       |      |
|       |A506_32|
|       |%I0044 |
|       +--]/[--+
|
|SQ_COND                                                           P-START  << RUNG 7  STEP #0039 >>
|%M0070                                                            %M0065
+--]/[-----------------------------------------------------------------------(^)-- (* Pulse - Start production        *)
|
```

REFERENCE	NICKNAME	REFERENCE DESCRIPTION	REFERENCE	NICKNAME	REFERENCE DESCRIPTION
%I0044	A506_32	DMC Main motor running	%M0072	SQGOING	Start sequence going on
%I0019	A602_14	Safety monitors C	%M0070	SQ_COND	Start sequence conditions
%M0444	C-OFF	Steam barrier disabled	%M0071	SQ_END	Start sequence ended
%M0354	DT_RDY	Date unit not ready	%G0010	STEP_10	PRODUCTION
%M0050	JUMP_1	Jump to pos 1 (Emergency stop)	%G0011	STEP_11	END OF PRODUCTION
%M0051	JUMP_6	Jump to pos 6 (Fast stop)	%G0006	STEP_6	DRYING + STEAM CLEANING
%M0091	NS2	Normal stop step 2	%G0007	STEP_7	SIGNAL TO STERILIZER
%M0065	P-START	Pulse - Start production	%G0008	STEP_8	FLAPS + H2O2 TEMPERATURE
%I0087	S907	Push button inching JUM	%M0060	STP1-8	Step up conditions pos 1-8
%I0088	S911	Push button step up	%G0026	ST_9-10	Ladder position 9-10
%M0379	SA_INCH	SA strip not sealed inching	%M0063	ST_COND	Step up conditions

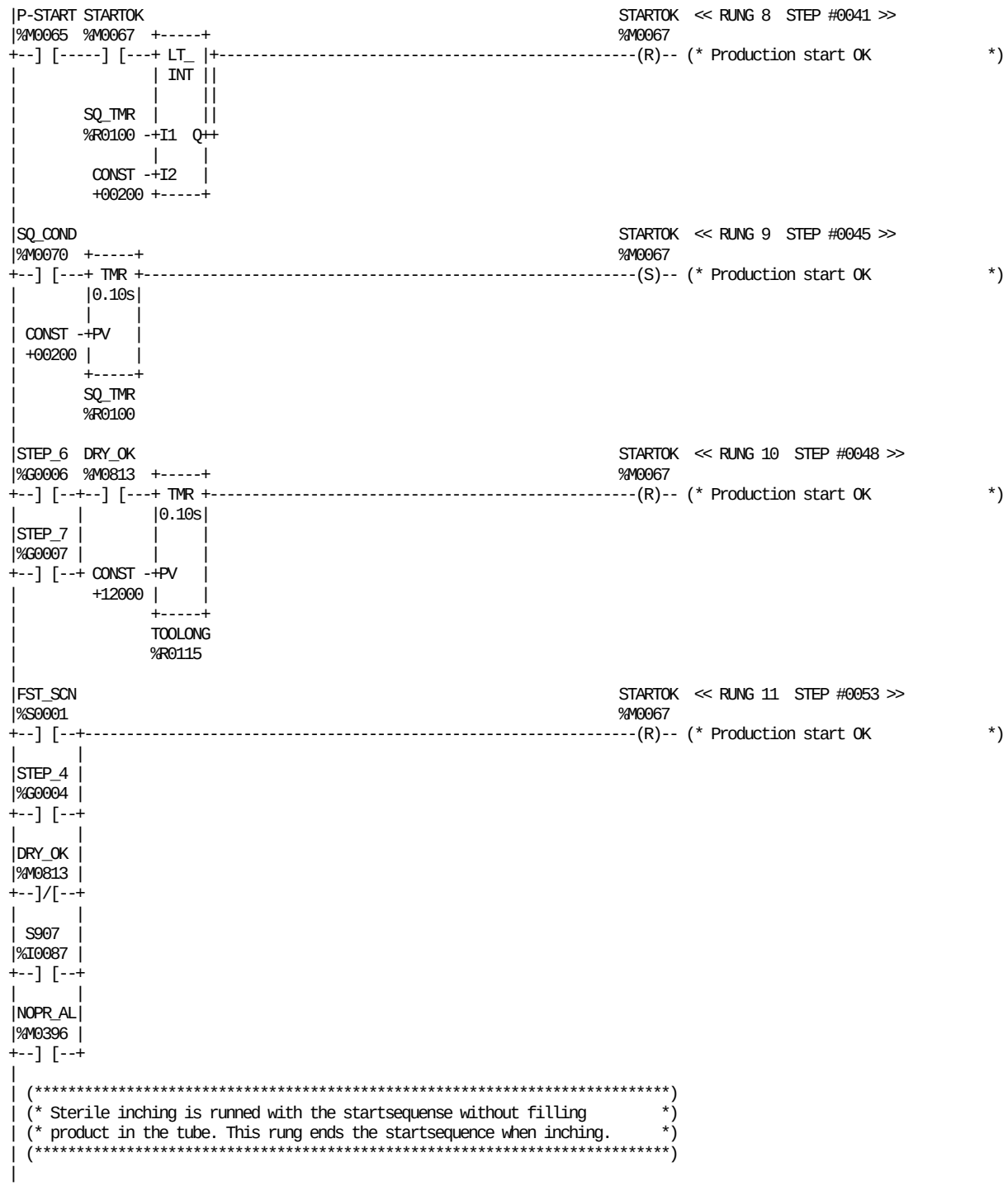

REFERENCE	NICKNAME	REFERENCE DESCRIPTION	REFERENCE	NICKNAME	REFERENCE DESCRIPTION
%M0813	DRY_OK	Drying ready	%R0100	SQ_TMR	Start sequense timer
%S0001	FST_SCN		%M0067	STARTOK	Production start OK
%M0396	NOPR_AL	No product at the machine ALARM	%G0004	STEP_4	HEAT STERILIZATION
%M0065	P-START	Pulse - Start production	%G0006	STEP_6	DRYING + STEAM CLEANING
%I0087	S907	Push button inching JUM	%G0007	STEP_7	SIGNAL TO STERILIZER
%M0070	SQ_COND	Start sequence conditions	%R0115	TOOLONG	TMR production stop too long

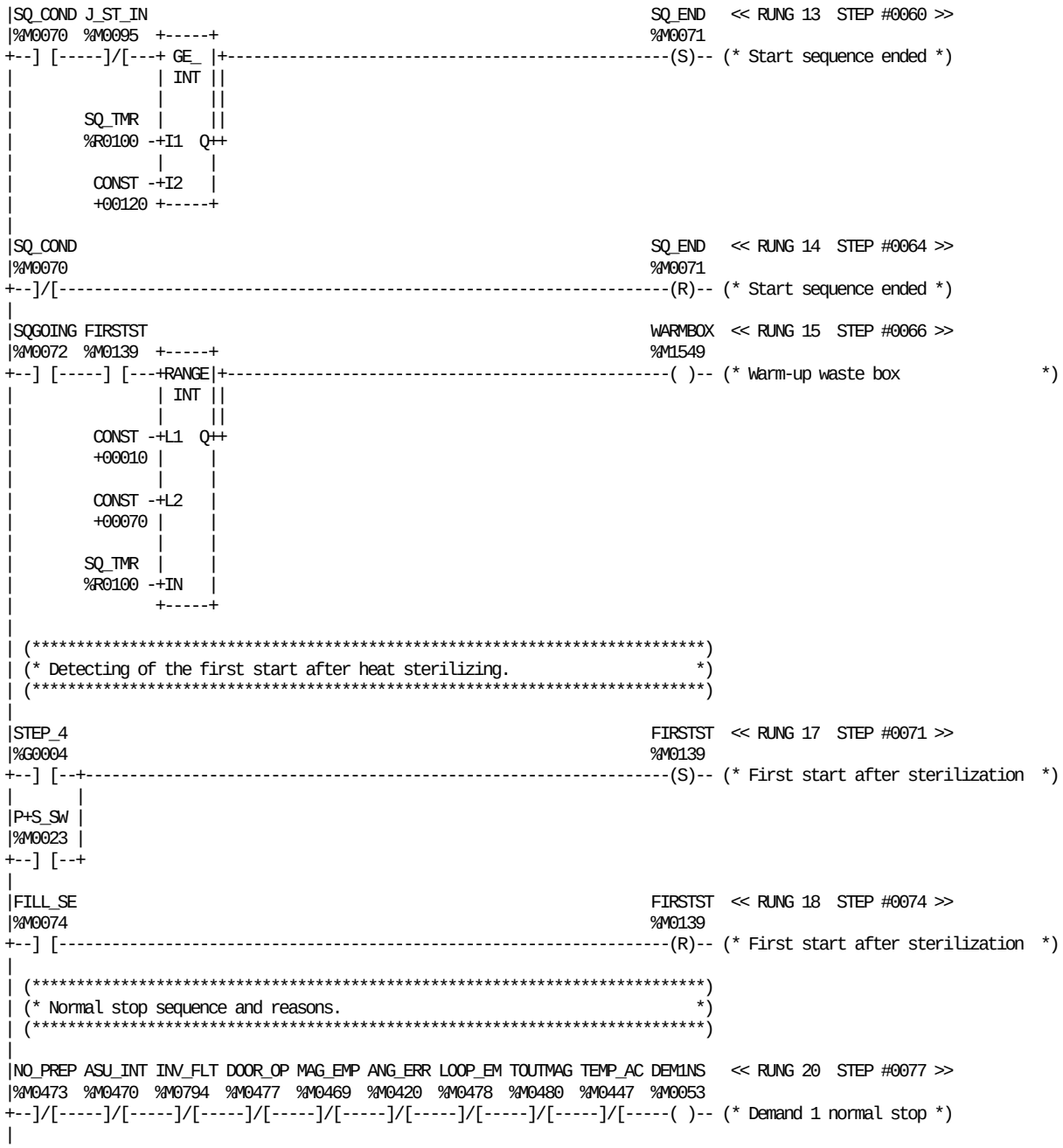

REFERENCE	NICKNAME	REFERENCE DESCRIPTION	REFERENCE	NICKNAME	REFERENCE DESCRIPTION
%M0420	ANG_ERR	Angle encoder error	%M0473	NO_PREP	ASU, Pkg mat end+not prepared
%M0470	ASU_INT	Splice sequence ASU interrupted	%M0023	P+S_SW	Service switch positive pulse
%M0053	DEM1NS	Demand 1 normal stop	%M0072	SQGOING	Start sequence going on
%M0477	DOOR_OP	Pack mat ended and doors open	%M0070	SQ_COND	Start sequence conditions
%M0074	FILL_SE	Fillsector (Only active 1 start)	%M0071	SQ_END	Start sequence ended
%M0139	FIRSTST	First start after sterilization	%R0100	SQ_TMR	Start sequense timer
%M0794	INV_FLT	General inverter fault	%G0004	STEP_4	HEAT STERILIZATION
%M0095	J_ST_IN	Stop sequence jaw_nr (inching)	%M0447	TEMP_AC	AC temperature too high
%M0478	LOOP_EM	Loop empty	%M0480	TOUTMAG	Magazine timeout expired
%M0469	MAG_EMP	Magazine ASU empty	%M1549	WARMBOX	Warm-up waste box

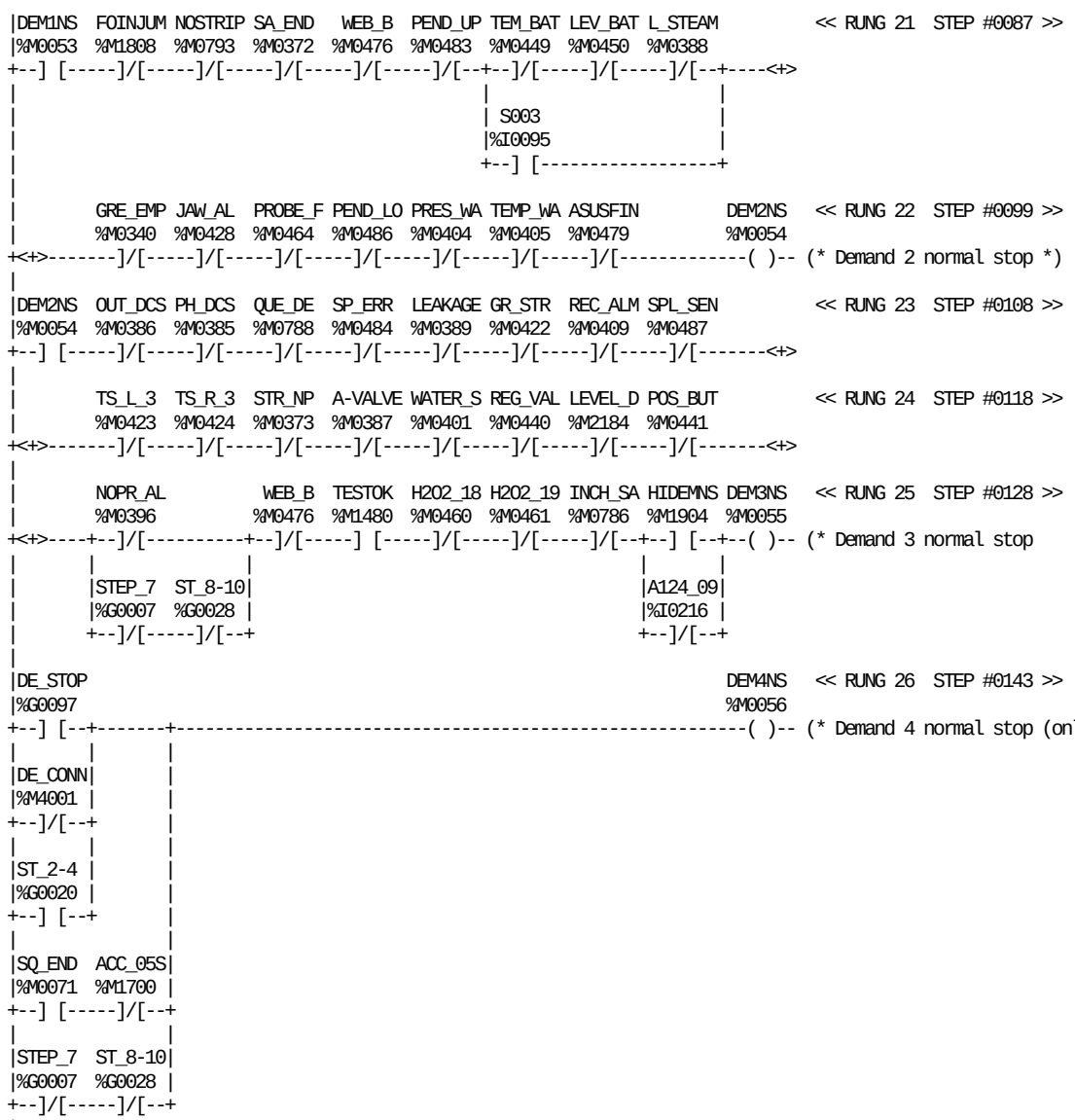

REFERENCE	NICKNAME	REFERENCE DESCRIPTION
%M0387	A-VALVE	A-valve position
%I0216	A124_09	HI Option
%M1700	ACC_05S	5 sec. acceleration main motor
%M0479	ASUSFIN	ASU, Side feeder position alarm
%M0053	DEM1NS	Demand 1 normal stop
%M0054	DEM2NS	Demand 2 normal stop
%M0055	DEM3NS	Demand 3 normal stop
%M0056	DEM4NS	Demand 4 normal stop (only DE)
%M4001	DE_CONN	DE communication connected
%G0097	DE_STOP	DE not ready for production
%M1808	FOINJUM	Force inching after LS alarm
%M0340	GRE_EMP	Greasing tank empty (stop)
%M0422	GR_STR	Greasing stroke not completed
%M0460	H2O2_18	H2O2 meter malfunction
%M0461	H2O2_19	H2O2 meter wrong concentration
%M1904	HIDEMNS	HI, Demand normal stop
%M0786	INCH_SA	SA forced inching for strip fail
%M0428	JAW_AL	Jaw sensor timeout
%M0389	LEAKAGE	Regulating valve leakage
%M2184	LEVEL_D	Level not OK delayed stop
%M0450	LEV_BAT	Level peroxide bath
%M0388	L_STEAM	Low temperature steam C-valve
%M0396	NOPR_AL	No product at the machine ALARM
%M0793	NOSTRIP	Strip general alarm
%M0386	OUT_DCS	Machine out of design

REFERENCE	NICKNAME	REFERENCE DESCRIPTION
%M0486	PEND_LO	Pendulum roller in low position
%M0483	PEND_UP	Pendulum roller in upper pos
%M0385	PH_DCS	Malfunction photocells DCS
%M0441	POS_BUT	Butterfly valve wrong position
%M0404	PRES_WA	Pressure water circulation
%M0464	PROBE_F	Level probe fault H2O2 tank
%M0788	QUE_DE	Queue due to DE
%M0409	REC_ALM	Recorder alarm
%M0440	REG_VAL	Regulating valve
%I0095	S003	Service switch
%M0372	SA_END	Strip end with open door
%M0487	SPL_SEN	Supervision of P.M. splice sens.
%M0484	SP_ERR	Splice guard error
%M0071	SQ_END	Start sequence ended
%G0007	STEP_7	SIGNAL TO STERILIZER
%M0373	STR_NP	Strip not prepared
%G0020	ST_2-4	Ladder position 2-4
%G0028	ST_8-10	Ladder position 8-10
%M0405	TEMP_WA	Temperature water circulation
%M0449	TEM_BAT	Temperature peroxide bath
%M1480	TESTOK	SA, bobbin research OK
%M0423	TS_L_3	TS-error 3 packs left
%M0424	TS_R_3	TS-error 3 packs right
%M0401	WATER_S	Water supply
%M0476	WEB_B	ASU, Broken web at magazine

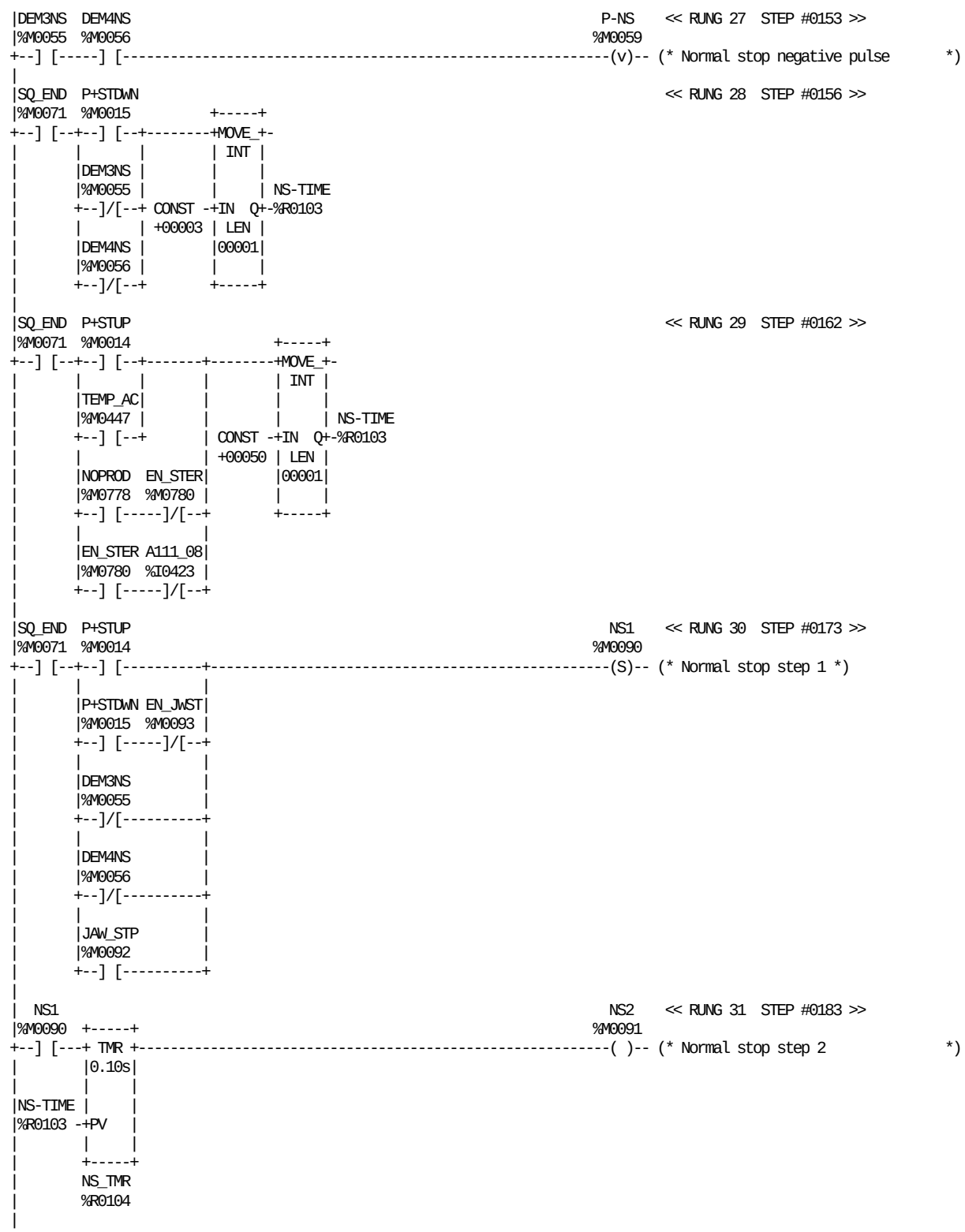

REFERENCE	NICKNAME	REFERENCE DESCRIPTION	REFERENCE	NICKNAME	REFERENCE DESCRIPTION
%I0423	A111_08	Product line sterile	%M0090	NS1	Normal stop step 1
%M0055	DEM3NS	Demand 3 normal stop	%M0091	NS2	Normal stop step 2
%M0056	DEM4NS	Demand 4 normal stop (only DE)	%R0104	NS_TMR	Normal stop timer
%M0093	EN_JWST	Enable jaw stop function	%M0015	P+STDWN	Step down positive pulse
%M0780	EN_STER	Sterile/not sterile enabled	%M0014	P+STUP	Step up positive pulse
%M0092	JAW_STP	Stop jaw on defined jaw_nr	%M0059	P-NS	Normal stop negative pulse
%M0778	NOPROD	No product at the machine	%M0071	SQ_END	Start sequence ended
%R0103	NS-TIME	Normal stop time	%M0447	TEMP_AC	AC temperature too high

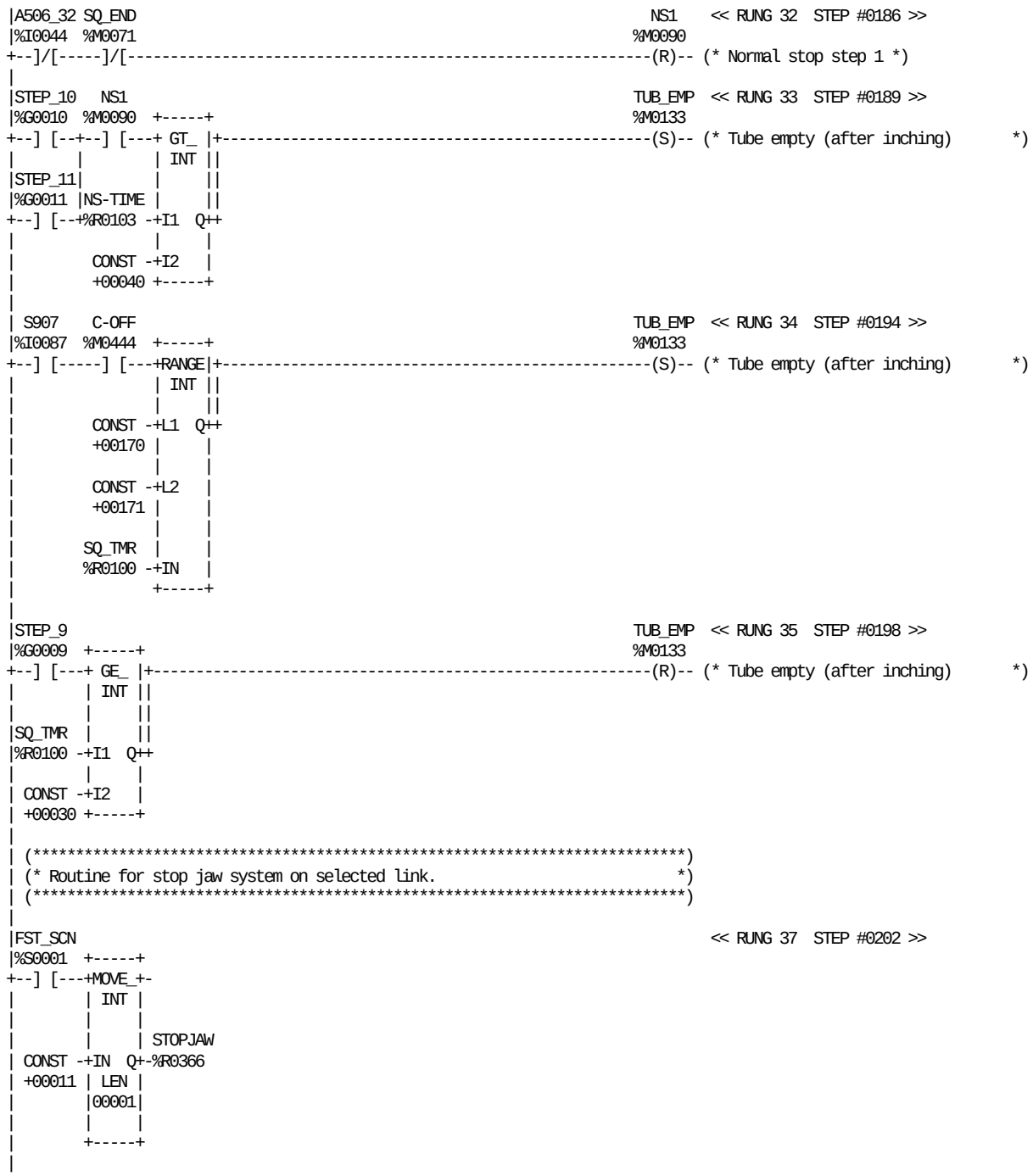

REFERENCE	NICKNAME	REFERENCE DESCRIPTION
%I0044	A506_32	DMC Main motor running
%M0444	C-OFF	Steam barrier disabled
%S0001	FST_SCN	
%R0103	NS-TIME	Normal stop time
%M0090	NS1	Normal stop step 1
%I0087	S907	Push button inching JUM
%M0071	SQ_END	Start sequence ended

REFERENCE	NICKNAME	REFERENCE DESCRIPTION
%R0100	SQ_TMR	Start sequense timer
%G0010	STEP_10	PRODUCTION
%G0011	STEP_11	END OF PRODUCTION
%G0009	STEP_9	MOTOR START
%R0366	STOPJAW	Stop jaw system link nr
%M0133	TUB_EMP	Tube empty (after inching)

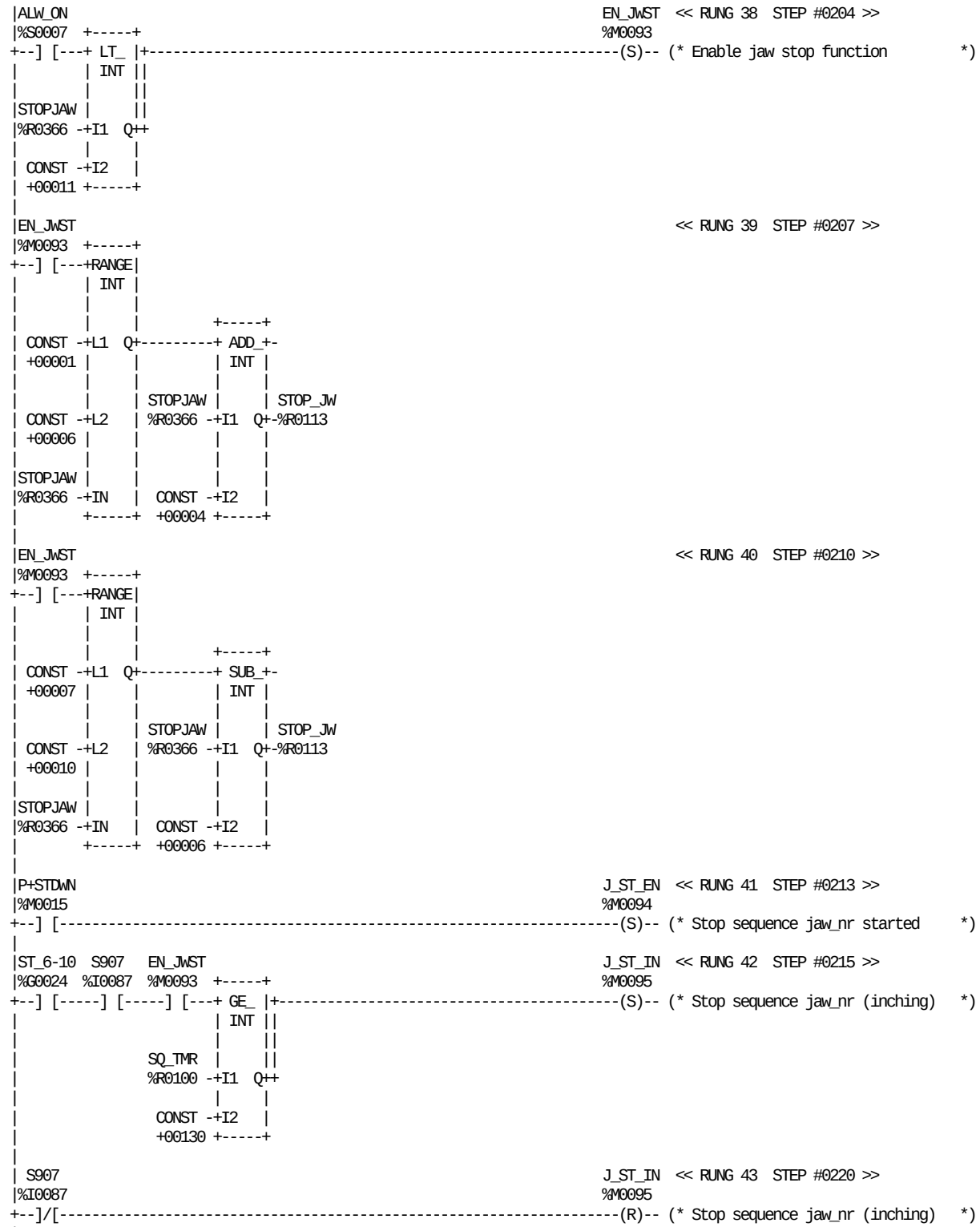

REFERENCE	NICKNAME	REFERENCE DESCRIPTION	REFERENCE	NICKNAME	REFERENCE DESCRIPTION
%S0007	ALW_ON		%I0087	S907	Push button inching JUM
%M0093	EN_JWST	Enable jaw stop function	%R0100	SQ_TMR	Start sequense timer
%M0094	J_ST_EN	Stop sequence jaw_nr started	%R0366	STOPJAW	Stop jaw system link nr
%M0095	J_ST_IN	Stop sequence jaw_nr (inching)	%R0113	STOP_JW	Stop on jaw nr
%M0015	P+STDWN	Step down positive pulse	%G0024	ST_6-10	Ladder position 6-10

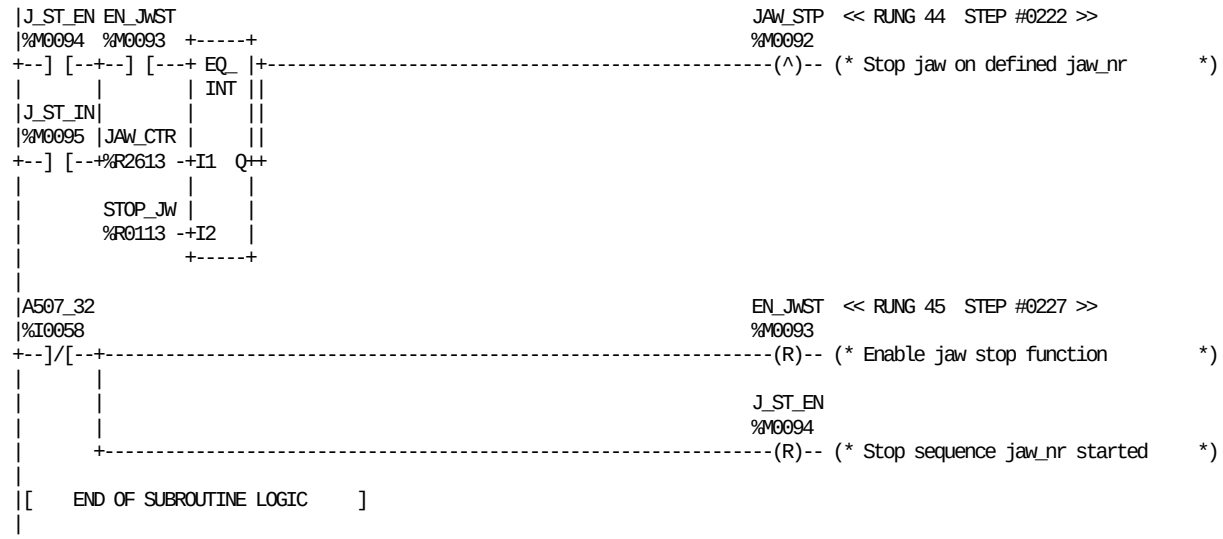

REFERENCE	NICKNAME	REFERENCE DESCRIPTION	REFERENCE	NICKNAME	REFERENCE DESCRIPTION
%I0058	A507_32	DMC FFU motor running	%M0094	J_ST_EN	Stop sequence jaw_nr started
%M0093	EN_JWST	Enable jaw stop function	%M0095	J_ST_IN	Stop sequence jaw_nr (inching)
%R2613	JAW_CTR	Jaw counter	%R0113	STOP_JW	Stop on jaw nr
%M0092	JAW_STP	Stop jaw on defined jaw_nr			

```
|[  START LD SUBROUTINE  P_FEED   ]
|
|[     VARIABLE DECLARATIONS      ]
|
|[   START OF SUBROUTINE LOGIC    ]
|
| (*************************************************************************)
| (* Subroutine to control the pendulum roller in the column.              *)
| (* It moves up only for 10 sec. after 10 sec. from the beginning         *)
| (* of the spraying phase. During the same time the sqeegee rollers       *)
| (* are activeted to keep the paper in position.                          *)
| (*************************************************************************)
|
|STEP_5                                                          PENDSPR  << RUNG 5  STEP #0003 >>
|%G0005  +-----+                                                 %M0847
+--] [---+RANGE|+-------------------------------------------------------( )-- (* Pendulum valve spraying time     *)
|        | INT ||
|        |     ||
| CONST -+L1  Q++
| +00220 |     |
|        |     |
| CONST -+L2   |
| +00320 |     |
|        |     |
|SPRAY_T |     |
|%R1006 -+IN   |
|        +-----+
|
|ST_2-12                                                          K007    << RUNG 6  STEP #0006 >>
|%G0021                                                          %Q0029
+--] [--+-------------------------------------------------------------( )-- (* Drive roller                    *)
|       |
|STEP_13|PENDSPR                                                  Y1501
|%G0013 |%M0847                                                  %Q0116
+--] [--+--]/[-------------------------------------------------------( )-- (* Feed packaging material         *)
|
| K007                                                           POW_PEN  << RUNG 7  STEP #0013 >>
|%Q0029  +-----+                                                 %M0790
+--] [---+ TMR +-------------------------------------------------------( )-- (* Power on to pendulum inverter    *)
|        |0.10s|
|        |     |
| CONST -+PV   |
| +00030 |     |
|        +-----+
|        TMR_PEN
|        %R1155
|
|A410_19 POW_PEN                                                 PEN_FAI  << RUNG 8  STEP #0016 >>
|%I0038  %M0790                                                  %M0443
+--]/[-----] [-------------------------------------------------------(S)-- (* Pendulum roller inverter fail    *)
|
|AL_RES                                                          PEN_FAI  << RUNG 9  STEP #0019 >>
|%M0600                                                          %M0443
+--] [-------------------------------------------------------------(R)-- (* Pendulum roller inverter fail    *)
|
| (*************************************************************************)
| (* The start of the pendulum roller must be after the main motor has      *)
| (* started otherwise there is the risk that if you make several start     *)
| (* attempts and the machine is not starting, the drying house will be     *)
| (* filled with paper. The delay is different if you run high speed or     *)
| (* low speed. In fast inching the pendulum is enabled before to avoid     *)
| (* to break the tube in case the inching button is released during the    *)
| (* main motor acceleration (44i still OFF).                              *)
| (*************************************************************************)
|
```

REFERENCE	NICKNAME	REFERENCE DESCRIPTION	REFERENCE	NICKNAME	REFERENCE DESCRIPTION
%I0038	A410_19	Failure drive roller	%R1006	SPRAY_T	Spray sequence timer
%M0600	AL_RES	Alarm reset (From TPOP)	%G0013	STEP_13	OPEN DOORS, CUT TUBE
%Q0029	K007	Drive roller	%G0005	STEP_5	SPRAYING
%M0847	PENDSPR	Pendulum valve spraying time	%G0021	ST_2-12	Ladder position 2-12
%M0443	PEN_FAI	Pendulum roller inverter fail	%R1155	TMR_PEN	Delay for pend.conv.falut detect
%M0790	POW_PEN	Power on to pendulum inverter	%Q0116	Y1501	Feed packaging material

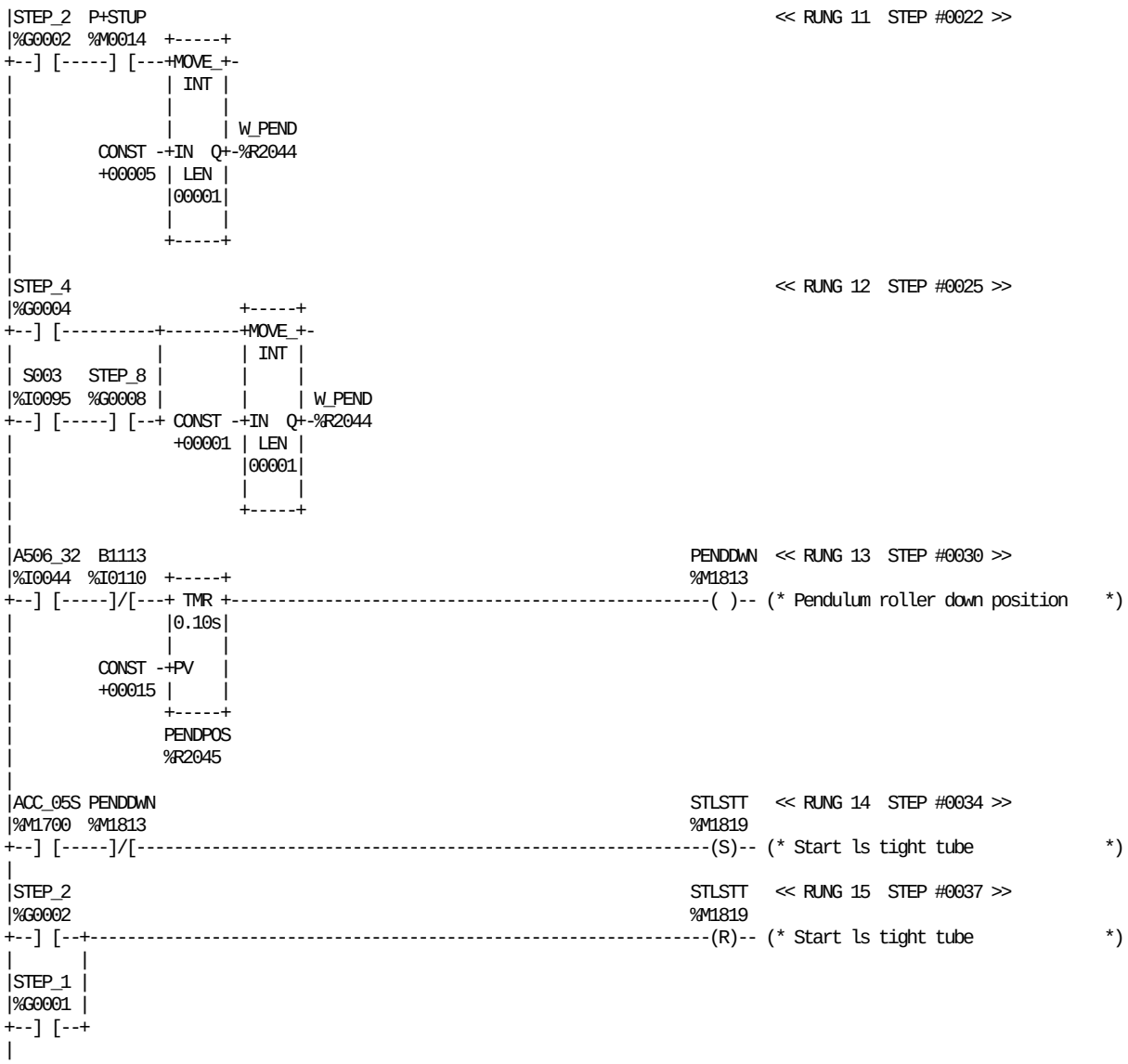

REFERENCE	NICKNAME	REFERENCE DESCRIPTION	REFERENCE	NICKNAME	REFERENCE DESCRIPTION
%I0044	A506_32	DMC Main motor running	%G0001	STEP_1	STANDBY
%M1700	ACC_05S	5 sec. acceleration main motor	%G0002	STEP_2	PREPARATION (3 MIN.)
%I0110	B1113	Pendulum roller regulat position	%G0004	STEP_4	HEAT STERILIZATION
%M0014	P+STUP	Step up positive pulse	%G0008	STEP_8	FLAPS + H2O2 TEMPERATURE
%M1813	PENDDWN	Pendulum roller down position	%M1819	STLSTT	Start ls tight tube
%R2045	PENDPOS	Check pendulum down	%R2044	W_PEND	Start delay pendulum roller
%I0095	S003	Service switch			

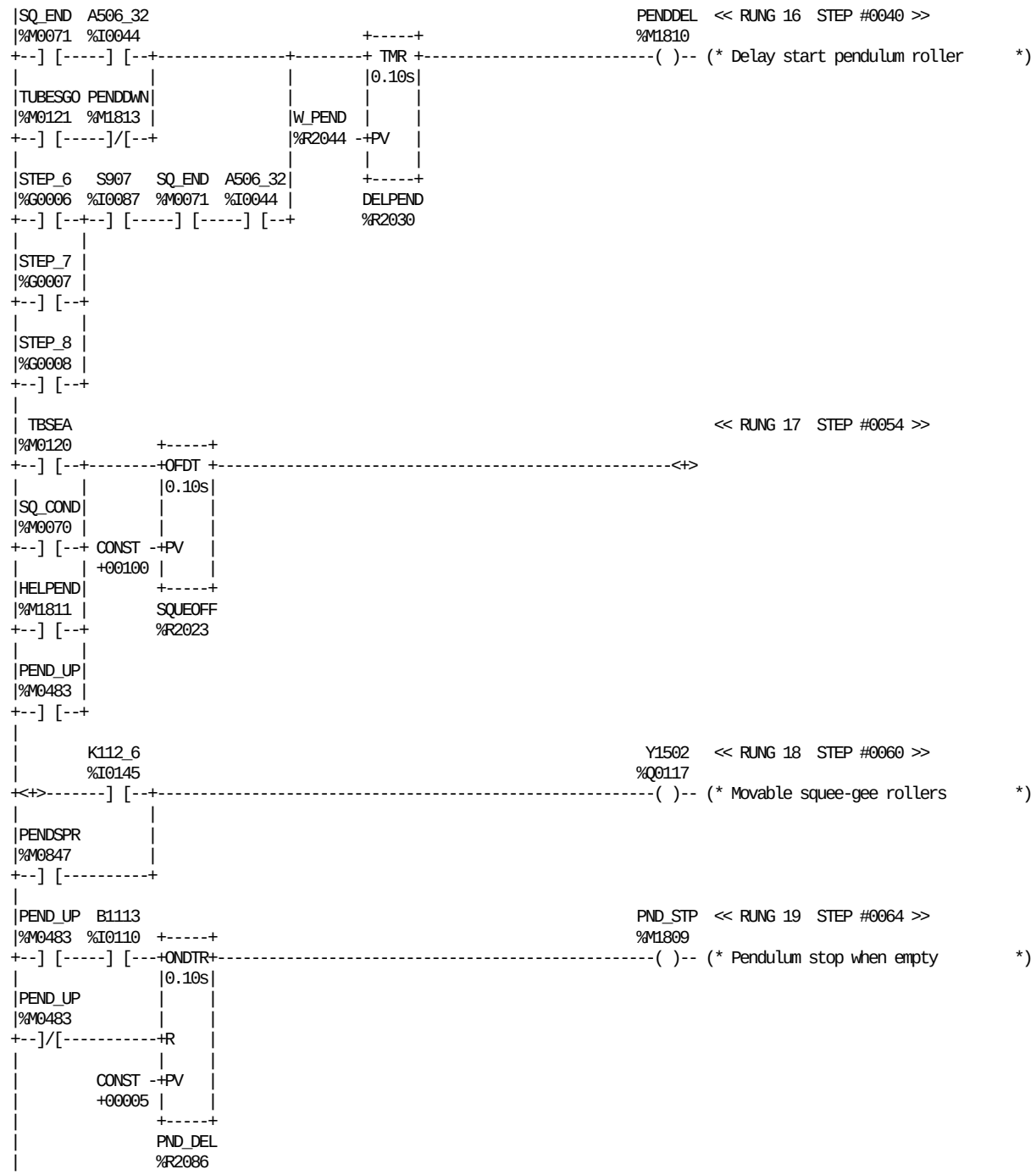

REFERENCE	NICKNAME	REFERENCE DESCRIPTION	REFERENCE	NICKNAME	REFERENCE DESCRIPTION
%I0044	A506_32	DMC Main motor running	%I0087	S907	Push button inching JUM
%I0110	B1113	Pendulum roller regulat position	%R2023	SQUEOFF	Off delay squee gee roller
%R2030	DELPEND	Start delay pendulum roller	%M0070	SQ_COND	Start sequence conditions
%M1811	HELPEND	Help when paperweb is threaded	%M0071	SQ_END	Start sequence ended
%I0145	K112_6	Top door closed aseptic chamber	%G0006	STEP_6	DRYING + STEAM CLEANING
%M1810	PENDDEL	Delay start pendulum roller	%G0007	STEP_7	SIGNAL TO STERILIZER
%M1813	PENDDWN	Pendulum roller down position	%G0008	STEP_8	FLAPS + H2O2 TEMPERATURE
%M0847	PENDSPR	Pendulum valve spraying time	%M0120	TBSEA	Tube sealing
%M0483	PEND_UP	Pendulum roller in upper pos	%M0121	TUBESGO	Tube sealing going on
%R2086	PND_DEL	TMR delay pendulum stop	%R2044	W_PEND	Start delay pendulum roller
%M1809	PND_STP	Pendulum stop when empty	%Q0117	Y1502	Movable squee-gee rollers

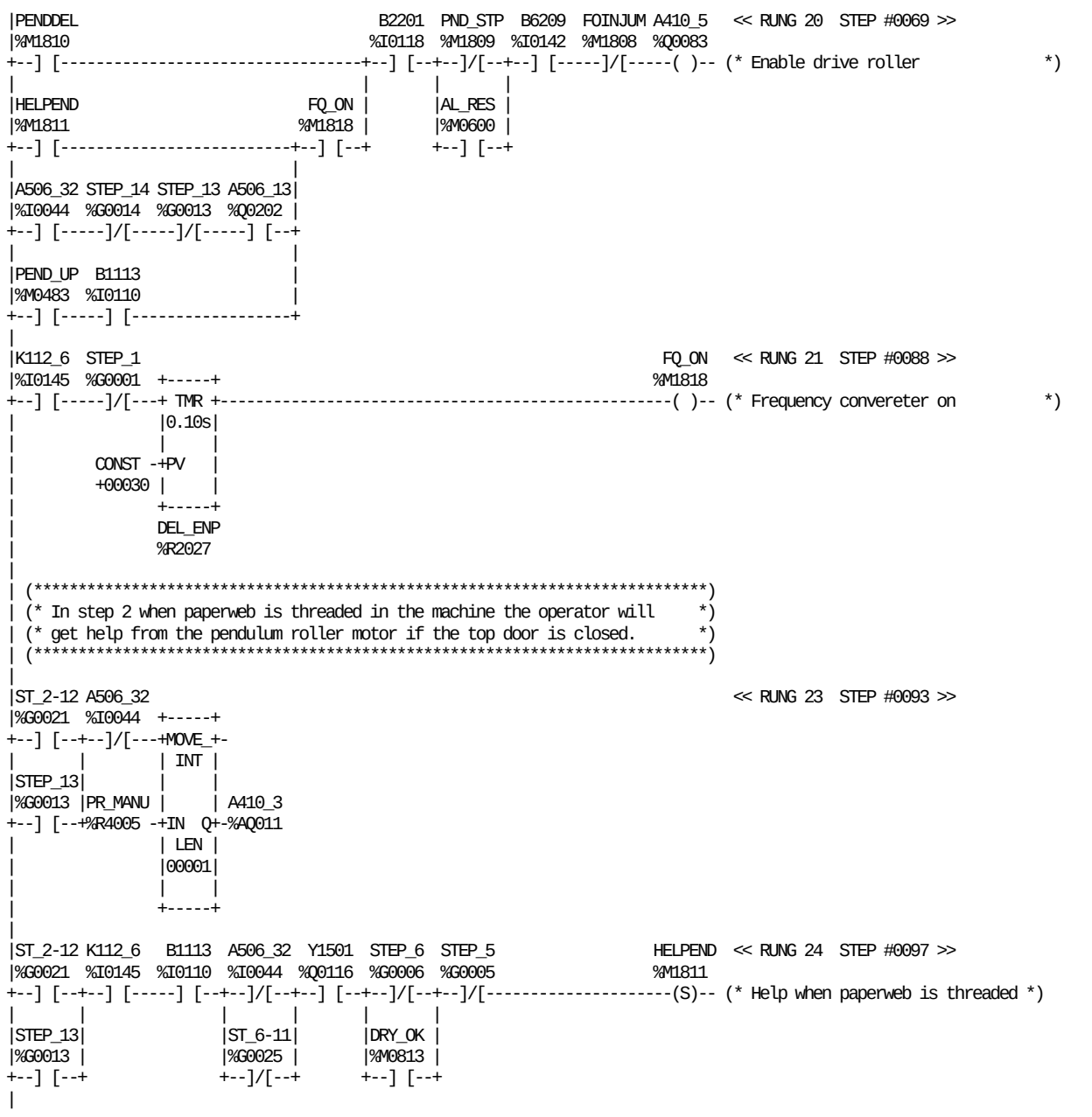

REFERENCE	NICKNAME	REFERENCE DESCRIPTION
%AQ011	A410_3	Drive roller
%Q0083	A410_5	Enable drive roller
%Q0202	A506_13	DMC Main Motor Low speed
%I0044	A506_32	DMC Main motor running
%M0600	AL_RES	Alarm reset (From TPOP)
%I0110	B1113	Pendulum roller regulat position
%I0118	B2201	Main air supply pressure
%I0142	B6209	Internal door SA
%R2027	DEL_ENP	Delay enable signal pend.roller
%M0813	DRY_OK	Drying ready
%M1808	FOINJUM	Force inching after LS alarm
%M1818	FQ_ON	Frequency convereter on
%M1811	HELPEND	Help when paperweb is threaded
%I0145	K112_6	Top door closed aseptic chamber
%M1810	PENDDEL	Delay start pendulum roller
%M0483	PEND_UP	Pendulum roller in upper pos
%M1809	PND_STP	Pendulum stop when empty
%R4005	PR_MANU	PendRoll Manual paper feed speed
%G0001	STEP_1	STANDBY
%G0013	STEP_13	OPEN DOORS, CUT TUBE
%G0014	STEP_14	CIP / HC
%G0005	STEP_5	SPRAYING
%G0006	STEP_6	DRYING + STEAM CLEANING
%G0021	ST_2-12	Ladder position 2-12
%G0025	ST_6-11	Ladder position 6-11
%Q0116	Y1501	Feed packaging material

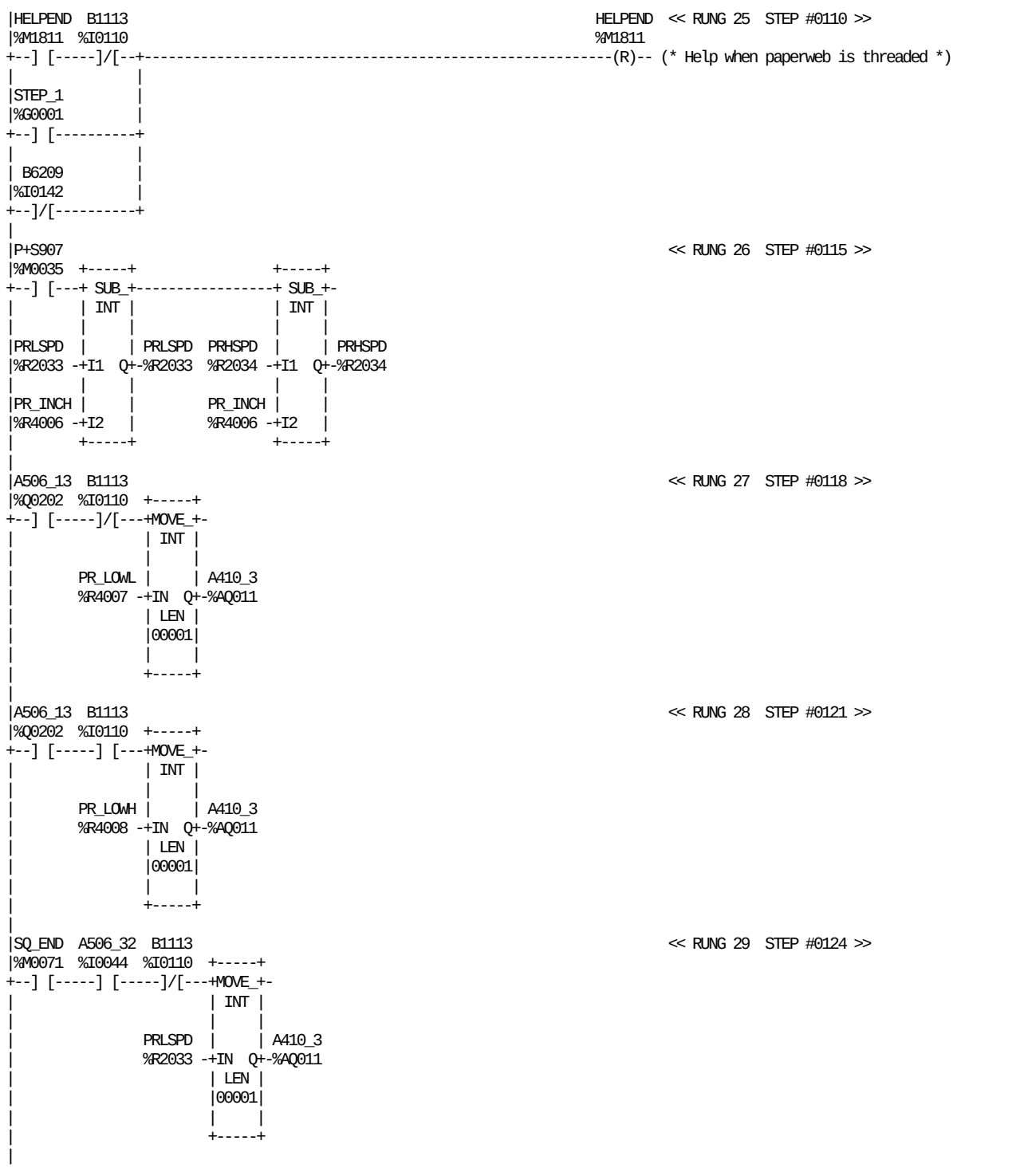

REFERENCE	NICKNAME	REFERENCE DESCRIPTION	REFERENCE	NICKNAME	REFERENCE DESCRIPTION
%AQ011	A410_3	Drive roller	%R2034	PRHSPD	Pendulum roller prod high speed
%Q0202	A506_13	DMC Main Motor Low speed	%R2033	PRLSPD	Pendulum roller prod low speed
%I0044	A506_32	DMC Main motor running	%R4006	PR_INCH	Pendulum Roller Inching speed
%I0110	B1113	Pendulum roller regulat position	%R4008	PR_LOWH	Pendulum Roller Low speed High
%I0142	B6209	Internal door SA	%R4007	PR_LOWL	Pendulum Roller Low speed Low
%M1811	HELPEND	Help when paperweb is threaded	%M0071	SQ_END	Start sequence ended
%M0035	P+S907	Pulse pos edge inching button	%G0001	STEP_1	STANDBY

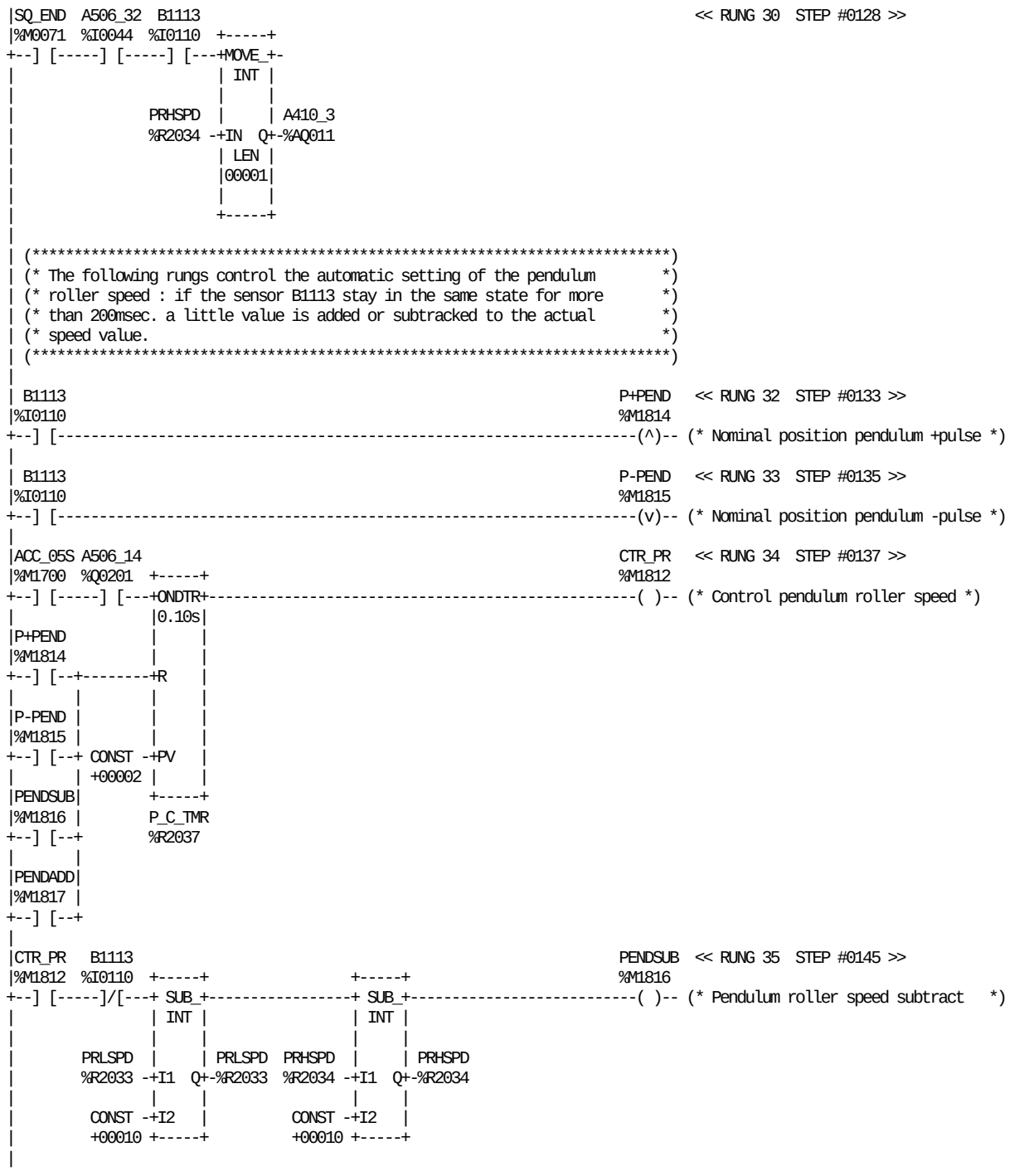

REFERENCE	NICKNAME	REFERENCE DESCRIPTION	REFERENCE	NICKNAME	REFERENCE DESCRIPTION
%AQ011	A410_3	Drive roller	%M1815	P-PEND	Nominal position pendulum -pulse
%Q0201	A506_14	DMC Main Motor High speed	%M1817	PENDADD	Pendulum roller speed add
%I0044	A506_32	DMC Main motor running	%M1816	PENDSUB	Pendulum roller speed subtract
%M1700	ACC_05S	5 sec. acceleration main motor	%R2034	PRHSPD	Pendulum roller prod high speed
%I0110	B1113	Pendulum roller regulat position	%R2033	PRLSPD	Pendulum roller prod low speed
%M1812	CTR_PR	Control pendulum roller speed	%R2037	P_C_TMR	Pend speed check timer
%M1814	P+PEND	Nominal position pendulum +pulse	%M0071	SQ_END	Start sequence ended

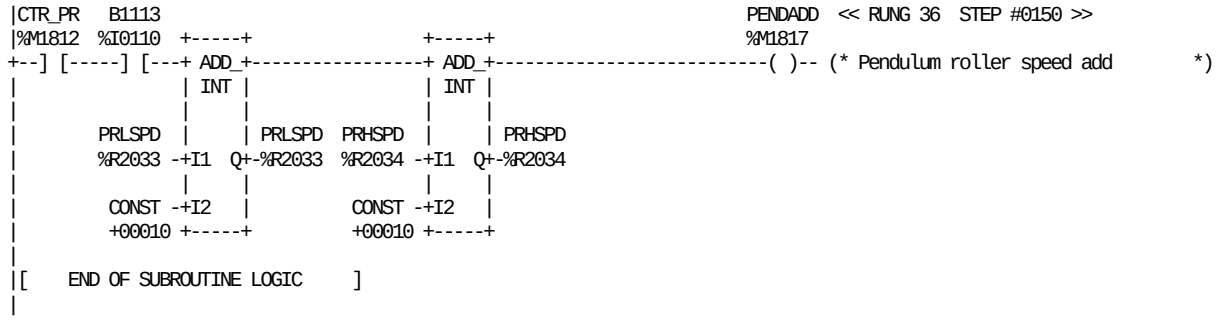

REFERENCE	NICKNAME	REFERENCE DESCRIPTION	REFERENCE	NICKNAME	REFERENCE DESCRIPTION
%I0110	B1113	Pendulum roller regulat position	%R2034	PRHSPD	Pendulum roller prod high speed
%M1812	CTR_PR	Control pendulum roller speed	%R2033	PRLSPD	Pendulum roller prod low speed
%M1817	PENDADD	Pendulum roller speed add			

This page left intentionally blank

```
|[  START LD SUBROUTINE  LS_SEAL  ]
|
|[     VARIABLE DECLARATIONS      ]
|
|[   START OF SUBROUTINE LOGIC    ]
|
| (*************************************************************************)
| (* Short stop position of the inductor.                                  *)
| (* When the machine stands still in steril mode (after tight tube) the   *)
| (* inductor should be in the down position.During the start sequence when *)
| (* SQ_END signal is activated the short stop sequence is started. In that *)
| (* sequence the inductor moves up and it stays up as long as the motor is *)
| (* running.                                                               *)
| (*************************************************************************)
|
|SQ_COND SQ_END                                                  Y1401   << RUNG 5  STEP #0003 >>
|%M0070  %M0071                                                 %Q0107
+--] [-----]/[--+-------------------------------------------------------(S)-- (* Movable lower forming ring      *)
|               |
|STEP_12        |
|%G0012         |
+--] [----------+
|               |
|STEP_1         |
|%G0001         |
+--] [----------+
|
|SQ_END                                                          Y1401   << RUNG 6  STEP #0008 >>
|%M0071  +-----+                                                %Q0107
+--] [---+ TMR +-------------------------------------------------------(R)-- (* Movable lower forming ring      *)
|        |0.10s|
|        |     |
| CONST -+PV   |
| +00003 |     |
|        +-----+
|         UP_LS
|        %R2003
|
|ST_6-11 SQ_COND                                                 Y1401   << RUNG 7  STEP #0011 >>
|%G0025  %M0070                                                 %Q0107
+--] [-----]/[--+-------------------------------------------------------(R)-- (* Movable lower forming ring      *)
|               |
|STEP_2         |
|%G0002         |
+--] [----------+
|
| (*************************************************************************)
| (* Sealing pulse for LS.                                                 *)
| (*************************************************************************)
|
|A506_32 STEP_14 STEP_2  STEP_13 STLSTT                          A501_8   << RUNG 9  STEP #0016 >>
|%I0044  %G0014  %G0002  %G0013  %M1819                          %Q0063
+--] [--+--]/[-----]/[-----]/[-----] [-----------------------------------( )-- (* Start TPIH LS                  *)
|       |
|SQ_END |
|%M0071 |
+--] [--+
|
| (*************************************************************************)
| (* There are two differet LS power setting for tight tube: one with the  *)
| (* machine HOT (when the column temperature is more then 50 degrees) and  *)
| (* one with the machine at envirnoment temperature.                       *)
| (*************************************************************************)
|
```

REFERENCE	NICKNAME	REFERENCE DESCRIPTION	REFERENCE	NICKNAME	REFERENCE DESCRIPTION
%Q0063	A501_8	Start TPIH LS	%G0014	STEP_14	CIP / HC
%I0044	A506_32	DMC Main motor running	%G0002	STEP_2	PREPARATION (3 MIN.)
%M0070	SQ_COND	Start sequence conditions	%M1819	STLSTT	Start ls tight tube
%M0071	SQ_END	Start sequence ended	%G0025	ST_6-11	Ladder position 6-11
%G0001	STEP_1	STANDBY	%R2003	UP_LS	LS inductor up
%G0012	STEP_12	VENTING	%Q0107	Y1401	Movable lower forming ring
%G0013	STEP_13	OPEN DOORS, CUT TUBE			

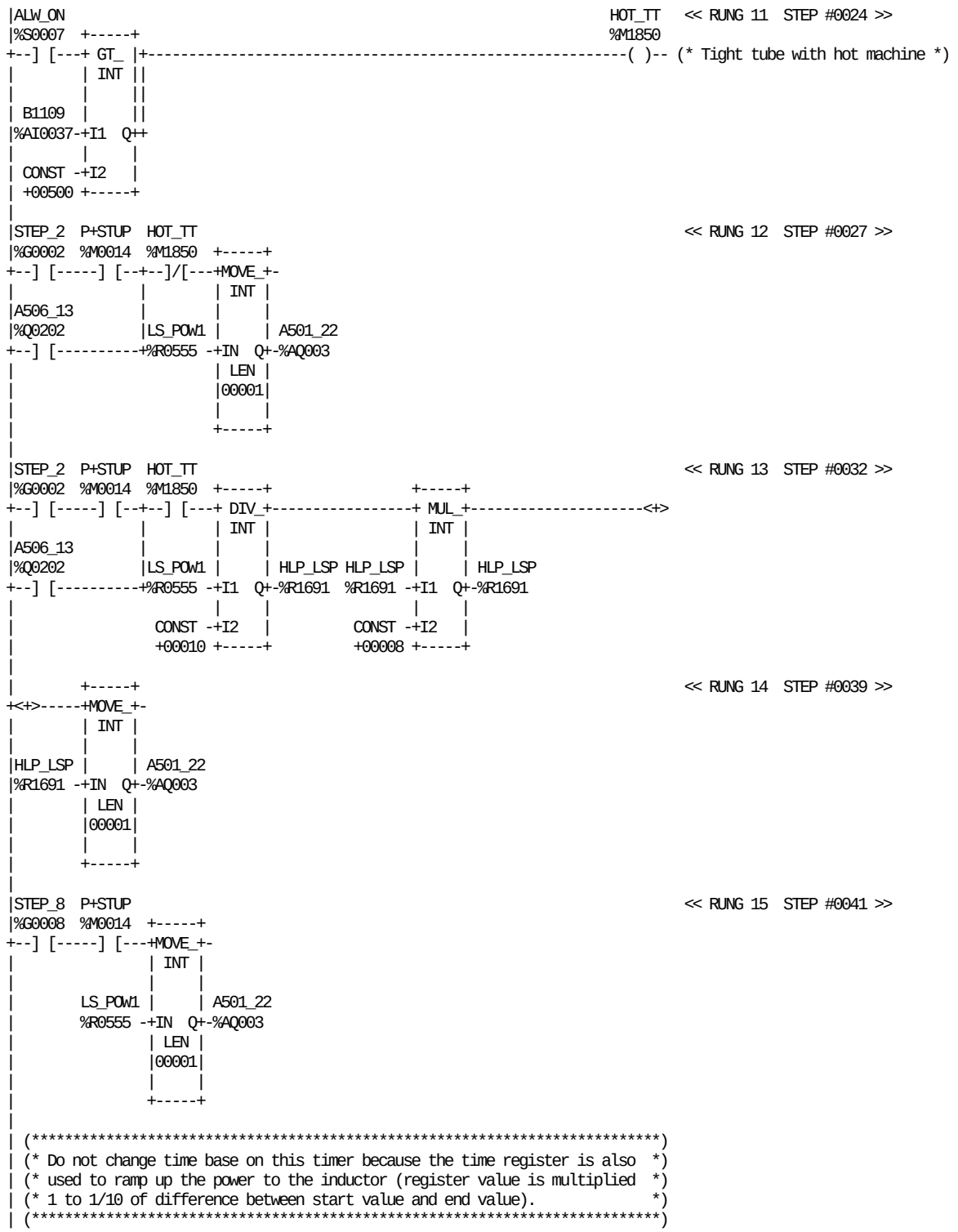

REFERENCE	NICKNAME	REFERENCE DESCRIPTION
%AQ003	A501_22	TPIH LS-Power
%Q0202	A506_13	DMC Main Motor Low speed
%S0007	ALW_ON	
%AI0037	B1109	Temp top Aseptic Chamber
%R1691	HLP_LSP	Help reg LS-power hot machine
%M1850	HOT_TT	Tight tube with hot machine
%R0555	LS_POW1	LS power low speed (TPOP)
%M0014	P+STUP	Step up positive pulse
%G0002	STEP_2	PREPARATION (3 MIN.)
%G0008	STEP_8	FLAPS + H2O2 TEMPERATURE

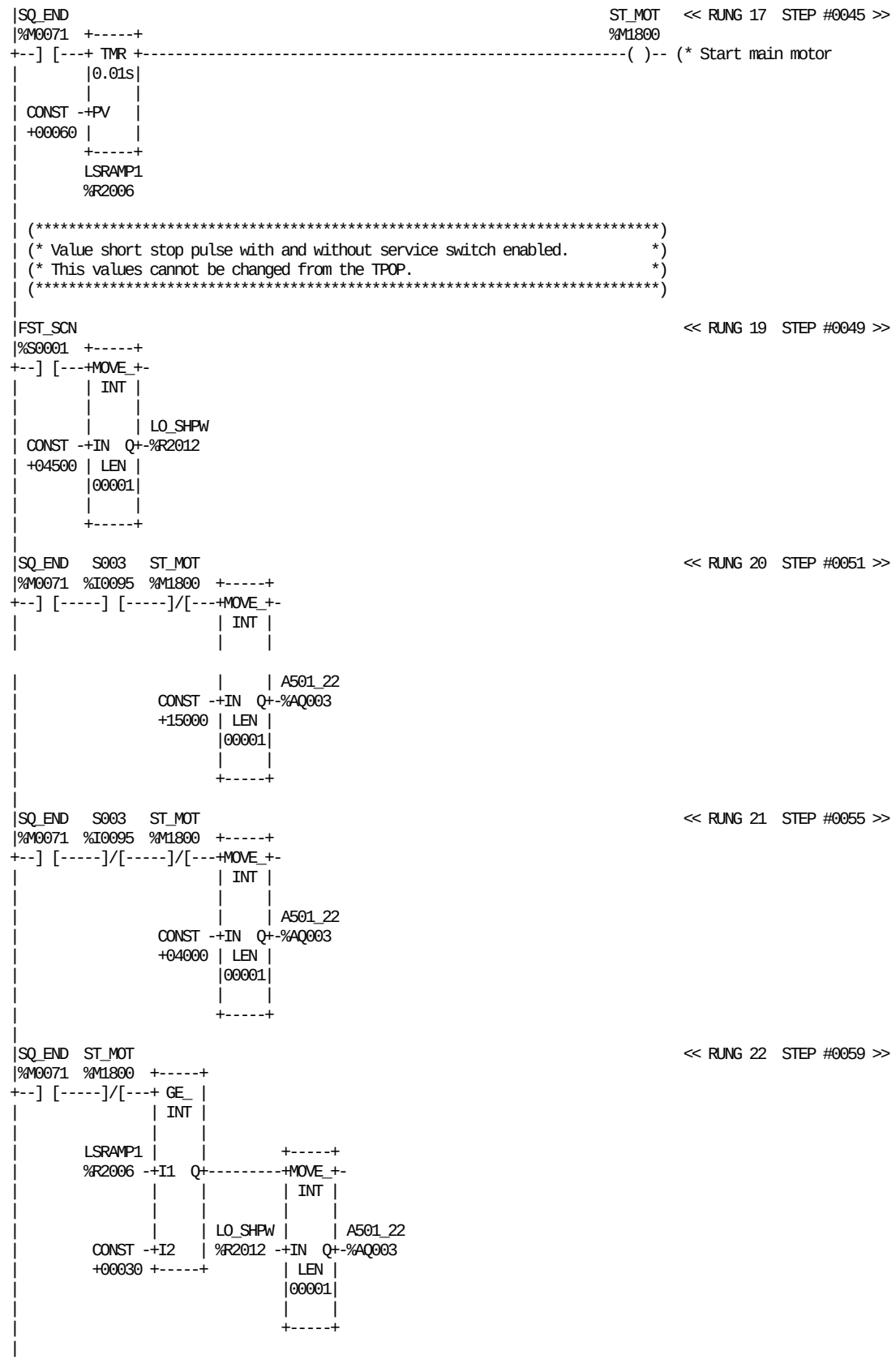

REFERENCE	NICKNAME	REFERENCE DESCRIPTION	REFERENCE	NICKNAME	REFERENCE DESCRIPTION
%AQ003	A501_22	TPIH LS-Power	%I0095	S003	Service switch
%S0001	FST_SCN		%M0071	SQ_END	Start sequence ended
%R2012	LO_SHPW	Low power short stop pulse	%M1800	ST_MOT	Start main motor
%R2006	LSRAMP1	LS short stop ramp part 1			

```
| (*************************************************************************)
| (* Motor start ramp LS.                                                  *)
| (* The  power  is  ramped  up  one 25:th of the                          *)
| (* difference between start and stop value once every 40 mSec.(the ramp  *)
| (* is 1 sec). To avoid an offset error the TPOP value is transfered to   *)
| (* the output when the ramp is completed.                               *)
| (* The ramps are put in the sub RAMPS.                                  *)
| (*************************************************************************)
|
|STEP_8          S003                                          << RUNG 24  STEP #0064 >>
|%G0008         %I0095  +-----+               +-----+
+--] [----------+--] [---+ SUB_+---------------+ DIV_+-
|               |        | INT |               | INT |
|STEP_6   S907  |        |     |               |     |
|%G0006  %I0087 |LS_POW3 |     | POWMUL  POWMUL  |     | POWMUL
+--] [--+--] [--+%R0557 -+I1  Q+-%R2013  %R2013 -+I1  Q+-%R2013
|       |                |     |                 |     |
|STEP_7 |                |     |                 |     |
|%G0007 |        LO_SHPW |     |                 |     |
+--] [--+        %R2012 -+I2   |          CONST -+I2   |
|                         +-----+          +00025 +-----+
|
|STEP_8          S003                                          << RUNG 25  STEP #0072 >>
|%G0008         %I0095  +-----+               +-----+
+--] [----------+--]/[---+ SUB_+---------------+ DIV_+-
|               |        | INT |               | INT |
|STEP_6   S907  |        |     |               |     |
|%G0006  %I0087 |LS_POW2 |     | POWMUL  POWMUL  |     | POWMUL
+--] [--+--] [--+%R0556 -+I1  Q+-%R2013  %R2013 -+I1  Q+-%R2013
|       |                |     |                 |     |
|STEP_7 |                |     |                 |     |
|%G0007 |        LO_SHPW |     |                 |     |
+--] [--+        %R2012 -+I2   |          CONST -+I2   |
|                         +-----+          +00025 +-----+
|
|RAMP_OK  S003                                                << RUNG 26  STEP #0080 >>
|%M1804  %I0095  +-----+               +-----+
+--] [-----] [---+ SUB_+---------------+ DIV_+-
|               | INT |               | INT |
|               |     |               |     |
|       LS_POW3 |     | POWMUL  POWMUL  |     | POWMUL
|       %R0557 -+I1  Q+-%R2013  %R2013 -+I1  Q+-%R2013
|               |     |                 |     |
|       LO_SHPW |     |                 |     |
|       %R2012 -+I2   |          CONST -+I2   |
|               +-----+          +00009 +-----+
|
|RAMP_OK  S003                                                << RUNG 27  STEP #0084 >>
|%M1804  %I0095  +-----+               +-----+
+--] [-----]/[---+ SUB_+---------------+ DIV_+-
|               | INT |               | INT |

|               |     |               |     |
|       LS_POW2 |     | POWMUL  POWMUL  |     | POWMUL
|       %R0556 -+I1  Q+-%R2013  %R2013 -+I1  Q+-%R2013
|               |     |                 |     |
|       LO_SHPW |     |                 |     |
|       %R2012 -+I2   |          CONST -+I2   |
|               +-----+          +00009 +-----+
|
| (*************************************************************************)
| (* LS-power increase when there is a paper splice. When the splice guard  *)
| (* is activated the upcounter is reseted.                                 *)
| (*************************************************************************)
|
```

REFERENCE	NICKNAME	REFERENCE DESCRIPTION	REFERENCE	NICKNAME	REFERENCE DESCRIPTION
%R2012	LO_SHPW	Low power short stop pulse	%I0095	S003	Service switch
%R0556	LS_POW2	LS power production (TPOP)	%I0087	S907	Push button inching JUM
%R0557	LS_POW3	LS power service switch (TPOP)	%G0006	STEP_6	DRYING + STEAM CLEANING
%R2013	POWMUL	Power multipel short stop ramp	%G0007	STEP_7	SIGNAL TO STERILIZER
%M1804	RAMP_OK	LS-Ramp (up) ready	%G0008	STEP_8	FLAPS + H2O2 TEMPERATURE

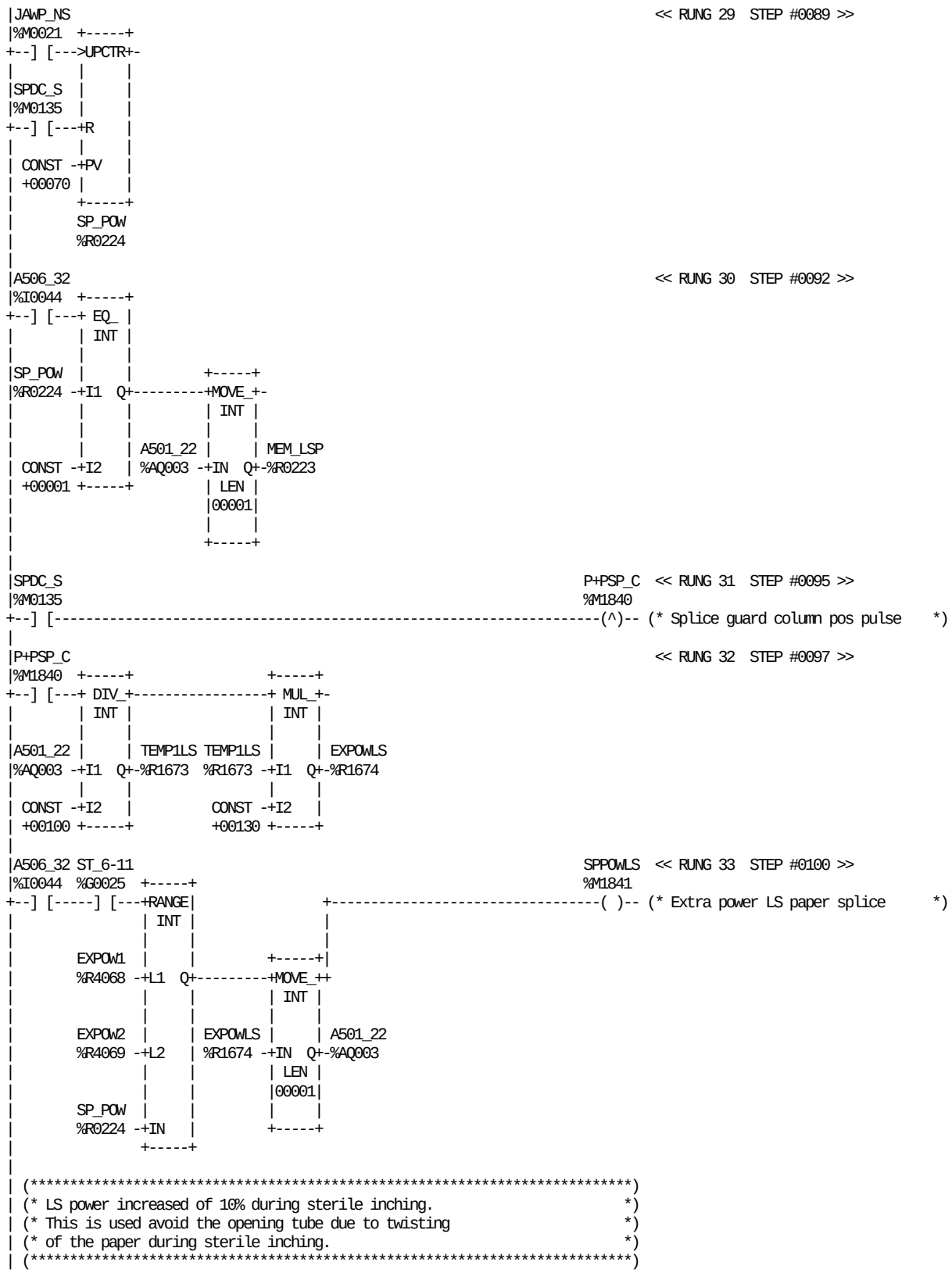

REFERENCE	NICKNAME	REFERENCE DESCRIPTION	REFERENCE	NICKNAME	REFERENCE DESCRIPTION
%AQ003	A501_22	TPIH LS-Power	%M1840	P+PSP_C	Splice guard column pos pulse
%I0044	A506_32	DMC Main motor running	%M0135	SPDC_S	Splice detection in columm set
%R4068	EXPOW1	Extra power ls range 1	%M1841	SPPOWLS	Extra power LS paper splice
%R4069	EXPOW2	Extra power ls range 2	%R0224	SP_POW	Increase power splice
%R1674	EXPOWLS	Extra power LS paper splice	%G0025	ST_6-11	Ladder position 6-11
%M0021	JAWP_NS	Jawpulse Normal scan	%R1673	TEMP1LS	Temporary register 1 LS
%R0223	MEM_LSP	Store LS power value (splice)			

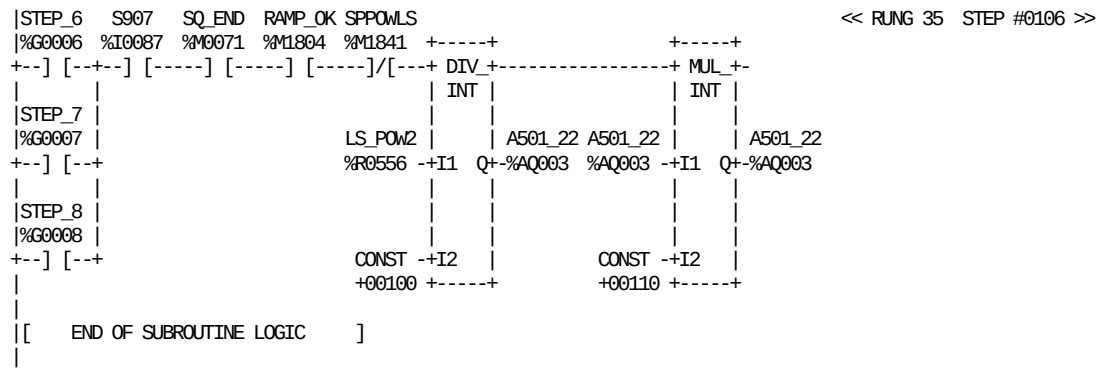

REFERENCE	NICKNAME	REFERENCE DESCRIPTION
%AQ003	A501_22	TPIH LS-Power
%R0556	LS_POW2	LS power production (TPOP)
%M1804	RAMP_OK	LS-Ramp (up) ready
%I0087	S907	Push button inching JUM
%M1841	SPPOWLS	Extra power LS paper splice

REFERENCE	NICKNAME	REFERENCE DESCRIPTION
%M0071	SQ_END	Start sequence ended
%G0006	STEP_6	DRYING + STEAM CLEANING
%G0007	STEP_7	SIGNAL TO STERILIZER
%G0008	STEP_8	FLAPS + H2O2 TEMPERATURE

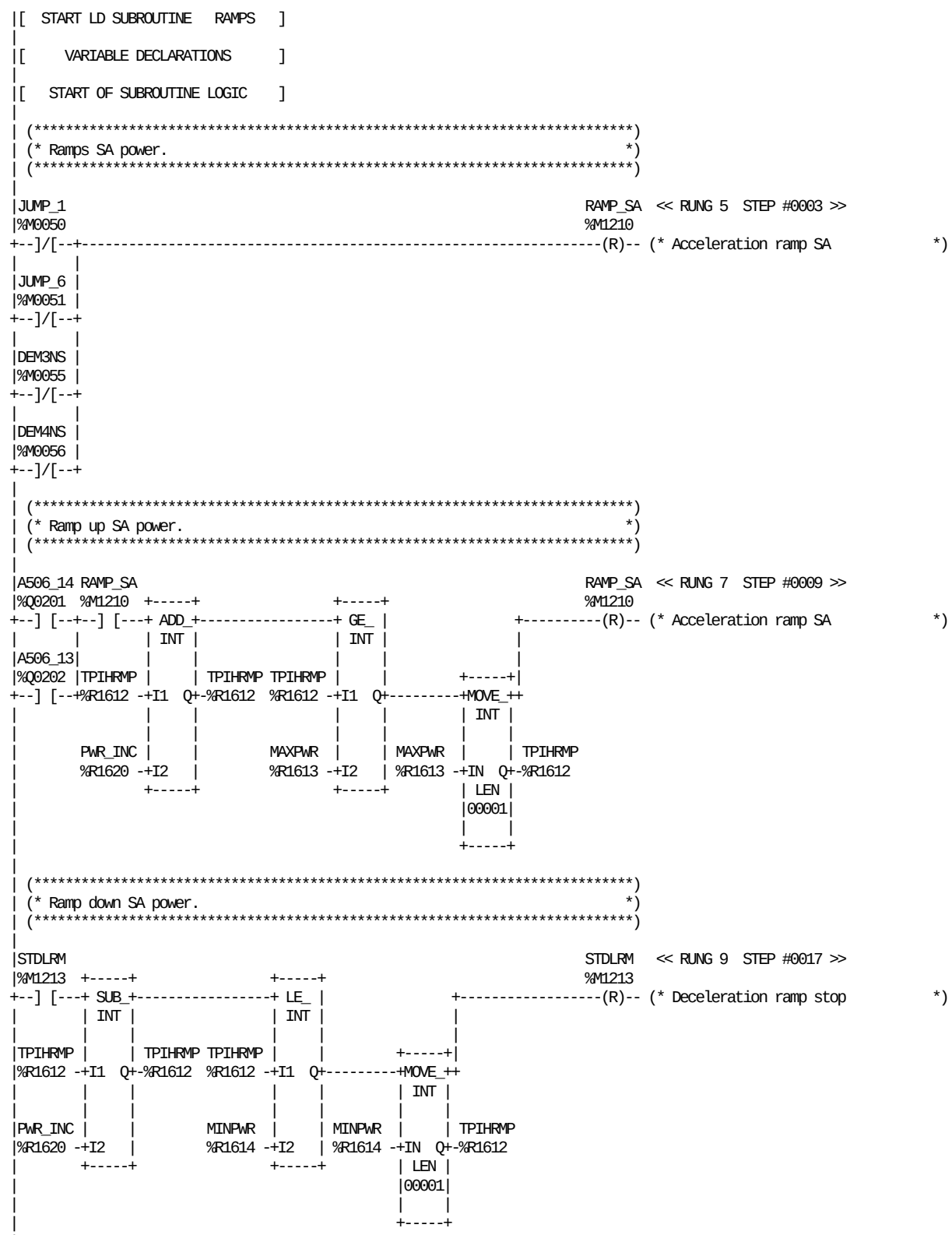

REFERENCE	NICKNAME	REFERENCE DESCRIPTION	REFERENCE	NICKNAME	REFERENCE DESCRIPTION
%Q0202	A506_13	DMC Main Motor Low speed	%R1613	MAXPWR	TPIH power upper limit
%Q0201	A506_14	DMC Main Motor High speed	%R1614	MINPWR	TPIH power lower limit
%M0055	DEM3NS	Demand 3 normal stop	%R1620	PWR_INC	Power increment SA
%M0056	DEM4NS	Demand 4 normal stop (only DE)	%M1210	RAMP_SA	Acceleration ramp SA
%M0050	JUMP_1	Jump to pos 1 (Emergency stop)	%M1213	STDLRM	Deceleration ramp stop
%M0051	JUMP_6	Jump to pos 6 (Fast stop)	%R1612	TPIHRMP	TPIH power ramp register

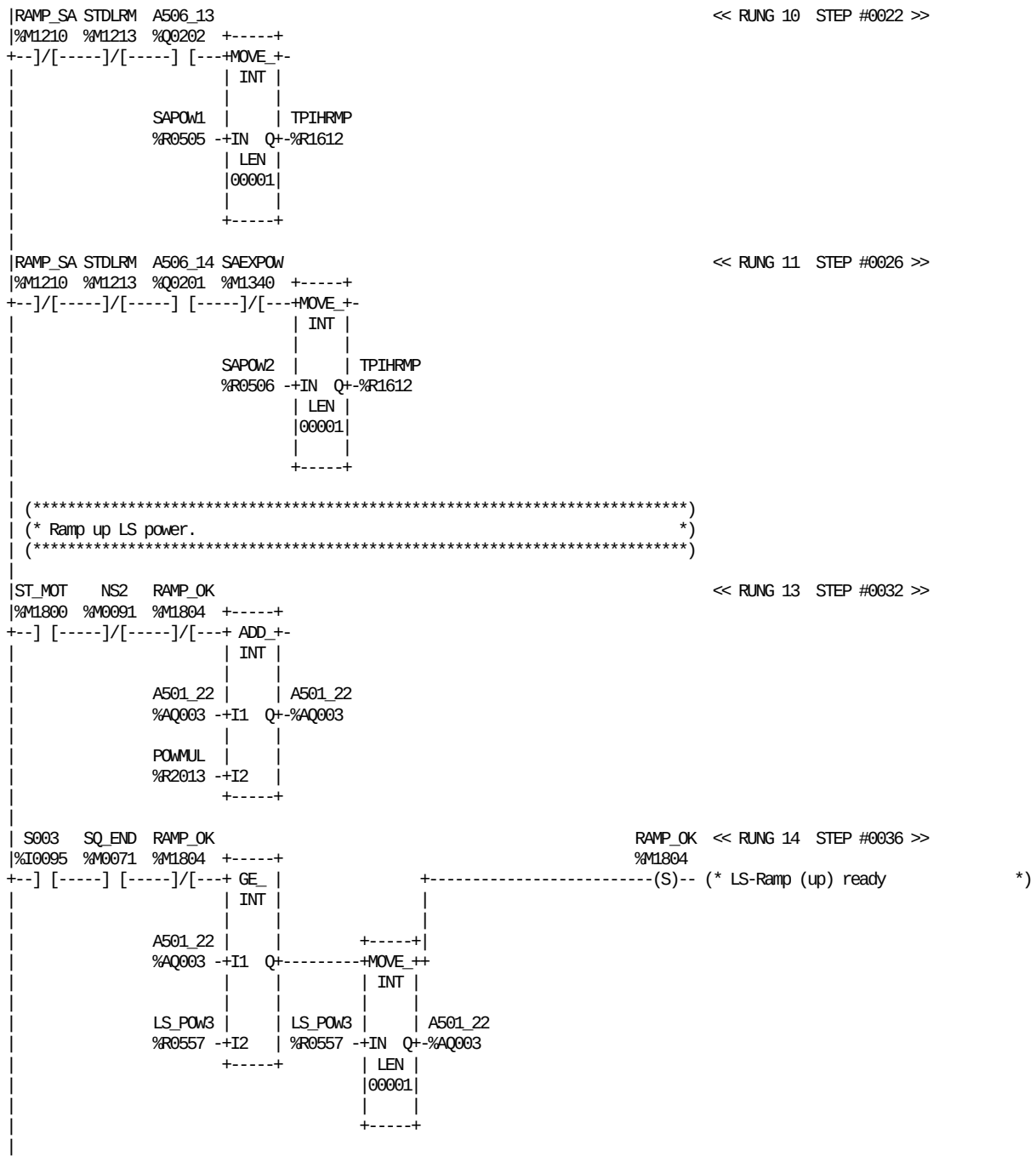

REFERENCE	NICKNAME	REFERENCE DESCRIPTION	REFERENCE	NICKNAME	REFERENCE DESCRIPTION
%AQ003	A501_22	TPIH LS-Power	%I0095	S003	Service switch
%Q0202	A506_13	DMC Main Motor Low speed	%M1340	SAEXPOW	SA, extra power for splice in SA
%Q0201	A506_14	DMC Main Motor High speed	%R0505	SAPOW1	Power SA low speed (TPOP)
%R0557	LS_POW3	LS power service switch (TPOP)	%R0506	SAPOW2	Power SA production speed (TPOP)
%M0091	NS2	Normal stop step 2	%M0071	SQ_END	Start sequence ended
%R2013	POWMUL	Power multipel short stop ramp	%M1213	STDLRM	Deceleration ramp stop
%M1804	RAMP_OK	LS-Ramp (up) ready	%M1800	ST_MOT	Start main motor
%M1210	RAMP_SA	Acceleration ramp SA	%R1612	TPIHRMP	TPIH power ramp register

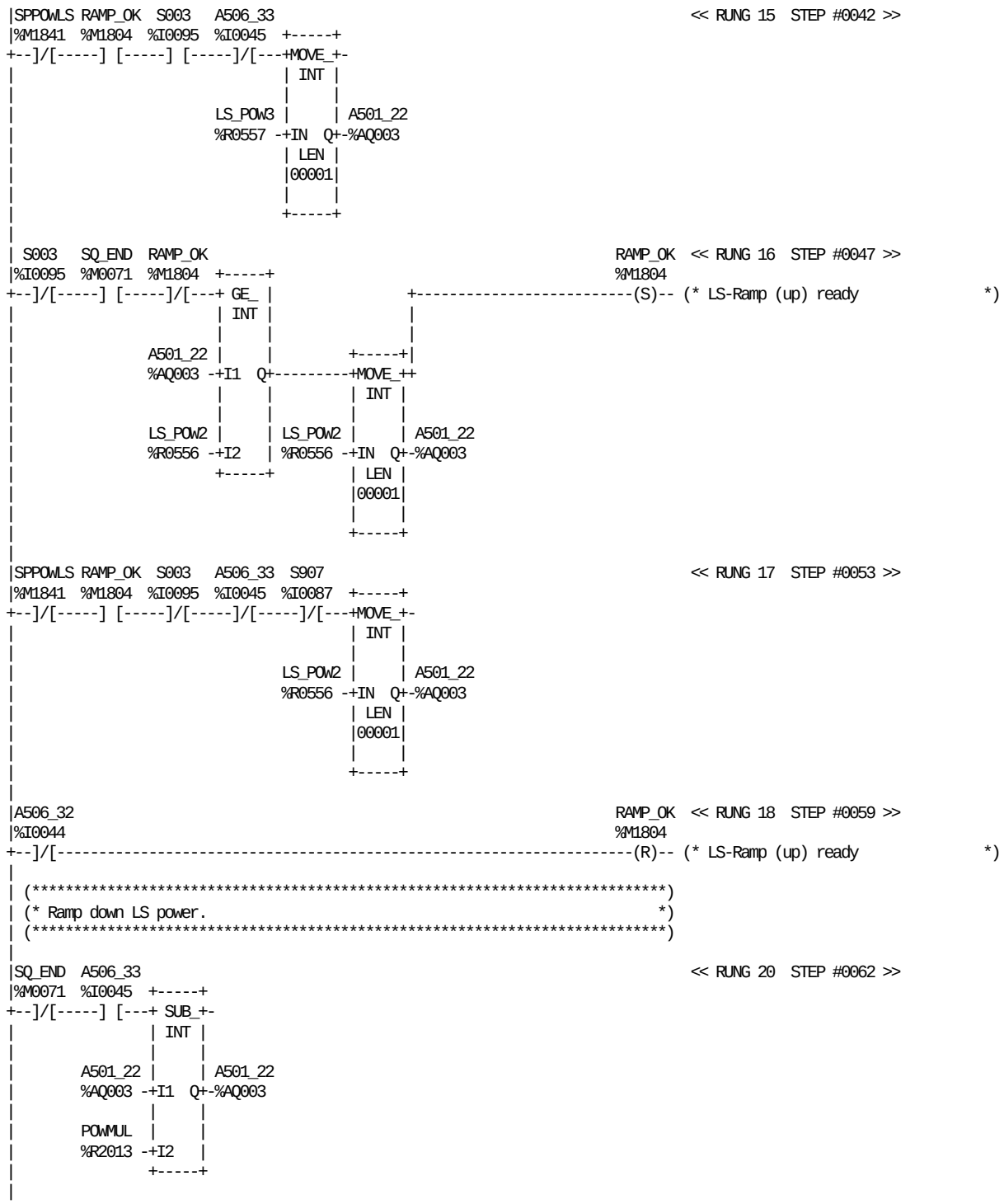

REFERENCE	NICKNAME	REFERENCE DESCRIPTION	REFERENCE	NICKNAME	REFERENCE DESCRIPTION
%AQ003	A501_22	TPIH LS-Power	%M1804	RAMP_OK	LS-Ramp (up) ready
%I0044	A506_32	DMC Main motor running	%I0095	S003	Service switch
%I0045	A506_33	DMC Main motor retard	%I0087	S907	Push button inching JUM
%R0556	LS_POW2	LS power production (TPOP)	%M1841	SPPOWLS	Extra power LS paper splice
%R0557	LS_POW3	LS power service switch (TPOP)	%M0071	SQ_END	Start sequence ended
%R2013	POWMUL	Power multipel short stop ramp			

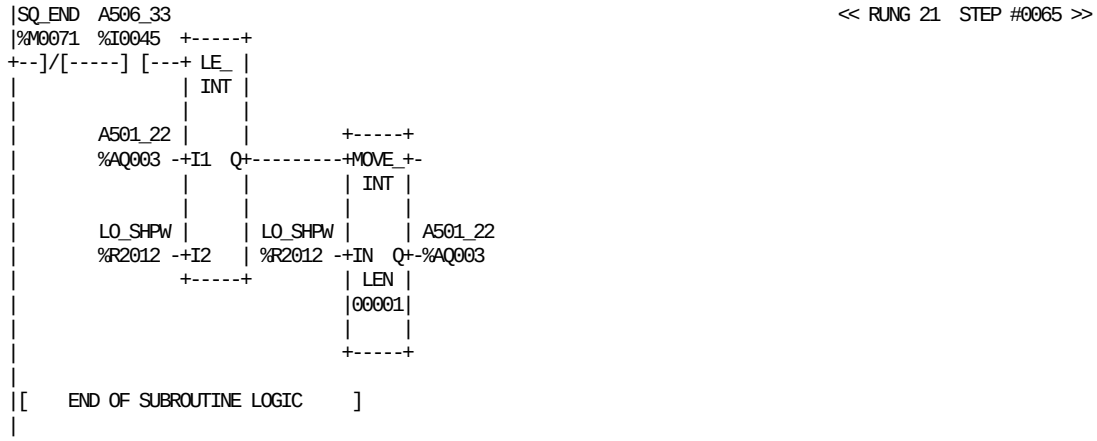

REFERENCE	NICKNAME	REFERENCE DESCRIPTION	REFERENCE	NICKNAME	REFERENCE DESCRIPTION
%AQ003	A501_22	TPIH LS-Power	%R2012	LO_SHPW	Low power short stop pulse
%I0045	A506_33	DMC Main motor retard	%M0071	SQ_END	Start sequence ended

```
|[  START LD SUBROUTINE  LEV_CON  ]
|
|[     VARIABLE DECLARATIONS      ]
|
|[   START OF SUBROUTINE LOGIC    ]
|
| (*************************************************************************)
| (* Transfer all the parameter for the level control to TMCC FCS card     *)
| (* with a serial comunication.                                           *)
| (*                                                                       *)
| (* ~~~~~~~~~~~~~~~~~~~~~~~~~~~~~~~~~~~~~~~~~~~~~~~~~~~~~~~~~~~~~~~~~~~~ *)
| (* Register 1 (1 Word)                                                  *)
| (*   Least Significant Byte: Start Flow (0-255)                         *)
| (*   Most Significant Byte : Production Flow (0-255)                   *)
| (*                                                                      *)
| (* Register 2 (1 Word)                                                  *)
| (*   Least Significant Byte: Sterilization Flow (0-255)                *)
| (*   Most Significant Byte : Cleaning Flow (0-255)                     *)
| (*                                                                      *)
| (* Register 3 (1 Word)                                                  *)
| (*   Least Significant Byte: Prefilling Threshold Level (0-255)        *)
| (*   Most Significant Byte : Set Point Level (0-255)                   *)
| (*                                                                      *)
| (* Register 4 (1 Word)                                                  *)
| (*   Least Significant Byte: Bit1 - Output type                        *)
| (*                           Bit2 - Auto-tuning on production          *)
| (*                           Bit3 - Auto-tuning on start               *)
| (*                           Bit4 - Auto-tuning on prefilling          *)
| (*                           Bit5 - Prefilling function                *)
| (*                           Bit6 - PID trigger                        *)
| (*                           Bit7 - //                                 *)
| (*                           Bit8 - //                                 *)
| (*   Most Significant Byte : PID Trigger Level (0-255)                  *)
| (*                                                                      *)
| (* Register 5 (1 Word)                                                  *)
| (*   Least Significant Byte: P Constant (0-255)                        *)
| (*   Most Significant Byte : Steady P Constant (0-255)                  *)
| (*                                                                      *)
| (* Register 6 (1 Word)                                                  *)
| (*   Least Significant Byte: I Constant (0-255)                        *)
| (*   Most Significant Byte : Steady I Constant (0-255)                  *)
| (*                                                                      *)
| (* Register 7 (1 Word)                                                  *)
| (*   Least Significant Byte: D Constant (0-255)                        *)
| (*   Most Significant Byte : Steady D Constant (0-255)                  *)
| (* ~~~~~~~~~~~~~~~~~~~~~~~~~~~~~~~~~~~~~~~~~~~~~~~~~~~~~~~~~~~~~~~~~~~~ *)
| (*************************************************************************)
|
|STEP_2                                                    << RUNG 5  STEP #0003 >>
|%G0002  +-----+
+--] [---+MOVE_+-
|        | INT |
|        |     |
|FCSREG1 |     | DEF_FCS
|%R2970 -+IN  Q+-%R2984
|        | LEN |
|        |00001|
|        |     |
|        +-----+
|
|STEP_2                                                    << RUNG 6  STEP #0005 >>
|%G0002  +-----+
+--] [---+ AND_+-
|        | WORD|
|        |     |
|DEF_FCS |     | DEFFCSF
|%R2984 -+I1  Q+-%R2985
|        |     |
| CONST -+I2   |
|   00FF +-----+
|
```

REFERENCE	NICKNAME	REFERENCE DESCRIPTION	REFERENCE	NICKNAME	REFERENCE DESCRIPTION
%R2985	DEFFCSF	Default value FCS Start Flow	%R2970	FCSREG1	TMCC FCS Default register 1
%R2984	DEF_FCS	Default value FCS parameters	%G0002	STEP_2	PREPARATION (3 MIN.)

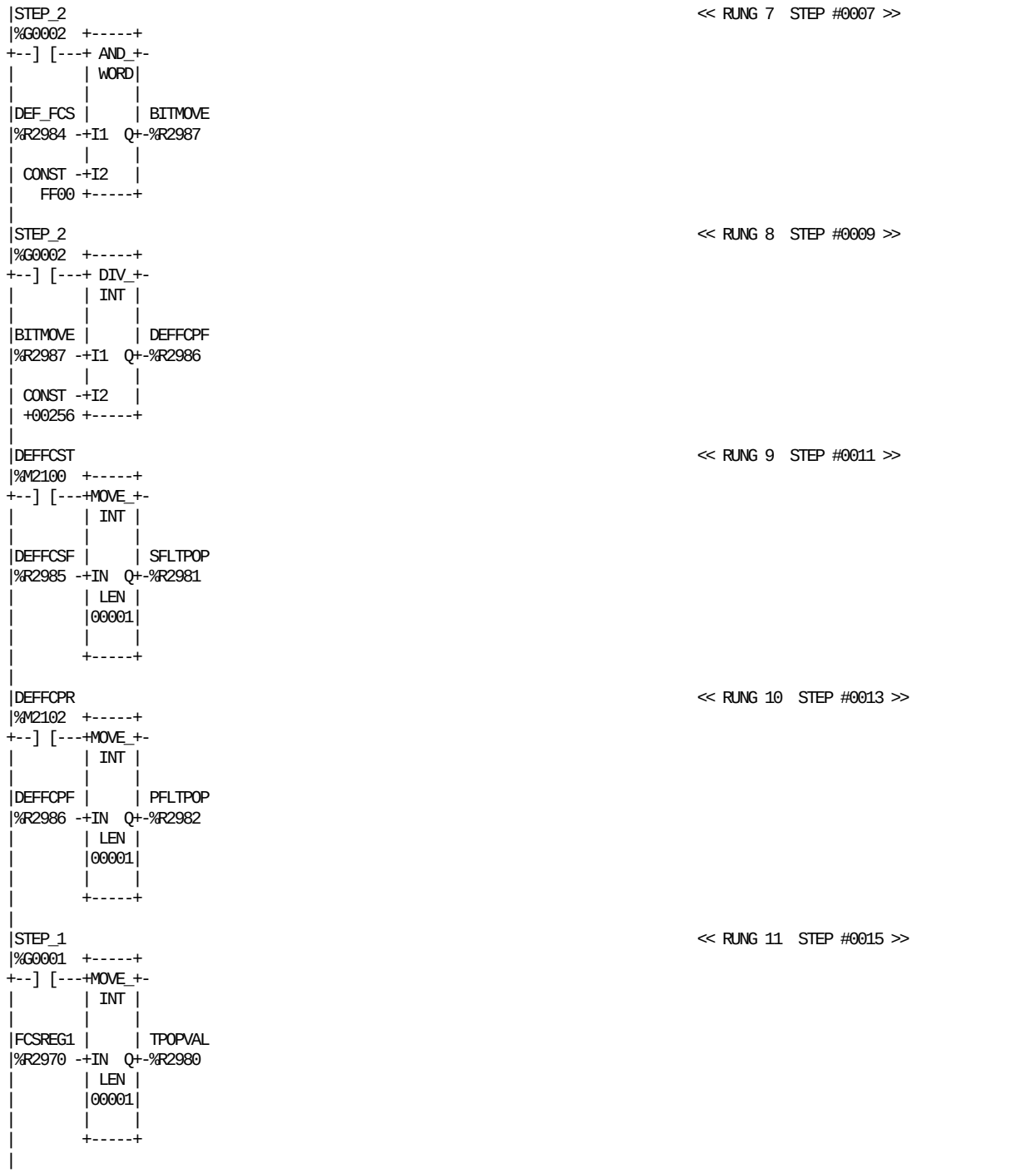

REFERENCE	NICKNAME	REFERENCE DESCRIPTION	REFERENCE	NICKNAME	REFERENCE DESCRIPTION
%R2987	BITMOVE	Default move from Byte H to Low	%R2970	FCSREG1	TMCC FCS Default register 1
%R2986	DEFFCPF	Default value FCS Prod Flow	%R2982	PFLTPOP	Prod Flow value from TPOP
%M2102	DEFFCPR	Request default Prod Flow TPOP	%R2981	SFLTPOP	Start Flow value from TPOP
%R2985	DEFFCSF	Default value FCS Start Flow	%G0001	STEP_1	STANDBY
%M2100	DEFFCST	Request default Start Flow TPOP	%G0002	STEP_2	PREPARATION (3 MIN.)
%R2984	DEF_FCS	Default value FCS parameters	%R2980	TPOPVAL	Register to transfer new param.

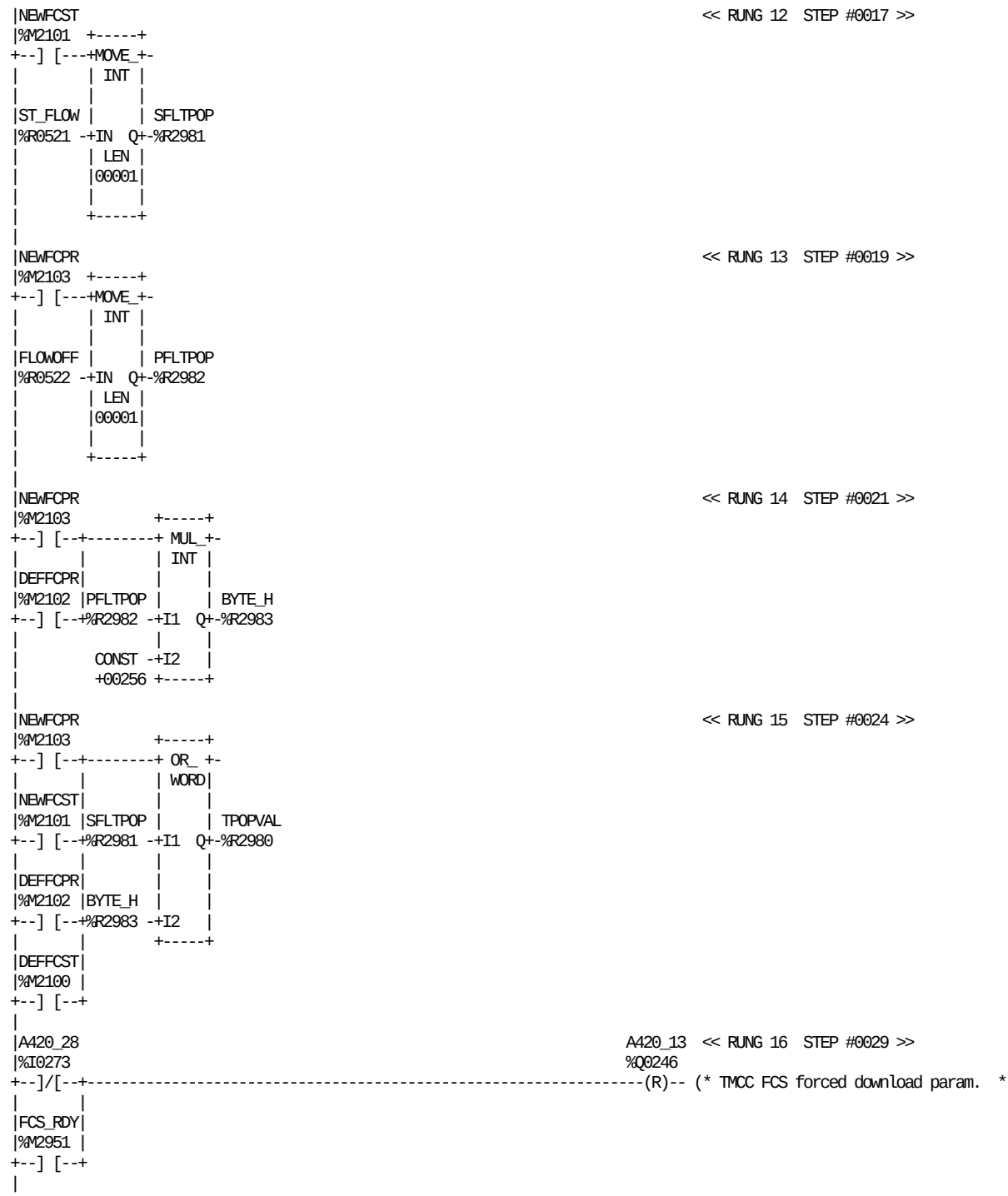

REFERENCE	NICKNAME	REFERENCE DESCRIPTION	REFERENCE	NICKNAME	REFERENCE DESCRIPTION
%Q0246	A420_13	TMCC FCS forced download param.	%M2103	NEWFCPR	Request new value Prod Flow TPOP
%I0273	A420_28	TMCC FCS transmission OK	%M2101	NEWFCST	Request new value StartFlow TPOP
%R2983	BYTE_H	Move Prod Flow to the high Byte	%R2982	PFLTPOP	Prod Flow value from TPOP
%M2102	DEFFCPR	Request default Prod Flow TPOP	%R2981	SFLTPOP	Start Flow value from TPOP
%M2100	DEFFCST	Request default Start Flow TPOP	%R0521	ST_FLOW	Start flow value (TPOP)
%M2951	FCS_RDY	TMCC FCS Ready for transfre	%R2980	TPOPVAL	Register to transfer new param.
%R0522	FLOWOFF	Flow offset value (TPOP)			

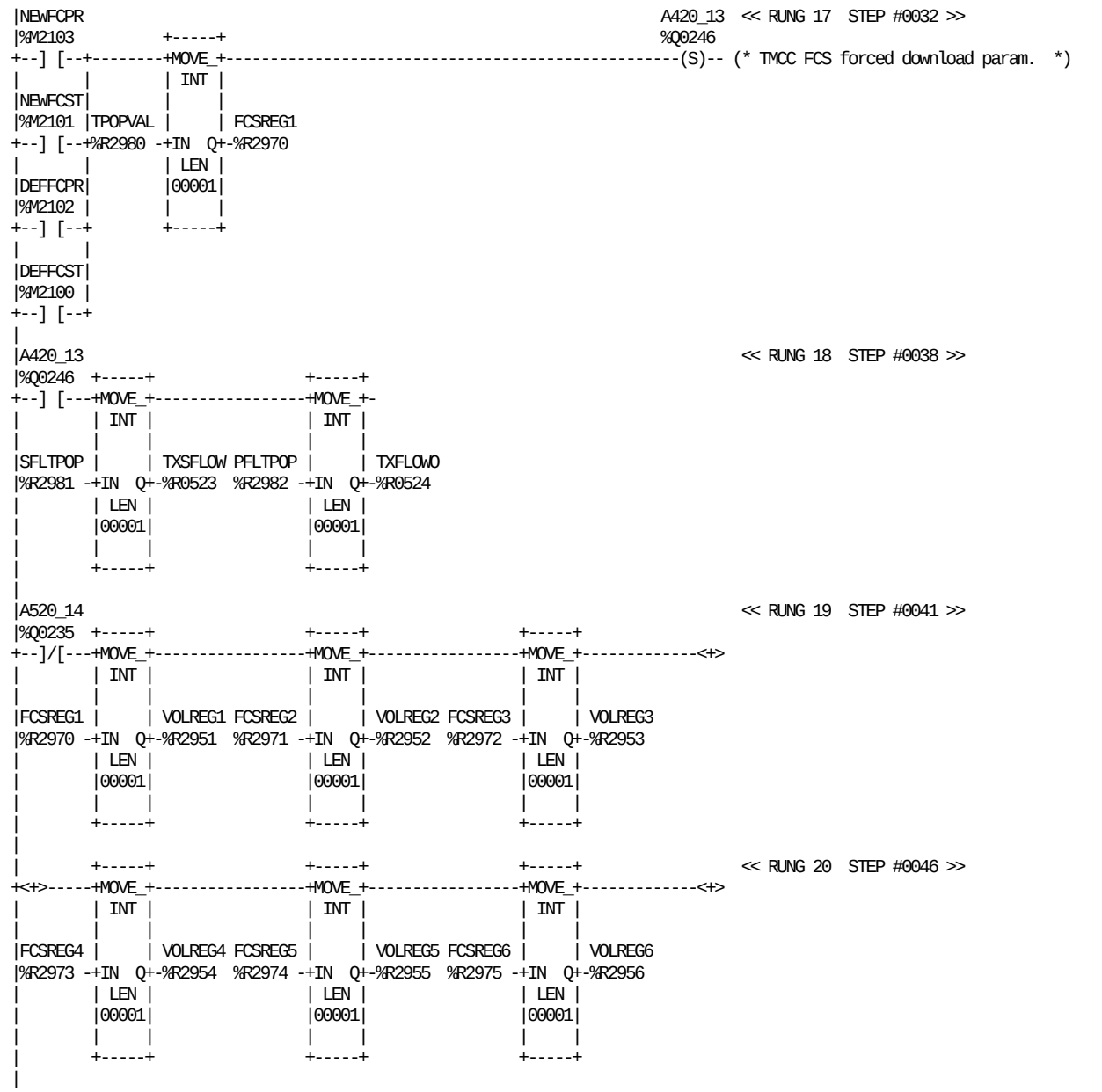

REFERENCE	NICKNAME	REFERENCE DESCRIPTION
%Q0246	A420_13	TMCC FCS forced download param.
%Q0235	A520_14	TMCC FCS Enable
%M2102	DEFFCPR	Request default Prod Flow TPOP
%M2100	DEFFCST	Request default Start Flow TPOP
%R2970	FCSREG1	TMCC FCS Default register 1
%R2971	FCSREG2	TMCC FCS Default register 2
%R2972	FCSREG3	TMCC FCS Default register 3
%R2973	FCSREG4	TMCC FCS Default register 4
%R2974	FCSREG5	TMCC FCS Default register 5
%R2975	FCSREG6	TMCC FCS Default register 6
%M2103	NEWFCPR	Request new value Prod Flow TPOP
%M2101	NEWFCST	Request new value StartFlow TPOP

REFERENCE	NICKNAME	REFERENCE DESCRIPTION
%R2982	PFLTPOP	Prod Flow value from TPOP
%R2981	SFLTPOP	Start Flow value from TPOP
%R2980	TPOPVAL	Register to transfer new param.
%R0524	TXFLOW0	Last transf value FlowOff(TPOP)
%R0523	TXSFLOW	Last transf value StrtFlow(TPOP)
%R2951	VOLREG1	TMCC FCS Register 1
%R2952	VOLREG2	TMCC FCS Register 2
%R2953	VOLREG3	TMCC FCS Register 3
%R2954	VOLREG4	TMCC FCS Register 4
%R2955	VOLREG5	TMCC FCS Register 5
%R2956	VOLREG6	TMCC FCS Register 6

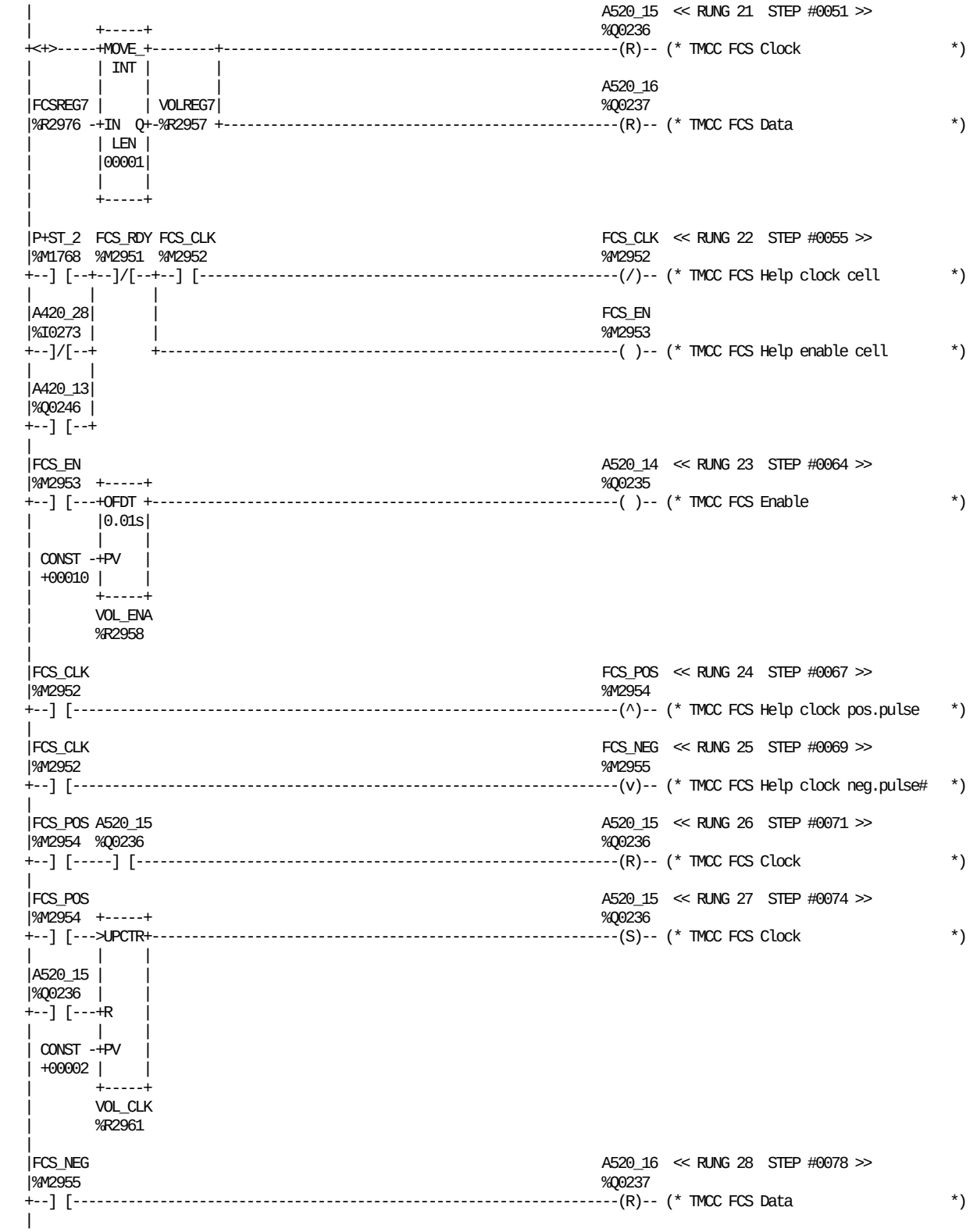

REFERENCE	NICKNAME	REFERENCE DESCRIPTION	REFERENCE	NICKNAME	REFERENCE DESCRIPTION
%Q0246	A420_13	TMCC FCS forced download param.	%M2955	FCS_NEG	TMCC FCS Help clock neg.pulse#
%I0273	A420_28	TMCC FCS transmission OK	%M2954	FCS_POS	TMCC FCS Help clock pos.pulse
%Q0235	A520_14	TMCC FCS Enable	%M2951	FCS_RDY	TMCC FCS Ready for transfre
%Q0236	A520_15	TMCC FCS Clock	%M1768	P+ST_2	Step 2 pos pulse
%Q0237	A520_16	TMCC FCS Data	%R2957	VOLREG7	TMCC FCS Register 7
%R2976	FCSREG7	TMCC FCS Default register 7	%R2961	VOL_CLK	TMCC FCS Clock generator counter
%M2952	FCS_CLK	TMCC FCS Help clock cell	%R2958	VOL_ENA	TMCC FCS Delay enable TX timer
%M2953	FCS_EN	TMCC FCS Help enable cell			

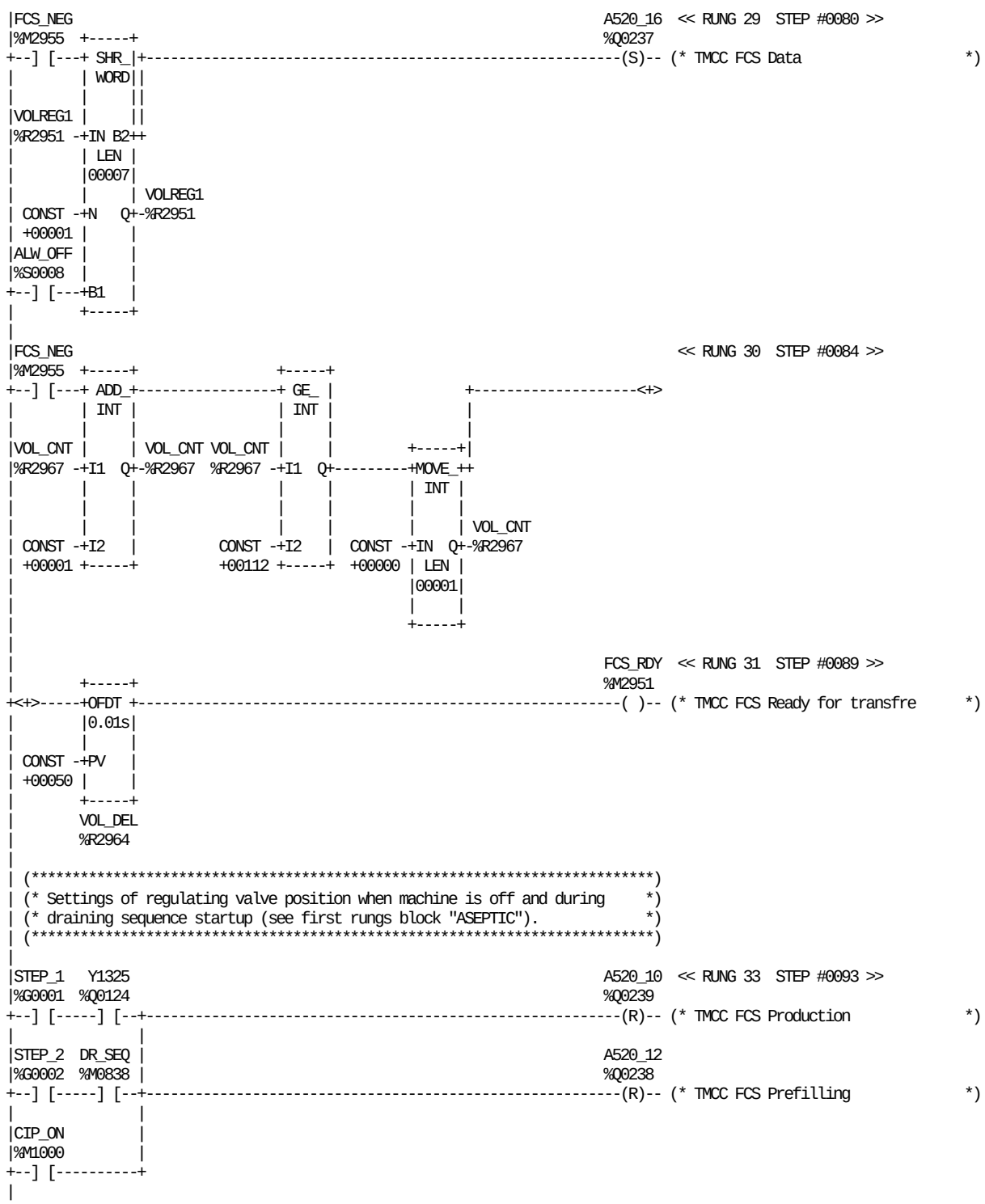

REFERENCE	NICKNAME	REFERENCE DESCRIPTION	REFERENCE	NICKNAME	REFERENCE DESCRIPTION
%Q0239	A520_10	TMCC FCS Production	%M2951	FCS_RDY	TMCC FCS Ready for transfre
%Q0238	A520_12	TMCC FCS Prefilling	%G0001	STEP_1	STANDBY
%Q0237	A520_16	TMCC FCS Data	%G0002	STEP_2	PREPARATION (3 MIN.)
%S0008	ALW_OFF		%R2951	VOLREG1	TMCC FCS Register 1
%M1000	CIP_ON	CIP going on	%R2967	VOL_CNT	TMCC FCS Data transfer counter
%M0838	DR_SEQ	Draning sequence filling circuit	%R2964	VOL_DEL	TMCC FCS Delay end TX data timer
%M2955	FCS_NEG	TMCC FCS Help clock neg.pulse#	%Q0124	Y1325	Cleaning cup draining

```
|STEP_2  DR_SEQ   S003                                              A420_09  << RUNG 34  STEP #0101 >>
|%G0002  %M0838  %I0095                                            %Q0244
+--] [-----]/[--+--]/[-------------------------------------------------(S)-- (* TMCC FCS sterilisation          *)
|               |
|STEP_3         |
|%G0003         |
+--] [----------+
|               |
|STEP_4         |
|%G0004         |
+--] [----------+
|
|STEP_1   Y1325                                                     A420_09  << RUNG 35  STEP #0107 >>
|%G0001  %Q0124                                                     %Q0244
+--] [-----] [--+-------------------------------------------------------(R)-- (* TMCC FCS sterilisation          *)
|               |
|STEP_2  DR_SEQ |
|%G0002  %M0838 |
+--] [-----] [--+
|               |
|STEP_6  DRY_OK |
|%G0006  %M0813 |
+--] [-----] [--+
|               |
|CIP_ON         |
|%M1000         |
+--] [----------+
|
| (*****************************************************************************)
| (* Prefilling of tube and valve position during start-sequence.             *)
| (*****************************************************************************)
|
|P+SQCON  S907   FIRSTST                                            A520_12  << RUNG 37  STEP #0118 >>
|%M0032  %I0087  %M0139                                             %Q0238
+--] [-----]/[-----]/[-------------------------------------------------(S)-- (* TMCC FCS Prefilling           *)
|
|STEP_9                                                             A520_12  << RUNG 38  STEP #0122 >>
|%G0009                                                             %Q0238
+--]/[--+-------------------------------------------------------------(R)-- (* TMCC FCS Prefilling           *)
|       |
|A420_26|
|%I0275 |
+--]/[--+
|
| (*****************************************************************************)
| (* Cleaning signal to TMCC.                                                  *)
| (*****************************************************************************)
|
```

REFERENCE	NICKNAME	REFERENCE DESCRIPTION	REFERENCE	NICKNAME	REFERENCE DESCRIPTION
%Q0244	A420_09	TMCC FCS sterilisation	%I0087	S907	Push button inching JUM
%I0275	A420_26	TMCC FCS low level alarm	%G0001	STEP_1	STANDBY
%Q0238	A520_12	TMCC FCS Prefilling	%G0002	STEP_2	PREPARATION (3 MIN.)
%M1000	CIP_ON	CIP going on	%G0003	STEP_3	TUBE SEALING
%M0813	DRY_OK	Drying ready	%G0004	STEP_4	HEAT STERILIZATION
%M0838	DR_SEQ	Draning sequence filling circuit	%G0006	STEP_6	DRYING + STEAM CLEANING
%M0139	FIRSTST	First start after sterilization	%G0009	STEP_9	MOTOR START
%M0032	P+SQCON	Sequence condition pos pulse	%Q0124	Y1325	Cleaning cup draining
%I0095	S003	Service switch			

```
|STEP_11                                                          A520_11  << RUNG 40  STEP #0126 >>
|%G0011                                                          %Q0240
+--] [--+-------------------------------------------------------------( )-- (* TMCC FCS Cleaning              *)
|       |
|STEP_12|
|%G0012 |
+--] [--+
|       |
|STEP_13|
|%G0013 |
+--] [--+
|       |
|STEP_14|
|%G0014 |
+--] [--+
|       |
|STEP_15|
|%G0015 |
+--] [--+
|
| (*************************************************************************)
| (* Monitoring of level during start sequence.                           *)
| (*************************************************************************)
|
|ALW_ON                                                                   << RUNG 42  STEP #0133 >>
|%S0007  +-----+
+--] [---+ DIV_+-
|        | INT |
|        |     |
|A509_06 |     | LEVTPOP
|%AI0023-+I1  Q+-%R0390
|        |     |
| CONST -+I2   |
| +00327 +-----+
|
| (*************************************************************************)
| (* TMCC level control during production.                                 *)
| (*************************************************************************)
|
|SQ_END   Y1301  FIRSTST                                          A520_10  << RUNG 44  STEP #0136 >>
|%M0071  %Q0118  %M0139                                           %Q0239
+--] [-----] [-----]/[-------------------------------------------------(S)-- (* TMCC FCS Production          *)
|
|SQ_END                                                           A520_10  << RUNG 45  STEP #0140 >>
|%M0071                                                           %Q0239
+--]/[--+-------------------------------------------------------------(R)-- (* TMCC FCS Production          *)
|       |
| Y1301 |
|%Q0118 |
+--]/[--+
|
| (*************************************************************************)
| (* Start of levelcontroller during first start after sterilization.     *)
| (*************************************************************************)
|
|FILL_SE                                                          A520_10  << RUNG 47  STEP #0144 >>
|%M0074                                                           %Q0239
+--] [-------------------------------------------------------------(S)-- (* TMCC FCS Production          *)
|
```

REFERENCE	NICKNAME	REFERENCE DESCRIPTION	REFERENCE	NICKNAME	REFERENCE DESCRIPTION
%AI0023	A509_06	TMCC FCS Filtered level	%M0071	SQ_END	Start sequence ended
%Q0239	A520_10	TMCC FCS Production	%G0011	STEP_11	END OF PRODUCTION
%Q0240	A520_11	TMCC FCS Cleaning	%G0012	STEP_12	VENTING
%S0007	ALW_ON		%G0013	STEP_13	OPEN DOORS, CUT TUBE
%M0074	FILL_SE	Fillsector (Only active 1 start)	%G0014	STEP_14	CIP / HC
%M0139	FIRSTST	First start after sterilization	%G0015	STEP_15	BLOWING
%R0390	LEVTPOP	Level signal to TPOP	%Q0118	Y1301	A-valve

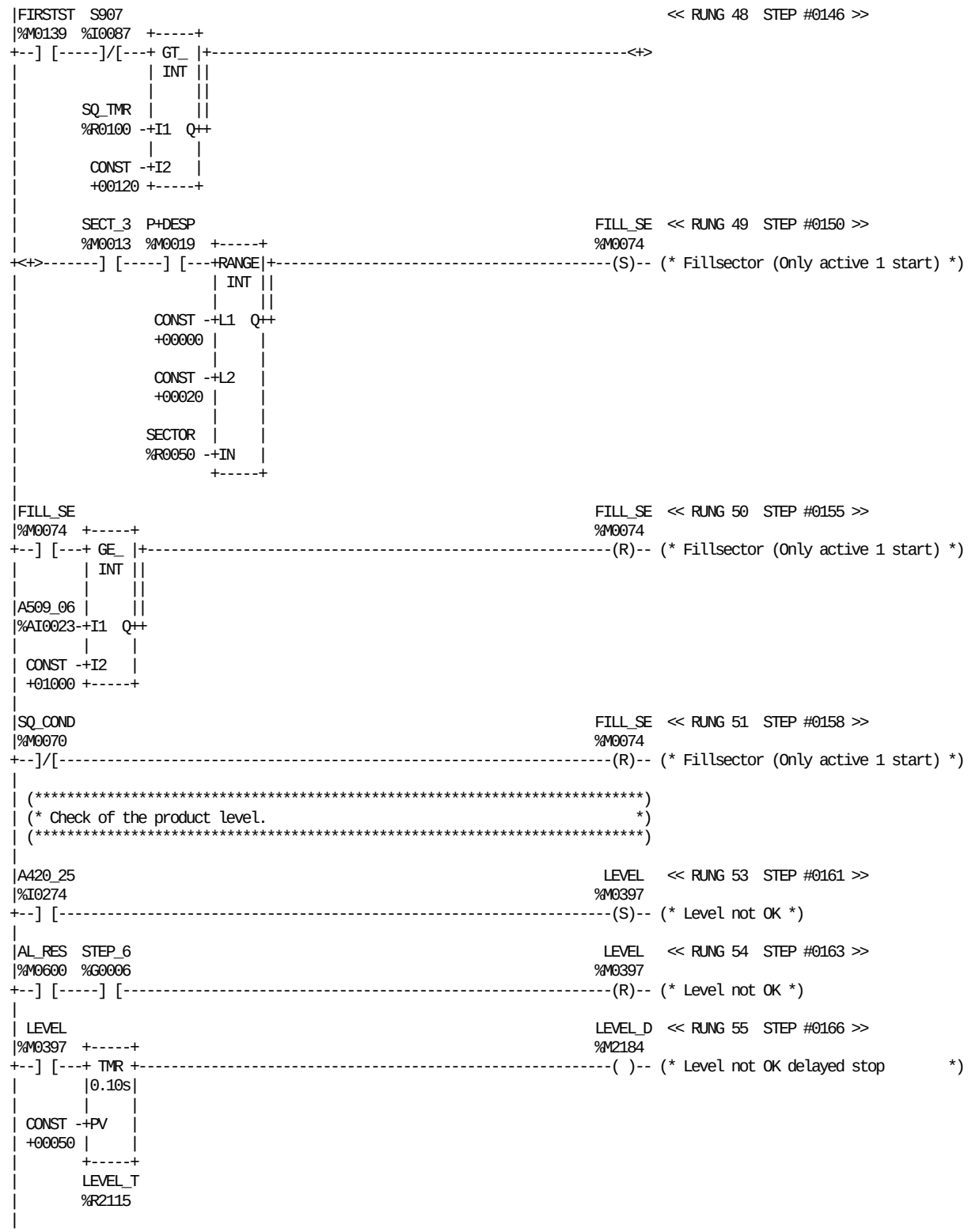

REFERENCE	NICKNAME	REFERENCE DESCRIPTION	REFERENCE	NICKNAME	REFERENCE DESCRIPTION
%I0274	A420_25	TMCC FCS high level alarm	%M0019	P+DESP	Barcode signal positive pulse
%AI0023	A509_06	TMCC FCS Filtered level	%I0087	S907	Push button inching JUM
%M0600	AL_RES	Alarm reset (From TPOP)	%R0050	SECTOR	Angle sector (0-63 Dec)
%M0074	FILL_SE	Fillsector (Only active 1 start)	%M0013	SECT_3	Angle sector 3 (300-377 oct)
%M0139	FIRSTST	First start after sterilization	%M0070	SQ_COND	Start sequence conditions
%M0397	LEVEL	Level not OK	%R0100	SQ_TMR	Start sequense timer
%M2184	LEVEL_D	Level not OK delayed stop	%G0006	STEP_6	DRYING + STEAM CLEANING
%R2115	LEVEL_T	Delay for product level stop			

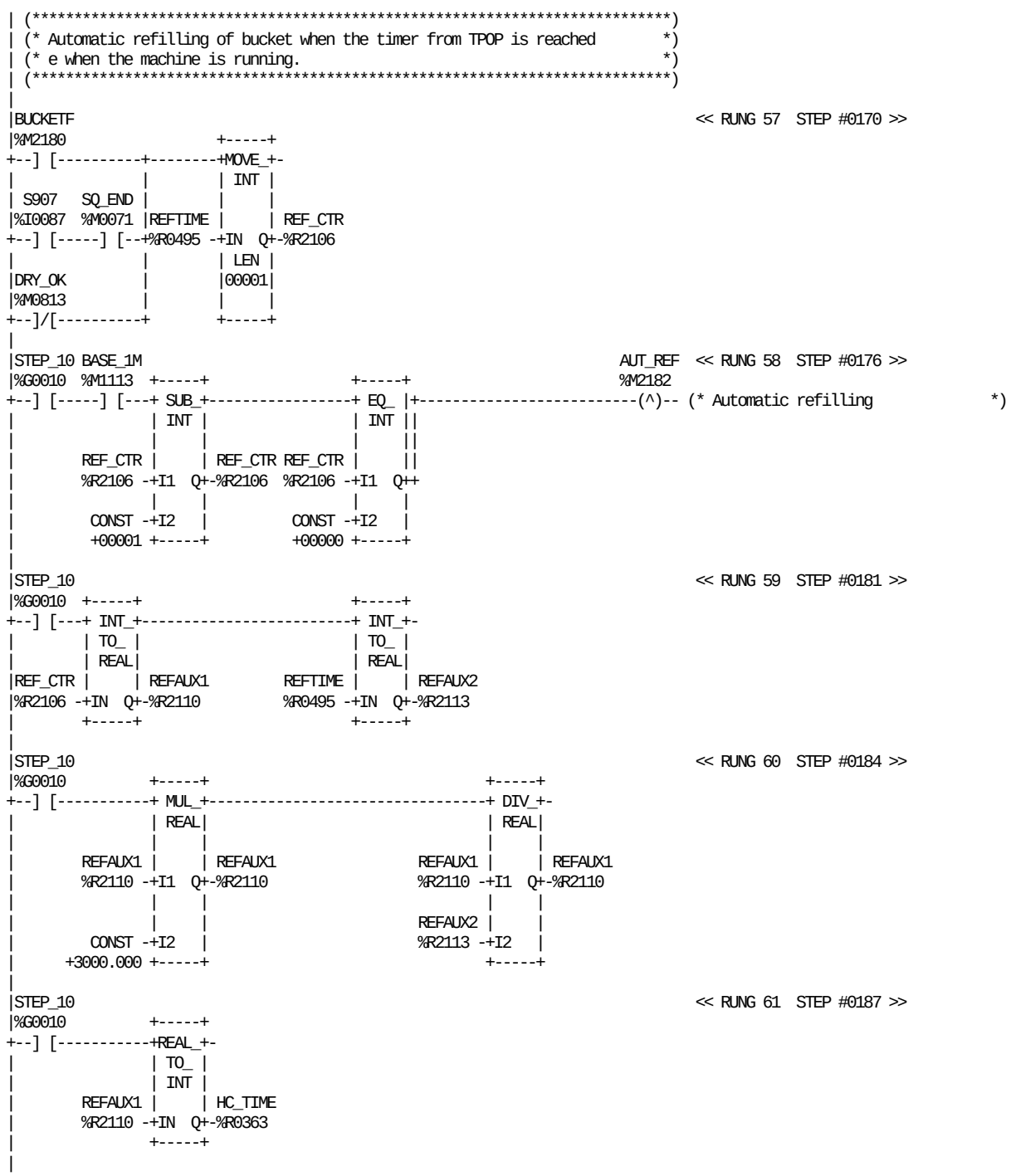

REFERENCE	NICKNAME	REFERENCE DESCRIPTION
%M2182	AUT_REF	Automatic refilling
%M1113	BASE_1M	Base 1 minute
%M2180	BUCKETF	Refill bucket with air
%M0813	DRY_OK	Drying ready
%R0363	HC_TIME	HC timer to the TPOP
%R2110	REFAUX1	Refilling register aux 1
%R2113	REFAUX2	Refilling register aux 2
%R0495	REFTIME	Refilling interval from TPOP
%R2106	REF_CTR	Refilling counter
%I0087	S907	Push button inching JUM
%M0071	SQ_END	Start sequence ended
%G0010	STEP_10	PRODUCTION

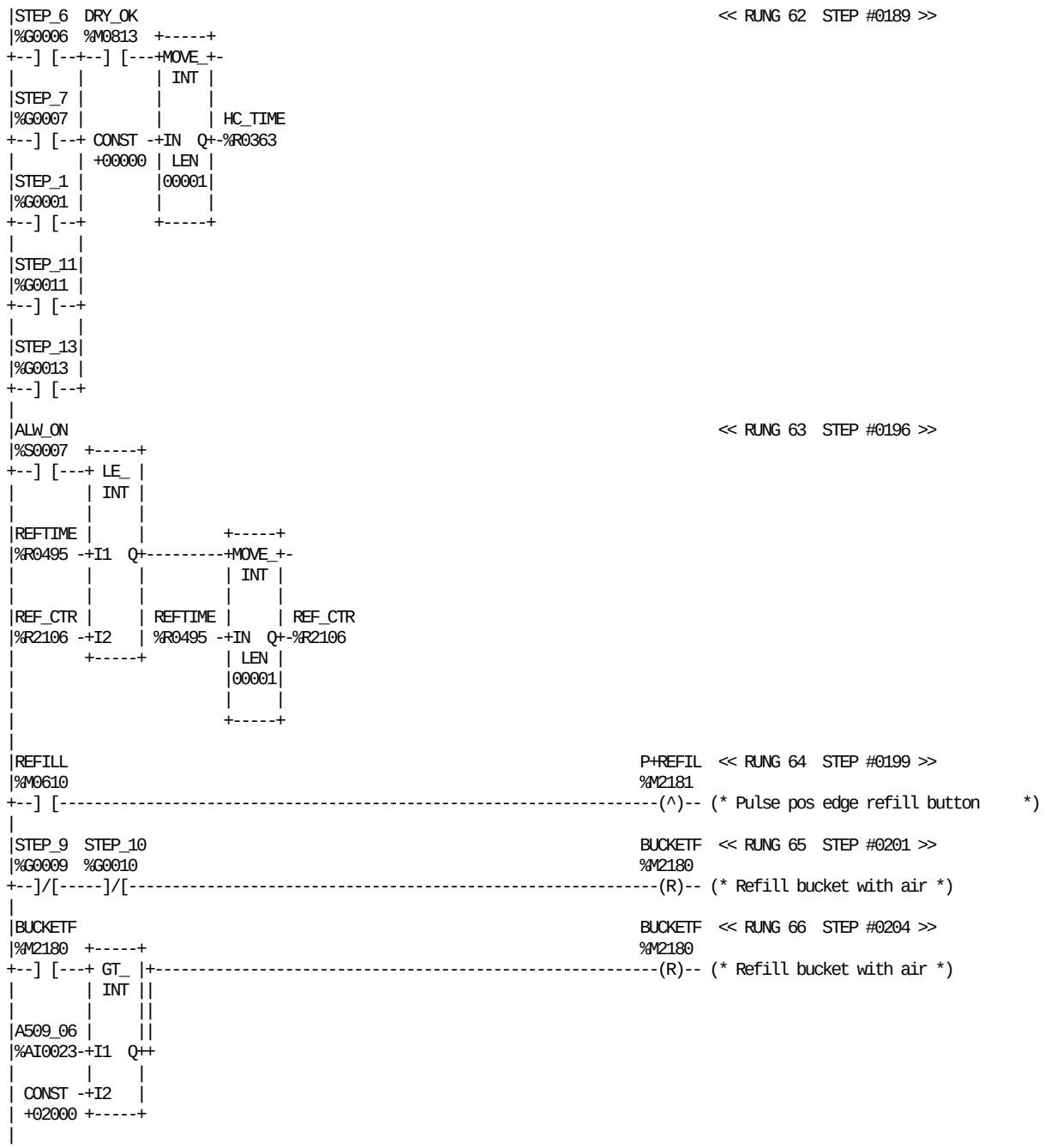

REFERENCE	NICKNAME	REFERENCE DESCRIPTION	REFERENCE	NICKNAME	REFERENCE DESCRIPTION
%AI0023	A509_06	TMCC FCS Filtered level	%R2106	REF_CTR	Refilling counter
%S0007	ALW_ON		%G0001	STEP_1	STANDBY
%M2180	BUCKETF	Refill bucket with air	%G0010	STEP_10	PRODUCTION
%M0813	DRY_OK	Drying ready	%G0011	STEP_11	END OF PRODUCTION
%R0363	HC_TIME	HC timer to the TPOP	%G0013	STEP_13	OPEN DOORS, CUT TUBE
%M2181	P+REFIL	Pulse pos edge refill button	%G0006	STEP_6	DRYING + STEAM CLEANING
%M0610	REFILL	Refilling of bucket	%G0007	STEP_7	SIGNAL TO STERILIZER
%R0495	REFTIME	Refilling interval from TPOP	%G0009	STEP_9	MOTOR START

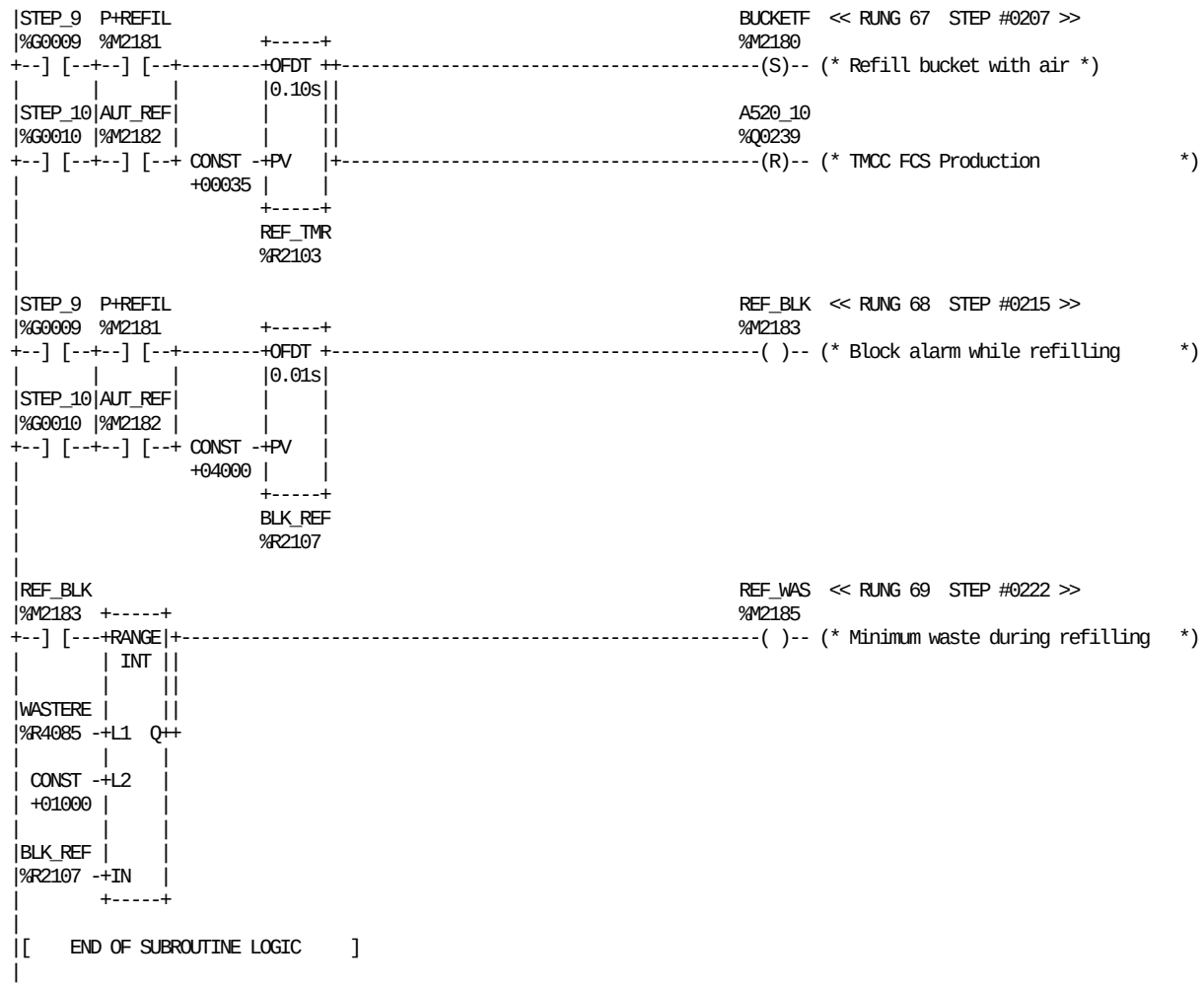

REFERENCE	NICKNAME	REFERENCE DESCRIPTION	REFERENCE	NICKNAME	REFERENCE DESCRIPTION
%Q0239	A520_10	TMCC FCS Production	%R2103	REF_TMR	Refill bucket timer
%M2182	AUT_REF	Automatic refilling	%M2185	REF_WAS	Minimum waste during refilling
%R2107	BLK_REF	Time block alarm (Refilling)	%G0010	STEP_10	PRODUCTION
%M2180	BUCKETF	Refill bucket with air	%G0009	STEP_9	MOTOR START
%M2181	P+REFIL	Pulse pos edge refill button	%R4085	WASTERE	Start waste for refilling
%M2183	REF_BLK	Block alarm while refilling			

```
|[  START LD SUBROUTINE  BRAKES   ]
|
|[     VARIABLE DECLARATIONS      ]
|
|[   START OF SUBROUTINE LOGIC    ]
|
| (*************************************************************************)
| (* Reel Brake management.                                                 *)
| (*************************************************************************)
|
| S907   STEP_2  TESTOK                                          INCHDEL  << RUNG 5  STEP #0003 >>
|%I0087  %G0002  %M1480          +-----+                         %M1362
+--] [--+--] [-----] [--+--------+ TMR +---------------------------------(S)-- (* ASU, inching button delayed     *)
|       |               |        |0.10s|
|       |STEP_6         |        |     |
|       |%G0006         |        |     |
|       +--] [----------+ CONST -+PV   |
|       |               | +00120 |     |
|       |STEP_7         |        +-----+
|       |%G0007         |        INCH_12
|       +--] [----------+        %R1715
|       |               |
|       |STEP_8         |
|       |%G0008         |
|       +--] [----------+
|
|INCHDEL  S907                                                   P-INCH   << RUNG 6  STEP #0012 >>
|%M1362  %I0087                                                  %M1270
+--] [-----]/[-----------------------------------------------------------(^)-- (* Pulse - inching push-button     *)
|
|P-INCH                                                          INCHDEL  << RUNG 7  STEP #0015 >>
|%M1270                                                          %M1362
+--] [-----------------------------------------------------------------(R)-- (* ASU, inching button delayed     *)
|
|TUBESGO                                                         P-TUBE   << RUNG 8  STEP #0017 >>
|%M0121                                                          %M1488
+--] [-----------------------------------------------------------------(v)-- (* Pulse - tube sealing           *)
|
|STEP_11                                                         P-STP11  << RUNG 9  STEP #0019 >>
|%G0011                                                          %M1271
+--] [-----------------------------------------------------------------(v)-- (* Pulse - step_11               *)
|
|A506_14                                                         BRAKDEL  << RUNG 10  STEP #0021 >>
|%Q0201          +-----+                                         %M1360
+--] [--+--------+OFDT +-------------------------------------------------( )-- (* ASU, brake delay consent       *)
|       |        |0.10s|
|A506_13|        |     |
|%Q0202 |        |     |
+--] [--+ CONST -+PV   |
|         +00020 |     |
|                +-----+
|                TMR_15
|                %R1742
|
```

REFERENCE	NICKNAME	REFERENCE DESCRIPTION	REFERENCE	NICKNAME	REFERENCE DESCRIPTION
%Q0202	A506_13	DMC Main Motor Low speed	%G0011	STEP_11	END OF PRODUCTION
%Q0201	A506_14	DMC Main Motor High speed	%G0002	STEP_2	PREPARATION (3 MIN.)
%M1360	BRAKDEL	ASU, brake delay consent	%G0006	STEP_6	DRYING + STEAM CLEANING
%M1362	INCHDEL	ASU, inching button delayed	%G0007	STEP_7	SIGNAL TO STERILIZER
%R1715	INCH_12	TMR 12 sec.inching button	%G0008	STEP_8	FLAPS + H2O2 TEMPERATURE
%M1270	P-INCH	Pulse - inching push-button	%M1480	TESTOK	SA, bobbin research OK
%M1271	P-STP11	Pulse - step_11	%R1742	TMR_15	ASU, delay FST_WEB off for brake
%M1488	P-TUBE	Pulse - tube sealing	%M0121	TUBESGO	Tube sealing going on
%I0087	S907	Push button inching JUM			

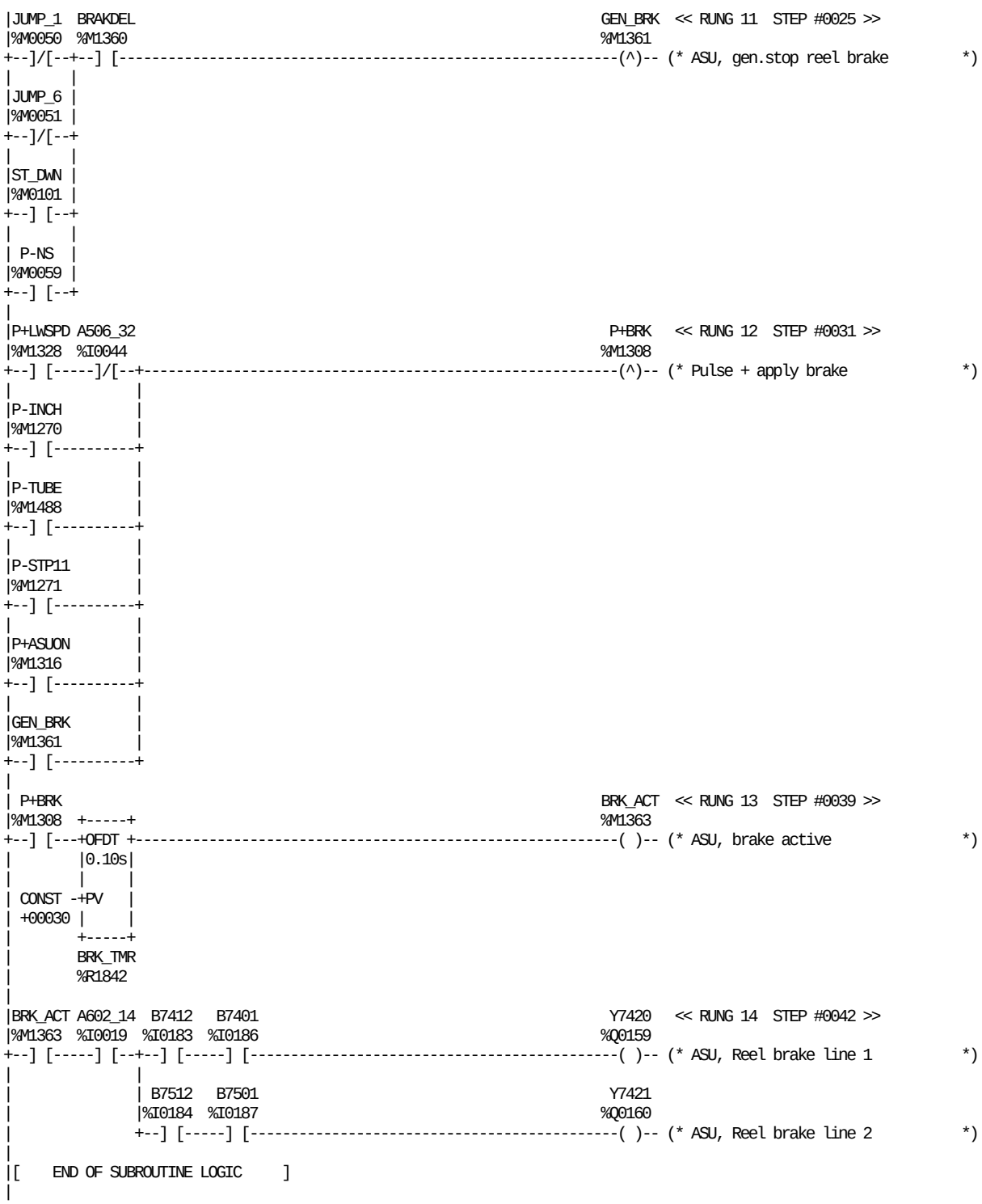

REFERENCE	NICKNAME	REFERENCE DESCRIPTION	REFERENCE	NICKNAME	REFERENCE DESCRIPTION
%I0044	A506_32	DMC Main motor running	%M0051	JUMP_6	Jump to pos 6 (Fast stop)
%I0019	A602_14	Safety monitors C	%M1316	P+ASUON	Pulse + ASU splice going on
%I0186	B7401	Material reel 1 empty	%M1308	P+BRK	Pulse + apply brake
%I0183	B7412	Side feeder position 1	%M1328	P+LWSPD	Pulse + ASU low restart after sp
%I0187	B7501	Material reel 2 epmty	%M1270	P-INCH	Pulse - inching push-button
%I0184	B7512	Side feeder position 2	%M0059	P-NS	Normal stop negative pulse
%M1360	BRAKDEL	ASU, brake delay consent	%M1271	P-STP11	Pulse - step_11
%M1363	BRK_ACT	ASU, brake active	%M1488	P-TUBE	Pulse - tube sealing
%R1842	BRK_TMR	ASU, reel brake timer	%M0101	ST_DWN	Pushbuttons step down
%M1361	GEN_BRK	ASU, gen.stop reel brake	%Q0159	Y7420	ASU, Reel brake line 1
%M0050	JUMP_1	Jump to pos 1 (Emergency stop)	%Q0160	Y7421	ASU, Reel brake line 2

```
|[  START LD SUBROUTINE  TEMPREG  ]
|
|[     VARIABLE DECLARATIONS      ]
|
|[   START OF SUBROUTINE LOGIC    ]
|
| (*************************************************************************)
| (* Temperature loops. They are named loop 1-10.                          *)
| (*                                                                       *)
| (* ***** Loopnr ************* Loop name ************** Loop reg(PID) ***** *)
| (*                                                                       *)
| (*         1      Temp reg Peroxide tank               R3000-R3039       *)
| (*         2      Temp reg Flap heating top left       R3040-R3079       *)
| (*         3      Temp reg Flap heating top right      R3080-R3119       *)
| (*         4      Temp reg Flap heating bottom left    R3120-R3159       *)
| (*         5      Temp reg Flap heating bottom right   R3160-R3199       *)
| (*         6      Temp reg Air super heater            R3200-R3239       *)
| (*         7      Temp reg External peroxide heater    R3240-R3279       *)
| (*         8      Temp reg HI air heater               R3280-R3319       *)
| (*         9      Reserved for future use              R3320-R3359       *)
| (*         10     Reserved for future use              R3360-R3399       *)
| (*                                                                       *)
| (*       Remark  Tempcontroller electrical cabinet is an on-off controller  *)
| (*       in a special sub-routine.                                       *)
| (*************************************************************************)
|
| (*************************************************************************)
| (* The first rungs is contaning the default values for all loops. They are  *)
| (* loaded in to the controller from order of the TPOP. In order to keep     *)
| (* down the communication area to the TPOP, dedicated registers in the TPOP *)
| (* register area are used for all values that could be changed or read by   *)
| (* the TPOP. If changes in the PLC should be possible, the changes must be  *)
| (* made in these registers and that is also the explanation of the used     *)
| (* MOVE instructions below and in the default sub.                         *)
| (*************************************************************************)
|
|ALW_ON                                                    << RUNG 6  STEP #0004 >>
|%S0007  +-----+
+--] [---+ NE_ |
|        | INT |
|        |     |
|DEFREG1 |     |                +-------------+
|%R0398 -+I1  Q+----------------+ CALL DEFAULT+
|        |     |                | (SUBROUTINE)|
|        |     |                +-------------+
|        |     |
| CONST -+I2   |
| +00000 +-----+
|
| (*************************************************************************)
| (* Start of logic Loop 1.                                                *)
| (*************************************************************************)
|
|STEP_2                                                      ST1H2O   << RUNG 8  STEP #0008 >>
|%G0002                                                      %M0799
+--] [-------------------------------------------------------------------(R)-- (* First start temp.control H2O     *)
|
|STEP_6                                                      ST1H2O   << RUNG 9  STEP #0010 >>
|%G0006                                                      %M0799
+--] [-------------------------------------------------------------------(S)-- (* First start temp.control H2O     *)
|
```

REFERENCE	NICKNAME	REFERENCE DESCRIPTION	REFERENCE	NICKNAME	REFERENCE DESCRIPTION
%S0007	ALW_ON		%M0799	ST1H2O	First start temp.control H2O
	DEFAULT	Default values temp controllers	%G0002	STEP_2	PREPARATION (3 MIN.)
%R0398	DEFREG1	Activate default setvalues	%G0006	STEP_6	DRYING + STEAM CLEANING

```
|ST1H2O                                                          << RUNG 10  STEP #0012 >>
|%M0799  +-----+
+--] [---+MOVE_+-
|        | INT |
|        |     |
|        |     | L1_SV1
| CONST -+IN  Q+-%R0448
| +00850 | LEN |
|        |00001|
|        |     |
|        +-----+
|
|ST1H2O                                                          << RUNG 11  STEP #0014 >>
|%M0799  +-----+
+--]/[---+MOVE_+-
|        | INT |
|        |     |
|        |     | L1_SV1
| CONST -+IN  Q+-%R0448
| +00750 | LEN |
|        |00001|
|        |     |
|        +-----+
|
|ALW_ON                                                          << RUNG 12  STEP #0016 >>
|%S0007  +-----+                +-----+
+--] [---+ ADD_+----------------+ SUB_+-
|        | INT |                | INT |
|        |     |                |     |
|L1_SV1  |     | CAL1_1H L1_SV1 |     | CAL1_1L
|%R0448 -+I1  Q+-%R3450  %R0448 -+I1  Q+-%R3451
|        |     |                |     |
|AL1H_L1 |     |         AL1L_L1|     |
|%R0450 -+I2   |         %R0451 -+I2   |
|        +-----+                +-----+
|
|ALW_ON                                                          << RUNG 13  STEP #0019 >>
|%S0007  +-----+
+--] [---+MOVE_+-
|        | INT |
|        |     |
|L1_SV1  |     |  SV_L1
|%R0448 -+IN  Q+-%R3400
|        | LEN |
|        |00001|
|        |     |
|        +-----+
|
| (*************************************************************************)
| (* Transfer of values between TPOP interface registers and actual GE-fanuc  *)
| (* PID registers.                                                          *)
| (*************************************************************************)
|
|ALW_ON                                                          << RUNG 15  STEP #0022 >>
|%S0007  +-----+                +-----+
+--] [---+MOVE_+----------------+MOVE_+-
|        | INT |                | INT |
|        |     |                |     |
| B1222  |     |  L1_PV  L1SAMP |     | SAMP_L1
|%AI0034-+IN  Q+-%R0459  %R0454 -+IN  Q+-%R3002
|        | LEN |                | LEN |
|        |00001|                |00001|
|        |     |                |     |
|        +-----+                +-----+
|
```

REFERENCE	NICKNAME	REFERENCE DESCRIPTION	REFERENCE	NICKNAME	REFERENCE DESCRIPTION
%R0450	AL1H_L1	Alarm SV1 high loop 1	%R0454	L1SAMP	Sample value loop 1 TPOP <-->
%R0451	AL1L_L1	Alarm SV1 low loop 1	%R0459	L1_PV	Process value loop 1 TPOP <-->
%S0007	ALW_ON		%R0448	L1_SV1	Loop 1 setvalue 1 TPOP <-->
%AI0034	B1222	Peroxide bath temperature	%R3002	SAMP_L1	Sample loop 1 (1=10ms)
%R3450	CAL1_1H	Calc val AL_Lim Loop 1 SV1 High	%M0799	ST1H2O	First start temp.control H2O
%R3451	CAL1_1L	Calc val AL_Lim Loop 1 SV1 Low	%R3400	SV_L1	Setvalue loop 1

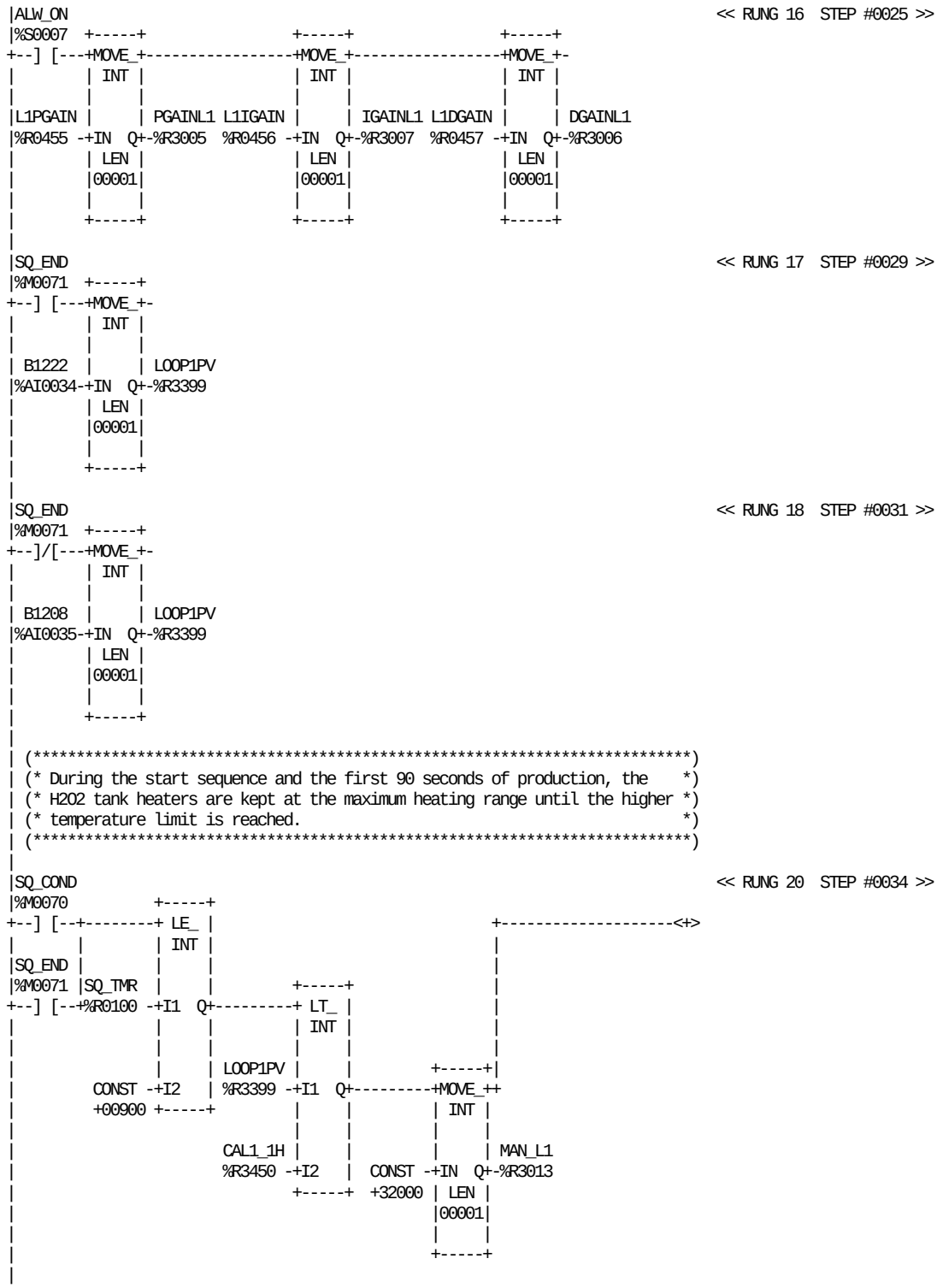

REFERENCE	NICKNAME	REFERENCE DESCRIPTION
%S0007	ALW_ON	
%AI0035	B1208	Water temperature
%AI0034	B1222	Peroxide bath temperature
%R3450	CAL1_1H	Calc val AL_Lim Loop 1 SV1 High
%R3006	DGAINL1	D-gain loop 1 0-327,67 Sec
%R3007	IGAINL1	I-Gain loop 1 0-32.767 repeats/s
%R0457	L1DGAIN	D gain value loop1 TPOP <-->
%R0456	L1IGAIN	I gain value loop 1 TPOP <-->

REFERENCE	NICKNAME	REFERENCE DESCRIPTION
%R0455	L1PGAIN	P gain value loop 1 TPOP <-->
%R3399	LOOP1PV	Process value loop 1
%R3013	MAN_L1	Manual command value loop 1
%R3005	PGAINL1	P-gain loop 1 0-327,67 %
%M0070	SQ_COND	Start sequence conditions
%M0071	SQ_END	Start sequence ended
%R0100	SQ_TMR	Start sequense timer

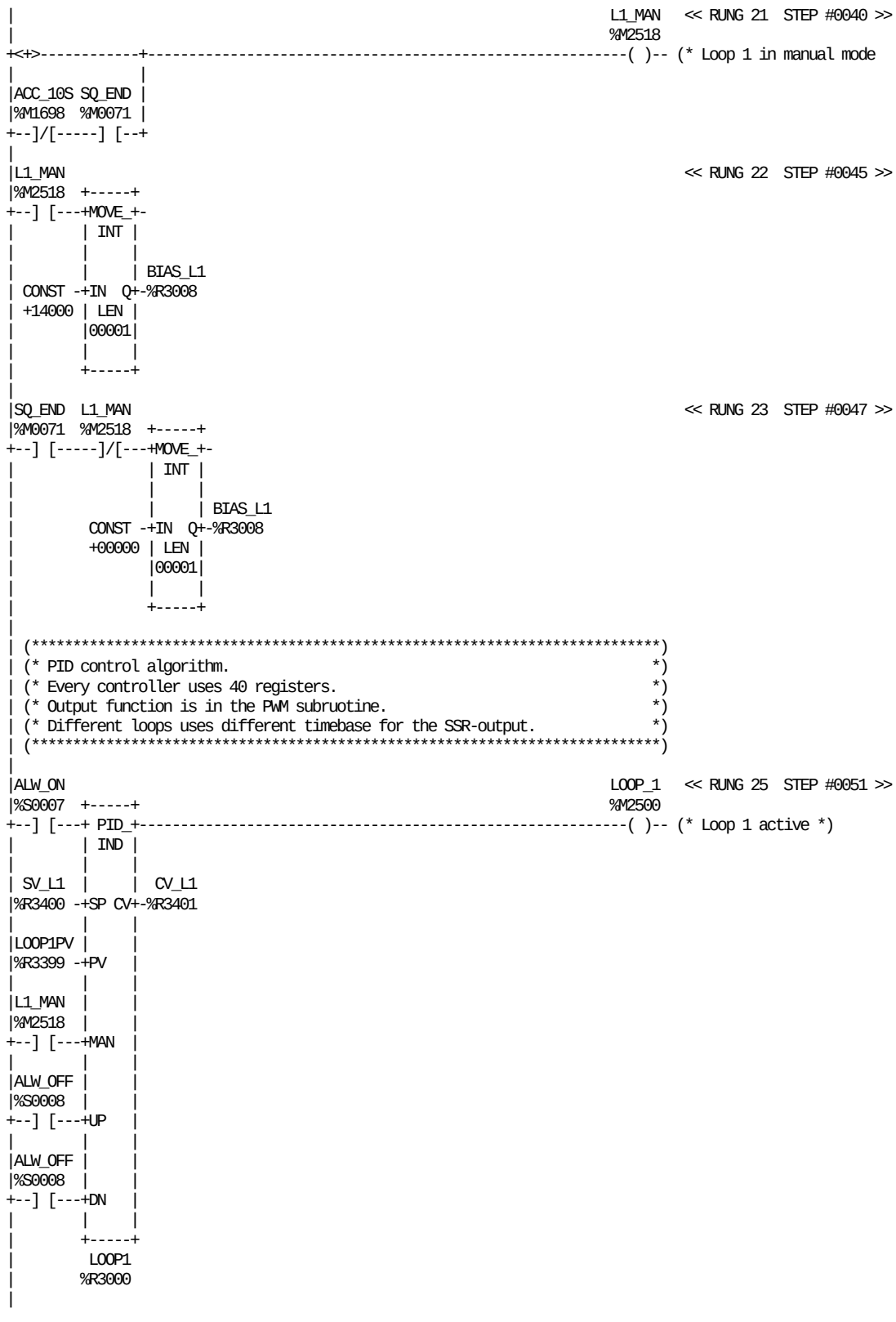

REFERENCE	NICKNAME	REFERENCE DESCRIPTION	REFERENCE	NICKNAME	REFERENCE DESCRIPTION
%M1698	ACC_10S	10 sec.acceleration main motor	%R3000	LOOP1	Loop 1 peroxide tank
%S0008	ALW_OFF		%R3399	LOOP1PV	Process value loop 1
%S0007	ALW_ON		%M2500	LOOP_1	Loop 1 active
%R3008	BIAS_L1	Bias loop 1 -100/+100 %	%M0071	SQ_END	Start sequence ended
%R3401	CV_L1	Control value loop 1	%R3400	SV_L1	Setvalue loop 1
%M2518	L1_MAN	Loop 1 in manual mode			

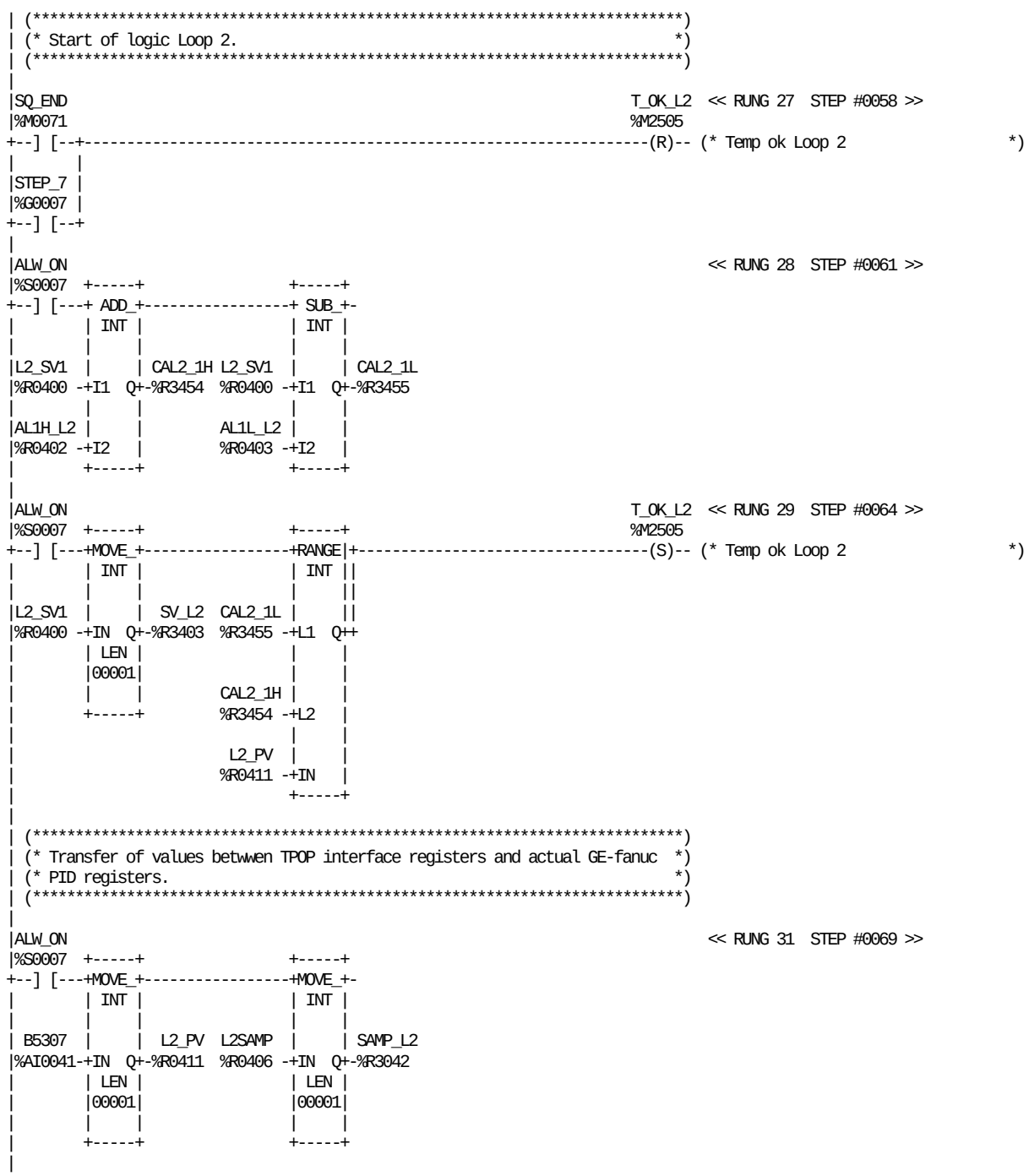

REFERENCE	NICKNAME	REFERENCE DESCRIPTION	REFERENCE	NICKNAME	REFERENCE DESCRIPTION
%R0402	AL1H_L2	Activate default values	%R0411	L2_PV	Process value loop 2 TPOP <-->
%R0403	AL1L_L2	Alarm SV1 low loop 2	%R0400	L2_SV1	Loop 2 setvalue 1 TPOP <-->
%S0007	ALW_ON		%R3042	SAMP_L2	Sample loop 2 (1=10ms)
%AI0041	B5307	Flap heating Top Left	%M0071	SQ_END	Start sequence ended
%R3454	CAL2_1H	Calc val AL_Lim Loop 2 SV1 High	%G0007	STEP_7	SIGNAL TO STERILIZER
%R3455	CAL2_1L	Calc val AL_Lim Loop 2 SV1 Low	%R3403	SV_L2	Setvalue loop 2
%R0406	L2SAMP	Sample value loop 2 TPOP <-->	%M2505	T_OK_L2	Temp ok Loop 2

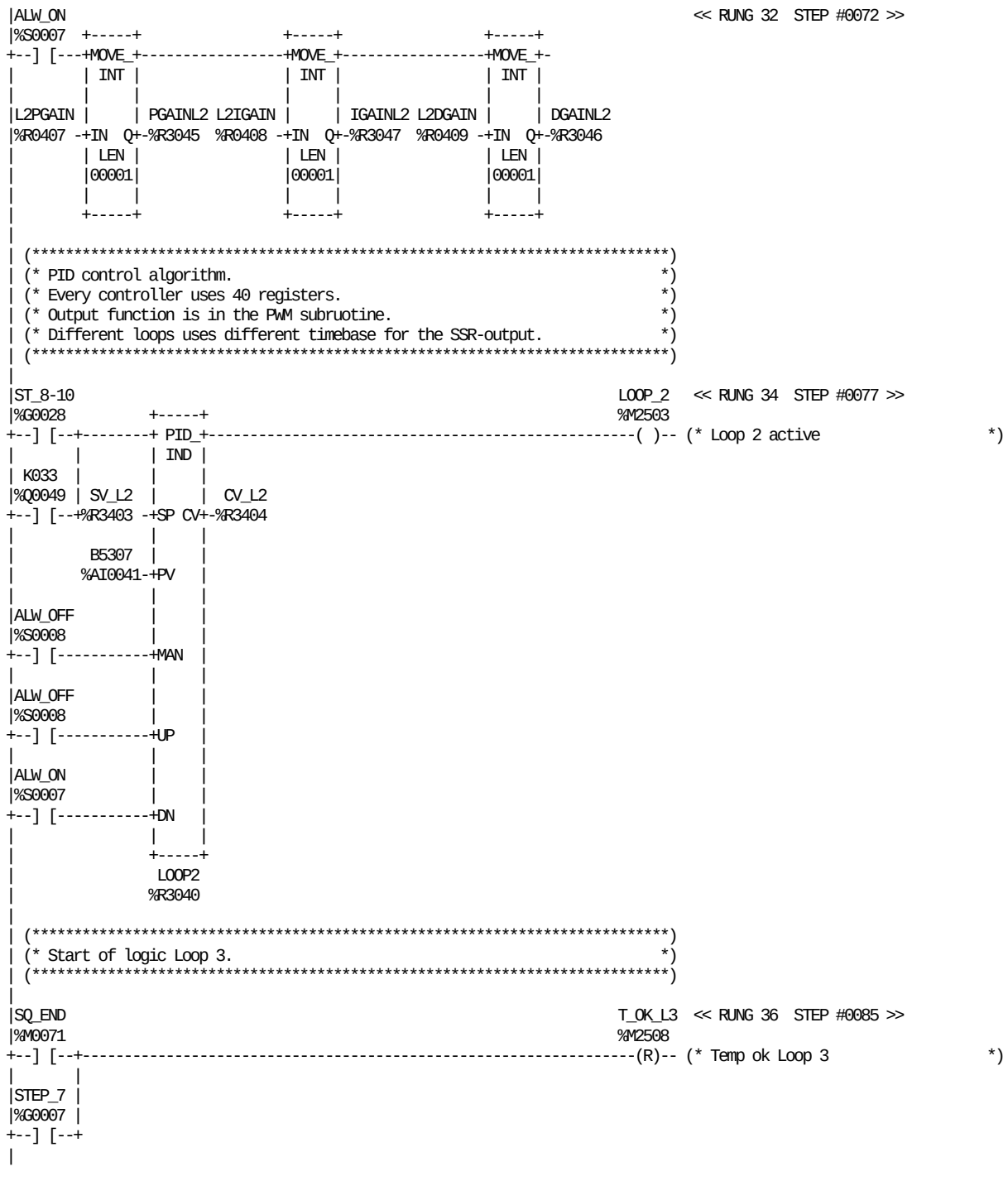

REFERENCE	NICKNAME	REFERENCE DESCRIPTION	REFERENCE	NICKNAME	REFERENCE DESCRIPTION
%S0008	ALW_OFF		%R0407	L2PGAIN	P gain value loop 2 TPOP <-->
%S0007	ALW_ON		%R3040	LOOP2	Loop 2 top flap left
%AI0041	B5307	Flap heating Top Left	%M2503	LOOP_2	Loop 2 active
%R3404	CV_L2	Control value loop 2	%R3045	PGAINL2	P-gain loop 2 0-327,67%
%R3046	DGAINL2	D-gain loop 2 0-327,67 Sec	%M0071	SQ_END	Start sequence ended
%R3047	IGAINL2	I-gain loop 2 0-32.767 repeats/s	%G0007	STEP_7	SIGNAL TO STERILIZER
%Q0049	K033	FFU flap heating	%G0028	ST_8-10	Ladder position 8-10
%R0409	L2DGAIN	D gain value loop 2 TPOP <-->	%R3403	SV_L2	Setvalue loop 2
%R0408	L2IGAIN	I gain value loop 2 TPOP <-->	%M2508	T_OK_L3	Temp ok Loop 3

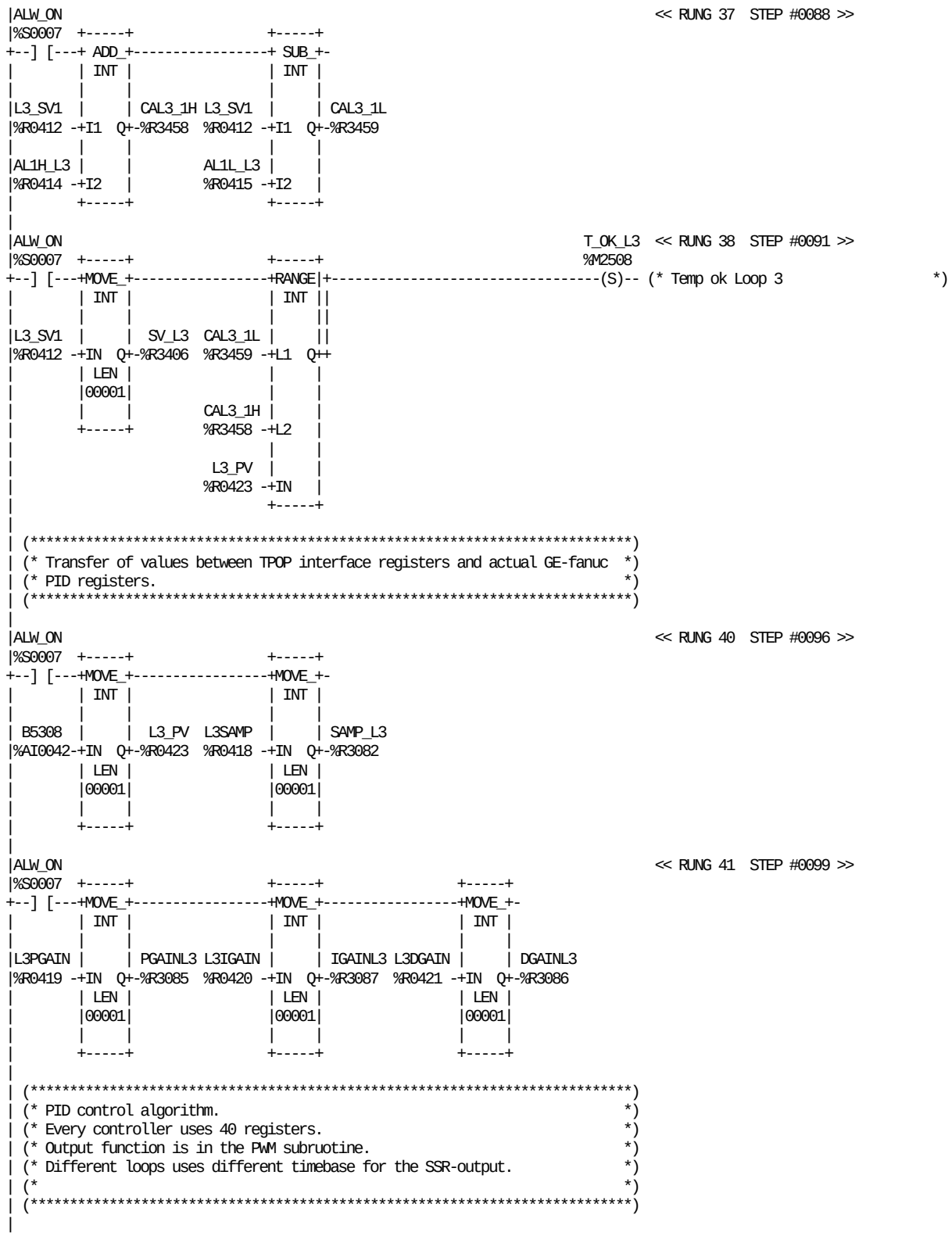

REFERENCE	NICKNAME	REFERENCE DESCRIPTION	REFERENCE	NICKNAME	REFERENCE DESCRIPTION
%R0414	AL1H_L3	Alarm SV1 high loop 3	%R0420	L3IGAIN	I gain value loop 3 TPOP <-->
%R0415	AL1L_L3	Alarm SV1 low loop 3	%R0419	L3PGAIN	P gain value loop 3 TPOP <-->
%S0007	ALW_ON		%R0418	L3SAMP	Sample value loop 3 TPOP <-->
%AI0042	B5308	Flap heating Top Right	%R0423	L3_PV	Process value loop 3 TPOP <-->
%R3458	CAL3_1H	Calc val AL_Lim Loop 3 SV1 High	%R0412	L3_SV1	Loop 3 setvalue 1 TPOP <-->
%R3459	CAL3_1L	Calc val AL_Lim Loop 3 SV1 Low	%R3085	PGAINL3	P-gain loop 3 0-327,67%
%R3086	DGAINL3	D-gain loop 3 0-327,67 Sec	%R3082	SAMP_L3	Sample loop 3 (1=10ms)
%R3087	IGAINL3	I-gain loop 3 0-32.767 repeats/s	%R3406	SV_L3	Setvalue loop 3
%R0421	L3DGAIN	D gain value loop 3 TPOP <-->	%M2508	T_OK_L3	Temp ok Loop 3

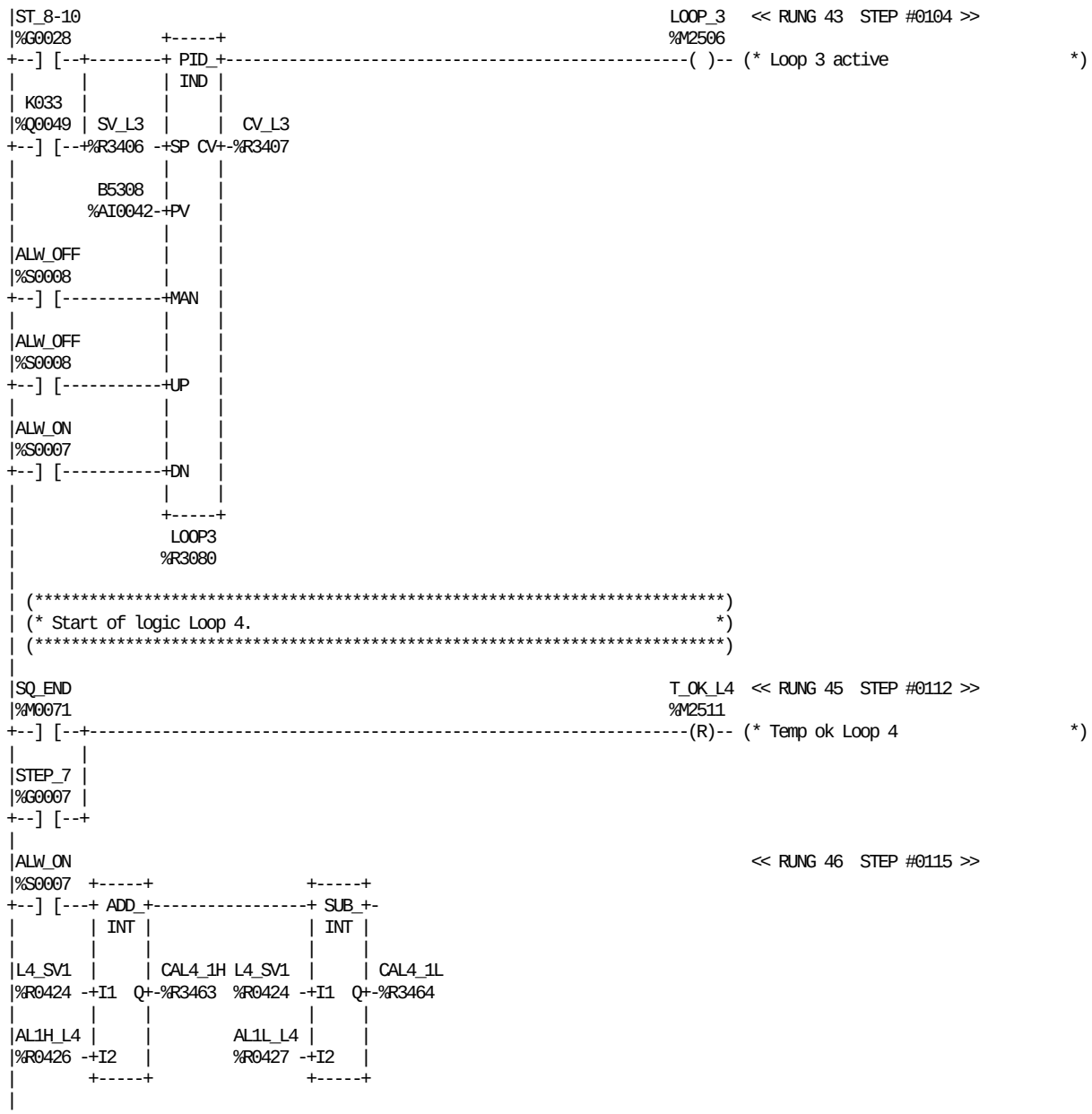

REFERENCE	NICKNAME	REFERENCE DESCRIPTION
%R0426	AL1H_L4	Alarm SV1 high loop 4
%R0427	AL1L_L4	Alarm SV1 low loop 4
%S0008	ALW_OFF	
%S0007	ALW_ON	
%AI0042	B5308	Flap heating Top Right
%R3463	CAL4_1H	Calc val AL_Lim Loop 4 SV1 High
%R3464	CAL4_1L	Calc val AL_Lim Loop 4 SV1 Low
%R3407	CV_L3	Control value loop 3
%Q0049	K033	FFU flap heating

REFERENCE	NICKNAME	REFERENCE DESCRIPTION
%R0424	L4_SV1	Loop 4 setvalue 1 TPOP <-->
%R3080	LOOP3	Loop 3 top flap right
%M2506	LOOP_3	Loop 3 active
%M0071	SQ_END	Start sequence ended
%G0007	STEP_7	SIGNAL TO STERILIZER
%G0028	ST_8-10	Ladder position 8-10
%R3406	SV_L3	Setvalue loop 3
%M2511	T_OK_L4	Temp ok Loop 4

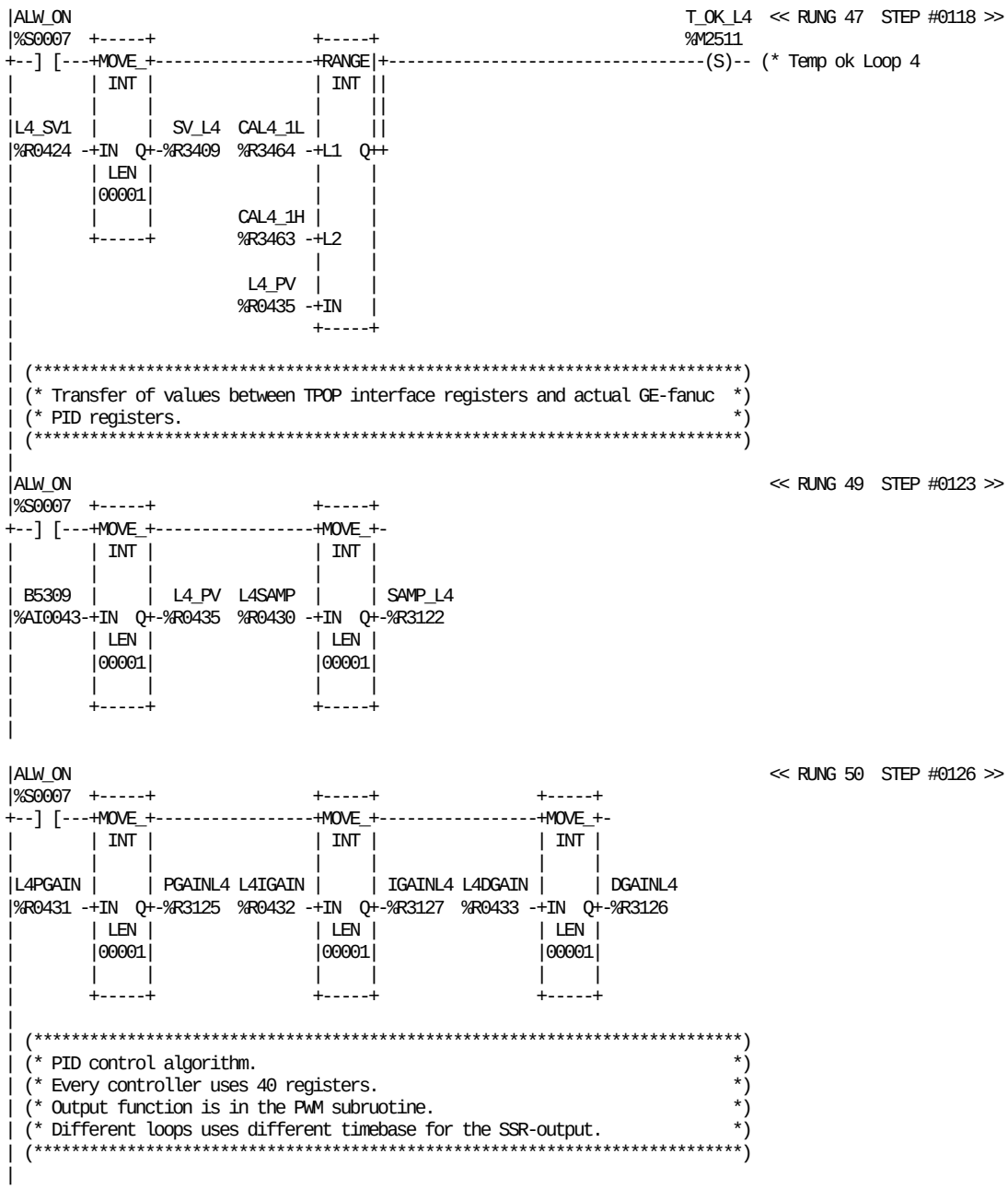

REFERENCE	NICKNAME	REFERENCE DESCRIPTION
%S0007	ALW_ON	
%AI0043	B5309	Flap heating Bottom Left
%R3463	CAL4_1H	Calc val AL_Lim Loop 4 SV1 High
%R3464	CAL4_1L	Calc val AL_Lim Loop 4 SV1 Low
%R3126	DGAINL4	D-gain loop 4 0-327,67 Sec
%R3127	IGAINL4	I-gain loop 4 0-32.767 repeats/s
%R0433	L4DGAIN	D gain value loop 4 TPOP <-->
%R0432	L4IGAIN	I gain value loop 4 TPOP <-->

REFERENCE	NICKNAME	REFERENCE DESCRIPTION
%R0431	L4PGAIN	P gain value loop 4 TPOP <-->
%R0430	L4SAMP	Sample value loop 4 TPOP <-->
%R0435	L4_PV	Process value loop 4 TPOP <-->
%R0424	L4_SV1	Loop 4 setvalue 1 TPOP <-->
%R3125	PGAINL4	P-gain loop 4 0-327,67%
%R3122	SAMP_L4	Sample loop 4 (1=10ms)
%R3409	SV_L4	Setvalue loop 4
%M2511	T_OK_L4	Temp ok Loop 4

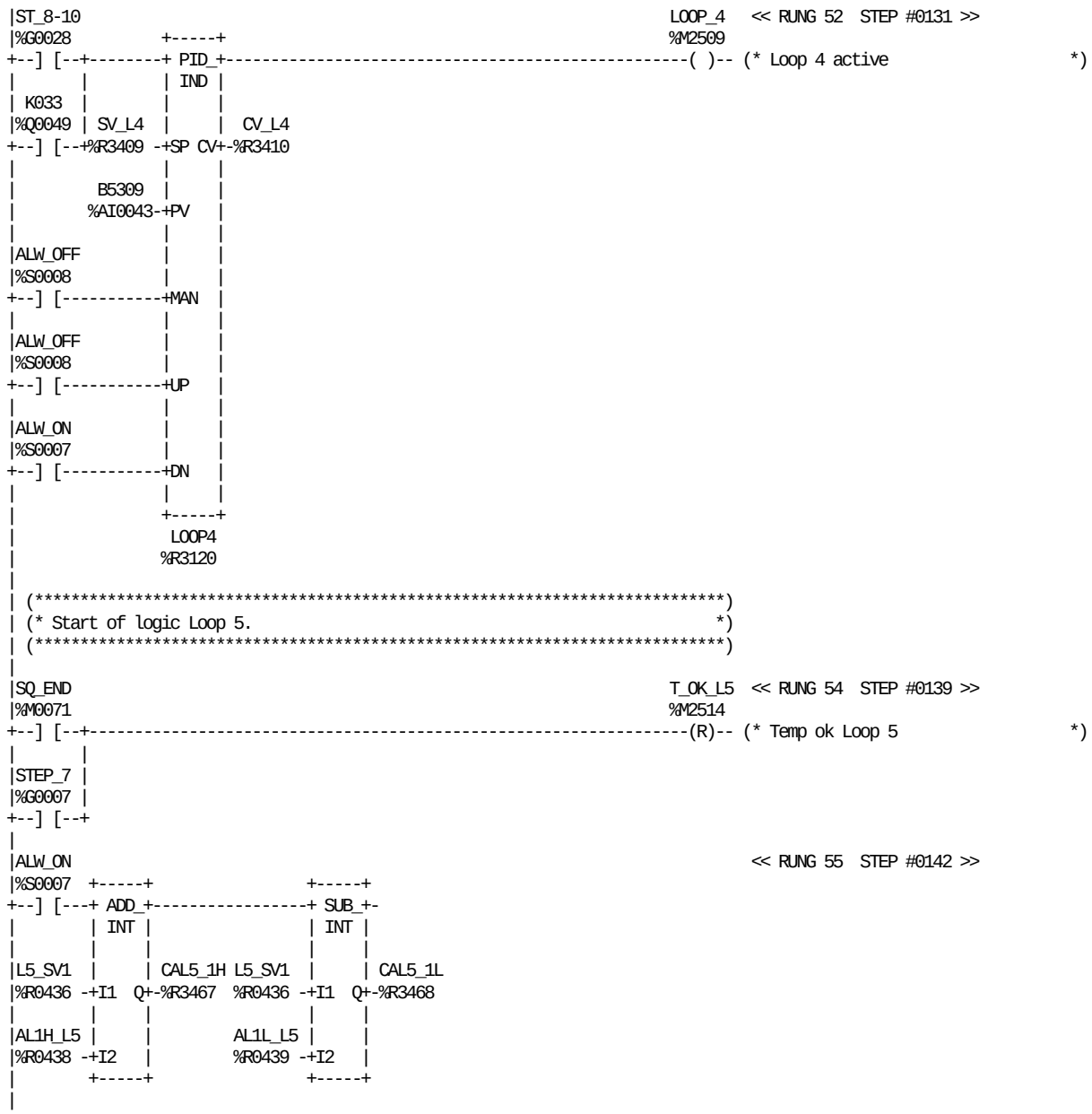

REFERENCE	NICKNAME	REFERENCE DESCRIPTION
%R0438	AL1H_L5	Alarm SV1 high loop 5
%R0439	AL1L_L5	Alarm SV1 low loop 5
%S0008	ALW_OFF	
%S0007	ALW_ON	
%AI0043	B5309	Flap heating Bottom Left
%R3467	CAL5_1H	Calc val AL_Lim Loop 5 SV1 High
%R3468	CAL5_1L	Calc val AL_Lim Loop 5 SV1 Low
%R3410	CV_L4	Control value loop 4
%Q0049	K033	FFU flap heating

REFERENCE	NICKNAME	REFERENCE DESCRIPTION
%R0436	L5_SV1	Loop 5 setvalue 1 TPOP <-->
%R3120	LOOP4	Loop 4 bottom flap left
%M2509	LOOP_4	Loop 4 active
%M0071	SQ_END	Start sequence ended
%G0007	STEP_7	SIGNAL TO STERILIZER
%G0028	ST_8-10	Ladder position 8-10
%R3409	SV_L4	Setvalue loop 4
%M2514	T_OK_L5	Temp ok Loop 5

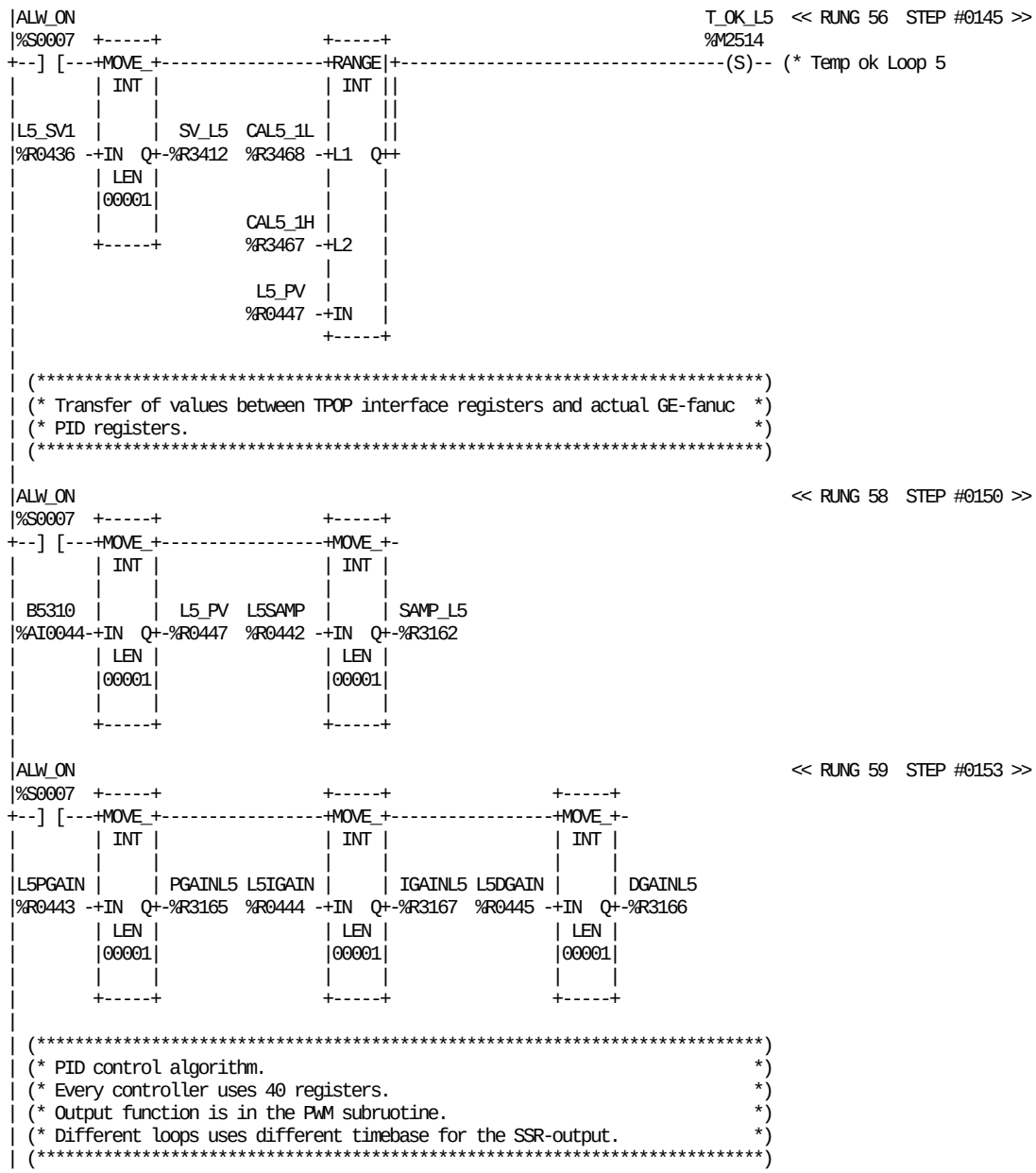

REFERENCE	NICKNAME	REFERENCE DESCRIPTION
%S0007	ALW_ON	
%AI0044	B5310	Flap heating Bottom Right
%R3467	CAL5_1H	Calc val AL_Lim Loop 5 SV1 High
%R3468	CAL5_1L	Calc val AL_Lim Loop 5 SV1 Low
%R3166	DGAINL5	D-gain loop 5 0-327,67 Sec
%R3167	IGAINL5	I-gain loop 5 0-32.767 repeats/s
%R0445	L5DGAIN	D gain value loop 5 TPOP <-->
%R0444	L5IGAIN	I gain value loop 5 TPOP <-->
%R0443	L5PGAIN	P gain value loop 5 TPOP <-->
%R0442	L5SAMP	Sample value loop 5 TPOP <-->
%R0447	L5_PV	Process value loop 5 TPOP <-->
%R0436	L5_SV1	Loop 5 setvalue 1 TPOP <-->
%R3165	PGAINL5	P-gain loop 5 0-327,67 %
%R3162	SAMP_L5	Sample loop 5 (1=10ms)
%R3412	SV_L5	Setvalue loop 5
%M2514	T_OK_L5	Temp ok Loop 5

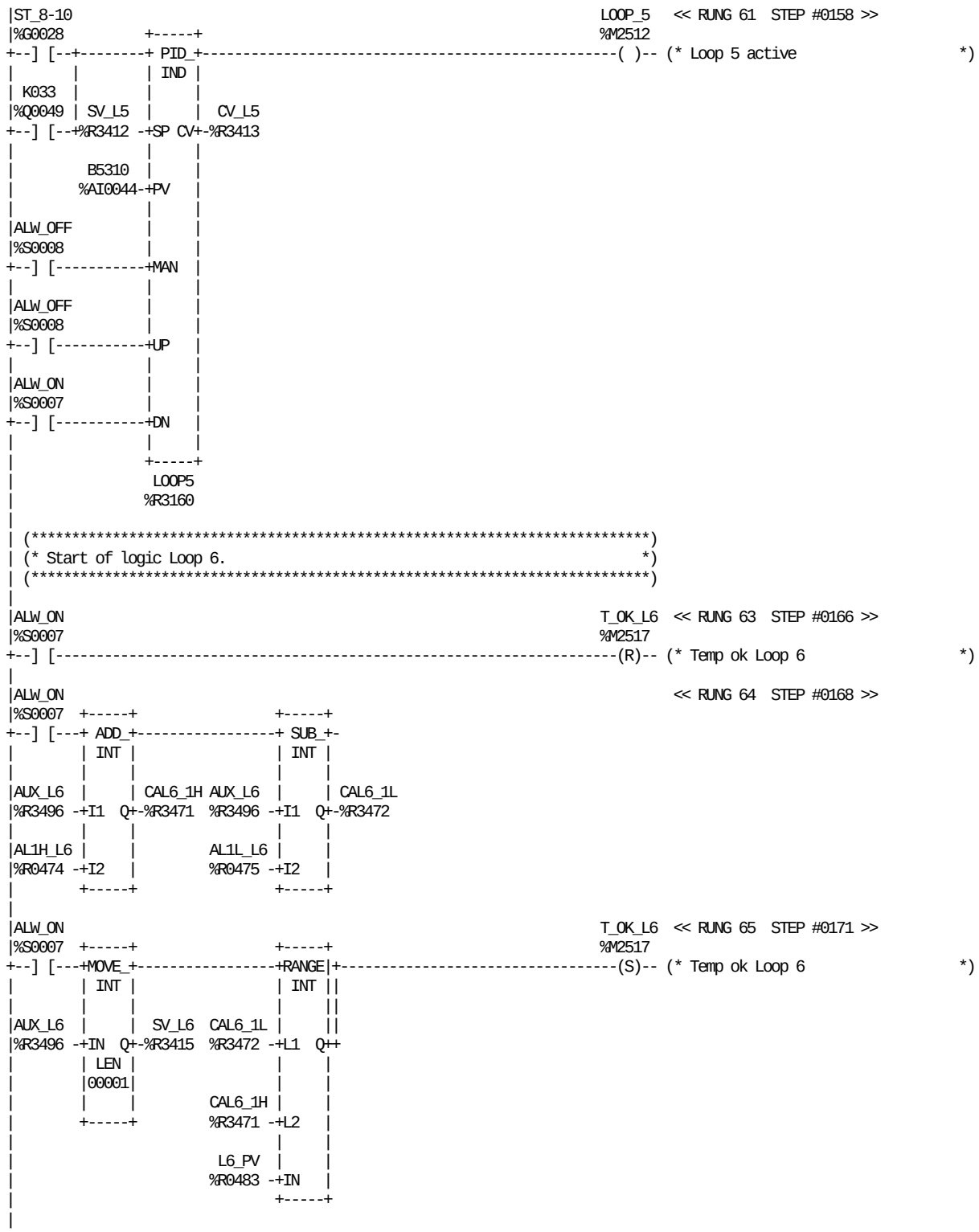

REFERENCE	NICKNAME	REFERENCE DESCRIPTION
%R0474	AL1H_L6	Alarm SV1 high loop 6
%R0475	AL1L_L6	Alarm SV1 low loop 6
%S0008	ALW_OFF	
%S0007	ALW_ON	
%R3496	AUX_L6	Aux register Loop 6
%AI0044	B5310	Flap heating Bottom Right
%R3471	CAL6_1H	Calc val AL_Lim Loop 6 SV1 High
%R3472	CAL6_1L	Calc val AL_Lim Loop 6 SV1 Low
%R3413	CV_L5	Control value loop 5
%Q0049	K033	FFU flap heating
%R0483	L6_PV	Process value loop 6 TPOP <-->
%R3160	LOOP5	Loop 5 bottom flap right
%M2512	LOOP_5	Loop 5 active
%G0028	ST_8-10	Ladder position 8-10
%R3412	SV_L5	Setvalue loop 5
%R3415	SV_L6	Setvalue loop 6
%M2517	T_OK_L6	Temp ok Loop 6

```
|BLOW_ON                                                          << RUNG 66  STEP #0175 >>
|%M0991  +-----+
+--] [---+RANGE|
|        | INT |
|        |     |
|        |     |         +-----+
| CONST -+L1  Q+---------+MOVE_+-
| +00480 |     |         | INT |
|        |     |         |     |
|        |     |         |     |  SV_L6
| CONST -+L2   |  CONST -+IN  Q+-%R3415
| +00900 |     |  +01500 | LEN |
|        |     |         |00001|
|TEMP_CP |     |         |     |
|%R1345 -+IN   |         +-----+
|        +-----+
|
|BLOW_ON                                                          << RUNG 67  STEP #0178 >>
|%M0991  +-----+
+--] [---+RANGE|
|        | INT |
|        |     |
|        |     |         +-----+
| CONST -+L1  Q+---------+MOVE_+-
| +00000 |     |         | INT |
|        |     |         |     |
|        |     |         |     |  SV_L6
| CONST -+L2   |  CONST -+IN  Q+-%R3415
| +00480 |     |  +00100 | LEN |
|        |     |         |00001|
|TEMP_CP |     |         |     |
|%R1345 -+IN   |         +-----+
|        +-----+
|
| (*************************************************************************)
| (* Transfer of values between TPOP interface registers and actual GE-fanuc  *)
| (* PID registers.                                                          *)
| (*************************************************************************)
|
|ALW_ON                                                           << RUNG 69  STEP #0182 >>
|%S0007  +-----+                +-----+                +-----+
+--] [---+MOVE_+----------------+MOVE_+----------------+MOVE_+-
|        | INT |                | INT |                | INT |
|        |     |                |     |                |     |
| B1105  |     |  L6_PV  L6SAMP |     | SAMP_L6  SV_L6 |     | L6_SV1
|%AI0046-+IN  Q+-%R0483  %R0478 -+IN  Q+-%R3202  %R3415 -+IN  Q+-%R0472
|        | LEN |                | LEN |                | LEN |
|        |00001|                |00001|                |00001|
|        |     |                |     |                |     |
|        +-----+                +-----+                +-----+
|
|ALW_ON                                                           << RUNG 70  STEP #0186 >>
|%S0007  +-----+                +-----+                +-----+
+--] [---+MOVE_+----------------+MOVE_+----------------+MOVE_+-
|        | INT |                | INT |                | INT |
|        |     |                |     |                |     |
|L6PGAIN |     | PGAINL6 L6IGAIN |     | IGAINL6 L6DGAIN |     | DGAINL6
|%R0479 -+IN  Q+-%R3205  %R0480 -+IN  Q+-%R3207  %R0481 -+IN  Q+-%R3206
|        | LEN |                | LEN |                | LEN |
|        |00001|                |00001|                |00001|
|        |     |                |     |                |     |
|        +-----+                +-----+                +-----+
|
```

REFERENCE	NICKNAME	REFERENCE DESCRIPTION
%S0007	ALW_ON	
%AI0046	B1105	Air super heater
%M0991	BLOW_ON	CIP blowing going on
%R3206	DGAINL6	D-gain loop6 0-327,67 Sec
%R3207	IGAINL6	I-gain loop 6 0-32.767 repeats/s
%R0481	L6DGAIN	D gain value loop 6 TPOP <-->
%R0480	L6IGAIN	I gain value loop 6 TPOP <-->
%R0479	L6PGAIN	P gain value loop 6 TPOP <-->

REFERENCE	NICKNAME	REFERENCE DESCRIPTION
%R0478	L6SAMP	Sample value loop 6 TPOP <-->
%R0483	L6_PV	Process value loop 6 TPOP <-->
%R0472	L6_SV1	Loop 6 setvalue 1 TPOP <-->
%R3205	PGAINL6	P-gain loop 6 0-327,67 %
%R3202	SAMP_L6	Sample loop 6 (1=10ms)
%R3415	SV_L6	Setvalue loop 6
%R1345	TEMP_CP	Temp reg CIP drain time calc.

```
| (*************************************************************************)
| (* These 2 rungs is making a feed forward change to decrease the output     *)
| (* when the 3 step valve switches the first time and the preheated air      *)
| (* will be feed in to the AIR SUPER HEATER. This is to avoid an increase    *)
| (* of tempereture which the PID part otherwise has to deal with.           *)
| (*************************************************************************)
|
|TAC_LT                                                          << RUNG 72  STEP #0191 >>
|%M0832  +-----+
+--] [---+MOVE_+-
|        | INT |
|        |     |
|        |     | BIAS_L6
| CONST -+IN  Q+-%R3208
| +00000 | LEN |
|        |00001|
|        |     |
|        +-----+
|
|TAC_LT                                                          << RUNG 73  STEP #0193 >>
|%M0832  +-----+
+--]/[---+MOVE_+-
|        | INT |
|        |     |
|        |     | BIAS_L6
| CONST -+IN  Q+-%R3208
| +18000 | LEN |
|        |00001|
|        |     |
|        +-----+
|
| (*************************************************************************)
| (* PID control algorithm.                                                 *)
| (* Every controller uses 40 registers.                                   *)
| (* Output function is in the PWM subruotine.                             *)
| (* Different loops uses different timebase for the SSR-output.           *)
| (*************************************************************************)
|
|ALW_ON                                                    LOOP_6   << RUNG 75  STEP #0196 >>
|%S0007  +-----+                                           %M2515
+--] [---+ PID_+-----------------------------------------------------------( )-- (* Loop 6 active                    *)
|        | IND |
|        |     |
| SV_L6  |     |  CV_L6
|%R3415 -+SP CV+-%R3416
|        |     |
| B1105  |     |
|%AI0046-+PV   |
|        |     |
|ALW_OFF |     |
|%S0008  |     |
+--] [---+MAN  |
|        |     |
|ALW_OFF |     |
|%S0008  |     |
+--] [---+UP   |
|        |     |
|ALW_ON  |     |
|%S0007  |     |
+--] [---+DN   |
|        |     |
|        +-----+
|         LOOP6
|        %R3200
|
| (*************************************************************************)
| (* Start of logic Loop 7.                                                 *)
| (*************************************************************************)
|
```

REFERENCE	NICKNAME	REFERENCE DESCRIPTION	REFERENCE	NICKNAME	REFERENCE DESCRIPTION
%S0008	ALW_OFF		%R3200	LOOP6	Loop 6 air super heater
%S0007	ALW_ON		%M2515	LOOP_6	Loop 6 active
%AI0046	B1105	Air super heater	%R3415	SV_L6	Setvalue loop 6
%R3208	BIAS_L6	Bias loop 6 -100/+100 %	%M0832	TAC_LT	Top AC low temperature
%R3416	CV_L6	Control value loop 6			

```
|ALW_ON                                                                  << RUNG 77  STEP #0203 >>
|%S0007  +-----+                +-----+
+--] [---+ ADD_+----------------+ SUB_+-
|        | INT |                | INT |
|        |     |                |     |
|AUX_L7  |     | CAL7_1H AUX_L7 |     | CAL7_1L
|%R3497 -+I1  Q+-%R3475  %R3497 -+I1  Q+-%R3476
|        |     |                |     |
|AL1H_L7 |     |         AL1L_L7 |     |
|%R0702 -+I2   |         %R0703 -+I2   |
|        +-----+                +-----+
|
|ALW_ON                                                                  << RUNG 78  STEP #0206 >>
|%S0007  +-----+
+--] [---+MOVE_+-
|        | INT |
|        |     |
|AUX_L7  |     |  SV_L7
|%R3497 -+IN  Q+-%R3418
|        | LEN |
|        |00001|
|        |     |
|        +-----+
|
|L1_MAN                                                                  << RUNG 79  STEP #0208 >>
|%M2518          +-----+
+--] [--+--------+ ADD_+-
|       |        | INT |
|STEP_8 |        |     |
|%G0008 |        |     |  SV_L7
+--] [--+ CONST -+I1  Q+-%R3418
|         +00010 |     |
|                |     |
|         SV_L7  |     |
|        %R3418 -+I2   |
|                +-----+
|
|STEP_2                                                    ST1H2O2  << RUNG 80  STEP #0211 >>
|%G0002                                                    %M0798
+--] [-------------------------------------------------------------------(R)-- (* First start temp.control H2O2    *)
|
|STEP_10                                                   ST1H2O2  << RUNG 81  STEP #0213 >>
|%G0010                                                    %M0798
+--] [-------------------------------------------------------------------(S)-- (* First start temp.control H2O2    *)
|
|ST1H2O2                                                                 << RUNG 82  STEP #0215 >>
|%M0798  +-----+
+--]/[---+MOVE_+-
|        | INT |
|        |     |
|        |     |  SV_L7
| CONST -+IN  Q+-%R3418
| +00900 | LEN |
|        |00001|
|        |     |
|        +-----+
|
| (*************************************************************************)
| (* Transfer of values between TPOP interface and actual GE-Fanuc         *)
| (* PID registers.                                                        *)
| (*************************************************************************)
|
```

REFERENCE	NICKNAME	REFERENCE DESCRIPTION	REFERENCE	NICKNAME	REFERENCE DESCRIPTION
%R0702	AL1H_L7	Alarm SV1 high loop 7	%M2518	L1_MAN	Loop 1 in manual mode
%R0703	AL1L_L7	Alarm SV1 low loop 7	%M0798	ST1H2O2	First start temp.control H2O2
%S0007	ALW_ON		%G0010	STEP_10	PRODUCTION
%R3497	AUX_L7	Aux register Loop 7	%G0002	STEP_2	PREPARATION (3 MIN.)
%R3475	CAL7_1H	Calc val AL_Lim loop 7 SV1 High	%G0008	STEP_8	FLAPS + H2O2 TEMPERATURE
%R3476	CAL7_1L	Calc val Al_Lim loop 7 SV1 Low	%R3418	SV_L7	Setvalue loop 7

```
|ALW_ON                                                                  << RUNG 84  STEP #0218 >>
|%S0007  +-----+                +-----+                +-----+
+--] [---+MOVE_+----------------+MOVE_+----------------+MOVE_+-
|        | INT |                | INT |                | INT |
|        |     |                |     |                |     |
| B1212  |     |  L7_PV  L7SAMP |     | SAMP_L7  SV_L7 |     | L7_SV1
|%AI0036-+IN  Q+-%R0711  %R0706 -+IN  Q+-%R3242  %R3418 -+IN  Q+-%R0700
|        | LEN |                | LEN |                | LEN |
|        |00001|                |00001|                |00001|
|        |     |                |     |                |     |
|        +-----+                +-----+                +-----+
|
|ALW_ON                                                                  << RUNG 85  STEP #0222 >>
|%S0007  +-----+                +-----+                +-----+
+--] [---+MOVE_+----------------+MOVE_+----------------+MOVE_+-
|        | INT |                | INT |                | INT |
|        |     |                |     |                |     |
|L7PGAIN |     | PGAINL7 L7IGAIN |     | IGAINL7 L7DGAIN |     | DGAINL7
|%R0707 -+IN  Q+-%R3245  %R0708 -+IN  Q+-%R3247  %R0709 -+IN  Q+-%R3246
|        | LEN |                | LEN |                | LEN |
|        |00001|                |00001|                |00001|
|        |     |                |     |                |     |
|        +-----+                +-----+                +-----+
|
|ST_3-10                                                                 << RUNG 86  STEP #0226 >>
|%G0023  +-----+
+--] [---+ LT_ |
|        | INT |
|        |     |
| B1212  |     |        +-----+
|%AI0036-+I1  Q+--------+MOVE_+-
|        |     |        | INT |
|        |     |        |     |
| SV_L7  |     |        |     | BIAS_L7
|%R3418 -+I2   |  CONST -+IN  Q+-%R3248
|        +-----+  +20000 | LEN |
|                        |00001|
|                        |     |
|                        +-----+
|
|ST_3-10                                                                 << RUNG 87  STEP #0229 >>
|%G0023  +-----+
+--] [---+ GE_ |
|        | INT |
|        |     |
| B1212  |     |        +-----+
|%AI0036-+I1  Q+--------+MOVE_+-
|        |     |        | INT |
|        |     |        |     |
| SV_L7  |     |        |     | BIAS_L7
|%R3418 -+I2   |  CONST -+IN  Q+-%R3248
|        +-----+  +00000 | LEN |
|                        |00001|
|                        |     |
|                        +-----+
|
| (*************************************************************************)
| (* PID control algorithm.                                                *)
| (* Every controller uses 40 registers.                                   *)
| (* Output function is in the PWM subroutine.                             *)
| (* Different loops uses different timebase for the SSR-output.           *)
| (*************************************************************************)
|
```

REFERENCE	NICKNAME	REFERENCE DESCRIPTION
%S0007	ALW_ON	
%AI0036	B1212	Temp monitor H2O2 tank
%R3248	BIAS_L7	Bias loop 7 -100/+100 %
%R3246	DGAINL7	D-gain loop 7 0-327,67 sec.
%R3247	IGAINL7	I-gain loop 7 0-32.767 repeats/s
%R0709	L7DGAIN	D gain value loop 7 TPOP<-->
%R0708	L7IGAIN	I gain value loop 7 TPOP<-->
%R0707	L7PGAIN	P gain value loop 7 TPOP<-->
%R0706	L7SAMP	Sample value loop 7 TPOP<-->
%R0711	L7_PV	Process value loop 7 TPOP<-->
%R0700	L7_SV1	Loop 7 setvalue 1 TPOP<-->
%R3245	PGAINL7	P-gain loop 7 0-327,67%
%R3242	SAMP_L7	Sample loop 7 (1=10ms)
%G0023	ST_3-10	Ladder position 3-10
%R3418	SV_L7	Setvalue loop 7

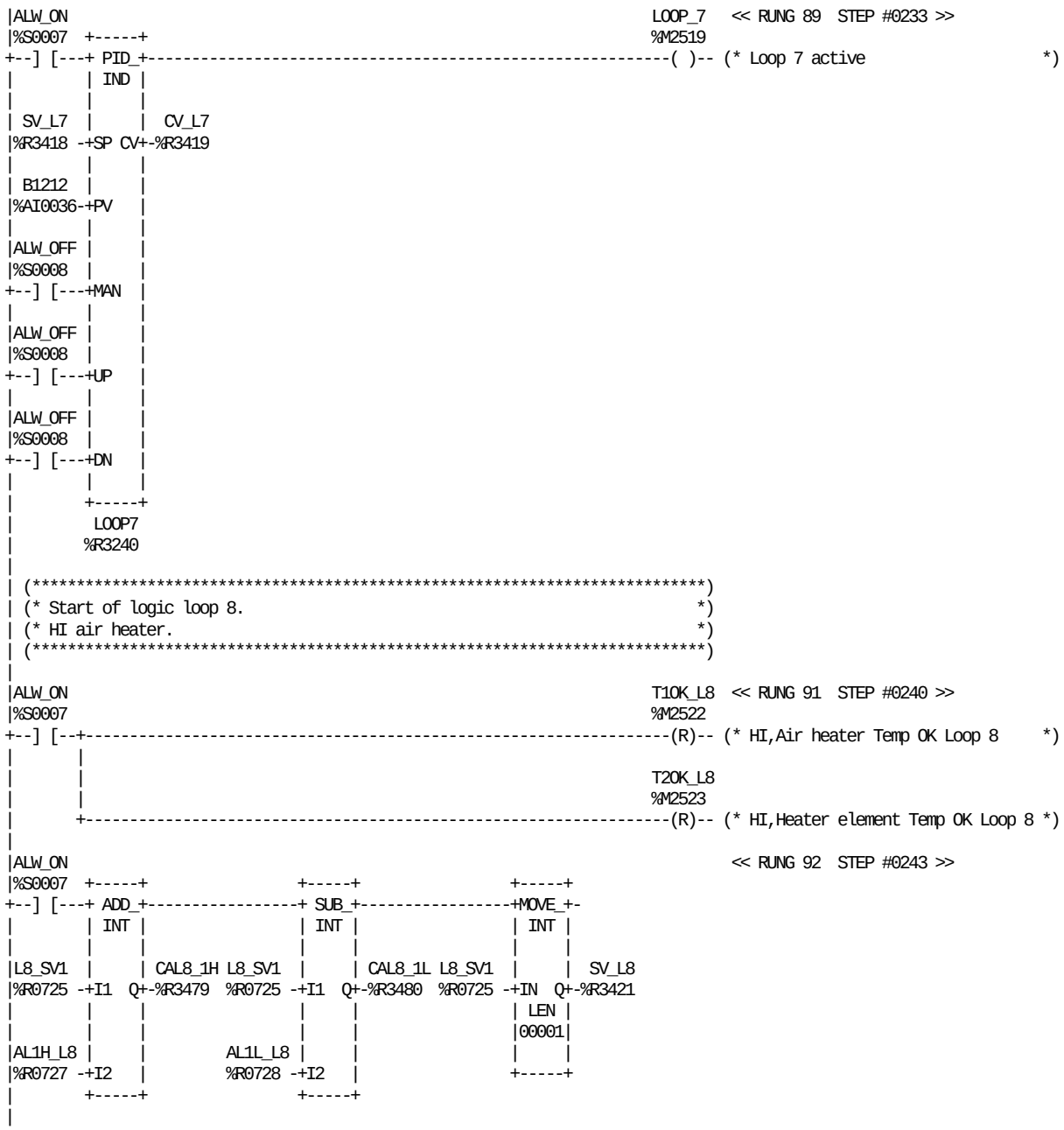

REFERENCE	NICKNAME	REFERENCE DESCRIPTION
%R0727	AL1H_L8	Alarm SV1 high loop 8
%R0728	AL1L_L8	Alarm SV1 low loop 8
%S0008	ALW_OFF	
%S0007	ALW_ON	
%AI0036	B1212	Temp monitor H2O2 tank
%R3479	CAL8_1H	Calc val AL_Lim loop 8 SV1 High
%R3480	CAL8_1L	Calc val Al_Lim loop 8 SV1 Low
%R3419	CV_L7	Control value loop 7

REFERENCE	NICKNAME	REFERENCE DESCRIPTION
%R0725	L8_SV1	Loop 8 setvalue 1 TPOP <-->
%R3240	LOOP7	Loop 7 external heating
%M2519	LOOP_7	Loop 7 active
%R3418	SV_L7	Setvalue loop 7
%R3421	SV_L8	Setvalue loop 8
%M2522	T1OK_L8	HI,Air heater Temp OK Loop 8
%M2523	T2OK_L8	HI,Heater element Temp OK Loop 8

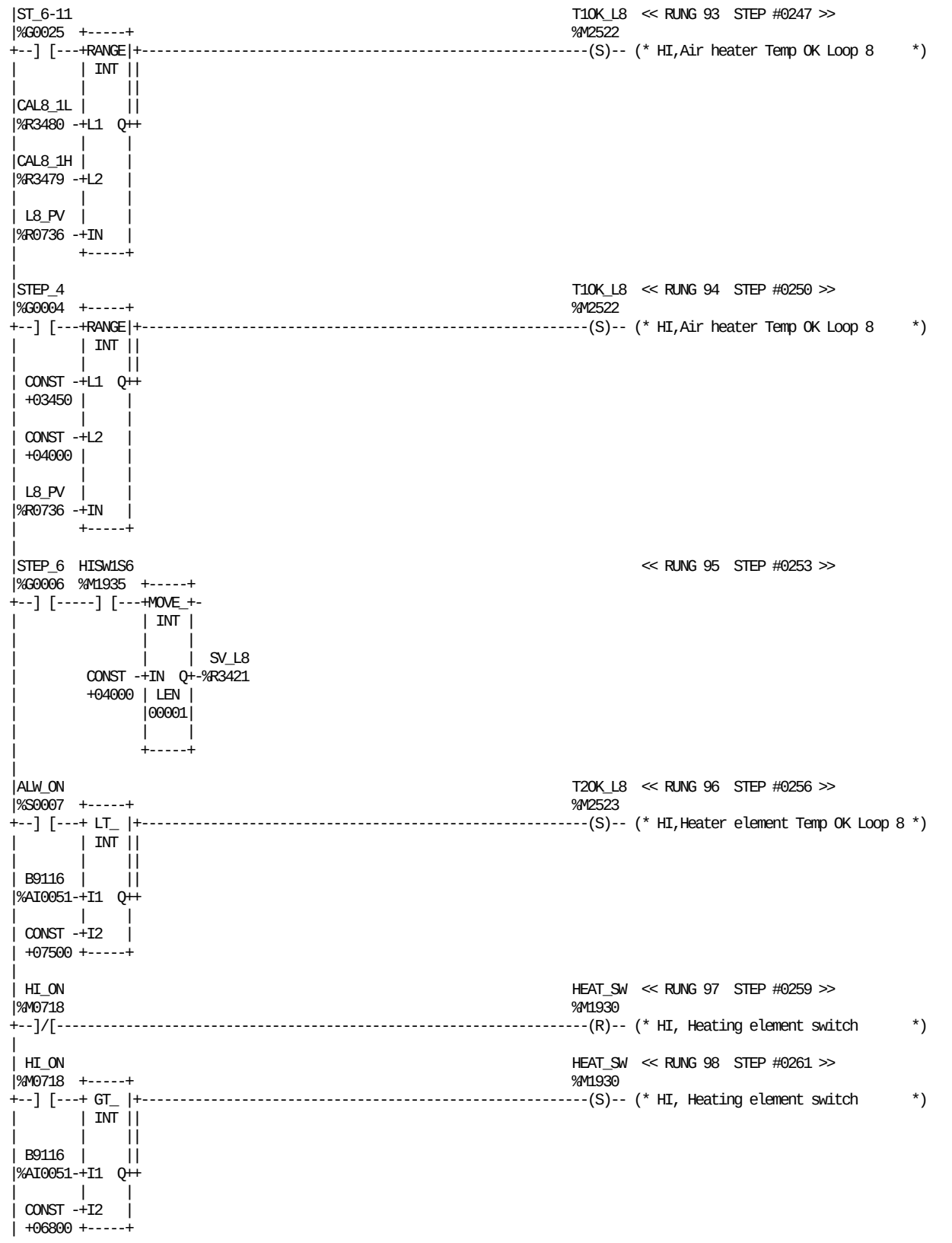

REFERENCE	NICKNAME	REFERENCE DESCRIPTION	REFERENCE	NICKNAME	REFERENCE DESCRIPTION
%S0007	ALW_ON		%R0736	L8_PV	Process value loop 8 TPOP <-->
%AI0051	B9116	HI, Heater element temperature	%G0004	STEP_4	HEAT STERILIZATION
%R3479	CAL8_1H	Calc val AL_Lim loop 8 SV1 High	%G0006	STEP_6	DRYING + STEAM CLEANING
%R3480	CAL8_1L	Calc val Al_Lim loop 8 SV1 Low	%G0025	ST_6-11	Ladder position 6-11
%M1930	HEAT_SW	HI, Heating element switch	%R3421	SV_L8	Setvalue loop 8
%M1935	HISW1S6	HI, Switch valve pulse in step 6	%M2522	T1OK_L8	HI,Air heater Temp OK Loop 8
%M0718	HI_ON	HI, system setting with HI	%M2523	T2OK_L8	HI,Heater element Temp OK Loop 8

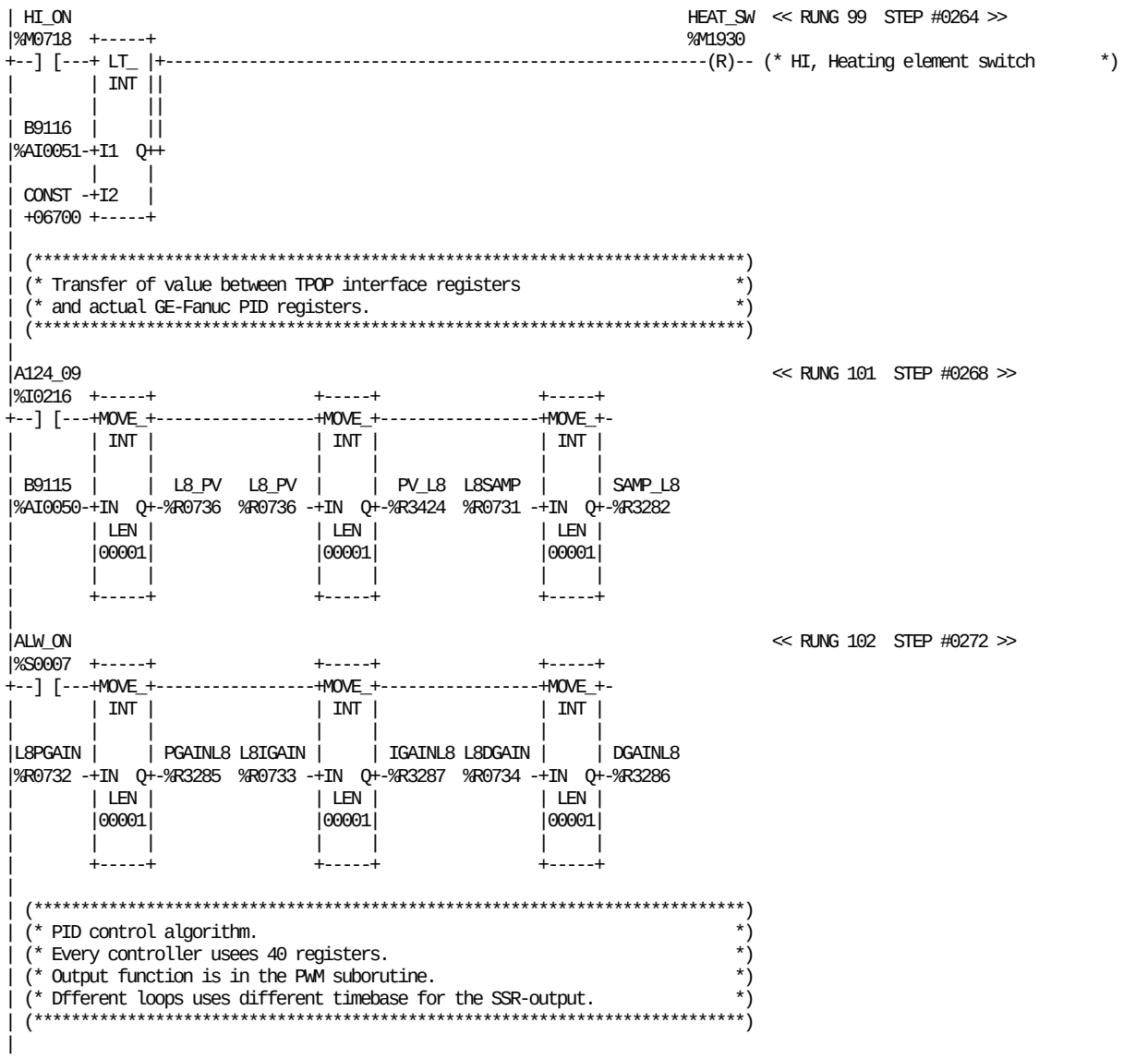

REFERENCE	NICKNAME	REFERENCE DESCRIPTION
%I0216	A124_09	HI Option
%S0007	ALW_ON	
%AI0050	B9115	HI, Air heater temperature
%AI0051	B9116	HI, Heater element temperature
%R3286	DGAINL8	D-gain loop 8 0-327,67 Sec
%M1930	HEAT_SW	HI, Heating element switch
%M0718	HI_ON	HI, system setting with HI
%R3287	IGAINL8	I-gain loop 8 0-32.767 repeats/s

REFERENCE	NICKNAME	REFERENCE DESCRIPTION
%R0734	L8DGAIN	D gain value loop 8 TPOP <-->
%R0733	L8IGAIN	I gain value loop 8 TPOP <-->
%R0732	L8PGAIN	P gain value loop 8 TPOP <-->
%R0731	L8SAMP	Sample value loop 8 TPOP <-->
%R0736	L8_PV	Process value loop 8 TPOP <-->
%R3285	PGAINL8	P-gain loop 8 0-327,67%
%R3424	PV_L8	Process value loop 8
%R3282	SAMP_L8	Sample loop 8 (1=10ms)

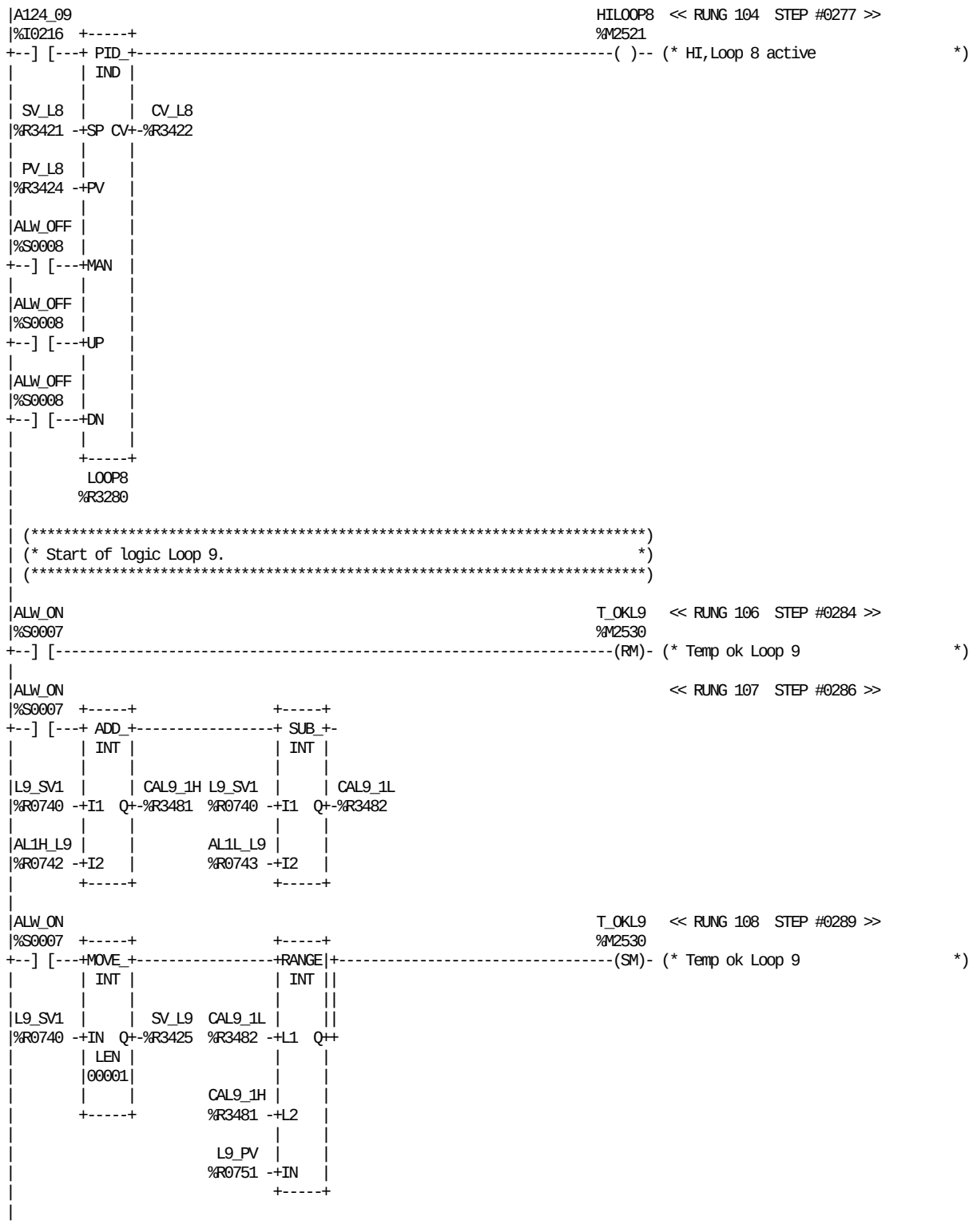

REFERENCE	NICKNAME	REFERENCE DESCRIPTION	REFERENCE	NICKNAME	REFERENCE DESCRIPTION
%I0216	A124_09	HI Option	%M2521	HILOOP8	HI,Loop 8 active
%R0742	AL1H_L9	Alarm SV1 high loop 9	%R0751	L9_PV	Process value loop 9 TPOP <-->
%R0743	AL1L_L9	Alarm SV1 low loop 9	%R0740	L9_SV1	Loop 9 setvalue 1 TPOP <-->
%S0008	ALW_OFF		%R3280	LOOP8	Loop 8 HI heater
%S0007	ALW_ON		%R3424	PV_L8	Process value loop 8
%R3481	CAL9_1H	Calc val AL_Lim loop 9 SV1 High	%R3421	SV_L8	Setvalue loop 8
%R3482	CAL9_1L	Calc val Al_Lim loop 9 SV1 Low	%R3425	SV_L9	Setvalue loop 9
%R3422	CV_L8	Control value loop 8	%M2530	T_OKL9	Temp ok Loop 9

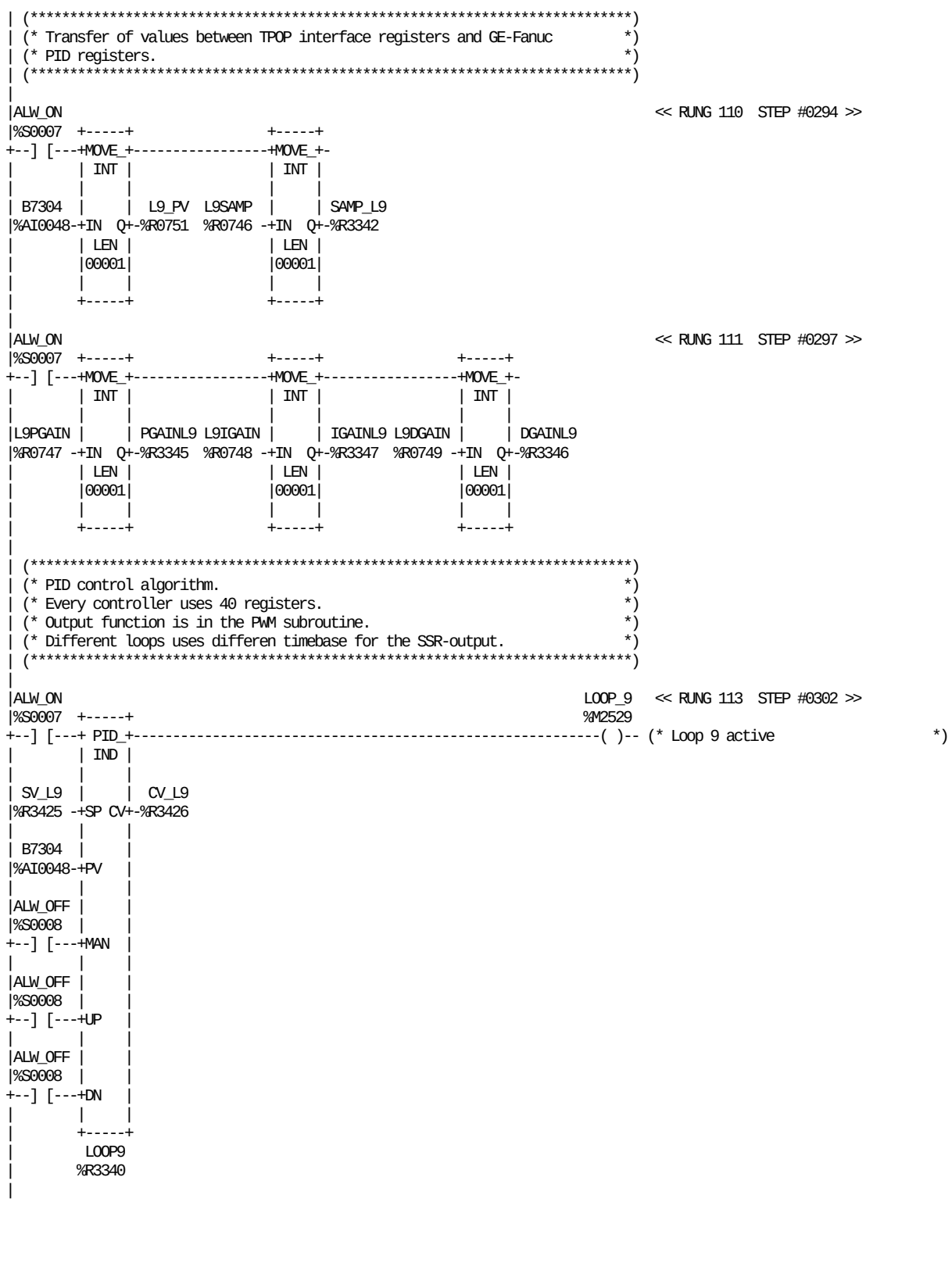

REFERENCE	NICKNAME	REFERENCE DESCRIPTION
%S0008	ALW_OFF	
%S0007	ALW_ON	
%AI0048	B7304	Temp. ASU Constant Heat element
%R3426	CV_L9	Control value loop 9
%R3346	DGAINL9	D-gain loop 9 0-327,67 Sec
%R3347	IGAINL9	I-gain loop 9 0-32.767 repeats/s
%R0749	L9DGAIN	D gain value loop 9 TPOP <-->
%R0748	L9IGAIN	I gain value loop 9 TPOP <-->
%R0747	L9PGAIN	P gain value loop 9 TPOP <-->
%R0746	L9SAMP	Sample value loop 9 TPOP <-->
%R0751	L9_PV	Process value loop 9 TPOP <-->
%R3340	LOOP9	Loop 9 ASu Constant Heat
%M2529	LOOP_9	Loop 9 active
%R3345	PGAINL9	P-gain loop 9 0-327,67%
%R3342	SAMP_L9	Sample loop 9 (1=10ms)
%R3425	SV_L9	Setvalue loop 9

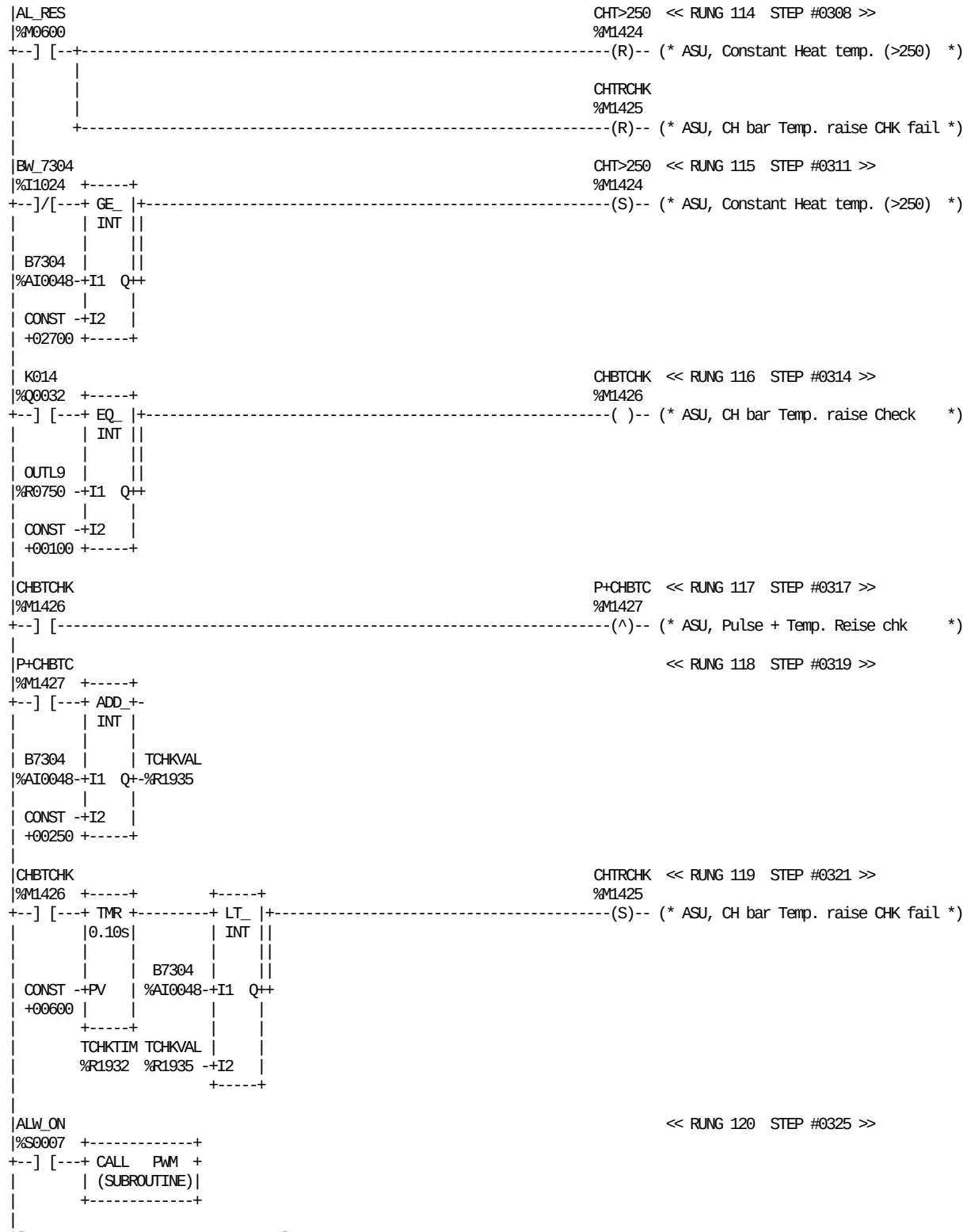

REFERENCE	NICKNAME	REFERENCE DESCRIPTION	REFERENCE	NICKNAME	REFERENCE DESCRIPTION
%S0007	ALW_ON		%Q0032	K014	ASU, Power Constant Heat
%M0600	AL_RES	Alarm reset (From TPOP)	%R0750	OUTL9	Output loop 9 <--> TPOP
%AI0048	B7304	Temp. ASU Constant Heat element	%M1427	P+CHBTC	ASU, Pulse + Temp. Reise chk
%I1024	BW_7304	Broken wire ASU Const. Heat bar		PWM	Output control temperature
%M1426	CHBTCHK	ASU, CH bar Temp. raise Check	%R1932	TCHKTIM	ASU, CH BAR Temp. Check time
%M1424	CHT>250	ASU, Constant Heat temp. (>250)	%R1935	TCHKVAL	ASU, CH BAR Temp. Check value
%M1425	CHTRCHK	ASU, CH bar Temp. raise CHK fail			

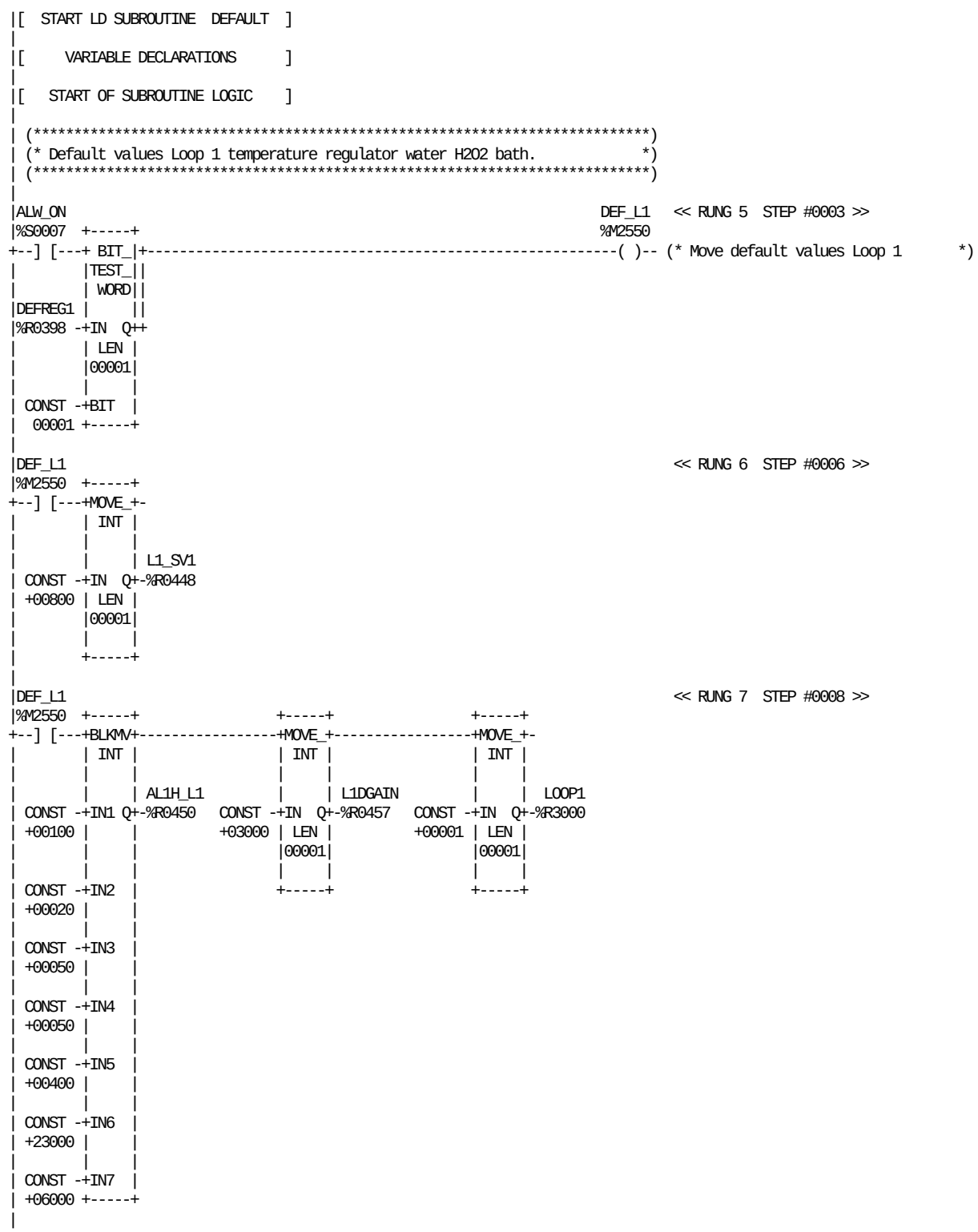

REFERENCE	NICKNAME	REFERENCE DESCRIPTION	REFERENCE	NICKNAME	REFERENCE DESCRIPTION
%R0450	AL1H_L1	Alarm SV1 high loop 1	%R0457	L1DGAIN	D gain value loop1 TPOP <-->
%S0007	ALW_ON		%R0448	L1_SV1	Loop 1 setvalue 1 TPOP <-->
%R0398	DEFREG1	Activate default setvalues	%R3000	LOOP1	Loop 1 peroxide tank
%M2550	DEF_L1	Move default values Loop 1			

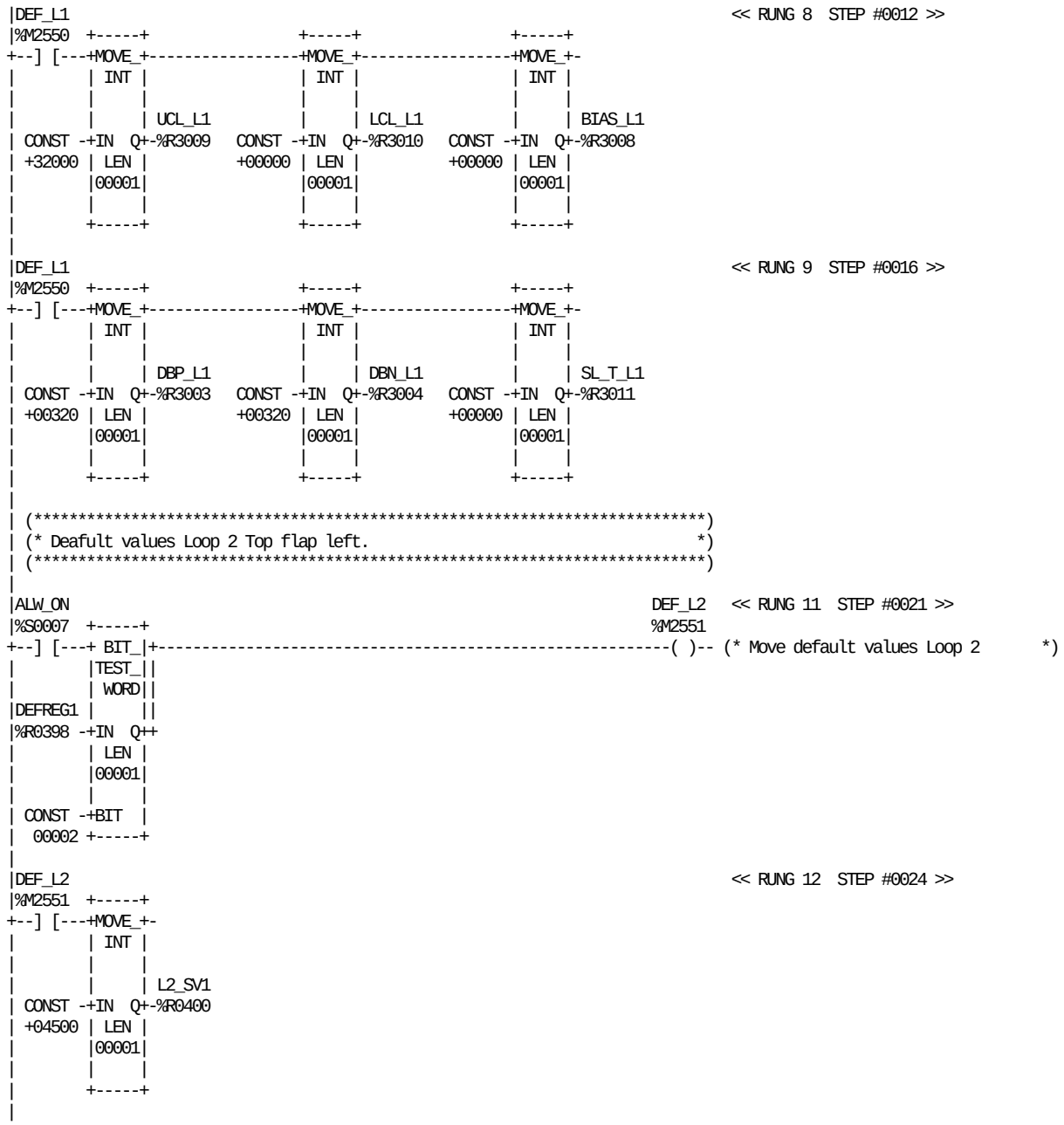

REFERENCE	NICKNAME	REFERENCE DESCRIPTION
%S0007	ALW_ON	
%R3008	BIAS_L1	Bias loop 1 -100/+100 %
%R3004	DBN_L1	Dead band- loop1(0-32000=0-100%)
%R3003	DBP_L1	Dead band+ loop1(0-32000=0-100%)
%R0398	DEFREG1	Activate default setvalues
%M2550	DEF_L1	Move default values Loop 1
%M2551	DEF_L2	Move default values Loop 2
%R0400	L2_SV1	Loop 2 setvalue 1 TPOP <-->
%R3010	LCL_L1	Lower clamp loop 1 (0)
%R3011	SL_T_L1	Min slew time loop 1 (0)
%R3009	UCL_L1	Upper clamp loop 1 (32000)

```
|DEF_L2                                                                  << RUNG 13  STEP #0026 >>
|%M2551  +-----+                +-----+                +-----+
+--] [---+BLKMV+----------------+MOVE_+----------------+MOVE_+-
|        | INT |                | INT |                | INT |
|        |     |                |     |                |     |
|        |     | AL1H_L2        |     | L2DGAIN        |     |  LOOP2
| CONST -+IN1 Q+-%R0402   CONST -+IN  Q+-%R0409   CONST -+IN  Q+-%R3040
| +00300 |     |          +02000 | LEN |          +00002 | LEN |
|        |     |                 |00001|                 |00001|
|        |     |                 |     |                 |     |
| CONST -+IN2  |                 +-----+                 +-----+
| +00150 |     |
|        |     |
| CONST -+IN3  |
| +00100 |     |
|        |     |
| CONST -+IN4  |
| +00100 |     |
|        |     |
| CONST -+IN5  |
| +00025 |     |
|        |     |
| CONST -+IN6  |
| +02000 |     |
|        |     |
| CONST -+IN7  |
| +03000 +-----+
|
|DEF_L2                                                                  << RUNG 14  STEP #0030 >>
|%M2551  +-----+                +-----+                +-----+
+--] [---+MOVE_+----------------+MOVE_+----------------+MOVE_+-
|        | INT |                | INT |                | INT |
|        |     |                |     |                |     |
|        |     | UCL_L2         |     | LCL_L2         |     | BIAS_L2
| CONST -+IN  Q+-%R3049   CONST -+IN  Q+-%R3050   CONST -+IN  Q+-%R3048
| +32000 | LEN |          +00000 | LEN |          +16000 | LEN |
|        |00001|                 |00001|                 |00001|
|        |     |                 |     |                 |     |
|        +-----+                 +-----+                 +-----+
|
|DEF_L2                                                                  << RUNG 15  STEP #0034 >>
|%M2551  +-----+                +-----+                +-----+
+--] [---+MOVE_+----------------+MOVE_+----------------+MOVE_+-
|        | INT |                | INT |                | INT |
|        |     |                |     |                |     |
|        |     | DBP_L2         |     | DBN_L2         |     | SL_T_L2
| CONST -+IN  Q+-%R3043   CONST -+IN  Q+-%R3044   CONST -+IN  Q+-%R3051
| +00320 | LEN |          +00320 | LEN |          +00000 | LEN |
|        |00001|                 |00001|                 |00001|
|        |     |                 |     |                 |     |
|        +-----+                 +-----+                 +-----+
|
| (*************************************************************************)
| (* Default values Loop 3 Top flap right.                                 *)
| (*************************************************************************)
|
```

REFERENCE	NICKNAME	REFERENCE DESCRIPTION	REFERENCE	NICKNAME	REFERENCE DESCRIPTION
%R0402	AL1H_L2	Activate default values	%R0409	L2DGAIN	D gain value loop 2 TPOP <-->
%R3048	BIAS_L2	Bias loop 2 -100/+100 %	%R3050	LCL_L2	Lower clamp loop 2 (0)
%R3044	DBN_L2	Dead band- loop2(0-32000=0-100%)	%R3040	LOOP2	Loop 2 top flap left
%R3043	DBP_L2	Dead band+ loop2(0-32000=0-100%)	%R3051	SL_T_L2	Min slew time loop 2 (0)
%M2551	DEF_L2	Move default values Loop 2	%R3049	UCL_L2	Upper clamp loop 2 (32000)

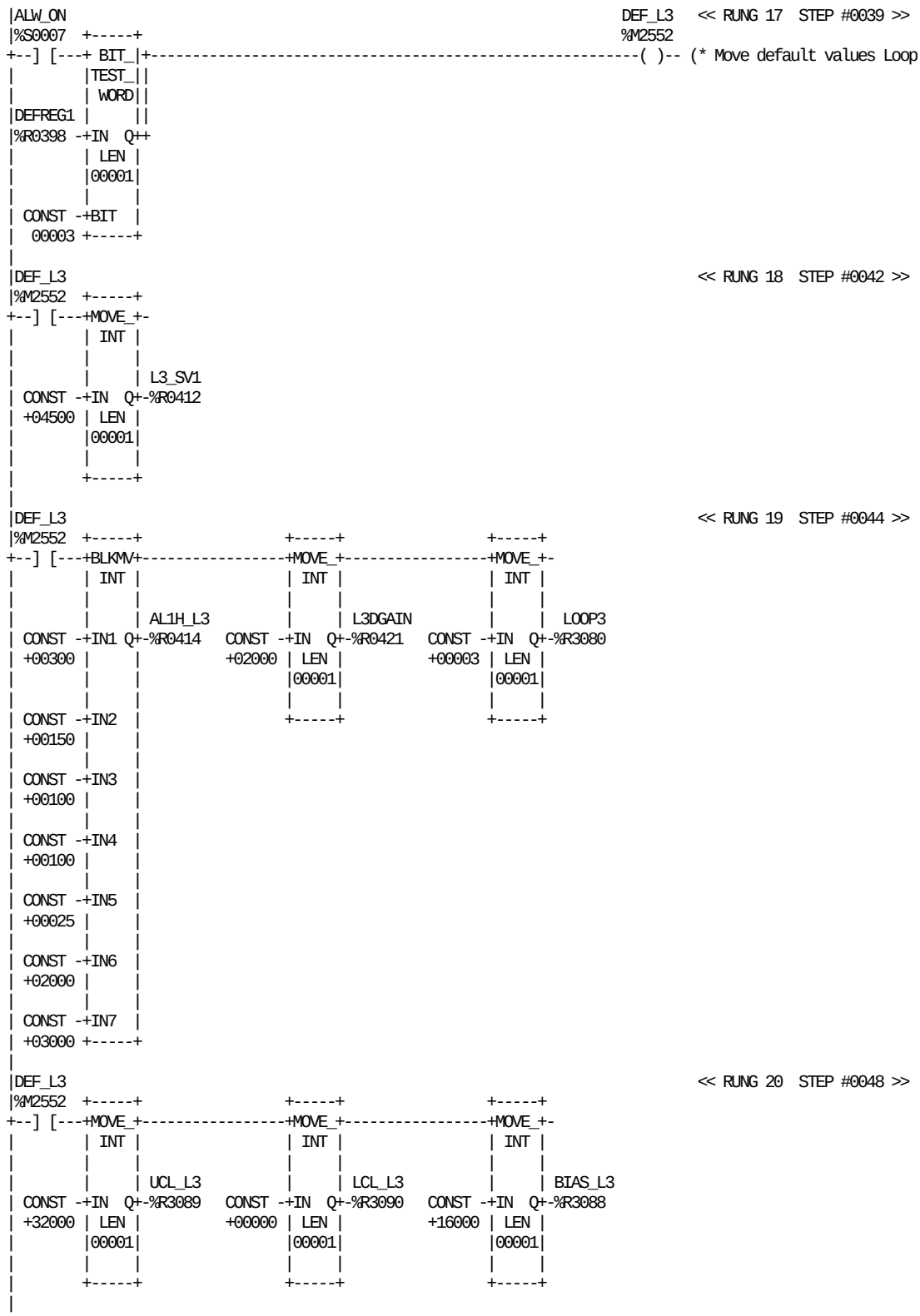

REFERENCE	NICKNAME	REFERENCE DESCRIPTION	REFERENCE	NICKNAME	REFERENCE DESCRIPTION
%R0414	AL1H_L3	Alarm SV1 high loop 3	%R0421	L3DGAIN	D gain value loop 3 TPOP <-->
%S0007	ALW_ON		%R0412	L3_SV1	Loop 3 setvalue 1 TPOP <-->
%R3088	BIAS_L3	Bias loop 3 -100/+100 %	%R3090	LCL_L3	Lower clamp loop 3 (0)
%R0398	DEFREG1	Activate default setvalues	%R3080	LOOP3	Loop 3 top flap right
%M2552	DEF_L3	Move default values Loop 3	%R3089	UCL_L3	Upper clamp loop 3 (32000)

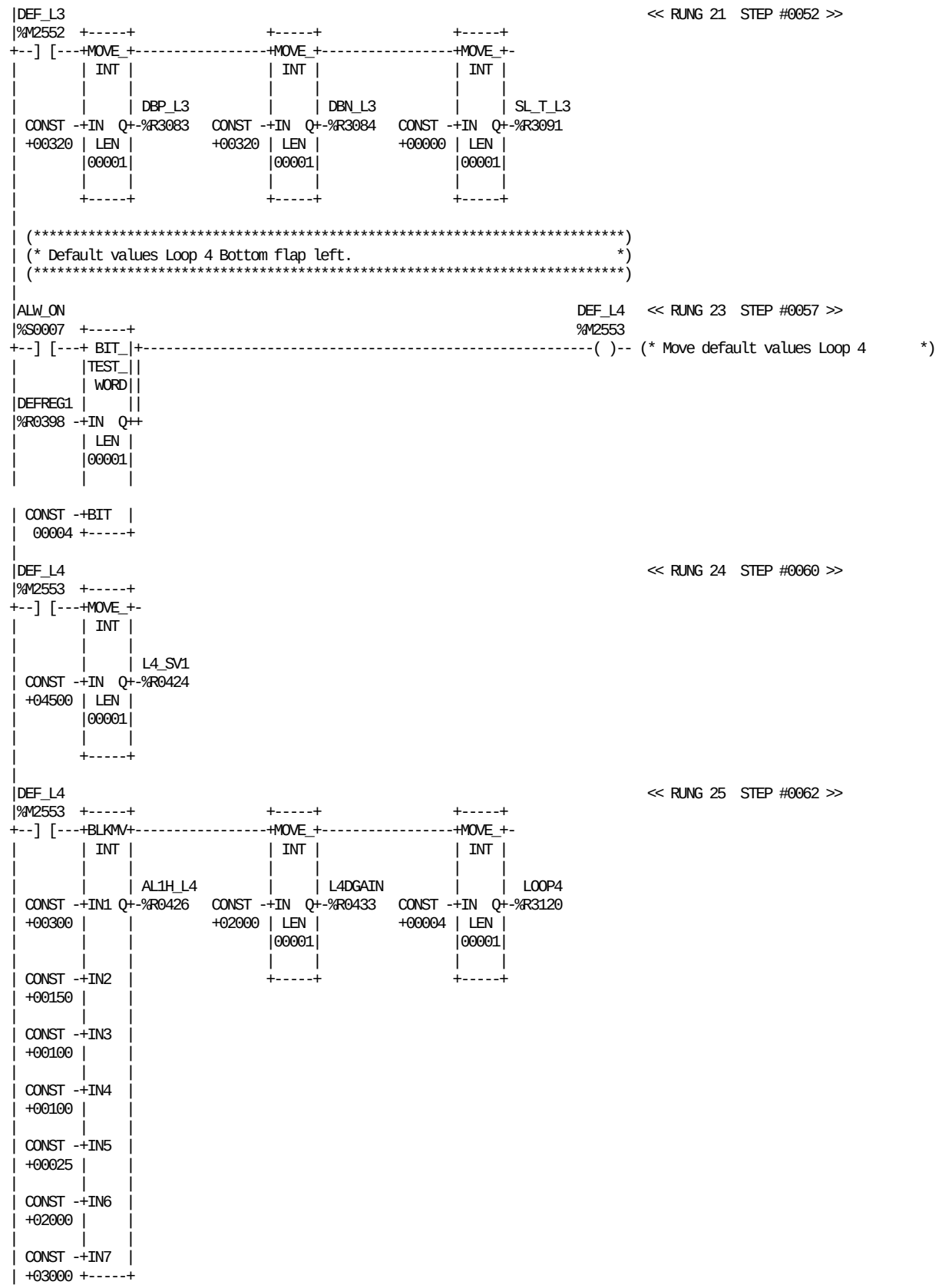

REFERENCE	NICKNAME	REFERENCE DESCRIPTION
%R0426	AL1H_L4	Alarm SV1 high loop 4
%S0007	ALW_ON	
%R3084	DBN_L3	Dead band- loop3(0-32000=0-100%)
%R3083	DBP_L3	Dead band+ loop3(0-32000=0-100%)
%R0398	DEFREG1	Activate default setvalues
%M2552	DEF_L3	Move default values Loop 3
%M2553	DEF_L4	Move default values Loop 4
%R0433	L4DGAIN	D gain value loop 4 TPOP <-->
%R0424	L4_SV1	Loop 4 setvalue 1 TPOP <-->
%R3120	LOOP4	Loop 4 bottom flap left
%R3091	SL_T_L3	Min slew time loop 3 (0)

```
|DEF_L4                                                                  << RUNG 26  STEP #0066 >>
|%M2553  +-----+                +-----+                +-----+
+--] [---+MOVE_+----------------+MOVE_+----------------+MOVE_+-
|        | INT |                | INT |                | INT |
|        |     |                |     |                |     |
|        |     | UCL_L4         |     | LCL_L4         |     | BIAS_L4
| CONST -+IN  Q+-%R3129   CONST -+IN  Q+-%R3130   CONST -+IN  Q+-%R3128
| +32000 | LEN |          +00000 | LEN |          +16000 | LEN |
|        |00001|                |00001|                |00001|
|        |     |                |     |                |     |
|        +-----+                +-----+                +-----+
|
|DEF_L4                                                                  << RUNG 27  STEP #0070 >>
|%M2553  +-----+                +-----+                +-----+
+--] [---+MOVE_+----------------+MOVE_+----------------+MOVE_+-
|        | INT |                | INT |                | INT |
|        |     |                |     |                |     |
|        |     | DBP_L4         |     | DBN_L4         |     | SL_T_L4
| CONST -+IN  Q+-%R3123   CONST -+IN  Q+-%R3124   CONST -+IN  Q+-%R3131
| +00320 | LEN |          +00320 | LEN |          +00000 | LEN |
|        |00001|                |00001|                |00001|
|        |     |                |     |                |     |
|        +-----+                +-----+                +-----+
|
| (*****************************************************************************)
| (* Default values Loop 5 Bottom flap right.                                  *)
| (*****************************************************************************)
|
|ALW_ON                                                    DEF_L5   << RUNG 29  STEP #0075 >>
|%S0007  +-----+                                           %M2554
+--] [---+ BIT_|+-----------------------------------------------------------( )-- (* Move default values Loop 5       *)
|        |TEST_||
|        | WORD||
|DEFREG1 |     ||
|%R0398 -+IN  Q++
|        | LEN |
|        |00001|
|        |     |
| CONST -+BIT  |
|  00005 +-----+
|
|DEF_L5                                                                  << RUNG 30  STEP #0078 >>
|%M2554  +-----+
+--] [---+MOVE_+-
|        | INT |
|        |     |
|        |     | L5_SV1
| CONST -+IN  Q+-%R0436
| +04500 | LEN |
|        |00001|
|        |     |
|        +-----+
|
```

REFERENCE	NICKNAME	REFERENCE DESCRIPTION	REFERENCE	NICKNAME	REFERENCE DESCRIPTION
%S0007	ALW_ON		%M2554	DEF_L5	Move default values Loop 5
%R3128	BIAS_L4	Bias loop 4 -100/+100 %	%R0436	L5_SV1	Loop 5 setvalue 1 TPOP <-->
%R3124	DBN_L4	Dead band- loop4(0-32000=0-100%)	%R3130	LCL_L4	Lower clamp loop 4 (0)
%R3123	DBP_L4	Dead band+ loop4(0-32000=0-100%)	%R3131	SL_T_L4	Min slew time loop 4 (0)
%R0398	DEFREG1	Activate default setvalues	%R3129	UCL_L4	Upper clamp loop 4 (32000)
%M2553	DEF_L4	Move default values Loop 4			

```
|DEF_L5                                                                    << RUNG 31  STEP #0080 >>
|%M2554  +-----+                +-----+                +-----+
+--] [---+BLKMV+----------------+MOVE_+----------------+MOVE_+-
|        | INT |                | INT |                | INT |
|        |     |                |     |                |     |
|        |     | AL1H_L5        |     | L5DGAIN        |     |  LOOP5
| CONST -+IN1 Q+-%R0438   CONST -+IN  Q+-%R0445   CONST -+IN  Q+-%R3160
| +00300 |     |          +02000 | LEN |          +00005 | LEN |
|        |     |                 |00001|                 |00001|
|        |     |                 |     |                 |     |
| CONST -+IN2  |                 +-----+                 +-----+
| +00150 |     |
|        |     |
| CONST -+IN3  |
| +00100 |     |
|        |     |
| CONST -+IN4  |
| +00100 |     |
|        |     |
| CONST -+IN5  |
| +00025 |     |
|        |     |
| CONST -+IN6  |
| +02000 |     |
|        |     |
| CONST -+IN7  |
| +03000 +-----+
|
|DEF_L5                                                                    << RUNG 32  STEP #0084 >>
|%M2554  +-----+                +-----+                +-----+
+--] [---+MOVE_+----------------+MOVE_+----------------+MOVE_+-
|        | INT |                | INT |                | INT |
|        |     |                |     |                |     |
|        |     | UCL_L5         |     | LCL_L5         |     | BIAS_L5
| CONST -+IN  Q+-%R3169   CONST -+IN  Q+-%R3170   CONST -+IN  Q+-%R3168
| +32000 | LEN |          +00000 | LEN |          +16000 | LEN |
|        |00001|                 |00001|                 |00001|
|        |     |                 |     |                 |     |
|        +-----+                 +-----+                 +-----+
|
|DEF_L5                                                                    << RUNG 33  STEP #0088 >>
|%M2554  +-----+                +-----+                +-----+
+--] [---+MOVE_+----------------+MOVE_+----------------+MOVE_+-
|        | INT |                | INT |                | INT |
|        |     |                |     |                |     |
|        |     | DBP_L5         |     | DBN_L5         |     | SL_T_L5
| CONST -+IN  Q+-%R3163   CONST -+IN  Q+-%R3164   CONST -+IN  Q+-%R3171
| +00320 | LEN |          +00320 | LEN |          +00000 | LEN |
|        |00001|                 |00001|                 |00001|
|        |     |                 |     |                 |     |
|        +-----+                 +-----+                 +-----+
|
| (*************************************************************************)
| (* Default values Loop 6 Air super heater.                               *)
| (*************************************************************************)
|
```

REFERENCE	NICKNAME	REFERENCE DESCRIPTION	REFERENCE	NICKNAME	REFERENCE DESCRIPTION
%R0438	AL1H_L5	Alarm SV1 high loop 5	%R0445	L5DGAIN	D gain value loop 5 TPOP <-->
%R3168	BIAS_L5	Bias loop 5 -100/+100 %	%R3170	LCL_L5	Lower clamp loop 5 (0)
%R3164	DBN_L5	Dead band- loop5(0-32000=0-100%)	%R3160	LOOP5	Loop 5 bottom flap right
%R3163	DBP_L5	Dead band+ loop5(0-32000=0-100%)	%R3171	SL_T_L5	Min slew time loop 5 (0)
%M2554	DEF_L5	Move default values Loop 5	%R3169	UCL_L5	Upper clamp loop 5 (32000)

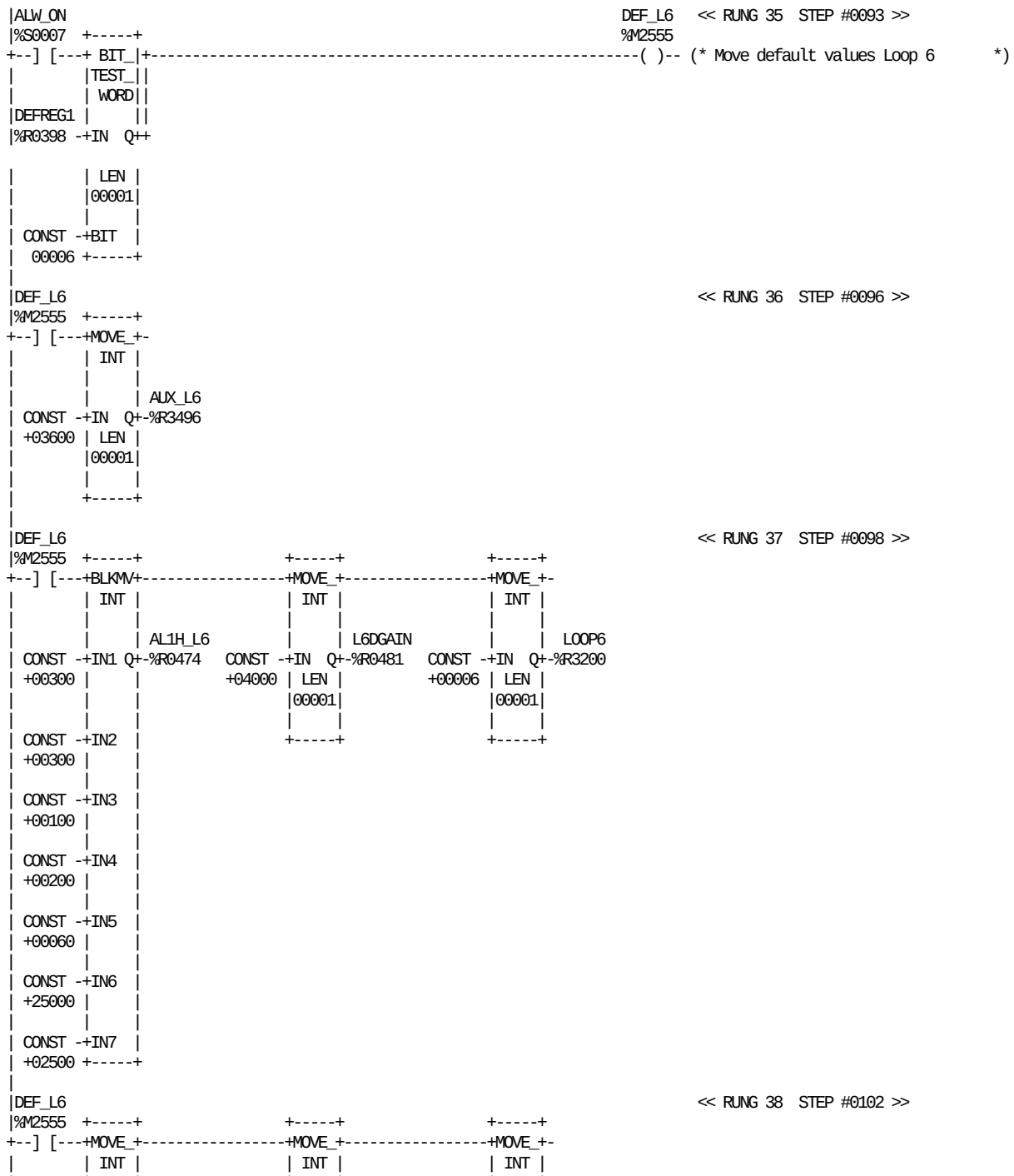

REFERENCE	NICKNAME	REFERENCE DESCRIPTION
%R0474	AL1H_L6	Alarm SV1 high loop 6
%S0007	ALW_ON	
%R3496	AUX_L6	Aux register Loop 6
%R3208	BIAS_L6	Bias loop 6 -100/+100 %
%R0398	DEFREG1	Activate default setvalues
%M2555	DEF_L6	Move default values Loop 6
%R0481	L6DGAIN	D gain value loop 6 TPOP <-->
%R3210	LCL_L6	Lower clamp loop 6 (0)
%R3200	LOOP6	Loop 6 air super heater
%R3209	UCL_L6	Upper clamp loop 6 (32000)

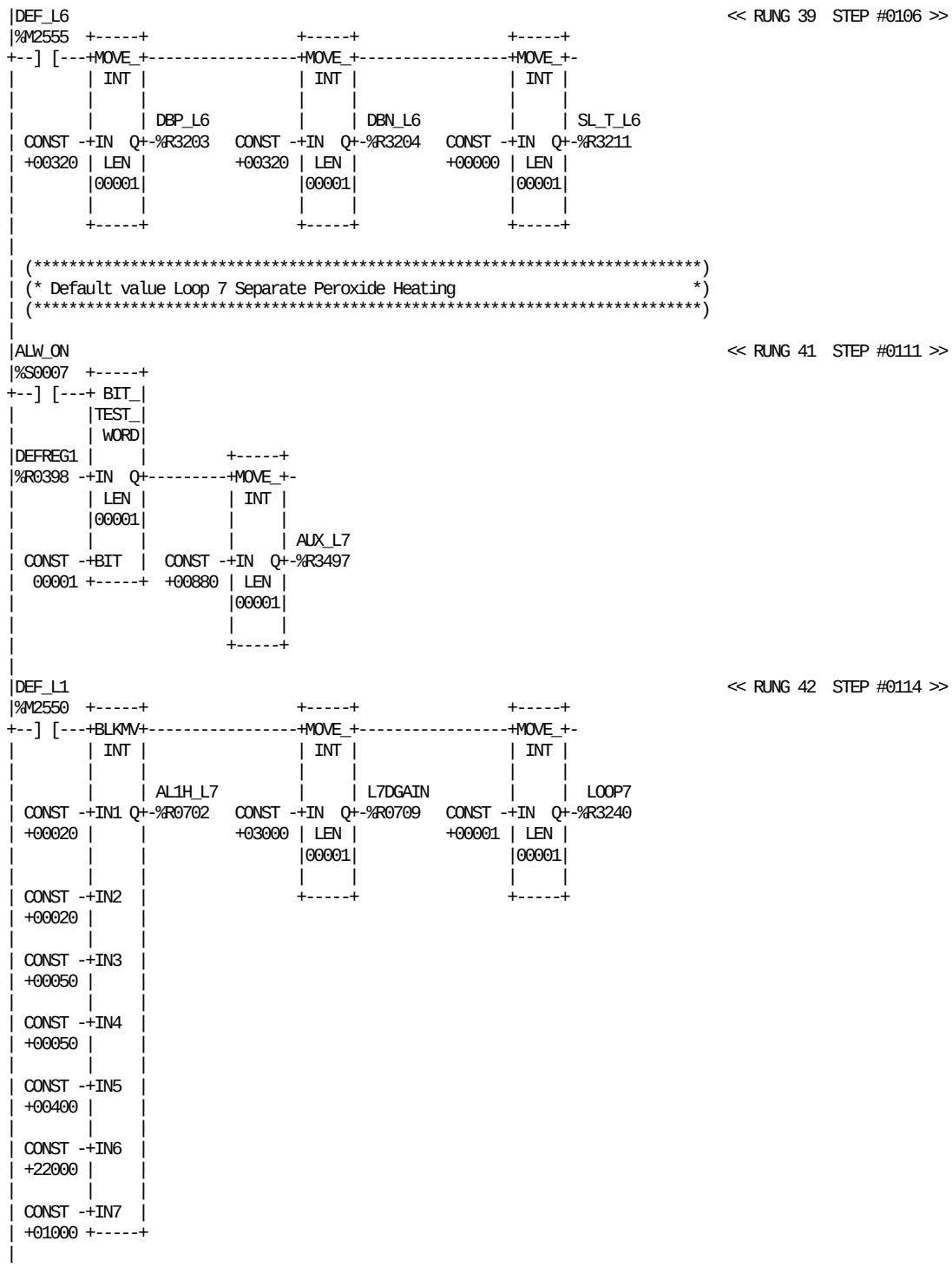

REFERENCE	NICKNAME	REFERENCE DESCRIPTION
%R0702	AL1H_L7	Alarm SV1 high loop 7
%S0007	ALW_ON	
%R3497	AUX_L7	Aux register Loop 7
%R3204	DBN_L6	Dead band- loop6(0-32000=0-100%)
%R3203	DBP_L6	Dead band+ loop6(0-32000=0-100%)
%R0398	DEFREG1	Activate default setvalues

REFERENCE	NICKNAME	REFERENCE DESCRIPTION
%M2550	DEF_L1	Move default values Loop 1
%M2555	DEF_L6	Move default values Loop 6
%R0709	L7DGAIN	D gain value loop 7 TPOP<-->
%R3240	LOOP7	Loop 7 external heating
%R3211	SL_T_L6	Min slew time loop 6 (0)

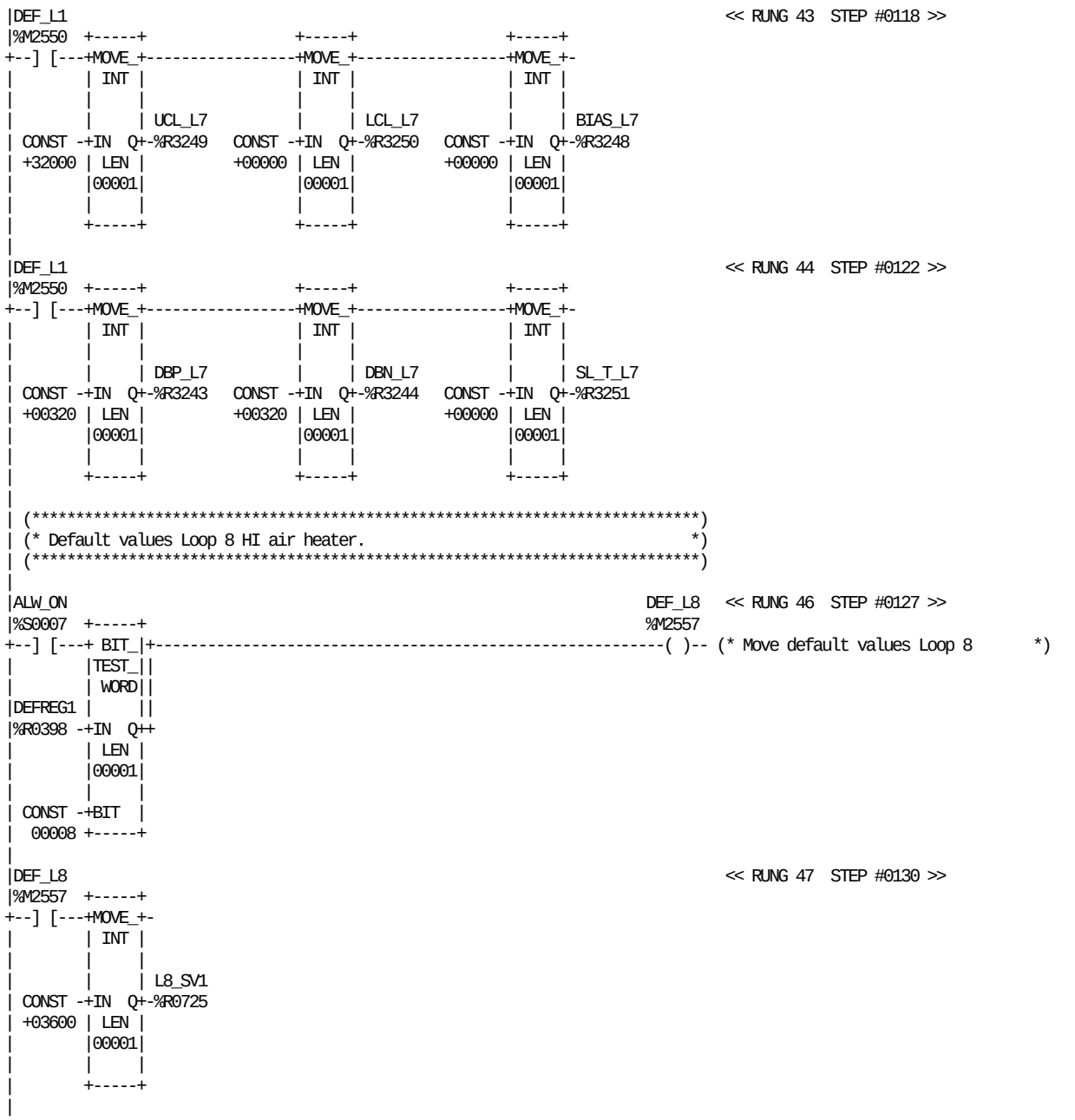

REFERENCE	NICKNAME	REFERENCE DESCRIPTION	REFERENCE	NICKNAME	REFERENCE DESCRIPTION
%S0007	ALW_ON		%M2557	DEF_L8	Move default values Loop 8
%R3248	BIAS_L7	Bias loop 7 -100/+100 %	%R0725	L8_SV1	Loop 8 setvalue 1 TPOP <-->
%R3244	DBN_L7	dead band-loop7(0-32000=0-100%)	%R3250	LCL_L7	Lower clamp loop 7 (0)
%R3243	DBP_L7	Dead band+loop7(0-32000=0-100%)	%R3251	SL_T_L7	Min slew time loop 7 (0)
%R0398	DEFREG1	Activate default setvalues	%R3249	UCL_L7	Upper clamp loop 7 (32000)
%M2550	DEF_L1	Move default values Loop 1			

```
|DEF_L8                                                                  << RUNG 48  STEP #0132 >>
|%M2557  +-----+                +-----+                +-----+
+--] [---+BLKMV+----------------+MOVE_+----------------+MOVE_+-
|        | INT |                | INT |                | INT |
|        |     |                |     |                |     |
|        |     | AL1H_L8        |     | L8DGAIN        |     |  LOOP8
| CONST -+IN1 Q+-%R0727   CONST -+IN  Q+-%R0734   CONST -+IN  Q+-%R3280
| +00900 |     |          +03000 | LEN |          +00008 | LEN |
|        |     |                 |00001|                 |00001|
|        |     |                 |     |                 |     |
| CONST -+IN2  |                 +-----+                 +-----+
| +00800 |     |
|        |     |
| CONST -+IN3  |
| +00100 |     |
|        |     |
| CONST -+IN4  |
| +00100 |     |
|        |     |
| CONST -+IN5  |
| +00025 |     |
|        |     |
| CONST -+IN6  |
| +08000 |     |
|        |     |
| CONST -+IN7  |
| +02000 +-----+
|
|DEF_L8                                                                  << RUNG 49  STEP #0136 >>
|%M2557  +-----+                +-----+                +-----+
+--] [---+MOVE_+----------------+MOVE_+----------------+MOVE_+-
|        | INT |                | INT |                | INT |
|        |     |                |     |                |     |
|        |     | UCL_L8         |     | LCL_L8         |     | BIAS_L8
| CONST -+IN  Q+-%R3289   CONST -+IN  Q+-%R3290   CONST -+IN  Q+-%R3288
| +32000 | LEN |          +00000 | LEN |          +00000 | LEN |
|        |00001|                 |00001|                 |00001|
|        |     |                 |     |                 |     |
|        +-----+                 +-----+                 +-----+
|
|DEF_L8                                                                  << RUNG 50  STEP #0140 >>
|%M2557  +-----+                +-----+                +-----+
+--] [---+MOVE_+----------------+MOVE_+----------------+MOVE_+-
|        | INT |                | INT |                | INT |
|        |     |                |     |                |     |
|        |     | DBP_L8         |     | DBN_L8         |     | SL_T_L8
| CONST -+IN  Q+-%R3283   CONST -+IN  Q+-%R3284   CONST -+IN  Q+-%R3291
| +00320 | LEN |          +00320 | LEN |          +00000 | LEN |
|        |00001|                 |00001|                 |00001|
|        |     |                 |     |                 |     |
|        +-----+                 +-----+                 +-----+
|
| (*************************************************************************)
| (* Default values Loop 9 ASU PS Constant Heat.                          *)
| (*************************************************************************)
|
```

REFERENCE	NICKNAME	REFERENCE DESCRIPTION	REFERENCE	NICKNAME	REFERENCE DESCRIPTION
%R0727	AL1H_L8	Alarm SV1 high loop 8	%R0734	L8DGAIN	D gain value loop 8 TPOP <-->
%R3288	BIAS_L8	Bias loop 8 -100/+100	%R3290	LCL_L8	Lower clamp loop 8 (0)
%R3284	DBN_L8	Dead band- loop8(0-32000=0-100)	%R3280	LOOP8	Loop 8 HI heater
%R3283	DBP_L8	Deab band+ loop8(0-32000=0-100)	%R3291	SL_T_L8	Min slew time loop 8 (0)
%M2557	DEF_L8	Move default values Loop 8	%R3289	UCL_L8	Upper clamp loop 8 (32000)

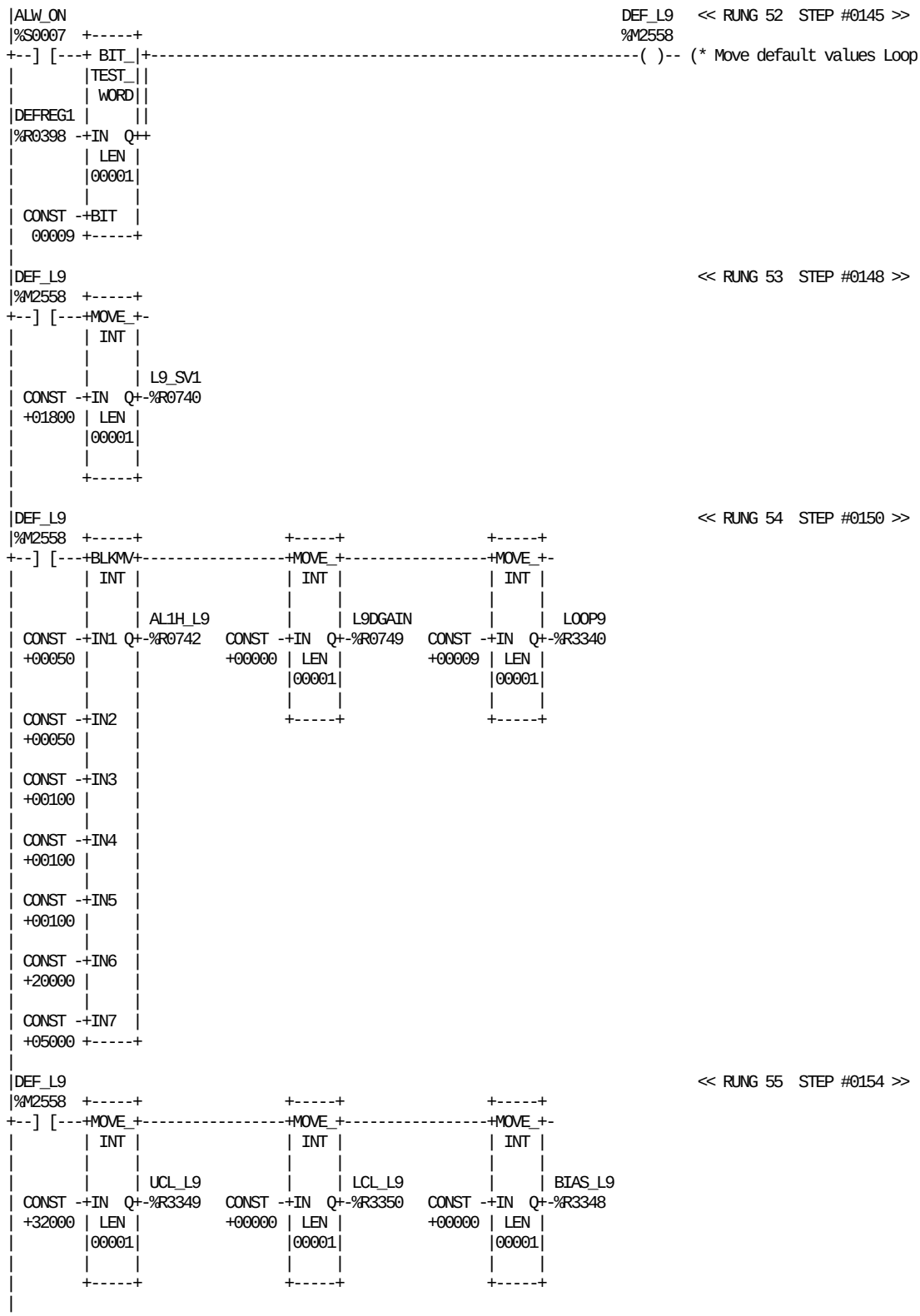

REFERENCE	NICKNAME	REFERENCE DESCRIPTION	REFERENCE	NICKNAME	REFERENCE DESCRIPTION
%R0742	AL1H_L9	Alarm SV1 high loop 9	%R0749	L9DGAIN	D gain value loop 9 TPOP <-->
%S0007	ALW_ON		%R0740	L9_SV1	Loop 9 setvalue 1 TPOP <-->
%R3348	BIAS_L9	Bias loop 9 -100/+100	%R3350	LCL_L9	Lower clamp loop 9 (0)
%R0398	DEFREG1	Activate default setvalues	%R3340	LOOP9	Loop 9 ASu Constant Heat
%M2558	DEF_L9	Move default values Loop 9	%R3349	UCL_L9	Upper clamp loop 9 (32000)

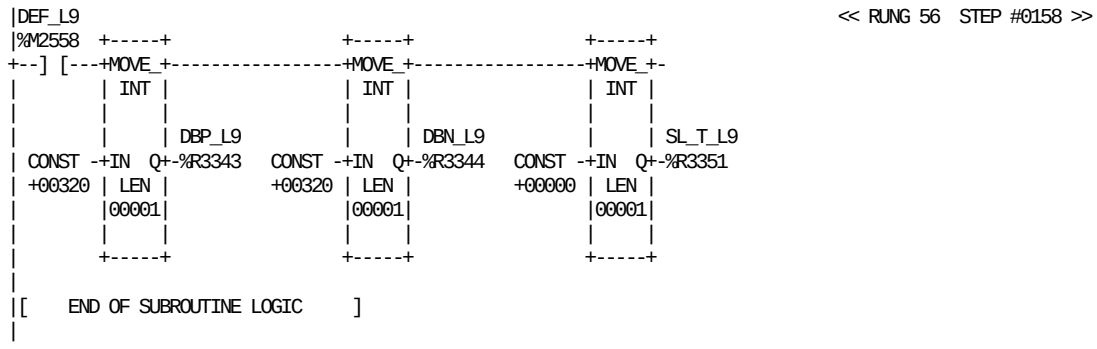

REFERENCE NICKNAME		REFERENCE DESCRIPTION	REFERENCE NICKNAME		REFERENCE DESCRIPTION
%R3344	DBN_L9	Dead band- loop9(0-32000=0-100)	%M2558	DEF_L9	Move default values Loop 9
%R3343	DBP_L9	Deab band+ loop9(0-32000=0-100)	%R3351	SL_T_L9	Min slew time loop 9 (0)

This page left intentionally blank

```
|[  START LD SUBROUTINE    PWM    ]
|
|[     VARIABLE DECLARATIONS      ]
|
|[   START OF SUBROUTINE LOGIC    ]
|
| (*************************************************************************)
| (* PWM (Pulse Width Modulation) timer: 1 timebase in 10 sec.              *)
| (*************************************************************************)
|
|LOOP_1   PWM_1                                                  PWM_1   << RUNG 5  STEP #0003 >>
|%M2500  %M2600  +-----+                                        %M2600
+--] [-----]/[---+ TMR +-----------------------------------------------(^)-- (* PWM timer 1 active              *)
|                |0.01s|
|                |     |
|         CONST -+PV   |
|         +01000 |     |
|                +-----+
|                PWMTMR1
|                %R3500
|
| (*************************************************************************)
| (* Output Loop 1 temperature regulatur water H2O2 bath.                  *)
| (*************************************************************************)
|
| PWM_1                                                                  << RUNG 7  STEP #0008 >>
|%M2600  +-----+
+--] [---+ DIV_+-
|        | INT |
|        |     |
| CV_L1  |     | SSR1TM
|%R3401 -+I1  Q+-%R3402
|        |     |
| CONST -+I2   |
| +00032 +-----+
|
|LOOP_1  BROK_W1 BROKWM2                                                 << RUNG 8  STEP #0010 >>
|%M2500  %I1004  %I1002  +-----+
+--] [-----]/[-----]/[---+ GT_ |+-----------------------------------------<+>
|                        | INT ||
|                        |     ||
|                SSR1TM  |     ||
|                %R3402 -+I1  Q++
|                        |     |
|                PWMTMR1 |     |
|                %R3500 -+I2   |
|                        +-----+
|
|        STEP_4                                                   K202    << RUNG 9  STEP #0015 >>
|        %G0004                                                  %Q0200
+<+>----+--] [--+-------------------------------------------------------( )-- (* Heating water                  *)
|       |       |
|       |STEP_5 |
|       |%G0005 |
|       +--] [--+
|       |       |
|       |SQGOING|
|       |%M0072 |
|       +--] [--+
|       |       |
|       |SQ_END |
|       |%M0071 |
|       +--] [--+
|                |
|W_COOL          |
|%M0818          |
+--] [----------+
```

REFERENCE	NICKNAME	REFERENCE DESCRIPTION	REFERENCE	NICKNAME	REFERENCE DESCRIPTION
%I1002	BROKWM2	Broken wire Mon2 (H2O2 bath)	%M0072	SQGOING	Start sequence going on
%I1004	BROK_W1	Broken wire loop 1(Water bath)	%M0071	SQ_END	Start sequence ended
%R3401	CV_L1	Control value loop 1	%R3402	SSR1TM	Time to activate SSR 1
%Q0200	K202	Heating water	%G0004	STEP_4	HEAT STERILIZATION
%M2500	LOOP_1	Loop 1 active	%G0005	STEP_5	SPRAYING
%R3500	PWMTMR1	PWM timer 1 timebase 10 sec	%M0818	W_COOL	Bath cooling set point
%M2600	PWM_1	PWM timer 1 active			

```
|LOOP_1                                                                  << RUNG 10  STEP #0023 >>
|%M2500  +-----+
+--] [---+ DIV_+-
|        | INT |
|        |     |
|SSR1TM  |     |  OUTL1
|%R3402 -+I1  Q+-%R0458
|        |     |
| CONST -+I2   |
| +00010 +-----+
|
| (*************************************************************************)
| (* PWM timer time base 500 msec.                                         *)
| (* For flap heaters only.                                                *)
| (*************************************************************************)
|
|LOOP_2   PWM_2                                                   PWM_2   << RUNG 12  STEP #0026 >>
|%M2503  %M2601  +-----+                                         %M2601
+--] [--+--]/[---+ TMR +-------------------------------------------------(^)-- (* PWM timer 2 active              *)
|       |        |.001s|
|LOOP_3 |        |     |
|%M2506 |        |     |
+--] [--+ CONST -+PV   |
|       | +00500 |     |
|LOOP_4 |        +-----+
|%M2509 |        PWMTMR2
+--] [--+        %R3503
|       |
|LOOP_5 |
|%M2512 |
+--] [--+
|
| (*************************************************************************)
| (* Output Loop 2 Top flap left.                                          *)
| (*************************************************************************)
|
| PWM_2                                                                  << RUNG 14  STEP #0034 >>
|%M2601  +-----+
+--] [---+ DIV_+-
|        | INT |
|        |     |
| CV_L2  |     | SSR2TM
|%R3404 -+I1  Q+-%R3405
|        |     |
| CONST -+I2   |
| +00064 +-----+
|
| K033   BROK_W2                                                   K208    << RUNG 15  STEP #0036 >>
|%Q0049  %I1017  +-----+                                         %Q0194
+--] [-----]/[---+ GT_ |+-------------------------------------------------( )-- (* Flap heating top left          *)
|                | INT ||
|                |     ||
|        SSR2TM  |     ||
|        %R3405 -+I1  Q++
|                |     |
|        PWMTMR2 |     |
|        %R3503 -+I2   |
|                +-----+
|
```

REFERENCE	NICKNAME	REFERENCE DESCRIPTION	REFERENCE	NICKNAME	REFERENCE DESCRIPTION
%I1017	BROK_W2	Broken wire loop 2 (FFU T.L)	%M2509	LOOP_4	Loop 4 active
%R3404	CV_L2	Control value loop 2	%M2512	LOOP_5	Loop 5 active
%Q0049	K033	FFU flap heating	%R0458	OUTL1	Output loop 1 <--> TPOP
%Q0194	K208	Flap heating top left	%R3503	PWMTMR2	PWM timer 1 timebase 100 Msec
%M2500	LOOP_1	Loop 1 active	%M2601	PWM_2	PWM timer 2 active
%M2503	LOOP_2	Loop 2 active	%R3402	SSR1TM	Time to activate SSR 1
%M2506	LOOP_3	Loop 3 active	%R3405	SSR2TM	Time to activate SSR 2

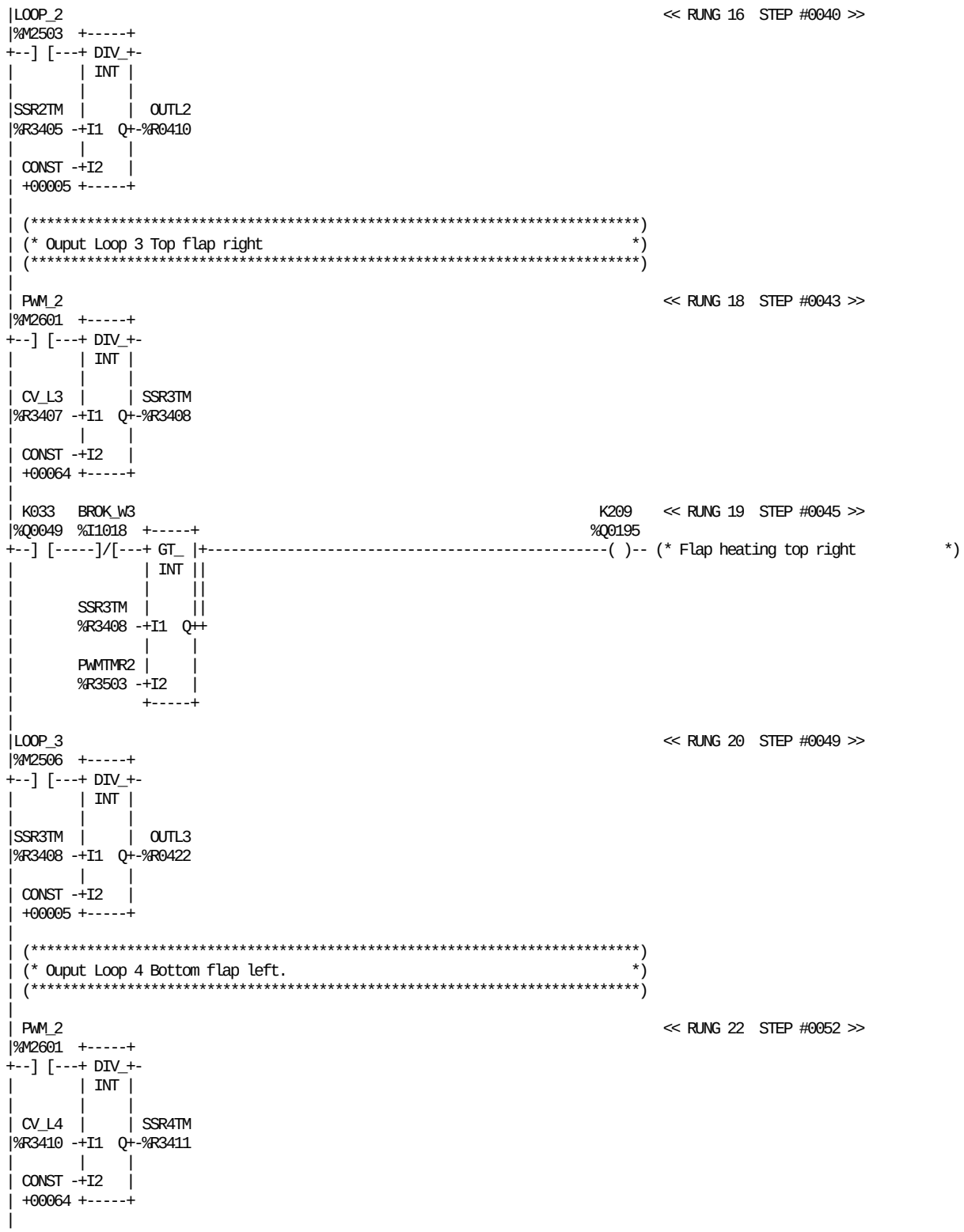

REFERENCE	NICKNAME	REFERENCE DESCRIPTION	REFERENCE	NICKNAME	REFERENCE DESCRIPTION
%I1018	BROK_W3	Broken wire loop 3 (FFU T.R)	%R0410	OUTL2	Output loop 2 <--> TPOP
%R3407	CV_L3	Control value loop 3	%R0422	OUTL3	Output loop 3 <--> TPOP
%R3410	CV_L4	Control value loop 4	%R3503	PWMTMR2	PWM timer 1 timebase 100 Msec
%Q0049	K033	FFU flap heating	%M2601	PWM_2	PWM timer 2 active
%Q0195	K209	Flap heating top right	%R3405	SSR2TM	Time to activate SSR 2
%M2503	LOOP_2	Loop 2 active	%R3408	SSR3TM	Time to activate SSR 3
%M2506	LOOP_3	Loop 3 active	%R3411	SSR4TM	Time to activate SSR 4

```
| K033   BROK_W4                                                    K210    << RUNG 23  STEP #0054 >>
|%Q0049  %I1019  +-----+                                          %Q0196
+--] [-----]/[---+ GT_ |+-------------------------------------------( )-- (* Flap heating bottom left        *)
|                | INT ||
|                |     ||
|        SSR4TM  |     ||
|        %R3411 -+I1  Q++
|                |     |
|        PWMTMR2 |     |
|        %R3503 -+I2   |
|                +-----+
|
|LOOP_4                                                             << RUNG 24  STEP #0058 >>
|%M2509  +-----+
+--] [---+ DIV_+-
|        | INT |
|        |     |
|SSR4TM  |     |  OUTL4
|%R3411 -+I1  Q+-%R0434
|        |     |
| CONST -+I2   |
| +00005 +-----+
|
| (*************************************************************************)
| (* Ouput Loop 5 Bottom flap right.                                       *)
| (*************************************************************************)
|
| PWM_2                                                             << RUNG 26  STEP #0061 >>
|%M2601  +-----+
+--] [---+ DIV_+-
|        | INT |
|        |     |
| CV_L5  |     | SSR5TM
|%R3413 -+I1  Q+-%R3414
|        |     |
| CONST -+I2   |
| +00064 +-----+
|
| K033   BROK_W5                                                    K211    << RUNG 27  STEP #0063 >>
|%Q0049  %I1020  +-----+                                          %Q0193
+--] [-----]/[---+ GT_ |+-------------------------------------------( )-- (* Flap heating bottom right       *)
|                | INT ||
|                |     ||
|        SSR5TM  |     ||
|        %R3414 -+I1  Q++
|                |     |
|        PWMTMR2 |     |
|        %R3503 -+I2   |
|                +-----+
|
|LOOP_5                                                             << RUNG 28  STEP #0067 >>
|%M2512  +-----+
+--] [---+ DIV_+-
|        | INT |
|        |     |
|SSR5TM  |     |  OUTL5
|%R3414 -+I1  Q+-%R0446
|        |     |
| CONST -+I2   |
| +00005 +-----+
|
```

REFERENCE	NICKNAME	REFERENCE DESCRIPTION	REFERENCE	NICKNAME	REFERENCE DESCRIPTION
%I1019	BROK_W4	Broken wire loop 4 (FFU B.L)	%M2512	LOOP_5	Loop 5 active
%I1020	BROK_W5	Broken wire loop 5 (FFU B.R)	%R0434	OUTL4	Output loop 4 <--> TPOP
%R3413	CV_L5	Control value loop 5	%R0446	OUTL5	Output loop 5 <--> TPOP
%Q0049	K033	FFU flap heating	%R3503	PWMTMR2	PWM timer 1 timebase 100 Msec
%Q0196	K210	Flap heating bottom left	%M2601	PWM_2	PWM timer 2 active
%Q0193	K211	Flap heating bottom right	%R3411	SSR4TM	Time to activate SSR 4
%M2509	LOOP_4	Loop 4 active	%R3414	SSR5TM	Time to activate SSR 5

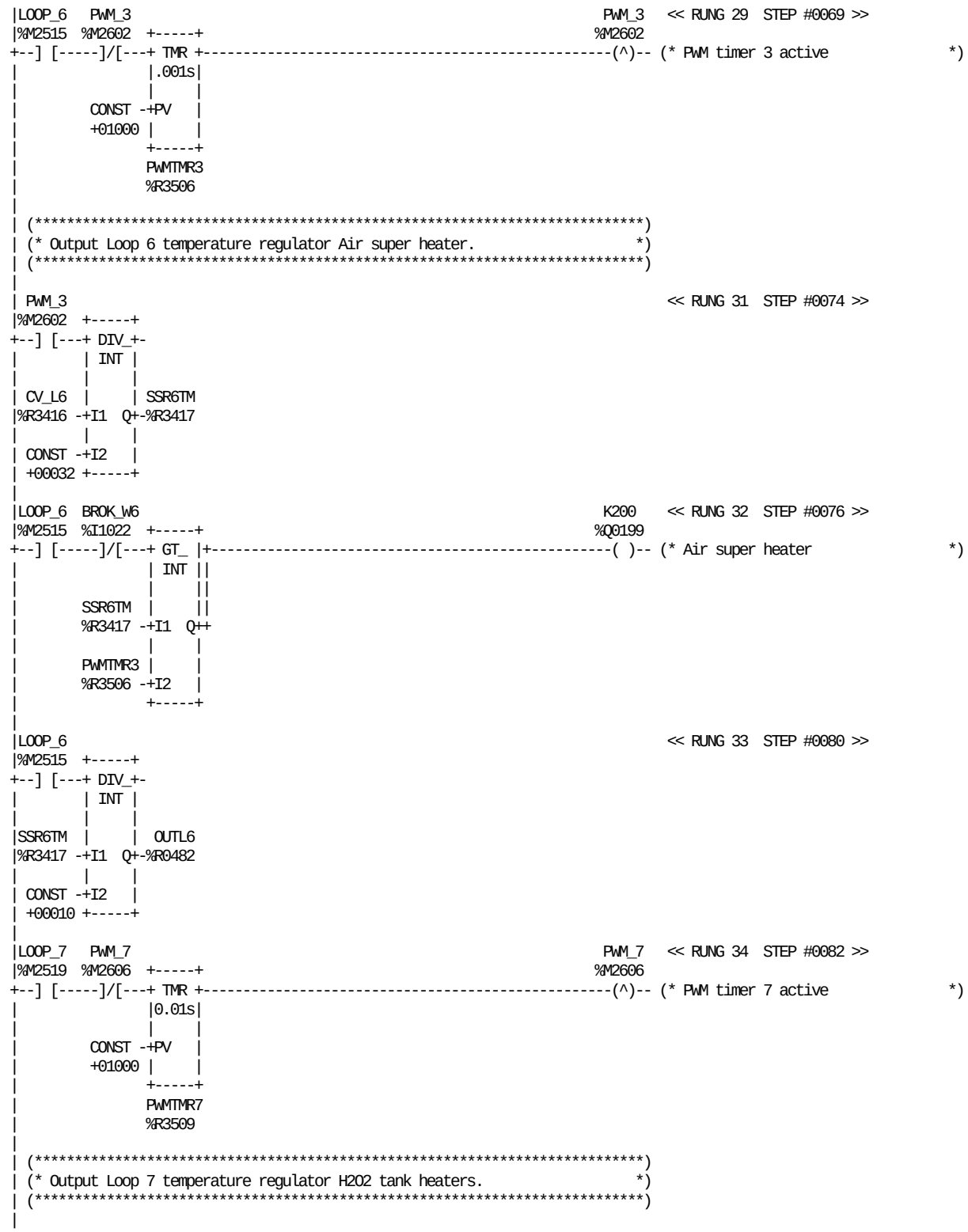

REFERENCE	NICKNAME	REFERENCE DESCRIPTION	REFERENCE	NICKNAME	REFERENCE DESCRIPTION
%I1022	BROK_W6	Broken wire loop 6 (Air super)	%R3506	PWMTMR3	PWM timer 3 time base 1 sec
%R3416	CV_L6	Control value loop 6	%R3509	PWMTMR7	PWM timer 7 time base 10 sec
%Q0199	K200	Air super heater	%M2602	PWM_3	PWM timer 3 active
%M2515	LOOP_6	Loop 6 active	%M2606	PWM_7	PWM timer 7 active
%M2519	LOOP_7	Loop 7 active	%R3417	SSR6TM	Time to activate SSR 6
%R0482	OUTL6	Output loop 6 <--> TPOP			

```
| PWM_7                                                                 << RUNG 36  STEP #0087 >>
|%M2606  +-----+
+--] [---+ DIV_+-
|        | INT |
|        |     |
| CV_L7  |     | SSR7TM
|%R3419 -+I1  Q+-%R3420
|        |     |
| CONST -+I2   |
| +00032 +-----+
|
|LOOP_7  BROKWM5                                          K206    << RUNG 37  STEP #0089 >>
|%M2519  %I1006  +-----+                                 %Q0198
+--] [-----]/[---+ GT_ |+-----------------------------------------------( )-- (* Peroxide tank heaters           *)
|                | INT ||
|                |     ||
|       SSR7TM   |     ||
|       %R3420 -+I1  Q++
|                |     |
|       PWMTMR7  |     |
|       %R3509 -+I2   |
|                +-----+
|
|LOOP_7                                                                 << RUNG 38  STEP #0093 >>
|%M2519  +-----+
+--] [---+ DIV_+-
|        | INT |
|        |     |
|SSR7TM  |     |  OUTL7
|%R3420 -+I1  Q+-%R0710
|        |     |
| CONST -+I2   |
| +00010 +-----+
|
| (*************************************************************************)
| (* PWM (Pulse Width Modulation) timer: 1 timebase in 5 sec.               *)
| (*************************************************************************)
|
|HILOOP8  PWM_8                                            PWM_8   << RUNG 40  STEP #0096 >>
|%M2521  %M2607  +-----+                                  %M2607
+--] [-----]/[---+ TMR +-----------------------------------------------(^)-- (* PWM timer 8 active             *)
|                |0.01s|
|                |     |
|         CONST -+PV   |
|         +00500 |     |
|                +-----+
|                PWMTMR8
|                %R3512
|
| (*************************************************************************)
| (* Output  Lopp 8 Temperature regulator HI air Heater.                   *)
| (*************************************************************************)
|
| PWM_8                                                                 << RUNG 42  STEP #0101 >>
|%M2607  +-----+
+--] [---+ DIV_+-
|        | INT |
|        |     |
| CV_L8  |     | SSR8TM
|%R3422 -+I1  Q+-%R3423
|        |     |
| CONST -+I2   |
| +00064 +-----+
|
```

REFERENCE	NICKNAME	REFERENCE DESCRIPTION
%I1006	BROKWM5	Broken wire Mon5 (Bottom AC)
%R3419	CV_L7	Control value loop 7
%R3422	CV_L8	Control value loop 8
%M2521	HILOOP8	HI,Loop 8 active
%Q0198	K206	Peroxide tank heaters
%M2519	LOOP_7	Loop 7 active
%R0710	OUTL7	Output loop 7 <--> TPOP
%R3509	PWMTMR7	PWM timer 7 time base 10 sec
%R3512	PWMTMR8	PWM timer 8 time base 0.5 sec
%M2606	PWM_7	PWM timer 7 active
%M2607	PWM_8	PWM timer 8 active
%R3420	SSR7TM	Time to active SSR 7
%R3423	SSR8TM	Time to active SSR 8

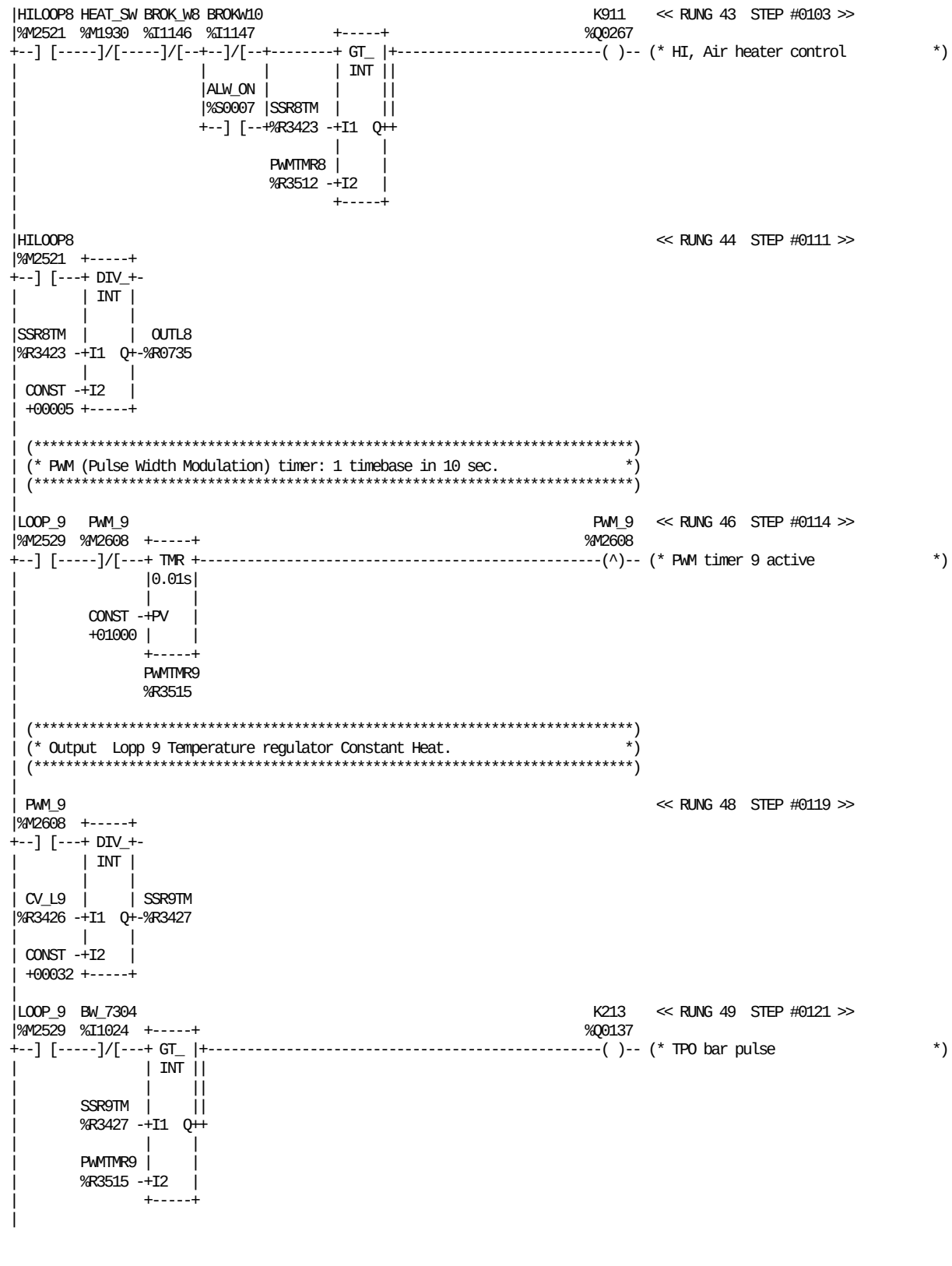

REFERENCE	NICKNAME	REFERENCE DESCRIPTION
%S0007	ALW_ON	
%I1147	BROKW10	Broken wire Mon10 (HIheat-B9116)
%I1146	BROK_W8	Broken wire loop 8 (HI Ster.Air)
%I1024	BW_7304	Broken wire ASU Const. Heat bar
%R3426	CV_L9	Control value loop 9
%M1930	HEAT_SW	HI, Heating element switch
%M2521	HILOOP8	HI,Loop 8 active
%Q0137	K213	TPO bar pulse

REFERENCE	NICKNAME	REFERENCE DESCRIPTION
%Q0267	K911	HI, Air heater control
%M2529	LOOP_9	Loop 9 active
%R0735	OUTL8	Output loop 8 <--> TPOP
%R3512	PWMTMR8	PWM timer 8 time base 0.5 sec
%R3515	PWMTMR9	PWM timer 9 time base 10 sec
%M2608	PWM_9	PWM timer 9 active
%R3423	SSR8TM	Time to active SSR 8
%R3427	SSR9TM	Time to active SSR 9



REFERENCE NICKNAME		REFERENCE DESCRIPTION	REFERENCE NICKNAME		REFERENCE DESCRIPTION
%M2529	LOOP_9	Loop 9 active	%R3427	SSR9TM	Time to active SSR 9
%R0750	OUTL9	Output loop 9 <--> TPOP			

```
|[  START LD SUBROUTINE    ASU    ]
|
|[     VARIABLE DECLARATIONS      ]
|
|[   START OF SUBROUTINE LOGIC    ]
|
|ST_2-12 CHTRCHK CHT>250                                          K014    << RUNG 4  STEP #0002 >>
|%G0021  %M1425  %M1424                                          %Q0032
+--] [-----]/[-----]/[-----------------------------------------------( )-- (* ASU, Power Constant Heat        *)
|
|A602_14 JUMP_1  ASU_INT                                          Y7425   << RUNG 5  STEP #0006 >>
|%I0019  %M0050  %M0470                                          %Q0156
+--] [-----] [-----]/[-----------------------------------------------( )-- (* Ventilating valve              *)
|
|A506_13                                                         SLW_WEB  << RUNG 6  STEP #0010 >>
|%Q0202                                                          %M0911
+--] [-----------------------------------------------------------------( )-- (* Paper web slow speed           *)
|
|A506_14                                                         FST_WEB  << RUNG 7  STEP #0012 >>
|%Q0201                                                          %M0912
+--] [-----------------------------------------------------------------( )-- (* Paper web fast speed           *)
|
| (*****************************************************************************)
| (* Generation of pulses for ASU.                                           *)
| (*****************************************************************************)
|
|A413_5                                                          P+EN_MG  << RUNG 9  STEP #0015 >>
|%Q0085                                                          %M1310
+--] [-----------------------------------------------------------------(^)-- (* Pulse + enable drive magazine   *)
|
| S7303                                                          P+LOCK   << RUNG 10  STEP #0017 >>
|%I0172                                                          %M1311
+--] [-----------------------------------------------------------------(v)-- (* Pulse + material locking ASU    *)
|
| S7303                                                          PLOCK_R  << RUNG 11  STEP #0019 >>
|%I0172  +-----+                                                 %M1429
+--] [---+ TMR +-------------------------------------------------------(S)-- (* ASU, spl head paper lock release *)
|        |0.10s|
|        |     |
| CONST -+PV   |
| +00050 |     |
|        +-----+
|        DEL1833
|        %R1833
|
|P+LOCK   B7512  A602_14  Y7303  PLOCK_R                         P+UNLK1  << RUNG 12  STEP #0022 >>
|%M1311  %I0184  %I0019  %Q0151  %M1429                          %M1312
+--] [-----] [-----]/[-----] [-----]/[-------------------------------------(^)-- (* Pulse + unlock material reel 1  *)
|
|P+LOCK   B7512  A602_14  Y7303  PLOCK_R                         P+LOCK1  << RUNG 13  STEP #0028 >>
|%M1311  %I0184  %I0019  %Q0151  %M1429                          %M1313
+--] [-----] [-----]/[-----]/[-----]/[-------------------------------------(^)-- (* Pulse + lock material reel 1    *)
|
|P+LOCK   B7412  A602_14  Y7315  PLOCK_R                         P+UNLK2  << RUNG 14  STEP #0034 >>
|%M1311  %I0183  %I0019  %Q0152  %M1429                          %M1314
+--] [-----] [-----]/[-----] [-----]/[-------------------------------------(^)-- (* Pulse + unlock material reel 2  *)
|
|P+LOCK   B7412  A602_14  Y7315  PLOCK_R                         P+LOCK2  << RUNG 15  STEP #0040 >>
|%M1311  %I0183  %I0019  %Q0152  %M1429                          %M1315
+--] [-----] [-----]/[-----]/[-----]/[-------------------------------------(^)-- (* Pulse + lock material reel 2    *)
|
```

REFERENCE	NICKNAME	REFERENCE DESCRIPTION	REFERENCE	NICKNAME	REFERENCE DESCRIPTION
%Q0085	A413_5	Enable drive magazine	%M1310	P+EN_MG	Pulse + enable drive magazine
%Q0202	A506_13	DMC Main Motor Low speed	%M1311	P+LOCK	Pulse + material locking ASU
%Q0201	A506_14	DMC Main Motor High speed	%M1313	P+LOCK1	Pulse + lock material reel 1
%I0019	A602_14	Safety monitors C	%M1315	P+LOCK2	Pulse + lock material reel 2
%M0470	ASU_INT	Splice sequence ASU interrupted	%M1312	P+UNLK1	Pulse + unlock material reel 1
%I0183	B7412	Side feeder position 1	%M1314	P+UNLK2	Pulse + unlock material reel 2
%I0184	B7512	Side feeder position 2	%M1429	PLOCK_R	ASU, spl head paper lock release
%M1424	CHT>250	ASU, Constant Heat temp. (>250)	%I0172	S7303	Push button material lock
%M1425	CHTRCHK	ASU, CH bar Temp. raise CHK fail	%M0911	SLW_WEB	Paper web slow speed
%R1833	DEL1833	ASU, delay	%G0021	ST_2-12	Ladder position 2-12
%M0912	FST_WEB	Paper web fast speed	%Q0151	Y7303	Lock cylinder 1
%M0050	JUMP_1	Jump to pos 1 (Emergency stop)	%Q0152	Y7315	Lock cylinder 2
%Q0032	K014	ASU, Power Constant Heat	%Q0156	Y7425	Ventilating valve

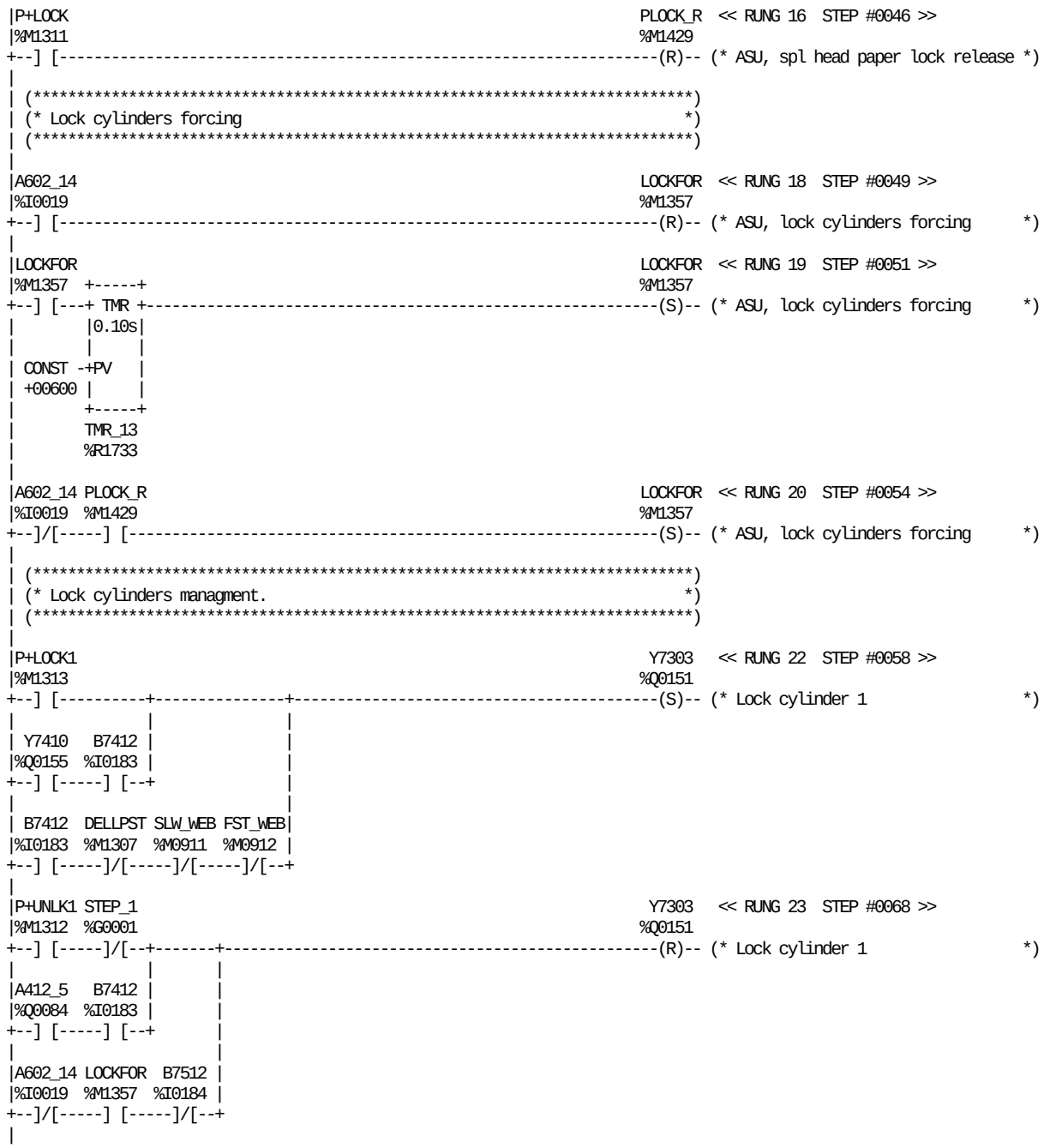

REFERENCE	NICKNAME	REFERENCE DESCRIPTION	REFERENCE	NICKNAME	REFERENCE DESCRIPTION
%Q0084	A412_5	Enable drive loop	%M1313	P+LOCK1	Pulse + lock material reel 1
%I0019	A602_14	Safety monitors C	%M1312	P+UNLK1	Pulse + unlock material reel 1
%I0183	B7412	Side feeder position 1	%M1429	PLOCK_R	ASU, spl head paper lock release
%I0184	B7512	Side feeder position 2	%M0911	SLW_WEB	Paper web slow speed
%M1307	DELLPST	Loop motor enable (stop delayed)	%G0001	STEP_1	STANDBY
%M0912	FST_WEB	Paper web fast speed	%R1733	TMR_13	TMR 13, ASU lock cylinder forced
%M1357	LOCKFOR	ASU, lock cylinders forcing	%Q0151	Y7303	Lock cylinder 1
%M1311	P+LOCK	Pulse + material locking ASU	%Q0155	Y7410	Cutting

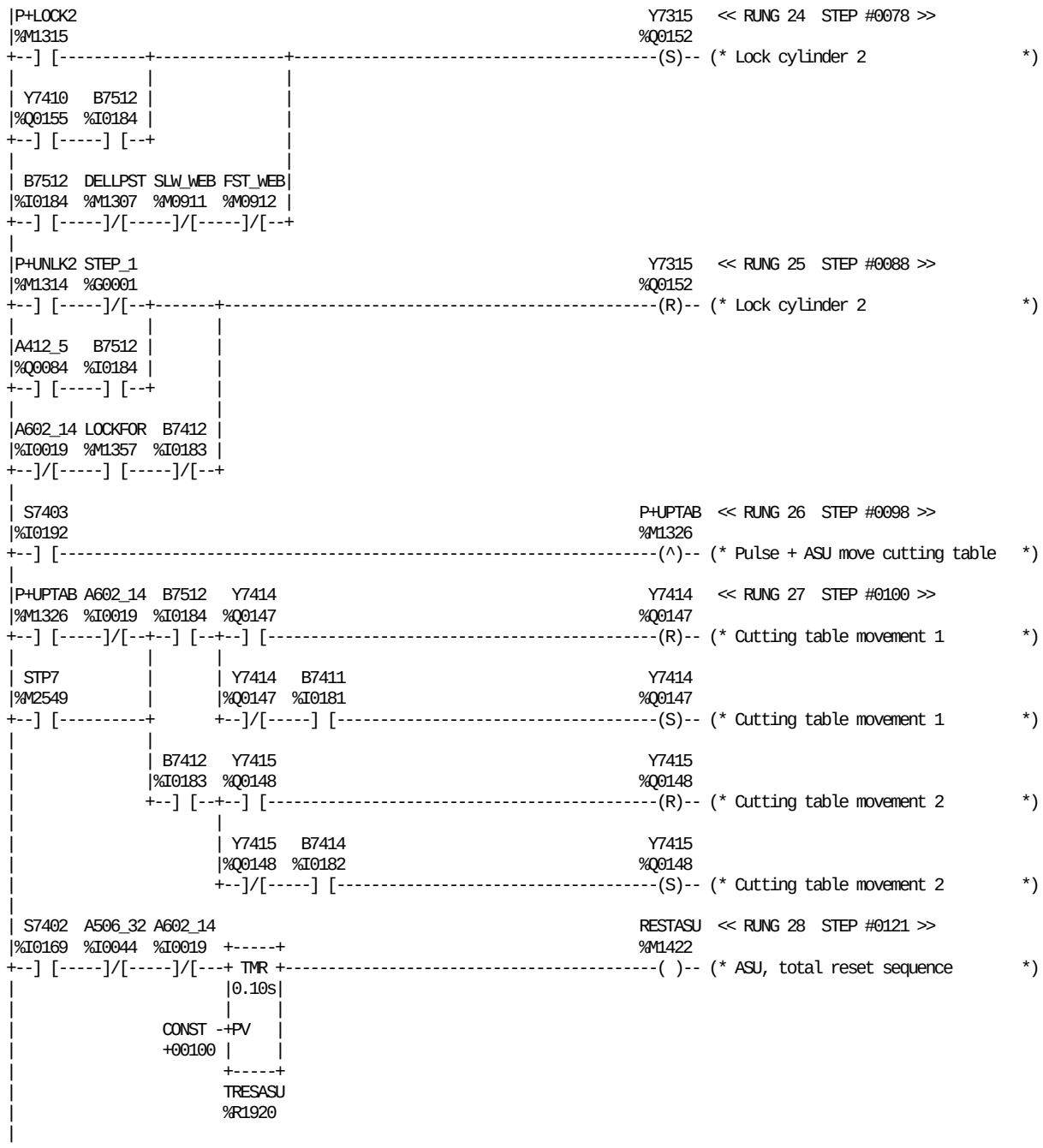

REFERENCE	NICKNAME	REFERENCE DESCRIPTION
%Q0084	A412_5	Enable drive loop
%I0044	A506_32	DMC Main motor running
%I0019	A602_14	Safety monitors C
%I0181	B7411	Material holder 1 down
%I0183	B7412	Side feeder position 1
%I0182	B7414	Material holder 2 down
%I0184	B7512	Side feeder position 2
%M1307	DELLPST	Loop motor enable (stop delayed)
%M0912	FST_WEB	Paper web fast speed
%M1357	LOCKFOR	ASU, lock cylinders forcing
%M1315	P+LOCK2	Pulse + lock material reel 2
%M1314	P+UNLK2	Pulse + unlock material reel 2

REFERENCE	NICKNAME	REFERENCE DESCRIPTION
%M1326	P+UPTAB	Pulse + ASU move cutting table
%M1422	RESTASU	ASU, total reset sequence
%I0169	S7402	Push button manual start ASU
%I0192	S7403	ASU, cutting tablemove button
%M0911	SLW_WEB	Paper web slow speed
%G0001	STEP_1	STANDBY
%M2549	STP7	Paper splice in position 7
%R1920	TRESASU	ASU, time for total reset sequen
%Q0152	Y7315	Lock cylinder 2
%Q0155	Y7410	Cutting
%Q0147	Y7414	Cutting table movement 1
%Q0148	Y7415	Cutting table movement 2

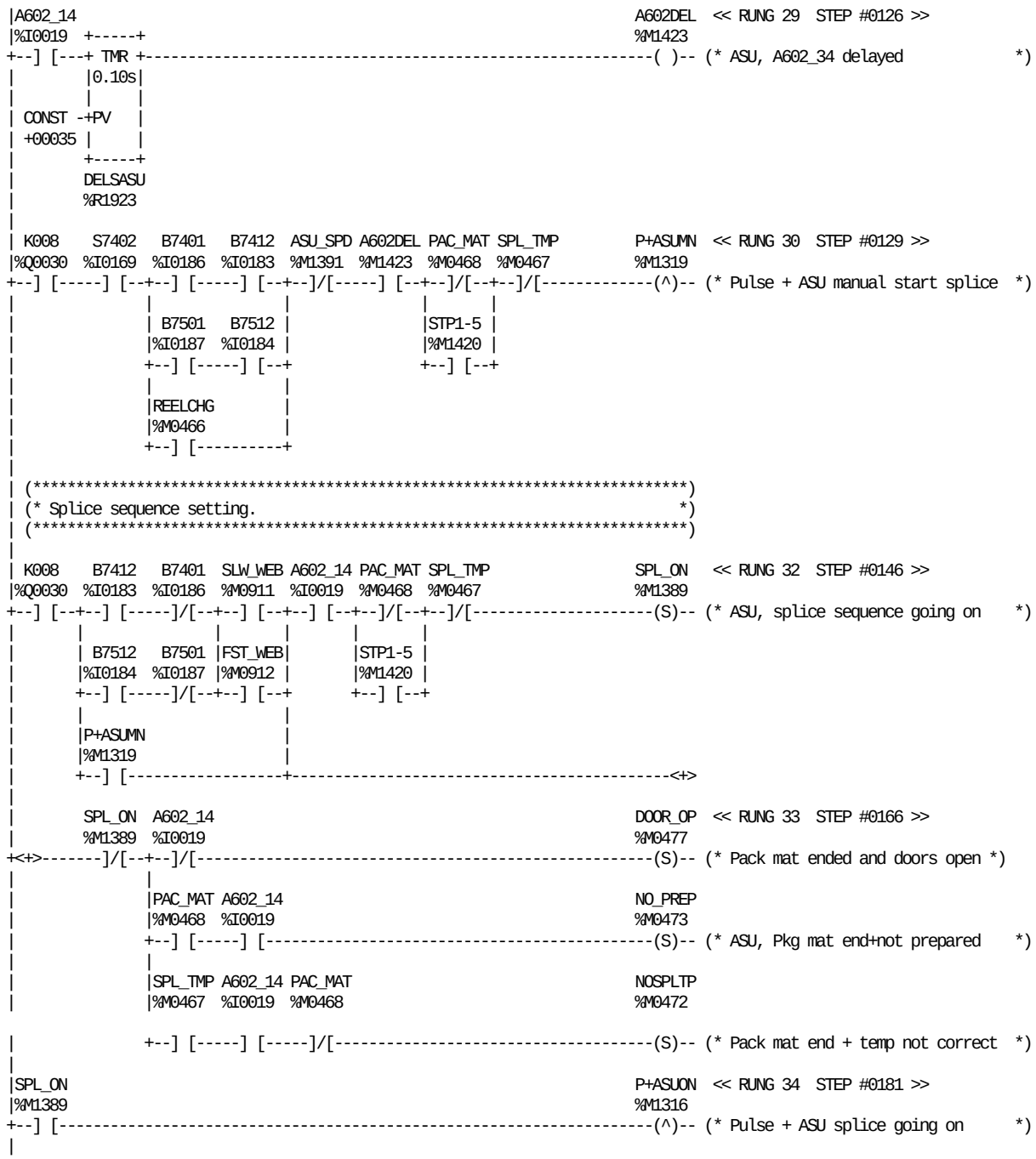

REFERENCE	NICKNAME	REFERENCE DESCRIPTION	REFERENCE	NICKNAME	REFERENCE DESCRIPTION
%M1423	A602DEL	ASU, A602_34 delayed	%M0472	NOSPLTP	Pack mat end + temp not correct
%I0019	A602_14	Safety monitors C	%M0473	NO_PREP	ASU, Pkg mat end+not prepared
%M1391	ASU_SPD	ASU, high speed after splice	%M1319	P+ASUMN	Pulse + ASU manual start splice
%I0186	B7401	Material reel 1 empty	%M1316	P+ASUON	Pulse + ASU splice going on
%I0183	B7412	Side feeder position 1	%M0468	PAC_MAT	Packaging ma splice not prepared
%I0187	B7501	Material reel 2 epmty	%M0466	REELCHG	ASU, make splice with new reel
%I0184	B7512	Side feeder position 2	%I0169	S7402	Push button manual start ASU
%R1923	DELSASU	ASU, timer delay safety raley A	%M0911	SLW_WEB	Paper web slow speed
%M0477	DOOR_OP	Pack mat ended and doors open	%M1389	SPL_ON	ASU, splice sequence going on
%M0912	FST_WEB	Paper web fast speed	%M0467	SPL_TMP	Paper sp temperature not correct
%Q0030	K008	ASU, Drive loop	%M1420	STP1-5	Paper splice between step 1 to 5

```
|DOOR_OP                                                          SPLNPBL  << RUNG 35  STEP #0183 >>
|%M0477                                                          %M1419
+--] [--+---------------------------------------------------------( )-- (* Paper splice was not possible    *)
|       |
|NO_PREP|
|%M0473 |
+--] [--+
|       |
|NOSPLTP|
|%M0472 |
+--] [--+
|
|SPL_SPD                                                          P+ASUSP  << RUNG 36  STEP #0187 >>
|%M1395                                                          %M1317
+--] [---------------------------------------------------------(^)-- (* Pulse + ASU splice speed        *)
|
|POSOKFS                                                          POS_OK   << RUNG 37  STEP #0189 >>
|%M1418                                                          %M1354
+--] [---------------------------------------------------------(^)-- (* ASU, position OK to complete     *)
|
|POS_OK                                                           SPL_SRC  << RUNG 38  STEP #0191 >>
|%M1354                                                          %M1386
+--] [--+------------------------------------------------------(R)-- (* ASU, splice position search      *)
|       |
|SPL_RES|                                                          SPL_SPD
|%M1374 |                                                          %M1395
+--] [--+------------------------------------------------------(R)-- (* ASU, low speed before splice     *)
|       |
|SPL_ON |                                                          LP_RDY
|%M1389 |                                                          %M1280
+--]/[--+------------------------------------------------------(R)-- (* Loop ready                       *)
|       |
|       |                                                          LOOPSLW
|       |                                                          %M1398
|       +------------------------------------------------------(R)-- (* ASU, loop slow speed barcode cnt *)
|       |
|       |                                                          POSOKFS
|       |                                                          %M1418
|       +------------------------------------------------------(R)-- (* ASU, pps spl pos OK fast scan    *)
|
|ALW_ON                                                                   << RUNG 39  STEP #0199 >>
|%S0007  +-------------+ +-------------+
+--] [---+ CALL PAPERSP+-+ CALL ASU_MOT+
|        | (SUBROUTINE)| | (SUBROUTINE)|
|        +-------------+ +-------------+
|
|ALW_ON                                                                   << RUNG 40  STEP #0202 >>
|%S0007  +-------------+ +-------------+
+--] [---+ CALL STRIPSP+-+ CALL STRSEL +
|        | (SUBROUTINE)| | (SUBROUTINE)|
|        +-------------+ +-------------+
|
|ALW_ON                                                                   << RUNG 41  STEP #0205 >>
|%S0007  +-------------+
+--] [---+ CALL STRIPOK+
|        | (SUBROUTINE)|
|        +-------------+
|
|[    END OF SUBROUTINE LOGIC     ]
|
```

REFERENCE	NICKNAME	REFERENCE DESCRIPTION
%S0007	ALW_ON	
	ASU_MOT	Drive rollers ASU
%M0477	DOOR_OP	Pack mat ended and doors open
%M1398	LOOPSLW	ASU, loop slow speed barcode cnt
%M1280	LP_RDY	Loop ready
%M0472	NOSPLTP	Pack mat end + temp not correct
%M0473	NO_PREP	ASU, Pkg mat end+not prepared
%M1317	P+ASUSP	Pulse + ASU splice speed
	PAPERSP	Paper splice sequence
%M1418	POSOKFS	ASU, pps spl pos OK fast scan

REFERENCE	NICKNAME	REFERENCE DESCRIPTION
%M1354	POS_OK	ASU, position OK to complete
%M1419	SPLNPBL	Paper splice was not possible
%M1389	SPL_ON	ASU, splice sequence going on
%M1374	SPL_RES	ASU, splice sequence reset
%M1395	SPL_SPD	ASU, low speed before splice
%M1386	SPL_SRC	ASU, splice position search
	STRIPOK	Strip bobbin test
	STRIPSP	Strip splice sequence
	STRSEL	Strip sealing control

This page left intentionally blank

```
|[  START LD SUBROUTINE  ASU_MOT  ]
|
|[     VARIABLE DECLARATIONS      ]
|
|[   START OF SUBROUTINE LOGIC    ]
|
| (*************************************************************************)
| (* Subroutine to control the Loop motor and the Magazine motor in ASU.   *)
| (*************************************************************************)
|
|STEP_2                                                          K036    << RUNG 5  STEP #0003 >>
|%G0002  +-----+                                                %Q0031
+--] [---+ GE_ |+-------------------------------------------------(S)-- (* ASU, Drive magazine          *)
|        | INT ||
|        |     ||
|DC_BUS  |     ||
|%R2100 -+I1  Q++
|        |     |
| CONST -+I2   |
| +00050 +-----+
|
|STEP_2                                                          K008    << RUNG 6  STEP #0006 >>
|%G0002  +-----+                                                %Q0030
+--] [---+ GE_ |+-------------------------------------------------(S)-- (* ASU, Drive loop             *)
|        | INT ||
|        |     ||
|DC_BUS  |     ||
|%R2100 -+I1  Q++
|        |     |
| CONST -+I2   |
| +00100 +-----+
|
|STEP_1                                                          K036    << RUNG 7  STEP #0009 >>
|%G0001                                                         %Q0031
+--] [-------------------------------------------------------------(R)-- (* ASU, Drive magazine          *)
|
|STEP_1                                                          K008    << RUNG 8  STEP #0011 >>
|%G0001                                                         %Q0030
+--] [-------------------------------------------------------------(R)-- (* ASU, Drive loop             *)
|
| (*************************************************************************)
| (* The inverter must switch ON 3 seconds before to be ready             *)
| (* to receive the input signals.                                         *)
| (*************************************************************************)
|
| K036    K008                                                   POW_ON   << RUNG 10  STEP #0014 >>
|%Q0031  %Q0030  +-----+                                        %M1215
+--] [-----] [---+ TMR +-------------------------------------------------( )-- (* Power on to inverter          *)
|                |0.10s|
|                |     |
|         CONST -+PV   |
|         +00030 |     |
|                +-----+
|                POWONRG
|                %R1622
|
| (*************************************************************************)
| (* Loop full                                                             *)
| (*************************************************************************)
|
|ALW_ON                                                          LP_FULL  << RUNG 12  STEP #0019 >>
|%S0007                                                         %M1380
+--] [-------------------------------------------------------------(R)-- (* ASU, loop full              *)
|
```

REFERENCE	NICKNAME	REFERENCE DESCRIPTION
%S0007	ALW_ON	
%R2100	DC_BUS	Delay DC-bus
%Q0030	K008	ASU, Drive loop
%Q0031	K036	ASU, Drive magazine
%M1380	LP_FULL	ASU, loop full

REFERENCE	NICKNAME	REFERENCE DESCRIPTION
%R1622	POWONRG	Power on register
%M1215	POW_ON	Power on to inverter
%G0001	STEP_1	STANDBY
%G0002	STEP_2	PREPARATION (3 MIN.)

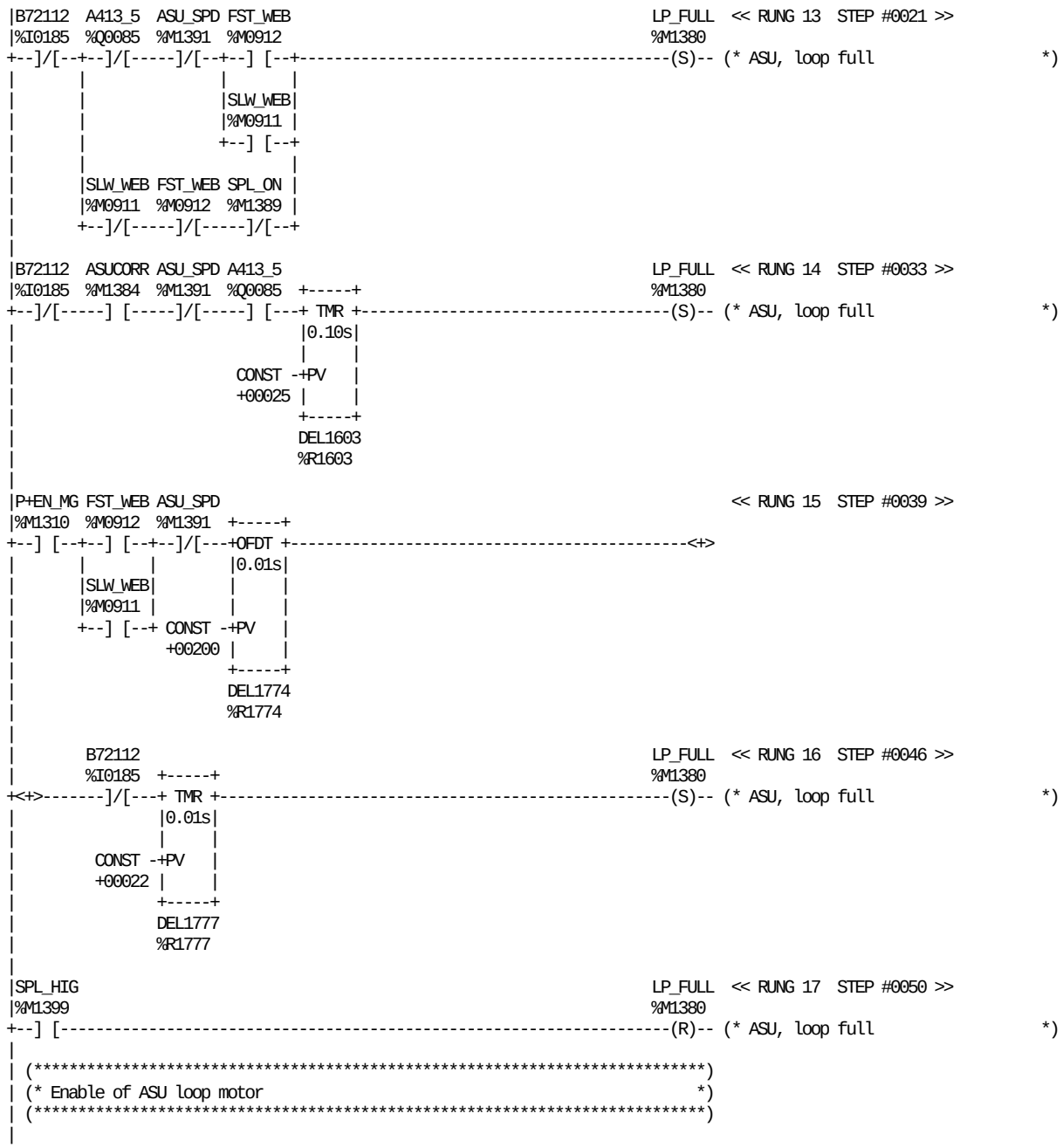

REFERENCE	NICKNAME	REFERENCE DESCRIPTION	REFERENCE	NICKNAME	REFERENCE DESCRIPTION
%Q0085	A413_5	Enable drive magazine	%M0912	FST_WEB	Paper web fast speed
%M1384	ASUCORR	ASU, delay speed correction	%M1380	LP_FULL	ASU, loop full
%M1391	ASU_SPD	ASU, high speed after splice	%M1310	P+EN_MG	Pulse + enable drive magazine
%I0185	B72112	Adjustment loop photocell	%M0911	SLW_WEB	Paper web slow speed
%R1603	DEL1603	ASU loop delay	%M1399	SPL_HIG	ASU, forced loop after splice
%R1774	DEL1774	ASU, loop delay	%M1389	SPL_ON	ASU, splice sequence going on
%R1777	DEL1777	ASU, loop delay			

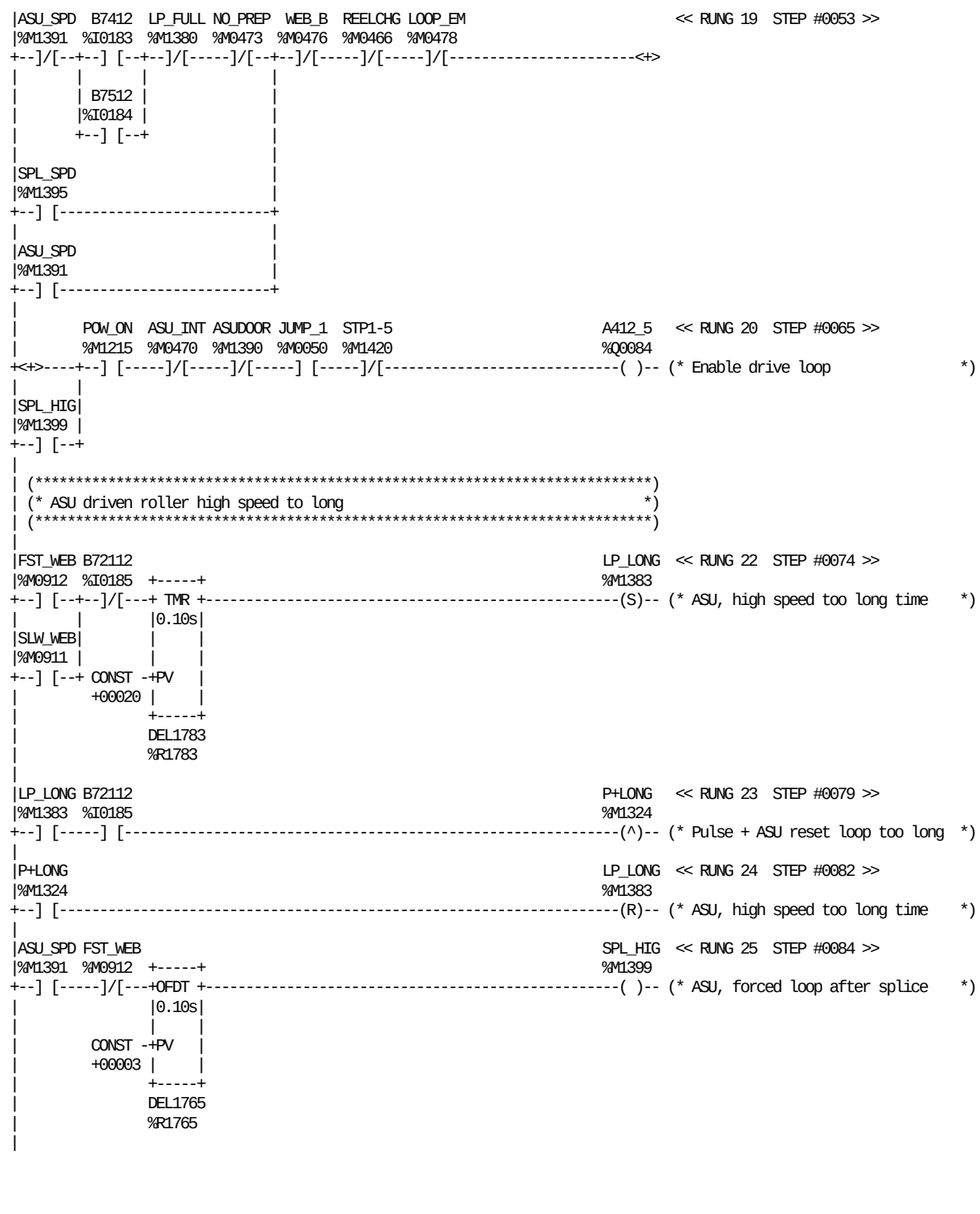

REFERENCE	NICKNAME	REFERENCE DESCRIPTION	REFERENCE	NICKNAME	REFERENCE DESCRIPTION
%Q0084	A412_5	Enable drive loop	%M1380	LP_FULL	ASU, loop full
%M1390	ASUDOOR	ASU, doors open	%M1383	LP_LONG	ASU, high speed too long time
%M0470	ASU_INT	Splice sequence ASU interrupted	%M0473	NO_PREP	ASU, Pkg mat end+not prepared
%M1391	ASU_SPD	ASU, high speed after splice	%M1324	P+LONG	Pulse + ASU reset loop too long
%I0185	B72112	Adjustment loop photocell	%M1215	POW_ON	Power on to inverter
%I0183	B7412	Side feeder position 1	%M0466	REELCHG	ASU, make splice with new reel
%I0184	B7512	Side feeder position 2	%M0911	SLW_WEB	Paper web slow speed
%R1765	DEL1765	ASU, delay	%M1399	SPL_HIG	ASU, forced loop after splice
%R1783	DEL1783	check status safety relay	%M1395	SPL_SPD	ASU, low speed before splice
%M0912	FST_WEB	Paper web fast speed	%M1420	STP1-5	Paper splice between step 1 to 5
%M0050	JUMP_1	Jump to pos 1 (Emergency stop)	%M0476	WEB_B	ASU, Broken web at magazine
%M0478	LOOP_EM	Loop empty			

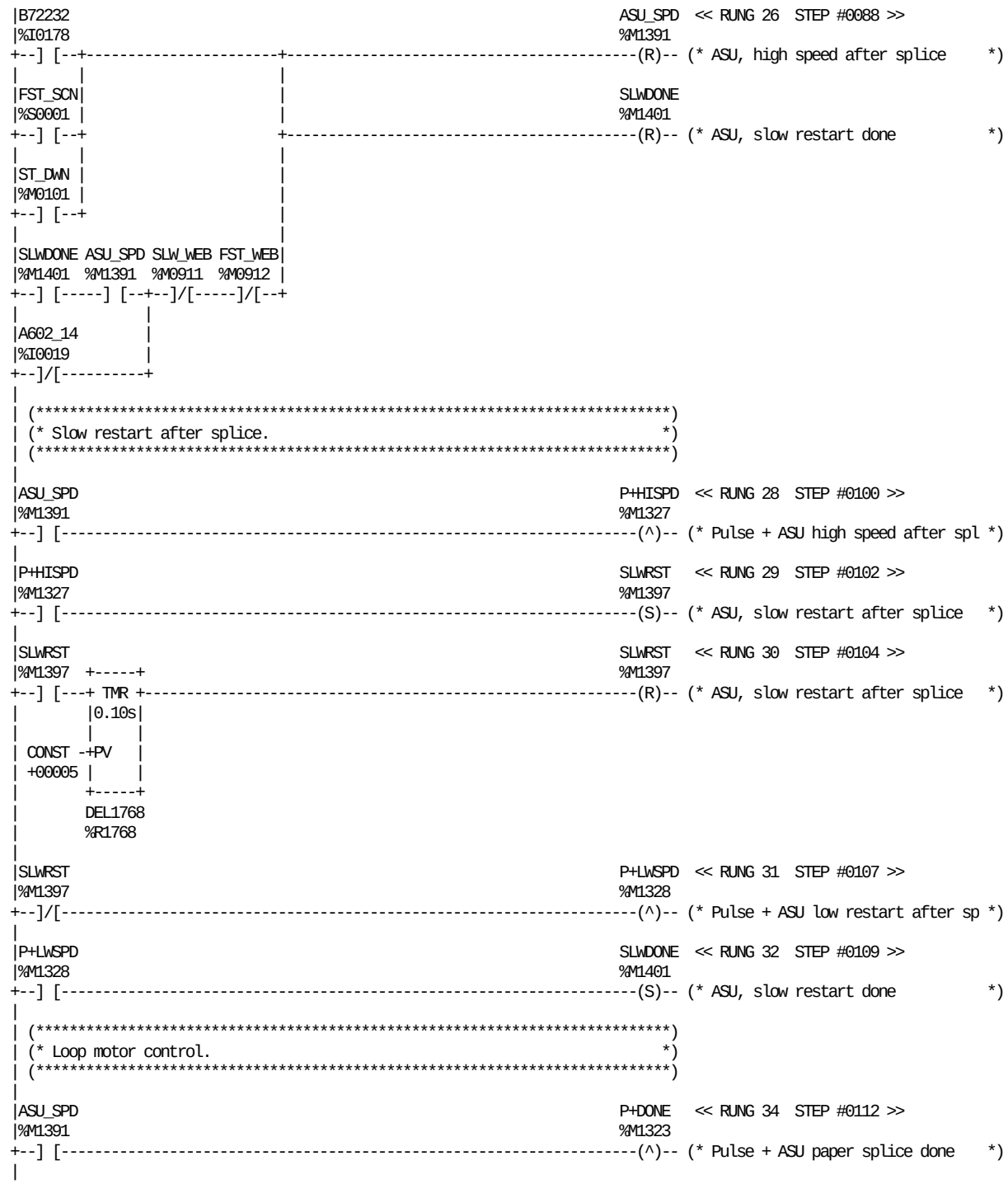

REFERENCE	NICKNAME	REFERENCE DESCRIPTION	REFERENCE	NICKNAME	REFERENCE DESCRIPTION
%I0019	A602_14	Safety monitors C	%M1327	P+HISPD	Pulse + ASU high speed after spl
%M1391	ASU_SPD	ASU, high speed after splice	%M1328	P+LWSPD	Pulse + ASU low restart after sp
%I0178	B72232	Magazine down	%M1401	SLWDONE	ASU, slow restart done
%R1768	DEL1768	ASU, delay	%M1397	SLWRST	ASU, slow restart after splice
%S0001	FST_SCN		%M0911	SLW_WEB	Paper web slow speed
%M0912	FST_WEB	Paper web fast speed	%M0101	ST_DWN	Pushbuttons step down
%M1323	P+DONE	Pulse + ASU paper splice done			

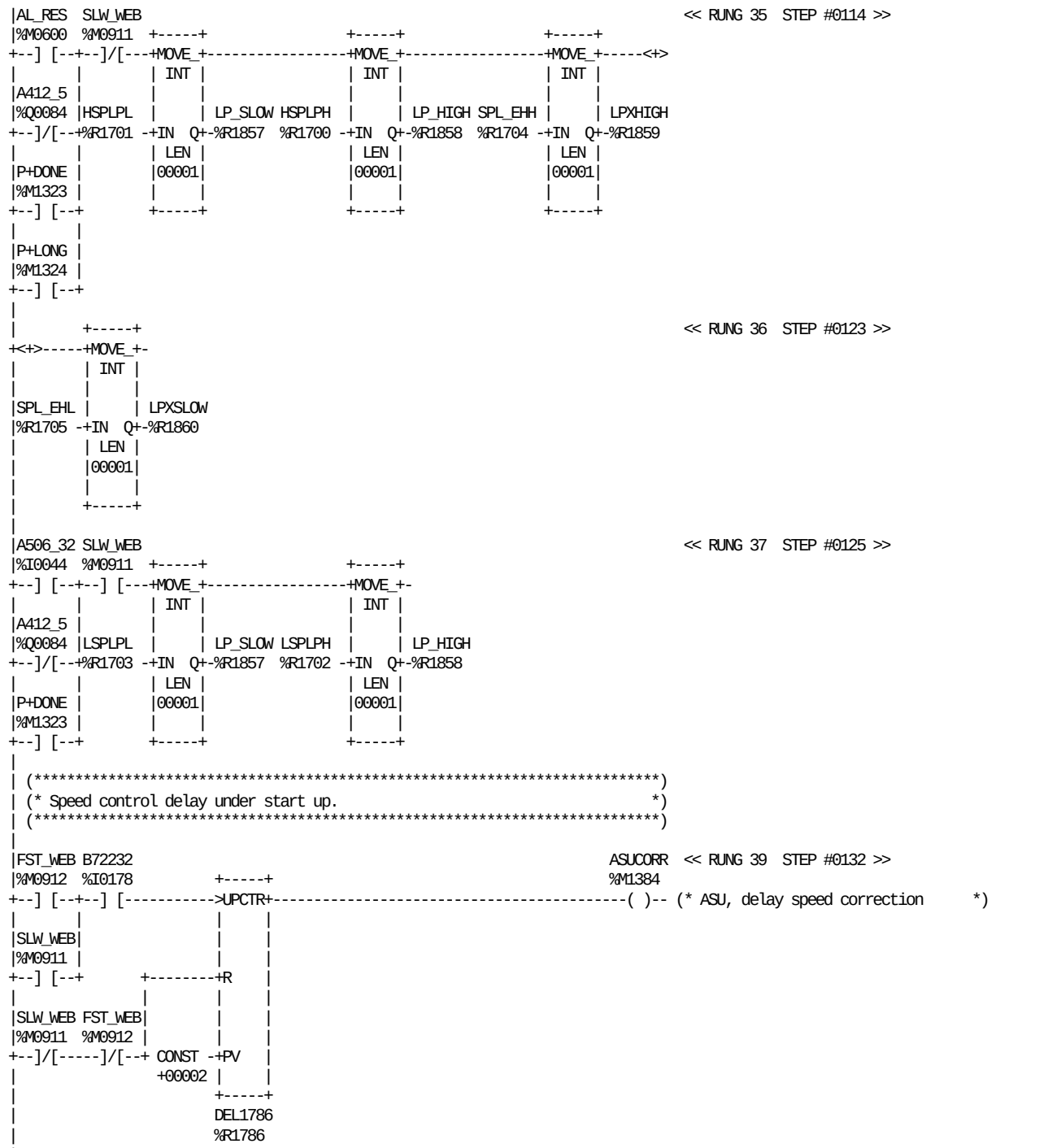

REFERENCE	NICKNAME	REFERENCE DESCRIPTION	REFERENCE	NICKNAME	REFERENCE DESCRIPTION
%Q0084	A412_5	Enable drive loop	%R1860	LPXSLOW	ASU, loop extra slow sp after sp
%I0044	A506_32	DMC Main motor running	%R1858	LP_HIGH	ASU, loop high speed
%M0600	AL_RES	Alarm reset (From TPOP)	%R1857	LP_SLOW	ASU, loop slow speed
%M1384	ASUCORR	ASU, delay speed correction	%R1702	LSPLPH	Low speed loop high
%I0178	B72232	Magazine down	%R1703	LSPLPL	Low speed loop low
%R1786	DEL1786	ASU, loop delay	%M1323	P+DONE	Pulse + ASU paper splice done
%M0912	FST_WEB	Paper web fast speed	%M1324	P+LONG	Pulse + ASU reset loop too long
%R1700	HSPLPH	High speed loop high	%M0911	SLW_WEB	Paper web slow speed
%R1701	HSPLPL	High speed loop low	%R1704	SPL_EHH	Loop extra high speed high(TPOP)
%R1859	LPXHIGH	ASU, loop extra high sp after sp	%R1705	SPL_EHL	Loop extra high speed low (TPOP)

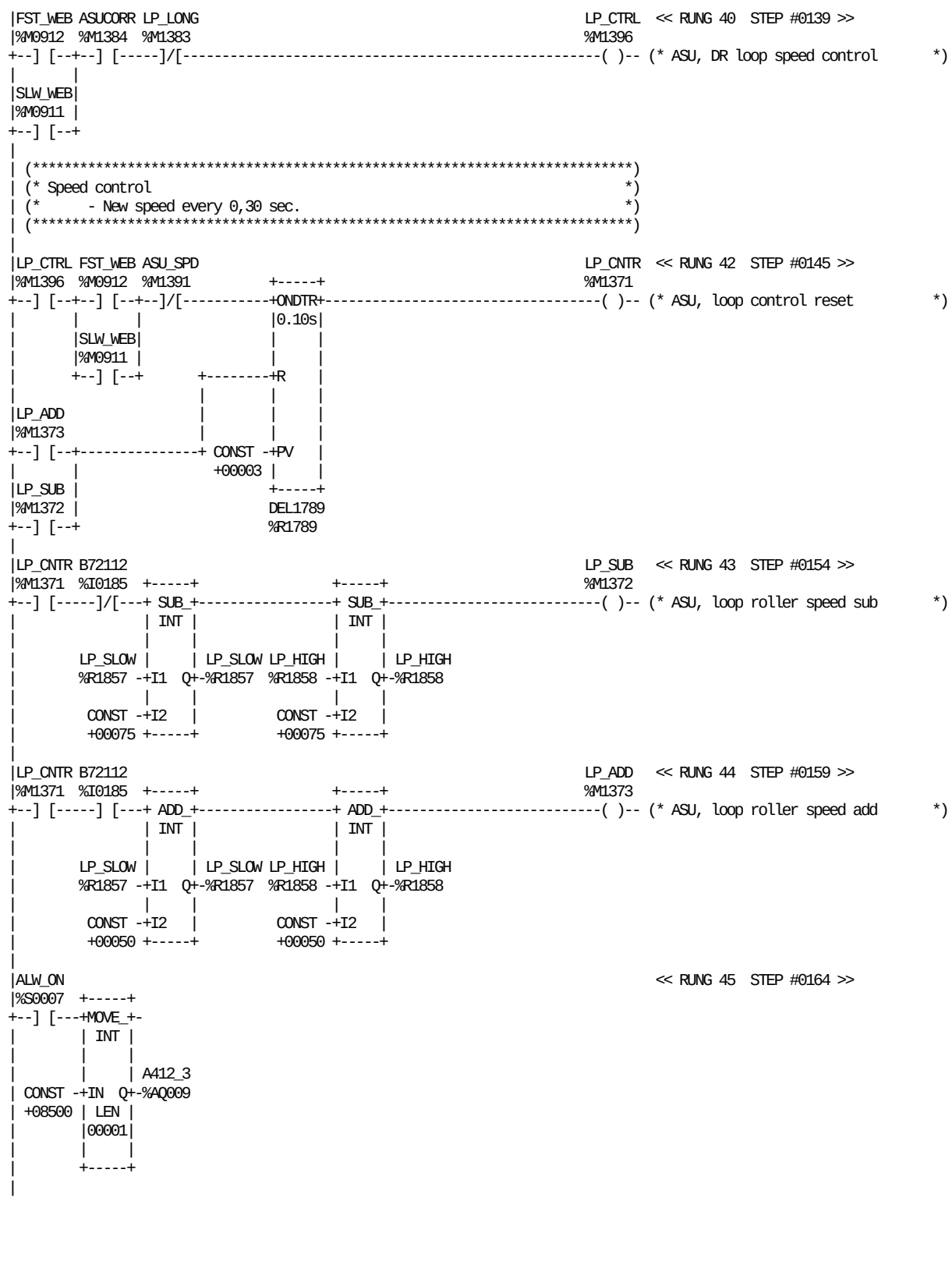

REFERENCE	NICKNAME	REFERENCE DESCRIPTION	REFERENCE	NICKNAME	REFERENCE DESCRIPTION
%AQ009	A412_3	Drive ASU loop	%M1371	LP_CNTR	ASU, loop control reset
%S0007	ALW_ON		%M1396	LP_CTRL	ASU, DR loop speed control
%M1384	ASUCORR	ASU, delay speed correction	%R1858	LP_HIGH	ASU, loop high speed
%M1391	ASU_SPD	ASU, high speed after splice	%M1383	LP_LONG	ASU, high speed too long time
%I0185	B72112	Adjustment loop photocell	%R1857	LP_SLOW	ASU, loop slow speed
%R1789	DEL1789	ASU, loop delay	%M1372	LP_SUB	ASU, loop roller speed sub
%M0912	FST_WEB	Paper web fast speed	%M0911	SLW_WEB	Paper web slow speed
%M1373	LP_ADD	ASU, loop roller speed add			

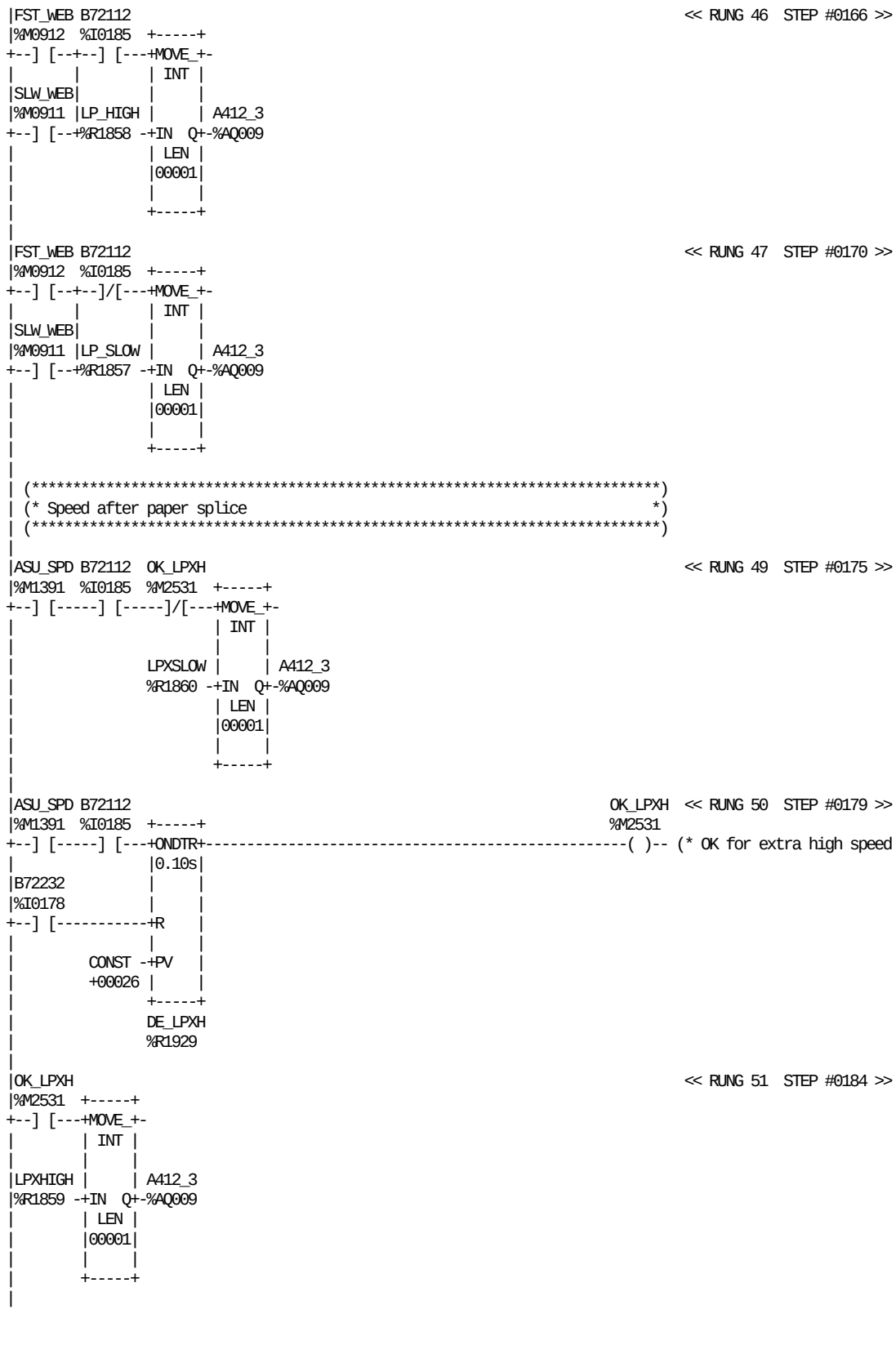

REFERENCE	NICKNAME	REFERENCE DESCRIPTION	REFERENCE	NICKNAME	REFERENCE DESCRIPTION
%AQ009	A412_3	Drive ASU loop	%R1859	LPXHIGH	ASU, loop extra high sp after sp
%M1391	ASU_SPD	ASU, high speed after splice	%R1860	LPXSLOW	ASU, loop extra slow sp after sp
%I0185	B72112	Adjustment loop photocell	%R1858	LP_HIGH	ASU, loop high speed
%I0178	B72232	Magazine down	%R1857	LP_SLOW	ASU, loop slow speed
%R1929	DE_LPXH	Delay loop extra high speed	%M2531	OK_LPXH	OK for extra high speed
%M0912	FST_WEB	Paper web fast speed	%M0911	SLW_WEB	Paper web slow speed

```
|ASU_SPD B72112                                                    << RUNG 52  STEP #0186 >>
|%M1391  %I0185  +-----+
+--] [-----]/[---+MOVE_+-
|                | INT |
|                |     |
|        LPXSLOW |     | A412_3
|        %R1860 -+IN  Q+-%AQ009
|                | LEN |
|                |00001|
|                |     |
|                +-----+
|
|ASU_SPD SLW_WEB SLWRST                                            << RUNG 53  STEP #0189 >>
|%M1391  %M0911  %M1397          +-----+
+--] [--+--]/[-----] [--+--------+ DIV_+-
|       |              |        | INT |
|       |SLW_WEB B72112 |        |     |
|       |%M0911  %I0185 |LPXHIGH |     | A412_3
|       +--] [-----] [--+%R1859 -+I1  Q+-%AQ009
|                             |     |
|                        CONST -+I2   |
|                        +00004 +-----+
|
|ASU_SPD SLW_WEB B72112                                            << RUNG 54  STEP #0197 >>
|%M1391  %M0911  %I0185  +-----+
+--] [-----] [-----]/[---+ DIV_+-
|                        | INT |
|                        |     |
|                LPXHIGH |     | A412_3
|                %R1859 -+I1  Q+-%AQ009
|                        |     |
|                 CONST -+I2   |
|                 +00005 +-----+
|
| (*************************************************************************)
| (* Loop motor at 50% of normal speed between first and second barcode.   *)
| (* After that run at 20% until motor stop.                              *)
| (*************************************************************************)
|
|LOOPSLW SPL_SPD                                                   << RUNG 56  STEP #0202 >>
|%M1398  %M1395  +-----+
+--] [-----]/[---+ DIV_+-
|                | INT |
|                |     |
|        LP_SLOW |     | A412_3
|        %R1857 -+I1  Q+-%AQ009
|                |     |
|         CONST -+I2   |
|         +00002 +-----+
|
|SPL_SPD                                                           << RUNG 57  STEP #0205 >>
|%M1395  +-----+
+--] [---+ DIV_+-
|        | INT |
|        |     |
|LP_SLOW |     | A412_3
|%R1857 -+I1  Q+-%AQ009
|        |     |
| CONST -+I2   |
| +00005 +-----+
|
```

REFERENCE	NICKNAME	REFERENCE DESCRIPTION	REFERENCE	NICKNAME	REFERENCE DESCRIPTION
%AQ009	A412_3	Drive ASU loop	%R1860	LPXSLOW	ASU, loop extra slow sp after sp
%M1391	ASU_SPD	ASU, high speed after splice	%R1857	LP_SLOW	ASU, loop slow speed
%I0185	B72112	Adjustment loop photocell	%M1397	SLWRST	ASU, slow restart after splice
%M1398	LOOPSLW	ASU, loop slow speed barcode cnt	%M0911	SLW_WEB	Paper web slow speed
%R1859	LPXHIGH	ASU, loop extra high sp after sp	%M1395	SPL_SPD	ASU, low speed before splice

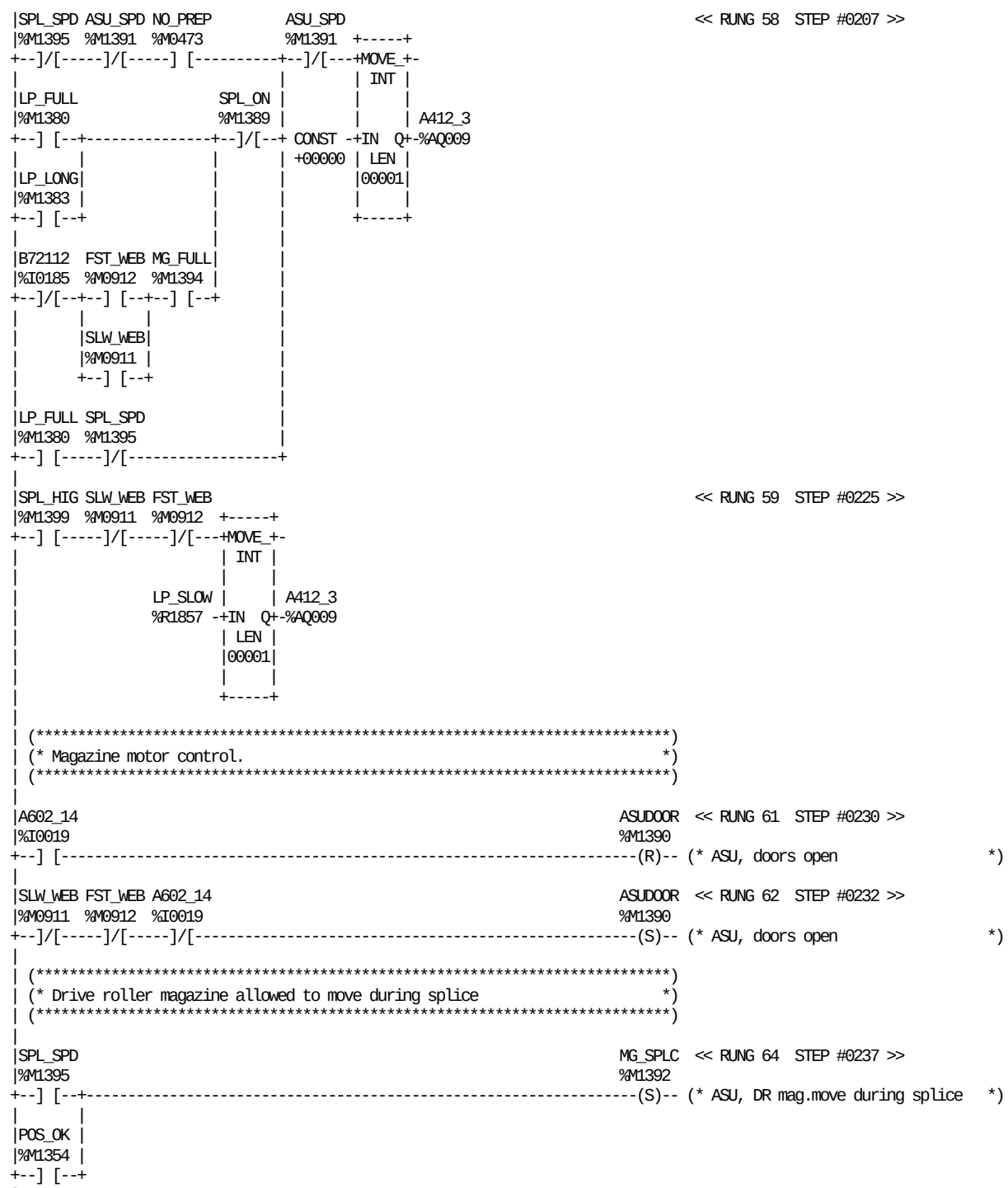

REFERENCE	NICKNAME	REFERENCE DESCRIPTION	REFERENCE	NICKNAME	REFERENCE DESCRIPTION
%AQ009	A412_3	Drive ASU loop	%M1394	MG_FULL	ASU, DR mag. full
%I0019	A602_14	Safety monitors C	%M1392	MG_SPLC	ASU, DR mag.move during splice
%M1390	ASUDOOR	ASU, doors open	%M0473	NO_PREP	ASU, Pkg mat end+not prepared
%M1391	ASU_SPD	ASU, high speed after splice	%M1354	POS_OK	ASU, position OK to complete
%I0185	B72112	Adjustment loop photocell	%M0911	SLW_WEB	Paper web slow speed
%M0912	FST_WEB	Paper web fast speed	%M1399	SPL_HIG	ASU, forced loop after splice
%M1380	LP_FULL	ASU, loop full	%M1389	SPL_ON	ASU, splice sequence going on
%M1383	LP_LONG	ASU, high speed too long time	%M1395	SPL_SPD	ASU, low speed before splice
%R1857	LP_SLOW	ASU, loop slow speed			

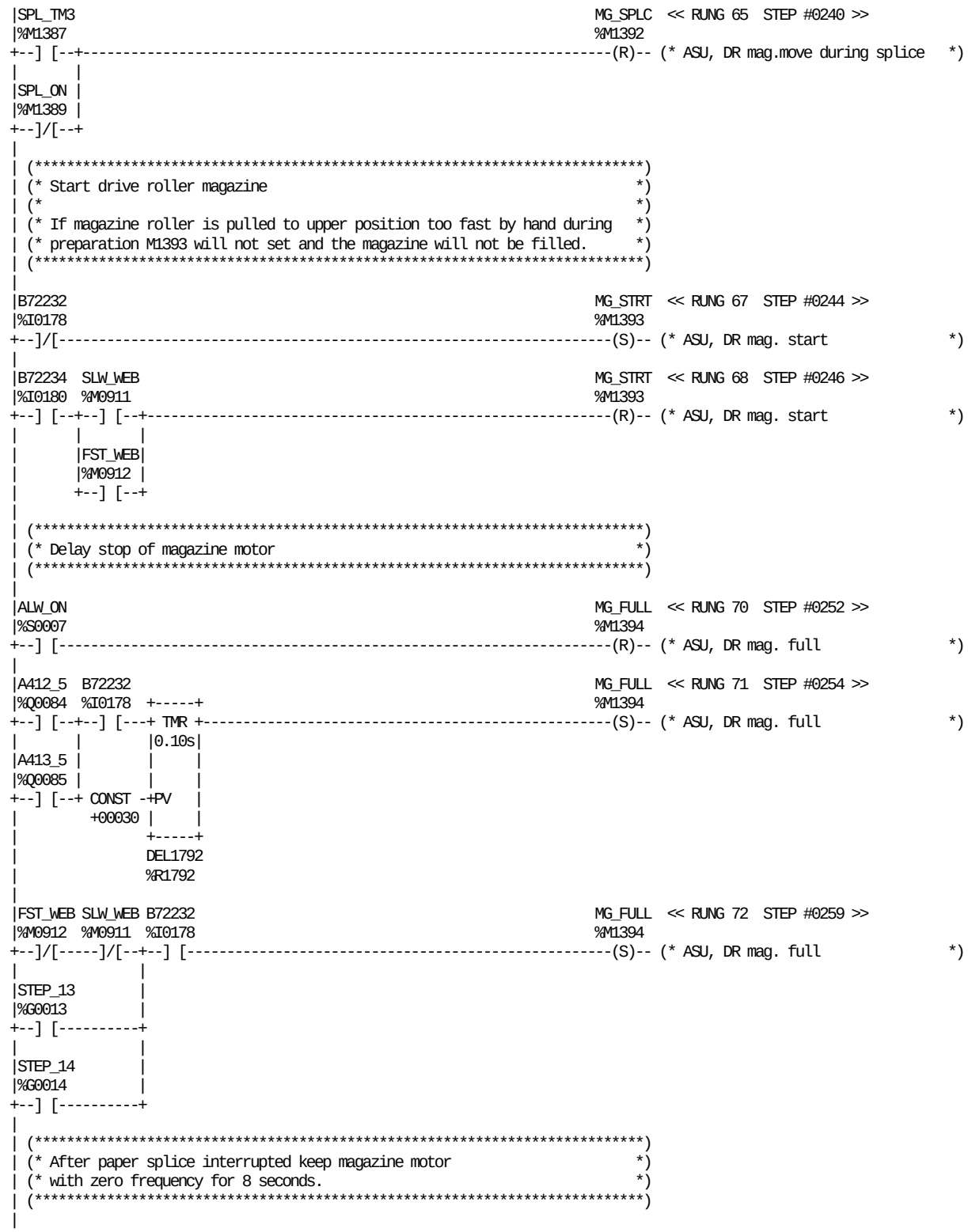

REFERENCE	NICKNAME	REFERENCE DESCRIPTION	REFERENCE	NICKNAME	REFERENCE DESCRIPTION
%Q0084	A412_5	Enable drive loop	%M1392	MG_SPLC	ASU, DR mag.move during splice
%Q0085	A413_5	Enable drive magazine	%M1393	MG_STRT	ASU, DR mag. start
%S0007	ALW_ON		%M0911	SLW_WEB	Paper web slow speed
%I0178	B72232	Magazine down	%M1389	SPL_ON	ASU, splice sequence going on
%I0180	B72234	Magazine empty	%M1387	SPL_TM3	ASU, splice sequence (2,55-2,65)
%R1792	DEL1792	ASU, magazine delay	%G0013	STEP_13	OPEN DOORS, CUT TUBE
%M0912	FST_WEB	Paper web fast speed	%G0014	STEP_14	CIP / HC
%M1394	MG_FULL	ASU, DR mag. full			

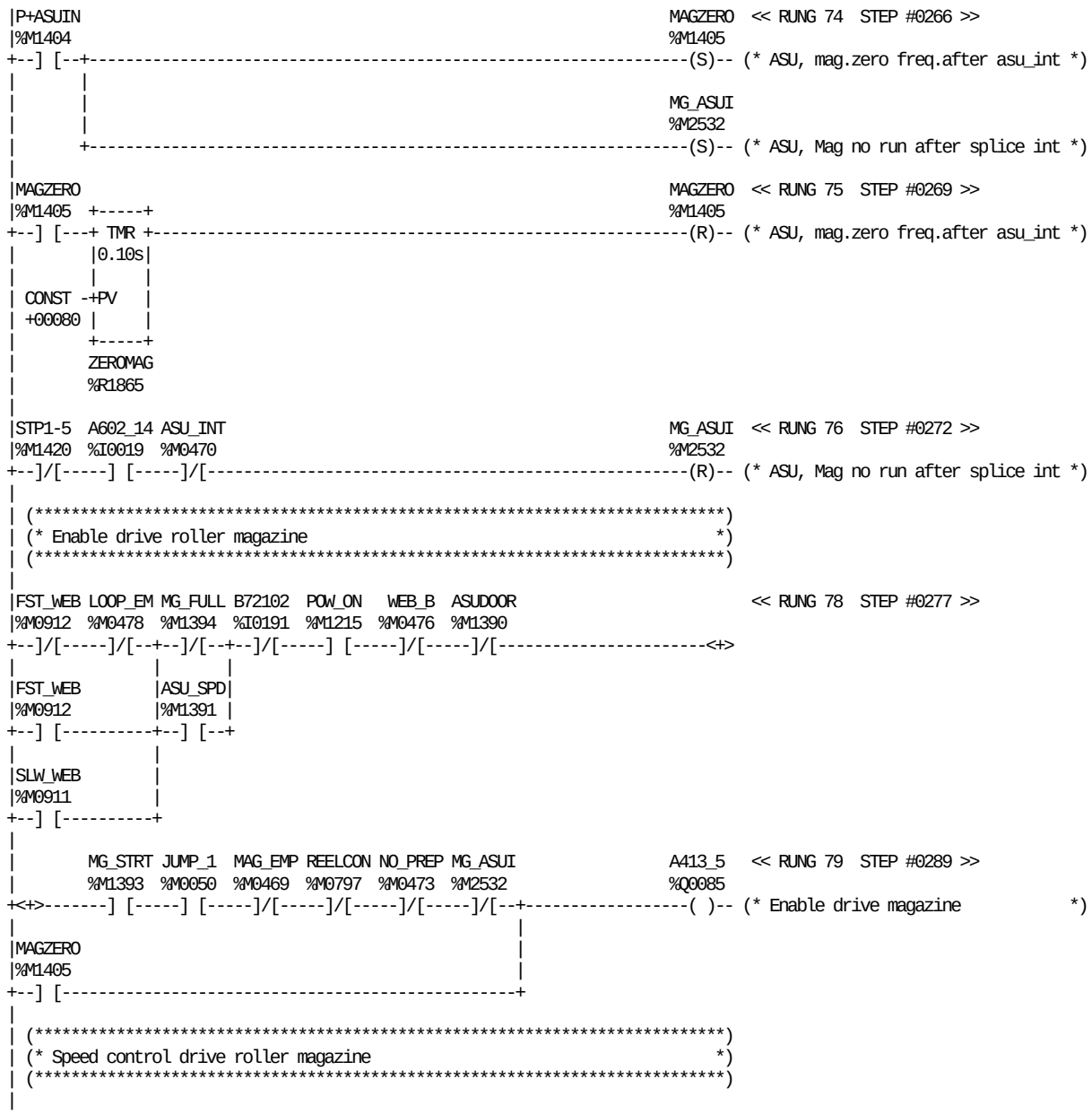

REFERENCE	NICKNAME	REFERENCE DESCRIPTION	REFERENCE	NICKNAME	REFERENCE DESCRIPTION
%Q0085	A413_5	Enable drive magazine	%M2532	MG_ASUI	ASU, Mag no run after splice int
%I0019	A602_14	Safety monitors C	%M1394	MG_FULL	ASU, DR mag. full
%M1390	ASUDOOR	ASU, doors open	%M1393	MG_STRT	ASU, DR mag. start
%M0470	ASU_INT	Splice sequence ASU interrupted	%M0473	NO_PREP	ASU, Pkg mat end+not prepared
%M1391	ASU_SPD	ASU, high speed after splice	%M1404	P+ASUIN	ASU, pulse + splice interrupted
%I0191	B72102	Loop empty	%M1215	POW_ON	Power on to inverter
%M0912	FST_WEB	Paper web fast speed	%M0797	REELCON	ASU, step up reel condition
%M0050	JUMP_1	Jump to pos 1 (Emergency stop)	%M0911	SLW_WEB	Paper web slow speed
%M0478	LOOP_EM	Loop empty	%M1420	STP1-5	Paper splice between step 1 to 5
%M1405	MAGZERO	ASU, mag.zero freq.after asu_int	%M0476	WEB_B	ASU, Broken web at magazine
%M0469	MAG_EMP	Magazine ASU empty	%R1865	ZEROMAG	ASU, TMR mag.frequence = 0

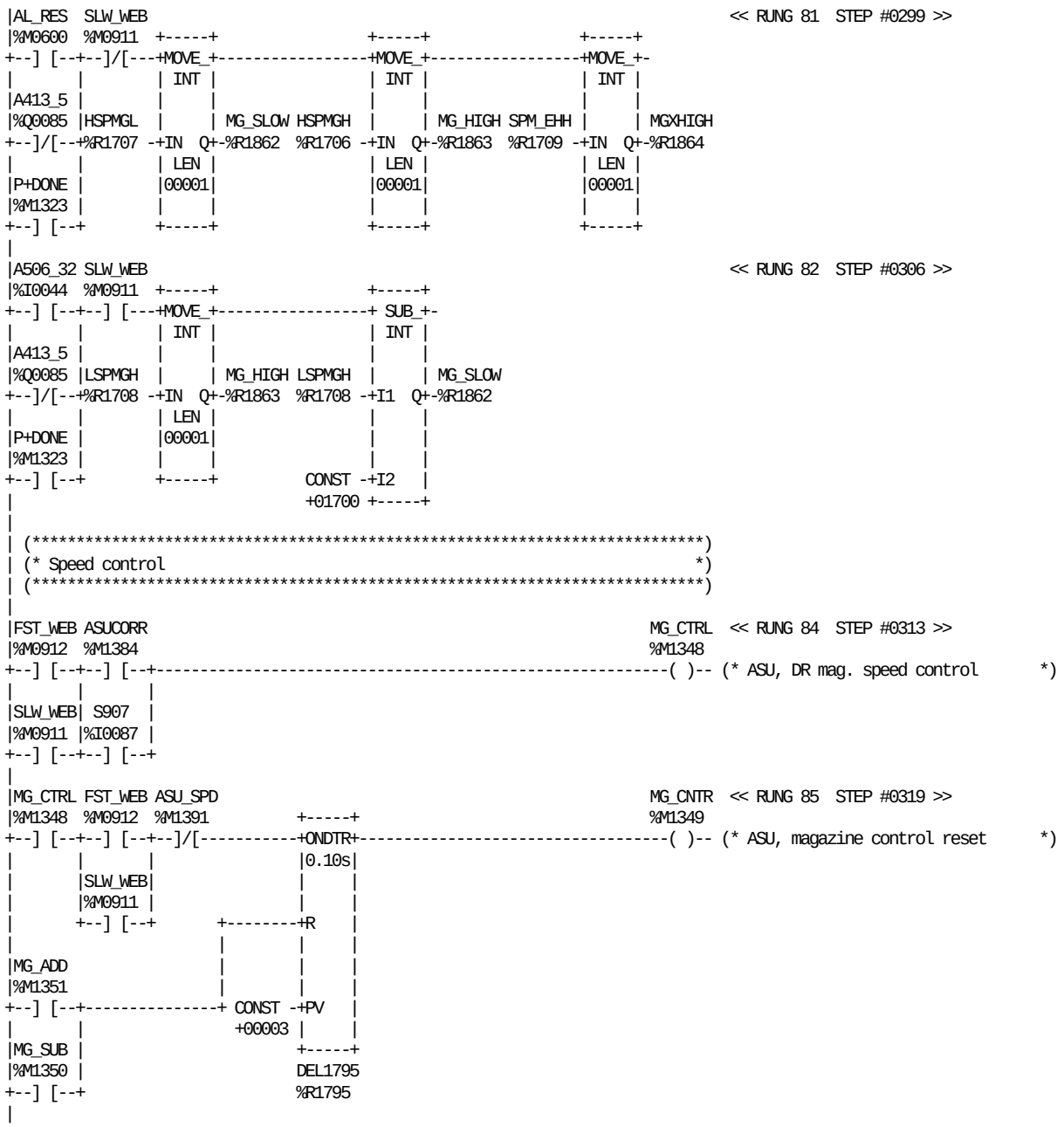

REFERENCE	NICKNAME	REFERENCE DESCRIPTION	REFERENCE	NICKNAME	REFERENCE DESCRIPTION
%Q0085	A413_5	Enable drive magazine	%M1351	MG_ADD	ASU, magazine roller speed add
%I0044	A506_32	DMC Main motor running	%M1349	MG_CNTR	ASU, magazine control reset
%M0600	AL_RES	Alarm reset (From TPOP)	%M1348	MG_CTRL	ASU, DR mag. speed control
%M1384	ASUCORR	ASU, delay speed correction	%R1863	MG_HIGH	ASU, magazine roller high speed
%M1391	ASU_SPD	ASU, high speed after splice	%R1862	MG_SLOW	ASU, magazine roller slow speed
%R1795	DEL1795	ASU, magazine delay	%M1350	MG_SUB	ASU, magazine roller dpeed sub
%M0912	FST_WEB	Paper web fast speed	%M1323	P+DONE	Pulse + ASU paper splice done
%R1706	HSPMGH	High speed magazine high	%I0087	S907	Push button inching JUM
%R1707	HSPMGL	High speed magazine low	%M0911	SLW_WEB	Paper web slow speed
%R1708	LSPMGH	Low speed magazine high	%R1709	SPM_EHH	Extra high speep mag high (TPOP)
%R1864	MGXHIGH	ASU, high speed after splice			

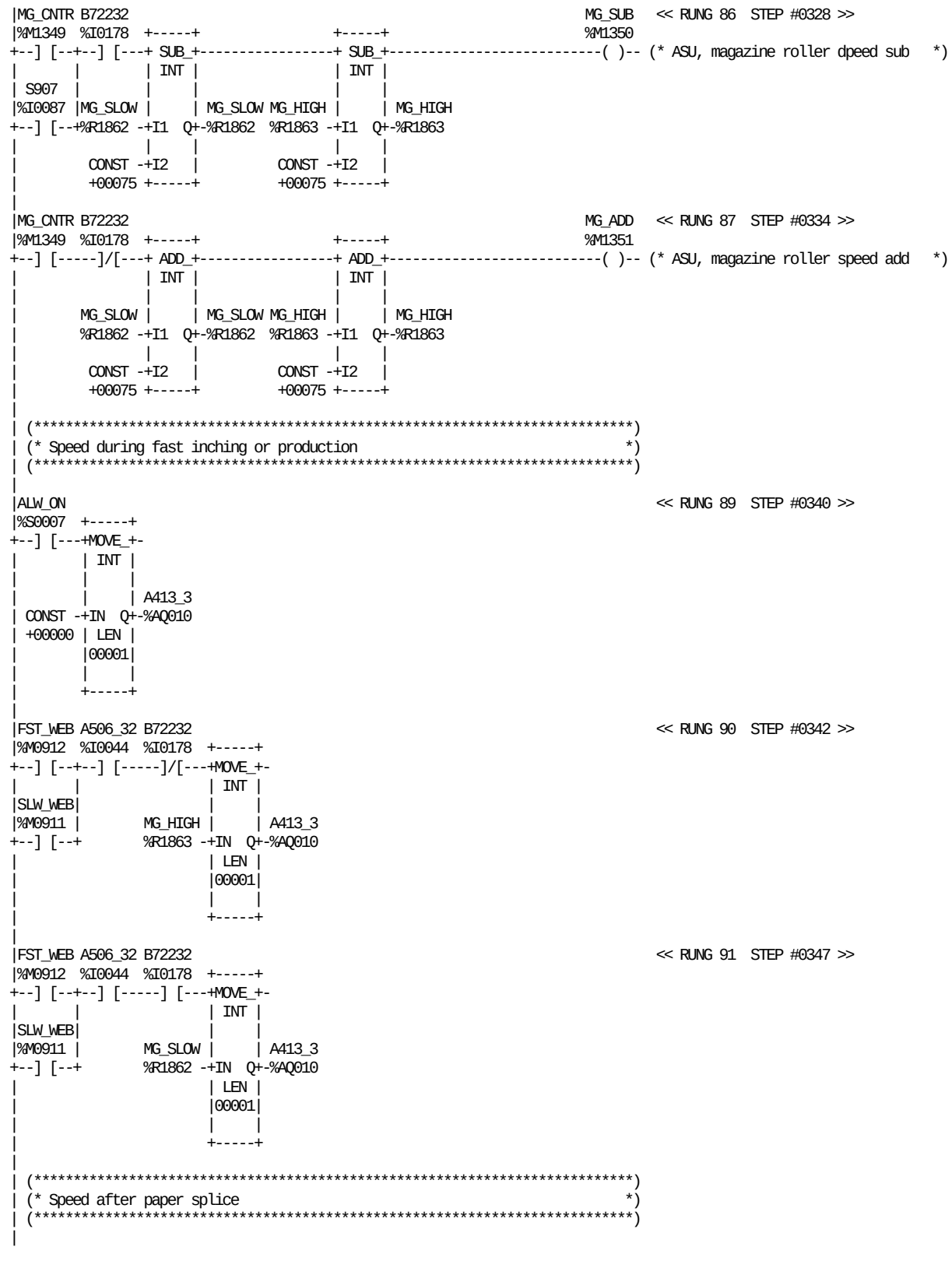

REFERENCE	NICKNAME	REFERENCE DESCRIPTION	REFERENCE	NICKNAME	REFERENCE DESCRIPTION
%AQ010	A413_3	Drive ASU magazine	%M1349	MG_CNTR	ASU, magazine control reset
%I0044	A506_32	DMC Main motor running	%R1863	MG_HIGH	ASU, magazine roller high speed
%S0007	ALW_ON		%R1862	MG_SLOW	ASU, magazine roller slow speed
%I0178	B72232	Magazine down	%M1350	MG_SUB	ASU, magazine roller dpeed sub
%M0912	FST_WEB	Paper web fast speed	%I0087	S907	Push button inching JUM
%M1351	MG_ADD	ASU, magazine roller speed add	%M0911	SLW_WEB	Paper web slow speed

```
|ASU_SPD FST_WEB                                                    << RUNG 93  STEP #0353 >>
|%M1391  %M0912  +-----+
+--] [-----] [---+MOVE_+-
|                | INT |
|                |     |
|        MGXHIGH |     | A413_3
|        %R1864 -+IN  Q+-%AQ010
|                | LEN |
|                |00001|
|                |     |
|                +-----+
|
| (*************************************************************************)
| (* Magazine motor at 70% of normal speed between first and second barcode.  *)
| (* After that run at 33% until motor stop.                                  *)
| (*************************************************************************)
|
|LOOPSLW SPL_SPD                                                    << RUNG 95  STEP #0357 >>
|%M1398  %M1395  +-----+                +-----+
+--] [-----]/[---+ DIV_+----------------+ MUL_+-
|                | INT |                | INT |
|                |     |                |     |
|        MG_SLOW |     | A413_3  A413_3 |     | A413_3
|        %R1862 -+I1  Q+-%AQ010  %AQ010 -+I1  Q+-%AQ010
|                |     |                |     |
|         CONST -+I2   |          CONST -+I2   |
|         +00100 +-----+          +00070 +-----+
|
|SPL_SPD                                                            << RUNG 96  STEP #0361 >>
|%M1395  +-----+
+--] [---+ DIV_+-
|        | INT |
|        |     |
|MG_SLOW |     | A413_3
|%R1862 -+I1  Q+-%AQ010
|        |     |
| CONST -+I2   |
| +00003 +-----+
|
|B72102                                                             << RUNG 97  STEP #0363 >>
|%I0191          +-----+
+--] [--+--------+MOVE_+-
|       |        | INT |
|MG_SPLC|        |     |
|%M1392 |        |     | A413_3
+--] [--+ CONST -+IN  Q+-%AQ010
|         +00000 | LEN |
|                |00001|
|                |     |
|                +-----+
|
|SLW_WEB FST_WEB B72232  ASU_SPD                                    << RUNG 98  STEP #0366 >>
|%M0911  %M0912  %I0178  %M1391  +-----+
+--]/[-----]/[-----]/[-----]/[---+MOVE_+-
|                                | INT |
|                                |     |
|                                |     | A413_3
|                         CONST -+IN  Q+-%AQ010
|                         +05500 | LEN |
|                                |00001|
|                                |     |
|                                +-----+
|
```

REFERENCE	NICKNAME	REFERENCE DESCRIPTION	REFERENCE	NICKNAME	REFERENCE DESCRIPTION
%AQ010	A413_3	Drive ASU magazine	%R1864	MGXHIGH	ASU, high speed after splice
%M1391	ASU_SPD	ASU, high speed after splice	%R1862	MG_SLOW	ASU, magazine roller slow speed
%I0191	B72102	Loop empty	%M1392	MG_SPLC	ASU, DR mag.move during splice
%I0178	B72232	Magazine down	%M0911	SLW_WEB	Paper web slow speed
%M0912	FST_WEB	Paper web fast speed	%M1395	SPL_SPD	ASU, low speed before splice
%M1398	LOOPSLW	ASU, loop slow speed barcode cnt			



REFERENCE NICKNAME	REFERENCE DESCRIPTION	REFERENCE NICKNAME	REFERENCE DESCRIPTION
%AQ010 A413_3	Drive ASU magazine	%M1405 MAGZERO	ASU, mag.zero freq.after asu_int

This page left intentionally blank

```
|[  START LD SUBROUTINE  PAPERSP  ]
|
|[     VARIABLE DECLARATIONS      ]
|
|[   START OF SUBROUTINE LOGIC    ]
|
| (*************************************************************************)
| (* Paper splice`s step counter.                                          *)
| (*************************************************************************)
|
| STP7                                                          SPL_ON   << RUNG 5  STEP #0003 >>
|%M2549                                                        %M1389
+--] [--+-------------------------------------------------------(R)-- (* ASU, splice sequence going on    *)
|       |
|SPL_RES|
|%M1374 |
+--] [--+
|
|SPL_ON                                                         STP0    << RUNG 6  STEP #0006 >>
|%M1389  +-----+                                              %M2542
+--] [---+ EQ_ |+-----------------------------------------------( )-- (* Paper splice in position 0      *)
|        | INT ||
|        |     ||
|PSP_RG1 |     ||
|%R1179 -+I1  Q++
|        |     |
| CONST -+I2   |
| +00000 +-----+
|
|SPL_ON                                                         STP1    << RUNG 7  STEP #0009 >>
|%M1389  +-----+                                              %M2543
+--] [---+ EQ_ |+-----------------------------------------------( )-- (* Paper splice in position 1      *)
|        | INT ||
|        |     ||
|PSP_RG1 |     ||
|%R1179 -+I1  Q++
|        |     |
| CONST -+I2   |
| +00001 +-----+
|
|SPL_ON                                                         STP2    << RUNG 8  STEP #0012 >>
|%M1389  +-----+                                              %M2544
+--] [---+ EQ_ |+-----------------------------------------------( )-- (* Paper splice in position 2      *)
|        | INT ||
|        |     ||
|PSP_RG1 |     ||
|%R1179 -+I1  Q++
|        |     |
| CONST -+I2   |
| +00002 +-----+
|
|SPL_ON                                                         STP3    << RUNG 9  STEP #0015 >>
|%M1389  +-----+                                              %M2545
+--] [---+ EQ_ |+-----------------------------------------------( )-- (* Paper splice in position 3      *)
|        | INT ||
|        |     ||
|PSP_RG1 |     ||
|%R1179 -+I1  Q++
|        |     |
| CONST -+I2   |
| +00003 +-----+
|
```

REFERENCE	NICKNAME	REFERENCE DESCRIPTION	REFERENCE	NICKNAME	REFERENCE DESCRIPTION
%R1179	PSP_RG1	Paper splice register position	%M2543	STP1	Paper splice in position 1
%M1389	SPL_ON	ASU, splice sequence going on	%M2544	STP2	Paper splice in position 2
%M1374	SPL_RES	ASU, splice sequence reset	%M2545	STP3	Paper splice in position 3
%M2542	STP0	Paper splice in position 0	%M2549	STP7	Paper splice in position 7

```
|SPL_ON                                                          STP4    << RUNG 10  STEP #0018 >>
|%M1389  +-----+                                                %M2546
+--] [---+ EQ_ |+-------------------------------------------------------( )-- (* Paper splice in position 4      *)
|        | INT ||
|        |     ||
|PSP_RG1 |     ||
|%R1179 -+I1  Q++
|        |     |
| CONST -+I2   |
| +00004 +-----+
|
|SPL_ON                                                          STP5    << RUNG 11  STEP #0021 >>
|%M1389  +-----+                                                %M2547
+--] [---+ EQ_ |+-------------------------------------------------------( )-- (* Paper splice in position 5      *)
|        | INT ||
|        |     ||
|PSP_RG1 |     ||
|%R1179 -+I1  Q++
|        |     |
| CONST -+I2   |
| +00005 +-----+
|
|SPL_ON                                                          STP6    << RUNG 12  STEP #0024 >>
|%M1389  +-----+                                                %M2548
+--] [---+ EQ_ |+-------------------------------------------------------( )-- (* Paper splice in position 6      *)
|        | INT ||
|        |     ||
|PSP_RG1 |     ||
|%R1179 -+I1  Q++
|        |     |
| CONST -+I2   |
| +00006 +-----+
|
|SPL_ON                                                          STP7    << RUNG 13  STEP #0027 >>
|%M1389  +-----+                                                %M2549
+--] [---+ EQ_ |+-------------------------------------------------------( )-- (* Paper splice in position 7      *)
|        | INT ||
|        |     ||
|PSP_RG1 |     ||
|%R1179 -+I1  Q++
|        |     |
| CONST -+I2   |
| +00007 +-----+
|
| (*****************************************************************************)
| (* Web tension                                                               *)
| (*****************************************************************************)
|
|P+ASUON                                                         Y7407   << RUNG 15  STEP #0031 >>
|%M1316                                                          %Q0153
+--] [-------------------------------------------------------------------(S)-- (* Web tension                      *)
|
|ASU_INT                                                         Y7407   << RUNG 16  STEP #0033 >>
|%M0470                                                          %Q0153
+--] [--+----------------------------------------------------------------(R)-- (* Web tension                      *)
|       |
|RES_WT |
|%M2533 |
+--] [--+
|
| (*****************************************************************************)
| (* STEP 0: Wait paper stop.                                                 *)
| (*****************************************************************************)
|
| STP0   POS_OK                                                  ST0_ST   << RUNG 18  STEP #0037 >>
|%M2542  %M1354                                                  %M2534
+--] [-----] [-------------------------------------------------------( )-- (* Position 0 ended                 *)
```

REFERENCE	NICKNAME	REFERENCE DESCRIPTION	REFERENCE	NICKNAME	REFERENCE DESCRIPTION
%M0470	ASU_INT	Splice sequence ASU interrupted	%M2542	STP0	Paper splice in position 0
%M1316	P+ASUON	Pulse + ASU splice going on	%M2546	STP4	Paper splice in position 4
%M1354	POS_OK	ASU, position OK to complete	%M2547	STP5	Paper splice in position 5
%R1179	PSP_RG1	Paper splice register position	%M2548	STP6	Paper splice in position 6
%M2533	RES_WT	ASU, reset web tension output	%M2549	STP7	Paper splice in position 7
%M1389	SPL_ON	ASU, splice sequence going on	%Q0153	Y7407	Web tension
%M2534	ST0_ST	Position 0 ended			

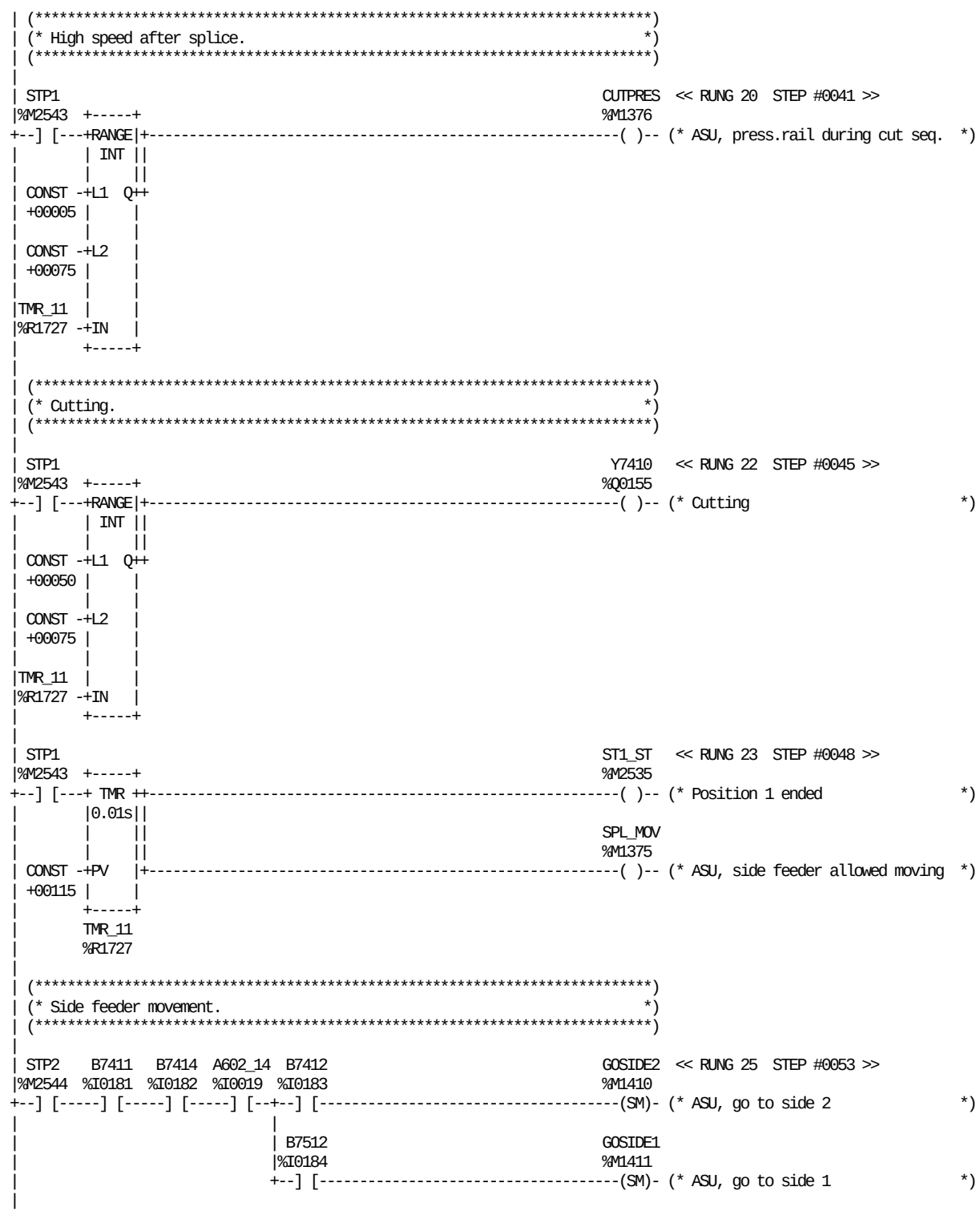

REFERENCE	NICKNAME	REFERENCE DESCRIPTION	REFERENCE	NICKNAME	REFERENCE DESCRIPTION
%I0019	A602_14	Safety monitors C	%M1410	GOSIDE2	ASU, go to side 2
%I0181	B7411	Material holder 1 down	%M1375	SPL_MOV	ASU, side feeder allowed moving
%I0183	B7412	Side feeder position 1	%M2535	ST1_ST	Position 1 ended
%I0182	B7414	Material holder 2 down	%M2543	STP1	Paper splice in position 1
%I0184	B7512	Side feeder position 2	%M2544	STP2	Paper splice in position 2
%M1376	CUTPRES	ASU, press.rail during cut seq.	%R1727	TMR_11	TMR 11, ASU cut sequence (0.01S)
%M1411	GOSIDE1	ASU, go to side 1	%Q0155	Y7410	Cutting

TBA/22-050V
BLOCK 23 PAPER SPLICE SEQUENCE

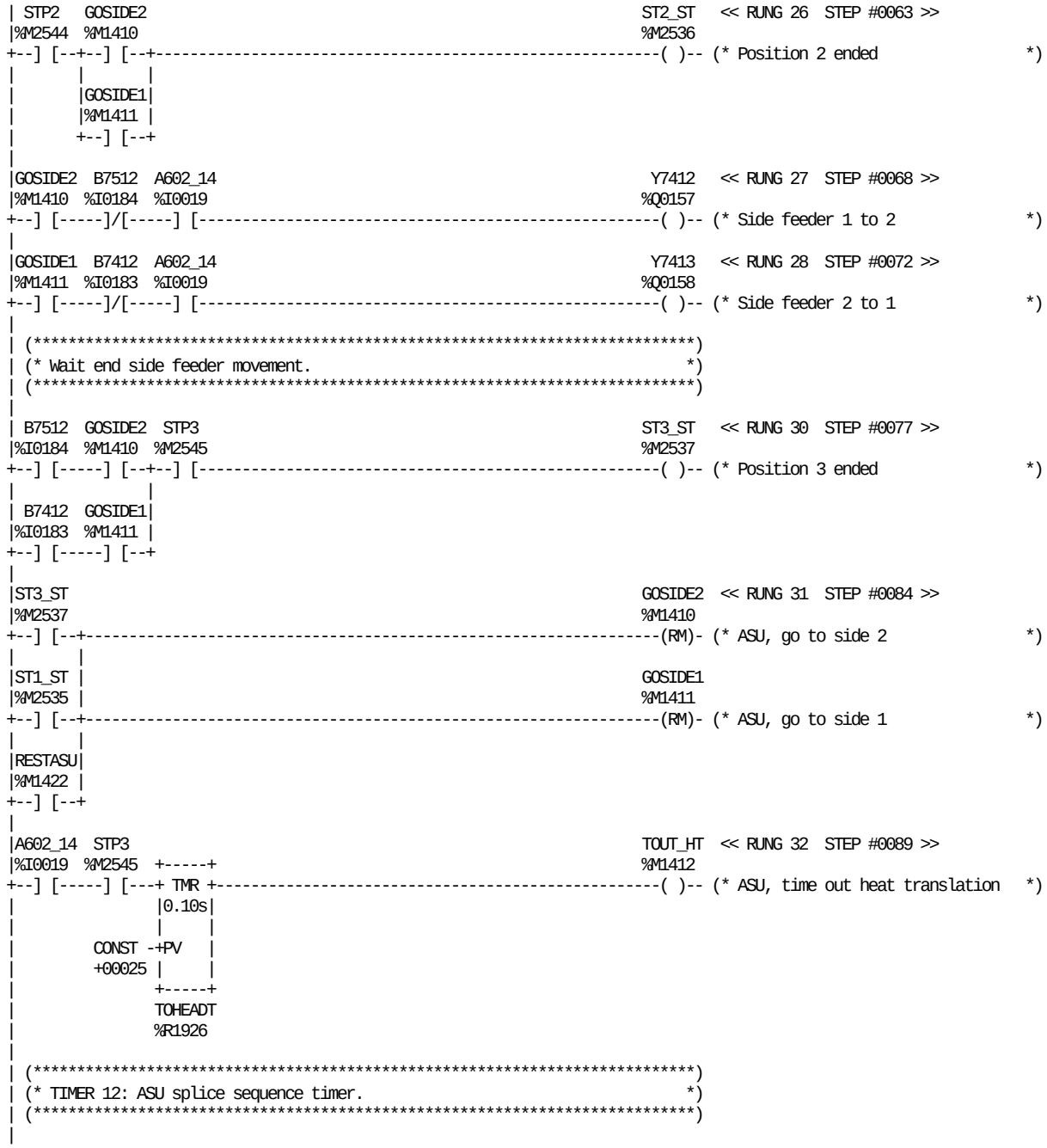

REFERENCE	NICKNAME	REFERENCE DESCRIPTION	REFERENCE	NICKNAME	REFERENCE DESCRIPTION
%I0019	A602_14	Safety monitors C	%M2537	ST3_ST	Position 3 ended
%I0183	B7412	Side feeder position 1	%M2544	STP2	Paper splice in position 2
%I0184	B7512	Side feeder position 2	%M2545	STP3	Paper splice in position 3
%M1411	GOSIDE1	ASU, go to side 1	%R1926	TOHEADT	ASU, timeout head translation
%M1410	GOSIDE2	ASU, go to side 2	%M1412	TOUT_HT	ASU, time out heat translation
%M1422	RESTASU	ASU, total reset sequence	%Q0157	Y7412	Side feeder 1 to 2
%M2535	ST1_ST	Position 1 ended	%Q0158	Y7413	Side feeder 2 to 1
%M2536	ST2_ST	Position 2 ended			

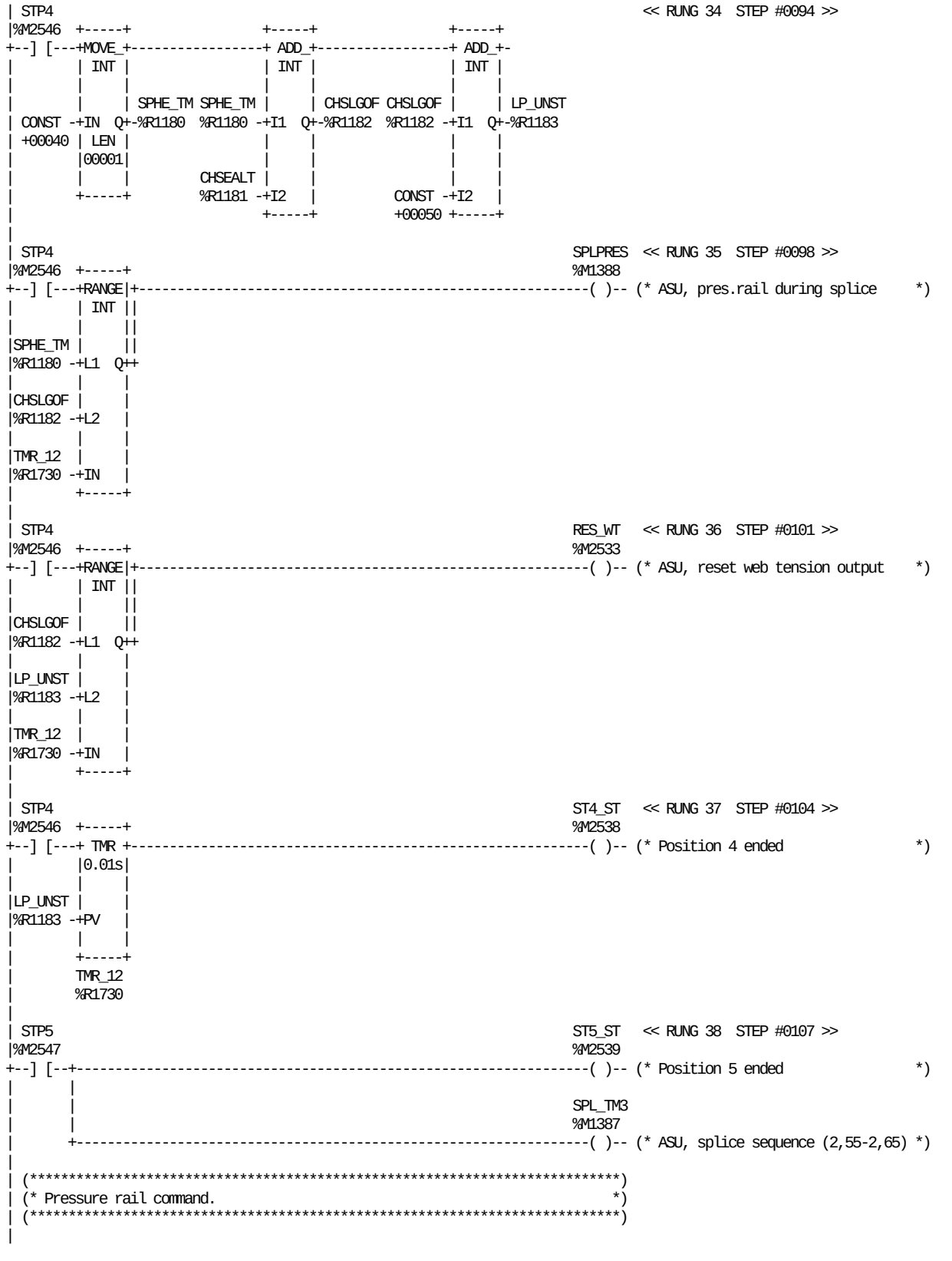

REFERENCE	NICKNAME	REFERENCE DESCRIPTION	REFERENCE	NICKNAME	REFERENCE DESCRIPTION
%R1181	CHSEALT	ASU, CH Sealing Time (TPOP)	%M1387	SPL_TM3	ASU, splice sequence (2,55-2,65)
%R1182	CHSLGOF	ASU, CH Sealing OFF (Pres. Rail)	%M2538	ST4_ST	Position 4 ended
%R1183	LP_UNST	ASU, Loop Drive Unstick Pulse	%M2539	ST5_ST	Position 5 ended
%M2533	RES_WT	ASU, reset web tension output	%M2546	STP4	Paper splice in position 4
%R1180	SPHE_TM	ASU, Splic. Head Bouncing Timer	%M2547	STP5	Paper splice in position 5
%M1388	SPLPRES	ASU, pres.rail during splice	%R1730	TMR_12	TMR 12, ASU splice seq. (0.01s)

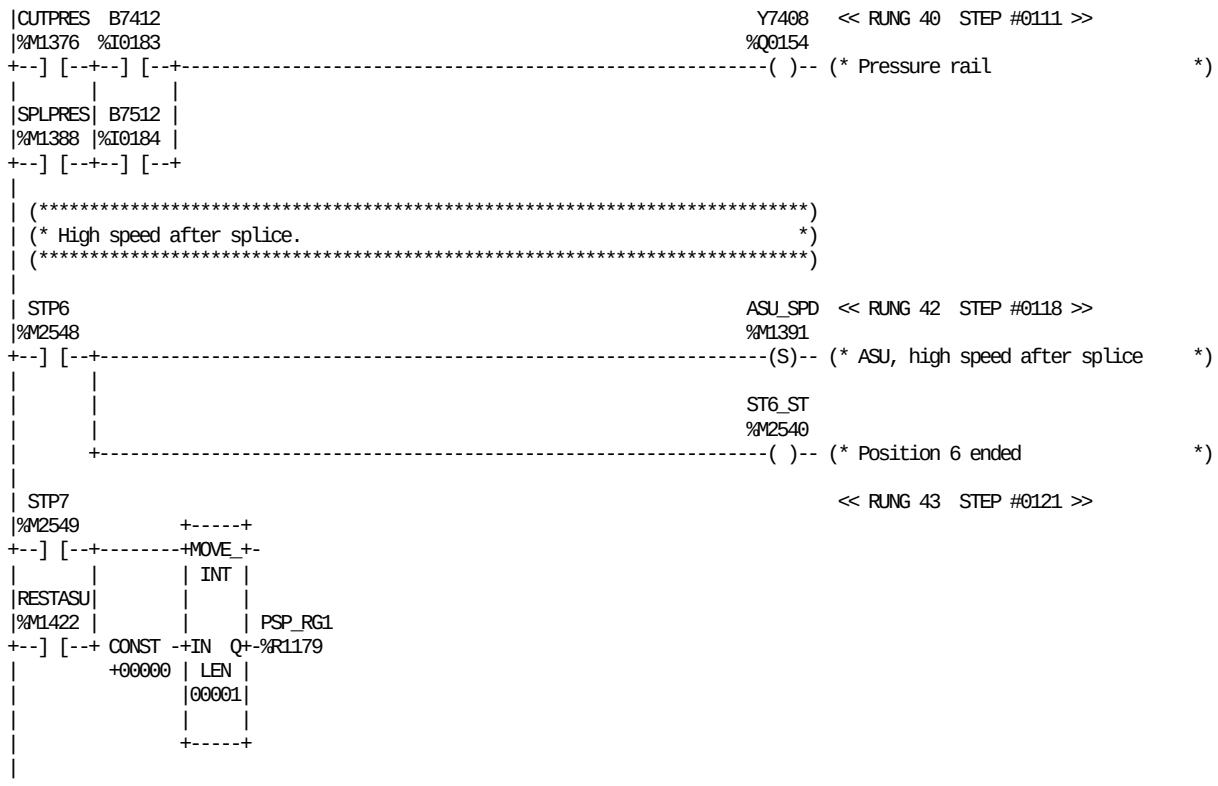

REFERENCE	NICKNAME	REFERENCE DESCRIPTION	REFERENCE	NICKNAME	REFERENCE DESCRIPTION
%M1391	ASU_SPD	ASU, high speed after splice	%M1388	SPLPRES	ASU, pres.rail during splice
%I0183	B7412	Side feeder position 1	%M2540	ST6_ST	Position 6 ended
%I0184	B7512	Side feeder position 2	%M2548	STP6	Paper splice in position 6
%M1376	CUTPRES	ASU, press.rail during cut seq.	%M2549	STP7	Paper splice in position 7
%R1179	PSP_RG1	Paper splice register position	%Q0154	Y7408	Pressure rail
%M1422	RESTASU	ASU, total reset sequence			

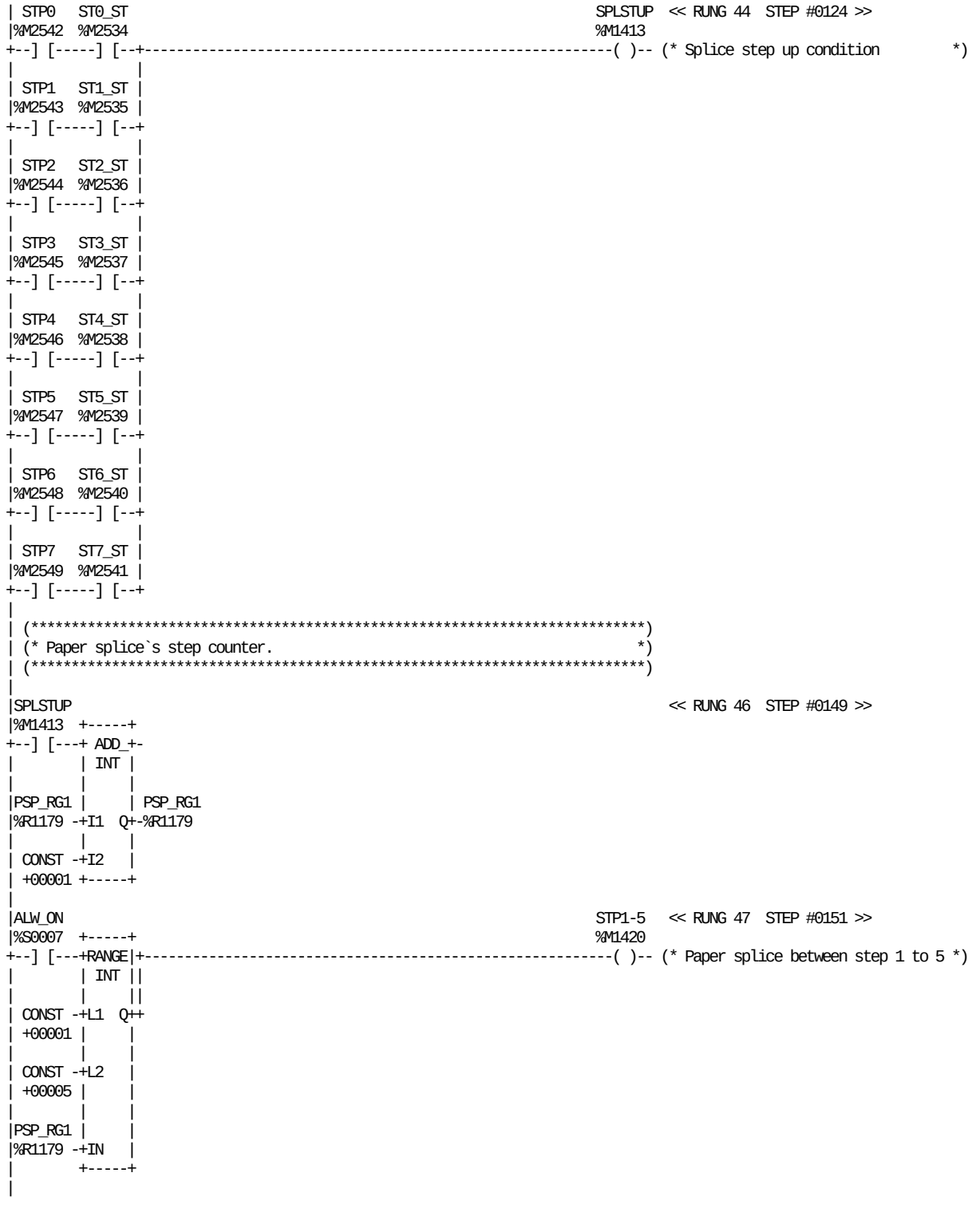

REFERENCE	NICKNAME	REFERENCE DESCRIPTION
%S0007	ALW_ON	
%R1179	PSP_RG1	Paper splice register position
%M1413	SPLSTUP	Splice step up condition
%M2534	ST0_ST	Position 0 ended
%M2535	ST1_ST	Position 1 ended
%M2536	ST2_ST	Position 2 ended
%M2537	ST3_ST	Position 3 ended
%M2538	ST4_ST	Position 4 ended
%M2539	ST5_ST	Position 5 ended
%M2540	ST6_ST	Position 6 ended

REFERENCE	NICKNAME	REFERENCE DESCRIPTION
%M2541	ST7_ST	Position 7 ended
%M2542	STP0	Paper splice in position 0
%M2543	STP1	Paper splice in position 1
%M1420	STP1-5	Paper splice between step 1 to 5
%M2544	STP2	Paper splice in position 2
%M2545	STP3	Paper splice in position 3
%M2546	STP4	Paper splice in position 4
%M2547	STP5	Paper splice in position 5
%M2548	STP6	Paper splice in position 6
%M2549	STP7	Paper splice in position 7

```
| (*************************************************************************)
| (* Splice counter.                                                       *)
| (*************************************************************************)
|
|P+ASUON                                                    << RUNG 49  STEP #0155 >>
|%M1316  +-----+
+--] [---+ ADD_+-
|        | INT |
|        |     |
|SPL_CNT |     | SPL_CNT
|%R1184 -+I1  Q+-%R1184
|        |     |
| CONST -+I2   |
| +00001 +-----+
|
| (*************************************************************************)
| (* Forzatura del valore impostabile da TPOP.                             *)
| (*************************************************************************)
|
|ALW_ON                                                     << RUNG 51  STEP #0158 >>
|%S0007  +-----+
+--] [---+MOVE_+-
|        | INT |
|        |     |
|        |     | CHSEALT
| CONST -+IN  Q+-%R1181
| +00200 | LEN |
|        |00001|
|        |     |
|        +-----+
|
|[    END OF SUBROUTINE LOGIC     ]
|
```

REFERENCE	NICKNAME	REFERENCE DESCRIPTION	REFERENCE	NICKNAME	REFERENCE DESCRIPTION
%S0007	ALW_ON		%M1316	P+ASUON	Pulse + ASU splice going on
%R1181	CHSEALT	ASU, CH Sealing Time (TPOP)	%R1184	SPL_CNT	ASU, material splice counter

```
|[  START LD SUBROUTINE  STRIPSP  ]
|
|[     VARIABLE DECLARATIONS      ]
|
|[   START OF SUBROUTINE LOGIC    ]
|
|ST_2-12                                                          SA_ON   << RUNG 4  STEP #0002 >>
|%G0021                                                          %M1330
+--] [-----------------------------------------------------------------( )-- (* Strip magazine and SA heater ON  *)
|
| SA_ON  JUMP_1                                                   K032    << RUNG 5  STEP #0004 >>
|%M1330  %M0050                                                  %Q0048
+--] [-----] [--+-------------------------------------------------( )-- (* Power TPOP bar                 *)
|               |
|               |                                                 K005
|               |                                                %Q0028
|               +-------------------------------------------------( )-- (* Power inverter strip bobbin     *)
|
| (*************************************************************************)
| (* Motor switch control during start sequence and strip splice sequence.    *)
| (*************************************************************************)
|
|P+SABOB A506_14 A506_13 TESTOK   K7000   B6201                   SEARCH   << RUNG 7  STEP #0009 >>
|%M1487  %Q0201  %Q0202  %M1480  %Q0146  %I0174                   %M1473
+--] [-----]/[-----]/[-----]/[--+--] [-----]/[--+-----------------(S)-- (* SA, bobbin research going on    *)
|                               |               |
|                               | K7001   B6202 |
|                               |%Q0168  %I0175 |
|                               +--] [-----]/[--+
|
|AL_RES  TESTOK   B6204   B7801   K7000   B6201                   TESTOK   << RUNG 8  STEP #0020 >>
|%M0600  %M1480  %I0179  %I0188  %Q0146  %I0174                   %M1480
+--] [-----]/[-----]/[-----] [--+--] [-----] [--+-----------------(S)-- (* SA, bobbin research OK          *)
|                               |               |
|                               | K7001   B6202 |                 SEARCH
|                               |%Q0168  %I0175 |                 %M1473
|                               +--] [-----] [--+-----------------(R)-- (* SA, bobbin research going on    *)
|                                               |
|                                               |                 SA_FORC
|                                               |                 %M1407
|                                               +-----------------(S)-- (* SA, stripsplice forced          *)
|
|SEARCH  ENDFORW REVERSE TESTOK  POW_ON                           EN_FORW  << RUNG 9  STEP #0033 >>
|%M1473  %M1475  %M1477  %M1480  %M1215                           %M1483
+--] [--+--]/[--+--]/[-----]/[-----] [-------------------------------------( )-- (* SA, enable forward bobbin search *)
|       |      |
|       |P+ENREV|
|       |%M1481 |
|       +--] [--+
|
|SEARCH  REVERSE TESTOK  POW_ON                                   EN_REV   << RUNG 10  STEP #0041 >>
|%M1473  %M1477  %M1480  %M1215                                   %M1484
+--] [-----] [-----]/[-----] [-----------------------------------------( )-- (* SA, enable reverse bobbin serch  *)
|
```

REFERENCE	NICKNAME	REFERENCE DESCRIPTION
%Q0202	A506_13	DMC Main Motor Low speed
%Q0201	A506_14	DMC Main Motor High speed
%M0600	AL_RES	Alarm reset (From TPOP)
%I0174	B6201	Strip bobbin 1 empty
%I0175	B6202	Strip bobbin 2 empty
%I0179	B6204	Strip splice prepared
%I0188	B7801	Door guard strip applicator (17)
%M1475	ENDFORW	SA, end forward bobbin research
%M1483	EN_FORW	SA, enable forward bobbin search
%M1484	EN_REV	SA, enable reverse bobbin serch
%M0050	JUMP_1	Jump to pos 1 (Emergency stop)
%Q0028	K005	Power inverter strip bobbin

REFERENCE	NICKNAME	REFERENCE DESCRIPTION
%Q0048	K032	Power TPOP bar
%Q0146	K7000	SA Bobbin 1 running
%Q0168	K7001	SA Bobbin 2 running
%M1481	P+ENREV	SA, pulse + end reverse bobbin
%M1487	P+SABOB	SA, pulse + strip bobbin researh
%M1215	POW_ON	Power on to inverter
%M1477	REVERSE	SA, reverse moved bobbin
%M1407	SA_FORC	SA, stripsplice forced
%M1330	SA_ON	Strip magazine and SA heater ON
%M1473	SEARCH	SA, bobbin research going on
%G0021	ST_2-12	Ladder position 2-12
%M1480	TESTOK	SA, bobbin research OK

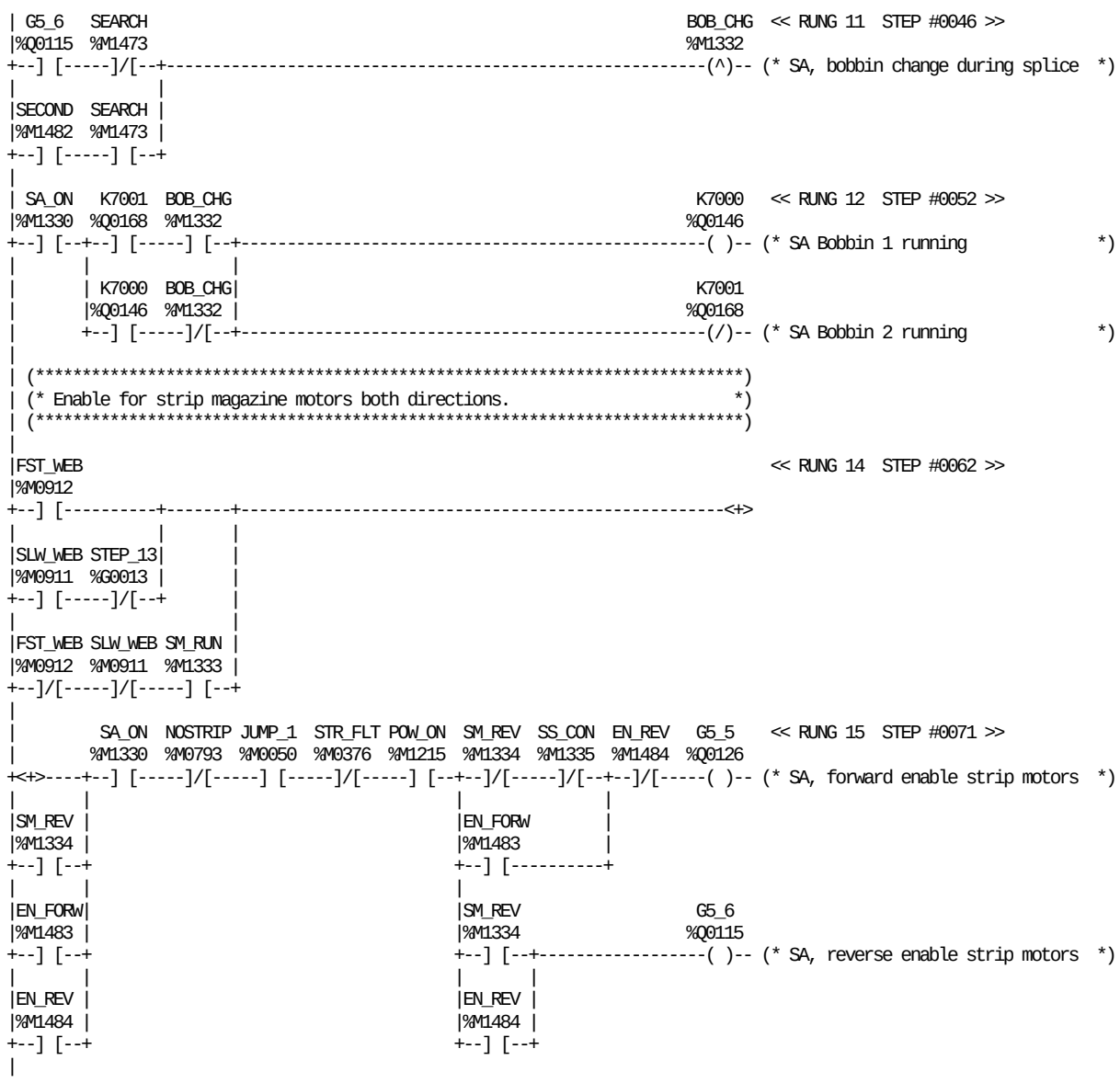

REFERENCE	NICKNAME	REFERENCE DESCRIPTION	REFERENCE	NICKNAME	REFERENCE DESCRIPTION
%M1332	BOB_CHG	SA, bobbin change during splice	%M1215	POW_ON	Power on to inverter
%M1483	EN_FORW	SA, enable forward bobbin search	%M1330	SA_ON	Strip magazine and SA heater ON
%M1484	EN_REV	SA, enable reverse bobbin serch	%M1473	SEARCH	SA, bobbin research going on
%M0912	FST_WEB	Paper web fast speed	%M1482	SECOND	SA, second bobbin research
%Q0126	G5_5	SA, forward enable strip motors	%M0911	SLW_WEB	Paper web slow speed
%Q0115	G5_6	SA, reverse enable strip motors	%M1334	SM_REV	SA, motor reverse during spl.seq
%M0050	JUMP_1	Jump to pos 1 (Emergency stop)	%M1333	SM_RUN	Strip magazine running
%Q0146	K7000	SA Bobbin 1 running	%M1335	SS_CON	SA, motor enable stop during sp.
%Q0168	K7001	SA Bobbin 2 running	%G0013	STEP_13	OPEN DOORS, CUT TUBE
%M0793	NOSTRIP	Strip general alarm	%M0376	STR_FLT	Strip inverter fault

```
| (*************************************************************************)
| (* Internal registers for PID regulators (9700 registers)                *)
| (* Ref+0:  Loop number                                                   *)
| (* Ref+2:  Sample period, time in increments of 0.01s between executions of *)
| (*         the function block                                            *)
| (* Ref+3:  Upper dead band, in counts 0-32000 equals 0-100% of the error  *)
| (* Ref+4:  Lower dead band, in counts 0-32000 equals 0--100% of the error *)
| (*         If the error is inside the dead band, the error is considered  *)
| (*         as 0                                                          *)
| (* Ref+5:  Proportional gain, in 0.01%/%                                 *)
| (* Ref+6:  Derivate gain, in 0.01 sec                                    *)
| (* Ref+7:  Integral gain, in repeats per 1000 sec                       *)
| (* Ref+8:  Bias, in counts 0-32000 equals -100-100%, Feed forward function *)
| (* Ref+9:  Upper output clamp, in counts 0-32000, upper limit for CV output *)
| (* Ref+10: Lower output clamp, in counts 0-32000, lower limit for CV output *)
| (* Ref+11: Minimum slew time, in seconds per full travel, limits how     *)
| (*         quickly the output is allowed to change from 0-100%           *)
| (*                                                                       *)
| (*************************************************************************)
|
| (*************************************************************************)
| (* Registers for displaying parameters on TPOP (8000 registers)          *)
| (* Ref+0:  Set value 1                                                   *)
| (* Ref+1:  Set value 2                                                   *)
| (* Ref+2:  Alarm level S1 high                                          *)
| (* Ref+3:  Alarm level S1 low                                           *)
| (* Ref+4:  Alarm level S2 high                                          *)
| (* Ref+5:  Alarm level S3 low                                           *)
| (* Ref+6:  Sample time                                                  *)
| (* Ref+7:  P-gain                                                       *)
| (* Ref+8:  I-gain                                                       *)
| (* Ref+9:  D-gain                                                       *)
| (* Ref+10: Output                                                       *)
| (* Ref+11: Process value                                               *)
| (*                                                                       *)
| (*************************************************************************)
|
| (*************************************************************************)
| (* Loop 2 default PID regulator settings                                 *)
| (*************************************************************************)
|
|FST_SCN                                                          << RUNG 19  STEP #0095 >>
|%S0001  +-----+               +-----+               +-----+
+--] [---+MOVE_+----------------+MOVE_+----------------+MOVE_+-
|        | INT |               | INT |               | INT |
|        |     |               |     |               |     |
|        |     | LOOP_SA       |     | SAMP_SA       |     | DBP_SA
| CONST -+IN  Q+-%R9700   CONST -+IN  Q+-%R9702   CONST -+IN  Q+-%R9703
| +00002 | LEN |         +00010 | LEN |         +00050 | LEN |
|        |00001|                |00001|                |00001|
|        |     |               |     |               |     |
|        +-----+               +-----+               +-----+
|
|FST_SCN                                                          << RUNG 20  STEP #0099 >>
|%S0001  +-----+               +-----+               +-----+
+--] [---+MOVE_+----------------+MOVE_+----------------+MOVE_+-
|        | INT |               | INT |               | INT |
|        |     |               |     |               |     |
|        |     | DBN_SA        |     | PGAINSA       |     | DGAINSA
| CONST -+IN  Q+-%R9704   CONST -+IN  Q+-%R9705   CONST -+IN  Q+-%R9706
| +00050 | LEN |         +00600 | LEN |         +00000 | LEN |
|        |00001|                |00001|                |00001|
|        |     |               |     |               |     |
|        +-----+               +-----+               +-----+
|
```

REFERENCE	NICKNAME	REFERENCE DESCRIPTION	REFERENCE	NICKNAME	REFERENCE DESCRIPTION
%R9704	DBN_SA	Dead band-loopSA(0-32000=0-100%)	%R9700	LOOP_SA	SA strip motor PID registers
%R9703	DBP_SA	Dead band+loopSA(0-32000=0-100%)	%R9705	PGAINSA	P-gain loop SA 0-327,67 %
%R9706	DGAINSA	D-gain loop SA 0-327,67 Sec	%R9702	SAMP_SA	Sample loop SA (1=10ms)
%S0001	FST_SCN				

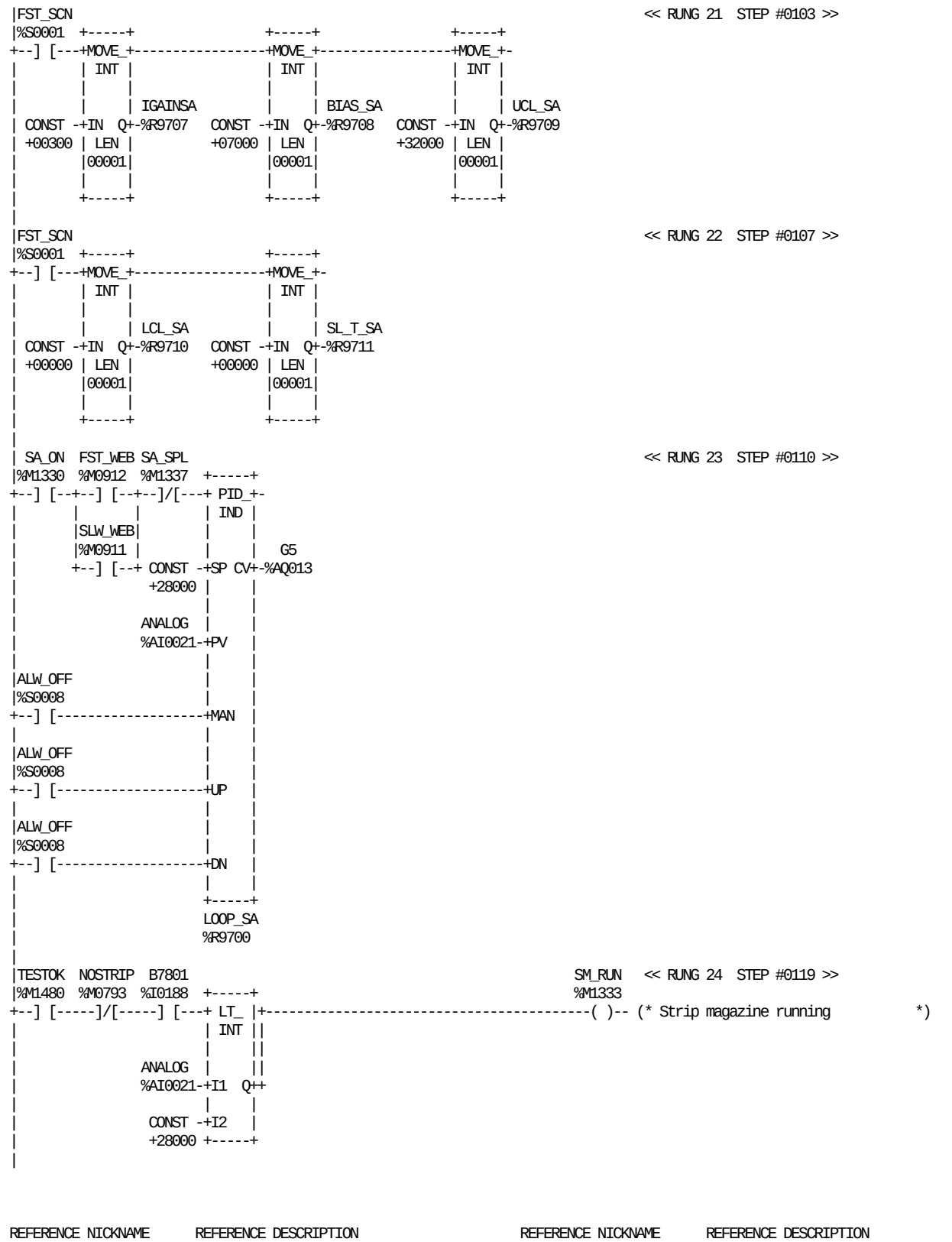

REFERENCE	NICKNAME	REFERENCE DESCRIPTION
%S0008	ALW_OFF	
%AI0021	ANALOG	SA, Analog sensor strip magazine
%I0188	B7801	Door guard strip applicator (17)
%R9708	BIAS_SA	Bias loop SA -100/+100 %
%S0001	FST_SCN	
%M0912	FST_WEB	Paper web fast speed
%AQ013	G5	SA, strip motor speed
%R9707	IGAINSA	I-Gain loop SA 0-32.767 repeat/s
%R9710	LCL_SA	Lower clamp loop SA (0)

REFERENCE	NICKNAME	REFERENCE DESCRIPTION
%R9700	LOOP_SA	SA strip motor PID registers
%M0793	NOSTRIP	Strip general alarm
%M1330	SA_ON	Strip magazine and SA heater ON
%M1337	SA_SPL	SA, splice going on
%M0911	SLW_WEB	Paper web slow speed
%R9711	SL_T_SA	Min slew time loop SA (0)
%M1333	SM_RUN	Strip magazine running
%M1480	TESTOK	SA, bobbin research OK
%R9709	UCL_SA	Upper clamp loop SA (32000)

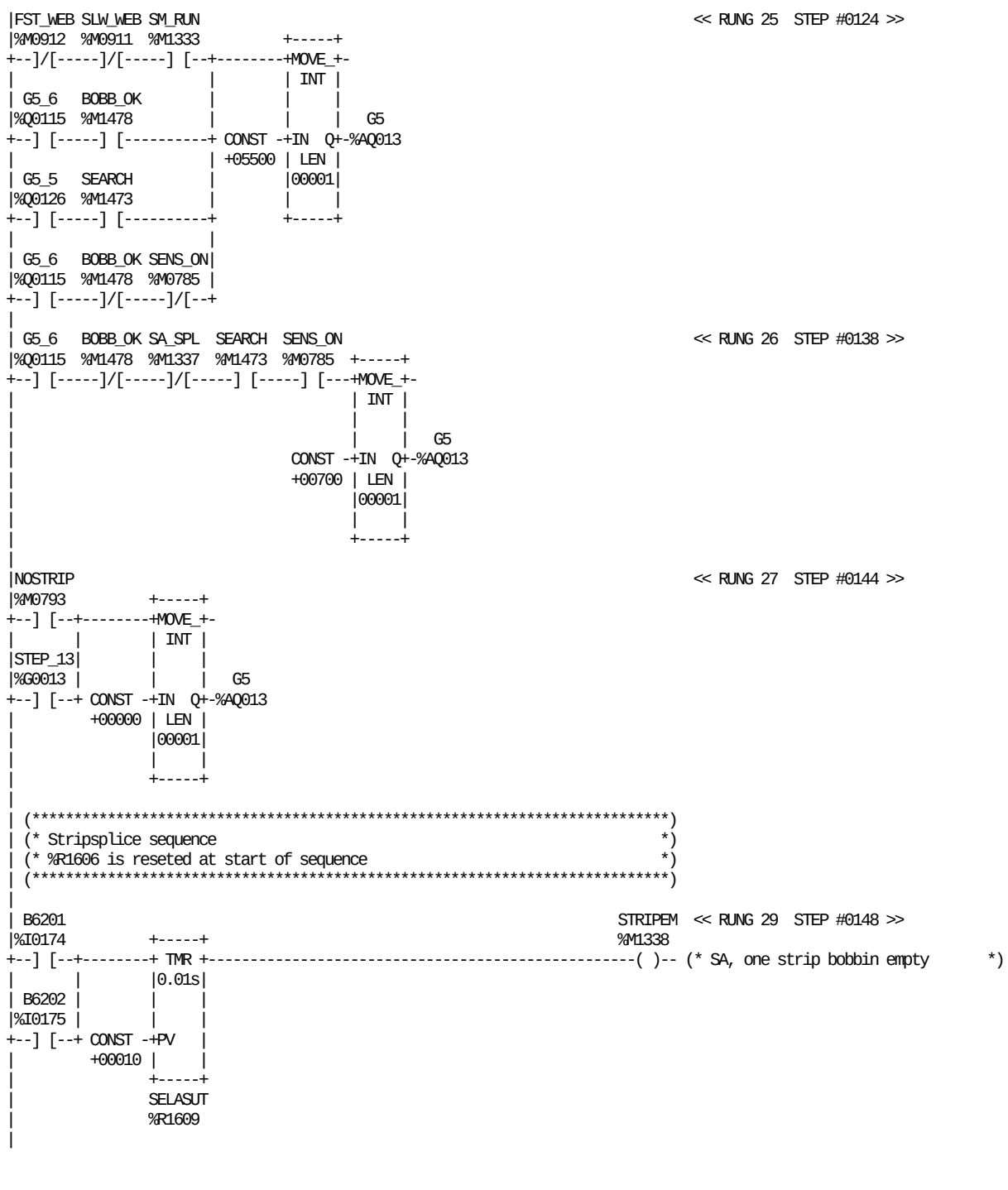

REFERENCE	NICKNAME	REFERENCE DESCRIPTION	REFERENCE	NICKNAME	REFERENCE DESCRIPTION
%I0174	B6201	Strip bobbin 1 empty	%M1337	SA_SPL	SA, splice going on
%I0175	B6202	Strip bobbin 2 empty	%M1473	SEARCH	SA, bobbin research going on
%M1478	BOBB_OK	SA, strip bobbin OK	%R1609	SELASUT	Sealing ASU timer
%M0912	FST_WEB	Paper web fast speed	%M0785	SENS_ON	SA strip prepared sensor detect.
%AQ013	G5	SA, strip motor speed	%M0911	SLW_WEB	Paper web slow speed
%Q0126	G5_5	SA, forward enable strip motors	%M1333	SM_RUN	Strip magazine running
%Q0115	G5_6	SA, reverse enable strip motors	%G0013	STEP_13	OPEN DOORS, CUT TUBE
%M0793	NOSTRIP	Strip general alarm	%M1338	STRIPEM	SA, one strip bobbin empty

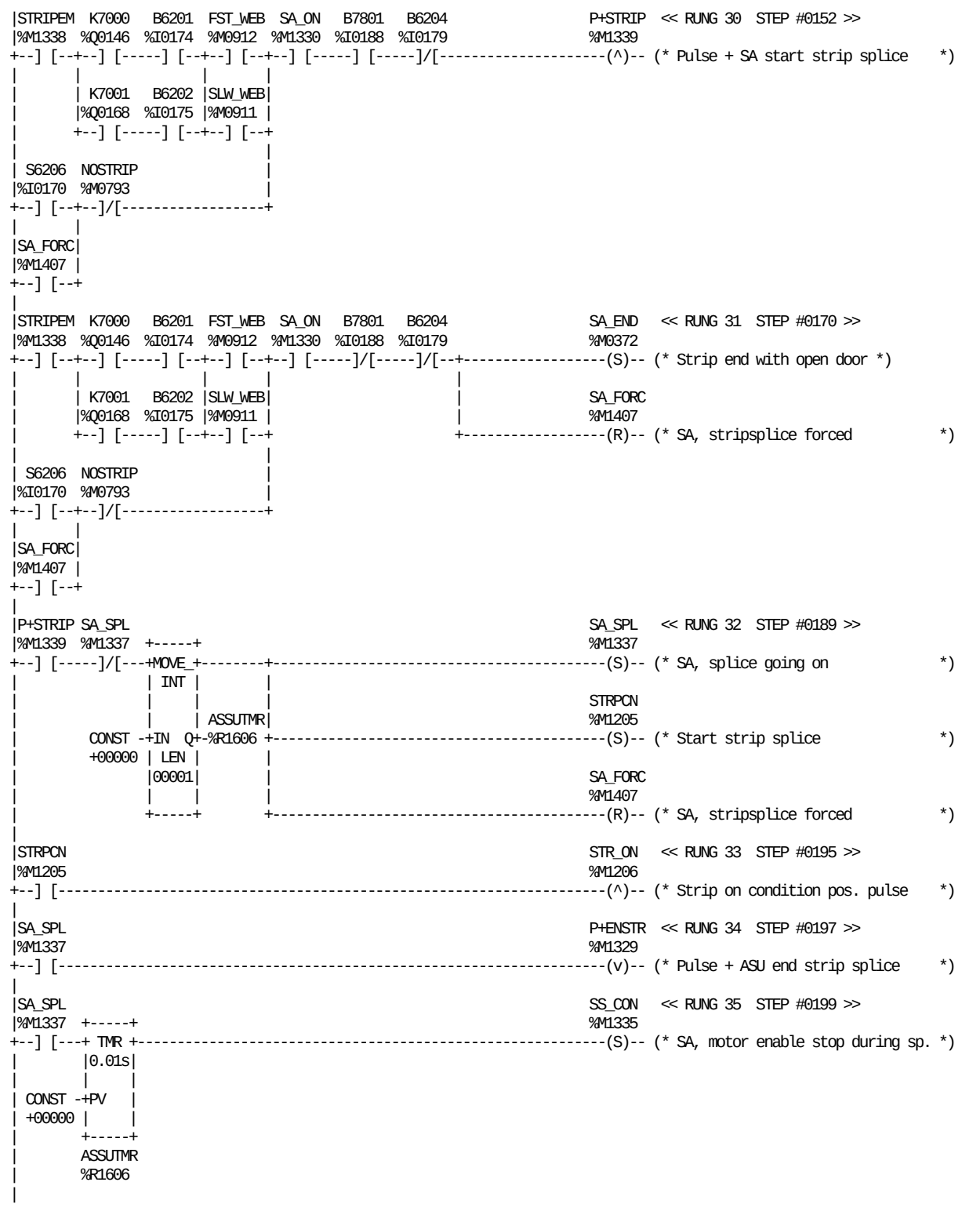

REFERENCE	NICKNAME	REFERENCE DESCRIPTION	REFERENCE	NICKNAME	REFERENCE DESCRIPTION
%R1606	ASSUTMR	ASSU splice timer	%I0170	S6206	Push button manual start ASSU
%I0174	B6201	Strip bobbin 1 empty	%M0372	SA_END	Strip end with open door
%I0175	B6202	Strip bobbin 2 empty	%M1407	SA_FORC	SA, stripsplice forced
%I0179	B6204	Strip splice prepared	%M1330	SA_ON	Strip magazine and SA heater ON
%I0188	B7801	Door guard strip applicator (17)	%M1337	SA_SPL	SA, splice going on
%M0912	FST_WEB	Paper web fast speed	%M0911	SLW_WEB	Paper web slow speed
%Q0146	K7000	SA Bobbin 1 running	%M1335	SS_CON	SA, motor enable stop during sp.
%Q0168	K7001	SA Bobbin 2 running	%M1338	STRIPEM	SA, one strip bobbin empty
%M0793	NOSTRIP	Strip general alarm	%M1205	STRPCN	Start strip splice
%M1329	P+ENSTR	Pulse + ASU end strip splice	%M1206	STR_ON	Strip on condition pos. pulse
%M1339	P+STRIP	Pulse + SA start strip splice			

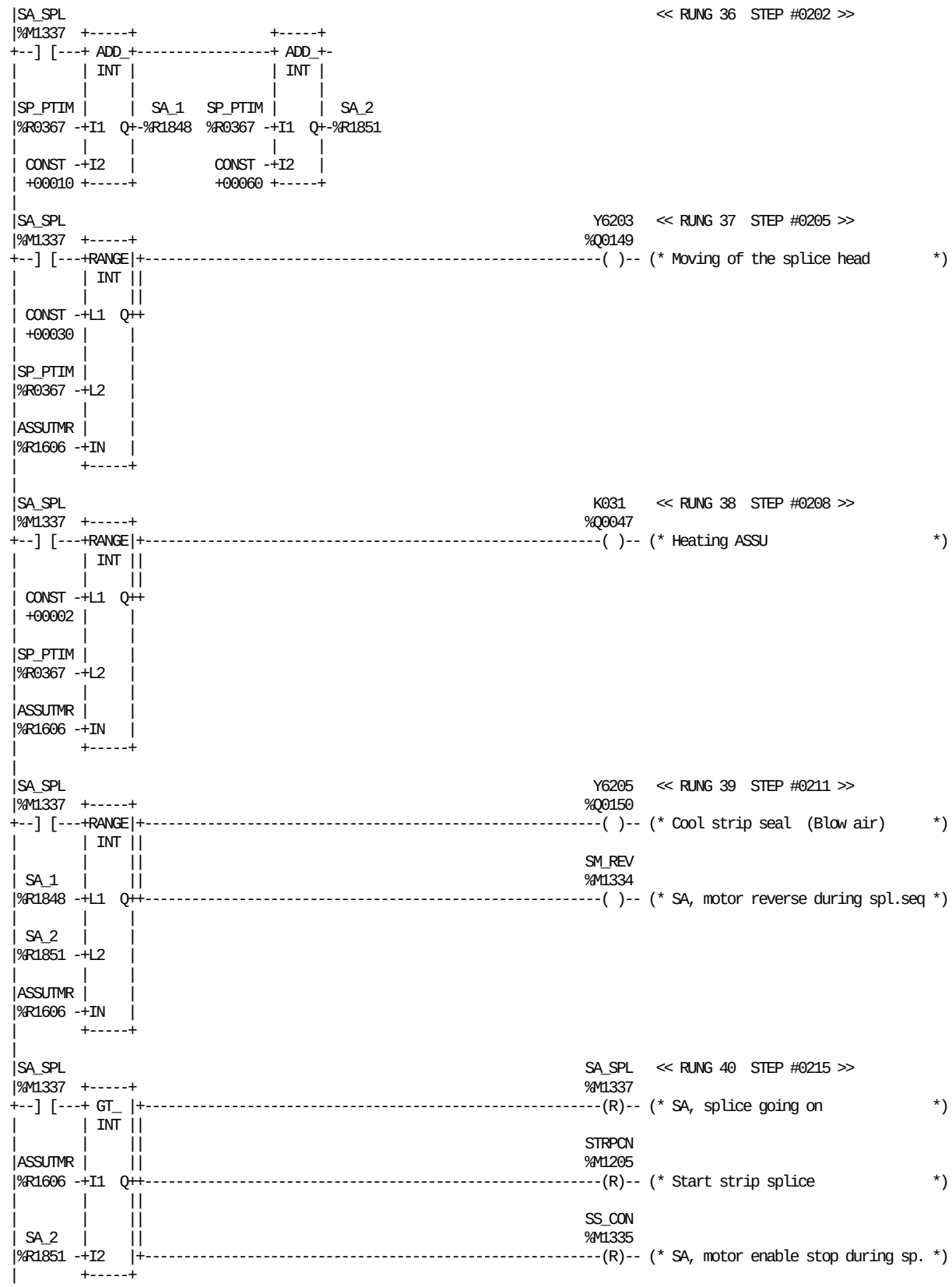

REFERENCE	NICKNAME	REFERENCE DESCRIPTION	REFERENCE	NICKNAME	REFERENCE DESCRIPTION
%R1606	ASSUTMR	ASSU splice timer	%R0367	SP_PTIM	Strip splice pulse time
%Q0047	K031	Heating ASSU	%M1335	SS_CON	SA, motor enable stop during sp.
%R1848	SA_1	Strip seal cooling start delay	%M1205	STRPCN	Start strip splice
%R1851	SA_2	Strip seal cooling stop delay	%Q0149	Y6203	Moving of the splice head
%M1337	SA_SPL	SA, splice going on	%Q0150	Y6205	Cool strip seal (Blow air)
%M1334	SM_REV	SA, motor reverse during spl.seq			

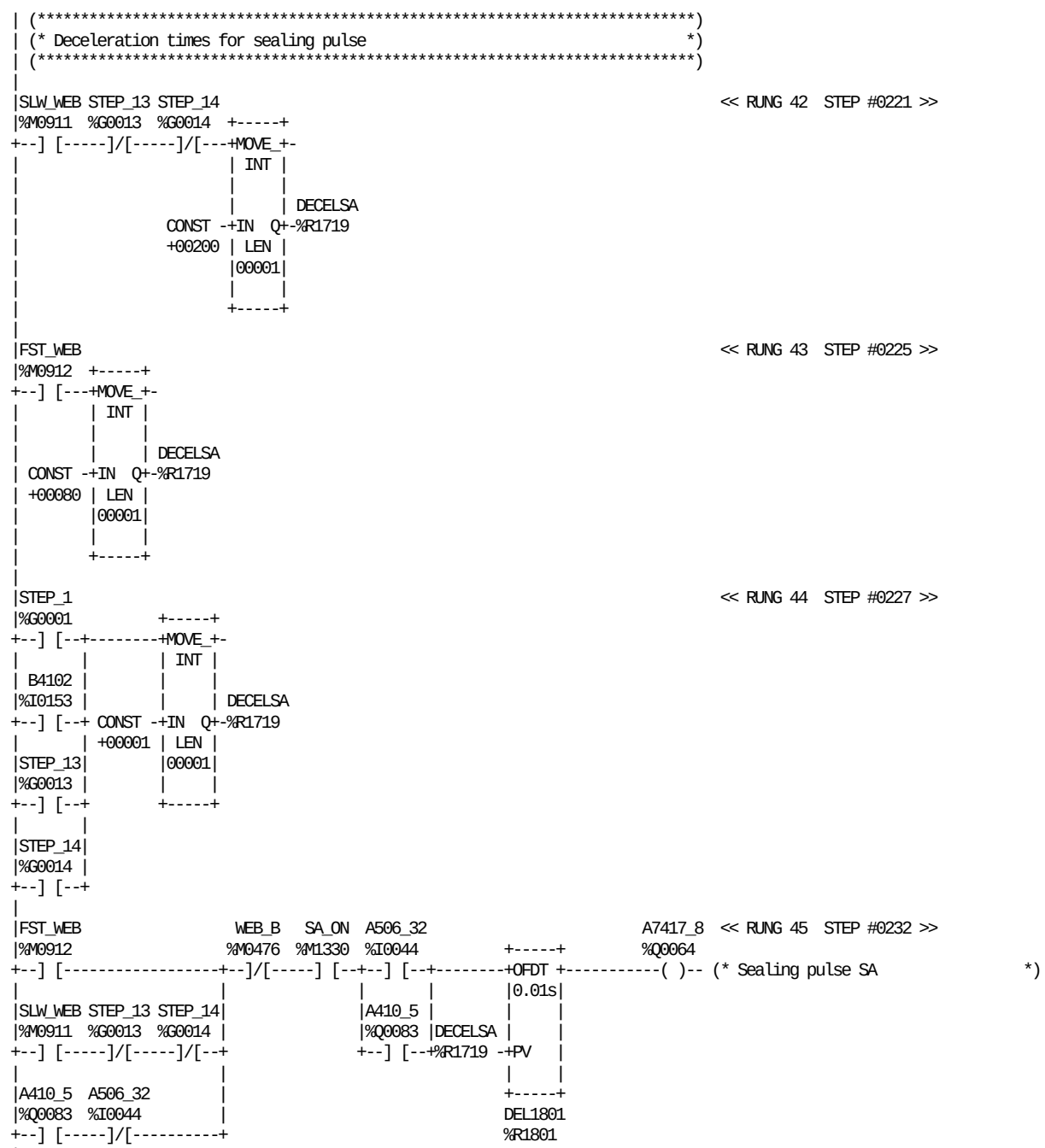

REFERENCE	NICKNAME	REFERENCE DESCRIPTION	REFERENCE	NICKNAME	REFERENCE DESCRIPTION
%Q0083	A410_5	Enable drive roller	%M1336	P-SAPUL	SA, pulse - strip sealing pulse
%I0044	A506_32	DMC Main motor running	%M1330	SA_ON	Strip magazine and SA heater ON
%Q0064	A7417_8	Sealing pulse SA	%M0911	SLW_WEB	Paper web slow speed
%I0153	B4102	Crank guard JUM	%G0001	STEP_1	STANDBY
%R1719	DECELSA	SA power pulse in deceleration	%G0013	STEP_13	OPEN DOORS, CUT TUBE
%R1801	DEL1801	SA, delay	%G0014	STEP_14	CIP / HC
%M0912	FST_WEB	Paper web fast speed	%M0476	WEB_B	ASU, Broken web at magazine

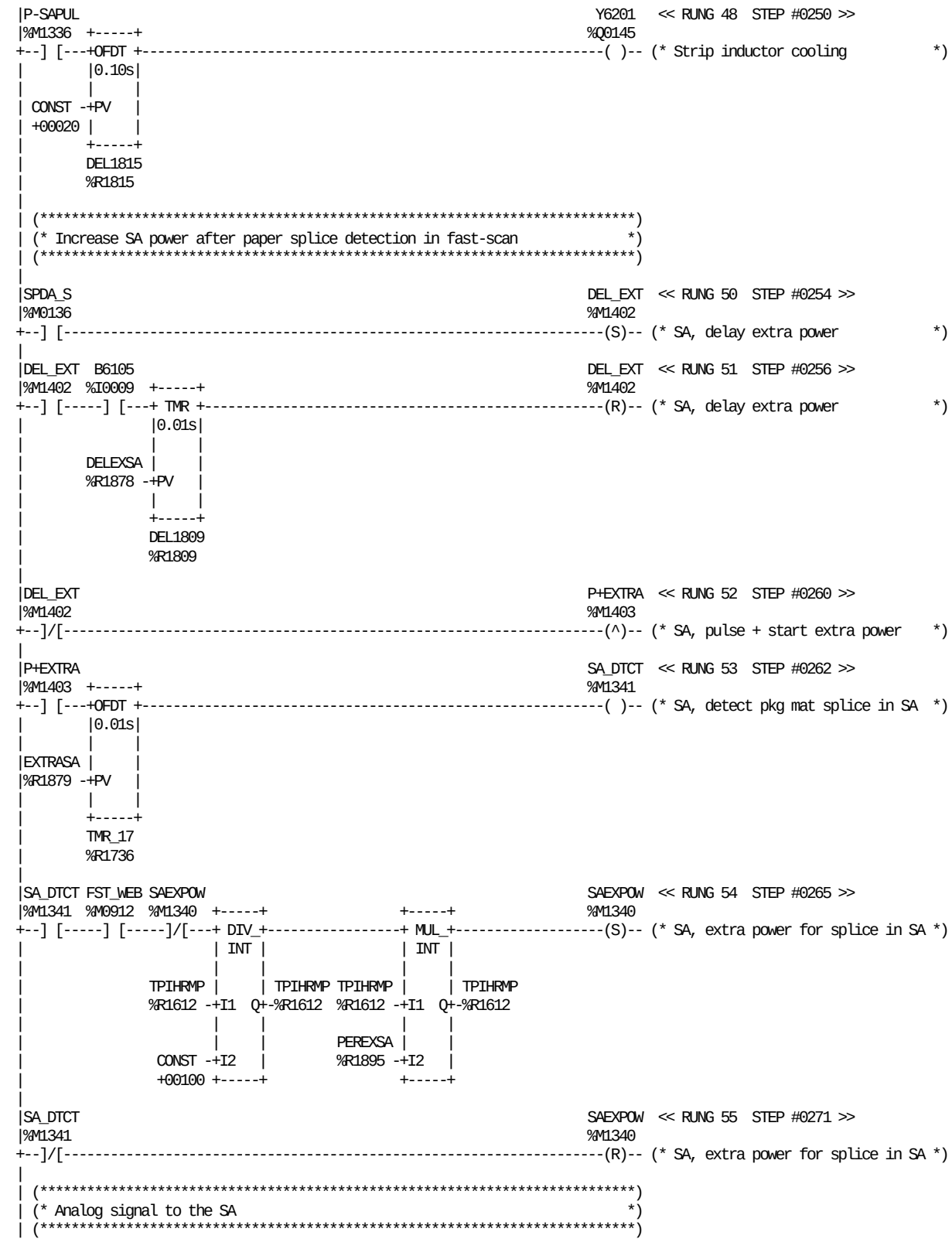

REFERENCE	NICKNAME	REFERENCE DESCRIPTION	REFERENCE	NICKNAME	REFERENCE DESCRIPTION
%I0009	B6105	Splice detection in ASU	%M1336	P-SAPUL	SA, pulse - strip sealing pulse
%R1809	DEL1809	SA, delay before extra power	%R1895	PEREXSA	SA, percentage extra sa power
%R1815	DEL1815	SA, delay	%M1340	SAEXPOW	SA, extra power for splice in SA
%R1878	DELEXSA	SA, delay start extra power SA	%M1341	SA_DTCT	SA, detect pkg mat splice in SA
%M1402	DEL_EXT	SA, delay extra power	%M0136	SPDA_S	Splice detection in ASU set
%R1879	EXTRASA	SA, time extra power SA	%R1736	TMR_17	TMR 17,timer extra power
%M0912	FST_WEB	Paper web fast speed	%R1612	TPIHRMP	TPIH power ramp register
%M1403	P+EXTRA	SA, pulse + start extra power	%Q0145	Y6201	Strip inductor cooling

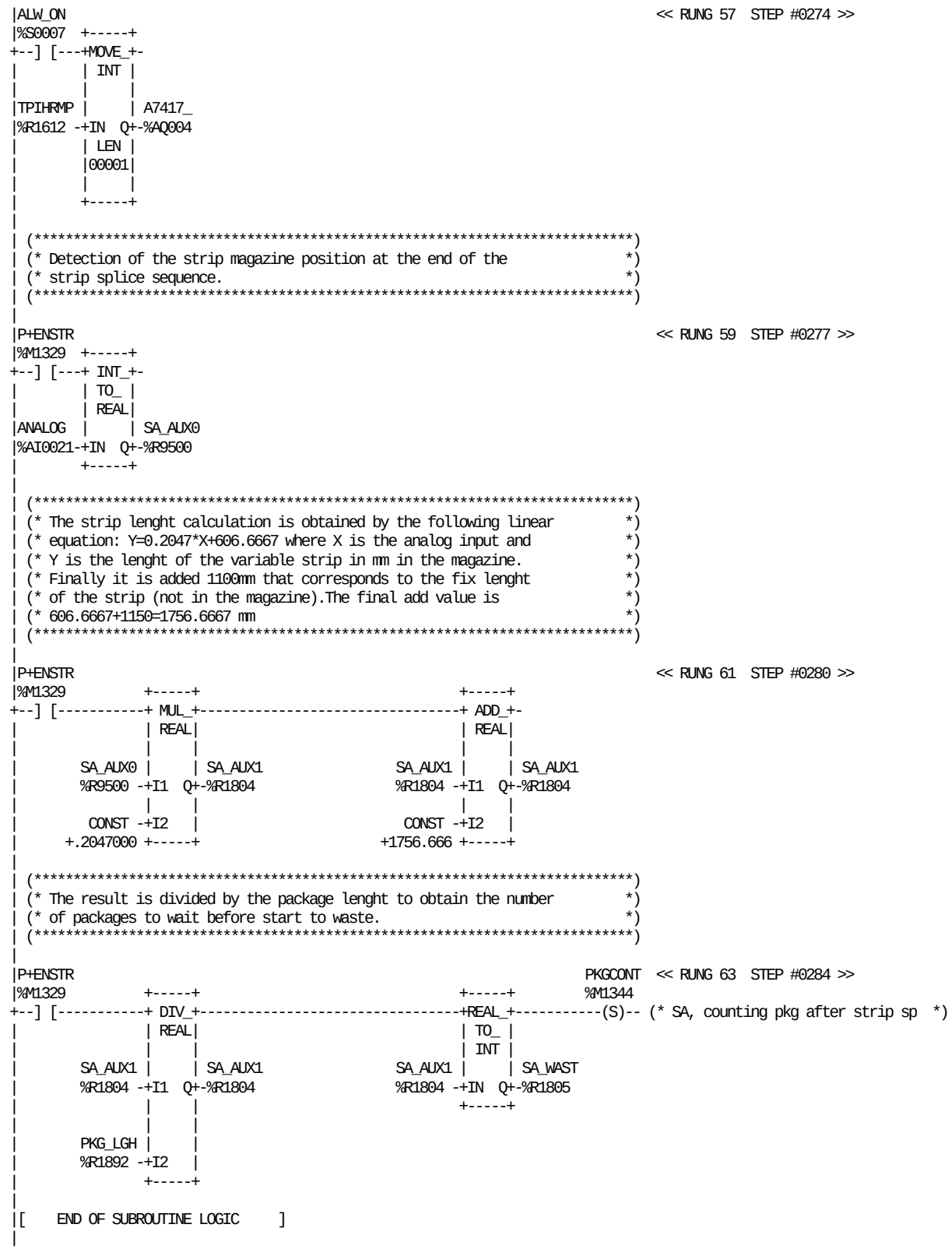

REFERENCE	NICKNAME	REFERENCE DESCRIPTION	REFERENCE	NICKNAME	REFERENCE DESCRIPTION
%AQ004	A7417_	TPIH Sealing ASU/SA power	%R1892	PKG_LGH	SA, package paper lenght
%S0007	ALW_ON		%R9500	SA_AUX0	SA, Aux 0 waste strip splice
%AI0021	ANALOG	SA, Analog sensor strip magazine	%R1804	SA_AUX1	SA, Aux 1 waste strip splice
%M1329	P+ENSTR	Pulse + ASU end strip splice	%R1805	SA_WAST	SA, waiting pkg before waste
%M1344	PKGCONT	SA, counting pkg after strip sp	%R1612	TPIHRMP	TPIH power ramp register

```
|[  START LD SUBROUTINE  STRSEL   ]
|
|[     VARIABLE DECLARATIONS      ]
|
|[   START OF SUBROUTINE LOGIC    ]
|
|FST_SCN                                                          << RUNG 4  STEP #0002 >>
|%S0001  +-----+
+--] [---+MOVE_+-
|        | INT |
|        |     |
|        |     | MIN_PWR
| CONST -+IN  Q+-%R1658
| +02500 | LEN |
|        |00001|
|        |     |
|        +-----+
|
| (*************************************************************************)
| (* When the main motor start at high speed (production or fast inching)  *)
| (* the SA power ramp is generated starting from MINPWR to SAPOW2.        *)
| (*************************************************************************)
|
|A506_32 STDLRM  ST_6-10                                          << RUNG 6  STEP #0005 >>
|%I0044  %M1213  %G0024          +-----+
+--]/[-----]/[-----] [--+--------+MOVE_+-
|                       |        | INT |
| B4102                 |        |     |
|%I0153                 |SAPOW1  |     | TPIHRMP
+--] [------------------+%R0505 -+IN  Q+-%R1612
|                                | LEN |
|                                |00001|
|                                |     |
|                                +-----+
|
|P+PROD                                                  RAMP_SA  << RUNG 7  STEP #0010 >>
|%M1209  +-----+                 +-----+                 %M1210
+--] [---+MOVE_+-----------------+MOVE_+-----------------------------------(S)-- (* Acceleration ramp SA            *)
|        | INT |                 | INT |
|        |     |                 |     |
|MIN_PWR |     | TPIHRMP SAPOW2  |     | MAXPWR
|%R1658 -+IN  Q+-%R1612  %R0506 -+IN  Q+-%R1613
|        | LEN |                 | LEN |
|        |00001|                 |00001|
|        |     |                 |     |
|        +-----+                 +-----+
|
| (*************************************************************************)
| (* This is the SA power ramp control during Tight tube or slow inching.  *)
| (*************************************************************************)
|
|A506_13 STEP_9                                           P+MLS   << RUNG 9  STEP #0015 >>
|%Q0202  %G0009                                          %M1284
+--] [-----]/[-------------------------------------------------------------(^)-- (* Magazine low speed pos. pulse    *)
|
| P+MLS                                                  RAMP_SA  << RUNG 10  STEP #0018 >>
|%M1284  +-----+                 +-----+                 %M1210
+--] [---+MOVE_+-----------------+MOVE_+-----------------------------------(S)-- (* Acceleration ramp SA            *)
|        | INT |                 | INT |
|        |     |                 |     |
|        |     | TPIHRMP SAPOW1  |     | MAXPWR
| CONST -+IN  Q+-%R1612  %R0505 -+IN  Q+-%R1613
| +02500 | LEN |                 | LEN |
|        |00001|                 |00001|
|        |     |                 |     |
|        +-----+                 +-----+
|
```

REFERENCE	NICKNAME	REFERENCE DESCRIPTION	REFERENCE	NICKNAME	REFERENCE DESCRIPTION
%Q0202	A506_13	DMC Main Motor Low speed	%M1210	RAMP_SA	Acceleration ramp SA
%I0044	A506_32	DMC Main motor running	%R0505	SAPOW1	Power SA low speed (TPOP)
%I0153	B4102	Crank guard JUM	%R0506	SAPOW2	Power SA production speed (TPOP)
%S0001	FST_SCN		%M1213	STDLRM	Deceleration ramp stop
%R1613	MAXPWR	TPIH power upper limit	%G0009	STEP_9	MOTOR START
%R1658	MIN_PWR	Start power TPIH ramp SA	%G0024	ST_6-10	Ladder position 6-10
%M1284	P+MLS	Magazine low speed pos. pulse	%R1612	TPIHRMP	TPIH power ramp register
%M1209	P+PROD	Production on positive pulse			

```
|RAMP_SA                                                          P+R_SA   << RUNG 11  STEP #0022 >>
|%M1210                                                          %M1216
+--] [-----------------------------------------------------------------(^)-- (* Ramp up SA positive pulse       *)
|
| (*************************************************************************)
| (* Everytime one ramps is created the number of steps needed to reach the  *)
| (* upper limit is calculated. The reset and the actual ramp function is    *)
| (* placed in the subroutine "RAMPS".                                       *)
| (* In the Wallet case the acceleration time of the pendulum inverter is    *)
| (* 1 sec. to reach 100Hz. The frequency of the pendulum roller in          *)
| (* production speed is between 52 and 59Hz that means a acceleration      *)
| (* time of about 0.5 sec.                                                 *)
| (* The number of program cycles in 0.5 sec. is 14.                        *)
| (*************************************************************************)
|
|P+R_SA                                                                    << RUNG 13  STEP #0025 >>
|%M1216  +-----+                +-----+
+--] [---+ SUB_+----------------+ DIV_+-
|        | INT |                | INT |
|        |     |                |     |
|MAXPWR  |     | DIFF_SA DIFF_SA |     | PWR_INC
|%R1613 -+I1  Q+-%R1618  %R1618 -+I1  Q+-%R1620
|        |     |                |     |
|TPIHRMP |     |                |     |
|%R1612 -+I2   |          CONST -+I2   |
|        +-----+          +00016 +-----+
|
| (*************************************************************************)
| (* This is the part related the down ramp used for any drive roller motor  *)
| (* stop during tight tube or slow inching.                                 *)
| (*************************************************************************)
|
|A506_14                                                          PROD_NG  << RUNG 15  STEP #0029 >>
|%Q0201                                                           %M1211
+--] [-----------------------------------------------------------------(v)-- (* Production on negative pulse    *)
|
|PROD_NG                                                          STDLRM   << RUNG 16  STEP #0031 >>
|%M1211  +-----+                +-----+                          %M1213
+--] [---+MOVE_+----------------+MOVE_+----------------------------------(S)-- (* Deceleration ramp stop          *)
|        | INT |                | INT |
|        |     |                |     |
|SAPOW2  |     | TPIHRMP MIN_PWR |     | MINPWR
|%R0506 -+IN  Q+-%R1612  %R1658 -+IN  Q+-%R1614
|        | LEN |                | LEN |
|        |00001|                |00001|
|        |     |                |     |
|        +-----+                +-----+
|
|A506_13                                                           P-MLS   << RUNG 17  STEP #0035 >>
|%Q0202                                                           %M1285
+--] [-----------------------------------------------------------------(v)-- (* Magazine low speed neg. pulse   *)
|
| P-MLS                                                           STDLRM   << RUNG 18  STEP #0037 >>
|%M1285  +-----+                +-----+                          %M1213
+--] [---+MOVE_+----------------+MOVE_+----------------------------------(S)-- (* Deceleration ramp stop          *)
|        | INT |                | INT |
|        |     |                |     |
|SAPOW1  |     | TPIHRMP MIN_PWR |     | MINPWR
|%R0505 -+IN  Q+-%R1612  %R1658 -+IN  Q+-%R1614
|        | LEN |                | LEN |
|        |00001|                |00001|
|        |     |                |     |
|        +-----+                +-----+
|
```

REFERENCE	NICKNAME	REFERENCE DESCRIPTION	REFERENCE	NICKNAME	REFERENCE DESCRIPTION
%Q0202	A506_13	DMC Main Motor Low speed	%M1211	PROD_NG	Production on negative pulse
%Q0201	A506_14	DMC Main Motor High speed	%R1620	PWR_INC	Power increment SA
%R1618	DIFF_SA	Difference max-min power SA ramp	%M1210	RAMP_SA	Acceleration ramp SA
%R1613	MAXPWR	TPIH power upper limit	%R0505	SAPOW1	Power SA low speed (TPOP)
%R1614	MINPWR	TPIH power lower limit	%R0506	SAPOW2	Power SA production speed (TPOP)
%R1658	MIN_PWR	Start power TPIH ramp SA	%M1213	STDLRM	Deceleration ramp stop
%M1216	P+R_SA	Ramp up SA positive pulse	%R1612	TPIHRMP	TPIH power ramp register
%M1285	P-MLS	Magazine low speed neg. pulse			

```
| (*************************************************************************)
| (* As for the up rumps, is calculated the number of steps.               *)
| (*************************************************************************)
|
|STDLRM                                                          P+DR_SA  << RUNG 20  STEP #0042 >>
|%M1213                                                          %M1217
+--] [-------------------------------------------------------------------(^)-- (* Down ramp SA positive pulse      *)
|
|P+DR_SA                                                                  << RUNG 21  STEP #0044 >>
|%M1217  +-----+                +-----+
+--] [---+ SUB_+----------------+ DIV_+-
|        | INT |                | INT |
|        |     |                |     |
|TPIHRMP |     | DIFF_SA DIFF_SA |     | PWR_INC
|%R1612 -+I1  Q+-%R1618  %R1618 -+I1  Q+-%R1620
|        |     |                |     |
|MINPWR  |     |                |     |
|%R1614 -+I2   |          CONST -+I2   |
|        +-----+          +00013 +-----+
|
|[    END OF SUBROUTINE LOGIC     ]
|
```

REFERENCE	NICKNAME	REFERENCE DESCRIPTION	REFERENCE	NICKNAME	REFERENCE DESCRIPTION
%R1618	DIFF_SA	Difference max-min power SA ramp	%R1620	PWR_INC	Power increment SA
%R1614	MINPWR	TPIH power lower limit	%M1213	STDLRM	Deceleration ramp stop
%M1217	P+DR_SA	Down ramp SA positive pulse	%R1612	TPIHRMP	TPIH power ramp register

This page left intentionally blank

```
|[  START LD SUBROUTINE  VOL_CAM  ]
|
|[     VARIABLE DECLARATIONS      ]
|
|[   START OF SUBROUTINE LOGIC    ]
|
| (*************************************************************************)
| (* Subroutine to control the stepper motor for volume adjustmen cams.    *)
| (*                                                                       *)
| (* Note: part of the logic for this function is in the 1 msec. scan      *)
| (*       subroutine.                                                     *)
| (*************************************************************************)
|
|ST_3-10  P+100  NEW_VAL ADJ_VOL CHAN_G                          << RUNG 5  STEP #0003 >>
|%G0023  %M0029  %M1781  %M1771  %M1786  +-----+
+--] [--+--] [--+--] [--+--]/[-----]/[---+MOVE_+-
|       |       |       |               | INT |
|STEP_2 |       |CHANGEV|               |     |
|%G0002 |       |%M1784 |        SET_POS |     | TEMP_SP
+--] [--+       +--] [--+       %R0490 -+IN  Q+-%R2715
|                                       | LEN |
|                                       |00001|

|                                       |     |
|                                       +-----+
|
|ADJ_VOL                                                         << RUNG 6  STEP #0012 >>
|%M1771          +-----+
+--] [--+--------+MOVE_+-
|       |        | INT |
|CHAN_G |        |     |
|%M1786 |TEMP_SP |     | SET_POS
+--] [--+%R2715 -+IN  Q+-%R0490
|                | LEN |
|                |00001|
|                |     |
|                +-----+
|
|END_POS                                                                 END_PP   << RUNG 7  STEP #0015 >>
|%M1778                                                                  %M1780
+--] [-----------------------------------------------------------------(^)-- (* End positioning positive pulse   *)
|
|END_PP                                                                  NEW_VAL  << RUNG 8  STEP #0017 >>
|%M1780                                                                  %M1781
+--] [-----------------------------------------------------------------(R)-- (* New value set position *)
|
|STEP_2                                                                  NEW_VAL  << RUNG 9  STEP #0019 >>
|%G0002          +-----+                                                 %M1781
+--] [--+--------+ NE_ |+-------------------------------------------------(S)-- (* New value set position *)
|       |        | INT ||
|ST_4-7 |        |     ||
|%G0029 |SET_POS |     ||
+--] [--+%R0490 -+I1  Q++
|                |     |
|        TEMP_SP |     |
|        %R2715 -+I2   |
|                +-----+
|
|STEP_2  CHAN_G                                                          A424_27  << RUNG 10  STEP #0023 >>
|%G0002  %M1786                                                          %Q0066
+--] [--+--] [--+-------------------------------------------------------( )-- (* Enable motor volume adjustment *)
|       |       |
|ST_3-10|ADJ_VOL|
|%G0023 |%M1771 |
+--] [--+--] [--+
|
```

REFERENCE	NICKNAME	REFERENCE DESCRIPTION	REFERENCE	NICKNAME	REFERENCE DESCRIPTION
%Q0066	A424_27	Enable motor volume adjustment	%M0029	P+100	100ms scan positive pulse
%M1771	ADJ_VOL	Volume adjustment going on	%R0490	SET_POS	Set position volume adjustment
%M1784	CHANGEV	Change set position volume cam	%G0002	STEP_2	PREPARATION (3 MIN.)
%M1786	CHAN_G	Change set pos volume going on	%G0023	ST_3-10	Ladder position 3-10
%M1778	END_POS	End positioning volume adjust	%G0029	ST_4-7	Ladder position 4-7
%M1780	END_PP	End positioning positive pulse	%R2715	TEMP_SP	Temporary register set position
%M1781	NEW_VAL	New value set position			

```
|ADJ_VOL                                                          VOL_DIR  << RUNG 11  STEP #0029 >>
|%M1771  +-----+                                                  %M1772
+--] [---+ TMR +-----------------------------------------------------( )-- (* Delayed motor direction *)
|        |0.10s|
|        |     |
| CONST -+PV   |
| +00002 |     |
|        +-----+
|        DIRECT
|        %R2700
|
|ADJ_VOL                                                          CLK_DEL  << RUNG 12  STEP #0032 >>
|%M1771  +-----+                                                  %M1775
+--] [---+ TMR +-----------------------------------------------------( )-- (* Delay start clock pulse *)
|        |0.10s|
|        |     |
| CONST -+PV   |
| +00004 |     |
|        +-----+
|        CLPULSE
|        %R2703
|
|HOME_P                                                           HOM_DEL  << RUNG 13  STEP #0035 >>
|%M1776  +-----+                                                  %M1777
+--] [---+ TMR +-----------------------------------------------------( )-- (* Delay home position *)
|        |0.10s|
|        |     |
| CONST -+PV   |
| +00002 |     |
|        +-----+
|        HOMEDEL
|        %R2709
|
|END_POS HOME_P                                                   ADJ_VOL  << RUNG 14  STEP #0038 >>
|%M1778  %M1776                                                   %M1771
+--] [-----] [-------------------------------------------------------(R)-- (* Volume adjustment going on *)
|
|ST_VOL                                                           ADJ_VOL  << RUNG 15  STEP #0041 >>
|%M1770                                                           %M1771
+--] [--+-----------------------------------------------------------(S)-- (* Volume adjustment going on *)
|       |
|NEW_SP |
|%M1779 |
+--] [--+
|
| (*************************************************************************)
| (* The following rungs are used to allow to change the volume cam position  *)
| (* while the machine is running.                                           *)
| (*************************************************************************)
|
|ST_9-10 CHANGEV                                                  CHANGEV  << RUNG 17  STEP #0045 >>
|%G0026  %M1784  +-----+                                          %M1784
+--] [--+--]/[---+ NE_ |+-------------------------------------------(S)-- (* Change set position volume cam   *)
|       |        | INT ||
|STEP_8 |        |     ||
|%G0008 |SET_POS |     ||
+--] [--+%R0490 -+I1  Q++
|       |        |     |
|STEP_3 |        |     |
|%G0003 |TEMP_SP |     |
+--] [--+%R2715 -+I2   |
|                +-----+
|
```

REFERENCE	NICKNAME	REFERENCE DESCRIPTION	REFERENCE	NICKNAME	REFERENCE DESCRIPTION
%M1771	ADJ_VOL	Volume adjustment going on	%M1779	NEW_SP	New set position volume adjust
%M1784	CHANGEV	Change set position volume cam	%R0490	SET_POS	Set position volume adjustment
%M1775	CLK_DEL	Delay start clock pulse	%G0003	STEP_3	TUBE SEALING
%R2703	CLPULSE	TMR delay start clock pulse	%G0008	STEP_8	FLAPS + H2O2 TEMPERATURE
%R2700	DIRECT	TMR delay for the direction	%G0026	ST_9-10	Ladder position 9-10
%M1778	END_POS	End positioning volume adjust	%M1770	ST_VOL	Start positioning volume cams
%R2709	HOMEDEL	TMR delay home position	%R2715	TEMP_SP	Temporary register set position
%M1776	HOME_P	Home position reached	%M1772	VOL_DIR	Delayed motor direction
%M1777	HOM_DEL	Delay home position			

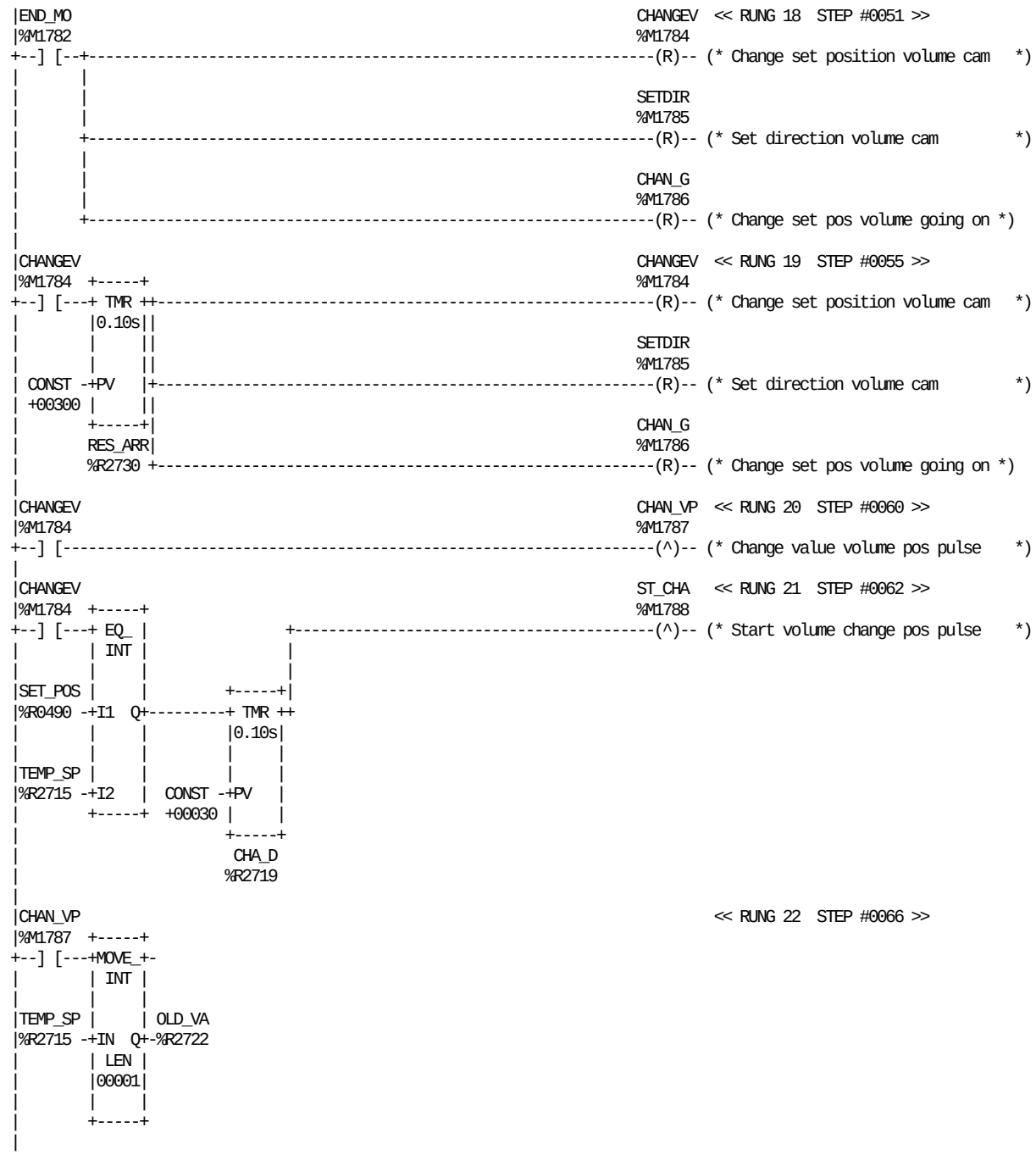

REFERENCE	NICKNAME	REFERENCE DESCRIPTION	REFERENCE	NICKNAME	REFERENCE DESCRIPTION
%M1784	CHANGEV	Change set position volume cam	%R2730	RES_ARR	Reset arrows volume cam TPOP
%M1786	CHAN_G	Change set pos volume going on	%M1785	SETDIR	Set direction volume cam
%M1787	CHAN_VP	Change value volume pos pulse	%R0490	SET_POS	Set position volume adjustment
%R2719	CHA_D	TMR change delay (volume)	%M1788	ST_CHA	Start volume change pos pulse
%M1782	END_MO	End movement volume cam	%R2715	TEMP_SP	Temporary register set position
%R2722	OLD_VA	Old value volume cam			

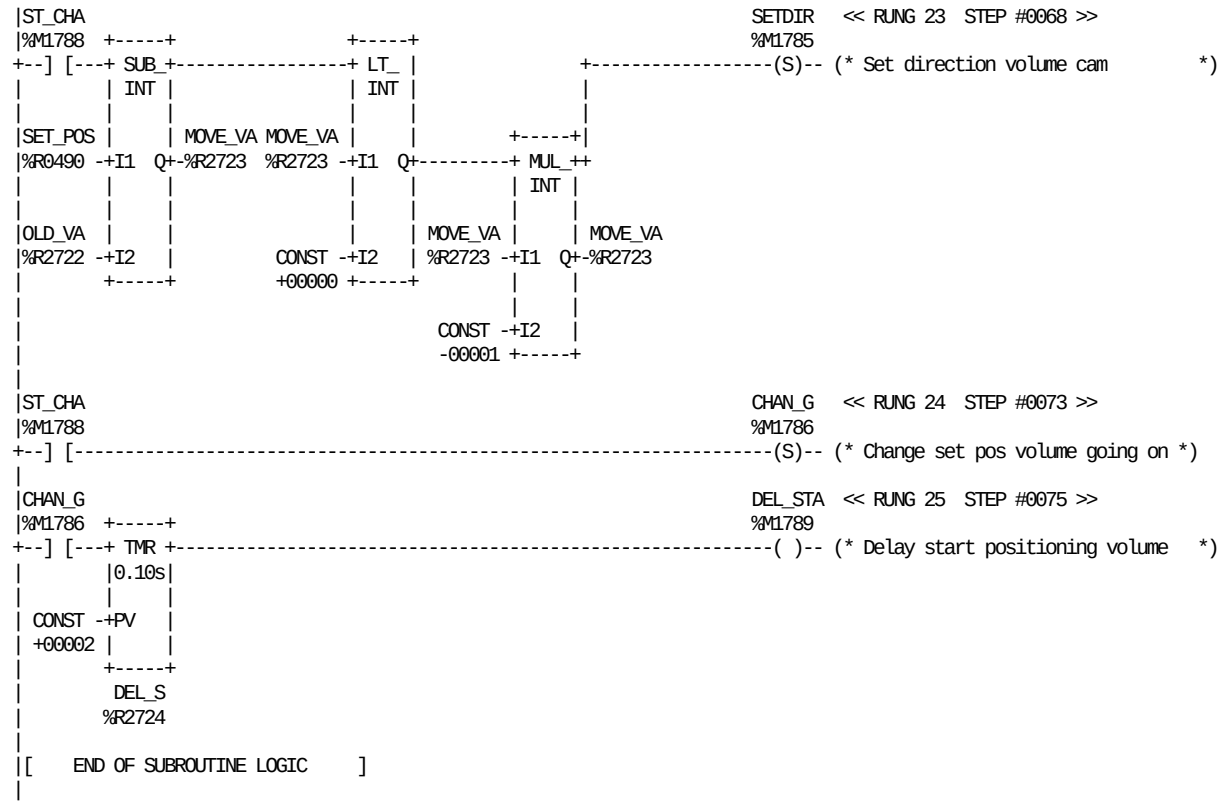

REFERENCE	NICKNAME	REFERENCE DESCRIPTION	REFERENCE	NICKNAME	REFERENCE DESCRIPTION
%M1786	CHAN_G	Change set pos volume going on	%R2722	OLD_VA	Old value volume cam
%R2724	DEL_S	TRM delay start positioning	%M1785	SETDIR	Set direction volume cam
%M1789	DEL_STA	Delay start positioning volume	%R0490	SET_POS	Set position volume adjustment
%R2723	MOVE_VA	Moving value volume cam	%M1788	ST_CHA	Start volume change pos pulse

```
|[  START LD SUBROUTINE  TUBEPOS  ]
|
|[     VARIABLE DECLARATIONS      ]
|
|[   START OF SUBROUTINE LOGIC    ]
|
| (*************************************************************************)
| (* Subroutine to control the stepper motor for tube positioning.         *)
| (*************************************************************************)
|
|ST_3-10  P+100   NEW_V  TUB_POS CHAN_GO                          << RUNG 5  STEP #0003 >>
|%G0023  %M0029  %M1823  %M1825  %M1835  +-----+
+--] [--+--] [--+--] [--+--]/[-----]/[---+MOVE_+-
|       |      |       |                | INT |
|STEP_2 |      |CHANGE |                |     |
|%G0002 |      |%M1831 |        SET_PO  |     | TEMP_SE
+--] [--+      +--] [--+       %R0554 -+IN  Q+-%R2050
|                                       | LEN |
|                                       |00001|
|                                       |     |
|                                       +-----+
|
|TUB_POS                                                          << RUNG 6  STEP #0012 >>
|%M1825          +-----+
+--] [--+--------+MOVE_+-
|       |        | INT |
|CHAN_GO|        |     |
|%M1835 |TEMP_SE |     | SET_PO
+--] [--+%R2050 -+IN  Q+-%R0554
|                | LEN |
|                |00001|
|                |     |
|                +-----+
|
|END_PO                                                            END_P   << RUNG 7  STEP #0015 >>
|%M1821                                                           %M1822
+--] [-----------------------------------------------------------------(^)-- (* End tube positioning pos pulse   *)
|
| END_P                                                            NEW_V   << RUNG 8  STEP #0017 >>
|%M1822                                                           %M1823
+--] [-----------------------------------------------------------------(R)-- (* New value set positioning tube   *)
|
|STEP_2                                                            NEW_V   << RUNG 9  STEP #0019 >>
|%G0002          +-----+                                          %M1823
+--] [--+--------+ NE_ |+-------------------------------------------------(S)-- (* New value set positioning tube   *)
|       |        | INT ||
|ST_4-7 |        |     ||
|%G0029 |SET_PO  |     ||
+--] [--+%R0554 -+I1  Q++
|                |     |
|        TEMP_SE |     |
|        %R2050 -+I2   |
|                +-----+
|
```

REFERENCE	NICKNAME	REFERENCE DESCRIPTION	REFERENCE	NICKNAME	REFERENCE DESCRIPTION
%M1831	CHANGE	Change set position tube	%R0554	SET_PO	Set position tube positioning
%M1835	CHAN_GO	Change set position going on	%G0002	STEP_2	PREPARATION (3 MIN.)
%M1822	END_P	End tube positioning pos pulse	%G0023	ST_3-10	Ladder position 3-10
%M1821	END_PO	End tube positioning	%G0029	ST_4-7	Ladder position 4-7
%M1823	NEW_V	New value set positioning tube	%R2050	TEMP_SE	Temporary register set position
%M0029	P+100	100ms scan positive pulse	%M1825	TUB_POS	Tube positioning going on

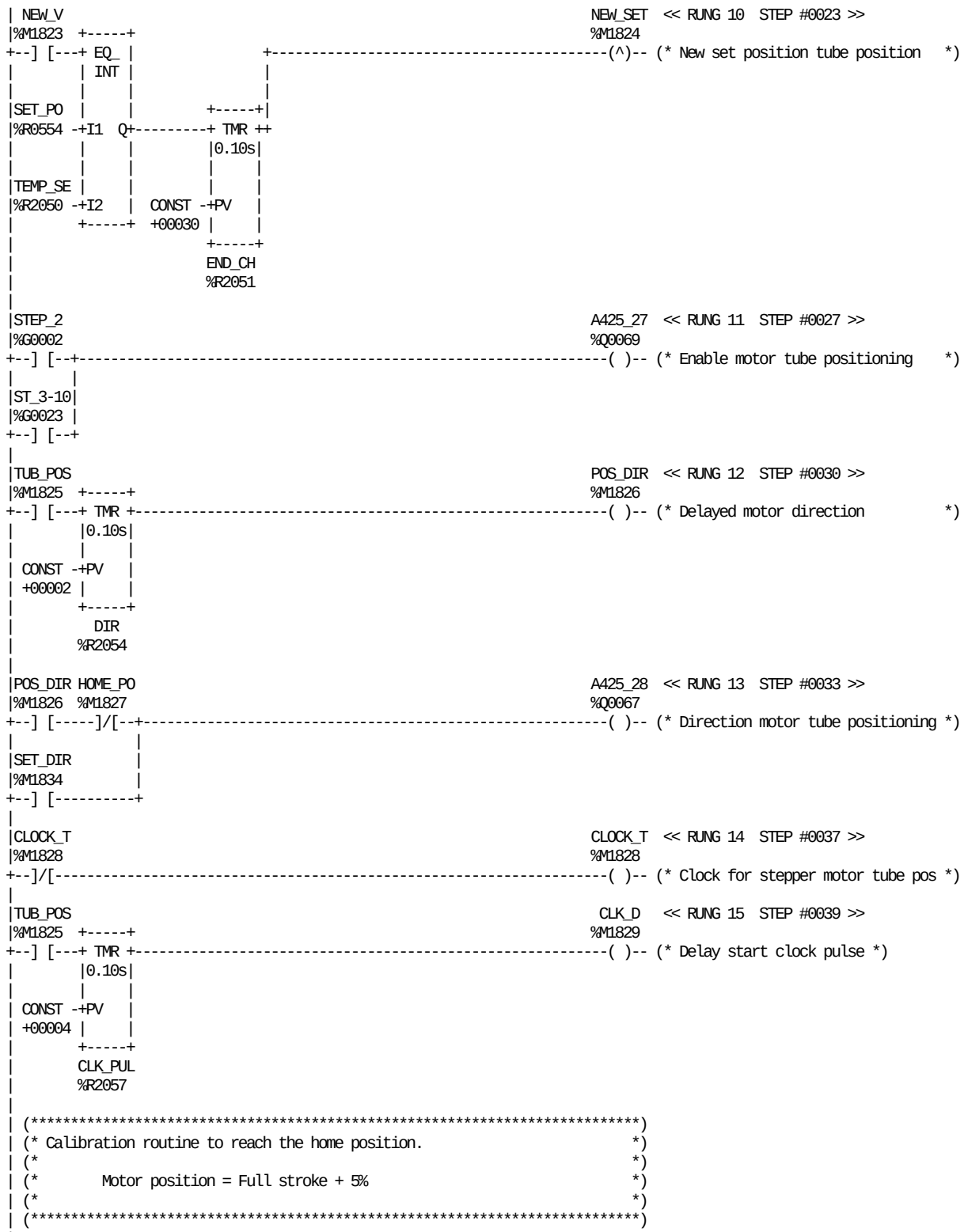

REFERENCE	NICKNAME	REFERENCE DESCRIPTION	REFERENCE	NICKNAME	REFERENCE DESCRIPTION
%Q0069	A425_27	Enable motor tube positioning	%M1823	NEW_V	New value set positioning tube
%Q0067	A425_28	Direction motor tube positioning	%M1826	POS_DIR	Delayed motor direction
%M1829	CLK_D	Delay start clock pulse	%M1834	SET_DIR	Set direction tube positioning
%R2057	CLK_PUL	TMR delay start clock pulse	%R0554	SET_PO	Set position tube positioning
%M1828	CLOCK_T	Clock for stepper motor tube pos	%G0002	STEP_2	PREPARATION (3 MIN.)
%R2054	DIR	TMR delay for the direction	%G0023	ST_3-10	Ladder position 3-10
%R2051	END_CH	TMR check end of change tube pos	%R2050	TEMP_SE	Temporary register set position
%M1827	HOME_PO	Home position reached	%M1825	TUB_POS	Tube positioning going on
%M1824	NEW_SET	New set position tube position			

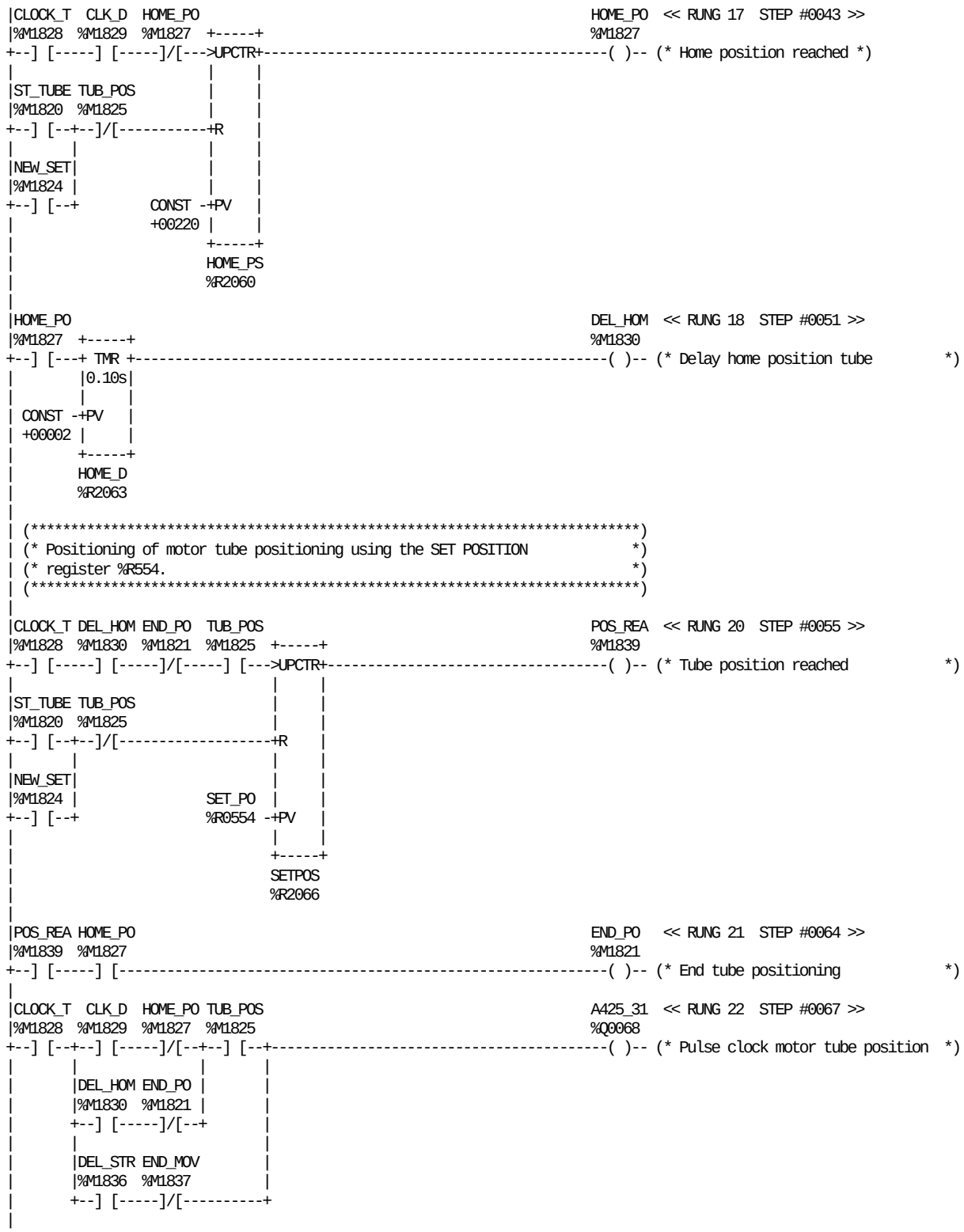

REFERENCE	NICKNAME	REFERENCE DESCRIPTION	REFERENCE	NICKNAME	REFERENCE DESCRIPTION
%Q0068	A425_31	Pulse clock motor tube position	%M1827	HOME_PO	Home position reached
%M1829	CLK_D	Delay start clock pulse	%R2060	HOME_PS	Counter home position tube
%M1828	CLOCK_T	Clock for stepper motor tube pos	%M1824	NEW_SET	New set position tube position
%M1830	DEL_HOM	Delay home position tube	%M1839	POS_REA	Tube position reached
%M1836	DEL_STR	Delayed start positioning	%R2066	SETPOS	Counter set position tube
%M1837	END_MOV	End move tube positioning	%R0554	SET_PO	Set position tube positioning
%M1821	END_PO	End tube positioning	%M1820	ST_TUBE	Start tube positioning
%R2063	HOME_D	TMR delay home position tube	%M1825	TUB_POS	Tube positioning going on

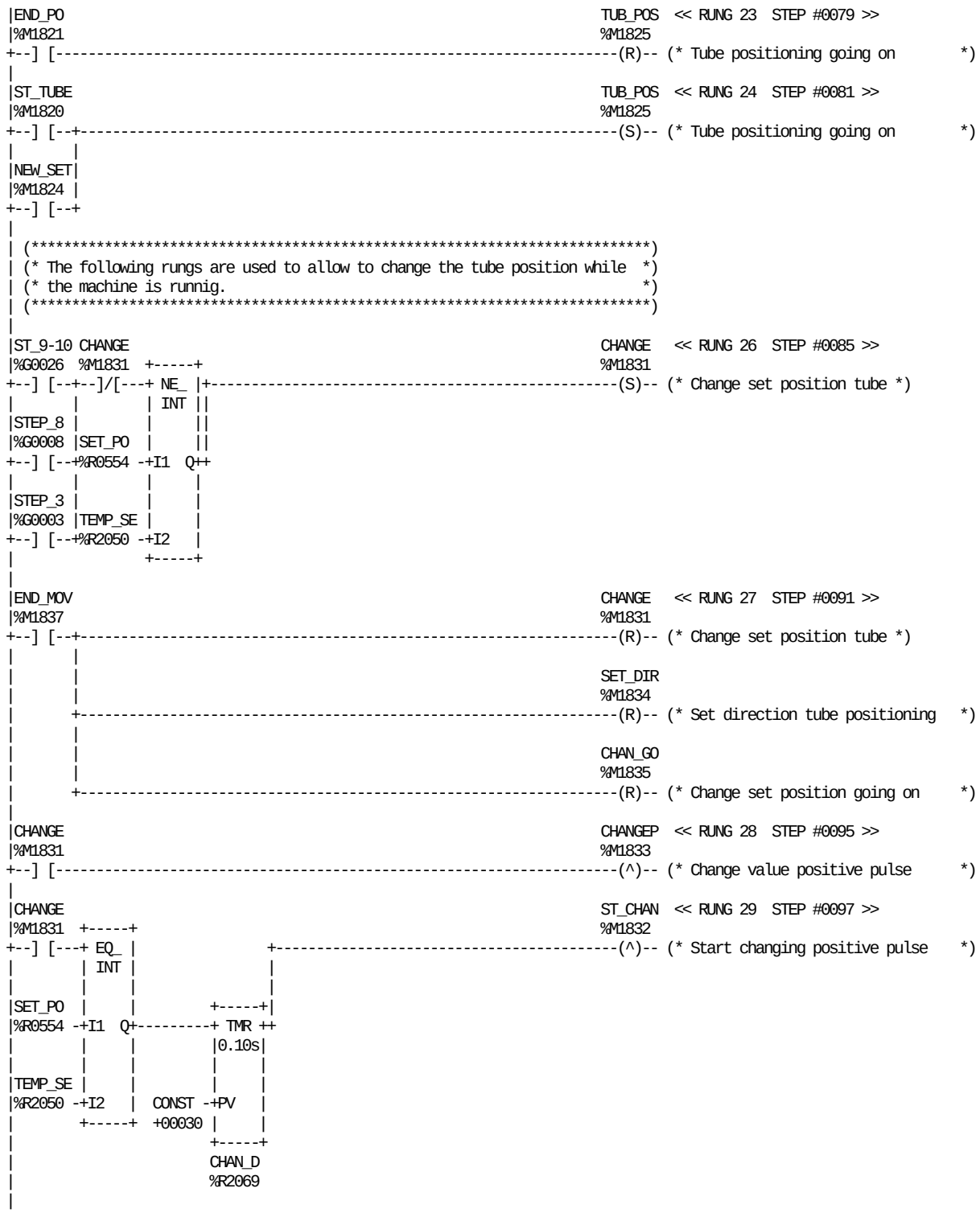

REFERENCE	NICKNAME	REFERENCE DESCRIPTION	REFERENCE	NICKNAME	REFERENCE DESCRIPTION
%M1831	CHANGE	Change set position tube	%R0554	SET_PO	Set position tube positioning
%M1833	CHANGEP	Change value positive pulse	%G0003	STEP_3	TUBE SEALING
%R2069	CHAN_D	TMR delay change	%G0008	STEP_8	FLAPS + H2O2 TEMPERATURE
%M1835	CHAN_GO	Change set position going on	%G0026	ST_9-10	Ladder position 9-10
%M1837	END_MOV	End move tube positioning	%M1832	ST_CHAN	Start changing positive pulse
%M1821	END_PO	End tube positioning	%M1820	ST_TUBE	Start tube positioning
%M1824	NEW_SET	New set position tube position	%R2050	TEMP_SE	Temporary register set position
%M1834	SET_DIR	Set direction tube positioning	%M1825	TUB_POS	Tube positioning going on

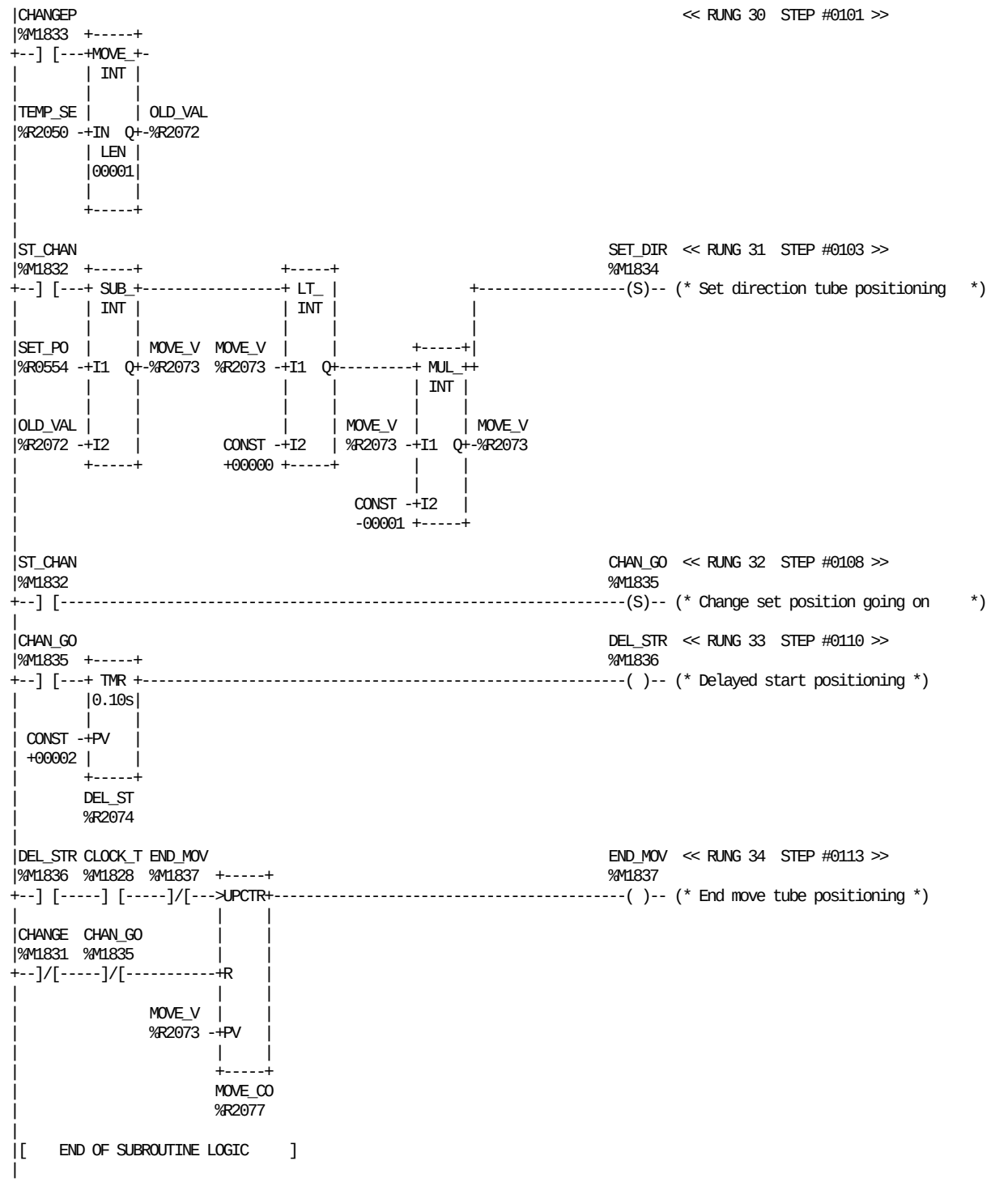

REFERENCE	NICKNAME	REFERENCE DESCRIPTION	REFERENCE	NICKNAME	REFERENCE DESCRIPTION
%M1831	CHANGE	Change set position tube	%R2077	MOVE_CO	Move tube positioning counter
%M1833	CHANGEP	Change value positive pulse	%R2073	MOVE_V	Moving value tube position
%M1835	CHAN_GO	Change set position going on	%R2072	OLD_VAL	Old value tube position
%M1828	CLOCK_T	Clock for stepper motor tube pos	%M1834	SET_DIR	Set direction tube positioning
%R2074	DEL_ST	TMR delay start positioning	%R0554	SET_PO	Set position tube positioning
%M1836	DEL_STR	Delayed start positioning	%M1832	ST_CHAN	Start changing positive pulse
%M1837	END_MOV	End move tube positioning	%R2050	TEMP_SE	Temporary register set position

This page left intentionally blank

```
|[  START LD SUBROUTINE   WASTE   ]
|
|[     VARIABLE DECLARATIONS      ]
|
|[   START OF SUBROUTINE LOGIC    ]
|
| (*************************************************************************)
| (* DCS barcode pulse simulators.                                         *)
| (*************************************************************************)
|
|STEP_2                                                          << RUNG 5  STEP #0003 >>
|%G0002  +-----+
+--] [---+MOVE_+-
|        | INT |
|        |     |
|        |     | TB_DCCK
| CONST -+IN  Q+-%R1749
| +00082 | LEN |
|        |00001|
|        |     |
|        +-----+
|
|STEP_5                                                          << RUNG 6  STEP #0005 >>
|%G0005                          +-----+
+--] [------------------+--------+MOVE_+-
|                       |        | INT |
|STEP_6  DRY_OK   S907  |        |     |
|%G0006  %M0813  %I0087 |        |     | TB_DCCK
+--] [-----] [-----] [--+ CONST -+IN  Q+-%R1749
|                        +00025 | LEN |
|                               |00001|
|                               |     |
|                               +-----+
|
|ST_9-10                                                         << RUNG 7  STEP #0011 >>
|%G0026  +-----+
+--] [---+MOVE_+-
|        | INT |
|        |     |
|        |     | TB_DCCK
| CONST -+IN  Q+-%R1749
| +00020 | LEN |
|        |00001|
|        |     |
|        +-----+
|
|ACC_02S A506_14 DC_CLK  P+DESP                                  DC_CLK   << RUNG 8  STEP #0013 >>
|%M1699  %Q0201  %M1301  %M0019  +-----+                         %M1301
+--] [-----] [--+--]/[-----]/[---+ TMR +---------------------------------( )-- (* Bar code DCS clock              *)
|               |                |0.01s|
|A506_13 HC_SEL |                |     |
|%Q0202  %M0713 |        TB_DCCK |     |
+--] [-----]/[--+        %R1749 -+PV   |
|                                |     |
|                                +-----+
|                                BCDC_C
|                                %R1753
|
```

REFERENCE	NICKNAME	REFERENCE DESCRIPTION	REFERENCE	NICKNAME	REFERENCE DESCRIPTION
%Q0202	A506_13	DMC Main Motor Low speed	%M0019	P+DESP	Barcode signal positive pulse
%Q0201	A506_14	DMC Main Motor High speed	%I0087	S907	Push button inching JUM
%M1699	ACC_02S	2 sec. acceleration main motor	%G0002	STEP_2	PREPARATION (3 MIN.)
%R1753	BCDC_C	Bar code DCS clock timer	%G0005	STEP_5	SPRAYING
%M1301	DC_CLK	Bar code DCS clock	%G0006	STEP_6	DRYING + STEAM CLEANING
%M0813	DRY_OK	Drying ready	%G0026	ST_9-10	Ladder position 9-10
%M0713	HC_SEL	Hygienic cleaning selection ok	%R1749	TB_DCCK	Time-base dcs photocell pulse

```
| (*************************************************************************)
| (* Packages wasted under Strip-applicator during transitions.            *)
| (*                                                                       *)
| (* EVENT                    TRIGGER                 PACKAGES WASTED      *)
| (*                                                  250B   200B   200S   *)
| (* Production on or                                                      *)
| (* sterile inching          %M0032 "P+SQCON"         8     10     6     *)
| (*                                                                       *)
| (* Strip Splice             %M1206 "STR_ON"          3      3     3     *)
| (*                                                                       *)
| (* Strip break              %M1554 "P_STRBK"        48     56     54    *)
| (*                                                                       *)
| (* TPIH failure SA          %M1555 "P_TPIHF"        10     12     10    *)
| (*************************************************************************)
|
|P+SQCON                                                          << RUNG 10  STEP #0023 >>
|%M0032  +-----+                +-----+                +-----+
+--] [---+ AND_+----------------+ AND_+----------------+ AND_+-
|        | WORD|                | WORD|                | WORD|
|        |     |                |     |                |     |
|WSTRS1  |     | WH_REG5 WSTRS2 |     | WH_REG6 WSTRS3 |     | WH_REG7
|%R4025 -+I1  Q+-%R2754  %R4026 -+I1  Q+-%R2755  %R4027 -+I1  Q+-%R2756
|        |     |                |     |                |     |
|WH_REG5 |     |         WH_REG6 |     |         WH_REG7 |     |
|%R2754 -+I2   |         %R2755 -+I2   |         %R2756 -+I2   |
|        +-----+                +-----+                +-----+
|
|WASTEPK                                                          << RUNG 11  STEP #0027 >>
|%M1347  +-----+                +-----+                +-----+
+--] [---+ AND_+----------------+ AND_+----------------+ AND_+-
|        | WORD|                | WORD|                | WORD|
|        |     |                |     |                |     |
|WSSPL1  |     | WH_REG5 WSSPL2 |     | WH_REG6 WSSPL3 |     | WH_REG7
|%R4028 -+I1  Q+-%R2754  %R4029 -+I1  Q+-%R2755  %R4030 -+I1  Q+-%R2756
|        |     |                |     |                |     |
|WH_REG5 |     |         WH_REG6 |     |         WH_REG7 |     |
|%R2754 -+I2   |         %R2755 -+I2   |         %R2756 -+I2   |
|        +-----+                +-----+                +-----+
|
|WASTEPK                                                    WASTEPK  << RUNG 12  STEP #0031 >>
|%M1347                                                     %M1347
+--] [--+-------------------------------------------------------------(R)-- (* SA, waste pkg with strip splice  *)
|       |
|A506_32|
|%I0044 |
+--]/[--+
|       |
|ST_DWN |
|%M0101 |
+--] [--+
|
| (*************************************************************************)
| (* If the machine stops or another strip splice starts                   *)
| (* before the strip splice waste register has been loaded,               *)
| (* the complete strip magazine is wasted.                                *)
| (*************************************************************************)
|
```

REFERENCE	NICKNAME	REFERENCE DESCRIPTION	REFERENCE	NICKNAME	REFERENCE DESCRIPTION
%I0044	A506_32	DMC Main motor running	%R4028	WSSPL1	Waste strip splice register 1
%M0032	P+SQCON	Sequence condition pos pulse	%R4029	WSSPL2	Waste strip splice register 2
%M0101	ST_DWN	Pushbuttons step down	%R4030	WSSPL3	Waste strip splice register 3
%M1347	WASTEPK	SA, waste pkg with strip splice	%R4025	WSTRS1	Waste start strip register 1
%R2754	WH_REG5	Waste handeling register5	%R4026	WSTRS2	Waste start strip register 2
%R2755	WH_REG6	Waste handeling register6	%R4027	WSTRS3	Waste start strip register 3
%R2756	WH_REG7	Waste handeling register7			

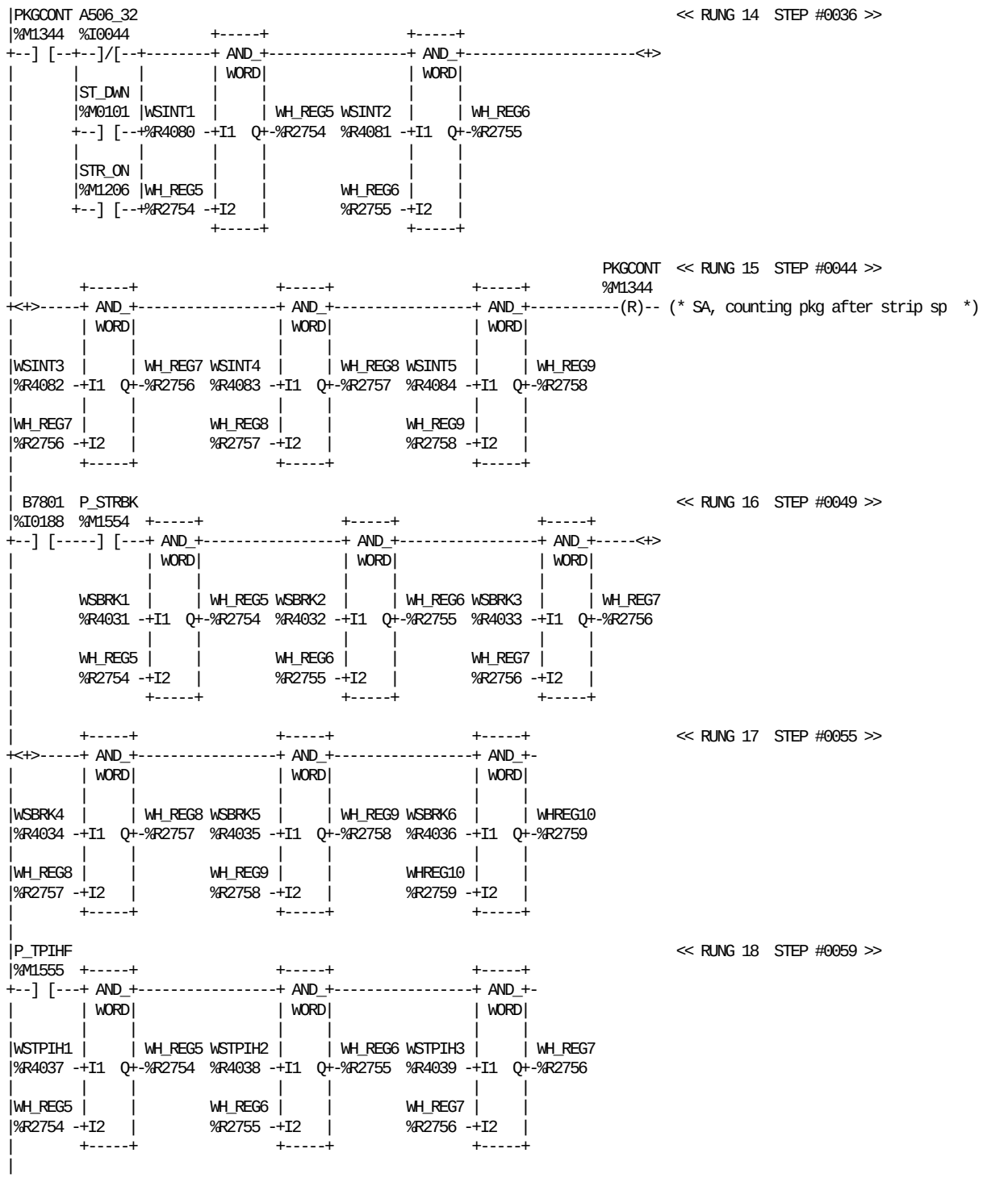

REFERENCE	NICKNAME	REFERENCE DESCRIPTION
%I0044	A506_32	DMC Main motor running
%I0188	B7801	Door guard strip applicator (17)
%M1344	PKGCONT	SA, counting pkg after strip sp
%M1554	P_STRBK	Strip break positive pulse
%M1555	P_TPIHF	TPIH failure positive pulse
%M1206	STR_ON	Strip on condition pos. pulse
%M0101	ST_DWN	Pushbuttons step down
%R2759	WHREG10	Waste handeling register10
%R2754	WH_REG5	Waste handeling register5
%R2755	WH_REG6	Waste handeling register6
%R2756	WH_REG7	Waste handeling register7
%R2757	WH_REG8	Waste handeling register8
%R2758	WH_REG9	Waste handeling register9
%R4031	WSBRK1	Waste strip break register 1
%R4032	WSBRK2	Waste strip break register 2
%R4033	WSBRK3	Waste strip break register 3
%R4034	WSBRK4	Waste strip break register 4
%R4035	WSBRK5	Waste strip break register 5
%R4036	WSBRK6	Waste strip break register 6
%R4080	WSINT1	Waste strip refill.inter.reg.1
%R4081	WSINT2	Waste strip refill.inter.reg.2
%R4082	WSINT3	Waste strip refill.inter.reg.3
%R4083	WSINT4	Waste strip refill.inter.reg.4
%R4084	WSINT5	Waste strip refill.inter.reg.5
%R4037	WSTPIH1	Waste strip TPIH fail register 1
%R4038	WSTPIH2	Waste strip TPIH fail register 2
%R4039	WSTPIH3	Waste strip TPIH fail register 3

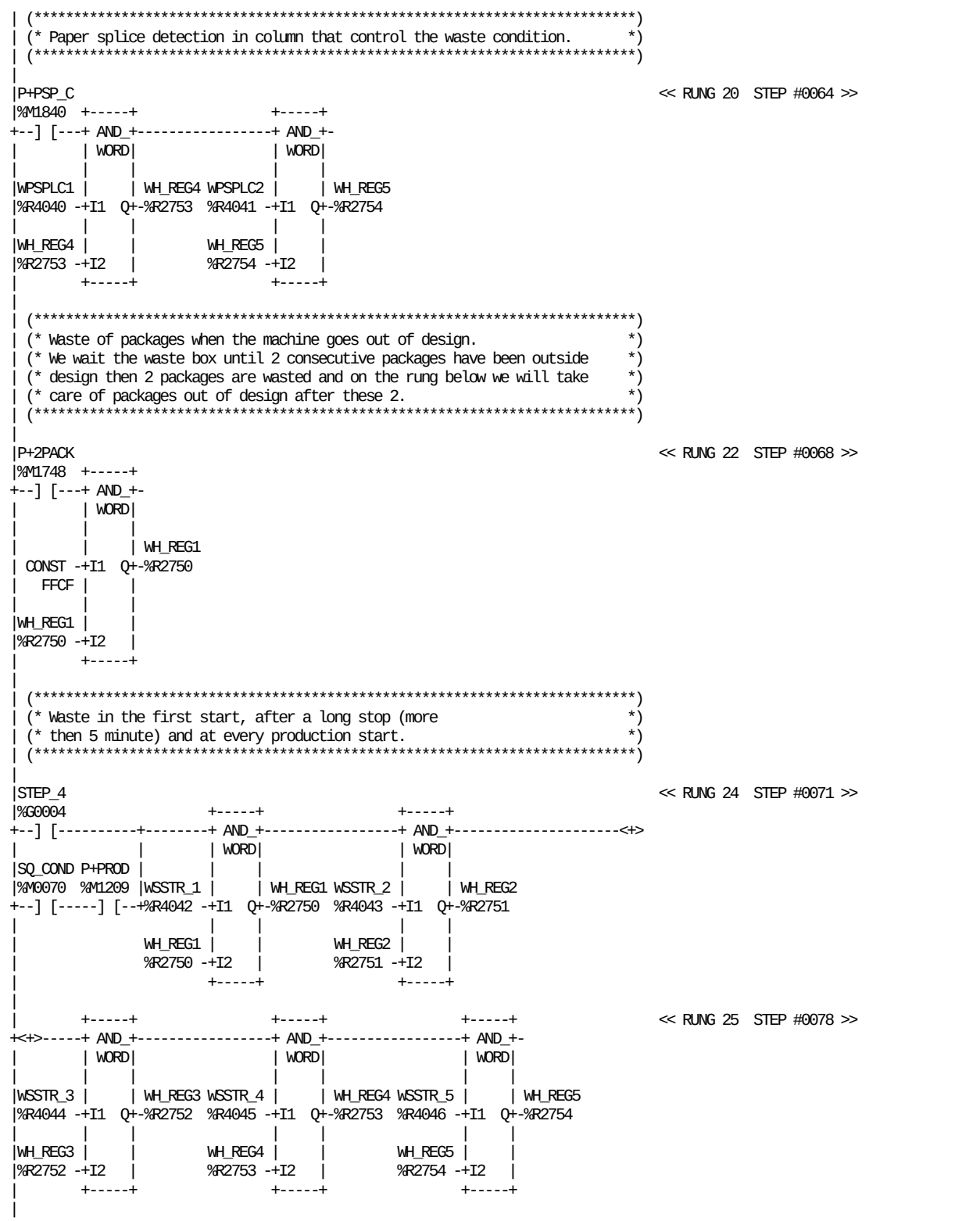

REFERENCE	NICKNAME	REFERENCE DESCRIPTION	REFERENCE	NICKNAME	REFERENCE DESCRIPTION
%M1748	P+2PACK	Machine out of design pos pulse	%R2754	WH_REG5	Waste handeling register5
%M1209	P+PROD	Production on positive pulse	%R4040	WPSPLC1	Waste paper spl detection column
%M1840	P+PSP_C	Splice guard column pos pulse	%R4041	WPSPLC2	Waste paper spl detection column
%M0070	SQ_COND	Start sequence conditions	%R4042	WSSTR_1	Waste startup reg 1
%G0004	STEP_4	HEAT STERILIZATION	%R4043	WSSTR_2	Waste startup reg 2
%R2750	WH_REG1	Waste handeling register1 (out)	%R4044	WSSTR_3	Waste startup reg 3
%R2751	WH_REG2	Waste handeling register2	%R4045	WSSTR_4	Waste startup reg 4
%R2752	WH_REG3	Waste handeling register3	%R4046	WSSTR_5	Waste startup reg 5
%R2753	WH_REG4	Waste handeling register4			

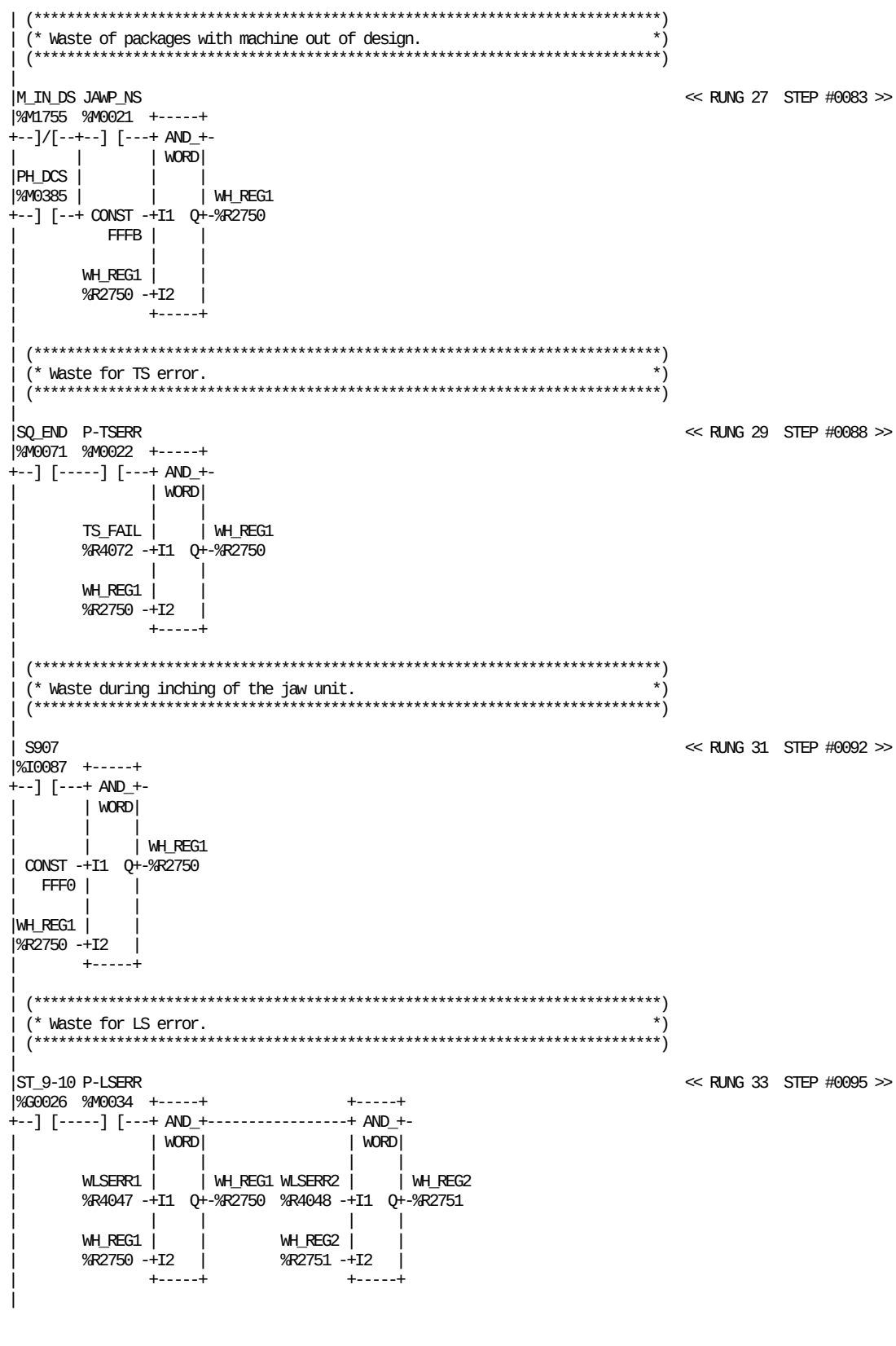

REFERENCE	NICKNAME	REFERENCE DESCRIPTION
%M0021	JAWP_NS	Jawpulse Normal scan
%M1755	M_IN_DS	Machine in design
%M0034	P-LSERR	TPIH LS error negative pulse
%M0022	P-TSERR	TS-error negative pulse
%M0385	PH_DCS	Malfunction photocells DCS
%I0087	S907	Push button inching JUM
%M0071	SQ_END	Start sequence ended

REFERENCE	NICKNAME	REFERENCE DESCRIPTION
%G0026	ST_9-10	Ladder position 9-10
%R4072	TS_FAIL	Waste for TS load error
%R2750	WH_REG1	Waste handeling register1 (out)
%R2751	WH_REG2	Waste handeling register2
%R4047	WLSERR1	Waste LS error reg 1
%R4048	WLSERR2	Waste LS error reg 2

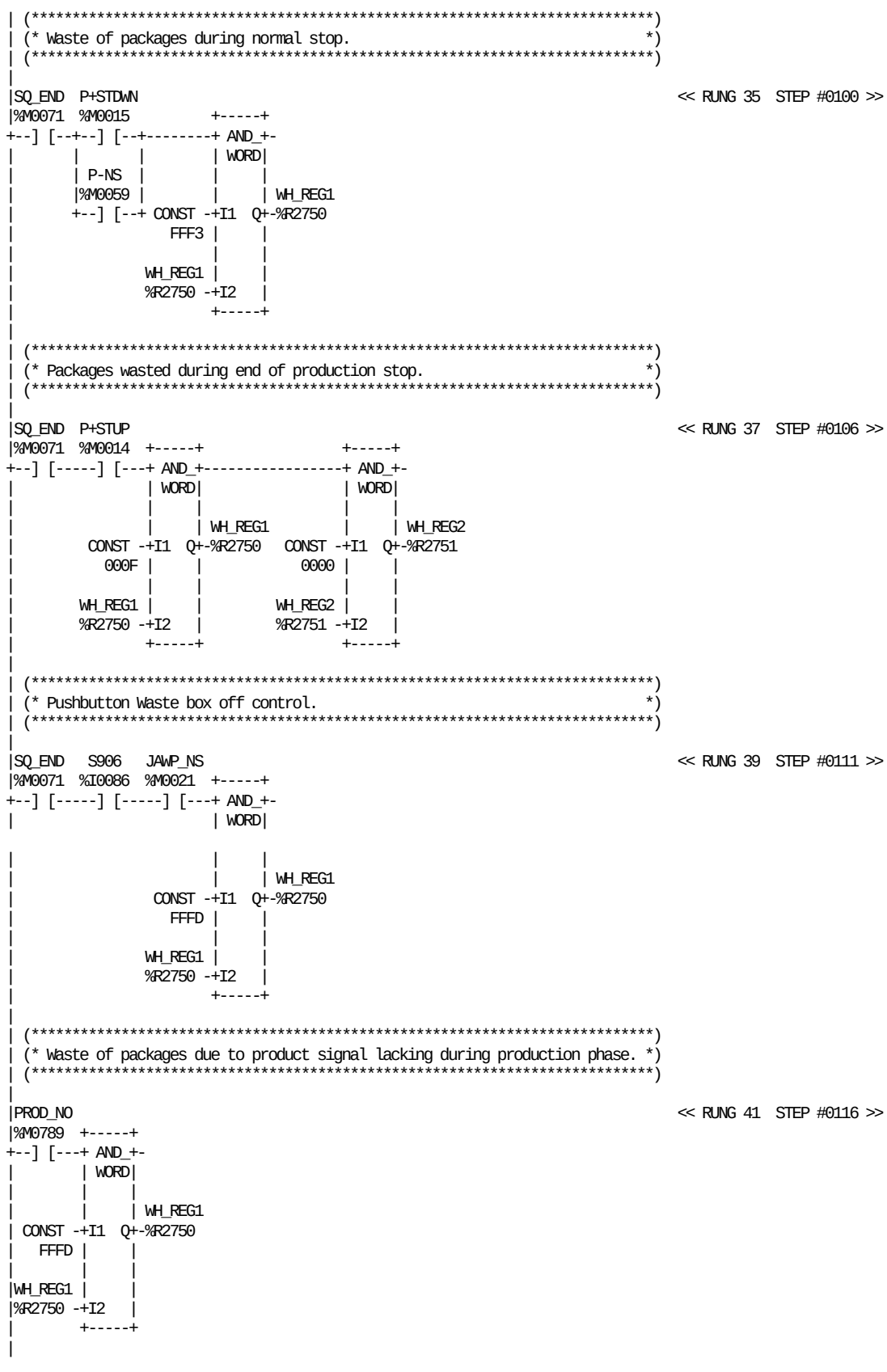

REFERENCE	NICKNAME	REFERENCE DESCRIPTION	REFERENCE	NICKNAME	REFERENCE DESCRIPTION
%M0021	JAWP_NS	Jawpulse Normal scan	%I0086	S906	Push button drop chute off
%M0015	P+STDWN	Step down positive pulse	%M0071	SQ_END	Start sequence ended
%M0014	P+STUP	Step up positive pulse	%R2750	WH_REG1	Waste handeling register1 (out)
%M0059	P-NS	Normal stop negative pulse	%R2751	WH_REG2	Waste handeling register2
%M0789	PROD_NO	No product signal in production			

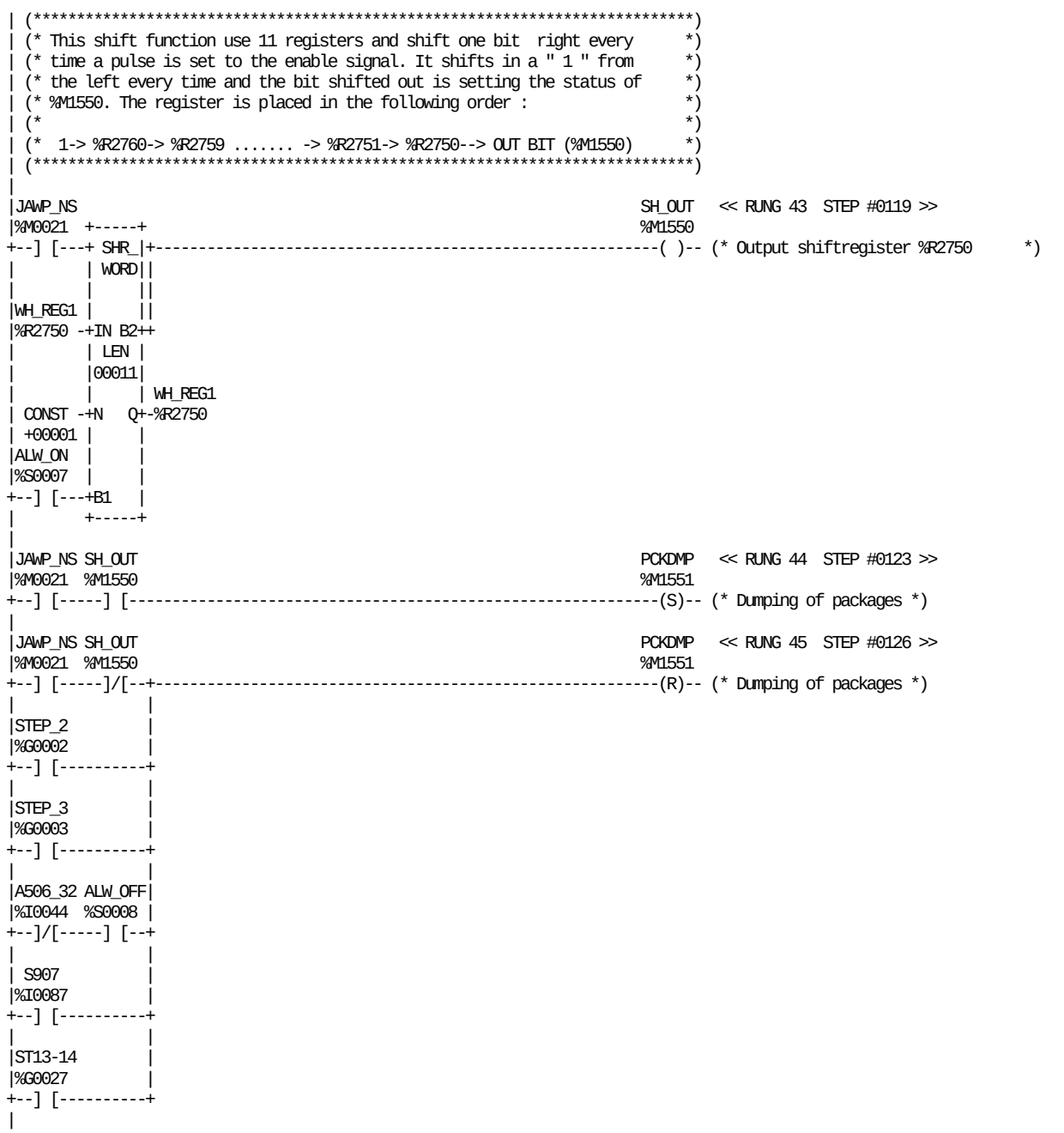

REFERENCE	NICKNAME	REFERENCE DESCRIPTION
%I0044	A506_32	DMC Main motor running
%S0008	ALW_OFF	
%S0007	ALW_ON	
%M0021	JAWP_NS	Jawpulse Normal scan
%M1551	PCKDMP	Dumping of packages
%I0087	S907	Push button inching JUM

REFERENCE	NICKNAME	REFERENCE DESCRIPTION
%M1550	SH_OUT	Output shiftregister %R2750
%G0027	ST13-14	Ladder position 13-14
%G0002	STEP_2	PREPARATION (3 MIN.)
%G0003	STEP_3	TUBE SEALING
%R2750	WH_REG1	Waste handeling register1 (out)

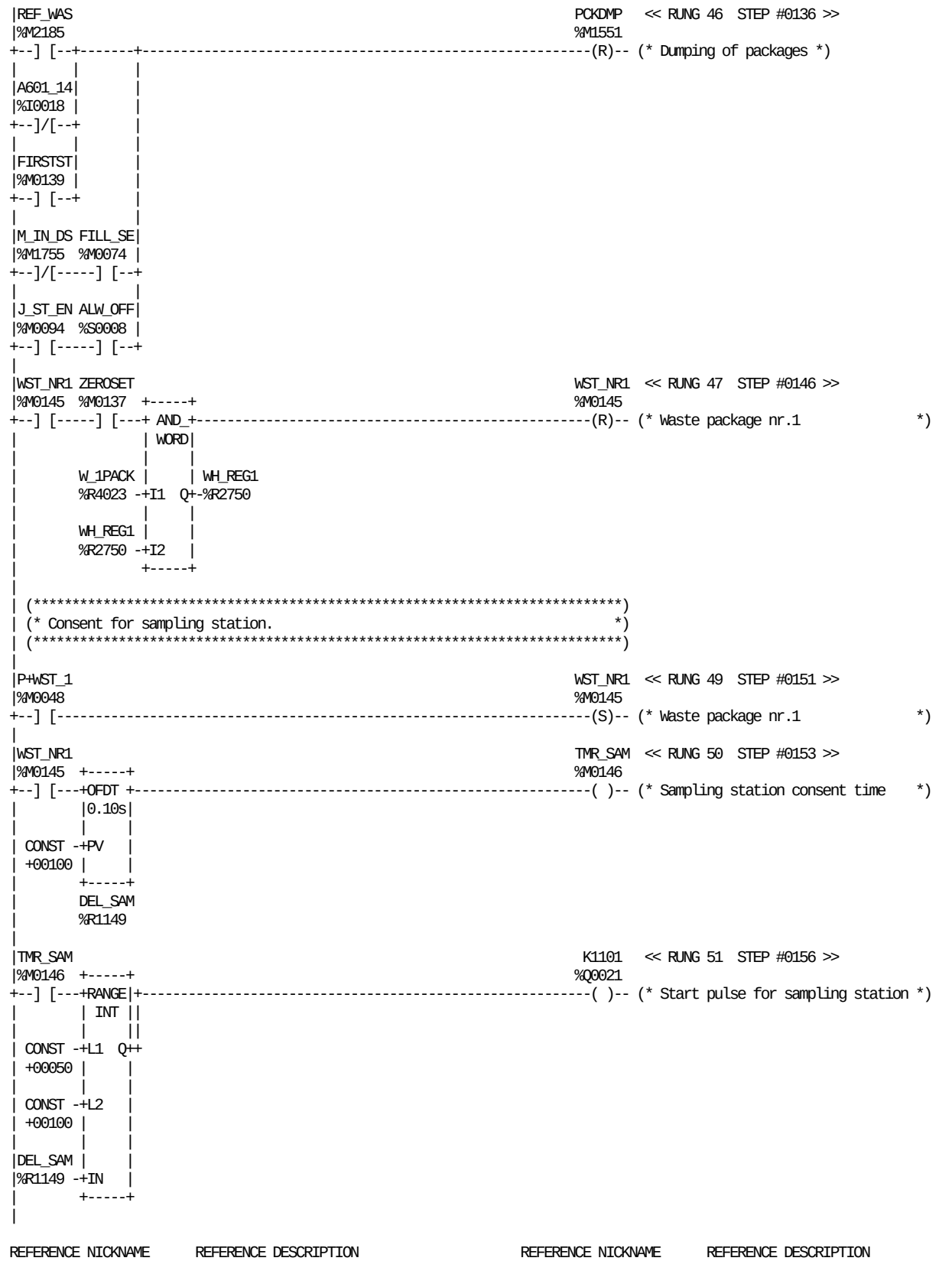

REFERENCE	NICKNAME	REFERENCE DESCRIPTION	REFERENCE	NICKNAME	REFERENCE DESCRIPTION
%I0018	A601_14	Safety monitors B	%M0048	P+WST_1	Pulse pos edge waste link nr.1
%S0008	ALW_OFF		%M1551	PCKDMP	Dumping of packages
%R1149	DEL_SAM	TMR sampling station consent	%M2185	REF_WAS	Minimum waste during refilling
%M0074	FILL_SE	Fillsector (Only active 1 start)	%M0146	TMR_SAM	Sampling station consent time
%M0139	FIRSTST	First start after sterilization	%R2750	WH_REG1	Waste handeling register1 (out)
%M0094	J_ST_EN	Stop sequence jaw_nr started	%M0145	WST_NR1	Waste package nr.1
%Q0021	K1101	Start pulse for sampling station	%R4023	W_1PACK	Waste of package Nr 1
%M1755	M_IN_DS	Machine in design	%M0137	ZEROSET	Zero jaw fast scan set

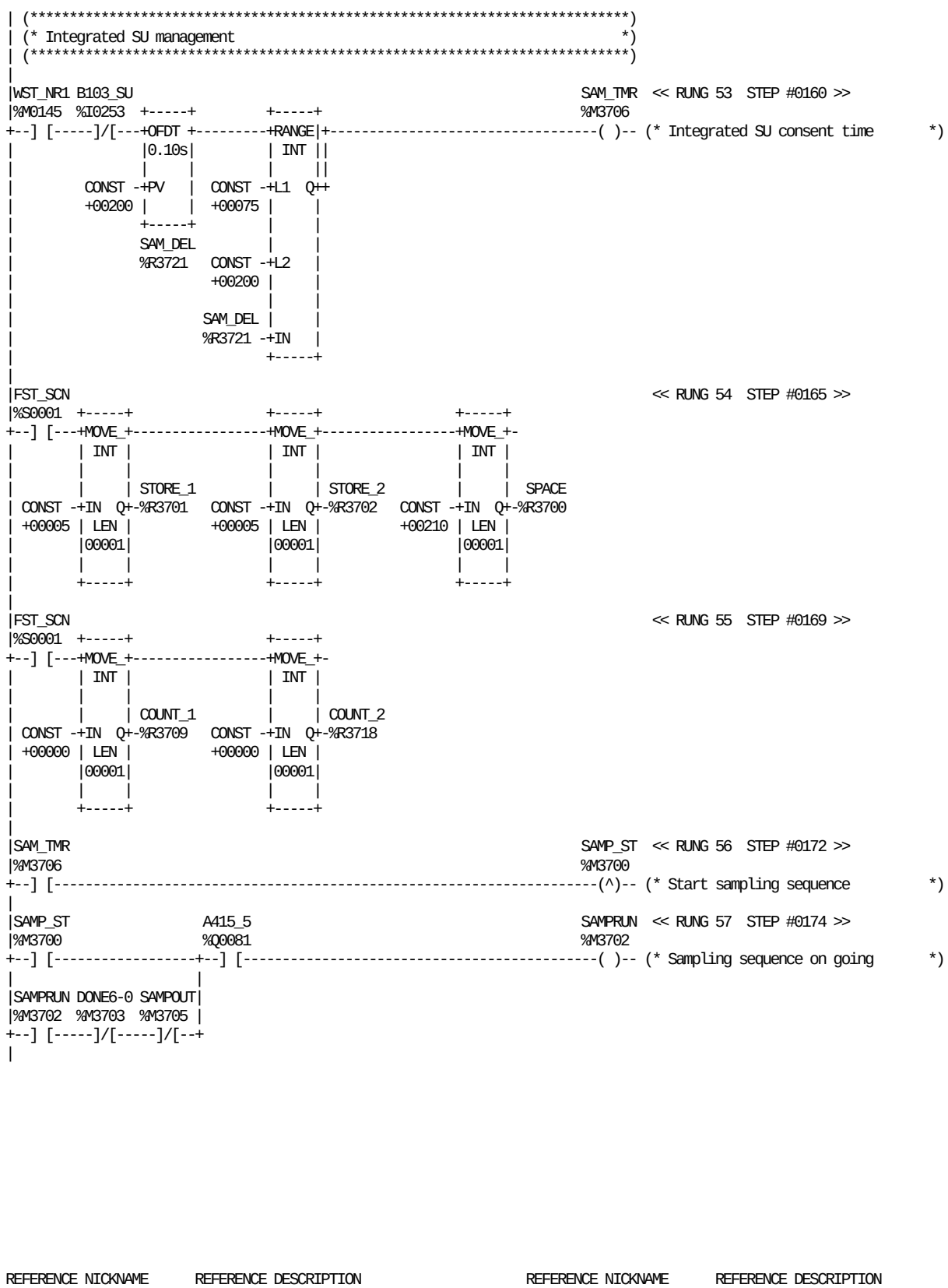

REFERENCE	NICKNAME	REFERENCE DESCRIPTION
%Q0081	A415_5	Enable external conveyor
%I0253	B103_SU	Sampling chutes occupied
%R3709	COUNT_1	Packs counting for chute 1
%R3718	COUNT_2	Packs counting for chute 2
%M3703	DONE6-0	Sampling packs 6-10 done
%S0001	FST_SCN	
%M3705	SAMPOUT	Timeout sampling sequence
%M3702	SAMPRUN	Sampling sequence on going

REFERENCE	NICKNAME	REFERENCE DESCRIPTION
%M3700	SAMP_ST	Start sampling sequence
%R3721	SAM_DEL	TMR delay integrated SU
%M3706	SAM_TMR	Integrated SU consent time
%R3700	SPACE	Space between packs
%R3701	STORE_1	Number of packs for chute 1
%R3702	STORE_2	Number of packs for chute 2
%M0145	WST_NR1	Waste package nr.1

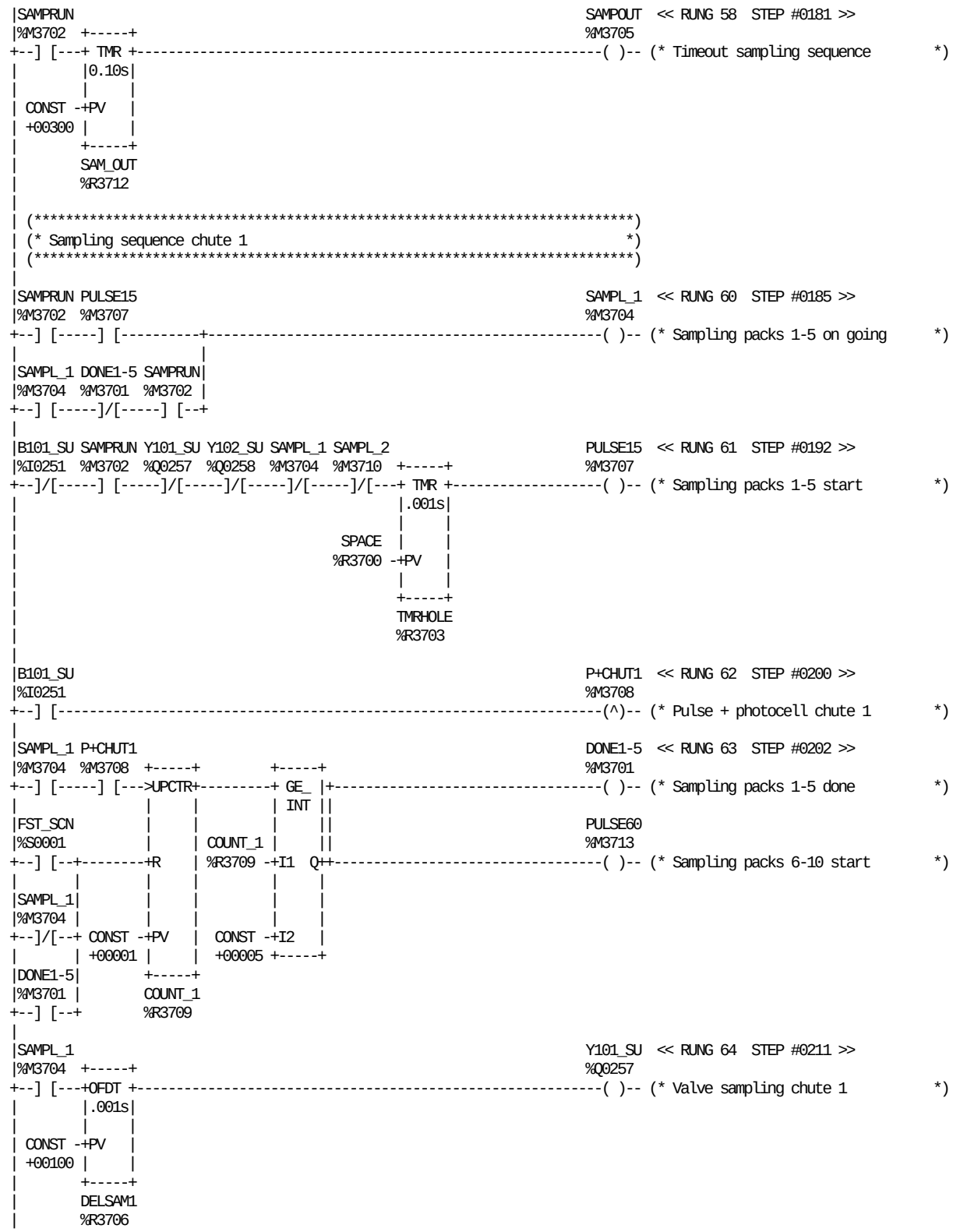

REFERENCE	NICKNAME	REFERENCE DESCRIPTION	REFERENCE	NICKNAME	REFERENCE DESCRIPTION
%I0251	B101_SU	Photocell sampling chute 1	%M3710	SAMPL_2	Sampling packs 6-10 on going
%R3709	COUNT_1	Packs counting for chute 1	%M3705	SAMPOUT	Timeout sampling sequence
%R3706	DELSAM1	TMR delayed blowing for chute 1	%M3702	SAMPRUN	Sampling sequence on going
%M3701	DONE1-5	Sampling packs 1-5 done	%R3712	SAM_OUT	TMR timeout sampling sequence
%S0001	FST_SCN		%R3700	SPACE	Space between packs
%M3708	P+CHUT1	Pulse + photocell chute 1	%R3703	TMRHOLE	TMR hole between packs
%M3707	PULSE15	Sampling packs 1-5 start	%Q0257	Y101_SU	Valve sampling chute 1
%M3713	PULSE60	Sampling packs 6-10 start	%Q0258	Y102_SU	Valve sampling chute 2
%M3704	SAMPL_1	Sampling packs 1-5 on going			

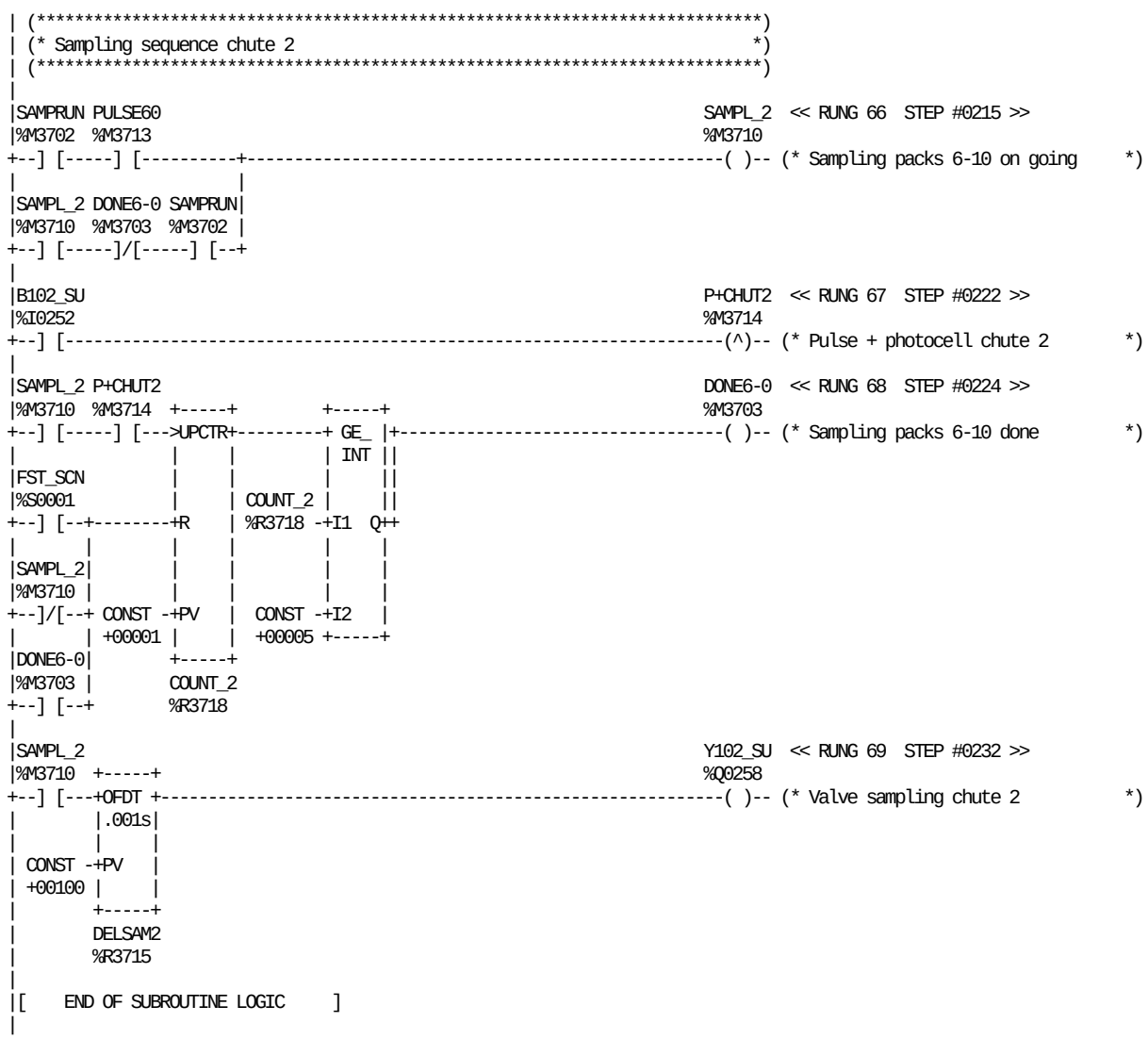

REFERENCE	NICKNAME	REFERENCE DESCRIPTION	REFERENCE	NICKNAME	REFERENCE DESCRIPTION
%I0252	B102_SU	Photocell sampling chute 2	%M3714	P+CHUT2	Pulse + photocell chute 2
%R3718	COUNT_2	Packs counting for chute 2	%M3713	PULSE60	Sampling packs 6-10 start
%R3715	DELSAM2	TMR delayed blowing for chute 2	%M3710	SAMPL_2	Sampling packs 6-10 on going
%M3703	DONE6-0	Sampling packs 6-10 done	%M3702	SAMPRUN	Sampling sequence on going
%S0001	FST_SCN		%Q0258	Y102_SU	Valve sampling chute 2

This page left intentionally blank

```
|[  START LD SUBROUTINE  AL_LOCK  ]
|
|[     VARIABLE DECLARATIONS      ]
|
|[   START OF SUBROUTINE LOGIC    ]
|
| (*************************************************************************)
| (* This subroutine is used to lock the alarm that have to be             *)
| (* displayed on TPOP to avoid to lose any alarm information.              *)
| (*************************************************************************)
|
|JUMP_1                                                          A_ALARM  << RUNG 5  STEP #0003 >>
|%M0050          +-----+                                         %M0620
+--]/[--+--------+ TMR +-------------------------------------------( )-- (* A-alarm present *)
|       |        |0.10s|
|JUMP_6 |        |     |
|%M0051 |        |     |
+--]/[--+ CONST -+PV   |
|       | +00020 |     |
|DEM3NS |        +-----+
|%M0055 |        DELTPOP
+--]/[--+        %R0021
|       |
|DEM4NS |
|%M0056 |
+--]/[--+
|
|LOCK_AL                                                                << RUNG 6  STEP #0009 >>
|%M0622  +-----+
+--]/[---+MOVE_+-
|        | WORD|
|        |     |
|DOOR_FL |     | AL_SAF1
|%M0305 -+IN  Q+-%R0340
|        | LEN |
|        |00001|
|        |     |
|        +-----+
|
|LOCK_AL                                                                << RUNG 7  STEP #0011 >>
|%M0622  +-----+
+--]/[---+MOVE_+-
|        | WORD|
|        |     |
|DOOR_FR |     | AL_SAF2
|%M0321 -+IN  Q+-%R0341
|        | LEN |
|        |00001|
|        |     |
|        +-----+
|
|LOCK_AL                                                                << RUNG 8  STEP #0013 >>
|%M0622  +-----+
+--]/[---+MOVE_+-
|        | WORD|
|        |     |
|G_EMPTY |     | AL_JUM2
|%M0337 -+IN  Q+-%R0342
|        | LEN |
|        |00001|
|        |     |
|        +-----+
|
```

REFERENCE	NICKNAME	REFERENCE DESCRIPTION	REFERENCE	NICKNAME	REFERENCE DESCRIPTION
%R0342	AL_JUM2	Alarms JUM 2	%M0305	DOOR_FL	Door guard front left
%R0340	AL_SAF1	Alarms satety 1	%M0321	DOOR_FR	Door guard front right
%R0341	AL_SAF2	Alarms safety 2	%M0337	G_EMPTY	Greasing tank empty
%M0620	A_ALARM	A-alarm present	%M0050	JUMP_1	Jump to pos 1 (Emergency stop)
%R0021	DELTPOP	Delay for alarm to TPOP	%M0051	JUMP_6	Jump to pos 6 (Fast stop)
%M0055	DEM3NS	Demand 3 normal stop	%M0622	LOCK_AL	Alarm lock
%M0056	DEM4NS	Demand 4 normal stop (only DE)			

```
|LOCK_AL                                                    << RUNG 9  STEP #0015 >>
|%M0622  +-----+
+--]/[---+MOVE_+-
|        | WORD|
|        |     |
|MOT_FFU |     | AL_FFU
|%M0353 -+IN  Q+-%R0343
|        | LEN |
|        |00001|
|        |     |
|        +-----+
|
|LOCK_AL                                                    << RUNG 10  STEP #0017 >>
|%M0622  +-----+
+--]/[---+MOVE_+-
|        | WORD|
|        |     |
|SEAL_SA |     |  AL_SA
|%M0369 -+IN  Q+-%R0344
|        | LEN |
|        |00001|
|        |     |
|        +-----+
|
|LOCK_AL                                                    << RUNG 11  STEP #0019 >>
|%M0622  +-----+
+--]/[---+MOVE_+-
|        | WORD|
|        |     |
|PH_DCS  |     | AL-FILL
|%M0385 -+IN  Q+-%R0345
|        | LEN |
|        |00001|
|        |     |
|        +-----+
|
|LOCK_AL                                                    << RUNG 12  STEP #0021 >>
|%M0622  +-----+
+--]/[---+MOVE_+-
|        | WORD|
|        |     |
|WATER_S |     | AL_SER1
|%M0401 -+IN  Q+-%R0346
|        | LEN |
|        |00001|
|        |     |
|        +-----+
|
|LOCK_AL                                                    << RUNG 13  STEP #0023 >>
|%M0622  +-----+
+--]/[---+MOVE_+-
|        | WORD|
|        |     |
| JAWNR  |     | AL_JUM1
|%M0417 -+IN  Q+-%R0347
|        | LEN |
|        |00001|
|        |     |
|        +-----+
|
```

REFERENCE	NICKNAME	REFERENCE DESCRIPTION
%R0345	AL-FILL	Alarms filling system
%R0343	AL_FFU	Alarms FFU
%R0347	AL_JUM1	Alarms JUM 1
%R0344	AL_SA	Alarms SA/magazine
%R0346	AL_SER1	Alarms service unit 1
%M0417	JAWNR	Show jaw number display

REFERENCE	NICKNAME	REFERENCE DESCRIPTION
%M0622	LOCK_AL	Alarm lock
%M0353	MOT_FFU	FFU servo motor fault
%M0385	PH_DCS	Malfunction photocells DCS
%M0369	SEAL_SA	Sealing strip applicator
%M0401	WATER_S	Water supply

```
|LOCK_AL                                                    << RUNG 14  STEP #0025 >>
|%M0622  +-----+
+--]/[---+MOVE_+-
|        | WORD|
|        |     |
|PRES_AS |     | AL_STER
|%M0433 -+IN  Q+-%R0348
|        | LEN |
|        |00001|
|        |     |
|        +-----+
|
|LOCK_AL                                                    << RUNG 15  STEP #0027 >>
|%M0622  +-----+
+--]/[---+MOVE_+-
|        | WORD|
|        |     |
|TEM_BAT |     | AL_PER1
|%M0449 -+IN  Q+-%R0349
|        | LEN |
|        |00001|
|        |     |
|        +-----+
|
|LOCK_AL                                                    << RUNG 16  STEP #0029 >>
|%M0622  +-----+
+--]/[---+MOVE_+-
|        | WORD|
|        |     |
|HI_PER1 |     | AL_PER2
|%M0529 -+IN  Q+-%R0355
|        | LEN |
|        |00001|
|        |     |
|        +-----+
|
|LOCK_AL                                                    << RUNG 17  STEP #0031 >>
|%M0622  +-----+
+--]/[---+MOVE_+-
|        | WORD|
|        |     |
|HI_PER1 |     | AL_PER2
|%M0529 -+IN  Q+-%R0355
|        | LEN |
|        |00001|
|        |     |
|        +-----+
|
|LOCK_AL                                                    << RUNG 18  STEP #0033 >>
|%M0622  +-----+
+--]/[---+MOVE_+-
|        | WORD|
|        |     |
|MON_BAR |     | AL_ASU
|%M0465 -+IN  Q+-%R0350
|        | LEN |
|        |00001|
|        |     |
|        +-----+
|
```

REFERENCE	NICKNAME	REFERENCE DESCRIPTION
%R0350	AL_ASU	Alarms ASU
%R0349	AL_PER1	Alarms peroxide system reg.1
%R0355	AL_PER2	Alarms peroxide system reg.2
%R0348	AL_STER	Alarms sterile air system
%M0529	HI_PER1	HI, Spray tank slow filling

REFERENCE	NICKNAME	REFERENCE DESCRIPTION
%M0622	LOCK_AL	Alarm lock
%M0465	MON_BAR	Rotation monitor barcode ASU
%M0433	PRES_AS	Pressure aseptic chamber
%M0449	TEM_BAT	Temperature peroxide bath

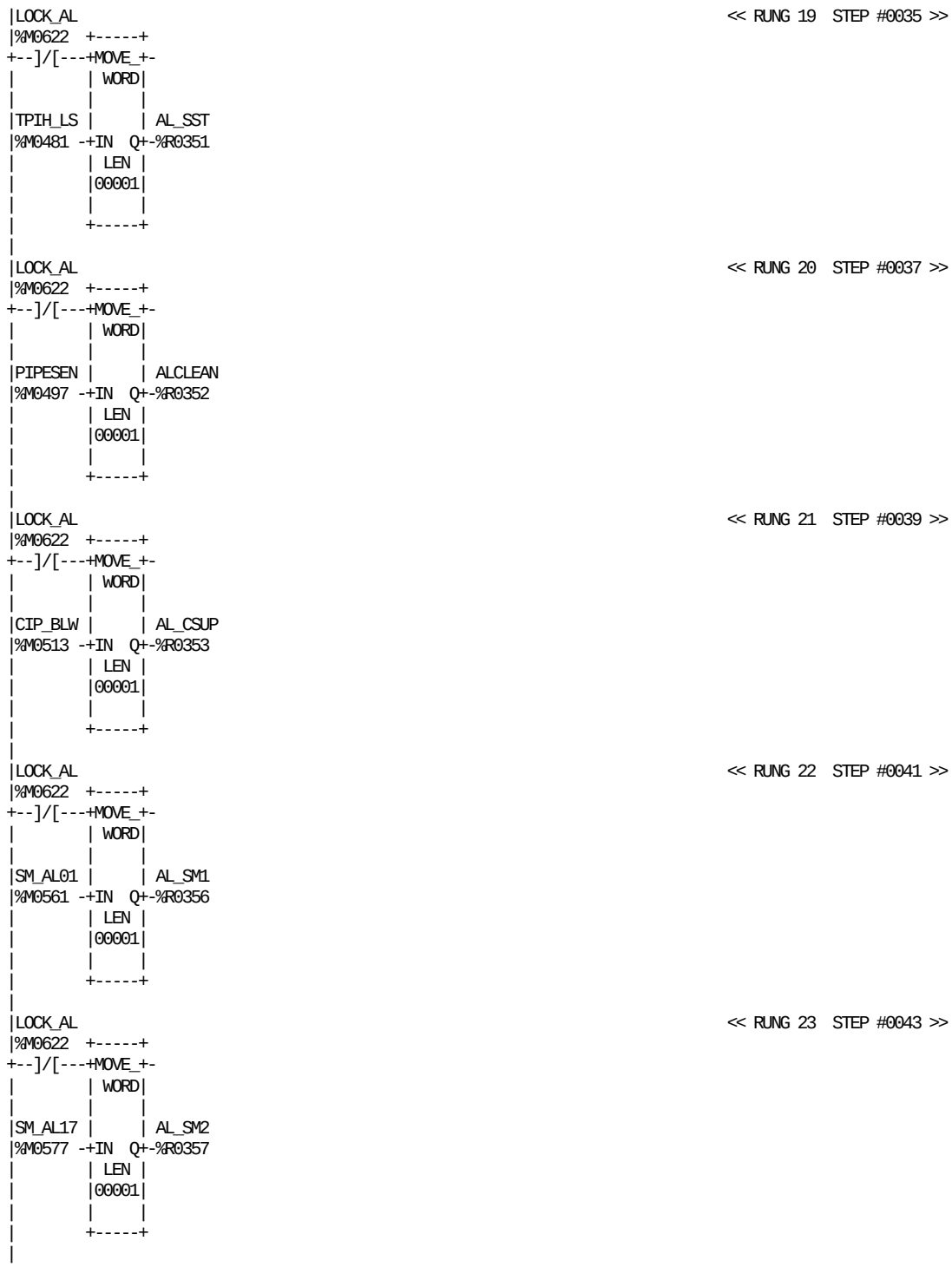

REFERENCE	NICKNAME	REFERENCE DESCRIPTION
%R0352	ALCLEAN	Alarms cleaning
%R0353	AL_CSUP	Alarms CIP Supervision
%R0356	AL_SM1	Alarms Sealing Monitoring reg.1
%R0357	AL_SM2	Alarms Sealing Monitoring reg.2
%R0351	AL_SST	Alarms superstructure
%M0513	CIP_BLW	CIP_AL, max delay CIP-Blowing

REFERENCE	NICKNAME	REFERENCE DESCRIPTION
%M0622	LOCK_AL	Alarm lock
%M0497	PIPESEN	CIP pipe sensor
%M0561	SM_AL01	SM LS-SA Generator not detected
%M0577	SM_AL17	SM TS Generator not detected
%M0481	TPIH_LS	LS TPIH fault

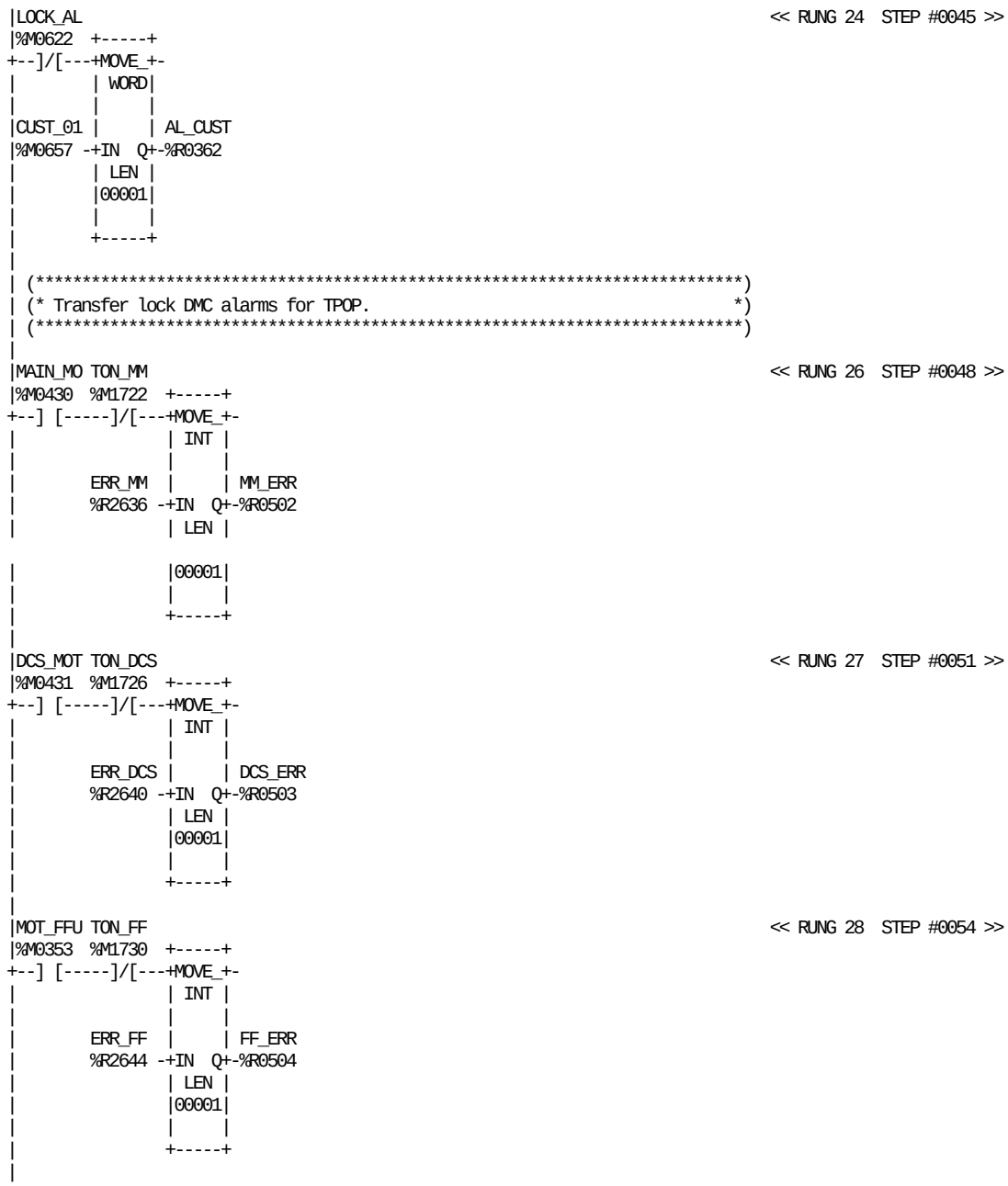

REFERENCE	NICKNAME	REFERENCE DESCRIPTION
%R0362	AL_CUST	Alarms Customer page
%M0657	CUST_01	Customer alarm 1 (down time)
%R0503	DCS_ERR	Error code DMC DCS
%M0431	DCS_MOT	DCS servo motor fault
%R2640	ERR_DCS	Error code DMC DCS
%R2644	ERR_FF	Error code DMC FF
%R2636	ERR_MM	Error code DMC MM
%R0504	FF_ERR	Error code DMC FF

REFERENCE	NICKNAME	REFERENCE DESCRIPTION
%M0622	LOCK_AL	Alarm lock
%M0430	MAIN_MO	Main servo motor fault
%R0502	MM_ERR	Error code DMC MM
%M0353	MOT_FFU	FFU servo motor fault
%M1726	TON_DCS	Transmission in progress DMC DCS
%M1730	TON_FF	Transmission in progress DMC FF
%M1722	TON_MM	Transmission in progress DMC MM

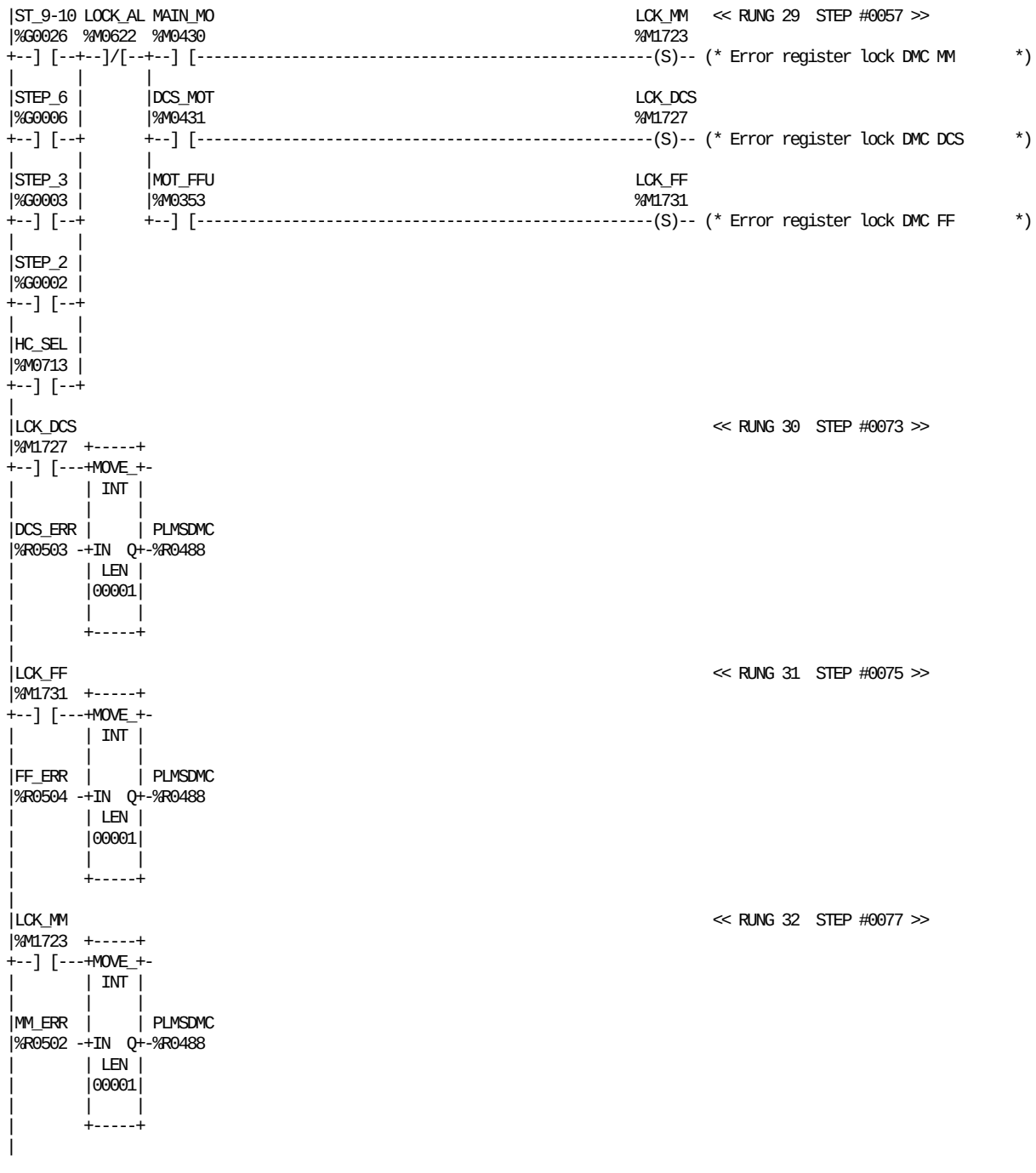

REFERENCE	NICKNAME	REFERENCE DESCRIPTION	REFERENCE	NICKNAME	REFERENCE DESCRIPTION
%R0503	DCS_ERR	Error code DMC DCS	%M0430	MAIN_MO	Main servo motor fault
%M0431	DCS_MOT	DCS servo motor fault	%R0502	MM_ERR	Error code DMC MM
%R0504	FF_ERR	Error code DMC FF	%M0353	MOT_FFU	FFU servo motor fault
%M0713	HC_SEL	Hygienic cleaning selection ok	%R0488	PLMSDMC	DMC error code to PLMS
%M1727	LCK_DCS	Error register lock DMC DCS	%G0002	STEP_2	PREPARATION (3 MIN.)
%M1731	LCK_FF	Error register lock DMC FF	%G0003	STEP_3	TUBE SEALING
%M1723	LCK_MM	Error register lock DMC MM	%G0006	STEP_6	DRYING + STEAM CLEANING
%M0622	LOCK_AL	Alarm lock	%G0026	ST_9-10	Ladder position 9-10

TBA/22-050V
BLOCK 30 ALARM LOCK

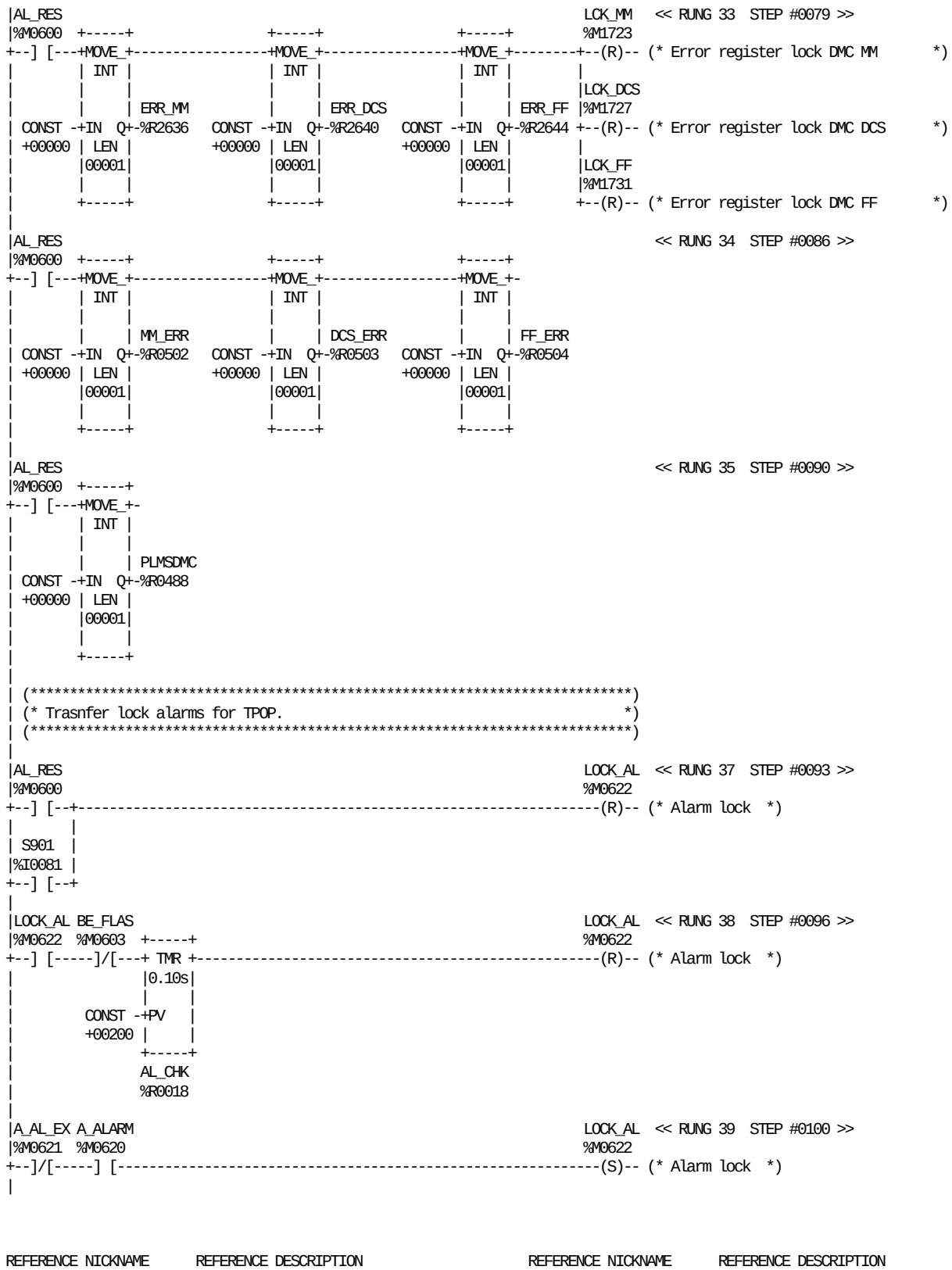

REFERENCE	NICKNAME	REFERENCE DESCRIPTION
%R0018	AL_CHK	Timer check Alarm-lock failure
%M0600	AL_RES	Alarm reset (From TPOP)
%M0620	A_ALARM	A-alarm present
%M0621	A_AL_EX	Old A-alarm exists
%M0603	BE_FLAS	Beacon lamp flashing (from TPOP)
%R0503	DCS_ERR	Error code DMC DCS
%R2640	ERR_DCS	Error code DMC DCS
%R2644	ERR_FF	Error code DMC FF
%R2636	ERR_MM	Error code DMC MM

REFERENCE	NICKNAME	REFERENCE DESCRIPTION
%R0504	FF_ERR	Error code DMC FF
%M1727	LCK_DCS	Error register lock DMC DCS
%M1731	LCK_FF	Error register lock DMC FF
%M1723	LCK_MM	Error register lock DMC MM
%M0622	LOCK_AL	Alarm lock
%R0502	MM_ERR	Error code DMC MM
%R0488	PLMSDMC	DMC error code to PLMS
%I0081	S901	Push button TPOP reset

```
|A_ALARM                                                          A_AL_EX  << RUNG 40  STEP #0103 >>
|%M0620                                                          %M0621
+--] [-----------------------------------------------------------------( )-- (* Old A-alarm exists *)
|
|[    END OF SUBROUTINE LOGIC     ]
|
```

REFERENCE	NICKNAME	REFERENCE DESCRIPTION	REFERENCE	NICKNAME	REFERENCE DESCRIPTION
%M0620	A_ALARM	A-alarm present	%M0621	A_AL_EX	Old A-alarm exists

```
|[  START LD SUBROUTINE  SAFETY1  ]
|
|[     VARIABLE DECLARATIONS      ]
|
|[   START OF SUBROUTINE LOGIC    ]
|
| (*************************************************************************)
| (* Subroutine taking care of safety system of the machine                *)
| (* (first part).                                                         *)
| (*************************************************************************)
|
| B2830                                                          DOOR_FL  << RUNG 5  STEP #0003 >>
|%I0137                                                          %M0305
+--]/[-----------------------------------------------------------------( )-- (* Door guard front left *)
|
| B2831                                                          DOORFFU  << RUNG 6  STEP #0005 >>
|%I0138                                                          %M0306
+--]/[-----------------------------------------------------------------( )-- (* Door guard FFU left *)
|
| B2832                                                          DOORJUM  << RUNG 7  STEP #0007 >>
|%I0139                                                          %M0307
+--]/[-----------------------------------------------------------------( )-- (* Door guard JUM left *)
|
|A600_14 A601_14  B7807  AL_BLK                                  DOORASL  << RUNG 8  STEP #0009 >>
|%I0017  %I0018  %I0144  %M0200                                  %M0309
+--] [-----] [-----]/[-----]/[-----------------------------------------( )-- (* Door guard ASU left *)
|
| S2804                                                          ESTOPBL  << RUNG 9  STEP #0014 >>
|%I0125                                                          %M0313
+--]/[-----------------------------------------------------------------( )-- (* Emergency stop bottom left *)
|
| S1802                                                          ESTOPAC  << RUNG 10  STEP #0016 >>
|%I0123                                                          %M0332
+--]/[-----------------------------------------------------------------( )-- (* Emergency stop steril air system *)
|
| B1507                                                          DOORBSS  << RUNG 11  STEP #0018 >>
|%I0131                                                          %M0315
+--]/[-----------------------------------------------------------------( )-- (* Door bottom superstructure *)
|
| B1508  CIP_SEL                                                 DOOR_BC  << RUNG 12  STEP #0020 >>
|%I0150  %M0712                                                  %M0320
+--]/[--+--] [--+-------------------------------------------------------( )-- (* Door guard bucket cleaning      *)
|       |      |
|       |CIPBLOW|
|       |%M0993 |
|       +--] [--+
|
```

REFERENCE	NICKNAME	REFERENCE DESCRIPTION
%I0017	A600_14	Emergency stop
%I0018	A601_14	Safety monitors B
%M0200	AL_BLK	Alarm block active (From TPOP)
%I0131	B1507	Bottom door superstructure
%I0150	B1508	Bucket cleaning door guard
%I0137	B2830	Door guard left side door(30)
%I0138	B2831	Door guard left side door(31)
%I0139	B2832	Door guard left side door(32)
%I0144	B7807	Door guard 22 ASU line 2
%M0993	CIPBLOW	CIP blowing must be done
%M0712	CIP_SEL	CIP select from TPOP

REFERENCE	NICKNAME	REFERENCE DESCRIPTION
%M0309	DOORASL	Door guard ASU left
%M0315	DOORBSS	Door bottom superstructure
%M0306	DOORFFU	Door guard FFU left
%M0307	DOORJUM	Door guard JUM left
%M0320	DOOR_BC	Door guard bucket cleaning
%M0305	DOOR_FL	Door guard front left
%M0332	ESTOPAC	Emergency stop steril air system
%M0313	ESTOPBL	Emergency stop bottom left
%I0123	S1802	Em.stop aseptic chamber
%I0125	S2804	Emergency stop left side cabinet

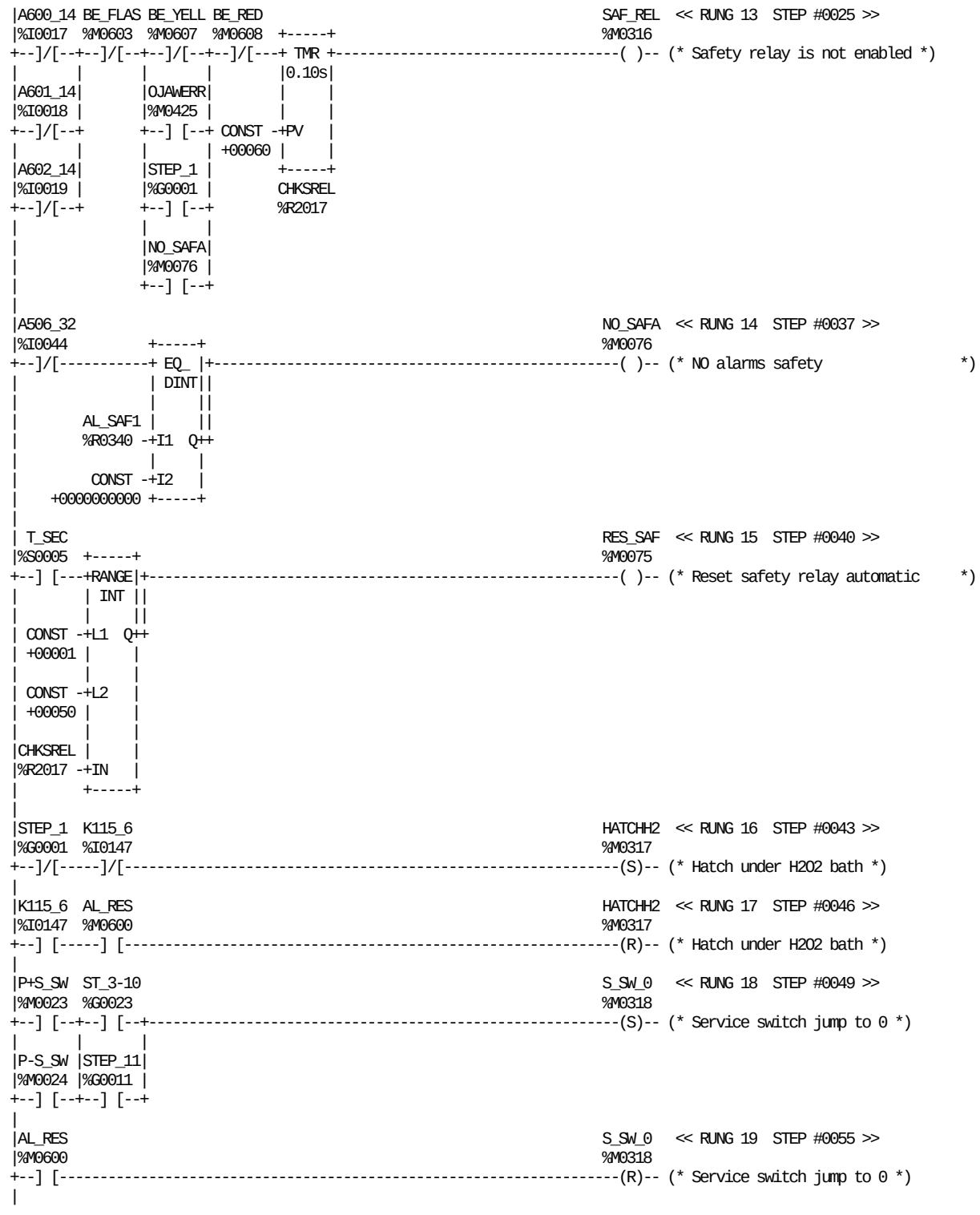

REFERENCE	NICKNAME	REFERENCE DESCRIPTION
%I0044	A506_32	DMC Main motor running
%I0017	A600_14	Emergency stop
%I0018	A601_14	Safety monitors B
%I0019	A602_14	Safety monitors C
%M0600	AL_RES	Alarm reset (From TPOP)
%R0340	AL_SAF1	Alarms satety 1
%M0603	BE_FLAS	Beacon lamp flashing (from TPOP)
%M0608	BE_RED	Beacon lamp RED (From TPOP)
%M0607	BE_YELL	Beacon lamp YELLOW (From TPOP)
%R2017	CHKSREL	Check status safety relay
%M0317	HATCHH2	Hatch under H2O2 bath
%I0147	K115_6	Bottom cover H2O2-bath closed

REFERENCE	NICKNAME	REFERENCE DESCRIPTION
%M0076	NO_SAFA	NO alarms safety
%M0425	OJAWERR	Zero jaw not detected
%M0023	P+S_SW	Service switch positive pulse
%M0024	P-S_SW	Service switch negative pulse
%M0075	RES_SAF	Reset safety relay automatic
%M0316	SAF_REL	Safety relay is not enabled
%G0001	STEP_1	STANDBY
%G0011	STEP_11	END OF PRODUCTION
%G0023	ST_3-10	Ladder position 3-10
%M0318	S_SW_0	Service switch jump to 0
%S0005	T_SEC	

TBA/22-050V
BLOCK 32 SAFETY 1 ALARMS



REFERENCE	NICKNAME	REFERENCE DESCRIPTION	REFERENCE	NICKNAME	REFERENCE DESCRIPTION
%I0044	A506_32	DMC Main motor running	%M0600	AL_RES	Alarm reset (From TPOP)
%I0058	A507_32	DMC FFU motor running	%I0153	B4102	Crank guard JUM
%M0200	AL_BLK	Alarm block active (From TPOP)	%M0319	CRANK_J	Crank guard JUM

This page left intentionally blank

```
|[  START LD SUBROUTINE  SAFETY2  ]
|
|[     VARIABLE DECLARATIONS      ]
|
|[   START OF SUBROUTINE LOGIC    ]
|
| (*************************************************************************)
| (* Subroutine taking care of safety system of the machine                 *)
| (* (second part).                                                         *)
| (*************************************************************************)
|
| B2810                                                          DOOR_FR  << RUNG 5  STEP #0003 >>
|%I0133                                                         %M0321
+--]/[-------------------------------------------------------------( )-- (* Door guard front right *)
|
| B2811                                                          DOORFFR  << RUNG 6  STEP #0005 >>
|%I0134                                                         %M0322
+--]/[-------------------------------------------------------------( )-- (* Door guard FFU right *)
|
| B2812                                                          DOOR_JR  << RUNG 7  STEP #0007 >>
|%I0135                                                         %M0323
+--]/[-------------------------------------------------------------( )-- (* Door guard JUM right *)
|
| B7801  AL_BLK                                                  DOOR_SA  << RUNG 8  STEP #0009 >>
|%I0188  %M0200                                                 %M0325
+--]/[-----]/[-----------------------------------------------------( )-- (* Door guard SA *)
|
|A600_14 A601_14  B7806  AL_BLK                                  DOORASR  << RUNG 9  STEP #0012 >>
|%I0017  %I0018  %I0141  %M0200                                 %M0326
+--] [-----] [-----]/[-----]/[-------------------------------------( )-- (* Door guard ASU right *)
|
| B6209                                                          DOORINT  << RUNG 10  STEP #0017 >>
|%I0142                                                         %M0324
+--]/[-------------------------------------------------------------( )-- (* Internal door guard SA          *)
|
| B6209  ST_2-12                                                 SA_DOOR  << RUNG 11  STEP #0019 >>
|%I0142  %G0021                                                 %M0783
+--]/[-----] [-----------------------------------------------------(S)-- (* SA internal door open           *)
|
| B6209  AL_RES                                                  SA_DOOR  << RUNG 12  STEP #0022 >>
|%I0142  %M0600                                                 %M0783
+--] [-----] [-----------------------------------------------------(R)-- (* SA internal door open           *)
|
|K112_6   B1505  K114_1  AL_BLK                                  DOORATF  << RUNG 13  STEP #0025 >>
|%I0145  %I0143  %I0146  %M0200                                 %M0327
+--] [-----]/[-----]/[--+--]/[--+-------------------------------------( )-- (* Door aseptic chamber top front *)
|                       |      |
|                       | S003  |
|                       |%I0095 |
|                       +--]/[--+
|                       |       |
|                       |DOORATF|
|                       |%M0327 |
|                       +--] [--+
|
```

REFERENCE	NICKNAME	REFERENCE DESCRIPTION
%I0017	A600_14	Emergency stop
%I0018	A601_14	Safety monitors B
%M0200	AL_BLK	Alarm block active (From TPOP)
%M0600	AL_RES	Alarm reset (From TPOP)
%I0143	B1505	Top front door AC
%I0133	B2810	Door guard right side door(10)
%I0134	B2811	Door guard right side door(11)
%I0135	B2812	Door guard right side door(12)
%I0142	B6209	Internal door SA
%I0188	B7801	Door guard strip applicator (17)
%I0141	B7806	Door guard 22 ASU line 1
%M0326	DOORASR	Door guard ASU right

REFERENCE	NICKNAME	REFERENCE DESCRIPTION
%M0327	DOORATF	Door aseptic chamber top front
%M0322	DOORFFR	Door guard FFU right
%M0324	DOORINT	Internal door guard SA
%M0321	DOOR_FR	Door guard front right
%M0323	DOOR_JR	Door guard JUM right
%M0325	DOOR_SA	Door guard SA
%I0145	K112_6	Top door closed aseptic chamber
%I0146	K114_1	Front doors closed AC
%I0095	S003	Service switch
%M0783	SA_DOOR	SA internal door open
%G0021	ST_2-12	Ladder position 2-12

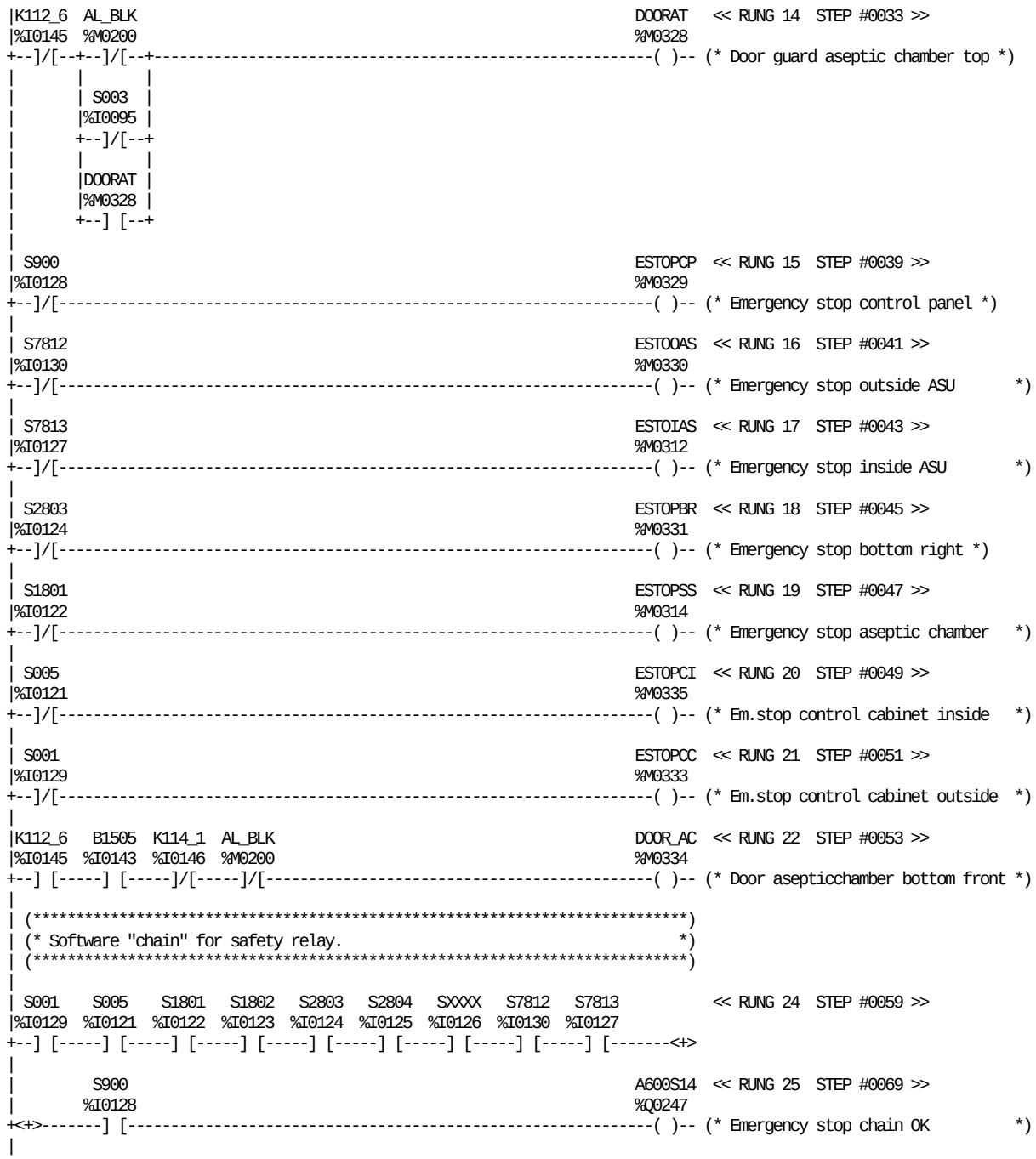

REFERENCE	NICKNAME	REFERENCE DESCRIPTION
%Q0247	A600S14	Emergency stop chain OK
%M0200	AL_BLK	Alarm block active (From TPOP)
%I0143	B1505	Top front door AC
%M0328	DOORAT	Door guard aseptic chamber top
%M0334	DOOR_AC	Door asepticchamber bottom front
%M0312	ESTOIAS	Emergency stop inside ASU
%M0330	ESTOOAS	Emergency stop outside ASU
%M0331	ESTOPBR	Emergency stop bottom right
%M0333	ESTOPCC	Em.stop control cabinet outside
%M0335	ESTOPCI	Em.stop control cabinet inside
%M0329	ESTOPCP	Emergency stop control panel
%M0314	ESTOPSS	Emergency stop aseptic chamber
%I0145	K112_6	Top door closed aseptic chamber

REFERENCE	NICKNAME	REFERENCE DESCRIPTION
%I0146	K114_1	Front doors closed AC
%I0129	S001	Em.stop control cabinet outside
%I0095	S003	Service switch
%I0121	S005	Em.stop control cabinet inside
%I0122	S1801	Em.stop aseptic module top
%I0123	S1802	Em.stop aseptic chamber
%I0124	S2803	Em.stop right side cabinet
%I0125	S2804	Emergency stop left side cabinet
%I0130	S7812	Emergency stop ASU outside
%I0127	S7813	Emergency stop ASU inside
%I0128	S900	Emergency stop control panel
%I0126	SXXXX	Emergency stop DE-Equipment

```
| B1507  DG_SP01  B2810   B2811   B2812  DG_SP02  B2830   B2831   B2832          << RUNG 26  STEP #0072 >>
|%I0131  %I0132  %I0133  %I0134  %I0135  %I0136  %I0137  %I0138  %I0139
+--] [-----] [-----] [-----] [-----] [-----] [-----] [-----] [-----] [-------<+>
|
|        DG_SP03                                                          A601S14  << RUNG 27  STEP #0082 >>
|        %I0140                                                           %Q0248
+<+>-------] [-----------------------------------------------------------------( )-- (* Doors chain OK                 *)
|
| B7806   B7807   B6209                                                   A602S14  << RUNG 28  STEP #0085 >>
|%I0141  %I0144  %I0142                                                   %Q0264
+--] [-----] [-----] [-------------------------------------------------------( )-- (* Doors chain ASU OK              *)
|
|[    END OF SUBROUTINE LOGIC     ]
|
```

REFERENCE	NICKNAME	REFERENCE DESCRIPTION	REFERENCE	NICKNAME	REFERENCE DESCRIPTION
%Q0248	A601S14	Doors chain OK	%I0139	B2832	Door guard left side door(32)
%Q0264	A602S14	Doors chain ASU OK	%I0142	B6209	Internal door SA
%I0131	B1507	Bottom door superstructure	%I0141	B7806	Door guard 22 ASU line 1
%I0133	B2810	Door guard right side door(10)	%I0144	B7807	Door guard 22 ASU line 2
%I0134	B2811	Door guard right side door(11)	%I0132	DG_SP01	Door guard spare 01
%I0135	B2812	Door guard right side door(12)	%I0136	DG_SP02	Door guard spare 02
%I0137	B2830	Door guard left side door(30)	%I0140	DG_SP03	Door guard spare 03
%I0138	B2831	Door guard left side door(31)			

This page left intentionally blank

```
|[  START LD SUBROUTINE    JUM    ]
|
|[     VARIABLE DECLARATIONS      ]
|
|[   START OF SUBROUTINE LOGIC    ]
|
| (*************************************************************************)
| (* Detection of TS error and the number of jaw in error.                 *)
| (*************************************************************************)
|
|TS_LEFT                                                          JAWNR   << RUNG 5  STEP #0003 >>
|%M0418                                                          %M0417
+--] [--+-------------------------------------------------------( )-- (* Show jaw number display *)
|       |
|TSRIGHT|
|%M0419 |
+--] [--+
|
|A506_32 P-TSERR                                                          << RUNG 6  STEP #0006 >>
|%I0044  %M0022  +-----+
+--] [-----] [---+MOVE_+-
|               | INT |
|               |     |
|       JAW_CTR |     | JAW_NR
|       %R2613 -+IN  Q+-%R0497
|               | LEN |
|               |00001|
|               |     |
|               +-----+
|
|A506_32 P-TSERR LEFTTS                                           TS_LEFT  << RUNG 7  STEP #0009 >>
|%I0044  %M0022  %M1712                                          %M0418
+--] [-----] [--+--] [-------------------------------------------------(S)-- (* TS left jaws *)
|               |
|               |LEFTTS                                          TSRIGHT
|               |%M1712                                          %M0419
|               +--]/[-------------------------------------------------(S)-- (* TS right jaws *)
|
|AL_RES  A502305                                                  TS_LEFT  << RUNG 8  STEP #0017 >>
|%M0600  %I0035                                                  %M0418
+--] [--+--] [--+-------------------------------------------------------(R)-- (* TS left jaws *)
|       |       |
|A506_32|       |                                                 TSRIGHT
|%I0044 |       |                                                 %M0419
+--]/[--+       +-------------------------------------------------------(R)-- (* TS right jaws *)
|               |
|TS_L_3         |
|%M0423         |
+--] [----------+
|               |
|TS_R_3         |
|%M0424         |
+--] [----------+
|
| (*************************************************************************)
| (* Check of malfunction of the angle encoder by checking the              *)
| (* status of the bits (in the Fast Scan subroutine).                      *)
| (*************************************************************************)
|
```

REFERENCE	NICKNAME	REFERENCE DESCRIPTION	REFERENCE	NICKNAME	REFERENCE DESCRIPTION
%I0035	A502305	Failure TPIH TS	%M1712	LEFTTS	Sealing side TS (for alarm)
%I0044	A506_32	DMC Main motor running	%M0022	P-TSERR	TS-error negative pulse
%M0600	AL_RES	Alarm reset (From TPOP)	%M0419	TSRIGHT	TS right jaws
%M0417	JAWNR	Show jaw number display	%M0418	TS_LEFT	TS left jaws
%R2613	JAW_CTR	Jaw counter	%M0423	TS_L_3	TS-error 3 packs left
%R0497	JAW_NR	Jaw nr --> TPOP	%M0424	TS_R_3	TS-error 3 packs right

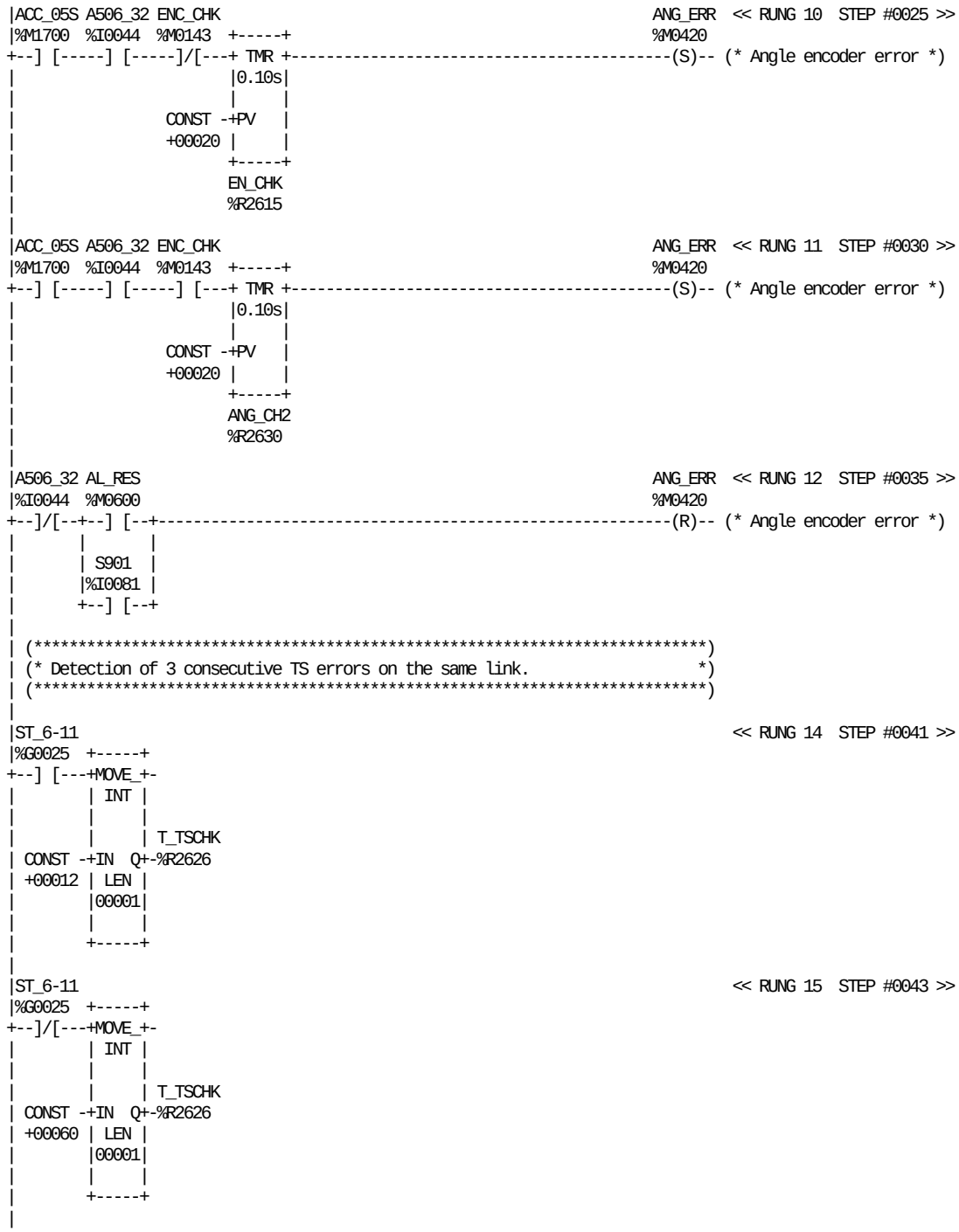

REFERENCE	NICKNAME	REFERENCE DESCRIPTION	REFERENCE	NICKNAME	REFERENCE DESCRIPTION
%I0044	A506_32	DMC Main motor running	%M0143	ENC_CHK	Angle encoder check
%M1700	ACC_05S	5 sec. acceleration main motor	%R2615	EN_CHK	Angle encoder check
%M0600	AL_RES	Alarm reset (From TPOP)	%I0081	S901	Push button TPOP reset
%R2630	ANG_CH2	Angle encoder check 2	%G0025	ST_6-11	Ladder position 6-11
%M0420	ANG_ERR	Angle encoder error	%R2626	T_TSCHK	Timebase TS-check

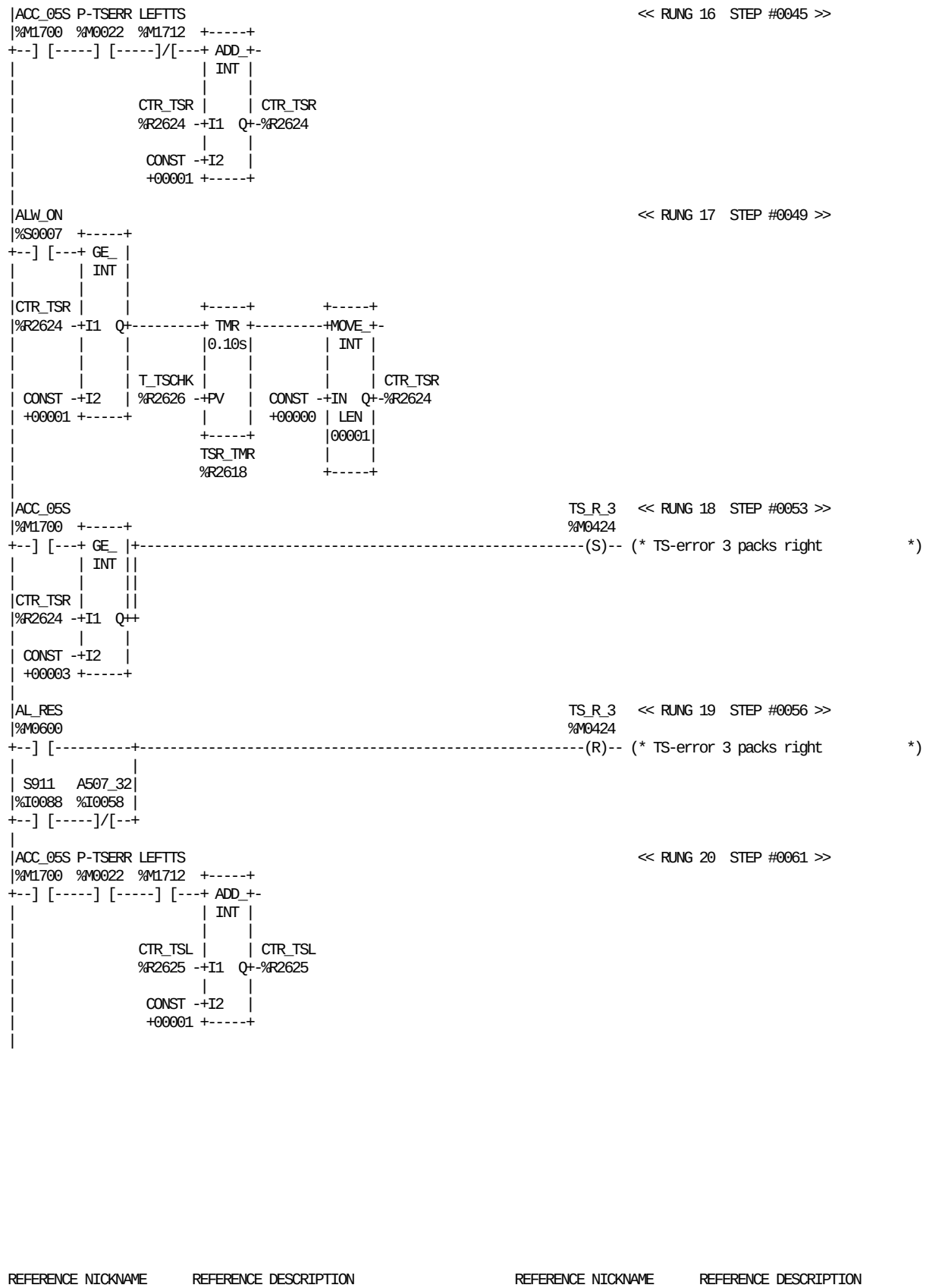

REFERENCE	NICKNAME	REFERENCE DESCRIPTION	REFERENCE	NICKNAME	REFERENCE DESCRIPTION
%I0058	A507_32	DMC FFU motor running	%M1712	LEFTTS	Sealing side TS (for alarm)
%M1700	ACC_05S	5 sec. acceleration main motor	%M0022	P-TSERR	TS-error negative pulse
%S0007	ALW_ON		%I0088	S911	Push button step up
%M0600	AL_RES	Alarm reset (From TPOP)	%R2618	TSR_TMR	Timeout TS error right side
%R2625	CTR_TSL	Counter TS error left	%M0424	TS_R_3	TS-error 3 packs right
%R2624	CTR_TSR	Counter TS error right	%R2626	T_TSCHK	Timebase TS-check

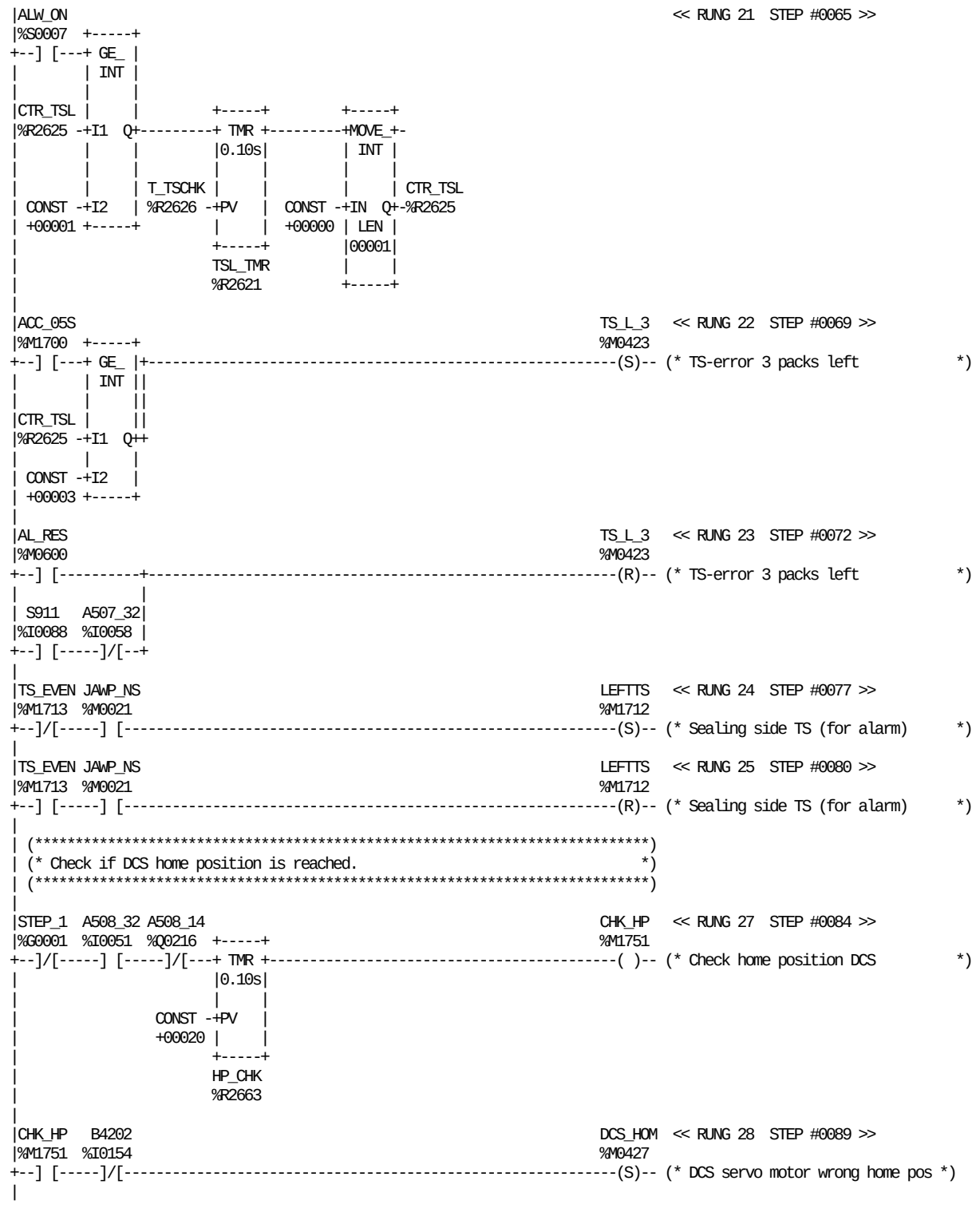

REFERENCE	NICKNAME	REFERENCE DESCRIPTION
%I0058	A507_32	DMC FFU motor running
%Q0216	A508_14	DMC DCS precorrection 1
%I0051	A508_32	DMC DCS in home position
%M1700	ACC_05S	5 sec. acceleration main motor
%S0007	ALW_ON	
%M0600	AL_RES	Alarm reset (From TPOP)
%I0154	B4202	Home position sensor DCS
%M1751	CHK_HP	Check home position DCS
%R2625	CTR_TSL	Counter TS error left
%M0427	DCS_HOM	DCS servo motor wrong home pos
%R2663	HP_CHK	Home position check timer
%M0021	JAWP_NS	Jawpulse Normal scan
%M1712	LEFTTS	Sealing side TS (for alarm)
%I0088	S911	Push button step up
%G0001	STEP_1	STANDBY
%R2621	TSL_TMR	Timeout TS error left side
%M1713	TS_EVEN	Ts sealing even Jaw
%M0423	TS_L_3	TS-error 3 packs left
%R2626	T_TSCHK	Timebase TS-check

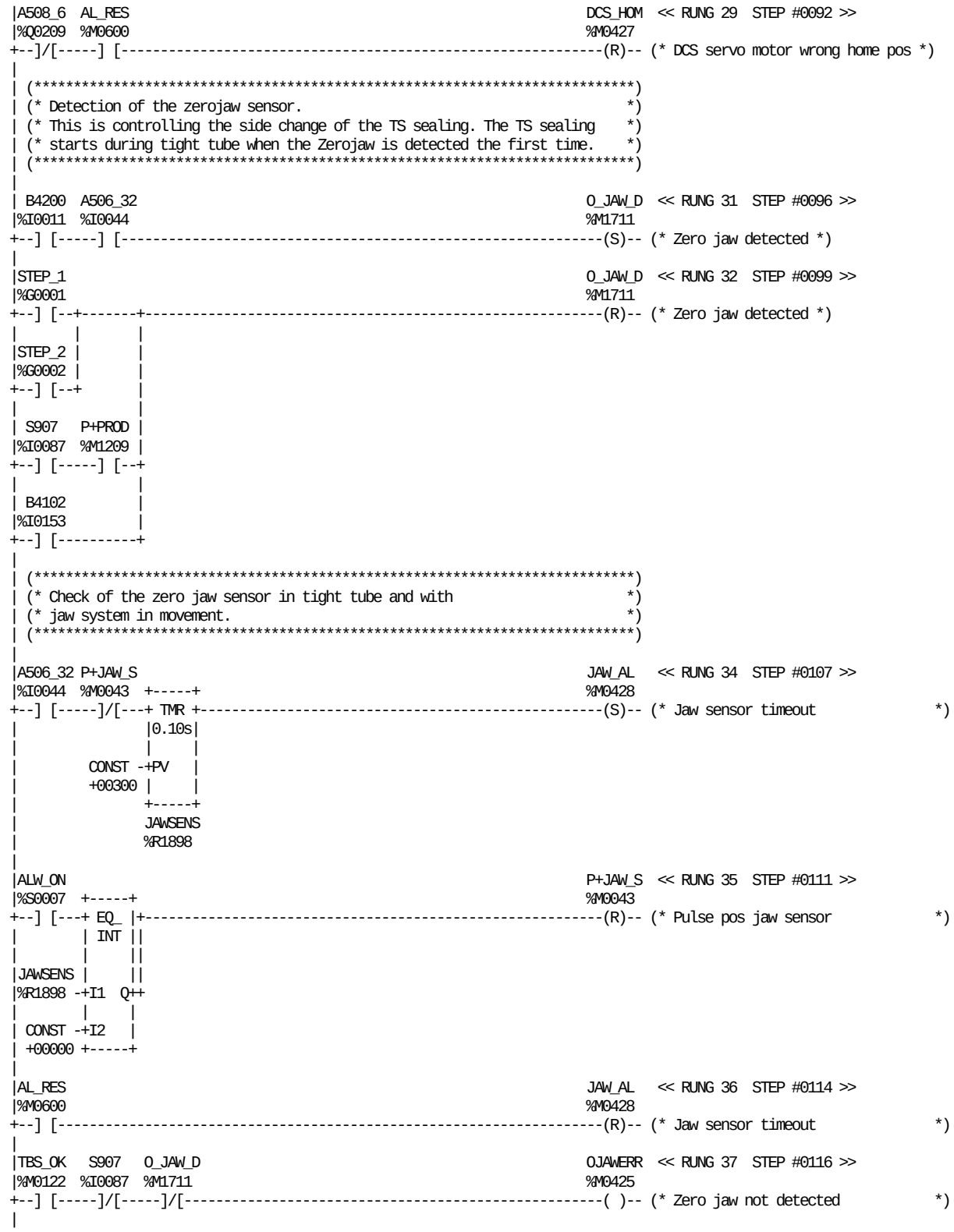

REFERENCE	NICKNAME	REFERENCE DESCRIPTION	REFERENCE	NICKNAME	REFERENCE DESCRIPTION
%I0044	A506_32	DMC Main motor running	%M0425	OJAWERR	Zero jaw not detected
%Q0209	A508_6	DMC DCS hardware enable	%M1711	O_JAW_D	Zero jaw detected
%S0007	ALW_ON		%M0043	P+JAW_S	Pulse pos jaw sensor
%M0600	AL_RES	Alarm reset (From TPOP)	%M1209	P+PROD	Production on positive pulse
%I0153	B4102	Crank guard JUM	%I0087	S907	Push button inching JUM
%I0011	B4200	Zero jaw sensor	%G0001	STEP_1	STANDBY
%M0427	DCS_HOM	DCS servo motor wrong home pos	%G0002	STEP_2	PREPARATION (3 MIN.)
%R1898	JAWSENS	TMR jaw sensor timeout	%M0122	TBS_OK	Tube sealing ok
%M0428	JAW_AL	Jaw sensor timeout			

```
| (*************************************************************************)
| (* 100 packages out of design alarm.                                     *)
| (*************************************************************************)
|
|PACK100                                                          OUT_DCS  << RUNG 39  STEP #0121 >>
|%M1754                                                           %M0386
+--] [-----------------------------------------------------------------(S)-- (* Machine out of design           *)
|
|A507_32 AL_RES                                                   OUT_DCS  << RUNG 40  STEP #0123 >>
|%I0058  %M0600                                                   %M0386
+--]/[-----] [-----------------------------------------------------------(R)-- (* Machine out of design           *)
|
| (*************************************************************************)
| (* Check if all the motors are OK.                                       *)
| (*************************************************************************)
|
| K025   A601_14 STEP_11 STEP_12 STEP_13  K120   A507_15 P-DCSEN                 << RUNG 42  STEP #0127 >>
|%Q0041  %I0018  %G0011  %G0012  %G0013  %Q0059  %Q0187  %M1749  +-----+
+--] [-----] [-----]/[-----]/[-----]/[-----]/[-----]/[-----]/[---+ TMR +-----<+>
|                                                                 |0.10s|
|                                                                 |     |
|                                                          CONST -+PV   |
|                                                          +00240 |     |
|                                                                 +-----+
|                                                                 DC_DMC
|                                                                 %R2666
|
|       A508_29                                                           DCS_MOT  << RUNG 43  STEP #0137 >>
|       %I0048                                                            %M0431
+<+>----+--]/[-----------------------------------------------------------(S)-- (* DCS servo motor fault *)
|       |
|       |A506_29                                                         MAIN_MO
|       |%I0041                                                          %M0430
|       +--]/[-----------------------------------------------------------(S)-- (* Main servo motor fault *)
|       |
|       |A507_29                                                         MOT_FFU
|       |%I0055                                                          %M0353
|       +--]/[-----------------------------------------------------------(S)-- (* FFU servo motor fault *)
|
```

REFERENCE	NICKNAME	REFERENCE DESCRIPTION
%I0041	A506_29	DMC Main motor ready
%Q0187	A507_15	Software enable FFU
%I0055	A507_29	DMC FFU ready
%I0058	A507_32	DMC FFU motor running
%I0048	A508_29	DMC DCS ready
%I0018	A601_14	Safety monitors B
%M0600	AL_RES	Alarm reset (From TPOP)
%M0431	DCS_MOT	DCS servo motor fault
%R2666	DC_DMC	Check DMC_OK DCS
%Q0041	K025	Delayed DC-bus servo motors

REFERENCE	NICKNAME	REFERENCE DESCRIPTION
%Q0059	K120	Software enable main motor
%M0430	MAIN_MO	Main servo motor fault
%M0353	MOT_FFU	FFU servo motor fault
%M0386	OUT_DCS	Machine out of design
%M1749	P-DCSEN	Pulse neg edge Enable DCS
%M1754	PACK100	100 packages out of design
%G0011	STEP_11	END OF PRODUCTION
%G0012	STEP_12	VENTING
%G0013	STEP_13	OPEN DOORS, CUT TUBE

```
|A506_14         A506_29 MOT_FFU                                          MAIN_MO  << RUNG 44  STEP #0148 >>
|%Q0201          %I0041  %M0353                                           %M0430
+--] [----------+--]/[--+--]/[-------------------------------------------(S)-- (* Main servo motor fault *)
|                |       |
|A506_13  K025   |       |
|%Q0202  %Q0041  |       |
+--] [-----] [--+       |
|               |       |
|SQ_COND        |       |
|%M0070         |       |
+--] [----------+       |
|               |       |
| TBSEA         |       |
|%M0120         |       |
+--] [----------+       |
|               |       |
|GREA_GO        |       |
|%M3600         |       |
+--] [----------+       |
|                        |
|CHK_MMI                 |
|%M0125                  |
+--] [------------------+
|                        |
|CHK_MM  A506_32         |
|%M0124  %I0044          |
+--] [-----]/[----------+
|
|ST_9-10 A506_30                                                          MAIN_MO  << RUNG 45  STEP #0162 >>
|%G0026  %I0042                                                           %M0430
+--] [-----] [-----------------------------------------------------------(S)-- (* Main servo motor fault *)
|
|A506_32 A506_29 CHK_MM  CHK_MMI AL_RES                                   MAIN_MO  << RUNG 46  STEP #0165 >>
|%I0044  %I0041  %M0124  %M0125  %M0600                                   %M0430
+--]/[-----] [-----]/[-----]/[-----] [------------------------------------(R)-- (* Main servo motor fault *)
|
|A508_29 AL_RES                                                           DCS_MOT  << RUNG 47  STEP #0171 >>
|%I0048  %M0600                                                           %M0431
+--] [-----] [-----------------------------------------------------------(R)-- (* DCS servo motor fault *)
|
|ST_9-10 A508_30                                                          DCS_MOT  << RUNG 48  STEP #0174 >>
|%G0026  %I0049                                                           %M0431
+--] [-----] [-----------------------------------------------------------(S)-- (* DCS servo motor fault *)
|
| (*************************************************************************)
| (* 2 packages out of design alarm.                                       *)
| (*************************************************************************)
|
|PACK_2  PACK100                                                           OUT_2   << RUNG 50  STEP #0178 >>
|%M1753  %M1754                                                           %M0400
+--] [-----]/[-----------------------------------------------------------( )-- (* Machine out of design(blue)      *)
|
| (*************************************************************************)
| (* Check if the JAW system is moved while the machine is stoped.         *)
| (*************************************************************************)
|
```

REFERENCE	NICKNAME	REFERENCE DESCRIPTION	REFERENCE	NICKNAME	REFERENCE DESCRIPTION
%Q0202	A506_13	DMC Main Motor Low speed	%M3600	GREA_GO	Greasing cycle JUM going on
%Q0201	A506_14	DMC Main Motor High speed	%Q0041	K025	Delayed DC-bus servo motors
%I0041	A506_29	DMC Main motor ready	%M0430	MAIN_MO	Main servo motor fault
%I0042	A506_30	DMC Main motor position error	%M0353	MOT_FFU	FFU servo motor fault
%I0044	A506_32	DMC Main motor running	%M0400	OUT_2	Machine out of design(blue)
%I0048	A508_29	DMC DCS ready	%M1754	PACK100	100 packages out of design
%I0049	A508_30	DMC DCS Position error	%M1753	PACK_2	2 packages out of design
%M0600	AL_RES	Alarm reset (From TPOP)	%M0070	SQ_COND	Start sequence conditions
%M0124	CHK_MM	Check main motor running Tight	%G0026	ST_9-10	Ladder position 9-10
%M0125	CHK_MMI	Check main motor running inching	%M0120	TBSEA	Tube sealing
%M0431	DCS_MOT	DCS servo motor fault			

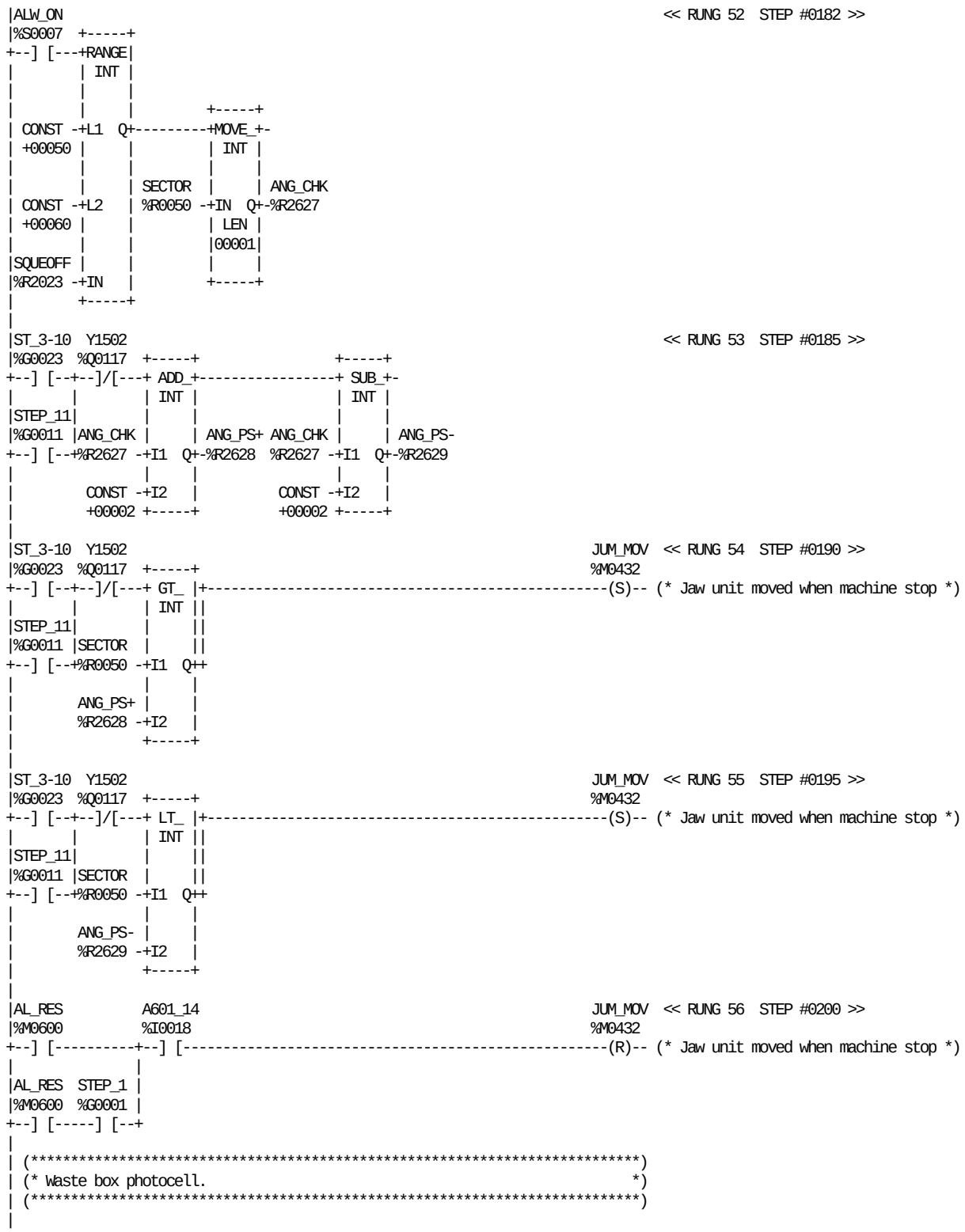

REFERENCE	NICKNAME	REFERENCE DESCRIPTION	REFERENCE	NICKNAME	REFERENCE DESCRIPTION
%I0018	A601_14	Safety monitors B	%R0050	SECTOR	Angle sector (0-63 Dec)
%S0007	ALW_ON		%R2023	SQUEOFF	Off delay squee gee roller
%M0600	AL_RES	Alarm reset (From TPOP)	%G0001	STEP_1	STANDBY
%R2627	ANG_CHK	Check angle-encoder machine stop	%G0011	STEP_11	END OF PRODUCTION
%R2628	ANG_PS+	Angle encoder stop pos plus chk	%G0023	ST_3-10	Ladder position 3-10
%R2629	ANG_PS-	Angle encoder stop pos min chk	%Q0117	Y1502	Movable squee-gee rollers
%M0432	JUM_MOV	Jaw unit moved when machine stop			

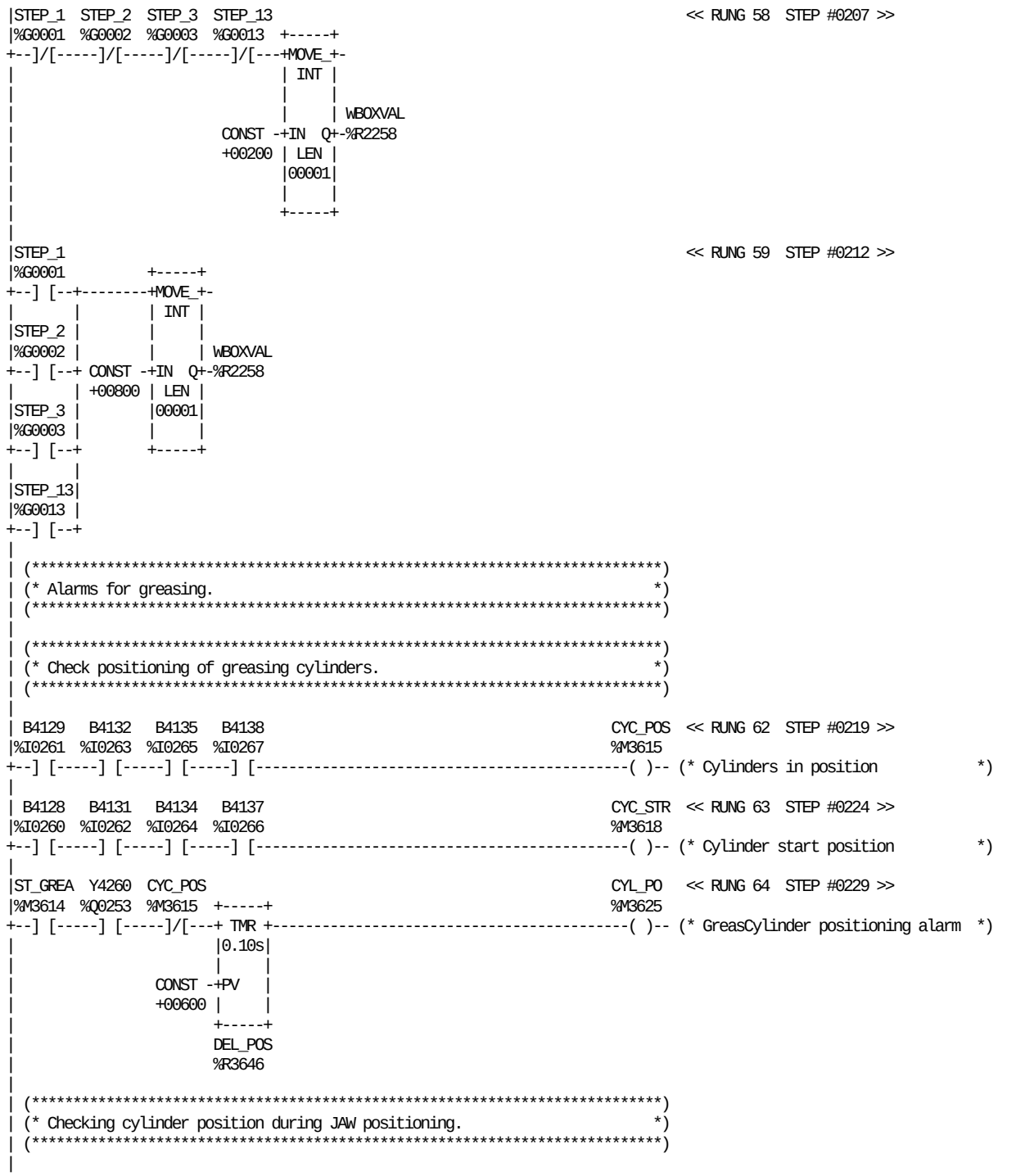

REFERENCE	NICKNAME	REFERENCE DESCRIPTION
%I0260	B4128	Cylinder 1 start position
%I0261	B4129	Cylinder 1 end position
%I0262	B4131	Cylinder 2 start position
%I0263	B4132	Cylinder 2 end position
%I0264	B4134	Cylinder 3 start position
%I0265	B4135	Cylinder 3 end position
%I0266	B4137	Cylinder 4 start position
%I0267	B4138	Cylinder 4 end position
%M3615	CYC_POS	Cylinders in position
%M3618	CYC_STR	Cylinder start position

REFERENCE	NICKNAME	REFERENCE DESCRIPTION
%M3625	CYL_PO	GreasCylinder positioning alarm
%R3646	DEL_POS	TMR alarm cutting CAM
%G0001	STEP_1	STANDBY
%G0013	STEP_13	OPEN DOORS, CUT TUBE
%G0002	STEP_2	PREPARATION (3 MIN.)
%G0003	STEP_3	TUBE SEALING
%M3614	ST_GREA	Start greasing stroke
%R2258	WBOXVAL	Waste box alarm value
%Q0253	Y4260	Greasing cylinders

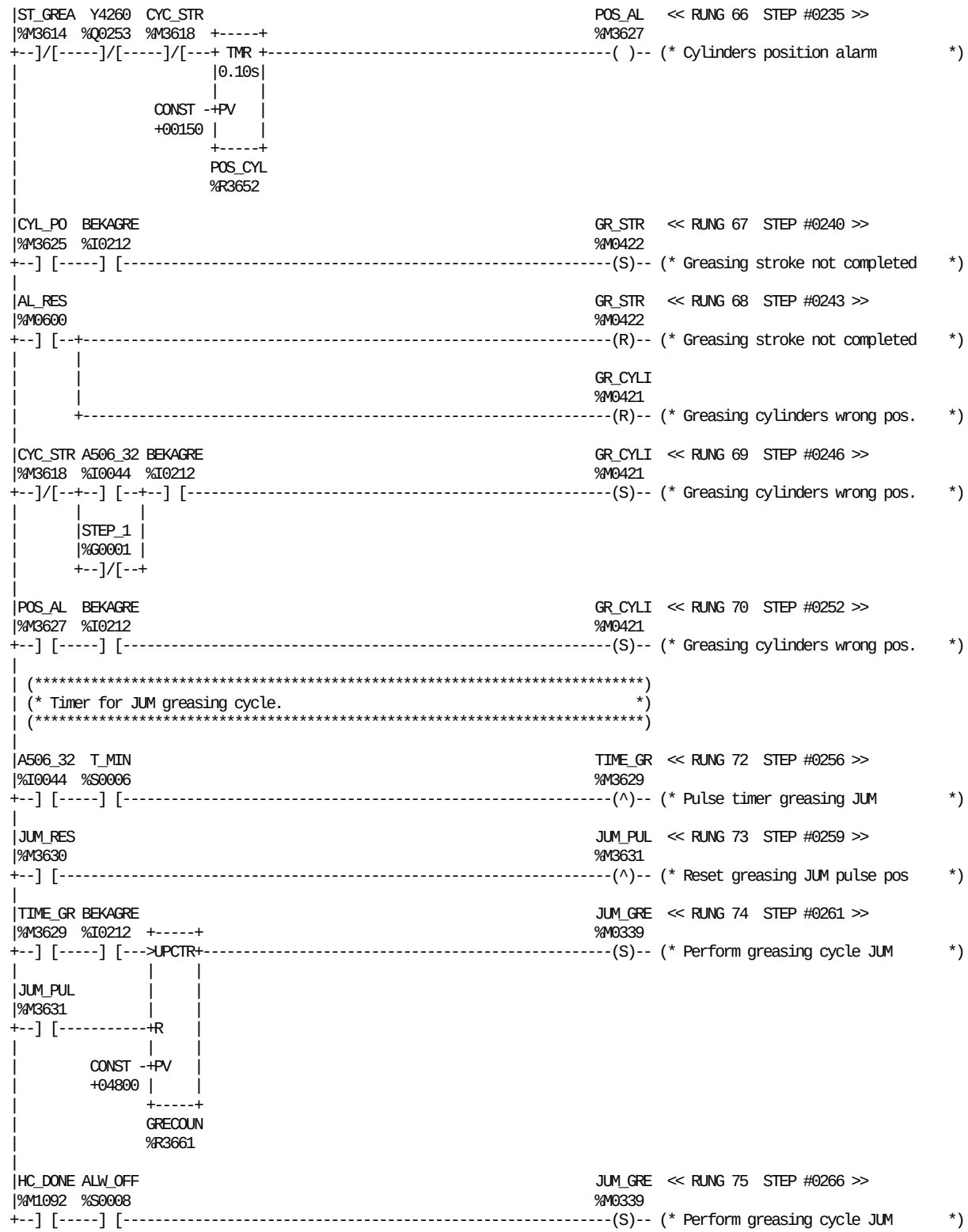

REFERENCE	NICKNAME	REFERENCE DESCRIPTION	REFERENCE	NICKNAME	REFERENCE DESCRIPTION
%I0044	A506_32	DMC Main motor running	%M0339	JUM_GRE	Perform greasing cycle JUM
%S0008	ALW_OFF		%M3631	JUM_PUL	Reset greasing JUM pulse pos
%M0600	AL_RES	Alarm reset (From TPOP)	%M3630	JUM_RES	Reset greasing cycle JUM count
%I0212	BEKAGRE	Option BEKA Greasing KIT	%M3627	POS_AL	Cylinders position alarm
%M3618	CYC_STR	Cylinder start position	%R3652	POS_CYL	TMR alarm cutting CAM
%M3625	CYL_PO	GreasCylinder positioning alarm	%G0001	STEP_1	STANDBY
%R3661	GRECOUN	Greasing pulse counter	%M3614	ST_GREA	Start greasing stroke
%M0421	GR_CYLI	Greasing cylinders wrong pos.	%M3629	TIME_GR	Pulse timer greasing JUM
%M0422	GR_STR	Greasing stroke not completed	%S0006	T_MIN	
%M1092	HC_DONE	Hygienic cleaning completed	%Q0253	Y4260	Greasing cylinders

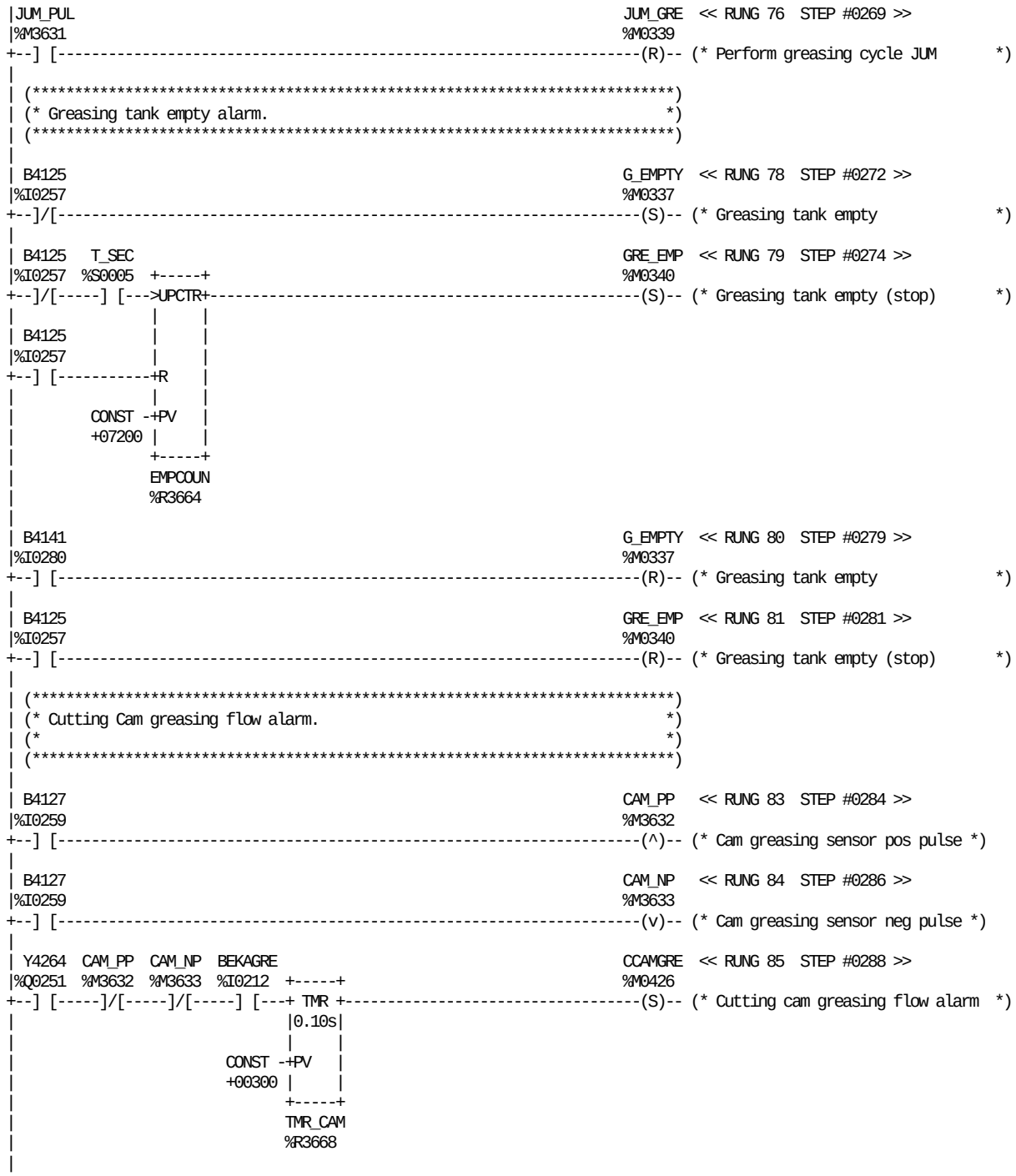

REFERENCE	NICKNAME	REFERENCE DESCRIPTION	REFERENCE	NICKNAME	REFERENCE DESCRIPTION
%I0257	B4125	Greasing level sensor empty	%M0340	GRE_EMP	Greasing tank empty (stop)
%I0259	B4127	Cutting cam greasing sensor	%M0337	G_EMPTY	Greasing tank empty
%I0280	B4141	Greasing tank full	%M0339	JUM_GRE	Perform greasing cycle JUM
%I0212	BEKAGRE	Option BEKA Greasing KIT	%M3631	JUM_PUL	Reset greasing JUM pulse pos
%M3633	CAM_NP	Cam greasing sensor neg pulse	%R3668	TMR_CAM	TMR alarm cutting CAM
%M3632	CAM_PP	Cam greasing sensor pos pulse	%S0005	T_SEC	
%M0426	CCAMGRE	Cutting cam greasing flow alarm	%Q0251	Y4264	Cutting cam grease line
%R3664	EMPCOUN	Greasing tank empty stop			

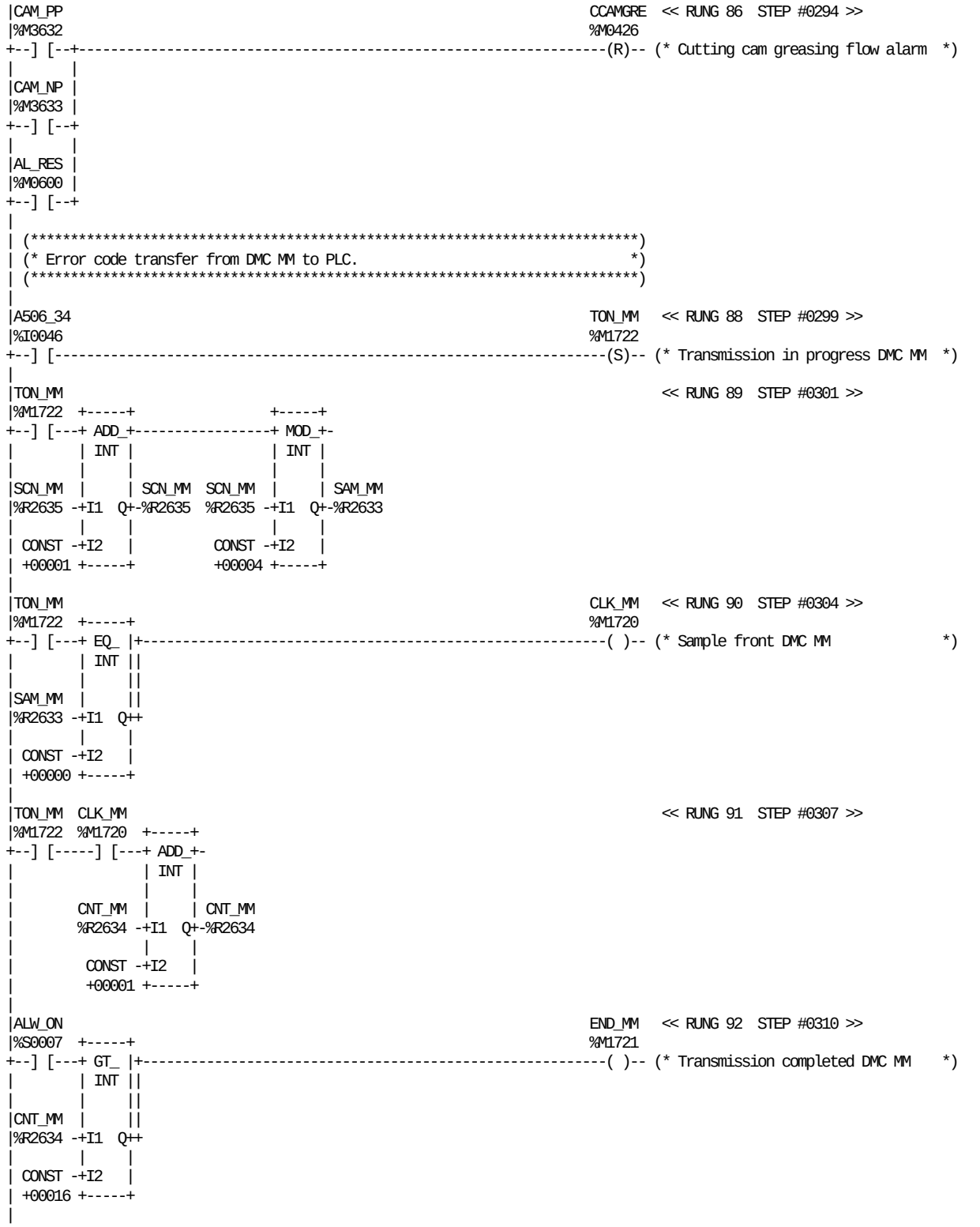

REFERENCE	NICKNAME	REFERENCE DESCRIPTION	REFERENCE	NICKNAME	REFERENCE DESCRIPTION
%I0046	A506_34	DMC Main motor error code	%M1720	CLK_MM	Sample front DMC MM
%S0007	ALW_ON		%R2634	CNT_MM	Received bit counter DMC MM
%M0600	AL_RES	Alarm reset (From TPOP)	%M1721	END_MM	Transmission completed DMC MM
%M3633	CAM_NP	Cam greasing sensor neg pulse	%R2633	SAM_MM	Sample DMC MM
%M3632	CAM_PP	Cam greasing sensor pos pulse	%R2635	SCN_MM	Scansion counter DMC MM
%M0426	CCAMGRE	Cutting cam greasing flow alarm	%M1722	TON_MM	Transmission in progress DMC MM

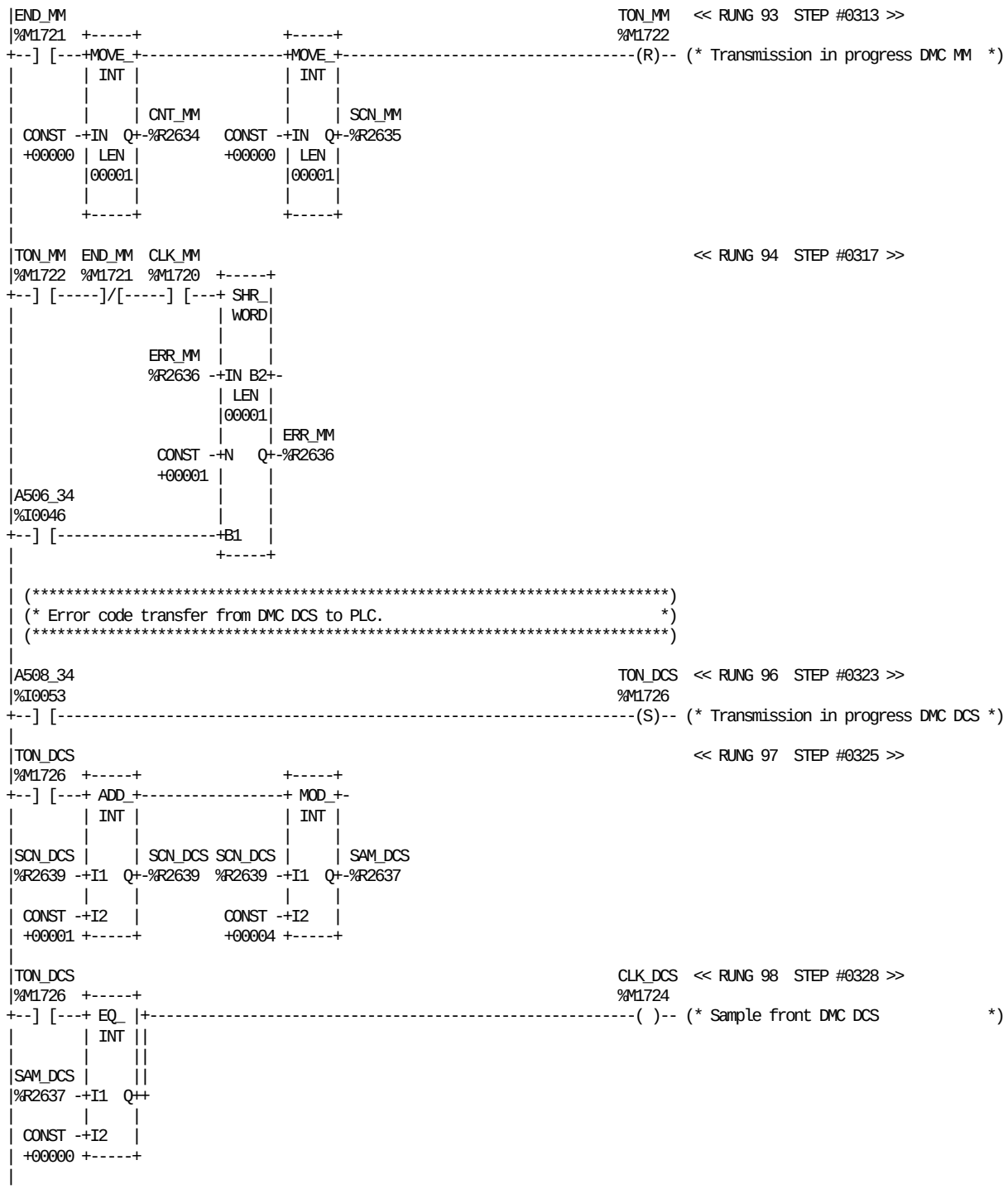

<< RUNG 93 STEP #0313 >>

<< RUNG 94 STEP #0317 >>

<< RUNG 96 STEP #0323 >>

<< RUNG 97 STEP #0325 >>

<< RUNG 98 STEP #0328 >>

REFERENCE	NICKNAME	REFERENCE DESCRIPTION	REFERENCE	NICKNAME	REFERENCE DESCRIPTION
%I0046	A506_34	DMC Main motor error code	%R2636	ERR_MM	Error code DMC MM
%I0053	A508_34	DMC DCS motor error code	%R2637	SAM_DCS	Sample DMC DCS
%M1724	CLK_DCS	Sample front DMC DCS	%R2639	SCN_DCS	Scansion counter DMC DCS
%M1720	CLK_MM	Sample front DMC MM	%R2635	SCN_MM	Scansion counter DMC MM
%R2634	CNT_MM	Received bit counter DMC MM	%M1726	TON_DCS	Transmission in progress DMC DCS
%M1721	END_MM	Transmission completed DMC MM	%M1722	TON_MM	Transmission in progress DMC MM

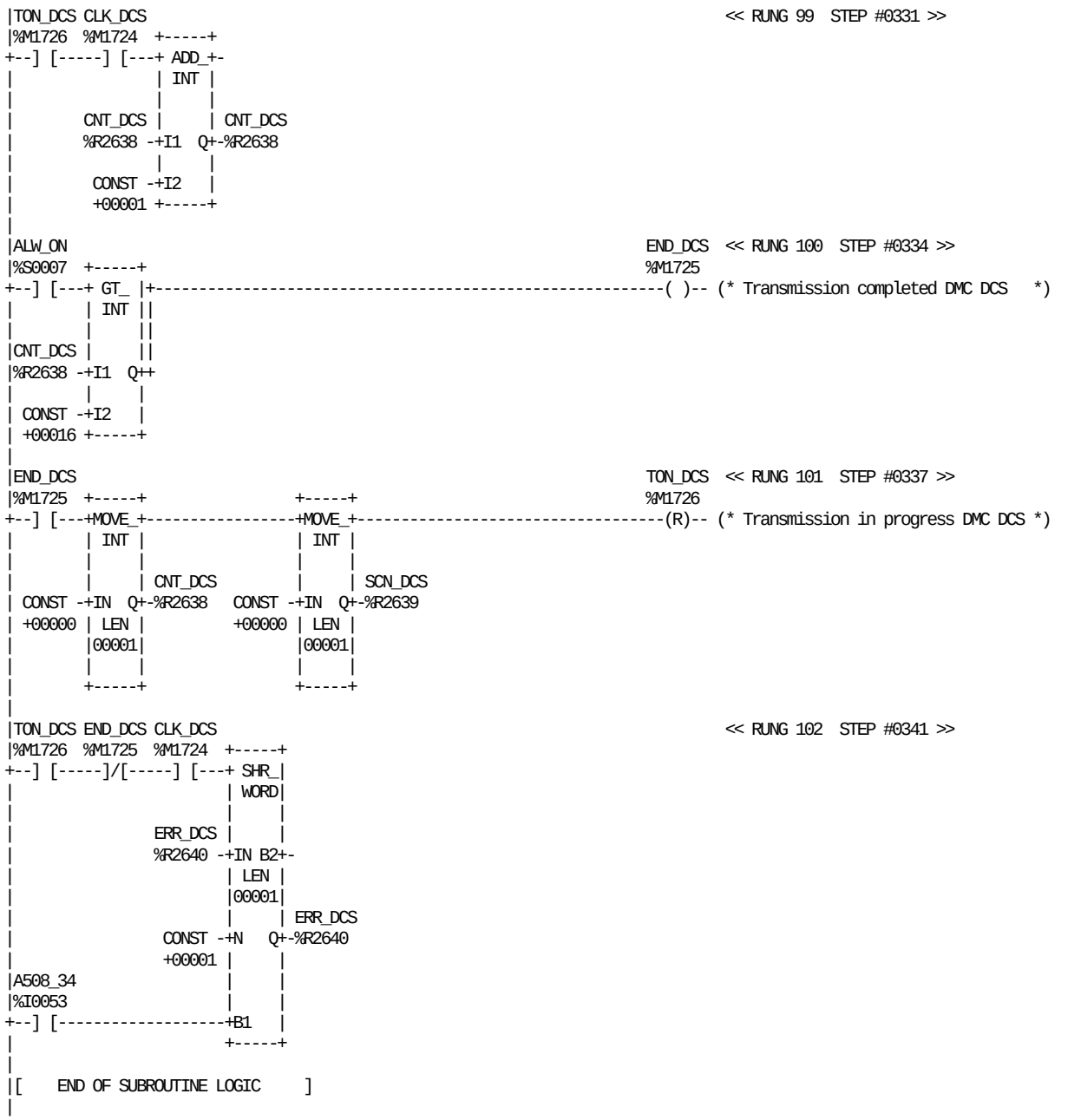

REFERENCE	NICKNAME	REFERENCE DESCRIPTION	REFERENCE	NICKNAME	REFERENCE DESCRIPTION
%I0053	A508_34	DMC DCS motor error code	%M1725	END_DCS	Transmission completed DMC DCS
%S0007	ALW_ON		%R2640	ERR_DCS	Error code DMC DCS
%M1724	CLK_DCS	Sample front DMC DCS	%R2639	SCN_DCS	Scansion counter DMC DCS
%R2638	CNT_DCS	Received bit counter DMC DCS	%M1726	TON_DCS	Transmission in progress DMC DCS

```
|[  START LD SUBROUTINE    FFU    ]
|
|[     VARIABLE DECLARATIONS      ]
|
|[   START OF SUBROUTINE LOGIC    ]
|
| (*************************************************************************)
| (* Check faults in FFU servo motor.                                      *)
| (*************************************************************************)
|
|A507_12         A507_29 MAIN_MO                                  MOT_FFU  << RUNG 5  STEP #0003 >>
|%Q0192          %I0055  %M0430                                   %M0353
+--] [--+-------+--]/[-----]/[-----------------------------------------(S)-- (* FFU servo motor fault *)
|       |       |
|A507_13|       |
|%Q0185 |       |
+--] [--+       |
|               |
|A507_14  K025  |
|%Q0186  %Q0041 |
+--] [-----] [--+
|             |
| TBSEA       |
|%M0120       |
+--] [----------+
|             |
|SQGOING      |
|%M0072       |
+--] [----------+
|
|A507_30 ST_9-10                                                   MOT_FFU  << RUNG 6  STEP #0013 >>
|%I0056  %G0026                                                    %M0353
+--] [-----] [-----------------------------------------------------------(S)-- (* FFU servo motor fault *)
|
|A507_32 A507_29 AL_RES                                            MOT_FFU  << RUNG 7  STEP #0016 >>
|%I0058  %I0055  %M0600                                            %M0353
+--]/[-----] [-----] [-----------------------------------------------------(R)-- (* FFU servo motor fault *)
|
| (*************************************************************************)
| (* Control of the status of the external Date unit.                      *)
| (*************************************************************************)
|
|ST_6-10  K1200  DT1_CON  S003                                     DT_RDY   << RUNG 9  STEP #0021 >>
|%G0024  %I0028  %M4002  %I0095                                    %M0354
+--] [-----]/[-----] [-----]/[-----------------------------------------(S)-- (* Date unit not ready             *)
|
|A507_32  K1200  AL_RES                                            DT_RDY   << RUNG 10  STEP #0026 >>
|%I0058  %I0028  %M0600                                            %M0354
+--]/[-----] [-----] [-----------------------------------------------------(R)-- (* Date unit not ready             *)
|
|ST_6-10  K1201  DT2_CON                                           DT_SUP   << RUNG 11  STEP #0030 >>
|%G0024  %I0029  %M4003                                            %M0355
+--] [-----]/[-----] [-----------------------------------------------------( )-- (* External date unit supply       *)
|
| (*************************************************************************)
| (* Check if servo motor is ready to drive synchronuos and is in home     *)
| (* position.                                                             *)
| (*************************************************************************)
|
```

REFERENCE	NICKNAME	REFERENCE DESCRIPTION	REFERENCE	NICKNAME	REFERENCE DESCRIPTION
%Q0192	A507_12	Synchrounous drive FFU	%Q0041	K025	Delayed DC-bus servo motors
%Q0185	A507_13	High speed inching FFU	%I0028	K1200	Date unit ready signal
%Q0186	A507_14	Low speed inching FFU	%I0029	K1201	Date unit supply low signal
%I0055	A507_29	DMC FFU ready	%M0430	MAIN_MO	Main servo motor fault
%I0056	A507_30	DMC FFU Position error	%M0353	MOT_FFU	FFU servo motor fault
%I0058	A507_32	DMC FFU motor running	%I0095	S003	Service switch
%M0600	AL_RES	Alarm reset (From TPOP)	%M0072	SQGOING	Start sequence going on
%M4002	DT1_CON	Date unit signal 1 connected	%G0024	ST_6-10	Ladder position 6-10
%M4003	DT2_CON	Date unit signal 2 connected	%G0026	ST_9-10	Ladder position 9-10
%M0354	DT_RDY	Date unit not ready	%M0120	TBSEA	Tube sealing
%M0355	DT_SUP	External date unit supply			

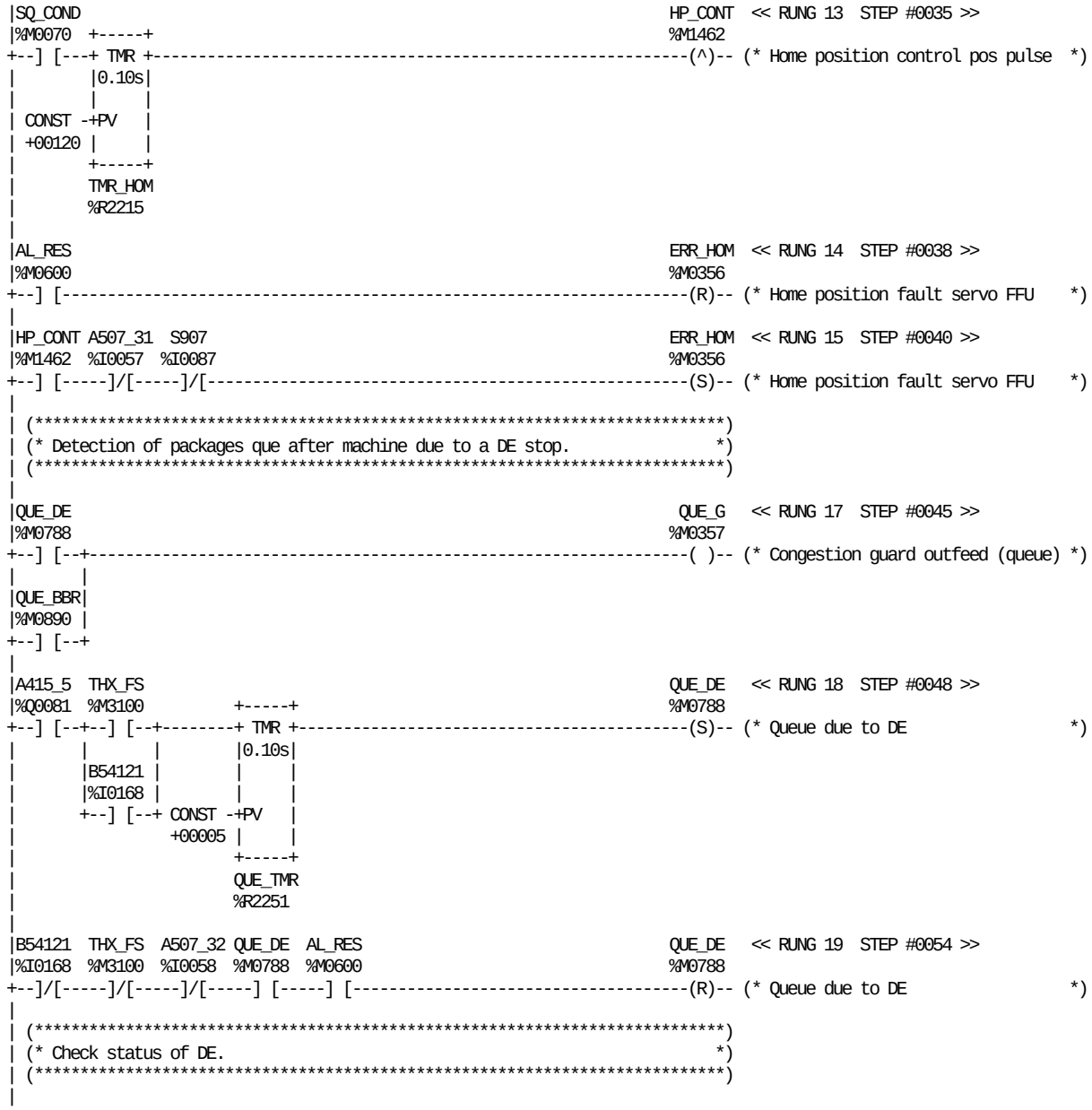

REFERENCE	NICKNAME	REFERENCE DESCRIPTION	REFERENCE	NICKNAME	REFERENCE DESCRIPTION
%Q0081	A415_5	Enable external conveyor	%M0788	QUE_DE	Queue due to DE
%I0057	A507_31	DMC FFU Home position	%M0357	QUE_G	Congestion guard outfeed (queue)
%I0058	A507_32	DMC FFU motor running	%R2251	QUE_TMR	Que after machine delay
%M0600	AL_RES	Alarm reset (From TPOP)	%I0087	S907	Push button inching JUM
%I0168	B54121	Que guard after machine	%M0070	SQ_COND	Start sequence conditions
%M0356	ERR_HOM	Home position fault servo FFU	%M3100	THX_FS	Stop Signal from THx22 in bypass
%M1462	HP_CONT	Home position control pos pulse	%R2215	TMR_HOM	TMR check home position FFU
%M0890	QUE_BBR	Queue after belt brake			

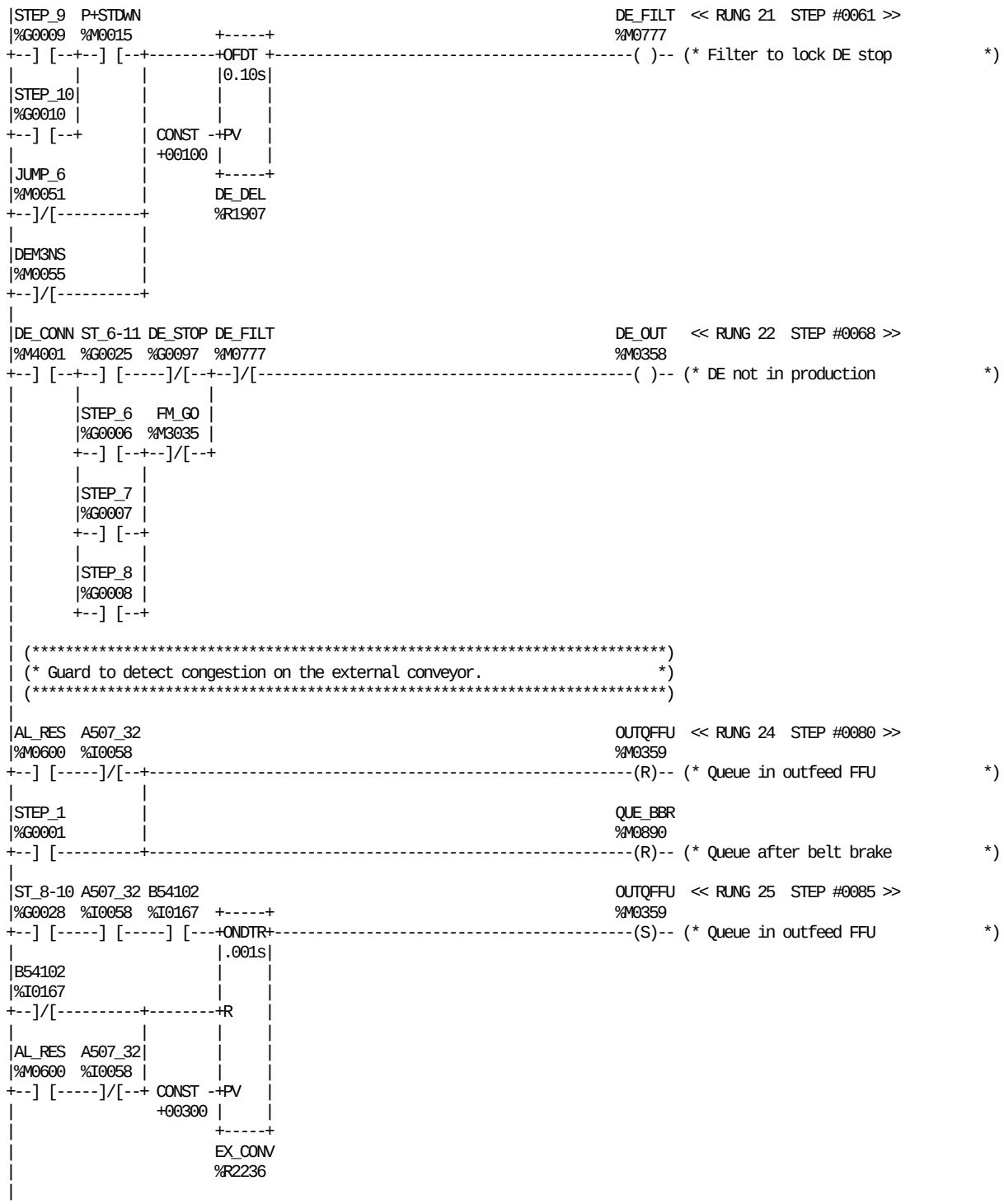

REFERENCE	NICKNAME	REFERENCE DESCRIPTION	REFERENCE	NICKNAME	REFERENCE DESCRIPTION
%I0058	A507_32	DMC FFU motor running	%M0359	OUTQFFU	Queue in outfeed FFU
%M0600	AL_RES	Alarm reset (From TPOP)	%M0015	P+STDWN	Step down positive pulse
%I0167	B54102	Congestion guard ext.conveyor	%M0890	QUE_BBR	Queue after belt brake
%M0055	DEM3NS	Demand 3 normal stop	%G0001	STEP_1	STANDBY
%M4001	DE_CONN	DE communication connected	%G0010	STEP_10	PRODUCTION
%R1907	DE_DEL	TMR filter to lock DE stop	%G0006	STEP_6	DRYING + STEAM CLEANING
%M0777	DE_FILT	Filter to lock DE stop	%G0007	STEP_7	SIGNAL TO STERILIZER
%M0358	DE_OUT	DE not in production	%G0008	STEP_8	FLAPS + H2O2 TEMPERATURE
%G0097	DE_STOP	DE not ready for production	%G0009	STEP_9	MOTOR START
%R2236	EX_CONV	TMR for congestion ext.conveyor	%G0025	ST_6-11	Ladder position 6-11
%M3035	FM_GO	FM can start (from DE)	%G0028	ST_8-10	Ladder position 8-10
%M0051	JUMP_6	Jump to pos 6 (Fast stop)			

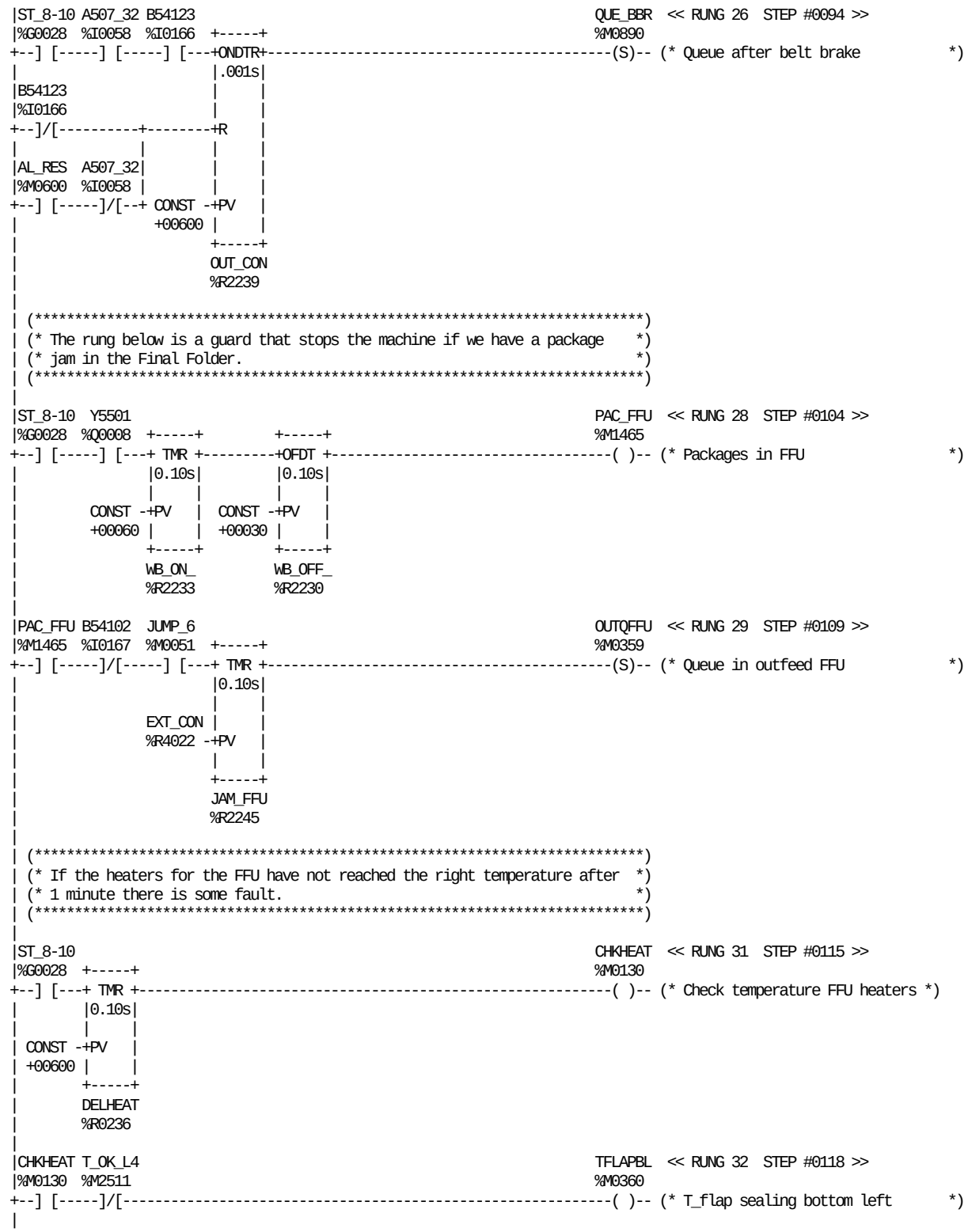

REFERENCE	NICKNAME	REFERENCE DESCRIPTION	REFERENCE	NICKNAME	REFERENCE DESCRIPTION
%I0058	A507_32	DMC FFU motor running	%R2239	OUT_CON	TMR for congestion outfeed
%M0600	AL_RES	Alarm reset (From TPOP)	%M1465	PAC_FFU	Packages in FFU
%I0167	B54102	Congestion guard ext.conveyor	%M0890	QUE_BBR	Queue after belt brake
%I0166	B54123	Congestion guard outfeed photoc.	%G0028	ST_8-10	Ladder position 8-10
%M0130	CHKHEAT	Check temperature FFU heaters	%M0360	TFLAPBL	T_flap sealing bottom left
%R0236	DELHEAT	Delay check of FFU heaters	%M2511	T_OK_L4	Temp ok Loop 4
%R4022	EXT_CON	External conv timer value	%R2230	WB_OFF_	Waste box off timer
%R2245	JAM_FFU	Check pakage jam FFU	%R2233	WB_ON_	Waste box on timer
%M0051	JUMP_6	Jump to pos 6 (Fast stop)	%Q0008	Y5501	Waste box FFU
%M0359	OUTQFFU	Queue in outfeed FFU			

```
|CHKHEAT T_OK_L5                                                    TFLAPBR  << RUNG 33  STEP #0121 >>
|%M0130  %M2514                                                    %M0361
+--] [-----]/[-------------------------------------------------------( )-- (* T_flap sealing bottom right      *)
|
|CHKHEAT T_OK_L2                                                    TFLAPTL  << RUNG 34  STEP #0124 >>
|%M0130  %M2505                                                    %M0362
+--] [-----]/[-------------------------------------------------------( )-- (* T_flap sealing top left          *)
|
|CHKHEAT T_OK_L3                                                    TFLAPTR  << RUNG 35  STEP #0127 >>
|%M0130  %M2508                                                    %M0363
+--] [-----]/[-------------------------------------------------------( )-- (* T_flap sealing top right         *)
|
| (*************************************************************************)
| (* Transfer of value for homeposition FFU(Set by the operator on the TPOP). *)
| (*************************************************************************)
|
|ALW_ON                                                                  << RUNG 37  STEP #0131 >>
|%S0007  +-----+
+--] [---+MOVE_+-
|        | INT |
|        |     |
|ST_FFU  |     | A507_3
|%R0500 -+IN  Q+-%AQ008
|        | LEN |
|        |00001|
|        |     |
|        +-----+
|
| (*************************************************************************)
| (* Check of the FFU greasing flow.                                       *)
| (*************************************************************************)
|
|GR_GOIN A507_32 FFU_PP  FFU_NP                                     AL_GREA  << RUNG 39  STEP #0134 >>
|%M3619  %I0058  %M3622  %M3623  +-----+                            %M0367
+--] [-----] [-----]/[-----]/[---+ TMR +---------------------------------(S)-- (* Greasing pump alarm            *)
|                                |0.10s|
|                                |     |
|                          CONST -+PV   |
|                          +00300 |     |
|                                 +-----+
|                                 FLOW_FF
|                                 %R3655
|
|FFU_PP                                                             AL_GREA  << RUNG 40  STEP #0140 >>
|%M3622                                                            %M0367
+--] [--+-------------------------------------------------------------(R)-- (* Greasing pump alarm            *)
|       |
|FFU_NP |
|%M3623 |
+--] [--+
|
| (*************************************************************************)
| (* Error code transfer from DMC MM to PLC.                              *)
| (*************************************************************************)
|
|A507_34                                                            TON_FF   << RUNG 42  STEP #0144 >>
|%I0060                                                            %M1730
+--] [-------------------------------------------------------------(S)-- (* Transmission in progress DMC FF  *)
|
```

REFERENCE	NICKNAME	REFERENCE DESCRIPTION	REFERENCE	NICKNAME	REFERENCE DESCRIPTION
%AQ008	A507_3	Home position setting FFU	%M3619	GR_GOIN	FFU greasing going on
%I0058	A507_32	DMC FFU motor running	%R0500	ST_FFU	Stop position FFU (TPOP)
%I0060	A507_34	DMC FFU motor error code	%M0361	TFLAPBR	T_flap sealing bottom right
%S0007	ALW_ON		%M0362	TFLAPTL	T_flap sealing top left
%M0367	AL_GREA	Greasing pump alarm	%M0363	TFLAPTR	T_flap sealing top right
%M0130	CHKHEAT	Check temperature FFU heaters	%M1730	TON_FF	Transmission in progress DMC FF
%M3623	FFU_NP	FFU greasing sensor neg pulse	%M2505	T_OK_L2	Temp ok Loop 2
%M3622	FFU_PP	FFU greasing sensor pos pulse	%M2508	T_OK_L3	Temp ok Loop 3
%R3655	FLOW_FF	TMR greasing flow FFU	%M2514	T_OK_L5	Temp ok Loop 5

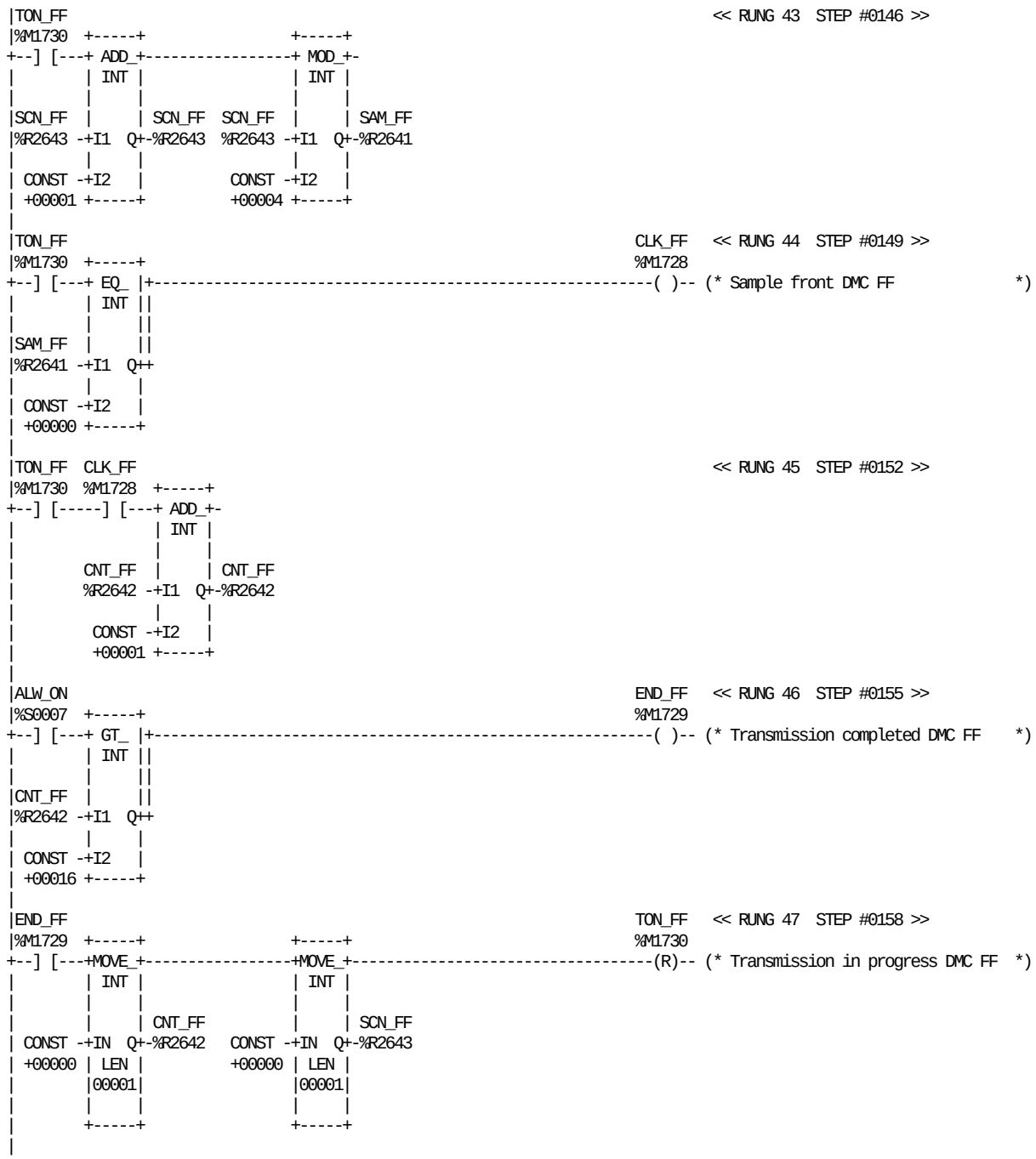

REFERENCE	NICKNAME	REFERENCE DESCRIPTION	REFERENCE	NICKNAME	REFERENCE DESCRIPTION
%S0007	ALW_ON		%R2641	SAM_FF	Sample DMC FF
%M1728	CLK_FF	Sample front DMC FF	%R2643	SCN_FF	Scansion counter DMC FF
%R2642	CNT_FF	Received bit counter DMC FF	%M1730	TON_FF	Transmission in progress DMC FF
%M1729	END_FF	Transmission completed DMC FF			

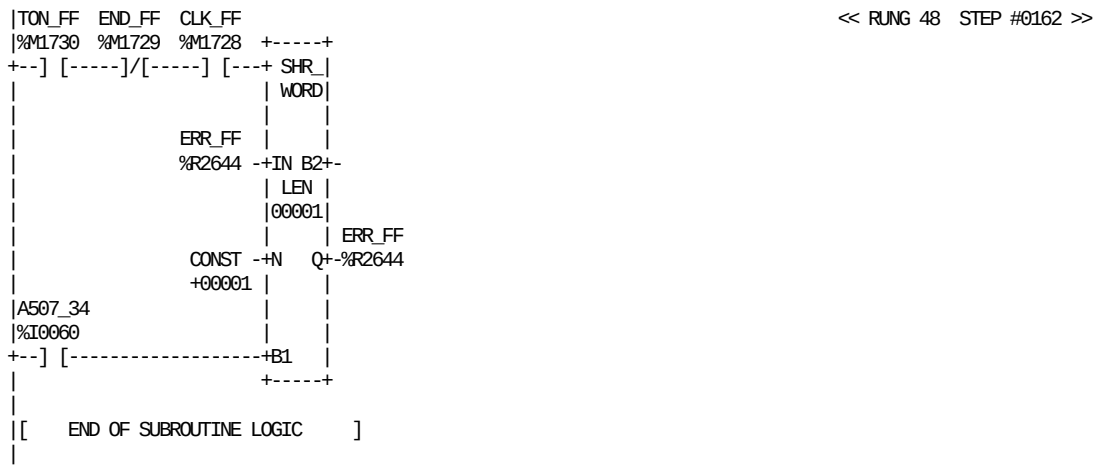

<< RUNG 48 STEP #0162 >>

REFERENCE	NICKNAME	REFERENCE DESCRIPTION
%I0060	A507_34	DMC FFU motor error code
%M1728	CLK_FF	Sample front DMC FF
%M1729	END_FF	Transmission completed DMC FF

REFERENCE	NICKNAME	REFERENCE DESCRIPTION
%R2644	ERR_FF	Error code DMC FF
%M1730	TON_FF	Transmission in progress DMC FF

This page left intentionally blank

```
|[  START LD SUBROUTINE  SA_UNIT  ]
|
|[     VARIABLE DECLARATIONS      ]
|
|[   START OF SUBROUTINE LOGIC    ]
|
| (*************************************************************************)
| (* Check of all alarm conditions for Strip Applicator.                  *)
| (*************************************************************************)
|
| K032                                                              TPIHDEL  << RUNG 5  STEP #0003 >>
|%Q0048  +-----+                                                    %M1406
+--] [---+ TMR +-------------------------------------------------------( )-- (* ASU, TPIH SA power delayed      *)
|        |0.10s|
|        |     |
| CONST -+PV   |
| +00010 |     |
|        +-----+
|        DEL1812
|        %R1812
|
| A7417  TPIHDEL                                                    SEAL_SA  << RUNG 6  STEP #0006 >>
|%I0036  %M1406                                                     %M0369
+--]/[-----] [--+-------------------------------------------------------(S)-- (* Sealing strip applicator *)
|               |
|               |                                                   FOINJUM
|               |                                                   %M1808
|               +-------------------------------------------------------(S)-- (* Force inching after LS alarm    *)
|
| S907   A506_32                                                    SEAL_SA  << RUNG 7  STEP #0010 >>
|%I0087  %I0044          +-----+                                    %M0369
+--] [-----] [--+--------+ TMR +-----------------------------------------(R)-- (* Sealing strip applicator *)
|               |        |0.10s|
|STEP_6         |        |     |
|%G0006         |        |     |
+--]/[----------+ CONST -+PV   |
|                 +00250 |     |
|                        +-----+
|                        DEL1821
|                        %R1821
|
|STRIPEM STEP_1   B7801  SA_EMPT                                    STR_NP   << RUNG 8  STEP #0015 >>
|%M1338  %G0001  %I0188  %M0370                                     %M0373
+--] [-----]/[-----] [-----] [-------------------------------------------(S)-- (* Strip not prepared             *)
|
|AL_RES                                                             STR_NP   << RUNG 9  STEP #0020 >>
|%M0600                                                             %M0373
+--] [-------------------------------------------------------------------(R)-- (* Strip not prepared             *)
|
|P-STPSP                                                            SA_EMPT  << RUNG 10  STEP #0022 >>
|%M0037                                                             %M0370
+--] [----------+-------------------------------------------------------(S)-- (* Strip applicator supply empty *)
|               |
| B6204  SEARCH |
|%I0179  %M1473 |
+--] [-----]/[--+
|
| B7801                                                             SA_EMPT  << RUNG 11  STEP #0027 >>
|%I0188                                                             %M0370
+--]/[--+-------------------------------------------------------------------(R)-- (* Strip applicator supply empty *)
|       |
|SEARCH |
|%M1473 |
+--] [--+
```

REFERENCE	NICKNAME	REFERENCE DESCRIPTION	REFERENCE	NICKNAME	REFERENCE DESCRIPTION
%I0044	A506_32	DMC Main motor running	%I0087	S907	Push button inching JUM
%I0036	A7417	Failure TPIH SA	%M0370	SA_EMPT	Strip applicator supply empty
%M0600	AL_RES	Alarm reset (From TPOP)	%M0369	SEAL_SA	Sealing strip applicator
%I0179	B6204	Strip splice prepared	%M1473	SEARCH	SA, bobbin research going on
%I0188	B7801	Door guard strip applicator (17)	%G0001	STEP_1	STANDBY
%R1812	DEL1812	SA, TPIH power delay	%G0006	STEP_6	DRYING + STEAM CLEANING
%R1821	DEL1821	SA, Force inching on TPIH alarm	%M1338	STRIPEM	SA, one strip bobbin empty
%M1808	FOINJUM	Force inching after LS alarm	%M0373	STR_NP	Strip not prepared
%Q0048	K032	Power TPOP bar	%M1406	TPIHDEL	ASU, TPIH SA power delayed
%M0037	P-STPSP	Pulse neg strip splice			

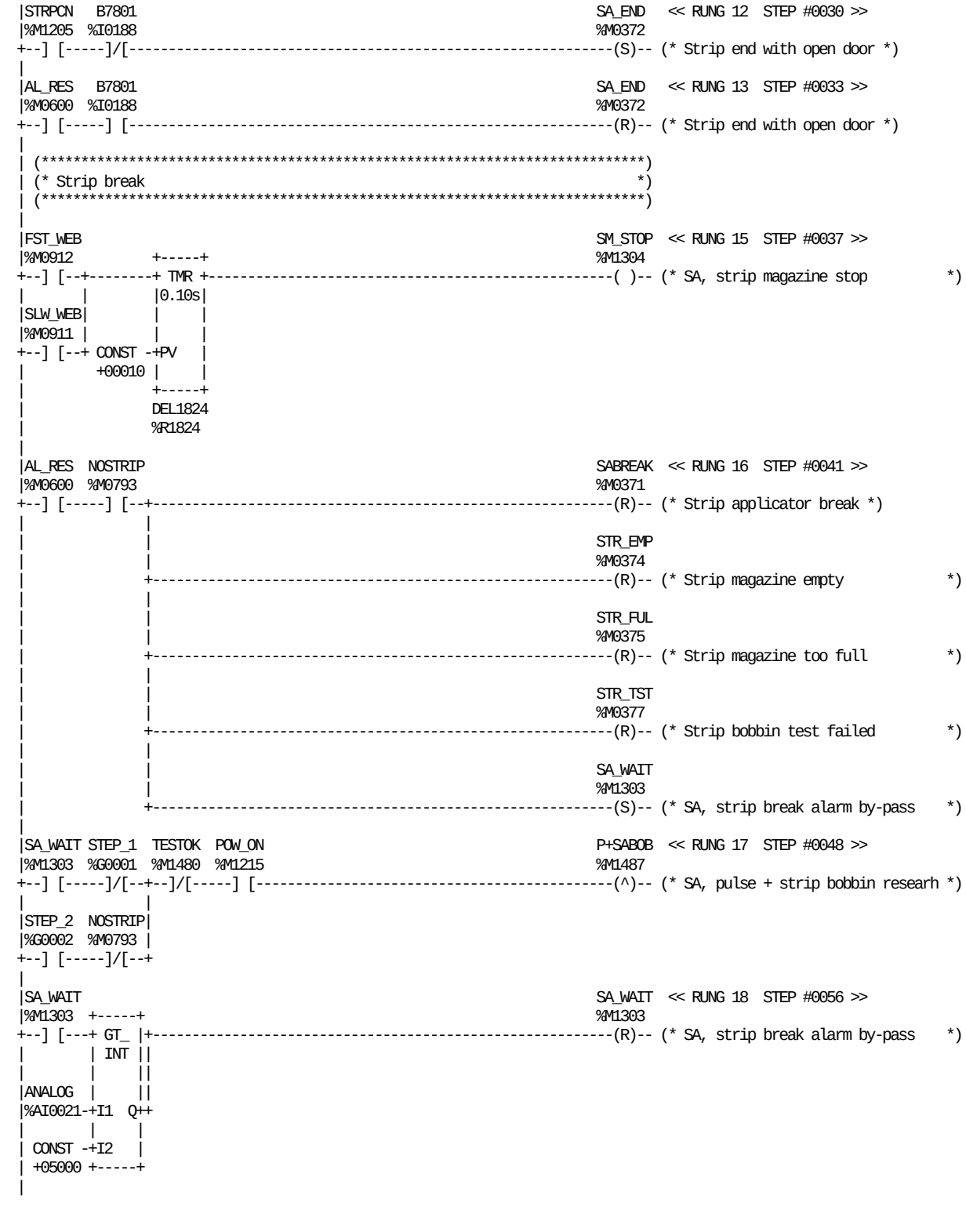

REFERENCE	NICKNAME	REFERENCE DESCRIPTION	REFERENCE	NICKNAME	REFERENCE DESCRIPTION
%M0600	AL_RES	Alarm reset (From TPOP)	%M1303	SA_WAIT	SA, strip break alarm by-pass
%AI0021	ANALOG	SA, Analog sensor strip magazine	%M0911	SLW_WEB	Paper web slow speed
%I0188	B7801	Door guard strip applicator (17)	%M1304	SM_STOP	SA, strip magazine stop
%R1824	DEL1824	SA, delay	%G0001	STEP_1	STANDBY
%M0912	FST_WEB	Paper web fast speed	%G0002	STEP_2	PREPARATION (3 MIN.)
%M0793	NOSTRIP	Strip general alarm	%M1205	STRPCN	Start strip splice
%M1487	P+SABOB	SA, pulse + strip bobbin researh	%M0374	STR_EMP	Strip magazine empty
%M1215	POW_ON	Power on to inverter	%M0375	STR_FUL	Strip magazine too full
%M0371	SABREAK	Strip applicator break	%M0377	STR_TST	Strip bobbin test failed
%M0372	SA_END	Strip end with open door	%M1480	TESTOK	SA, bobbin research OK

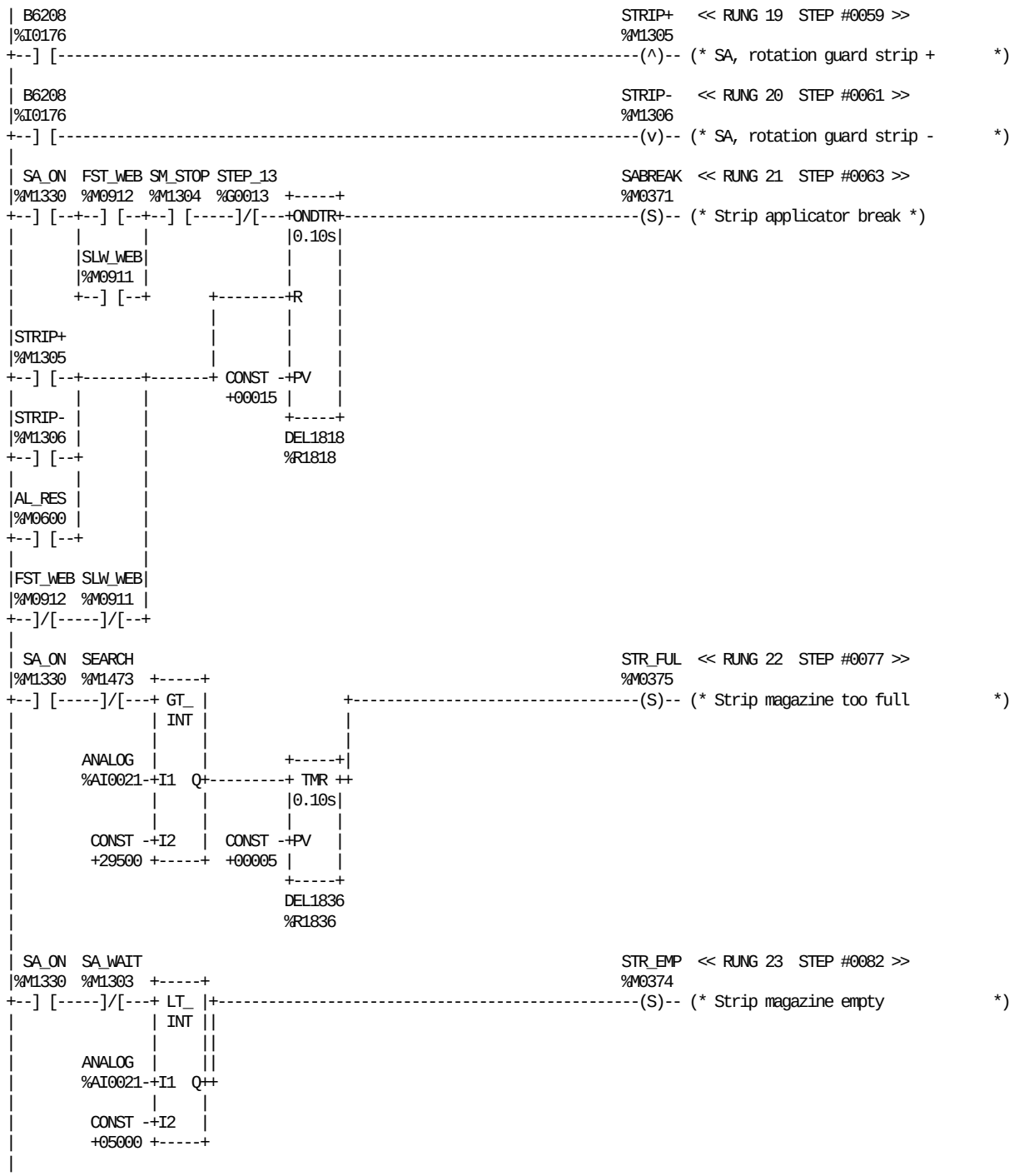

REFERENCE	NICKNAME	REFERENCE DESCRIPTION	REFERENCE	NICKNAME	REFERENCE DESCRIPTION
%M0600	AL_RES	Alarm reset (From TPOP)	%M1473	SEARCH	SA, bobbin research going on
%AI0021	ANALOG	SA, Analog sensor strip magazine	%M0911	SLW_WEB	Paper web slow speed
%I0176	B6208	Rotation monitoring SA	%M1304	SM_STOP	SA, strip magazine stop
%R1818	DEL1818	SA, delay	%G0013	STEP_13	OPEN DOORS, CUT TUBE
%R1836	DEL1836	SA, delay	%M1305	STRIP+	SA, rotation guard strip +
%M0912	FST_WEB	Paper web fast speed	%M1306	STRIP-	SA, rotation guard strip -
%M0371	SABREAK	Strip applicator break	%M0374	STR_EMP	Strip magazine empty
%M1330	SA_ON	Strip magazine and SA heater ON	%M0375	STR_FUL	Strip magazine too full
%M1303	SA_WAIT	SA, strip break alarm by-pass			

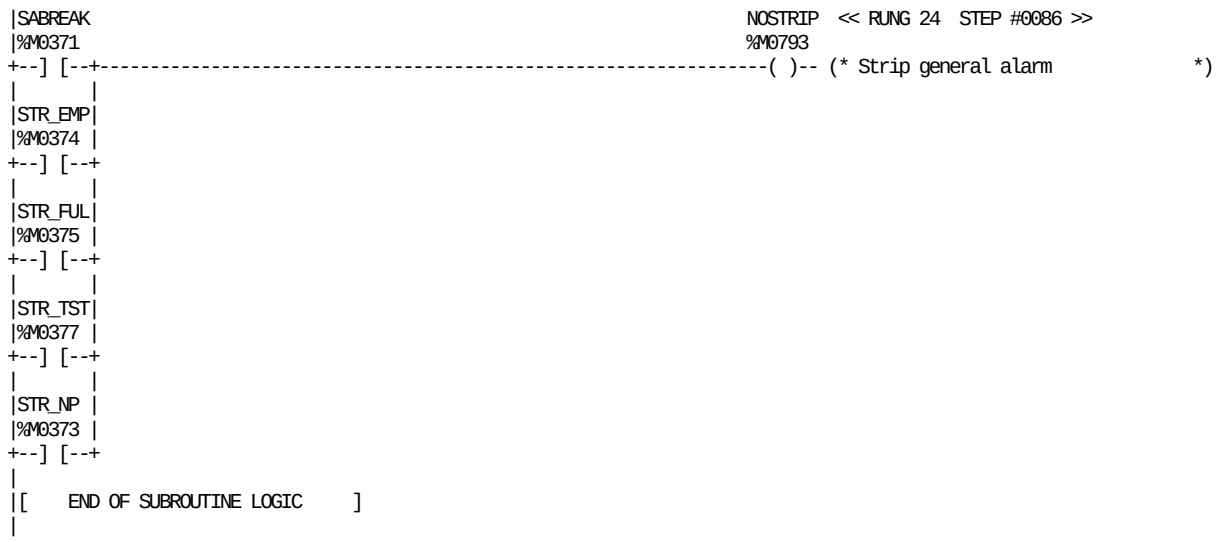

REFERENCE	NICKNAME	REFERENCE DESCRIPTION	REFERENCE	NICKNAME	REFERENCE DESCRIPTION
%M0793	NOSTRIP	Strip general alarm	%M0375	STR_FUL	Strip magazine too full
%M0371	SABREAK	Strip applicator break	%M0373	STR_NP	Strip not prepared
%M0374	STR_EMP	Strip magazine empty	%M0377	STR_TST	Strip bobbin test failed

```
|[  START LD SUBROUTINE  FIL_DCS  ]
|
|[     VARIABLE DECLARATIONS      ]
|
|[   START OF SUBROUTINE LOGIC    ]
|
| (*************************************************************************)
| (* Check reading of the barcode in the different conditions.             *)
| (*************************************************************************)
|
|A506_14 FIRSTST                                                  << RUNG 5  STEP #0003 >>
|%Q0201  %M0139  +-----+
+--] [-----]/[---+MOVE_+-
|                | INT |
|                |     |
|                |     | BCD_CHK
|         CONST -+IN  Q+-%R2675
|         +00005 | LEN |
|                |00001|
|                |     |
|                +-----+
|
|A506_14 FIRSTST                                                  << RUNG 6  STEP #0006 >>
|%Q0201  %M0139          +-----+
+--] [--+--] [--+--------+MOVE_+-
|       |      |        | INT |
|       | S907  |        |     |
|       |%I0087 |        |     | BCD_CHK
|       +--] [--+ CONST -+IN  Q+-%R2675
|                 +00040 | LEN |
|                        |00001|
|                        |     |
|                        +-----+
|
|A506_13                                                          << RUNG 7  STEP #0011 >>
|%Q0202  +-----+
+--] [---+MOVE_+-
|        | INT |
|        |     |
|        |     | BCD_CHK
| CONST -+IN  Q+-%R2675
| +00070 | LEN |
|        |00001|
|        |     |
|        +-----+
|
|STEP_14 ACC_05S A418_31 REF_BLK                                  PH_DCS   << RUNG 8  STEP #0013 >>
|%G0014  %M1700  %I0062  %M2183  +-----+                          %M0385
+--]/[-----] [-----]/[-----]/[---+ TMR +----------------------------------(S)-- (* Malfunction photocells DCS *)
|                                |0.10s|
|                                |     |
|                        BCD_CHK |     |
|                        %R2675 -+PV   |
|                                |     |
|                                +-----+
|                                BCD_MON
|                                %R2676
|
|A506_32 AL_RES                                                   PH_DCS   << RUNG 9  STEP #0019 >>
|%I0044  %M0600                                                   %M0385
+--]/[-----] [--+-------------------------------------------------------(R)-- (* Malfunction photocells DCS *)
|               |
|STEP_1         |
|%G0001         |
+--] [----------+
|
```

REFERENCE	NICKNAME	REFERENCE DESCRIPTION	REFERENCE	NICKNAME	REFERENCE DESCRIPTION
%I0062	A418_31	Bar code signal DCS	%R2676	BCD_MON	Timer for barcode monitoring
%Q0202	A506_13	DMC Main Motor Low speed	%M0139	FIRSTST	First start after sterilization
%Q0201	A506_14	DMC Main Motor High speed	%M0385	PH_DCS	Malfunction photocells DCS
%I0044	A506_32	DMC Main motor running	%M2183	REF_BLK	Block alarm while refilling
%M1700	ACC_05S	5 sec. acceleration main motor	%I0087	S907	Push button inching JUM
%M0600	AL_RES	Alarm reset (From TPOP)	%G0001	STEP_1	STANDBY
%R2675	BCD_CHK	Time base for barcode control	%G0014	STEP_14	CIP / HC

```
| (*************************************************************************)
| (* Check movement of the A-valve.                                        *)
| (*************************************************************************)
|
| Y1301  AL_RES                                                  A-VALVE  << RUNG 11  STEP #0024 >>
|%Q0118  %M0600                                                  %M0387
+--]/[-----] [-------------------------------------------------------------(R)-- (* A-valve position *)
|
| Y1301                                                          A-VALVE  << RUNG 12  STEP #0027 >>
|%Q0118          +-----+                                         %M0387
+--] [-----------+ONDTR+-----------------------------------------------(S)-- (* A-valve position *)
|                |0.10s|
| B1301          |     |
|%I0097          |     |
+--] [--+--------+R    |
|       |        |     |
| Y1301 |        |     |
|%Q0118 |        |     |
+--]/[--+ CONST -+PV   |
|         +00020 |     |
|                +-----+
|                AV_CHK
|                %R1033
|
| (*************************************************************************)
| (* Check manbrane in the regulating valve.                              *)
| (*************************************************************************)
|
|STEP_1  A305_18                                                 LEAKAGE  << RUNG 14  STEP #0033 >>
|%G0001  %I0107                                                  %M0389
+--]/[-----] [-------------------------------------------------------------(S)-- (* Regulating valve leakage *)
|
|A305_18 AL_RES                                                  LEAKAGE  << RUNG 15  STEP #0036 >>
|%I0107  %M0600                                                  %M0389
+--]/[-----] [-------------------------------------------------------------(R)-- (* Regulating valve leakage *)
|
| (*************************************************************************)
| (* Check position of the C-valve.                                        *)
| (*************************************************************************)
|
| Y1303                                                          C-ON_ER  << RUNG 17  STEP #0040 >>
|%Q0105          +-----+                                         %M0823
+--] [-----------+ONDTR+-----------------------------------------------( )-- (* C-valve open error *)
|                |0.10s|
| B1303          |     |
|%I0099          |     |
+--] [--+--------+R    |
|       |        |     |
| Y1303 |        |     |
|%Q0105 |        |     |
+--]/[--+ CONST -+PV   |
|         +00030 |     |
|                +-----+
|                C-ON_CK
|                %R1036
|
```

REFERENCE	NICKNAME	REFERENCE DESCRIPTION	REFERENCE	NICKNAME	REFERENCE DESCRIPTION
%M0387	A-VALVE	A-valve position	%R1036	C-ON_CK	C-valve open position control
%I0107	A305_18	Regulating valve leakage	%M0823	C-ON_ER	C-valve open error
%M0600	AL_RES	Alarm reset (From TPOP)	%M0389	LEAKAGE	Regulating valve leakage
%R1033	AV_CHK	Check A-valve position	%G0001	STEP_1	STANDBY
%I0097	B1301	A-valve position sensor	%Q0118	Y1301	A-valve
%I0099	B1303	C-valve position sensor	%Q0105	Y1303	C-valve open

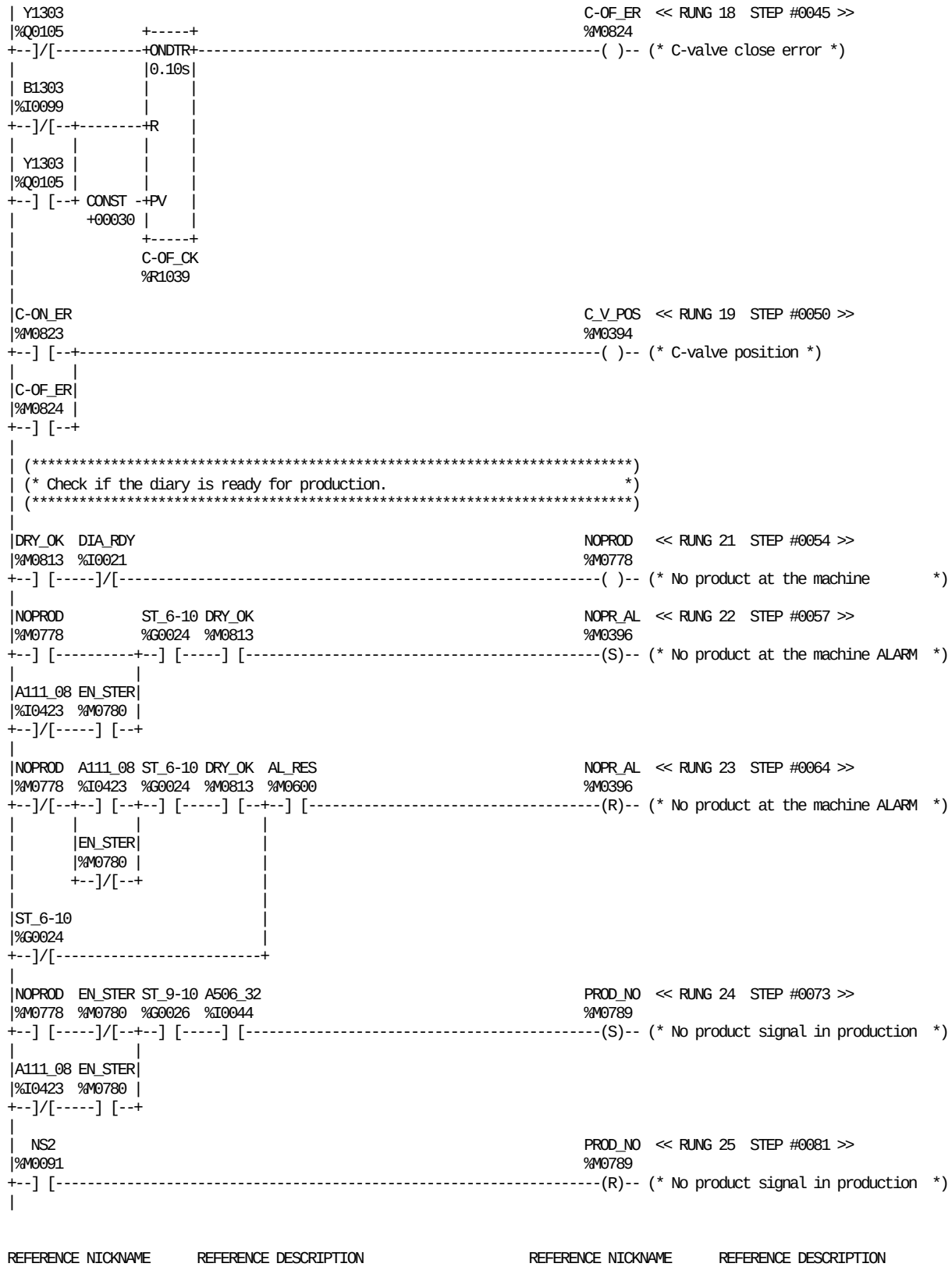

REFERENCE	NICKNAME	REFERENCE DESCRIPTION	REFERENCE	NICKNAME	REFERENCE DESCRIPTION
%I0423	A111_08	Product line sterile	%M0813	DRY_OK	Drying ready
%I0044	A506_32	DMC Main motor running	%M0780	EN_STER	Sterile/not sterile enabled
%M0600	AL_RES	Alarm reset (From TPOP)	%M0778	NOPROD	No product at the machine
%I0099	B1303	C-valve position sensor	%M0396	NOPR_AL	No product at the machine ALARM
%R1039	C-OF_CK	C-valve close position control	%M0091	NS2	Normal stop step 2
%M0824	C-OF_ER	C-valve close error	%M0789	PROD_NO	No product signal in production
%M0823	C-ON_ER	C-valve open error	%G0024	ST_6-10	Ladder position 6-10
%M0394	C_V_POS	C-valve position	%G0026	ST_9-10	Ladder position 9-10
%I0021	DIA_RDY	Diary ready for production	%Q0105	Y1303	C-valve open

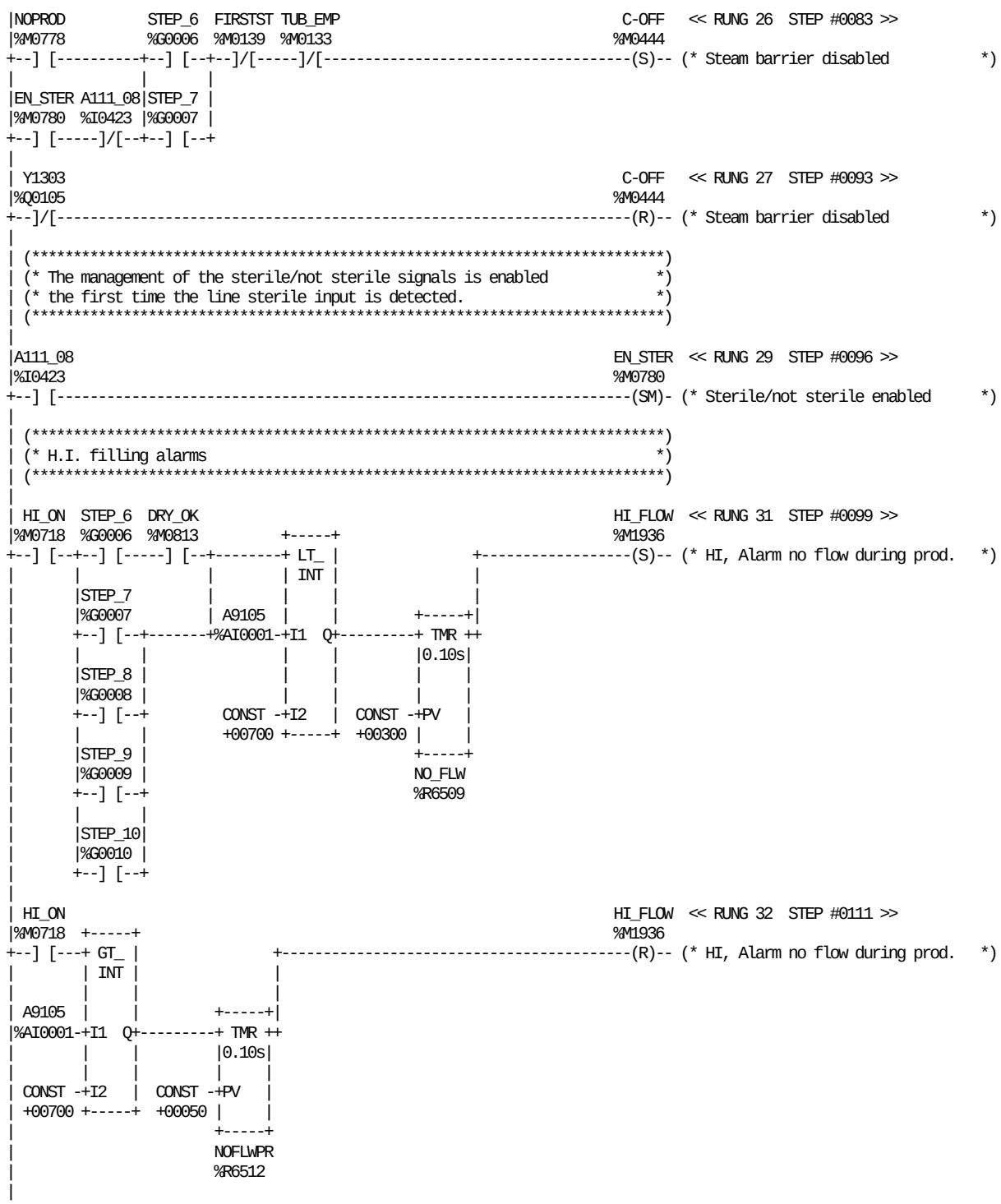

REFERENCE	NICKNAME	REFERENCE DESCRIPTION	REFERENCE	NICKNAME	REFERENCE DESCRIPTION
%I0423	A111_08	Product line sterile	%M0778	NOPROD	No product at the machine
%AI0001	A9105	HI, Flow meter	%R6509	NO_FLW	HI, Delay no flow alarm
%M0444	C-OFF	Steam barrier disabled	%G0010	STEP_10	PRODUCTION
%M0813	DRY_OK	Drying ready	%G0006	STEP_6	DRYING + STEAM CLEANING
%M0780	EN_STER	Sterile/not sterile enabled	%G0007	STEP_7	SIGNAL TO STERILIZER
%M0139	FIRSTST	First start after sterilization	%G0008	STEP_8	FLAPS + H2O2 TEMPERATURE
%M1936	HI_FLOW	HI, Alarm no flow during prod.	%G0009	STEP_9	MOTOR START
%M0718	HI_ON	HI, system setting with HI	%M0133	TUB_EMP	Tube empty (after inching)
%R6512	NOFLWPR	HI, Delay no flow during prod.	%Q0105	Y1303	C-valve open

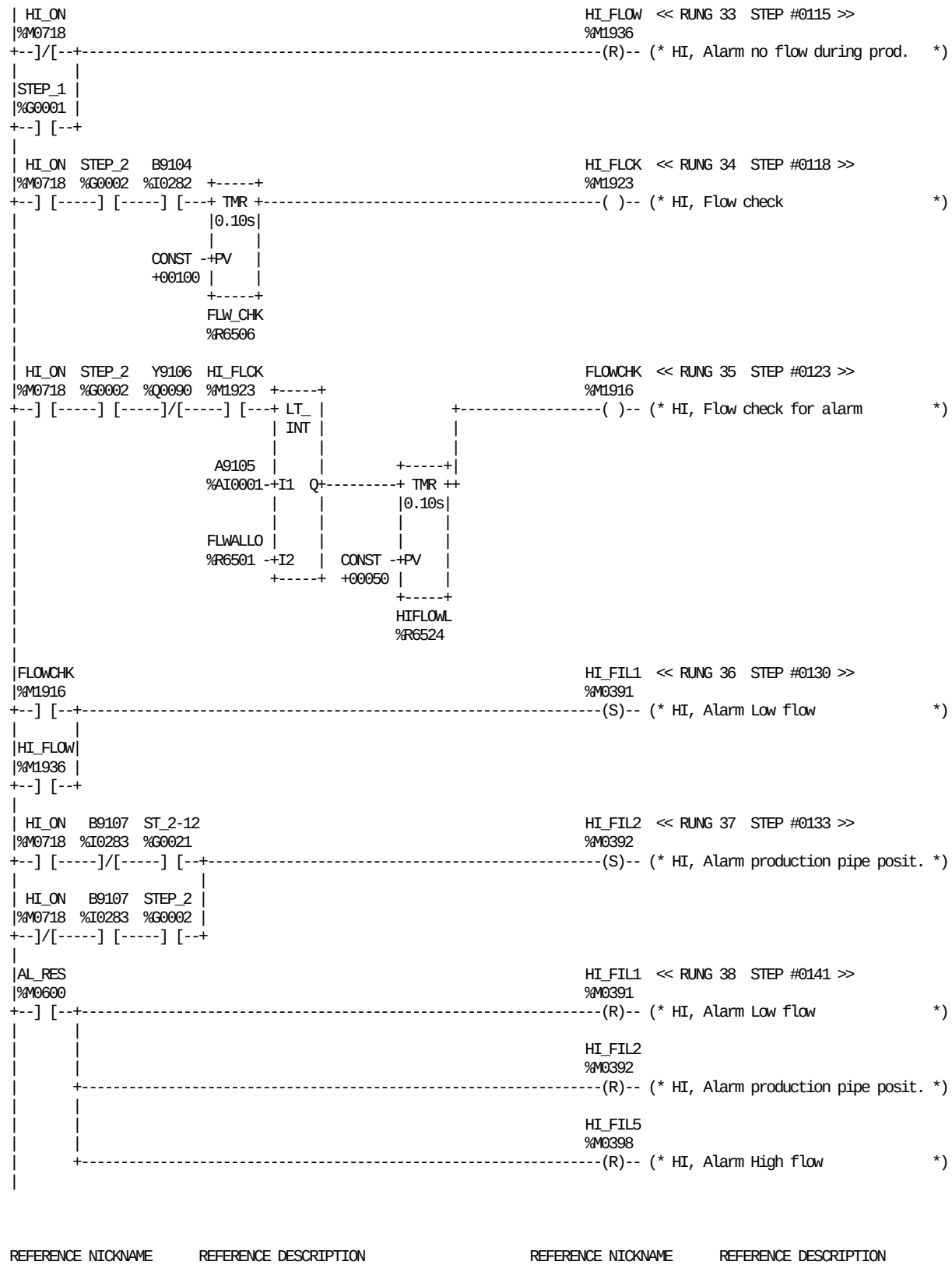

REFERENCE	NICKNAME	REFERENCE DESCRIPTION
%AI0001	A9105	HI, Flow meter
%M0600	AL_RES	Alarm reset (From TPOP)
%I0282	B9104	HI, Pressure guard
%I0283	B9107	HI, Product pipe position
%M1916	FLOWCHK	HI, Flow check for alarm
%R6501	FLWALLO	HI, Flow alarm low level
%R6506	FLW_CHK	HI, Delay flow check
%R6524	HIFLOWL	HI, Low flow alarm delay
%M0391	HI_FIL1	HI, Alarm Low flow

REFERENCE	NICKNAME	REFERENCE DESCRIPTION
%M0392	HI_FIL2	HI, Alarm production pipe posit.
%M0398	HI_FIL5	HI, Alarm High flow
%M1923	HI_FLCK	HI, Flow check
%M1936	HI_FLOW	HI, Alarm no flow during prod.
%M0718	HI_ON	HI, system setting with HI
%G0001	STEP_1	STANDBY
%G0002	STEP_2	PREPARATION (3 MIN.)
%G0021	ST_2-12	Ladder position 2-12
%Q0090	Y9106	HI, Switch air in aseptic chamb.

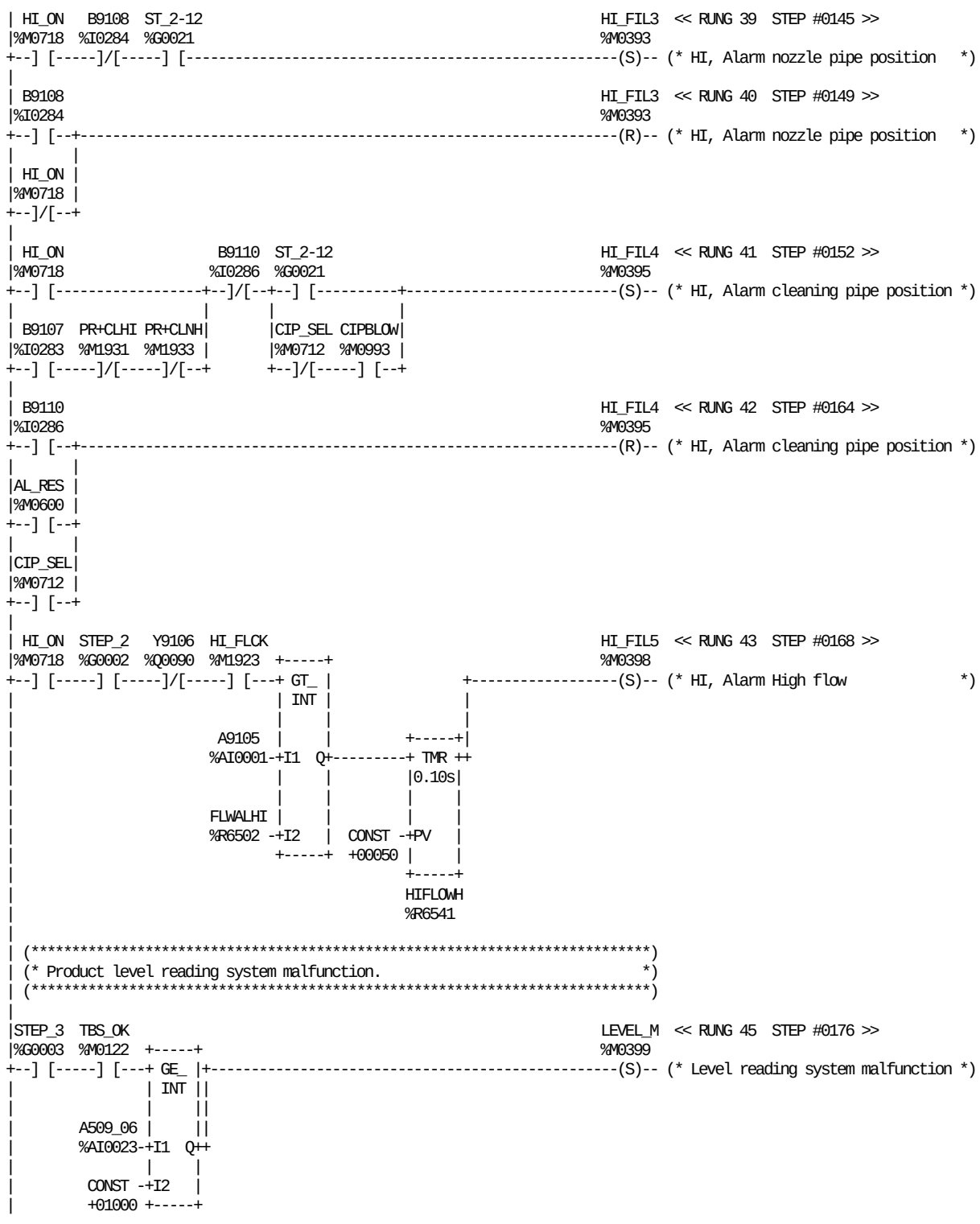

REFERENCE	NICKNAME	REFERENCE DESCRIPTION	REFERENCE	NICKNAME	REFERENCE DESCRIPTION
%AI0023	A509_06	TMCC FCS Filtered level	%M0398	HI_FIL5	HI, Alarm High flow
%AI0001	A9105	HI, Flow meter	%M1923	HI_FLCK	HI, Flow check
%M0600	AL_RES	Alarm reset (From TPOP)	%M0718	HI_ON	HI, system setting with HI
%I0283	B9107	HI, Product pipe position	%M0399	LEVEL_M	Level reading system malfunction
%I0284	B9108	HI, Spray nozzle pipe position	%M1931	PR+CLHI	HI, Production+clean with HI
%I0286	B9110	HI, Production configuration	%M1933	PR+CLNH	HI, Production+clean without HI
%M0993	CIPBLOW	CIP blowing must be done	%G0002	STEP_2	PREPARATION (3 MIN.)
%M0712	CIP_SEL	CIP select from TPOP	%G0003	STEP_3	TUBE SEALING
%R6502	FLWALHI	HI, Flow alarm high level	%G0021	ST_2-12	Ladder position 2-12
%R6541	HIFLOWH	HI, High flow alarm delay	%M0122	TBS_OK	Tube sealing ok
%M0393	HI_FIL3	HI, Alarm nozzle pipe position	%Q0090	Y9106	HI, Switch air in aseptic chamb.
%M0395	HI_FIL4	HI, Alarm cleaning pipe position			

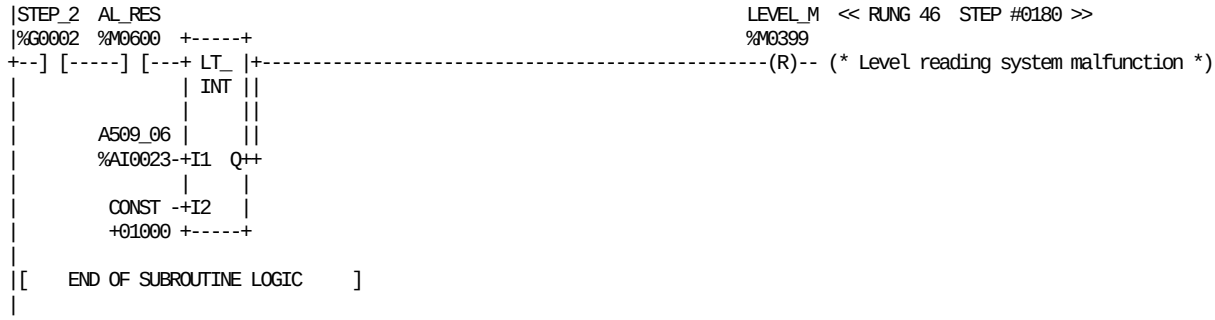

REFERENCE	NICKNAME	REFERENCE DESCRIPTION	REFERENCE	NICKNAME	REFERENCE DESCRIPTION
%AI0023	A509_06	TMCC FCS Filtered level	%M0399	LEVEL_M	Level reading system malfunction
%M0600	AL_RES	Alarm reset (From TPOP)	%G0002	STEP_2	PREPARATION (3 MIN.)

This page left intentionally blank

```
|[  START LD SUBROUTINE  SERVIC1  ]
|
|[     VARIABLE DECLARATIONS      ]
|
|[   START OF SUBROUTINE LOGIC    ]
|
| (*************************************************************************)
| (* Check of water and air supply at the machine.                        *)
| (*************************************************************************)
|
| B2102                                                          WATER_S  << RUNG 5  STEP #0003 >>
|%I0117  +-----+                                                 %M0401
+--]/[---+ TMR +-----------------------------------------------(S)-- (* Water supply *)
|        |0.10s|
|        |     |
| CONST -+PV   |
| +00100 |     |
|        +-----+
|         P_H2O
|        %R0233
|
| B2102  A507_32 AL_RES                                          WATER_S  << RUNG 6  STEP #0006 >>
|%I0117  %I0058  %M0600                                          %M0401
+--] [-----]/[-----] [-----------------------------------------------(R)-- (* Water supply *)
|
| B2201                                                          AIR_SUP  << RUNG 7  STEP #0010 >>
|%I0118                                                          %M0402
+--]/[-----------------------------------------------------------(S)-- (* Air supply *)
|
| B2201  AIR_SUP                                                 AIR_SUP  << RUNG 8  STEP #0012 >>
|%I0118  %M0402  +-----+                                         %M0402
+--] [-----] [---+ TMR +-----------------------------------------(R)-- (* Air supply *)
|                |0.10s|
|                |     |
|         CONST -+PV   |
|         +00010 |     |
|                +-----+
|                DEL_AIR
|                %R0266
|
| (*************************************************************************)
| (* Check of all overload protections.                                    *)
| (*************************************************************************)
|
|Q24_34                                                          OVERLO   << RUNG 10  STEP #0017 >>
|%I0020                                                          %M0403
+--]/[--+-------------------------------------------------------------( )-- (* Tripped motor overload protectio *)
|       |
|Q24_14 |
|%I0022 |
+--]/[--+
|
| (*************************************************************************)
| (* Check of water circulation system.                                    *)
| (*************************************************************************)
|
|ST_6-11  B2501                                                  PRES_WA  << RUNG 12  STEP #0021 >>
|%G0025  %I0115  +-----+                                         %M0404
+--] [-----]/[---+ TMR +-----------------------------------------(S)-- (* Pressure water circulation *)
|                |0.10s|
|                |     |
|         CONST -+PV   |
|         +00060 |     |
|                +-----+
|                DEL_CWP
|                %R0260
|
```

REFERENCE	NICKNAME	REFERENCE DESCRIPTION	REFERENCE	NICKNAME	REFERENCE DESCRIPTION
%I0058	A507_32	DMC FFU motor running	%M0403	OVERLO	Tripped motor overload protectio
%M0402	AIR_SUP	Air supply	%M0404	PRES_WA	Pressure water circulation
%M0600	AL_RES	Alarm reset (From TPOP)	%R0233	P_H2O	Delay alarm cold water pressure
%I0117	B2102	Cold water pressure	%I0022	Q24_14	Overload summary
%I0118	B2201	Main air supply pressure	%I0020	Q24_34	Overload DC-BUS
%I0115	B2501	Circulation cooling water	%G0025	ST_6-11	Ladder position 6-11
%R0266	DEL_AIR	Delay alarm reset air pressure	%M0401	WATER_S	Water supply
%R0260	DEL_CWP	Delay alarm cooling water Press.			

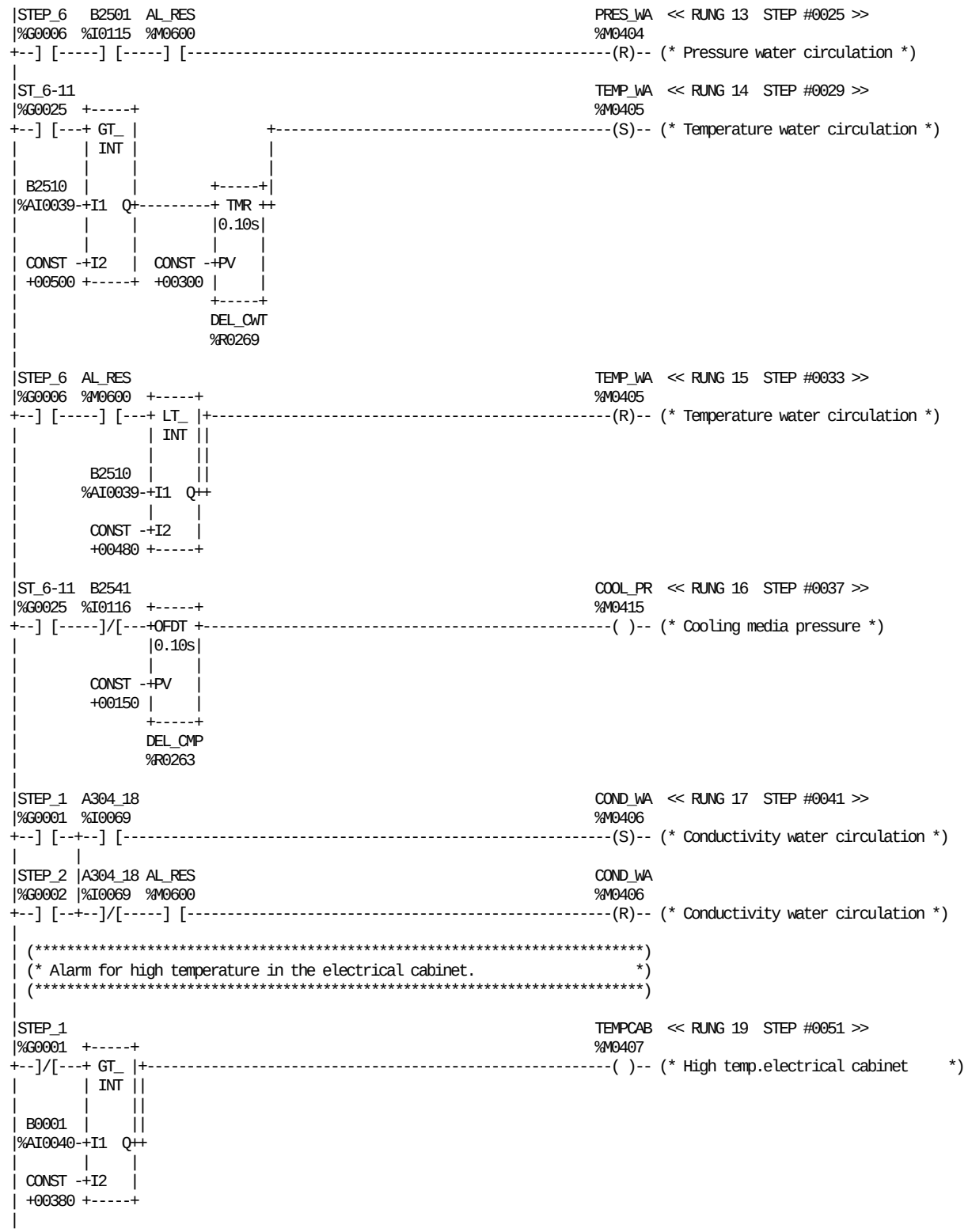

REFERENCE	NICKNAME	REFERENCE DESCRIPTION	REFERENCE	NICKNAME	REFERENCE DESCRIPTION
%I0069	A304_18	Circulation water cond. sensor	%R0269	DEL_CWT	Delay alarm circul. water temper
%M0600	AL_RES	Alarm reset (From TPOP)	%M0404	PRES_WA	Pressure water circulation
%AI0040	B0001	Temperature electrical cabinet	%G0001	STEP_1	STANDBY
%I0115	B2501	Circulation cooling water	%G0002	STEP_2	PREPARATION (3 MIN.)
%AI0039	B2510	Cooling water temperature	%G0006	STEP_6	DRYING + STEAM CLEANING
%I0116	B2541	Coooling media pressures	%G0025	ST_6-11	Ladder position 6-11
%M0406	COND_WA	Conductivity water circulation	%M0407	TEMPCAB	High temp.electrical cabinet
%M0415	COOL_PR	Cooling media pressure	%M0405	TEMP_WA	Temperature water circulation
%R0263	DEL_CMP	Delay alarm cooling media press.			

```
| (*************************************************************************)
| (* Overview of all termocouple.                                          *)
| (*************************************************************************)
|
|BROKWM1                                                          << RUNG 21  STEP #0055 >>
|%I1001
+--] [--+-------------------------------------------------------------------<+>
|       |
|BROKWM2|
|%I1002 |
+--] [--+
|       |
|BROKWM3|
|%I1003 |
+--] [--+
|       |
|BROK_W1|
|%I1004 |
+--] [--+
|       |
|BROKWM4|
|%I1005 |
+--] [--+
|       |
|BROKWM5|
|%I1006 |
+--] [--+
|       |
|BROKWM6|
|%I1007 |
+--] [--+
|       |
|BROKWM7|
|%I1008 |
+--] [--+
|
+<+>----+-------------------------------------------------------------------<+>  << RUNG 22  STEP #0064 >>
|       |
|BROK_W2|
|%I1017 |
+--] [--+
|       |
|BROK_W3|
|%I1018 |
+--] [--+
|       |
|BROK_W4|
|%I1019 |
+--] [--+
|       |
|BROK_W5|
|%I1020 |
+--] [--+
|       |
|BROKWM8|
|%I1021 |
+--] [--+
|       |
|BROK_W6|
|%I1022 |
+--] [--+
|       |
|BW_7304|
|%I1024 |
+--] [--+
|
```

REFERENCE	NICKNAME	REFERENCE DESCRIPTION	REFERENCE	NICKNAME	REFERENCE DESCRIPTION
%I1001	BROKWM1	Broken wire Mon1 (Heat Ster)	%I1004	BROK_W1	Broken wire loop 1(Water bath)
%I1002	BROKWM2	Broken wire Mon2 (H2O2 bath)	%I1017	BROK_W2	Broken wire loop 2 (FFU T.L)
%I1003	BROKWM3	Broken wire Mon3 (Water bath)	%I1018	BROK_W3	Broken wire loop 3 (FFU T.R)
%I1005	BROKWM4	Broken wire Mon4 (Top AC)	%I1019	BROK_W4	Broken wire loop 4 (FFU B.L)
%I1006	BROKWM5	Broken wire Mon5 (Bottom AC)	%I1020	BROK_W5	Broken wire loop 5 (FFU B.R)
%I1007	BROKWM6	Broken wire Mon6 (Cool water)	%I1022	BROK_W6	Broken wire loop 6 (Air super)
%I1008	BROKWM7	Broken wire Mon7 (El cabinet)	%I1024	BW_7304	Broken wire ASU Const. Heat bar
%I1021	BROKWM8	Broken wire Mon8 (Steam C)			

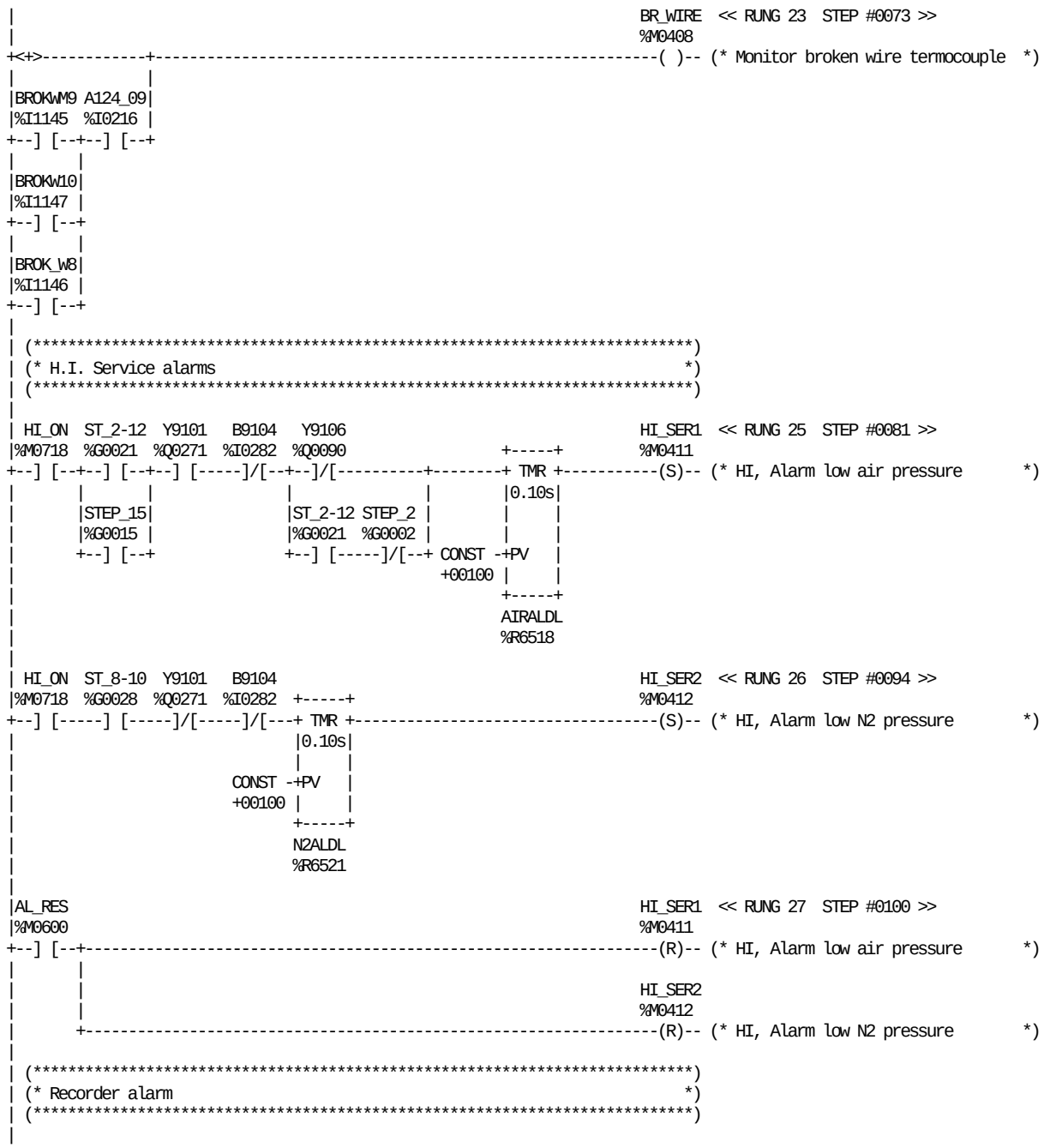

REFERENCE	NICKNAME	REFERENCE DESCRIPTION	REFERENCE	NICKNAME	REFERENCE DESCRIPTION
%I0216	A124_09	HI Option	%M0411	HI_SER1	HI, Alarm low air pressure
%R6518	AIRALDL	HI, Air pressure alarm delay	%M0412	HI_SER2	HI, Alarm low N2 pressure
%M0600	AL_RES	Alarm reset (From TPOP)	%R6521	N2ALDL	HI, N2 pressure alarm delay
%I0282	B9104	HI, Pressure guard	%G0015	STEP_15	BLOWING
%I1147	BROKW10	Broken wire Mon10 (HIheat-B9116)	%G0002	STEP_2	PREPARATION (3 MIN.)
%I1145	BROKWM9	Broken wire Mon9 (HIspray-B9106)	%G0021	ST_2-12	Ladder position 2-12
%I1146	BROK_W8	Broken wire loop 8 (HI Ster.Air)	%G0028	ST_8-10	Ladder position 8-10
%M0408	BR_WIRE	Monitor broken wire termocouple	%Q0271	Y9101	HI, Air/N2 supply
%M0718	HI_ON	HI, system setting with HI	%Q0090	Y9106	HI, Switch air in aseptic chamb.

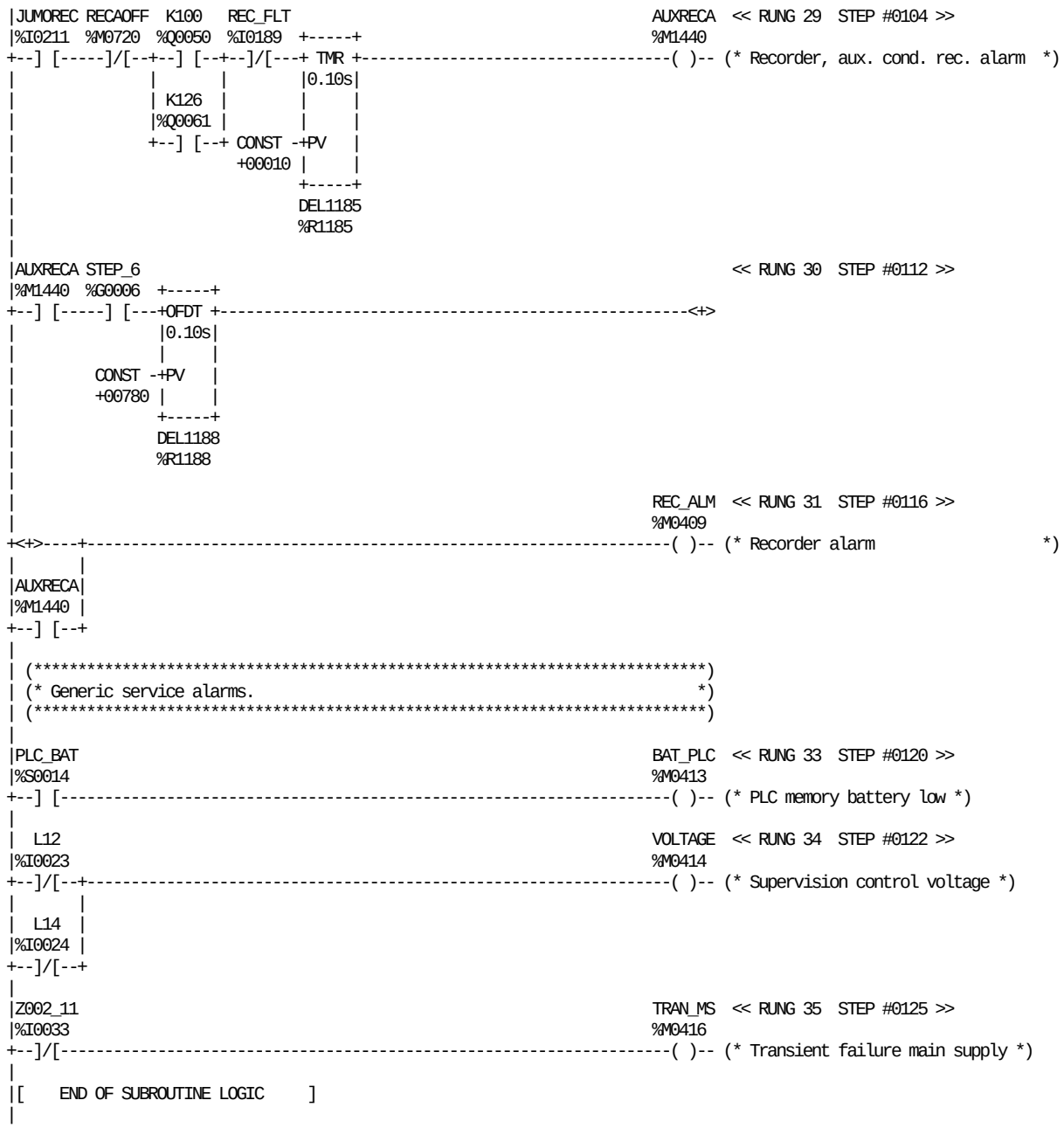

REFERENCE	NICKNAME	REFERENCE DESCRIPTION	REFERENCE	NICKNAME	REFERENCE DESCRIPTION
%M1440	AUXRECA	Recorder, aux. cond. rec. alarm	%S0014	PLC_BAT	
%M0413	BAT_PLC	PLC memory battery low	%M0720	RECAOFF	Recorder alarm disabled
%R1185	DEL1185	TMR delay for JUMO recorder kit	%M0409	REC_ALM	Recorder alarm
%R1188	DEL1188	TMR delay for JUMO recorder kit	%I0189	REC_FLT	Recorder fault
%I0211	JUMOREC	Option Jumo recorder	%G0006	STEP_6	DRYING + STEAM CLEANING
%Q0050	K100	CIP recorder	%M0416	TRAN_MS	Transient failure main supply
%Q0061	K126	Production recorder	%M0414	VOLTAGE	Supervision control voltage
%I0023	L12	Supervision voltage line1 24V DC	%I0033	Z002_11	Failure mains (transient)
%I0024	L14	Supervision voltage line2 24V DC			

This page left intentionally blank

```
|[  START LD SUBROUTINE  STERIL   ]
|
|[     VARIABLE DECLARATIONS      ]
|
|[   START OF SUBROUTINE LOGIC    ]
|
| (*************************************************************************)
| (* Check aseptic doors when the machine is sterile.                      *)
| (*************************************************************************)
|
| B1505  STER_ON                                                  DAC_CHK  << RUNG 5  STEP #0003 >>
|%I0143  %M0803                                                   %M0144
+--]/[--+--] [--+-------------------------------------------------(R)-- (* Doors AC closed when mach ster.  *)
|       |      |
|K114_1 |STEP_3 |
|%I0146 |%G0003 |
+--]/[--+--] [--+
|       |
|K112_6 |
|%I0145 |
+--]/[--+
|
| B1505  K114_1  K112_6  DAC_CHK AL_RES                           DAC_CHK  << RUNG 6  STEP #0010 >>
|%I0143  %I0146  %I0145  %M0144  %M0600                           %M0144
+--] [-----] [-----] [--+--]/[-----] [-------------------------------------(S)-- (* Doors AC closed when mach ster.  *)
|                       |
|STER_ON STEP_3         |
|%M0803  %G0003         |
+--]/[-----]/[----------+
|
| (*************************************************************************)
| (* Check of pressure and temperature in the aseptic chamber               *)
| (* during production.                                                     *)
| (*************************************************************************)
|
|STER_ON                                                          CHK_ACP  << RUNG 8  STEP #0020 >>
|%M0803  +-----+                                                  %M0142
+--] [---+ GE_ |+-----------------------------------------------------(S)-- (* Check aseptic chamber pressure   *)
|        | INT ||
|        |     ||
| DRY_T  |     ||
|%R1015 -+I1  Q++
|        |     |
| CONST -+I2   |
| +00050 +-----+
|
|ST_6-11                                                          CHK_ACP  << RUNG 9  STEP #0023 >>
|%G0025                                                           %M0142
+--]/[-----------------------------------------------------------------(R)-- (* Check aseptic chamber pressure   *)
|
|CHK_ACP  B1103   S003                                            PRES_AS  << RUNG 10  STEP #0025 >>
|%M0142  %I0112  %I0095                                           %M0433
+--] [-----]/[-----]/[-------------------------------------------------(S)-- (* Pressure aseptic chamber *)
|
|AL_RES                                                           PRES_AS  << RUNG 11  STEP #0029 >>
|%M0600                                                           %M0433
+--] [--+-----------------------------------------------------------(R)-- (* Pressure aseptic chamber *)
|       |
|STEP_2 |
|%G0002 |
+--] [--+
|
```

REFERENCE	NICKNAME	REFERENCE DESCRIPTION	REFERENCE	NICKNAME	REFERENCE DESCRIPTION
%M0600	AL_RES	Alarm reset (From TPOP)	%I0146	K114_1	Front doors closed AC
%I0112	B1103	Air pressure aseptic chamber	%M0433	PRES_AS	Pressure aseptic chamber
%I0143	B1505	Top front door AC	%I0095	S003	Service switch
%M0142	CHK_ACP	Check aseptic chamber pressure	%G0002	STEP_2	PREPARATION (3 MIN.)
%M0144	DAC_CHK	Doors AC closed when mach ster.	%G0003	STEP_3	TUBE SEALING
%R1015	DRY_T	Draying timer	%M0803	STER_ON	Steril system on
%I0145	K112_6	Top door closed aseptic chamber	%G0025	ST_6-11	Ladder position 6-11

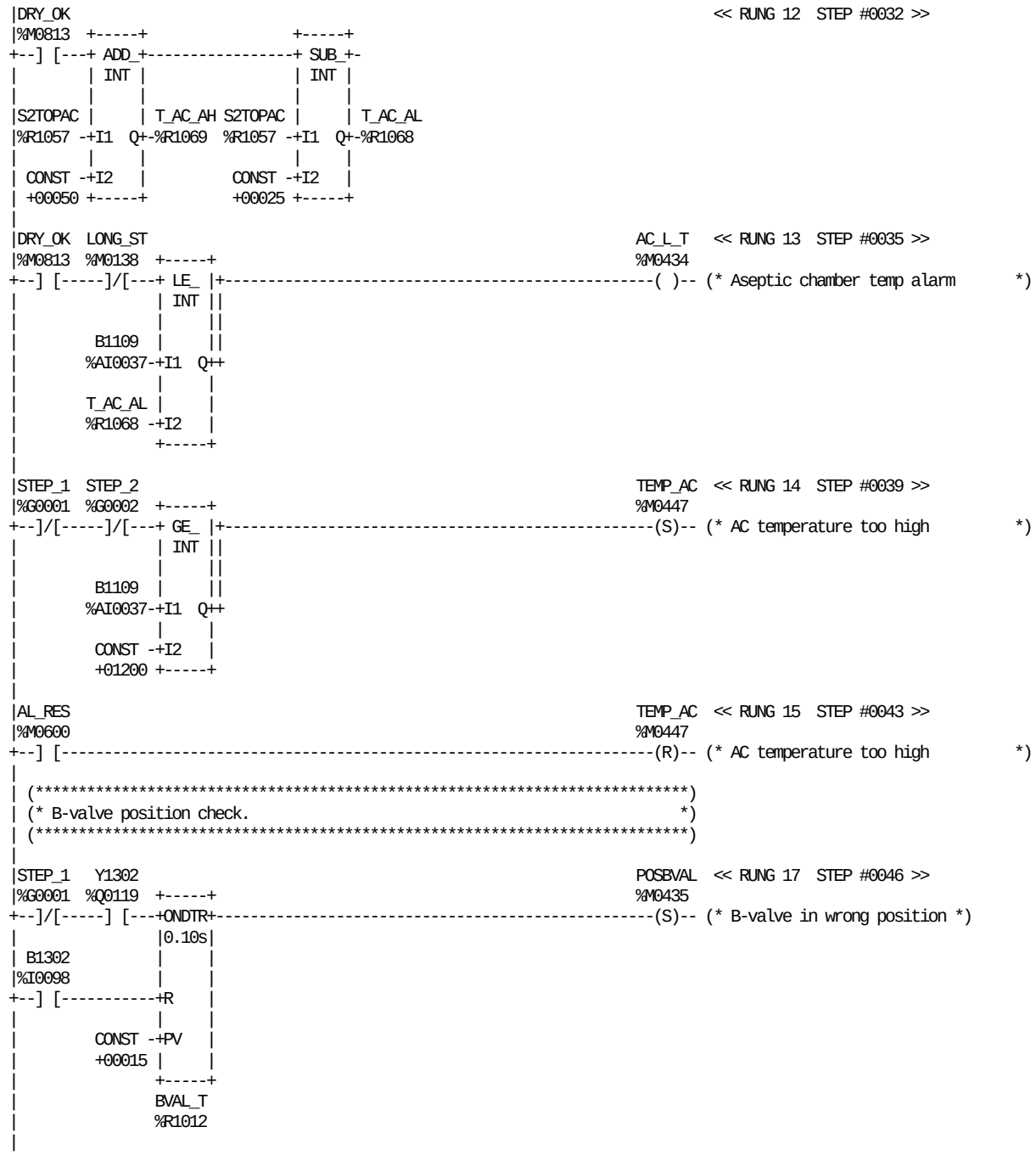

REFERENCE	NICKNAME	REFERENCE DESCRIPTION	REFERENCE	NICKNAME	REFERENCE DESCRIPTION
%M0434	AC_L_T	Aseptic chamber temp alarm	%R1057	S2TOPAC	Setvalue 2 top aseptic chamber
%M0600	AL_RES	Alarm reset (From TPOP)	%G0001	STEP_1	STANDBY
%AI0037	B1109	Temp top Aseptic Chamber	%G0002	STEP_2	PREPARATION (3 MIN.)
%I0098	B1302	B-valve position sensor	%M0447	TEMP_AC	AC temperature too high
%R1012	BVAL_T	B-valve check position timer	%R1069	T_AC_AH	Top aseptic chamber high limit
%M0813	DRY_OK	Drying ready	%R1068	T_AC_AL	Top aseptic chamber low limit
%M0138	LONG_ST	To long stop in sterile mode	%Q0119	Y1302	B-valve
%M0435	POSBVAL	B-valve in wrong position			

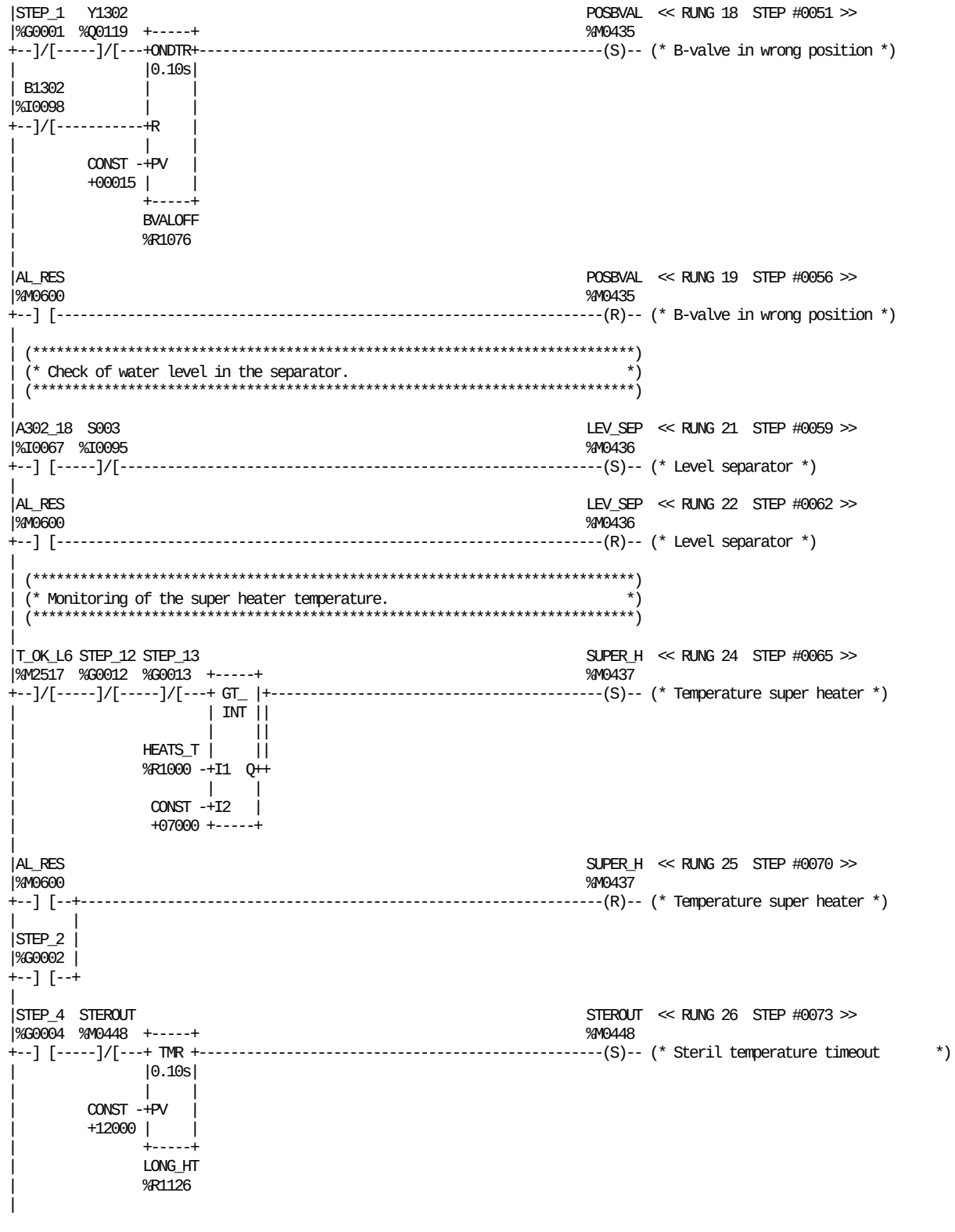

REFERENCE	NICKNAME	REFERENCE DESCRIPTION	REFERENCE	NICKNAME	REFERENCE DESCRIPTION
%I0067	A302_18	Level water separator	%G0001	STEP_1	STANDBY
%M0600	AL_RES	Alarm reset (From TPOP)	%G0012	STEP_12	VENTING
%I0098	B1302	B-valve position sensor	%G0013	STEP_13	OPEN DOORS, CUT TUBE
%R1076	BVALOFF	B_valve off offdelay	%G0002	STEP_2	PREPARATION (3 MIN.)
%R1000	HEATS_T	Heat sterilizing timer	%G0004	STEP_4	HEAT STERILIZATION
%M0436	LEV_SEP	Level separator	%M0448	STEROUT	Steril temperature timeout
%R1126	LONG_HT	TMR heating phase too long	%M0437	SUPER_H	Temperature super heater
%M0435	POSBVAL	B-valve in wrong position	%M2517	T_OK_L6	Temp ok Loop 6
%I0095	S003	Service switch	%Q0119	Y1302	B-valve

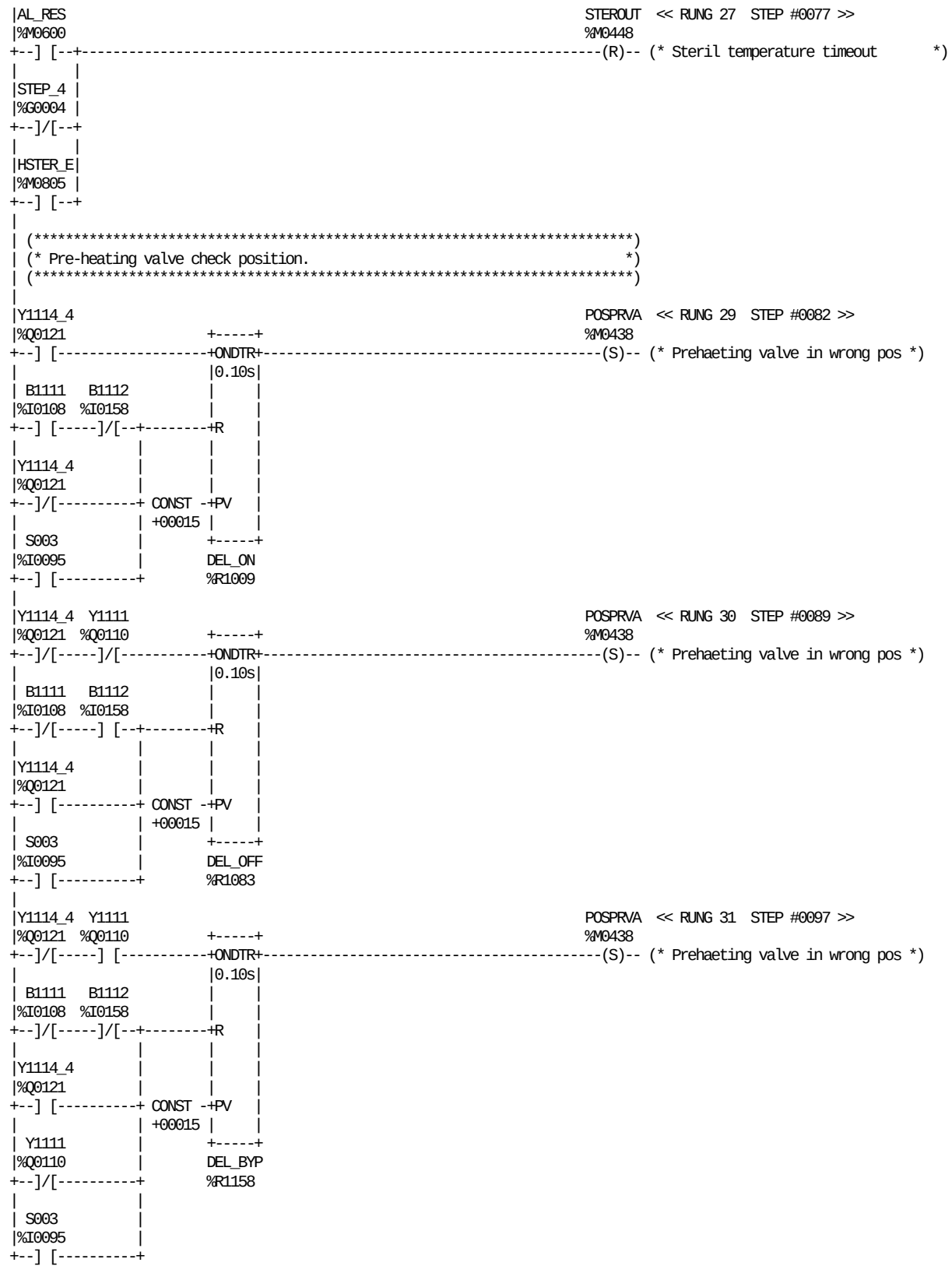

REFERENCE	NICKNAME	REFERENCE DESCRIPTION	REFERENCE	NICKNAME	REFERENCE DESCRIPTION
%M0600	AL_RES	Alarm reset (From TPOP)	%M0438	POSPRVA	Prehaeting valve in wrong pos
%I0108	B1111	Preheating valve steriliz.pos.	%I0095	S003	Service switch
%I0158	B1112	Preheating valve in bypass pos.	%G0004	STEP_4	HEAT STERILIZATION
%R1158	DEL_BYP	Preheating valve bypass delay	%M0448	STEROUT	Steril temperature timeout
%R1083	DEL_OFF	Preheating valve off delay	%Q0110	Y1111	Preheating valve
%R1009	DEL_ON	Preheating valve on delay	%Q0121	Y1114_4	Preheating valve step 1
%M0805	HSTER_E	Heat sterilizing end			

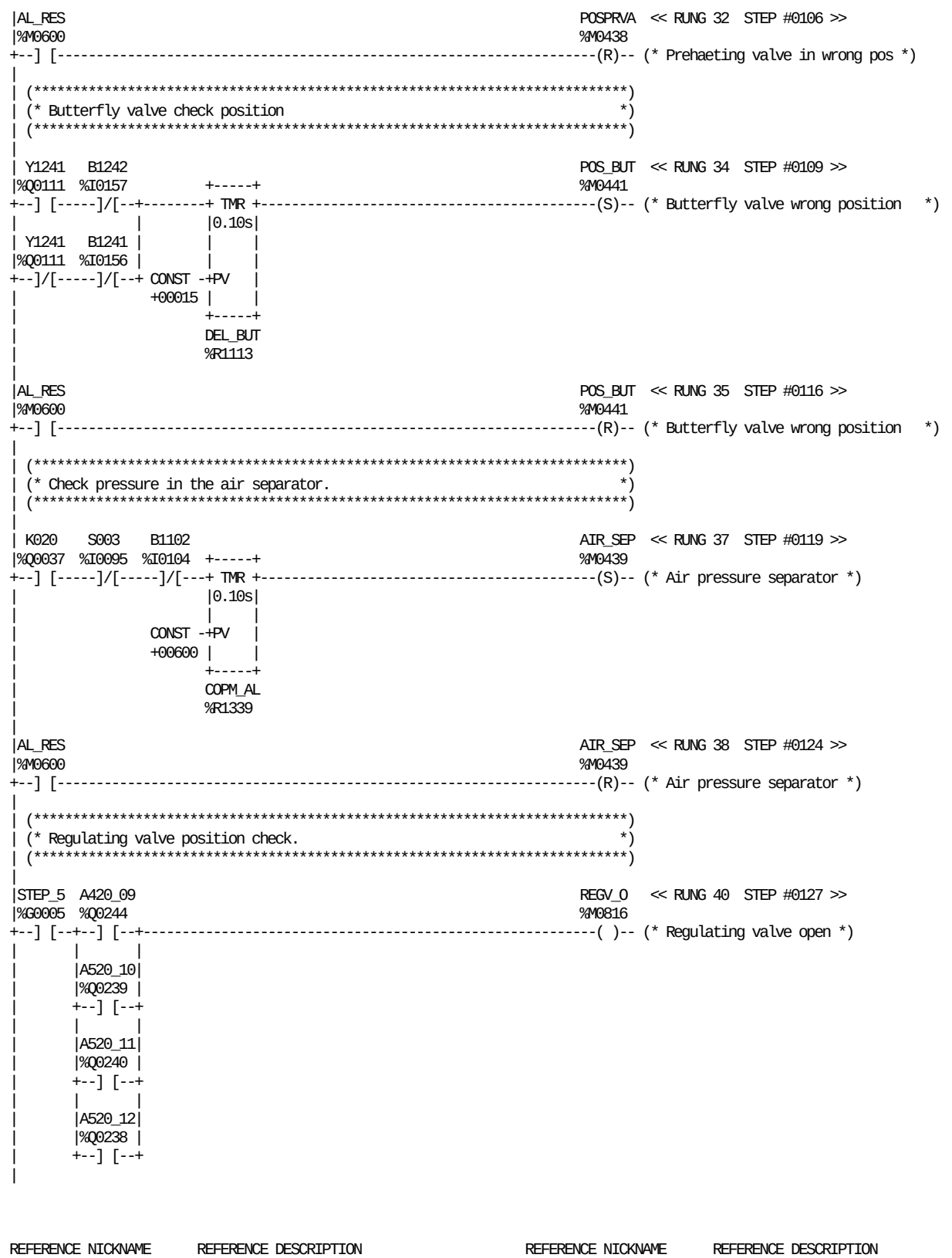

REFERENCE	NICKNAME	REFERENCE DESCRIPTION
%Q0244	A420_09	TMCC FCS sterilisation
%Q0239	A520_10	TMCC FCS Production
%Q0240	A520_11	TMCC FCS Cleaning
%Q0238	A520_12	TMCC FCS Prefilling
%M0439	AIR_SEP	Air pressure separator
%M0600	AL_RES	Alarm reset (From TPOP)
%I0104	B1102	Air pressure separator
%I0156	B1241	Butterfly valve open
%I0157	B1242	Butterfly valve closed

REFERENCE	NICKNAME	REFERENCE DESCRIPTION
%R1339	COPM_AL	Compressor flow alarm
%R1113	DEL_BUT	TMR butterfly valve alarm
%Q0037	K020	Air system compressor
%M0438	POSPRVA	Prehaeting valve in wrong pos
%M0441	POS_BUT	Butterfly valve wrong position
%M0816	REGV_O	Regulating valve open
%I0095	S003	Service switch
%G0005	STEP_5	SPRAYING
%Q0111	Y1241	Butterfly valve

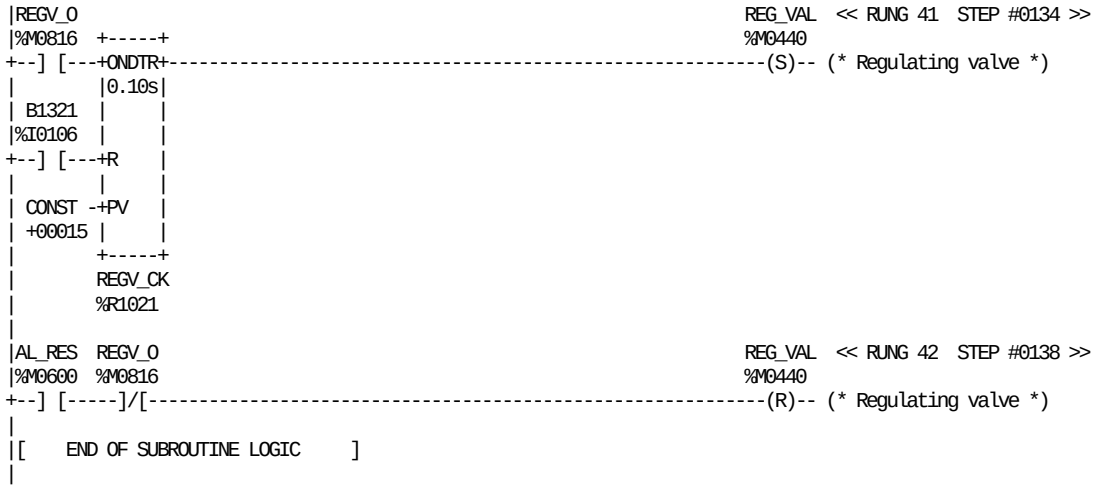

REFERENCE	NICKNAME	REFERENCE DESCRIPTION	REFERENCE	NICKNAME	REFERENCE DESCRIPTION
%M0600	AL_RES	Alarm reset (From TPOP)	%M0816	REGV_O	Regulating valve open
%I0106	B1321	Regulating valve position	%M0440	REG_VAL	Regulating valve
%R1021	REGV_CK	Regulating valve open timer			

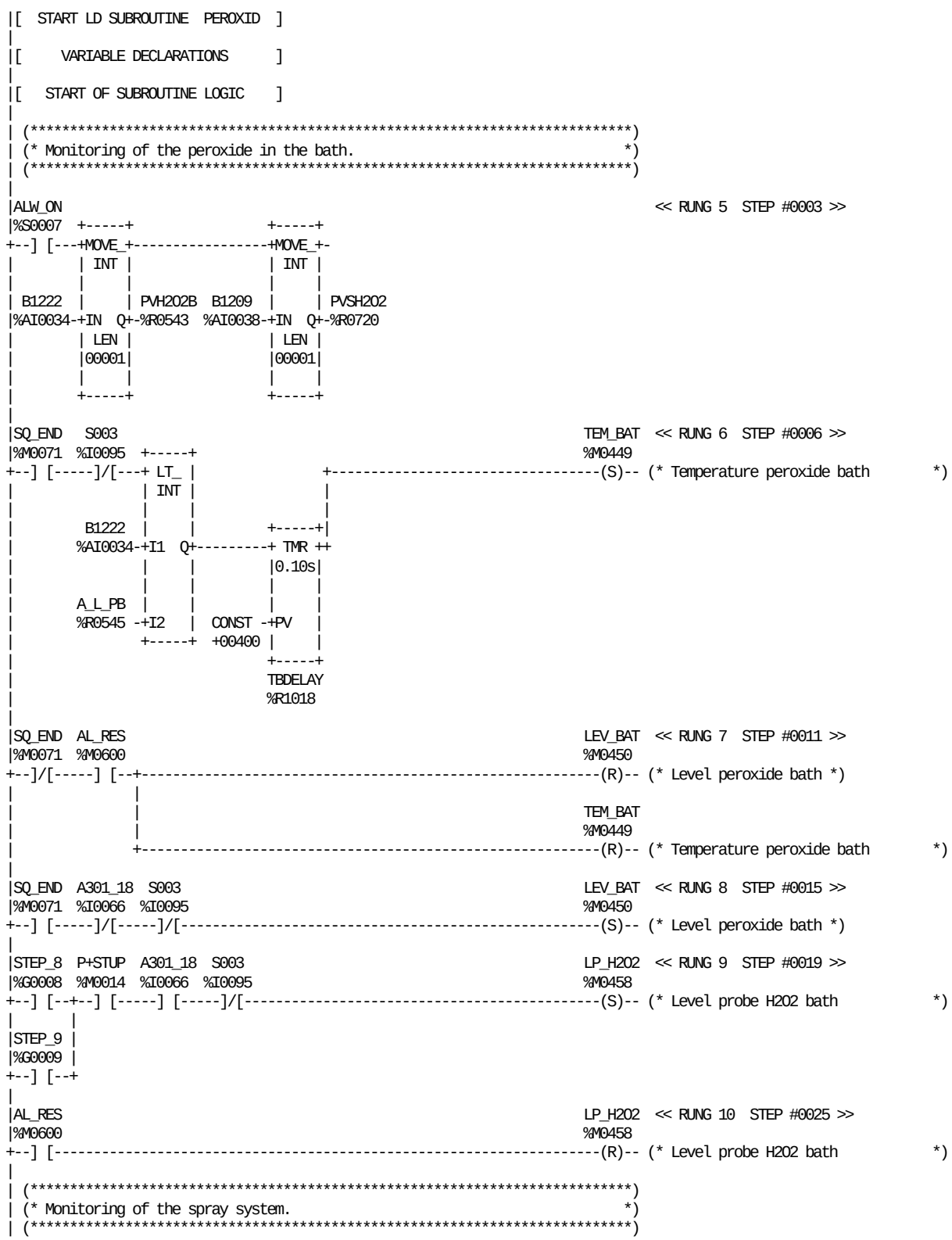

REFERENCE	NICKNAME	REFERENCE DESCRIPTION	REFERENCE	NICKNAME	REFERENCE DESCRIPTION
%I0066	A301_18	Level peroxide bath	%R0543	PVH2O2B	Temperature H2O2 bath (TPOP)
%S0007	ALW_ON		%R0720	PVSH2O2	Separate peroxide water (TPOP)
%M0600	AL_RES	Alarm reset (From TPOP)	%I0095	S003	Service switch
%R0545	A_L_PB	Alarm low temp. H2O2 bath (TPOP)	%M0071	SQ_END	Start sequence ended
%AI0038	B1209	Separate peroxide water	%G0008	STEP_8	FLAPS + H2O2 TEMPERATURE
%AI0034	B1222	Peroxide bath temperature	%G0009	STEP_9	MOTOR START
%M0450	LEV_BAT	Level peroxide bath	%R1018	TBDELAY	Temperature peroxide bath delay
%M0458	LP_H2O2	Level probe H2O2 bath	%M0449	TEM_BAT	Temperature peroxide bath
%M0014	P+STUP	Step up positive pulse			

```
| (*************************************************************************)
| (* If the filling sequence is to fast (less than 3.0 sec.) or to slow      *)
| (* (more than 10 sec.) we jump back to Tight tube.                         *)
| (*************************************************************************)
|
|STEP_5  A300_18                                                  FILFAST  << RUNG 13  STEP #0029 >>
|%G0005  %I0065  +-----+                                          %M0536
+--] [-----] [---+RANGE|+-----------------------------------------------(S)-- (* Filling spray tank fast         *)
|                | INT ||
|                |     ||
|         CONST -+L1  Q++
|         +00001 |     |
|                |     |
|         CONST -+L2   |
|         +00030 |     |
|                |     |
|        SPRAY_T |     |
|        %R1006 -+IN   |
|                +-----+
|
|STEP_5  A300_18                                                  FILSLOW  << RUNG 14  STEP #0033 >>
|%G0005  %I0065  +-----+                                          %M0452
+--] [-----]/[---+RANGE|+-----------------------------------------------(S)-- (* Filling spray tank slow         *)
|                | INT ||
|                |     ||
|         CONST -+L1  Q++
|         +00100 |     |
|                |     |
|         CONST -+L2   |
|         +00120 |     |
|                |     |
|        SPRAY_T |     |
|        %R1006 -+IN   |
|                +-----+
|
| (*************************************************************************)
| (* If the spray is to slow (more than 45 sec. after the start             *)
| (* of the spray sequence) or to fast (less than 30 sec. after the         *)
| (* start of the spray sequnce) the sequence is stopped, thw machine goes  *)
| (* directly in Drying and after in Venting and then step 0.                *)
| (*************************************************************************)
|
|STEP_5  A300_18                                                  SPRFAST  << RUNG 16  STEP #0038 >>
|%G0005  %I0065  +-----+                                          %M0537
+--] [-----]/[---+RANGE|+-----------------------------------------------(S)-- (* Spary fast --> go to Venting    *)
|                | INT ||
|                |     ||
|         CONST -+L1  Q++
|         +00120 |     |
|                |     |
|         CONST -+L2   |
|         +00300 |     |
|                |     |
|        SPRAY_T |     |
|        %R1006 -+IN   |
|                +-----+
|
```

REFERENCE	NICKNAME	REFERENCE DESCRIPTION	REFERENCE	NICKNAME	REFERENCE DESCRIPTION
%I0065	A300_18	Level peroxide spray tank	%R1006	SPRAY_T	Spray sequence timer
%M0536	FILFAST	Filling spray tank fast	%M0537	SPRFAST	Spary fast --> go to Venting
%M0452	FILSLOW	Filling spray tank slow	%G0005	STEP_5	SPRAYING

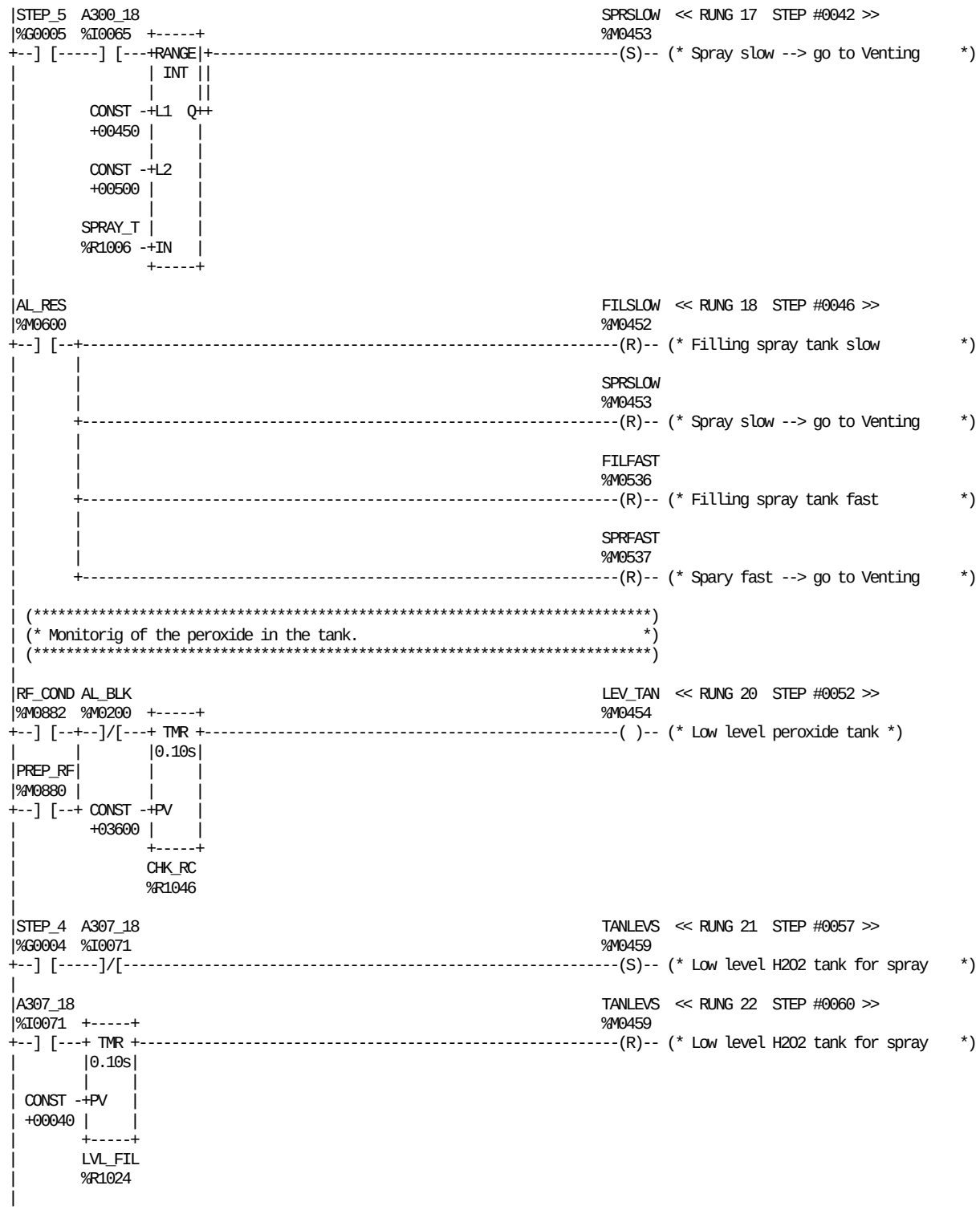

REFERENCE	NICKNAME	REFERENCE DESCRIPTION	REFERENCE	NICKNAME	REFERENCE DESCRIPTION
%I0065	A300_18	Level peroxide spray tank	%M0880	PREP_RF	Refilling command in preparation
%I0071	A307_18	Safety level peroxide tank	%M0882	RF_COND	Refilling condition in prod.
%M0200	AL_BLK	Alarm block active (From TPOP)	%R1006	SPRAY_T	Spray sequence timer
%M0600	AL_RES	Alarm reset (From TPOP)	%M0537	SPRFAST	Spary fast --> go to Venting
%R1046	CHK_RC	Check ringcontainer empty	%M0453	SPRSLOW	Spray slow --> go to Venting
%M0536	FILFAST	Filling spray tank fast	%G0004	STEP_4	HEAT STERILIZATION
%M0452	FILSLOW	Filling spray tank slow	%G0005	STEP_5	SPRAYING
%M0454	LEV_TAN	Low level peroxide tank	%M0459	TANLEVS	Low level H2O2 tank for spray
%R1024	LVL_FIL	H2O2 tank level filter			

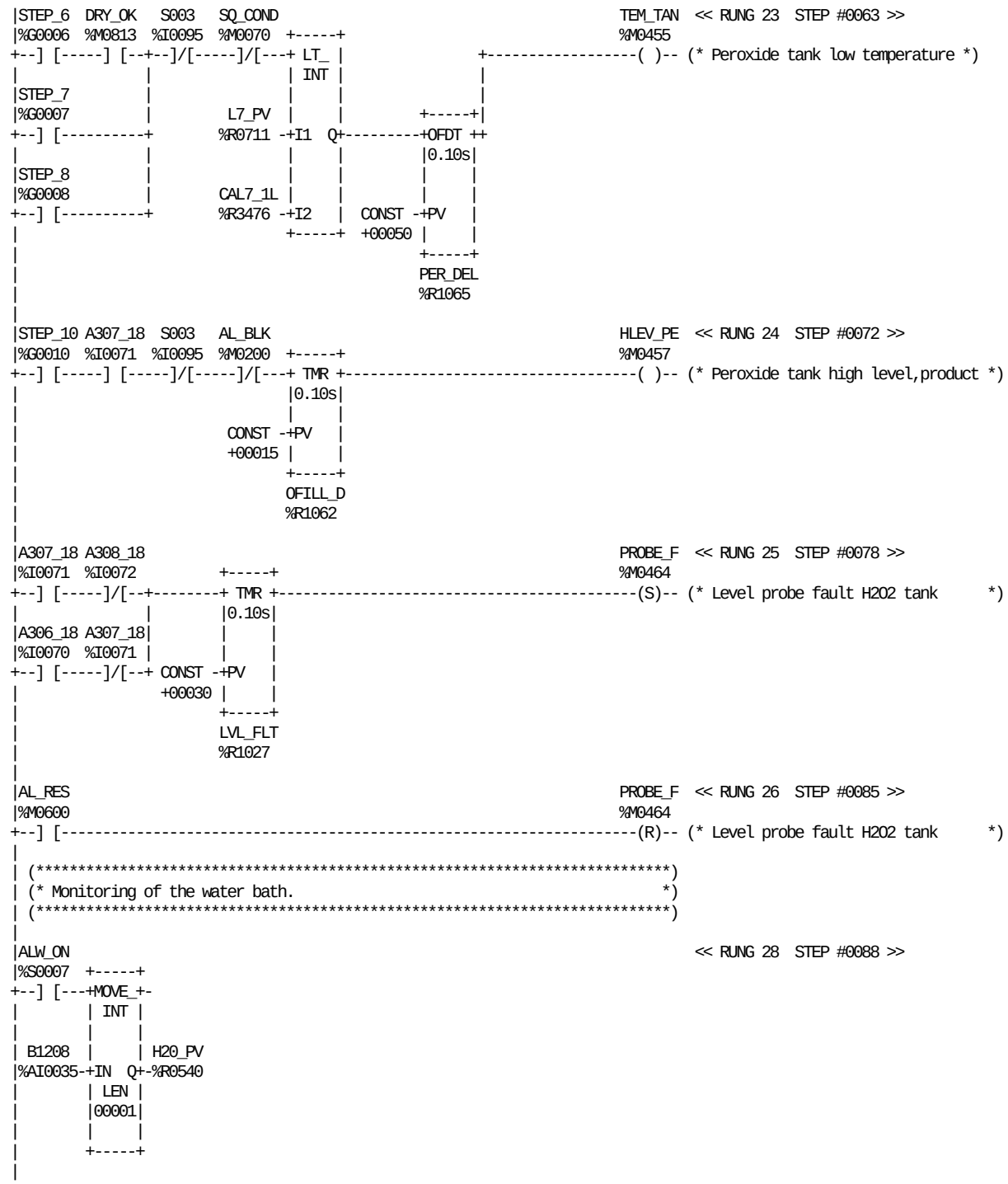

REFERENCE	NICKNAME	REFERENCE DESCRIPTION
%I0070	A306_18	Level peroxide tank preheating
%I0071	A307_18	Safety level peroxide tank
%I0072	A308_18	Level peroxide tank production
%S0007	ALW_ON	
%M0200	AL_BLK	Alarm block active (From TPOP)
%M0600	AL_RES	Alarm reset (From TPOP)
%AI0035	B1208	Water temperature
%R3476	CAL7_1L	Calc val Al_Lim loop 7 SV1 Low
%M0813	DRY_OK	Drying ready
%R0540	H20_PV	Temperature water bath (TPOP)
%M0457	HLEV_PE	Peroxide tank high level,product
%R0711	L7_PV	Process value loop 7 TPOP<-->

REFERENCE	NICKNAME	REFERENCE DESCRIPTION
%R1027	LVL_FLT	H2O2 tank probe fault filter
%R1062	OFILL_D	Overfilling per.tank in prod.
%R1065	PER_DEL	Dealy alarm peroxide tank
%M0464	PROBE_F	Level probe fault H2O2 tank
%I0095	S003	Service switch
%M0070	SQ_COND	Start sequence conditions
%G0010	STEP_10	PRODUCTION
%G0006	STEP_6	DRYING + STEAM CLEANING
%G0007	STEP_7	SIGNAL TO STERILIZER
%G0008	STEP_8	FLAPS + H2O2 TEMPERATURE
%M0455	TEM_TAN	Peroxide tank low temperature

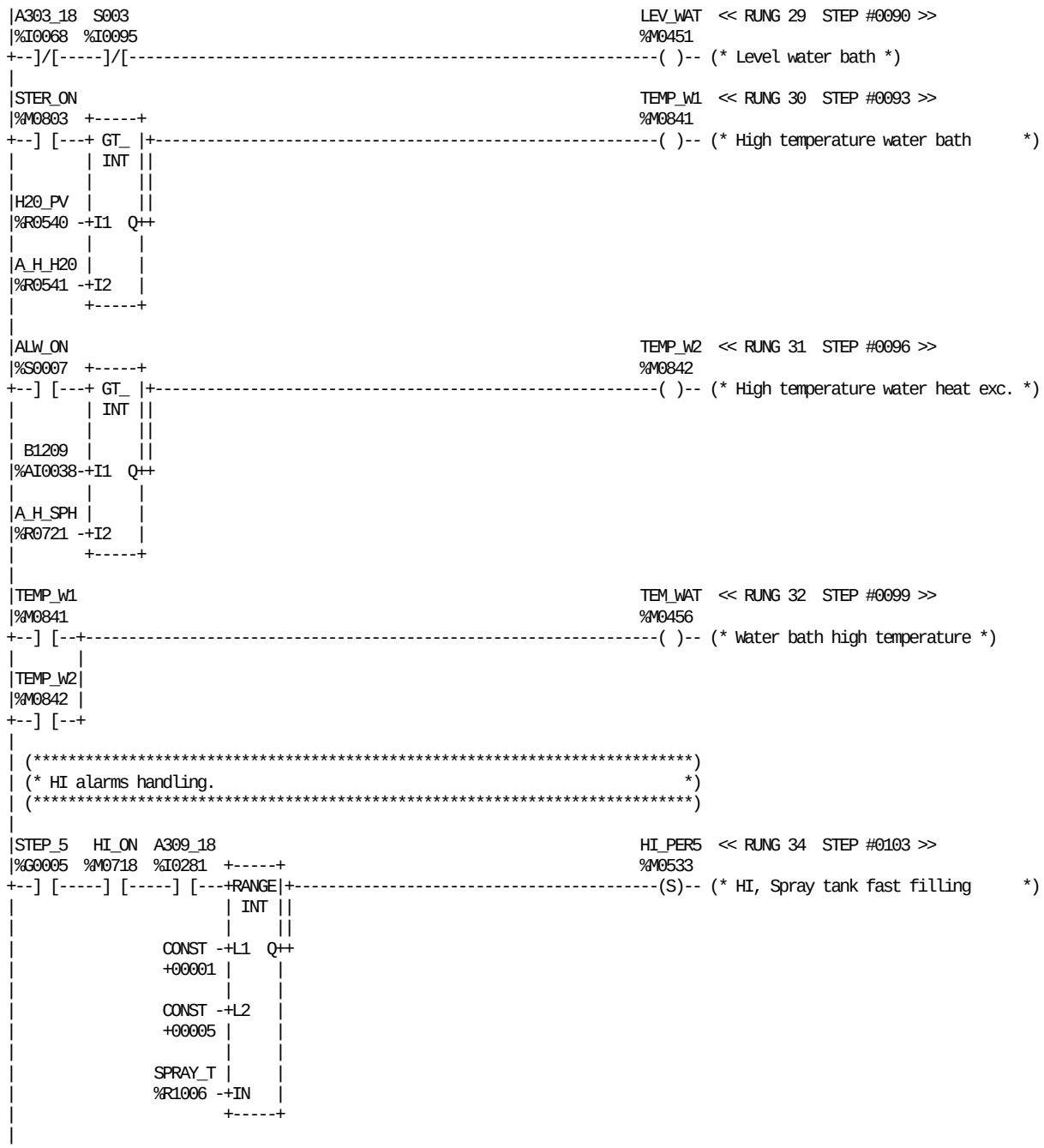

REFERENCE	NICKNAME	REFERENCE DESCRIPTION	REFERENCE	NICKNAME	REFERENCE DESCRIPTION
%I0068	A303_18	Level water bath	%M0451	LEV_WAT	Level water bath
%I0281	A309_18	HI, Level peroxide tank	%I0095	S003	Service switch
%S0007	ALW_ON		%R1006	SPRAY_T	Spray sequence timer
%R0541	A_H_H20	Alarm high temp water bath(TPOP)	%G0005	STEP_5	SPRAYING
%R0721	A_H_SPH	Alarm high temp.sep.water(TPOP)	%M0803	STER_ON	Steril system on
%AI0038	B1209	Separate peroxide water	%M0841	TEMP_W1	High temperature water bath
%R0540	H20_PV	Temperature water bath (TPOP)	%M0842	TEMP_W2	High temperature water heat exc.
%M0718	HI_ON	HI, system setting with HI	%M0456	TEM_WAT	Water bath high temperature
%M0533	HI_PER5	HI, Spray tank fast filling			

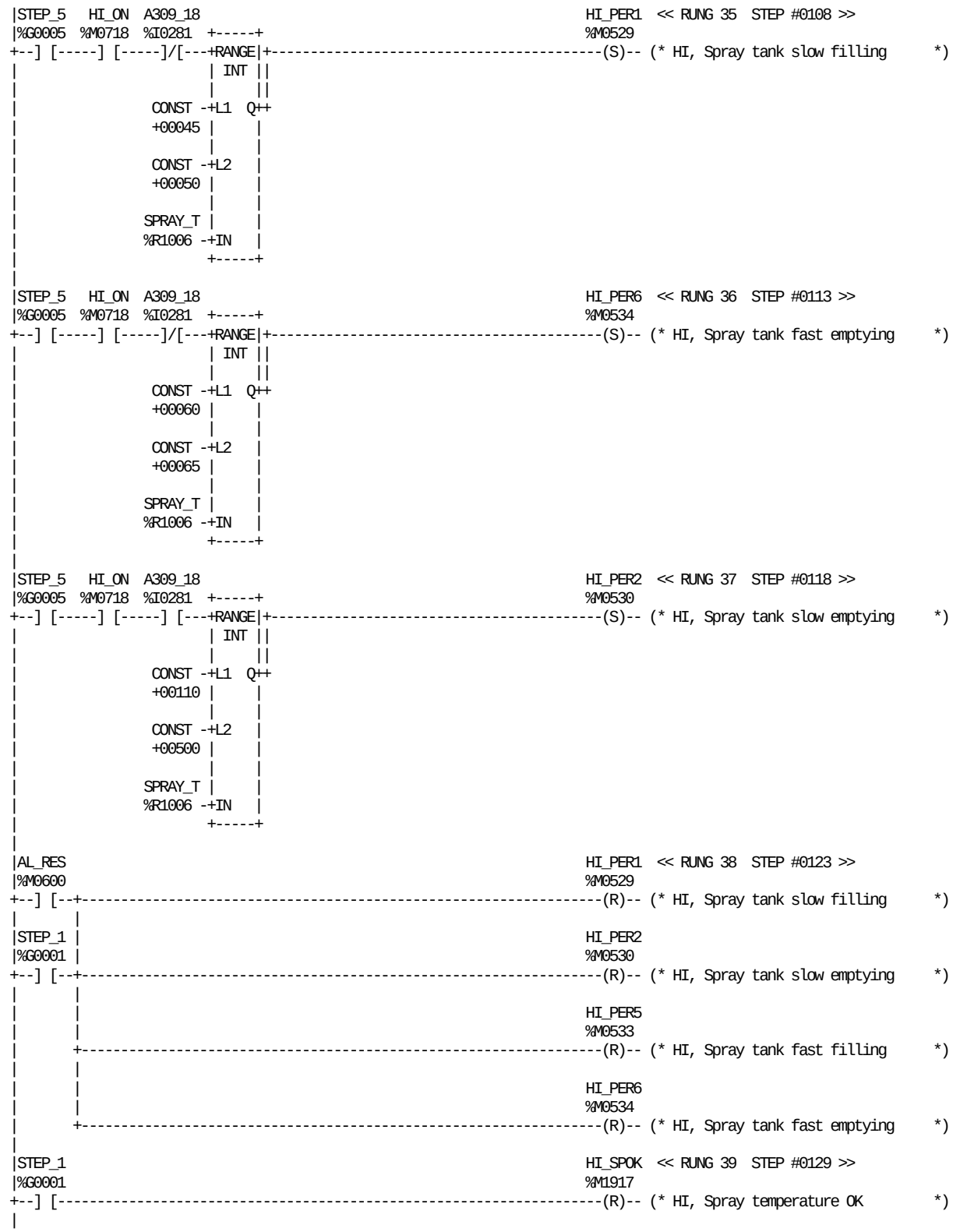

REFERENCE	NICKNAME	REFERENCE DESCRIPTION	REFERENCE	NICKNAME	REFERENCE DESCRIPTION
%I0281	A309_18	HI, Level peroxide tank	%M0534	HI_PER6	HI, Spray tank fast emptying
%M0600	AL_RES	Alarm reset (From TPOP)	%M1917	HI_SPOK	HI, Spray temperature OK
%M0718	HI_ON	HI, system setting with HI	%R1006	SPRAY_T	Spray sequence timer
%M0529	HI_PER1	HI, Spray tank slow filling	%G0001	STEP_1	STANDBY
%M0530	HI_PER2	HI, Spray tank slow emptying	%G0005	STEP_5	SPRAYING
%M0533	HI_PER5	HI, Spray tank fast filling			

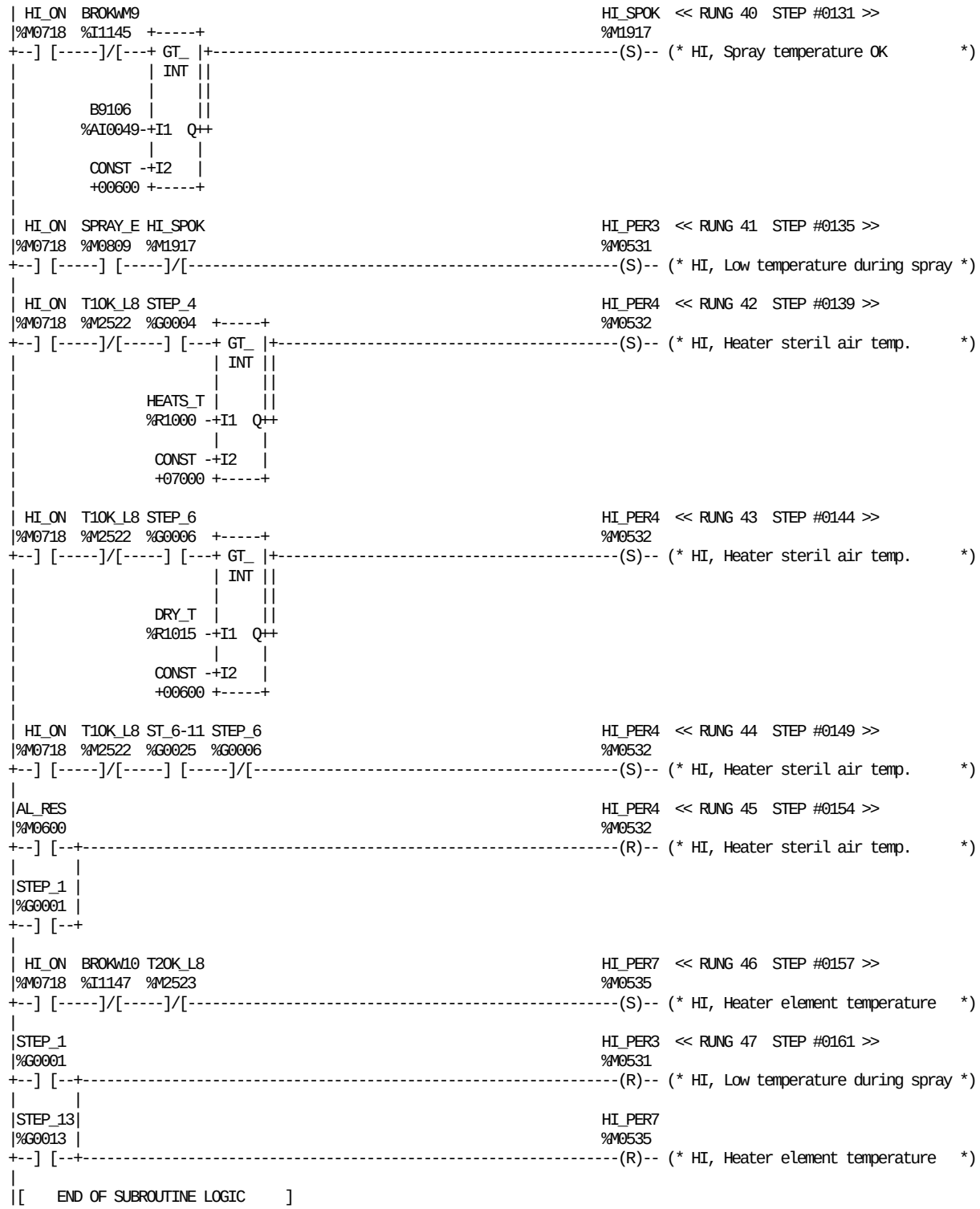

REFERENCE	NICKNAME	REFERENCE DESCRIPTION
%M0600	AL_RES	Alarm reset (From TPOP)
%AI0049	B9106	HI, Temp. monitor spray
%I1147	BROKW10	Broken wire Mon10 (HIheat-B9116)
%I1145	BROKWM9	Broken wire Mon9 (HIspray-B9106)
%R1015	DRY_T	Draying timer
%R1000	HEATS_T	Heat sterilizing timer
%M0718	HI_ON	HI, system setting with HI
%M0531	HI_PER3	HI, Low temperature during spray
%M0532	HI_PER4	HI, Heater steril air temp.
%M0535	HI_PER7	HI, Heater element temperature
%M1917	HI_SPOK	HI, Spray temperature OK
%M0809	SPRAY_E	Spray end
%G0001	STEP_1	STANDBY
%G0013	STEP_13	OPEN DOORS, CUT TUBE
%G0004	STEP_4	HEAT STERILIZATION
%G0006	STEP_6	DRYING + STEAM CLEANING
%G0025	ST_6-11	Ladder position 6-11
%M2522	T1OK_L8	HI,Air heater Temp OK Loop 8
%M2523	T2OK_L8	HI,Heater element Temp OK Loop 8

This page left intentionally blank

```
|[  START LD SUBROUTINE  ASU_AL   ]
|
|[     VARIABLE DECLARATIONS      ]
|
|[   START OF SUBROUTINE LOGIC    ]
|
| (*************************************************************************)
| (* Rotation monitor barcode ASU                                         *)
| (*************************************************************************)
|
|A506_14                                                          << RUNG 5  STEP #0003 >>
|%Q0201  +-----+
+--] [---+MOVE_+-
|        | INT |
|        |     |
|        |     | T_RMBCD
| CONST -+IN  Q+-%R1659
| +00005 | LEN |
|        |00001|
|        |     |
|        +-----+
|
|A506_13                                                          << RUNG 6  STEP #0005 >>
|%Q0202                  +-----+
+--] [--+-------+--------+MOVE_+-
|       |       |        | INT |
|STEP_2 |       |        |     |
|%G0002 |       |        |     | T_RMBCD
+--] [--+       | CONST -+IN  Q+-%R1659
|               | +00020 | LEN |
|SPL_SPD SPL_ON |        |00001|
|%M1395  %M1389 |        |     |
+--] [-----] [--+        +-----+
|
|A412_5                                                   DEL_LP   << RUNG 7  STEP #0011 >>
|%Q0084  +-----+                                          %M1302
+--] [---+ TMR +-----------------------------------------------------------( )-- (* Loop motor enable (delayed)      *)
|        |0.01s|
|        |     |
| CONST -+PV   |
| +00030 |     |
|        +-----+
|        LP_DEL
|        %R1756
|
|A412_5                                                   DELLPST  << RUNG 8  STEP #0014 >>
|%Q0084  +-----+                                          %M1307
+--] [---+OFDT +-----------------------------------------------------------( )-- (* Loop motor enable (stop delayed) *)
|        |0.10s|
|        |     |
| CONST -+PV   |
| +00050 |     |
|        +-----+
|        DEL1759
|        %R1759
|
|AL_RES                                                   MON_BAR  << RUNG 9  STEP #0017 >>
|%M0600                                                   %M0465
+--] [-------------------------------------------------------------------(R)-- (* Rotation monitor barcode ASU *)
|
```

REFERENCE	NICKNAME	REFERENCE DESCRIPTION	REFERENCE	NICKNAME	REFERENCE DESCRIPTION
%Q0084	A412_5	Enable drive loop	%R1756	LP_DEL	Timer delayed signal Loop enable
%Q0202	A506_13	DMC Main Motor Low speed	%M0465	MON_BAR	Rotation monitor barcode ASU
%Q0201	A506_14	DMC Main Motor High speed	%M1389	SPL_ON	ASU, splice sequence going on
%M0600	AL_RES	Alarm reset (From TPOP)	%M1395	SPL_SPD	ASU, low speed before splice
%R1759	DEL1759	ASU, delay	%G0002	STEP_2	PREPARATION (3 MIN.)
%M1307	DELLPST	Loop motor enable (stop delayed)	%R1659	T_RMBCD	Time base barcode check ASU
%M1302	DEL_LP	Loop motor enable (delayed)			

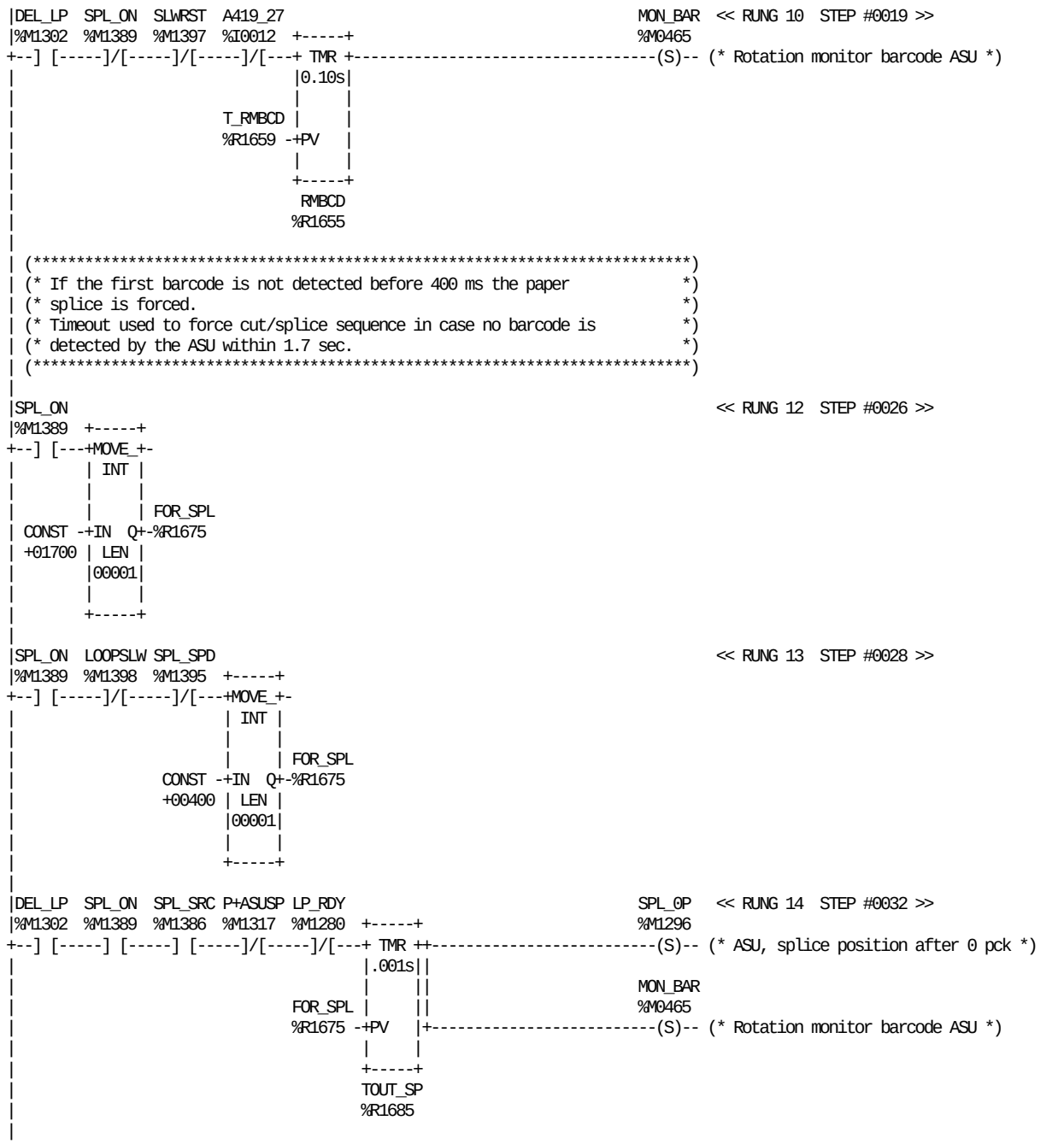

REFERENCE	NICKNAME	REFERENCE DESCRIPTION	REFERENCE	NICKNAME	REFERENCE DESCRIPTION
%I0012	A419_27	Design signal ASU (Barcode)	%M1397	SLWRST	ASU, slow restart after splice
%M1302	DEL_LP	Loop motor enable (delayed)	%M1296	SPL_0P	ASU, splice position after 0 pck
%R1675	FOR_SPL	Forced paper splice timing	%M1389	SPL_ON	ASU, splice sequence going on
%M1398	LOOPSLW	ASU, loop slow speed barcode cnt	%M1395	SPL_SPD	ASU, low speed before splice
%M1280	LP_RDY	Loop ready	%M1386	SPL_SRC	ASU, splice position search
%M0465	MON_BAR	Rotation monitor barcode ASU	%R1685	TOUT_SP	Timeout splice in design
%M1317	P+ASUSP	Pulse + ASU splice speed	%R1659	T_RMBCD	Time base barcode check ASU
%R1655	RMBCD	Bar code monitor register			

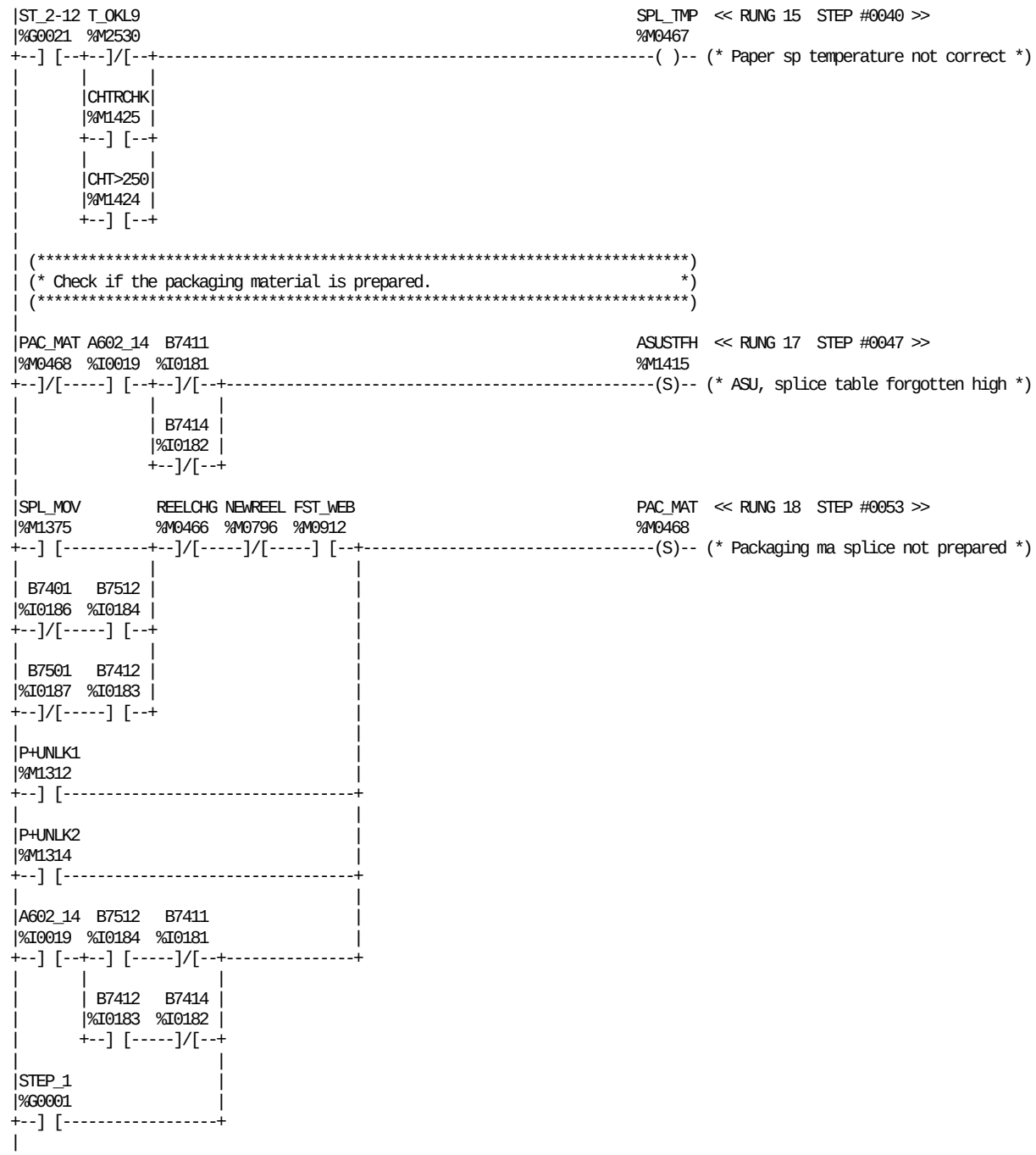

REFERENCE	NICKNAME	REFERENCE DESCRIPTION	REFERENCE	NICKNAME	REFERENCE DESCRIPTION
%I0019	A602_14	Safety monitors C	%M0796	NEWREEL	ASU, finish splice with new reel
%M1415	ASUSTFH	ASU, splice table forgotten high	%M1312	P+UNLK1	Pulse + unlock material reel 1
%I0186	B7401	Material reel 1 empty	%M1314	P+UNLK2	Pulse + unlock material reel 2
%I0181	B7411	Material holder 1 down	%M0468	PAC_MAT	Packaging ma splice not prepared
%I0183	B7412	Side feeder position 1	%M0466	REELCHG	ASU, make splice with new reel
%I0182	B7414	Material holder 2 down	%M1375	SPL_MOV	ASU, side feeder allowed moving
%I0187	B7501	Material reel 2 epmty	%M0467	SPL_TMP	Paper sp temperature not correct
%I0184	B7512	Side feeder position 2	%G0001	STEP_1	STANDBY
%M1424	CHT>250	ASU, Constant Heat temp. (>250)	%G0021	ST_2-12	Ladder position 2-12
%M1425	CHTRCHK	ASU, CH bar Temp. raise CHK fail	%M2530	T_OKL9	Temp ok Loop 9
%M0912	FST_WEB	Paper web fast speed			

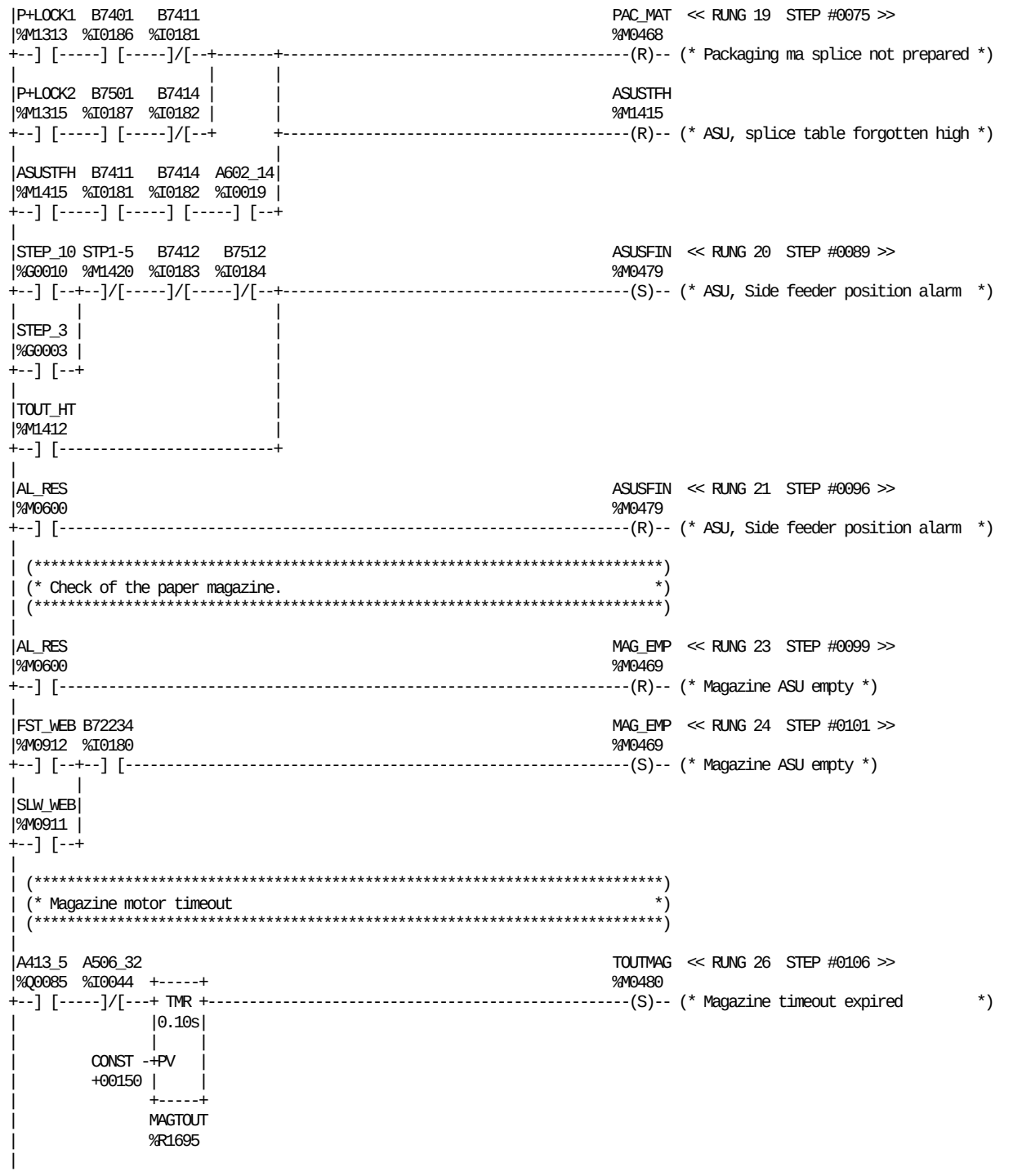

REFERENCE	NICKNAME	REFERENCE DESCRIPTION	REFERENCE	NICKNAME	REFERENCE DESCRIPTION
%Q0085	A413_5	Enable drive magazine	%M0912	FST_WEB	Paper web fast speed
%I0044	A506_32	DMC Main motor running	%R1695	MAGTOUT	Magazine motor timeout
%I0019	A602_14	Safety monitors C	%M0469	MAG_EMP	Magazine ASU empty
%M0600	AL_RES	Alarm reset (From TPOP)	%M1313	P+LOCK1	Pulse + lock material reel 1
%M0479	ASUSFIN	ASU, Side feeder position alarm	%M1315	P+LOCK2	Pulse + lock material reel 2
%M1415	ASUSTFH	ASU, splice table forgotten high	%M0468	PAC_MAT	Packaging ma splice not prepared
%I0180	B72234	Magazine empty	%M0911	SLW_WEB	Paper web slow speed
%I0186	B7401	Material reel 1 empty	%G0010	STEP_10	PRODUCTION
%I0181	B7411	Material holder 1 down	%G0003	STEP_3	TUBE SEALING
%I0183	B7412	Side feeder position 1	%M1420	STP1-5	Paper splice between step 1 to 5
%I0182	B7414	Material holder 2 down	%M0480	TOUTMAG	Magazine timeout expired
%I0187	B7501	Material reel 2 epmty	%M1412	TOUT_HT	ASU, time out heat translation
%I0184	B7512	Side feeder position 2			

```
|AL_RES                                                                TOUTMAG  << RUNG 27  STEP #0110 >>
|%M0600                                                               %M0480
+--] [-------------------------------------------------------------------(R)-- (* Magazine timeout expired        *)
|
| (*************************************************************************)
| (* Monitor splice sequence                                             *)
| (*************************************************************************)
|
|AL_RES  ASU_INT                                                       ASU_INT  << RUNG 29  STEP #0113 >>
|%M0600  %M0470                                                        %M0470
+--] [-----] [----------------------------------------------------------(R)-- (* Splice sequence ASU interrupted *)
|
|A602_14 SPL_MON                                                       ASU_INT  << RUNG 30  STEP #0116 >>
|%I0019  %M1292                                                        %M0470
+--]/[-----] [--+---------------------------------------------------------(S)-- (* Splice sequence ASU interrupted *)
|              |
|SPL_OUT       |
|%M1309        |
+--] [----------+
|              |
|TOUT_HT       |
|%M1412        |
+--] [----------+
|
|ASU_INT                                                               P+ASUIN  << RUNG 31  STEP #0121 >>
|%M0470                                                                %M1404
+--] [-------------------------------------------------------------------(^)-- (* ASU, pulse + splice interrupted  *)
|
|A602_14                                                               SPL_RES  << RUNG 32  STEP #0123 >>
|%I0019                                                                %M1374
+--]/[--+-----------------------------------------------------------------( )-- (* ASU, splice sequence reset       *)
|       |
|ASU_INT|
|%M0470 |
+--] [--+
|       |
|FST_SCN|
|%S0001 |
+--] [--+
|
|P+ASUON                                                               SPL_MON  << RUNG 33  STEP #0127 >>
|%M1316                                                                %M1292
+--] [-------------------------------------------------------------------(S)-- (* ASU,Splice sequence monitor      *)
|
|SPL_TM3                                                               SPL_MON  << RUNG 34  STEP #0129 >>
|%M1387                                                                %M1292
+--] [--+----------------------------------------------------------------(R)-- (* ASU,Splice sequence monitor      *)
|       |
|SPL_RES|
|%M1374 |
+--] [--+
|
|SPL_MON                                                               SPL_OUT  << RUNG 35  STEP #0132 >>
|%M1292  +-----+                                                       %M1309
+--] [---+ TMR +-----------------------------------------------------------( )-- (* ASU, splice sequence timeout     *)
|        |0.10s|
|        |     |
| CONST -+PV   |
| +00200 |     |
|        +-----+
|        DEL1762
|        %R1762
|
| (*************************************************************************)
| (* Pack mat end and splice not prepared                                  *)
| (* is managed in papersp subroutine                                      *)
| (*************************************************************************)
```

REFERENCE	NICKNAME	REFERENCE DESCRIPTION	REFERENCE	NICKNAME	REFERENCE DESCRIPTION
%I0019	A602_14	Safety monitors C	%M1292	SPL_MON	ASU,Splice sequence monitor
%M0600	AL_RES	Alarm reset (From TPOP)	%M1309	SPL_OUT	ASU, splice sequence timeout
%M0470	ASU_INT	Splice sequence ASU interrupted	%M1374	SPL_RES	ASU, splice sequence reset
%R1762	DEL1762	ASU, delay	%M1387	SPL_TM3	ASU, splice sequence (2,55-2,65)
%S0001	FST_SCN		%M0480	TOUTMAG	Magazine timeout expired
%M1404	P+ASUIN	ASU, pulse + splice interrupted	%M1412	TOUT_HT	ASU, time out heat translation
%M1316	P+ASUON	Pulse + ASU splice going on			

```
| (*************************************************************************)
| (* Overload motors ASU check.                                            *)
| (*************************************************************************)
|
| SA_ON                                                          CKACMOT  << RUNG 38  STEP #0137 >>
|%M1330  +-----+                                                 %M1299
+--] [---+ONDTR+-----------------------------------------------------( )-- (* Check fault frequency converter  *)
|        |0.10s|
| SA_ON  |     |
|%M1330  |     |
+--]/[---+R    |
|        |     |
| CONST -+PV   |
| +00050 |     |
|        +-----+
|        CKALINV
|        %R4200
|
|POW_ON  A412_19 SPL_ON                                          ROLLER3  << RUNG 39  STEP #0141 >>
|%M1215  %I0040  %M1389                                          %M0474
+--] [-----]/[-----]/[-----------------------------------------------(S)-- (* Overload motor drive roller 3 *)
|
|POW_ON  A413_19                                                 ROLLER7  << RUNG 40  STEP #0145 >>
|%M1215  %I0039                                                  %M0475
+--] [-----]/[-----------------------------------------------------(S)-- (* Overload motor drive roller 7 *)
|
|CKACMOT A411_19                                                 STR_FLT  << RUNG 41  STEP #0148 >>
|%M1299  %I0152                                                  %M0376
+--] [-----]/[-----------------------------------------------------(S)-- (* Strip inverter fault            *)
|
|ROLLER3                                                         INV_FLT  << RUNG 42  STEP #0151 >>
|%M0474                                                          %M0794
+--] [--+-------------------------------------------------------------( )-- (* General inverter fault          *)
|       |
|ROLLER7|
|%M0475 |
+--] [--+
|       |
|STR_FLT|
|%M0376 |
+--] [--+
|       |
|EXT_FAI|
|%M0368 |
+--] [--+
|       |
|PEN_FAI|
|%M0443 |
+--] [--+
|       |
|BELT_AL|
|%M0364 |
+--] [--+
|
|AL_RES                                                          ROLLER3  << RUNG 43  STEP #0158 >>
|%M0600                                                          %M0474
+--] [--+-------------------------------------------------------------(R)-- (* Overload motor drive roller 3 *)
|       |
|       |                                                        ROLLER7
|       |                                                        %M0475
|       +-------------------------------------------------------------(R)-- (* Overload motor drive roller 7 *)
|       |
|       |                                                        STR_FLT
|       |                                                        %M0376
|       +-------------------------------------------------------------(R)-- (* Strip inverter fault            *)
|
```

REFERENCE	NICKNAME	REFERENCE DESCRIPTION	REFERENCE	NICKNAME	REFERENCE DESCRIPTION
%I0152	A411_19	Failure drive strip motor ASU	%M0794	INV_FLT	General inverter fault
%I0040	A412_19	Failure drive loop ASU	%M0443	PEN_FAI	Pendulum roller inverter fail
%I0039	A413_19	Failure drive magazine ASU	%M1215	POW_ON	Power on to inverter
%M0600	AL_RES	Alarm reset (From TPOP)	%M0474	ROLLER3	Overload motor drive roller 3
%M0364	BELT_AL	Belt brake inverter alarm	%M0475	ROLLER7	Overload motor drive roller 7
%M1299	CKACMOT	Check fault frequency converter	%M1330	SA_ON	Strip magazine and SA heater ON
%R4200	CKALINV	Delay to check inverter bobbin	%M1389	SPL_ON	ASU, splice sequence going on
%M0368	EXT_FAI	External conveyor inverter fault	%M0376	STR_FLT	Strip inverter fault

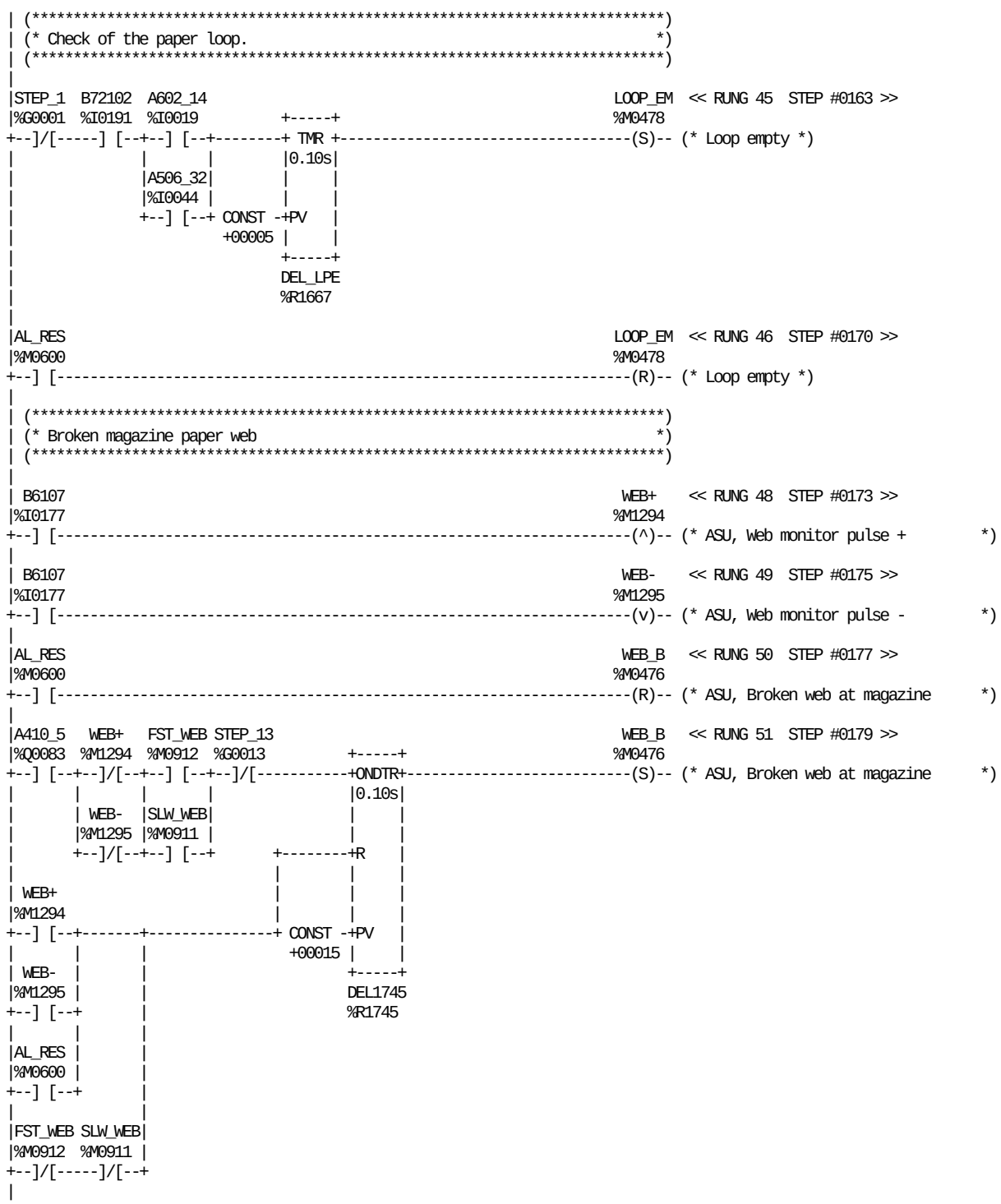

REFERENCE	NICKNAME	REFERENCE DESCRIPTION	REFERENCE	NICKNAME	REFERENCE DESCRIPTION
%Q0083	A410_5	Enable drive roller	%M0912	FST_WEB	Paper web fast speed
%I0044	A506_32	DMC Main motor running	%M0478	LOOP_EM	Loop empty
%I0019	A602_14	Safety monitors C	%M0911	SLW_WEB	Paper web slow speed
%M0600	AL_RES	Alarm reset (From TPOP)	%G0001	STEP_1	STANDBY
%I0177	B6107	Rotation guard SA	%G0013	STEP_13	OPEN DOORS, CUT TUBE
%I0191	B72102	Loop empty	%M1294	WEB+	ASU, Web monitor pulse +
%R1745	DEL1745	Broken Web at Magazine Timer	%M1295	WEB-	ASU, Web monitor pulse -
%R1667	DEL_LPE	Delay loop empty alarm	%M0476	WEB_B	ASU, Broken web at magazine

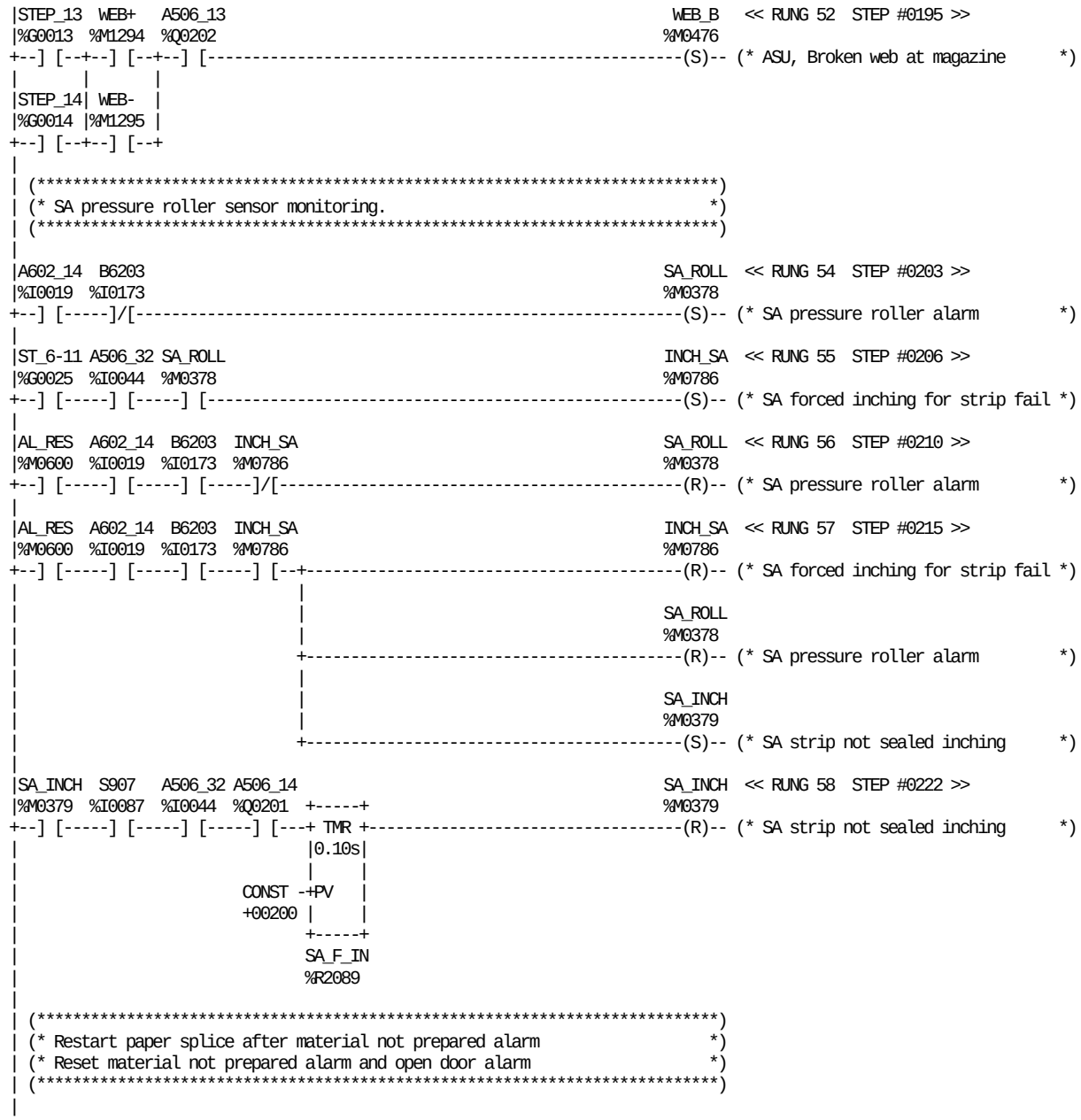

REFERENCE	NICKNAME	REFERENCE DESCRIPTION	REFERENCE	NICKNAME	REFERENCE DESCRIPTION
%Q0202	A506_13	DMC Main Motor Low speed	%M0379	SA_INCH	SA strip not sealed inching
%Q0201	A506_14	DMC Main Motor High speed	%M0378	SA_ROLL	SA pressure roller alarm
%I0044	A506_32	DMC Main motor running	%G0013	STEP_13	OPEN DOORS, CUT TUBE
%I0019	A602_14	Safety monitors C	%G0014	STEP_14	CIP / HC
%M0600	AL_RES	Alarm reset (From TPOP)	%G0025	ST_6-11	Ladder position 6-11
%I0173	B6203	SA pressure roller	%M1294	WEB+	ASU, Web monitor pulse +
%M0786	INCH_SA	SA forced inching for strip fail	%M1295	WEB-	ASU, Web monitor pulse -
%I0087	S907	Push button inching JUM	%M0476	WEB_B	ASU, Broken web at magazine
%R2089	SA_F_IN	TMR forced inching for SA fail			

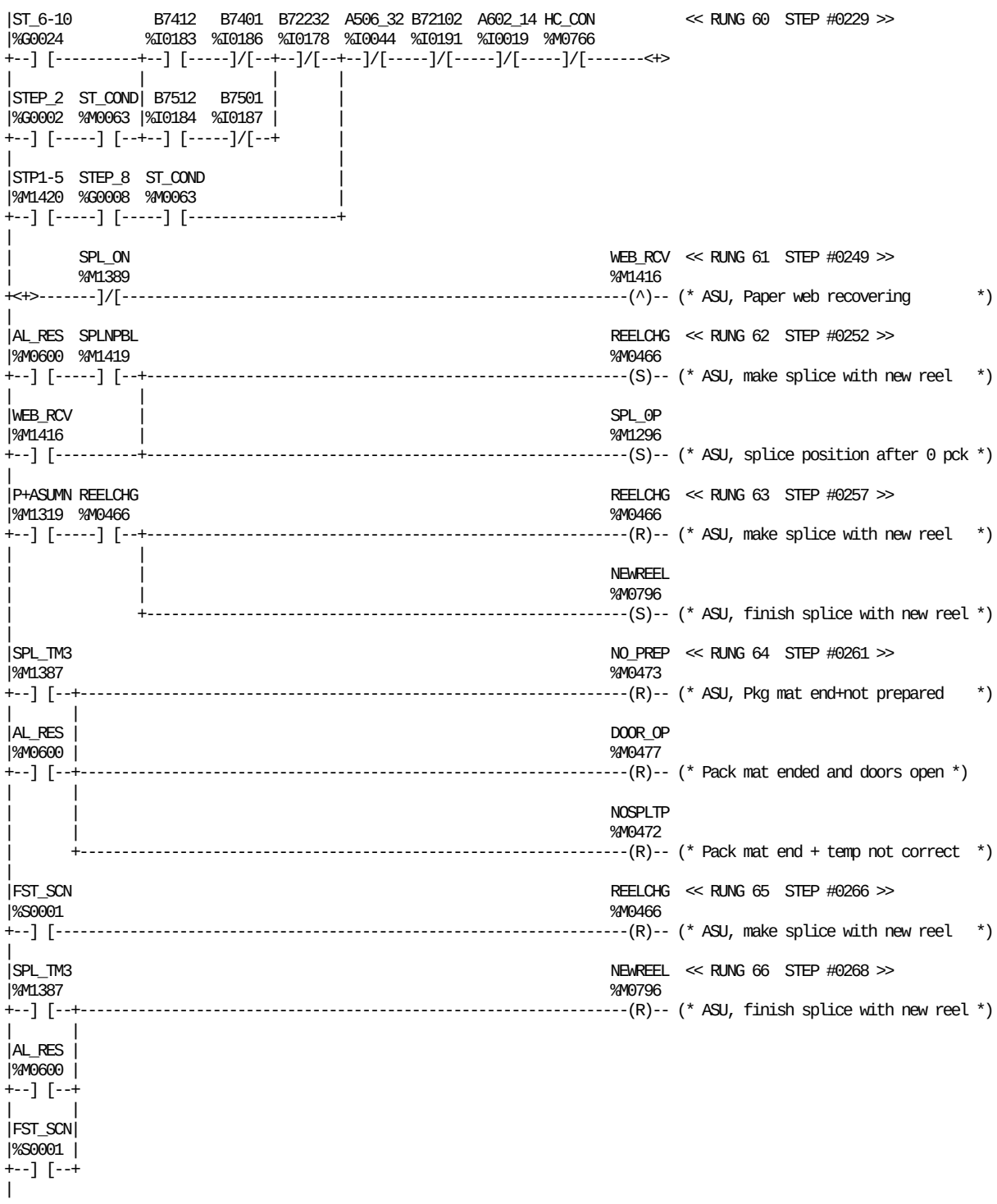

REFERENCE	NICKNAME	REFERENCE DESCRIPTION
%I0044	A506_32	DMC Main motor running
%I0019	A602_14	Safety monitors C
%M0600	AL_RES	Alarm reset (From TPOP)
%I0191	B72102	Loop empty
%I0178	B72232	Magazine down
%I0186	B7401	Material reel 1 empty
%I0183	B7412	Side feeder position 1
%I0187	B7501	Material reel 2 epmty
%I0184	B7512	Side feeder position 2
%M0477	DOOR_OP	Pack mat ended and doors open
%S0001	FST_SCN	
%M0766	HC_CON	HC start condition
%M0796	NEWREEL	ASU, finish splice with new reel
%M0472	NOSPLTP	Pack mat end + temp not correct

REFERENCE	NICKNAME	REFERENCE DESCRIPTION
%M0473	NO_PREP	ASU, Pkg mat end+not prepared
%M1319	P+ASUMN	Pulse + ASU manual start splice
%M0466	REELCHG	ASU, make splice with new reel
%M1419	SPLNPBL	Paper splice was not possible
%M1296	SPL_0P	ASU, splice position after 0 pck
%M1389	SPL_ON	ASU, splice sequence going on
%M1387	SPL_TM3	ASU, splice sequence (2,55-2,65)
%G0002	STEP_2	PREPARATION (3 MIN.)
%G0008	STEP_8	FLAPS + H2O2 TEMPERATURE
%M1420	STP1-5	Paper splice between step 1 to 5
%G0024	ST_6-10	Ladder position 6-10
%M0063	ST_COND	Step up conditions
%M1416	WEB_RCV	ASU, Paper web recovering

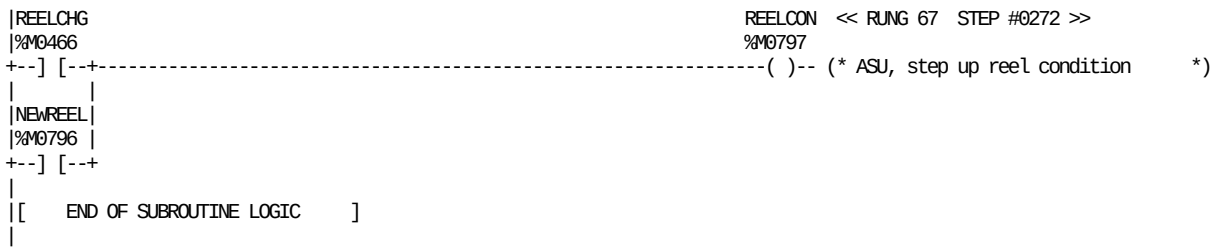

REFERENCE NICKNAME		REFERENCE DESCRIPTION	REFERENCE NICKNAME		REFERENCE DESCRIPTION
%M0796	NEWREEL	ASU, finish splice with new reel	%M0797	REELCON	ASU, step up reel condition
%M0466	REELCHG	ASU, make splice with new reel			

```
|[  START LD SUBROUTINE  CIP_AL   ]
|
|[     VARIABLE DECLARATIONS      ]
|
|[   START OF SUBROUTINE LOGIC    ]
|
| (*************************************************************************)
| (* Check of CIP SWITCH position.                                         *)
| (*************************************************************************)
|
|CIP_SEL  B1306                                                 PIPESEN  << RUNG 5  STEP #0003 >>
|%M0712  %I0101                                                 %M0497
+--] [-----]/[-------------------------------------------------------(S)-- (* CIP pipe sensor                *)
|
|CIP_SEL          B1307  CIPTODO                                AIR_SEN  << RUNG 6  STEP #0006 >>
|%M0712          %I0102  %M0992                                 %M0498
+--]/[----------+--]/[-----]/[-----------------------------------------(S)-- (* CIP steril air sensor           *)
|               |
|CIPBLOW CIP_SEL|
|%M0993  %M0712 |
+--] [-----]/[--+
|
| (*************************************************************************)
| (* Check of draining pipe position.                                      *)
| (*************************************************************************)
|
|CIP_SEL CIP_ON  AL_BLK   B7814                                 CUP_BC   << RUNG 8  STEP #0014 >>
|%M0712  %M1000  %M0200  %I0109                                 %M0499
+--] [-----]/[--+--]/[--+--]/[-----------------------------------------( )-- (* Cup position bucket cleaning     *)
|               |       |
|CIPBLOW BLOW_ON|       | B1330                                 BUCK_BC
|%M0993  %M0991 |       |%I0159                                 %M0500
+--] [-----]/[--+       +--]/[-----------------------------------------( )-- (* Bucket not present in clean unit *)
|
|CIP_SEL  B1350                                                 DR_PIPE  << RUNG 9  STEP #0026 >>
|%M0712  %I0100                                                 %M0510
+--] [-----]/[----------+-----------------------------------------( )-- (* Draining pipe pos during cip *)
|                       |
|CIP_SEL CIPBLOW  B1350 |
|%M0712  %M0993  %I0100 |
+--]/[-----]/[-----] [--+
|                       |
|CIPBLOW CIP_SEL  B1350 |
|%M0993  %M0712  %I0100 |
+--] [-----]/[-----]/[--+
|
| (*************************************************************************)
| (* Monitoring of the valves position during CIP.                         *)
| (*************************************************************************)
|
```

REFERENCE	NICKNAME	REFERENCE DESCRIPTION	REFERENCE	NICKNAME	REFERENCE DESCRIPTION
%M0498	AIR_SEN	CIP steril air sensor	%M0500	BUCK_BC	Bucket not present in clean unit
%M0200	AL_BLK	Alarm block active (From TPOP)	%M0993	CIPBLOW	CIP blowing must be done
%I0101	B1306	Cleaning pipe sensor	%M0992	CIPTODO	CIP must be done
%I0102	B1307	Steril air pipe sensor	%M1000	CIP_ON	CIP going on
%I0159	B1330	Bucket cleaning pipe sensor	%M0712	CIP_SEL	CIP select from TPOP
%I0100	B1350	Cup draining pipe in position	%M0499	CUP_BC	Cup position bucket cleaning
%I0109	B7814	Bucket cleaning cup position	%M0510	DR_PIPE	Draining pipe pos during cip
%M0991	BLOW_ON	CIP blowing going on	%M0497	PIPESEN	CIP pipe sensor

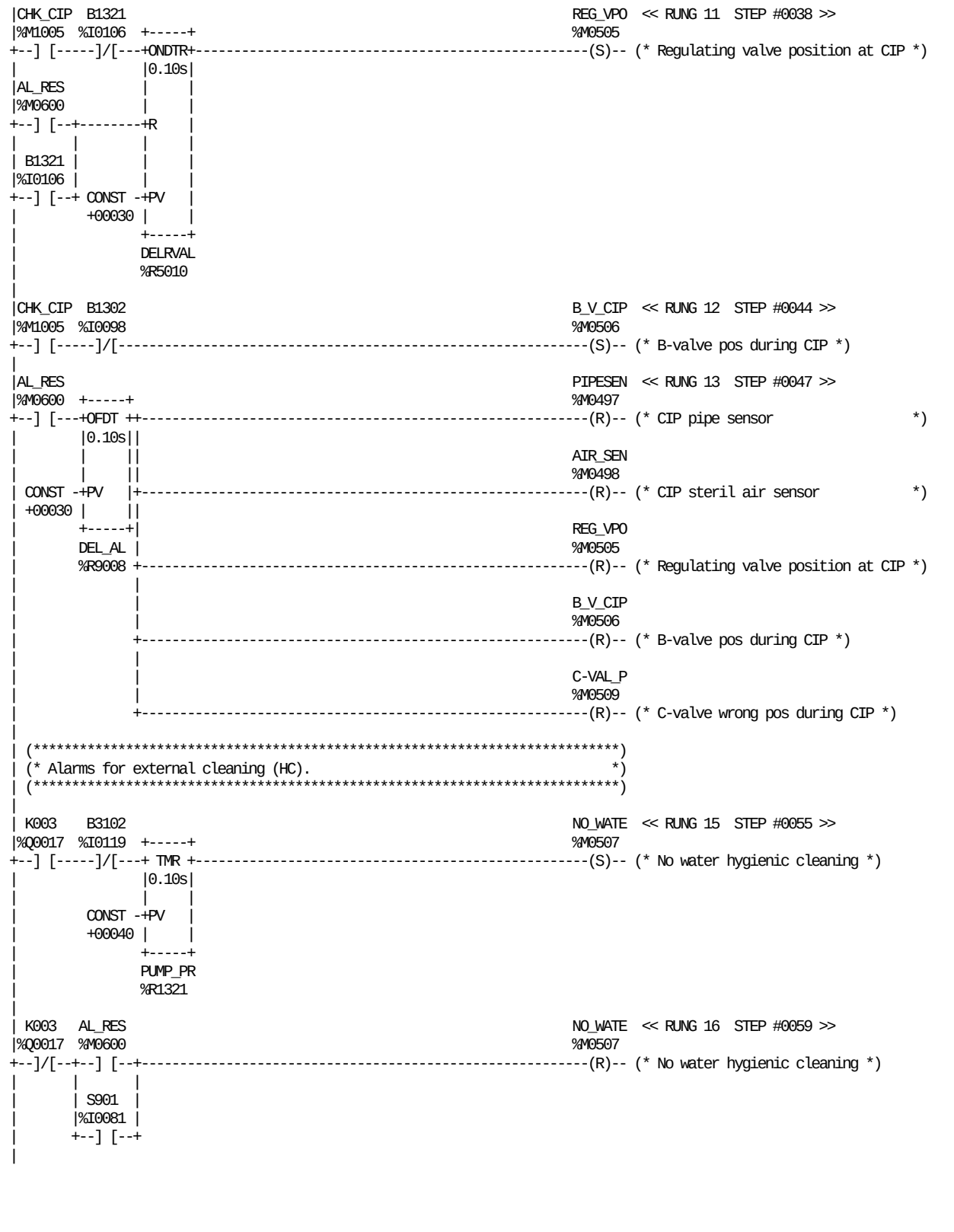

REFERENCE	NICKNAME	REFERENCE DESCRIPTION	REFERENCE	NICKNAME	REFERENCE DESCRIPTION
%M0498	AIR_SEN	CIP steril air sensor	%R5010	DELRVAL	Delay regulating valve pos alarm
%M0600	AL_RES	Alarm reset (From TPOP)	%R9008	DEL_AL	Delay alarms on TPOP
%I0098	B1302	B-valve position sensor	%Q0017	K003	Cleaning pump external cleaning
%I0106	B1321	Regulating valve position	%M0507	NO_WATE	No water hygienic cleaning
%I0119	B3102	Pumping water guard	%M0497	PIPESEN	CIP pipe sensor
%M0506	B_V_CIP	B-valve pos during CIP	%R1321	PUMP_PR	Check waterpressure cleaning
%M0509	C-VAL_P	C-valve wrong pos during CIP	%M0505	REG_VPO	Regulating valve position at CIP
%M1005	CHK_CIP	Check valves during CIP	%I0081	S901	Push button TPOP reset

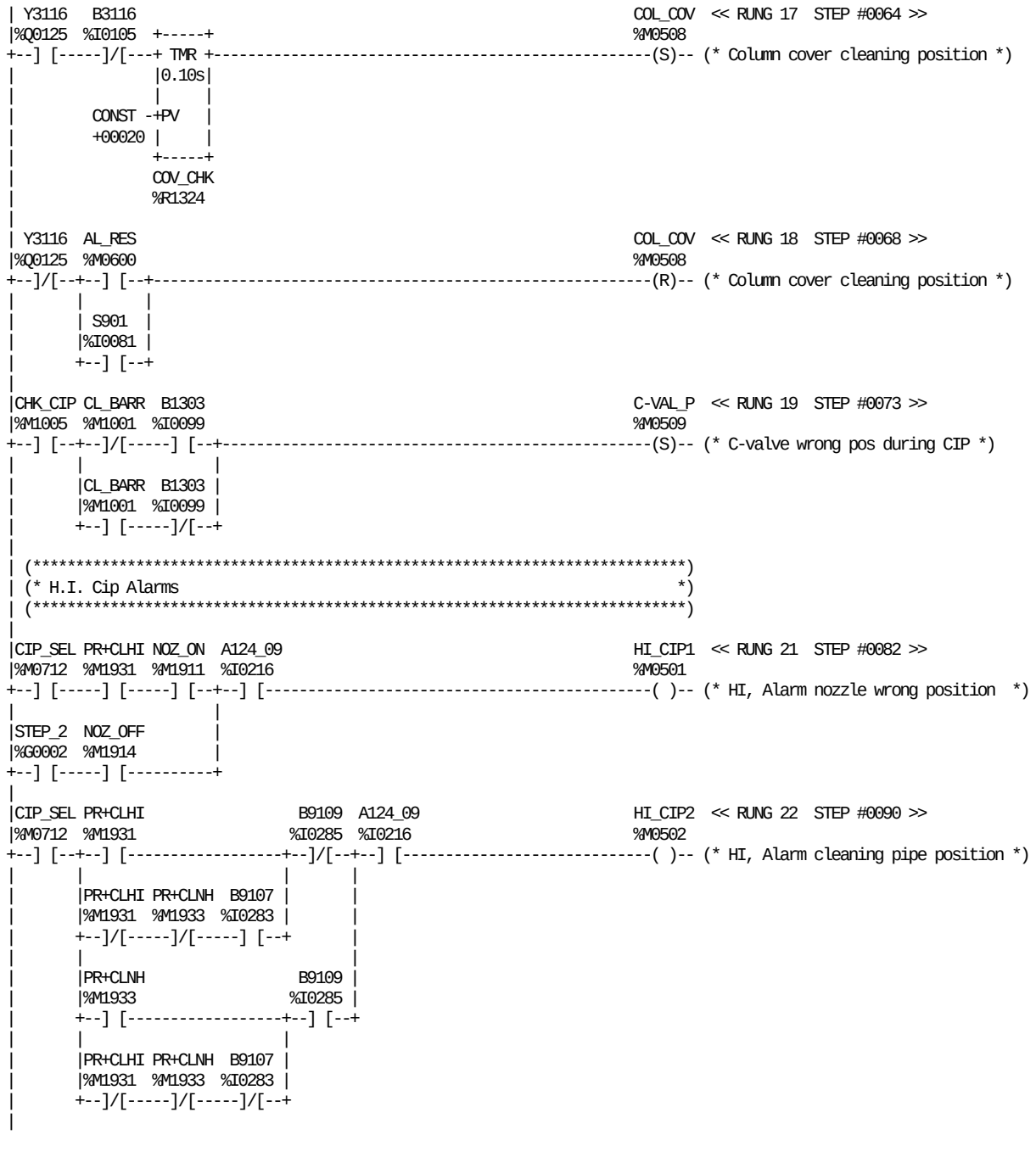

REFERENCE	NICKNAME	REFERENCE DESCRIPTION	REFERENCE	NICKNAME	REFERENCE DESCRIPTION
%I0216	A124_09	HI Option	%R1324	COV_CHK	Check column cover position
%M0600	AL_RES	Alarm reset (From TPOP)	%M0501	HI_CIP1	HI, Alarm nozzle wrong position
%I0099	B1303	C-valve position sensor	%M0502	HI_CIP2	HI, Alarm cleaning pipe position
%I0105	B3116	Column ball and cover position	%M1914	NOZ_OFF	HI, Nozzle off after CIP dry
%I0283	B9107	HI, Product pipe position	%M1911	NOZ_ON	HI, Nozzle on before CIP
%I0285	B9109	HI, Cleaning configuration	%M1931	PR+CLHI	HI, Production+clean with HI
%M0509	C-VAL_P	C-valve wrong pos during CIP	%M1933	PR+CLNH	HI, Production+clean without HI
%M1005	CHK_CIP	Check valves during CIP	%I0081	S901	Push button TPOP reset
%M0712	CIP_SEL	CIP select from TPOP	%G0002	STEP_2	PREPARATION (3 MIN.)
%M1001	CL_BARR	Cleaning barrier space	%Q0125	Y3116	Column cleaning ball/lid
%M0508	COL_COV	Column cover cleaning position			

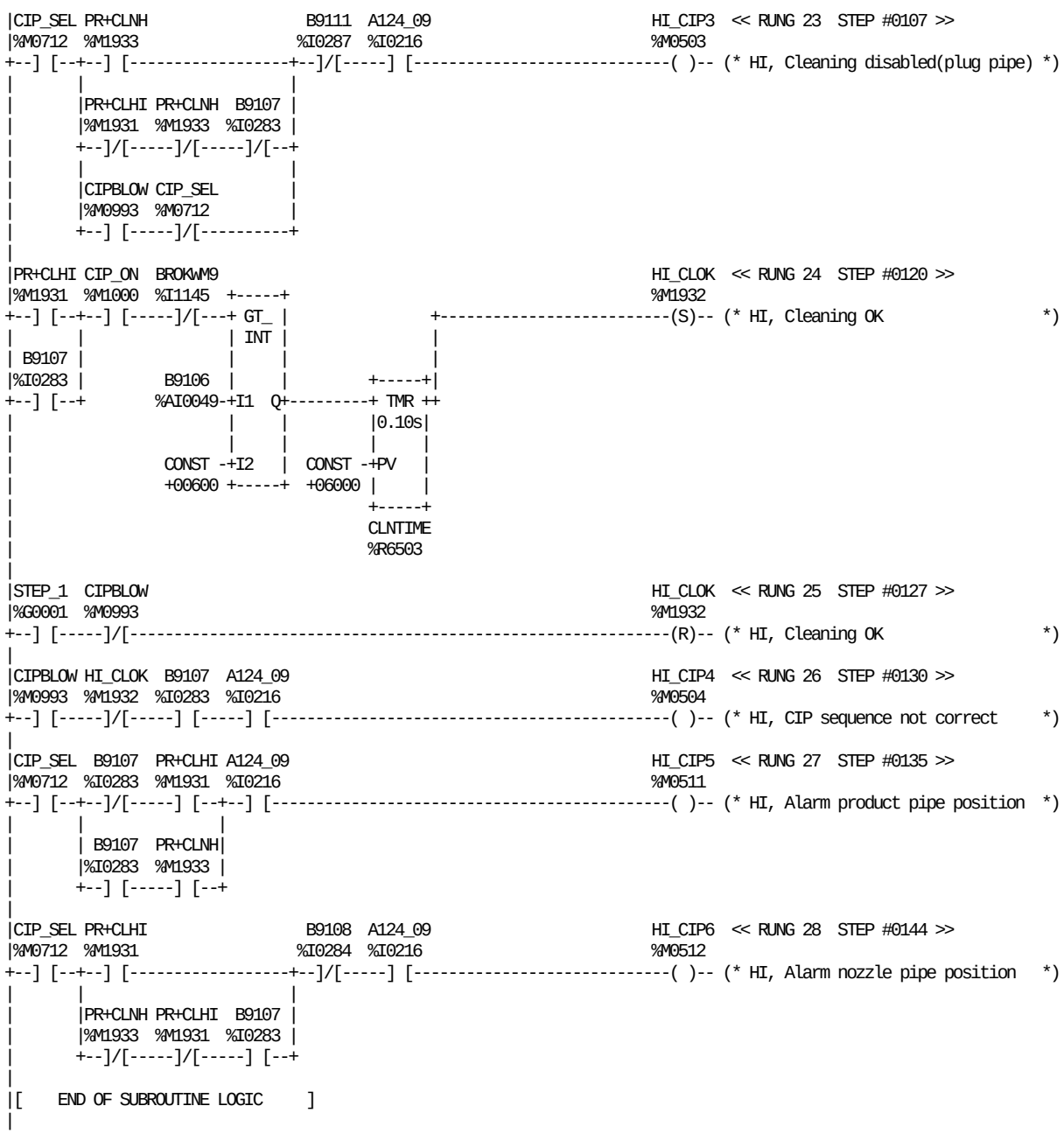

REFERENCE	NICKNAME	REFERENCE DESCRIPTION
%I0216	A124_09	HI Option
%AI0049	B9106	HI, Temp. monitor spray
%I0283	B9107	HI, Product pipe position
%I0284	B9108	HI, Spray nozzle pipe position
%I0287	B9111	HI, Cleaning circuit cup
%I1145	BROKWM9	Broken wire Mon9 (HIspray-B9106)
%M0993	CIPBLOW	CIP blowing must be done
%M1000	CIP_ON	CIP going on
%M0712	CIP_SEL	CIP select from TPOP

REFERENCE	NICKNAME	REFERENCE DESCRIPTION
%R6503	CLNTIME	HI, Cleaning temperature timer
%M0503	HI_CIP3	HI, Cleaning disabled(plug pipe)
%M0504	HI_CIP4	HI, CIP sequence not correct
%M0511	HI_CIP5	HI, Alarm product pipe position
%M0512	HI_CIP6	HI, Alarm nozzle pipe position
%M1932	HI_CLOK	HI, Cleaning OK
%M1931	PR+CLHI	HI, Production+clean with HI
%M1933	PR+CLNH	HI, Production+clean without HI
%G0001	STEP_1	STANDBY

```
|[  START LD SUBROUTINE    CIP    ]
|
|[     VARIABLE DECLARATIONS      ]
|
|[   START OF SUBROUTINE LOGIC    ]
|
| (*************************************************************************)
| (* Logic for the control of the CIP cleaning.                            *)
| (* The CIP is select from the TPOP and when all the condition are         *)
| (* full filled  is possible to start the cleaning by  pushing the         *)
| (* step-up push button.                                                  *)
| (*************************************************************************)
|
| S004   CIP_ON  A111_09                                          CL_BARR  << RUNG 5  STEP #0003 >>
|%I0094  %M1000  %I0424                                           %M1001
+--]/[-----]/[--+--] [--+-------------------------------------------(S)-- (* Cleaning barrier space *)
|               |      |
|               |EN_STER|
|               |%M0780 |
|               +--]/[--+
|
| S004   A111_09 EN_STER CIP_ON                                   NO_C_CL  << RUNG 6  STEP #0009 >>
|%I0094  %I0424  %M0780  %M1000                                   %M0446
+--]/[-----]/[-----] [-----] [-------------------------------------------(S)-- (* C valve cleaning disabled       *)
|
|CIP_ON                                                           NO_C_CL  << RUNG 7  STEP #0014 >>
|%M1000                                                           %M0446
+--]/[-------------------------------------------------------------------(R)-- (* C valve cleaning disabled       *)
|
|CIP_SEL                                                          CL_BARR  << RUNG 8  STEP #0016 >>
|%M0712                                                           %M1001
+--]/[-------------------------------------------------------------------(R)-- (* Cleaning barrier space *)
|
|CIP_ON  CL_BARR                                                  CHK_DRA  << RUNG 9  STEP #0018 >>
|%M1000  %M1001                                                   %M0998
+--] [-----] [-------------------------------------------------------(S)-- (* Check CIP drainig on            *)
|
|CL_BARR  B1306                                                   CHK_DRA  << RUNG 10  STEP #0021 >>
|%M1001  %I0101          +-----+                                  %M0998
+--]/[--+--] [--+--------+ TMR +-------------------------------------(R)-- (* Check CIP drainig on            *)
|       |      |        |0.10s|
|       | B1307 |       |     |
|       |%I0102 |       |     |
|       +--] [--+ CONST -+PV   |
|                +00020 |     |
|                       +-----+
|                       DCPDROK
|                       %R1342
|
|CIP_SEL A601_14 A305_18  B1350  L_STEAM H_STEAM K114_1   B1306   B1508          << RUNG 11  STEP #0027 >>
|%M0712  %I0018  %I0107  %I0100  %M0388  %M0390  %I0146  %I0101  %I0150
+--] [-----] [-----]/[-----] [--+--]/[-----]/[--+--] [-----] [-----] [-------<+>
|                             |              |
|                             |CIP_ON  CL_BARR|
|                             |%M1000  %M1001 |
|                             +--] [-----] [--+
|
```

REFERENCE	NICKNAME	REFERENCE DESCRIPTION
%I0424	A111_09	Product line not sterile
%I0107	A305_18	Regulating valve leakage
%I0018	A601_14	Safety monitors B
%I0101	B1306	Cleaning pipe sensor
%I0102	B1307	Steril air pipe sensor
%I0100	B1350	Cup draining pipe in position
%I0150	B1508	Bucket cleaning door guard
%M0998	CHK_DRA	Check CIP drainig on
%M1000	CIP_ON	CIP going on

REFERENCE	NICKNAME	REFERENCE DESCRIPTION
%M0712	CIP_SEL	CIP select from TPOP
%M1001	CL_BARR	Cleaning barrier space
%R1342	DCPDROK	Cleaning cup draining ok
%M0780	EN_STER	Sterile/not sterile enabled
%M0390	H_STEAM	High temperature steam C-valve
%I0146	K114_1	Front doors closed AC
%M0388	L_STEAM	Low temperature steam C-valve
%M0446	NO_C_CL	C valve cleaning disabled
%I0094	S004	Clean steam barrier space switch

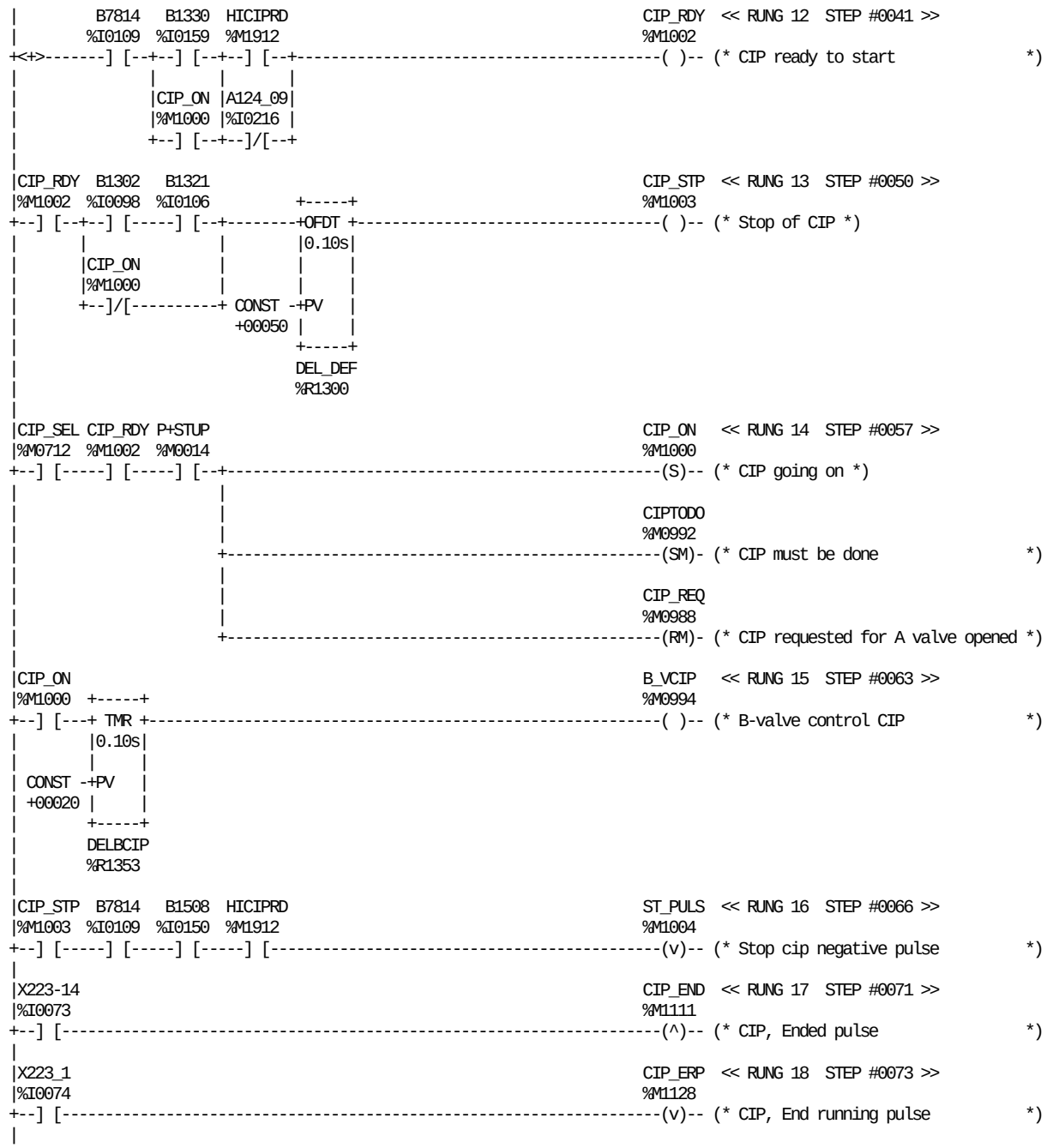

REFERENCE	NICKNAME	REFERENCE DESCRIPTION
%I0216	A124_09	HI Option
%I0098	B1302	B-valve position sensor
%I0106	B1321	Regulating valve position
%I0159	B1330	Bucket cleaning pipe sensor
%I0150	B1508	Bucket cleaning door guard
%I0109	B7814	Bucket cleaning cup position
%M0994	B_VCIP	B-valve control CIP
%M0992	CIPTODO	CIP must be done
%M1111	CIP_END	CIP, Ended pulse
%M1128	CIP_ERP	CIP, End running pulse
%M1000	CIP_ON	CIP going on

REFERENCE	NICKNAME	REFERENCE DESCRIPTION
%M1002	CIP_RDY	CIP ready to start
%M0988	CIP_REQ	CIP requested for A valve opened
%M0712	CIP_SEL	CIP select from TPOP
%M1003	CIP_STP	Stop of CIP
%R1353	DELBCIP	Delay open B-valve in CIP
%R1300	DEL_DEF	TMR delay for D,E,F valves
%M1912	HICIPRD	HI, HI system ready for CIP
%M0014	P+STUP	Step up positive pulse
%M1004	ST_PULS	Stop cip negative pulse
%I0073	X223-14	CIP comm. 1 CIP ended
%I0074	X223_1	CIP comm. 2 CIP running

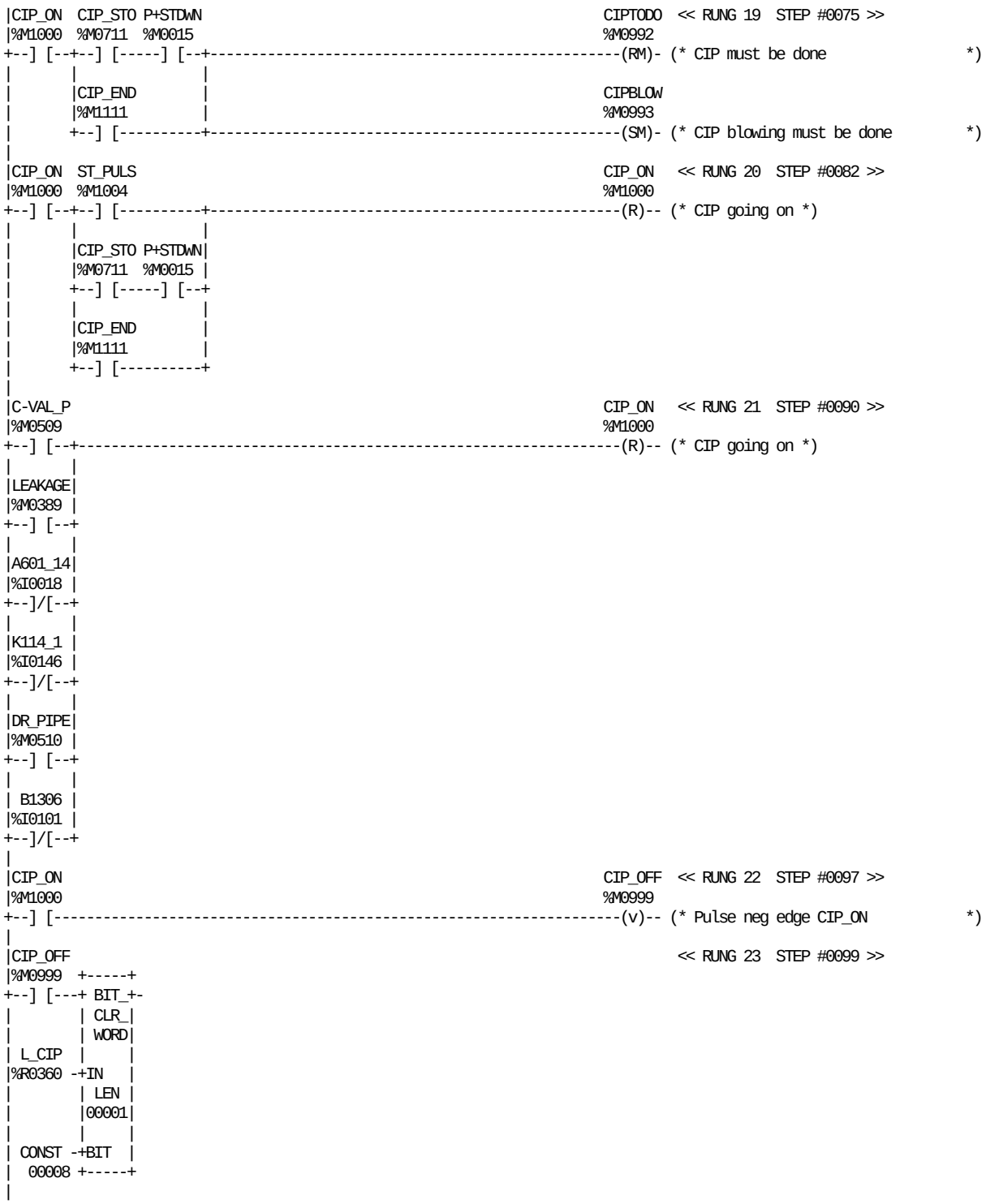

REFERENCE	NICKNAME	REFERENCE DESCRIPTION	REFERENCE	NICKNAME	REFERENCE DESCRIPTION
%I0018	A601_14	Safety monitors B	%M0711	CIP_STO	CIP stop from TPOP
%I0101	B1306	Cleaning pipe sensor	%M0510	DR_PIPE	Draining pipe pos during cip
%M0509	C-VAL_P	C-valve wrong pos during CIP	%I0146	K114_1	Front doors closed AC
%M0993	CIPBLOW	CIP blowing must be done	%M0389	LEAKAGE	Regulating valve leakage
%M0992	CIPTODO	CIP must be done	%R0360	L_CIP	Cleaning signals (TPOP)
%M1111	CIP_END	CIP, Ended pulse	%M0015	P+STDWN	Step down positive pulse
%M0999	CIP_OFF	Pulse neg edge CIP_ON	%M1004	ST_PULS	Stop cip negative pulse
%M1000	CIP_ON	CIP going on			

```
|CIP_ON                                                                CHK_CIP  << RUNG 24  STEP #0101 >>
|%M1000  +-----+                                                       %M1005
+--] [---+ TMR +-----------------------------------------------------( )-- (* Check valves during CIP *)
|        |0.10s|
|        |     |
| CONST -+PV   |
| +00045 |     |
|        +-----+
|        CIP_CHK
|        %R1309
|
| (*************************************************************************)
| (* CIP supervision.                                                      *)
| (*************************************************************************)
|
|X223_1                                                                CIP_STR  << RUNG 26  STEP #0105 >>
|%I0074                                                                %M1112
+--] [-------------------------------------------------------------------(^)-- (* CIP, Started pulse              *)
|
|X223_2  CIP_ON                                                        NEW_STP  << RUNG 27  STEP #0107 >>
|%I0075  %M1000                                                        %M1114
+--] [-----] [--+-----------------------------------------------------(^)-- (* CIP, new cleaning step pulse    *)
|              |
|X223-14       |
|%I0073        |
+--] [----------+
|
| (*************************************************************************)
| (* CIP supervision alarm condition.                                     *)
| (*************************************************************************)
|
|CIPSUP1 FLOW_OK AL_SWIT NEW_STP                                       WT_FLOW  << RUNG 29  STEP #0112 >>
|%M1101  %M1107  %M1124  %M1114                                        %M0520
+--] [--+--]/[-----]/[--+--] [-----------------------------------------(SM)- (* CIP_AL, water flow              *)
|       |              |
|CIPSUP2|FLOW_CT AL_SWIT|
|%M1102 |%M1125  %M1124 |
+--] [--+--]/[-----] [--+
|       |
|CIPSUP4|
|%M1104 |
+--] [--+
|       |
|CIPSUP6|
|%M1106 |
+--] [--+
|
|CIPSUP1 TEMP_OK AL_SWIT NEW_STP                                       WT_TEMP  << RUNG 30  STEP #0124 >>
|%M1101  %M1108  %M1124  %M1114                                        %M0521
+--] [--+--]/[-----]/[--+--] [-----------------------------------------(SM)- (* CIP_AL, water temperature       *)
|       |              |
|CIPSUP2|TEMP_CT AL_SWIT|
|%M1102 |%M1126  %M1124 |
+--] [--+--]/[-----] [--+
|       |
|CIPSUP4|
|%M1104 |
+--] [--+
|       |
|CIPSUP6|
|%M1106 |
+--] [--+
|
```

REFERENCE	NICKNAME	REFERENCE DESCRIPTION	REFERENCE	NICKNAME	REFERENCE DESCRIPTION
%M1124	AL_SWIT	CIP, Alarm set switch	%M1107	FLOW_OK	CIP, Flow OK
%M1005	CHK_CIP	Check valves during CIP	%M1114	NEW_STP	CIP, new cleaning step pulse
%M1101	CIPSUP1	CIP Superv.Step 1-Cold rinsing	%M1126	TEMP_CT	CIP, Temperature control alarm
%M1102	CIPSUP2	CIP Superv.Step 2-Warm rinsing	%M1108	TEMP_OK	CIP, Temperature OK
%M1104	CIPSUP4	CIP Superv.Step 4-Alkali rinsing	%M0520	WT_FLOW	CIP_AL, water flow
%M1106	CIPSUP6	CIP Superv.Step 6-Final rinsing	%M0521	WT_TEMP	CIP_AL, water temperature
%R1309	CIP_CHK	Check valves during CIP	%I0073	X223-14	CIP comm. 1 CIP ended
%M1000	CIP_ON	CIP going on	%I0074	X223_1	CIP comm. 2 CIP running
%M1112	CIP_STR	CIP, Started pulse	%I0075	X223_2	CIP comm. 3 CIP new cycle step
%M1125	FLOW_CT	CIP, Flow control alarm			

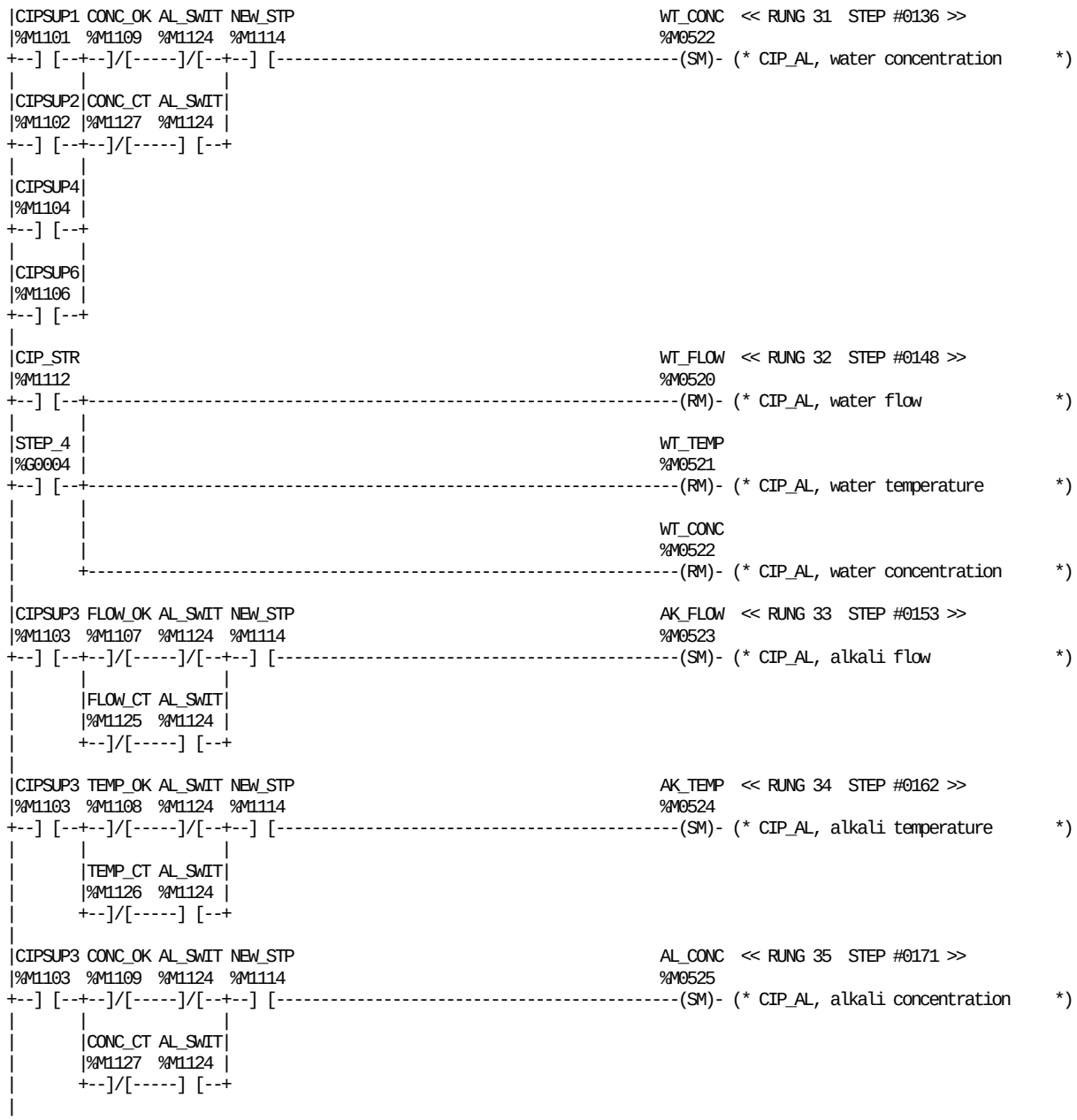

REFERENCE	NICKNAME	REFERENCE DESCRIPTION	REFERENCE	NICKNAME	REFERENCE DESCRIPTION
%M0523	AK_FLOW	CIP_AL, alkali flow	%M1109	CONC_OK	CIP, Concentration OK
%M0524	AK_TEMP	CIP_AL, alkali temperature	%M1125	FLOW_CT	CIP, Flow control alarm
%M0525	AL_CONC	CIP_AL, alkali concentration	%M1107	FLOW_OK	CIP, Flow OK
%M1124	AL_SWIT	CIP, Alarm set switch	%M1114	NEW_STP	CIP, new cleaning step pulse
%M1101	CIPSUP1	CIP Superv.Step 1-Cold rinsing	%G0004	STEP_4	HEAT STERILIZATION
%M1102	CIPSUP2	CIP Superv.Step 2-Warm rinsing	%M1126	TEMP_CT	CIP, Temperature control alarm
%M1103	CIPSUP3	CIP Superv.Step 3-Alkali clean.	%M1108	TEMP_OK	CIP, Temperature OK
%M1104	CIPSUP4	CIP Superv.Step 4-Alkali rinsing	%M0522	WT_CONC	CIP_AL, water concentration
%M1106	CIPSUP6	CIP Superv.Step 6-Final rinsing	%M0520	WT_FLOW	CIP_AL, water flow
%M1112	CIP_STR	CIP, Started pulse	%M0521	WT_TEMP	CIP_AL, water temperature
%M1127	CONC_CT	CIP, Concentration control alarm			

```
|CIP_ERP CIPSUP1                                                    AK_FLOW  << RUNG 36  STEP #0180 >>
|%M1128  %M1101                                                    %M0523
+--] [--+--] [--+-----------------------------------------------------(SM)- (* CIP_AL, alkali flow             *)
|       |       |
|       |CIPSUP2|                                                   AK_TEMP
|       |%M1102 |                                                   %M0524
|       +--] [--+-----------------------------------------------------(SM)- (* CIP_AL, alkali temperature      *)
|       |       |
|       |CIPSUP3|                                                   AL_CONC
|       |%M1103 |                                                   %M0525
|       +--] [--+-----------------------------------------------------(SM)- (* CIP_AL, alkali concentration    *)
|
|CIP_STR                                                            AK_FLOW  << RUNG 37  STEP #0188 >>
|%M1112                                                             %M0523
+--] [--+-------------------------------------------------------------(RM)- (* CIP_AL, alkali flow             *)
|       |
|STEP_4 |                                                           AK_TEMP
|%G0004 |                                                           %M0524
+--] [--+-------------------------------------------------------------(RM)- (* CIP_AL, alkali temperature      *)
|       |
|       |                                                           AL_CONC
|       |                                                           %M0525
|       +-------------------------------------------------------------(RM)- (* CIP_AL, alkali concentration    *)
|
|CIPSUP5 FLOW_OK AL_SWIT NEW_STP                                    AC_FLOW  << RUNG 38  STEP #0193 >>
|%M1105  %M1107  %M1124  %M1114                                     %M0526
+--] [--+--]/[-----]/[--+--] [-----------------------------------------(SM)- (* CIP_AL, acid flow               *)
|       |               |
|       |FLOW_CT AL_SWIT|
|       |%M1125  %M1124 |
|       +--]/[-----] [--+
|
|CIPSUP5 TEMP_OK AL_SWIT NEW_STP                                    AC_TEMP  << RUNG 39  STEP #0202 >>
|%M1105  %M1108  %M1124  %M1114                                     %M0527
+--] [--+--]/[-----]/[--+--] [-----------------------------------------(SM)- (* CIP_AL, acid temperature        *)
|       |               |
|       |TEMP_CT AL_SWIT|
|       |%M1126  %M1124 |
|       +--]/[-----] [--+
|
|CIPSUP5 CONC_OK AL_SWIT NEW_STP                                    AC_CONC  << RUNG 40  STEP #0211 >>
|%M1105  %M1109  %M1124  %M1114                                     %M0528
+--] [--+--]/[-----]/[--+--] [-----------------------------------------(SM)- (* CIP_AL, acid concentration      *)
|       |               |
|       |CONC_CT AL_SWIT|
|       |%M1127  %M1124 |
|       +--]/[-----] [--+
|
```

REFERENCE	NICKNAME	REFERENCE DESCRIPTION	REFERENCE	NICKNAME	REFERENCE DESCRIPTION
%M0528	AC_CONC	CIP_AL, acid concentration	%M1128	CIP_ERP	CIP, End running pulse
%M0526	AC_FLOW	CIP_AL, acid flow	%M1112	CIP_STR	CIP, Started pulse
%M0527	AC_TEMP	CIP_AL, acid temperature	%M1127	CONC_CT	CIP, Concentration control alarm
%M0523	AK_FLOW	CIP_AL, alkali flow	%M1109	CONC_OK	CIP, Concentration OK
%M0524	AK_TEMP	CIP_AL, alkali temperature	%M1125	FLOW_CT	CIP, Flow control alarm
%M0525	AL_CONC	CIP_AL, alkali concentration	%M1107	FLOW_OK	CIP, Flow OK
%M1124	AL_SWIT	CIP, Alarm set switch	%M1114	NEW_STP	CIP, new cleaning step pulse
%M1101	CIPSUP1	CIP Superv.Step 1-Cold rinsing	%G0004	STEP_4	HEAT STERILIZATION
%M1102	CIPSUP2	CIP Superv.Step 2-Warm rinsing	%M1126	TEMP_CT	CIP, Temperature control alarm
%M1103	CIPSUP3	CIP Superv.Step 3-Alkali clean.	%M1108	TEMP_OK	CIP, Temperature OK
%M1105	CIPSUP5	CIP Superv.Step 5-Acid cleaning			

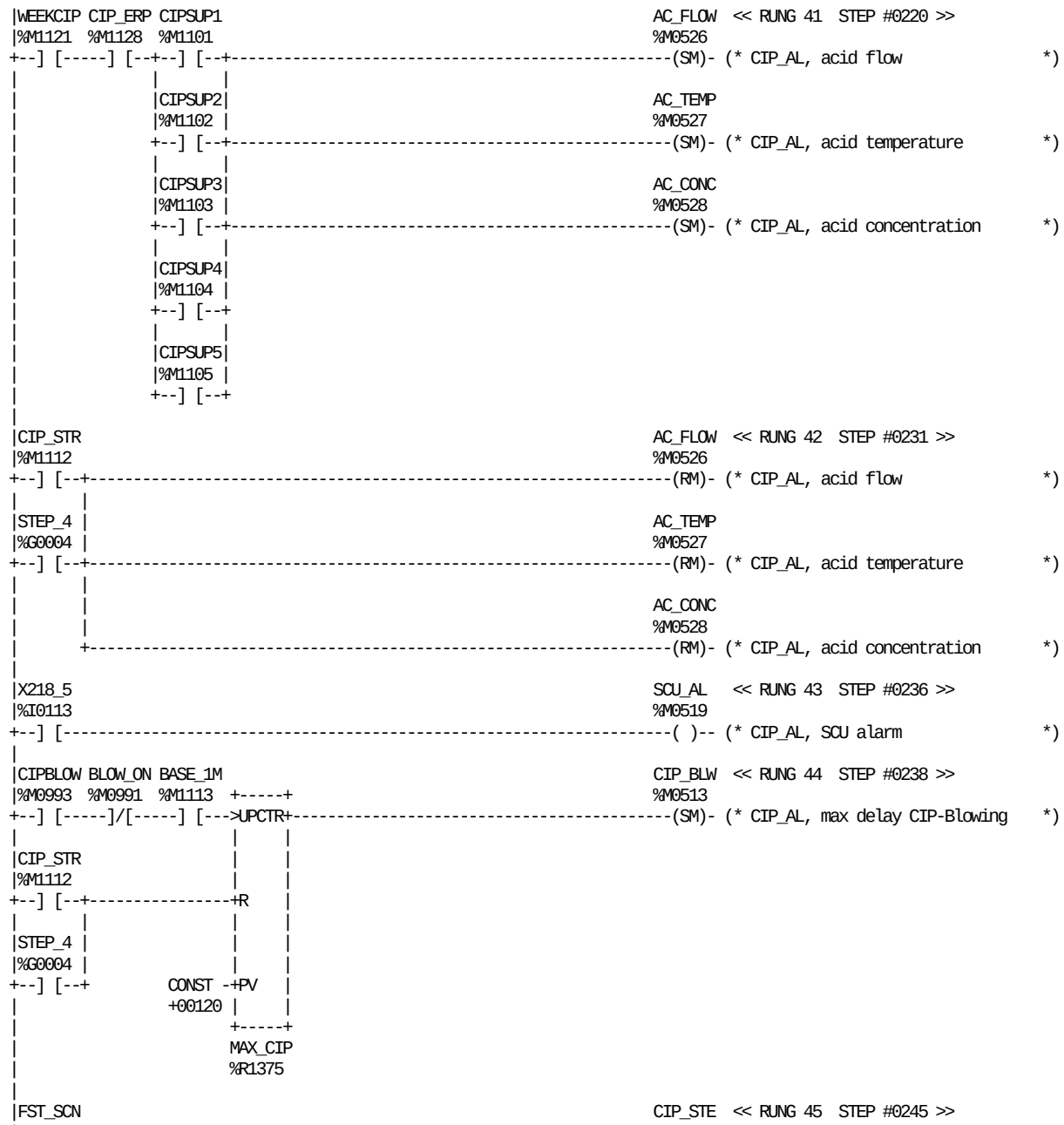

REFERENCE	NICKNAME	REFERENCE DESCRIPTION
%M0528	AC_CONC	CIP_AL, acid concentration
%M0526	AC_FLOW	CIP_AL, acid flow
%M0527	AC_TEMP	CIP_AL, acid temperature
%M1113	BASE_1M	Base 1 minute
%M0991	BLOW_ON	CIP blowing going on
%M0993	CIPBLOW	CIP blowing must be done
%M1101	CIPSUP1	CIP Superv.Step 1-Cold rinsing
%M1102	CIPSUP2	CIP Superv.Step 2-Warm rinsing
%M1103	CIPSUP3	CIP Superv.Step 3-Alkali clean.
%M1104	CIPSUP4	CIP Superv.Step 4-Alkali rinsing
%M1105	CIPSUP5	CIP Superv.Step 5-Acid cleaning

REFERENCE	NICKNAME	REFERENCE DESCRIPTION
%M0513	CIP_BLW	CIP_AL, max delay CIP-Blowing
%M1128	CIP_ERP	CIP, End running pulse
%M0514	CIP_STE	CIP_AL, max delay CIP-Steriliz.
%M1112	CIP_STR	CIP, Started pulse
%S0001	FST_SCN	
%R1375	MAX_CIP	CIP, Max.time to complete
%M0519	SCU_AL	CIP_AL, SCU alarm
%G0004	STEP_4	HEAT STERILIZATION
%M1121	WEEKCIP	CIP, Weekly cleaning
%I0113	X218_5	CIP comm. 5 SCU in alarm

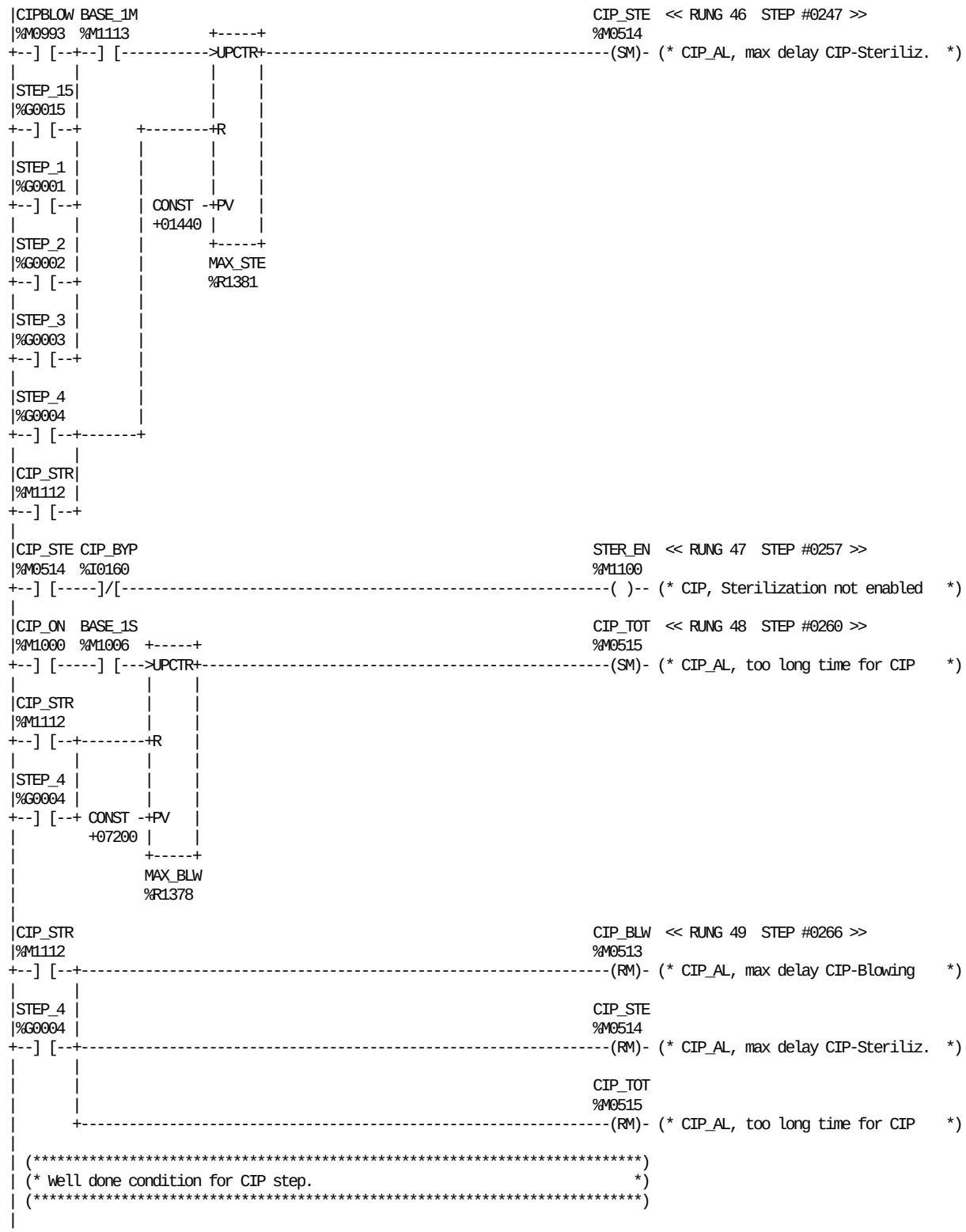

REFERENCE	NICKNAME	REFERENCE DESCRIPTION	REFERENCE	NICKNAME	REFERENCE DESCRIPTION
%M1113	BASE_1M	Base 1 minute	%R1378	MAX_BLW	CIP, Max.time to Blow
%M1006	BASE_1S	Base 1 sec. positive pulse	%R1381	MAX_STE	CIP, Max.time to Sterilize
%M0993	CIPBLOW	CIP blowing must be done	%G0001	STEP_1	STANDBY
%M0513	CIP_BLW	CIP_AL, max delay CIP-Blowing	%G0015	STEP_15	BLOWING
%I0160	CIP_BYP	CIP done condition, By-pass	%G0002	STEP_2	PREPARATION (3 MIN.)
%M1000	CIP_ON	CIP going on	%G0003	STEP_3	TUBE SEALING
%M0514	CIP_STE	CIP_AL, max delay CIP-Steriliz.	%G0004	STEP_4	HEAT STERILIZATION
%M1112	CIP_STR	CIP, Started pulse	%M1100	STER_EN	CIP, Sterilization not enabled
%M0515	CIP_TOT	CIP_AL, too long time for CIP			

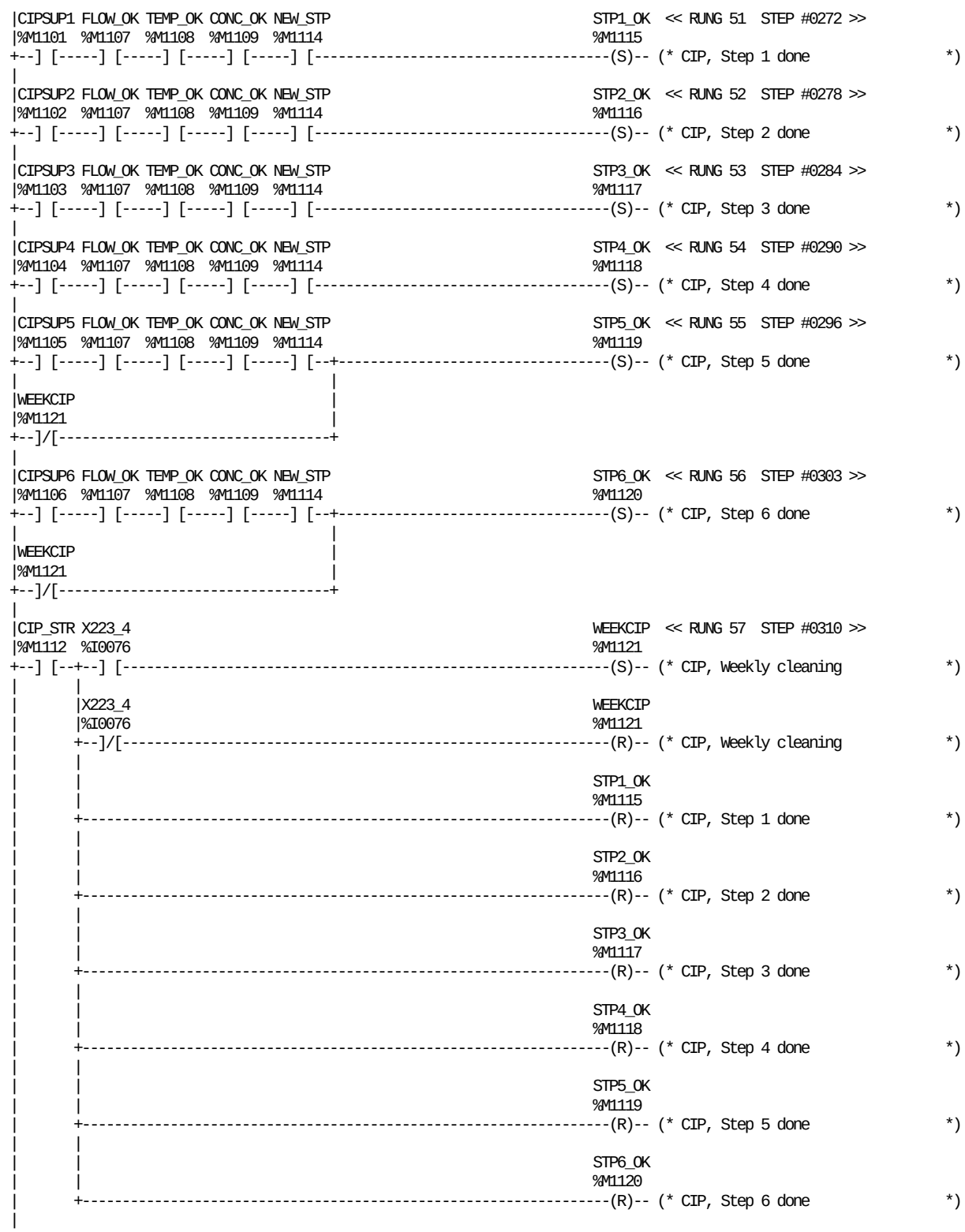

REFERENCE	NICKNAME	REFERENCE DESCRIPTION	REFERENCE	NICKNAME	REFERENCE DESCRIPTION
%M1101	CIPSUP1	CIP Superv.Step 1-Cold rinsing	%M1115	STP1_OK	CIP, Step 1 done
%M1102	CIPSUP2	CIP Superv.Step 2-Warm rinsing	%M1116	STP2_OK	CIP, Step 2 done
%M1103	CIPSUP3	CIP Superv.Step 3-Alkali clean.	%M1117	STP3_OK	CIP, Step 3 done
%M1104	CIPSUP4	CIP Superv.Step 4-Alkali rinsing	%M1118	STP4_OK	CIP, Step 4 done
%M1105	CIPSUP5	CIP Superv.Step 5-Acid cleaning	%M1119	STP5_OK	CIP, Step 5 done
%M1106	CIPSUP6	CIP Superv.Step 6-Final rinsing	%M1120	STP6_OK	CIP, Step 6 done
%M1112	CIP_STR	CIP, Started pulse	%M1108	TEMP_OK	CIP, Temperature OK
%M1109	CONC_OK	CIP, Concentration OK	%M1121	WEEKCIP	CIP, Weekly cleaning
%M1107	FLOW_OK	CIP, Flow OK	%I0076	X223_4	CIP comm. 4 CIP weekly cleaning
%M1114	NEW_STP	CIP, new cleaning step pulse			

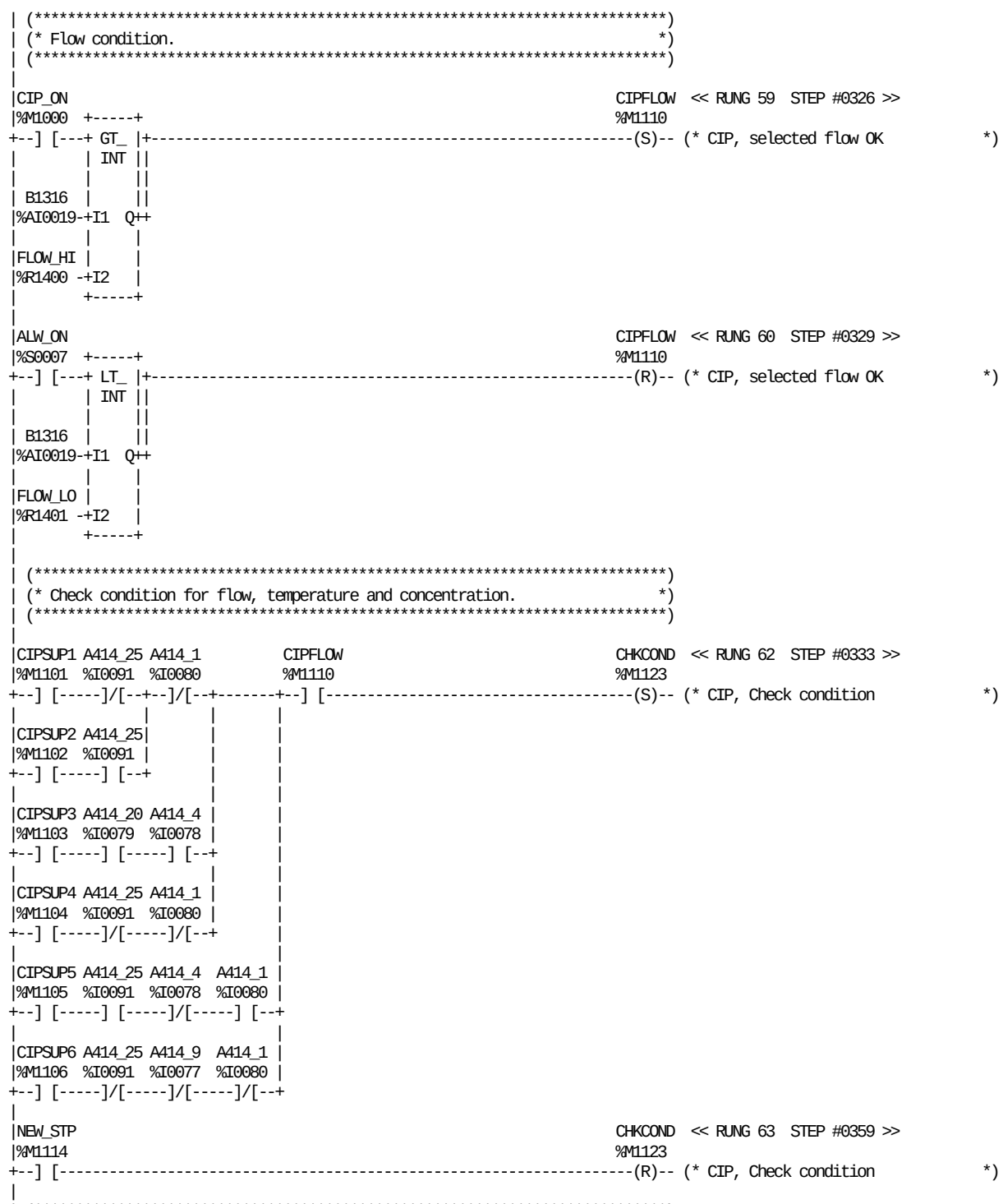

REFERENCE	NICKNAME	REFERENCE DESCRIPTION
%I0080	A414_1	CIP, PH OK acid cleaning
%I0079	A414_20	CIP, temper OK alkali cleaning
%I0091	A414_25	CIP, Temper OK Warm Rinsing-Acid
%I0078	A414_4	CIP, PH OK alkali cleaning
%I0077	A414_9	CIP, PH OK rinsing water
%S0007	ALW_ON	
%AI0019	B1316	CIP flow
%M1123	CHKCOND	CIP, Check condition
%M1110	CIPFLOW	CIP, selected flow OK
%M1101	CIPSUP1	CIP Superv.Step 1-Cold rinsing
%M1102	CIPSUP2	CIP Superv.Step 2-Warm rinsing
%M1103	CIPSUP3	CIP Superv.Step 3-Alkali clean.
%M1104	CIPSUP4	CIP Superv.Step 4-Alkali rinsing
%M1105	CIPSUP5	CIP Superv.Step 5-Acid cleaning
%M1106	CIPSUP6	CIP Superv.Step 6-Final rinsing
%M1000	CIP_ON	CIP going on
%R1400	FLOW_HI	CIP, Flow switch high
%R1401	FLOW_LO	CIP, Flow switch low
%M1114	NEW_STP	CIP, new cleaning step pulse

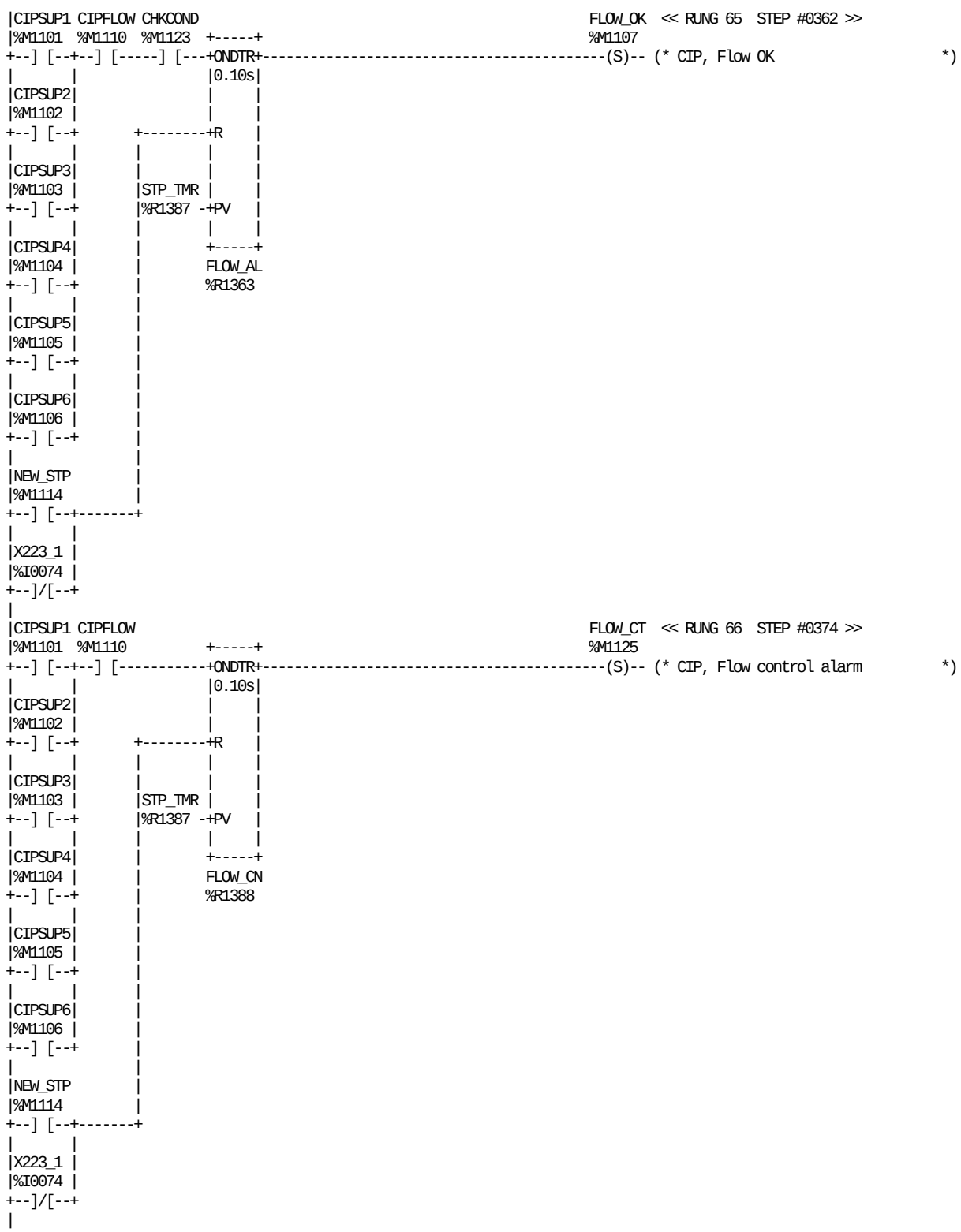

REFERENCE	NICKNAME	REFERENCE DESCRIPTION
%M1123	CHKCOND	CIP, Check condition
%M1110	CIPFLOW	CIP, selected flow OK
%M1101	CIPSUP1	CIP Superv.Step 1-Cold rinsing
%M1102	CIPSUP2	CIP Superv.Step 2-Warm rinsing
%M1103	CIPSUP3	CIP Superv.Step 3-Alkali clean.
%M1104	CIPSUP4	CIP Superv.Step 4-Alkali rinsing
%M1105	CIPSUP5	CIP Superv.Step 5-Acid cleaning
%M1106	CIPSUP6	CIP Superv.Step 6-Final rinsing

REFERENCE	NICKNAME	REFERENCE DESCRIPTION
%R1363	FLOW_AL	CIP, Flow alarm timer
%R1388	FLOW_CN	CIP, Flow control timer
%M1125	FLOW_CT	CIP, Flow control alarm
%M1107	FLOW_OK	CIP, Flow OK
%M1114	NEW_STP	CIP, new cleaning step pulse
%R1387	STP_TMR	CIP, Step time register
%I0074	X223_1	CIP comm. 2 CIP running

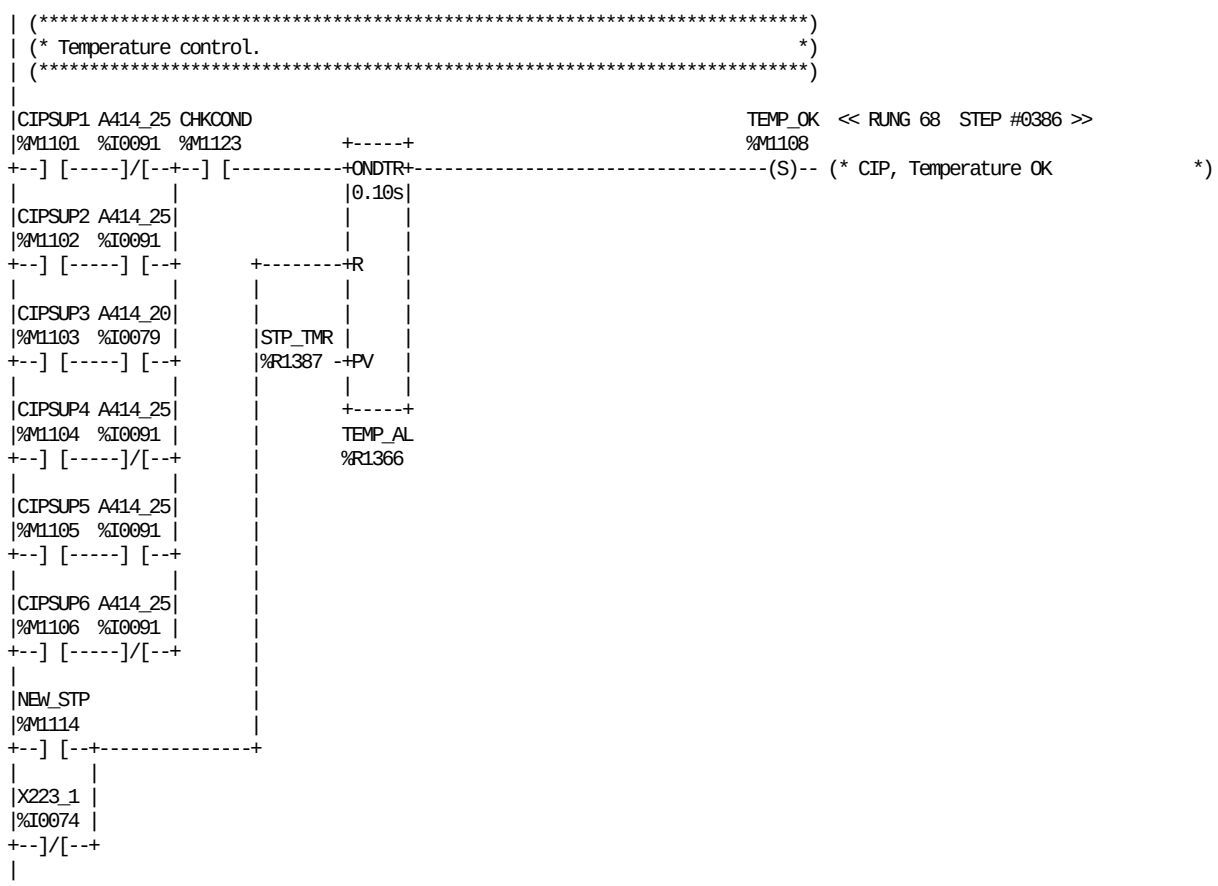

REFERENCE	NICKNAME	REFERENCE DESCRIPTION	REFERENCE	NICKNAME	REFERENCE DESCRIPTION
%I0079	A414_20	CIP, temper OK alkali cleaning	%M1105	CIPSUP5	CIP Superv.Step 5-Acid cleaning
%I0091	A414_25	CIP, Temper OK Warm Rinsing-Acid	%M1106	CIPSUP6	CIP Superv.Step 6-Final rinsing
%M1123	CHKCOND	CIP, Check condition	%M1114	NEW_STP	CIP, new cleaning step pulse
%M1101	CIPSUP1	CIP Superv.Step 1-Cold rinsing	%R1387	STP_TMR	CIP, Step time register
%M1102	CIPSUP2	CIP Superv.Step 2-Warm rinsing	%R1366	TEMP_AL	CIP, Temperature alarm timer
%M1103	CIPSUP3	CIP Superv.Step 3-Alkali clean.	%M1108	TEMP_OK	CIP, Temperature OK
%M1104	CIPSUP4	CIP Superv.Step 4-Alkali rinsing	%I0074	X223_1	CIP comm. 2 CIP running

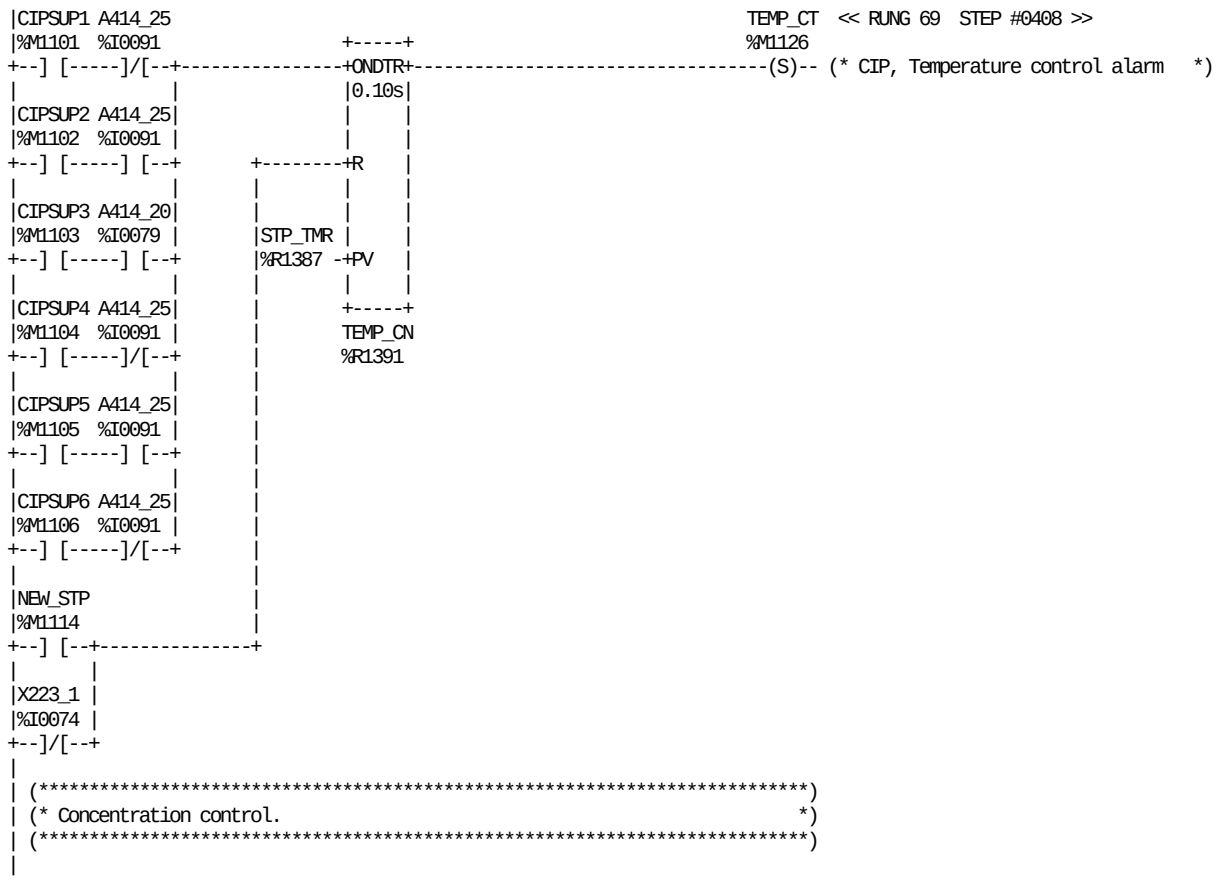

REFERENCE	NICKNAME	REFERENCE DESCRIPTION
%I0079	A414_20	CIP, temper OK alkali cleaning
%I0091	A414_25	CIP, Temper OK Warm Rinsing-Acid
%M1101	CIPSUP1	CIP Superv.Step 1-Cold rinsing
%M1102	CIPSUP2	CIP Superv.Step 2-Warm rinsing
%M1103	CIPSUP3	CIP Superv.Step 3-Alkali clean.
%M1104	CIPSUP4	CIP Superv.Step 4-Alkali rinsing
%M1105	CIPSUP5	CIP Superv.Step 5-Acid cleaning

REFERENCE	NICKNAME	REFERENCE DESCRIPTION
%M1106	CIPSUP6	CIP Superv.Step 6-Final rinsing
%M1114	NEW_STP	CIP, new cleaning step pulse
%R1387	STP_TMR	CIP, Step time register
%R1391	TEMP_CN	CIP, Temperature control timer
%M1126	TEMP_CT	CIP, Temperature control alarm
%I0074	X223_1	CIP comm. 2 CIP running

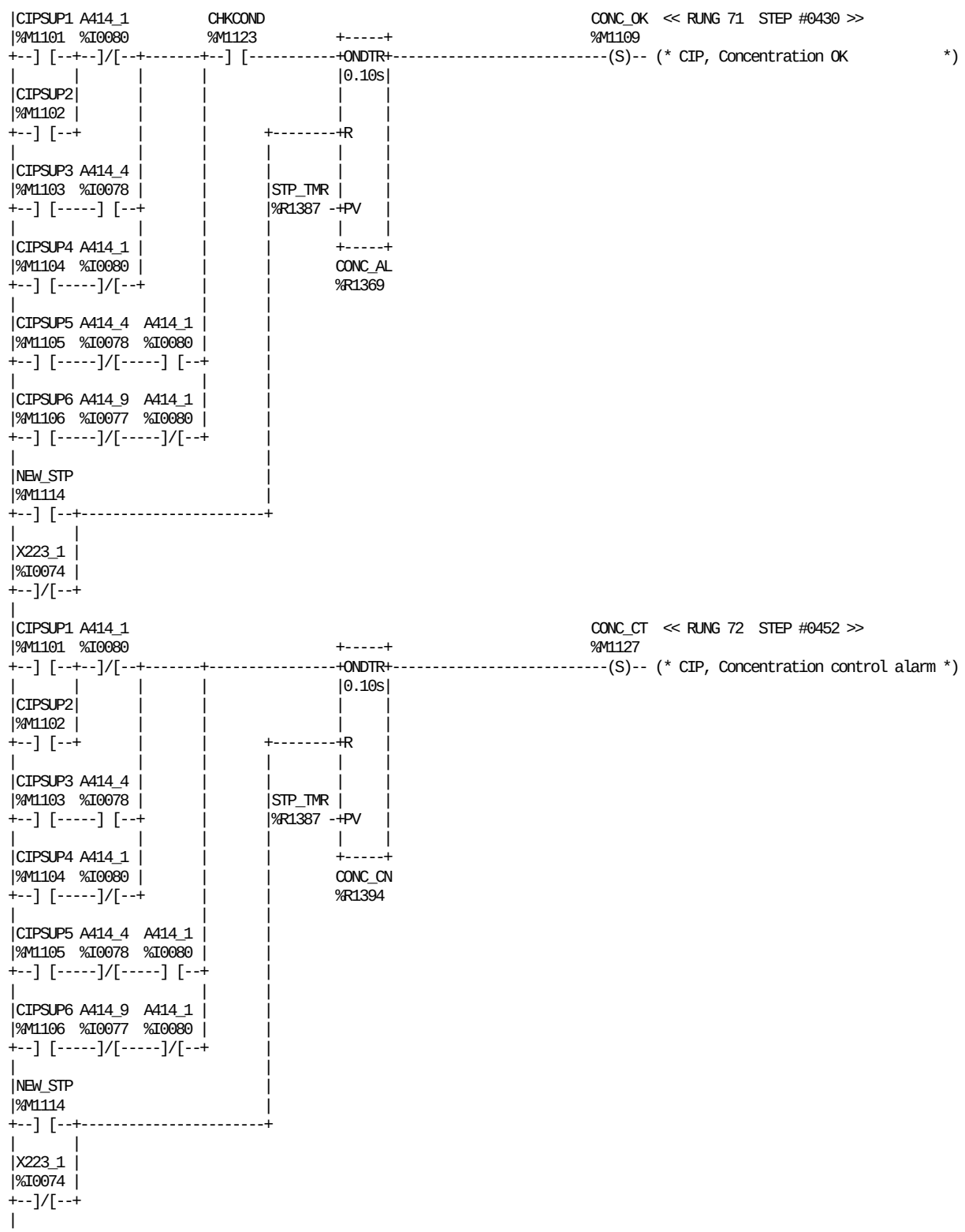

REFERENCE	NICKNAME	REFERENCE DESCRIPTION
%I0080	A414_1	CIP, PH OK acid cleaning
%I0078	A414_4	CIP, PH OK alkali cleaning
%I0077	A414_9	CIP, PH OK rinsing water
%M1123	CHKCOND	CIP, Check condition
%M1101	CIPSUP1	CIP Superv.Step 1-Cold rinsing
%M1102	CIPSUP2	CIP Superv.Step 2-Warm rinsing
%M1103	CIPSUP3	CIP Superv.Step 3-Alkali clean.
%M1104	CIPSUP4	CIP Superv.Step 4-Alkali rinsing
%M1105	CIPSUP5	CIP Superv.Step 5-Acid cleaning
%M1106	CIPSUP6	CIP Superv.Step 6-Final rinsing
%R1369	CONC_AL	CIP, Concentration alarm timer
%R1394	CONC_CN	CIP, Concentration control timer
%M1127	CONC_CT	CIP, Concentration control alarm
%M1109	CONC_OK	CIP, Concentration OK
%M1114	NEW_STP	CIP, new cleaning step pulse
%R1387	STP_TMR	CIP, Step time register
%I0074	X223_1	CIP comm. 2 CIP running

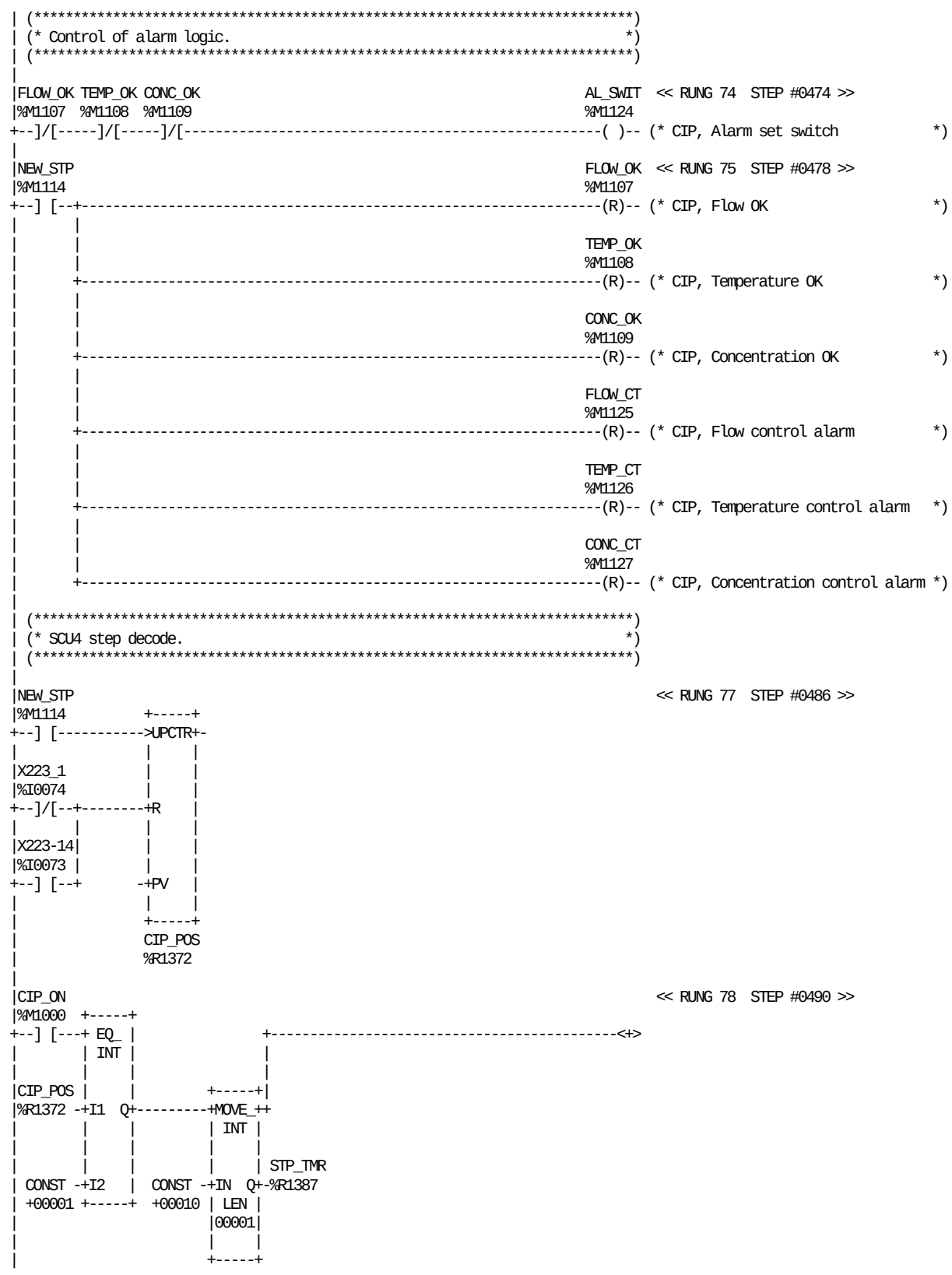

REFERENCE	NICKNAME	REFERENCE DESCRIPTION	REFERENCE	NICKNAME	REFERENCE DESCRIPTION
%M1124	AL_SWIT	CIP, Alarm set switch	%M1114	NEW_STP	CIP, new cleaning step pulse
%M1000	CIP_ON	CIP going on	%R1387	STP_TMR	CIP, Step time register
%R1372	CIP_POS	CIP, Cycle position	%M1126	TEMP_CT	CIP, Temperature control alarm
%M1127	CONC_CT	CIP, Concentration control alarm	%M1108	TEMP_OK	CIP, Temperature OK
%M1109	CONC_OK	CIP, Concentration OK	%I0073	X223-14	CIP comm. 1 CIP ended
%M1125	FLOW_CT	CIP, Flow control alarm	%I0074	X223_1	CIP comm. 2 CIP running
%M1107	FLOW_OK	CIP, Flow OK			

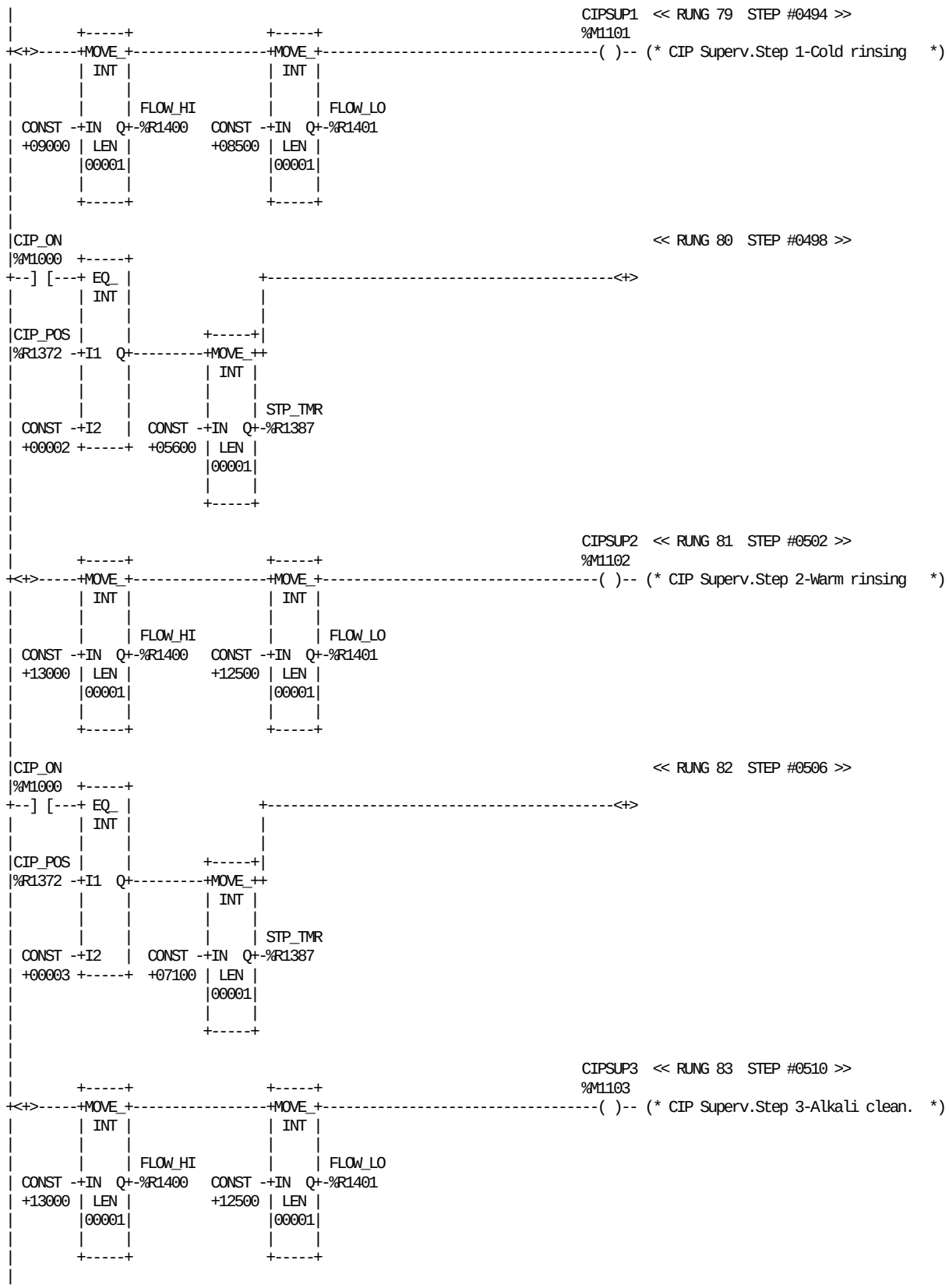

REFERENCE	NICKNAME	REFERENCE DESCRIPTION	REFERENCE	NICKNAME	REFERENCE DESCRIPTION
%M1101	CIPSUP1	CIP Superv.Step 1-Cold rinsing	%R1372	CIP_POS	CIP, Cycle position
%M1102	CIPSUP2	CIP Superv.Step 2-Warm rinsing	%R1400	FLOW_HI	CIP, Flow switch high
%M1103	CIPSUP3	CIP Superv.Step 3-Alkali clean.	%R1401	FLOW_LO	CIP, Flow switch low
%M1000	CIP_ON	CIP going on	%R1387	STP_TMR	CIP, Step time register

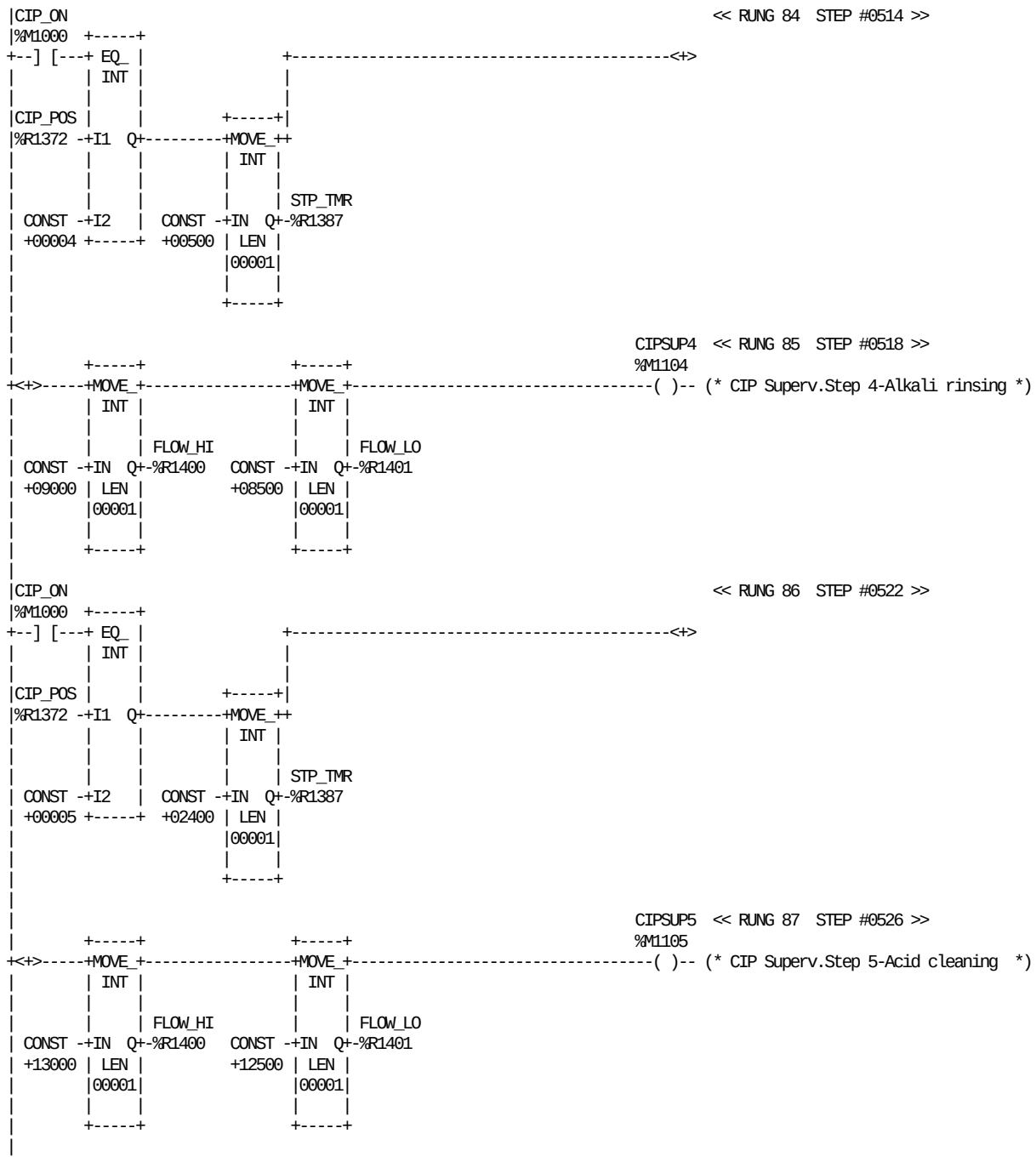

REFERENCE	NICKNAME	REFERENCE DESCRIPTION	REFERENCE	NICKNAME	REFERENCE DESCRIPTION
%M1104	CIPSUP4	CIP Superv.Step 4-Alkali rinsing	%R1400	FLOW_HI	CIP, Flow switch high
%M1105	CIPSUP5	CIP Superv.Step 5-Acid cleaning	%R1401	FLOW_LO	CIP, Flow switch low
%M1000	CIP_ON	CIP going on	%R1387	STP_TMR	CIP, Step time register
%R1372	CIP_POS	CIP, Cycle position			

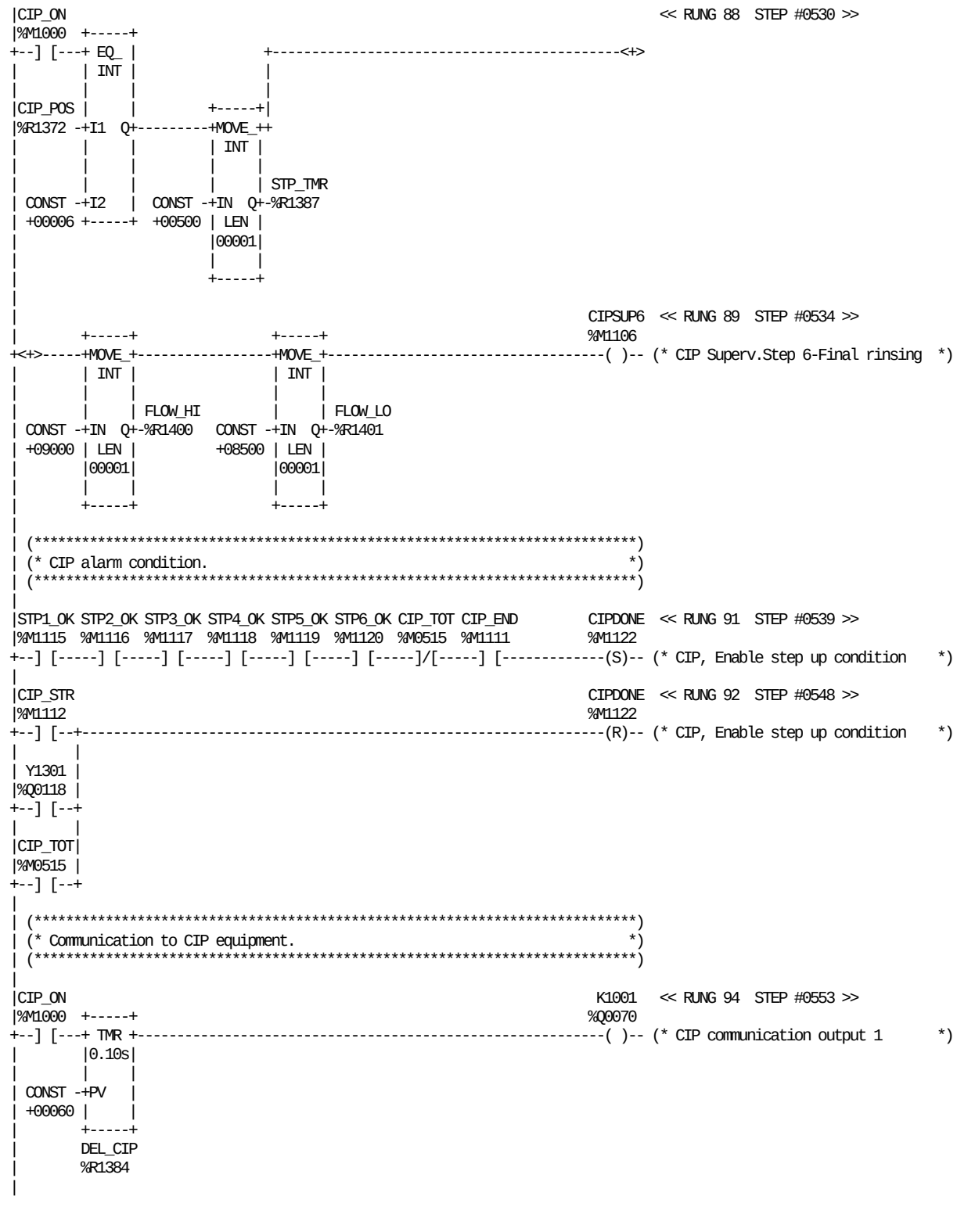

REFERENCE	NICKNAME	REFERENCE DESCRIPTION	REFERENCE	NICKNAME	REFERENCE DESCRIPTION
%M1122	CIPDONE	CIP, Enable step up condition	%Q0070	K1001	CIP communication output 1
%M1106	CIPSUP6	CIP Superv.Step 6-Final rinsing	%M1115	STP1_OK	CIP, Step 1 done
%M1111	CIP_END	CIP, Ended pulse	%M1116	STP2_OK	CIP, Step 2 done
%M1000	CIP_ON	CIP going on	%M1117	STP3_OK	CIP, Step 3 done
%R1372	CIP_POS	CIP, Cycle position	%M1118	STP4_OK	CIP, Step 4 done
%M1112	CIP_STR	CIP, Started pulse	%M1119	STP5_OK	CIP, Step 5 done
%M0515	CIP_TOT	CIP_AL, too long time for CIP	%M1120	STP6_OK	CIP, Step 6 done
%R1384	DEL_CIP	CIP, Delay for signal CIP ON	%R1387	STP_TMR	CIP, Step time register
%R1400	FLOW_HI	CIP, Flow switch high	%Q0118	Y1301	A-valve
%R1401	FLOW_LO	CIP, Flow switch low			

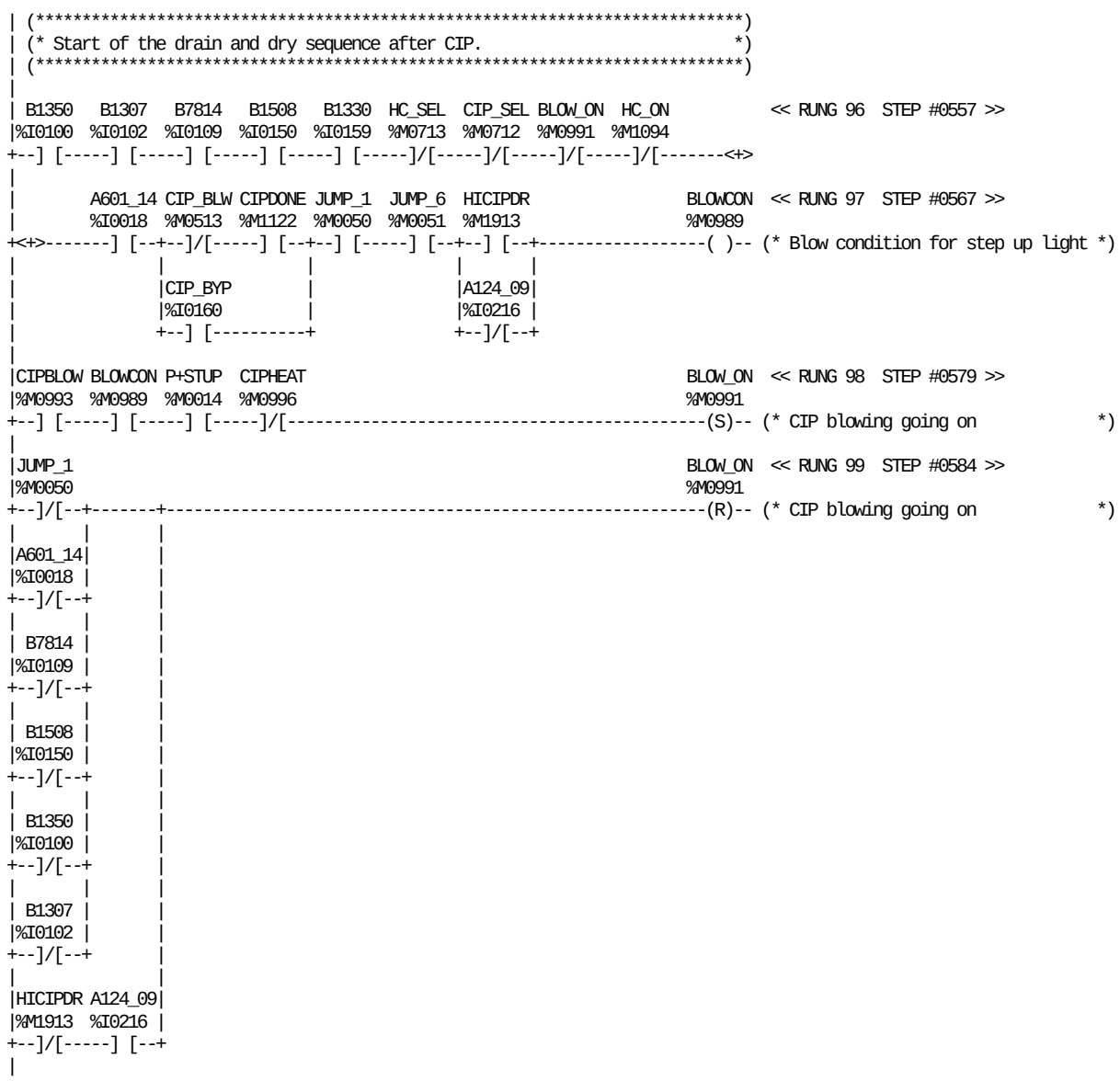

REFERENCE	NICKNAME	REFERENCE DESCRIPTION
%I0216	A124_09	HI Option
%I0018	A601_14	Safety monitors B
%I0102	B1307	Steril air pipe sensor
%I0159	B1330	Bucket cleaning pipe sensor
%I0100	B1350	Cup draining pipe in position
%I0150	B1508	Bucket cleaning door guard
%I0109	B7814	Bucket cleaning cup position
%M0989	BLOWCON	Blow condition for step up light
%M0991	BLOW_ON	CIP blowing going on
%M0993	CIPBLOW	CIP blowing must be done
%M1122	CIPDONE	CIP, Enable step up condition

REFERENCE	NICKNAME	REFERENCE DESCRIPTION
%M0996	CIPHEAT	Heating during CIP draining
%M0513	CIP_BLW	CIP_AL, max delay CIP-Blowing
%I0160	CIP_BYP	CIP done condition, By-pass
%M0712	CIP_SEL	CIP select from TPOP
%M1094	HC_ON	Hygienic cleaning going on
%M0713	HC_SEL	Hygienic cleaning selection ok
%M1913	HICIPDR	HI, HI system ready for CIP dry
%M0050	JUMP_1	Jump to pos 1 (Emergency stop)
%M0051	JUMP_6	Jump to pos 6 (Fast stop)
%M0014	P+STUP	Step up positive pulse

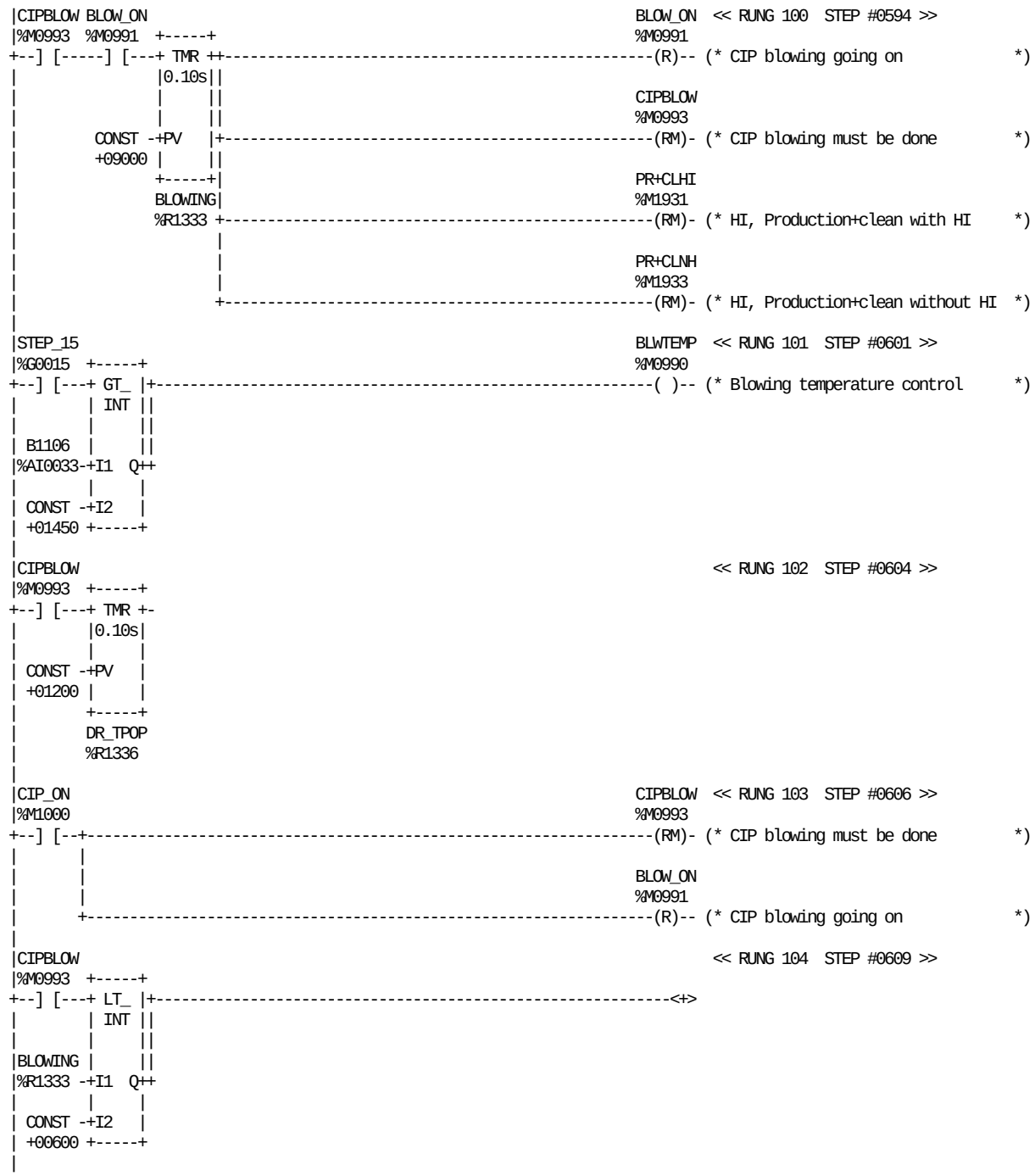

REFERENCE	NICKNAME	REFERENCE DESCRIPTION	REFERENCE	NICKNAME	REFERENCE DESCRIPTION
%AI0033	B1106	Heat sterilization	%M1000	CIP_ON	CIP going on
%R1333	BLOWING	Blowing time	%R1336	DR_TPOP	Draining bar for TPOP
%M0991	BLOW_ON	CIP blowing going on	%M1931	PR+CLHI	HI, Production+clean with HI
%M0990	BLWTEMP	Blowing temperature control	%M1933	PR+CLNH	HI, Production+clean without HI
%M0993	CIPBLOW	CIP blowing must be done	%G0015	STEP_15	BLOWING

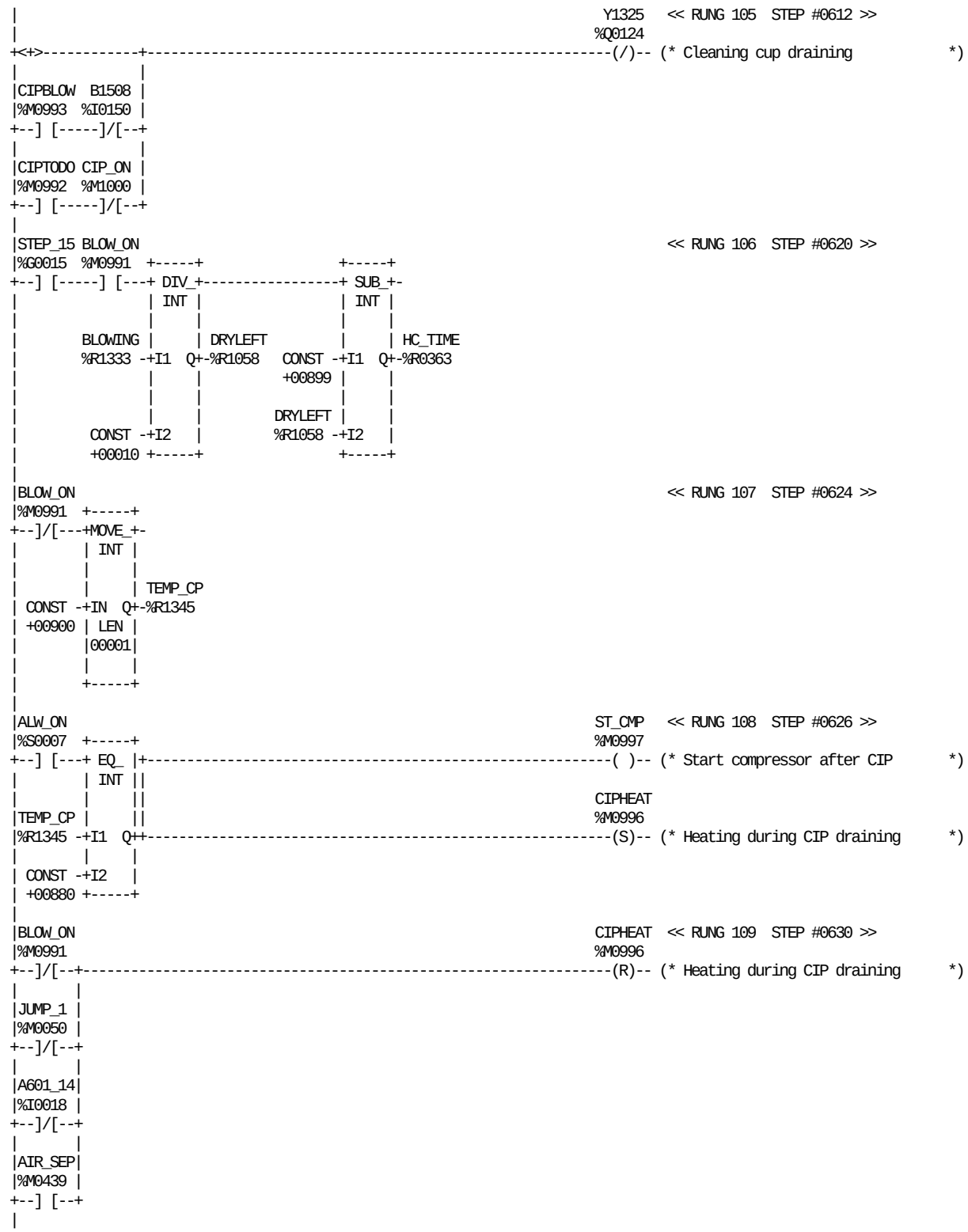

REFERENCE	NICKNAME	REFERENCE DESCRIPTION
%I0018	A601_14	Safety monitors B
%M0439	AIR_SEP	Air pressure separator
%S0007	ALW_ON	
%I0150	B1508	Bucket cleaning door guard
%R1333	BLOWING	Blowing time
%M0991	BLOW_ON	CIP blowing going on
%M0993	CIPBLOW	CIP blowing must be done
%M0996	CIPHEAT	Heating during CIP draining
%M0992	CIPTODO	CIP must be done

REFERENCE	NICKNAME	REFERENCE DESCRIPTION
%M1000	CIP_ON	CIP going on
%R1058	DRYLEFT	Drying time left (seconds)
%R0363	HC_TIME	HC timer to the TPOP
%M0050	JUMP_1	Jump to pos 1 (Emergency stop)
%G0015	STEP_15	BLOWING
%M0997	ST_CMP	Start compressor after CIP
%R1345	TEMP_CP	Temp reg CIP drain time calc.
%Q0124	Y1325	Cleaning cup draining

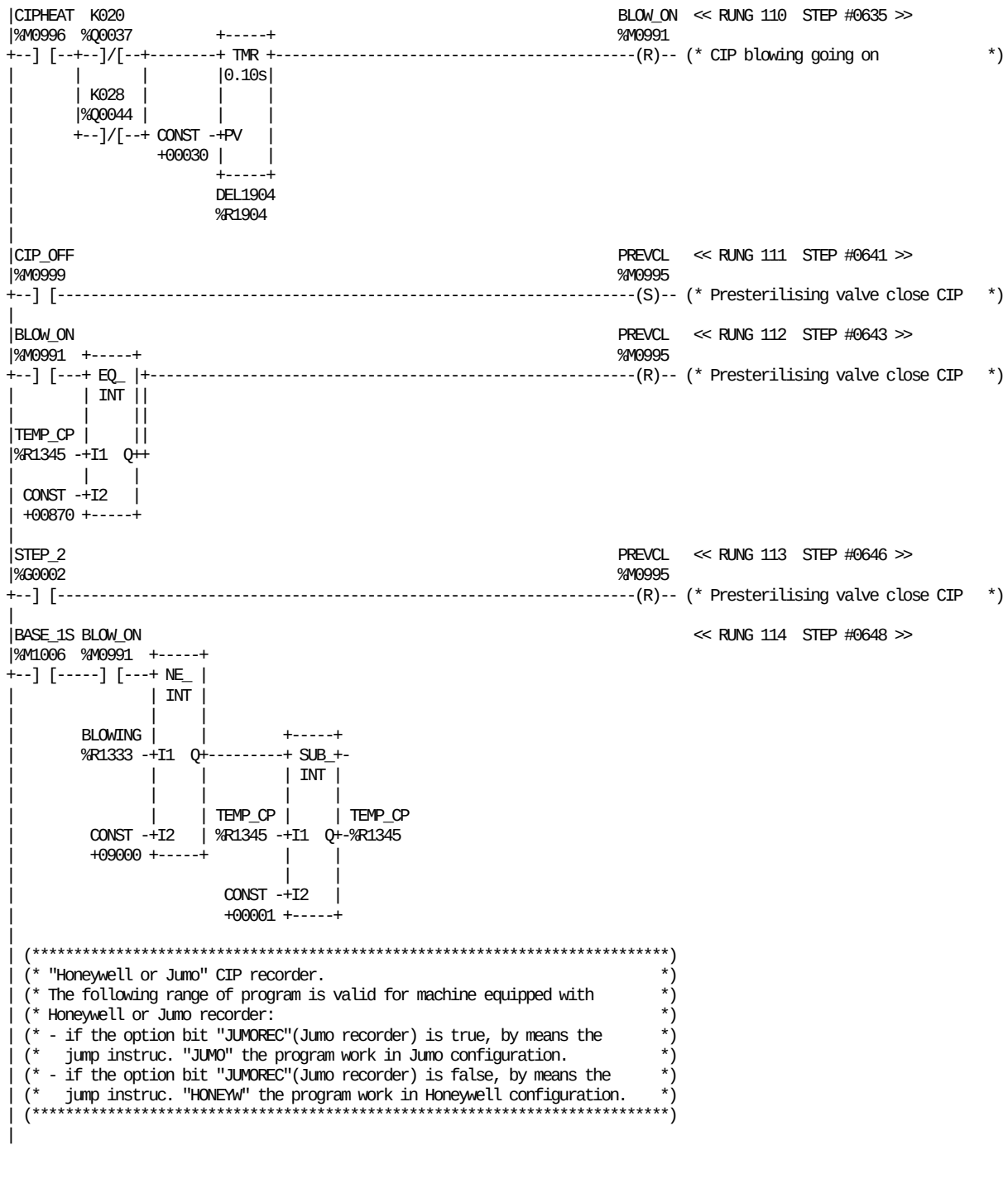

REFERENCE	NICKNAME	REFERENCE DESCRIPTION
%M1006	BASE_1S	Base 1 sec. positive pulse
%R1333	BLOWING	Blowing time
%M0991	BLOW_ON	CIP blowing going on
%M0996	CIPHEAT	Heating during CIP draining
%M0999	CIP_OFF	Pulse neg edge CIP_ON
%R1904	DEL1904	TMR delay for blowing stop

REFERENCE	NICKNAME	REFERENCE DESCRIPTION
%Q0037	K020	Air system compressor
%Q0044	K028	Air super heater
%M0995	PREVCL	Presterilising valve close CIP
%G0002	STEP_2	PREPARATION (3 MIN.)
%R1345	TEMP_CP	Temp reg CIP drain time calc.

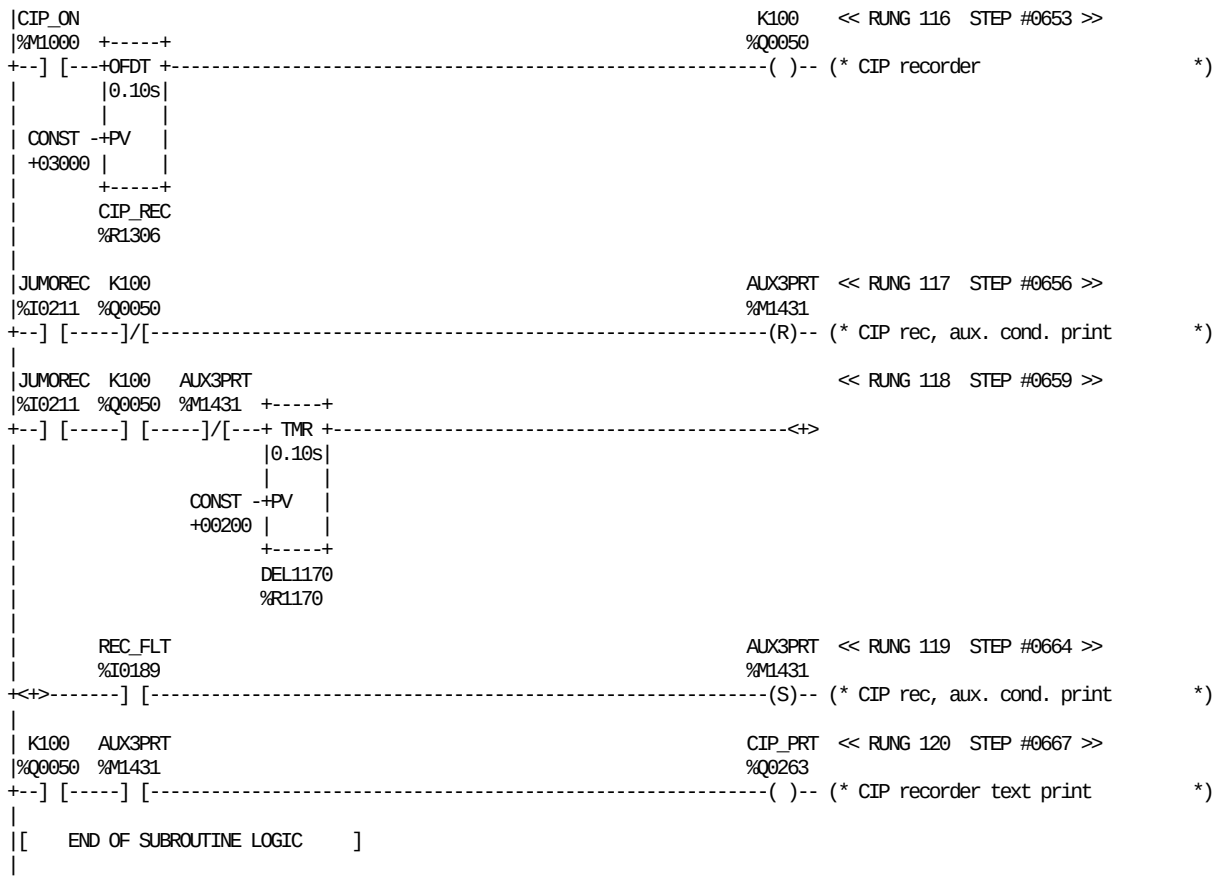

REFERENCE	NICKNAME	REFERENCE DESCRIPTION	REFERENCE	NICKNAME	REFERENCE DESCRIPTION
%M1431	AUX3PRT	CIP rec, aux. cond. print	%R1170	DEL1170	TMR delay for JUMO recorder kit
%M1000	CIP_ON	CIP going on	%I0211	JUMOREC	Option Jumo recorder
%Q0263	CIP_PRT	CIP recorder text print	%Q0050	K100	CIP recorder
%R1306	CIP_REC	Delay off,for CIP recorder	%I0189	REC_FLT	Recorder fault

This page left intentionally blank

```
|[  START LD SUBROUTINE    HC     ]
|
|[     VARIABLE DECLARATIONS      ]
|
|[   START OF SUBROUTINE LOGIC    ]
|
| (*************************************************************************)
| (* Subroutine for the control of the Hygienic Cleaning cycle:             *)
| (*                                                                         *)
| (*   There is a main ladder with complete cycle and complete              *)
| (*   selections. The differt selections are made by jumping in             *)
| (*   the main ladder changing the value of the main counter :              *)
| (*                                                                         *)
| (*                register %R1312 (HELPHCC)                              *)
| (*************************************************************************)
|
|HC_DONE  HC_ON  JUMP_6  COL_COV NO_WATE  B2201  Q24_14  K114_1  GR_SEL  HC_CON   << RUNG 5  STEP #0003 >>
|%M1092  %M1094  %M0051  %M0508  %M0507  %I0118  %I0022  %I0146  %M0716  %M0766
+--]/[-----]/[-----] [-----]/[-----]/[-----] [-----] [-----] [-----]/[-----( )-- (* HC start condition              *)
|
|HC_SEL  GR_SEL  HC_CON   S911                                          HC_ON   << RUNG 6  STEP #0013 >>
|%M0713  %M0716  %M0766  %I0088  +-----+                               %M1094
+--] [-----]/[-----] [-----] [---+ TMR +-----------------------------------(S)-- (* Hygienic cleaning going on *)
|                               |0.10s|
|                               |     |
|                         CONST -+PV   |
|                         +00030 |     |
|                               +-----+
|                                ST_HC
|                               %R1327
|
|HC_DONE                                                                 HC_ON   << RUNG 7  STEP #0019 >>
|%M1092                                                                 %M1094
+--] [--+-------+-------------------------------------------------------(R)-- (* Hygienic cleaning going on *)
|       |       |
|FST_SCN|       |
|%S0001 |       |
+--] [--+       |
|               |
| HC_ON  JUMP_6 |
|%M1094  %M0051 |
+--] [--+--]/[--+
|       |      |
|       |COL_COV|
|       |%M0508 |
|       +--] [--+
|       |       |
|       |NO_WATE|
|       |%M0507 |
|       +--] [--+
|       |       |
|       | B2201 |
|       |%I0118 |
|       +--]/[--+
|       |       |
|       |Q24_14 |
|       |%I0022 |
|       +--]/[--+
|       |       |
|       |K114_1 |
|       |%I0146 |
|       +--]/[--+
|
```

REFERENCE	NICKNAME	REFERENCE DESCRIPTION	REFERENCE	NICKNAME	REFERENCE DESCRIPTION
%I0118	B2201	Main air supply pressure	%M0713	HC_SEL	Hygienic cleaning selection ok
%M0508	COL_COV	Column cover cleaning position	%M0051	JUMP_6	Jump to pos 6 (Fast stop)
%S0001	FST_SCN		%I0146	K114_1	Front doors closed AC
%M0716	GR_SEL	Greasing selected	%M0507	NO_WATE	No water hygienic cleaning
%M0766	HC_CON	HC start condition	%I0022	Q24_14	Overload summary
%M1092	HC_DONE	Hygienic cleaning completed	%I0088	S911	Push button step up
%M1094	HC_ON	Hygienic cleaning going on	%R1327	ST_HC	Start timer Hygienic cleaning

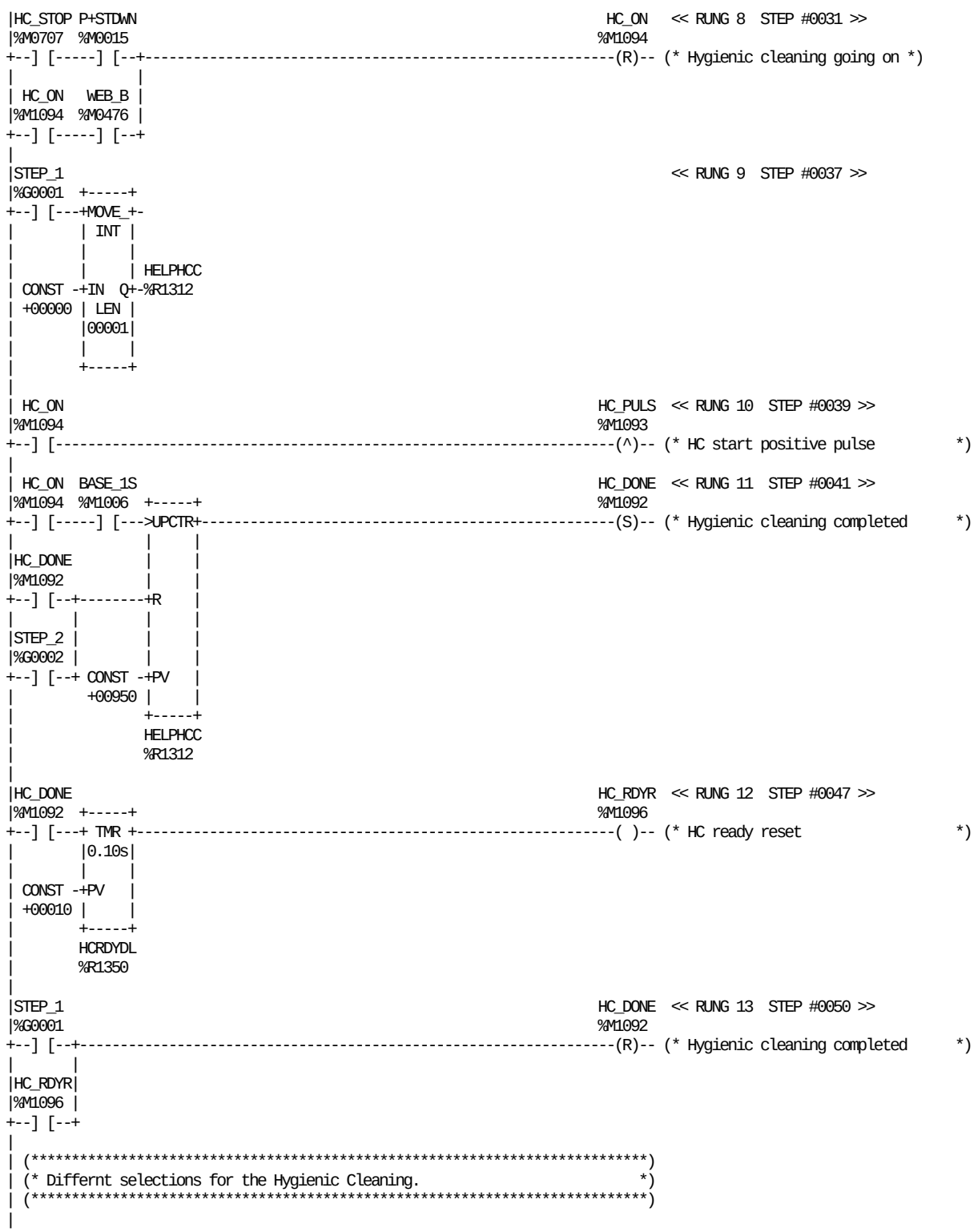

REFERENCE	NICKNAME	REFERENCE DESCRIPTION	REFERENCE	NICKNAME	REFERENCE DESCRIPTION
%M1006	BASE_1S	Base 1 sec. positive pulse	%M0707	HC_STOP	Stop hygienic cleaning
%R1350	HCRDYDL	TMR delay HC ready signal	%R1312	HELPHCC	Help HC counter
%M1092	HC_DONE	Hygienic cleaning completed	%M0015	P+STDWN	Step down positive pulse
%M1094	HC_ON	Hygienic cleaning going on	%G0001	STEP_1	STANDBY
%M1093	HC_PULS	HC start positive pulse	%G0002	STEP_2	PREPARATION (3 MIN.)
%M1096	HC_RDYR	HC ready reset	%M0476	WEB_B	ASU, Broken web at magazine

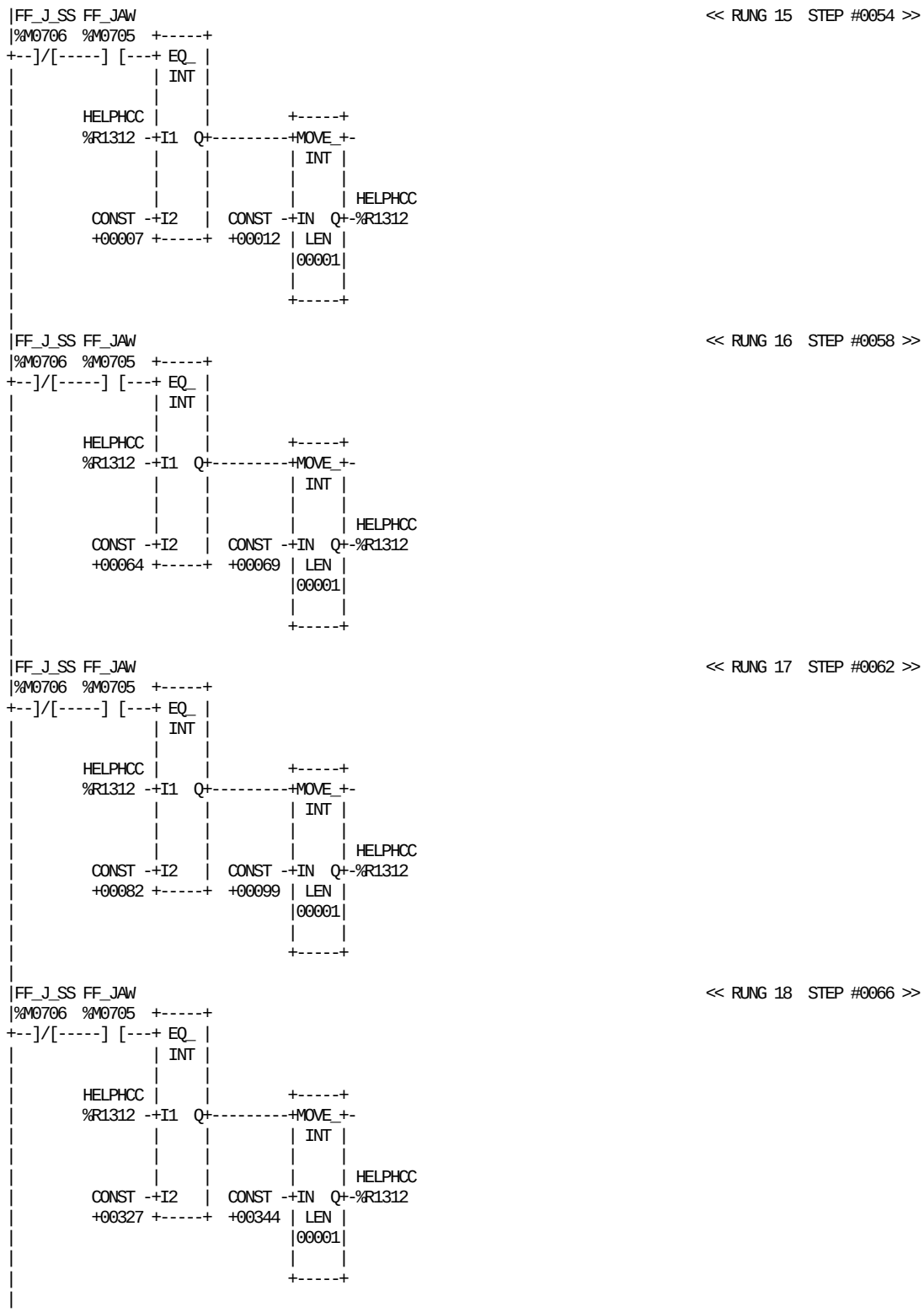

REFERENCE NICKNAME		REFERENCE DESCRIPTION	REFERENCE NICKNAME		REFERENCE DESCRIPTION
%M0705	FF_JAW	FFU+JAW selection	%R1312	HELPHCC	Help HC counter
%M0706	FF_J_SS	FFU+JAW+SST selection			

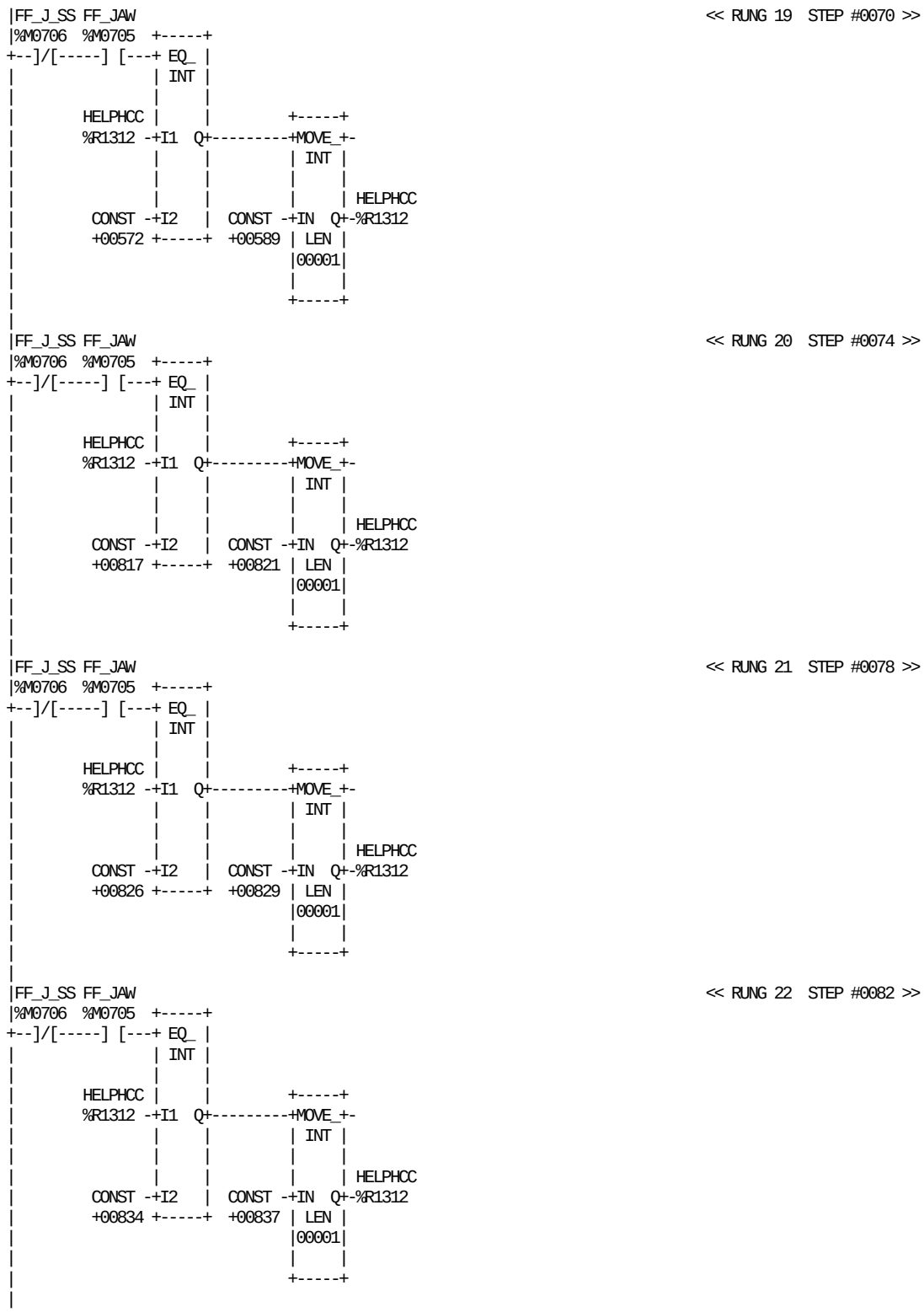

REFERENCE	NICKNAME	REFERENCE DESCRIPTION	REFERENCE	NICKNAME	REFERENCE DESCRIPTION
%M0705	FF_JAW	FFU+JAW selection	%R1312	HELPHCC	Help HC counter
%M0706	FF_J_SS	FFU+JAW+SST selection			

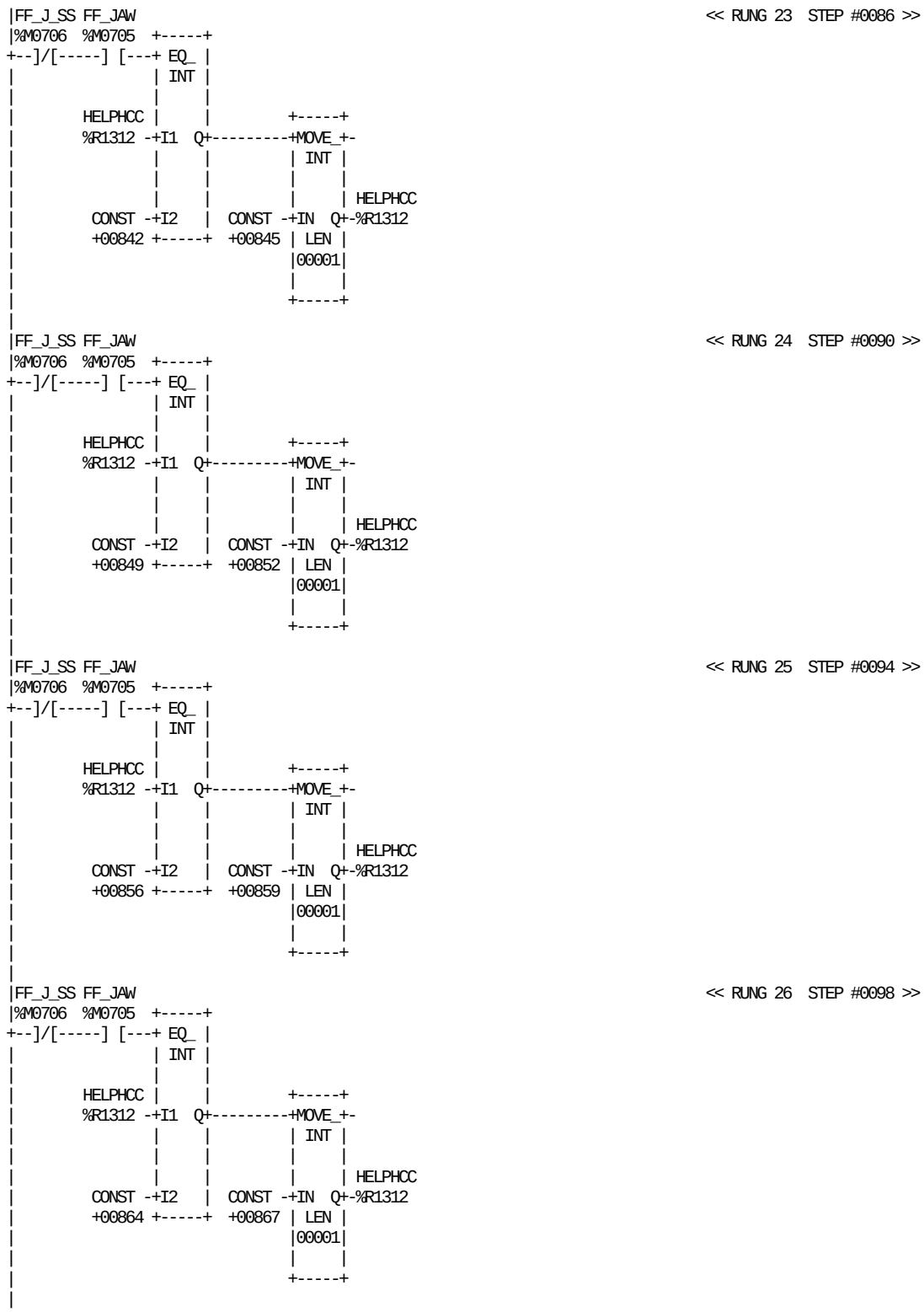

REFERENCE	NICKNAME	REFERENCE DESCRIPTION	REFERENCE	NICKNAME	REFERENCE DESCRIPTION
%M0705	FF_JAW	FFU+JAW selection	%R1312	HELPHCC	Help HC counter
%M0706	FF_J_SS	FFU+JAW+SST selection			

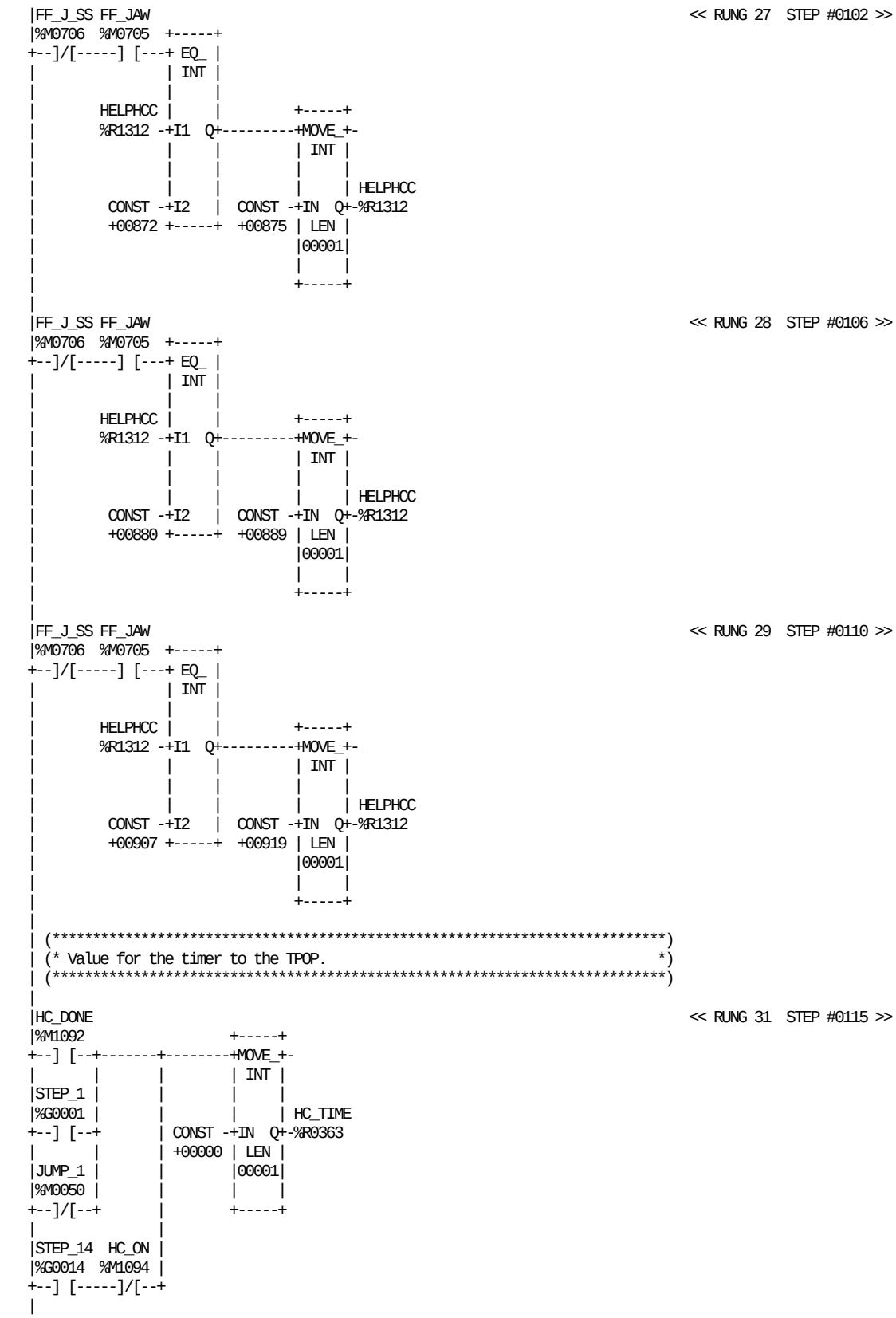

REFERENCE	NICKNAME	REFERENCE DESCRIPTION
%M0705	FF_JAW	FFU+JAW selection
%M0706	FF_J_SS	FFU+JAW+SST selection
%M1092	HC_DONE	Hygienic cleaning completed
%M1094	HC_ON	Hygienic cleaning going on
%R0363	HC_TIME	HC timer to the TPOP

REFERENCE	NICKNAME	REFERENCE DESCRIPTION
%R1312	HELPHCC	Help HC counter
%M0050	JUMP_1	Jump to pos 1 (Emergency stop)
%G0001	STEP_1	STANDBY
%G0014	STEP_14	CIP / HC

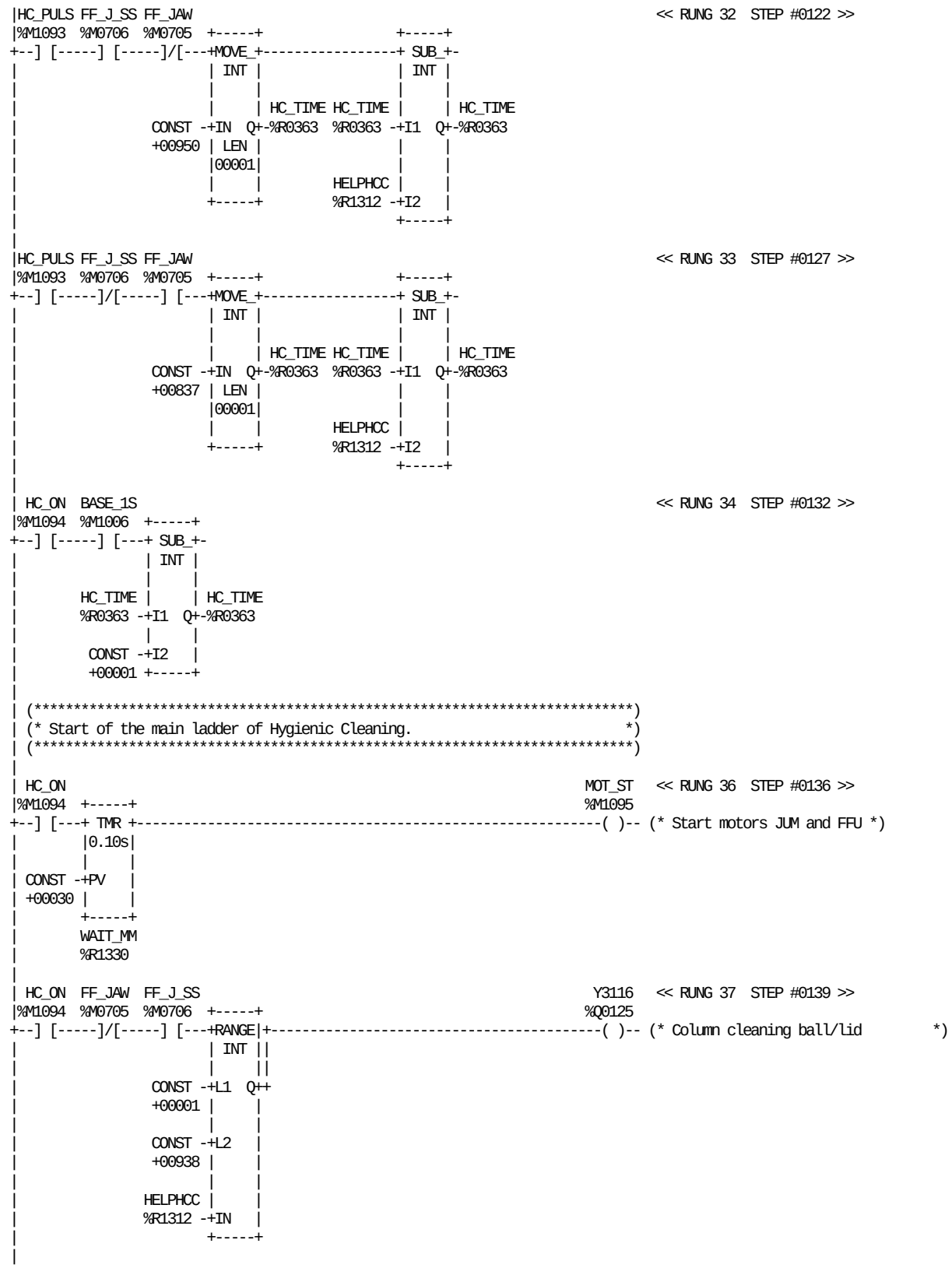

REFERENCE	NICKNAME	REFERENCE DESCRIPTION	REFERENCE	NICKNAME	REFERENCE DESCRIPTION
%M1006	BASE_1S	Base 1 sec. positive pulse	%R0363	HC_TIME	HC timer to the TPOP
%M0705	FF_JAW	FFU+JAW selection	%R1312	HELPHCC	Help HC counter
%M0706	FF_J_SS	FFU+JAW+SST selection	%M1095	MOT_ST	Start motors JUM and FFU
%M1094	HC_ON	Hygienic cleaning going on	%R1330	WAIT_MM	Delay start of motors
%M1093	HC_PULS	HC start positive pulse	%Q0125	Y3116	Column cleaning ball/lid

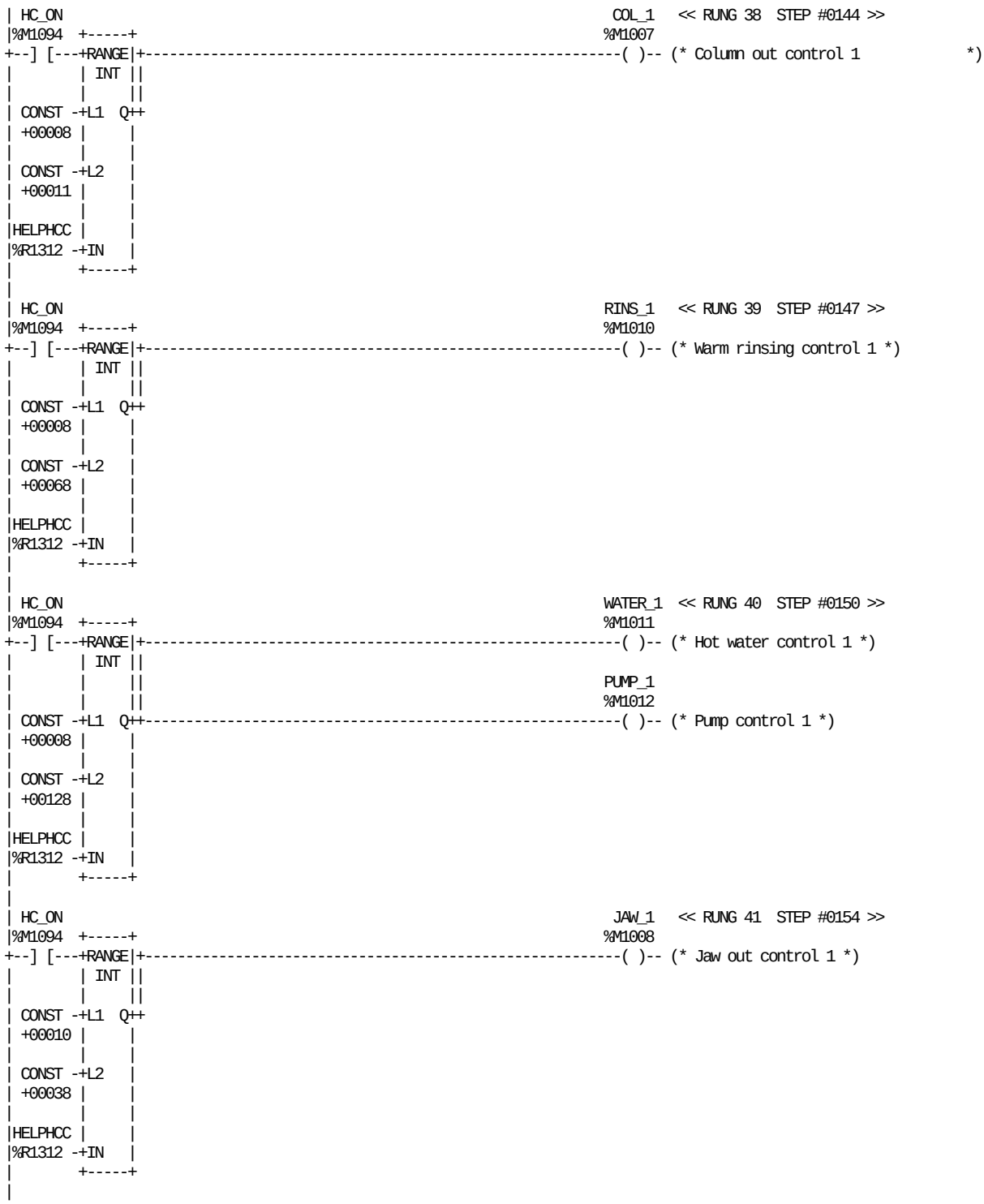

REFERENCE	NICKNAME	REFERENCE DESCRIPTION	REFERENCE	NICKNAME	REFERENCE DESCRIPTION
%M1007	COL_1	Column out control 1	%M1012	PUMP_1	Pump control 1
%M1094	HC_ON	Hygienic cleaning going on	%M1010	RINS_1	Warm rinsing control 1
%R1312	HELPHCC	Help HC counter	%M1011	WATER_1	Hot water control 1
%M1008	JAW_1	Jaw out control 1			

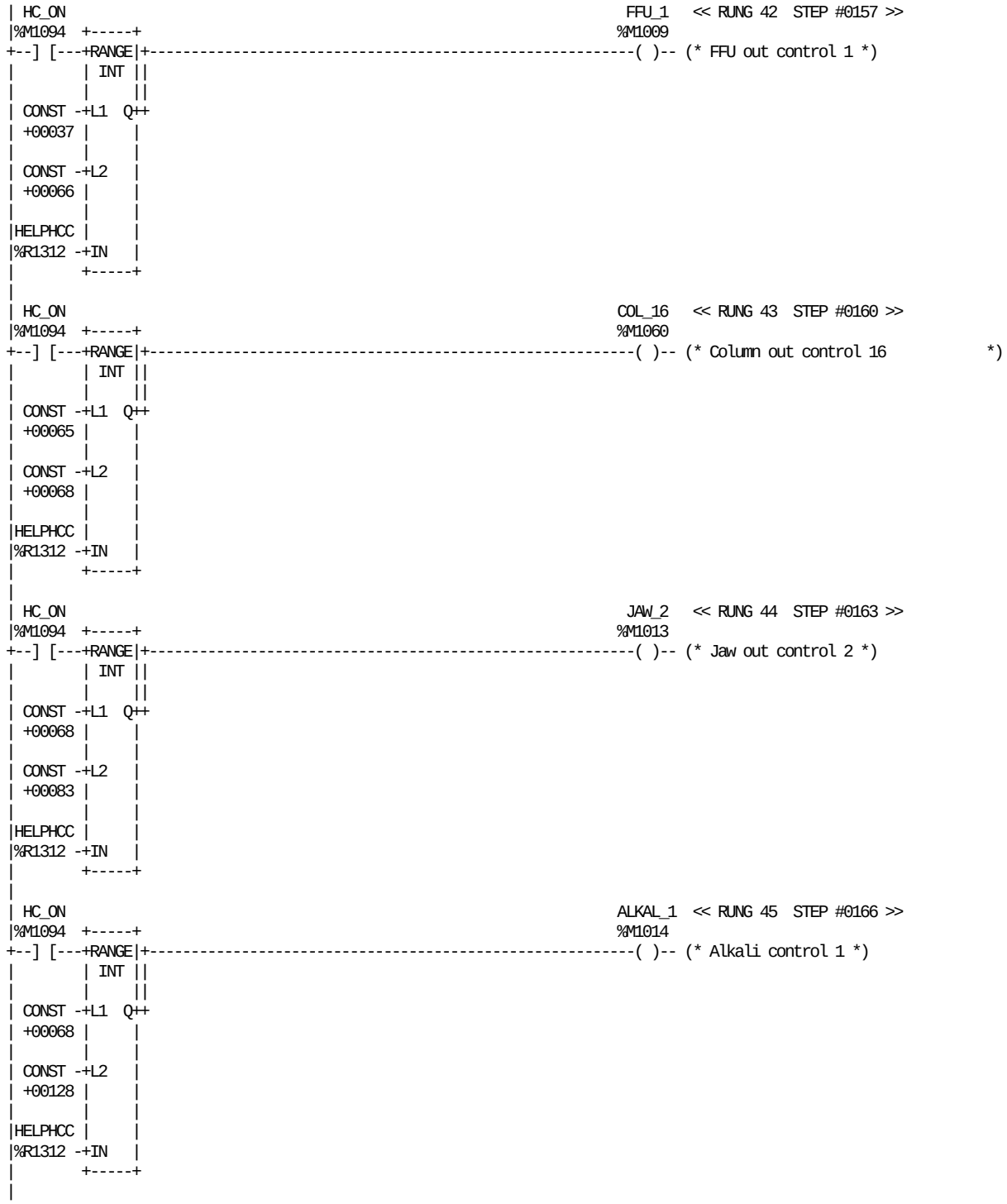

REFERENCE	NICKNAME	REFERENCE DESCRIPTION
%M1014	ALKAL_1	Alkali control 1
%M1060	COL_16	Column out control 16
%M1009	FFU_1	FFU out control 1
%M1094	HC_ON	Hygienic cleaning going on
%R1312	HELPHCC	Help HC counter
%M1013	JAW_2	Jaw out control 2

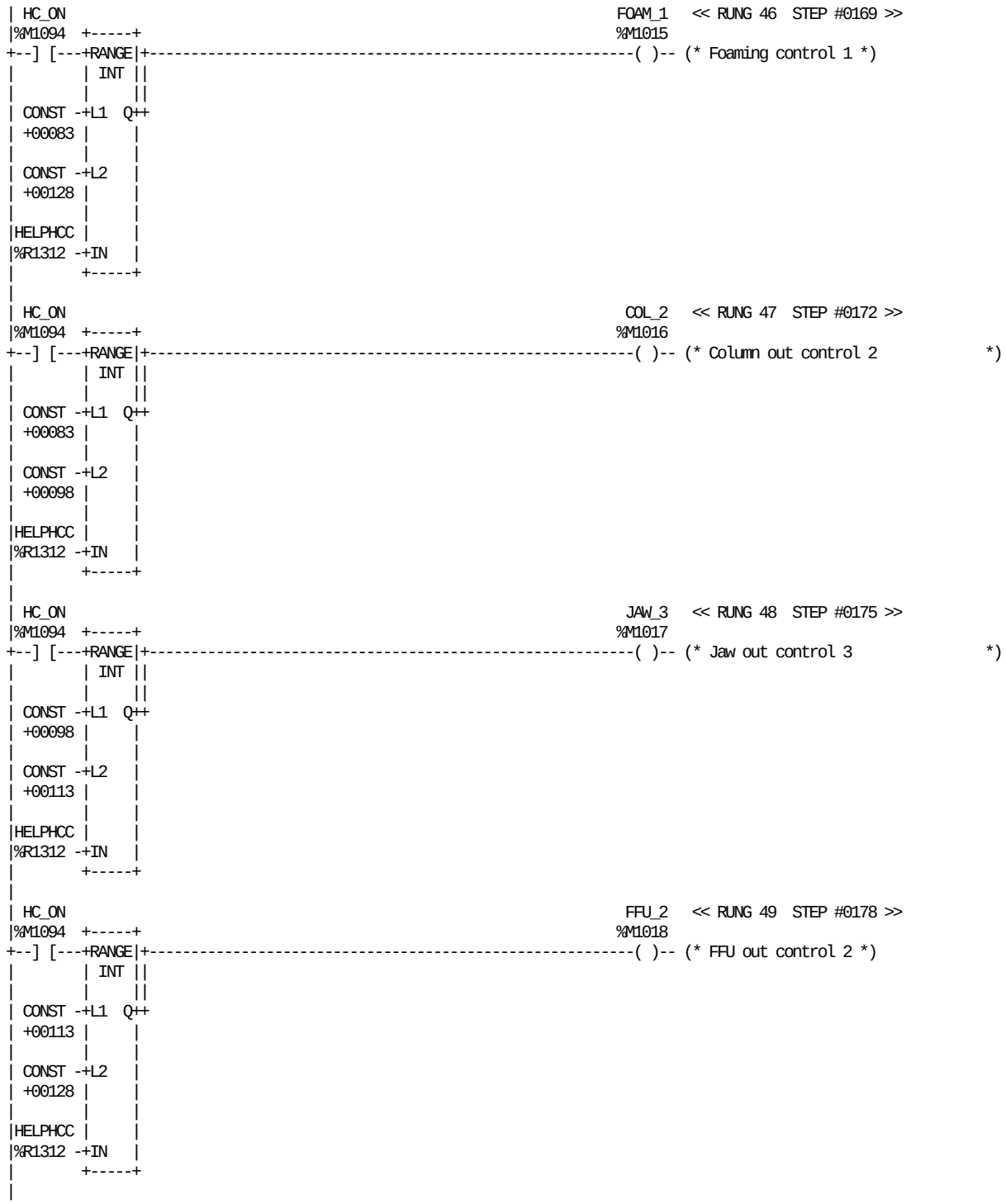

REFERENCE	NICKNAME	REFERENCE DESCRIPTION	REFERENCE	NICKNAME	REFERENCE DESCRIPTION
%M1016	COL_2	Column out control 2	%M1094	HC_ON	Hygienic cleaning going on
%M1018	FFU_2	FFU out control 2	%R1312	HELPHCC	Help HC counter
%M1015	FOAM_1	Foaming control 1	%M1017	JAW_3	Jaw out control 3

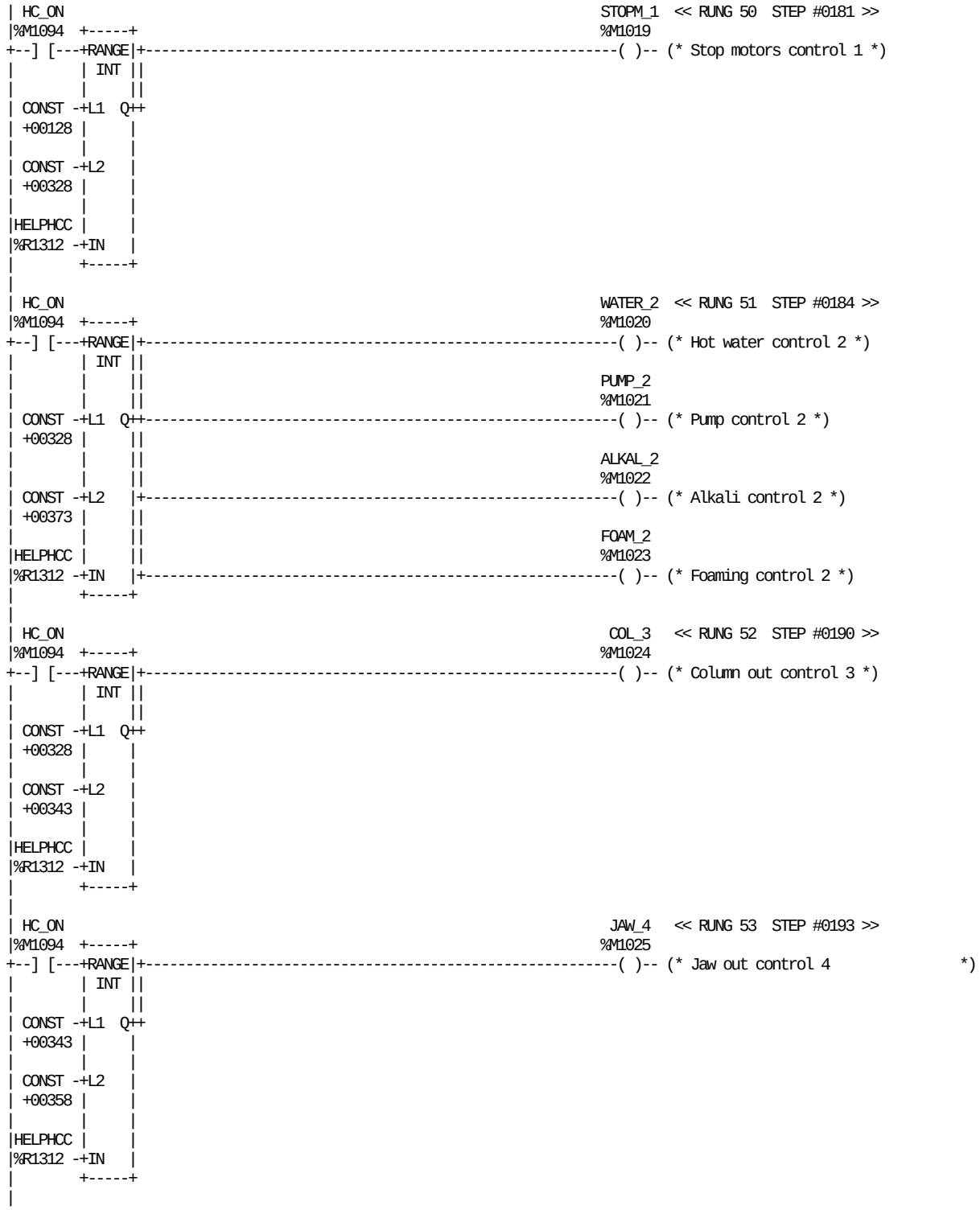

REFERENCE	NICKNAME	REFERENCE DESCRIPTION	REFERENCE	NICKNAME	REFERENCE DESCRIPTION
%M1022	ALKAL_2	Alkali control 2	%M1025	JAW_4	Jaw out control 4
%M1024	COL_3	Column out control 3	%M1021	PUMP_2	Pump control 2
%M1023	FOAM_2	Foaming control 2	%M1019	STOPM_1	Stop motors control 1
%M1094	HC_ON	Hygienic cleaning going on	%M1020	WATER_2	Hot water control 2
%R1312	HELPHCC	Help HC counter			

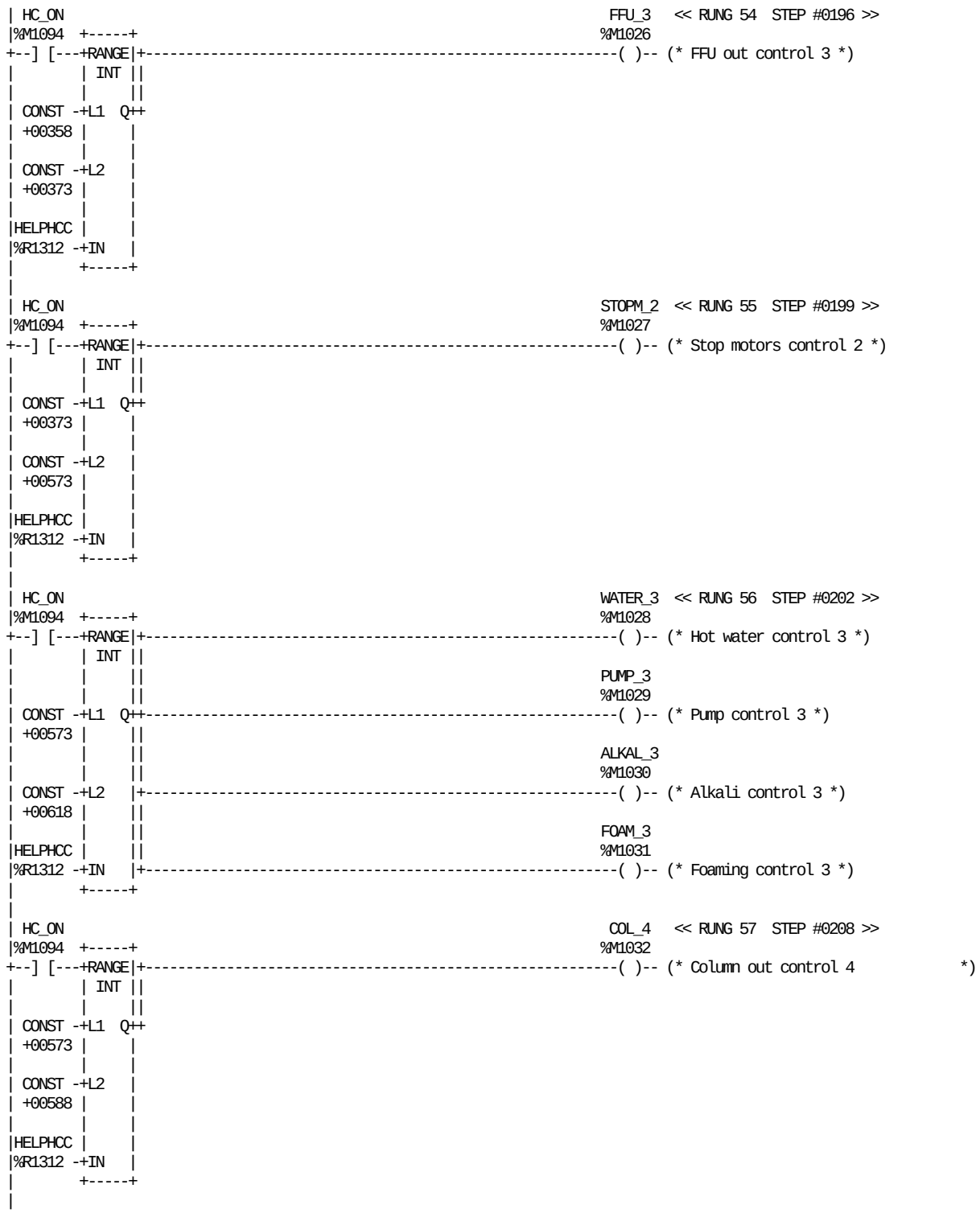

REFERENCE	NICKNAME	REFERENCE DESCRIPTION	REFERENCE	NICKNAME	REFERENCE DESCRIPTION
%M1030	ALKAL_3	Alkali control 3	%R1312	HELPHCC	Help HC counter
%M1032	COL_4	Column out control 4	%M1029	PUMP_3	Pump control 3
%M1026	FFU_3	FFU out control 3	%M1027	STOPM_2	Stop motors control 2
%M1031	FOAM_3	Foaming control 3	%M1028	WATER_3	Hot water control 3
%M1094	HC_ON	Hygienic cleaning going on			

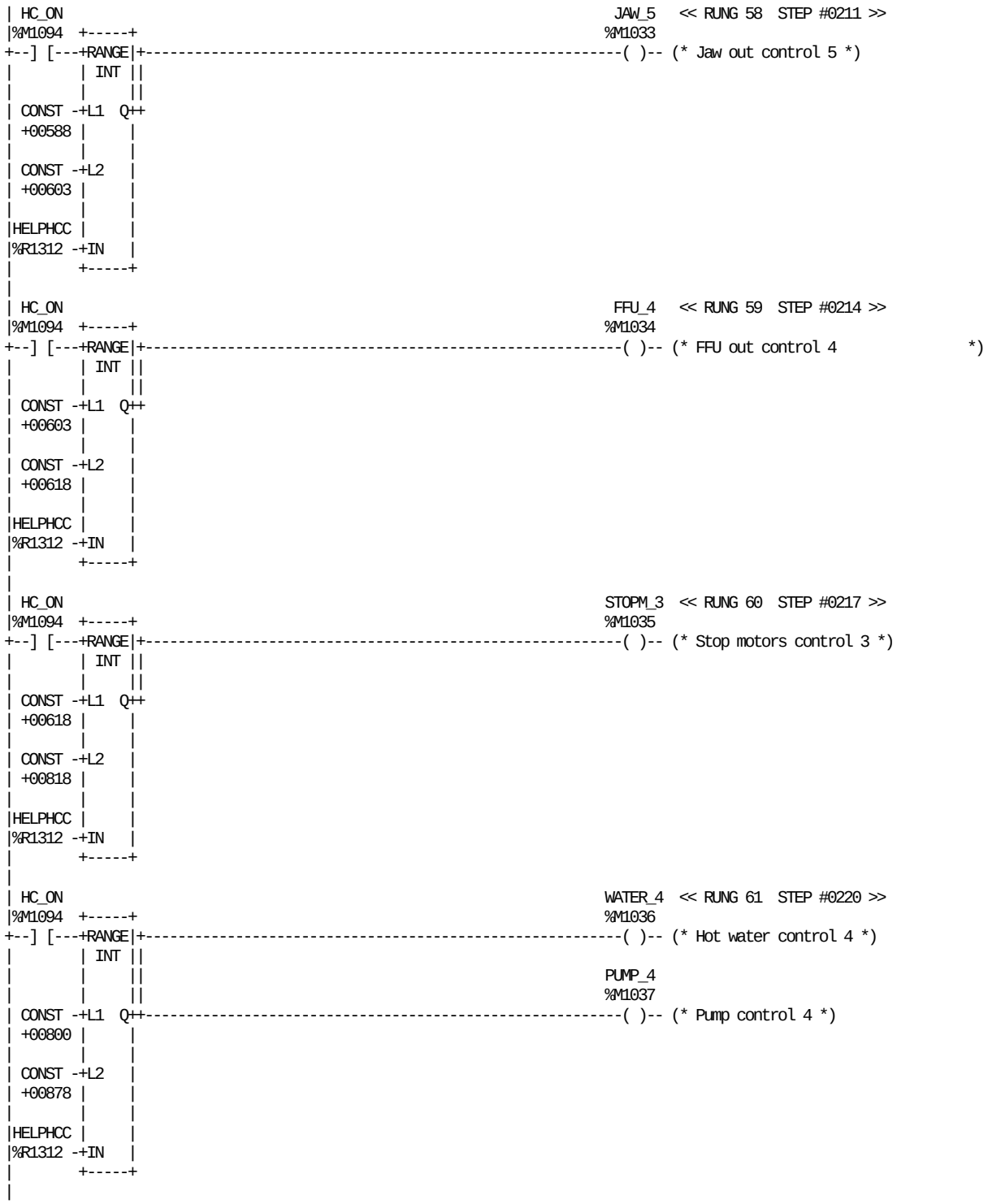

REFERENCE	NICKNAME	REFERENCE DESCRIPTION	REFERENCE	NICKNAME	REFERENCE DESCRIPTION
%M1034	FFU_4	FFU out control 4	%M1037	PUMP_4	Pump control 4
%M1094	HC_ON	Hygienic cleaning going on	%M1035	STOPM_3	Stop motors control 3
%R1312	HELPHCC	Help HC counter	%M1036	WATER_4	Hot water control 4
%M1033	JAW_5	Jaw out control 5			

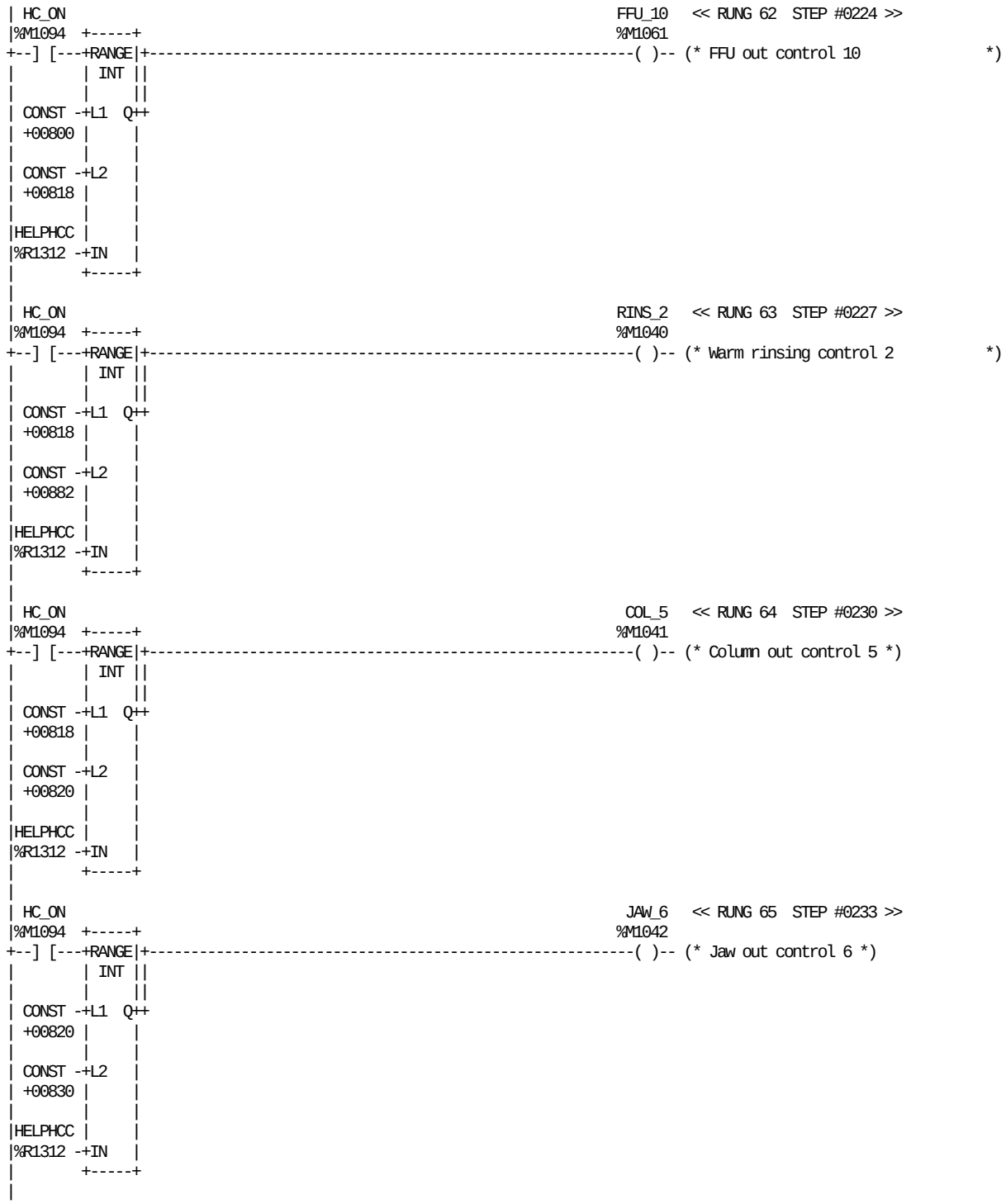

REFERENCE	NICKNAME	REFERENCE DESCRIPTION	REFERENCE	NICKNAME	REFERENCE DESCRIPTION
%M1041	COL_5	Column out control 5	%R1312	HELPHCC	Help HC counter
%M1061	FFU_10	FFU out control 10	%M1042	JAW_6	Jaw out control 6
%M1094	HC_ON	Hygienic cleaning going on	%M1040	RINS_2	Warm rinsing control 2

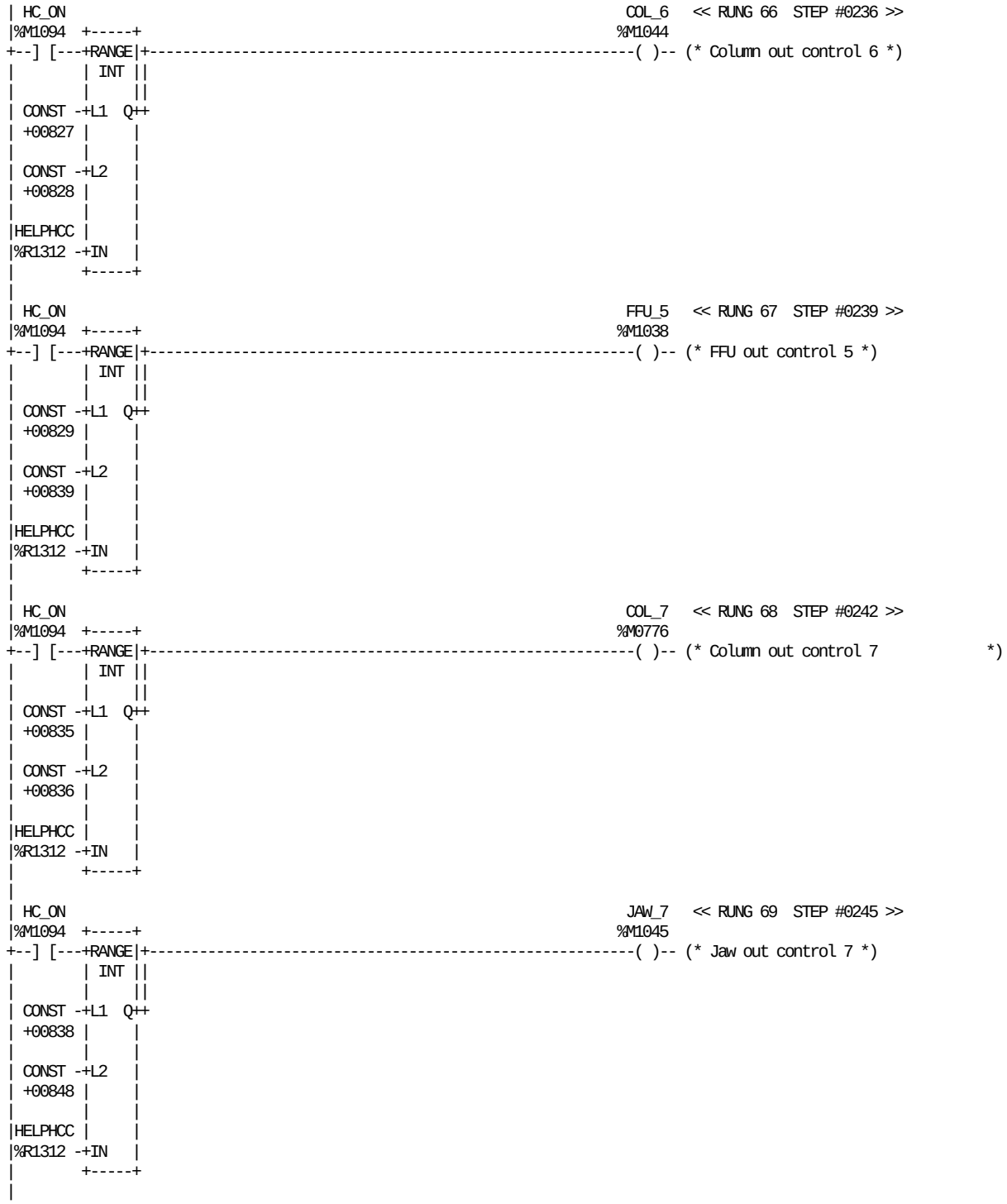

REFERENCE	NICKNAME	REFERENCE DESCRIPTION
%M1044	COL_6	Column out control 6
%M0776	COL_7	Column out control 7
%M1038	FFU_5	FFU out control 5
%M1094	HC_ON	Hygienic cleaning going on
%R1312	HELPHCC	Help HC counter
%M1045	JAW_7	Jaw out control 7

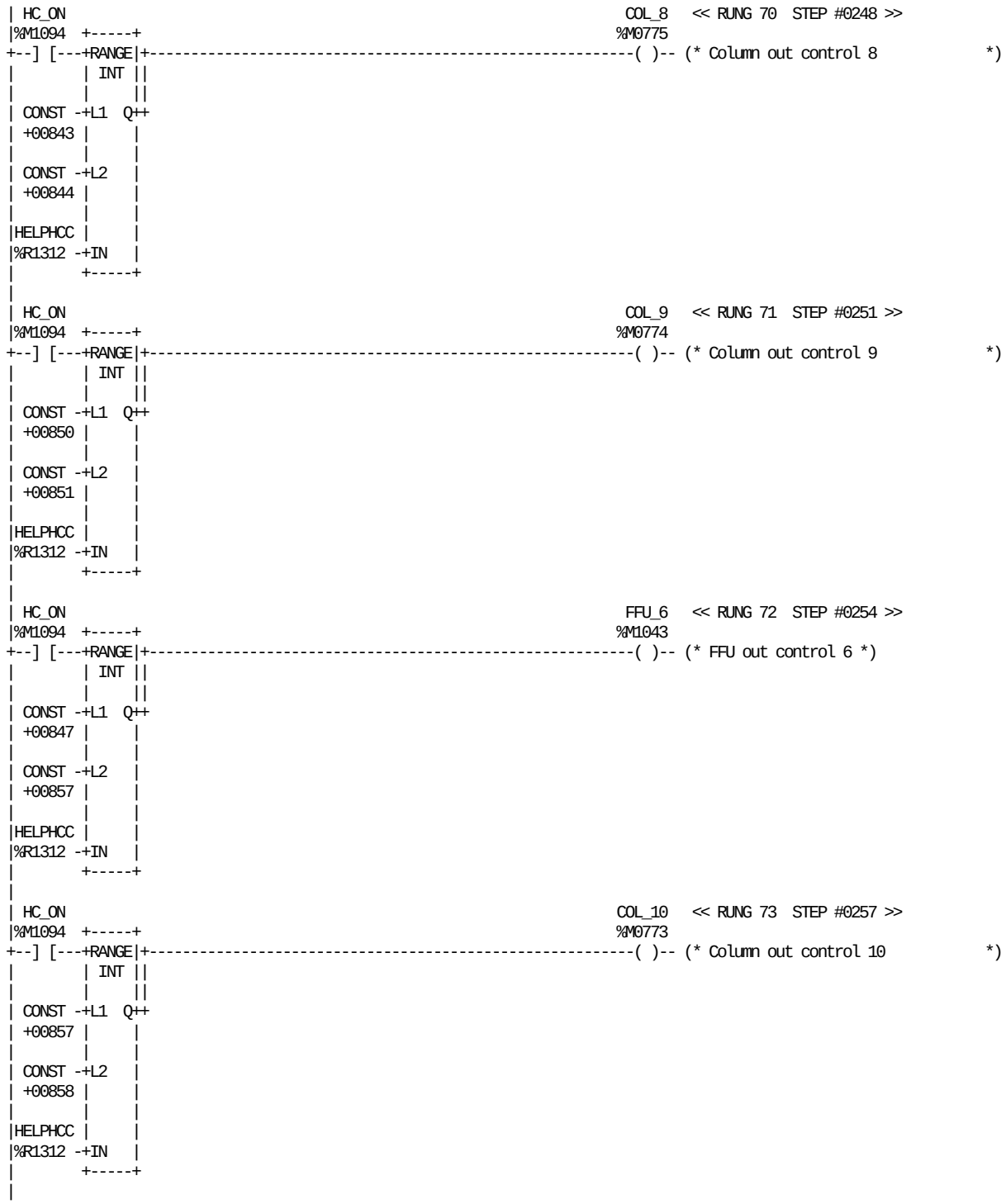

REFERENCE	NICKNAME	REFERENCE DESCRIPTION
%M0773	COL_10	Column out control 10
%M0775	COL_8	Column out control 8
%M0774	COL_9	Column out control 9
%M1043	FFU_6	FFU out control 6
%M1094	HC_ON	Hygienic cleaning going on
%R1312	HELPHCC	Help HC counter

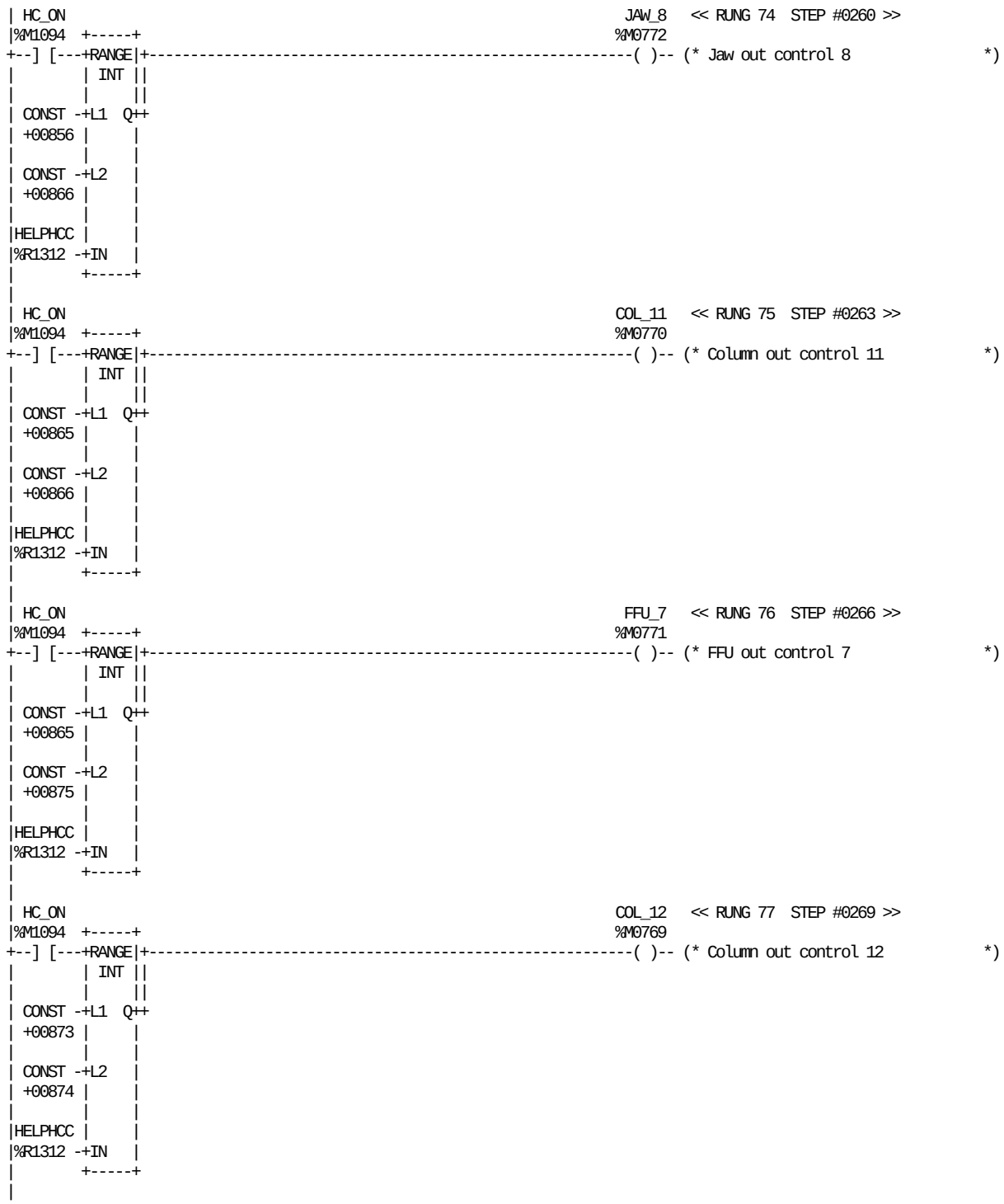

REFERENCE	NICKNAME	REFERENCE DESCRIPTION
%M0770	COL_11	Column out control 11
%M0769	COL_12	Column out control 12
%M0771	FFU_7	FFU out control 7

REFERENCE	NICKNAME	REFERENCE DESCRIPTION
%M1094	HC_ON	Hygienic cleaning going on
%R1312	HELPHCC	Help HC counter
%M0772	JAW_8	Jaw out control 8

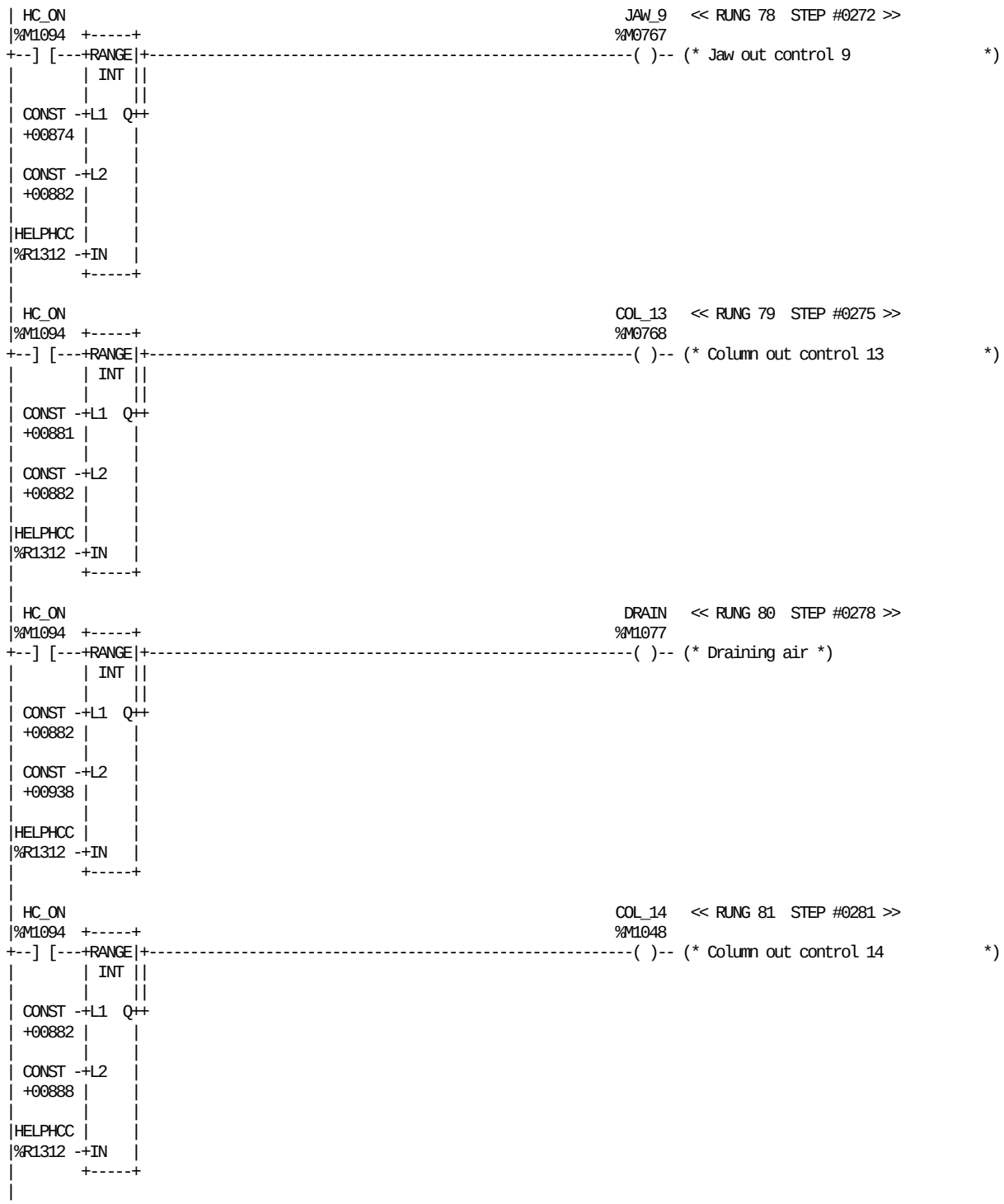

REFERENCE	NICKNAME	REFERENCE DESCRIPTION
%M0768	COL_13	Column out control 13
%M1048	COL_14	Column out control 14
%M1077	DRAIN	Draining air
%M1094	HC_ON	Hygienic cleaning going on
%R1312	HELPHCC	Help HC counter
%M0767	JAW_9	Jaw out control 9

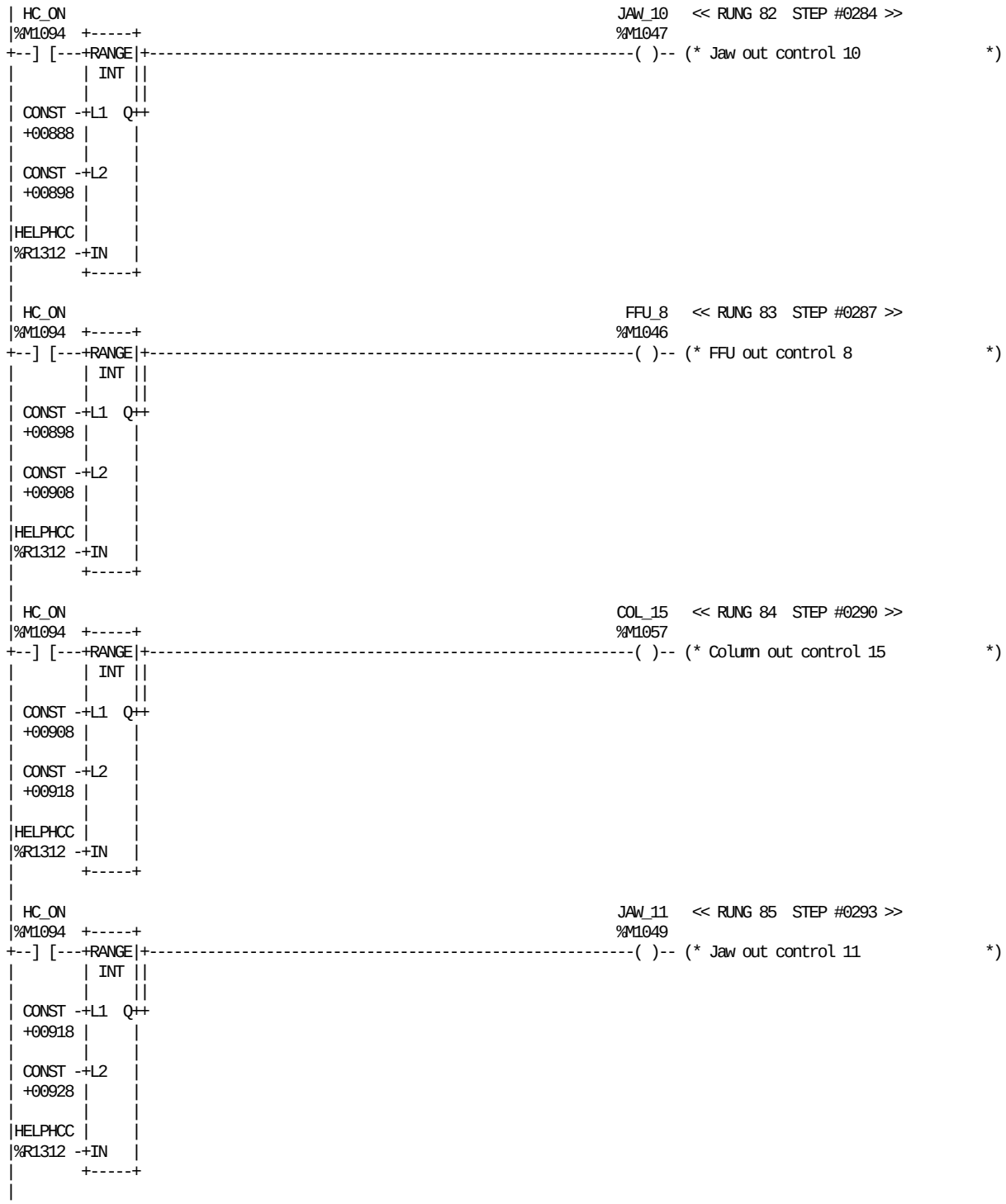

REFERENCE	NICKNAME	REFERENCE DESCRIPTION	REFERENCE	NICKNAME	REFERENCE DESCRIPTION
%M1057	COL_15	Column out control 15	%R1312	HELPHCC	Help HC counter
%M1046	FFU_8	FFU out control 8	%M1047	JAW_10	Jaw out control 10
%M1094	HC_ON	Hygienic cleaning going on	%M1049	JAW_11	Jaw out control 11

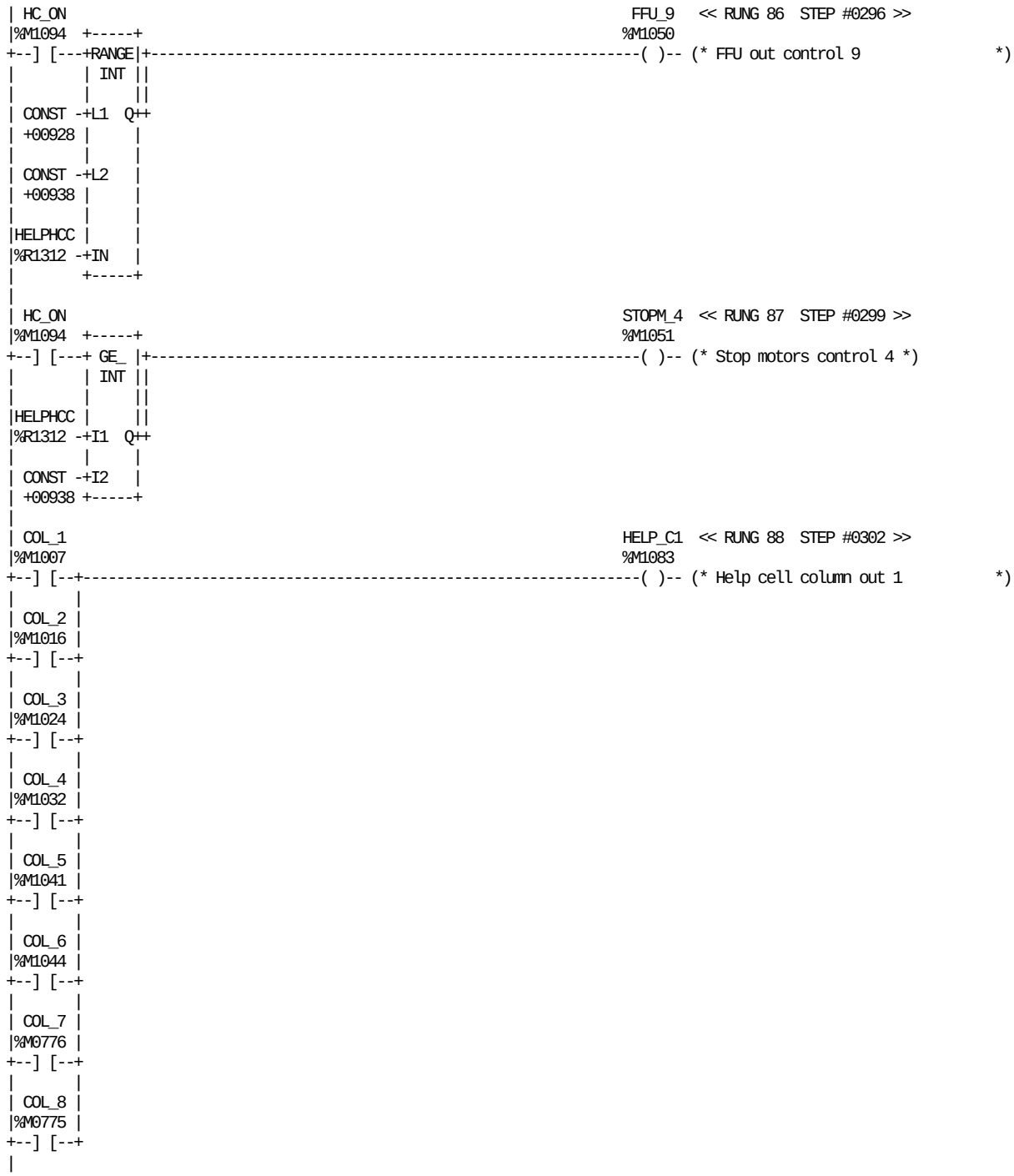

REFERENCE	NICKNAME	REFERENCE DESCRIPTION
%M1007	COL_1	Column out control 1
%M1016	COL_2	Column out control 2
%M1024	COL_3	Column out control 3
%M1032	COL_4	Column out control 4
%M1041	COL_5	Column out control 5
%M1044	COL_6	Column out control 6
%M0776	COL_7	Column out control 7
%M0775	COL_8	Column out control 8
%M1050	FFU_9	FFU out control 9
%M1094	HC_ON	Hygienic cleaning going on
%R1312	HELPHCC	Help HC counter
%M1083	HELP_C1	Help cell column out 1
%M1051	STOPM_4	Stop motors control 4

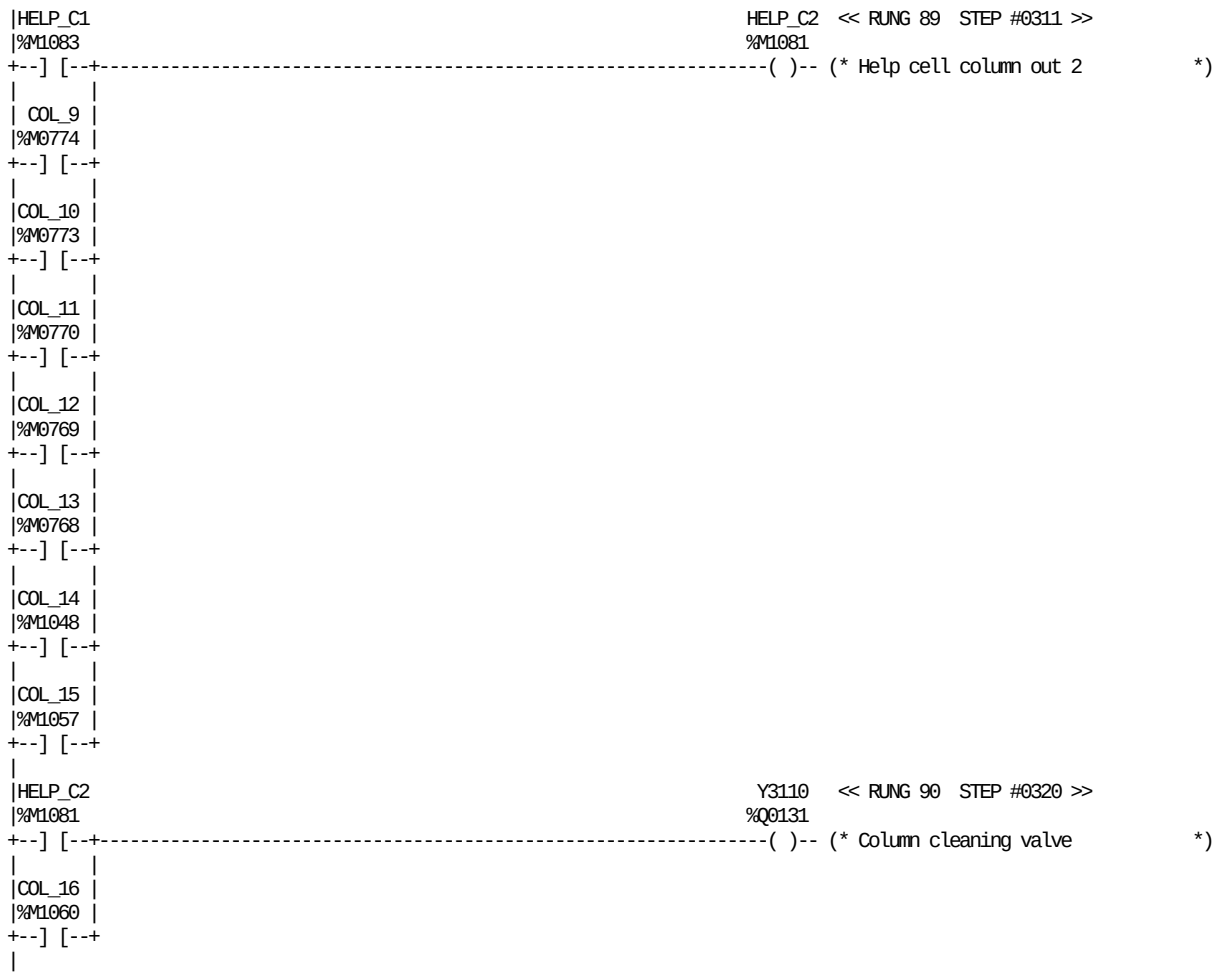

REFERENCE	NICKNAME	REFERENCE DESCRIPTION	REFERENCE	NICKNAME	REFERENCE DESCRIPTION
%M0773	COL_10	Column out control 10	%M1060	COL_16	Column out control 16
%M0770	COL_11	Column out control 11	%M0774	COL_9	Column out control 9
%M0769	COL_12	Column out control 12	%M1083	HELP_C1	Help cell column out 1
%M0768	COL_13	Column out control 13	%M1081	HELP_C2	Help cell column out 2
%M1048	COL_14	Column out control 14	%Q0131	Y3110	Column cleaning valve
%M1057	COL_15	Column out control 15			

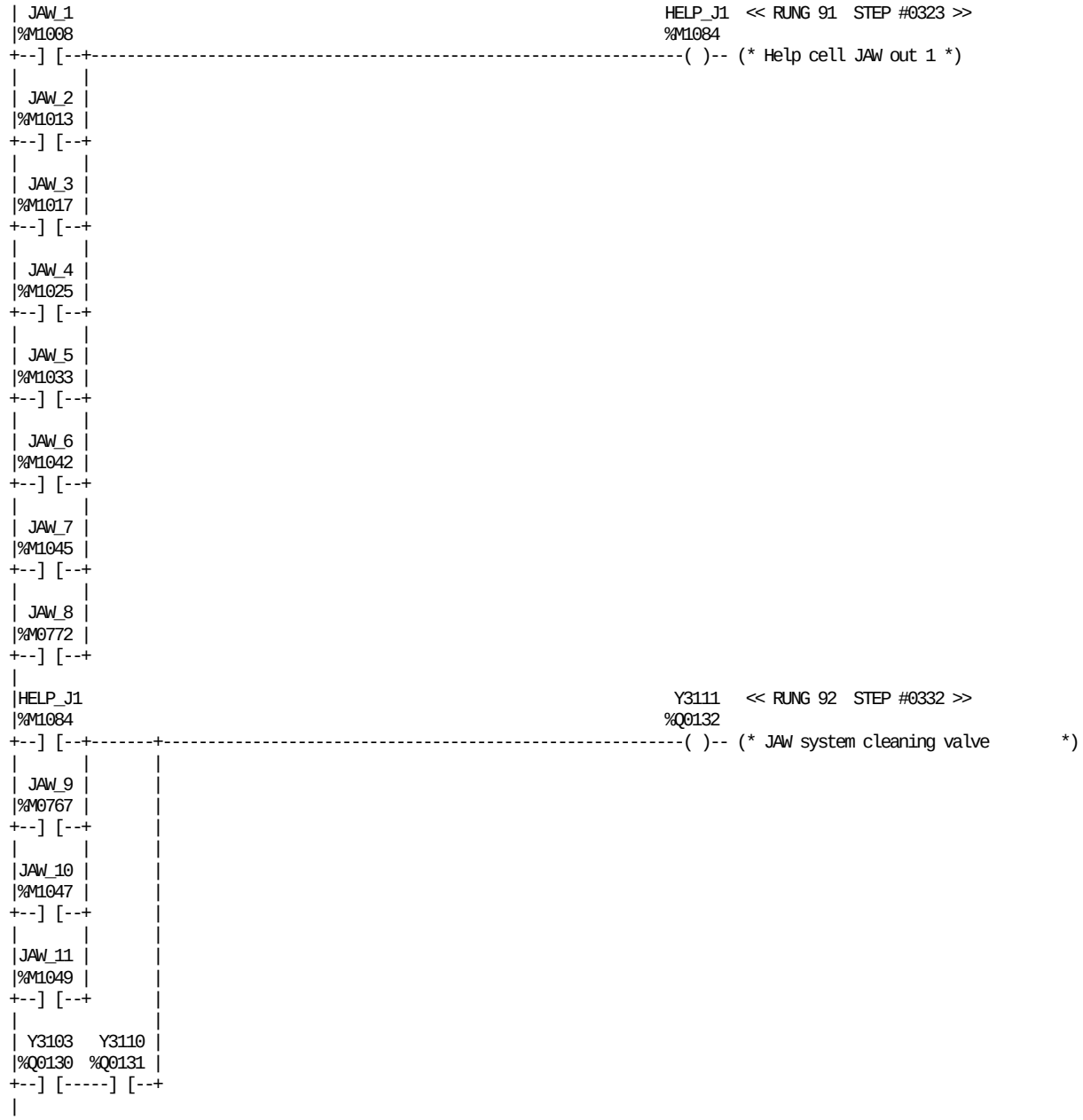

REFERENCE	NICKNAME	REFERENCE DESCRIPTION
%M1084	HELP_J1	Help cell JAW out 1
%M1008	JAW_1	Jaw out control 1
%M1047	JAW_10	Jaw out control 10
%M1049	JAW_11	Jaw out control 11
%M1013	JAW_2	Jaw out control 2
%M1017	JAW_3	Jaw out control 3
%M1025	JAW_4	Jaw out control 4
%M1033	JAW_5	Jaw out control 5
%M1042	JAW_6	Jaw out control 6
%M1045	JAW_7	Jaw out control 7
%M0772	JAW_8	Jaw out control 8
%M0767	JAW_9	Jaw out control 9
%Q0130	Y3103	Warm rinsing valve
%Q0131	Y3110	Column cleaning valve
%Q0132	Y3111	JAW system cleaning valve

```
| FFU_1                                                                HELP_F1  << RUNG 93  STEP #0340 >>
|%M1009                                                               %M1086
+--] [--+-------------------------------------------------------------( )-- (* Help cell FFU out 1 *)
|       |
| FFU_2 |
|%M1018 |
+--] [--+
|       |
| FFU_3 |
|%M1026 |
+--] [--+
|       |
| FFU_4 |
|%M1034 |
+--] [--+
|       |
| FFU_5 |
|%M1038 |
+--] [--+
|       |
| FFU_6 |
|%M1043 |
+--] [--+
|       |
| FFU_7 |
|%M0771 |
+--] [--+
|       |
| FFU_8 |
|%M1046 |
+--] [--+
|
| Y3103   Y3110                                                        Y3112   << RUNG 94  STEP #0349 >>
|%Q0130  %Q0131                                                       %Q0133
+--] [-----] [--+-----------------------------------------------------( )-- (* FFU cleaning valve              *)
|               |
|HELP_F1        |
|%M1086         |
+--] [----------+
|               |
| FFU_9         |
|%M1050         |
+--] [----------+
|               |
|FFU_10         |
|%M1061         |
+--] [----------+
|
|RINS_1                                                                Y3103   << RUNG 95  STEP #0355 >>
|%M1010                                                               %Q0130
+--] [--+-------------------------------------------------------------( )-- (* Warm rinsing valve              *)
|       |
|RINS_2 |
|%M1040 |
+--] [--+
|
```

REFERENCE	NICKNAME	REFERENCE DESCRIPTION	REFERENCE	NICKNAME	REFERENCE DESCRIPTION
%M1009	FFU_1	FFU out control 1	%M1046	FFU_8	FFU out control 8
%M1061	FFU_10	FFU out control 10	%M1050	FFU_9	FFU out control 9
%M1018	FFU_2	FFU out control 2	%M1086	HELP_F1	Help cell FFU out 1
%M1026	FFU_3	FFU out control 3	%M1010	RINS_1	Warm rinsing control 1
%M1034	FFU_4	FFU out control 4	%M1040	RINS_2	Warm rinsing control 2
%M1038	FFU_5	FFU out control 5	%Q0130	Y3103	Warm rinsing valve
%M1043	FFU_6	FFU out control 6	%Q0131	Y3110	Column cleaning valve
%M0771	FFU_7	FFU out control 7	%Q0133	Y3112	FFU cleaning valve

```
|WATER_1                                                          Y3101   << RUNG 96  STEP #0358 >>
|%M1011                                                         %Q0019
+--] [--+-----------------------------------------------------------( )-- (* Hot water supply                *)
|       |
|WATER_2|
|%M1020 |
+--] [--+
|       |
|WATER_3|
|%M1028 |
+--] [--+
|       |
|WATER_4|
|%M1036 |
+--] [--+
|
|PUMP_1                                                           K003    << RUNG 97  STEP #0363 >>
|%M1012                                                         %Q0017
+--] [--+-----------------------------------------------------------( )-- (* Cleaning pump external cleaning  *)
|       |
|PUMP_2 |
|%M1021 |
+--] [--+
|       |
|PUMP_3 |
|%M1029 |
+--] [--+
|       |
|PUMP_4 |
|%M1037 |
+--] [--+
|
|FOAM_1                                                           Y3109   << RUNG 98  STEP #0368 >>
|%M1015                                                         %Q0129
+--] [--+-----------------------------------------------------------( )-- (* Foaming / Drain(air) valve       *)
|       |
|FOAM_2 |
|%M1023 |
+--] [--+
|       |
|FOAM_3 |
|%M1031 |
+--] [--+
|       |
| DRAIN |
|%M1077 |
+--] [--+
|
|STOPM_1                                                          STOPMOT  << RUNG 99  STEP #0373 >>
|%M1019                                                          %M1088
+--] [--+-----------------------------------------------------------( )-- (* Stop motors during HC *)
|       |
|STOPM_2|
|%M1027 |
+--] [--+
|       |
|STOPM_3|
|%M1035 |
+--] [--+
|       |
|STOPM_4|
|%M1051 |
+--] [--+
|
```

REFERENCE	NICKNAME	REFERENCE DESCRIPTION	REFERENCE	NICKNAME	REFERENCE DESCRIPTION
%M1077	DRAIN	Draining air	%M1019	STOPM_1	Stop motors control 1
%M1015	FOAM_1	Foaming control 1	%M1027	STOPM_2	Stop motors control 2
%M1023	FOAM_2	Foaming control 2	%M1035	STOPM_3	Stop motors control 3
%M1031	FOAM_3	Foaming control 3	%M1051	STOPM_4	Stop motors control 4
%Q0017	K003	Cleaning pump external cleaning	%M1011	WATER_1	Hot water control 1
%M1012	PUMP_1	Pump control 1	%M1020	WATER_2	Hot water control 2
%M1021	PUMP_2	Pump control 2	%M1028	WATER_3	Hot water control 3
%M1029	PUMP_3	Pump control 3	%M1036	WATER_4	Hot water control 4
%M1037	PUMP_4	Pump control 4	%Q0019	Y3101	Hot water supply
%M1088	STOPMOT	Stop motors during HC	%Q0129	Y3109	Foaming / Drain(air) valve

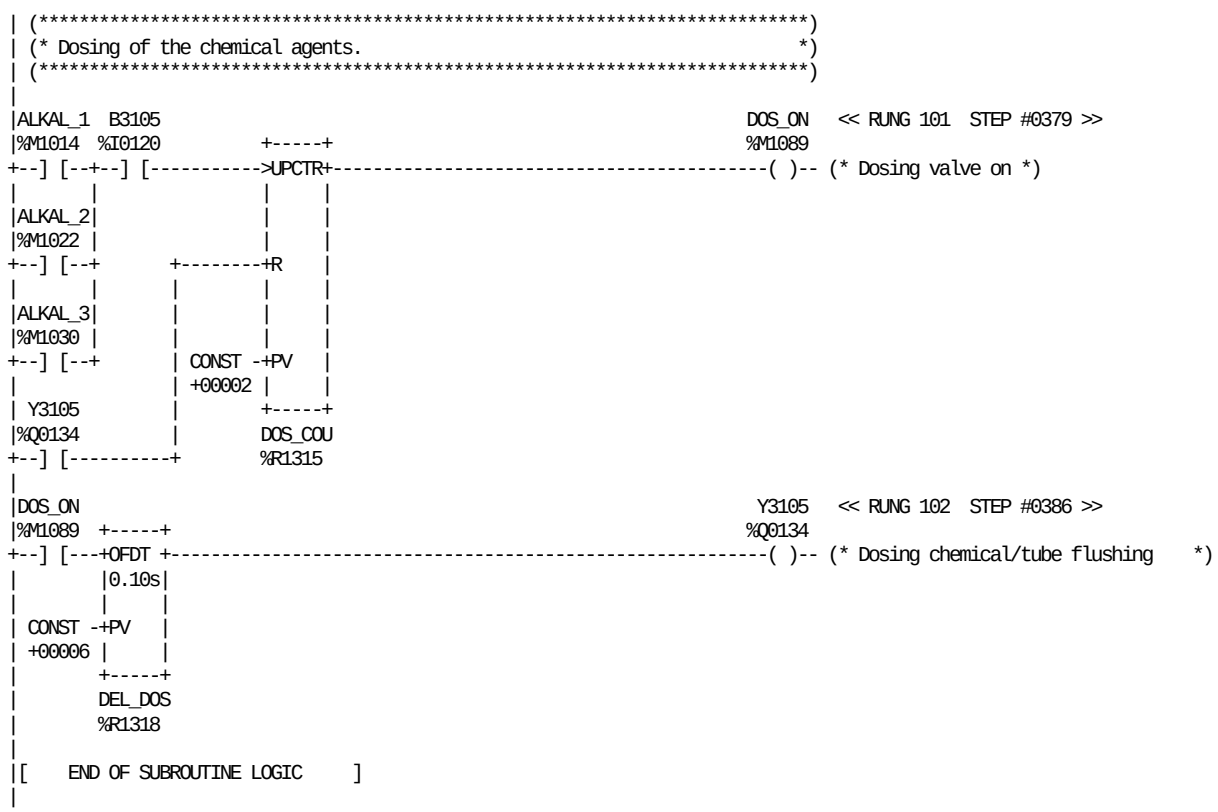

REFERENCE	NICKNAME	REFERENCE DESCRIPTION	REFERENCE	NICKNAME	REFERENCE DESCRIPTION
%M1014	ALKAL_1	Alkali control 1	%R1318	DEL_DOS	TMR delay off dosing chem. valve
%M1022	ALKAL_2	Alkali control 2	%R1315	DOS_COU	Dosing chemical counter
%M1030	ALKAL_3	Alkali control 3	%M1089	DOS_ON	Dosing valve on
%I0120	B3105	Dosing chemical flow counter	%Q0134	Y3105	Dosing chemical/tube flushing

This page left intentionally blank

```
|[  START LD SUBROUTINE  DEF_PAR  ]
|
|[     VARIABLE DECLARATIONS      ]
|
|[   START OF SUBROUTINE LOGIC    ]
|
| (*************************************************************************)
| (* This subruotine is used to load all the default setting               *)
| (* parameters of the machine.                                            *)
| (*************************************************************************)
|
|ADJ_VOL                                                          << RUNG 5  STEP #0003 >>
|%M1771  +-----+
+--]/[---+ BIT_|
|        |TEST_|
|        | WORD|
|DEF_JUM |     |         +-----+
|%R0393 -+IN  Q+---------+MOVE_+-
|        | LEN |         | INT |
|        |00001|         |     |
|        |     |         |     | SET_POS
| CONST -+BIT  |  CONST -+IN  Q+-%R0490
|  00001 +-----+  +01500 | LEN |
|                        |00001|
|                        |     |
|                        +-----+
|
|ALW_ON                                                           << RUNG 6  STEP #0006 >>
|%S0007  +-----+
+--] [---+ BIT_|
|        |TEST_|
|        | WORD|
|DEF_JUM |     |         +-----+
|%R0393 -+IN  Q+---------+MOVE_+-
|        | LEN |         | INT |
|        |00001|         |     |
|        |     |         |     | TS_POW
| CONST -+BIT  |  CONST -+IN  Q+-%R0491
|  00002 +-----+  +18560 | LEN |
|                        |00001|
|                        |     |
|                        +-----+
|
| (*************************************************************************)
| (* Check the limits of the TS power and reload the default values in     *)
| (* case of values not correct.                                           *)
| (*************************************************************************)
|
|INCH_HS                                                          << RUNG 8  STEP #0010 >>
|%M1716  +-----+
+--]/[---+ LT_ |
|        | INT |
|        |     |
|TS_POW  |     |         +-----+
|%R0491 -+I1  Q+---------+MOVE_+-
|        |     |         | INT |
|        |     |         |     |
|        |     |         |     | TS_POW
| CONST -+I2   |  CONST -+IN  Q+-%R0491
| +13760 +-----+  +18560 | LEN |
|                        |00001|
|                        |     |
|                        +-----+
|
```

REFERENCE	NICKNAME	REFERENCE DESCRIPTION	REFERENCE	NICKNAME	REFERENCE DESCRIPTION
%M1771	ADJ_VOL	Volume adjustment going on	%M1716	INCH_HS	Inching at high speed
%S0007	ALW_ON		%R0490	SET_POS	Set position volume adjustment
%R0393	DEF_JUM	Default values JUM	%R0491	TS_POW	TS-Power setting (TPOP)

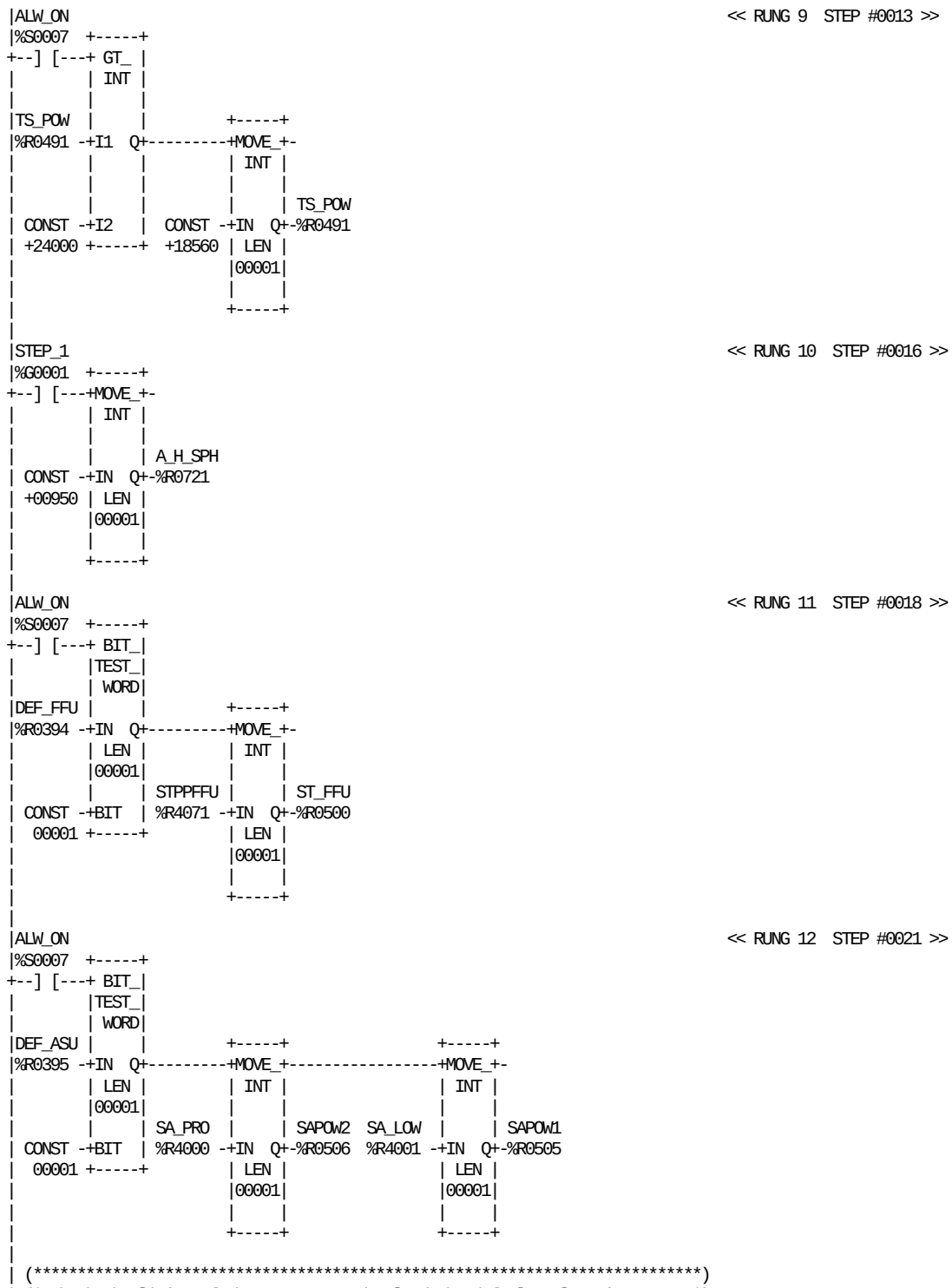

REFERENCE	NICKNAME	REFERENCE DESCRIPTION	REFERENCE	NICKNAME	REFERENCE DESCRIPTION
%S0007	ALW_ON		%R4001	SA_LOW	Power SA low speed
%R0721	A_H_SPH	Alarm high temp.sep.water(TPOP)	%R4000	SA_PRO	Power SA production speed
%R0395	DEF_ASU	Default values ASU	%G0001	STEP_1	STANDBY
%R0394	DEF_FFU	Default values FFU	%R4071	STPPFFU	Stop position FFU delault value
%R0505	SAPOW1	Power SA low speed (TPOP)	%R0500	ST_FFU	Stop position FFU (TPOP)
%R0506	SAPOW2	Power SA production speed (TPOP)	%R0491	TS_POW	TS-Power setting (TPOP)

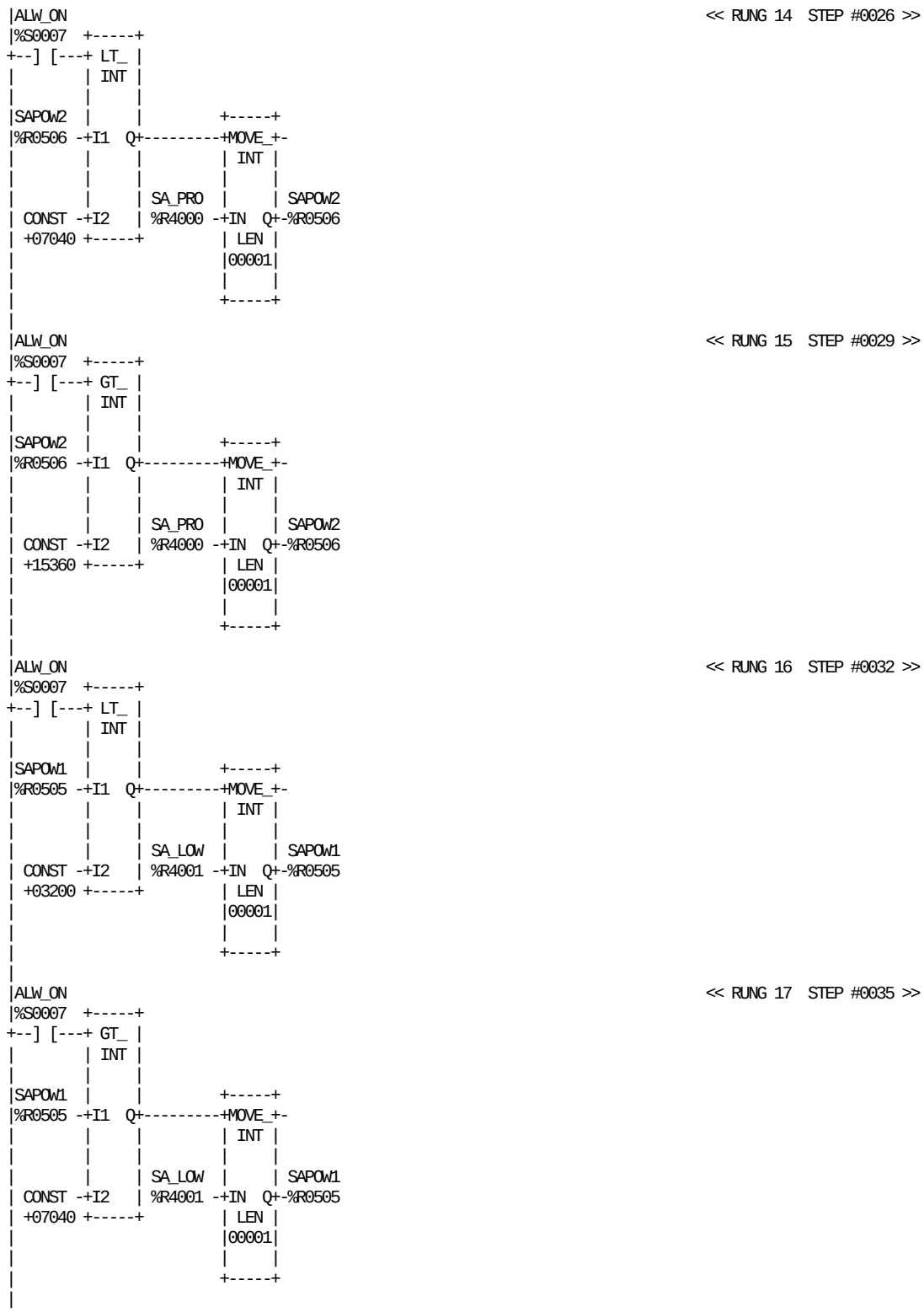

REFERENCE	NICKNAME	REFERENCE DESCRIPTION
%S0007	ALW_ON	
%R0505	SAPOW1	Power SA low speed (TPOP)
%R0506	SAPOW2	Power SA production speed (TPOP)

REFERENCE	NICKNAME	REFERENCE DESCRIPTION
%R4001	SA_LOW	Power SA low speed
%R4000	SA_PRO	Power SA production speed

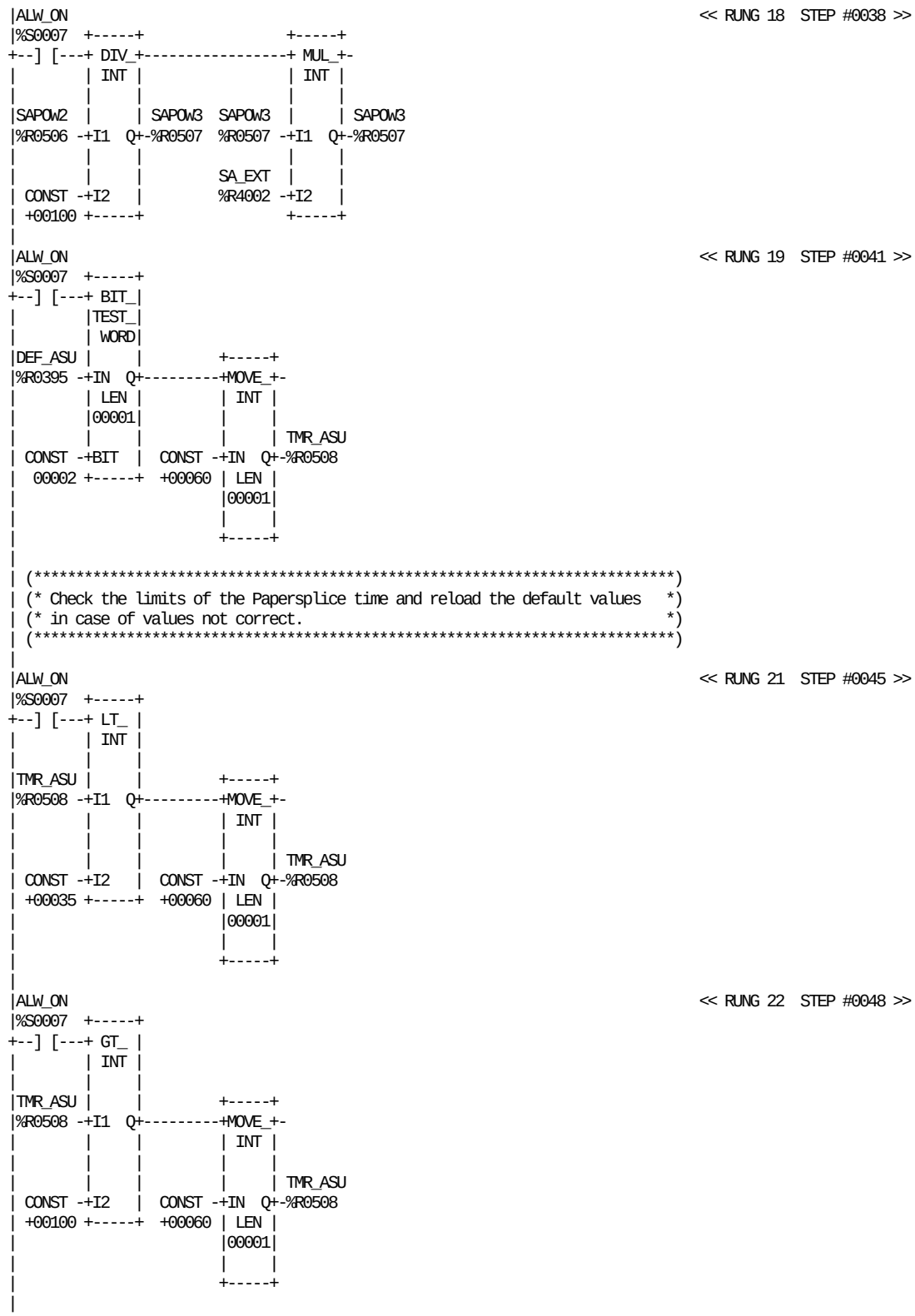

REFERENCE	NICKNAME	REFERENCE DESCRIPTION	REFERENCE	NICKNAME	REFERENCE DESCRIPTION
%S0007	ALW_ON		%R0507	SAPOW3	Power SA extra high speed (TPOP)
%R0395	DEF_ASU	Default values ASU	%R4002	SA_EXT	Power SA extra high speed
%R0506	SAPOW2	Power SA production speed (TPOP)	%R0508	TMR_ASU	Paper splice timing (TPOP)

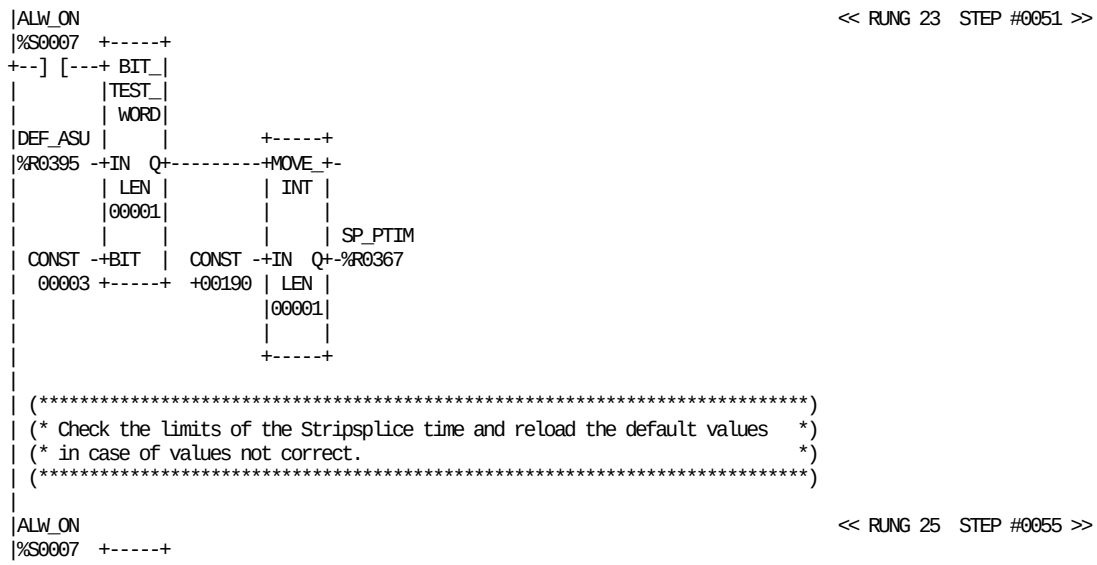

REFERENCE	NICKNAME	REFERENCE DESCRIPTION
%S0007	ALW_ON	
%R0395	DEF_ASU	Default values ASU
%R0394	DEF_FFU	Default values FFU

REFERENCE	NICKNAME	REFERENCE DESCRIPTION
%R0501	SPL_PO	Splice pos changed from TPOP
%R4067	SP_POS	Splice position preset
%R0367	SP_PTIM	Strip splice pulse time

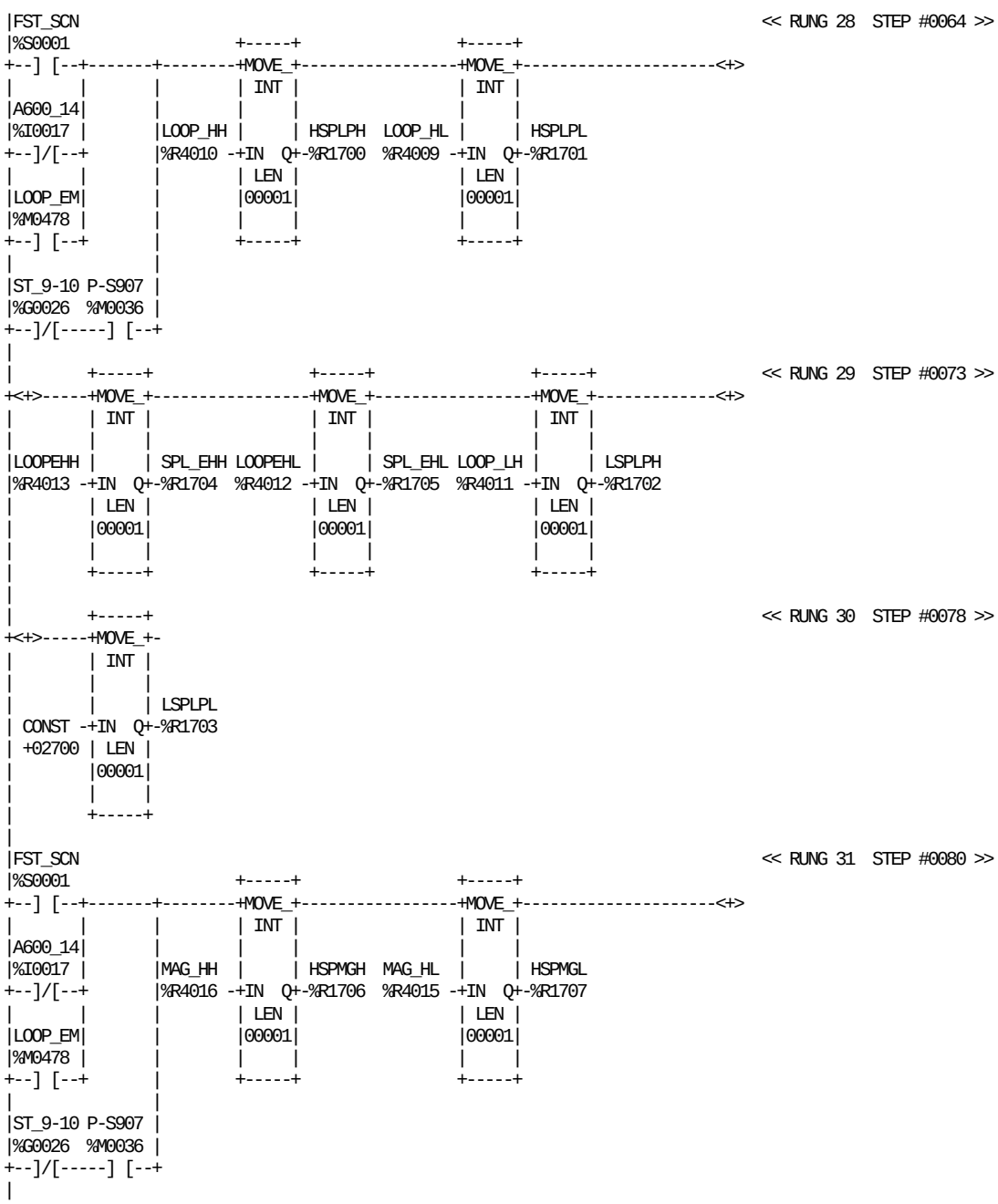

REFERENCE	NICKNAME	REFERENCE DESCRIPTION
%I0017	A600_14	Emergency stop
%S0001	FST_SCN	
%R1700	HSPLPH	High speed loop high
%R1701	HSPLPL	High speed loop low
%R1706	HSPMGH	High speed magazine high
%R1707	HSPMGL	High speed magazine low
%R4013	LOOPEHH	Extra High speed loop High
%R4012	LOOPEHL	Extra High speed loop Low
%M0478	LOOP_EM	Loop empty
%R4010	LOOP_HH	High speed loop High

REFERENCE	NICKNAME	REFERENCE DESCRIPTION
%R4009	LOOP_HL	High speed loop Low
%R4011	LOOP_LH	Low speed loop High
%R1702	LSPLPH	Low speed loop high
%R1703	LSPLPL	Low speed loop low
%R4016	MAG_HH	High speed magazine High
%R4015	MAG_HL	High speed magazine Low
%M0036	P-S907	Pulse neg edge Inching button
%R1704	SPL_EHH	Loop extra high speed high(TPOP)
%R1705	SPL_EHL	Loop extra high speed low (TPOP)
%G0026	ST_9-10	Ladder position 9-10

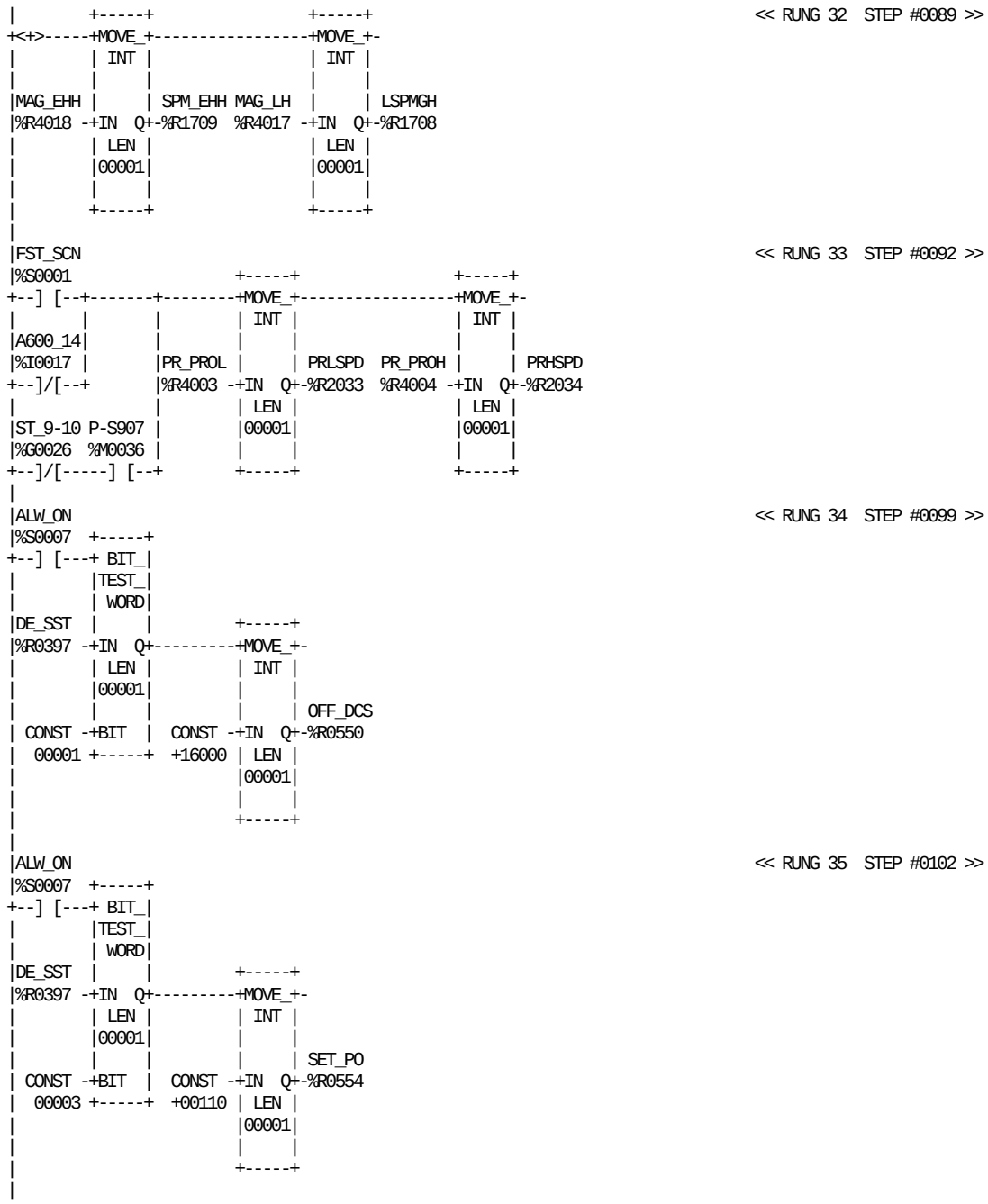

REFERENCE	NICKNAME	REFERENCE DESCRIPTION
%I0017	A600_14	Emergency stop
%S0007	ALW_ON	
%R0397	DE_SST	Deafults super structure func.
%S0001	FST_SCN	
%R1708	LSPMGH	Low speed magazine high
%R4018	MAG_EHH	Extra High speed magazine High
%R4017	MAG_LH	Low speed magazine High
%R0550	OFF_DCS	Offset value DCS

REFERENCE	NICKNAME	REFERENCE DESCRIPTION
%M0036	P-S907	Pulse neg edge Inching button
%R2034	PRHSPD	Pendulum roller prod high speed
%R2033	PRLSPD	Pendulum roller prod low speed
%R4004	PR_PROH	Pendulum roller prod speed high
%R4003	PR_PROL	Pendulum roller prod speed Low
%R0554	SET_PO	Set position tube positioning
%R1709	SPM_EHH	Extra high speep mag high (TPOP)
%G0026	ST_9-10	Ladder position 9-10

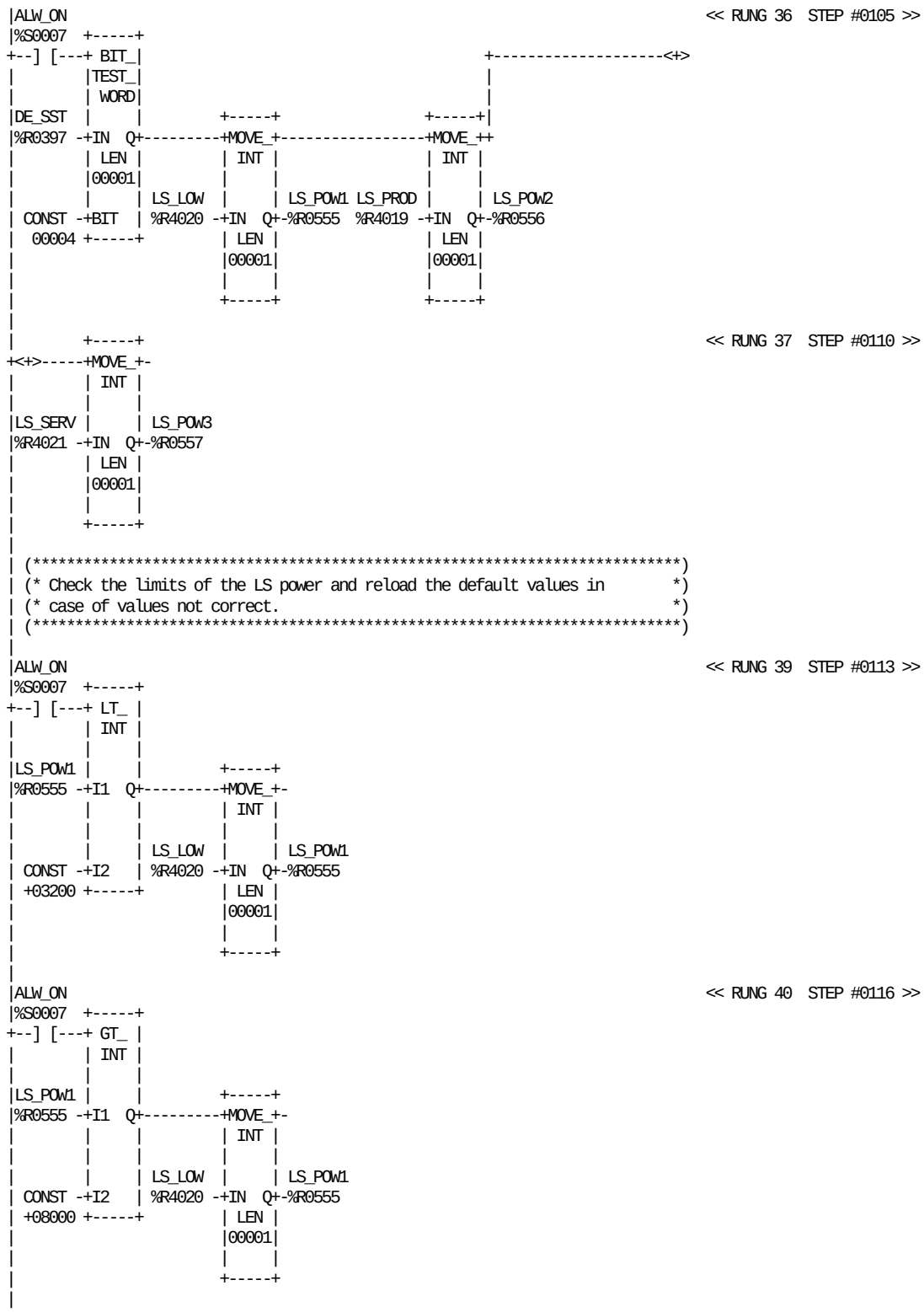

REFERENCE	NICKNAME	REFERENCE DESCRIPTION	REFERENCE	NICKNAME	REFERENCE DESCRIPTION
%S0007	ALW_ON		%R0556	LS_POW2	LS power production (TPOP)
%R0397	DE_SST	Deafults super structure func.	%R0557	LS_POW3	LS power service switch (TPOP)
%R4020	LS_LOW	LS power low speed	%R4019	LS_PROD	LS power production
%R0555	LS_POW1	LS power low speed (TPOP)	%R4021	LS_SERV	LS power service switch

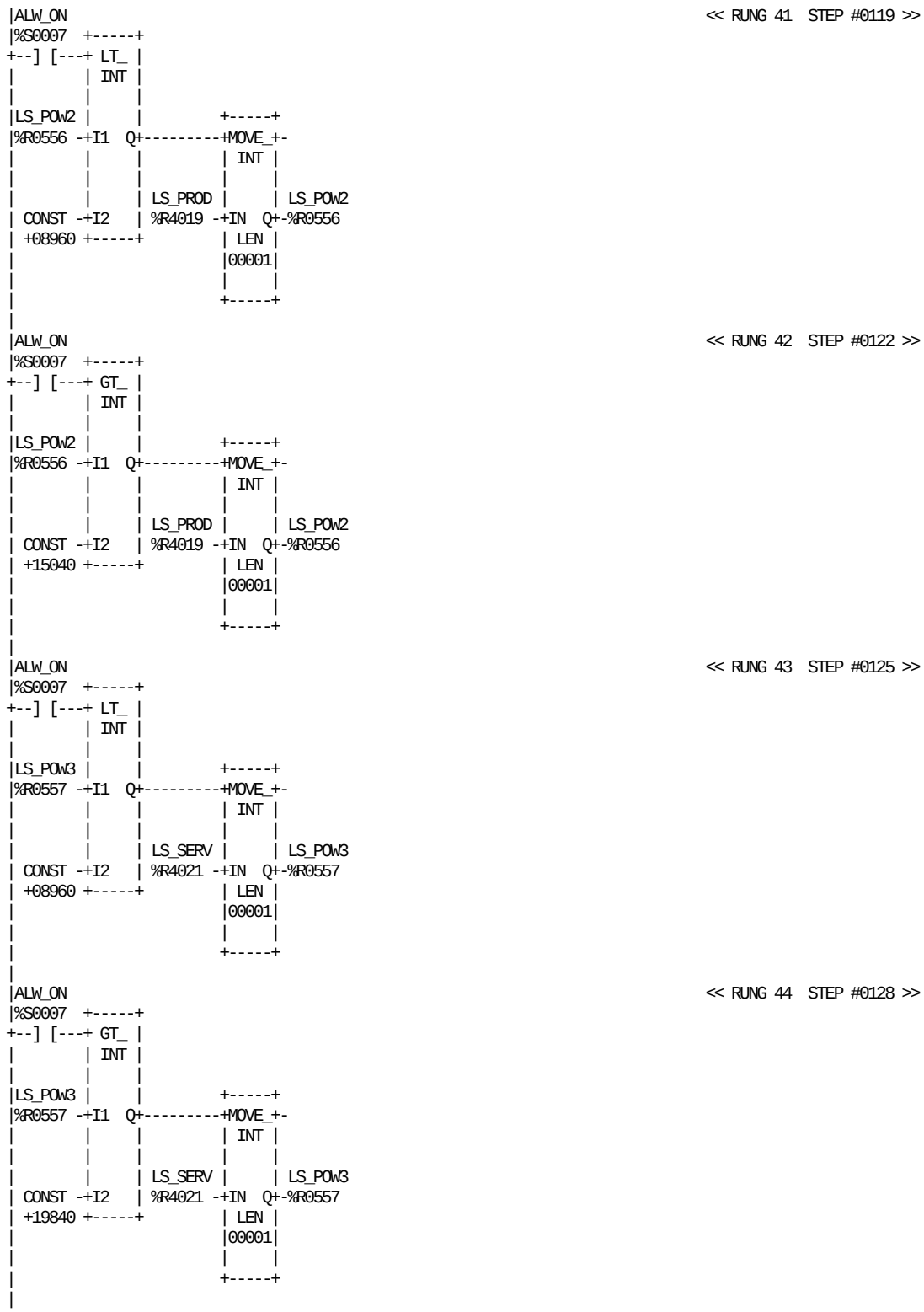

REFERENCE	NICKNAME	REFERENCE DESCRIPTION
%S0007	ALW_ON	
%R0556	LS_POW2	LS power production (TPOP)
%R0557	LS_POW3	LS power service switch (TPOP)

REFERENCE	NICKNAME	REFERENCE DESCRIPTION
%R4019	LS_PROD	LS power production
%R4021	LS_SERV	LS power service switch

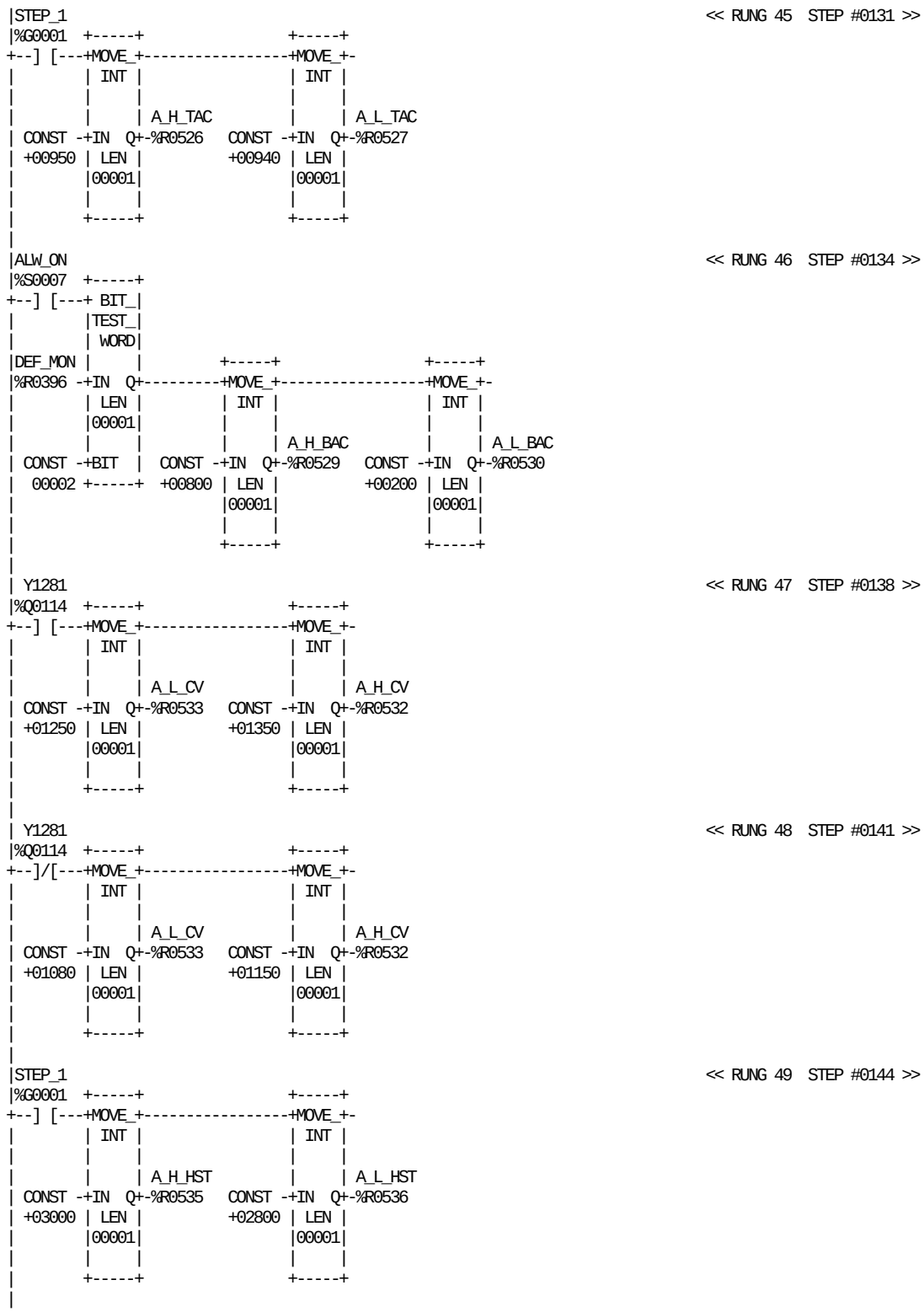

REFERENCE	NICKNAME	REFERENCE DESCRIPTION	REFERENCE	NICKNAME	REFERENCE DESCRIPTION
%S0007	ALW_ON		%R0533	A_L_CV	Alarmlev low temp C-valve (TPOP)
%R0529	A_H_BAC	Alarm level high bottom AC(TPOP)	%R0536	A_L_HST	Alarm level low heat st. (TPOP)
%R0532	A_H_CV	Alarmlev high temp C-valve(TPOP)	%R0527	A_L_TAC	Alarm level low top AC (TPOP)
%R0535	A_H_HST	Alarm level high heat st. (TPOP)	%R0396	DEF_MON	Deafult values temp. monitor
%R0526	A_H_TAC	Alarm level high top AC (TPOP)	%G0001	STEP_1	STANDBY
%R0530	A_L_BAC	Alarm level low bottom AC (TPOP)	%Q0114	Y1281	TCSB valve

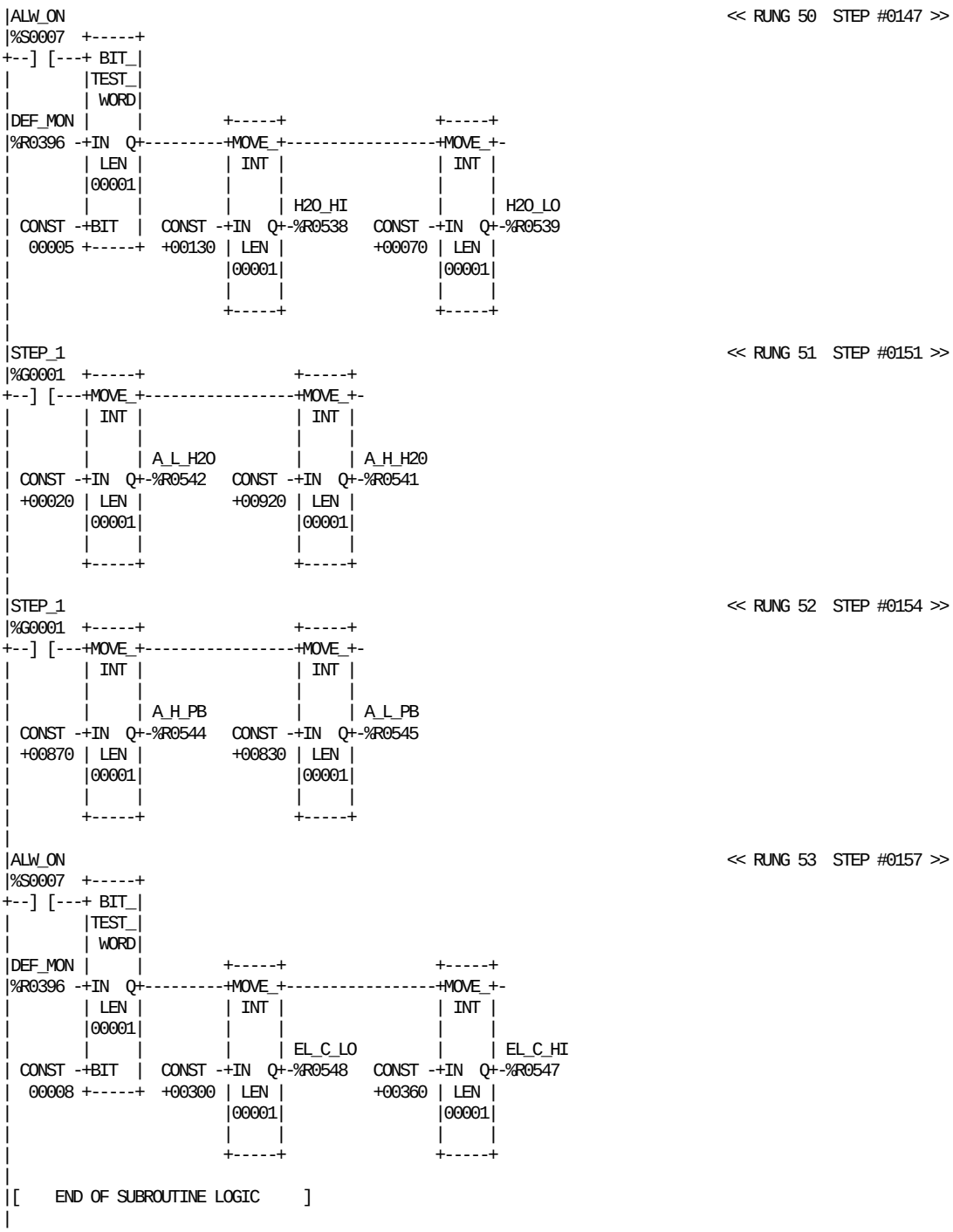

REFERENCE	NICKNAME	REFERENCE DESCRIPTION	REFERENCE	NICKNAME	REFERENCE DESCRIPTION
%S0007	ALW_ON		%R0547	EL_C_HI	Temp limit EL_cabinet high
%R0541	A_H_H20	Alarm high temp water bath(TPOP)	%R0548	EL_C_LO	Temp limit EL-cabinet low
%R0544	A_H_PB	Alarm high temp. H2O2 bath(TPOP)	%R0538	H2O_HI	Cooling water temp high limit
%R0542	A_L_H2O	Alarm low temp water bath (TPOP)	%R0539	H2O_LO	Cooling water temp low limit
%R0545	A_L_PB	Alarm low temp. H2O2 bath (TPOP)	%G0001	STEP_1	STANDBY
%R0396	DEF_MON	Deafult values temp. monitor			

This page left intentionally blank

```
|[  START LD SUBROUTINE  SST_AL   ]
|
|[     VARIABLE DECLARATIONS      ]
|
|[   START OF SUBROUTINE LOGIC    ]
|
| (*************************************************************************)
| (* Alarm on the Longitudinal Sealing.                                    *)
| (*************************************************************************)
|
|ST_2-12 POW_ON  A501305                                          TPIH_LS  << RUNG 5  STEP #0003 >>
|%G0021  %M1215  %I0034                                           %M0481
+--] [-----] [-----]/[--+-----------------------------------------------(S)-- (* LS TPIH fault *)
|                       |
|                       |                                         FOINJUM
|                       |                                         %M1808
|                       +-----------------------------------------------(S)-- (* Force inching after LS alarm     *)
|
|A506_32 AL_RES                                                   FOINJUM  << RUNG 6  STEP #0008 >>
|%I0044  %M0600                                                   %M1808
+--]/[-----] [--+-----------------------------------------------------(R)-- (* Force inching after LS alarm     *)
|               |
|STEP_1         |
|%G0001         |
+--] [----------+
|
| S907   A506_32                                                  TPIH_LS  << RUNG 7  STEP #0012 >>
|%I0087  %I0044          +-----+                                  %M0481
+--] [-----] [--+--------+ TMR +-----------------------------------------(R)-- (* LS TPIH fault *)
|               |        |0.10s|
|STEP_6         |        |     |
|%G0006         |        |     |
+--]/[----------+ CONST -+PV   |
|                 +00050 |     |
|                        +-----+
|                        FOINDEL
|                        %R2009
|
| (*************************************************************************)
| (* Check of sqeege roller position.                                     *)
| (*************************************************************************)
|
| Y1502   B1502   B2201  K112_6                                   SQUEEGE  << RUNG 9  STEP #0018 >>
|%Q0117  %I0111  %I0118  %I0145  +-----+                          %M0482
+--] [-----]/[-----] [-----] [---+ TMR +---------------------------------(S)-- (* Squee gee roller position *)
|                               |0.10s|
|                               |     |
|                         CONST -+PV   |
|                         +00020 |     |
|                                +-----+
|                                DELSQUE
|                                %R2020
|
| B1502  AL_RES                                                   SQUEEGE  << RUNG 10  STEP #0024 >>
|%I0111  %M0600                                                   %M0482
+--] [--+--] [-----------------------------------------------------(R)-- (* Squee gee roller position *)
|       |
| Y1502 |
|%Q0117 |
+--]/[--+
|
| (*************************************************************************)
| (* Monitoring of the pendulum roller working position.                  *)
| (*************************************************************************)
|
```

REFERENCE	NICKNAME	REFERENCE DESCRIPTION	REFERENCE	NICKNAME	REFERENCE DESCRIPTION
%I0034	A501305	Failure TPIH LS	%M1215	POW_ON	Power on to inverter
%I0044	A506_32	DMC Main motor running	%I0087	S907	Push button inching JUM
%M0600	AL_RES	Alarm reset (From TPOP)	%M0482	SQUEEGE	Squee gee roller position
%I0111	B1502	Movable squee-gee roller	%G0001	STEP_1	STANDBY
%I0118	B2201	Main air supply pressure	%G0006	STEP_6	DRYING + STEAM CLEANING
%R2020	DELSQUE	Delay alarm on Squee gee roller	%G0021	ST_2-12	Ladder position 2-12
%R2009	FOINDEL	Force inching reset timer	%M0481	TPIH_LS	LS TPIH fault
%M1808	FOINJUM	Force inching after LS alarm	%Q0117	Y1502	Movable squee-gee rollers
%I0145	K112_6	Top door closed aseptic chamber			

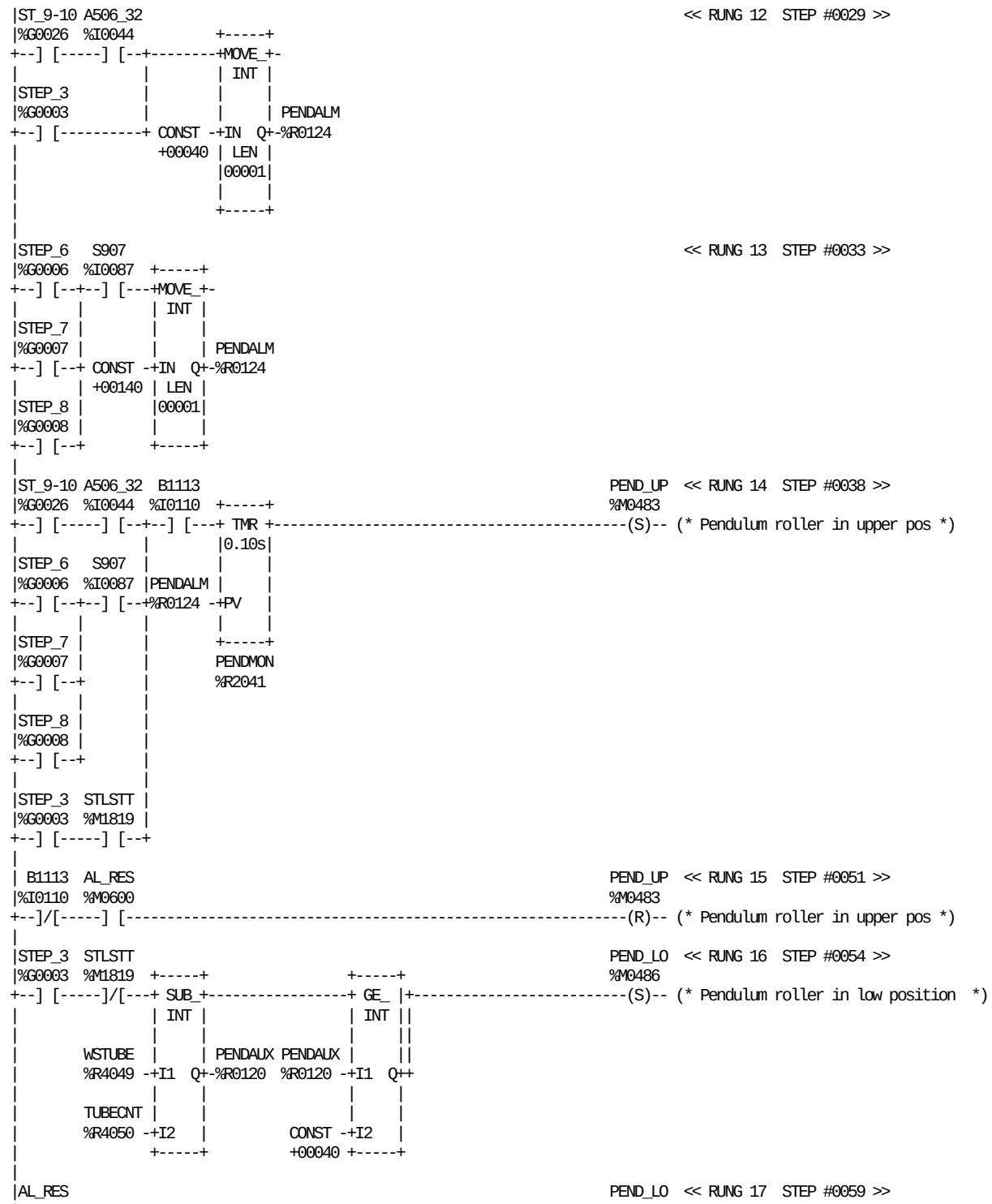

REFERENCE	NICKNAME	REFERENCE DESCRIPTION	REFERENCE	NICKNAME	REFERENCE DESCRIPTION
%I0044	A506_32	DMC Main motor running	%G0003	STEP_3	TUBE SEALING
%M0600	AL_RES	Alarm reset (From TPOP)	%G0006	STEP_6	DRYING + STEAM CLEANING
%I0110	B1113	Pendulum roller regulat position	%G0007	STEP_7	SIGNAL TO STERILIZER
%R0124	PENDALM	Timing for pendulum alarm	%G0008	STEP_8	FLAPS + H2O2 TEMPERATURE
%R0120	PENDAUX	Pendulum roller low aux register	%M1819	STLSTT	Start ls tight tube
%R2041	PENDMON	Timedelay pendulum up alarm	%G0026	ST_9-10	Ladder position 9-10
%M0486	PEND_LO	Pendulum roller in low position	%R4050	TUBECNT	Pkgs counter for tight tube
%M0483	PEND_UP	Pendulum roller in upper pos	%R4049	WSTUBE	Waste pkgs tight sealing tube
%I0087	S907	Push button inching JUM			

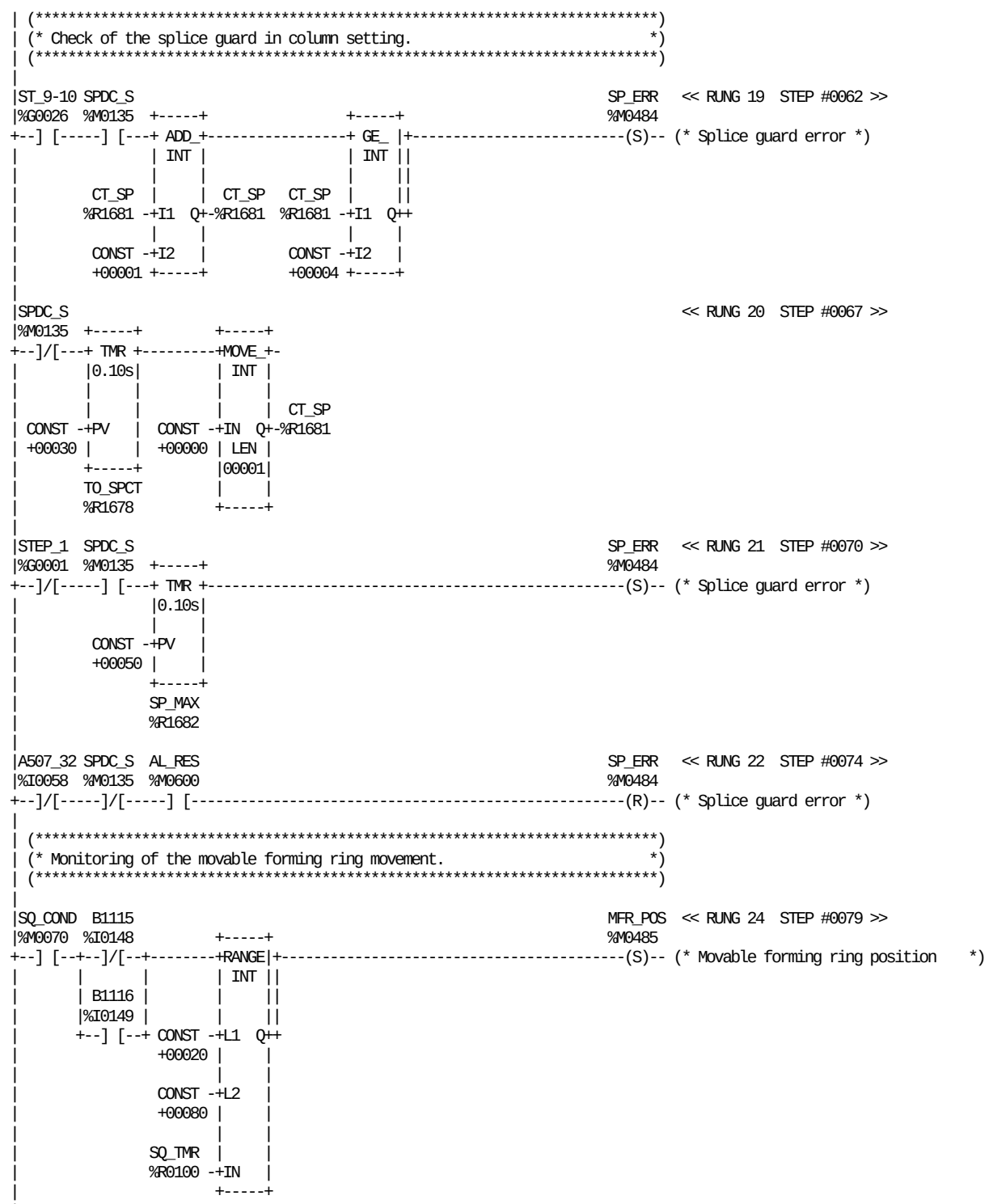

REFERENCE	NICKNAME	REFERENCE DESCRIPTION	REFERENCE	NICKNAME	REFERENCE DESCRIPTION
%I0058	A507_32	DMC FFU motor running	%M0484	SP_ERR	Splice guard error
%M0600	AL_RES	Alarm reset (From TPOP)	%R1682	SP_MAX	Max time splice guard on
%I0148	B1115	Movable forming ring DOWN	%M0070	SQ_COND	Start sequence conditions
%I0149	B1116	Movable forming ring UP	%R0100	SQ_TMR	Start sequense timer
%R1681	CT_SP	Counter splice pulses	%G0001	STEP_1	STANDBY
%M0485	MFR_POS	Movable forming ring position	%G0026	ST_9-10	Ladder position 9-10
%M0135	SPDC_S	Splice detection in columm set	%R1678	TO_SPCT	Timeout splice guard monitor

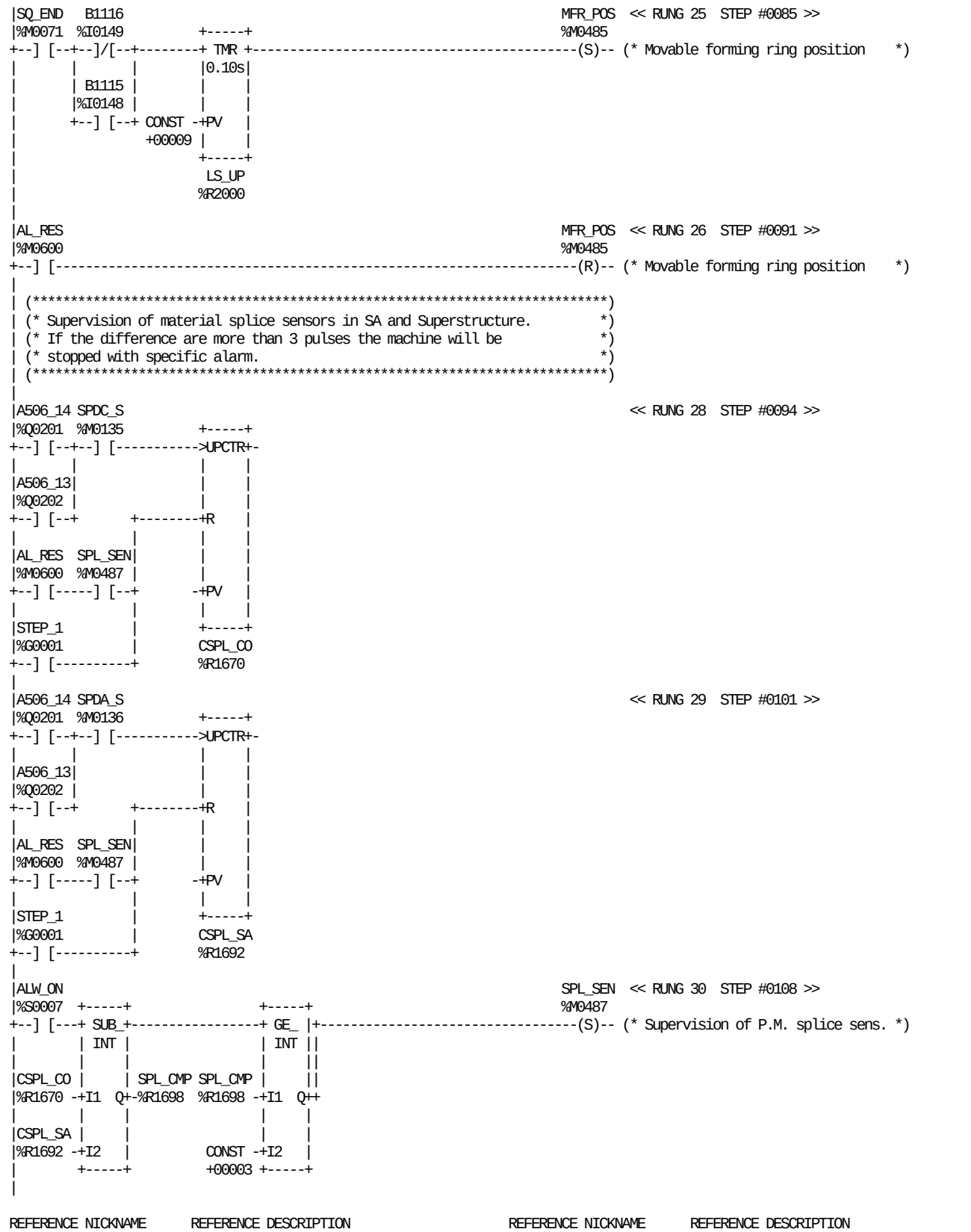

REFERENCE	NICKNAME	REFERENCE DESCRIPTION	REFERENCE	NICKNAME	REFERENCE DESCRIPTION
%Q0202	A506_13	DMC Main Motor Low speed	%R2000	LS_UP	Delay LS inductor up
%Q0201	A506_14	DMC Main Motor High speed	%M0485	MFR_POS	Movable forming ring position
%S0007	ALW_ON		%M0136	SPDA_S	Splice detection in ASU set
%M0600	AL_RES	Alarm reset (From TPOP)	%M0135	SPDC_S	Splice detection in columm set
%I0148	B1115	Movable forming ring DOWN	%R1698	SPL_CMP	Pckg.Mtrl. splice comparision
%I0149	B1116	Movable forming ring UP	%M0487	SPL_SEN	Supervision of P.M. splice sens.
%R1670	CSPL_CO	Counter splice detection Column	%M0071	SQ_END	Start sequence ended
%R1692	CSPL_SA	Counter splice detection SA	%G0001	STEP_1	STANDBY

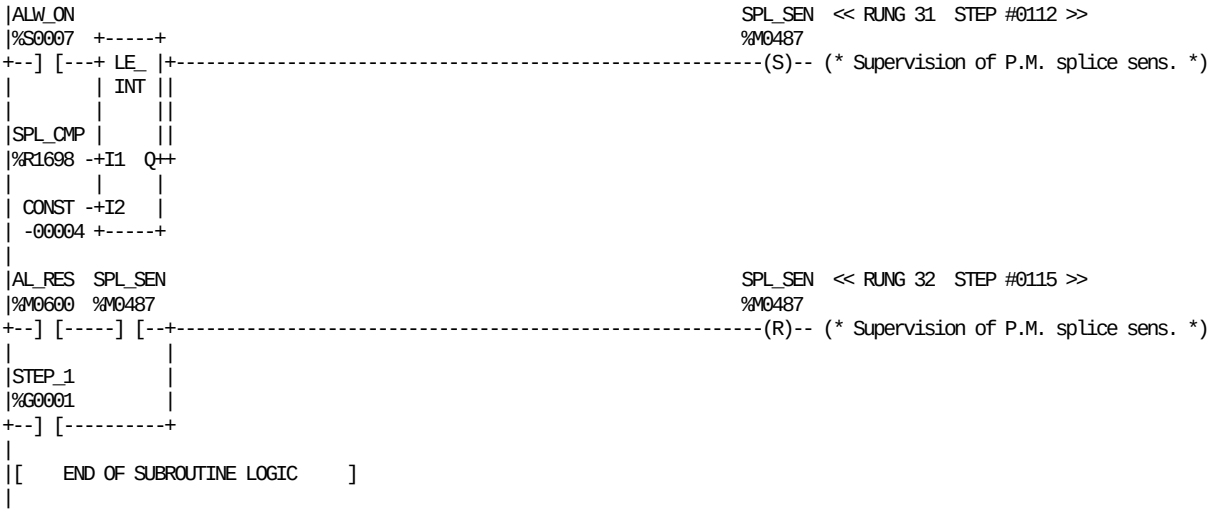

REFERENCE	NICKNAME	REFERENCE DESCRIPTION	REFERENCE	NICKNAME	REFERENCE DESCRIPTION
%S0007	ALW_ON		%M0487	SPL_SEN	Supervision of P.M. splice sens.
%M0600	AL_RES	Alarm reset (From TPOP)	%G0001	STEP_1	STANDBY
%R1698	SPL_CMP	Pckg.Mtrl. splice comparision			

This page left intentionally blank

```
|[  START LD SUBROUTINE  STRIPOK  ]
|
|[     VARIABLE DECLARATIONS      ]
|
|[   START OF SUBROUTINE LOGIC    ]
|
|SEARCH  NOSTRIP                                                    P+SEARC  << RUNG 4  STEP #0002 >>
|%M1473  %M0793                                                     %M1474
+--] [--+--]/[-----------------------------------------------------------(^)-- (* SA, pulse + bobbin research      *)
|       |
|P+ENREV|
|%M1481 |
+--] [--+
|
|P+SEARC  B6204  SECOND  TESTOK                                     SENS_ON  << RUNG 5  STEP #0006 >>
|%M1474  %I0179  %M1482  %M1480                                     %M0785
+--] [-----]/[-----]/[-----]/[-------------------------------------------(S)-- (* SA strip prepared sensor detect. *)
|
|P+SEARC                                                                    << RUNG 6  STEP #0011 >>
|%M1474  +-----+                +-----+
+--] [---+MOVE_+----------------+ ADD_+-
|        | INT |                | INT |
|        |     |                |     |
|ANALOG  |     | ANAL_1  ANAL_1 |     | ANAL_1
|%AI0021-+IN  Q+-%R1868  %R1868 -+I1  Q+-%R1868
|        | LEN |                |     |
|        |00001|                |     |
|        |     |                |     |
|        +-----+         CONST -+I2   |
|                        +00150 +-----+
|
|SEARCH  ENDFORW POW_ON  SENS_ON  B6204                             ENDFORW  << RUNG 7  STEP #0014 >>
|%M1473  %M1475  %M1215  %M0785  %I0179                             %M1475
+--] [-----]/[-----] [-----] [-----] [-------------------------------------(S)-- (* SA, end forward bobbin research  *)
|
|SEARCH  ENDFORW POW_ON                                             ENDFORW  << RUNG 8  STEP #0020 >>
|%M1473  %M1475  %M1215  +-----+                                    %M1475
+--] [-----]/[-----] [---+ TMR +-------------------------------------------(S)-- (* SA, end forward bobbin research  *)
|                       |0.01s|
|                       |     |
|                CONST -+PV   |
|                +00100 |     |
|                       +-----+
|                       DEL1874
|                       %R1874
|
|ENDFORW                                                            P+VERIF  << RUNG 9  STEP #0025 >>
|%M1475                                                             %M1476
+--] [-----------------------------------------------------------------------(^)-- (* SA, pulse + bobbin determination *)
|
|P+VERIF                                                            REVERSE  << RUNG 10  STEP #0027 >>
|%M1476  +-----+                                                    %M1477
+--] [---+MOVE_+-----------------------------------------------------------(S)-- (* SA, reverse moved bobbin         *)
|        | INT |
|        |     |
|ANALOG  |     | ANAL_2
|%AI0021-+IN  Q+-%R1871
|        | LEN |
|        |00001|
|        |     |
|        +-----+
|
```

REFERENCE	NICKNAME	REFERENCE DESCRIPTION	REFERENCE	NICKNAME	REFERENCE DESCRIPTION
%AI0021	ANALOG	SA, Analog sensor strip magazine	%M1474	P+SEARC	SA, pulse + bobbin research
%R1868	ANAL_1	SA, first pos.analog sensor	%M1476	P+VERIF	SA, pulse + bobbin determination
%R1871	ANAL_2	SA, second pos.analog sensor	%M1215	POW_ON	Power on to inverter
%I0179	B6204	Strip splice prepared	%M1477	REVERSE	SA, reverse moved bobbin
%R1874	DEL1874	SA, time forward research bobbin	%M1473	SEARCH	SA, bobbin research going on
%M1475	ENDFORW	SA, end forward bobbin research	%M1482	SECOND	SA, second bobbin research
%M0793	NOSTRIP	Strip general alarm	%M0785	SENS_ON	SA strip prepared sensor detect.
%M1481	P+ENREV	SA, pulse + end reverse bobbin	%M1480	TESTOK	SA, bobbin research OK

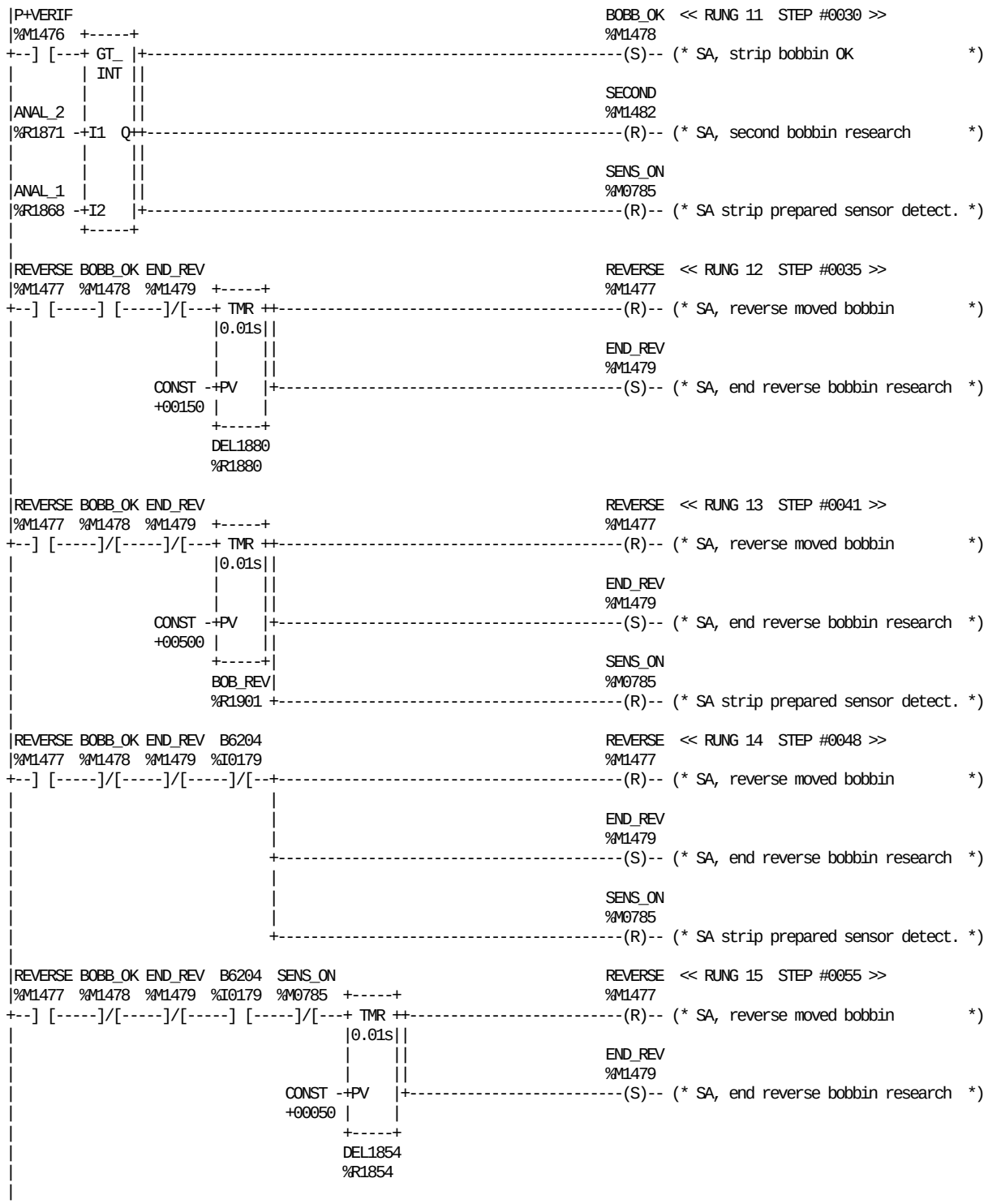

REFERENCE	NICKNAME	REFERENCE DESCRIPTION	REFERENCE	NICKNAME	REFERENCE DESCRIPTION
%R1868	ANAL_1	SA, first pos.analog sensor	%R1880	DEL1880	SA, time reverse research bobbin
%R1871	ANAL_2	SA, second pos.analog sensor	%M1479	END_REV	SA, end reverse bobbin research
%I0179	B6204	Strip splice prepared	%M1476	P+VERIF	SA, pulse + bobbin determination
%M1478	BOBB_OK	SA, strip bobbin OK	%M1477	REVERSE	SA, reverse moved bobbin
%R1901	BOB_REV	TMR slow reverse bobbin research	%M1482	SECOND	SA, second bobbin research
%R1854	DEL1854	SA, delay	%M0785	SENS_ON	SA strip prepared sensor detect.

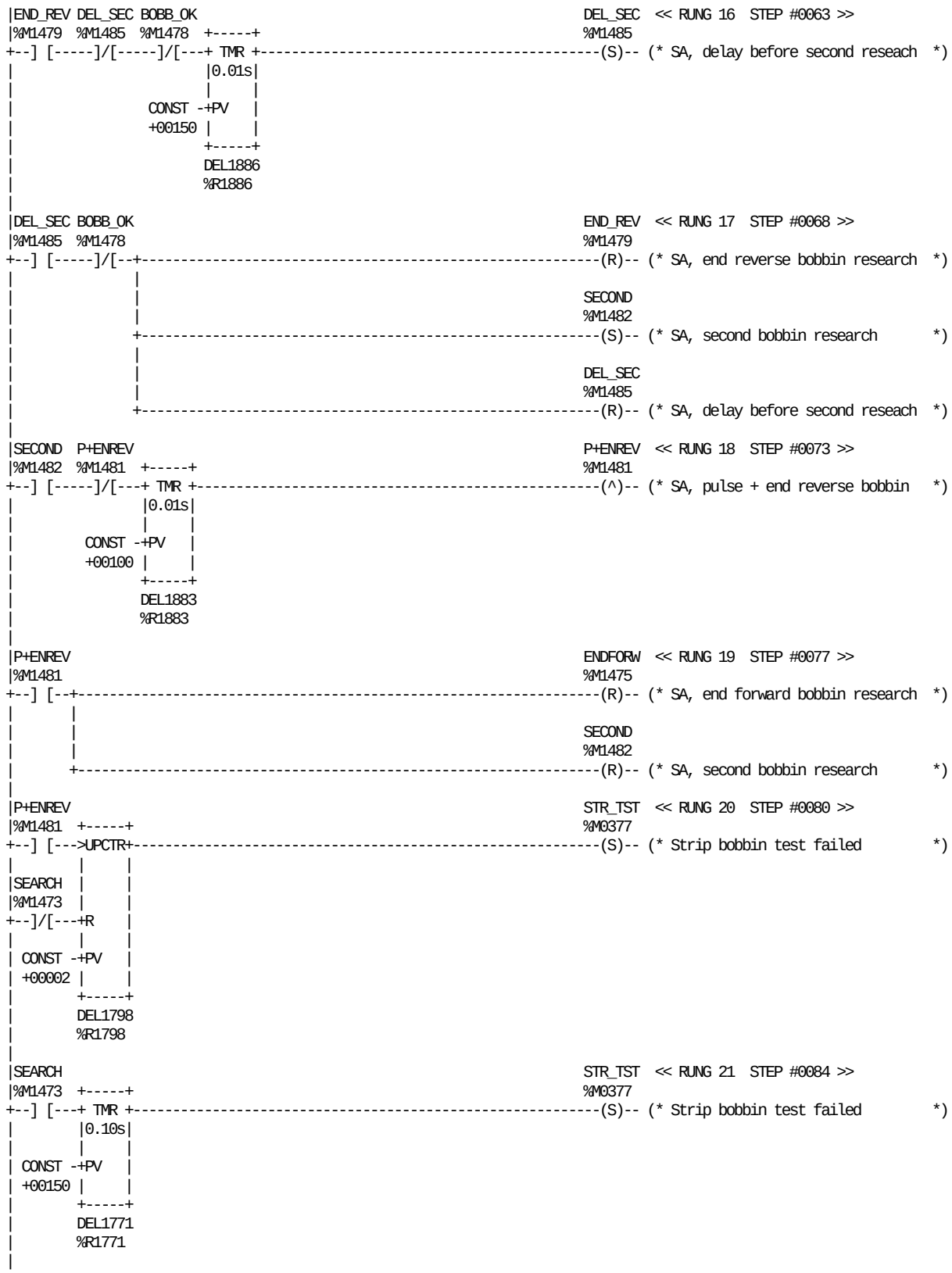

REFERENCE	NICKNAME	REFERENCE DESCRIPTION	REFERENCE	NICKNAME	REFERENCE DESCRIPTION
%M1478	BOBB_OK	SA, strip bobbin OK	%M1475	ENDFORW	SA, end forward bobbin research
%R1771	DEL1771	SA, delay	%M1479	END_REV	SA, end reverse bobbin research
%R1798	DEL1798	Delay enable timer	%M1481	P+ENREV	SA, pulse + end reverse bobbin
%R1883	DEL1883	SA, delay bobbin switch	%M1473	SEARCH	SA, bobbin research going on
%R1886	DEL1886	SA, delay strip reseach	%M1482	SECOND	SA, second bobbin research
%M1485	DEL_SEC	SA, delay before second reseach	%M0377	STR_TST	Strip bobbin test failed

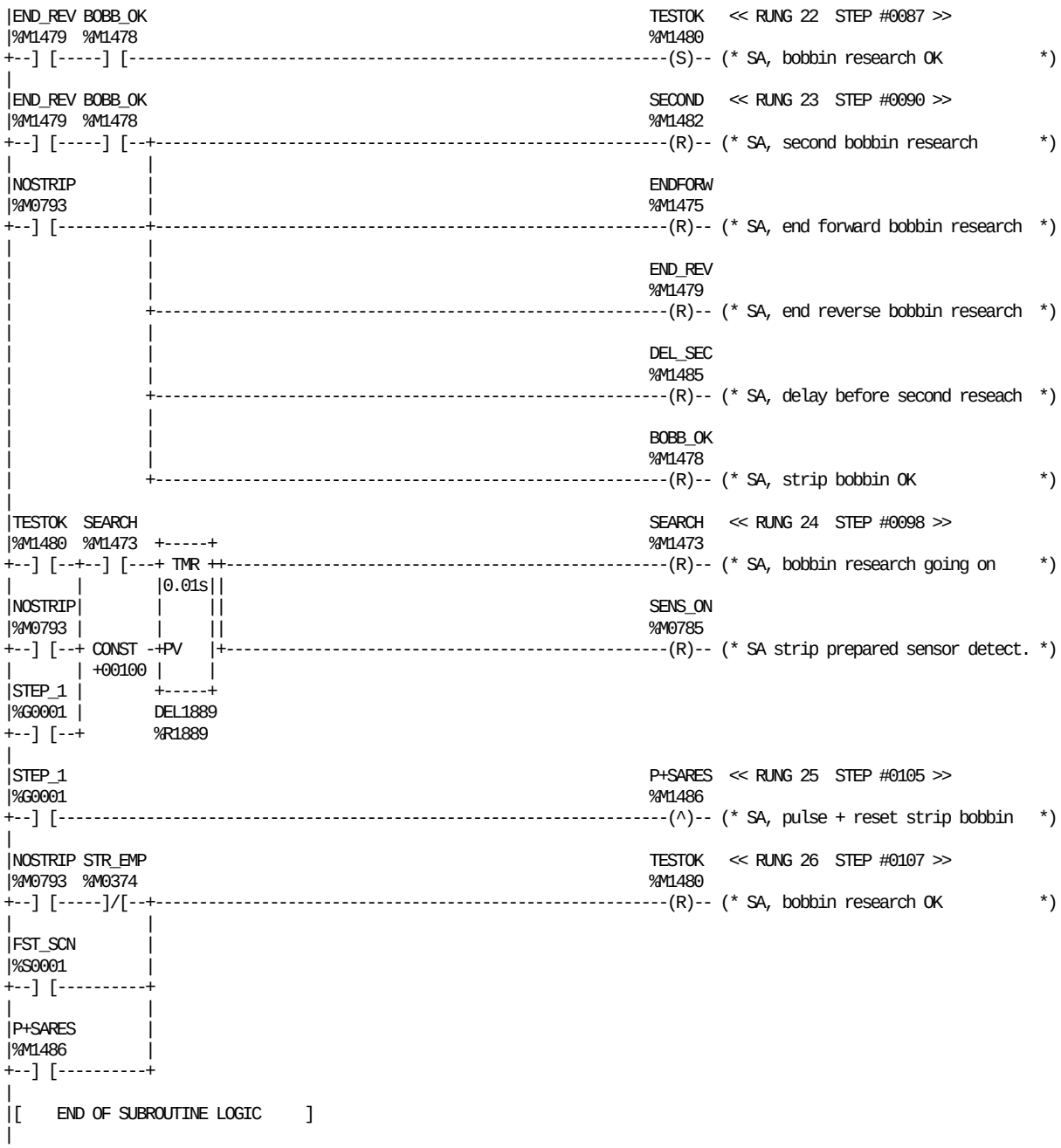

REFERENCE	NICKNAME	REFERENCE DESCRIPTION	REFERENCE	NICKNAME	REFERENCE DESCRIPTION
%M1478	BOBB_OK	SA, strip bobbin OK	%M1486	P+SARES	SA, pulse + reset strip bobbin
%R1889	DEL1889	SA, delay strip research end	%M1473	SEARCH	SA, bobbin research going on
%M1485	DEL_SEC	SA, delay before second reseach	%M1482	SECOND	SA, second bobbin research
%M1475	ENDFORW	SA, end forward bobbin research	%M0785	SENS_ON	SA strip prepared sensor detect.
%M1479	END_REV	SA, end reverse bobbin research	%G0001	STEP_1	STANDBY
%S0001	FST_SCN		%M0374	STR_EMP	Strip magazine empty
%M0793	NOSTRIP	Strip general alarm	%M1480	TESTOK	SA, bobbin research OK

```
|[  START LD SUBROUTINE  PLMSLA4  ]
|
|[     VARIABLE DECLARATIONS      ]
|
|[   START OF SUBROUTINE LOGIC    ]
|
| (*************************************************************************)
| (* DE machines supported in Line Automation                               *)
| (* ---------------------------------------                                 *)
| (* Level  0: TBA 22                                                       *)
| (* Level 10: THx 22                                                       *)
| (* Level 20: TSA22HS - TCAP 21(L) - TCAP 21(R) - Gen.TCAP(L) - Gen.TCAP(R)  *)
| (* Level 30: Meurer FW - Generic FW - GKM - FW 68(L) - FW 68(R)           *)
| (* Level 40: THA 32 - Generic HA                                         *)
| (* Level 50: TCBP 71 - TCBP 22 - Generic CBP - TCBP 70(L) - TCBP 70(R)    *)
| (* Level 60: TTS 51 - Generic TS                                        *)
| (* Level 70: TE 10                                                      *)
| (* Level 80: TPL 10                                                     *)
| (*           PD 122: Automatic Switch 1-2 (Divider)                     *)
| (*           UC 221: Automatic Switch 2-1 (Converger)                   *)
| (*************************************************************************)
|
| (*************************************************************************)
| (* Comunication signals with the Distribution Equipment machines          *)
| (*************************************************************************)
|
| (*************************************************************************)
| (* Level 10                                                               *)
| (* THx 22                                                                 *)
| (*************************************************************************)
|
|ALW_ON                                                    THX22_S  << RUNG 7  STEP #0005 >>
|%S0007  +-----+                                           %M3005
+--] [---+ BIT_|+-----------------------------------------------------( )-- (* Ready/stopsignal THx22          *)
|        |TEST_||
|        | WORD||
|THX22_4 |     ||
|%R0663 -+IN  Q++
|        | LEN |
|        |00001|
|        |     |
| CONST -+BIT  |
|  00001 +-----+
|
|THX_BP  ALW_OFF                                           THX_FS   << RUNG 8  STEP #0008 >>
|%M3101  %S0008  +-----+                                   %M3100
+--] [-----] [---+ BIT_|+-------------------------------------------------( )-- (* Stop Signal from THx22 in bypass *)
|                |TEST_||
|                | WORD||
|       THX22_4  |     ||
|       %R0663 -+IN  Q++
|                | LEN |
|                |00001|
|                |     |
|         CONST -+BIT  |
|          00003 +-----+
|
|ALW_ON                                                    THX_BP   << RUNG 9  STEP #0012 >>
|%S0007  +-----+                                           %M3101
+--] [---+ BIT_|+-----------------------------------------------------( )-- (* THx22 in bypass                *)
|        |TEST_||
|        | WORD||
|THX22_4 |     ||
|%R0663 -+IN  Q++
|        | LEN |
|        |00001|
|        |     |
| CONST -+BIT  |
|  00004 +-----+
|
```

REFERENCE	NICKNAME	REFERENCE DESCRIPTION	REFERENCE	NICKNAME	REFERENCE DESCRIPTION
%S0008	ALW_OFF		%M3005	THX22_S	Ready/stopsignal THx22
%S0007	ALW_ON		%M3101	THX_BP	THx22 in bypass
%R0663	THX22_4	THx22 Signals	%M3100	THX_FS	Stop Signal from THx22 in bypass

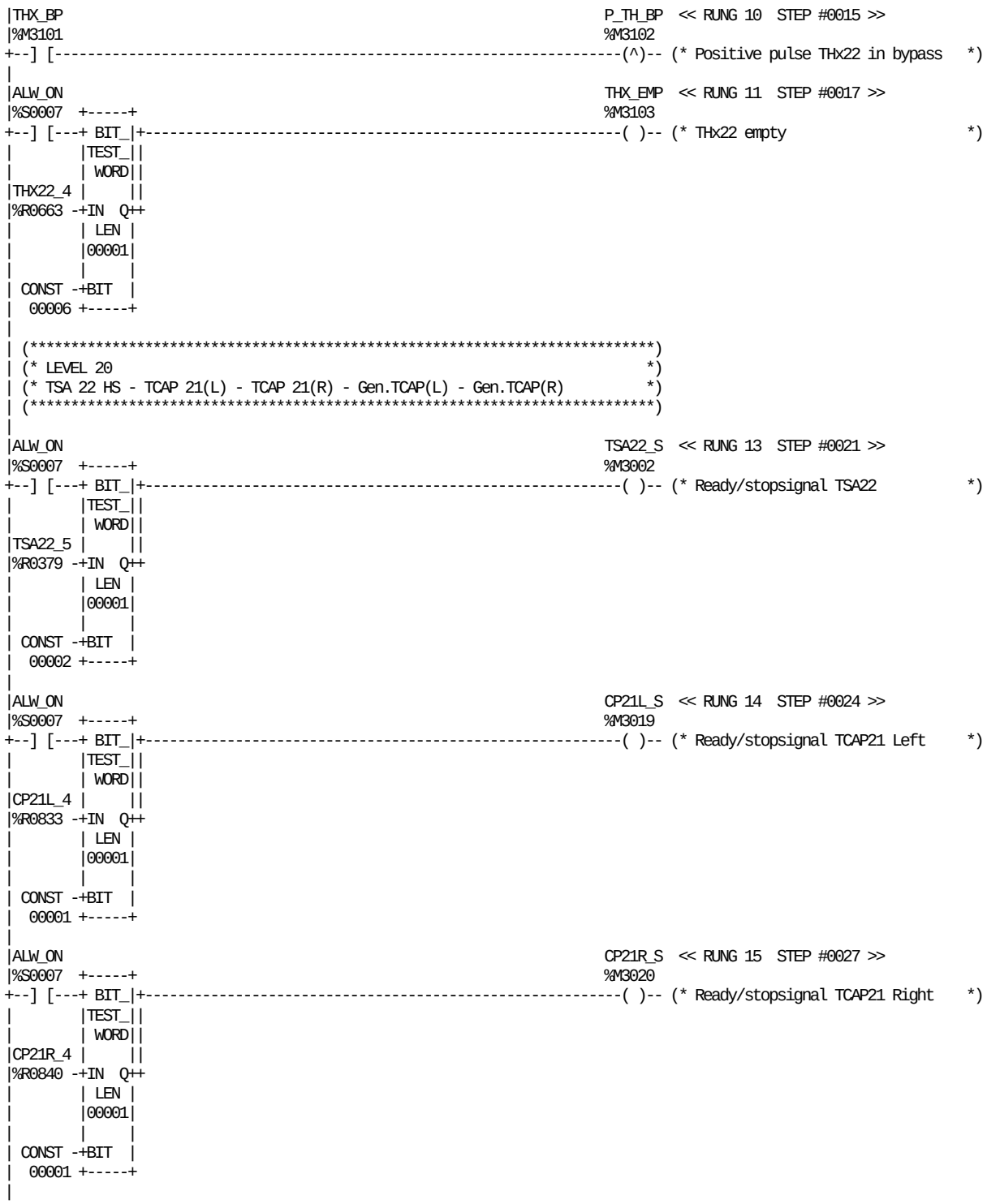

REFERENCE	NICKNAME	REFERENCE DESCRIPTION	REFERENCE	NICKNAME	REFERENCE DESCRIPTION
%S0007	ALW_ON		%R0663	THX22_4	THx22 Signals
%R0833	CP21L_4	TCAP21 (Left) Signals	%M3101	THX_BP	THx22 in bypass
%M3019	CP21L_S	Ready/stopsignal TCAP21 Left	%M3103	THX_EMP	THx22 empty
%R0840	CP21R_4	TCAP21 (Right) Signals	%R0379	TSA22_5	TSA22 Signals
%M3020	CP21R_S	Ready/stopsignal TCAP21 Right	%M3002	TSA22_S	Ready/stopsignal TSA22
%M3102	P_TH_BP	Positive pulse THx22 in bypass			

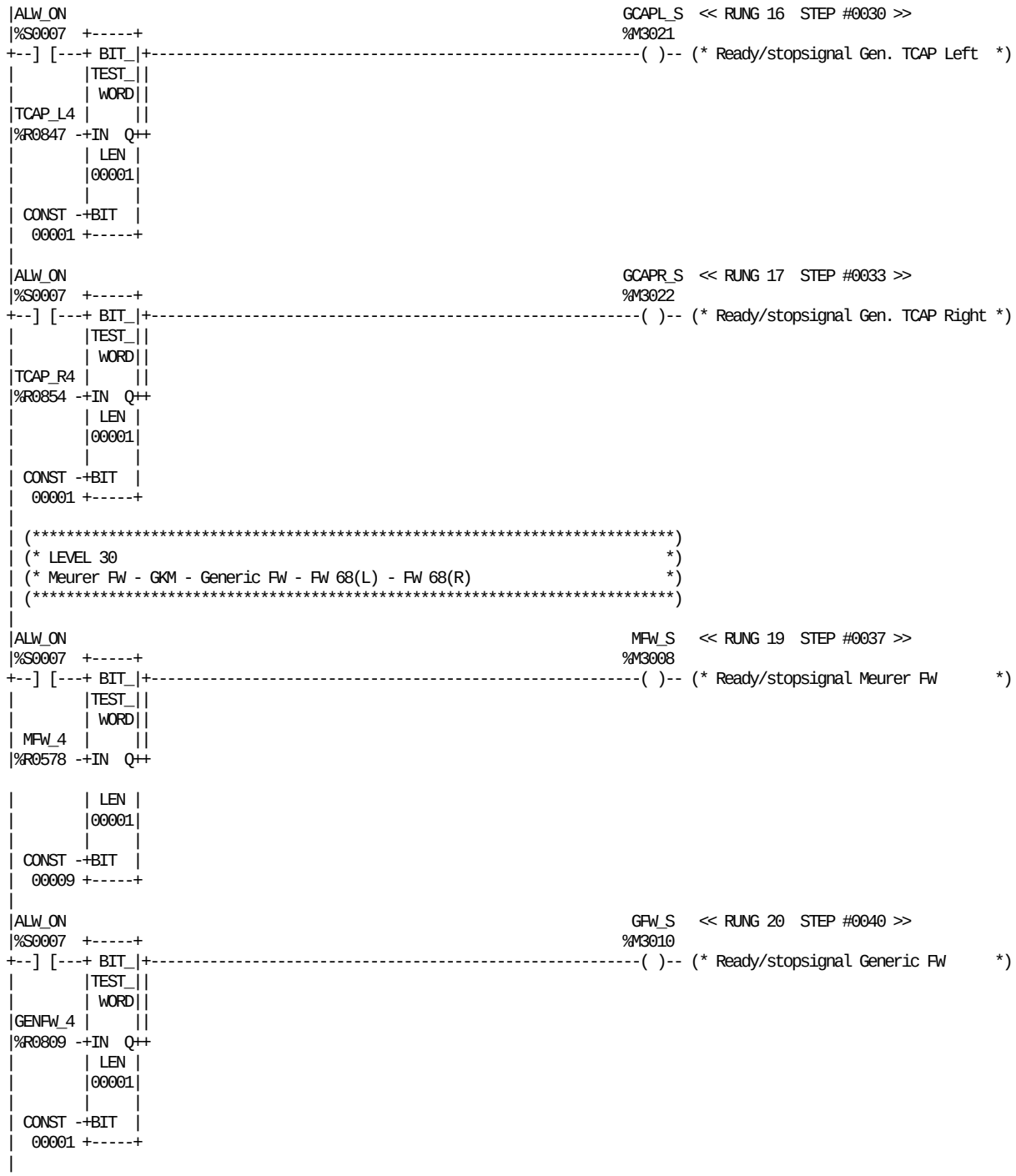

REFERENCE	NICKNAME	REFERENCE DESCRIPTION	REFERENCE	NICKNAME	REFERENCE DESCRIPTION
%S0007	ALW_ON		%R0578	MFW_4	Meurer FW Signals
%M3021	GCAPL_S	Ready/stopsignal Gen. TCAP Left	%M3008	MFW_S	Ready/stopsignal Meurer FW
%M3022	GCAPR_S	Ready/stopsignal Gen. TCAP Right	%R0847	TCAP_L4	Generic TCAP (Left) Signals
%R0809	GENFW_4	Generic FW Signals	%R0854	TCAP_R4	Generic TCAP (Right) Signals
%M3010	GFW_S	Ready/stopsignal Generic FW			

```
|ALW_ON                                                                GKM_S   << RUNG 21  STEP #0043 >>
|%S0007  +-----+                                                      %M3015
+--] [---+ BIT_|+-------------------------------------------------------( )-- (* Ready/stopsignal GKM            *)
|        |TEST_||
|        | WORD||
| GKM_4  |     ||
|%R0628 -+IN  Q++
|        | LEN |
|        |00001|
|        |     |
| CONST -+BIT  |
|  00001 +-----+
|
|ALW_ON                                                                FW68L_S  << RUNG 22  STEP #0046 >>
|%S0007  +-----+                                                      %M3016
+--] [---+ BIT_|+-------------------------------------------------------( )-- (* Ready/stopsignal FW68 Left      *)
|        |TEST_||
|        | WORD||
|FW68L_4 |     ||
|%R0783 -+IN  Q++
|        | LEN |
|        |00001|
|        |     |
| CONST -+BIT  |
|  00001 +-----+
|
|ALW_ON                                                                FW68LDI  << RUNG 23  STEP #0049 >>
|%S0007  +-----+                                                      %M3304
+--] [---+ BIT_|+-------------------------------------------------------( )-- (* FW68 Left Double infeed        *)
|        |TEST_||
|        | WORD||
|FW68L_4 |     ||
|%R0783 -+IN  Q++
|        | LEN |
|        |00001|
|        |     |
| CONST -+BIT  |
|  00004 +-----+
|
|ALW_ON                                                                FW68R_S  << RUNG 24  STEP #0052 >>
|%S0007  +-----+                                                      %M3017
+--] [---+ BIT_|+-------------------------------------------------------( )-- (* Ready/stopsignal FW68 Right     *)
|        |TEST_||
|        | WORD||
|FW68R_4 |     ||
|%R0789 -+IN  Q++
|        | LEN |
|        |00001|
|        |     |
| CONST -+BIT  |
|  00001 +-----+
|
|ALW_ON                                                                FW68RDI  << RUNG 25  STEP #0055 >>
|%S0007  +-----+                                                      %M3104
+--] [---+ BIT_|+-------------------------------------------------------( )-- (* FW68 Right Double infeed        *)
|        |TEST_||
|        | WORD||
|FW68R_4 |     ||
|%R0789 -+IN  Q++
|        | LEN |
|        |00001|
|        |     |
| CONST -+BIT  |
|  00004 +-----+
|
| (*****************************************************************************)
| (* LEVEL 40                                                                  *)
| (* THA 32 - Generic HA                                                       *)
| (*****************************************************************************)
```

REFERENCE	NICKNAME	REFERENCE DESCRIPTION	REFERENCE	NICKNAME	REFERENCE DESCRIPTION
%S0007	ALW_ON		%R0789	FW68R_4	FW68 (Right) Signals
%M3304	FW68LDI	FW68 Left Double infeed	%M3017	FW68R_S	Ready/stopsignal FW68 Right
%R0783	FW68L_4	FW68 (Left) Signals	%R0628	GKM_4	GKM Signals
%M3016	FW68L_S	Ready/stopsignal FW68 Left	%M3015	GKM_S	Ready/stopsignal GKM
%M3104	FW68RDI	FW68 Right Double infeed			

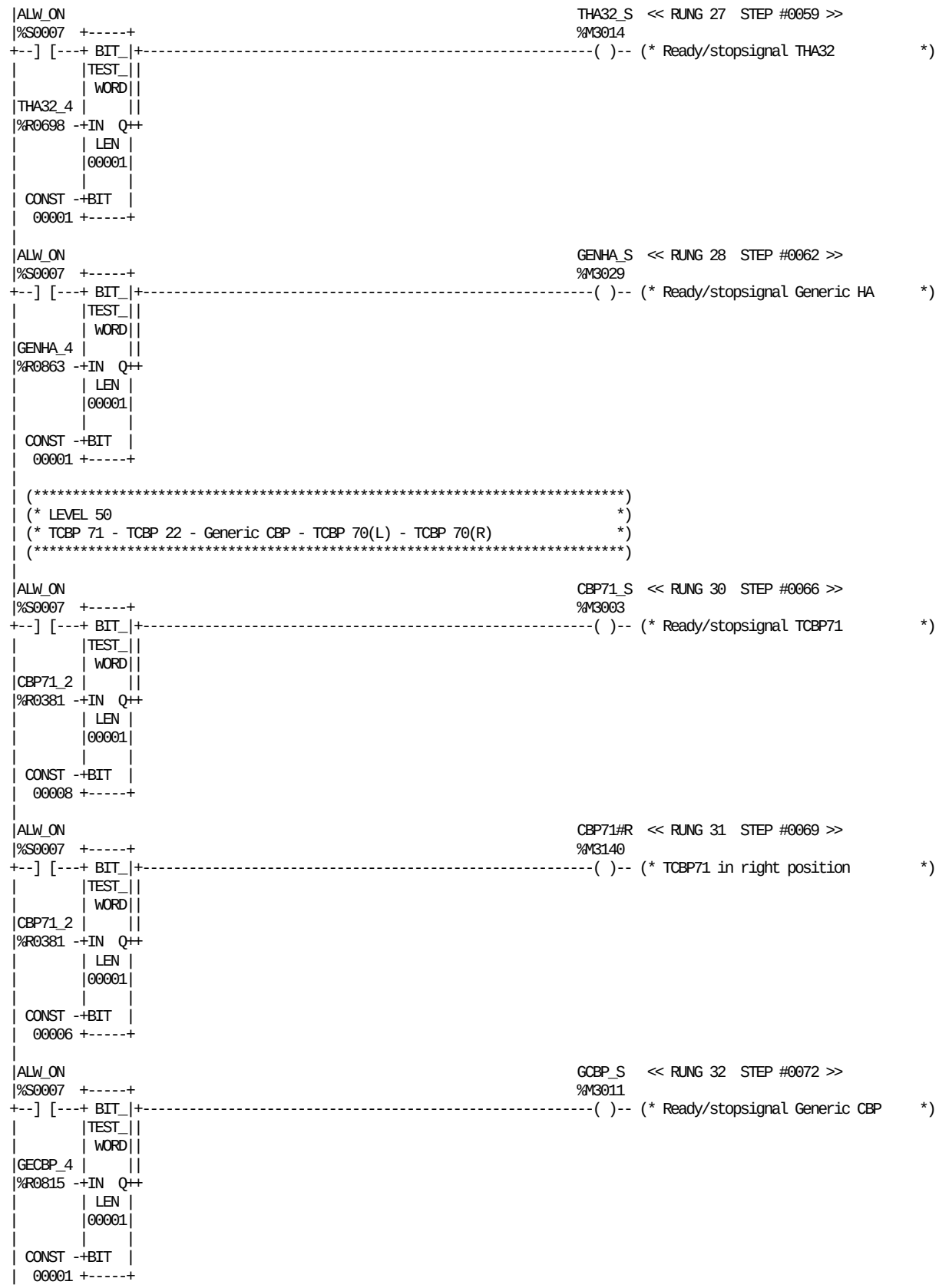

REFERENCE	NICKNAME	REFERENCE DESCRIPTION	REFERENCE	NICKNAME	REFERENCE DESCRIPTION
%S0007	ALW_ON		%R0815	GECBP_4	Generic CBP Signals
%M3140	CBP71#R	TCBP71 in right position	%R0863	GENHA_4	Generic HA Signals
%R0381	CBP71_2	TCBP71 Signals	%M3029	GENHA_S	Ready/stopsignal Generic HA
%M3003	CBP71_S	Ready/stopsignal TCBP71	%R0698	THA32_4	THA32 Signals
%M3011	GCBP_S	Ready/stopsignal Generic CBP	%M3014	THA32_S	Ready/stopsignal THA32

```
|ALW_ON                                                                GCBP#R   << RUNG 33  STEP #0075 >>
|%S0007  +-----+                                                       %M3141
+--] [---+ BIT_|+-------------------------------------------------------( )-- (* Generic CBP in right position    *)
|        |TEST_||
|        | WORD||
|GECBP_4 |     ||
|%R0815 -+IN  Q++
|        | LEN |
|        |00001|
|        |     |
| CONST -+BIT  |
|  00006 +-----+
|
|ALW_ON                                                                CPB22_S  << RUNG 34  STEP #0078 >>
|%S0007  +-----+                                                       %M3013
+--] [---+ BIT_|+-------------------------------------------------------( )-- (* Ready/stopsignal TCBP22         *)
|        |TEST_||
|        | WORD||
|CBP22_4 |     ||
|%R0683 -+IN  Q++
|        | LEN |
|        |00001|
|        |     |
| CONST -+BIT  |
|  00001 +-----+
|
|ALW_ON                                                                CBP22#R  << RUNG 35  STEP #0081 >>
|%S0007  +-----+                                                       %M3142
+--] [---+ BIT_|+-------------------------------------------------------( )-- (* TCBP22 in right position        *)
|        |TEST_||
|        | WORD||
|CBP22_4 |     ||
|%R0683 -+IN  Q++
|        | LEN |
|        |00001|
|        |     |
| CONST -+BIT  |
|  00006 +-----+
|
|ALW_ON                                                                CB70L_S  << RUNG 36  STEP #0084 >>
|%S0007  +-----+                                                       %M3025
+--] [---+ BIT_|+-------------------------------------------------------( )-- (* Ready/stopsignal TCBP70 Left     *)
|        |TEST_||
|        | WORD||
|CB70L_4 |     ||
|%R0633 -+IN  Q++
|        | LEN |

|        |00001|
|        |     |
| CONST -+BIT  |
|  00001 +-----+
|
|ALW_ON                                                                CB70R_S  << RUNG 37  STEP #0087 >>
|%S0007  +-----+                                                       %M3026
+--] [---+ BIT_|+-------------------------------------------------------( )-- (* Ready/stopsignal TCBP70 Right    *)
|        |TEST_||
|        | WORD||
|CB70R_4 |     ||
|%R0640 -+IN  Q++
|        | LEN |
|        |00001|
|        |     |
| CONST -+BIT  |
|  00001 +-----+
|
| (*************************************************************************)
| (* LEVEL 60                                                              *)
| (* TTS 51 - Generic TS                                                   *)
| (*************************************************************************)
```

REFERENCE	NICKNAME	REFERENCE DESCRIPTION	REFERENCE	NICKNAME	REFERENCE DESCRIPTION
%S0007	ALW_ON		%M3142	CBP22#R	TCBP22 in right position
%R0633	CB70L_4	TCBP70 (Left) Signals	%R0683	CBP22_4	TCBP22 Signals
%M3025	CB70L_S	Ready/stopsignal TCBP70 Left	%M3013	CPB22_S	Ready/stopsignal TCBP22
%R0640	CB70R_4	TCBP70 (Right) Signals	%M3141	GCBP#R	Generic CBP in right position
%M3026	CB70R_S	Ready/stopsignal TCBP70 Right	%R0815	GECBP_4	Generic CBP Signals

```
|ALW_ON                                                          TTS51_S  << RUNG 39  STEP #0091 >>
|%S0007  +-----+                                                 %M3007
+--] [---+ BIT_|+-----------------------------------------------------( )-- (* Ready/stopsignal TTS51          *)
|        |TEST_||
|        | WORD||
|TTS51_4 |     ||
|%R0678 -+IN  Q++
|        | LEN |
|        |00001|
|        |     |
| CONST -+BIT  |
|  00001 +-----+
|
|ALW_ON                                                           GTS_S   << RUNG 40  STEP #0094 >>
|%S0007  +-----+                                                 %M3012
+--] [---+ BIT_|+-----------------------------------------------------( )-- (* Ready/stopsignal Generic TS     *)
|        |TEST_||
|        | WORD||
|GENTS_4 |     ||
|%R0821 -+IN  Q++
|        | LEN |
|        |00001|
|        |     |
| CONST -+BIT  |
|  00001 +-----+
|
| (*************************************************************************)
| (* LEVEL 70                                                              *)
| (* TE 10                                                                 *)
| (*************************************************************************)
|
|ALW_ON                                                          TE10_S   << RUNG 42  STEP #0098 >>
|%S0007  +-----+                                                 %M3028
+--] [---+ BIT_|+-----------------------------------------------------( )-- (* Ready/stopsignal TE10           *)
|        |TEST_||
|        | WORD||
|TE10_4  |     ||
|%R0603 -+IN  Q++
|        | LEN |
|        |00001|
|        |     |
| CONST -+BIT  |
|  00001 +-----+
|
| (*************************************************************************)
| (* LEVEL 80                                                              *)
| (* TPL 10                                                                *)
| (*************************************************************************)
|
|ALW_ON                                                          TPL10_S  << RUNG 44  STEP #0102 >>
|%S0007  +-----+                                                 %M3027
+--] [---+ BIT_|+-----------------------------------------------------( )-- (* Ready/stopsignal TPL10          *)
|        |TEST_||
|        | WORD||
|TPL10_4 |     ||
|%R0598 -+IN  Q++
|        | LEN |
|        |00001|
|        |     |
| CONST -+BIT  |
|  00001 +-----+
|
| (*************************************************************************)
| (* Automatic Switch 12 (Divider)                                         *)
| (* Automatic Switch 21 (Converger)                                      *)
| (*************************************************************************)
|
```

REFERENCE	NICKNAME	REFERENCE DESCRIPTION	REFERENCE	NICKNAME	REFERENCE DESCRIPTION
%S0007	ALW_ON		%R0598	TPL10_4	TPL10 Signals
%R0821	GENTS_4	Generic TS Signals	%M3027	TPL10_S	Ready/stopsignal TPL10
%M3012	GTS_S	Ready/stopsignal Generic TS	%R0678	TTS51_4	TTS51 Signals
%R0603	TE10_4	TE10 Signals	%M3007	TTS51_S	Ready/stopsignal TTS51
%M3028	TE10_S	Ready/stopsignal TE10			

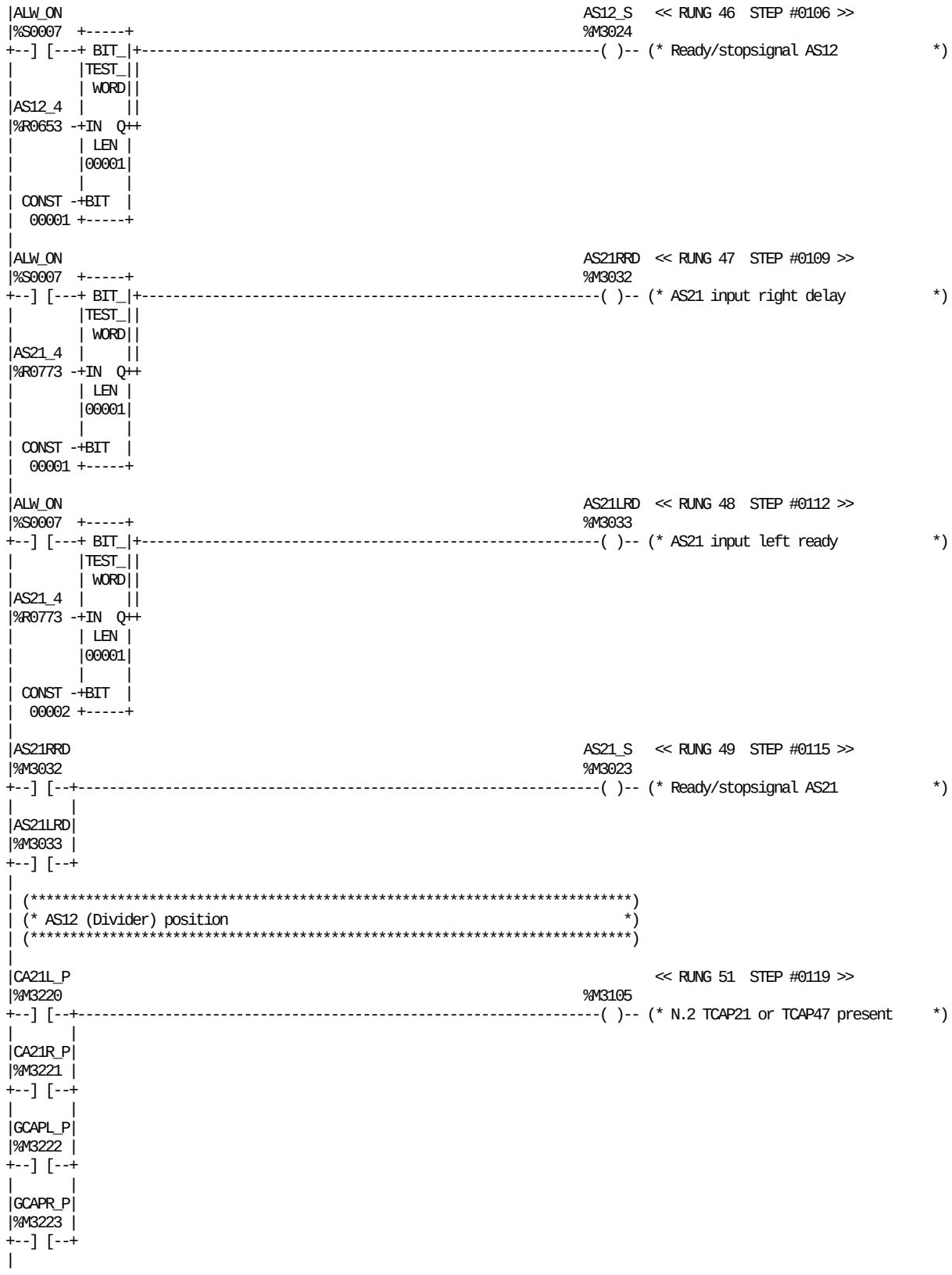

REFERENCE	NICKNAME	REFERENCE DESCRIPTION	REFERENCE	NICKNAME	REFERENCE DESCRIPTION
%M3105		N.2 TCAP21 or TCAP47 present	%R0773	AS21_4	AS21 Signal
%S0007	ALW_ON		%M3023	AS21_S	Ready/stopsignal AS21
%R0653	AS12_4	AS12 Signals	%M3220	CA21L_P	TCAP21 Left present
%M3024	AS12_S	Ready/stopsignal AS12	%M3221	CA21R_P	TCAP21 Right present
%M3033	AS21LRD	AS21 input left ready	%M3222	GCAPL_P	Generic TCAP Left present
%M3032	AS21RRD	AS21 input right delay	%M3223	GCAPR_P	Generic TCAP Right present

```
|       MFW_PRE                                                          << RUNG 52  STEP #0124 >>
|%M3105  %M3209                                                %M3106
+--]/[--+--] [--+-----------------------------------------------------( )-- (* MFW or GFW or GKM present       *)
|       |       |
|       |GKM_PRE|
|       |%M3216 |
|       +--] [--+
|       |       |
|       |GFW_PRE|
|       |%M3211 |
|       +--] [--+
|
|FW68L_P FW68R_P                                                         << RUNG 53  STEP #0130 >>
|%M3217  %M3218                                                %M3107
+--]/[-----]/[-----------------------------------------------------------( )-- (* FW68 not present               *)
|
|FW68L_P FW68LDI FW68R_P                                                 << RUNG 54  STEP #0133 >>
|%M3217  %M3304  %M3218                                        %M3108
+--] [-----]/[-----]/[---------------------------------------------------( )-- (* N.1 FW68 present (Single Infeed) *)
|
|FW68L_P FW68LDI FW68R_P                                                 << RUNG 55  STEP #0137 >>
|%M3217  %M3304  %M3218                                        %M3109
+--] [-----] [-----]/[---------------------------------------------------( )-- (* N.1 FW68 present (Double Infeed) *)
|
|FW68L_P FW68LDI FW68R_P FW68RDI                                         << RUNG 56  STEP #0141 >>
|%M3217  %M3304  %M3218  %M3104                                %M3110
+--] [-----]/[-----] [-----]/[-------------------------------------------( )-- (* N.2 FW68 present (Single Infeed) *)
|
|       AS12_PR                                                 AS12#20  << RUNG 57  STEP #0146 >>
|%M3105  %M3225                                                %M3112
+--] [-----] [-----------------------------------------------------------( )-- (* AS12 before Cap Applicator      *)
|
|                  AS12_PR                                      AS12#30  << RUNG 58  STEP #0149 >>
|%M3105  %M3106  %M3109  %M3225                                %M3113
+--]/[-----]/[--+--] [--+--] [-------------------------------------------( )-- (* AS12 before FW68               *)
|               |       |
|               |%M3110 |
|               +--] [--+
|
|                  AS12_PR                                      AS12#50  << RUNG 59  STEP #0156 >>
|%M3105  %M3106  %M3108  %M3225                                %M3114
+--]/[-----]/[--+--] [--+--] [-------------------------------------------( )-- (* AS12 before Lev50 (CBP)        *)
|               |       |
|               |%M3107 |
|               +--] [--+
|                  |
|%M3105  %M3106    |
+--]/[-----] [----------+
|
| (*************************************************************************)
| (* AS 21 (Converger) position                                           *)
| (*************************************************************************)
|
|       AS21_PR                                                 AS21#30  << RUNG 61  STEP #0167 >>
|%M3110  %M3224                                                %M3118
+--] [-----] [-----------------------------------------------------------( )-- (* AS21 after FW68                *)
|
|               AS21_PR                                         AS21#20  << RUNG 62  STEP #0170 >>
|%M3110  %M3105  %M3224                                        %M3117
+--]/[-----] [-----] [---------------------------------------------------( )-- (* AS21 after Cap Applicator       *)
|
| (*************************************************************************)
| (* Stop signal DE to filling machine.(97G)                              *)
| (*************************************************************************)
```

REFERENCE	NICKNAME	REFERENCE DESCRIPTION	REFERENCE	NICKNAME	REFERENCE DESCRIPTION
%M3105		N.2 TCAP21 or TCAP47 present	%M3117	AS21#20	AS21 after Cap Applicator
%M3106		MFW or GFW or GKM present	%M3118	AS21#30	AS21 after FW68
%M3107		FW68 not present	%M3224	AS21_PR	AS21 present
%M3108		N.1 FW68 present (Single Infeed)	%M3304	FW68LDI	FW68 Left Double infeed
%M3109		N.1 FW68 present (Double Infeed)	%M3217	FW68L_P	FW68 Left present
%M3110		N.2 FW68 present (Single Infeed)	%M3104	FW68RDI	FW68 Right Double infeed
%M3112	AS12#20	AS12 before Cap Applicator	%M3218	FW68R_P	FW68 Right present
%M3113	AS12#30	AS12 before FW68	%M3211	GFW_PRE	Generic FW present
%M3114	AS12#50	AS12 before Lev50 (CBP)	%M3216	GKM_PRE	GKM present
%M3225	AS12_PR	AS12 present	%M3209	MFW_PRE	Meurer FW present

```
| (*****************************************************************************)
| (* First connection DE level 10 (Start/stop).                                *)
| (*****************************************************************************)
|
|THX22_S                                                          LEV10   << RUNG 65  STEP #0176 >>
|%M3005                                                          %M3040
+--] [-------------------------------------------------------------(S)-- (* DE level 10                    *)
|
|STEP_1                                                           LEV10   << RUNG 66  STEP #0178 >>
|%G0001                                                          %M3040
+--] [--+----------------------------------------------------------(R)-- (* DE level 10                    *)
|       |
|THX_BP |
|%M3101 |
+--] [--+
|
| LEV10  THX22_S                                                 STLEV10  << RUNG 67  STEP #0181 >>
|%M3040  %M3005                                                  %M3050
+--] [-----] [-------------------------------------------------------( )-- (* DE stopsignal level 10       *)
|
| (*****************************************************************************)
| (* First connection DE level 20 (Start/stop).                                *)
| (*****************************************************************************)
|
| LEV10  AS12#20 AS12_S                                           LEV20   << RUNG 69  STEP #0185 >>
|%M3040  %M3112  %M3024                                          %M3041
+--]/[--+--] [-----] [--+-----------------------------------------(S)-- (* DE level 20                    *)
|       |              |
|       |AS12_CN TSA22_S|
|       |%M3257  %M3002 |
|       +--]/[--+--] [--+
|       |       |
|       |AS12#30|
|       |%M3113 |
|       +--] [--+
|       |       |
|       |AS12#50|
|       |%M3114 |
|       +--] [--+
|
|STEP_1                                                           LEV20   << RUNG 70  STEP #0195 >>
|%G0001                                                          %M3041
+--] [--+----------------------------------------------------------(R)-- (* DE level 20                    *)
|       |
| LEV10 |
|%M3040 |
+--] [--+
|
| LEV20  AS12#20 AS12_S                                          STLEV20  << RUNG 71  STEP #0198 >>
|%M3041  %M3112  %M3024                                          %M3051
+--] [--+--] [-----] [--+-----------------------------------------( )-- (* DE stopsignal level 20         *)
|       |              |
|       |AS12_CN TSA22_S|
|       |%M3257  %M3002 |
|       +--]/[--+--] [--+
|       |       |
|       |AS12#30|
|       |%M3113 |
|       +--] [--+
|       |       |
|       |AS12#50|
|       |%M3114 |
|       +--] [--+
|
| (*****************************************************************************)
| (* First connection DS level 30 (Start/stop).                                *)
| (*****************************************************************************)
```

REFERENCE	NICKNAME	REFERENCE DESCRIPTION	REFERENCE	NICKNAME	REFERENCE DESCRIPTION
%M3112	AS12#20	AS12 before Cap Applicator	%G0001	STEP_1	STANDBY
%M3113	AS12#30	AS12 before FW68	%M3050	STLEV10	DE stopsignal level 10
%M3114	AS12#50	AS12 before Lev50 (CBP)	%M3051	STLEV20	DE stopsignal level 20
%M3257	AS12_CN	AS12 connected	%M3005	THX22_S	Ready/stopsignal THx22
%M3024	AS12_S	Ready/stopsignal AS12	%M3101	THX_BP	THx22 in bypass
%M3040	LEV10	DE level 10	%M3002	TSA22_S	Ready/stopsignal TSA22
%M3041	LEV20	DE level 20			

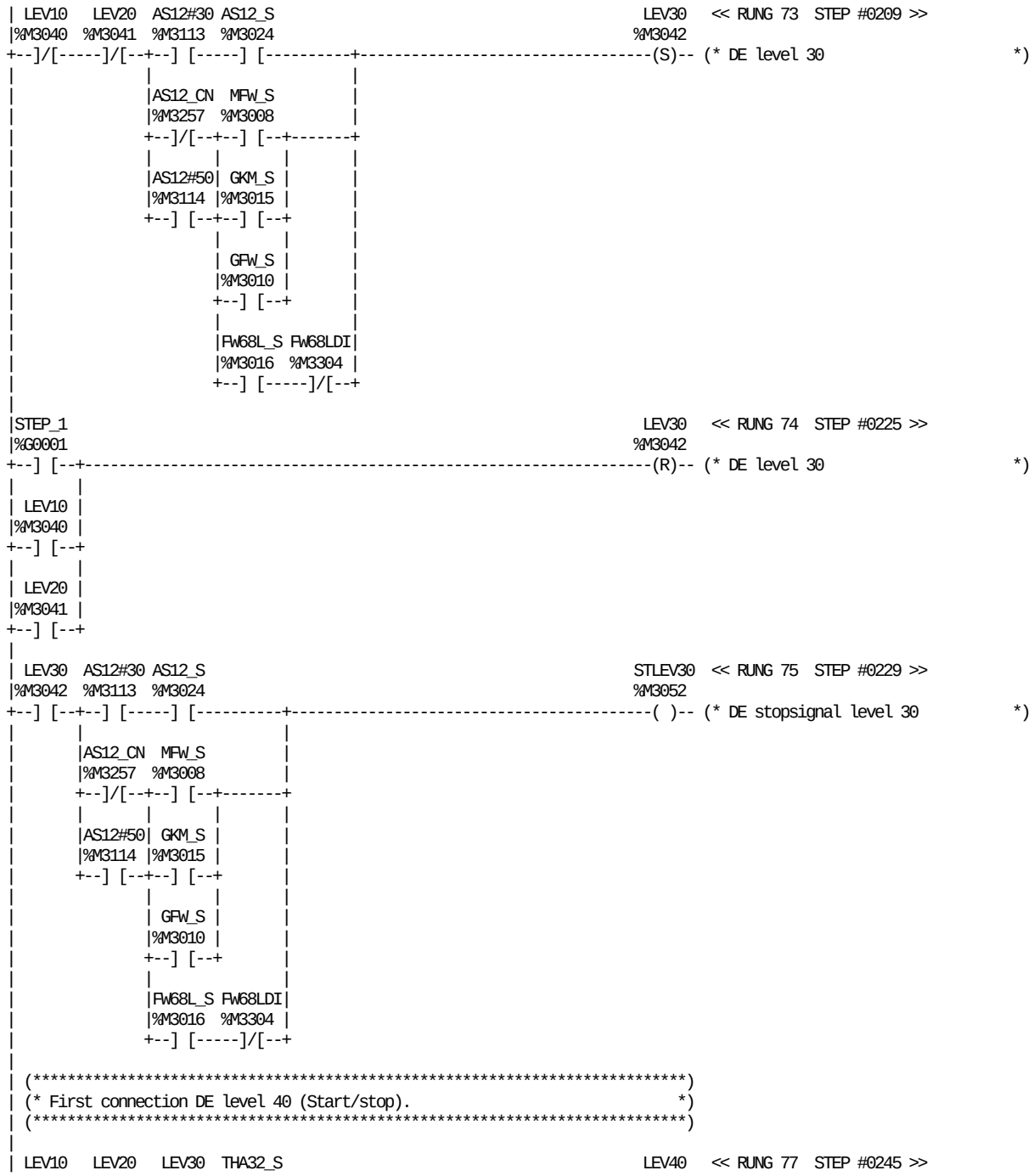

REFERENCE	NICKNAME	REFERENCE DESCRIPTION	REFERENCE	NICKNAME	REFERENCE DESCRIPTION
%M3113	AS12#30	AS12 before FW68	%M3040	LEV10	DE level 10
%M3114	AS12#50	AS12 before Lev50 (CBP)	%M3041	LEV20	DE level 20
%M3257	AS12_CN	AS12 connected	%M3042	LEV30	DE level 30
%M3024	AS12_S	Ready/stopsignal AS12	%M3043	LEV40	DE level 40
%M3304	FW68LDI	FW68 Left Double infeed	%M3008	MFW_S	Ready/stopsignal Meurer FW
%M3016	FW68L_S	Ready/stopsignal FW68 Left	%G0001	STEP_1	STANDBY
%M3029	GENHA_S	Ready/stopsignal Generic HA	%M3052	STLEV30	DE stopsignal level 30
%M3010	GFW_S	Ready/stopsignal Generic FW	%M3014	THA32_S	Ready/stopsignal THA32
%M3015	GKM_S	Ready/stopsignal GKM			

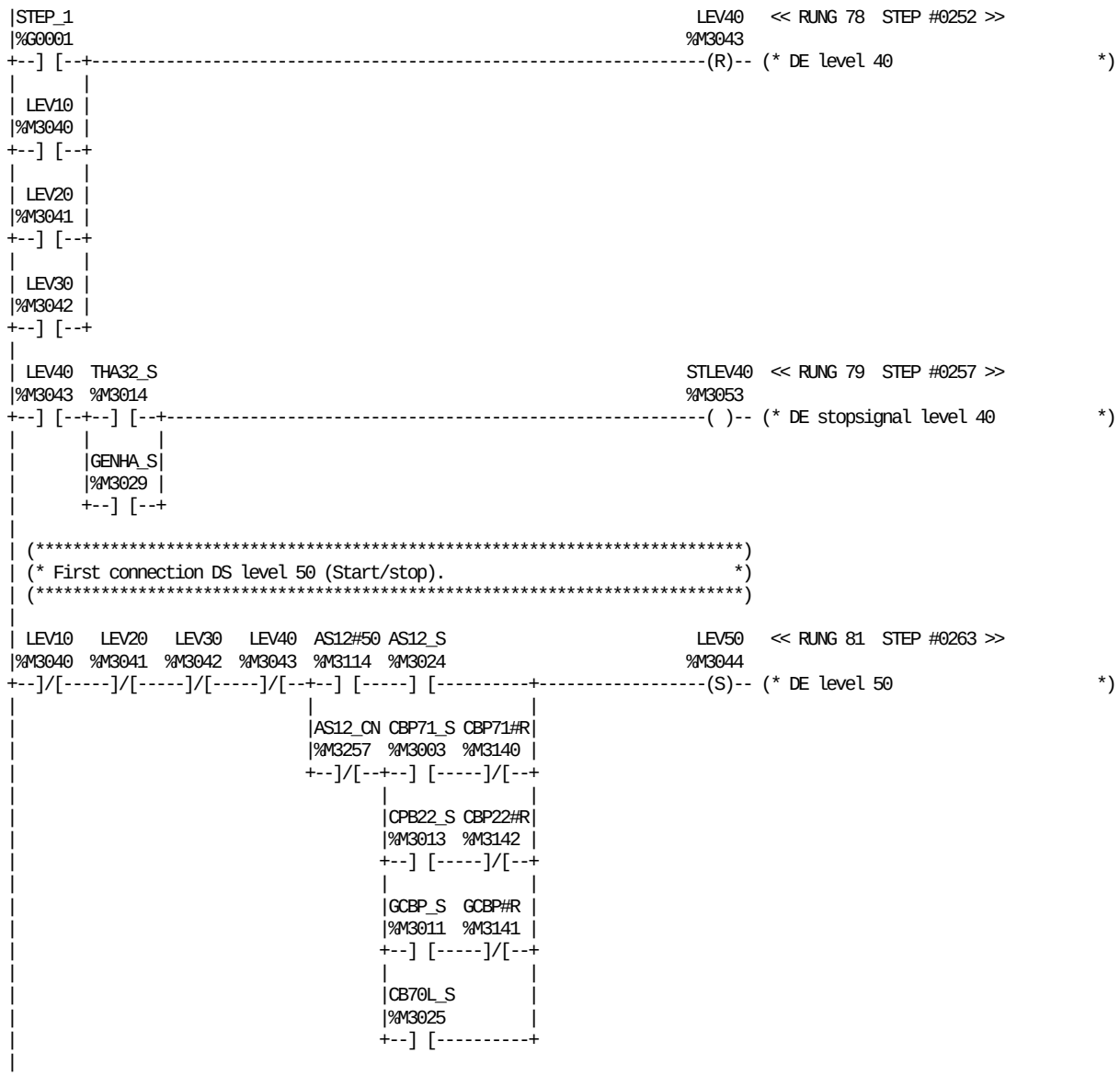

REFERENCE	NICKNAME	REFERENCE DESCRIPTION
%M3114	AS12#50	AS12 before Lev50 (CBP)
%M3257	AS12_CN	AS12 connected
%M3024	AS12_S	Ready/stopsignal AS12
%M3025	CB70L_S	Ready/stopsignal TCBP70 Left
%M3142	CBP22#R	TCBP22 in right position
%M3140	CBP71#R	TCBP71 in right position
%M3003	CBP71_S	Ready/stopsignal TCBP71
%M3013	CPB22_S	Ready/stopsignal TCBP22
%M3141	GCBP#R	Generic CBP in right position
%M3011	GCBP_S	Ready/stopsignal Generic CBP

REFERENCE	NICKNAME	REFERENCE DESCRIPTION
%M3029	GENHA_S	Ready/stopsignal Generic HA
%M3040	LEV10	DE level 10
%M3041	LEV20	DE level 20
%M3042	LEV30	DE level 30
%M3043	LEV40	DE level 40
%M3044	LEV50	DE level 50
%G0001	STEP_1	STANDBY
%M3053	STLEV40	DE stopsignal level 40
%M3014	THA32_S	Ready/stopsignal THA32

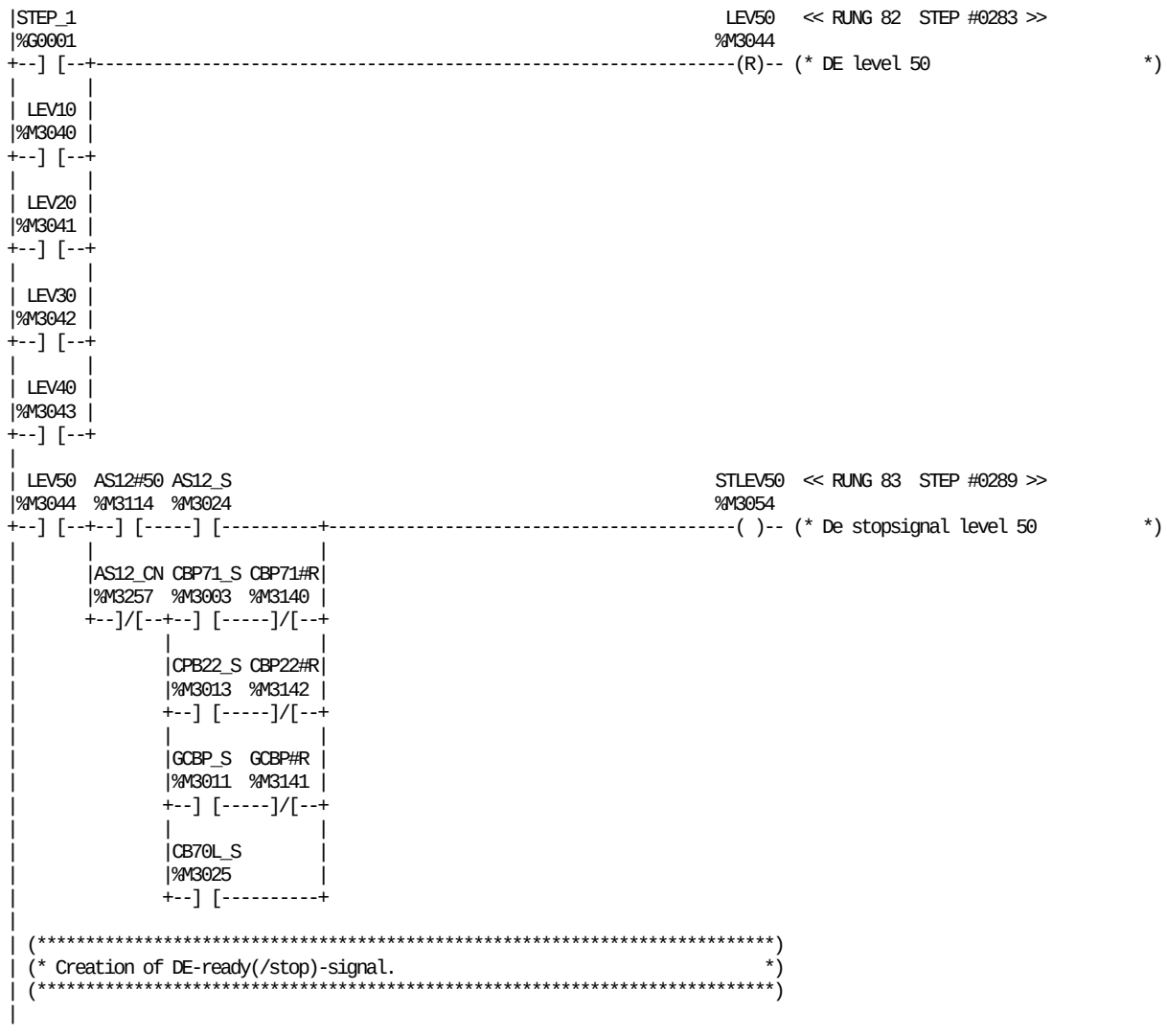

REFERENCE	NICKNAME	REFERENCE DESCRIPTION	REFERENCE	NICKNAME	REFERENCE DESCRIPTION
%M3114	AS12#50	AS12 before Lev50 (CBP)	%M3011	GCBP_S	Ready/stopsignal Generic CBP
%M3257	AS12_CN	AS12 connected	%M3040	LEV10	DE level 10
%M3024	AS12_S	Ready/stopsignal AS12	%M3041	LEV20	DE level 20
%M3025	CB70L_S	Ready/stopsignal TCBP70 Left	%M3042	LEV30	DE level 30
%M3142	CBP22#R	TCBP22 in right position	%M3043	LEV40	DE level 40
%M3140	CBP71#R	TCBP71 in right position	%M3044	LEV50	DE level 50
%M3003	CBP71_S	Ready/stopsignal TCBP71	%G0001	STEP_1	STANDBY
%M3013	CPB22_S	Ready/stopsignal TCBP22	%M3054	STLEV50	De stopsignal level 50
%M3141	GCBP#R	Generic CBP in right position			

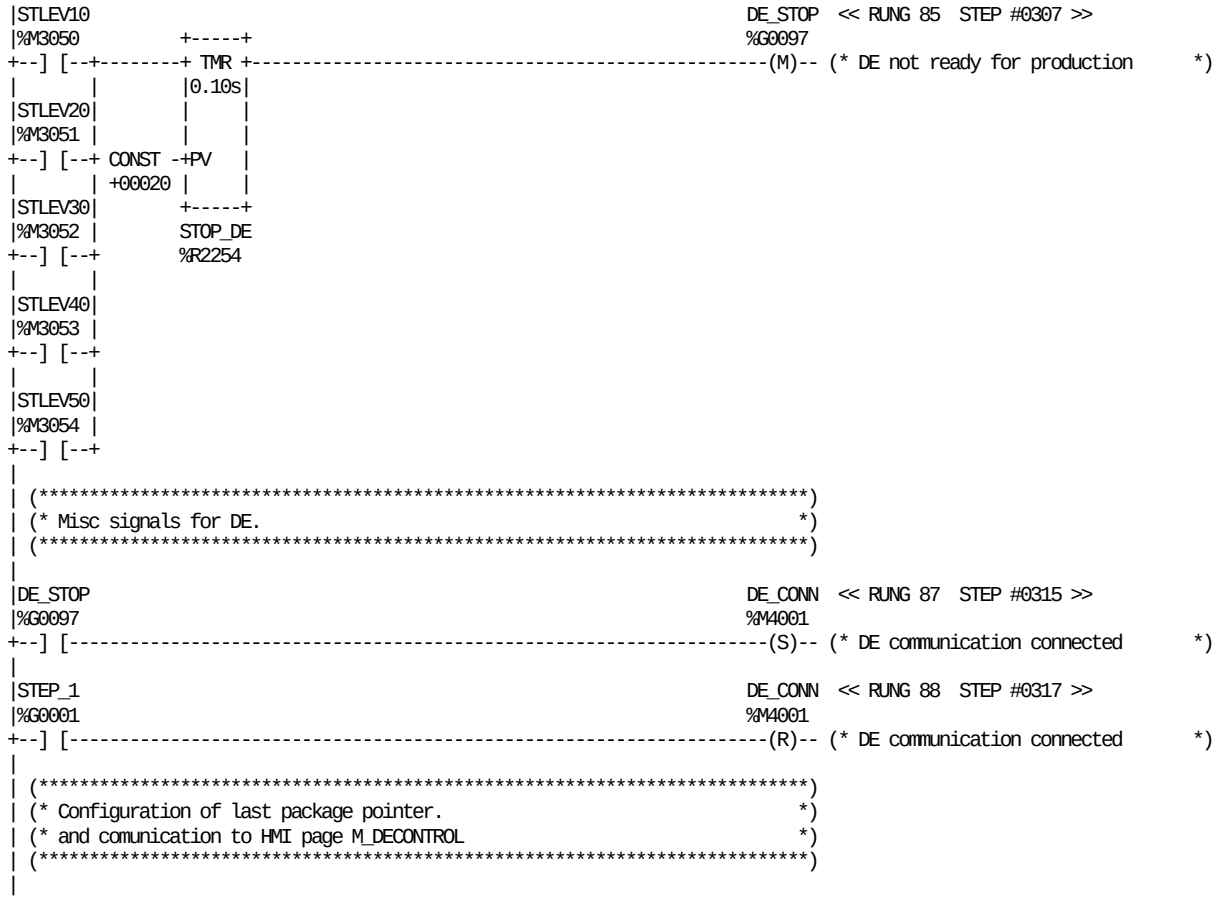

REFERENCE	NICKNAME	REFERENCE DESCRIPTION
%M4001	DE_CONN	DE communication connected
%G0097	DE_STOP	DE not ready for production
%G0001	STEP_1	STANDBY
%M3050	STLEV10	DE stopsignal level 10
%M3051	STLEV20	DE stopsignal level 20
%M3052	STLEV30	DE stopsignal level 30
%M3053	STLEV40	DE stopsignal level 40
%M3054	STLEV50	De stopsignal level 50
%R2254	STOP_DE	TMR delay on detection DE stop

```
| (*****************************************************************************)
| (* Comunication to HMI page M_DECONTROL                                      *)
| (*                                                                           *)
| (* CONNECTED SIGNALS                                                         *)
| (* %M3233  DE connected         ID= 0                                       *)
| (* %M3234  DE connected         ID= 1                                       *)
| (* %M3235  TSA22HS connected    ID= 2                                       *)
| (* %M3236  TCBP71 connected     ID= 3                                       *)
| (* %M3237  DE connected         ID= 4                                       *)
| (* %M3238  THX22 connected      ID= 5                                       *)
| (* %M3239  DE connected         ID= 6                                       *)
| (* %M3240  TTS51 connected      ID= 7                                       *)
| (* %M3241  MFW connected        ID= 8                                       *)
| (* %M3242  DE connected         ID= 9                                       *)
| (* %M3243  GFW connected        ID=10                                       *)
| (* %M3244  GCBP connected       ID=11                                       *)
| (* %M3245  GTS connected        ID=12                                       *)
| (* %M3246  TCBP22 connected     ID=13                                       *)
| (* %M3247  THA32 connected      ID=14                                       *)
| (* %M3248  GKM connected        ID=15                                       *)
| (* %M3249  FW68(L) connected    ID=16                                       *)
| (* %M3250  FW68(R) connected    ID=17                                       *)
| (* %M3251  DE connected         ID=18                                       *)
| (* %M3252  TCAP21(L) connected  ID=19                                       *)
| (* %M3253  TCAP21(R) connected  ID=20                                       *)
| (* %M3254  GTCAP(L) connected   ID=21                                       *)
| (* %M3255  GTCAP(R) connected   ID=22                                       *)
| (* %M3256  AS21 connected       ID=23                                       *)
| (* %M3257  AS12 connected       ID=24                                       *)
| (* %M3258  TCBP70(L) connected  ID=25                                       *)
| (* %M3259  TCBP70(R) connected  ID=26                                       *)
| (* %M3260  TPL10 connected      ID=27                                       *)
| (* %M3261  TE10 connected       ID=28                                       *)
| (* %M3262  GHA connected        ID=29                                       *)
| (* %M3263  DE connected         ID=30                                       *)
| (* %M3264  DE connected         ID=31                                       *)
| (*****************************************************************************)
|
| (*****************************************************************************)
| (* Comunication to HMI page M_DECONTROL                                      *)
| (*                                                                           *)
| (* PRESENT SIGNALS (LEFT SIDE)                                               *)
| (* %M3201  DE present         ID= 0                                         *)
| (* %M3202  DE present         ID= 1                                         *)
| (* %M3203  TSA22HS present    ID= 2                                         *)
| (* %M3204  TCBP71 present     ID= 3                                         *)
| (* %M3205  DE present         ID= 4                                         *)
| (* %M3206  THX22 present      ID= 5                                         *)
| (* %M3207  DE present         ID= 6                                         *)
| (* %M3208  TTS51 present      ID= 7                                         *)
| (* %M3209  MFW present        ID= 8                                         *)
| (* %M3210  DE present         ID= 9                                         *)
| (* %M3211  GFW present        ID=10                                         *)

| (* %M3212  GCBP present       ID=11                                         *)
| (* %M3213  GTS present        ID=12                                         *)
| (* %M3214  TCBP22 present     ID=13                                         *)
| (* %M3215  THA32 present      ID=14                                         *)
| (* %M3216  GKM present        ID=15                                         *)
| (* %M3217  FW68(L) present    ID=16                                         *)
| (* %M3218  FW68(R) present    ID=17                                         *)
| (* %M3219  DE present         ID=18                                         *)
| (* %M3220  TCAP21(L) present  ID=19                                         *)
| (* %M3221  TCAP21(R) present  ID=20                                         *)
| (* %M3222  GTCAP(L) present   ID=21                                         *)
| (* %M3223  GTCAP(R) present   ID=22                                         *)
| (* %M3224  AS21 present       ID=23                                         *)
| (* %M3225  AS12 present       ID=24                                         *)
| (* %M3226  TCBP70(L) present  ID=25                                         *)
| (* %M3227  TCBP70(R) present  ID=26                                         *)
| (* %M3228  TPL10 present      ID=27                                         *)
| (* %M3229  TE10 present       ID=28                                         *)
| (* %M3230  GHA present        ID=29                                         *)
| (* %M3231  DE present         ID=30                                         *)
| (* %M3232  DE present         ID=31                                         *)
| (*****************************************************************************)
|
```

```
| (*****************************************************************************)
| (* Comunication to HMI page M_DECONTROL                                      *)
| (*                                                                           *)
| (* PRESENT SIGNALS (RIGHT SIDE)                                             *)
| (* %M3265  DE present         ID= 0                                        *)
| (* %M3266  DE present         ID= 1                                        *)
| (* %M3267  TSA22 present      ID= 2                                        *)
| (* %M3268  TCBP71 present     ID= 3                                        *)
| (* %M3269  DE present         ID= 4                                        *)
| (* %M3270  DE present         ID= 5                                        *)
| (* %M3271  DE present         ID= 6                                        *)
| (* %M3272  DE present         ID= 7                                        *)
| (* %M3273  MFW present        ID= 8                                        *)
| (* %M3274  DE present         ID= 9                                        *)
| (* %M3275  GFW present        ID=10                                        *)
| (* %M3276  GCBP present       ID=11                                        *)
| (* %M3277  DE present         ID=12                                        *)
| (* %M3278  TCBP22 present     ID=13                                        *)
| (* %M3279  THA32 present      ID=14                                        *)
| (* %M3280  GKM present        ID=15                                        *)
| (* %M3281  DE present         ID=16                                        *)
| (* %M3282  DE present         ID=17                                        *)
| (* %M3283  DE present         ID=18                                        *)
| (* %M3284  DE present         ID=19                                        *)
| (* %M3285  DE present         ID=20                                        *)
| (* %M3286  DE present         ID=21                                        *)
| (* %M3287  DE present         ID=22                                        *)
| (* %M3288  DE present         ID=23                                        *)
| (* %M3289  DE present         ID=24                                        *)
| (* %M3290  DE present         ID=25                                        *)
| (* %M3291  DE present         ID=26                                        *)
| (* %M3292  DE present         ID=27                                        *)
| (* %M3293  DE present         ID=28                                        *)
| (* %M3294  GHA present        ID=29                                        *)
| (* %M3295  DE present         ID=30                                        *)
| (* %M3296  DE present         ID=31                                        *)
| (*****************************************************************************)
|
|THX22_S                                                          THX_CON  << RUNG 93  STEP #0323 >>
|%M3005                                                           %M3238
+--] [--+-------------------------------------------------------------(S)-- (* THx22 connected                *)
|       |
|       |                                                         THX_PRE
|       |                                                         %M3206
|       +-------------------------------------------------------------(SM)- (* THx22 present                *)
|
|TSA22_S                                                          TSA_CON  << RUNG 94  STEP #0326 >>
|%M3002                                                           %M3235
+--] [--+-------------------------------------------------------------(S)-- (* TSA22 connected                *)
|       |
|       |                                                         TSA_PRE
|       |                                                         %M3203
|       +-------------------------------------------------------------(SM)- (* TSA22 present                *)
|
|CP21L_S                                                          CA21L_C  << RUNG 95  STEP #0329 >>
|%M3019                                                           %M3252
+--] [--+-------------------------------------------------------------(S)-- (* TCAP21 Left connected         *)
|       |
|       |                                                         CA21L_P
|       |                                                         %M3220
|       +-------------------------------------------------------------(SM)- (* TCAP21 Left present          *)
|
```

REFERENCE	NICKNAME	REFERENCE DESCRIPTION	REFERENCE	NICKNAME	REFERENCE DESCRIPTION
%M3252	CA21L_C	TCAP21 Left connected	%M3206	THX_PRE	THx22 present
%M3220	CA21L_P	TCAP21 Left present	%M3002	TSA22_S	Ready/stopsignal TSA22
%M3019	CP21L_S	Ready/stopsignal TCAP21 Left	%M3235	TSA_CON	TSA22 connected
%M3005	THX22_S	Ready/stopsignal THx22	%M3203	TSA_PRE	TSA22 present
%M3238	THX_CON	THx22 connected			

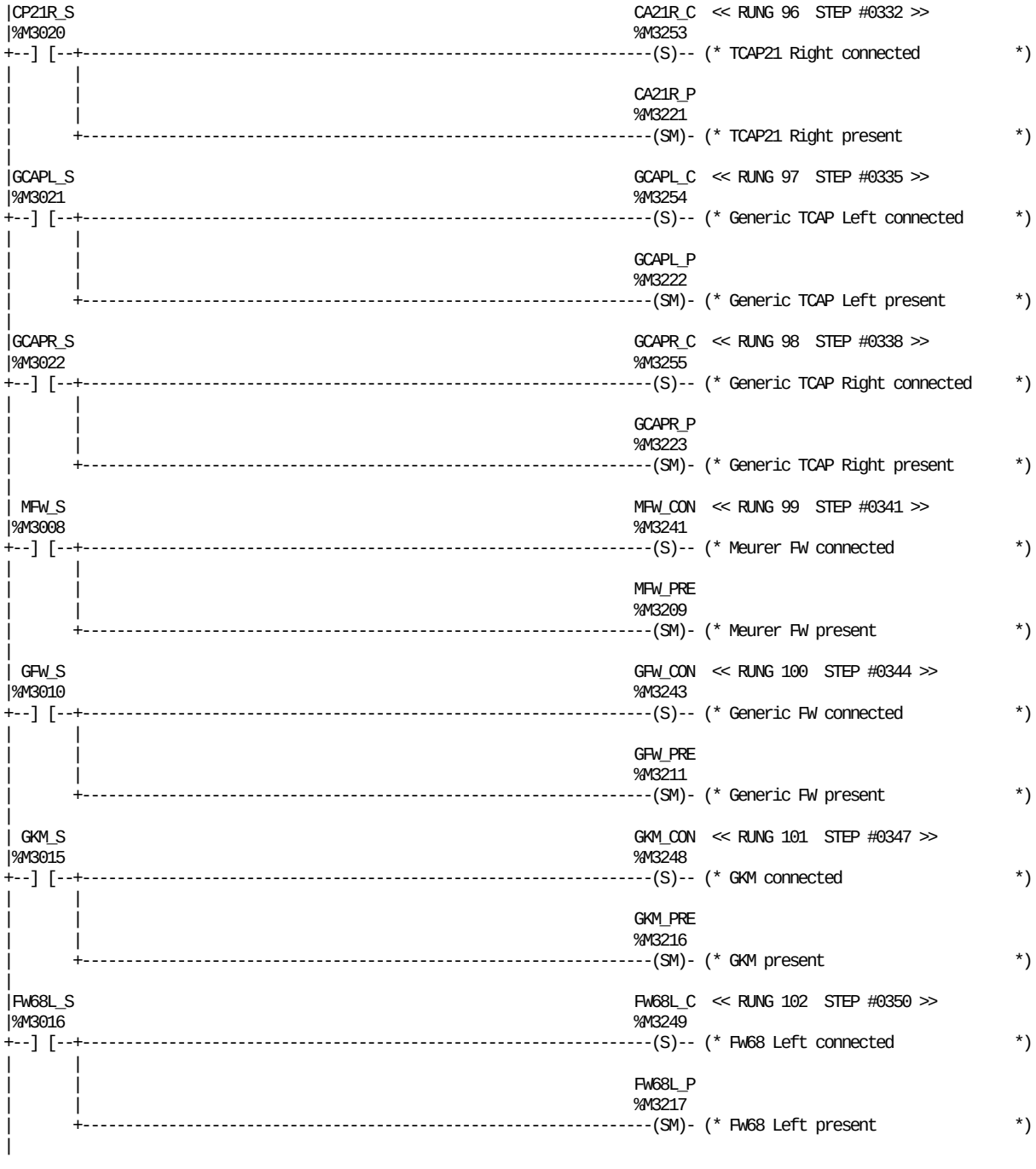

REFERENCE	NICKNAME	REFERENCE DESCRIPTION	REFERENCE	NICKNAME	REFERENCE DESCRIPTION
%M3253	CA21R_C	TCAP21 Right connected	%M3022	GCAPR_S	Ready/stopsignal Gen. TCAP Right
%M3221	CA21R_P	TCAP21 Right present	%M3243	GFW_CON	Generic FW connected
%M3020	CP21R_S	Ready/stopsignal TCAP21 Right	%M3211	GFW_PRE	Generic FW present
%M3249	FW68L_C	FW68 Left connected	%M3010	GFW_S	Ready/stopsignal Generic FW
%M3217	FW68L_P	FW68 Left present	%M3248	GKM_CON	GKM connected
%M3016	FW68L_S	Ready/stopsignal FW68 Left	%M3216	GKM_PRE	GKM present
%M3254	GCAPL_C	Generic TCAP Left connected	%M3015	GKM_S	Ready/stopsignal GKM
%M3222	GCAPL_P	Generic TCAP Left present	%M3241	MFW_CON	Meurer FW connected
%M3021	GCAPL_S	Ready/stopsignal Gen. TCAP Left	%M3209	MFW_PRE	Meurer FW present
%M3255	GCAPR_C	Generic TCAP Right connected	%M3008	MFW_S	Ready/stopsignal Meurer FW
%M3223	GCAPR_P	Generic TCAP Right present			

```
|FW68R_S                                                          FW68R_C  << RUNG 103  STEP #0353 >>
|%M3017                                                          %M3250
+--] [--+---------------------------------------------------------(S)-- (* FW68 Right connected          *)
|       |
|       |                                                       FW68R_P
|       |                                                       %M3218
|       +---------------------------------------------------------(SM)- (* FW68 Right present          *)
|
|THA32_S                                                          THA_CON  << RUNG 104  STEP #0356 >>
|%M3014                                                          %M3247
+--] [--+---------------------------------------------------------(S)-- (* THA32 connected             *)
|       |
|       |                                                       THA_PRE
|       |                                                       %M3215
|       +---------------------------------------------------------(SM)- (* THA32 present             *)
|
|GENHA_S                                                          GHA_CON  << RUNG 105  STEP #0359 >>
|%M3029                                                          %M3262
+--] [--+---------------------------------------------------------(S)-- (* GHA connected              *)
|       |
|       |                                                       GHA_PRE
|       |                                                       %M3230
|       +---------------------------------------------------------(SM)- (* GHA present              *)
|
|CBP71_S                                                          CBP71CN  << RUNG 106  STEP #0362 >>
|%M3003                                                          %M3236
+--] [--+---------------------------------------------------------(S)-- (* TCBP71 connected           *)
|       |
|       |CBP71#R                                                CBP71PL
|       |%M3140                                                 %M3204
|       +--]/[------------------------------------------------------(SM)- (* TCBP71 present left side   *)
|       |
|       |CBP71#R                                                CBP71PR
|       |%M3140                                                 %M3268
|       +--] [------------------------------------------------------(SM)- (* TCBP71 present right side  *)
|
|GCBP_S                                                           GCBP_CN  << RUNG 107  STEP #0372 >>
|%M3011                                                          %M3244
+--] [--+---------------------------------------------------------(S)-- (* Generic CBP connected       *)
|       |
|       |GCBP#R                                                 GCBP_PL
|       |%M3141                                                 %M3212
|       +--]/[------------------------------------------------------(SM)- (* Generic CBP present left side  *)
|       |
|       |GCBP#R                                                 GCBP_PR
|       |%M3141                                                 %M3276
|       +--] [------------------------------------------------------(SM)- (* Generic CBP present right side *)
|
|CPB22_S                                                          CPB22CN  << RUNG 108  STEP #0382 >>
|%M3013                                                          %M3246
+--] [--+---------------------------------------------------------(S)-- (* TCBP22 connected           *)
|       |
|       |CBP22#R                                                CBP22PL
|       |%M3142                                                 %M3214
|       +--]/[------------------------------------------------------(SM)- (* TCBP22 present left side   *)
|       |
|       |CBP22#R                                                CBP22PR
|       |%M3142                                                 %M3278
|       +--] [------------------------------------------------------(SM)- (* TCBP22 present right side  *)
|
```

REFERENCE	NICKNAME	REFERENCE DESCRIPTION
%M3142	CBP22#R	TCBP22 in right position
%M3214	CBP22PL	TCBP22 present left side
%M3278	CBP22PR	TCBP22 present right side
%M3140	CBP71#R	TCBP71 in right position
%M3236	CBP71CN	TCBP71 connected
%M3204	CBP71PL	TCBP71 present left side
%M3268	CBP71PR	TCBP71 present right side
%M3003	CBP71_S	Ready/stopsignal TCBP71
%M3246	CPB22CN	TCBP22 connected
%M3013	CPB22_S	Ready/stopsignal TCBP22
%M3250	FW68R_C	FW68 Right connected
%M3218	FW68R_P	FW68 Right present

REFERENCE	NICKNAME	REFERENCE DESCRIPTION
%M3017	FW68R_S	Ready/stopsignal FW68 Right
%M3141	GCBP#R	Generic CBP in right position
%M3244	GCBP_CN	Generic CBP connected
%M3212	GCBP_PL	Generic CBP present left side
%M3276	GCBP_PR	Generic CBP present right side
%M3011	GCBP_S	Ready/stopsignal Generic CBP
%M3029	GENHA_S	Ready/stopsignal Generic HA
%M3262	GHA_CON	GHA connected
%M3230	GHA_PRE	GHA present
%M3014	THA32_S	Ready/stopsignal THA32
%M3247	THA_CON	THA32 connected
%M3215	THA_PRE	THA32 present

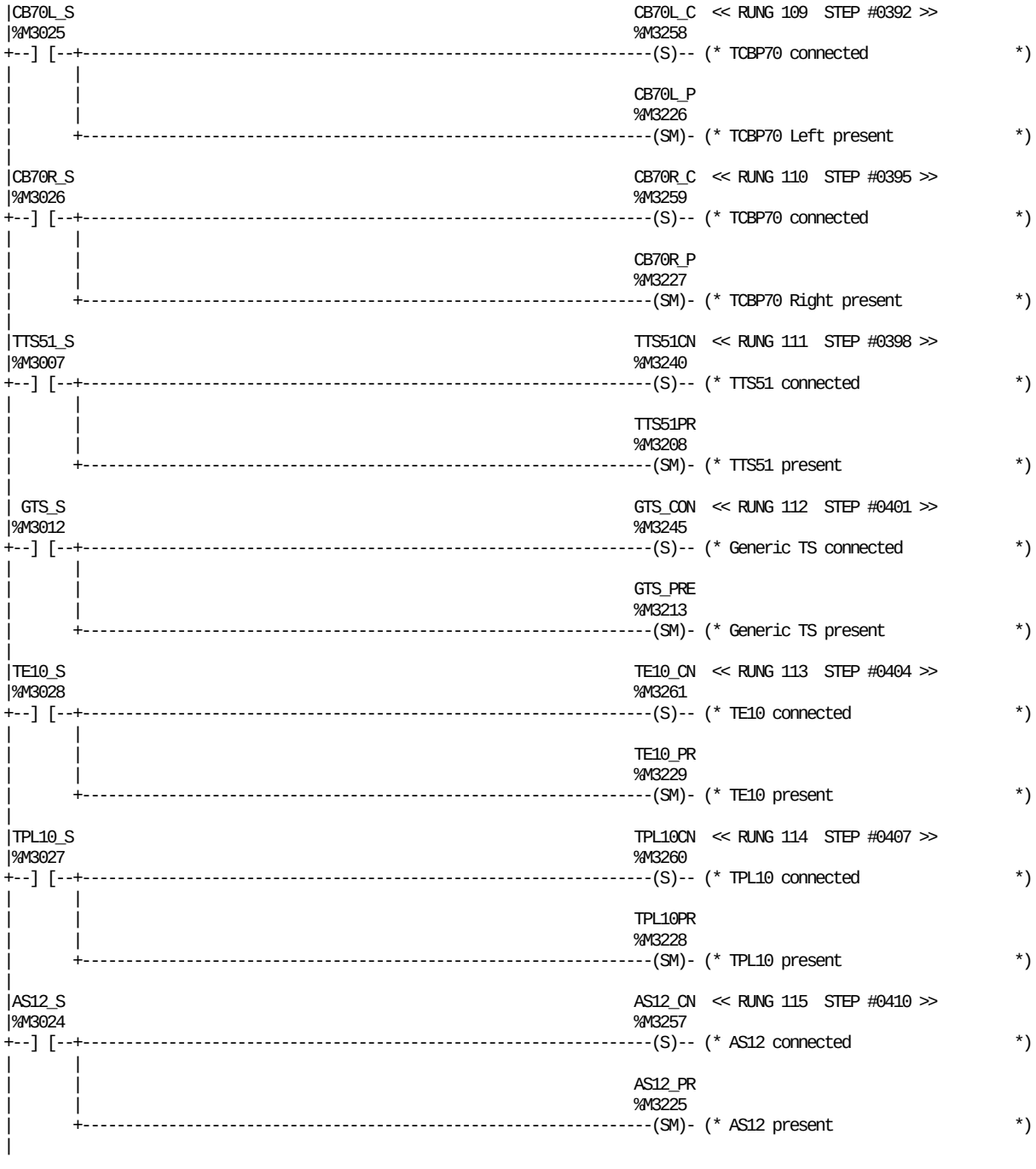

REFERENCE	NICKNAME	REFERENCE DESCRIPTION
%M3257	AS12_CN	AS12 connected
%M3225	AS12_PR	AS12 present
%M3024	AS12_S	Ready/stopsignal AS12
%M3258	CB70L_C	TCBP70 connected
%M3226	CB70L_P	TCBP70 Left present
%M3025	CB70L_S	Ready/stopsignal TCBP70 Left
%M3259	CB70R_C	TCBP70 connected
%M3227	CB70R_P	TCBP70 Right present
%M3026	CB70R_S	Ready/stopsignal TCBP70 Right
%M3245	GTS_CON	Generic TS connected
%M3213	GTS_PRE	Generic TS present

REFERENCE	NICKNAME	REFERENCE DESCRIPTION
%M3012	GTS_S	Ready/stopsignal Generic TS
%M3261	TE10_CN	TE10 connected
%M3229	TE10_PR	TE10 present
%M3028	TE10_S	Ready/stopsignal TE10
%M3260	TPL10CN	TPL10 connected
%M3228	TPL10PR	TPL10 present
%M3027	TPL10_S	Ready/stopsignal TPL10
%M3240	TTS51CN	TTS51 connected
%M3208	TTS51PR	TTS51 present
%M3007	TTS51_S	Ready/stopsignal TTS51

```
|AS21_S                                                              AS21_CN  << RUNG 116  STEP #0413 >>
|%M3023                                                             %M3256
+--] [--+-----------------------------------------------------------(S)-- (* AS21 connected                *)
|       |
|       |                                                          AS21_PR
|       |                                                          %M3224
|       +-----------------------------------------------------------(SM)- (* AS21 present                 *)
|
|P_TH_BP                                                             P_DE_BP  << RUNG 117  STEP #0416 >>
|%M3102                                                             %M3150
+--] [-----------------------------------------------------------(^)-- (* Positive pulse DE in bypass   *)
|
|P+TUBE                                                             THX_CON  << RUNG 118  STEP #0418 >>
|%M0066                                                             %M3238
+--] [--+-----------------------------------------------------------(R)-- (* THx22 connected              *)
|       |
|P_DE_BP|                                                          TSA_CON
|%M3150 |                                                          %M3235
+--] [--+-----------------------------------------------------------(R)-- (* TSA22 connected              *)
|       |
|       |                                                          CA21L_C
|       |                                                          %M3252
|       +-----------------------------------------------------------(R)-- (* TCAP21 Left connected        *)
|       |
|       |                                                          CA21R_C
|       |                                                          %M3253
|       +-----------------------------------------------------------(R)-- (* TCAP21 Right connected       *)
|       |
|       |                                                          GCAPL_C
|       |                                                          %M3254
|       +-----------------------------------------------------------(R)-- (* Generic TCAP Left connected  *)
|       |
|       |                                                          GCAPR_C
|       |                                                          %M3255
|       +-----------------------------------------------------------(R)-- (* Generic TCAP Right connected *)
|
|P+TUBE                                                             MFW_CON  << RUNG 119  STEP #0426 >>
|%M0066                                                             %M3241
+--] [--+-----------------------------------------------------------(R)-- (* Meurer FW connected          *)
|       |
|P_DE_BP|                                                          GFW_CON
|%M3150 |                                                          %M3243
+--] [--+-----------------------------------------------------------(R)-- (* Generic FW connected         *)
|       |
|       |                                                          GKM_CON
|       |                                                          %M3248
|       +-----------------------------------------------------------(R)-- (* GKM connected               *)
|       |
|       |                                                          FW68L_C
|       |                                                          %M3249
|       +-----------------------------------------------------------(R)-- (* FW68 Left connected          *)
|       |
|       |                                                          FW68R_C
|       |                                                          %M3250
|       +-----------------------------------------------------------(R)-- (* FW68 Right connected         *)
|       |
|       |                                                          THA_CON
|       |                                                          %M3247
|       +-----------------------------------------------------------(R)-- (* THA32 connected              *)
|       |
|       |                                                          GHA_CON
|       |                                                          %M3262
|       +-----------------------------------------------------------(R)-- (* GHA connected               *)
|
```

REFERENCE	NICKNAME	REFERENCE DESCRIPTION	REFERENCE	NICKNAME	REFERENCE DESCRIPTION
%M3256	AS21_CN	AS21 connected	%M3262	GHA_CON	GHA connected
%M3224	AS21_PR	AS21 present	%M3248	GKM_CON	GKM connected
%M3023	AS21_S	Ready/stopsignal AS21	%M3241	MFW_CON	Meurer FW connected
%M3252	CA21L_C	TCAP21 Left connected	%M0066	P+TUBE	Pulse + Tight tube cmpleted
%M3253	CA21R_C	TCAP21 Right connected	%M3150	P_DE_BP	Positive pulse DE in bypass
%M3249	FW68L_C	FW68 Left connected	%M3102	P_TH_BP	Positive pulse THx22 in bypass
%M3250	FW68R_C	FW68 Right connected	%M3247	THA_CON	THA32 connected
%M3254	GCAPL_C	Generic TCAP Left connected	%M3238	THX_CON	THx22 connected
%M3255	GCAPR_C	Generic TCAP Right connected	%M3235	TSA_CON	TSA22 connected
%M3243	GFW_CON	Generic FW connected			

```
|P+TUBE                                                                CBP71CN  << RUNG 120  STEP #0435 >>
|%M0066                                                               %M3236
+--] [--+-------------------------------------------------------------(R)-- (* TCBP71 connected                *)
|       |
|P_DE_BP|                                                             GCBP_CN
|%M3150 |                                                             %M3244
+--] [--+-------------------------------------------------------------(R)-- (* Generic CBP connected          *)
|       |
|       |                                                             CPB22CN
|       |                                                             %M3246
|       +-------------------------------------------------------------(R)-- (* TCBP22 connected                *)
|       |
|       |                                                             CB70L_C
|       |                                                             %M3258
|       +-------------------------------------------------------------(R)-- (* TCBP70 connected                *)
|       |
|       |                                                             CB70R_C
|       |                                                             %M3259
|       +-------------------------------------------------------------(R)-- (* TCBP70 connected                *)
|
|P+TUBE                                                                TTS51CN  << RUNG 121  STEP #0442 >>
|%M0066                                                               %M3240
+--] [--+-------------------------------------------------------------(R)-- (* TTS51 connected                 *)
|       |
|P_DE_BP|                                                             GTS_CON
|%M3150 |                                                             %M3245
+--] [--+-------------------------------------------------------------(R)-- (* Generic TS connected           *)
|       |
|       |                                                             TE10_CN
|       |                                                             %M3261
|       +-------------------------------------------------------------(R)-- (* TE10 connected                 *)
|       |
|       |                                                             TPL10CN
|       |                                                             %M3260
|       +-------------------------------------------------------------(R)-- (* TPL10 connected                *)
|       |
|       |                                                             AS12_CN
|       |                                                             %M3257
|       +-------------------------------------------------------------(R)-- (* AS12 connected                 *)
|       |
|       |                                                             AS21_CN
|       |                                                             %M3256
|       +-------------------------------------------------------------(R)-- (* AS21 connected                 *)
|
| (*************************************************************************)
| (* Reset of present signals                                            *)
| (*************************************************************************)
|
```

REFERENCE	NICKNAME	REFERENCE DESCRIPTION
%M3257	AS12_CN	AS12 connected
%M3256	AS21_CN	AS21 connected
%M3258	CB70L_C	TCBP70 connected
%M3259	CB70R_C	TCBP70 connected
%M3236	CBP71CN	TCBP71 connected
%M3246	CPB22CN	TCBP22 connected
%M3244	GCBP_CN	Generic CBP connected

REFERENCE	NICKNAME	REFERENCE DESCRIPTION
%M3245	GTS_CON	Generic TS connected
%M0066	P+TUBE	Pulse + Tight tube cmpleted
%M3150	P_DE_BP	Positive pulse DE in bypass
%M3261	TE10_CN	TE10 connected
%M3260	TPL10CN	TPL10 connected
%M3240	TTS51CN	TTS51 connected

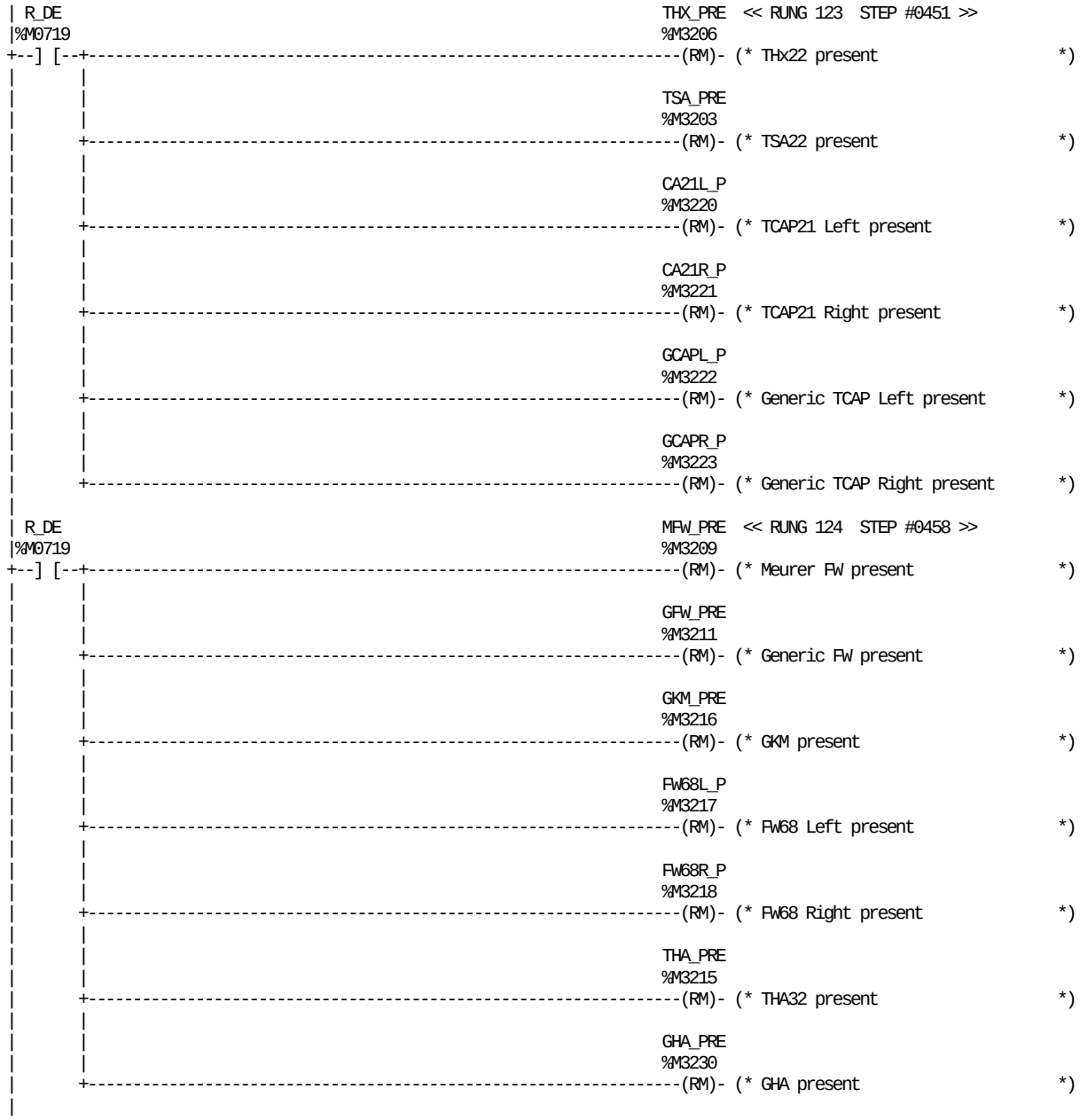

REFERENCE	NICKNAME	REFERENCE DESCRIPTION
%M3220	CA21L_P	TCAP21 Left present
%M3221	CA21R_P	TCAP21 Right present
%M3217	FW68L_P	FW68 Left present
%M3218	FW68R_P	FW68 Right present
%M3222	GCAPL_P	Generic TCAP Left present
%M3223	GCAPR_P	Generic TCAP Right present
%M3211	GFW_PRE	Generic FW present
%M3230	GHA_PRE	GHA present
%M3216	GKM_PRE	GKM present
%M3209	MFW_PRE	Meurer FW present
%M0719	R_DE	Reset DE configuration
%M3215	THA_PRE	THA32 present
%M3206	THX_PRE	THx22 present
%M3203	TSA_PRE	TSA22 present

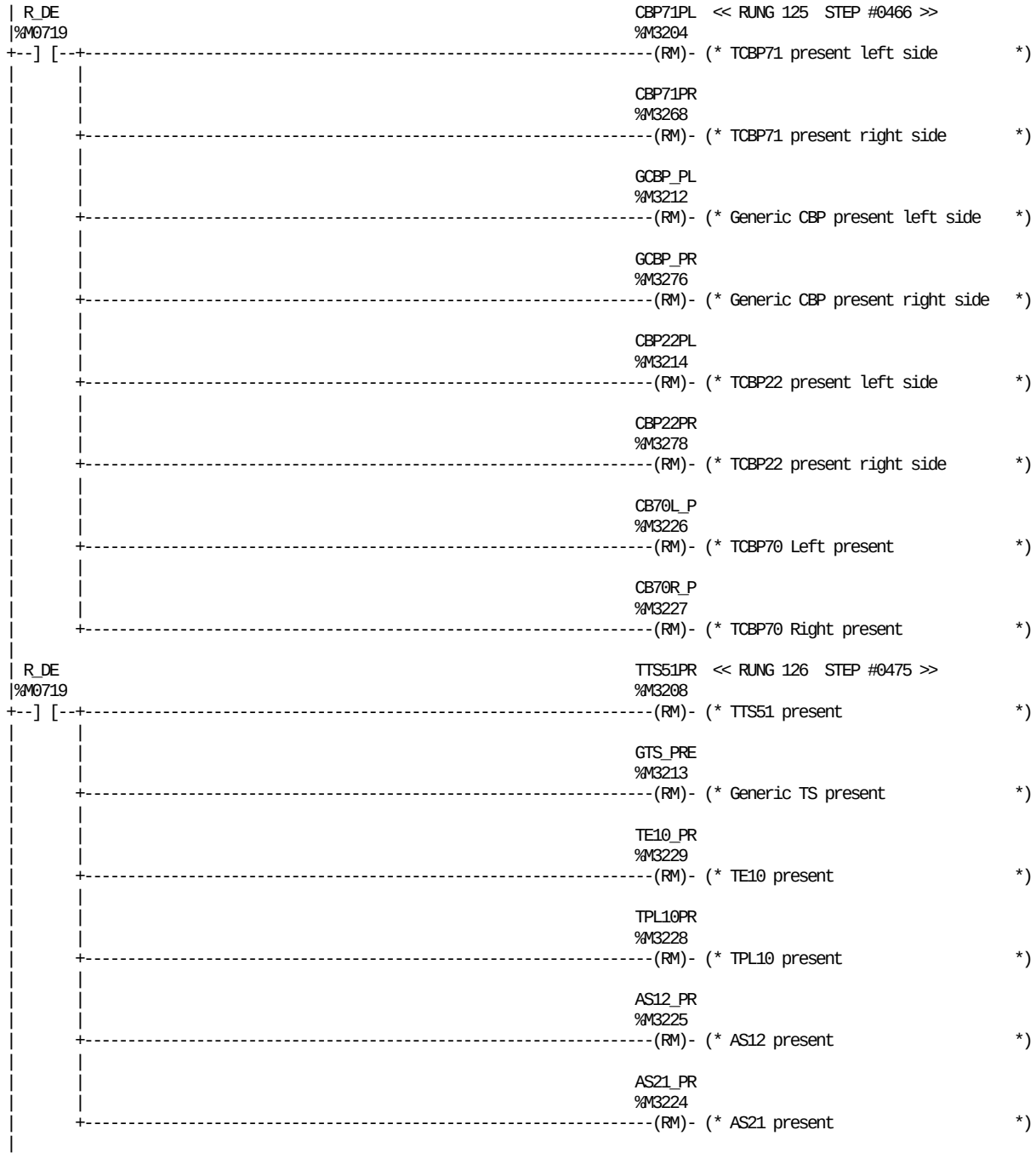

REFERENCE	NICKNAME	REFERENCE DESCRIPTION
%M3225	AS12_PR	AS12 present
%M3224	AS21_PR	AS21 present
%M3226	CB70L_P	TCBP70 Left present
%M3227	CB70R_P	TCBP70 Right present
%M3214	CBP22PL	TCBP22 present left side
%M3278	CBP22PR	TCBP22 present right side
%M3204	CBP71PL	TCBP71 present left side
%M3268	CBP71PR	TCBP71 present right side

REFERENCE	NICKNAME	REFERENCE DESCRIPTION
%M3212	GCBP_PL	Generic CBP present left side
%M3276	GCBP_PR	Generic CBP present right side
%M3213	GTS_PRE	Generic TS present
%M0719	R_DE	Reset DE configuration
%M3229	TE10_PR	TE10 present
%M3228	TPL10PR	TPL10 present
%M3208	TTS51PR	TTS51 present

```
|ALW_ON                                                                  << RUNG 127  STEP #0482 >>
|%S0007  +-----+                +-----+
+--] [---+MOVE_+----------------+MOVE_+-
|        | INT |                | INT |
|        |     |                |     |
|        |     | DE_PRE1        |     | DE_CON1
|%M3201 -+IN  Q+-%R0460  %M3265 -+IN  Q+-%R0462
|        | LEN |                | LEN |
|        |00002|                |00002|
|        |     |                |     |
|        +-----+                +-----+
|
|AS12#20 AS12#30 AS12#50                                          AS12_P1  << RUNG 128  STEP #0485 >>
|%M3112  %M3113  %M3114                                           %M3297
+--]/[-----] [-----]/[-------------------------------------------------( )-- (* AS12 in position 1              *)
|
|AS12#20 AS12#20 AS12#50                                          AS12_P3  << RUNG 129  STEP #0489 >>
|%M3112  %M3112  %M3114                                           %M3299
+--]/[-----]/[-----] [-------------------------------------------------( )-- (* AS12 in position 3              *)
|
|AS12#20 AS12#30 AS12#50                                          AS12_P5  << RUNG 130  STEP #0493 >>
|%M3112  %M3113  %M3114                                           %M3301
+--] [-----]/[-----]/[-------------------------------------------------( )-- (* AS12 in position 5              *)
|
|AS21#20 AS21#30                                                  AS21_P2  << RUNG 131  STEP #0497 >>
|%M3117  %M3118                                                   %M3306
+--]/[-----] [---------------------------------------------------------( )-- (* AS21 in position 2              *)
|
|AS21#20 AS21#30                                                  AS21_P1  << RUNG 132  STEP #0500 >>
|%M3117  %M3118                                                   %M3305
+--] [-----]/[---------------------------------------------------------( )-- (* AS21 in position 1              *)
|
|DELEV60 DELEV70 DELEV80                                          NODEACP  << RUNG 133  STEP #0503 >>
|%M3068  %M3069  %M3070                                           %M3312
+--]/[-----]/[-----]/[-------------------------------------------------( )-- (* No DE after cardboard packer    *)
|
|ALW_ON                                                                  << RUNG 134  STEP #0507 >>
|%S0007  +-----+
+--] [---+MOVE_+-
|        | INT |
|        |     |
|AS12_P1 |     | DE_AS_P
|%M3297 -+IN  Q+-%R0464
|        | LEN |
|        |00001|
|        |     |
|        +-----+
|
| (*************************************************************************)
| (* Line Packages counter                                                 *)
| (*************************************************************************)
|
```

REFERENCE	NICKNAME	REFERENCE DESCRIPTION
%M3201		Spare DE present ID=0
%M3265		Spare DE present ID=0 right side
%S0007	ALW_ON	
%M3112	AS12#20	AS12 before Cap Applicator
%M3113	AS12#30	AS12 before FW68
%M3114	AS12#50	AS12 before Lev50 (CBP)
%M3297	AS12_P1	AS12 in position 1
%M3299	AS12_P3	AS12 in position 3
%M3301	AS12_P5	AS12 in position 5
%M3117	AS21#20	AS21 after Cap Applicator
%M3118	AS21#30	AS21 after FW68
%M3305	AS21_P1	AS21 in position 1
%M3306	AS21_P2	AS21 in position 2
%M3068	DELEV60	Level 60 present
%M3069	DELEV70	Level 70 present
%M3070	DELEV80	Level 80 present
%R0464	DE_AS_P	DE Automatic switch present
%R0462	DE_CON1	DE connected word_1
%R0460	DE_PRE1	DE present word_1
%M3312	NODEACP	No DE after cardboard packer

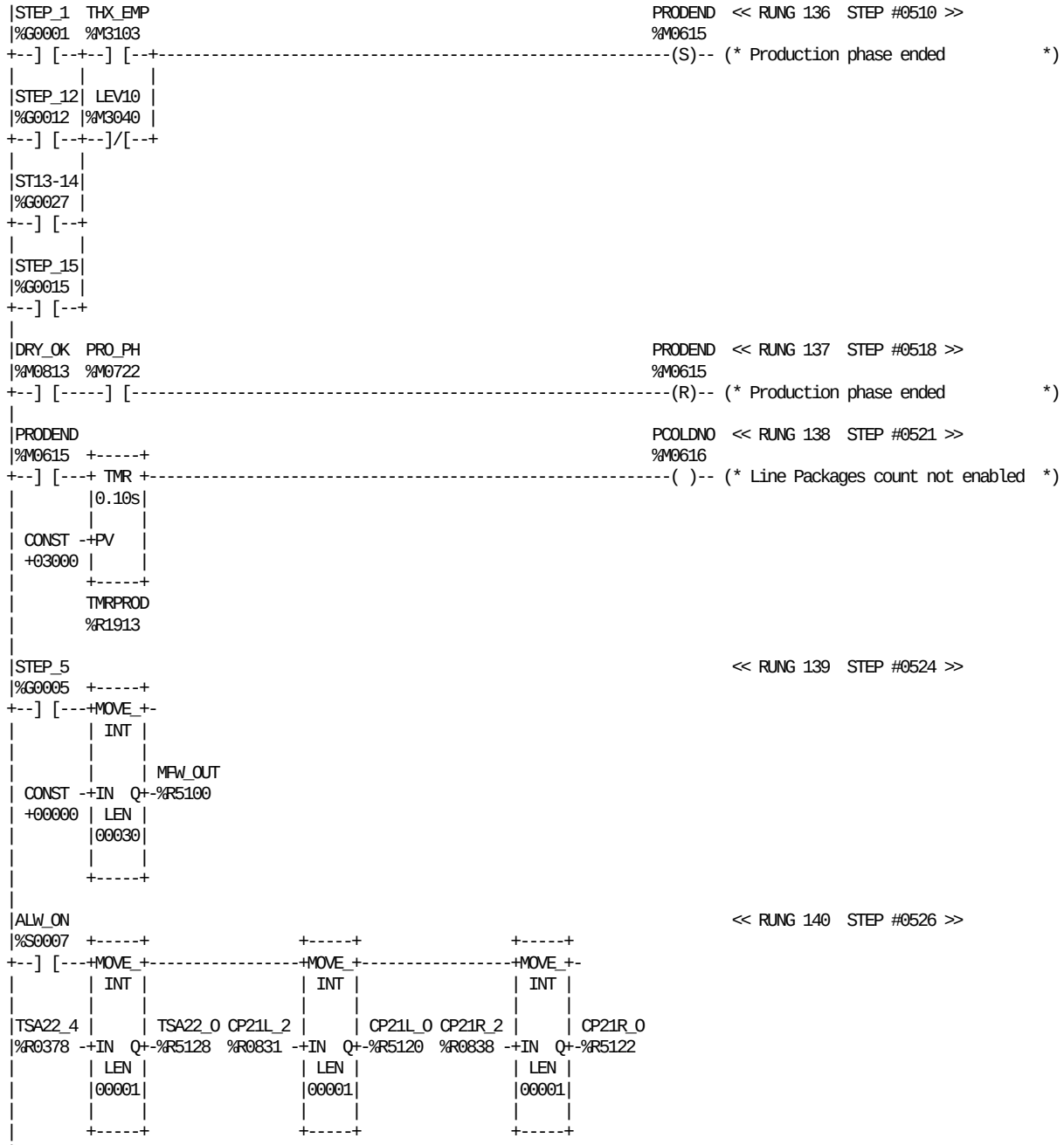

REFERENCE	NICKNAME	REFERENCE DESCRIPTION
%S0007	ALW_ON	
%R0831	CP21L_2	TCAP21 (Left) Packs OUT
%R5120	CP21L_O	Packs out TCAP21 left (D_INT)
%R0838	CP21R_2	TCAP21 (Right) Packs OUT
%R5122	CP21R_O	Packs out TCAP21 right (D_INT)
%M0813	DRY_OK	Drying ready
%M3040	LEV10	DE level 10
%R5100	MFW_OUT	Packs out MFW (D_INT)
%M0616	PCOLDNO	Line Packages count not enabled
%M0615	PRODEND	Production phase ended

REFERENCE	NICKNAME	REFERENCE DESCRIPTION
%M0722	PRO_PH	Production phase (to PLMS)
%G0027	ST13-14	Ladder position 13-14
%G0001	STEP_1	STANDBY
%G0012	STEP_12	VENTING
%G0015	STEP_15	BLOWING
%G0005	STEP_5	SPRAYING
%M3103	THX_EMP	THx22 empty
%R1913	TMRPROD	TMR Delay Production phase ended
%R0378	TSA22_4	TSA22 Packs OUT
%R5128	TSA22_O	Packs out TSA22 (D_INT)

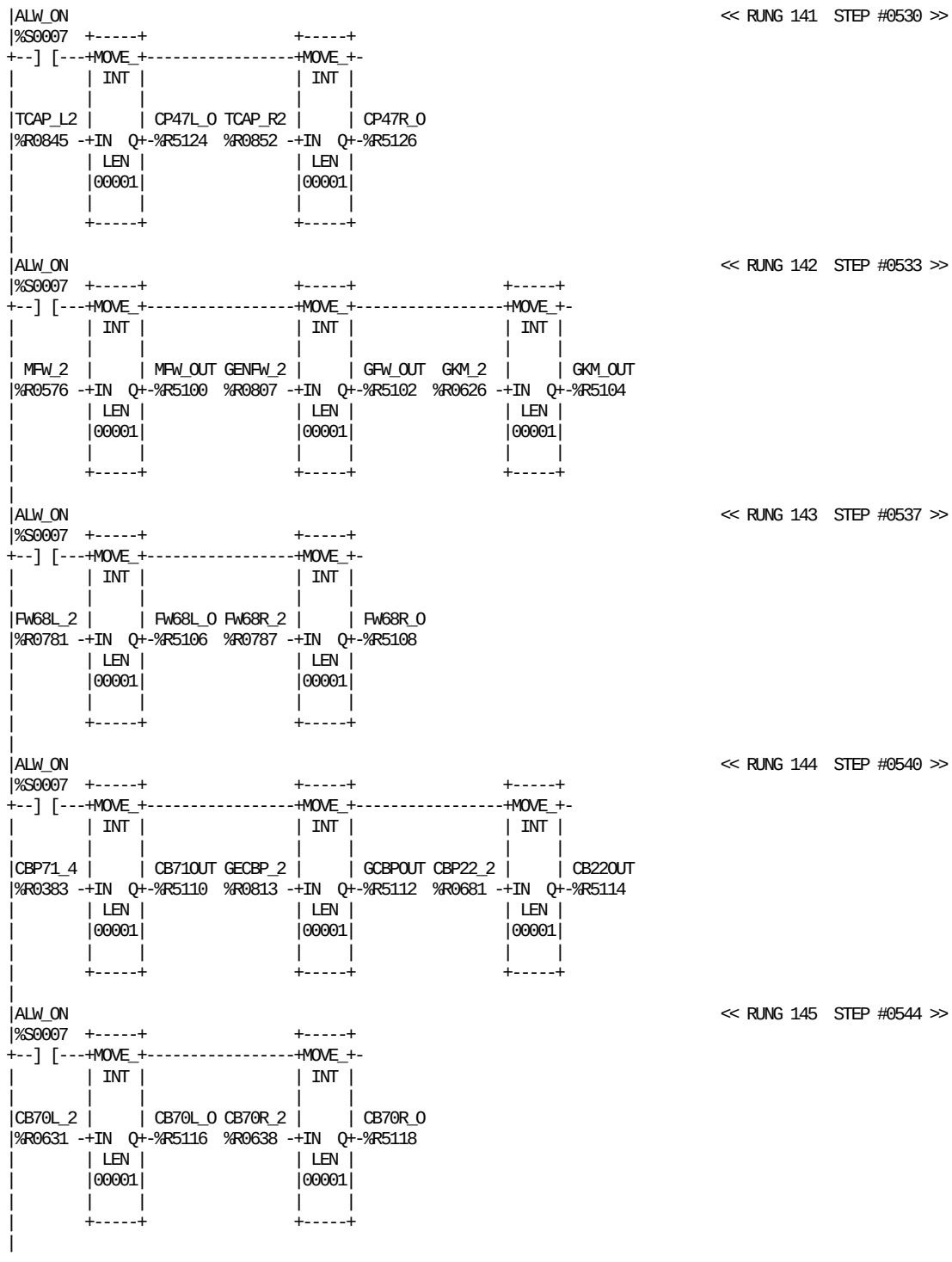

REFERENCE	NICKNAME	REFERENCE DESCRIPTION
%S0007	ALW_ON	
%R5114	CB22OUT	Packs out TCBP22 (D_INT)
%R0631	CB70L_2	TCBP70 (Left) Packs OUT
%R5116	CB70L_O	Packs out TCBP70 left (D_INT)
%R0638	CB70R_2	TCBP70 (Right) Packs OUT
%R5118	CB70R_O	Packs out TCBP70 right (D_INT)
%R5110	CB71OUT	Packs out TCBP71 (D_INT)
%R0681	CBP22_2	TCBP22 Packs OUT
%R0383	CBP71_4	TCBP71 Packs OUT
%R5124	CP47L_O	Packs out TCAP47 left (D_INT)
%R5126	CP47R_O	Packs out TCAP47 right (D_INT)
%R0781	FW68L_2	FW68 (Left) Packs OUT
%R5106	FW68L_O	Packs out TFW68 left (D_INT)

REFERENCE	NICKNAME	REFERENCE DESCRIPTION
%R0787	FW68R_2	FW68 (Right) Packs OUT
%R5108	FW68R_O	Packs out TFW68 right (D_INT)
%R5112	GCBPOUT	Packs out Generic CBP (D_INT)
%R0813	GECBP_2	Generic CBP Packs OUT
%R0807	GENFW_2	Generic FW Packs OUT
%R5102	GFW_OUT	Packs out GFW (D_INT)
%R0626	GKM_2	GKM Packs OUT (Not available)
%R5104	GKM_OUT	Packs out GKM (D_INT)
%R0576	MFW_2	Meurer FW Packs OUT
%R5100	MFW_OUT	Packs out MFW (D_INT)
%R0845	TCAP_L2	Generic TCAP (Left) Packs OUT
%R0852	TCAP_R2	Generic TCAP (Right) Packs OUT

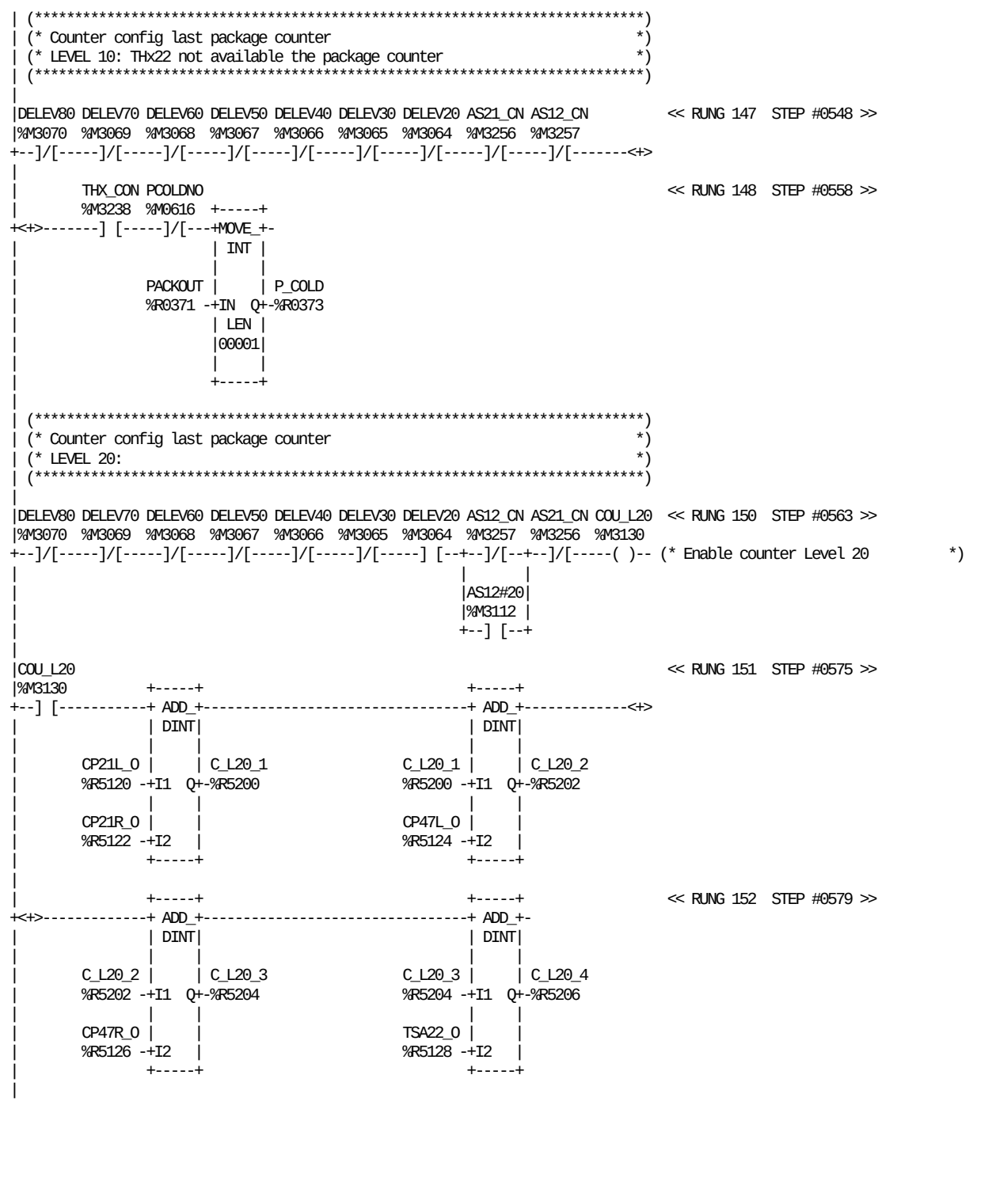

REFERENCE	NICKNAME	REFERENCE DESCRIPTION
%M3112	AS12#20	AS12 before Cap Applicator
%M3257	AS12_CN	AS12 connected
%M3256	AS21_CN	AS21 connected
%M3130	COU_L20	Enable counter Level 20
%R5120	CP21L_O	Packs out TCAP21 left (D_INT)
%R5122	CP21R_O	Packs out TCAP21 right (D_INT)
%R5124	CP47L_O	Packs out TCAP47 left (D_INT)
%R5126	CP47R_O	Packs out TCAP47 right (D_INT)
%R5200	C_L20_1	Auxiliary counter Level 20 #1
%R5202	C_L20_2	Auxiliary counter Level 20 #2
%R5204	C_L20_3	Auxiliary counter Level 20 #3
%R5206	C_L20_4	Auxiliary counter Level 20 #4

REFERENCE	NICKNAME	REFERENCE DESCRIPTION
%M3064	DELEV20	Level 20 present
%M3065	DELEV30	Level 30 present
%M3066	DELEV40	Level 40 present
%M3067	DELEV50	Level 50 present
%M3068	DELEV60	Level 60 present
%M3069	DELEV70	Level 70 present
%M3070	DELEV80	Level 80 present
%R0371	PACKOUT	Packages out of filler(PLMS)
%M0616	PCOLDNO	Line Packages count not enabled
%R0373	P_COLD	Packs to cold store (PLMS)
%M3238	THX_CON	THx22 connected
%R5128	TSA22_O	Packs out TSA22 (D_INT)

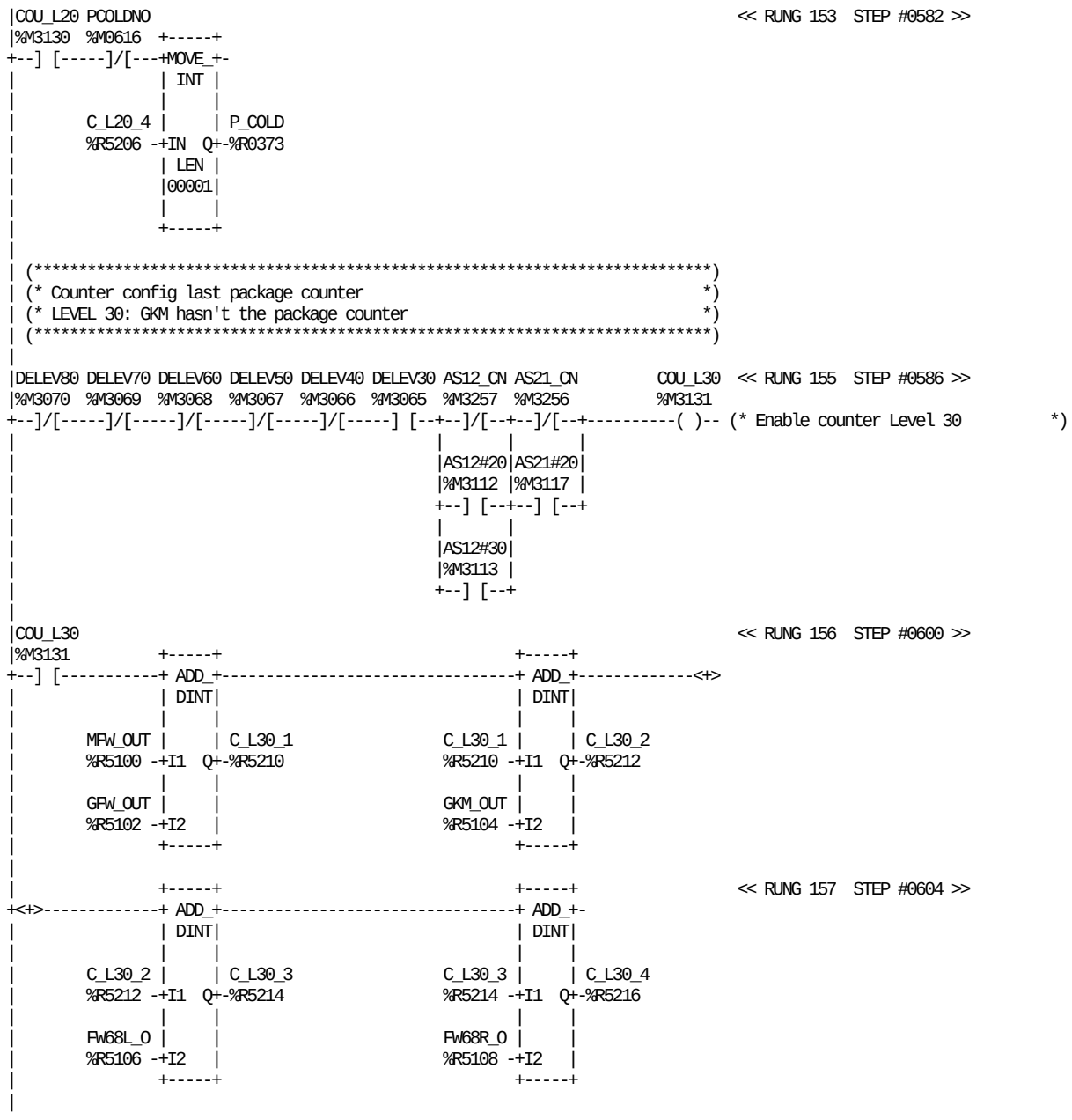

REFERENCE	NICKNAME	REFERENCE DESCRIPTION
%M3112	AS12#20	AS12 before Cap Applicator
%M3113	AS12#30	AS12 before FW68
%M3257	AS12_CN	AS12 connected
%M3117	AS21#20	AS21 after Cap Applicator
%M3256	AS21_CN	AS21 connected
%M3130	COU_L20	Enable counter Level 20
%M3131	COU_L30	Enable counter Level 30
%R5206	C_L20_4	Auxiliary counter Level 20 #4
%R5210	C_L30_1	Auxiliary counter Level 30 #1
%R5212	C_L30_2	Auxiliary counter Level 30 #2
%R5214	C_L30_3	Auxiliary counter Level 30 #3
%R5216	C_L30_4	Auxiliary counter Level 30 #4
%M3065	DELEV30	Level 30 present
%M3066	DELEV40	Level 40 present
%M3067	DELEV50	Level 50 present
%M3068	DELEV60	Level 60 present
%M3069	DELEV70	Level 70 present
%M3070	DELEV80	Level 80 present
%R5106	FW68L_O	Packs out TFW68 left (D_INT)
%R5108	FW68R_O	Packs out TFW68 right (D_INT)
%R5102	GFW_OUT	Packs out GFW (D_INT)
%R5104	GKM_OUT	Packs out GKM (D_INT)
%R5100	MFW_OUT	Packs out MFW (D_INT)
%M0616	PCOLDNO	Line Packages count not enabled
%R0373	P_COLD	Packs to cold store (PLMS)

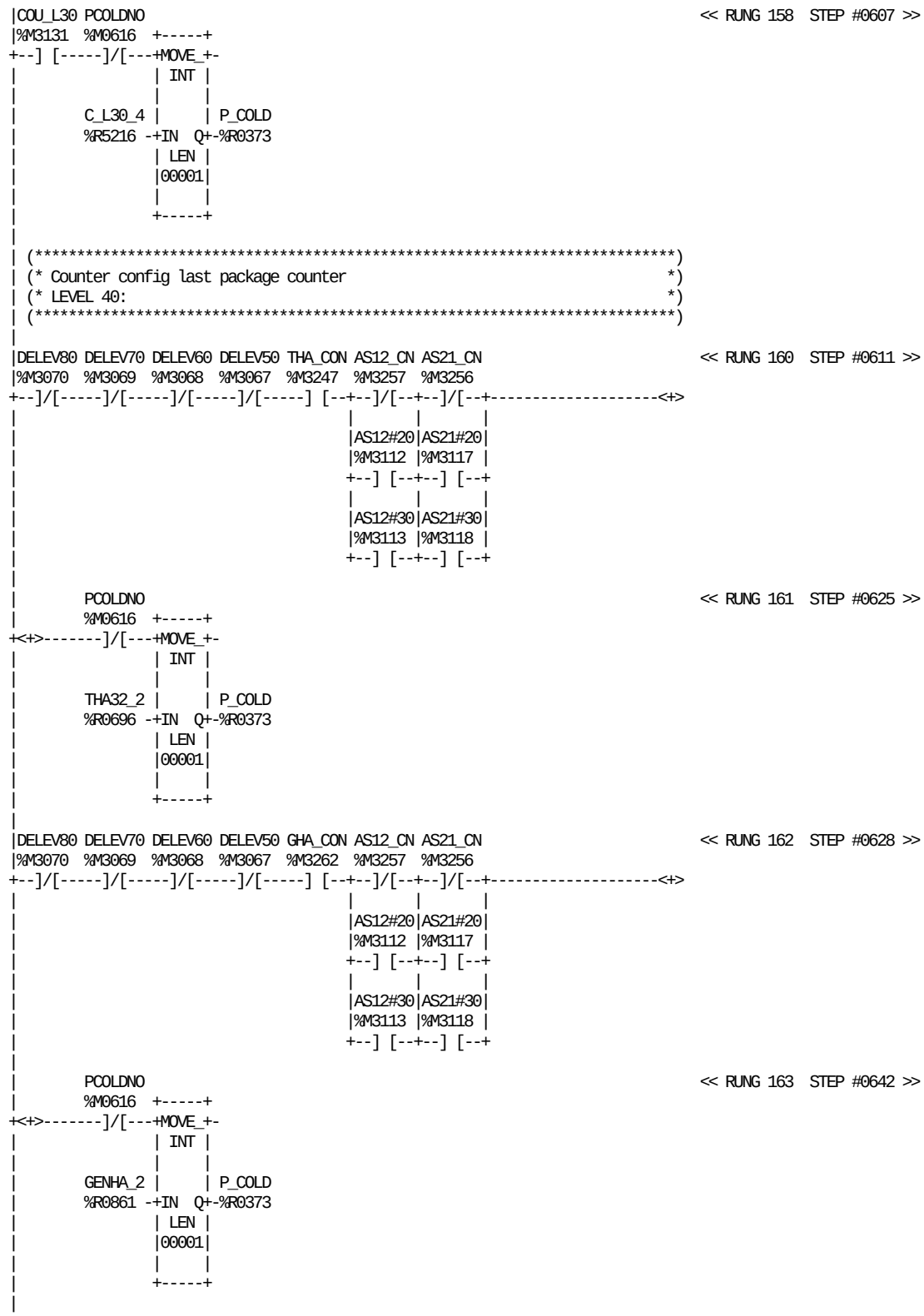

REFERENCE	NICKNAME	REFERENCE DESCRIPTION	REFERENCE	NICKNAME	REFERENCE DESCRIPTION
%M3112	AS12#20	AS12 before Cap Applicator	%M3068	DELEV60	Level 60 present
%M3113	AS12#30	AS12 before FW68	%M3069	DELEV70	Level 70 present
%M3257	AS12_CN	AS12 connected	%M3070	DELEV80	Level 80 present
%M3117	AS21#20	AS21 after Cap Applicator	%R0861	GENHA_2	Generic HA Packs OUT
%M3118	AS21#30	AS21 after FW68	%M3262	GHA_CON	GHA connected
%M3256	AS21_CN	AS21 connected	%M0616	PCOLDNO	Line Packages count not enabled
%M3131	COU_L30	Enable counter Level 30	%R0373	P_COLD	Packs to cold store (PLMS)
%R5216	C_L30_4	Auxiliary counter Level 30 #4	%R0696	THA32_2	THA32 Packs OUT
%M3067	DELEV50	Level 50 present	%M3247	THA_CON	THA32 connected

```
| (*************************************************************************)
| (* Counter config last package counter                                   *)
| (* LEVEL 50:                                                            *)
| (*************************************************************************)
|
|DELEV80 DELEV70 DELEV60 DELEV50                                  COU_L50  << RUNG 165  STEP #0646 >>
|%M3070  %M3069  %M3068  %M3067                                  %M3133
+--]/[-----]/[-----]/[-----] [-----------------------------------------( )-- (* Enable counter Level 50         *)
|
|COU_L50                                                                   << RUNG 166  STEP #0651 >>
|%M3133          +-----+                          +-----+
+--] [-----------+ ADD_+----------------------------+ ADD_+-------------<+>
|                | DINT|                          | DINT|
|                |     |                          |     |
|        CB71OUT |     | C_L50_1          C_L50_1 |     | C_L50_2
|        %R5110 -+I1  Q+-%R5220           %R5220 -+I1  Q+-%R5222
|                |     |                          |     |
|        GCBPOUT |     |                  CB22OUT |     |
|        %R5112 -+I2   |                  %R5114 -+I2   |
|                +-----+                          +-----+
|
|                +-----+                          +-----+                 << RUNG 167  STEP #0655 >>
+<+>-------------+ ADD_+----------------------------+ ADD_+-
|                | DINT|                          | DINT|
|                |     |                          |     |
|        C_L50_2 |     | C_L50_3          C_L50_3 |     | C_L50_4
|        %R5222 -+I1  Q+-%R5224           %R5224 -+I1  Q+-%R5226
|                |     |                          |     |
|        CB70L_O |     |                  CB70R_O |     |
|        %R5116 -+I2   |                  %R5118 -+I2   |
|                +-----+                          +-----+
|
|COU_L50 PCOLDNO                                                           << RUNG 168  STEP #0658 >>
|%M3133  %M0616  +-----+
+--] [-----]/[---+MOVE_+-
|                | INT |
|                |     |
|        C_L50_4 |     | P_COLD
|        %R5226 -+IN  Q+-%R0373
|                | LEN |
|                |00001|
|                |     |
|                +-----+
|
| (*************************************************************************)
| (* Counter config last package counter                                   *)
| (* LEVEL 60:                                                            *)
| (*************************************************************************)
|
|DELEV80 DELEV70 TTS51CN PCOLDNO                                           << RUNG 170  STEP #0662 >>
|%M3070  %M3069  %M3240  %M0616  +-----+
+--]/[-----]/[-----] [-----]/[---+MOVE_+-
|                               | INT |
|                               |     |
|                      TTS51_2  |     | P_COLD
|                      %R0676 -+IN  Q+-%R0373
|                               | LEN |
|                               |00001|
|                               |     |
|                               +-----+
|
```

REFERENCE	NICKNAME	REFERENCE DESCRIPTION
%R5114	CB22OUT	Packs out TCBP22 (D_INT)
%R5116	CB70L_O	Packs out TCBP70 left (D_INT)
%R5118	CB70R_O	Packs out TCBP70 right (D_INT)
%R5110	CB71OUT	Packs out TCBP71 (D_INT)
%M3133	COU_L50	Enable counter Level 50
%R5220	C_L50_1	Auxiliary counter Level 50 #1
%R5222	C_L50_2	Auxiliary counter Level 50 #2
%R5224	C_L50_3	Auxiliary counter Level 50 #3
%R5226	C_L50_4	Auxiliary counter Level 50 #4

REFERENCE	NICKNAME	REFERENCE DESCRIPTION
%M3067	DELEV50	Level 50 present
%M3068	DELEV60	Level 60 present
%M3069	DELEV70	Level 70 present
%M3070	DELEV80	Level 80 present
%R5112	GCBPOUT	Packs out Generic CBP (D_INT)
%M0616	PCOLDNO	Line Packages count not enabled
%R0373	P_COLD	Packs to cold store (PLMS)
%M3240	TTS51CN	TTS51 connected
%R0676	TTS51_2	TTS51 Packs OUT

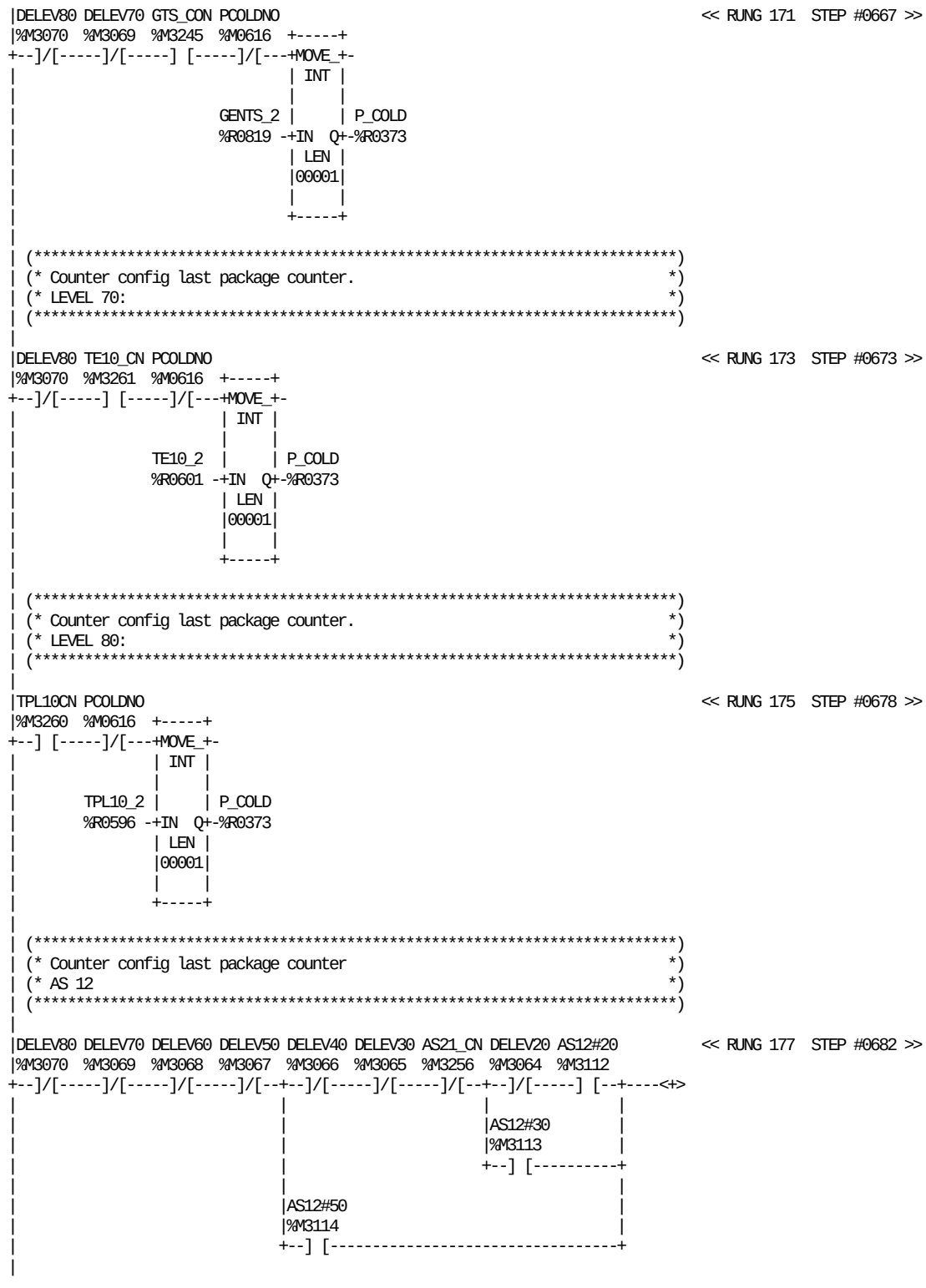

REFERENCE	NICKNAME	REFERENCE DESCRIPTION
%M3112	AS12#20	AS12 before Cap Applicator
%M3113	AS12#30	AS12 before FW68
%M3114	AS12#50	AS12 before Lev50 (CBP)
%M3256	AS21_CN	AS21 connected
%M3064	DELEV20	Level 20 present
%M3065	DELEV30	Level 30 present
%M3066	DELEV40	Level 40 present
%M3067	DELEV50	Level 50 present
%M3068	DELEV60	Level 60 present
%M3069	DELEV70	Level 70 present

REFERENCE	NICKNAME	REFERENCE DESCRIPTION
%M3070	DELEV80	Level 80 present
%R0819	GENTS_2	Generic TS Packs OUT
%M3245	GTS_CON	Generic TS connected
%M0616	PCOLDNO	Line Packages count not enabled
%R0373	P_COLD	Packs to cold store (PLMS)
%R0601	TE10_2	TE10 Packs OUT
%M3261	TE10_CN	TE10 connected
%M3260	TPL10CN	TPL10 connected
%R0596	TPL10_2	TPL10 Packs OUT

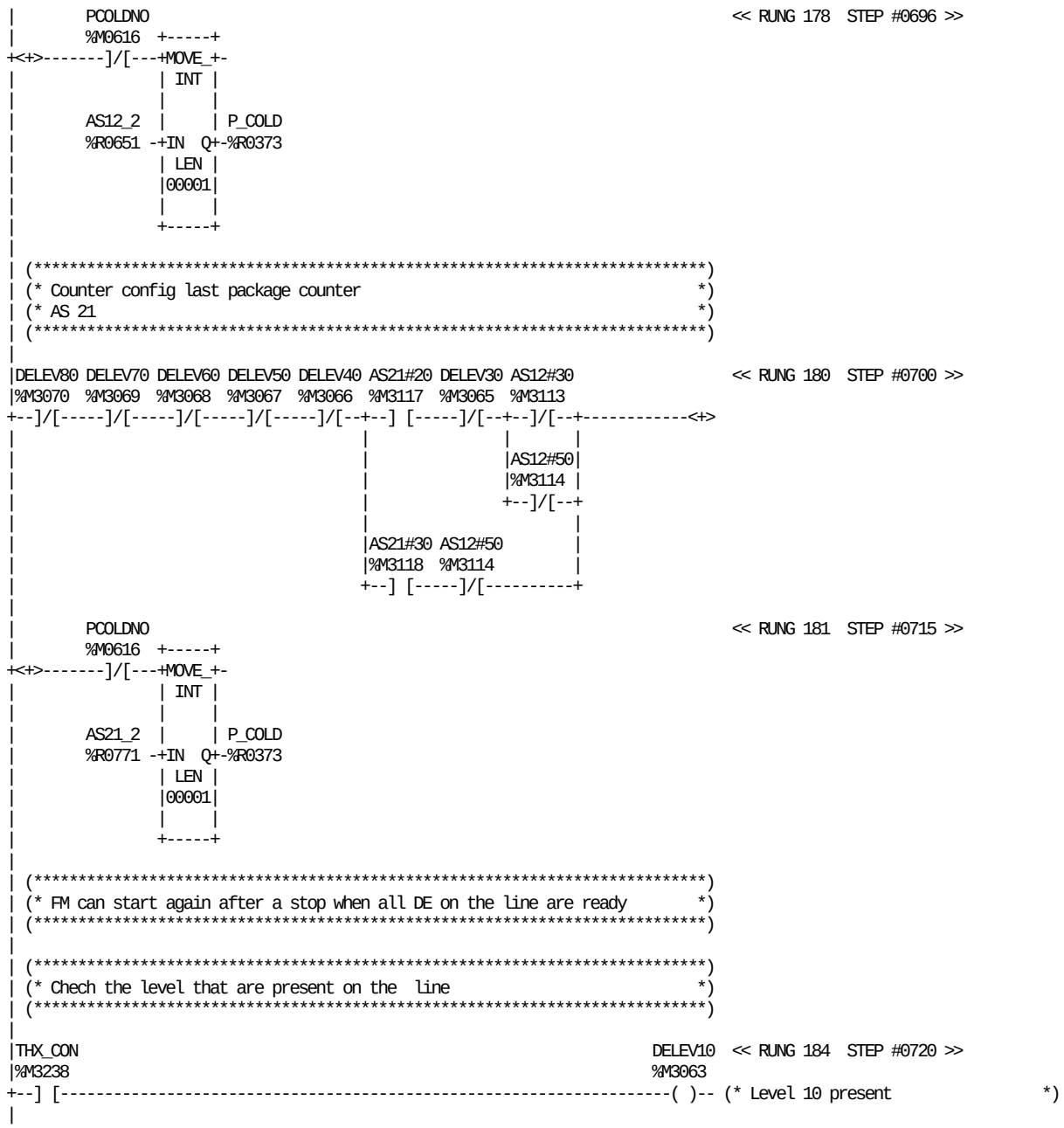

REFERENCE	NICKNAME	REFERENCE DESCRIPTION
%M3113	AS12#30	AS12 before FW68
%M3114	AS12#50	AS12 before Lev50 (CBP)
%R0651	AS12_2	AS12 Packs OUT
%M3117	AS21#20	AS21 after Cap Applicator
%M3118	AS21#30	AS21 after FW68
%R0771	AS21_2	AS21 Packs OUT
%M3063	DELEV10	Level 10 present
%M3065	DELEV30	Level 30 present
%M3066	DELEV40	Level 40 present
%M3067	DELEV50	Level 50 present
%M3068	DELEV60	Level 60 present
%M3069	DELEV70	Level 70 present
%M3070	DELEV80	Level 80 present
%M0616	PCOLDNO	Line Packages count not enabled
%R0373	P_COLD	Packs to cold store (PLMS)
%M3238	THX_CON	THx22 connected

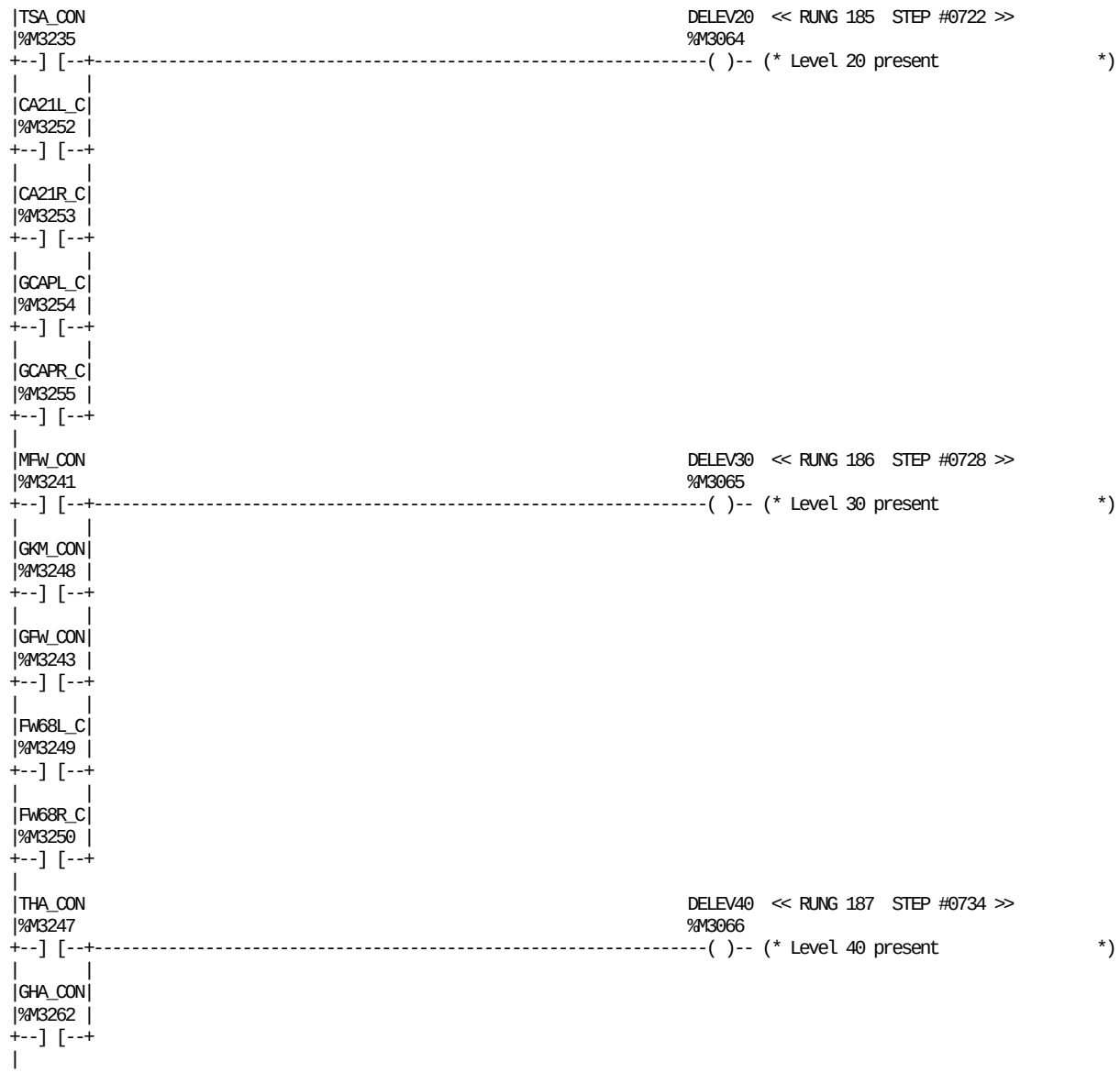

REFERENCE	NICKNAME	REFERENCE DESCRIPTION	REFERENCE	NICKNAME	REFERENCE DESCRIPTION
%M3252	CA21L_C	TCAP21 Left connected	%M3255	GCAPR_C	Generic TCAP Right connected
%M3253	CA21R_C	TCAP21 Right connected	%M3243	GFW_CON	Generic FW connected
%M3064	DELEV20	Level 20 present	%M3262	GHA_CON	GHA connected
%M3065	DELEV30	Level 30 present	%M3248	GKM_CON	GKM connected
%M3066	DELEV40	Level 40 present	%M3241	MFW_CON	Meurer FW connected
%M3249	FW68L_C	FW68 Left connected	%M3247	THA_CON	THA32 connected
%M3250	FW68R_C	FW68 Right connected	%M3235	TSA_CON	TSA22 connected
%M3254	GCAPL_C	Generic TCAP Left connected			

```
|CBP71CN                                                          DELEV50  << RUNG 188  STEP #0737 >>
|%M3236                                                          %M3067
+--] [--+---------------------------------------------------------( )-- (* Level 50 present               *)
|       |
|CPB22CN|
|%M3246 |
+--] [--+
|       |
|GCBP_CN|
|%M3244 |
+--] [--+
|       |
|CB70L_C|
|%M3258 |
+--] [--+
|       |
|CB70R_C|
|%M3259 |
+--] [--+
|
|TTS51CN                                                          DELEV60  << RUNG 189  STEP #0743 >>
|%M3240                                                          %M3068
+--] [--+---------------------------------------------------------( )-- (* Level 60 present               *)
|       |
|GTS_CON|
|%M3245 |
+--] [--+
|
|TE10_CN                                                          DELEV70  << RUNG 190  STEP #0746 >>
|%M3261                                                          %M3069
+--] [---------------------------------------------------------( )-- (* Level 70 present               *)
|
|TPL10CN                                                          DELEV80  << RUNG 191  STEP #0748 >>
|%M3260                                                          %M3070
+--] [---------------------------------------------------------( )-- (* Level 80 present               *)
|
| (*************************************************************************)
| (* FM start conditions when it is not present the AS12 on the line      *)
| (*************************************************************************)
|
```

REFERENCE	NICKNAME	REFERENCE DESCRIPTION	REFERENCE	NICKNAME	REFERENCE DESCRIPTION
%M3258	CB70L_C	TCBP70 connected	%M3070	DELEV80	Level 80 present
%M3259	CB70R_C	TCBP70 connected	%M3244	GCBP_CN	Generic CBP connected
%M3236	CBP71CN	TCBP71 connected	%M3245	GTS_CON	Generic TS connected
%M3246	CPB22CN	TCBP22 connected	%M3261	TE10_CN	TE10 connected
%M3067	DELEV50	Level 50 present	%M3260	TPL10CN	TPL10 connected
%M3068	DELEV60	Level 60 present	%M3240	TTS51CN	TTS51 connected
%M3069	DELEV70	Level 70 present			

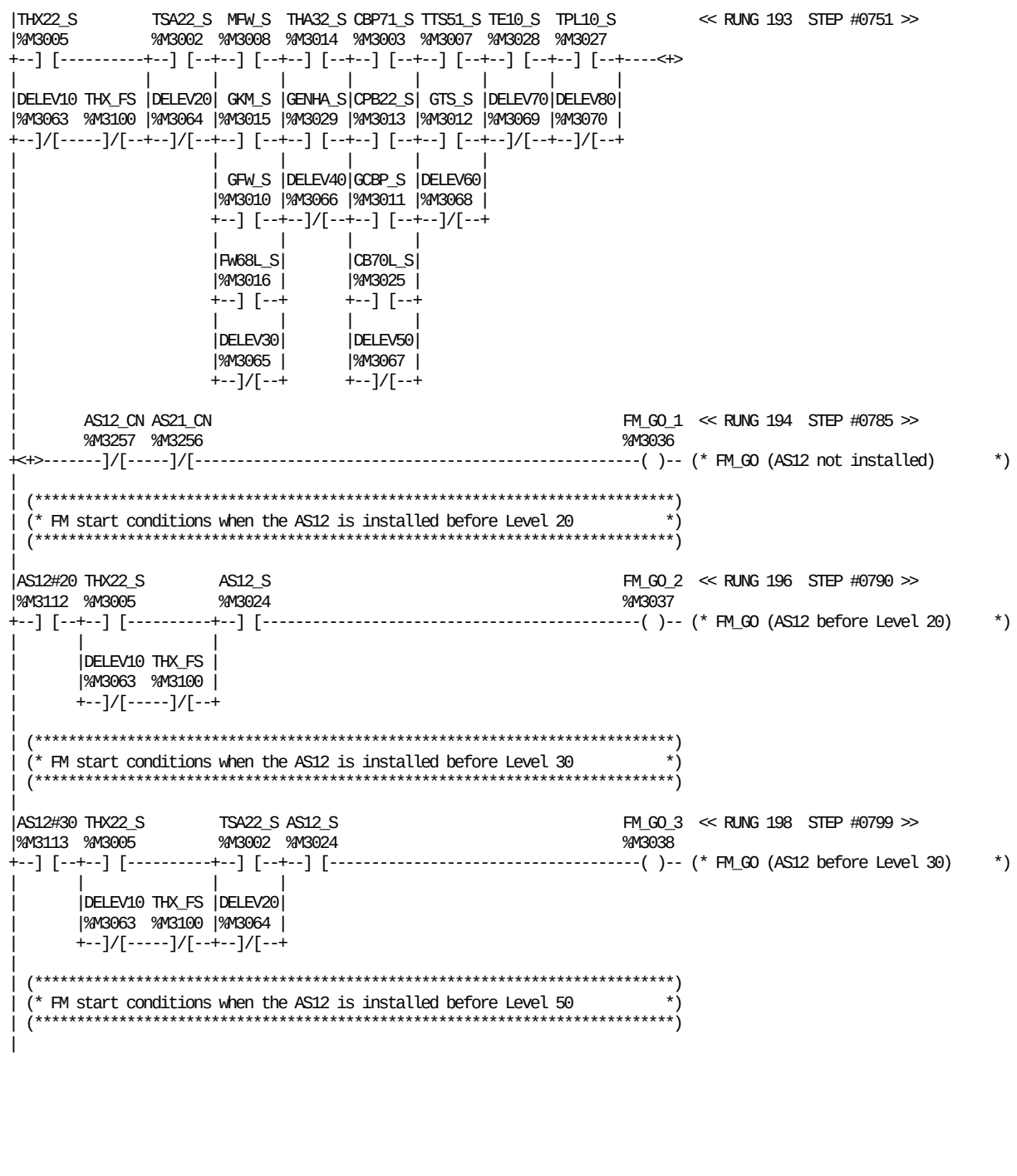

REFERENCE	NICKNAME	REFERENCE DESCRIPTION
%M3112	AS12#20	AS12 before Cap Applicator
%M3113	AS12#30	AS12 before FW68
%M3257	AS12_CN	AS12 connected
%M3024	AS12_S	Ready/stopsignal AS12
%M3256	AS21_CN	AS21 connected
%M3025	CB70L_S	Ready/stopsignal TCBP70 Left
%M3003	CBP71_S	Ready/stopsignal TCBP71
%M3013	CPB22_S	Ready/stopsignal TCBP22
%M3063	DELEV10	Level 10 present
%M3064	DELEV20	Level 20 present
%M3065	DELEV30	Level 30 present
%M3066	DELEV40	Level 40 present
%M3067	DELEV50	Level 50 present
%M3068	DELEV60	Level 60 present
%M3069	DELEV70	Level 70 present
%M3070	DELEV80	Level 80 present
%M3036	FM_GO_1	FM_GO (AS12 not installed)

REFERENCE	NICKNAME	REFERENCE DESCRIPTION
%M3037	FM_GO_2	FM_GO (AS12 before Level 20)
%M3038	FM_GO_3	FM_GO (AS12 before Level 30)
%M3016	FW68L_S	Ready/stopsignal FW68 Left
%M3011	GCBP_S	Ready/stopsignal Generic CBP
%M3029	GENHA_S	Ready/stopsignal Generic HA
%M3010	GFW_S	Ready/stopsignal Generic FW
%M3015	GKM_S	Ready/stopsignal GKM
%M3012	GTS_S	Ready/stopsignal Generic TS
%M3008	MFW_S	Ready/stopsignal Meurer FW
%M3028	TE10_S	Ready/stopsignal TE10
%M3014	THA32_S	Ready/stopsignal THA32
%M3005	THX22_S	Ready/stopsignal THx22
%M3100	THX_FS	Stop Signal from THx22 in bypass
%M3027	TPL10_S	Ready/stopsignal TPL10
%M3002	TSA22_S	Ready/stopsignal TSA22
%M3007	TTS51_S	Ready/stopsignal TTS51

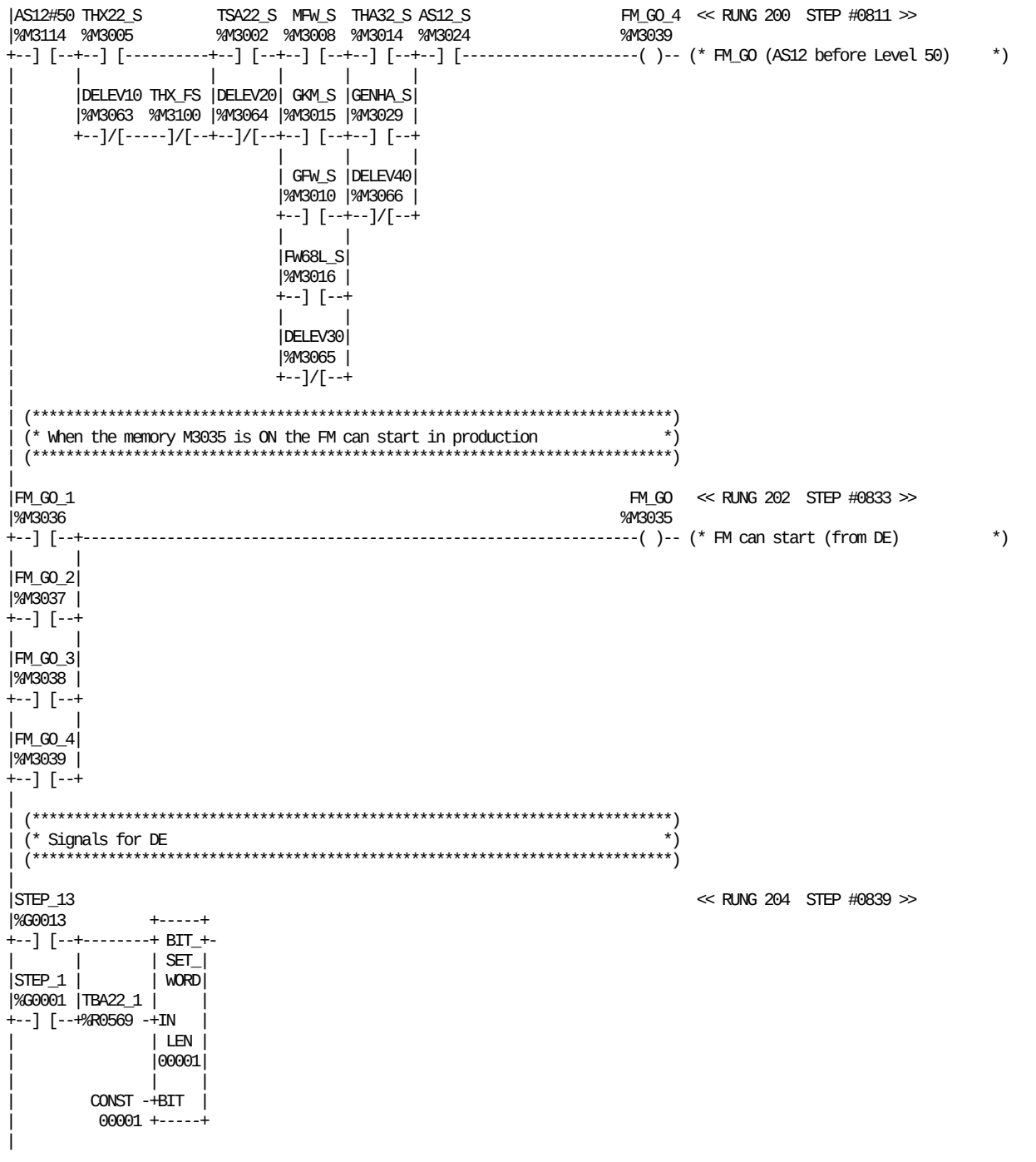

REFERENCE	NICKNAME	REFERENCE DESCRIPTION
%M3114	AS12#50	AS12 before Lev50 (CBP)
%M3024	AS12_S	Ready/stopsignal AS12
%M3063	DELEV10	Level 10 present
%M3064	DELEV20	Level 20 present
%M3065	DELEV30	Level 30 present
%M3066	DELEV40	Level 40 present
%M3035	FM_GO	FM can start (from DE)
%M3036	FM_GO_1	FM_GO (AS12 not installed)
%M3037	FM_GO_2	FM_GO (AS12 before Level 20)
%M3038	FM_GO_3	FM_GO (AS12 before Level 30)
%M3039	FM_GO_4	FM_GO (AS12 before Level 50)
%M3016	FW68L_S	Ready/stopsignal FW68 Left

REFERENCE	NICKNAME	REFERENCE DESCRIPTION
%M3029	GENHA_S	Ready/stopsignal Generic HA
%M3010	GFW_S	Ready/stopsignal Generic FW
%M3015	GKM_S	Ready/stopsignal GKM
%M3008	MFW_S	Ready/stopsignal Meurer FW
%G0001	STEP_1	STANDBY
%G0013	STEP_13	OPEN DOORS, CUT TUBE
%R0569	TBA22_1	TBA22 signals
%M3014	THA32_S	Ready/stopsignal THA32
%M3005	THX22_S	Ready/stopsignal THx22
%M3100	THX_FS	Stop Signal from THx22 in bypass
%M3002	TSA22_S	Ready/stopsignal TSA22

```
|STEP_4                                                                << RUNG 205  STEP #0842 >>
|%G0004  +-----+
+--] [---+ BIT_+-
|        | CLR_|
|        | WORD|
|TBA22_1 |     |
|%R0569 -+IN   |
|        | LEN |
|        |00001|
|        |     |
| CONST -+BIT  |
|  00001 +-----+
|
|ST_9-10                                                               << RUNG 206  STEP #0844 >>
|%G0026                  +-----+
+--] [----------+--------+ BIT_+-
|               |        | SET_|
|ST_6-11 A415_5 |        | WORD|
|%G0025  %Q0081 |TBA22_1 |     |
+--] [-----] [--+%R0569 -+IN   |
|                        | LEN |
|                        |00001|
|                        |     |
|                CONST -+BIT  |
|                 00002 +-----+
|
|ST_9-10 A415_5                                                        << RUNG 207  STEP #0849 >>
|%G0026  %Q0081          +-----+
+--]/[-----]/[--+--------+ BIT_+-
|               |        | CLR_|
|ST_6-11        |        | WORD|
|%G0025         |TBA22_1 |     |
+--]/[----------+%R0569 -+IN   |
|                        | LEN |
|                        |00001|
|                        |     |
|                CONST -+BIT  |
|                 00002 +-----+
|
|PCOLDNO                                                               << RUNG 208  STEP #0853 >>
|%M0616  +-----+
+--] [---+ BIT_+-
|        | SET_|
|        | WORD|
|TBA22_1 |     |
|%R0569 -+IN   |
|        | LEN |
|        |00001|
|        |     |
| CONST -+BIT  |
|  00003 +-----+
|
|PCOLDNO                                                               << RUNG 209  STEP #0855 >>
|%M0616  +-----+
+--]/[---+ BIT_+-
|        | CLR_|
|        | WORD|
|TBA22_1 |     |
|%R0569 -+IN   |
|        | LEN |
|        |00001|
|        |     |
| CONST -+BIT  |
|  00003 +-----+
|
|[    END OF SUBROUTINE LOGIC     ]
|
```

REFERENCE	NICKNAME	REFERENCE DESCRIPTION	REFERENCE	NICKNAME	REFERENCE DESCRIPTION
%Q0081	A415_5	Enable external conveyor	%G0025	ST_6-11	Ladder position 6-11
%M0616	PCOLDNO	Line Packages count not enabled	%G0026	ST_9-10	Ladder position 9-10
%G0004	STEP_4	HEAT STERILIZATION	%R0569	TBA22_1	TBA22 signals

This page left intentionally blank

```
|[  START LD SUBROUTINE  S__250B  ]
|
|[     VARIABLE DECLARATIONS      ]
|
|[   START OF SUBROUTINE LOGIC    ]
|
| (*************************************************************************)
| (* Default set values for SA power.                                      *)
| (*************************************************************************)
|
|STEP_1                                                          << RUNG 5  STEP #0003 >>
|%G0001  +-----+               +-----+               +-----+
+--] [---+MOVE_+---------------+MOVE_+---------------+MOVE_+-
|        | INT |               | INT |               | INT |
|        |     |               |     |               |     |
|        |     | SA_PRO        |     | SA_LOW        |     | SA_EXT
| CONST -+IN  Q+-%R4000   CONST -+IN  Q+-%R4001   CONST -+IN  Q+-%R4002
| +12800 | LEN |          +04480 | LEN |          +00114 | LEN |
|        |00001|                 |00001|                 |00001|
|        |     |                 |     |                 |     |
|        +-----+                 +-----+                 +-----+
|
|STEP_1                                                          << RUNG 6  STEP #0007 >>
|%G0001  +-----+               +-----+               +-----+
+--] [---+MOVE_+---------------+MOVE_+---------------+MOVE_+-
|        | INT |               | INT |               | INT |
|        |     |               |     |               |     |
|        |     | DELEXSA       |     | EXTRASA       |     | PEREXSA
| CONST -+IN  Q+-%R1878   CONST -+IN  Q+-%R1879   CONST -+IN  Q+-%R1895
| +00019 | LEN |          +00022 | LEN |          +00150 | LEN |
|        |00001|                 |00001|                 |00001|
|        |     |                 |     |                 |     |
|        +-----+                 +-----+                 +-----+
|
| (*************************************************************************)
| (* Default set values for Loop motor speed.                             *)
| (*************************************************************************)
|
|STEP_1                                                          << RUNG 8  STEP #0012 >>
|%G0001  +-----+               +-----+               +-----+
+--] [---+MOVE_+---------------+MOVE_+---------------+MOVE_+-
|        | INT |               | INT |               | INT |
|        |     |               |     |               |     |
|        |     | LOOP_HL       |     | LOOP_HH       |     | LOOP_LH
| CONST -+IN  Q+-%R4009   CONST -+IN  Q+-%R4010   CONST -+IN  Q+-%R4011
| +14445 | LEN |          +16585 | LEN |          +05750 | LEN |
|        |00001|                 |00001|                 |00001|
|        |     |                 |     |                 |     |
|        +-----+                 +-----+                 +-----+
|
|STEP_1                                                          << RUNG 9  STEP #0016 >>
|%G0001  +-----+               +-----+               +-----+
+--] [---+MOVE_+---------------+MOVE_+---------------+MOVE_+-
|        | INT |               | INT |               | INT |
|        |     |               |     |               |     |
|        |     | LOOPEHL       |     | LOOPEHH       |     | LOOPSPL
| CONST -+IN  Q+-%R4012   CONST -+IN  Q+-%R4013   CONST -+IN  Q+-%R4014
| +18725 | LEN |          +20865 | LEN |          +07000 | LEN |
|        |00001|                 |00001|                 |00001|
|        |     |                 |     |                 |     |
|        +-----+                 +-----+                 +-----+
|
| (*************************************************************************)
| (* Default set values for Magazine motor speed.                         *)
| (*************************************************************************)
|
```

REFERENCE	NICKNAME	REFERENCE DESCRIPTION	REFERENCE	NICKNAME	REFERENCE DESCRIPTION
%R1878	DELEXSA	SA, delay start extra power SA	%R4011	LOOP_LH	Low speed loop High
%R1879	EXTRASA	SA, time extra power SA	%R1895	PEREXSA	SA, percentage extra sa power
%R4013	LOOPEHH	Extra High speed loop High	%R4002	SA_EXT	Power SA extra high speed
%R4012	LOOPEHL	Extra High speed loop Low	%R4001	SA_LOW	Power SA low speed
%R4014	LOOPSPL	Loop speed during paper splice	%R4000	SA_PRO	Power SA production speed
%R4010	LOOP_HH	High speed loop High	%G0001	STEP_1	STANDBY
%R4009	LOOP_HL	High speed loop Low			

```
|STEP_1                                                                  << RUNG 11  STEP #0021 >>
|%G0001  +-----+                +-----+                +-----+
+--] [---+MOVE_+----------------+MOVE_+----------------+MOVE_+-
|        | INT |                | INT |                | INT |
|        |     |                |     |                |     |
|        |     | MAG_HL         |     | MAG_HH         |     | MAG_LH
| CONST -+IN  Q+-%R4015   CONST -+IN  Q+-%R4016   CONST -+IN  Q+-%R4017
| +17000 | LEN |          +18500 | LEN |          +05950 | LEN |
|        |00001|                |00001|                |00001|
|        |     |                |     |                |     |
|        +-----+                +-----+                +-----+
|
|STEP_1                                                                  << RUNG 12  STEP #0025 >>
|%G0001  +-----+
+--] [---+MOVE_+-
|        | INT |
|        |     |
|        |     | MAG_EHH
| CONST -+IN  Q+-%R4018
| +23000 | LEN |
|        |00001|
|        |     |
|        +-----+
|
| (*************************************************************************)
| (* Default set values for LS power.                                      *)
| (*************************************************************************)
|
|STEP_1                                                                  << RUNG 14  STEP #0028 >>
|%G0001  +-----+                +-----+                +-----+
+--] [---+MOVE_+----------------+MOVE_+----------------+MOVE_+-
|        | INT |                | INT |                | INT |
|        |     |                |     |                |     |
|        |     | LS_PROD        |     | LS_LOW         |     | LS_SERV
| CONST -+IN  Q+-%R4019   CONST -+IN  Q+-%R4020   CONST -+IN  Q+-%R4021
| +12800 | LEN |          +05760 | LEN |          +14720 | LEN |
|        |00001|                |00001|                |00001|
|        |     |                |     |                |     |
|        +-----+                +-----+                +-----+
|
|STEP_1                                                                  << RUNG 15  STEP #0032 >>
|%G0001  +-----+                +-----+
+--] [---+MOVE_+----------------+MOVE_+-
|        | INT |                | INT |
|        |     |                |     |
|        |     | EXPOW1         |     | EXPOW2
| CONST -+IN  Q+-%R4068   CONST -+IN  Q+-%R4069
| +00045 | LEN |          +00047 | LEN |
|        |00001|                |00001|
|        |     |                |     |
|        +-----+                +-----+
|
| (*************************************************************************)
| (* Default set values for Drive roller motor speed.                      *)
| (*************************************************************************)
|
|STEP_1                                                                  << RUNG 17  STEP #0036 >>
|%G0001  +-----+                +-----+                +-----+
+--] [---+MOVE_+----------------+MOVE_+----------------+MOVE_+-
|        | INT |                | INT |                | INT |
|        |     |                |     |                |     |
|        |     | PR_PROL        |     | PR_PROH        |     | PR_MANU
| CONST -+IN  Q+-%R4003   CONST -+IN  Q+-%R4004   CONST -+IN  Q+-%R4005
| +18450 | LEN |          +20050 | LEN |          +05000 | LEN |
|        |00001|                |00001|                |00001|
|        |     |                |     |                |     |
|        +-----+                +-----+                +-----+
```

REFERENCE	NICKNAME	REFERENCE DESCRIPTION	REFERENCE	NICKNAME	REFERENCE DESCRIPTION
%R4068	EXPOW1	Extra power ls range 1	%R4015	MAG_HL	High speed magazine Low
%R4069	EXPOW2	Extra power ls range 2	%R4017	MAG_LH	Low speed magazine High
%R4020	LS_LOW	LS power low speed	%R4005	PR_MANU	PendRoll Manual paper feed speed
%R4019	LS_PROD	LS power production	%R4004	PR_PROH	Pendulum roller prod speed high
%R4021	LS_SERV	LS power service switch	%R4003	PR_PROL	Pendulum roller prod speed Low
%R4018	MAG_EHH	Extra High speed magazine High	%G0001	STEP_1	STANDBY
%R4016	MAG_HH	High speed magazine High			

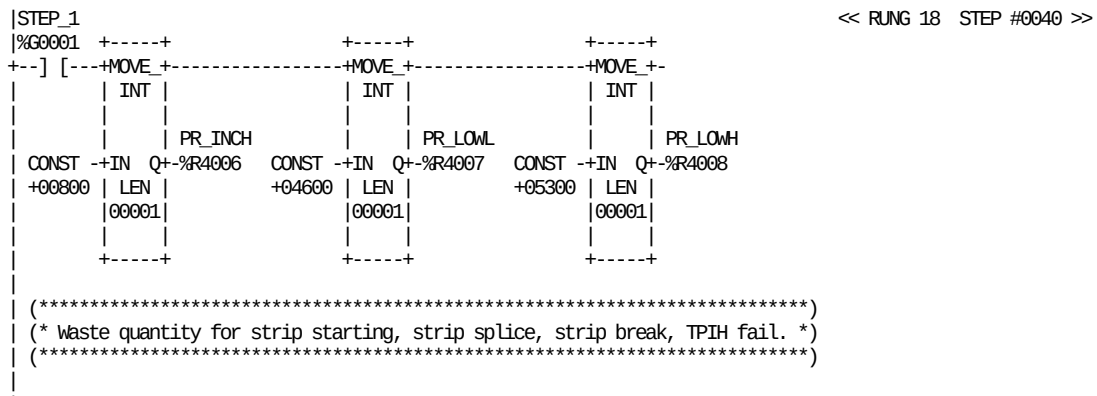

REFERENCE	NICKNAME	REFERENCE DESCRIPTION
%R4006	PR_INCH	Pendulum Roller Inching speed
%R4008	PR_LOWH	Pendulum Roller Low speed High
%R4007	PR_LOWL	Pendulum Roller Low speed Low
%G0001	STEP_1	STANDBY
%R4031	WSBRK1	Waste strip break register 1
%R4032	WSBRK2	Waste strip break register 2
%R4033	WSBRK3	Waste strip break register 3
%R4034	WSBRK4	Waste strip break register 4
%R4035	WSBRK5	Waste strip break register 5
%R4036	WSBRK6	Waste strip break register 6
%R4028	WSSPL1	Waste strip splice register 1
%R4029	WSSPL2	Waste strip splice register 2
%R4030	WSSPL3	Waste strip splice register 3
%R4025	WSTRS1	Waste start strip register 1
%R4026	WSTRS2	Waste start strip register 2
%R4027	WSTRS3	Waste start strip register 3

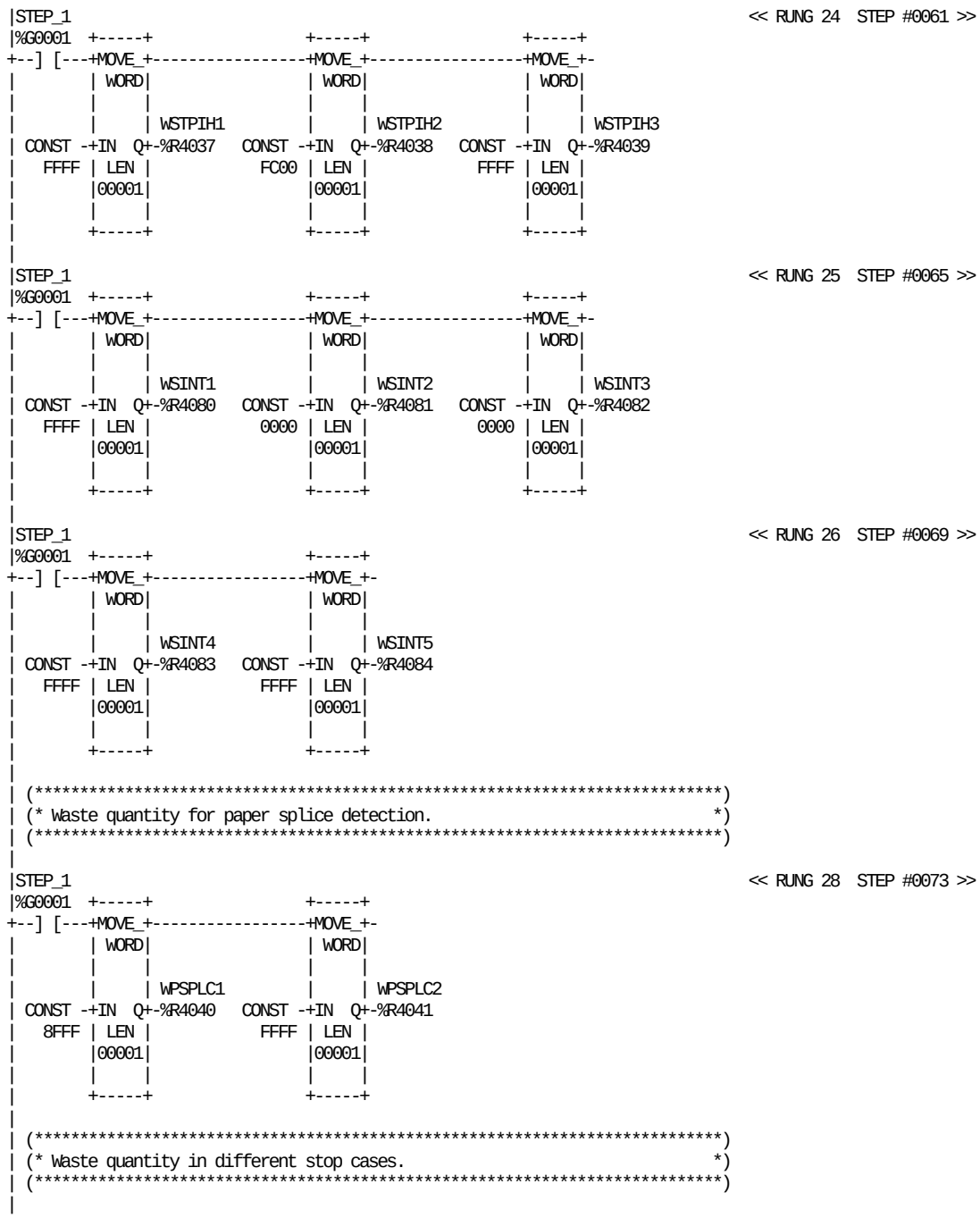

REFERENCE	NICKNAME	REFERENCE DESCRIPTION	REFERENCE	NICKNAME	REFERENCE DESCRIPTION
%G0001	STEP_1	STANDBY			
%R4040	WPSPLC1	Waste paper spl detection column	%R4084	WSINT5	Waste strip refill.inter.reg.5
%R4041	WPSPLC2	Waste paper spl detection column	%R4037	WSTPIH1	Waste strip TPIH fail register 1
%R4080	WSINT1	Waste strip refill.inter.reg.1	%R4038	WSTPIH2	Waste strip TPIH fail register 2
%R4081	WSINT2	Waste strip refill.inter.reg.2	%R4039	WSTPIH3	Waste strip TPIH fail register 3
%R4082	WSINT3	Waste strip refill.inter.reg.3			
%R4083	WSINT4	Waste strip refill.inter.reg.4			

```
|ALW_ON                                                                  << RUNG 30  STEP #0077 >>
|%S0007  +-----+               +-----+               +-----+
+--] [---+MOVE_+---------------+MOVE_+---------------+MOVE_+-
|        | WORD|               | WORD|               | WORD|
|        |     |               |     |               |     |
|        |     | WSSTR_1       |     | WSSTR_2       |     | WSSTR_3
| CONST -+IN  Q+-%R4042  CONST -+IN  Q+-%R4043  CONST -+IN  Q+-%R4044
|   0000 | LEN |          0000 | LEN |          0000 | LEN |
|        |00001|               |00001|               |00001|
|        |     |               |     |               |     |
|        +-----+               +-----+               +-----+
|
|ALW_ON                                                                  << RUNG 31  STEP #0081 >>
|%S0007  +-----+               +-----+               +-----+
+--] [---+MOVE_+---------------+MOVE_+---------------+MOVE_+-
|        | WORD|               | WORD|               | WORD|
|        |     |               |     |               |     |
|        |     | WSSTR_4       |     | WSSTR_5       |     | WLSERR1
| CONST -+IN  Q+-%R4045  CONST -+IN  Q+-%R4046  CONST -+IN  Q+-%R4047
|   FC00 | LEN |          FFFF | LEN |          0FFF | LEN |
|        |00001|               |00001|               |00001|
|        |     |               |     |               |     |
|        +-----+               +-----+               +-----+
|
|STARTOK                                                                 << RUNG 32  STEP #0085 >>
|%M0067  +-----+               +-----+               +-----+
+--] [---+MOVE_+---------------+MOVE_+---------------+MOVE_+-
|        | WORD|               | WORD|               | WORD|
|        |     |               |     |               |     |
|        |     | WSSTR_1       |     | WSSTR_2       |     | WSSTR_3
| CONST -+IN  Q+-%R4042  CONST -+IN  Q+-%R4043  CONST -+IN  Q+-%R4044
|   0000 | LEN |          F000 | LEN |          FFFF | LEN |
|        |00001|               |00001|               |00001|
|        |     |               |     |               |     |
|        +-----+               +-----+               +-----+
|
|STARTOK                                                                 << RUNG 33  STEP #0089 >>
|%M0067  +-----+               +-----+
+--] [---+MOVE_+---------------+MOVE_+-
|        | WORD|               | WORD|
|        |     |               |     |
|        |     | WSSTR_4       |     | WSSTR_5
| CONST -+IN  Q+-%R4045  CONST -+IN  Q+-%R4046
|   FFFF | LEN |          FFFF | LEN |
|        |00001|               |00001|
|        |     |               |     |
|        +-----+               +-----+
|
|STEP_1                                                                  << RUNG 34  STEP #0092 >>
|%G0001  +-----+               +-----+
+--] [---+MOVE_+---------------+MOVE_+-
|        | WORD|               | WORD|
|        |     |               |     |
|        |     | WLSERR2       |     | TS_FAIL
| CONST -+IN  Q+-%R4048  CONST -+IN  Q+-%R4072
|   FFFF | LEN |          FFE1 | LEN |
|        |00001|               |00001|
|        |     |               |     |
|        +-----+               +-----+
|
| (*************************************************************************)
| (* Setting for TS side shift in the fast scan.                          *)
| (*************************************************************************)
|
```

REFERENCE	NICKNAME	REFERENCE DESCRIPTION	REFERENCE	NICKNAME	REFERENCE DESCRIPTION
%S0007	ALW_ON		%R4042	WSSTR_1	Waste startup reg 1
%M0067	STARTOK	Production start OK	%R4043	WSSTR_2	Waste startup reg 2
%G0001	STEP_1	STANDBY	%R4044	WSSTR_3	Waste startup reg 3
%R4072	TS_FAIL	Waste for TS load error	%R4045	WSSTR_4	Waste startup reg 4
%R4047	WLSERR1	Waste LS error reg 1	%R4046	WSSTR_5	Waste startup reg 5
%R4048	WLSERR2	Waste LS error reg 2			

```
|STEP_1                                                                << RUNG 36  STEP #0096 >>
|%G0001  +-----+                +-----+
+--] [---+MOVE_+----------------+MOVE_+-
|        | INT |                | INT |
|        |     |                |     |
|        |     | TSSH_S1        |     | TSSH_S2
| CONST -+IN  Q+-%R4054   CONST -+IN  Q+-%R4055
| +00060 | LEN |          +00063 | LEN |
|        |00001|                |00001|
|        |     |                |     |
|        +-----+                +-----+
|
| (*************************************************************************)
| (* Setting for TS start pulse in the fast scan.                         *)
| (*************************************************************************)
|
|STEP_1                                                                << RUNG 38  STEP #0100 >>
|%G0001  +-----+                +-----+
+--] [---+MOVE_+----------------+MOVE_+-
|        | INT |                | INT |
|        |     |                |     |
|        |     | SSEALW1        |     | SSEALW2
| CONST -+IN  Q+-%R4056   CONST -+IN  Q+-%R4057
| +00000 | LEN |          +00003 | LEN |
|        |00001|                |00001|
|        |     |                |     |
|        +-----+                +-----+
|
| (*************************************************************************)
| (* Setting for waste box window in the fast scan.                        *)
| (*************************************************************************)
|
|STEP_1                                                                << RUNG 40  STEP #0104 >>
|%G0001  +-----+                +-----+
+--] [---+MOVE_+----------------+MOVE_+-
|        | INT |                | INT |
|        |     |                |     |
|        |     | WB_ONW1        |     | WB_ONW2
| CONST -+IN  Q+-%R4058   CONST -+IN  Q+-%R4059
| +00000 | LEN |          +00005 | LEN |
|        |00001|                |00001|
|        |     |                |     |
|        +-----+                +-----+
|
|STEP_1                                                                << RUNG 41  STEP #0107 >>
|%G0001  +-----+                +-----+
+--] [---+MOVE_+----------------+MOVE_+-
|        | INT |                | INT |
|        |     |                |     |
|        |     | WB_OFW1        |     | WB_OFW2
| CONST -+IN  Q+-%R4060   CONST -+IN  Q+-%R4061
| +00035 | LEN |          +00040 | LEN |
|        |00001|                |00001|
|        |     |                |     |
|        +-----+                +-----+
|
| (*************************************************************************)
| (* Setting for DCS TMCC parameter.                                       *)
| (*************************************************************************)
|
```

REFERENCE	NICKNAME	REFERENCE DESCRIPTION	REFERENCE	NICKNAME	REFERENCE DESCRIPTION
%R4056	SSEALW1	Start sealing sect window 1	%R4060	WB_OFW1	Waste box off window 1
%R4057	SSEALW2	Start sealing sect window 2	%R4061	WB_OFW2	Waste box off window 2
%G0001	STEP_1	STANDBY	%R4058	WB_ONW1	Waste box on window 1
%R4054	TSSH_S1	TS Shift sector window 1	%R4059	WB_ONW2	Waste box on window 2
%R4055	TSSH_S2	TS Shift sector window 2			

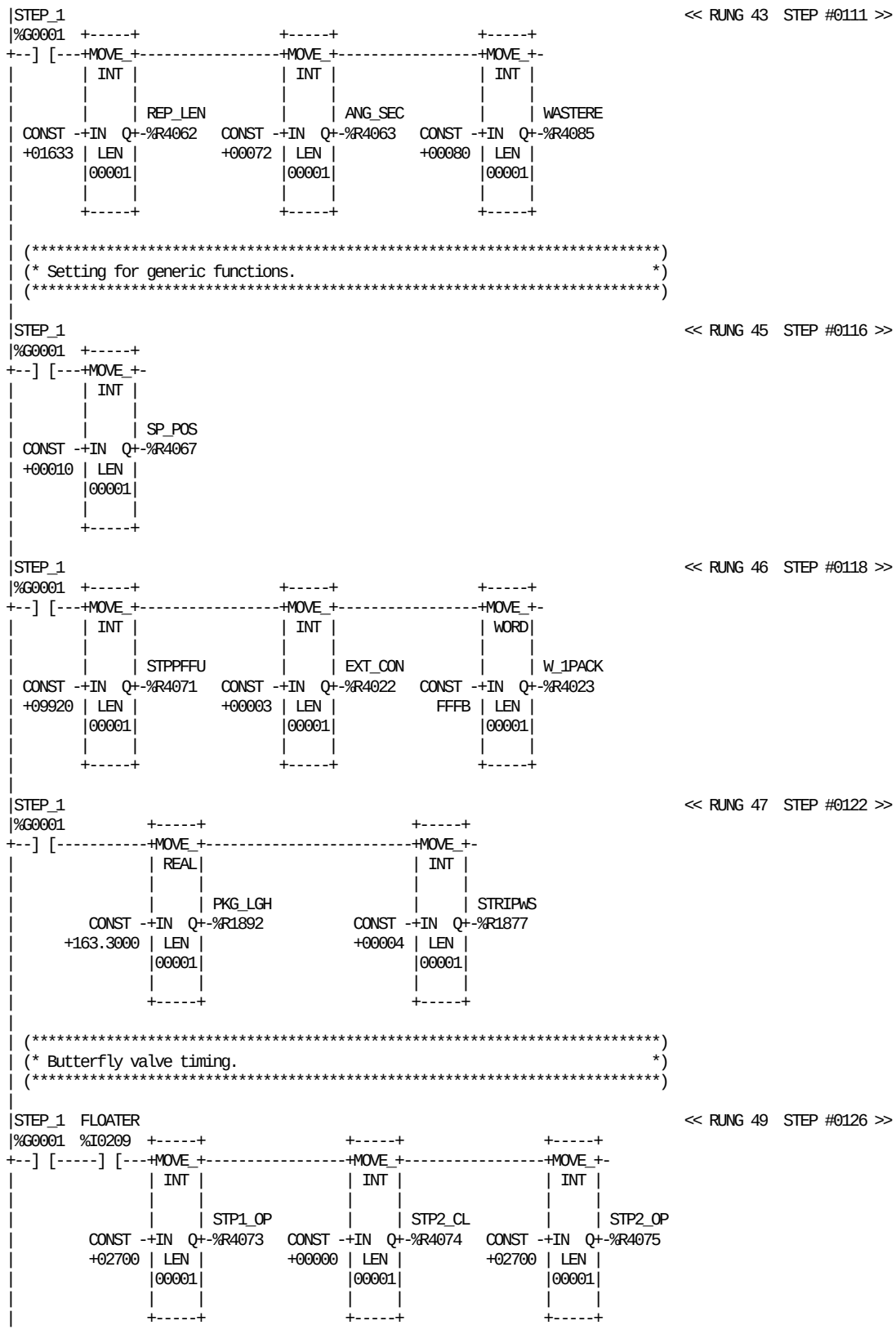

REFERENCE	NICKNAME	REFERENCE DESCRIPTION	REFERENCE	NICKNAME	REFERENCE DESCRIPTION
%R4063	ANG_SEC	Angle sector TMCC	%R4073	STP1_OP	Butterfly step 1 open time
%R4022	EXT_CON	External conv timer value	%R4074	STP2_CL	Butterfly step 2 close time
%I0209	FLOATER	Option for level with floater	%R4075	STP2_OP	Butterfly step 2 open time
%R1892	PKG_LGH	SA, package paper lenght	%R4071	STPPFFU	Stop position FFU delault value
%R4062	REP_LEN	Repeat length TMCC	%R1877	STRIPWS	SA, strip waste packages (PLMS)
%R4067	SP_POS	Splice position preset	%R4085	WASTERE	Start waste for refilling
%G0001	STEP_1	STANDBY	%R4023	W_1PACK	Waste of package Nr 1

```
|STEP_1  FLOATER                                                    << RUNG 50  STEP #0131 >>
|%G0001  %I0209  +-----+                +-----+
+--] [-----] [---+MOVE_+----------------+MOVE_+-
|                | INT |                | INT |
|                |     |                |     |
|                |     | STP3_CL        |     | STP3_OP
|         CONST -+IN  Q+-%R4076   CONST -+IN  Q+-%R4077
|         +00000 | LEN |          +02700 | LEN |
|                |00001|                |00001|
|                |     |                |     |
|                +-----+                +-----+
|
|STEP_1  FLOATER                                                    << RUNG 51  STEP #0135 >>
|%G0001  %I0209  +-----+                +-----+
+--] [-----] [---+MOVE_+----------------+MOVE_+-
|                | INT |                | INT |
|                |     |                |     |
|                |     | STP4_CL        |     | STP4_OP
|         CONST -+IN  Q+-%R4078   CONST -+IN  Q+-%R4079
|         +00000 | LEN |          +02700 | LEN |
|                |00001|                |00001|
|                |     |                |     |
|                +-----+                +-----+
|
|STEP_1  FLOATER                                                    << RUNG 52  STEP #0139 >>
|%G0001  %I0209  +-----+                +-----+                +-----+
+--] [-----]/[---+MOVE_+----------------+MOVE_+----------------+MOVE_+-
|                | INT |                | INT |                | INT |
|                |     |                |     |                |     |
|                |     | STP1_OP        |     | STP2_CL        |     | STP2_OP
|         CONST -+IN  Q+-%R4073   CONST -+IN  Q+-%R4074   CONST -+IN  Q+-%R4075
|         +03300 | LEN |          +04200 | LEN |          +04800 | LEN |
|                |00001|                |00001|                |00001|
|                |     |                |     |                |     |
|                +-----+                +-----+                +-----+
|
|STEP_1  FLOATER                                                    << RUNG 53  STEP #0144 >>
|%G0001  %I0209  +-----+                +-----+
+--] [-----]/[---+MOVE_+----------------+MOVE_+-
|                | INT |                | INT |
|                |     |                |     |
|                |     | STP3_CL        |     | STP3_OP
|         CONST -+IN  Q+-%R4076   CONST -+IN  Q+-%R4077
|         +05700 | LEN |          +08400 | LEN |
|                |00001|                |00001|
|                |     |                |     |
|                +-----+                +-----+
|
|STEP_1  FLOATER                                                    << RUNG 54  STEP #0148 >>
|%G0001  %I0209  +-----+                +-----+
+--] [-----]/[---+MOVE_+----------------+MOVE_+-
|                | INT |                | INT |
|                |     |                |     |
|                |     | STP4_CL        |     | STP4_OP
|         CONST -+IN  Q+-%R4078   CONST -+IN  Q+-%R4079
|         +05700 | LEN |          +08400 | LEN |
|                |00001|                |00001|
|                |     |                |     |
|                +-----+                +-----+
|
| (*************************************************************************)
| (* TMCC parameters for level control.                                   *)
| (*************************************************************************)
|
```

REFERENCE	NICKNAME	REFERENCE DESCRIPTION	REFERENCE	NICKNAME	REFERENCE DESCRIPTION
%I0209	FLOATER	Option for level with floater	%R4076	STP3_CL	Butterfly step 3 close time
%G0001	STEP_1	STANDBY	%R4077	STP3_OP	Butterfly step 3 open time
%R4073	STP1_OP	Butterfly step 1 open time	%R4078	STP4_CL	Butterfly step 4 close time
%R4074	STP2_CL	Butterfly step 2 close time	%R4079	STP4_OP	Butterfly step 4 open time
%R4075	STP2_OP	Butterfly step 2 open time			

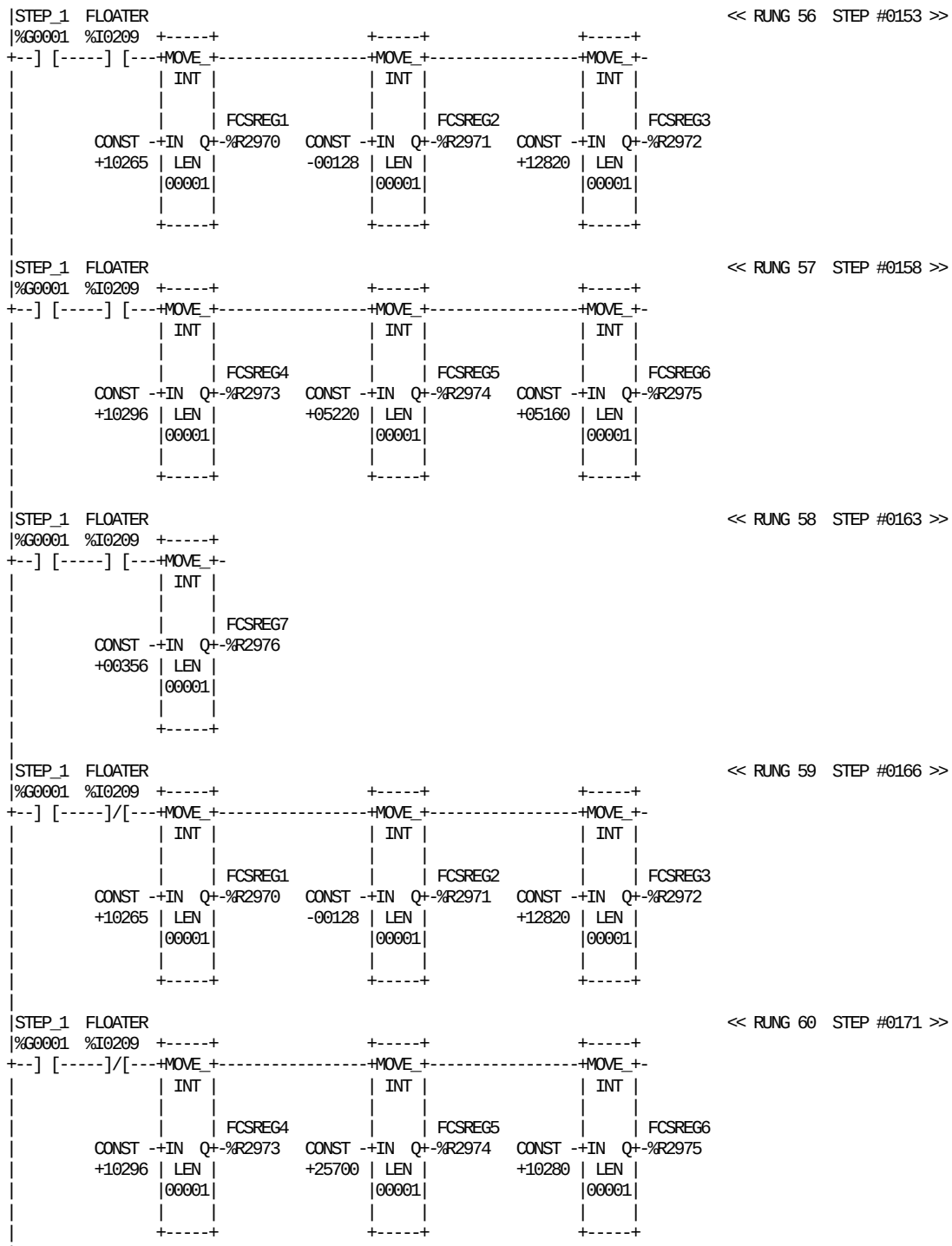

REFERENCE	NICKNAME	REFERENCE DESCRIPTION	REFERENCE	NICKNAME	REFERENCE DESCRIPTION
%R2970	FCSREG1	TMCC FCS Default register 1	%R2975	FCSREG6	TMCC FCS Default register 6
%R2971	FCSREG2	TMCC FCS Default register 2	%R2976	FCSREG7	TMCC FCS Default register 7
%R2972	FCSREG3	TMCC FCS Default register 3	%I0209	FLOATER	Option for level with floater
%R2973	FCSREG4	TMCC FCS Default register 4	%G0001	STEP_1	STANDBY
%R2974	FCSREG5	TMCC FCS Default register 5			

```
|STEP_1  FLOATER                                                    << RUNG 61  STEP #0176 >>
|%G0001  %I0209  +-----+
+--] [-----]/[---+MOVE_+-
|                | INT |
|                |     |
|                |     | FCSREG7
|         CONST -+IN  Q+-%R2976
|         +00356 | LEN |
|                |00001|
|                |     |
|                +-----+
|
| (*************************************************************************)
| (* Tight tube counters.                                                 *)
| (*************************************************************************)
|
|STEP_1                                                             << RUNG 63  STEP #0180 >>
|%G0001  +-----+                +-----+
+--] [---+MOVE_+----------------+MOVE_+-
|        | INT |                | INT |
|        |     |                |     |
|        |     | WSTUBE         |     | SPLTUBE
| CONST -+IN  Q+-%R4049   CONST -+IN  Q+-%R4053
| +00090 | LEN |          +00064 | LEN |
|        |00001|                |00001|
|        |     |                |     |
|        +-----+                +-----+
|
| (*************************************************************************)
| (* Sterilizing temperature in AC.                                       *)
| (*************************************************************************)
|
|STEP_1  FLOATER                                                    << RUNG 65  STEP #0184 >>
|%G0001  %I0209  +-----+
+--] [-----] [---+MOVE_+-
|                | INT |
|                |     |
|                |     | STER_AC
|         CONST -+IN  Q+-%R4099
|         +00600 | LEN |
|                |00001|
|                |     |
|                +-----+
|
|STEP_1  FLOATER                                                    << RUNG 66  STEP #0187 >>
|%G0001  %I0209  +-----+
+--] [-----]/[---+MOVE_+-
|                | INT |
|                |     |
|                |     | STER_AC
|         CONST -+IN  Q+-%R4099
|         +00600 | LEN |
|                |00001|
|                |     |
|                +-----+
|
| (*************************************************************************)
| (* Greasing stop position angle.                                        *)
| (*************************************************************************)
|
```

REFERENCE	NICKNAME	REFERENCE DESCRIPTION	REFERENCE	NICKNAME	REFERENCE DESCRIPTION
%R2976	FCSREG7	TMCC FCS Default register 7	%G0001	STEP_1	STANDBY
%I0209	FLOATER	Option for level with floater	%R4099	STER_AC	AC sterilizing temperature
%R4053	SPLTUBE	Pkgs from jaw to splice detector	%R4049	WSTUBE	Waste pkgs tight sealing tube

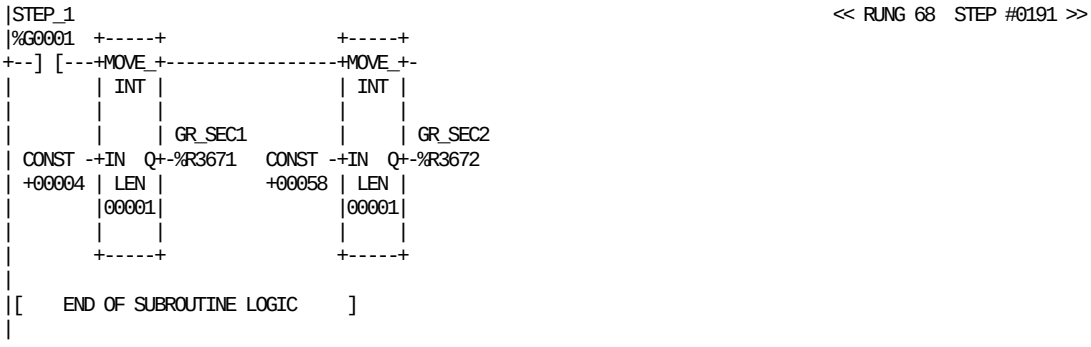

REFERENCE NICKNAME		REFERENCE DESCRIPTION	REFERENCE NICKNAME		REFERENCE DESCRIPTION
%R3671	GR_SEC1	Greasing stop sector STOP 1	%G0001	STEP_1	STANDBY
%R3672	GR_SEC2	Greasing stop sector STOP 2			

This page left intentionally blank

```
|[  START LD SUBROUTINE  S__200B  ]
|
|[     VARIABLE DECLARATIONS      ]
|
|[   START OF SUBROUTINE LOGIC    ]
|
| (*************************************************************************)
| (* Default set values for SA power.                                      *)
| (*************************************************************************)
|
|STEP_1                                                          << RUNG 5  STEP #0003 >>
|%G0001  +-----+               +-----+               +-----+
+--] [---+MOVE_+---------------+MOVE_+---------------+MOVE_+-
|        | INT |               | INT |               | INT |
|        |     |               |     |               |     |
|        |     | SA_PRO        |     | SA_LOW        |     | SA_EXT
| CONST -+IN  Q+-%R4000   CONST -+IN  Q+-%R4001   CONST -+IN  Q+-%R4002
| +09600 | LEN |          +03840 | LEN |          +00110 | LEN |
|        |00001|                 |00001|                 |00001|
|        |     |                 |     |                 |     |
|        +-----+                 +-----+                 +-----+
|
|STEP_1                                                          << RUNG 6  STEP #0007 >>
|%G0001  +-----+               +-----+               +-----+
+--] [---+MOVE_+---------------+MOVE_+---------------+MOVE_+-
|        | INT |               | INT |               | INT |
|        |     |               |     |               |     |
|        |     | DELEXSA       |     | EXTRASA       |     | PEREXSA
| CONST -+IN  Q+-%R1878   CONST -+IN  Q+-%R1879   CONST -+IN  Q+-%R1895
| +00021 | LEN |          +00025 | LEN |          +00150 | LEN |
|        |00001|                 |00001|                 |00001|
|        |     |                 |     |                 |     |
|        +-----+                 +-----+                 +-----+
|
| (*************************************************************************)
| (* Default set values for Loop motor speed.                             *)
| (*************************************************************************)
|
|STEP_1                                                          << RUNG 8  STEP #0012 >>
|%G0001  +-----+               +-----+               +-----+
+--] [---+MOVE_+---------------+MOVE_+---------------+MOVE_+-
|        | INT |               | INT |               | INT |
|        |     |               |     |               |     |
|        |     | LOOP_HL       |     | LOOP_HH       |     | LOOP_LH
| CONST -+IN  Q+-%R4009   CONST -+IN  Q+-%R4010   CONST -+IN  Q+-%R4011
| +12305 | LEN |          +13375 | LEN |          +04500 | LEN |
|        |00001|                 |00001|                 |00001|
|        |     |                 |     |                 |     |
|        +-----+                 +-----+                 +-----+
|
|STEP_1                                                          << RUNG 9  STEP #0016 >>
|%G0001  +-----+               +-----+               +-----+
+--] [---+MOVE_+---------------+MOVE_+---------------+MOVE_+-
|        | INT |               | INT |               | INT |
|        |     |               |     |               |     |
|        |     | LOOPEHL       |     | LOOPEHH       |     | LOOPSPL
| CONST -+IN  Q+-%R4012   CONST -+IN  Q+-%R4013   CONST -+IN  Q+-%R4014
| +16585 | LEN |          +18725 | LEN |          +07000 | LEN |
|        |00001|                 |00001|                 |00001|
|        |     |                 |     |                 |     |
|        +-----+                 +-----+                 +-----+
|
| (*************************************************************************)
| (* Default set values for Magazine motor speed.                         *)
| (*************************************************************************)
|
```

REFERENCE	NICKNAME	REFERENCE DESCRIPTION
%R1878	DELEXSA	SA, delay start extra power SA
%R1879	EXTRASA	SA, time extra power SA
%R4013	LOOPEHH	Extra High speed loop High
%R4012	LOOPEHL	Extra High speed loop Low
%R4014	LOOPSPL	Loop speed during paper splice
%R4010	LOOP_HH	High speed loop High
%R4009	LOOP_HL	High speed loop Low
%R4011	LOOP_LH	Low speed loop High
%R1895	PEREXSA	SA, percentage extra sa power
%R4002	SA_EXT	Power SA extra high speed
%R4001	SA_LOW	Power SA low speed
%R4000	SA_PRO	Power SA production speed
%G0001	STEP_1	STANDBY

```
|STEP_1                                                                  << RUNG 11  STEP #0021 >>
|%G0001  +-----+                +-----+                +-----+
+--] [---+MOVE_+----------------+MOVE_+----------------+MOVE_+-
|        | INT |                | INT |                | INT |
|        |     |                |     |                |     |
|        |     | MAG_HL         |     | MAG_HH         |     | MAG_LH
| CONST -+IN  Q+-%R4015   CONST -+IN  Q+-%R4016   CONST -+IN  Q+-%R4017
| +14800 | LEN |          +16000 | LEN |          +05000 | LEN |
|        |00001|                |00001|                |00001|
|        |     |                |     |                |     |
|        +-----+                +-----+                +-----+
|
|STEP_1                                                                  << RUNG 12  STEP #0025 >>
|%G0001  +-----+
+--] [---+MOVE_+-
|        | INT |
|        |     |
|        |     | MAG_EHH
| CONST -+IN  Q+-%R4018
| +21000 | LEN |
|        |00001|
|        |     |
|        +-----+
|
| (*************************************************************************)
| (* Default set values for LS power.                                      *)
| (*************************************************************************)
|
|STEP_1                                                                  << RUNG 14  STEP #0028 >>
|%G0001  +-----+                +-----+                +-----+
+--] [---+MOVE_+----------------+MOVE_+----------------+MOVE_+-
|        | INT |                | INT |                | INT |
|        |     |                |     |                |     |
|        |     | LS_PROD        |     | LS_LOW         |     | LS_SERV
| CONST -+IN  Q+-%R4019   CONST -+IN  Q+-%R4020   CONST -+IN  Q+-%R4021
| +09920 | LEN |          +05120 | LEN |          +16000 | LEN |
|        |00001|                |00001|                |00001|
|        |     |                |     |                |     |
|        +-----+                +-----+                +-----+
|
|STEP_1                                                                  << RUNG 15  STEP #0032 >>
|%G0001  +-----+                +-----+
+--] [---+MOVE_+----------------+MOVE_+-
|        | INT |                | INT |
|        |     |                |     |
|        |     | EXPOW1         |     | EXPOW2
| CONST -+IN  Q+-%R4068   CONST -+IN  Q+-%R4069
| +00052 | LEN |          +00054 | LEN |
|        |00001|                |00001|
|        |     |                |     |
|        +-----+                +-----+
|
| (*************************************************************************)
| (* Default set values for Drive roller motor speed.                      *)
| (*************************************************************************)
|
|STEP_1                                                                  << RUNG 17  STEP #0036 >>
|%G0001  +-----+                +-----+                +-----+
+--] [---+MOVE_+----------------+MOVE_+----------------+MOVE_+-
|        | INT |                | INT |                | INT |
|        |     |                |     |                |     |
|        |     | PR_PROL        |     | PR_PROH        |     | PR_MANU
| CONST -+IN  Q+-%R4003   CONST -+IN  Q+-%R4004   CONST -+IN  Q+-%R4005
| +15780 | LEN |          +17660 | LEN |          +04100 | LEN |
|        |00001|                |00001|                |00001|
|        |     |                |     |                |     |
|        +-----+                +-----+                +-----+
```

REFERENCE	NICKNAME	REFERENCE DESCRIPTION	REFERENCE	NICKNAME	REFERENCE DESCRIPTION
%R4068	EXPOW1	Extra power ls range 1	%R4015	MAG_HL	High speed magazine Low
%R4069	EXPOW2	Extra power ls range 2	%R4017	MAG_LH	Low speed magazine High
%R4020	LS_LOW	LS power low speed	%R4005	PR_MANU	PendRoll Manual paper feed speed
%R4019	LS_PROD	LS power production	%R4004	PR_PROH	Pendulum roller prod speed high
%R4021	LS_SERV	LS power service switch	%R4003	PR_PROL	Pendulum roller prod speed Low
%R4018	MAG_EHH	Extra High speed magazine High	%G0001	STEP_1	STANDBY
%R4016	MAG_HH	High speed magazine High			

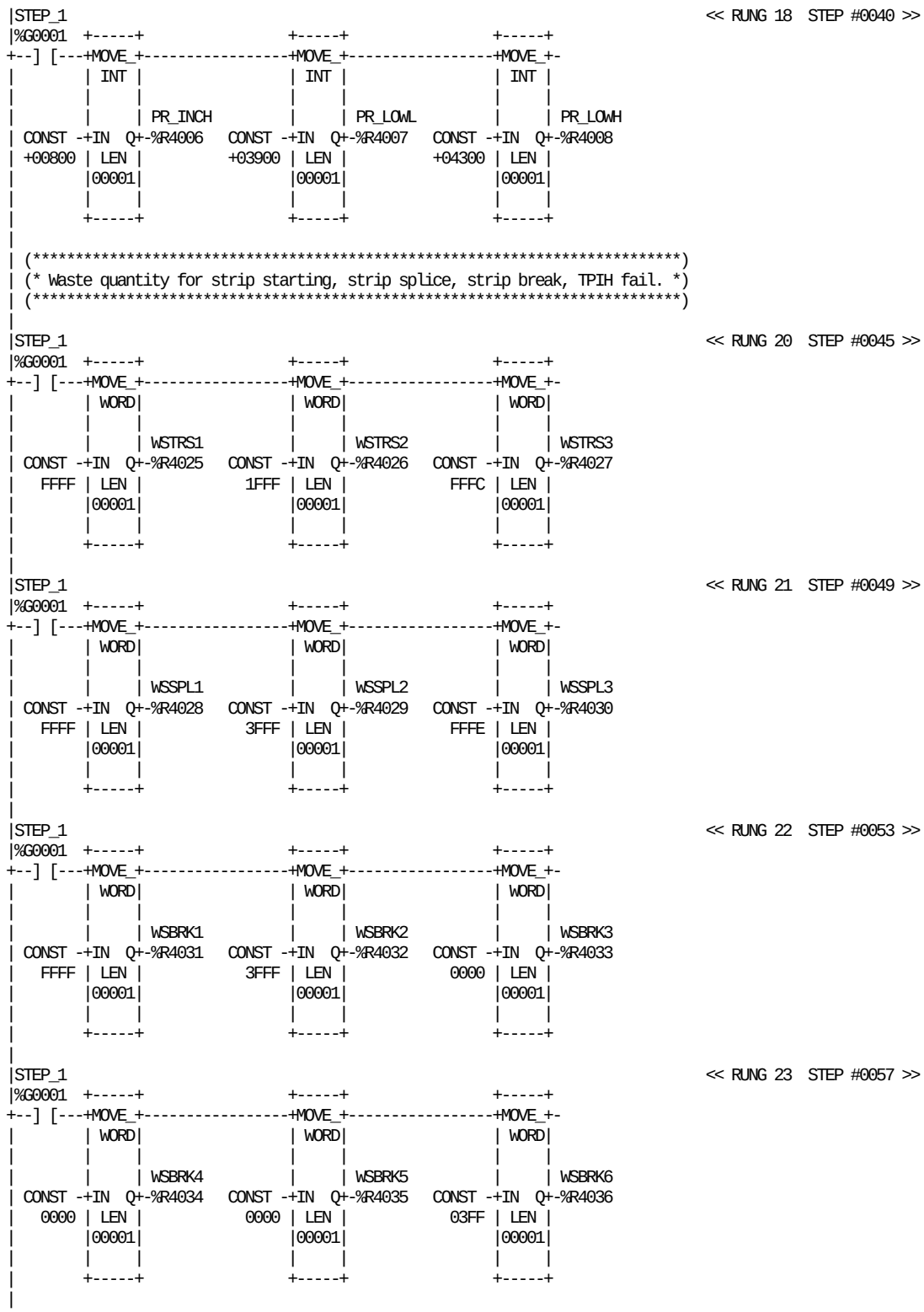

REFERENCE	NICKNAME	REFERENCE DESCRIPTION
%R4006	PR_INCH	Pendulum Roller Inching speed
%R4008	PR_LOWH	Pendulum Roller Low speed High
%R4007	PR_LOWL	Pendulum Roller Low speed Low
%G0001	STEP_1	STANDBY
%R4031	WSBRK1	Waste strip break register 1
%R4032	WSBRK2	Waste strip break register 2
%R4033	WSBRK3	Waste strip break register 3
%R4034	WSBRK4	Waste strip break register 4
%R4035	WSBRK5	Waste strip break register 5
%R4036	WSBRK6	Waste strip break register 6
%R4028	WSSPL1	Waste strip splice register 1
%R4029	WSSPL2	Waste strip splice register 2
%R4030	WSSPL3	Waste strip splice register 3
%R4025	WSTRS1	Waste start strip register 1
%R4026	WSTRS2	Waste start strip register 2
%R4027	WSTRS3	Waste start strip register 3

```
|STEP_1                                                                  << RUNG 24  STEP #0061 >>
|%G0001  +-----+                +-----+                +-----+
+--] [---+MOVE_+----------------+MOVE_+----------------+MOVE_+-
|        | WORD|                | WORD|                | WORD|
|        |     |                |     |                |     |
|        |     | WSTPIH1        |     | WSTPIH2        |     | WSTPIH3
| CONST -+IN  Q+-%R4037   CONST -+IN  Q+-%R4038   CONST -+IN  Q+-%R4039
|   FFFF | LEN |            1FFF | LEN |            FE00 | LEN |
|        |00001|                 |00001|                 |00001|
|        |     |                 |     |                 |     |
|        +-----+                 +-----+                 +-----+
|
|STEP_1                                                                  << RUNG 25  STEP #0065 >>
|%G0001  +-----+                +-----+                +-----+
+--] [---+MOVE_+----------------+MOVE_+----------------+MOVE_+-
|        | WORD|                | WORD|                | WORD|
|        |     |                |     |                |     |
|        |     | WSINT1         |     | WSINT2         |     | WSINT3
| CONST -+IN  Q+-%R4080   CONST -+IN  Q+-%R4081   CONST -+IN  Q+-%R4082
|   FFFF | LEN |            1FFF | LEN |            0000 | LEN |
|        |00001|                 |00001|                 |00001|
|        |     |                 |     |                 |     |
|        +-----+                 +-----+                 +-----+
|
|STEP_1                                                                  << RUNG 26  STEP #0069 >>
|%G0001  +-----+                +-----+
+--] [---+MOVE_+----------------+MOVE_+-
|        | WORD|                | WORD|
|        |     |                |     |
|        |     | WSINT4         |     | WSINT5
| CONST -+IN  Q+-%R4083   CONST -+IN  Q+-%R4084
|   0000 | LEN |            FFF0 | LEN |
|        |00001|                 |00001|
|        |     |                 |     |
|        +-----+                 +-----+
|
| (*************************************************************************)
| (* Waste quantity for paper splice detection.                           *)
| (*************************************************************************)
|
|STEP_1                                                                  << RUNG 28  STEP #0073 >>
|%G0001  +-----+                +-----+
+--] [---+MOVE_+----------------+MOVE_+-
|        | WORD|                | WORD|
|        |     |                |     |
|        |     | WPSPLC1        |     | WPSPLC2
| CONST -+IN  Q+-%R4040   CONST -+IN  Q+-%R4041
|   FFFF | LEN |            FE3F | LEN |
|        |00001|                 |00001|
|        |     |                 |     |
|        +-----+                 +-----+
|
| (*************************************************************************)
| (* Waste quantity in different stop cases.                              *)
| (*************************************************************************)
|
```

REFERENCE	NICKNAME	REFERENCE DESCRIPTION	REFERENCE	NICKNAME	REFERENCE DESCRIPTION
%G0001	STEP_1	STANDBY	%R4083	WSINT4	Waste strip refill.inter.reg.4
%R4040	WPSPLC1	Waste paper spl detection column	%R4084	WSINT5	Waste strip refill.inter.reg.5
%R4041	WPSPLC2	Waste paper spl detection column	%R4037	WSTPIH1	Waste strip TPIH fail register 1
%R4080	WSINT1	Waste strip refill.inter.reg.1	%R4038	WSTPIH2	Waste strip TPIH fail register 2
%R4081	WSINT2	Waste strip refill.inter.reg.2	%R4039	WSTPIH3	Waste strip TPIH fail register 3
%R4082	WSINT3	Waste strip refill.inter.reg.3			

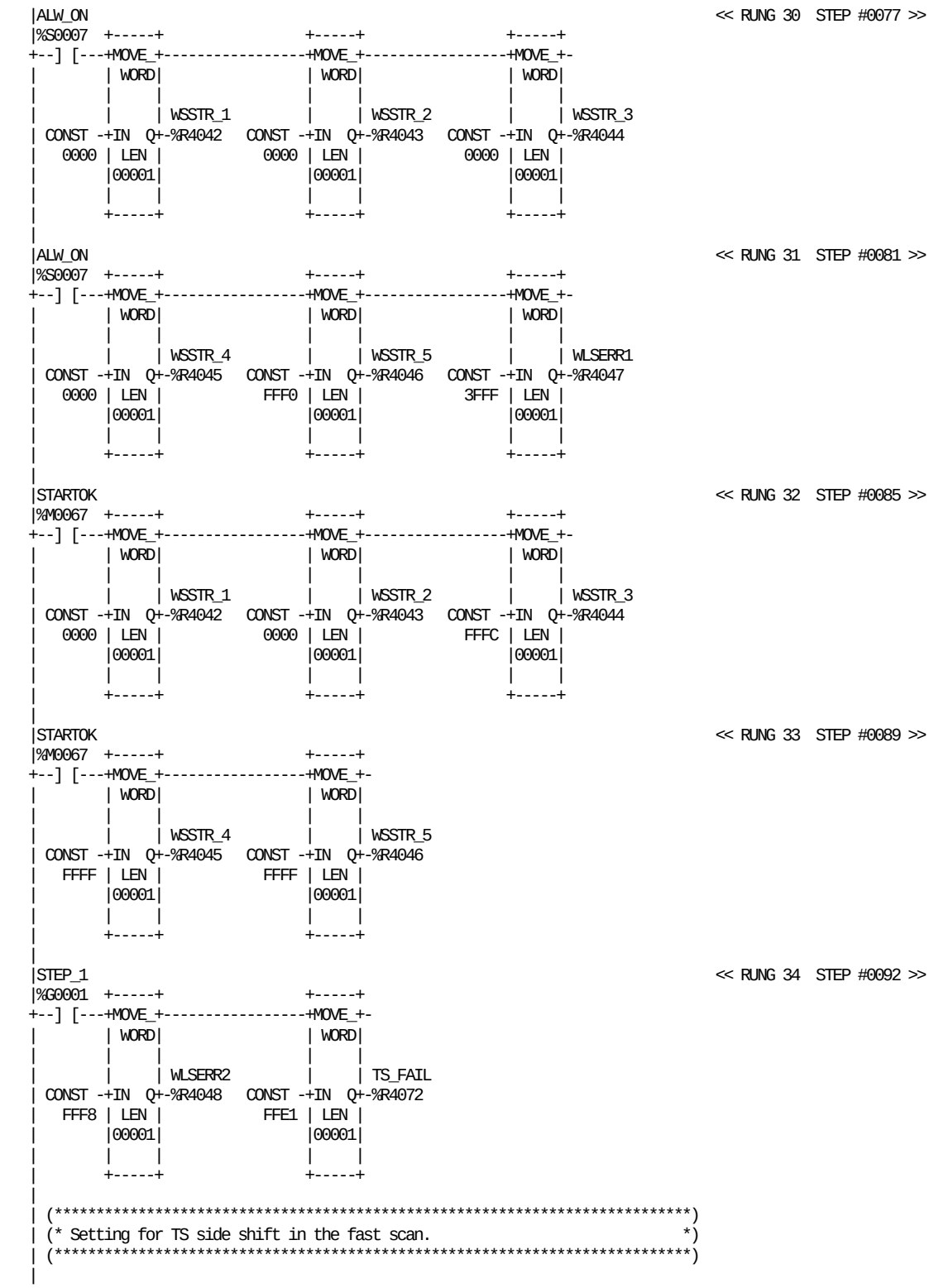

REFERENCE	NICKNAME	REFERENCE DESCRIPTION	REFERENCE	NICKNAME	REFERENCE DESCRIPTION
%S0007	ALW_ON		%R4042	WSSTR_1	Waste startup reg 1
%M0067	STARTOK	Production start OK	%R4043	WSSTR_2	Waste startup reg 2
%G0001	STEP_1	STANDBY	%R4044	WSSTR_3	Waste startup reg 3
%R4072	TS_FAIL	Waste for TS load error	%R4045	WSSTR_4	Waste startup reg 4
%R4047	WLSERR1	Waste LS error reg 1	%R4046	WSSTR_5	Waste startup reg 5
%R4048	WLSERR2	Waste LS error reg 2			

```
|STEP_1                                                                << RUNG 36  STEP #0096 >>
|%G0001  +-----+                +-----+
+--] [---+MOVE_+----------------+MOVE_+-
|        | INT |                | INT |
|        |     |                |     |
|        |     | TSSH_S1        |     | TSSH_S2
| CONST -+IN  Q+-%R4054   CONST -+IN  Q+-%R4055
| +00008 | LEN |          +00011 | LEN |
|        |00001|                |00001|
|        |     |                |     |
|        +-----+                +-----+
|
| (*************************************************************************)
| (* Setting for TS start pulse in the fast scan.                         *)
| (*************************************************************************)
|
|STEP_1                                                                << RUNG 38  STEP #0100 >>
|%G0001  +-----+                +-----+
+--] [---+MOVE_+----------------+MOVE_+-
|        | INT |                | INT |
|        |     |                |     |
|        |     | SSEALW1        |     | SSEALW2
| CONST -+IN  Q+-%R4056   CONST -+IN  Q+-%R4057
| +00012 | LEN |          +00015 | LEN |
|        |00001|                |00001|
|        |     |                |     |
|        +-----+                +-----+
|
| (*************************************************************************)
| (* Setting for waste box window in the fast scan.                        *)
| (*************************************************************************)
|
|STEP_1                                                                << RUNG 40  STEP #0104 >>
|%G0001  +-----+                +-----+
+--] [---+MOVE_+----------------+MOVE_+-
|        | INT |                | INT |
|        |     |                |     |
|        |     | WB_ONW1        |     | WB_ONW2
| CONST -+IN  Q+-%R4058   CONST -+IN  Q+-%R4059
| +00045 | LEN |          +00050 | LEN |
|        |00001|                |00001|
|        |     |                |     |
|        +-----+                +-----+
|
|STEP_1                                                                << RUNG 41  STEP #0107 >>
|%G0001  +-----+                +-----+
+--] [---+MOVE_+----------------+MOVE_+-
|        | INT |                | INT |
|        |     |                |     |
|        |     | WB_OFW1        |     | WB_OFW2
| CONST -+IN  Q+-%R4060   CONST -+IN  Q+-%R4061
| +00005 | LEN |          +00010 | LEN |
|        |00001|                |00001|
|        |     |                |     |
|        +-----+                +-----+
|
| (*************************************************************************)
| (* Setting for DCS TMCC parameter.                                       *)
| (*************************************************************************)
|
```

REFERENCE	NICKNAME	REFERENCE DESCRIPTION	REFERENCE	NICKNAME	REFERENCE DESCRIPTION
%R4056	SSEALW1	Start sealing sect window 1	%R4060	WB_OFW1	Waste box off window 1
%R4057	SSEALW2	Start sealing sect window 2	%R4061	WB_OFW2	Waste box off window 2
%G0001	STEP_1	STANDBY	%R4058	WB_ONW1	Waste box on window 1
%R4054	TSSH_S1	TS Shift sector window 1	%R4059	WB_ONW2	Waste box on window 2
%R4055	TSSH_S2	TS Shift sector window 2			

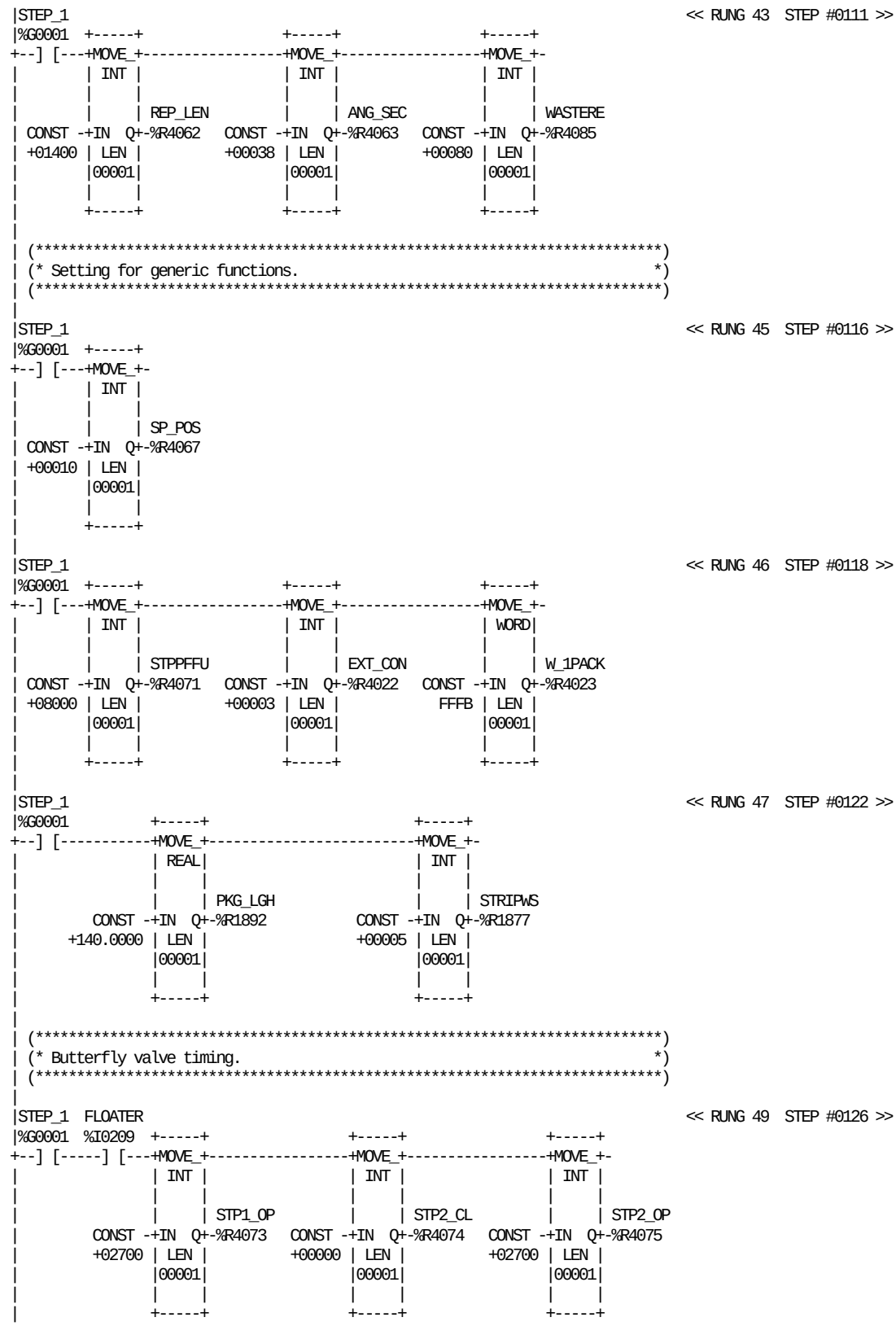

REFERENCE	NICKNAME	REFERENCE DESCRIPTION	REFERENCE	NICKNAME	REFERENCE DESCRIPTION
%R4063	ANG_SEC	Angle sector TMCC	%R4073	STP1_OP	Butterfly step 1 open time
%R4022	EXT_CON	External conv timer value	%R4074	STP2_CL	Butterfly step 2 close time
%I0209	FLOATER	Option for level with floater	%R4075	STP2_OP	Butterfly step 2 open time
%R1892	PKG_LGH	SA, package paper lenght	%R4071	STPPFFU	Stop position FFU delault value
%R4062	REP_LEN	Repeat length TMCC	%R1877	STRIPWS	SA, strip waste packages (PLMS)
%R4067	SP_POS	Splice position preset	%R4085	WASTERE	Start waste for refilling
%G0001	STEP_1	STANDBY	%R4023	W_1PACK	Waste of package Nr 1

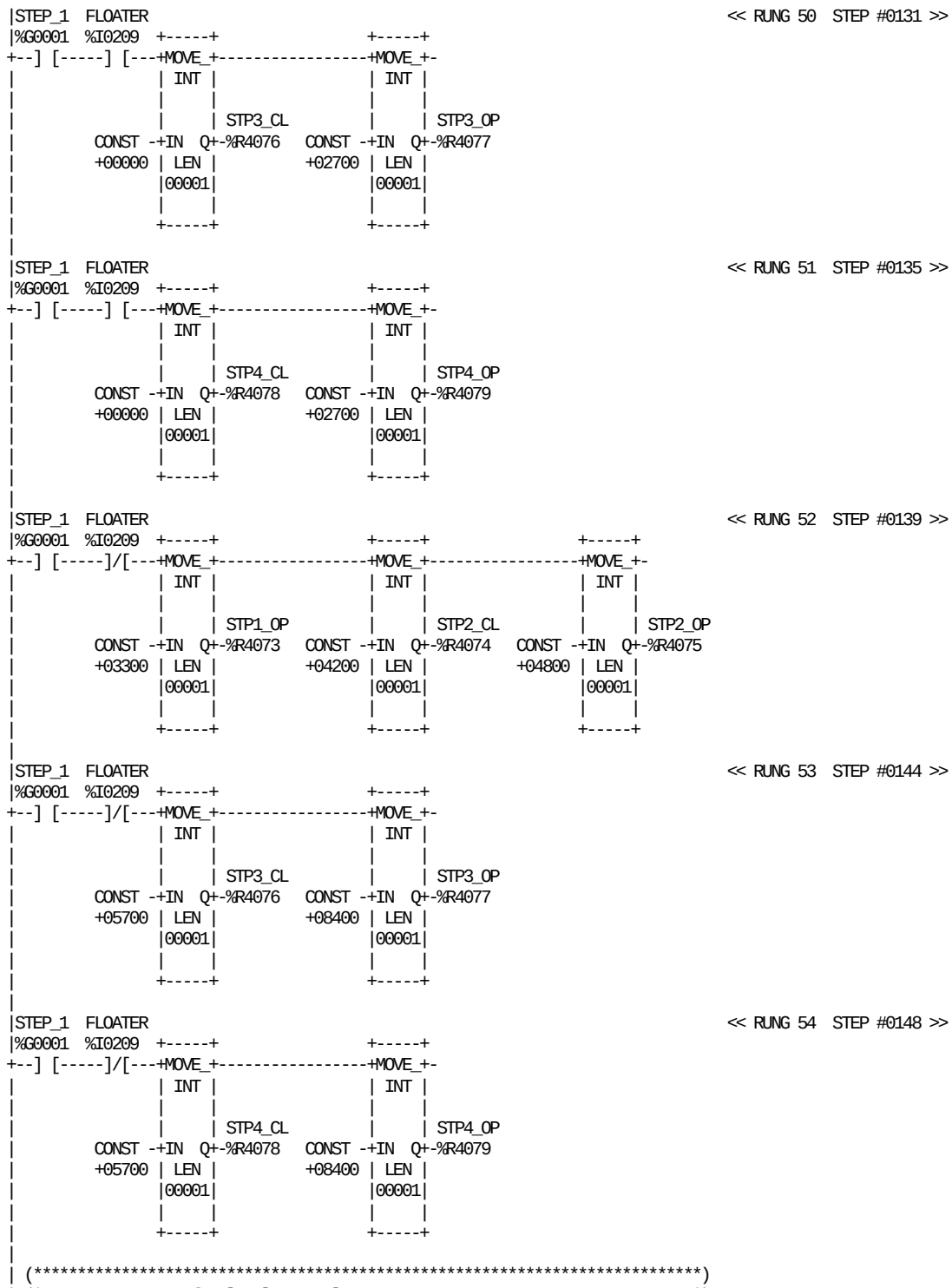

REFERENCE	NICKNAME	REFERENCE DESCRIPTION	REFERENCE	NICKNAME	REFERENCE DESCRIPTION
%I0209	FLOATER	Option for level with floater	%R4076	STP3_CL	Butterfly step 3 close time
%G0001	STEP_1	STANDBY	%R4077	STP3_OP	Butterfly step 3 open time
%R4073	STP1_OP	Butterfly step 1 open time	%R4078	STP4_CL	Butterfly step 4 close time
%R4074	STP2_CL	Butterfly step 2 close time	%R4079	STP4_OP	Butterfly step 4 open time
%R4075	STP2_OP	Butterfly step 2 open time			

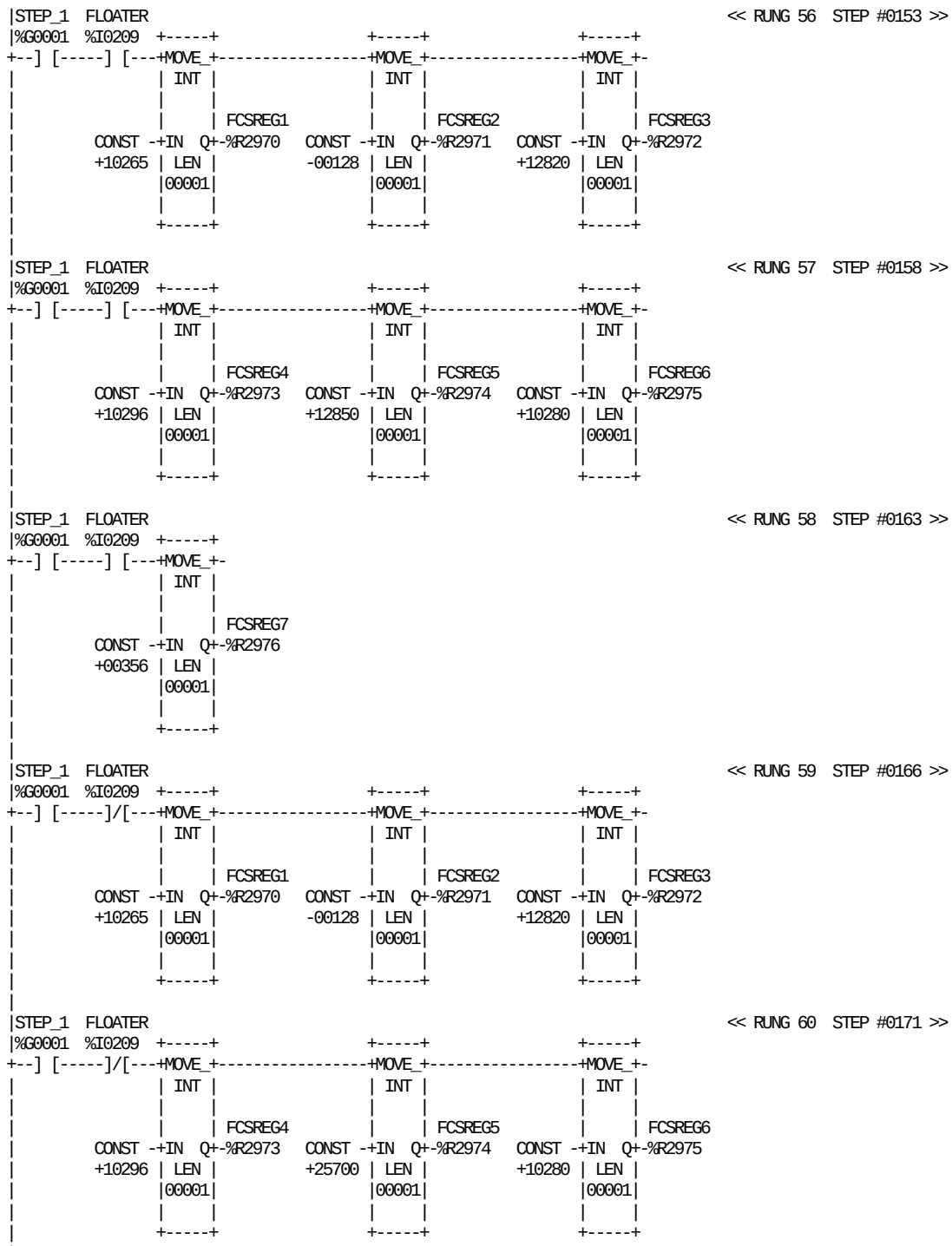

REFERENCE	NICKNAME	REFERENCE DESCRIPTION
%R2970	FCSREG1	TMCC FCS Default register 1
%R2971	FCSREG2	TMCC FCS Default register 2
%R2972	FCSREG3	TMCC FCS Default register 3
%R2973	FCSREG4	TMCC FCS Default register 4
%R2974	FCSREG5	TMCC FCS Default register 5
%R2975	FCSREG6	TMCC FCS Default register 6
%R2976	FCSREG7	TMCC FCS Default register 7
%I0209	FLOATER	Option for level with floater
%G0001	STEP_1	STANDBY

```
|STEP_1  FLOATER                                                    << RUNG 61  STEP #0176 >>
|%G0001  %I0209  +-----+
+--] [-----]/[---+MOVE_+-
|                | INT |
|                |     |
|                |     | FCSREG7
|         CONST -+IN  Q+-%R2976
|         +00356 | LEN |
|                |00001|
|                |     |
|                +-----+
|
| (*************************************************************************)
| (* Tight tube counters.                                                 *)
| (*************************************************************************)
|
|STEP_1                                                             << RUNG 63  STEP #0180 >>
|%G0001  +-----+                +-----+
+--] [---+MOVE_+----------------+MOVE_+-
|        | INT |                | INT |
|        |     |                |     |
|        |     | WSTUBE         |     | SPLTUBE
| CONST -+IN  Q+-%R4049   CONST -+IN  Q+-%R4053
| +00103 | LEN |          +00074 | LEN |
|        |00001|                |00001|
|        |     |                |     |
|        +-----+                +-----+
|
| (*************************************************************************)
| (* Sterilizing temperature in AC.                                       *)
| (*************************************************************************)
|
|STEP_1  FLOATER                                                    << RUNG 65  STEP #0184 >>
|%G0001  %I0209  +-----+
+--] [-----] [---+MOVE_+-
|                | INT |
|                |     |
|                |     | STER_AC
|         CONST -+IN  Q+-%R4099
|         +00600 | LEN |
|                |00001|
|                |     |
|                +-----+
|
|STEP_1  FLOATER                                                    << RUNG 66  STEP #0187 >>
|%G0001  %I0209  +-----+
+--] [-----]/[---+MOVE_+-
|                | INT |
|                |     |
|                |     | STER_AC
|         CONST -+IN  Q+-%R4099
|         +00600 | LEN |
|                |00001|
|                |     |
|                +-----+
|
| (*************************************************************************)
| (* Greasing stop position angle.                                         *)
| (*************************************************************************)
|
```

REFERENCE	NICKNAME	REFERENCE DESCRIPTION	REFERENCE	NICKNAME	REFERENCE DESCRIPTION
%R2976	FCSREG7	TMCC FCS Default register 7	%G0001	STEP_1	STANDBY
%I0209	FLOATER	Option for level with floater	%R4099	STER_AC	AC sterilizing temperature
%R4053	SPLTUBE	Pkgs from jaw to splice detector	%R4049	WSTUBE	Waste pkgs tight sealing tube

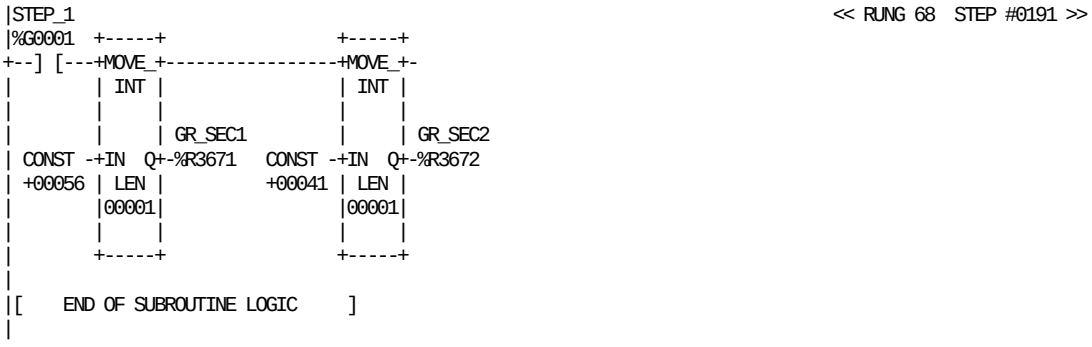

REFERENCE NICKNAME		REFERENCE DESCRIPTION	REFERENCE NICKNAME		REFERENCE DESCRIPTION
%R3671	GR_SEC1	Greasing stop sector STOP 1	%G0001	STEP_1	STANDBY
%R3672	GR_SEC2	Greasing stop sector STOP 2			

This page left intentionally blank

```
|[  START LD SUBROUTINE  CUSTOM   ]
|
|[     VARIABLE DECLARATIONS      ]
|
|[   START OF SUBROUTINE LOGIC    ]
|
| K1200                                                                  DT1_CON  << RUNG 4  STEP #0002 >>
|%I0028                                                                 %M4002
+--] [-----------------------------------------------------------------(S)-- (* Date unit signal 1 connected     *)
|
| K1201                                                                  DT2_CON  << RUNG 5  STEP #0004 >>
|%I0029                                                                 %M4003
+--] [-----------------------------------------------------------------(S)-- (* Date unit signal 2 connected     *)
|
|FST_SCN                                                                 DT1_CON  << RUNG 6  STEP #0006 >>
|%S0001                                                                 %M4002
+--] [--+--------------------------------------------------------------(R)-- (* Date unit signal 1 connected     *)
|      |
|      |                                                                DT2_CON
|      |                                                                %M4003
|      +--------------------------------------------------------------(R)-- (* Date unit signal 2 connected     *)
|
| (*************************************************************************)
| (* If the signal from the process is connected to the machine the        *)
| (* Bridge in the connection box must be removed.                         *)
| (*************************************************************************)
|
|DIA_RDY                                                                 DIARDY   << RUNG 8  STEP #0010 >>
|%I0021                                                                 %M0131
+--] [-----------------------------------------------------------------( )-- (* Diary ready for production *)
|
|ST_6-11 DRY_OK                                                          K1006_0  << RUNG 9  STEP #0012 >>
|%G0025  %M0813                                                         %Q2033
+--] [-----] [--+-----------------------------------------------------( )-- (* Signal to UHT "Filler steril"    *)
|               |
|               |                                                       K1007_0
|               |                                                       %Q2035
|               +-----------------------------------------------------(/)-- (* Signal to UHT "Filler unsteril"  *)
|
| (*************************************************************************)
| (* TS flushing logic.                                                    *)
| (*************************************************************************)
|
|A506_32 P-TSERR                                                         TS_FLS1  << RUNG 11  STEP #0017 >>
|%I0044  %M0022                 +-----+                                 %M0781
+--] [--+--] [----------+--------+OFDT +---------------------------------( )-- (* TS flushing enable 1            *)
|       |               |        |0.10s|
|       | S903    S904  |        |     |
|       |%I0083  %I0084 |        |     |
|       +--]/[-----] [--+ CONST -+PV   |
|                        +00050 |     |
|                               +-----+
|                               FLUSH_1
|                               %R5000
|
```

REFERENCE	NICKNAME	REFERENCE DESCRIPTION
%I0044	A506_32	DMC Main motor running
%M0131	DIARDY	Diary ready for production
%I0021	DIA_RDY	Diary ready for production
%M0813	DRY_OK	Drying ready
%M4002	DT1_CON	Date unit signal 1 connected
%M4003	DT2_CON	Date unit signal 2 connected
%R5000	FLUSH_1	TS flushing time 1
%S0001	FST_SCN	
%Q2033	K1006_0	Signal to UHT "Filler steril"
%Q2035	K1007_0	Signal to UHT "Filler unsteril"
%I0028	K1200	Date unit ready signal
%I0029	K1201	Date unit supply low signal
%M0022	P-TSERR	TS-error negative pulse
%I0083	S903	Mode selector switch
%I0084	S904	Station chain sprinkler
%G0025	ST_6-11	Ladder position 6-11
%M0781	TS_FLS1	TS flushing enable 1

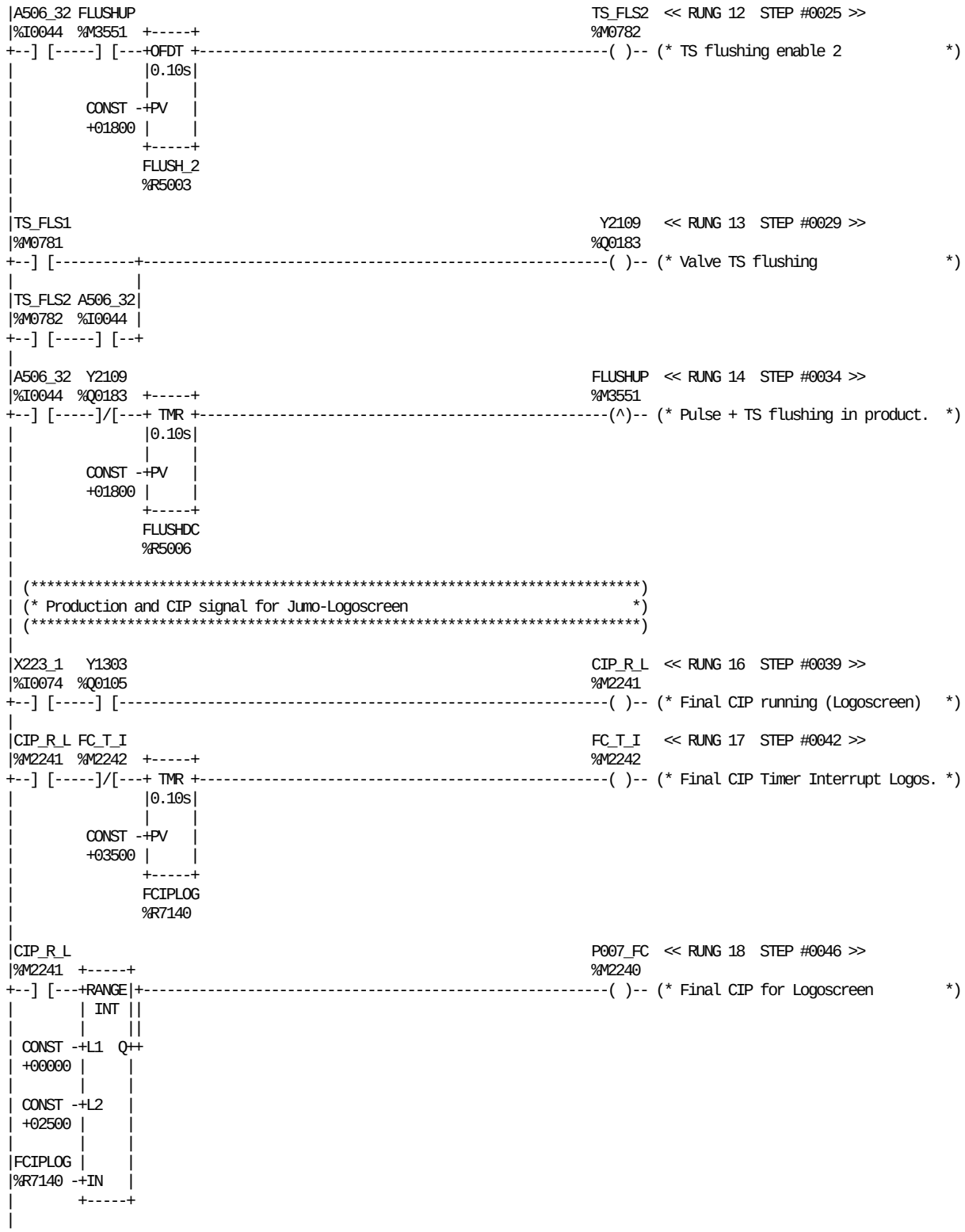

REFERENCE	NICKNAME	REFERENCE DESCRIPTION	REFERENCE	NICKNAME	REFERENCE DESCRIPTION
%I0044	A506_32	DMC Main motor running	%M2240	P007_FC	Final CIP for Logoscreen
%M2241	CIP_R_L	Final CIP running (Logoscreen)	%M0781	TS_FLS1	TS flushing enable 1
%R7140	FCIPLOG	Final CIP Timer Interrupt Logos.	%M0782	TS_FLS2	TS flushing enable 2
%M2242	FC_T_I	Final CIP Timer Interrupt Logos.	%I0074	X223_1	CIP comm. 2 CIP running
%R5006	FLUSHDC	TS flushing pulse generation	%Q0105	Y1303	C-valve open
%M3551	FLUSHUP	Pulse + TS flushing in product.	%Q0183	Y2109	Valve TS flushing
%R5003	FLUSH_2	TS flushing time 2			

```
|ST_9-10                                                                P007-11  << RUNG 19  STEP #0049 >>
|%G0026                                                                 %Q2041
+--] [--+--------------+-----------------------------------------------( )-- (* Production+CIP for Logoscreen    *)
|       |              |
|P007_FC|              |
|%M2240 |              |
+--] [--+              |
|                      |
|X223_1   Y1303   T_MIN |
|%I0074  %Q0105  %S0006 |
+--] [-----]/[-----] [--+
|
| (*************************************************************************)
| (* Steril signal for Jumo-Logoscreen                                    *)
| (*************************************************************************)
|
|ST_6-10                                                                 P007-10  << RUNG 21  STEP #0057 >>
|%G0024                                                                  %Q2042
+--] [-----------------------------------------------------------------( )-- (* Steril signal for Logoscreen     *)
|
| (*************************************************************************)
| (* Stop signal for Jumo-Logoscreen                                      *)
| (*************************************************************************)
|
|M-STOP  ST_6-10 BE_YELL DT_RDY  STR_NP   FLSH4  NOPROD                          << RUNG 23  STEP #0060 >>
|%M0636  %G0024  %M0607  %M0354  %M0373  %M0276  %M0778
+--] [-----] [--+--] [-----]/[-----]/[-----]/[-----]/[----------------------<+>
|               |
|ST_6-10 STEP_10|
|%G0024  %G0010 |
+--] [-----]/[--+
|
|        DOOR_OP NO_PREP                                                 P007-09  << RUNG 24  STEP #0071 >>
|        %M0477  %M0473                                                  %Q2043
+<+>-------]/[-----]/[-------------------------------------------------(SM)- (* Stop signal for Logoscreen       *)
|
|SQGOING                                                                 P007-09  << RUNG 25  STEP #0075 >>
|%M0072                                                                  %Q2043
+--] [--+-------------------------------------------------------------(RM)- (* Stop signal for Logoscreen       *)
|       |
|STEP_1 |
|%G0001 |
+--] [--+
|
| (*************************************************************************)
| (* Splice signal for Jumo-Logoscreen                                     *)
| (* ASSU          120 sec                                                *)
| (* ASU           240 sec                                                *)
| (* Factory splice  30 sec                                               *)
| (*************************************************************************)
|
|STRPCN                                                                  STRIP_S  << RUNG 27  STEP #0079 >>
|%M1205                                                                  %M2245
+--] [-----------------------------------------------------------------(SM)- (* Strip signal for Logoscreen      *)
|
```

REFERENCE	NICKNAME	REFERENCE DESCRIPTION	REFERENCE	NICKNAME	REFERENCE DESCRIPTION
%M0607	BE_YELL	Beacon lamp YELLOW (From TPOP)	%M0072	SQGOING	Start sequence going on
%M0477	DOOR_OP	Pack mat ended and doors open	%G0001	STEP_1	STANDBY
%M0354	DT_RDY	Date unit not ready	%G0010	STEP_10	PRODUCTION
%M0276	FLSH4	Ladderposition 4 flashing	%M2245	STRIP_S	Strip signal for Logoscreen
%M0636	M-STOP	Machine stop (To TPOP)	%M1205	STRPCN	Start strip splice
%M0473	NO_PREP	ASU, Pkg mat end+not prepared	%M0373	STR_NP	Strip not prepared
%Q2043	P007-09	Stop signal for Logoscreen	%G0024	ST_6-10	Ladder position 6-10
%Q2042	P007-10	Steril signal for Logoscreen	%G0026	ST_9-10	Ladder position 9-10
%Q2041	P007-11	Production+CIP for Logoscreen	%S0006	T_MIN	
%M2240	P007_FC	Final CIP for Logoscreen	%I0074	X223_1	CIP comm. 2 CIP running
			%Q0105	Y1303	C-valve open

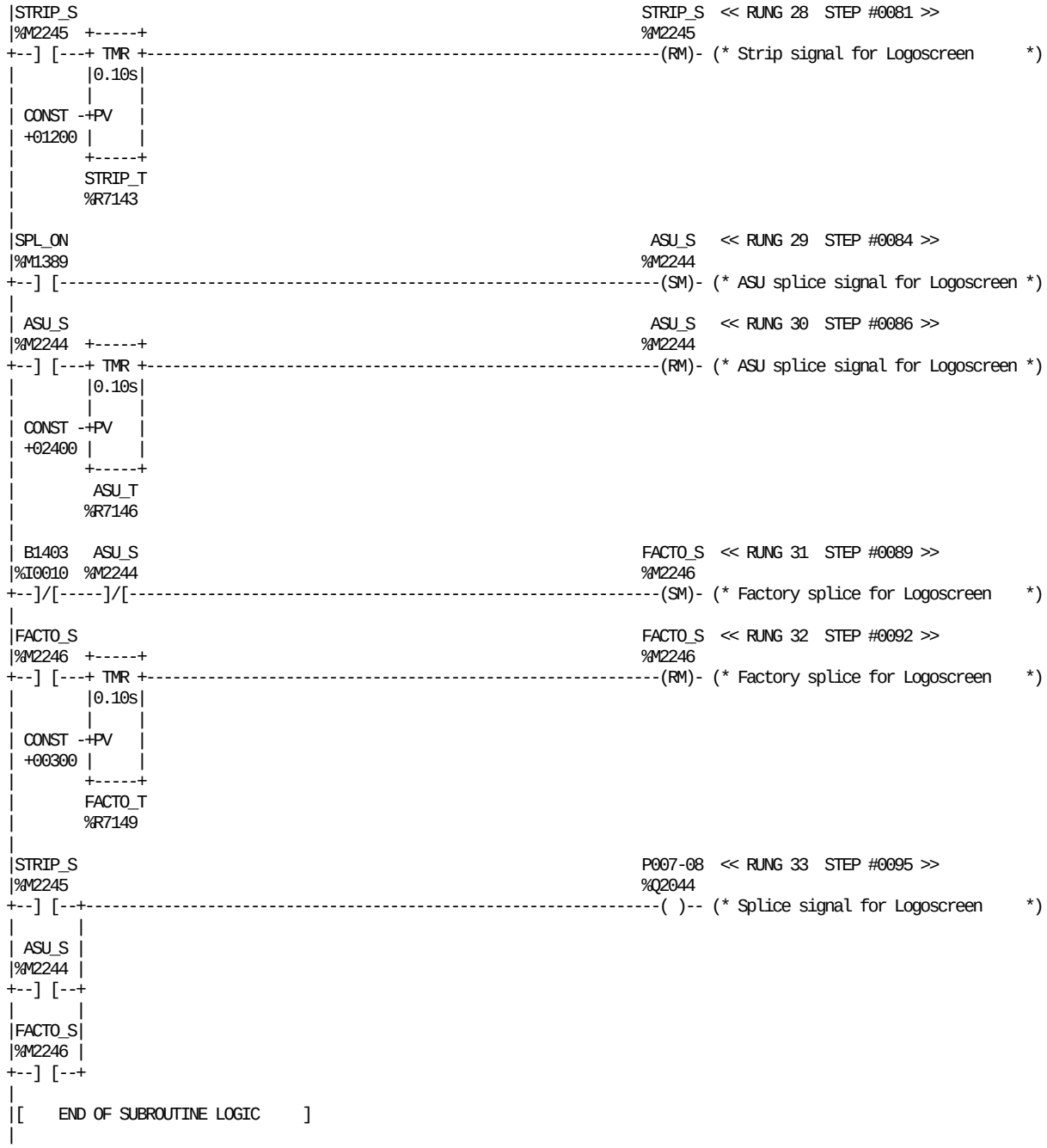

REFERENCE	NICKNAME	REFERENCE DESCRIPTION	REFERENCE	NICKNAME	REFERENCE DESCRIPTION
%M2244	ASU_S	ASU splice signal for Logoscreen	%Q2044	P007-08	Splice signal for Logoscreen
%R7146	ASU_T	ASU splice timer Logoscreen	%M1389	SPL_ON	ASU, splice sequence going on
%I0010	B1403	Splice detection in Column	%M2245	STRIP_S	Strip signal for Logoscreen
%M2246	FACTO_S	Factory splice for Logoscreen	%R7143	STRIP_T	Strip splice timer Logoscreen
%R7149	FACTO_T	Factory splice timer Logoscreen			

```
|[  START LD SUBROUTINE  S__200M  ]
|
|[     VARIABLE DECLARATIONS      ]
|
|[   START OF SUBROUTINE LOGIC    ]
|
| (*************************************************************************)
| (* Default set values for SA power.                                      *)
| (*************************************************************************)
|
|STEP_1                                                          << RUNG 5  STEP #0003 >>
|%G0001  +-----+               +-----+               +-----+
+--] [---+MOVE_+---------------+MOVE_+---------------+MOVE_+-
|        | INT |               | INT |               | INT |
|        |     |               |     |               |     |
|        |     | SA_PRO        |     | SA_LOW        |     | SA_EXT
| CONST -+IN  Q+-%R4000   CONST -+IN  Q+-%R4001   CONST -+IN  Q+-%R4002
| +12800 | LEN |          +04480 | LEN |          +00118 | LEN |
|        |00001|                 |00001|                 |00001|
|        |     |                 |     |                 |     |
|        +-----+                 +-----+                 +-----+
|
|STEP_1                                                          << RUNG 6  STEP #0007 >>
|%G0001  +-----+               +-----+               +-----+
+--] [---+MOVE_+---------------+MOVE_+---------------+MOVE_+-
|        | INT |               | INT |               | INT |
|        |     |               |     |               |     |
|        |     | DELEXSA       |     | EXTRASA       |     | PEREXSA
| CONST -+IN  Q+-%R1878   CONST -+IN  Q+-%R1879   CONST -+IN  Q+-%R1895
| +00015 | LEN |          +00030 | LEN |          +00150 | LEN |
|        |00001|                 |00001|                 |00001|
|        |     |                 |     |                 |     |
|        +-----+                 +-----+                 +-----+
|
| (*************************************************************************)
| (* Default set values for Loop motor speed.                             *)
| (*************************************************************************)
|
|STEP_1                                                          << RUNG 8  STEP #0012 >>
|%G0001  +-----+               +-----+               +-----+
+--] [---+MOVE_+---------------+MOVE_+---------------+MOVE_+-
|        | INT |               | INT |               | INT |
|        |     |               |     |               |     |
|        |     | LOOP_HL       |     | LOOP_HH       |     | LOOP_LH
| CONST -+IN  Q+-%R4009   CONST -+IN  Q+-%R4010   CONST -+IN  Q+-%R4011
| +13375 | LEN |          +14980 | LEN |          +05750 | LEN |
|        |00001|                 |00001|                 |00001|
|        |     |                 |     |                 |     |
|        +-----+                 +-----+                 +-----+
|
|STEP_1                                                          << RUNG 9  STEP #0016 >>
|%G0001  +-----+               +-----+               +-----+
+--] [---+MOVE_+---------------+MOVE_+---------------+MOVE_+-
|        | INT |               | INT |               | INT |
|        |     |               |     |               |     |
|        |     | LOOPEHL       |     | LOOPEHH       |     | LOOPSPL
| CONST -+IN  Q+-%R4012   CONST -+IN  Q+-%R4013   CONST -+IN  Q+-%R4014
| +17655 | LEN |          +19795 | LEN |          +07000 | LEN |
|        |00001|                 |00001|                 |00001|
|        |     |                 |     |                 |     |
|        +-----+                 +-----+                 +-----+
|
| (*************************************************************************)
| (* Default set values for Magazine motor speed.                         *)
| (*************************************************************************)
|
```

REFERENCE	NICKNAME	REFERENCE DESCRIPTION	REFERENCE	NICKNAME	REFERENCE DESCRIPTION
%R1878	DELEXSA	SA, delay start extra power SA	%R4011	LOOP_LH	Low speed loop High
%R1879	EXTRASA	SA, time extra power SA	%R1895	PEREXSA	SA, percentage extra sa power
%R4013	LOOPEHH	Extra High speed loop High	%R4002	SA_EXT	Power SA extra high speed
%R4012	LOOPEHL	Extra High speed loop Low	%R4001	SA_LOW	Power SA low speed
%R4014	LOOPSPL	Loop speed during paper splice	%R4000	SA_PRO	Power SA production speed
%R4010	LOOP_HH	High speed loop High	%G0001	STEP_1	STANDBY
%R4009	LOOP_HL	High speed loop Low			

```
|STEP_1                                                                  << RUNG 11  STEP #0021 >>
|%G0001  +-----+                +-----+                +-----+
+--] [---+MOVE_+----------------+MOVE_+----------------+MOVE_+-
|        | INT |                | INT |                | INT |
|        |     |                |     |                |     |
|        |     | MAG_HL         |     | MAG_HH         |     | MAG_LH
| CONST -+IN  Q+-%R4015   CONST -+IN  Q+-%R4016   CONST -+IN  Q+-%R4017
| +17000 | LEN |          +18500 | LEN |          +05950 | LEN |
|        |00001|                |00001|                |00001|
|        |     |                |     |                |     |
|        +-----+                +-----+                +-----+
|
|STEP_1                                                                  << RUNG 12  STEP #0025 >>
|%G0001  +-----+
+--] [---+MOVE_+-
|        | INT |
|        |     |
|        |     | MAG_EHH
| CONST -+IN  Q+-%R4018
| +22000 | LEN |
|        |00001|
|        |     |
|        +-----+
|
| (*************************************************************************)
| (* Default set values for LS power.                                      *)
| (*************************************************************************)
|
|STEP_1                                                                  << RUNG 14  STEP #0028 >>
|%G0001  +-----+                +-----+                +-----+
+--] [---+MOVE_+----------------+MOVE_+----------------+MOVE_+-
|        | INT |                | INT |                | INT |
|        |     |                |     |                |     |
|        |     | LS_PROD        |     | LS_LOW         |     | LS_SERV
| CONST -+IN  Q+-%R4019   CONST -+IN  Q+-%R4020   CONST -+IN  Q+-%R4021
| +12800 | LEN |          +05760 | LEN |          +14720 | LEN |
|        |00001|                |00001|                |00001|
|        |     |                |     |                |     |
|        +-----+                +-----+                +-----+
|
|STEP_1                                                                  << RUNG 15  STEP #0032 >>
|%G0001  +-----+                +-----+
+--] [---+MOVE_+----------------+MOVE_+-
|        | INT |                | INT |
|        |     |                |     |
|        |     | EXPOW1         |     | EXPOW2
| CONST -+IN  Q+-%R4068   CONST -+IN  Q+-%R4069
| +00046 | LEN |          +00048 | LEN |
|        |00001|                |00001|
|        |     |                |     |
|        +-----+                +-----+
|
| (*************************************************************************)
| (* Default set values for Drive roller motor speed.                      *)
| (*************************************************************************)
|
|STEP_1                                                                  << RUNG 17  STEP #0036 >>
|%G0001  +-----+                +-----+                +-----+
+--] [---+MOVE_+----------------+MOVE_+----------------+MOVE_+-
|        | INT |                | INT |                | INT |
|        |     |                |     |                |     |
|        |     | PR_PROL        |     | PR_PROH        |     | PR_MANU
| CONST -+IN  Q+-%R4003   CONST -+IN  Q+-%R4004   CONST -+IN  Q+-%R4005
| +18900 | LEN |          +20500 | LEN |          +05000 | LEN |
|        |00001|                |00001|                |00001|
|        |     |                |     |                |     |
|        +-----+                +-----+                +-----+
```

REFERENCE	NICKNAME	REFERENCE DESCRIPTION	REFERENCE	NICKNAME	REFERENCE DESCRIPTION
%R4068	EXPOW1	Extra power ls range 1	%R4015	MAG_HL	High speed magazine Low
%R4069	EXPOW2	Extra power ls range 2	%R4017	MAG_LH	Low speed magazine High
%R4020	LS_LOW	LS power low speed	%R4005	PR_MANU	PendRoll Manual paper feed speed
%R4019	LS_PROD	LS power production	%R4004	PR_PROH	Pendulum roller prod speed high
%R4021	LS_SERV	LS power service switch	%R4003	PR_PROL	Pendulum roller prod speed Low
%R4018	MAG_EHH	Extra High speed magazine High	%G0001	STEP_1	STANDBY
%R4016	MAG_HH	High speed magazine High			

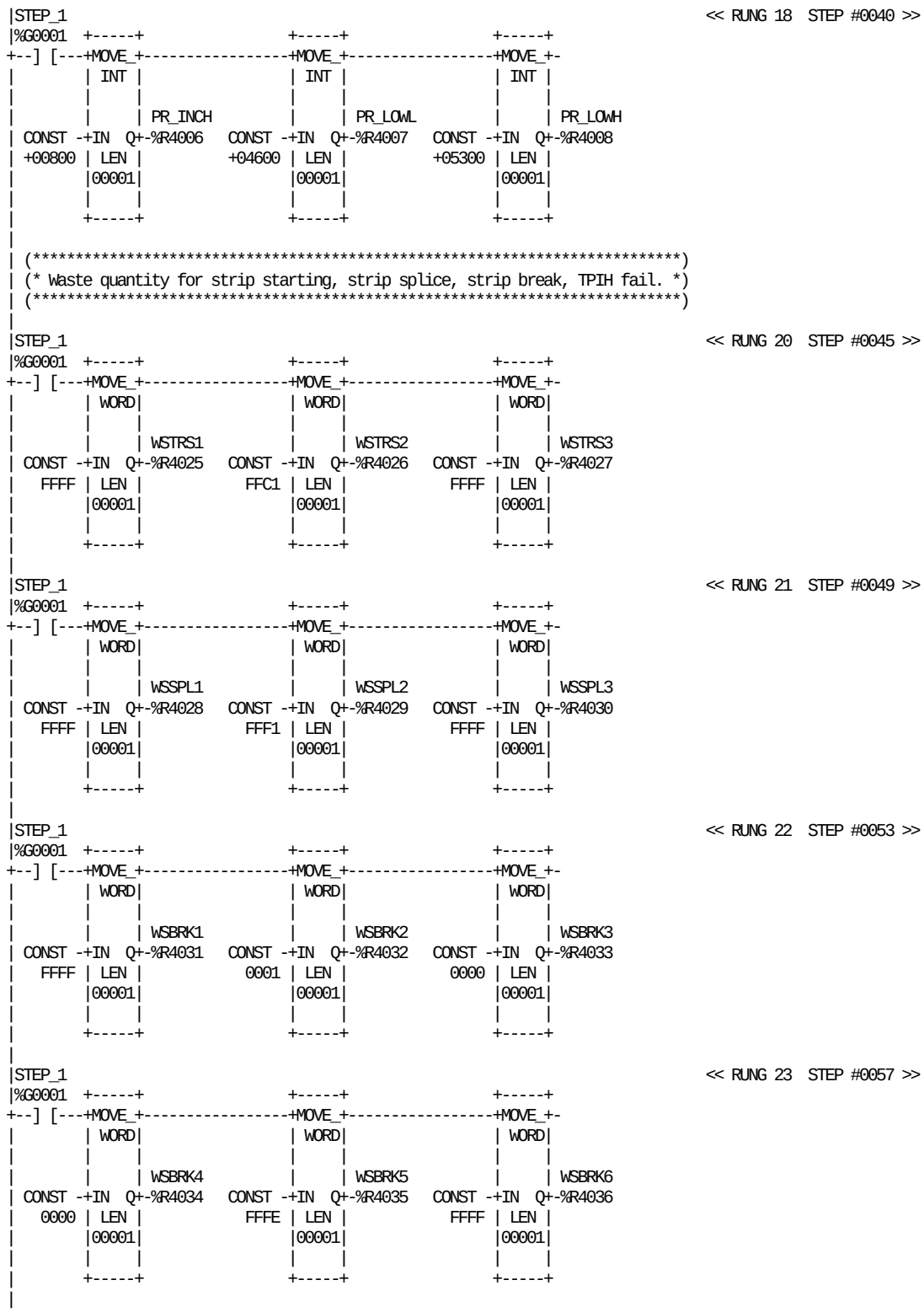

REFERENCE	NICKNAME	REFERENCE DESCRIPTION	REFERENCE	NICKNAME	REFERENCE DESCRIPTION
%R4006	PR_INCH	Pendulum Roller Inching speed	%R4035	WSBRK5	Waste strip break register 5
%R4008	PR_LOWH	Pendulum Roller Low speed High	%R4036	WSBRK6	Waste strip break register 6
%R4007	PR_LOWL	Pendulum Roller Low speed Low	%R4028	WSSPL1	Waste strip splice register 1
%G0001	STEP_1	STANDBY	%R4029	WSSPL2	Waste strip splice register 2
%R4031	WSBRK1	Waste strip break register 1	%R4030	WSSPL3	Waste strip splice register 3
%R4032	WSBRK2	Waste strip break register 2	%R4025	WSTRS1	Waste start strip register 1
%R4033	WSBRK3	Waste strip break register 3	%R4026	WSTRS2	Waste start strip register 2
%R4034	WSBRK4	Waste strip break register 4	%R4027	WSTRS3	Waste start strip register 3

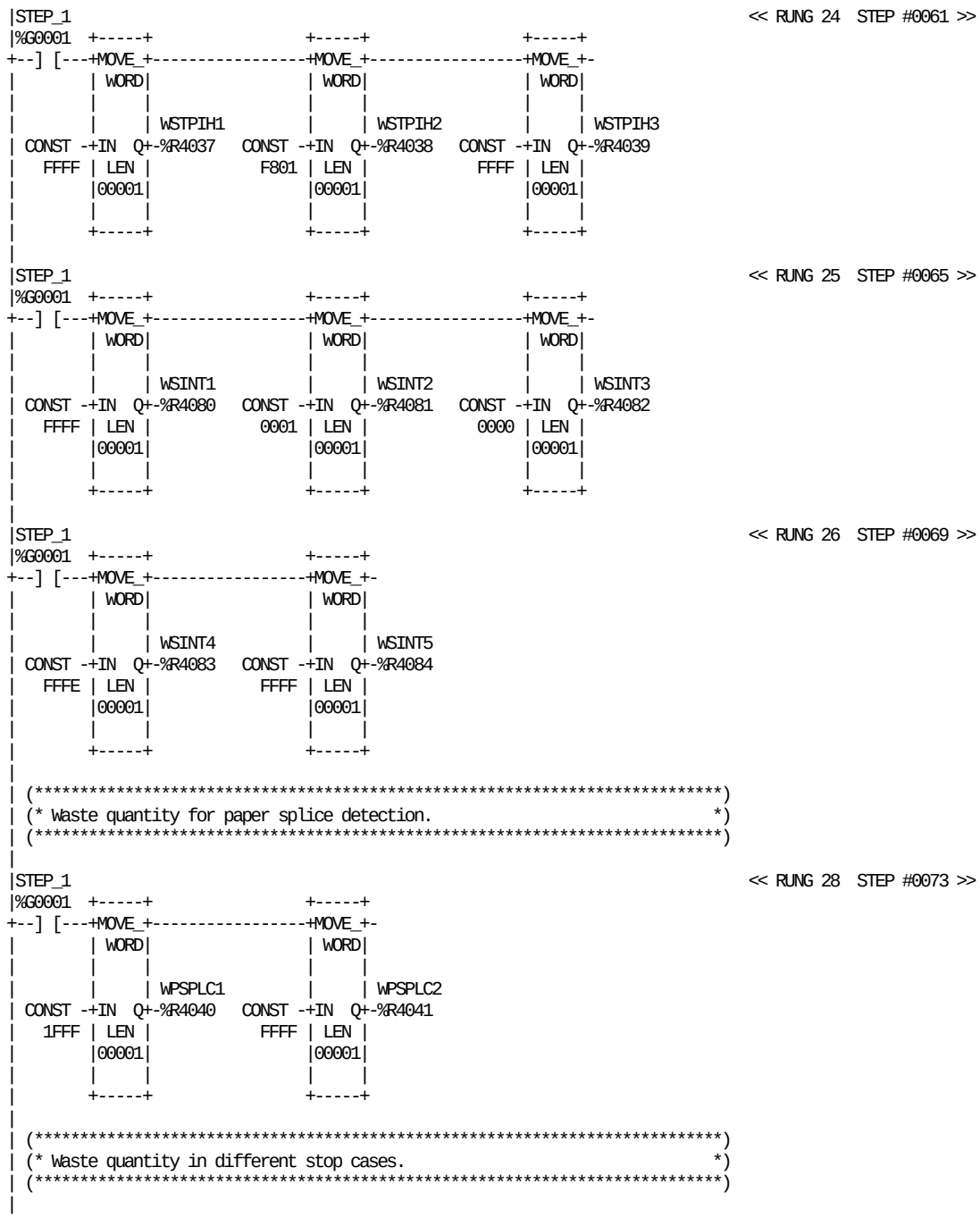

REFERENCE	NICKNAME	REFERENCE DESCRIPTION	REFERENCE	NICKNAME	REFERENCE DESCRIPTION
%G0001	STEP_1	STANDBY			
%R4040	WPSPLC1	Waste paper spl detection column	%R4084	WSINT5	Waste strip refill.inter.reg.5
%R4041	WPSPLC2	Waste paper spl detection column	%R4037	WSTPIH1	Waste strip TPIH fail register 1
%R4080	WSINT1	Waste strip refill.inter.reg.1	%R4038	WSTPIH2	Waste strip TPIH fail register 2
%R4081	WSINT2	Waste strip refill.inter.reg.2	%R4039	WSTPIH3	Waste strip TPIH fail register 3
%R4082	WSINT3	Waste strip refill.inter.reg.3			
%R4083	WSINT4	Waste strip refill.inter.reg.4			

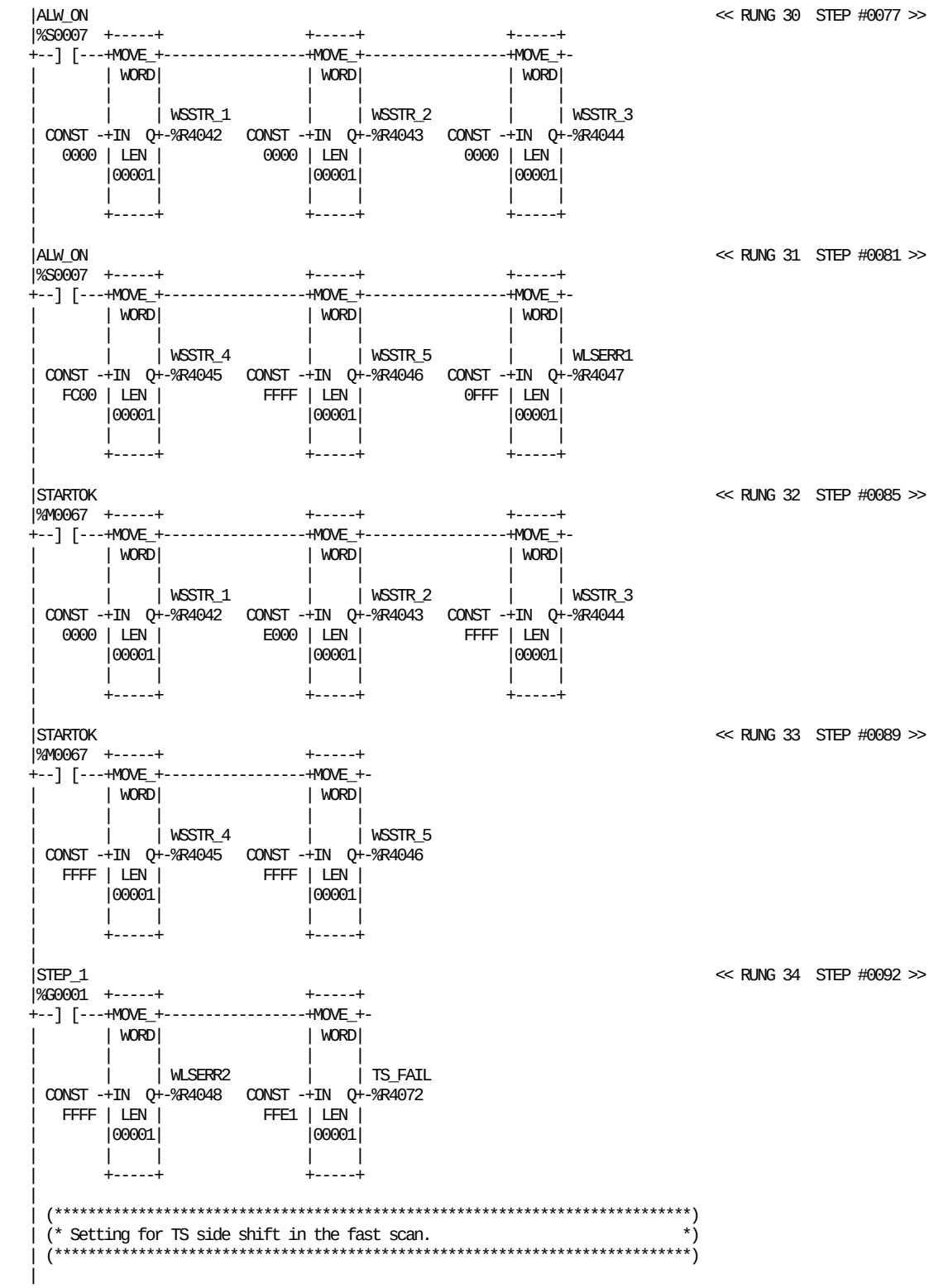

REFERENCE	NICKNAME	REFERENCE DESCRIPTION	REFERENCE	NICKNAME	REFERENCE DESCRIPTION
%S0007	ALW_ON		%R4042	WSSTR_1	Waste startup reg 1
%M0067	STARTOK	Production start OK	%R4043	WSSTR_2	Waste startup reg 2
%G0001	STEP_1	STANDBY	%R4044	WSSTR_3	Waste startup reg 3
%R4072	TS_FAIL	Waste for TS load error	%R4045	WSSTR_4	Waste startup reg 4
%R4047	WLSERR1	Waste LS error reg 1	%R4046	WSSTR_5	Waste startup reg 5
%R4048	WLSERR2	Waste LS error reg 2			

```
|STEP_1                                                                  << RUNG 36  STEP #0096 >>
|%G0001  +-----+                +-----+
+--] [---+MOVE_+----------------+MOVE_+-
|        | INT |                | INT |
|        |     |                |     |
|        |     | TSSH_S1        |     | TSSH_S2
| CONST -+IN  Q+-%R4054   CONST -+IN  Q+-%R4055
| +00033 | LEN |          +00036 | LEN |
|        |00001|                |00001|
|        |     |                |     |
|        +-----+                +-----+
|
| (*************************************************************************)
| (* Setting for TS start pulse in the fast scan.                         *)
| (*************************************************************************)
|
|STEP_1                                                                  << RUNG 38  STEP #0100 >>
|%G0001  +-----+                +-----+
+--] [---+MOVE_+----------------+MOVE_+-
|        | INT |                | INT |
|        |     |                |     |
|        |     | SSEALW1        |     | SSEALW2
| CONST -+IN  Q+-%R4056   CONST -+IN  Q+-%R4057
| +00052 | LEN |          +00056 | LEN |
|        |00001|                |00001|
|        |     |                |     |
|        +-----+                +-----+
|
| (*************************************************************************)
| (* Setting for waste box window in the fast scan.                        *)
| (*************************************************************************)
|
|STEP_1                                                                  << RUNG 40  STEP #0104 >>
|%G0001  +-----+                +-----+
+--] [---+MOVE_+----------------+MOVE_+-
|        | INT |                | INT |
|        |     |                |     |
|        |     | WB_ONW1        |     | WB_ONW2
| CONST -+IN  Q+-%R4058   CONST -+IN  Q+-%R4059
| +00040 | LEN |          +00045 | LEN |
|        |00001|                |00001|
|        |     |                |     |
|        +-----+                +-----+
|
|STEP_1                                                                  << RUNG 41  STEP #0107 >>
|%G0001  +-----+                +-----+
+--] [---+MOVE_+----------------+MOVE_+-
|        | INT |                | INT |
|        |     |                |     |
|        |     | WB_OFW1        |     | WB_OFW2
| CONST -+IN  Q+-%R4060   CONST -+IN  Q+-%R4061
| +00060 | LEN |          +00065 | LEN |
|        |00001|                |00001|
|        |     |                |     |
|        +-----+                +-----+
|
| (*************************************************************************)
| (* Setting for DCS TMCC parameter.                                       *)
| (*************************************************************************)
|
```

REFERENCE	NICKNAME	REFERENCE DESCRIPTION	REFERENCE	NICKNAME	REFERENCE DESCRIPTION
%R4056	SSEALW1	Start sealing sect window 1	%R4060	WB_OFW1	Waste box off window 1
%R4057	SSEALW2	Start sealing sect window 2	%R4061	WB_OFW2	Waste box off window 2
%G0001	STEP_1	STANDBY	%R4058	WB_ONW1	Waste box on window 1
%R4054	TSSH_S1	TS Shift sector window 1	%R4059	WB_ONW2	Waste box on window 2
%R4055	TSSH_S2	TS Shift sector window 2			

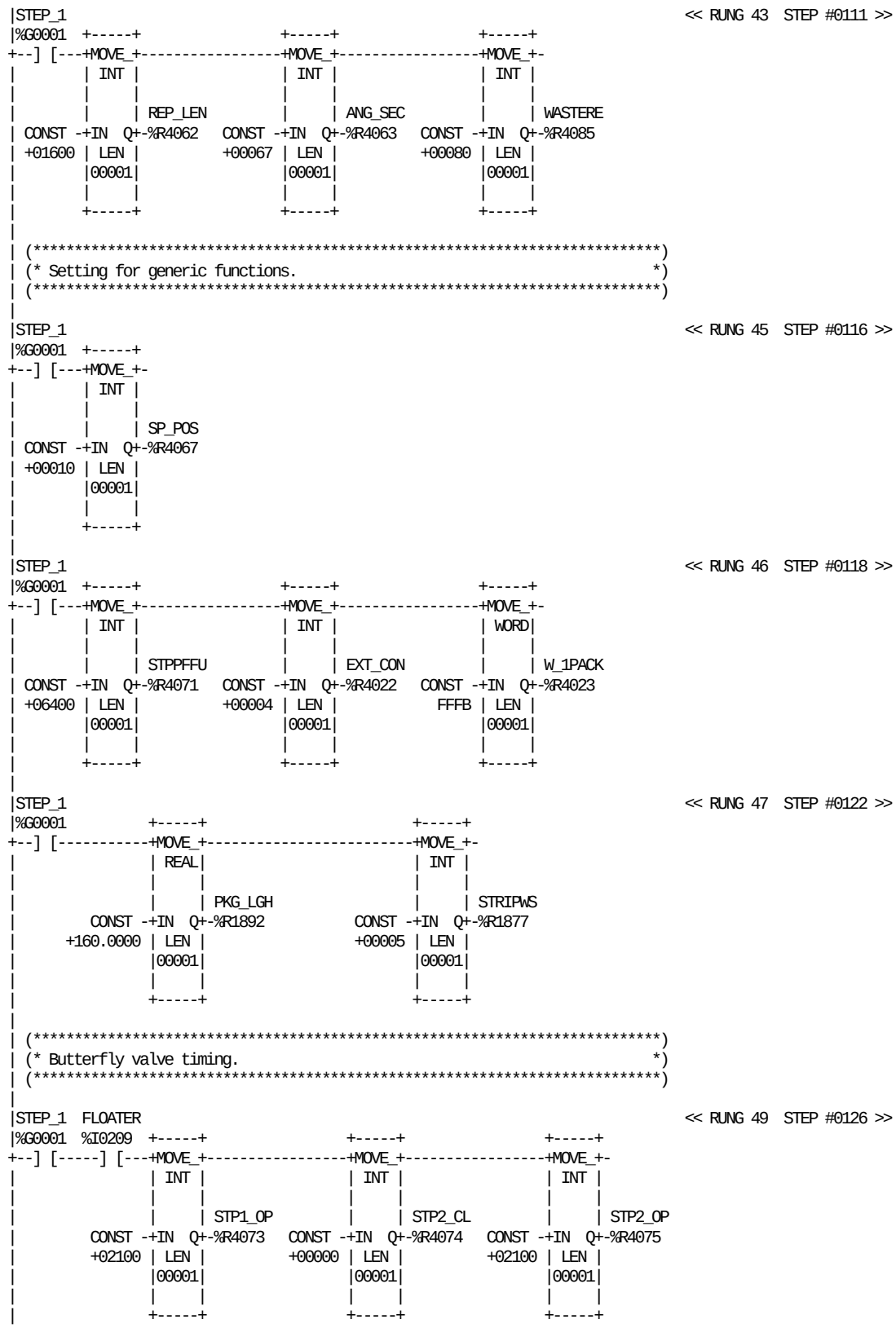

REFERENCE	NICKNAME	REFERENCE DESCRIPTION	REFERENCE	NICKNAME	REFERENCE DESCRIPTION
%R4063	ANG_SEC	Angle sector TMCC	%R4073	STP1_OP	Butterfly step 1 open time
%R4022	EXT_CON	External conv timer value	%R4074	STP2_CL	Butterfly step 2 close time
%I0209	FLOATER	Option for level with floater	%R4075	STP2_OP	Butterfly step 2 open time
%R1892	PKG_LGH	SA, package paper lenght	%R4071	STPPFFU	Stop position FFU delault value
%R4062	REP_LEN	Repeat length TMCC	%R1877	STRIPWS	SA, strip waste packages (PLMS)
%R4067	SP_POS	Splice position preset	%R4085	WASTERE	Start waste for refilling
%G0001	STEP_1	STANDBY	%R4023	W_1PACK	Waste of package Nr 1

```
|STEP_1  FLOATER                                                    << RUNG 50  STEP #0131 >>
|%G0001  %I0209  +-----+                +-----+
+--] [-----] [---+MOVE_+----------------+MOVE_+-
|                | INT |                | INT |
|                |     |                |     |
|                |     | STP3_CL        |     | STP3_OP
|         CONST -+IN  Q+-%R4076   CONST -+IN  Q+-%R4077
|         +00000 | LEN |          +02100 | LEN |
|                |00001|                |00001|
|                |     |                |     |
|                +-----+                +-----+
|
|STEP_1  FLOATER                                                    << RUNG 51  STEP #0135 >>
|%G0001  %I0209  +-----+                +-----+
+--] [-----] [---+MOVE_+----------------+MOVE_+-
|                | INT |                | INT |
|                |     |                |     |
|                |     | STP4_CL        |     | STP4_OP
|         CONST -+IN  Q+-%R4078   CONST -+IN  Q+-%R4079
|         +00000 | LEN |          +02100 | LEN |
|                |00001|                |00001|
|                |     |                |     |
|                +-----+                +-----+
|
|STEP_1  FLOATER                                                    << RUNG 52  STEP #0139 >>
|%G0001  %I0209  +-----+                +-----+                +-----+
+--] [-----]/[---+MOVE_+----------------+MOVE_+----------------+MOVE_+-
|                | INT |                | INT |                | INT |
|                |     |                |     |                |     |
|                |     | STP1_OP        |     | STP2_CL        |     | STP2_OP
|         CONST -+IN  Q+-%R4073   CONST -+IN  Q+-%R4074   CONST -+IN  Q+-%R4075
|         +03300 | LEN |          +04200 | LEN |          +04800 | LEN |
|                |00001|                |00001|                |00001|
|                |     |                |     |                |     |
|                +-----+                +-----+                +-----+
|
|STEP_1  FLOATER                                                    << RUNG 53  STEP #0144 >>
|%G0001  %I0209  +-----+                +-----+
+--] [-----]/[---+MOVE_+----------------+MOVE_+-
|                | INT |                | INT |
|                |     |                |     |
|                |     | STP3_CL        |     | STP3_OP
|         CONST -+IN  Q+-%R4076   CONST -+IN  Q+-%R4077
|         +05700 | LEN |          +08400 | LEN |
|                |00001|                |00001|
|                |     |                |     |
|                +-----+                +-----+
|
|STEP_1  FLOATER                                                    << RUNG 54  STEP #0148 >>
|%G0001  %I0209  +-----+                +-----+
+--] [-----]/[---+MOVE_+----------------+MOVE_+-
|                | INT |                | INT |
|                |     |                |     |
|                |     | STP4_CL        |     | STP4_OP
|         CONST -+IN  Q+-%R4078   CONST -+IN  Q+-%R4079
|         +05700 | LEN |          +08400 | LEN |
|                |00001|                |00001|
|                |     |                |     |
|                +-----+                +-----+
|
| (*************************************************************************)
| (* TMCC parameters for level control.                                   *)
| (*************************************************************************)
|
```

REFERENCE	NICKNAME	REFERENCE DESCRIPTION	REFERENCE	NICKNAME	REFERENCE DESCRIPTION
%I0209	FLOATER	Option for level with floater	%R4076	STP3_CL	Butterfly step 3 close time
%G0001	STEP_1	STANDBY	%R4077	STP3_OP	Butterfly step 3 open time
%R4073	STP1_OP	Butterfly step 1 open time	%R4078	STP4_CL	Butterfly step 4 close time
%R4074	STP2_CL	Butterfly step 2 close time	%R4079	STP4_OP	Butterfly step 4 open time
%R4075	STP2_OP	Butterfly step 2 open time			

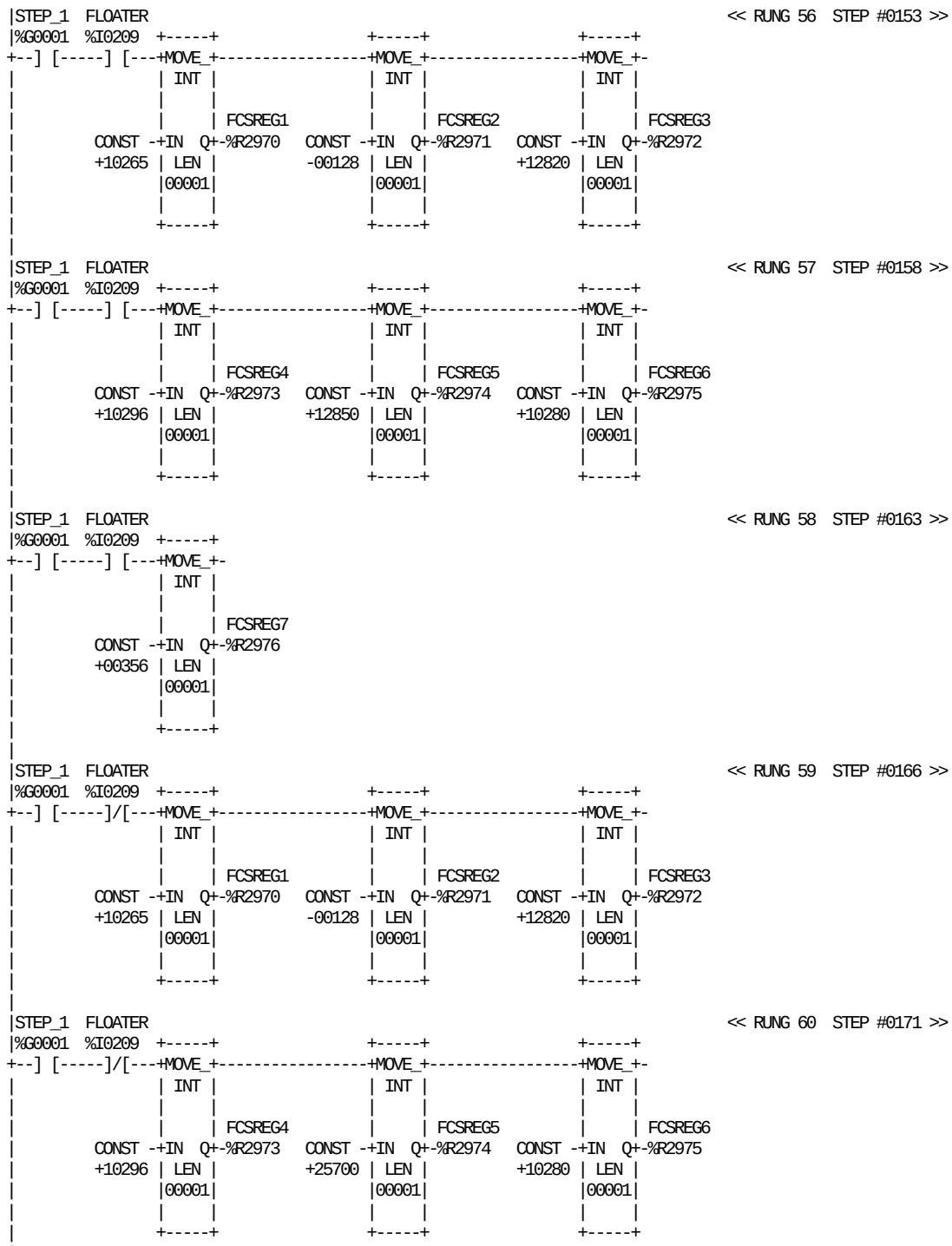

REFERENCE	NICKNAME	REFERENCE DESCRIPTION
%R2970	FCSREG1	TMCC FCS Default register 1
%R2971	FCSREG2	TMCC FCS Default register 2
%R2972	FCSREG3	TMCC FCS Default register 3
%R2973	FCSREG4	TMCC FCS Default register 4
%R2974	FCSREG5	TMCC FCS Default register 5
%R2975	FCSREG6	TMCC FCS Default register 6
%R2976	FCSREG7	TMCC FCS Default register 7
%I0209	FLOATER	Option for level with floater
%G0001	STEP_1	STANDBY

```
|STEP_1  FLOATER                                                    << RUNG 61  STEP #0176 >>
|%G0001  %I0209  +-----+
+--] [-----]/[---+MOVE_+-
|                | INT |
|                |     |
|                |     | FCSREG7
|         CONST -+IN  Q+-%R2976
|         +00356 | LEN |
|                |00001|
|                |     |
|                +-----+
|
| (*************************************************************************)
| (* Tight tube counters.                                                 *)
| (*************************************************************************)
|
|STEP_1                                                             << RUNG 63  STEP #0180 >>
|%G0001  +-----+                +-----+
+--] [---+MOVE_+----------------+MOVE_+-
|        | INT |                | INT |
|        |     |                |     |
|        |     | WSTUBE         |     | SPLTUBE
| CONST -+IN  Q+-%R4049   CONST -+IN  Q+-%R4053
| +00092 | LEN |          +00065 | LEN |
|        |00001|                |00001|
|        |     |                |     |
|        +-----+                +-----+
|
| (*************************************************************************)
| (* Sterilizing temperature in AC.                                       *)
| (*************************************************************************)
|
|STEP_1  FLOATER                                                    << RUNG 65  STEP #0184 >>
|%G0001  %I0209  +-----+
+--] [-----] [---+MOVE_+-
|                | INT |
|                |     |
|                |     | STER_AC
|         CONST -+IN  Q+-%R4099
|         +00600 | LEN |
|                |00001|
|                |     |
|                +-----+
|
|STEP_1  FLOATER                                                    << RUNG 66  STEP #0187 >>
|%G0001  %I0209  +-----+
+--] [-----]/[---+MOVE_+-
|                | INT |
|                |     |
|                |     | STER_AC
|         CONST -+IN  Q+-%R4099
|         +00600 | LEN |
|                |00001|
|                |     |
|                +-----+
|
| (*************************************************************************)
| (* Greasing stop position angle.                                         *)
| (*************************************************************************)
|
```

REFERENCE	NICKNAME	REFERENCE DESCRIPTION	REFERENCE	NICKNAME	REFERENCE DESCRIPTION
%R2976	FCSREG7	TMCC FCS Default register 7	%G0001	STEP_1	STANDBY
%I0209	FLOATER	Option for level with floater	%R4099	STER_AC	AC sterilizing temperature
%R4053	SPLTUBE	Pkgs from jaw to splice detector	%R4049	WSTUBE	Waste pkgs tight sealing tube

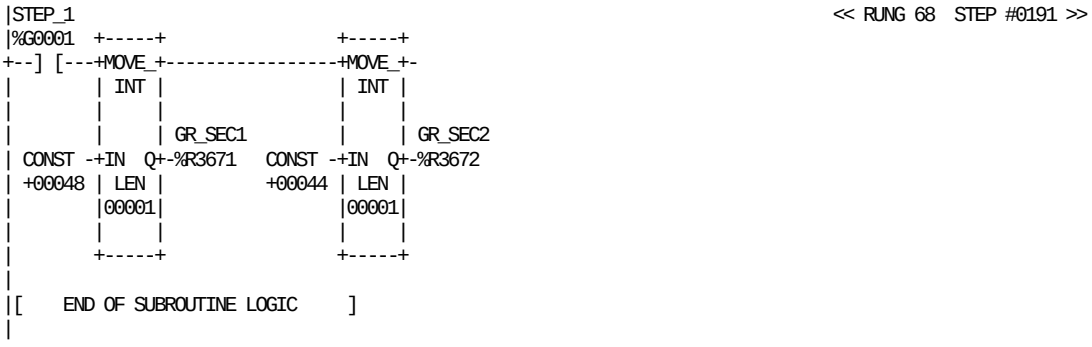

REFERENCE	NICKNAME	REFERENCE DESCRIPTION	REFERENCE	NICKNAME	REFERENCE DESCRIPTION
%R3671	GR_SEC1	Greasing stop sector STOP 1	%G0001	STEP_1	STANDBY
%R3672	GR_SEC2	Greasing stop sector STOP 2			

This page left intentionally blank

```
|[  START LD SUBROUTINE  S__250S  ]
|
|[     VARIABLE DECLARATIONS      ]
|
|[   START OF SUBROUTINE LOGIC    ]
|
| (*************************************************************************)
| (* Sterilizing temperature in AC.                                        *)
| (*************************************************************************)
|
|STEP_1                                                                    << RUNG 5  STEP #0003 >>
|%G0001  +-----+               +-----+               +-----+
+--] [---+MOVE_+---------------+MOVE_+---------------+MOVE_+-
|        | INT |               | INT |               | INT |
|        |     |               |     |               |     |
|        |     | SA_PRO        |     | SA_LOW        |     | SA_EXT
| CONST -+IN  Q+-%R4000   CONST -+IN  Q+-%R4001   CONST -+IN  Q+-%R4002
| +12800 | LEN |          +04480 | LEN |          +00121 | LEN |
|        |00001|                |00001|                |00001|
|        |     |                |     |                |     |
|        +-----+                +-----+                +-----+
|
|STEP_1                                                                    << RUNG 6  STEP #0007 >>
|%G0001  +-----+               +-----+               +-----+
+--] [---+MOVE_+---------------+MOVE_+---------------+MOVE_+-
|        | INT |               | INT |               | INT |
|        |     |               |     |               |     |
|        |     | DELEXSA       |     | EXTRASA       |     | PEREXSA
| CONST -+IN  Q+-%R1878   CONST -+IN  Q+-%R1879   CONST -+IN  Q+-%R1895
| +00010 | LEN |          +00025 | LEN |          +00135 | LEN |
|        |00001|                |00001|                |00001|
|        |     |                |     |                |     |
|        +-----+                +-----+                +-----+
|
| (*************************************************************************)
| (* Greasing stop position angle.                                         *)
| (*************************************************************************)
|
|STEP_1                                                                    << RUNG 8  STEP #0012 >>
|%G0001  +-----+               +-----+               +-----+
+--] [---+MOVE_+---------------+MOVE_+---------------+MOVE_+-
|        | INT |               | INT |               | INT |
|        |     |               |     |               |     |
|        |     | LOOP_HL       |     | LOOP_HH       |     | LOOP_LH
| CONST -+IN  Q+-%R4009   CONST -+IN  Q+-%R4010   CONST -+IN  Q+-%R4011
| +15830 | LEN |          +17468 | LEN |          +06470 | LEN |
|        |00001|                |00001|                |00001|
|        |     |                |     |                |     |
|        +-----+                +-----+                +-----+
|
|STEP_1                                                                    << RUNG 9  STEP #0016 >>
|%G0001  +-----+               +-----+               +-----+
+--] [---+MOVE_+---------------+MOVE_+---------------+MOVE_+-
|        | INT |               | INT |               | INT |
|        |     |               |     |               |     |
|        |     | LOOPEHL       |     | LOOPEHH       |     | LOOPSPL
| CONST -+IN  Q+-%R4012   CONST -+IN  Q+-%R4013   CONST -+IN  Q+-%R4014
| +18939 | LEN |          +21079 | LEN |          +07850 | LEN |
|        |00001|                |00001|                |00001|
|        |     |                |     |                |     |
|        +-----+                +-----+                +-----+
|
```

REFERENCE	NICKNAME	REFERENCE DESCRIPTION	REFERENCE	NICKNAME	REFERENCE DESCRIPTION
%R1878	DELEXSA	SA, delay start extra power SA	%R4011	LOOP_LH	Low speed loop High
%R1879	EXTRASA	SA, time extra power SA	%R1895	PEREXSA	SA, percentage extra sa power
%R4013	LOOPEHH	Extra High speed loop High	%R4002	SA_EXT	Power SA extra high speed
%R4012	LOOPEHL	Extra High speed loop Low	%R4001	SA_LOW	Power SA low speed
%R4014	LOOPSPL	Loop speed during paper splice	%R4000	SA_PRO	Power SA production speed
%R4010	LOOP_HH	High speed loop High	%G0001	STEP_1	STANDBY
%R4009	LOOP_HL	High speed loop Low			

```
|STEP_1                                                                  << RUNG 11  STEP #0021 >>
|%G0001  +-----+                +-----+                +-----+
+--] [---+MOVE_+----------------+MOVE_+----------------+MOVE_+-
|        | INT |                | INT |                | INT |
|        |     |                |     |                |     |
|        |     | MAG_HL         |     | MAG_HH         |     | MAG_LH
| CONST -+IN  Q+-%R4015   CONST -+IN  Q+-%R4016   CONST -+IN  Q+-%R4017
| +19130 | LEN |          +20730 | LEN |          +06830 | LEN |
|        |00001|                |00001|                |00001|
|        |     |                |     |                |     |
|        +-----+                +-----+                +-----+
|
|STEP_1                                                                  << RUNG 12  STEP #0025 >>
|%G0001  +-----+
+--] [---+MOVE_+-
|        | INT |
|        |     |
|        |     | MAG_EHH
| CONST -+IN  Q+-%R4018
| +24000 | LEN |
|        |00001|
|        |     |
|        +-----+
|
|STEP_1                                                                  << RUNG 14  STEP #0028 >>
|%G0001  +-----+                +-----+                +-----+
+--] [---+MOVE_+----------------+MOVE_+----------------+MOVE_+-
|        | INT |                | INT |                | INT |
|        |     |                |     |                |     |
|        |     | LS_PROD        |     | LS_LOW         |     | LS_SERV
| CONST -+IN  Q+-%R4019   CONST -+IN  Q+-%R4020   CONST -+IN  Q+-%R4021
| +12800 | LEN |          +05760 | LEN |          +14720 | LEN |
|        |00001|                |00001|                |00001|
|        |     |                |     |                |     |
|        +-----+                +-----+                +-----+
|
|STEP_1                                                                  << RUNG 15  STEP #0032 >>
|%G0001  +-----+                +-----+
+--] [---+MOVE_+----------------+MOVE_+-
|        | INT |                | INT |
|        |     |                |     |
|        |     | EXPOW1         |     | EXPOW2
| CONST -+IN  Q+-%R4068   CONST -+IN  Q+-%R4069
| +00039 | LEN |          +00041 | LEN |
|        |00001|                |00001|
|        |     |                |     |
|        +-----+                +-----+
|
|STEP_1                                                                  << RUNG 17  STEP #0036 >>
|%G0001  +-----+                +-----+                +-----+
+--] [---+MOVE_+----------------+MOVE_+----------------+MOVE_+-
|        | INT |                | INT |                | INT |
|        |     |                |     |                |     |
|        |     | PR_PROL        |     | PR_PROH        |     | PR_MANU
| CONST -+IN  Q+-%R4003   CONST -+IN  Q+-%R4004   CONST -+IN  Q+-%R4005
| +21150 | LEN |          +23350 | LEN |          +05500 | LEN |
|        |00001|                |00001|                |00001|
|        |     |                |     |                |     |
|        +-----+                +-----+                +-----+
|
```

REFERENCE	NICKNAME	REFERENCE DESCRIPTION
%R4068	EXPOW1	Extra power ls range 1
%R4069	EXPOW2	Extra power ls range 2
%R4020	LS_LOW	LS power low speed
%R4019	LS_PROD	LS power production
%R4021	LS_SERV	LS power service switch
%R4018	MAG_EHH	Extra High speed magazine High
%R4016	MAG_HH	High speed magazine High

REFERENCE	NICKNAME	REFERENCE DESCRIPTION
%R4015	MAG_HL	High speed magazine Low
%R4017	MAG_LH	Low speed magazine High
%R4005	PR_MANU	PendRoll Manual paper feed speed
%R4004	PR_PROH	Pendulum roller prod speed high
%R4003	PR_PROL	Pendulum roller prod speed Low
%G0001	STEP_1	STANDBY

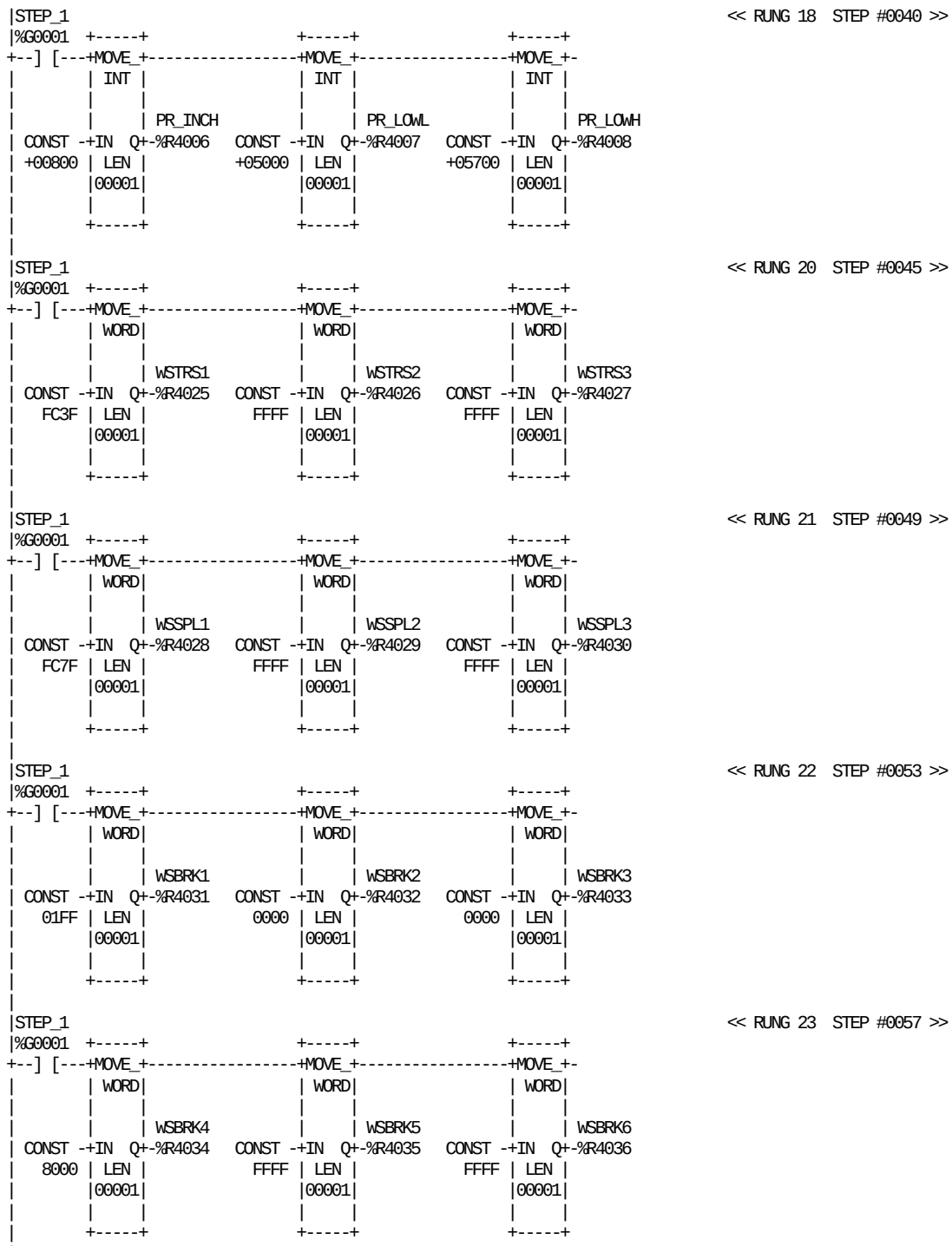

REFERENCE	NICKNAME	REFERENCE DESCRIPTION	REFERENCE	NICKNAME	REFERENCE DESCRIPTION
%R4006	PR_INCH	Pendulum Roller Inching speed	%R4035	WSBRK5	Waste strip break register 5
%R4008	PR_LOWH	Pendulum Roller Low speed High	%R4036	WSBRK6	Waste strip break register 6
%R4007	PR_LOWL	Pendulum Roller Low speed Low	%R4028	WSSPL1	Waste strip splice register 1
%G0001	STEP_1	STANDBY	%R4029	WSSPL2	Waste strip splice register 2
%R4031	WSBRK1	Waste strip break register 1	%R4030	WSSPL3	Waste strip splice register 3
%R4032	WSBRK2	Waste strip break register 2	%R4025	WSTRS1	Waste start strip register 1
%R4033	WSBRK3	Waste strip break register 3	%R4026	WSTRS2	Waste start strip register 2
%R4034	WSBRK4	Waste strip break register 4	%R4027	WSTRS3	Waste start strip register 3

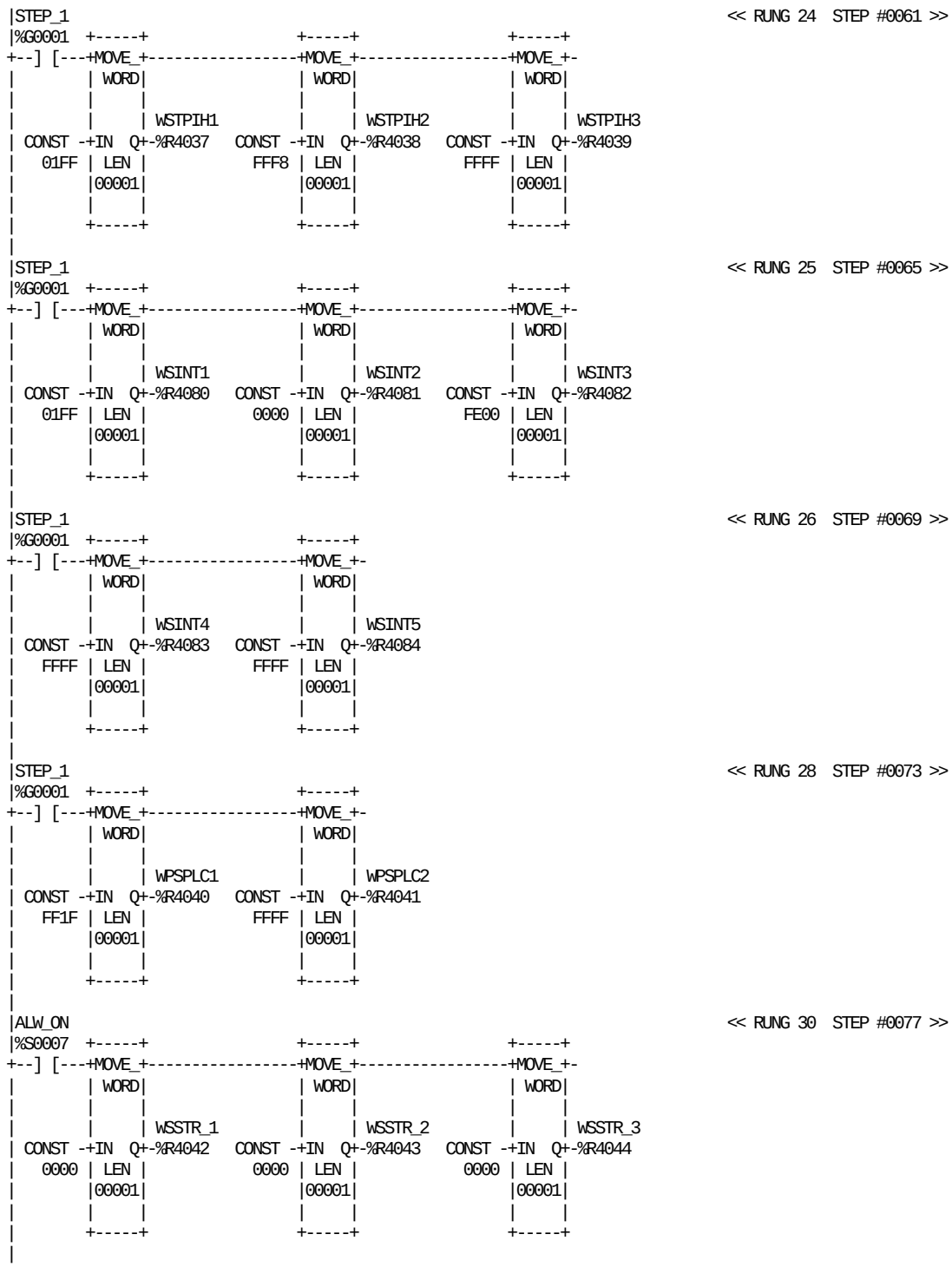

REFERENCE	NICKNAME	REFERENCE DESCRIPTION
%S0007	ALW_ON	
%G0001	STEP_1	STANDBY
%R4040	WPSPLC1	Waste paper spl detection column
%R4041	WPSPLC2	Waste paper spl detection column
%R4080	WSINT1	Waste strip refill.inter.reg.1
%R4081	WSINT2	Waste strip refill.inter.reg.2
%R4082	WSINT3	Waste strip refill.inter.reg.3
%R4083	WSINT4	Waste strip refill.inter.reg.4
%R4084	WSINT5	Waste strip refill.inter.reg.5
%R4042	WSSTR_1	Waste startup reg 1
%R4043	WSSTR_2	Waste startup reg 2
%R4044	WSSTR_3	Waste startup reg 3
%R4037	WSTPIH1	Waste strip TPIH fail register 1
%R4038	WSTPIH2	Waste strip TPIH fail register 2
%R4039	WSTPIH3	Waste strip TPIH fail register 3

```
|ALW_ON                                                                  << RUNG 31  STEP #0081 >>
|%S0007  +-----+                +-----+                +-----+
+--] [---+MOVE_+----------------+MOVE_+----------------+MOVE_+-
|        | WORD|                | WORD|                | WORD|
|        |     |                |     |                |     |
|        |     | WSSTR_4        |     | WSSTR_5        |     | WLSERR1
| CONST -+IN  Q+-%R4045   CONST -+IN  Q+-%R4046   CONST -+IN  Q+-%R4047
|   FFF8 | LEN |            FFFF | LEN |           87FF | LEN |
|        |00001|                 |00001|                |00001|
|        |     |                 |     |                |     |
|        +-----+                 +-----+                +-----+
|
|STARTOK                                                                 << RUNG 32  STEP #0085 >>
|%M0067  +-----+                +-----+                +-----+
+--] [---+MOVE_+----------------+MOVE_+----------------+MOVE_+-
|        | WORD|                | WORD|                | WORD|
|        |     |                |     |                |     |
|        |     | WSSTR_1        |     | WSSTR_2        |     | WSSTR_3
| CONST -+IN  Q+-%R4042   CONST -+IN  Q+-%R4043   CONST -+IN  Q+-%R4044
|   0000 | LEN |            FC00 | LEN |           FFFF | LEN |
|        |00001|                 |00001|                |00001|
|        |     |                 |     |                |     |
|        +-----+                 +-----+                +-----+
|
|STARTOK                                                                 << RUNG 33  STEP #0089 >>
|%M0067  +-----+                +-----+
+--] [---+MOVE_+----------------+MOVE_+-
|        | WORD|                | WORD|
|        |     |                |     |
|        |     | WSSTR_4        |     | WSSTR_5
| CONST -+IN  Q+-%R4045   CONST -+IN  Q+-%R4046
|   FFFF | LEN |            FFFF | LEN |
|        |00001|                 |00001|
|        |     |                 |     |
|        +-----+                 +-----+
|
|STEP_1                                                                  << RUNG 34  STEP #0092 >>
|%G0001  +-----+                +-----+
+--] [---+MOVE_+----------------+MOVE_+-
|        | WORD|                | WORD|
|        |     |                |     |
|        |     | WLSERR2        |     | TS_FAIL
| CONST -+IN  Q+-%R4048   CONST -+IN  Q+-%R4072
|   FFFF | LEN |            FFF0 | LEN |
|        |00001|                 |00001|
|        |     |                 |     |
|        +-----+                 +-----+
|
|STEP_1                                                                  << RUNG 36  STEP #0096 >>
|%G0001  +-----+                +-----+
+--] [---+MOVE_+----------------+MOVE_+-
|        | INT |                | INT |
|        |     |                |     |
|        |     | TSSH_S1        |     | TSSH_S2
| CONST -+IN  Q+-%R4054   CONST -+IN  Q+-%R4055
| +00060 | LEN |           +00063 | LEN |
|        |00001|                 |00001|
|        |     |                 |     |
|        +-----+                 +-----+
|
```

REFERENCE	NICKNAME	REFERENCE DESCRIPTION
%S0007	ALW_ON	
%M0067	STARTOK	Production start OK
%G0001	STEP_1	STANDBY
%R4054	TSSH_S1	TS Shift sector window 1
%R4055	TSSH_S2	TS Shift sector window 2
%R4072	TS_FAIL	Waste for TS load error
%R4047	WLSERR1	Waste LS error reg 1
%R4048	WLSERR2	Waste LS error reg 2
%R4042	WSSTR_1	Waste startup reg 1
%R4043	WSSTR_2	Waste startup reg 2
%R4044	WSSTR_3	Waste startup reg 3
%R4045	WSSTR_4	Waste startup reg 4
%R4046	WSSTR_5	Waste startup reg 5

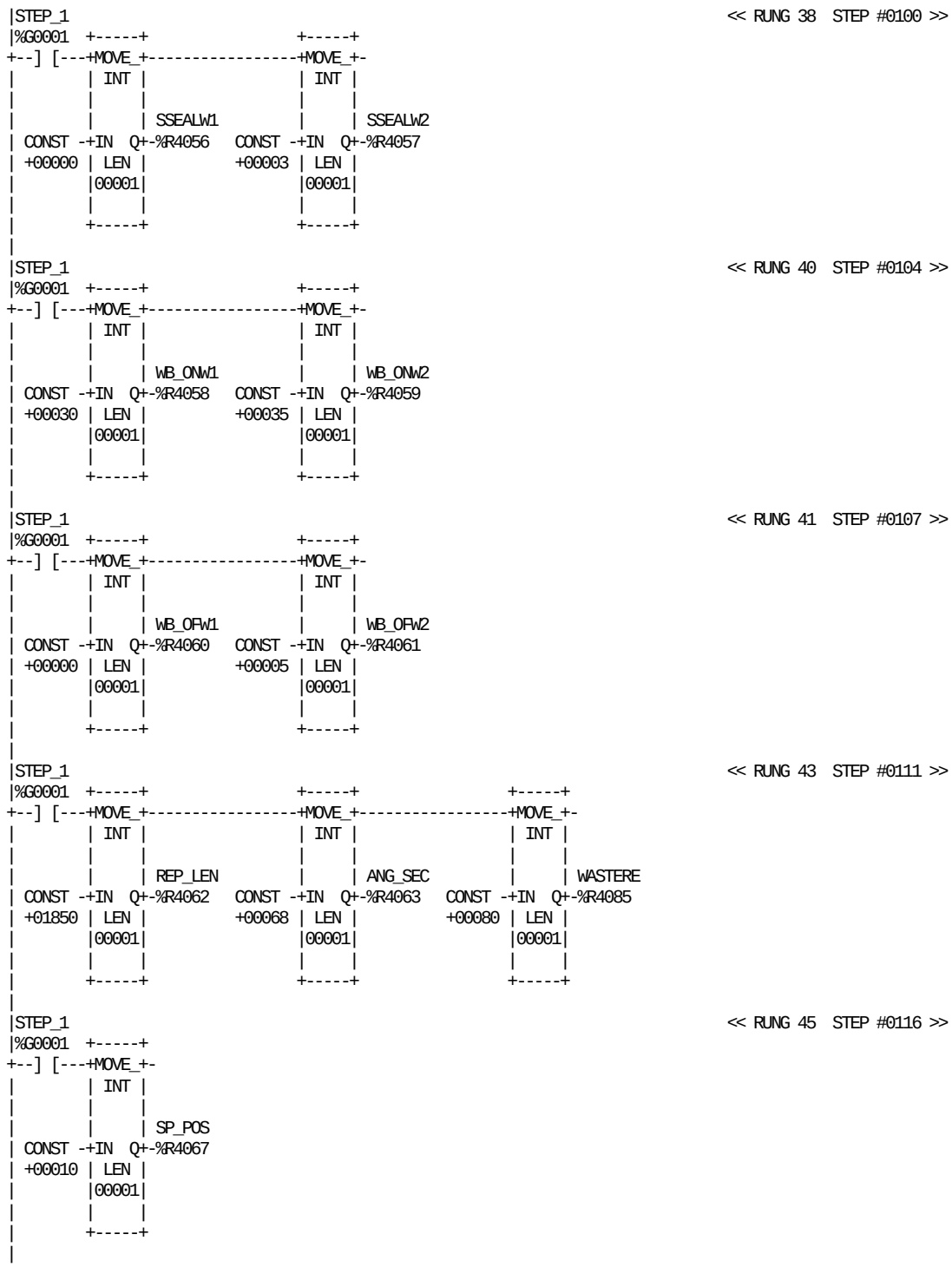

REFERENCE	NICKNAME	REFERENCE DESCRIPTION	REFERENCE	NICKNAME	REFERENCE DESCRIPTION
%R4063	ANG_SEC	Angle sector TMCC	%R4085	WASTERE	Start waste for refilling
%R4062	REP_LEN	Repeat length TMCC	%R4060	WB_OFW1	Waste box off window 1
%R4067	SP_POS	Splice position preset	%R4061	WB_OFW2	Waste box off window 2
%R4056	SSEALW1	Start sealing sect window 1	%R4058	WB_ONW1	Waste box on window 1
%R4057	SSEALW2	Start sealing sect window 2	%R4059	WB_ONW2	Waste box on window 2
%G0001	STEP_1	STANDBY			

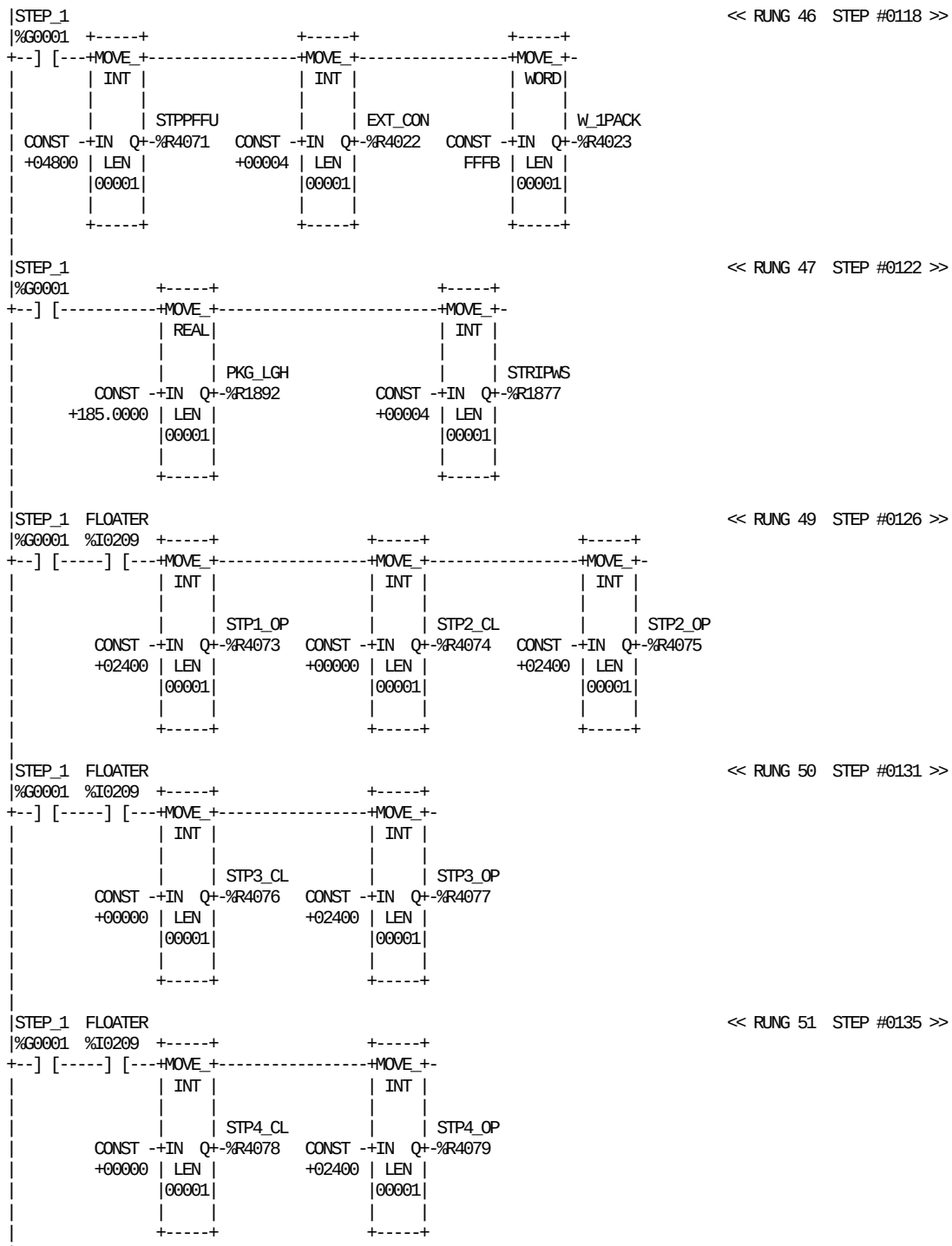

REFERENCE	NICKNAME	REFERENCE DESCRIPTION	REFERENCE	NICKNAME	REFERENCE DESCRIPTION
%R4022	EXT_CON	External conv timer value	%R4076	STP3_CL	Butterfly step 3 close time
%I0209	FLOATER	Option for level with floater	%R4077	STP3_OP	Butterfly step 3 open time
%R1892	PKG_LGH	SA, package paper lenght	%R4078	STP4_CL	Butterfly step 4 close time
%G0001	STEP_1	STANDBY	%R4079	STP4_OP	Butterfly step 4 open time
%R4073	STP1_OP	Butterfly step 1 open time	%R4071	STPPFFU	Stop position FFU delault value
%R4074	STP2_CL	Butterfly step 2 close time	%R1877	STRIPWS	SA, strip waste packages (PLMS)
%R4075	STP2_OP	Butterfly step 2 open time	%R4023	W_1PACK	Waste of package Nr 1

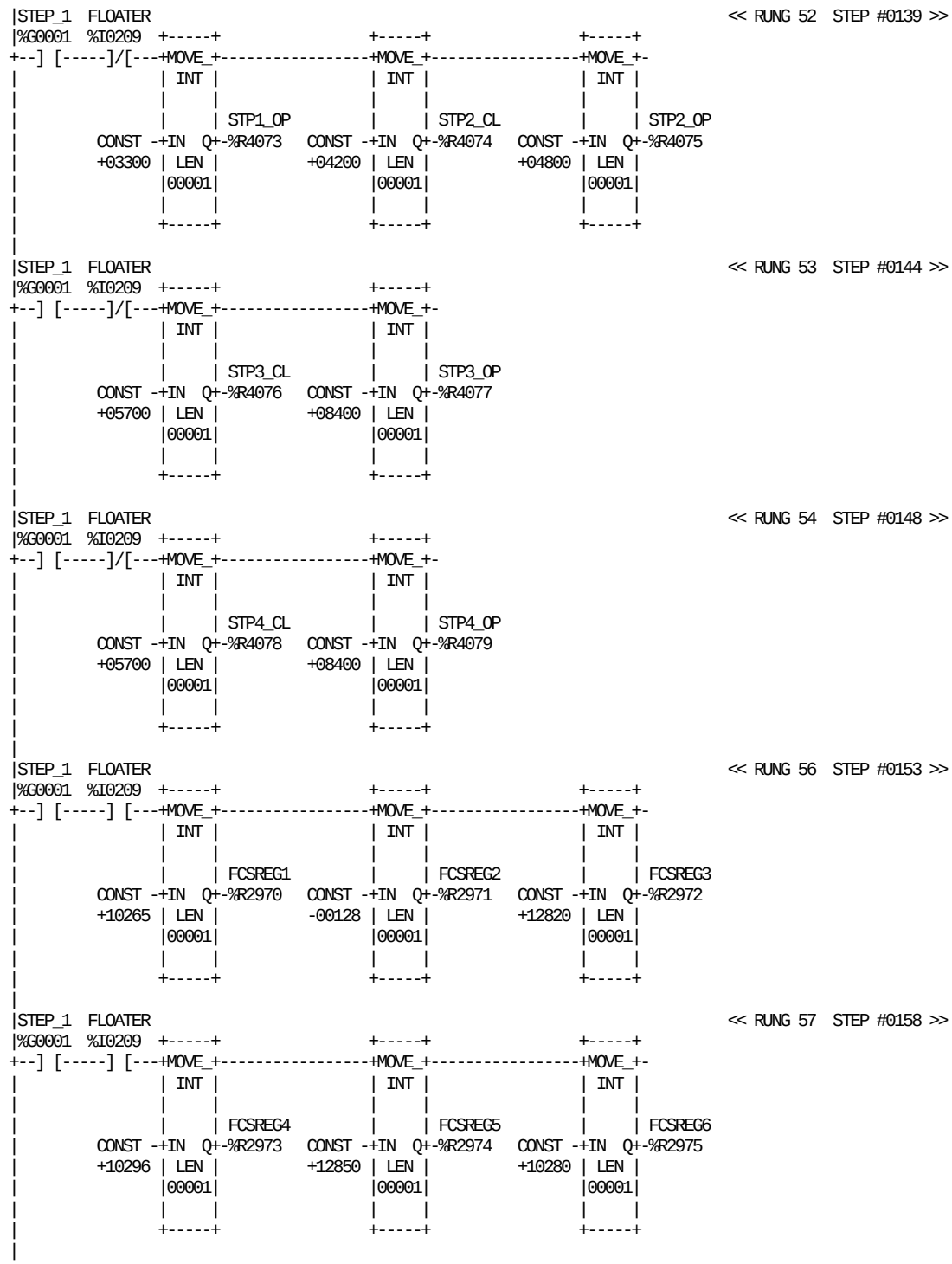

REFERENCE	NICKNAME	REFERENCE DESCRIPTION	REFERENCE	NICKNAME	REFERENCE DESCRIPTION
%R2970	FCSREG1	TMCC FCS Default register 1	%R4073	STP1_OP	Butterfly step 1 open time
%R2971	FCSREG2	TMCC FCS Default register 2	%R4074	STP2_CL	Butterfly step 2 close time
%R2972	FCSREG3	TMCC FCS Default register 3	%R4075	STP2_OP	Butterfly step 2 open time
%R2973	FCSREG4	TMCC FCS Default register 4	%R4076	STP3_CL	Butterfly step 3 close time
%R2974	FCSREG5	TMCC FCS Default register 5	%R4077	STP3_OP	Butterfly step 3 open time
%R2975	FCSREG6	TMCC FCS Default register 6	%R4078	STP4_CL	Butterfly step 4 close time
%I0209	FLOATER	Option for level with floater	%R4079	STP4_OP	Butterfly step 4 open time
%G0001	STEP_1	STANDBY			

```
|STEP_1  FLOATER                                                    << RUNG 58  STEP #0163 >>
|%G0001  %I0209  +-----+
+--] [-----] [---+MOVE_+-
|                | INT |
|                |     |
|                |     | FCSREG7
|         CONST -+IN  Q+-%R2976
|         +00356 | LEN |
|                |00001|
|                |     |
|                +-----+
|
|STEP_1  FLOATER                                                    << RUNG 59  STEP #0166 >>
|%G0001  %I0209  +-----+                +-----+                +-----+
+--] [-----]/[---+MOVE_+----------------+MOVE_+----------------+MOVE_+-
|                | INT |                | INT |                | INT |
|                |     |                |     |                |     |
|                |     | FCSREG1        |     | FCSREG2        |     | FCSREG3
|         CONST -+IN  Q+-%R2970   CONST -+IN  Q+-%R2971   CONST -+IN  Q+-%R2972
|         +10265 | LEN |          -00128 | LEN |          +12820 | LEN |
|                |00001|                |00001|                |00001|
|                |     |                |     |                |     |
|                +-----+                +-----+                +-----+
|
|STEP_1  FLOATER                                                    << RUNG 60  STEP #0171 >>
|%G0001  %I0209  +-----+                +-----+                +-----+
+--] [-----]/[---+MOVE_+----------------+MOVE_+----------------+MOVE_+-
|                | INT |                | INT |                | INT |
|                |     |                |     |                |     |
|                |     | FCSREG4        |     | FCSREG5        |     | FCSREG6
|         CONST -+IN  Q+-%R2973   CONST -+IN  Q+-%R2974   CONST -+IN  Q+-%R2975
|         +10296 | LEN |          +25700 | LEN |          +10280 | LEN |
|                |00001|                |00001|                |00001|
|                |     |                |     |                |     |
|                +-----+                +-----+                +-----+
|
|STEP_1  FLOATER                                                    << RUNG 61  STEP #0176 >>
|%G0001  %I0209  +-----+
+--] [-----]/[---+MOVE_+-
|                | INT |
|                |     |
|                |     | FCSREG7
|         CONST -+IN  Q+-%R2976
|         +00356 | LEN |
|                |00001|
|                |     |
|                +-----+
|
|STEP_1                                                             << RUNG 63  STEP #0180 >>
|%G0001  +-----+                +-----+
+--] [---+MOVE_+----------------+MOVE_+-
|        | INT |                | INT |
|        |     |                |     |
|        |     | WSTUBE         |     | SPLTUBE
| CONST -+IN  Q+-%R4049   CONST -+IN  Q+-%R4053
| +00076 | LEN |          +00056 | LEN |
|        |00001|                |00001|
|        |     |                |     |
|        +-----+                +-----+
|
| (*************************************************************************)
| (* Sterilizing temperature in AC.                                       *)
| (*************************************************************************)
|
```

REFERENCE	NICKNAME	REFERENCE DESCRIPTION	REFERENCE	NICKNAME	REFERENCE DESCRIPTION
%R2970	FCSREG1	TMCC FCS Default register 1	%R2976	FCSREG7	TMCC FCS Default register 7
%R2971	FCSREG2	TMCC FCS Default register 2	%I0209	FLOATER	Option for level with floater
%R2972	FCSREG3	TMCC FCS Default register 3	%R4053	SPLTUBE	Pkgs from jaw to splice detector
%R2973	FCSREG4	TMCC FCS Default register 4	%G0001	STEP_1	STANDBY
%R2974	FCSREG5	TMCC FCS Default register 5	%R4049	WSTUBE	Waste pkgs tight sealing tube
%R2975	FCSREG6	TMCC FCS Default register 6			

```
|STEP_1  FLOATER                                                    << RUNG 65  STEP #0184 >>
|%G0001  %I0209  +-----+
+--] [-----] [---+MOVE_+-
|                | INT |
|                |     |
|                |     | STER_AC
|         CONST -+IN  Q+-%R4099
|         +00600 | LEN |
|                |00001|
|                |     |
|                +-----+
|
|STEP_1  FLOATER                                                    << RUNG 66  STEP #0187 >>
|%G0001  %I0209  +-----+
+--] [-----]/[---+MOVE_+-
|                | INT |
|                |     |
|                |     | STER_AC
|         CONST -+IN  Q+-%R4099
|         +00600 | LEN |
|                |00001|
|                |     |
|                +-----+
|
| (*************************************************************************)
| (* Greasing stop position angle.                                        *)
| (*************************************************************************)
|
|STEP_1                                                             << RUNG 68  STEP #0191 >>
|%G0001  +-----+                +-----+
+--] [---+MOVE_+----------------+MOVE_+-
|        | INT |                | INT |
|        |     |                |     |
|        |     | GR_SEC1        |     | GR_SEC2
| CONST -+IN  Q+-%R3671   CONST -+IN  Q+-%R3672
| +00050 | LEN |          +00050 | LEN |
|        |00001|                |00001|
|        |     |                |     |
|        +-----+                +-----+
|
|[    END OF SUBROUTINE LOGIC     ]
|
```

REFERENCE	NICKNAME	REFERENCE DESCRIPTION	REFERENCE	NICKNAME	REFERENCE DESCRIPTION
%I0209	FLOATER	Option for level with floater	%G0001	STEP_1	STANDBY
%R3671	GR_SEC1	Greasing stop sector STOP 1	%R4099	STER_AC	AC sterilizing temperature
%R3672	GR_SEC2	Greasing stop sector STOP 2			

```
|[  START LD SUBROUTINE  S__300S  ]
|
|[     VARIABLE DECLARATIONS      ]
|
|[   START OF SUBROUTINE LOGIC    ]
|
| (*************************************************************************)
| (* Default set values for SA power.                                      *)
| (*************************************************************************)
|
|STEP_1                                                          << RUNG 5  STEP #0003 >>
|%G0001  +-----+               +-----+               +-----+
+--] [---+MOVE_+---------------+MOVE_+---------------+MOVE_+-
|        | INT |               | INT |               | INT |
|        |     |               |     |               |     |
|        |     | SA_PRO        |     | SA_LOW        |     | SA_EXT
| CONST -+IN  Q+-%R4000   CONST -+IN  Q+-%R4001   CONST -+IN  Q+-%R4002
| +12800 | LEN |          +04480 | LEN |          +00123 | LEN |
|        |00001|                 |00001|                 |00001|
|        |     |                 |     |                 |     |
|        +-----+                 +-----+                 +-----+
|
|STEP_1                                                          << RUNG 6  STEP #0007 >>
|%G0001  +-----+               +-----+               +-----+
+--] [---+MOVE_+---------------+MOVE_+---------------+MOVE_+-
|        | INT |               | INT |               | INT |
|        |     |               |     |               |     |
|        |     | DELEXSA       |     | EXTRASA       |     | PEREXSA
| CONST -+IN  Q+-%R1878   CONST -+IN  Q+-%R1879   CONST -+IN  Q+-%R1895
| +00010 | LEN |          +00025 | LEN |          +00135 | LEN |
|        |00001|                 |00001|                 |00001|
|        |     |                 |     |                 |     |
|        +-----+                 +-----+                 +-----+
|
| (*************************************************************************)
| (* Default set values for Loop motor speed.                             *)
| (*************************************************************************)
|
|STEP_1                                                          << RUNG 8  STEP #0012 >>
|%G0001  +-----+               +-----+               +-----+
+--] [---+MOVE_+---------------+MOVE_+---------------+MOVE_+-
|        | INT |               | INT |               | INT |
|        |     |               |     |               |     |
|        |     | LOOP_HL       |     | LOOP_HH       |     | LOOP_LH
| CONST -+IN  Q+-%R4009   CONST -+IN  Q+-%R4010   CONST -+IN  Q+-%R4011
| +14980 | LEN |          +16585 | LEN |          +06300 | LEN |
|        |00001|                 |00001|                 |00001|
|        |     |                 |     |                 |     |
|        +-----+                 +-----+                 +-----+
|
|STEP_1                                                          << RUNG 9  STEP #0016 >>
|%G0001  +-----+               +-----+               +-----+
+--] [---+MOVE_+---------------+MOVE_+---------------+MOVE_+-
|        | INT |               | INT |               | INT |
|        |     |               |     |               |     |
|        |     | LOOPEHL       |     | LOOPEHH       |     | LOOPSPL
| CONST -+IN  Q+-%R4012   CONST -+IN  Q+-%R4013   CONST -+IN  Q+-%R4014
| +18725 | LEN |          +21507 | LEN |          +07600 | LEN |
|        |00001|                 |00001|                 |00001|
|        |     |                 |     |                 |     |
|        +-----+                 +-----+                 +-----+
|
| (*************************************************************************)
| (* Default set values for Magazine motor speed.                         *)
| (*************************************************************************)
|
```

REFERENCE	NICKNAME	REFERENCE DESCRIPTION	REFERENCE	NICKNAME	REFERENCE DESCRIPTION
%R1878	DELEXSA	SA, delay start extra power SA	%R4011	LOOP_LH	Low speed loop High
%R1879	EXTRASA	SA, time extra power SA	%R1895	PEREXSA	SA, percentage extra sa power
%R4013	LOOPEHH	Extra High speed loop High	%R4002	SA_EXT	Power SA extra high speed
%R4012	LOOPEHL	Extra High speed loop Low	%R4001	SA_LOW	Power SA low speed
%R4014	LOOPSPL	Loop speed during paper splice	%R4000	SA_PRO	Power SA production speed
%R4010	LOOP_HH	High speed loop High	%G0001	STEP_1	STANDBY
%R4009	LOOP_HL	High speed loop Low			

```
|STEP_1                                                                  << RUNG 11  STEP #0021 >>
|%G0001  +-----+                +-----+                +-----+
+--] [---+MOVE_+----------------+MOVE_+----------------+MOVE_+-
|        | INT |                | INT |                | INT |
|        |     |                |     |                |     |
|        |     | MAG_HL         |     | MAG_HH         |     | MAG_LH
| CONST -+IN  Q+-%R4015   CONST -+IN  Q+-%R4016   CONST -+IN  Q+-%R4017
| +18300 | LEN |          +19800 | LEN |          +06100 | LEN |
|        |00001|                |00001|                |00001|
|        |     |                |     |                |     |
|        +-----+                +-----+                +-----+
|
|STEP_1                                                                  << RUNG 12  STEP #0025 >>
|%G0001  +-----+
+--] [---+MOVE_+-
|        | INT |
|        |     |
|        |     | MAG_EHH
| CONST -+IN  Q+-%R4018
| +24400 | LEN |
|        |00001|
|        |     |
|        +-----+
|
| (*****************************************************************************)
| (* Default set values for LS power.                                         *)
| (*****************************************************************************)
|
|STEP_1                                                                  << RUNG 14  STEP #0028 >>
|%G0001  +-----+                +-----+                +-----+
+--] [---+MOVE_+----------------+MOVE_+----------------+MOVE_+-
|        | INT |                | INT |                | INT |
|        |     |                |     |                |     |
|        |     | LS_PROD        |     | LS_LOW         |     | LS_SERV
| CONST -+IN  Q+-%R4019   CONST -+IN  Q+-%R4020   CONST -+IN  Q+-%R4021
| +12800 | LEN |          +05760 | LEN |          +14720 | LEN |
|        |00001|                |00001|                |00001|
|        |     |                |     |                |     |
|        +-----+                +-----+                +-----+
|
|STEP_1                                                                  << RUNG 15  STEP #0032 >>
|%G0001  +-----+                +-----+
+--] [---+MOVE_+----------------+MOVE_+-
|        | INT |                | INT |
|        |     |                |     |
|        |     | EXPOW1         |     | EXPOW2
| CONST -+IN  Q+-%R4068   CONST -+IN  Q+-%R4069
| +00041 | LEN |          +00043 | LEN |
|        |00001|                |00001|
|        |     |                |     |
|        +-----+                +-----+
|
| (*****************************************************************************)
| (* Default set values for Drive roller motor speed.                        *)
| (*****************************************************************************)
|
|STEP_1                                                                  << RUNG 17  STEP #0036 >>
|%G0001  +-----+                +-----+                +-----+
+--] [---+MOVE_+----------------+MOVE_+----------------+MOVE_+-
|        | INT |                | INT |                | INT |
|        |     |                |     |                |     |
|        |     | PR_PROL        |     | PR_PROH        |     | PR_MANU
| CONST -+IN  Q+-%R4003   CONST -+IN  Q+-%R4004   CONST -+IN  Q+-%R4005
| +20350 | LEN |          +22350 | LEN |          +05300 | LEN |
|        |00001|                |00001|                |00001|
|        |     |                |     |                |     |
|        +-----+                +-----+                +-----+
```

REFERENCE	NICKNAME	REFERENCE DESCRIPTION	REFERENCE	NICKNAME	REFERENCE DESCRIPTION
%R4068	EXPOW1	Extra power ls range 1	%R4015	MAG_HL	High speed magazine Low
%R4069	EXPOW2	Extra power ls range 2	%R4017	MAG_LH	Low speed magazine High
%R4020	LS_LOW	LS power low speed	%R4005	PR_MANU	PendRoll Manual paper feed speed
%R4019	LS_PROD	LS power production	%R4004	PR_PROH	Pendulum roller prod speed high
%R4021	LS_SERV	LS power service switch	%R4003	PR_PROL	Pendulum roller prod speed Low
%R4018	MAG_EHH	Extra High speed magazine High	%G0001	STEP_1	STANDBY
%R4016	MAG_HH	High speed magazine High			

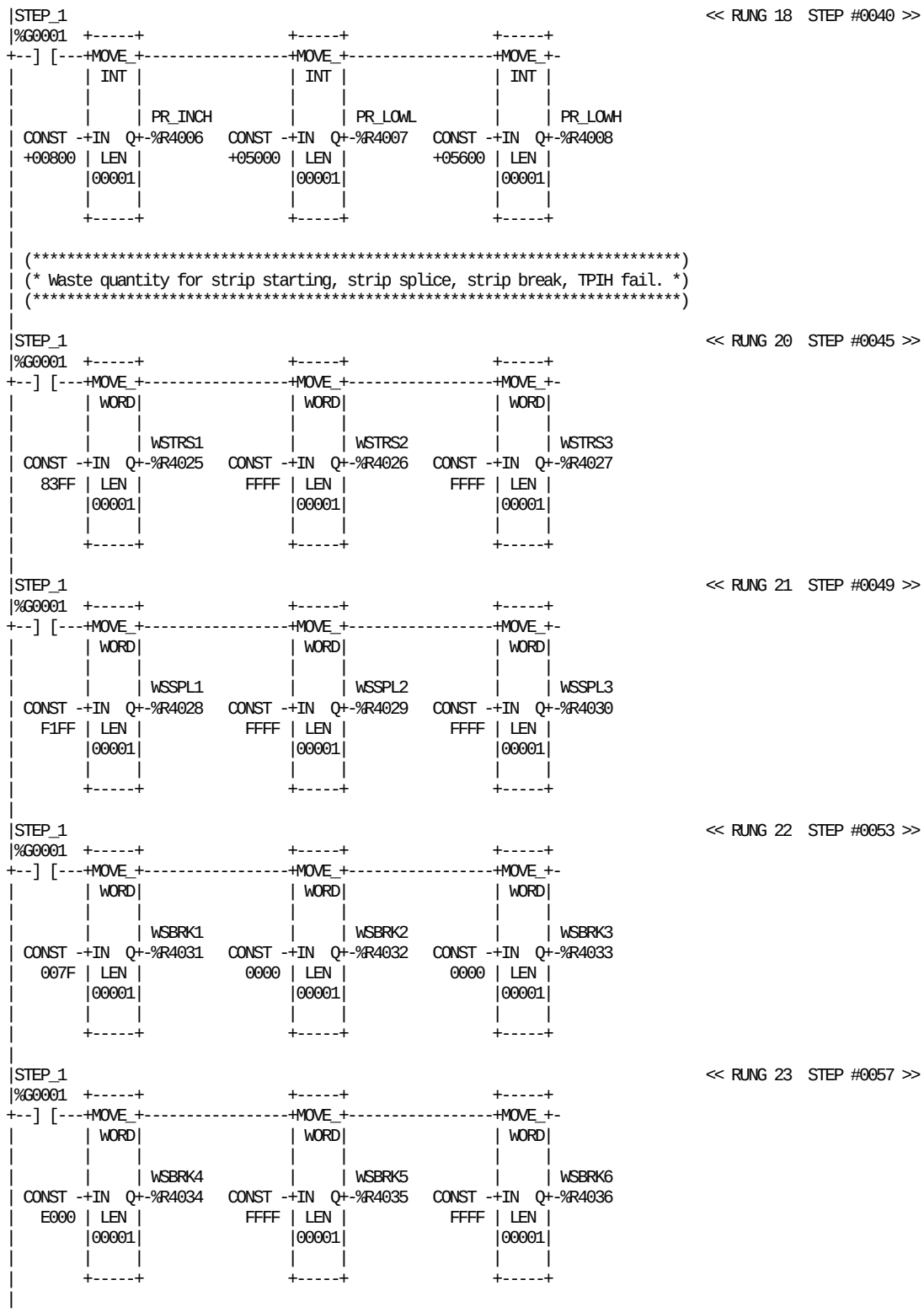

REFERENCE	NICKNAME	REFERENCE DESCRIPTION	REFERENCE	NICKNAME	REFERENCE DESCRIPTION
%R4006	PR_INCH	Pendulum Roller Inching speed	%R4035	WSBRK5	Waste strip break register 5
%R4008	PR_LOWH	Pendulum Roller Low speed High	%R4036	WSBRK6	Waste strip break register 6
%R4007	PR_LOWL	Pendulum Roller Low speed Low	%R4028	WSSPL1	Waste strip splice register 1
%G0001	STEP_1	STANDBY	%R4029	WSSPL2	Waste strip splice register 2
%R4031	WSBRK1	Waste strip break register 1	%R4030	WSSPL3	Waste strip splice register 3
%R4032	WSBRK2	Waste strip break register 2	%R4025	WSTRS1	Waste start strip register 1
%R4033	WSBRK3	Waste strip break register 3	%R4026	WSTRS2	Waste start strip register 2
%R4034	WSBRK4	Waste strip break register 4	%R4027	WSTRS3	Waste start strip register 3

TBA/22-040V
BLOCK 55 SETTING VALUES 300S

```
|STEP_1                                                                  << RUNG 24  STEP #0061 >>
|%G0001  +-----+                +-----+                +-----+
+--] [---+MOVE_+----------------+MOVE_+----------------+MOVE_+-
|        | WORD|                | WORD|                | WORD|
|        |     |                |     |                |     |
|        |     | WSTPIH1        |     | WSTPIH2        |     | WSTPIH3
| CONST -+IN  Q+-%R4037   CONST -+IN  Q+-%R4038   CONST -+IN  Q+-%R4039
|   007F | LEN |            FFFE | LEN |            FFFF | LEN |
|        |00001|                 |00001|                 |00001|
|        |     |                 |     |                 |     |
|        +-----+                 +-----+                 +-----+
|
|STEP_1                                                                  << RUNG 25  STEP #0065 >>
|%G0001  +-----+                +-----+                +-----+
+--] [---+MOVE_+----------------+MOVE_+----------------+MOVE_+-
|        | WORD|                | WORD|                | WORD|
|        |     |                |     |                |     |
|        |     | WSINT1         |     | WSINT2         |     | WSINT3
| CONST -+IN  Q+-%R4080   CONST -+IN  Q+-%R4081   CONST -+IN  Q+-%R4082
|   007F | LEN |            0000 | LEN |            FF00 | LEN |
|        |00001|                 |00001|                 |00001|
|        |     |                 |     |                 |     |
|        +-----+                 +-----+                 +-----+
|
|STEP_1                                                                  << RUNG 26  STEP #0069 >>
|%G0001  +-----+                +-----+
+--] [---+MOVE_+----------------+MOVE_+-
|        | WORD|                | WORD|
|        |     |                |     |
|        |     | WSINT4         |     | WSINT5
| CONST -+IN  Q+-%R4083   CONST -+IN  Q+-%R4084
|   FFFF | LEN |            FFFF | LEN |
|        |00001|                 |00001|
|        |     |                 |     |
|        +-----+                 +-----+
|
| (*****************************************************************************)
| (* Waste quantity for paper splice detection.                               *)
| (*****************************************************************************)
|
|STEP_1                                                                  << RUNG 28  STEP #0073 >>
|%G0001  +-----+                +-----+
+--] [---+MOVE_+----------------+MOVE_+-
|        | WORD|                | WORD|
|        |     |                |     |
|        |     | WPSPLC1        |     | WPSPLC2
| CONST -+IN  Q+-%R4040   CONST -+IN  Q+-%R4041
|   FC7F | LEN |            FFFF | LEN |
|        |00001|                 |00001|
|        |     |                 |     |
|        +-----+                 +-----+
|
| (*****************************************************************************)
| (* Waste quantity in different stop cases.                                  *)
| (*****************************************************************************)
|
```

REFERENCE	NICKNAME	REFERENCE DESCRIPTION	REFERENCE	NICKNAME	REFERENCE DESCRIPTION
%G0001	STEP_1	STANDBY	%R4083	WSINT4	Waste strip refill.inter.reg.4
%R4040	WPSPLC1	Waste paper spl detection column	%R4084	WSINT5	Waste strip refill.inter.reg.5
%R4041	WPSPLC2	Waste paper spl detection column	%R4037	WSTPIH1	Waste strip TPIH fail register 1
%R4080	WSINT1	Waste strip refill.inter.reg.1	%R4038	WSTPIH2	Waste strip TPIH fail register 2
%R4081	WSINT2	Waste strip refill.inter.reg.2	%R4039	WSTPIH3	Waste strip TPIH fail register 3
%R4082	WSINT3	Waste strip refill.inter.reg.3			

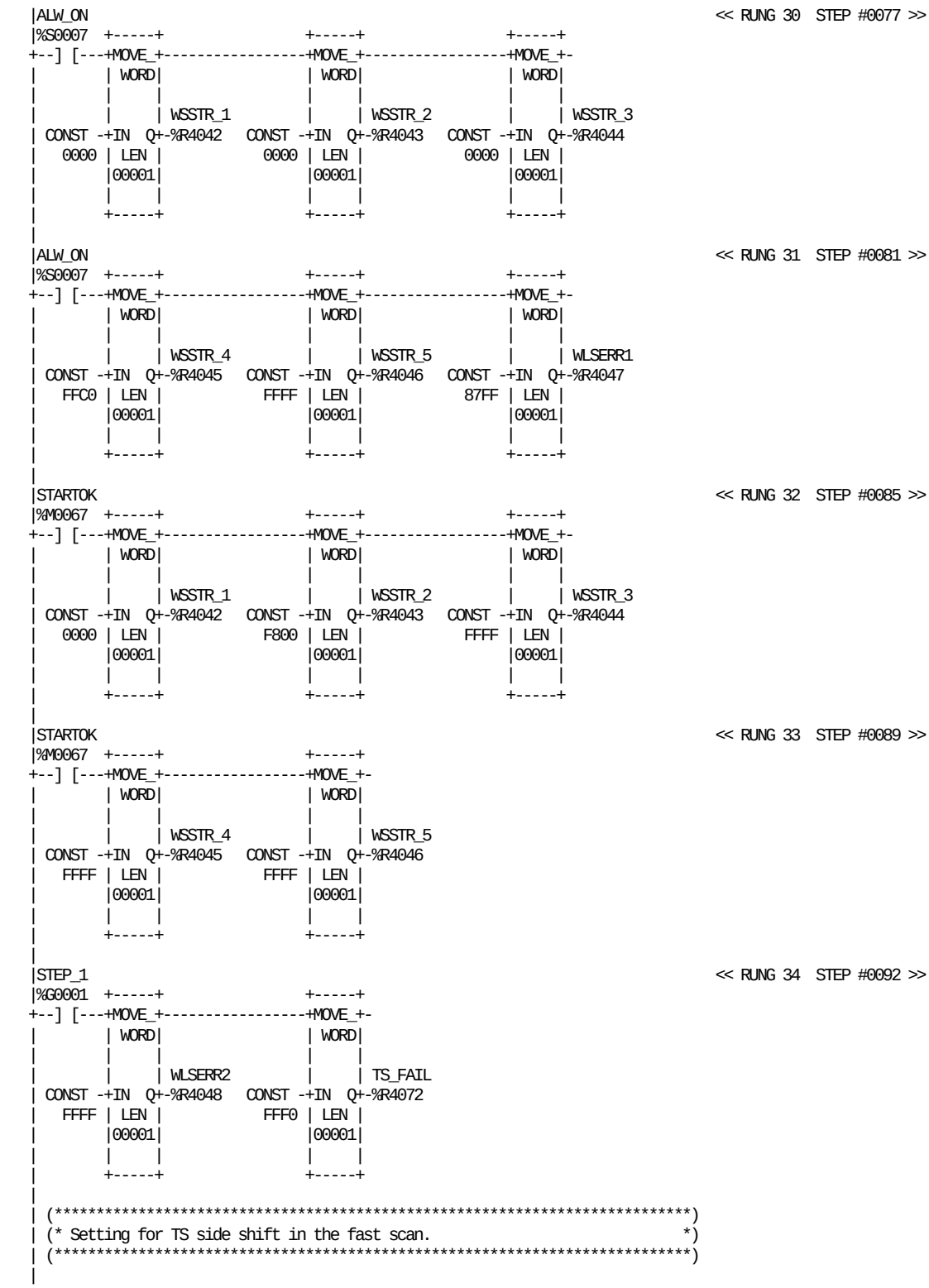

REFERENCE	NICKNAME	REFERENCE DESCRIPTION	REFERENCE	NICKNAME	REFERENCE DESCRIPTION
%S0007	ALW_ON		%R4042	WSSTR_1	Waste startup reg 1
%M0067	STARTOK	Production start OK	%R4043	WSSTR_2	Waste startup reg 2
%G0001	STEP_1	STANDBY	%R4044	WSSTR_3	Waste startup reg 3
%R4072	TS_FAIL	Waste for TS load error	%R4045	WSSTR_4	Waste startup reg 4
%R4047	WLSERR1	Waste LS error reg 1	%R4046	WSSTR_5	Waste startup reg 5
%R4048	WLSERR2	Waste LS error reg 2			

```
|STEP_1                                                                << RUNG 36  STEP #0096 >>
|%G0001  +-----+                +-----+
+--] [---+MOVE_+----------------+MOVE_+-
|        | INT |                | INT |
|        |     |                |     |
|        |     | TSSH_S1        |     | TSSH_S2
| CONST -+IN  Q+-%R4054   CONST -+IN  Q+-%R4055
| +00016 | LEN |          +00021 | LEN |
|        |00001|                |00001|
|        |     |                |     |
|        +-----+                +-----+
|
| (*************************************************************************)
| (* Setting for TS start pulse in the fast scan.                         *)
| (*************************************************************************)
|
|STEP_1                                                                << RUNG 38  STEP #0100 >>
|%G0001  +-----+                +-----+
+--] [---+MOVE_+----------------+MOVE_+-
|        | INT |                | INT |
|        |     |                |     |
|        |     | SSEALW1        |     | SSEALW2
| CONST -+IN  Q+-%R4056   CONST -+IN  Q+-%R4057
| +00027 | LEN |          +00032 | LEN |
|        |00001|                |00001|
|        |     |                |     |
|        +-----+                +-----+
|
| (*************************************************************************)
| (* Setting for waste box window in the fast scan.                        *)
| (*************************************************************************)
|
|STEP_1                                                                << RUNG 40  STEP #0104 >>
|%G0001  +-----+                +-----+
+--] [---+MOVE_+----------------+MOVE_+-
|        | INT |                | INT |
|        |     |                |     |
|        |     | WB_ONW1        |     | WB_ONW2
| CONST -+IN  Q+-%R4058   CONST -+IN  Q+-%R4059
| +00055 | LEN |          +00060 | LEN |
|        |00001|                |00001|
|        |     |                |     |
|        +-----+                +-----+
|
|STEP_1                                                                << RUNG 41  STEP #0107 >>
|%G0001  +-----+                +-----+
+--] [---+MOVE_+----------------+MOVE_+-
|        | INT |                | INT |
|        |     |                |     |
|        |     | WB_OFW1        |     | WB_OFW2
| CONST -+IN  Q+-%R4060   CONST -+IN  Q+-%R4061
| +00020 | LEN |          +00025 | LEN |
|        |00001|                |00001|
|        |     |                |     |
|        +-----+                +-----+
|
| (*************************************************************************)
| (* Setting for DCS TMCC parameter.                                       *)
| (*************************************************************************)
|
```

REFERENCE	NICKNAME	REFERENCE DESCRIPTION	REFERENCE	NICKNAME	REFERENCE DESCRIPTION
%R4056	SSEALW1	Start sealing sect window 1	%R4060	WB_OFW1	Waste box off window 1
%R4057	SSEALW2	Start sealing sect window 2	%R4061	WB_OFW2	Waste box off window 2
%G0001	STEP_1	STANDBY	%R4058	WB_ONW1	Waste box on window 1
%R4054	TSSH_S1	TS Shift sector window 1	%R4059	WB_ONW2	Waste box on window 2
%R4055	TSSH_S2	TS Shift sector window 2			

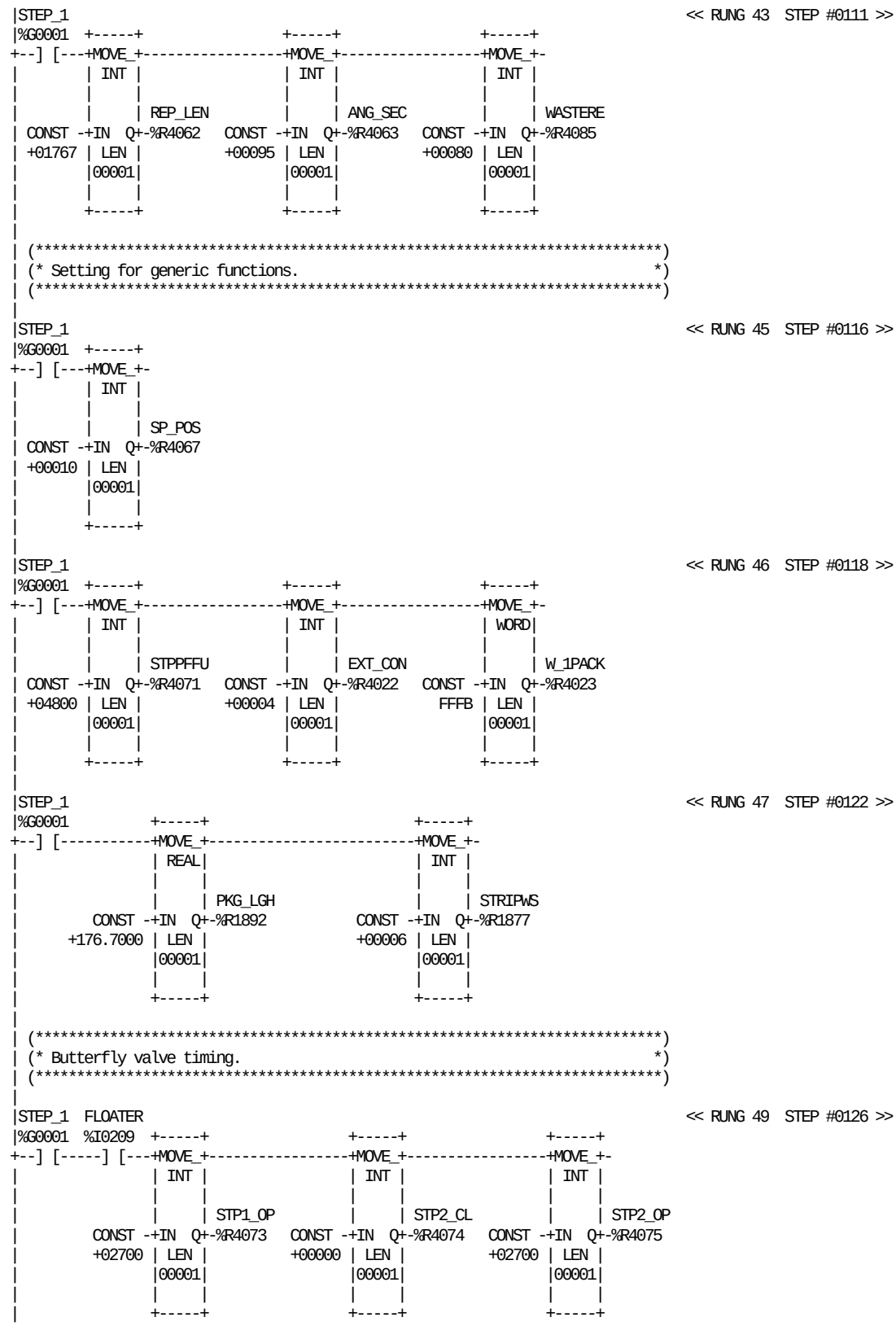

REFERENCE	NICKNAME	REFERENCE DESCRIPTION	REFERENCE	NICKNAME	REFERENCE DESCRIPTION
%R4063	ANG_SEC	Angle sector TMCC	%R4073	STP1_OP	Butterfly step 1 open time
%R4022	EXT_CON	External conv timer value	%R4074	STP2_CL	Butterfly step 2 close time
%I0209	FLOATER	Option for level with floater	%R4075	STP2_OP	Butterfly step 2 open time
%R1892	PKG_LGH	SA, package paper lenght	%R4071	STPPFFU	Stop position FFU delault value
%R4062	REP_LEN	Repeat length TMCC	%R1877	STRIPWS	SA, strip waste packages (PLMS)
%R4067	SP_POS	Splice position preset	%R4085	WASTERE	Start waste for refilling
%G0001	STEP_1	STANDBY	%R4023	W_1PACK	Waste of package Nr 1

```
|STEP_1  FLOATER                                                    << RUNG 50  STEP #0131 >>
|%G0001  %I0209  +-----+                +-----+
+--] [-----] [---+MOVE_+----------------+MOVE_+-
|                | INT |                | INT |
|                |     |                |     |
|                |     | STP3_CL        |     | STP3_OP
|         CONST -+IN  Q+-%R4076   CONST -+IN  Q+-%R4077
|         +00000 | LEN |          +02700 | LEN |
|                |00001|                |00001|
|                |     |                |     |
|                +-----+                +-----+
|
|STEP_1  FLOATER                                                    << RUNG 51  STEP #0135 >>
|%G0001  %I0209  +-----+                +-----+
+--] [-----] [---+MOVE_+----------------+MOVE_+-
|                | INT |                | INT |
|                |     |                |     |
|                |     | STP4_CL        |     | STP4_OP
|         CONST -+IN  Q+-%R4078   CONST -+IN  Q+-%R4079
|         +00000 | LEN |          +02700 | LEN |
|                |00001|                |00001|
|                |     |                |     |
|                +-----+                +-----+
|
|STEP_1  FLOATER                                                    << RUNG 52  STEP #0139 >>
|%G0001  %I0209  +-----+                +-----+                +-----+
+--] [-----]/[---+MOVE_+----------------+MOVE_+----------------+MOVE_+-
|                | INT |                | INT |                | INT |
|                |     |                |     |                |     |
|                |     | STP1_OP        |     | STP2_CL        |     | STP2_OP
|         CONST -+IN  Q+-%R4073   CONST -+IN  Q+-%R4074   CONST -+IN  Q+-%R4075
|         +03300 | LEN |          +04200 | LEN |          +04800 | LEN |
|                |00001|                |00001|                |00001|
|                |     |                |     |                |     |
|                +-----+                +-----+                +-----+
|
|STEP_1  FLOATER                                                    << RUNG 53  STEP #0144 >>
|%G0001  %I0209  +-----+                +-----+
+--] [-----]/[---+MOVE_+----------------+MOVE_+-
|                | INT |                | INT |
|                |     |                |     |
|                |     | STP3_CL        |     | STP3_OP
|         CONST -+IN  Q+-%R4076   CONST -+IN  Q+-%R4077
|         +05700 | LEN |          +08400 | LEN |
|                |00001|                |00001|
|                |     |                |     |
|                +-----+                +-----+
|
|STEP_1  FLOATER                                                    << RUNG 54  STEP #0148 >>
|%G0001  %I0209  +-----+                +-----+
+--] [-----]/[---+MOVE_+----------------+MOVE_+-
|                | INT |                | INT |
|                |     |                |     |
|                |     | STP4_CL        |     | STP4_OP
|         CONST -+IN  Q+-%R4078   CONST -+IN  Q+-%R4079
|         +05700 | LEN |          +08400 | LEN |
|                |00001|                |00001|
|                |     |                |     |
|                +-----+                +-----+
|
| (*************************************************************************)
| (* TMCC parameters for level control.                                   *)
| (*************************************************************************)
|
```

REFERENCE	NICKNAME	REFERENCE DESCRIPTION	REFERENCE	NICKNAME	REFERENCE DESCRIPTION
%I0209	FLOATER	Option for level with floater	%R4076	STP3_CL	Butterfly step 3 close time
%G0001	STEP_1	STANDBY	%R4077	STP3_OP	Butterfly step 3 open time
%R4073	STP1_OP	Butterfly step 1 open time	%R4078	STP4_CL	Butterfly step 4 close time
%R4074	STP2_CL	Butterfly step 2 close time	%R4079	STP4_OP	Butterfly step 4 open time
%R4075	STP2_OP	Butterfly step 2 open time			

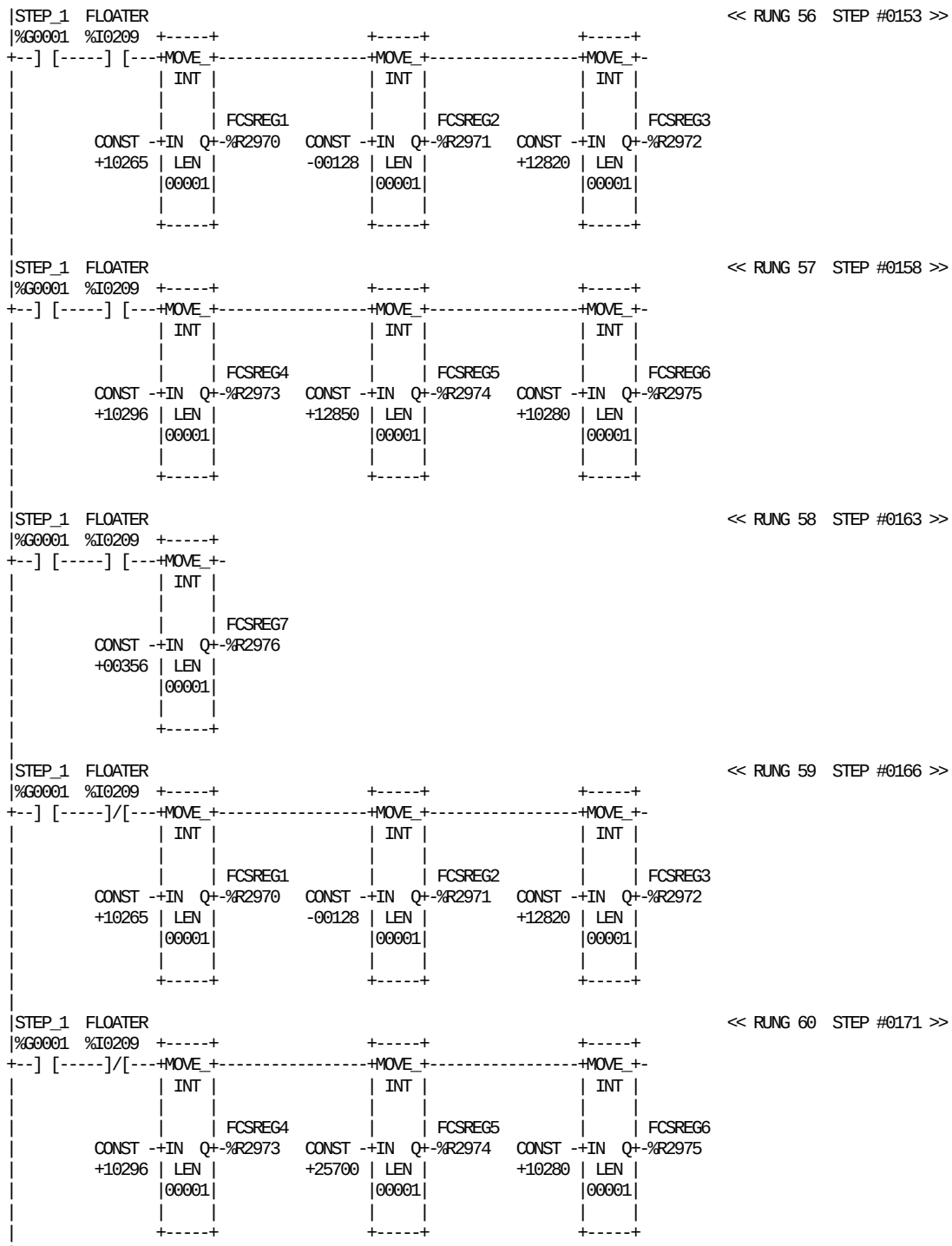

REFERENCE	NICKNAME	REFERENCE DESCRIPTION
%R2970	FCSREG1	TMCC FCS Default register 1
%R2971	FCSREG2	TMCC FCS Default register 2
%R2972	FCSREG3	TMCC FCS Default register 3
%R2973	FCSREG4	TMCC FCS Default register 4
%R2974	FCSREG5	TMCC FCS Default register 5
%R2975	FCSREG6	TMCC FCS Default register 6
%R2976	FCSREG7	TMCC FCS Default register 7
%I0209	FLOATER	Option for level with floater
%G0001	STEP_1	STANDBY

```
|STEP_1  FLOATER                                                    << RUNG 61  STEP #0176 >>
|%G0001  %I0209  +-----+
+--] [-----]/[---+MOVE_+-
|                | INT |
|                |     |
|                |     | FCSREG7
|         CONST -+IN  Q+-%R2976
|         +00356 | LEN |
|                |00001|
|                |     |
|                +-----+
|
| (*************************************************************************)
| (* Tight tube counters.                                                 *)
| (*************************************************************************)
|
|STEP_1                                                             << RUNG 63  STEP #0180 >>
|%G0001  +-----+                +-----+
+--] [---+MOVE_+----------------+MOVE_+-
|        | INT |                | INT |
|        |     |                |     |
|        |     | WSTUBE         |     | SPLTUBE
| CONST -+IN  Q+-%R4049   CONST -+IN  Q+-%R4053
| +00082 | LEN |          +00059 | LEN |
|        |00001|                |00001|
|        |     |                |     |
|        +-----+                +-----+
|
| (*************************************************************************)
| (* Sterilizing temperature in AC.                                       *)
| (*************************************************************************)
|
|STEP_1  FLOATER                                                    << RUNG 65  STEP #0184 >>
|%G0001  %I0209  +-----+
+--] [-----] [---+MOVE_+-
|                | INT |
|                |     |
|                |     | STER_AC
|         CONST -+IN  Q+-%R4099
|         +00600 | LEN |
|                |00001|
|                |     |
|                +-----+
|
|STEP_1  FLOATER                                                    << RUNG 66  STEP #0187 >>
|%G0001  %I0209  +-----+
+--] [-----]/[---+MOVE_+-
|                | INT |
|                |     |
|                |     | STER_AC
|         CONST -+IN  Q+-%R4099
|         +00600 | LEN |
|                |00001|
|                |     |
|                +-----+
|
| (*************************************************************************)
| (* Greasing stop position angle.                                        *)
| (*************************************************************************)
|
```

REFERENCE	NICKNAME	REFERENCE DESCRIPTION	REFERENCE	NICKNAME	REFERENCE DESCRIPTION
%R2976	FCSREG7	TMCC FCS Default register 7	%G0001	STEP_1	STANDBY
%I0209	FLOATER	Option for level with floater	%R4099	STER_AC	AC sterilizing temperature
%R4053	SPLTUBE	Pkgs from jaw to splice detector	%R4049	WSTUBE	Waste pkgs tight sealing tube

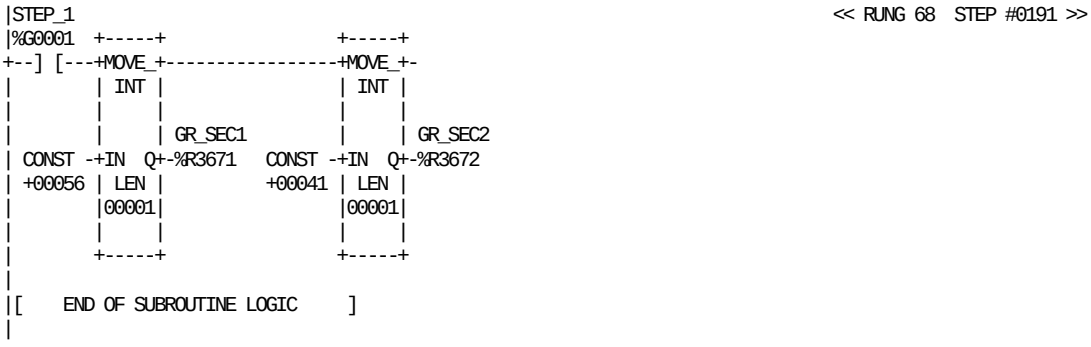

REFERENCE	NICKNAME	REFERENCE DESCRIPTION
%R3671	GR_SEC1	Greasing stop sector STOP 1
%R3672	GR_SEC2	Greasing stop sector STOP 2

REFERENCE	NICKNAME	REFERENCE DESCRIPTION
%G0001	STEP_1	STANDBY

This page left intentionally blank

```
|[  START LD SUBROUTINE  S__200S  ]
|
|[     VARIABLE DECLARATIONS      ]
|
|[   START OF SUBROUTINE LOGIC    ]
|
| (*************************************************************************)
| (* Default set values for SA power.                                      *)
| (*************************************************************************)
|
|STEP_1                                                          << RUNG 5  STEP #0003 >>
|%G0001  +-----+               +-----+               +-----+
+--] [---+MOVE_+---------------+MOVE_+---------------+MOVE_+-
|        | INT |               | INT |               | INT |
|        |     |               |     |               |     |
|        |     | SA_PRO        |     | SA_LOW        |     | SA_EXT
| CONST -+IN  Q+-%R4000   CONST -+IN  Q+-%R4001   CONST -+IN  Q+-%R4002
| +12800 | LEN |          +04480 | LEN |          +00121 | LEN |
|        |00001|                 |00001|                 |00001|
|        |     |                 |     |                 |     |
|        +-----+                 +-----+                 +-----+
|
|STEP_1                                                          << RUNG 6  STEP #0007 >>
|%G0001  +-----+               +-----+               +-----+
+--] [---+MOVE_+---------------+MOVE_+---------------+MOVE_+-
|        | INT |               | INT |               | INT |
|        |     |               |     |               |     |
|        |     | DELEXSA       |     | EXTRASA       |     | PEREXSA
| CONST -+IN  Q+-%R1878   CONST -+IN  Q+-%R1879   CONST -+IN  Q+-%R1895
| +00010 | LEN |          +00025 | LEN |          +00135 | LEN |
|        |00001|                 |00001|                 |00001|
|        |     |                 |     |                 |     |
|        +-----+                 +-----+                 +-----+
|
| (*************************************************************************)
| (* Default set values for Loop motor speed.                             *)
| (*************************************************************************)
|
|STEP_1                                                          << RUNG 8  STEP #0012 >>
|%G0001  +-----+               +-----+               +-----+
+--] [---+MOVE_+---------------+MOVE_+---------------+MOVE_+-
|        | INT |               | INT |               | INT |
|        |     |               |     |               |     |
|        |     | LOOP_HL       |     | LOOP_HH       |     | LOOP_LH
| CONST -+IN  Q+-%R4009   CONST -+IN  Q+-%R4010   CONST -+IN  Q+-%R4011
| +15194 | LEN |          +16478 | LEN |          +06100 | LEN |
|        |00001|                 |00001|                 |00001|
|        |     |                 |     |                 |     |
|        +-----+                 +-----+                 +-----+
|
|STEP_1                                                          << RUNG 9  STEP #0016 >>
|%G0001  +-----+               +-----+               +-----+
+--] [---+MOVE_+---------------+MOVE_+---------------+MOVE_+-
|        | INT |               | INT |               | INT |
|        |     |               |     |               |     |
|        |     | LOOPEHL       |     | LOOPEHH       |     | LOOPSPL
| CONST -+IN  Q+-%R4012   CONST -+IN  Q+-%R4013   CONST -+IN  Q+-%R4014
| +18191 | LEN |          +20865 | LEN |          +07400 | LEN |
|        |00001|                 |00001|                 |00001|
|        |     |                 |     |                 |     |
|        +-----+                 +-----+                 +-----+
|
| (*************************************************************************)
| (* Default set values for Magazine motor speed.                         *)
| (*************************************************************************)
|
```

REFERENCE	NICKNAME	REFERENCE DESCRIPTION	REFERENCE	NICKNAME	REFERENCE DESCRIPTION
%R1878	DELEXSA	SA, delay start extra power SA	%R4011	LOOP_LH	Low speed loop High
%R1879	EXTRASA	SA, time extra power SA	%R1895	PEREXSA	SA, percentage extra sa power
%R4013	LOOPEHH	Extra High speed loop High	%R4002	SA_EXT	Power SA extra high speed
%R4012	LOOPEHL	Extra High speed loop Low	%R4001	SA_LOW	Power SA low speed
%R4014	LOOPSPL	Loop speed during paper splice	%R4000	SA_PRO	Power SA production speed
%R4010	LOOP_HH	High speed loop High	%G0001	STEP_1	STANDBY
%R4009	LOOP_HL	High speed loop Low			

```
|STEP_1                                                                  << RUNG 11  STEP #0021 >>
|%G0001  +-----+                +-----+                +-----+
+--] [---+MOVE_+----------------+MOVE_+----------------+MOVE_+-
|        | INT |                | INT |                | INT |
|        |     |                |     |                |     |
|        |     | MAG_HL         |     | MAG_HH         |     | MAG_LH
| CONST -+IN  Q+-%R4015   CONST -+IN  Q+-%R4016   CONST -+IN  Q+-%R4017
| +18000 | LEN |          +19600 | LEN |          +05900 | LEN |
|        |00001|                |00001|                |00001|
|        |     |                |     |                |     |
|        +-----+                +-----+                +-----+
|
|STEP_1                                                                  << RUNG 12  STEP #0025 >>
|%G0001  +-----+
+--] [---+MOVE_+-
|        | INT |
|        |     |
|        |     | MAG_EHH
| CONST -+IN  Q+-%R4018
| +23000 | LEN |
|        |00001|
|        |     |
|        +-----+
|
| (*************************************************************************)
| (* Default set values for LS power.                                      *)
| (*************************************************************************)
|
|STEP_1                                                                  << RUNG 14  STEP #0028 >>
|%G0001  +-----+                +-----+                +-----+
+--] [---+MOVE_+----------------+MOVE_+----------------+MOVE_+-
|        | INT |                | INT |                | INT |
|        |     |                |     |                |     |
|        |     | LS_PROD        |     | LS_LOW         |     | LS_SERV
| CONST -+IN  Q+-%R4019   CONST -+IN  Q+-%R4020   CONST -+IN  Q+-%R4021
| +12800 | LEN |          +05760 | LEN |          +14720 | LEN |
|        |00001|                |00001|                |00001|
|        |     |                |     |                |     |
|        +-----+                +-----+                +-----+
|
|STEP_1                                                                  << RUNG 15  STEP #0032 >>
|%G0001  +-----+                +-----+
+--] [---+MOVE_+----------------+MOVE_+-
|        | INT |                | INT |
|        |     |                |     |
|        |     | EXPOW1         |     | EXPOW2
| CONST -+IN  Q+-%R4068   CONST -+IN  Q+-%R4069
| +00043 | LEN |          +00045 | LEN |
|        |00001|                |00001|
|        |     |                |     |
|        +-----+                +-----+
|
| (*************************************************************************)
| (* Default set values for Drive roller motor speed.                      *)
| (*************************************************************************)
|
|STEP_1                                                                  << RUNG 17  STEP #0036 >>
|%G0001  +-----+                +-----+                +-----+
+--] [---+MOVE_+----------------+MOVE_+----------------+MOVE_+-
|        | INT |                | INT |                | INT |
|        |     |                |     |                |     |
|        |     | PR_PROL        |     | PR_PROH        |     | PR_MANU
| CONST -+IN  Q+-%R4003   CONST -+IN  Q+-%R4004   CONST -+IN  Q+-%R4005
| +19700 | LEN |          +21700 | LEN |          +05250 | LEN |
|        |00001|                |00001|                |00001|
|        |     |                |     |                |     |
|        +-----+                +-----+                +-----+
```

REFERENCE	NICKNAME	REFERENCE DESCRIPTION	REFERENCE	NICKNAME	REFERENCE DESCRIPTION
%R4068	EXPOW1	Extra power ls range 1	%R4015	MAG_HL	High speed magazine Low
%R4069	EXPOW2	Extra power ls range 2	%R4017	MAG_LH	Low speed magazine High
%R4020	LS_LOW	LS power low speed	%R4005	PR_MANU	PendRoll Manual paper feed speed
%R4019	LS_PROD	LS power production	%R4004	PR_PROH	Pendulum roller prod speed high
%R4021	LS_SERV	LS power service switch	%R4003	PR_PROL	Pendulum roller prod speed Low
%R4018	MAG_EHH	Extra High speed magazine High	%G0001	STEP_1	STANDBY
%R4016	MAG_HH	High speed magazine High			

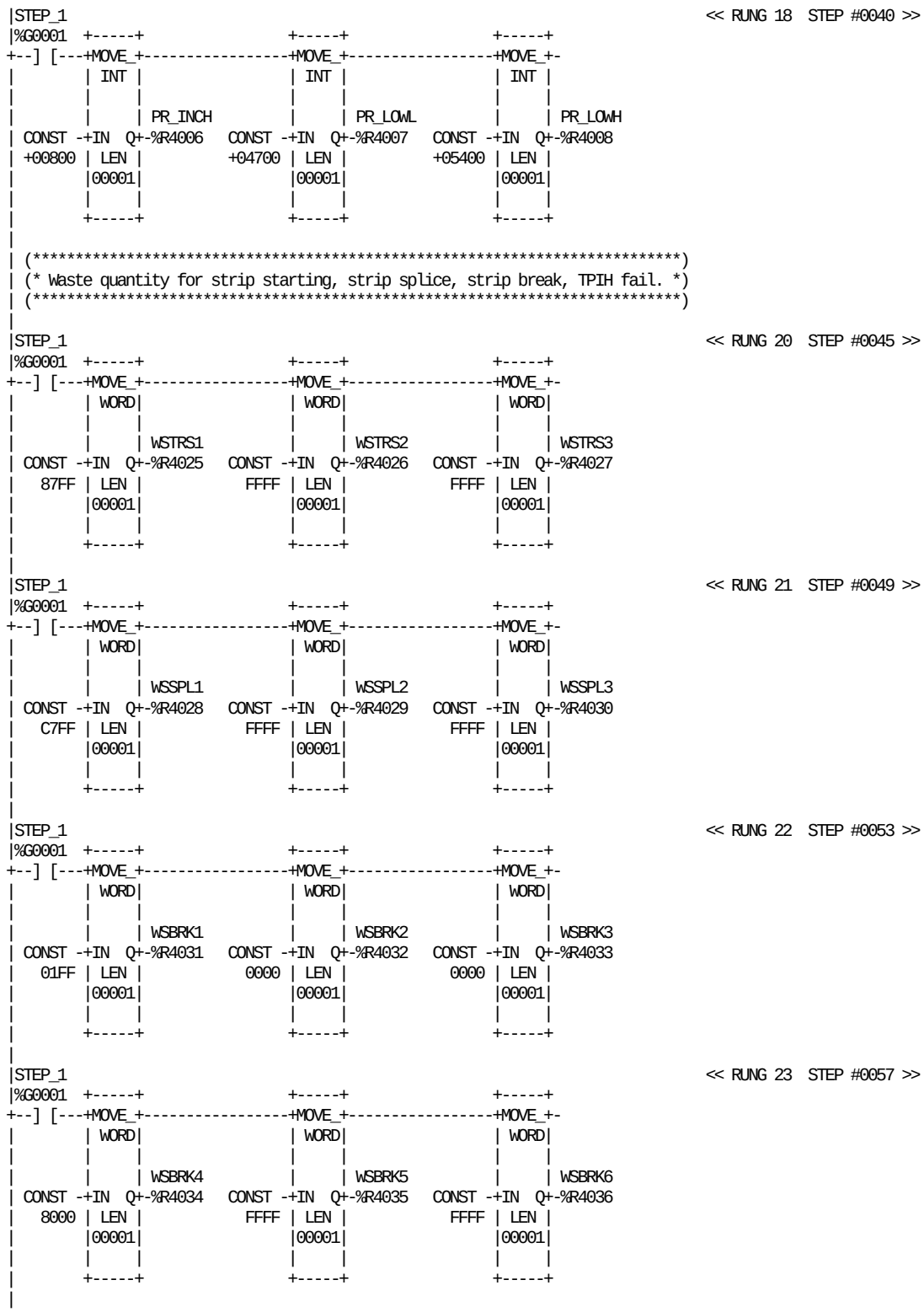

REFERENCE	NICKNAME	REFERENCE DESCRIPTION
%R4006	PR_INCH	Pendulum Roller Inching speed
%R4008	PR_LOWH	Pendulum Roller Low speed High
%R4007	PR_LOWL	Pendulum Roller Low speed Low
%G0001	STEP_1	STANDBY
%R4031	WSBRK1	Waste strip break register 1
%R4032	WSBRK2	Waste strip break register 2
%R4033	WSBRK3	Waste strip break register 3
%R4034	WSBRK4	Waste strip break register 4
%R4035	WSBRK5	Waste strip break register 5
%R4036	WSBRK6	Waste strip break register 6
%R4028	WSSPL1	Waste strip splice register 1
%R4029	WSSPL2	Waste strip splice register 2
%R4030	WSSPL3	Waste strip splice register 3
%R4025	WSTRS1	Waste start strip register 1
%R4026	WSTRS2	Waste start strip register 2
%R4027	WSTRS3	Waste start strip register 3

```
|STEP_1                                                                  << RUNG 24  STEP #0061 >>
|%G0001  +-----+                +-----+                +-----+
+--] [---+MOVE_+----------------+MOVE_+----------------+MOVE_+-
|        | WORD|                | WORD|                | WORD|
|        |     |                |     |                |     |
|        |     | WSTPIH1        |     | WSTPIH2        |     | WSTPIH3
| CONST -+IN  Q+-%R4037   CONST -+IN  Q+-%R4038   CONST -+IN  Q+-%R4039
|   01FF | LEN |            FFF8 | LEN |            FFFF | LEN |
|        |00001|                 |00001|                 |00001|
|        |     |                 |     |                 |     |
|        +-----+                 +-----+                 +-----+
|
|STEP_1                                                                  << RUNG 25  STEP #0065 >>
|%G0001  +-----+                +-----+                +-----+
+--] [---+MOVE_+----------------+MOVE_+----------------+MOVE_+-
|        | WORD|                | WORD|                | WORD|
|        |     |                |     |                |     |
|        |     | WSINT1         |     | WSINT2         |     | WSINT3
| CONST -+IN  Q+-%R4080   CONST -+IN  Q+-%R4081   CONST -+IN  Q+-%R4082
|   01FF | LEN |            0000 | LEN |            FE00 | LEN |
|        |00001|                 |00001|                 |00001|
|        |     |                 |     |                 |     |
|        +-----+                 +-----+                 +-----+
|
|STEP_1                                                                  << RUNG 26  STEP #0069 >>
|%G0001  +-----+                +-----+
+--] [---+MOVE_+----------------+MOVE_+-
|        | WORD|                | WORD|
|        |     |                |     |
|        |     | WSINT4         |     | WSINT5
| CONST -+IN  Q+-%R4083   CONST -+IN  Q+-%R4084
|   FFFF | LEN |            FFFF | LEN |
|        |00001|                 |00001|
|        |     |                 |     |
|        +-----+                 +-----+
|
| (*************************************************************************)
| (* Waste quantity for paper splice detection.                           *)
| (*************************************************************************)
|
|STEP_1                                                                  << RUNG 28  STEP #0073 >>
|%G0001  +-----+                +-----+
+--] [---+MOVE_+----------------+MOVE_+-
|        | WORD|                | WORD|
|        |     |                |     |
|        |     | WPSPLC1        |     | WPSPLC2
| CONST -+IN  Q+-%R4040   CONST -+IN  Q+-%R4041
|   F8FF | LEN |            FFFF | LEN |
|        |00001|                 |00001|
|        |     |                 |     |
|        +-----+                 +-----+
|
| (*************************************************************************)
| (* Waste quantity in different stop cases.                              *)
| (*************************************************************************)
|
```

REFERENCE	NICKNAME	REFERENCE DESCRIPTION	REFERENCE	NICKNAME	REFERENCE DESCRIPTION
%G0001	STEP_1	STANDBY			
%R4040	WPSPLC1	Waste paper spl detection column	%R4083	WSINT4	Waste strip refill.inter.reg.4
%R4041	WPSPLC2	Waste paper spl detection column	%R4084	WSINT5	Waste strip refill.inter.reg.5
%R4080	WSINT1	Waste strip refill.inter.reg.1	%R4037	WSTPIH1	Waste strip TPIH fail register 1
%R4081	WSINT2	Waste strip refill.inter.reg.2	%R4038	WSTPIH2	Waste strip TPIH fail register 2
%R4082	WSINT3	Waste strip refill.inter.reg.3	%R4039	WSTPIH3	Waste strip TPIH fail register 3

```
|ALW_ON                                                                  << RUNG 30  STEP #0077 >>
|%S0007  +-----+               +-----+               +-----+
+--] [---+MOVE_+---------------+MOVE_+---------------+MOVE_+-
|        | WORD|               | WORD|               | WORD|
|        |     |               |     |               |     |
|        |     | WSSTR_1       |     | WSSTR_2       |     | WSSTR_3
| CONST -+IN  Q+-%R4042  CONST -+IN  Q+-%R4043  CONST -+IN  Q+-%R4044
|   0000 | LEN |          0000 | LEN |          0000 | LEN |
|        |00001|               |00001|               |00001|
|        |     |               |     |               |     |
|        +-----+               +-----+               +-----+
|
|ALW_ON                                                                  << RUNG 31  STEP #0081 >>
|%S0007  +-----+               +-----+               +-----+
+--] [---+MOVE_+---------------+MOVE_+---------------+MOVE_+-
|        | WORD|               | WORD|               | WORD|
|        |     |               |     |               |     |
|        |     | WSSTR_4       |     | WSSTR_5       |     | WLSERR1
| CONST -+IN  Q+-%R4045  CONST -+IN  Q+-%R4046  CONST -+IN  Q+-%R4047
|   FF80 | LEN |          FFFF | LEN |          87FF | LEN |
|        |00001|               |00001|               |00001|
|        |     |               |     |               |     |
|        +-----+               +-----+               +-----+
|
|STARTOK                                                                 << RUNG 32  STEP #0085 >>
|%M0067  +-----+               +-----+               +-----+
+--] [---+MOVE_+---------------+MOVE_+---------------+MOVE_+-
|        | WORD|               | WORD|               | WORD|
|        |     |               |     |               |     |
|        |     | WSSTR_1       |     | WSSTR_2       |     | WSSTR_3
| CONST -+IN  Q+-%R4042  CONST -+IN  Q+-%R4043  CONST -+IN  Q+-%R4044
|   0000 | LEN |          F000 | LEN |          FFFF | LEN |
|        |00001|               |00001|               |00001|
|        |     |               |     |               |     |
|        +-----+               +-----+               +-----+
|
|STARTOK                                                                 << RUNG 33  STEP #0089 >>
|%M0067  +-----+               +-----+
+--] [---+MOVE_+---------------+MOVE_+-
|        | WORD|               | WORD|
|        |     |               |     |
|        |     | WSSTR_4       |     | WSSTR_5
| CONST -+IN  Q+-%R4045  CONST -+IN  Q+-%R4046
|   FFFF | LEN |          FFFF | LEN |
|        |00001|               |00001|
|        |     |               |     |
|        +-----+               +-----+
|
|STEP_1                                                                  << RUNG 34  STEP #0092 >>
|%G0001  +-----+               +-----+
+--] [---+MOVE_+---------------+MOVE_+-
|        | WORD|               | WORD|
|        |     |               |     |
|        |     | WLSERR2       |     | TS_FAIL
| CONST -+IN  Q+-%R4048  CONST -+IN  Q+-%R4072
|   FFFF | LEN |          FFF0 | LEN |
|        |00001|               |00001|
|        |     |               |     |
|        +-----+               +-----+
|
| (*************************************************************************)
| (* Setting for TS side shift in the fast scan.                          *)
| (*************************************************************************)
|
```

REFERENCE	NICKNAME	REFERENCE DESCRIPTION	REFERENCE	NICKNAME	REFERENCE DESCRIPTION
%S0007	ALW_ON		%R4042	WSSTR_1	Waste startup reg 1
%M0067	STARTOK	Production start OK	%R4043	WSSTR_2	Waste startup reg 2
%G0001	STEP_1	STANDBY	%R4044	WSSTR_3	Waste startup reg 3
%R4072	TS_FAIL	Waste for TS load error	%R4045	WSSTR_4	Waste startup reg 4
%R4047	WLSERR1	Waste LS error reg 1	%R4046	WSSTR_5	Waste startup reg 5
%R4048	WLSERR2	Waste LS error reg 2			

```
|STEP_1                                                                << RUNG 36  STEP #0096 >>
|%G0001  +-----+                +-----+
+--] [---+MOVE_+----------------+MOVE_+-
|        | INT |                | INT |
|        |     |                |     |
|        |     | TSSH_S1        |     | TSSH_S2
| CONST -+IN  Q+-%R4054   CONST -+IN  Q+-%R4055
| +00060 | LEN |          +00063 | LEN |
|        |00001|                |00001|
|        |     |                |     |
|        +-----+                +-----+
|
| (*************************************************************************)
| (* Setting for TS start pulse in the fast scan.                         *)
| (*************************************************************************)
|
|STEP_1                                                                << RUNG 38  STEP #0100 >>
|%G0001  +-----+                +-----+
+--] [---+MOVE_+----------------+MOVE_+-
|        | INT |                | INT |
|        |     |                |     |
|        |     | SSEALW1        |     | SSEALW2
| CONST -+IN  Q+-%R4056   CONST -+IN  Q+-%R4057
| +00000 | LEN |          +00003 | LEN |
|        |00001|                |00001|
|        |     |                |     |
|        +-----+                +-----+
|
| (*************************************************************************)
| (* Setting for waste box window in the fast scan.                        *)
| (*************************************************************************)
|
|STEP_1                                                                << RUNG 40  STEP #0104 >>
|%G0001  +-----+                +-----+
+--] [---+MOVE_+----------------+MOVE_+-
|        | INT |                | INT |
|        |     |                |     |
|        |     | WB_ONW1        |     | WB_ONW2
| CONST -+IN  Q+-%R4058   CONST -+IN  Q+-%R4059
| +00055 | LEN |          +00060 | LEN |
|        |00001|                |00001|
|        |     |                |     |
|        +-----+                +-----+
|
|STEP_1                                                                << RUNG 41  STEP #0107 >>
|%G0001  +-----+                +-----+
+--] [---+MOVE_+----------------+MOVE_+-
|        | INT |                | INT |
|        |     |                |     |
|        |     | WB_OFW1        |     | WB_OFW2
| CONST -+IN  Q+-%R4060   CONST -+IN  Q+-%R4061
| +00005 | LEN |          +00010 | LEN |
|        |00001|                |00001|
|        |     |                |     |
|        +-----+                +-----+
|
| (*************************************************************************)
| (* Setting for DCS TMCC parameter.                                       *)
| (*************************************************************************)
|
```

REFERENCE	NICKNAME	REFERENCE DESCRIPTION	REFERENCE	NICKNAME	REFERENCE DESCRIPTION
%R4056	SSEALW1	Start sealing sect window 1	%R4060	WB_OFW1	Waste box off window 1
%R4057	SSEALW2	Start sealing sect window 2	%R4061	WB_OFW2	Waste box off window 2
%G0001	STEP_1	STANDBY	%R4058	WB_ONW1	Waste box on window 1
%R4054	TSSH_S1	TS Shift sector window 1	%R4059	WB_ONW2	Waste box on window 2
%R4055	TSSH_S2	TS Shift sector window 2			

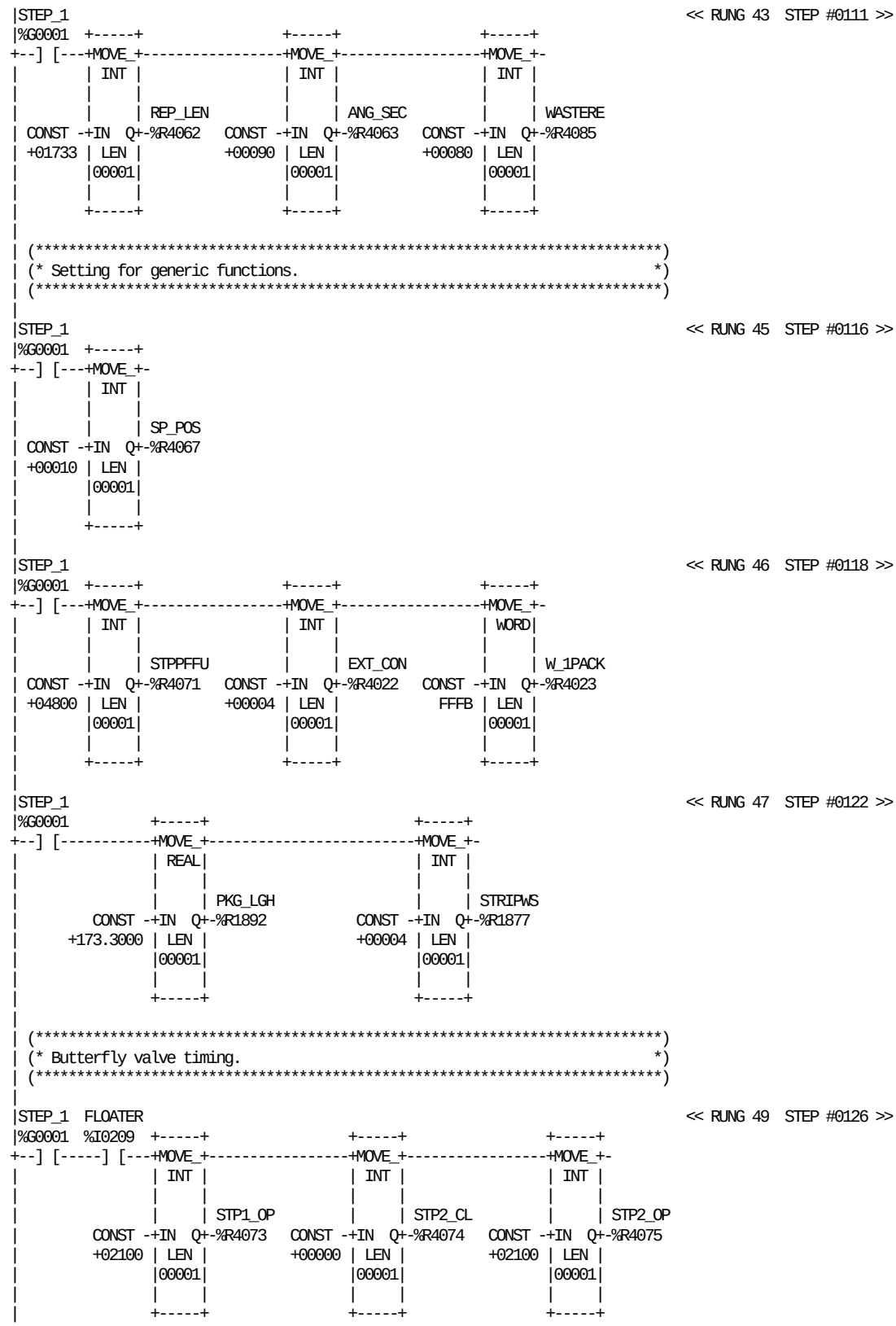

REFERENCE	NICKNAME	REFERENCE DESCRIPTION	REFERENCE	NICKNAME	REFERENCE DESCRIPTION
%R4063	ANG_SEC	Angle sector TMCC	%R4073	STP1_OP	Butterfly step 1 open time
%R4022	EXT_CON	External conv timer value	%R4074	STP2_CL	Butterfly step 2 close time
%I0209	FLOATER	Option for level with floater	%R4075	STP2_OP	Butterfly step 2 open time
%R1892	PKG_LGH	SA, package paper lenght	%R4071	STPPFFU	Stop position FFU delault value
%R4062	REP_LEN	Repeat length TMCC	%R1877	STRIPWS	SA, strip waste packages (PLMS)
%R4067	SP_POS	Splice position preset	%R4085	WASTERE	Start waste for refilling
%G0001	STEP_1	STANDBY	%R4023	W_1PACK	Waste of package Nr 1

```
|STEP_1  FLOATER                                                    << RUNG 50  STEP #0131 >>
|%G0001  %I0209  +-----+                +-----+
+--] [-----] [---+MOVE_+----------------+MOVE_+-
|                | INT |                | INT |
|                |     |                |     |
|                |     | STP3_CL        |     | STP3_OP
|         CONST -+IN  Q+-%R4076   CONST -+IN  Q+-%R4077
|         +00000 | LEN |          +02100 | LEN |
|                |00001|                |00001|
|                |     |                |     |
|                +-----+                +-----+
|
|STEP_1  FLOATER                                                    << RUNG 51  STEP #0135 >>
|%G0001  %I0209  +-----+                +-----+
+--] [-----] [---+MOVE_+----------------+MOVE_+-
|                | INT |                | INT |
|                |     |                |     |
|                |     | STP4_CL        |     | STP4_OP
|         CONST -+IN  Q+-%R4078   CONST -+IN  Q+-%R4079
|         +00000 | LEN |          +02100 | LEN |
|                |00001|                |00001|
|                |     |                |     |
|                +-----+                +-----+
|
|STEP_1  FLOATER                                                    << RUNG 52  STEP #0139 >>
|%G0001  %I0209  +-----+                +-----+                +-----+
+--] [-----]/[---+MOVE_+----------------+MOVE_+----------------+MOVE_+-
|                | INT |                | INT |                | INT |
|                |     |                |     |                |     |
|                |     | STP1_OP        |     | STP2_CL        |     | STP2_OP
|         CONST -+IN  Q+-%R4073   CONST -+IN  Q+-%R4074   CONST -+IN  Q+-%R4075
|         +03300 | LEN |          +04200 | LEN |          +04800 | LEN |
|                |00001|                |00001|                |00001|
|                |     |                |     |                |     |
|                +-----+                +-----+                +-----+
|
|STEP_1  FLOATER                                                    << RUNG 53  STEP #0144 >>
|%G0001  %I0209  +-----+                +-----+
+--] [-----]/[---+MOVE_+----------------+MOVE_+-
|                | INT |                | INT |
|                |     |                |     |
|                |     | STP3_CL        |     | STP3_OP
|         CONST -+IN  Q+-%R4076   CONST -+IN  Q+-%R4077
|         +05700 | LEN |          +08400 | LEN |
|                |00001|                |00001|
|                |     |                |     |
|                +-----+                +-----+
|
|STEP_1  FLOATER                                                    << RUNG 54  STEP #0148 >>
|%G0001  %I0209  +-----+                +-----+
+--] [-----]/[---+MOVE_+----------------+MOVE_+-
|                | INT |                | INT |
|                |     |                |     |
|                |     | STP4_CL        |     | STP4_OP
|         CONST -+IN  Q+-%R4078   CONST -+IN  Q+-%R4079
|         +05700 | LEN |          +08400 | LEN |
|                |00001|                |00001|
|                |     |                |     |
|                +-----+                +-----+
|
| (*************************************************************************)
| (* TMCC parameters for level control.                                   *)
| (*************************************************************************)
|
```

REFERENCE	NICKNAME	REFERENCE DESCRIPTION	REFERENCE	NICKNAME	REFERENCE DESCRIPTION
%I0209	FLOATER	Option for level with floater	%R4076	STP3_CL	Butterfly step 3 close time
%G0001	STEP_1	STANDBY	%R4077	STP3_OP	Butterfly step 3 open time
%R4073	STP1_OP	Butterfly step 1 open time	%R4078	STP4_CL	Butterfly step 4 close time
%R4074	STP2_CL	Butterfly step 2 close time	%R4079	STP4_OP	Butterfly step 4 open time
%R4075	STP2_OP	Butterfly step 2 open time			

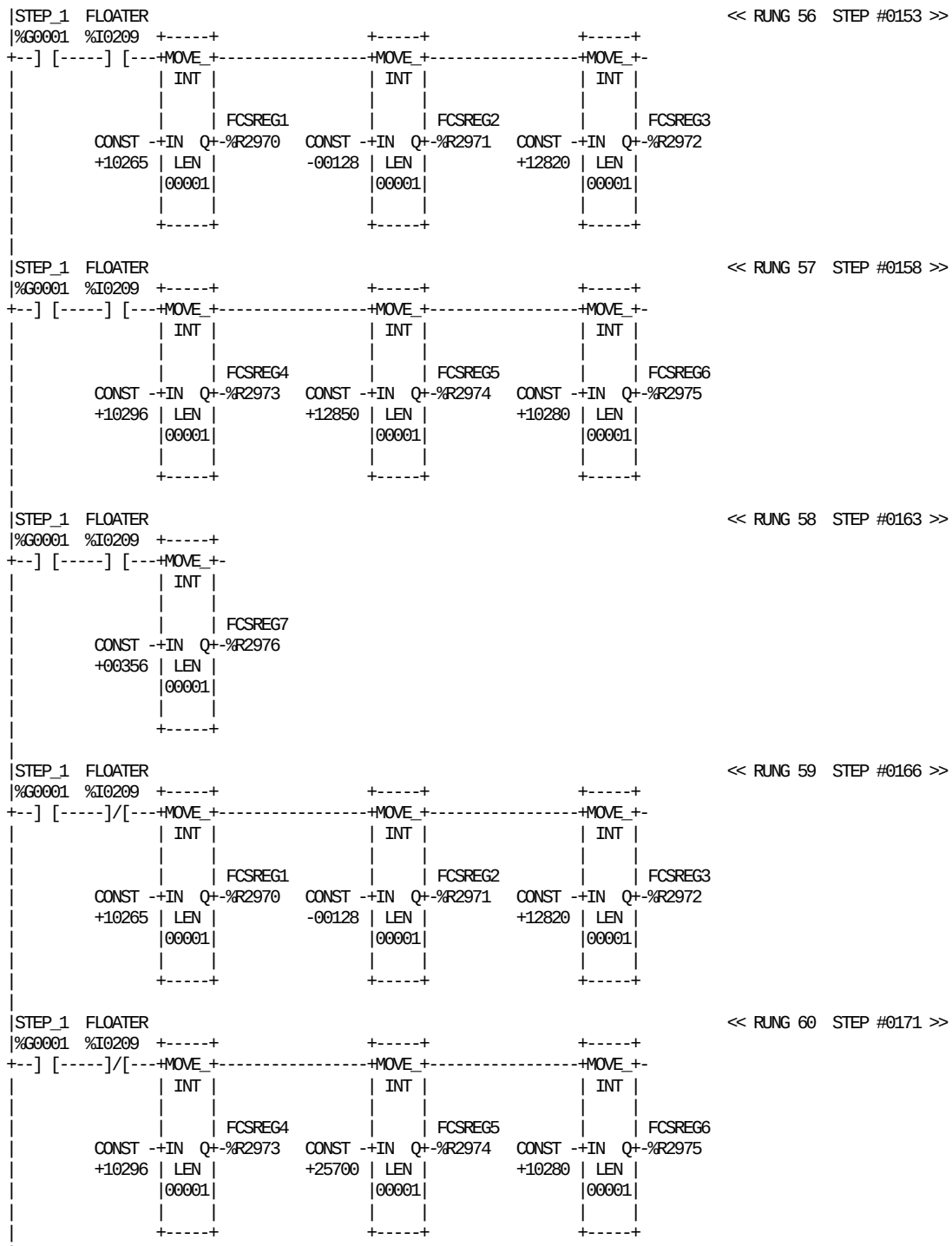

REFERENCE	NICKNAME	REFERENCE DESCRIPTION
%R2970	FCSREG1	TMCC FCS Default register 1
%R2971	FCSREG2	TMCC FCS Default register 2
%R2972	FCSREG3	TMCC FCS Default register 3
%R2973	FCSREG4	TMCC FCS Default register 4
%R2974	FCSREG5	TMCC FCS Default register 5
%R2975	FCSREG6	TMCC FCS Default register 6
%R2976	FCSREG7	TMCC FCS Default register 7
%I0209	FLOATER	Option for level with floater
%G0001	STEP_1	STANDBY

```
|STEP_1  FLOATER                                                    << RUNG 61  STEP #0176 >>
|%G0001  %I0209  +-----+
+--] [-----]/[---+MOVE_+-
|                | INT |
|                |     |
|                |     | FCSREG7
|         CONST -+IN  Q+-%R2976
|         +00356 | LEN |
|                |00001|
|                |     |
|                +-----+
|
| (*************************************************************************)
| (* Tight tube counters.                                                 *)
| (*************************************************************************)
|
|STEP_1                                                             << RUNG 63  STEP #0180 >>
|%G0001  +-----+                +-----+
+--] [---+MOVE_+----------------+MOVE_+-
|        | INT |                | INT |
|        |     |                |     |
|        |     | WSTUBE         |     | SPLTUBE
| CONST -+IN  Q+-%R4049   CONST -+IN  Q+-%R4053
| +00083 | LEN |          +00060 | LEN |
|        |00001|                |00001|
|        |     |                |     |
|        +-----+                +-----+
|
| (*************************************************************************)
| (* Sterilizing temperature in AC.                                       *)
| (*************************************************************************)
|
|STEP_1  FLOATER                                                    << RUNG 65  STEP #0184 >>
|%G0001  %I0209  +-----+
+--] [-----] [---+MOVE_+-
|                | INT |
|                |     |
|                |     | STER_AC
|         CONST -+IN  Q+-%R4099
|         +00600 | LEN |
|                |00001|
|                |     |
|                +-----+
|
|STEP_1  FLOATER                                                    << RUNG 66  STEP #0187 >>
|%G0001  %I0209  +-----+
+--] [-----]/[---+MOVE_+-
|                | INT |
|                |     |
|                |     | STER_AC
|         CONST -+IN  Q+-%R4099
|         +00600 | LEN |
|                |00001|
|                |     |
|                +-----+
|
| (*************************************************************************)
| (* Greasing stop position angle.                                         *)
| (*************************************************************************)
|
```

REFERENCE	NICKNAME	REFERENCE DESCRIPTION	REFERENCE	NICKNAME	REFERENCE DESCRIPTION
%R2976	FCSREG7	TMCC FCS Default register 7	%G0001	STEP_1	STANDBY
%I0209	FLOATER	Option for level with floater	%R4099	STER_AC	AC sterilizing temperature
%R4053	SPLTUBE	Pkgs from jaw to splice detector	%R4049	WSTUBE	Waste pkgs tight sealing tube

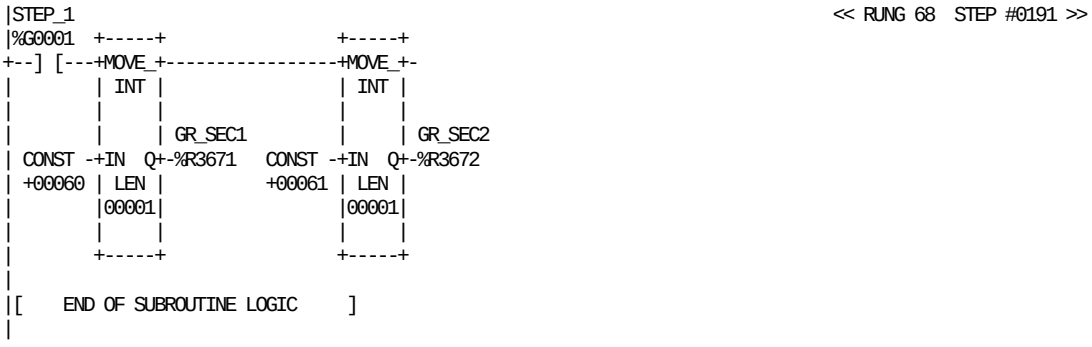

REFERENCE	NICKNAME	REFERENCE DESCRIPTION	REFERENCE	NICKNAME	REFERENCE DESCRIPTION
%R3671	GR_SEC1	Greasing stop sector STOP 1	%G0001	STEP_1	STANDBY
%R3672	GR_SEC2	Greasing stop sector STOP 2			

This page left intentionally blank

```
|[  START LD SUBROUTINE  IH_MON   ]
|
|[     VARIABLE DECLARATIONS      ]
|
|[   START OF SUBROUTINE LOGIC    ]
|
| (*************************************************************************)
| (* TMCC Sealing Monitoring control signals.                              *)
| (*************************************************************************)
|
|STEP_1  STEP_12 STEP_13 STEP_14 STEP_15                          A421_13  << RUNG 5  STEP #0003 >>
|%G0001  %G0012  %G0013  %G0014  %G0015                           %Q0241
+--]/[-----]/[-----]/[-----]/[-----]/[-----------------------------( )-- (* Enable sealing monitoring       *)
|
|A506_32                                                          A421_17  << RUNG 6  STEP #0009 >>
|%I0044                                                           %Q0242
+--] [-----------------------------------------------------------------( )-- (* Motor run sealing monitoring    *)
|
|ST_9-10                                                          A421_14  << RUNG 7  STEP #0011 >>
|%G0026                                                           %Q0243
+--] [-----------------------------------------------------------------( )-- (* Production for sealing monitorin *)
|
| (*************************************************************************)
| (* Acquisition data from TMCC Sealing Monitoring.                        *)
| (*************************************************************************)
|
|A421_29 A421_13                                                  << RUNG 9  STEP #0014 >>
|%I0249  %Q0241  +-----+
+--]/[--+--] [---+MOVE_+-
|       |       | INT |
|A422_29|       |     |
|%I0250 |A421_25|     | SM_CODE
+--]/[--+%I0241 -+IN  Q+-%R4100
|               | LEN |
|               |00001|
|               |     |
|               +-----+
|
|A422_29                                                          << RUNG 10  STEP #0018 >>
|%I0250  +-----+
+--]/[---+ AND_+-
|        | WORD|
|        |     |
|SM_CODE |     | SM_TEMP
|%R4100 -+I1  Q+-%R4103
|        |     |
| CONST -+I2   |
|   00F0 +-----+
|
|A422_29                                                          << RUNG 11  STEP #0020 >>
|%I0250  +-----+
+--]/[---+ SHR_|
|        | WORD|
|        |     |
|SM_TEMP |     |
|%R4103 -+IN B2+-
|        | LEN |
|        |00001|
|        |     | TS_CODE
| CONST -+N   Q+-%R4102
| +00004 |     |
|ALW_OFF |     |
|%S0008  |     |
+--] [---+B1   |
|        +-----+
```

REFERENCE	NICKNAME	REFERENCE DESCRIPTION	REFERENCE	NICKNAME	REFERENCE DESCRIPTION
%Q0241	A421_13	Enable sealing monitoring	%R4103	SM_TEMP	SM Temp. register
%Q0243	A421_14	Production for sealing monitorin	%G0001	STEP_1	STANDBY
%Q0242	A421_17	Motor run sealing monitoring	%G0012	STEP_12	VENTING
%I0241	A421_25	TMCC SM LS-SA Error Bit 0	%G0013	STEP_13	OPEN DOORS, CUT TUBE
%I0249	A421_29	TMCC SM LS-SA Strobe impulse	%G0014	STEP_14	CIP / HC
%I0250	A422_29	TMCC SM TS Strobe impulse	%G0015	STEP_15	BLOWING
%I0044	A506_32	DMC Main motor running	%G0026	ST_9-10	Ladder position 9-10
%S0008	ALW_OFF		%R4102	TS_CODE	SM TS Error Code
%R4100	SM_CODE	SM Error Code			

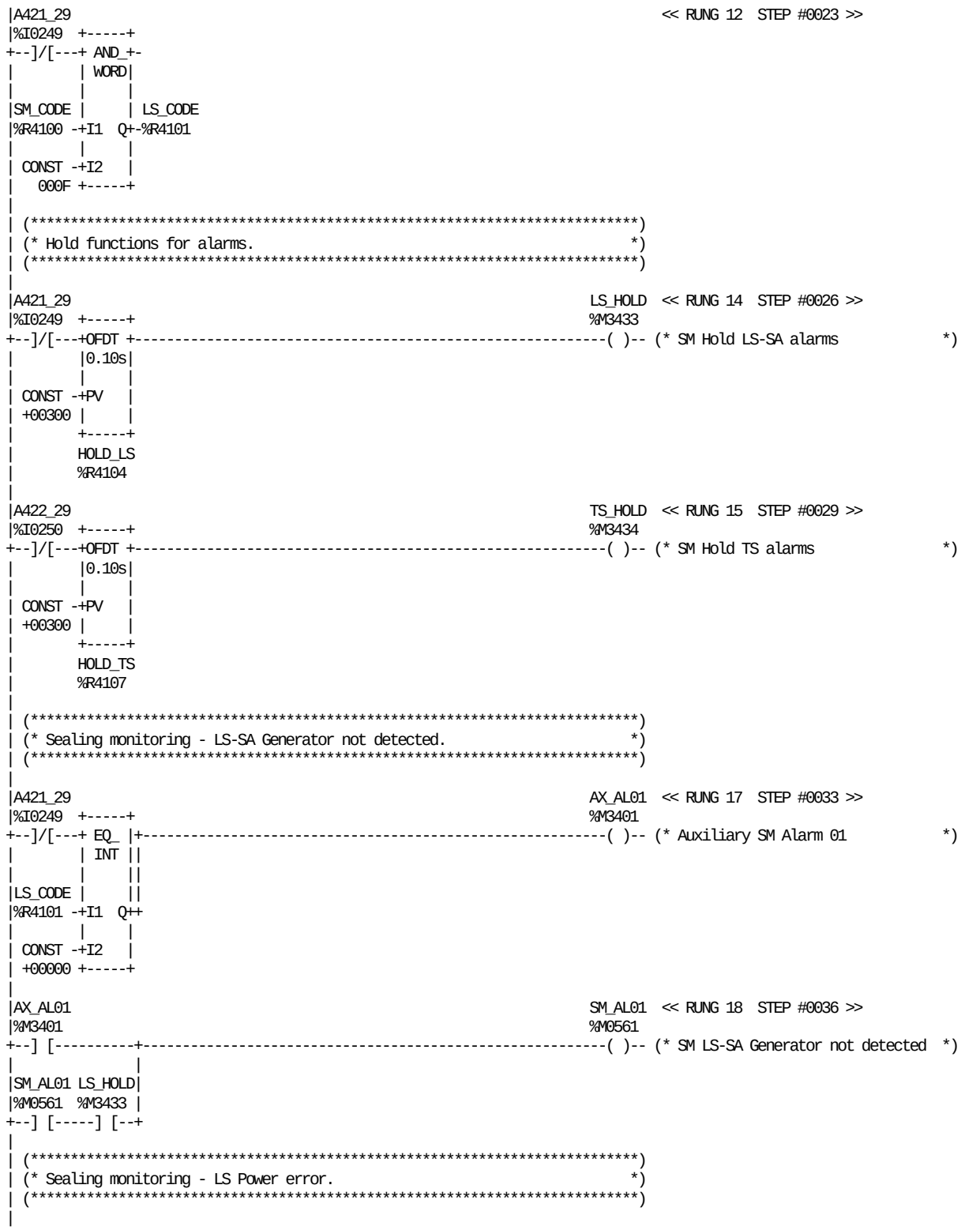

REFERENCE	NICKNAME	REFERENCE DESCRIPTION	REFERENCE	NICKNAME	REFERENCE DESCRIPTION
%I0249	A421_29	TMCC SM LS-SA Strobe impulse	%R4101	LS_CODE	SM LS-SA Error Code
%I0250	A422_29	TMCC SM TS Strobe impulse	%M3433	LS_HOLD	SM Hold LS-SA alarms
%M3401	AX_AL01	Auxiliary SM Alarm 01	%M0561	SM_AL01	SM LS-SA Generator not detected
%R4104	HOLD_LS	SM Hold LS-SA alarms	%R4100	SM_CODE	SM Error Code
%R4107	HOLD_TS	SM Hold TS alarms	%M3434	TS_HOLD	SM Hold TS alarms

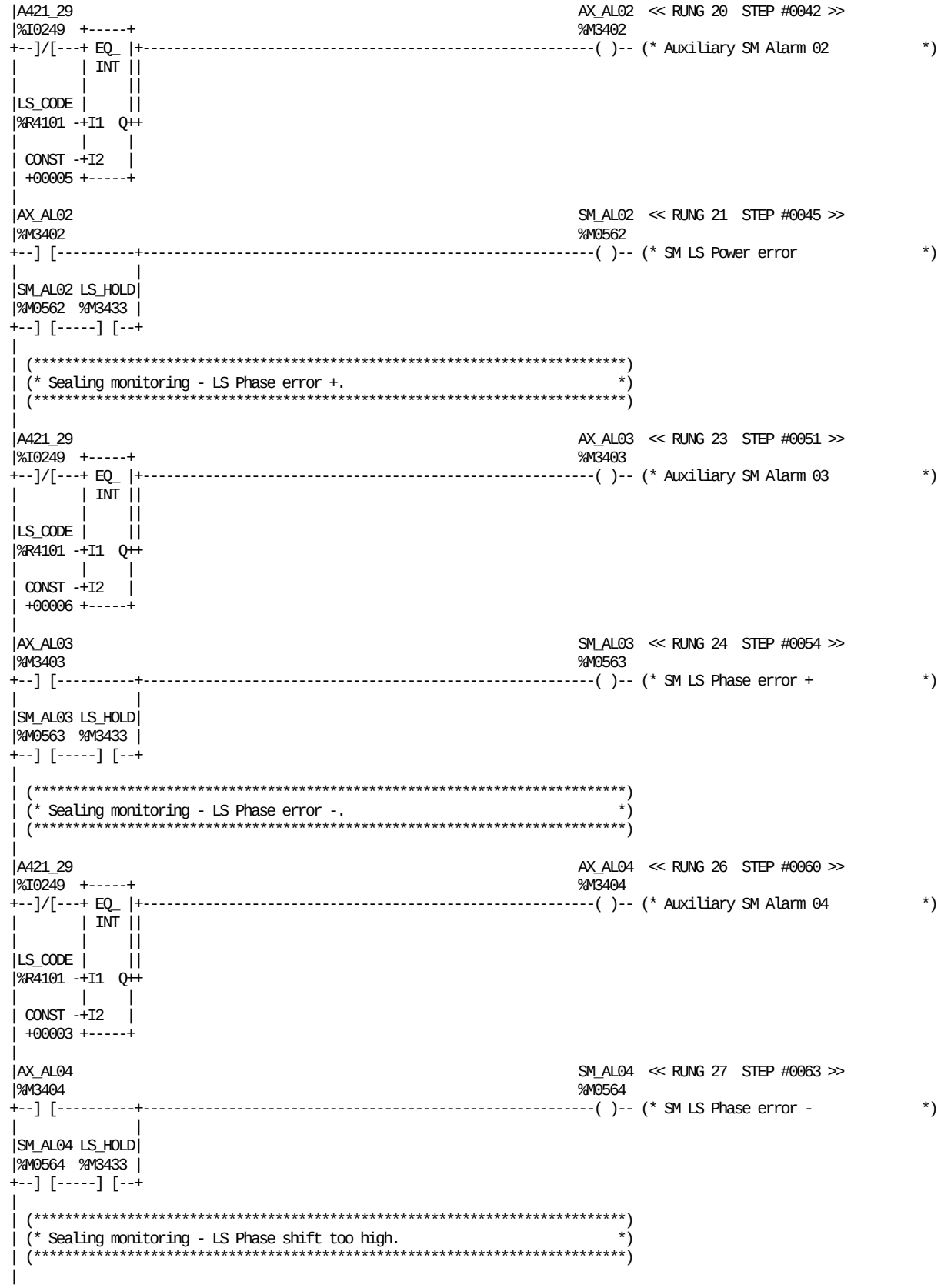

REFERENCE	NICKNAME	REFERENCE DESCRIPTION	REFERENCE	NICKNAME	REFERENCE DESCRIPTION
%I0249	A421_29	TMCC SM LS-SA Strobe impulse	%M3433	LS_HOLD	SM Hold LS-SA alarms
%M3402	AX_AL02	Auxiliary SM Alarm 02	%M0562	SM_AL02	SM LS Power error
%M3403	AX_AL03	Auxiliary SM Alarm 03	%M0563	SM_AL03	SM LS Phase error +
%M3404	AX_AL04	Auxiliary SM Alarm 04	%M0564	SM_AL04	SM LS Phase error -
%R4101	LS_CODE	SM LS-SA Error Code			

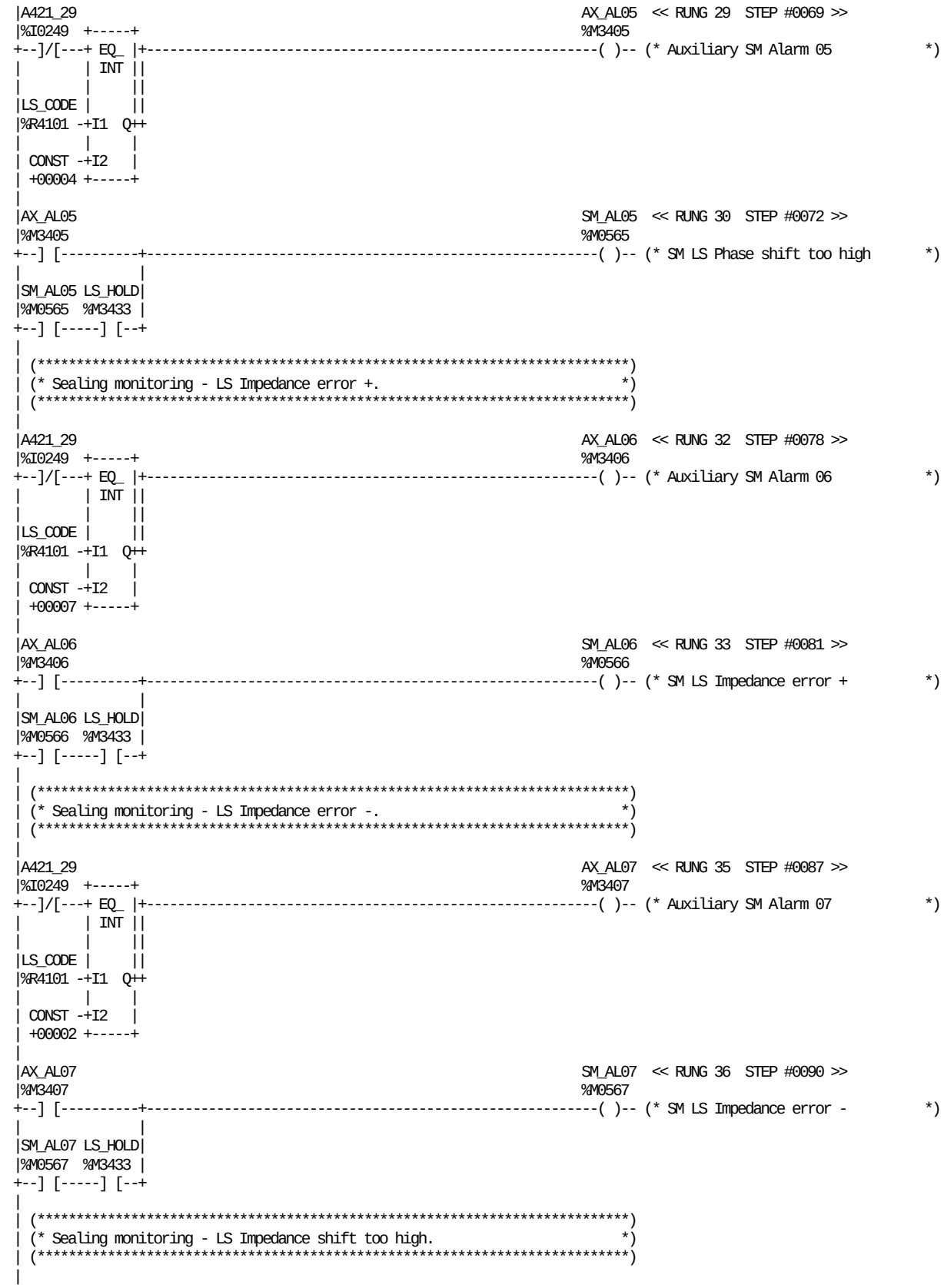

REFERENCE	NICKNAME	REFERENCE DESCRIPTION	REFERENCE	NICKNAME	REFERENCE DESCRIPTION
%I0249	A421_29	TMCC SM LS-SA Strobe impulse	%M3433	LS_HOLD	SM Hold LS-SA alarms
%M3405	AX_AL05	Auxiliary SM Alarm 05	%M0565	SM_AL05	SM LS Phase shift too high
%M3406	AX_AL06	Auxiliary SM Alarm 06	%M0566	SM_AL06	SM LS Impedance error +
%M3407	AX_AL07	Auxiliary SM Alarm 07	%M0567	SM_AL07	SM LS Impedance error -
%R4101	LS_CODE	SM LS-SA Error Code			

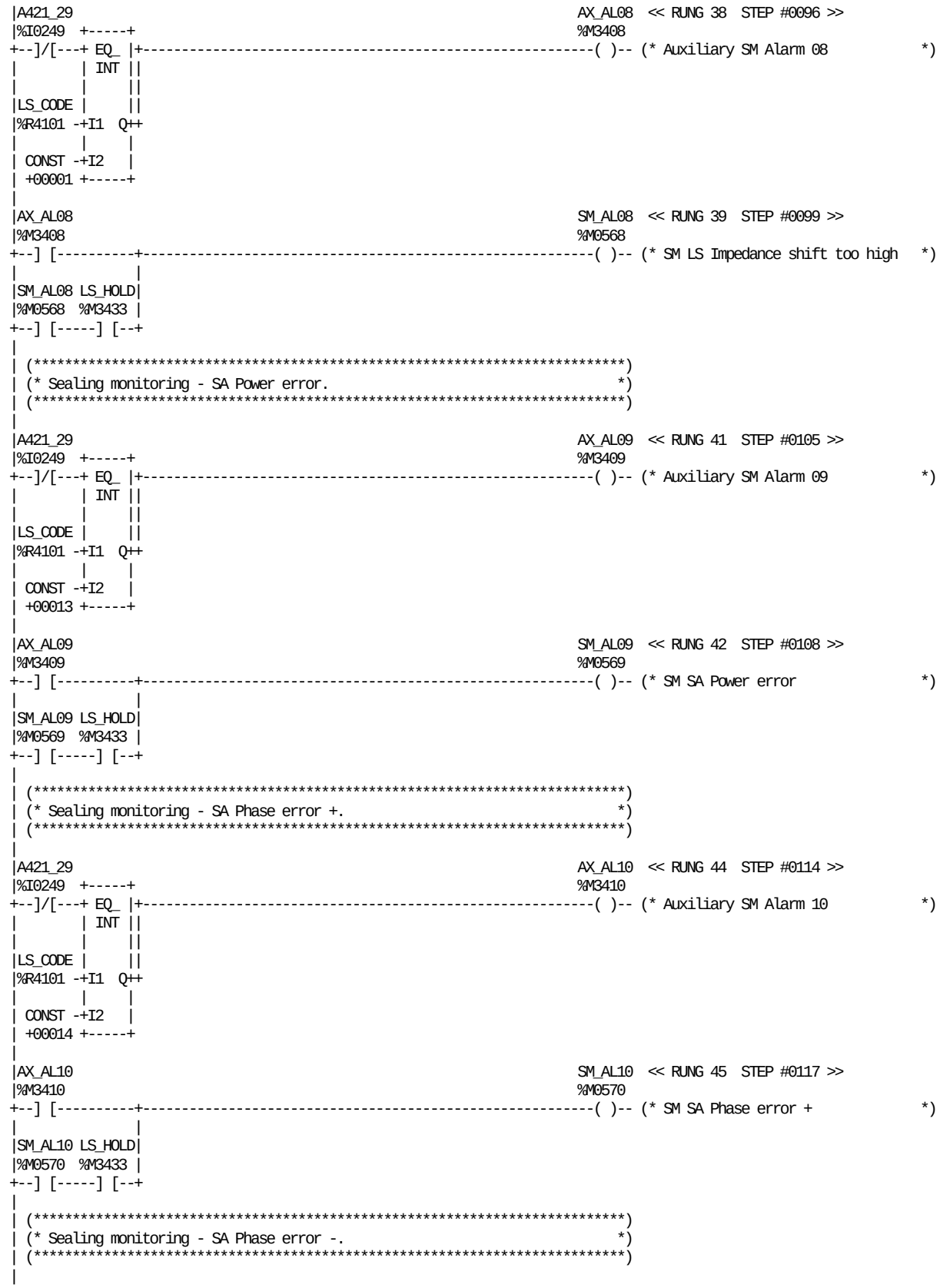

REFERENCE	NICKNAME	REFERENCE DESCRIPTION	REFERENCE	NICKNAME	REFERENCE DESCRIPTION
%I0249	A421_29	TMCC SM LS-SA Strobe impulse	%M3433	LS_HOLD	SM Hold LS-SA alarms
%M3408	AX_AL08	Auxiliary SM Alarm 08	%M0568	SM_AL08	SM LS Impedance shift too high
%M3409	AX_AL09	Auxiliary SM Alarm 09	%M0569	SM_AL09	SM SA Power error
%M3410	AX_AL10	Auxiliary SM Alarm 10	%M0570	SM_AL10	SM SA Phase error +
%R4101	LS_CODE	SM LS-SA Error Code			

```
|A421_29                                                          AX_AL11  << RUNG 47  STEP #0123 >>
|%I0249  +-----+                                                  %M3411
+--]/[---+ EQ_ |+-----------------------------------------------------( )-- (* Auxiliary SM Alarm 11           *)
|        | INT ||
|        |     ||
|LS_CODE |     ||
|%R4101 -+I1  Q++
|        |     |
| CONST -+I2   |
| +00011 +-----+
|
|AX_AL11                                                          SM_AL11  << RUNG 48  STEP #0126 >>
|%M3411                                                           %M0571
+--] [----------+-----------------------------------------------------( )-- (* SM SA Phase error -            *)
|               |
|SM_AL11 LS_HOLD|
|%M0571  %M3433 |
+--] [-----] [--+
|
| (*****************************************************************************)
| (* Sealing monitoring - SA Phase shift too high.                           *)
| (*****************************************************************************)
|
|A421_29                                                          AX_AL12  << RUNG 50  STEP #0132 >>
|%I0249  +-----+                                                  %M3412
+--]/[---+ EQ_ |+-----------------------------------------------------( )-- (* Auxiliary SM Alarm 12           *)
|        | INT ||
|        |     ||
|LS_CODE |     ||
|%R4101 -+I1  Q++
|        |     |
| CONST -+I2   |
| +00012 +-----+
|
|AX_AL12                                                          SM_AL12  << RUNG 51  STEP #0135 >>
|%M3412                                                           %M0572
+--] [----------+-----------------------------------------------------( )-- (* SM SA Phase shift too high      *)
|               |
|SM_AL12 LS_HOLD|
|%M0572  %M3433 |
+--] [-----] [--+
|
| (*****************************************************************************)
| (* Sealing monitoring - SA Impedance error +.                             *)
| (*****************************************************************************)
|
|A421_29                                                          AX_AL13  << RUNG 53  STEP #0141 >>
|%I0249  +-----+                                                  %M3413
+--]/[---+ EQ_ |+-----------------------------------------------------( )-- (* Auxiliary SM Alarm 13           *)
|        | INT ||
|        |     ||
|LS_CODE |     ||
|%R4101 -+I1  Q++
|        |     |
| CONST -+I2   |
| +00010 +-----+
|
|AX_AL13                                                          SM_AL13  << RUNG 54  STEP #0144 >>
|%M3413                                                           %M0573
+--] [----------+-----------------------------------------------------( )-- (* SM SA Impedance error +        *)
|               |
|SM_AL13 LS_HOLD|
|%M0573  %M3433 |
+--] [-----] [--+
|
| (*****************************************************************************)
| (* Sealing monitoring - SA Impedance error -.                              *)
| (*****************************************************************************)
|
```

REFERENCE	NICKNAME	REFERENCE DESCRIPTION	REFERENCE	NICKNAME	REFERENCE DESCRIPTION
%I0249	A421_29	TMCC SM LS-SA Strobe impulse	%M3433	LS_HOLD	SM Hold LS-SA alarms
%M3411	AX_AL11	Auxiliary SM Alarm 11	%M0571	SM_AL11	SM SA Phase error -
%M3412	AX_AL12	Auxiliary SM Alarm 12	%M0572	SM_AL12	SM SA Phase shift too high
%M3413	AX_AL13	Auxiliary SM Alarm 13	%M0573	SM_AL13	SM SA Impedance error +
%R4101	LS_CODE	SM LS-SA Error Code			

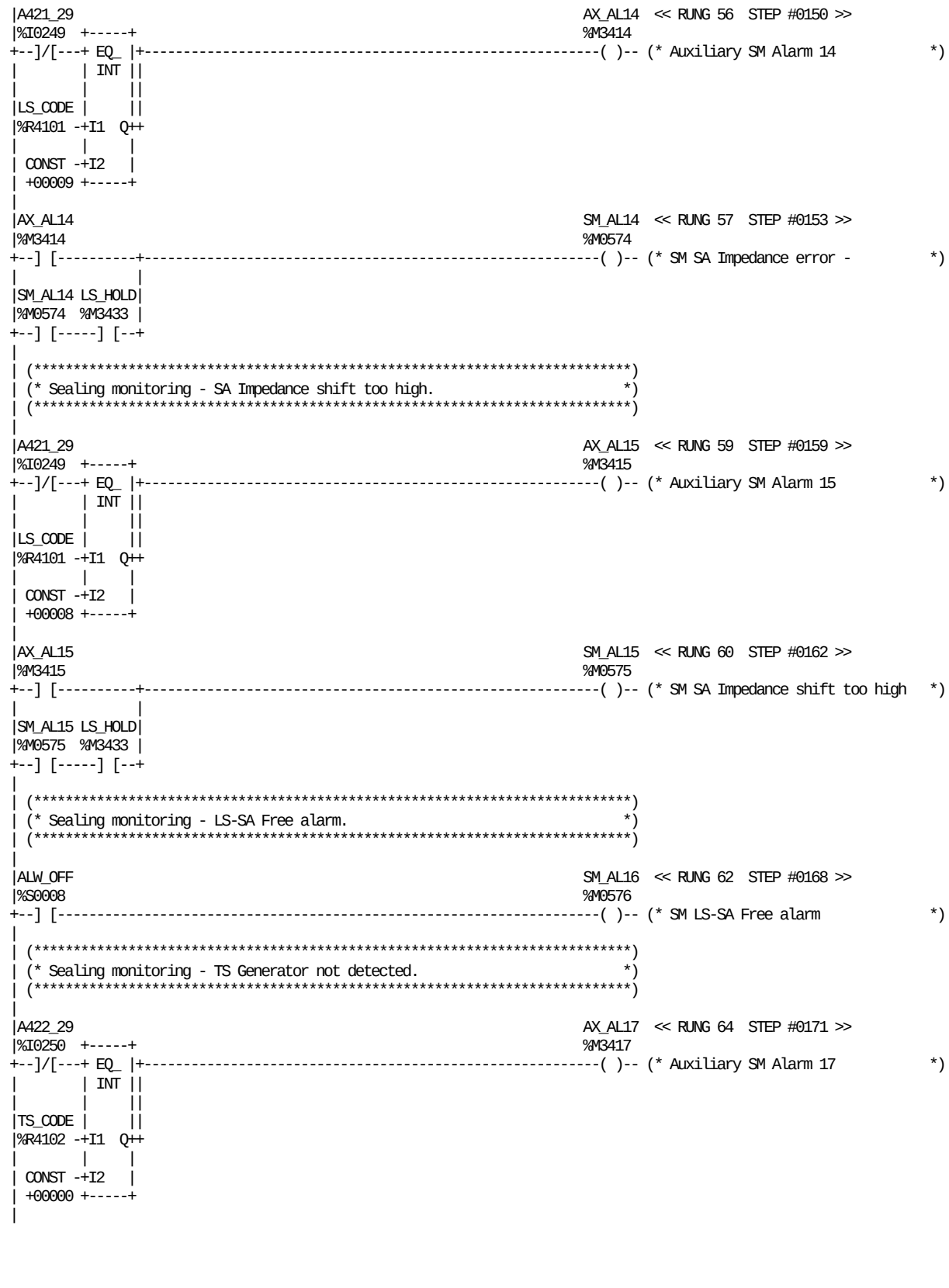

REFERENCE	NICKNAME	REFERENCE DESCRIPTION	REFERENCE	NICKNAME	REFERENCE DESCRIPTION
%I0249	A421_29	TMCC SM LS-SA Strobe impulse	%R4101	LS_CODE	SM LS-SA Error Code
%I0250	A422_29	TMCC SM TS Strobe impulse	%M3433	LS_HOLD	SM Hold LS-SA alarms
%S0008	ALW_OFF		%M0574	SM_AL14	SM SA Impedance error -
%M3414	AX_AL14	Auxiliary SM Alarm 14	%M0575	SM_AL15	SM SA Impedance shift too high
%M3415	AX_AL15	Auxiliary SM Alarm 15	%M0576	SM_AL16	SM LS-SA Free alarm
%M3417	AX_AL17	Auxiliary SM Alarm 17	%R4102	TS_CODE	SM TS Error Code

```
|AX_AL17                                                          SM_AL17  << RUNG 65  STEP #0174 >>
|%M3417                                                          %M0577
+--] [----------+-----------------------------------------------------( )-- (* SM TS Generator not detected     *)
|               |
|SM_AL17 TS_HOLD|
|%M0577  %M3434 |
+--] [-----] [--+
|
| (*************************************************************************)
| (* Sealing monitoring - TS Free alarm.                                   *)
| (*************************************************************************)
|
|ALW_OFF                                                          SM_AL18  << RUNG 67  STEP #0180 >>
|%S0008                                                          %M0578
+--] [-----------------------------------------------------------------( )-- (* SM TS Free alarm                *)
|
| (*************************************************************************)
| (* Sealing monitoring - TS Product temperature error.                    *)
| (*************************************************************************)
|
|A422_29                                                          AX_AL19  << RUNG 69  STEP #0183 >>
|%I0250  +-----+                                                  %M3419
+--]/[---+ EQ_ |+-----------------------------------------------------( )-- (* Auxiliary SM Alarm 19           *)
|        | INT ||
|        |     ||
|TS_CODE |     ||
|%R4102 -+I1  Q++
|        |     |
| CONST -+I2   |
| +00002 +-----+
|
|AX_AL19                                                          SM_AL19  << RUNG 70  STEP #0186 >>
|%M3419                                                          %M0579
+--] [----------+-----------------------------------------------------( )-- (* SM TS Product temperature error  *)
|               |
|SM_AL19 TS_HOLD|
|%M0579  %M3434 |
+--] [-----] [--+
|
| (*************************************************************************)
| (* Sealing monitoring - TS Phase change too low.                         *)
| (*************************************************************************)
|
|A422_29                                                          AX_AL20  << RUNG 72  STEP #0192 >>
|%I0250  +-----+                                                  %M3420
+--]/[---+ EQ_ |+-----------------------------------------------------( )-- (* Auxiliary SM Alarm 20           *)
|        | INT ||
|        |     ||
|TS_CODE |     ||
|%R4102 -+I1  Q++
|        |     |
| CONST -+I2   |
| +00003 +-----+
|
|AX_AL20                                                          SM_AL20  << RUNG 73  STEP #0195 >>
|%M3420                                                          %M0580
+--] [----------+-----------------------------------------------------( )-- (* SM TS Phase change too low      *)
|               |
|SM_AL20 TS_HOLD|
|%M0580  %M3434 |
+--] [-----] [--+
|
| (*************************************************************************)
| (* Sealing monitoring - TS Phase change too high.                        *)
| (*************************************************************************)
|
```

REFERENCE	NICKNAME	REFERENCE DESCRIPTION	REFERENCE	NICKNAME	REFERENCE DESCRIPTION
%I0250	A422_29	TMCC SM TS Strobe impulse	%M0578	SM_AL18	SM TS Free alarm
%S0008	ALW_OFF		%M0579	SM_AL19	SM TS Product temperature error
%M3417	AX_AL17	Auxiliary SM Alarm 17	%M0580	SM_AL20	SM TS Phase change too low
%M3419	AX_AL19	Auxiliary SM Alarm 19	%R4102	TS_CODE	SM TS Error Code
%M3420	AX_AL20	Auxiliary SM Alarm 20	%M3434	TS_HOLD	SM Hold TS alarms
%M0577	SM_AL17	SM TS Generator not detected			

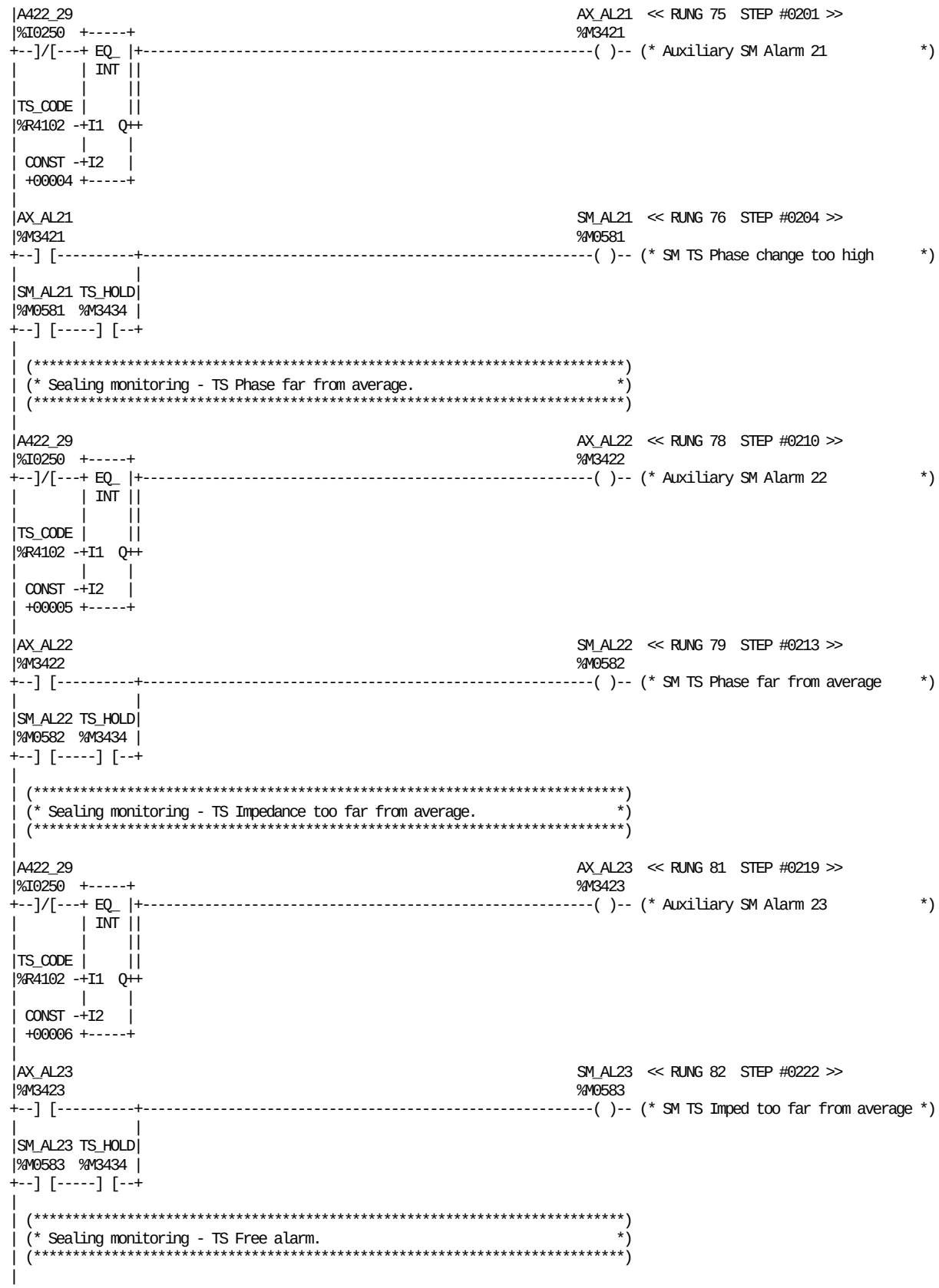

REFERENCE	NICKNAME	REFERENCE DESCRIPTION	REFERENCE	NICKNAME	REFERENCE DESCRIPTION
%I0250	A422_29	TMCC SM TS Strobe impulse	%M0582	SM_AL22	SM TS Phase far from average
%M3421	AX_AL21	Auxiliary SM Alarm 21	%M0583	SM_AL23	SM TS Imped too far from average
%M3422	AX_AL22	Auxiliary SM Alarm 22	%R4102	TS_CODE	SM TS Error Code
%M3423	AX_AL23	Auxiliary SM Alarm 23	%M3434	TS_HOLD	SM Hold TS alarms
%M0581	SM_AL21	SM TS Phase change too high			

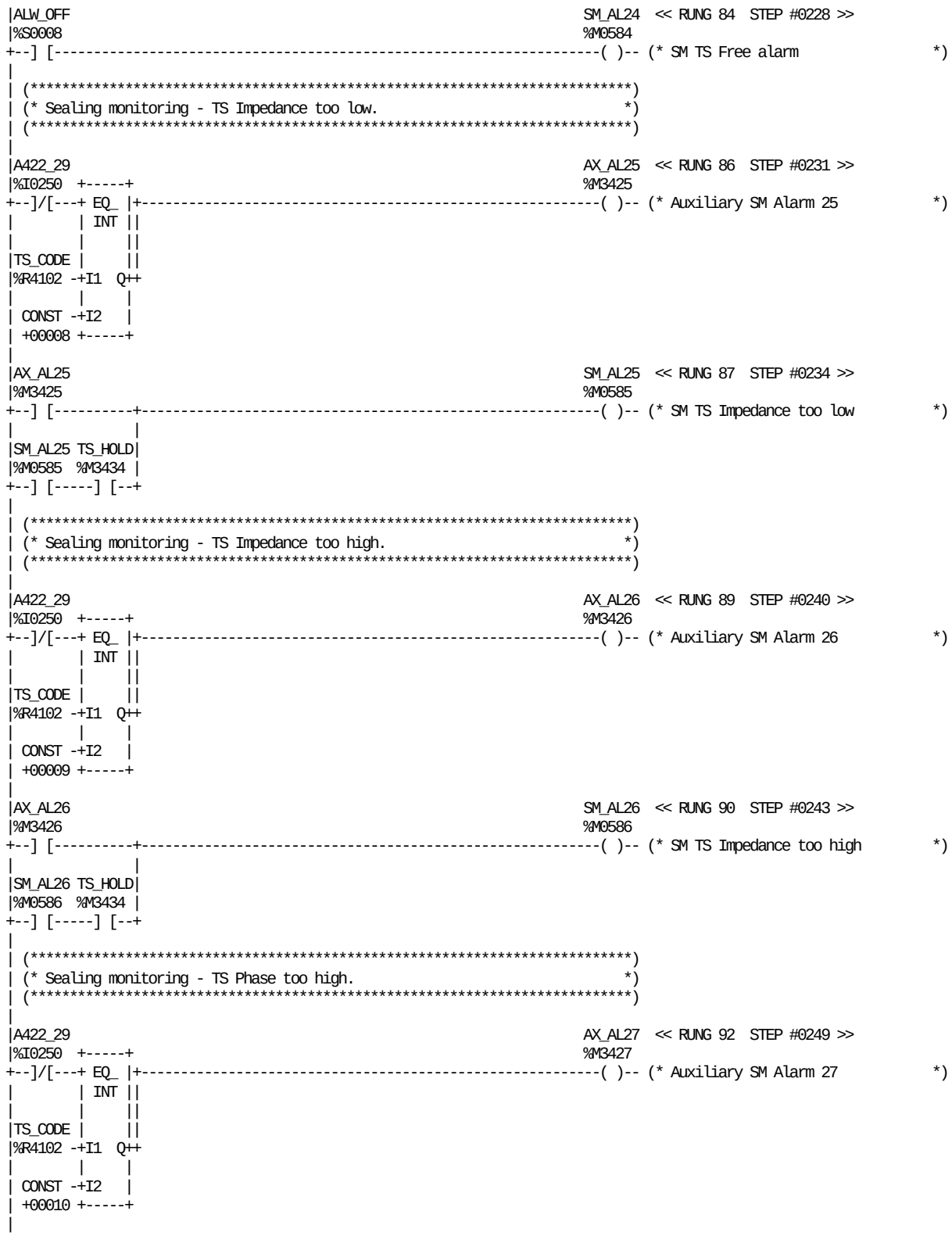

REFERENCE	NICKNAME	REFERENCE DESCRIPTION	REFERENCE	NICKNAME	REFERENCE DESCRIPTION
%I0250	A422_29	TMCC SM TS Strobe impulse	%M0584	SM_AL24	SM TS Free alarm
%S0008	ALW_OFF		%M0585	SM_AL25	SM TS Impedance too low
%M3425	AX_AL25	Auxiliary SM Alarm 25	%M0586	SM_AL26	SM TS Impedance too high
%M3426	AX_AL26	Auxiliary SM Alarm 26	%R4102	TS_CODE	SM TS Error Code
%M3427	AX_AL27	Auxiliary SM Alarm 27	%M3434	TS_HOLD	SM Hold TS alarms

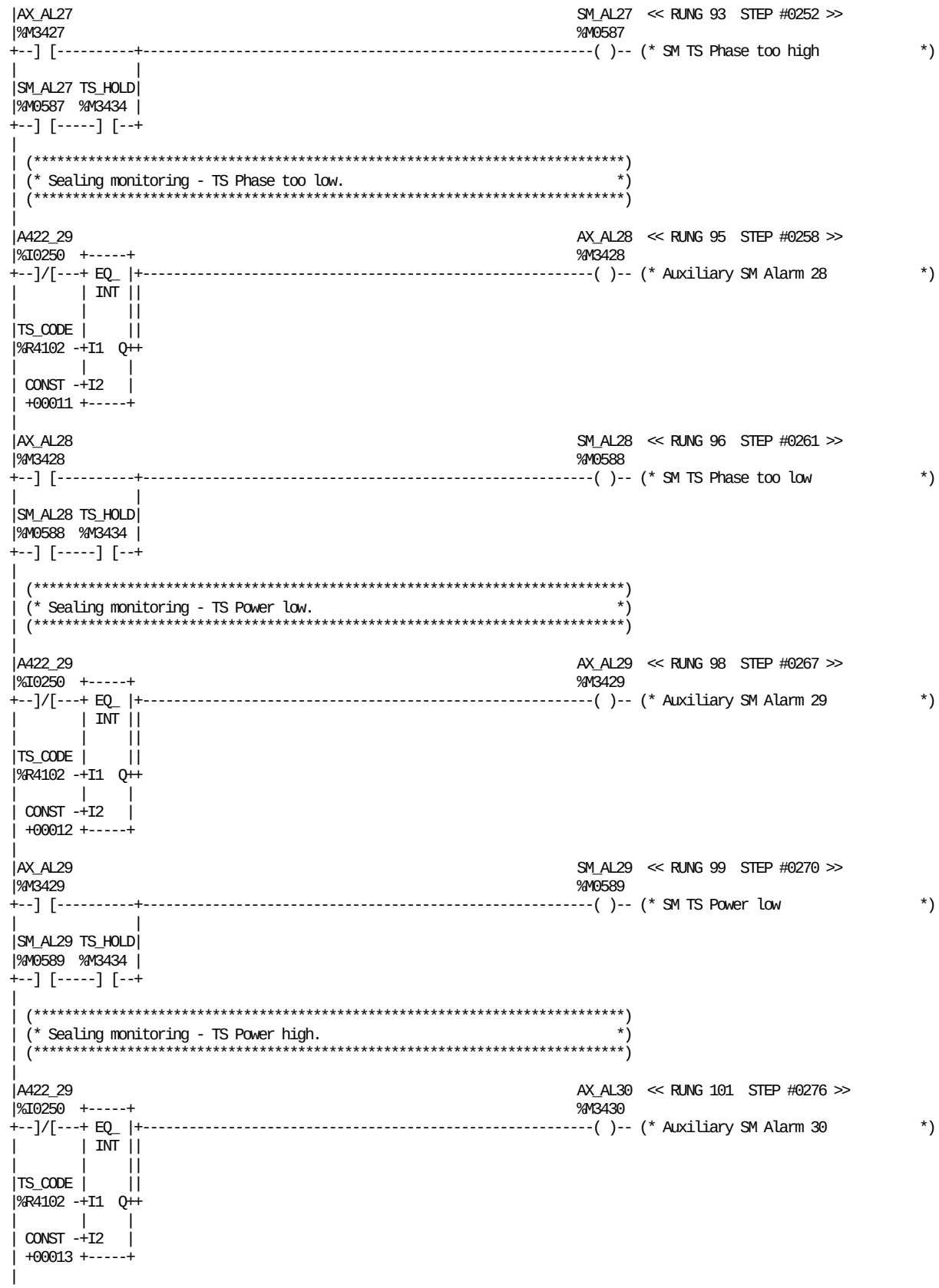

REFERENCE	NICKNAME	REFERENCE DESCRIPTION	REFERENCE	NICKNAME	REFERENCE DESCRIPTION
%I0250	A422_29	TMCC SM TS Strobe impulse	%M0587	SM_AL27	SM TS Phase too high
%M3427	AX_AL27	Auxiliary SM Alarm 27	%M0588	SM_AL28	SM TS Phase too low
%M3428	AX_AL28	Auxiliary SM Alarm 28	%M0589	SM_AL29	SM TS Power low
%M3429	AX_AL29	Auxiliary SM Alarm 29	%R4102	TS_CODE	SM TS Error Code
%M3430	AX_AL30	Auxiliary SM Alarm 30	%M3434	TS_HOLD	SM Hold TS alarms

```
|AX_AL30                                                          SM_AL30  << RUNG 102  STEP #0279 >>
|%M3430                                                          %M0590
+--] [----------+-----------------------------------------------------( )-- (* SM TS Power high                *)
|               |
|SM_AL30 TS_HOLD|
|%M0590  %M3434 |
+--] [-----] [--+
|
| (*************************************************************************)
| (* Sealing monitoring - TS Time error.                                   *)
| (*************************************************************************)
|
|A422_29                                                          AX_AL31  << RUNG 104  STEP #0285 >>
|%I0250  +-----+                                                  %M3431
+--]/[---+ EQ_ |+-----------------------------------------------------( )-- (* Auxiliary SM Alarm 31           *)
|        | INT ||
|        |     ||
|TS_CODE |     ||
|%R4102 -+I1  Q++
|        |     |
| CONST -+I2   |
| +00014 +-----+
|
|AX_AL31                                                          SM_AL31  << RUNG 105  STEP #0288 >>
|%M3431                                                          %M0591
+--] [----------+-----------------------------------------------------( )-- (* SM TS Time error               *)
|               |
|SM_AL31 TS_HOLD|
|%M0591  %M3434 |
+--] [-----] [--+
|
| (*************************************************************************)
| (* Sealing monitoring - TS Free alarm.                                   *)
| (*************************************************************************)
|
|ALW_OFF                                                          SM_AL32  << RUNG 107  STEP #0294 >>
|%S0008                                                          %M0592
+--] [-----------------------------------------------------------------( )-- (* SM TS Free alarm               *)
|
|[    END OF SUBROUTINE LOGIC     ]
|
```

REFERENCE	NICKNAME	REFERENCE DESCRIPTION
%I0250	A422_29	TMCC SM TS Strobe impulse
%S0008	ALW_OFF	
%M3430	AX_AL30	Auxiliary SM Alarm 30
%M3431	AX_AL31	Auxiliary SM Alarm 31
%M0590	SM_AL30	SM TS Power high
%M0591	SM_AL31	SM TS Time error
%M0592	SM_AL32	SM TS Free alarm
%R4102	TS_CODE	SM TS Error Code
%M3434	TS_HOLD	SM Hold TS alarms

```
|[  START LD SUBROUTINE    HI     ]
|
|[     VARIABLE DECLARATIONS      ]
|
|[   START OF SUBROUTINE LOGIC    ]
|
| (*************************************************************************)
| (* HI nozzle selection from TPOP and flow limit setting                  *)
| (* (automatically select n.3 i case of no nozzle selection)              *)
| (*************************************************************************)
|
| HI_ON                                                          << RUNG 5  STEP #0003 >>
|%M0718  +-----+
+--] [---+MOVE_+-
|        | WORD|
|        |     |
|HINOZZL |     | HINOZ01
|%R0493 -+IN  Q+-%M1937
|        | LEN |
|        |00001|
|        |     |
|        +-----+
|
| HI_ON                                                          << RUNG 6  STEP #0005 >>
|%M0718  +-----+
+--] [---+ EQ_ |
|        | INT |
|        |     |
|HINOZZL |     |         +-----+
|%R0493 -+I1  Q+---------+MOVE_+-
|        |     |         | INT |
|        |     |         |     |
|        |     |         |     | HINOZZL
| CONST -+I2   |  CONST -+IN  Q+-%R0493
| +00000 +-----+  +00001 | LEN |
|                        |00001|
|                        |     |
|                        +-----+
|
|STEP_1  HINOZ01                                                 << RUNG 7  STEP #0008 >>
|%G0001  %M1937  +-----+                +-----+
+--] [--+--] [---+MOVE_+----------------+MOVE_+-
|       |        | INT |                | INT |
|STEP_2 |        |     |                |     |
|%G0002 |        |     | FLWALLO        |     | FLWALHI
+--] [--+ CONST -+IN  Q+-%R6501   CONST -+IN  Q+-%R6502
|         +02000 | LEN |          +09400 | LEN |
|                |00001|                 |00001|
|                |     |                 |     |
|                +-----+                 +-----+
|
|STEP_1  HINOZ02                                                 << RUNG 8  STEP #0013 >>
|%G0001  %M1938  +-----+                +-----+
+--] [--+--] [---+MOVE_+----------------+MOVE_+-
|       |        | INT |                | INT |
|STEP_2 |        |     |                |     |
|%G0002 |        |     | FLWALLO        |     | FLWALHI
+--] [--+ CONST -+IN  Q+-%R6501   CONST -+IN  Q+-%R6502
|         +04400 | LEN |          +12000 | LEN |
|                |00001|                 |00001|
|                |     |                 |     |
|                +-----+                 +-----+
|
```

REFERENCE	NICKNAME	REFERENCE DESCRIPTION
%R6502	FLWALHI	HI, Flow alarm high level
%R6501	FLWALLO	HI, Flow alarm low level
%M1937	HINOZ01	HI, Nozzle selection 0.3
%M1938	HINOZ02	HI, Nozzle selection 0.4

REFERENCE	NICKNAME	REFERENCE DESCRIPTION
%R0493	HINOZZL	HI, Nozzle selection from TPOP
%M0718	HI_ON	HI, system setting with HI
%G0001	STEP_1	STANDBY
%G0002	STEP_2	PREPARATION (3 MIN.)

```
|STEP_1  HINOZ03                                                    << RUNG 9  STEP #0018 >>
|%G0001  %M1939  +-----+               +-----+
+--] [--+--] [---+MOVE_+----------------+MOVE_+-
|       |        | INT |               | INT |
|STEP_2 |        |     |               |     |
|%G0002 |        |     | FLWALLO       |     | FLWALHI
+--] [--+ CONST -+IN  Q+-%R6501   CONST -+IN  Q+-%R6502
|         +11200 | LEN |          +19000 | LEN |
|                |00001|                |00001|
|                |     |                |     |
|                +-----+                +-----+
|
|STEP_1  HINOZ04                                                    << RUNG 10  STEP #0023 >>
|%G0001  %M1940  +-----+               +-----+
+--] [--+--] [---+MOVE_+----------------+MOVE_+-
|       |        | INT |               | INT |
|STEP_2 |        |     |               |     |
|%G0002 |        |     | FLWALLO       |     | FLWALHI
+--] [--+ CONST -+IN  Q+-%R6501   CONST -+IN  Q+-%R6502
|         +16000 | LEN |          +24000 | LEN |
|                |00001|                |00001|
|                |     |                |     |
|                +-----+                +-----+
|
|STEP_1  HINOZ05                                                    << RUNG 11  STEP #0028 >>
|%G0001  %M1941  +-----+               +-----+
+--] [--+--] [---+MOVE_+----------------+MOVE_+-
|       |        | INT |               | INT |
|STEP_2 |        |     |               |     |
|%G0002 |        |     | FLWALLO       |     | FLWALHI
+--] [--+ CONST -+IN  Q+-%R6501   CONST -+IN  Q+-%R6502
|         +08400 | LEN |          +16200 | LEN |
|                |00001|                |00001|
|                |     |                |     |
|                +-----+                +-----+
|
| (*****************************************************************************)
| (* HI spray temperature and HI Air/N2 flow monitor.                          *)
| (* Transfer of registers to TPOP.                                            *)
| (*****************************************************************************)
|
|A124_09                                                            << RUNG 13  STEP #0034 >>
|%I0216  +-----+               +-----+
+--] [---+MOVE_+----------------+MOVE_+-
|        | INT |               | INT |
|        |     |               |     |
| B9106  |     | L8_PV2   A9105|     | HIFLOW
|%AI0049-+IN  Q+-%R0737  %AI0001-+IN  Q+-%R0496
|        | LEN |               | LEN |
|        |00001|               |00001|
|        |     |               |     |
|        +-----+               +-----+
|
| (*****************************************************************************)
| (* Flow impulse for I/P transducer.                                           *)
| (*****************************************************************************)
|
```

REFERENCE	NICKNAME	REFERENCE DESCRIPTION
%I0216	A124_09	HI Option
%AI0001	A9105	HI, Flow meter
%AI0049	B9106	HI, Temp. monitor spray
%R6502	FLWALHI	HI, Flow alarm high level
%R6501	FLWALLO	HI, Flow alarm low level
%R0496	HIFLOW	HI, N2/Air flow for TPOP

REFERENCE	NICKNAME	REFERENCE DESCRIPTION
%M1939	HINOZ03	HI, Nozzle selection 0.5
%M1940	HINOZ04	HI, Nozzle selection 0.6
%M1941	HINOZ05	HI, Nozzle selection 4x0.2
%R0737	L8_PV2	HI, Process value spray temp.
%G0001	STEP_1	STANDBY
%G0002	STEP_2	PREPARATION (3 MIN.)

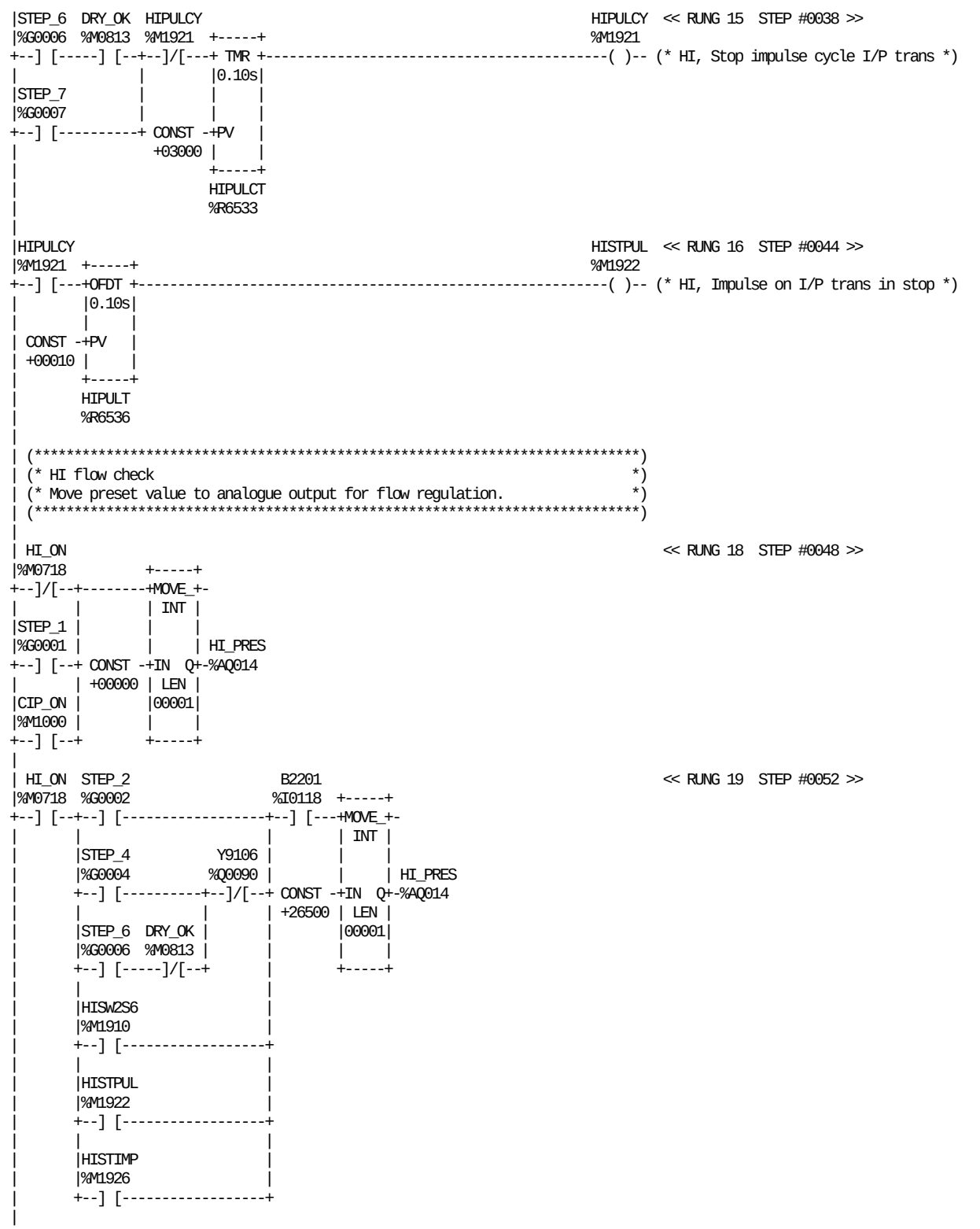

REFERENCE	NICKNAME	REFERENCE DESCRIPTION	REFERENCE	NICKNAME	REFERENCE DESCRIPTION
%I0118	B2201	Main air supply pressure	%M0718	HI_ON	HI, system setting with HI
%M1000	CIP_ON	CIP going on	%AQ014	HI_PRES	HI, Pressure regulator
%M0813	DRY_OK	Drying ready	%G0001	STEP_1	STANDBY
%R6533	HIPULCT	HI, Stop impulse cycle timer	%G0002	STEP_2	PREPARATION (3 MIN.)
%M1921	HIPULCY	HI, Stop impulse cycle I/P trans	%G0004	STEP_4	HEAT STERILIZATION
%R6536	HIPULT	HI, Stop impulse timer	%G0006	STEP_6	DRYING + STEAM CLEANING
%M1926	HISTIMP	HI, Injection impulse on stop	%G0007	STEP_7	SIGNAL TO STERILIZER
%M1922	HISTPUL	HI, Impulse on I/P trans in stop	%Q0090	Y9106	HI, Switch air in aseptic chamb.
%M1910	HISW2S6	HI, Switch valve pulse in step 6			

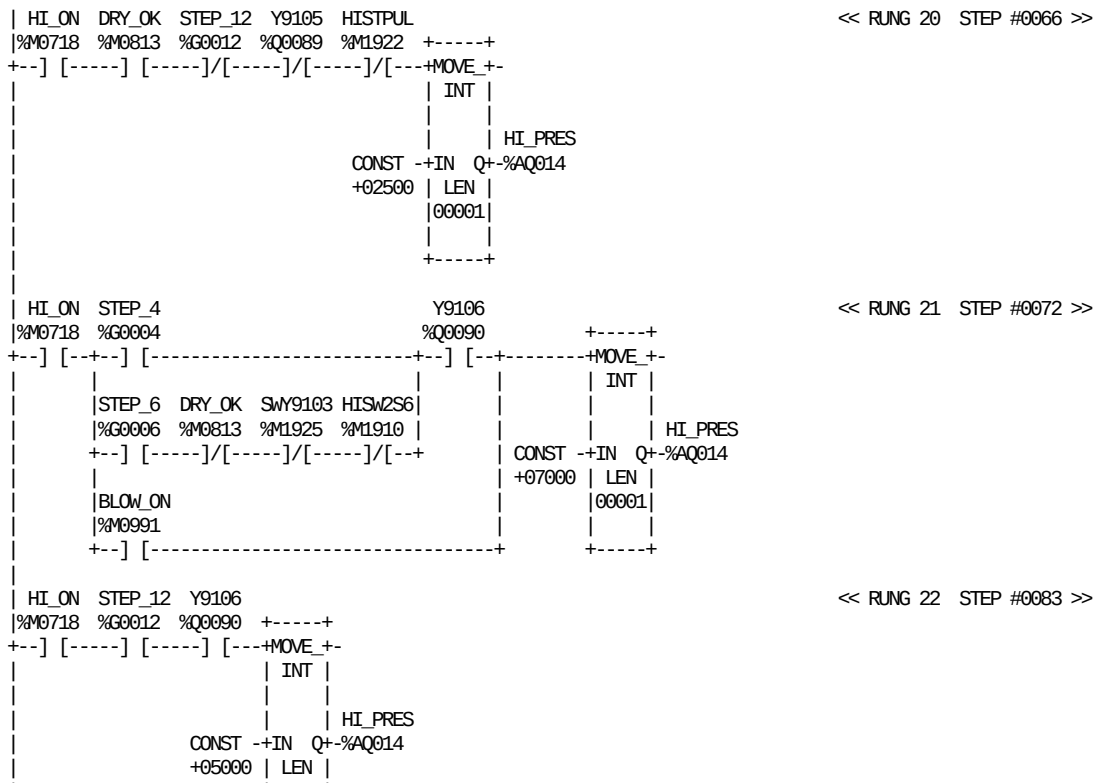

REFERENCE	NICKNAME	REFERENCE DESCRIPTION
%M0991	BLOW_ON	CIP blowing going on
%M0813	DRY_OK	Drying ready
%R0494	HIPRESS	HI, Pressure value from TPOP
%M1926	HISTIMP	HI, Injection impulse on stop
%M1922	HISTPUL	HI, Impulse on I/P trans in stop
%M1910	HISW2S6	HI, Switch valve pulse in step 6
%M0718	HI_ON	HI, system setting with HI
%AQ014	HI_PRES	HI, Pressure regulator

REFERENCE	NICKNAME	REFERENCE DESCRIPTION
%I0095	S003	Service switch
%G0012	STEP_12	VENTING
%G0004	STEP_4	HEAT STERILIZATION
%G0006	STEP_6	DRYING + STEAM CLEANING
%G0024	ST_6-10	Ladder position 6-10
%M1925	SWY9103	HI, Switch valve pulse in step 3
%Q0089	Y9105	HI, Injection
%Q0090	Y9106	HI, Switch air in aseptic chamb.

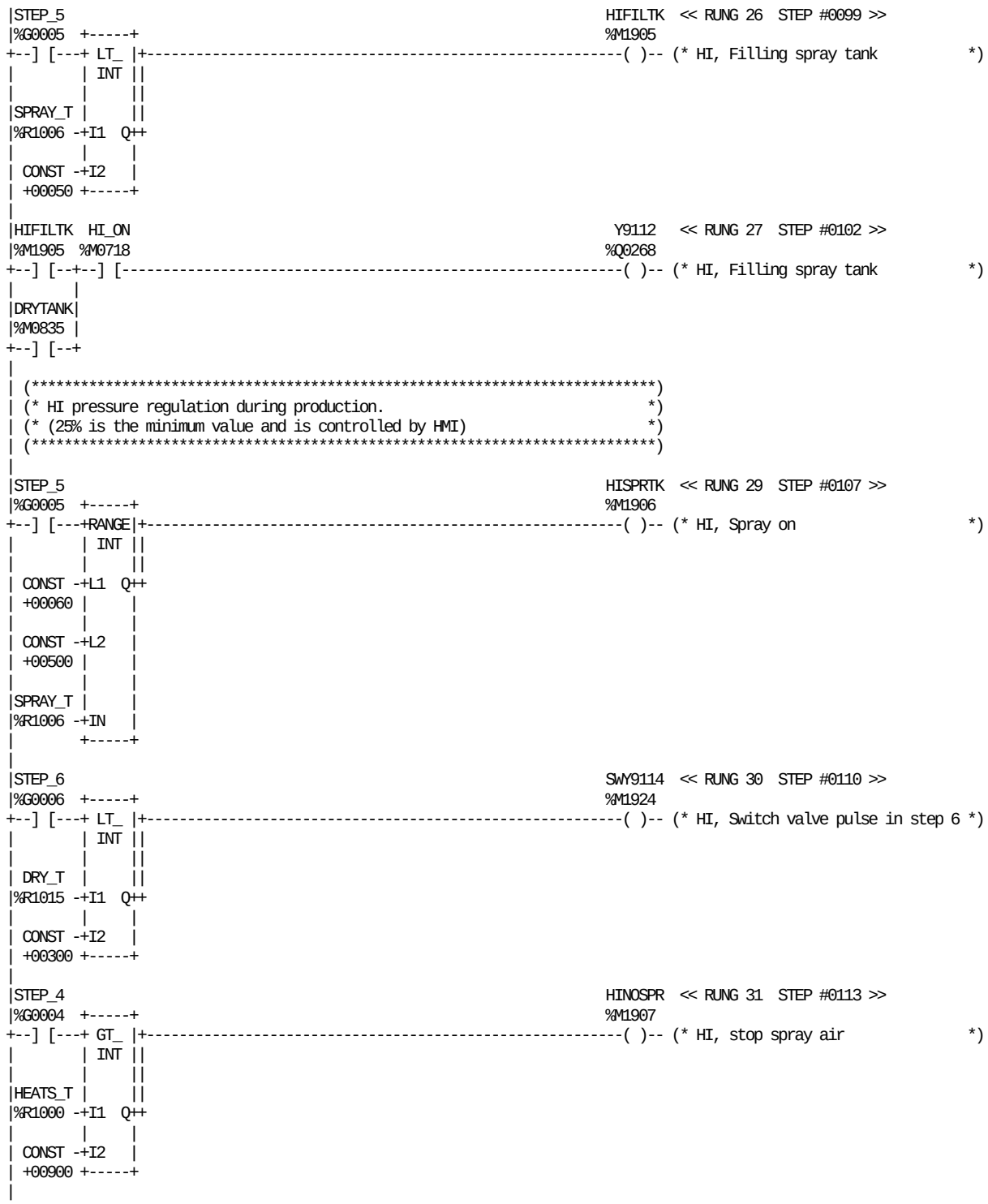

REFERENCE	NICKNAME	REFERENCE DESCRIPTION
%M0835	DRYTANK	Drain spray tank
%R1015	DRY_T	Draying timer
%R1000	HEATS_T	Heat sterilizing timer
%M1905	HIFILTK	HI, Filling spray tank
%M1907	HINOSPR	HI, stop spray air
%M1906	HISPRTK	HI, Spray on
%M0718	HI_ON	HI, system setting with HI
%R1006	SPRAY_T	Spray sequence timer
%G0004	STEP_4	HEAT STERILIZATION
%G0005	STEP_5	SPRAYING
%G0006	STEP_6	DRYING + STEAM CLEANING
%M1924	SwY9114	HI, Switch valve pulse in step 6
%Q0268	Y9112	HI, Filling spray tank

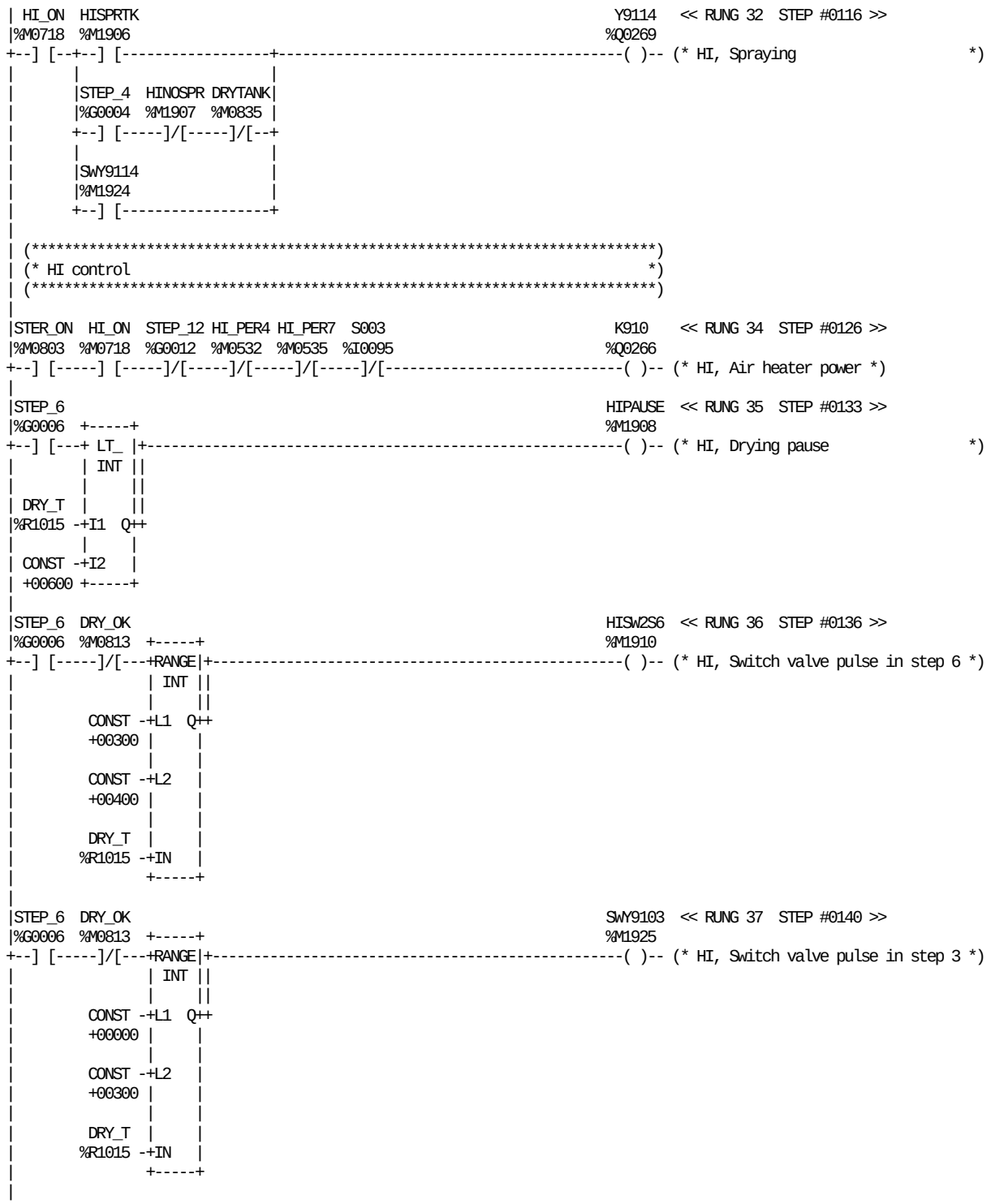

REFERENCE	NICKNAME	REFERENCE DESCRIPTION
%M0835	DRYTANK	Drain spray tank
%M0813	DRY_OK	Drying ready
%R1015	DRY_T	Draying timer
%M1907	HINOSPR	HI, stop spray air
%M1908	HIPAUSE	HI, Drying pause
%M1906	HISPRTK	HI, Spray on
%M1910	HISW2S6	HI, Switch valve pulse in step 6
%M0718	HI_ON	HI, system setting with HI
%M0532	HI_PER4	HI, Heater steril air temp.
%M0535	HI_PER7	HI, Heater element temperature

REFERENCE	NICKNAME	REFERENCE DESCRIPTION
%Q0266	K910	HI, Air heater power
%I0095	S003	Service switch
%G0012	STEP_12	VENTING
%G0004	STEP_4	HEAT STERILIZATION
%G0006	STEP_6	DRYING + STEAM CLEANING
%M0803	STER_ON	Steril system on
%M1925	SWY9103	HI, Switch valve pulse in step 3
%M1924	SWY9114	HI, Switch valve pulse in step 6
%Q0269	Y9114	HI, Spraying

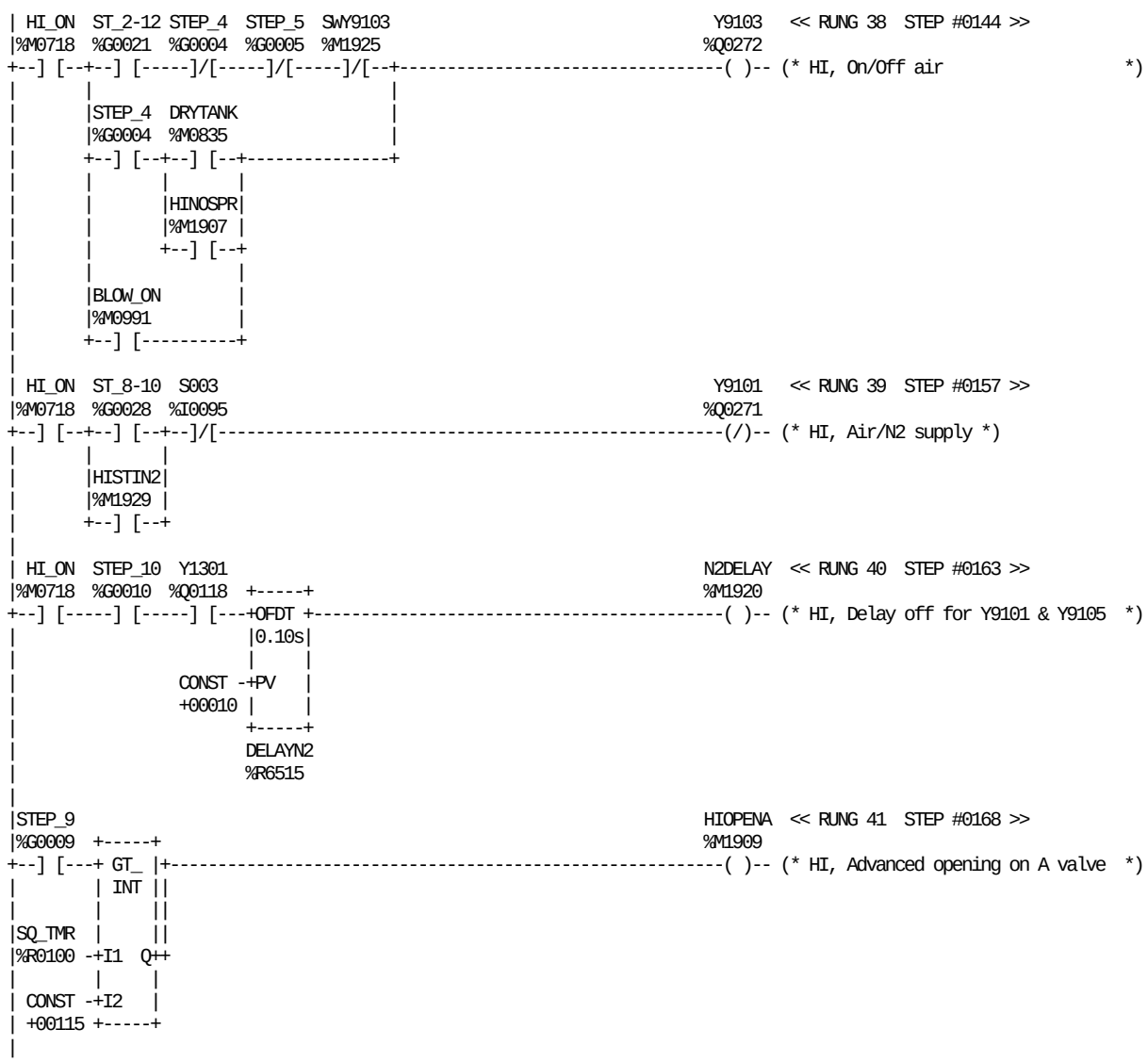

REFERENCE	NICKNAME	REFERENCE DESCRIPTION
%M0991	BLOW_ON	CIP blowing going on
%R6515	DELAYN2	HI, Delay off for Y9101 & Y9105
%M0835	DRYTANK	Drain spray tank
%M1907	HINOSPR	HI, stop spray air
%M1909	HIOPENA	HI, Advanced opening on A valve
%M1929	HISTIN2	HI, Injection impulse 2 on stop
%M0718	HI_ON	HI, system setting with HI
%M1920	N2DELAY	HI, Delay off for Y9101 & Y9105
%I0095	S003	Service switch
%R0100	SQ_TMR	Start sequense timer

REFERENCE	NICKNAME	REFERENCE DESCRIPTION
%G0010	STEP_10	PRODUCTION
%G0004	STEP_4	HEAT STERILIZATION
%G0005	STEP_5	SPRAYING
%G0009	STEP_9	MOTOR START
%G0021	ST_2-12	Ladder position 2-12
%G0028	ST_8-10	Ladder position 8-10
%M1925	SWY9103	HI, Switch valve pulse in step 3
%Q0118	Y1301	A-valve
%Q0271	Y9101	HI, Air/N2 supply
%Q0272	Y9103	HI, On/Off air

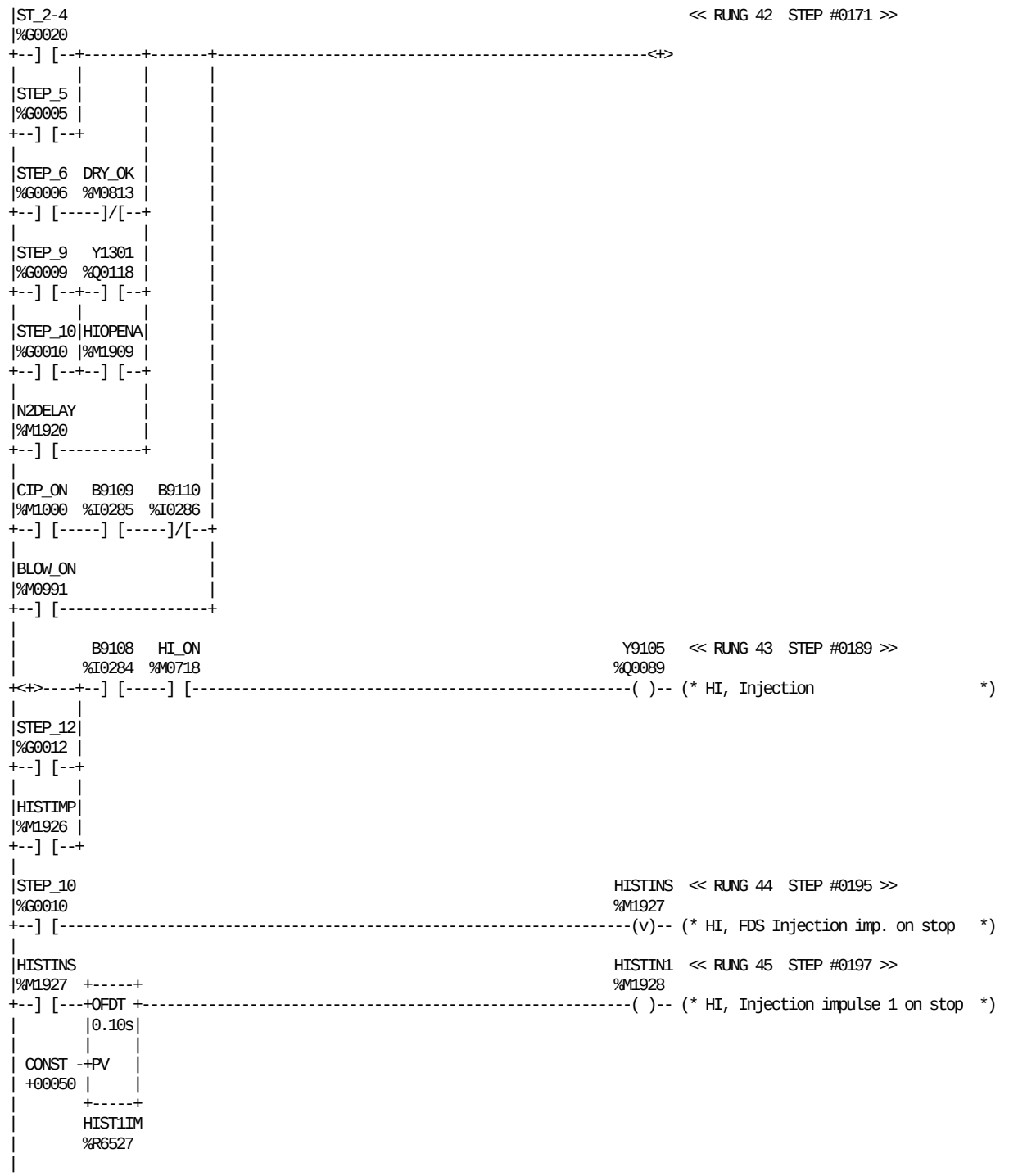

REFERENCE	NICKNAME	REFERENCE DESCRIPTION	REFERENCE	NICKNAME	REFERENCE DESCRIPTION
%I0284	B9108	HI, Spray nozzle pipe position	%M0718	HI_ON	HI, system setting with HI
%I0285	B9109	HI, Cleaning configuration	%M1920	N2DELAY	HI, Delay off for Y9101 & Y9105
%I0286	B9110	HI, Production configuration	%G0010	STEP_10	PRODUCTION
%M0991	BLOW_ON	CIP blowing going on	%G0012	STEP_12	VENTING
%M1000	CIP_ON	CIP going on	%G0005	STEP_5	SPRAYING
%M0813	DRY_OK	Drying ready	%G0006	STEP_6	DRYING + STEAM CLEANING
%M1909	HIOPENA	HI, Advanced opening on A valve	%G0009	STEP_9	MOTOR START
%R6527	HIST1IM	HI, Injection stop impulse timer	%G0020	ST_2-4	Ladder position 2-4
%M1926	HISTIMP	HI, Injection impulse on stop	%Q0118	Y1301	A-valve
%M1928	HISTIN1	HI, Injection impulse 1 on stop	%Q0089	Y9105	HI, Injection
%M1927	HISTINS	HI, FDS Injection imp. on stop			

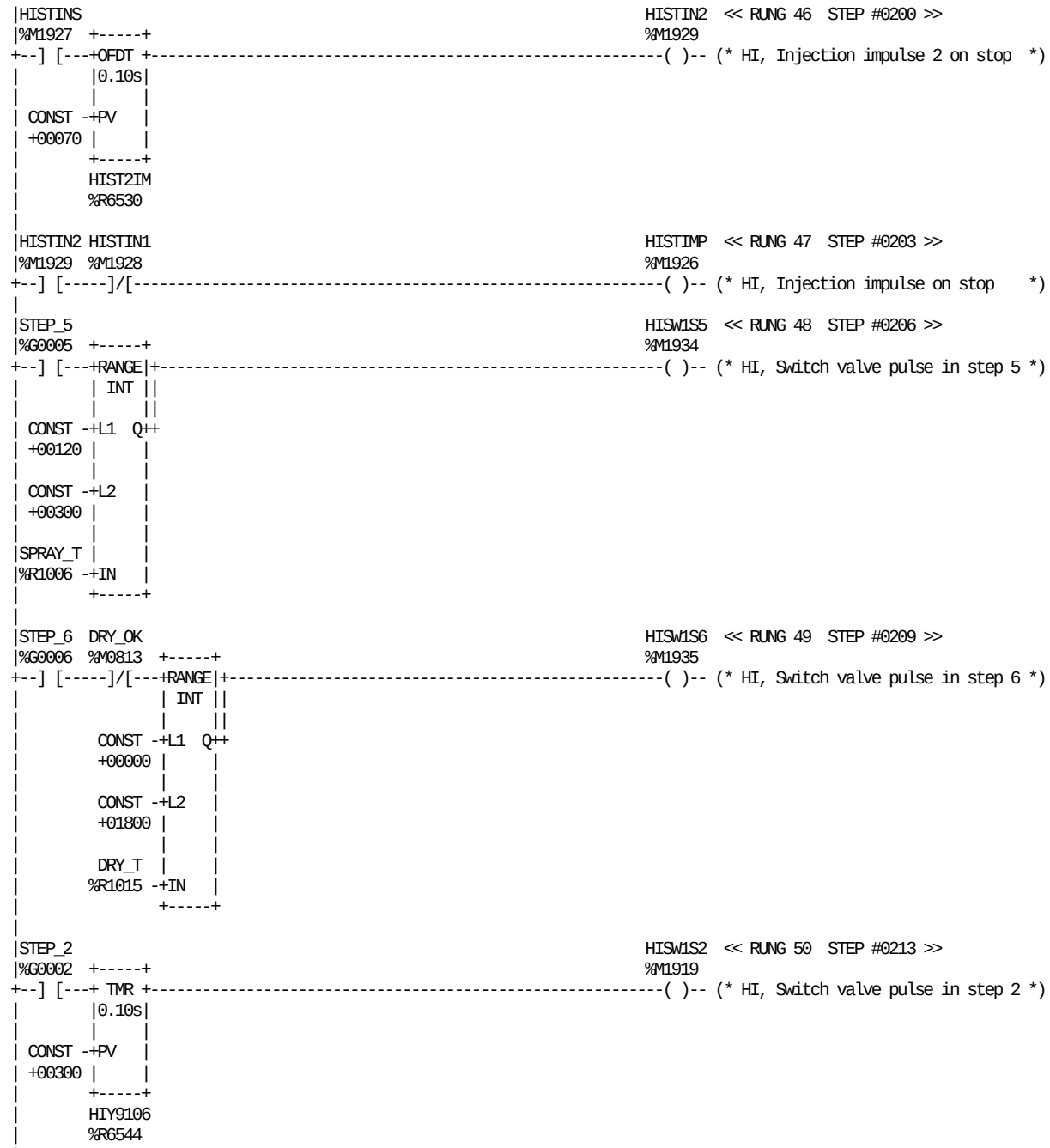

REFERENCE	NICKNAME	REFERENCE DESCRIPTION
%M0813	DRY_OK	Drying ready
%R1015	DRY_T	Draying timer
%R6530	HIST2IM	HI, Injection stop impulse timer
%M1926	HISTIMP	HI, Injection impulse on stop
%M1928	HISTIN1	HI, Injection impulse 1 on stop
%M1929	HISTIN2	HI, Injection impulse 2 on stop
%M1927	HISTINS	HI, FDS Injection imp. on stop
%M1919	HISW1S2	HI, Switch valve pulse in step 2
%M1934	HISW1S5	HI, Switch valve pulse in step 5
%M1935	HISW1S6	HI, Switch valve pulse in step 6
%R6544	HIY9106	HI, Y9106 on in step 2
%R1006	SPRAY_T	Spray sequence timer
%G0002	STEP_2	PREPARATION (3 MIN.)
%G0005	STEP_5	SPRAYING
%G0006	STEP_6	DRYING + STEAM CLEANING

TBA/22-050V
BLOCK 58 HI

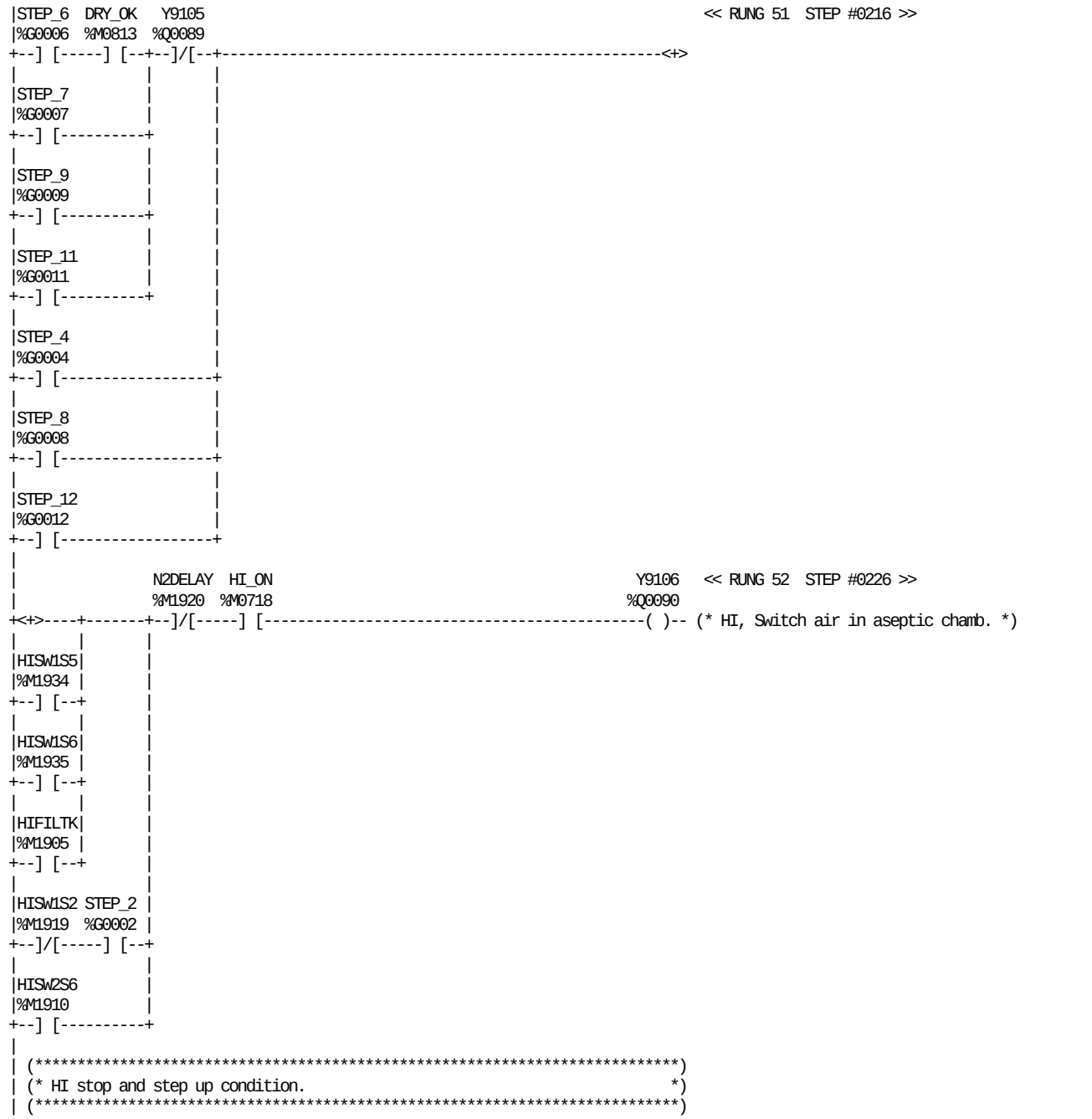

REFERENCE	NICKNAME	REFERENCE DESCRIPTION	REFERENCE	NICKNAME	REFERENCE DESCRIPTION
%M0813	DRY_OK	Drying ready	%G0012	STEP_12	VENTING
%M1905	HIFILTK	HI, Filling spray tank	%G0002	STEP_2	PREPARATION (3 MIN.)
%M1919	HISW1S2	HI, Switch valve pulse in step 2	%G0004	STEP_4	HEAT STERILIZATION
%M1934	HISW1S5	HI, Switch valve pulse in step 5	%G0006	STEP_6	DRYING + STEAM CLEANING
%M1935	HISW1S6	HI, Switch valve pulse in step 6	%G0007	STEP_7	SIGNAL TO STERILIZER
%M1910	HISW2S6	HI, Switch valve pulse in step 6	%G0008	STEP_8	FLAPS + H2O2 TEMPERATURE
%M0718	HI_ON	HI, system setting with HI	%G0009	STEP_9	MOTOR START
%M1920	N2DELAY	HI, Delay off for Y9101 & Y9105	%Q0089	Y9105	HI, Injection
%G0011	STEP_11	END OF PRODUCTION	%Q0090	Y9106	HI, Switch air in aseptic chamb.

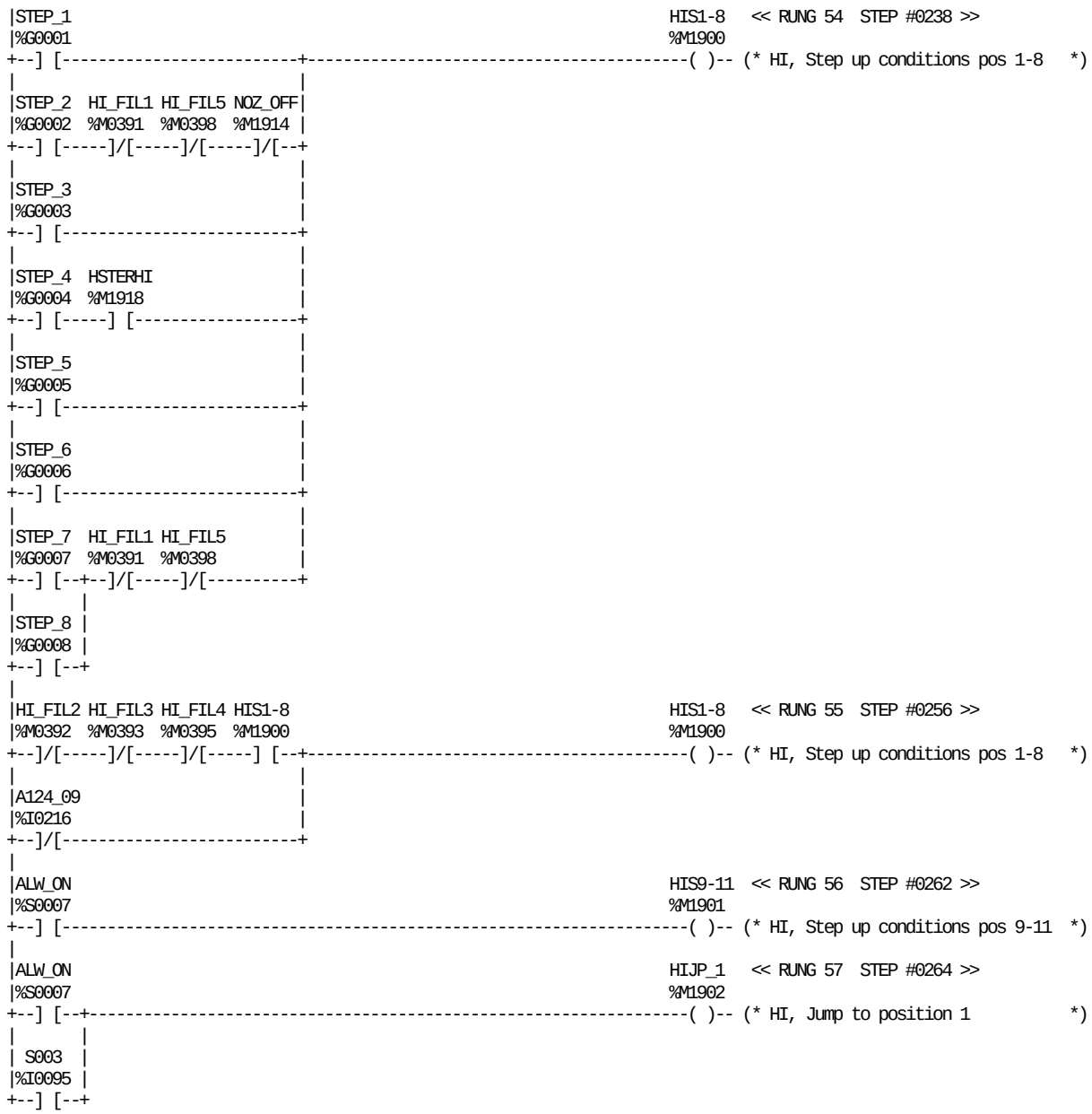

REFERENCE	NICKNAME	REFERENCE DESCRIPTION	REFERENCE	NICKNAME	REFERENCE DESCRIPTION
%I0216	A124_09	HI Option	%M1914	NOZ_OFF	HI, Nozzle off after CIP dry
%S0007	ALW_ON		%I0095	S003	Service switch
%M1902	HIJP_1	HI, Jump to position 1	%G0001	STEP_1	STANDBY
%M1900	HIS1-8	HI, Step up conditions pos 1-8	%G0002	STEP_2	PREPARATION (3 MIN.)
%M1901	HIS9-11	HI, Step up conditions pos 9-11	%G0003	STEP_3	TUBE SEALING
%M0391	HI_FIL1	HI, Alarm Low flow	%G0004	STEP_4	HEAT STERILIZATION
%M0392	HI_FIL2	HI, Alarm production pipe posit.	%G0005	STEP_5	SPRAYING
%M0393	HI_FIL3	HI, Alarm nozzle pipe position	%G0006	STEP_6	DRYING + STEAM CLEANING
%M0395	HI_FIL4	HI, Alarm cleaning pipe position	%G0007	STEP_7	SIGNAL TO STERILIZER
%M0398	HI_FIL5	HI, Alarm High flow	%G0008	STEP_8	FLAPS + H2O2 TEMPERATURE
%M1918	HSTERHI	HI, Heat sterilzing end			

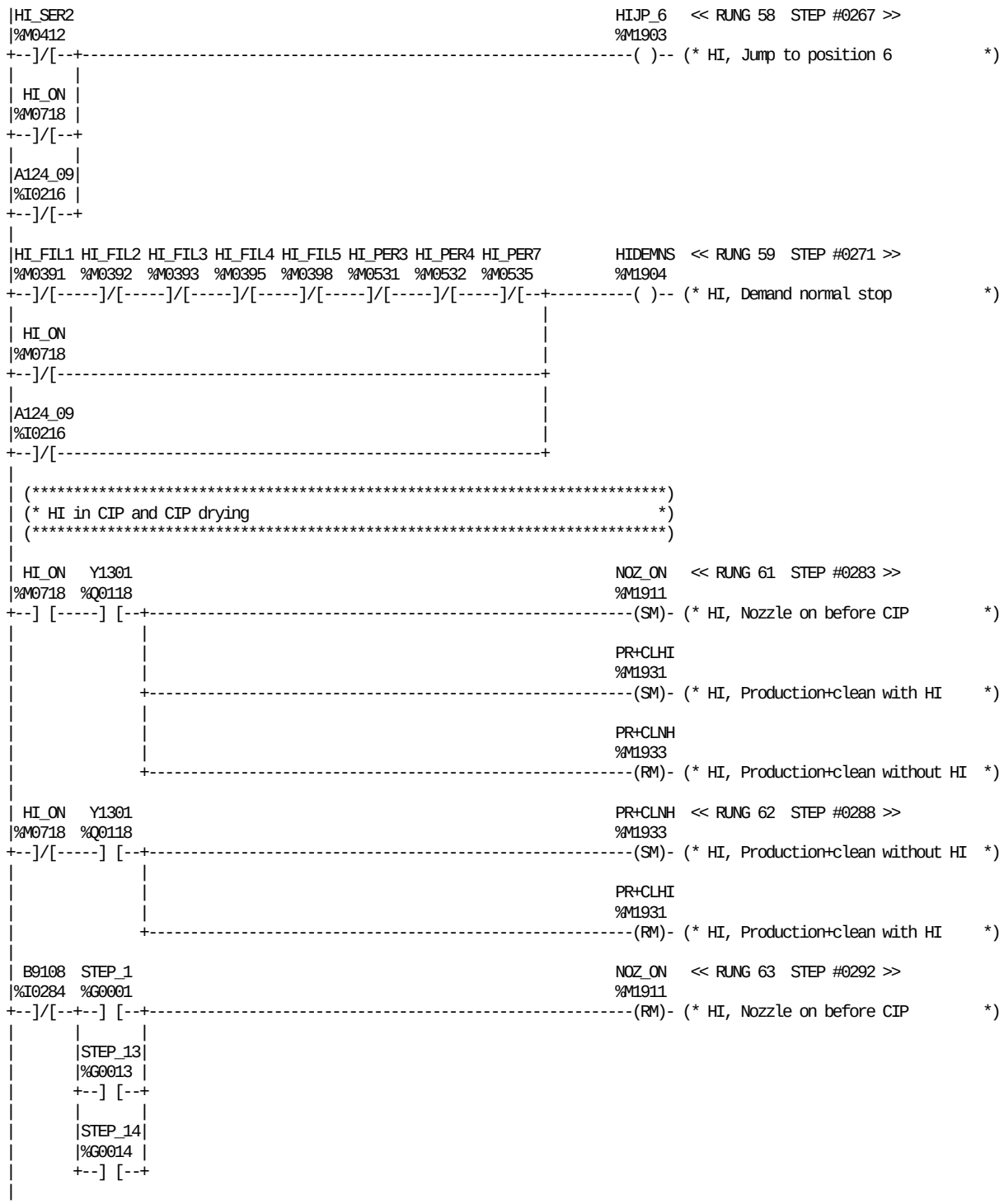

REFERENCE	NICKNAME	REFERENCE DESCRIPTION	REFERENCE	NICKNAME	REFERENCE DESCRIPTION
%I0216	A124_09	HI Option	%M0532	HI_PER4	HI, Heater steril air temp.
%I0284	B9108	HI, Spray nozzle pipe position	%M0535	HI_PER7	HI, Heater element temperature
%M1904	HIDEMNS	HI, Demand normal stop	%M0412	HI_SER2	HI, Alarm low N2 pressure
%M1903	HIJP_6	HI, Jump to position 6	%M1911	NOZ_ON	HI, Nozzle on before CIP
%M0391	HI_FIL1	HI, Alarm Low flow	%M1931	PR+CLHI	HI, Production+clean with HI
%M0392	HI_FIL2	HI, Alarm production pipe posit.	%M1933	PR+CLNH	HI, Production+clean without HI
%M0393	HI_FIL3	HI, Alarm nozzle pipe position	%G0001	STEP_1	STANDBY
%M0395	HI_FIL4	HI, Alarm cleaning pipe position	%G0013	STEP_13	OPEN DOORS, CUT TUBE
%M0398	HI_FIL5	HI, Alarm High flow	%G0014	STEP_14	CIP / HC
%M0718	HI_ON	HI, system setting with HI	%Q0118	Y1301	A-valve
%M0531	HI_PER3	HI, Low temperature during spray			

```
|CIP_SEL HI_CIP1 HI_CIP2 HI_CIP3 HI_CIP5 HI_CIP6                        HICIPRD  << RUNG 64  STEP #0298 >>
|%M0712  %M0501  %M0502  %M0503  %M0511  %M0512                         %M1912
+--] [-----]/[-----]/[-----]/[-----]/[-----]/[----------------------------( )-- (* HI, HI system ready for CIP      *)
|
|CIPBLOW CIP_SEL HI_FIL4 HI_CIP3 HI_CIP5 HI_CIP6                        HICIPDR  << RUNG 65  STEP #0305 >>
|%M0993  %M0712  %M0395  %M0503  %M0511  %M0512                         %M1913
+--] [-----]/[-----]/[-----]/[-----]/[-----]/[----------------------------( )-- (* HI, HI system ready for CIP dry  *)
|
| HI_ON   B9107  BLOW_ON                                                 NOZ_OFF  << RUNG 66  STEP #0312 >>
|%M0718  %I0283  %M0991                                                  %M1914
+--] [-----] [-----] [-------------------------------------------------------(SM)- (* HI, Nozzle off after CIP dry     *)
|
| B9108                                                                  NOZ_OFF  << RUNG 67  STEP #0316 >>
|%I0284                                                                  %M1914
+--]/[-------------------------------------------------------------------(RM)- (* HI, Nozzle off after CIP dry     *)
|
|[    END OF SUBROUTINE LOGIC     ]
|
```

REFERENCE	NICKNAME	REFERENCE DESCRIPTION	REFERENCE	NICKNAME	REFERENCE DESCRIPTION
%I0283	B9107	HI, Product pipe position	%M0502	HI_CIP2	HI, Alarm cleaning pipe position
%I0284	B9108	HI, Spray nozzle pipe position	%M0503	HI_CIP3	HI, Cleaning disabled(plug pipe)
%M0991	BLOW_ON	CIP blowing going on	%M0511	HI_CIP5	HI, Alarm product pipe position
%M0993	CIPBLOW	CIP blowing must be done	%M0512	HI_CIP6	HI, Alarm nozzle pipe position
%M0712	CIP_SEL	CIP select from TPOP	%M0395	HI_FIL4	HI, Alarm cleaning pipe position
%M1913	HICIPDR	HI, HI system ready for CIP dry	%M0718	HI_ON	HI, system setting with HI
%M1912	HICIPRD	HI, HI system ready for CIP	%M1914	NOZ_OFF	HI, Nozzle off after CIP dry
%M0501	HI_CIP1	HI, Alarm nozzle wrong position			

This page left intentionally blank

```
|[  START LD SUBROUTINE  GRE_FFU  ]
|
|[     VARIABLE DECLARATIONS      ]
|
|[   START OF SUBROUTINE LOGIC    ]
|
| (*************************************************************************)
| (* Automatic and manual greasing for FFU: you have an automatic          *)
| (* greasing of 4 seconds every 45 minutes,if a manual start is not       *)
| (* activated,or an automatic greasing of 8 seconds after an Hygenic      *)
| (* Cleaning.                                                             *)
| (*************************************************************************)
|
|A507_32  HC_ON                                                  ST_GRES  << RUNG 5  STEP #0003 >>
|%I0058  %M1094  +-----+                                         %M3620
+--] [-----]/[---+ONDTR+-------------------------------------------------( )-- (* Start greasing FFU             *)
|                |0.10s|
|GR_GOIN         |     |
|%M3619          |     |
+--] [-----------+R    |
|                |     |
|         CONST -+PV   |
|         +27000 |     |
|                +-----+
|                TMR_FFG
|                %R3634
|
|GR_FFU                                                          GR_GOIN  << RUNG 6  STEP #0008 >>
|%M0715          +-----+                                         %M3619
+--] [--+--------+MOVE_+-------------------------------------------------(S)-- (* FFU greasing going on          *)
|       |        | INT |
|ST_GRES|        |     |
|%M3620 |        |     | FF_GR_C
+--] [--+ CONST -+IN  Q+-%R3667
|         +00004 | LEN |
|                |00001|
|                |     |
|                +-----+
|
|HC_DONE                                                         GR_GOIN  << RUNG 7  STEP #0012 >>
|%M1092  +-----+                                                 %M3619
+--] [---+MOVE_+-------------------------------------------------------(S)-- (* FFU greasing going on          *)
|        | INT |
|        |     |
|        |     | FF_GR_C
| CONST -+IN  Q+-%R3667
| +00008 | LEN |
|        |00001|
|        |     |
|        +-----+
|
|GR_GOIN A507_32                                                  K122    << RUNG 8  STEP #0015 >>
|%M3619  %I0058                                                  %Q0249
+--] [-----] [--+-------------------------------------------------------(S)-- (* Enable greasing pump           *)
|               |
|               |                                                 Y4263
|               |                                                 %Q0250
|               +-------------------------------------------------------( )-- (* FFU grease line              *)
|               |
|               |                                                 Y4266
|               |                                                 %Q0273
|               +-------------------------------------------------------(S)-- (* Greasing recycle              *)
|
| B4126                                                          FFU_PP   << RUNG 9  STEP #0020 >>
|%I0258                                                          %M3622
+--] [-------------------------------------------------------------------(^)-- (* FFU greasing sensor pos pulse  *)
|
```

REFERENCE	NICKNAME	REFERENCE DESCRIPTION	REFERENCE	NICKNAME	REFERENCE DESCRIPTION
%I0058	A507_32	DMC FFU motor running	%M1094	HC_ON	Hygienic cleaning going on
%I0258	B4126	FFU greasing sensor	%Q0249	K122	Enable greasing pump
%M3622	FFU_PP	FFU greasing sensor pos pulse	%M3620	ST_GRES	Start greasing FFU
%R3667	FF_GR_C	FFU greasing pulse counter	%R3634	TMR_FFG	TMR for greasing FFU
%M0715	GR_FFU	Greasing FFU	%Q0250	Y4263	FFU grease line
%M3619	GR_GOIN	FFU greasing going on	%Q0273	Y4266	Greasing recycle
%M1092	HC_DONE	Hygienic cleaning completed			

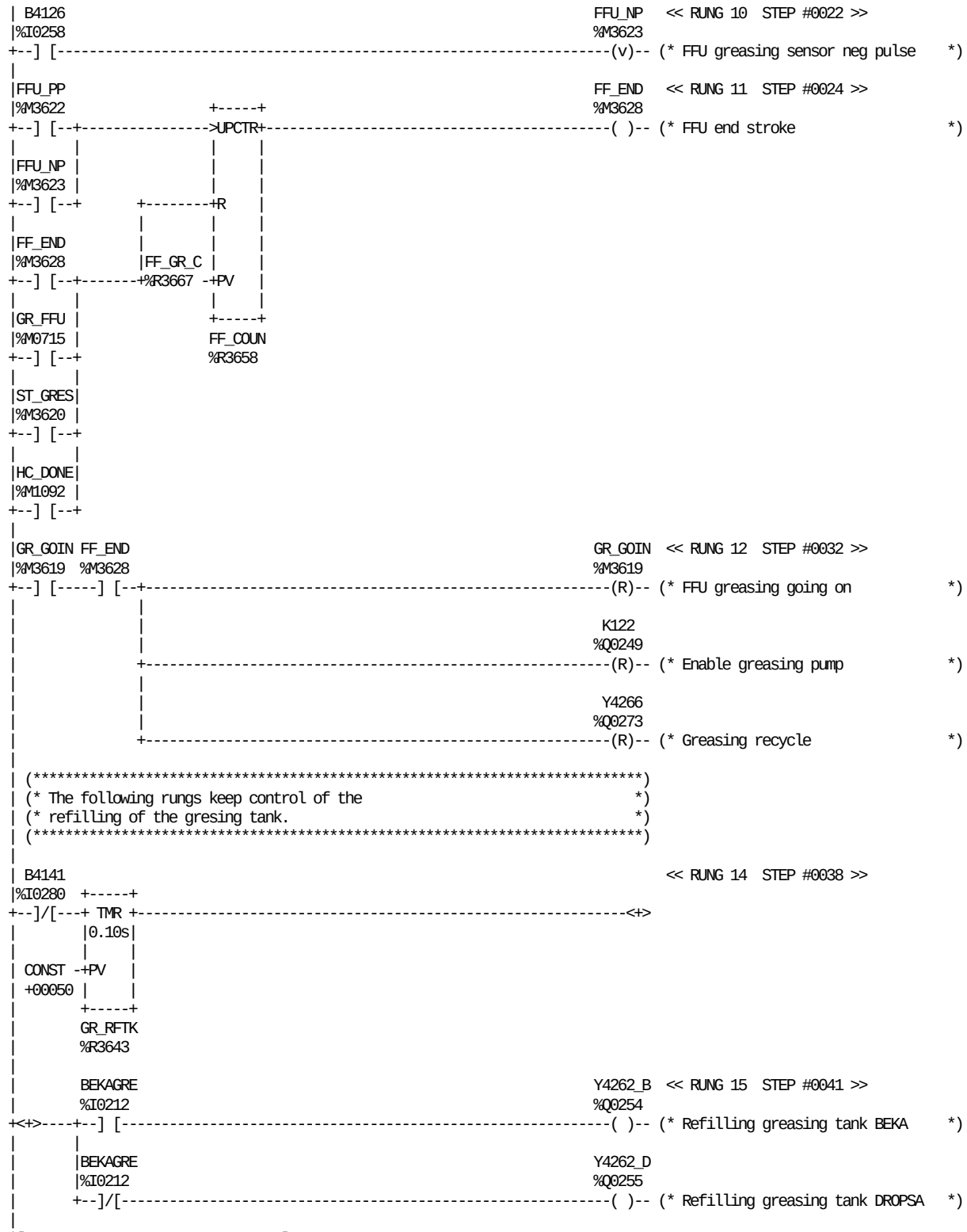

REFERENCE	NICKNAME	REFERENCE DESCRIPTION	REFERENCE	NICKNAME	REFERENCE DESCRIPTION
%I0258	B4126	FFU greasing sensor	%M3619	GR_GOIN	FFU greasing going on
%I0280	B4141	Greasing tank full	%R3643	GR_RFTK	TMR delay refilling tank
%I0212	BEKAGRE	Option BEKA Greasing KIT	%M1092	HC_DONE	Hygienic cleaning completed
%M3623	FFU_NP	FFU greasing sensor neg pulse	%Q0249	K122	Enable greasing pump
%M3622	FFU_PP	FFU greasing sensor pos pulse	%M3620	ST_GRES	Start greasing FFU
%R3658	FF_COUN	FFU pulse counter	%Q0254	Y4262_B	Refilling greasing tank BEKA
%M3628	FF_END	FFU end stroke	%Q0255	Y4262_D	Refilling greasing tank DROPSA
%R3667	FF_GR_C	FFU greasing pulse counter	%Q0273	Y4266	Greasing recycle
%M0715	GR_FFU	Greasing FFU			

```
|[  START LD SUBROUTINE  GRE_JUM  ]
|
|[     VARIABLE DECLARATIONS      ]
|
|[   START OF SUBROUTINE LOGIC    ]
|
|GR_JUM  ST_COND  S911   GREA_GO                                    H7703   << RUNG 5  STEP #0003 >>
|%M0714  %M0063  %I0088  %M3600                                    %Q0076
+--] [-----] [-----] [-----]/[-----------------------------------------( )-- (* Hooter *)
|
|RES_GR                                                            GREA_GO  << RUNG 6  STEP #0008 >>
|%M3601                                                            %M3600
+--] [-------------------------------------------------------------------(R)-- (* Greasing cycle JUM going on      *)
|
|ST_COND GREA_GO  S911                                             K004    << RUNG 7  STEP #0010 >>
|%M0063  %M3600  %I0088  +-----+                                   %Q0034
+--] [-----]/[-----] [---+ TMR ++-----------------------------------------(S)-- (* Contactor main motor *)
|                        |0.10s||
|                        |     ||                                  GREA_GO
|                        |     ||                                  %M3600
|                CONST -+PV   |+-----------------------------------------(S)-- (* Greasing cycle JUM going on      *)
|                +00030 |     |
|                       +-----+
|                       CONT_MM
|                       %R3600
|
|GREA_GO                                                           Y4265   << RUNG 8  STEP #0016 >>
|%M3600                                                            %Q0252
+--] [-------------------------------------------------------------------( )-- (* Cylinders JUM grease line        *)
|
|GREA_GO                                                           GRGO_PP  << RUNG 9  STEP #0018 >>
|%M3600                                                            %M3634
+--] [-------------------------------------------------------------------(^)-- (* Gresing going on positive pulse  *)
|
|GRGO_PP                                                           K122    << RUNG 10  STEP #0020 >>
|%M3634                                                            %Q0249
+--] [--+----------------------------------------------------------------(S)-- (* Enable greasing pump            *)
|       |
|       |                                                          Y4266
|       |                                                          %Q0273
|       +----------------------------------------------------------------(S)-- (* Greasing recycle               *)
|
|GREA_GO                                                           K024    << RUNG 11  STEP #0023 >>
|%M3600                                                            %Q0040
+--]/[--+----------------------------------------------------------------(R)-- (* DC-bus servo motors             *)
|       |
|JUMP_1 |
|%M0050 |
+--]/[--+
|       |
|FST_SCN|
|%S0001 |
+--] [--+
|
| S911                                                             K024    << RUNG 12  STEP #0027 >>
|%I0088                                                            %Q0040
+--] [-------------------------------------------------------------------(S)-- (* DC-bus servo motors             *)
|
```

REFERENCE	NICKNAME	REFERENCE DESCRIPTION	REFERENCE	NICKNAME	REFERENCE DESCRIPTION
%R3600	CONT_MM	Delay for contactor main motor	%Q0040	K024	DC-bus servo motors
%S0001	FST_SCN		%Q0249	K122	Enable greasing pump
%M3600	GREA_GO	Greasing cycle JUM going on	%M3601	RES_GR	Reset greasing going on
%M3634	GRGO_PP	Gresing going on positive pulse	%I0088	S911	Push button step up
%M0714	GR_JUM	Greasing JUM	%M0063	ST_COND	Step up conditions
%Q0076	H7703	Hooter	%Q0252	Y4265	Cylinders JUM grease line
%M0050	JUMP_1	Jump to pos 1 (Emergency stop)	%Q0273	Y4266	Greasing recycle
%Q0034	K004	Contactor main motor			

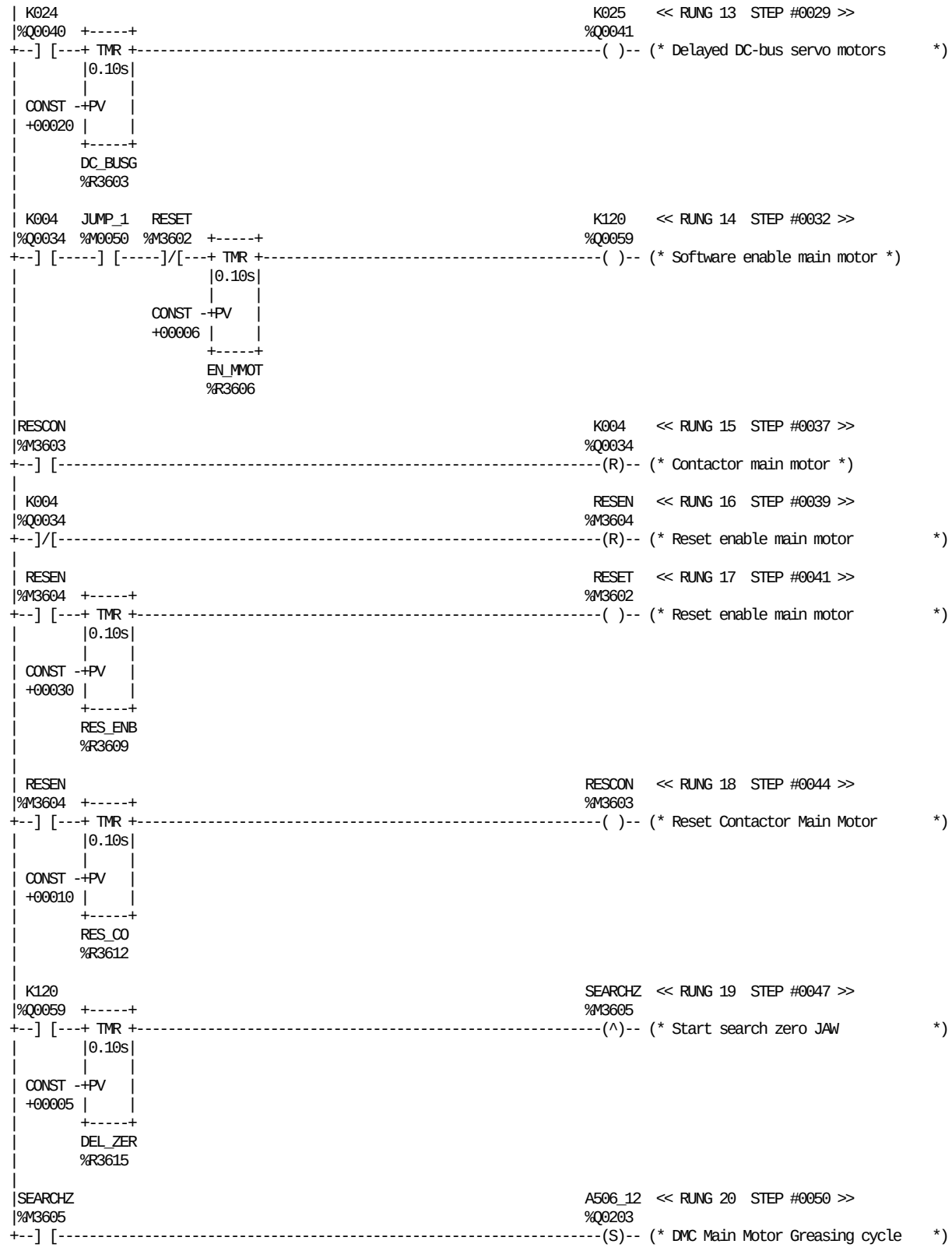

REFERENCE	NICKNAME	REFERENCE DESCRIPTION	REFERENCE	NICKNAME	REFERENCE DESCRIPTION
%Q0203	A506_12	DMC Main Motor Greasing cycle	%Q0059	K120	Software enable main motor
%R3603	DC_BUSG	Delay DC_BUS on during greasing	%M3603	RESCON	Reset Contactor Main Motor
%R3615	DEL_ZER	Delay for start search zero JAW	%M3604	RESEN	Reset enable main motor
%R3606	EN_MMOT	Delay software enable main motor	%M3602	RESET	Reset enable main motor
%M0050	JUMP_1	Jump to pos 1 (Emergency stop)	%R3612	RES_CO	Delay reset contactor mmotor
%Q0034	K004	Contactor main motor	%R3609	RES_ENB	Delay reset enable main motor
%Q0040	K024	DC-bus servo motors	%M3605	SEARCHZ	Start search zero JAW
%Q0041	K025	Delayed DC-bus servo motors			

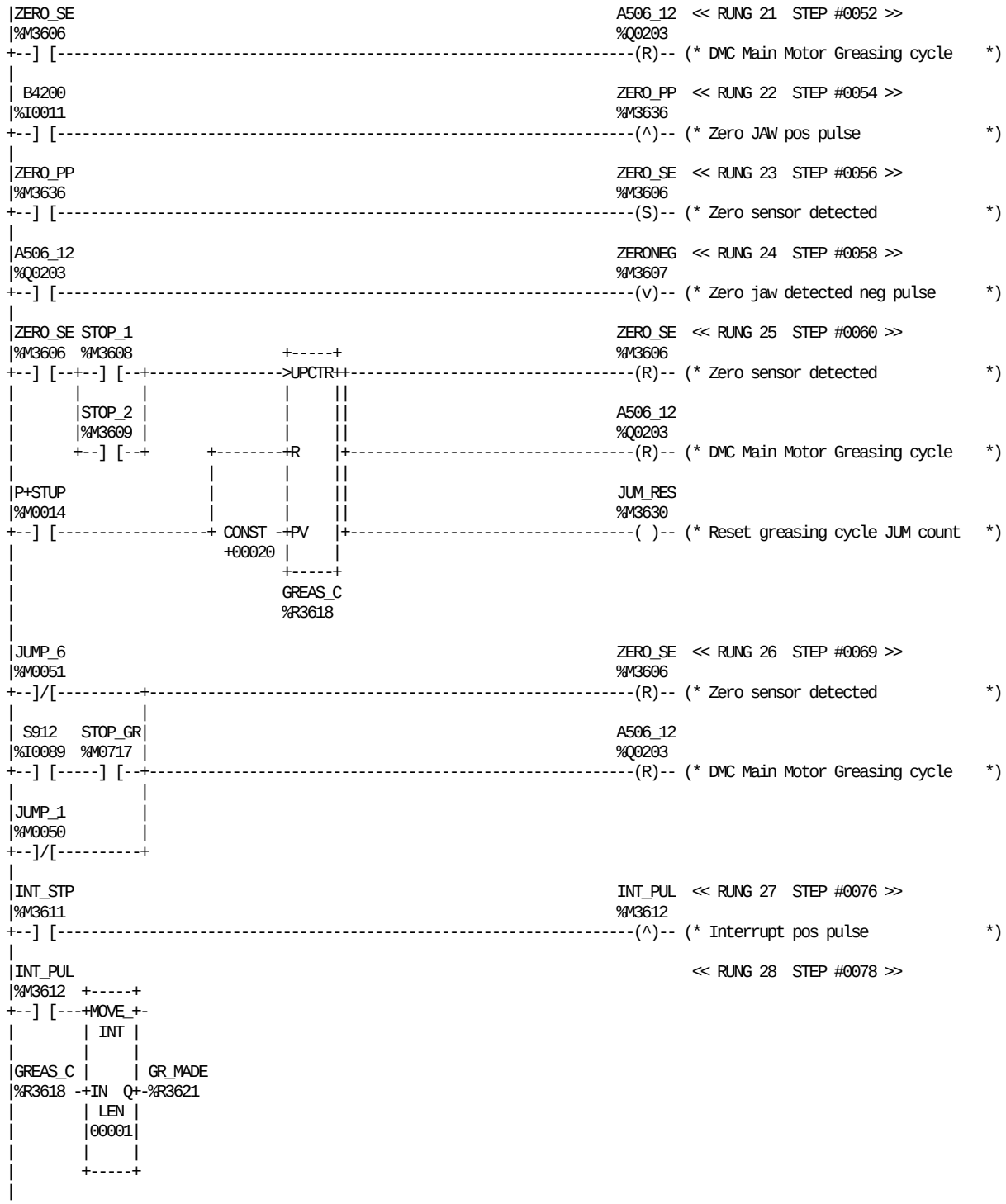

REFERENCE	NICKNAME	REFERENCE DESCRIPTION
%Q0203	A506_12	DMC Main Motor Greasing cycle
%I0011	B4200	Zero jaw sensor
%R3618	GREAS_C	Counter of greasing strokes
%R3621	GR_MADE	Greasing strokes made
%M3612	INT_PUL	Interrupt pos pulse
%M3611	INT_STP	Interrupt stop (Cycle not ended)
%M0050	JUMP_1	Jump to pos 1 (Emergency stop)
%M0051	JUMP_6	Jump to pos 6 (Fast stop)
%M3630	JUM_RES	Reset greasing cycle JUM count

REFERENCE	NICKNAME	REFERENCE DESCRIPTION
%M0014	P+STUP	Step up positive pulse
%I0089	S912	Push button step down
%M3608	STOP_1	Stop sector JAW system
%M3609	STOP_2	Stop sector JAW system
%M0717	STOP_GR	Stop greasing cycle JUM
%M3607	ZERONEG	Zero jaw detected neg pulse
%M3636	ZERO_PP	Zero JAW pos pulse
%M3606	ZERO_SE	Zero sensor detected

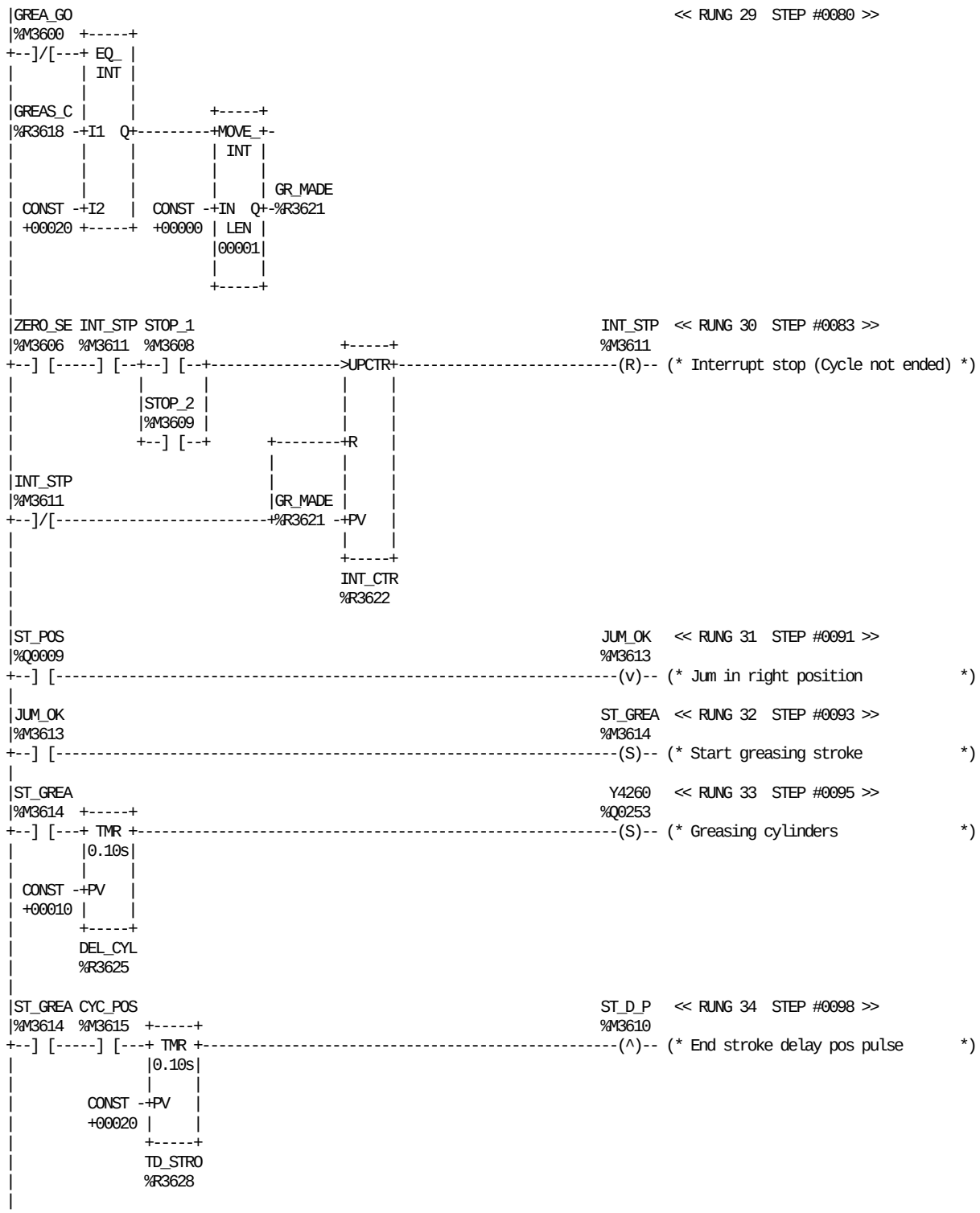

REFERENCE	NICKNAME	REFERENCE DESCRIPTION	REFERENCE	NICKNAME	REFERENCE DESCRIPTION
%M3615	CYC_POS	Cylinders in position	%M3608	STOP_1	Stop sector JAW system
%R3625	DEL_CYL	TMR delay for cylinders	%M3609	STOP_2	Stop sector JAW system
%R3618	GREAS_C	Counter of greasing strokes	%M3610	ST_D_P	End stroke delay pos pulse
%M3600	GREA_GO	Greasing cycle JUM going on	%M3614	ST_GREA	Start greasing stroke
%R3621	GR_MADE	Greasing strokes made	%Q0009	ST_POS	Start positioning Greasing
%R3622	INT_CTR	Interrupt counter	%R3628	TD_STRO	TMR delay end stroke
%M3611	INT_STP	Interrupt stop (Cycle not ended)	%Q0253	Y4260	Greasing cylinders
%M3613	JUM_OK	Jum in right position	%M3606	ZERO_SE	Zero sensor detected

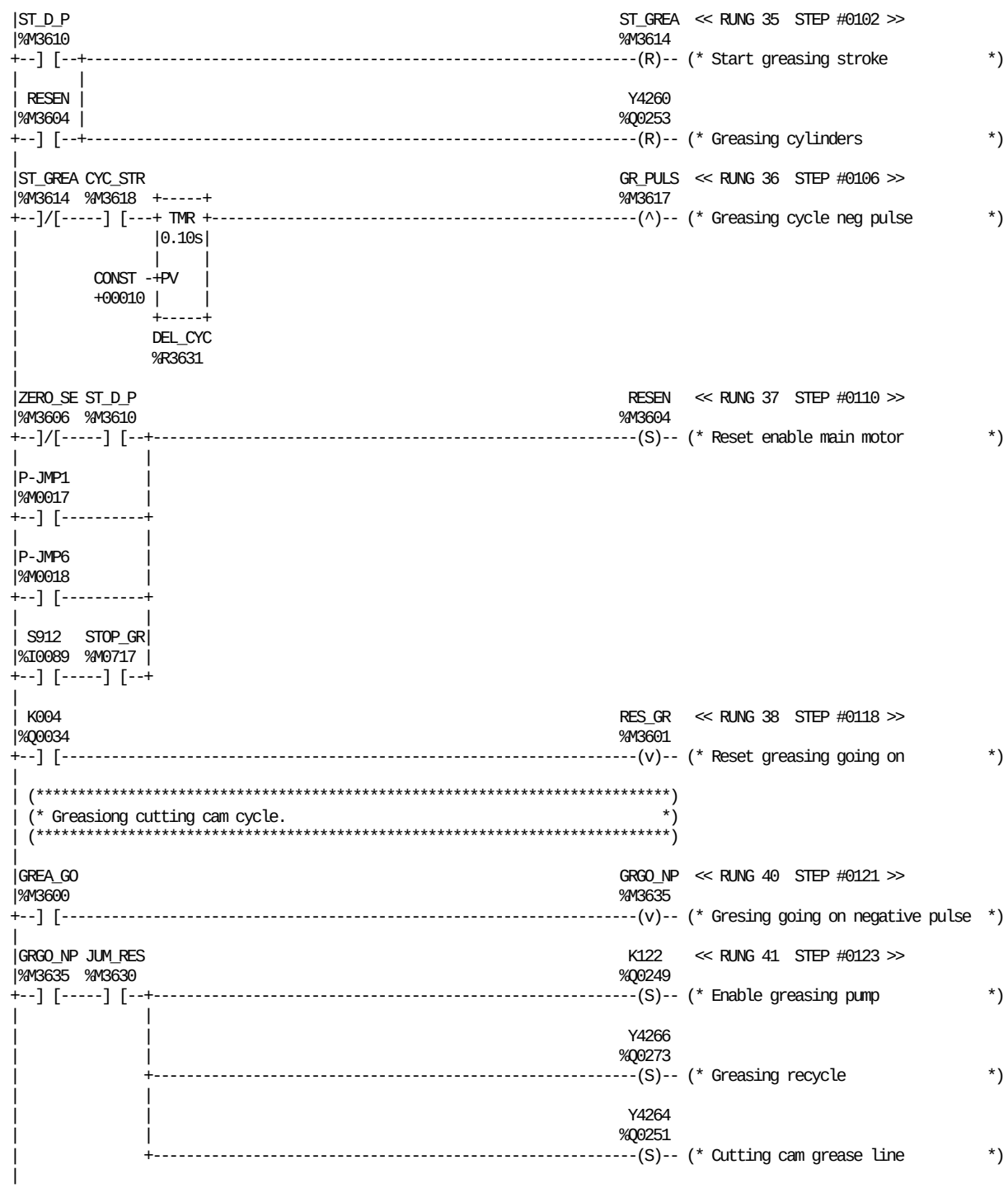

REFERENCE	NICKNAME	REFERENCE DESCRIPTION	REFERENCE	NICKNAME	REFERENCE DESCRIPTION
%M3618	CYC_STR	Cylinder start position	%M3604	RESEN	Reset enable main motor
%R3631	DEL_CYC	TMR delay start greasing cycle	%M3601	RES_GR	Reset greasing going on
%M3600	GREA_GO	Greasing cycle JUM going on	%I0089	S912	Push button step down
%M3635	GRGO_NP	Gresing going on negative pulse	%M0717	STOP_GR	Stop greasing cycle JUM
%M3617	GR_PULS	Greasing cycle neg pulse	%M3610	ST_D_P	End stroke delay pos pulse
%M3630	JUM_RES	Reset greasing cycle JUM count	%M3614	ST_GREA	Start greasing stroke
%Q0034	K004	Contactor main motor	%Q0253	Y4260	Greasing cylinders
%Q0249	K122	Enable greasing pump	%Q0251	Y4264	Cutting cam grease line
%M0017	P-JMP1	Jump pos 1 negative pulse	%Q0273	Y4266	Greasing recycle
%M0018	P-JMP6	Jump pos 6 Negative pulse	%M3606	ZERO_SE	Zero sensor detected

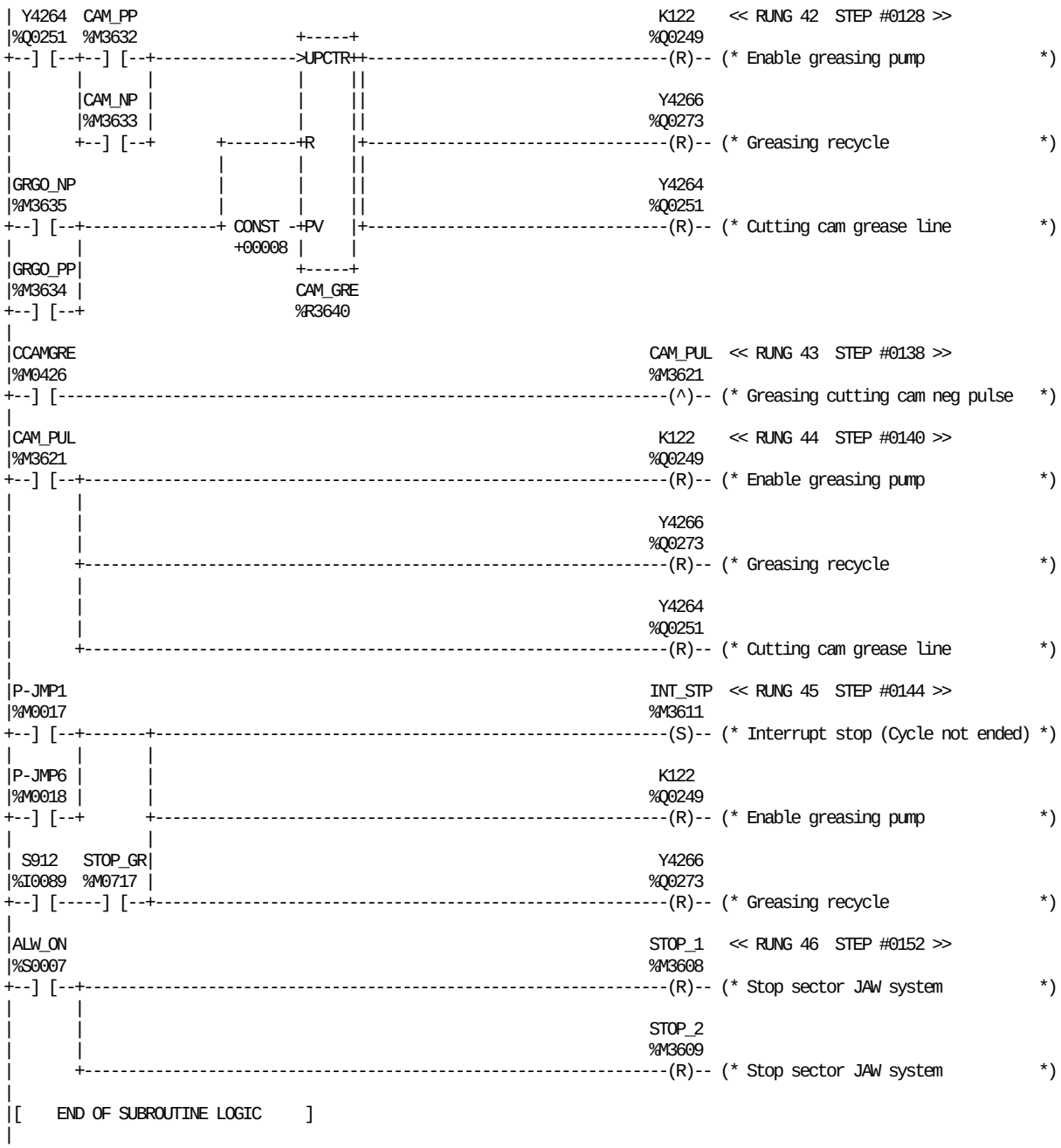

REFERENCE	NICKNAME	REFERENCE DESCRIPTION	REFERENCE	NICKNAME	REFERENCE DESCRIPTION
%S0007	ALW_ON		%Q0249	K122	Enable greasing pump
%R3640	CAM_GRE	TMR cutting cam greasing	%M0017	P-JMP1	Jump pos 1 negative pulse
%M3633	CAM_NP	Cam greasing sensor neg pulse	%M0018	P-JMP6	Jump pos 6 Negative pulse
%M3632	CAM_PP	Cam greasing sensor pos pulse	%I0089	S912	Push button step down
%M3621	CAM_PUL	Greasing cutting cam neg pulse	%M3608	STOP_1	Stop sector JAW system
%M0426	CCAMGRE	Cutting cam greasing flow alarm	%M3609	STOP_2	Stop sector JAW system
%M3635	GRGO_NP	Gresing going on negative pulse	%M0717	STOP_GR	Stop greasing cycle JUM
%M3634	GRGO_PP	Gresing going on positive pulse	%Q0251	Y4264	Cutting cam grease line
%M3611	INT_STP	Interrupt stop (Cycle not ended)	%Q0273	Y4266	Greasing recycle

12 Engineering Change Description

TechPub_2614345_v3_DRAFT_ReleaseTB127677en.fm

Description

This chapter described the changements introduced with the ECM.

TechPub_2614345_v3_DRAFT_ReleaseTB127677en.fm

Ecn No	Drawing No	Alteration
30809	-	DOCUMENTATION INTRODUCED.
30959	-	
	2552985-002:02	POSITION SUMMARY : CHANGED ACCORDING TO UPDATE CIRCUIT DIAGRAM.
	2552985-003:02	LINE SUMMARY : CHANGED ACCORDING TO UPDATE CIRCUIT DIAGRAM.
	2552985-004:02	TERMINAL SUMMARY : CHANGED ACCORDING TO UPDATE CIRCUIT DIAGRAM.
	2552985-015:02	CHANGED DENOMINATION.
	2552985-024:02	ADDED CABLE'S NAME W424.
	2552985-025:02	ADDED CABLE'S NAME W425.
	2552985-050:02	ADDED CABLE'S NAME W414.
	2552985-057:02	CORRECTED SHEET REFERENCES A AND B.
	2552985-070:02	CHANGED DENOMINATION.
	2552985-071:02	CHANGED DENOMINATION.
	2552985-101:02	ADDED CABLE'S NAME W136.
	2552985-102:02	ADDED CABLE'S NAME W137.
	2552985-124:02	INTRODUCED CONNECTION INPUT I0160.
	2552986-400:02	CHANGED CABLE'S NAME W4200.
31209	-	
	2552985-002:03	POSITION SUMMARY : CHANGED ACCORDING TO UPDATE CIRCUIT DIAGRAM.
	2552985-003:03	LINE SUMMARY : CHANGED ACCORDING TO UPDATE CIRCUIT DIAGRAM.
	2552985-004:03	TERMINAL SUMMARY : CHANGED ACCORDING TO UPDATE CIRCUIT DIAGRAM.
	2552985-052:03	CONNECTION REFERENCE (FC, FD) IS ERASED.
	2552985-054:03	COMPONENT R010 IS ERASED.
	2552985-056:03	DRAWING REMARK IS ADDED.
	2552985-131:03	TEXT CHANGED IN THE INPUT A124:02. DRAWING REMARK IS ADDED.

This drawing must not without the consent of Tetra Pak be copied, transmitted or disclosed to any third party.

Ecn No	Drawing No	Alteration
	2552985-152:03	OUTPUT A132:18 AND A132:19 CHANGED TO SPARE.
	2552985-174:03	CORRECTED PIN' S NAME B4140.
	2552986-102:03	CABLE W2041 IS CHANGED TO W2042. CABLE W2042 IS CHANGED TO W2041.
	2552986-111:03	CABLE W1049 I S CORRECTED.
	2552986-408:03	CABLE W4120 I S CORRECTED. CONNECTION BETWEEN X4008:7- AND X4121:1- IS CORRECTED.
	2552986-409:03	CORRECTED PIN' S NAME B4140.
	2552986-903:03	CABLE W2068 IS CORRECTED.
122712	-	
	2593852-0001:AA	DOCUMENT LIST INTRODUCED
	2593852-0002:AA	POSITION SUMMARY INTRODUCED
	2593852-0003:AA	CIRCUIT DIAGRAM INTRODUCED
	2593852-0004:AA	LINE SUMMARY INTRODUCED
	2593852-0005:AA	CABINET TERMINAL SUMMARY INTRODUCED
	2593852-0006:AA	TERMINAL STRIP OVERVIEW INTRODUCED
	2593852-0007:AA	CABLE CONNECTION LIST INTRODUCED
	2593852-0008:AA	MAINS CONNECTION INTRODUCED
	2593852-0099:AA	EC DESCRIPTION INTRODUCED
	39912-0004	INTRODUCED NEW VERSION PLC PROGRAM
133610	-	
	2593852-0001:AB	DOCUMENT LIST : CHANGED ACCORDING TO UPDATE NEW AB VERSION. .
	2593852-0002:AB	POSITION SUMMARY : CHANGED ACCORDING TO UPDATE CIRCUIT DIAGRAM.
	2593852-0003:AB	SH. 011 – CONNECTION OF "AM" REFERENCE IS CORRECTED FROM X129:4 TO X129:3. SH. 012 – GROUND CONNECTIONS ARE ERASED FROM THE SHIELDS W124, W123 AND W1256.

This drawing must not without the consent of Tetra Pak be copied, transmitted or disclosed to any third party.

Ecn No	Drawing No	Alteration
		SH. 013 – GROUND CONNECTION IS ERASED FROM THE SHIELD W125.
		SH. 023 – TERMINAL SYMBOLS X600 CORRECTED.
		SH. 026 – TERMINAL SYMBOLS X600 CORRECTED.
		SH. 037 – CONNECTION OF K101:6 IS CORRECTED FROM P002:10 TO P002:11.
		SH. 049 – CONNECTION OF X454 IS CHANGED FROM G100:PORT TO D100:PORT2. EXPANSIONS-RACK CONFIGURATIONS ARE CORRECTED.
		SH. 055 – CONNECTION REFERENCE (IJ) IS ADDED.
		SH. 056 – CONNECTION REFERENCE (IJ) IS ADDED.
		SH. 061 – CABLES W4502 AND 4500 ARE CORRECTED.
		SH. 108 – TERMINAL SYMBOLS X600 CORRECTED. – COMPONENTS LOCATION K1000, K1100, K1200 AND K1201 ARE CORRECTED.
		SH. 172 – CONNECTION REFERENCES (IJ , IW) ARE ADDED.
		SH. 181 – FUNCTION TEST FOR A145:07 IS ADDED.
	2593852-0004:AB	LINE SUMMARY : CHANGED ACCORDING TO UPDATE CIRCUIT DIAGRAM.
	2593852-0005:AB	CABINET TERMINAL SUMMARY : CHANGED ACCORDING TO UPDATE CIRCUIT DIAGRAM.
	2593852-0006:AB	TERMINAL STRIP OVERVIEW : CHANGED ACCORDING TO UPDATE CIRCUIT DIAGRAM.
	2593852-0007:AB	CABLE CONNECTION LIST : CHANGED ACCORDING TO UPDATE CIRCUIT DIAGRAM.
	2593852-0008:AB	MAINS CONNECTION : CHANGED ACCORDING TO UPDATE CIRCUIT DIAGRAM.
	2593852-0099:AB	EC DESCRIPTION : CHANGED ACCORDING TO UPDATE NEW AB VERSION. .
	AE39912	INTRODUCED NEW VERSION PLC PROGRAM
141035	-	

This drawing must not without the consent of Tetra Pak be copied, transmitted or disclosed to any third party.

Ecn No	Drawing No	Alteration
	2593852-0001:AC	DOCUMENT LIST : CHANGED ACCORDING TO UPDATE NEW AC VERSION. .
	2593852-0002:AC	POSITION SUMMARY : CHANGED ACCORDING TO UPDATE CIRCUIT DIAGRAM.
	2593852-0003:AC	SH. 006 – COMPONENTS F910, K910, X502, R9100 AND W9100 ADDED. TERMINALS X002:67 AND X003:113 ARE ADDED. SH. 023 – COMPONENT M1122 IS CHANGED. CONNECTIONS BETWEEN X122 AND M1122 ARE CHANGED. COMPONENT Q122 IS ADDED. TERMINAL X002:15 IS ADDED. SH. 026 – COMPONENT Q015 IS ADDED AND F015 IS ERASED. SH. 034 – COMPONENT F122 IS ERASED. SH. 037 – PAGE IS ERASED. SH. 038 – PAGE IS ERASED. SH. 039 – PAGE IS ADDED. SH. 045 – PAGE IS ADDED. SH. 049 – MODULE A143 IS ADDED. SH. 059 – TEXT “CIP COMM. IN 3” IS CORRECTED. SH. 087 – ANALOG INPUT AI41, AI42, AI43, AI44, AI45, AI46, AI47 AND AI48 ARE CORRECTED. SH. 094 – COMPONENT B1150 IS ERASED. COMPONENTS B9105, X9100, W9117 AND W9119 ARE ADDED. CONNECTIONS IN A107:07 AND A107:09 ARE CORRECTED. SH. 094 – COMPONENT B1150 IS ERASED. SH. 101 – COMPONENTS W9118, X9100, W9105, X9105 AND A9115 ARE ADDED. SH. 107 – CONTACT Q122 IS ADDED.

This drawing must not without the consent of Tetra Pak be copied, transmitted or disclosed to any third party.

Ecn No	Drawing No	Alteration
		SH. 124 – INPUT NAMES ARE CORRECTED. SH. 128 – CONNECTION REFERENCE (AY) IS ADDED. SH. 131 – OPTION “JUMO RECORDER” IS ADDED. OPTION “H.I.” IS ADDED. SH. 148 – COMPONENTS Y9105 AND Y9106 ARE ADDED. SH. 154 – CONTACTS K015 AND Q015 ARE ADDED. SH. 173 – COMPONENT B4125 IS CHANGED. COMPONENTS B4130, B4131 AND B4132 ARE CHANGED WITH B4131, B4132 AND B4134. SH. 174 – COMPONENTS B4133, B4134, B4136, B4139 AND B4140 ARE ERASED. COMPONENTS B4135, B4137 AND B4138 ARE CHANGED POSITIONS. SH. 175 – COMPONENTS B4141 AND W4141 ARE CHANGED. SH. 176 – COMPONENTS X210, X9100, B9104, B9107, B9108, B9109, B9110, B9111, W9104, W9107, W9108, W9109, W9110 AND W9111 ARE ADDED. SH. 177 – PAGE IS ADDED. SH. 182 – CONTACT Q122 IS ADDED. COMPONENT Y4261 IS ERASED. COMPONENT Y4262 IS CHANGED POSITION. SH. 183 – CONNECTIONS REFERENCE (AW, AX) ARE ADDED. SH. 184 – COMPONENTS X210, X212, X9100, K910, Y9112, Y9114, Y9101, Y9103, W9112, W9114, W9101AND W9103 ARE ADDED.

This drawing must not without the consent of Tetra Pak be copied, transmitted or disclosed to any third party.

Ecn No	Drawing No	Alteration
		SH. 185 – COMPONENTS Y4266 AND W4142 ARE ADDED.
	2593852-0004:AC	LINE SUMMARY : CHANGED ACCORDING TO UPDATE CIRCUIT DIAGRAM.
	2593852-0005:AC	CABINET TERMINAL SUMMARY : CHANGED ACCORDING TO UPDATE CIRCUIT DIAGRAM.
	2593852-0006:AC	TERMINAL STRIP OVERVIEW : CHANGED ACCORDING TO UPDATE CIRCUIT DIAGRAM.
	2593852-0007:AC	CABLE CONNECTION LIST : CHANGED ACCORDING TO UPDATE CIRCUIT DIAGRAM.
	2593852-0008:AC	MAINS CONNECTION : CHANGED ACCORDING TO UPDATE CIRCUIT DIAGRAM.
	2593852-0099:AC	EC DESCRIPTION : CHANGED ACCORDING TO UPDATE NEW AC VERSION. .
153152	-	
	2593852-0001:AD	DOCUMENT LIST : CHANGED ACCORDING TO UPDATE NEW AD VERSION.
	2593852-0002:AD	POSITION SUMMARY : CHANGED ACCORDING TO UPDATE CIRCUIT DIAGRAM.
	2593852-0003:AD	SH. 011 – CABLE W134 IS CORRECTED. COMPONENTS F010, F7304, T7304, W7074 AND W7075 ARE ERASED. COMPONENTS F115 AND W7305 ARE ADDED. COMPONENT R7304 IS CHANGED.
		SH. 016 – CONNECTION REFERENCE (FF) IS CHANGED.
		SH. 018 – CORRECTED PINS NAME R001,R002 AND R003.
		SH. 019 – TEXT “ALARM ENCODING” IS ADDED IN A506:DO1.
		SH. 020 – TEXT “ALARM ENCODING” IS ADDED IN A507:DO1.

This drawing must not without the consent of Tetra Pak be copied, transmitted or disclosed to any third party.

Ecn No	Drawing No	Alteration
		SH. 021 – TEXT “ALARM ENCODING” IS ADDED IN A508:DO1.
		SH. 022 – “BELT BRAKE” SYMBOL IS CHANGED.
		SH. 053 – CONNECTION REFERENCE (IZ) IS ADDED.
		SH. 056 – COMPONENT K215 IS ADDED.
		SH. 059 – CONNECTIONS REFERENCE (JF,JG,JH) ARE CORRECTED.
		SH. 061 – COMPONENTS PREFIX A4500, W4500, A4501 AND W4501 ARE CHANGED (EXT).
		SH. 065 – CONNECTIONS OF A602 ARE CHANGED. LINES L70 AND L71 ARE ADDED. LINE L32 IS ERASED.
		SH. 080 – CABLE W4018 IS CORRECTED.
		SH. 081 – CONNECTION REFERENCE (IR) IS CHANGED.
		SH. 087 – COMPONENTS B7304, X7304, W7304 ARE ADDED.
		SH. 102 – COMPONENTS PREFIX A4200 AND W4200 ARE CHANGED (EXT).
		SH. 105 – CONNECTIONS REFERENCE (JG,JH) ARE CORRECTED.
		SH. 107 – CONNECTION REFERENCE (JF) IS CORRECTED. CORRECTED PINS NAME Q002, Q009, Q020, Q023 AND Q024.
		SH. 110 – TEXT OF A113:I0046 IS CHANGED.
		SH. 111 – TEXT OF A114:I0053 IS CHANGED.
		SH. 112 – TEXT OF A114:I0060 IS CHANGED.
		SH. 122 – CONNECTIONS TO A119:I0141, A119:I0142 AND A119:I0144 ARE CHANGED. POTENTIAL NAME TO X231:1 IS CHANGED.

This drawing must not without the consent of Tetra Pak be copied, transmitted or disclosed to any third party.

Ecn No	Drawing No	Alteration
		SH. 128 – TEXT OF A122:I0188 IS CHANGED. SH. 129 – TEXT OF A123:I0196 IS CORRECTED. SH. 131 – WIRE “CONSTANT HEAT” IS ADDED. WIRE “GREASING” IS ADDED. SH. 140 – CONNECTIONS REFERENCE (KF, KG) ARE ERASED. TEXT OF K014 IS CHANGED. SH. 147 – CONNECTION TO A130:Q0083 IS CHANGED. SH. 154 – CORRECTED PINS NAME K015. SH. 155 – CONNECTIONS BETWEEN Y7414, Y7415 AND X7001 ARE CHANGED. CONNECTION TO A134:Q0145 IS CHANGED. TEXT OF B7801 IS CHANGED. SH. 156 – CONNECTIONS TO ALL OUTPUTS ARE CHANGED. LINES L70 AND L71 ARE ADDED. SH. 177 – CABLE W179 IS ADDED. SH. 184 – CORRECTED PINS NAME K910.
	2593852-0004:AD	LINE SUMMARY : CHANGED ACCORDING TO UPDATE CIRCUIT DIAGRAM.
	2593852-0005:AD	CABINET TERMINAL SUMMARY : CHANGED ACCORDING TO UPDATE CIRCUIT DIAGRAM.
	2593852-0006:AD	TERMINAL STRIP OVERVIEW : CHANGED ACCORDING TO UPDATE CIRCUIT DIAGRAM.
	2593852-0007:AD	CABLE CONNECTION LIST : CHANGED ACCORDING TO UPDATE CIRCUIT DIAGRAM.
	2593852-0008:AD	MAINS CONNECTION : CHANGED ACCORDING TO UPDATE CIRCUIT DIAGRAM.
	2593852-0099:AD	EC DESCRIPTION : CHANGED ACCORDING TO UPDATE NEW AD VERSION. .
175296	2593852:AE	PROPERTY NET-BASED WIRES CHANGED.

This drawing must not without the consent of Tetra Pak be copied, transmitted or disclosed to any third party.

Ecn No	Drawing No	Alteration
	2593852-0001:AE	DOCUMENT LIST: NO CHANGES
	2593852-0002:AE	POSITION SUMMARY: NO CHANGES
	2593852-0003:AE	CIRCUIT DIAGRAM: NO CHANGES
	2593852-0004:AE	LINE SUMMARY: NO CHANGES
	2593852-0005:AE	CABINET TERMINAL SUMMARY: NO CHANGES
	2593852-0006:AE	TERMINAL STRIP OVERVIEW: NO CHANGES
	2593852-0007:AE	CABLE CONNECTION LIST: NO CHANGES
	2593852-0008:AE	MAINS CONNECTION: NO CHANGES
	2593852-0099:AE	EC DESCRIPTION : NO CHANGES

This drawing must not without the consent of Tetra Pak be copied, transmitted or disclosed to any third party.

This page left intentionally blank

13 Bills of Material

TechPub_2614345_v3_DRAFT_ReleaseTB137677en.fm

Description

This chapter included the lists of the documents and programs.

TechPub_2614345_v3_DRAFT_ReleaseTB137677en.fm

ECM P110533(L110532)
Release date 2001.09.27

Chg	Position	Sp	SH	Description	As	Size	Identity	DTp	Prt	Vs	Unit	Column quantity All
I	0010			ELECTRICAL DOCUMENT	X		42930-0500				PC	1
I	0020			STANDARD EQUIPMENT	X		48198-0500				PC	1

**********This is the Last Page**********

ECM	P110534(L110532)	P113403(L113402)	P117588(L117587)	P122714(L122713)	P133612(L133611)	P141038(L141037)
Release date	2001.09.27	2002.08.21	2002.11.12	2003.02.07	2003.07.18	2003.11.11

ECM	P150881(L150880)	P166273(L153153)	P175305(L175297)
Release date	2003.11.14	2004.06.01	2004.06.11

Chg	Position	Sp	SH	Description	As	Size	Identity	DTp	Prt	Vs	Unit	Column quantity All
I	1001			DOCUMENT LIST	A4		2593852-0001	ELD	000	AE		x
I	1002			POSITION SUMMARY	A4		2593852-0002	ELD	000	AE		x
I	1003			CIRCUIT DIAGRAM	A4		2593852-0003	ELD	000	AE		x
I	1004			LINE SUMMARY	A4		2593852-0004	ELD	000	AE		x
I	1005			CABINET TERMINAL SUMMARY	A4		2593852-0005	ELD	000	AE		x
I	1006			TERMINAL STRIP OVERVIEW	A4		2593852-0006	ELD	000	AE		x
I	1007			CABLE CONNECTION LIST	A4		2593852-0007	ELD	000	AE		x
I	1008			MAINS CONNECTION	A4		2593852-0008	ELD	000	AE		x
I	1099			ENGINEERING CHANGE DESCRIPTION	A4		2593852-0099	ELD	000	AE		x
	4001			PLC PROGRAM BLOCK	A4		39912-0001	ELD	000	AF		x
	4002			PLC PROGRAM BLOCK	A4		39912-0002	ELD	000	AF		x
	4003			PLC PROGRAM BLOCK	A4		39912-0003	ELD	000	AF		x
	4004			PLC PROGRAM BLOCK	A4		39912-0004	ELD	000	AF		x
	4005			PLC PROGRAM BLOCK	A4		39912-0005	ELD	000	AF		x
	4006			PLC PROGRAM BLOCK	A4		39912-0006	ELD	000	AF		x
	4007			PLC PROGRAM BLOCK	A4		39912-0007	ELD	000	AF		x
	4008			PLC PROGRAM BLOCK	A4		39912-0008	ELD	000	AF		x
	4009			PLC PROGRAM BLOCK	A4		39912-0009	ELD	000	AF		x
	4010			PLC PROGRAM BLOCK	A4		39912-0010	ELD	000	AF		x
	4011			PLC PROGRAM BLOCK	A4		39912-0011	ELD	000	AF		x
	4012			PLC PROGRAM BLOCK	A4		39912-0012	ELD	000	AF		x
	4013			PLC PROGRAM BLOCK	A4		39912-0013	ELD	000	AF		x
	4014			PLC PROGRAM BLOCK	A4		39912-0014	ELD	000	AF		x
	4015			PLC PROGRAM BLOCK	A4		39912-0015	ELD	000	AF		x
	4016			PLC PROGRAM BLOCK	A4		39912-0016	ELD	000	AF		x
	4017			PLC PROGRAM BLOCK	A4		39912-0017	ELD	000	AF		x
	4018			PLC PROGRAM BLOCK	A4		39912-0018	ELD	000	AF		x
	4019			PLC PROGRAM BLOCK	A4		39912-0019	ELD	000	AF		x
	4020			PLC PROGRAM BLOCK	A4		39912-0020	ELD	000	AF		x
	4021			PLC PROGRAM BLOCK	A4		39912-0021	ELD	000	AF		x
	4022			PLC PROGRAM BLOCK	A4		39912-0022	ELD	000	AF		x
	4023			PLC PROGRAM BLOCK	A4		39912-0023	ELD	000	AF		x
	4024			PLC PROGRAM BLOCK	A4		39912-0024	ELD	000	AF		x

ChgPosition	Sp	SH	Description	As	Size	Identity	DTp	Prt	Vs	Unit	Column quantity All
4025			PLC PROGRAM BLOCK	A4-		39912-0025	ELD	000	AF		x
4026			PLC PROGRAM BLOCK	A4-		39912-0026	ELD	000	AF		x
4027			PLC PROGRAM BLOCK	A4-		39912-0027	ELD	000	AF		x
4028			PLC PROGRAM BLOCK	A4-		39912-0028	ELD	000	AF		x
4029			PLC PROGRAM BLOCK	A4-		39912-0029	ELD	000	AF		x
4030			PLC PROGRAM BLOCK	A4-		39912-0030	ELD	000	AF		x
4031			PLC PROGRAM BLOCK	A4-		39912-0031	ELD	000	AF		x
4032			PLC PROGRAM BLOCK	A4-		39912-0032	ELD	000	AF		x
4033			PLC PROGRAM BLOCK	A4-		39912-0033	ELD	000	AF		x
4034			PLC PROGRAM BLOCK	A4-		39912-0034	ELD	000	AF		x
4035			PLC PROGRAM BLOCK	A4-		39912-0035	ELD	000	AF		x
4036			PLC PROGRAM BLOCK	A4-		39912-0036	ELD	000	AF		x
4037			PLC PROGRAM BLOCK	A4-		39912-0037	ELD	000	AF		x
4038			PLC PROGRAM BLOCK	A4-		39912-0038	ELD	000	AF		x
4039			PLC PROGRAM BLOCK	A4-		39912-0039	ELD	000	AF		x
4040			PLC PROGRAM BLOCK	A4-		39912-0040	ELD	000	AF		x
4041			PLC PROGRAM BLOCK	A4-		39912-0041	ELD	000	AF		x
4042			PLC PROGRAM BLOCK	A4-		39912-0042	ELD	000	AF		x
4043			PLC PROGRAM BLOCK	A4-		39912-0043	ELD	000	AF		x
4044			PLC PROGRAM BLOCK	A4-		39912-0044	ELD	000	AF		x
4045			PLC PROGRAM BLOCK	A4-		39912-0045	ELD	000	AF		x
4046			PLC PROGRAM BLOCK	A4-		39912-0046	ELD	000	AF		x
4047			PLC PROGRAM BLOCK	A4-		39912-0047	ELD	000	AF		x
4048			PLC PROGRAM BLOCK	A4-		39912-0048	ELD	000	AF		x
4049			PLC PROGRAM BLOCK	A4-		39912-0049	ELD	000	AF		x
4050			PLC PROGRAM BLOCK	A4-		39912-0050	ELD	000	AF		x
4052			PLC PROGRAM BLOCK	A4-		39912-0052	ELD	000	AF		x
4053			PLC PROGRAM BLOCK	A4-		39912-0053	ELD	000	AF		x
4054			PLC PROGRAM BLOCK	A4-		39912-0054	ELD	000	AF		x
4055			PLC PROGRAM BLOCK	A4-		39912-0055	ELD	000	AF		x
4056			PLC PROGRAM BLOCK	A4-		39912-0056	ELD	000	AF		x
4057			PLC PROGRAM BLOCK	A4-		39912-0057	ELD	000	AF		x
4059			PLC PROGRAM BLOCK	A4-		39912-0059	ELD	000	AF		x
4501			MAIN + CROSS REFERENCE	A4-		39912-0501	ELD	000	AF		x
4502			1T0001 FAST SCAN	A4-		39912-0502	ELD	000	AF		x

Information 'valid to' 2004.06.11

Chg	Position	Sp	SH	Description	As	Size	Identity	DTp	Prt	Vs	Unit	Column quantity All
D	1001			DOCUMENT LIST	A4		2593852-0001	ELD	000	AD		x
D	1002			POSITION SUMMARY	A4		2593852-0002	ELD	000	AD		x
D	1003			CIRCUIT DIAGRAM	A4		2593852-0003	ELD	000	AD		x
D	1004			LINE SUMMARY	A4		2593852-0004	ELD	000	AD		x
D	1005			CABINET TERMINAL SUMMARY	A4		2593852-0005	ELD	000	AD		x
D	1006			TERMINAL STRIP OVERVIEW	A4		2593852-0006	ELD	000	AD		x
D	1007			CABLE CONNECTION LIST	A4		2593852-0007	ELD	000	AD		x
D	1008			MAINS CONNECTION	A4		2593852-0008	ELD	000	AD		x
D	1099			ENGINEERING CHANGE DESCRIPTION	A4		2593852-0099	ELD	000	AD		x

ECM	P110535(L110532)	P113468(L113402)	P117589(L117587)	P122715(L122713)	P133663(L133611)	P141153(L153153)
Release date	2001.09.27	2002.08.21	2002.11.12	2003.02.07	2003.07.18	2004.06.01

ChgPosition	Sp	SH	Description	As	Size	Identity	DTp	Prt	Vs	Unit	Column quantity All
I 0010			PLC-PROGRAMME LIST	Y		39912-0006				PC	1
			I n t e r n a l c o m m e n t								
			PLC program version AF39912								

Information 'valid to' 2004.06.01

Chg	Position	Sp	SH	Description	As	Size	Identity	DTp	Prt	Vs	Unit	Column quantity All
D	0010			PLC-PROGRAMME LIST	X		39912-0005				PC	1

14 Fuse Panel Label

TechPub_2614345_v3_DRAFT_ReleaseTB147677en.fm

Description

This chapter shown the location and the setting of the fuses.

TechPub_2614345_v3_DRAFT_ReleaseTB147677en.fm

15 Genius Bus Configuration

TechPub_2614345_v3_DRAFT_ReleaseTB157677en.fm

Description

This chapter describes how to troubleshoot the communications link between the machines in a production line.

TechPub_2614345_v3_DRAFT_ReleaseTB157677en.fm

1.1 Configuration description. . . . . 1 - 5

Generic Register Document . . . . . 1 - 7

1.2 Genius Communication Example . . . . . 1 - 8

TBA/22 Genius Configuration . . . . . 1 - 9

THx 22 Genius configuration . . . . . 1 - 11

TCBP 71 Genius configuration . . . . . 1 - 13

Register document TBA/22 . . . . . 1 - 15

Generic Tray Shrink . . . . . 1 - 16

Generic Cardboard Packer . . . . . 1 - 18

Generic Film Wrapper . . . . . 1 - 20

Generic Handle Applicator . . . . . 1 - 22

TechPub_2614345_v3_DRAFT_ReleaseTB157677en.fm

This page intentionally left blank

TechPub_2614345_v3_DRAFT_ReleaseTB157677en.fm

1.1 Configuration description

This instruction describes how to troubleshoot the communications link between the machines in a production line.

To configure a Genius module means “to specify the memory addresses of a PLC to make it readable but not modifiable from all other PLCs connected to the net”.

To establish correct communication between each machine installed in a line, it is necessary to configure the Genius module in each machine with the configuration data of the other machines in the line.

To find the configuration parameters of the Genius modules it is necessary to consult the **Register document** table on each machine EM.

For a **non standard line**, the following three generic machines are defined:

- Generic Tray Shrink.,
- Generic Cardboard Packer;
- Generic Film Wrapper;
- See the register documents for the Generic Tray Shrink, Generic Cardboard Packer; and Generic Film Wrapper at the back of this section.

(Cont'd)

TechPub_2614345_v3_DRAFT_ReleaseTB157677en.fm

(Cont'd)

The following illustration shows an example of a **Register document** (THx22) where the 4 items of data needed to configure the Genius module can be found:

a) **Genius ID/Module SBA** (1);

b) From the field **Register to use** (2) it is possible to get two parameters:

- **Start reference** which is the first address of the register used,
- **Reference length** which is the number of registers used;

c) **Message Buffer Byte Offset** (3);

(Cont'd)

TechPub_2614345_v3_DRAFT_ReleaseTB157677en.fm

(Cont'd)

Generic Register Document



Document ID	**xxxxxxx-xxxx ELD xxx AC**	**Date**	**24-Jun-03**
Machine type	**Generic Tray Shrink**	**Signature**	**xxx**
Development step	**Release 3**	**ECM**	**xxxxxxx**

Module Genius configuration

Start Ref %R818	**Reference length 6**	**Genius ID 12**	%R818 Packages IN (Counter) %R819 Packages OUT (Counter) %R820 Alarms 1-16 %R821 LA signals and Ladderstep %R822 Alarms 17-32 %R823 Alarms 33-48
Register to use %R818 - %R823		**Byte offset 0**	
Stopcode range 8800			

Bit configuration

%R818	**Packages IN (Counter)**

%R819	**Packages OUT (Counter)**

%R820 Alarms 1-16

Bit (PLC)	Description	Stop	Value Hex	Value Dec	Stop code number DE	Stop code number Line	Tag name
1	Reserved (TS)	D	1	1	8810	48810	DEGenericTS1.00
2	Emergency stop (TS)	D	2	2	8811	48811	DEGenericTS1.01
3	Reserved (TS)	D	4	4	8812	48812	DEGenericTS1.02
4	Door guards (TS)	D	8	8	8813	48813	DEGenericTS1.03
5	Motor protection (TS)	D	10	16	8814	48814	DEGenericTS1.04
6	Sealing unit (TS)	D	20	32	8815	48815	DEGenericTS1.05
7	Film upper break (TS)	D	40	64	8816	48816	DEGenericTS1.06
8	Film lower break (TS)	D	80	128	8817	48817	DEGenericTS1.07
9	Electrical equipments (TS)	D	100	256	8818	48818	DEGenericTS1.08
10	Servo Drives (TS)	D	200	512	8819	48819	DEGenericTS1.09
11	Frequency Controllers (TS)	D	400	1024	8820	48820	DEGenericTS1.10
12	Encoder (TS)	D	800	2048	8821	48821	DEGenericTS1.11
13	Tunnel (TS)	D	1000	4096	8822	48822	DEGenericTS1.12
14	Outfeed jam (TS)	D	2000	8192	8823	48823	DEGenericTS1.13
15	Infeed jam (TS)	D	4000	16384	8824	48824	DEGenericTS1.14
16	Reserved (TS)	D	8000	32768	8825	48825	DEGenericTS1.15

%R821 LA signals and Ladderstep

Bit (PLC)	Description	Stop	Value Hex	Value Dec	Stop code number	Tag name
1	READY	LA	1	1	----	DEGenericTS2.00
2	RUN	LA	2	2	----	DEGenericTS2.01
3	ALARM	LA	4	4	----	DEGenericTS2.02
4	N/A	LA	8	8	----	DEGenericTS2.03
5	N/A	LA	10	16	----	DEGenericTS2.04
6	N/A	LA	20	32	----	DEGenericTS2.05
7	N/A	LA	40	64	----	DEGenericTS2.06
8	N/A	LA	80	128	----	DEGenericTS2.07
9	N/A	IS	100	256		DEGenericTS2.08
10	N/A	IS	200	512		DEGenericTS2.09
11	N/A	IS	400	1024		DEGenericTS2.10
12	N/A	IS	800	2048		DEGenericTS2.11
13	DE production time signal	IS	1000	4096	8851	DEGenericTS2.12
14	Ladderstep Off	IS	2000	8192	8857	DEGenericTS2.13
15	Ladderstep Preparation	IS	4000	16384	8858	DEGenericTS2.14
16	Ladderstep Production	IS	8000	32768	8859	DEGenericTS2.15

TechPub_2614345_v3_DRAFT_ReleaseTB157677en.fm

1.2 Genius Communication Example

SPC reference	

This procedure gives an example of how to make or verify a simplified configuration.

The example is for a line containing the following three machines:

- TBA 22
- THx 22 (Tetra Helix 22)
- TCBP 71 (Tetra Cardboard Packer 71)

For each of the three machines see the **Generic register document** table in each machine EM.

Extract the four parameters necessary to configure the Genius module.

Note! Organize the parameters in a table similar to the one below.

From the **Register document** we get the following data:

Machine	Parameter	Value
TBA 22	SBA (ID)	1
	Start ref.	%R0569
	Reference Length	1
	Msg Buffer Byte Offset	0
THx 22	SBA (ID)	5
	Start ref.	%R0660
	Reference Length	6
	Msg Buffer Byte Offset	0
TCBP 71	SBA (ID)	3
	Start ref.	%R0380
	Reference Length	5
	Msg Buffer Byte Offset	1

To enable the three machines to communicate it is necessary to verify that each Genius module is configured in accordance with the data given in the table.

The following pages describe how to verify the Genius module of TBA/22, THx22 and TCBP 71.

(Cont'd)

TechPub_2614345_v3_DRAFT_ReleaseTB157677en.fm

(Cont'd)

TBA/22 Genius Configuration

Note! The example below shows the configuration methodology of a Genius module type Enhanced (IC693CMM302). For all the machines equipped with this type of Genius module the procedure will be the same.

a) Connect the PC to the PLC communication port of the TBA/22.

b) Select the PLC configuration menu.

c) The field **SBA of This Module** (1) shows the machine ID/SBA you are connected with.

d) Make sure that the value in the field (ID) parameter is the same as that for machine number 1, see the table above.

e) Press **Page up** or **Page down** to display the other pages.

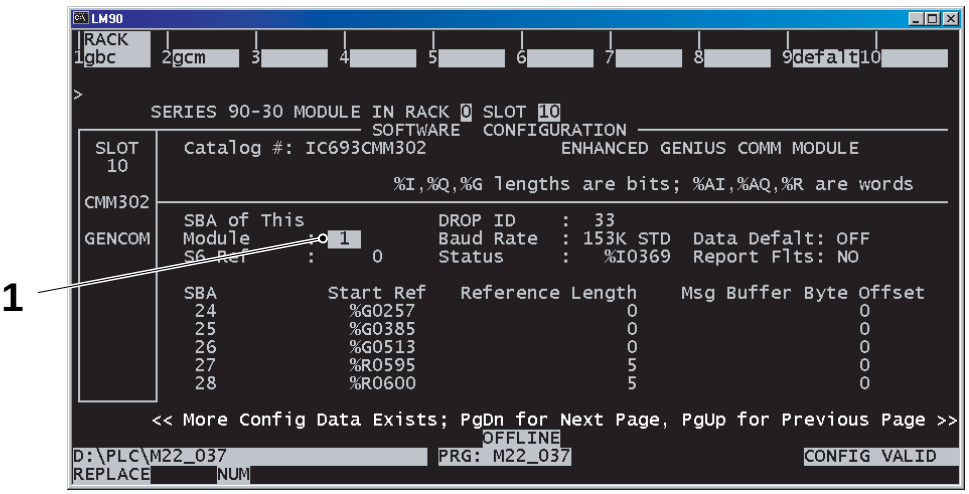

1 Module field

(Cont'd)

TechPub_2614345_v3_DRAFT_ReleaseTB157677en.fm

(Cont'd)

Note! In the illustration below the machines that must be configured are highlighted.

f) Make sure that the values in the highlighted lines (2) correspond with the data in the table. If not set accordingly.

Note! The symbol * next to the number 1 means that we are working on the PLC with ID = 1.

Note! It is not necessary to erase references to configured machines that are not present in the line. This information will not be used by the program.

Note! Different machines cannot use the same memory area even if they will never be installed at the same time. If this is done, the **config invalid** alarm (3) will appear.

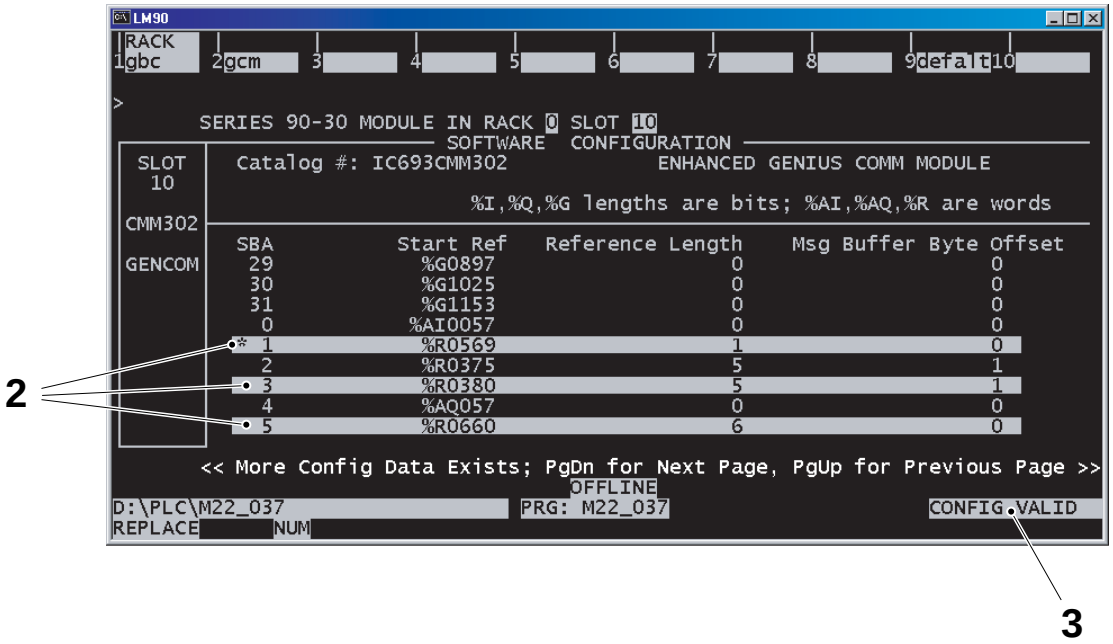

2 Highlighted line
3 Alarm

(Cont'd)

TechPub_2614345_v3_DRAFT_ReleaseTB157677en.fm

(Cont'd)

THx 22 Genius configuration

Note! The example below shows the configuration methodology of a Genius module type Enhanced (IC693CMM302). For all the machines equipped with this type of Genius module the procedure will be the same.

a) Connect the PC to the PLC communication port of the THx22.

b) Select the PLC configuration menu.

c) The field **SBA of This Module** (1) shows the machine ID/SBA you are connected with.

d) Make sure that the value in the field (ID) parameter is the same as that for machine number 5, see the table above.

e) Press **Page up** or **Page down** to display the other pages.

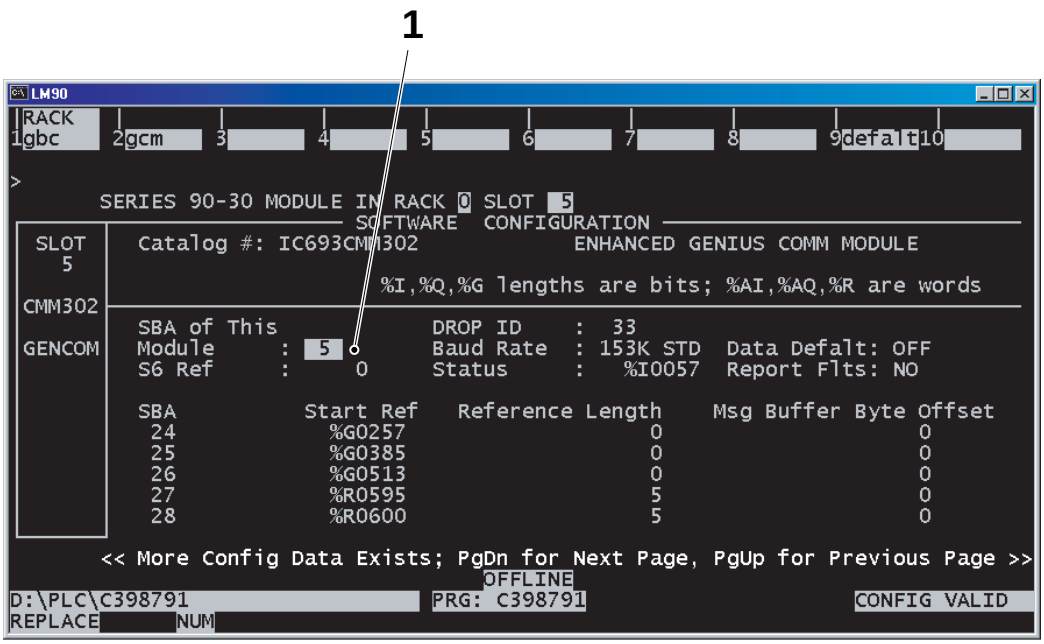

1 Parameter module

(Cont'd)

TechPub_2614345_v3_DRAFT_ReleaseTB157677en.fm

(Cont'd)

Note! In the illustration below the machines that must be configured are highlighted.

f) Make sure that the values in the highlighted lines correspond to the data in the table above. If not, set accordingly.

Note! The symbol * next to the number 5 means that we are working on the PLC with ID = 5.

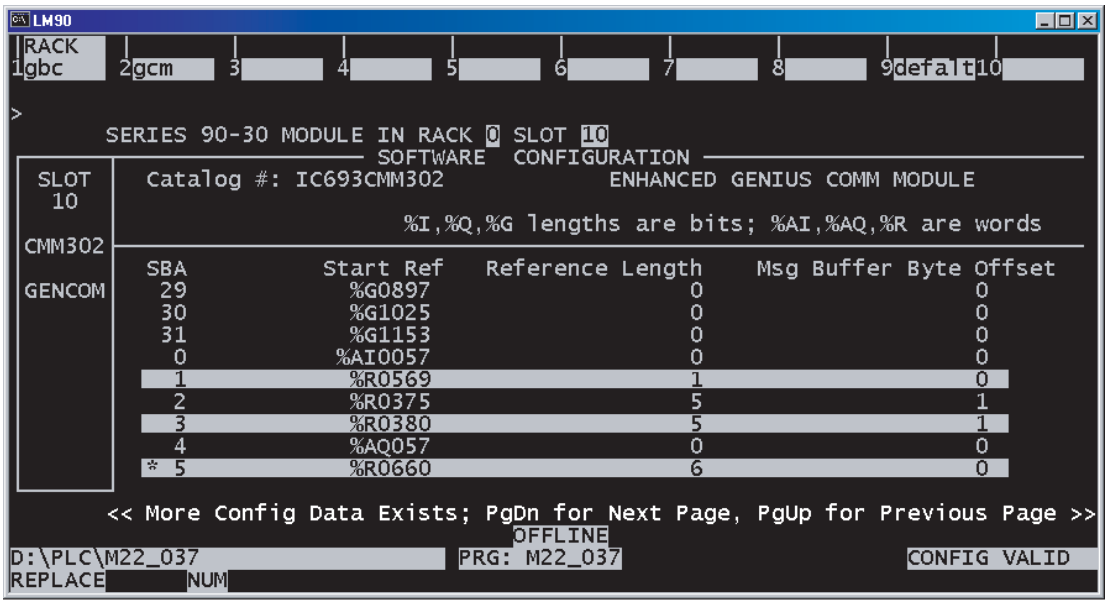

(Cont'd)

TechPub_2614345_v3_DRAFT_ReleaseTB157677en.fm

(Cont'd)

TCBP 71 Genius configuration

Note! The example below shows the configuration methodology of a Genius module type IC693BEM331 (used only on TCBP 71 and TSA22HS). The configuration instructions for this type of module are different to those for the Enhanced module.

a) Connect the PC to the PLC communication port of the TCBP71.

b) Select the PLC configuration menu.

c) Make sure that the value in the field **Module SBA** (1) is the same as that for machine number 3 in the table above. If not, set accordingly.

Note! In the 'DEVICE DATA' area, the registers shown indicate data exchange with only one DE PLC. To understand the machine that we are configurating we must see the value of parameters **Device SBA** (2).

Note! The following illustration shows the register configuration of the TBA22. If not, set accordingly.

d) Press **Page down** until DEVICE SBA = 3 is displayed in order to see the configuration of TCBP 71.

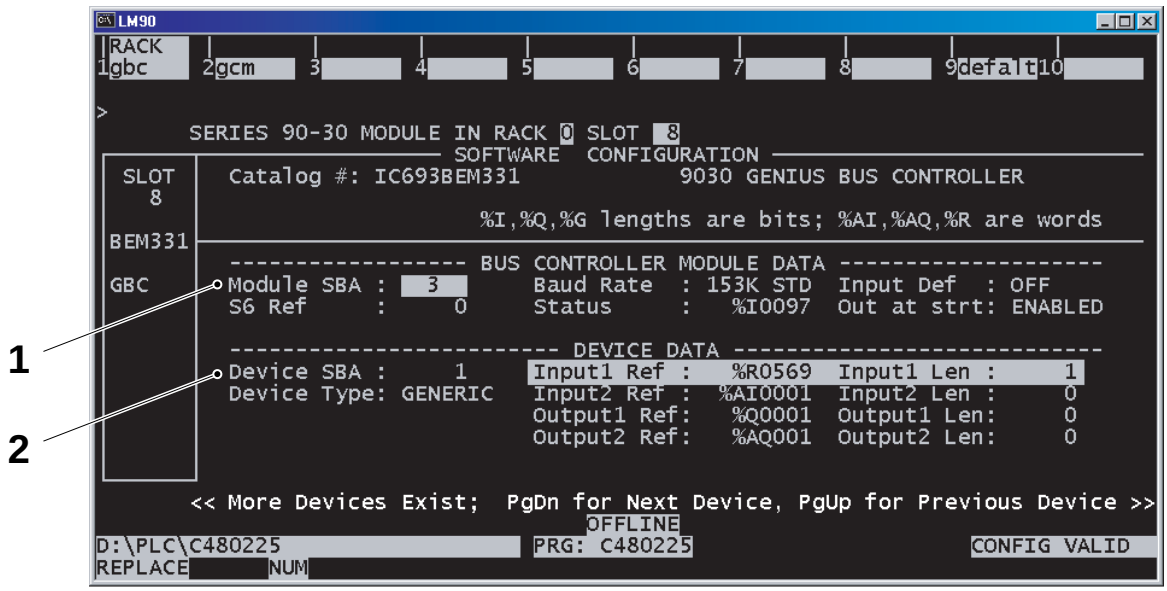

1 Parameter Module SBA
2 Parameter Device SBA

(Cont'd)

TechPub_2614345_v3_DRAFT_ReleaseTB157677en.fm

(Cont'd)

In the illustration below the highlighted lines shows the configuration of the TCBP71:

- line (1) sets the **Msg Buffer Byte Offset** parameter equal to 1, see table above;
- line (2) configure the **Genius bus exchange registers**;

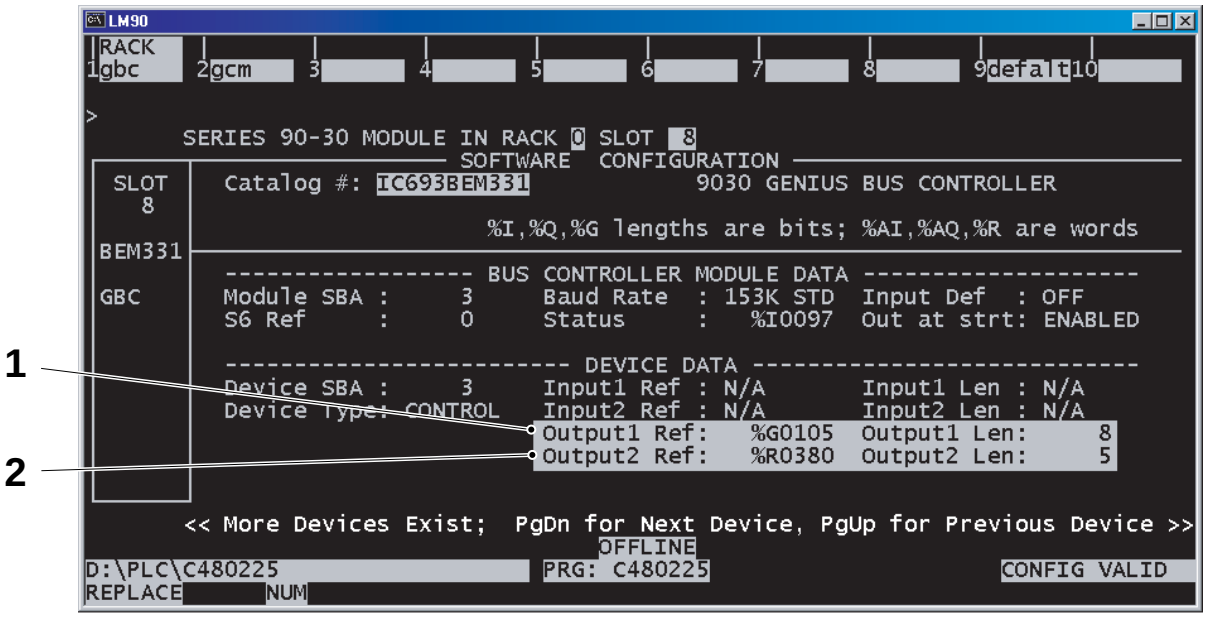

Press **Page down** until DEVICE SBA = 5 is displayed to see the configuration of THx22.

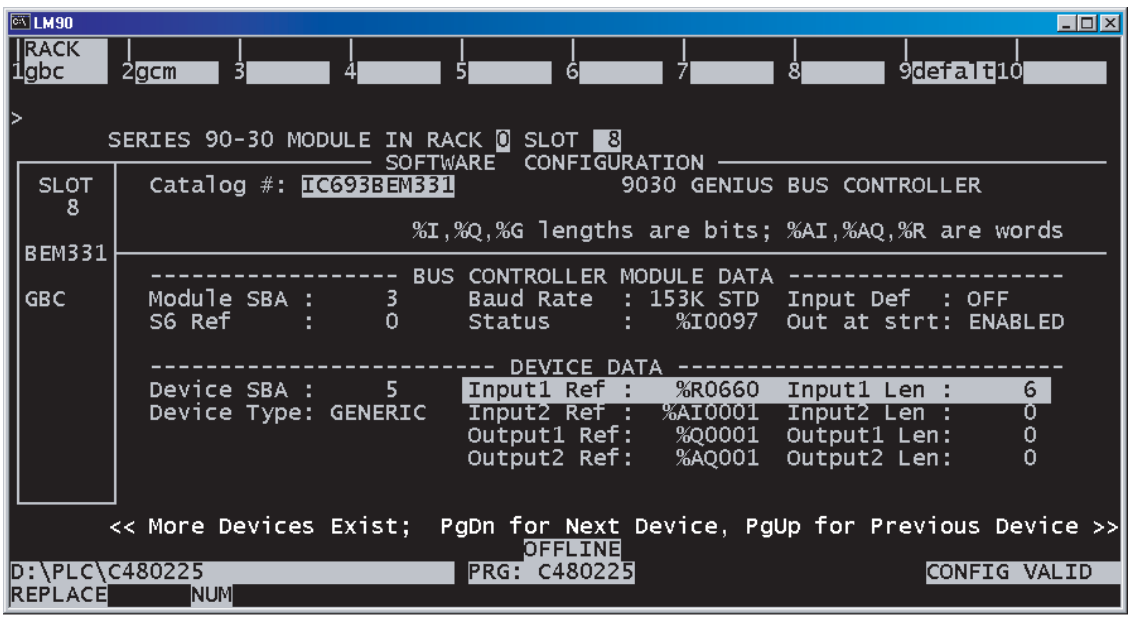

(Cont'd)

TechPub_2614345_v3_DRAFT_ReleaseTB157677en.fm

(Cont'd)

Register document TBA/22

Document ID	**xxxxxxx-xxxx ELD xxx AC**	**Date**	**28-Oct-03**
Machine type	**TBA 22**	**Signature**	**xxx**
Development step	**0500**	**ECM**	**xxxxxxx**

Module Genius configuration

Start Ref **%R569**	**Reference length** **1**	**Genius ID** **1**	%R569 Signals
Register to use **%R569**		**Byte offset** **0**	
Stopcode range **----**			

Bit configuration

%R569	**Signals**					
Bit (PLC)	**Description**	**Stop**	**Value Hex**	**Value Dec**	**Stop code number**	**Tag name**
1	TBA22 in PREPARATION	LA	1	1	----	
2	TBA22 in RUN	LA	2	2	----	
3	N/A	LA	4	4	----	
4	N/A	LA	8	8	----	
5	N/A	LA	10	16	----	
6	N/A	LA	20	32	----	
7	N/A	LA	40	64	----	
8	N/A	LA	80	128	----	
9	N/A	LA	100	256	----	
10	N/A	LA	200	512	----	
11	N/A	LA	400	1024	----	
12	N/A	LA	800	2048	----	
13	N/A	LA	1000	4096	----	
14	N/A	LA	2000	8192	----	
15	N/A	LA	4000	16384	----	
16	N/A	LA	8000	32768	----	

TechPub_2614345_v3_DRAFT_ReleaseTB157677en.fm

(Cont'd)

(Cont'd)

Generic Tray Shrink

Document ID	**xxxxxxx-xxxx ELD xxx AC**	**Date**	**24-Jun-03**
Machine type	**Generic Tray Shrink**	**Signature**	**xxx**
Development step	**Release 3**	**ECM**	**xxxxxxx**

Module Genius configuration

Start Ref %R818	**Reference length 6**	**Genius ID 12**	%R818 Packages IN (Counter) %R819 Packages OUT (Counter) %R820 Alarms 1-16 %R821 LA signals and Ladderstep %R822 Alarms 17-32 %R823 Alarms 33-48
Register to use %R818 - %R823		**Byte offset 0**	
Stopcode range 8800			

Bit configuration

%R818	**Packages IN (Counter)**

%R819	**Packages OUT (Counter)**

%R820 Alarms 1-16

Bit (PLC)	Description	Stop	Value Hex	Value Dec	Stop code number DE	Stop code number Line	Tag name
1	Reserved (TS)	D	1	1	8810	48810	DEGenericTS1.00
2	Emergency stop (TS)	D	2	2	8811	48811	DEGenericTS1.01
3	Reserved (TS)	D	4	4	8812	48812	DEGenericTS1.02
4	Door guards (TS)	D	8	8	8813	48813	DEGenericTS1.03
5	Motor protection (TS)	D	10	16	8814	48814	DEGenericTS1.04
6	Sealing unit (TS)	D	20	32	8815	48815	DEGenericTS1.05
7	Film upper break (TS)	D	40	64	8816	48816	DEGenericTS1.06
8	Film lower break (TS)	D	80	128	8817	48817	DEGenericTS1.07
9	Electrical equipments (TS)	D	100	256	8818	48818	DEGenericTS1.08
10	Servo Drives (TS)	D	200	512	8819	48819	DEGenericTS1.09
11	Frequency Controllers (TS)	D	400	1024	8820	48820	DEGenericTS1.10
12	Encoder (TS)	D	800	2048	8821	48821	DEGenericTS1.11
13	Tunnel (TS)	D	1000	4096	8822	48822	DEGenericTS1.12
14	Outfeed jam (TS)	D	2000	8192	8823	48823	DEGenericTS1.13
15	Infeed jam (TS)	D	4000	16384	8824	48824	DEGenericTS1.14
16	Reserved (TS)	D	8000	32768	8825	48825	DEGenericTS1.15

%R821 LA signals and Ladderstep

Bit (PLC)	Description	Stop	Value Hex	Value Dec	Stop code number	Tag name
1	READY	LA	1	1	----	DEGenericTS2.00
2	RUN	LA	2	2	----	DEGenericTS2.01
3	ALARM	LA	4	4	----	DEGenericTS2.02
4	N/A	LA	8	8	----	DEGenericTS2.03
5	N/A	LA	10	16	----	DEGenericTS2.04
6	N/A	LA	20	32	----	DEGenericTS2.05
7	N/A	LA	40	64	----	DEGenericTS2.06
8	N/A	LA	80	128	----	DEGenericTS2.07
9	N/A	IS	100	256		DEGenericTS2.08
10	N/A	IS	200	512		DEGenericTS2.09
11	N/A	IS	400	1024		DEGenericTS2.10
12	N/A	IS	800	2048		DEGenericTS2.11
13	DE production time signal	IS	1000	4096	8851	DEGenericTS2.12
14	Ladderstep Off	IS	2000	8192	8857	DEGenericTS2.13
15	Ladderstep Preparation	IS	4000	16384	8858	DEGenericTS2.14
16	Ladderstep Production	IS	8000	32768	8859	DEGenericTS2.15

(Cont'd)

TechPub_2614345_v3_DRAFT_ReleaseTB157677en.fm

(Cont'd)

Document ID	xxxxxxx-xxxx ELD xxx AC	Date	24-Jun-03
Machine type	Generic Tray Shrink	Signature	xxx
Development step	Release 3	ECM	xxxxxxx

Module Genius configuration

Start Ref %R818	Reference length 6	Genius ID 12	%R818 Packages IN (Counter) %R819 Packages OUT (Counter) %R820 Alarms 1-16 %R821 LA signals and Ladderstep %R822 Alarms 17-32 %R823 Alarms 33-48
Register to use %R818 - %R823		Byte offset 0	
Stopcode range 8800			

Bit configuration

Page 2/2

%R822	Alarms 17-32						
Bit (PLC)	Description	Stop	Value Hex	Value Dec	Stop code number DE	Stop code number Line	Tag name
1	Lubrication (TS)	D	1	1	8826	48826	DEGenericTS3.00
2	Mechanical equipments (TS)	D	2	2	8827	48827	DEGenericTS3.01
3	Reserved (TS)	D	4	4	8828	48828	DEGenericTS3.02
4	Reserved (TS)	D	8	8	8829	48829	DEGenericTS3.03
5	Reserved (TS)	D	10	16	8830	48830	DEGenericTS3.04
6	Downtime alarm _ 1 (TS)	D	20	32	8831	48831	DEGenericTS3.05
7	Downtime alarm _ 2 (TS)	D	40	64	8832	48832	DEGenericTS3.06
8	Downtime alarm _ 3 (TS)	D	80	128	8833	48833	DEGenericTS3.07
9	Downtime alarm _ 4 (TS)	D	100	256	8834	48834	DEGenericTS3.08
10	Downtime alarm _ 5 (TS)	D	200	512	8835	48835	DEGenericTS3.09
11	Downtime alarm _ 6 (TS)	D	400	1024	8836	48836	DEGenericTS3.10
12	Downtime alarm _ 7 (TS)	D	800	2048	8837	48837	DEGenericTS3.11
13	Downtime alarm _ 8 (TS)	D	1000	4096	8838	48838	DEGenericTS3.12
14	Downtime alarm _ 9 (TS)	D	2000	8192	8839	48839	DEGenericTS3.13
15	Manual Stop (TS)	I	4000	16384	8886	74217	DEGenericTS3.14
16	Air Pressure (TS)	I	8000	32768	8887	74218	DEGenericTS3.15

%R823	Alarms 33-48						
Bit (PLC)	Description	Stop	Value Hex	Value Dec	Stop code number DE	Stop code number Line	Tag name
1	Downstream not ready (TS)	I	1	1	8870	74201	DEGenericTS4.00
2	Queue after machine (TS)	I	2	2	8871	74202	DEGenericTS4.01
3	Film supply upper (TS)	I	4	4	8872	74203	DEGenericTS4.02
4	Film supply lower (TS)	I	8	8	8873	74204	DEGenericTS4.03
5	Cabinet overtemperature (TS)	I	10	16	8874	74205	DEGenericTS4.04
6	Reserved (TS)	I	20	32	8875	74206	DEGenericTS4.05
7	Reserved (TS)	I	40	64	8876	74207	DEGenericTS4.06
8	Reserved (TS)	I	80	128	8877	74208	DEGenericTS4.07
9	Idle time _ 1 (TS)	I	100	256	8878	74209	DEGenericTS4.08
10	Idle time _ 2 (TS)	I	200	512	8879	74210	DEGenericTS4.09
11	Idle time _ 3 (TS)	I	400	1024	8880	74211	DEGenericTS4.10
12	Idle time _ 4 (TS)	I	800	2048	8881	74212	DEGenericTS4.11
13	Idle time _ 5 (TS)	I	1000	4096	8882	74213	DEGenericTS4.12
14	Idle time _ 6 (TS)	I	2000	8192	8883	74214	DEGenericTS4.13
15	Idle time _ 7 (TS)	I	4000	16384	8884	74215	DEGenericTS4.14
16	Idle time _ 8 (TS)	I	8000	32768	8885	74216	DEGenericTS4.15

(Cont'd)

TechPub_2614345_v3_DRAFT_ReleaseTB157677en.fm

(Cont'd)

Generic Cardboard Packer

Document ID	**xxxxxxx-xxxx ELD xxx AC**	**Date**	**24-Jun-03**
Machine type	**Generic CardBoard Packer**	**Signature**	**xxx**
Development step	**Release 3**	**ECM**	**xxxxxxx**

Module Genius configuration

Start Ref %R812	**Reference length 6**	**Genius ID 11**	%R812 Packages IN (Counter) %R813 Packages OUT (Counter) %R814 Alarms 1-16 %R815 LA signals and Ladderstep %R816 Alarms 17-32 %R817 Alarms 33-48
Register to use %R812 - %R817		**Byte offset 0**	
Stopcode range 8700			

Bit configuration

%R812	**Packages IN (Counter)**

%R813	**Packages OUT (Counter)**

%R814 Alarms 1-16

Bit (PLC)	Description	Stop	Value Hex	Value Dec	Stop code number DE	Stop code number Line	Tag name
1	Emergency Stop (CBP)	D	1	1	8710	48710	DEGenericCBP1.00
2	Door Guards (CBP)	D	2	2	8711	48711	DEGenericCBP1.01
3	Reserved (CBP)	D	4	4	8712	48712	DEGenericCBP1.02
4	Electrical equipments (CBP)	D	8	8	8713	48713	DEGenericCBP1.03
5	Motor overload (CBP)	D	10	16	8714	48714	DEGenericCBP1.04
6	Servo Drives (CBP)	D	20	32	8715	48715	DEGenericCBP1.05
7	Frequency Controllers (CBP)	D	40	64	8716	48716	DEGenericCBP1.06
8	Encoder (CBP)	D	80	128	8717	48717	DEGenericCBP1.07
9	Infeed Unit (CBP)	D	100	256	8718	48718	DEGenericCBP1.08
10	Divider Unit (CBP)	D	200	512	8719	48719	DEGenericCBP1.09
11	Grouping Unit (CBP)	D	400	1024	8720	48720	DEGenericCBP1.10
12	Loading Unit (CBP)	D	800	2048	8721	48721	DEGenericCBP1.11
13	Magazine unit (CBP)	D	1000	4096	8722	48722	DEGenericCBP1.12
14	Infeed jam (CBP)	D	2000	8192	8723	48723	DEGenericCBP1.13
15	Sealing Unit Jam (CBP)	D	4000	16384	8724	48724	DEGenericCBP1.14
16	Outfeed jam (CBP)	D	8000	32768	8725	48725	DEGenericCBP1.15

%R815 LA signals and Ladderstep

Bit (PLC)	Description	Stop	Value Hex	Value Dec	Stop code number	Tag name
1	READY	LA	1	1	----	DEGenericCBP2.00
2	RUN	LA	2	2	----	DEGenericCBP2.01
3	ALARM	LA	4	4	----	DEGenericCBP2.02
4	N/A	LA	8	8	----	DEGenericCBP2.03
5	N/A	LA	10	16	----	DEGenericCBP2.04
6	Connection side to AS (=1; Right)	LA	20	32	----	DEGenericCBP2.05
7	N/A	LA	40	64	----	DEGenericCBP2.06
8	N/A	LA	80	128	----	DEGenericCBP2.07
9	N/A	IS	100	256		DEGenericCBP2.08
10	N/A	IS	200	512		DEGenericCBP2.09
11	N/A	IS	400	1024		DEGenericCBP2.10
12	N/A	IS	800	2048		DEGenericCBP2.11
13	DE production time signal	IS	1000	4096	8751	DEGenericCBP2.12
14	Ladderstep Off	IS	2000	8192	8757	DEGenericCBP2.13
15	Ladderstep Preparation	IS	4000	16384	8758	DEGenericCBP2.14
16	Ladderstep Production	IS	8000	32768	8759	DEGenericCBP2.15

TechPub_2614345_v3_DRAFT_ReleaseTB157677en.fm

(Cont'd)

(Cont'd)

Document ID	xxxxxxx-xxxx ELD xxx AC	Date	24-Jun-03
Machine type	Generic CardBoard Packer	Signature	xxx
Development step	Release 3	ECM	xxxxxxx

Module Genius configuration

Start Ref %R812	Reference length 6	Genius ID 11	%R812 Packages IN (Counter) %R813 Packages OUT (Counter) %R814 Alarms 1-16 %R815 LA signals and Ladderstep %R816 Alarms 17-32 %R817 Alarms 33-48
Register to use %R812 - %R817		Byte offset 0	
Stopcode range 8700			

Bit configuration

%R816	Alarms 17-32						
Bit (PLC)	Description	Stop	Value Hex	Value Dec	Stop code number DE	Stop code number Line	Tag name
1	Outfeed Unit (CBP)	D	1	1	8726	48726	DEGenericCBP3.00
2	Hot melt Unit (CBP)	D	2	2	8727	48727	DEGenericCBP3.01
3	Reserved (CBP)	D	4	4	8728	48728	DEGenericCBP3.02
4	Lubrication (CBP)	D	8	8	8729	48729	DEGenericCBP3.03
5	Card Insert (CBP)	D	10	16	8730	48730	DEGenericCBP3.04
6	Mechanical, Others (or equipments) (CBP)	D	20	32	8731	48731	DEGenericCBP3.05
7	Fallen package (CBP)	D	40	64	8732	48732	DEGenericCBP3.06
8	Reserved (CBP)	D	80	128	8733	48733	DEGenericCBP3.07
9	Reserved (CBP)	D	100	256	8734	48734	DEGenericCBP3.08
10	Reserved (CBP)	D	200	512	8735	48735	DEGenericCBP3.09
11	Downtime alarm_1 (CBP)	D	400	1024	8736	48736	DEGenericCBP3.10
12	Downtime alarm_2 (CBP)	D	800	2048	8737	48737	DEGenericCBP3.11
13	Downtime alarm_3 (CBP)	D	1000	4096	8738	48738	DEGenericCBP3.12
14	Downtime alarm_4 (CBP)	D	2000	8192	8739	48739	DEGenericCBP3.13
15	Manual Stop (CBP)	I	4000	16384	8786	74116	DEGenericCBP3.14
16	Air pressure (CBP)	I	8000	32768	8787	74117	DEGenericCBP3.15

%R817	Alarms 33-48						
Bit (PLC)	Description	Stop	Value Hex	Value Dec	Stop code number DE	Stop code number Line	Tag name
1	Reserved (CBP)	I	1	1	8770	74100	DEGenericCBP4.00
2	Reserved (CBP)	I	2	2	8771	74101	DEGenericCBP4.01
3	Reserved (CBP)	I	4	4	8772	74102	DEGenericCBP4.02
4	Supply blanks (CBP)	I	8	8	8773	74103	DEGenericCBP4.03
5	Infeed packages out of specification (CBP)	I	10	16	8774	74104	DEGenericCBP4.04
6	Outfeed queue (CBP)	I	20	32	8775	74105	DEGenericCBP4.05
7	Downstream not ready (CBP)	I	40	64	8776	74106	DEGenericCBP4.06
8	Infeed, Fallen Package (CBP)	I	80	128	8777	74107	DEGenericCBP4.07
9	Cabinet overtemperature (CBP)	I	100	256	8778	74108	DEGenericCBP4.08
10	Supply hot melt (CBP)	I	200	512	8779	74109	DEGenericCBP4.09
11	Idle time _ 1 (CBP)	I	400	1024	8780	74110	DEGenericCBP4.10
12	Idle time _ 2 (CBP)	I	800	2048	8781	74111	DEGenericCBP4.11
13	Idle time _ 3 (CBP)	I	1000	4096	8782	74112	DEGenericCBP4.12
14	Idle time _ 4 (CBP)	I	2000	8192	8783	74113	DEGenericCBP4.13
15	Idle time _ 5 (CBP)	I	4000	16384	8784	74114	DEGenericCBP4.14
16	Idle time _ 6 (CBP)	I	8000	32768	8785	74115	DEGenericCBP4.15

(Cont'd)

TechPub_2614345_v3_DRAFT_ReleaseTB157677en.fm

(Cont'd)

Generic Film Wrapper

Document ID	**xxxxxxx-xxxx ELD xxx AC**	**Date**	**24-Jun-03**
Machine type	**Generic Film Wrapper**	**Signature**	**xxx**
Development step	**Release 3**	**ECM**	**xxxxxxx**

Module Genius configuration

Start Ref %R806	**Reference length 6**	**Genius ID 10**	%R806 Packages IN (Counter) %R807 Packages OUT (Counter) %R808 Alarms 1-16 %R809 LA signals and Ladderstep %R810 Alarms 17-32 %R811 Alarms 33-48
Register to use %R806 - %R811		**Byte offset 0**	
Stopcode range 8600			

Bit configuration

%R806	**Packages IN (Counter)**

%R807	**Packages OUT (Counter)**

%R808 Alarms 1-16

Bit (PLC)	Description	Stop	Value Hex	Value Dec	Stop code number DE	Stop code number Line	Tag name
1	Emergency Stop (FW)	D	1	1	8610	48610	DEGenericFW1.00
2	Door Guards (FW)	D	2	2	8611	48611	DEGenericFW1.01
3	Reserved (FW)	D	4	4	8612	48612	DEGenericFW1.02
4	Electrical equipments (FW)	D	8	8	8613	48613	DEGenericFW1.03
5	Motor overload (FW)	D	10	16	8614	48614	DEGenericFW1.04
6	Servo Drives(FW)	D	20	32	8615	48615	DEGenericFW1.05
7	Frequency Controllers (FW)	D	40	64	8616	48616	DEGenericFW1.06
8	Encoder (FW)	D	80	128	8617	48617	DEGenericFW1.07
9	Infeed Unit (FW)	D	100	256	8618	48618	DEGenericFW1.08
10	Divider Unit (FW)	D	200	512	8619	48619	DEGenericFW1.09
11	Grouping Unit (FW)	D	400	1024	8620	48620	DEGenericFW1.10
12	Outfeed Unit (FW)	D	800	2048	8621	48621	DEGenericFW1.11
13	Film #1 (FW)	D	1000	4096	8622	48622	DEGenericFW1.12
14	Film #2 (FW)	D	2000	8192	8623	48623	DEGenericFW1.13
15	Sealing Unit (FW)	D	4000	16384	8624	48624	DEGenericFW1.14
16	Tunnel (FW)	D	8000	32768	8625	48625	DEGenericFW1.15

%R809 LA signals and Ladderstep

Bit (PLC)	Description	Stop	Value Hex	Value Dec	Stop code number	Tag name
1	READY	LA	1	1	----	DEGenericFW2.00
2	RUN	LA	2	2	----	DEGenericFW2.01
3	ALARM	LA	4	4	----	DEGenericFW2.02
4	N/A	LA	8	8	----	DEGenericFW2.03
5	N/A	LA	10	16	----	DEGenericFW2.04
6	N/A	LA	20	32	----	DEGenericFW2.05
7	N/A	LA	40	64	----	DEGenericFW2.06
8	N/A	LA	80	128	----	DEGenericFW2.07
9	N/A	IS	100	256		DEGenericFW2.08
10	N/A	IS	200	512		DEGenericFW2.09
11	N/A	IS	400	1024		DEGenericFW2.10
12	N/A	IS	800	2048		DEGenericFW2.11
13	DE production time signal	IS	1000	4096	8651	DEGenericFW2.12
14	Ladderstep Off	IS	2000	8192	8657	DEGenericFW2.13
15	Ladderstep Preparation	IS	4000	16384	8658	DEGenericFW2.14
16	Ladderstep Production	IS	8000	32768	8659	DEGenericFW2.15

(Cont'd)

TechPub_2614345_v3_DRAFT_ReleaseTB157677en.fm

(Cont'd)

Document ID	xxxxxxx-xxxx ELD xxx AC	Date	24-Jun-03
Machine type	Generic Film Wrapper	Signature	xxx
Development step	Release 3	ECM	xxxxxxx

Module Genius configuration

Start Ref %R806	Reference length 6	Genius ID 10	%R806 Packages IN (Counter) %R807 Packages OUT (Counter) %R808 Alarms 1-16 %R809 LA signals and Ladderstep %R810 Alarms 17-32 %R811 Alarms 33-48
Register to use %R806 - %R811		Byte offset 0	
Stopcode range 8600			

Bit configuration

%R810	Alarms 17-32						
Bit (PLC)	Description	Stop	Value Hex	Value Dec	Stop code number DE	Stop code number Line	Tag name
1	Outfeed jam (FW)	D	1	1	8626	48626	DEGenericFW3.00
2	Infeed jam (FW)	D	2	2	8627	48627	DEGenericFW3.01
3	Reserved (FW)	D	4	4	8628	48628	DEGenericFW3.02
4	Lubrication (FW)	D	8	8	8629	48629	DEGenericFW3.03
5	Card Insert (FW)	D	10	16	8630	48630	DEGenericFW3.04
6	Mechanical, Others (or equipments) (FW)	D	20	32	8631	48631	DEGenericFW3.05
7	Fallen package (FW)	D	40	64	8632	48632	DEGenericFW3.06
8	Reserved (FW)	D	80	128	8633	48633	DEGenericFW3.07
9	Reserved (FW)	D	100	256	8634	48634	DEGenericFW3.08
10	Reserved (FW)	D	200	512	8635	48635	DEGenericFW3.09
11	Downtime alarm _ 1 (FW)	D	400	1024	8636	48636	DEGenericFW3.10
12	Downtime alarm _ 2 (FW)	D	800	2048	8637	48637	DEGenericFW3.11
13	Downtime alarm _ 3 (FW)	D	1000	4096	8638	48638	DEGenericFW3.12
14	Downtime alarm _ 4 (FW)	D	2000	8192	8639	48639	DEGenericFW3.13
15	Manual Stop (FW)	I	4000	16384	8686	74166	DEGenericFW3.14
16	Air Pressure (FW)	I	8000	32768	8687	74167	DEGenericFW3.15

%R811	Alarms 33-48						
Bit (PLC)	Description	Stop	Value Hex	Value Dec	Stop code number DE	Stop code number Line	Tag name
1	Reserved (FW)	I	1	1	8670	74150	DEGenericFW4.00
2	Reserved (FW)	I	2	2	8671	74151	DEGenericFW4.01
3	Reserved (FW)	I	4	4	8672	74152	DEGenericFW4.02
4	Empty film #1 (FW)	I	8	8	8673	74153	DEGenericFW4.03
5	Empty film #2 (FW)	I	10	16	8674	74154	DEGenericFW4.04
6	Outfeed queue (FW)	I	20	32	8675	74155	DEGenericFW4.05
7	Downstream not ready (FW)	I	40	64	8676	74156	DEGenericFW4.06
8	Infeed, Fallen Package (FW)	I	80	128	8677	74157	DEGenericFW4.07
9	Infeed, packages not conformity (FW)	I	100	256	8678	74158	DEGenericFW4.08
10	Cabinet overtemperature (FW)	I	200	512	8679	74159	DEGenericFW4.09
11	Idle time _ 1 (FW)	I	400	1024	8680	74160	DEGenericFW4.10
12	Idle time _ 2 (FW)	I	800	2048	8681	74161	DEGenericFW4.11
13	Idle time _ 3 (FW)	I	1000	4096	8682	74162	DEGenericFW4.12
14	Idle time _ 4 (FW)	I	2000	8192	8683	74163	DEGenericFW4.13
15	Idle time _ 5 (FW)	I	4000	16384	8684	74164	DEGenericFW4.14
16	Idle time _ 6 (FW)	I	8000	32768	8685	74165	DEGenericFW4.15

(Cont'd)

TechPub_2614345_v3_DRAFT_ReleaseTB157677en.fm

(Cont'd)

Generic Handle Applicator

Document ID	**xxxxxxx-xxxx ELD xxx AC**	**Date**	**1-Mar-04**
Machine type	**Generic Handle Applicator**	**Signature**	**SG**
Development step	**Release 1**	**ECM**	**xxxxxxx**

Module Genius configuration

Start Ref %R860	**Reference length 6**	**Genius ID 29**	%R860 Packages IN (Counter) %R861 Packages OUT (Counter) %R862 Alarms 1-16 %R863 LA signals and Ladderstep %R864 Alarms 17-32 %R865 Alarms 33-48
Register to use	**%R860 - %R865**	**Byte offset 0**	
Stopcode range	**8100**		

Bit configuration

%R860	**Packages IN (Counter)**

%R861	**Packages OUT (Counter)**

%R862 Alarms 1-16

Bit (PLC)	Description	Stop	Value Hex	Value Dec	Stop code number DE	Stop code number Line	Tag name
1	Emergency stop (HA)	D	1	1	8110	48110	DEGenericHA_1.00
2	Door open (HA)	D	2	2	8111	48111	DEGenericHA_1.01
3	Door supervision system (HA)	D	4	4	8112	48112	DEGenericHA_1.02
4	Motor overload (HA)	D	8	8	8113	48113	DEGenericHA_1.03
5	Servo drives (HA)	D	10	16	8114	48114	DEGenericHA_1.04
6	Servo home position not found (HA)	D	20	32	8115	48115	DEGenericHA_1.05
7	Frequency controllers (HA)	D	40	64	8116	48116	DEGenericHA_1.06
8	Encoder (HA)	D	80	128	8117	48117	DEGenericHA_1.07
9	Control system error (HA)	D	100	256	8118	48118	DEGenericHA_1.08
10	Electrical equipments (HA)	D	200	512	8119	48119	DEGenericHA_1.09
11	Air pressure (HA)	D	400	1024	8120	48120	DEGenericHA_1.10
12	Safety clutch (HA)	D	800	2048	8121	48121	DEGenericHA_1.11
13	Mechanical equipments (HA)	D	1000	4096	8122	48122	DEGenericHA_1.12
14	Label broken (HA)	D	2000	8192	8123	48123	DEGenericHA_1.13
15	Label out position (HA)	D	4000	16384	8124	48124	DEGenericHA_1.14
16	Label, no print mark detected (HA)	D	8000	32768	8125	48125	DEGenericHA_1.15

%R863 LA signals and Ladderstep

Bit (PLC)	Description	Stop	Value Hex	Value Dec	Stop code number	Tag name
1	READY	LA	1	1	----	DEGenericHA_2.00
2	RUN	LA	2	2	----	DEGenericHA_2.01
3	ALARM	LA	4	4	----	DEGenericHA_2.02
4	N/A	LA	8	8	----	DEGenericHA_2.03
5	N/A	LA	10	16	----	DEGenericHA_2.04
6	Connection side to AS (=1; Right)	LA	20	32	----	DEGenericHA_2.05
7	N/A	LA	40	64	----	DEGenericHA_2.06
8	N/A	LA	80	128	----	DEGenericHA_2.07
9	N/A	IS	100	256		DEGenericHA_2.08
10	Cabinet overtemperature (HA)	IS	200	512	8160	DEGenericHA_2.09
11	Lubrication (HA)	IS	400	1024	8161	DEGenericHA_2.10
12	No Handle selected (HA)	IS	800	2048	8162	DEGenericHA_2.11
13	DE production time signal (HA)	IS	1000	4096	8151	DEGenericHA_2.12
14	Ladderstep Off (HA)	IS	2000	8192	8157	DEGenericHA_2.13
15	Ladderstep Preparation (HA)	IS	4000	16384	8158	DEGenericHA_2.14
16	Ladderstep Production (HA)	IS	8000	32768	8159	DEGenericHA_2.15

(Cont'd)

TechPub_2614345_v3_DRAFT_ReleaseTB157677en.fm

(Cont'd)

Document ID	xxxxxxx-xxxx ELD xxx AC	Date	1-Mar-04
Machine type	Generic Handle Applicator	Signature	SG
Development step	Release 1	ECM	xxxxxxx

Module Genius configuration

Start Ref %R860	Reference length 6	Genius ID 29	%R860 Packages IN (Counter) %R861 Packages OUT (Counter) %R862 Alarms 1-16 %R863 LA signals and Ladderstep %R864 Alarms 17-32 %R865 Alarms 33-48
Register to use %R860 - %R865		Byte offset 0	
Stopcode range 8100			

Bit configuration

%R864	Alarms 17-32						
Bit (PLC)	Description	Stop	Value Hex	Value Dec	Stop code number DE	Stop code number Line	Tag name
1	Tape broken (HA)	D	1	1	8126	48126	DEGenericHA_3.00
2	Tape out position (HA)	D	2	2	8127	48127	DEGenericHA_3.01
3	Fallen package (HA)	D	4	4	8128	48128	DEGenericHA_3.02
4	Infeed unit (HA)	D	8	8	8129	48129	DEGenericHA_3.03
5	Divider unit (HA)	D	10	16	8130	48130	DEGenericHA_3.04
6	Grouping unit (HA)	D	20	32	8131	48131	DEGenericHA_3.05
7	Loading unit (HA)	D	40	64	8132	48132	DEGenericHA_3.06
8	Outfeed unit (HA)	D	80	128	8133	48133	DEGenericHA_3.07
9	Infeed jam (HA)	D	100	256	8134	48134	DEGenericHA_3.08
10	Outfeed jam (HA)	D	200	512	8135	48135	DEGenericHA_3.09
11	Card insert (HA)	D	400	1024	8136	48136	DEGenericHA_3.10
12	Downtime alarm_1 (HA)	D	800	2048	8137	48137	DEGenericHA_3.11
13	Downtime alarm_2 (HA)	D	1000	4096	8138	48138	DEGenericHA_3.12
14	Downtime alarm_3 (HA)	D	2000	8192	8139	48139	DEGenericHA_3.13
15	Manual stop (HA)	I	4000	16384	8170	74280	DEGenericHA_3.14
16	Main air supply (HA)	I	8000	32768	8171	74281	DEGenericHA_3.15

%R865	Alarms 33-48						
Bit (PLC)	Description	Stop	Value Hex	Value Dec	Stop code number DE	Stop code number Line	Tag name
1	Outfeed queue (HA)	I	1	1	8172	74282	DEGenericHA_4.00
2	Supply label (HA)	I	2	2	8173	74283	DEGenericHA_4.01
3	Supply tape (HA)	I	4	4	8174	74284	DEGenericHA_4.02
4	Infeed, Fallen package (HA)	I	8	8	8175	74285	DEGenericHA_4.03
5	Infeed, Package not conformity (HA)	I	10	16	8176	74286	DEGenericHA_4.04
6	Supply card insert (HA)	I	20	32	8177	74287	DEGenericHA_4.05
7	Idle time_1 (HA)	I	40	64	8178	74288	DEGenericHA_4.06
8	Idle time_2 (HA)	I	80	128	8179	74289	DEGenericHA_4.07
9	Idle time_3 (HA)	I	100	256	8180	74290	DEGenericHA_4.08
10	Idle time_4 (HA)	I	200	512	8181	74291	DEGenericHA_4.09
11	Idle time_5 (HA)	I	400	1024	8182	74292	DEGenericHA_4.10
12	Idle time_6 (HA)	I	800	2048	8183	74293	DEGenericHA_4.11
13	Idle time_7 (HA)	I	1000	4096	8184	74294	DEGenericHA_4.12
14	Idle time_8 (HA)	I	2000	8192	8185	74295	DEGenericHA_4.13
15	Idle time_9 (HA)	I	4000	16384	8186	74296	DEGenericHA_4.14
16	Idle time_10 (HA)	I	8000	32768	8187	74297	DEGenericHA_4.15

TechPub_2614345_v3_DRAFT_ReleaseTB157677en.fm

This page intentionally left blank

TechPub_2614345_v3_DRAFT_ReleaseTB157677en.fm

16 Other Information

TechPub_2614345_v3_DRAFT_ReleaseTB167677en.fm

This page intentionally left blank

TechPub_2614345_v3_DRAFT_ReleaseTB167677en.fm

Tetra Pak

Note! *This page is generated* ***automatically****.*
using the ***variable definitions*** *made in the* ***front page*** *file!*

TBA/22 050V
648571-0500
Issue 2004-05 Doc. No. EM-81767-0107

TBA/22 050V 1(2)
648571-0500
Issue 2004-05 Doc. No. EM-81767-0107

TBA/22 050V
648571-0500
Issue 2004-05 Doc. No. EM-81767-0107

TBA/22 050V 1(2)
648571-0500
Issue 2004-05 Doc. No. EM-81767-0107

TBA/22 050V
648571-0500
Issue 2004-05 Doc. No. EM-81767-0107

TBA/22 050V 1(2)
648571-0500
Issue 2004-05 Doc. No. EM-81767-0107

TBA/22 050V
648571-0500
Issue 2004-05 Doc. No. EM-81767-0107

TBA/22 050V 1(2)
648571-0500
Issue 2004-05 Doc. No. EM-81767-0107

TBA/22 050V
648571-0500
Issue 2004-05 Doc. No. EM-81767-0107

TBA/22 050V 2(2)
648571-0500
Issue 2004-05 Doc. No. EM-81767-0107

TBA/22 050V
648571-0500
Issue 2004-05 Doc. No. EM-81767-0107

TBA/22 050V 2(2)
648571-0500
Issue 2004-05 Doc. No. EM-81767-0107

TBA/22 050V
648571-0500
Issue 2004-05 Doc. No. EM-81767-0107

TBA/22 050V 2(2)
648571-0500
Issue 2004-05 Doc. No. EM-81767-0107

40 mm Full width ***Note!*** *This page is generated* ***automatically****.*
using the ***variable definitions*** *made in the* ***front page*** *file!*

TBA/22 050V
648571-0500

Issue 2004-05 Doc. No. EM-81767-0107

TBA/22 050V 1(2)
648571-0500

Issue 2004-05 Doc. No. EM-81767-0107

TBA/22 050V
648571-0500

Issue 2004-05 Doc. No. EM-81767-0107

TBA/22 050V 1(2)
648571-0500

Issue 2004-05 Doc. No. EM-81767-0107

TBA/22 050V
648571-0500

Issue 2004-05 Doc. No. EM-81767-0107

TBA/22 050V 1(2)
648571-0500

Issue 2004-05 Doc. No. EM-81767-0107

TBA/22 050V
648571-0500

Issue 2004-05 Doc. No. EM-81767-0107

TBA/22 050V 2(2)
648571-0500

Issue 2004-05 Doc. No. EM-81767-0107

TBA/22 050V
648571-0500

Issue 2004-05 Doc. No. EM-81767-0107

TBA/22 050V 2(2)
648571-0500

Issue 2004-05 Doc. No. EM-81767-0107

TBA/22 050V
648571-0500

Issue 2004-05 Doc. No. EM-81767-0107

TBA/22 050V 2(2)
648571-0500

Issue 2004-05 Doc. No. EM-81767-0107