IM

Installation Manual

TBA/22

648571-0500

TechPub_2614345_0107 - IM81766_0118fro.fm

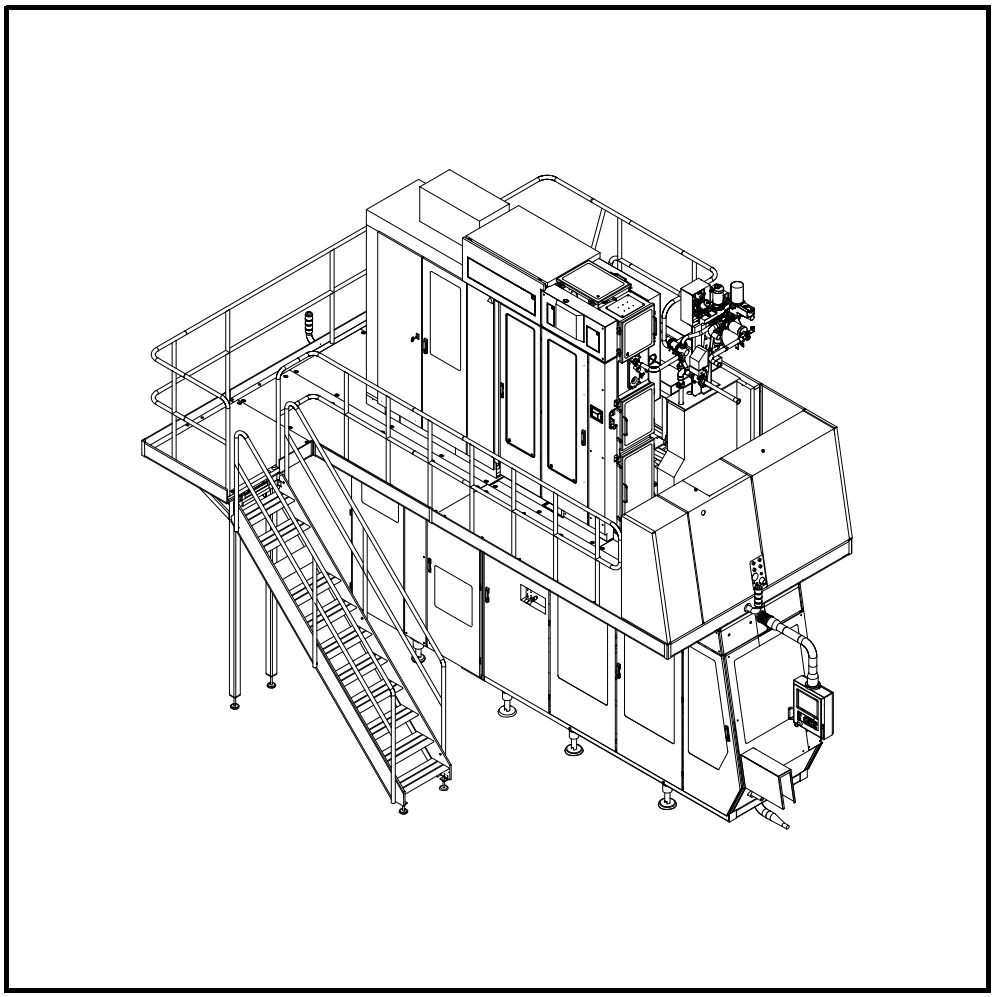

WARNING

Read and follow all safety precaution instructions throughout this manual and on safety signs attached to this equipment.
Failure to follow all safety precaution instructions could result in death or serious injury.

Tetra Pak

Doc. No. IM-81766-0118

Copyright © 2009 Tetra Pak Group

All rights reserved. No part of this document may be reproduced or copied in any form or by any means without written permission from Tetra Pak Packaging Solutions.

Tetra Pak and all Tetra Pak products are trademarks belonging to the Tetra Pak Group.

The content of this manual is in accordance with the design and construction of the machine or equipment at the time of publishing. Tetra Pak reserves the right to introduce design modifications without prior notice.

The English language version of this document contains the original instructions. All other language versions are translations of the original instructions.

This document was produced by:

Tetra Pak Packaging Solutions
Via Delfini 1
41123 Modena
Italy

Additional copies can be ordered from Tetra Pak. When ordering additional copies, always provide the **document number.**

Doc. No. IM-81766-0118

Issue 2009-11

TechPub_2614345_0107 - IM81766_0118fro.fm

This manual is valid for:

Series No./ Machine No. Sign.

IM

Installation Manual

TBA/22
648571-0500

i Introduction

ii Safety Precautions

1 Technical Data and Drawings

2 Preparation

3 Moving and Unpacking the Equipment

4 Positioning, Assembly and Connections

5 Final Installation Checks

6 Preparation for Commissioning

7 Disassembly and Removal

TechPub_2614345_0107 - IM81766_0118fro.fm

Machine or equipment configurations that this manual is valid for are described on the next page.

Doc. No. IM-81766-0118

Issue 2009-11

Tetra Pak

Tetra Pak Packaging Solutions

Valid for:

Name	Drawing Specification and Development Step	Additional Information
TBA/22 050V	648571-0500	Optional Equipment: HI - Headspace by Injection 2551071-0100 Adjustable LS Inductor 2611157-0100 Filling Pipe with Float 2540810-0100 Automatic Greasing 2574340-0100 Gearbox improvement 2581919-0200 Jaw ID Printing 2722568-0100 Conveyor Group 648568-0100

TechPub_2614345_0107 - IM81766_0118fro.fm

i Introduction

TechPub_2614345_0107 - IM_81766_0118int.fm

About the Introduction Chapter

This chapter contains basic information about this manual and the related Tetra Pak equipment.

TechPub_2614345_0107 - IM_81766_0118int.fm

Abbreviations and Terminology . . . . . 1 - 5

Manual Information . . . . . 1 - 6

Delivered Manuals . . . . . 1 - 6

Page Layout . . . . . 1 - 7

Page Numbering. . . . . 1 - 8

Typographical Conventions . . . . . 1 - 8

Symbols . . . . . 1 - 8

Machine Introduction . . . . . 1 - 9

Intended Use of the Equipment . . . . . 1 - 9

Manufacturer . . . . . 1 - 9

Support and Feedback . . . . . 1 - 9

Identification . . . . . 1 - 10

CE Classification . . . . . 1 - 10

Machine Plate . . . . . 1 - 10

Orientation . . . . . 1 - 11

Hygiene. . . . . 1 - 12

Packaging Material. . . . . 1 - 12

Steam Barrier in the Product Valve . . . . . 1 - 12

TechPub_2614345_0107 - IM_81766_0118int.fm

This page intentionally left blank

TechPub_2614345_0107 - IM_81766_0118int.fm

Abbreviations and Terminology

Abbreviation/ Terminology	Meaning	Translation
ASU	Automatic Splicing Unit	
B	Base (package shape)	
CIP	Cleaning In Place	
DE	Distribution Equipment	
DIMC	Direct Injection Moulded Concept	
ECM	Engineering Change Management	
EM	Electrical Manual	
HI	Headspace by gas Injection	
ICU	Integrated Cleaning Unit	
IH	Induction Heating	
LED	Light Emitting Diode	
LH	Left Hand	
LS	Longitudinal Seal(ing)	
MB	Master Batch	
min	Minimum	
max	Maximum	
MKC	Mandatory Kit Corrective	
MKS	Mandatory Kit Human and Product Safety	
MM	Maintenance Manual	
OK	Optional Kit	
OE	Optional Equipment	
OM	Operation Manual	
PE	Polyethylene	
PM	Packaging Material	
PT	PullTab	
RH	Right Hand	
RK	Rebuilding Kit	
RM	Rebuilding Manual	
S	Slim (package shape)	
SA	Strip Applicator	
SPC	Spare Parts Catalogue	
Sq	Square (package shape)	
TBA	Tetra Brik Aseptic	
TMCC	Tetra Pak Multi-purpose Compact Controller	
TPOP	Tetra Pak Operator Panel	
TS	Transversal Sealing	
UK	Upgrade Kit	

TechPub_2614345_0107 - IM_81766_0118int.fm

Manual Information

Tetra Pak recommends reading all delivered manuals carefully. Make sure that the delivered manuals are available to personnel who operate or maintain the equipment.

It is important to keep this manual for the lifetime of the equipment and to pass the manual on to any subsequent holder or user.

Tetra Pak will not be held responsible for any damage to the equipment caused by not following the instructions given in this manual.

Delivered Manuals

Manuals delivered with this equipment:

- Conversion Manual (CM) provides technicians with information on converting the equipment between different production modes.
- Electrical Manual (EM) provides technicians with information about the equipment's electrical system.
- Installation Manual (IM) provides technicians with information required to safely install the equipment.
- Maintenance Manual (MM) provides technicians with information on maintaining the equipment.
- Operation Manual (OM) provides the operator with information on handling and operating the equipment before, during, and after production.
- Spare Parts Catalogue (SPC) provides the information necessary to order spare parts from Tetra Pak
- Technical Manual (TeM) provides technicians with:
  - information required to safely install the equipment
  - information on maintaining the equipment
  - information about the machine's/equipment's electrical system
  - information necessary to order spare parts from Tetra Pak.

TechPub_2614345_0107 - IM_81766_0118int.fm

Page Layout

Every main page in a manual contains a header and a footer. The page header contains the chapter name (1) and the section name (2). The page footer contains the page number (3), and the document number (4). See also the Page Numbering section.

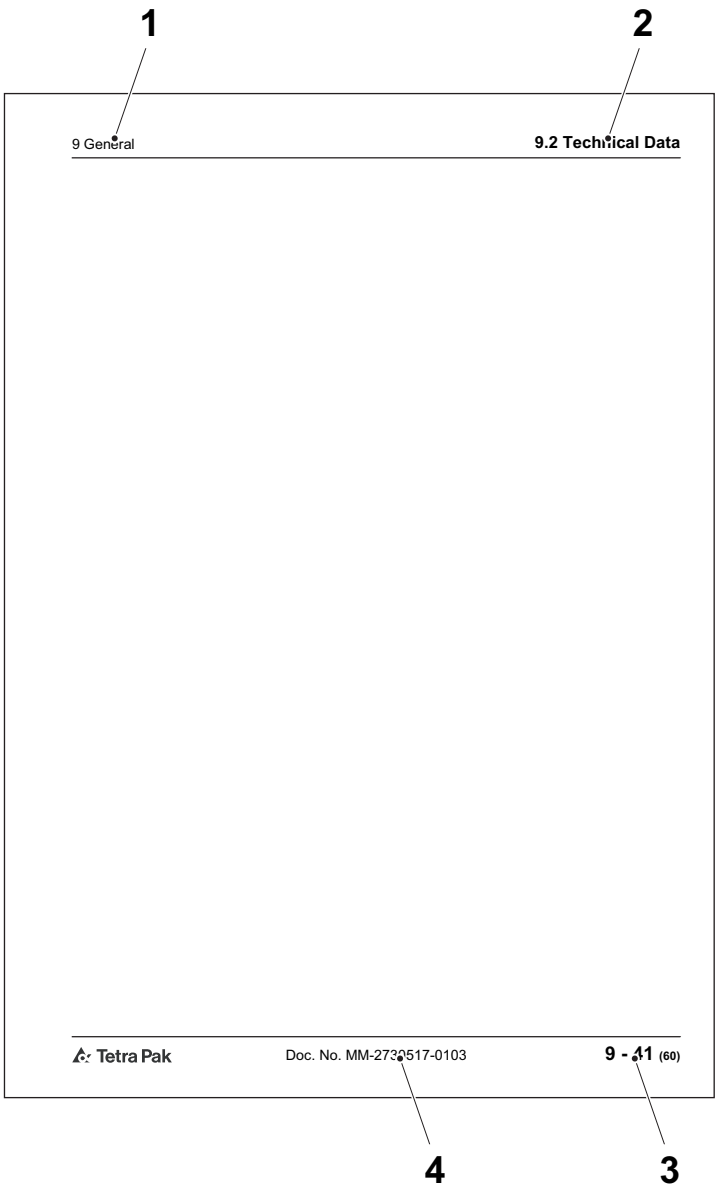

1 Chapter name
2 Section name
3 Page number
4 Document number

TechPub_2614345_0107 - IM_81766_0118int.fm

Page Numbering

A page number has three parts:

- chapter number (1)
- consecutive page number (2) within the chapter
- total number of pages (3) in the chapter.

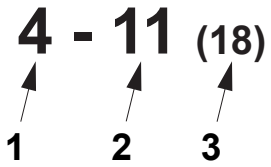

1 Chapter name
2 Consecutive page number
3 Total number of page

Typographical Conventions

Controls on the operator panel, emergency stop devices, and program steps are printed in CAPITAL LETTERS.

Cross-references are underlined.

Symbols

Symbols used in illustrations.

	A pointer arrow indicates the position of an object.
	A zoom arrow indicates that an object view is enlarged. The arrow points towards the enlarged view of the object.
	A rotation movement arrow indicates rotational movement of an object. The arrow points in the direction of rotation.
	A straight movement arrow indicates movement of an object. The arrow points in the direction of movement.

TechPub_2614345_0107 - IM_81766_0118int.fm

Machine Introduction

Intended Use of the Equipment

The intended use of this Tetra Pak equipment is to pack liquid food products.

All other use is prohibited. Tetra Pak will not be held responsible for injury or damage if the equipment is used for any other purpose.

Manufacturer

This Tetra Pak equipment has been manufactured by

Tetra Pak Packaging Solutions
Via Delfini 1
41123 Modena
Italy

Support and Feedback

If you encounter problems when operating this equipment or have other inquiries, comments, or suggestions for improvement, contact Tetra Pak.

TechPub_2614345_0107 - IM_81766_0118int.fm

Identification

CE Classification

This equipment complies with the basic health and safety regulations of the European Economic Area (EEA).

Machine Plate

The illustration below shows an example of the machine plate and its location on the equipment. The machine plate carries data needed when contacting Tetra Pak concerning this specific equipment.

Make sure that the equipment data in the front pages of this manual corresponds to the machine plate data and the machine specification.

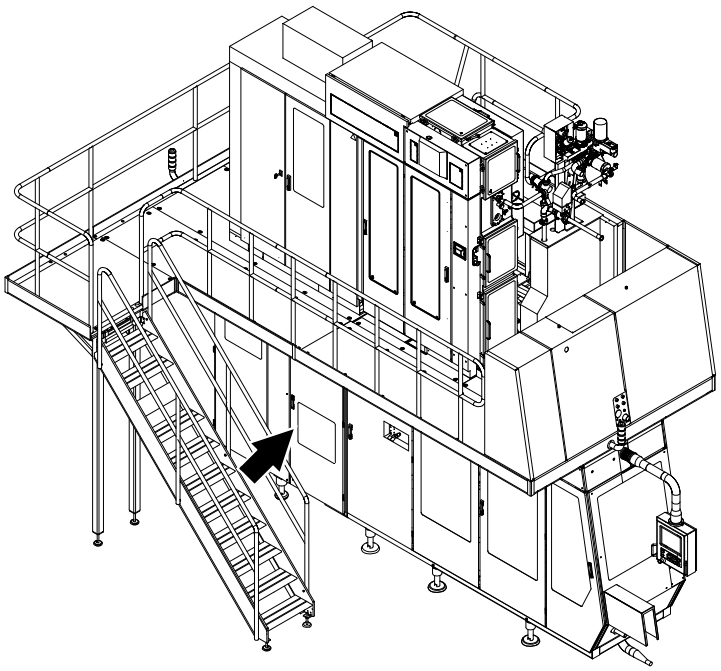

1 Machine type
2 Volume
3 Drawing specifications
4 Machine serial number
5 Manufacturer
6 CE mark
7 Year of manufacture

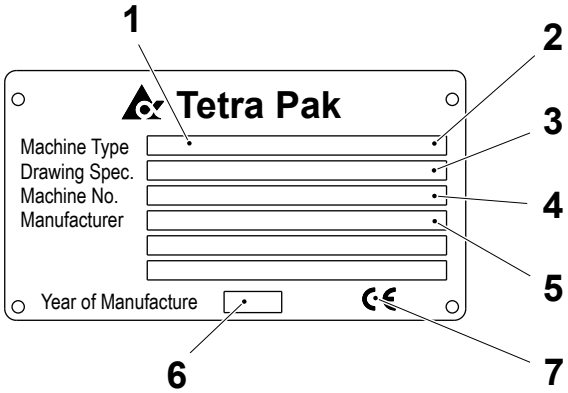

TechPub_2614345_0107 - IM_81766_0118int.fm

Orientation

The illustration below shows the orientation of the equipment. This orientation information will be used throughout this manual. The arrows indicate the flow of material.

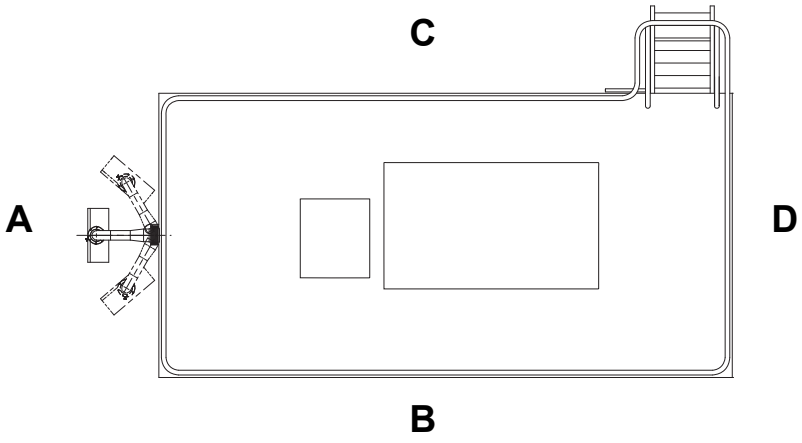

A Front
B Right-hand side
C Left-hand side
D Back

TechPub_2614345_0107 - IM_81766_0118int.fm

Hygiene

Packaging Material

Avoid microbiological contamination of the packaging material:

- Always protect your packaging material against contamination.
- Always keep the doors to the filling room (area) closed. To prevent contamination via air streams, never open a window when the machine is in production.
- Never clean the floors or the machine in the filling room (area) when the machine is in production.
- Compressed air used for cleaning purposes is to be used only for cleaning filters and should only be used outside of the filling room (area) or in the final folder compartment of the filling machine.
- Prepare the splicing of the packaging material as late as possible.
- Disinfect your hands before touching anything that may come into contact with the product. Use code H disinfectant. See the Technical Data chapter of the Maintenance Manual.
- Keep your hands clean.
- Always wear some type of hair protection (cap or hairnet) and clean clothes (preferably white).
- Do not wear a watch, ring, necklace, earrings, or any other exposed jewellery.

Steam Barrier in the Product Valve

The filling machine’s product valve employs a steam barrier to separate the product supply line from the filling machine. The steam barrier allows the machine and the product supply line to be independently sterilised to commercial sterility conditions.

- Never disengage the steam barrier, and never interrupt the steam supply when the filling machine or the product supply line is being brought to the pre-sterilization phase, or when the machine is already in the production phase.
- If any maintenance activity requires disengagement of the steam barrier or the interruption of the steam supply to the machine, make sure that the product supply line is idle and empty of product.

TechPub_2614345_0107 - IM_81766_0118int.fm

ii Safety Precautions

TechPub_2614345_0107 - IM_81766_0118sp.fm

Safety Precaution Instructions

WARNING

Read all safety precaution instructions throughout this manual and on safety signs attached to this equipment.

Failure to follow all safety precaution instructions could result in death or serious injury.

Definition of Lockout Procedure

A lockout procedure is a procedure to put each necessary energy isolating device in its safe position to prevent the energisation of the equipment, such as when a maintenance procedure should be carried out.

A lockout is the use of a device, for example, a padlock, to make sure that an energy isolating device cannot be operated.

An energy isolating device is a mechanical device that physically prevents transmission or release of energy, such as a power supply disconnector.

TechPub_2614345_0107 - IM_81766_0118sp.fm

Safety Messages Description . . . . . 1 - 5

Personnel Requirements . . . . . 1 - 6

Skilled Person . . . . . 1 - 6

Instructed Person . . . . . 1 - 6

Safety Signs . . . . . 1 - 7

Locations of Safety Signs . . . . . 1 - 9

HI Equipment (OE) . . . . . 1 - 15

Protective Devices . . . . . 1 - 16

Emergency Stop . . . . . 1 - 16

EMERGENCY STOP Push-Buttons . . . . . 1 - 17

Safeguards . . . . . 1 - 18

Warning Lamp . . . . . 1 - 20

Audible Alarm . . . . . 1 - 20

Personal Protection . . . . . 1 - 21

Noise Hazard . . . . . 1 - 21

Entanglement Hazard . . . . . 1 - 21

Hazardous Substances . . . . . 1 - 22

Disposal of Chemical Substances . . . . . 1 - 23

Hydrogen Peroxide (H_2O_2) . . . . . 1 - 24

Emergency Procedures . . . . . 1 - 24

Personal Protective Equipment . . . . . 1 - 25

Handling of Hydrogen Peroxide . . . . . 1 - 26

Storage of Hydrogen Peroxide . . . . . 1 - 27

Disposal of Hydrogen Peroxide . . . . . 1 - 28

TechPub_2614345_0107 - IM_81766_0118sp.fm

Caustic Soda/Sodium Hydroxide (NaOH) . . . . . 1 - 29
Emergency Procedures . . . . . 1 - 29
Personal Protective Equipment . . . . . 1 - 30
Handling and Storage of Caustic Soda/Sodium Hydroxide . . . . . 1 - 31
Disposal of Caustic Soda/Sodium Hydroxide . . . 1 - 31
Nitric Acid (HNO3) . . . . . 1 - 32
Emergency Procedures . . . . . 1 - 32
Personal Protective Equipment . . . . . 1 - 34
Handling and Storage of Nitric Acid . . . . . 1 - 35
Disposal of Nitric Acid . . . . . 1 - 36
Supply Systems . . . . . 1 - 37
Power Supply . . . . . 1 - 37
Residual Voltage . . . . . 1 - 37
Electrical Cabinet . . . . . 1 - 38
Air Supply . . . . . 1 - 39
Steam Supply . . . . . 1 - 40
Water Supply . . . . . 1 - 41
Equipment for Lifting and Moving Loads . . . . 1 - 42

TechPub_2614345_0107 - IM_81766_0118sp.fm

Safety Messages Description

A safety message is always accompanied by a safety alert symbol and a signal word.

The safety alert symbol is used to alert about potential personal injury hazards. To avoid hazards, obey all safety messages that follow this symbol.

The following safety alert symbols and signal words are used in this manual to inform the user of hazards.

DANGER	Danger indicates an imminently hazardous situation which, if not avoided, will result in death or serious injury.
WARNING	Warning indicates a potentially hazardous situation which, if not avoided, **could** result in **death or serious injury**.
CAUTION	Caution indicates a potentially hazardous situation which, if not avoided, **may** result in **minor or moderate injury.** It may also be used to alert against unsafe practices.
CAUTION	Caution without the safety alert symbol indicates a potentially hazardous situation which, if not avoided, **may** result in **property damage**.

TechPub_2614345_0107 - IM_81766_0118sp.fm

Personnel Requirements

Note! Personnel includes all persons working on or near this equipment.

Only skilled or instructed persons are allowed to work with this equipment.

Skilled Person

A skilled person must have relevant education and experience to enable him or her to identify hazards, analyse risks, and avoid hazards which electricity, machinery, chemicals, other energies, and supply systems on this equipment can create.

Skilled persons must meet local regulations, such as certifications and qualifications for working with these energies and systems.

Instructed Person

An instructed person must be adequately advised or supervised by a skilled person. The skilled person enables the instructed person to identify hazards, analyse risks, and avoid hazards which electricity, machinery, chemicals, other energies, and supply systems on this equipment can create.

TechPub_2614345_0107 - IM_81766_0118sp.fm

Safety Signs

WARNING

Damaged or missing safety signs increase the risk of death or serious injury.

Replace all missing or damaged safety signs immediately.

Safety signs are attached to the equipment. The table below lists all the signs that are used, and illustrations show their locations on the equipment. Each position number refers to two variants of a safety sign in the table, but only one is used on the equipment.

- Make sure that each safety sign is legible and in its correct position after installation and maintenance.
- Replace all missing or damaged safety signs immediately.

Pos.	ISO sign	ANSI sign
1		
	Moving part can crush and cut. Do not operate with guard removed. Follow lockout procedure before maintenance.	
2		
	Hazardous voltage. Will shock, burn, or cause death. Follow lockout procedure before maintenance.	
3		
	Hazardous voltage **with** power supply disconnector **switched off**. Can shock, burn, or cause death. Do not touch.	
4		
	Chemical burn hazard. Wear personal protective equipment.	

TechPub_2614345_0107 - IM_81766_0118sp.fm

Pos.	ISO sign	ANSI sign
5	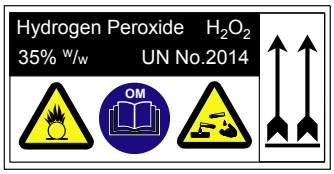	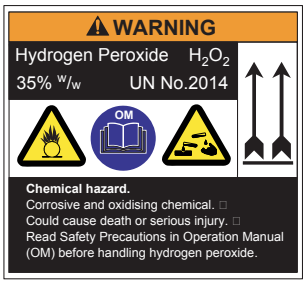
	Chemical hazard. Corrosive and oxidising chemical. Could cause death or serious injury. Read Safety Precautions in Operation Manual (OM) before handling hydrogen peroxide.	
6		
	Hot surface. Do not touch. Follow lockout procedure before maintenance.	

TechPub_2614345_0107 - IM_81766_0118sp.fm

Locations of Safety Signs

The illustration shows where the safety signs are located. The position numbers refer to the table in the Safety Signs section.

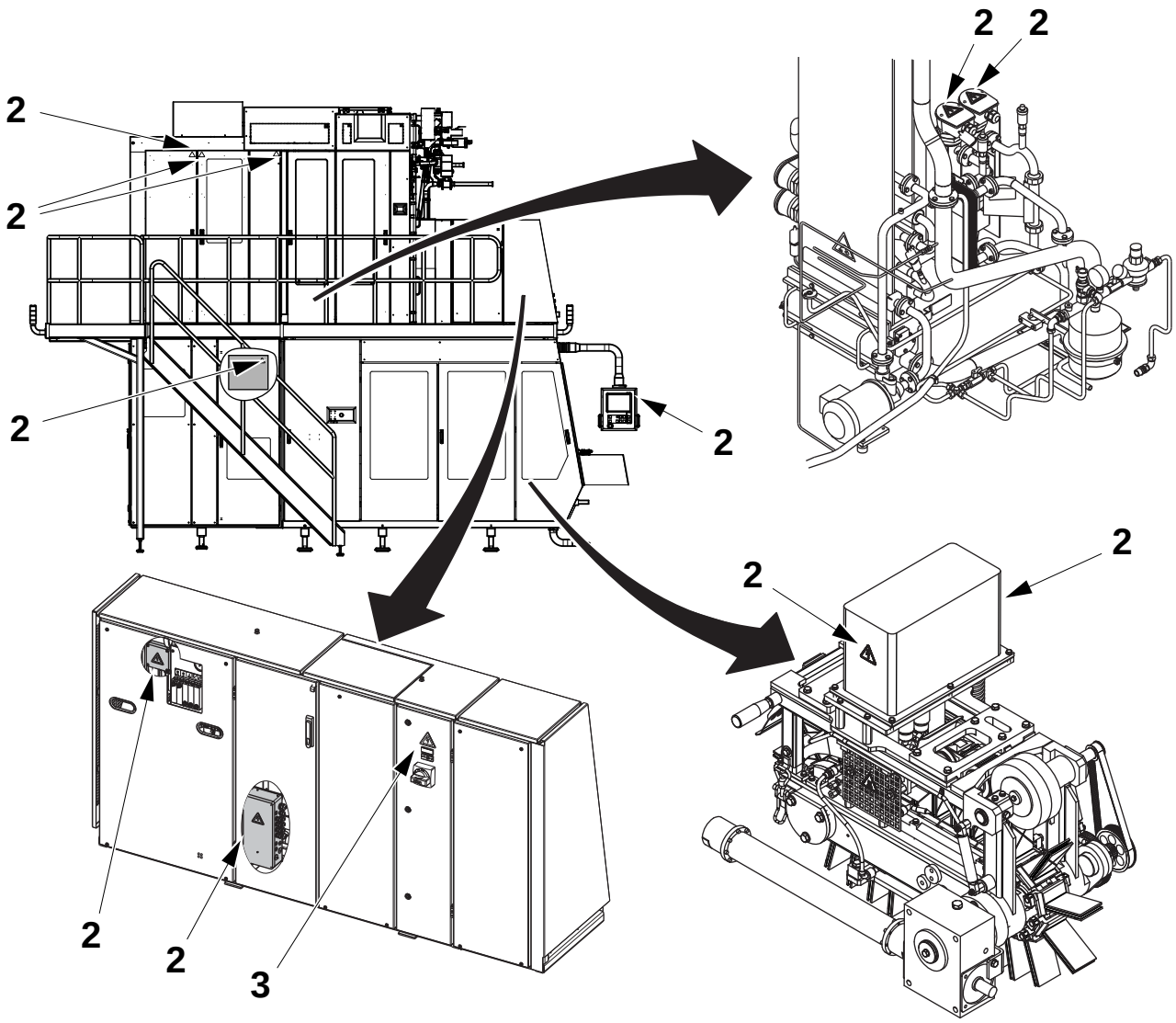

(Cont'd)

TechPub_2614345_0107 - IM_81766_0118sp.fm

(Cont'd)

The illustration shows where the safety signs are located. The position numbers refer to the table in the Safety Signs section.

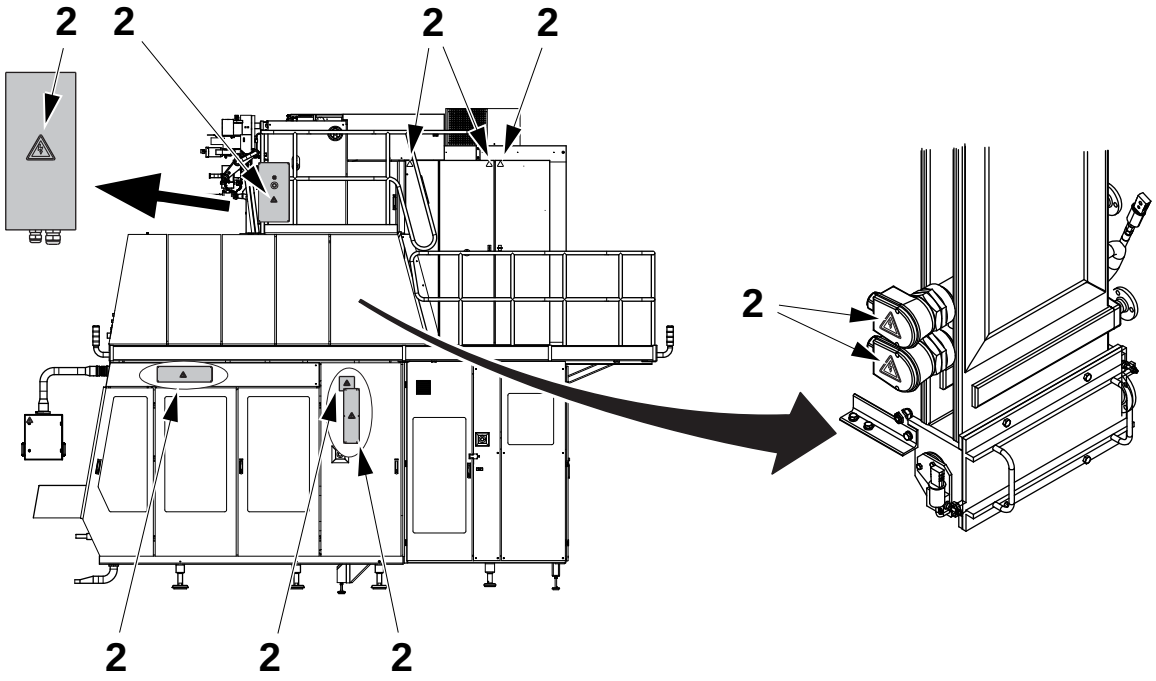

(Cont'd)

TechPub_2614345_0107 - IM_81766_0118sp.fm

(Cont'd)

The illustration shows where the safety signs are located. The position numbers refer to the table in the Safety Signs section.

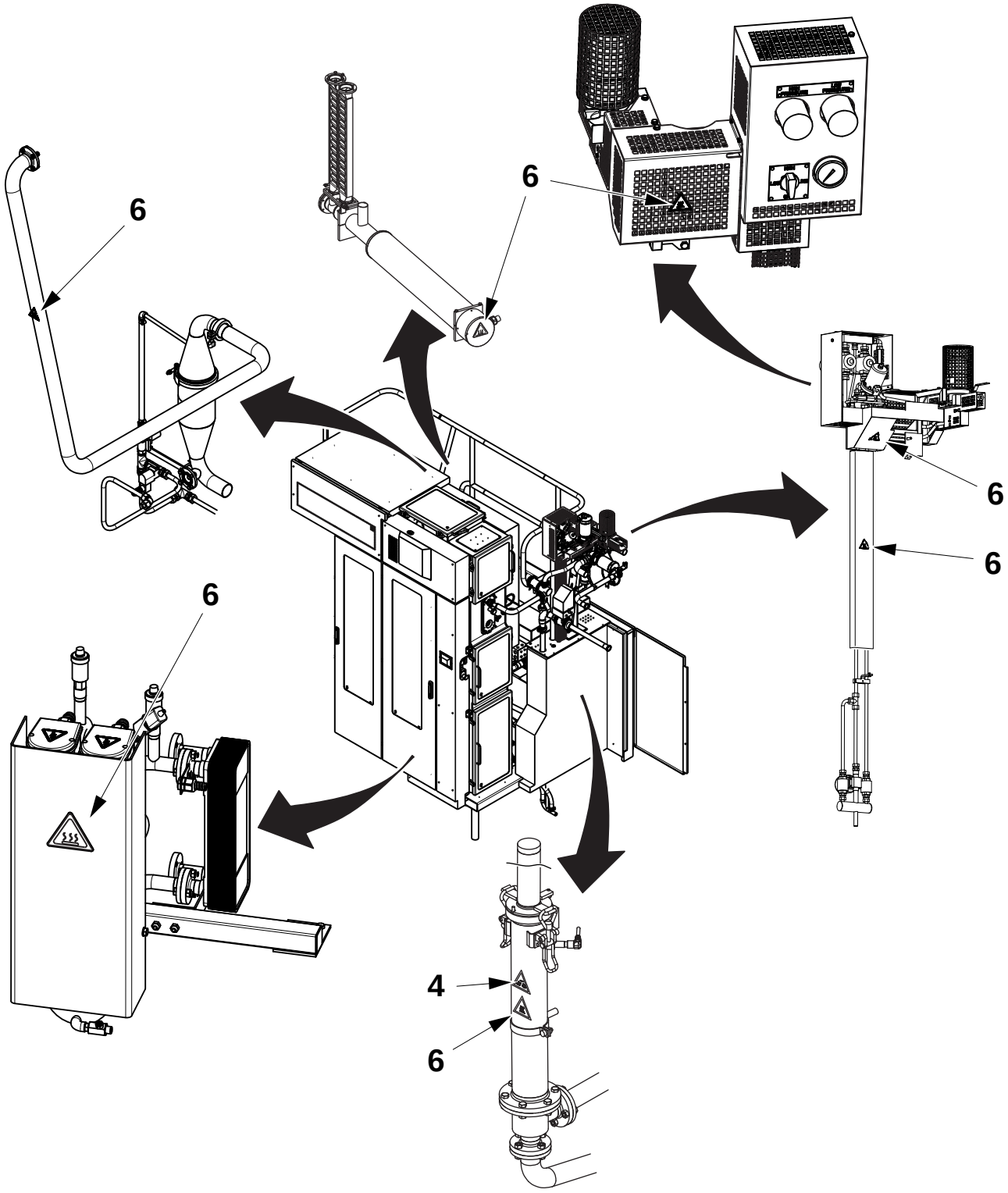

(Cont'd)

TechPub_2614345_0107 - IM_81766_0118sp.fm

(Cont'd)

The illustration shows where the safety signs are located. The position numbers refer to the table in the Safety Signs section.

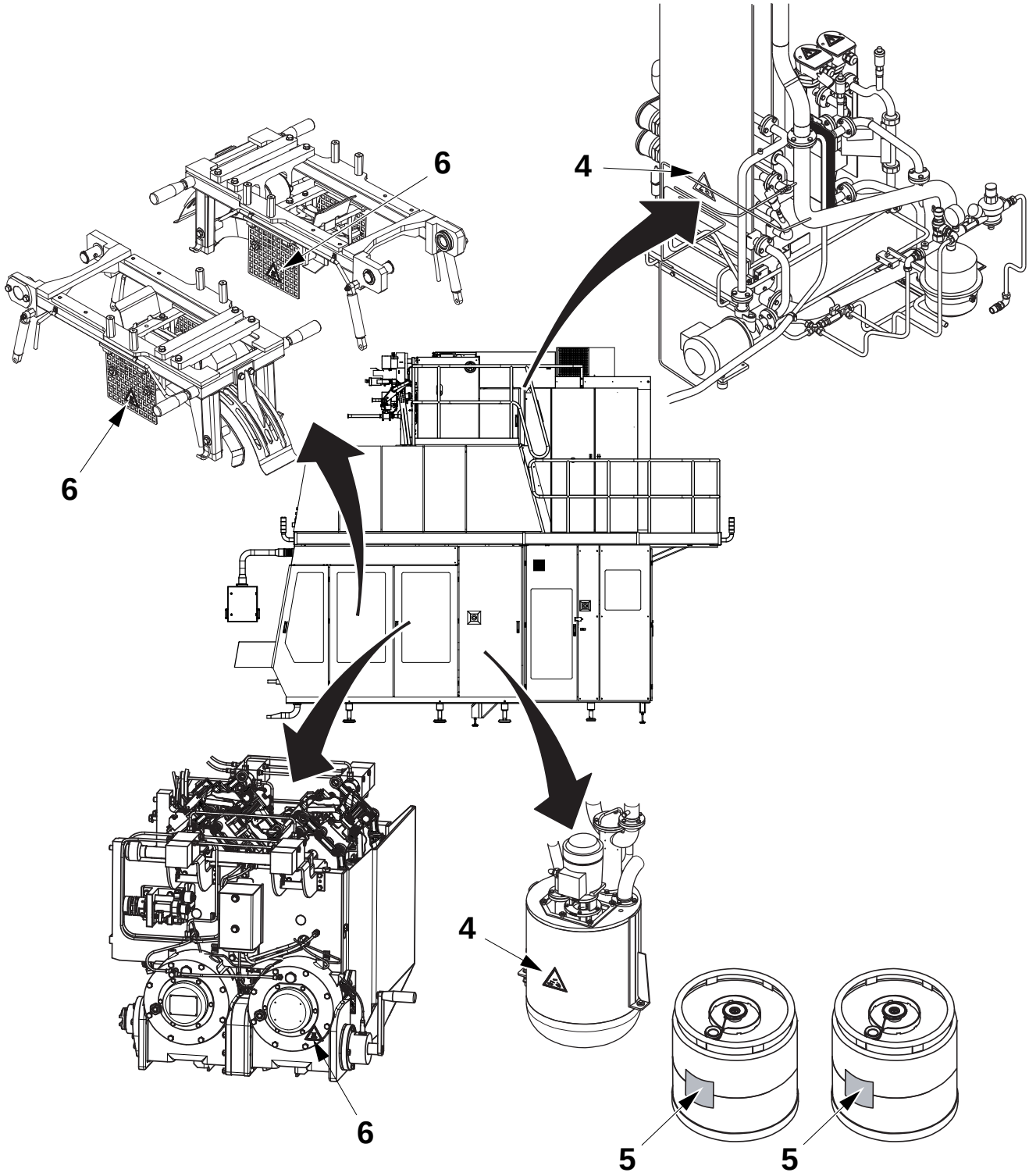

TechPub_2614345_0107 - IM_81766_0118sp.fm

(Cont'd)

(Cont'd)

The illustration shows where the safety signs are located. The position numbers refer to the table in the Safety Signs section.

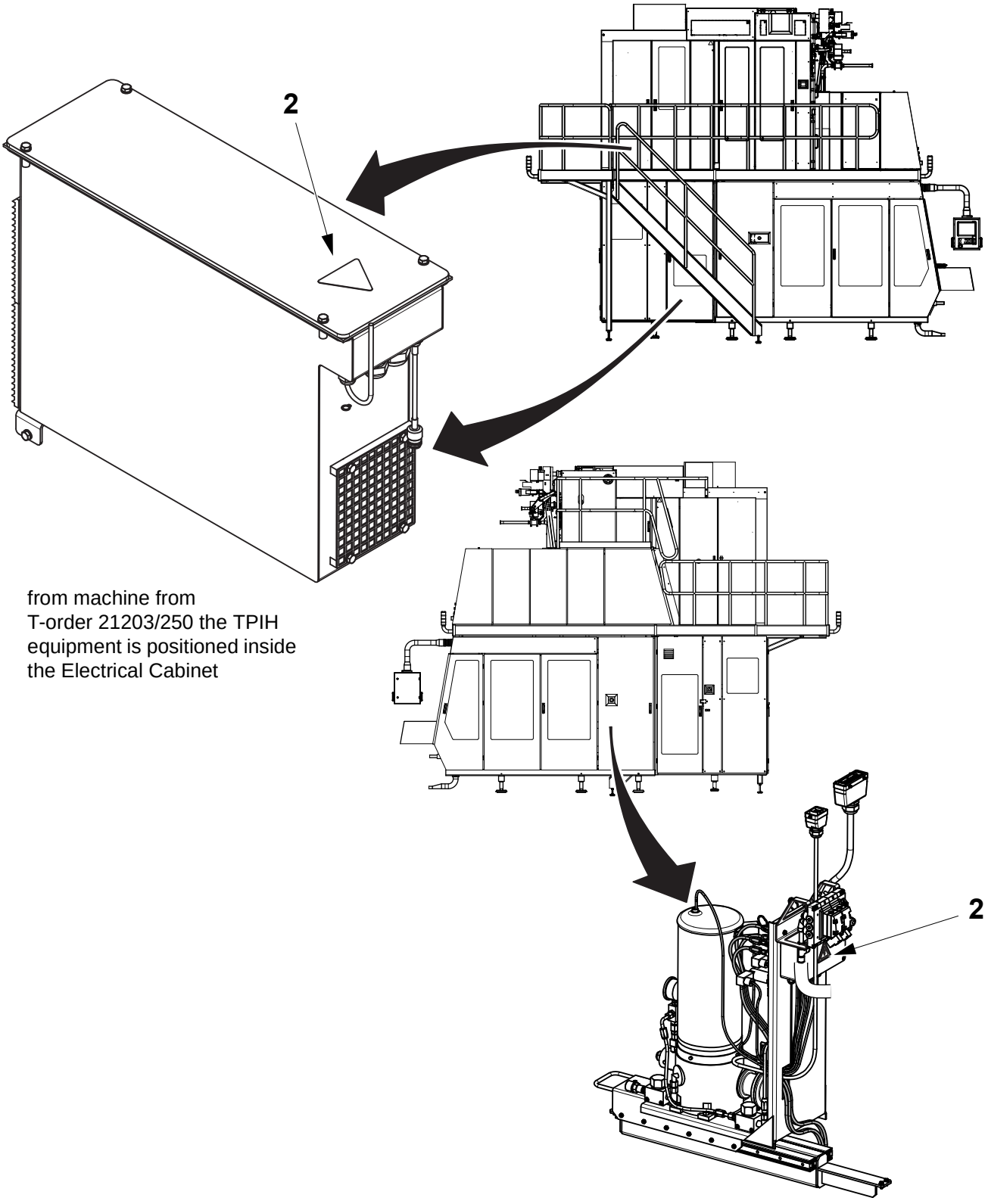

from machine from T-order 21203/250 the TPIH equipment is positioned inside the Electrical Cabinet

TechPub_2614345_0107 - IM_81766_0118sp.fm

(Cont'd)

(Cont'd)

The illustration shows where the safety signs are located. The position numbers refer to the table in the Safety Signs section.

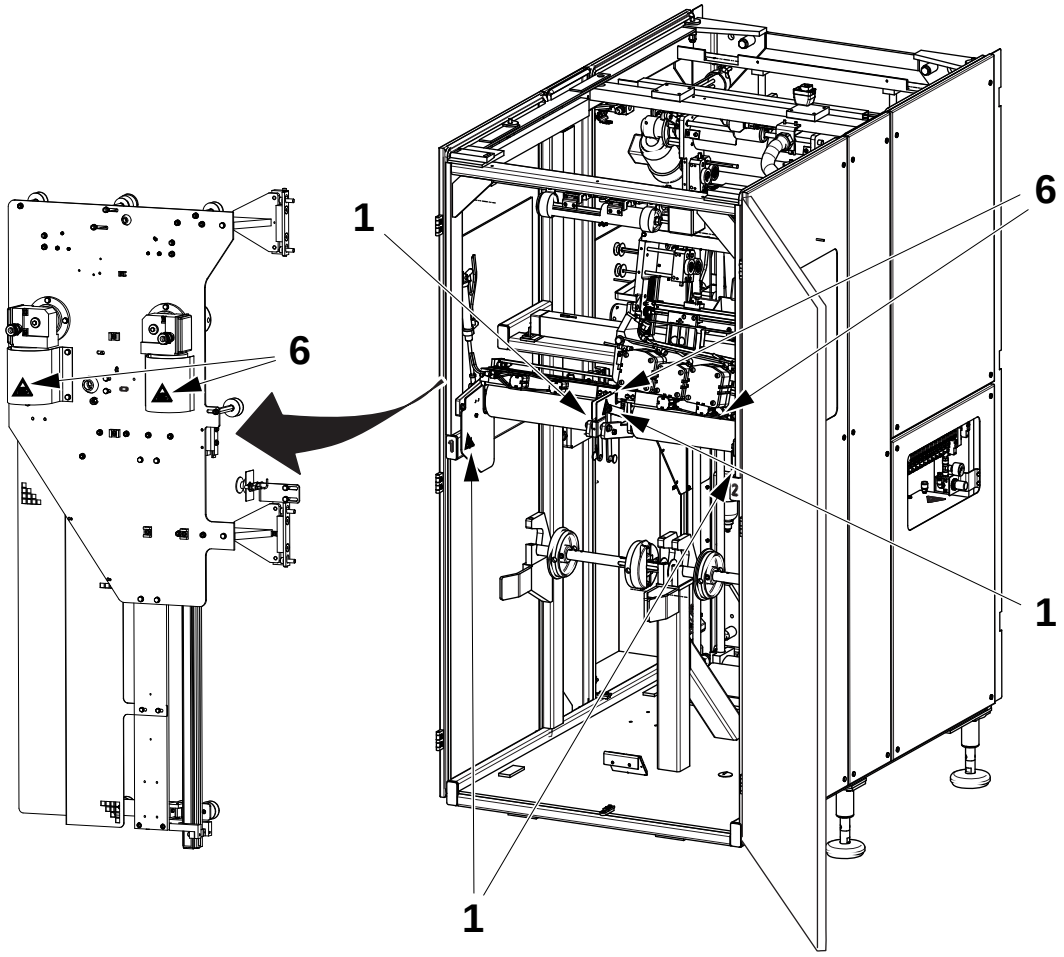

(Cont'd)

TechPub_2614345_0107 - IM_81766_0118sp.fm

(Cont'd)

HI Equipment (OE)

The illustration shows where the safety signs are located. The position numbers refer to the table in the Safety Signs section.

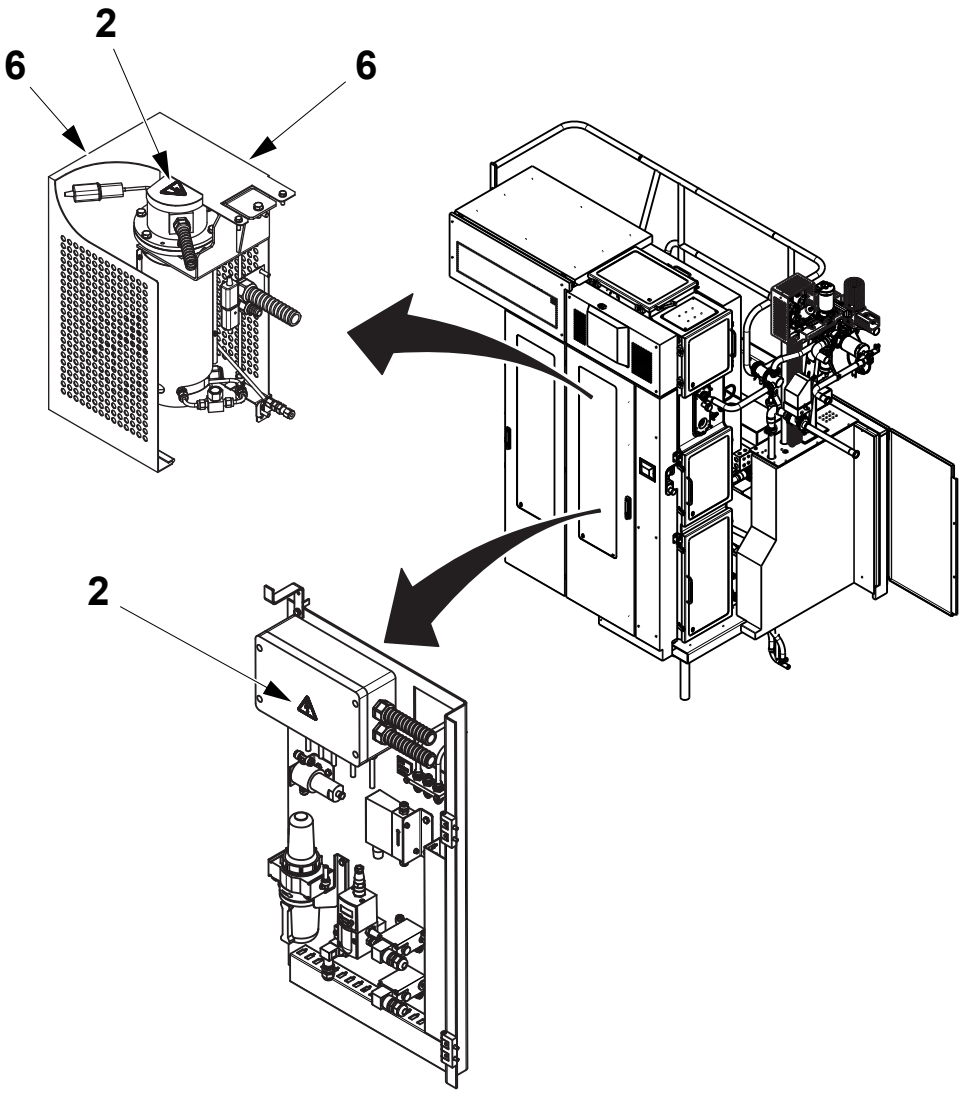

TechPub_2614345_0107 - IM_81766_0118sp.fm

Protective Devices

WARNING

Hazardous zones.

Hazardous zones are safeguarded and provided with protective devices. Do not inch or run this equipment if any protective device is inoperative.

Change inoperative components of the safety system immediately.

WARNING

Hazardous voltage.

Hazardous voltage remains on this equipment after activating an EMERGENCY STOP or an interlocking device.

Emergency Stop

Emergency stop devices are used to stop this equipment immediately in an hazardous situation. Learn the positions of all emergency stop devices and how to use them.

Instructions for a normal production stop are included in the Stop chapter of the Operation Manual.

TechPub_2614345_0107 - IM_81766_0118sp.fm

EMERGENCY STOP Push-Buttons

Push one of the EMERGENCY STOP push-buttons to stop this equipment immediately.

The illustration shows an EMERGENCY STOP push-button. The location of each EMERGENCY STOP push-button is shown by an arrow.

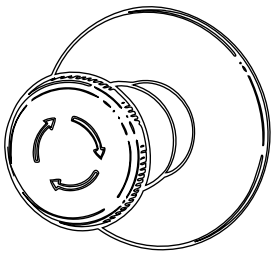

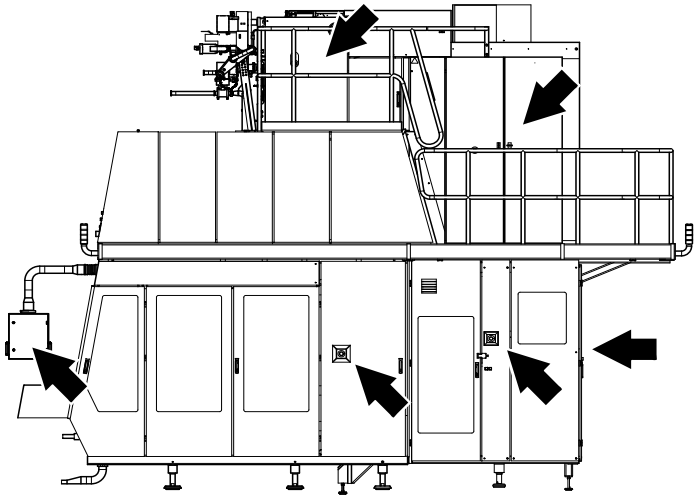

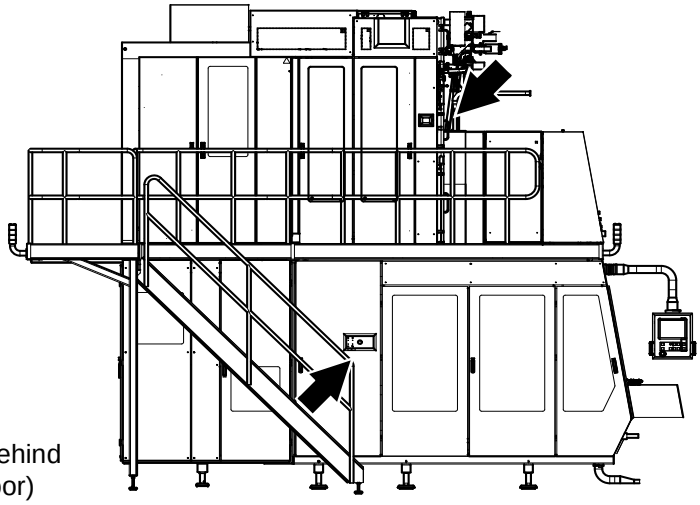

(behind door)

TechPub_2614345_0107 - IM_81766_0118sp.fm

Safeguards

WARNING
Moving machinery.
Never defeat or bypass the interlocking devices.

Movable guards, for example, doors and covers leading to hazardous zones, are fitted with interlocking devices where required. These devices are usually electric safety switches that are parts of the safety system and must never be defeated, bypassed, or otherwise made inoperative.

CAUTION
Burn hazard.
Parts of this equipment may be hot after operation.

After installation and maintenance, and before this equipment is inched or run, check that all safeguards are in place and that they operate correctly.

CAUTION
Equipment damage.
Never stop this equipment by opening an interlocking guard.

(Cont'd)

TechPub_2614345_0107 - IM_81766_0118sp.fm

(Cont'd)

The location of each movable guard is shown by an arrow.

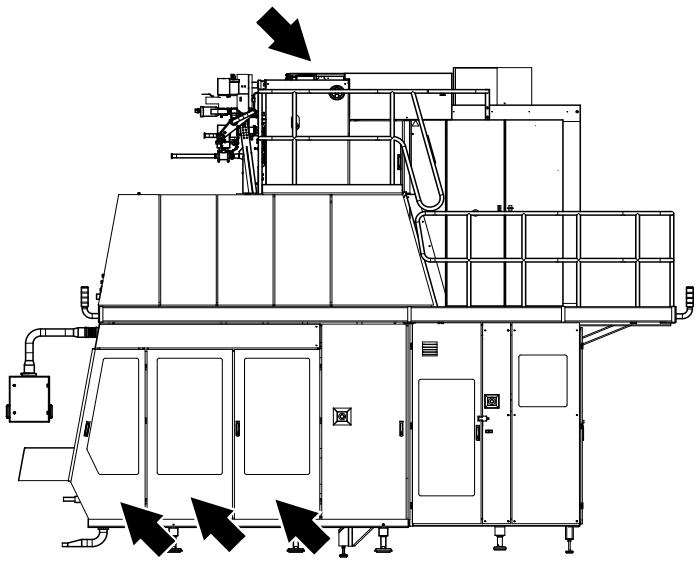

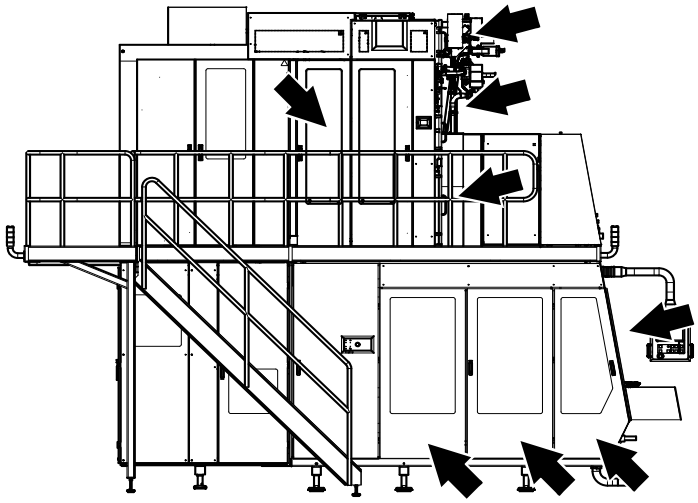

TechPub_2614345_0107 - IM_81766_0118sp.fm

Warning Lamp

A warning lamp is a column of warning lights:

- A red light (1) indicates a hazardous condition. This is a situation that requires immediate action.
- A yellow light (2) indicates an abnormal or impending critical condition. This is a condition calling for action by the operator.
- A blue light (3) indicates that operator action is required.

Audible Alarm

The audible alarm produces a warning signal every time this equipment is about to start. The warning signal sounds for approximately three seconds prior to starting to alert personnel.

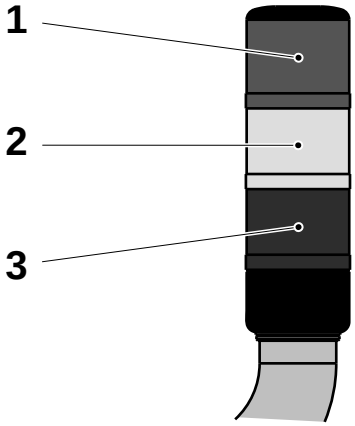

1 Red light
2 Yellow light
3 Blue light

TechPub_2614345_0107 - IM_81766_0118sp.fm

Personal Protection

This section applies to all personnel at all times when this equipment is in operation. For special personal protection required when handling hazardous substances, see the Hazardous Substances section.

Noise Hazard

CAUTION

Hazardous noise.

Risk of impaired hearing. Hearing protection is recommended whenever this equipment is in operation.

Entanglement Hazard

WARNING

Risk of entanglement.

Do not wear jewellery or loose clothing when working on or near this equipment. Long hair may not be loose.

TechPub_2614345_0107 - IM_81766_0118sp.fm

Hazardous Substances

WARNING

Contact with chemicals can cause death, serious injury, or illness.
Always read and follow the instructions in the safety data sheet supplied by the manufacturer or local supplier, when handling chemicals.

Make sure that

- the safety data sheet is available
- the showers work
- an eyewash device, movable or wall-mounted, is available and operational
- additional washing facilities are nearby

Note! Learn the locations of all washing facilities in order to act immediately in case of an accident.





TechPub_2614345_0107 - IM_81766_0118sp.fm

Disposal of Chemical Substances

Always read and follow the disposal instructions in the safety data sheet supplied by the manufacturer or local supplier.

It is strongly recommended that used chemical containers are

- disposed of according to the instructions immediately after use
- not used as disposal containers for other chemicals in order to avoid uncontrolled chemical reactions within the container

TechPub_2614345_0107 - IM_81766_0118sp.fm

Hydrogen Peroxide (H_2O_2)

WARNING
Corrosive chemical.
Wear personal protective equipment.

In both liquid and gas states, hydrogen peroxide may cause irritation or damage if it comes into contact with skin, mucous membranes, eyes, or clothes. Call for medical attention immediately if there is an accident.

Liquid hydrogen peroxide in concentrations of less than 1% is generally considered harmless to humans.

Consult the instructions on the label of the tank or container.

Emergency Procedures

If there is an accident involving hydrogen peroxide, rinse the affected area as soon as possible with large amounts of water.

If hydrogen peroxide is swallowed

- do not attempt to cause vomiting
- drink large amounts of lukewarm water to dilute the peroxide
- call for medical attention immediately

If splashes or vapour from hydrogen peroxide come in contact with the eyes

- wash the eyes thoroughly with lukewarm water for 15 minutes (keep eyelids wide apart)
- call for medical attention immediately

If hydrogen peroxide comes into contact with skin or clothes

- rinse immediately with plenty of water
- call for medical attention immediately if skin burns appear
- thoroughly wash the clothes before wearing them again

If irritation or pain is experienced due to having **inhaled** hydrogen peroxide vapour

- leave the affected area and get some fresh air
- call for medical attention if the symptoms get worse

TechPub_2614345_0107 - IM_81766_0118sp.fm

Personal Protective Equipment

The personal protective equipment for hydrogen peroxide is

- protective goggles (TP No. 90303-11)
- protective gloves made of neoprene (TP No. 90303-12)
- protective apron (TP No. 90303-13)
- protective shoes made of PVC, PE plastic, or rubber

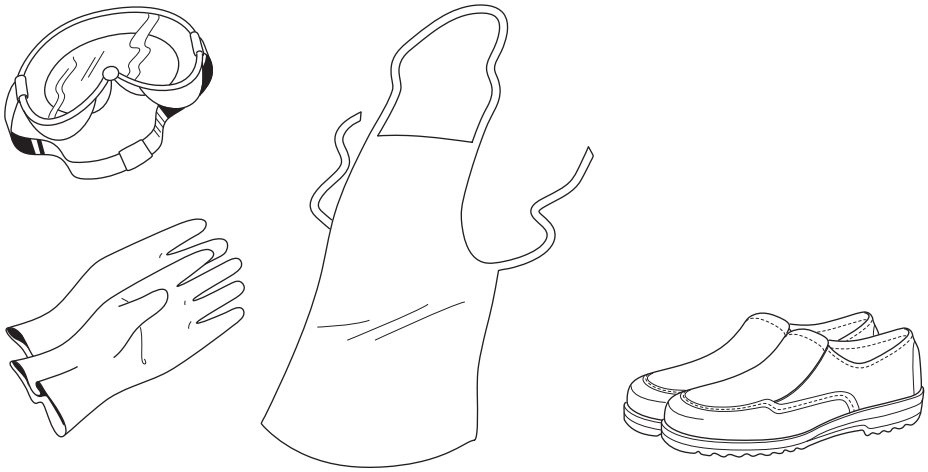

TechPub_2614345_0107 - IM_81766_0118sp.fm

Handling of Hydrogen Peroxide

WARNING

Sudden and violent chemical reaction.

Avoid any contamination of hydrogen peroxide.

Hydrogen peroxide reacts suddenly and violently with many compounds or if it is contaminated. The reaction is a violent decomposition liberating oxygen and heat, with a big increase in volume due to the oxygen produced by the peroxide decomposition.

Never pour surplus hydrogen peroxide back into the original container if it contains fresh hydrogen peroxide. There is a risk of explosion when hydrogen peroxide is in a closed container.

Ensure that equipment used for handling and diluting hydrogen peroxide is clean before it comes in contact with hydrogen peroxide. Pumps or other equipment used for handling hydrogen peroxide must be **used for this purpose only** and must be manufactured from appropriate materials, such as stainless steel 316 L, glass, polyethylene, or teflon. After use, make sure that all peroxide residue is rinsed away.

If hydrogen peroxide is spilled, dilute it with large amounts of water. Dispose of the diluted hydrogen peroxide according to local regulations.

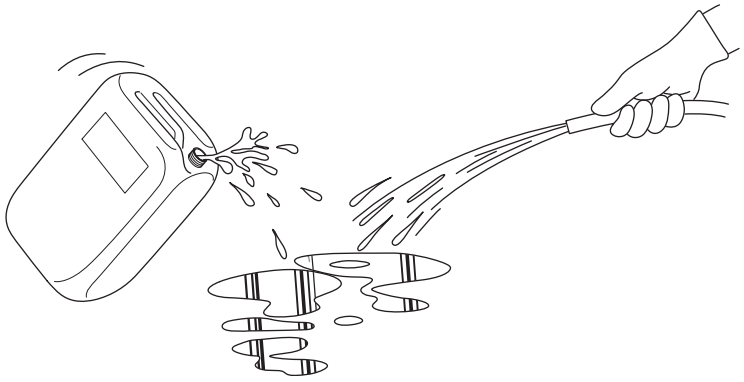

WARNING

Self-ignition.

Never wipe up hydrogen peroxide with materials such as rags or paper as these may self-ignite several hours after contact. If there is a fire, spray with large quantities of water.

TechPub_2614345_0107 - IM_81766_0118sp.fm

Storage of Hydrogen Peroxide

DANGER

Containers may explode if not properly ventilated.
Keep the container upright and fitted with its proper ventilation cap. If there is a fire, cool all containers by spraying them with large quantities of water.

Hydrogen peroxide decomposes much faster with increasing temperature. There is a risk of explosion at high temperatures, since the ventilation cap cannot release the gases produced quickly enough.

Hydrogen peroxide **must** be stored in the **original container** delivered by the supplier. Keep the container upright and fitted with its proper ventilation cap, which allows oxygen to escape. Otherwise, there can be an explosion if decomposition of the peroxide occurs violently.

Make sure that the container is always properly closed.

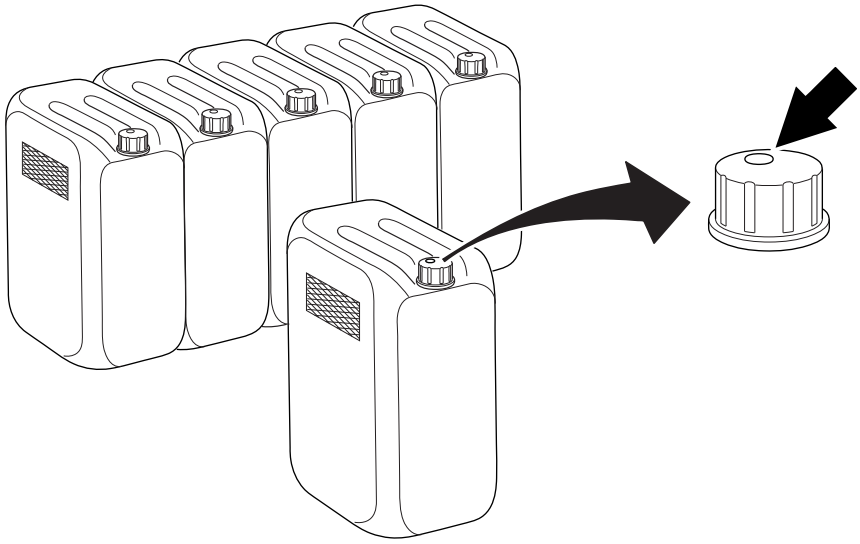

(Cont'd)

TechPub_2614345_0107 - IM_81766_0118sp.fm

(Cont'd)

Commercial food-grade hydrogen peroxide has been stabilized to inhibit the catalytic decomposition effects of metals and other impurities, but it can decompose into oxygen and water if it is exposed to heat or contaminated.

Make sure that the area used for storage of hydrogen peroxide is

- cool, clean, and well ventilated
- shielded from direct sunlight
- kept free from combustible materials

Disposal of Hydrogen Peroxide

Always read and follow the disposal instructions in the safety data sheet supplied by the manufacturer or local supplier.

TechPub_2614345_0107 - IM_81766_0118sp.fm

Caustic Soda/Sodium Hydroxide (NaOH)

WARNING
Corrosive chemical.
Wear personal protective equipment.

Caustic soda/sodium hydroxide is highly corrosive in all forms and can cause serious burns on contact with skin and eyes.

Always wear personal protective equipment (as specified on the next page).

Emergency Procedures

First Aid Measures

Inhalation
Remove victim immediately from source of exposure, provide rest, warmth and fresh air, get medical attention if any discomfort continues.

Ingestion
Do not induce vomiting, immediately rinse mouth and drink plenty of water (200 - 300 ml) and get medical attention immediately!

Skin Contact
Immediately remove contaminated clothing, rinse the skin with lots of water and get medical attention.

Eye Contact
May cause permanent damage if eye is not immediately irrigated. Make sure to remove any contact lenses from eyes before rinsing. Promptly wash eyes with plenty of water while lifting the eyelids, get immediately medical attention and continue to rinse.

WARNING
Corrosive chemical.
Wear personal protective equipment.

Accidental Release, Spillage or Splashing
In case of accidental release, spillage or splashing

- wash contaminated area with water. Alternatively, absorb in vermiculite, dry sand or earth, place into containers and wash the affected area
- in case of contact with eyes or skin wash with plenty of water
- remove any contaminated clothing immediately

TechPub_2614345_0107 - IM_81766_0118sp.fm

Personal Protective Equipment

The personal protective equipment for caustic soda/sodium hydroxide is

- protective goggles (TP No. 90303-11)
- protective gloves made of neoprene (TP No. 90303-12)
- protective apron (TP No. 90303-13)
- protective shoes made of PVC, PE plastic, or rubber

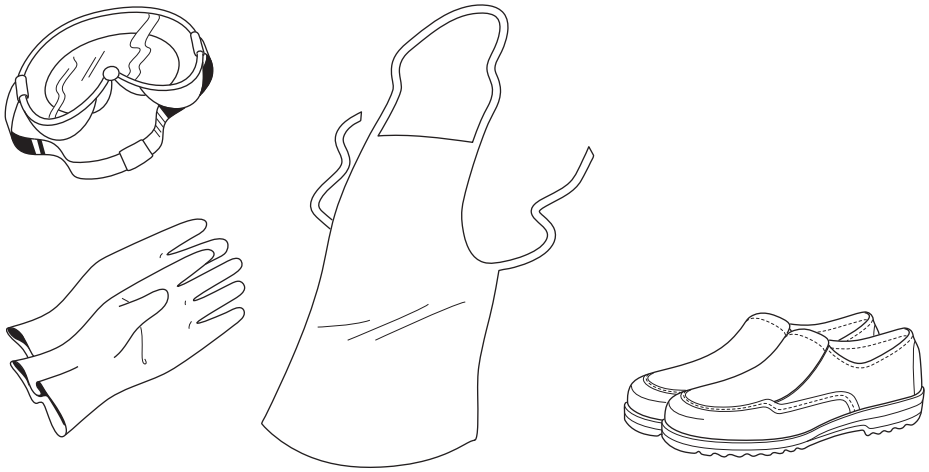

TechPub_2614345_0107 - IM_81766_0118sp.fm

Handling and Storage of Caustic Soda/Sodium Hydroxide

WARNING

Sudden and violent chemical reaction.

Avoid any contamination of caustic soda/sodium hydroxide. Never store or mix caustic soda together with hydrogen peroxide.

Ensure that

- containers are kept tightly closed
- containers are stored in a cool dry place away from direct sunlight or sources of heat
- designated storage and handling areas are adequately ventilated and that emergency shower and eye wash facilities are available nearby
- handle containers carefully during transport
- avoid spilling, skin and eye contact
- use dedicated equipment when sampling, pouring or decanting
- never store or mix caustic soda together with hydrogen peroxide

Disposal of Caustic Soda/Sodium Hydroxide

Dispose of waste and residues in accordance with local authority requirements. Used caustic soda should be sent to an approved facility for destruction. Never allow caustic soda to be disposed into the drain.

CAUTION

Fire-Fighting Measures

Always apply the following measures.

Extinguishing Media

The product is non-combustible, use fire extinguishing media appropriate for surrounding materials.

Specific Hazards

Corrosive liquid.

Protective Measures in Fire

Self-contained breathing apparatus and full-protective clothing must be worn in case of fire.

Note! Always refer to your supplier’s Material Safety Data Sheet (MSDS) for caustic soda.

TechPub_2614345_0107 - IM_81766_0118sp.fm

Nitric Acid (HNO_3)

WARNING
Corrosive chemical.
Wear personal protective equipment.

Nitric acid is extremely hazardous; it is corrosive, reactive, a strong oxidizer and a poison. Liquid and mist can cause serious burns on contact with skin and eyes; contact with other material may cause fire; liquid and mist cause severe burns to skin and eyes; inhalation may cause lung and tooth damage.

Always wear personal protective equipment (as specified on the next page).

Emergency Procedures

First Aid Measures

Inhalation
Remove victim immediately from source of exposure, provide rest, warmth and fresh air. If not breathing, give artificial respiration; if breathing is difficult give oxygen. Get medical attention immediately.

Ingestion
Do not induce vomiting, immediately rinse mouth and drink plenty of water or milk if available. Never give anything by mouth to an unconscious person. Get medical attention immediately.

Skin Contact
Immediately remove contaminated clothing, rinse the skin with lots of water and get medical attention.

Eye Contact
May cause permanent damage if eye is not immediately irrigated. Make sure to remove any contact lenses from eyes before rinsing. Promptly wash eyes with plenty of water while lifting the eyelids, get immediately medical attention and continue to rinse. Get medical attention if any discomfort continues.

(Cont'd)

TechPub_2614345_0107 - IM_81766_0118sp.fm

(Cont'd)

WARNING
Corrosive chemical.
Wear personal protective equipment.

Accidental Release, Spillage or Splashing

In case of accidental release, spillage or splashing

- ventilate area of leak or spill, isolate hazard area, keep unnecessary and unprotected personnel from entering, contain and recover liquid when possible, neutralise with alkaline material (soda ash, lime) then absorb with an inert material (e.g.,vermiculite, dry sand or earth), place in a chemical waste container; do not use combustible materials, such as saw dust, rags, paper, wood
- in case of contact with eyes or skin wash with plenty of water
- remove any contaminated clothing immediately; see the Fire-fighting (fire) measures section on page ii-36

TechPub_2614345_0107 - IM_81766_0118sp.fm

Personal Protective Equipment

The personal protective equipment for nitric acid is

- protective goggles (TP No. 90303-11)
- protective gloves made of neoprene (TP No. 90303-12)
- protective apron (TP No. 90303-13)
- protective shoes made of PVC, PE plastic, or rubber

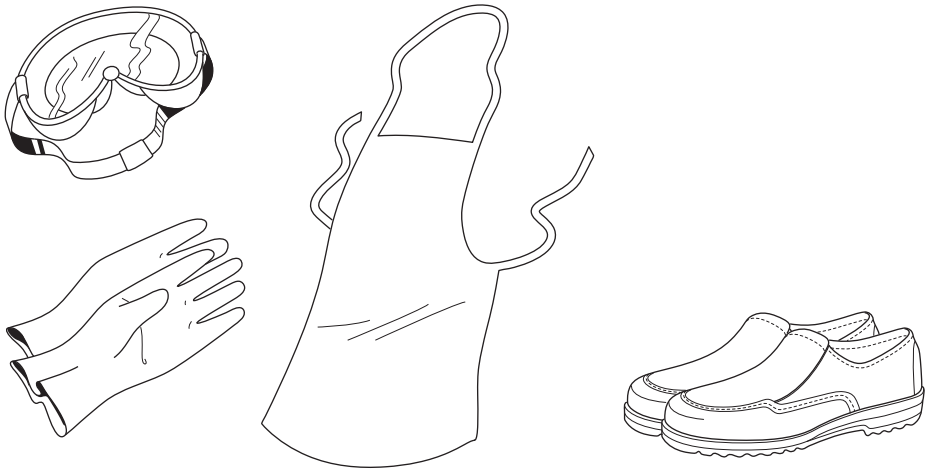

TechPub_2614345_0107 - IM_81766_0118sp.fm

Handling and Storage of Nitric Acid

WARNING

Sudden and violent chemical reaction.

Avoid any contamination of nitric acid.

Ensure that

- containers are kept tightly closed
- containers are stored in a cool dry place away from direct sunlight or sources of heat, water and incompatible materials and that emergency shower and eye wash facilities are available nearby
- designated storage and handling areas are adequately ventilated and have acid-resistant floors
- handle containers carefully during transport
- avoid spilling, skin and eye contact
- use dedicated equipment when sampling, pouring or decanting
- do not wash out container and use it for other purposes. Containers of this material may be hazardous when empty since they retain product residues (vapours, liquid)

TechPub_2614345_0107 - IM_81766_0118sp.fm

Disposal of Nitric Acid

Dispose of waste and residues in accordance with local authority requirements. Used nitric acid should be sent to an approved facility for destruction. Never allow nitric acid to be disposed into the drain.

CAUTION
Fire-fighting measures.
Always apply the following measures.

Fire

The product is non-combustible, but it is a strong oxidiser and its heat of reaction with reducing agents or combustibles may cause ignition. Can react with metals to release flammable hydrogen gas.

Explosion

Reacts explosively with combustible organic or readily oxidizable materials such as alcohols, turpentine, charcoal, organic refuse, metal powder, hydrogen sulphide, etc. Reacts with most metals to release hydrogen gas which can form explosive mixtures with air.

Extinguishing Media

Water spray may be used to keep containers exposed to the fire cool. Do not get water inside containers. Use fire extinguishing media appropriate for surrounding materials.

Special Information

Increases the flammability of combustible, organic and readily oxidizable materials.

Protective Measures In Fire

Self-contained breathing apparatus and full-protective clothing must be worn in case of fire.

Note! Always refer to your supplier’s Material Safety Data Sheet (MSDS) for nitric acid.

TechPub_2614345_0107 - IM_81766_0118sp.fm

Supply Systems

Power Supply

DANGER

Hazardous voltage and moving machinery.
The power supply disconnector must be turned off and secured with a lock before any maintenance.

Note! The key to the lock must be removed by the technician and retained in his/her possession until all work is completed.

Certain maintenance procedures may require power supply systems to be on. These exceptions are clearly stated in the Maintenance Manual.

The illustrations show the power supply disconnector and its location.

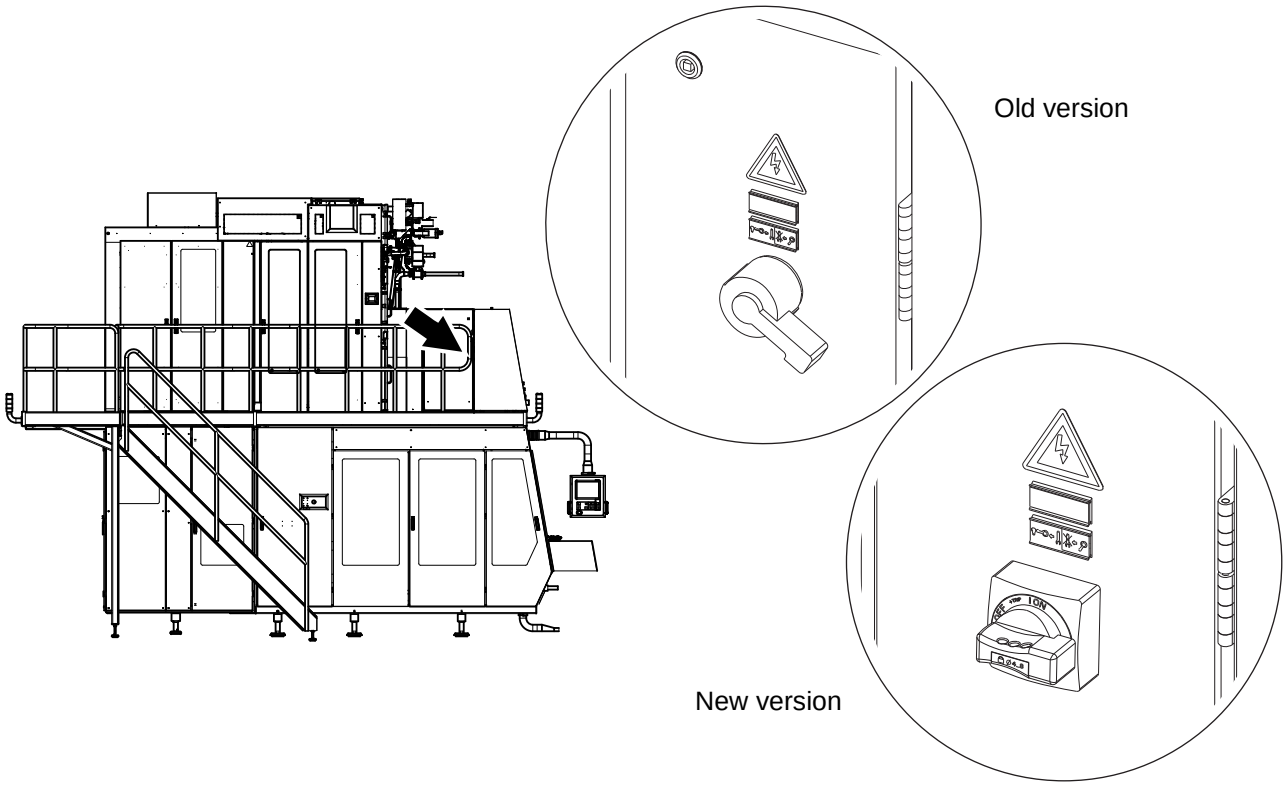

Residual Voltage

DANGER

Hazardous voltage.
Do not touch any terminals immediately after the power supply disconnector is turned off. Ensure that no residual voltage remains on the capacitors before touching. Wait five minutes. Failure to observe this information will cause death or serious injury.

After the power supply disconnector is turned off, residual voltage remains in the capacitor circuits.

TechPub_2614345_0107 - IM_81766_0118sp.fm

Electrical Cabinet

DANGER

Hazardous voltage.
Will shock, burn, or cause death. The power supply disconnector must be turned off and secured with a lock before maintenance inside the electrical cabinet.

Note! The key to the lock must be removed by the technician and retained in his/her possession until all work is completed.

Make sure that the electrical cabinet doors are closed after working inside the electrical cabinet. Doors with lock must be locked.

The location of each electrical cabinet for the TBA/22 is shown by an arrow.

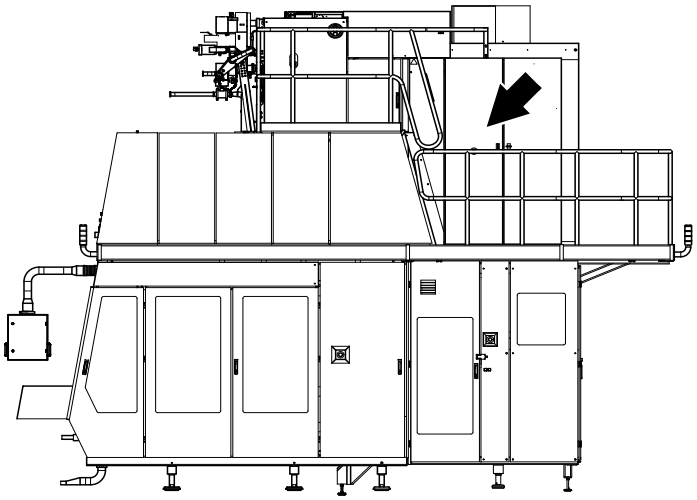

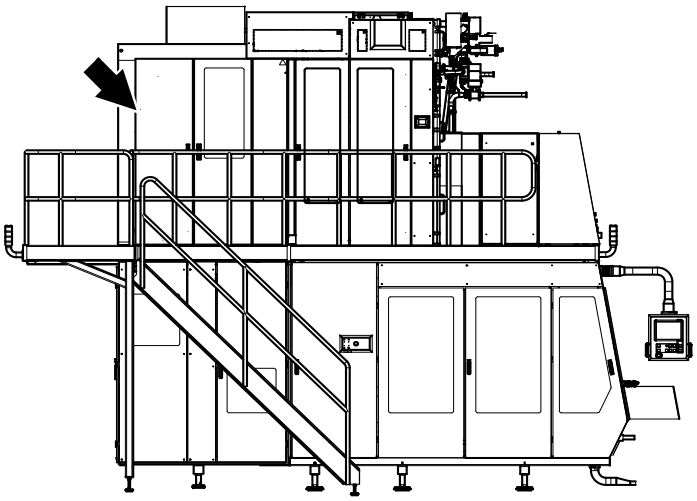

TechPub_2614345_0107 - IM_81766_0118sp.fm

Air Supply

WARNING

Compressed air and moving machinery.
Close the main air valve and lock it before any maintenance.

Note! The key to the lock must be removed by the technician and retained in his/her possession until all work is completed.

Certain maintenance procedures may require air supply systems to be on. These exceptions are clearly stated in the Maintenance Manual.

The illustrations show the main air valve (1), the lock (2), and their location.

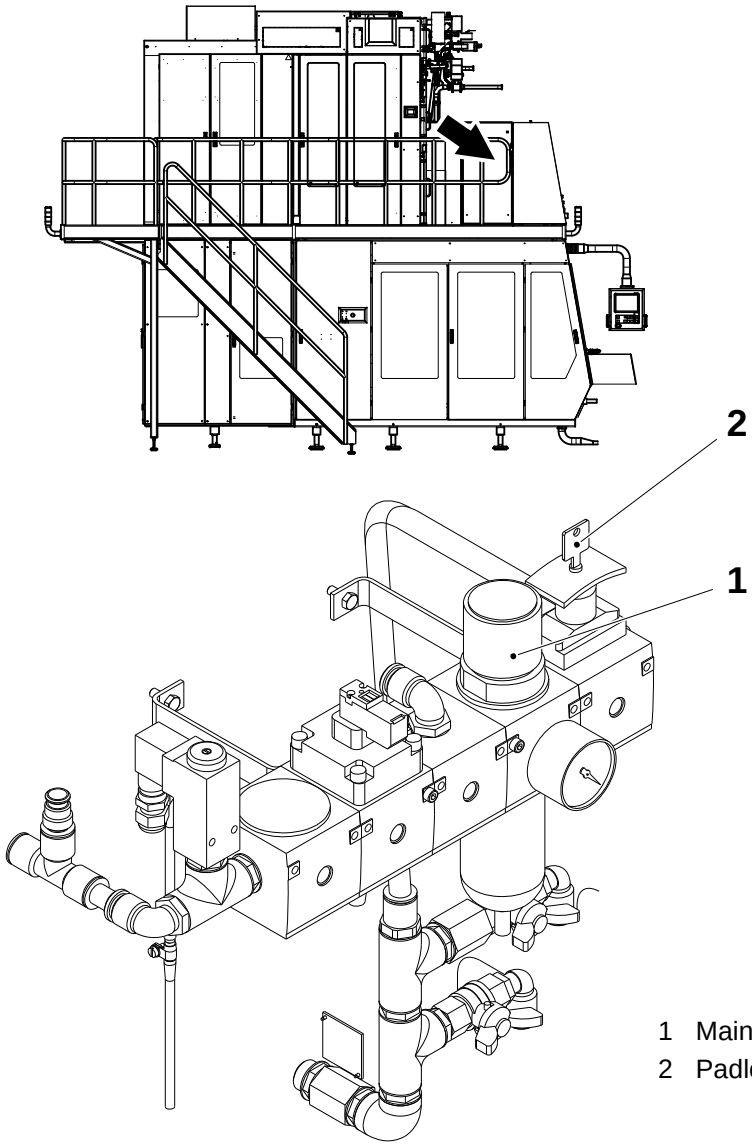

1 Main air valve
2 Padlock

TechPub_2614345_0107 - IM_81766_0118sp.fm

Steam Supply

WARNING

Hot steam can cause scalds.

Pressurized steam can be discharged unexpectedly. Close the steam supply valve and lock it, depressurize and vent all steam safely before any maintenance on parts with steam, such as pipes and valves.

Note! The key to the lock must be removed by the technician and retained in his/her possession until all work is completed.

Certain maintenance procedures may require steam supply systems to be on. These exceptions are clearly stated in the Maintenance Manual.

The illustrations show the steam supply valve (1), and its location.

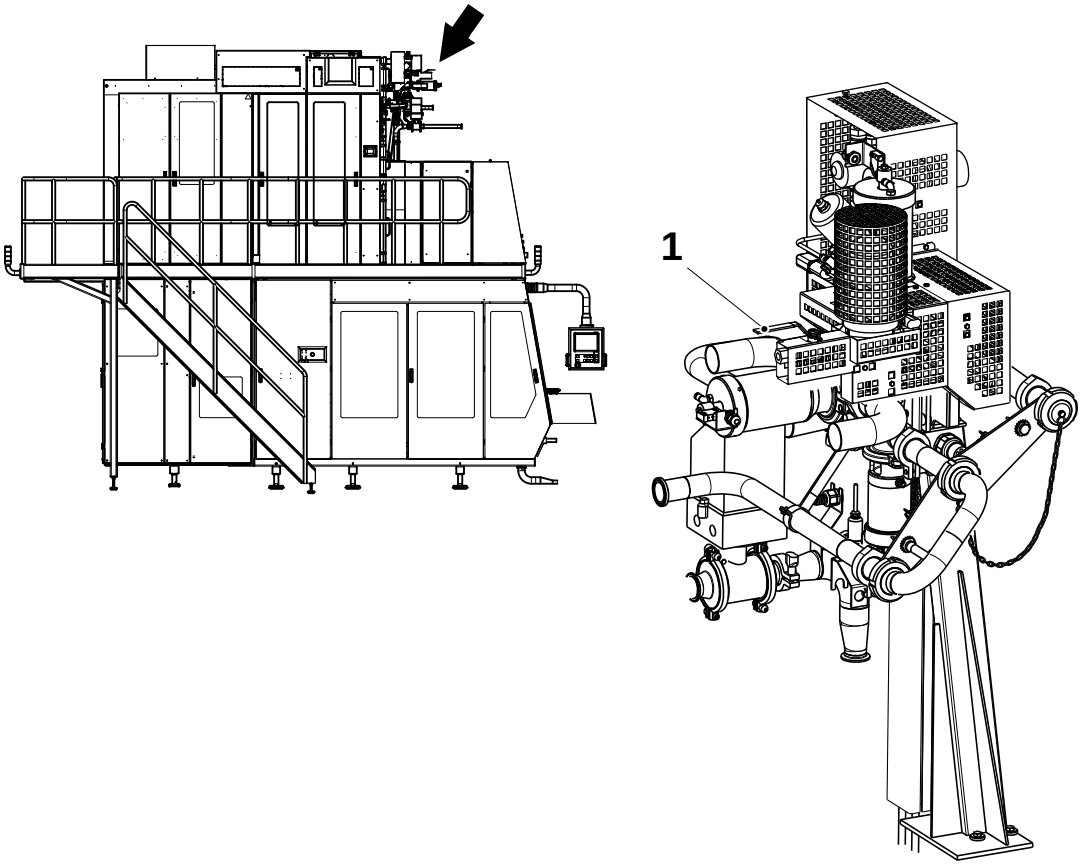

1 Steam supply valve

TechPub_2614345_0107 - IM_81766_0118sp.fm

Water Supply

CAUTION

Water under pressure.

Close the water supply valves before any maintenance.

Certain maintenance procedures may require water supply systems to be on. These exceptions are clearly stated in the Maintenance Manual.

The illustrations show the water supply valves (1) and their location.

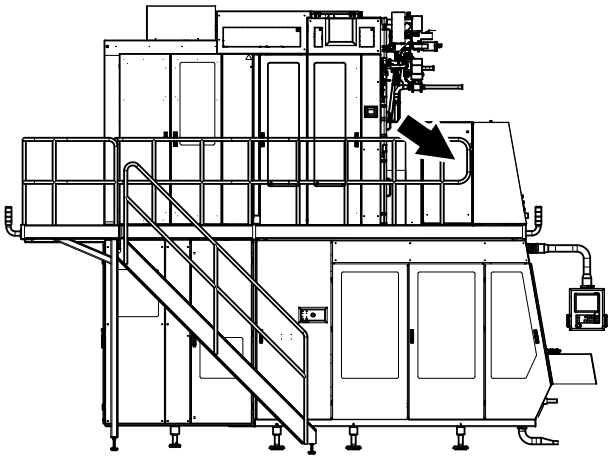

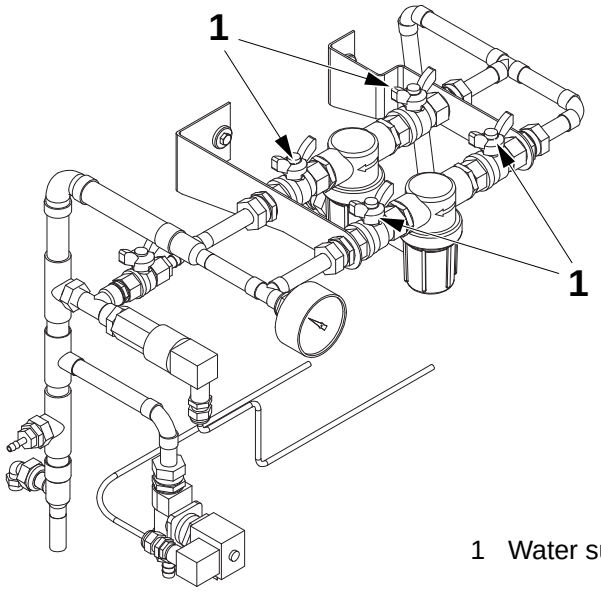

1 Water supply valve

TechPub_2614345_0107 - IM_81766_0118sp.fm

Equipment for Lifting and Moving Loads

WARNING

Risk of crushing injury.

Make sure that the capacity of the lifting equipment is adequate and that the equipment itself is in proper working order.

If lifting tackle must be joined to make up the necessary lengths, make sure that the joints are secure and have the same lifting capacity as the rest of the lifting tackle.

Always engage safety clips fitted to lifting hooks to prevent the lifting tackle from slipping off.

Use ropes or poles to steady and manoeuvre suspended loads. Do **not** use hands or feet.

Make sure that the route and destination are free from obstacles before moving a suspended load. It must always be possible to quickly and safely lower the load to the floor in an emergency.

When depositing loads, keep lifting tackle in place until the stability of the load has been substantiated.

TechPub_2614345_0107 - IM_81766_0118sp.fm

1 Technical Data and Drawings

Technical Data and Drawings - Description

This chapter includes drawings showing overall dimensions, connection positions and dimensions, and access dimensions. Values are in millimetres unless otherwise stated. All dimensions must be respected.

1.1 Installation Drawings. . . . . 1 - 7

1.1.1 LH Side View. . . . . 1 - 7

1.1.2 Top View . . . . . 1 - 8

1.1.3 Machine feet and Drainage Locations . . . . . 1 - 9

1.1.4 Front View, LH Stair . . . . . 1 - 10

1.1.5 Front View, RH Stair (Optional Kit) . . . . . 1 - 11

1.1.6 Top View, Showing Typical Conveyor Configuration . . . . . 1 - 12

1.1.7 Service Unit Connection Plate . . . . . 1 - 13

1.1.8 System Drawings . . . . . 1 - 14

1.2 Filling Machine Capacity. . . . . 1 - 15

1.3 Mass (Weight) . . . . . 1 - 16

1.3.1 Static Load . . . . . 1 - 16

1.3.2 Centre of Gravity . . . . . 1 - 17

1.4 Utility Connection Data . . . . . 1 - 18

1.4.1 Electrical Power . . . . . 1 - 18

1.4.1.1 Electrical Power Specifications . . . . . 1 - 18

1.4.1.2 Electrical Power Consumption . . . . . 1 - 18

1.4.1.3 Electrical Power Consumption with HI . . . . . 1 - 18

1.4.2 Compressed Air . . . . . 1 - 19

1.4.2.1 General Requirements . . . . . 1 - 19

1.4.2.2 Specifications . . . . . 1 - 19

1.4.2.3 Consumption . . . . . 1 - 19

1.4.3 Sanitary Air . . . . . 1 - 20

1.4.3.1 General Requirements . . . . . 1 - 20

1.4.3.2 General Characteristics . . . . . 1 - 20

1.4.4 Water . . . . . 1 - 21

1.4.4.1 General Requirements . . . . . 1 - 21
1.4.4.2 Water Hardness . . . . . 1 - 21
1.4.4.3 Corrosion Characteristics . . . . . 1 - 21
1.4.4.4 Additional Data for Water Supply . . . . . 1 - 22
1.4.4.5 Additional Specifications of Cold Water Supply 1 - 23
1.4.4.6 Water Supply, Ice (optional Equipment) . . . . . 1 - 23

1.4.5 Steam . . . . . 1 - 24

1.4.5.1 General Requirements . . . . . 1 - 24
1.4.5.2 General Characteristics . . . . . 1 - 24
1.4.5.3 Specifications . . . . . 1 - 24

1.4.6 Hydrogen Peroxide . . . . . 1 - 25

1.4.7 Nitrogen (only for Machines Equipped with HI Kit) . . . . . 1 - 25

1.4.8 Cleaning Products . . . . . 1 - 26

1.4.8.1 Cleaning in Place (CIP) . . . . . 1 - 26
1.4.8.2 External Cleaning . . . . . 1 - 26
1.4.8.3 Cleaning the Product Pipes Inside the TBA/22 . 1 - 26
1.4.8.4 Communication Between TBA/22 and CIP Cleaning Unit . . . . . 1 - 27

1.5 Noise . . . . . 1 - 28

1.6 Emissions and Thermal Load . . . . . 1 - 29

1.6.1 Emissions . . . . . 1 - 29

1.6.2 Thermal Load . . . . . 1 - 29

1.7 Interaction with Processing Line . . . . . 1 - 30

1.7.1 Direct Filling . . . . . 1 - 30

1.7.2 Filling from the Aseptic Tank . . . . . 1 - 30

1.7.2.1 Condensate Drain . . . . . 1 - 30
1.7.2.2 Control of the Pre-Sterilisation Temperature . . . 1 - 30
1.7.2.3 Pipe Installation . . . . . 1 - 30
1.7.2.4 Filling Pressure . . . . . 1 - 30

1.7.3 Cleaning Demands . . . . . 1 - 31
1.7.4 Automation . . . . . 1 - 32
1.7.4.1 Signals from Plant to TBA/22 . . . . . 1 - 32
1.7.4.2 Signals from TBA/22 to Plant . . . . . 1 - 32
1.7.4.3 Connection Diagrams to Dairy and DE . . . . . 1 - 32
1.8 Product . . . . . 1 - 33
1.8.1 Capacity . . . . . 1 - 33
1.8.2 Filling Temperature . . . . . 1 - 33
1.8.3 Feed Pressure . . . . . 1 - 34
1.9 Ambient Temperature . . . . . 1 - 35
1.10 Outfeed Conveyor . . . . . 1 - 36
1.11 Multi-Installation . . . . . 1 - 37

This page intentionally left blank

1.1 Installation Drawings

1.1.1 LH Side View

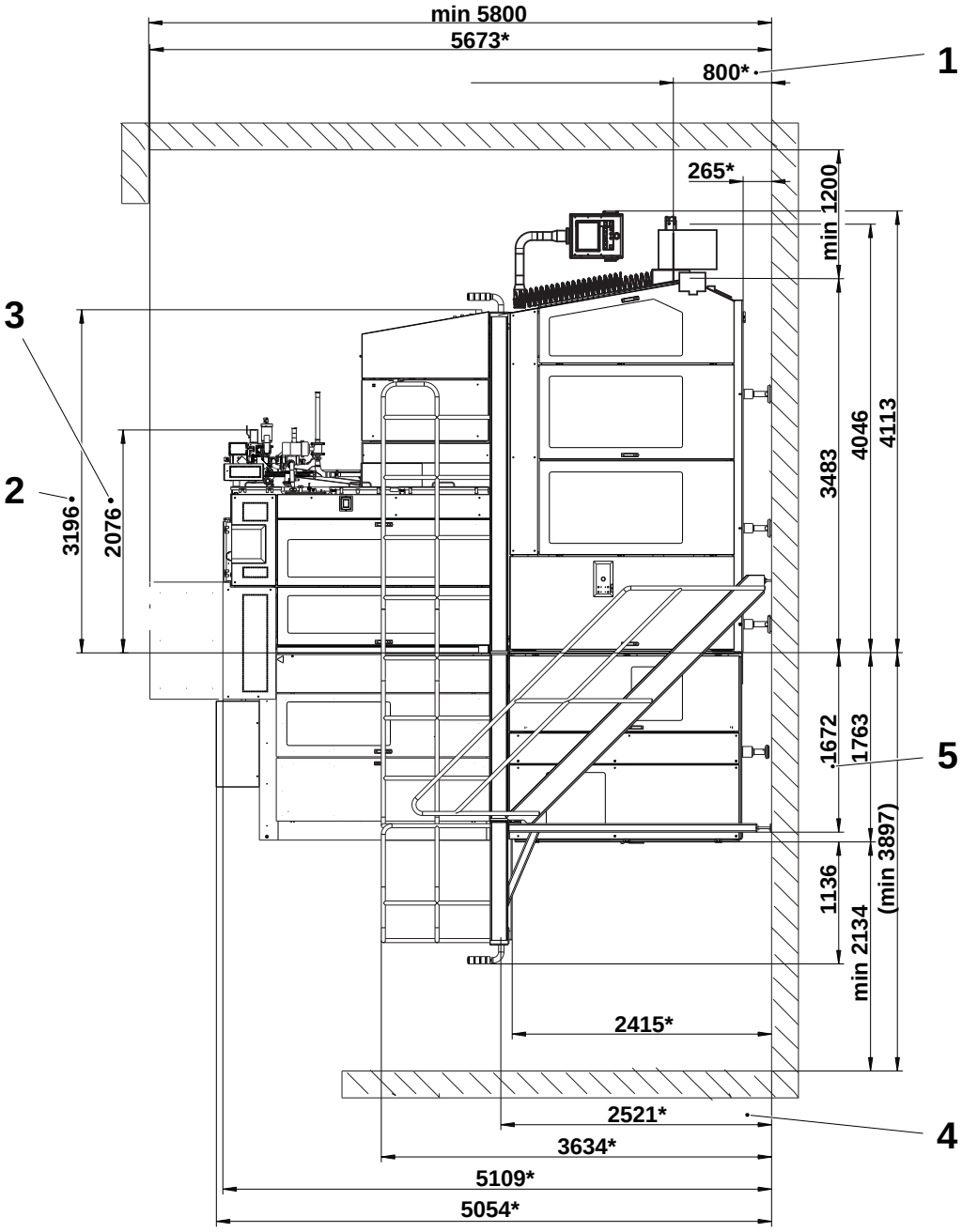

1 Upper side of conveyor chain
2 Connection plate
3 Steam connection in
4 Machine body
5 Stair leg

* All measurements from the floor have a tolerance of +95/-0.

1.1.2 Top View

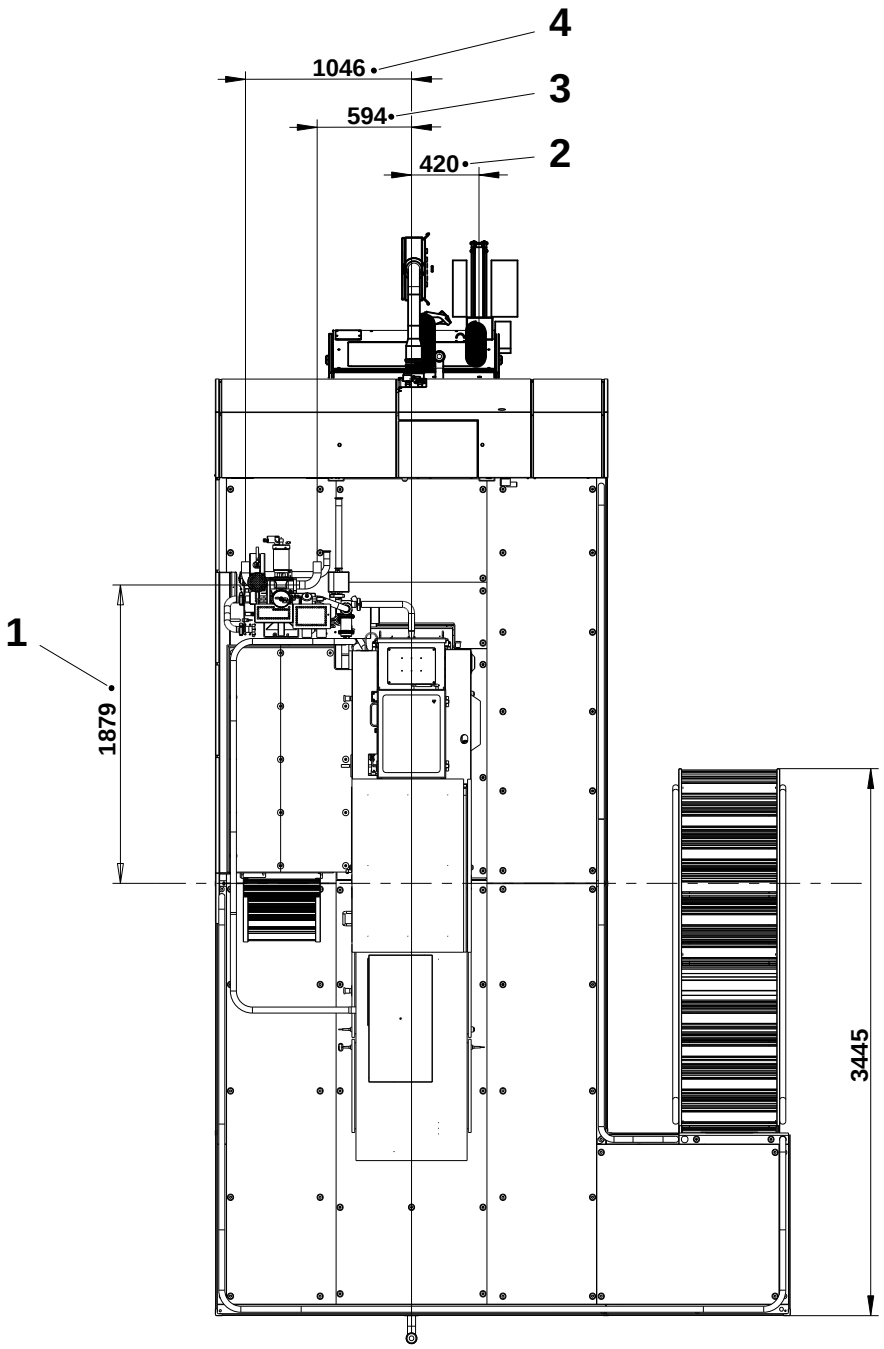

1 Product connection in/out, Ø51
2 Conveyor chain
3 Left product connection in/out
4 Right product connection in/out

1.1.3 Machine feet and Drainage Locations

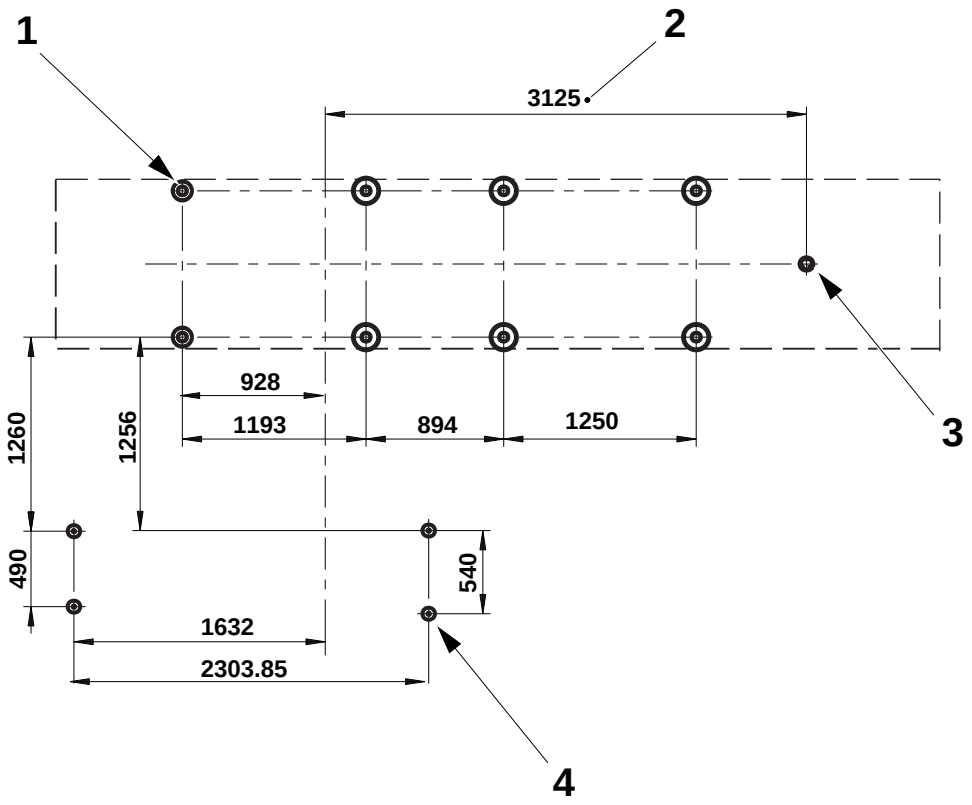

1 Machine feet (8x)
2 Drainage Ø76
3 Height above floor 146 +95/-0
4 Stair feet (4x)

1.1.4 Front View, LH Stair

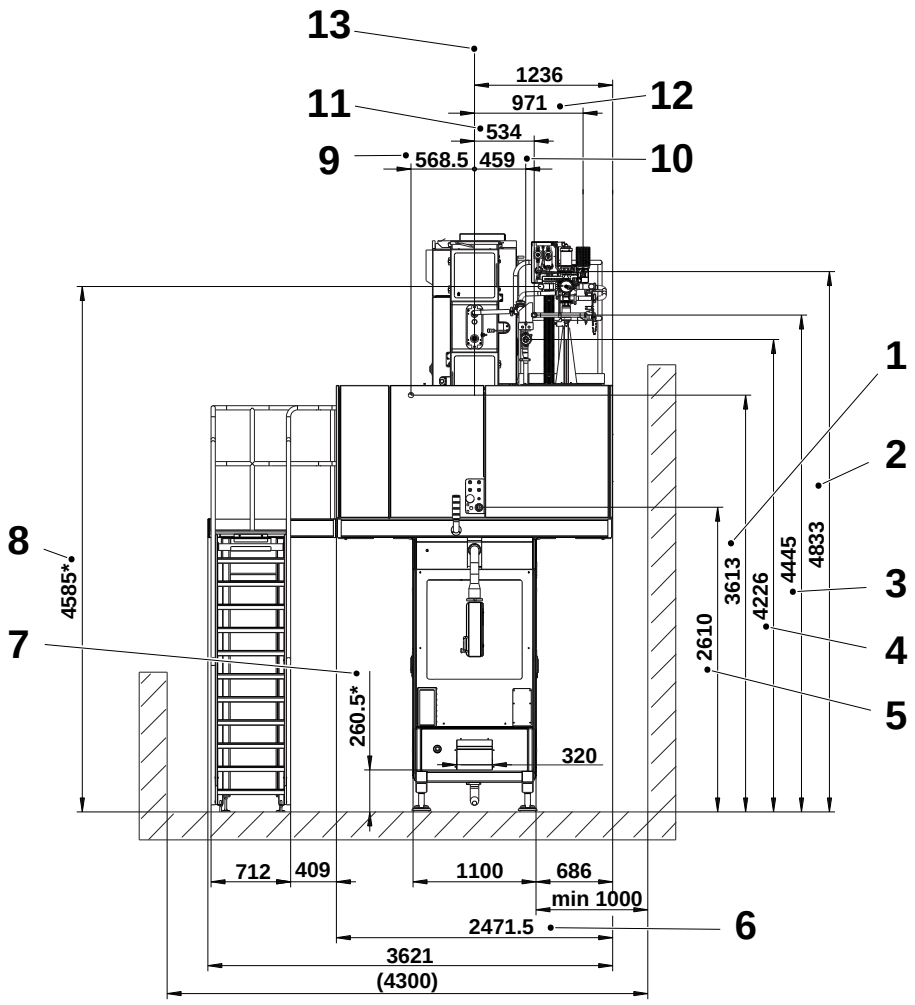

1 Electrical supply Ø48
2 Steam connection in
3 CIP in
4 CIP out
5 Connection plate
6 Platform
7 Waste outlet
8 Product connection in/out Ø51
9 Electrical supply
10 CIP in Ø38
11 CIP out Ø38
12 Steam connection in Ø12
13 Connection plate centre

* All measurements from the floor have a tolerance of +95/-0.

1.1.5 Front View, RH Stair (Optional Kit)

WARNING

Risk of personal injury!

When the stair on the RH side is installed on the machine, leave at least distance A between the stair (1) and the wall (2) as safety distance. In case of accident it will allow a quick escape route if the Jaw System (3) is open in maintenance position.

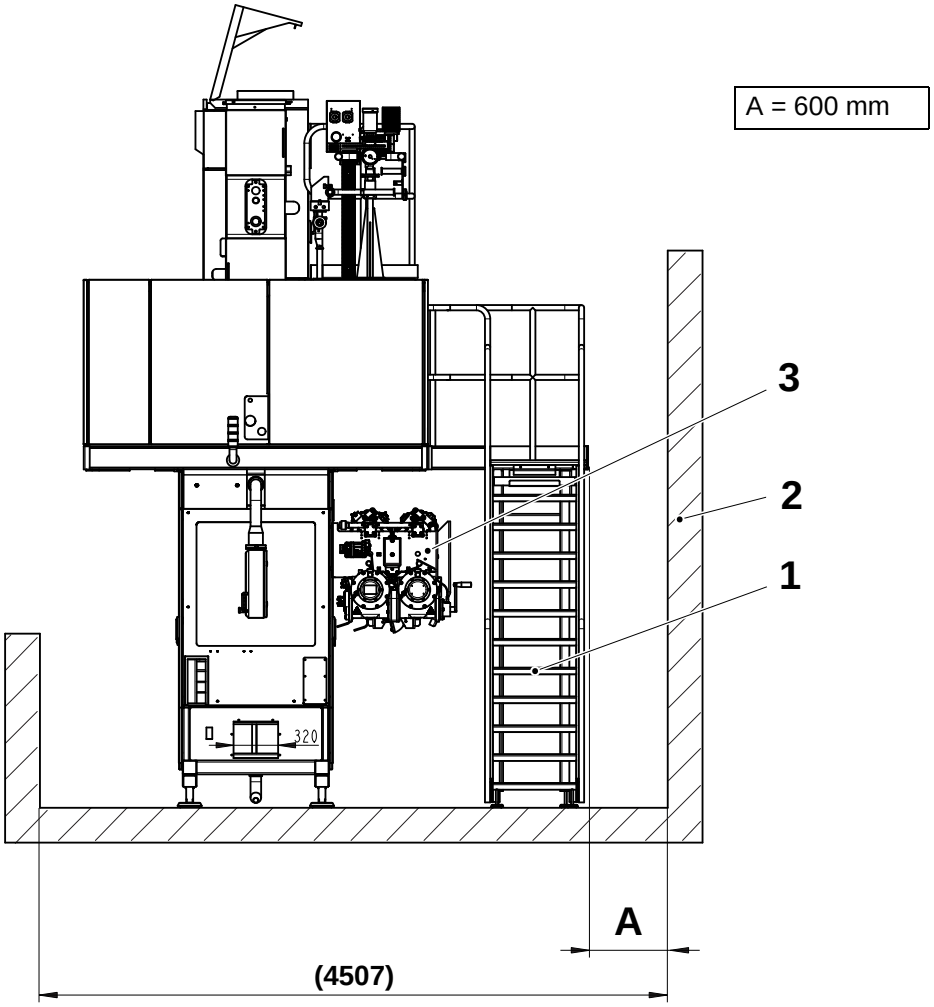

1 Stairs
2 Wall
3 Jaw system

* All measurements that are not given are the same as for LH stair

1.1.6 Top View, Showing Typical Conveyor Configuration

It is important that the components in the first 6 metres of the conveyor are connected to the filling machine (1) via the connection box (7). This allows the conveyor to be controlled from the filling machine with a number of advantages such as:

- If a failure occurs in the first part of the conveyor, for example, the printer (5) ceases to function correctly, the filling machine can bring the conveyor to a halt preventing the production on un-stamped packages.
- If a package jam occurs in the Jaw/FFU area, the conveyor may be allowed, by the filling machine, to print packages and prepare the line for a restart when the jam has been cleared.

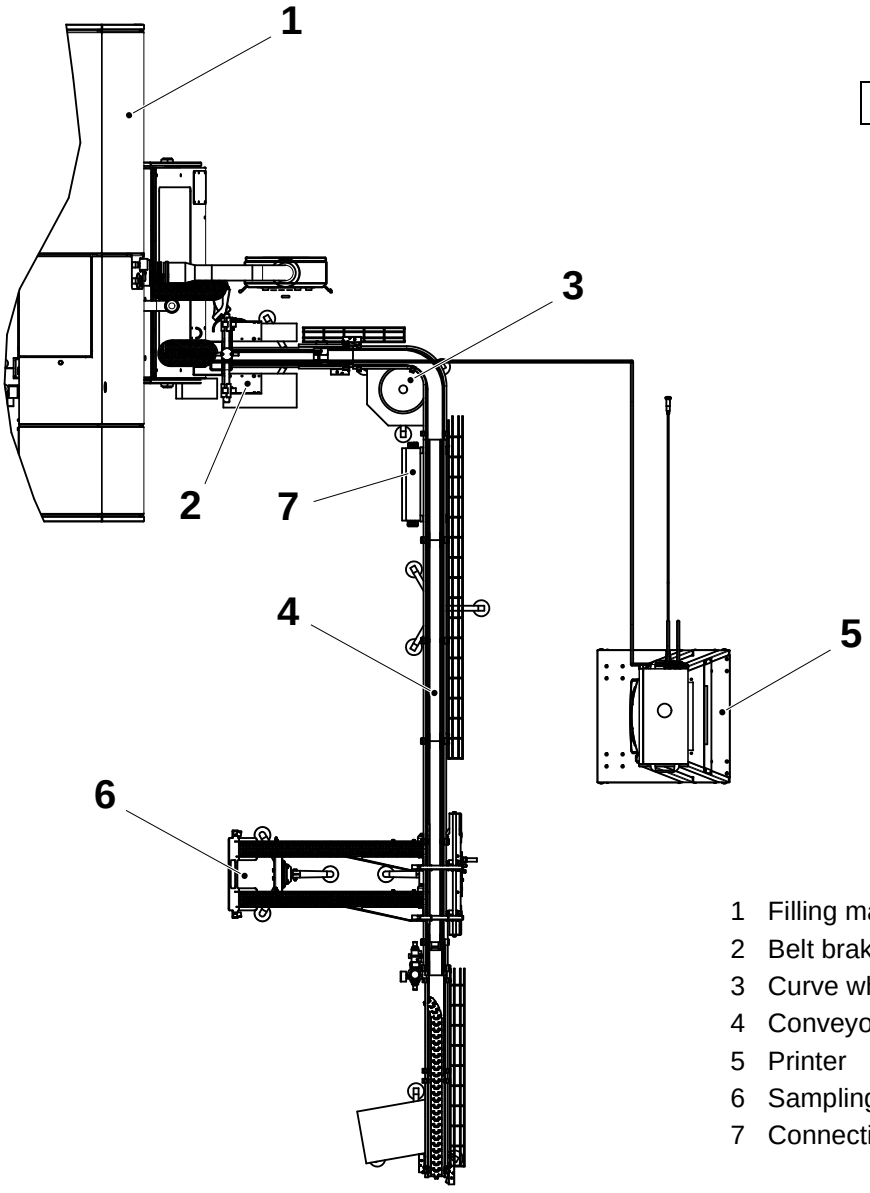

1 Filling machine
2 Belt brake and print head
3 Curve wheel
4 Conveyor section
5 Printer
6 Sampling unit
7 Connection box

1.1.7 Service Unit Connection Plate

Note! The inlet (4) must be supplied **only** with **drinking-water**.

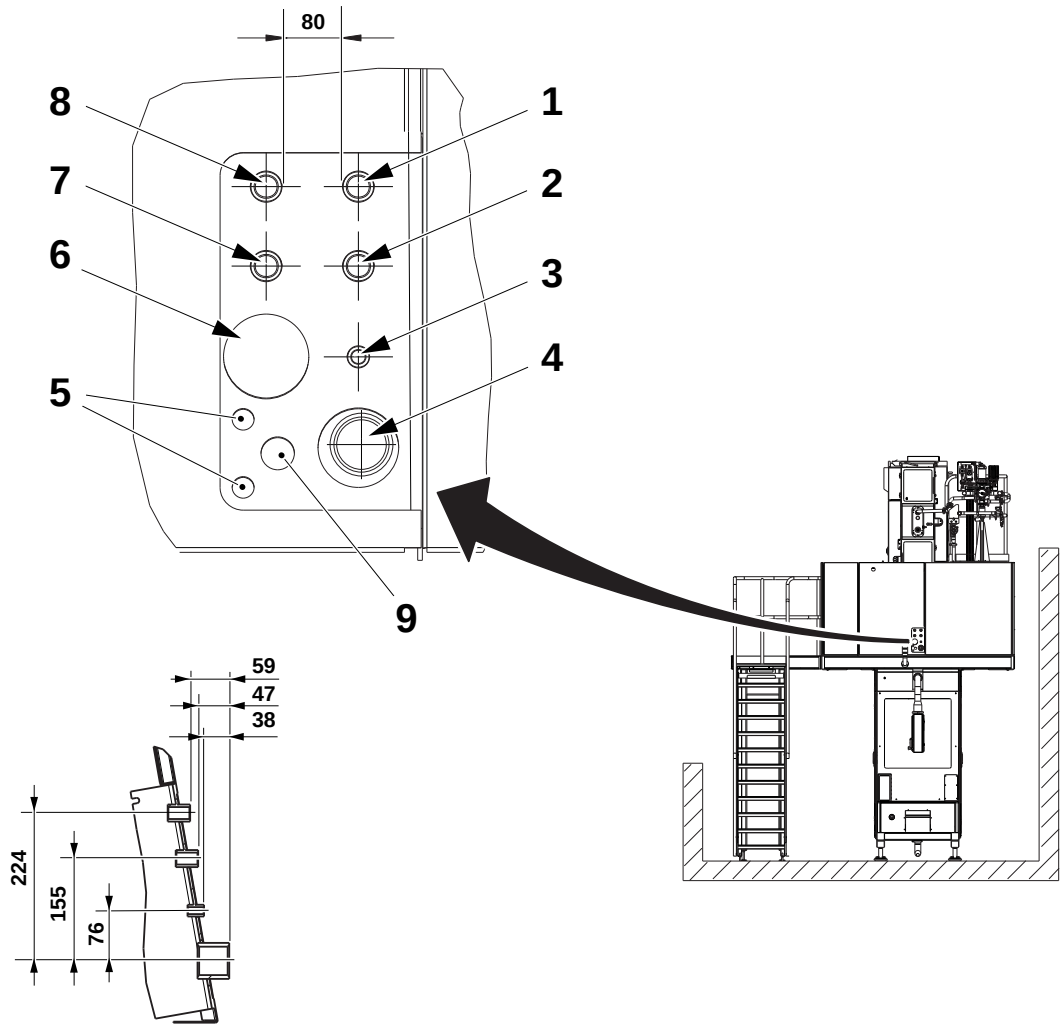

1 Ice water In (when used)
2 Ice water Out (when used)
3 Nitrogen connection (only for machines with HI kit installed
4 Hot water in RP 1 1/2” (ISO 7/1)
5 Electrical connection dairy Ø19 (2X), Ø29 (1X)
6 Spare Ø60
7 Cold water in RP 1/2” (ISO 7/1)
8 Air in RP 1/2 (ISO 7/1)
9 Cold water Out (when re-circulation of cooler water is used)

1.1.8 System Drawings

The system drawings are located on the equipment itself, behind the door (1) of the filling machine:

- installation drawing
- external cleaning diagram
- aseptic diagram
- filling diagram
- pneumatic diagram, ASU
- pneumatic diagram, superstructure
- pneumatic diagram, machine body
- pneumatic diagram, service unit
- peroxide system diagram
- water diagram.

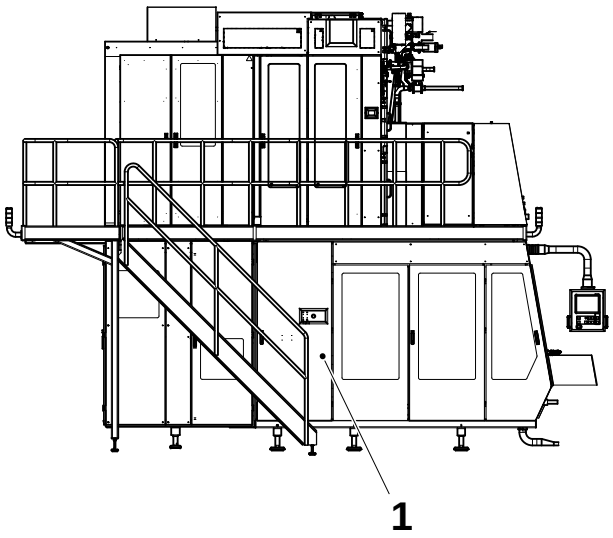

1 Door

1.2 Filling Machine Capacity

Note! The data in this section refers to machines with or without HI kit installed.

Machine Configuration	Production Capacity	Notes
TBA/22 Std	TBA 200 B - 20000 p/h (0 to +1%)	
TBA/22 Std	TBA 200 S - 20000 p/h (0 to +1%)	
TBA/22 Std	TBA 200 M - 20000 p/h (0 to +1%)	
TBA/22 Std	TBA 250 B - 20000 p/h (0 to +1%)	
TBA/22 Std	TBA 250 S - 20000 p/h (0 to +1%)	
TBA/22 Std	TBA 300 S - 20000 p/h (0 to +1%)	

1.3 Mass (Weight)

Machine Configuration	Weight	Notes
TBA/22	Approx. 8400 kg (18500 lbs)	

1.3.1 Static Load

The following illustration and table show the static load on each machine foot on an installed and correctly levelled machine.

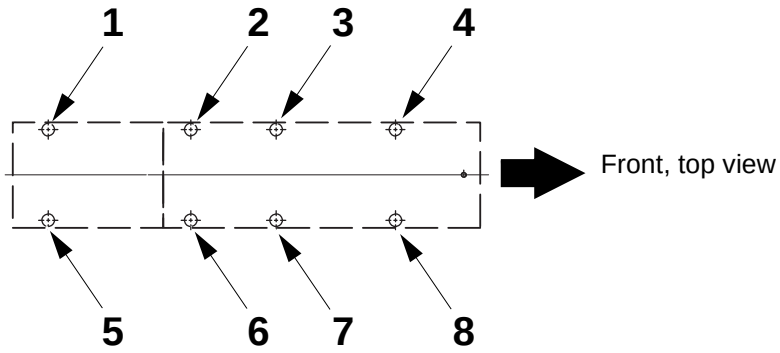

Leg Position	Static Load (Kg)
1	1180
2	870
3	930
4	1100
5	1100
6	1050
7	750
8	620

1.3.2 Centre of Gravity

=

Complete machine

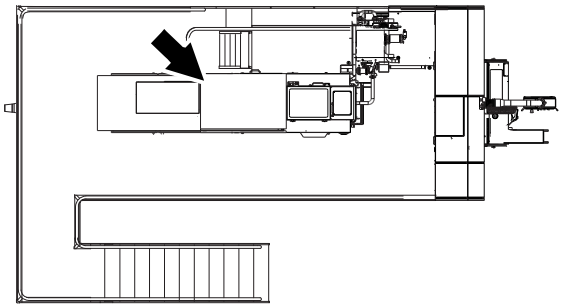

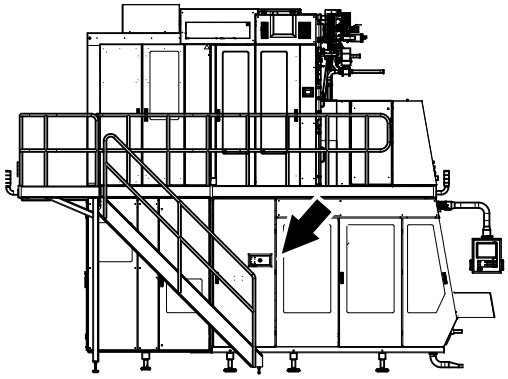

Machine body + ASU

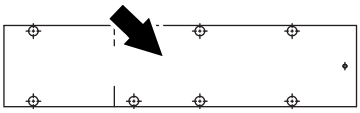

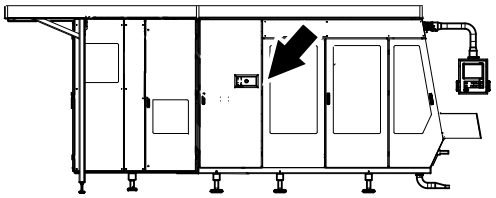

Machine body

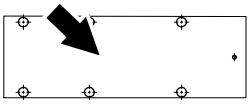

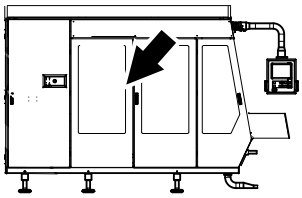

1.4 Utility Connection Data

1.4.1 Electrical Power

1.4.1.1 Electrical Power Specifications

Characteristic	Value	Notes
Supply voltage to machine	400/230 VAC, 3 phase +N + earth	Other voltages available to order with transformer. Power failure ≥ 50 mS resets machine to zero
Max voltage fluctuation	±10%	
Frequency	50/60 ± 2%	To be specified on order
Recommended main fuse	100 A (Slow)	Value for optimum selectivity at 400/230 VAC
Control circuits voltage	24 VDC	

1.4.1.2 Electrical Power Consumption

TBA/22 Without Hi Kit, Consumption During:	Value	Peak Value
Heat sterilisation	29 ±1.2 kW	36 kW
Sterilisation, spraying	34 ±1.2 kW	None
Sterilisation, drying	20 ±1.2 kW	37 kW
Ready for production	19 ±1.2 kW	None
Production	30.5 ±1.2 kW	49 kW
Production finished	12 ±1.2 kW	None
Cleaning	10 ±1.2 kW	None

1.4.1.3 Electrical Power Consumption with HI

TBA/22 With Hi Kit, Extra Consumption During:	Value	Peak Value
Heat sterilisation	3 ±1.2 kW max	39 kW
Sterilisation, spraying	3 ±1.2 kW max	None
Sterilisation, drying	3 ±1.2 kW max	40 kW
Ready for production	3 ±1.2 kW max	None
Production	3 ±1.2 kW max	52 kW
Production finished	None	None
Cleaning	None	None

1.4.2 Compressed Air

1.4.2.1 General Requirements

- Oil is invariably introduced into compressed air from oil-lubricated compressors and must be removed as completely as possible. Oil is a serious pollutant which is difficult to remove from instruments.
- Water will condense within the pneumatic system in quantities varying with the humidity of the input air, the temperature before and after the compressor, or after a temperature drop in a section of the air line routed through a cold zone.

  To avoid condensation, the air must be dried to an extent determined by the lowest temperature after the drier.

  Air expands and cools down in orifices and nozzles inside instruments with condensation as a result.

  For this reason, the dew point of the air at the instrument inlet must be at least 3°C.
- Dirt in the form of solid particles down to a size of 15 microns (0.015 mm) must be removed, for instance by means of filters or filter-equipped reducing valves.

  Position the filters so they can be seen and easily checked. The filters must be checked daily and their cartridges or inserts renewed whenever necessary.
- The air supply line must include a master shut-off valve.
- The volume of the storage (tank) for compressed air should be approximately 6 times the required capacity/h.

1.4.2.2 Specifications

Characteristic	Value	Notes
Supply pressure	550 - 600 kPa (5.5 - 6 bar)	
Max particle size	15 µm	
Max particle content	8 mg/m3	
Dew point	3°C (37.4°F)	
Oil content	0.01 mg/m3	

1.4.2.3 Consumption

Machine Configuration	Average Consumption During Production	Maximum Supply During Short Duration
TBA/22 std	560 ±16 l_n/minute	960 ±16 l_n/minute
TBA/22 with HI kit	580 ±16 l_n/minute max	

1.4.3 Sanitary Air

Note! Sanitary air can be used with HI (Optional kit) as a replacement for nitrogen.

1.4.3.1 General Requirements

The sanitary air must be dry and clean with no traces of oil.

- Use a compressor without oil lubrication in the cylinder to achieve oil-free air.
- Compressors are available from Tetra Pak as optional equipment.
- To produce dry air, the compressor can be equipped with an aftercooler and/or an air drier.
- Dirt in the form of solid particles larger than 10 microns (0.01 mm) must be removed, for instance by filters or filter-equipped reducing valves.
- Position the filters so they can be seen and easily checked. The filters must be checked daily and their cartridges or inserts renewed whenever necessary.
- The air supply line must include a master shut-off valve.

Note! The sanitary air must not be used as instrument air.

1.4.3.2 General Characteristics

CAUTION

Machine Damage

Non compliance with these requirements may endanger the equipment.

Characteristics:	
oil content	none
max. dew point	min. 6°C below ambient temperature. For the sterile air filter, a pressure dew point of +8°C is sufficient
solid particles	max. 0.01 mm

1.4.4 Water

1.4.4.1 General Requirements

- The water supply pipe must be equipped with a master shut-off valve.
- The supply pressure must be constant.
- Water used in the plant must be soft (by water softening if necessary) and clean in order to avoid deposits.

CAUTION

Machine Damage

Deposits due to water of inferior quality circulating in the plant can cause malfunction of vital parts.

1.4.4.2 Water Hardness

If the water is hard (high concentration of Calcium carbonate, $CaCO_3$), deposits will accumulate in devices such as valves. This process is accelerated at high temperatures. Cleaning results and detergent consumption will also be affected due to hard water. These effects become more severe the harder the water.

1.4.4.3 Corrosion Characteristics

In order to minimise corrosion the water should:

- have low concentrations of chlorine (Cl_2) and/or chloride ions (Cl^-).
- be slightly alkaline (the pH value is easily determined by litmus paper or a pH meter).

1.4.4.4 Additional Data for Water Supply

Water used for cooling, product flushing, rinsing and cleaning should meet the World Health Organisation (WHO) guidelines (stated below) or the European drinking water directive.

CAUTION

Machine Damage

Non compliance with these requirements may endanger the equipment.

Characteristics	
Taste	none
Smell	none
Turbidity	max. 3 NTU
Colour	max. 20 mg/l Pt
Oxygen demand	max. 20 mg/l $KMnO_4$
Total dissolved solids	max 500 mg/l
pH	7 - 8.5
Hardness	5-10 °f (max 180 mg/l Ca CO_3)
Ammonium	trace amounts
Ammonia	max. 0.5 mg/l NH_4
Iron	none
Manganese	none
Nitrate	max. 30 mg/l NO_3
Sulphate	max. 100 mg/l SO_4
Chlorine (M, S)	max 0.2 mg/l Cl_2
Chloride (M, S)	max 30 mg/l Cl^-
Aggressive carbon acid	max. 0 mg/l CO_2
Total amounts of bacteria	max. 100/ml
Total amount of 35°C coliform bacteria	max. 1/100 ml
Total amount of 44°C coliform bacteria	0/100 ml
Copper	max. 0.05 mg/l Cu
Zinc	max. 1.0 mg/l Zn
Feed Water to Steam Boiler	
Hardness	max. 0.18 °f
Aluminium	max 0.2 mg/l Al
pH	8.5 - 9.0
Silicon acid	max. 30 mg/l

1.4.4.5 Additional Specifications of Cold Water Supply

Characteristic	Value	Notes
Supply pressure	300 - 450 kPa (3 - 4.5 bar)	
Max inlet temperature	20°C (68°F)	
Production consumption	8.8 l/min. (1.9 imp. galls/min.)	Sterile air compressor
Production consumption	14.8 - 16.8 l/min. (3.3 - 3.7 imp. galls/min.)	Cooling system with compressor and air compressor
Max Production consumption	30 l/min. (6.6 imp. galls/min.)	Maximum supply during a short duration
pH	5 - 8	

1.4.4.6 Water Supply, Ice (optional Equipment)

Characteristic	Value	Notes
Supply pressure	200 - 400 kPa (2 - 4 bar) [29.0 - 58.0 psi]	
Max inlet temperature range	2 - 5°C (36 - 41°F)	
Consumption	2 - 7 l/min. (0.45 - 1.55 imp. galls/min.)	
pH	5 - 8	

1.4.5 Steam

1.4.5.1 General Requirements

The steam must be of good quality and free from condensate and air.

Supply line:

- The steam supply line must be equipped with a pressure controller to maintain a constant feed pressure.
- Condensate traps must be provided close to the process line to produce dry steam.
- A master shut-off valve must be installed in the steam supply line.
- Steam pipes must be insulated as protection against personal injury.
- Before connecting the steam supply to the process line, the steam pipes must be blown clear with repeated blasts of steam, lasting 5-10 minutes.

1.4.5.2 General Characteristics

CAUTION

Machine damage

Non compliance with these requirements may endanger the equipment.

Characteristics:	
quality	dry saturated steam
humidity	max. 5% condensate
pH	8.5 - 9.2
carbon dioxide	max. 2 ppm
chloride	max. 8 ppm
solid particles	max. 0.5 mm
turbidity	max. 3 ppm $KMnO_4$

1.4.5.3 Specifications

Characteristic	**Value**	**Notes**
Water quality	See paragraph: 1.4.4.4 Additional Data for Water Supply, page 1-22.	Boiler additives must be suitable for use with drinking water. See paragraph: 1.4.4.4 Additional Data for Water Supply, page 1-22.
Supply pressure	170 kPa ±30 KPa (1.7 bar ±0.3 bar)	
Inlet temperature	>130°C (>266°F)	Measured after APV
Consumption	3.5 kg/h (7.7 lbs/h)	

1.4.6 Hydrogen Peroxide

Characteristic	Value	Notes
Quality	Food grade	
Concentration	30 - 50%	
Consumption	4 ±1 l/h	

1.4.7 Nitrogen (only for Machines Equipped with HI Kit)

Characteristic	Value	Notes
Quality	Min. Purity 99.5%. No solid particles, no oil particles Nitrogen must comply with local regulations and specifications. In the absence of local regulations and specifications follow either the European Directive 1996/77/EC or the US Code of Federal Regulations 21CFR184.1540	
Supply pressure	600 - 700 kPa (6 - 7 bar) [60 - 100 psi]	
Consumption	2 - 5 + headspace volume Nl/min	The 2 to 5 Nl/min represents the amount of nitrogen consumed during the HI process. The nominal headspace volume Nl/min represents the amount of nitrogen determined by the local customized headspace setting. Both amounts are dependent on the type of package and product being produced.

1.4.8 Cleaning Products

Use only a **drinking-water** supply for both CIP and EXTERNAL CLEANING. See paragraph: 1.4.4.4 Additional Data for Water Supply, page 1-22.

1.4.8.1 Cleaning in Place (CIP)

Characteristic	Value	Notes
Max inlet pressure	350 kPa (3.5 bar)	
Min. flow	8000 l/h	

1.4.8.2 External Cleaning

Characteristic	Value	Notes
Hot water supply pressure	300 - 450 kPa (3 - 4.5 bar)	
Hot water max inlet temperature	20 - 25°C (68 - 77°F)	
Hot water consumption	250 l/cycle (55 imp. galls/cycle)	Minimum flow 95 l/min.
Detergent pH	5 - 8	
Detergent consumption - Alkali	1.2 (1.8*) l/cycle (0.3 (0.4) imp. galls/cycle)	* if EXTERNAL CLEANING SUPERSTRUCTURE is also running.
Detergent consumption - Acid	0.9 l/cycle (0.2 imp. galls/cycle)	
Detergent consumption - Disinfectant	0.6 l/cycle (0.1 imp. galls/cycle)	

Note! It is not permitted to clean two or more filling machines in series. We recommend that two or more filling machines are cleaned in parallel.

1.4.8.3 Cleaning the Product Pipes Inside the TBA/22

Cleaning of the pipes inside the TBA/22 from the heat treatment process is not permitted because of a risk to hygiene. Cleaning solution from the UHT can pollute the Filling Machine. Risk that the demanded cleaning capacity can not be obtained from the UHT plant.

1.4.8.4 Communication Between TBA/22 and CIP Cleaning Unit

To be able to monitor the CIP process the following signals must be provided by the CIP Cleaning Unit:

Cleaning Cycle running	This signal must be ON when the cleaning cycle starts and OFF when the cleaning cycle ends. If the cleaning cycle is stopped and restarted from the beginning, this signal goes OFF temporarily and then turns ON again.
Cleaning Cycle ended (pulse)	The signal must be ON (for approximately 1 second) when the cleaning cycle is finished.
Alkali or Alkali and Acid selected	This signal must be OFF if only **Alkali** cleaning has been selected and ON if **Alkali and Acid** cleaning has been selected. The signal must not be pulsed.
Cleaning cycle new step (pulse)	This signal must be ON (for approximately 1 second) each time the cleaning unit completes a phase and starts the next.
Cleaning unit alarm	This signal should be ON when there is an alarm at the cleaning unit. The signal triggers an alarm on the TPOP suggesting operator action.

The signals are used to prevent phases overlapping and to ensure that similar phases are recognised.

Note! Any cleaning unit used, must be able to produce the above signals.

1.5 Noise

The tables below gives the noise level measurements for the machine, in accordance with ISO 4871, under the following conditions:

- machine on a concrete floor supported by standard feet
- production under normal operating conditions.

Measured A-weighted Emission Sound Pressure Level, L_{PA}: (ref. 20 µPa) at the operator's position A. Uncertain factor, K_{pA}: values determined using the basic standard ISO 11204 (Engineering method)	**76.5** dB (A) 2.5 dB (A)
Measured A-weighted Sound Power Level, L_{WA}: (ref. 1 pW): Uncertain factor, K_{pA}: values determined using the basic standard ISO 3744 (Engineering method)	**95.5** dB (A) 2.5 dB (A)

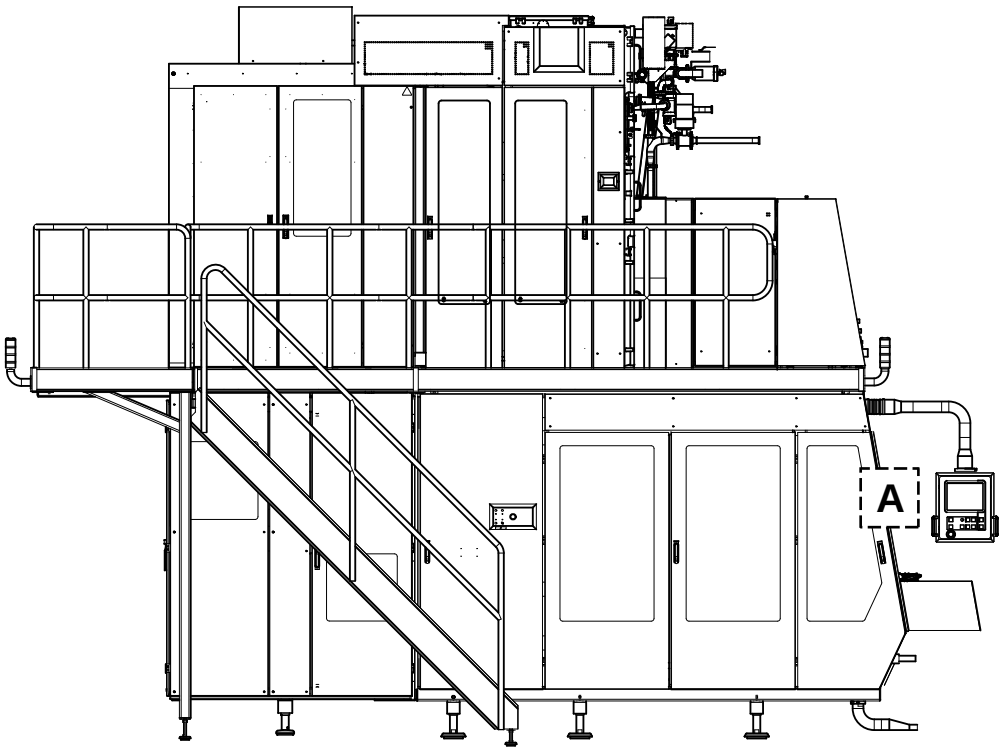

1.6 Emissions and Thermal Load

1.6.1 Emissions

Characteristic	Value	Notes
Hydrogen peroxide fumes in operator´s environment	< 1 ppm	TLV - Time Weighted Average value
Hydrogen peroxide outlet to drain	≤1%	
Oil fumes in the operator´s environment	None	
Oil spillages	None	
Detergent spillages	None	Except during external cleaning
Water spillages	None	Except during external cleaning
Product spillages	None	

1.6.2 Thermal Load

Machine Configuration	Value	Notes
TBA/22 Std	Approx. 17.4 kW ±1.4 kW	during PRODUCTION
TBA/22 with HI kit	Approx. 20 kW ±1.4 kW	during PRODUCTION

1.7 Interaction with Processing Line

Note! The following is general information. For more details check the specific processing guidelines.

1.7.1 Direct Filling

- The highest point in the feed line should be at the filling machine.
- The back pressure should be placed at a minimum of 10 metres from the last filling machine at a low level.
- Direct filling from a UHT plant must be arranged with a circulation cooler to ensure that the filling temperature does not vary by more than ± 5°C from the pre-set temperature.

1.7.2 Filling from the Aseptic Tank

1.7.2.1 Condensate Drain

The aseptic tank including the feed pipe to filling machines is normally pre-sterilised by steam. When condensate is trapped, the pre-sterilisation temperature will be 15-20°C lower than the steam temperature; therefore it is important to minimise the quantity and size of condensate pockets.

It is often impossible to avoid pockets completely, therefore we recommend these pockets are made as small as possible so it is easy to heat up- or blow out the condensate.

The pipes should slope downwards to drain points.

1.7.2.2 Control of the Pre-Sterilisation Temperature

There are many factors which can influence the pre-sterilisation temperature, therefore it is important to check the temperature at different points on the pipes with a surface thermometer. When the lowest temperature has been found, install a temperature transmitter to monitor the pre-sterilisation temperature.

1.7.2.3 Pipe Installation

It is recommended the valve cluster is placed after the last filling machine outside the filling area. From the last filling machine to the valve cluster there should be at least 5-10 metres of pipe.

1.7.2.4 Filling Pressure

Because of the pressure control margin, we recommend the aseptic tank is placed below the filling machine to have better control of the filling pressure.

1.7.3 Cleaning Demands

Cleaning the Outer Part of the A-Valve

- Recommended CIP capacity is >8000 l/h.
- When the UHT unit has a low capacity and the cleaning capacity cannot be supplied from the UHT plant, it is recommended that a booster pump is installed in a circuit around the filling machines to increase the capacity.

1.7.4 Automation

1.7.4.1 Signals from Plant to TBA/22

Signal	Type	Notes
Line sterile	Optional	If not connected, every time the signal **Product at machine** goes **Off**, the Filling Machine stops, empties the packaging material tube and sets the steam barrier with the consequential waste of packages at the restart. If connected, the Filling Machine stops in **Normal Stop** without setting the steam barrier.
Line not sterile	Optional	
Product at machine	Mandatory	

1.7.4.2 Signals from TBA/22 to Plant

Signal	Type	Notes
A-Valve open (product valve)		
Machine ready for Production		

1.7.4.3 Connection Diagrams to Dairy and DE

Refer to the Electrical Manual for the specific dairy and DE connection diagrams:

- Dairy communication diagram,
- CIP and Sterilizer connection diagram.

1.8 Product

Note! All pressures in this manual are “gauge pressures” unless otherwise stated.

1.8.1 Capacity

Note! Accuracy of the filling capacity is 0 - +1%.

For production of 20.000 packages per hours:

Package Volume (ml)	Filling Capacity (l/h)	A-Valve Size
TBA 200	4000	2"/Ø 51
TBA 250	5000	2"/Ø 51
TBA 300	6000	2"/Ø 51

For bucket refilling it is necessary to have a feed capacity that is 10% more than the filling capacity. When several filling machines are connected together, the total feed capacity must be the combined filling capacity plus 10% of the filling capacity of one machine, i.e.: three filling machines with a capacity of 4000 l/h each gives a total feed capacity of 12.000 + 10% of 4000 = 12.400 l/h.

1.8.2 Filling Temperature

The packaging temperature depends on the product requirements and the ambient temperature and humidity. When problems occur with condensate on the packages, it can be solved by increasing the product temperature during filling.

Optimum Temperature	**20-25°C**
Limitations	max.35°C min.10°C

Note! When the packaging machine is adjusted for a certain filling temperature the **demanded accuracy will be ± 5°C**. Greater variations can cause bad transversal sealing.

1.8.3 Feed Pressure

Characteristic	Value	Notes
Supply pressure	160 ±40 kPa	Filling with Probe
Supply pressure	150 ±50 kPa	Filling with Floater
Overcapacity	20%	Feed capacity at the first start and for bucket refilling, see note below.
Particles	Absent	Product must leave no hard residue on a 600 µm mesh
Citrus fibres	Absent	Measured as fibre residue on a 600 µm mesh
pH	2.5 - 8	

Note! At the first start and for bucket refilling it is recommended to have a feed capacity that is 20% more than the filling capacity. When several filling machines are connected together, the total feed capacity must be the combined filling capacity plus 20% of the filling capacity of the machine with the highest capacity.
If the factory supply system cannot provide the recommended overcapacity, the quantity of packages wasted at the start-up (or for bucket refilling) may increase.
If several machines start simultaneously, the quantity of packages wasted at the start-up (or for bucket refilling) may increase.

1.9 Ambient Temperature

Characteristic	Value	Notes
Minimum ambient temperature	5°C (41°F)	
Maximum ambient temperature	50°C (122°F)	
Recommended ambient temperature	15°C to 30°C (59°F to 86°F)	

1.10 Outfeed Conveyor

Characteristic	Value	Notes
Recommended conveyor make/model	See **PIM Conveyors** manual.	Width varies according to package volume. Contact service organisation if necessary.
Recommended conveyor speed	39 m/min	

1.11 Multi-Installation

It is not recommended to connect TBA/22 together with other types of filling machines, but several of TBA/22 can be connected together.

This page intentionally left blank

2 Preparation

Preparation - Description

This chapter describes the requirements for the installation of the equipment.

2.1 Requirements . . . . . 1 - 5

2.1.1 General Requirements . . . . . 1 - 5

2.1.1.1 Personnel . . . . . 1 - 5

2.1.2 Space Requirements . . . . . 1 - 6

2.1.2.1 Unpacking Area . . . . . 1 - 6

2.1.2.2 Installation Area . . . . . 1 - 6

2.2 Special Tools, Auxiliary Equipment and Information . . . . . 1 - 7

2.2.1 Tools and Materials . . . . . 1 - 7

2.2.2 Equipment for Lifting and Moving . . . . . 1 - 8

2.2.2.1 Types of Lifting Equipment . . . . . 1 - 8

2.2.2.2 Lifting Equipment Specifications . . . . . 1 - 8

2.2.2.3 Lifting Equipment Specifications for Uncrated Equipment . . . . . 1 - 9

2.3 Specific Construction Details . . . . . 1 - 10

2.3.1 Hot Water Supply for External Cleaning . . . . . 1 - 10

This page intentionally left blank

2.1 Requirements

2.1.1 General Requirements

The choice of site location should be determined with regard to the utilities and supplies required by the machine and access limitations.

Access is required for a fork lift or lifting equipment should be available to site the machine.

The installation site must be prepared in advance by the customer.

No special foundation work is required for the machine. The floor should be strong enough to support the full weight of the machine when packaging material is present.

2.1.1.1 Personnel

Only skilled or instructed Tetra Pak installation personnel are allowed to assemble the machine.

Personnel must know how to use the portable PC computer programs for modifying PLC program parameters and downloading the GE Fanuc program.

2.1.2 Space Requirements

2.1.2.1 Unpacking Area

The minimum unpacking area must be at least twice the size of the main crate (number 1). This only allows an area large enough for one crate to be unpacked at a time.

Minimum area: 12000 x 6000 x 4000 mm high (40 x 20 x 14 ft high)

The ideal unpacking area allows all crates to be unpacked together.

WARNING

Risk of personal injury.

Make sure there is sufficient room to move safely around the installation site. If machines around the site cannot be stopped, place guards around them to prevent accidental contact.

2.1.2.2 Installation Area

a) Make sure that all customer preparation work has been completed to prepare the site for the machine.

b) Make sure that all the necessary utility supplies are available, see section 1 Technical Data and Drawings.

c) Clear all obstacles away from the installation site and, if necessary, clean the floor of the site before starting to install the machine.

d) Leave the protective packing on parts until they are required during the machine assembly procedure.

e) Make sure that the lighting is adequate. Arrange additional portable lights if required, making sure that the cables are routed safely.

2.2 Special Tools, Auxiliary Equipment and Information

2.2.1 Tools and Materials

The following tools and materials are needed to move and install the equipment:

- two hydraulic jacks, min. capacity 3 tons
- pallet trolley, capacity 800 kg (1765 lbs)
- spirit level, TP No. 90243-163
- 2 m (7’) step ladder
- pneumatic or electric powered wrench
- crowbar or strong lever
- large rubber coated mallet
- cable ties
- insulating tape.

The following special tools may also be available from the local service organisation:

- machine carriage, TP No. 2514392-0100
- lifting equipment, TP No. 1185025-0000

2.2.2 Equipment for Lifting and Moving

2.2.2.1 Types of Lifting Equipment

The following types of equipment can be used to lift and move the crates:

- overhead gantry
- mobile crane
- fork lift.

2.2.2.2 Lifting Equipment Specifications

Make sure that the lifting equipment complies with the specifications given in the following table.

Equipment or tackle	Lifting capacity kg (lbs)	Notes
Overhead gantry	8 000 (18 000)	9 000 kg (22 000 lbs) required if gantry does not have gradual acceleration deceleration ramps.
Mobile crane	8 000 (18 000)	9 000 kg (22 000 lbs) required if crane does not have gradual acceleration deceleration ramps.
Lifting chains, cables, ropes or hoist slings	8 000 (18 000)	9 000 kg (22 000 lbs) required if lifting equipment does not have gradual acceleration deceleration ramps. Min. length hook to hook: – Main crate: 15 m (50’) – Second crate: 15 m (50’) – Third crate: 15 m (50’)
Fork lift	9 000 (20 000)	A higher capacity fork lift truck allows the centre of gravity of the crate to be raised safely to a height of 1500 mm (5’).
Lifting forks	9 000 (20 000)	Min. length: – Main crate: 2 000 mm (6’6”) – Second crate: 2 000 mm (6’6”) – Third crate: 2 000 mm (6’6”) Recommended setting width: – Main crate: 2 000 mm (6’6”) – Second crate: 2 000 mm (6’6”) – Third crate: 2 000 mm (6’6”)

2.2.2.3 Lifting Equipment Specifications for Uncrated Equipment

Make sure that the lifting equipment used to move the uncrated equipment complies with the specifications given in the following table.

Equipment or tackle	Minimum lifting capacity kg (lbs)	Notes
Lifting chains, cables, ropes or hoist slings	5000 (11025)	Machine body (with ASU) Two pieces: Min. length hook to hook = 10 m (33')
	1500 (3307)	Superstructure Lifting tool, TP No. 985818 Min. length using shackles 4.5 m (15').
	1000 (2205)	Electrical cabinet Lifting tool, TP No. 985818
	500 (1103)	Service unit Lifting tool, TP No. 2720716-0000 Min. length hook to hook = 3.0 m (10')
Lifting forks	5000 (11025)	Machine body, (with ASU) Min. length 1500 mm (4'11"). Min. setting width 1800 mm (5'11").
	2000 (4410)	Superstructure (fork tubes dim. = 149 x 70 mm) Min. length 500 mm (4'11"). Setting width 613 mm (2'01").
	1000 (2205)	Electrical cabinet (fork tubes dim. = 175 x 75 mm) Min. length 1500 mm (4'11"). Setting width 766 mm (2'6").

2.3 Specific Construction Details

2.3.1 Hot Water Supply for External Cleaning

The external foam cleaning system needs a substantial amount of hot water during short periods of cleaning, see chapter 1 Technical Data and Drawings for the correct hot water supply figures.

If the existing water supply system cannot deliver the necessary amount of water, place a tank or other kind of vessel with a capacity of at least 250 litres of water above the hot water inlet of the machine. This position ensures adequate gravity feed pressure. The supply pipe must not be smaller than Ø 48.3 x 3.2 mm ($1^1/_2$ inch thread). A full tank of this size will manage one hot water rinse (The normal cleaning has two hot water rinses. A full cleaning, all the programs after each other, needs four hot water rinses).

CAUTION
Risk of damage to the equipment.
A constant supply to the cleaning pump is essential. There is a risk of severe pump damage if the pump runs dry.

The method of water heating may vary depending on local equipment. Note, however, that there are only 10 minutes for filling and heating a full tank of water.

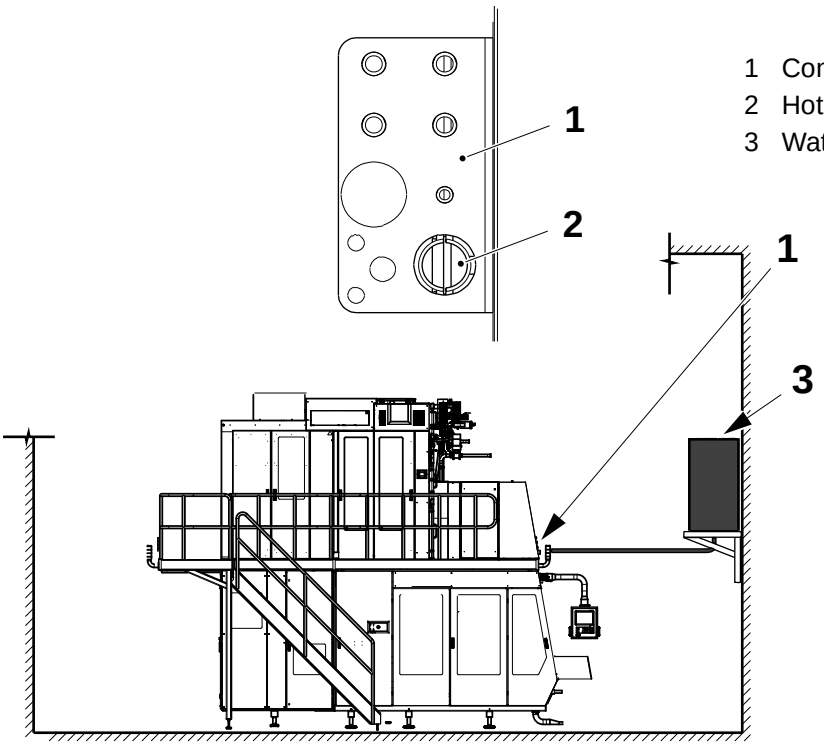

1 Connection plate
2 Hot water inlet
3 Water tank

3 Moving and Unpacking the Equipment

Moving and Unpacking the Equipment - Description

This chapter describes the crates that the equipment is delivered in and how to move and unpack the crates prior to the equipment installation.

3.1 Crate Handling . . . . . 1 - 5

3.1.1 Crate Data . . . . . 1 - 5

3.1.1.1 Main Crate (1) . . . . . 1 - 5

3.1.1.2 Second Crate (2) . . . . . 1 - 6

3.1.2 Lifting and Unloading . . . . . 1 - 7

3.1.2.1 Labels, Symbols and Warning Placards . . . . . 1 - 7

3.1.2.2 Using an Overhead Gantry or Mobile Crane . . . . 1 - 8

3.1.2.3 Using a Fork Lift . . . . . 1 - 9

3.1.3 Moving the Crated Equipment . . . . . 1 - 10

3.1.4 Storing the Crated Equipment . . . . . 1 - 11

3.2 Unpacking Sequence . . . . . 1 - 12

3.2.1 Opening the Crates . . . . . 1 - 13

3.2.2 Unpacking the Main Crate (1) . . . . . 1 - 14

3.2.2.1 Inspection . . . . . 1 - 14

3.2.2.2 Removing the Machine Body with an Overhead Gantry or Mobile Crane . . . . . 1 - 15

3.2.2.3 Removing the Machine Body with a Fork Lift . 1 - 16

3.2.3 Unpacking the Second Crate (2). . . . . 1 - 17

3.2.3.1 Inspection . . . . . 1 - 17

3.2.3.2 Removing the Machine Parts with an Overhead Gantry or Mobile Crane . . . . . 1 - 18

3.2.3.3 Removing the Machine Parts with a Fork Lift . . 1 - 19

3.2.4 Inspection Documentation . . . . . 1 - 20

3.2.5 Disposing of Reusable Materials and Waste . . . 1 - 20

This page intentionally left blank

3.1 Crate Handling

The following sections contain information specific to the correct handling of this crated equipment.

3.1.1 Crate Data

Additional parts (Optional Equipment, OE) can be included in the crates depending on the machine configuration. See the Packing List for further details.

Machine Type	No. of Crates
TBA/22	2

3.1.1.1 Main Crate (1)

Weight and Dimensions

Machine Type	**Gross Weight kg (lbs)**	**Net Weight kg (lbs)**	**Length mm (ft.-in)**	**Width mm (ft.-in)**	**Height mm (ft.-in)**
TBA/22	7070 (15585)	5750 (12675)	5800 (19´0”)	2100 (6´10”)	2870 (9´4”)

Note! The weight of the crates can increase significantly if the crates become wet.

Contents

Contents	
TBA/22	Machine body ASU Platforms Railings Stair Stair support Doors and covers Technical documentation box Accessories

3.1.1.2 Second Crate (2)

Weight and Dimensions

Machine Type	Gross Weight kg (lbs)	Net Weight kg (lbs)	Length mm (ft.-in)	Width mm (ft.-in)	Height mm (ft.-in)
TBA/22	3370 (7430)	2650 (5840)	4200 (13’ 9”)	2400 (7’ 9”)	2870 (9’ 4”)

Note! The weight of the crate can increase significantly if the crate becomes wet.

Contents

Contents
Superstructure
Electrical cabinet
Service unit
Doors and covers
Accessories

3.1.2 Lifting and Unloading

3.1.2.1 Labels, Symbols and Warning Placards

Labels, symbols and warning placards are located on the external surfaces of the transit crates and outline the handling principles which must be observed.

- The crates should not be subjected to sudden shocks or movement
- The crates are not load bearing and must not be stacked or have other items placed on them
- The transit crates should be kept in the indicated upright position.

Labels may be installed to indicate that the crates have been tipped over or exposed to extremes of humidity.

Symbol	Meaning
	Centre of gravity
	Lifting points for chains, cables, ropes, or slings
	This way up
	Fragile
	Keep dry
TOP	Top of crate
FRAGILE	‘Fragile’ warning
HANDLE WITH CARE	‘Handle with care’ warning
NOT TO BE DROPPED	‘Not to be dropped’ warning
GROSS KG.	‘Gross weight’ value
NET KG.	‘Net weight’ value

3.1.2.2 Using an Overhead Gantry or Mobile Crane

The crates are marked with lifting tackle symbols.

The lifting tackle must be passed under and fixed at these points when lifting the crate.

For capacity and length of the lifting tackle, see 2.2.2.2 Lifting Equipment Specifications.

Use ropes or poles to steady and manoeuvre loads. Do **not** use hands or feet.

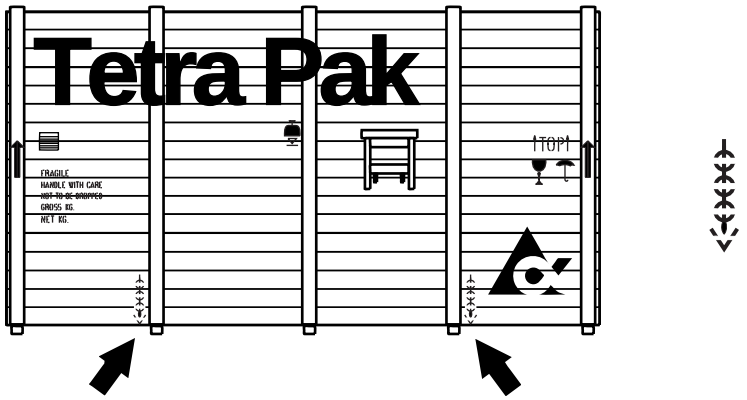

3.1.2.3 Using a Fork Lift

The crates are marked with centre of gravity symbols.

The lifting forks must be positioned at equal distances from the symbol when lifting the crate.

For the capacity, length and setting width of the lifting forks, see 2.2.2.2 Lifting Equipment Specifications.

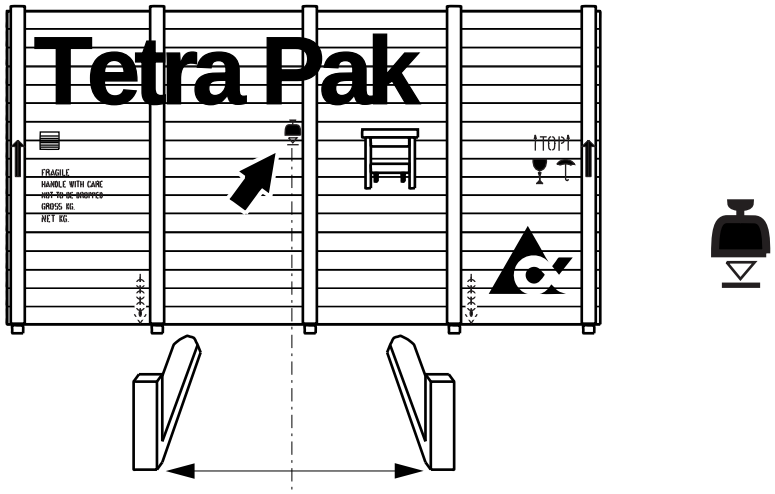

3.1.3 Moving the Crated Equipment

CAUTION
Risk of damage to the equipment.
Move the crate slowly and gently.

If installation has to start immediately, check whether it is possible to move the crates to the installation site. Uncrating and installation can then be performed together.

When moving the crates to the installation site, deposit them so that the equipment can be lifted out and positioned without being turned around. Open the customs inspection panels to see inside the crates.

Wait until installation can start before unpacking the crates.

a) Lift the crate as instructed in 3.1 Crate Handling. **Lift only** enough to clear the floor.
b) Make sure that the crate remains stable on the lifting equipment.
c) Move the crate to its destination.
d) Look through the customs inspection panel to see in what way the contents are facing. Position the crate to face the most convenient direction.
e) Lower the crate gently to the floor, leaving enough room around it for easy access to all sides.
f) Make sure that the crate is firmly supported. Place blocks or plates under it if required.
g) Remove the lifting equipment.

3.1.4 Storing the Crated Equipment

CAUTION
Risk of damage to the equipment.
Do not stack the crates on top of each other. Store the crates indoors. Exposure to damp or to high or low temperatures may damage the equipment.

a) Make sure that the storage environment respects the conditions specified in the table below.

b) Store the crates with about 1000 mm (3 ft) of free access space around and above for access and ventilation.

c) If the floor under the crates is uneven, place blocks or plates under them to provide a steady support.

Characteristic	Value	Notes
Min and max temperatures °C (°F)	5 - 40 (40 - 105)	If the water system is drained, the equipment can withstand freezing conditions.
Max relative humidity%	80	Non-condensing.

3.2 Unpacking Sequence

The following sections contain the correct procedures for opening the crates and unpacking this equipment.

Examine the outside of the crates before starting to unpack the equipment and record any damage. Record the readings of the humidity indicators and tipping indicators attached to the outside of the crates (if present).

This information must later be recorded on the **Transport Damage Report** (a section of the Start-up Machine Quality report), see section 3.2.4 Inspection Documentation.

3.2.1 Opening the Crates

WARNING

Risk of personal injury.

Take care when disassembling the crates.

Note! The following instructions apply to all crates. Open the crates in the order in which the equipment components are required.

a) Remove the top of the crate and the reinforcement cross-beams, see *figure 1*.

b) Unscrew any screws fixing the contents to the front of the crate and remove the front of the crate, see *figure 2*.

c) Unscrew any screws fixing the contents to the back of the crate and remove the back of the crate, see *figure 3*.

d) Unscrew any screws fixing the contents to the sides of the crate and remove the sides of the crate, see *figure 4*.

e) Remove all loose boxes and packages.

Fig.1

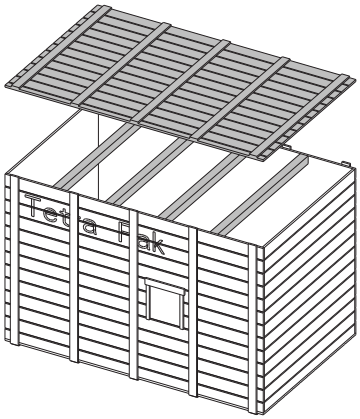

Fig.2

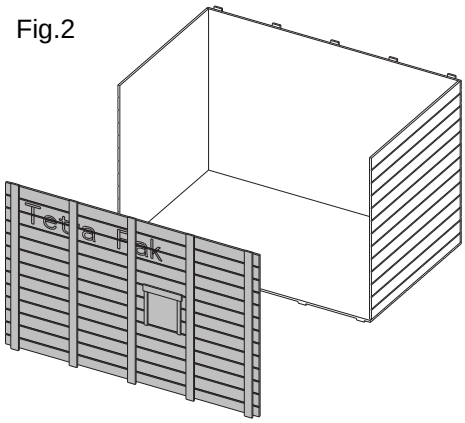

Fig.3

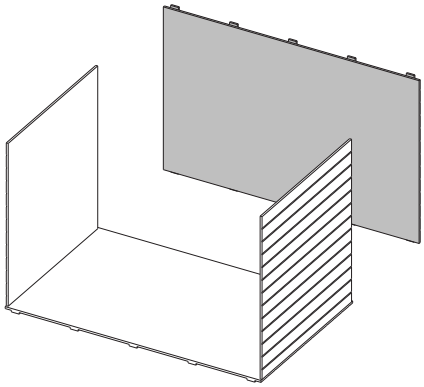

Fig.4

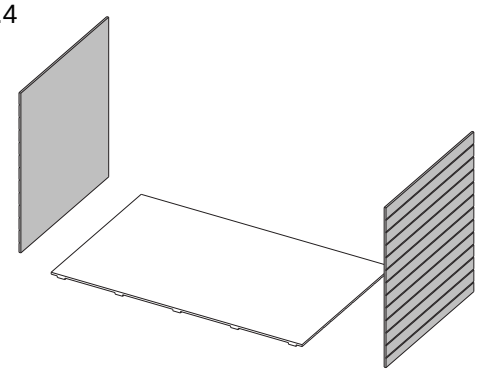

3.2.2 Unpacking the Main Crate (1)

Look through the customs inspection panel to see in which direction the contents are facing. Position the crate to face the most convenient direction.

Open the crate according to section 3.2.1 Opening the Crates.

3.2.2.1 Inspection

a) Use the packing list to check that nothing is missing.

b) Inspect the machine and the accessories for damage.

c) Open the machine document box and check that the documentation corresponds with the machine and the machine number.

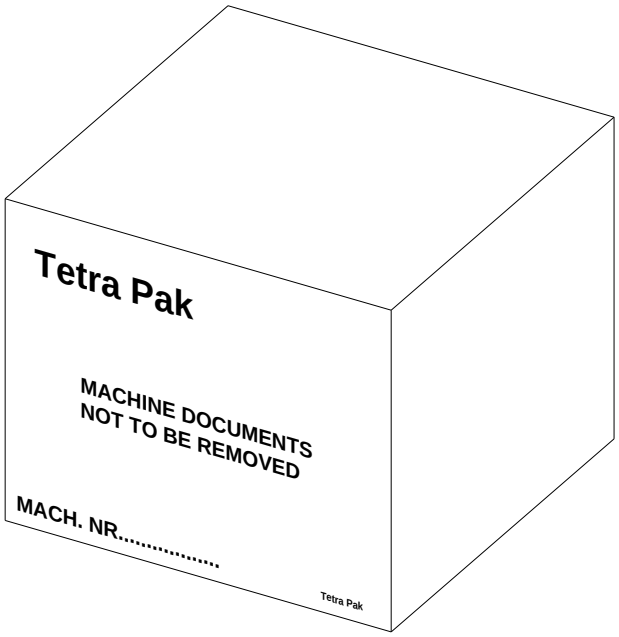

Separate Components

Place all separate components in a location where they will not disturb the installation work and the normal plant activities. If possible do not remove any transportation protections until the components are required.

3.2.2.2 Removing the Machine Body with an Overhead Gantry or Mobile Crane

WARNING

Risk of serious machine damage!

Position the lifting equipment as shown and handle carefully, otherwise the machine frame will be severely damaged.

For the correct lifting equipment, see section 2.1 Requirements.

a) Attach the lifting equipment on the **outside** of the feet as shown.

Note! Before lifting the machine body, protect the steel plates to prevent damage being caused by the lifting equipment.

b) Lift only enough to clear the crate.

c) Manoeuvre the machine body out of the crate.

d) Lower the feet approximately 150 mm to facilitate levelling later on.

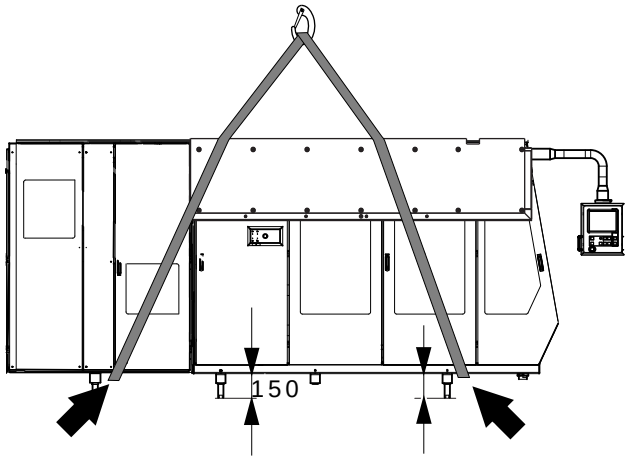

3.2.2.3 Removing the Machine Body with a Fork Lift

WARNING

Risk of serious machine damage!

Position the lifting equipment as shown and handle carefully, otherwise the machine frame will be severely damaged.

For the correct lifting equipment, see section 2.2.2.3 Lifting Equipment Specifications for Uncrated Equipment.

a) Place the forks an equal distance from the centre of gravity. See the illustration for each location.

b) Lift only enough to clear the crate.

c) Manoeuvre the machine body out of the crate.

d) Lower the machine feet approximately 150 mm to facilitate levelling later on.

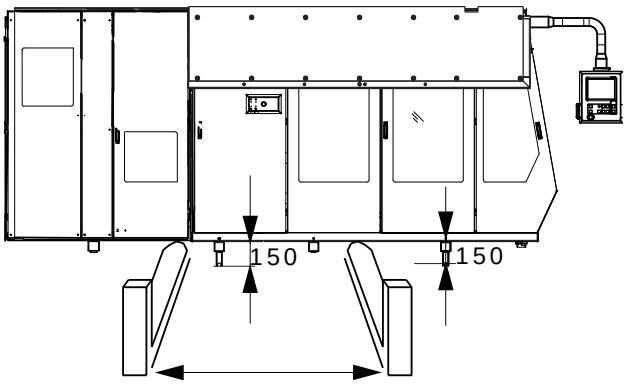

3.2.3 Unpacking the Second Crate (2)

Look through the customs inspection panel to see in which direction the contents are facing. Position the crate to face the most convenient direction.

Open the crate, see section 3.2.1 Opening the Crates.

3.2.3.1 Inspection

a) Use the packing list to check that nothing is missing.

b) Inspect the machine parts and the accessories for damage.

Separate Components

Place all separate components aside in a location where they will not disturb the installation work and the normal plant activities. If possible do not remove any transportation protection until the components are required.

CAUTION

Risk of damage to the equipment.

To protect vital parts from being damaged, the superstructure is equipped with transportation supports. Do not remove the supports until the superstructure is ready to be lifted up onto the machine body.

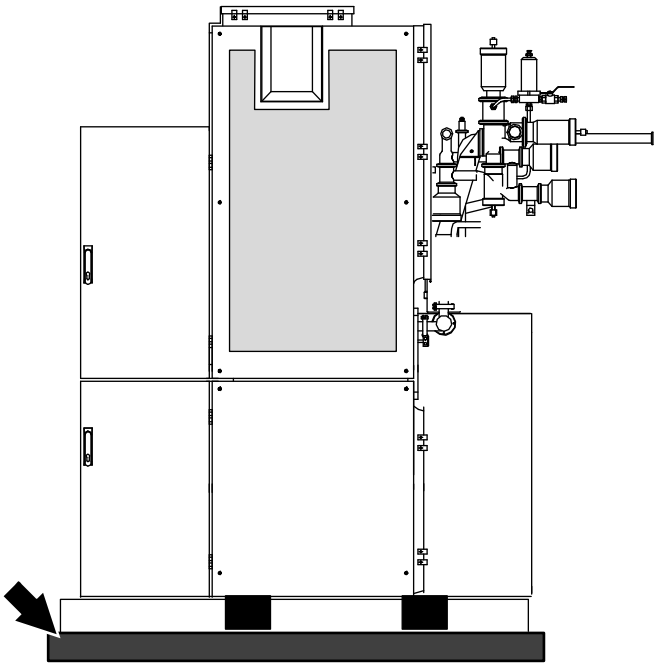

3.2.3.2 Removing the Machine Parts with an Overhead Gantry or Mobile Crane

WARNING
Risk of crushing!

Note! From filling machine number T-21203/64, one of the Superstructure eye bolt fixing holes is differently positioned (see drawing).

a) Fit the eye bolts as illustrated. Attach the lifting equipment (a Tetra Pak tool is illustrated but other equivalent lifting equipment can be used). See 2.2 Special Tools, Auxiliary Equipment and Information section for specifications.

b) Lift only enough to clear the crate.

c) Manoeuvre each machine part out of the crate.

Note! In the drawing, Superstructure is shown as a frame for simplicity.

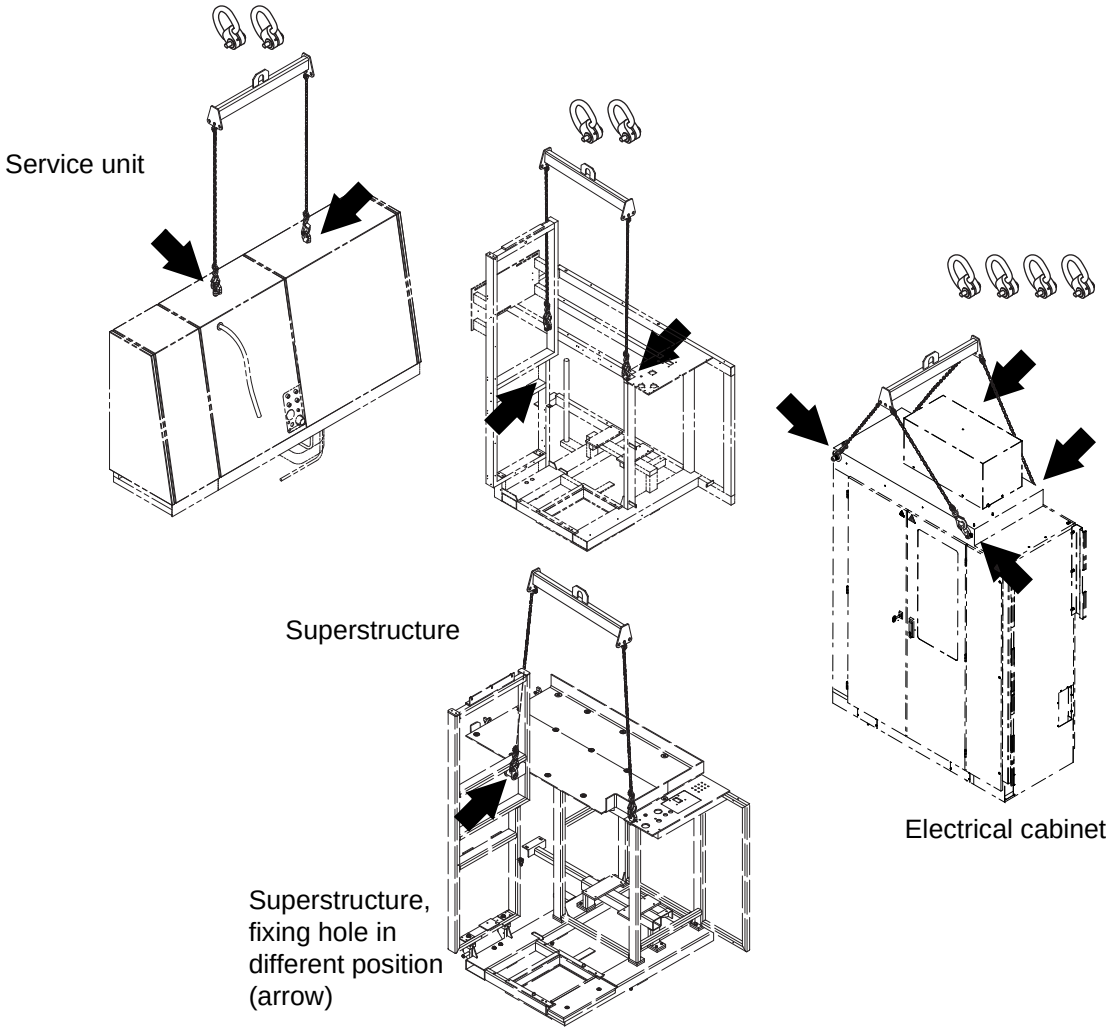

3.2.3.3 Removing the Machine Parts with a Fork Lift

WARNING
Risk of crushing!

Service unit

a) Fit the eye bolts and the lifting equipment. Place and lift with the forks as illustrated.

b) Lift only enough to clear the crate.

c) Manoeuvre the machine part out of the crate.

Superstructure and Electrical Cabinet

a) Place the forks in the fork tubes as illustrated. Both sides can be used depending on access. See 2.2.2.3 Lifting Equipment Specifications for Uncrated Equipment section for lifting specifications.

b) Lift only enough to clear the crate.

c) Manoeuvre the machine part out of the crate.

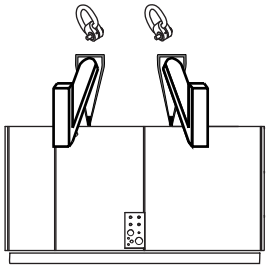

Service unit

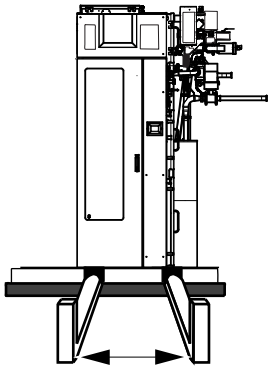

Superstructure
(tubes 149 x 70 mm)

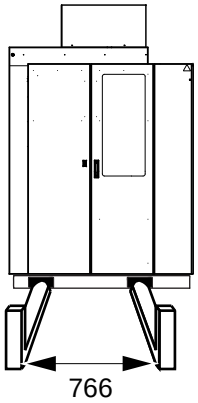

Electrical cabinet
(tubes 175 x 75 mm)

3.2.4 Inspection Documentation

No claims will be accepted for machines in commercial production if the **Start-Up Machine Quality Report** (SUMQR) has not been returned to the manufacturer. Compile the:

- **Transport Damage Report** (a section of the SUMQR).
  If no damage has occurred during transport, state “NO TRANSPORT DAMAGE”.
- **Feedback from MC** form **only in case of claims on the equipment**.
  For further information about claims see the **Claim and Complaint Handling** procedure, available from the local Service Organisation.

3.2.5 Disposing of Reusable Materials and Waste

Note! Packing materials (including crates, wrapping and boxes) are not normally returned to the manufacturer.

a) Check with the customer if there is a special agreement for the return of the packing to the manufacturer.

b) If the packing must be returned to the manufacturer, prepare an area to store the crates and other returnable packing.

c) Check with the customer if there is a special agreement for recycling packing.

d) If packing has not to be recycled, check with the customer how to separate and dispose of packing (wood, plastic, paper, etc.).

e) Dispose of pollutant waste (bubble wrapping, plastic bags, expanded polystyrene, etc.) in accordance with local regulations.

4 Positioning, Assembly and Connections

Positioning, Assembly and Connections - Description

This chapter describes the installation of this equipment.

4.1 Transporting the Equipment . . . . . 1 - 5

4.1.1 Transporting the Machine Body . . . . . 1 - 5

4.1.1.1 Transporting the Machine Body with Carriages . 1 - 5

4.1.2 Transporting the Machine Parts . . . . . 1 - 8

4.2 Positioning the Equipment . . . . . 1 - 9

4.2.1 Positioning the Machine Body . . . . . 1 - 10

4.3 Levelling the Equipment . . . . . 1 - 11

4.3.1 Set the Machine Body Height . . . . . 1 - 11

4.3.2 Levelling . . . . . 1 - 12

4.4 Assembling the Equipment . . . . . 1 - 16

4.4.1 Assembling the Platform . . . . . 1 - 16

4.4.2 Assembling the Superstructure . . . . . 1 - 21

4.4.3 Assembling the Supply Unit . . . . . 1 - 23

4.4.4 Assembling the Electrical Cabinet . . . . . 1 - 24

4.4.5 Assembling the Stairs and Railings . . . . . 1 - 28

4.5 Connections . . . . . 1 - 29

4.5.1 Product and Utility Connections . . . . . 1 - 29

4.5.1.1 Product Connection . . . . . 1 - 29

4.5.1.2 Utilities Connections . . . . . 1 - 30

4.5.1.3 Re-Circulation of Cold Water . . . . . 1 - 31

4.5.1.4 Drain Connections . . . . . 1 - 33

4.5.1.5 Ensuring the Drying Function in CIP . . . . . 1 - 33

4.5.2 Conveyor Equipment . . . . . 1 - 34

4.5.3 Service Unit . . . . . 1 - 35

4.5.4 Superstructure . . . . . 1 - 36

4.5.5 Electrical Cabinet and other Electrical Supplies 1 - 37

4.5.6 External Data Unit (OE) . . . . . 1 - 42

4.5.7 Conveyor Unit (Valid for Conveyor Group TP. 648568-0100) . . . . . 1 - 43

4.5.7.1 General . . . . . 1 - 43
4.5.7.2 Sampling Unit (OE) . . . . . 1 - 46
4.5.7.3 Domino Printer (OE) . . . . . 1 - 47
4.5.7.4 All Configurations . . . . . 1 - 48

4.6 Final Assembly. . . . . 1 - 49

4.6.1 Automatic Splicing Unit . . . . . 1 - 49

4.6.2 Machine Body . . . . . 1 - 49

4.6.3 Superstructure. . . . . 1 - 51

4.6.3.1 Filling the Hydrogen Peroxide Heating Water Circuit . . . . . 1 - 51
4.6.3.2 Hydrogen Peroxide - Set Pressure . . . . . 1 - 53
4.6.3.3 Hydrogen Peroxide - Check Leaks . . . . . 1 - 54
4.6.3.4 LS Inductor- Fix Position . . . . . 1 - 55
4.6.3.5 Filling System . . . . . 1 - 56
4.6.3.5 Completion Tasks . . . . . 1 - 57

4.6.4 Service Unit . . . . . 1 - 58

4.6.5 Doors and Covers . . . . . 1 - 59

4.6.6 TPOP. . . . . 1 - 60

4.6.7 Serial Communication . . . . . 1 - 60

4.6.8 Line Automation . . . . . 1 - 63

4.6.8.1 Introduction . . . . . 1 - 63
4.6.8.2 Genius Bus Controllers . . . . . 1 - 64
4.6.8.3 Interconnections . . . . . 1 - 65
4.6.8.4 Data Flow . . . . . 1 - 70
4.6.8.5 Troubleshooting . . . . . 1 - 71

4.7 Disposal or Return of Packing . . . . . 1 - 74

4.1 Transporting the Equipment

The following section contains the correct procedures for transporting the uncrated equipment to the installation area.

4.1.1 Transporting the Machine Body

After uncrating, transfer the machine body directly to the installation area. When it is not possible to use the uncrating equipment to transport the machine body, a set of wheeled carriages TP No. 2514392-0100 can be used, see 4.1.1.1 Transporting the Machine Body with Carriages below.

4.1.1.1 Transporting the Machine Body with Carriages

When it is not possible to use the uncrating equipment to transport the machine body, a set of wheeled carriages can be used as follows:

a) Remove the wheel assembly from one side of each carriage.

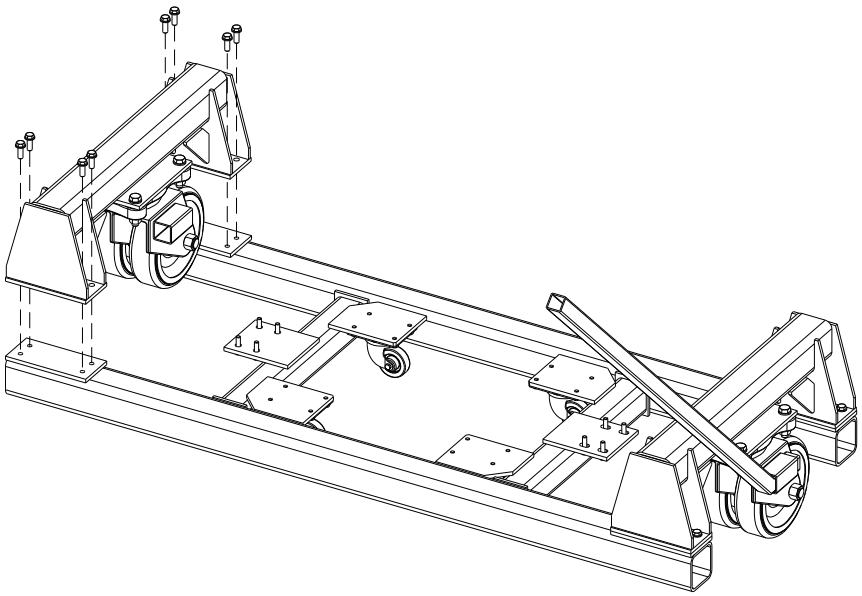

(Cont'd)

(Cont'd)

CAUTION
Risk of damage to the equipment.
The carriages must be secured to the machine frame with screws to avoid transport damage. Only lift one side of the machine body at a time.

Note! Hydraulic jacks can be used to lift the machine body.

b) Roll the carriages under the machine frame as shown in the illustration and install each wheel assembly.

c) Remove the machine feet if necessary and raise the remaining machine feet enough to clear any variations in the floor level.

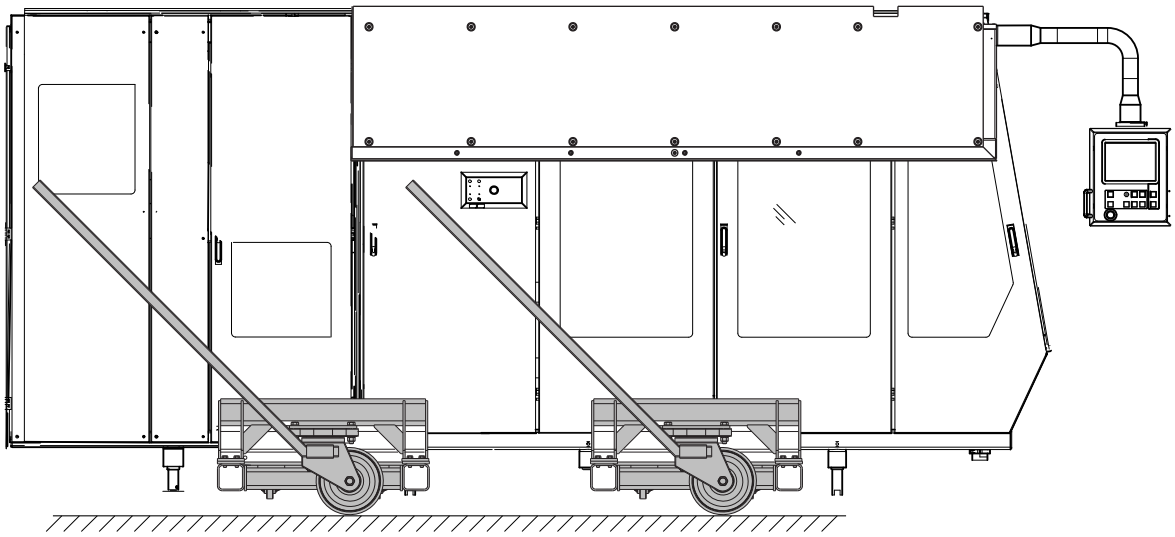

(Cont'd)

(Cont'd)

CAUTION
Risk of damage to the equipment.
Block the wheels if the machine must be left on the carriages.

d) Move the machine, by manual pushing or towing with a truck, very carefully to the installation area. Steer with the steering handles.

e) Place the machine in the exact position according to the site installation drawing, see 4.2 Positioning the Equipment.

f) Fit the machine feet if any have been removed.

g) Remove the carriages in the reverse order of fitting.

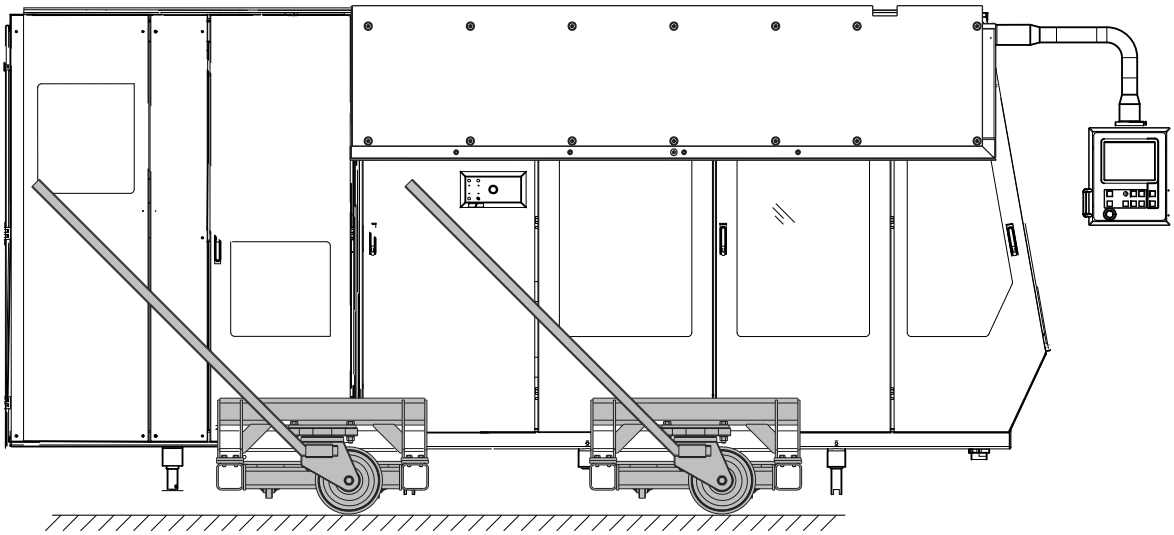

4.1.2 Transporting the Machine Parts

Transport the machine parts as they are needed to the installation area with the lifting equipment.

4.2 Positioning the Equipment

The following section contains the correct procedures for positioning this equipment in the installation area.

4.2.1 Positioning the Machine Body

Set the machine in its exact position if not already done. Place a damper underneath each machine foot. Respect minimum distances around the machine.

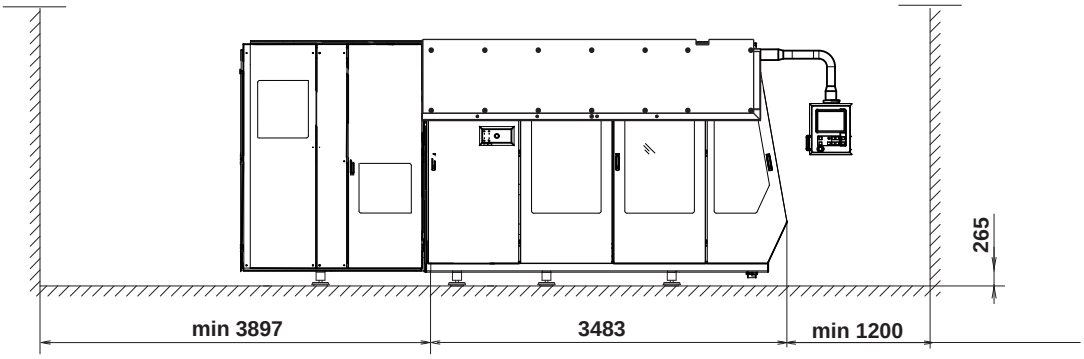

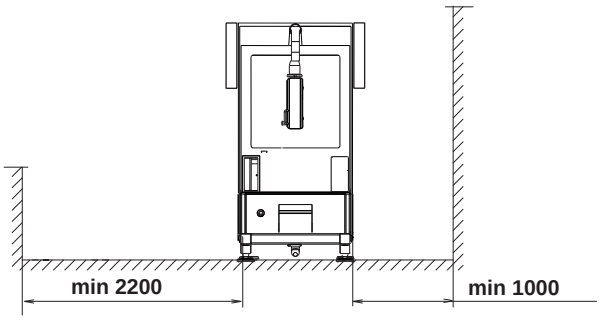

4.3 Levelling the Equipment

The following sections contain the correct procedures for setting the height and level of this equipment.

4.3.1 Set the Machine Body Height

Set the machine body to the correct height by adjusting the four machine feet (1). For installations with existing conveyor equipment, the machine's outfeed conveyor should be adjusted to the same height as the conveyor equipment. For new installations adjust the height to **265** mm (nominal height).

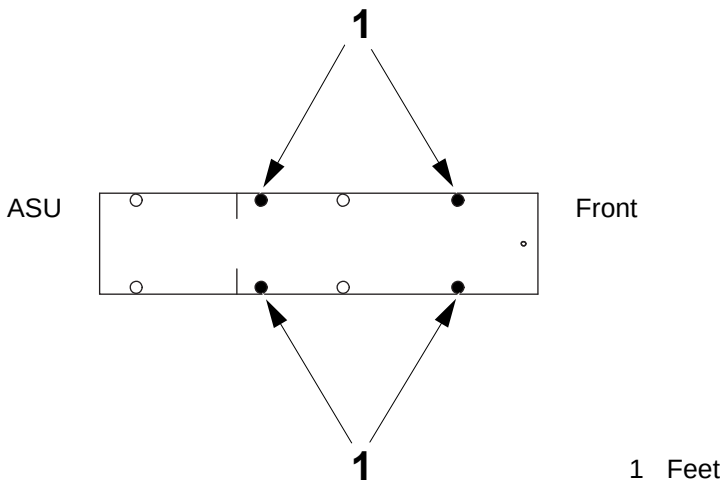

1 Feet

4.3.2 Levelling

Height

Make sure there is a damper under each machine foot.

Note! To adjust the height: support the machine with a fork lift at positions appropriate for the feet to be raised. Remove the fork lift.

Adjust the machine to the correct height using the four machine feet shown. The outfeed of the machine height should be in line with the height of the first conveyor.

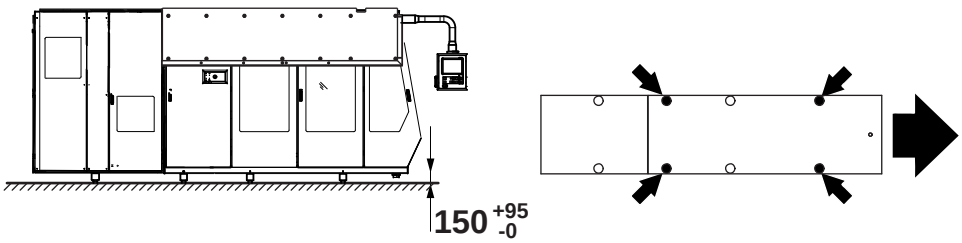

Levelling

Note! The following describes the recommended procedure for levelling the machine. An alternative method, that uses the jaw system frame, is also described. Whenever possible, level the machine using the machine superstructure frame.

(Cont'd)

(Cont'd)

Levelling using the Machine Superstructure Frame (recommended method):

WARNING

Risk of falling!

Take care when working on machines without platforms and railings.

a) Place the spirit level on the surface that supports the superstructure (see arrow).

b) Level the machine longitudinally using the two rear feet as shown.

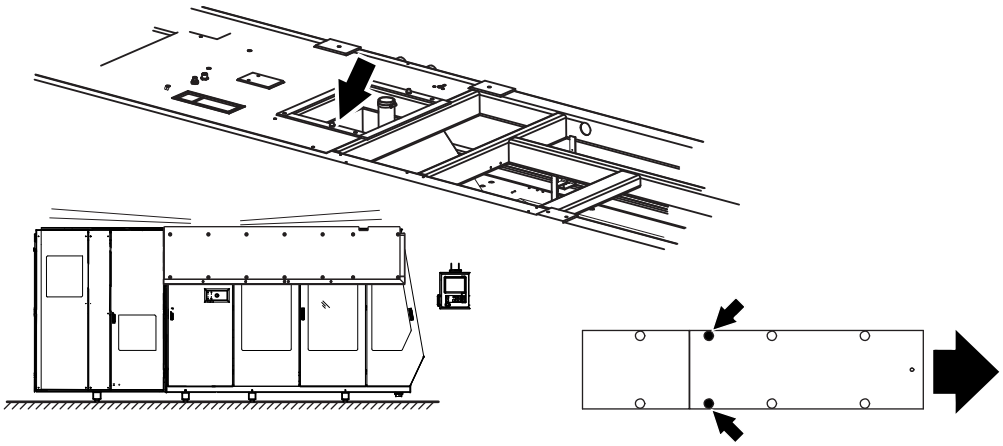

c) Turn the spirit level 90° (see arrow) and level the machine transversally using the four feet.

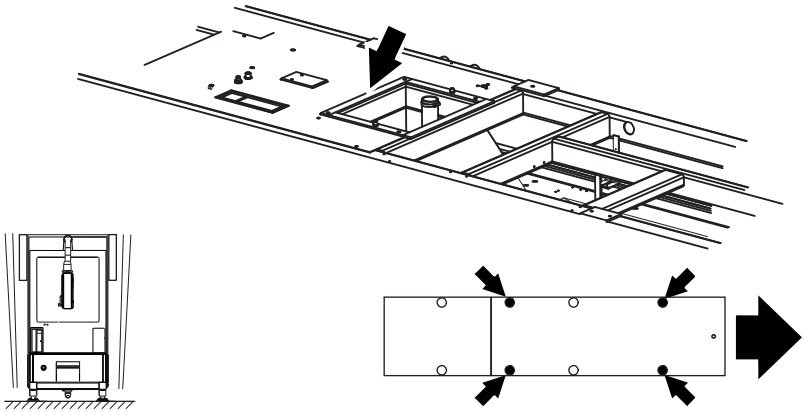

d) Lower the rest of the feet carefully.

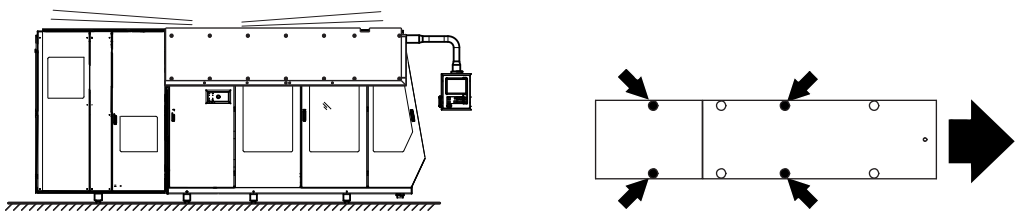

(Cont'd)

(Cont'd)

Levelling using the Jaw System Frame (alternative method):

a) Remove the jaw system cover.

b) Hold the spirit level (1) against the front surface (2) of the jaw system frame.

c) Level the machine longitudinally using the two rear feet shown.

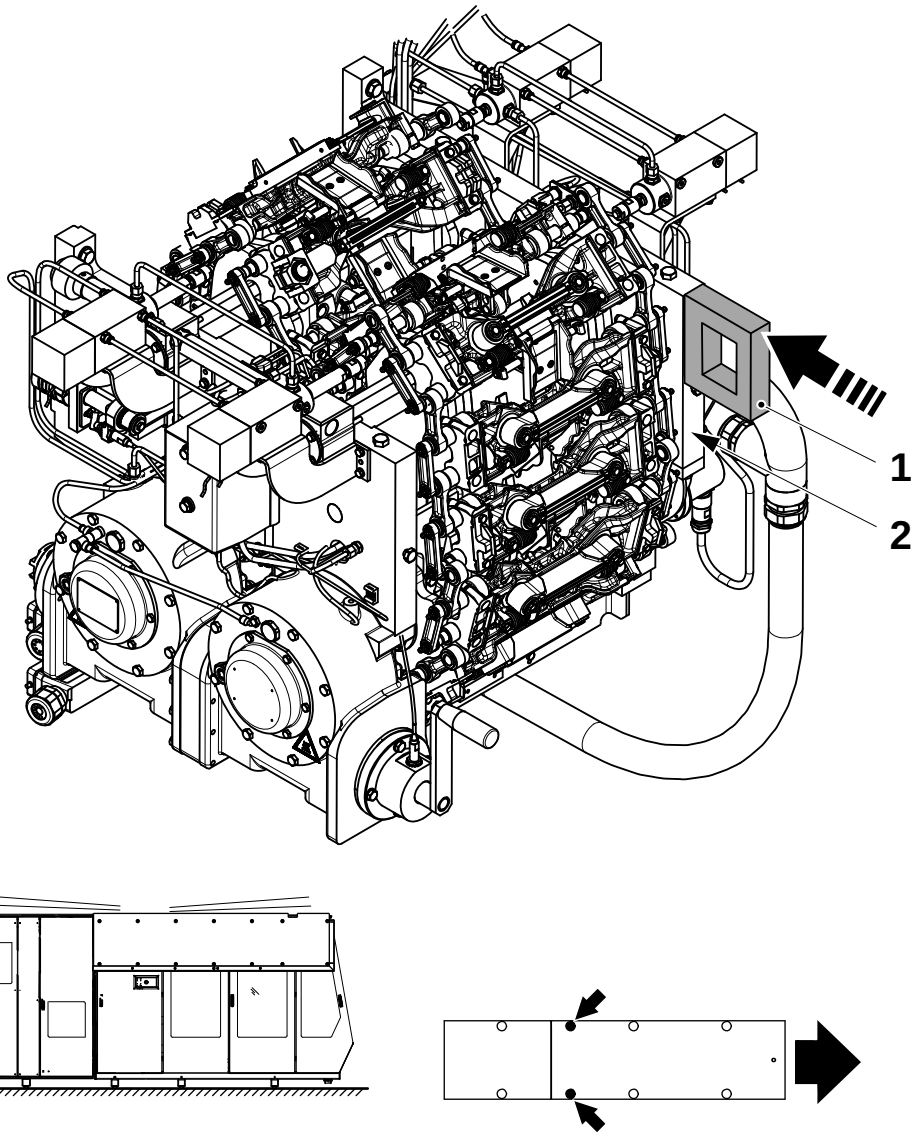

1 Spirit level
2 Front surface

(Cont'd)

(Cont'd)

d) Hold the spirit level (1) against the side surface (3) of the jaw system frame.

e) Level the machine transversally using the four feet shown.

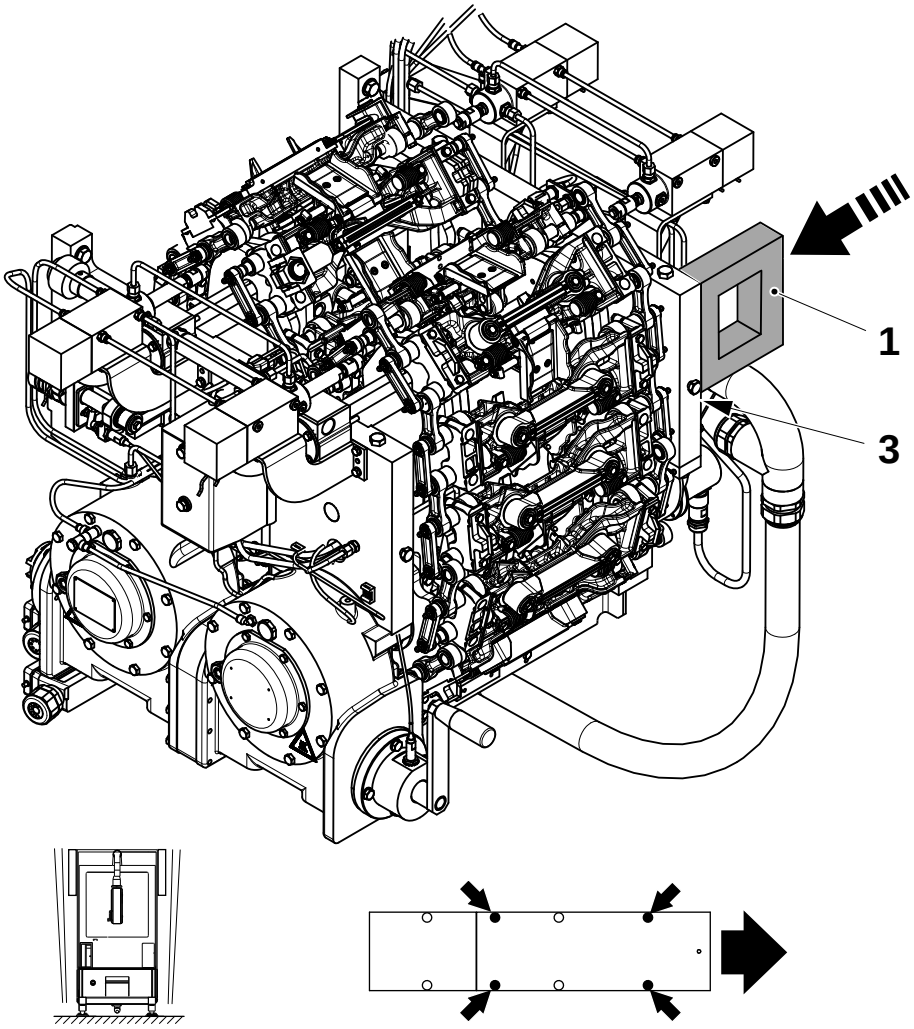

1 Spirit level
3 Side surface

4.4 Assembling the Equipment

The following sections contain the correct procedures for assembling the equipment components.

4.4.1 Assembling the Platform

WARNING

Risk of falling!

Take care when working on machines without platforms and railings.

WARNING

Risk of crushing!

a) Lift the frame (1) onto the ASU (2) so the cutouts (3) are positioned over the pins (4) on the machine body (5).

b) Insert the screws (6) into the holes (7) in the machine body (5) and tighten them until the frame (1) is the distance **A** from the machine body (5).

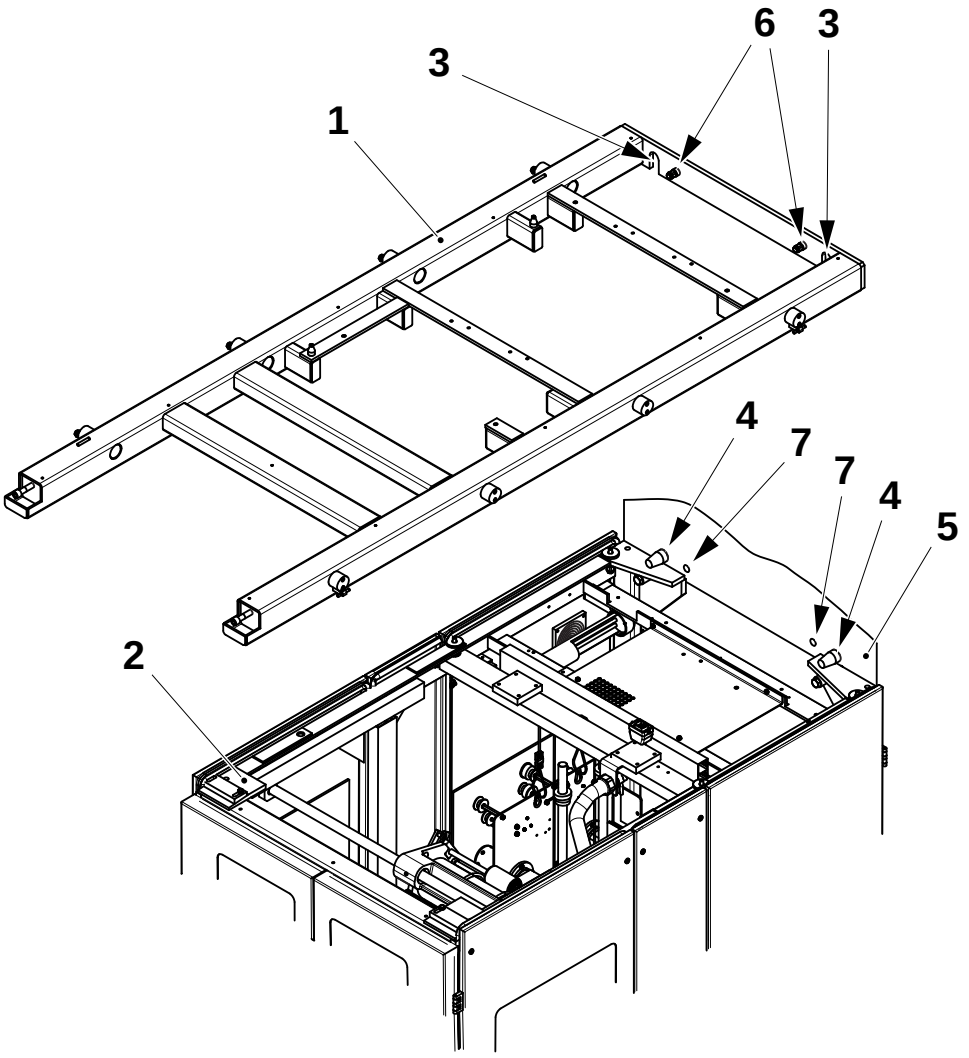

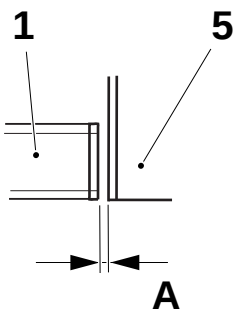

A = 10 mm

1 Frame
2 ASU
3 Cutout
4 Pin
5 Machine body
6 Screw
7 Hole

(Cont'd)

(Cont'd)

c) At both sides of the ASU, adjust the registering devices (8) by rotating the spacer (9) until it touches the base of the frame (1) and then tighten the screw (10).

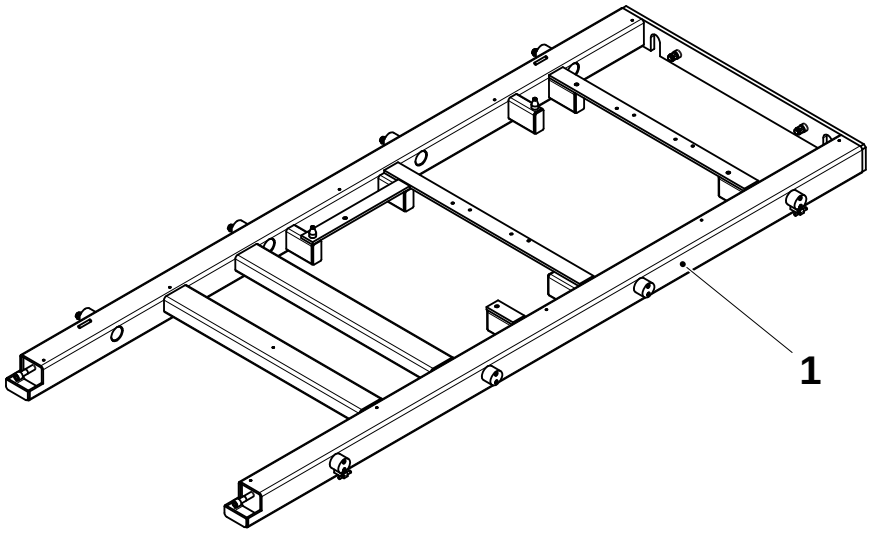

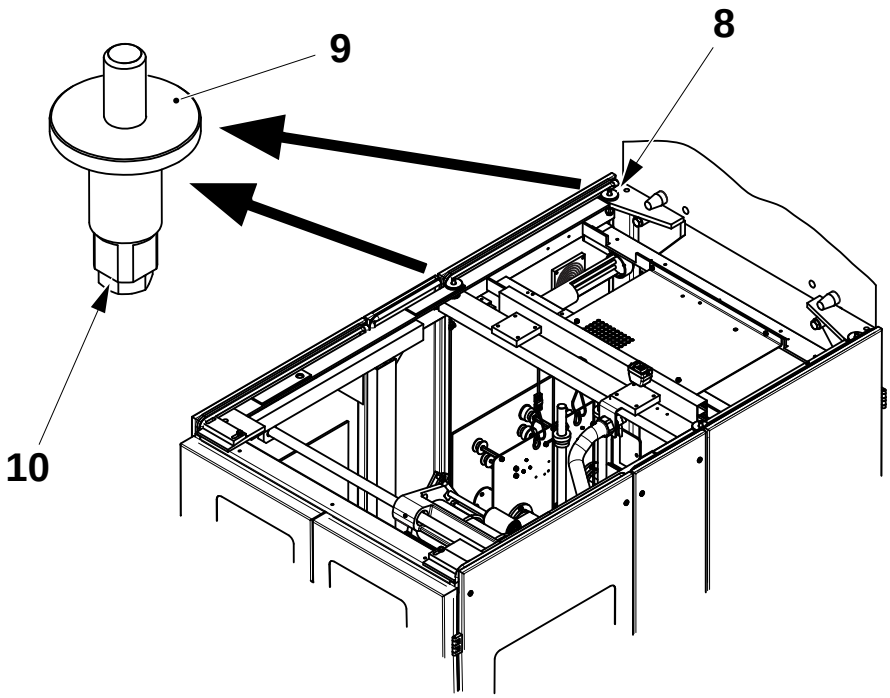

1 Frame
8 Registering device
9 Spacer
10 Screw

(Cont'd)

(Cont'd)

CAUTION

Risk of machine damage.

Do not swing the platforms past the horizontal position as this may break the screws in the hinge. Use only class 12.9 zinc plated high tensile strength screws for step g)**.**

d) Using a crane, swing the side platform (11) into position, insert the hinge pins (12) and fit the nuts (13) to connect the hinge parts (14) and (15) together.

e) Swing the side platform (11) until it is horizontal and secure it into position with the screws (16).

f) Repeat for the other side platform (17).

g) Fit the top platform (18) and secure it in position with the screws (16), see arrows.

Platform screws**,**
torque 44 Nm

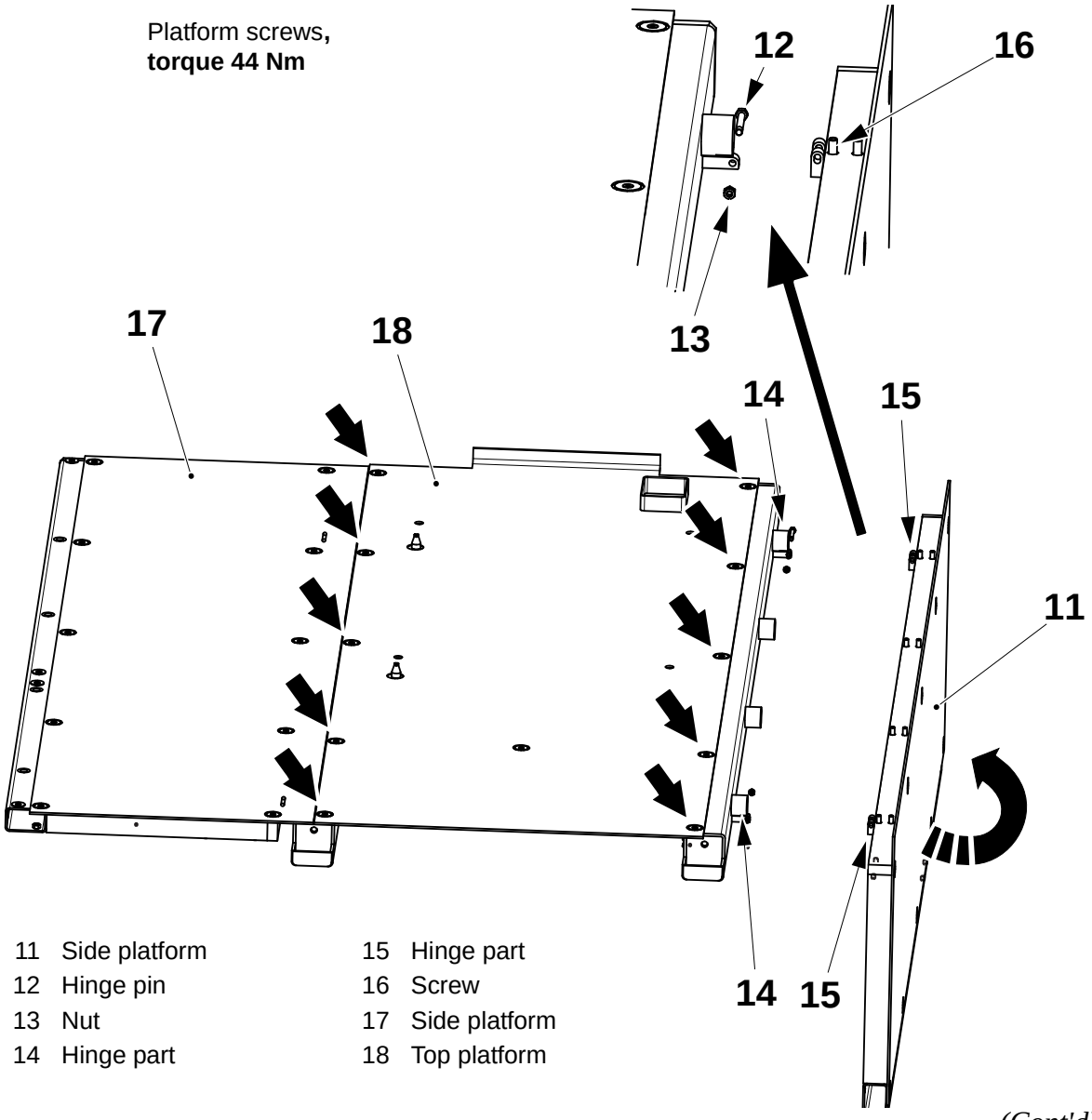

11	Side platform	15	Hinge part
12	Hinge pin	16	Screw
13	Nut	17	Side platform
14	Hinge part	18	Top platform

(Cont'd)

(Cont'd)

h) Fit the beam (19) and secure it in position with the screws (20) and (21).

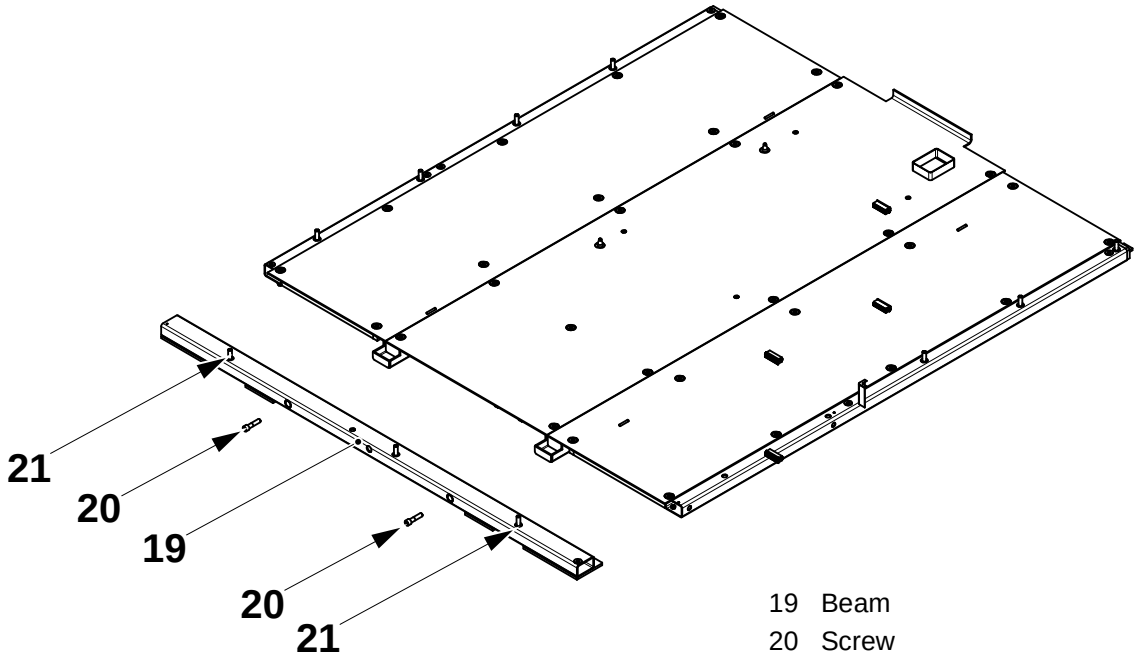

19 Beam
20 Screw
21 Screw

(Cont'd)

(Cont'd)

CAUTION

Risk of machine damage.

Do not swing the platforms past the horizontal position as this may break the screws in the hinge. Use only class 12.9 zinc plated high tensile strength screws for step i).

i) Swing the front platforms (22) until they are horizontal and secure them in position with the screws, see arrows.

j) Fit the plate (23) on both sides of the machine.

k) Fit the platform (24) onto the leg assembly (25) and attach the platform (24) to the rear platform (11).

l) If the stair assembly (28) is not interfering with the remaining installation work, fit the stair assembly and lock the bracket (26) in position with the clamp (27), see also 4.4.5 Assembling the Stairs and Railings.

m) Check the stair platform and stair assembly (28) with a spirit level. Adjust using the feet on the leg assembly (25) and stair assembly (28), then tighten the lock nuts.

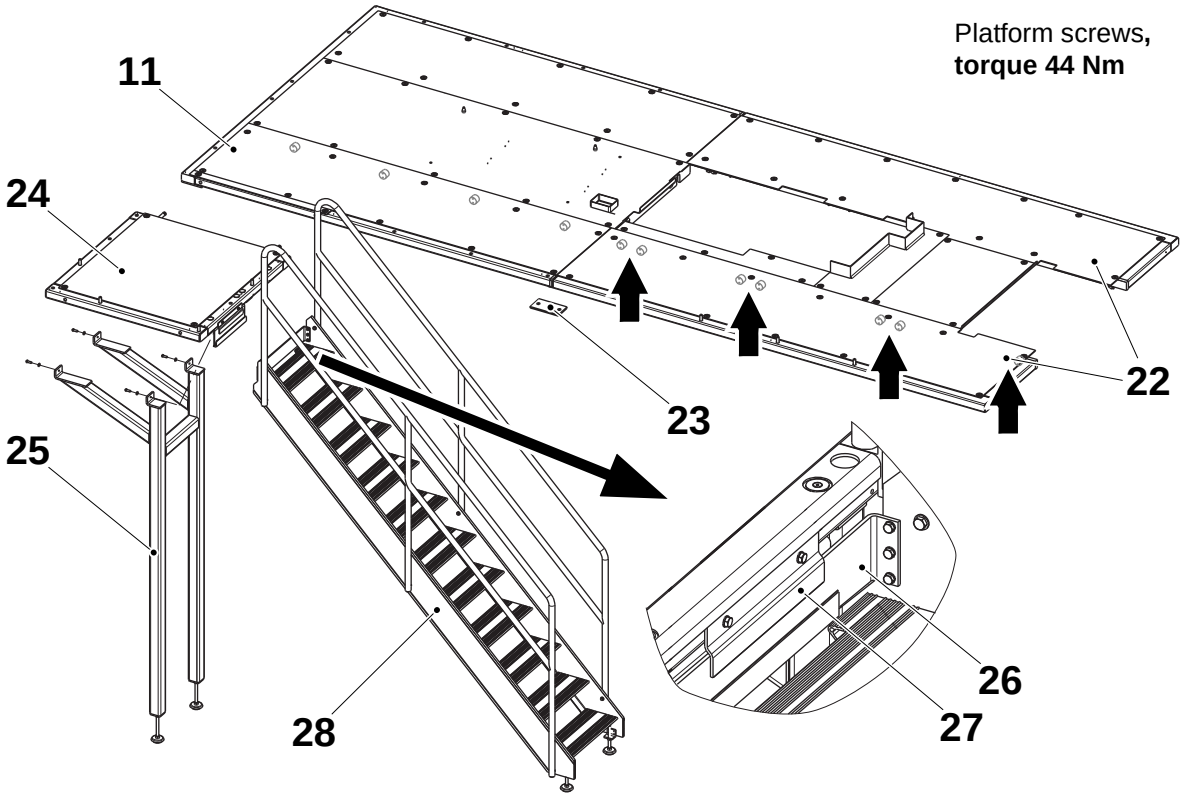

11	Platform	25	Leg assembly
22	Platfor	26	Bracket
23	Plate	27	Clamp
24	Platform	28	Stair assembly

4.4.2 Assembling the Superstructure

a) Before lifting the superstructure:
   - Remove the plugs from the peroxide pipes (1), (2) and (3).
   - Install the three peroxide pipe gaskets (4).

b) Lift the superstructure and position the three superstructure peroxide pipes (5), (6) and (7) directly above those on the machine body.

c) Lower the superstructure to check the pipes (5), (6) and (7) align.

d) Lift the superstructure again.

e) Put the rubber seal (8) and holder (9) on the superstructure pipes (5), (6) and (7) and lift them out of the way.

Note! In the following steps, the superstructure should still be suspended from the crane or supported by the fork lift until the pipe flanges have been connected together.

f) Lower the superstructure until the peroxide pipes touch, insert and tighten the peroxide piping screws (10).

g) Lower the rubber seal (8) and holder (9) into position and lock them in place with the screws (11).

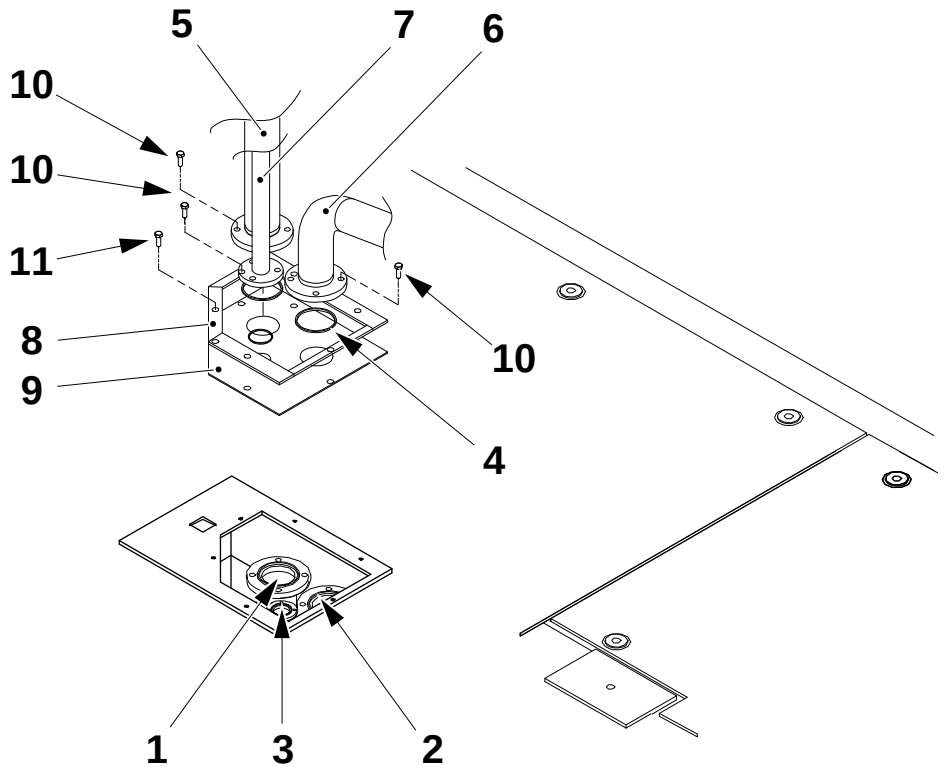

1 Pipe
2 Pipe
3 Pipe
4 Gasket
5 Pipe
6 Pipe
7 Pipe
8 Seal
9 Holder
10 Screw
11 Screw

(Cont'd)

(Cont'd)

h) Clear any dirt from the contact surfaces (12).

i) Align the two guide pins (13) on the machine body with the superstructure.

j) Lower the superstructure onto the machine body and secure it in position with the eight screws (14), (15) and (16).

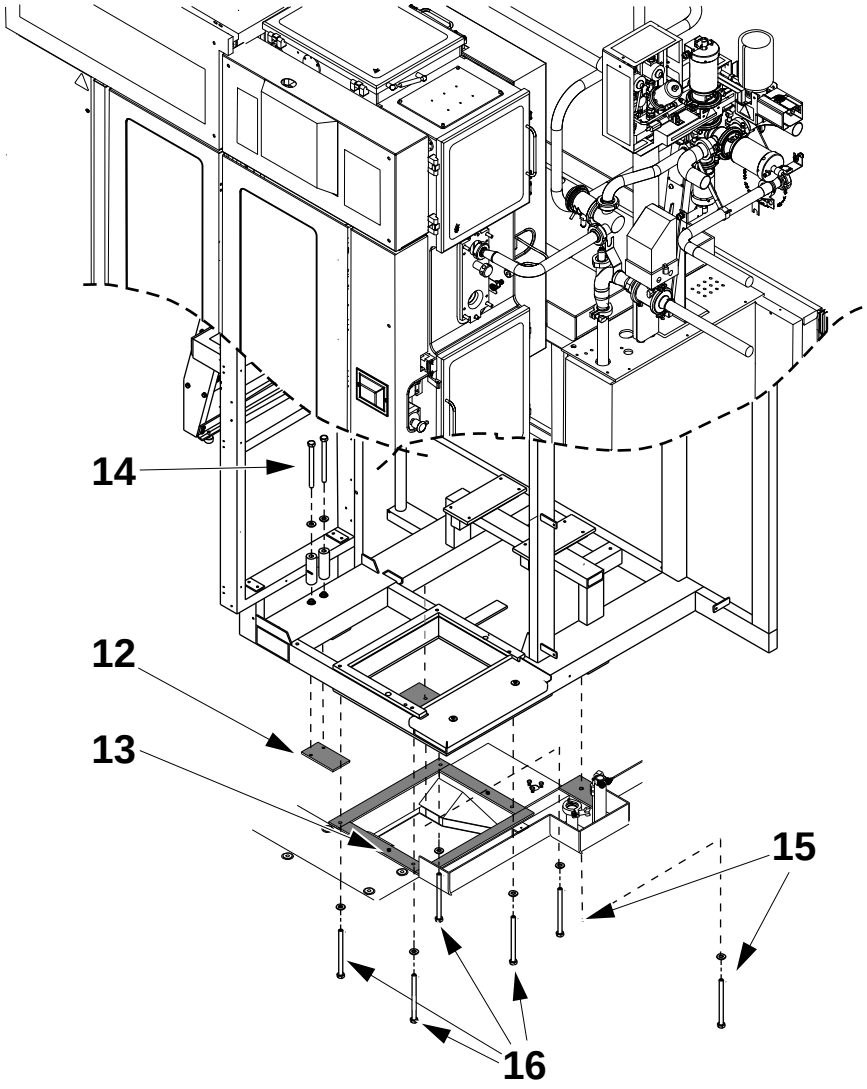

12 Contact surfaces (greyed areas)
13 Guide pin
14 Screws, with spacers, to the frame (2 pcs)
15 Screws to the frame (2 pcs)
16 Screws to the aseptic chamber (4 pcs)

4.4.3 Assembling the Supply Unit

Lift the supply unit up on to the front of the machine body. Tighten the supply unit to the machine body by means of the three screws (1).

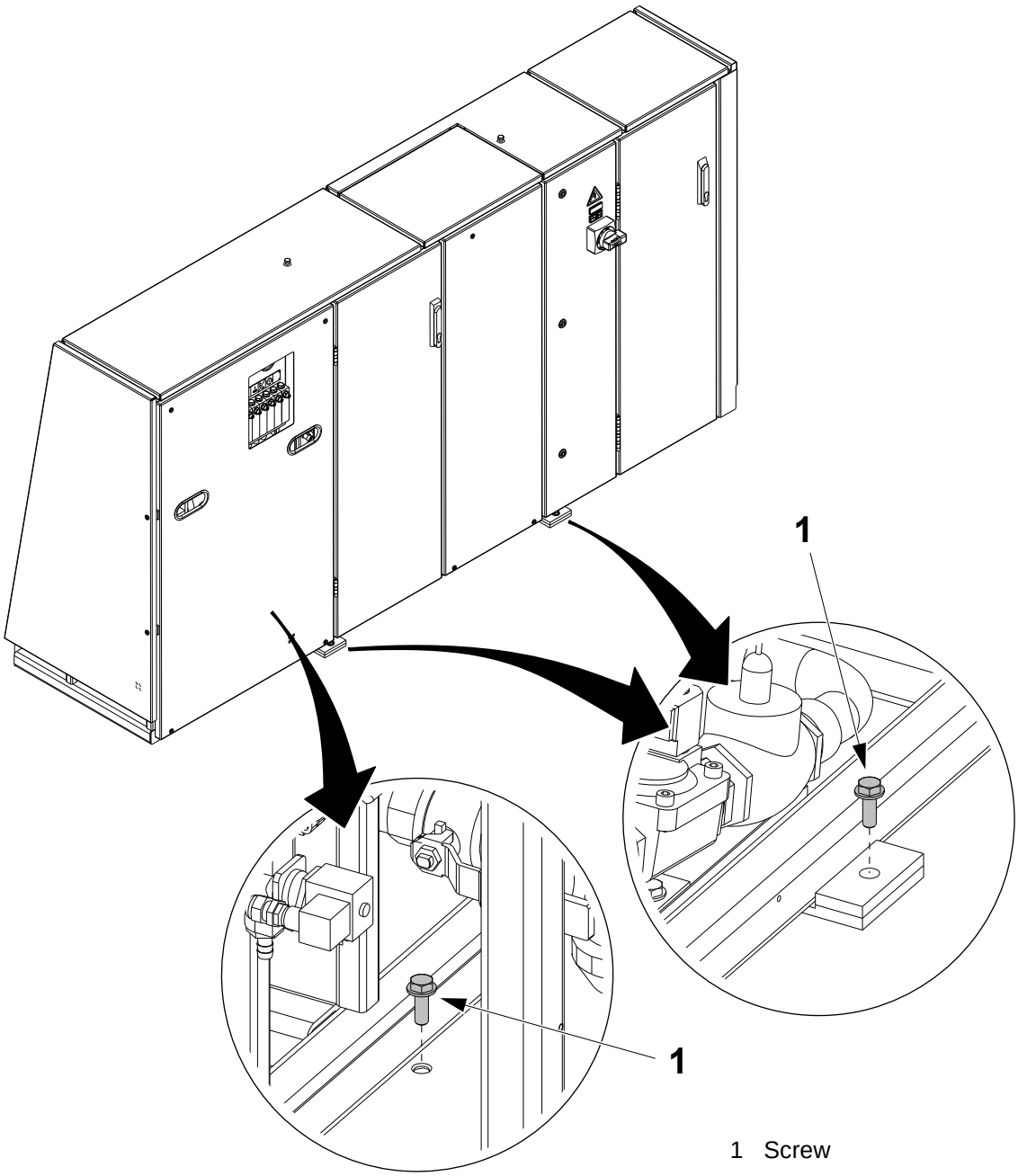

1 Screw

4.4.4 Assembling the Electrical Cabinet

a) Organise all the electrical cables on the machine body roof so they will not interfere with the placement of the electrical cabinet.

b) At both sides of the electrical cabinet open the panel (1).

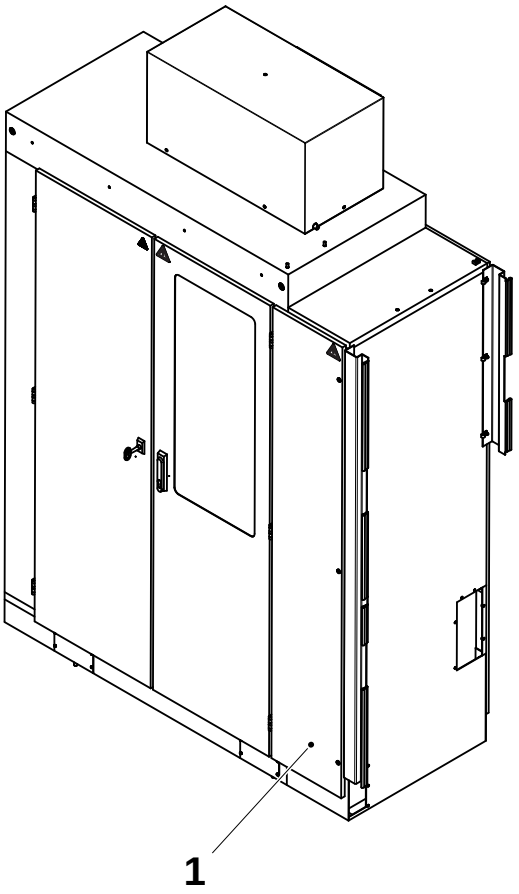

1 Panel

(Cont'd)

(Cont'd)

c) Remove the transportation bracket (2) from the cable duct (3).

d) Remove the cover (4).

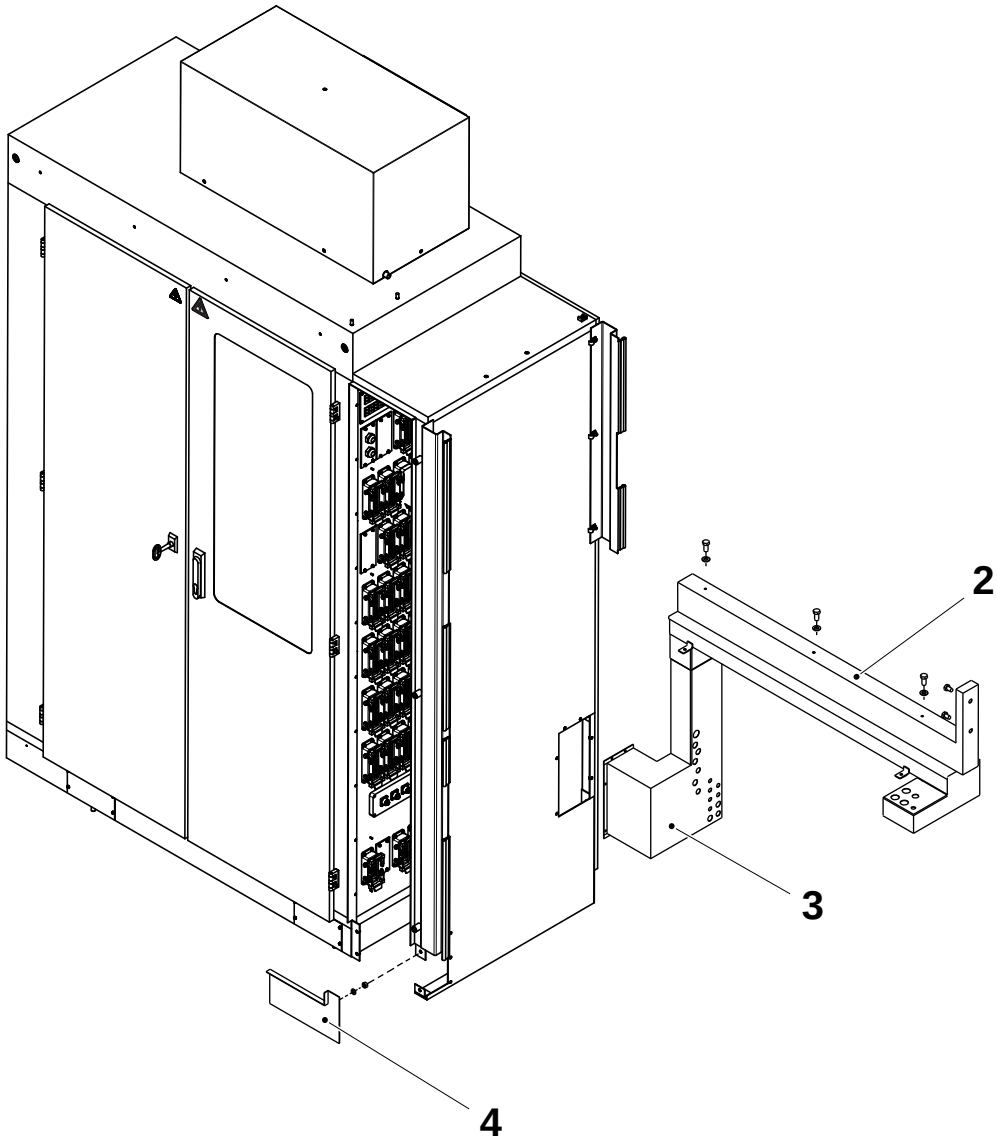

2 Transportation bracket
3 Cable duct
4 Cover

(Cont'd)

(Cont'd)

e) Lift the electrical cabinet above the machine body.

f) Feed the cables from the cable duct (3) into the electrical cabinet connection compartment (5).

g) Remove the four covers (6).

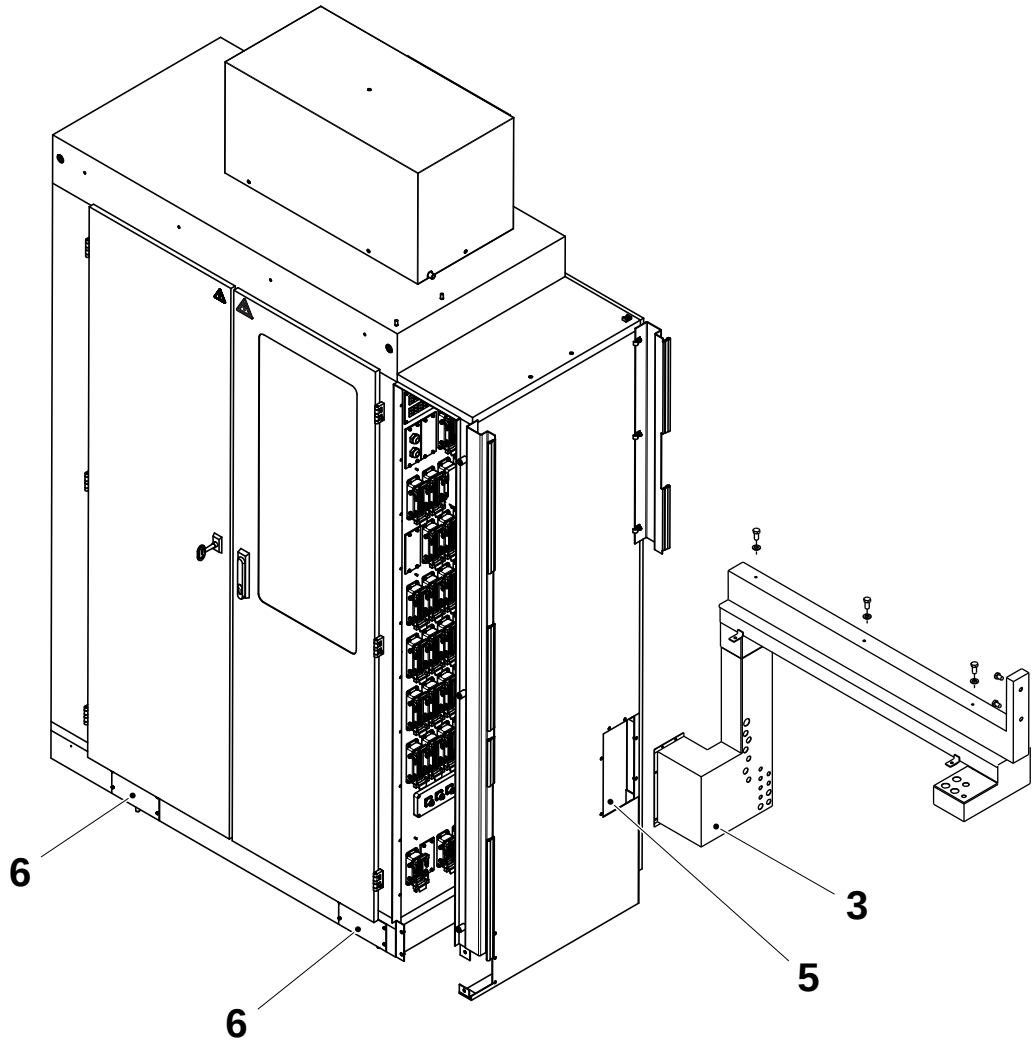

3 Cable duct
5 Connection compartment
6 Cover

(Cont'd)

(Cont'd)

h) Lower the electrical cabinet on to the machine body and secure it in position with the two long screws (7) and the two short screws (8). When doing this feed the cables from the ASU (9) into the connection compartment (5) so they do not become trapped beneath the cabinet.

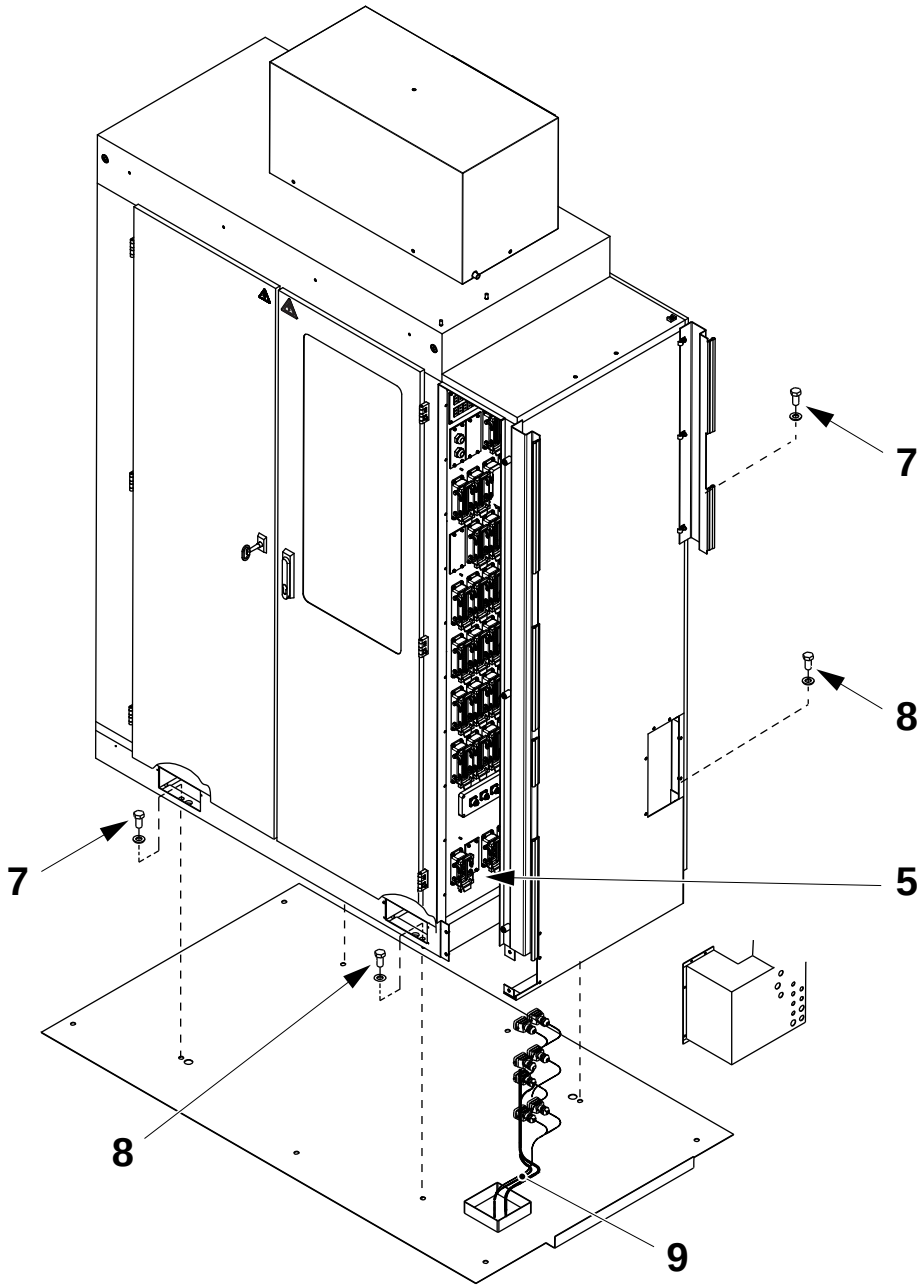

5 Connection compartment
7 Long screw
8 Short screw
9 ASU cables

4.4.5 Assembling the Stairs and Railings

a) Fit the stair assembly if not already done. See section 4.4.1 Assembling the Platform.

b) Fit the sign holders (1), signs (2), and the handrail (3) all around the machine, taking care to position the corner pieces (4) as required.

c) Tighten screws according to the torques listed here.

Note! The sign holders are fixed on top of the platform frame by the handrails.
The signs are fixed in the sign holders by the corner pieces.
The corner pieces are fixed in place by the sign holders on either side.

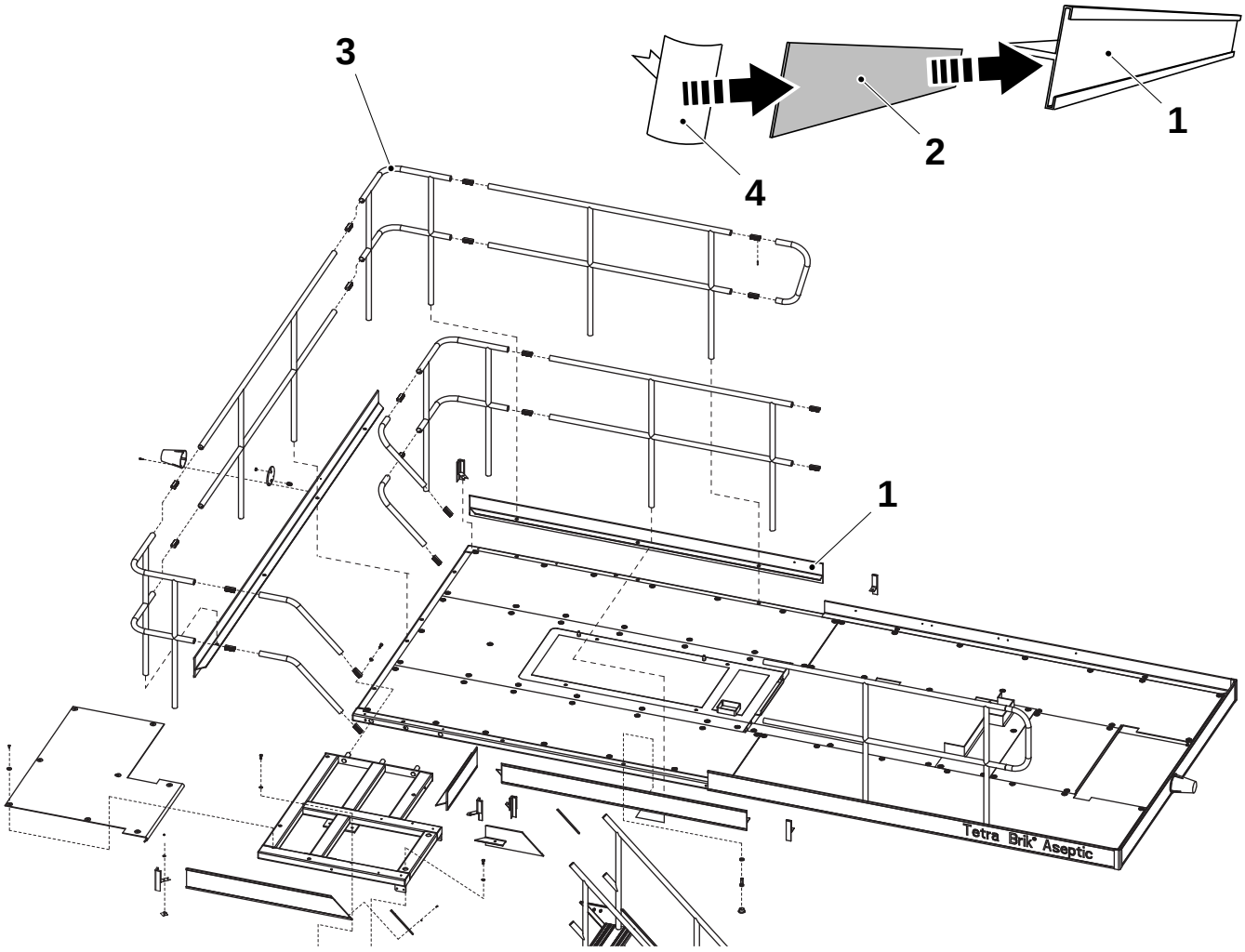

Hand rail, screws **torque 197 Nm**
Hand rail, stop screws **torque 44 Nm**
Platform Screws **torque 44 Nm**

1 Sign holder
2 Sign
3 Handrail
4 Corner piece

4.5 Connections

The following sections contain the correct procedures for making connections to utility sources and the internal connections between the different modules of this equipment.

4.5.1 Product and Utility Connections

4.5.1.1 Product Connection

Prepare the connections to the filling system as shown below.
See 1.1 Installation Drawings for measurements and dimensions.

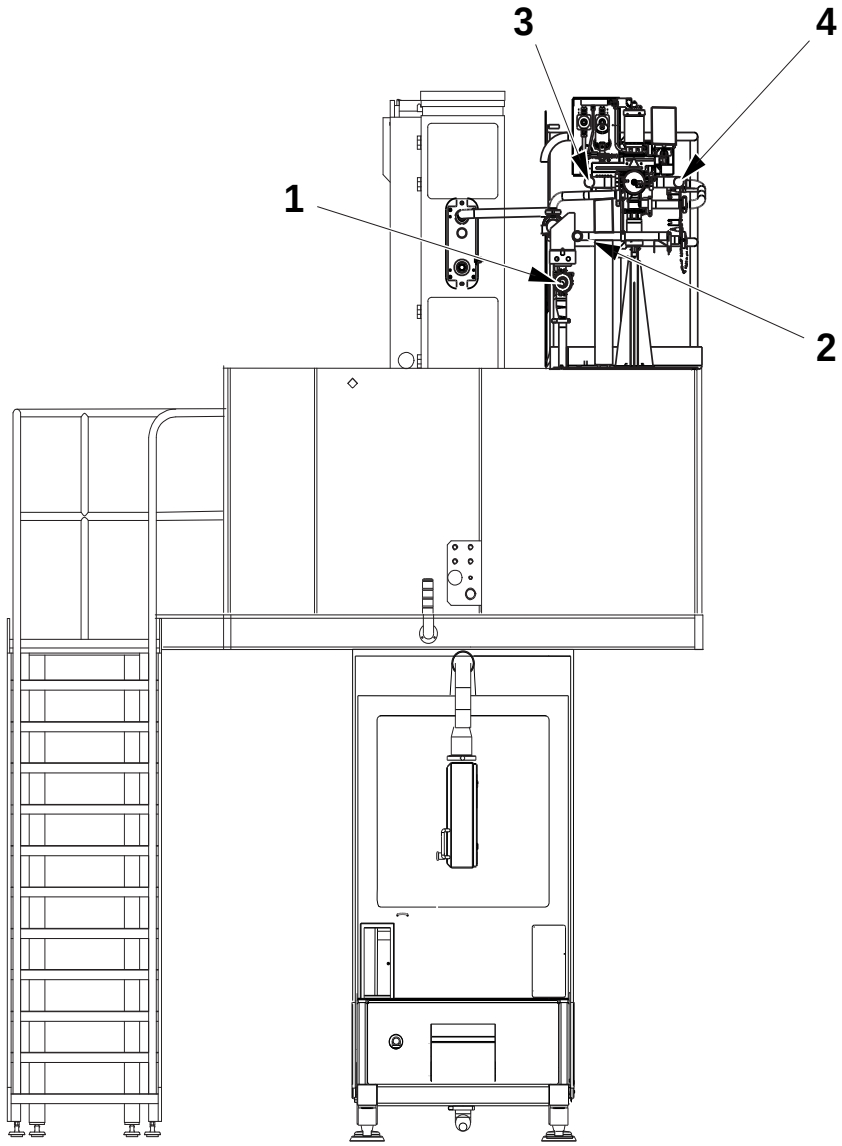

1 CIP out
2 CIP in
3 Product in/out
4 Product in/out

4.5.1.2 Utilities Connections

Prepare the connections to the service unit as shown below.
See 1.1 Installation Drawings for measurements and dimensions.

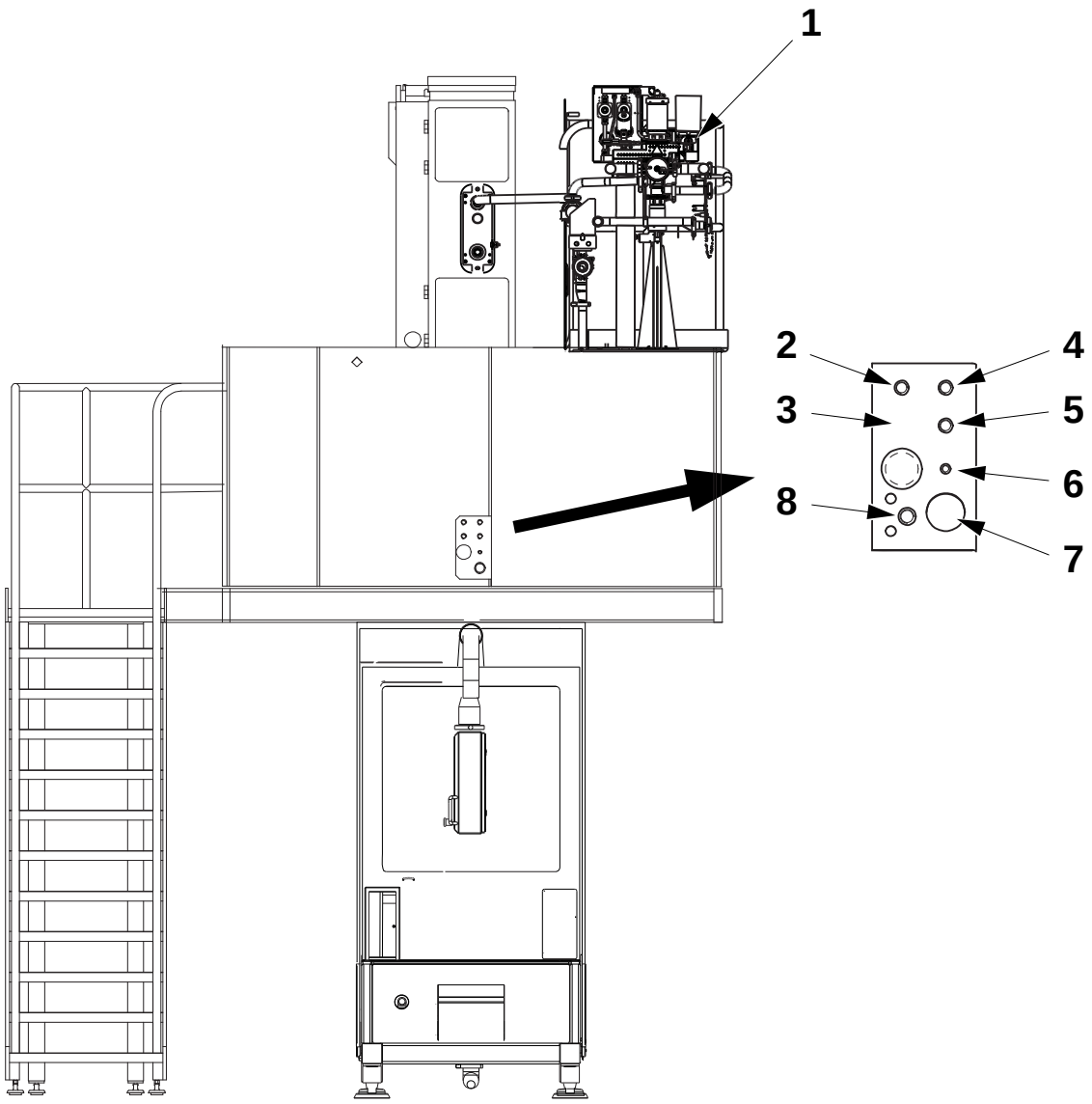

1 Steam In
2 Air In
3 Cold water In
4 Ice water In (when used)
5 Ice water Out (when used)
6 Nitrogen In (only for machines equipped with HI kit)
7 Hot water In
8 Cold water Out (when re-circulation of cooler water is applied)

4.5.1.3 Re-Circulation of Cold Water

Note! The re-circulation of cold water is only valid for machines equipped a compressor for the cooling unit.

It is possible to re-circulate the waste water discharged from the cooling unit compressor located in the service unit. The re-circulated waste water is made available at the COLD WATER OUT connection on the service unit connection plate. To configure the machine to re-circulate the waste water proceed as follows:

a) Lift the checker plate (1).

b) Loosen the clip (2) and disconnect the hose (3).

c) Remove the nipple (4) from the connector (5).

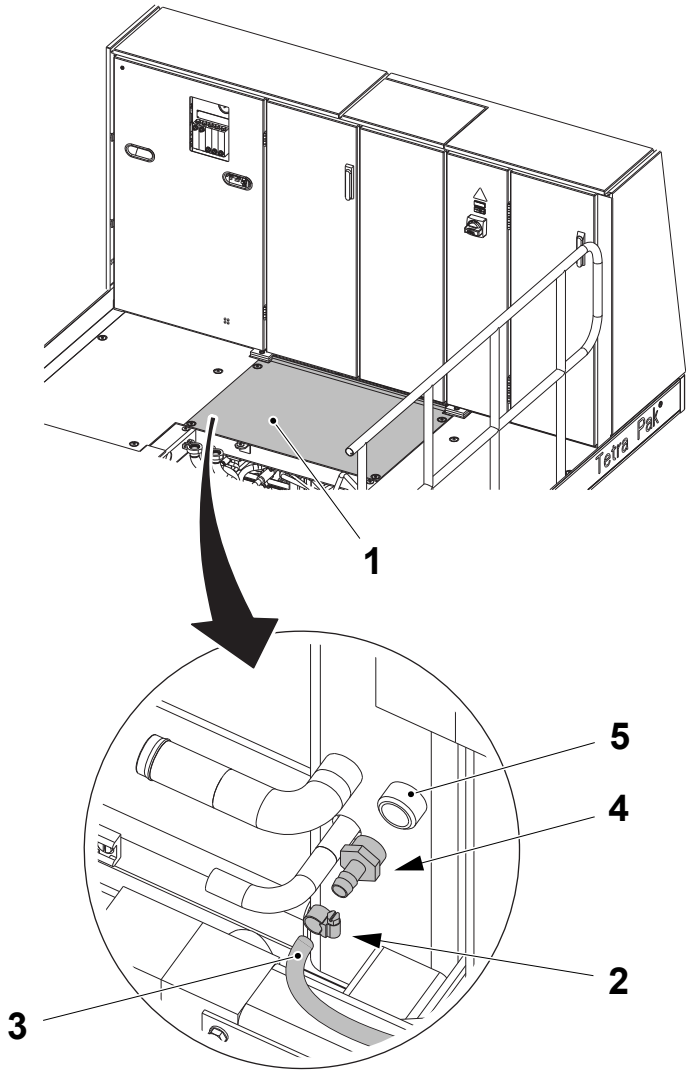

1 Checker plate
2 Clip
3 Hose
4 Nipple
5 Connector

(Cont'd)

(Cont'd)

d) Remove the plug (6) from the COLD WATER OUT connector (7) on the service unit connection plate (8).

e) Fit the nipple (4) at the rear of the connector (7) (from inside the service unit).

f) Fit the cooling hose (3) on the nipple (4) and secure it in position with the clip (2).

g) Fit the plug (6) in the connector (5), see step c).

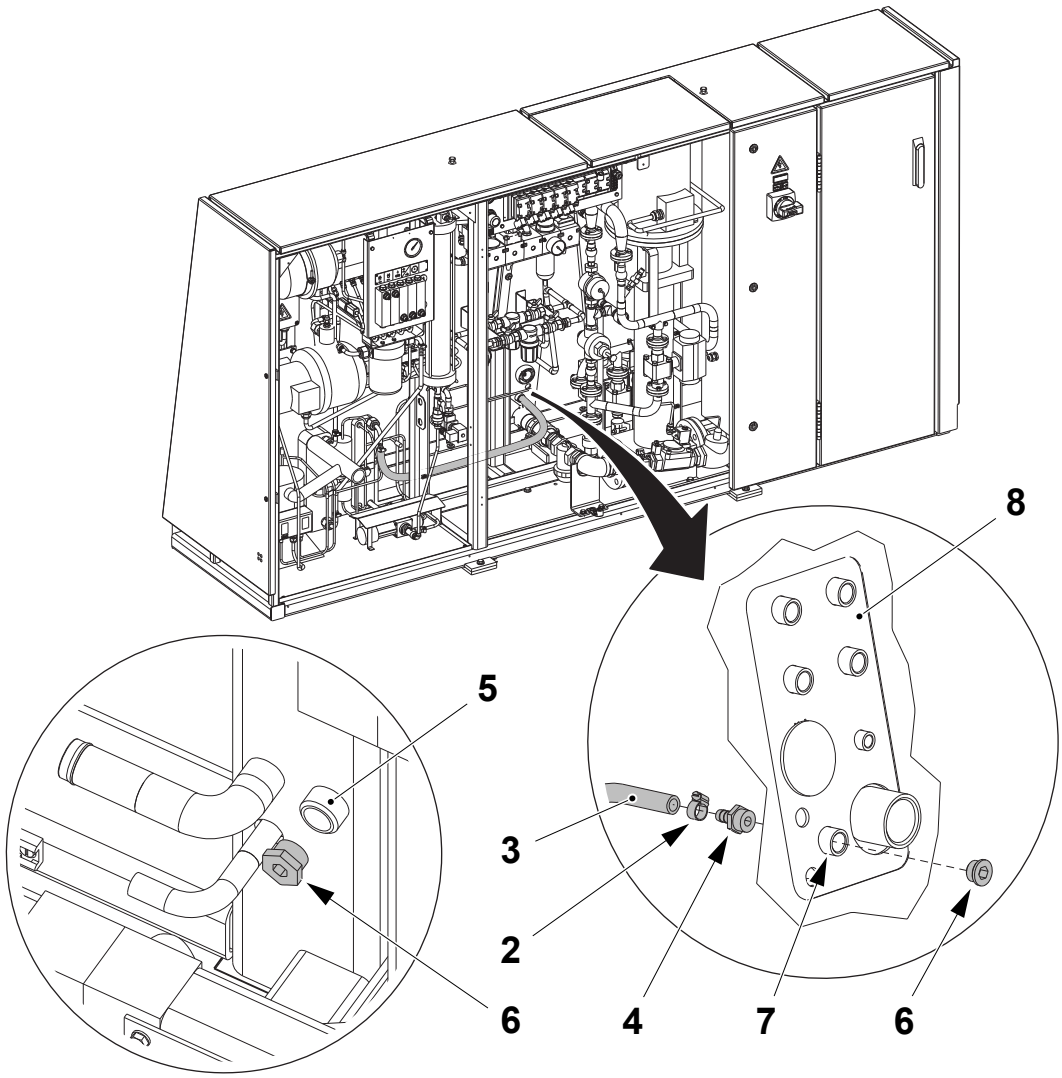

2 Clip
3 Hoes
4 Nipple
5 Connector
6 Plug
7 Connector
8 Connection plate

4.5.1.4 Drain Connections

Connect the drain outlet from the machine to the waste water drain.

CAUTION
Check the legal requirements for disposing of diluted hydrogen peroxide. A separate drain may have to be used.

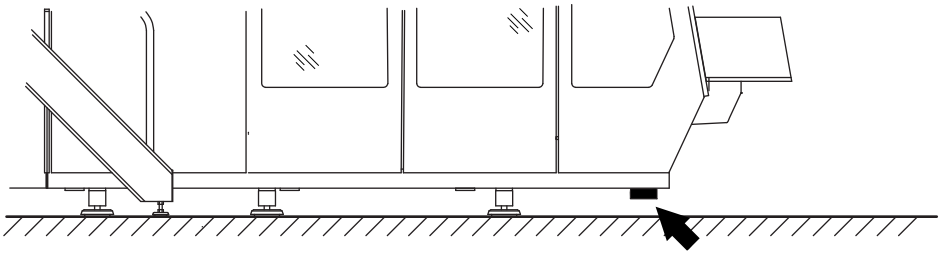

4.5.1.5 Ensuring the Drying Function in CIP

CAUTION
Machine Malfunction
During the final stage of the **CIP** cycle, the CIP circuit is vented and dried by hot air. It is essential a drain valve is opened at the end of the CIP circuit during the **Venting** stage.

In the SCU/4, this function is facilitated by a drain valve, which automatically opens in the VENTING/DRYING sequence.
When not using the SCU/4 or using SCU/4 in parallel with more than one filling machine, it is essential that a drain valve is placed at the end of the line and this valve is opened during the VENTING/DRYING cycle. If there is no valve to open the circuit, drying air cannot flow and consequently the correct air temperature will not be reached. As a result of this the drying cycle will not be performed correctly.

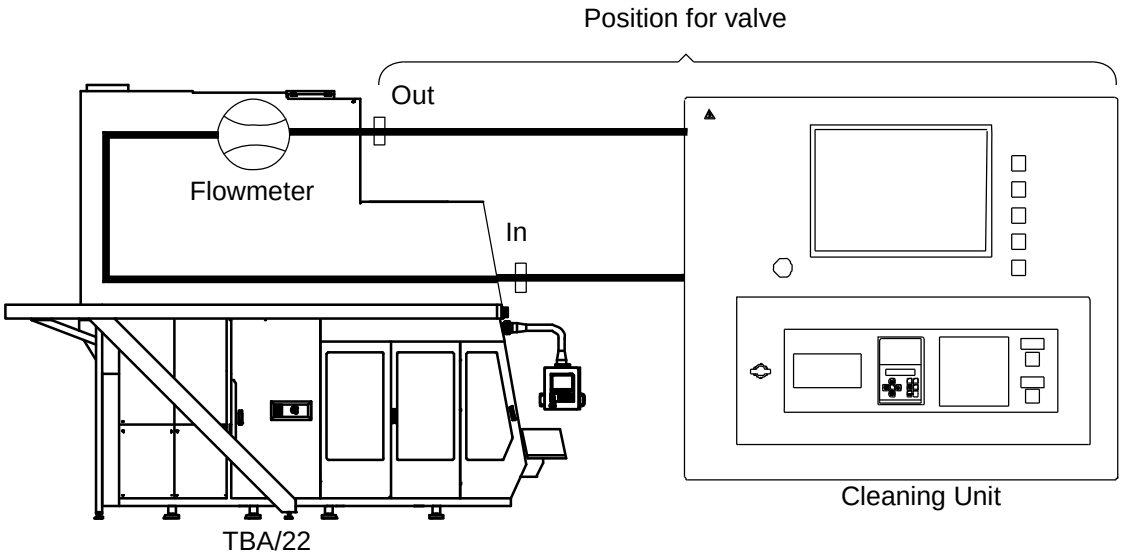

4.5.2 Conveyor Equipment

To connect the machine to the plant conveyor system:

a) Connect the package outfeed conveyor according to the plant installation and connection drawings. See the package conveyor´s own installation manual for instructions.

b) Make all necessary electrical connections. See the *EM* for further details.

c) Set the recommended conveyor speed. See the package conveyor´s own installation manual for instructions.

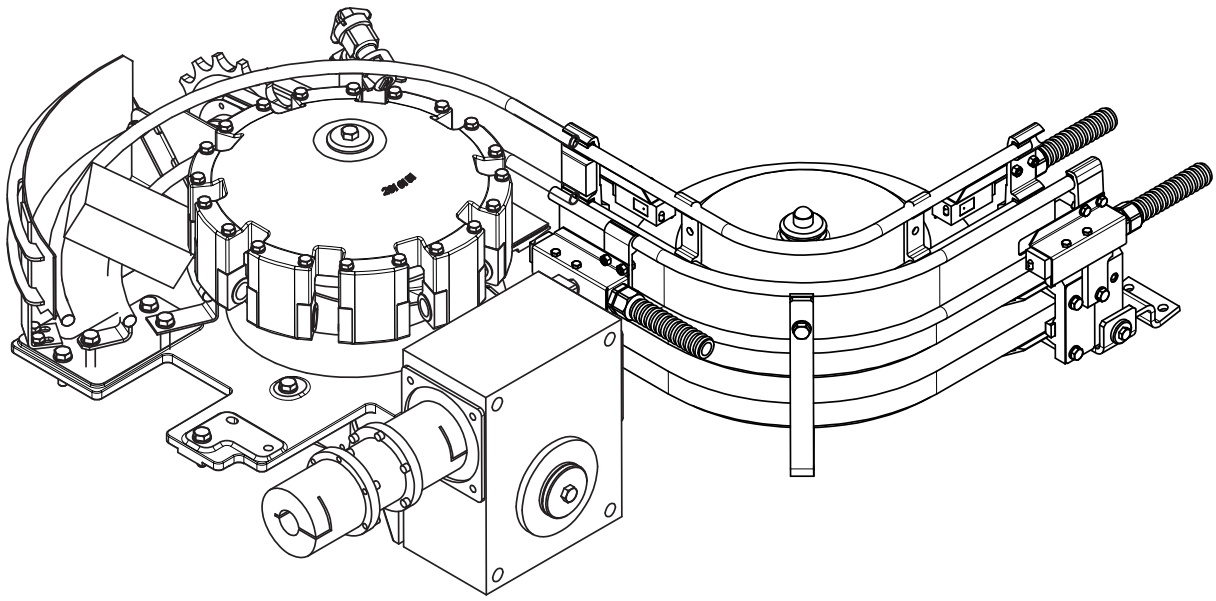

4.5.3 Service Unit

Fit the connections to and from the service unit.
Use the list to check all connections.

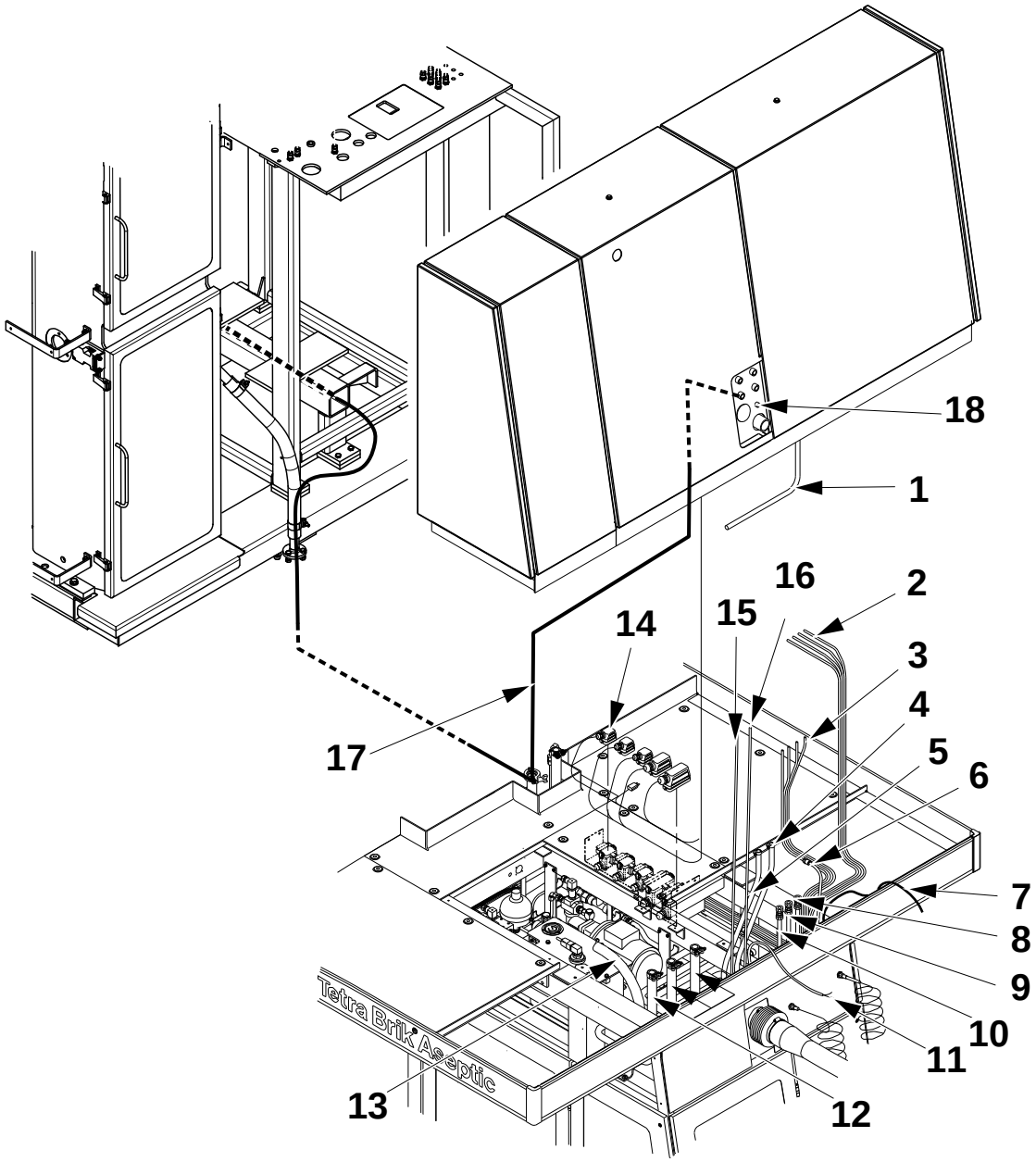

1 Drainage from cooling unit tray
2 Cooling water feed hose (4)
3 Cooling water return hose (4)
4 Water flushing final folder
5 Drainage from cooling equipment
6 Air, external cleaning unit
7 Cleaning unit, external cleaning unit
8 Cold water supply
9 Air, regulated supply
10 Air, constant supply
11 Cable front warning beacon (through the hole
12 External cleaning hose (3)
13 Internal electrical main cable
14 Electrical connections (6)
15 Air gun (blue)
16 Water gun
17 Nitrogen hose (HI OE)
18 Nitrogen inlet (HI OE)

4.5.4 Superstructure

Fit the connections to and from the superstructure.

Use the list to check all connections.

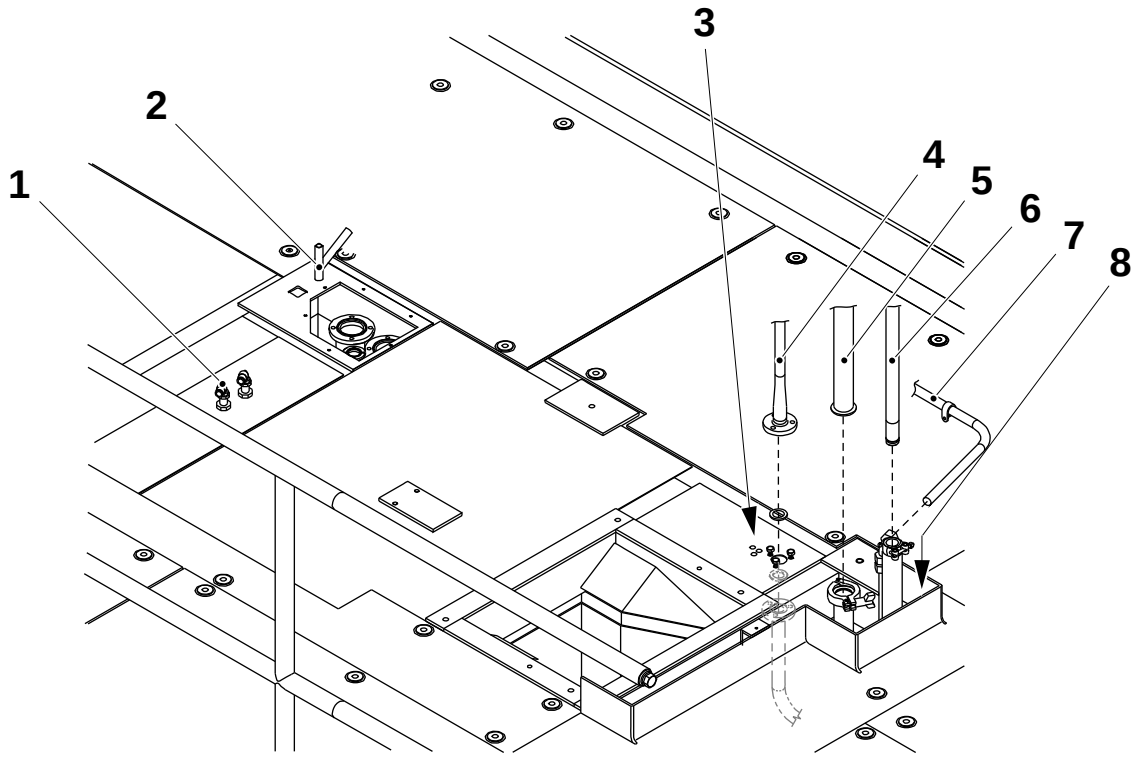

1 Air supply (2 pcs)
2 Drainage, electrical cabinet and separator
3 Communication cables
4 External cleaning, column
5 Return CIP
6 Water, compressor
7 Drainage, product valve group
8 Cooling water hose, IH-LS (2 pcs)

4.5.5 Electrical Cabinet and other Electrical Supplies

a) Secure the cable duct (1) to the electrical cabinet.

b) Fit and secure the cable duct (2).

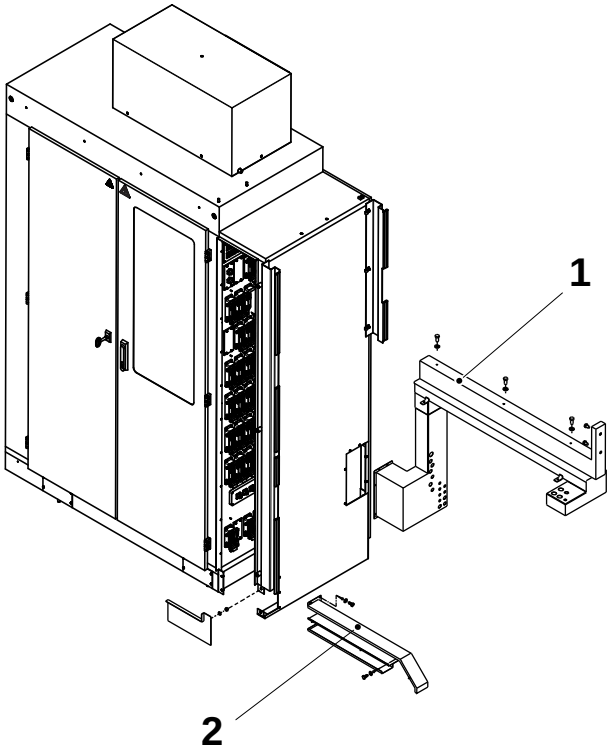

1 Cable duct
2 Cable duct

c) Feed the internal mains cable (3) through the cable bracket (4) and connect it to the terminals in the electrical cabinet.

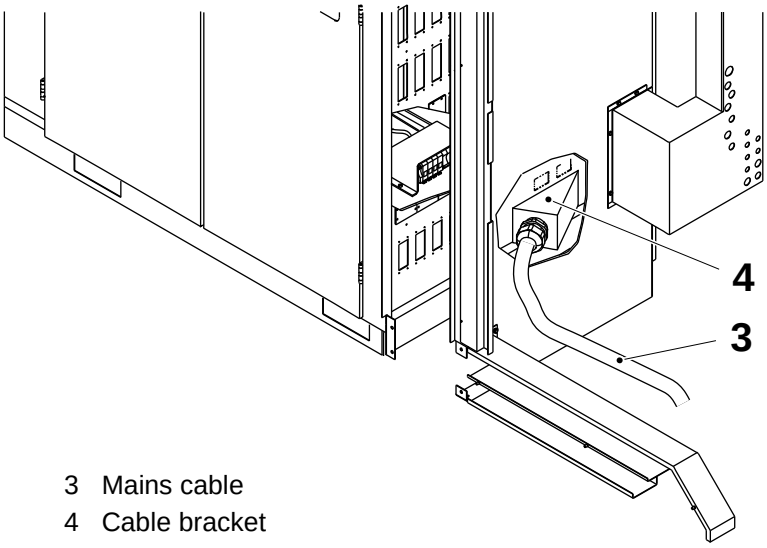

3 Mains cable
4 Cable bracket

(Cont'd)

(Cont'd)

Note! The cables must not hang directly from the connectors to avoid possible future contacts.

Note! Follow the Electrical Manual circuit diagrams when wiring cables directly inside the electrical cabinet. Always check the circuit diagrams for notes regarding shielded cables and follow the wiring instructions for the cables shield as detailed in the Electrical Manual chapter 10 Drawing Remarks.

d) Connect the electrical cables from the different parts of the machine to the electrical cabinet. Carefully match the markings on the cable to the corresponding markings in the cabinet.
Fasten the cables to the wall connectors. To avoid bad contacts, cables must not hang directly on their connectors.

e) Fit the covers (5), (6) and (7) to the electrical cabinet.

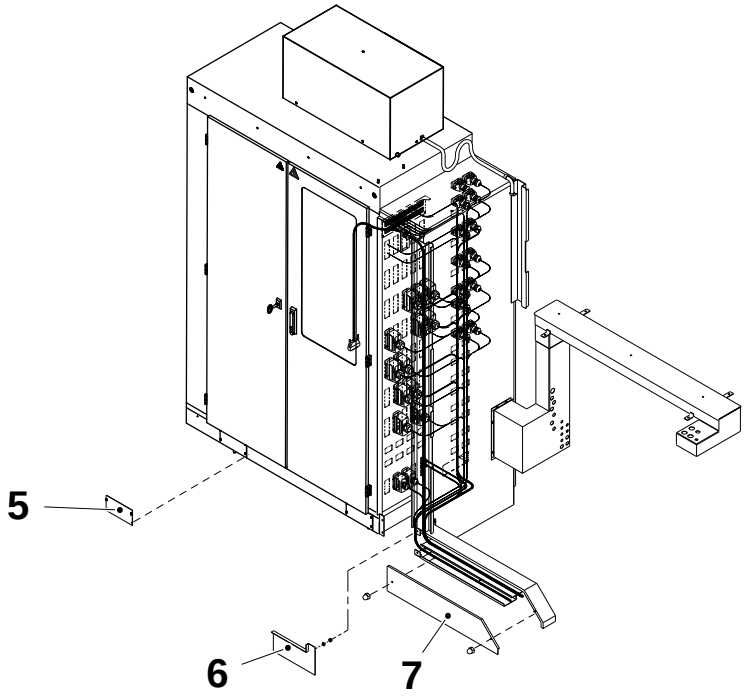

5 Cover
6 Cover
7 Cover

(Cont'd)

(Cont'd)

f) If the two warning beacons are not fitted to the machine, fit them where shown.

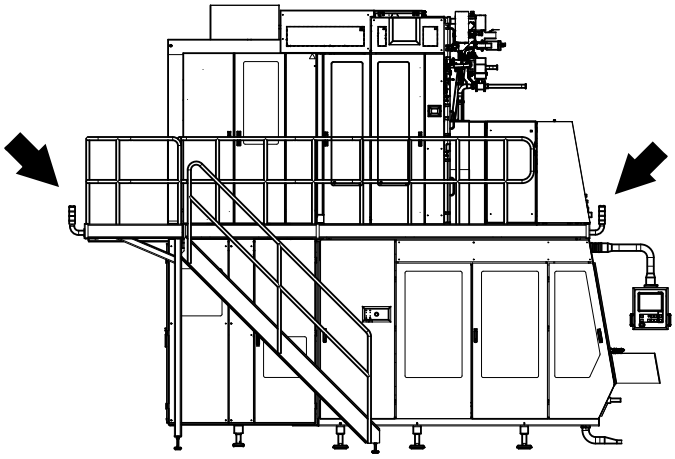

(Cont'd)

(Cont'd)

DANGER

Risk of electrocution.

In case of an accident call for medical attention immediately.

g) Make sure that the main electrical power supply to the machine is OFF.

h) Make sure that the main switch on the service unit is in the OFF position.

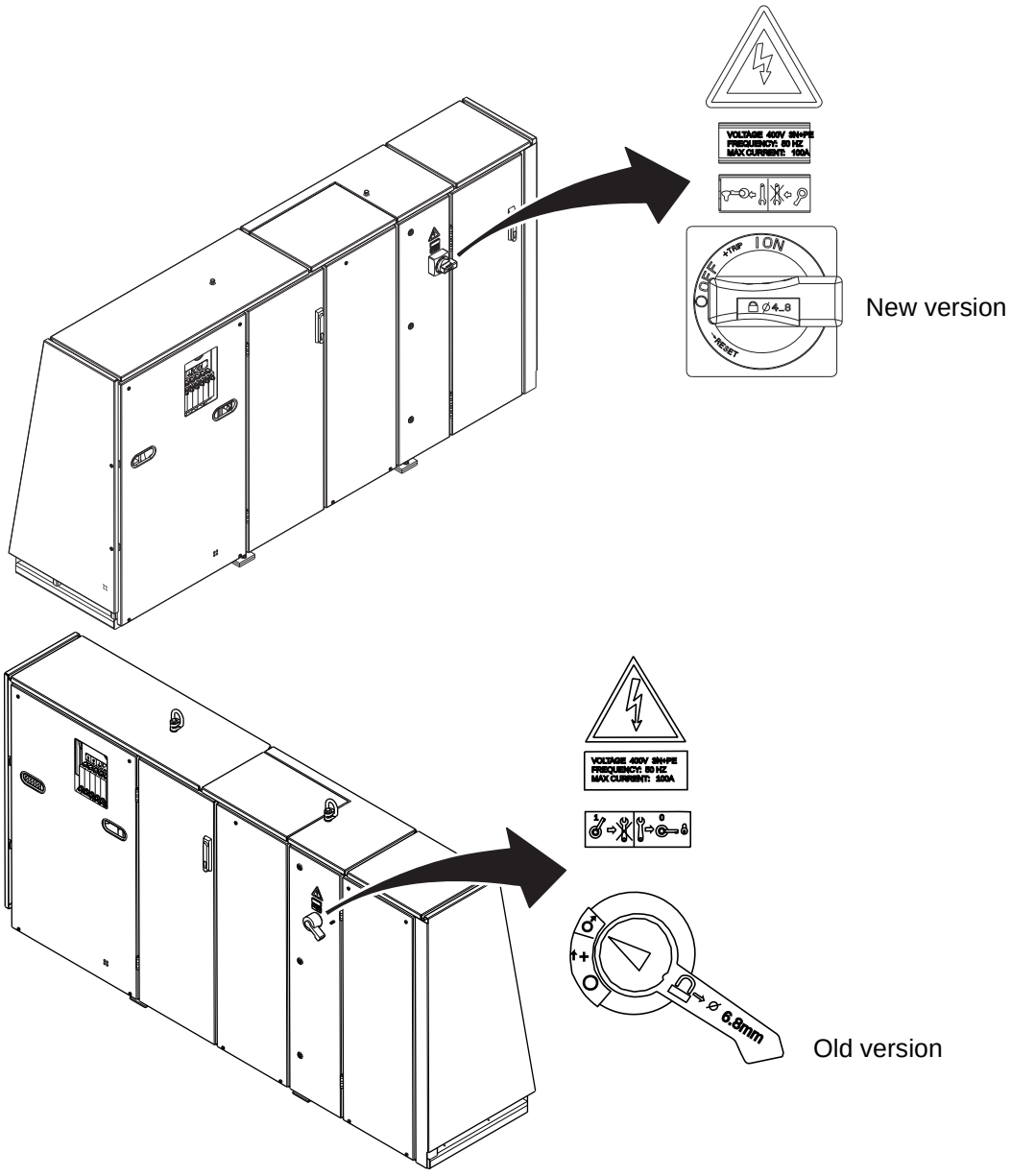

(Cont'd)

(Cont'd)

DANGER

Risk of electrocution.

In case of an accident call for medical attention immediately.

i) Connect the internal electrical mains supply to the service unit.

j) Connect the electrical mains supply cable to the service unit according to the electrical diagram in section 9 Mains Connections in the filling machine's EM.

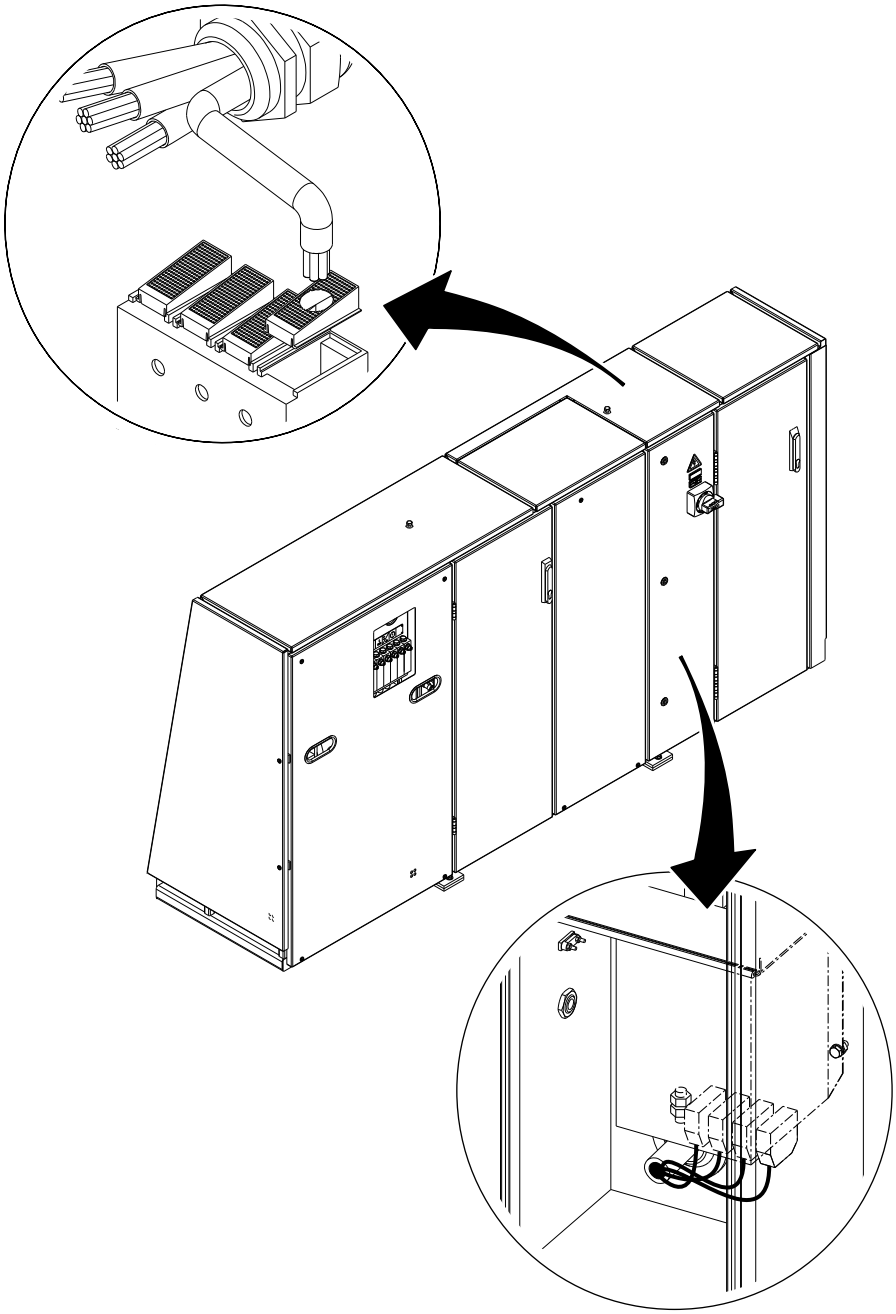

4.5.6 External Data Unit (OE)

Place the external data unit close to the filling machine along the conveyor system.

a) Connect the external data unit according to the plant installation and connection drawings, see the installation manual for the external data unit for instructions.

b) Make all necessary electrical connections, see the EM for further details.

Note! The external data unit main power supply must be separated from the machine.

c) Set the external data unit, see the external data unit own installation manual for instructions.

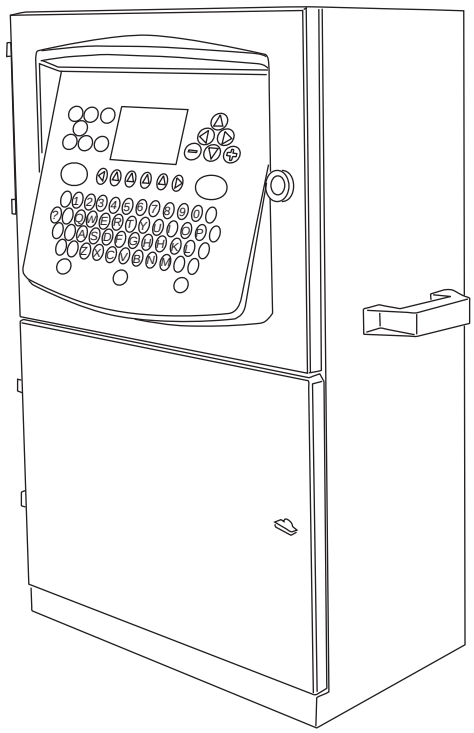

4.5.7 Conveyor Unit (Valid for Conveyor Group TP. 648568-0100)

4.5.7.1 General

a) Remove the cover (1) from over the machine outfeed conveyor.

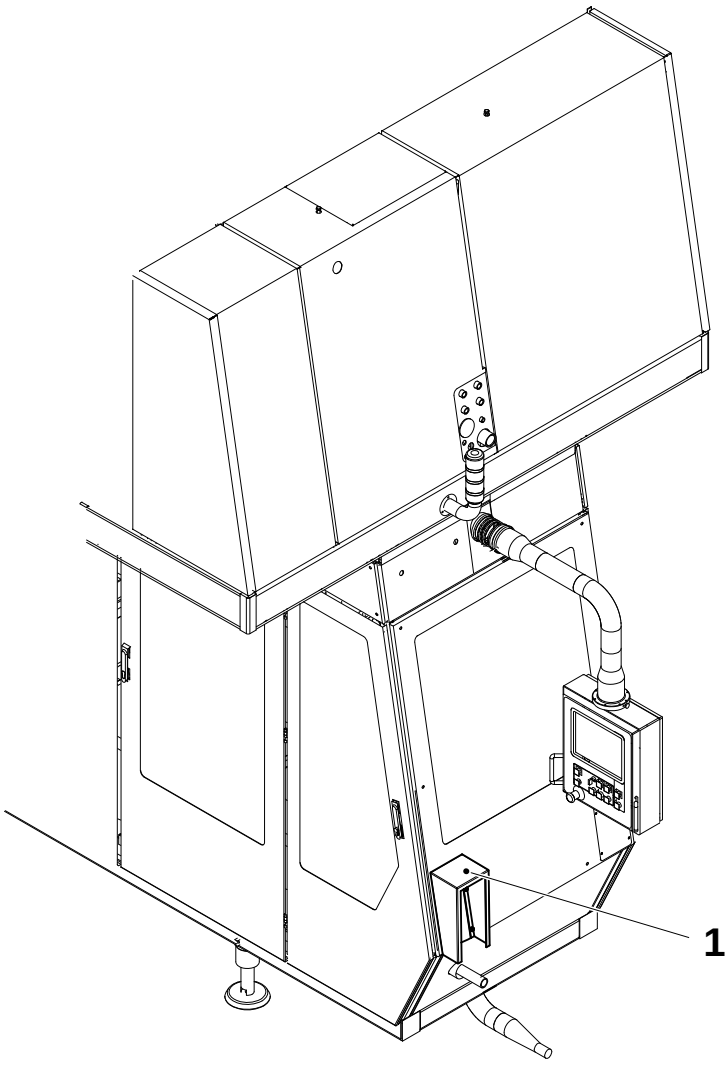

1 Cover

(Cont'd)

(Cont'd)

b) Connect the belt brake (2) to the machine outfeed conveyor (3).

c) Connect the connection box of the belt brake to the filling machine with the cable provided. See the EM of the Filling Machine.

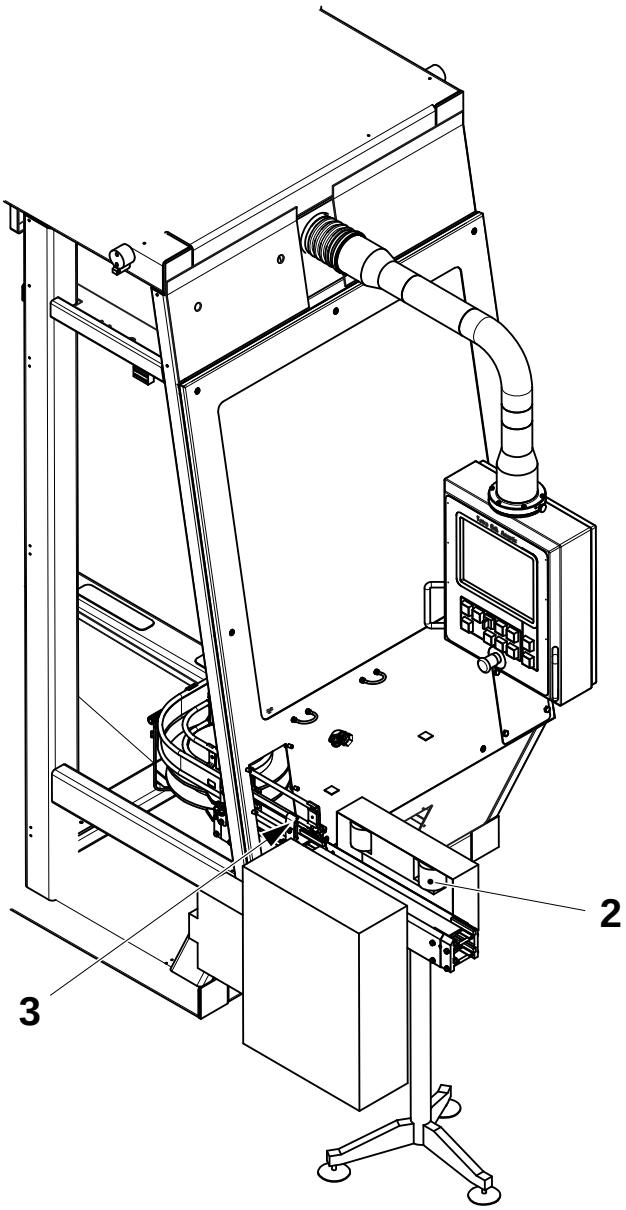

2 Belt brake
3 Outfeed conveyor

(Cont'd)

(Cont'd)

d) Connect the conveyor (4) to the belt tensioner (5) and the drive unit (6) to the belt brake (2).

Note! For all electrical connections, see the electrical documentation.

Note! The connection box (7) must not be mounted more than 5 metres from the filling machine.

e) Mount the connection box (7), supplied with the conveyor (4), on the conveyor and connect the conveyor and drive unit cables to it. Connect the connection box (7) to the filling machine with the cables provided.

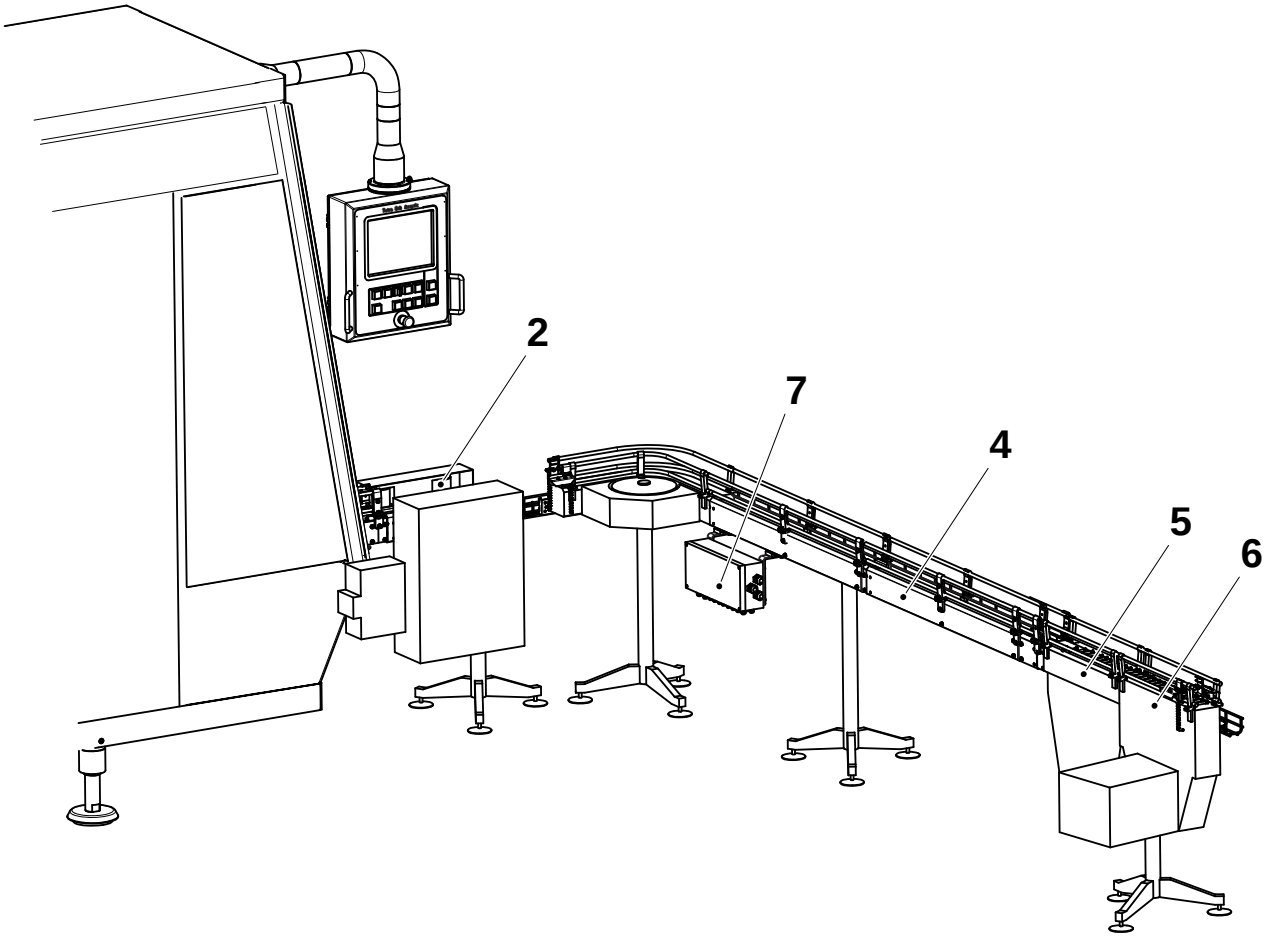

2 Belt brake
4 Conveyor
5 Belt tensioner
6 Drive unit
7 Connection box

4.5.7.2 Sampling Unit (OE)

Note! For all electrical connections, see the EM of the Filling Machine.

Note! It is recommended that the sampling unit (1) is mounted not more than 6 metres from the filling machine.

a) Mount the sampling station (1) on the conveyor (2).

b) Mount the pressure regulator (4) for the sampling unit on the conveyor.

c) Connect the sampling station (1) to the conveyor connection box (5).

d) Connect the air line (6) via a T-connector to the pressure regulator (4).

Note! The electrical cabinet (3) supplied with the sampling unit (1) should not be used. The sampling unit (1) must be connected directly to the conveyor connection box (5).

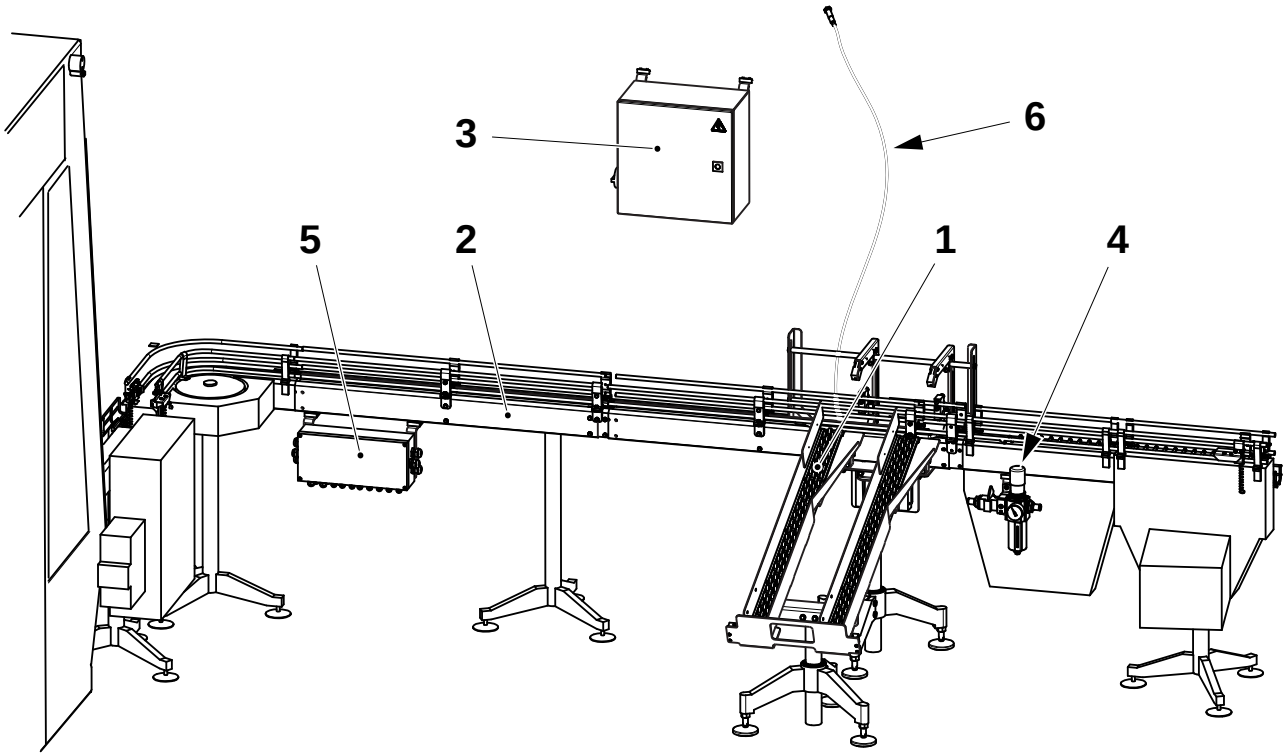

1 Sampling unit
2 Conveyor
3 Electrical cabinet
4 Pressure regulator
5 Connection box
6 Air line

4.5.7.3 Domino Printer (OE)

Note! For all electrical connections, see the EM of the Filling Machine.

a) Position the Domino printer (1) as near as possible to the belt brake (2). The maximum allowable distance is 3 metres.

b) Mount the brackets (3) and print head (4) on the belt brake (2).

c) Connect the Domino printer (1) to the print head (4).

d) Connect the Domino air connector (5) via a T-connector to the pressure regulator. (6).

e) Connect the Jaw ID cable (8) and the alarm cable (9) from the Domino printer (1) to the connection box (7).

f) Connect the Jaw ID option wire in the electrical cabinet of the filling machine.

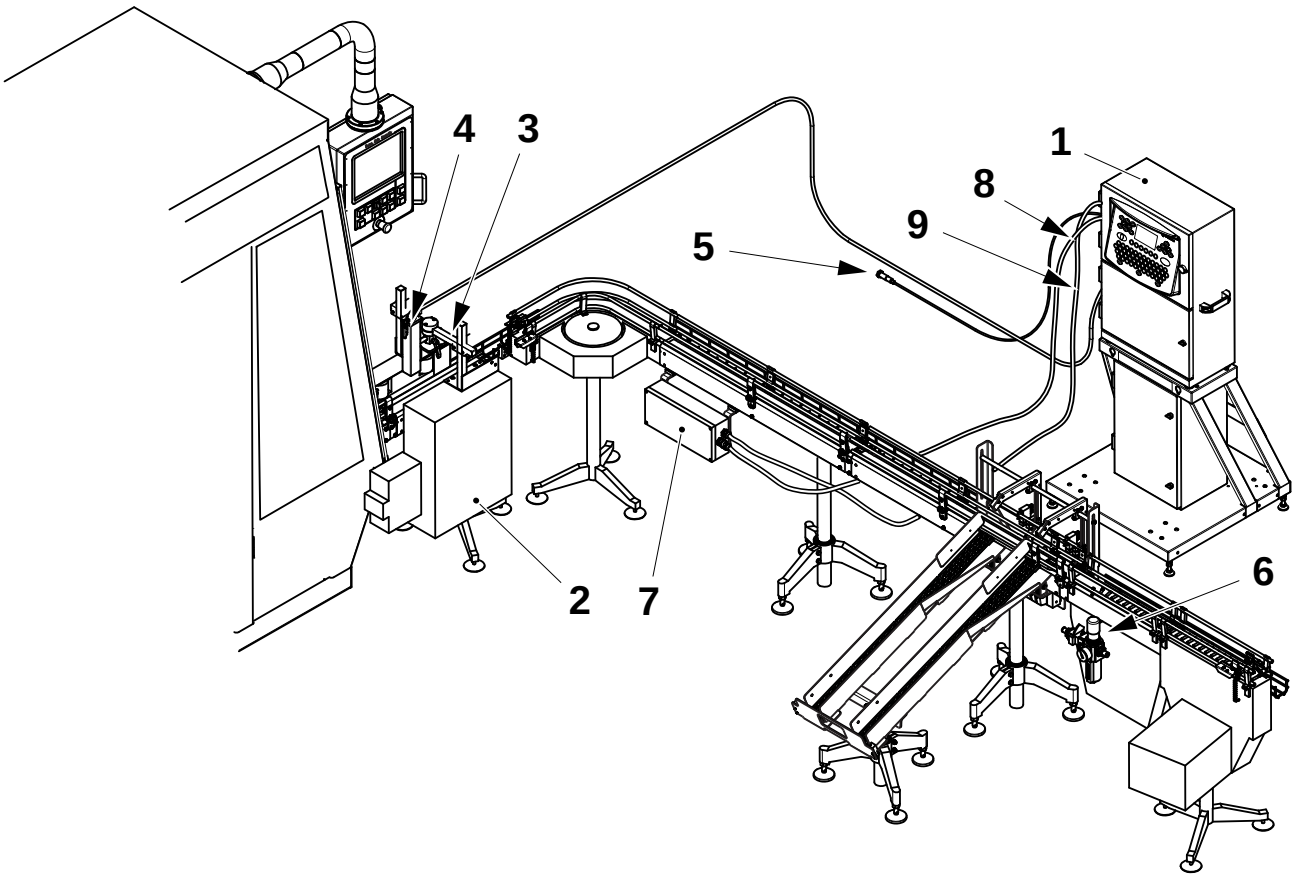

1 Domino printer
2 Belt brake
3 Bracket
4 Print head
5 Air connector
6 Pressure regulator
7 Connection box
8 Jaw ID cable
9 Alarm cable

4.5.7.4 All Configurations

Note! The cover (1) is for machines with a Domino Printer. The other cover (2) is for machines without a Domino Printer.

Fit the cover (1) or (2) over the machine outfeed conveyor.

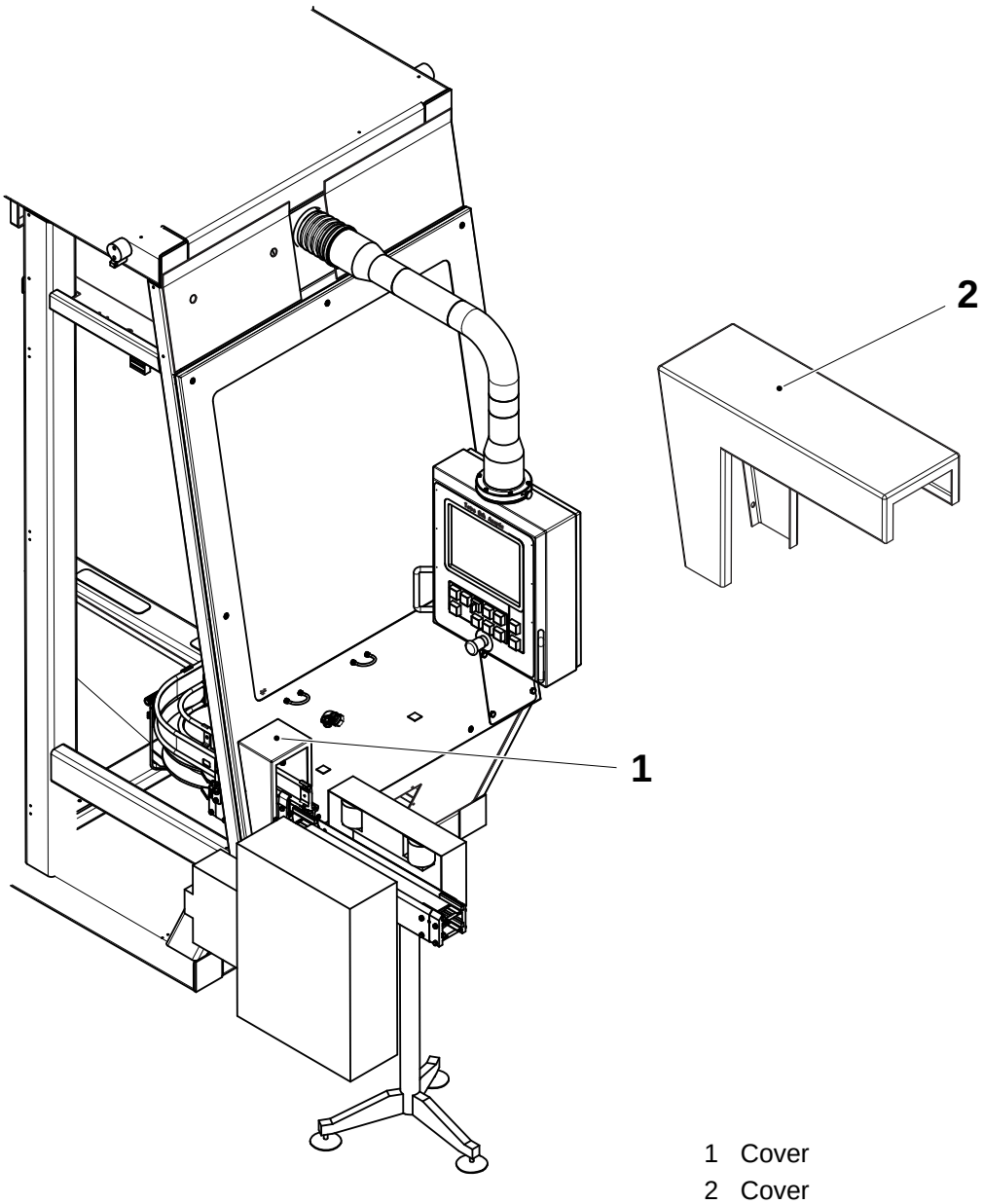

1 Cover
2 Cover

4.6 Final Assembly

4.6.1 Automatic Splicing Unit

Remove the piece of wood securing the splicing device.

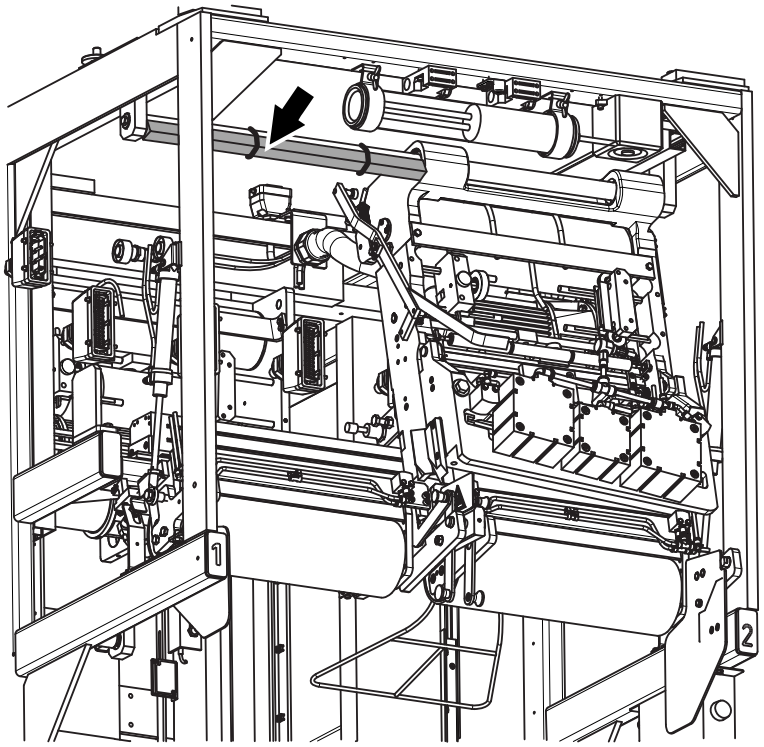

4.6.2 Machine Body

a) Fit the protective cover (1) over the package outfeed.

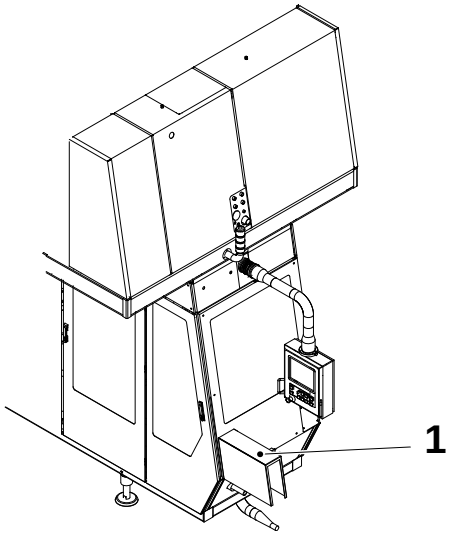

1 Protective cover

(Cont'd)

(Cont'd)

b) Put the peroxide container into the peroxide compartment, on the left-hand side of the machine.

c) Remove the transportation cap from the container.

d) Lift the safety cap off the bracket at the side of the compartment and fit it on the container.

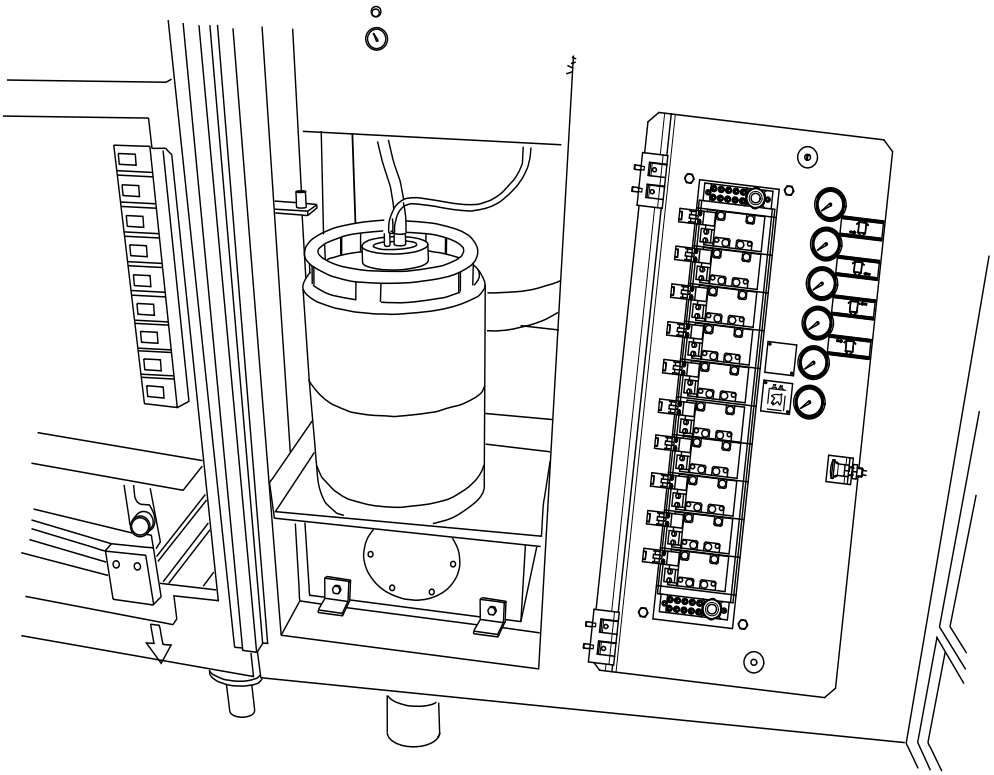

e) Put the cleaning liquid container into the compartment in the service unit and fit the connection.

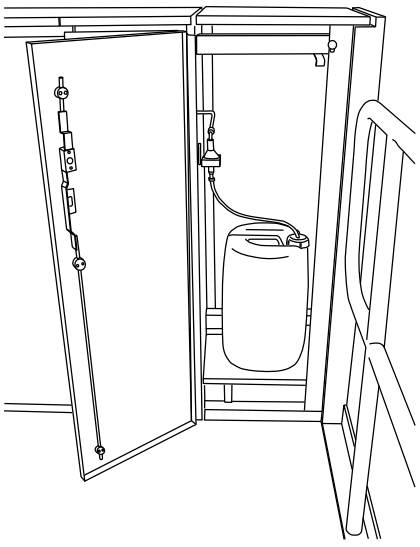

4.6.3 Superstructure

4.6.3.1 Filling the Hydrogen Peroxide Heating Water Circuit

a) Make sure the water is on.

Note! Make sure there is no gasket under the top cap of the venting valves (1) and (2), if there is, remove it.

b) Loosen the plugs (3) and (4).

c) Start filling the circuit with water by opening the shut off valves (5).

d) Continue filling until the water reaches the plug (4).

e) Tighten the plug (4) and continue filling until the water reaches the plug (3).

f) Tighten the plug (3).

g) Close the shut off valves (5).

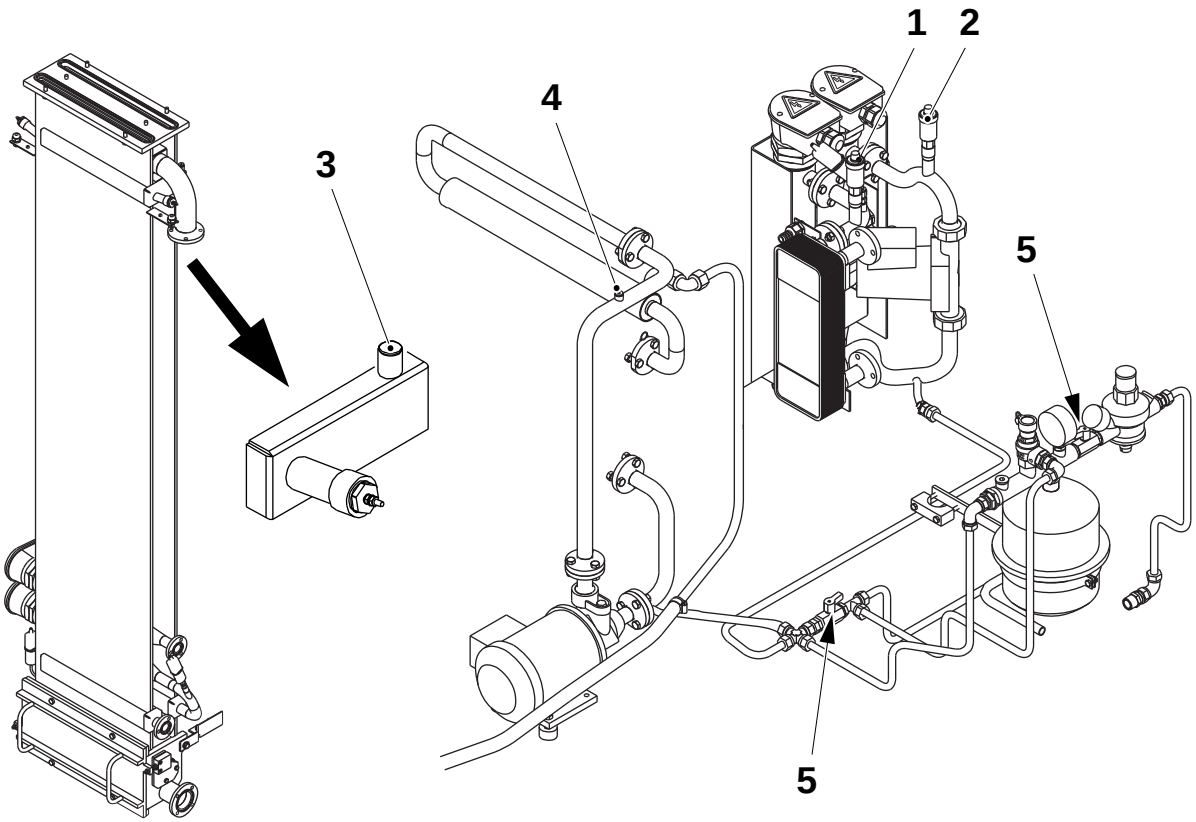

1 Venting valve
2 Venting valve
3 Plug
4 Plug
5 Shut off valve

(Cont'd)

(Cont'd)

h) Read the pressure in the liquid container (6) on the pressure gauge (7). The pressure must be between **2** and **2.5 bar**. If not set the correct pressure with the automatic feeder (8), see 4.6.3.2 Hydrogen Peroxide - Set Pressure.

i) Bleed air from the pump (9) by unscrewing the plug (10) a few turns. Tighten the plug when water runs from the hole and there are no air bubbles.

WARNING

Risk of personal injury!

The hydrogen peroxide system and adjacent components may be hot. If required wear heat-resistant protective gloves.

j) Step up the machine to HEAT STERILISATION.

k) Check the pressure on the pressure gauge (7) and set it if required.

l) Repeat h) and i) at four hourly intervals with machine running, until the water system is free of air bubbles.

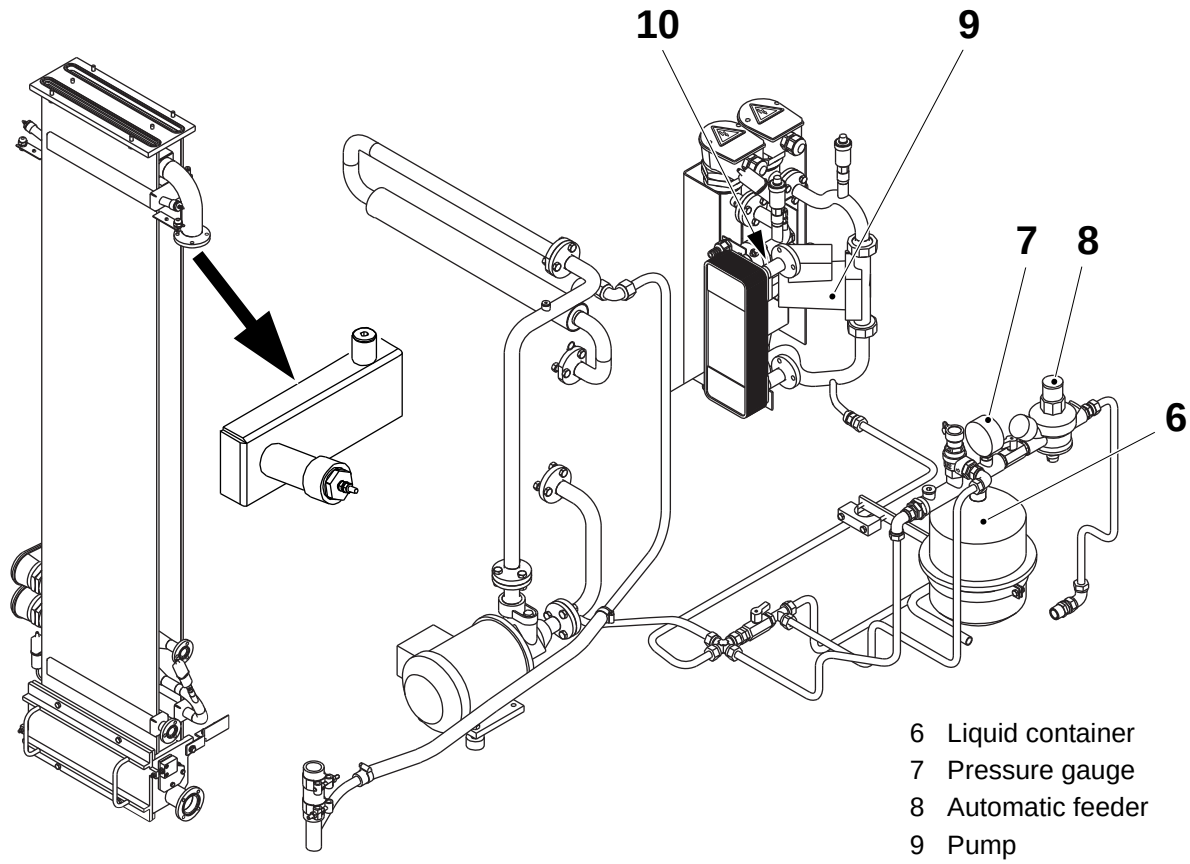

6 Liquid container
7 Pressure gauge
8 Automatic feeder
9 Pump
10 Plug

4.6.3.2 Hydrogen Peroxide - Set Pressure

WARNING

Risk of personal injury!

The hydrogen peroxide system and adjacent components may be hot.
If required wear heat-resistant protective gloves.

a) Unscrew and remove the cap (1) from the valve (2).

b) Using an allen key, unscrew the plug nut (3) a few turns. When the pressure on the gauge (4) reaches **2.0 - 2.5 bar** tighten the plug nut (3).

c) Fit the cap (1).

Note! Item d) must be performed during the first three hours of machine run.

d) Check the pressure indicated by the gauge (4) every half hour.

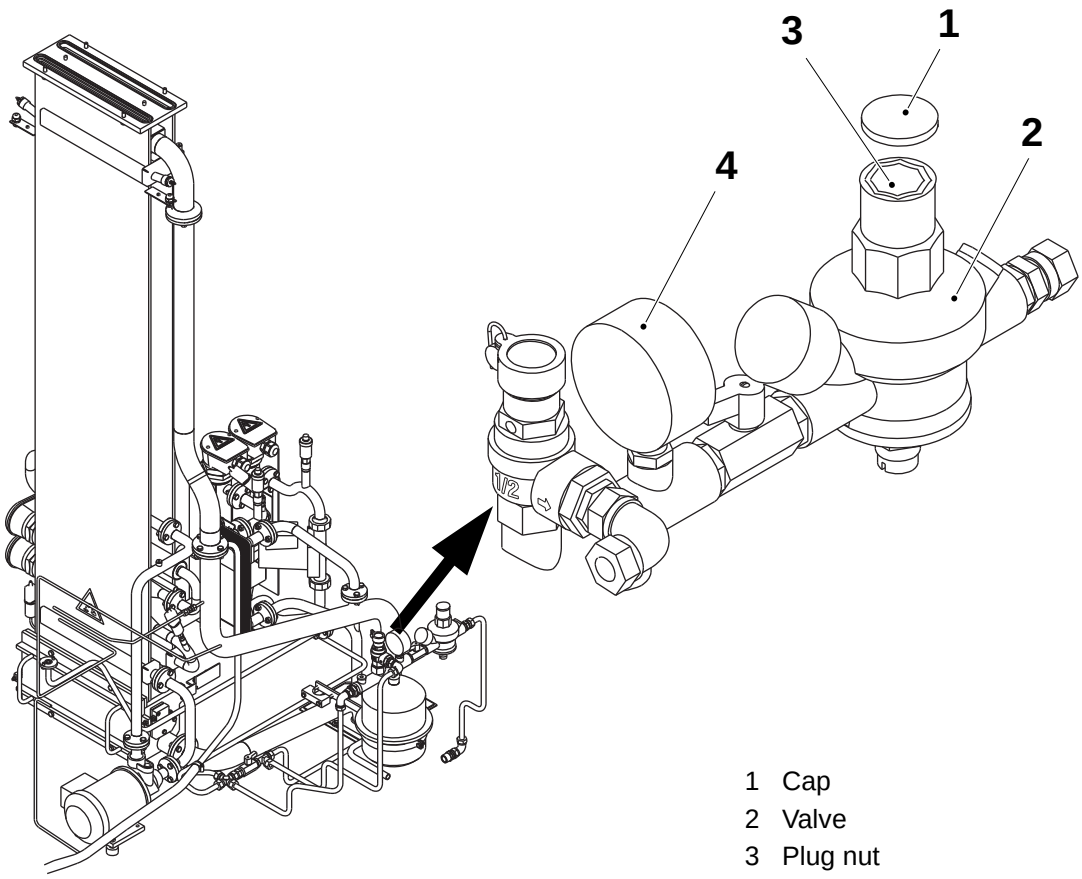

1 Cap
2 Valve
3 Plug nut
4 Pressure gauge

4.6.3.3 Hydrogen Peroxide - Check Leaks

WARNING
Hydrogen Peroxide!
Follow the Safety precautions.

WARNING
Risk of personal injury!
The hydrogen peroxide system and adjacent components may be hot.
If required wear heat-resistant protective gloves.

a) Check that the pressure in the liquid container (1) reaches **2 bar,** on the pressure gauge (2). If not set the correct pressure with the automatic feeder (3), see 4.6.3.2 Hydrogen Peroxide - Set Pressure.

b) Step up the machine to step HEAT STERILISATION.

c) Check the pipe connections for leaks, see arrows. Change the seals if required.

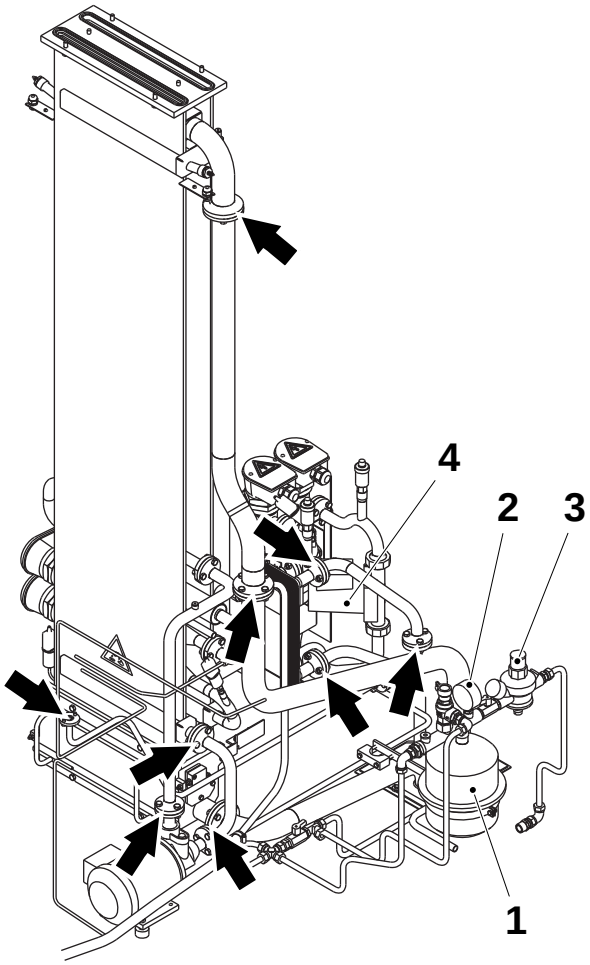

1 Container
2 Pressure gauge
3 Automatic feeder
4 Pump

4.6.3.4 LS Inductor- Fix Position

Note! The LS inductor must be fixed in position with the screw (1) and pins (2) and (3) before the machine is ready for production, see the procedures LS inductor -set and LS inductor - fix in the MM for the Filling Machine**.**

Note! Make sure the plate (4) completely covers the elongated hole beneath, see the procedures LS inductor - fix in the MM for the Filling Machine**.**

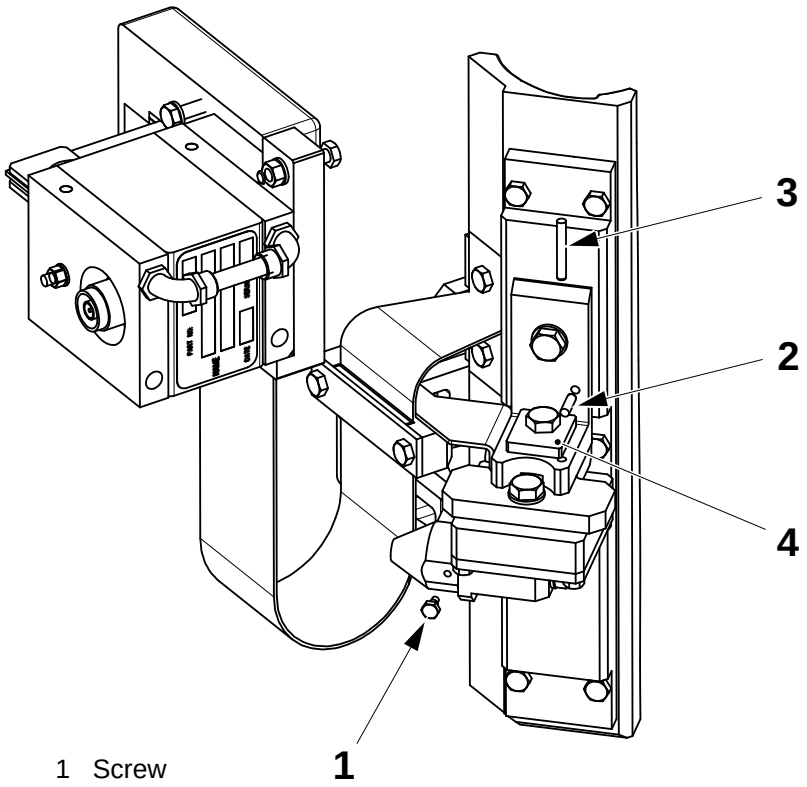

1 Screw
2 Pin
3 Pin
4 Plate

4.6.3.5 Filling System

Fit the filling pipe (1).

Follow the complete setting sequence flowchart for the superstructure as detailed in the Filling Machine Maintenance Manual

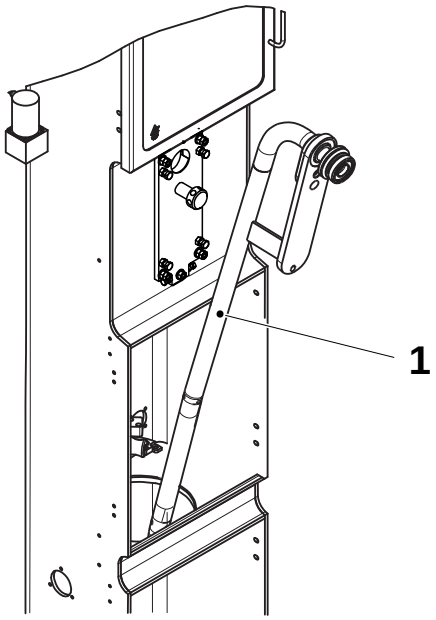

1 Filling pipe

4.6.3.5 Completion Tasks

a) Fit the cover plate to the superstructure as shown.

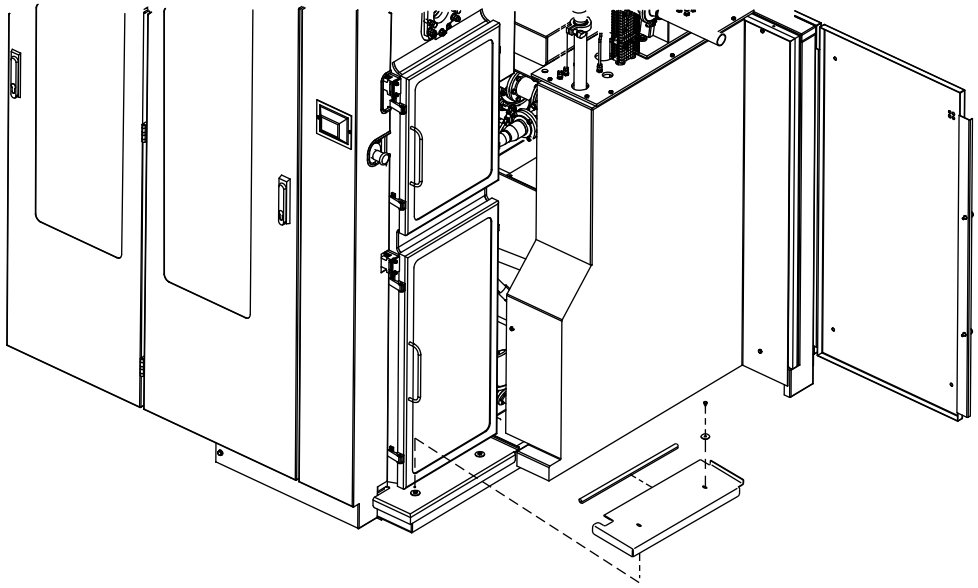

b) Locate the CIP equipment and check that it is complete as shown.

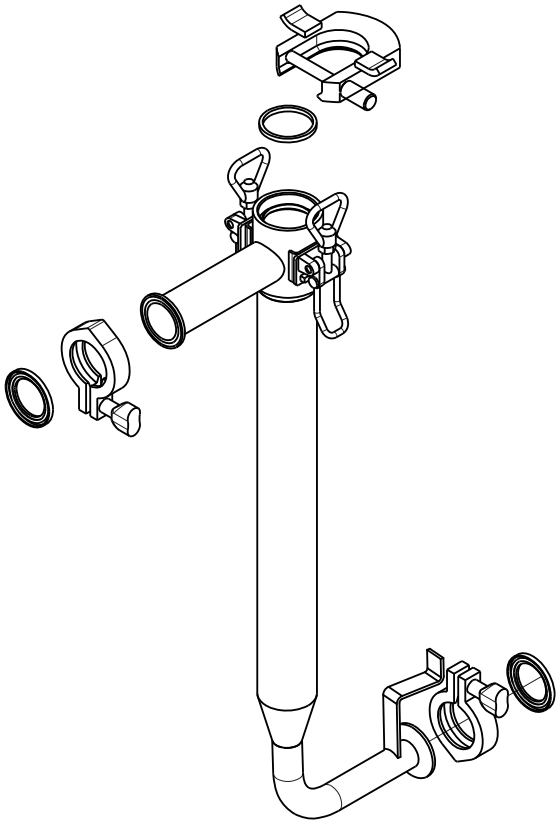

Level probe version

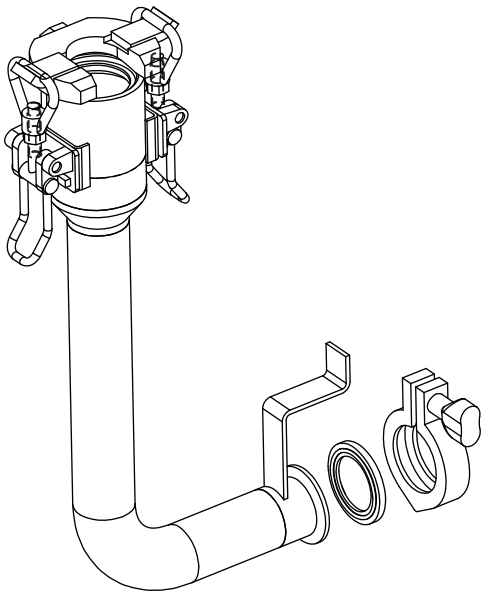

Floater version

4.6.4 Service Unit

WARNING

Risk of personal injury.

Cooling media R134A. Follow the Safety precautions.

Fill the cooling water system:

a) Make sure the air, water, and mains power are ON.

b) Open the valve (3) until the water pressure gauge (5) indicates **200 kPa**, close the valve (3).

c) Open the valve (2) to bleed out any air, close the valve (2). If necessary, adjust the pressure with the valve (3).

d) Check the expansion vessel (1) is approximately half full.

Note! The system should be bled again when the pump is (4) is running. This is when the machine has been stepped up to DRYING. When the machine has produced a TIGHT TUBE for the first time and has been stepped up to DRYING**,** repeat from step c).

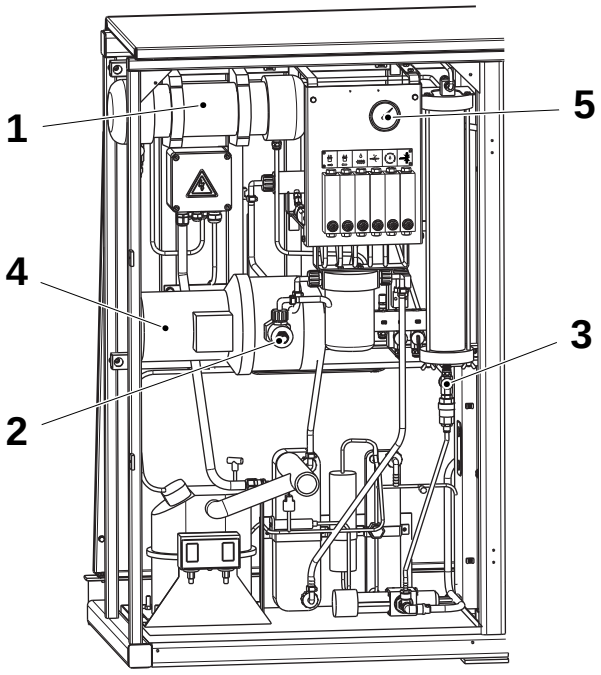

Drawing shows the not updated cooling circuit version

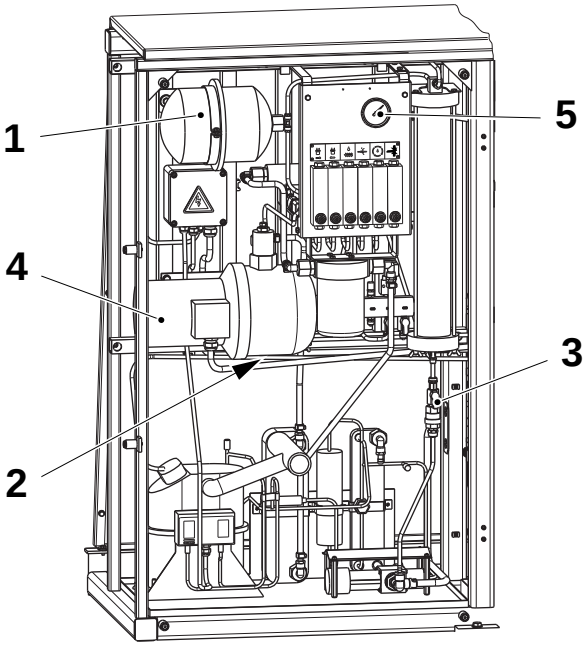

Drawing shows the updated cooling circuit version

1 Expansion vessel
2 Valve
3 Valve
4 Pump
5 Pressure gauge

4.6.5 Doors and Covers

Make sure that the doors, covers and railings shown below are fitted to the machine.

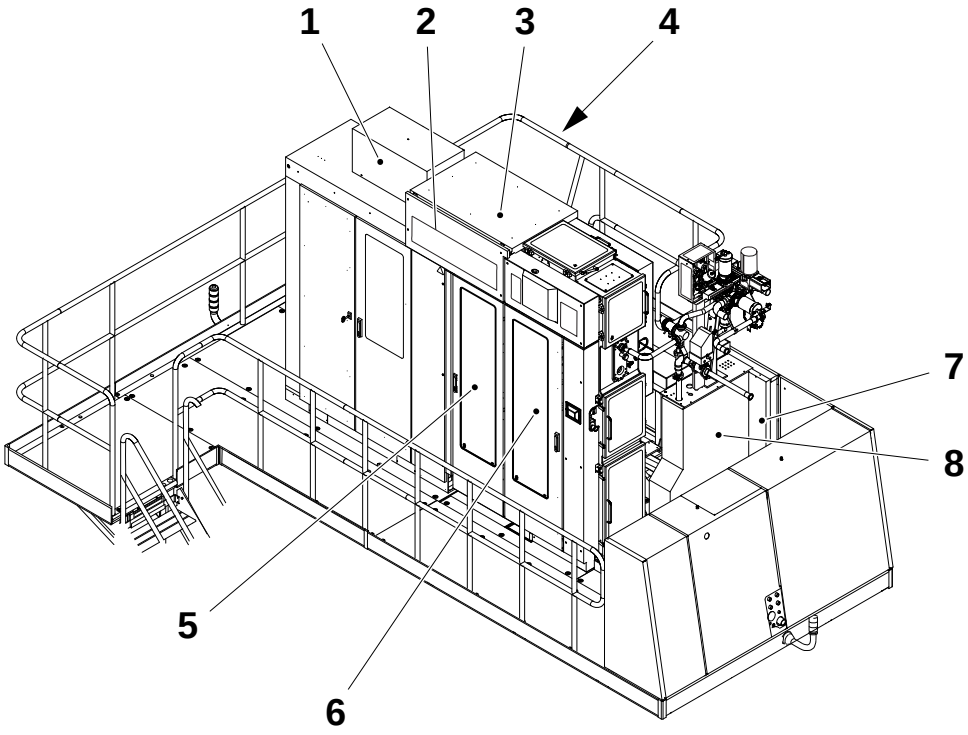

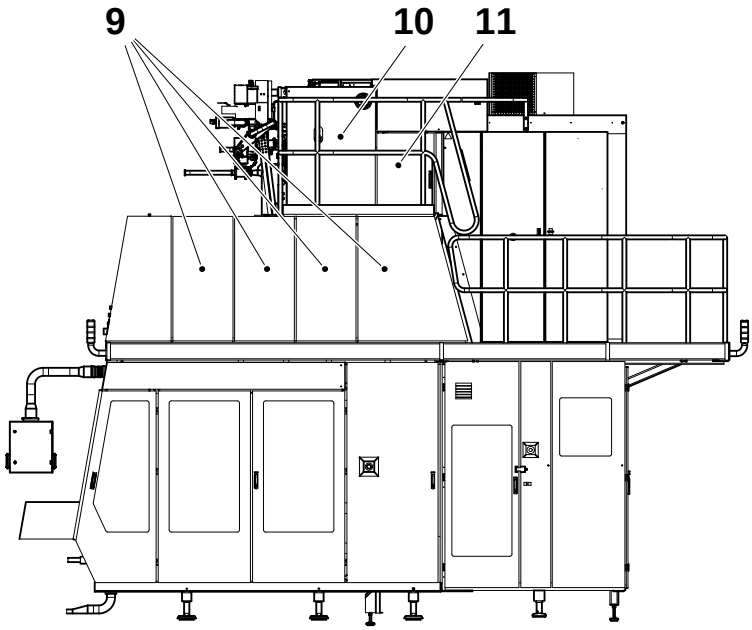

1 Covers, electrical cabinet cooler
2 Cover plate, top cover
3 Top cover
4 Railing
5 Door
6 Door pneumatic air panel
7 Cover frame, sterile air system
8 Front cover, sterile air system
9 Covers, sterile air system
10 Top cover superstructure, RH side
11 Cover plate

4.6.6 TPOP

Set date and time see, MM TPOP - set date and time PLMS.

Set language see, OM language setting.

4.6.7 Serial Communication

a) Remove the cover (1).

b) Open the connection box (2) X2000 and connect the serial communication cable (3) W4500 according to the table below.

c) Feed the communication cable (3) through the gland (4) at the side of the connection box (2).

From	To
W4500 - WH	145
W4500 - BN	146
W4500 - YE	147
W4500 - GN	148
Screen	E10

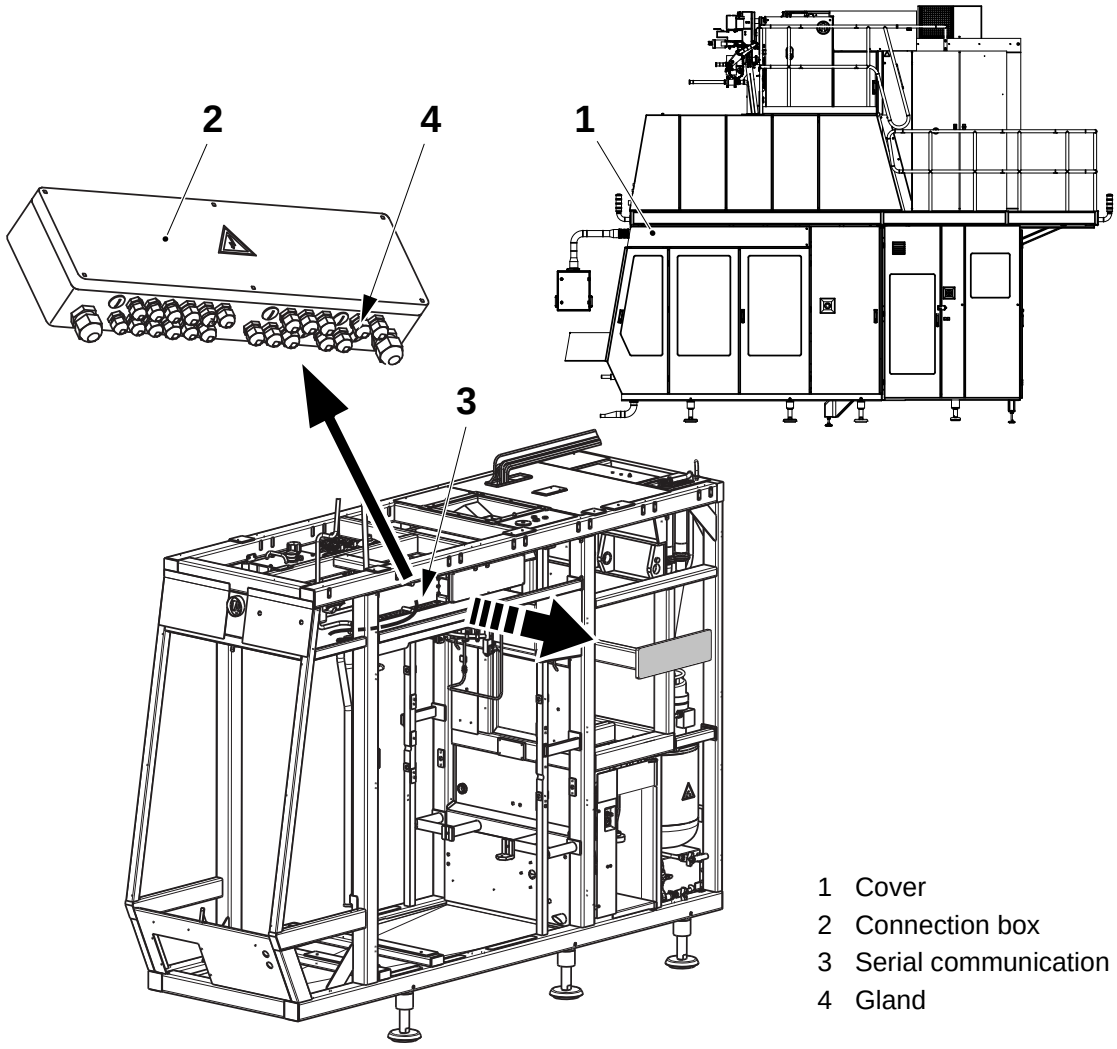

1 Cover
2 Connection box
3 Serial communication cable
4 Gland

(Cont'd)

(Cont'd)

d) Feed the serial communication cable (3) out of the machine. Two alternative paths can be chosen: from the FFU chamber or from the service unit front panel, see picture.

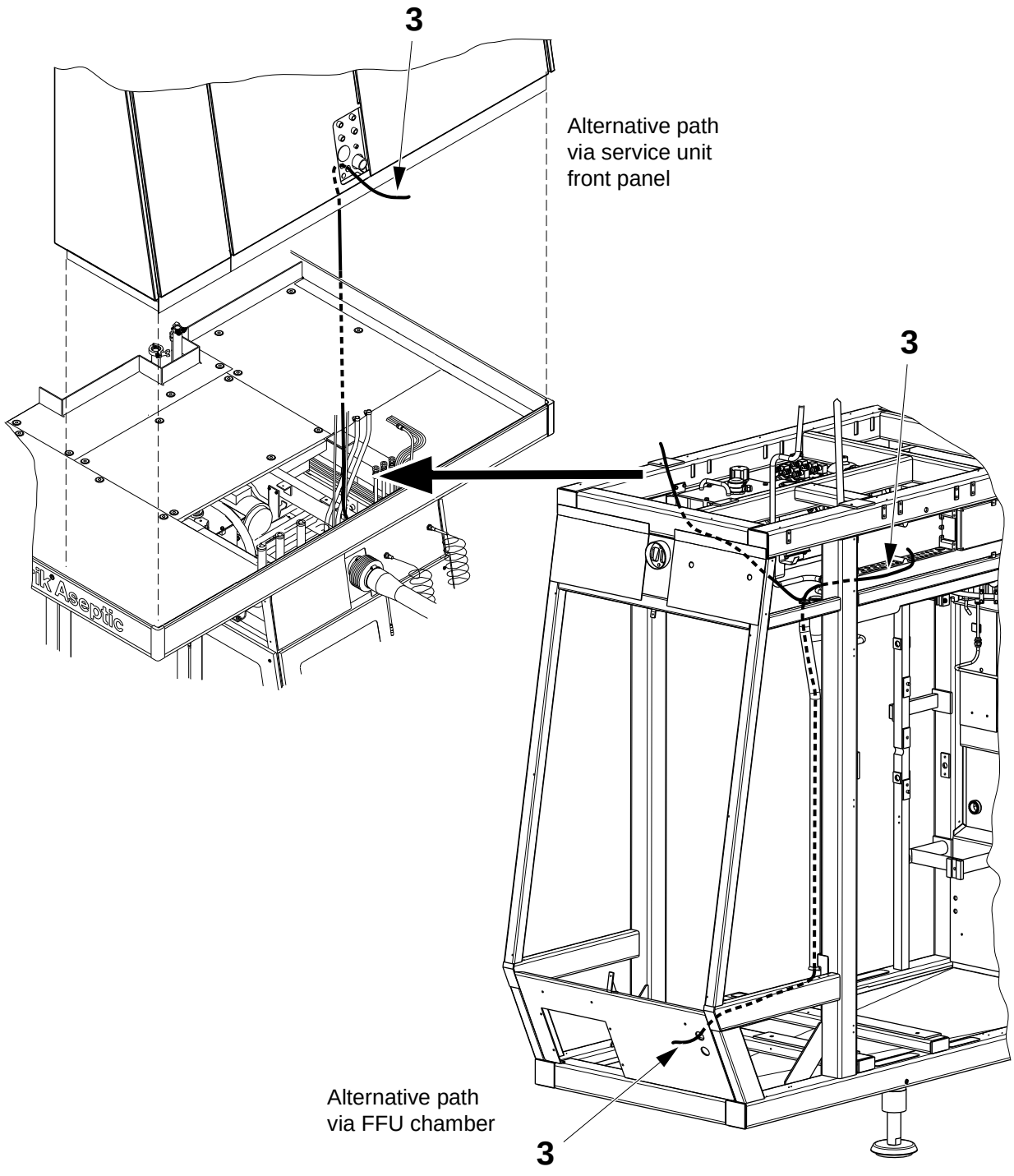

3 Serial communication cable

(Cont'd)

(Cont'd)

Note! All free cables coming from the Filling Machine should be protected by cable ducts. Care should be taken to ensure the communication cable is not placed near to any power supply cable coming from other equipment.

e) Feed the serial communication cable (3) to the short haul modem (5) A4500 in the dairy PC office. Connect the serial communication cable (3) to the short haul modem (5) according to the table below.

From	To		From	To
W4500 - YE	1		W4500 - BN	4
W4500 - GN	2		Screen	5
W4500 - WH	3			

f) Connect the short haul modem (5) to the 220 VCA main supply.

g) Connect the short haul modem (5) to the Office PC communication port with the cable (6) W4501 and install in the PC the PLMS Receive, see PLMS Send and Receive User Manual.

h) Install in the Office PC the PLMS Off-Line Analysis, see PLMS Off-Line Analysis User Manual.

i) Close the connection box (2) and fit the cover (1).

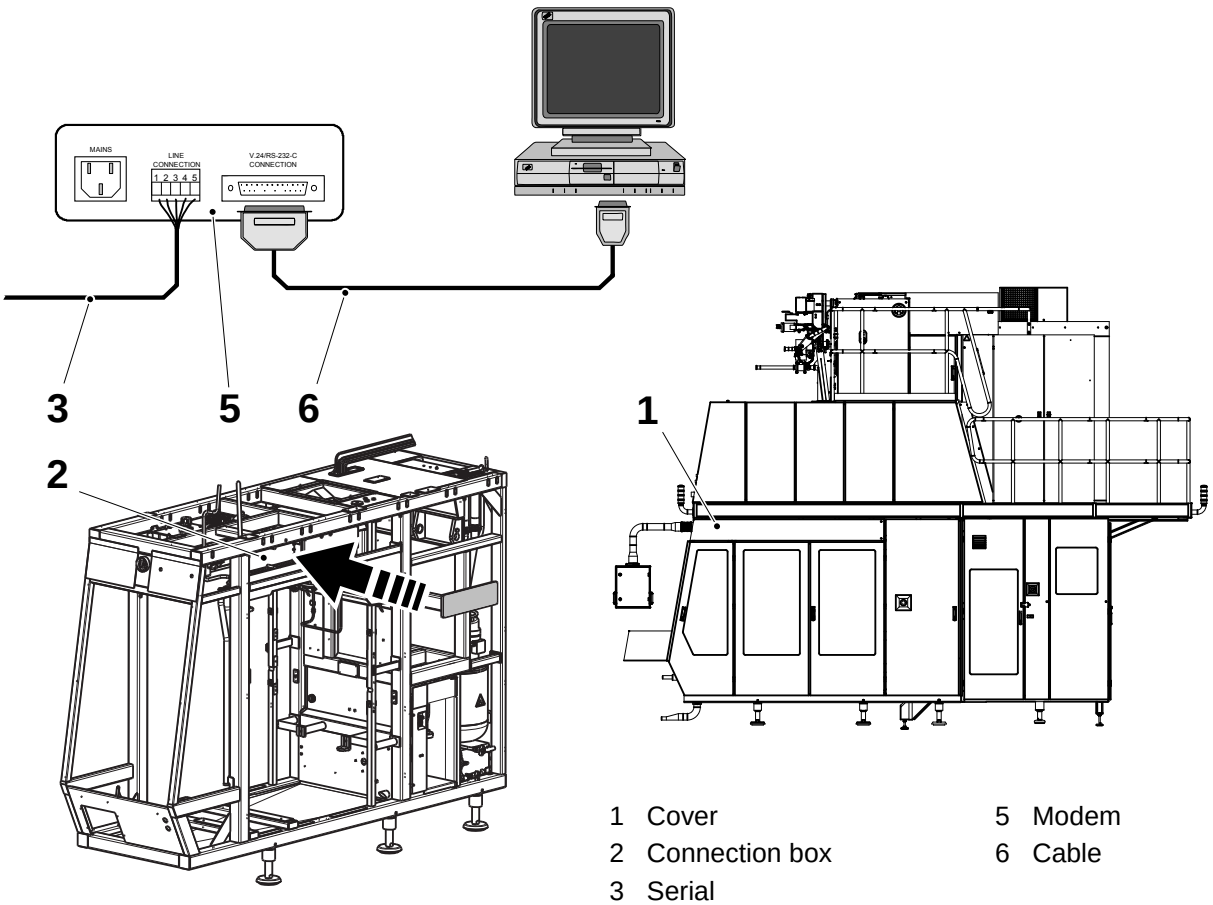

1 Cover
2 Connection box
3 Serial communication cable
5 Modem
6 Cable

4.6.8 Line Automation

4.6.8.1 Introduction

A Genius Serial Communications link is used to allow the TBA/22 Filling Machine to communicate with the Distribution Equipment (DE) in a TBA/22 Standard Line. This is done via an I/O serial bus.

Genius Bus Controllers are used as interfaces between the serial bus and the PLCs (90-30 Series GE Fanuc) in each TetraPak machine.

These modules allow “global data” to be shared between the PLC’s of the filler and the DE machines.

For a more detailed description, see chapter 13 Genius Bus Configuration in the EM of the Filling Machine.

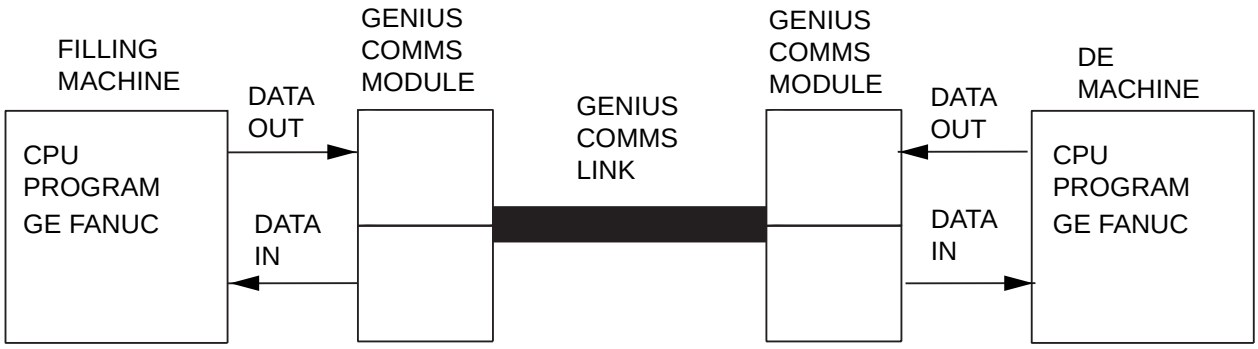

4.6.8.2 Genius Bus Controllers

There are two types of Genius Bus Controllers, the Enhanced Genius Communication Module (EGCM) and the Genius Bus Control module (GBC).

The EGCM, housed in the filing machine and the Helix, and the GBC's, housed in other DE machines, perform the same tasks. The EGCM is, however, more powerful than the GCB. They have an identical terminal layouts.

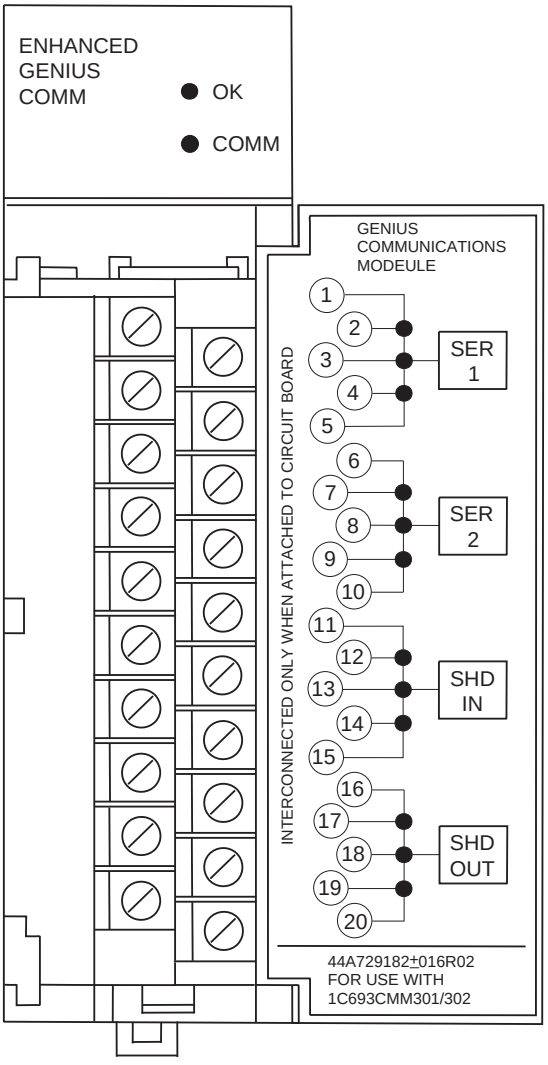

EGCM in TBA/22 and Helix

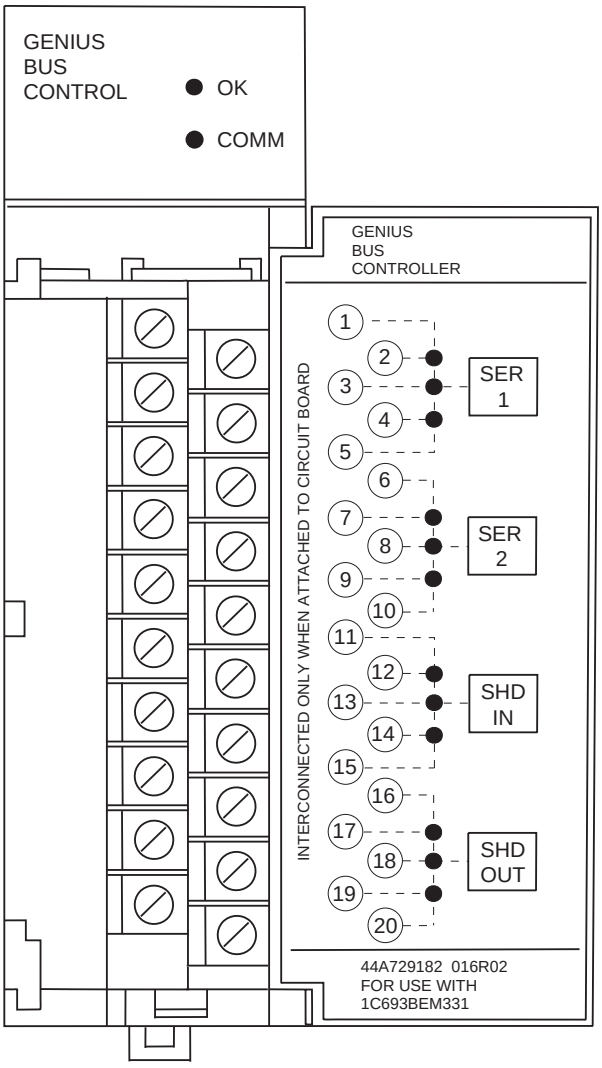

GBC in DE equipment

4.6.8.3 Interconnections

All Genius Modules of each machine installed in the line are connected by shielded twisted pair cables and terminated by a resistor at the both ends. Ferrite rings are also used at each end to reduce noise. The value of the resistors depends on the “characteristic impedance” of the cable used, and varies between 75 and 150 Ohm. In TBA/22 standard lines, 120Ohm resistors are used. In the connection diagram the position of the ferrites (indicated by the letter Z 90458-1141) are shown. The standard TBA/22 machine is already supplied with a 120 Ohm resistor and a ferrite. Additional resistors and ferrites for the line are supplied together with a Genius cable.

Note! It is important that the machines are connected in the order they are positioned in the line as shown.

The cable shield should be connected between the SHIELD OUT terminal of one machine and the SHIELD IN terminal of the next. The SHIELD IN terminal of the Filling Machine and the SHIELD OUT terminal of the last machine in the line must not be used.

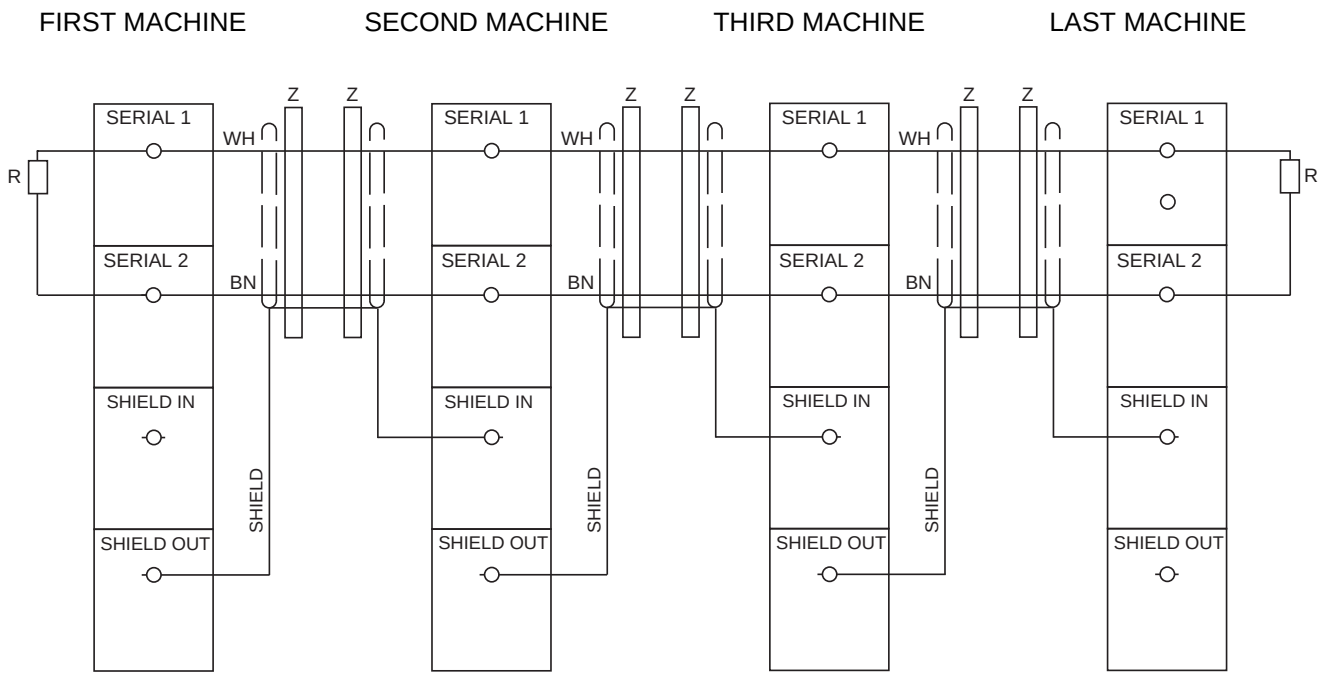

(Cont'd)

(Cont'd)

All SERIAL 1 (SER 1) terminals are connected together inside the unit. The same applies for the SERIAL 2 (SER 2), SHIELD IN (SHD IN) and SHIELD OUT (SHD OUT) timeliness.

Incoming and outgoing signal pairs can be connected to either one or two SERIAL 1 or SERIAL 2 terminals on the Terminal Assembly.
Spade or lug connectors should be used to ensure a good connection. If two terminals are used, a jumper lead should be installed between the two terminals. This will allow the Terminal Assembly to be removed without interrupting the Serial Communications link. If a single terminal is used, the Terminal Assembly can be removed without interrupting the link

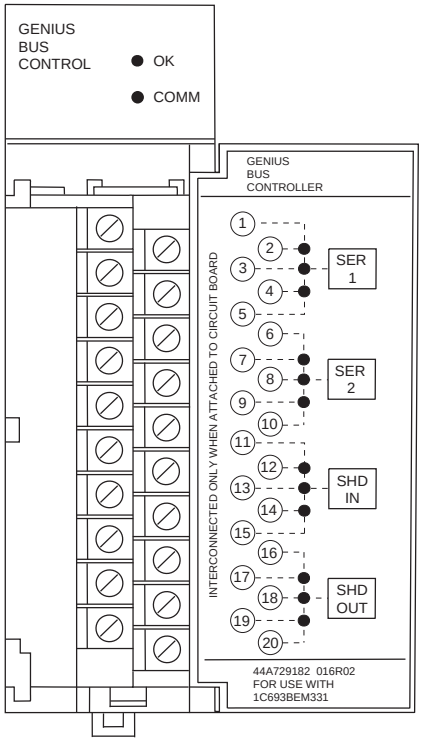

Internal and external connections on Genius Bus Controllers

Serial I signal wires connected to one terminal

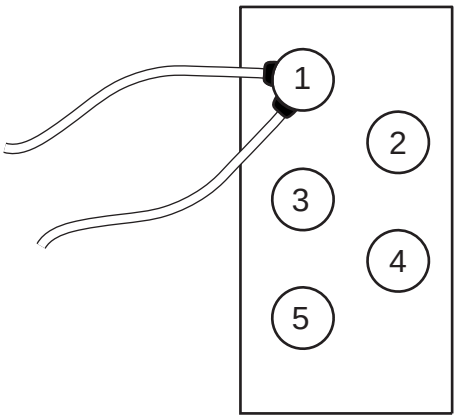

Serial 2 signal wires connected to two terminals with jumper between

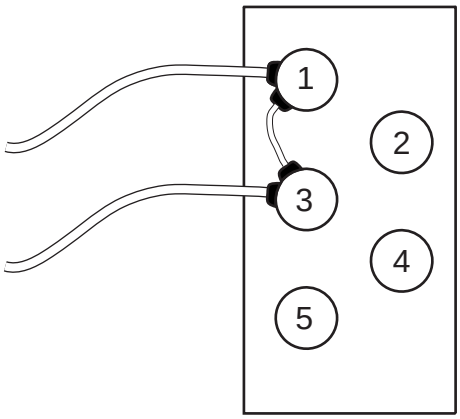

(Cont'd)

(Cont'd)

The following illustration shows the correct and incorrect way of connecting the machines. The correct method shows all machines connected in a daisy chain with the first and last machines terminated correctly.

The incorrect method shows the first two machines connected in parallel and the wrong DE machine terminated.

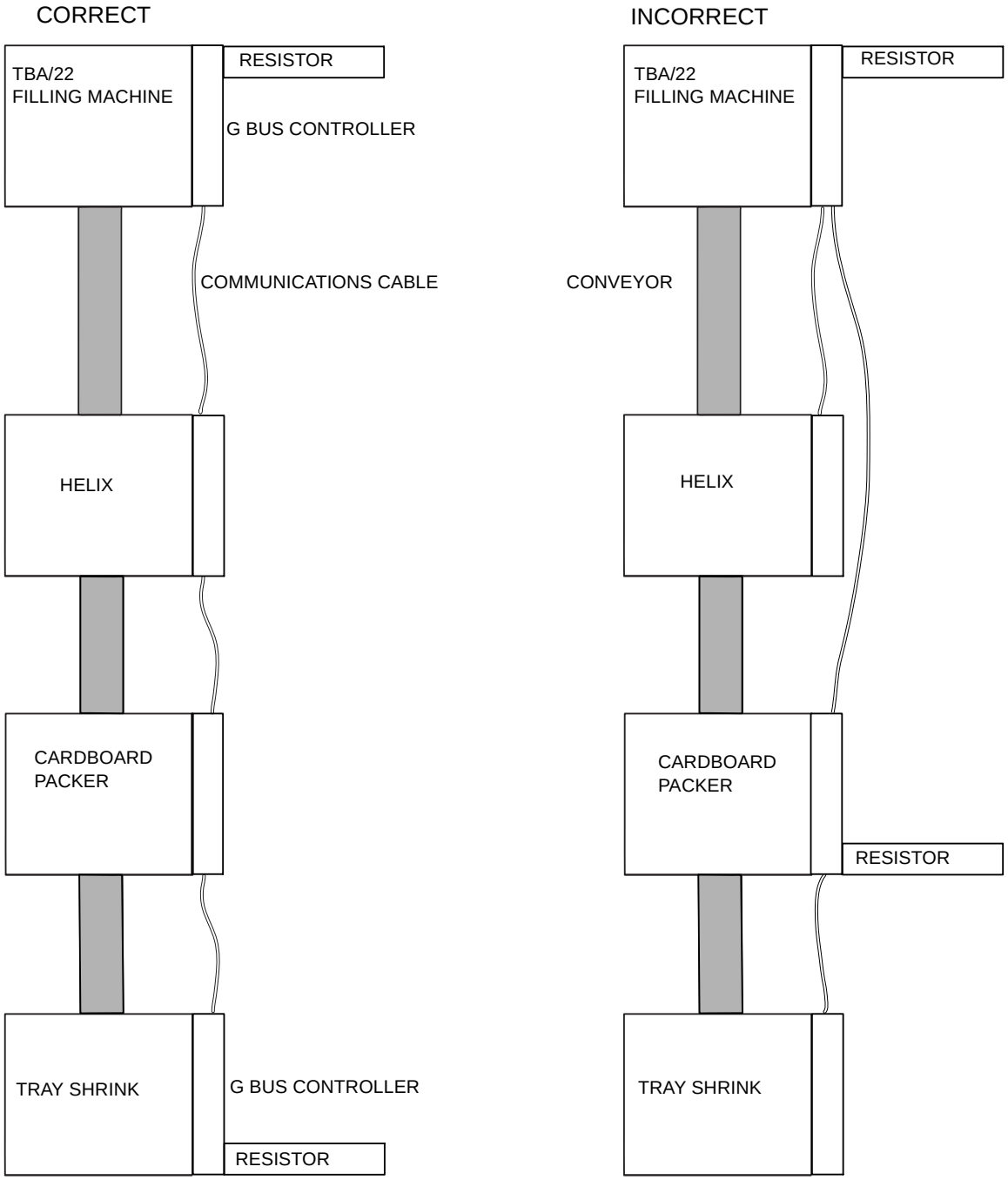

(Cont'd)

(Cont'd)

If an extra machine is placed in the line, for example a Straw Applicator, it must be connected as shown. The cable (1) previously connected between the Helix and the Cardboard Packer is now connected between the Helix and the Straw Applicator. A new cable (2) completes the link in the correct way.

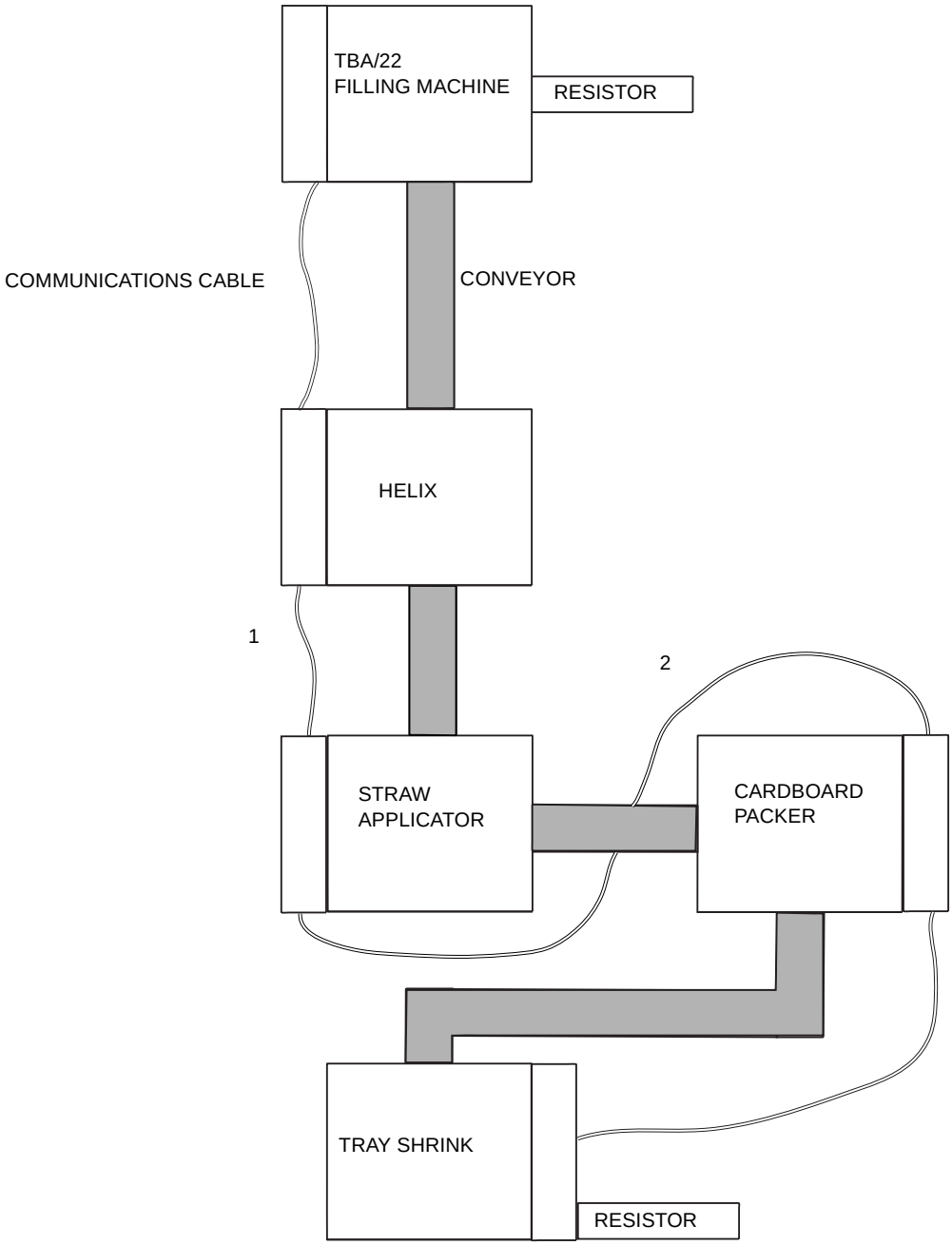

(Cont'd)

(Cont'd)

The following illustration shows the connections of a real standard line. The terminals have the following assignments:

- From 1 to 5 are connected in parallel to SER 1
- From 6 to 10 are connected in parallel to SER 2
- From 11 to 15 are connected in parallel to SHD IN
- From 16 to 20 are connected in parallel to SHD OUT

The following diagram show the Genius Bus connection.

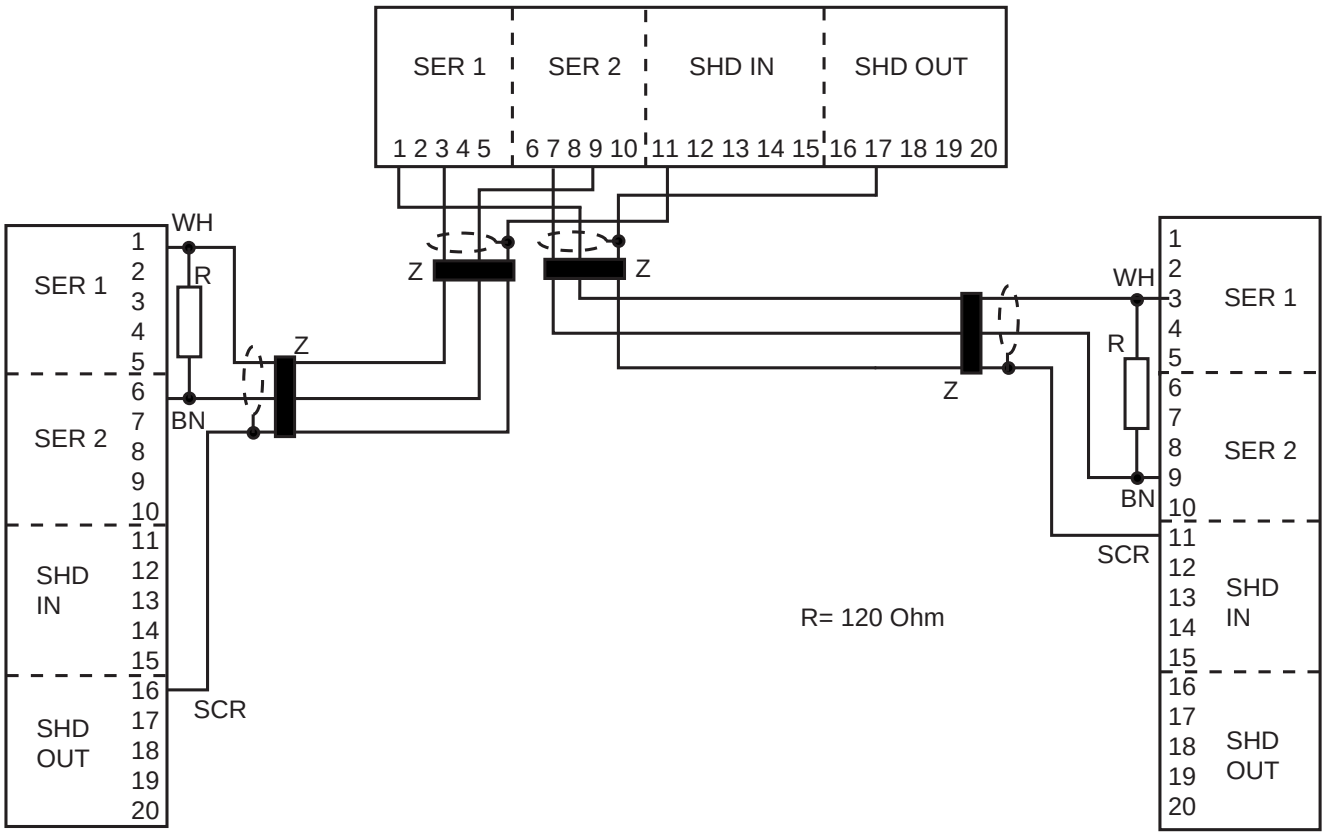

4.6.8.4 Data Flow

All equipment in the line shares its "**local status**" and **alarm** data with all machines connected to the Genius Link. This data is placed on the Genius Link by registers in the PLC. The data could be, for example:

- Alarms
- Number of packages into machine
- Number of packages out of machine
- Machine Status

See the electrical manuals for the exact data produced by the equipment.

The TBA/22 collects all stop reasons from all machines to be used in the PLMS data collection system.

4.6.8.5 Troubleshooting

It is important to try to prevent trouble occurring when a new system is started for the first time. Trouble is often caused by mistakes in cabling or field wiring, or by faulty logic in the CPU's application program.

Note! To check the Communication Link between the DE and the Filling Machine, see chapter 9 Electrical cabinet, procedure: TPOP - configure and check PLMS line supervision in the MM for the Filling Machine.

Here are the basic rules to follow when troubleshooting:

Interconnections

Make sure the correct type of cable has been used for the distance between the machines.

Make sure the cables have been connected in a daisy chain.

Make sure all cables are connected to the correct terminals and are secure.

Make sure all shields are connected to the correct terminals and are secure.

Make sure the Communication Link is terminated correctly.

A 120 Ohm resistor is recommended as standard.

If it is necessary to replace any communication cable or to add a cable to an existing bus (for example, to add another machine), make sure the above criteria are met.

Genius Communications Problems

A major cause of communication errors is the installation of the incorrect software. This may be outdated software or that which is incompatible.

Make sure the programs installed in the machines have the correct revision numbers.

Genius I/O diagnostics messages are an aid to locating faults in input and output circuits and in the I/O blocks. They will help locate I/O problems such as wiring errors, output loads that are too great or too small for proper operation, or short circuits or overloads on inputs. In many cases, an I/O block will shut down a circuit that has one of these faults. The fault must be located and corrected before the diagnostic message can be cleared and the circuit can be operated successfully.

(Cont'd)

(Cont'd)

Check the CPU status LEDs on the GE Fanuc.
PWR, OK and RUN should be on.
The BATT LED must be off.

If the correct status is not displayed, refer to the documentation for the CPU.

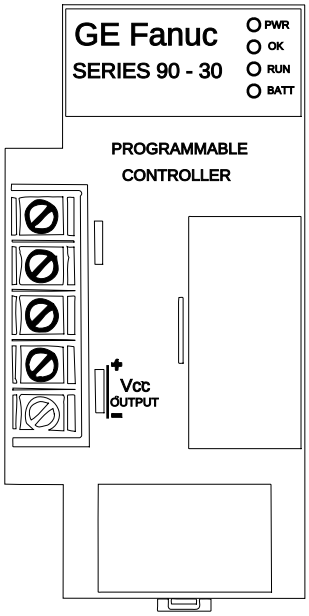

Check the status LEDs on the GBC.
OK and COM should be on.

If all the CPU and bus controller status LEDs are on, proceed to I/O block troubleshooting.

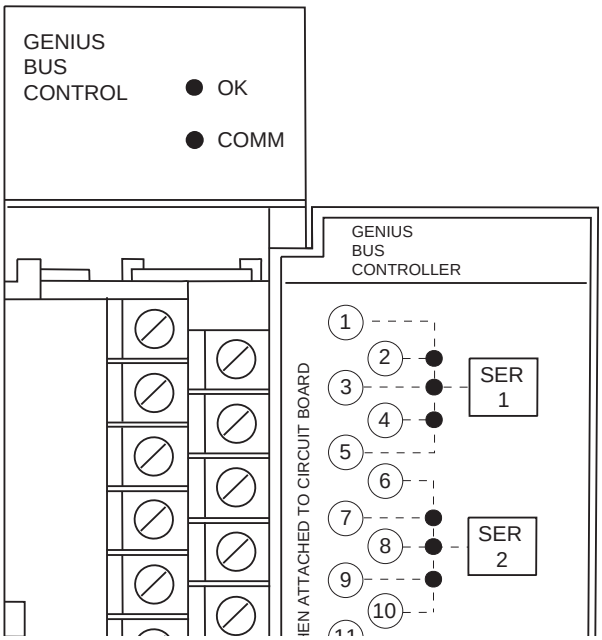

(Cont'd)

(Cont'd)

Bus and Bus Controller Troubleshooting

The following problems may occur with a bus controller, or in the basic operation of the bus:

1) The bus controller LEDs (OK and COM) are OFF.

   The bus controller is probably not receiving enough power from the rack or the computer power supply.

2) The bus controller is not communicating with the CPU.

   This may indicate a programming or address assignment error. Also, check the CPU operating mode.

3) The bus controller is not communicating on the bus.

   Two devices on the same bus may have been configured with the same Device Number. Most devices will not communicate if their Device Number is already used by another device. However, both the OK and the COMM LEDs will be blinking together.

   Check the baud rate.

   Check the Device Number (bus address) assigned to the bus controller against the intended Device Number from your records of system configuration. All new bus controllers are shipped from the factory already set up to use Device Number 31.

4) The bus controller begins operating, but does not seem to be operating normally.

   Make sure the bus cable is not close to high voltage wiring.

5) Communications on the bus are intermittent or lacking.

   This may be caused by mixed baud rates.
   To check this, power up the machines one at a time and use a PC to look at the baud rate in the **Configuration Module** of each machine. If you find different baud rates, they must be changed. All devices on the bus must use the same baud rate. Any change to the baud rate in the block will not take effect until the block power is cycled.

6) The COMM OK light on the bus controller blinks excessively, and/or there are propagation delays on the bus, and/or the bus is operating, but CPU repeatedly receives Addition of Block or Loss of Block diagnostics.

   There is excessive ambient noise on the bus. This can be corrected by re-routing the communications cable, or shielding the source of the electrical noise. The proper solution to these problems will depend on the application.

4.7 Disposal or Return of Packing

Note! Packing materials (including the crates, wrapping, and boxes) are not normally returned to the manufacturer.

a) Check with the customer if there is a special agreement for the return of packing to the manufacturer.

b) If packing must be returned to the manufacturer, prepare an area to store the crates and other returnable packing.

c) Check with the customer if there is a special agreement for recycling packing.

d) If the packing is not to be recycled, ask the customer how to separate and dispose of the packing (wood, plastic, paper, etc.).

WARNING

Risk of intoxication!

e) Dispose of pollutant waste (bubble wrapping, plastic bags, expanded polystyrene, etc.) according to local regulations.

5 Final Installation Checks

Final Installation Checks - Description

This chapter describes the checks to be made after the installation has been completed and prior to the start of the commissioning of this equipment.

5.1 Installation and Connection Checks . . . . . 1 - 5

5.2 Valve Checks . . . . . 1 - 6

5.3 Lubricant Level Checks . . . . . 1 - 7

5.4 Safety Checks . . . . . 1 - 8

This page intentionally left blank

5.1 Installation and Connection Checks

Verify the installation work by following the checklist below.
See section 4 Positioning, Assembly and Connections for further details.

	No.	Check	Done
Filling Machine	1	The machine is level transversally and longitudinally.	
	2	All railings have been fitted.	
	3	The utility connections work has been done.	
	4	The conveyor equipment is connected.	
	5	The connection work to the service unit is finished.	
	6	The connection work to the superstructure is finished.	
	7	The electrical power cables are correctly connected: - in the main switch cabinet - between the main switch and the electrical cabinet - in the electrical cabinet	
	8	All covers are fitted.	
	9	The water circulation system is filled.	
	10	The filling pipe and seal ring are fitted.	
	11	The protective cover for the outfeed is fitted.	
	12	The peroxide container is in place.	
	13	The detergent container is installed and filled with the correct detergent, see OM.	
	14	The transport securing devices are removed.	
	15	The cooling water system is filled.	
	16	The eject conveyor/bin is connected/positioned.	
	17	Upstream valves/switches are open/on: – electrical power – cold water – hot water – compressed air – steam – ice water supply and return (OE) – nitrogen (only for machines equipped with HI kit)	
	18	There are no leakages from the utility connections.	
	19	The production line has been flushed with water to eliminate welding residue, and to detect any leakages.	
	20	The machine crates and other packing have been taken care of as agreed with the customer.	
ASU	1	The machine is level transversally and longitudinally.	
	2	The electrical power cables are correctly connected in the electrical cabinet.	
	3	The transport securing devices are removed.	
	4	All covers are fitted.	

5.2 Valve Checks

No.	Check		Done
1	The **three** peroxide valves are closed: - Peroxide tank, drain valve. - Peroxide tank, sampling valve. - Dilution tank, drain valve.	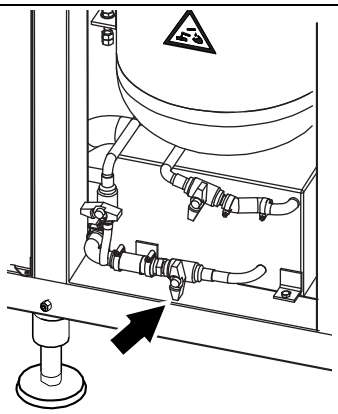	
2	The air valve and the water valves of the service unit are opened.	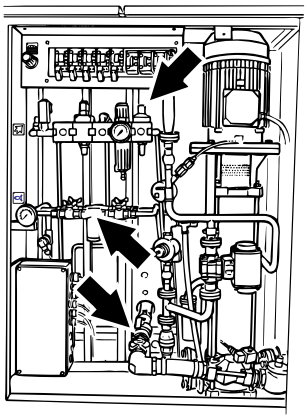	

5.3 Lubricant Level Checks

See the OM for further details on the following lubricant level checks.

No.	Check	Done
1	Machine body - Automatic Greasing System. This should be done when the machine is in PREPARATION.	

5.4 Safety Checks

No.	Check	Done
1	All doors open and close correctly.	
2	All hatches and safety covers are secured.	
3	All the **Emergency stop** buttons. See the Safety precautions section for further details. Press each emergency stop button and make sure the machine steps down to **Off**.	
4	All the doors, covers and guards. See section Safety precautions for further details. Open each door, cover or guard and make sure that the TPOP shows the correct alarms.	
5	The machine and the machine area are free from remaining installation packing and wrapping.	

6 Preparation for Commissioning

Preparation for Commissioning - Description

This chapter describes how to prepare and run the equipment for the first time.

Note! Commissioning covers only the functioning of the individual machine. A line performance test is required to check the functioning of the machine as part of a complete line. Check with the local service organisation as to what arrangements have been made for a line performance test.

6.1 Presence and Correctness Checks . . . . . 1 - 5

6.2 Product and Utility Value Checks . . . . . 1 - 7

6.3 Function Checks . . . . . 1 - 8

6.3.1 Preparation . . . . . 1 - 8

6.3.2 Normal Operating Checks . . . . . 1 - 8

6.3.3 Selecting Injection Nozzle Size (only for machines equipped with HI kit) . . . . . 1 - 10

6.3.4 Changing PLC Parameters . . . . . 1 - 10

6.4 Health and Safety Checks. . . . . 1 - 11

6.5 Documentation. . . . . 1 - 12

This page intentionally left blank

6.1 Presence and Correctness Checks

No.	Check	Done
1	The TP No. on the program diskette corresponds to the TP No. in the EM.	
2	The spare parts have been deposited in the spare parts stores.	
3	The accessories are available to the operator: – apron – gloves – goggles.	
4	All the documents correspond to the specific machine. – EM – IM – OM – MM – SPC – System drawings – Machine Specification Document – Final Inspection Report – Machine Deviation Report (if relevant).	
5	A packaging material trolley must be available and functioning correctly.	
6	The supply and quality of product is sufficient for the purpose of the commissioning.	
7	All supplies are of the correct type and are available in sufficient quantities for the purpose of the commissioning: – Packaging material – LS strip – Hydrogen peroxide – Ink – Detergents – Nitrogen (only for machines equipped with HI kit)	

(Cont'd)

(Cont'd)

No.	Check		Done
8	The compressed air valve key in the service unit is present.	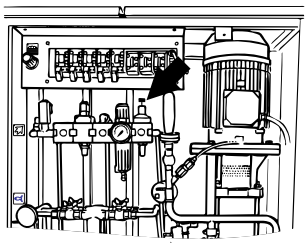	
9	The electrical cabinet keys are present – service switch key – CIP switch key.	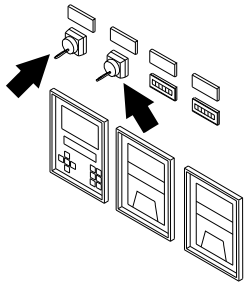	

6.2 Product and Utility Value Checks

Make sure the product and utility values are correct. Ask for the assistance of the customer's technical personnel if necessary. If values are incorrect, inform the customer's technical personnel.
See section 1.1 Installation Drawings.

No.	Check	Done
1	Product supply: – pressure – max pressure fluctuation – inlet temperature – max particle size.	
2	Electrical power supply: – voltage – max voltage fluctuation – frequency – fuse rating.	
3	Cold water supply: – pressure – max inlet temperature – pH.	
4	Hot water supply: – pressure – inlet temperature.	
5	Compressed air supply: – pressure – max particle size – max particle content – dew point – oil content.	
6	Steam supply: – water quality – pressure – max pressure fluctuation – inlet temperature.	
7	Detergents: – correct type (specifications) – pH.	
8	Hydrogen peroxide supply: – aseptic (food) grade – concentration (35%).	
9	Nitrogen supply (only for machines equipped with HI kit): – purity – pressure	

6.3 Function Checks

6.3.1 Preparation

a) Make sure that the PLC program on the diskette corresponds with that in the machine PLC. See the *EM* for further details.

b) Connect a cold water supply to the product inlet connection.
(If the product pipes have been welded, flush them thoroughly before use.)

c) Make sure the mains power switch is on (set to position 1).
(Make sure the electric motors rotate in the correct directions. See the *EM* for further details.)

d) Load the recorders with paper, see the OM for further details on the:
– time recorder
– process recorder (OE)
– cleaning recorder (OE).

e) Perform CIP. See the OM for further details**.**

f) Prepare the machine for production. See the OM for further details.

g) Make sure that starting up from cold takes less than 35 minutes at an ambient temperature of no less than 20ºC (68ºF).

h) Start up the package outfeed conveyor (and eject conveyor if present).

i) Put the machine into **Production** according to the OM.

6.3.2 Normal Operating Checks

No.	Check	Done
1	The first packages during the start sequence are fed onto the waste conveyor. For 250B and 200M filling machines this is 60 packages. For 200B filling machines this is 68 packages.	
2	All flaps of the packages are correctly sealed. Check continuously.	
3	The package outfeed conveyor speed is set properly. The packages enter the conveyor chain without difficulty.	

(Cont'd)

(Cont'd)

No.	Check	**Done**
4	Finished packages are correct in terms of: – size and shape – longitudinal and transversal sealing – date code printing – filled package weight or volume (see the OM for further details (Package checks section) – right amount of Headspace (only for machines equipped with HI kit. See next page)	
5	Production capacity is as specified (count the packages produced in ten minutes and multiply by six.	
6	All pressures remain within tolerance. See the OM for further details.	
7	There are no fluid leaks.	
8	There are no unusual noises which could indicate loose or misaligned parts.	
9	There are no unusual smells which could indicate internal leaks or burning of electrical circuits.	
10	The peroxide concentration continuously to detect any sign of degradation.	
11	Defective packages are ejected (start up, normal stop, material splice, strip splice, production stop).	
12	The manual strip splice to verify the function. See the OM for further details. Sixteen packages must be wasted to ensure that the package containing the splice is ejected.	
13	Packaging material trolley function.	
14	The manual package material splice to verify the function. See the OM for further details. Twelve packages must be wasted to ensure that the package containing the splice is ejected.	
15	Stop methods. Stop the machine according to the OM to verify the different stop functions.	
16	External cleaning. For machines with upgraded cleaning (OE), run all the cleaning programs.	
17	The time recorder is functioning and the printout is readable.	
18	The cleaning recorder (CIP) is functioning and the printout is readable (OE).	
19	The process recorder is functioning and the printout is readable (OE).	
20	The different TPOP systems to verify the functions. See the OM for further details.	
21	Check the synchronisation of the Jaw ID number printed on the top of the package (OE), see 9.5.1-5 PLC - Change Parameters for Jaw ID Synchronisation in the Filling Machine MM.	

(Cont'd)

(Cont'd)

6.3.3 Selecting Injection Nozzle Size (only for machines equipped with HI kit)

Apply the following criteria when selecting a new injection nozzle size.

Larger Nozzles:

- increase the volume of injected gas
- increase the effect of pressure changes
- produce a coarser foam (with larger, short life bubbles - useful for products which foam easily).

Smaller Nozzles:

- reduce the volumes of injected gas
- reduce the effect of pressure changes
- produce a finer foam (with finer, long life bubbles - useful for products which do not foam easily).

6.3.4 Changing PLC Parameters

CAUTION

Risk of machine damage!

Do not change the PLC parameters unless absolutely necessary. Make a copy of the existing parameters before modifying them. Also keep a copy of the new parameters for future reference.

Only skilled or instructed personnel are allowed to make changes to the PLC and TMCC parameters.

6.4 Health and Safety Checks

No.	Check	Done
1	All **Emergency stop** buttons. See section Safety precautions for further details. Press each emergency stop button and make sure that the machine steps down to **Off**.	
2	All the doors, covers and guards. See section Safety precautions for further details. Open each door, cover or guard and make sure that the TPOP shows the correct alarms.	
3	Make sure that each safety sign is undamaged and it its correct position after installation. Replace all missing or damaged safety signs immediately. See section Safety precautions for further details.	
4	The manual strip splice button is disabled when the SA door is opened.	
5	The manual packaging material splice button is disabled when an ASU door is opened.	
6	Filled packages and outlet water samples have the correct hydrogen peroxide residue/content as measured using: – Test kit 90298-31 for packages – Test kit 90298-30 for outlet water.	

6.5 Documentation

Note! No claims will be accepted for machines in commercial production if the **Start-Up Machine Quality Report** (SUMQR) has not been returned to the manufacturer.

a) Compile the **Transport Damage Report** (a section of the SUMQR). If no damage has occurred during transport, state “NO TRANSPORT DAMAGE”.

b) Compile the **Feedback from MC** form **only in case of claims on the equipment**.
For further information about claims see the **Claim and Complaint Handling** procedure, available from the local Service Organisation.

c) Compile the **Start-Up Machine Quality Report**.
List all work, besides the installation work, performed to ensure correct functioning.

The installation work covered by this manual is now complete.

7 Disassembly and Removal

Disassembly and Removal - Description

This chapter describes what must be done if the equipment will be placed in long or short term storage and how to permanently dispose of this equipment.

7.1 Draining . . . . . 1 - 5

7.1.1 Draining Methods . . . . . 1 - 6

7.1.2 Preparation . . . . . 1 - 6

7.1.2.1 Ice-Water Cooling System (OE) . . . . . 1 - 6

7.1.3 Draining Procedure . . . . . 1 - 7

7.1.3.1 Cleaning Pump Circuit . . . . . 1 - 7

7.1.3.2 Cold Water System Circuit (updated cooling circuit version) . . . . . 1 - 10

7.1.3.3 Cold Water System Circuit (not updated cooling circuit version) . . . . . 1 - 11

7.1.3.4 Cooling Water System, Compressor . . . . . 1 - 13

7.1.3.5 Heating Water System . . . . . 1 - 14

7.1.3.6 Hydrogen Peroxide . . . . . 1 - 16

7.1.3.7 Final Checks . . . . . 1 - 17

7.2 Moving and Transporting the Equipment . . . . 1 - 18

7.2.1 Short Moves and Short-term Storage . . . . . 1 - 18

7.2.2 Long Moves and Long-term Storage . . . . . 1 - 20

7.3 Return to the Manufacturer . . . . . 1 - 22

7.4 Disposal . . . . . 1 - 23

This page intentionally left blank

7.1 Draining

CAUTION
Risk of damage to the equipment.
If the equipment is going to stand or travel in freezing conditions, the water circuits must be drained to avoid damage from freezing.

The equipment can be moved **for short distances** without being drained or disassembled, but **only if no freezing conditions will be encountered**.

The equipment must be drained before long distance moves or long term storage. If draining is required, perform the draining procedure before disconnecting the equipment from the mains power supply.

Only skilled or instructed installation technicians are allowed to disassemble the equipment for moving to other installation positions.

7.1.1 Draining Methods

To drain certain circuits, the solenoid valves controlling them must be opened. This can be done electronically using a portable PC to force PLC outputs or by operating the valve manually.

To use the PC, use the following:

- a portable PC running the latest update of TIT software, V 2.0
- a GE Fanuc serial cable, TP No. 90031-300
- the EM

A valve can be opened manually by pushing the green button (1) on the solenoid, releasing the button closes the valve.

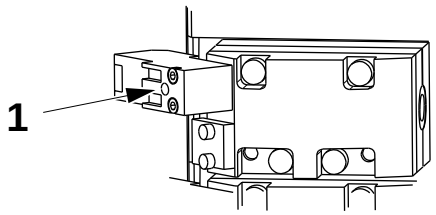

1 Green button

7.1.2 Preparation

Shut off the hot and cold water supplies upstream from the machine. Operate the water gun to release the residual pressure from the cold water circuit.

Disconnect the hot and cold water supplies at the connection panel on the service unit.

7.1.2.1 Ice-Water Cooling System (OE)

a) If the installation is configured for ice-water, disconnect the ice-water in and ice-water out connectors at the connection panel on the Service unit.

b) Arrange a compressed air line for the connection to the water systems. Use a special adapter if available. Otherwise block the pipe around the air line to prevent the air from escaping.

c) Connect the PLC unit.

d) Turn ON the mains power switch.
Make sure that no emergency stops are engaged, all doors with switches are closed and there are no alarms on the TPOP.

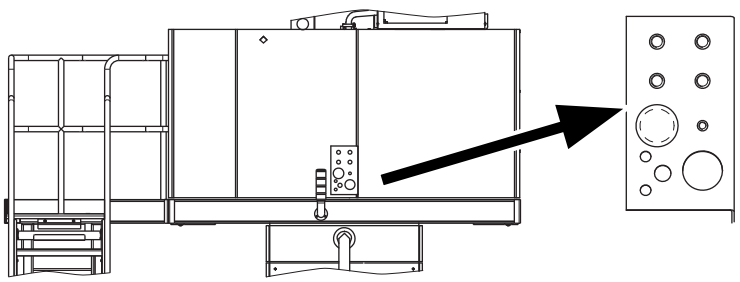

7.1.3 Draining Procedure

WARNING
Risk of injury and damage!
Make sure that fluid expelled under pressure cannot cause injury or damage.

7.1.3.1 Cleaning Pump Circuit

a) Engage the **Hot water supply** valve Y3101 (2), and the **Rinsing chemical parts** valve Y3113 (1). This must be done using a PC.

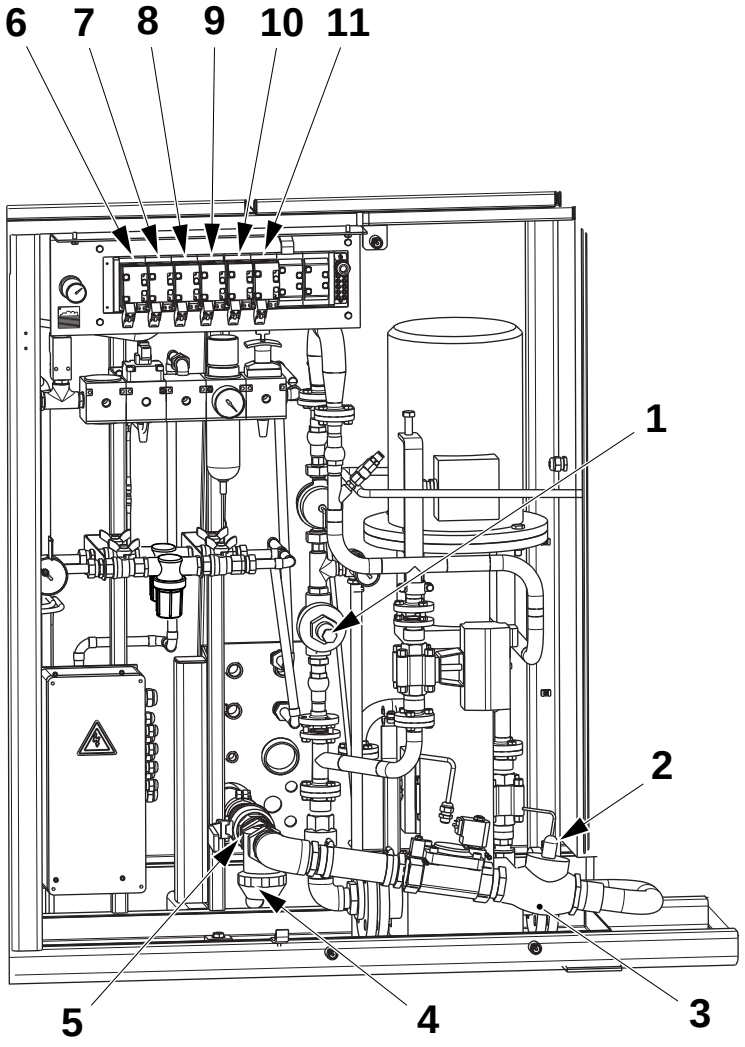

1 Valve Y3113
2 Valve Y3101
3 Drain plug (rear side)
4 Filter
5 Main valve
6 Valve Y3109
7 Valve Y 3103
8 Valve Y 3110
9 Valve Y 3111
10 Valve Y 3112
11 Valve Y 3105

(Cont'd)

(Cont'd)

b) On the superstructure valve panel, open the Column cleaning ball/lid valve Y3116 (12).

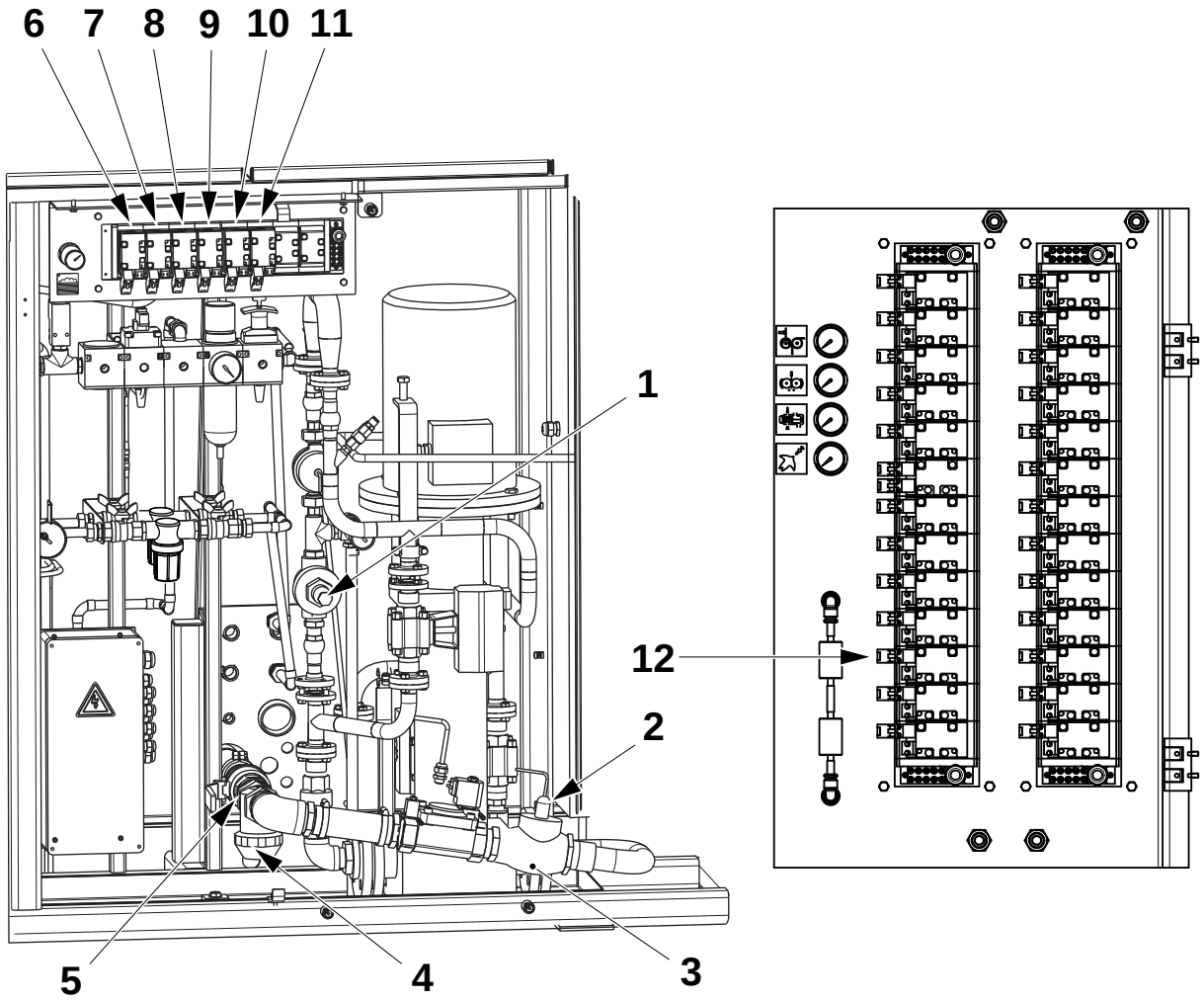

1 Valve Y 3113
2 Valve Y 3101
3 Drain plug (rear side)
4 Filter
5 Main valve
6 Valve Y 3109
7 Valve Y 3103
8 Valve Y 3110
9 Valve Y 3111
10 Valve Y 3112
11 Valve Y 3105
12 Valve Y 3116

(Cont'd)

(Cont'd)

c) Remove the drain plug (3) from the rear of the cleaning pump to drain the pump. Fit the drain plug.

d) Remove the filter (4) and clean it. Fit the filter.

e) Connect the compressed air line to the hot water inlet.

f) Slowly open the main valve (5) to avoid damage.
Manually open valves:
   - foaming Y3109 (6)
   - flushing Y3103 (7)
   - column cleaning Y3110 (8)
   - jaw system cleaning Y3111 (9)
   - FFU cleaning Y3112 (10)
   - chemical dosing pump Y3105 (11).

g) Close the compressed air supply.

h) Loosen the drain plug (3) to drain the remaining water. Tighten the plug.

i) Restore all parts and reset the valves.

(Cont'd)

(Cont'd)

7.1.3.2 Cold Water System Circuit (updated cooling circuit version)

a) Close the valves (1) for incoming cold water.

b) Disconnect the hose (2) on valve S2550. Fold the hose in half and use tape to secure it.

c) Disconnect the pipe (3) on the other side of the valve S2550 to drain the water. Fit the pipe and tighten carefully.

d) Remove the non-return valve (4).

e) Open valve (5) and to drain the water softener.

f) Fit the non-return valve (4).

g) Remove both water filters (6) and clean them.
Fit the water filters.

h) Connect the compressed air line to the cold water inlet.

i) Slowly open the valves (1).

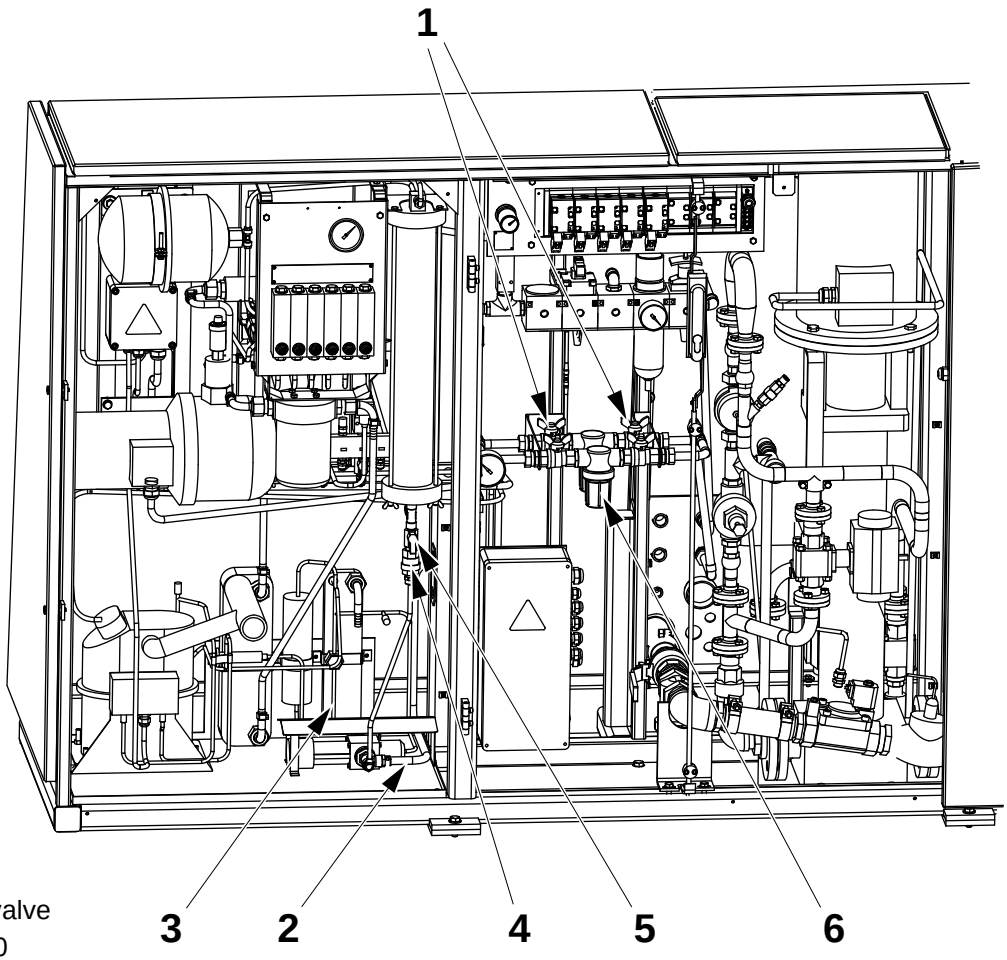

1 Cold water valve
2 Hose, S2550
3 Pipe, S2550
4 Non return valve
5 Water softener valve
6 Water filter

(Cont'd)

(Cont'd)

7.1.3.3 Cold Water System Circuit (not updated cooling circuit version)

a) Close the valves (1) for incoming cold water.

b) Disconnect the hose (2) on valve S2550. Fold the hose in half and use tape to secure it.

c) Disconnect the pipe (3) on the other side of the valve S2550 to drain the water. Fit the pipe and tighten carefully.

d) Remove the non-return valve (4).

e) Open valve (5) and to drain the water softener.

f) Fit the non-return valve (4).

g) Remove both water filters (6) and clean them.
Fit the water filters.

h) Connect the compressed air line to the cold water inlet.

i) Slowly open the valves (1).

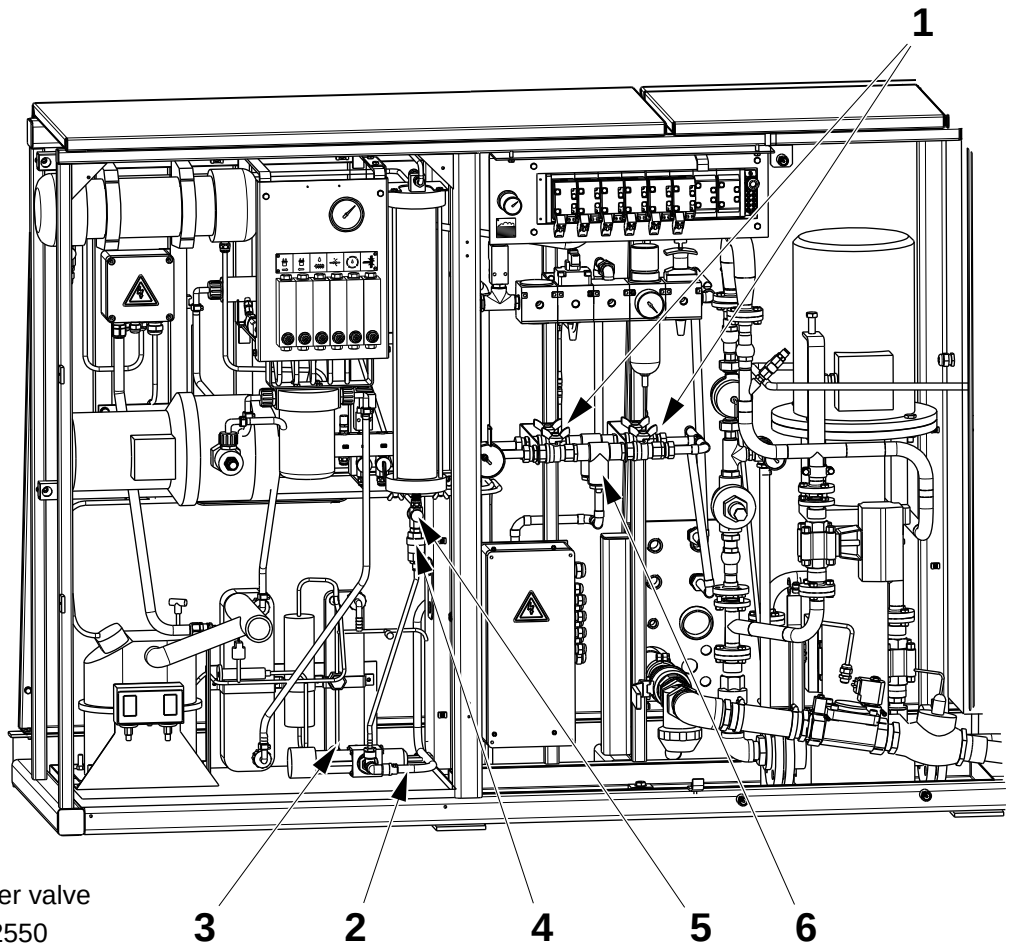

1 Cold water valve
2 Hose, S2550
3 Pipe, S2550
4 Non return valve
5 Water softener valve
6 Water filter

(Cont'd)

j) On the TPOP, press the manual flushing final folder button (7) to open the final folder flushing valve Y2108. Release the button when only air comes out of the final folder flushing nozzles.

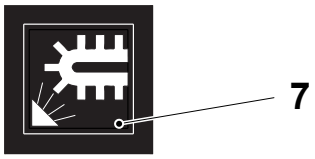

7 Manual flushing final folder button

k) On the lower valve panel, open the Tube flushing valve Y2104 (8) until only dry air comes out of the tube flushing nozzles.

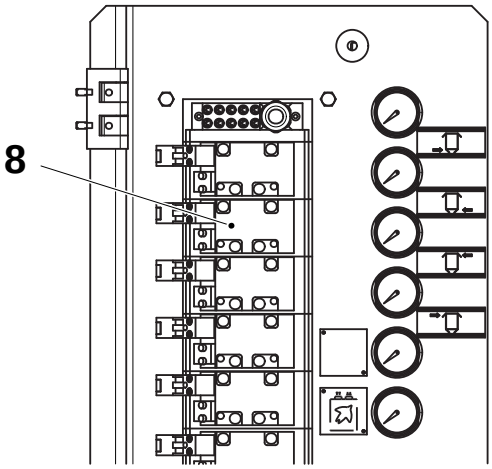

8 Valve Y 2104

l) Operate the water gun until only dry air comes out.

m) Open the Seal water valve Y1104 (9).

n) Replace any parts that have been removed.

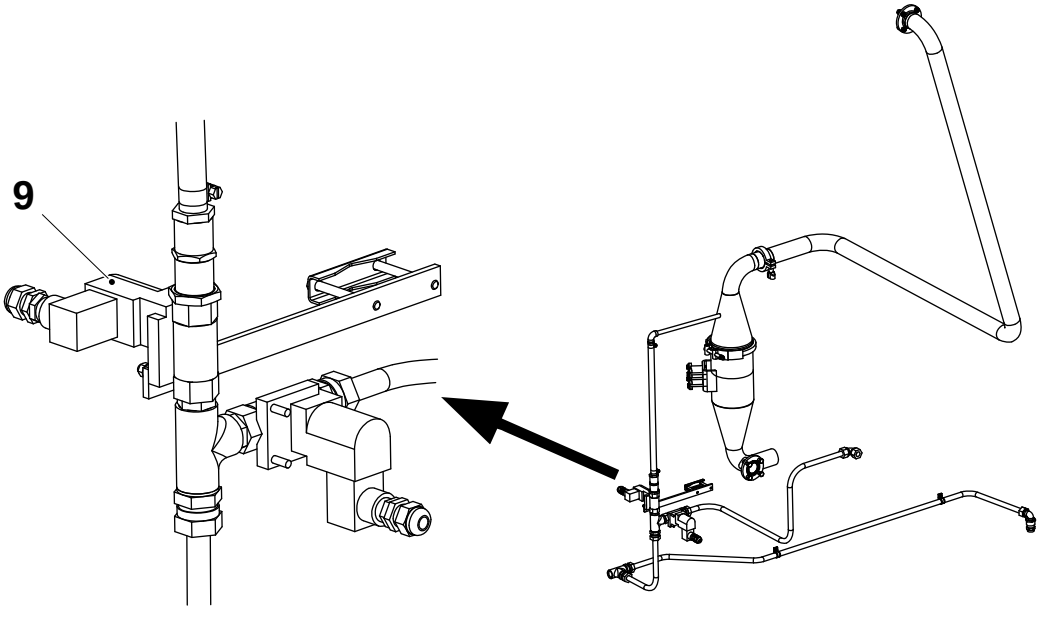

9 Valve Y 1104

(Cont'd)

(Cont'd)

7.1.3.4 Cooling Water System, Compressor

a) Disconnect the cooling water hose (1) from the final folder to depressurize the system and drain some water, then reconnect the hose (1).

b) Disconnect the lower hose connection (2) from the heat exchanger K2510.
Blow very carefully with compressed air into the hose until the water is drained out. Check on the flow meters (4).

c) Remove the drain plug (3) from the circulation pump to drain the pump. Fit the drain plug.

d) Replace all parts.

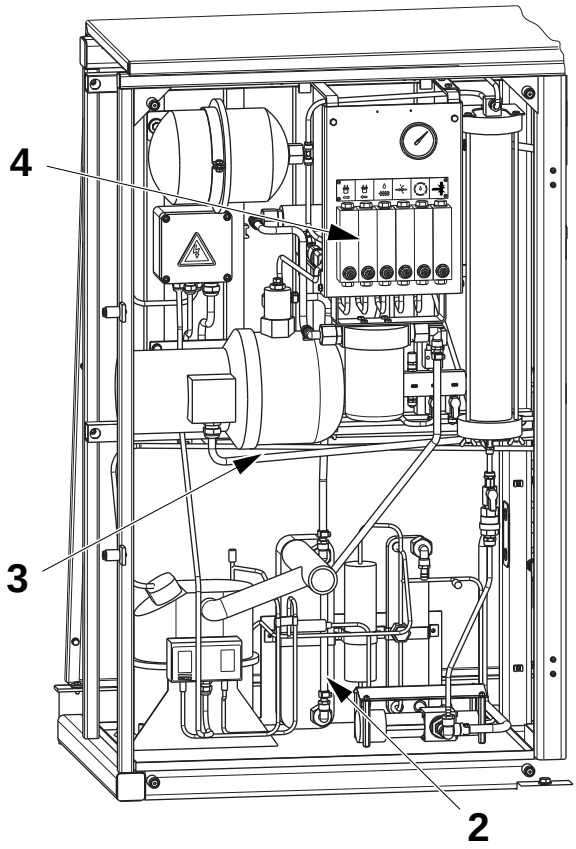

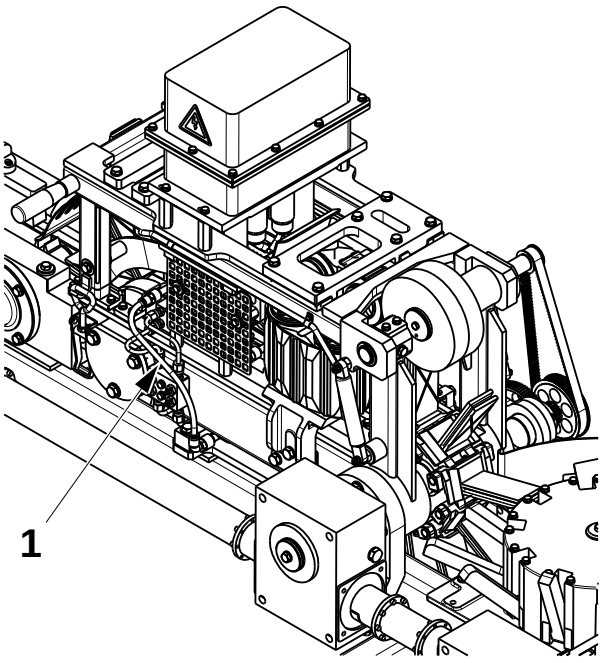

1 Cooling hose
2 Hose
3 Drain plug
4 Flow meter

(Cont'd)

(Cont'd)

7.1.3.5 Heating Water System

Hydrogen Peroxide Bath

a) Open the valve (1) to the hydrogen peroxide bath water system and drain the water completely. Leave the valve open.

b) Open the screw (2) on top of the hydrogen peroxide bath to drain the water system. Tighten the screw (2).

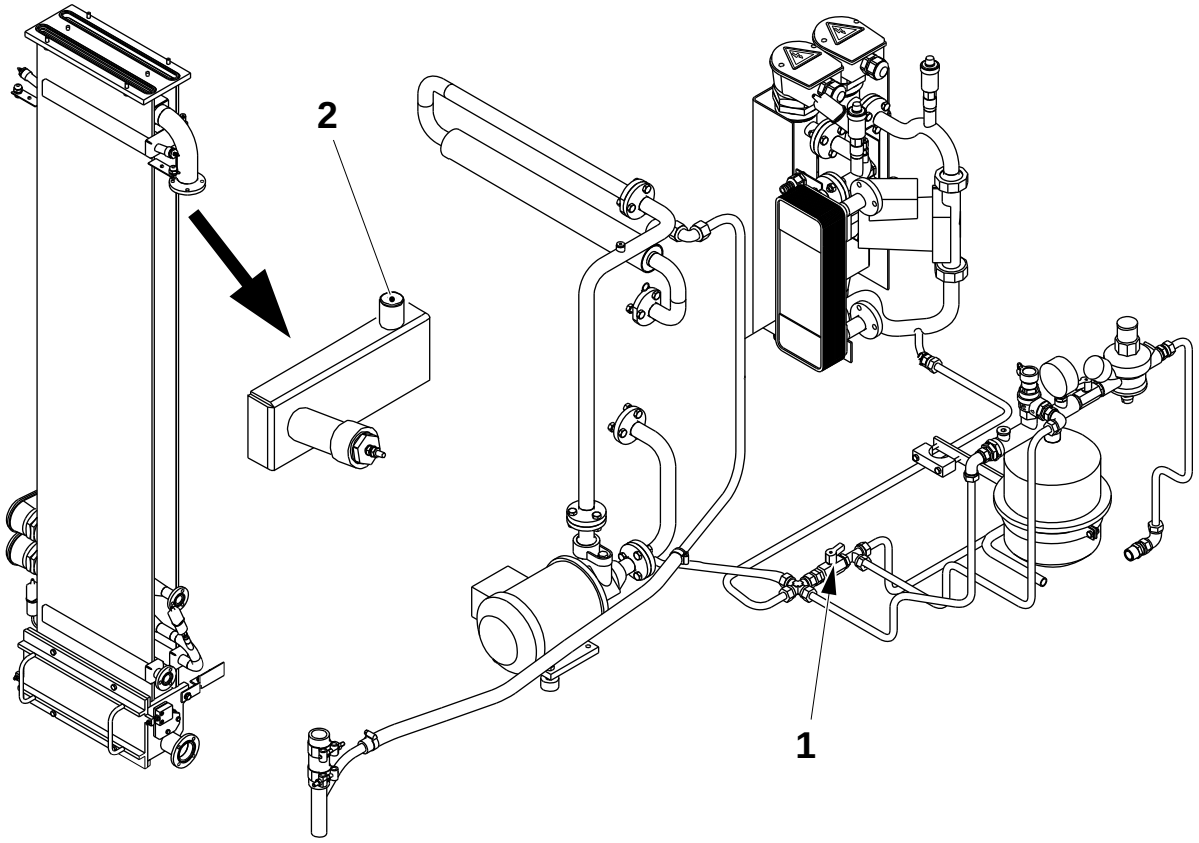

1 Shut off valve
2 Screw

(Cont'd)

(Cont'd)

Compressor
Remove the drain plug to drain the compressor.
Fit the drain plug.

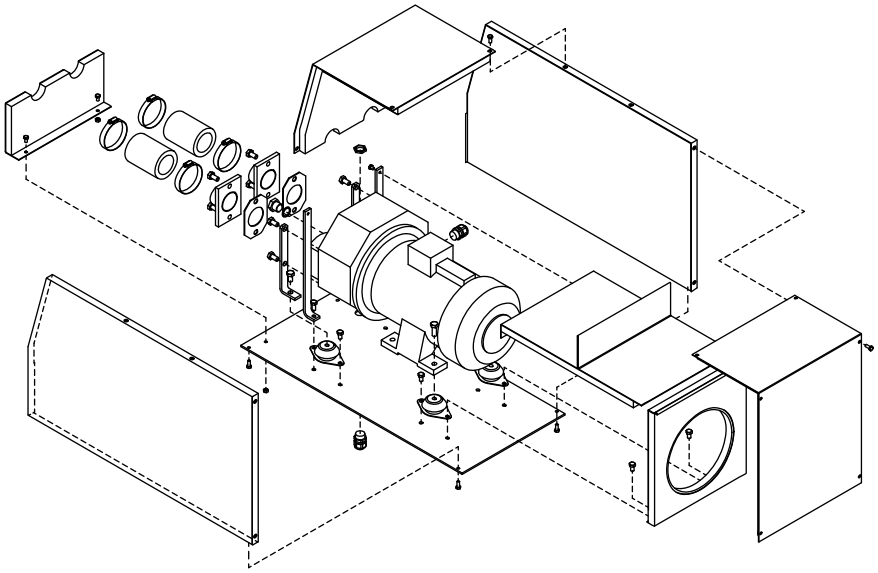

Separator
Remove the float chamber to drain the separator.
Fit the float chamber.

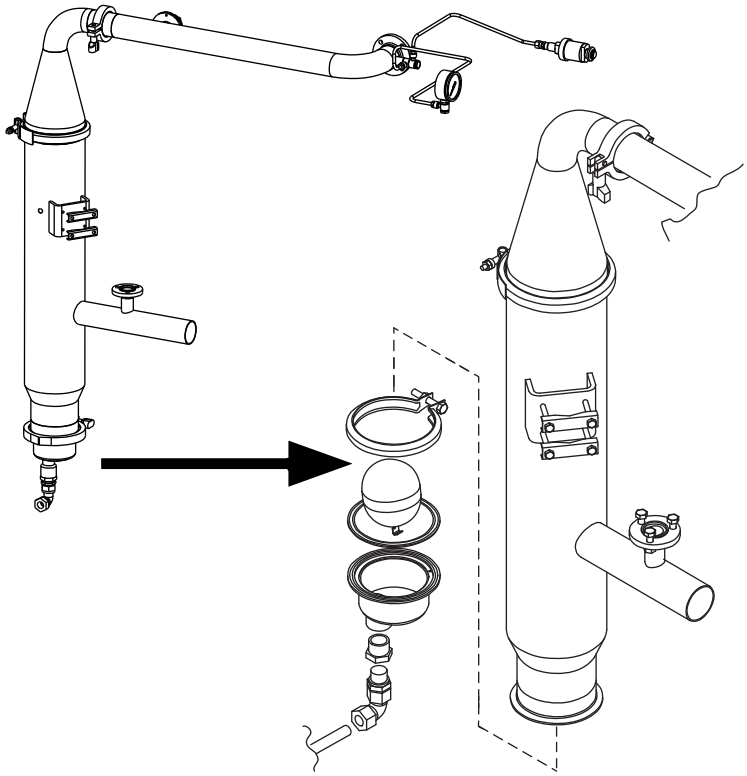

(Cont'd)

(Cont'd)

Sterilization Bath Water Pump
Open the pump house to drain the pump. Close the pump house.

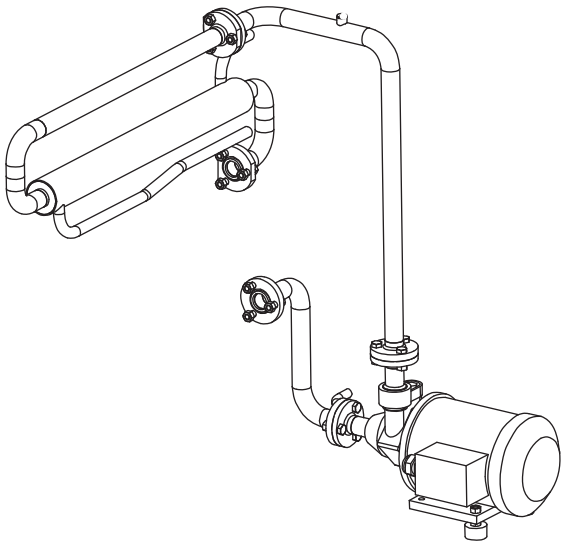

7.1.3.6 Hydrogen Peroxide

Peroxide Tank

WARNING
Hydrogen peroxide!
Follow the Safety precautions.
Drain the remaining peroxide from the peroxide tank and rinse the tank with water to avoid peroxide residue when dismantling the machine, see *OM Sterilisation liquid section*.

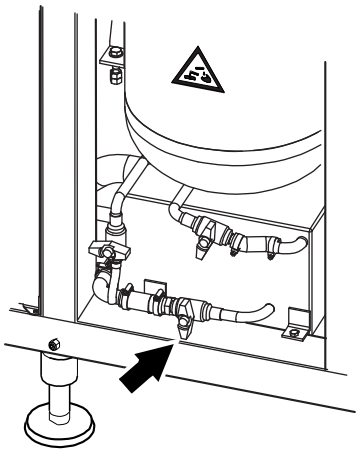

(Cont'd)

(Cont'd)

7.1.3.7 Final Checks

a) Make sure all cables used for the draining procedure are disconnected.

b) Make sure the cleaning pump filter and the cold water filters are fitted.

c) Make sure all relevant valve handles are open to prevent freezing.

d) Make sure all couplings and adapters on the connection panel of the service unit have been removed.

7.2 Moving and Transporting the Equipment

7.2.1 Short Moves and Short-term Storage

Note! The fully assembled equipment can be moved either on the wheeled transporter (TP No. 1185025, available from the local Service Organisation) or by forklift. Overhead gantries and mobile cranes **cannot** be used.

See section 4 Positioning, Assembly and Connections for further details on the operations in this section.

To disassemble parts, follow the assembly instructions in the reverse order.

a) Turn off and padlock the mains power switch.

b) Shut off all the utility and product supplies upstream:
   - electrical power
   - cold water
   - hot water
   - compressed air
   - product
   - steam
   - CIP
   - communication cables (when used)
   - ice water (OE)
   - nitrogen (only for machines equipped with HI kit).

c) Release pressure from the water and air circuits by operating the water and air guns. Close the following valves:
   - compressed air valve
   - cold water valves
   - hot water valve
   - steam valve
   - ice water valves (OE).

(Cont'd)

(Cont'd)

d) Disconnect the power, utility, drain and product lines:
   - electrical power (disconnect at power terminal and remove the cable)
   - communication cables (when used)
   - cold water
   - hot water
   - compressed air
   - product
   - steam
   - CIP lines
   - drainage
   - ice water lines (OE)
   - nitrogen line (only for machines equipped with HI kit).

e) Plug or protect all open connections.

f) Make sure cables are put away safely.

g) Disconnect the package outfeed conveyor.

h) Disconnect the eject conveyor or remove the eject bin.

i) Remove the stair and the stair support from the platforms.

Note! The machine weighs approximately 7700 kg (17000 lbs). Take great care when fitting the transporters and moving the unit.

j) Fit the transporters to the machine, or position the forks. See 4.1.1.1 Transporting the Machine Body with Carriages.

k) Move the equipment to its new position.

CAUTION

Machine Damage

Do not leave the equipment on the transporters. If the equipment is not supported evenly, the frame could be subjected to damaging torsional forces.

l) Level the equipment even if it is not going to be used. See 4.3 Levelling the Equipment.

If the equipment is to be stored for a while, observe the storage conditions. See 3.1.4 Storing the Crated Equipment.

7.2.2 Long Moves and Long-term Storage

See section 4 Positioning, Assembly and Connections for further details on the operations in this section.

a) Drain the equipment. See 7.1 Draining for further details.

b) Perform all the disconnection work mentioned in the 7.2.1 Short Moves and Short-term Storage section.

c) Empty the cleaning liquid containers. Follow the manufacturer´s instructions for disposal of the liquid.

d) Dismantle the machine by following the section 4 Positioning, Assembly and Connections in the reverse order.

Collect all material such as screws, washers, nuts, cables, etc., grouped as they are used in marked plastic bags.

The dismantled machine parts:

- the electrical cabinet
- the superstructure
- the service unit
- the machine body and ASU
- railings, platforms, stair and stair support
- non fixed parts such as:
  covers
  dating unit accessories
  CIP equipment
  filling pipe (needs proper coverage to protect the level probe)
  cleaning liquid containers (emptied)
  peroxide container (emptied)
  warning beacons
  light assembly.

e) Fit the transportation devices in the same locations from where they were removed when the machine was assembled. This will prevent movement during transport.

f) Wrap small components in bubble wrapping or similar to prevent damage.

(Cont'd)

(Cont'd)

g) The equipment must be packed in suitable crates to ensure safe transport and the correct storage conditions. Use the original crates and packing if available. Make sure the parts are adequately protected from transport damage. All parts must be fixed to the crates with proper bolts or similar equipment. Fix any loose sub-crates or boxes to the floors or walls of the crates to prevent them from moving during transport.
Protect the crates from the weather to prevent rain, snow or sand from entering.

7.3 Return to the Manufacturer

a) Drain the equipment. See section 7.1 Draining.

b) Prepare the equipment for transport. See section 7.2 Moving and Transporting the Equipment.

c) Contact the local service organisation for further instructions and to arrange shipment.

7.4 Disposal

If the equipment is to be permanently disposed of, perform the following operations.

a) Drain the equipment. See section 7.1 Draining.

b) Empty the cleaning liquid containers. Follow the manufacturer´s instructions for disposal of the liquid.

c) Remove the packaging material and the LS strip. Dispose of these in compliance with local regulations.

WARNING

Risk of personal injury.

Cooling media R134A. Follow the Safety precautions.

d) Cooling equipment containing (any kind of) cooling media must be dismantled, but only as far as can be considered safe without any cooling media leakage. Send the cooling media to an authorised company for proper handling.

e) Disassemble the machine as far as possible and separate the following materials:

- stainless steel
- aluminium
- glass panes
- cast iron
- rubber (seals, O-rings, etc.)
- nylon and other plastics
- electrical cables
- electrical components.

f) Recycle or dispose of all materials, groups and components in compliance with local regulations.

This page intentionally left blank

***Note!** This page is generated **automatically**.*
*using the **variable definitions** made in the **front page** file!*

TBA/22
648571-0500
Issue 2009-11 Doc. No. IM-81766-0118

TBA/22 1(2)
648571-0500
Issue 2009-11 Doc. No. IM-81766-0118

TBA/22
648571-0500
Issue 2009-11 Doc. No. IM-81766-0118

TBA/22 1(2)
648571-0500
Issue 2009-11 Doc. No. IM-81766-0118

TBA/22
648571-0500
Issue 2009-11 Doc. No. IM-81766-0118

TBA/22 1(2)
648571-0500
Issue 2009-11 Doc. No. IM-81766-0118

TBA/22
648571-0500
Issue 2009-11 Doc. No. IM-81766-0118

TBA/22 1(2)
648571-0500
Issue 2009-11 Doc. No. IM-81766-0118

TBA/22
648571-0500
Issue 2009-11 Doc. No. IM-81766-0118

TBA/22 2(2)
648571-0500
Issue 2009-11 Doc. No. IM-81766-0118

TBA/22
648571-0500
Issue 2009-11 Doc. No. IM-81766-0118

TBA/22 2(2)
648571-0500
Issue 2009-11 Doc. No. IM-81766-0118

TBA/22
648571-0500
Issue 2009-11 Doc. No. IM-81766-0118

TBA/22 2(2)
648571-0500
Issue 2009-11 Doc. No. IM-81766-0118

TBA/22
648571-0500
Issue 2009-11 Doc. No. IM-81766-0118

TBA/22 2(2)
648571-0500
Issue 2009-11 Doc. No. IM-81766-0118

40 mm Full width ***Note!*** *This page is generated* ***automatically****.*
using the ***variable definitions*** *made in the* ***front page*** *file!*

TBA/22
648571-0500

Issue 2009-11 Doc. No. IM-81766-0118

TBA/22 1(2)
648571-0500

Issue 2009-11 Doc. No. IM-81766-0118

TBA/22
648571-0500

Issue 2009-11 Doc. No. IM-81766-0118

TBA/22 1(2)
648571-0500

Issue 2009-11 Doc. No. IM-81766-0118

TBA/22
648571-0500

Issue 2009-11 Doc. No. IM-81766-0118

TBA/22 1(2)
648571-0500

Issue 2009-11 Doc. No. IM-81766-0118

TBA/22
648571-0500

Issue 2009-11 Doc. No. IM-81766-0118

TBA/22 2(2)
648571-0500

Issue 2009-11 Doc. No. IM-81766-0118

TBA/22
648571-0500

Issue 2009-11 Doc. No. IM-81766-0118

TBA/22 2(2)
648571-0500

Issue 2009-11 Doc. No. IM-81766-0118

TBA/22
648571-0500

Issue 2009-11 Doc. No. IM-81766-0118

TBA/22 2(2)
648571-0500

Issue 2009-11 Doc. No. IM-81766-0118