MM

Maintenance Manual

TBA/22 050V

648571-0500

TechPub_2614345_0102817640l7fro.fm

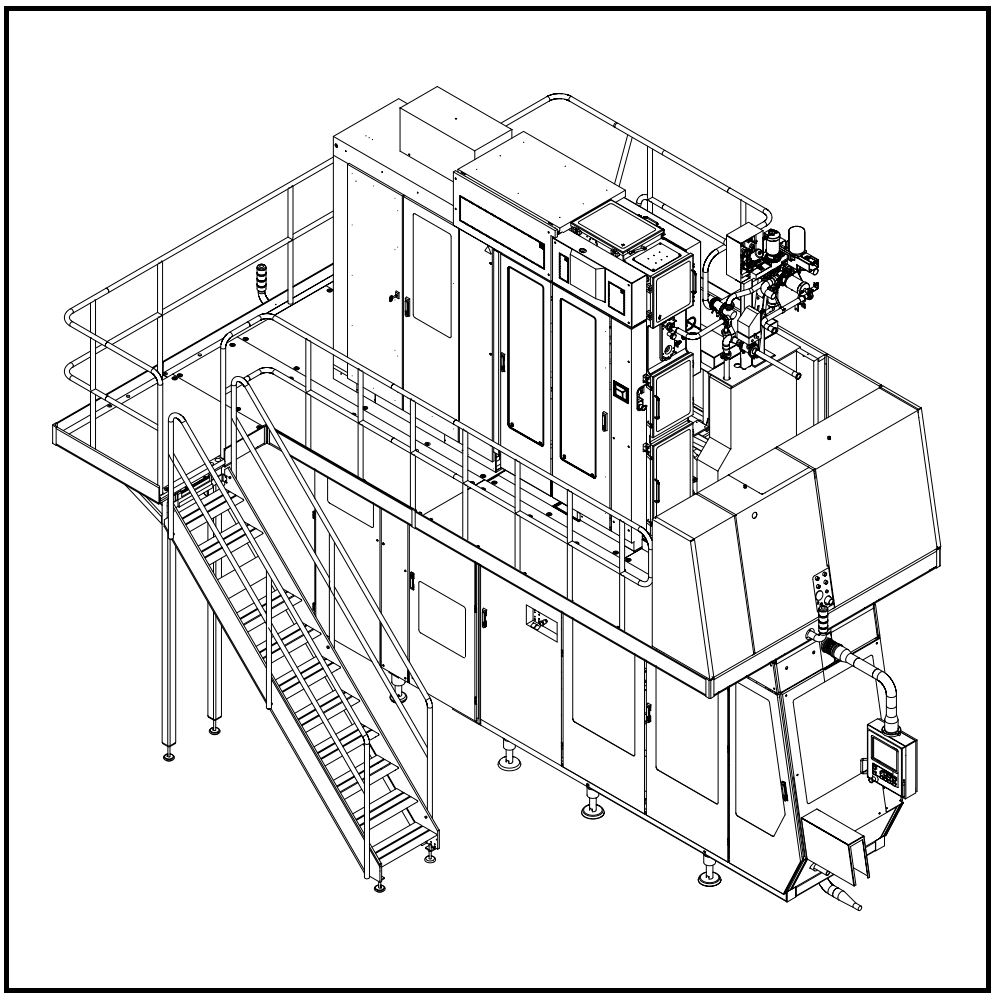

WARNING

Read and follow all safety precautions before working on or near this equipment.

Read all safety precautions throughout this manual and on safety signs attached to this equipment. Failure to follow all safety precautions could result in death or serious injury.

Tetra Pak

Doc. No. MM-81764-0107

Copyright © 2003 Tetra Pak Group

All rights reserved. No part of this document may be reproduced or copied in any form or by any means without written permission from Tetra Pak Carton Ambient S.p.A.

Tetra Pak and all Tetra Pak products are trademarks belonging to the Tetra Pak Group.

The content of this manual is in accordance with the design and construction of the machine or equipment at the time of publishing. Tetra Pak reserves the right to introduce design modifications without prior notice.

This document was produced by:

Tetra Pak Carton Ambient S.p.A.
Via Delfini, 1
41100 Modena
Italy

Additional copies can be ordered from Tetra Pak Parts or the nearest Tetra Pak office. When ordering additional copies, always provide the document number. This can be found in the machine specification document. It is also printed on the front cover and in the footer on each page of the manual.

Doc. No. MM-81764-0107

Issue 2003-10

TechPub_2614345_0102817640017fro.fm

This manual is valid for:

Series No./ Machine No. Sign.

MM
Maintenance Manual

TBA/22 050V
648571-0500

i Introduction

ii Safety Precautions

1 Superstructure

2 Machine Body

3 Drive

4 Jaw System

5 Final Folder Module

6 Service Unit

7 Conveyor Section

8 Automatic Splicing Unit

9 Electrical Cabinet

10 General

11 Checklist Overview

iii Index

A list of all optional equipment, optional kits, and rebuilding kits that this manual is valid for is found on the next page.

TechPub_2614345_0102817640l7fro.fm

Doc. No. MM-81764-0107

Issue 2003-10

Tetra Pak

Tetra Pak Carton Ambient S.p.A.

Valid for:

Adjustable LS inductor
2611157-0100

Filling pipe with float
2540810-0100

Movable tube support
2598520-0100

Automatic greasing
2574340-0100

Gearbox improvement
2581919-0100

Titanium links
2581813-0200

Rotating carbon brushes
2606212-0100

TechPub_2614345_0102817640017fro.fm

Update Log for Doc. No. MM-81764-0107

This table shows all changes made to this manual, such as kits installed and pages added or removed.

Date	Installed Kit	Added Pages (Doc. No.)	Removed Pages	Signature

TechPub_2614345_0102817640l7fro.fm

Date	Installed Kit	Added Pages (Doc. No.)	Removed Pages	Signature

TechPub_2614345_0102817640l7fro.fm

i Introduction

TechPub_2614345_0102817640l7int.fm

This chapter contains basic information about this manual and related Tetra Pak equipment.

TechPub_2614345_0102817640l7int.fm

Manual Information . . . . . i - 5
Delivered Manuals . . . . . i - 5
Page Layout . . . . . i - 6
Page Numbering. . . . . i - 7
Typographical Conventions . . . . . i - 7
Symbols . . . . . i - 7
Machine Introduction . . . . . i - 8
Intended Use of the Equipment . . . . . i - 8
Manufacturer . . . . . i - 8
Service . . . . . i - 8
Identification . . . . . i - 9
CE Classification . . . . . i - 9
Machine Plate . . . . . i - 9
Orientation . . . . . i - 10
Hygiene. . . . . i - 11
Abbreviations and Terminology . . . . . i - 12
How to Use This Maintenance Manual . . . . . i - 13
MM Procedure Codes . . . . . i - 13
Procedure Start Table . . . . . i - 14
Tetra Pak Maintenance System. . . . . i - 15
Planned Maintenance Program . . . . . i - 15
Checklists and Spare Parts Recommendations . . i - 15

TechPub_2614345_0102817640l7int.fm

This page intentionally left blank

TechPub_2614345_0102817640017int.fm

Manual Information

Tetra Pak recommends reading all delivered manuals carefully. Make sure that the delivered manuals are available to personnel who operate or maintain the equipment.

It is important to keep this manual for the lifetime of the equipment and to pass the manual on to any subsequent holder or user.

Tetra Pak will not be held responsible for any damage to the equipment caused by not following the instructions given in this manual.

Delivered Manuals

The manuals delivered with this equipment include

- Conversion Manual (CM)
  This manual provides technicians with information on converting the equipment between different production modes
- Electrical Manual (EM)
  This manual provides technicians with information about the equipment's electrical system
- Installation Manual (IM)
  This manual provides technicians with information required to safely install the equipment
- Maintenance Manual (MM)
  This manual provides technicians with information on maintaining the equipment.
- Operation Manual (OM)
  This manual provides the operator with information on handling and operating the equipment before, during, and after production
- Spare Parts Catalogue (SPC)
  This manual provides the information necessary to order spare parts from Tetra Pak
- Technical Manual (TeM)
  - provides technicians with information required to safely install the equipment
  - provides technicians with information on maintaining the equipment
  - provides technicians with information about the equipment's electrical system
  - provides the information necessary to order spare parts from Tetra Pak.

TechPub_2614345_0102817640l7int.fm

Page Layout

Every main page in a manual contains a header and a footer. The page header contains the section name (1) and the chapter name (2). The page footer contains the manual's document number (3), and the page number (4). See also the section Page Numbering.

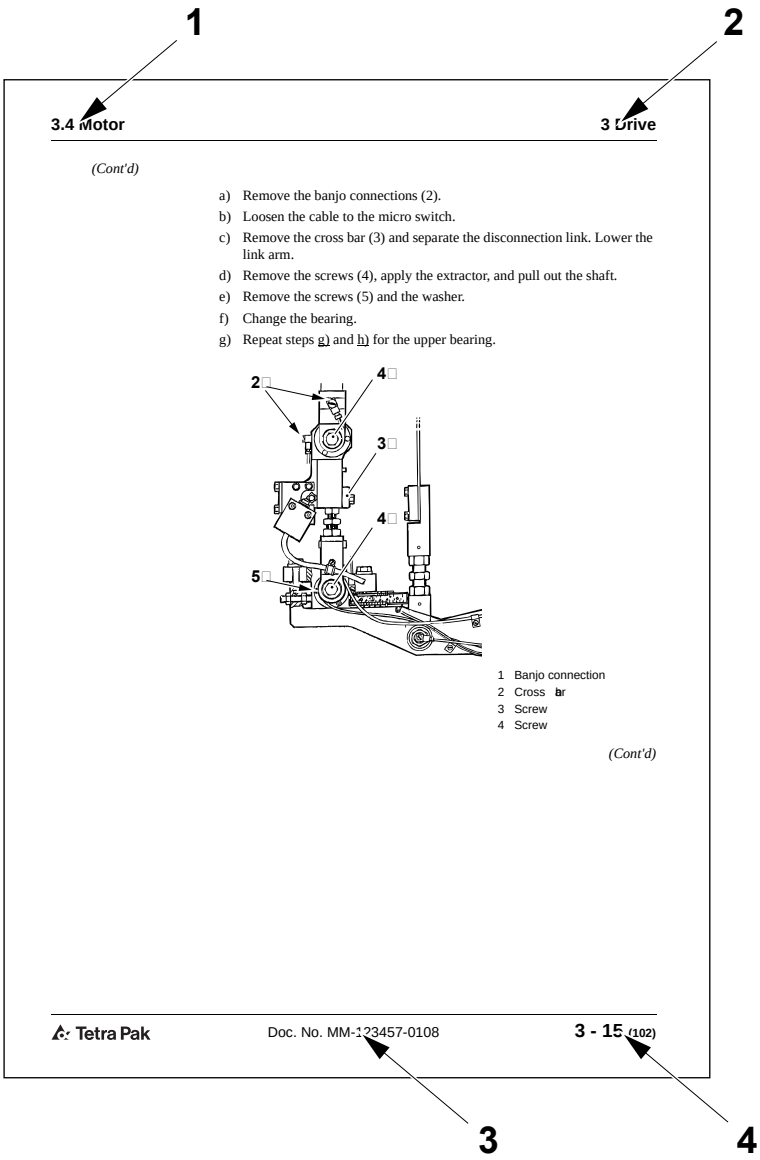

1 Section name
2 Chapter name
3 Document number
4 Page number

TechPub_2614345_0102817640l7int.fm

Page Numbering

A page number has three parts:

- chapter number (1)
- consecutive page number (2) within the chapter
- total number of pages (3) in the chapter.

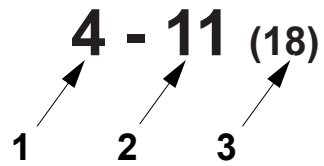

1 Chapter number
2 Consecutive page number
3 Total number of pages

Typographical Conventions

Controls on the operator panel, emergency stop devices, and program steps are printed in CAPITAL LETTERS.

Cross-references are underlined.

Symbols

The following symbols are used in illustrations:

- A pointer arrow (1) indicates the position of an object
- A zoom arrow (2) indicates that an object view is enlarged. The arrow points towards the enlarged view of the object
- A rotation movement arrow (3) indicates rotational movement of an object. The arrow points in the direction of rotation
- A straight movement arrow (4) indicates movement of an object. The arrow points in the direction of movement.

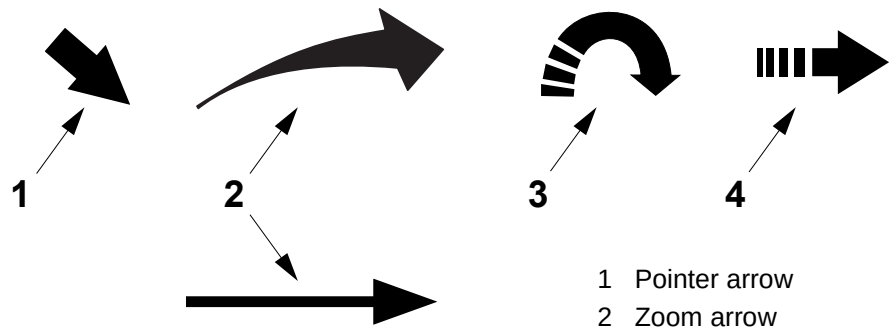

1 Pointer arrow
2 Zoom arrow
3 Rotation movement arrow
4 Straight movement arrow

TechPub_2614345_0102817640l7int.fm

Machine Introduction

Intended Use of the Equipment

The intended use of this Tetra Pak equipment is to pack liquid food products.

All other use is prohibited. Tetra Pak will not be held responsible for injury or damage if the equipment is used for any other purpose.

Manufacturer

This Tetra Pak equipment has been manufactured by

Tetra Pak Carton Ambient S.p.A.
Via Delfini, 1
41100 Modena
Italy

Service

If you encounter problems when operating this equipment, contact the nearest Tetra Pak office.

Contact the Liaison with other inquiries, comments, or suggestions for improvement regarding the equipment and its documentation.

TechPub_2614345_0102817640017int.fm

Identification

CE Classification

This equipment complies with the basic health and safety regulations of the European Economic Area (EEA).

Machine Plate

The illustration below shows an example of the machine plate and its location on the equipment. The machine plate carries data needed when contacting Tetra Pak concerning this specific equipment.

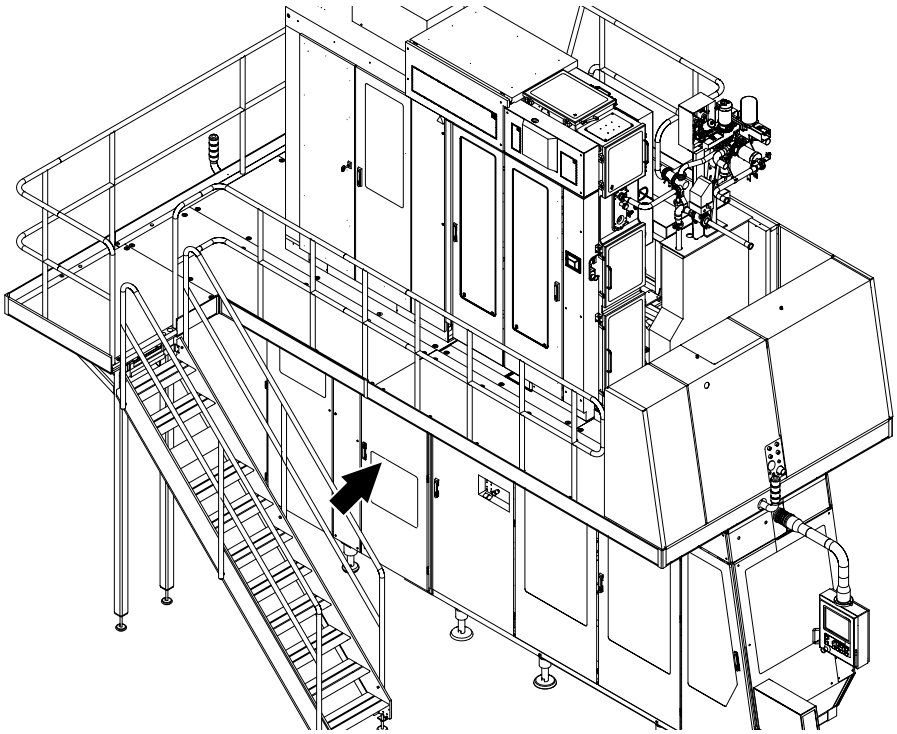

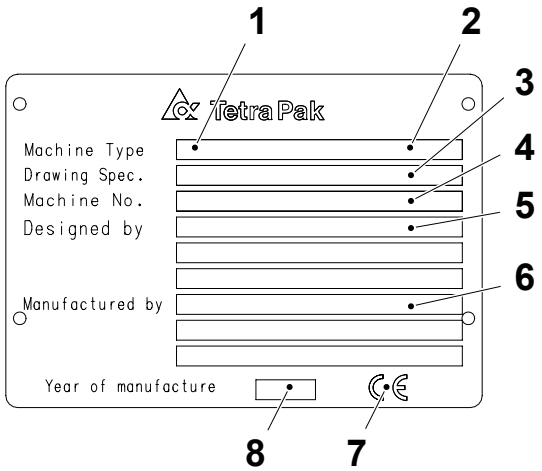

1 Machine type
2 Volume
3 Drawing specifications
4 Machine serial number
5 Designed by
6 Manufacturer
7 CE mark
8 Year of manufacture

TechPub_2614345_0102817640l7int.fm

Orientation

The illustration below shows the orientation of the equipment. This orientation information will be used throughout this manual.

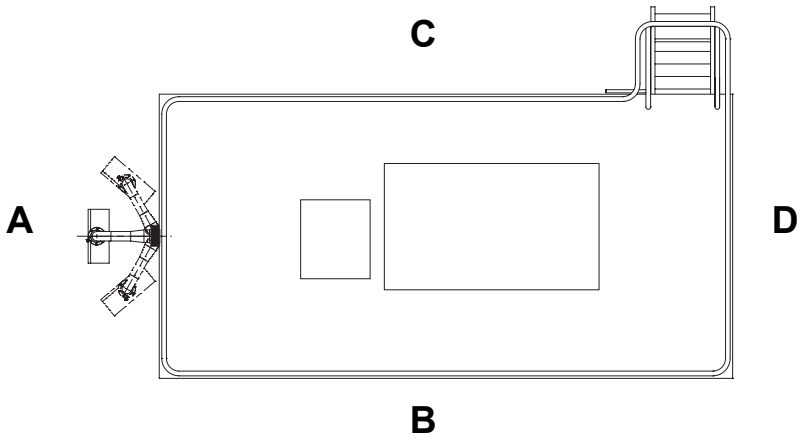

A Front
B Right-hand side
C Left-hand side
D Back

TechPub_2614345_0102817640l7int.fm

Hygiene

Avoid microbiological pollution of the packaging material:

- Always keep the doors to the filling room (area) closed. To prevent contamination via air streams, never open a window when the equipment is in production.
- Never clean the floors or the equipment in the filling room (area) when the equipment is in production.
- Compressed air used for cleaning purposes is to be used only for cleaning filters and should only be used outside of the filling room (area) or in the final folder compartment of the filling machine.
- Prepare the splicing of the packaging material as late as possible.
- Disinfect your hands before touching anything that may come into contact with the product. Use disinfectant code H. See the Technical Data chapter.
- Keep your hands and gloves clean.
- Always wear some type of hair protection (cap or hairnet) and clean clothes (preferably white).
- Do not wear a watch, ring, necklace, earrings, or any other exposed jewellery.

TechPub_2614345_0102817640l7int.fm

Abbreviations and Terminology

Abbreviation/ Terminology	Meaning	Translation
AP	Aseptic Product	
ASU	Automatic Splicing Unit	
B	Base (package shape)	
CIP	Cleaning In Place	
DE	Distribution Equipment	
DI	Digital	
EM	Electrical Manual	
HF	High Frequency	
HI	Headspace by gas Injection	
IM	Installation Manual	
LED	Light Emitting Diode	
LH	Left Hand	
LS	Longitudinal Seal(ing)	
min	Minimum	
max	Maximum	
MM	Maintenance Manual	
OK	Optional Kit	
OE	Optional Equipment	
OM	Operating Manual	
p/h	packages per hour	
PE	Polyethylene	
PLC	Programmable Logic Controller	
PM	Packaging Material	
RH	Right Hand	
S	Slim (package shape)	
SA	Strip Applicator	
SPC	Spare Parts Catalogue	
TBA	Tetra Brik Aseptic	
TMCC	Tetra Pak Multi-purpose Compact Controller	
TPIH	Tetra Pak Induction Heating	
TPO	Tetra Pak Oxide	
TPOP	Tetra Pak Operator Panel	
TS	Transversal Sealing	

TechPub_2614345_0102817640l7int.fm

How to Use This Maintenance Manual

MM Procedure Codes

Maintenance procedures are designated as shown in the example.

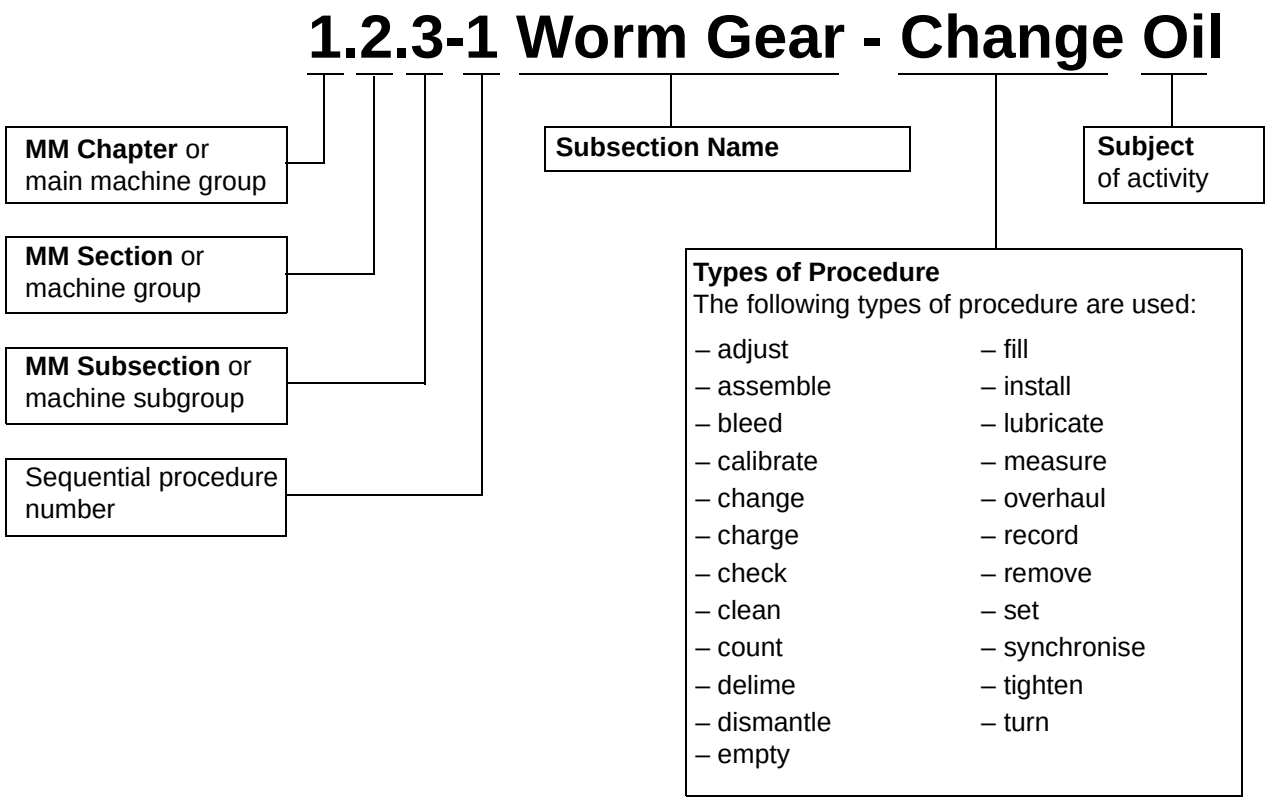

(Cont'd)

TechPub_2614345_0102817640l7int.fm

(Cont'd)

Procedure Start Table

Each maintenance procedure described in this manual begins with a table containing information needed to begin the procedure. This information includes the following:

- **Machine status** (1) shows actuator status, program step, and any other machine status necessary to begin the procedure
- **Special equipment** (2) shows a list of personal protective equipment and special tools that are not normally carried by a service technician, but are needed in the procedure
- **Consumables** (3) shows items, such as lubricants, that are required to perform the procedure. Consumables do not include replacement parts.
- **SPC reference** (4) shows the assembly number, found in the index of the Spare Parts Catalogue (SPC)

1.2.3-1 Worm Gear - Change Oil

1	Machine status	Power supply disconnecting device OFF Air valve OFF Steam valve ON
2	Special equipment	Torque wrench minimum 55 NM Protective gloves TP No. 90303-12 Apron TP No. 90303-13
3	Consumables	2 litre high pressure oil Grease code N
4	SPC reference	123456-0100

1 Machine status
2 Special equipment
3 Consumables
4 SPC reference

TechPub_2614345_0102817640l7int.fm

Tetra Pak Maintenance System

To ensure uninterrupted production, all equipment must be maintained on a regular basis.

Tetra Pak has developed a planned maintenance system to keep pace with the ongoing development of new and existing equipment from Tetra Pak, and to meet the demands set by customers for higher efficiency and better economy.

Planned Maintenance Program

The Tetra Pak planned maintenance system reduces unplanned downtime and maintenance time for complete production lines, as well as for individual equipment.

With the Tetra Pak planned maintenance system, preventive maintenance can be performed before production is affected. The system is continually updated based on experience with Tetra Pak equipment worldwide.

The Tetra Pak planned maintenance system maintains records of when maintenance is performed, when parts are changed, whether alterations are made, and so on. These records, combined with usage statistics, enable reliable predictions of the service life of all equipment parts.

Checklists and Spare Parts Recommendations

Customers using the Tetra Pak planned maintenance system receive checklists from their local Tetra Pak office whenever planned maintenance is due. These checklists are individualised for each customer, according to the type of equipment, equipment usage, and maintenance occasion. In addition, the system recommends spare parts, rotation units, tools, and templates according to the statistics collected.

Tip! Contact the local Tetra Pak office for additional information about the Tetra Pak Maintenance System and its planned maintenance program.

TechPub_2614345_0102817640l7int.fm

This page intentionally left blank

TechPub_2614345_0102817640017int.fm

ii Safety Precautions

TechPub_2614345_0102817640l7sp.fm

Read the Safety Precautions

WARNING

Read and follow all safety precautions before working on or near this equipment.

Read all safety precautions throughout this manual and on safety signs attached to this equipment. Failure to follow all safety precautions could result in death or serious injury.

Definitions

Energy Isolating Device. A mechanical device that physically prevents transmission or release of energy.

Power Supply Disconnector. The energy isolating device for the electrical power supply to the equipment.

Lockout. The use of a device, such as a padlock, to make sure that an energy isolating device, such as a power supply disconnector, cannot be operated.

Lockout Procedure. A procedure to put each necessary energy isolating device in its safe position to prevent the energising of the equipment, such as when a maintenance procedure should be carried out.

TechPub_2614345_0102817640l7sp.fm

Safety Messages Description . . . . . ii - 5
Personnel Requirements . . . . . ii - 6
Skilled Person . . . . . ii - 6
Instructed Person. . . . . ii - 6
Safety Signs . . . . . ii - 7
Locations of Safety Signs . . . . . ii - 12
Safety Devices . . . . . ii - 18
Emergency Stop . . . . . ii - 18
EMERGENCY STOP Push-Buttons . . . . . ii - 19
Safeguards . . . . . ii - 20
Warning Lamp . . . . . ii - 22
Audible Alarm . . . . . ii - 22
Personal Protection. . . . . ii - 23
Noise Hazard . . . . . ii - 23
Entanglement Hazard . . . . . ii - 23
Hazardous Materials . . . . . ii - 24
Hydrogen Peroxide (H_2O_2) . . . . . ii - 25
Emergency Procedures. . . . . ii - 25
Personal Protective Equipment . . . . . ii - 26
Handling . . . . . ii - 27
Storage . . . . . ii - 28
Disposal . . . . . ii - 29
Nitrogen (N2) . . . . . ii - 30
Emergency Procedures. . . . . ii - 30
Handling and Storage of Nitrogen Gas . . . . . ii - 30
Disposal of Nitrogen Gas . . . . . ii - 30
Cooling Media R134a . . . . . ii - 31
Emergency Procedures. . . . . ii - 31
Handling and Storage of Cooling Media R134a . ii - 31

TechPub_2614345_0102817640l7sp.fm

Disposal of Cooling Media R134a. . . . . ii - 31

Supply Systems . . . . . ii - 32

Electrical Cabinet . . . . . ii - 32

Power Supply . . . . . ii - 33

Air Supply . . . . . ii - 34

Steam Supply. . . . . ii - 35

Water Supply . . . . . ii - 36

Equipment for Lifting and Moving Loads . . . . ii - 37

TechPub_2614345_0102817640l7sp.fm

Safety Messages Description

A safety message is always accompanied by a safety alert symbol and a signal word.



This is the **safety alert symbol**. It is used to alert about potential personal injury hazards. To avoid hazards, obey all safety messages that follow this symbol.

The following safety alert symbols and **signal words** are used in this manual to inform the user of hazards.



DANGER

Danger indicates an imminently hazardous situation which, if not avoided, **will** result in **death or serious injury**.



WARNING

Warning indicates a potentially hazardous situation which, if not avoided, **could** result in **death or serious injury**.



CAUTION

Caution indicates a potentially hazardous situation which, if not avoided, **may** result in **minor or moderate injury.** It may also be used to alert against unsafe practices.

CAUTION

Caution without the safety alert symbol indicates a potentially hazardous situation which, if not avoided, **may** result in **property damage**.

TechPub_2614345_0102817640l7sp.fm

Personnel Requirements

Note! Personnel includes all persons working on or near this equipment.

Only skilled or instructed personnel are allowed to work with this equipment.

Skilled Person

A skilled person must have relevant education and experience to enable him or her to identify hazards, analyse risks, and avoid hazards which electricity, machinery, chemicals, other energies, and supply systems on this equipment can create.

Skilled persons must meet local regulations, such as certifications and qualifications for working with electricity, mechanical systems, and so on.

Instructed Person

An instructed person must be adequately advised or supervised by a skilled person. The skilled person enables the instructed person to identify hazards, analyse risks, and avoid hazards which electricity, machinery, chemicals, other energies, and supply systems on this equipment can create.

TechPub_2614345_0102817640l7sp.fm

Safety Signs

WARNING

Damaged or missing safety signs increase the risk of death or serious injury.

Replace all missing or damaged safety signs immediately.

There are two types of safety sign

- ISO signs are used worldwide
- ANSI signs are used in the United States only.

The table shows all safety signs that are located on this equipment.

Note! The position numbers (Pos.) in the table refer to the positions in the illustration(s) in the Locations of Safety Signs section.

Pos.	ISO sign	ANSI sign
1		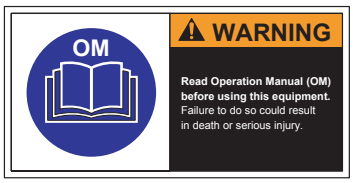
	Read Operation Manual (OM) before using this equipment. Failure to do so could result in death or serious injury.	
2		
	Hazardous noise. Risk of impaired hearing. Wear hearing protection.	
3		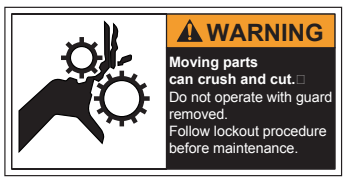
	Moving parts can crush and cut. Do not operate with guard removed. Follow lockout procedure before maintenance.	

TechPub_2614345_0102817640l7sp.fm

Pos.	ISO sign ANSI sign
4	  **Moving part can crush and cut.** Do not operate with guard removed. Follow lockout procedure before maintenance.
5	 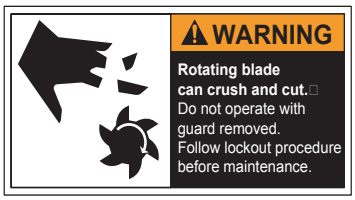 **Rotating blade can crush and cut.** Do not operate with guard removed. Follow lockout procedure before maintenance.
6	  **Blade hazard.** Do not touch the sharp knife.
7	  **Hazardous voltage.** Will shock, burn, or cause death. Follow lockout procedure before maintenance.
8	  **Hazardous voltage with power supply disconnector switched off.** Can shock, burn, or cause death. Do not touch.

TechPub_2614345_0102817640017sp.fm

Pos.	ISO sign ANSI sign
9	 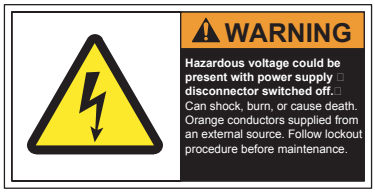 **Hazardous voltage could be present with power supply disconnector switched off.** Can shock, burn, or cause death. Orange conductors supplied from an external source. Follow lockout procedure before maintenance.
10	 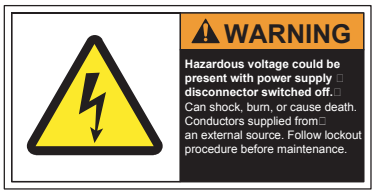 **Hazardous voltage could be present with power supply disconnector switched off.** Can shock, burn or cause death. Conductors supplied from an external source. Follow lockout procedure before maintenance.
11	  **Hazardous voltage.** Can shock, burn, or cause death. Read Maintenance Manual before using this socket outlet.
12	  **Chemical burn hazard.** Wear personal protective equipment.
13	  **Hot corrosive substance under high pressure.** Do not point nozzle at another person or at electrical devices. Wear personal protective equipment.

TechPub_2614345_0102817640l7sp.fm

Pos.	ISO sign	ANSI sign
14	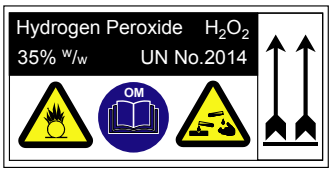	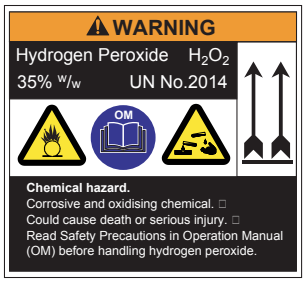
	Chemical hazard. Corrosive and oxidising chemical. Could cause death or serious injury. Read Safety Precautions in Operation Manual (OM) before handling hydrogen peroxide.	
15		
	Risk of eye injury. Wear eye protection.	
16		
	Risk of equipment damage. Do not let water into this area.	
17		
	Burn hazard. Trapped heat energy. Do not touch.	
18		
	Hot surface. Do not touch. Follow lockout procedure before maintenance.	

TechPub_2614345_0102817640l7sp.fm

Pos.	ISO sign	ANSI sign
19		
	Trapped pneumatic energy. Moving parts could cause serious injury. Follow lockout procedure before maintenance.	
20		
	Fall hazard. Be careful when using stairways and ladders.	
21		
	Fall hazard. Do NOT climb on equipment.	
22		
	Do NOT step or stand on the lower splicing table.	
23		
	Do NOT step or stand on these rails.	

TechPub_2614345_0102817640l7sp.fm

Locations of Safety Signs

Note! Make sure that each safety sign is undamaged and in its correct position after installation and maintenance. Replace all missing or damaged safety signs immediately.

The illustration shows where the safety signs are located. The position numbers refer to the table in the Safety Signs section.

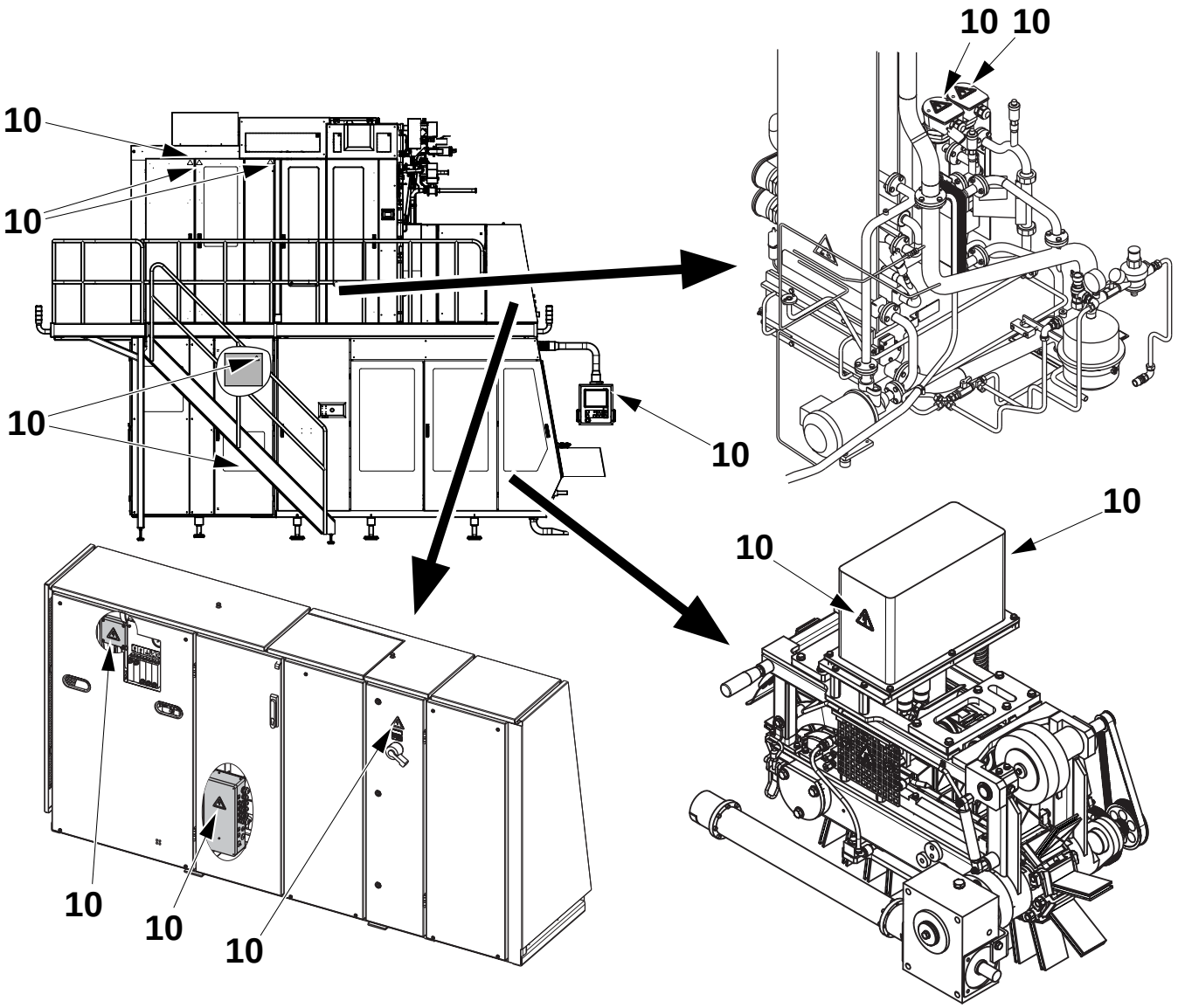

TechPub_2614345_0102817640017sp.fm

(Cont'd)

(Cont'd)

The illustration shows where the safety signs are located. The position numbers refer to the table in the Safety Signs section.

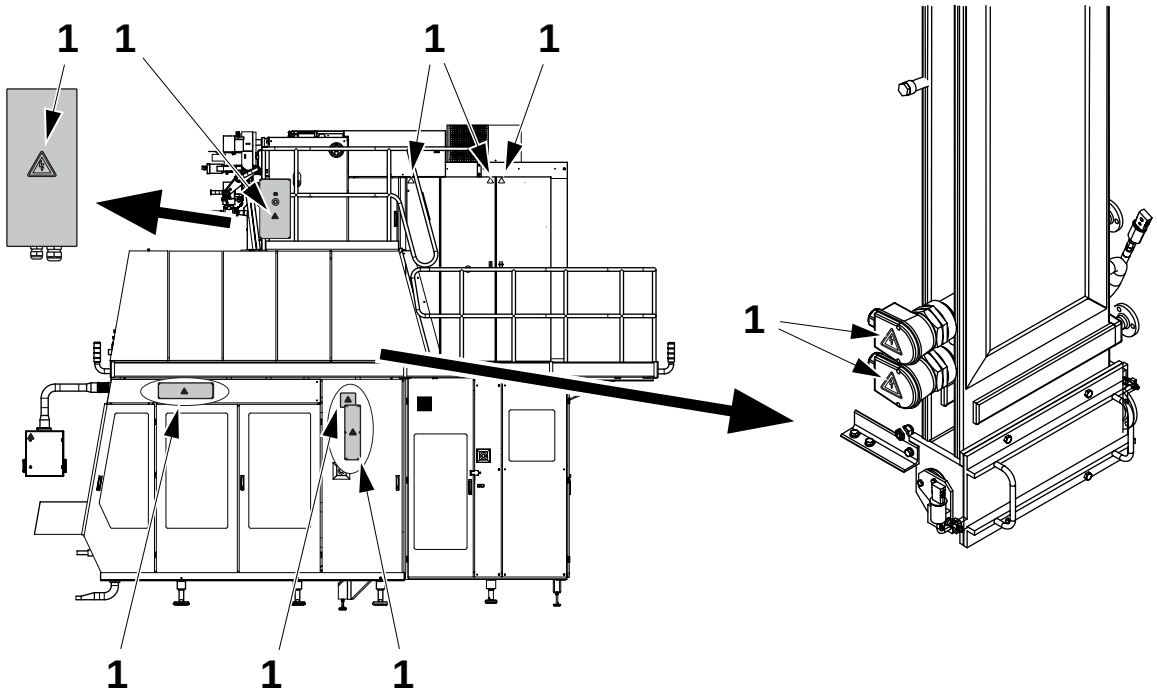

(Cont'd)

TechPub_2614345_0102817640017sp.fm

(Cont'd)

The illustration shows where the safety signs are located. The position numbers refer to the table in the Safety Signs section.

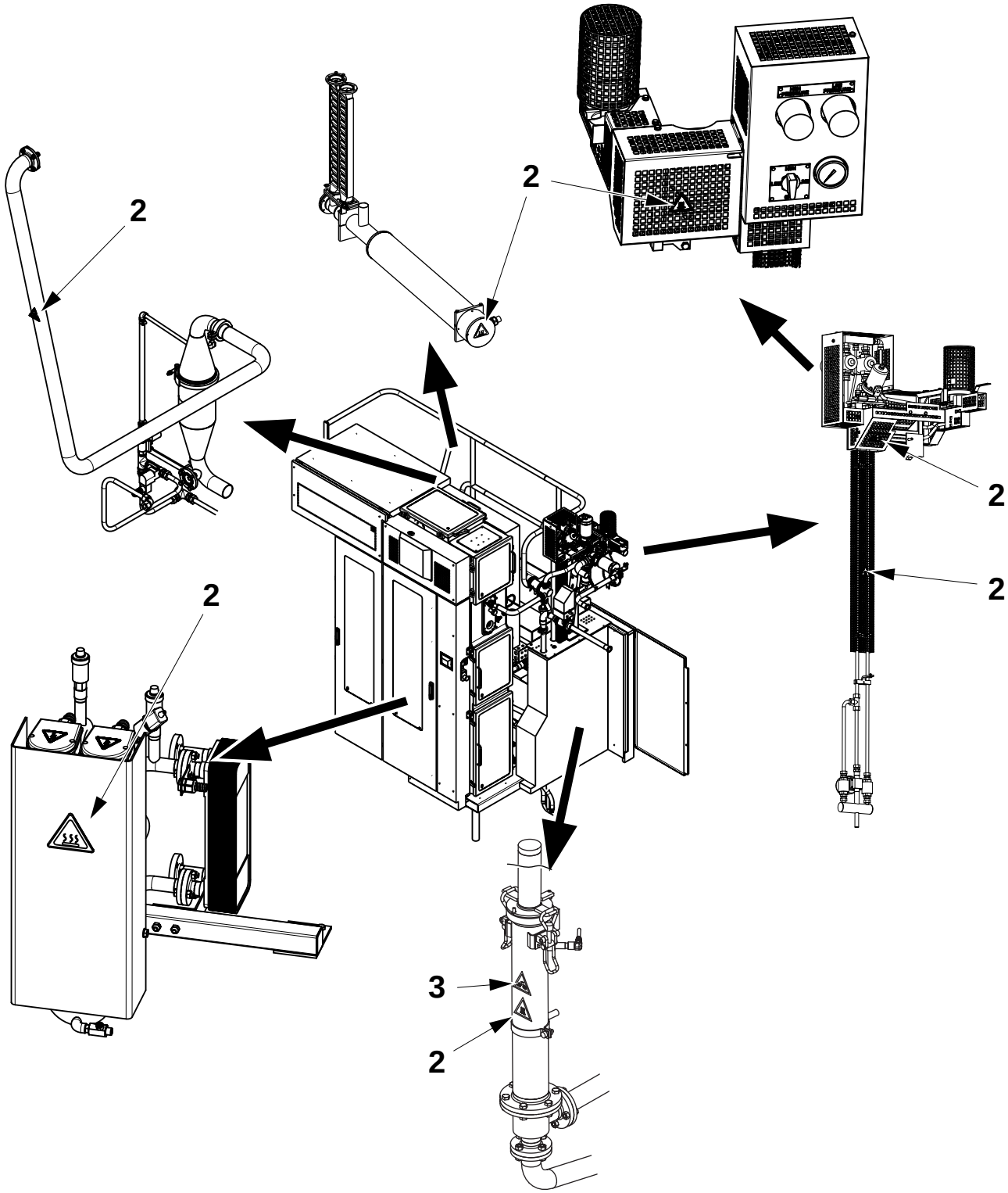

TechPub_2614345_0102817640017sp.fm

(Cont'd)

(Cont'd)

The illustration shows where the safety signs are located. The position numbers refer to the table in the Safety Signs section.

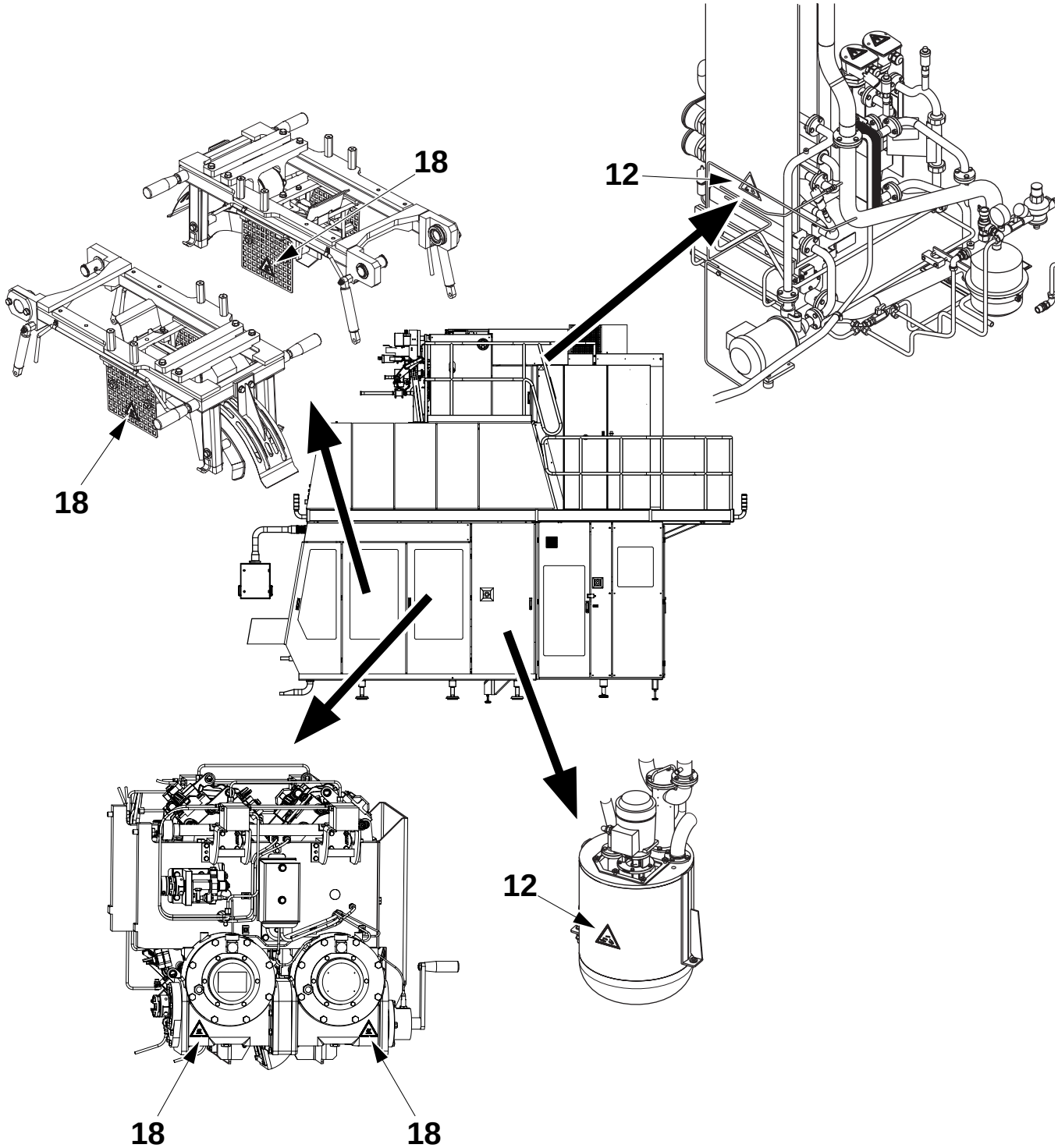

(Cont'd)

TechPub_2614345_0102817640l7sp.fm

(Cont'd)

The illustration shows where the safety signs are located. The position numbers refer to the table in the Safety Signs section.

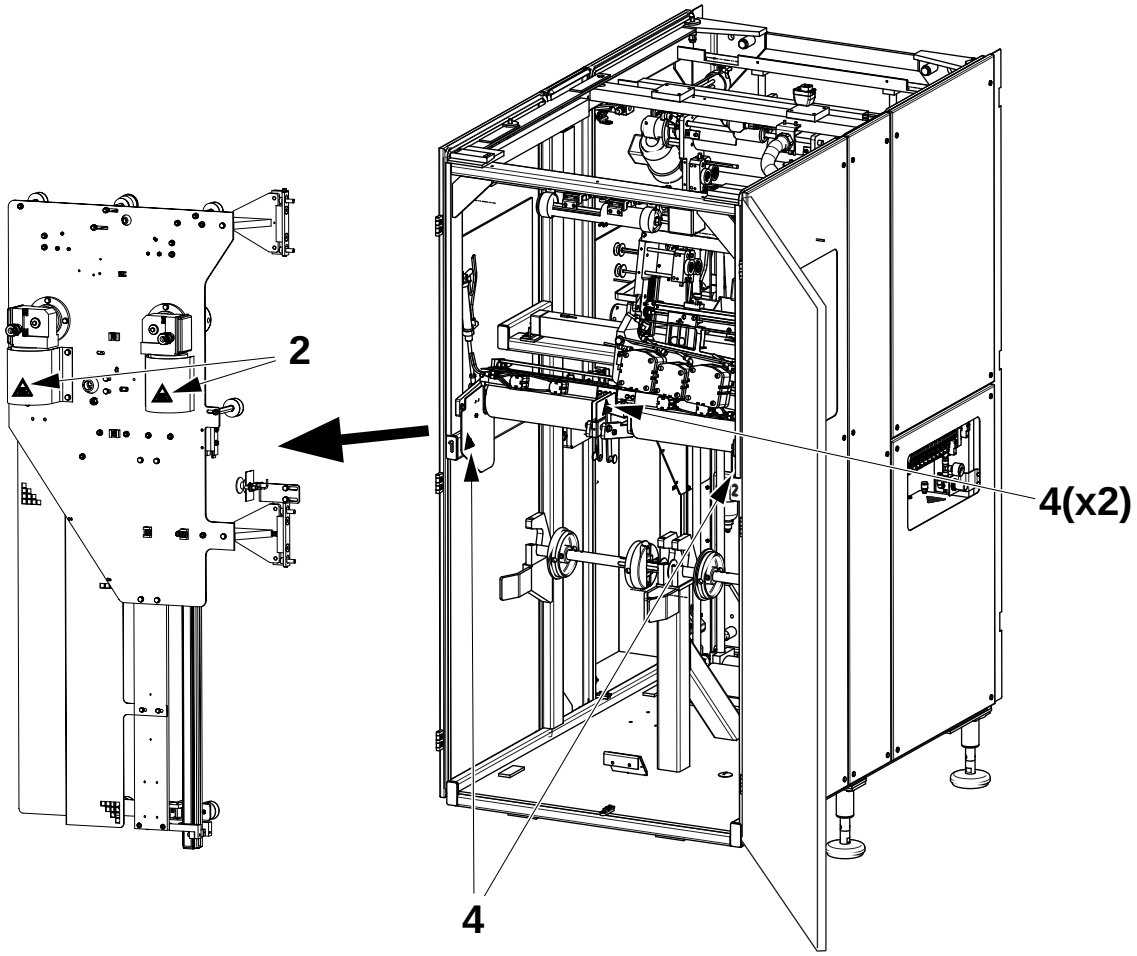

TechPub_2614345_0102817640017sp.fm

(Cont'd)

(Cont'd)

Valid for Machines with HI

The illustration shows where the safety signs are located. The position numbers refer to the table in the Safety Signs section.

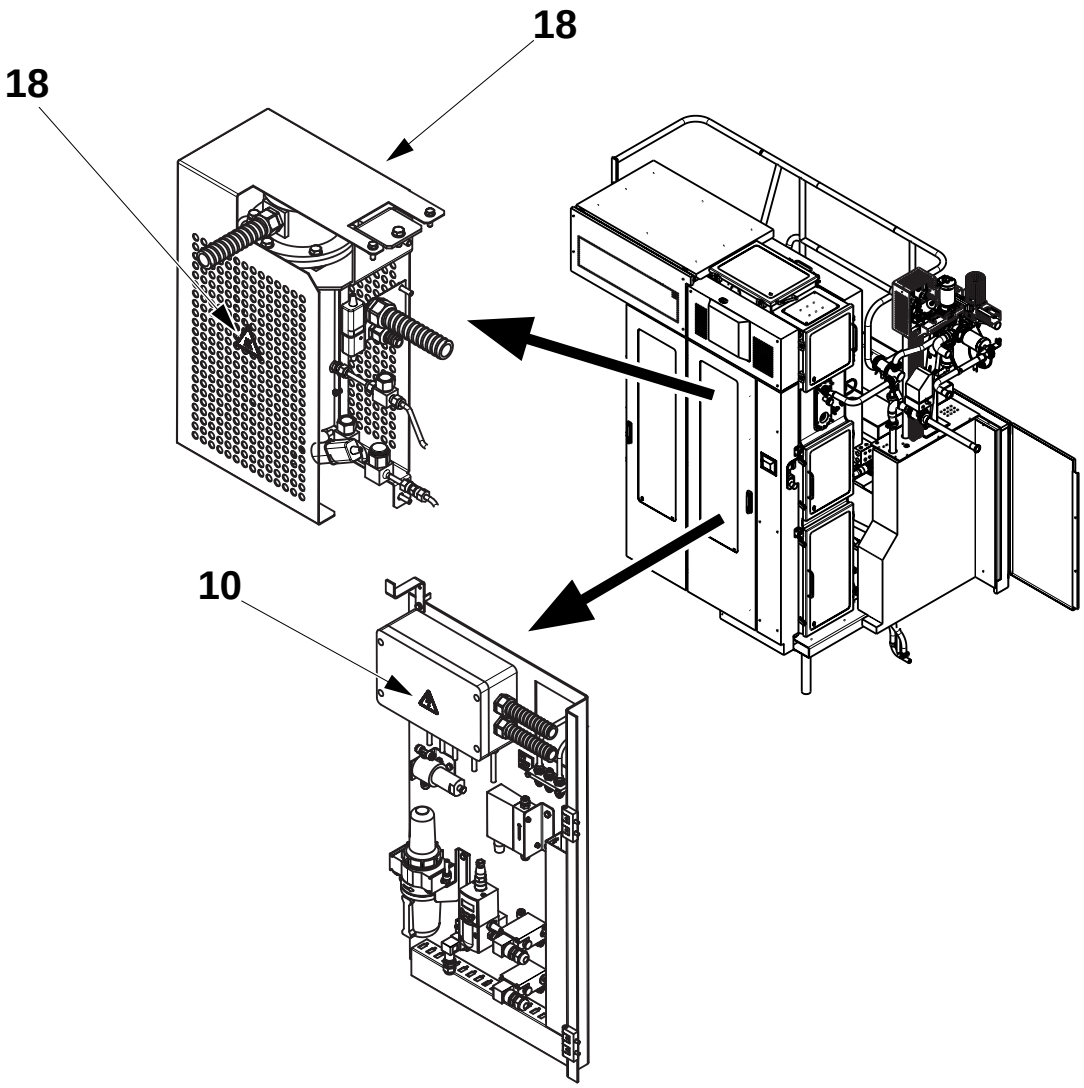

TechPub_2614345_0102817640l7sp.fm

Safety Devices

WARNING
Unshielded hazards.
Never inch or run this equipment if any safety device is inoperative.

Change inoperative components of the safety system immediately.

WARNING
Hazardous Voltage.
Activating a safety device, such as pressing an EMERGENCY STOP push-button or opening a door, does not disconnect the power supply from this equipment.

Emergency Stop

Emergency stop devices are used to stop this equipment immediately in an emergency. Learn the positions of all emergency stop devices and how to use them.

Instructions for a normal production stop are included in the Stop chapter of the Operation Manual.

TechPub_2614345_0102817640l7sp.fm

EMERGENCY STOP Push-Buttons

Push one of the EMERGENCY STOP push-buttons to stop this equipment immediately.

The illustration shows an EMERGENCY STOP push-button. The location of each EMERGENCY STOP push-button is shown by an arrow.

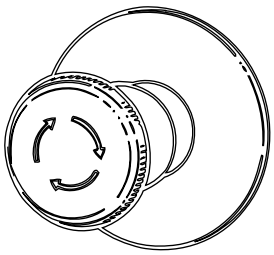

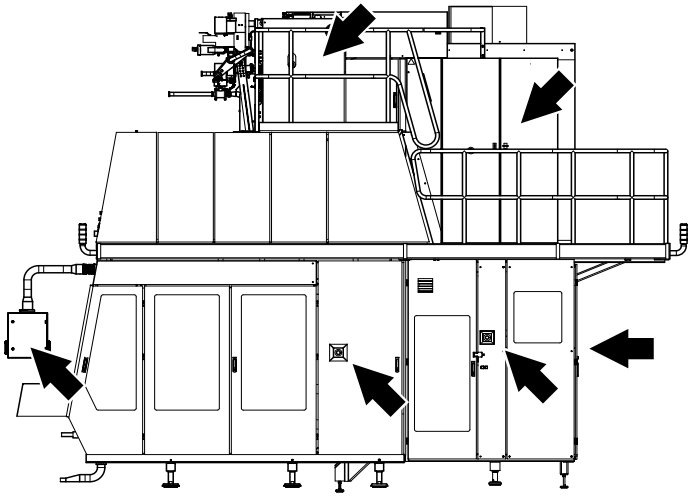

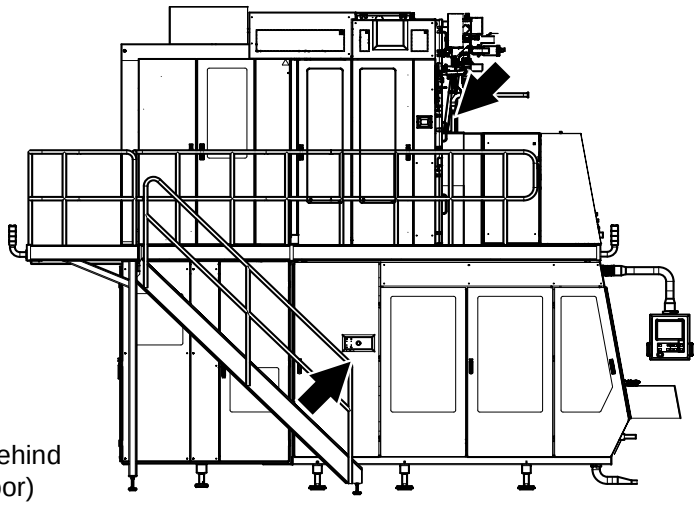

(behind door)

TechPub_2614345_0102817640l7sp.fm

Safeguards

WARNING
Moving machinery.
Never defeat or bypass the interlocking devices.

All movable guards, such as doors and covers, leading to hazardous areas are fitted with interlocking devices, usually electric safety switches. These devices are part of the safety system and must never be defeated, bypassed, or otherwise made inoperative.

CAUTION
Burn hazard.
Parts of this equipment protected by safeguards may be thermally hot after operation.

After installation and maintenance, and before this equipment is inched or run, check that all safeguards are in place and that they operate correctly.

CAUTION
Equipment damage.
Never stop this equipment by opening a movable guard.

(Cont'd)

TechPub_2614345_0102817640l7sp.fm

(Cont'd)

The location of each movable guard is shown by an arrow.

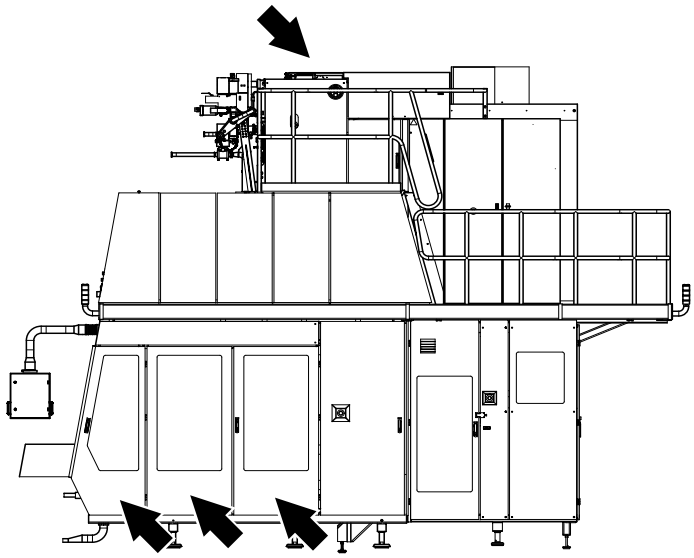

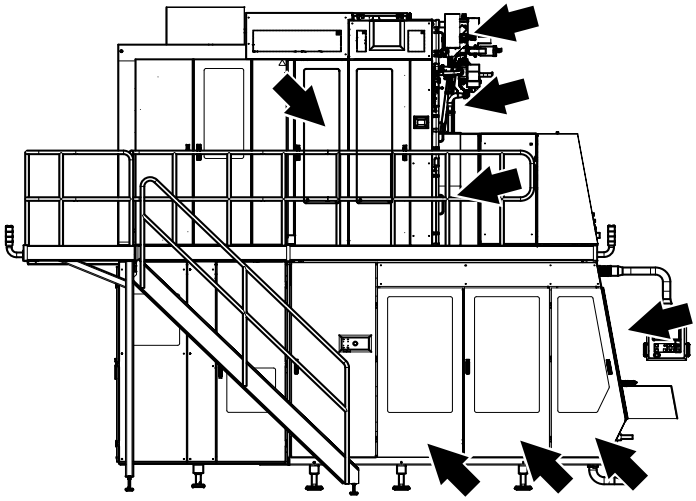

TechPub_2614345_0102817640l7sp.fm

Warning Lamp

A warning lamp is a column of warning lights:

- A red light (1) indicates a hazardous condition. This is an emergency situation that requires immediate action
- A yellow light (2) indicates an abnormal condition. This is an impending critical condition calling for action by the operator
- A blue light (3) indicates that operator action is required.

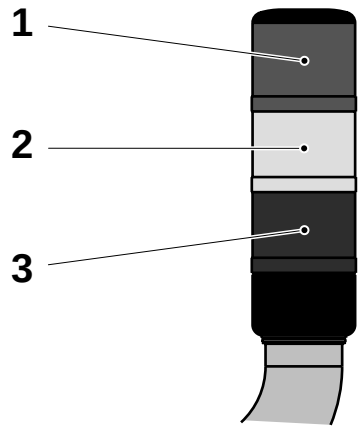

1 Red light
2 Yellow light
3 Blue light

A warning light flashes when operator action is required. The light stops flashing and remains lit when the alarm is acknowledged. After the fault is corrected or the operator takes the appropriate action, the warning light goes off.

Audible Alarm

The audible alarm produces a warning signal every time this equipment is about to start. The warning signal sounds for approximately three seconds prior to starting to alert personnel.

TechPub_2614345_0102817640l7sp.fm

Personal Protection

This section applies to all personnel at all times when this equipment is in operation. For special personal protection required when handling hazardous materials, see the Hazardous Materials section.

Noise Hazard

WARNING
Hazardous noise.
Risk of impaired hearing.
Wear hearing protection whenever this equipment is in operation.

CAUTION
Hazardous noise.
Risk of impaired hearing.
Hearing protection is recommended whenever this equipment is in operation.

Entanglement Hazard

WARNING
Risk of entanglement.
Do not wear jewellery or loose clothing when working on or near this equipment. Long hair may not be loose.

TechPub_2614345_0102817640l7sp.fm

Hazardous Materials

WARNING

Contact with chemicals can cause death, serious injury, and illness.

Always follow the chemical manufacturer’s instructions when handling chemicals.

Make sure that:

- the showers work
- an eyewash device, movable or wall-mounted, is available and operational
- additional washing facilities are nearby.

Note! Learn the locations of all washing facilities in order to act immediately in case of an accident.





TechPub_2614345_0102817640l7sp.fm

Hydrogen Peroxide (H_2O_2)

WARNING
Corrosive chemical.
Wear personal protective equipment.

In both liquid and gas states, hydrogen peroxide may cause irritation or damage if it comes into contact with skin, mucous membranes, eyes, or clothes. Call for medical attention immediately if there is an accident.

Liquid hydrogen peroxide in concentrations of less than 1% is generally considered harmless to humans.

Consult the instructions on the label of the tank or container.

Emergency Procedures

If there is an accident involving hydrogen peroxide, rinse the affected area as soon as possible with large amounts of water.

If hydrogen peroxide is swallowed

- do not attempt to cause vomiting
- drink large amounts of lukewarm water to dilute the peroxide
- call for medical attention immediately.

If splashes or vapour from hydrogen peroxide come in contact with the eyes

- wash the eyes thoroughly with lukewarm water for 15 minutes (keep eyelids wide apart)
- call for medical attention immediately.

If hydrogen peroxide comes into contact with skin or clothes

- rinse immediately with plenty of water
- call for medical attention immediately if skin burns appear
- thoroughly wash the clothes before wearing them again.

If irritation or pain is experienced due to having inhaled hydrogen peroxide vapour

- leave the affected area and get some fresh air
- call for medical attention if the symptoms get worse.

TechPub_2614345_0102817640l7sp.fm

Personal Protective Equipment

The personal protective equipment for hydrogen peroxide is

- safety goggles (TP No 90303-11)
- protective gloves made of neoprene (TP No.90303-12)
- apron (TP No. 90303-13)
- shoes made of PVC, PE plastic, or rubber.

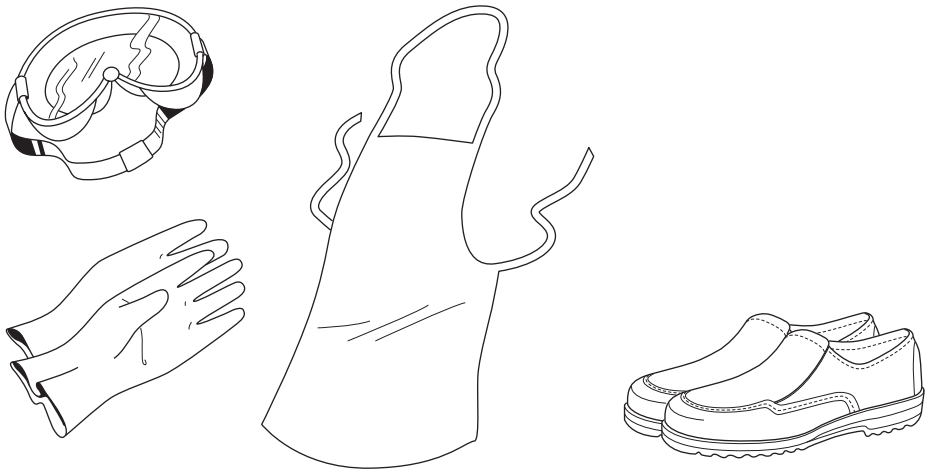

TechPub_2614345_0102817640l7sp.fm

Handling

WARNING
Sudden and violent chemical reaction.
Avoid any contamination of hydrogen peroxide.

Hydrogen peroxide reacts suddenly and violently with many compounds or if it is contaminated. The reaction is a violent decomposition liberating oxygen and heat, with a big increase in volume due to the oxygen produced by the peroxide decomposition.

Never pour surplus hydrogen peroxide back into the original container if it contains fresh hydrogen peroxide. There is a risk of explosion when hydrogen peroxide is in a closed container.

Ensure that equipment used for handling and diluting hydrogen peroxide is clean before it comes in contact with hydrogen peroxide. Pumps or other equipment used for handling hydrogen peroxide must be used for this purpose only and must be manufactured from appropriate materials, such as stainless steel 316 L, glass, polyethylene, or teflon. After use, make sure that all peroxide residue is rinsed away.

If hydrogen peroxide is spilled, dilute it with large amounts of water and flush it into a drain.



WARNING
Self-ignition.
Never wipe up hydrogen peroxide with materials such as rags or paper as these may self-ignite several hours after contact.
If there is a fire, spray with large quantities of water.

TechPub_2614345_0102817640l7sp.fm

Storage

DANGER

Containers will explode if not properly ventilated.
Keep the container upright and fitted with its proper ventilation cap. If there is a fire, cool all containers by spraying them with large quantities of water.

Hydrogen peroxide decomposes much faster with increasing temperature. There is a risk of explosion at high temperatures, since the ventilation cap cannot release the gases produced quickly enough.

Hydrogen peroxide must be stored in the original container delivered by the supplier. Keep the container upright and fitted with its proper ventilation cap, which allows oxygen to escape. Otherwise, there can be an explosion if decomposition of the peroxide occurs violently.

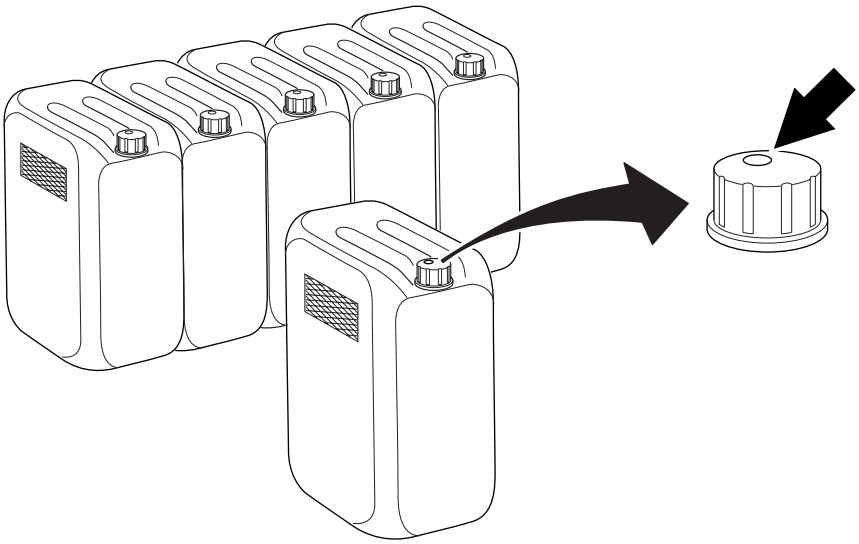

Make sure that the container is always properly closed.

(Cont'd)

TechPub_2614345_010281764017sp.fm

(Cont'd)

Commercial food-grade hydrogen peroxide has been stabilized to inhibit the catalytic decomposition effects of metals and other impurities, but it can decompose into oxygen and water if it is exposed to heat or contaminated.

Make sure that the area used for storage of hydrogen peroxide is:

- cool, clean, and well ventilated
- shielded from direct sunlight
- kept free from combustible materials.

Disposal

Hydrogen peroxide should be sent to an approved facility for destruction. Some countries allow it to be diluted with water to a concentration of less than 1% and poured into the drain.

TechPub_2614345_0102817640l7sp.fm

Nitrogen (N_2)

WARNING

High pressure gas.

Nitrogen gas in high concentration can cause rapid suffocation. Make sure that the areas for storing and using this gas are adequately ventilated.

WARNING

Extremely cold high pressure gas.

Rapidly expanding nitrogen gas can cause frostbite injuries. Always wear personal protective equipment.

Emergency Procedures

Nitrogen gas in high concentrations can cause an oxygen deficient environment. Rapidly expanding nitrogen gas can cause frostbite injuries.

In the case of an accidental release of this gas:

- leave the affected area immediately
- never attempt to rescue victims of exposure to this gas without the proper personal protective equipment
- remove victims to fresh air and if necessary administer expired air resuscitation and/or cardiopulmonary resuscitation. Call for immediate medical attention
- in case of contact with eyes or skin, soak the exposed areas with luke warm water, not hot or cold. Call for immediate medical attention.
- allow the gas to dissipate, use auxiliary ventilation if available.

Handling and Storage of Nitrogen Gas

When handling nitrogen gas cylinders, make sure that:

- the areas used for the storage and handling of this gas are adequately ventilated (min. 19.5% oxygen)
- the cylinders are transported with the valves closed and with the valve protection caps securely in place
- the gas cylinders are connected only to connections marked for this gas
- the cylinder valves are opened slowly

Disposal of Nitrogen Gas

When returning nitrogen gas cylinders, make sure that:

- the cylinder valves are closed and the valve protection caps are securely in place
- there is still some gas in the cylinder.

TechPub_2614345_0102817640l7sp.fm

Cooling Media R134a

WARNING

Refrigerant gas.

High concentration of cooling media R134a vapour can cause dizziness, headache, confusion and unconsciousness. In liquid form R134a can cause frostbite injuries on contact with skin. Always wear personal protective equipment.

Emergency Procedures

Inhaling large quantities of cooling media R134a vapour can cause dizziness, headache, confusion and unconsciousness. In liquid form cooling media R134a can cause frostbite injuries on contact with skin.

In the case of an accidental release of this refrigerant:

- leave the affected area immediately
- remove victims to fresh air and if necessary administer expired air resuscitation and/or cardiopulmonary resuscitation. Call for immediate medical attention
- in case of contact with eyes or skin, soak the exposed areas with luke warm water, not hot or cold. Call for immediate medical attention
- allow the vapour to dissipate, use auxiliary ventilation if available.

Handling and Storage of Cooling Media R134a

When handling cooling media R134a, make sure that:

- the cylinders are stored in a cool dry place away from direct sunlight or sources of heat
- the areas used for the storage and handling of this refrigerant are adequately ventilated
- the cylinders are transported carefully
- the cylinder valves are opened slowly.

Disposal of Cooling Media R134a

Cooling media R134a should whenever possible be reprocessed or recycled. Contact the manufacturer or supplier for information on authorised refrigerant reclamation and recycling programs.

TechPub_2614345_0102817640l7sp.fm

Supply Systems

Electrical Cabinet

DANGER

Hazardous voltage.
Will shock, burn, or cause death.
The power supply disconnector must be switched off and secured with a lock before maintenance inside the electrical cabinet.

Note! The key to the lock must be removed by the technician and retained in his/her possession until all work is completed.

Make sure that the electrical cabinet doors are closed after working inside the electrical cabinet. Doors with lock must be locked.

The location of each electrical cabinet is shown by an arrow.

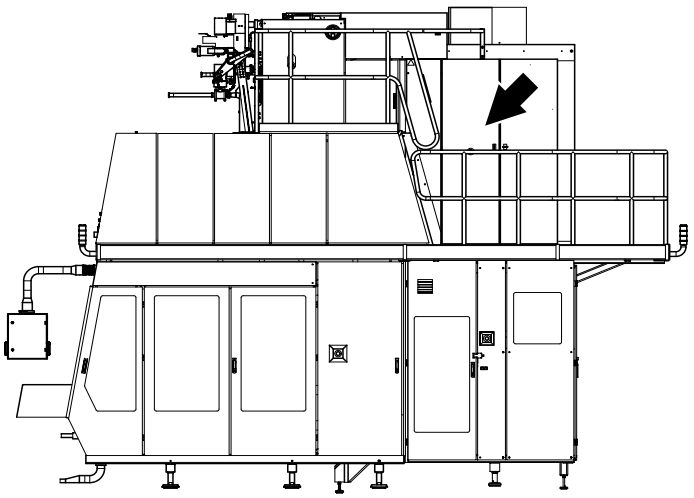

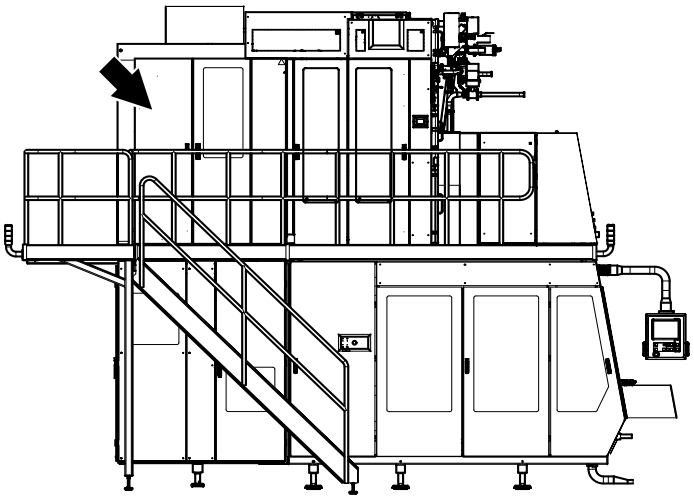

TechPub_2614345_0102817640017sp.fm

Power Supply

DANGER

Hazardous voltage and moving machinery.
The power supply disconnector must be switched off and secured with a lock before any maintenance.

Note! The key to the lock must be removed by the technician and retained in his/her possession until all work is completed.

Certain maintenance procedures may require power supply systems to be on. These exceptions are clearly stated in the Maintenance Manual.

The illustration shows the power supply disconnector. The arrow shows its location on this equipment.

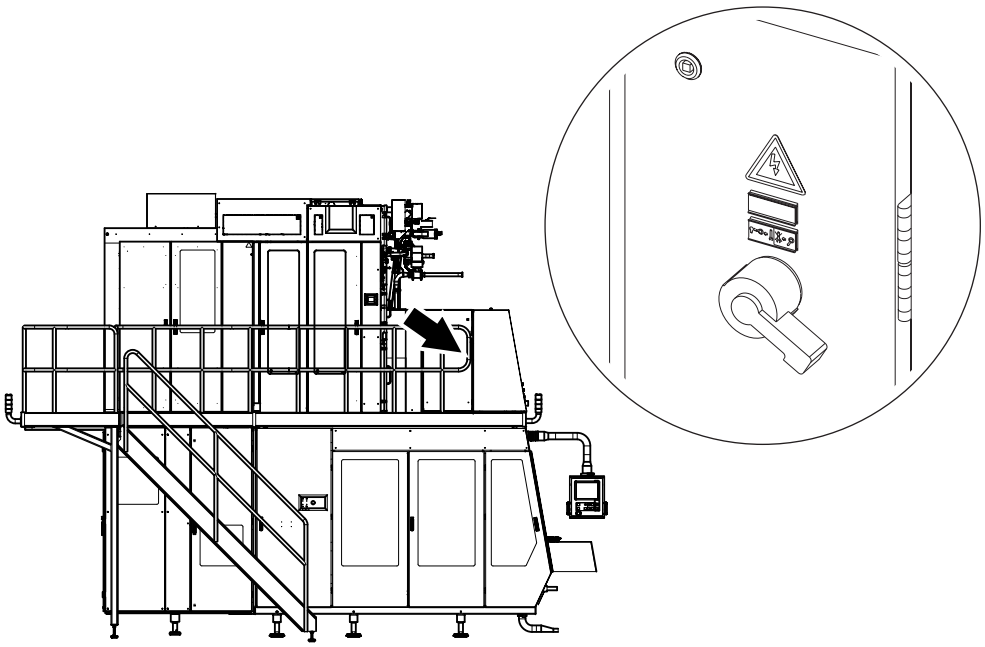

TechPub_2614345_0102817640l7sp.fm

Air Supply

WARNING

Compressed air and moving machinery.
Close the main air valve and secure it with a lock before any maintenance.

Note! The key to the lock must be removed by the technician and retained in his/her possession until all work is completed.

Certain maintenance procedures may require air supply systems to be on. These exceptions are clearly stated in the Maintenance Manual.

The illustrations show the main air valve (1) and the lock (2). The arrow shows their location on this equipment.

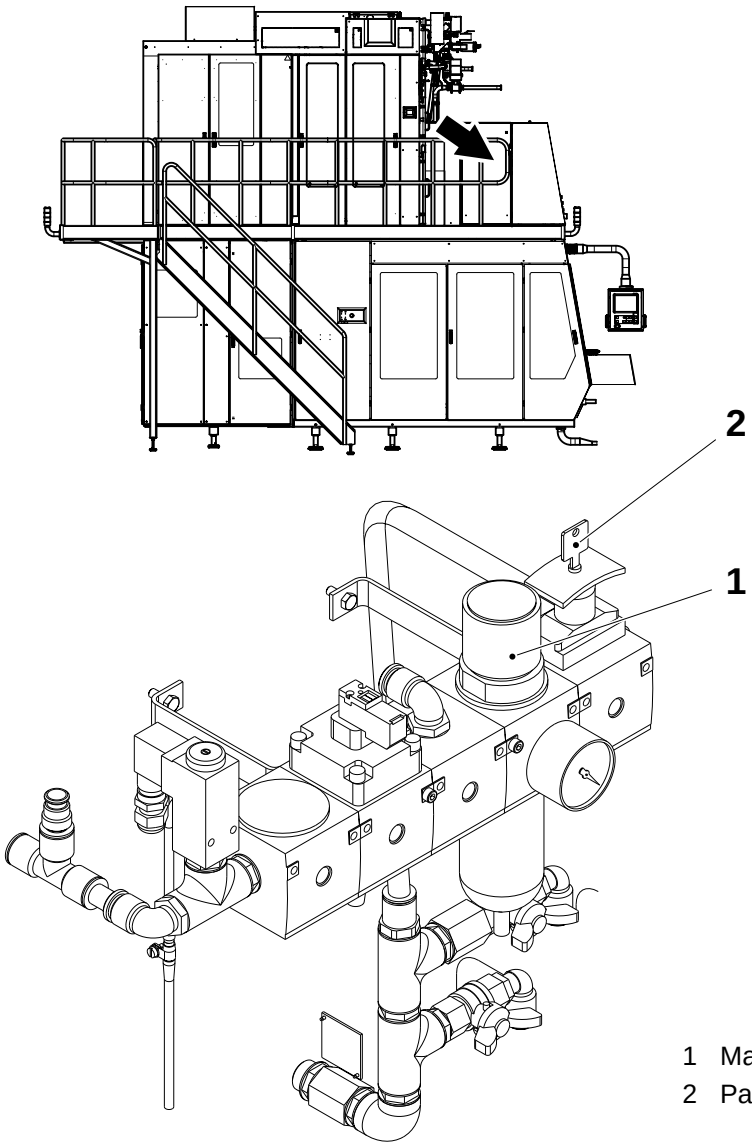

1 Main air valve
2 Padlock

TechPub_2614345_0102817640017sp.fm

Steam Supply

WARNING

Hot steam can cause scalds.

Pressurized steam can be discharged unexpectedly.
Close the steam supply valve and secure it with a lock, depressurize and vent all steam safely before any maintenance on parts with steam, such as pipes and valves.

Note! The key to the lock must be removed by the technician and retained in his/her possession until all work is completed.

Certain maintenance procedures may require steam supply systems to be on. These exceptions are clearly stated in the Maintenance Manual.

The illustration shows the steam supply valve (1) and its location.

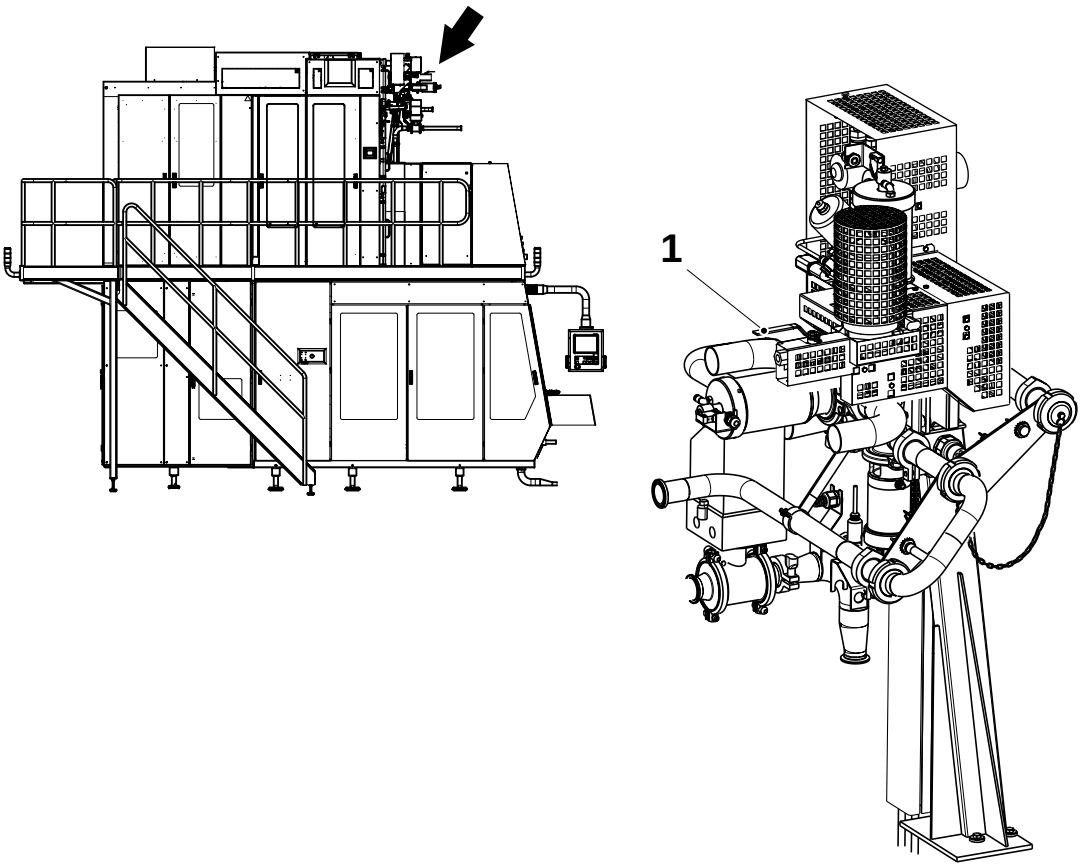

1 Steam supply valve

TechPub_2614345_0102817640l7sp.fm

Water Supply

WARNING
Water under pressure.
Close the water supply valves before any maintenance.

Certain maintenance procedures may require water supply systems to be on. These exceptions are clearly stated in the Maintenance Manual.

The illustration shows the water supply valves (1) and their location.

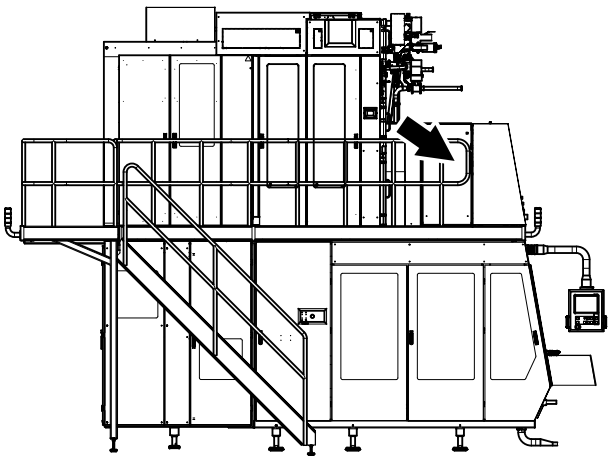

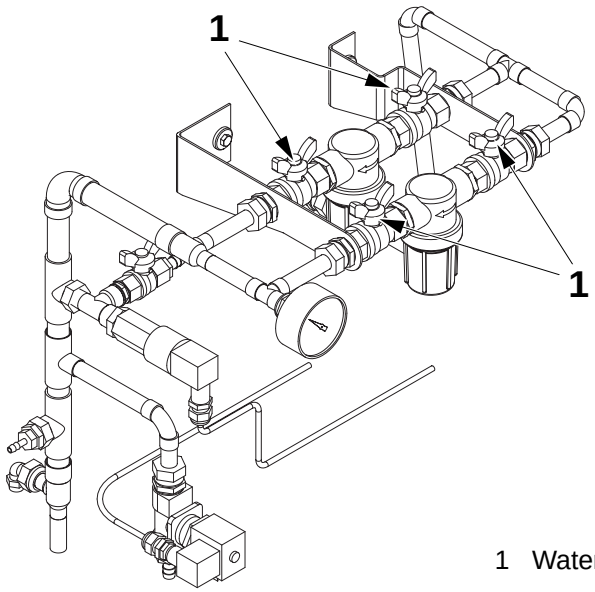

1 Water supply valve

TechPub_2614345_0102817640017sp.fm

Equipment for Lifting and Moving Loads

WARNING

Risk of crushing injury.

Make sure that the capacity of the lifting equipment is adequate and that the equipment itself is in proper working order.

If lifting tackle must be joined to make up the necessary lengths, make sure that the joints are secure and have the same lifting capacity as the rest of the lifting tackle.

Always engage safety clips fitted to lifting hooks to prevent the lifting tackle from slipping off.

Use ropes or poles to steady and manoeuvre suspended loads. Do **not** use hands or feet.

Make sure that the route and destination are free from obstacles before moving a suspended load. It must always be possible to quickly and safely lower the load to the floor in an emergency.

When depositing loads, keep lifting tackle in place until the stability of the load has been substantiated.

TechPub_2614345_0102817640l7sp.fm

This page intentionally left blank

TechPub_2614345_0102817640017sp.fm

1 Superstructure

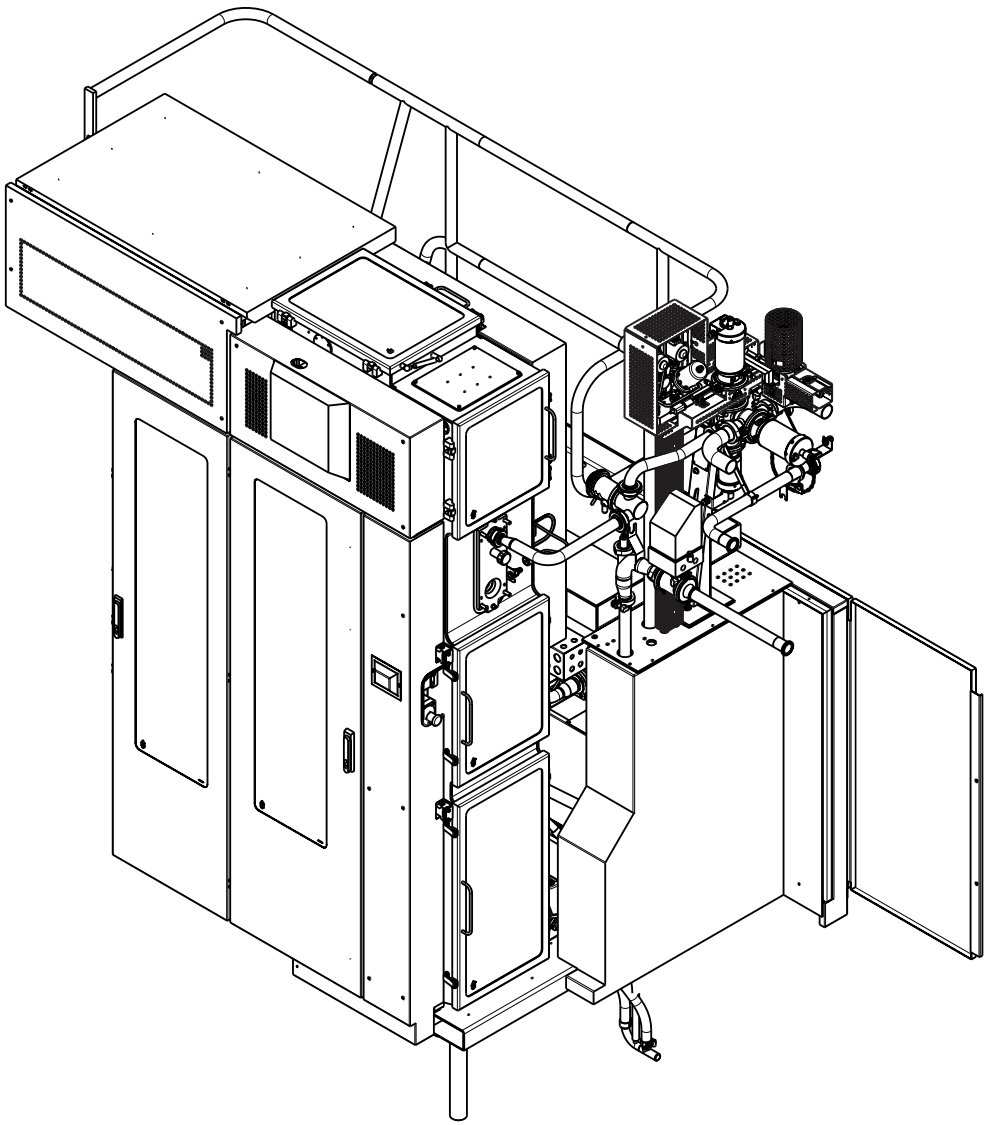

Superstructure - Description

SPC Reference	648521-0400

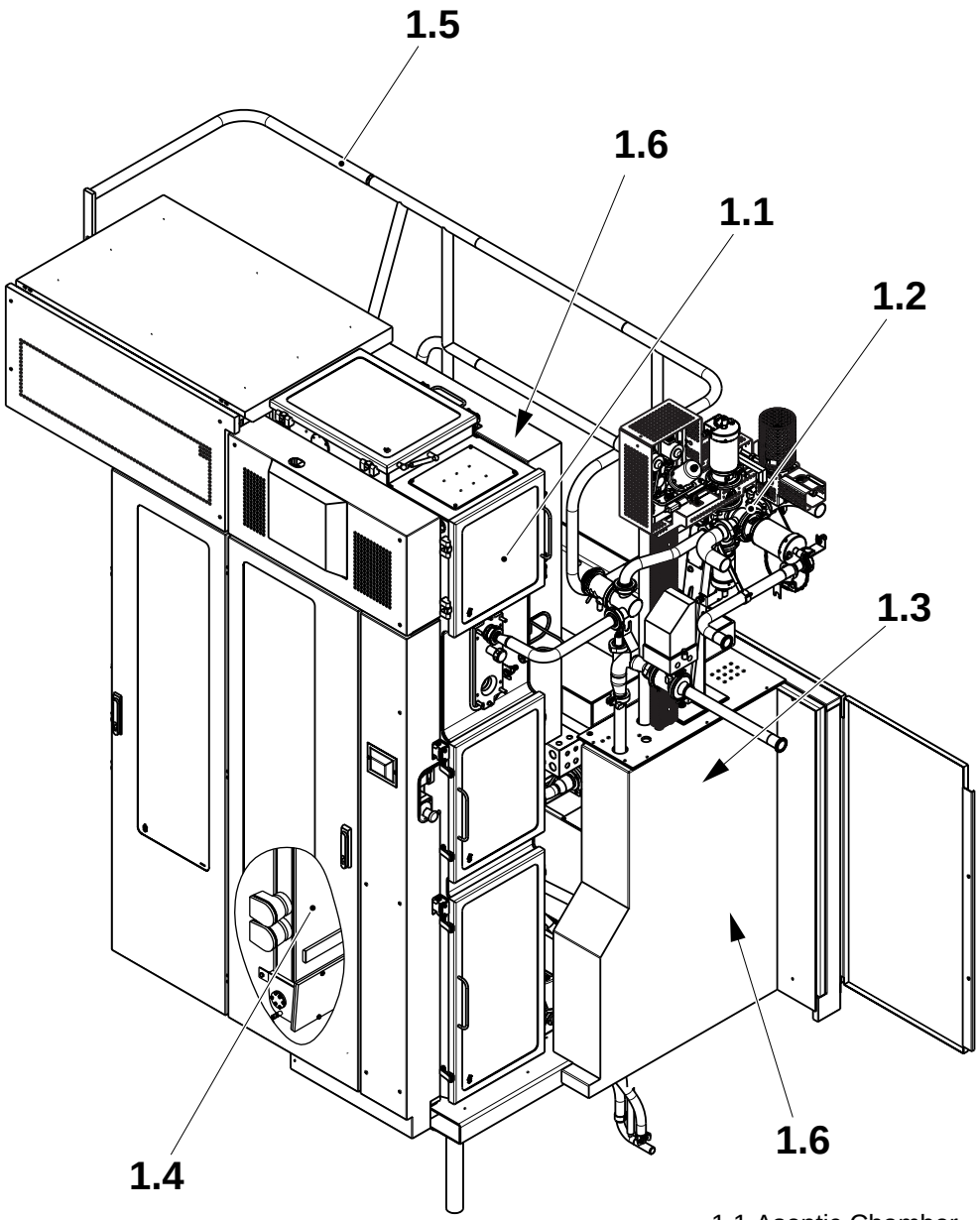

1.1 Aseptic Chamber
1.2 Filling System
1.3 Sterile Air System
1.4 Hydrogen Peroxide
1.5 Frame Section, Upper
1.6 Connection Box

1 Superstructure Settings . . . . . 1 - 9

1-1 Superstructure Settings - Setting Sequence . . . . . 1 - 9

1.1 Aseptic Chamber . . . . . 1 - 10

1.1-1 Aseptic Chamber - Check Forming Ring Rollers 1 - 10

1.1-2 Aseptic Chamber - Check Bending Rollers . . . 1 - 11

1.1-3 Aseptic Chamber - Check Overpressure . . . . . 1 - 12

1.1-4 Aseptic Chamber - Leakage Detection . . . . . 1 - 14

1.1.1 Upper Forming Ring . . . . . 1 - 18

1.1.1-1 Upper Forming Ring - Change Bushing . . . . . 1 - 18

1.1.2 Movable Forming Ring . . . . . 1 - 19

1.1.2-1 Movable Forming Ring - Change Bushings . . . . 1 - 19

1.1.2-2 Movable Forming Ring - Check Motor Bushings 1 - 20

1.1.2-3 Movable Forming Ring - Change Motor Bushing 1 - 22

1.1.3 Forming Ring . . . . . 1 - 25

1.1.3-1 Forming Ring - Change Bushings . . . . . 1 - 25

1.1.4 Lower Forming Ring . . . . . 1 - 26

1.1.4-1 Lower Forming Ring - Set Position . . . . . 1 - 26

1.1.4-2 Lower Forming Ring - Change Bushings . . . . . 1 - 29

1.1.4-3 Lower Forming Ring - Set Overlap . . . . . 1 - 30

1.1.5 Tube Support . . . . . 1 - 33

1.1.5-1 Tube Support - Change Ball Bearing . . . . . 1 - 33

1.1.6 Crank . . . . . 1 - 34

1.1.6-1 Crank - Check Chain . . . . . 1 - 34

1.1.7 Pillar . . . . . 1 - 35

1.1.7-1 Pillar - Check Gasket and Seal . . . . . 1 - 35

1.1.7-2 Pillar - Change Bearings . . . . . 1 - 36

1.1.7-3 Pillar - Set Proximity Switch . . . . . 1 - 37

1.1.8 Spray System . . . . . 1 - 38

1.1.8-1 Spray System - Check . . . . . 1 - 38

1.1.8-2 Spray System - Clean Peroxide Filter . . . . . 1 - 39

1.1.8-3 Spray System - Set Pressure . . . . . 1 - 41

1.1.8-4 Spray System - Clean Filter . . . . . 1 - 42

1.1.9 Bending Roller . . . . . 1 - 43

1.1.9-1 Bending Roller - Change Bearings . . . . . 1 - 43

1.1.10 Paper Guide . . . . . 1 - 45

1.1.10-1 Paper Guide - Check Bearings . . . . . 1 - 45

1.1.11 Bending Roller (Rotation) . . . . . 1 - 47

1.1.11-1 Bending Roller (Rotation) - Change Bearings . 1 - 47

1.1.11-2 Bending Roller (Rotation) - Set Angle . . . . . 1 - 50

1.1.12 Seal . . . . . 1 - 51

1.1.12-1 Seal - check . . . . . 1 - 51

1.1.12-2 Seal - Overhaul . . . . . 1 - 52

1.1.13 Pendulum Roller . . . . . 1 - 53

1.1.13-1 Pendulum Roller - Check . . . . . 1 - 53

1.1.13-2 Pendulum roller - set pressure . . . . . 1 - 54

1.1.13-3 Pendulum Roller - Change Bearings . . . . . 1 - 55

1.1.13-4 Pendulum Roller - Set Proximity Switch . . . . . 1 - 57

1.1.13-5 Pendulum Roller - Check Pneumatic Cylinder . 1 - 58

1.1.14 Calender Roller . . . . . 1 - 59

1.1.14-1 Calender Roller - Check . . . . . 1 - 59

1.1.14-2 Calender Roller - Set Pressure . . . . . 1 - 60

1.1.14-3 Calender Roller - Change Bushings and Bearings 1 - 61

1.1.14-4 Calender Roller - Set Proximity Switch . . . . . 1 - 63

1.1.14-5 Calender Roller - Check Pneumatic Cylinder . . 1 - 64

1.1.15 Driven Calender Roller . . . . . 1 - 65

1.1.15-1 Driven Calender Roller - Check . . . . . 1 - 65

1.1.15-2 Driven Calender Roller - Change Roller Bearings 1 - 66

1.1.16 Lid . . . . . 1 - 67

1.1.16-1 Lid - Check . . . . . 1 - 67

1.1.17 LS Inductor . . . . . 1 - 68

1.1.17-1 LS Inductor - Change, Set and Fix . . . . . 1 - 68

1.2 Filling System . . . . . 1 - 80

1.2-1 Filling System - Description . . . . . 1 - 80

1.2.1 Cleaning Sleeve . . . . . 1 - 82

1.2.1-1 Cleaning Sleeve - Check Gasket . . . . . 1 - 82
1.2.1-2 Cleaning Sleeve - Set . . . . . 1 - 85

1.2.2 Product Valve Group . . . . . 1 - 87

1.2.2-1 Product Valve Group - Remove Pneumatic Cylinders, AP-Valve . . . . . 1 - 87
1.2.2-2 Product Valve Group - Change Seals and Diaphragms, AP-Valve . . . . . 1 - 89
1.2.2-3 Product Valve Group - Change O-Rings, AP-Valve 1 - 93
1.2.2-4 Product Valve Group - Set Proximity Switches 1 - 99

1.2.3 Flow Regulator . . . . . 1 - 100

1.2.3-1 Flow Regulator - Overhaul Regulating Valve . 1 - 100
1.2.3-2 Flow Regulator - Set Proximity Switch . . . . . 1 - 106
1.2.3-3 Flow Regulator - Change Diaphragm . . . . . 1 - 107
1.2.3-4 Flow Regulator - Set Overpressure . . . . . 1 - 108

1.2.4 Fastening Plate. . . . . 1 - 109

1.2.4-1 Fastening Plate - Check . . . . . 1 - 109

1.2.5 Filling Pipe . . . . . 1 - 110

1.2.5-1 Filling Pipe - Remove . . . . . 1 - 110
1.2.5-2 Filling Pipe - Fit . . . . . 1 - 118
1.2.5-3 Filling Pipe - Set Position (Level Probe) . . . . . 1 - 130
1.2.5-4 Filling Pipe - Set Position (Float) . . . . . 1 - 144
1.2.5-5 Filling Pipe - Set Pressure Roller . . . . . 1 - 155
1.2.5-6 Filling Pipe - Set Level Probe . . . . . 1 - 156
1.2.5-7 Filling Pipe - Set Level Control Device . . . . . 1 - 158
1.2.5-8 Filling Pipe - Check . . . . . 1 - 163
1.2.5-9 Filling Pipe - Change Fitting (Level Probe) . . . 1 - 165
1.2.5-10 Filling Pipe - Change Level Probe . . . . . 1 - 166

1.2.6 Cleaning Pipe . . . . . 1 - 168

1.2.6-1 Cleaning Pipe - Set . . . . . 1 - 168
1.2.6-2 Cleaning Pipe - Check Gaskets . . . . . 1 - 169

1.2.7 Steam System. . . . . 1 - 170

1.2.7-1 Steam System - Clean Steam Trap . . . . . 1 - 170
1.2.7-2 Steam System - Clean Filter . . . . . 1 - 171
1.2.7-3 Steam System - Overhaul Pressure Regulator . 1 - 174

1.2.7-4 Steam System - Set Pressure Regulator . . . . . 1 - 178
1.2.7-5 Steam System - Check Membrane . . . . . 1 - 179
1.2.8 Intermediate Part . . . . . 1 - 180
1.2.8-1 Intermediate Part - Check Conductivity Sensor 1 - 180
1.2.8-2 Intermediate Part - Set Flow Meter . . . . . 1 - 181
1.3 Sterile Air System . . . . . 1 - 184
1.3-1 Sterile Air System - Check Leakages . . . . . 1 - 184
1.3.1 Air Superheater . . . . . 1 - 185
1.3.1-1 Air Superheater - Check . . . . . 1 - 185
1.3.1-2 Air Superheater - Check Heat Exchanger . . . . 1 - 186
1.3.2 Compressor Unit . . . . . 1 - 190
1.3.2-1 Compressor Unit - Check Pressure . . . . . 1 - 190
1.3.2-2 Compressor Unit - Check for Leaks and Vibrations . . . . . 1 - 191
1.3.2-3 Compressor Unit - Change Seals . . . . . 1 - 192
1.3.3 Valve Heat Exchanger . . . . . 1 - 195
1.3.3-1 Valve Heat Exchanger - Overhaul . . . . . 1 - 195
1.3.3-2 Valve Heat Exchanger - Set Bypass Position . 1 - 197
1.3.4 Butterfly Valve . . . . . 1 - 200
1.3.4-1 Butterfly Valve - Change Cylinder . . . . . 1 - 200
1.3.4-2 Butterfly Valve - Change Bushings . . . . . 1 - 201
1.3.4-3 Butterfly Valve - Set . . . . . 1 - 203
1.3.4-4 Butterfly Valve - Set Sensor . . . . . 1 - 204
1.3.5 Air Preheating Valve . . . . . 1 - 205
1.3.5-1 Air Preheating Valve - Overhaul . . . . . 1 - 205
1.3.5-2 Air Preheating Valve - Set Proximity Switches 1 - 207
1.3.5-3 Air Preheating Valve - Set By-pass Position . . 1 - 209
1.3.6 Scrubber . . . . . 1 - 210
1.3.6-1 Scrubber - Clean Constant Flow Valve . . . . . 1 - 210
1.3.6-2 Scrubber - Clean Filters . . . . . 1 - 211
1.3.7 Separator . . . . . 1 - 213
1.3.7-1 Separator - Check Pressure Guard . . . . . 1 - 213
1.3.7-2 Separator - Clean Filter and Float . . . . . 1 - 214

1.3.7-3 Separator - Overhaul . . . . . 1 - 217
1.3.7-4 Separator - Set Float Unit . . . . . 1 - 218
1.3.8 Pipe Line . . . . . 1 - 219
1.3.8-1 Pipe Line - Clean Spray Nozzle . . . . . 1 - 219
1.3.8-2 Pipe Line - Check Spray Nozzle . . . . . 1 - 222
1.3.9 Pressure Regulator (60 Hz) . . . . . 1 - 224
1.3.9-1 Pressure Regulator (60 Hz) - Set By-pass Valve 1 - 224
1.4 Hydrogen Peroxide . . . . . 1 - 225
1.4-1 Hydrogen Peroxide - Check Water Circulation 1 - 225
1.4-2 Hydrogen Peroxide - Fill Water Circulation . . 1 - 226
1.4.1 Bath . . . . . 1 - 228
1.4.1-1 Bath - Check Roller . . . . . 1 - 228
1.4.1-2 Bath - Change Heating Element . . . . . 1 - 229
1.4.1-3 Bath - Change Roller Bushings . . . . . 1 - 230
1.4.2 Heating Unit . . . . . 1 - 231
1.4.2-1 Heating Unit - Change Heating Elements . . . . 1 - 231
1.4.2-2 Heating Unit - Change Heat Exchanger . . . . . 1 - 233
1.4.2-3 Heating Unit - Drain . . . . . 1 - 235
1.4.2-4 Heating Unit - Check Pump . . . . . 1 - 236
1.4.3 Water Circulation . . . . . 1 - 237
1.4.3-1 Water Circulation - Set Pressure . . . . . 1 - 237
1.5 Frame Section, Upper . . . . . 1 - 238
1.5.1 Bending Roller . . . . . 1 - 238
1.5.1-1 Bending Roller - Check . . . . . 1 - 238
1.5.1-2 Bending Roller - Set Brake . . . . . 1 - 239
1.5.1-3 Bending Roller - Check Splice Detector . . . . . 1 - 240
1.5.1-4 Bending Roller - Set Splice Detector . . . . . 1 - 241
1.5.1-5 Bending Roller - Set Web Guide Position . . . . 1 - 242
1.5.1-6 Bending Roller - Check Web Guide . . . . . 1 - 243
1.5.1-7 Bending Roller - Change Bearings . . . . . 1 - 244
1.5.1-8 Bending Roller - Set Packaging Material Track 1 - 246
1.6 Connection Box . . . . . 1 - 247

1.6-1 Connection Box - Check Pressure Switch . . . 1 - 247
1.6-2 Connection Box - Set Pressure Switch . . . . . 1 - 247

1 Superstructure Settings

1-1 Superstructure Settings - Setting Sequence

SPC Reference	648521-0400

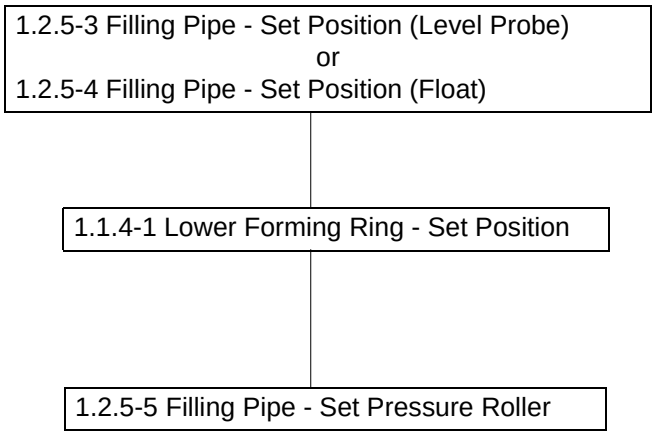

1.1 Aseptic Chamber

SPC Reference	577102-0400

1.1-1 Aseptic Chamber - Check Forming Ring Rollers

SPC Reference	577102-0400

Check the rollers (6) in the forming rings (1) to (4) and tube support (5) rotate freely in both directions. If a roller does not rotate freely, clean it.
If, after cleaning, a roller it still does rotate freely, change the bushings in the the roller, see the appropriate section i.e., 1.1.1-1 Upper Forming Ring - Change Bushing, 1.1.2-1 Movable Forming Ring - Change Bushings, 1.1.3-1 Forming Ring - Change Bushings, 1.1.4-2 Lower Forming Ring - Change Bushings,
1.1.5-1 Tube Support - Change Ball Bearing.

The illustration shows only the new design of the Forming ring (3)

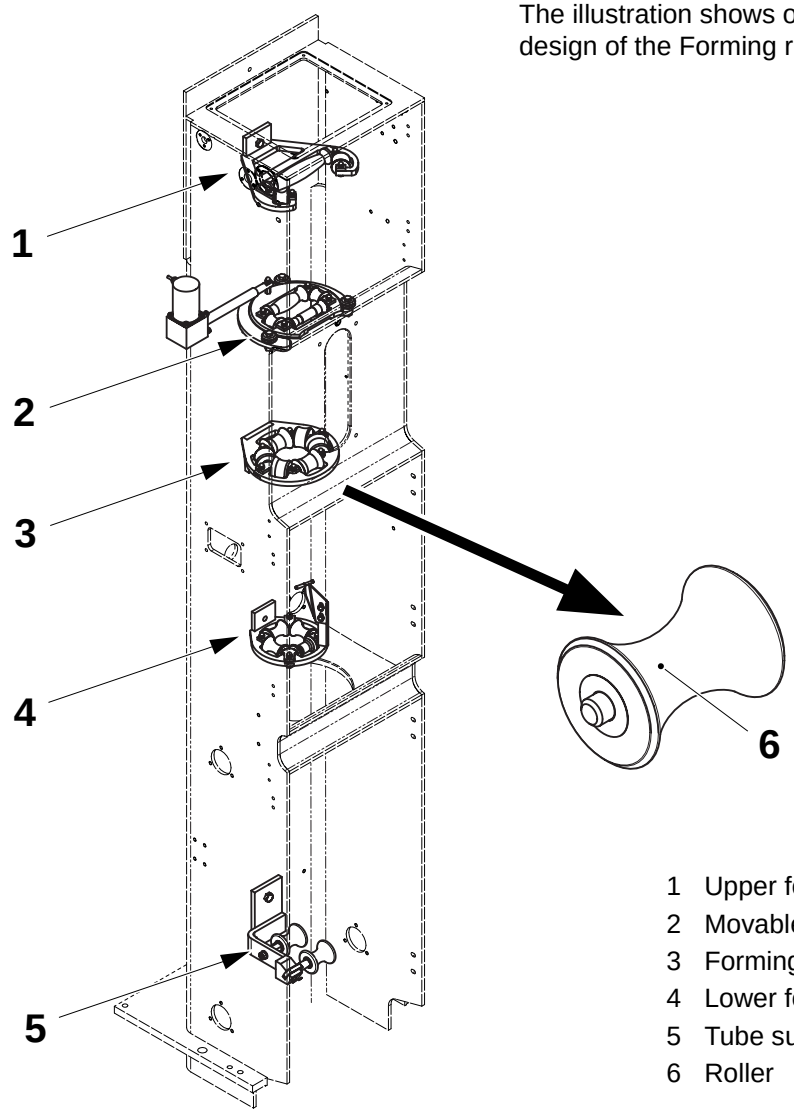

1 Upper forming ring
2 Movable forming ring
3 Forming ring
4 Lower forming ring
5 Tube support
6 Roller

1.1-2 Aseptic Chamber - Check Bending Rollers

SPC Reference	577102-0400

WARNING
Hydrogen Peroxide!
Follow the Safety precautions.

Check the following for surface damage, and check they rotate freely in both directions:

- the roller (1), see 1.1.7-2 Pillar - Change Bearings.
- the calender roller (2), see 1.1.14-1 Calender Roller - Check
- the drive roller (3), see 1.1.15-1 Driven Calender Roller - Check
- the pendulum roller (4), see 1.1.13-1 Pendulum Roller - Check
- the paper guide roller (5), see 1.1.10-1 Paper Guide - Check Bearings
- the bath roller (6), see 1.4.1-3 Bath - Change Roller Bushings.
- the bending roller (7) and (8), see 1.1.9-1 Bending Roller - Change Bearings.

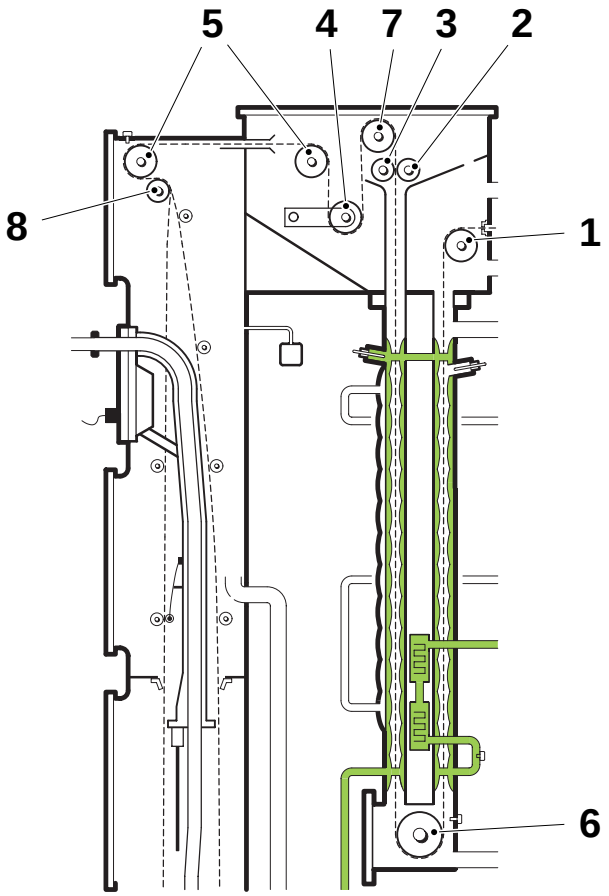

1 Roller (pillar)
2 Calender roller
3 Drive unit roller
4 Pendulum roller
5 Paper guide roller
6 Bath roller
7 Bending roller
8 Bending roller

1.1-3 Aseptic Chamber - Check Overpressure

Machine Status	**PRODUCTION**
Tools - Pressure Gauge	 TP No. 90243-0137
SPC Reference	577102-0400

WARNING
Hydrogen Peroxide!
Follow the Safety precautions.

Check the overpressure in the aseptic chamber every 1000 hours of operation.

a) Check the overlap, see 1.1.4-3 Lower Forming Ring - Set Overlap.

b) Check the seals, see 1.1.12-1 Seal - check, *and* 1.1.7-1 Pillar - Check Gasket and Seal.

c) Check the sterile air pressure, see 1.3.2-1 Compressor Unit - Check Pressure.

(Cont'd)

d) Remove the screw (1) in the column and replace it with a 7 mm outside diameter rubber tube. Connect a pressure gauge (2) to the other end of the tube.

e) With the machine in PRODUCTION, check the gauge (2) is within **400 - 500 Pa** (40 - 50 mm WC).

f) With the machine in NORMAL STOP, check the gauge (2) is within **400 - 500 Pa** (40 - 50 mm WC).

g) To prevent the packaging material from vibrating and damaging the aluminium layer, the overpressure drops (by-pass period) after 5 minutes in NORMAL STOP. Check the gauge (2) indicates at least **200 Pa** (20 mm WC) when this is the case.

If the gauge shows an overpressure that is too low, check for leaks, see 1.1-4 Aseptic Chamber - Leakage Detection.

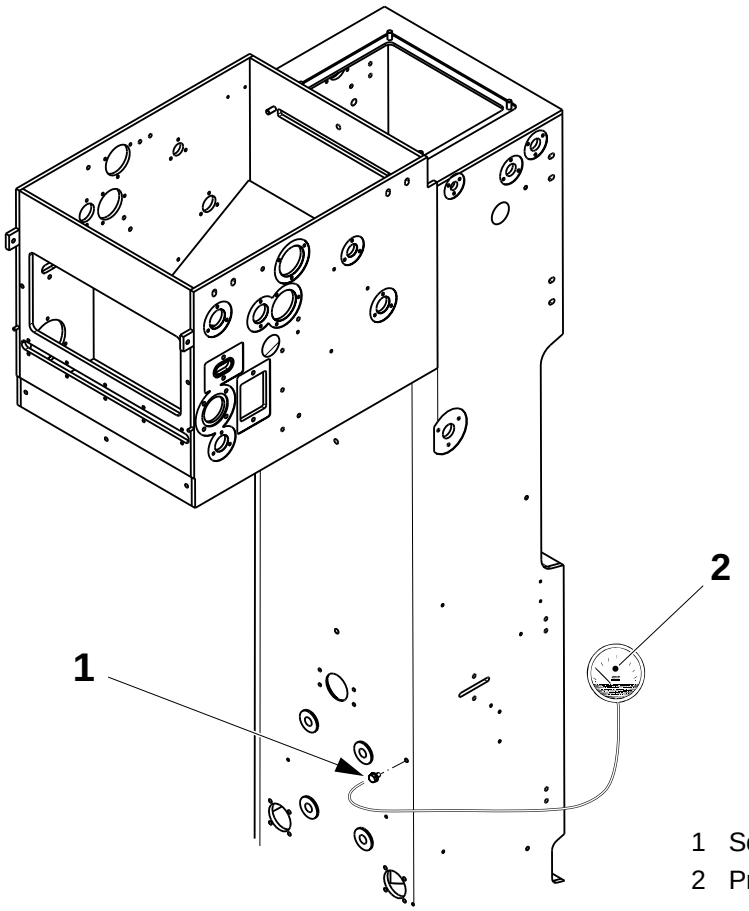

1 Screw
2 Pressure gauge

1.1-4 Aseptic Chamber - Leakage Detection

Machine Status	PRODUCTION
Tools - Leak Finding Equipment - Pressure Gauge	 TP No. 533014-0101 TP No. 90243-0137
SPC Reference	577102-0400

WARNING
Hydrogen Peroxide!
Follow the Safety precautions.

a) Operate the machine in PRODUCTION and perform a NORMAL STOP.

b) Push PROGRAM DOWN to step ZERO with the tube still filled. If possible, let the machine cool down.

c) Check the overlap, see 1.1.4-3 Lower Forming Ring - Set Overlap.

d) Remove the screw (1) in the column and replace it with a 7 mm outside diameter rubber tube. Connect the pressure gauge (2) to the other end of the tube.

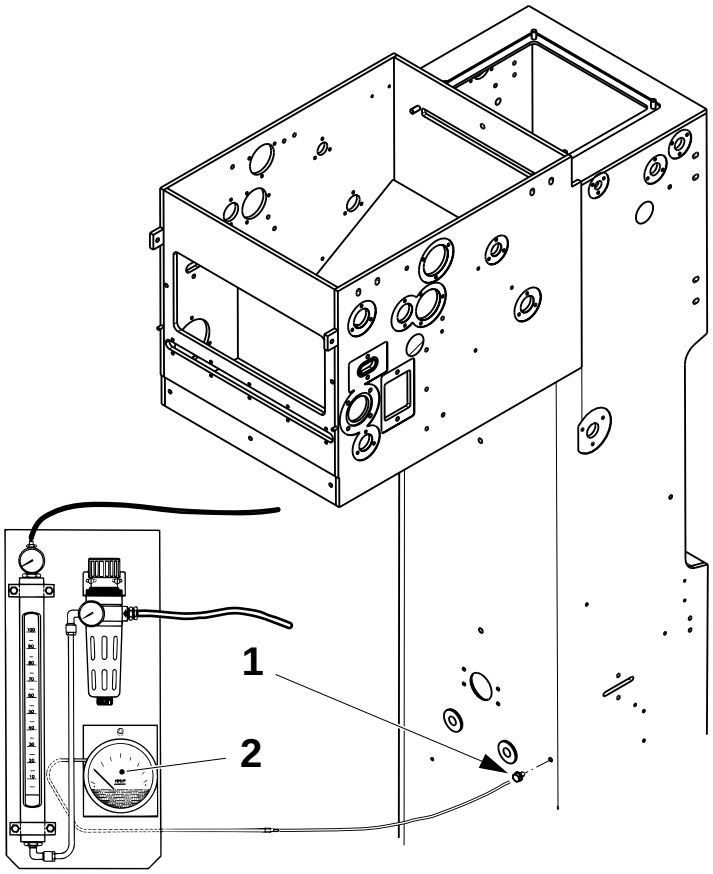

1 Screw
2 Pressure gauge

(Cont'd)

(Cont'd)

e) Remove the thermocouple connection (3).

f) Connect the hose from the equipment for tracing leakages (4) to a compressed air line.

g) Connect the flowmeter hose (5) to the thermocouple connection (3).

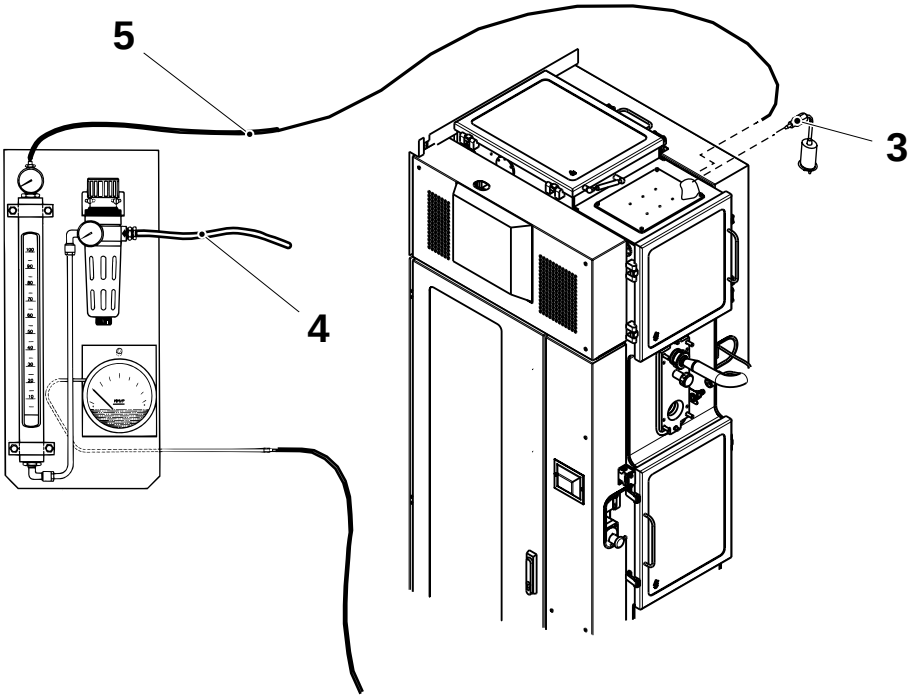

3 Thermocouple connection
4 Hose for tracing leakages
5 Flowmeter hose

(Cont'd)

(Cont'd)

h) Check that all connections and screws in the aseptic chamber are tight.

i) Check the door locks, the door hinges and the micro switch, making sure there are no leaks.

j) Check the aseptic chamber seals.
See 1.1.12-1 Seal - check, and 1.1.7-1 Pillar - Check Gasket and Seal.

k) Close the valves (6), (7) and (8) in the dilution tank.

l) Slowly open the pressure regulator (9) until the reading on the pressure gauge (10) is **200 Pa** (20 mm WC).

m) Read the flow **F%** on the flowmeter (11) and the pressure **P2** on the pressure gauge (12).

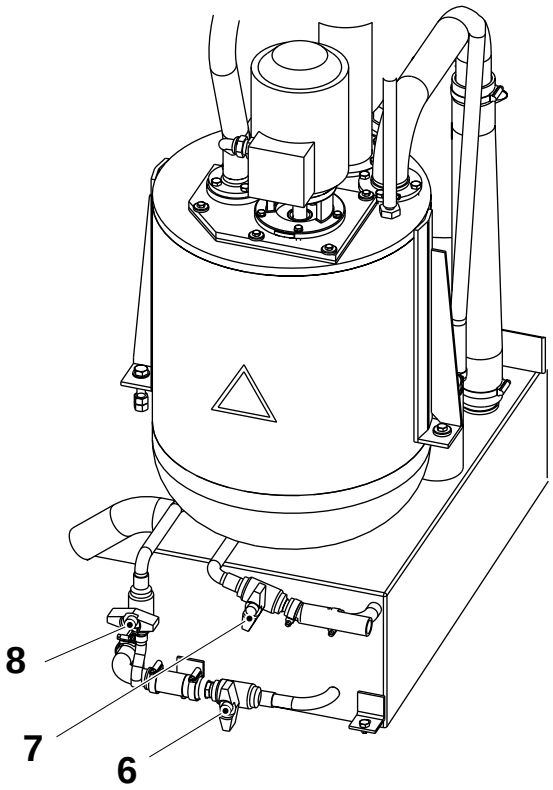

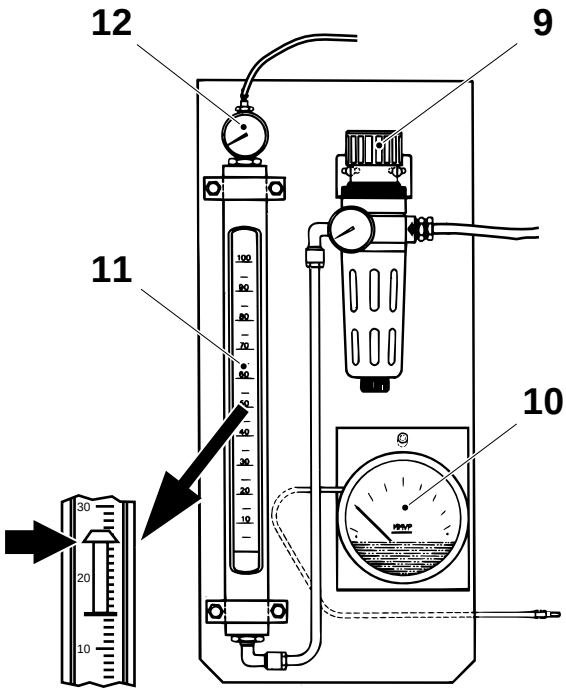

6 Valve
7 Valve
8 Valve
9 Pressure regulator
10 Pressure gauge
11 Flowmeter
12 Pressure gauge

(Cont'd)

(Cont'd)

n) Enter the values on the diagram and read the leakage **Q**.
The maximum leakage allowed is 2 m^3/h.

o) If the maximum allowed leakage is exceeded, check for leaks at:

- the safety lids in the hydrogen peroxide tank
- the door seals of the aseptic chamber
- the plug holes in the aseptic chamber
- the chain seals in the drier
- the aseptic chamber entry seal; change as required, see 1.1.7-1 Pillar - Check Gasket and Seal
- the seal in the pillar; see 1.1.12-1 Seal - check.

p) If the maximum allowed leakage is not exceeded, disconnect the equipment for tracing leaks.

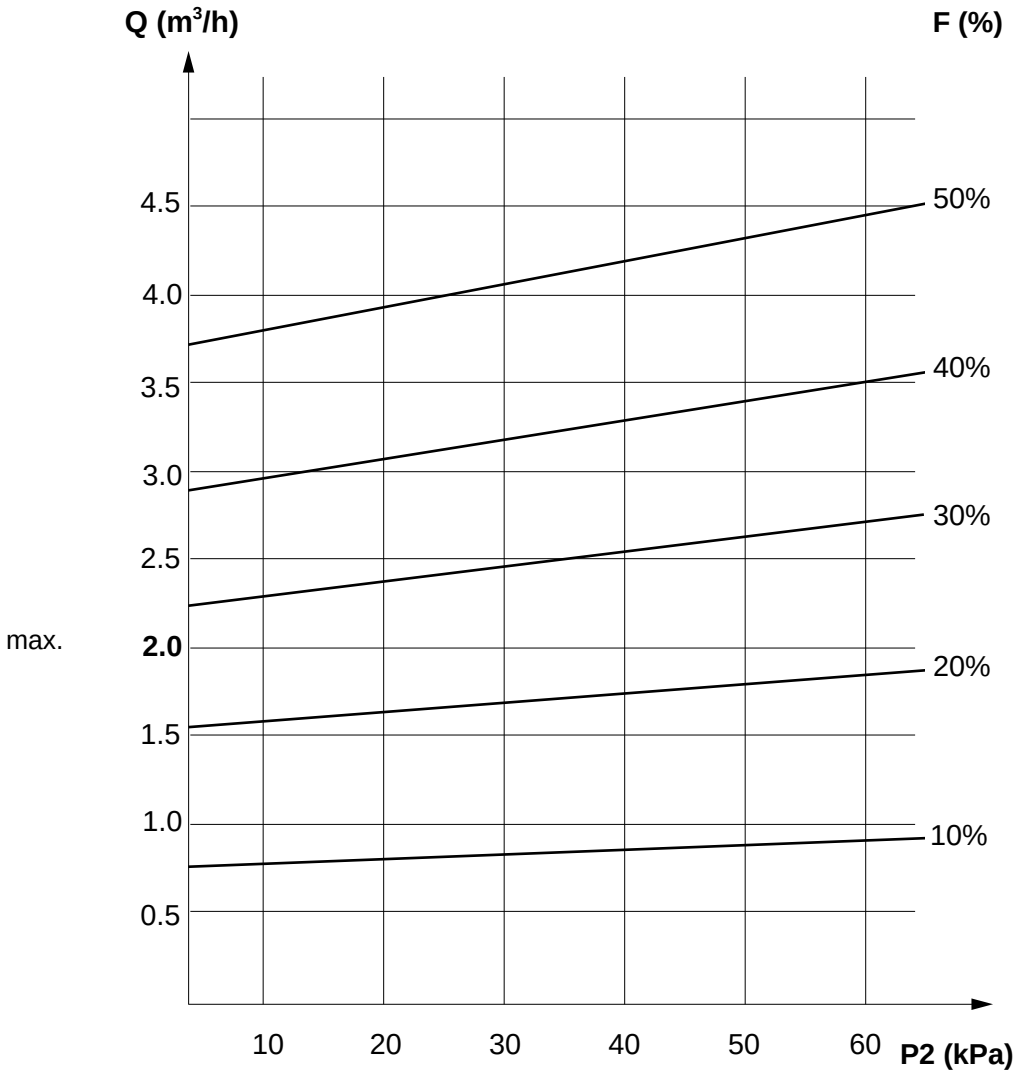

1.1.1 Upper Forming Ring

1.1.1-1 Upper Forming Ring - Change Bushing

SPC Reference	1195164-0200

a) Remove the nut (1), screw (2) and plates (3) and (4) at the both sides of the roller you want to remove.

b) Lift out the roller assembly (5).

c) Remove the washers (6).

d) Remove the shaft (7).

e) Push out the bushings (8).

f) Fit the new bushings and assemble in reverse order.

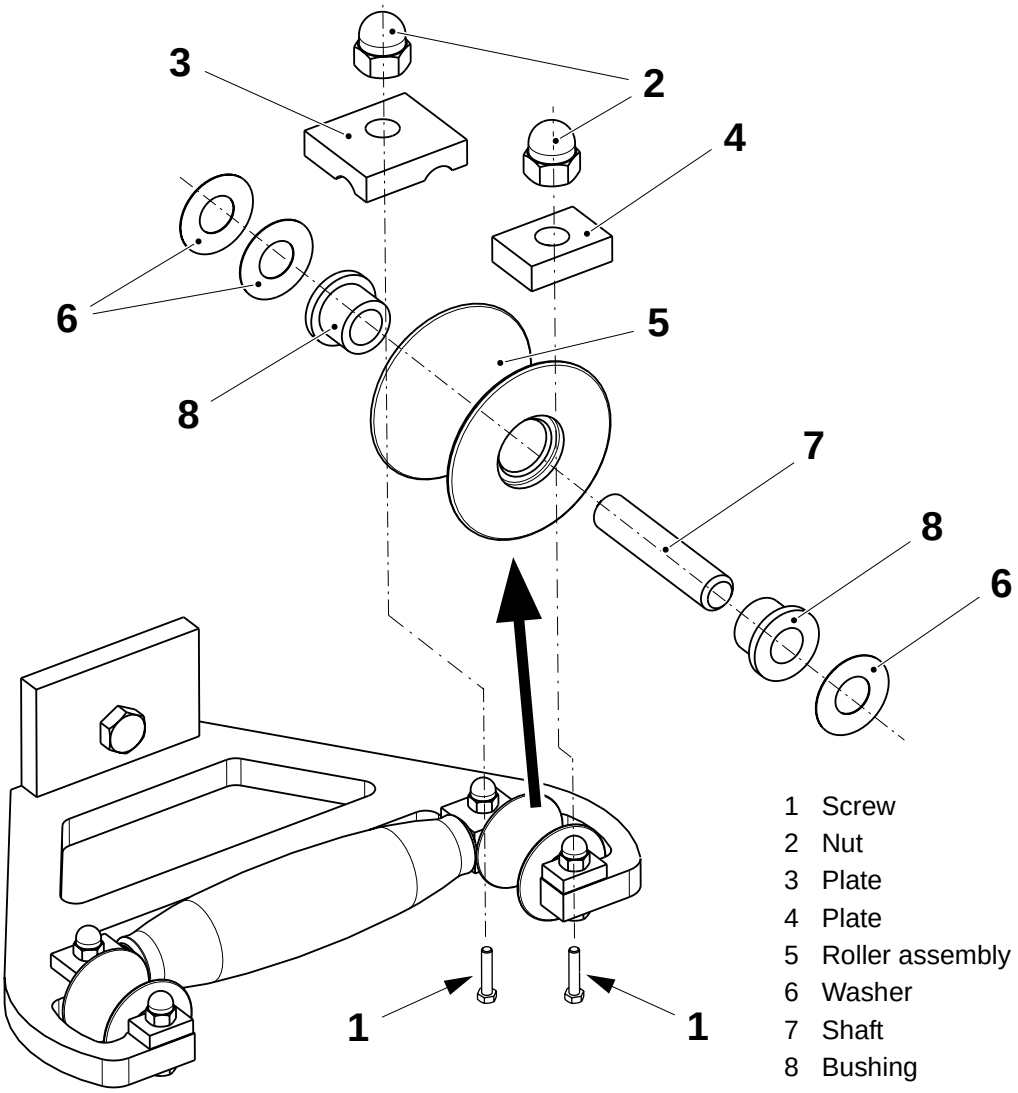

1 Screw
2 Nut
3 Plate
4 Plate
5 Roller assembly
6 Washer
7 Shaft
8 Bushing

1.1.2 Movable Forming Ring

1.1.2-1 Movable Forming Ring - Change Bushings

SPC Reference	1195161-0300

a) Remove the nut (1), screw (2) and plates (3) at the both sides of the roller to be remove.

b) Lift out the roller assembly (4).

c) Remove the washers (5).

d) Remove the shaft (6).

e) Push out the bushings (7).

f) Fit the new bushings and assemble in reverse order.

g) Remove the nuts (8) and (9) at both sides of the roller to be removed.

h) Lift the roller (10) off the shaft (12).

i) Remove and change the bushing (11).

j) Assemble in the reverse order.

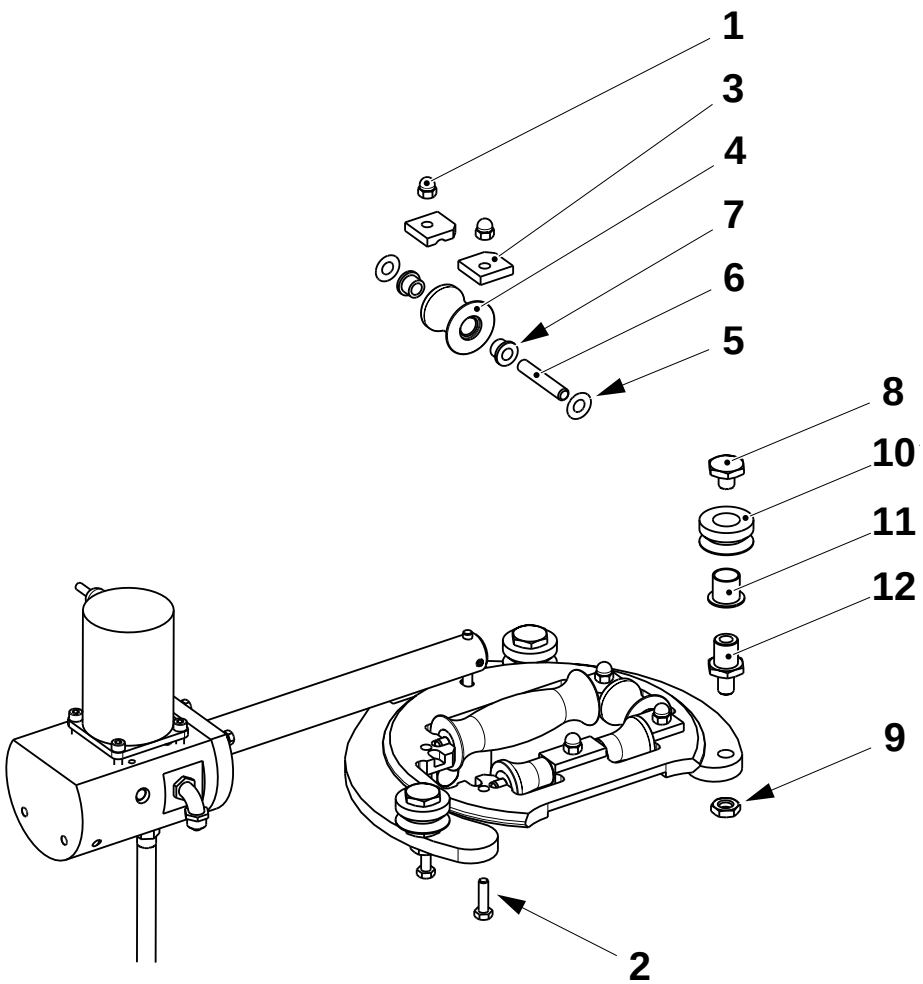

1 Nut
2 Screw
3 Plate
4 Roller assembly
5 Washer
6 Shaft
7 Bushing
8 Nut
9 Nut
10 Roller
11 Bushing
12 Shaft

1.1.2-2 Movable Forming Ring - Check Motor Bushings

SPC Reference	1195161-0300

a) In the service unit, close the water supply valves.

b) On the Final folder, loosen one of the water pipe connectors to depressurize the cooling water system.

c) When the water system has depressurize, tighten the connector.

d) Remove the water connectors (1) and (2) from the motor support block (3).

e) Remove the set screw (4) and the axle pin (5).

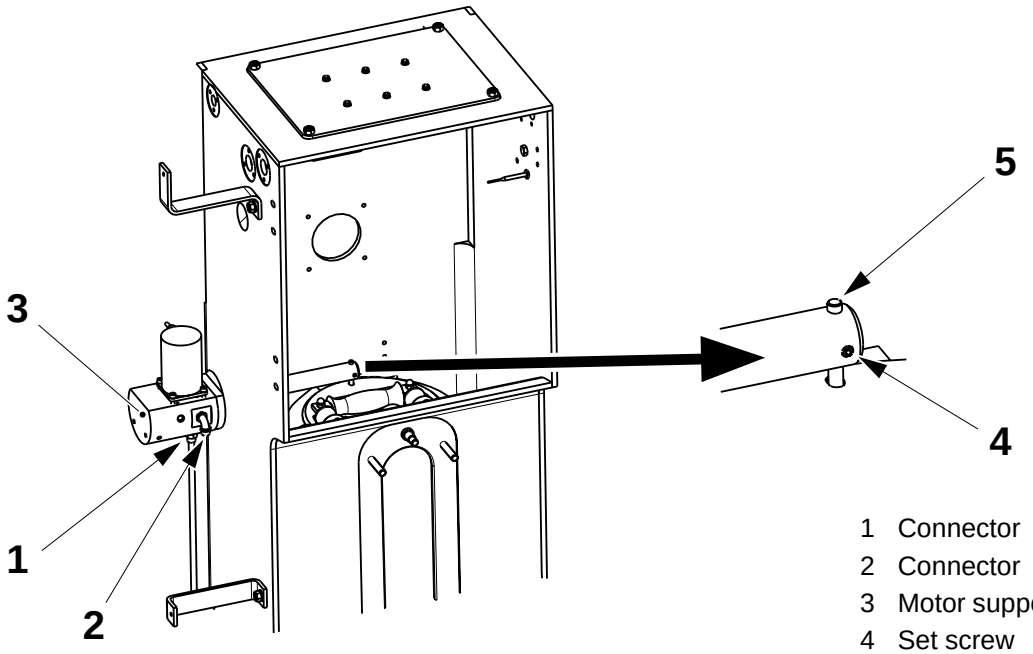

1 Connector
2 Connector
3 Motor support block
4 Set screw
5 Axle pin

(Cont'd)

(Cont'd)

f) Remove the screws (6), lift off the motor and eccentric (7) and hang it safely on the side of the pillar.

g) Remove and retain the pin (8).

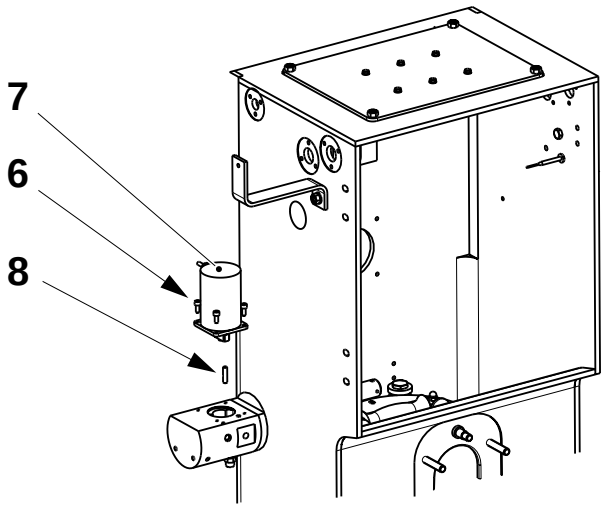

6 Screw
7 Motor and eccentric
8 Pin

h) Move the shaft (9) in and out to check the bushings for play. If the play is abnormal change the bushings, see 1.1.2-3 Movable Forming Ring - Change Motor Bushing. If the play is normal continue below.

i) Assemble in the reverse order the components removed in steps d) to g).

j) Open the water supply valves.

k) Bleed any air from the system, see 6.1-2 Cooling Water System - Fill.

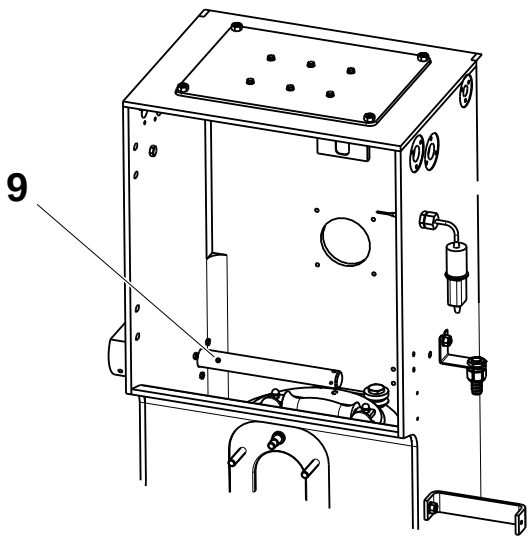

9 Shaft

1.1.2-3 Movable Forming Ring - Change Motor Bushing

SPC Reference	1195161-0300

a) Remove the screws (1) and pull the assembly (2) out of the pillar (3).

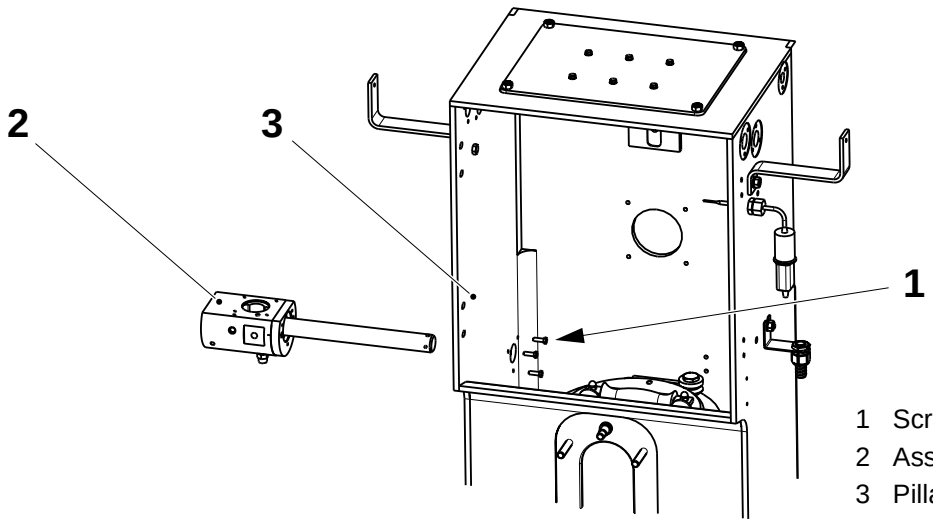

1 Screw
2 Assembly
3 Pillar

b) Remove the screws (4).

c) Remove the spacer (5).

d) Remove and change the sealing ring (6).

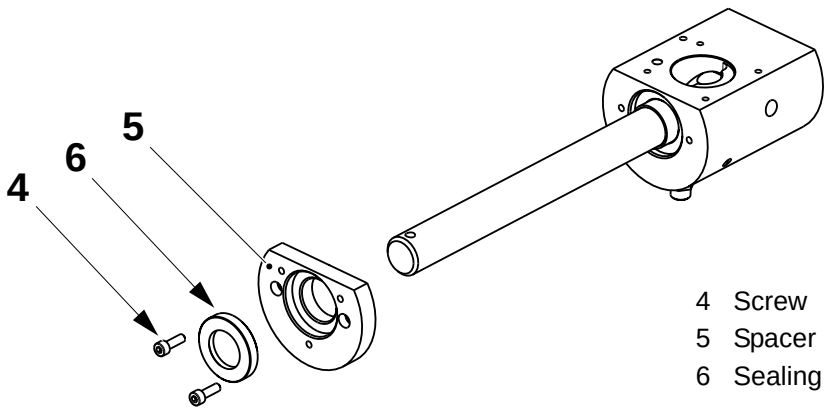

4 Screw
5 Spacer
6 Sealing ring

(Cont'd)

(Cont'd)

e) Remove the set screw (7) and push out the pin (8).

f) Pull out the shaft (9).

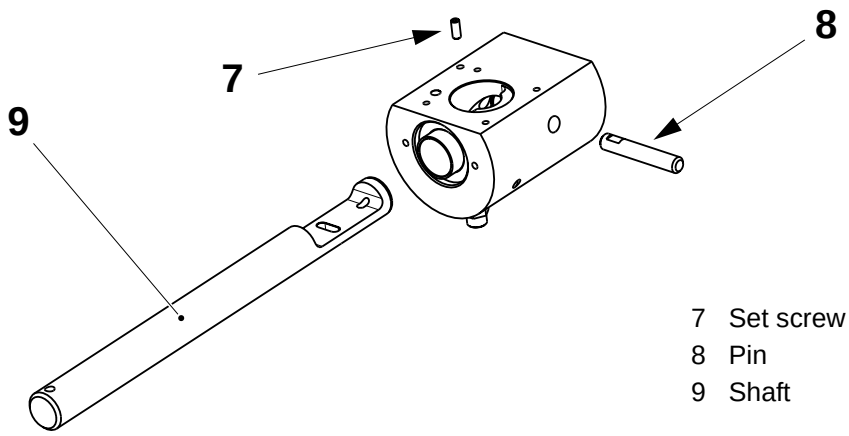

7 Set screw
8 Pin
9 Shaft

(Cont'd)

(Cont'd)

g) Extract the outer bushing (10).

h) Remove the inner bushing (11).
As the bushing is made of hard plastic, the easiest way to remove it is to break it. When doing this, proceed carefully to prevent damage to the metal housing.

i) Fit a new inner bushing (11) ensuring that it is inserted as far as it will go.

j) Fit a new outer bushing (10) ensuring that it is inserted until the dimension **A** is correct.

k) Assemble the rest of the components in the reverse order.

l) Open the water supply valves.

m) Bleed any air from the system, see 6.1-2 Cooling Water System - Fill.

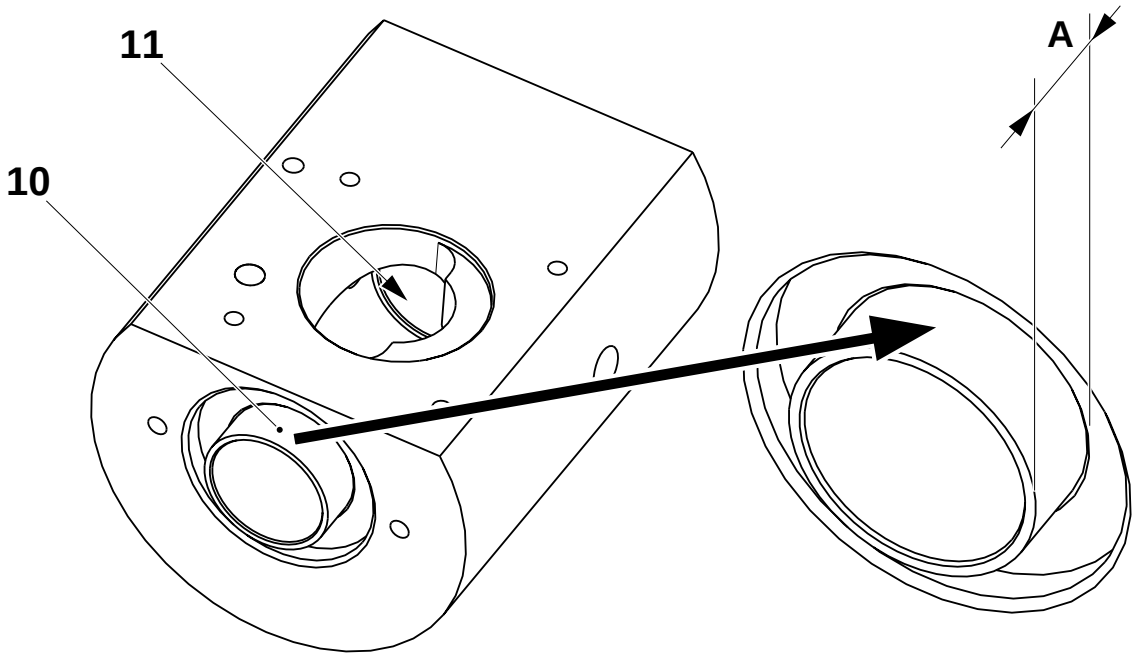

A = 9 +0.5 -0 mm

10 Outer bushing
11 Inner bushing

1.1.3 Forming Ring

1.1.3-1 Forming Ring - Change Bushings

SPC Reference	1195165-0200

a) Remove the nut (1), screw (2) and plates (3) at the both sides of the roller you want to remove.

b) Lift out the roller assembly (4).

c) Remove the washers (5).

d) Remove the shaft (6).

e) Push out the bushings (7).

f) Fit new bushings.

g) Assemble in reverse order.

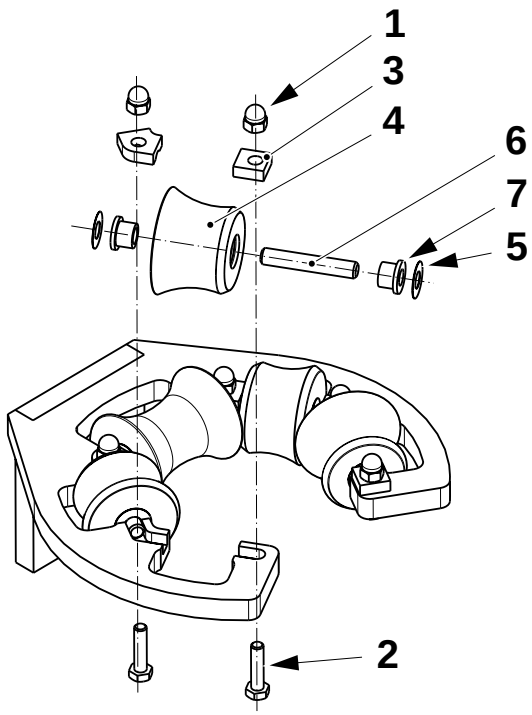

Forming ring old design

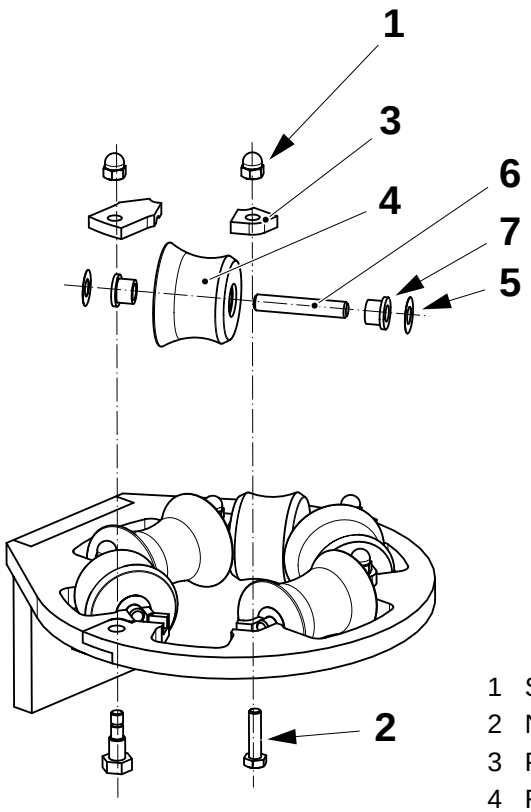

Forming ring new design

1 Screw
2 Nut
3 Plate
4 Roller assembly
5 Washer
6 Shaft
7 Bushing

1.1.4 Lower Forming Ring

1.1.4-1 Lower Forming Ring - Set Position

Machine Status	Air ON Mains Power ON
Tool - Template	 TP No. see table
SPC Reference	1195162-0100

a) Close the main air supply valve (1) in the service unit.

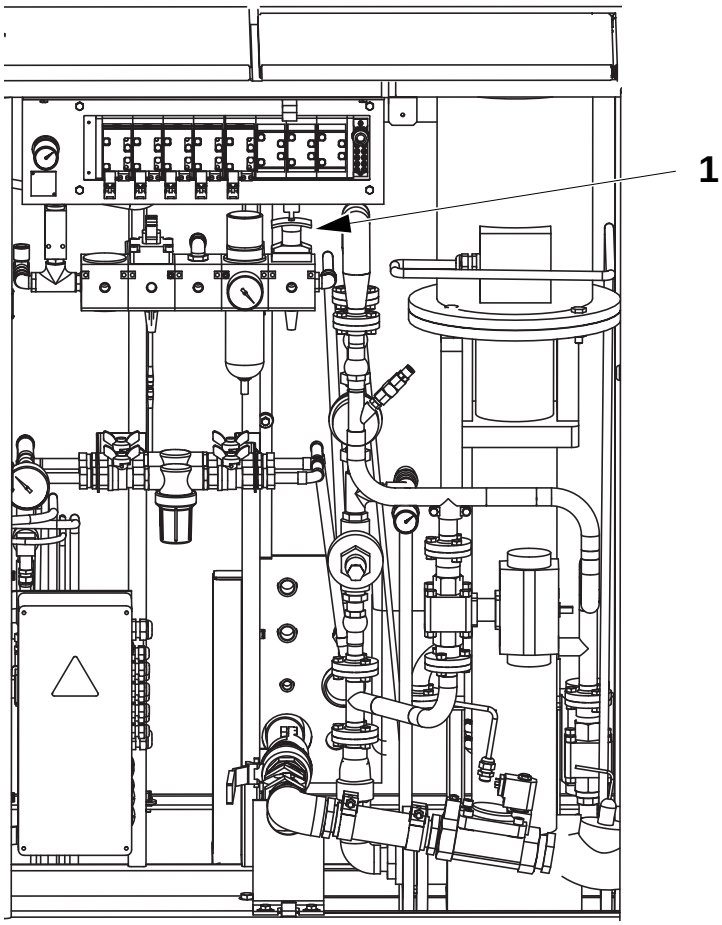

1 Main air supply valve

(Cont'd)

(Cont'd)

b) Rotate the shaft (2) and plate (3) fully clockwise so the short stop plate (4) is in the lower position.

c) Remove the screws (5) and (6) and remove the front part of the lower forming ring (7).

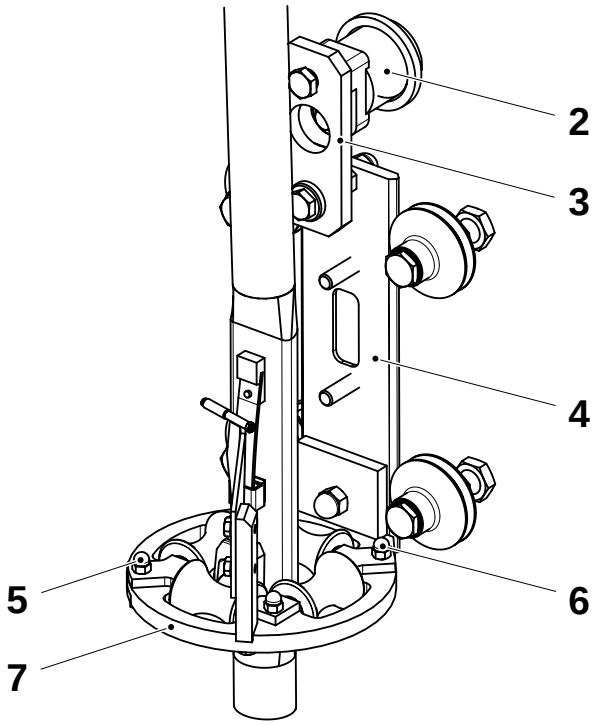

2 Shaft
3 Plate
4 Short stop plate
5 Screw
6 Screw
7 Lower forming ring

d) Fit the template (8) and secure in position with the screws (5) and (6).

Package	Template
TBA 200 B - TBA 200 M - TBA 250 B - TBA 250 S	TP No. 1498687
TBA 200 S	TP No. 2500588

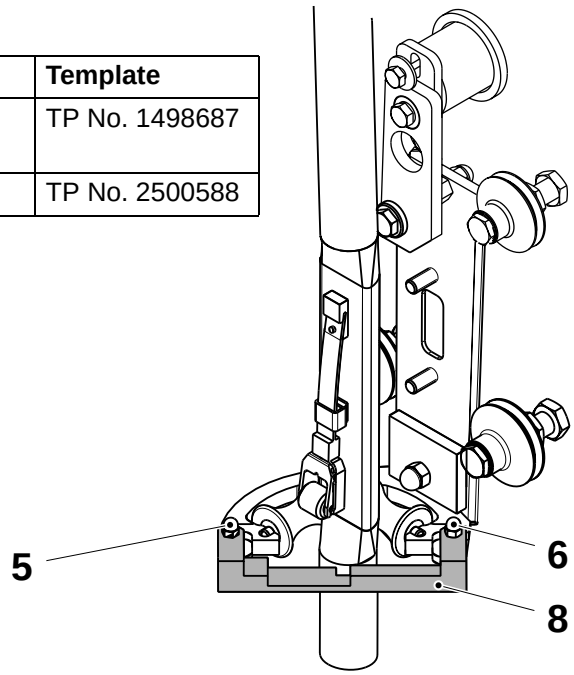

5 Screw
6 Screw
8 Template

(Cont'd)

(Cont'd)

e) Rotate the shaft (2) and plate (3) fully counter-clockwise so the short stop plate (4) is in the raised position.

f) Loosen the screw (9) in the plate (3).

g) Lift the lower forming ring until the template (8) just touches the pressure roller (10) and tighten the screw (9).

h) Remove the template and fit the front half of the lower forming ring.

i) Open the main air supply valve in the service unit.

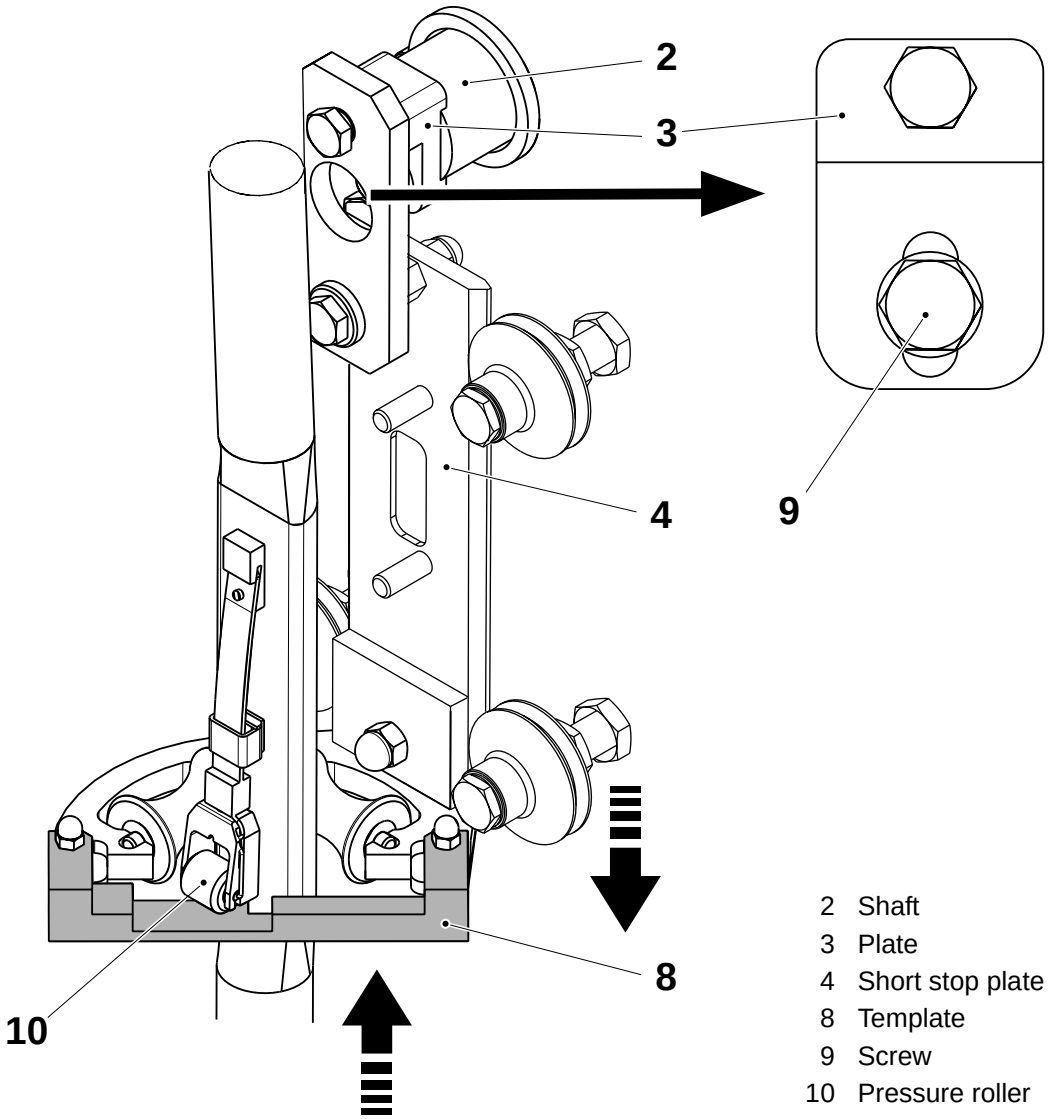

2 Shaft
3 Plate
4 Short stop plate
8 Template
9 Screw
10 Pressure roller

1.1.4-2 Lower Forming Ring - Change Bushings

SPC Reference	1195162-0100

a) Remove the nut (1), screw (2) and plate (3) at the side of the roller to be removed.

b) Remove the nut (4), screw (5) and plate (6) at the side of the roller to be removed.

c) Lift out the roller assembly (10).

d) Remove the washers (7).

e) Remove the shaft (8).

f) Push out the bushings (9).

g) Fit new bushings.

h) Assemble in reverse order.

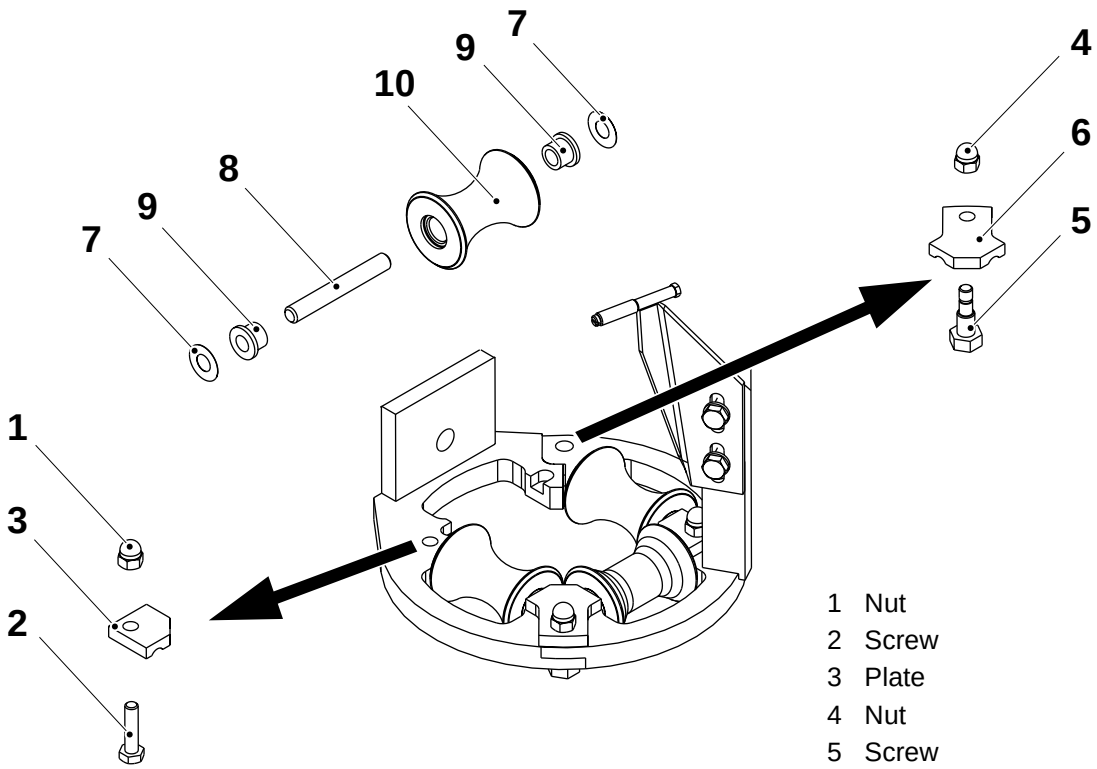

1 Nut
2 Screw
3 Plate
4 Nut
5 Screw
6 Plate
7 Washer
8 Shaft
9 Bushing
10 Roller assembly

1.1.4-3 Lower Forming Ring - Set Overlap

SPC Reference	1195162-0100

Pick up a package and measure the LS overlap **A**.

Set the overlap by changing rollers in the lower forming ring.

Note! The table below shows the **nominal** overlap value for each **nominal** packaging material width. If the width of the packaging material used is not the same as the nominal value, the overlap must be increased or decreased to produce the correct diameter tube.

Package	**Nominal packaging material width (mm)**	**Nominal overlap (mm)**	**Standard roller** TP No.	**Minus roller** TP No.	**Plus roller** TP No.
TBA 200 B - TBA 250 B	214 ±1 mm	8.0 ±1 mm	1484859	1490895	1490894
TBA 200 M - TBA 250 S	188 ±1 mm	6.0 ±1 mm	2523655	2551110	2551109
TBA 200 S	174 ±1 mm	4.0 ±0.5 mm	1558186	1558187	1558188

(Cont'd)

(Cont'd)

- to **increase** the overlap **A**, change up to three standard rollers for **minus** trimming rollers.
- to **decrease** the overlap **A**, change up to three standard rollers for **plus** trimming rollers.

Always fit trimming rollers symmetrically with respect to the pressure roller (4). **Never** fit Plus and Minus trimming rollers together.

After the forming ring has been set it will function correctly with all packaging material widths within the given limits.

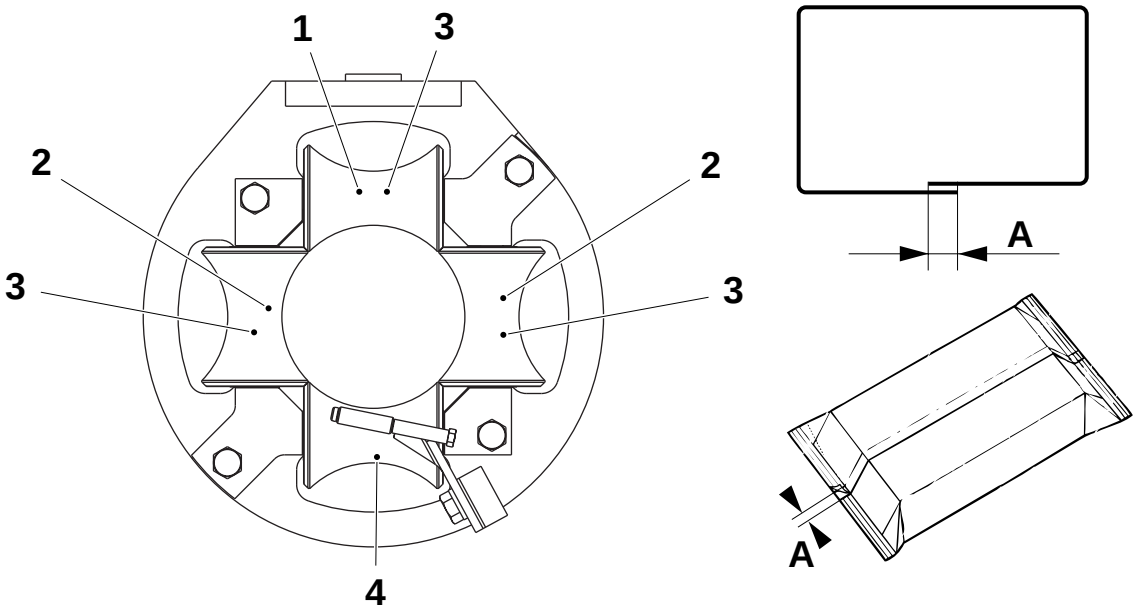

1 Where to put one trimming roller
2 Where to put two trimming rollers
3 Where to put three trimming rollers
4 Pressure roller

(Cont'd)

(Cont'd)

a) Loosen the screws (5) and push the bracket (6) to its lowest position.

b) Tighten the screws (5).

c) Loosen the screw (7) and turn the support (8) until the gap **B** between the finger (9) and the surface of the inductor (10) is obtained.

d) Hold the support (8) to prevent movement and tighten the screw (7).

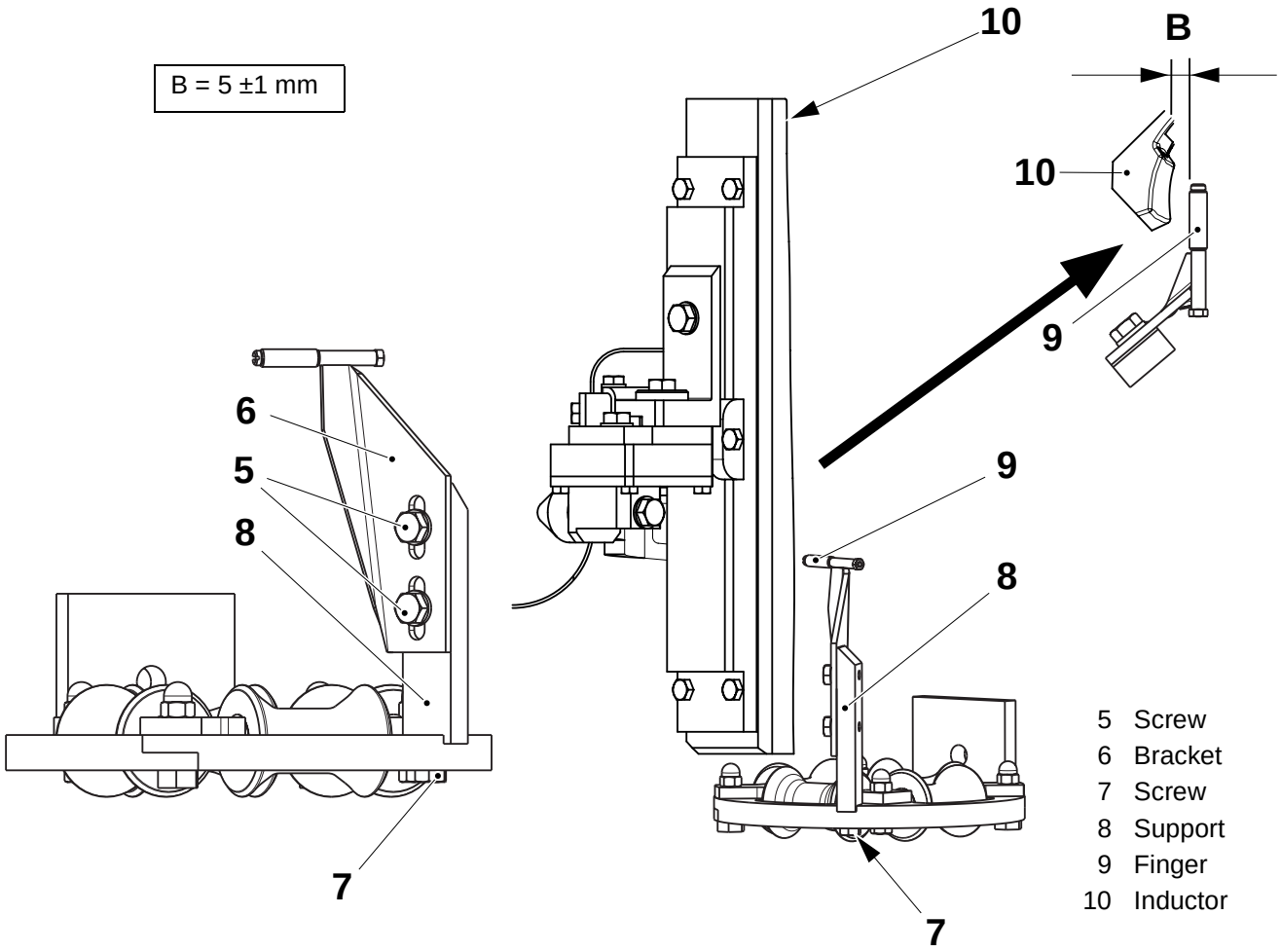

1.1.5 Tube Support

1.1.5-1 Tube Support - Change Ball Bearing

SPC Reference	2525541-0100

a) Remove the screw (1) and pull off the roller (2).
b) Change the ball bearings (3) and (4).
c) Assemble in the reverse order.
d) Repeat for the other roller.

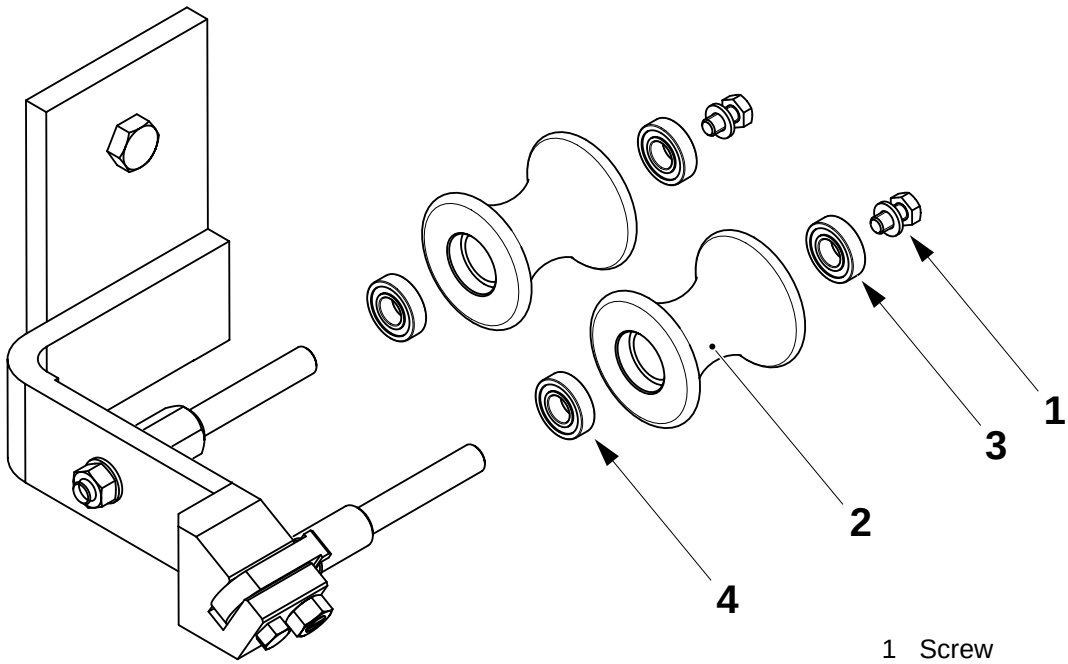

1 Screw
2 Roller
3 Ball bearing
4 Ball bearing

1.1.6 Crank

1.1.6-1 Crank - Check Chain

SPC Reference	996451-0100

WARNING
Risk of injury due to pinching or crushing!

Crank the chain (3) and check that it moves freely. If not:

- make sure the plates (8) are aligned.
- loosen the screws (9), turn the handle (2) until it rotates freely.
- tighten the screws (9).

Crank the paper carrier (1) with the handle (2) until it reaches the highest position and check the following parts for visual wear or damage:

- the paper carrier (1). Check the teeth in the paper carrier (1) are not damaged.
  Change as required.
- the bushing (4). Also check the radial play is not excessive.
- the O-rings (5) and (6). Change as required.
- the sprocket (7). Change as required.

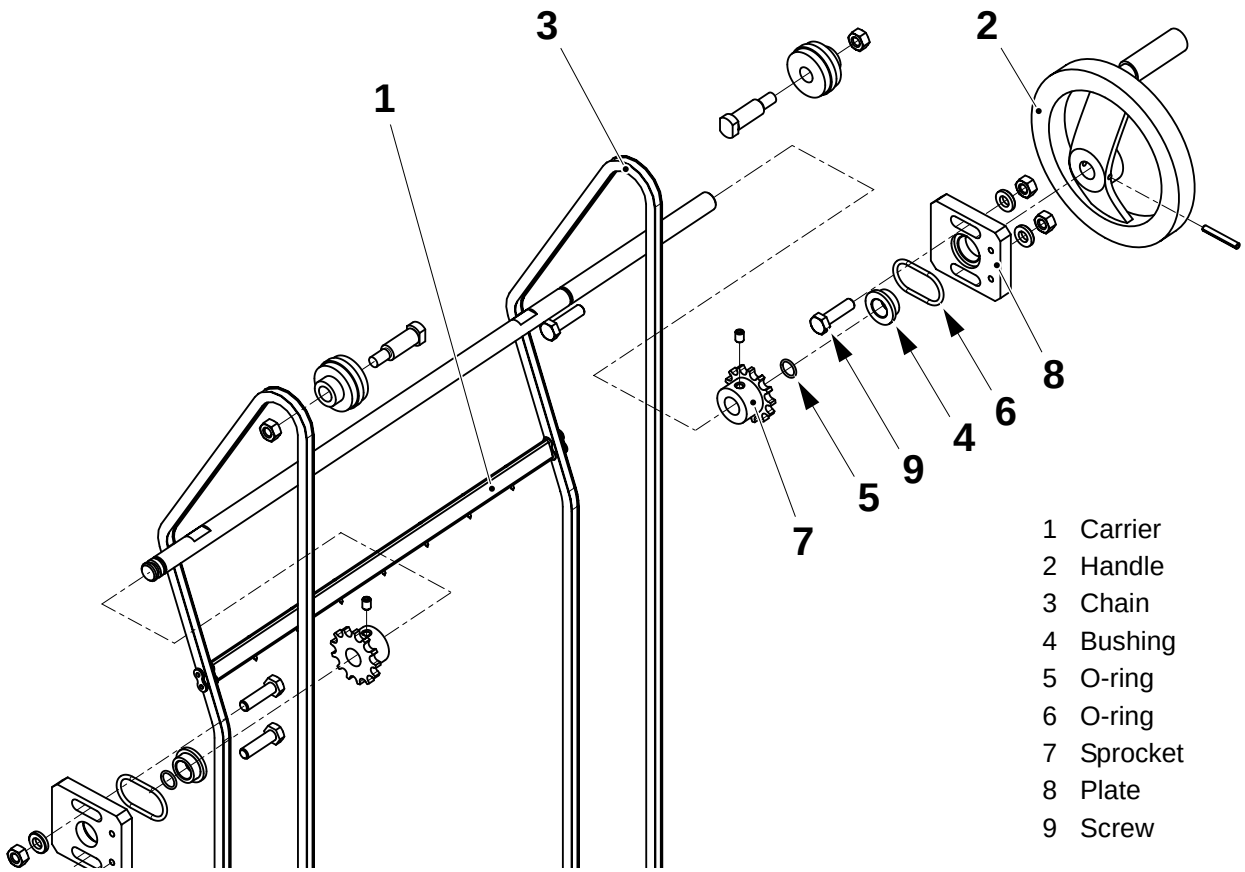

1.1.7 Pillar

1.1.7-1 Pillar - Check Gasket and Seal

SPC Reference	1195163-0300

WARNING
Hydrogen Peroxide!
Follow the Safety precautions.

a) Unscrew the handles (1) and remove the cover (2).
b) Remove the gasket (3) and change it if necessary.
c) Remove the screws (4) and remove the lid (5).
d) Pull out the seal (6) and change it if necessary.
e) Remove any undesirable residue.
f) Assemble in reverse order.
g) Make sure the cover (2) fits properly against the column when tightened with the handles (1).

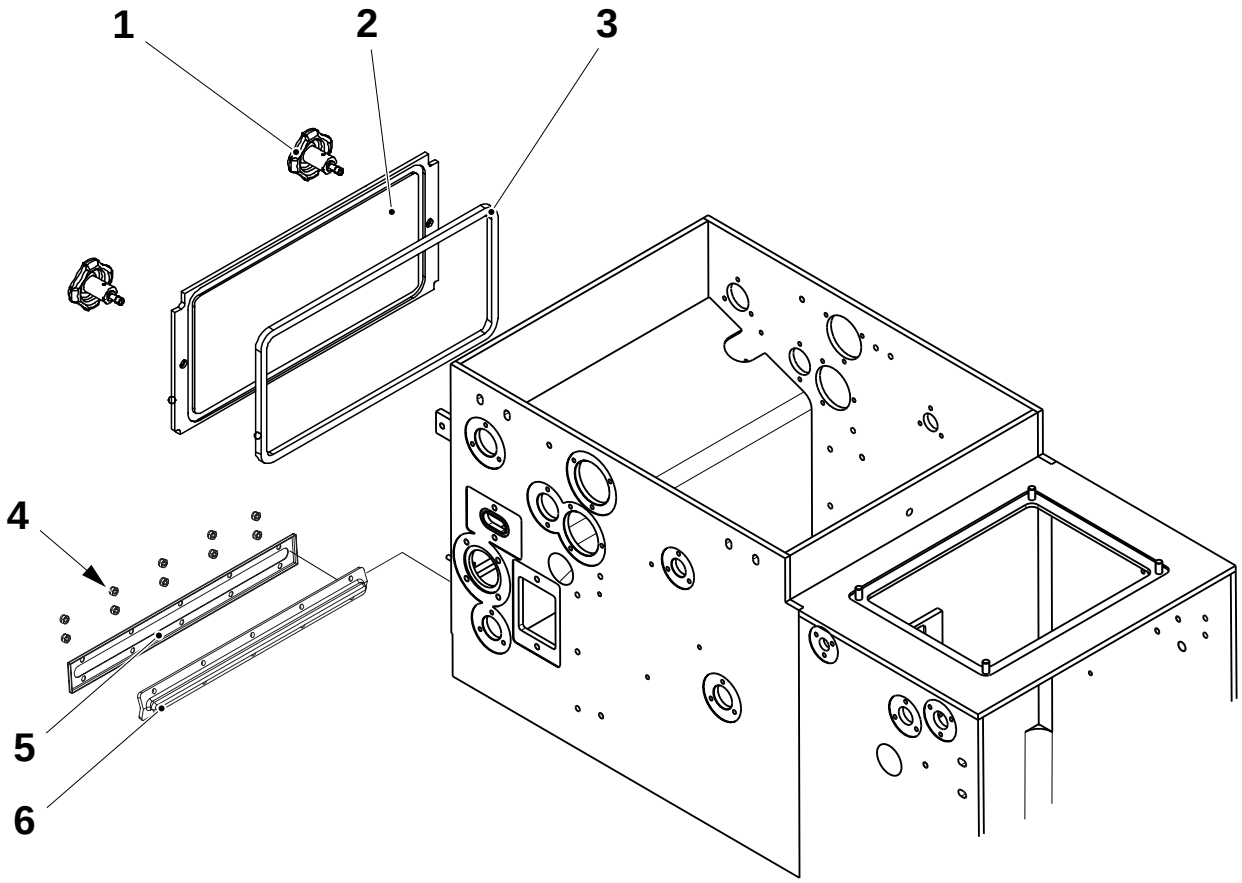

1 Handle
2 Cover
3 Gasket
4 Screw
5 Lid
6 Seal

1.1.7-2 Pillar - Change Bearings

SPC Reference	1195163-0300

WARNING
Hydrogen Peroxide!
Follow the Safety precautions.

a) Unscrew the handles (1) and remove the cover (2).

b) Loosen the nuts (3) and remove the lid (4).

Note! When removing the bending roller assembly make sure the wheel (8) does not drop into the aseptic bath.

c) Remove the complete roller assembly. This includes the wheels (5) and (8), bearings (6) and bending roller (7).

d) Change the bearings (6) as required.

e) Assemble in the reverse order.

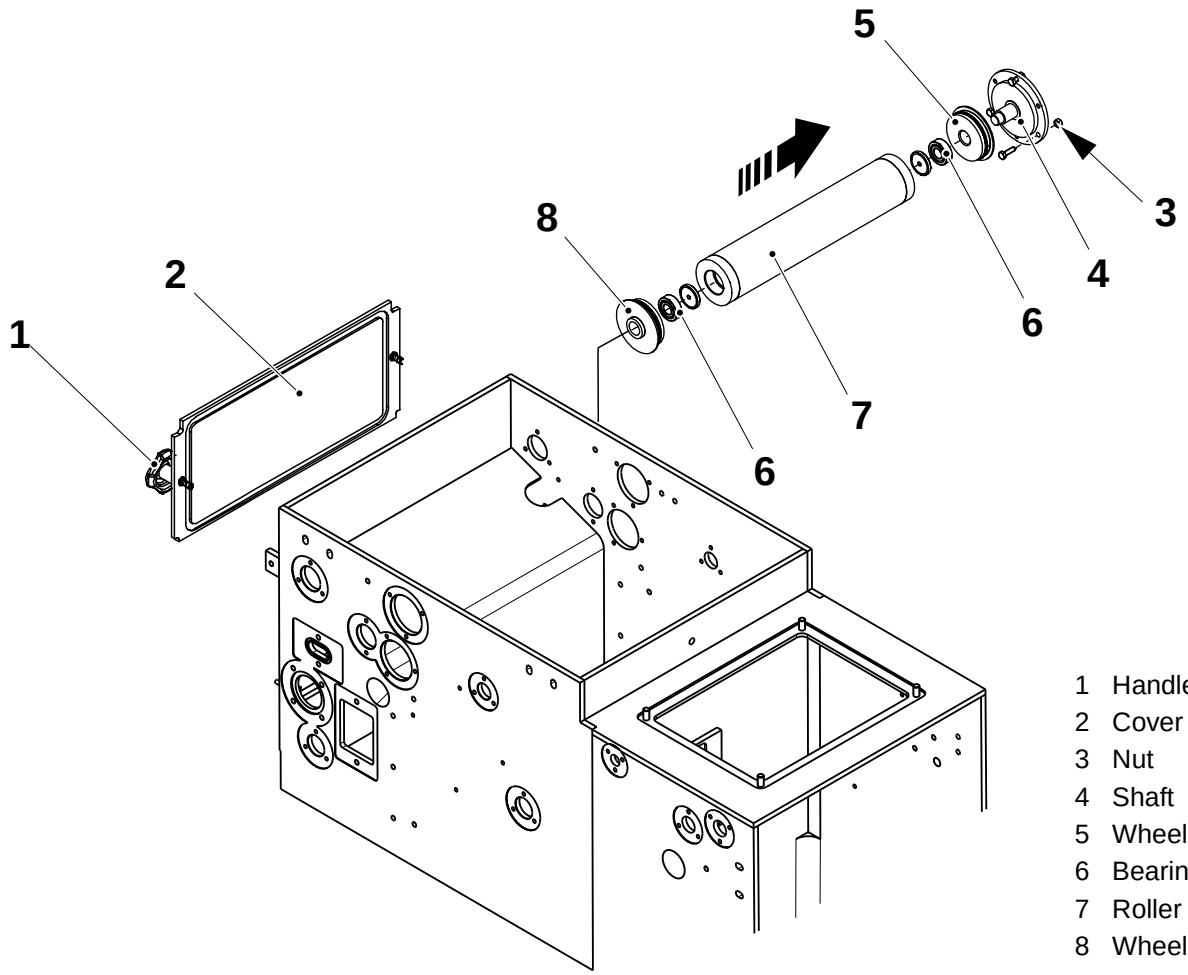

1 Handle
2 Cover
3 Nut
4 Shaft
5 Wheel
6 Bearing
7 Roller
8 Wheel

1.1.7-3 Pillar - Set Proximity Switch

SPC Reference	1195163-0300

WARNING
Hydrogen Peroxide!
Follow the Safety precautions.

a) Remove the lower filling pipe and fit the cleaning sleeve (4).

b) Turn the main power ON.

c) Set distance **A** between the proximity switch (1) and the plate (2) by means of the nut (3) so the sensor proximity switch (1) is activated when the cleaning sleeve (4) is in place.

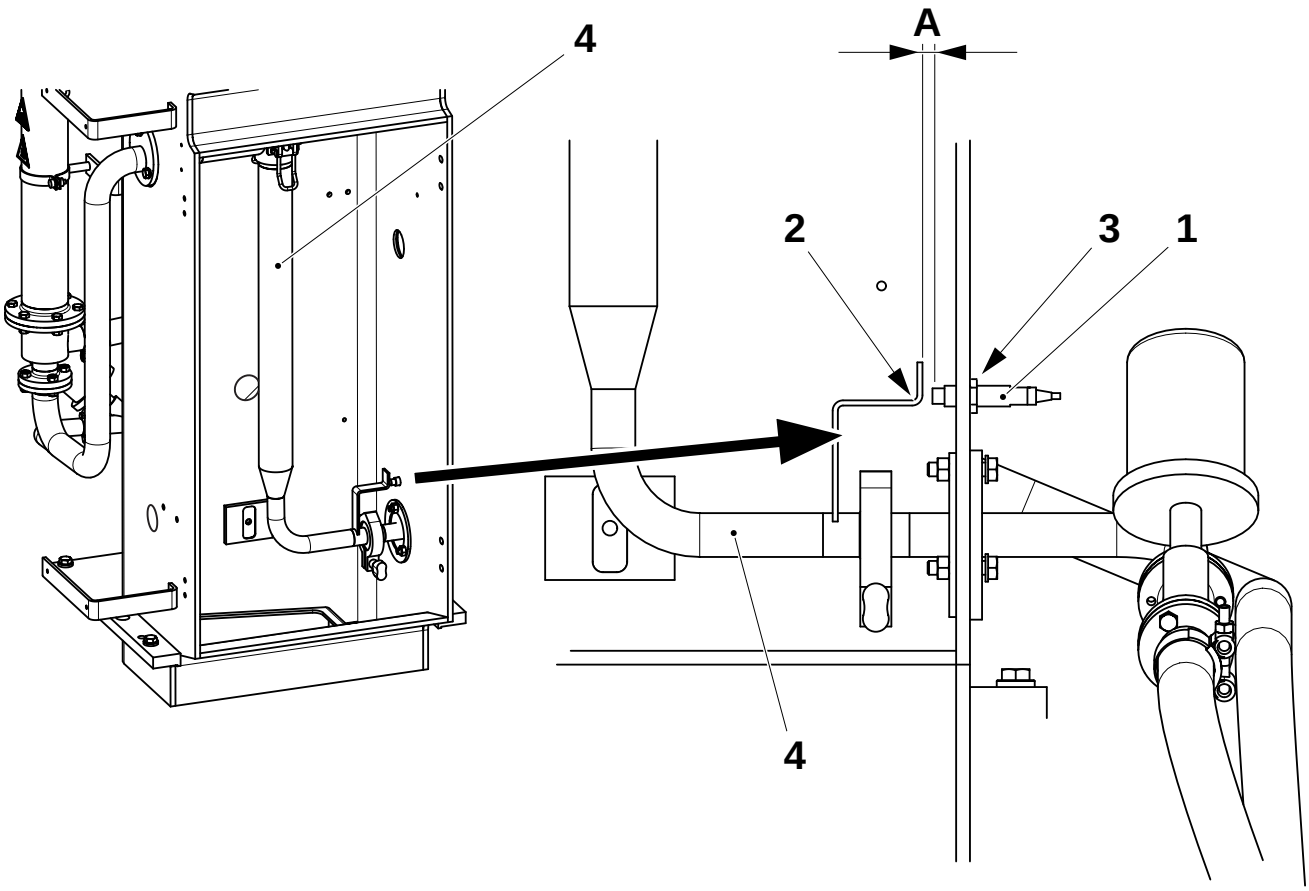

1 Proximity switch
2 Plate
3 Nut
4 Cleaning sleeve

1.1.8 Spray System

1.1.8-1 Spray System - Check

SPC Reference	2515213-0100

WARNING
Hydrogen Peroxide!
Follow the Safety precautions.

Check for peroxide leakages in the complete spray unit.

Note! Mark all connections before removal.

Change the O-rings (1) if worn or damaged.

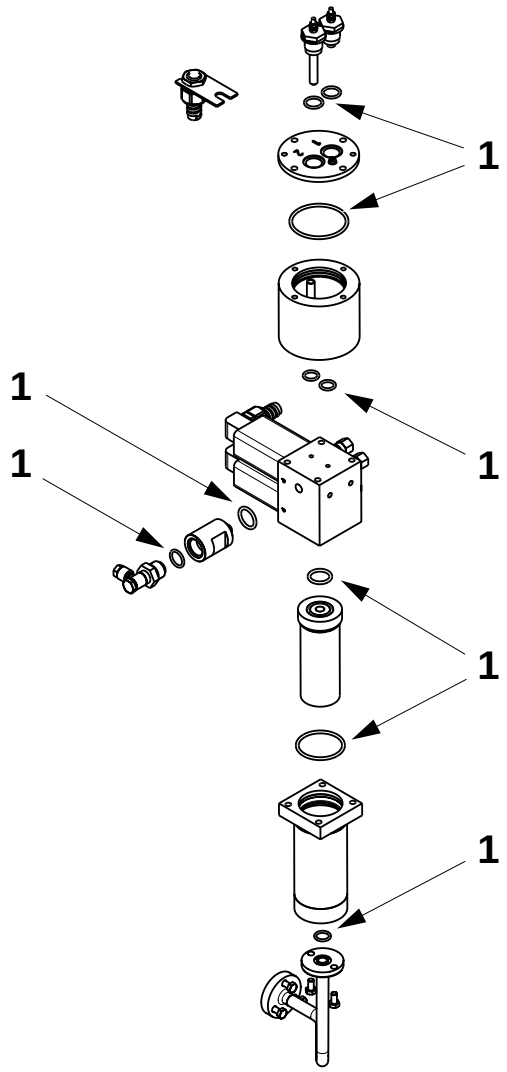

1 O-ring

1.1.8-2 Spray System - Clean Peroxide Filter

SPC Reference	2515213-0100

WARNING
Hydrogen Peroxide!
Follow the Safety precautions.

a) Remove the screws (1) and (2).
b) Remove the pipe (3).

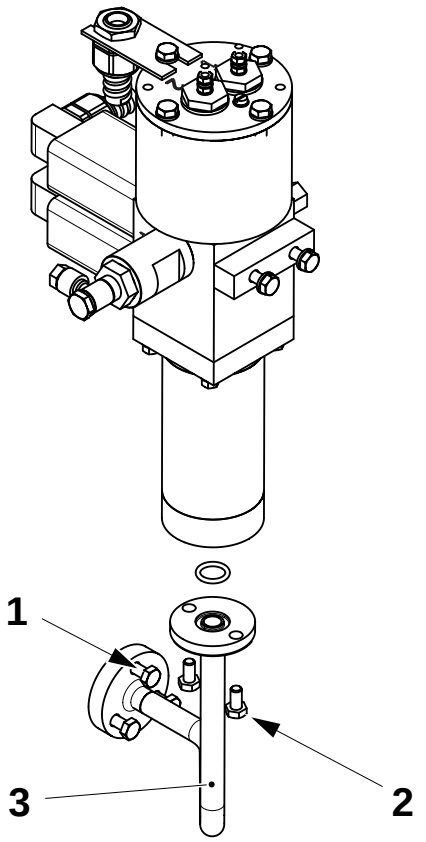

1 Screw
2 Screw
3 Pipe

(Cont'd)

(Cont'd)

c) Remove the nuts (4) and the filter housing (5).

d) Pull out the peroxide filter (6) and clean it with compressed air. If necessary, change the peroxide filter (6).

e) Assemble in the reverse order.

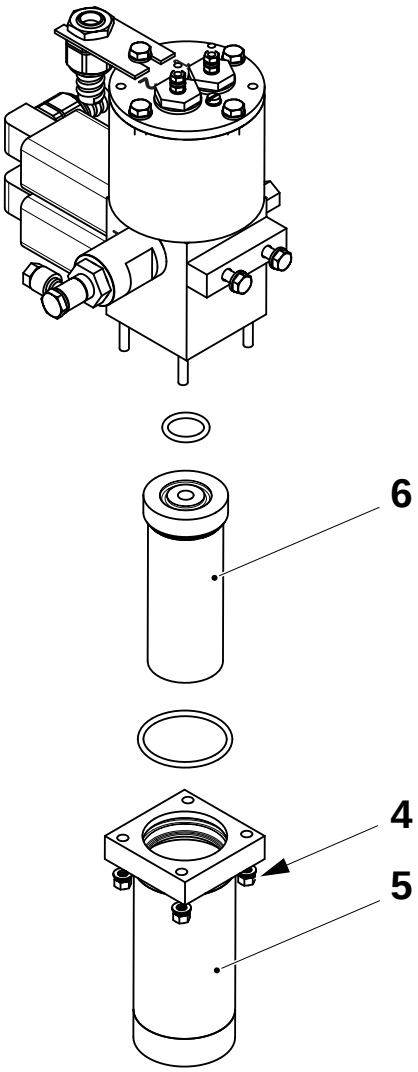

4 Nut
5 Housing
6 Filter

1.1.8-3 Spray System - Set Pressure

Machine Status	HEAT STERILIZATION
SPC Reference	2515213-0100

Using the pressure regulator (1) on the superstructure pneumatic panel (2), set the air pressure for the spray system to the correct value, see 10.1 Technical Data.

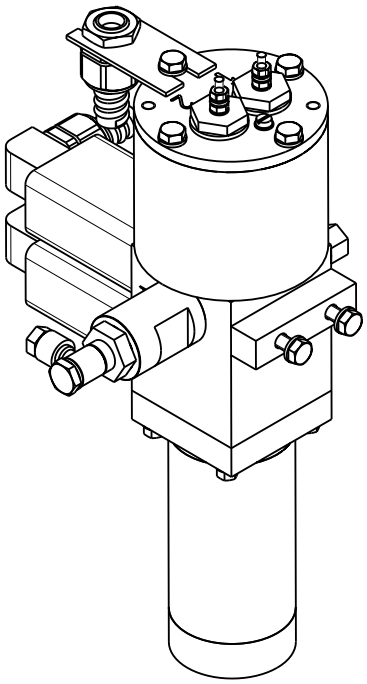

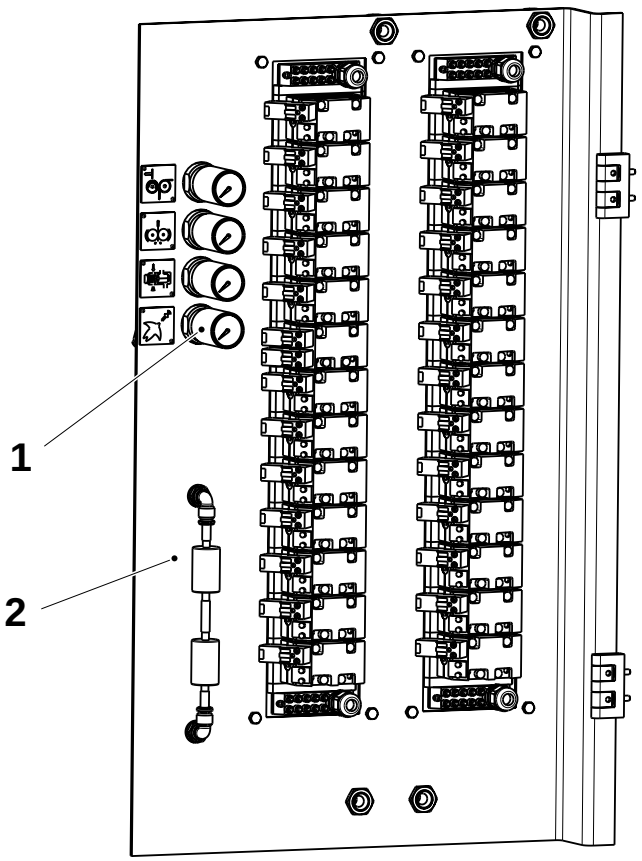

1 Pressure regulator
2 Pneumatic panel

1.1.8-4 Spray System - Clean Filter

SPC Reference	2515213-0100

WARNING
Hydrogen Peroxide!
Follow the Safety precautions.

a) Disconnect the air pipe (1) from the filter group (2).
b) Remove the filter group (2).
c) Remove the filter (3) from the filter house (4).
d) Clean the filter (3) as required with compressed air.
e) Check the gaskets (5) for wear or damage and change them as required.

Note! While assembling make sure to fit the gaskets (5) in the proper way.

f) Assemble in the reverse order.

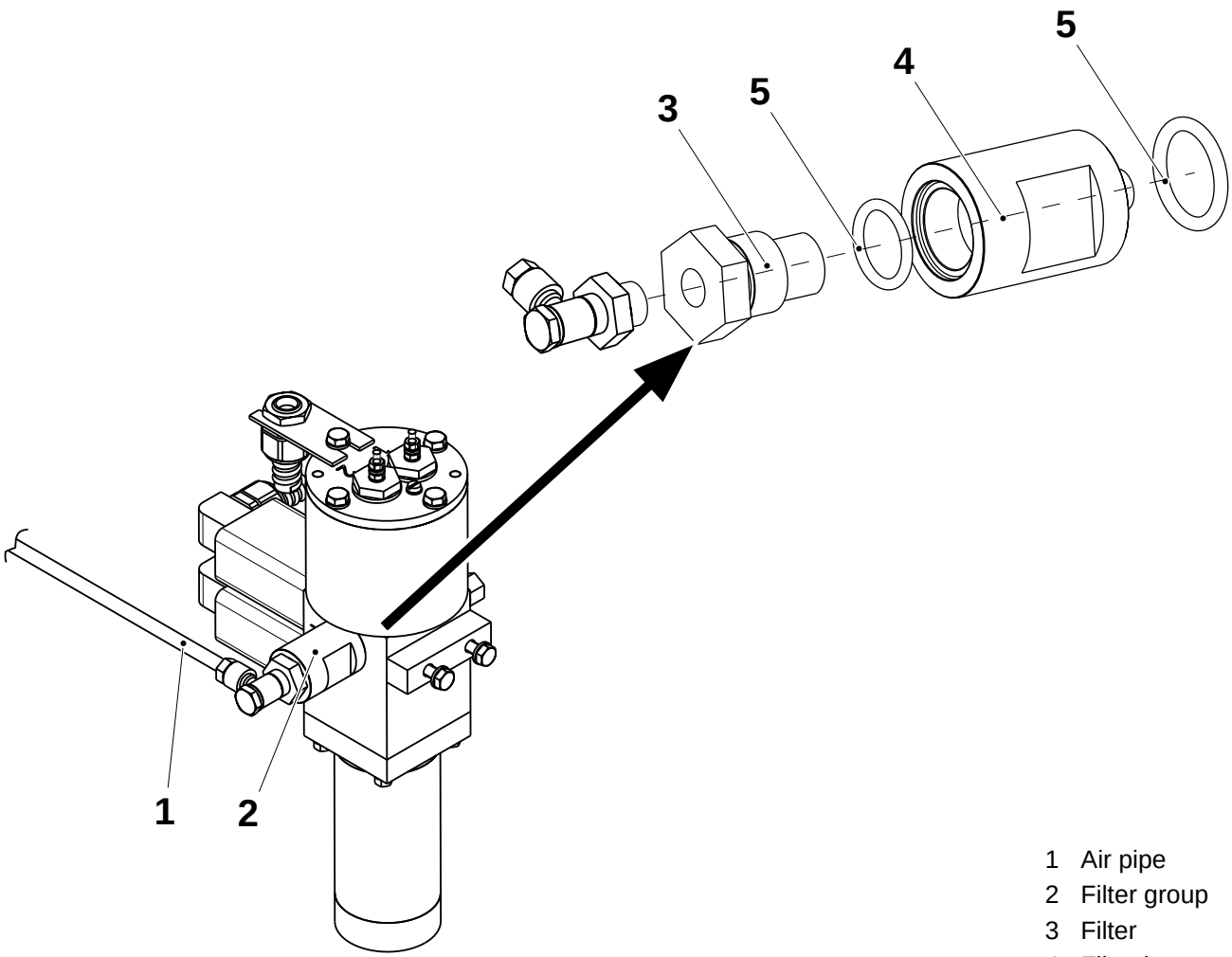

1 Air pipe
2 Filter group
3 Filter
4 Filter house
5 Gasket

1.1.9 Bending Roller

1.1.9-1 Bending Roller - Change Bearings

SPC Reference	1195209-0200

WARNING
Hydrogen Peroxide!
Follow the Safety precautions.

a) Check the surface of the roller (4), and check that it rotates freely in both directions. If not, continue below.

b) At both sides, remove the screws (1) and the nuts (2), pull out the shafts (3) and lift out the bending roller assembly (4).

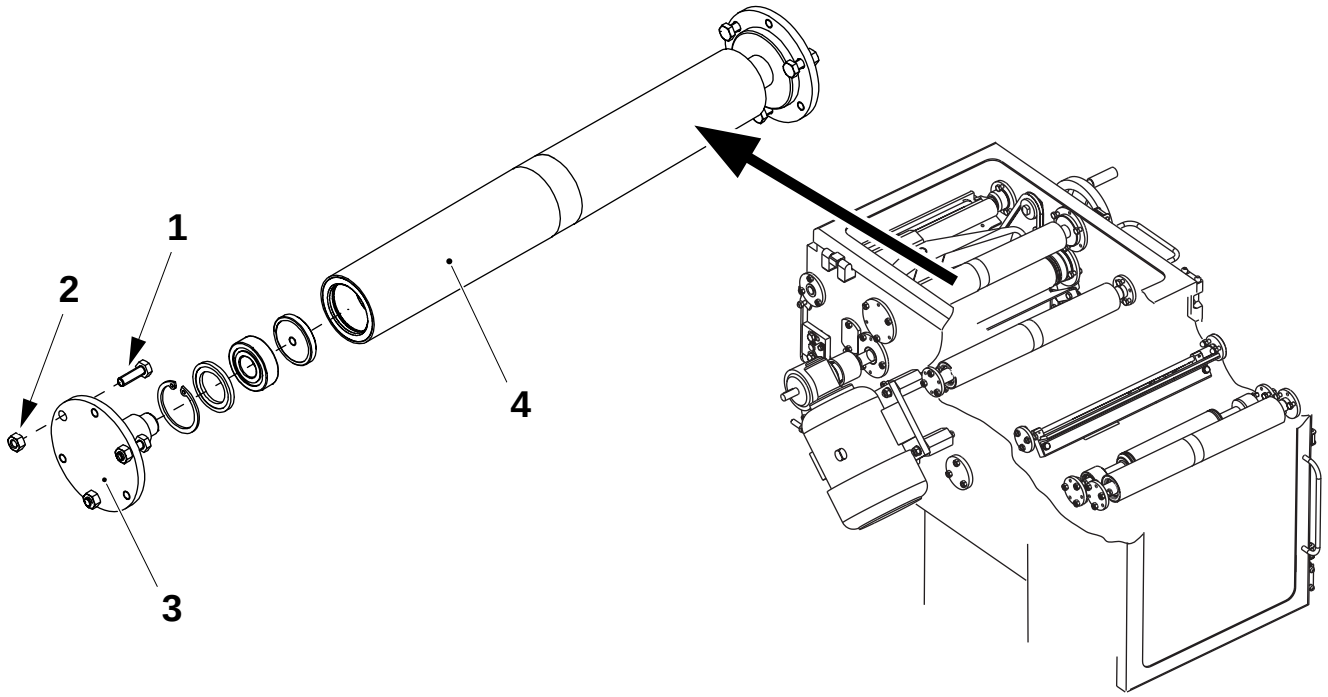

1 Screw
2 Nut
3 Shaft
4 Roller

(Cont'd)

(Cont'd)

Note! If the shaft is difficult to remove, insert M6 screws in the holes (5) and tighten sequentially to draw out the shaft (3).

c) Remove the retaining ring (6), washer (7), bearings (8), washer (9) and roller (4). Check for wear or damage and change as required.

Note! If a bearing is difficult to extract, insert an M6 screw in the hole in the washer (9) and pull out the bearing.

d) Assemble in the reverse order.

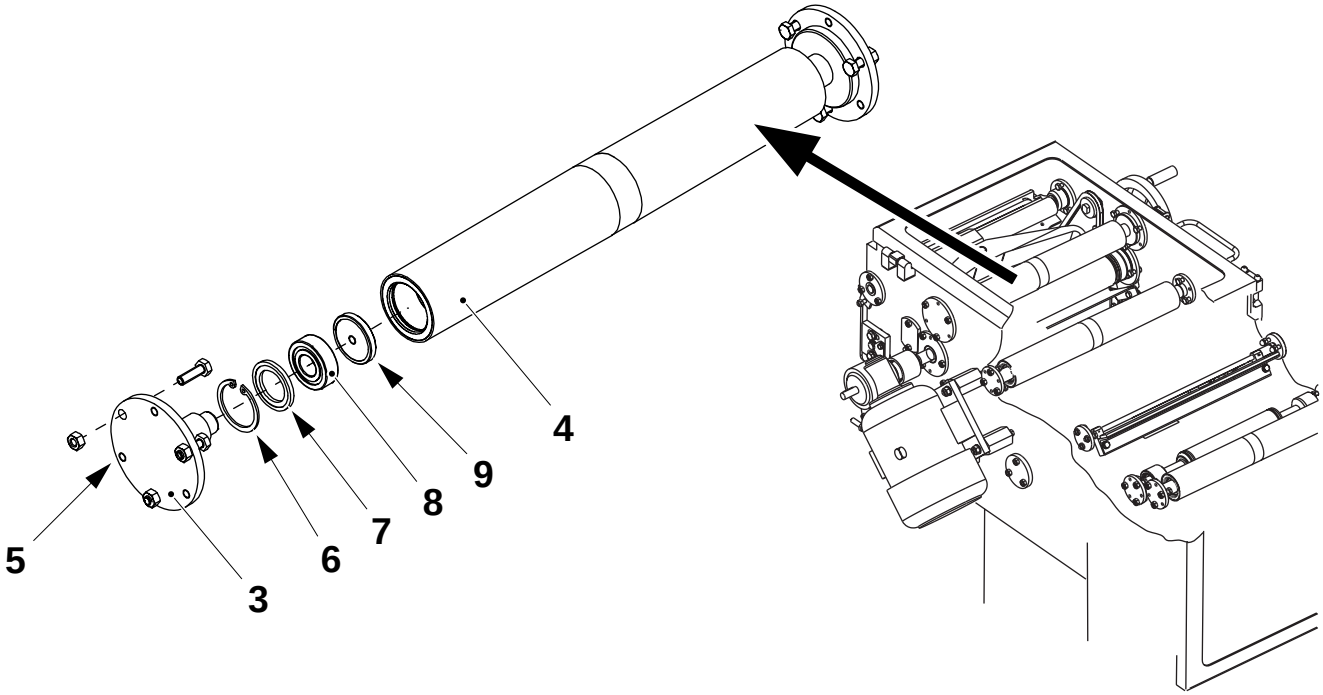

3 Shaft
4 Roller
5 Hole
6 Retaining ring
7 Washer
8 Bearing
9 Washer

1.1.10 Paper Guide

1.1.10-1 Paper Guide - Check Bearings

SPC Reference	1195166-0200

WARNING
Hydrogen Peroxide!
Follow the Safety precautions.

a) Check the surface of the roller (1), and check that it rotates freely in both directions. If not, continue below.

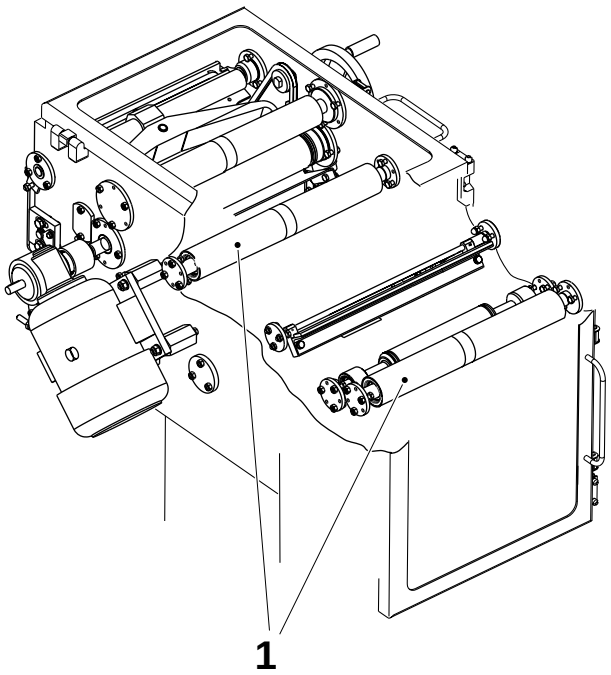

1 Roller

(Cont'd)

(Cont'd)

b) Loosen the nuts (2) on both sides.

c) Remove the shaft (4) at both sides and lift out the bending roller assembly.

Note! If a shaft is difficult to move, insert M6 screws in the holes (3) and tighten sequentially to draw out the shaft.

d) Remove the retaining ring (5), washer (6), bearings (7), washer (8) and roller (1). Check for wear or damage and change as required.

Note! If a bearing is difficult to extract, insert an M6 screw in the hole (9) and pull out the bearing.

e) Assemble in the reverse order.

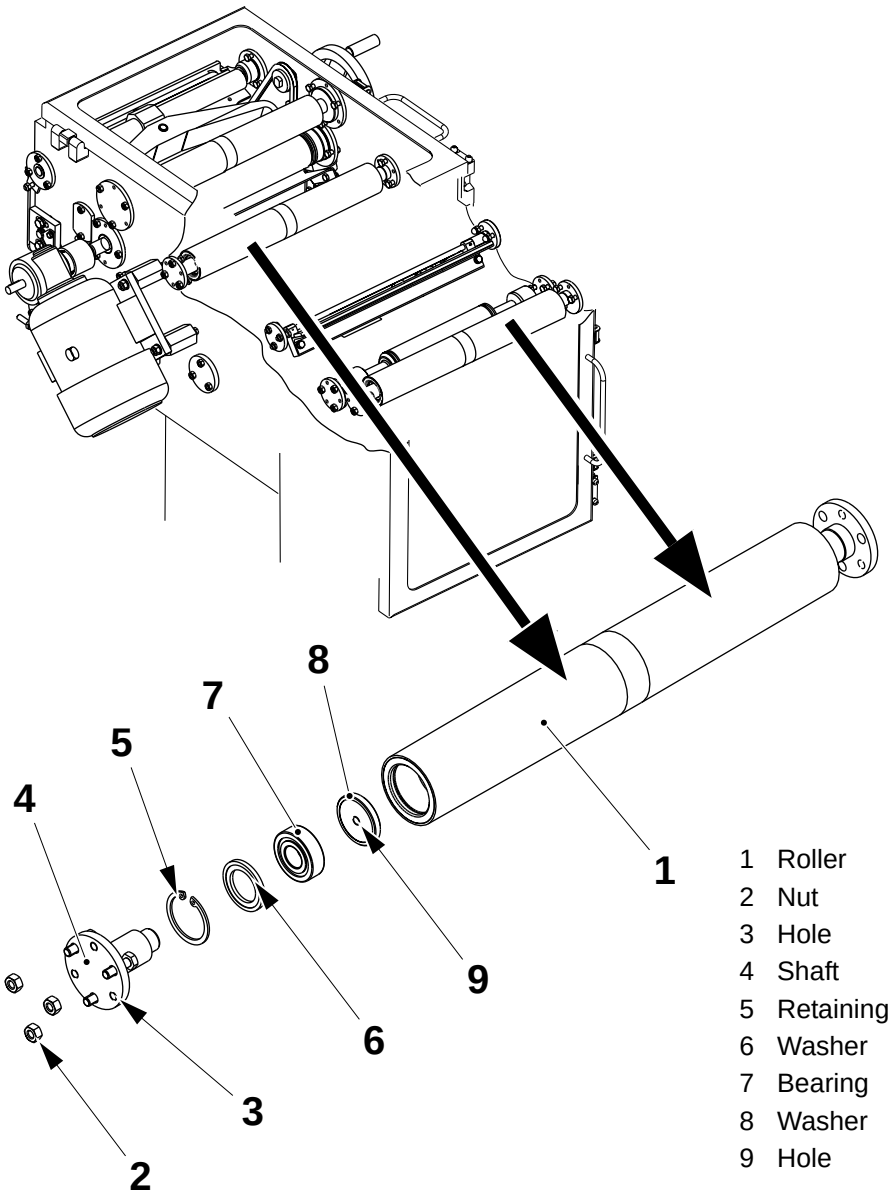

1 Roller
2 Nut
3 Hole
4 Shaft
5 Retaining ring
6 Washer
7 Bearing
8 Washer
9 Hole

1.1.11 Bending Roller (Rotation)

1.1.11-1 Bending Roller (Rotation) - Change Bearings

SPC Reference	2506842-0100

WARNING
Hydrogen Peroxide!
Follow the Safety precautions.

Check the surface of the roller (1), and check that:

- it rotates freely in the paper direction;
- can not rotate in the other direction and there is no play.

If not, continue below:

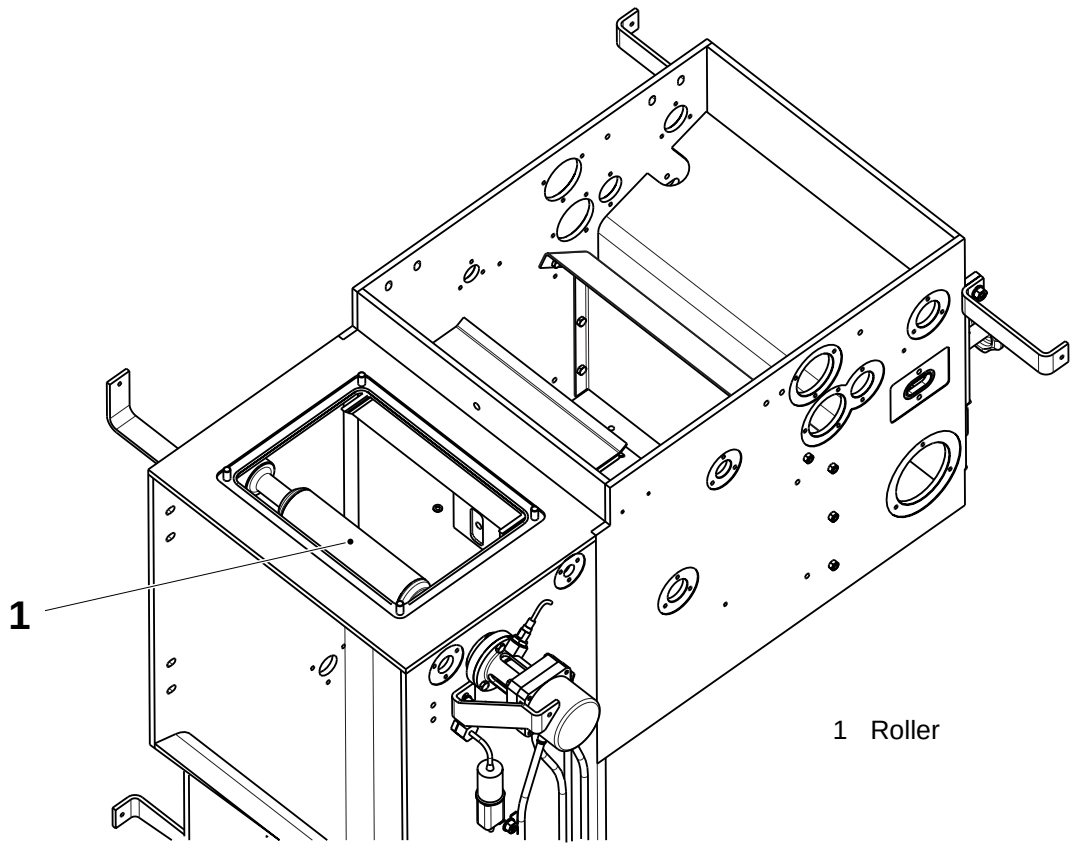

1 Roller

(Cont'd)

(Cont'd)

a) Remove the nut (2) and the bracket (3).
b) Remove the nut (4) and the actuator assembly (5).
c) Loosen the stop screws (6) and remove the counter (7).

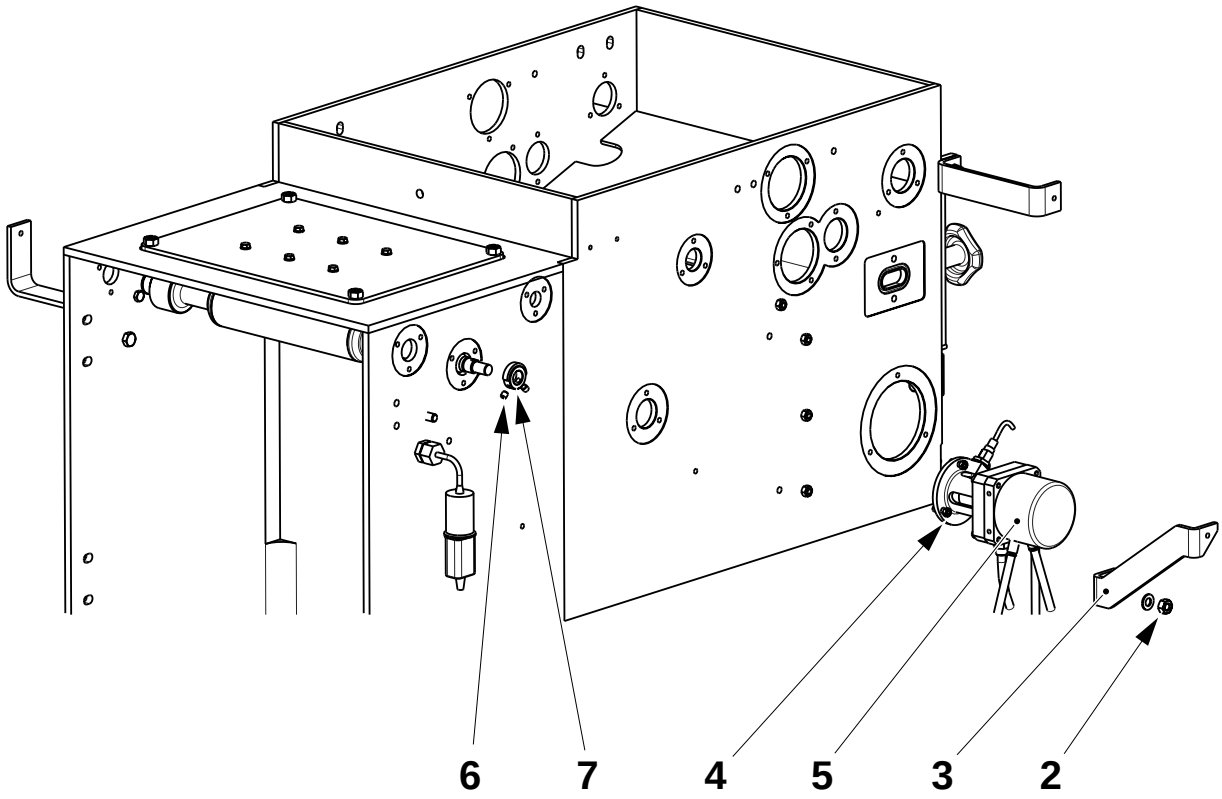

2 Nut
3 Bracket
4 Nut
5 Actuator Assembly
6 Stop screw
7 Counter

(Cont'd)

(Cont'd)

Note! If the shaft is difficult to move, insert M6 screws in the holes (11) and tighten sequentially to draw out the shaft.

d) Remove the nuts (8), the screws (10) and shaft (9).

Note! If the bearing is difficult to extract, insert an M6 screw in the hole (16) and pull out the bearing.

e) Remove the retaining ring (12), the washer (13), the ball bearing (14) and the washer (15).

f) Pull out the roller (17).

g) Remove the seal (18) and the ball bearing (19).

h) Apply PTFE grease, code N; see 10.3 Consumables, to the new bearings.

i) Assemble in the reverse order.

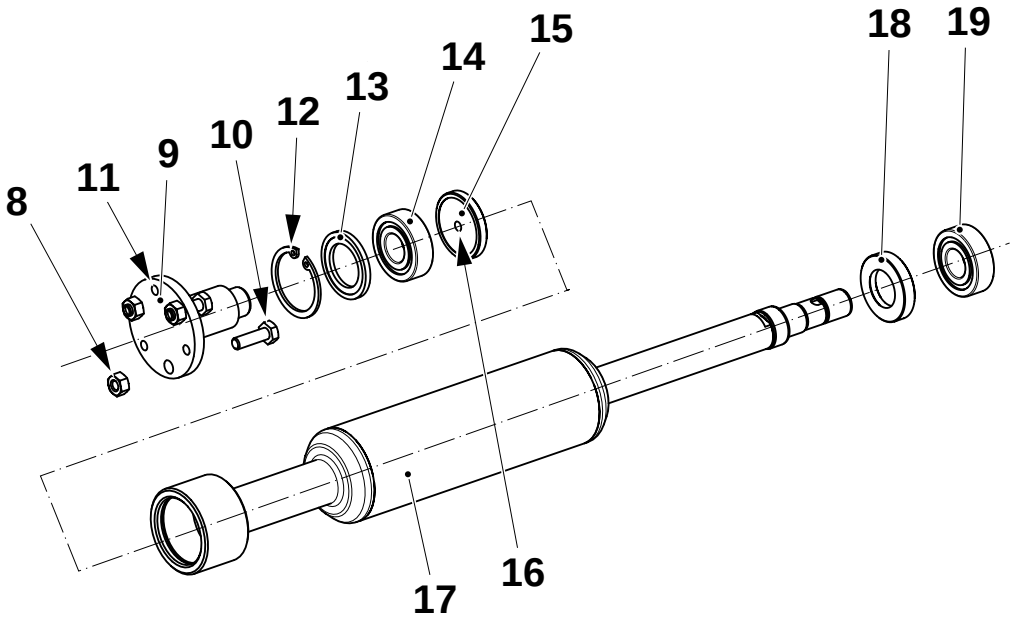

8	Nut	14	Ball bearing
9	Shaft	15	Washer
10	Screws	16	Hole
11	Hole	17	Roller
12	Retaining ring	18	Seal
13	Washer	19	Ball bearing

1.1.11-2 Bending Roller (Rotation) - Set Angle

SPC Reference	2506842-0100

a) Remove the cover (1) from the actuator (2).

b) Loosen the nuts (3) and rotate the stops (4) fully clockwise.

c) Tighten the nuts (3).

d) Loosen the screw (5) and push the bracket (6) against the stop (7).

e) Tighten the screw (5).

f) Loosen the screw (8) and move the bracket (9) so the surface (10) is in vertical position (the pointer (11) points to 160°).

g) Tighten the screw (8).

h) Fit the cover (1).

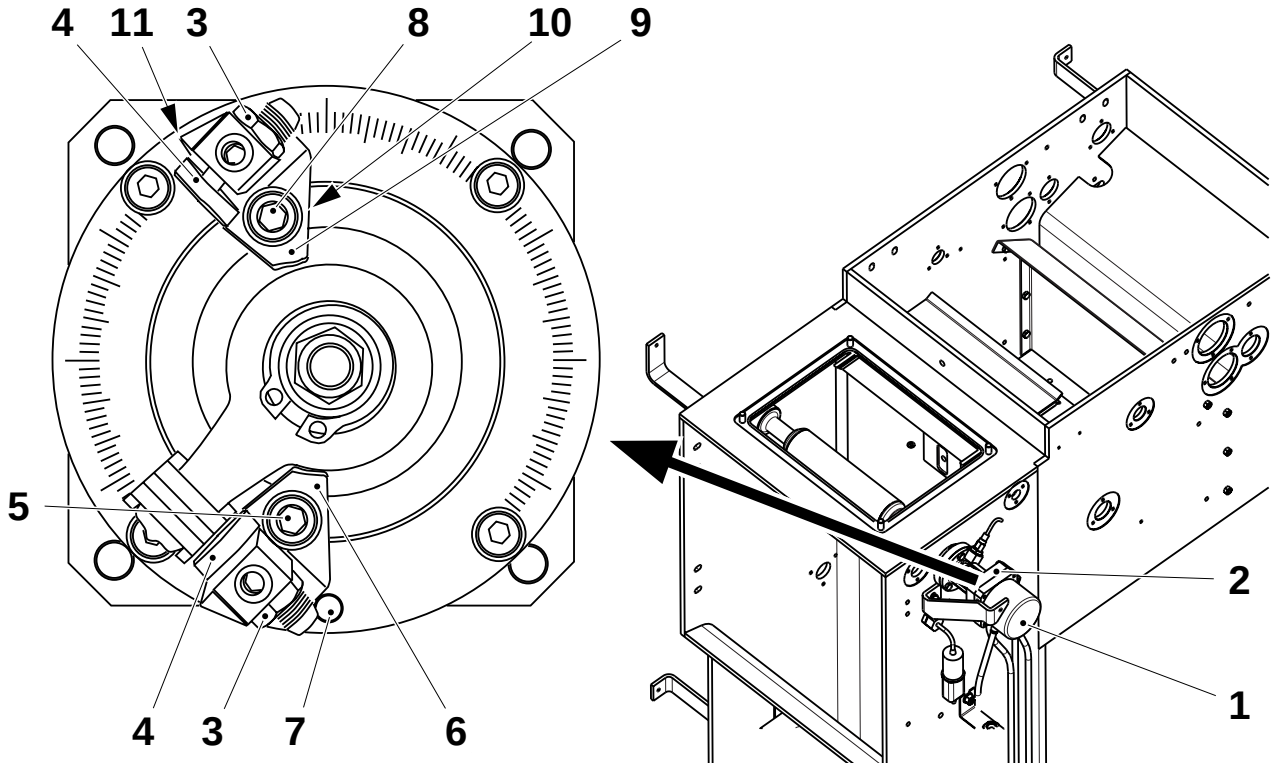

1	Cover	7	Stop
2	Actuator	8	Screw
3	Nut	9	Bracket
4	Stop	10	Surface
5	Screw	11	Pointer
6	Bracket		

1.1.12 Seal

1.1.12-1 Seal - check

SPC Reference	1195214-0100

Check the seal (1) is not worn or damaged. Change if the thickness is less than distance **A**.

Overhaul the seal unit as required, see 1.1.12-2 Seal - Overhaul.

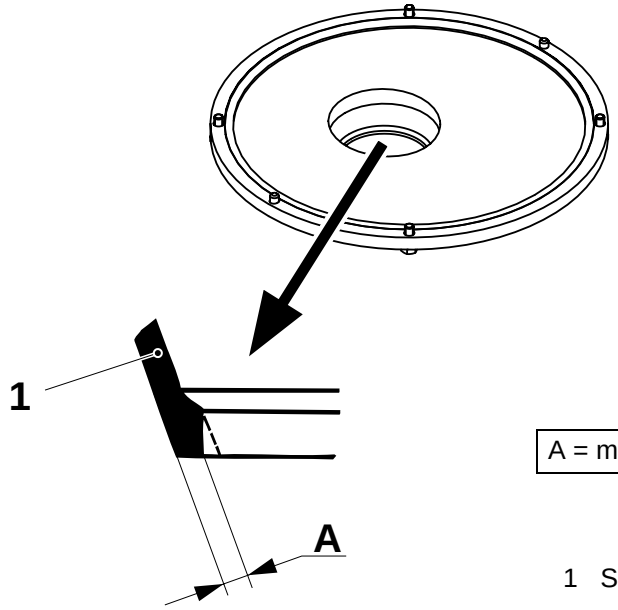

A = min. 1 mm

1 Seal

1.1.12-2 Seal - Overhaul

SPC Reference	1195214-0100

a) Remove the screws (1) and washers (2).

b) Remove the seal unit (3) and change the seal (4).

c) Remove the screws (5) and change the O-ring (6).

Note! Make sure the seal (4) and O-ring (6) are correctly fitted in their seats.

d) Make sure the pins (7) are in place, then tighten the screws (5) crosswise.

e) Fit the seal unit (3), washers (2) and screws (1).

f) Tighten the screws (1).

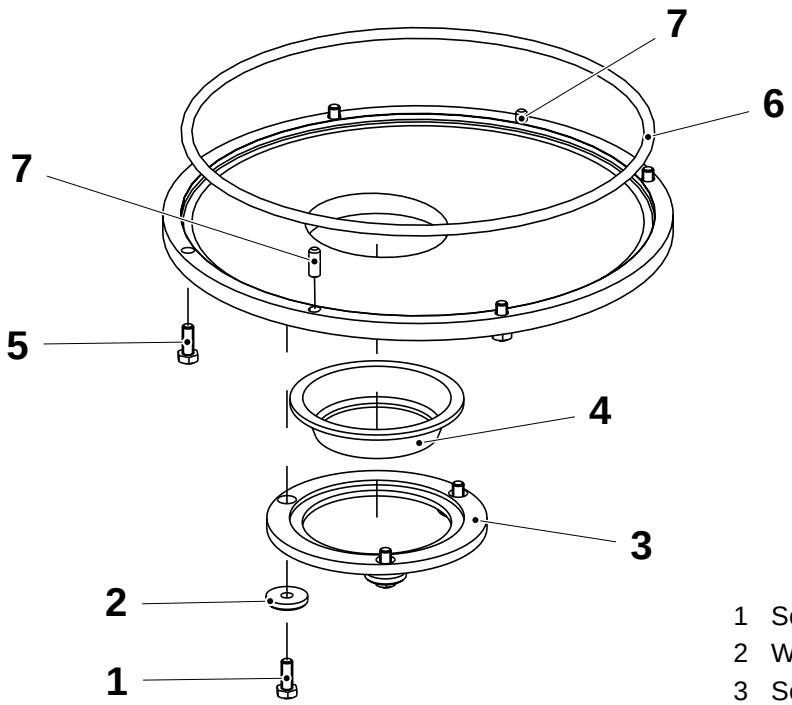

1 Screw
2 Washer
3 Seal unit
4 Seal
5 Screw
6 O-ring
7 Pin

1.1.13 Pendulum Roller

1.1.13-1 Pendulum Roller - Check

SPC Reference	1195173-0300

a) Check the surface of the roller (1) for wear or damage.

b) Check the roller rotates smoothly in both directions. Change the bearings (2) as required.

c) Lift the roller arm and check for play in the bearings (3). Change the bearings as required.

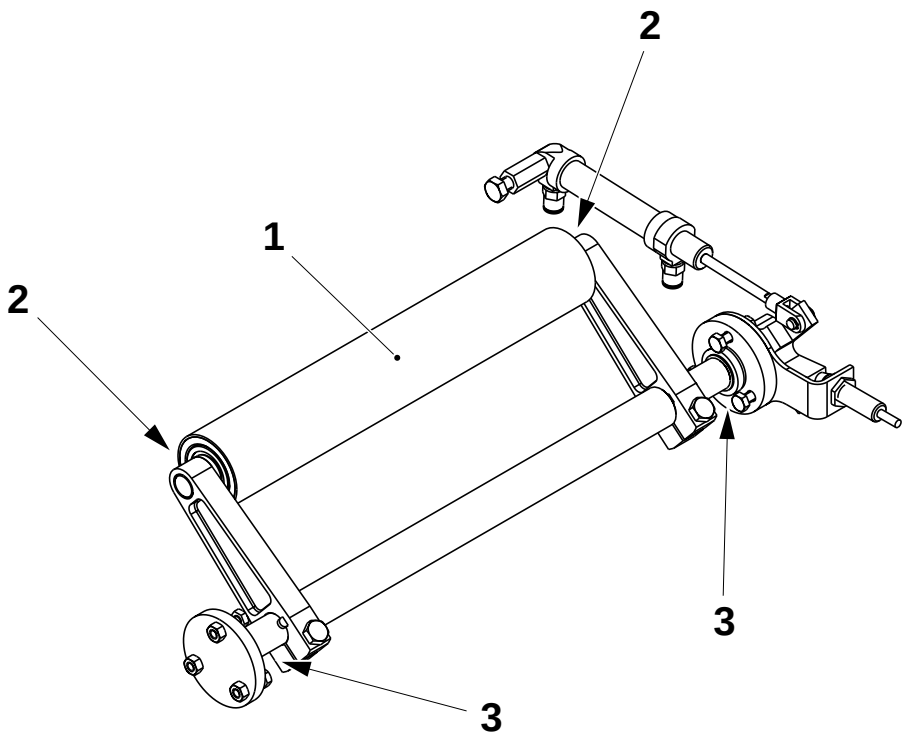

1 Pendulum roller
2 Bearings
3 Bearings

1.1.13-2 Pendulum roller - set pressure

Machine Status	Air ON Mains Power ON
SPC Reference	1195173-0300

Using the pressure regulator (2) on the superstructure pneumatic panel (3), set the air pressure of the pendulum roller (1) to the correct value, see 10.1 Technical Data.

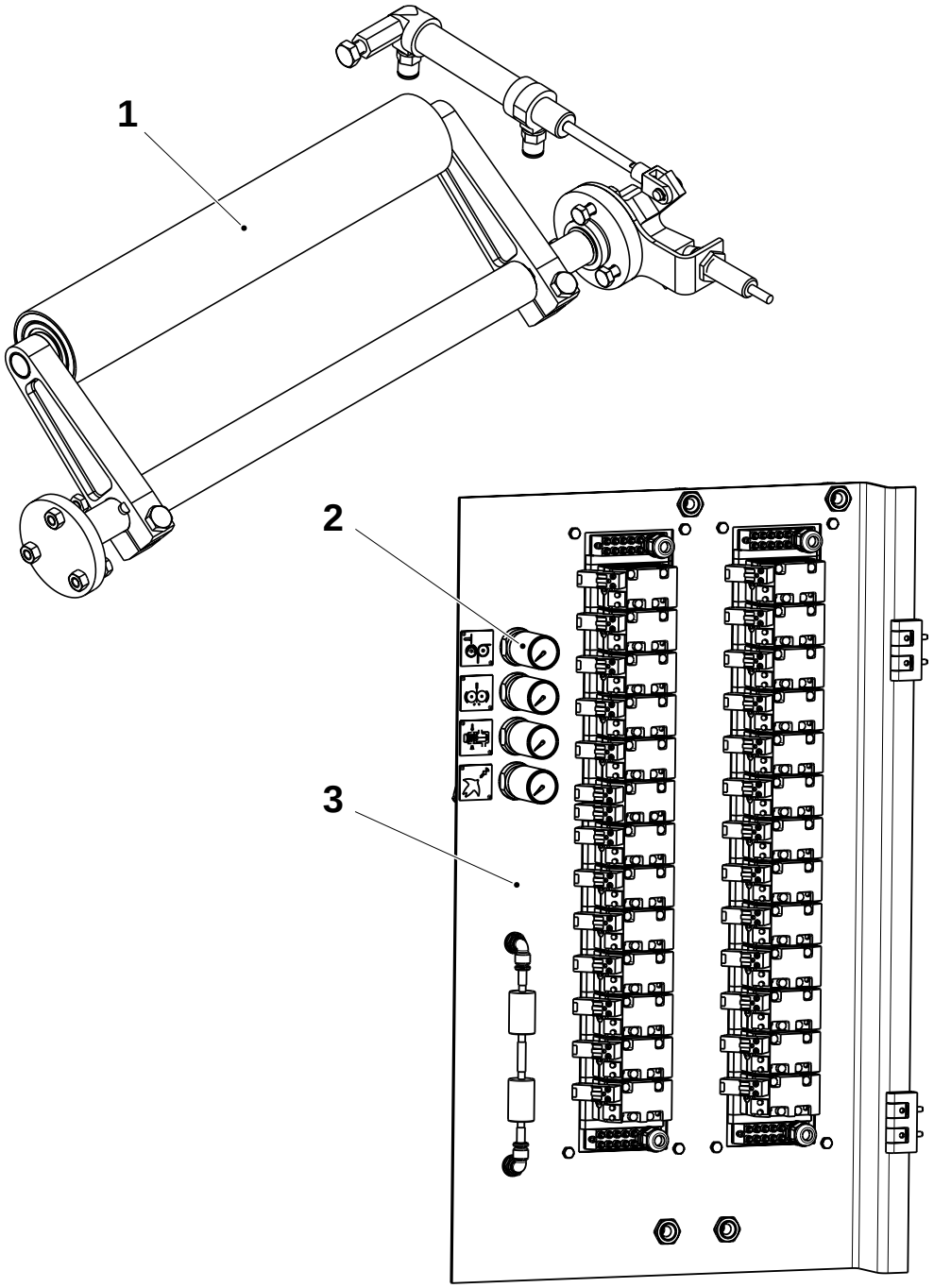

1 Pendulum roller
2 Pressure regulator
3 Pneumatic panel

1.1.13-3 Pendulum Roller - Change Bearings

SPC Reference	1195173-0300

a) Remove the clip (1) and disconnect the pneumatic cylinder (2).

b) Loosen the screw (3) and remove the lever (4).

c) On each side, remove the three screws and nuts (5), then remove the bearing cover (6).

d) Check the sealing ring (7). On each side, check the bushings (8) for wear or damage and change them as required.

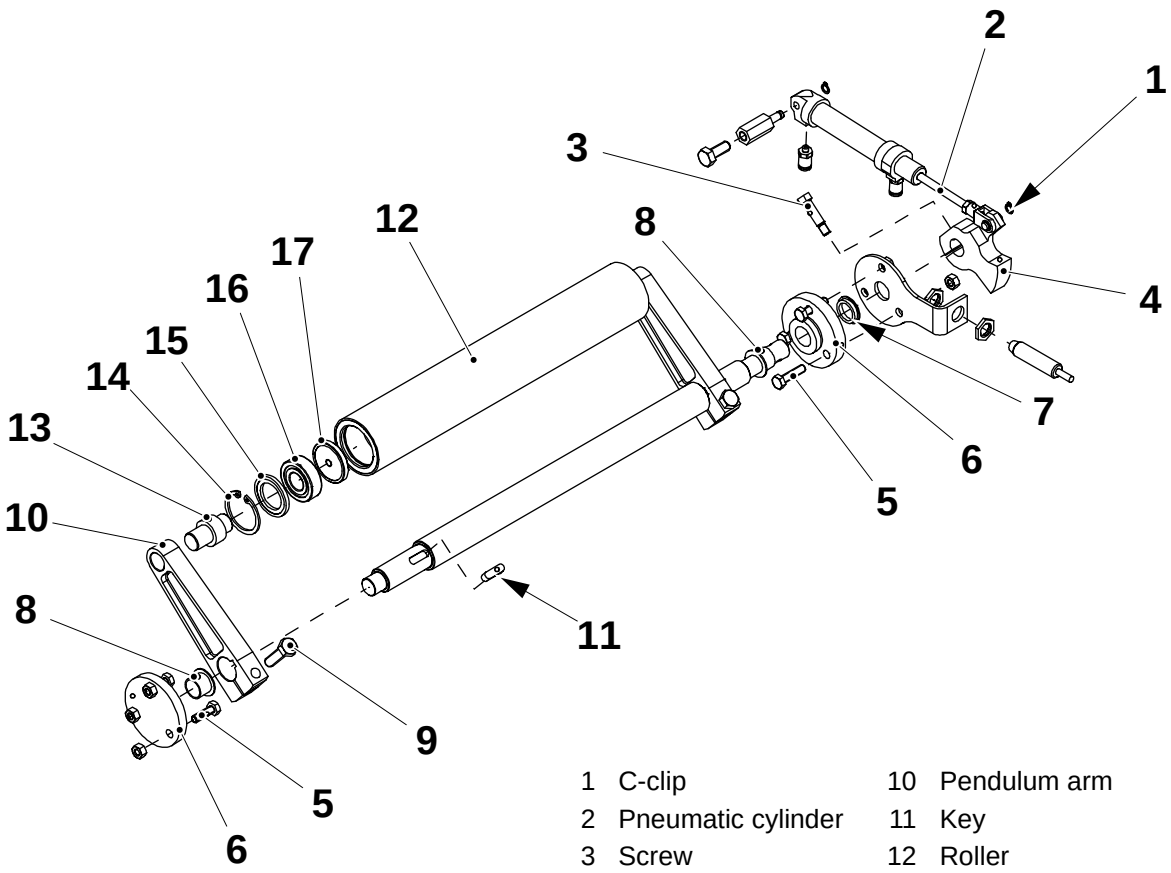

1	C-clip	10	Pendulum arm
2	Pneumatic cylinder	11	Key
3	Screw	12	Roller
4	Lever	13	Shaft
5	Screw	14	Retaining ring
6	Bearing cover	15	Washer
7	Sealing ring	16	Bearing
8	Bushings	17	Washer
9	Screw		

(Cont'd)

(Cont'd)

e) Remove the pendulum roller assembly.

f) Loosen the screw (9) and remove the pendulum arm (10). Retain the key (11) for later use.

g) Remove the roller (12). On each side of the roller, remove the shaft (13).

h) On each side of the roller, remove the retaining ring (14), washer (15), bearing (16) and washer (17).

i) Check the ball bearings (16) for wear or damage and change them as required.

j) Assemble in the reverse order.

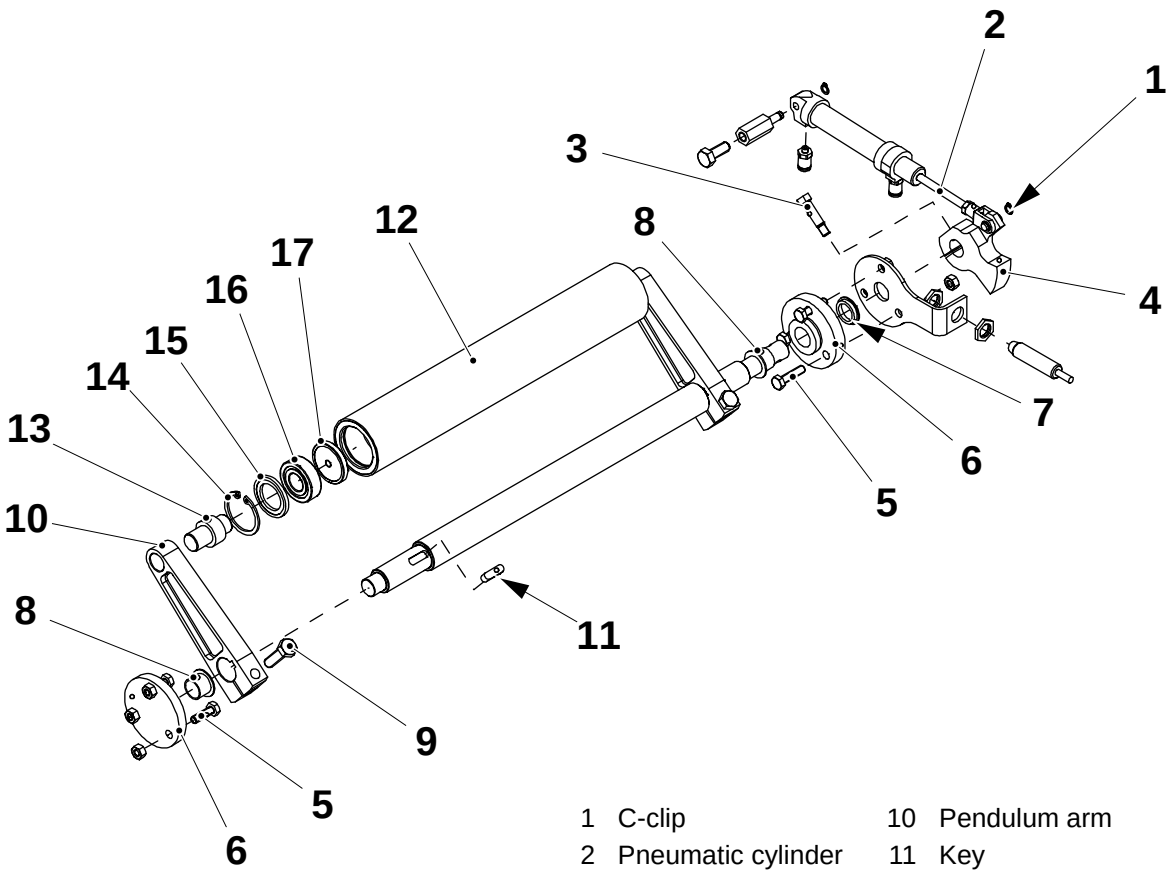

1	C-clip	10	Pendulum arm
2	Pneumatic cylinder	11	Key
3	Screw	12	Roller
4	Lever	13	Shaft
5	Screw	14	Retaining ring
6	Bearing cover	15	Washer
7	Sealing ring	16	Bearing
8	Bushings	17	Washer
9	Screw		

1.1.13-4 Pendulum Roller - Set Proximity Switch

Machine Status	Air ON Mains Power ON
SPC Reference	1195173-0300

a) Push down the lever (1) until it reaches its end position.

b) Check distance **A**. If incorrect, loosen the nut (2) and turn the connecting rod (3).

c) Tighten the nut (2).

d) Check distance **B**. If incorrect, slacken the nuts (4) and adjust the proximity switch (5). Then tighten the nuts (4).

e) Check the LED in the proximity switch (2) lights when the lever (5) is in its end position (lever fully counter-clockwise).

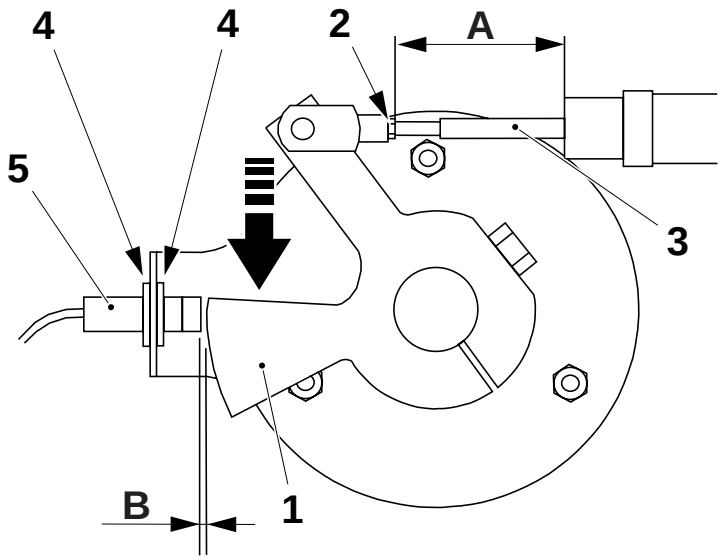

A = 57 ±1mm
B = 1.5 ±0.5mm

1 Lever
2 Nut
3 Connecting rod
4 Nut
5 Proximity switch

1.1.13-5 Pendulum Roller - Check Pneumatic Cylinder

SPC Reference	1195173-0300

Check the rod (1) and seal (2) for wear. If defective:

a) Remove the retaining ring (3) and disconnect the joint (4).

b) Remove the retaining ring (5). Label and disconnect the air lines (6) and (7).

c) Change the pneumatic cylinder.

d) Assemble in the reverse order, taking care to refit the air lines correctly.

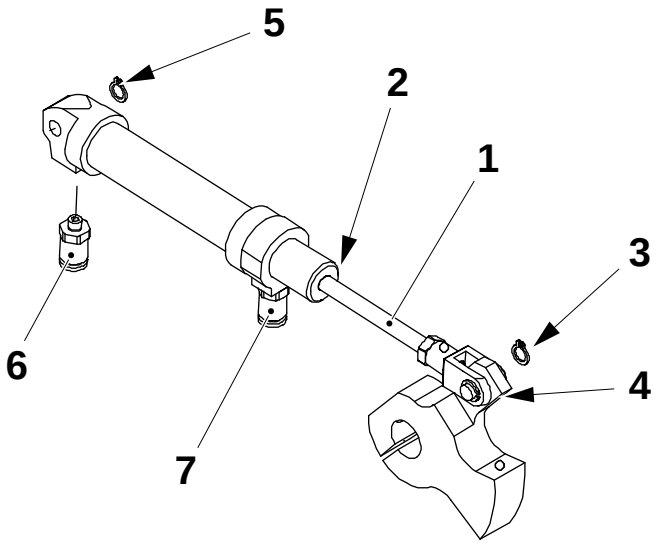

1 Rod
2 Seal
3 Retaining ring
4 Joint
5 Retaining ring
6 Air line
7 Air line

1.1.14 Calender Roller

1.1.14-1 Calender Roller - Check

SPC Reference	1334008-0200

WARNING
Hydrogen peroxide!
Follow the Safety precautions.

a) Check the roller rotates smoothly in both directions. Change bearings (2) as required. To do this, remove the roller, see 1.1.14-3 Calender Roller - Change Bushings and Bearings.

b) Check the pneumatic cylinder (3) is retracted.

c) Lift the roller (1) by hand and check the bushings (4) for wear or damage. Change as required, see 1.1.14-3 Calender Roller - Change Bushings and Bearings.

d) Check the roller moves freely backwards and forwards.

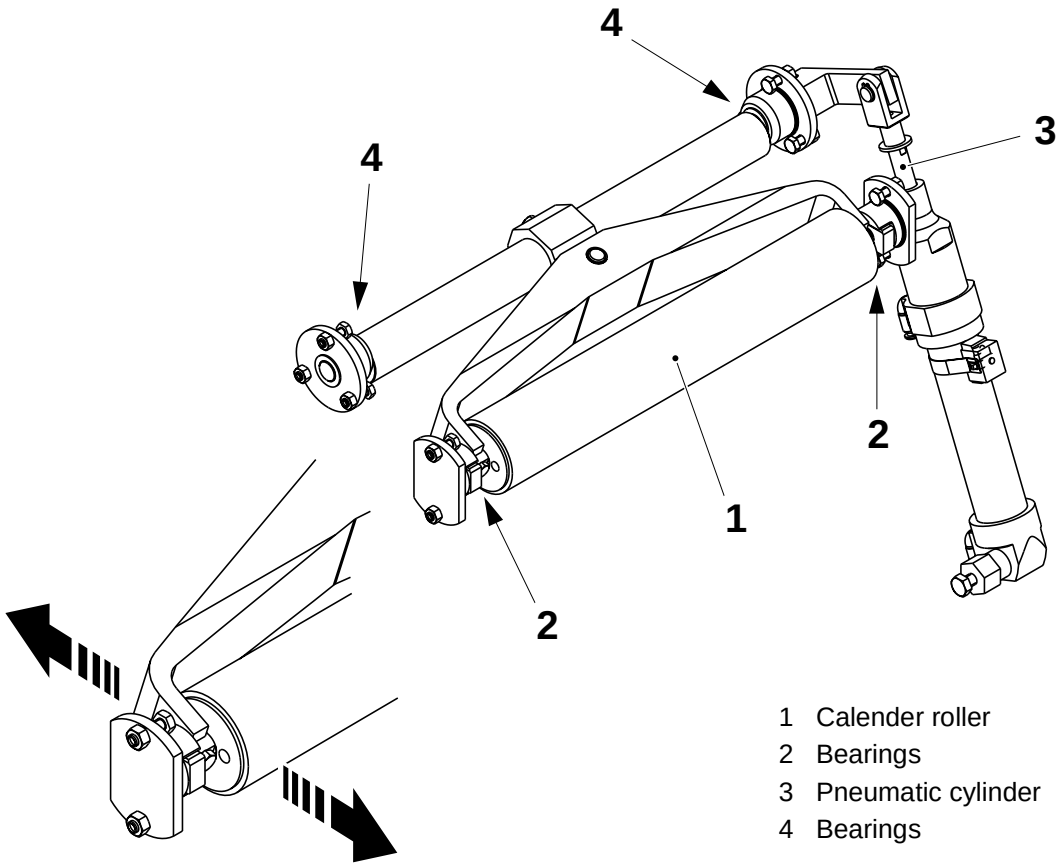

1 Calender roller
2 Bearings
3 Pneumatic cylinder
4 Bearings

1.1.14-2 Calender Roller - Set Pressure

Machine Status	Air ON
SPC Reference	1334008-0200

Set the air pressure for the calender roller (1) to the correct value, see 10.1 Technical Data, using the pressure regulator (2) on the superstructure pneumatic panel (3).

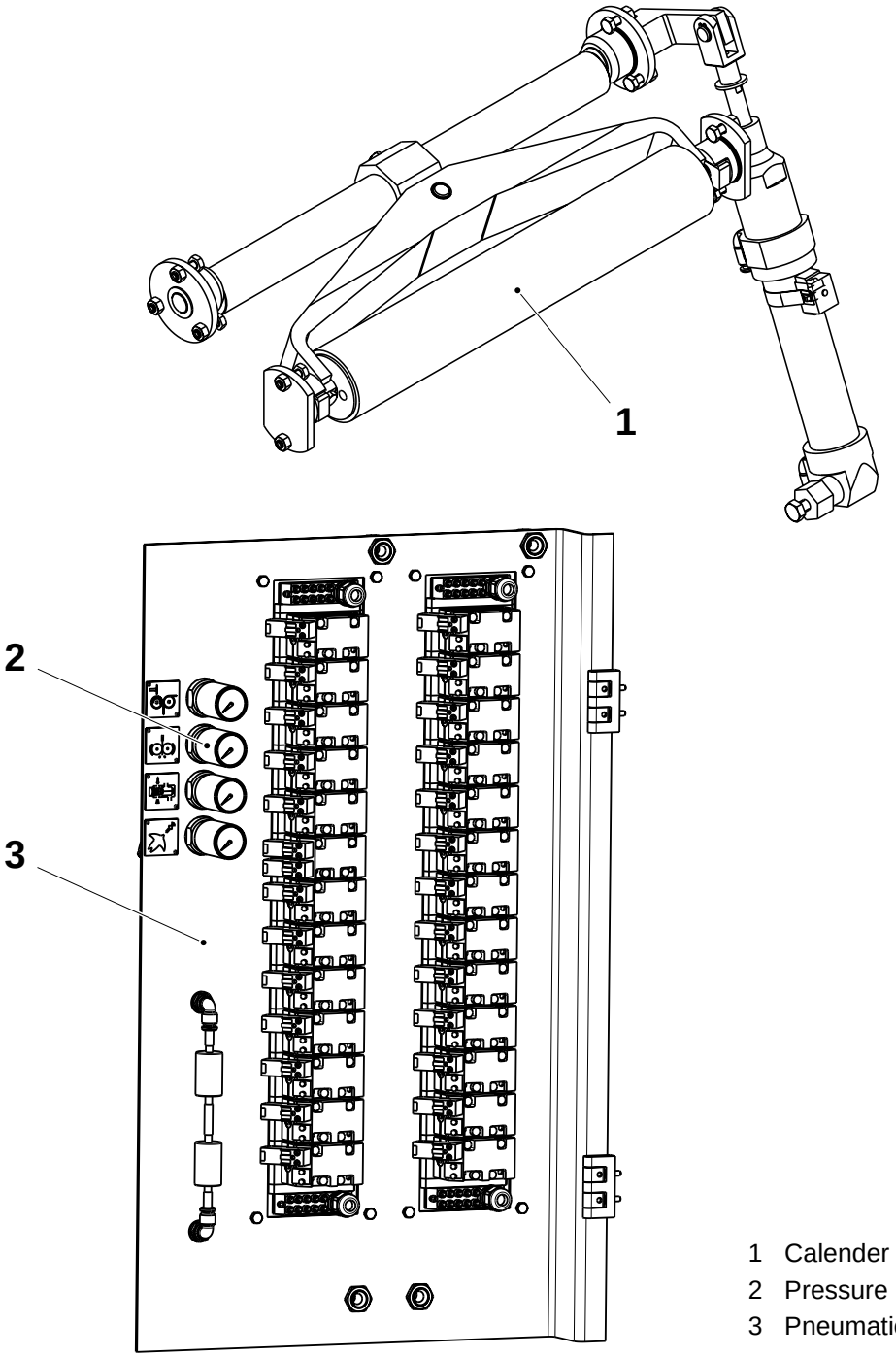

1 Calender roller
2 Pressure regulator
3 Pneumatic panel

1.1.14-3 Calender Roller - Change Bushings and Bearings

SPC Reference	1334008-0200

WARNING
Hydrogen peroxide!
Follow the Safety precautions.

a) Loosen the screw (1).

b) Remove the retaining ring (2) and the cylinder (3).

c) On each side, remove the screws and nuts (4), then remove the bearing covers (5). Retain the key (6) for later use.

d) On each side, check the bushings (7) and (8) for wear or damage and change them as required.

e) Remove the screw (9) and the shaft (10).

f) On each side, remove the screws and nuts (11), then remove the bearing covers (12).

Note! Do not drop the blocks (13).

g) Remove the roller assembly (14).

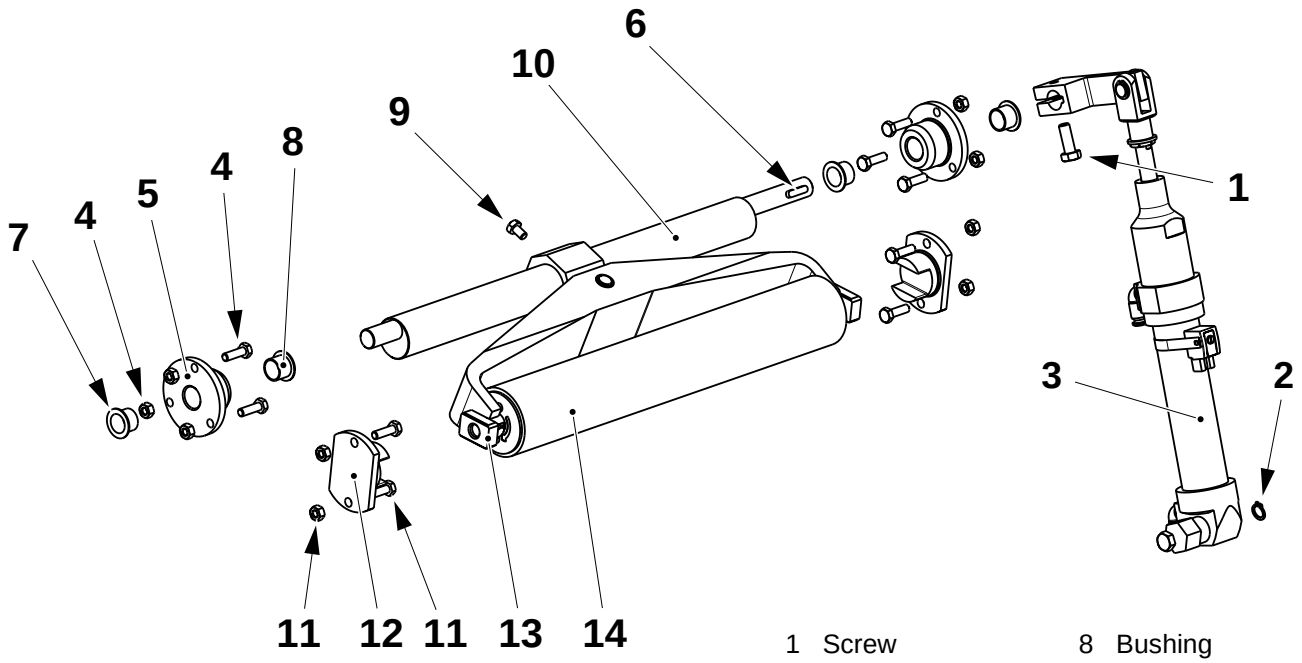

1	Screw	8	Bushing
2	Retaining ring	9	Screw
3	Cylinder	10	Shaft
4	Screw and nut	11	Screw and nut
5	Cover	12	Cover
6	Key	13	Block
7	Bushing	14	Roller assembly

(Cont'd)

(Cont'd)

h) Remove the screws (15) and the bracket (16).

i) On each side, remove:
   - the covers (17),
   - the shims (18),
   - the ball bearings (19),
   - the shims (20).

j) Check the ball bearings (19) for wear or damage and change them if necessary.

k) Assemble in the reverse order.

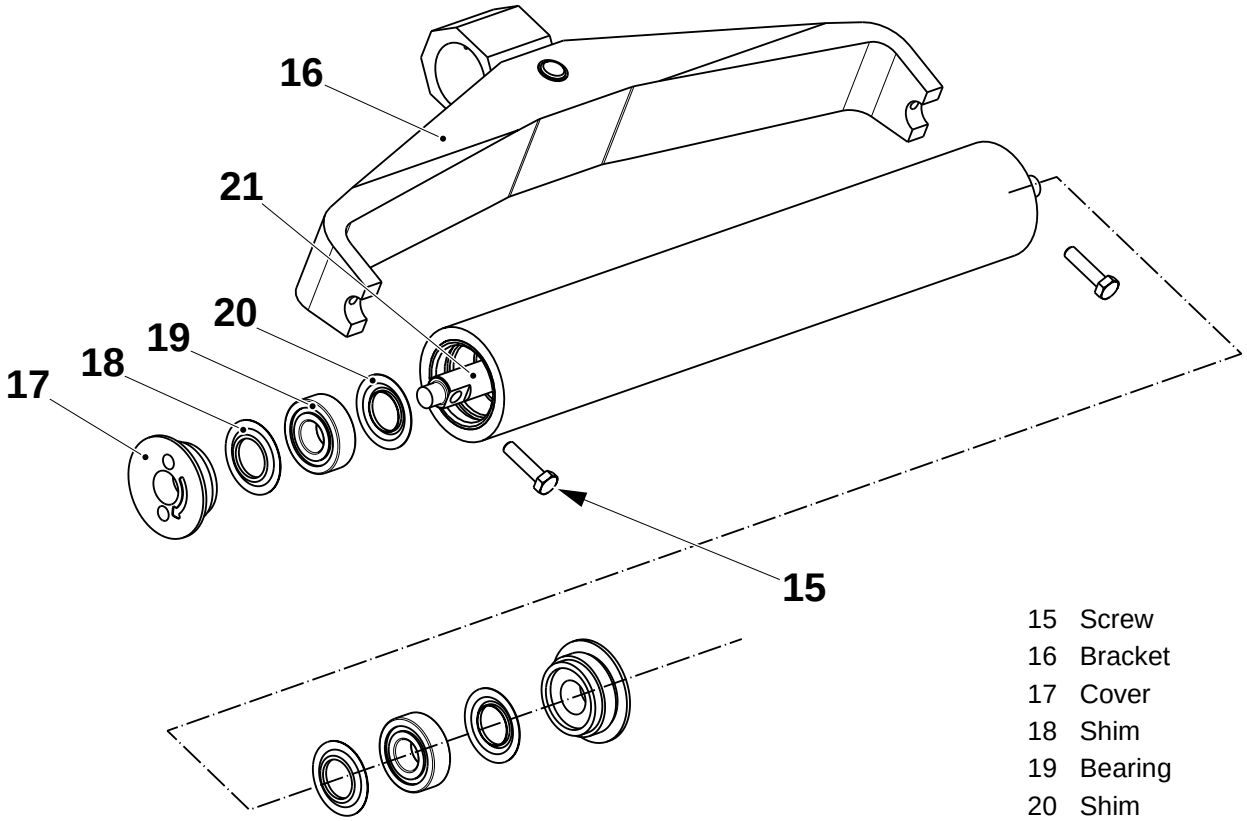

15 Screw
16 Bracket
17 Cover
18 Shim
19 Bearing
20 Shim

1.1.14-4 Calender Roller - Set Proximity Switch

Machine Status	Air ON Mains Power ON
SPC Reference	1334008-0200

a) Activate valve Y1502. Check the pneumatic cylinder (1) is fully extended.

b) Loosen the screw (2). Slide the proximity switch (3) up the pneumatic cylinder until the proximity switch LED lights.

c) Tighten the screw (2).

d) Deactivate then reactivate valve Y1502 again to check the proximity switch LED lights when the cylinder is fully extended.

e) Deactivate valve Y1502.

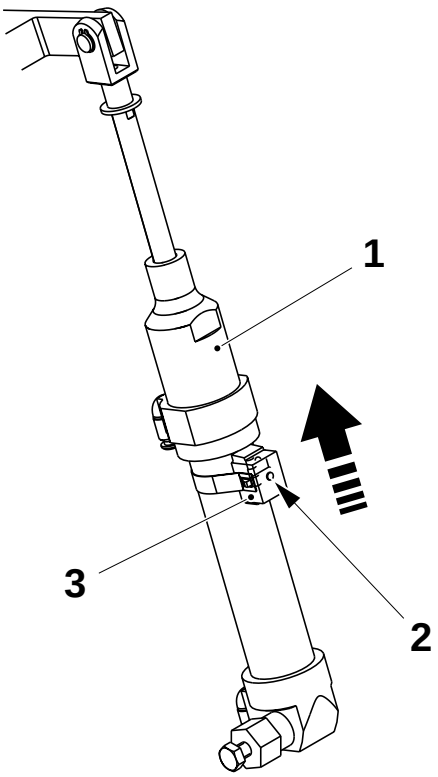

1 Pneumatic cylinder
2 Screw
3 Proximity switch

1.1.14-5 Calender Roller - Check Pneumatic Cylinder

SPC Reference	1334008-0200

Check the rod (1) and seal (2) for wear. If defective:

a) Loosen screw (3) and remove proximity switch (4).

b) Label and disconnect the air lines (5) and (6).

c) Unscrew the joint (7).

d) Remove the screw (8).

e) Change the pneumatic cylinder.

f) Assemble in the reverse order, taking care to refit the air lines correctly.

g) Set the proximity switch, see 1.1.14-4 Calender Roller - Set Proximity Switch.

h) Check for air leakages.

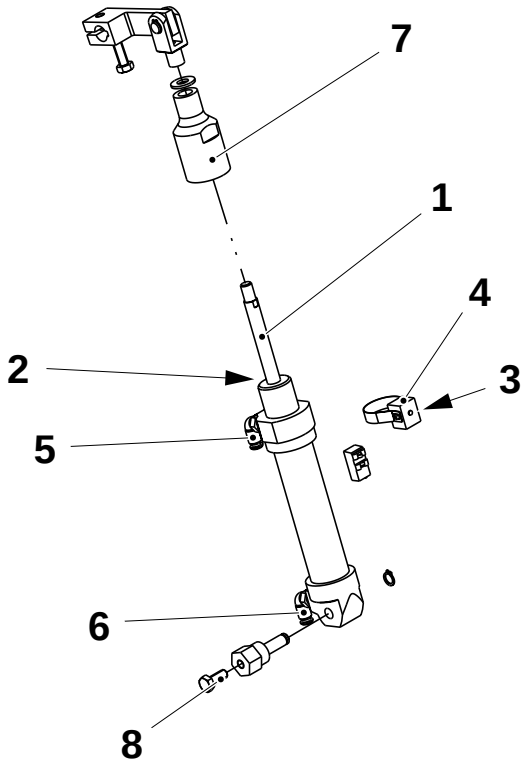

1 Rod
2 Seal
3 Screw
4 Proximity switch
5 Air line
6 Air line
7 Joint
8 Screw

1.1.15 Driven Calender Roller

1.1.15-1 Driven Calender Roller - Check

Machine Status	READY FOR PRODUCTION
SPC Reference	1347485-0100

WARNING
Hydrogen peroxide!
Follow the Safety precautions.

a) Step the machine up to PRODUCTION and check the drive motor (1) and gear (2) for abnormal noises. Change as required.

b) Step the machine down again and check the surface of the roller (3) for any marks. Change as required.

c) Check the roller (3) rotates smoothly in both directions. If necessary change the bearings as described in para. 1.1.15-2 Driven Calender Roller - Change Roller Bearings.

Checking During Production
Check there are no drops of hydrogen peroxide on the rollers, after the packaging material web has passed through.

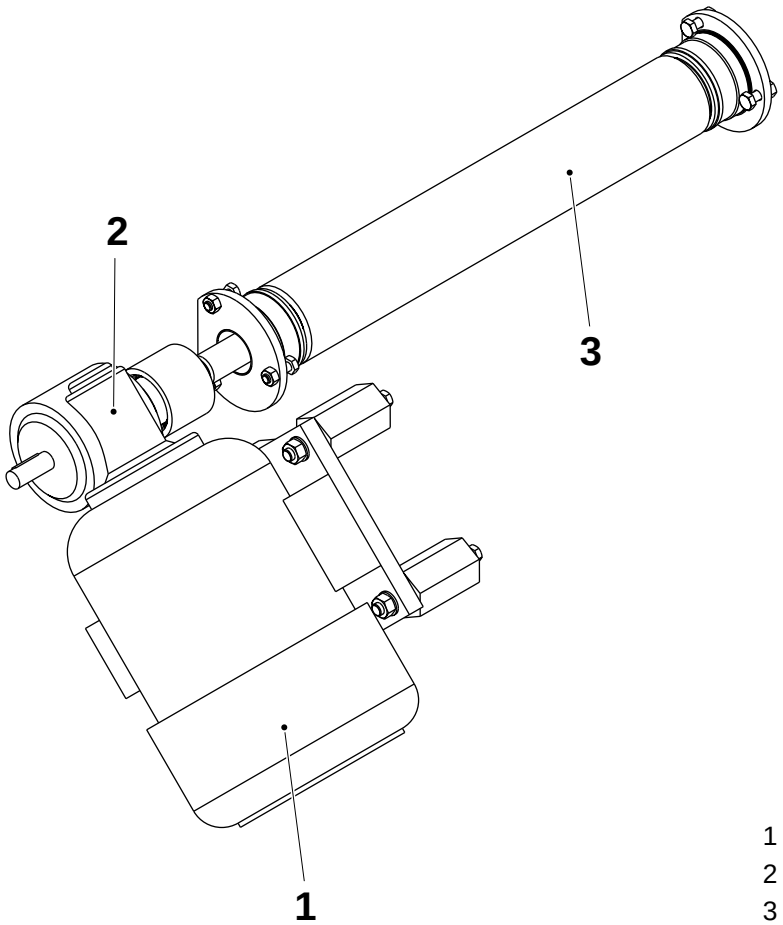

1 Drive motor
2 Gear motor
3 Roller

1.1.15-2 Driven Calender Roller - Change Roller Bearings

SPC Reference	1347485-0100

WARNING
Hydrogen peroxide!
Follow the Safety precautions.

a) Remove the screw (1) from the shaft coupling (2).
b) Remove the nuts and washers (3) holding the motor (4) in position.
c) Separate the motor (4) from the coupling (2).
d) Retain the key (5) for the later use.
e) Open the top compartment hatch.
f) At both sides, remove the screws and nuts (6) from the bearing housing (7).
g) Pull out the bearing housing (7).
h) Remove the seal (8), bearing (9) and seal (10).
i) Fit new bearings (9) and seals (8 & 10).

Note! Before assembly, apply PTFE grease, code N; see 10.3 Consumables, to the bearings (9).

j) Assemble in reverse order.

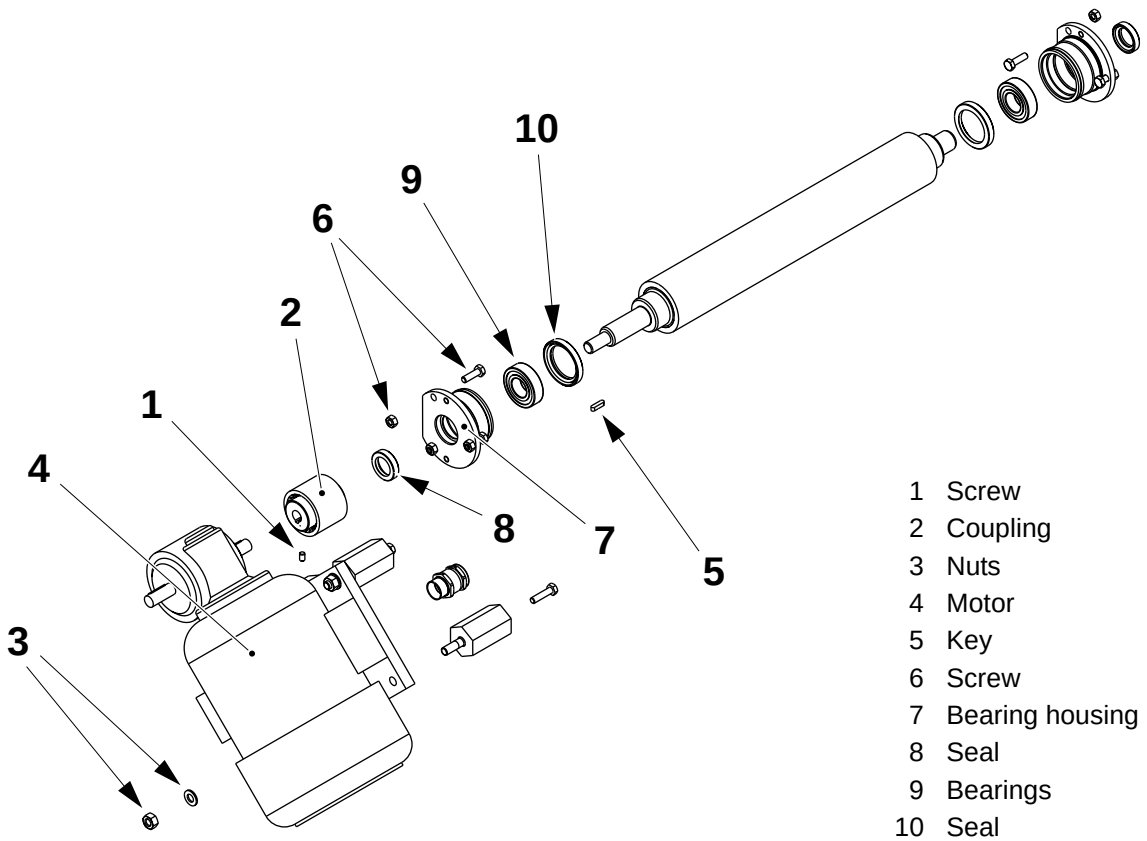

1 Screw
2 Coupling
3 Nuts
4 Motor
5 Key
6 Screw
7 Bearing housing
8 Seal
9 Bearings
10 Seal

1.1.16 Lid

1.1.16-1 Lid - Check

SPC Reference	2517372-0100

Remove the cover (1) and check the lid (2) moves freely.

Check the lid (2) seals correctly when closed.

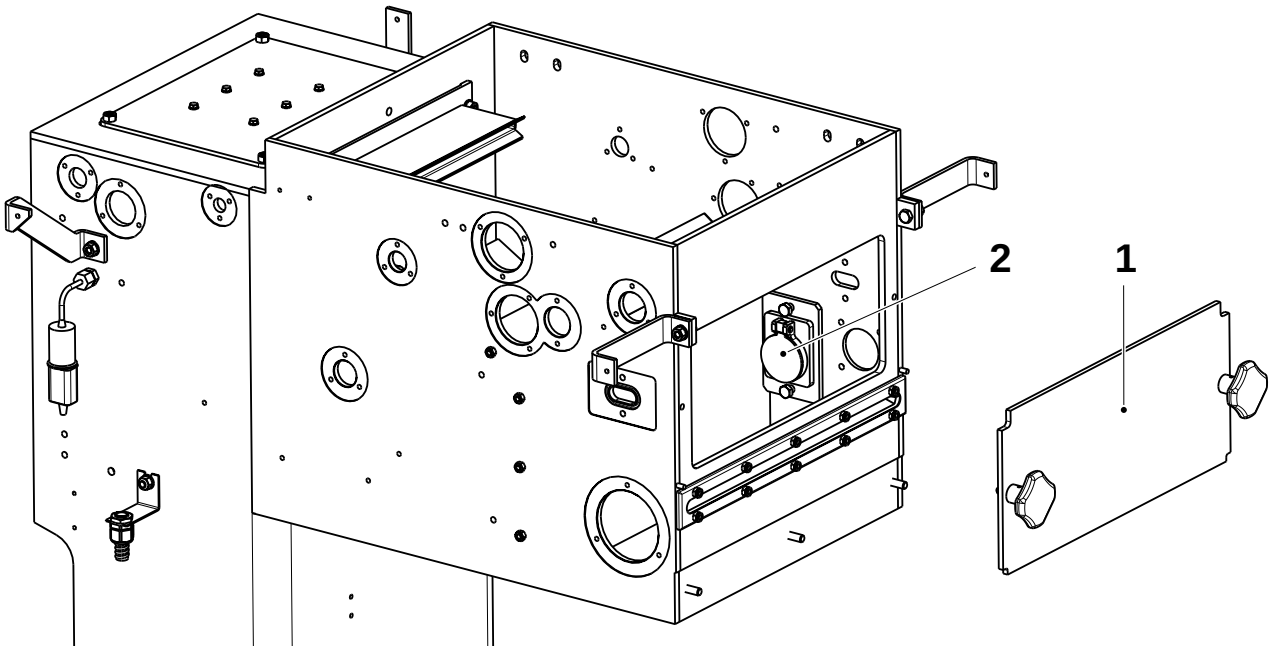

1 Cover
2 Lid

1.1.17 LS Inductor

1.1.17-1 LS Inductor - Change, Set and Fix

SPC Reference	1195174-0300

LS Inductor - Change

a) Remove the screws (1) and the plate (2) from the busbar clamp (3).

b) Remove the screws (4) and disconnect the busbar (5) from the inductor (6) taking care of the gasket (7).

c) Remove the nuts (8) and the inductor (6).

d) Fit new inductor in reverse order to above.

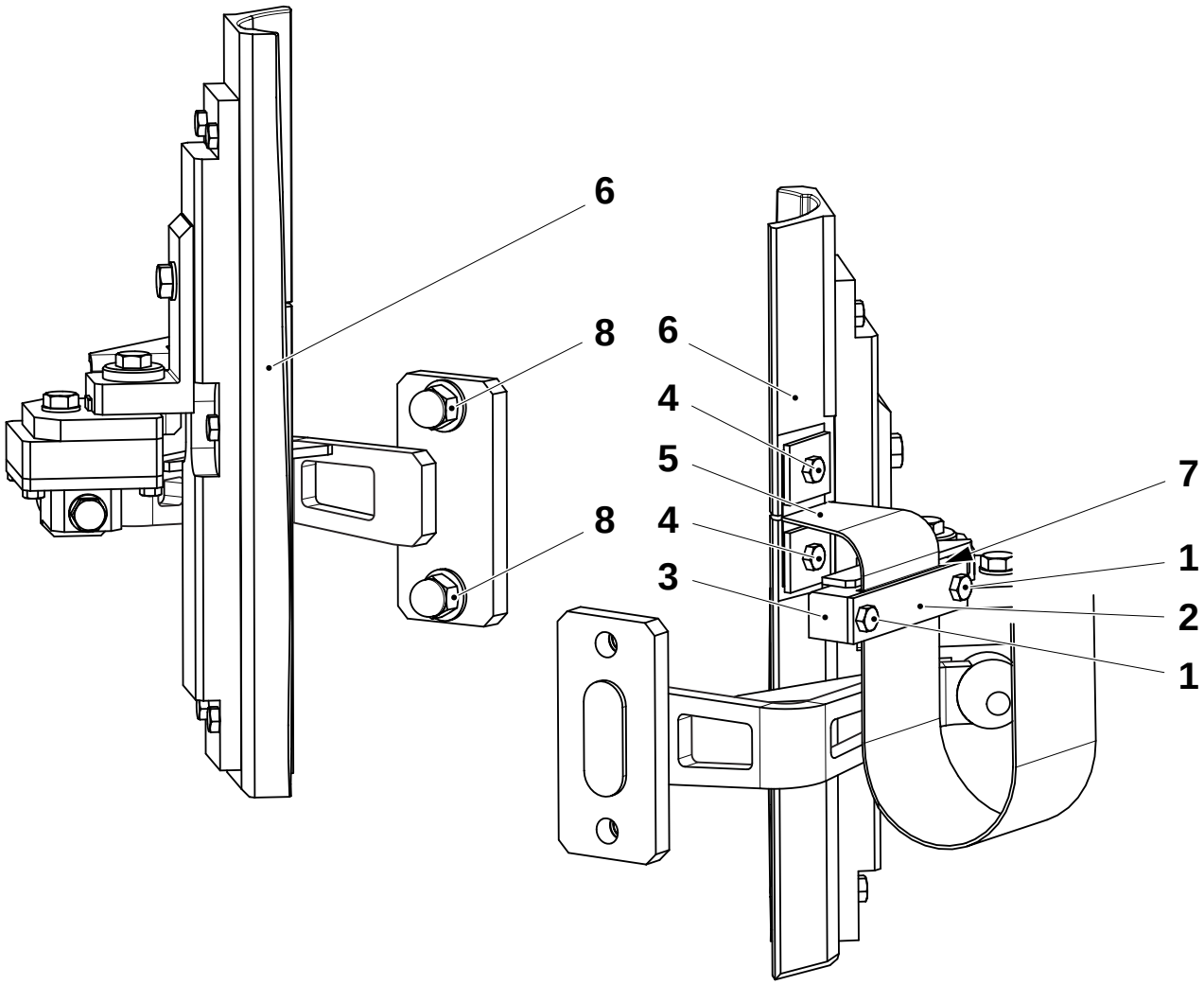

1 Screw
2 Plate
3 Busbar clamp
4 Screw
5 Busbar
6 Inductor
7 Gasket
8 Nut

(Cont'd)

(Cont'd)

LS Inductor - Set (Basic Setting)

a) Loosen the screws (1), (2) and (3).

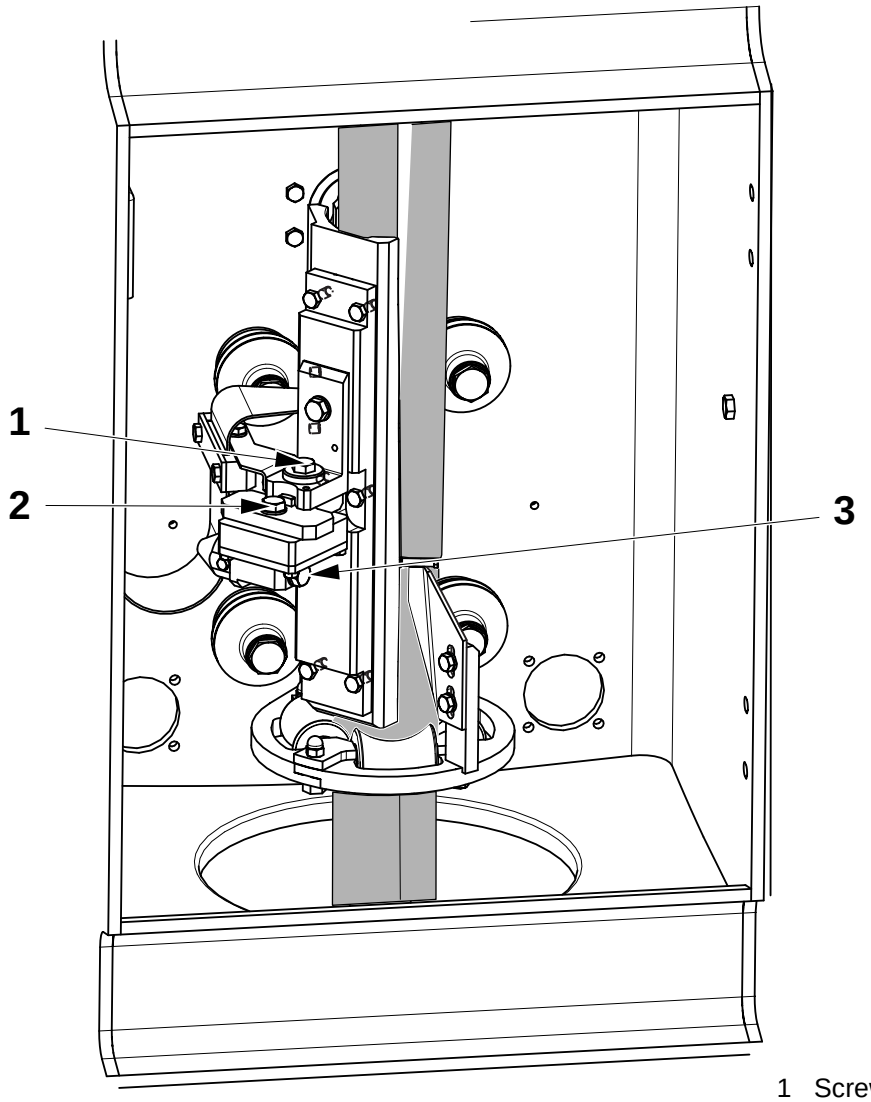

1 Screw
2 Screw
3 Screw

(Cont'd)

(Cont'd)

b) Move the inductor (4) so that:

- the packaging material (5) is distance **A** from the inductor at the point shown and distance **B** at the other point indicated. This is the preliminary setting.
- the edge of the packaging material (6) runs parallel with the edge of the inductor (4) at points **C** and **D**.
- the surface of the packaging material (5) is parallel with the surface of the inductor (4).

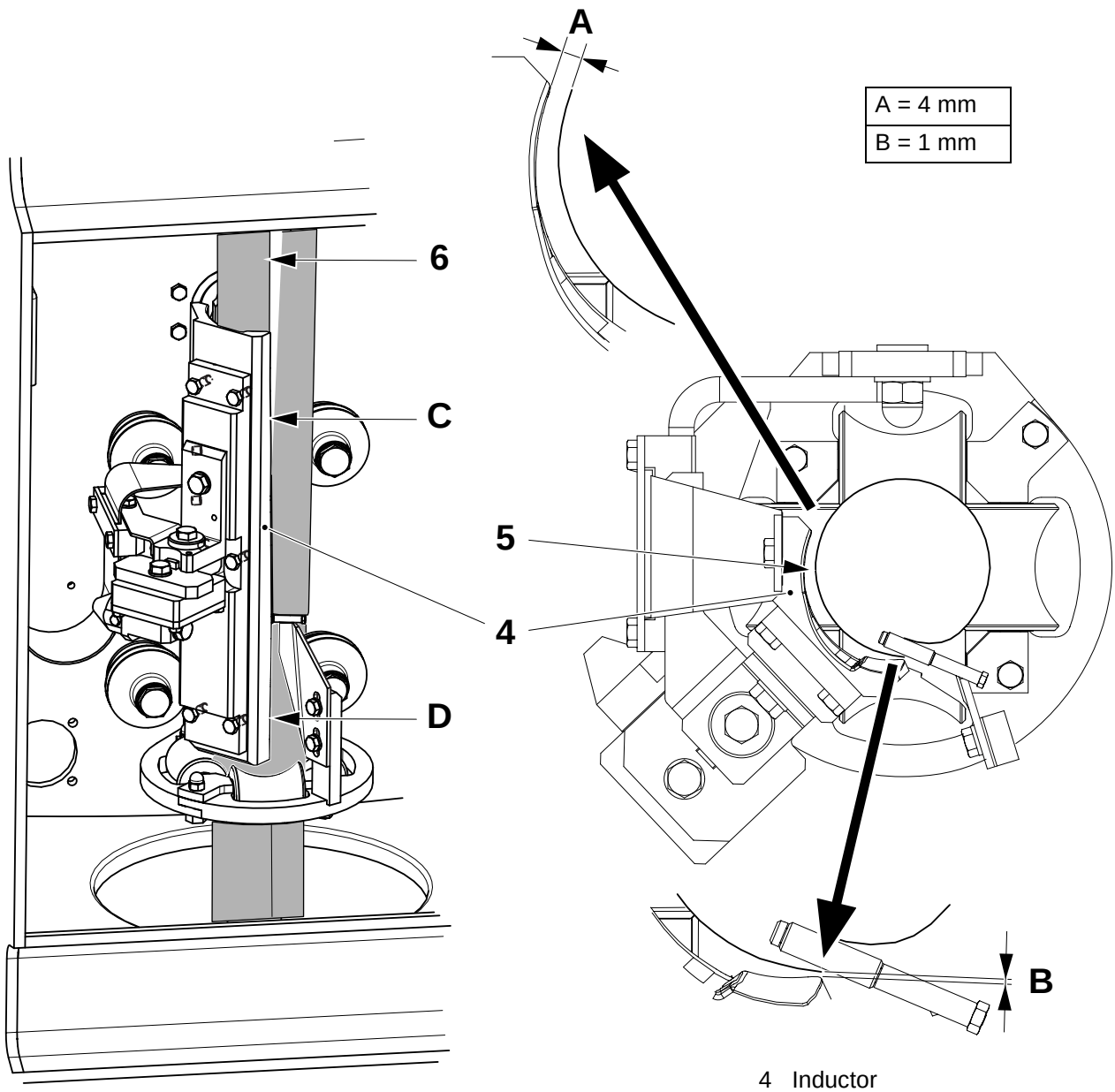

4 Inductor
5 Packaging material
6 Edge of packaging material

(Cont'd)

(Cont'd)

c) Without moving the inductor (4), tighten the screws (1), (2) and (3).

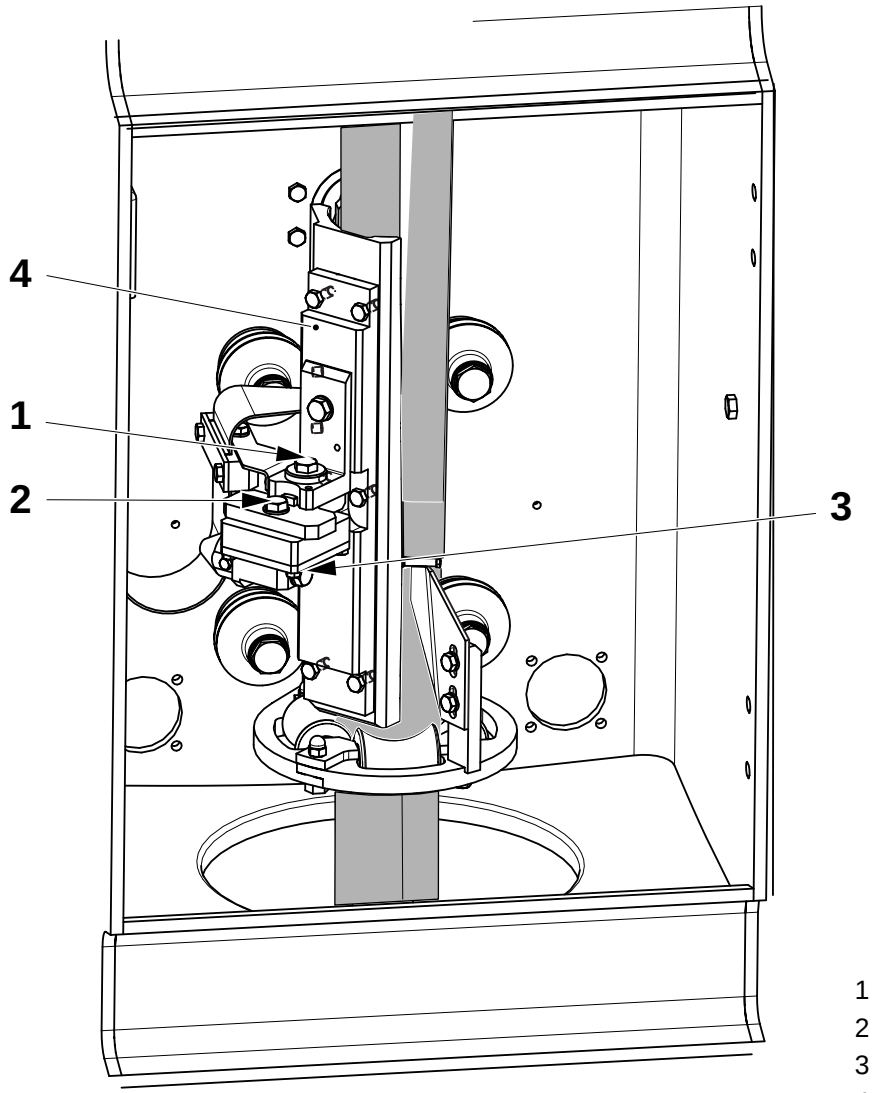

1 Screw
2 Screw
3 Screw
4 Inductor

(Cont'd)

(Cont'd)

LS Inductor - Set (Fine Setting)
Note! It is important the LS strip is applied correctly to the packaging and the packaging material is aligned correctly before adjustments are made to the LS inductor.

a) At the electrical cabinet, turn the SERVICE/PRODUCTION key to the SERVICE position.

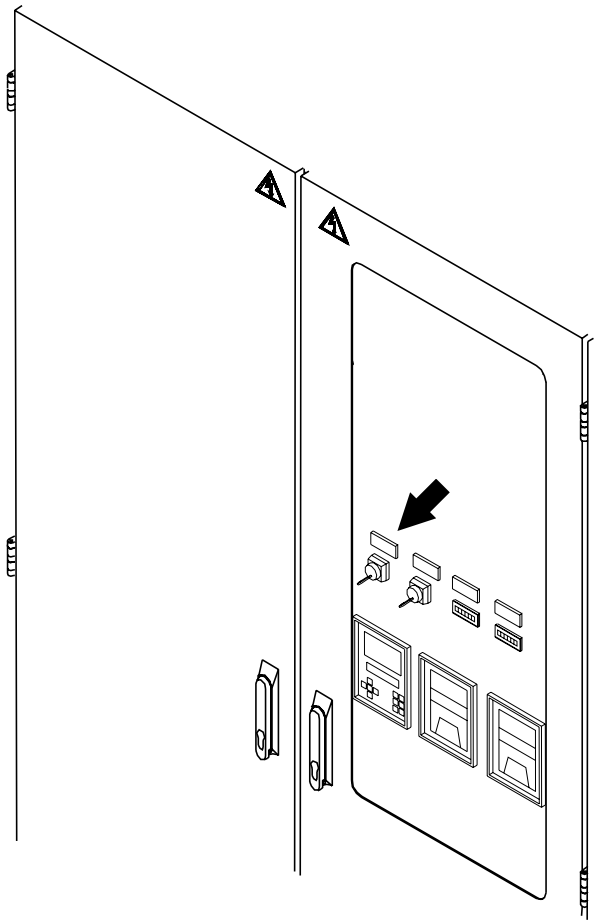

(Cont'd)

(Cont'd)

b) Step up the machine to TIGHT TUBE.

c) Check the LS strip is applied symmetrically **A**, if not see 8.2.4-2 Strip Guide - Set.

d) Check the package material overlap **B** is correct, if not see 1.1.4-3 Lower Forming Ring - Set Overlap.

Package	Nominal overlap B (mm)
TBA 200 B - TBA 250 B	8.0 ±1 mm
TBA 200 M - TBA 250 S	6.0 ±1 mm
TBA 200 S	4.0 ±0.5 mm

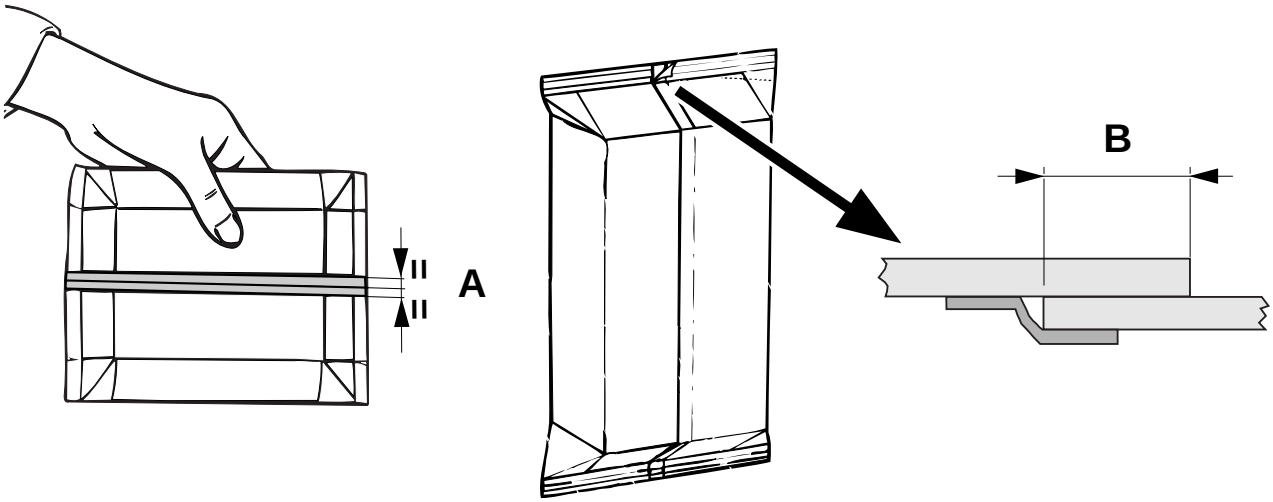

(Cont'd)

(Cont'd)

e) Using the TPOP, adjust the position of the moveable forming ring until the meters (1) and (2) indicate it is in the “zero” position.

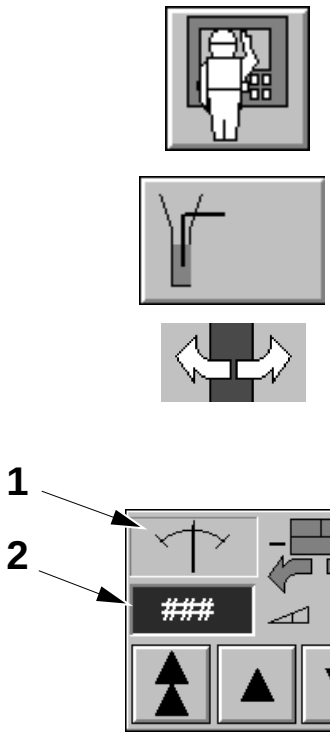

1 Meter
2 Meter

(Cont'd)

(Cont'd)

f) Loosen the grub screw (3) in the web guide (4) and move the web guide until the package creases are in the correct position as shown in row **C**. The packages in row **D** have incorrect package crease positions.

g) Tighten the grub screw (3) without moving the web guide (4).

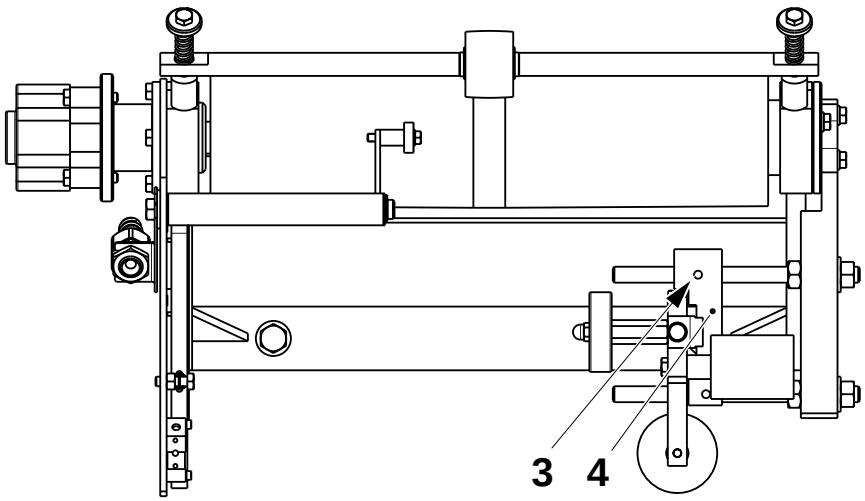

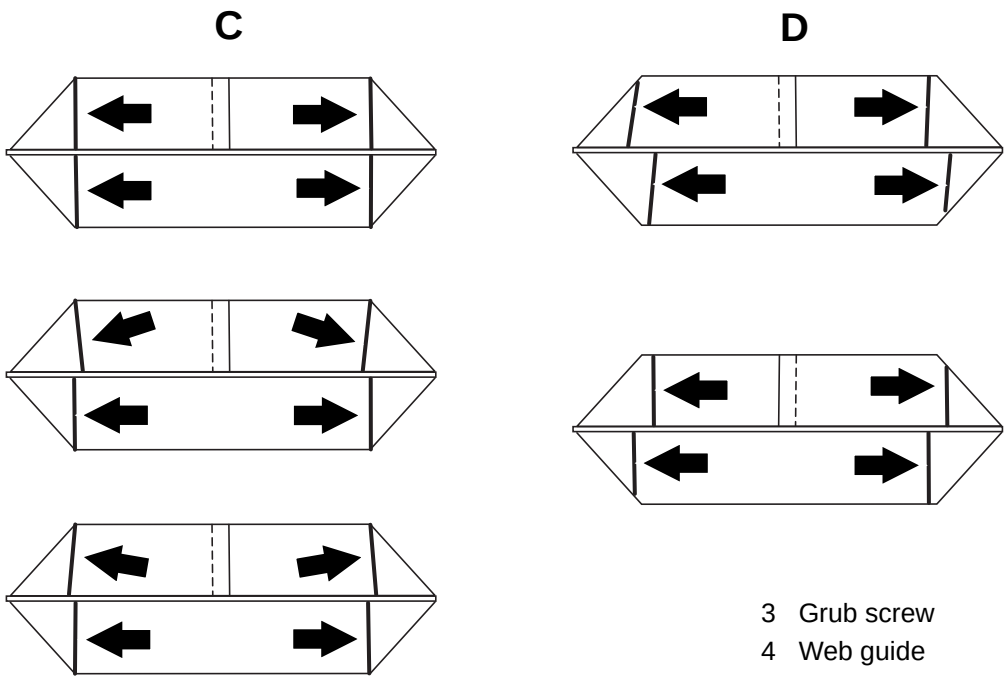

3 Grub screw
4 Web guide

(Cont'd)

(Cont'd)

h) Step down the machine to STEP ZERO.

i) At the electrical cabinet, connect a PC to the RS 232 connection of TMCC2 A421 (Longitudinal Sealing Monitoring).

j) Set up the PC to set up RS232 communications, see 9.2.1-2 TMCC2 Controller - Set Communication.

k) Follow the instructions in 9.2.1-1 TMCC2 Controller - Function Description TMCC2 Card A421 (Longitudinal Sealing Monitoring) to read the LS sealing data.

Note! The machine should be run with the door in front of the inductor open.

l) Step the machine up to TIGHT TUBE.

m) Loosen the screws (5), (6) and (7) enough to allow the inductor (8) to be moved.

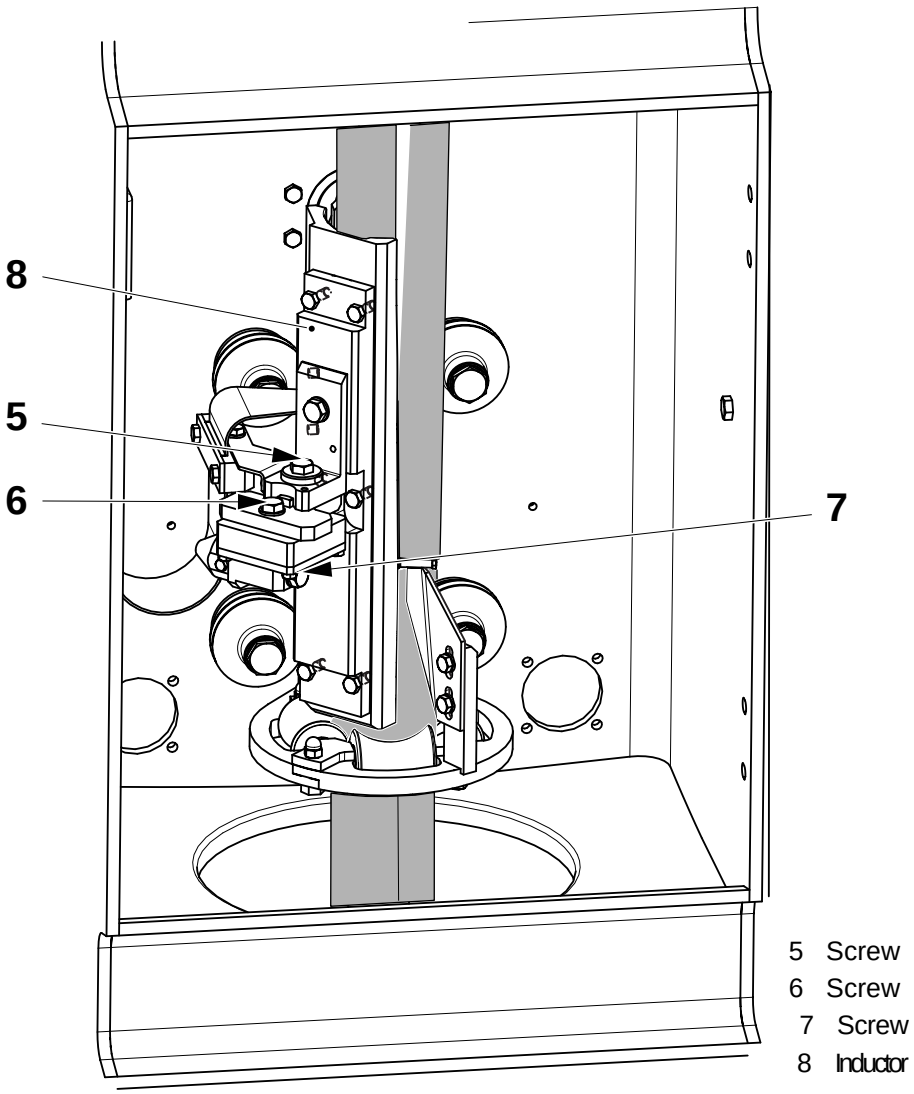

(Cont'd)

(Cont'd)

n) Move the inductor until the correct sealing parameters are obtained and then lock the inductor in position. The table below shows the limits for the two important parameters.

Phase angle (Degrees) (Ph)	Impedance (Ohms) (Z)
0 ±20	50 ±10

o) Step the machine up to PRODUCTION.

p) Check the sealing data again.

q) If the values are worse, repeat steps m) and n).

r) Step the machine down to STEP 0.

s) At the electrical cabinet, turn the SERVICE/PRODUCTION key to the PRODUCTION position.

t) Step the machine up to PRODUCTION.

u) Check the sealing data again. If the results are worse, step the machine down to STEP ZERO.

v) Move the inductor a little and repeat steps t) and u) until the correct sealing data is obtained.

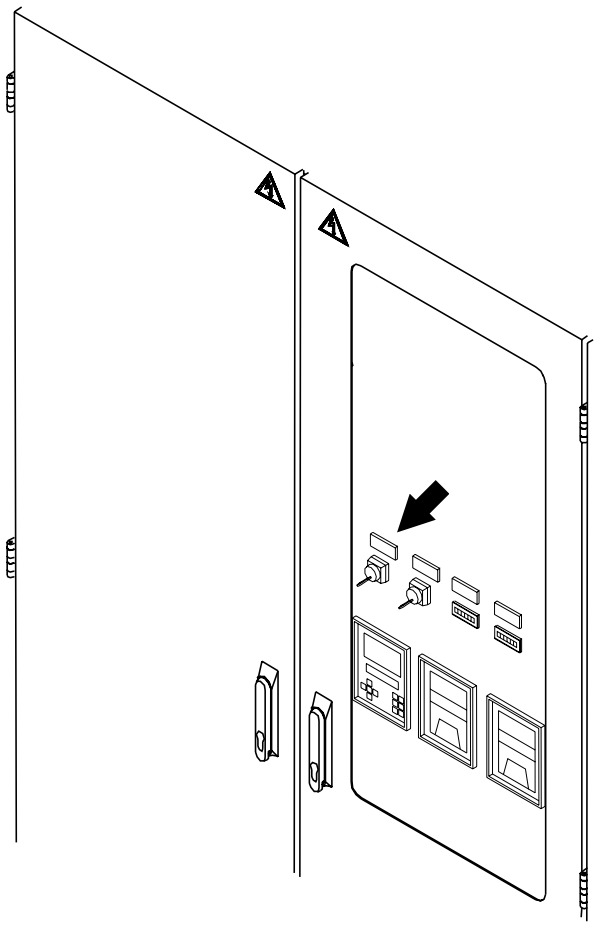

LS Inductor - Fix

CAUTION

Do not drill through the insulator into the inductor.

a) Using the hole (1) in the bracket (2) as a guide, drill a hole Ø 4 mm. The total depth of the hole must be 15.0-15.2 mm.

Note! Take care not to damage the screw thread in the hole (3) when drilling the hole in the holder (4).

b) Using the hole (3) in the holder (4) as a guide, drill a hole Ø 3 mm. The total depth of the hole **must be not more** than 10 mm deep.

c) Using the hole (5) in the bracket (2) as a guide, drill a hole Ø 4 mm in the plates (6) and (6). The hole should have a depth of 33.0-33.2 mm.

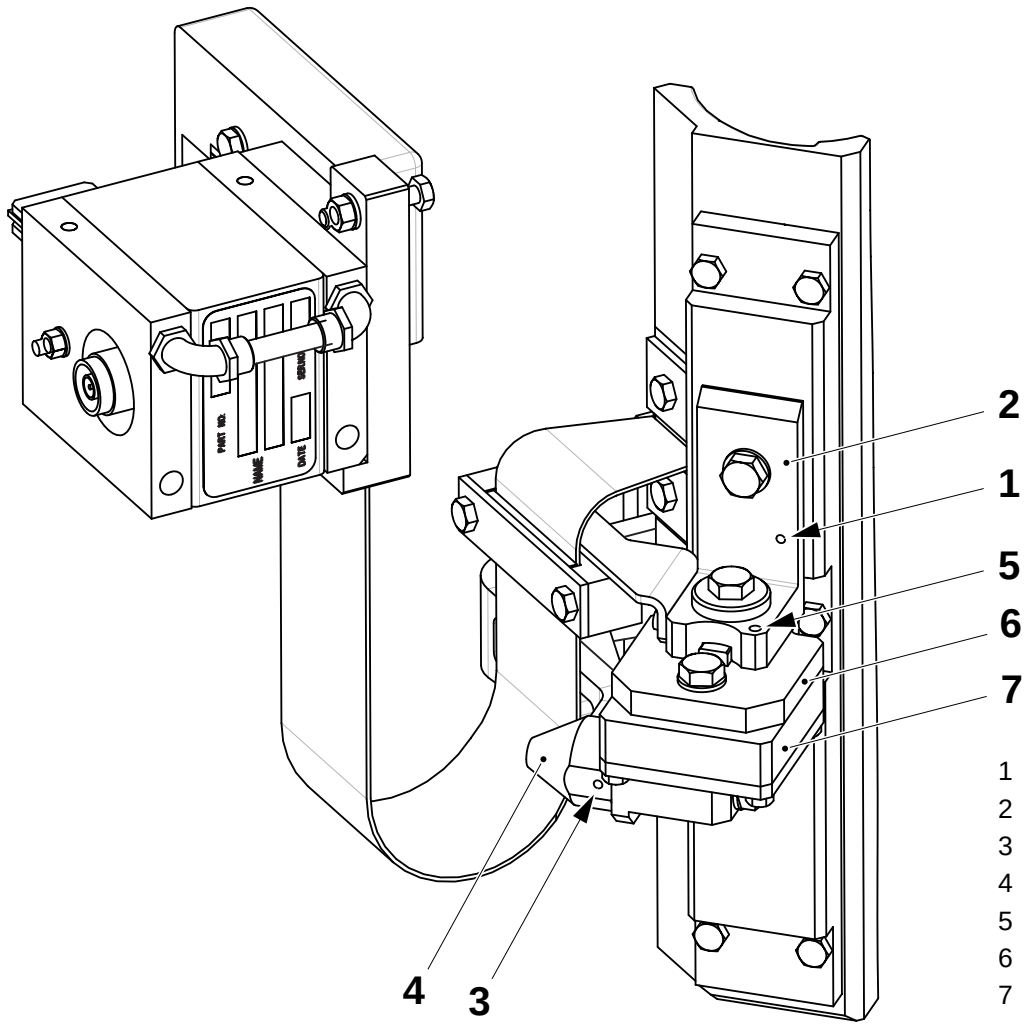

1 Hole
2 Bracket
3 Hole
4 Holder
5 Hole
6 Plate
7 Plate

(Cont'd)

(Cont'd)

d) Insert the pins (8) and (9).

e) Insert and tighten the screw (10).

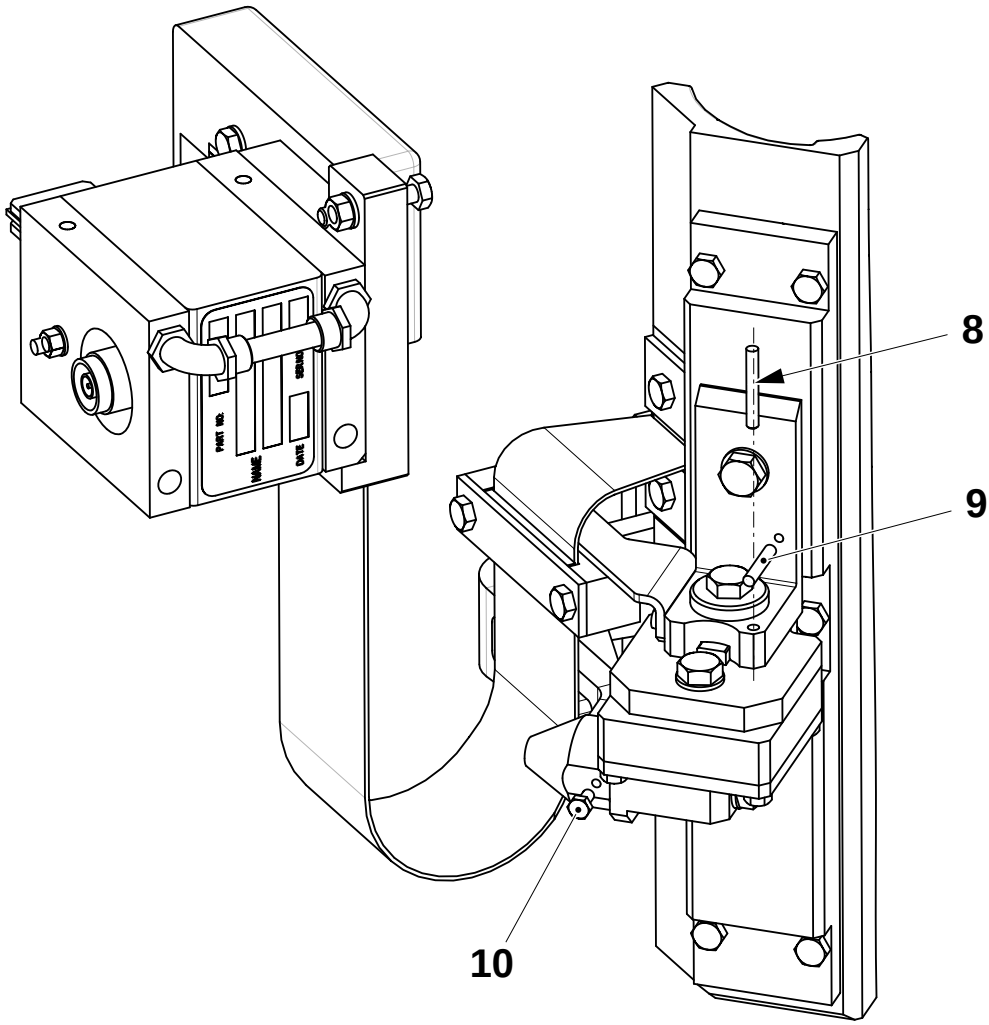

8 Pin
9 Pin
10 Screw

1.2 Filling System

SPC Reference	577103-0300

1.2-1 Filling System - Description

SPC Reference	577103-0300

Level Probe

The level probe (1) uses the conductivity of the product to determine the level inside the paper tube and transmit a signal to the PLC.

The electrical signal is converted to a compressed air signal in an IP transducer (2), which regulates the air pressure to the regulating valve (3), keeping the product flow constant even if the product viscosity changes.

A leakage detector (4) detects leaks in the diaphragms of the regulating valve.

Change the diaphragms if the alarm lights.

See also 1.2.3-1 Flow Regulator - Overhaul Regulating Valve.

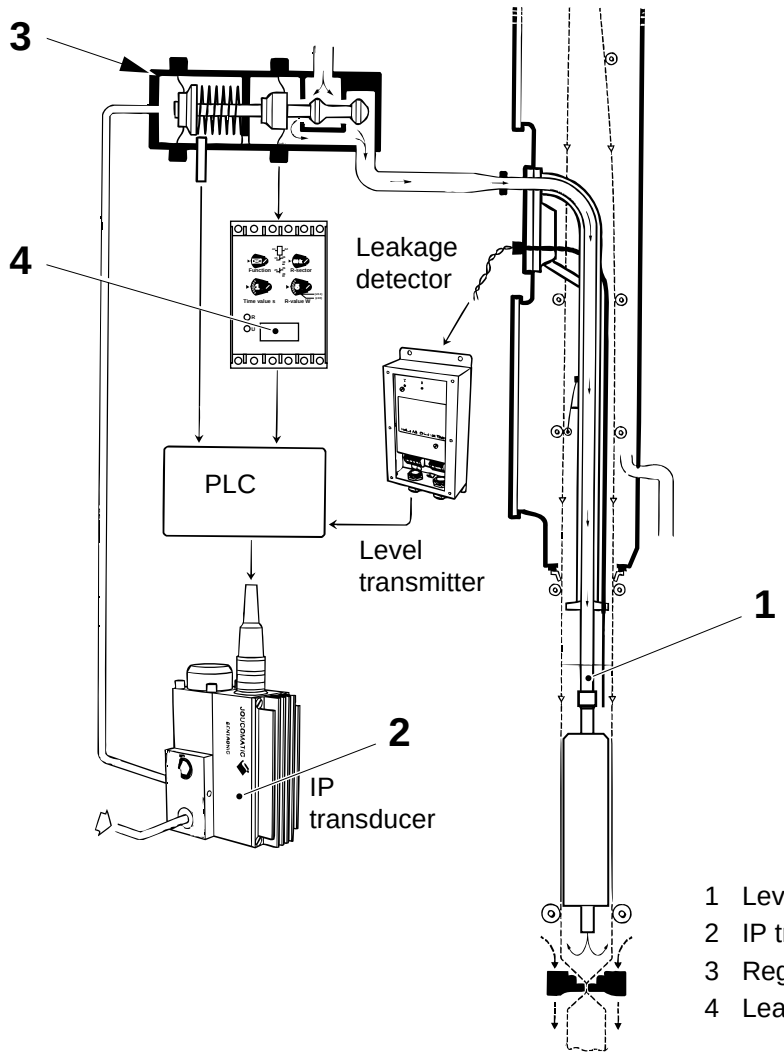

(Cont'd)

(Cont'd)

Float

The Magnetic level detector (1) uses the position of the float (2) to determine the level of product inside the paper tube and transmits a signal to the PLC.

The electrical signal is converted to a compressed air signal in an IP transducer (3), which regulates the air pressure to the regulating valve (4) to keep the product flow constant even if the product pressure changes.

A leakage detector (5) detects leaks in the diaphragms of the regulating valve.

Change the diaphragms if the alarm lights.

See also 1.2.3-1 Flow Regulator - Overhaul Regulating Valve.

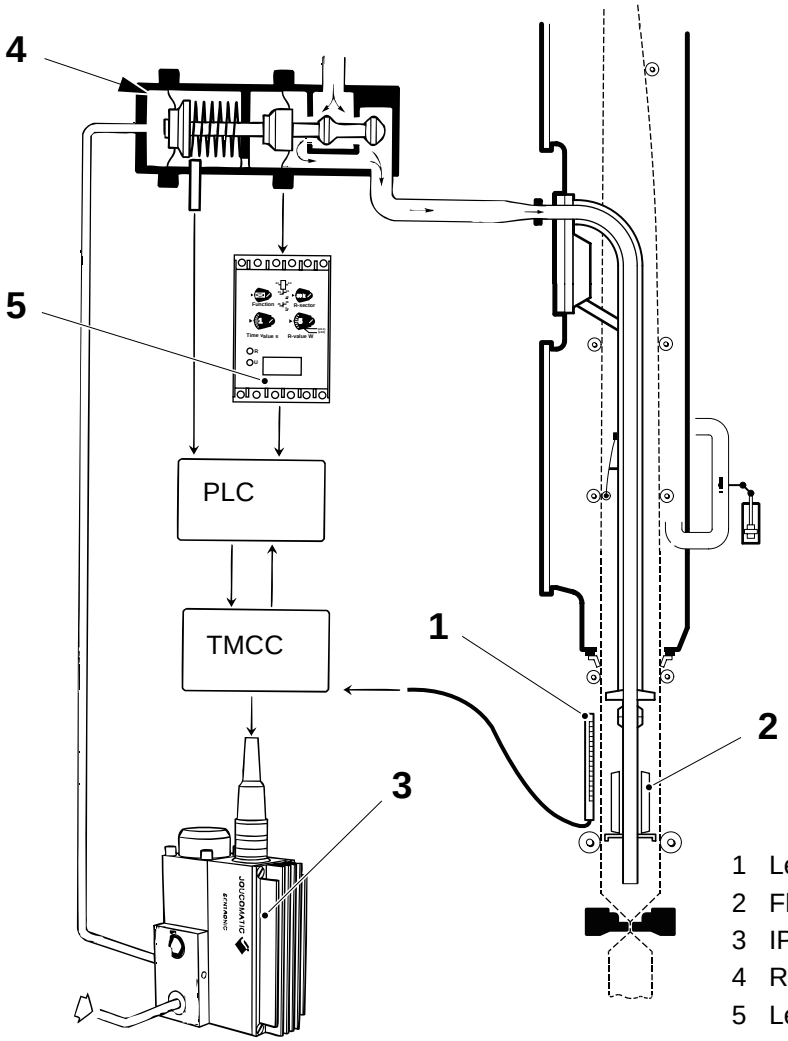

1 Level detector
2 Float
3 IP transducer
4 Regulating valve
5 Leakage detector

1.2.1 Cleaning Sleeve

1.2.1-1 Cleaning Sleeve - Check Gasket

SPC Reference	
- Level Probe	1498673-0200
- Float	2540802-0100

WARNING
Hydrogen Peroxide!
Follow the Safety precautions.

Level Probe

a) Remove the screws securing the pipe (1) to the valve (2).
b) Check the gasket (3).
c) Remove the screws securing the pipe (4) and (5) to the pipe (6).
d) Check the gaskets (7) and (8).
e) At both ends of the valve (9), remove the screws holding the valve in position.
f) Check the gaskets (10) and (11).

1 Pipe
2 Valve
3 Gasket
4 Pipe
5 Pipe
6 Pipe
7 Gasket
8 Gasket
9 Valve
10 gasket
11 Gasket

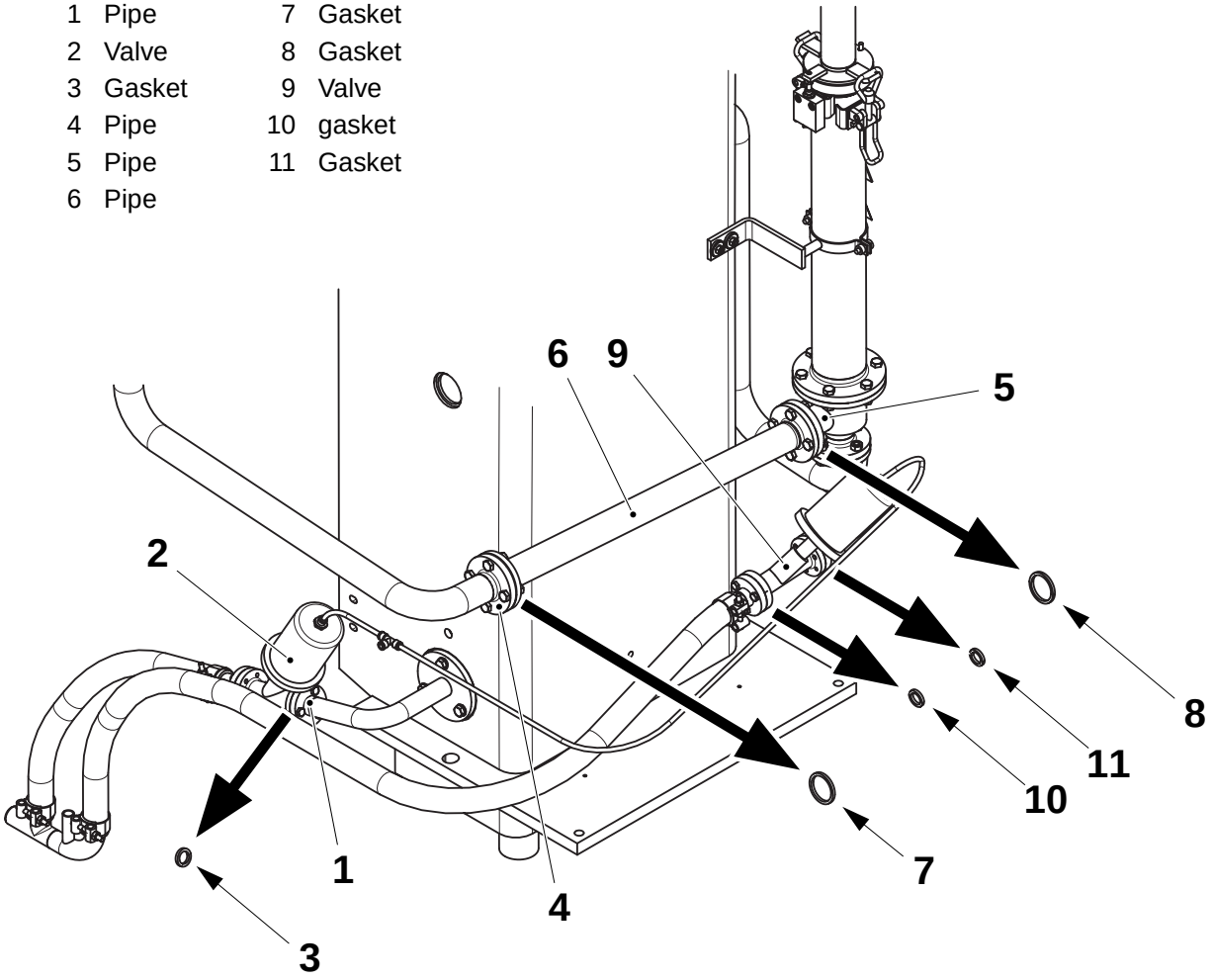

(Cont'd)

(Cont'd)

g) Remove the cover (12).

h) Check the O-ring (13) and gasket (14).

i) Remove the front part of the clamp (15) and the screws securing the container (16) to the pipe (5).

j) Check the gasket (17).

k) Remove the screws securing the pipe (5) to the pipes (6) and (18).

l) Check the gasket (19).

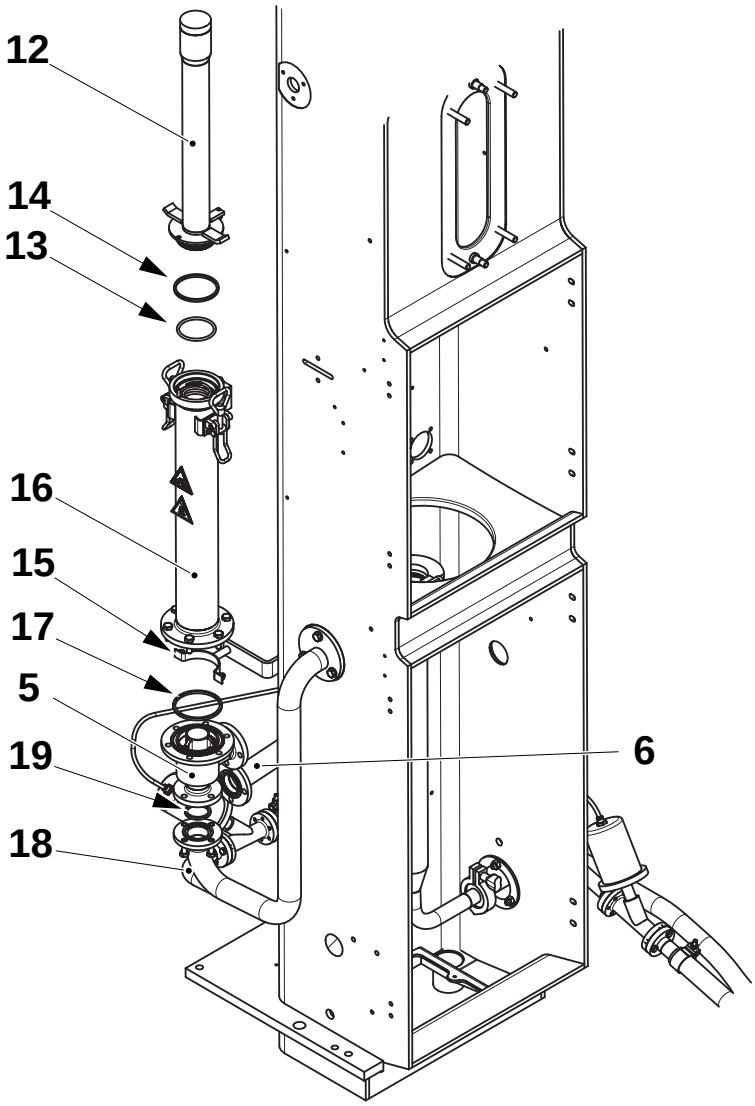

5	Pipe	14	Gasket	18	Pipe
6	Pipe	15	Clamp	19	Gasket
12	Cover	16	Container		
13	O-ring	17	Gasket		

(Cont'd)

(Cont'd)

Float

Check the gaskets from (1) to (8).

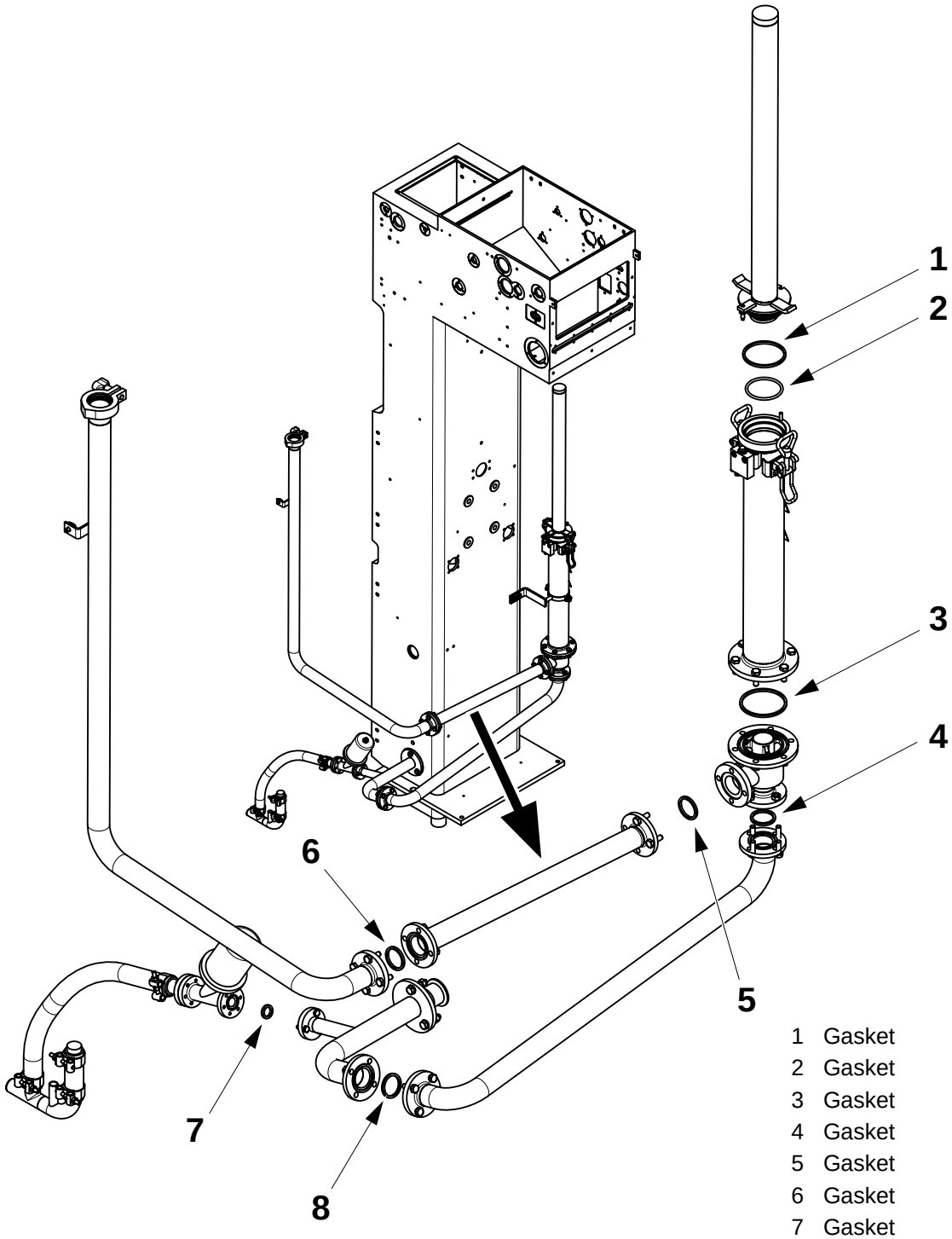

1 Gasket
2 Gasket
3 Gasket
4 Gasket
5 Gasket
6 Gasket
7 Gasket
8 Gasket

1.2.1-2 Cleaning Sleeve - Set

SPC Reference	
- Level Probe	1498673-0200
- Float	2540802-0100

Bucket Micro Switch

a) Loosen the nut (1) and screw the pin (2) in or out so the actuator (3) of the micro switch (4) is depressed to within 2 - 3 mm of its end position when the cover (5) is fitted.

b) Tighten the nut (1).

c) Open one of the clamps (6) and check the alarm immediately appear on the TPOP.

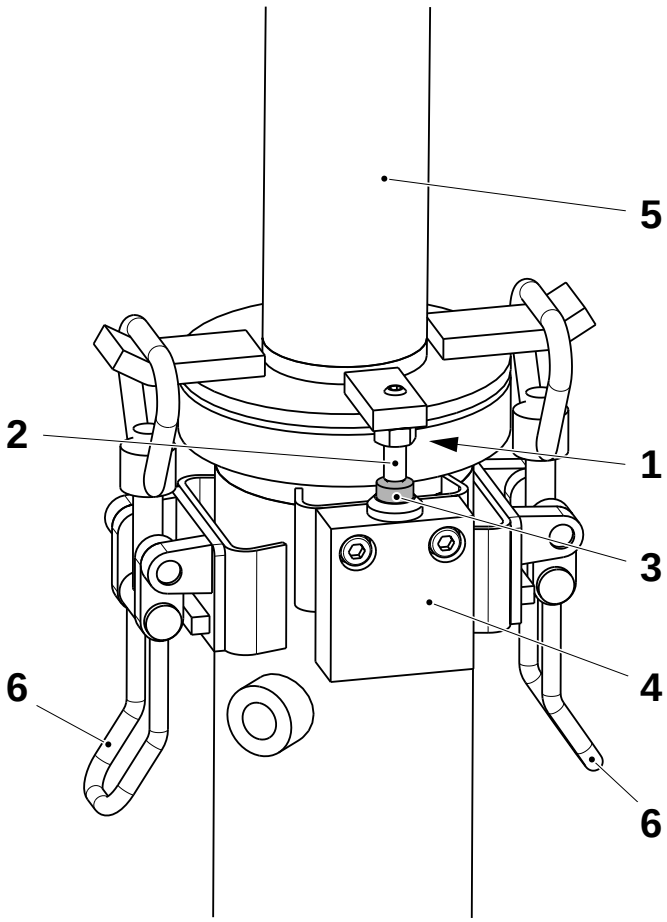

1 Nut
2 Pin
3 Actuator
4 Micro switch
5 Cover
6 Clamp

(Cont'd)

(Cont'd)

Cleaning Pipe Sensor

a) Remove the cover (1).

b) Screw the nuts (4) and (5) onto the sensor.

c) Screw the sensor (2) carefully into the boss (3) until the end of the sensor is aligned with the end the boss.
If the sensor protrudes beyond the end of the boss it may be damaged when the filling pipe is placed in the bucket.

d) While preventing the sensor from moving, tighten the nut (4) and the lock nut (5).

e) Put the lower filling pipe in the container (6) and fit back the cover (1).

f) Rotate manually the lower filling pipe and check the sensor (2) is always activated.

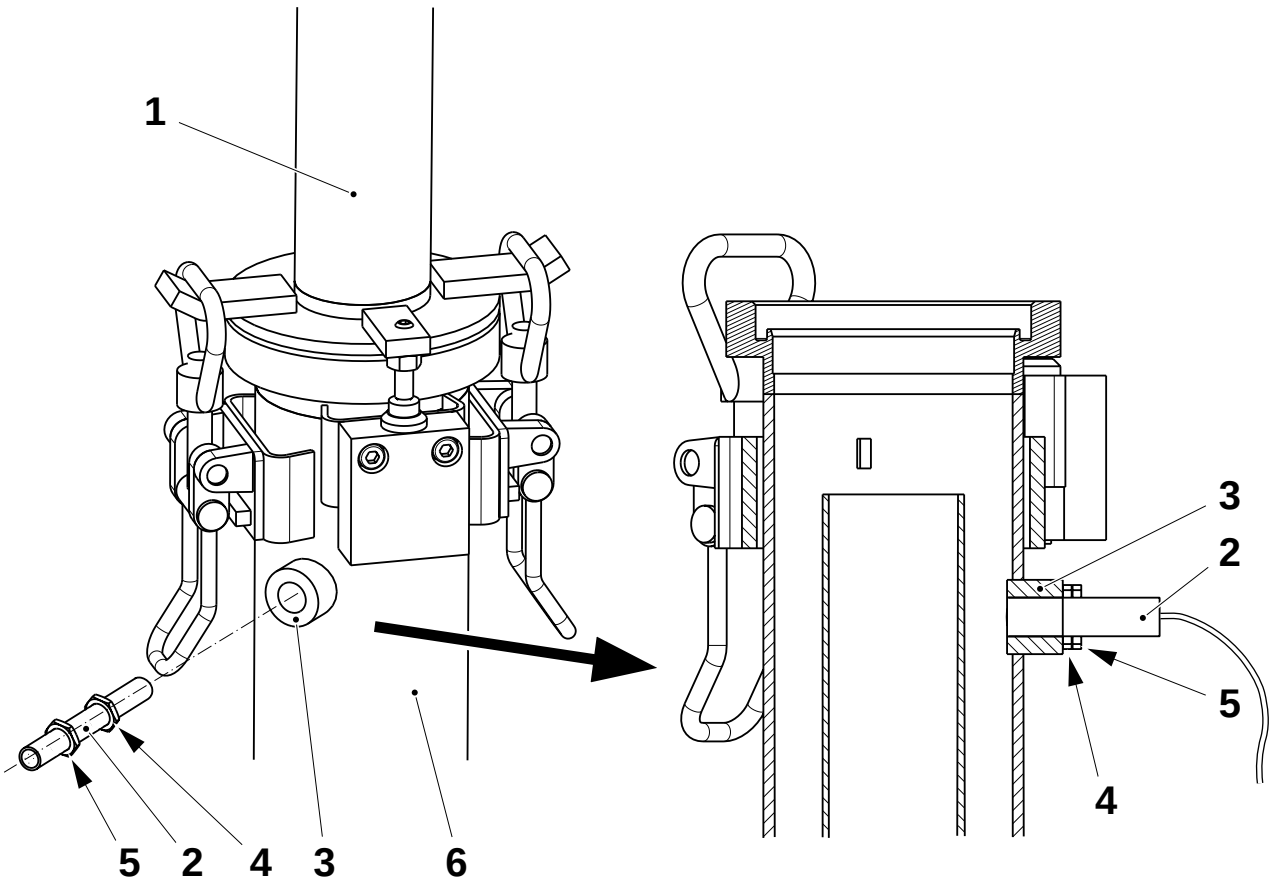

1 Cover
2 Sensor
3 Boss
4 Nut
5 Lock nut
6 Container

1.2.2 Product Valve Group

1.2.2-1 Product Valve Group - Remove Pneumatic Cylinders, AP-Valve

Tool - Handle Tool	 TP No. 449969-0101
SPC Reference	1255980-0200

WARNING

Risk of personal injury!

Make sure that the steam and the compressed air have been turned off. Make sure that there is **no product, steam or cleaning liquid** in the line. In case of an accident call for medical attention.

a) Remove the air connections (1) and, when required, the steam connections (2) from the cylinders.

b) Remove the screws (3) and the proximity switch brackets (4).

c) Screw out the sleeves (5) from the cylinders.

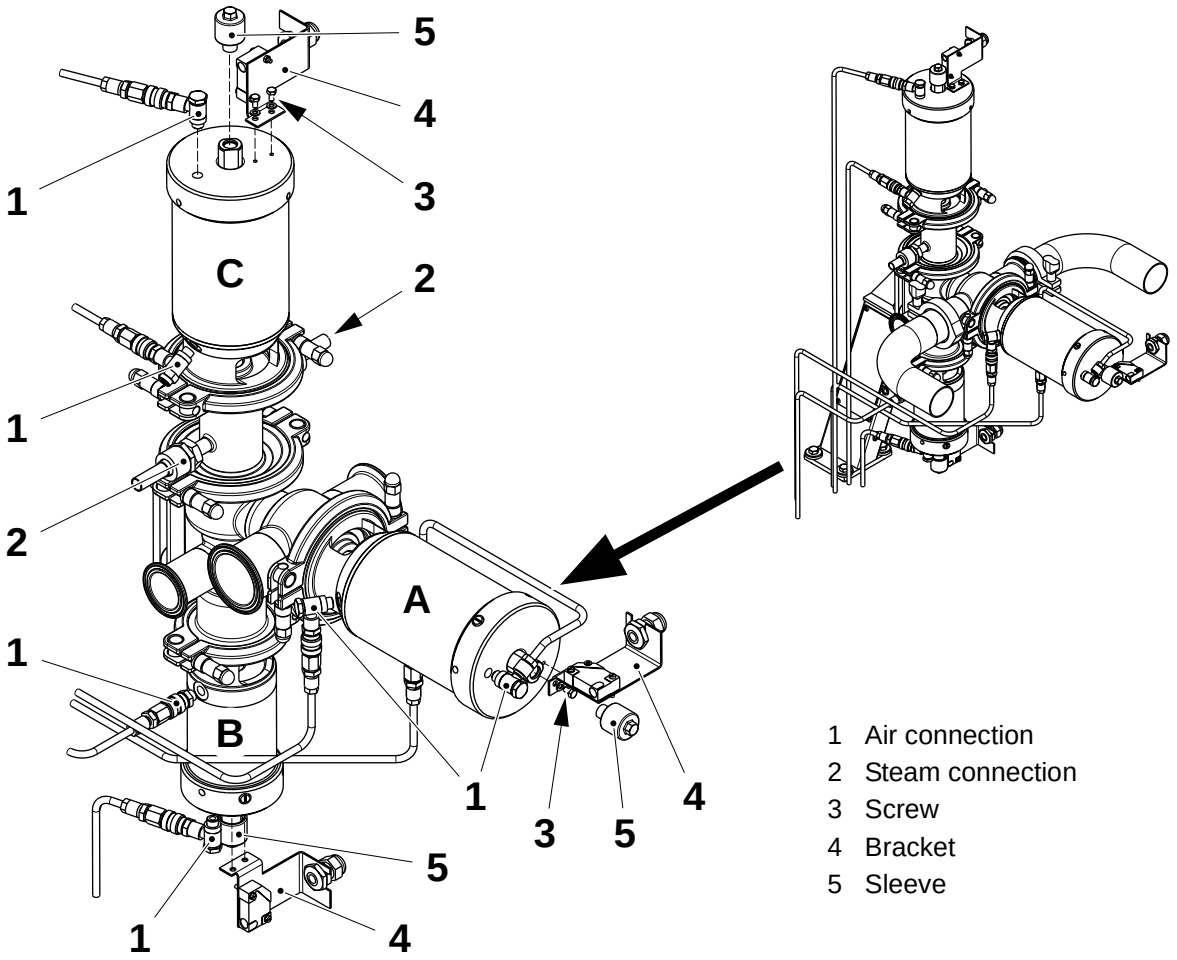

1 Air connection
2 Steam connection
3 Screw
4 Bracket
5 Sleeve

(Cont'd)

(Cont'd)

WARNING
Risk of personal injury!
If the valve is disassembled incorrectly, the spring in the pneumatic cylinder will eject forcefully.

d) Fit the handle tool (6) and turn the handle clockwise (approximately 5 turns) to release the piston pressure from the valve site.

e) Remove the clamp ring (7) and the valve **A**.

f) Check the gasket (8) and change it as required.

g) Change the O-rings as required, see 1.2.2-3 Product Valve Group - Change O-Rings, AP-Valve.

h) Repeat the same procedure for the valves **B** and **C**.

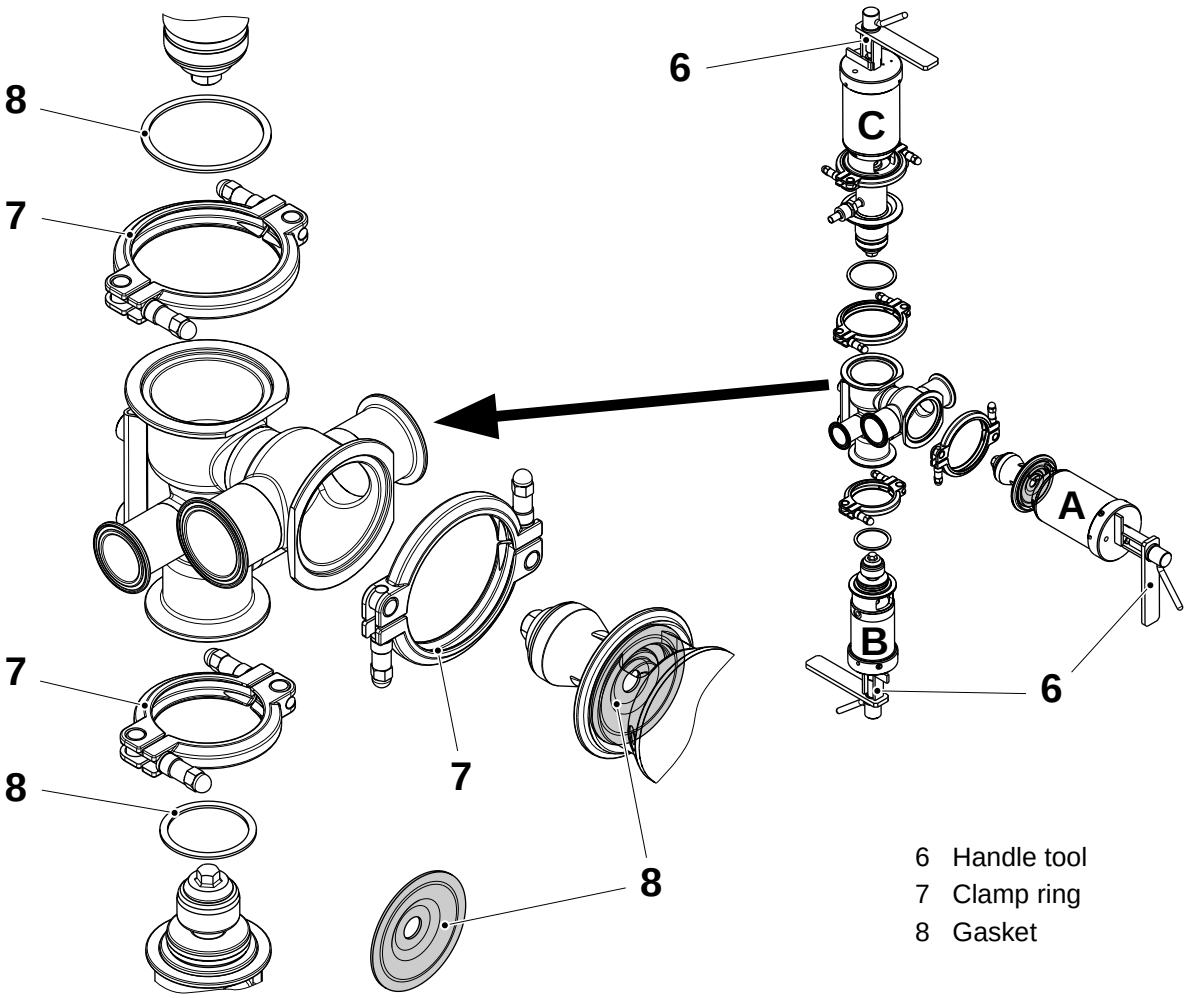

6 Handle tool
7 Clamp ring
8 Gasket

1.2.2-2 Product Valve Group - Change Seals and Diaphragms, AP-Valve

Tools - Torque Wrench - Handle Tool	 min. 50 Nm TP No. 449969-0101
SPC Reference	1255980-0200

WARNING

Risk of personal injury!

Make sure that the steam and the compressed air have been turned off. Make sure that there is **no product, steam or cleaning liquid** in the line. In case of an accident call for medical attention.

Product Valve (A)

a) Remove the valve, see 1.2.2-1 Product Valve Group - Remove Pneumatic Cylinders, AP-Valve.

b) Release the cylinder spring completely by means of the handle tool (7).

c) Remove the valve cone (1). Check the seal ring (2) and change it as required.

d) Remove the seal ring holder (3), the diaphragm (4), the ring (5) and the washer (6). Check the diaphragm (4) for damage and change as required.

e) Fit back the ring (5) and the washer (6) in the cylinder housing with the grooves facing upwards.

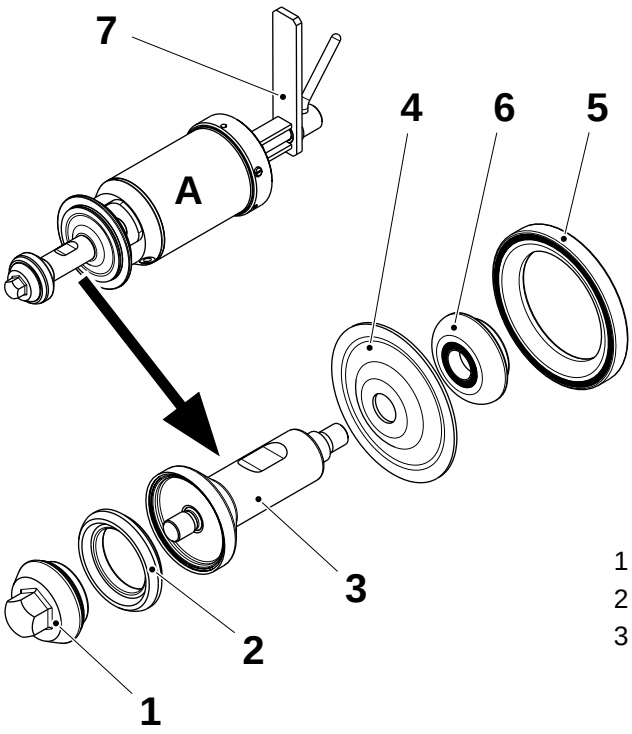

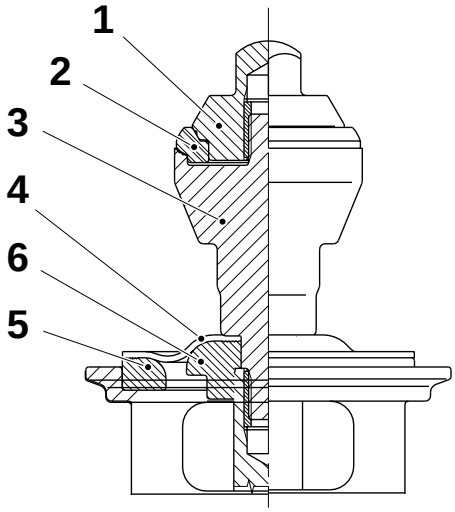

1 Valve cone
2 Seal ring
3 Seal ring holder
4 Diaphragm
5 Ring
6 Washer
7 Handle tool

(Cont'd)

(Cont'd)

f) Fit the new diaphragm (4) and the complete seal ring holder (3) onto the piston rod.

WARNING
Risk of serious production fault!
Make sure to fit the diaphragm (4) with the bulge facing away from the valve.

g) Tighten the seal ring holder (3) completely.

h) Fit the seal ring (2) and the valve cone (1).

Note! Slowly tighten the valve cone (1) with a torque wrench set to **50 Nm**. Repeat every 10-20 seconds, allowing the diaphragm (4) to penetrate into the grooves of the parts.

i) Compress the cylinder spring completely by means of the tool (7).

j) Fit the cylinder and tighten the clamp ring (8).

k) Remove the tool (7) and screw the sleeve (9) onto the cylinder.

l) Fit back the proximity switch bracket (10) and the air connections (11).

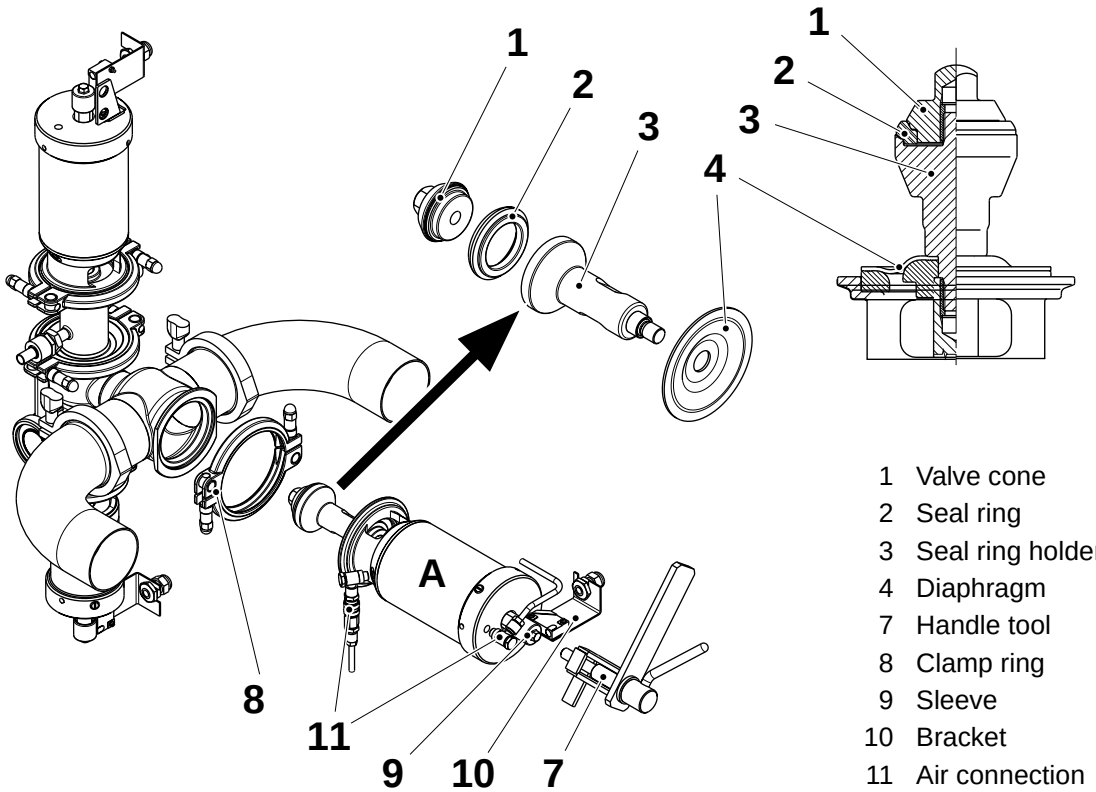

1 Valve cone
2 Seal ring
3 Seal ring holder
4 Diaphragm
7 Handle tool
8 Clamp ring
9 Sleeve
10 Bracket
11 Air connection

(Cont'd)

(Cont'd)

Sterile Air Valve (B)

a) Remove the valve, see 1.2.2-1 Product Valve Group - Remove Pneumatic Cylinders, AP-Valve.

b) Release the cylinder spring completely by means of the handle tool (7).

c) Change the O-ring (12).

d) Remove the valve cone (13) and change the seal rings (14) and (15).

e) Remove the washer (16) and change the O-ring (17).

f) Assemble in the reverse order.

Note! Tighten the valve cone (13) with a torque wrench set to **50 Nm**.

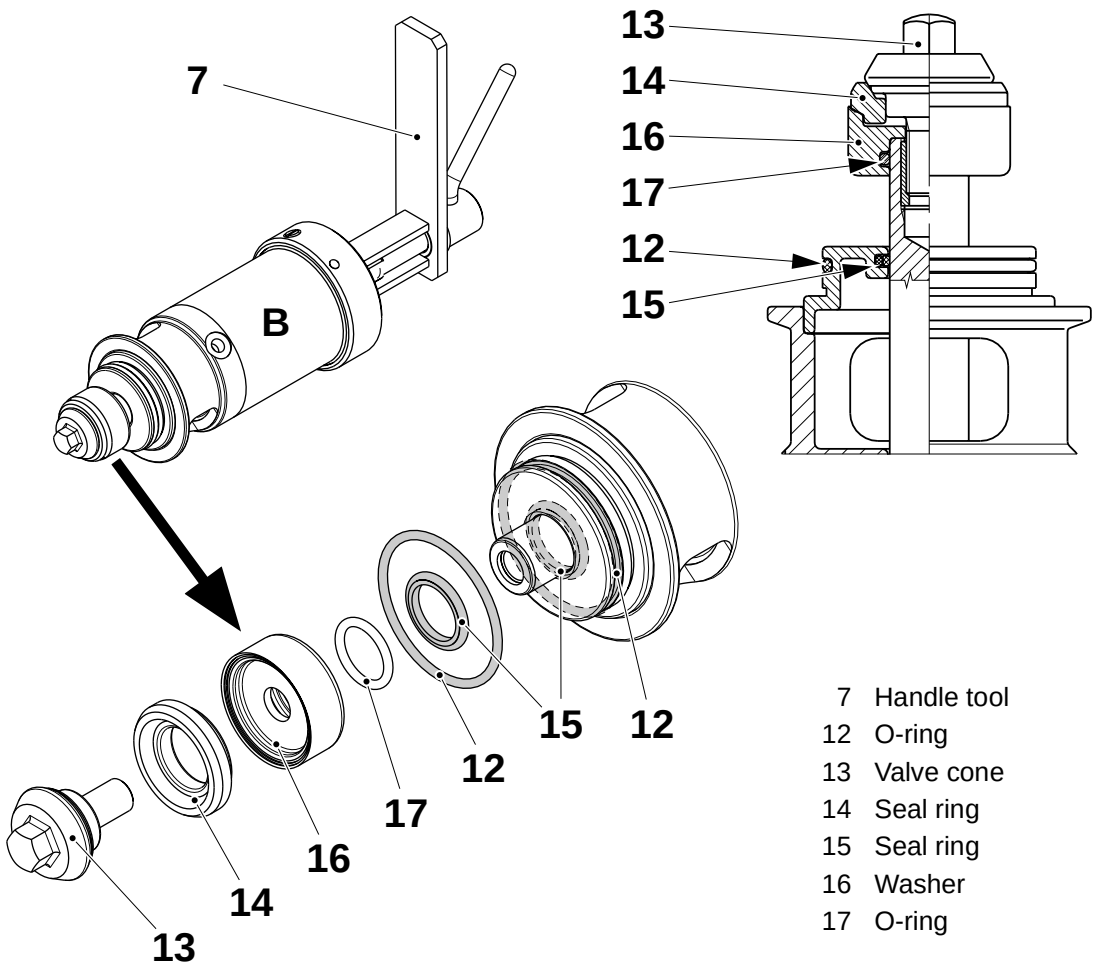

7 Handle tool
12 O-ring
13 Valve cone
14 Seal ring
15 Seal ring
16 Washer
17 O-ring

(Cont'd)

(Cont'd)

Steam Valve (C)

a) Remove the valve, see 1.2.2-1 Product Valve Group - Remove Pneumatic Cylinders, AP-Valve.

b) Release the cylinder spring completely by means of the handle tool (7).

c) Remove the valve cone (18) and the ring (19).

d) Check the seal rings (20) and change as required.

e) Loosen the screws (21) and remove the holder (22).

f) Check the seal ring (23) and change as required.

g) Assemble in the reverse order.

h) Tighten the valve cone (18) with a torque wrench set to **50 Nm**.

Note! If the product has a high viscosity, the steam valve **C** takes longer to close.

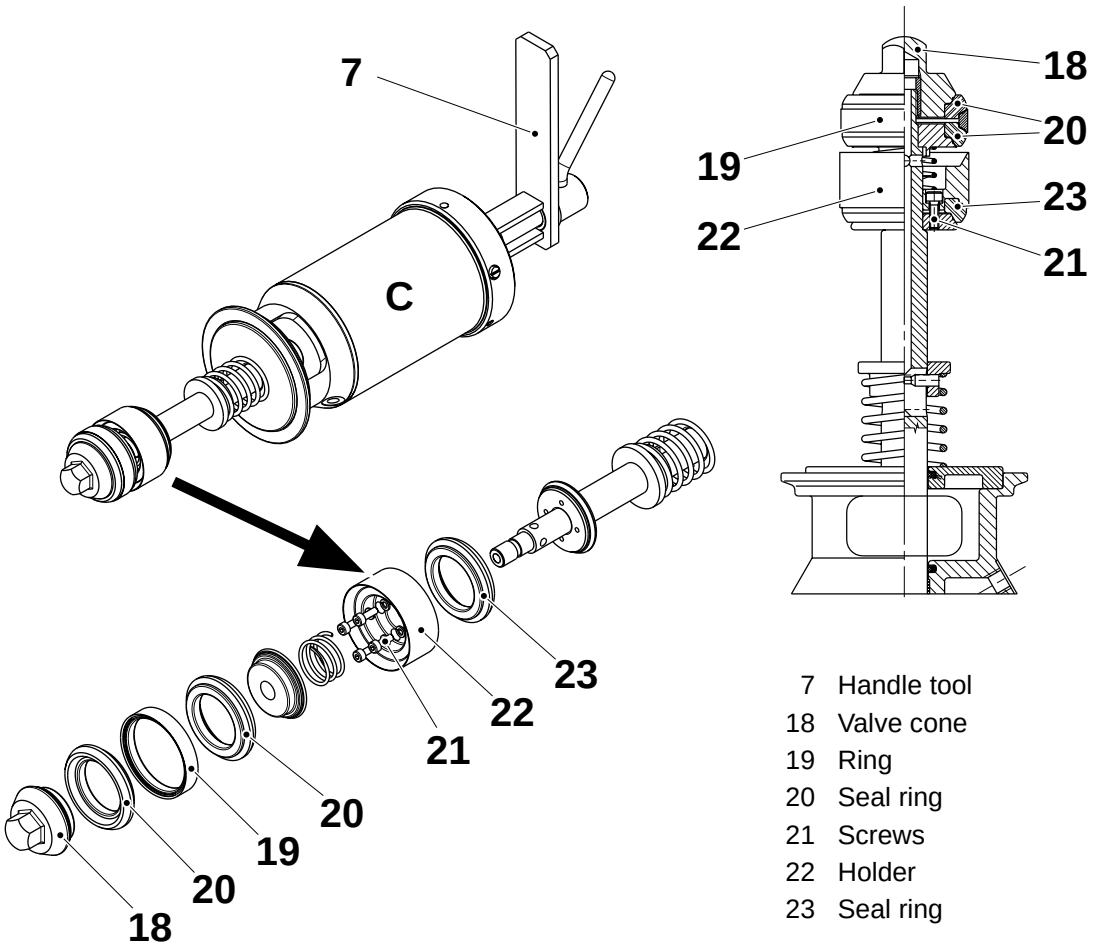

7 Handle tool
18 Valve cone
19 Ring
20 Seal ring
21 Screws
22 Holder
23 Seal ring

1.2.2-3 Product Valve Group - Change O-Rings, AP-Valve

Consumables - Silicon Grease	Code L
Tools - Torque Wrench	min. 50 Nm
SPC Reference	1255980-0200

WARNING

Risk of personal injury!

Make sure that the steam and the compressed air have been turned off. Make sure that there is **no product, steam or cleaning liquid** in the line. In case of an accident call for medical attention.

A-Cylinder (Product Valve)

a) Remove the product valve, see 1.2.2-2 Product Valve Group - Change Seals and Diaphragms, AP-Valve.

b) Remove the lock screw (1).

c) Loosen the handle tool (2) and remove the end section (3).

d) Check the O-ring (4), the wear ring (5) and the rod seal (6). Change as required.

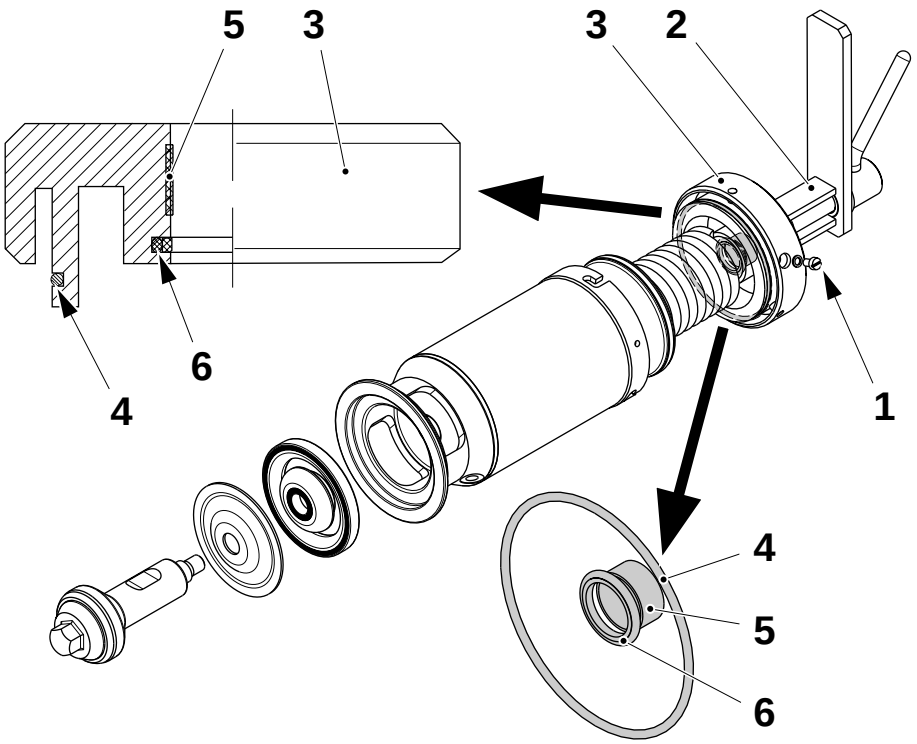

1 Lock screw
2 Handle tool
3 End section
4 O-ring
5 Wear ring
6 Rod seal

(Cont'd)

(Cont'd)

e) Remove the piston rod (7) with the spring (8) and the piston (9).

f) Remove the locking washers (10) and disassemble the piston (9) from the piston rod (7).

g) Check the O-ring (11), the piston seal (12), the rod seal (13) and the wear ring (14). Change as required.

h) Lubricate the threads of the piston rod (7) with silicon grease code L, see 10.3.1 Lubricants.

i) Assemble in the reverse order.

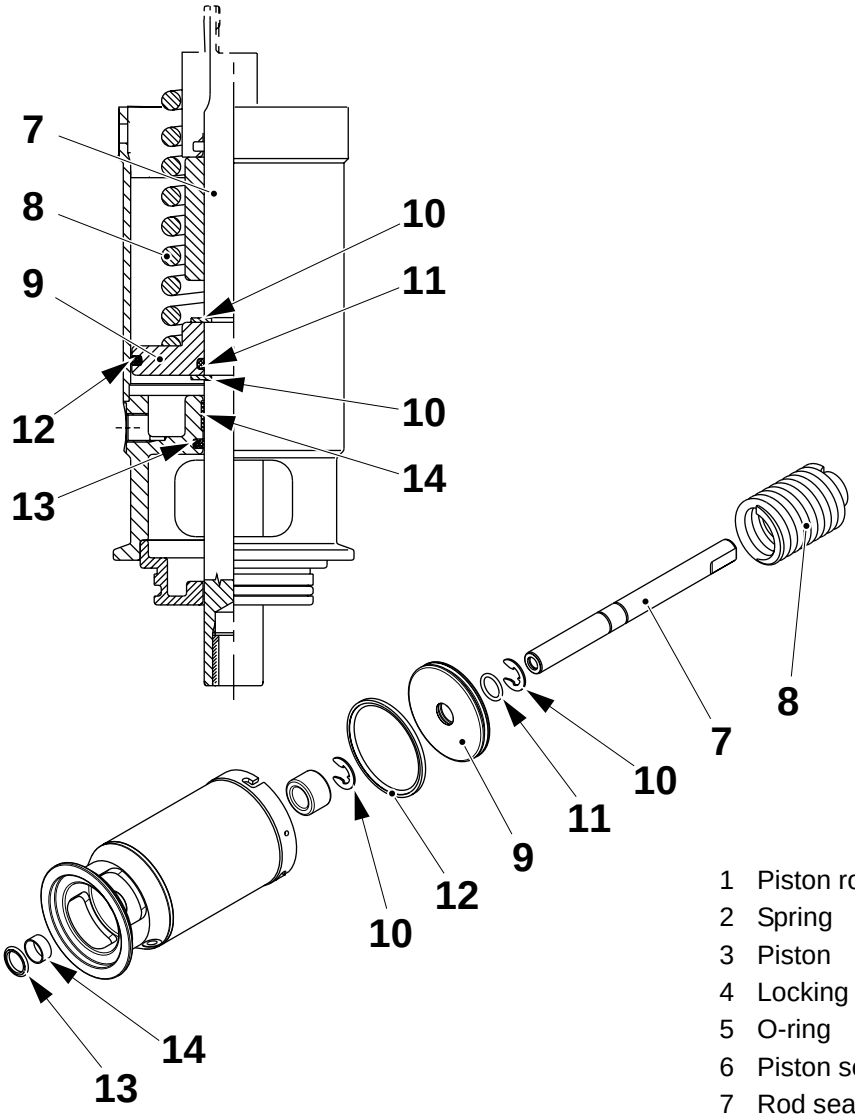

1 Piston rod
2 Spring
3 Piston
4 Locking washers
5 O-ring
6 Piston seal
7 Rod seal
8 Wear ring

(Cont'd)

(Cont'd)

B-Cylinder (Sterile Air Valve)

a) Remove the sterile air valve, see 1.2.2-2 Product Valve Group - Change Seals and Diaphragms, AP-Valve.

b) Remove the lock screw (1).

c) Loosen the handle tool (2) and remove the end section (3).

d) Check the O-ring (4), the wear ring (5) and the rod seal (6). Change as required.

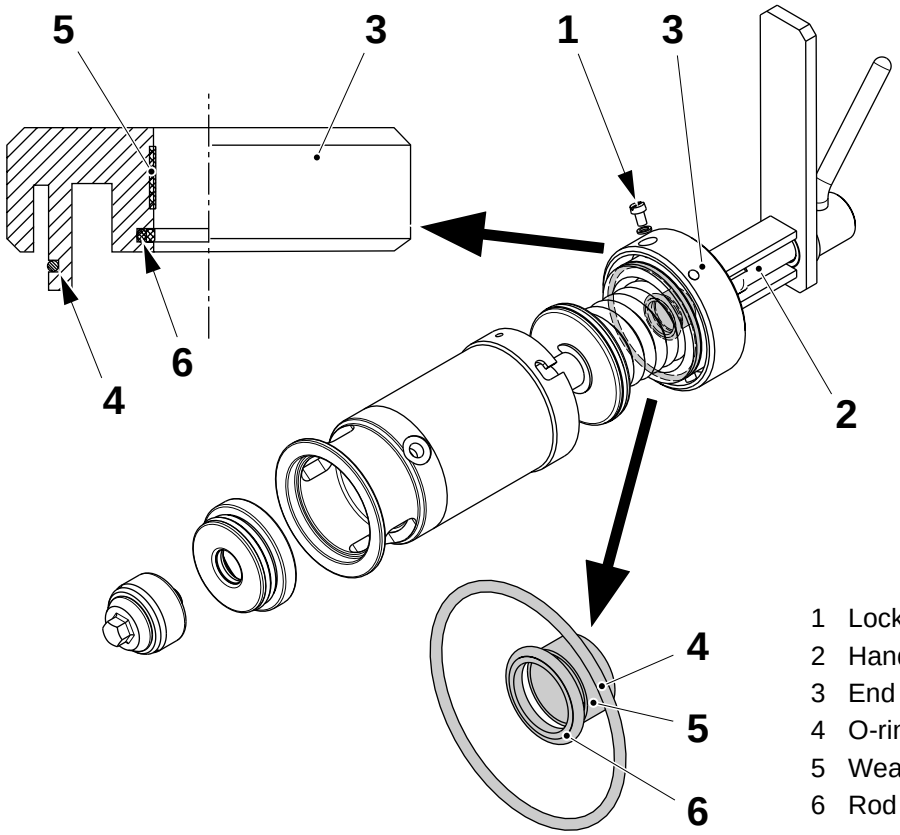

1 Lock screw
2 Handle tool
3 End section
4 O-ring
5 Wear ring
6 Rod seal

(Cont'd)

(Cont'd)

e) Remove the piston rod (7) with the spring (8) and the piston (9).

f) Remove the locking washers (10) and disassemble the piston (9) from the piston rod (7).

g) Check the O-ring (11), the piston seal (12), the rod seal (13) and the wear ring (14). Change as required.

h) Lubricate the threads of the piston rod (7) with silicon grease code L, see 10.3.1 Lubricants.

i) Assemble in the reverse order.

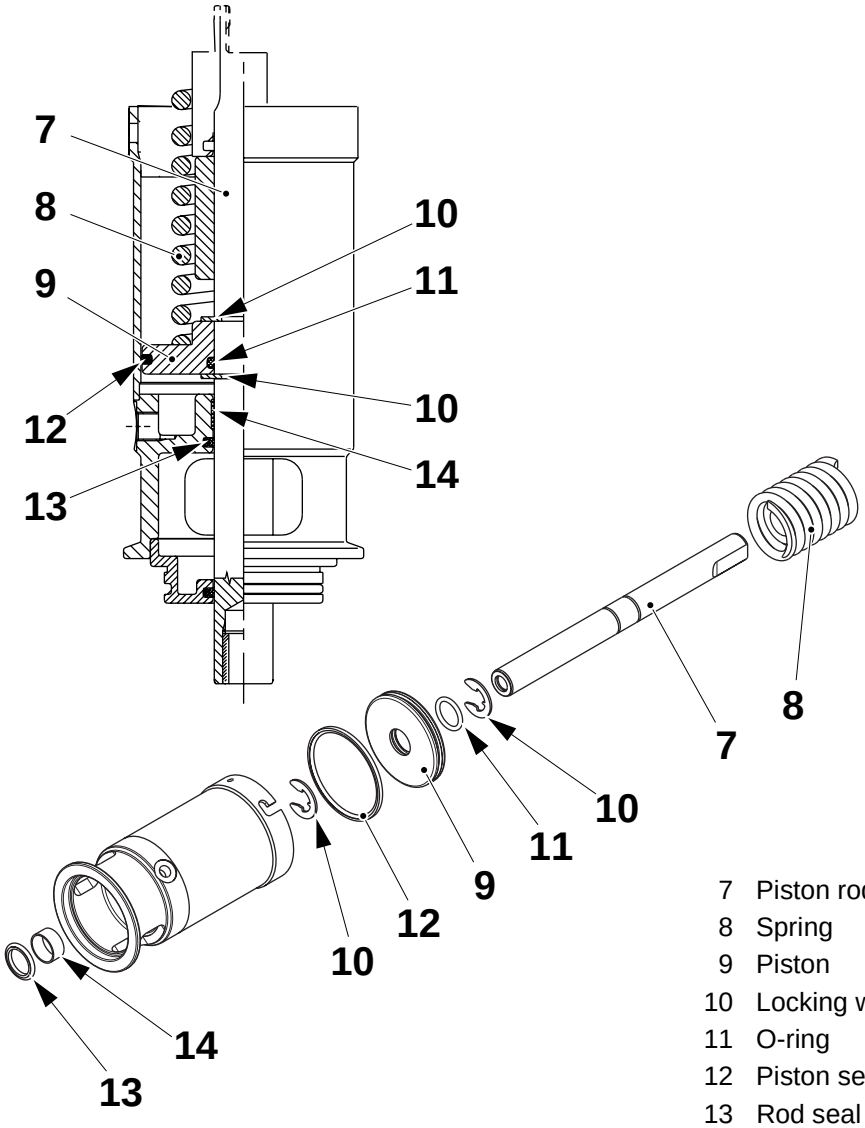

7 Piston rod
8 Spring
9 Piston
10 Locking washers
11 O-ring
12 Piston seal
13 Rod seal
14 Wear ring

(Cont'd)

(Cont'd)

C-Cylinder (Steam Valve)

a) Remove the steam valve, see 1.2.2-2 Product Valve Group - Change Seals and Diaphragms, AP-Valve.

b) Remove the lock screw (1).

c) Loosen the handle tool (2) and remove the end section (3).

d) Check the O-ring (4), the wear ring (5) and the rod seal (6). Change as required.

e) Remove the cylindrical pin (7), the washer (8) and the spring (9).

f) Remove the sealing washer (10).

g) Check the rod seal (11). Change as required.

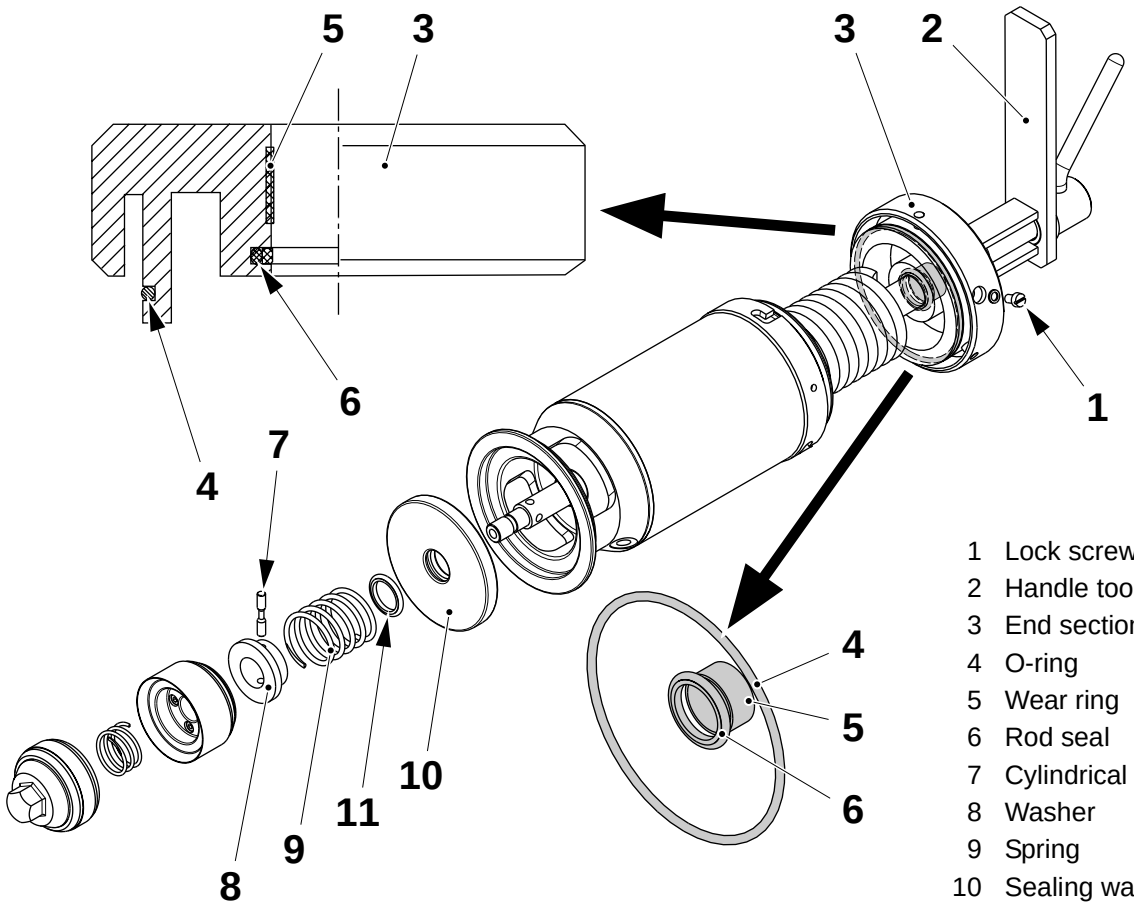

1 Lock screw
2 Handle tool
3 End section
4 O-ring
5 Wear ring
6 Rod seal
7 Cylindrical pin
8 Washer
9 Spring
10 Sealing washer
11 Rod seal

(Cont'd)

(Cont'd)

h) Remove the piston rod (12) with the spring (13) and the piston (14).

i) Remove the locking washers (15) and disassemble the piston (14) from the piston rod (12).

j) Check the O-ring (16), the piston seal (17), the rod seal (18) and the wear ring (19). Change as required.

k) Lubricate the threads of the piston rod (12) with silicon grease code L, see 10.3.1 Lubricants.

l) Assemble in the reverse order.

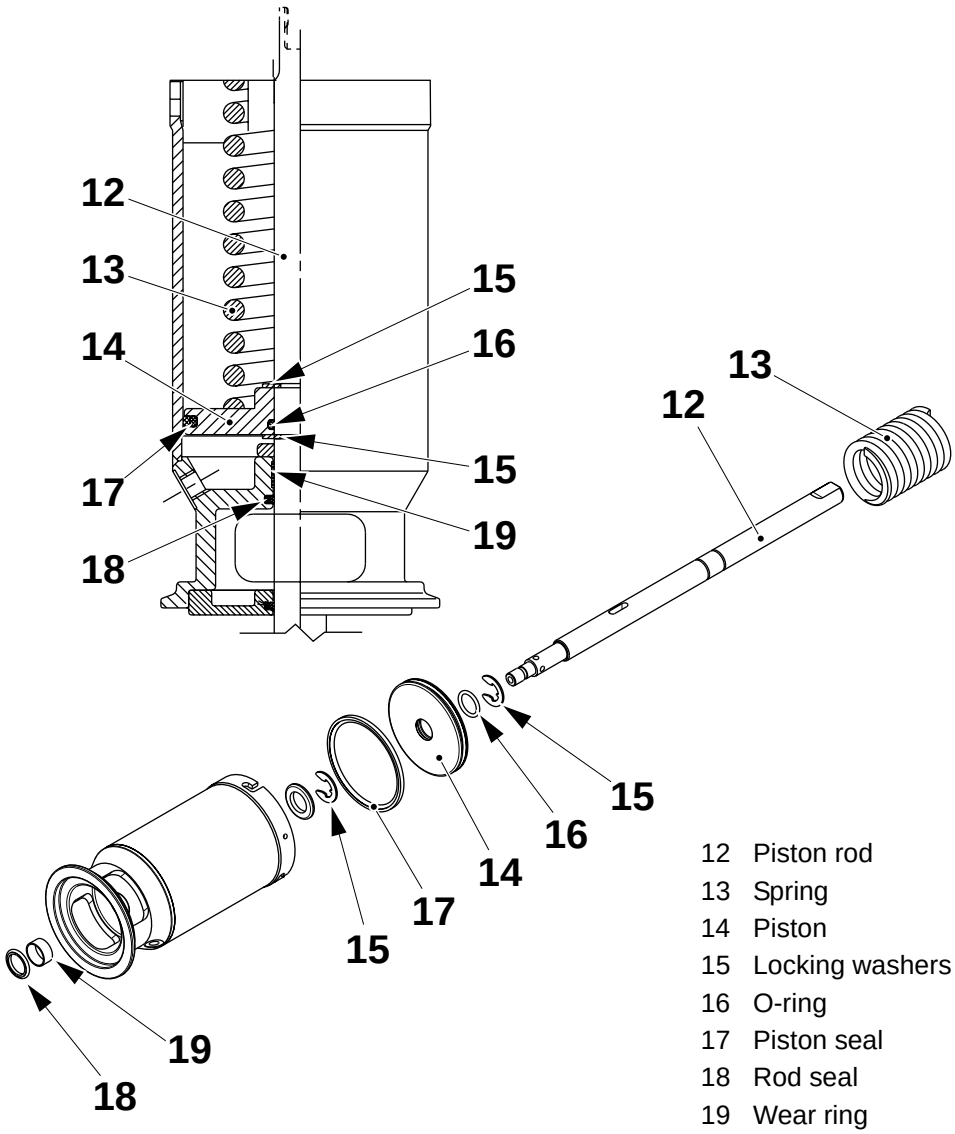

12 Piston rod
13 Spring
14 Piston
15 Locking washers
16 O-ring
17 Piston seal
18 Rod seal
19 Wear ring

1.2.2-4 Product Valve Group - Set Proximity Switches

Machine Status	Mains Power ON
SPC Reference	1255980-0200

a) Set the proximity switches (1) so they are activated when the cylinder sleeve (3) is in its highest position.

b) Adjust by moving either the proximity switch or the bracket (2).

c) Set distance **A** between the proximity switch (1) and the cylinder sleeve (3).

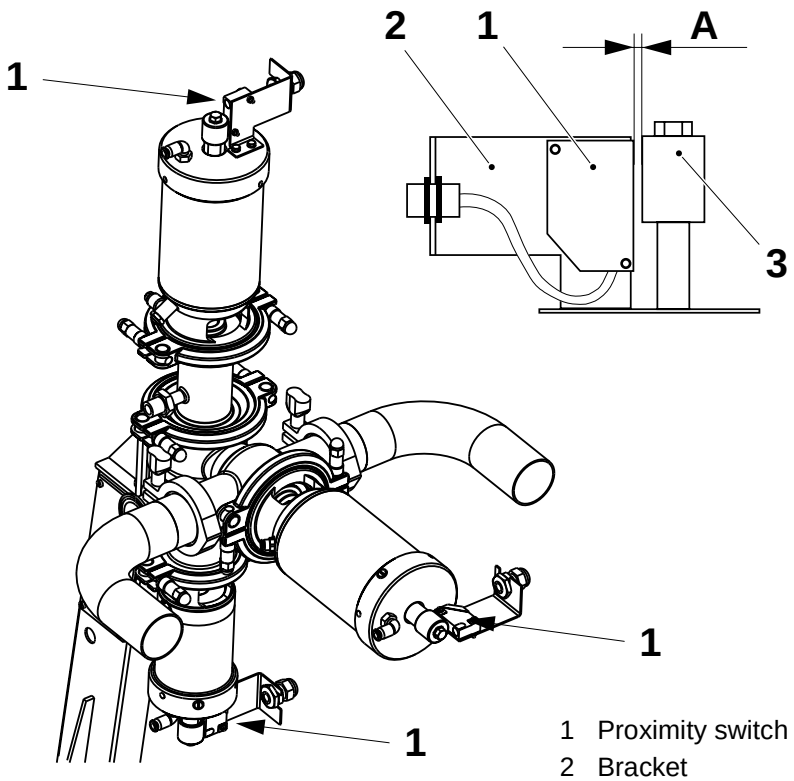

A = 2 ±0.5 mm

1 Proximity switch
2 Bracket
3 Cylinder sleeve

1.2.3 Flow Regulator

1.2.3-1 Flow Regulator - Overhaul Regulating Valve

SPC Reference	1498700-0200

WARNING
Risk of personal injury!
Spring-loaded parts.

Remove

a) Remove the pipes (1) and (2).

b) Remove the proximity switch (3).

c) Note the position of the wires (4), (5) and (6) and then disconnect them.

d) Unscrew couplings (7) and (8) and pull out the regulating valve.

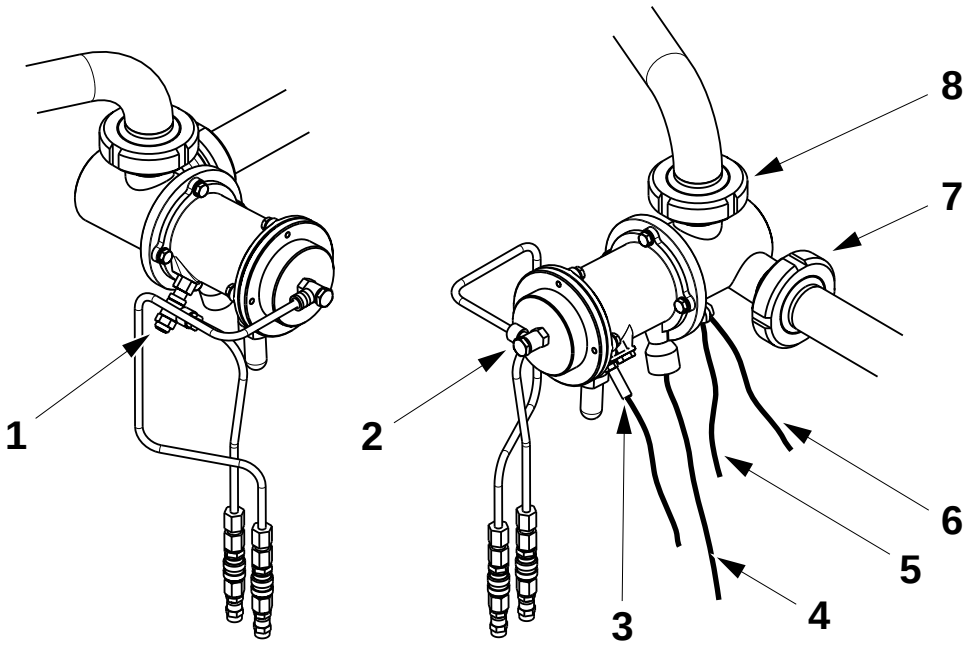

1 Pipe
2 Pipe
3 Proximity switch
4 Wire
5 Wire
6 Wire
7 Coupling
8 Coupling

(Cont'd)

(Cont'd)

e) Loosen the screws (9) and remove the cover (10) from the regulating valve.

f) Loosen the screws (11) crosswise in small steps. **Carefully** remove the regulator body (12) from the central body.

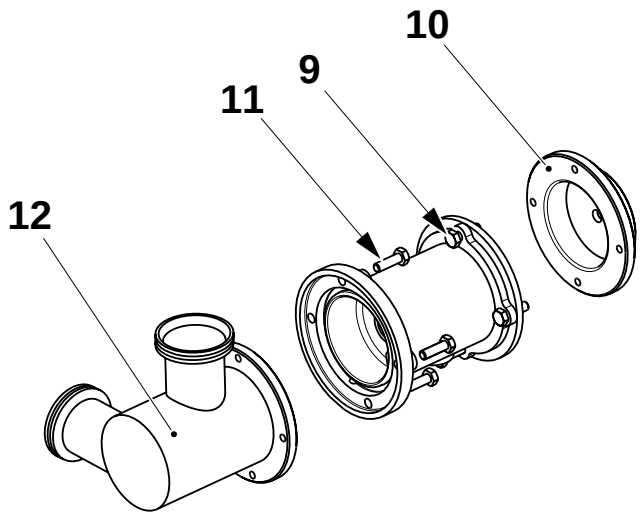

9 Screw
10 Cover
11 Screw
12 Regulator body

CAUTION
Take care not to damage the shutter.

g) Hold the shutter (13) and turn the locking screw (14) until the shutter can be removed.

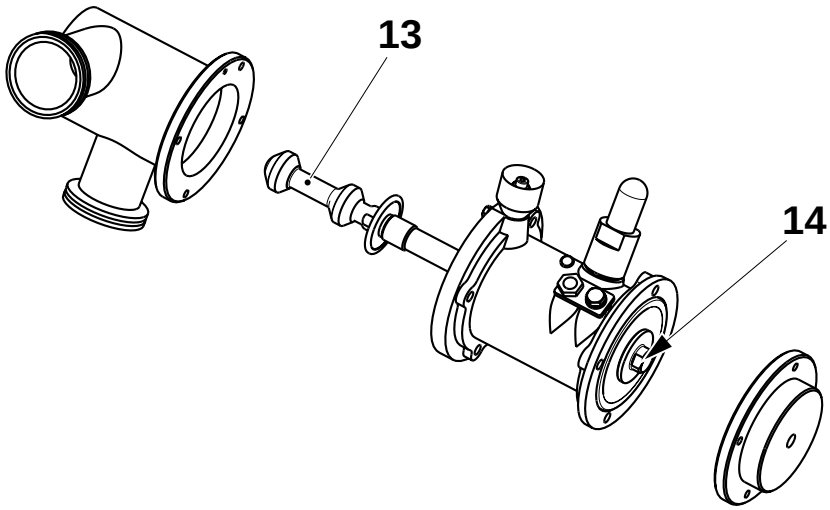

13 Shutter
14 Screw

(Cont'd)

(Cont'd)

h) Remove the diaphragm (15), the spacer (16), the spring (17) and pull out the shutter (13).

i) Remove the shock absorber (18). Loosen the bushing (19) and remove the spacer (20) and the diaphragm (21).

j) Change the diaphragms (15) and (21), the bushing (19) and the shock absorber (18) as required.

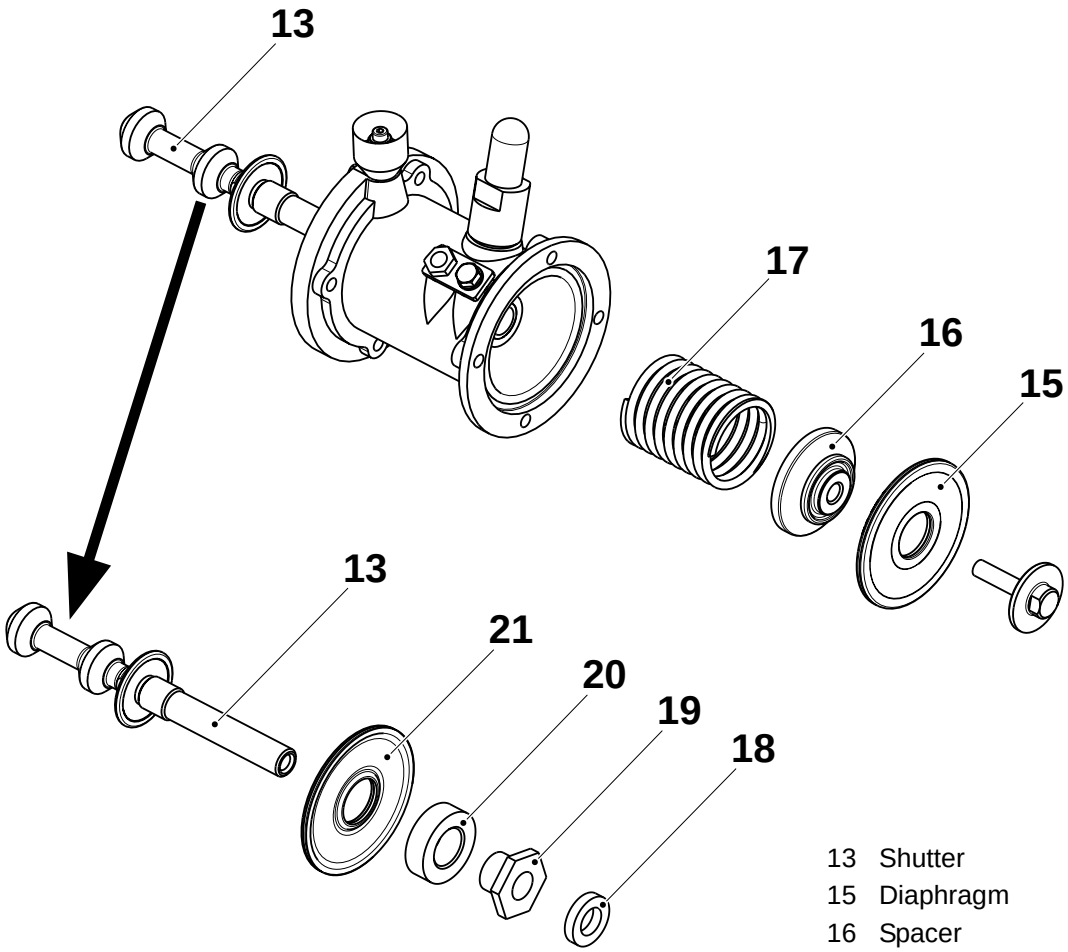

13 Shutter
15 Diaphragm
16 Spacer
17 Spring
18 Shock absorber
19 Bushing
20 Spacer
21 Diaphragm

(Cont'd)

(Cont'd)

Assemble

CAUTION
Make sure all parts are clean and dry. **Do not** lubricate.

CAUTION
Do not damage the diaphragm (21). Make sure the transparent side is facing the product side.

a) Assemble the diaphragm (21) and the spacer (20) on the shutter (13), then fit the bushing (19). Tighten until the bushing reaches its stop position.

b) Fit the shock absorber (18) on the shutter (13) and insert the shutter assembly in the central body (22).

CAUTION
Do not damage the diaphragm (15). Make sure the transparent side is facing the air side.

c) Fit the spring (17), the spacer (16), and the diaphragm (15) into the central body (22) using the screw (14).

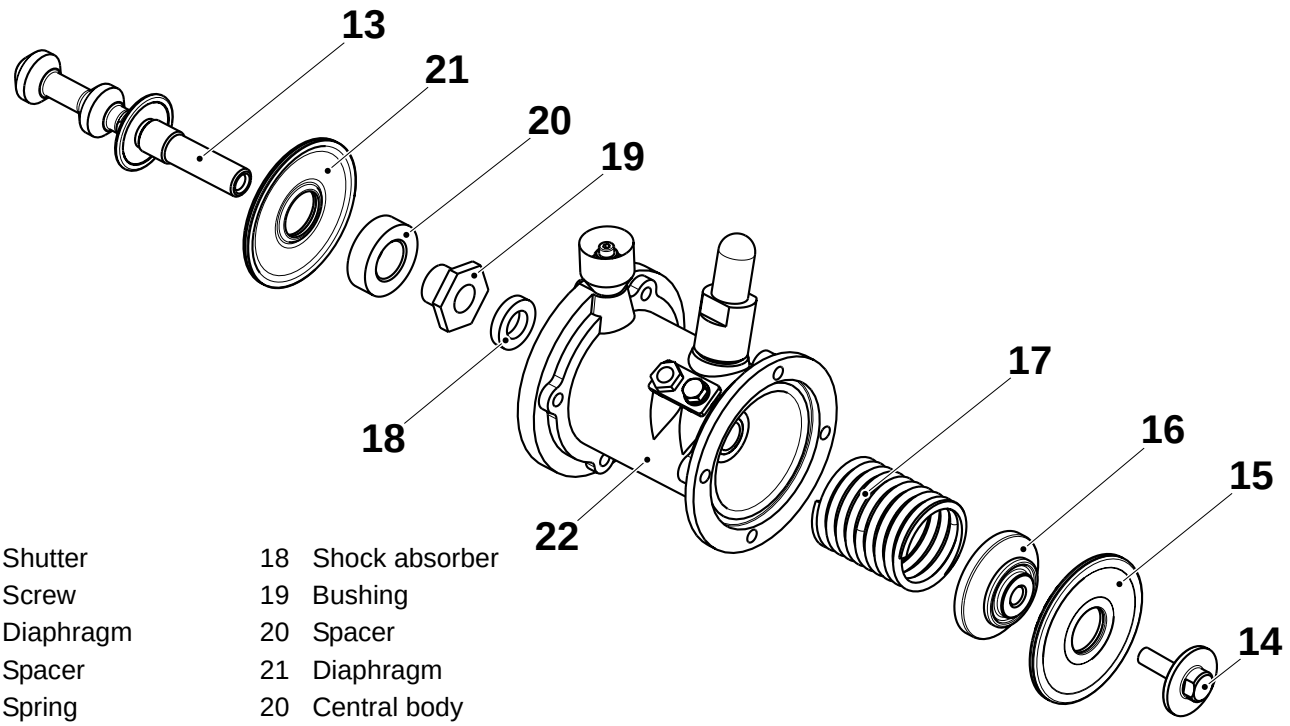

13	Shutter	18	Shock absorber
14	Screw	19	Bushing
15	Diaphragm	20	Spacer
16	Spacer	21	Diaphragm
17	Spring	20	Central body

(Cont'd)

(Cont'd)

CAUTION
Do not bend the shutter (13).

d) Fit the regulator body (12) into the central body (22). Tighten the screws (11) crosswise in small steps.

e) Push the screw (see arrow) with your finger and check the shutter (13) **moves smoothly**. If it does not move smoothly, change the shutter (13).

f) Fit the gasket cover (10) to the central body (22). Tighten the screws (9) crosswise.

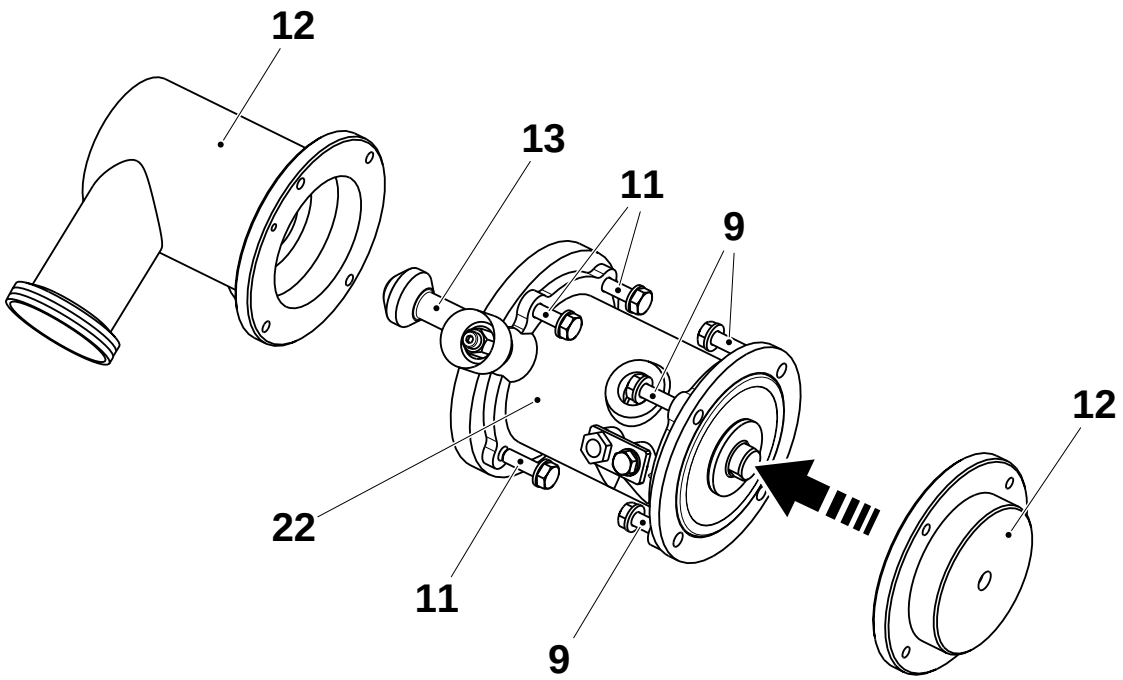

9 Screw
10 Cover
11 Screw
12 Regulator body
13 Shutter
22 Central body

(Cont'd)

(Cont'd)

g) Fit the regulating valve using the couplings (7) and (8).

h) Connect the wires (4), (5) and (6) to the regulator.

i) Fit the proximity switch (3).

j) Set the proximity switch (3), see 1.2.3-2 Flow Regulator - Set Proximity Switch.

k) Connect the pipes (1) and (2).

l) Check the horizontal levelling of the regulating valve using a spirit level.

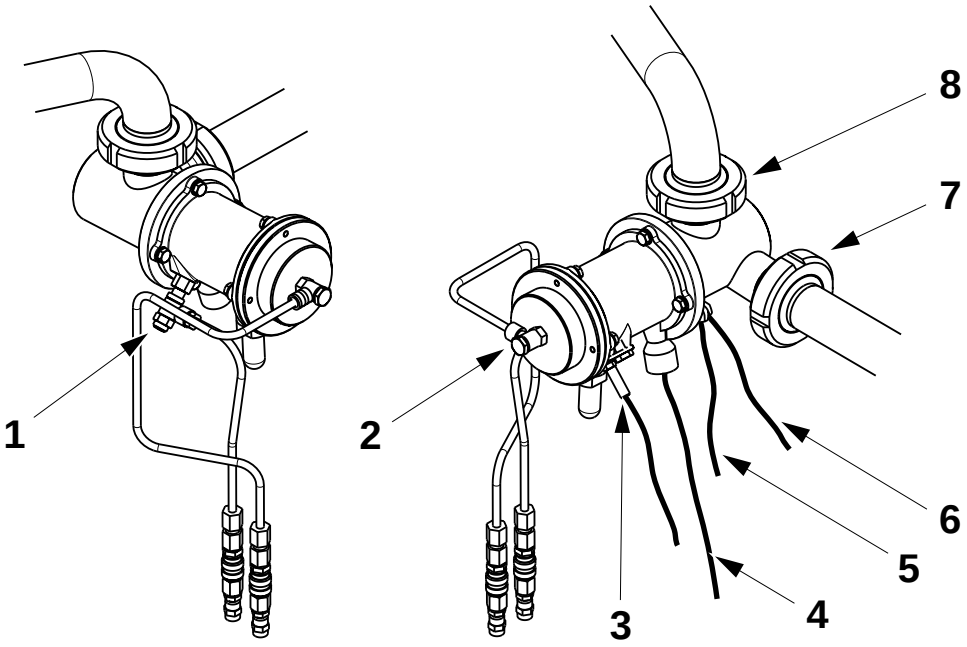

1 Pipe
2 Pipe
3 Proximity switch
4 Wire
5 Wire
6 Wire
7 Coupling
8 Coupling

1.2.3-2 Flow Regulator - Set Proximity Switch

Machine Status	Mains Power ON
SPC Reference	1498700-0200

a) Remove the hose (1) from the air connection and connect an external air supply. Switch **on** the external air supply.

b) Loosen the nut (3) and screw out the proximity switch (2).

c) Screw in the proximity switch (2) until it just it touches the spacer (4).

d) Make sure the proximity switch LED (5) lights.

e) Screw the proximity switch (2) out one half turn and tighten the nut (3).

f) Make sure the LED (5) is still lit.

g) Switch **Off** the external air supply and check the LED (5) goes out.

h) Remove the external air supply and reconnect the hose (1).

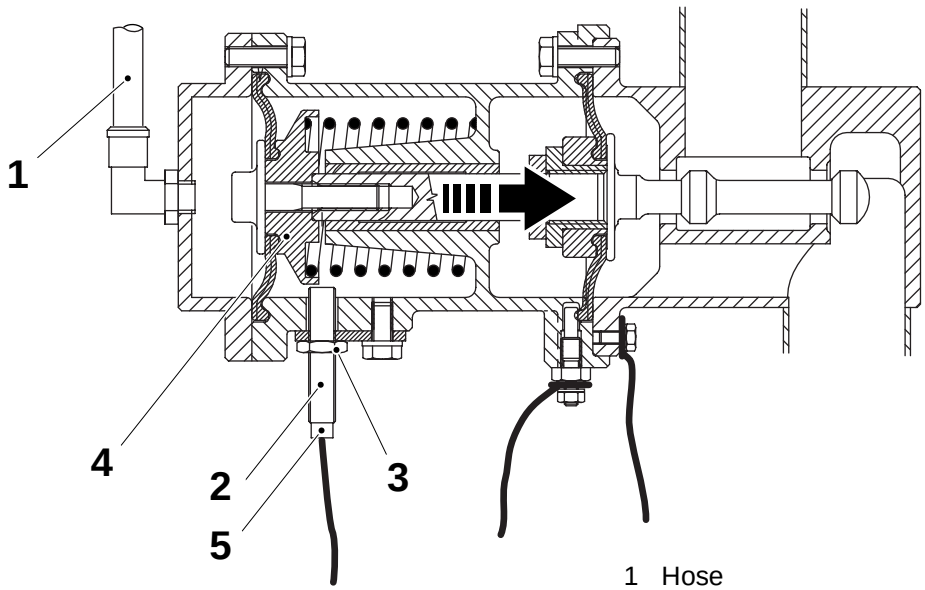

1 Hose
2 Proximity switch
3 Nut
4 Spacer
5 LED

1.2.3-3 Flow Regulator - Change Diaphragm

Machine Status	Mains Power ON
SPC Reference	1498700-0200

a) Dismantle the regulating valve, see 1.2.3-1 Flow Regulator - Overhaul Regulating Valve steps a) to g).

b) Remove the diaphragm (1), the spacer (2), the spring (3) and pull out the shutter (4). Change the diaphragm (1) as required.

c) Remove the shock absorber (5). Loosen the bushing (6) and remove the spacer (7) and the diaphragm (8). Change the diaphragm (8) as required.

d) Assemble in the reverse order, see 1.2.3-1 Flow Regulator - Overhaul Regulating Valve.

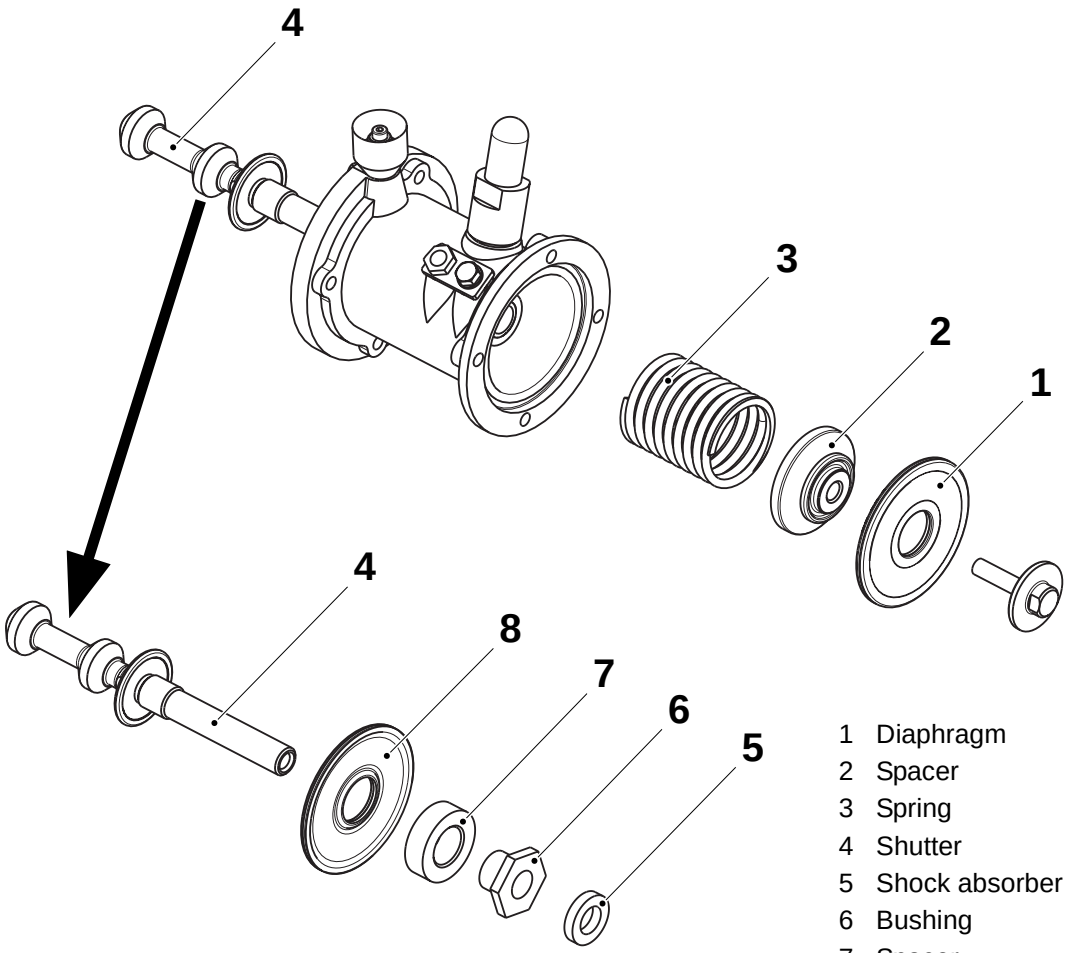

1 Diaphragm
2 Spacer
3 Spring
4 Shutter
5 Shock absorber
6 Bushing
7 Spacer
8 Diaphragm

1.2.3-4 Flow Regulator - Set Overpressure

Machine Status	Main Power ON
SPC Reference	1498700-0200

Using the pressure regulator (1) on the lower valve panel (2) set the air pressure for the flow regulator body (3) to a value within the limits **20 to 30 kPa (0.2 to 0.3 bar)**.

Note! This setting avoids condense in the flow regulator body.

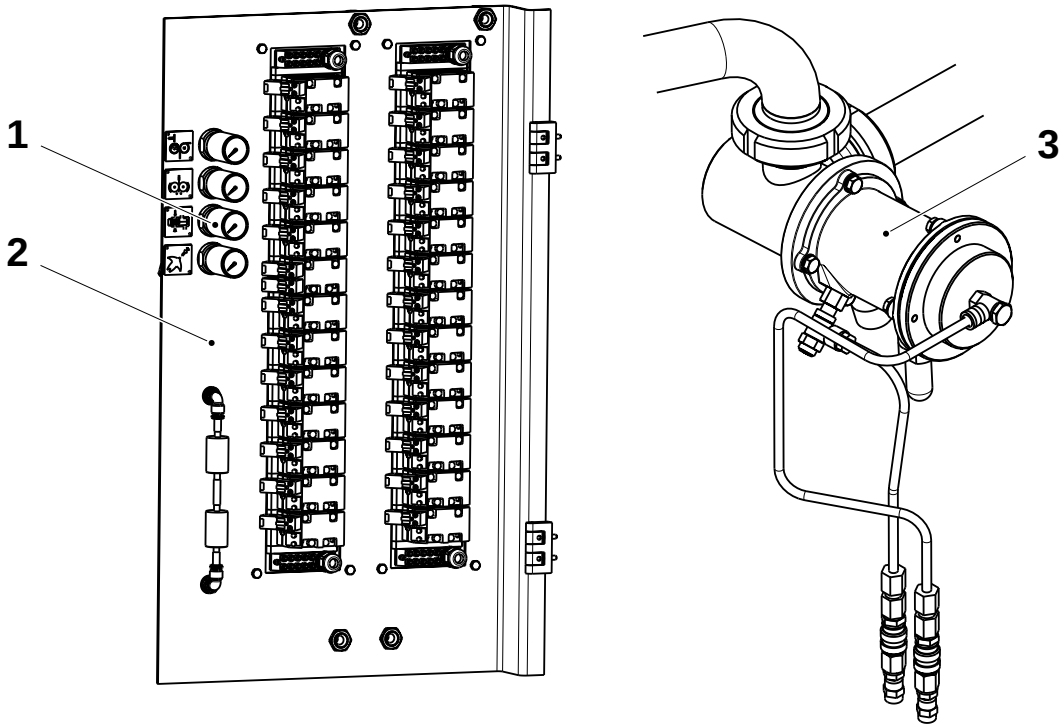

1 Pressure regulator
2 Valve panel
3 Flow regulator

1.2.4 Fastening Plate

1.2.4-1 Fastening Plate - Check

SPC Reference	1498667-0100

a) Remove the filling pipe, see 1.2.5-1 Filling Pipe - Remove.

b) Remove the nuts (1) and fastening plate (2).

Note! If you remove the gasket (3) make sure you clean the column thoroughly before fitting new gaskets.

c) Check the gasket (3) and (4) for wear or damage and change as required.

d) Fit the fastening plate (2) and nuts (1).

e) Tighten the nuts (1) until the gasket (4) between the fastening plate (2) and the column (5) is compressed to the dimension **A**.

f) Align the filling pipe, see 1.2.5-3 Filling Pipe - Set Position (Level Probe).

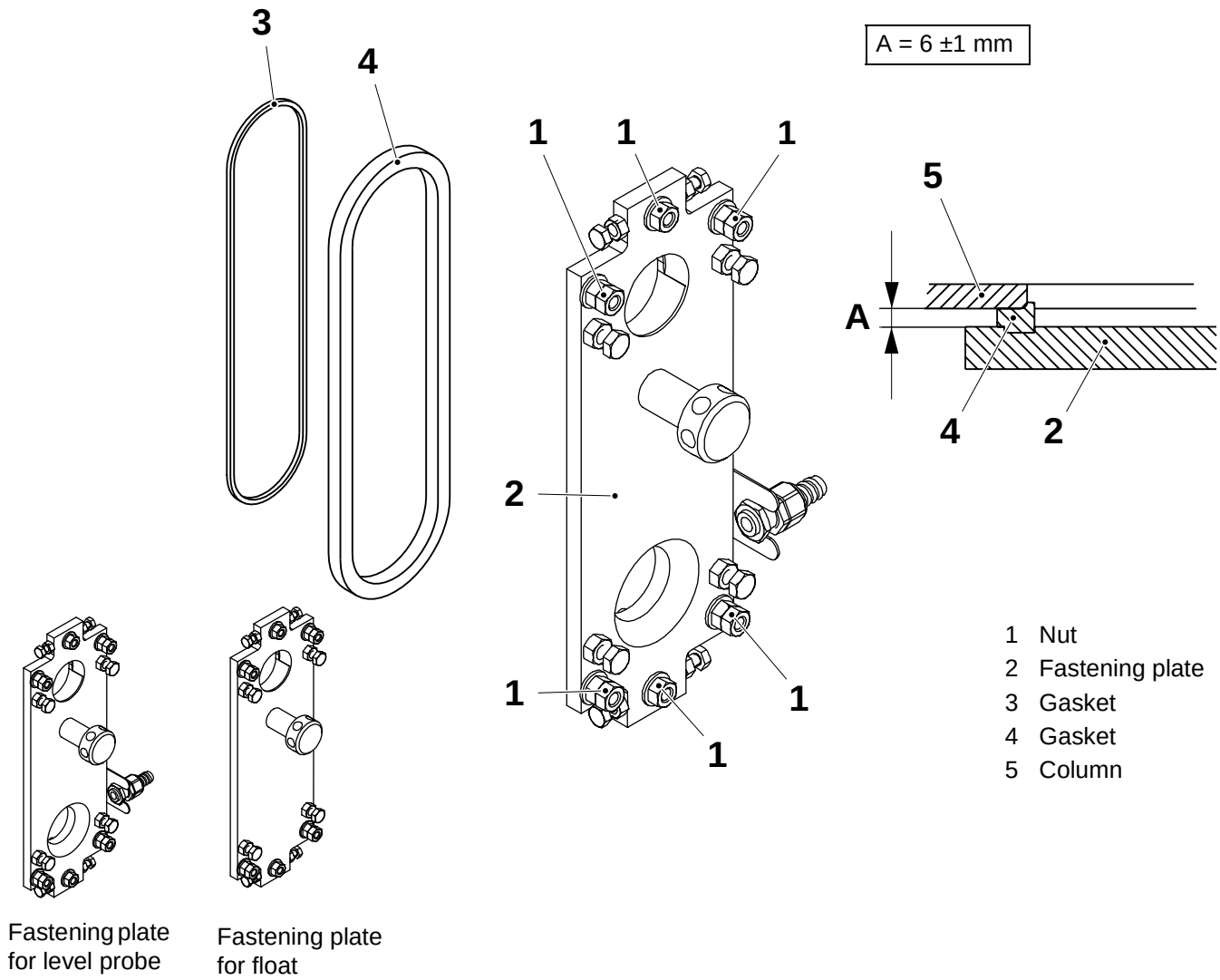

1.2.5 Filling Pipe

1.2.5-1 Filling Pipe - Remove

SPC Reference	1498668-0200 2523670-0200

Valid for Filling Pipe with Float

a) Remove the pin (1) and the lower part of the filling pipe (2).

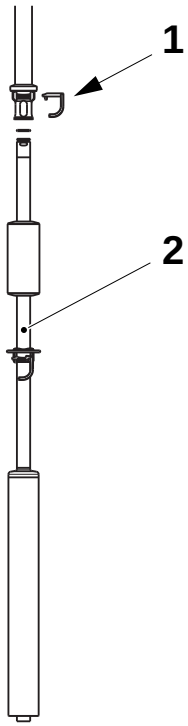

Design for all other volumes

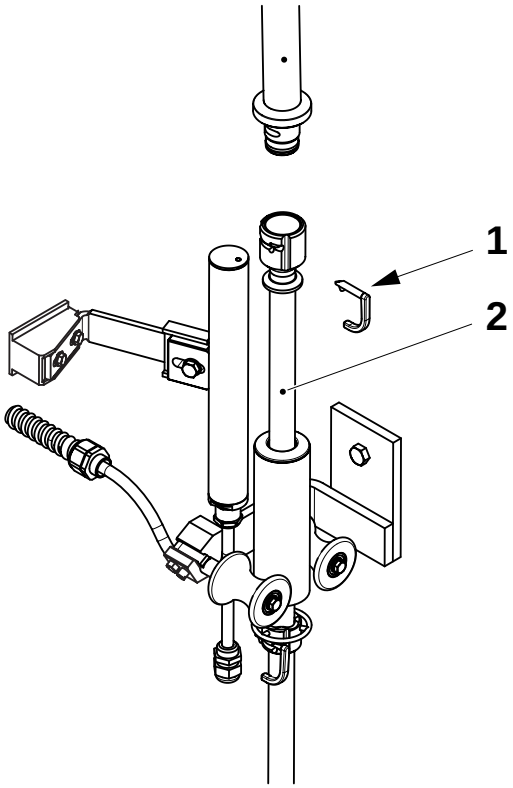

Design for volume TBA 200 S

1 Pin
2 Lower filling pipe

(Cont'd)

(Cont'd)

Valid for Filling Pipe with Level Probe

a) Remove the pin (1) and the lower part of the filling pipe (2), taking care not to damage the level probe (3).

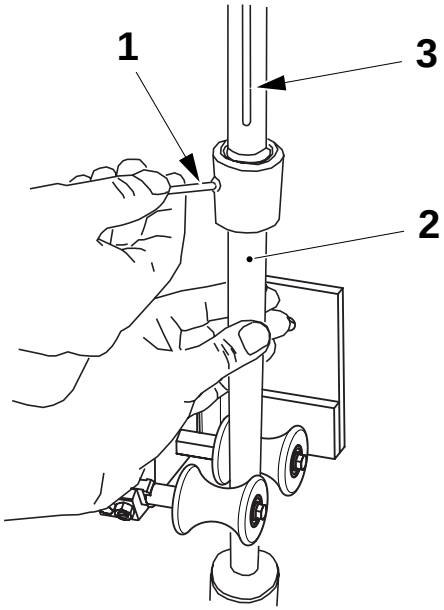

1 Pin
2 Lower filling pipe
3 Level probe

(Cont'd)

(Cont'd)

Valid for All Machines

a) Remove the screws (1) and the plate (2) from the busbar clamp (3).

b) Remove the screws (4) and disconnect the busbar (5) from the inductor (6) taking care of the gasket (7).

c) Remove the nuts (8) and the inductor (6).

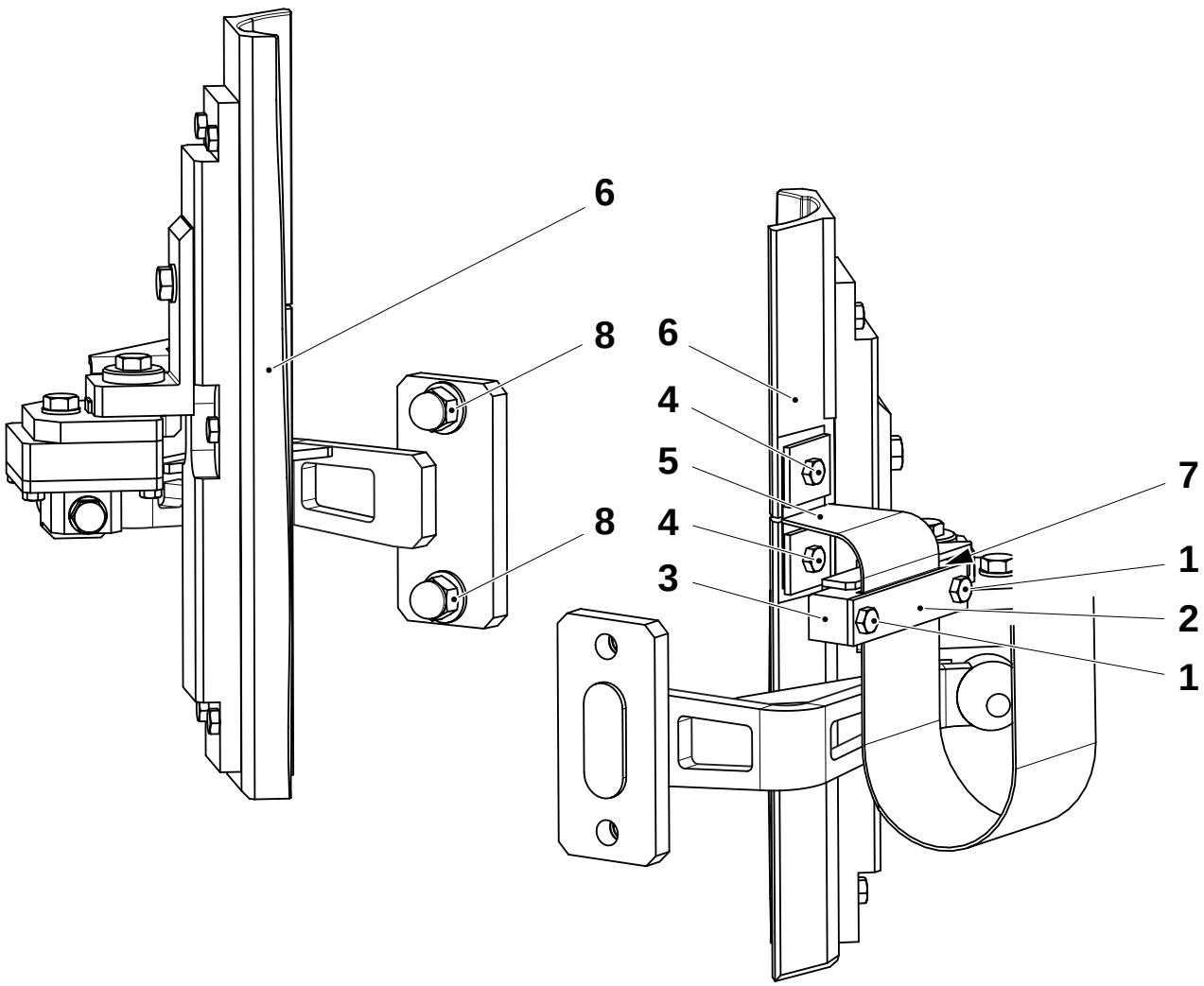

1 Screw
2 Plate
3 Busbar clamp
4 Screw
5 Busbar
6 Inductor
7 Gasket
8 Nut

(Cont'd)

(Cont'd)

d) Remove the screws (9) and then remove the front part of the lower forming ring (10).

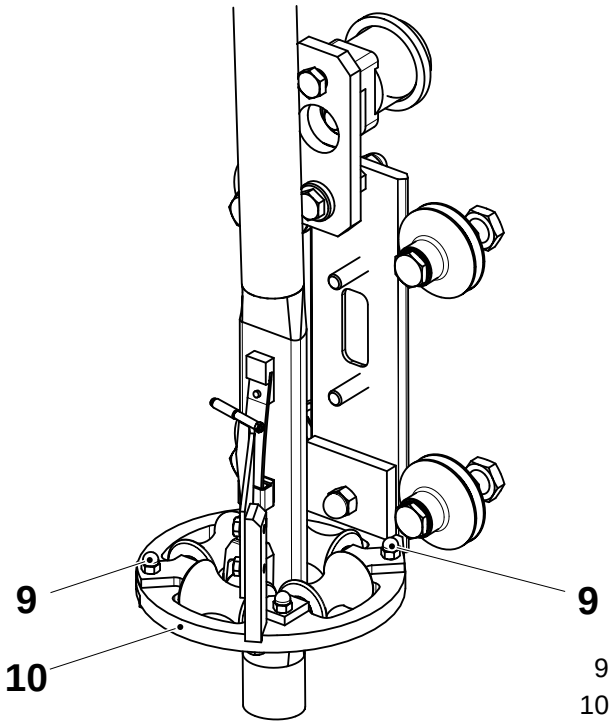

9 Screw
10 Front half of forming ring

e) Remove the pressure roller and spring (11) from the filling pipe.

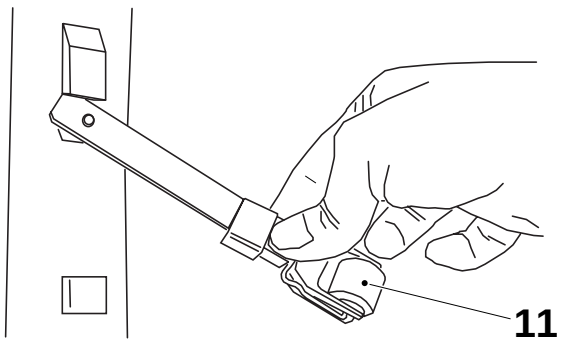

11 Pressure roller and spring

(Cont'd)

(Cont'd)

f) Remove the screws (12) and then remove the aseptic chamber seal (13) together with the O-ring (14).

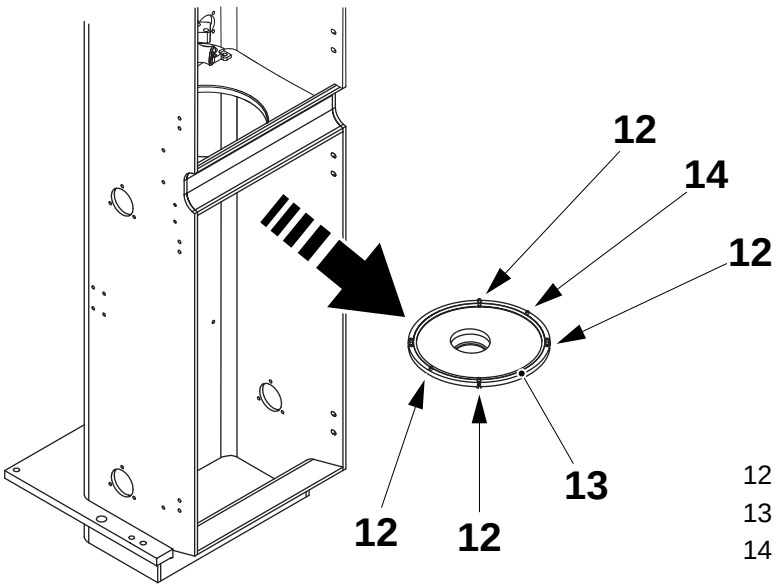

12 Screw
13 Seal
14 O-ring

g) Loosen the clamps (15) at either end the product pipe (16) and then remove the pipe and gaskets.

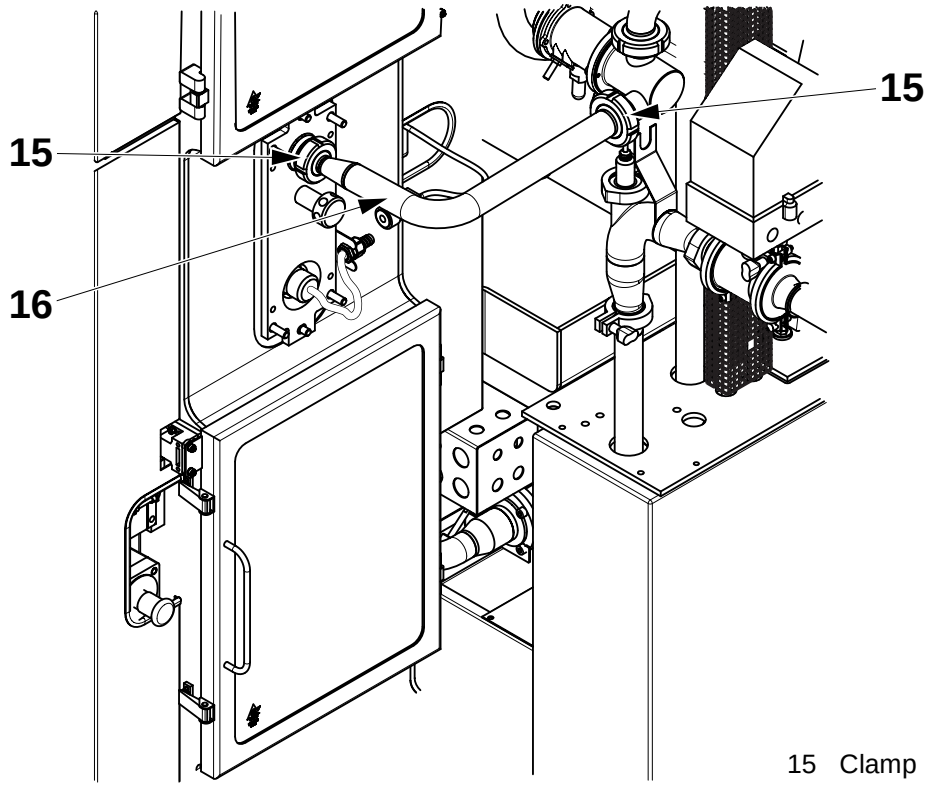

15 Clamp
16 Pipe

(Cont'd)

(Cont'd)

Valid for Old Forming Ring

Remove the screw (1) and forming ring (2).

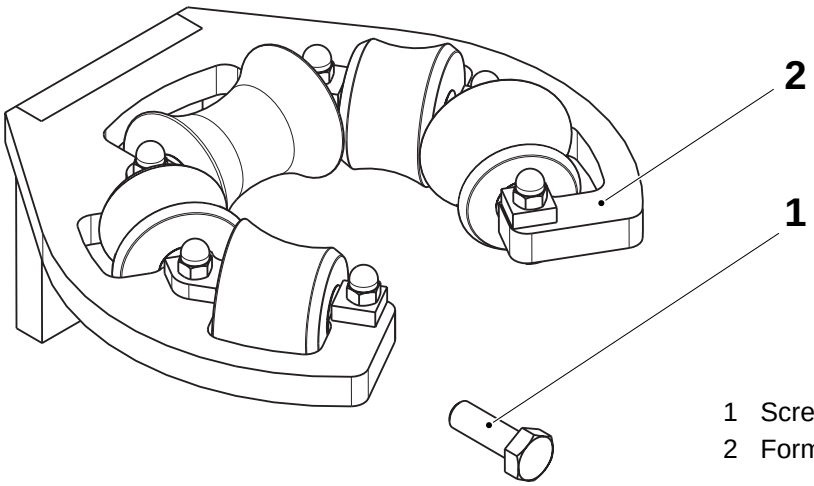

1 Screw
2 Forming ring

Valid for New Forming Ring

Remove the screws (1) and the front half of the forming ring (2).

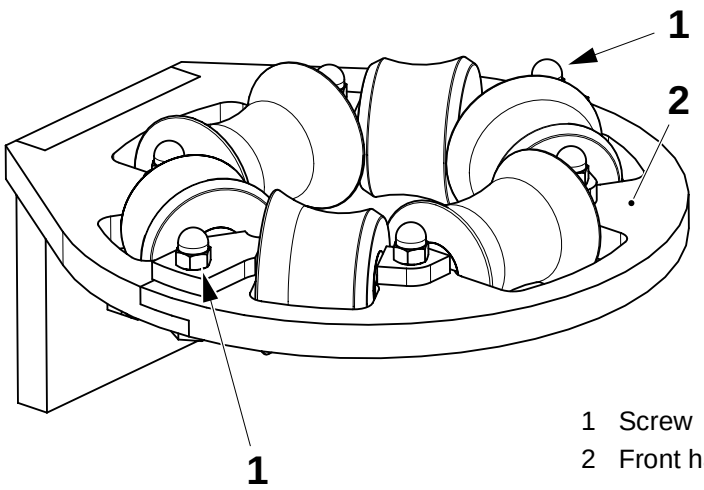

1 Screw
2 Front half of forming ring

(Cont'd)

(Cont'd)

Valid for Filling Pipe with Float

a) With one hand firmly holding the filling pipe (1), undo the screw (2) on the fastening plate (3).

b) Remove the filling pipe (1) and store it in a safe place.

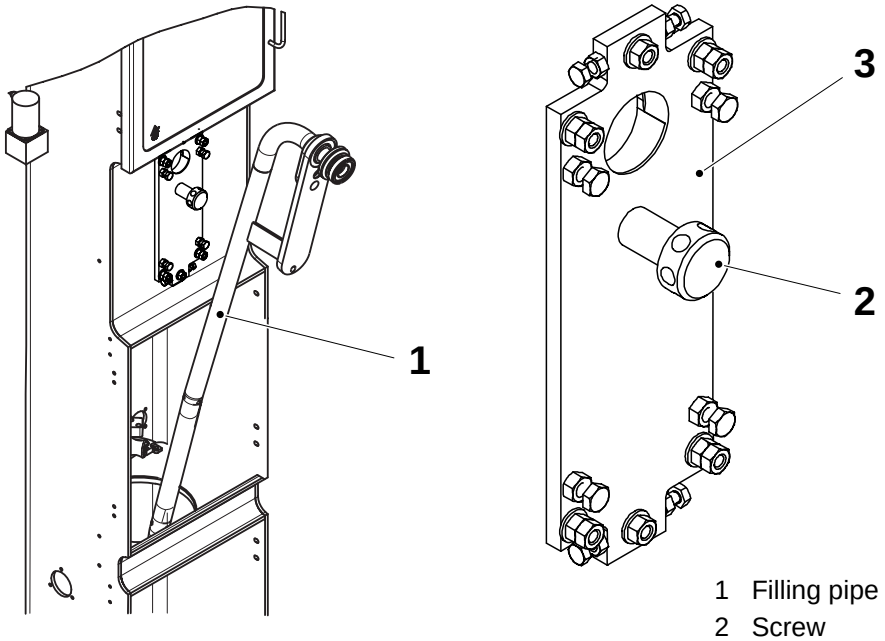

1 Filling pipe
2 Screw
3 Fastening plate

(Cont'd)

(Cont'd)

Valid for Filling Pipe with Level Probe

a) Disconnect the electrical connector (1) for the level probe.

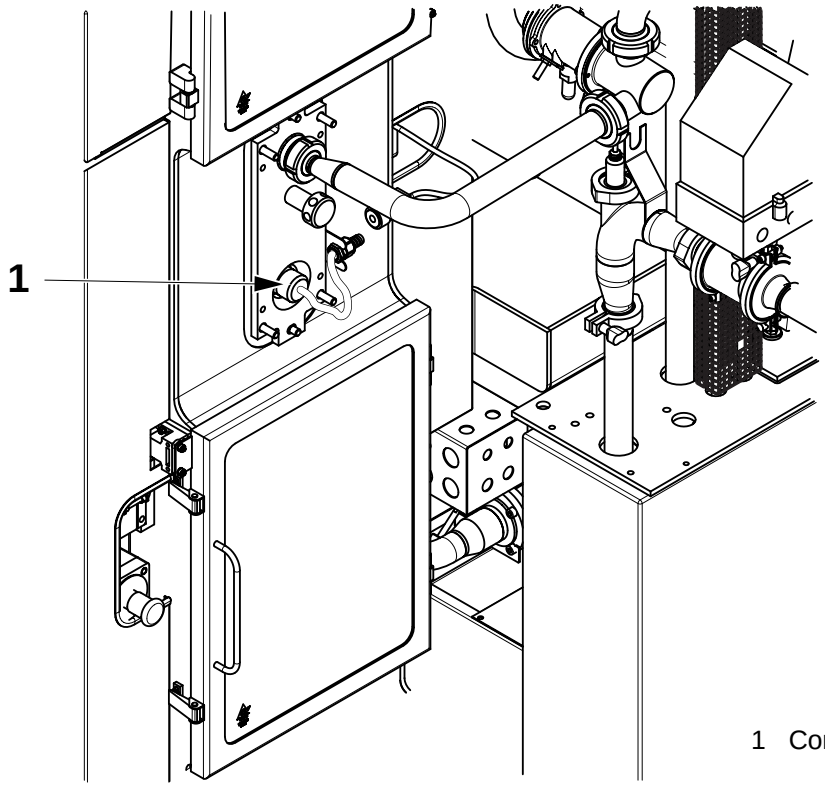

1 Connector

b) With one hand firmly holding the filling pipe (2), undo the screw (4) on the fastening plate (3).

c) Remove the filling pipe (2) and store it in a safe place **taking care not to damage the level probe**.

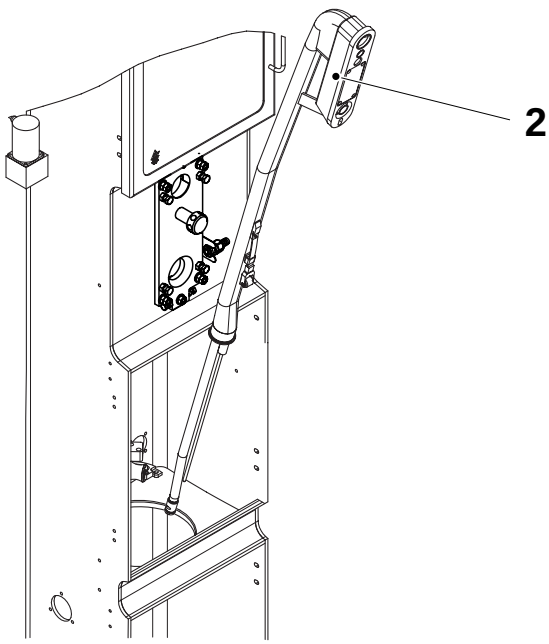

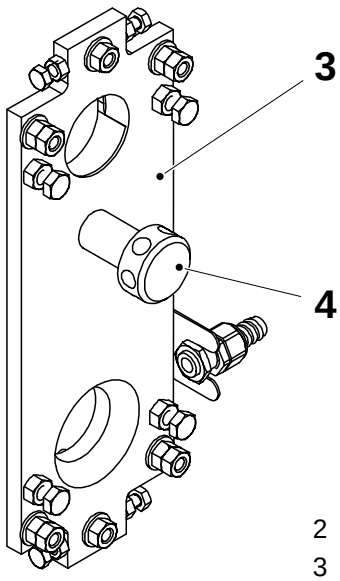

2 Filling pipe
3 Fastening plate
4 Screw

1.2.5-2 Filling Pipe - Fit

SPC Reference	1498668-0200 2523670-0200

a) Remove the screws (1) and the plate (2) from the busbar clamp (3).

b) Remove the screws (4) and disconnect the busbar (5) from the inductor (6) taking care of the gasket (7).

c) Remove the nuts (8) and the inductor (6).

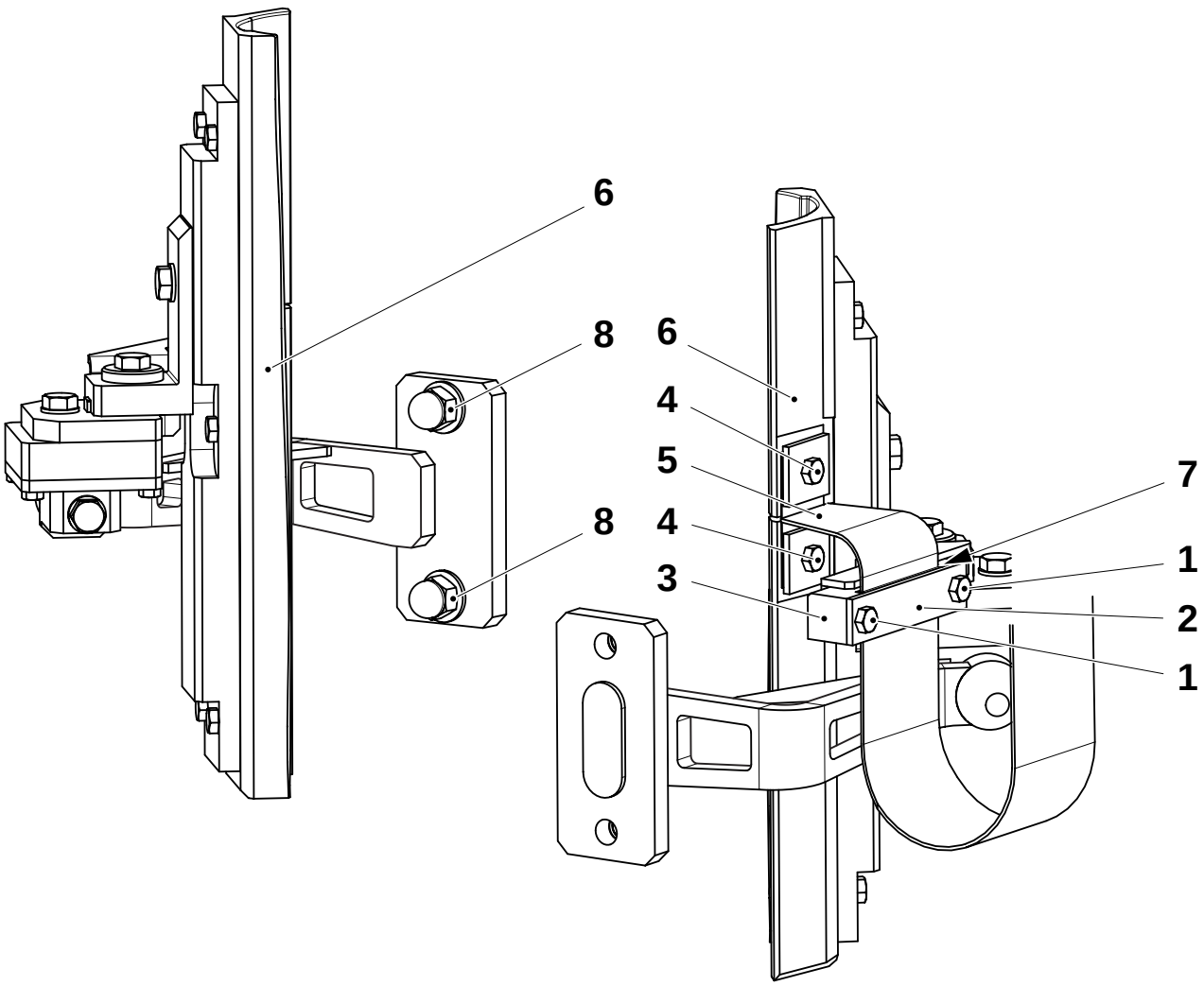

1 Screw
2 Plate
3 Busbar clamp
4 Screw
5 Busbar
6 Inductor
7 Gasket
8 Nut

(Cont'd)

(Cont'd)

d) Remove the screws (9) and then remove the front part of the lower forming ring (10).

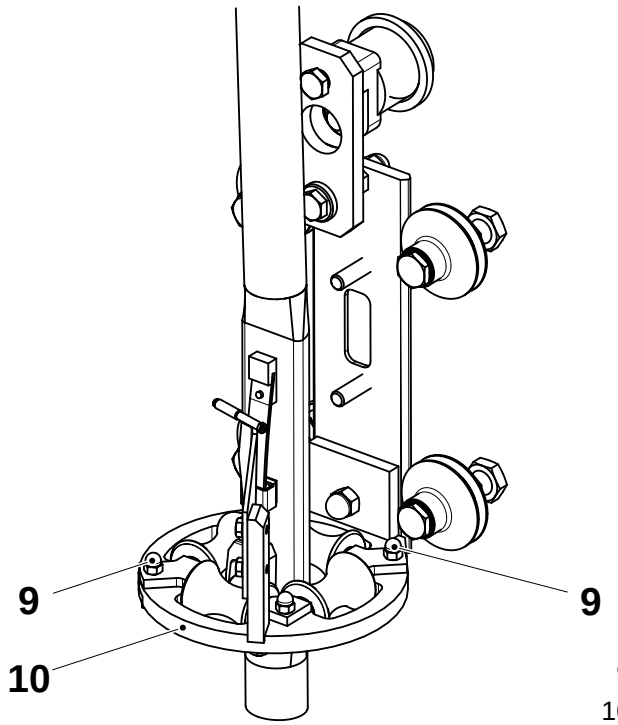

9 Screw
10 Front half of forming ring

e) Remove the pressure roller and spring (11) from the filling pipe.

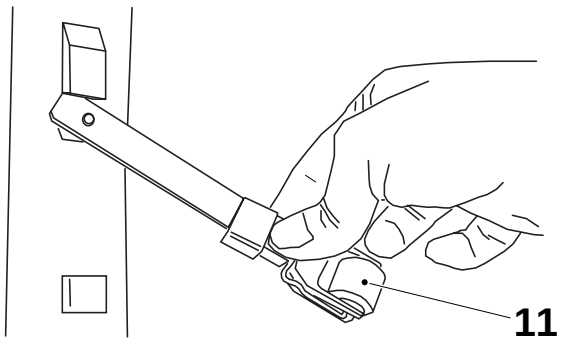

11 Pressure roller and spring

(Cont'd)

(Cont'd)

f) Remove the screws (12) and then remove the aseptic chamber seal (13) together with the O-ring (14).

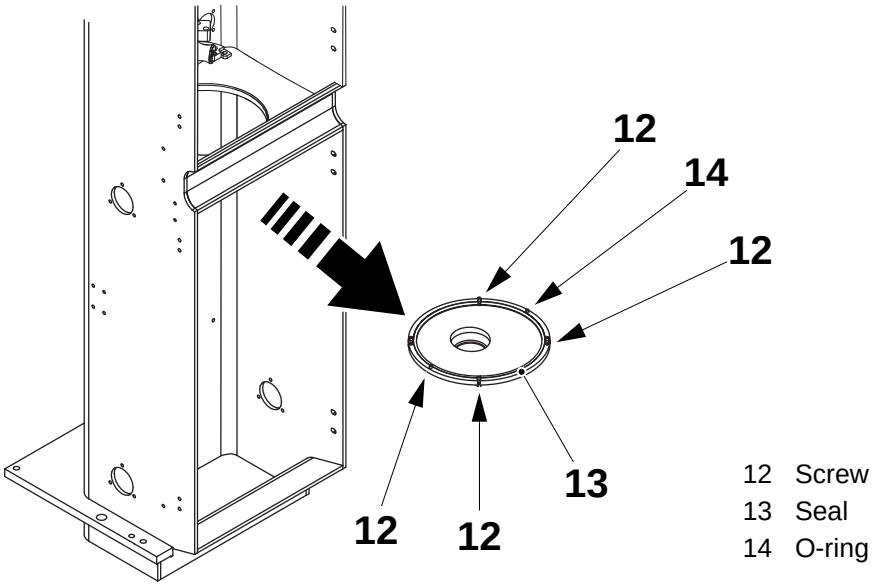

Valid for Old Forming Ring

Remove the screw (1) and forming ring (2).

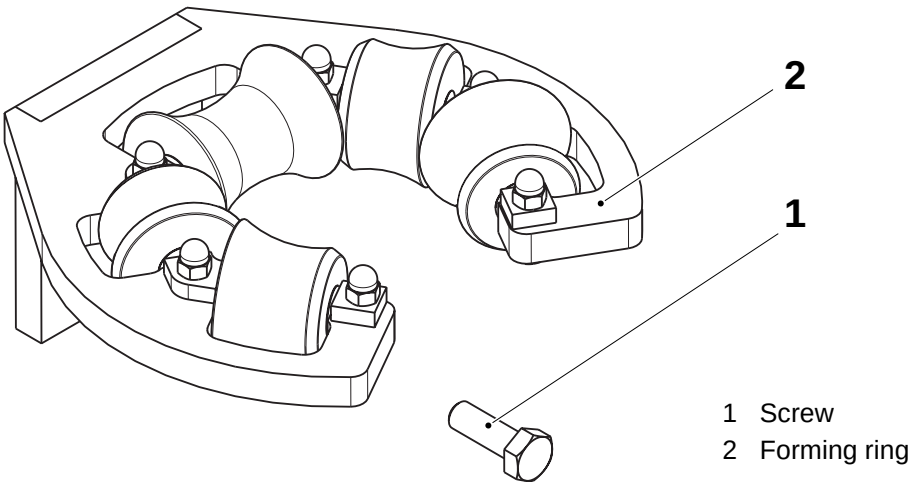

(Cont'd)

(Cont'd)

Valid for New Forming Ring

Remove the screws (1) and the front half of the forming ring (2).

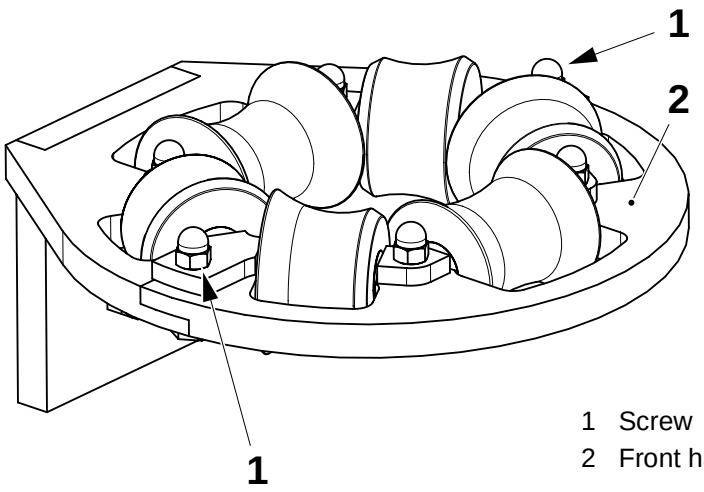

1 Screw
2 Front half of forming ring

Valid for Filling Pipe with Float

Fit the filling pipe (1) and secure it in position with the screw (2) on the fastening plate (3).

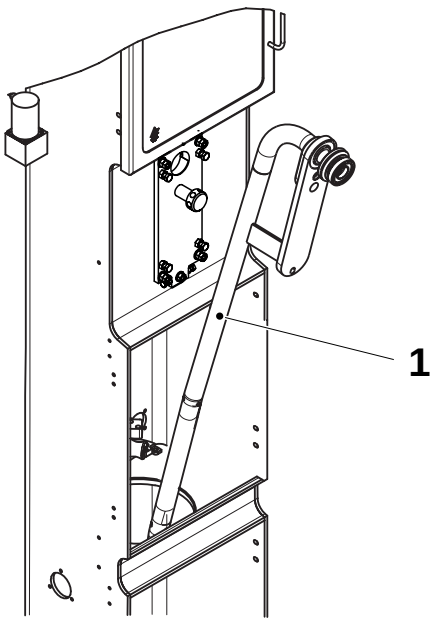

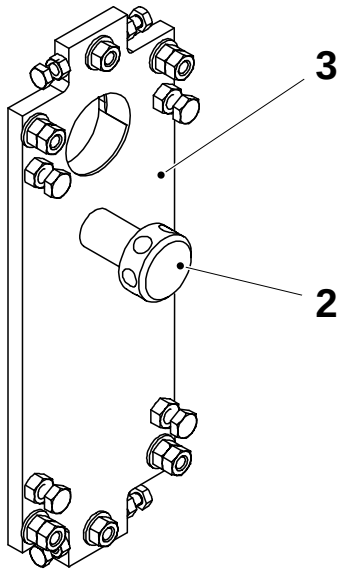

1 Filling pipe
2 Screw
3 Fastening plate

(Cont'd)

(Cont'd)

Valid for Filling Pipe with Level Probe

a) Fit the filling pipe (1) and secure it in position with the screw (3) on the fastening plate (2).

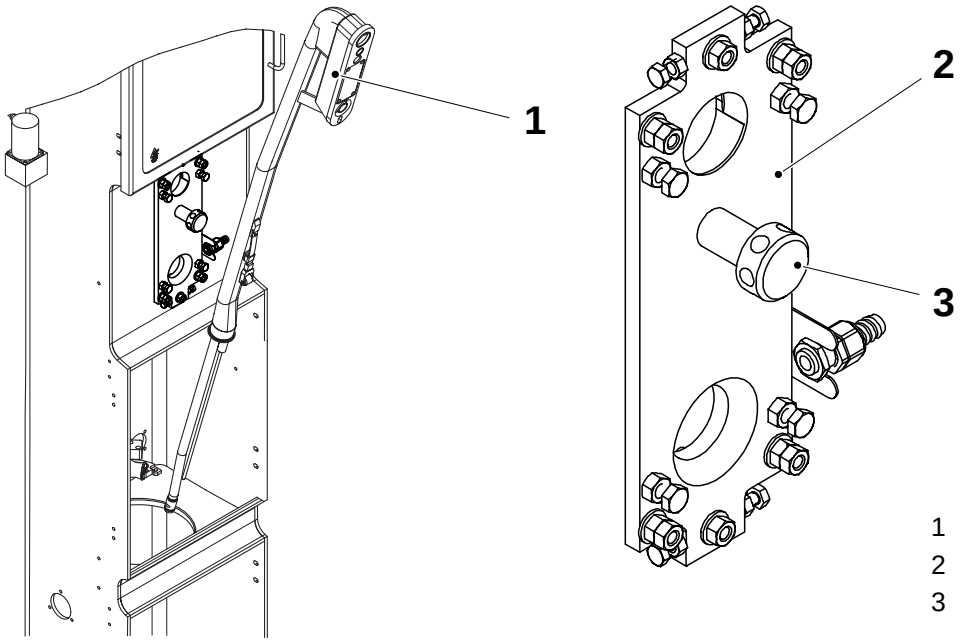

1 Filling pipe
2 Fastening plate
3 Screw

b) Connect the electrical connector (4) for the level probe.

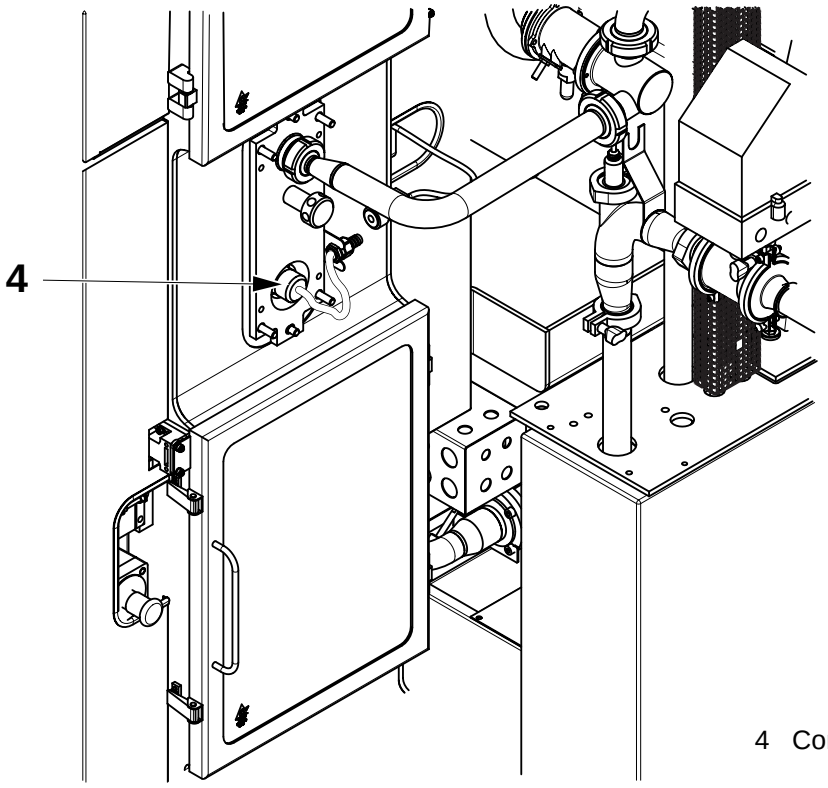

4 Connector

(Cont'd)

(Cont'd)

Valid for Old Forming Ring

Fit the forming ring (1) and secure it in position with the screw (2).

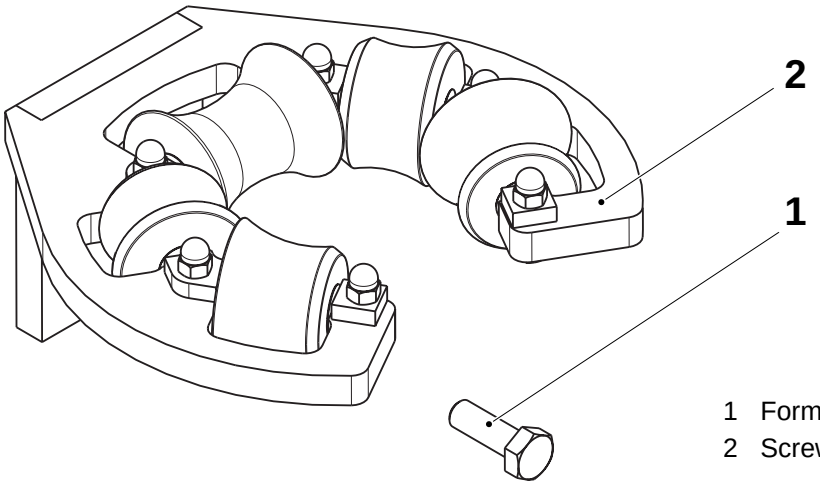

1 Forming ring
2 Screw

Valid for New Forming Ring

Fit the front half of the forming ring (1) with the screws (2).

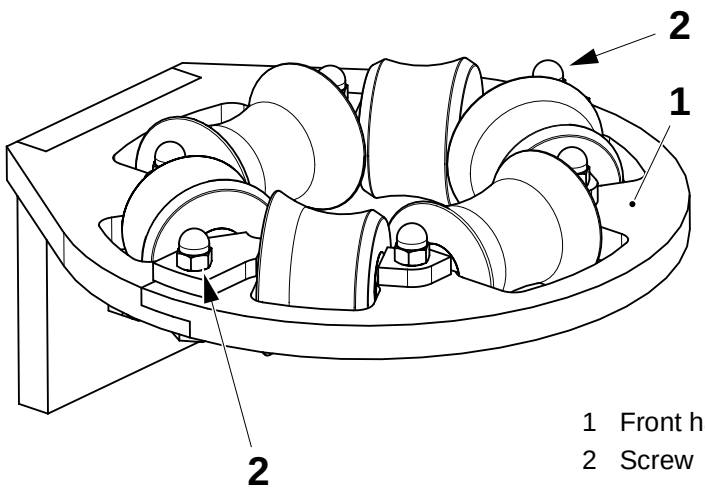

1 Front half of forming ring
2 Screw

(Cont'd)

(Cont'd)

Valid for All Machines

a) Fit the aseptic chamber seal (1) together with the O-ring (2) and tighten the screws (3).

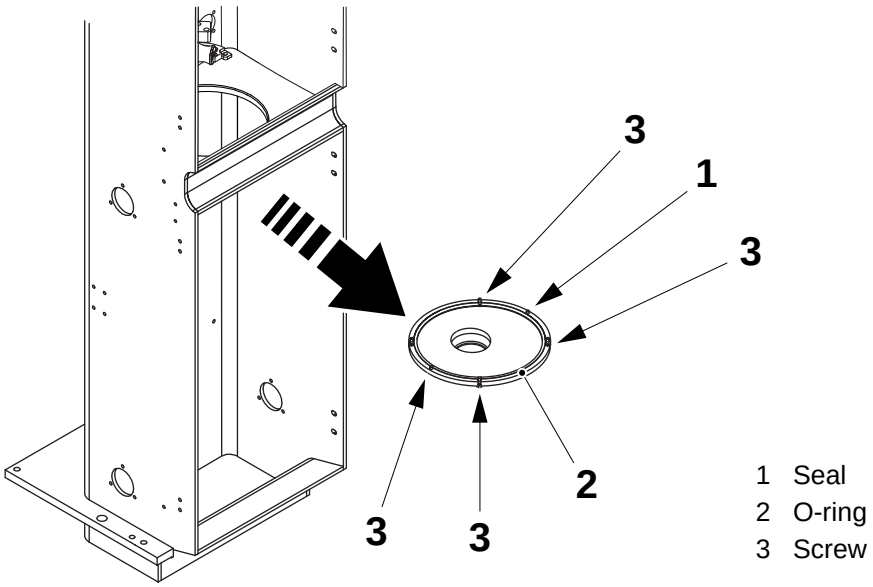

(Cont'd)

(Cont'd)

b) Fit the pressure roller and spring (4) on the filling pipe.

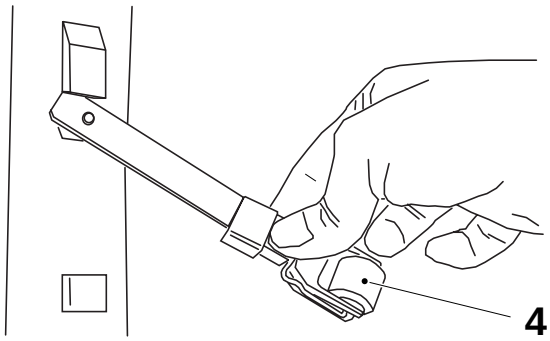

4 Pressure roller and spring

c) Fit the front part of the lower forming ring (5) and secure in position with the screws (6).

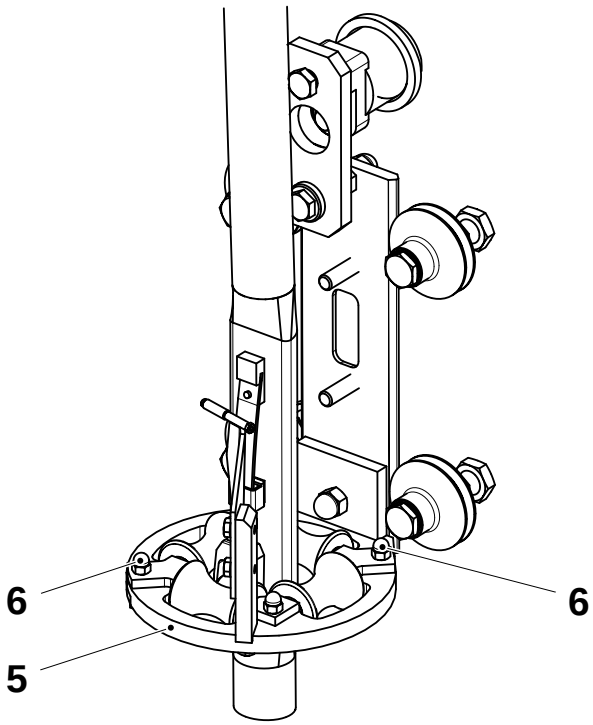

5 Front half of forming ring
6 Screw

(Cont'd)

(Cont'd)

d) Fit the inductor (7) and secure in position with the nuts (8).

e) Connect the busbar (9) to inductor (7) with the screws (10).

f) Fit the gasket (11) in the clamp (12) and secure the busbar (9) in position by fitting the plate (13) and inserting and tightening the screws (14).

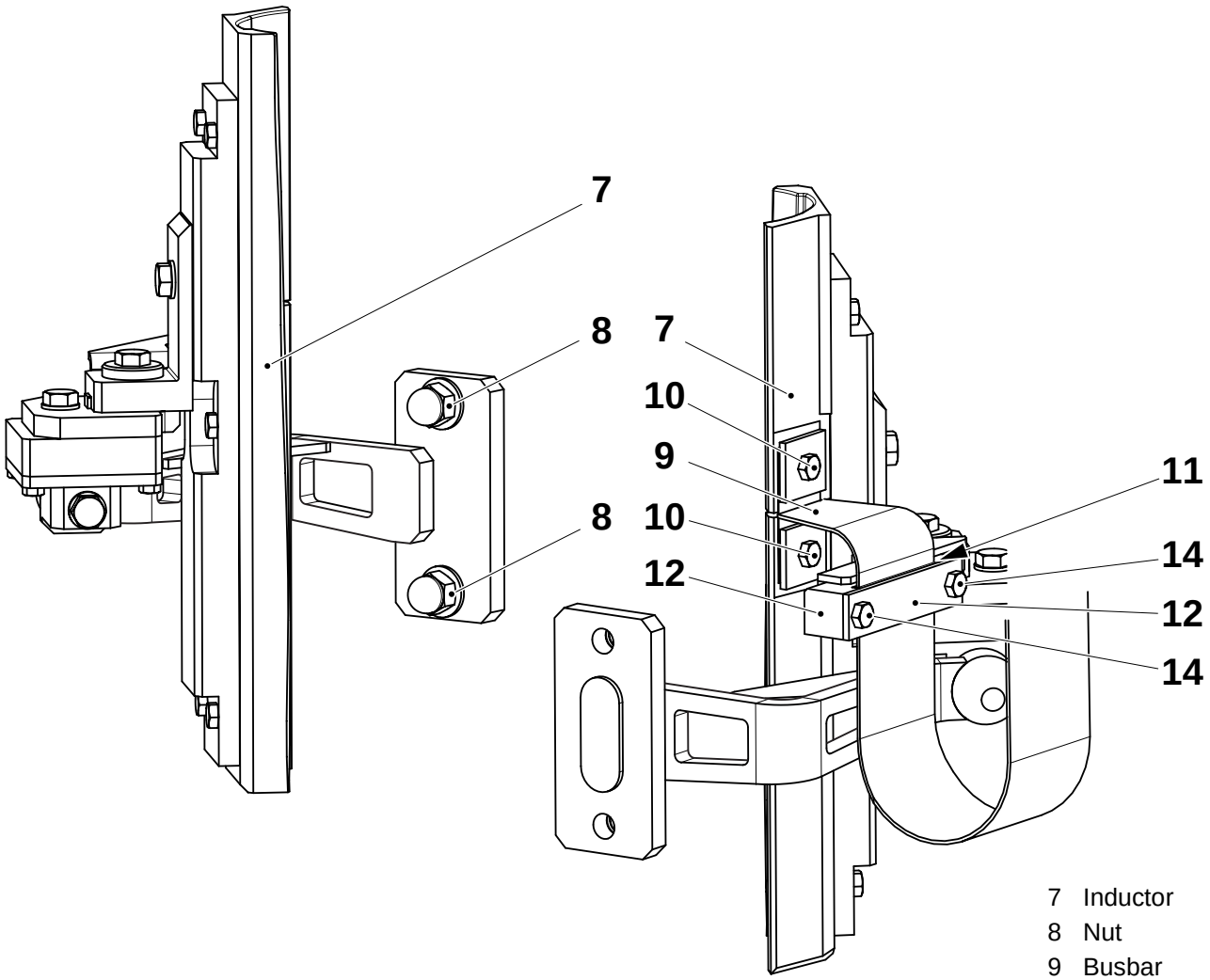

7 Inductor
8 Nut
9 Busbar
10 Screw
11 Gasket
12 Clamp
13 Plate
14 Screw

(Cont'd)

(Cont'd)

g) Fit the product pipe (14) and gaskets and tighten the clamps (16).

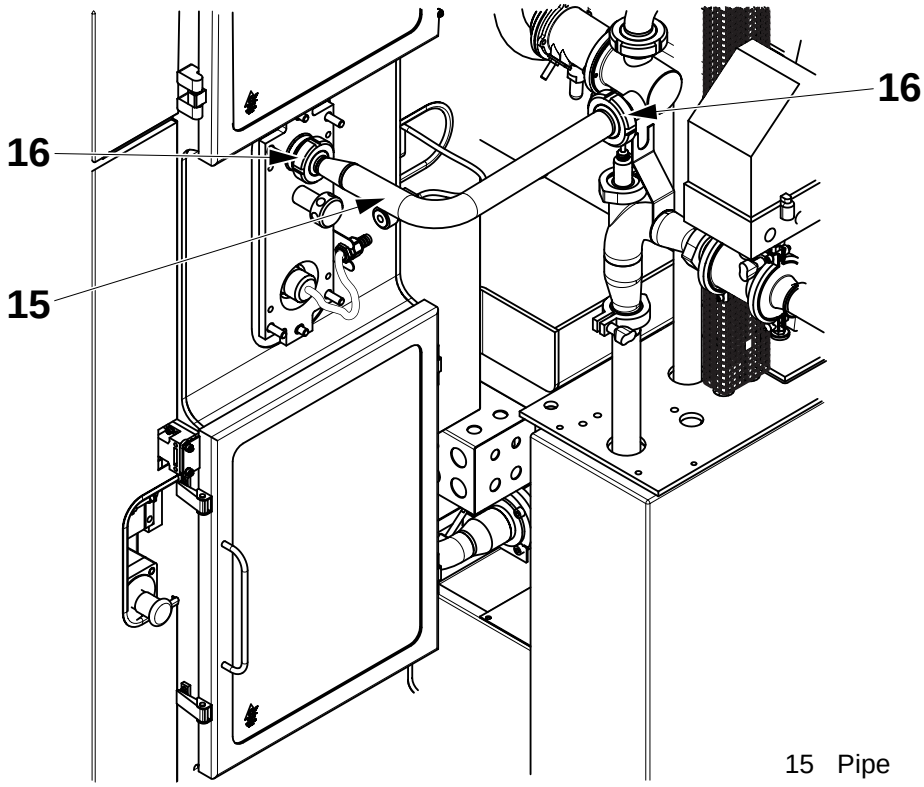

15 Pipe
16 Clamp

(Cont'd)

(Cont'd)

Valid for Filling Pipe with Float

a) Make sure the O-ring (1) is fitted and undamaged, change as required.

b) Fit the lower filling pipe (2) and lock it in position with the pin (3).

c) Set the position of the filling pipe, see 1.2.5-4 Filling Pipe - Set Position (Float).

d) Set the position of the lower forming ring, see 1.1.4-1 Lower Forming Ring - Set Position.

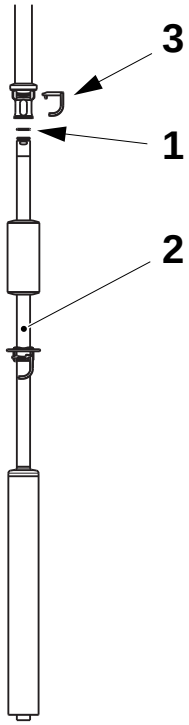

Design for all other volumes

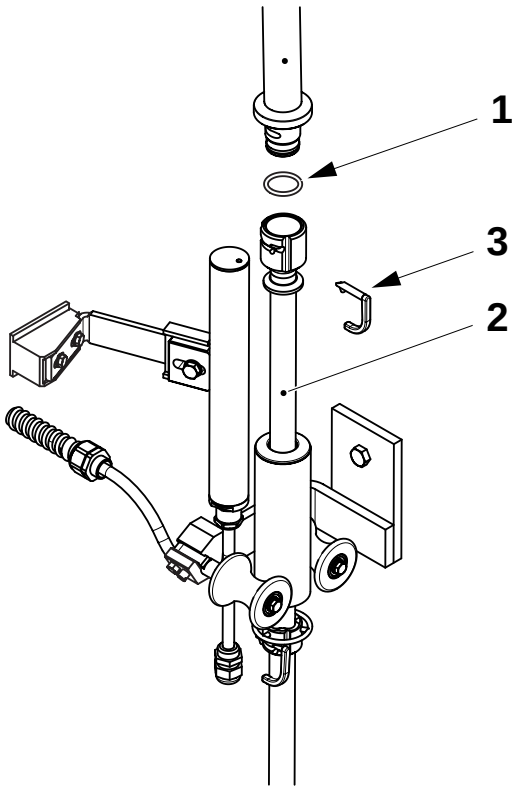

Design for volume TBA 200 S

1 O-ring
2 Lower filling pipe
3 Pin

(Cont'd)

(Cont'd)

Valid for Filling Pipe with Level Probe

a) Fit the filling pipe (1) and lock it in position with the pin (2) taking care not to damage the level probe (3).

b) Set the position of the filling pipe, see 1.2.5-3 Filling Pipe - Set Position (Level Probe).

c) Set the position of the lower forming ring, see 1.1.4-1 Lower Forming Ring - Set Position.

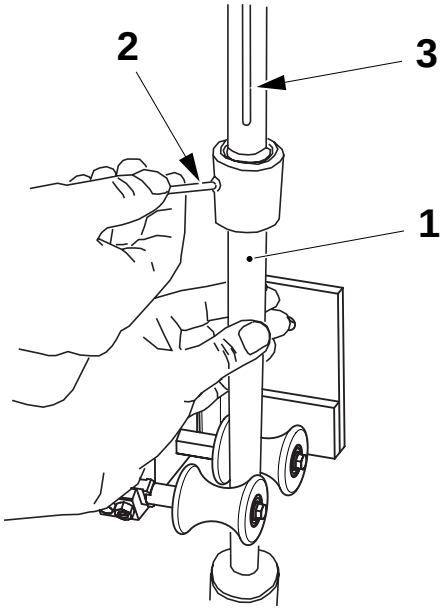

1 Lower filling pipe
2 Pin
3 Level probe

1.2.5-3 Filling Pipe - Set Position (Level Probe)

Tools - Template - Template	 TP No. 1498676 TP No. 1317807
SPC Reference	1498668-0200

a) Loosen the clamps (1) at either end the product pipe (2) and then remove the pipe and gaskets.

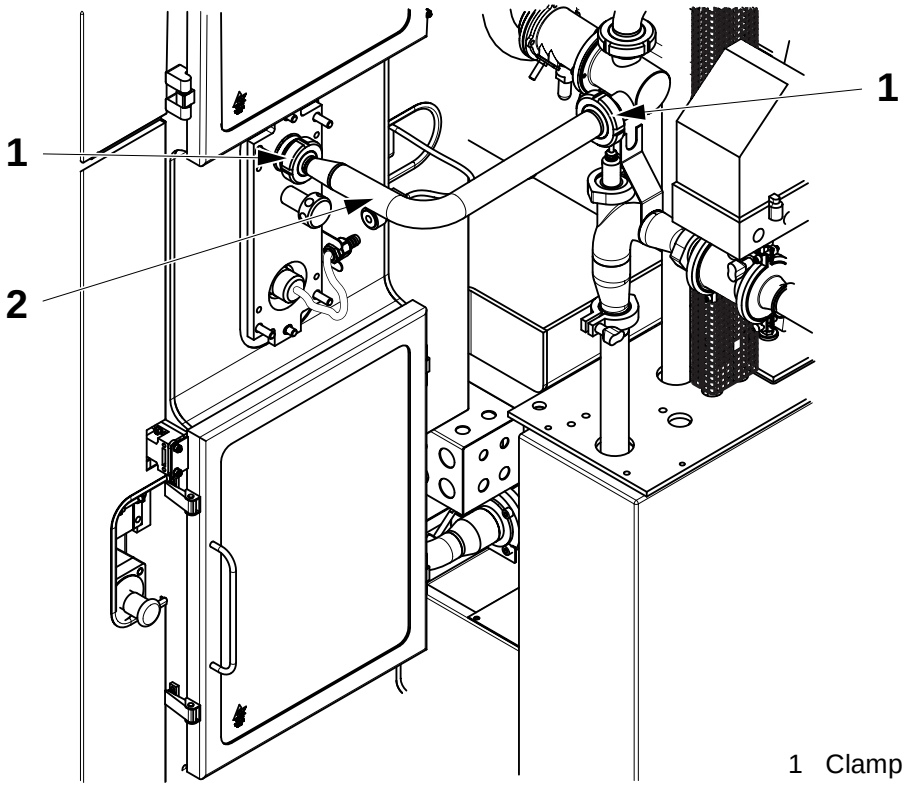

1 Clamp
2 Pipe

(Cont'd)

(Cont'd)

b) Remove the lower part of the filling pipe (3), taking care not to damage the level probe (4).

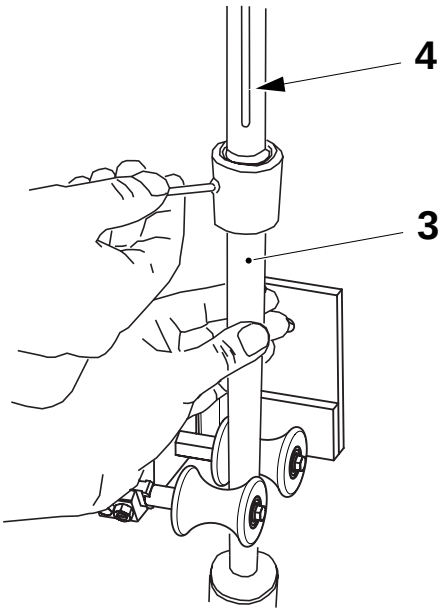

3 Lower filling pipe
4 Level probe

c) Remove the nut and (5) and the lower forming ring (6) from the short stop plate (7).

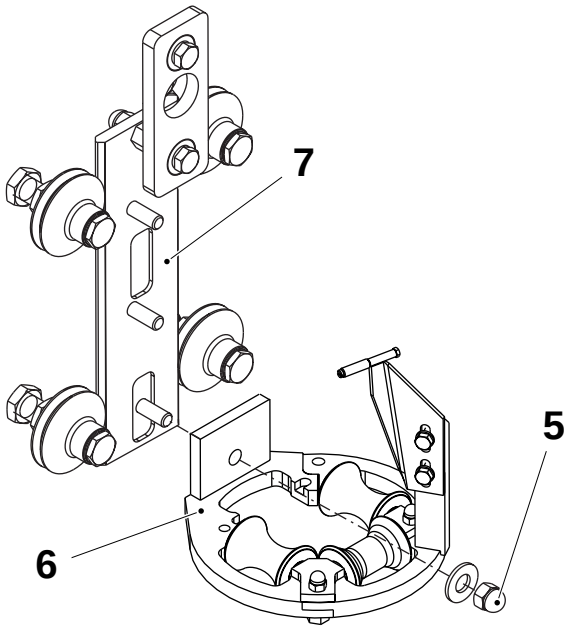

5 Nut
6 Lower forming ring
7 Short stop plate

(Cont'd)

(Cont'd)

d) Remove the screws (8) and then remove the aseptic chamber seal (9) together with the O-ring (10).

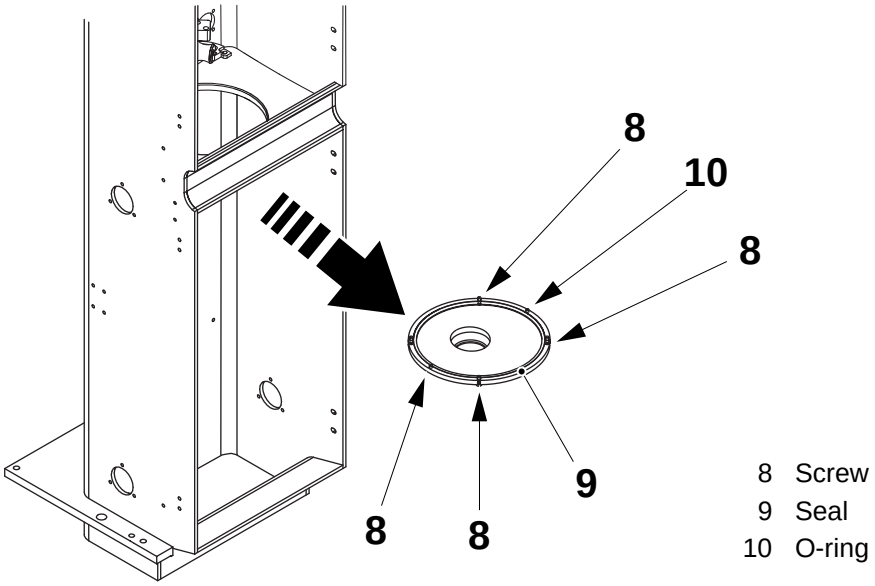

e) Fit the upper filling pipe template (11) and secure with the nut (5).

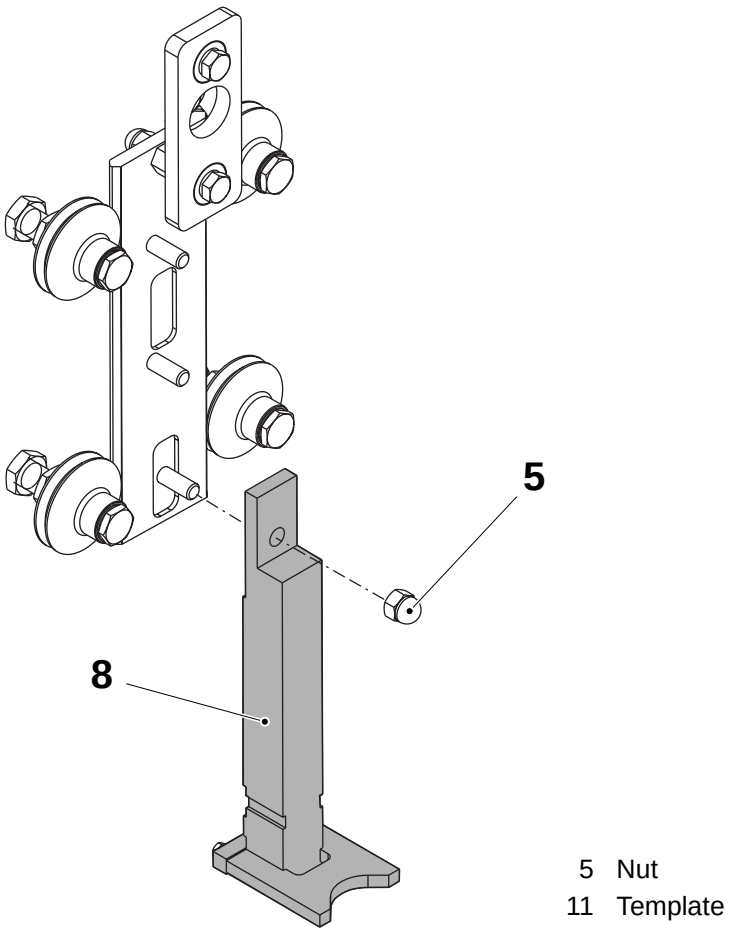

(Cont'd)

(Cont'd)

f) Remove the screw (12) and then remove the tube support (13).

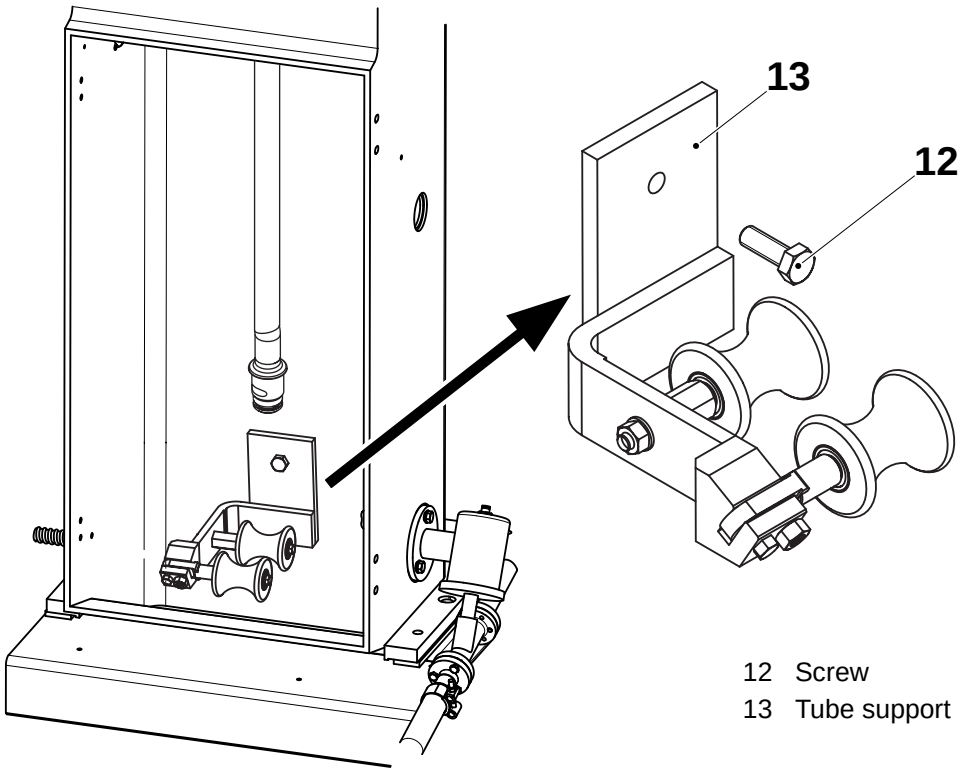

12 Screw
13 Tube support

g) Fit the template (14) and secure with the screw (15).

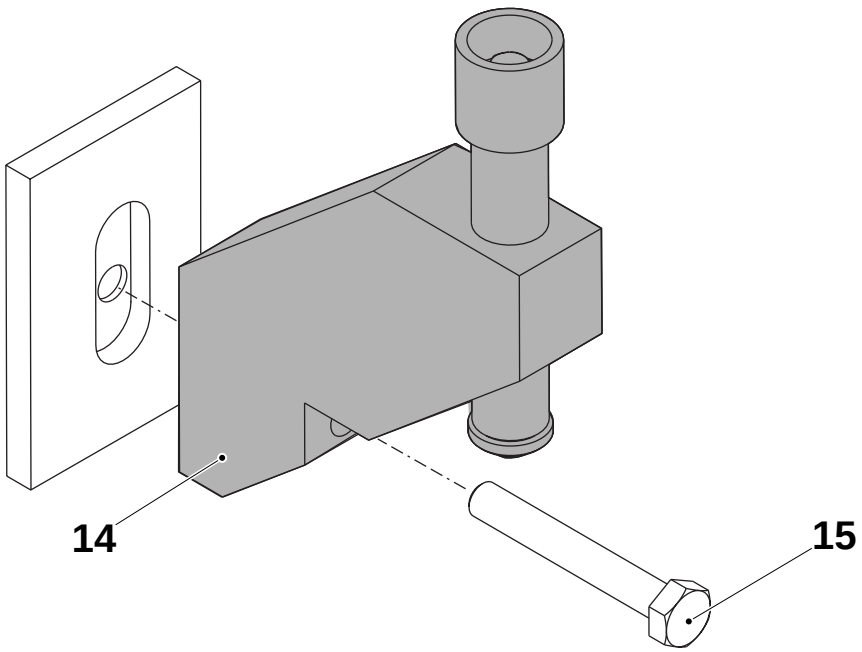

14 Template
15 Screw

(Cont'd)

(Cont'd)

h) Rotate the plate and shaft (16) clockwise so the short stop plate (7) is in the lowered position.

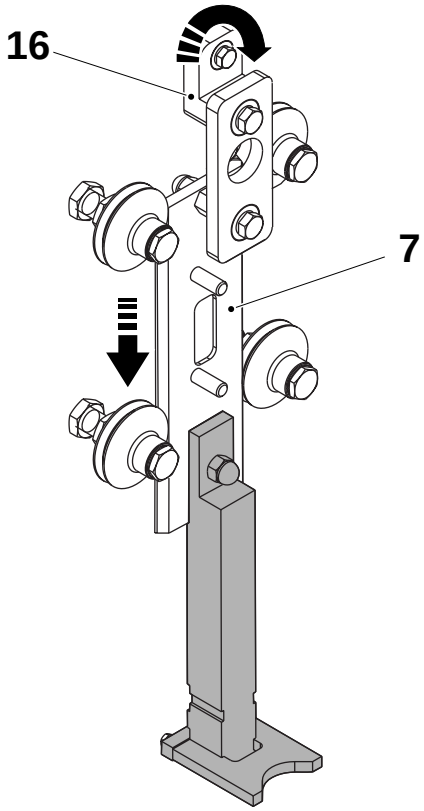

7 Short stop plate
16 Plate and shaft

(Cont'd)

(Cont'd)

i) Check the verticality of the filling pipe by raising the movable part of the lower template (17). It should be a sliding fit over the end of the filling pipe (18). If this is not the case continue with step j). When the template slides easily over the end of the pipe there is no need to align the pipe, continue with step n).

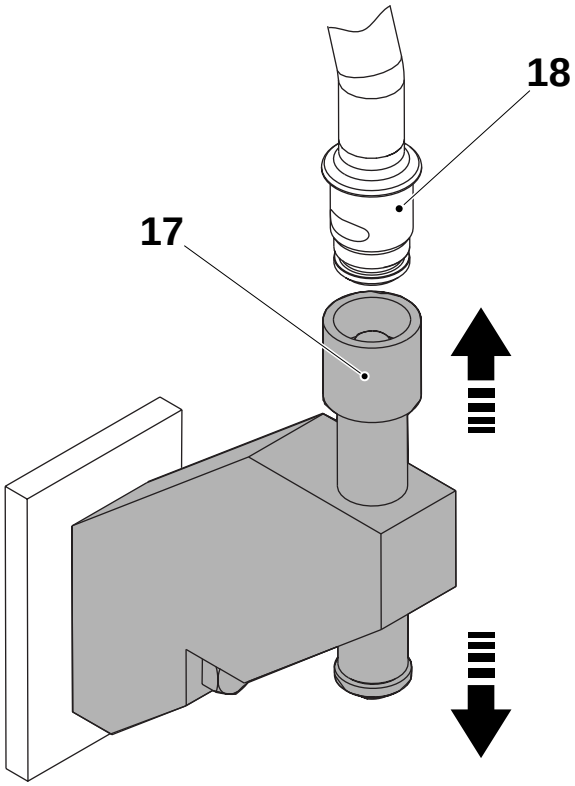

17 Movable part lower template
18 Filling pipe

j) On the fastening plate (19), loosen the locking nuts on the screws (20) and loosen the nuts (21). Loosen the screws (20) a few turns.

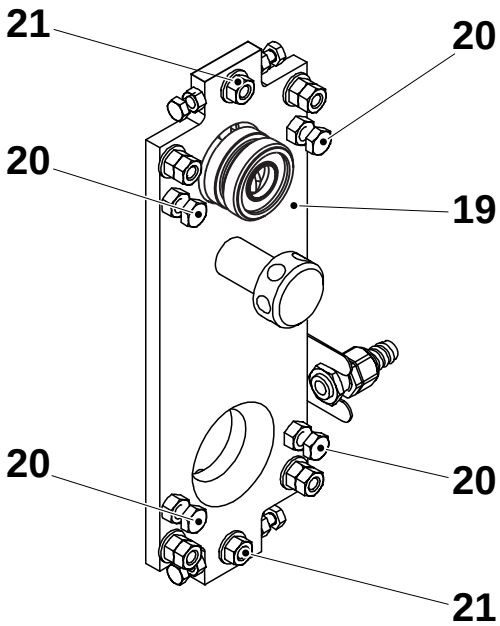

19 Fastening plate
20 Screws and locking nuts
21 Nuts

(Cont'd)

(Cont'd)

k) Align and centre the filling pipe to the templates using the screws (22) and (23). Do not overtighten the screws (22).

l) Check the seal (24) between the fastening plate (19) and the column (25) is compressed to distance **A**.

m) Lock the fastening plate in position with the lock nuts on screws (22) and (23).

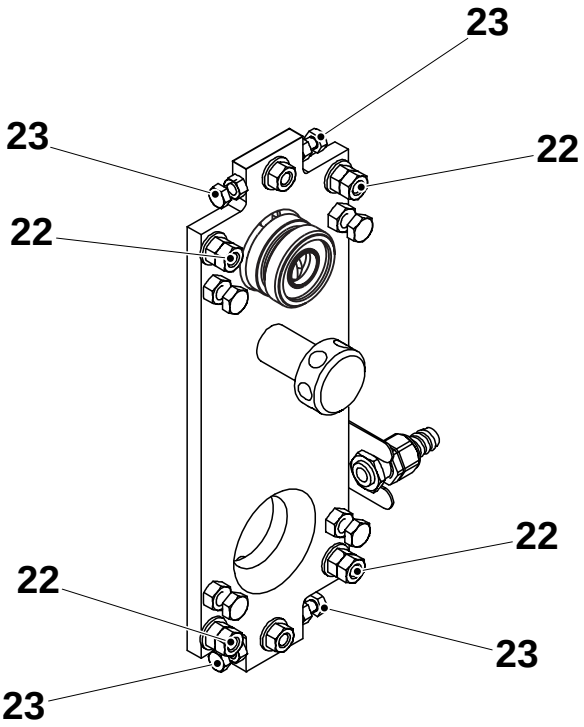

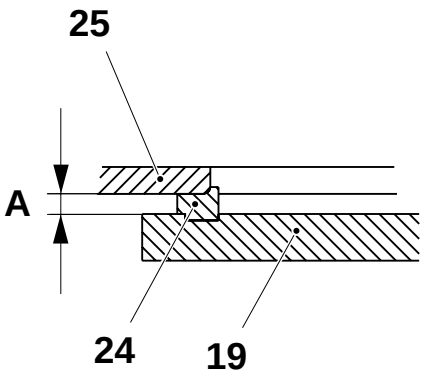

A = 6 ±1 mm

19 Fastening plate
22 Screws
23 Screws
24 Seal
25 Column

(Cont'd)

(Cont'd)

n) Check the position of the filling pipe by pushing the bottom part of the template (26) fully in the direction of the filling pipe.
The pipe is correctly positioned when the gap (distance A) between the part of the template (26) shown shaded and the flange on the pipe (27) is according to the table. If the pipe is positioned correctly, go to step p).
If distance **A** exceeds the limit, go to step o).

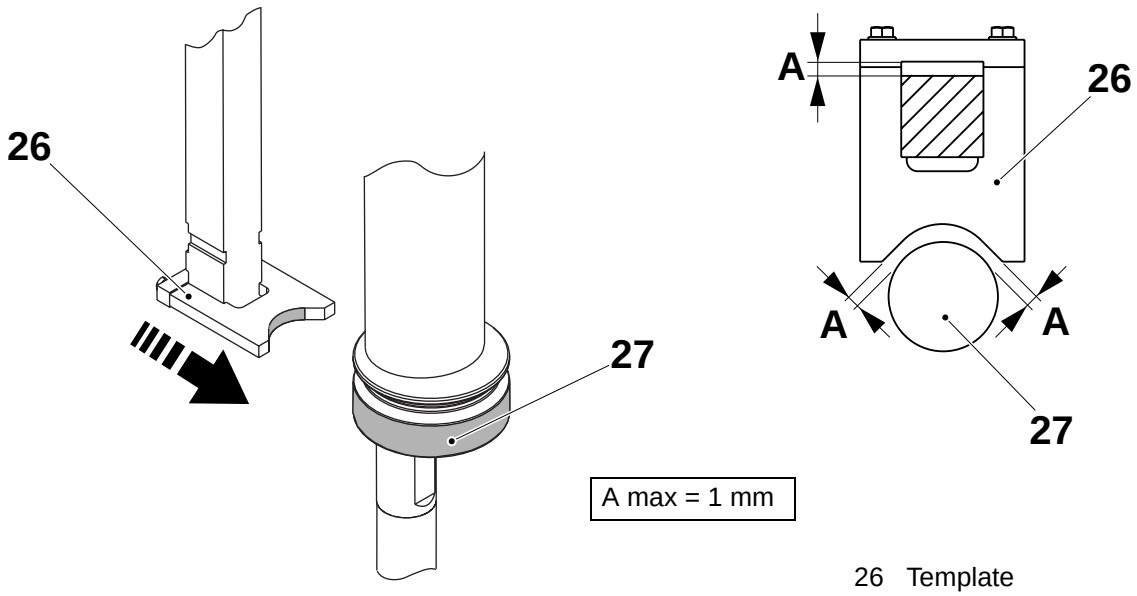

A max = 1 mm

26 Template
27 Filling pipe flange

(Cont'd)

(Cont'd)

o) Try to find a compromise: adjust the fastening plate so the lower template slides over the end of the filling pipe, even with difficulties, and distance **A** is within the tolerance.

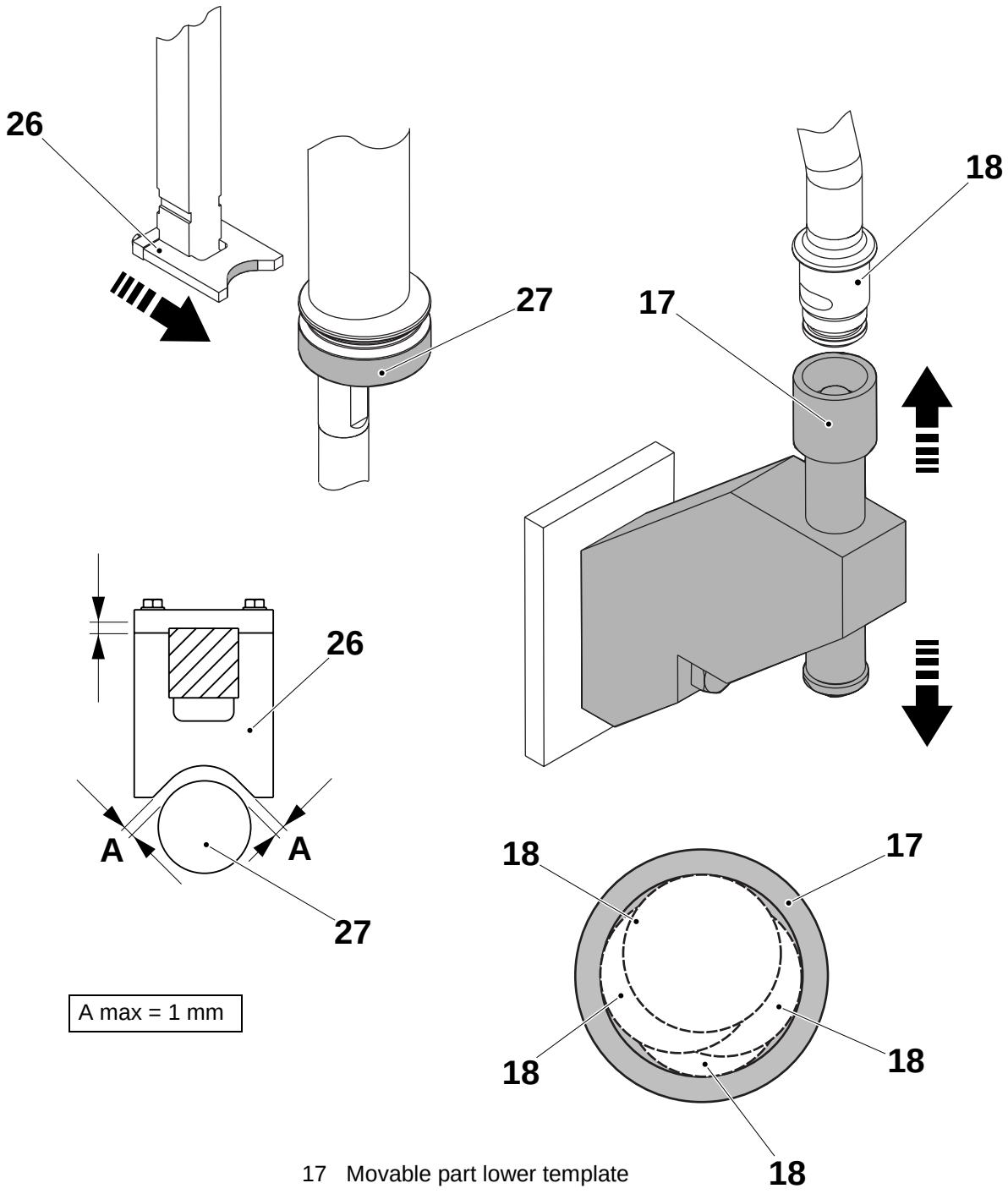

17 Movable part lower template
18 Filling pipe
26 Template
27 Filling pipe flange

(Cont'd)

(Cont'd)

p) Tighten the screws (20) on the fastening plate (19) until they just touch the bulkhead. Do not over tighten.
Lock the screws with the lock nuts.

q) Tighten the nuts (21). Do not over tighten.

r) Check alignment with the templates. If the filling pipe is not correctly aligned, repeat from step i). If it is aligned correctly, continue from step s).

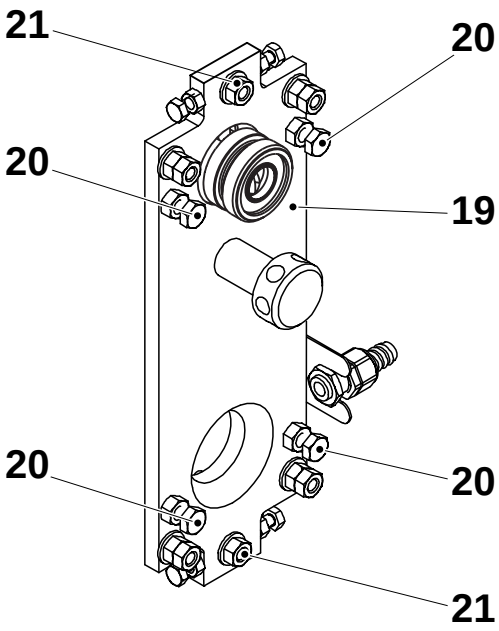

19 Fastening plate
20 Screw
21 Nut

(Cont'd)

(Cont'd)

s) Fit the product pipe and gaskets (2) and tighten the clamps (1).

t) Repeat the instructions given in o) to check the filling pipe is still aligned correctly. If it is not, realign the pipe by moving the components of the filling line upstream of the product pipe.

u) When the filling pipe is aligned correctly, remove the templates.

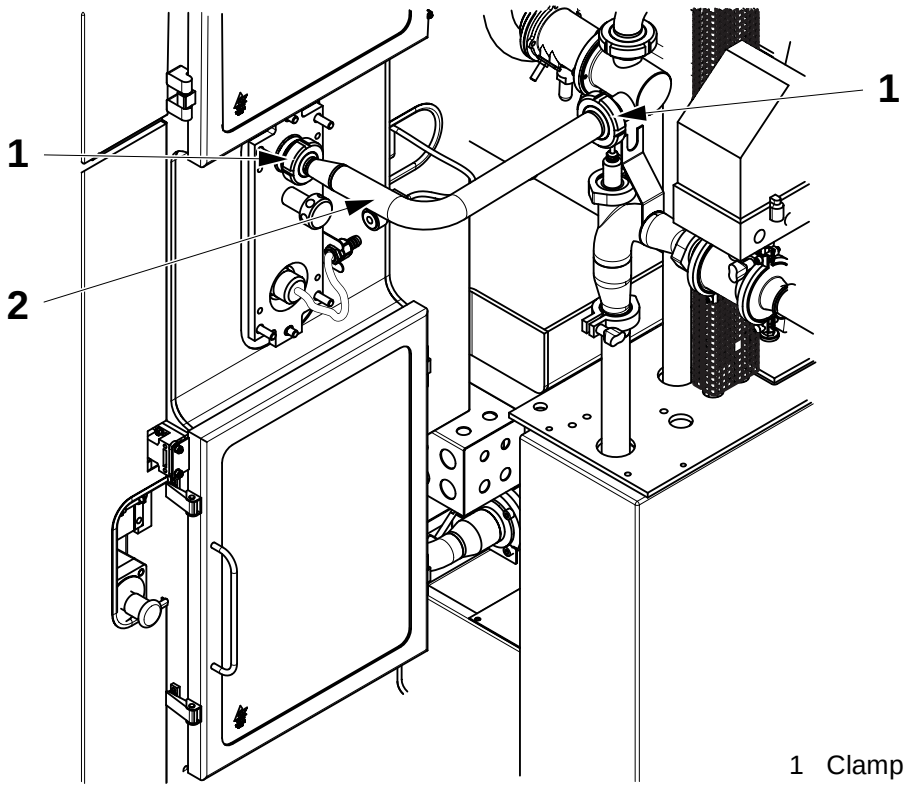

1 Clamp
2 Pipe

(Cont'd)

(Cont'd)

v) Slide the lower forming ring (6) over the filling pipe and secure it to the short stop plate (7) with nut (5).

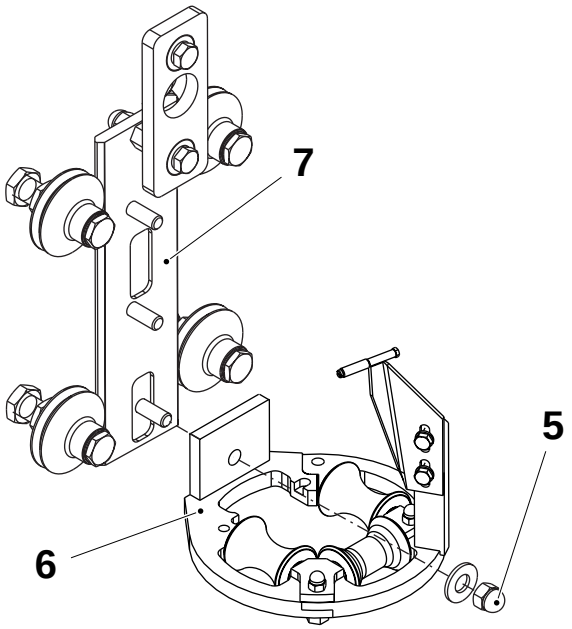

5 Nut
6 Lower forming ring
7 Short stop plate

w) Fit the aseptic chamber seal (10) together with the O-ring (9) and tighten the screws (8).

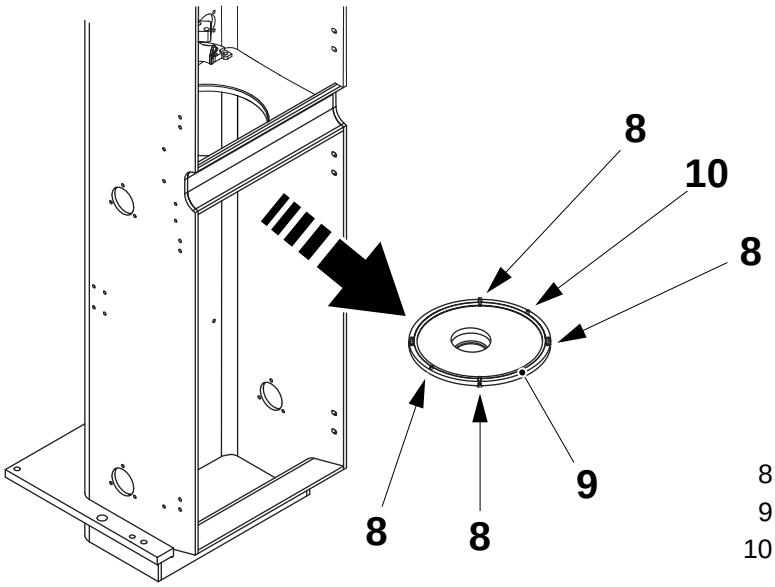

8 Screw
9 O-ring
10 Seal

(Cont'd)

(Cont'd)

x) Fit the tube support (13) and secure in position with the screw (12).

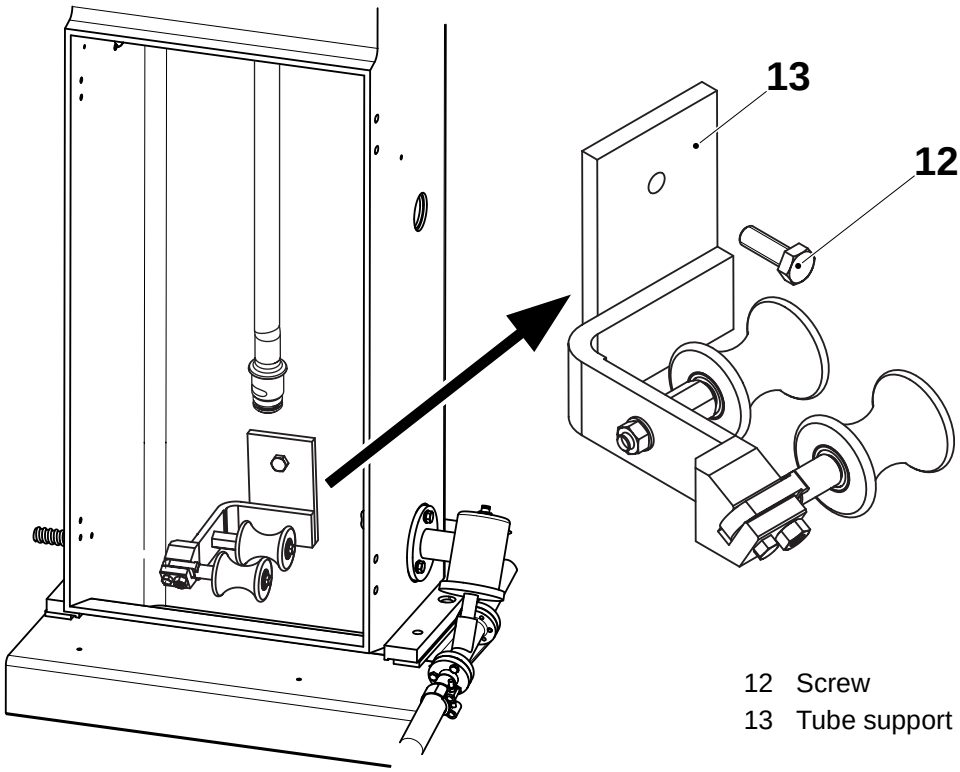

12 Screw
13 Tube support

(Cont'd)

(Cont'd)

y) Fit the lower part of the filling pipe (3), taking care not to damage the level probe (4).

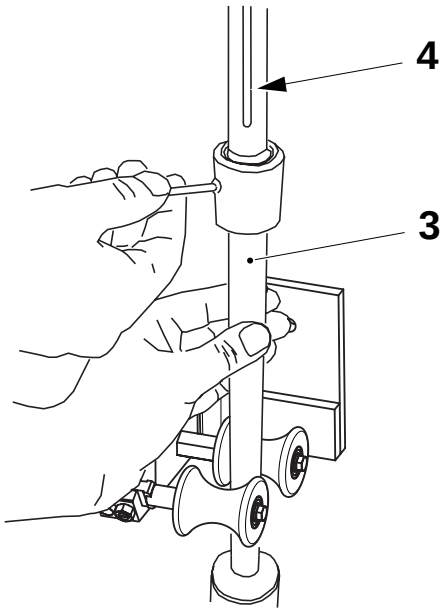

3 Lower filling pipe
4 Level probe

1.2.5-4 Filling Pipe - Set Position (Float)

Tools - Template	 TP No. 2525543
SPC Reference	2523670-0200

a) Loosen the clamps (1) at either end the product pipe (2) and then remove the pipe and gaskets.

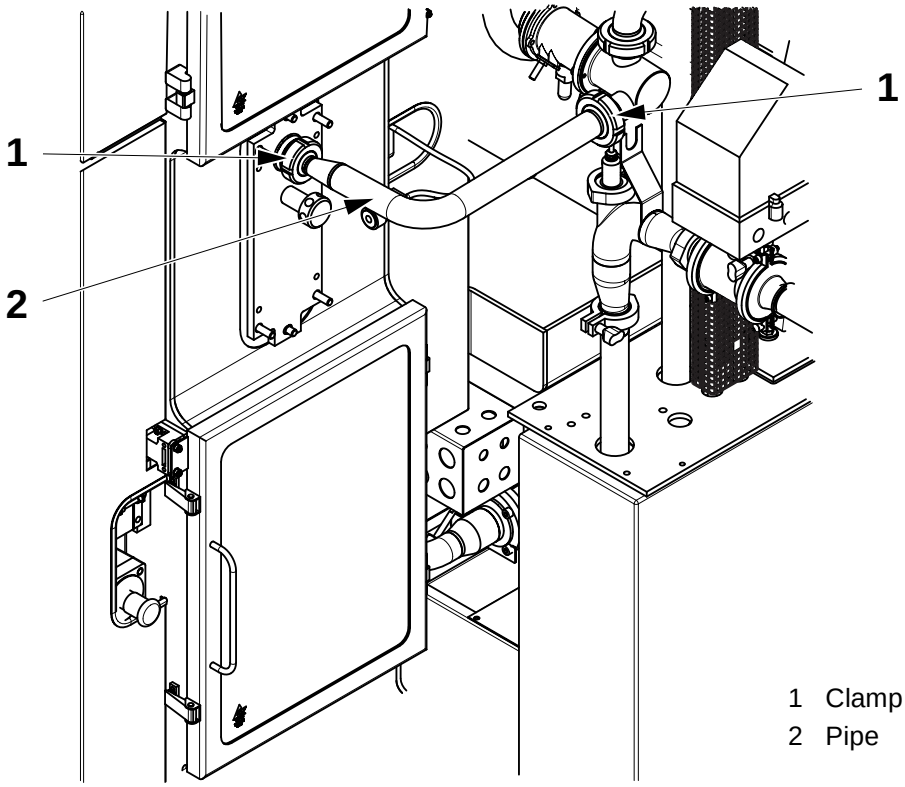

1 Clamp
2 Pipe

(Cont'd)

(Cont'd)

b) Remove the pin (3) and the lower part of the filling pipe (4).

c) Remove the screw (5) and the tube support (6).

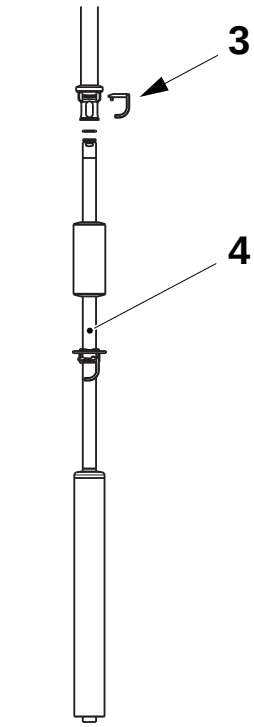

Design for all other volumes

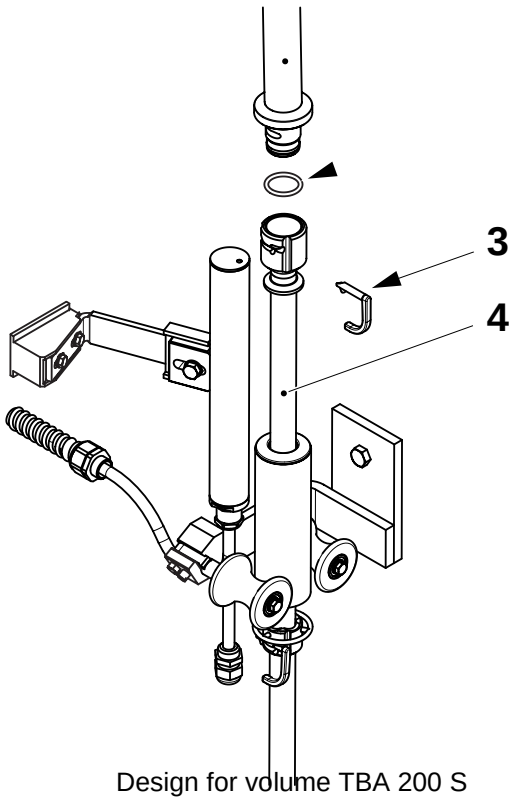

Design for volume TBA 200 S

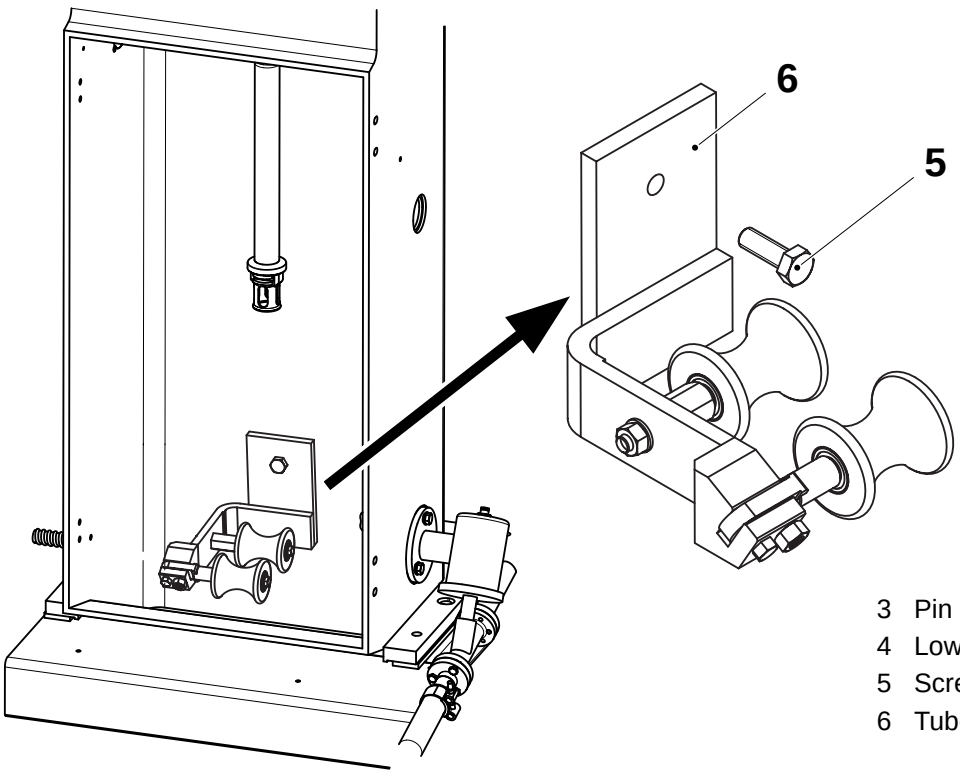

3 Pin
4 Lower filling pipe
5 Screw
6 Tube support

(Cont'd)

(Cont'd)

Note! The screw (9) is longer than the screw that holds the tube support in position.

d) Mount the template (7) in the recess (8) and secure it in position with the screw (9).

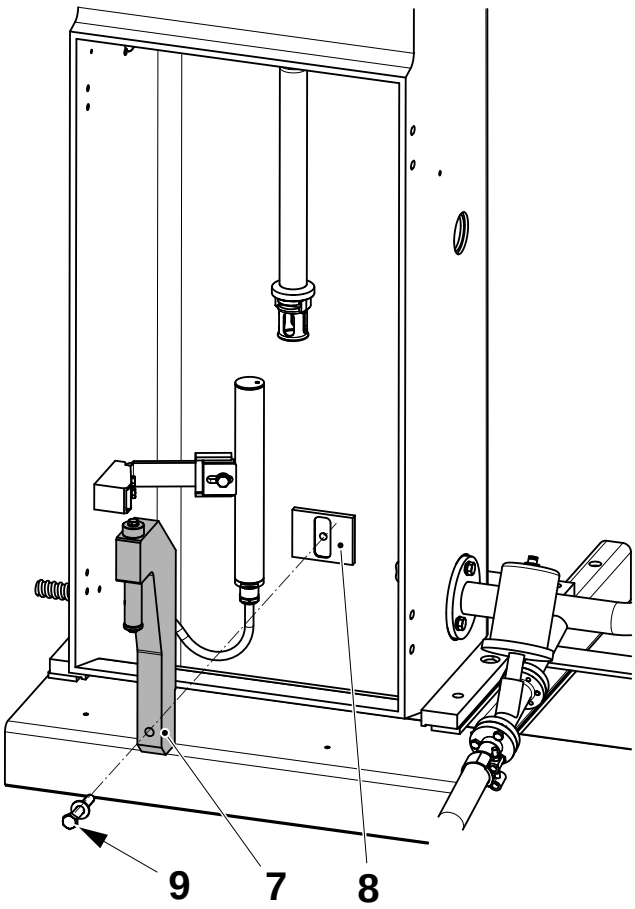

Design for all other volumes

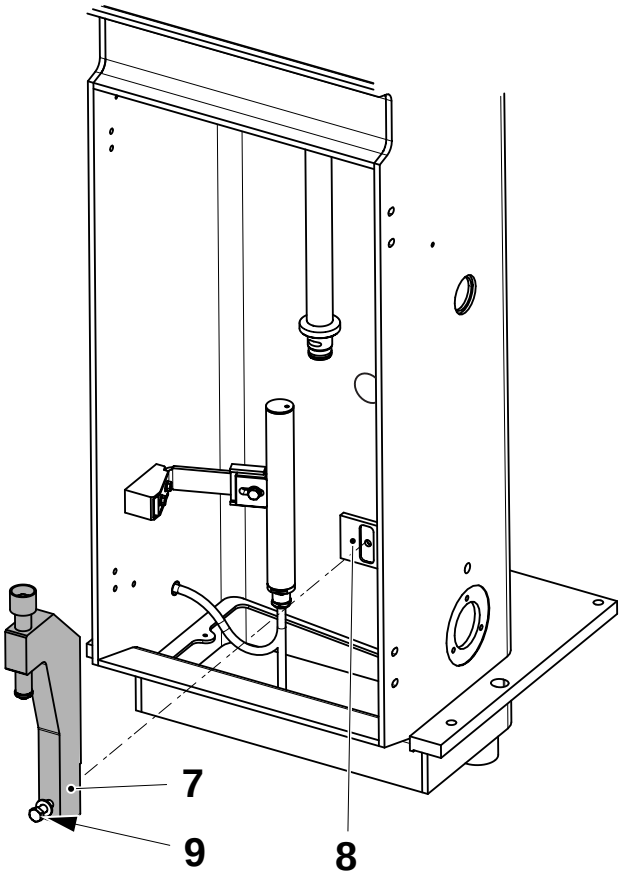

Design for volume TBA 200 S

7 Template
8 Recess
9 Screw

(Cont'd)

(Cont'd)

e) Check the alignment of the filling pipe by raising the movable part of the template (10). It should be a sliding fit in and out of the filling pipe (11). If this is the case, proceed from section o). If the pipe is not aligned correctly, continue below.

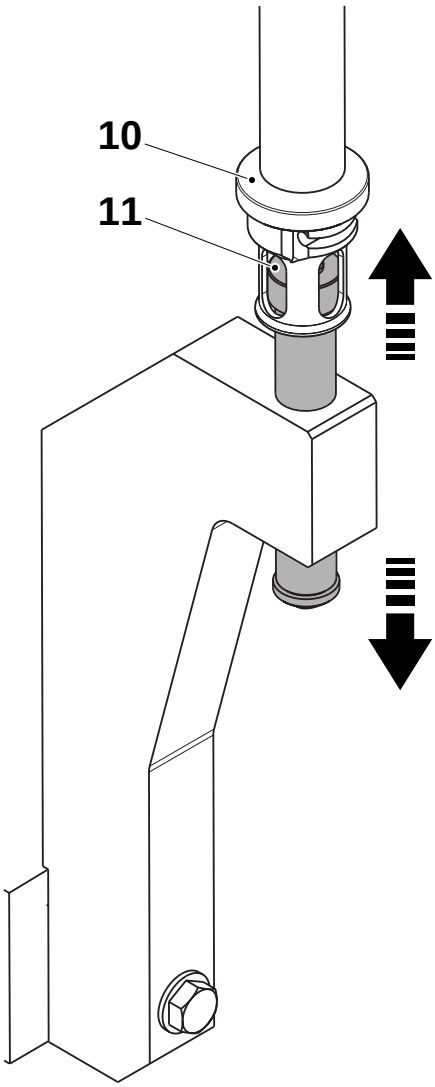

Design for all other volumes

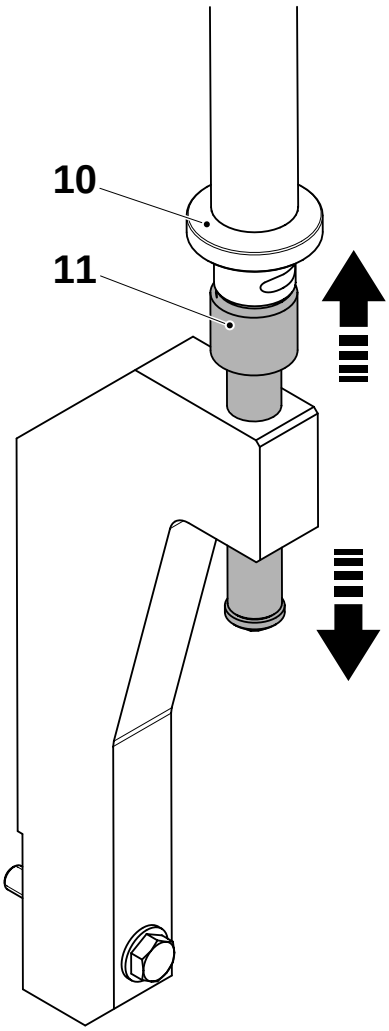

Design for volume TBA 200 S

10 Movable part of template
11 Filling pipe

(Cont'd)

(Cont'd)

f) On the fastening plate (12), loosen the locking nuts on the screws (9) and loosen the nuts (12). Loosen the screws (14) a few turns.

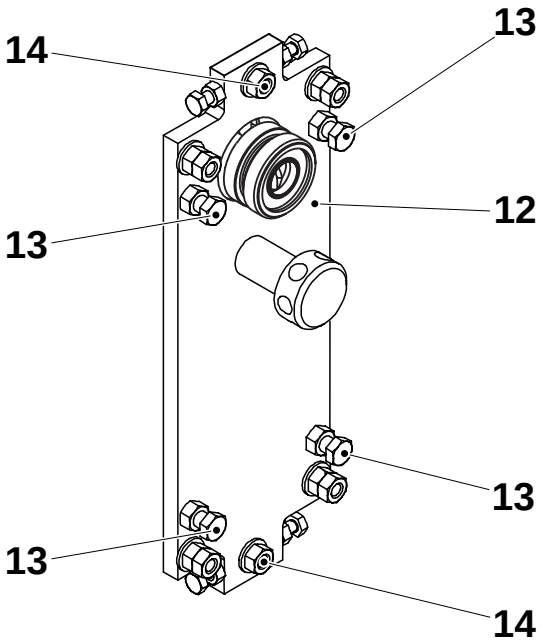

12 Fastening plate
13 Screw and locking nut
14 Nut

g) Align and centre the filling pipe to the template using the screws (15) and (16). Do not over tighten the screws (15).

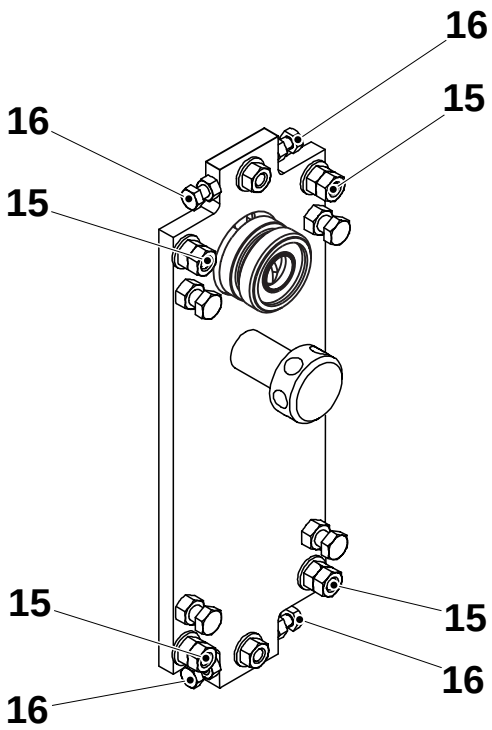

15 Screw
16 Screw

(Cont'd)

(Cont'd)

h) Check the seal (13) between the fastening plate (8) and the column (14) is compressed to dimension **A**.

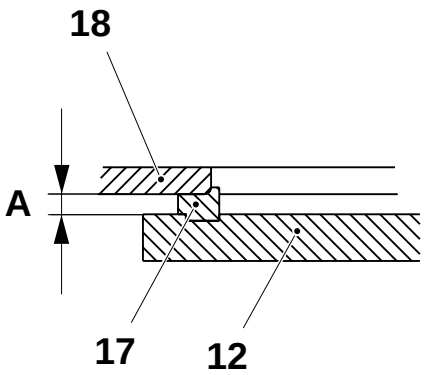

12 Fastening plate
17 Seal
18 Column

i) Lock the fastening plate in position with the lock nuts on screws (15) and (16).

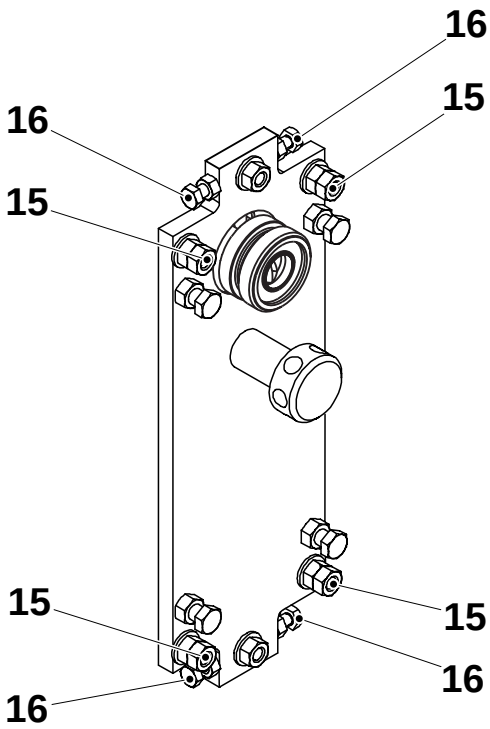

15 Screw
16 Screw

(Cont'd)

(Cont'd)

j) Tighten the screws (13) on the fastening plate (12) until they just touch the bulkhead. Do not over tighten.
Lock the screws with the lock nuts.

k) Tighten the nuts (14). Do not over tighten.

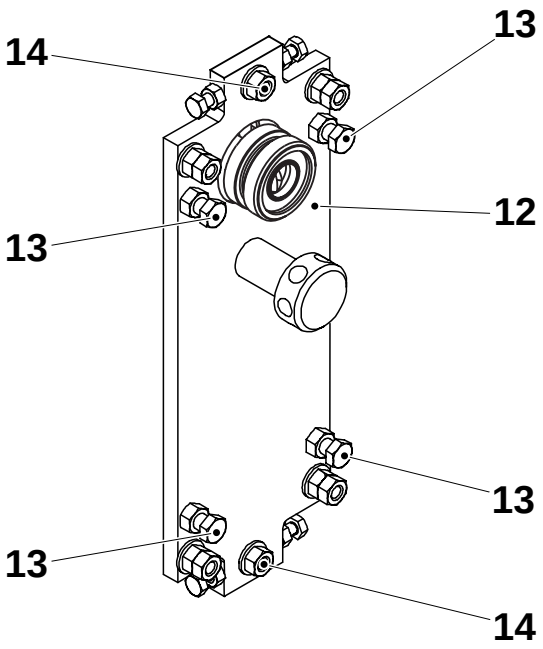

12 Fastening plate
13 Screw and locking nut
14 Nut

(Cont'd)

(Cont'd)

l) Fit the product pipe and gaskets (2) and tighten the clamps (1).

m) Repeat the instructions given in e) to check the filling pipe is still aligned correctly. If it is not, realign the pipe by moving the components of the filling line upstream of the product pipe.

n) When the filling pipe is aligned correctly, remove the templates.

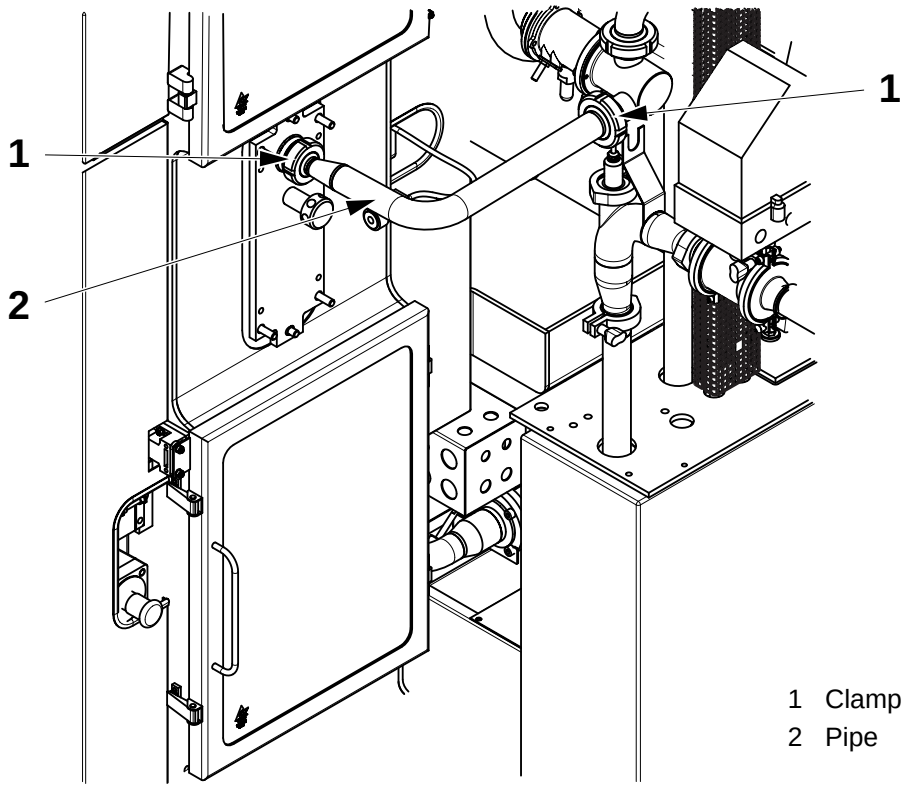

1 Clamp
2 Pipe

(Cont'd)

(Cont'd)

o) Remove the screw (9) and the template (7) from the recess (8).

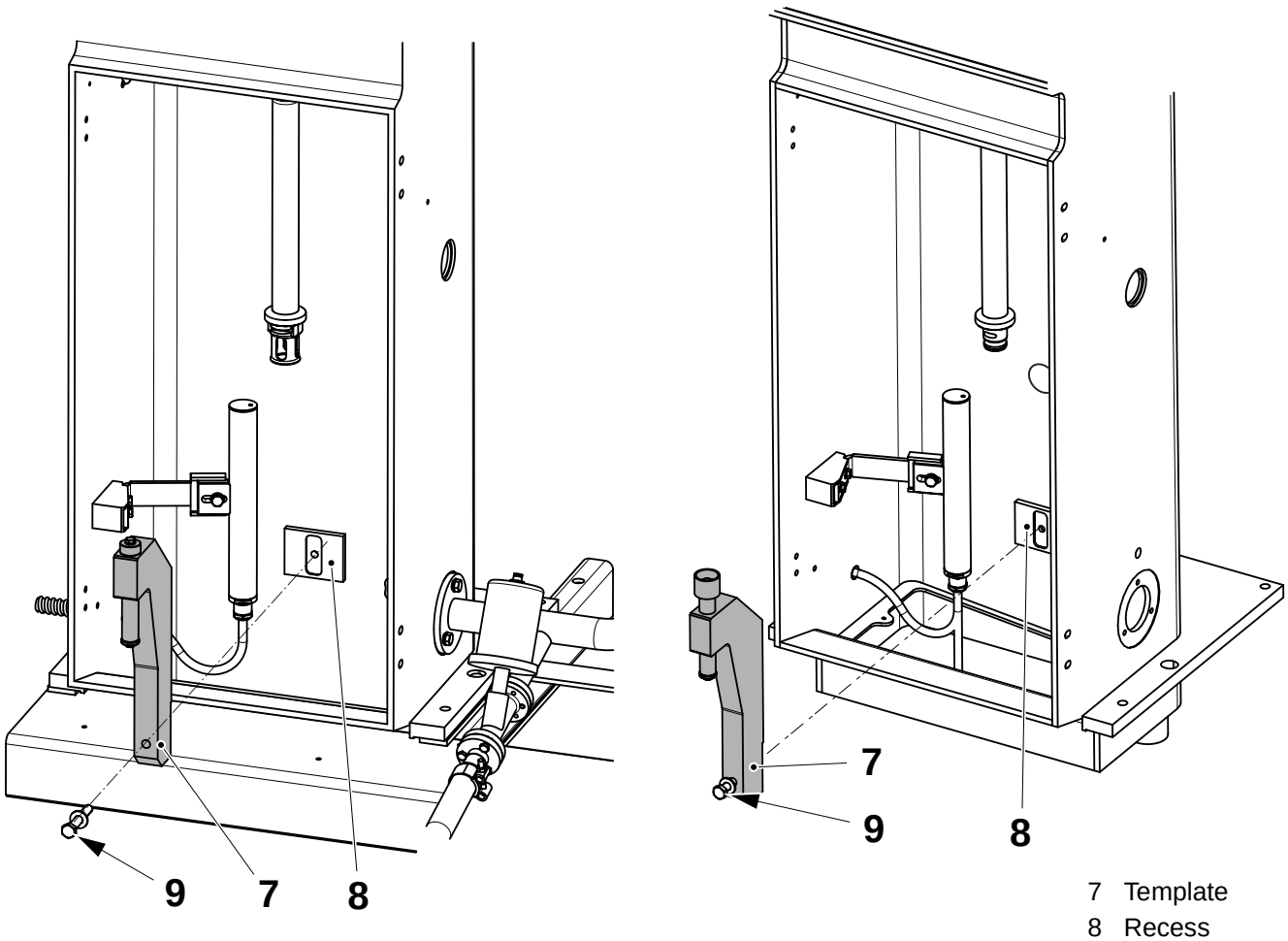

7 Template
8 Recess
9 Screw

(Cont'd)

(Cont'd)

p) Fit the tube support (6) and secure it in position with the screw (5).

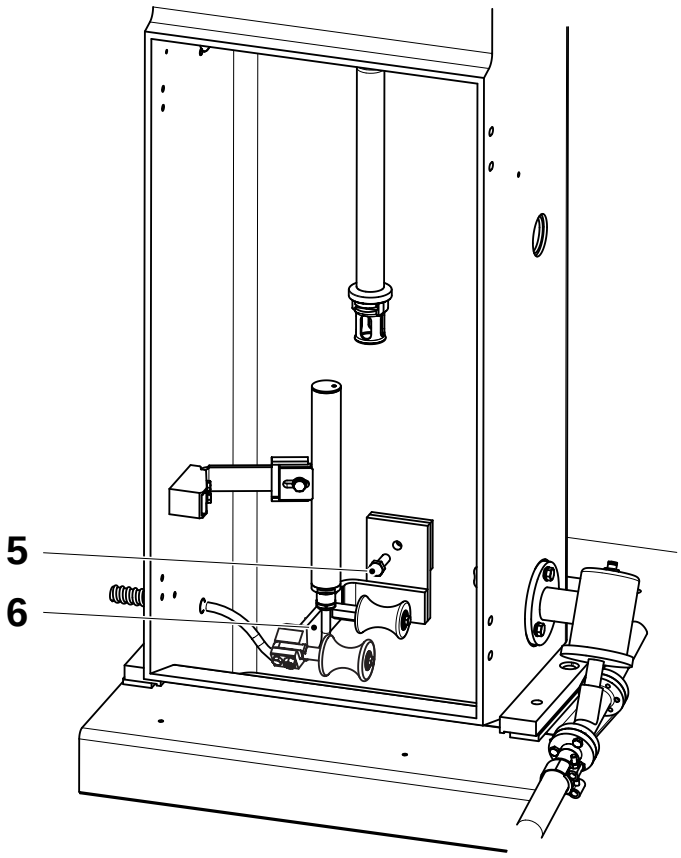

5 Screw
6 Tube support

(Cont'd)

(Cont'd)

q) Fit the lower filling pipe (4) and insert the pin (3).

r) Set the pressure roller, see 1.2.5-5 Filling Pipe - Set Pressure Roller.

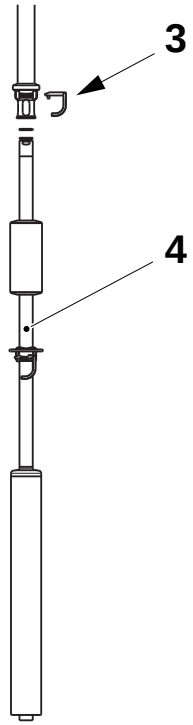

Design for all other volumes

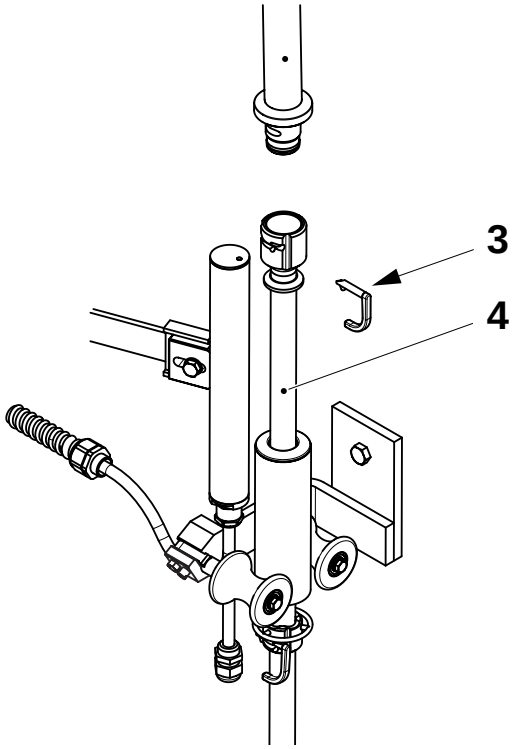

Design for volume TBA 200 S

3 Pin

4 Lower filling pipe

1.2.5-5 Filling Pipe - Set Pressure Roller

Tools - Dynamometer	 TP No. 74767-0102
SPC Reference - Level Probe - Float	 1498668-0200 2523670-0200

a) Fold a double piece of packaging material (5) and place it between the pressure roller (1) and the counter roller (2).

b) Press the dynamometer (4) against the pressure roller spring (3) and measure the force when the packaging material slips down.

c) Adjust by bending or changing the spring (3) until the correct force is obtained.

d) Check the position of the lower forming ring, see 1.1.4-1 Lower Forming Ring - Set Position.

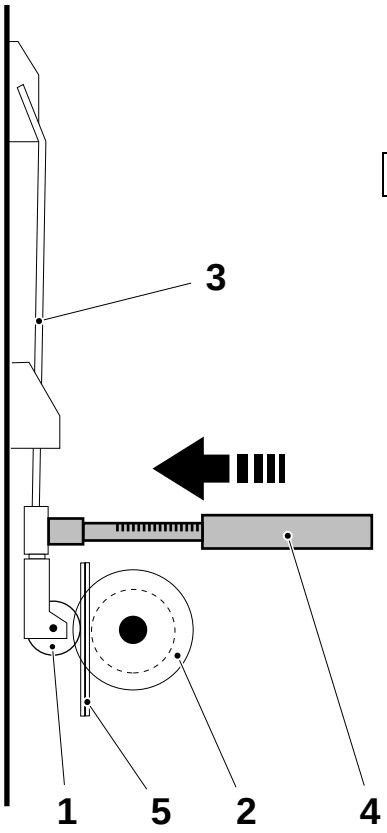

1 Pressure roller
2 Counter roller
3 Spring
4 Dynamometer
5 Packaging material

1.2.5-6 Filling Pipe - Set Level Probe

Machine Status	PREPARATION
Tools - Resistors - Wires with Crocodile Clips	 2 x 1 KOhm 4 x 0.75 mm ø
SPC Reference	1498668-0200

Note! Take care not to damage the level probe.

a) Connect the clip (5) of the resistor (4) to the machine ground. Connect the clip (3) at distance **A** from the bottom of the level probe (2).

b) Set the **zero** level on the TPOP between 0% and 1% by turning the Z potentiometer (1) with a screwdriver. If the **zero** level is set to 0%, the potentiometer can be turned further with the indicated value remaining at 0%.

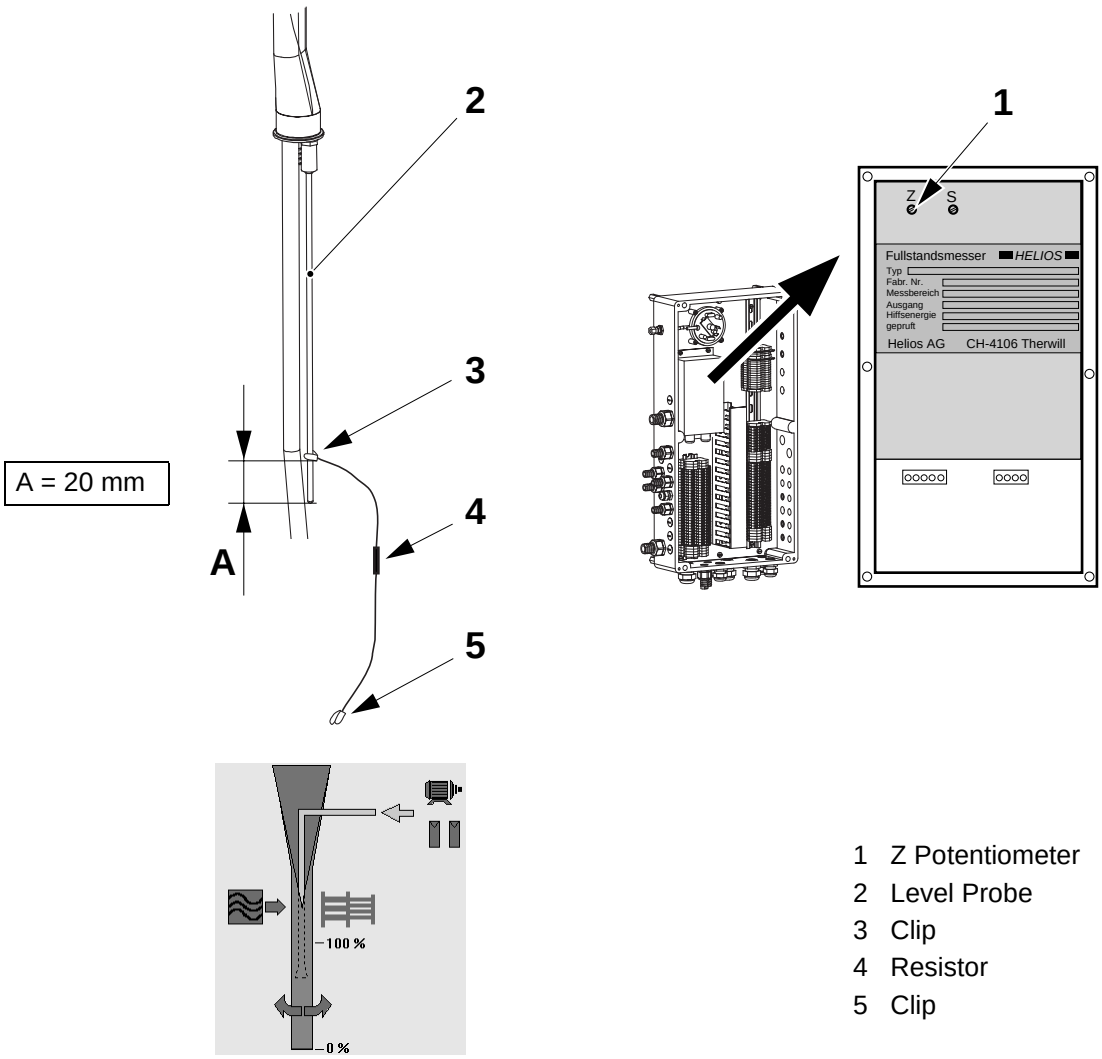

1 Z Potentiometer
2 Level Probe
3 Clip
4 Resistor
5 Clip

(Cont'd)

(Cont'd)

c) Connect the clip (9) of the resistor (8) to the machine ground. Connect the clip (7) at distance **B** from the top of the level probe.

d) Set the **maximum** level between 99% and 100% with the S potentiometer (6).

e) Repeat from step a) until the values are correct.

B = 10 mm

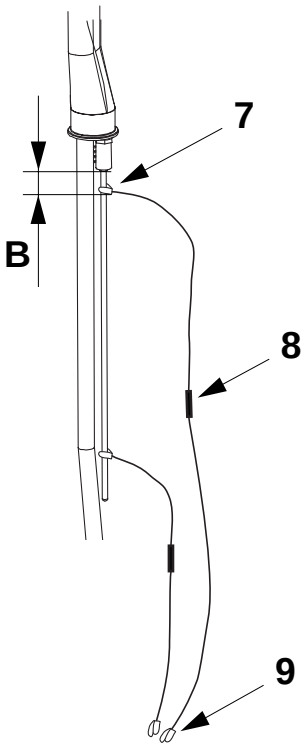

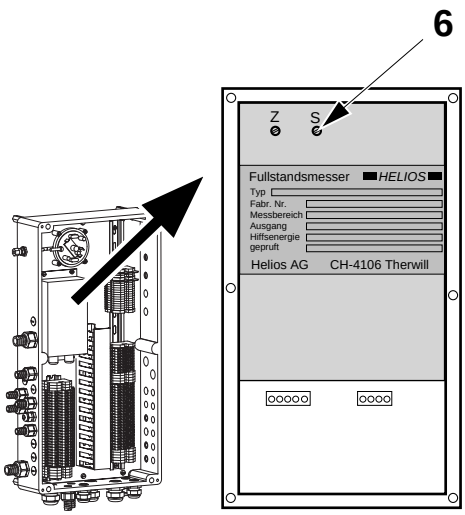

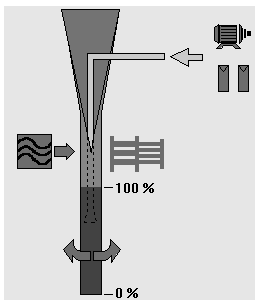

6 S Potentiometer
7 Clip
8 Resistor
9 Clip

1.2.5-7 Filling Pipe - Set Level Control Device

SPC Reference	2523670-0200

a) Loosen the screws (1) and (2) and move the sensor (3) to the set distance **A** between the sensor (3) and the float (4). Tighten the screws (1) and (2) on completion.

b) Set distance **B** from the top of the sensor (3) to the bottom of the stop (5).

Package	A (mm)	B (mm)
TBA 200 B - TBA 250 B - TBA 250 S	4	60
200 S	4	65

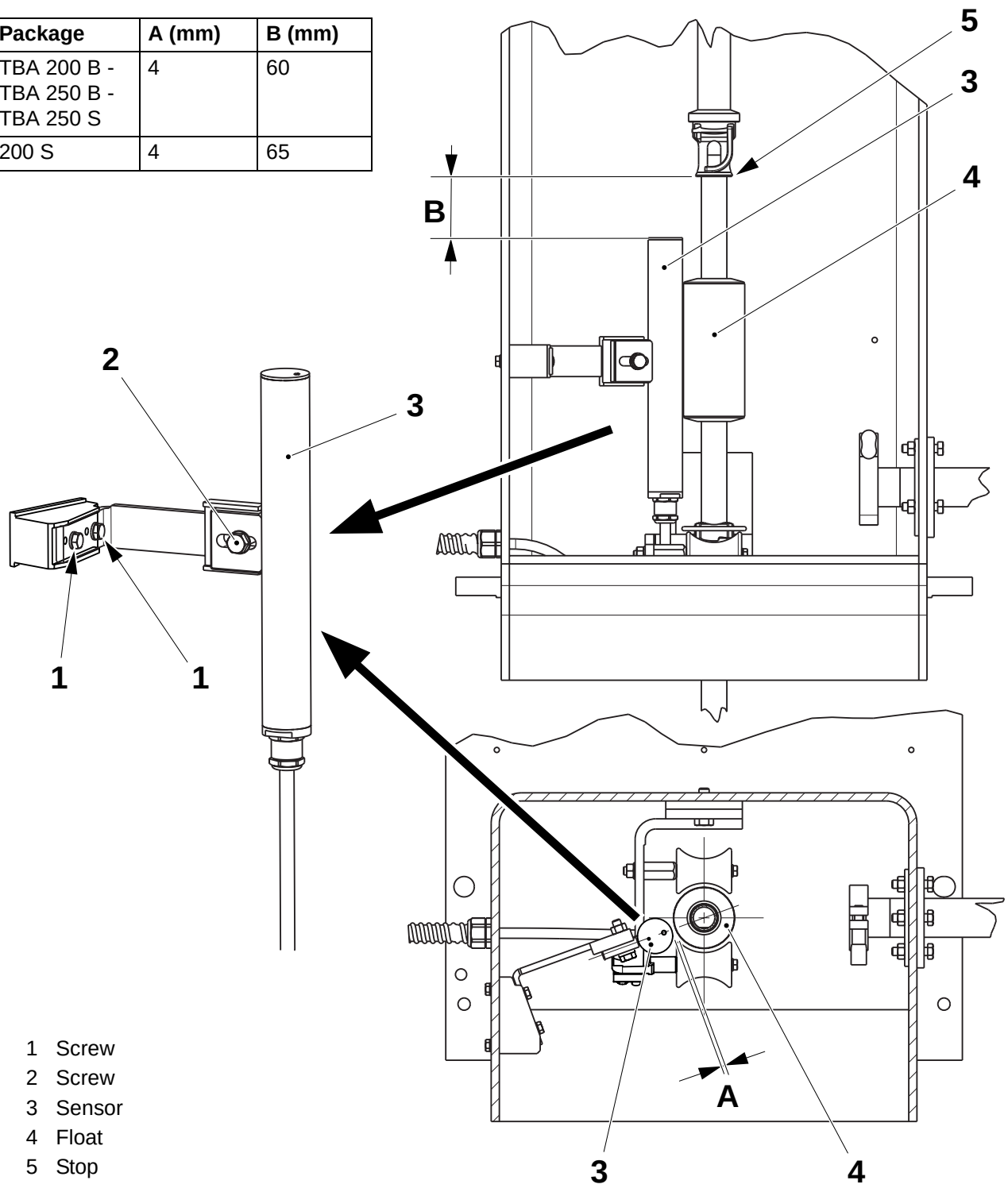

1 Screw
2 Screw
3 Sensor
4 Float
5 Stop

(Cont'd)

(Cont'd)

c) Rest the float (4) in its lowest position.

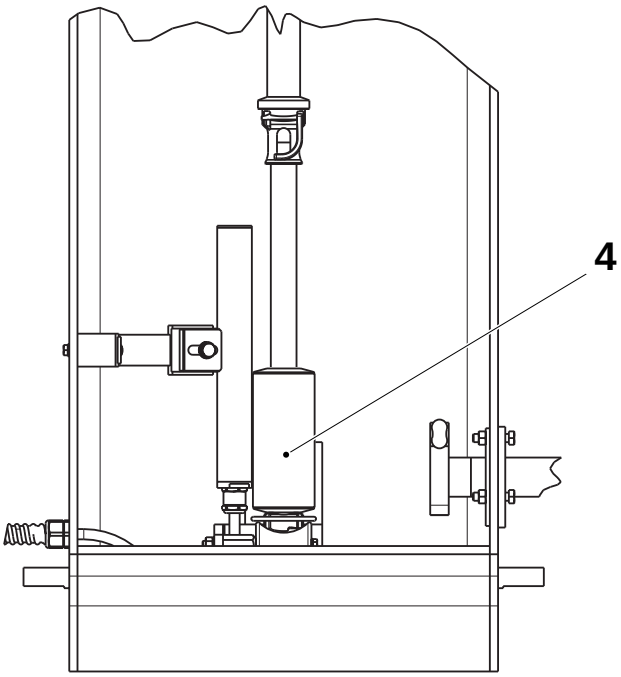

4 Float

d) Touch the MANOEUVRE SYSTEM button.



e) Touch the SUPERSTRUCTURE SETTINGS button.

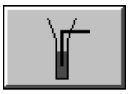

(Cont'd)

(Cont'd)

f) In the SUPERSTRUCTURE SETTINGS window, touch the level indicator and check the level indicator is operating. If not, move the sensor nearer the float until it does.

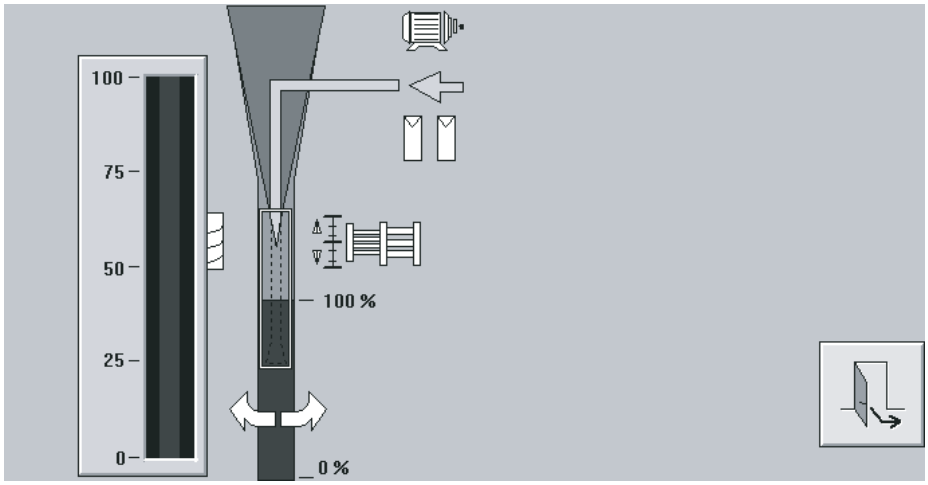

g) Raise the float (4) to its highest position and support it in that position. Check the level indicator is at 100% of the range. If 0% is indicated, contact your local Tetra Pak service station.

h) Allow the float to rest in its lowest position.

i) Move the float as far away as possible from the sensor and check the level indicator gives a reading and not 0%. If 0% is indicated, contact your local Tetra Pak service station.

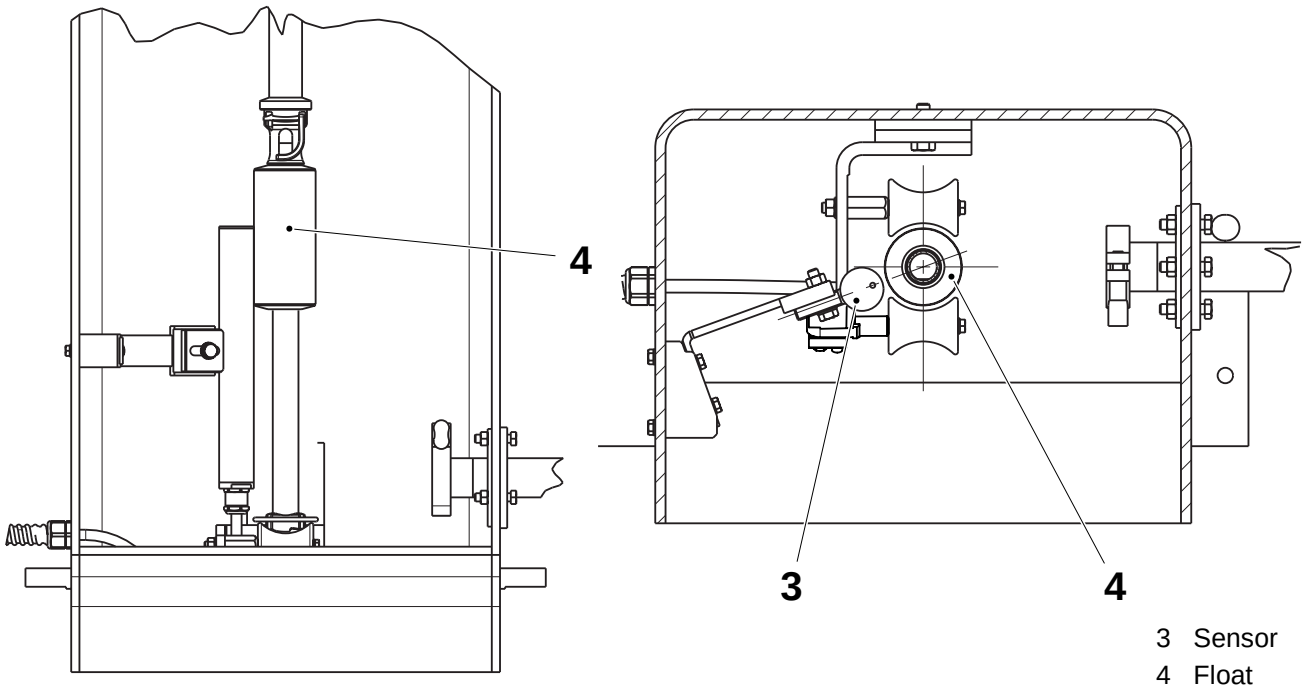

3 Sensor
4 Float

(Cont'd)

(Cont'd)

j) Step the machine up to TIGHT TUBE.

k) Loosen the screws (1) and (2) and move the sensor (3) to the set distance **B** between the sensor (3) and the tube (6). Tighten the screws (1) and (2).

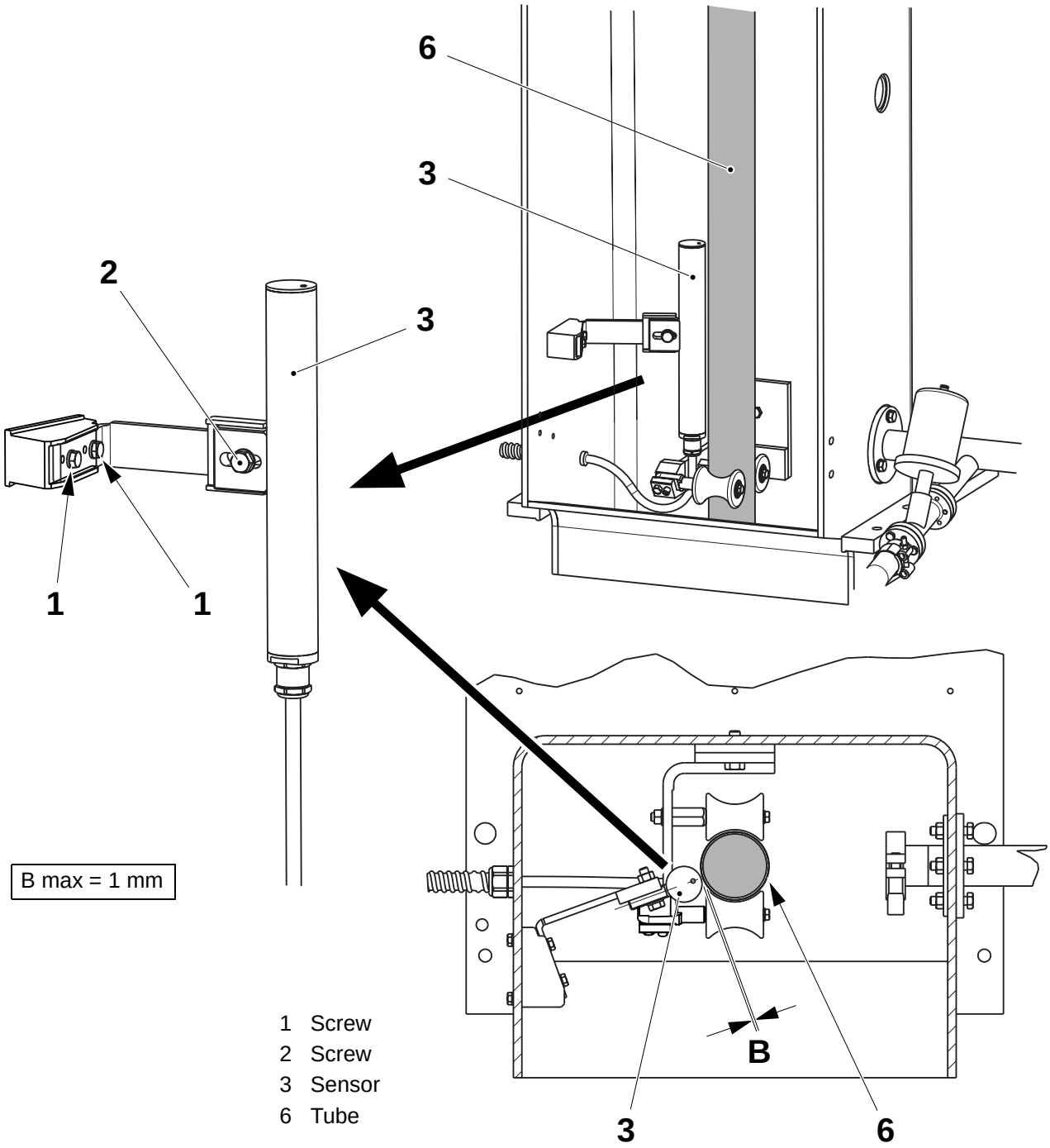

1 Screw
2 Screw
3 Sensor
6 Tube

(Cont'd)

(Cont'd)

l) Step the machine up to PRODUCTION.

m) Touch the MANOEUVRE SYSTEM button.



n) Touch the SUPERSTRUCTURE SETTINGS button.

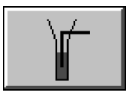

CAUTION

The level sensor must not touch the tube.

o) In the SUPERSTRUCTURE SETTINGS window, touch the level indicator and check the level indicator is operating. If not move the sensor nearer to the tube.

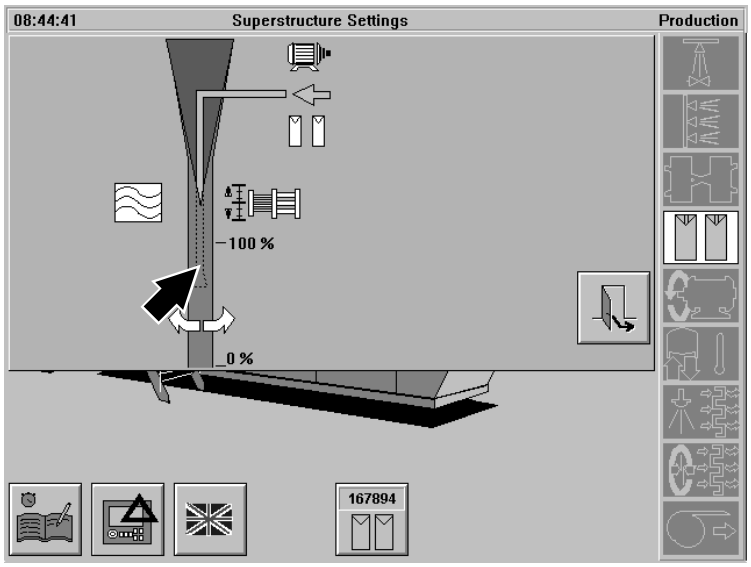

1.2.5-8 Filling Pipe - Check

SPC Reference	
- Level Probe	1498668-0200
- Float	2523670-0200

Valid for Filling Pipe with Level Probe

Check that:

- the pressure roller (1) is intact and rotates freely. Change the roller as required;
- level probe (2) is intact and change it as required, see 1.2.5-10 Filling Pipe - Change Level Probe;
- the fitting (3) is intact and change it as required, see 1.2.5-9 Filling Pipe - Change Fitting (Level Probe);
- the filling pipe (4) is centred to the lower forming ring (5). Set it as required, see 1.2.5-3 Filling Pipe - Set Position (Level Probe).

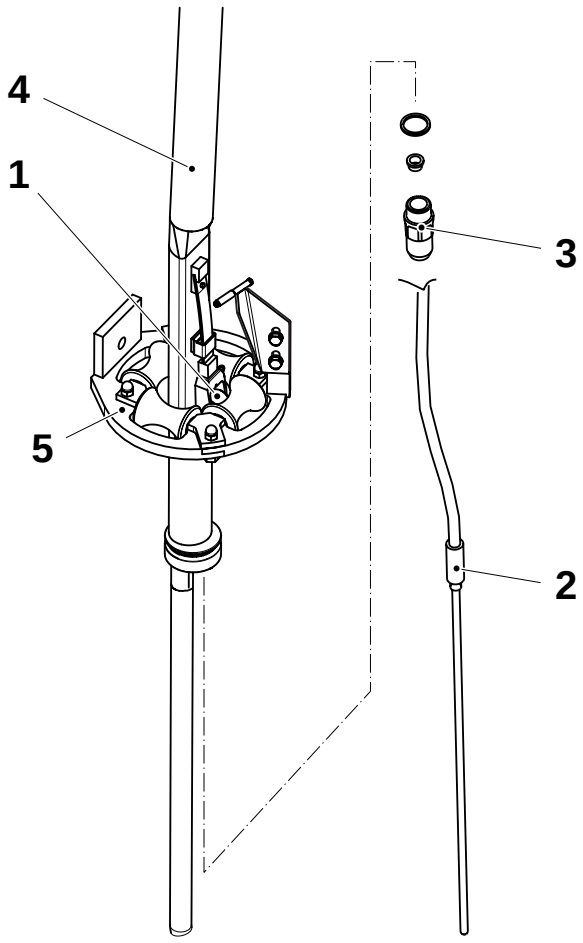

1 Pressure roller
2 Level probe
3 Fitting
4 Filling pipe
5 Lower forming ring

(Cont'd)

(Cont'd)

Valid for Filling Pipe with Float

Check that:

- the pressure roller (4) is intact and rotates freely. Change the roller as required;
- float (3) is intact and slides freely. Change the float as required;
- the filling pipe (1) is centred to the lower forming ring (2). Set it as required, see 1.2.5-4 Filling Pipe - Set Position (Float).

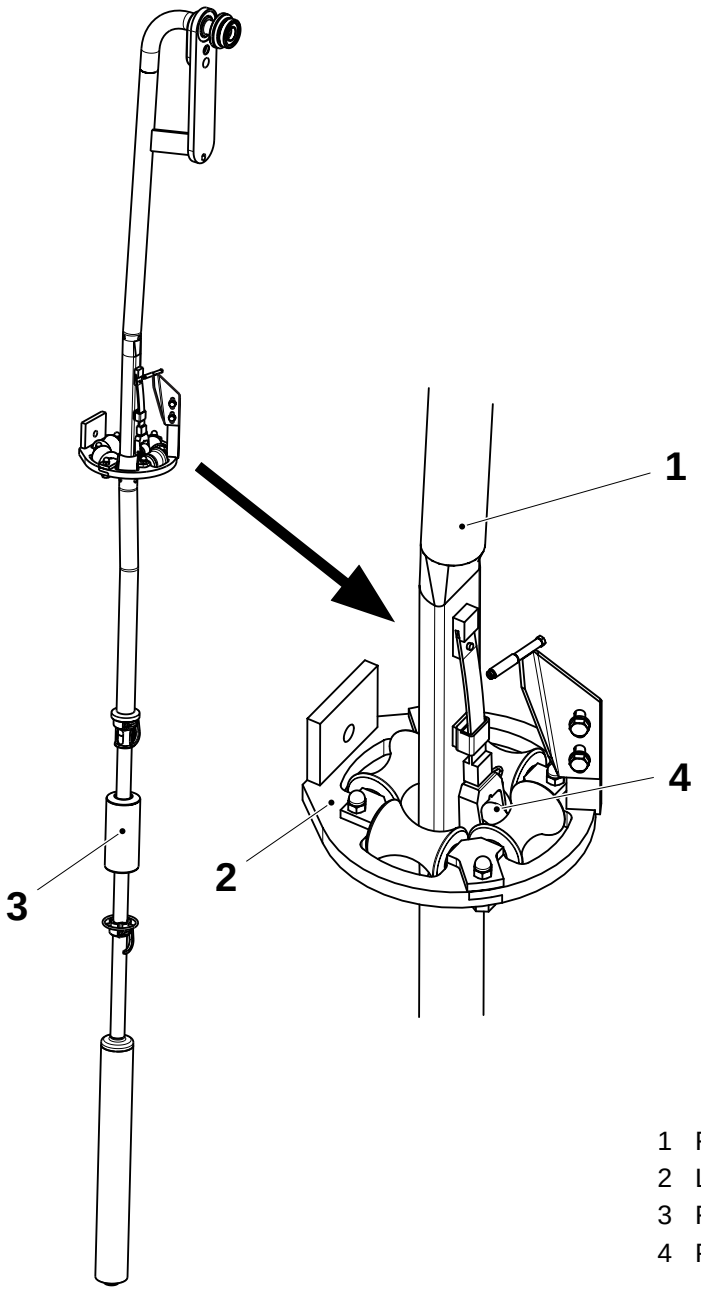

1 Filling pipe
2 Lower forming ring
3 Float
4 Pressure roller

1.2.5-9 Filling Pipe - Change Fitting (Level Probe)

Consumable - Lubrication Grease - Silicon Glue	 TP No. 90296-0091 TP No. 90157-0044
SPC Reference	1498668-0200

a) Remove the fitting (1), the sealing ring (2) and the sealing (3).

b) Apply a thin layer of lubrication grease on the external surface of the level probe (4) and on the internal surface of the sealing (3), see Fig.1.

c) Fit the sealing (3) on the level probe (4).

d) Fit the sealing ring (2) on the fitting (1).

e) Apply a thin layer of food approved silicon glue on the thread of the fitting (1) and on the external surface of the level probe (4), see Fig. 2.

f) Fit the fitting (1) on the level probe (4).

Note! The level probe (4) must not be rotated during the installation of the fitting (1).

Note! To dry-out the silicon glue **wait 10-12 hours** before re-starting the machine.

Fig. 1

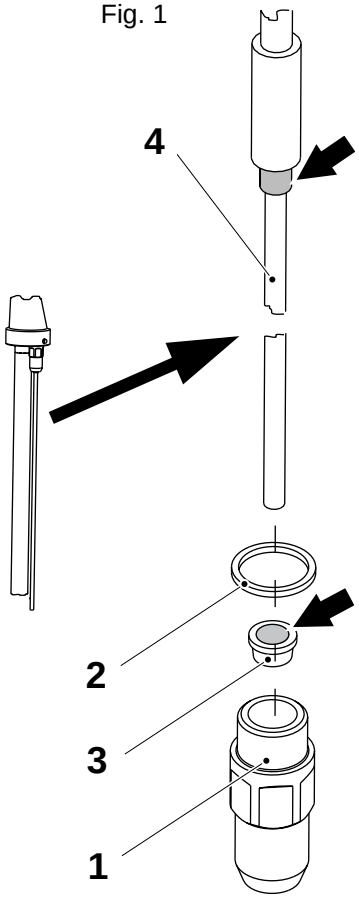

Fig. 2

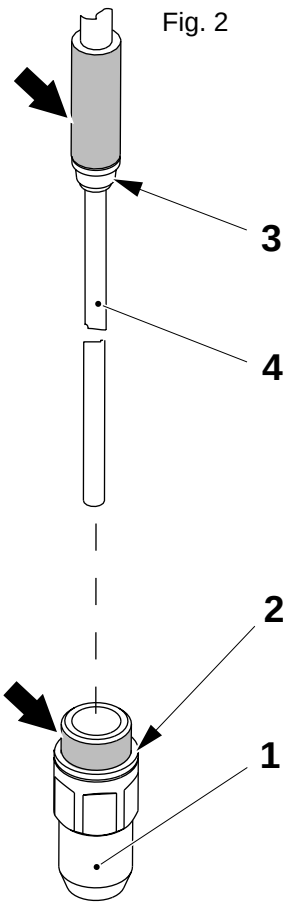

1 Fitting
2 Sealing ring
3 Sealing
4 Level probe

1.2.5-10 Filling Pipe - Change Level Probe

SPC Reference	1498668-0200

a) Remove the regulating valve, see 1.2.3-1 Flow Regulator - Overhaul Regulating Valve.

b) Remove the screws (3), (2) and (1).

c) Mark and disconnect the level probe cables (4) from the transformer (5) and the connector (6).

d) Remove the fitting (7), the sealing (8) and the sealing ring (9).

e) Connect the level probe cables (4) to a steel wire approximately four metres long by **1 mm** diameter.

f) Remove, gently, the level probe (10) from the filling pipe.

g) Remove the spacer (11) from the level probe (10).

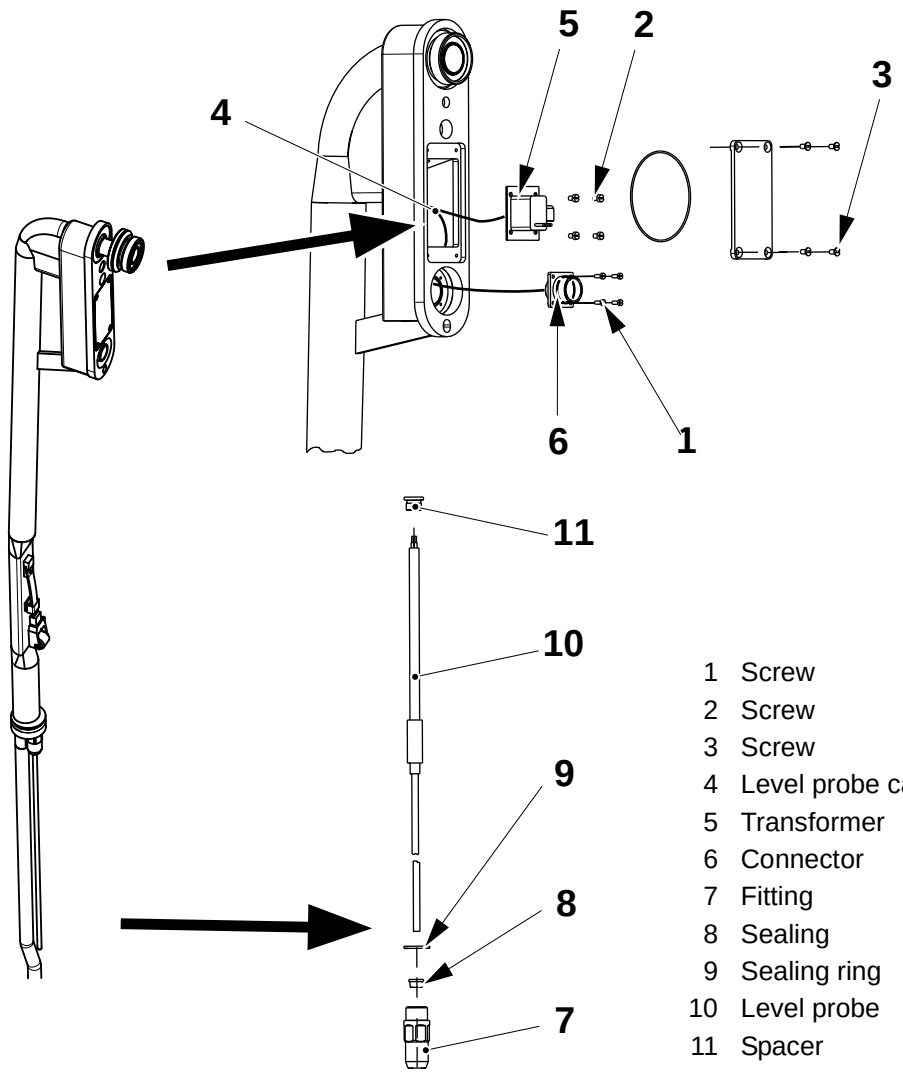

1 Screw
2 Screw
3 Screw
4 Level probe cable
5 Transformer
6 Connector
7 Fitting
8 Sealing
9 Sealing ring
10 Level probe
11 Spacer

(Cont'd)

(Cont'd)

Note! Assemble the fitting in the proper way according to 1.2.5-9 Filling Pipe - Change Fitting (Level Probe).

h) Assemble in the reverse order by means of the steel wire (12).

Note! Change the gasket between the filling pipe and the regulating valve during the assembling.

i) Assemble regulating valve, see 1.2.3-1 Flow Regulator - Overhaul Regulating Valve.

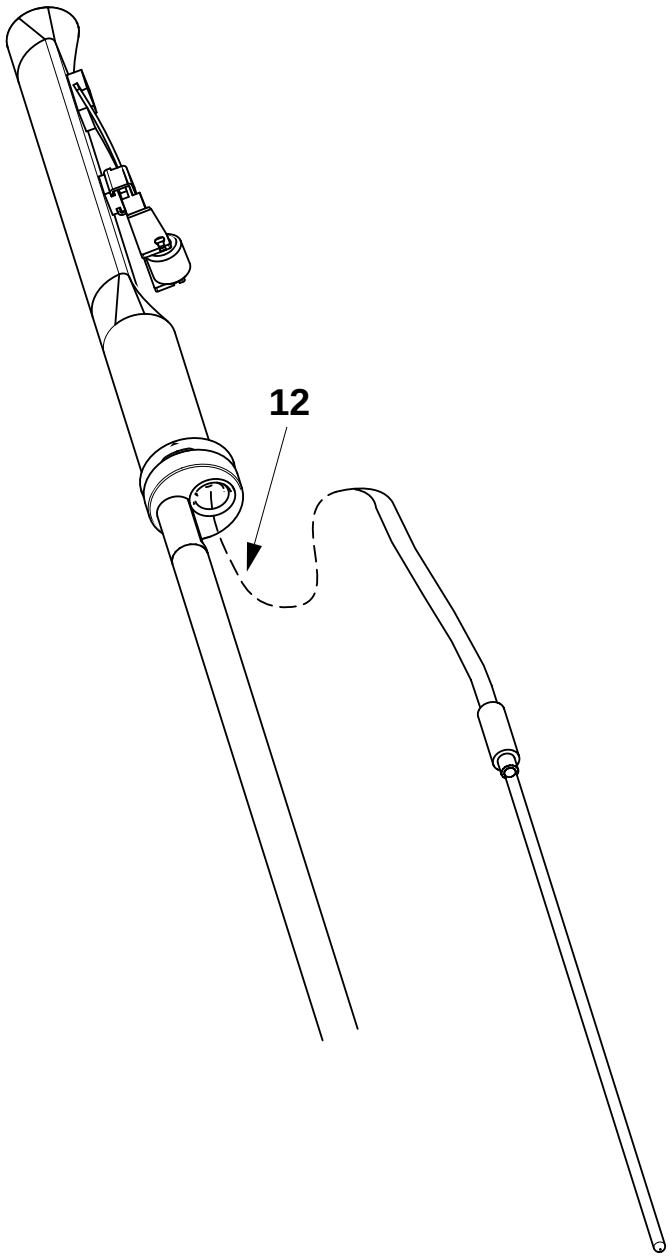

12 Wire

1.2.6 Cleaning Pipe

1.2.6-1 Cleaning Pipe - Set

SPC Reference	2525518-0100

Fit the switch-over pipe (1) and set distance **A** between the proximity switch (2) and the sensor plate (3).

Check the switch-over pipe (1) setting both in cleaning position and production position.

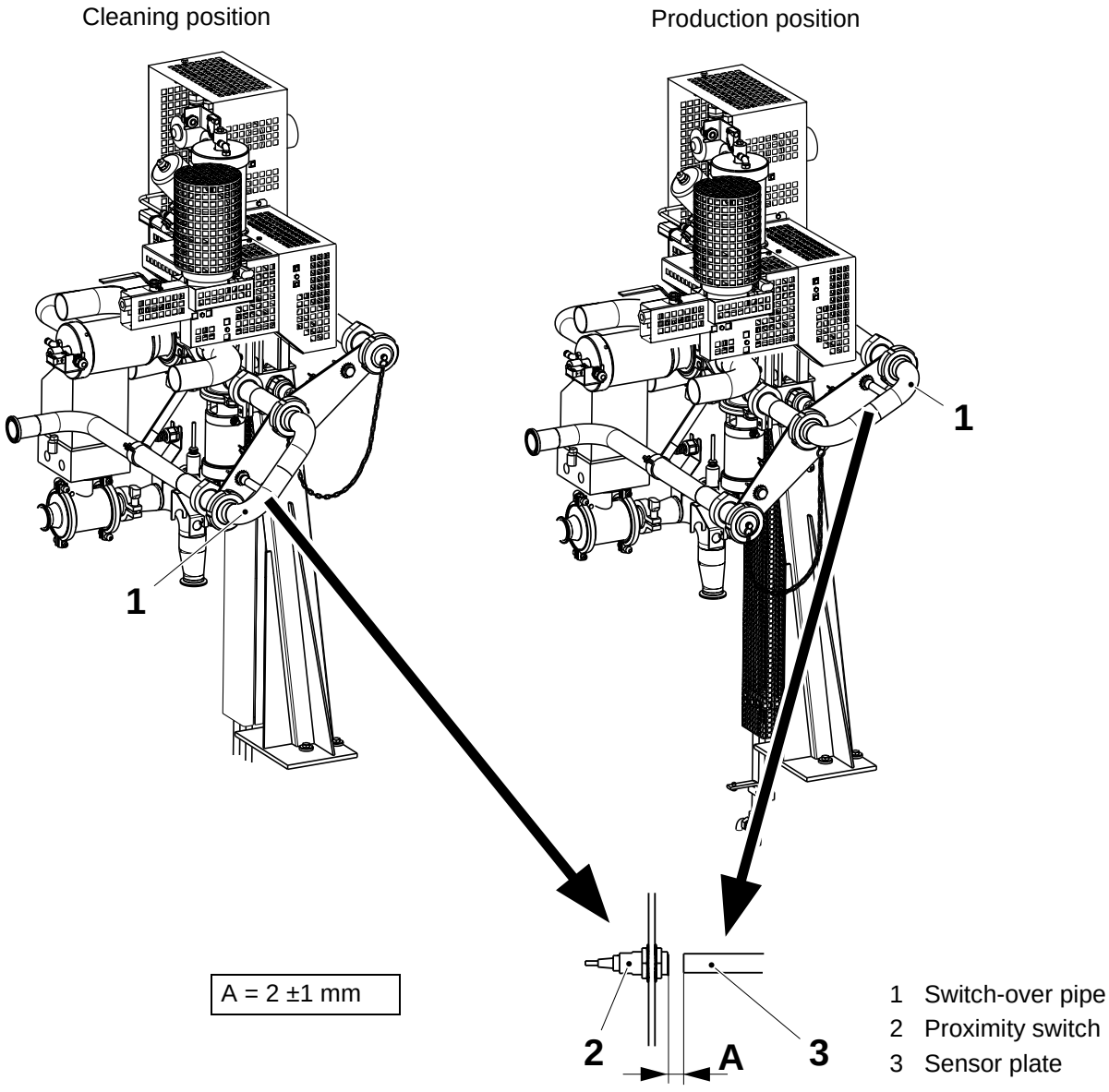

1.2.6-2 Cleaning Pipe - Check Gaskets

SPC Reference	2525518-0100

a) Remove the clamps (1) and the gaskets (2).

b) Remove the union nuts (3) and the gaskets (4).

c) Check the gaskets (2) and (4) for wear or damage. Change as required.

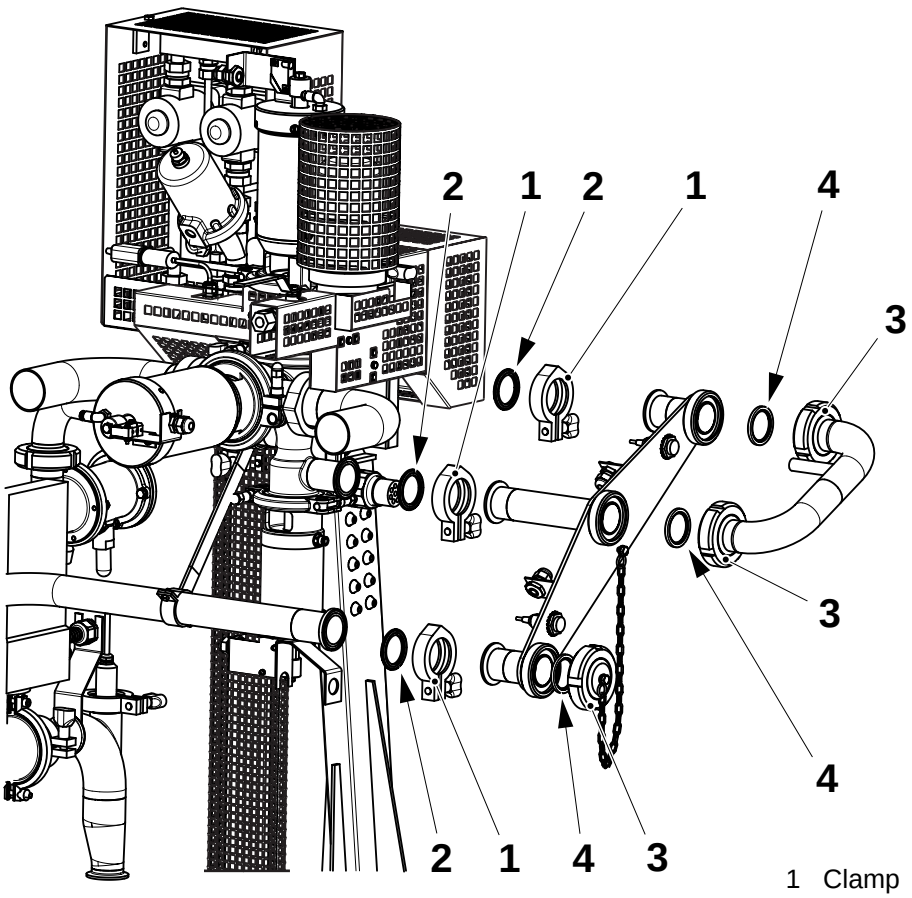

1 Clamp
2 Gasket
3 Union nut
4 Gasket

1.2.7 Steam System

1.2.7-1 Steam System - Clean Steam Trap

Consumables - Lubricant	TP No. 90296-57
SPC Reference	2523644-0100

WARNING
Risk of personal injury!
Turn off the steam and the compressed air. Make sure there is **no product, steam or cleaning liquid** in the line.

WARNING
Risk of personal injury!
The steam system and adjacent components may be hot. If necessary wear heat-resistant protective gloves. If an accident occurs, call immediately for medical attention.

a) Remove the steam traps (1) from the line.
b) Unscrew the cap (2).
c) Remove the spacer (3), the spring (4) and the strainer (5). Clean the parts as required.
d) Assemble in the reverse order.

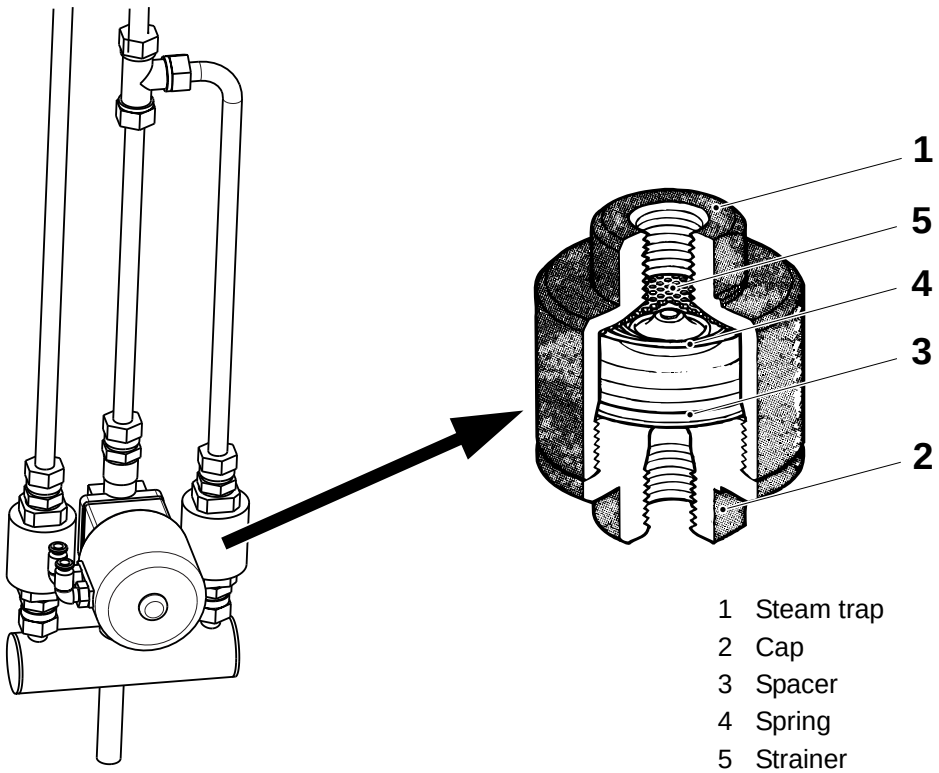

1 Steam trap
2 Cap
3 Spacer
4 Spring
5 Strainer

1.2.7-2 Steam System - Clean Filter

Tools - Tank - Filter - Coalecher Element - Thermometer - Pressure Gauge	 50 litres Pall Profile 10µm Pall SU range
Consumables - Nitric Acid	 14 - 15% (w/w)
SPC Reference	2523644-0100

Remove the O-ring (arrow) from the filter cartridge.

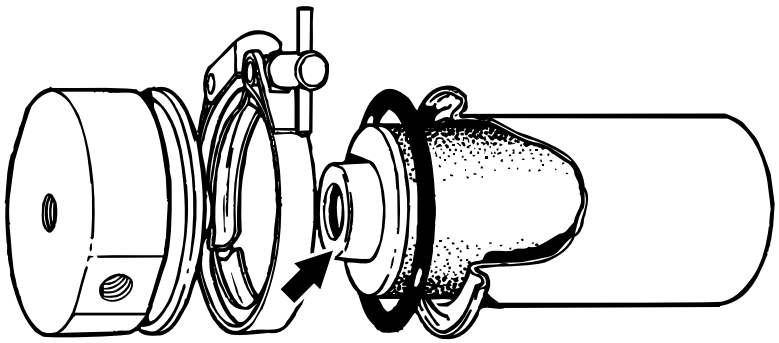

General information

To obtain optimum performance of the filter cartridge:

- Clean the filter cartridge thoroughly before reusing (or return to **Pall** for cleaning and testing).
- First remove the O-ring, then label and store used cartridges.

Clean with distilled **and** filtered water.

Rinse using a 50 litre tank designed to avoid “dead spaces”. Filter the incoming water (renewal rate 5 l/min.) with a 10µm Pall Profile.

Agitate the contents of the tank with compressed air, filtered through a Pall SU Coalecher element.

(Cont'd)

(Cont'd)

Cleaning with Nitric Acid

WARNING
Risk of personal injury!
Follow the Safety precautions.
The cleaning procedure must not contravene any legal or local safety regulations.

Note! If the cartridge is highly contaminated or if the recommended temperature cannot be used, contact **Pall Scientific & Laboratory Services** for advice.

a) Immerse the filter cartridge **in 14 - 15%** (w/w) nitric acid at **60 - 70°C** for 10 - 20 minutes.

b) Rinse the cartridge in water for **at least** 10 minutes.

c) Empty the tank and refill with water. Check the **pH level** of the tank contents is **6 - 8**.

d) Rinse the cartridge again for at least two hours, or until the pH level of the tank contents is the same as that of the incoming water.

e) Flush the cartridge in the reverse direction with water.
If the water from the cartridge is discoloured or is visibly contaminated, repeat steps a) and b).

(Cont'd)

(Cont'd)

Reverse Bubble Point Testing
Note! Do this **immediately after** the cleaning procedure.

a) Thoroughly soak the filter cartridge in water.

b) Plug one end of the cartridge and connect the other end to a compressed air line. The pressure should be **0 - 13 KPa**.

c) Submerge the filter cartridge in water. Keep the filter approximately **125 mm** below the surface.

d) Gradually increase the air pressure while slowly rotating the cartridge, until air bubbles emerge.
Record the air pressure at this point.

e) Carefully inspect the filter cartridge to ensure the air bubbles emerge at a similar rate from the entire cartridge.

f) Lower the pressure to half the recorded pressure. If air bubbles emerge from an isolated area of the cartridge at this pressure, replace the filter.

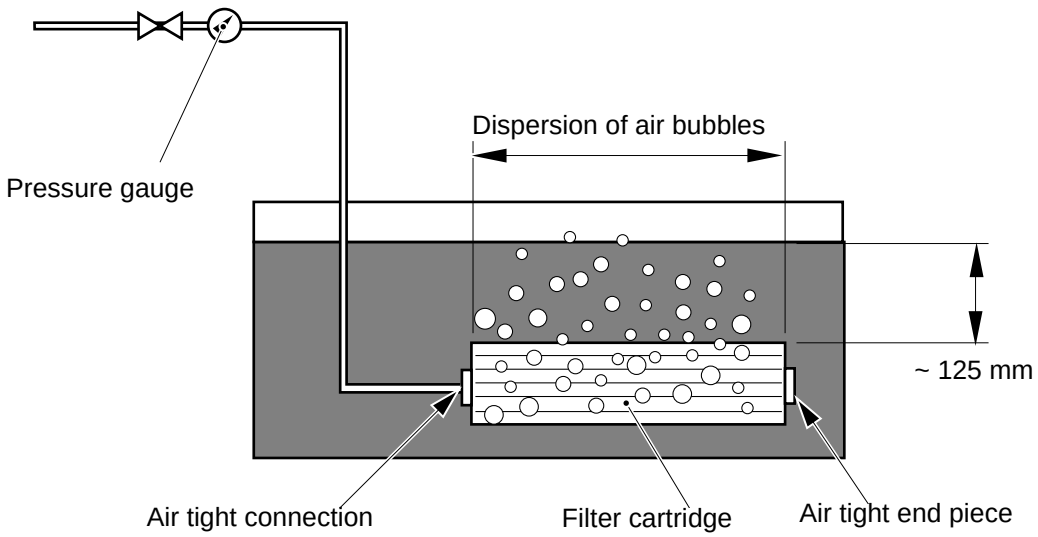

Drying Procedure
Dry the filter at **105 - 120°C** for 1 - 2 hours.

After drying, visually check the filter cartridge for damage or corrosion. Change the cartridge as required.

Fit a new O-ring before fitting the filter cartridge.

1.2.7-3 Steam System - Overhaul Pressure Regulator

SPC Reference	2523644-0100

WARNING
Risk of burns!
Parts may be hot.

a) Close the steam supply valve (1).
b) Remove the selector (2) and the screws (3).
c) Remove the cover (4).

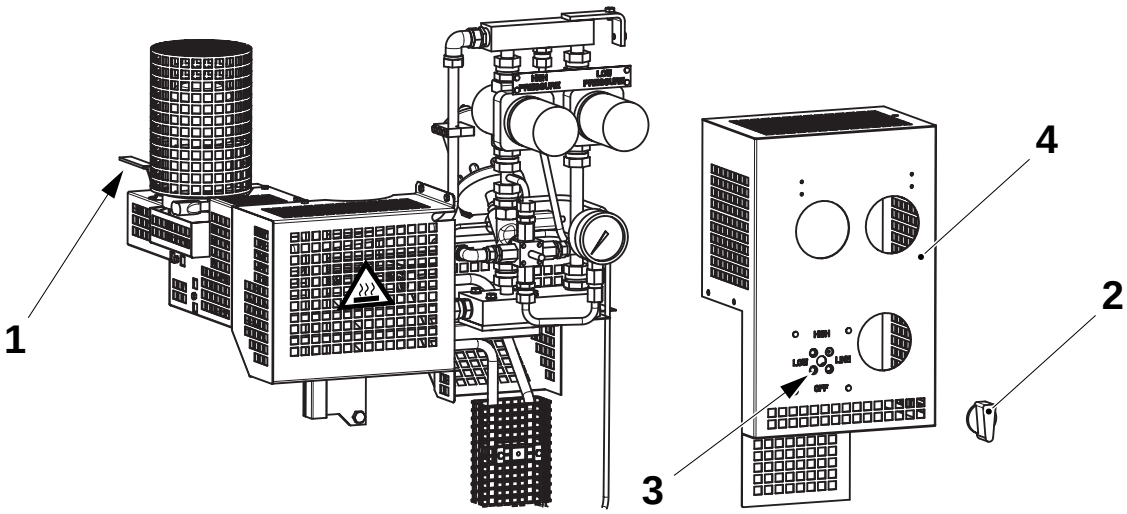

1 Steam supply valve
2 Selector
3 Screw
4 Cover

(Cont'd)

(Cont'd)

Note! Do not remove the pipes until the manometer indicates the lowest pressure value.

d) Loosen the nuts (5) and (6) and remove the group (7).

e) Remove the pressure regulators (8).

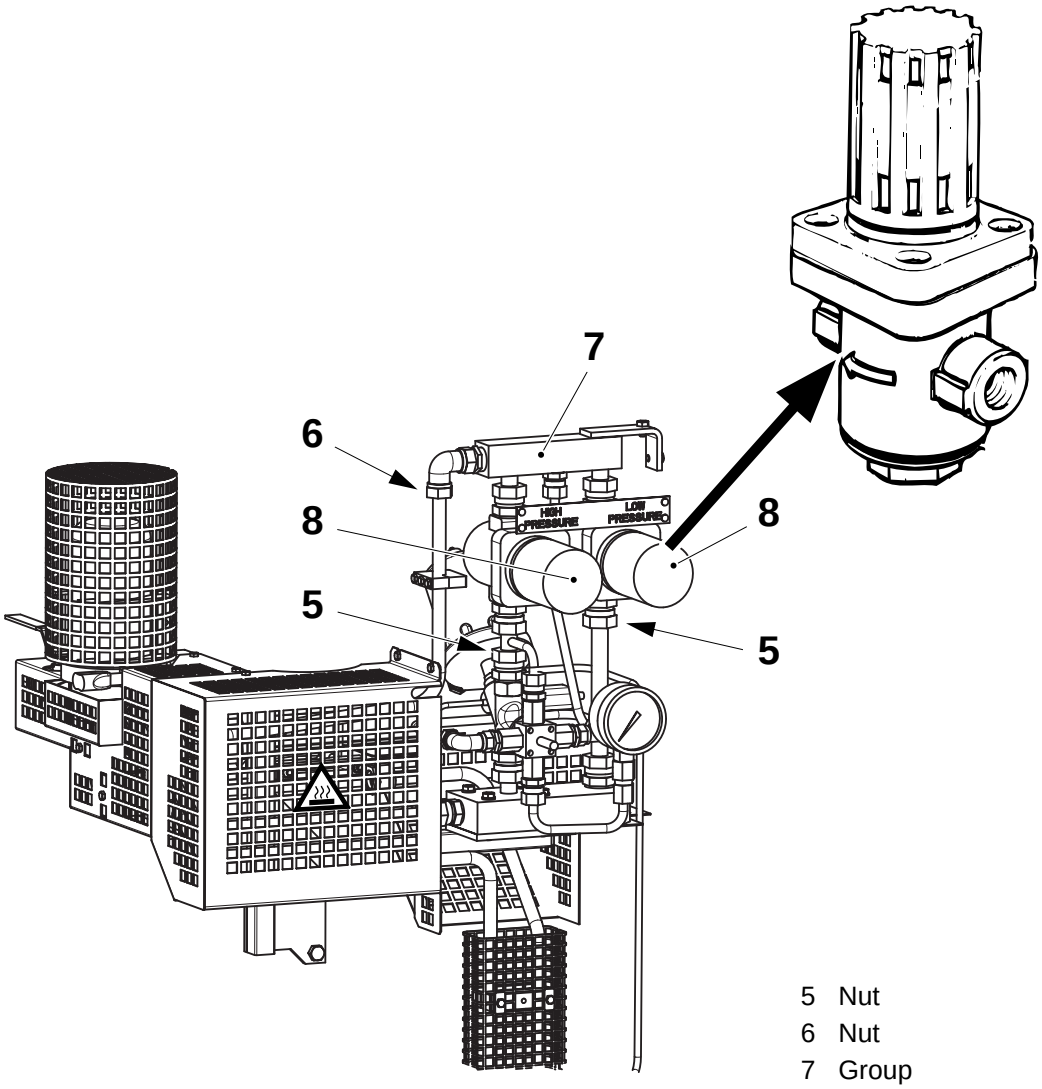

5 Nut
6 Nut
7 Group
8 Pressure regulator

(Cont'd)

(Cont'd)

f) Turn the handle (9) fully counter-clockwise to ensure a minimum spring pressure.

g) Mark the side of the top casting (10) corresponding to the label.

h) Loosen the screws (11) and remove the top casting (10).

i) Remove the spring (12) and the bellows (13).

j) Remove the pin (14) and clean it.

k) Check the seal (15); change as required.

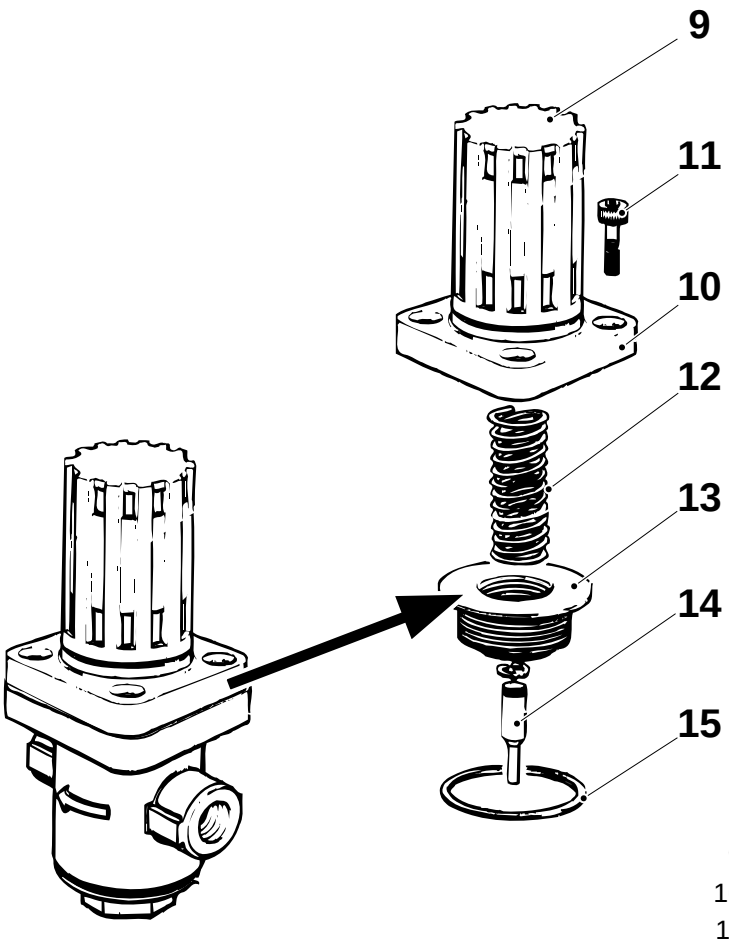

9 Handle
10 Top casting
11 Screw
12 Spring
13 Bellows
14 Pin
15 Seal

(Cont'd)

(Cont'd)

l) Open the lid (16) and remove the spring (17), the ball (18), the filter (19). Clean the seat of the ball if necessary.

m) Clean the filter (19) by means of hot water.

n) Check the seal (20); change as required.

o) Assemble in the reverse order.

CAUTION

Make sure the ball is correctly positioned in its seat, and the mark previously made in the top casting is aligned with the label.

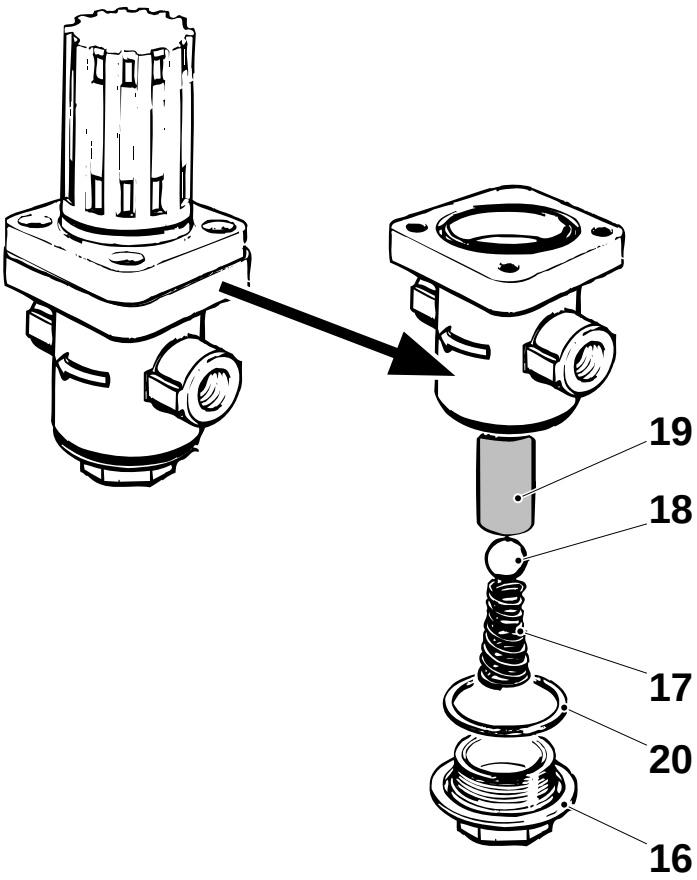

16 Lid
17 Spring
18 Ball
19 Filter
20 Seal

1.2.7-4 Steam System - Set Pressure Regulator

Machine Status	Mains Power ON
SPC Reference	2523644-0100

a) Open the steam supply valve (1).

b) Switch the selector (4) in position LINE. The value on the manometer (3) corresponds to the steam pressure in line.

c) Switch the selector (4) in position LOW **(**PRESSURE DURING PRODUCTION**)**. Set the steam pressure to **0.4 -0.5 bar** by means of the pressure regulator (2). This pressure value range correspond to a temperature range of
109 - 111 °C.

Note! If the pressure of **1.7 bar** can not be reached, set the pressure to the **maximum** value.

d) Switch the selector (4) in position HIGH (PRESSURE DURING STERILIZATION). Set the steam pressure to **1.7 bar** by means of the pressure regulator (5). This pressure value range correspond to a temperature range of
130 - 131 °C.

e) Switch the selector (4) in position OFF.

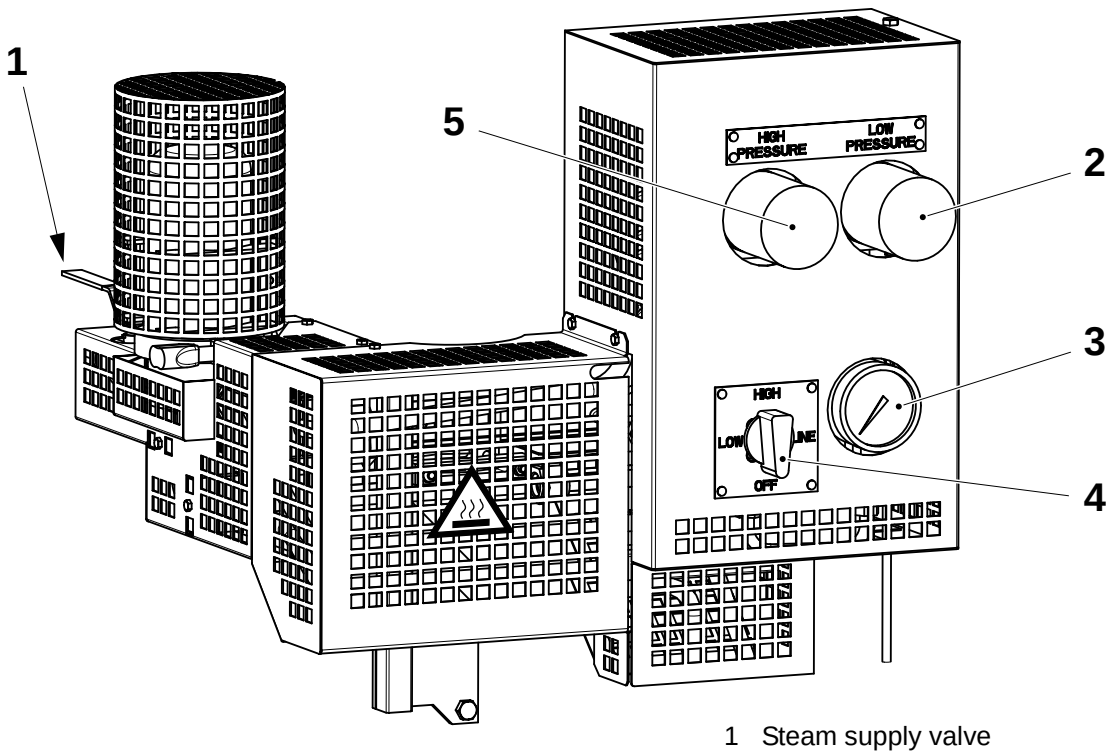

1 Steam supply valve
2 Pressure regulator - Low
3 Manometer
4 Selector
5 Pressure regulator - High

1.2.7-5 Steam System - Check Membrane

SPC Reference	2523644-0100

WARNING
Risk of burns!
Parts may be hot.

a) Remove the screws (1) and the diaphragm valve (2).

b) Remove and check membrane (3) for wear or damages. Change as required.

c) Assemble in the reverse order.

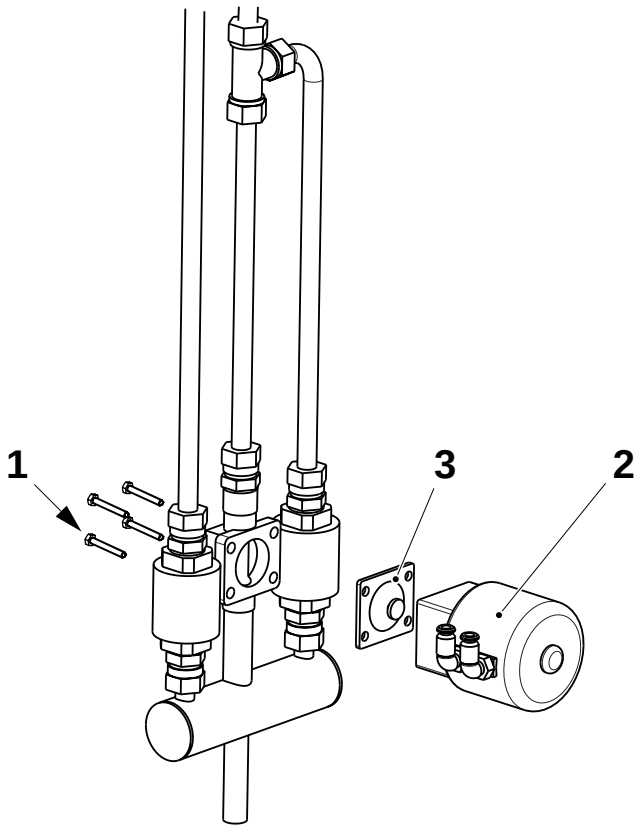

1 Screw
2 Diaphragm valve
3 Membrane

1.2.8 Intermediate Part

1.2.8-1 Intermediate Part - Check Conductivity Sensor

SPC Reference	1035259-0200

WARNING
Risk of burns!
Parts may be hot.

a) Remove the conductivity sensor (1) from the pipe (2).
b) Make sure the conductivity sensor is clean. Do not use an abrasive brush to clean it.
c) Check the O-ring (3). Replace it if it is damaged or worn.
d) Reassemble in the reverse order.

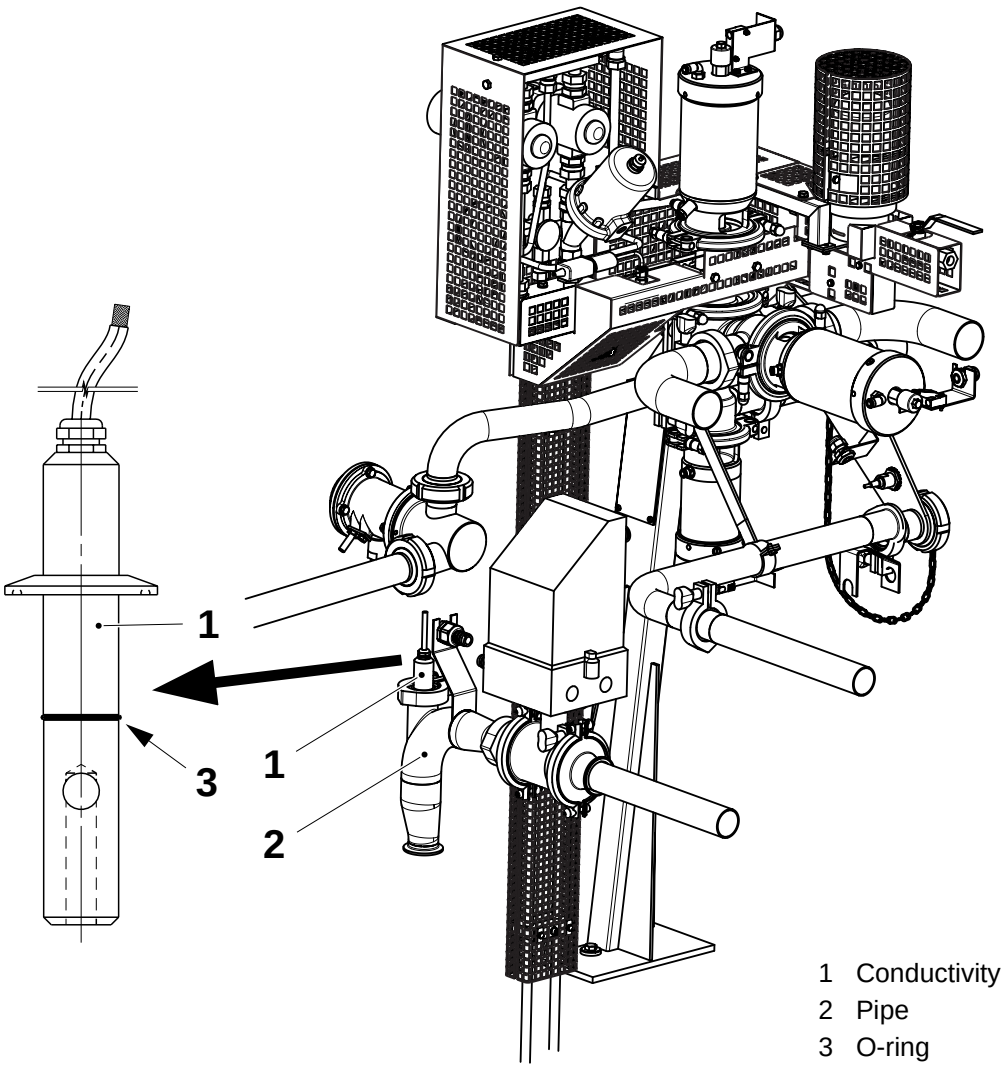

1 Conductivity sensor
2 Pipe
3 O-ring

1.2.8-2 Intermediate Part - Set Flow Meter

SPC Reference	1035259-0200

The flowmeter comprises a magnetic sensor and a signal converter mounted on the sensor. The signal converter is set in the factory according to the tables below.

Basic Setting

Flow direction	Positive
Qmax.	10 m^3/h
Low flow cut-off	1.5%
Totalizer units	L

Output Setting

Current output	On
Current output	0 - 20 mA
Current output time constant	15 seconds
Frequency/pulse on/off	On
Frequency/pulse output	Pulse
Pulse unit	L
Volume/pulse	10 L

(Cont'd)

(Cont'd)

To check the flowmeter is set correctly, use the appropriate flowmeter head.

Changes to the settings can be made from the flowmeter keypad.

Flow Meter Keypad

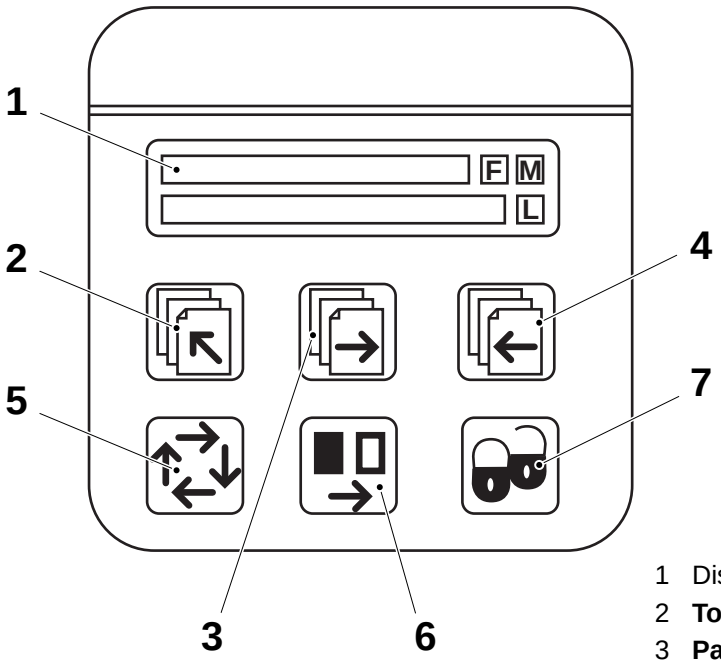

1 Display
2 **Top up** key
3 **Page forward** key
4 **Page backward** key
5 **Change** key
6 **Select** key
7 **Lock/unlock** key

The function of each key on the keypad is shown below.

Key	Function
TOP UP	This key always returns the display to the operator menu showing flow
PAGE FORWARD	This key is used to step forward through the menus. It is the only key normally used by the operator
PAGE BACKWARD	This key is used to step backward through the menus
CHANGE	This key changes the settings or numerical values
SELECT	This key selects the figures to be changed
LOCK/UNLOCK	This key allows the operator to change settings and gives access to submenus

(Cont'd)

(Cont'd)

To restore the factory settings, proceed as follows:

STEP	PUSH	DISPLAY	INPUT
1	TOP UP key (hold for 2 sec)	View	
2	PAGE FORWARD key	Change 0000	1000 (*)
3	LOCK/UNLOCK key	Converter setup mode	
4	LOCK/UNLOCK key	Basic settings	
5	LOCK/UNLOCK key	Flow direction Definition + (Q)	
6	PAGE FORWARD key	Qmax unit m^3/h	
7	PAGE FORWARD key	Qmax 12 m^3/h	10 m^3/h (*)
8	TOP UP key	Flow rate	

(*) Press the CHANGE key to change the value of each digit.

(*) Press the SELECT key to select the figures to be changed.

1.3 Sterile Air System

SPC Reference	577104-0300

1.3-1 Sterile Air System - Check Leakages

Machine Status	PREPARATION
SPC Reference	577104-0300

WARNING
Hydrogen Peroxide!
Follow the Safety precautions.

Check the connections for air leakages at the following points:

- the valve heat exchanger (1)
- the heat exchanger (2)
- the compressor unit (3)
- the air valve (4)
- the pressure regulator (5)
- the scrubber (6)
- the separator (7)
- the air superheater (8)
- the butterfly valve (9).

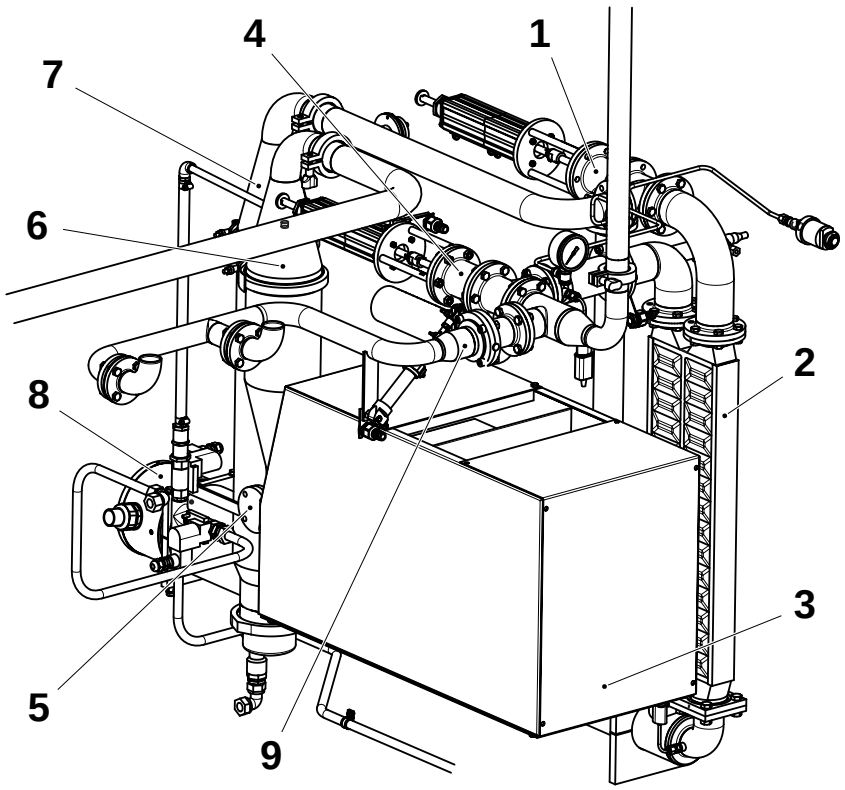

1 Valve heat exchanger
2 Heat exchanger
3 Compressor unit
4 Air valve
5 Pressure regulator
6 Scrubber
7 Separator
8 Air superheater
9 Butterfly valve

1.3.1 Air Superheater

1.3.1-1 Air Superheater - Check

Machine Status	HEAT STERILIZATION
SPC Reference	1347246-0100

WARNING
Risk of burns!
Parts may be hot.

Check the temperature of the air superheater (1) on the TPOP panel. Set it as required, see 10.1 Technical Data for the correct value.

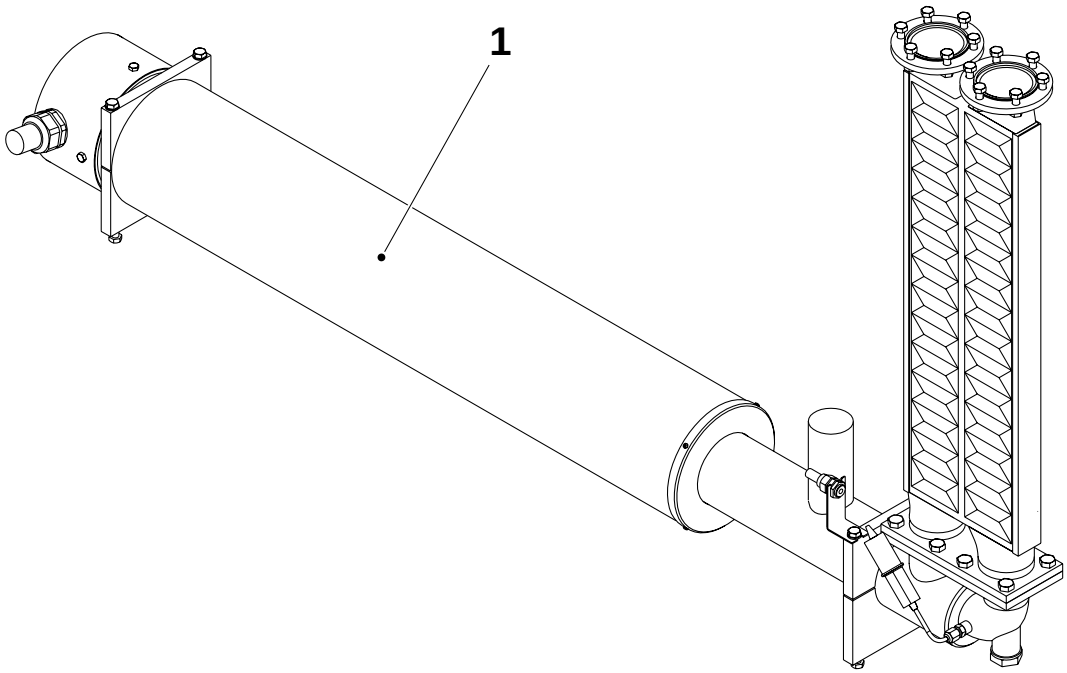

1 Air superheater

1.3.1-2 Air Superheater - Check Heat Exchanger

Consumables - Lime Scale Removal Acid	 See list below
Tools - Bottom Blank-off Flange - Hydrostatic Test Equipment - Top Blank-off Flange	 TP No. 1348263 TP No. 565536 -0101 TP No. 979951
SPC Reference	1347246-0100

WARNING
Risk of burns!
Parts may be hot.

Note! If the temperature of the aseptic chamber exceeds **100°C** during PRODUCTION, check the bypass position, see 1.3.3-2 Valve Heat Exchanger - Set Bypass Position. If the bypass position is correct, proceed as follows.

a) Remove the screws (1) and remove the heat exchanger from the machine.

b) Remove the lime scale from the heat exchanger with one of the following acid solutions listed on the next page.

Note! All solutions must be at ambient temperature during lime scale removal.

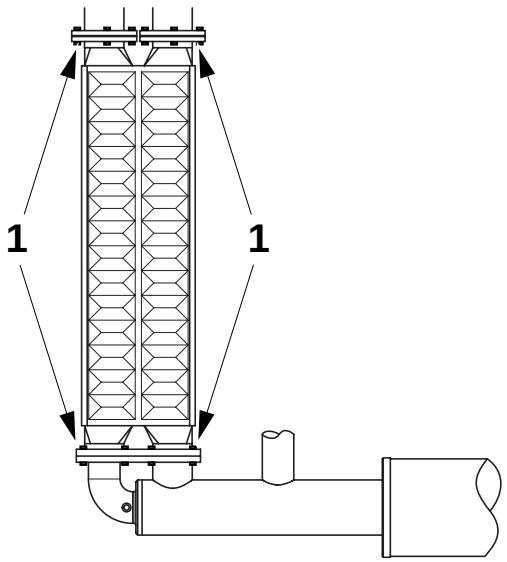

1 Screw

(Cont'd)

(Cont'd)

WARNING
Chemical products!
Acids. Follow the Safety precautions.

CAUTION
Only use acids listed below and do **not** use hydrochloric acid (HCl).

- acetic acid (CH_3COOH), 20%
- nitric acid (HNO_3), 5-10%
- citric acid ($C_6H_8O_7$), 20%
- phosphoric acid (H_3PO_4), 5-10%.

After lime scale removal flush with water and the last rinse is done with softened or distilled water.

c) Check the heat exchanger for leaks as described below.

d) Plug one of the heat exchanger connection by means of blank-off flange (3) (TP No. 1348263).

e) Connect the hydrostatic test equipment (TP 565536-0101) with the flange (TP No. 979951), to one of the heat exchanger connections (2).

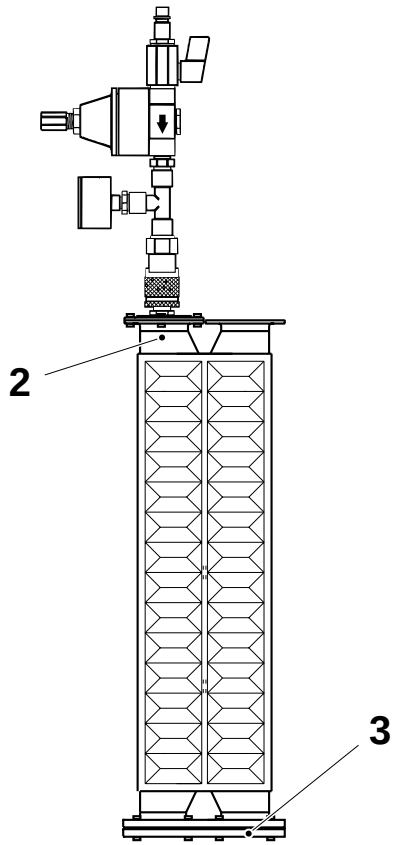

2 Heat exchanger connection
3 Blank-off flange

(Cont'd)

(Cont'd)

Note! Make sure the equipment is connected in the correct direction. The flow must run **from** the valve (5) **towards** the pressure gauge (8), in the direction of the arrow.

CAUTION
Before turning on the compressed air turn the adjustment screw (7) anti-clockwise until the spring load is released and close the valve (5).

f) Connect the compressed air connection (4).

g) Submerge the whole heat exchanger in water. Take care **not** to drench the pressure controller (6). Let the air bubbles disappear.

h) Open the valve (5). Adjust the pressure to **50 kPa (0.5 bar)** on the pressure gauge (8), by means of the adjustment screw (7). Air bubbles will immediately show any leaks in the heat exchanger.

i) Repeat the procedure on the other heat exchanger coil, using the other two diagonally-opposite connections.

j) If leakage is suspected, replace the heat exchanger.

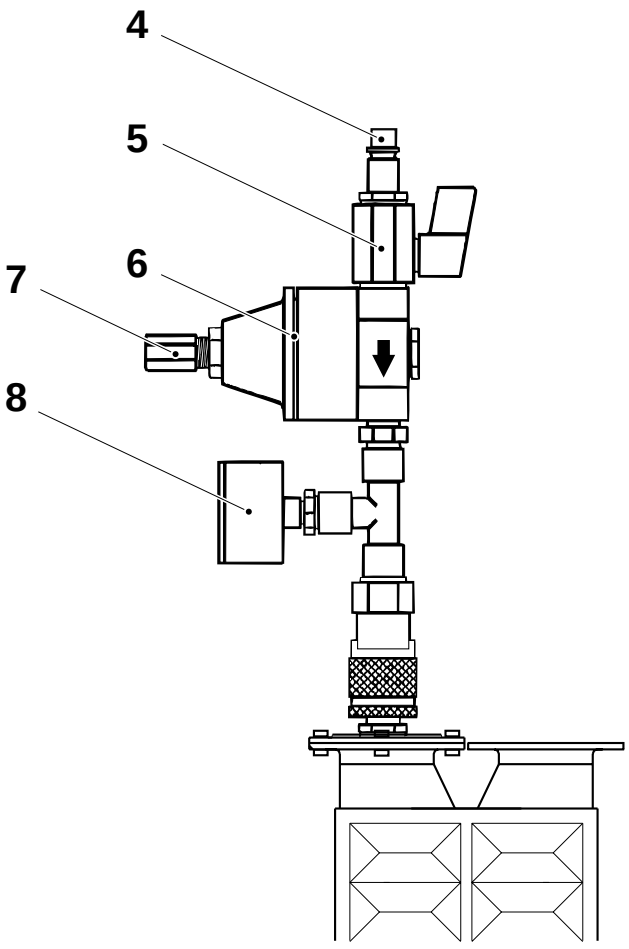

4 Compressed air connection
5 Valve
6 Pressure controller
7 Adjustment screw
8 Pressure gauge

(Cont'd)

(Cont'd)

k) Change the joint gaskets.

l) Fit the heat exchanger on the machine. Make sure the numbers on the heat exchanger flanges correspond with those on the pipes.

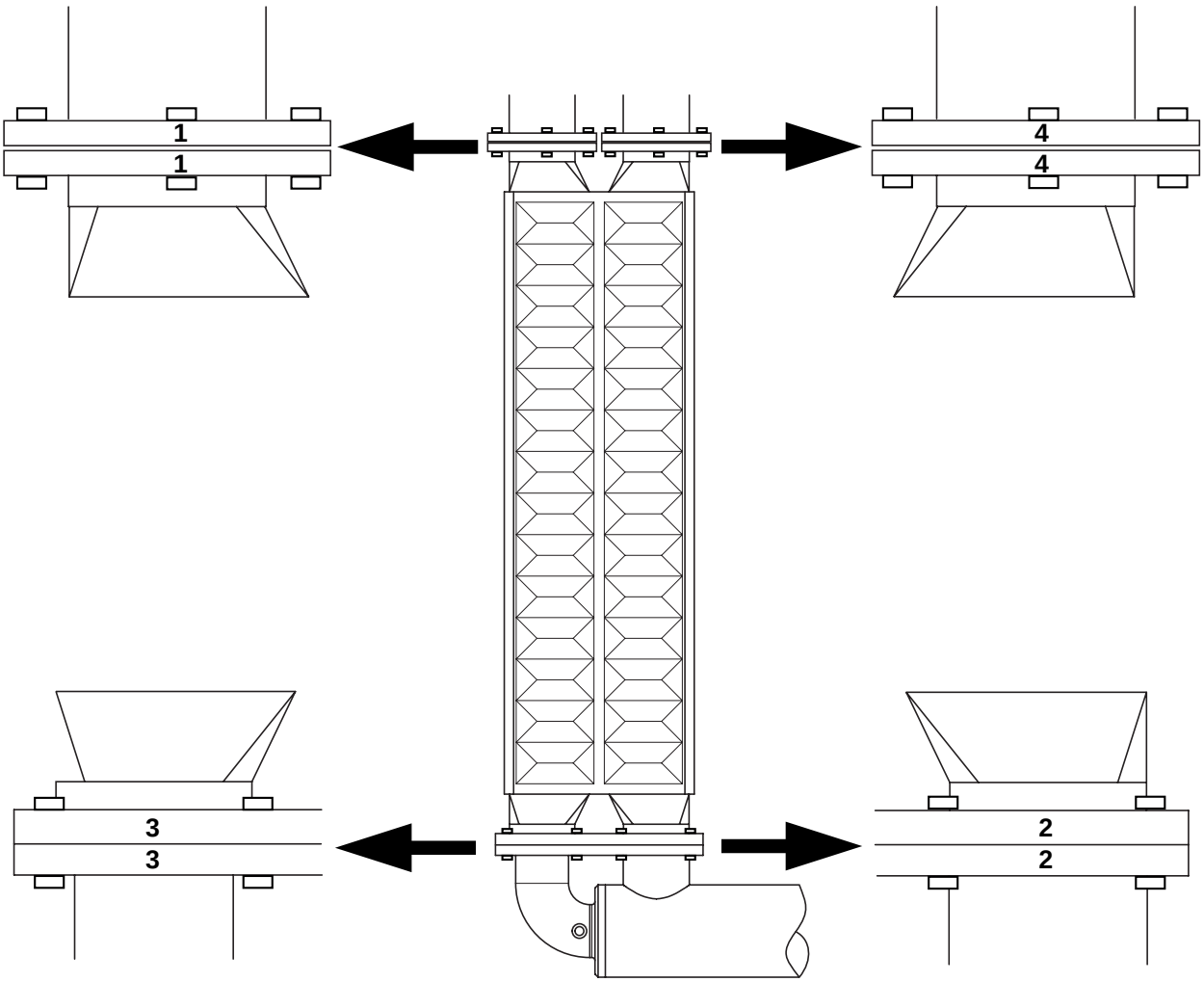

1.3.2 Compressor Unit

1.3.2-1 Compressor Unit - Check Pressure

Machine Status	Air ON Mains Power ON
SPC Reference	996475-0200

WARNING
Risk of burns!
Parts may be hot.

Step up the machine to PRE-STERILIZATION and check the sterile air system pressure gauge (1) indicates **15±1 kPa.**
Step up the machine to PRODUCTION and check the sterile air system pressure gauge (1) indicates **25±5 kPa.**

- If the pressure is too high this may be due to a blockage somewhere in the air system.
- If the pressure is too low this may be due to a leak in the air system, a blocked filter in the suction pipes, or insufficient compressor capacity.

If the correct pressure cannot be reached, change the pressure gauge (1) or change the seals (2), see 1.3.2-3 Compressor Unit - Change Seals.

Note! Only for **60 Hz** machines.
The pressure is adjusted using a by-pass throttle.
See also 1.3.9-1 Pressure Regulator (60 Hz) - Set By-pass Valve.

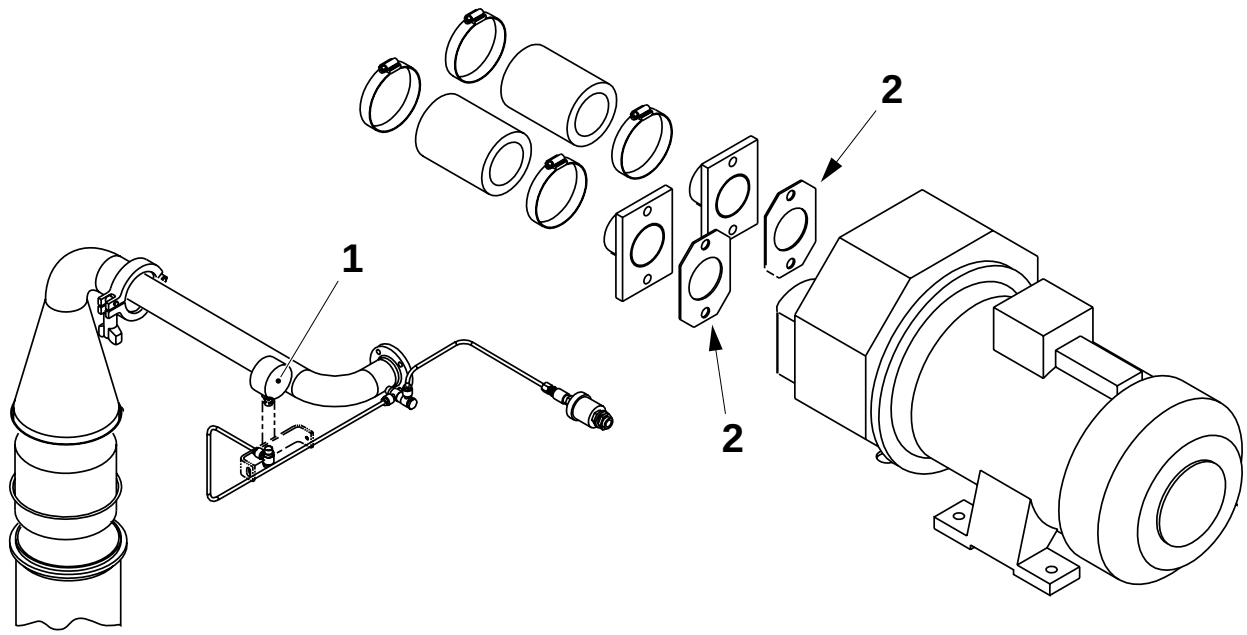

1 Pressure gauge
2 Seal

1.3.2-2 Compressor Unit - Check for Leaks and Vibrations

Machine Status	HEAT STERILIZATION
SPC Reference	996475-0200

WARNING
Risk of burns!
Parts may be hot.

a) Remove the compressor cover.

b) Check the compressor is running without any abnormal noises. Abnormal noise may be caused by dirt. If required,
   - step the machine down to ZERO
   - remove the drain plug (1)
   - flush the compressor with water to clean it.

c) Check the gasket (2) for leaks. Change the axial seals as required, see 1.3.2-3 Compressor Unit - Change Seals.

d) Check the gasket (3) for leaks.
To do this, remove the screws (4) and change the joint gasket as required.

e) Refit the compressor cover.

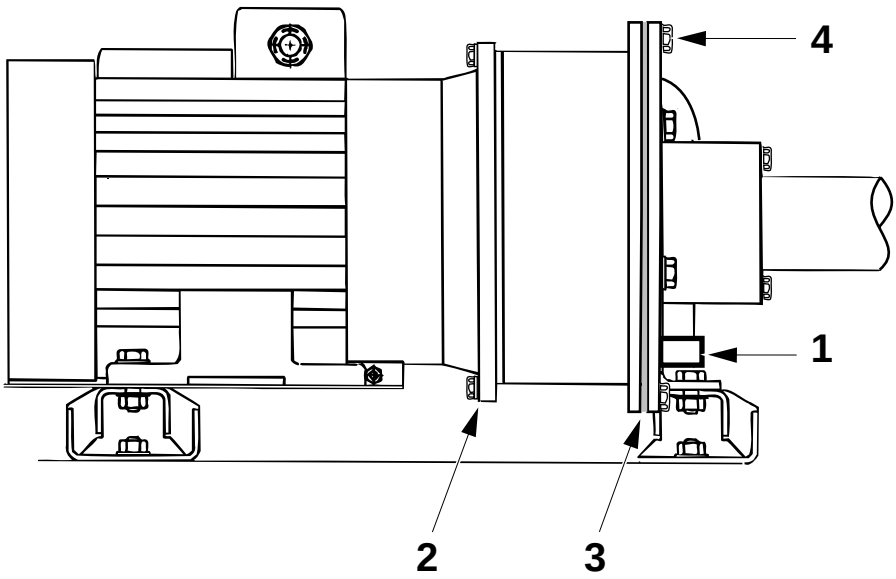

1 Drain plug
2 Gasket
3 Gasket
4 Screw

1.3.2-3 Compressor Unit - Change Seals

Tools - Extractor	TP No. 74305-0101
SPC Reference	996475-0200

WARNING
Risk of burns!
Parts may be hot.

a) Remove the screws (1), the inlet and outlet flanges (2) and the gasket (3).

b) Remove the screws (4), the gasket (5) and the end cover (6).

c) Using an extractor (TP No.V3-74305-0101), remove the locking nut (7), the washer (8), and the rotor (9).

Note! There are two holes in the rotor for the extractor.

d) Remove the rotor key (10).

e) Remove the nuts (11) and separate the pump housing (12) from the motor (13). The mechanical shaft seal (14) will then come away with the pump housing (12) when it is detached. Take care not to damage the ceramic sealing surfaces when removing the pump housing (12).

f) Remove the fixed sealing section (15) from the pump housing (12) by applying even pressure from the motor side. Fit a new one using a thin film of oil on the rubber sleeve.

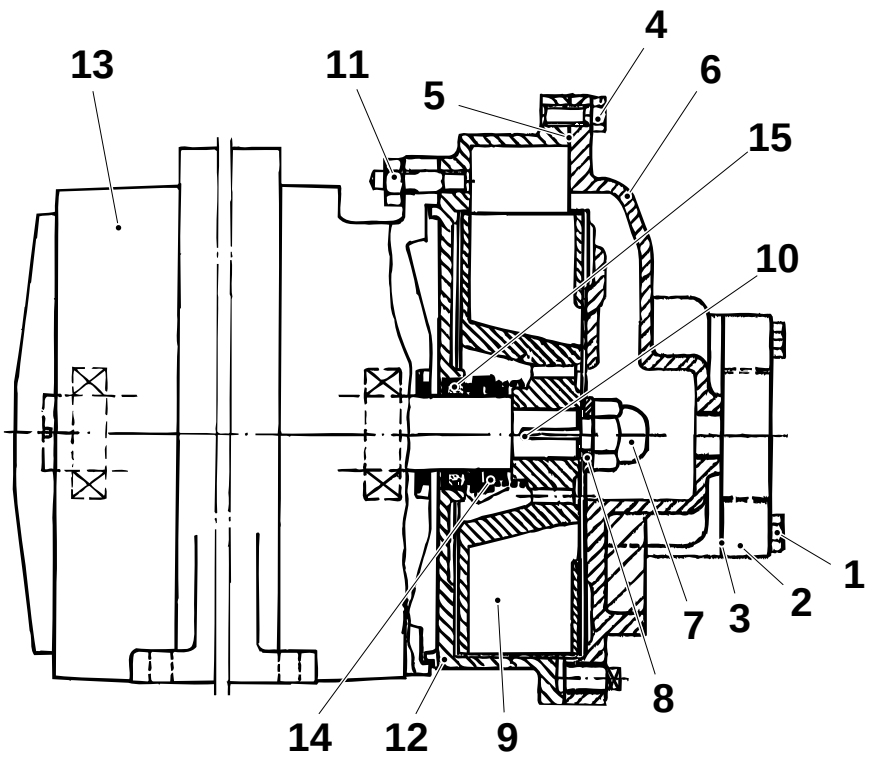

1 Screw
2 Flange
3 Gasket
4 Screw
5 Gasket
6 End cover
7 Locking nut
8 Washer
9 Rotor
10 Rotor key
11 Nut
12 Pump housing
13 Motor
14 Shaft seal
15 Fixed seal

(Cont'd)

(Cont'd)

CAUTION
Do not put grease on the sealing surfaces.

g) Fit the water deflector ring (16) on the motor shaft (17).
h) Mount the pump housing (12) against the motor (13).
i) Fit the rotating seal (18) on the motor shaft (17). Fit the coil spring (19).
j) Place the key (10) in the shaft (17).
k) Fit the rotor (9).
l) Fit the washer (8) and locking nut (7) on the shaft and tighten properly.
m) Put the pump housing gasket (5) in place.
n) Fit the end cover (6) and tighten the screws (4).
o) Fit the motor (13) and secure it in position with the nuts (11).

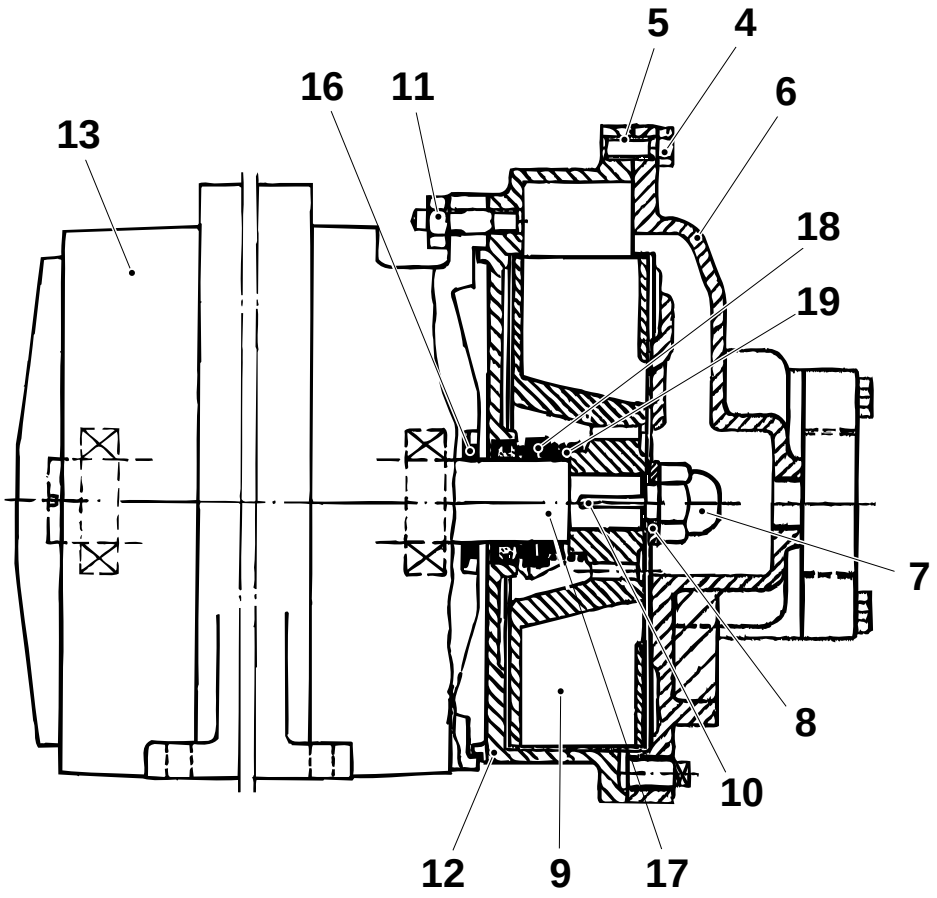

4 Screw
6 End cover
7 Locking nut
8 Washer
9 Rotor
10 Rotor key
11 Nut
12 Pump housing
13 Motor
16 Deflector ring
17 Shaft
18 Rotating seal
19 Coil spring

(Cont'd)

(Cont'd)

p) Fit shims (20) at the screws (21). Shim thickness as follows:
Measure the gap **A** on the screws with the nuts (11) loosened.
Add **0.1 - 0.2 mm** to the average value of the gap **A**.

q) Tighten the nuts (11).

r) Check the gap between the rotor (9) and the end cover (6) is approximately **0.1 mm** by inserting a feeler gauge through the inlet or outlet pipe.

s) Loosen the screws (4) again. Position the end cover (6) in the centre. Tighten the screws (4).

t) Using the motor fan, turn the rotor (9) and check that it rotates freely and does not touch the cover (8).

u) Fit the gasket (3) and the inlet and outlet flanges (2), then fit and tighten the screws (1).

v) Check once more the rotor (9) rotates freely.

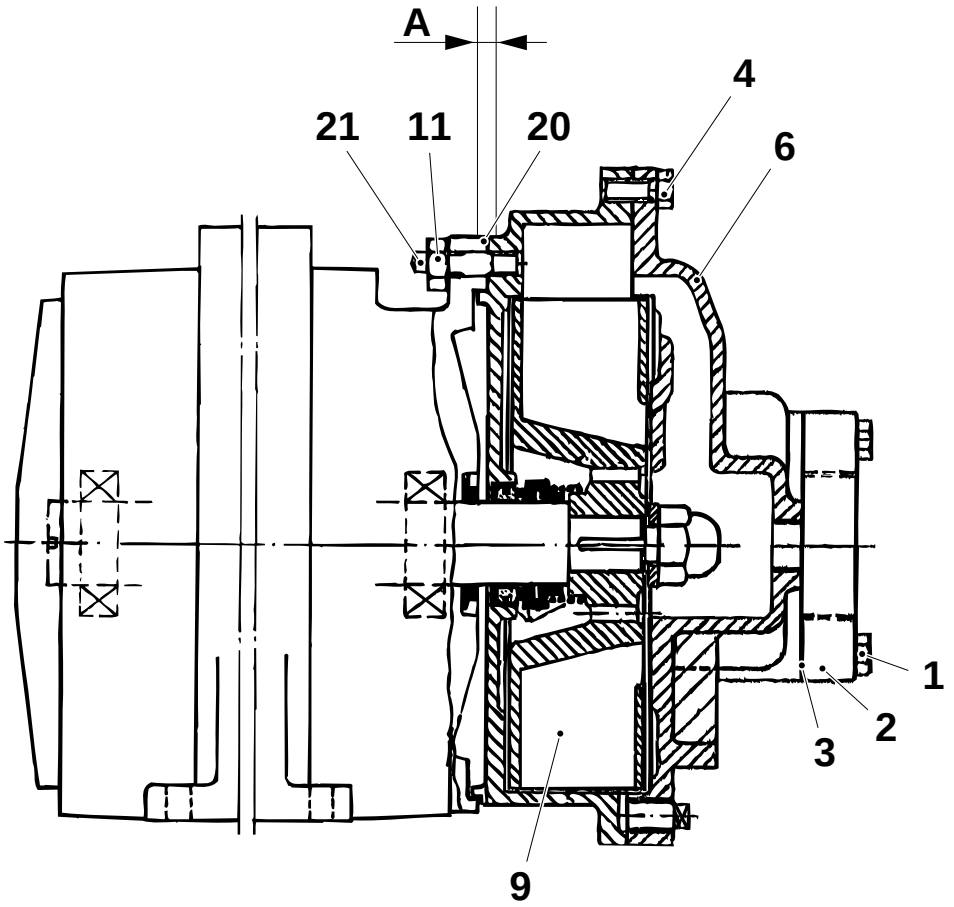

1 Screw
2 Flange
3 Gasket
4 Screw
6 End cover
9 Rotor
11 Nut
20 Shims
21 Screw

1.3.3 Valve Heat Exchanger

1.3.3-1 Valve Heat Exchanger - Overhaul

Tools - Torque Wrench	 min. 50 Nm
SPC Reference	1347141-0100

WARNING
Risk of burns!
Parts may be hot.

a) Remove the screws in the flanges (1), (2) and (3) and pull out the heat exchanger valve (4).

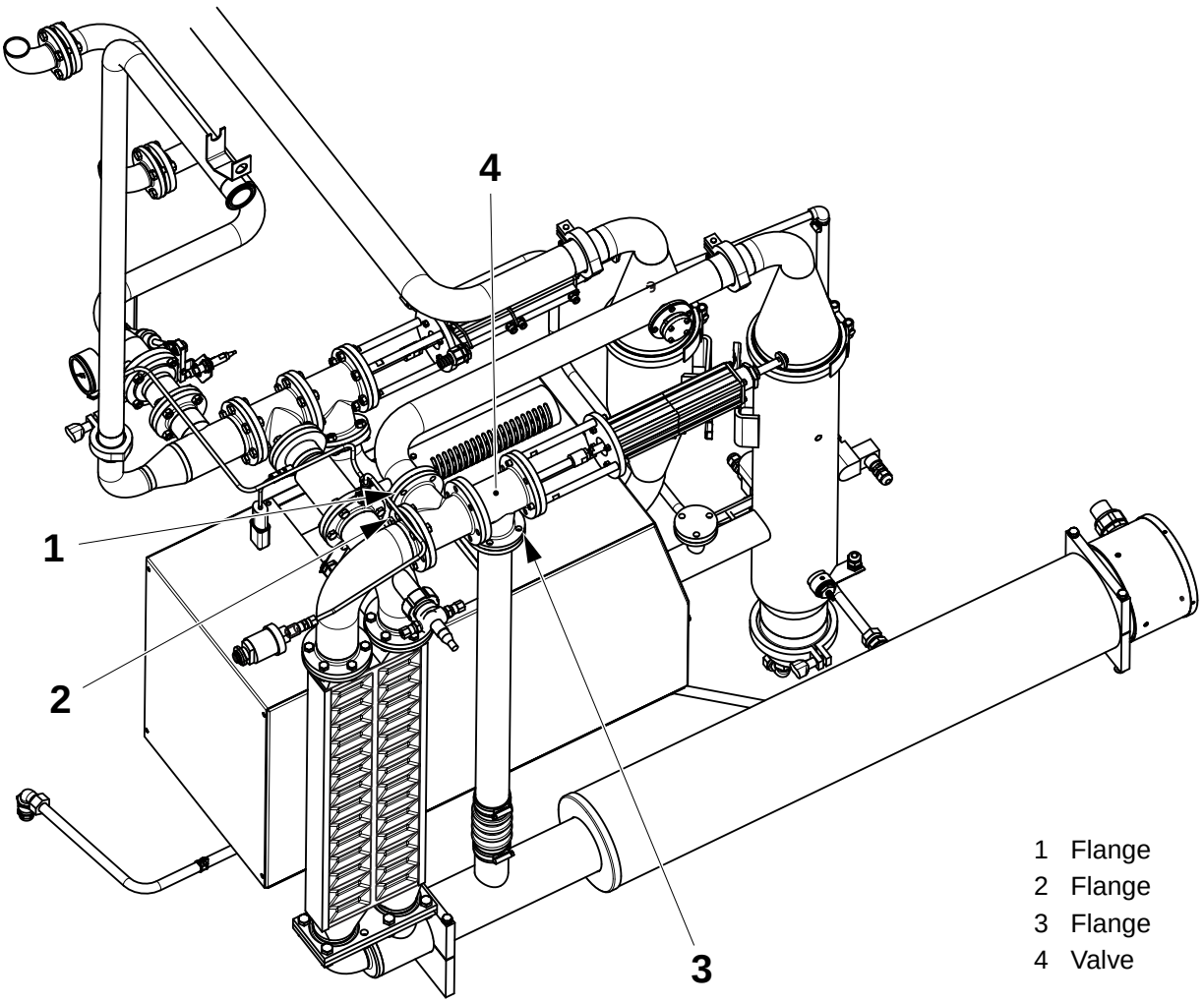

1 Flange
2 Flange
3 Flange
4 Valve

(Cont'd)

(Cont'd)

b) Change the gaskets (5), (6) and (7).

c) Remove the screws (8) and change the gasket (9).

d) Remove the valve cone (10) and change the seal rings (11) and (12).

e) Remove the screws (13) and change the gasket (14).

f) Disconnect the joint (15) and check the shaft (16) is not damaged or bent. Change as required.

g) Change the bearings (17) and the O-rings (18).

h) Check the cylinder (19) moves freely. Change as required.

i) Assemble in the reverse order.

Note! Using the torque wrench, tighten the valve cone (10) to **50 Nm**.

j) Set the heat exchanger valve, see 1.3.3-2 Valve Heat Exchanger - Set Bypass Position.

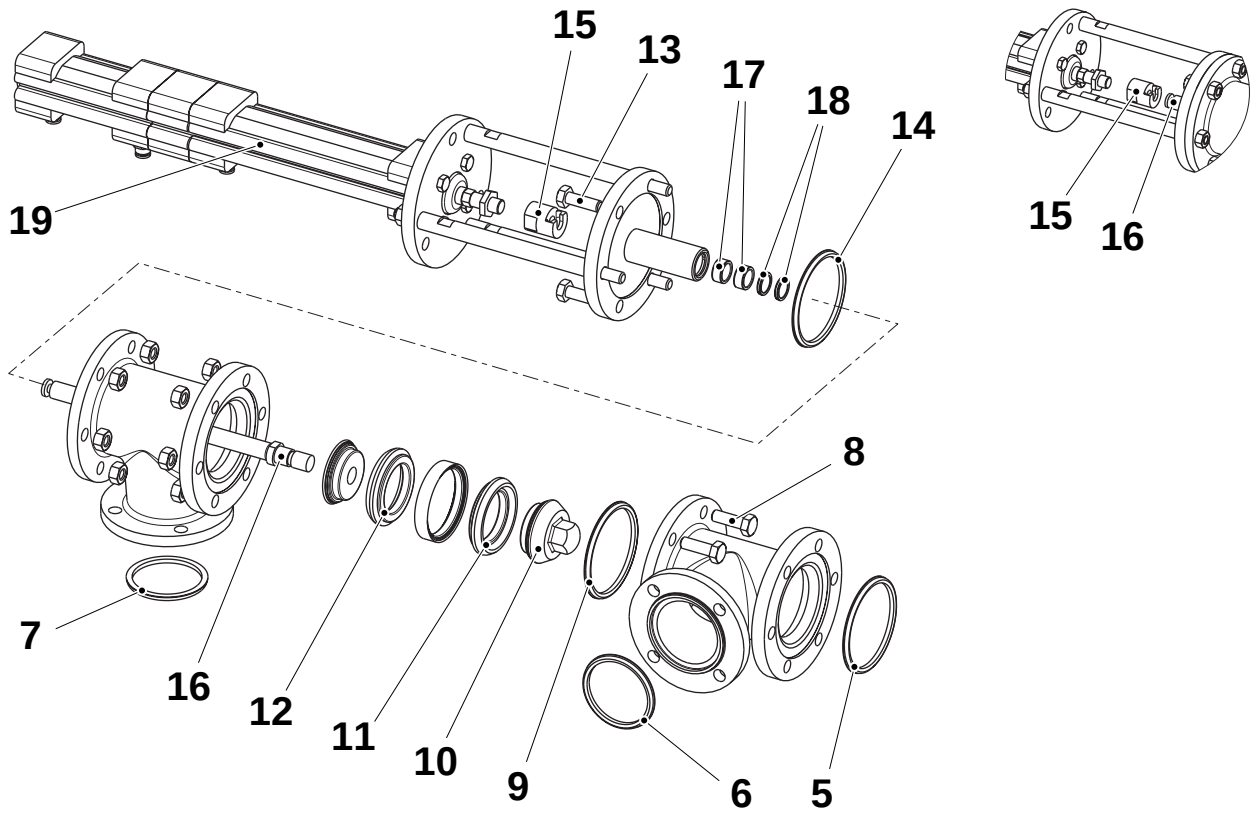

5	Gasket	13	Screw
6	Gasket	14	Gasket
7	Gasket	15	Joint
8	Screw	16	Shaft
9	Gasket	17	Bearing
10	Valve cone	18	O-ring
11	Seal ring	19	Cylinder
12	Seal ring		

1.3.3-2 Valve Heat Exchanger - Set Bypass Position

SPC Reference	1347141-0100

This setting ensures the opening and closing of the heat exchanger valve remains sealed.

a) Close the main air (1).

b) Remove the heat exchanger valve (2) and place it on a work bench, see 1.3.3-1 Valve Heat Exchanger - Overhaul.

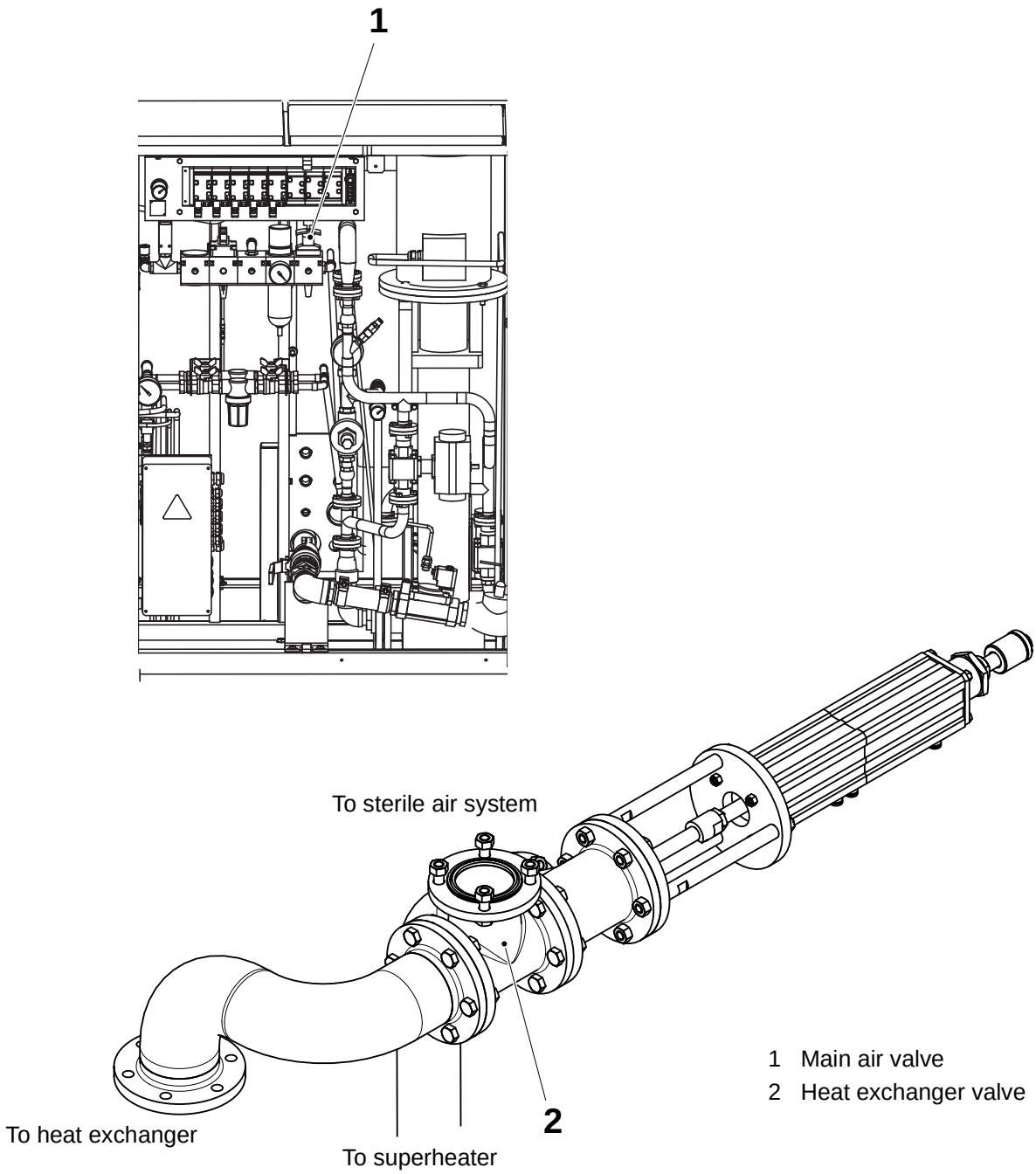

(Cont'd)

(Cont'd)

c) Loosen the nut (3).

d) Unscrew and disconnect the piston rod (4) from the pendulum suspension (5).

e) Push the piston rod (4) all the way into the cylinder, fig. **A** (maximum cooling position).

f) Connect the pendulum suspension (5) to the shaft (6).

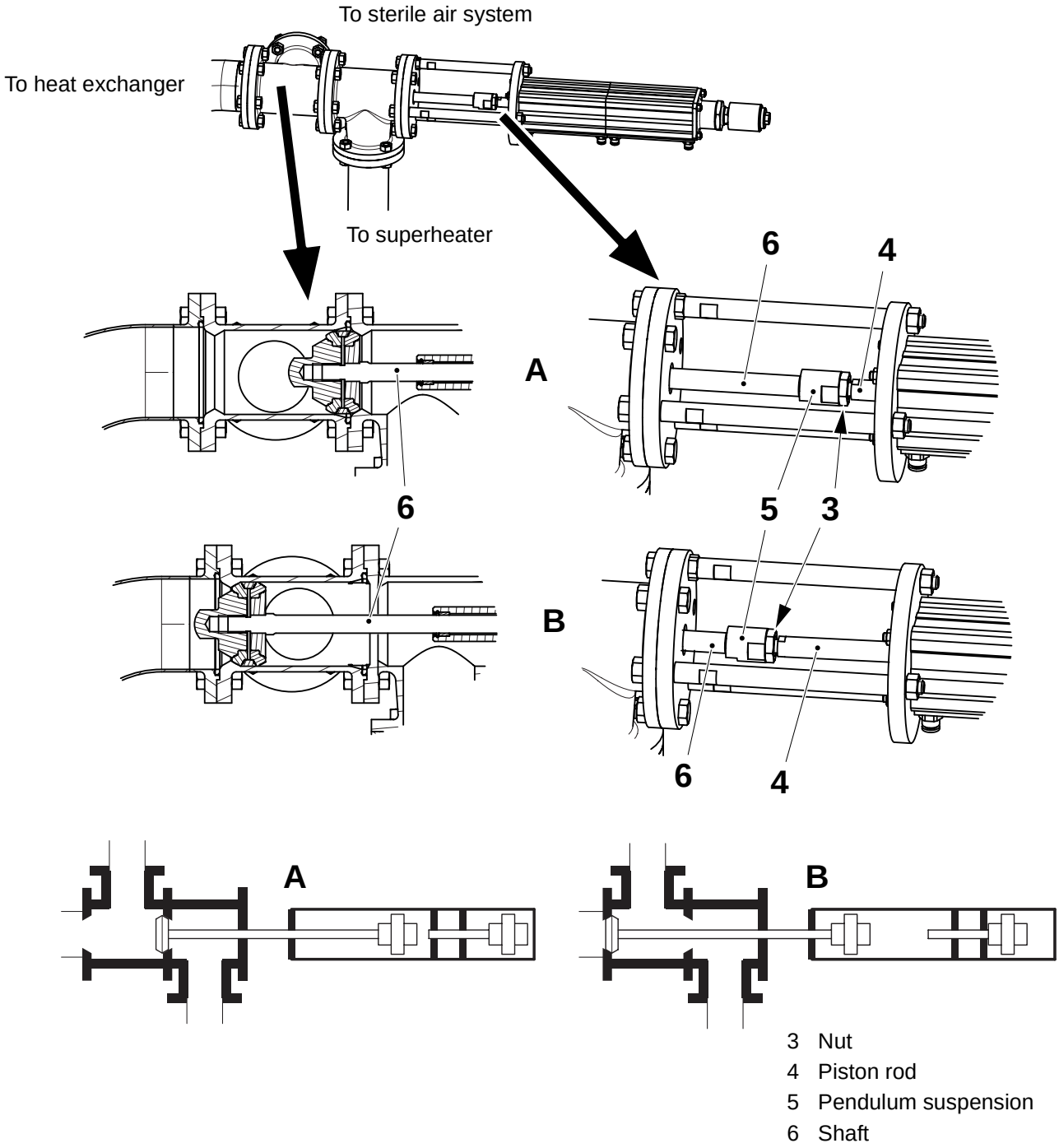

(Cont'd)

(Cont'd)

g) Holding the piston rod (4) in its position, screw the pendulum suspension (4) to the piston rod (4) until it starts to move, then 1/2 a turn more.

h) Tighten the nut (3).

i) Move the piston rod (4) by hand and check the valve close completely in both positions: **A** (max. cooling) and **B** (by-pass). If not repeat from c).

j) Assemble in the reverse order.

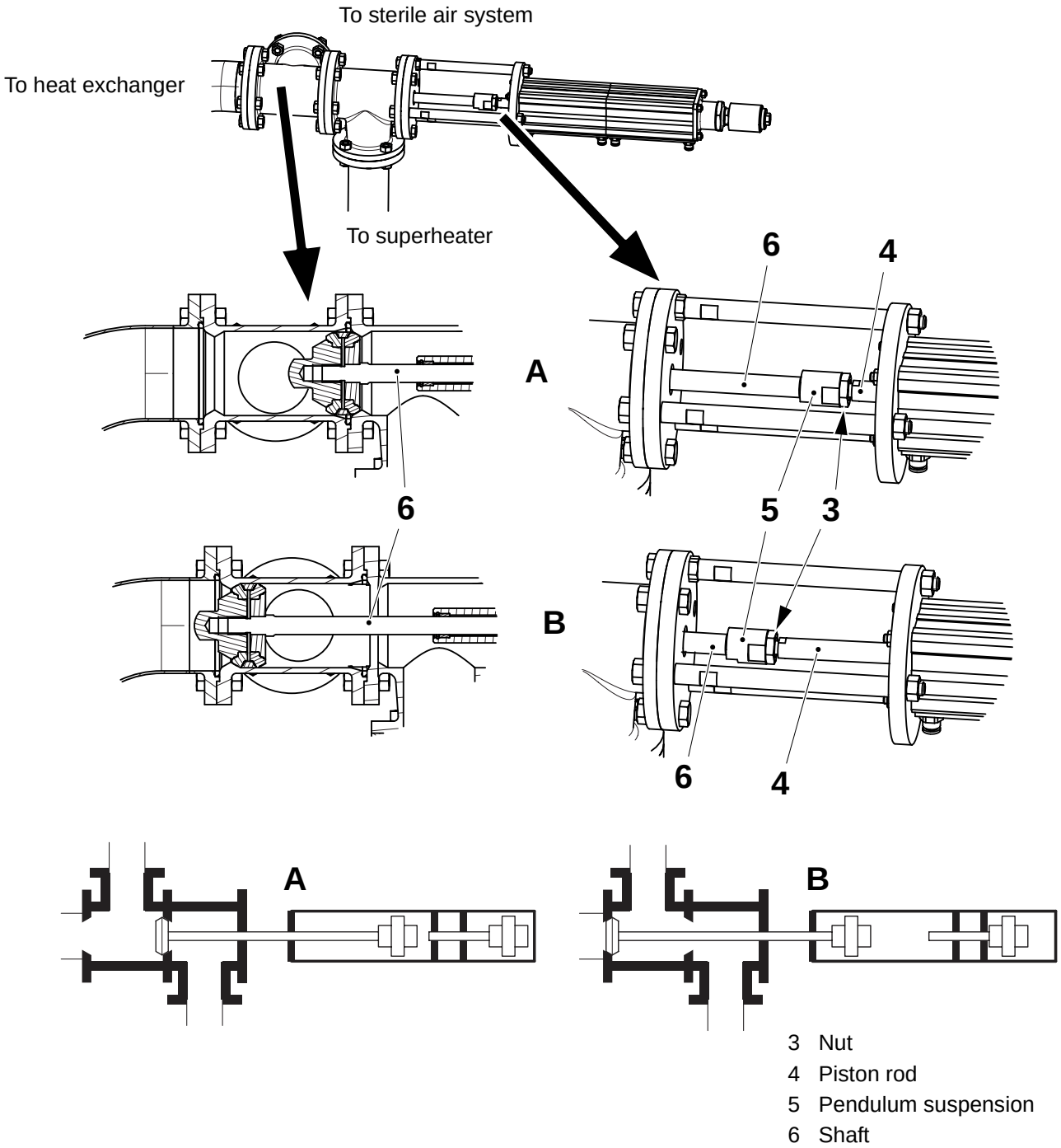

1.3.4 Butterfly Valve

1.3.4-1 Butterfly Valve - Change Cylinder

SPC Reference	2523664-0100

a) Remove the air pipes from the cylinder.
b) Remove the screw (1).
c) Remove the retaining ring (2) and pin (3).
d) Change the cylinder (4).
e) Assemble in the reverse order.
f) Set the cylinder, see 1.3.4-3 Butterfly Valve - Set.

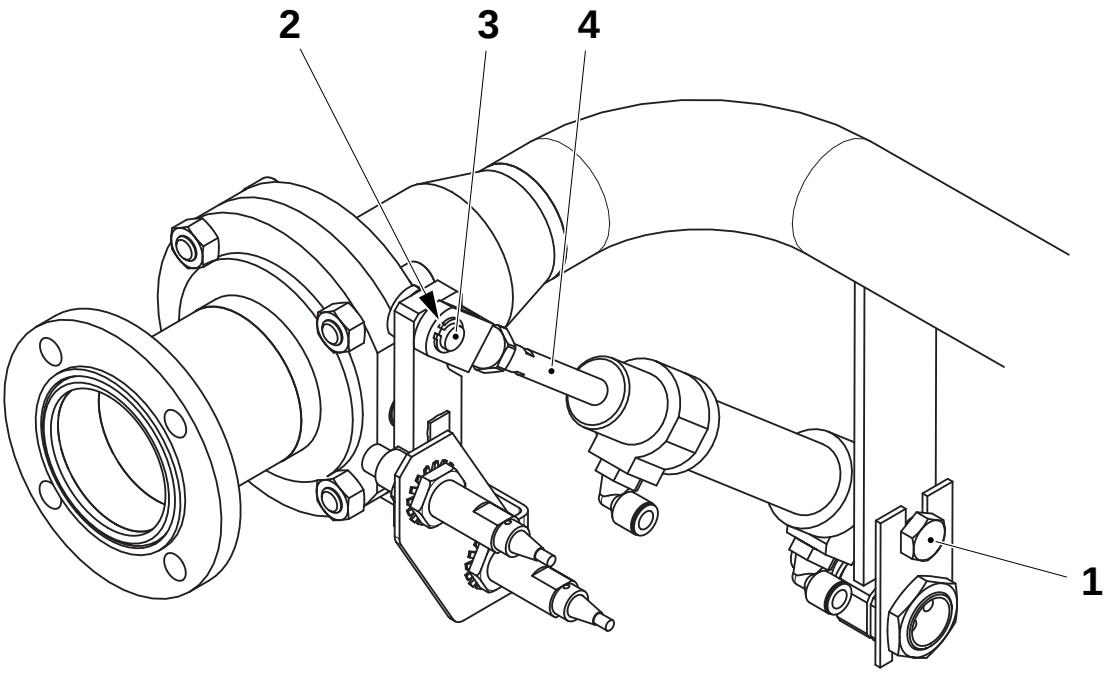

1 Screw
2 Retaining ring
3 Pin
4 Cylinder

1.3.4-2 Butterfly Valve - Change Bushings

SPC Reference	2523664-0100

a) Remove the screws and nuts (1).

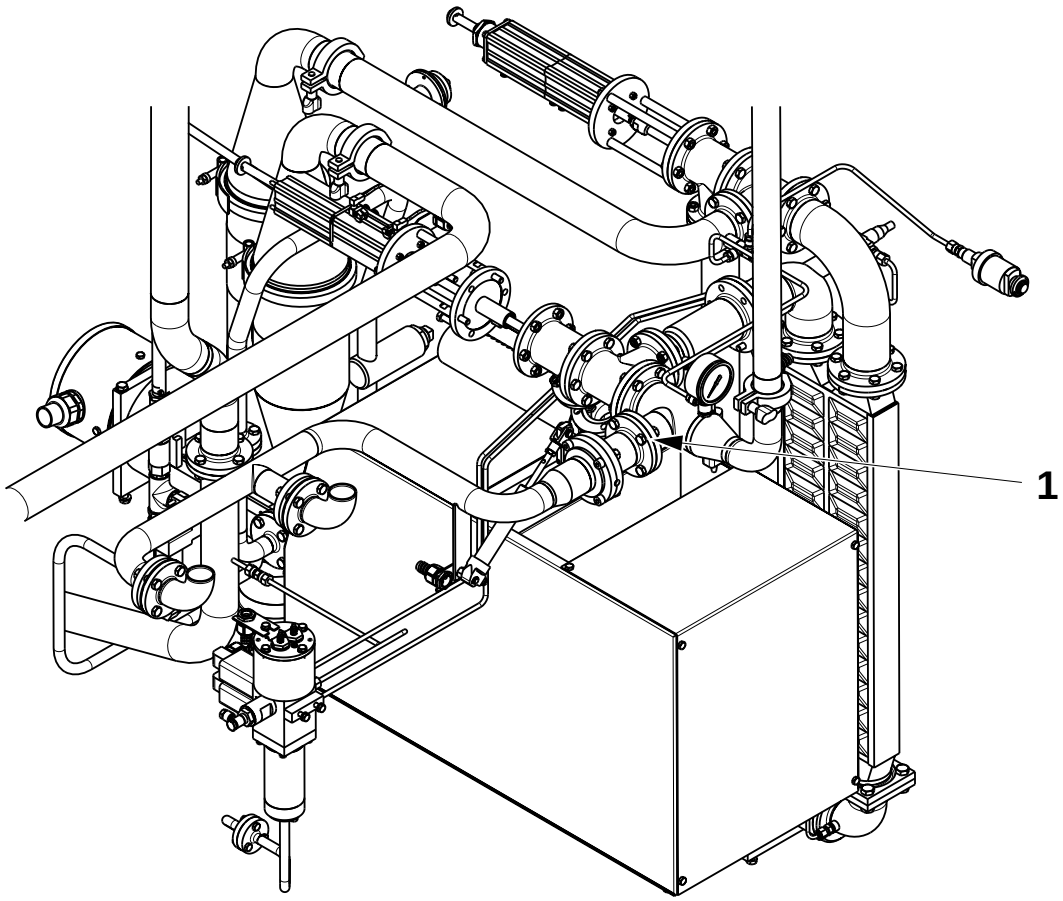

1 Screw and nut

(Cont'd)

(Cont'd)

b) Loosen the screw (2).
c) Remove the retaining ring (3) and pin (4).
d) Swing the cylinder (5) out of the way.
e) Loosen the screw (6) and pull the arm (7) of the shaft (8).
f) Remove the screws (9) and nuts (10).
g) Pull off the pipe (11).
h) Remove the shutter (12).
i) Remove the cap (13).
j) Change the bushings (14) and (15).
k) Mark the shaft (8) of the shutter (12) in some way so that it will be possible to verify the position of the slot (16) when the valve is assembled.
l) Assemble in the reverse order.
m) Set the cylinders, see 1.3.4-3 Butterfly Valve - Set.
n) Set the sensors, see 1.3.4-4 Butterfly Valve - Set Sensor.

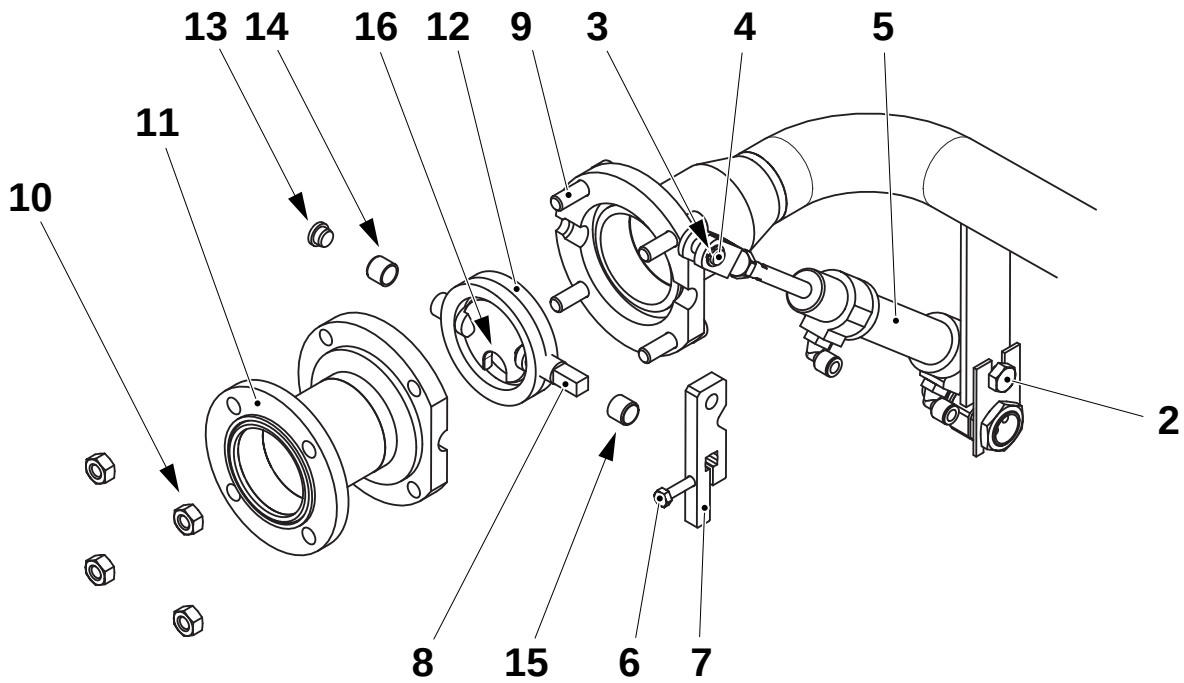

2	Screw	10	Nut
3	Retaining ring	11	Pipe
4	Pin	12	Shutter
5	Cylinder	13	Cap
6	Screw	14	Bushing
7	Arm	15	Bushing
8	Shaft	16	Slot
9	Screw		

1.3.4-3 Butterfly Valve - Set

SPC Reference	2523664-0100

a) Make sure the slot (1) of the shutter (2) is in the bottom position.

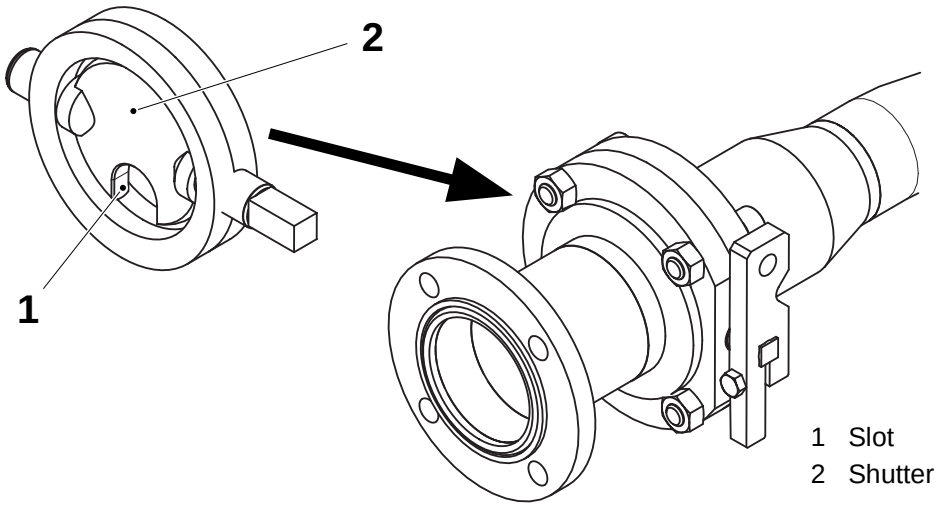

1 Slot
2 Shutter

b) Loosen the locking nut (3) and turn the piston (4) until the arm (5) is in the vertical position (valve closed).

c) Tighten the locking nut (3).

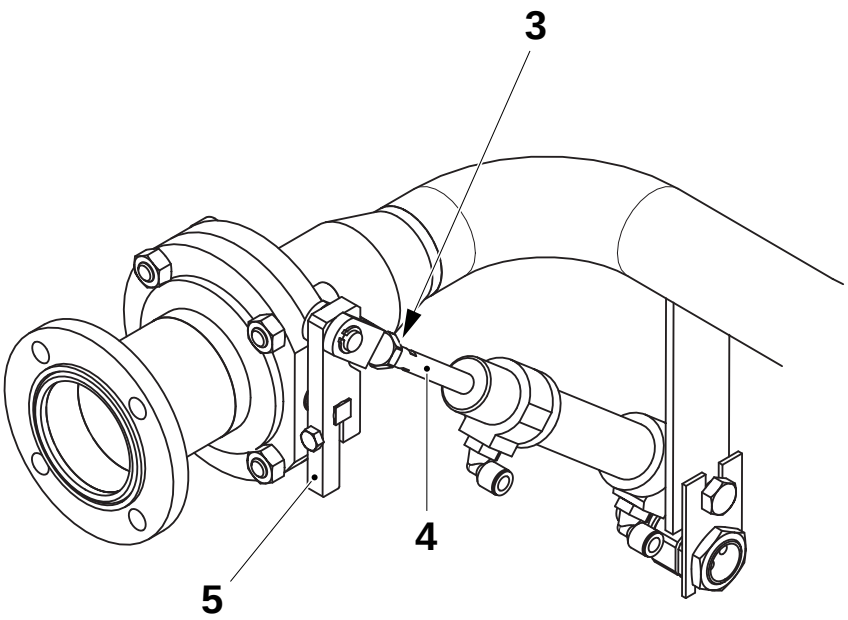

3 Locking nut
4 Cylinder
5 Arm

1.3.4-4 Butterfly Valve - Set Sensor

SPC Reference	2523664-0100

Set distance **A** between the sensor (1) and the arm (2) by means of the nuts (3).

Repeat on the sensor (4).

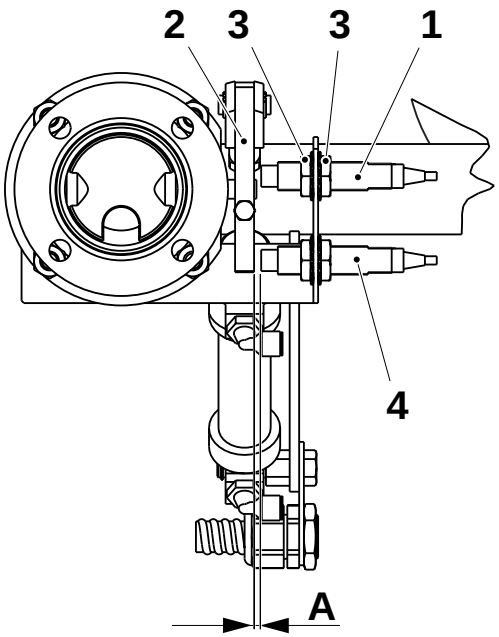

A = 3 ±0.5 mm

1 Sensor
2 Arm
3 Nut
4 Sensor

1.3.5 Air Preheating Valve

1.3.5-1 Air Preheating Valve - Overhaul

SPC Reference	1195285-0300

WARNING
Risk of burns!
Parts may be hot.

Remove the screws in the flanges (1), (2) and (3) and pull out the air preheating valve (4).

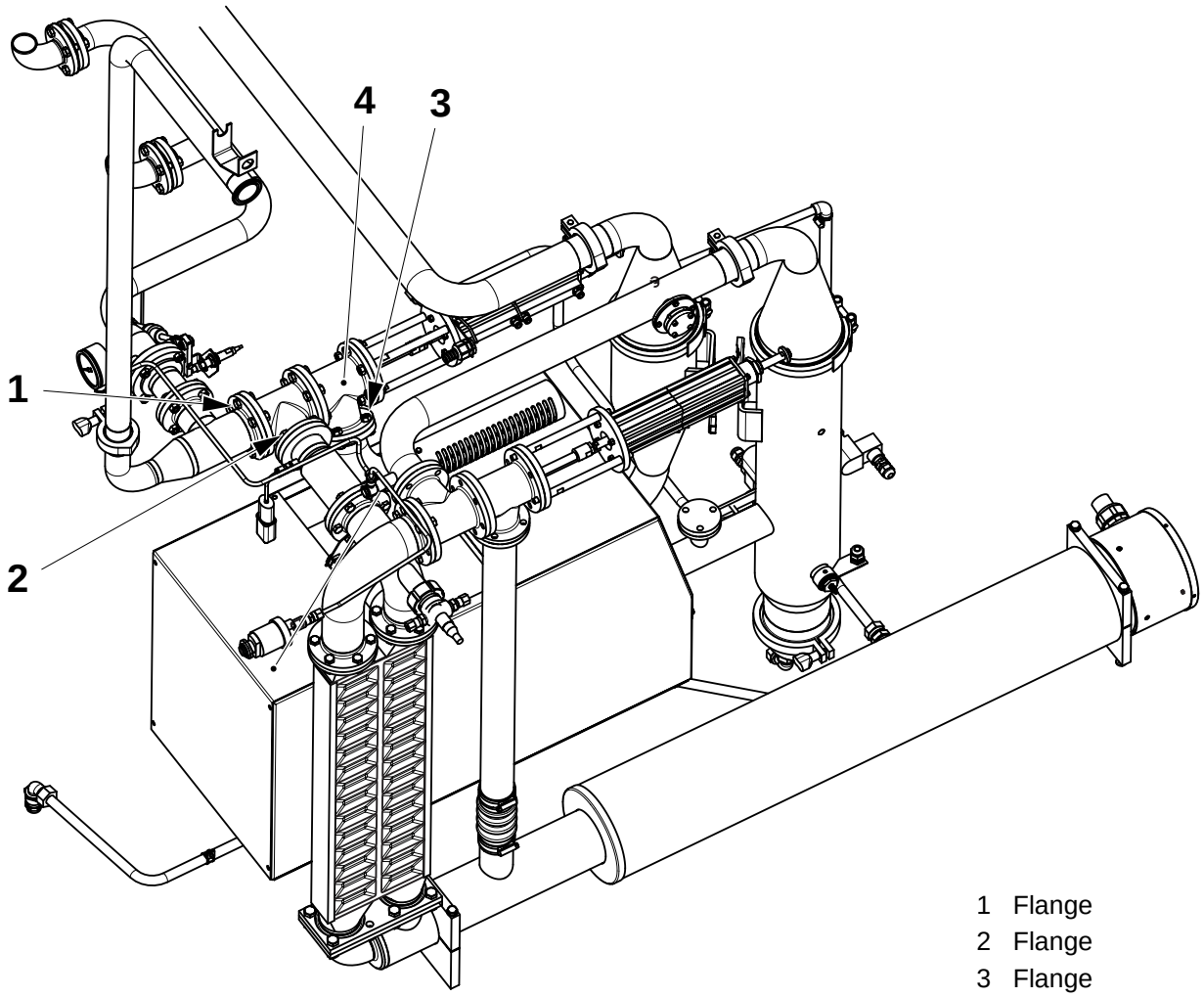

1 Flange
2 Flange
3 Flange
4 Valve

(Cont'd)

(Cont'd)

d) Change the gaskets (5), (6) and (7).

e) Remove the screws (8) and change the gasket (9).

f) Remove the valve cone (10) and change the seal rings (11) and (12).

g) Remove the screws (13) and change the gasket (14).

h) Disconnect the joint (15) and check the shaft (16) is not damaged or bent. Change as required.

i) Change the bearings (17) and the O-rings (18).

j) Check the cylinder (19) moves freely. Change as required.

k) Assemble in the reverse order.

l) Using a torque wrench, tighten the valve cone (10) to **50 Nm**.

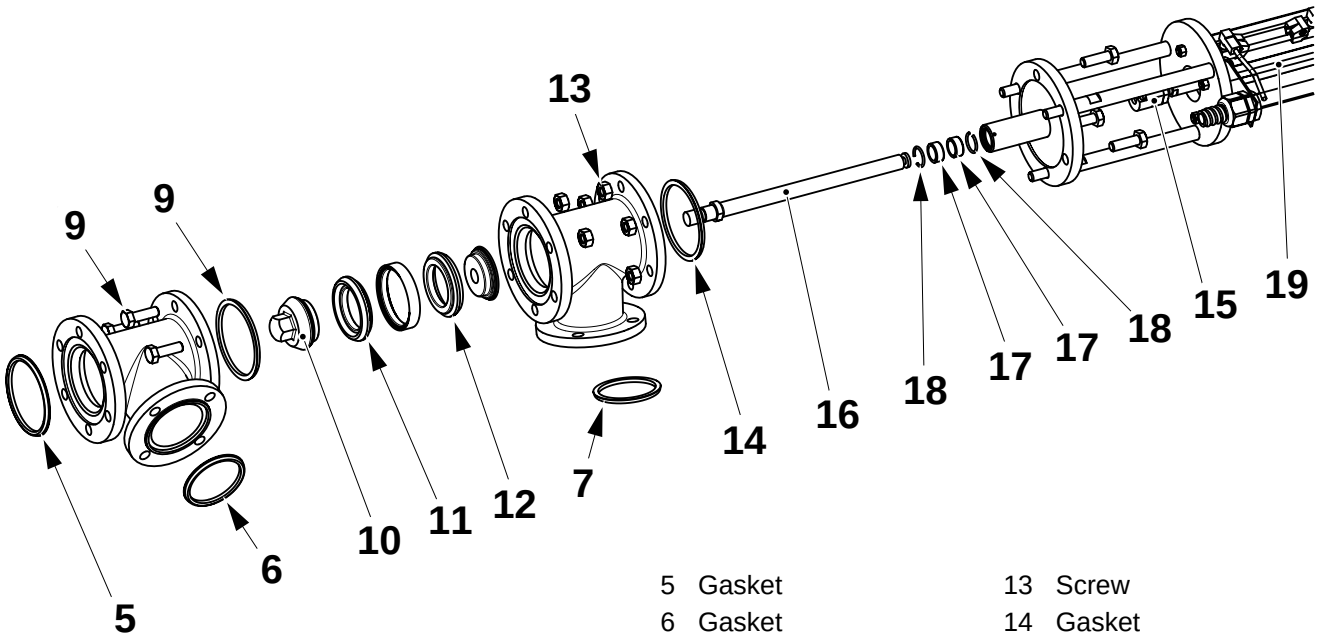

5	Gasket	13	Screw
6	Gasket	14	Gasket
7	Gasket	15	Joint
8	Screw	16	Shaft
9	Gasket	17	Bearing
10	Valve cone	18	O-ring
11	Seal ring	19	Cylinder
12	Seal ring		

1.3.5-2 Air Preheating Valve - Set Proximity Switches

Machine Status	HEAT STERILIZATION
SPC Reference	1195285-0300

a) Activate the valve Y1114:4 (1).

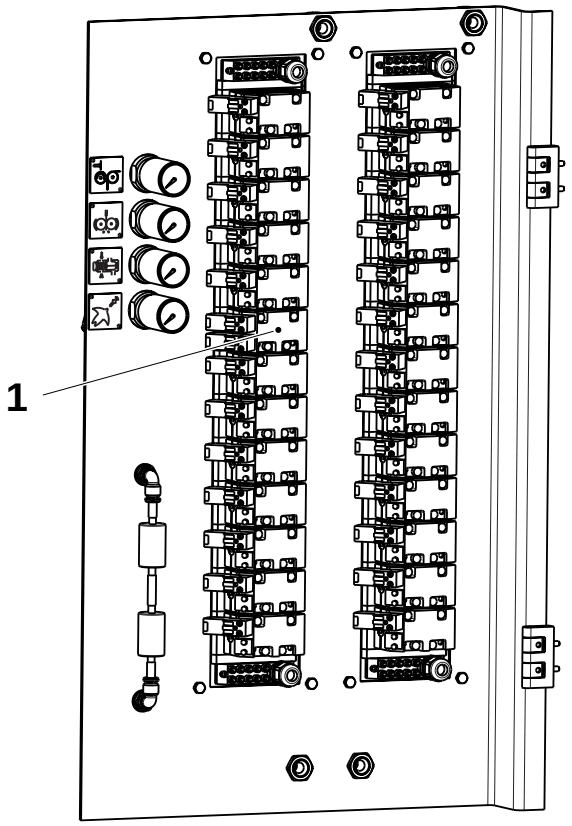

1 Valve

(Cont'd)

(Cont'd)

WARNING
Risk of burns!
Parts may be hot.

b) Loosen the screw in the sensor (2) and move it until the LED in the sensor lights. Tighten the locking screw.

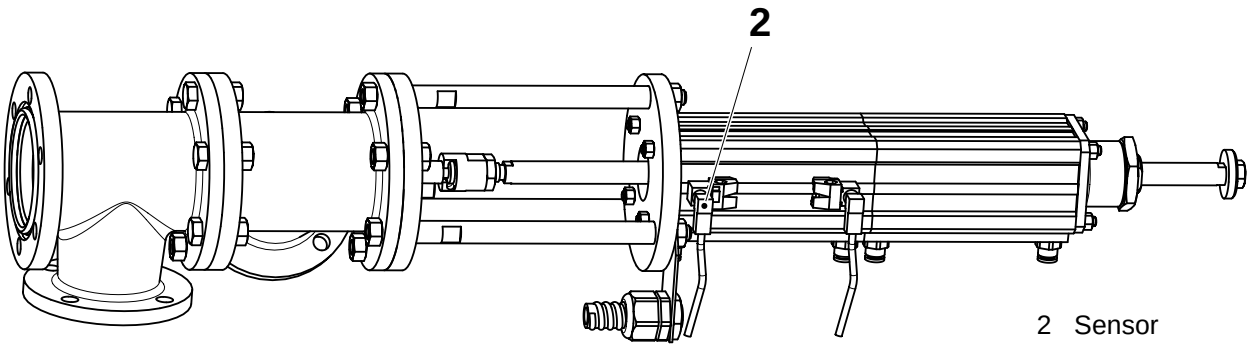

2 Sensor

c) Activate the valve Y1114:2 (1).

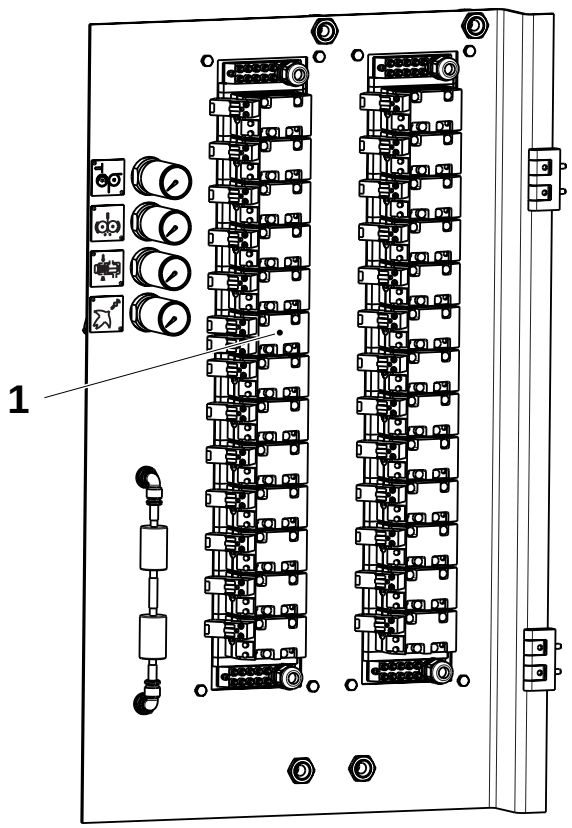

1 Valve

(Cont'd)

(Cont'd)

d) Loosen the screw in the sensor (3) and move it until the LED in the sensor lights. Tighten the locking screw.

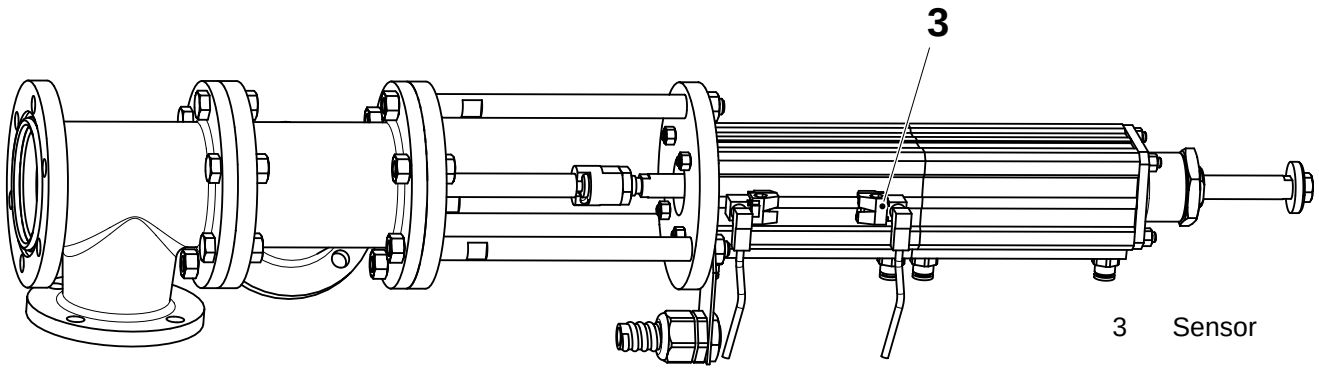

3 Sensor

1.3.5-3 Air Preheating Valve - Set By-pass Position

SPC Reference	1195285-0300

Set distance **A** between the stop screw (1) and the washer (2) by turning the stop screw (1).

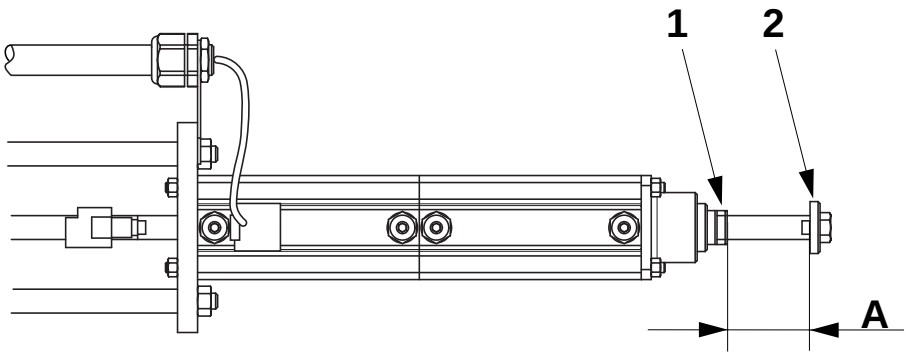

A = 39 ±0.5 mm

1 Stop screw
2 Washer

1.3.6 Scrubber

1.3.6-1 Scrubber - Clean Constant Flow Valve

SPC Reference	1255979-0300

a) Remove the constant flow valve (2) from the line.
b) Clean the inside of the constant flow valve with a damp sponge.
c) Blow compressed air through the pipe (1) and check for blockages.
d) Check the seal rings (3) for damage. Change as required.
e) Refit the constant flow valve (2), taking care not to overtighten it.

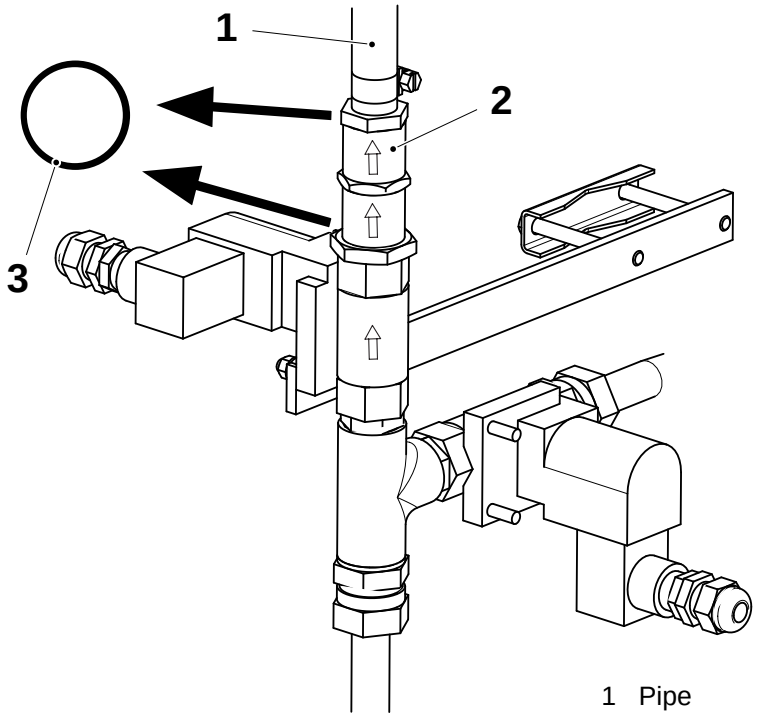

1 Pipe
2 Constant flow valve
3 Seal ring

1.3.6-2 Scrubber - Clean Filters

Consumables - Deliming Acid	See list below
SPC Reference	1255979-0300

WARNING
Chemical products!
Acids. Follow the Safety precautions.

a) Loosen the clamp (1) and the holder (2) and remove the upper section (3).

b) Remove and clean the nozzle (4) with compressed air. If required, use a needle to very carefully clean it.

c) Remove the O-ring (5) and change as required.

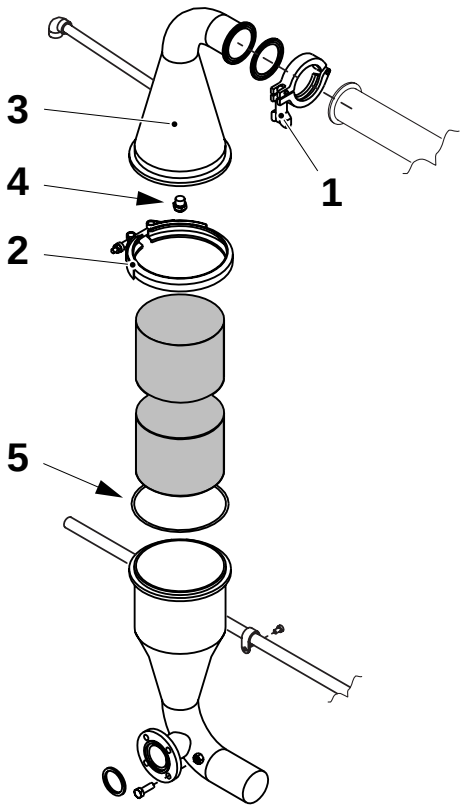

1 Clamp
2 Holder
3 Upper section cover
4 Nozzle
5 O-ring

(Cont'd)

(Cont'd)

CAUTION
Only use the acids listed below and do **not** use hydrochloric acid (HCl).

Note! All solutions must be at ambient temperature during lime scale removal.

d) Pull out the filters (6) and remove lime scale with one of the four acid solutions listed below.
   - acetic acid (CH_3COOH), 20%
   - nitric acid (HNO_3), 5-10%
   - citric acid ($C_6H_8O_7$), 20%
   - phosphoric acid (H_3PO_4), 5-10%.

e) After lime scale removal flush with water and the last rinse is done with softened or distilled water.

f) Assemble in the reverse order and make sure the upper filter (6) is in close contact with the upper section cover (3).

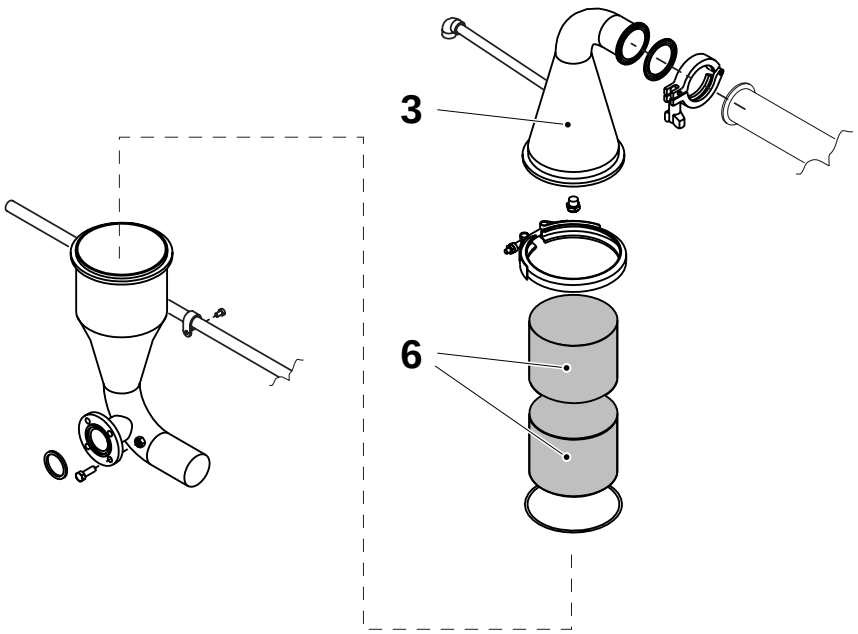

3 Upper section cover
6 Filter

1.3.7 Separator

1.3.7-1 Separator - Check Pressure Guard

Machine Status	HEAT STERILIZATION
SPC Reference	1347142-0200

WARNING
Risk of eye injury!
Follow the Safety precautions.

a) Step up the machine to HEAT STERILIZATION.

b) Slowly loosen the pipe connection (1) to the pressure switch (3).

c) When the value of water separator pressure gauge (2) drops to approximately **14 kPa**, check the machine steps down to step two **(**TIGHT TUBE).
If not, change the pressure switch (3).

d) Tighten the pipe connection (1).

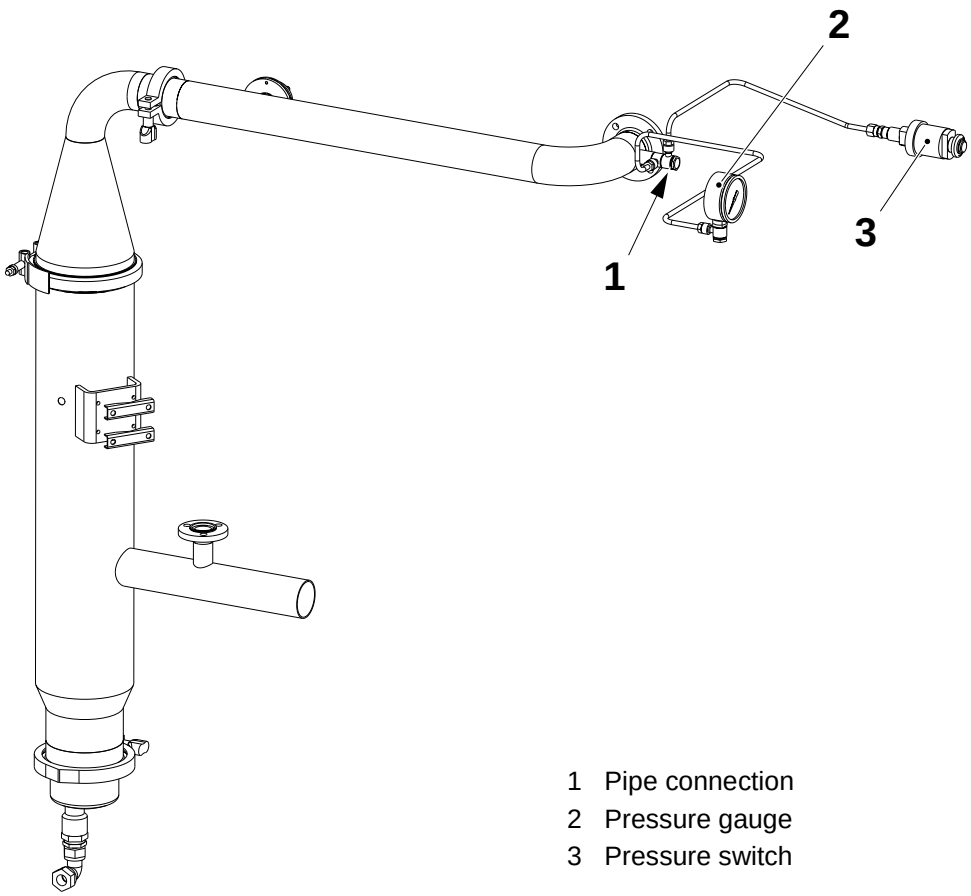

1 Pipe connection
2 Pressure gauge
3 Pressure switch

1.3.7-2 Separator - Clean Filter and Float

Consumables - Deliming Acid	See list below
SPC Reference	1347142-0200

WARNING
Risk of eye injury!
Follow the Safety precautions.

a) Unscrew the pipe connection (1).

b) Loosen the clamp (2) and remove the draining bowl (4) and the float unit.

c) Remove the float (3) from its arm and clean it. Shake the float (3) to check that no liquid has leaked into it. Change the float (3) as required. If the valve (6) or the valve seat (5) is defective, overhaul them as required, see 1.3.7-3 Separator - Overhaul.

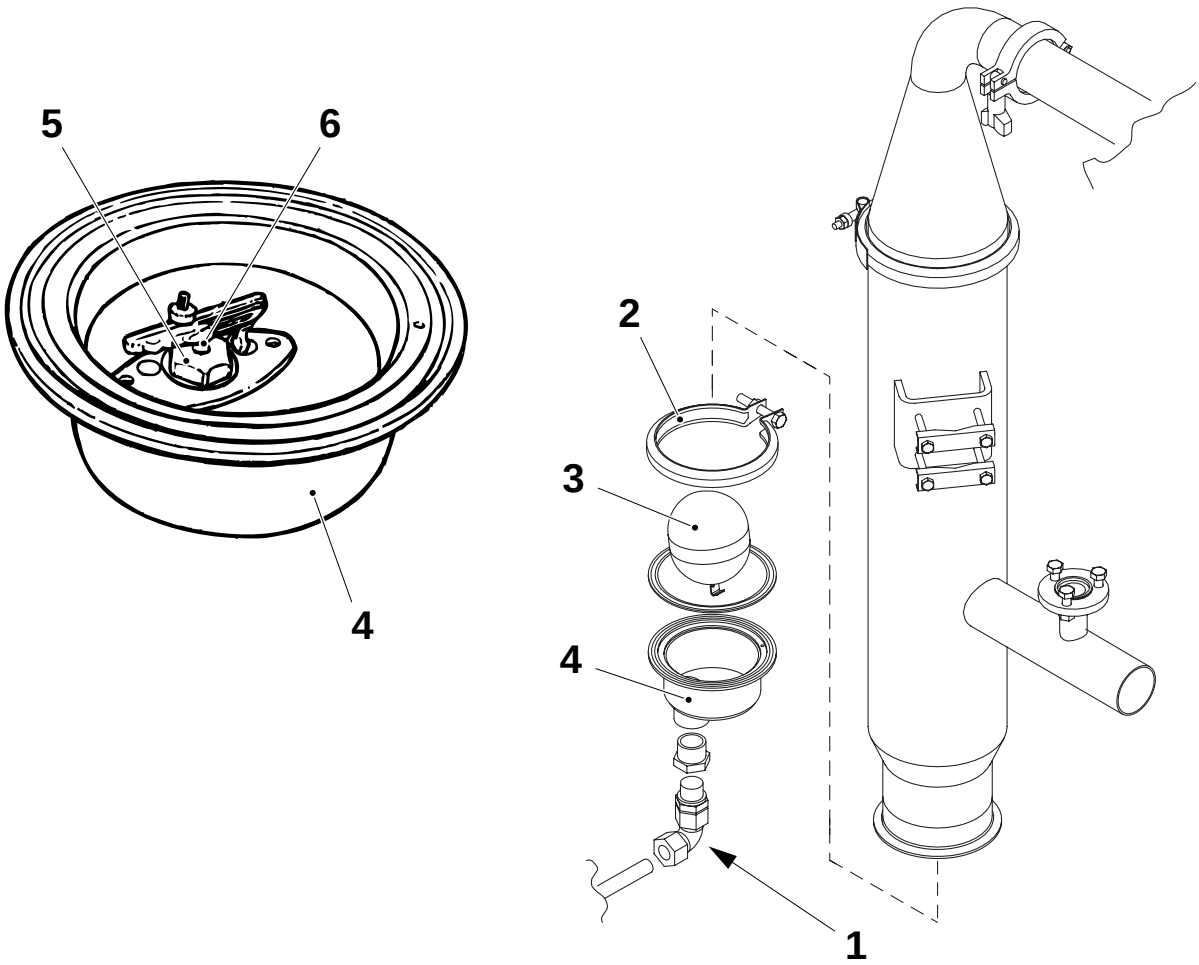

1 Pipe connection
2 Clamp
3 Float
4 Draining bowl
5 Valve seat
6 Valve

(Cont'd)

(Cont'd)

d) Clean the inside of the separator with a sponge and water. Blow dry with compressed air.

Note! Do not use detergents.

e) Undo the clamps (7) and (8).

f) Remove the upper section cover (9) and the O-ring (10).

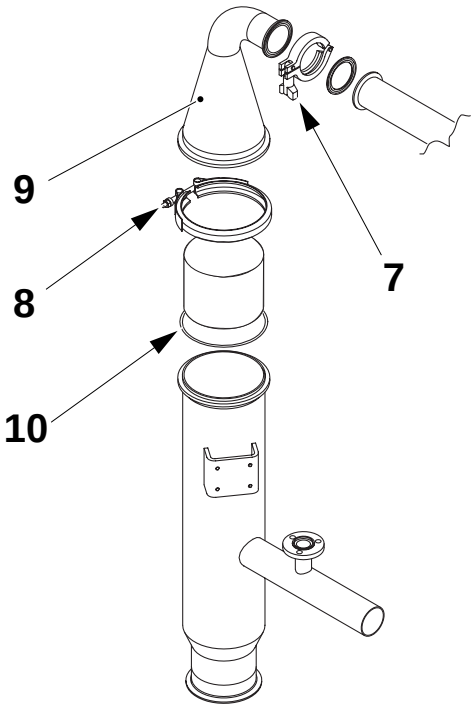

7 Clamp
8 Clamp
9 Cover
10 O-ring

(Cont'd)

(Cont'd)

WARNING
Chemical Products!
Acids. Follow the Safety precautions.

CAUTION
Only use acids listed below and do **not** use hydrochloric acid (HCl).

g) Remove lime scale from the filter (11) with one of the four acid solutions listed below. All solutions must be at ambient temperature during lime scale removal.
   – acetic acid (CH_3COOH), 20%
   – nitric acid (HNO_3), 5-10%
   – citric acid ($C_6H_8O_7$), 20%
   – phosphoric acid (H_3PO_4), 5-10%.

h) After lime scale removal, flush with water and the last rinse is done with softened or distilled water.

i) Assemble in the reverse order and set the float unit, see 1.3.7-4 Separator - Set Float Unit.

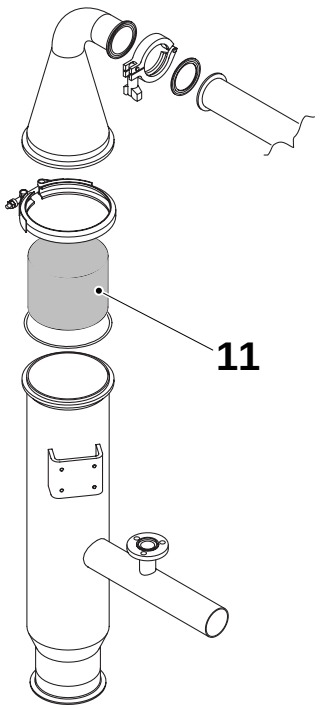

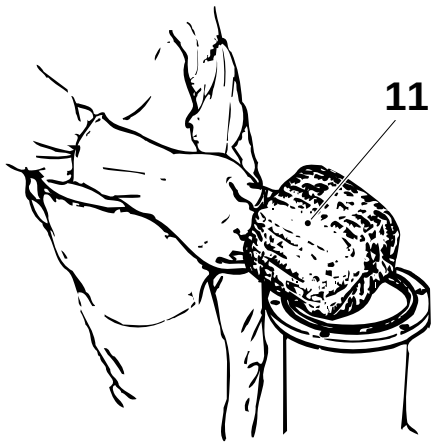

11 Clamp
12 Clamp
13 Cover
14 O-ring
15 Filter

1.3.7-3 Separator - Overhaul

SPC Reference	1347142-0200

a) Remove the float unit (1), see 1.3.7-2 Separator - Clean Filter and Float.

b) Remove the nut (2) and lift off the valve lever (3).

c) Remove and change the valve (4) and the valve seat (5).

d) Assemble the float unit in the reverse order and set, see 1.3.7-4 Separator - Set Float Unit.

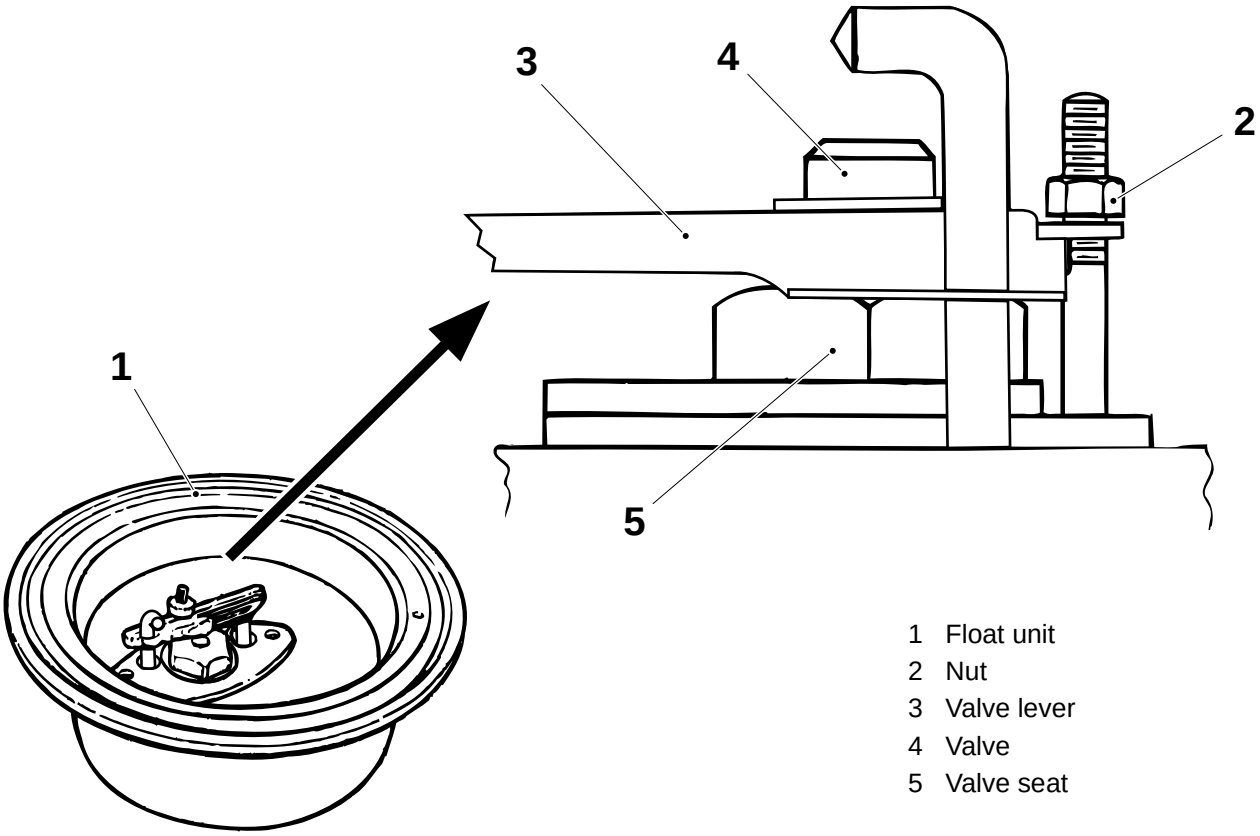

1 Float unit
2 Nut
3 Valve lever
4 Valve
5 Valve seat

1.3.7-4 Separator - Set Float Unit

SPC Reference	1347142-0200

On each side of the valve (1), press the valve lever (5) so the fulcrum points (4) sit horizontally on the valve seat (3).

With the valve lever in this position, set distance **A** between the nut (2) and the valve lever (5).

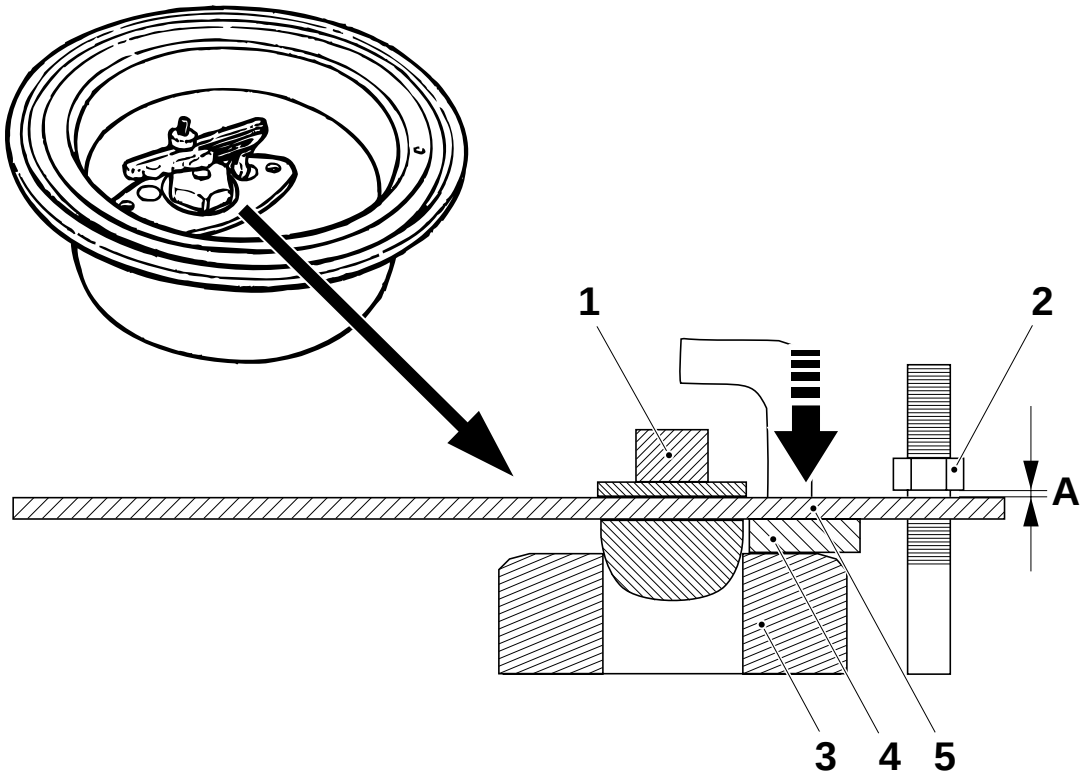

A = 0.4 ±0.1 mm

1 Valve
2 Nut
3 Valve seat
4 Fulcrum point
5 Valve lever

1.3.8 Pipe Line

1.3.8-1 Pipe Line - Clean Spray Nozzle

SPC Reference	1195284-0300

WARNING
Risk of burns!
Parts may be hot.

WARNING
Hydrogen Peroxide!
Follow the Safety precautions.

a) Disconnect the electrical connections from the thermocouple (1).

b) Remove the compressed air pipe from the connector (2) and the peroxide pipe from the connector (3).

c) Loosen the screws (4) and remove the holder (4).

d) Remove the screws (6) and (7) and lift off the spray generator (8).

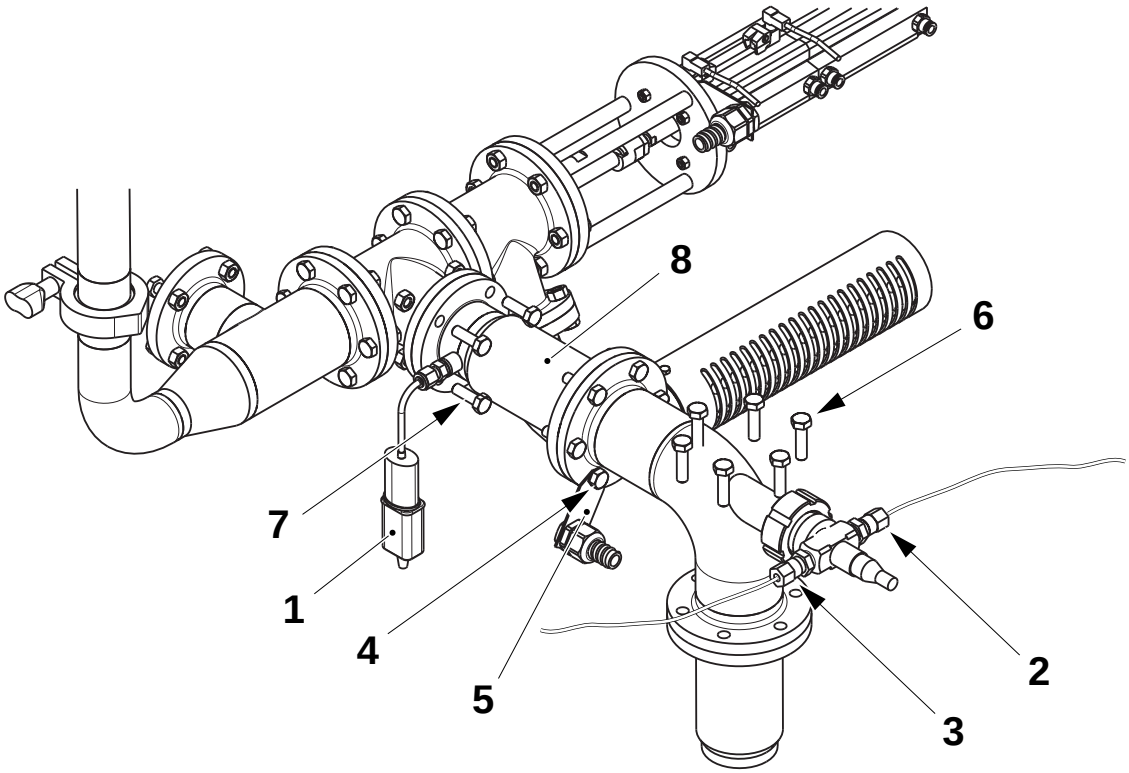

1 Thermocouple
2 Air connection
3 Peroxide connection
4 Screw
5 Holder
6 Screw
7 Screw
8 Spray generator

(Cont'd)

(Cont'd)

e) Loosen the nut (9) and remove the spray nozzle assembly (10).

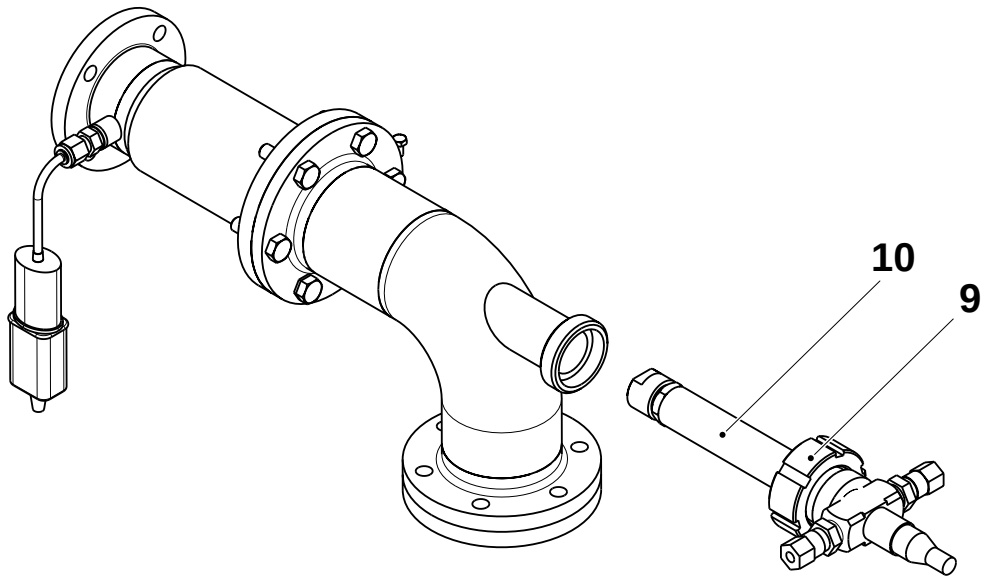

9 Nut
10 Spray nozzle

f) Remove the nut (11), the dome (12), the injector (13) and the spacer (14) from the spray nozzle assembly (10).
Clean all the parts with compressed air.

g) Remove the plug (15) and utilize its needle to clean the injector (13).

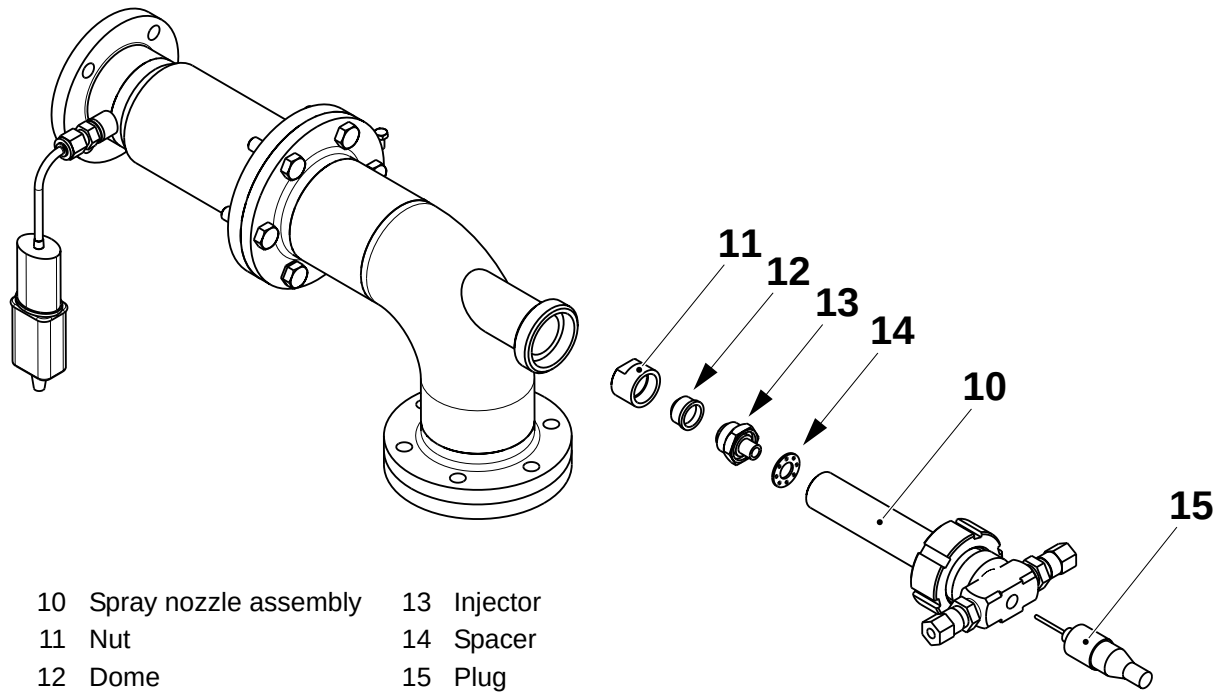

10 Spray nozzle assembly
11 Nut
12 Dome
13 Injector
14 Spacer
15 Plug

(Cont'd)

(Cont'd)

h) Disconnect the pipe (16) from the spray generator (8) by removing the screws (17) and the nuts (18).

i) Remove and clean the container (19) containing the balls with nitric acid (HNO_3) at 5-10%.The solution must have a temperature of **50°- 60°C** during peroxide residue removal.

j) After peroxide residue removal flush the container (19) with water and the last rinse is done with softened or distilled water.

WARNING
Chemical Products!
Acids. Follow the Safety precautions.

k) Assemble in the reverse order.

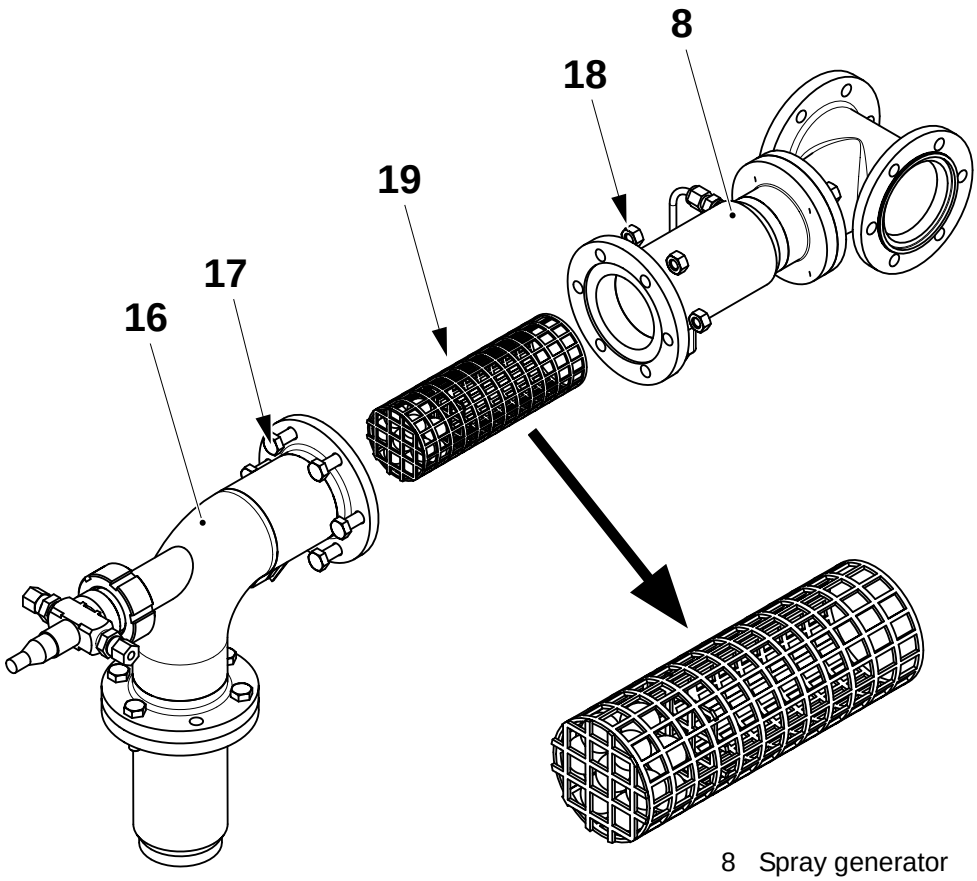

8 Spray generator
16 Pipe
17 Screw
18 Nut
19 Container

1.3.8-2 Pipe Line - Check Spray Nozzle

SPC Reference	1195284-0300

WARNING
Risk of Burns!
Parts may be hot.

WARNING
Hydrogen Peroxide!
Follow the Safety precautions.

a) Remove the compressed air pipe the connection (1) and the peroxide pipe from the connection (2).

b) Loosen the nut (3) and remove the spray nozzle (4).

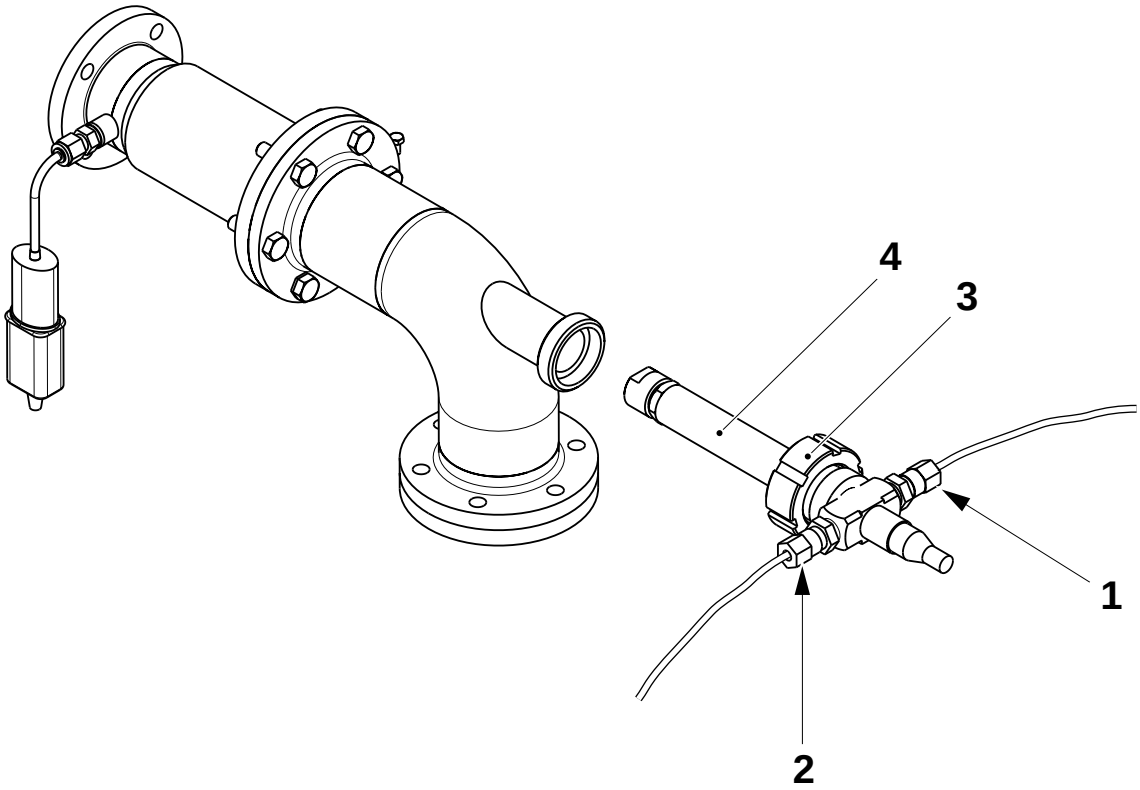

1 Air connection
2 Peroxide connection
3 Nut
4 Spray nozzle

(Cont'd)

(Cont'd)

Note! While assembling make sure to fit correctly the gasket (11), the spray nozzle gasket (12) and the spacer (13). Make sure the spray nozzle body (14) is correctly assembled, i.e. the embossed text “Air liquid” must be underneath.

Note! If the connections (15) have been removed from the spray nozzle body (14), when reassembling make sure to use teflon on the joints to avoid leakages.

c) Remove the injector (5), the dome (6) and the nut (7).

d) Remove the external pipe (8) and the nut (9).

e) Remove the lid (10) and its gasket (11).

f) Check all the parts for wear or damage and clean them as required with compressed air, see 1.3.8-1 Pipe Line - Clean Spray Nozzle.

g) Assemble in the reverse order.

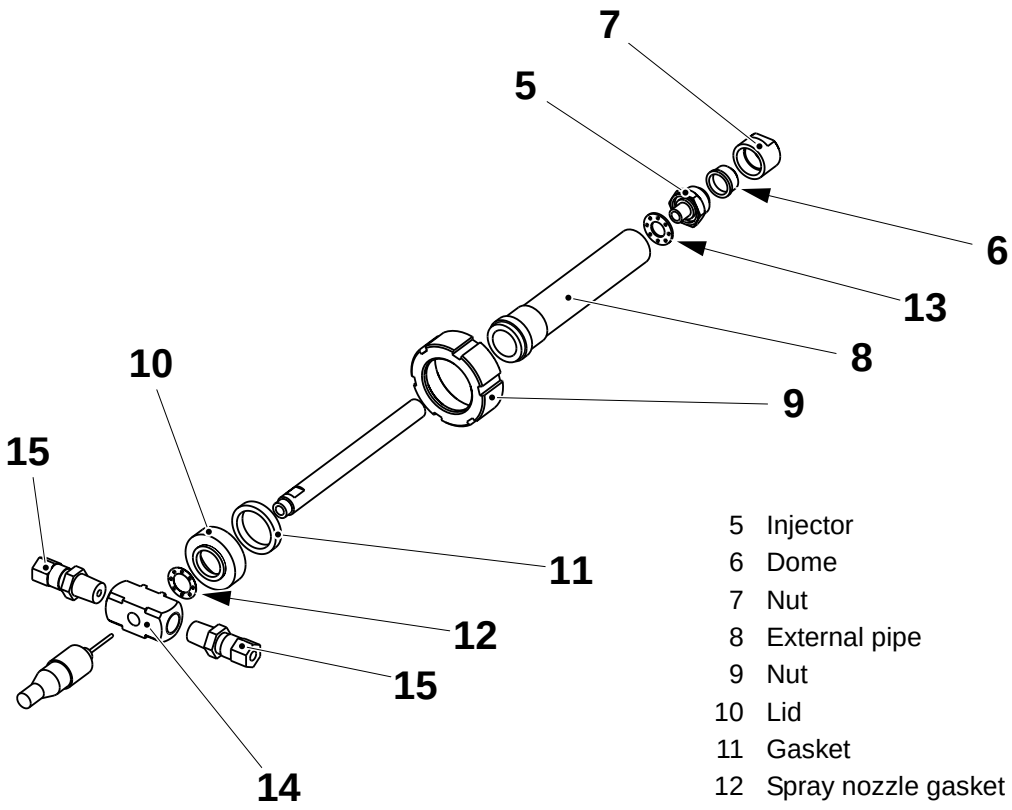

5 Injector
6 Dome
7 Nut
8 External pipe
9 Nut
10 Lid
11 Gasket
12 Spray nozzle gasket
13 Spacer
14 Spray nozzle body
15 Connector

1.3.9 Pressure Regulator (60 Hz)

1.3.9-1 Pressure Regulator (60 Hz) - Set By-pass Valve

Machine Status	Air ON Mains Power ON
SPC Reference	1478765-0100

WARNING
Risk of burns!
Parts may be hot.

Step up the machine to PRE-STERILIZATION and check the sterile air system pressure gauge (1) indicates **15±1 kPa.**
Step up the machine to PRODUCTION and check the sterile air system pressure gauge (1) indicates **25±5 kPa.**

- If the pressure is too high this may be due to a blockage somewhere in the air system.
- If the pressure is too low this may be due to a leak in the air system, a blocked filter in the suction pipes, or insufficient compressor capacity.

Adjust the throttle screw (3) to obtain the correct pressure.

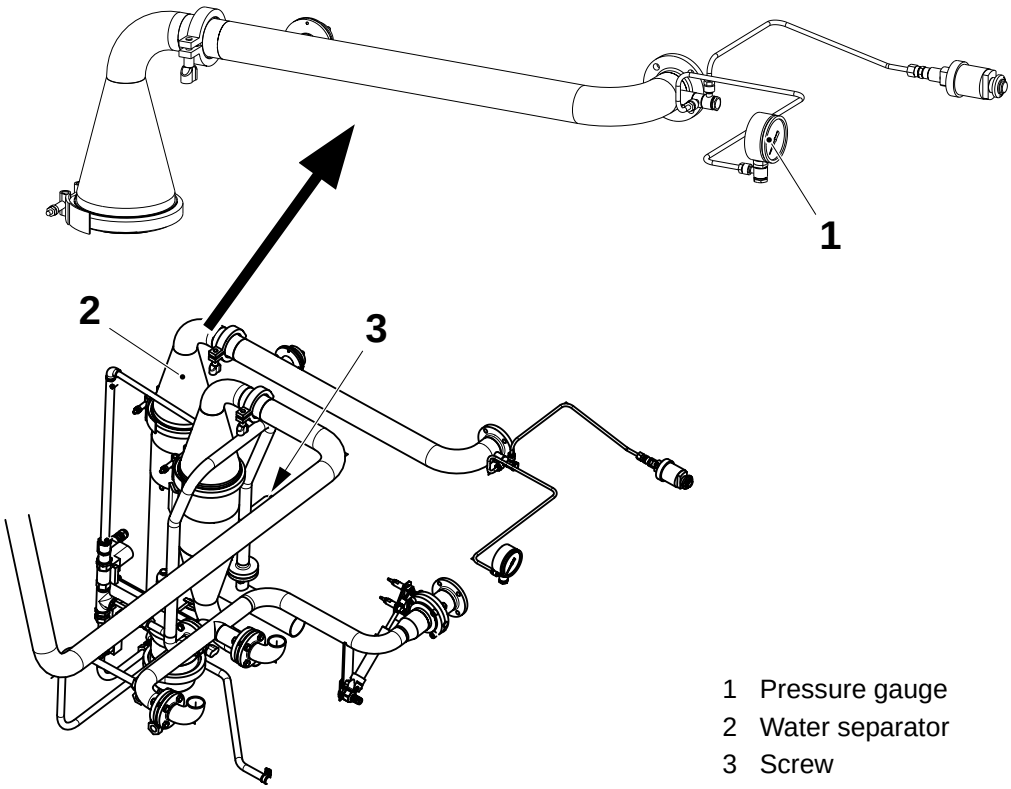

1 Pressure gauge
2 Water separator
3 Screw

1.4 Hydrogen Peroxide

SPC reference	1347171-0200

1.4-1 Hydrogen Peroxide - Check Water Circulation

Machine Status	Mains Power ON Machine COLD
SPC Reference	1347171-0200

WARNING
Hydrogen Peroxide!
Follow the Safety precautions.

a) Check the pressure in the liquid container (1) reaches **2 bar,** on the pressure gauge (2). If not set the pressure as required by means of the automatic feeder (3), see 1.4.3-1 Water Circulation - Set Pressure.

b) Step up the machine to step HEAT STERILIZATION.

c) Check the pipe connections for leaks, see arrows. Change the seals as required.

d) Check the pump (4) for noise.

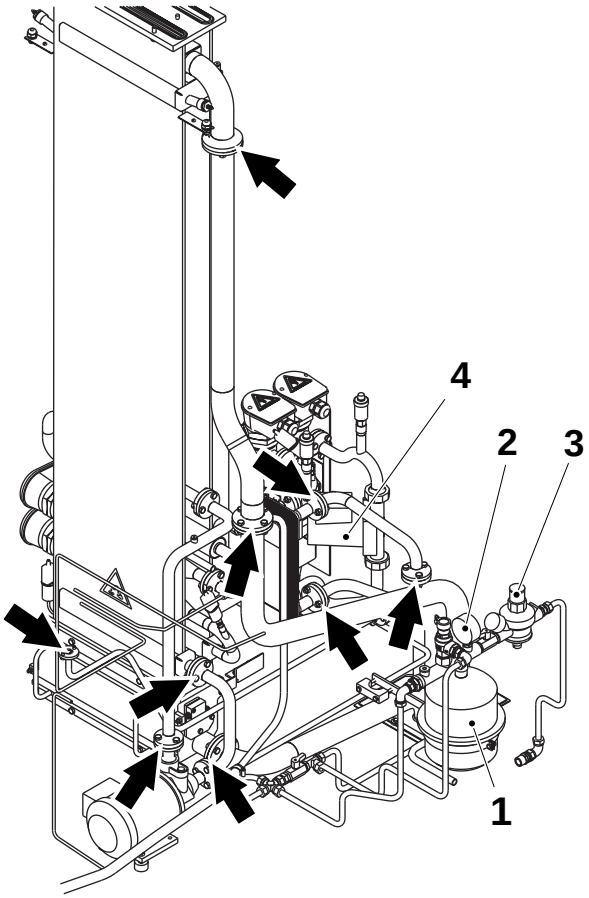

1 Container
2 Pressure gauge
3 Automatic feeder
4 Pump

1.4-2 Hydrogen Peroxide - Fill Water Circulation

SPC Reference	1347171-0200

WARNING
Hydrogen Peroxide!
Follow the Safety precautions.

Note! Make sure the gasket underneath the top cap, on the venting valves (1) and (2), is removed.

a) Loosen the plug (3), (4).
b) Start filling the circuit with water by opening the shut off valves (5).
c) Continue filling until the water reaches the plug (4).
d) Tighten the plug (4) and continue filling until the water reaches the plug (3).
e) Tighten the plug (3).

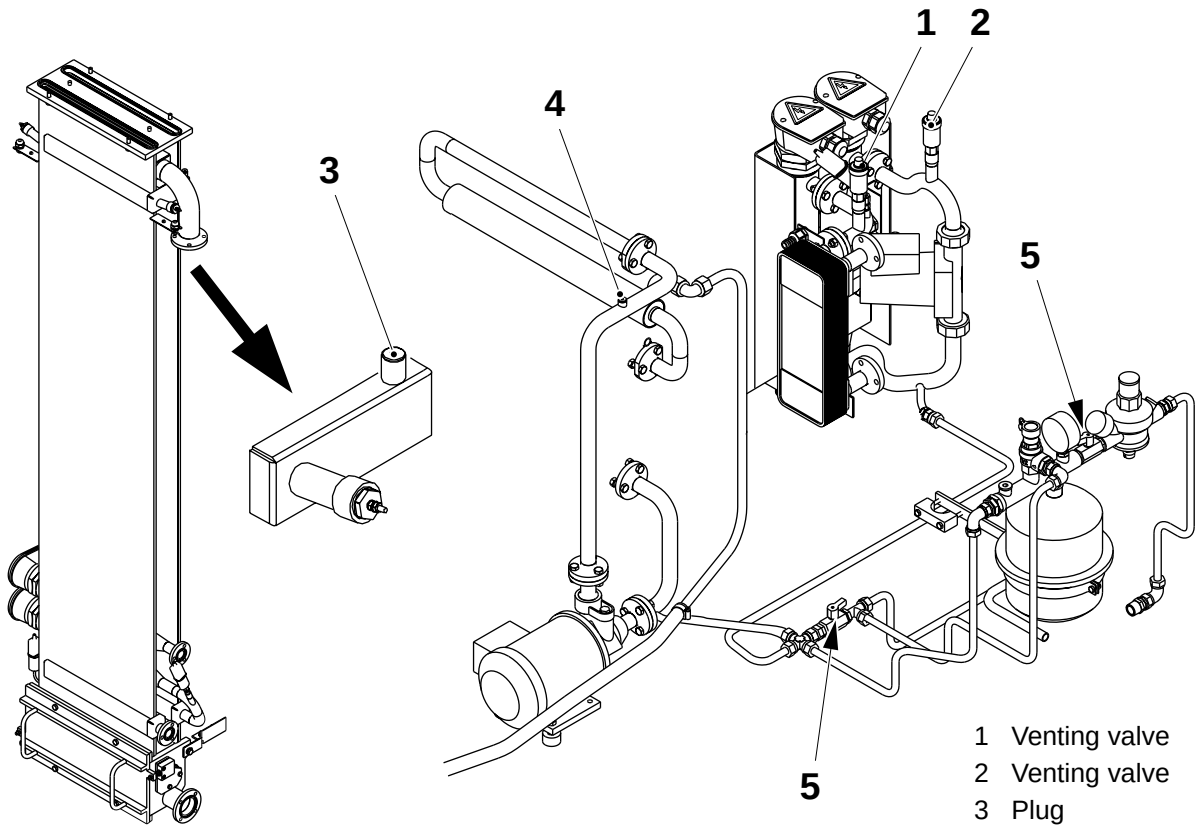

1 Venting valve
2 Venting valve
3 Plug
4 Plug
5 Shut off valve

(Cont'd)

(Cont'd)

f) Read the pressure of the liquid container (6) on the pressure gauge (7). The pressure must be between **2** and **2.5 bar**. If not set the pressure as required by means of the automatic feeder (8), see 1.4.3-1 Water Circulation - Set Pressure.

g) Bleed air from the motor (9) by unscrewing the plug (10) a few turns. Tighten the plug when water runs from the hole and there are no air bubbles.

WARNING
Risk of burns!
The hydrogen peroxide system and adjacent components may be hot.

h) Step up the machine to HEAT STERILIZATION.

i) Check the pressure on the pressure gauge (7) and set it as required.

j) Repeat f) and g) at four hourly intervals with machine running, until the water system is free of air bubbles.

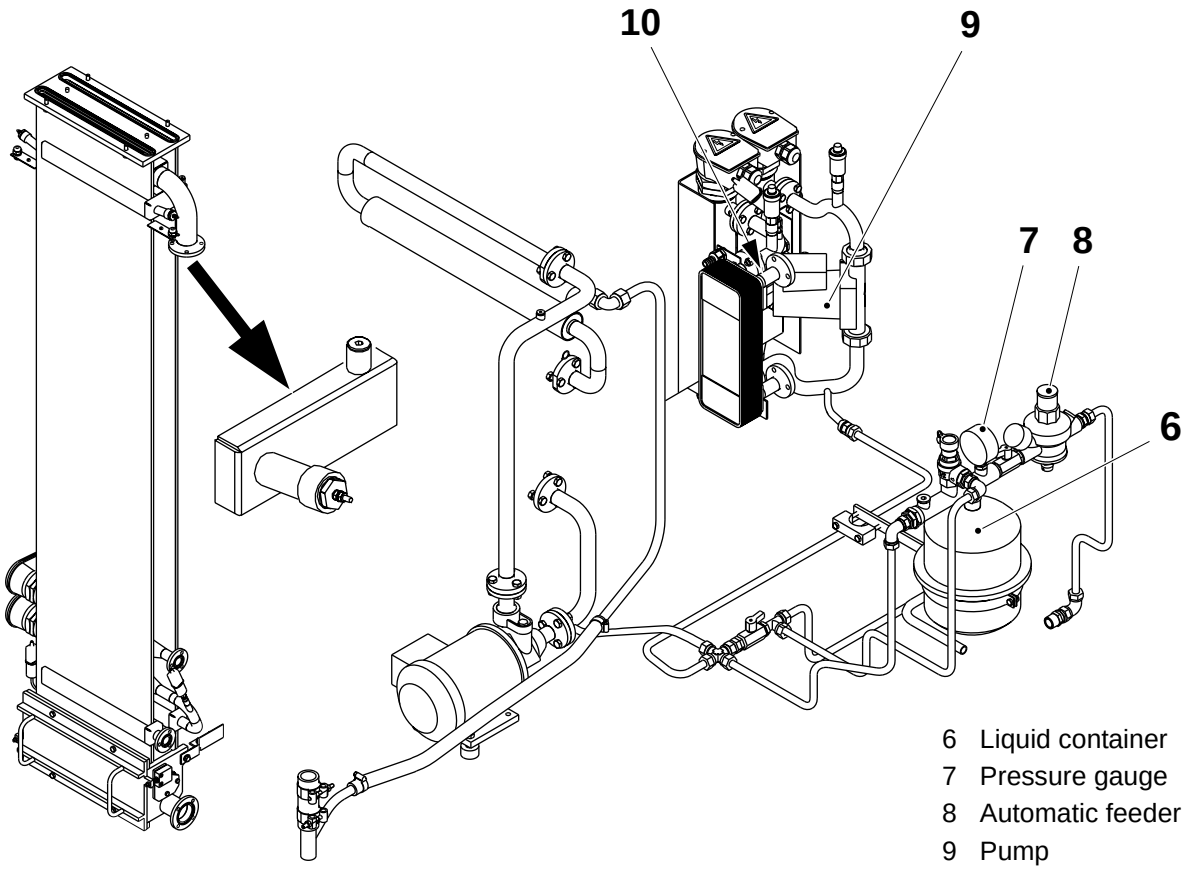

6 Liquid container
7 Pressure gauge
8 Automatic feeder
9 Pump
10 Plug

1.4.1 Bath

1.4.1-1 Bath - Check Roller

Machine Status	Mains Power ON Machine COLD
SPC Reference	1035008-0400

WARNING
Hydrogen Peroxide!
Follow the Safety precautions.

a) Loosen the screws (1) and remove the cover (2).

b) Check the gasket (3). If damaged, change it.

c) Clean any strip residue from the bath (4) and check the surface of the roller (5). Make sure the roller rotates freely.

d) Check the radial play of the bearings (6).
If excessive change them, see 1.4.1-3 Bath - Change Roller Bushings.

Note! The microswitch (7) must not be activated until the until the screws have been tightened. Check the alarm functions on the TPOP.

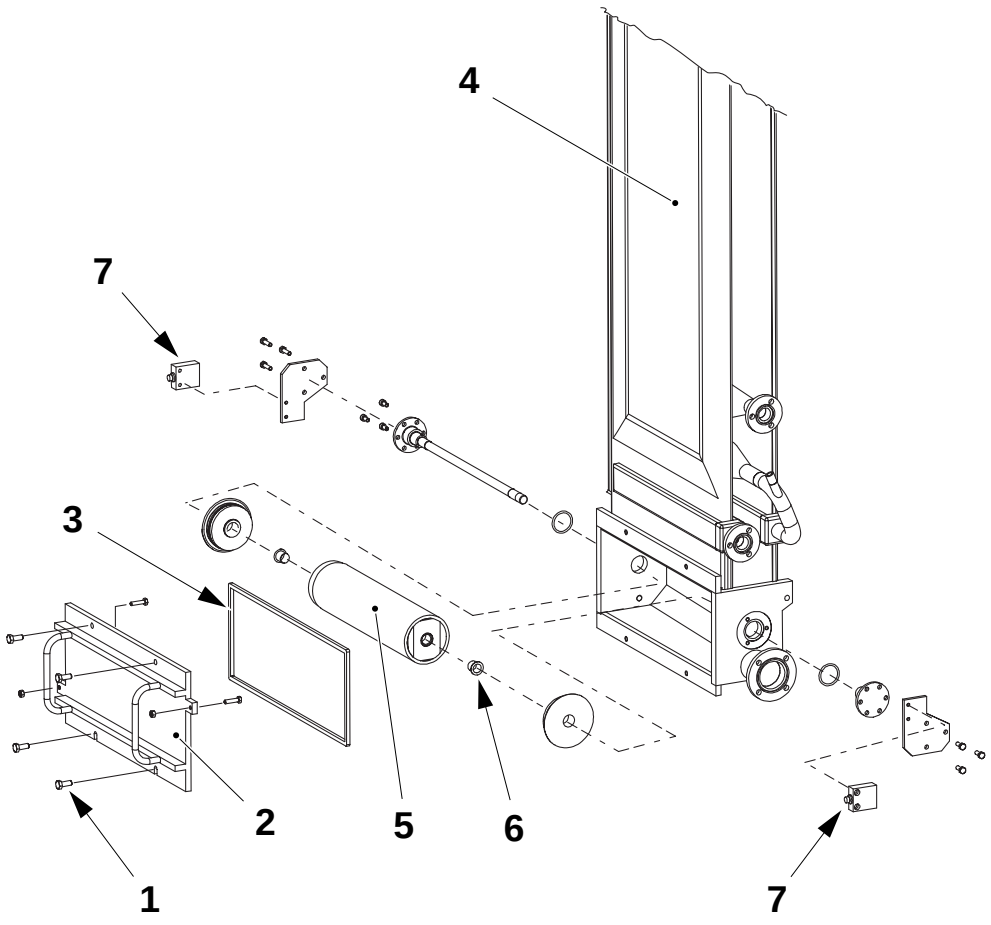

1 Screw
2 Cover
3 Gasket
4 Bath
5 Roller
6 Bearing
7 Microswitch

1.4.1-2 Bath - Change Heating Element

Tools - Socket Wrench	 TP No. 90206-330
SPC Reference	1035008-0400

WARNING
Hydrogen Peroxide!
Follow the Safety precautions.

a) Drain the water bath by opening valve (1).
b) Remove the connection box (2).
c) Mark and remove the electrical connections.
d) Remove the heating elements (3) with the aid of the sleeve socket wrench tool (4).
e) Change the heating elements (3) as required.
f) Assemble in the reverse order and refill the bath, see **1.4.1-2 Water circulation - fill**.

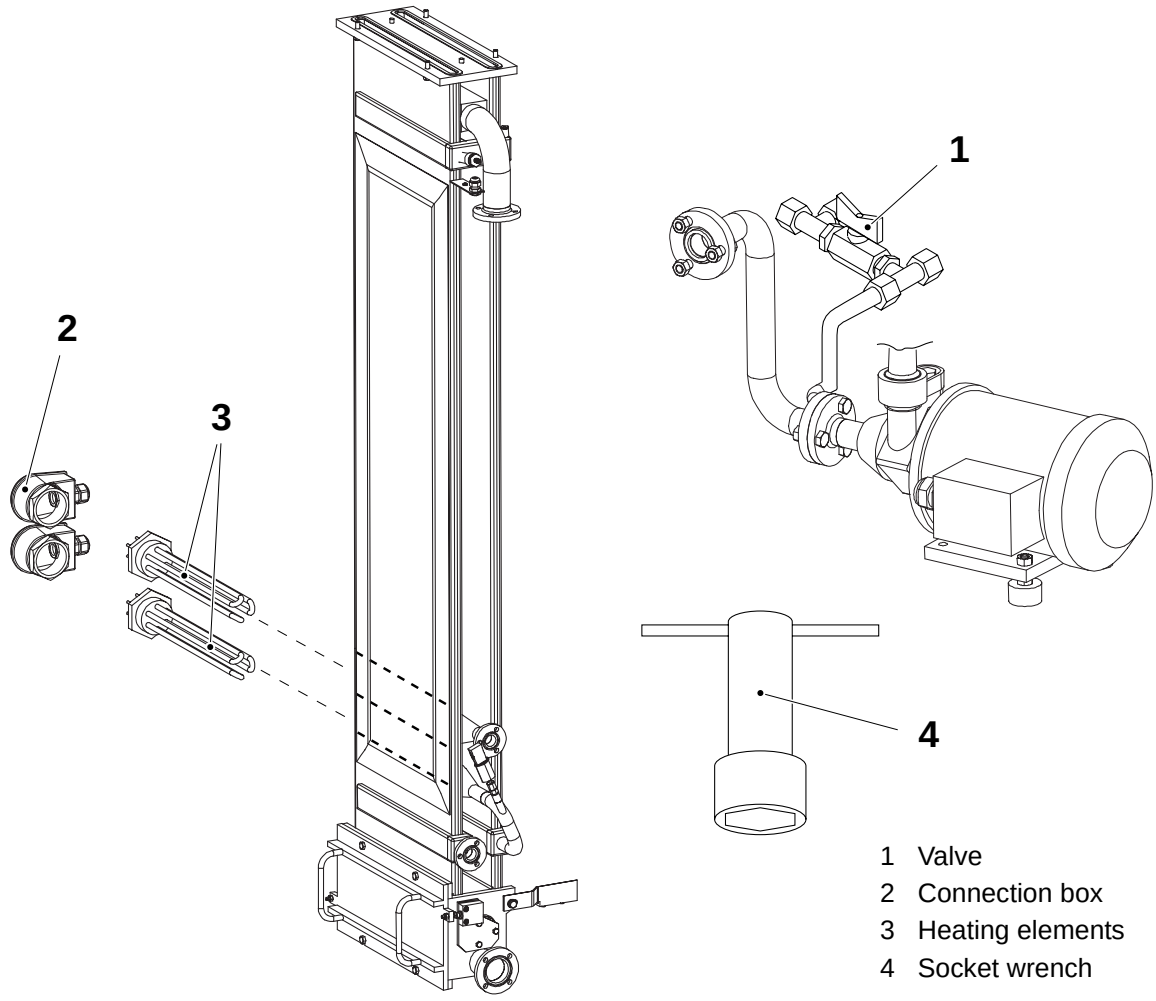

1 Valve
2 Connection box
3 Heating elements
4 Socket wrench

1.4.1-3 Bath - Change Roller Bushings

SPC Reference	1035008-0400

WARNING
Hydrogen Peroxide!
Follow the Safety precautions.

a) Loosen the screws (1) and (2) and remove the cover (3).
b) Remove the gasket (4) and change it as required.
c) Unscrew the screws (5) and remove the plates (6).
d) Unscrew the screws (7) and remove the shaft (8).
Change the shaft (8) as required.
e) Remove the O-rings (9) and change them as required.
f) Pull out the roller (10) from the bath (11) and change it as required.
g) Remove the bushings (12) and change them as required.
h) Assemble in the reverse order.

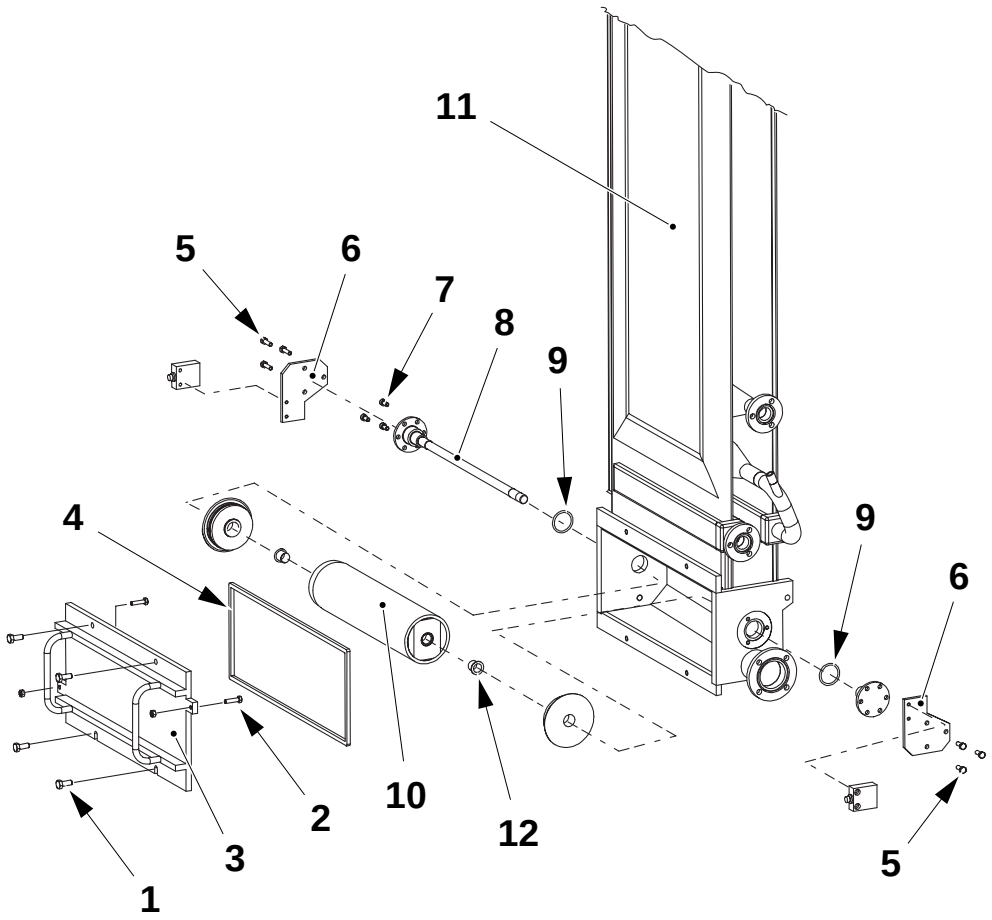

1 Screw
2 Screw
3 Cover
4 Gasket
5 Screw
6 Plate
7 Screw
8 Shaft
9 O-ring
10 Roller
11 Bath
12 Bushing

1.4.2 Heating Unit

1.4.2-1 Heating Unit - Change Heating Elements

Consumables - Thread Sealant	TP No. 90157-34
Tools - Socket Wrench	TP No. 90206-330
SPC Reference	1334506-0200

WARNING
Hydrogen Peroxide!
Follow the Safety precautions.

WARNING
Risk of burns!
The hydrogen peroxide system and adjacent components may be hot.

a) Drain the water system by opening the shut off valve (1) and slightly unscrew the venting valves (2) and (3).

b) Remove the connection boxes (4).

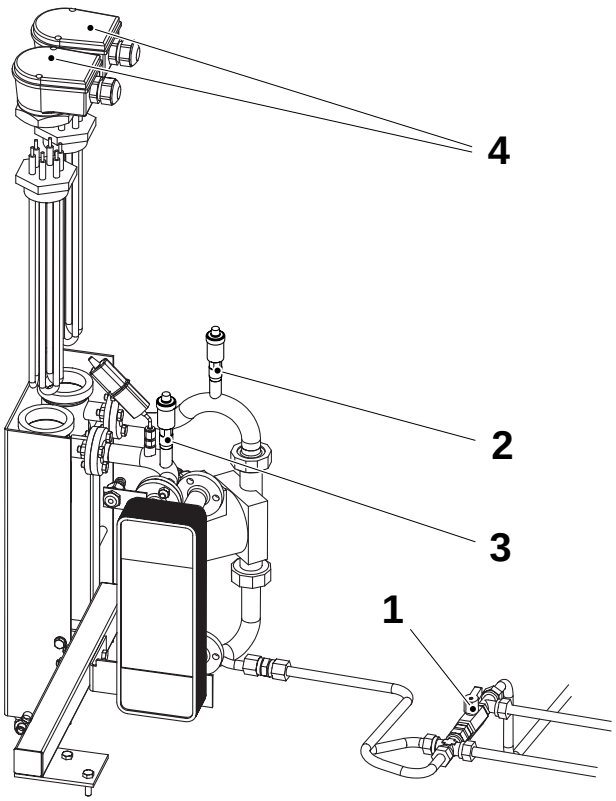

1 Shut off valve
2 Venting valve
3 Venting valve
4 Connection box

(Cont'd)

(Cont'd)

c) Mark and remove the electrical connections.

d) Remove the heating elements (5) with the aid of the sleeve socket wrench tool (6).

e) Change the heating elements (5). Coat the threads (7) of the heating elements with thread sealant.

f) Assemble in reverse order and refill the water circuit, see 1.4-2 Hydrogen Peroxide - Fill Water Circulation.

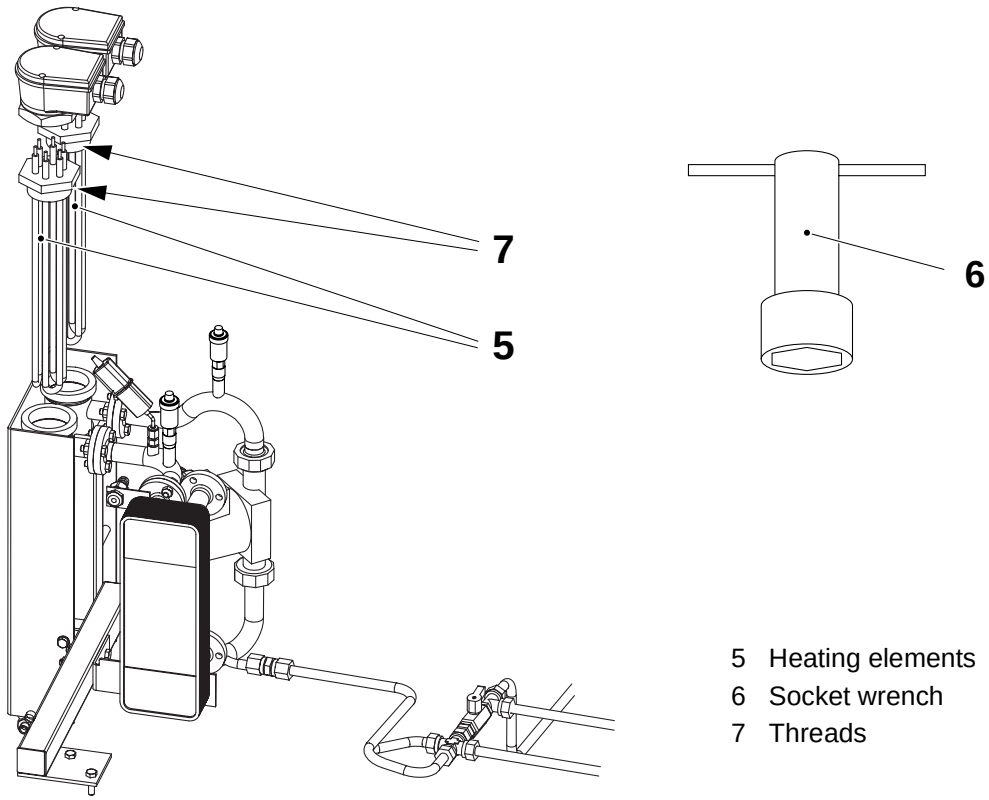

5 Heating elements
6 Socket wrench
7 Threads

1.4.2-2 Heating Unit - Change Heat Exchanger

SPC Reference	1334506-0200

WARNING
Hydrogen Peroxide!
Follow the Safety precautions.

WARNING
Risk of burns!
The hydrogen peroxide system and adjacent components may be hot.

a) Drain the water system by opening the shut off valve (1).
b) Remove the plug (2).

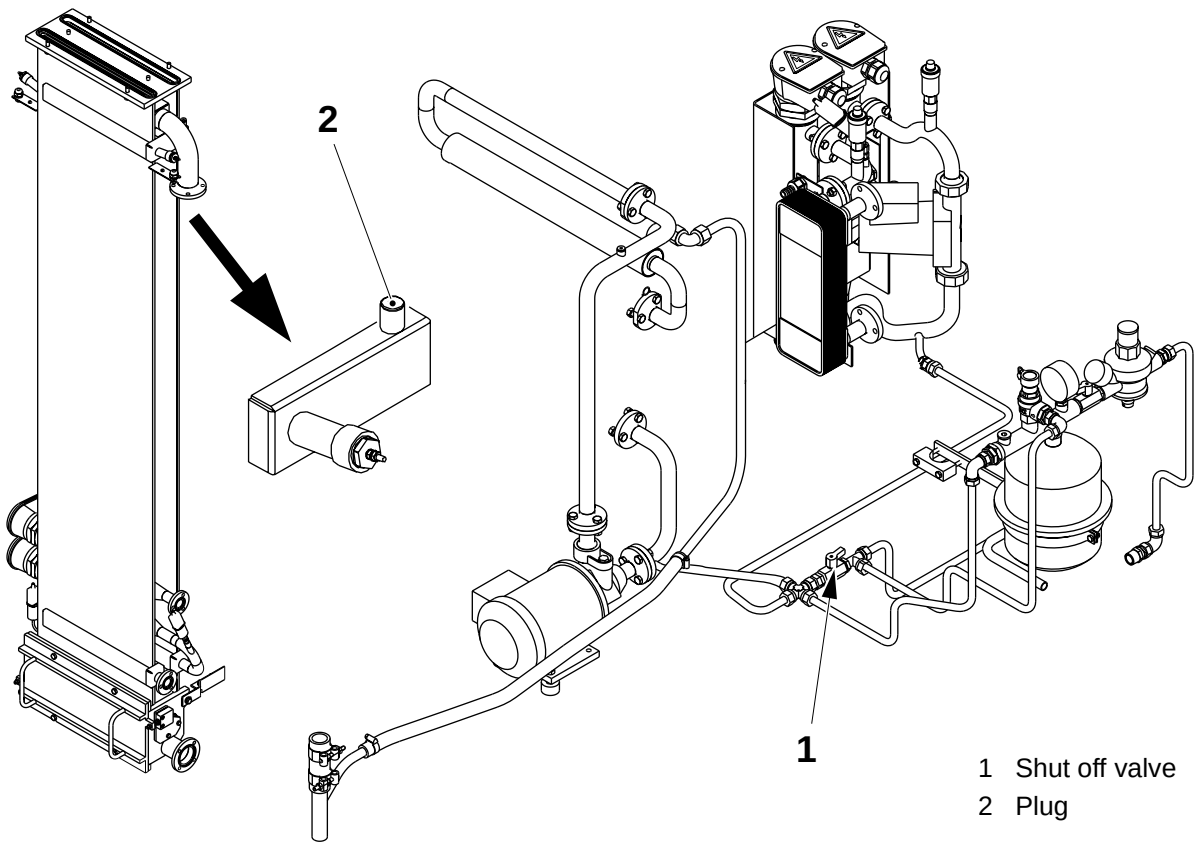

1 Shut off valve
2 Plug

(Cont'd)

(Cont'd)

c) Loosen the flanges (3) on the heat exchanger and remove it.

d) Change the heat exchanger, ensuring the flanges (3) are sealed by means of new gaskets.

e) Fit back the plug (2).

f) Close the shut off valve (1) and fill the heating unit, see 1.4-2 Hydrogen Peroxide - Fill Water Circulation.

g) Check for leaks, see 1.4-1 Hydrogen Peroxide - Check Water Circulation.

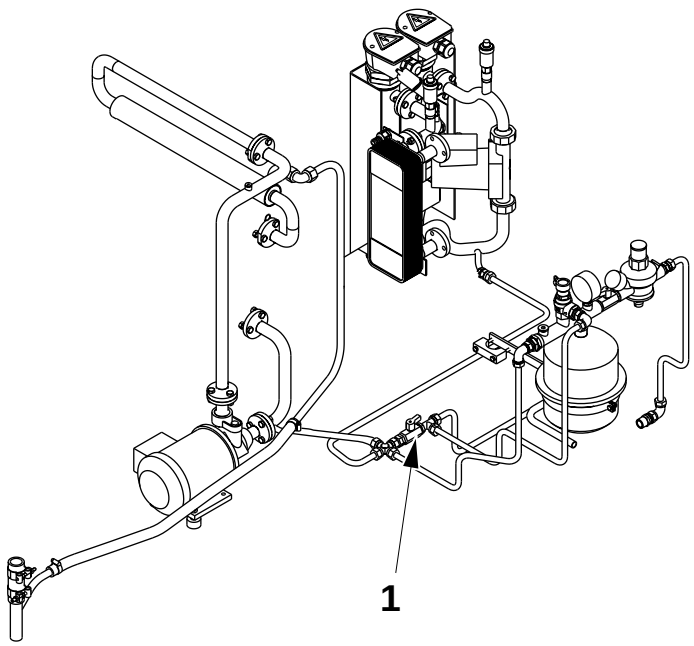

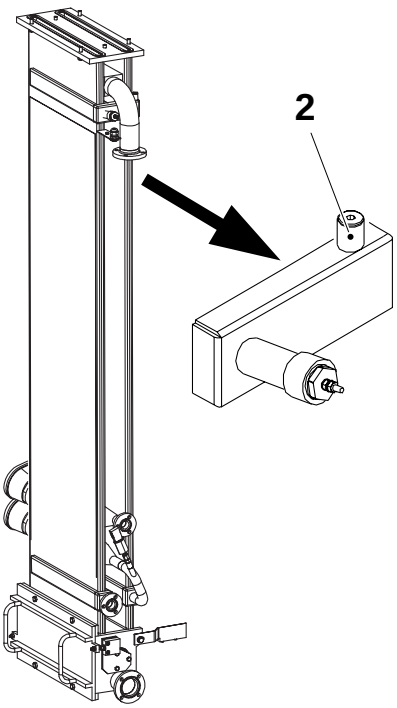

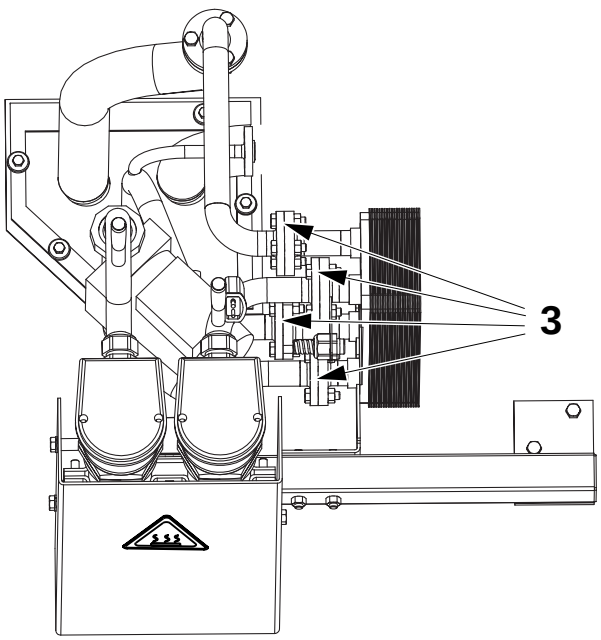

1 Shut off valve
2 Plug
3 Flanges

1.4.2-3 Heating Unit - Drain

SPC Reference	1334506-0200

WARNING
Hydrogen Peroxide!
Follow the Safety precautions.

WARNING
Risk of burns!
Parts may be hot.

a) Cut off the water supply to the heating unit and drain the system. See 1.4.2-2 Heating Unit - Change Heat Exchanger.

b) With the aid of a screwdriver, open the valve (1) and drain the water from the heating unit U-bend into a bucket.

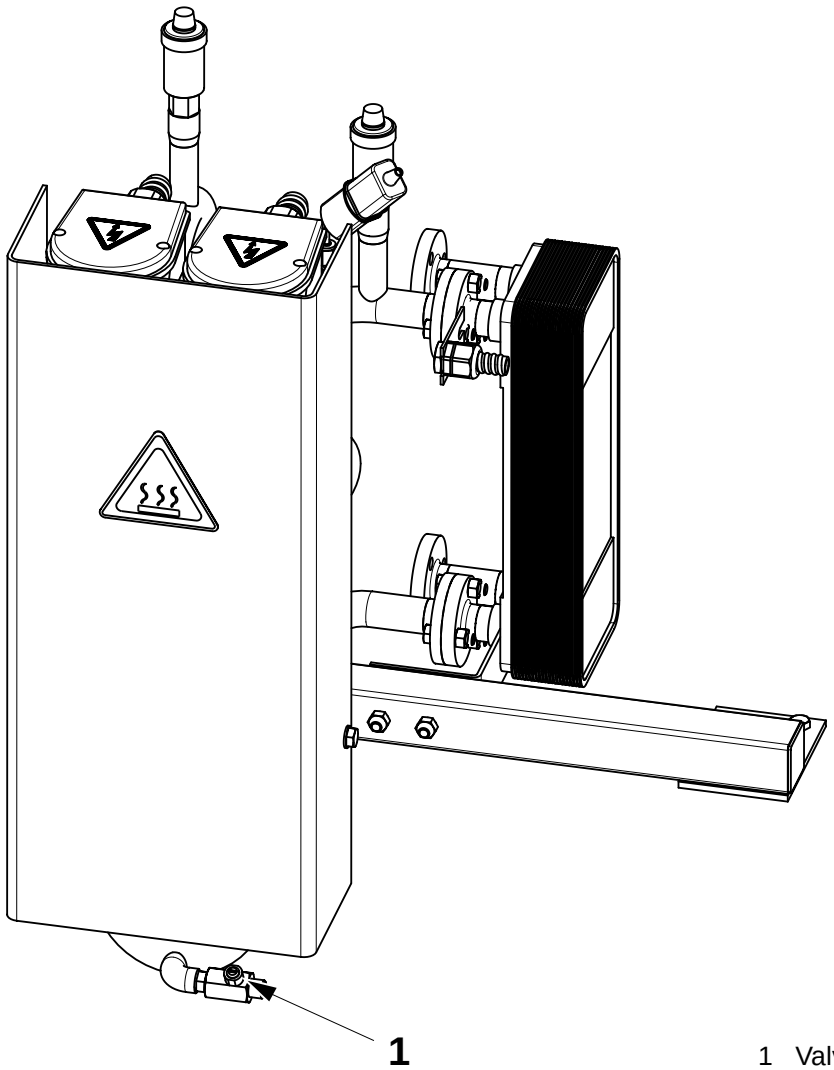

1 Valve

1.4.2-4 Heating Unit - Check Pump

SPC Reference	1334506-0200

WARNING
Risk of burns!
Parts may be hot.

Note! Make sure the pump (1) is set at the highest speed.

Check the pump (1) for leakages or excessive noise.

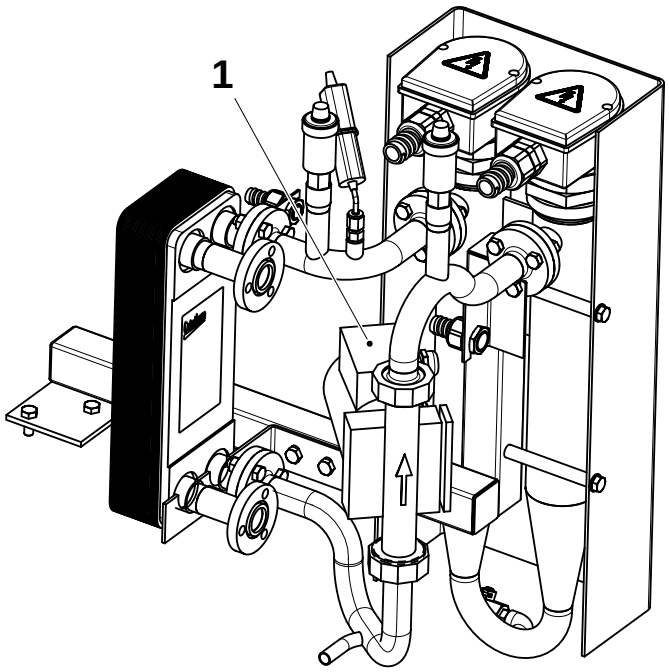

1 Pump

1.4.3 Water Circulation

1.4.3-1 Water Circulation - Set Pressure

Tools: - Allen Key (10 mm)	
SPC Reference	1347174-0200

WARNING
Hydrogen Peroxide!
Follow the Safety precautions.

a) Unscrew and remove the cap (1) from the valve (2).

b) Unscrew the plug nut (3) a few turns by means of an allen key. When the pressure on the gauge (4) reaches **2.0 - 2.5 bar** screw back in the plug nut (3).

c) Screw back in the cap (1).

Note! Item d) must be performed during the first three hours of machine run.

d) Check every half hour the pressure by means of the gauge (4).

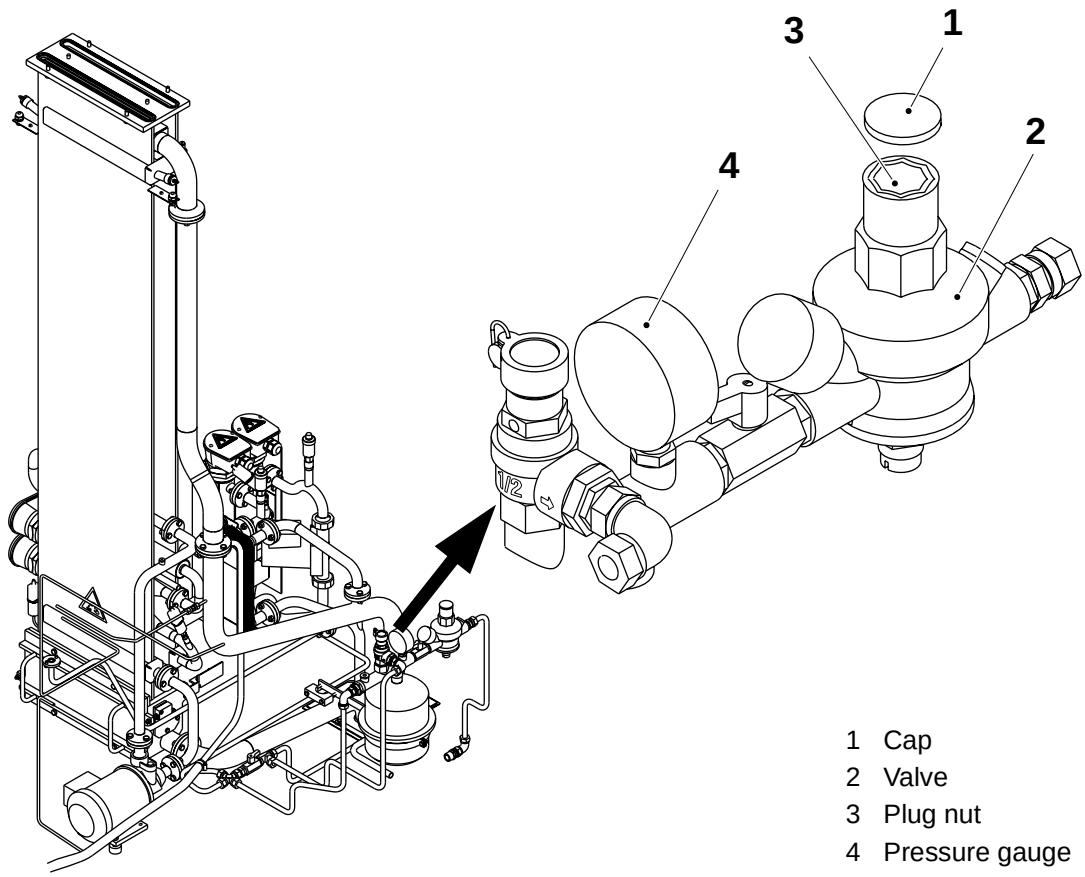

1 Cap
2 Valve
3 Plug nut
4 Pressure gauge

1.5 Frame Section, Upper

SPC Reference	1279802-0200

1.5.1 Bending Roller

1.5.1-1 Bending Roller - Check

SPC Reference	1279803-0200

Check the roller (2) and the counter pressure roller (1) rotate freely in both directions. If not, change the bushings, see 1.5.1-7 Bending Roller - Change Bearings.

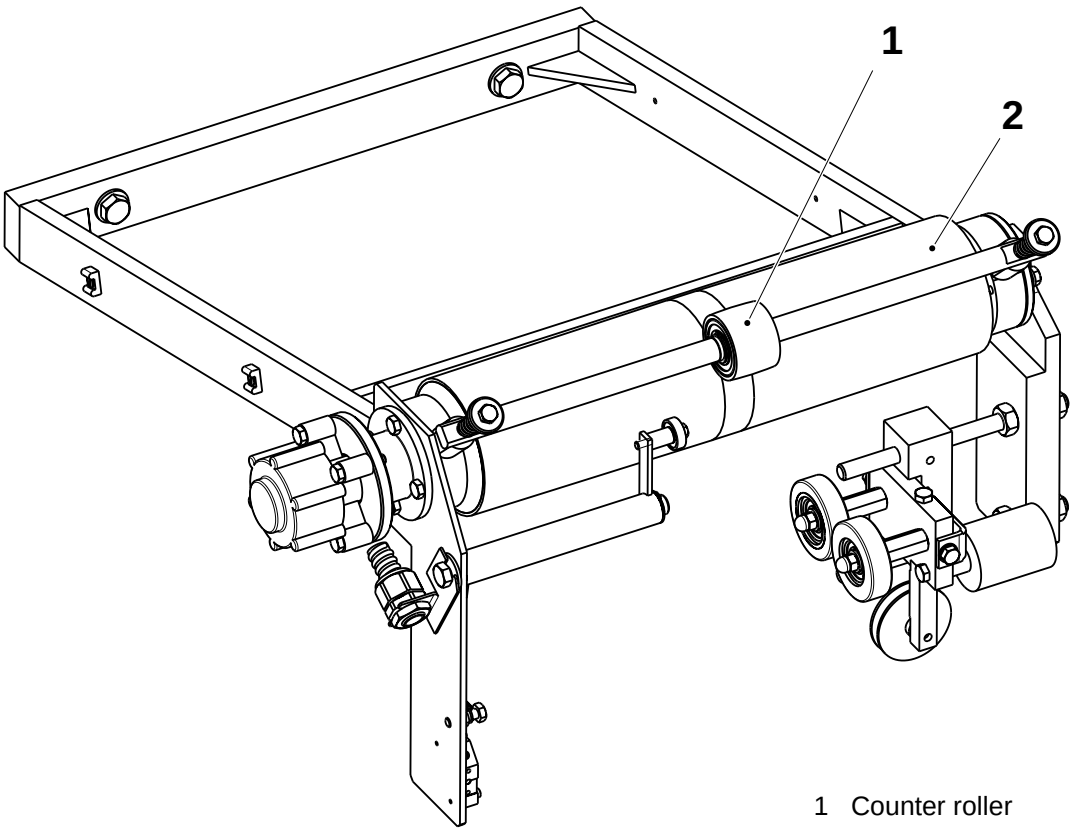

1 Counter roller
2 Roller

1.5.1-2 Bending Roller - Set Brake

SPC Reference	1279803-0200

Set the value on the bending roller brake to **5 by turning the knob (1).**

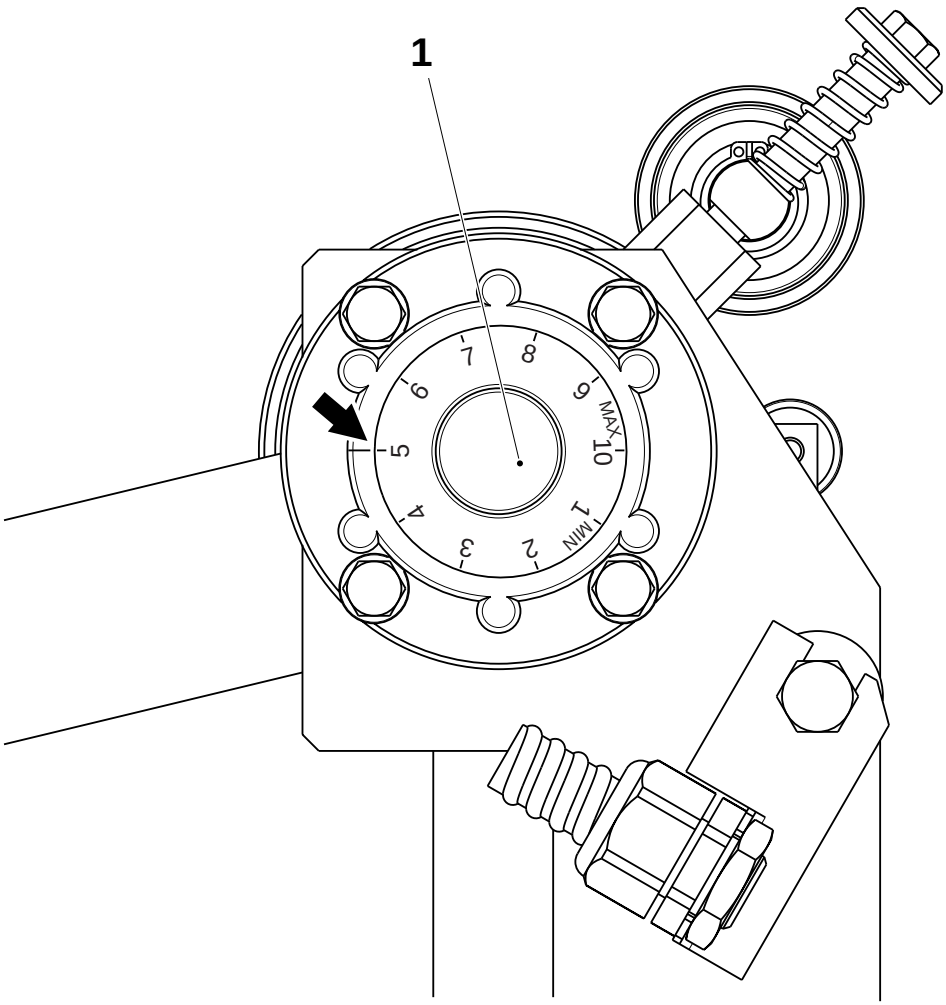

1 Knob

1.5.1-3 Bending Roller - Check Splice Detector

Machine Status	Mains Power ON
SPC Reference	1279803-0200

a) Check the ball bearing (2) rotates easily. Change as required.

b) Check the spring (5) is intact. Change as required.

c) Check the bracket (3) is easy to turn. If not, remove the retaining ring (4), the spring (5) and remove the bracket. Change the bushings (1) and assemble in the reverse order.

d) Place a piece of packaging material under the ball bearing (2) and check the LED (6) in the proximity switch is ON.

e) Place a piece of double packaging material underneath the ball bearing (2) and check the LED (6) switches OFF. If not, set the splice detector, see 1.5.1-4 Bending Roller - Set Splice Detector.

f) The machine ejects at least four packages; check that one of them has the taped splice.

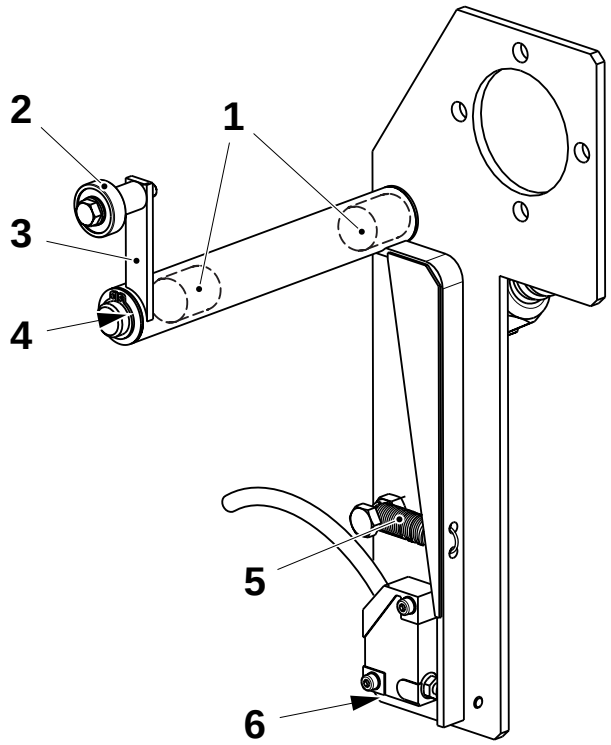

1 Bushing
2 Ball bearing
3 Bracket
4 Retaining ring
5 Spring
6 LED

1.5.1-4 Bending Roller - Set Splice Detector

Machine Status	Mains Power ON
SPC Reference	1279803-0200

a) Set the screw (3) so that it touches the proximity switch and the LED (2) switches ON.

b) Place a piece of double packaging material under the ball bearing (1).

c) Screw in the screw (3) until the LED (2) switches OFF.

d) Check with a single piece of packaging material the LED switches ON, and with a double piece of packaging material it switches OFF.

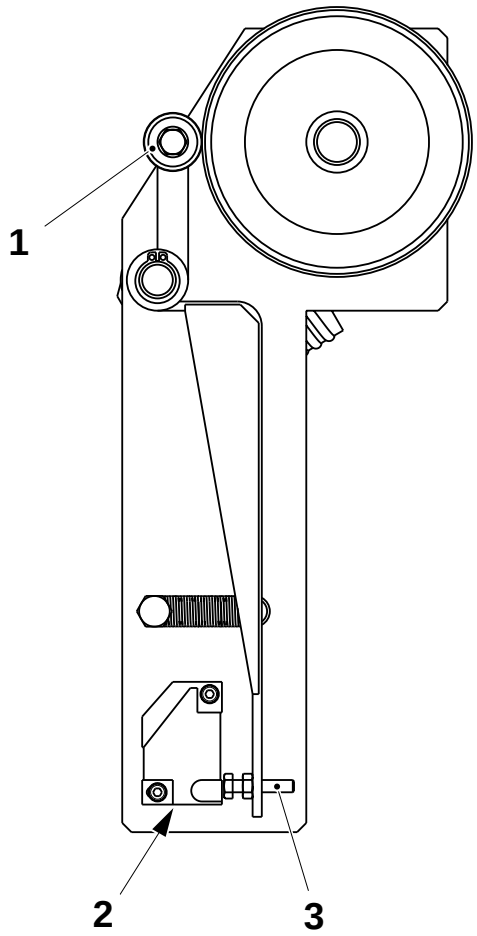

1 Ball bearing
2 LED
3 Screw

1.5.1-5 Bending Roller - Set Web Guide Position

SPC Reference	1279803-0200

Set distance **A** between the bracket (3) and the web guide (2). Loosen the grub screws (1) and shift the web guide sideways. Tighten the grub screws.

Package	**A ±0.5 (mm)**
TBA 200 B - TBA 250 B	50
TBA 200 M - TBA 250 S	48
TBA 200 S	70

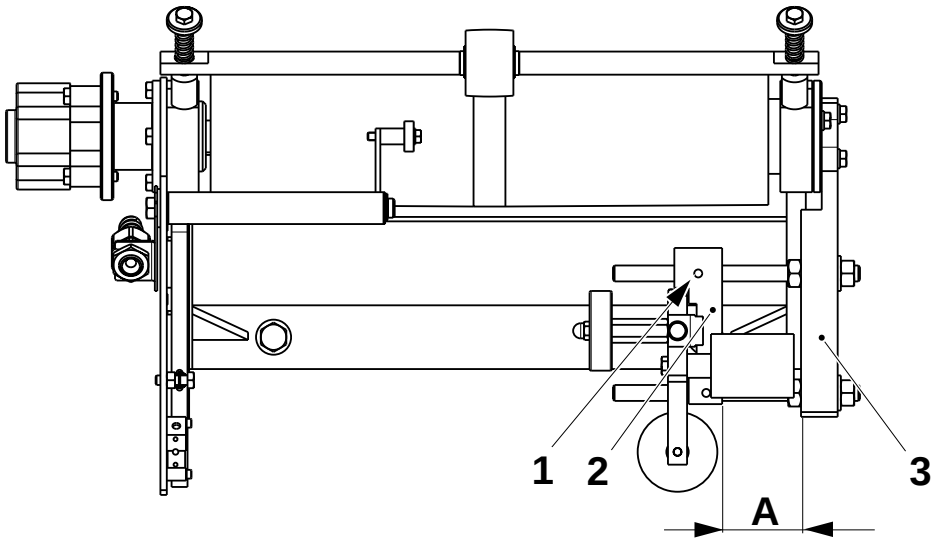

1 Grub screw
2 Web guide
3 Bracket

1.5.1-6 Bending Roller - Check Web Guide

SPC Reference	1279803-0200

Check the roller surfaces are not damaged.

Check the rollers rotate freely.

If not:

a) Remove the nuts (1), the washers and the retaining rings (2).

b) Change the ball bearings (3), the rubber roller (4) or the steel roller (5) as necessary.

c) Check the edge guide wheel (7) is clean. If not, remove the screw (6) and pull off and clean the guide wheel. If the wheel is worn or damaged, replace it.

d) Check the bushing (8) and the shaft (9) for wear. Change as required.

Note! Fit the rubber roller on the printed side of the packaging material web.

e) Assemble in the reverse order.

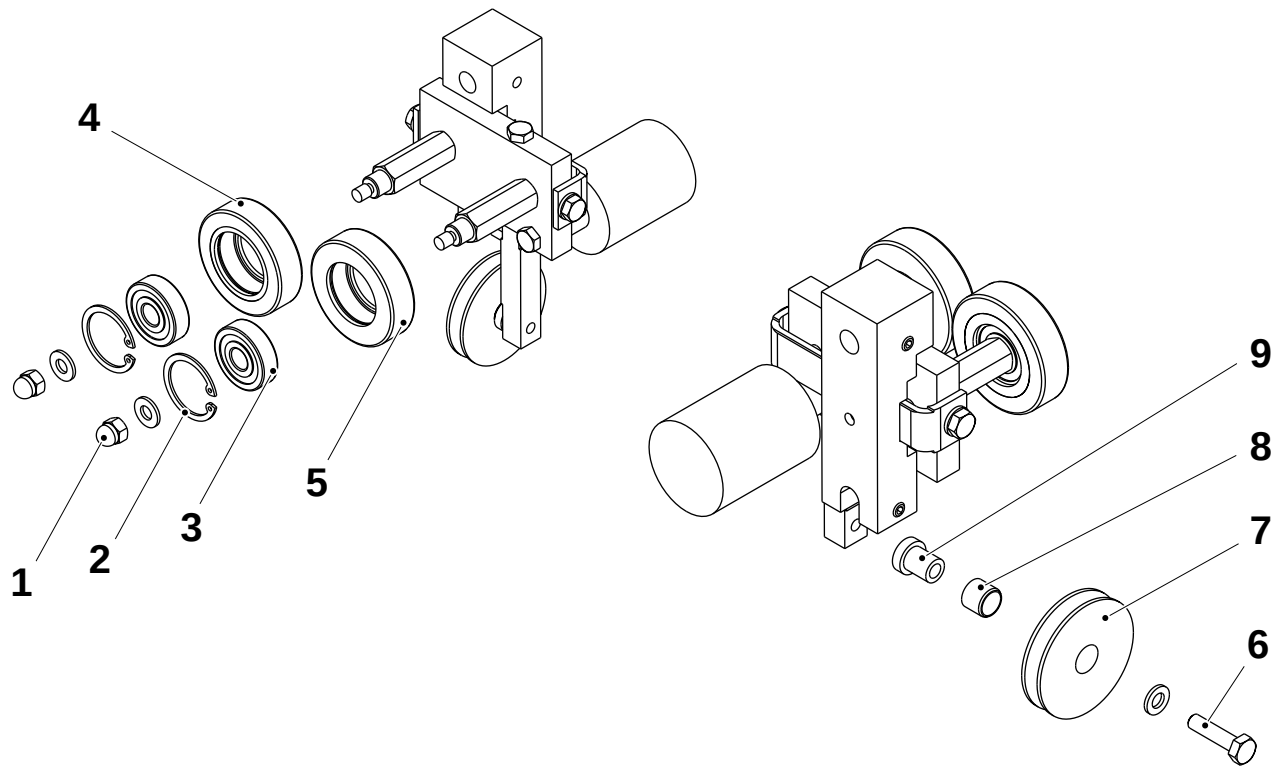

1 Nut
2 Retaining ring
3 Ball bearing
4 Rubber roller
5 Steel roller
6 Screw
7 Edge guide wheel
8 Bushing
9 Shaft

1.5.1-7 Bending Roller - Change Bearings

SPC Reference	1279803-0200

a) Remove the screws (1), the washers (2) and the springs (3).

b) Remove the roller assembly (4).

c) Remove the retaining rings (5) and the ball bearing (6).

d) Change the bearings and assemble in the reverse order.

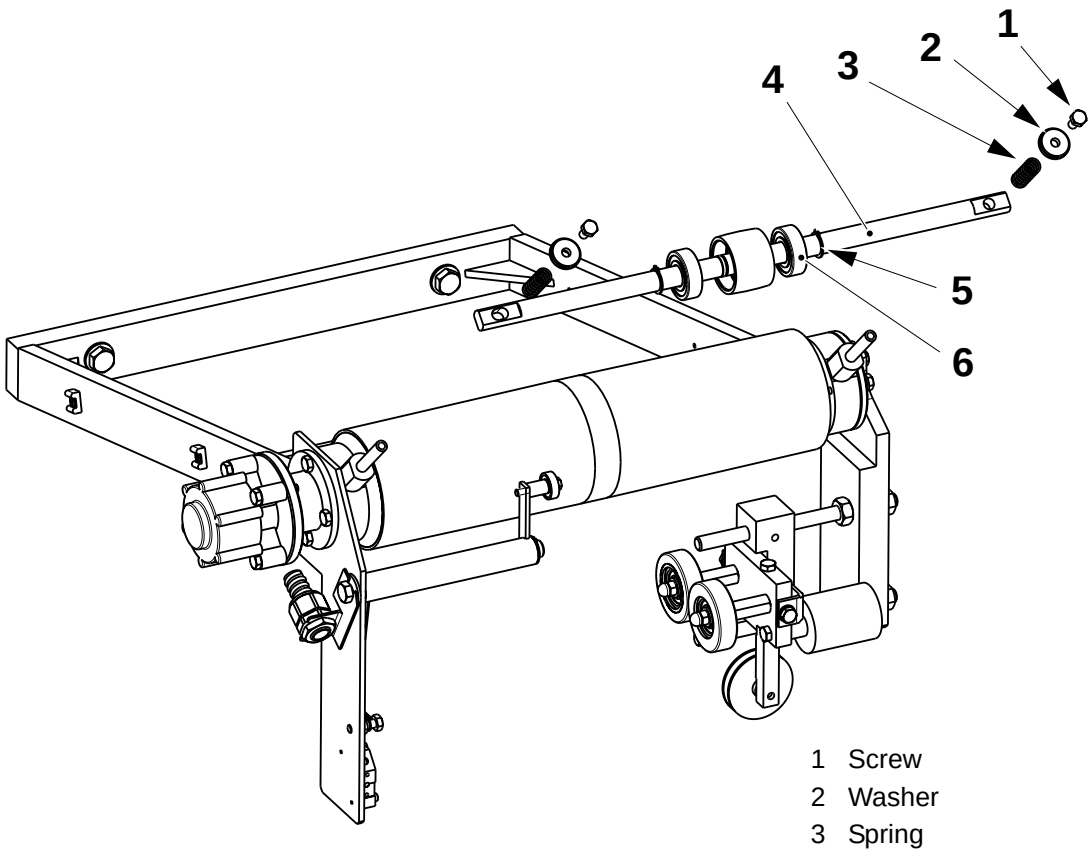

1 Screw
2 Washer
3 Spring
4 Roller assembly
5 Retaining ring
6 Ball bearing

(Cont'd)

(Cont'd)

e) Remove the screws (7) and the brake (8).

f) Remove the splice detector assembly (9).

g) Remove the screws (10) and the web guide assembly (11).

h) Remove the flange (12), the remove the roller (13) and remove the ball bearing (14).

i) Change the bearings and assemble in the reverse order.

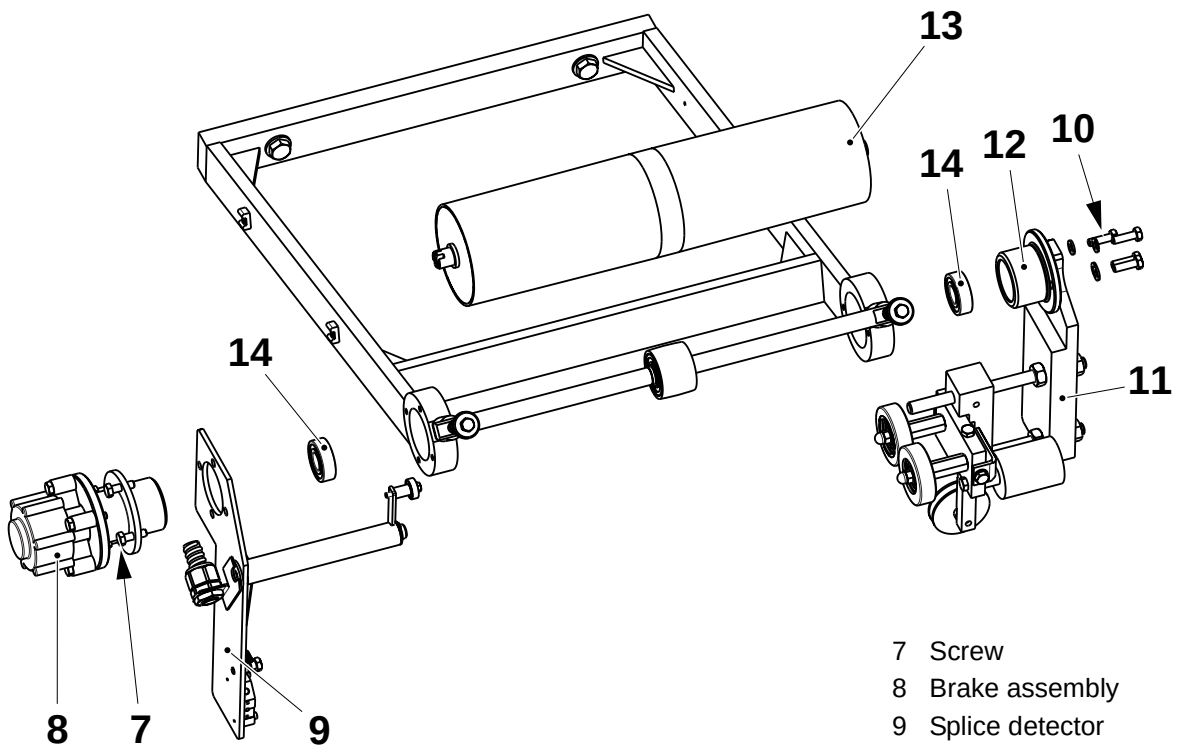

7 Screw
8 Brake assembly
9 Splice detector
10 Screw
11 Web guide assembly
12 Flange
13 Roller
14 Ball bearing

1.5.1-8 Bending Roller - Set Packaging Material Track

SPC Reference	1279803-0200

Fine adjust the packaging material track by loosening the screws (2) and make a small tilt of the frame (1).

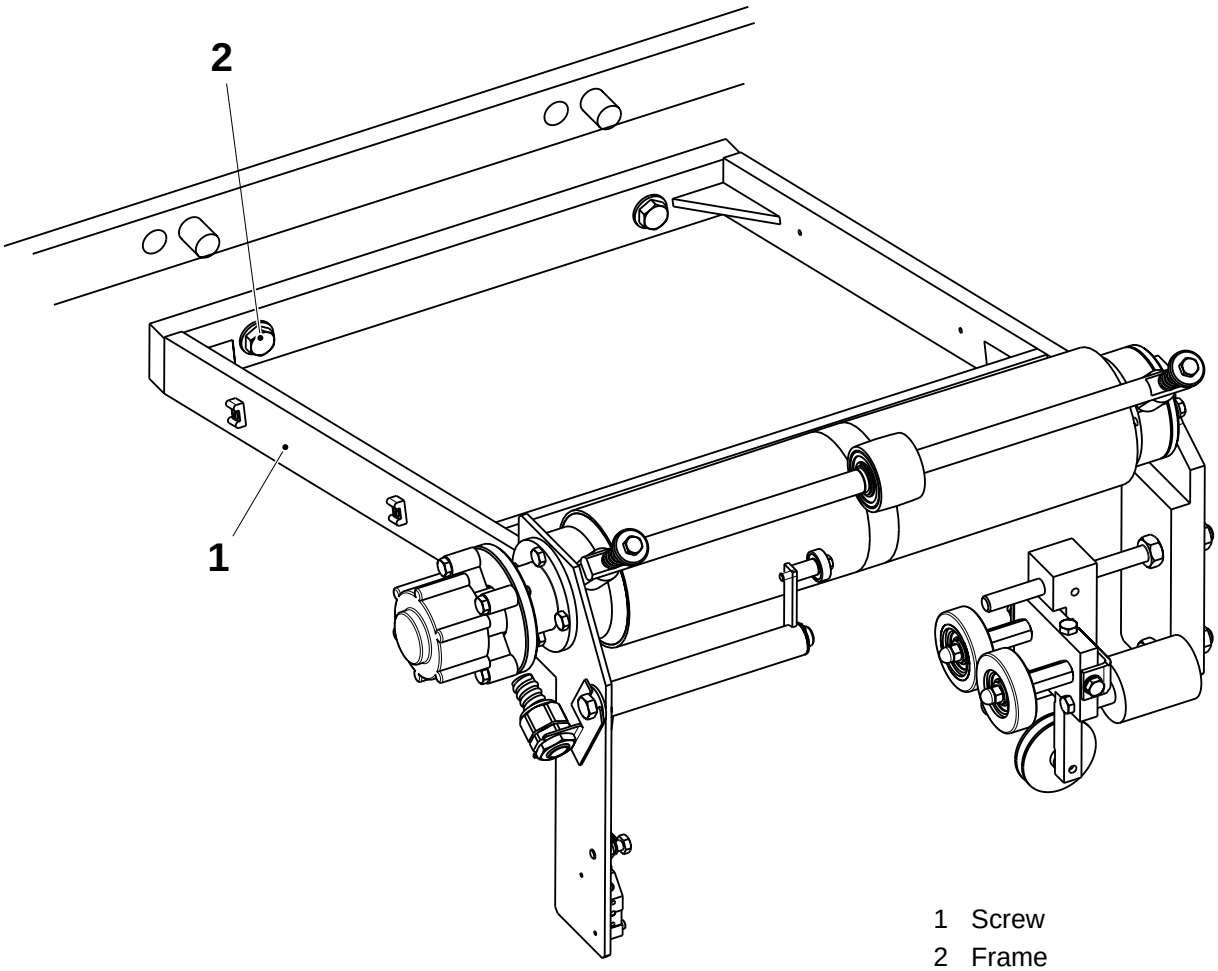

1 Screw
2 Frame

1.6 Connection Box

SPC Reference	1296847-0300

1.6-1 Connection Box - Check Pressure Switch

Machine Status	READY FOR PRODUCTION
SPC Reference	1296847-0300

Open a front window of the column.

Check the machine steps down to ZERO. If it does not, change the pressure switch. Set the new switch, see 1.6-2 Connection Box - Set Pressure Switch.

1.6-2 Connection Box - Set Pressure Switch

Machine Status	PREPARATION
SPC Reference	1296847-0300

a) Open the top front door of the aseptic chamber.

b) On the pressure switch (2), turn the screw (1) clockwise until the LED input **I135.06** on the PLC switches ON.

c) Turn the screw (1) anti-clockwise until the LED input **I135.06** on the PLC switches OFF.

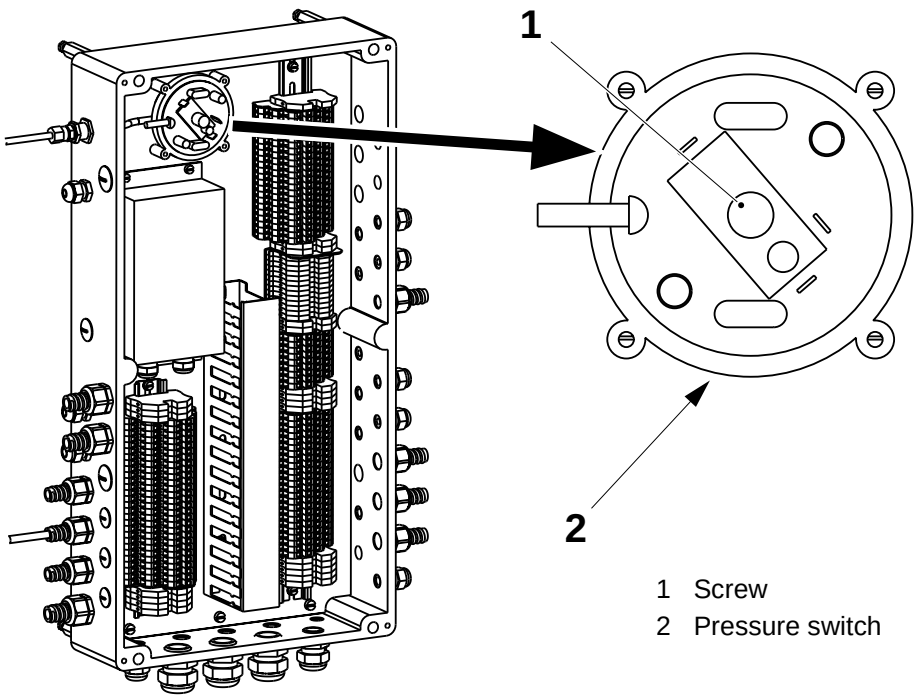

1 Screw
2 Pressure switch

This page intentionally left blank

2 Machine Body

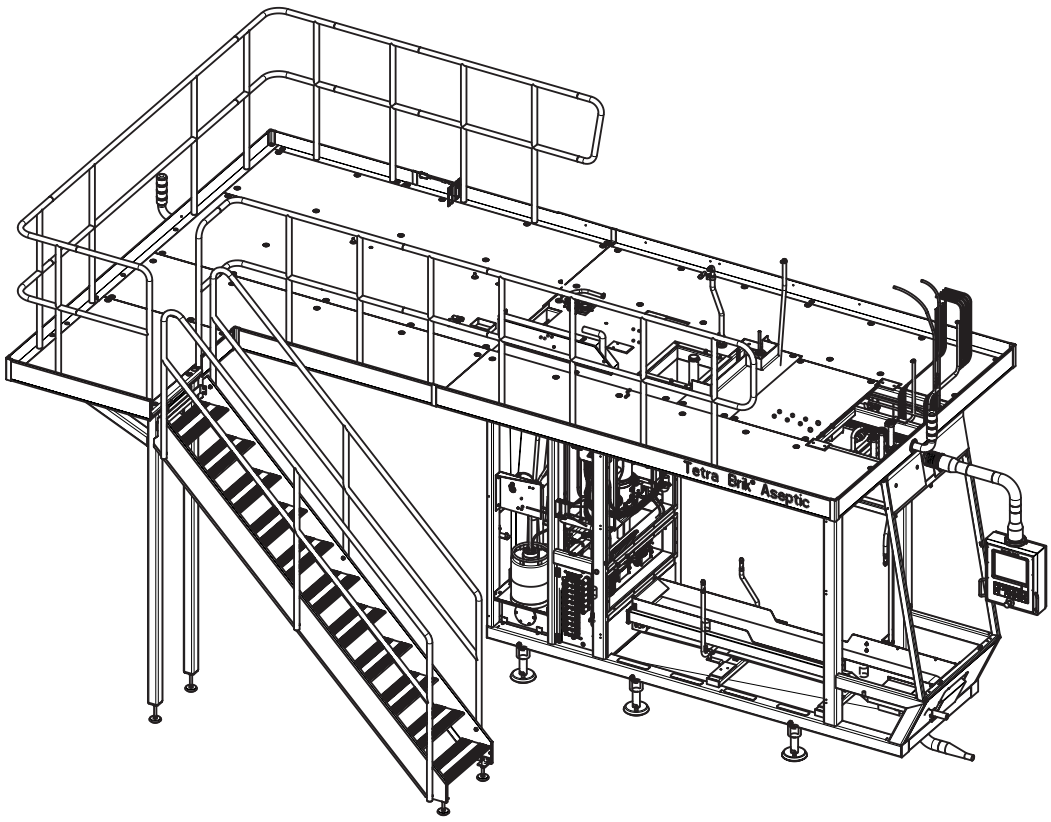

Machine Body - Description

SPC Reference	648522-0600

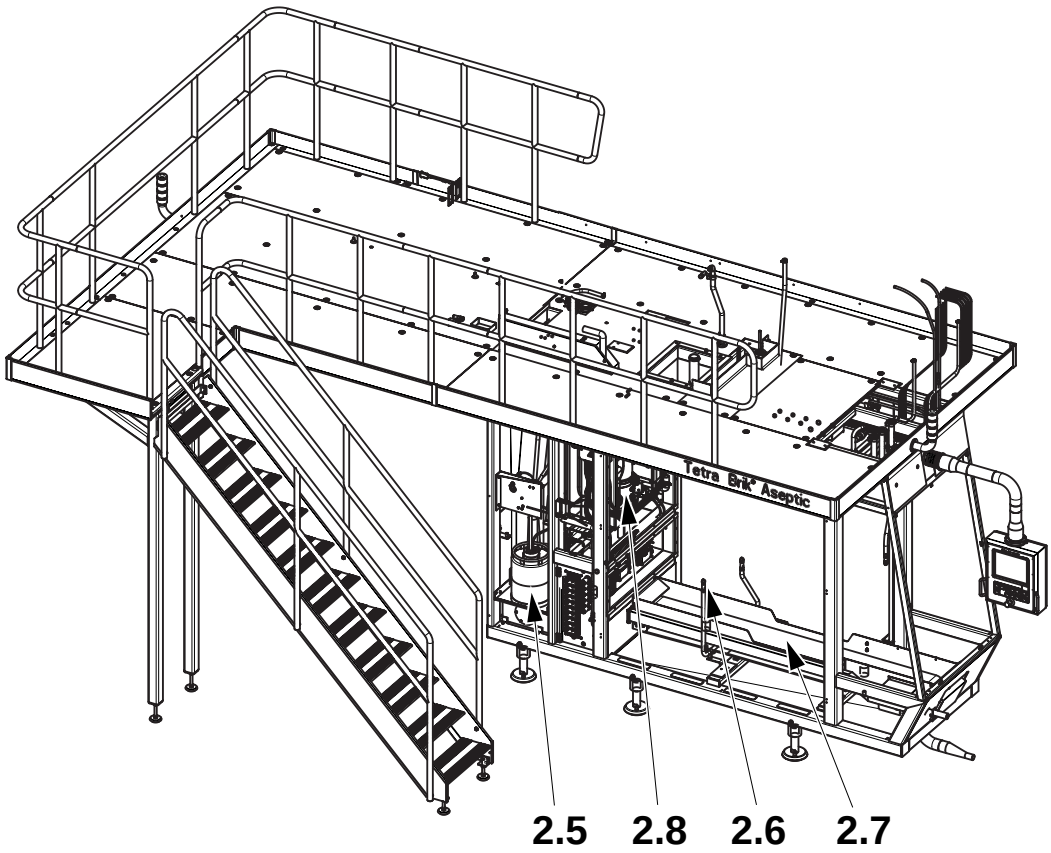

2.5 Hydrogen Peroxide
2.6 External Cleaning System
2.7 Waste Conveyor
2.8 Pump unit

2.5 Hydrogen Peroxide . . . . . 2 - 5

2.5-1 Hydrogen Peroxide - Check Leakages . . . . . 2 - 5

2.5-2 Hydrogen Peroxide - Check Pump . . . . . 2 - 6

2.5-3 Hydrogen Peroxide - Set Pressure . . . . . 2 - 7

2.5.1 Peroxide Pipe . . . . . 2 - 8

2.5.1-1 Peroxide Pipe - Check . . . . . 2 - 8

2.5.1-2 Peroxide Pipe - Clean Strainer . . . . . 2 - 9

2.5.2 Dilution Tank. . . . . 2 - 10

2.5.2-1 Dilution Tank - Check . . . . . 2 - 10

2.5.3 Pump . . . . . 2 - 11

2.5.3-1 Pump - Check . . . . . 2 - 11

2.5.3-2 Pump - Change Gasket and Non Return Valve . 2 - 12

2.5.3-3 Pump - Clean Filter . . . . . 2 - 13

2.5.4 Peroxide Pump . . . . . 2 - 14

2.5.4-1 Peroxide Pump - Change Pump . . . . . 2 - 14

2.5.4-2 Peroxide Pump - Overhaul Pump . . . . . 2 - 16

2.5.4-3 Peroxide Pump - Set Impeller . . . . . 2 - 23

2.5.5 Peroxide Tank. . . . . 2 - 26

2.5.5-1 Peroxide Tank - Check . . . . . 2 - 26

2.5.6 H_2O_2 Concentration Meter. . . . . 2 - 27

2.5.6-1 H_2O_2 Concentration Meter - Check Desiccant Cartridge . . . . . 2 - 27

2.5.6-2 H_2O_2 Concentration Meter - Change O-ring . . . 2 - 28

2.5.6-3 H_2O_2 Concentration Meter - Remove . . . . . 2 - 30

2.5.6-4 H_2O_2 Concentration Meter - Check Pt100 Sensor 2 - 32

2.5.6-5 H_2O_2 Concentration Meter - Check Prism and Led 2 - 34

2.6 External Cleaning System . . . . . 2 - 35

2.6-1 External Cleaning System - Check Nozzles . . . . 2 - 35

2.7 Waste Conveyor. . . . . 2 - 36

2.7-1 Waste conveyor - check . . . . . 2 - 36

2.7-2 Waste Conveyor - Change Coupling . . . . . 2 - 37

2.7-3 Waste Conveyor - Change Conveyor Belt . . . . 2 - 39

2.8 Pump unit . . . . . 2 - 40

2.8-1 Pump unit - Change Pump . . . . . 2 - 40

2.5 Hydrogen Peroxide

SPC Reference	1317102-0100

2.5-1 Hydrogen Peroxide - Check Leakages

SPC Reference	1317102-0100

WARNING
Hydrogen peroxide! Follow the Safety Precautions.

Check the connections for leakages at the following points:

- the peroxide pipe (1)
- the dilution tank (2)
- the cabinet (3)
- the peroxide pump (4)
- the peroxide tank (5).
- the H_2O_2 concentration meter (6).

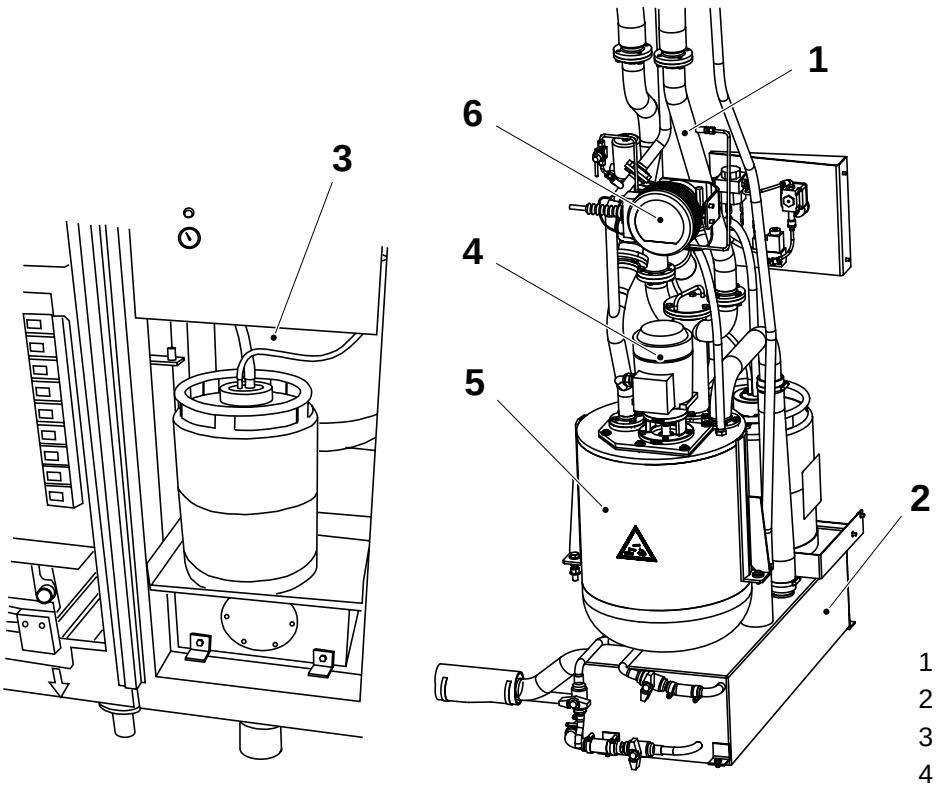

1 Peroxide pipe
2 Dilution tank
3 Cabinet
4 Peroxide pump
5 Peroxide tank
6 H_2O_2 concentration meter

2.5-2 Hydrogen Peroxide - Check Pump

Machine Status	STERILIZATION
SPC Reference	1317102-0100

Place a screwdriver in contact with the peroxide pump (1) and check for strange noises or vibrations.

Change the pump as required, see 2.5.4-1 Peroxide Pump - Change Pump.

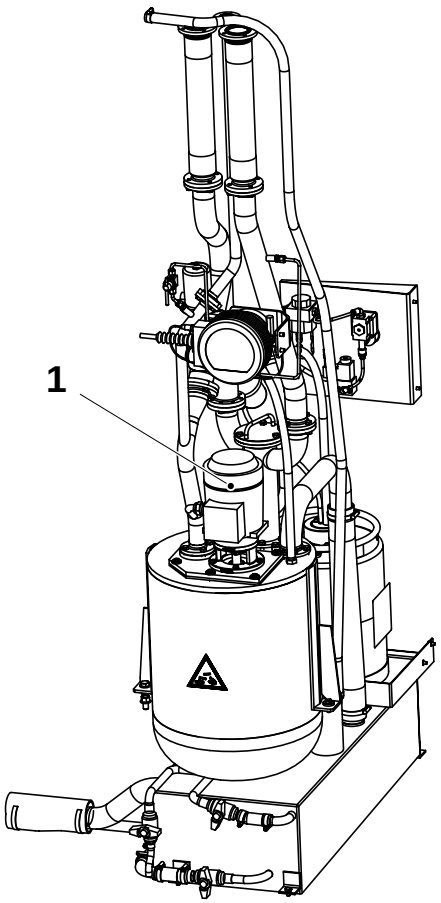

1 Peroxide pump

2.5-3 Hydrogen Peroxide - Set Pressure

Machine Status	STERILIZATION
SPC Reference	1317102-0100

WARNING

Hydrogen peroxide! Follow the Safety precautions.

Set the hydrogen peroxide tank filling pressure to **20 kPa** using the pressure regulator (1).

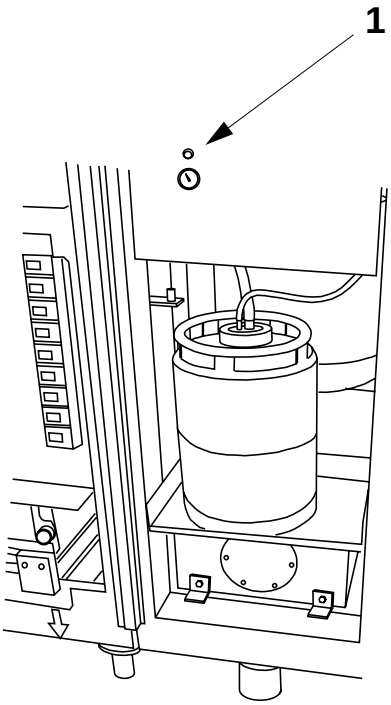

1 Pressure regulator

2.5.1 Peroxide Pipe

2.5.1-1 Peroxide Pipe - Check

SPC Reference	1282895-0200

WARNING
Hydrogen peroxide! Follow the Safety precautions.

Check the strainer (1) is not dirty.
Clean or change it as required, see 2.5.1-2 Peroxide Pipe - Clean Strainer.

Checking During Production
Turn the air and the mains power ON.

Check the pipe connections for any peroxide leakages.
If there are leaks, change the gaskets as required (indicated by the arrows).

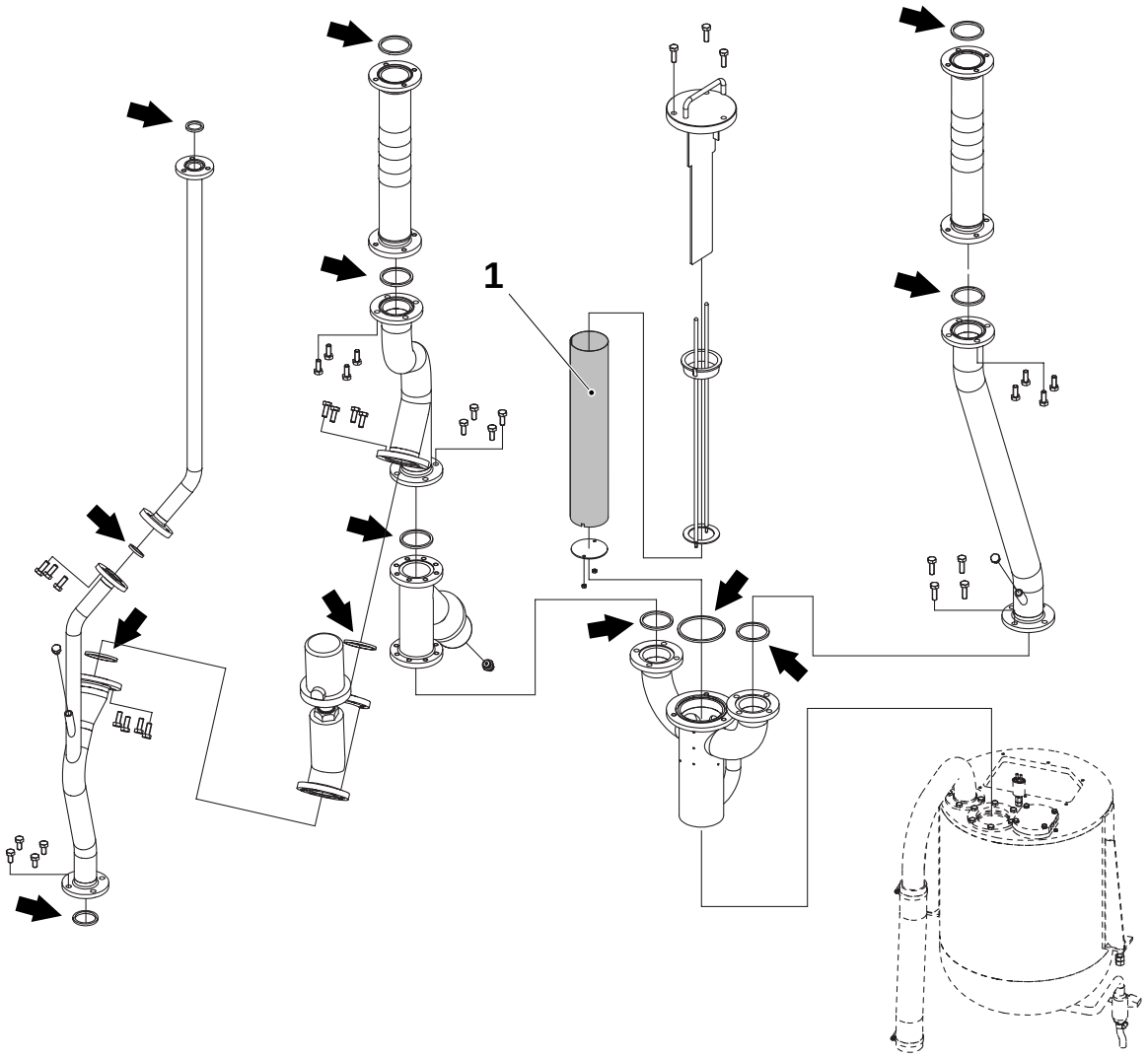

1 Strainer

2.5.1-2 Peroxide Pipe - Clean Strainer

SPC Reference	1282895-0200

WARNING
Hydrogen peroxide! Follow the Safety precautions.

a) Remove the screws (1).
b) Lift up the filter handle (2) and all the filter assembly.
c) Clean the filter completely in fresh water and, if needed, blow dry with compressed air. Rinse the filter with distilled water before assembly.
d) Check the gasket (3) and change it as required.
e) Remove the nuts (4) and the lid (5).
f) Remove the strainer (6) from the bracket (7) and change it as required.
g) Assemble in the reverse order.

Note! Fold the lower edge of the strainer (6) under the bracket (7) when assembling the filter unit.

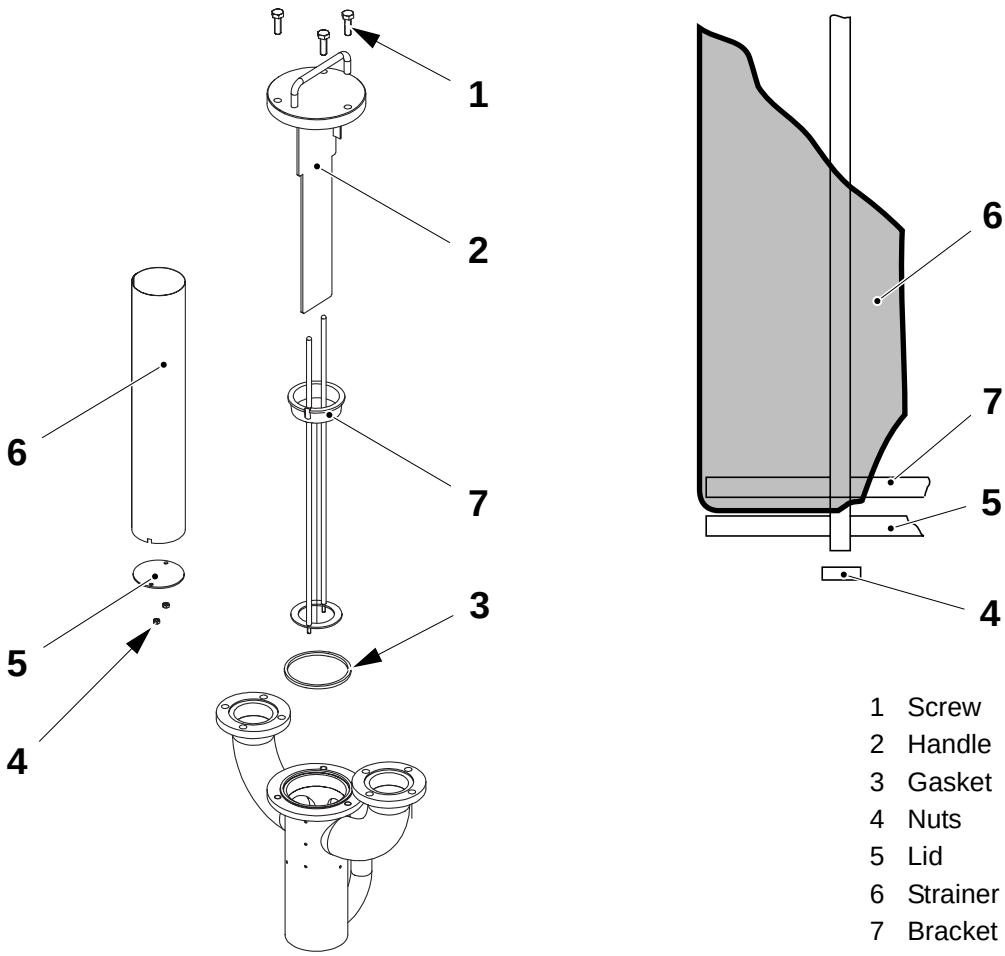

1 Screw
2 Handle
3 Gasket
4 Nuts
5 Lid
6 Strainer
7 Bracket

2.5.2 Dilution Tank

2.5.2-1 Dilution Tank - Check

Machine Status	PRODUCTION
SPC Reference	1282896-0100

WARNING
Hydrogen peroxide! Follow the Safety precautions.

Check that:

- the drain hole (1) is not clogged.
  If required, clean the hole using a proper tool bar.
- the outlet hoses (2) and (3) do not leak, see arrows.
- the cover (4) does not leak.
- the safety lid (5) is not stuck.
  Make sure that it moves freely, lifting by hand.
  If required, remove the safety lid (5) and clean it with water.

Note! To ensure the outlet concentration of peroxide is less than **1%**, run the machine for 24 hours in production before emptying the dilution tank.

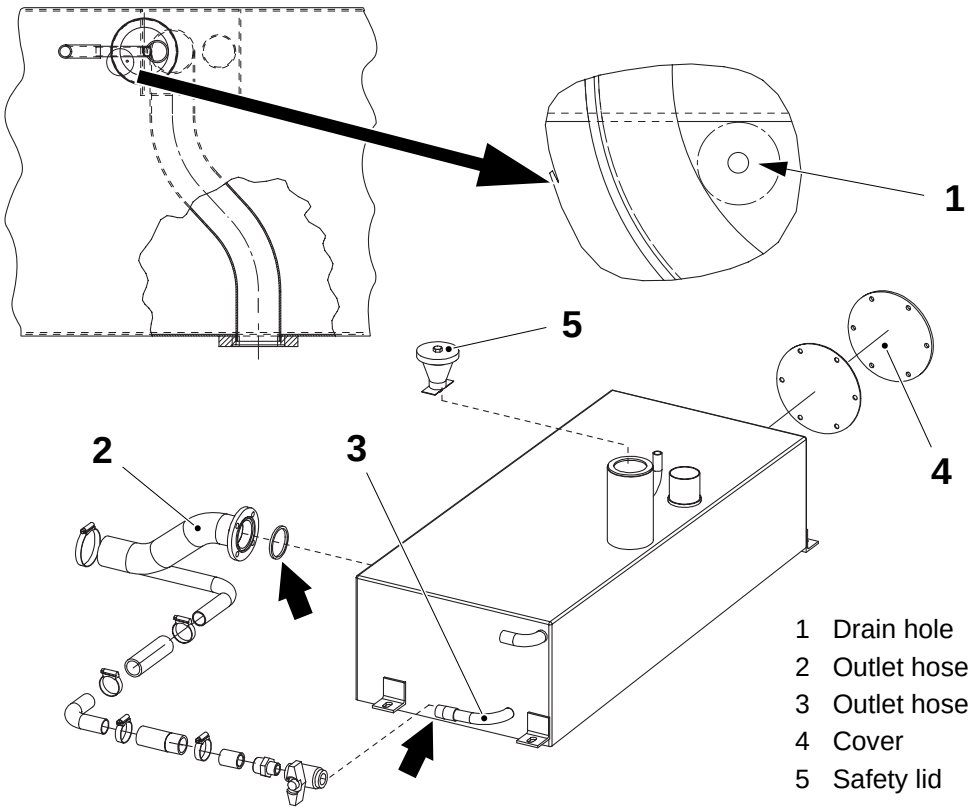

2.5.3 Pump

2.5.3-1 Pump - Check

SPC Reference	1317103-0100

WARNING
Hydrogen peroxide! Follow the Safety precautions.

Check that:

- The hoses (1), the non return valve (2) and the gasket (3) do not leak
  Change the non return valve (2) and the seal (3) as required, see 2.5.3-2 Pump - Change Gasket and Non Return Valve.
- The filter (4) is not dirty.
  Clean or change as required, see 2.5.3-3 Pump - Clean Filter.

Checking During Production
Check the weight (5) is properly installed on the peroxide container (6) and that it does not leak.

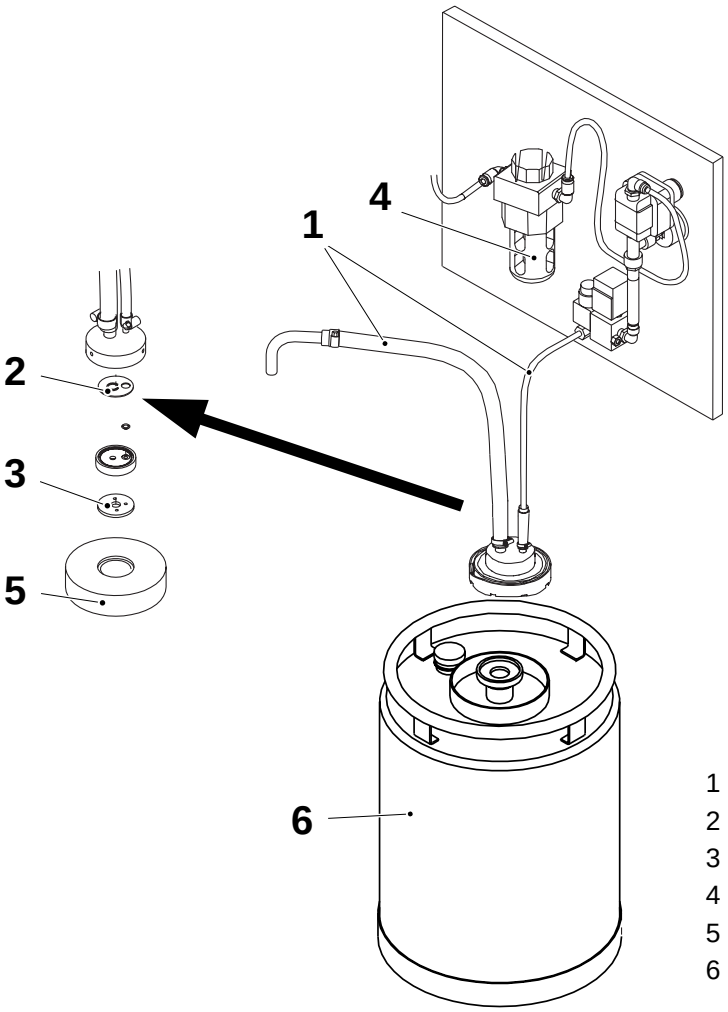

1 Hoses
2 Non return valve
3 Gasket
4 Filter
5 Weight
6 Peroxide container

2.5.3-2 Pump - Change Gasket and Non Return Valve

SPC Reference	1317103-0100

WARNING

Hydrogen peroxide! Follow the Safety precautions.

a) Unscrew the two screws (1).

b) Remove the weight (2).

c) Remove the gasket (3) and change it as required.

d) Remove the washer (4) from the weight (2).

e) Remove the non-return valve (5) from the attachment (6). Change the non-return valve as required.

f) Assemble in the reverse order.

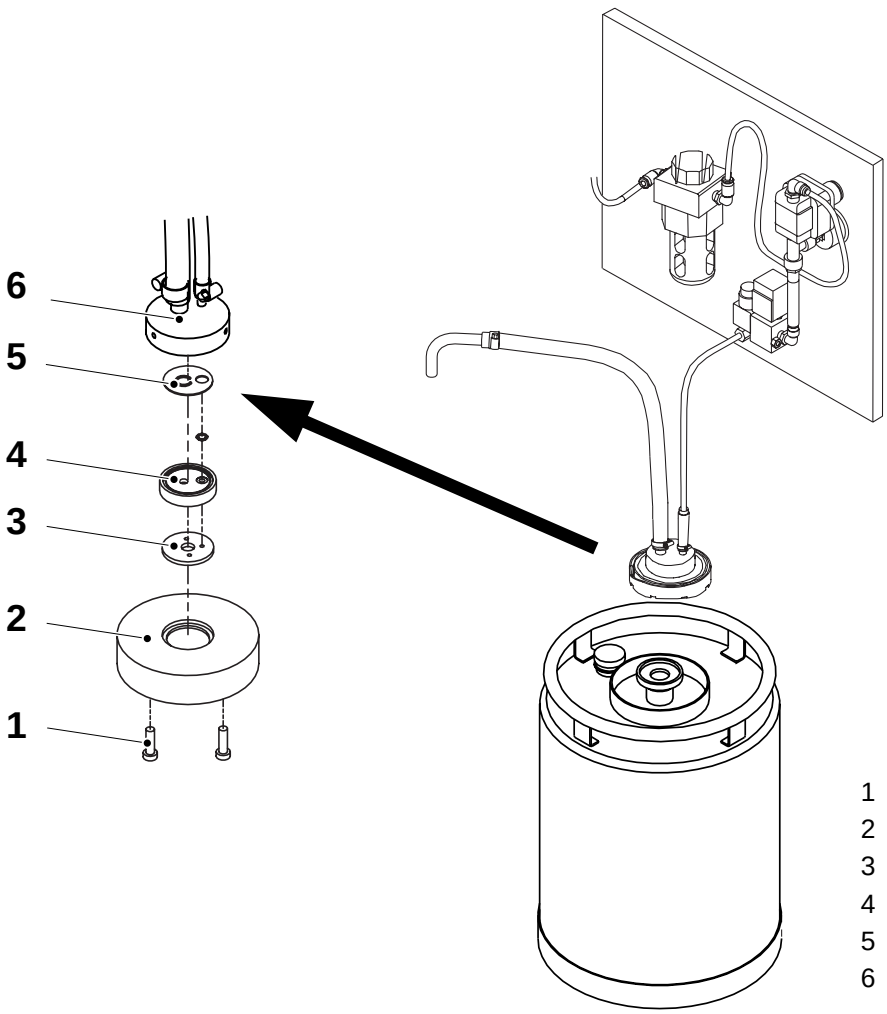

1 Screw
2 Weight
3 Gasket
4 Washer
5 Attachment
6 Non return valve

2.5.3-3 Pump - Clean Filter

Consumables - Soap	
Tools - Pliers	
SPC Reference	1317103-0100

WARNING

Hydrogen peroxide! Follow the Safety precautions.

a) Remove the filter cover (1).

b) Remove the reservoir (2). Change the O-ring as required.

c) Clean the reservoir (2) with soapy water and rinse with plenty of water.

d) Using a pair of pliers, remove and clean the filter insert inside the reservoir (2). Change it as required.

e) Refit the reservoir (2), making sure the O-ring is fitted correctly.

f) Refit the filter cover (1).

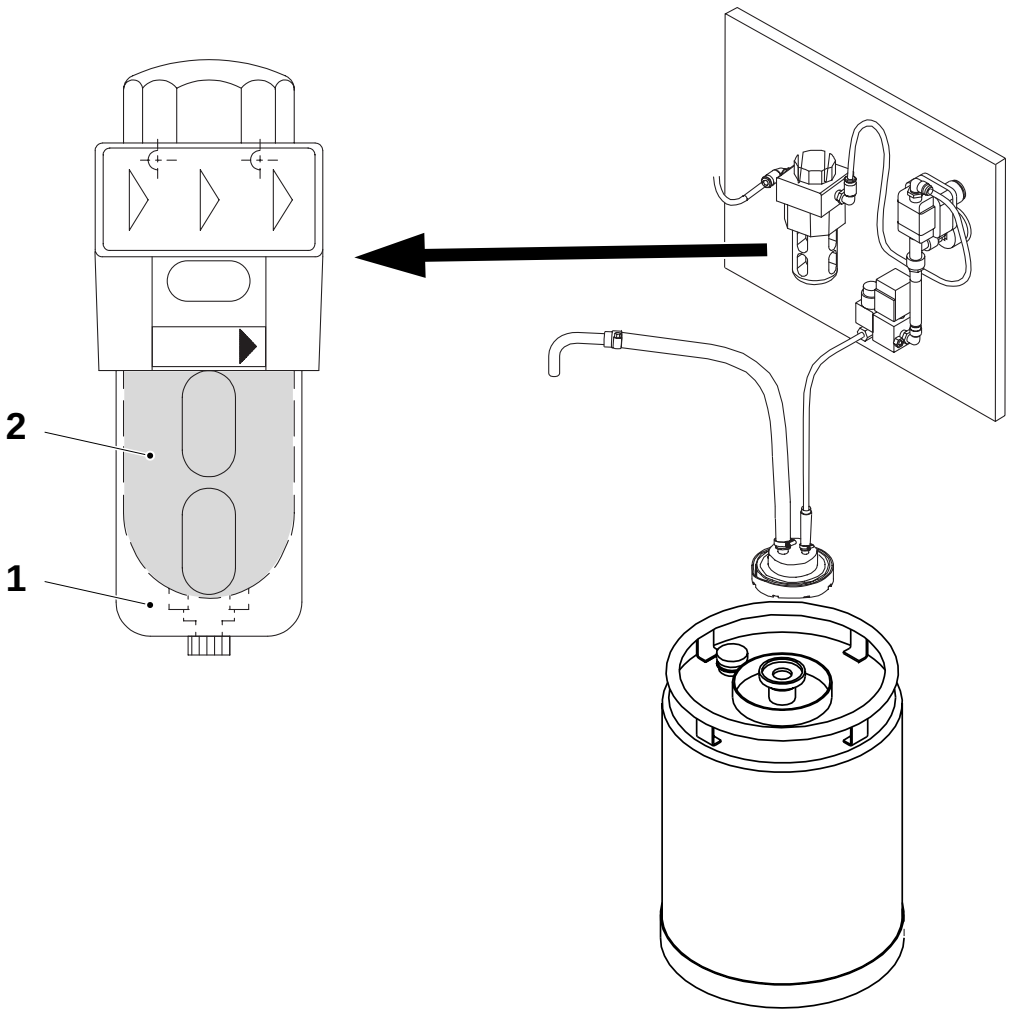

1 Cover
2 Reservoir

2.5.4 Peroxide Pump

2.5.4-1 Peroxide Pump - Change Pump

SPC Reference	996388-0400

WARNING
Hydrogen peroxide! Follow the Safety precautions.

Valid for New Peroxide Pump

a) Make sure the hydrogen peroxide is not too concentrated and then drain the dilution tank and then rinse carefully with distilled water.
b) Label and disconnect the electrical connections to the motor (1).
c) Remove the screws (2) at the flanges.
d) Remove the pipe (3).
e) Remove the pipe (4) and (5).
f) Remove the screws (6).
g) Lift and change the motor (1) with the pump (7).
h) Assemble in the reverse order.

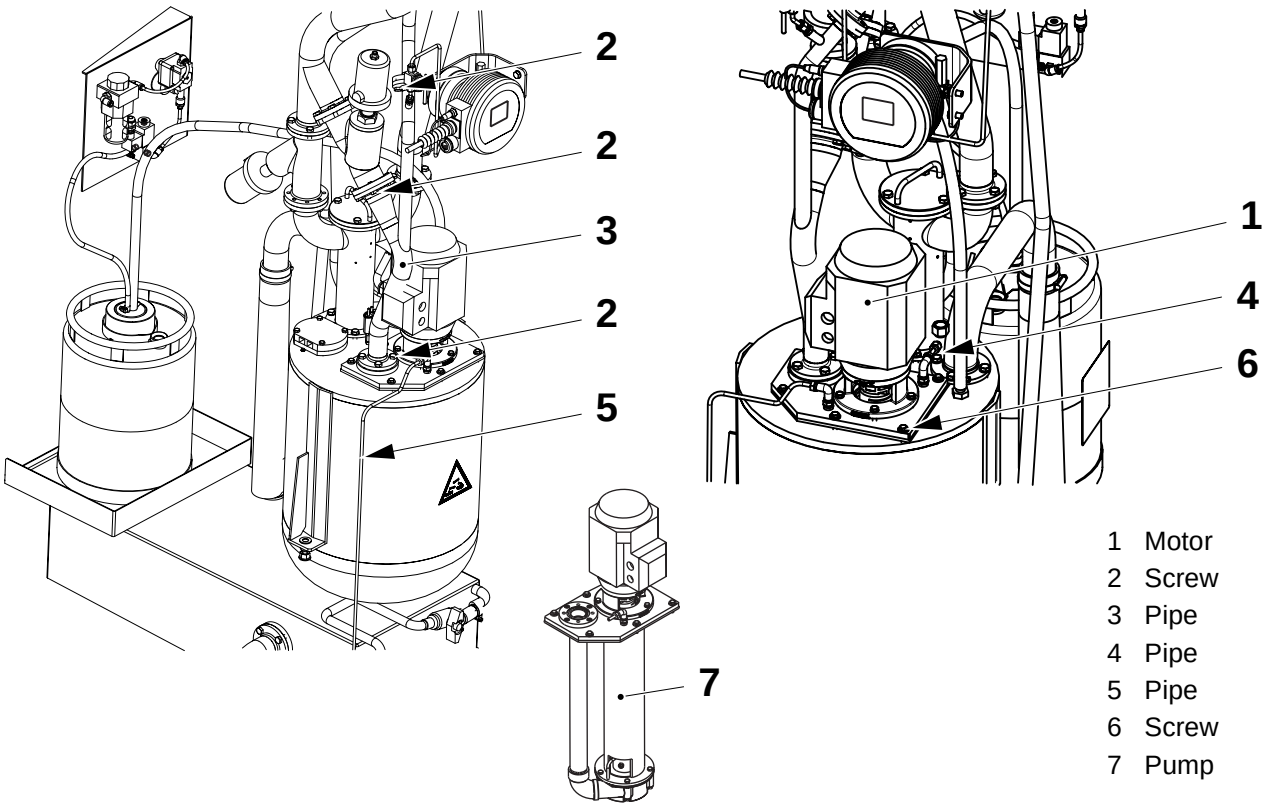

1 Motor
2 Screw
3 Pipe
4 Pipe
5 Pipe
6 Screw
7 Pump

(Cont'd)

(Cont'd)

WARNING
Hydrogen peroxide! Follow the Safety precautions.

Valid for Old Peroxide Pump

a) Make sure the hydrogen peroxide is not too concentrated and then drain the dilution tank.
b) Drain the hydrogen peroxide and then rinse carefully with deionized water.
c) Label and disconnect the electrical connections to the motor (1).
d) Remove the screws (2) at the flanges.
e) Remove the pipe (3).
f) Remove the screws (4).
g) Lift and change the motor (1) with the pump.
h) Assemble in the reverse order.

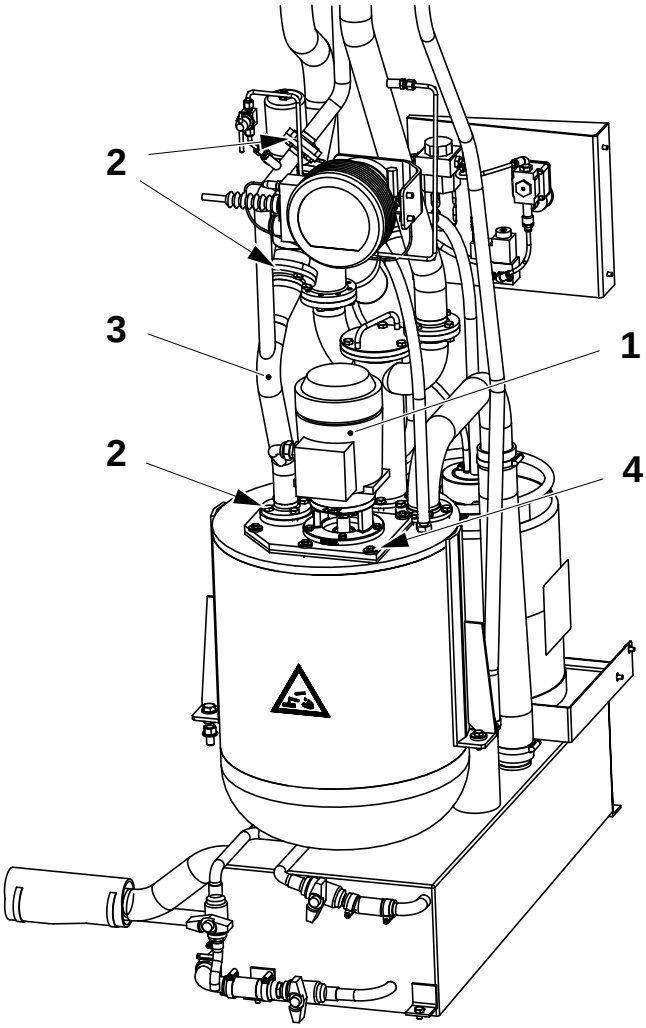

1 Motor
2 Screw
3 Pipe
4 Screw

2.5.4-2 Peroxide Pump - Overhaul Pump

SPC Reference	996388-0400

WARNING

Hydrogen peroxide! Follow the Safety precautions.

Valid for New Peroxide Pump

a) Remove the peroxide pump, see 2.5.4-1 Peroxide Pump - Change Pump.

b) Unscrew the screws (1) and remove the pipe (2).

c) Remove the O-rings (3), (4) and (5). Change the O-rings (3), (4) and (5) as required.

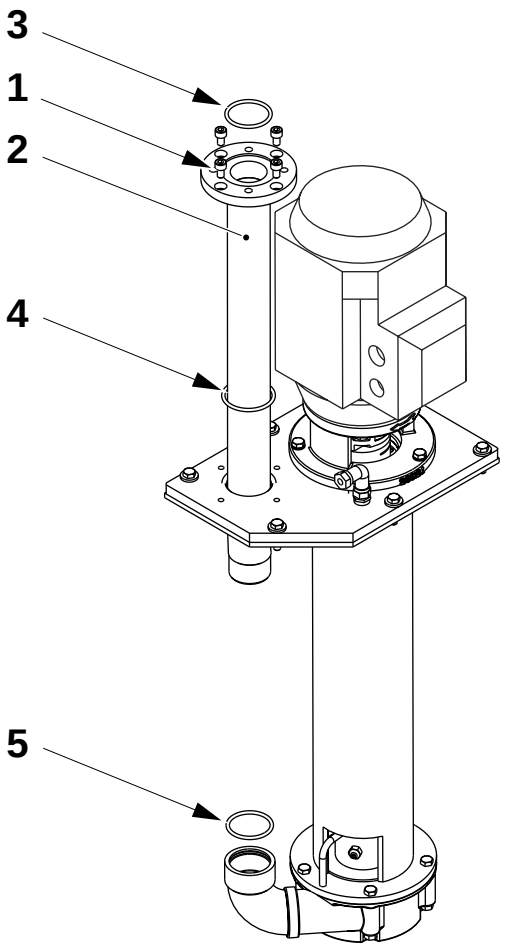

1 Screw
2 Pipe
3 O-ring
4 O-ring
5 O-ring

(Cont'd)

(Cont'd)

d) Mark the position of the pump housing (6) on the extension pipe (7).

e) Remove the screws (8), the nuts (9) and the pump housing (6).

f) Remove the split pin (10), the nut (11) and the washer (12).

g) Remove the impeller wheel (13) and the key (14). If required, change the impeller wheel (13).

h) Loosen the two screws (15) and remove the bushing (16) from the shaft (17).

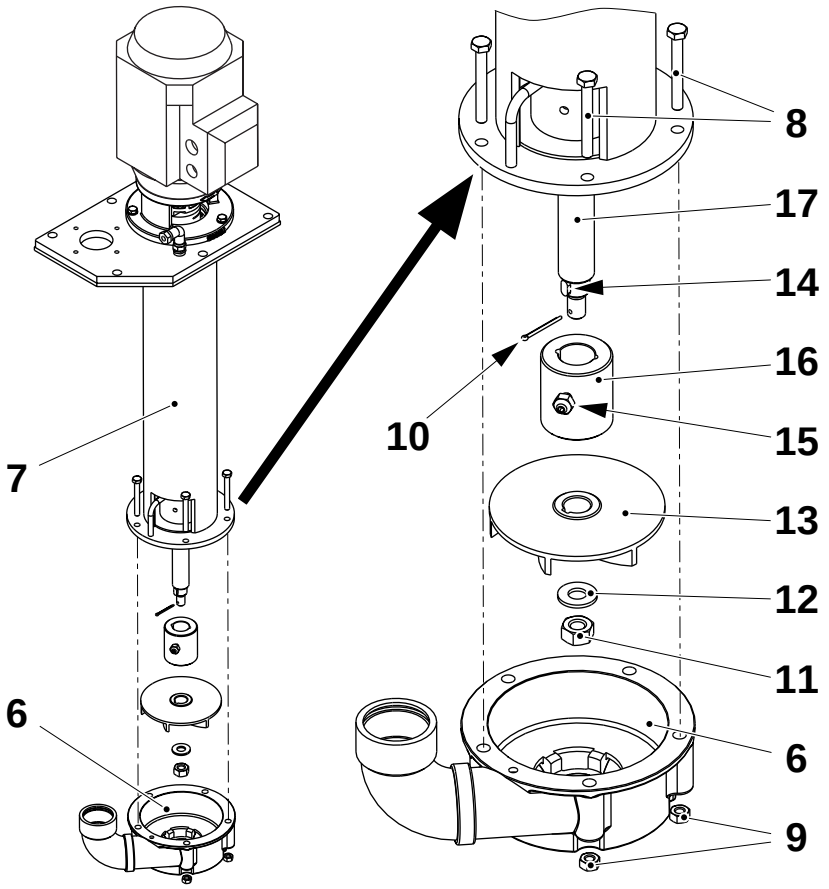

6 Pump housing
7 Extension pipe
8 Screw
9 Nut
10 Split pin
11 Nut
12 Washer
13 Impeller wheel
14 Key
15 Screw
16 Bushing
17 Shaft

(Cont'd)

(Cont'd)

i) Mark the position of the motor assembly (19) on the extension pipe (7).

j) Remove the screws (18) and the motor assembly (19).

k) Loosen the screw (20) and remove the coupling (21) from the motor shaft (22).

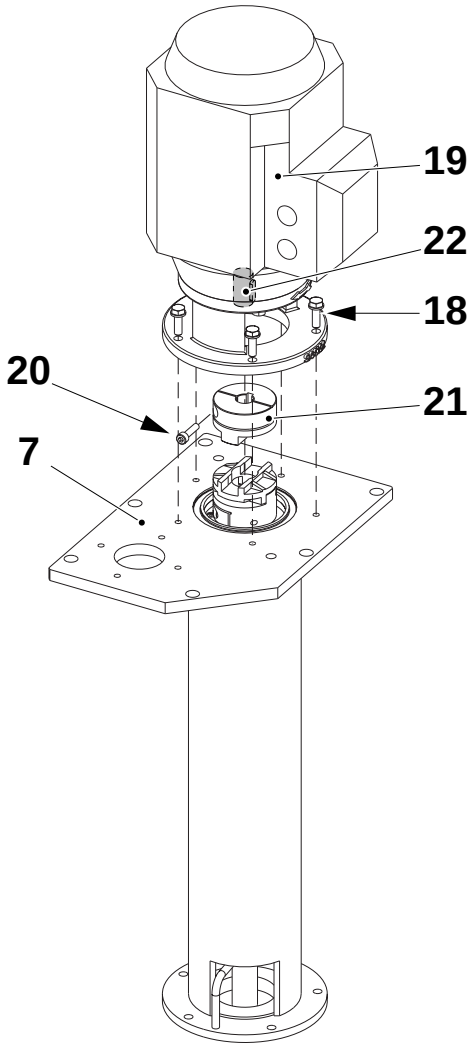

7 Extension pipe
18 Screw
19 Motor assembly
20 Screw
21 Coupling
22 Motor shaft

(Cont'd)

(Cont'd)

l) Remove the coupling disc (23).

m) Loosen the screw (24) and remove the coupling (25) from the shaft (17).

Note! When assembling the peroxide pump, check the play between the coupling disc (23) and the couplings (21) and (25) is less than **0.3 mm** with a feeler gauge.

n) Remove the screws (26) and the bushing (27) with the shaft (17).

o) Change the O-rings (28) and (29), the seal rings (30) and (31) and the bearing (32).

p) Check the retaining ring (33), the coupling disc (23) and the couplings (21) and (25). Change as required.

q) Set the impeller, see 2.5.4-3 Peroxide Pump - Set Impeller.

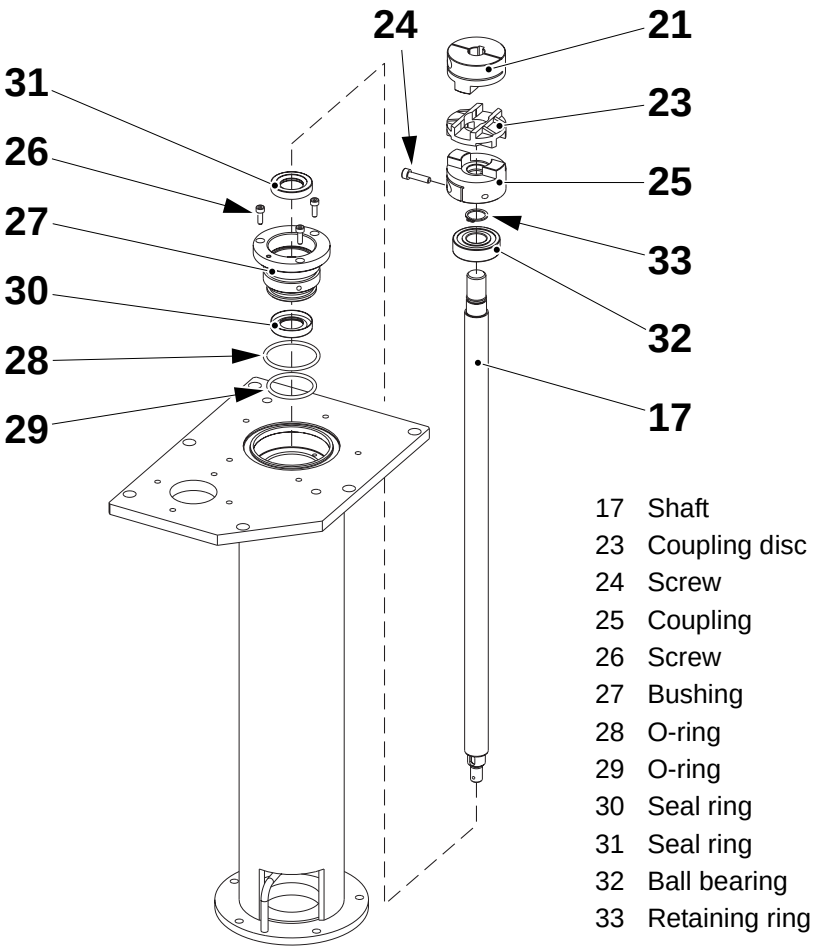

17 Shaft
23 Coupling disc
24 Screw
25 Coupling
26 Screw
27 Bushing
28 O-ring
29 O-ring
30 Seal ring
31 Seal ring
32 Ball bearing
33 Retaining ring

(Cont'd)

(Cont'd)

Valid for the Old Peroxide Pump

a) Remove the peroxide pump, see 2.5.4-1 Peroxide Pump - Change Pump.

b) Unscrew the screws (1) and remove the pipe (2).

c) Remove the O-rings (3) and (4) and change them as required.

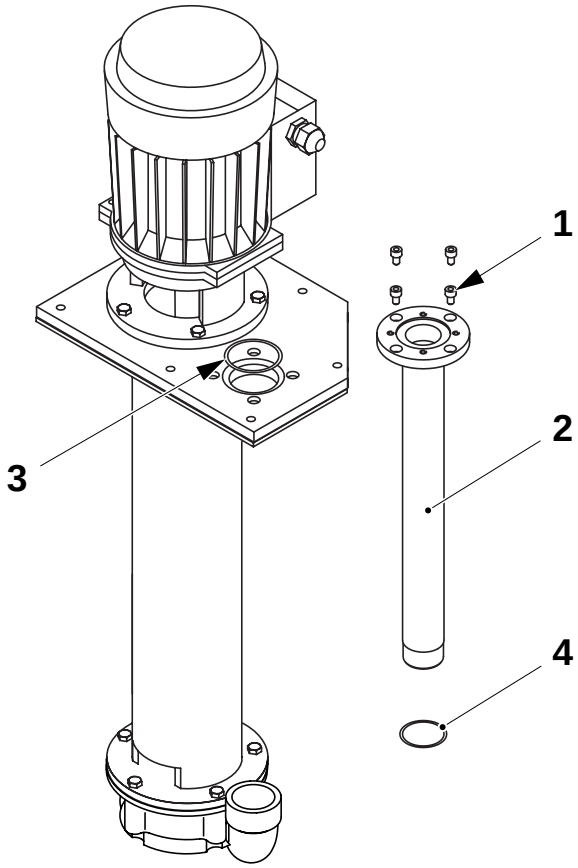

1 Screw
2 Pipe
3 O-ring
4 O-ring

(Cont'd)

(Cont'd)

Note! Mark the position of the pump housing (5) on the extension pipe (6).

d) Remove the screws (7) and the nuts (8). Remove the pump housing (5).

e) Change the bushing (9).

f) Remove the screw (10) and the washer (11).

g) Pull out the sleeve (12) and change it as required.

h) Remove the impeller (13) and change it as required.

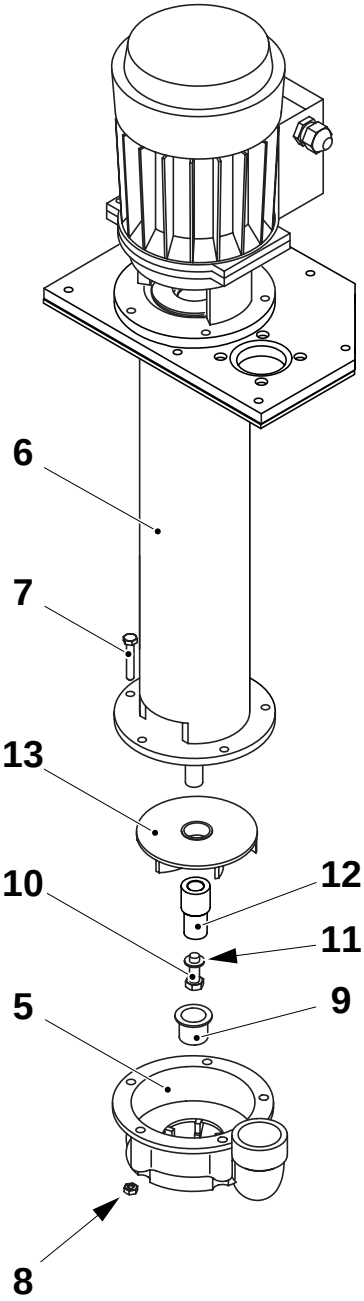

5 Pump housing
6 Extension pipe
7 Screws
8 Nuts
9 Bushing
10 Screw
11 Washer
12 Sleeve
13 Impeller

(Cont'd)

(Cont'd)

Note! Mark the position of the motor (15) on the extension pipe (6).

i) Remove the screws (14) and pull out the motor (15) with the shaft (16).
j) Unscrew the screws (17) and remove the two clamps (18).
k) Check the shaft (16) for wear or damage. Change as required.
l) Unscrew the screws (19), remove the washers (20) and the flange (21).
m) Pull out and change the seal ring (22).
n) Set the impeller as required, see 2.5.4-3 Peroxide Pump - Set Impeller.
o) Assemble in the reverse order.

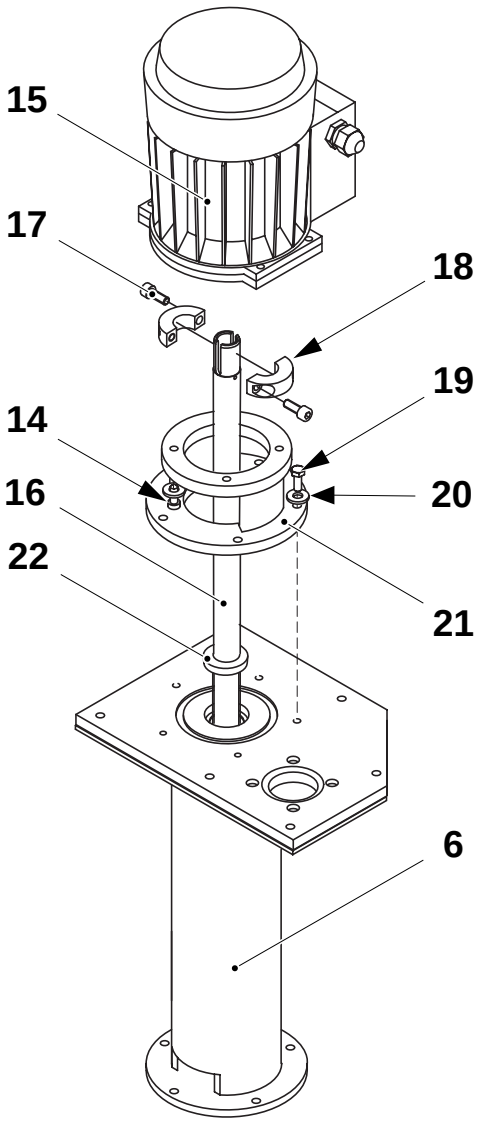

6 Extension pipe
14 Screw
15 Motor
16 Shaft
17 Screw
18 Clamp
19 Screw
20 Washer
21 Flange
22 Seal ring

2.5.4-3 Peroxide Pump - Set Impeller

SPC Reference	996388-0400

WARNING
Hydrogen peroxide! Follow the Safety precautions.

Valid for New Peroxide Pump

a) Remove the peroxide pump, see 2.5.4-1 Peroxide Pump - Change Pump.

b) Remove the screws (1) with the nuts and the pump housing (2).

c) Check the distance **A** between the impeller wheel (3) and the extension pipe (4) by means of a feeler gauge. If required, set the distance **A** between the impeller wheel (3) and the extension pipe (4) by means of:
   - loosen the screw (5) to the coupling (6)
   - lower the shaft (7)
   - set the distance **A** by means of a feeler gauge
   - tighten the screw (5).

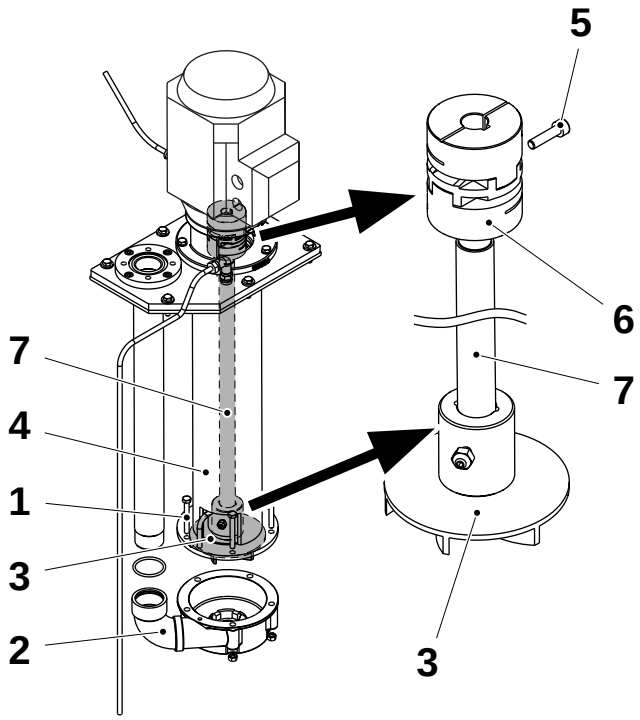

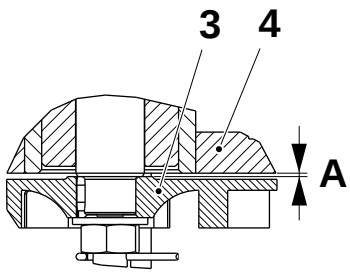

A = 1.0 ±0.2 mm

1 Screw
2 Pump housing
3 Impeller wheel
4 Extension pipe
5 Screw
6 Coupling
7 Shaft

(Cont'd)

(Cont'd)

d) Check the total play, distance **B**, between the coupling (6), the coupling disc (8) and the coupling (9) by means of a feeler gauge. If required, set the distance **B** between the coupling (6) and the coupling disc (8) by means of:
   - loosen the screw (10) to the coupling (9)
   - lower the coupling (9)
   - set the distance **B** by means of a feeler gauge
   - tighten the screw (10).

e) Fit back the pump housing (2) and tighten the screws (1).

f) Fit the peroxide pump, see 2.5.4-1 Peroxide Pump - Change Pump.

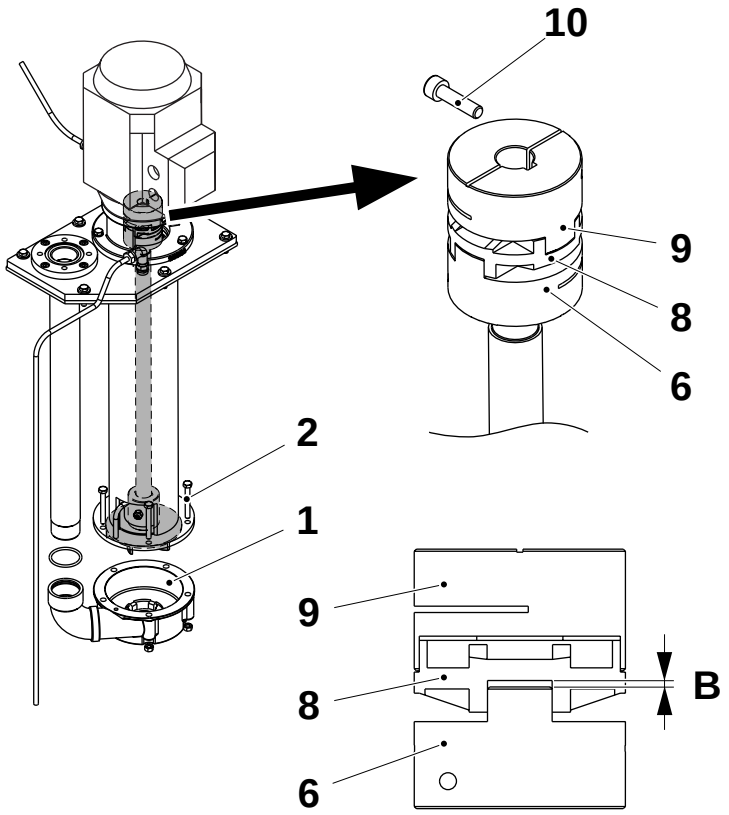

B = max. 0.3 mm

1 Screw
2 Pump housing
6 Coupling
8 Coupling disc
9 Coupling
10 Screw

(Cont'd)

(Cont'd)

WARNING

Hydrogen peroxide! Follow the Safety precautions.

Valid for Old Peroxide Pump

a) Remove the screws (1) with the nuts and the pump housing (2).

b) Loosen the clamp (3) by means of the screws (4) so the shaft (5) moves freely.

c) Lower the shaft (5).

d) Set the distance **A** between the impeller (6) and the extension pipe (7) by means of a feeler gauge.

e) Fit the clamp (3) on the shaft (5) and the motor shaft (9) in contact with the motor (8). Tighten the screws (4).

f) Fit back the pump housing (2) and tighten the screws (1).

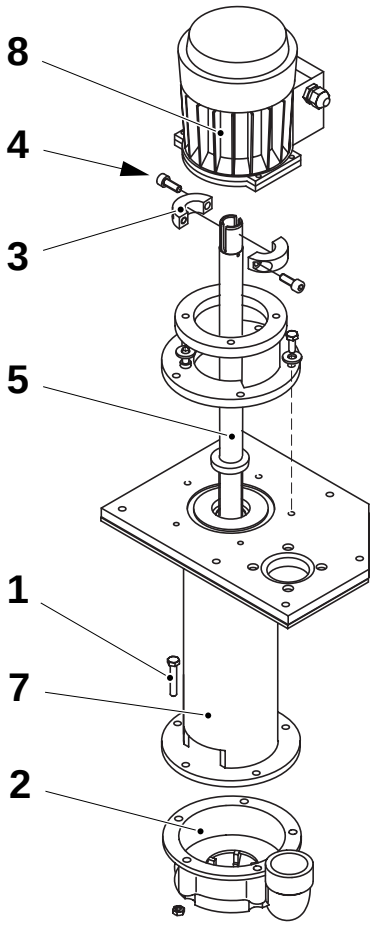

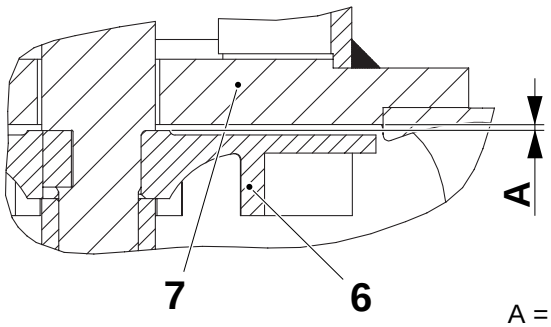

A = 1.0 ±0.2 mm

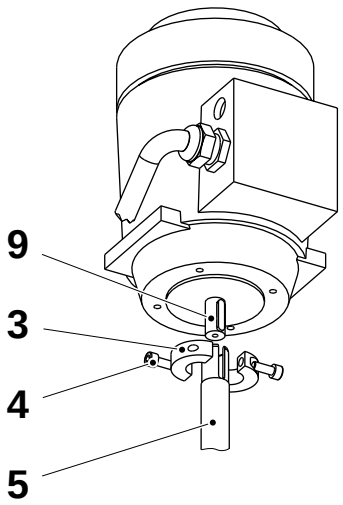

1 Screw
2 Pump housing
3 Clamp
4 Screw
5 Shaft
6 Impeller
7 Extension pipe
8 Motor
9 Shaft

2.5.5 Peroxide Tank

2.5.5-1 Peroxide Tank - Check

Tools - Brass Brush	
SPC Reference	1282894-0100

WARNING

Hydrogen peroxide! Follow the Safety precautions. Wear personal protective equipment.

Check that:

- the electrode (1) connections are not rusted.
  Clean the connections with a brass brush as required.
- there are no leaks at the connections (2) on the peroxide tank (2).

Change as required.

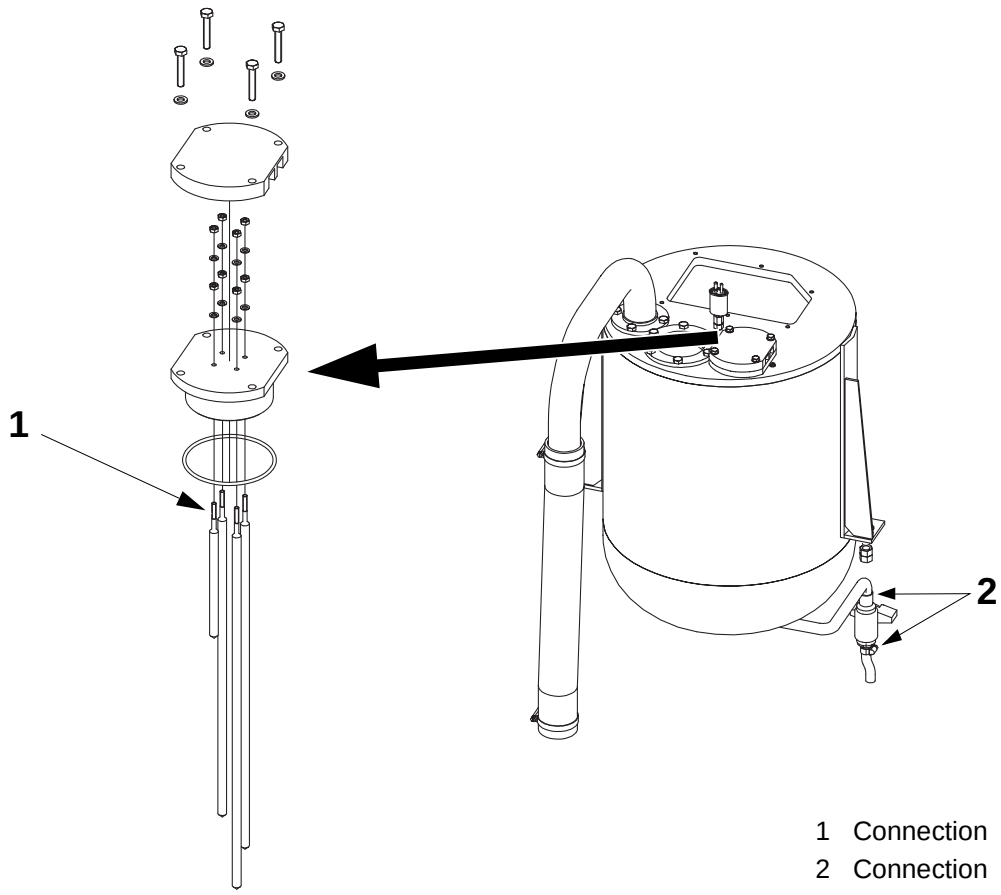

1 Connection
2 Connection

2.5.6 H_2O_2 Concentration Meter

2.5.6-1 H_2O_2 Concentration Meter - Check Desiccant Cartridge

SPC Reference	2519574-0100

WARNING
Hydrogen peroxide! Follow the Safety precautions. Wear personal protective equipment.

CAUTION
If the cartridge has to be changed, prepare the new cartridge before removing the old cartridge and perform the replacement as quickly as possible to avoid humidity entering the meter. Humidity may cause reading errors.

Check the colour of the cartridge (1). If the cartridge is coloured light cyan or white, change the cartridge as follows:

a) Unscrew the old cartridge using the plastic housing (2) of the new cartridge.

b) Fit the new cartridge.

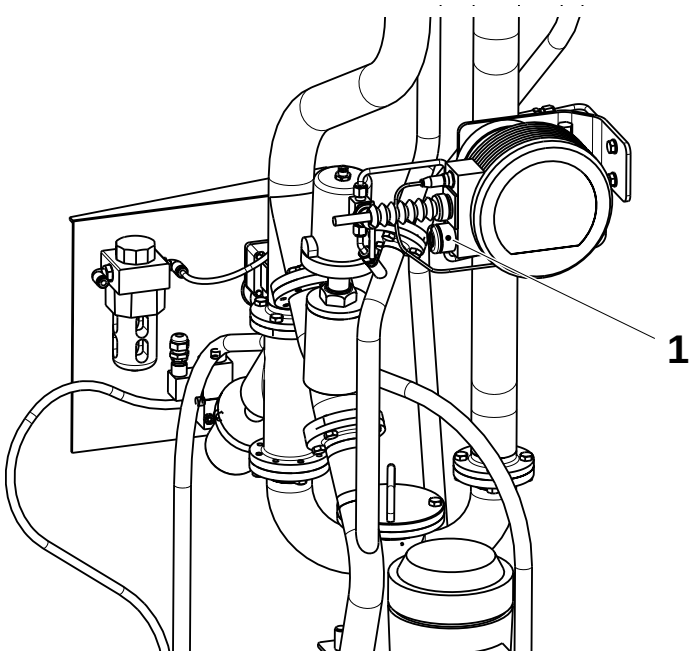

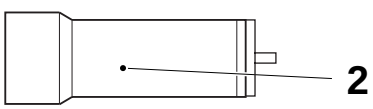

1 Cartridge
2 Housing

2.5.6-2 H_2O_2 Concentration Meter - Change O-ring

Machine Status	STEP ZERO
SPC Reference	2519574-0100

WARNING
Hydrogen peroxide! Follow the Safety precautions. Wear personal protective equipment.

a) Protect the pump (1) with a plastic bag as peroxide may still be present inside the deflector (2).

b) Close the tap (3).

c) Disconnect the power connection (4) and the PT100 connection (5).

CAUTION
Sealing the cables with the plugs prevents oxidization and possible damage by peroxide.

d) Fit the plugs (6) and (7).

e) Seal the ends of the power connection (4) and the PT100 connection (5) with the plugs (8) and (9).

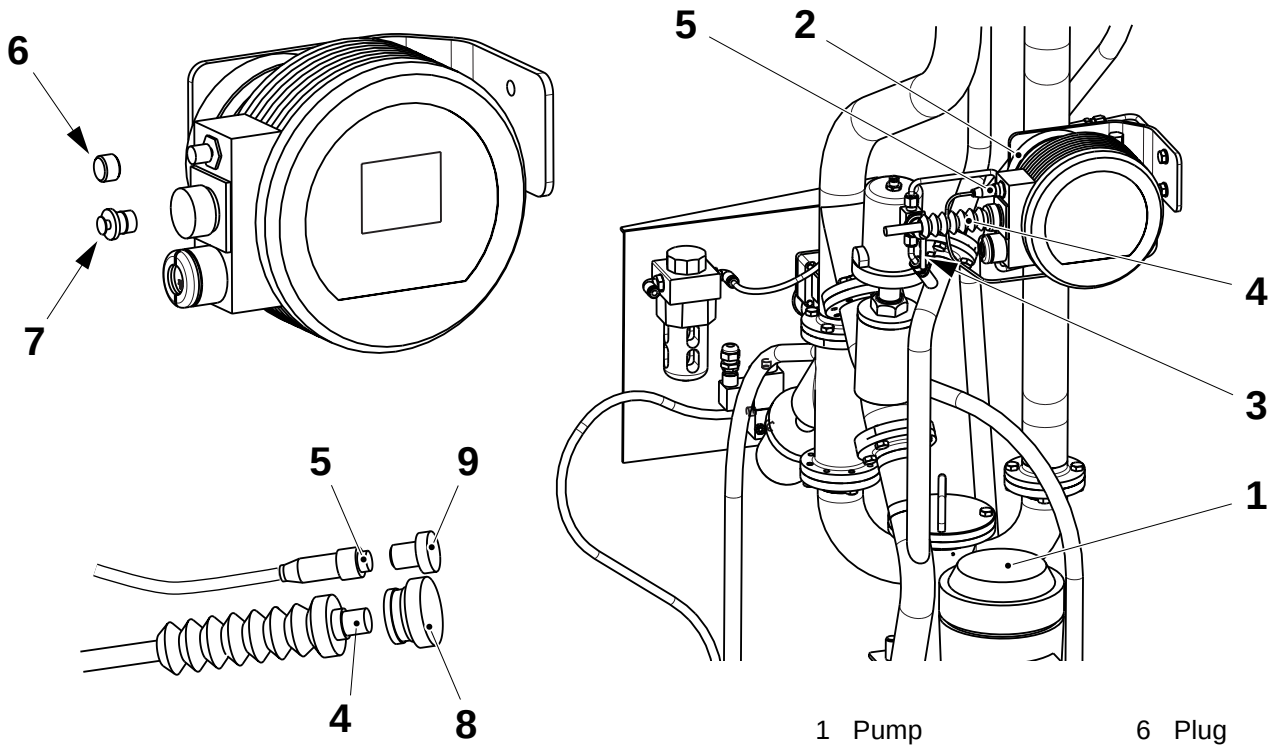

1 Pump
2 Deflector
3 Tap
4 Power connection
5 PT100 connection
6 Plug
7 Plug
8 Plug
9 Plug

(Cont'd)

(Cont'd)

f) Remove the clamp (10) and the peroxide concentration meter (11).

CAUTION
Avoid scratching the glass.

g) Dissolve 7 grs. of cleaning powder TP No. 90459-1098 in 3 ml. of distilled water. Pour the liquid on the prism (14) and wipe it off with clean paper to remove any peroxide residue.

h) Remove any rubber residue remaining from the O-ring (13) and clean the deflector (2) with paper soaked in distilled water.

Note! When assembling, connect the PT100 connection first and the power connection last.

i) Change the O-ring (12) and (13) and assemble in the reverse order.

j) Open the tap.

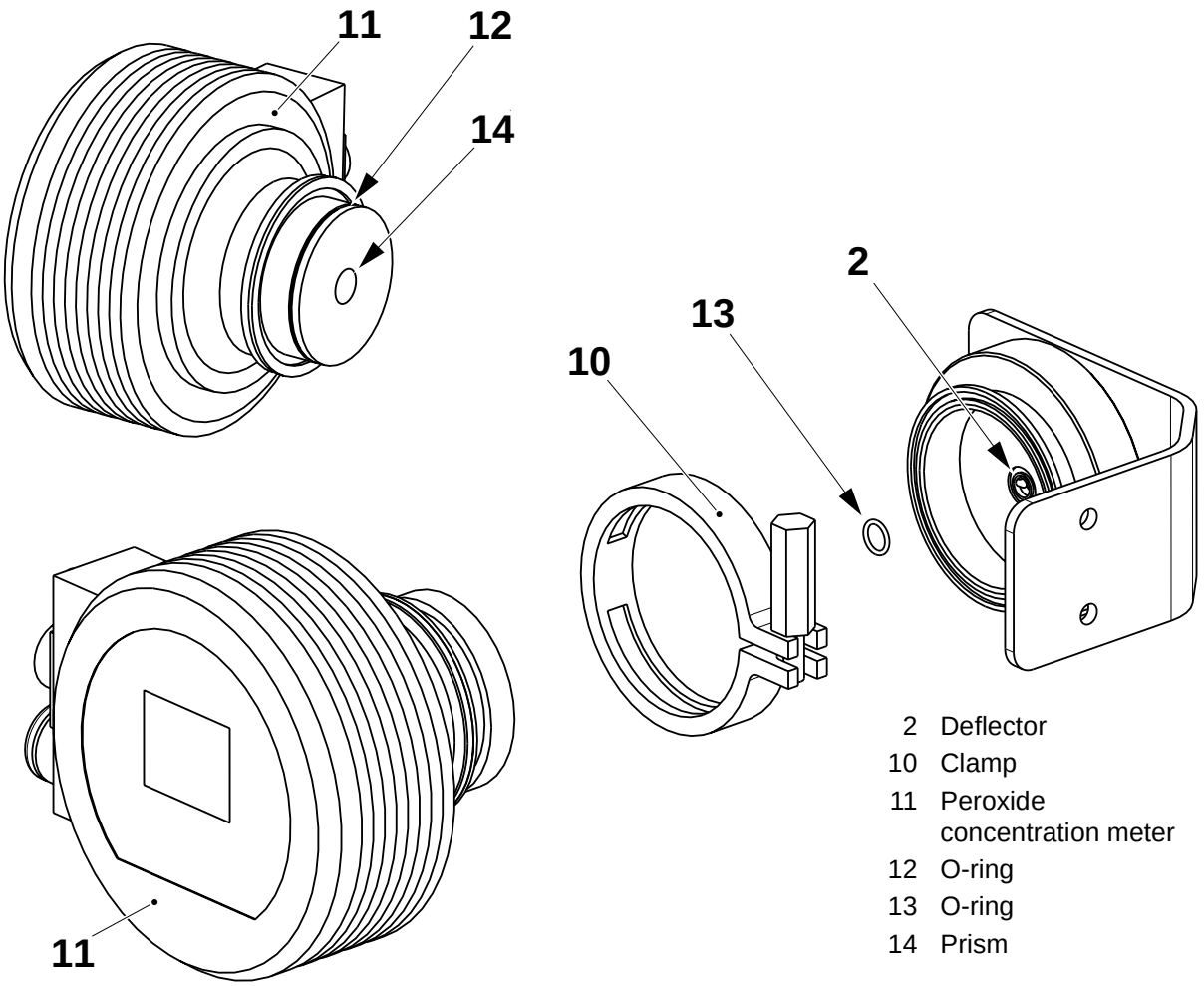

2 Deflector
10 Clamp
11 Peroxide concentration meter
12 O-ring
13 O-ring
14 Prism

2.5.6-3 H_2O_2 Concentration Meter - Remove

Machine Status	STEP ZERO
SPC Reference	2519574-0100

WARNING
Hydrogen peroxide! Follow the Safety precautions. Wear personal protective equipment.

a) Protect the pump (1) with a plastic bag as peroxide may still be present in the deflector (2).

b) Close the tap (3).

c) Disconnect the power connection (4) and the PT100 connection (5).

CAUTION
Sealing the cables with the plugs prevents oxidization and damage by peroxide.

d) Fit the plugs (6) and (7).

e) Seal the cables (4) and (5) with the plugs (8) and (9).

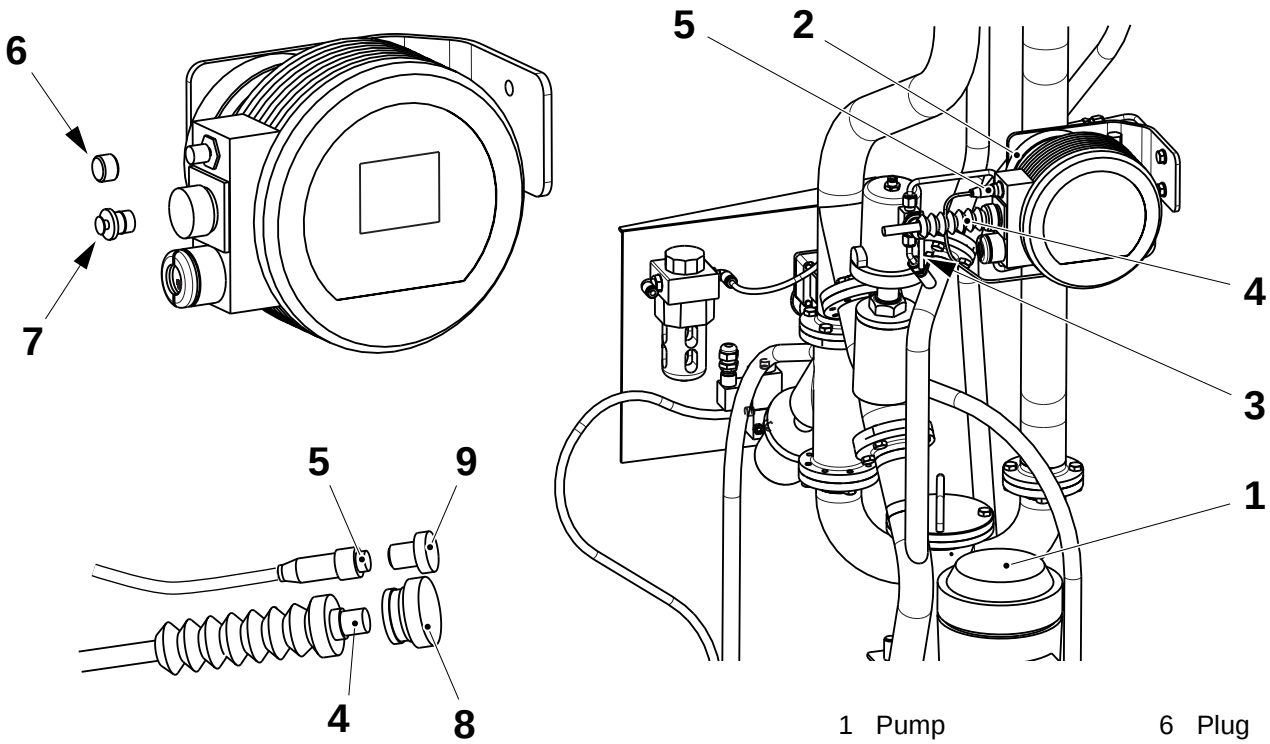

1 Pump
2 Deflector
3 Tap
4 Power connection
5 PT100 connection
6 Plug
7 Plug
8 Plug
9 Plug

(Cont'd)

(Cont'd)

f) Remove the clamp (10) and the peroxide concentration meter (11).

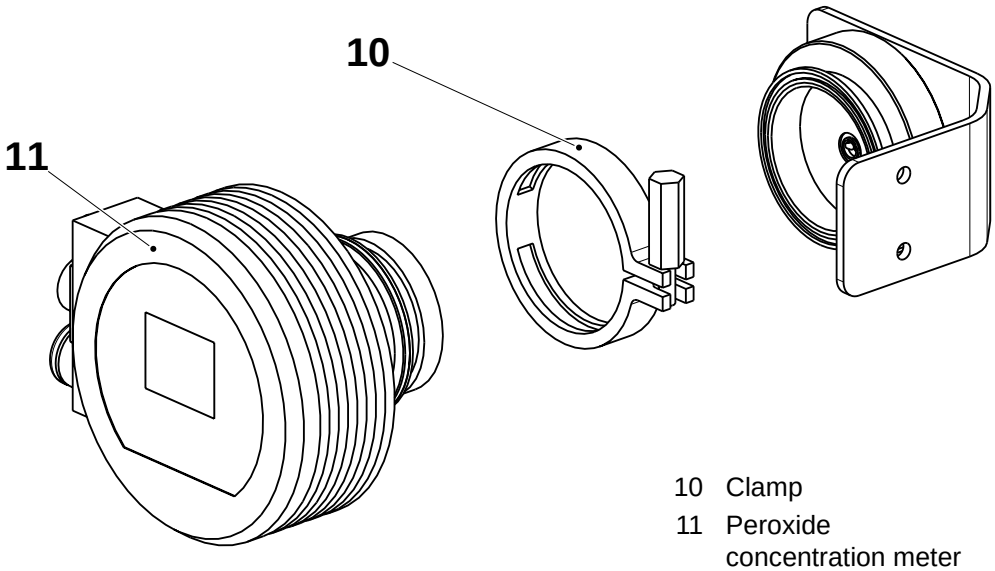

10 Clamp
11 Peroxide concentration meter

WARNING

Risk of hydrogen peroxide leakage! Make sure the O-ring (14) is in place and in good condition before assembling the plug (13).

g) Fit the spacer (12) and plug (13) onto the deflector (2) and lock in place with the clamp (10).

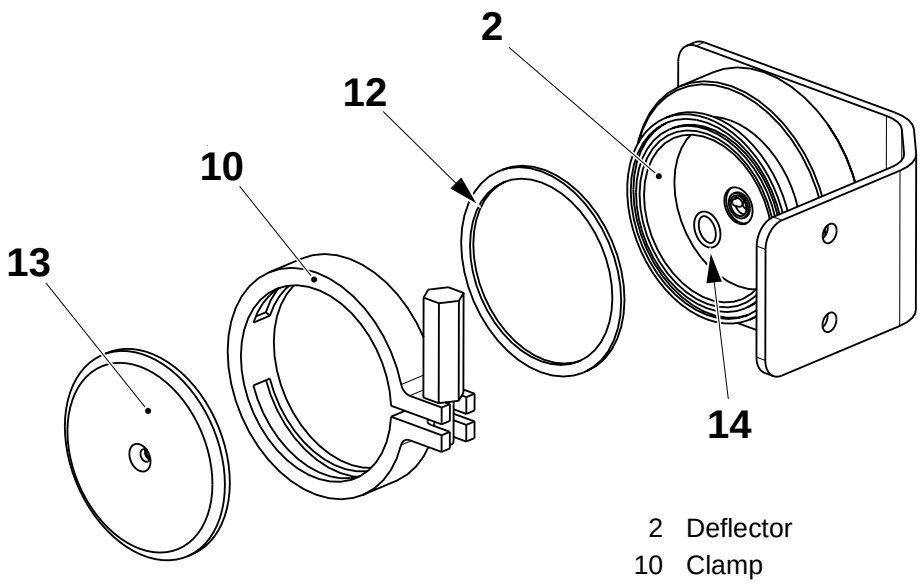

2 Deflector
10 Clamp
12 Spacer
13 Plug
14 O-ring

(Cont'd)

2.5.6-4 H_2O_2 Concentration Meter - Check Pt100 Sensor

Machine Status	PRODUCTION
SPC Reference	2519574-0100

WARNING

Hydrogen peroxide! Follow the Safety precautions. Wear personal protective equipment.

Check the peroxide temperature, see the TPOP.

Check the peroxide temperature in the tank, see the TPOP. If the temperature values differs more than 3 to 5 °C check the contacts of PT100 connection (1) for oxidation. If required, proceed as follow:

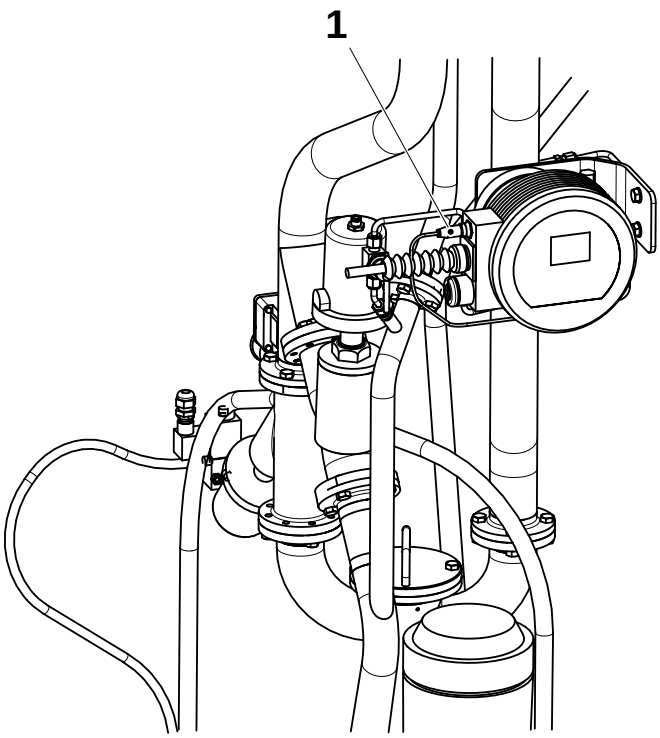

1 PT100 Connection

(Cont'd)

(Cont'd)

a) Step down the machine and close the tap (2).

b) Disconnect the power connection (3).

c) Protect the pump (4) with a plastic bag, as peroxide may still be present in the deflector (5).

d) Disconnect the connector PT 100 (1) from the peroxide concentration meter (6) and unscrew the sensor (7) from the deflector (5).

CAUTION
Apply teflon tape to the threads before assembling the new sensor.

e) Change the PT100 sensor and assemble in the reverse order.

f) Connect the power connection (3).

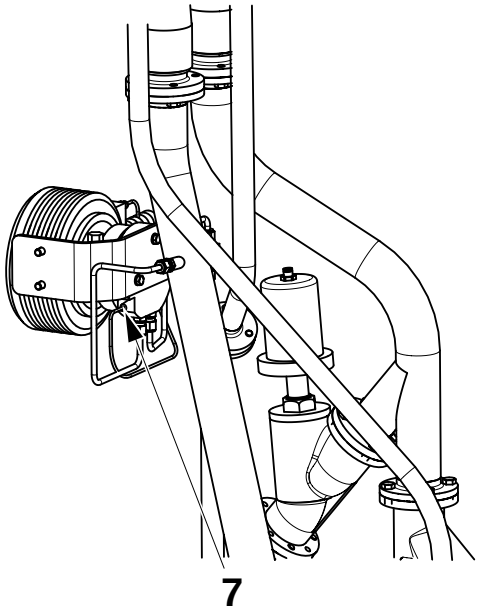

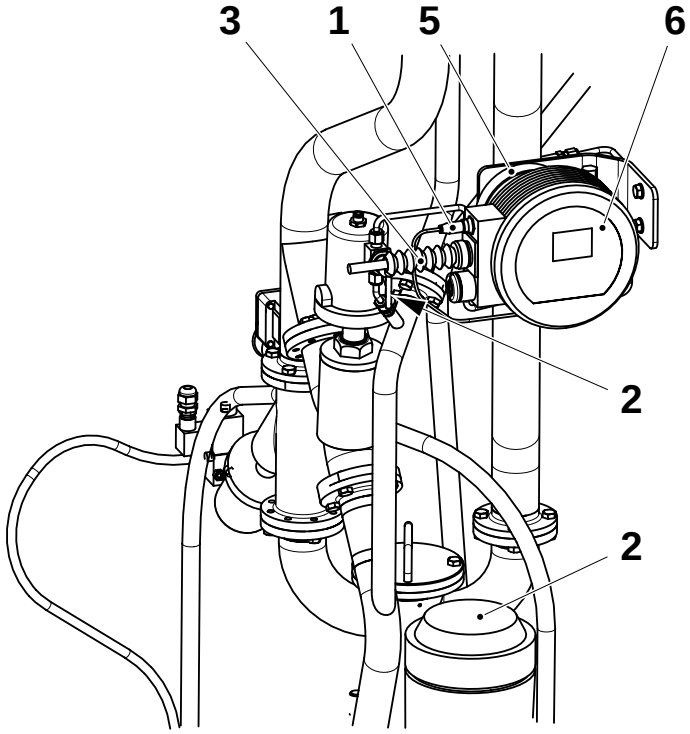

1 PT100 connection
2 Tap
3 Power connection
4 Pump
5 Deflector
6 Peroxide concentration meter

2.5.6-5 H_2O_2 Concentration Meter - Check Prism and Led

Machine Status	PRODUCTION
SPC Reference	2519574-0100

WARNING

Hydrogen peroxide! Follow the Safety precautions. Wear personal protective equipment.

a) Press and hold the ENTER button (1) to display the menu.

b) Read the numeric value in the DERIV. VALUE (2).

c) If the value is lower than 55000, clean the prism and change the O-ring, see 2.5.6-2 H_2O_2 Concentration Meter - Change O-ring.

d) Read the numeric value in the LED PERFORM.% field (3).

Note! If the value is lower than 50% the filling machine will stop.

e) If the value is between 50% and 60% there will be a TPOP alarm. Clean the prism, see 2.5.6-2 H_2O_2 Concentration Meter - Change O-ring.

f) If after cleaning the alarm is still present, remove the instrument and send it to the manufacturer, see 2.5.6-3 H_2O_2 Concentration Meter - Remove.

g) To exit from the menu, press the ENTER button (1) twice.

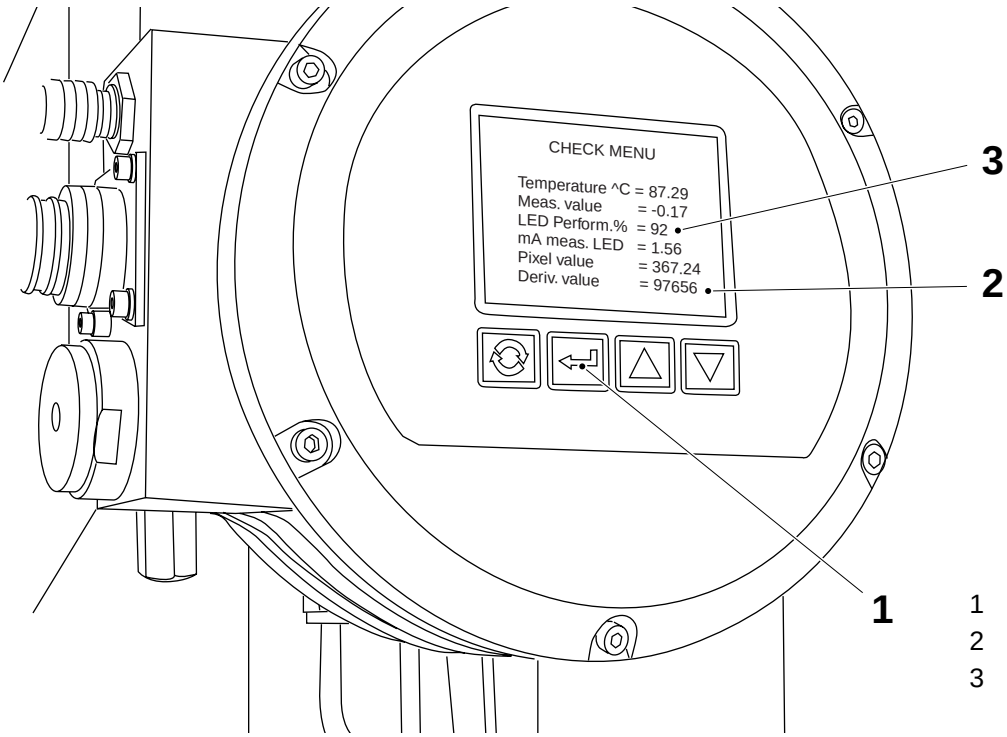

1 Enter button
2 Deriv. value
3 LED perform.%

2.6 External Cleaning System

SPC reference	577122-0300

2.6-1 External Cleaning System - Check Nozzles

Machine Status	EXTERNAL CLEANING
SPC Reference	577122-0300

Check that all the nozzles, see arrows, rotate easily.

Check that all the nozzles are not clogged and are free from any cleaning solution deposit.
If required, remove the nozzles and clean or delime them.

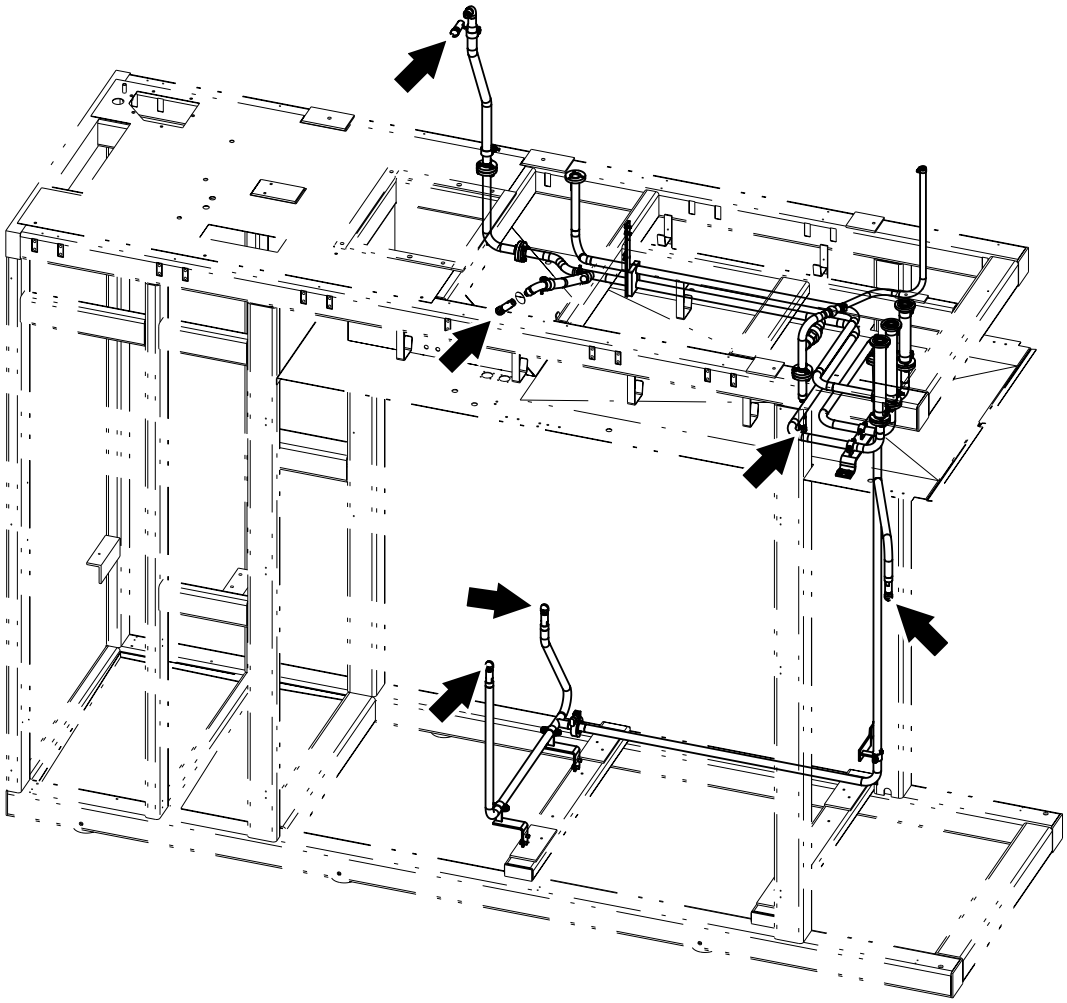

2.7 Waste Conveyor

SPC Reference	577114-0300

2.7-1 Waste conveyor - check

Machine Status	Mains Power ON Air ON
SPC Reference	577114-0300

Check:

- the hatch (1) moves freely in both directions;
- the guard plate (2) for wear on the teeth edge;
- the conveyor belt (3) for damage. Change as required, see 2.7-3 Waste Conveyor - Change Conveyor Belt.

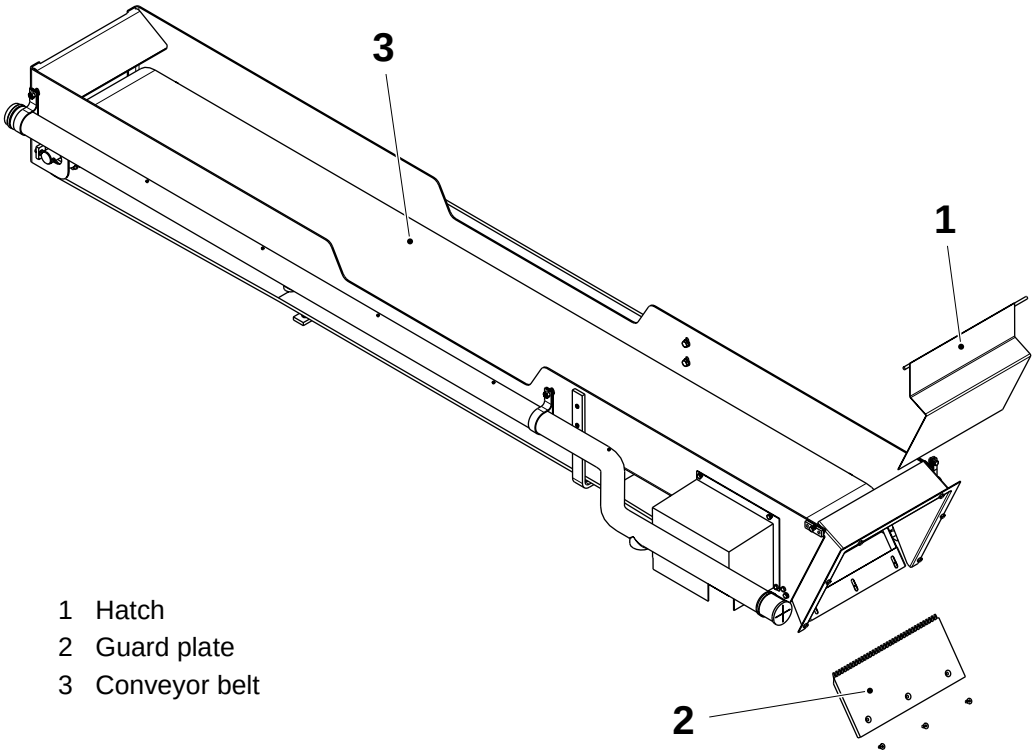

1 Hatch
2 Guard plate
3 Conveyor belt

2.7-2 Waste Conveyor - Change Coupling

SPC Reference	577114-0300

a) Remove the screws (1), the motor cover (2).

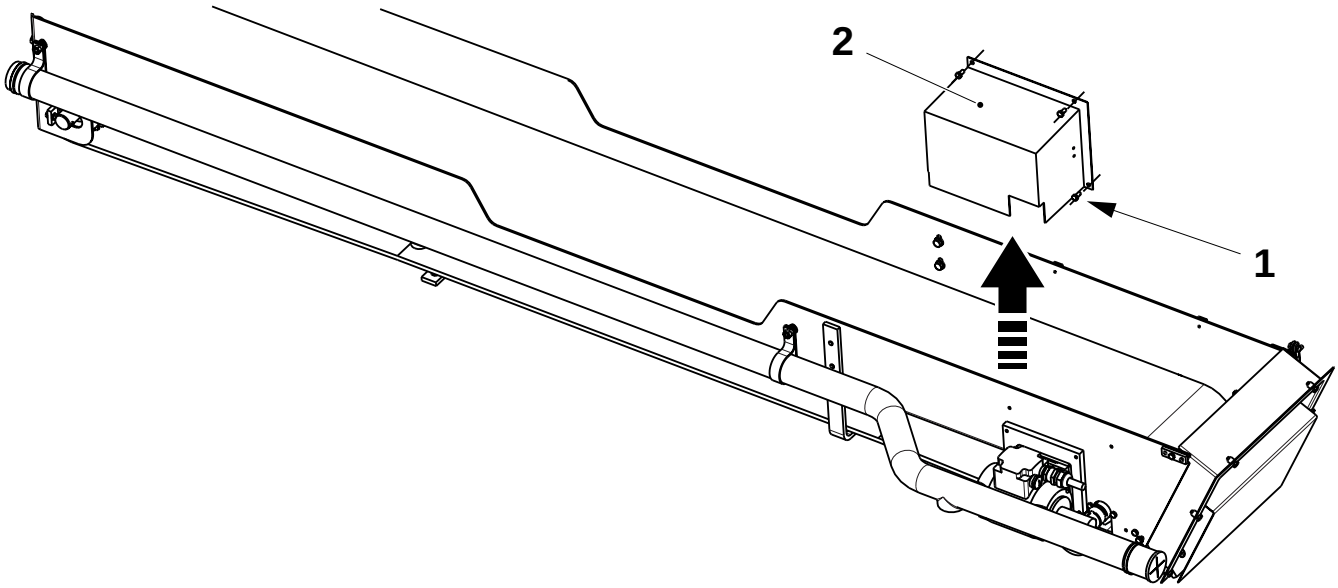

1 Screw
2 Motor cover

b) Remove the screws (3) and the motor (4).

c) Loosen the screw (5) in the joint coupling (6).

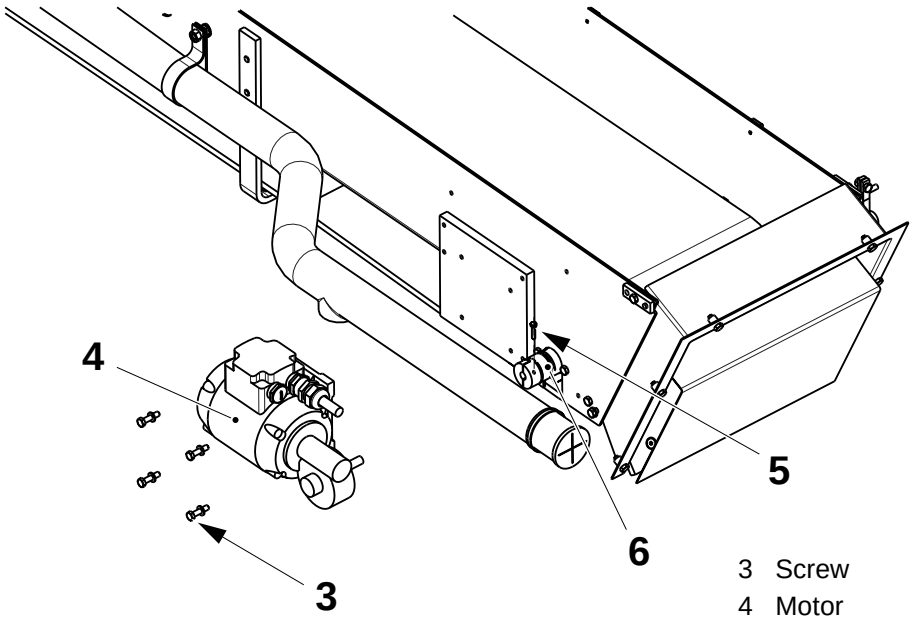

3 Screw
4 Motor
5 Screw
6 Joint coupling

(Cont'd)

(Cont'd)

d) Remove the screw (7) and the joint coupling (6).

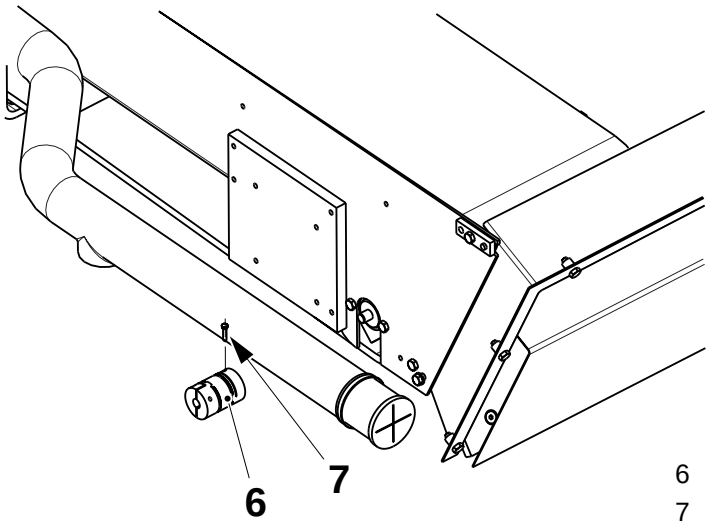

6 Joint coupling
7 Screw

e) Assemble in the reverse order, when doing so, use a feeler gauge to set the distance **A** between the plastic part of the joint coupling (1) and the hub, then tighten the screw (8).

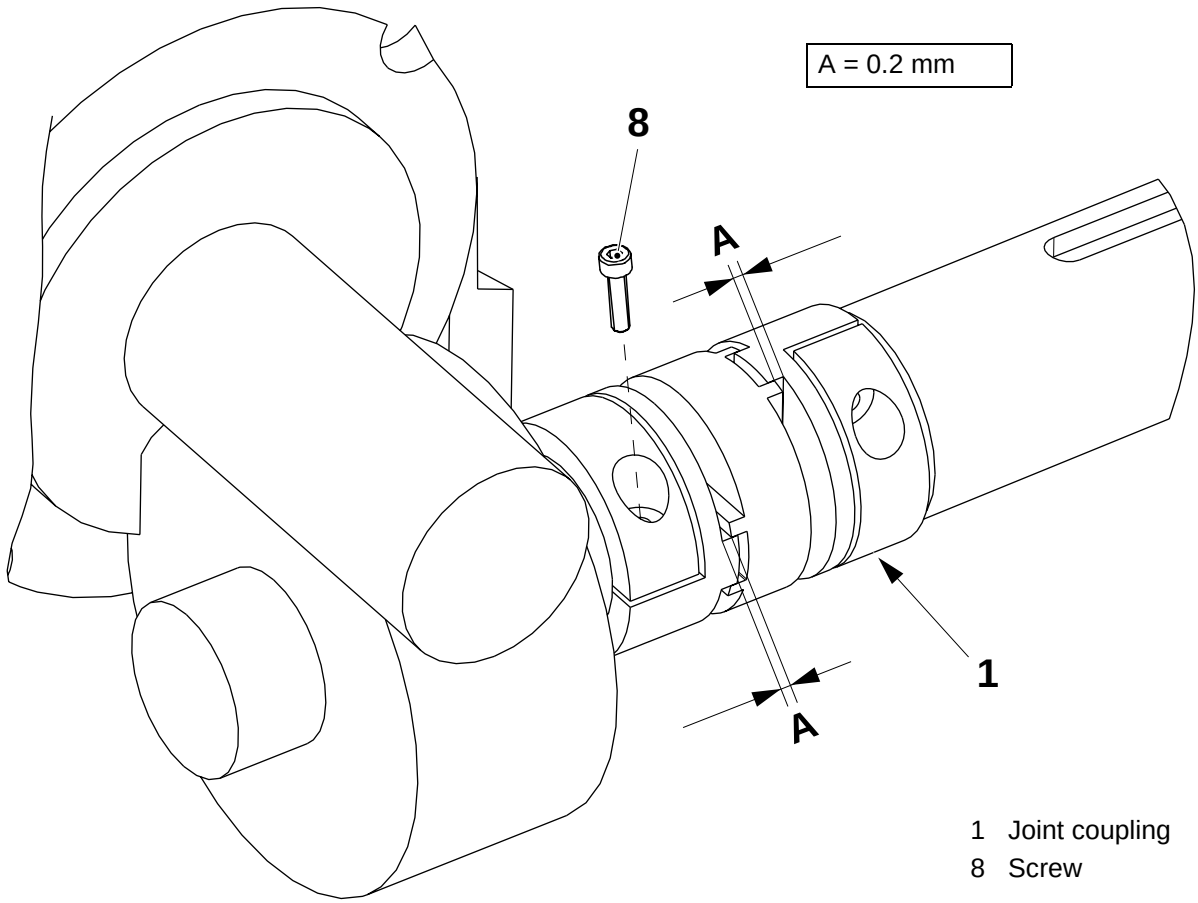

1 Joint coupling
8 Screw

2.7-3 Waste Conveyor - Change Conveyor Belt

Tools - 4 mm Drift	
SPC Reference	577114-0300

a) Loosen the tensioning screws (1) on each side.

b) Release the tension of the conveyor belt (2).

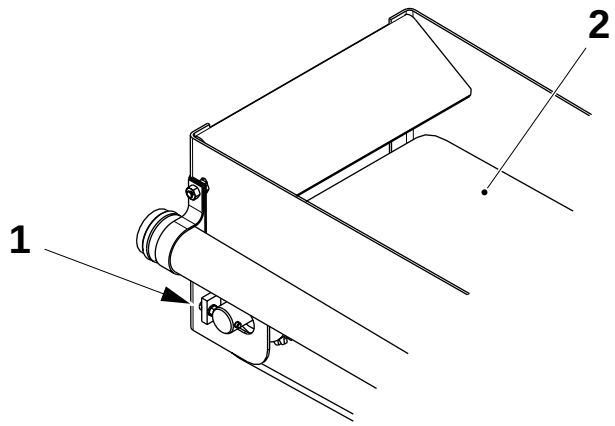

1 Screw
2 Conveyor belt

c) Using a 4 mm drift, push out one of the plastic connecting pins (3) in the conveyor belt.

d) Remove the conveyor belt and change it as required.

e) Assemble in the reverse order.

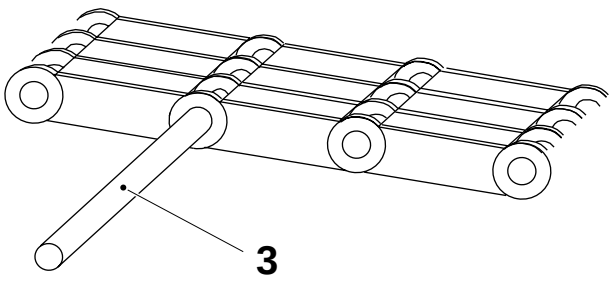

3 Pin

2.8 Pump unit

SPC Reference	2598203-0100

2.8-1 Pump unit - Change Pump

SPC Reference	2598203-0100

a) At both sides of the connection box (1) remove the screws securing the brackets (2) and (3) to the frame.

b) Lift out the connection box and suspend in a safe place.

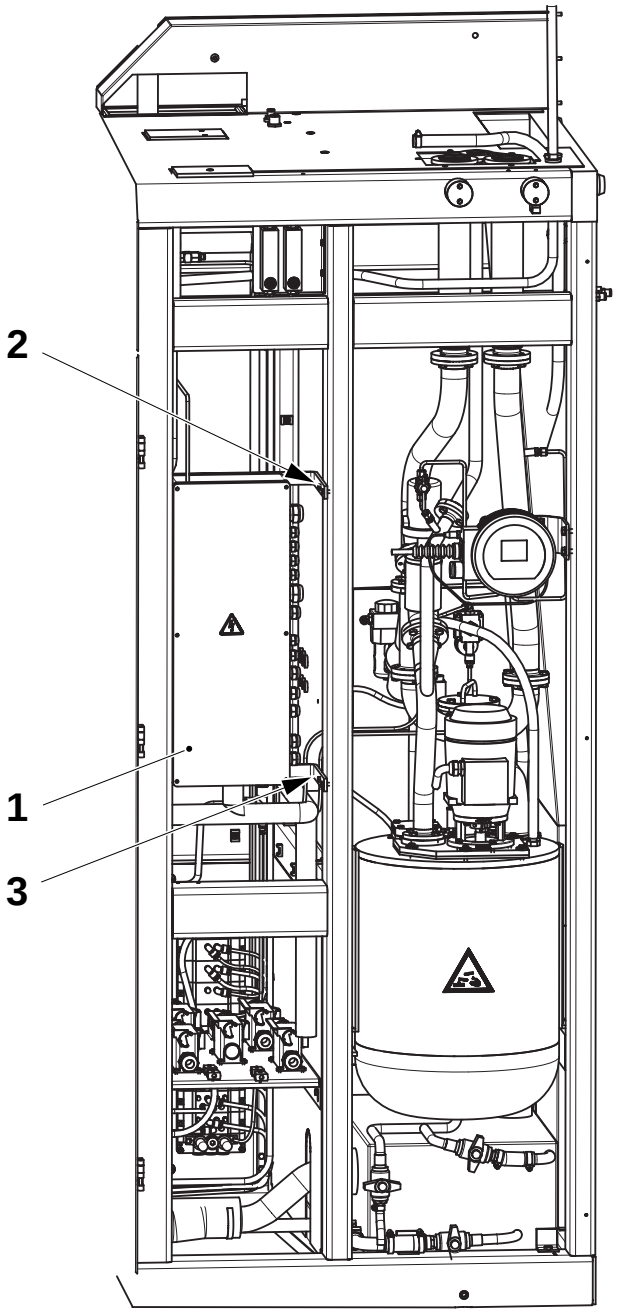

1 Connection box
2 Bracket
3 Bracket

(Cont'd)

(Cont'd)

c) Disconnect the four grease pipes (4) for the final folder from the pump assembly.

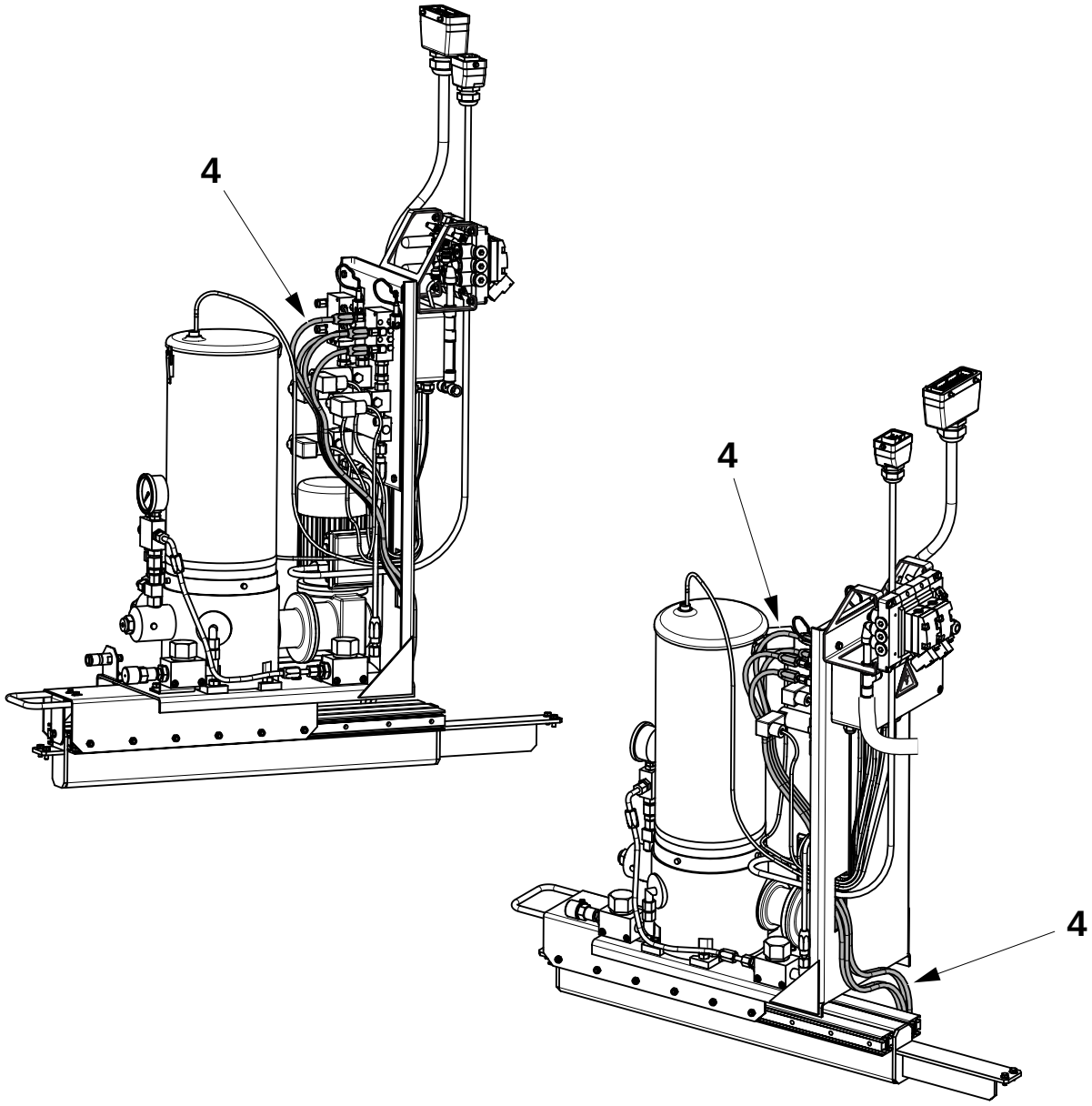

4 Grease pipe

(Cont'd)

(Cont'd)

d) Disconnect the four grease pipes (4) from the connectors (5).

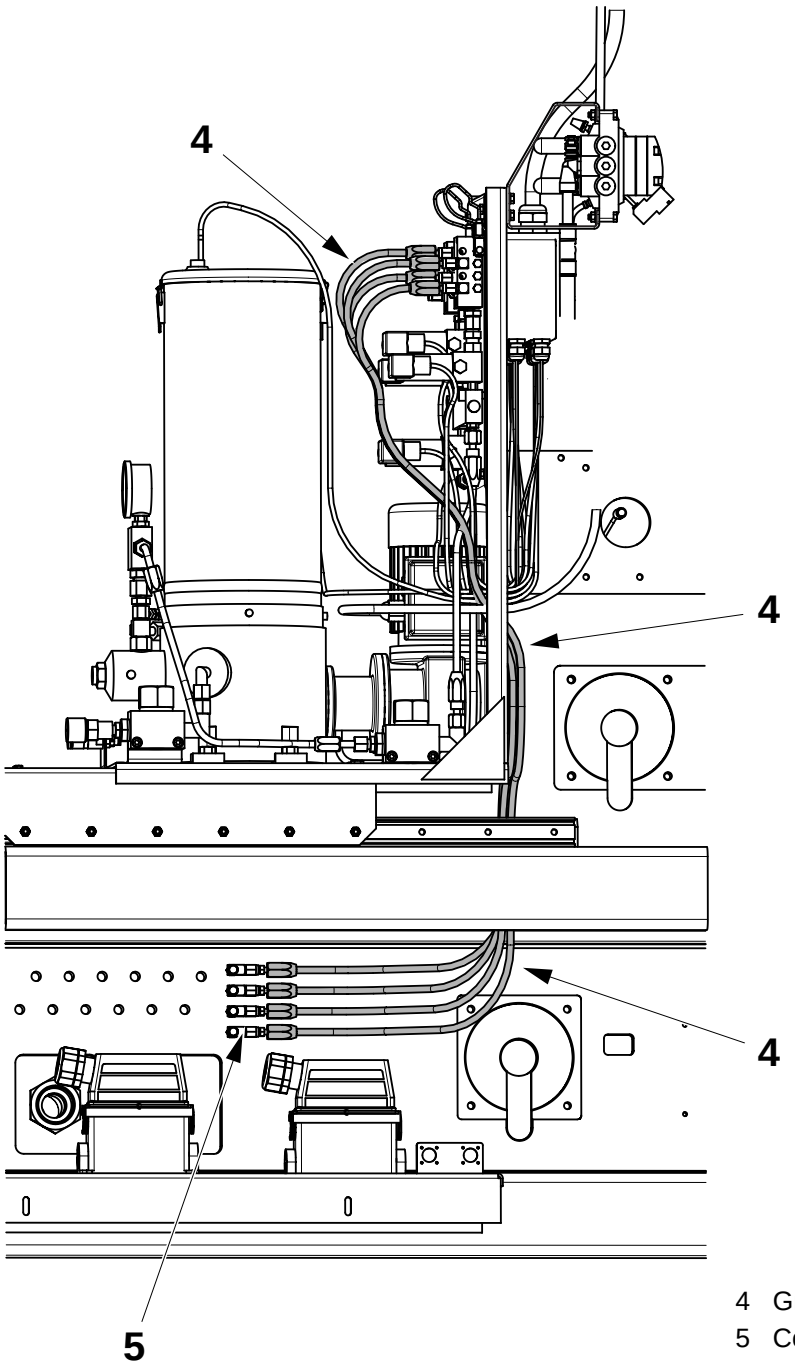

4 Grease pipe
5 Connector

(Cont'd)

(Cont'd)

e) Disconnect the grease pipes (6) and (7) from the pump assembly.

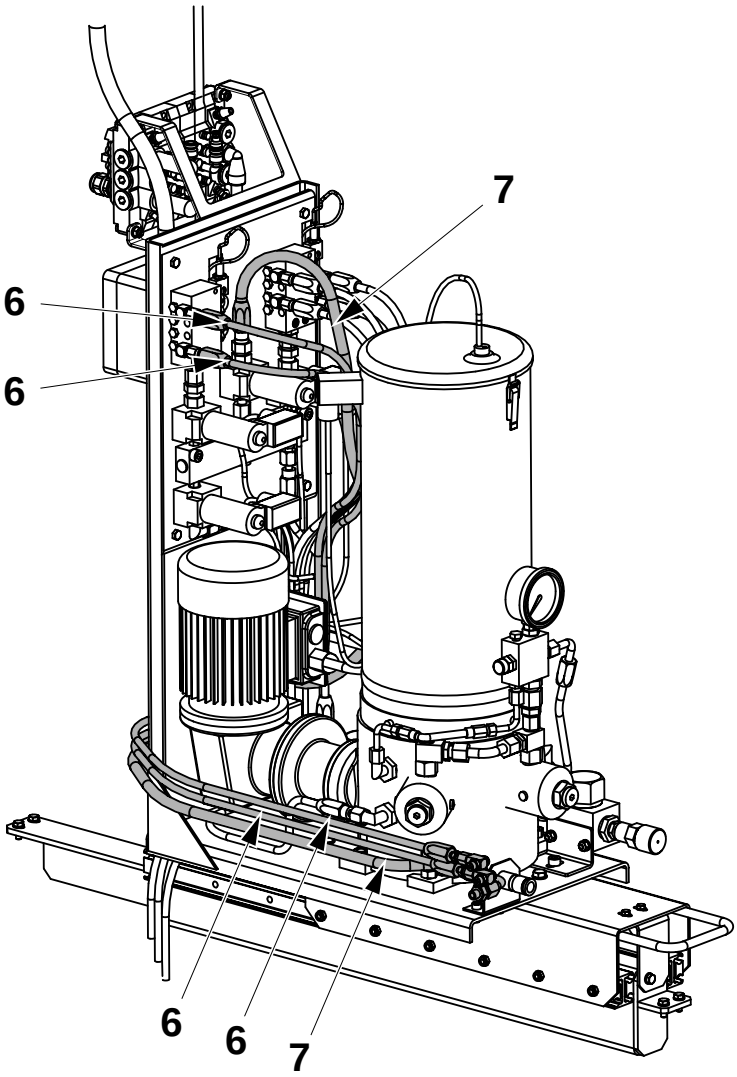

6 Grease pipe
7 Grease pipe

(Cont'd)

(Cont'd)

f) Disconnect the grease pipes (6) and (7) from the connectors on the plate (8).

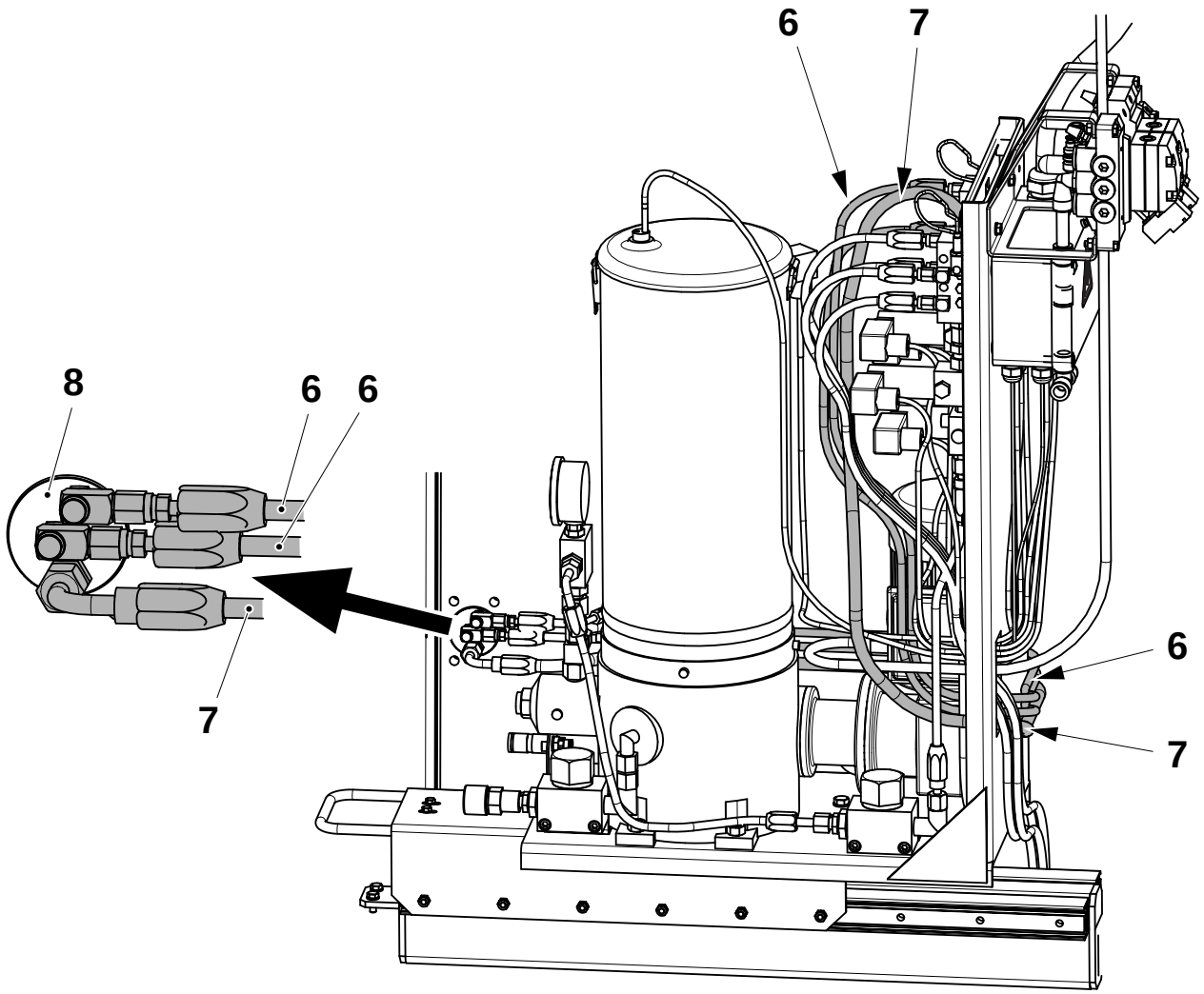

6 Grease pipe
7 Grease pipe
8 Plate

(Cont'd)

(Cont'd)

g) Disconnect the air pipes (9) and (10) from the connectors (11) and (12).

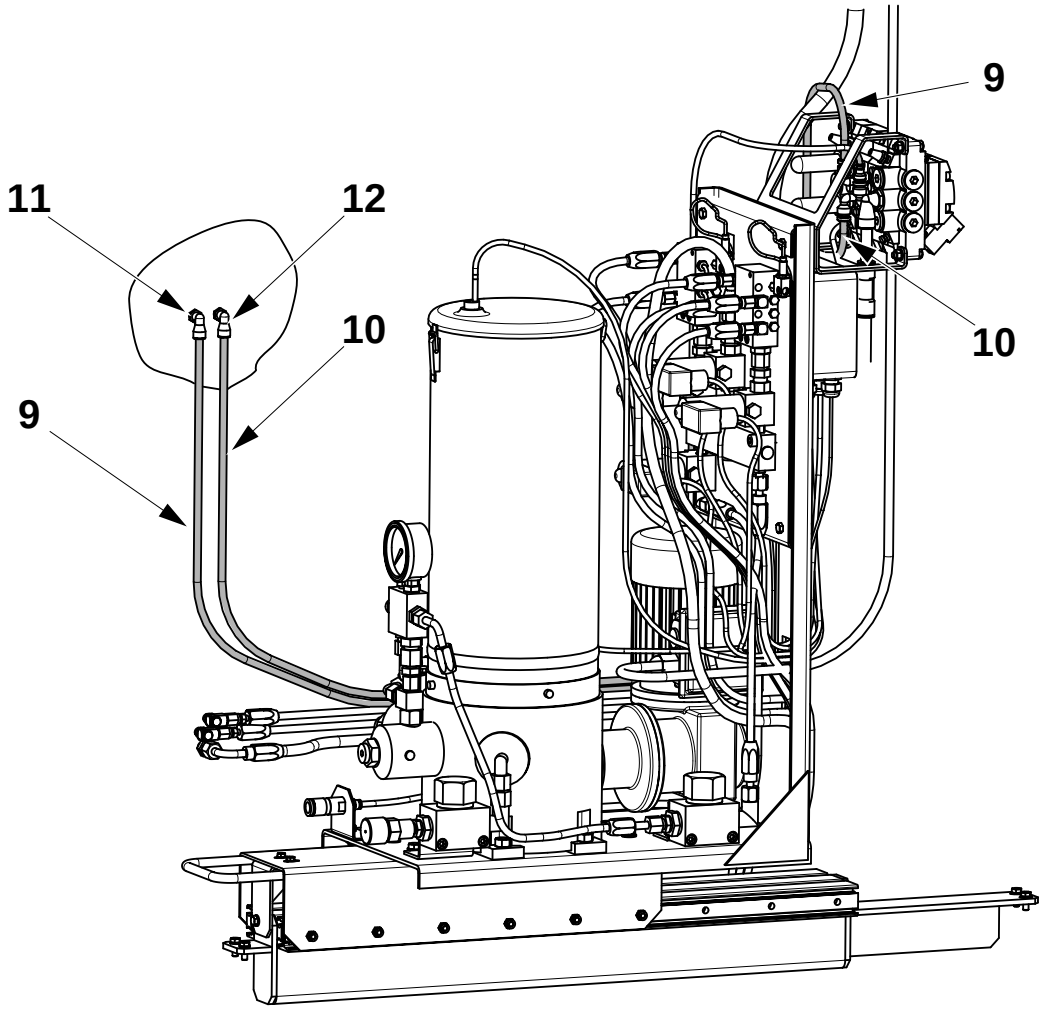

9 Air pipe
10 Air pipe
11 Connector
12 Connector

(Cont'd)

(Cont'd)

h) Disconnect the two hoses (13) and (14) from the T-piece (15).

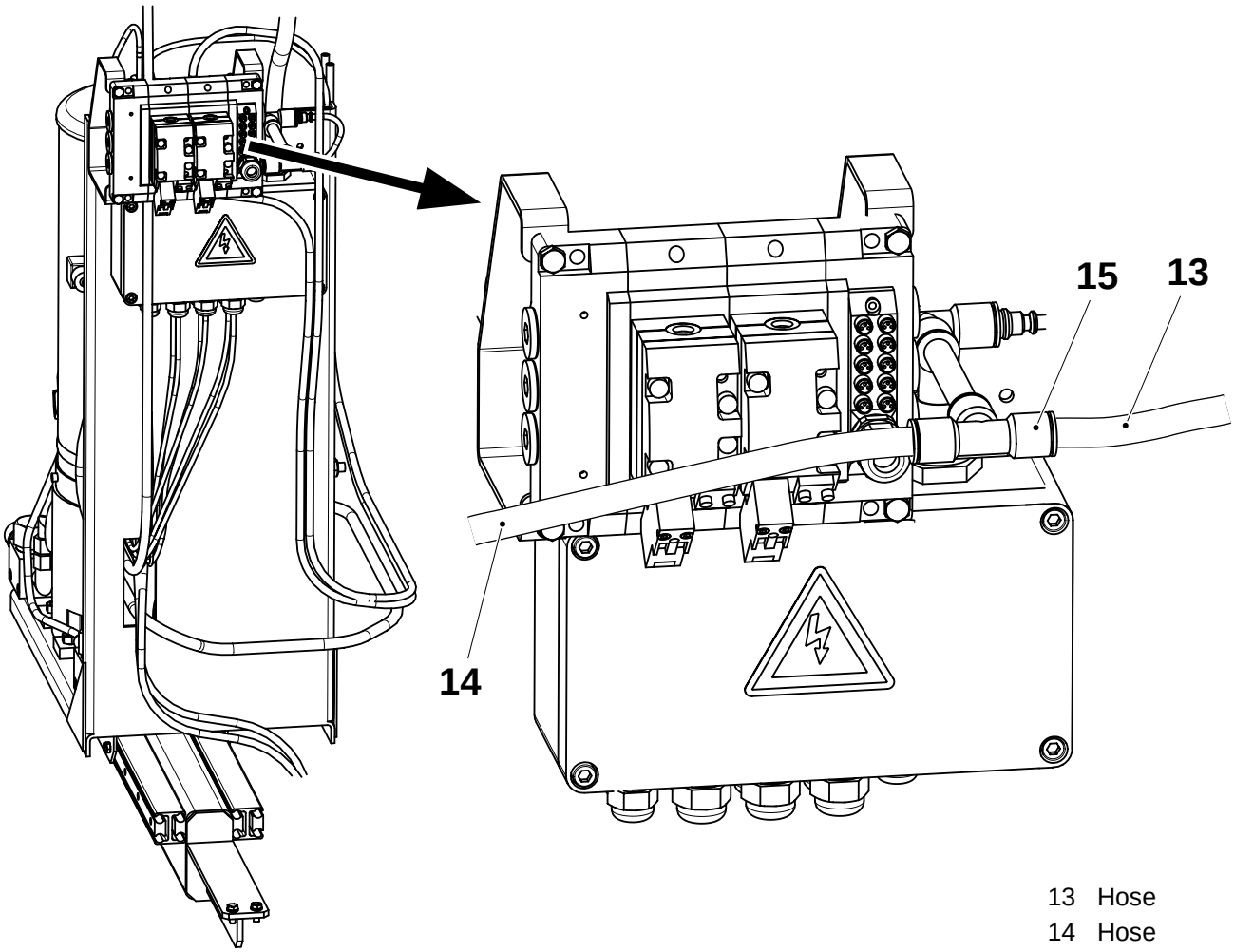

13 Hose
14 Hose
15 T-piece

(Cont'd)

(Cont'd)

i) Remove the screw (16) and pull the slide (17) forward.
j) Remove the screws (18).
k) Remove and change the pump assembly (19).
l) Insert the screws (18).
m) Push the slide (17) into the machine body and insert the screw (16).
n) Fit the pipes and hoses in the revers order.

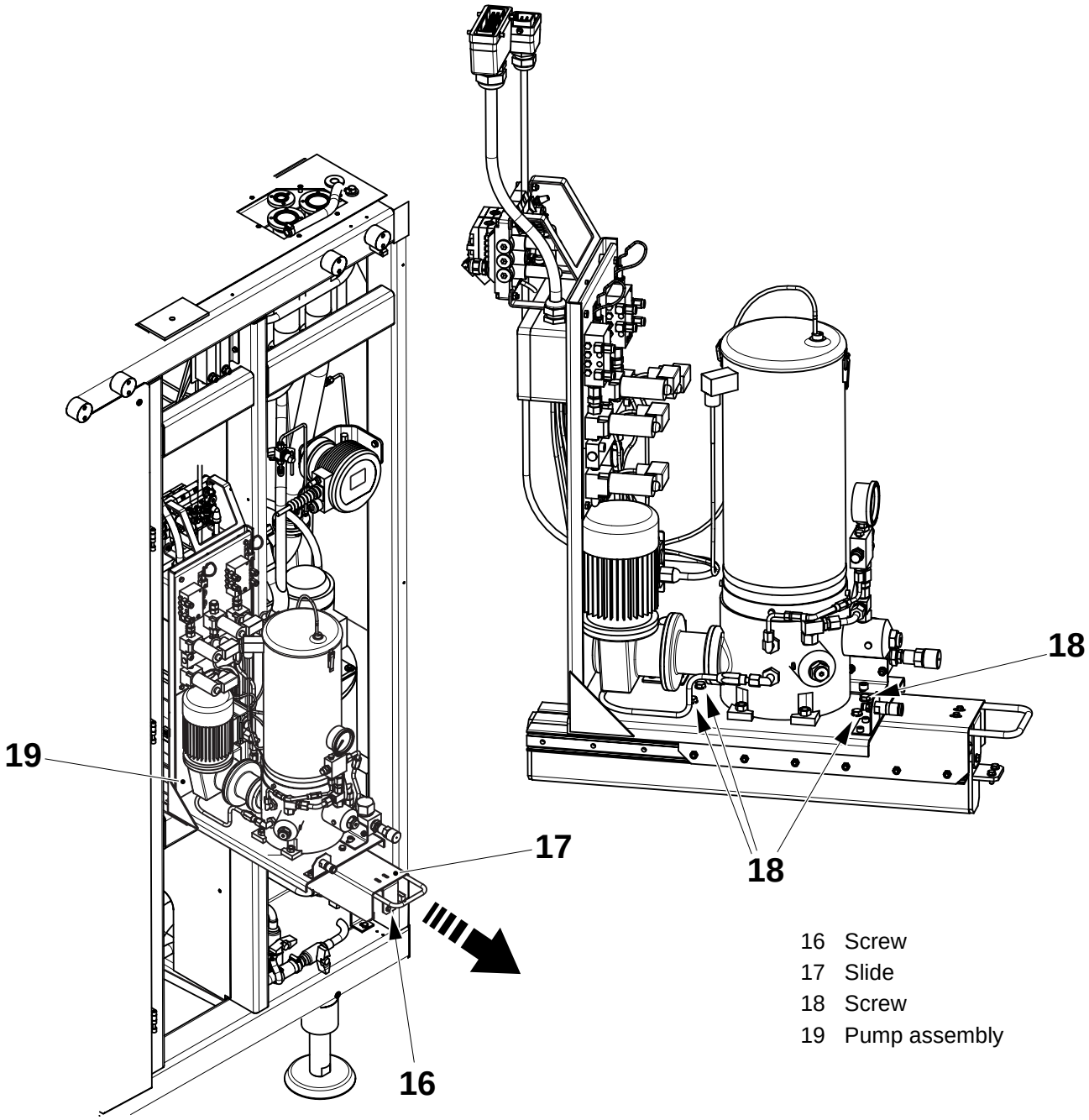

16 Screw
17 Slide
18 Screw
19 Pump assembly

(Cont'd)

(Cont'd)

o) Fit the connection box (20) and secure it in position with the brackets and screws (21) and (22).

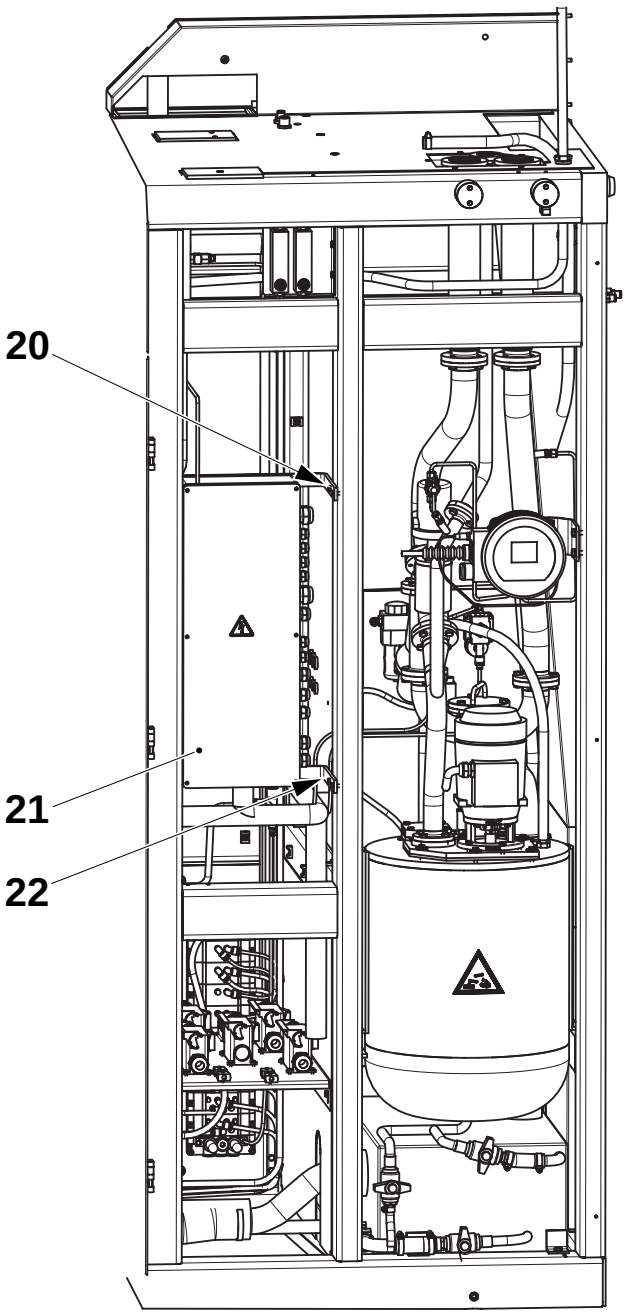

20 Connection box
21 Screw and bracket
22 Screw and bracket

3 Drive

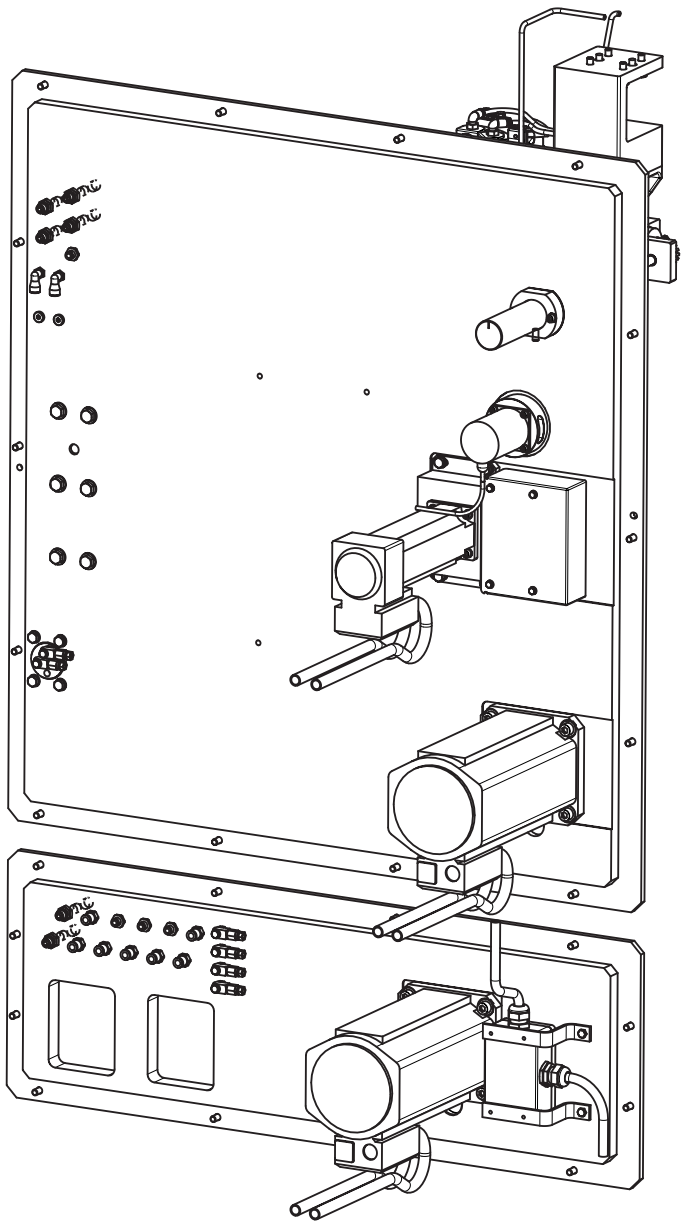

Drive - Description

SPC Reference	648563-0100

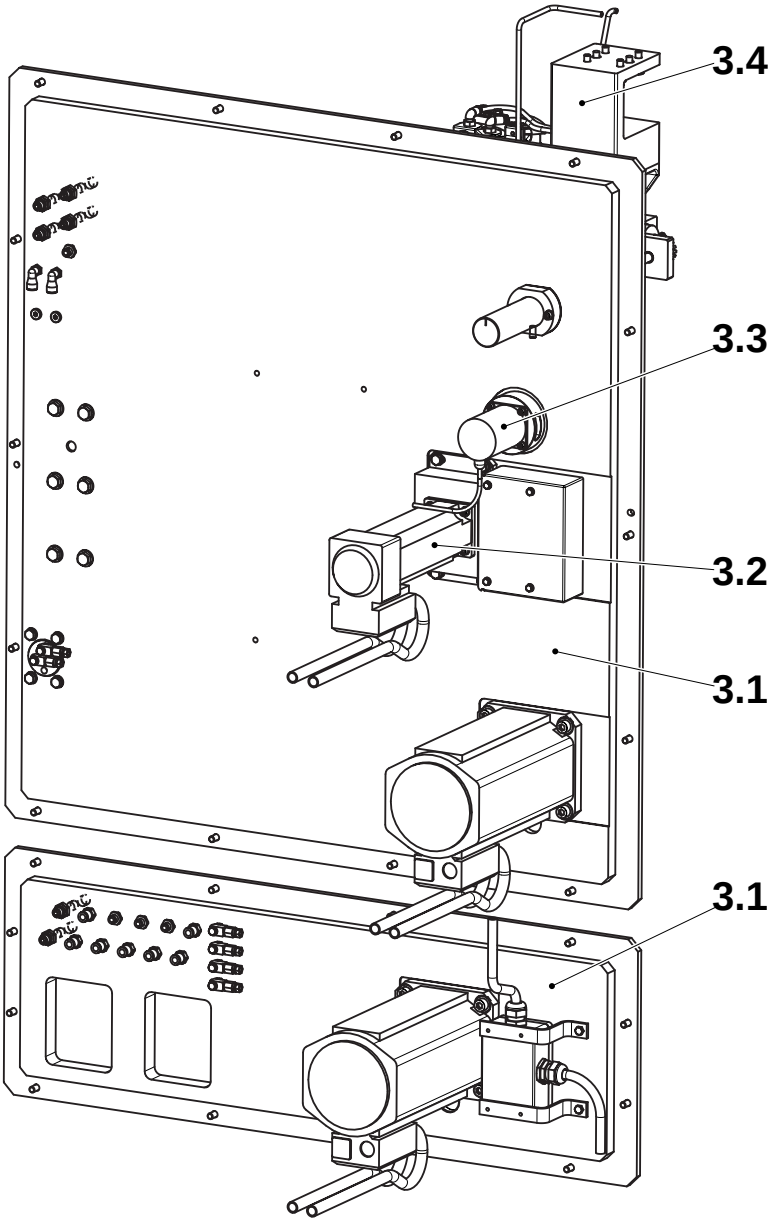

3.1 Plates
3.2 Design Correction Device
3.3 Volume Adjuster
3.4 Photocell Unit

3.1 Plates . . . . . 3 - 5

3.1-1 Plates - Overhaul . . . . . 3 - 5

3.2 Design Correction Device. . . . . 3 - 9

3.2-1 Design Correction Device - Overhaul . . . . . 3 - 9

3.3 Volume Adjuster . . . . . 3 - 12

3.3-1 Volume Adjuster - Stepper Motor Overhaul . . . 3 - 12

3.4 Photocell Unit . . . . . 3 - 16

3.4-1 Photocell Unit - Check . . . . . 3 - 16

3.4-2 Photocell Unit - Set . . . . . 3 - 17

This page intentionally left blank

3.1 Plates

SPC Reference	2511248-0100

3.1-1 Plates - Overhaul

SPC Reference	2511248-0100

Drive Jaw Unit

a) Loosen the screws (1) and then swing the jaw system open.

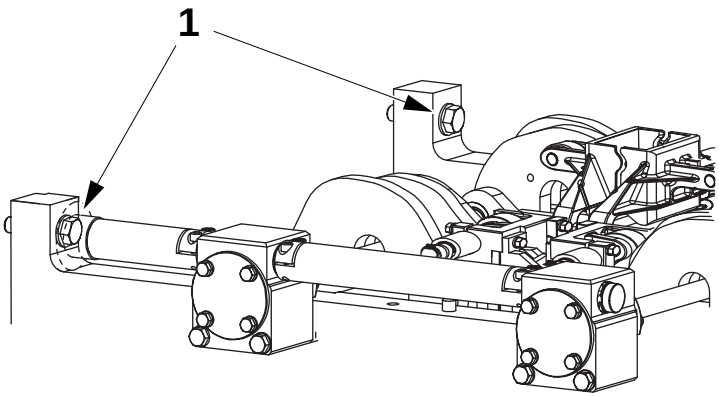

1 Screw

b) Loosen the screw (2) and remove the coupling part (3).

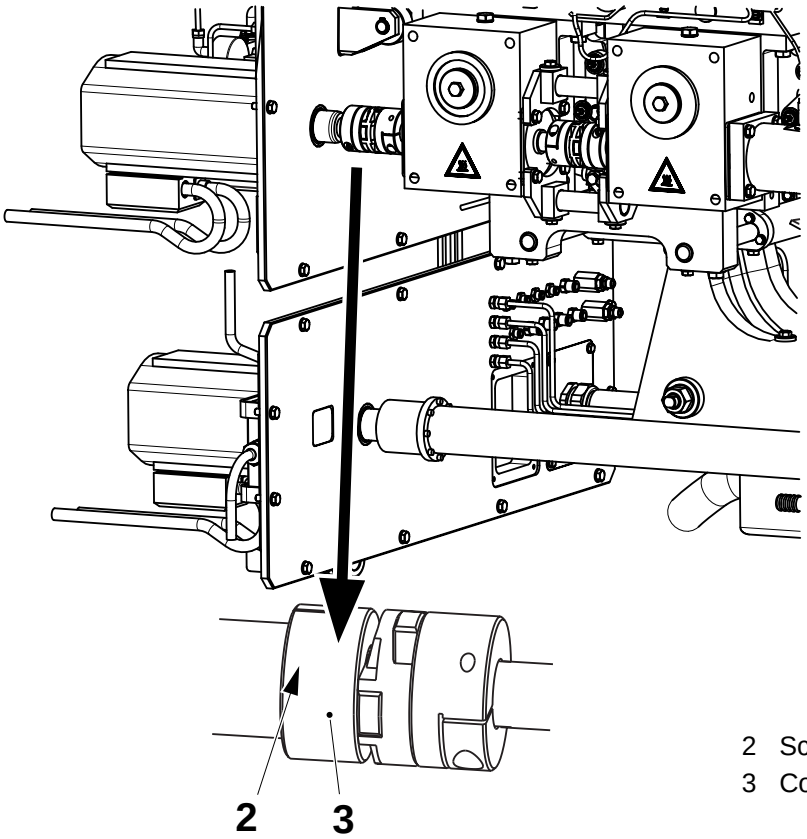

2 Screw
3 Coupling part

(Cont'd)

(Cont'd)

c) Remove the screw (4).

d) Insert a screw M10x100 in the shaft (5) and use a spanner to stop the shaft (5) turning.

e) Tighten the screw and remove the shaft (5) and gasket (6).

f) Check the servo motor (7) for wear or damage, if necessary change the servo motor as follows.

g) Remove the connections from the servo motor (7).

h) Remove the screws (8).

i) Remove the servo motor (7) from the plate (9).

j) Assemble in the reverse order.

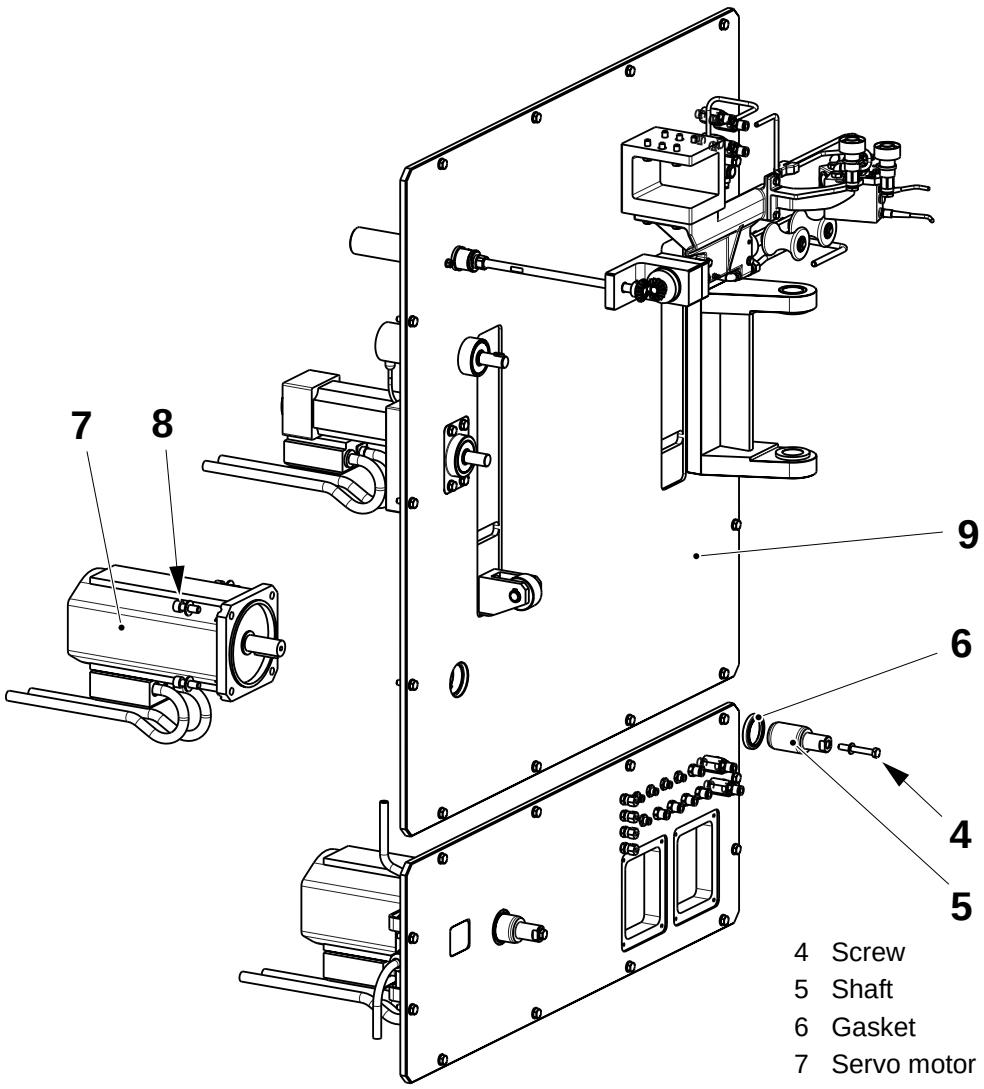

4 Screw
5 Shaft
6 Gasket
7 Servo motor
8 Screw
9 Plate

(Cont'd)

(Cont'd)

Drive Final Folder

a) Remove the screws (1) and the shaft (2).

b) Loosen the screw (3) in the coupling (4) and remove the coupling (4).

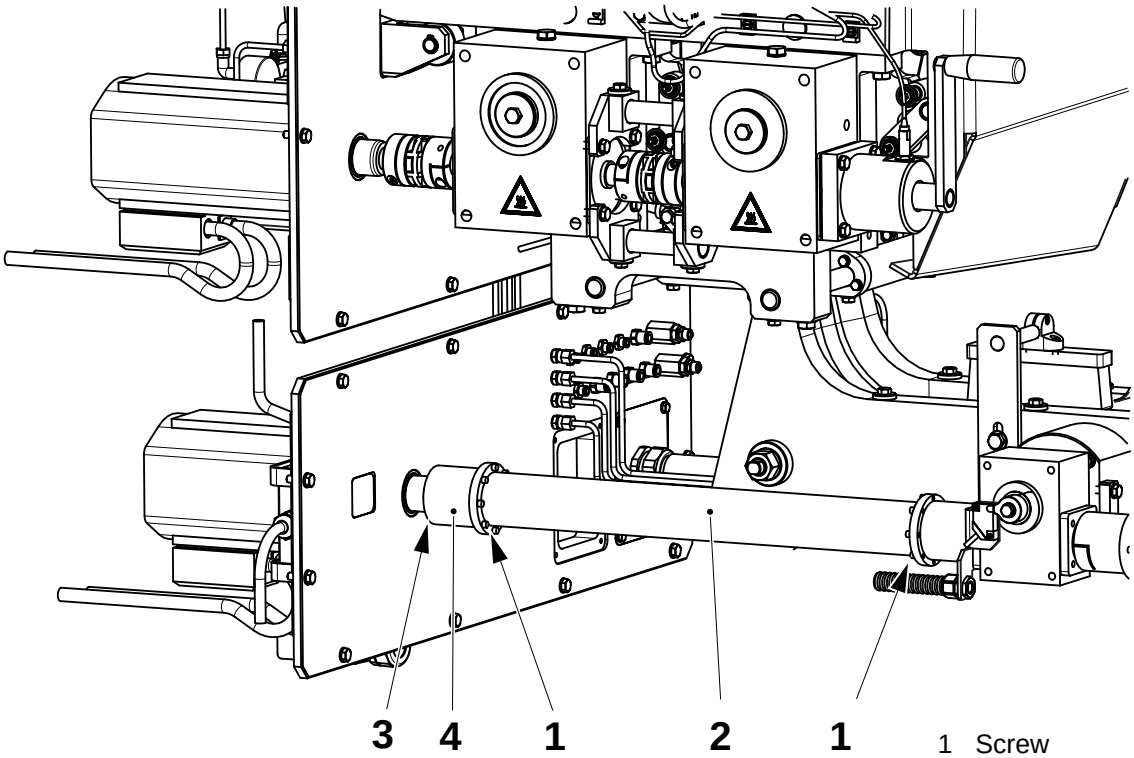

1 Screw
2 Shaft
3 Screw
4 Coupling

(Cont'd)

(Cont'd)

c) Remove the screw (5).

d) Insert a screw M10x100 in the shaft (6) and use a spanner to stop the shaft (6) turning.

e) Tighten the screw and remove the shaft (6) and the gasket (7).

f) Check the servo motor (8) for wear or damage, if required change the servo motor as follows.

g) Remove the connections from the servo motor (8).

h) Remove the screws (9).

i) Remove the servo motor (8) from the plate (10).

j) Assemble in the reverse order.

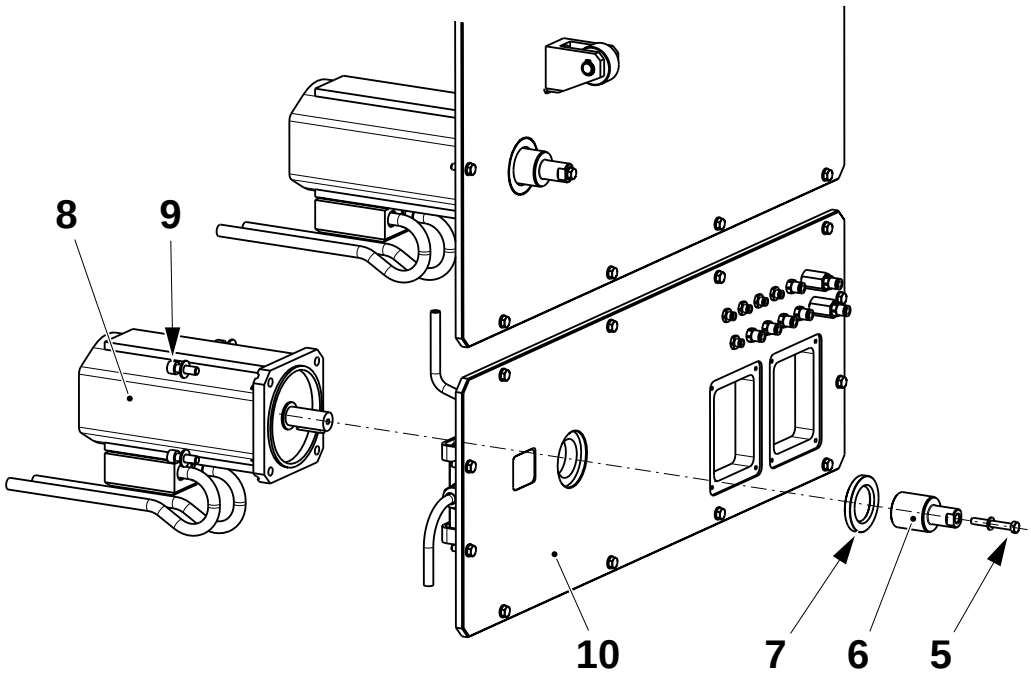

5 Screw
6 Shaft
7 Washer
8 Servo motor
9 Screw
10 Plate

3.2 Design Correction Device

SPC reference	2511247-0100

3.2-1 Design Correction Device - Overhaul

SPC Reference	2511247-0100

a) Loosen the screws (1) and then swing the jaw system open.

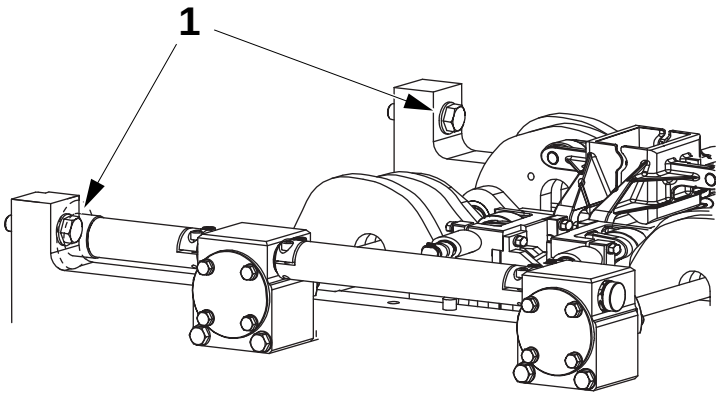

1 Screw

b) Loosen the screw (2) and remove the coupling part (3).

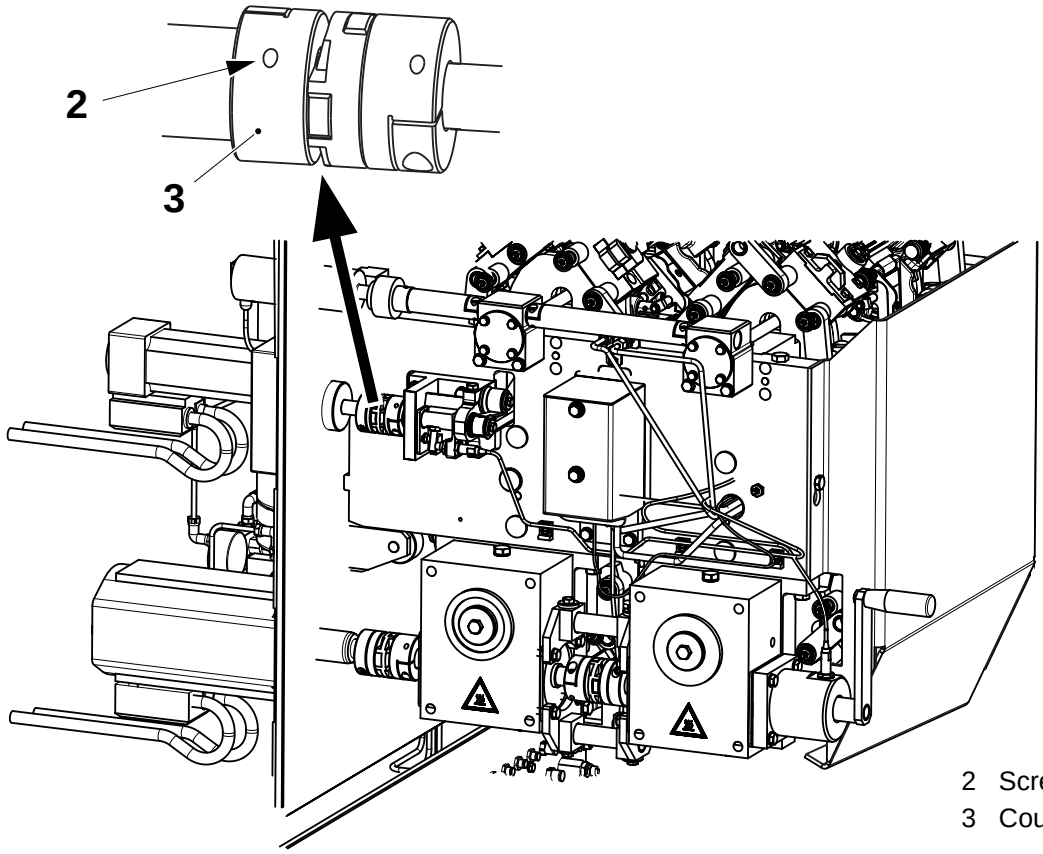

2 Screw
3 Coupling

(Cont'd)

(Cont'd)

c) Remove the connectors from the motor (4).

d) Remove the screws (5) and the cover (6).

e) Remove the screws (7) and the motor assembly (4) after first disconnecting it from the timing belt (8).

f) Remove the screw (9) and pulley (10), retain the key (11) for later use.

g) Remove the screws (12).

h) Check the motor (4) for wear or damage and replace if required.

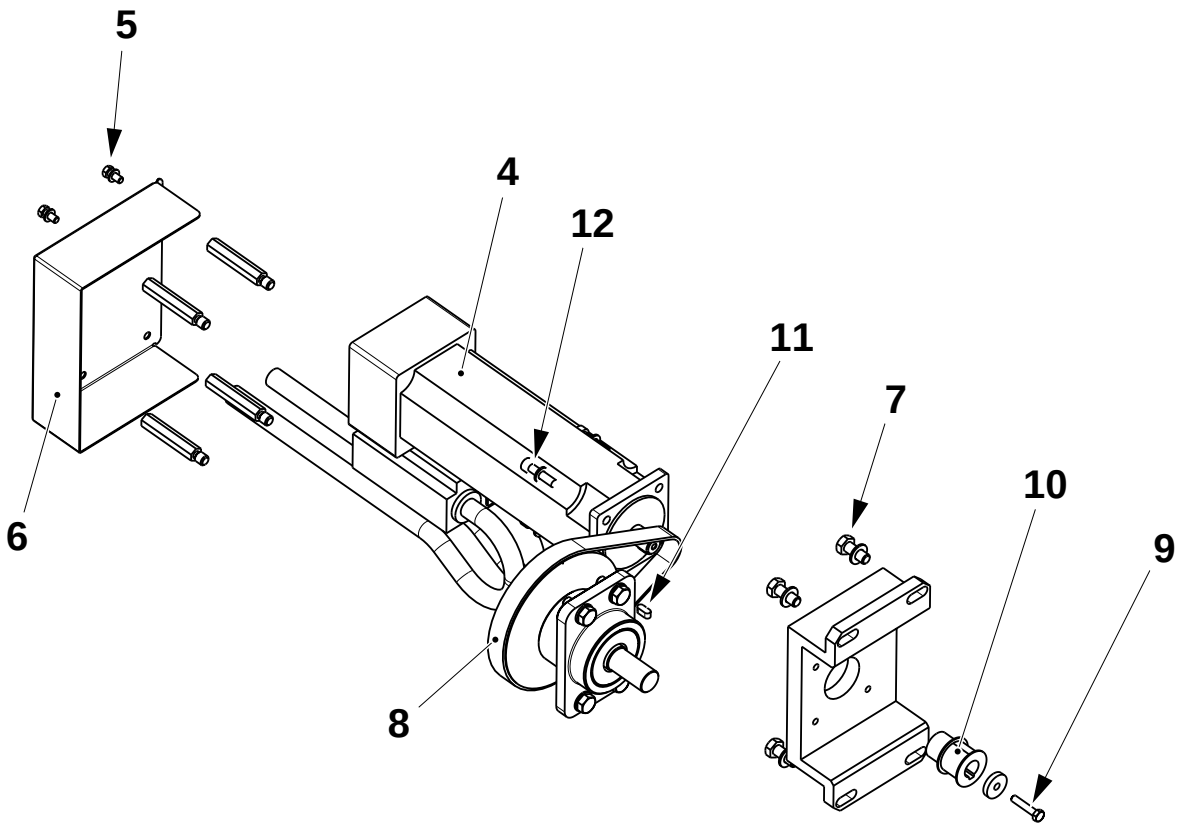

4	Motor	9	Screw
5	Screw	10	Pulley
6	Cover	11	Key
7	Screw	12	Screw
8	Timing belt		

(Cont'd)

(Cont'd)

i) Change the timing belt (8).

j) Remove the screw (13) and the pulley (14) from the shaft (15).

Note! Retain the key (16) for later use.

k) Remove the screws (17).

l) Remove the housing (18) and place it in a soft-jawed vice.

m) Press out the shaft (15), then remove and change the sealing ring (19).

n) Remove the retaining rings (20) and retaining ring (21).
Change the retaining ring.

o) Remove the ball bearings (22) and spacer (23). Check the ball bearings for wear or damage and replace as necessary.

p) Assemble in the reverse order.

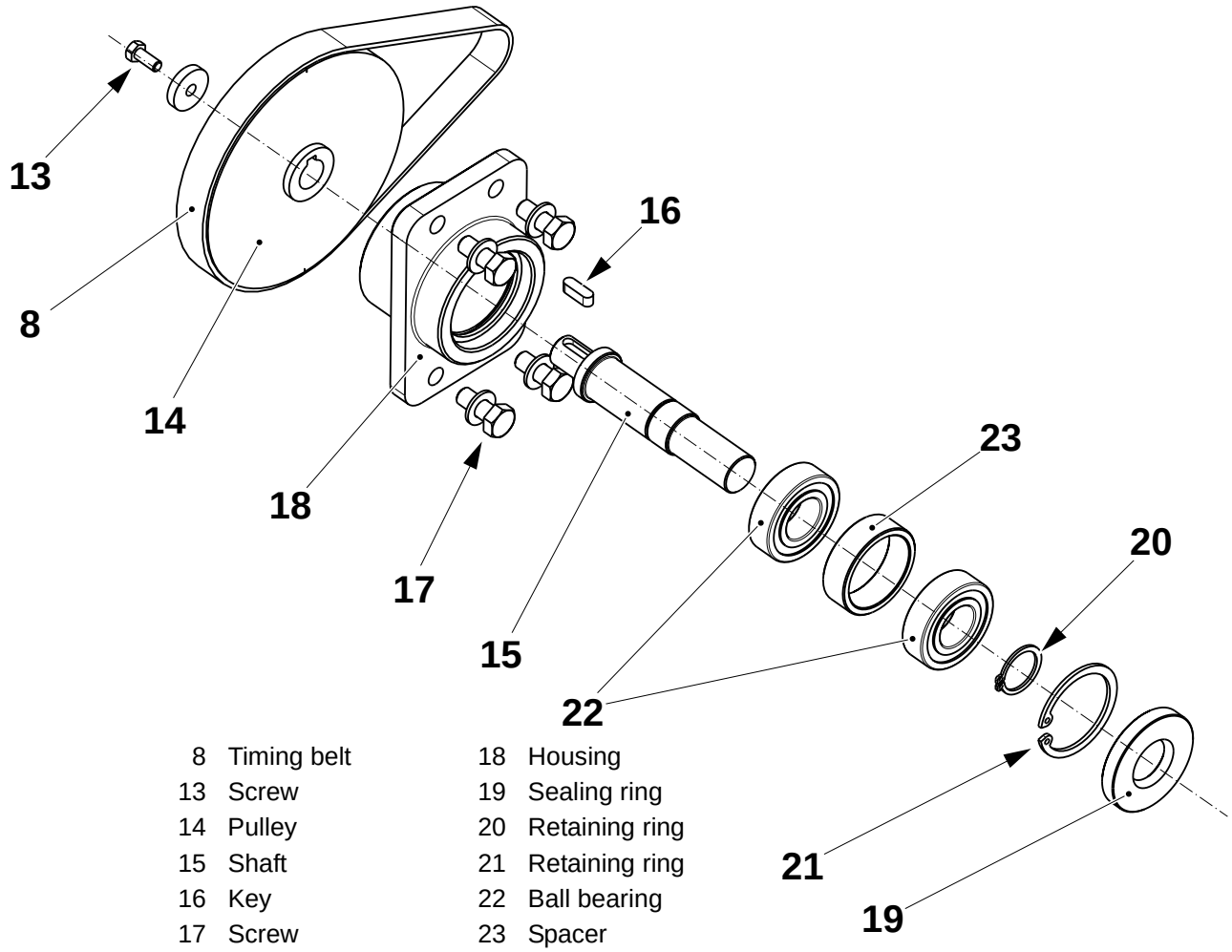

8	Timing belt	18	Housing
13	Screw	19	Sealing ring
14	Pulley	20	Retaining ring
15	Shaft	21	Retaining ring
16	Key	22	Ball bearing
17	Screw	23	Spacer

3.3 Volume Adjuster

SPC Reference	1260120-0100

3.3-1 Volume Adjuster - Stepper Motor Overhaul

SPC Reference	1260120-0100

a) Loosen the screws (1) and then swing the jaw system open.

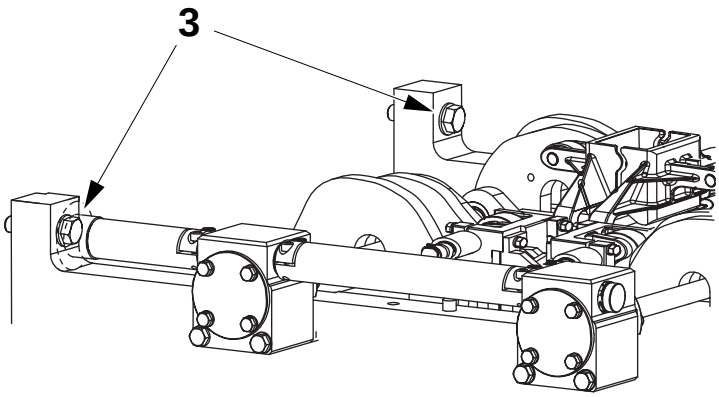

1 Screw

(Cont'd)

(Cont'd)

b) Loosen screw (2) and then remove the coupling (3).

c) Cut the cable ties and disconnect the motor cable at the connector box end. Do not try to disconnect the cable at the motor end.

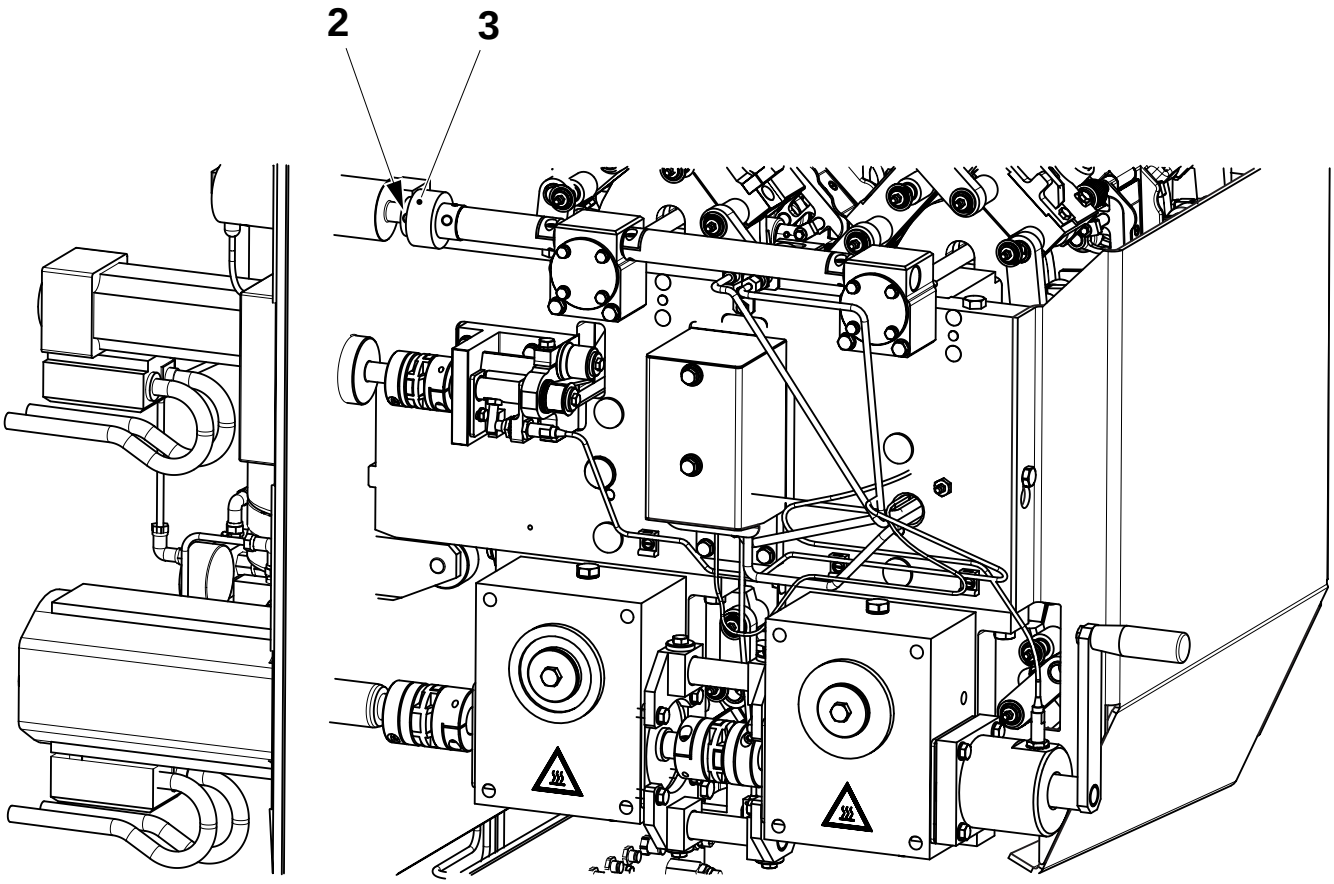

2 Screw
3 Coupling

(Cont'd)

(Cont'd)

d) Remove the screws (4) and pull out the volume adjuster stepper motor (5) with its bushing (6) from the plate (7).

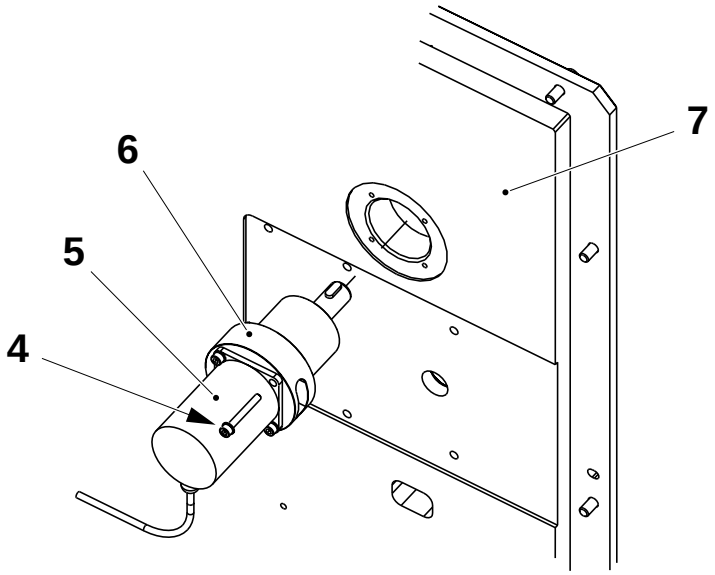

4 Screw
5 Stepper motor
6 Bushing
7 Plate

(Cont'd)

(Cont'd)

e) Remove the key (8) from the shaft (9).

f) Rotate the shaft (9) until the screws (10) are accessible through the slot (11).

g) Loosen the screws (10) and separate the stepper motor (5) from the bushing (6).

h) Place the bushing (6) in a soft-jawed vice with the larger end facing upwards.

i) Remove and change the retaining ring (12), then remove the shaft (9) upwards.

j) Change the retaining ring (13).

k) Push out the bearings (14) and spacer (15).

l) Change the bearing (14) and sealing ring (16).

m) Assemble in the reverse order.

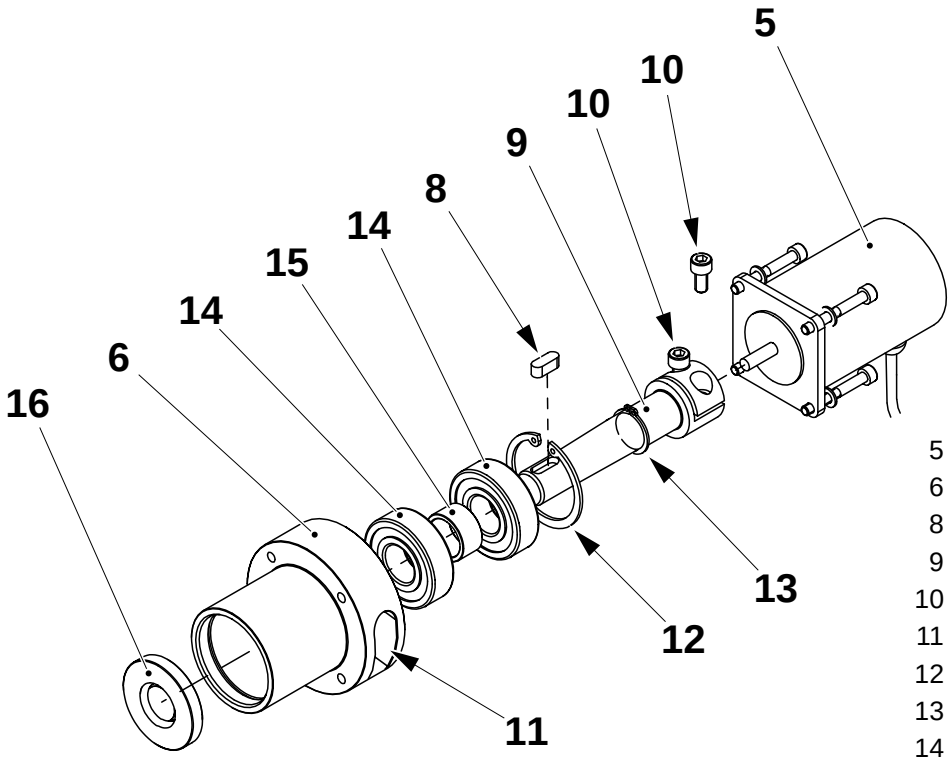

5 Stepper motor
6 Bushing
8 Key
9 Shaft
10 Screws
11 Slot
12 Retaining ring
13 Retaining ring
14 Bearings
15 Spacer
16 Sealing ring

3.4 Photocell Unit

SPC Reference	2511249-0100

3.4-1 Photocell Unit - Check

SPC Reference	2511249-0100

Check:

- the filter (1) on the lower valve panel (2). If **red**, change it;
- the filter (3) on the lower valve panel (2). If **pink**, change it;
- the O-rings (4) for damage and air leaks. Change as required;
- the photocell lenses (5) for damage. Change as required. Clean the lenses with a clean cloth.

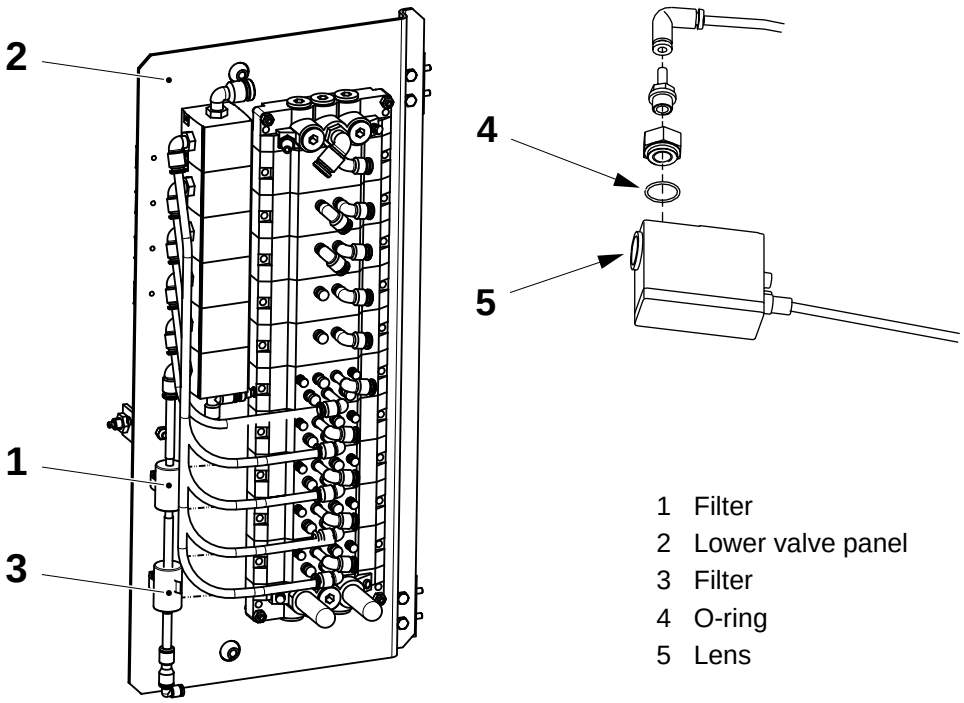

1 Filter
2 Lower valve panel
3 Filter
4 O-ring
5 Lens

3.4-2 Photocell Unit - Set

Machine Status	Mains Power ON Air ON
SPC Reference	2511249-0100

a) Crank the jaw system until the tight tube (1) is between the jaws.

b) Turn the screw (2) until distance **A** between the end of the flange (3) and the end of the shaft (4) is correct.

c) Step the machine up to PRODUCTION and position the tube correctly by turning the screw (2).

Package	**A ±2 (mm)**
TBA 200 B - TBA 250 B	140
TBA 200 M - TBA 250 S	137
TBA 200 S	135

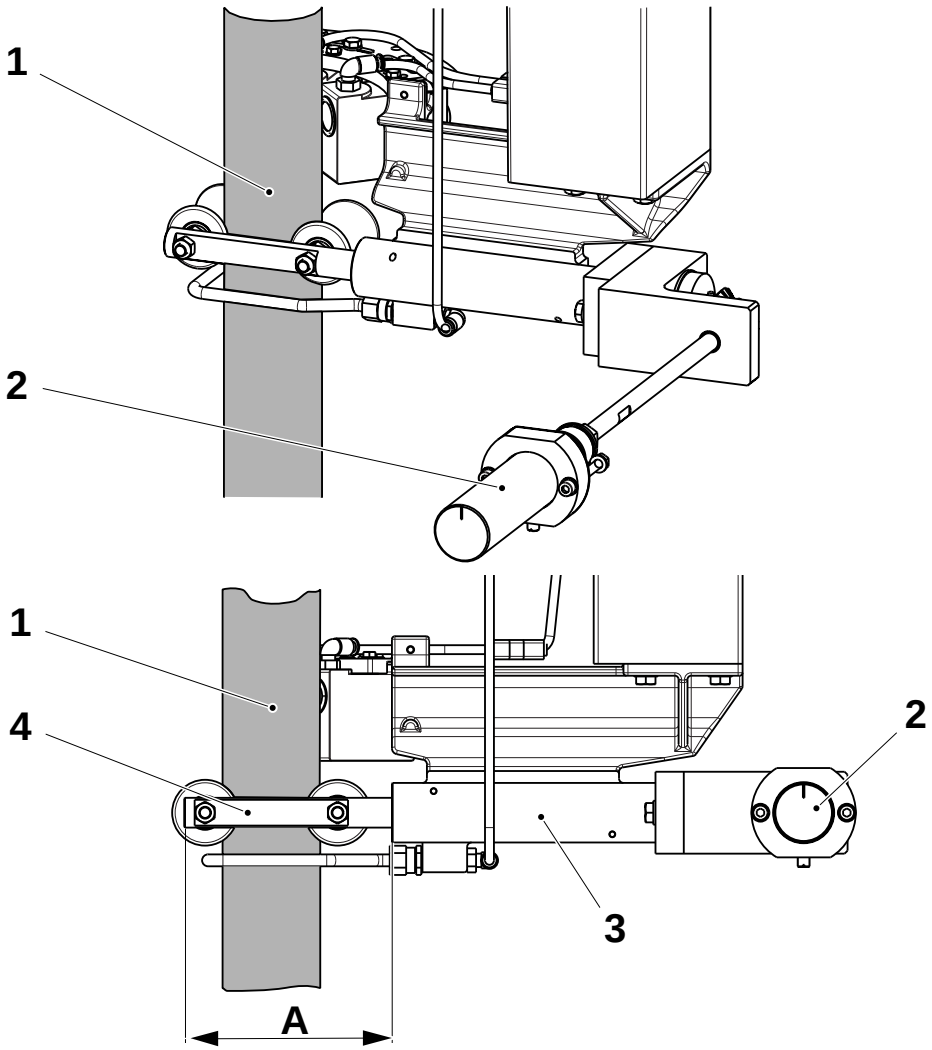

1 Tight tube
2 Screw
3 Flange
4 Shaft

(Cont'd)

(Cont'd)

Reading Bar Codes

Set distance **B** between the lens of the photocells (1) and the sealed tube (2) using the screws (3).

Centre the light spots on the barcodes (4) using the screws (5).

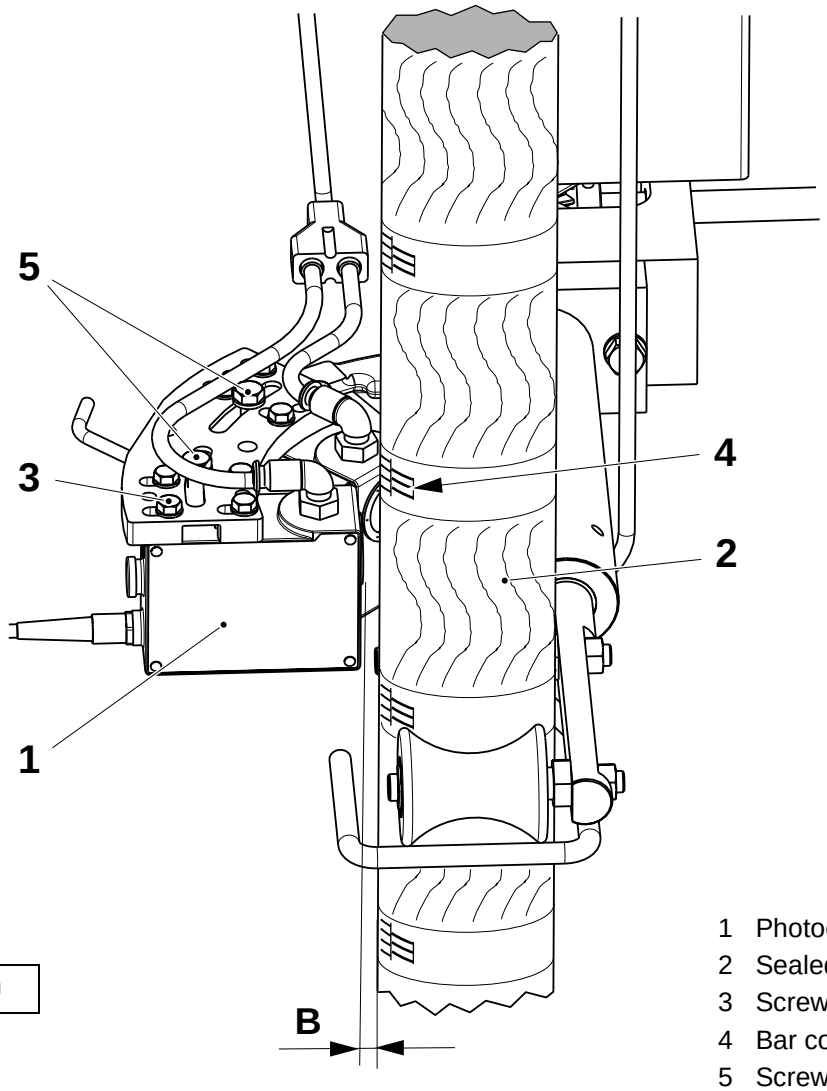

B = 11 ±1 mm

1 Photocell
2 Sealed tube
3 Screw
4 Bar code
5 Screw

(Cont'd)

(Cont'd)

Photocell Sensitivity

To set the photocells, see 9.2.1-4 TMCC2 Controller - Set Photocells.

Photocells Air Pressure Setting

Set the design correction air pressure by means of the pressure regulator (1) on the lower pneumatic panel (2).

Note! The air that is used to ventilate the peroxide fumes from the new peroxide pump is taken from the same air valve as the air to the design correction photocells.

Variant	Pressure (bar)
New peroxide pump	0.6
Old peroxide pump	0.2

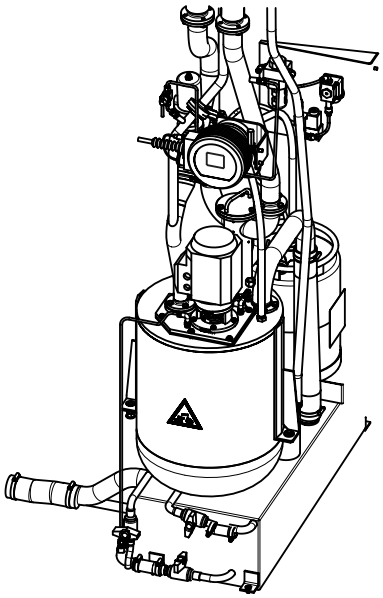

New peroxide pump,
TP No. 996388-0500

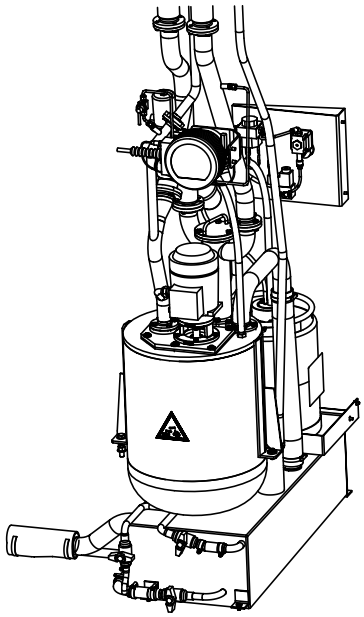

Old peroxide pump,
TP No. 996388-0400

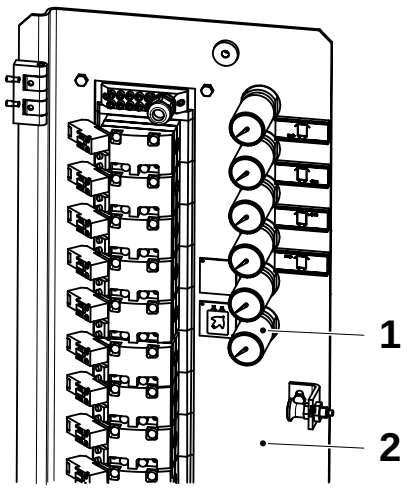

1 Pressure regulator
2 Air panel

This page intentionally left blank

4 Jaw System

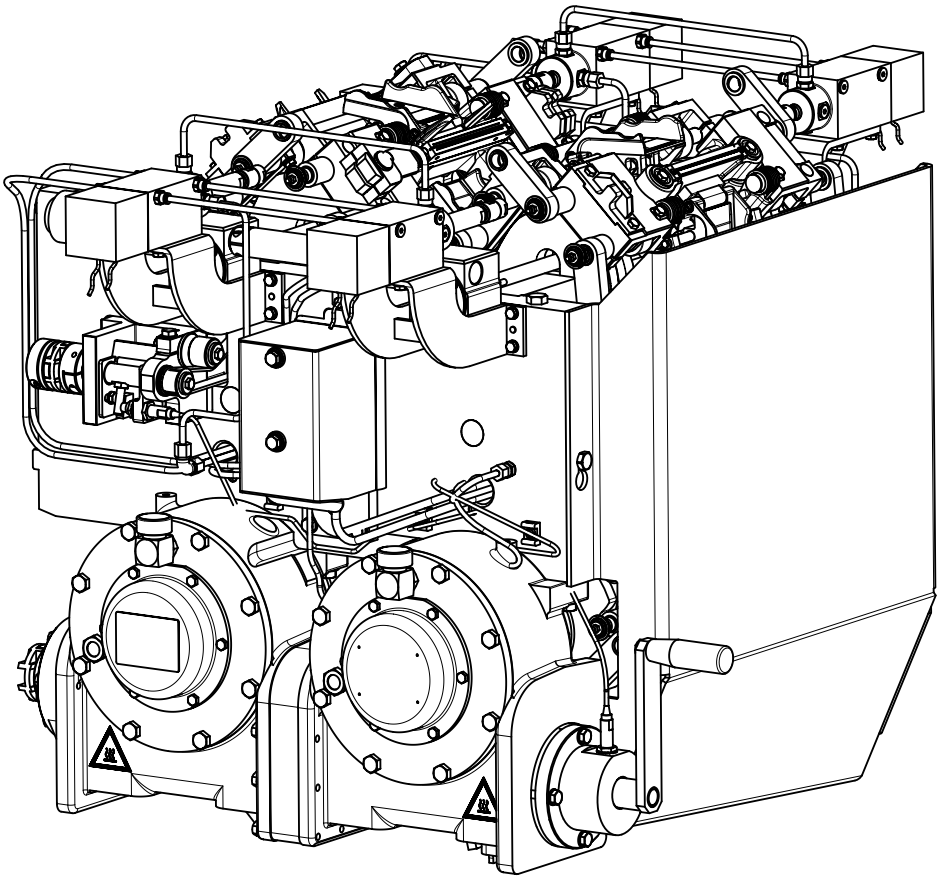

Jaw System - Description

SPC Reference	648554-0100

The procedures in this chapter are for all versions of the TBA/22 050V machine. Unless stated otherwise, the illustrations show the Jaw System with automatic greasing, new gearboxes and the latest design of waste box.

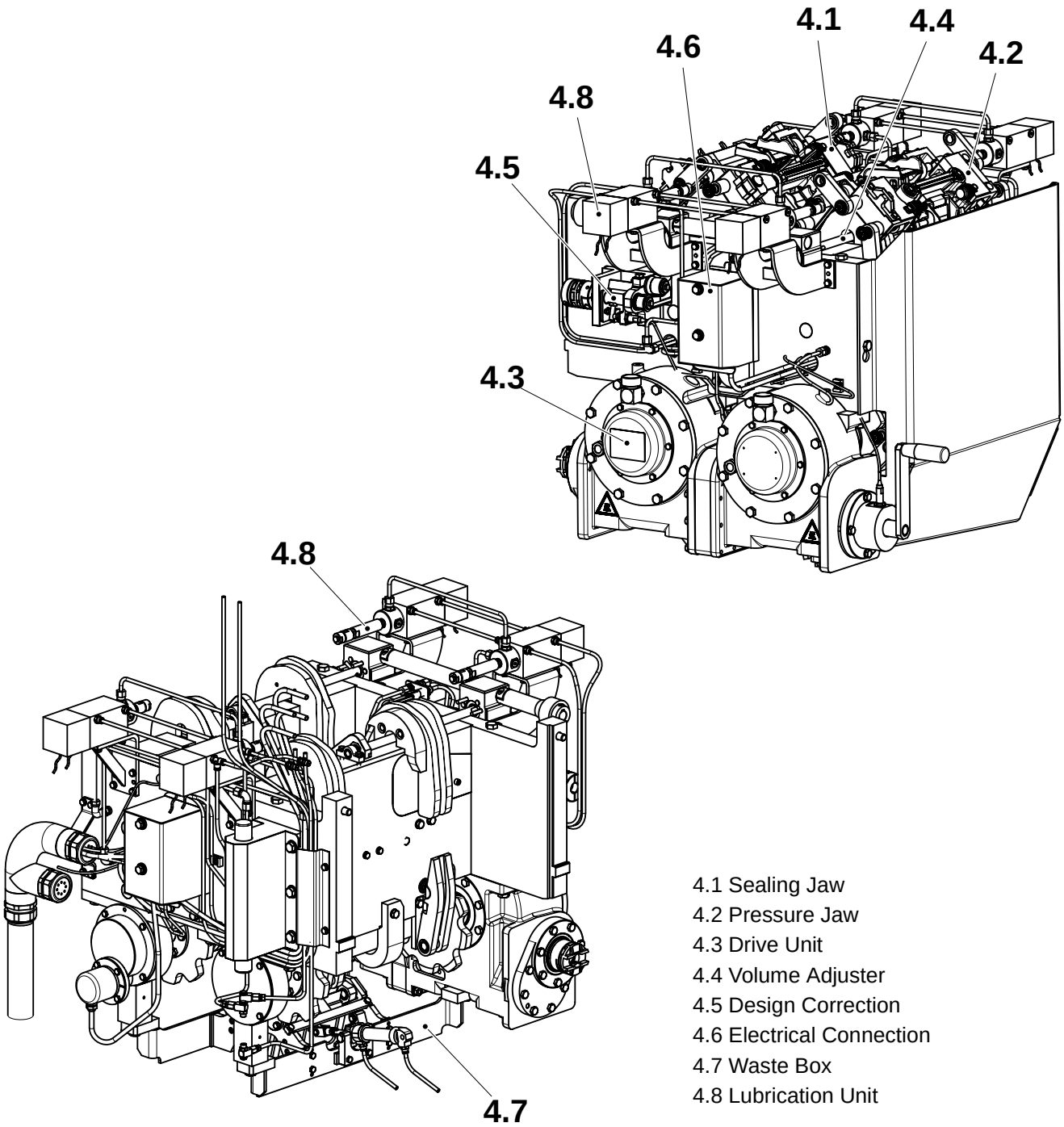

4.1 Sealing Jaw
4.2 Pressure Jaw
4.3 Drive Unit
4.4 Volume Adjuster
4.5 Design Correction
4.6 Electrical Connection
4.7 Waste Box
4.8 Lubrication Unit

4-1 Jaw System - Setting Sequence . . . . . 4 - 5
4-2 Jaw System - Chain Disassembly and Reassembly 4 - 6
4-3 Jaw System - Grease Chains . . . . . 4 - 18
4-4 Jaw System - Check Couplings . . . . . 4 - 19
4-5 Jaw System - Set Coupling . . . . . 4 - 21

4.1 Sealing Jaw . . . . . 4 - 26

4.1-1 Sealing Jaw - Check Guides . . . . . 4 - 26
4.1-2 Sealing Jaw - Check Volume Flap Dampers . . . 4 - 27
4.1-3 Sealing Jaw - Check Volume Flap Springs, Holder And Bushings . . . . . 4 - 27
4.1-4 Sealing Jaw - Check Volume Flap Rollers . . . . . 4 - 27
4.1-5 Sealing Jaw - Check Cam Followers . . . . . 4 - 27
4.1-6 Sealing Jaw - Check Flap Folding . . . . . 4 - 28
4.1-7 Sealing Jaw - Check Inductor . . . . . 4 - 29
4.1-8 Sealing Jaw - Check Carbon Brushes . . . . . 4 - 30
4.1-9 Sealing Jaw - Change Guide . . . . . 4 - 33
4.1-10 Sealing Jaw - Overhaul . . . . . 4 - 34

4.2 Pressure Jaw . . . . . 4 - 40

4.2-1 Pressure Jaw - Check Volume Flap Dampers . . . 4 - 40
4.2-2 Pressure Jaw - Check Volume Flap Springs, Holder and Bushings . . . . . 4 - 41
4.2-3 Pressure Jaw - Check Volume Flap Rollers . . . . 4 - 42
4.2-4 Pressure Jaw - Check Rollers . . . . . 4 - 43
4.2-5 Pressure Jaw - Change Volume Flap Springs, Holder and Bushings . . . . . 4 - 44
4.2-6 Pressure Jaw - Change Volume Flap Rollers . . . 4 - 47
4.2-7 Pressure Jaw - Check Pressure Bar Springs . . . . 4 - 48
4.2-8 Pressure Jaw - Change Knives . . . . . 4 - 49
4.2-9 Pressure Jaw - Change Sealing Dollies . . . . . 4 - 50
4.2-10 Pressure Jaw - Overhaul . . . . . 4 - 51
4.2-11 Pressure Jaw - Set Jaw Unit Reference Sensor . 4 - 55

4.3 Drive Unit . . . . . 4 - 56

4.3-1 Drive Unit - Set Angle Encoder . . . . . 4 - 56
4.3-2 Drive Unit - Overhaul (valid new gearboxes) . . 4 - 58

4.3-3 Drive Unit - Overhaul (valid for old gearboxes) 4 - 63
4.3-4 Drive Unit - Change Wheels . . . . . 4 - 74
4.3-5 Drive Unit - Change Gearboxes (valid for old gearboxes) . . . . . 4 - 75
4.3-6 Drive Unit - Change Gearboxes (valid for new gearboxes) . . . . . 4 - 75
4.3-7 Drive Unit - Refill Gearbox Oil . . . . . 4 - 92
4.3-8 Drive Unit - Set Gearbox Play (valid for old gearboxes) . . . . . 4 - 96

4.4 Volume Adjuster. . . . . 4 - 99

4.4-1 Volume Adjuster - Set . . . . . 4 - 99
4.4-2 Volume Adjuster - Change Cams . . . . . 4 - 100

4.5 Design Correction . . . . . 4 - 103

4.5-1 Design Correction - Set Belt Tension . . . . . 4 - 103
4.5-2 Design Correction - Check Belt . . . . . 4 - 104
4.5-3 Design Correction - Change Belt . . . . . 4 - 105
4.5-4 Design Correction - Overhaul . . . . . 4 - 106
4.5-5 Design Correction - Set . . . . . 4 - 108

4.6 Electrical Connection . . . . . 4 - 112

4.6-1 Electrical Connection - Clean TS Rail . . . . . 4 - 112
4.6-2 Electrical Connection - Check TS Rail . . . . . 4 - 116
4.6-3 Electrical Connection - Check Transformer . . 4 - 118

4.7 Waste Box. . . . . 4 - 121

4.7-1 Waste Box - Check . . . . . 4 - 121
4.7-2 Waste Box - Change Pneumatic Cylinder . . . . 4 - 125
4.7-3 Waste Box - Set Pneumatic Cylinder . . . . . 4 - 127
4.7-4 Waste Box - Change Bushings . . . . . 4 - 129
4.7-5 Waste Box - Set Air Guide Pressure . . . . . 4 - 136

4.8 Lubrication Unit . . . . . 4 - 137

4.8-1 Lubrication Unit - Change Cylinders . . . . . 4 - 137
4.8-2 Lubrication Unit - Set Sensors . . . . . 4 - 140

4-1 Jaw System - Setting Sequence

SPC Reference	648554-0100

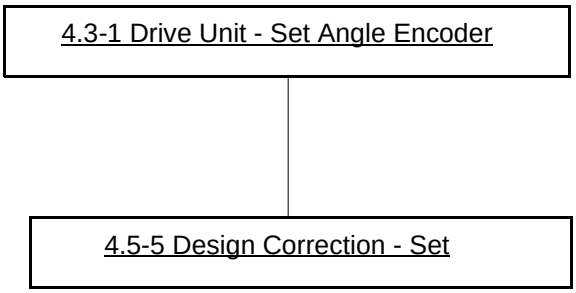

4-2 Jaw System - Chain Disassembly and Reassembly

SPC Reference	648554-0100

Disassembly

Note! The following instruction will prevent the drop chute (1) striking the conveyor frame (2) when the jaw unit is swung open.

a) Make sure the main air supply is turned OFF.

b) Push the drop chute (1) as far as it will go in the direction shown.

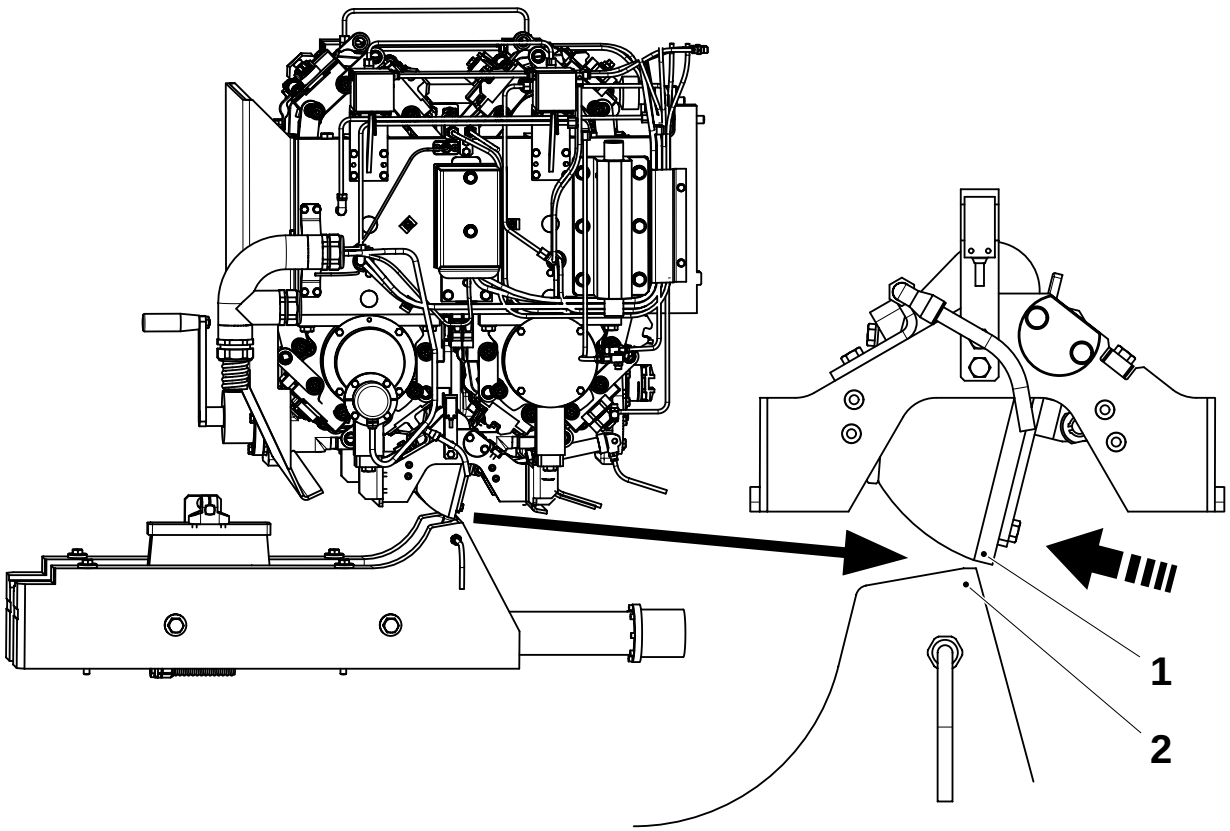

1 Drop chute
2 Conveyor frame

(Cont'd)

(Cont'd)

c) Remove the two screws (3) holding the jaw system to the bulkhead. Then swing the jaw system away from the bulkhead.

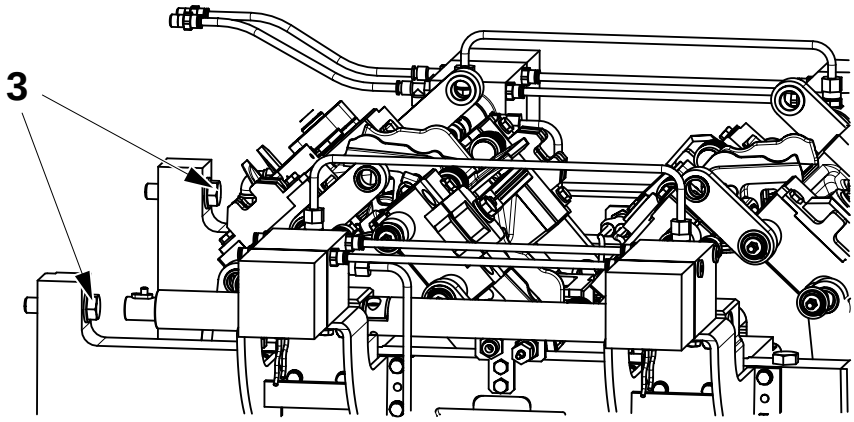

3 Screw

d) Remove the air lines from the drop chute cylinder (4).

e) Remove the photocell brackets (5).

f) Remove the screws (6) securing the waste box (7) to the jaw system and remove the waste box assembly (7).

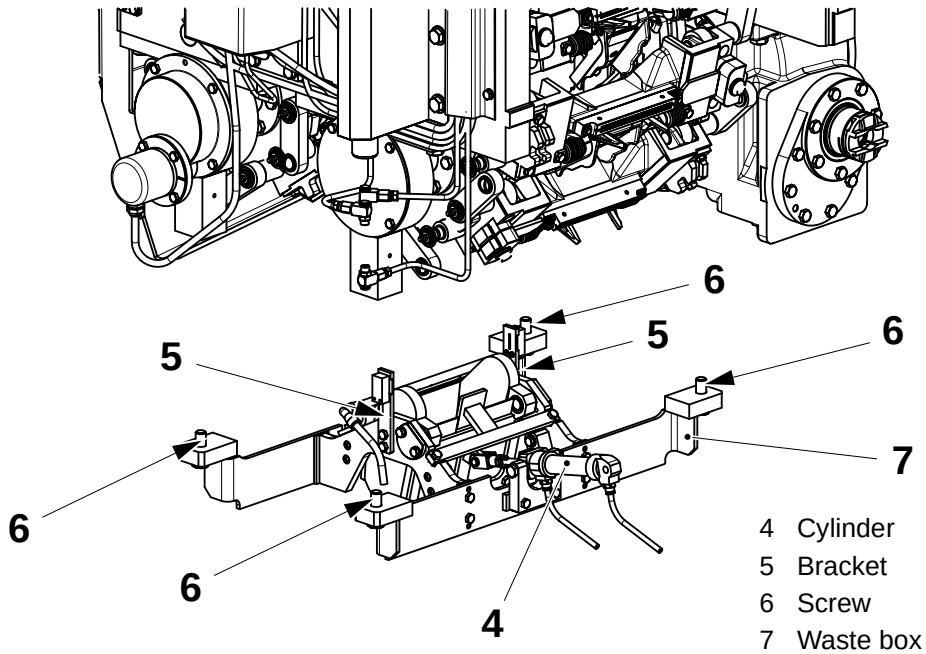

4 Cylinder
5 Bracket
6 Screw
7 Waste box

(Cont'd)

(Cont'd)

WARNING
Risk of crushing!
Be careful not to trap your fingers between the links.

CAUTION
Always remove one chain, carry out the necessary maintenance and fit it again before removing the other chain. Failure to do this can lead to equipment damage.

Note! Shims are fitted to ensure that each volume box will produce a package of optimum size. For this reason it is important that mating pressure and sealing links are marked before the chains are removed.
On assembly the numbered links must be matched again to ensure that packages are produced with the correct volume.

In the example below, the pressure and sealing jaws of link number 1 have been marked with an **X**.

The toothed drive wheel (8) and the shaft (9) of a jaw link should also be marked to ensure total matching.

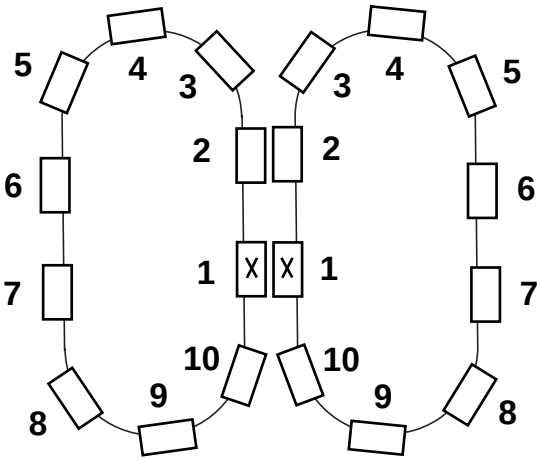

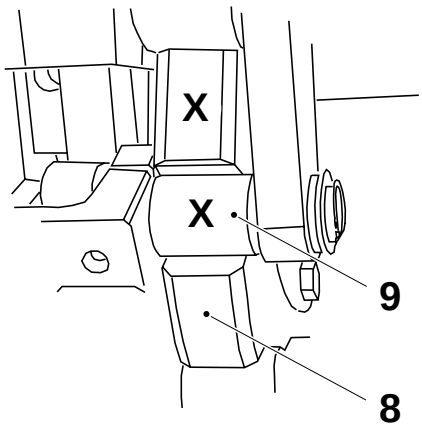

8 Wheel
9 Shaft

(Cont'd)

(Cont'd)

Note! Take care not to drop the bolts into the jaw mechanism.

g) To release the chain tension, insert four M8 x 45 hexagonal socket head screws (10) into the tensioner mechanism and tighten them fully.

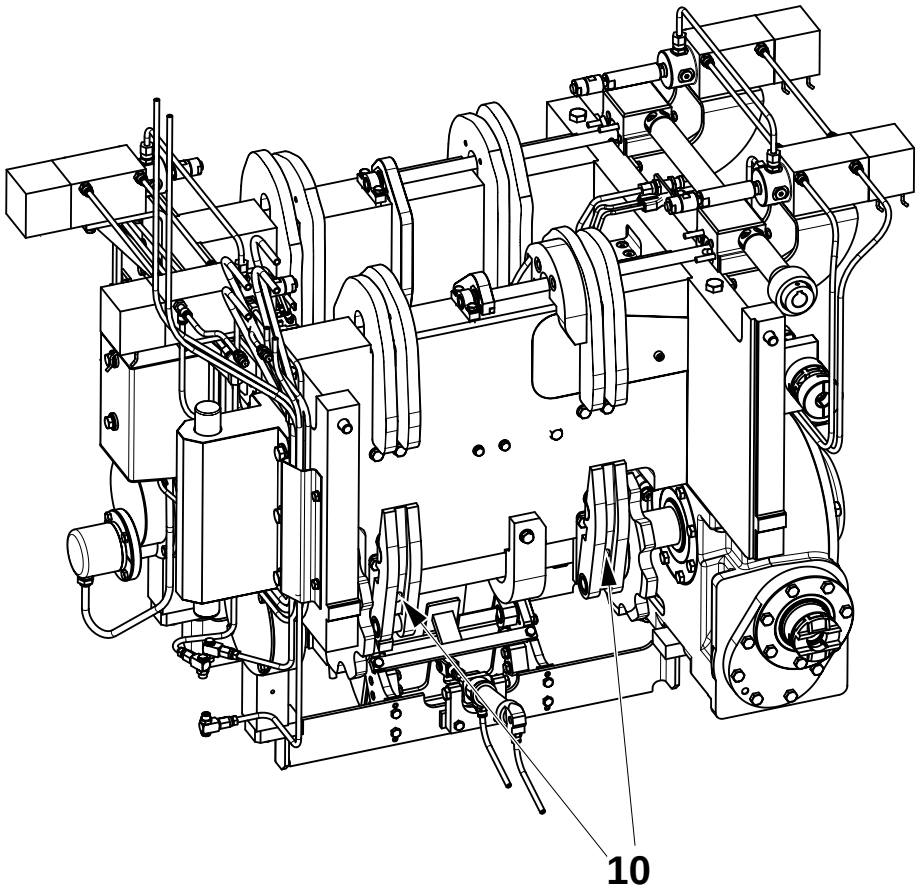

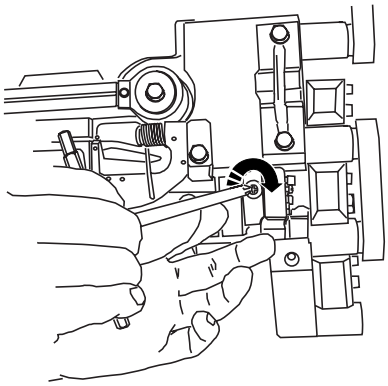

10 Screw

(Cont'd)

(Cont'd)

Note! This procedure shows how to remove the sealing link chain (11), the pressure link chain (12) can be removed in the same way.

h) Separate the sealing link chain (11) at the top (point **A**).

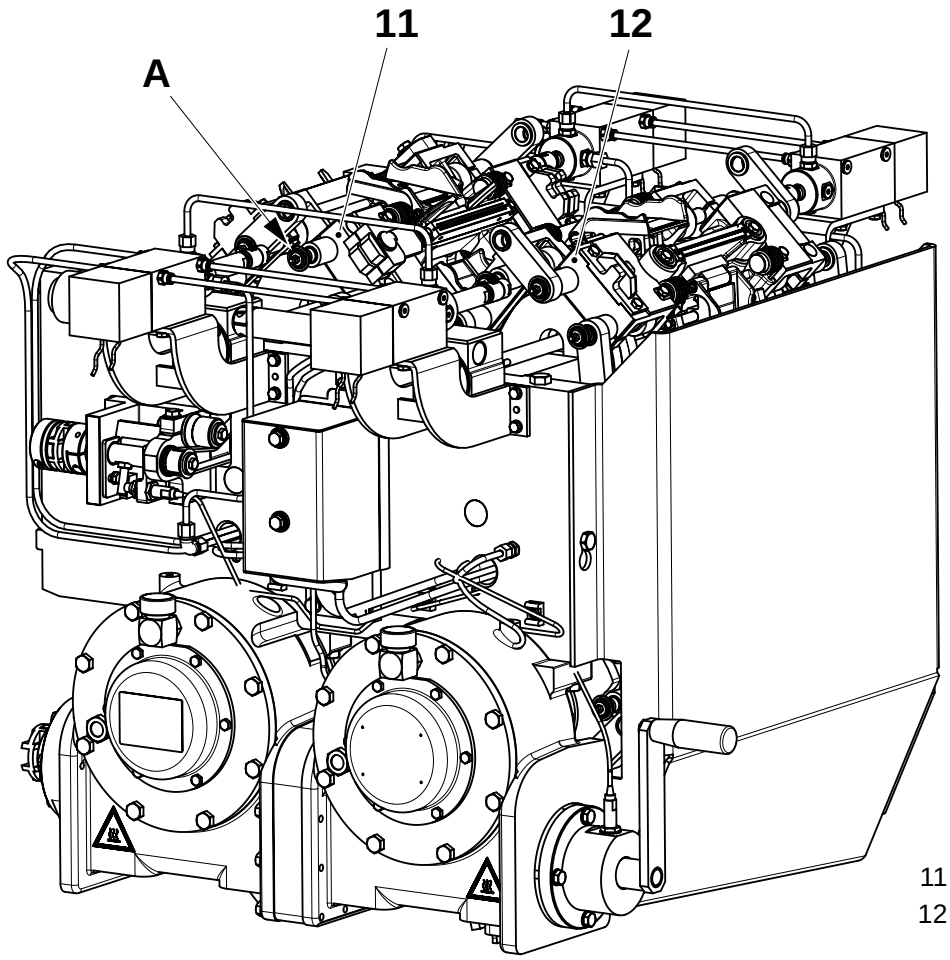

11 Sealing link chain
12 Pressure link chain

i) To separate the chain, remove the retaining ring and washer. Then remove the chain link.

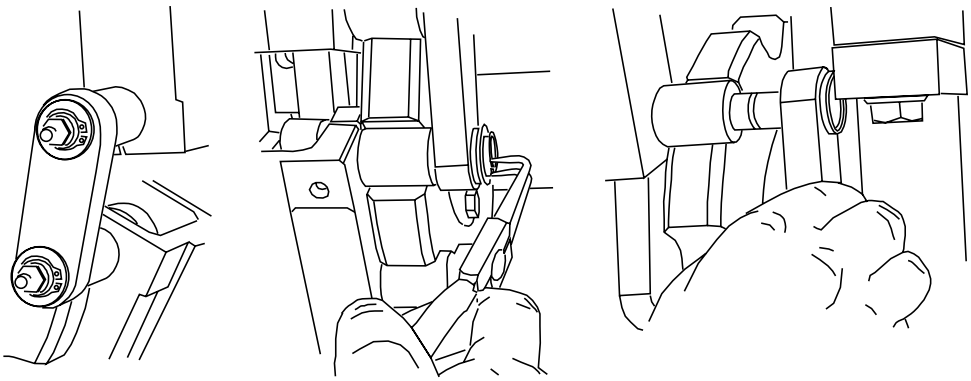

(Cont'd)

(Cont'd)

Note! Use two people to remove the chain, use a third to crank the jaw system.

j) Load a pallet truck with pallets and place a layer of cardboard on it. Push the pallet truck into position beneath the jaw system.

k) Pull the end of the chain (14) away from the jaw system and lay it on the pallets.

Note! While cranking keep the chain in tension by pulling it to keep the link shaft (9) in the sprocket (8).

l) Crank the jaw system to move the inner links of the chain through the jaw system until the trailing links (13) are at point **B** were they will still be supported by the jaw system.
While this is being done, pull the end of the chain (14) and lay the links on the pallets.

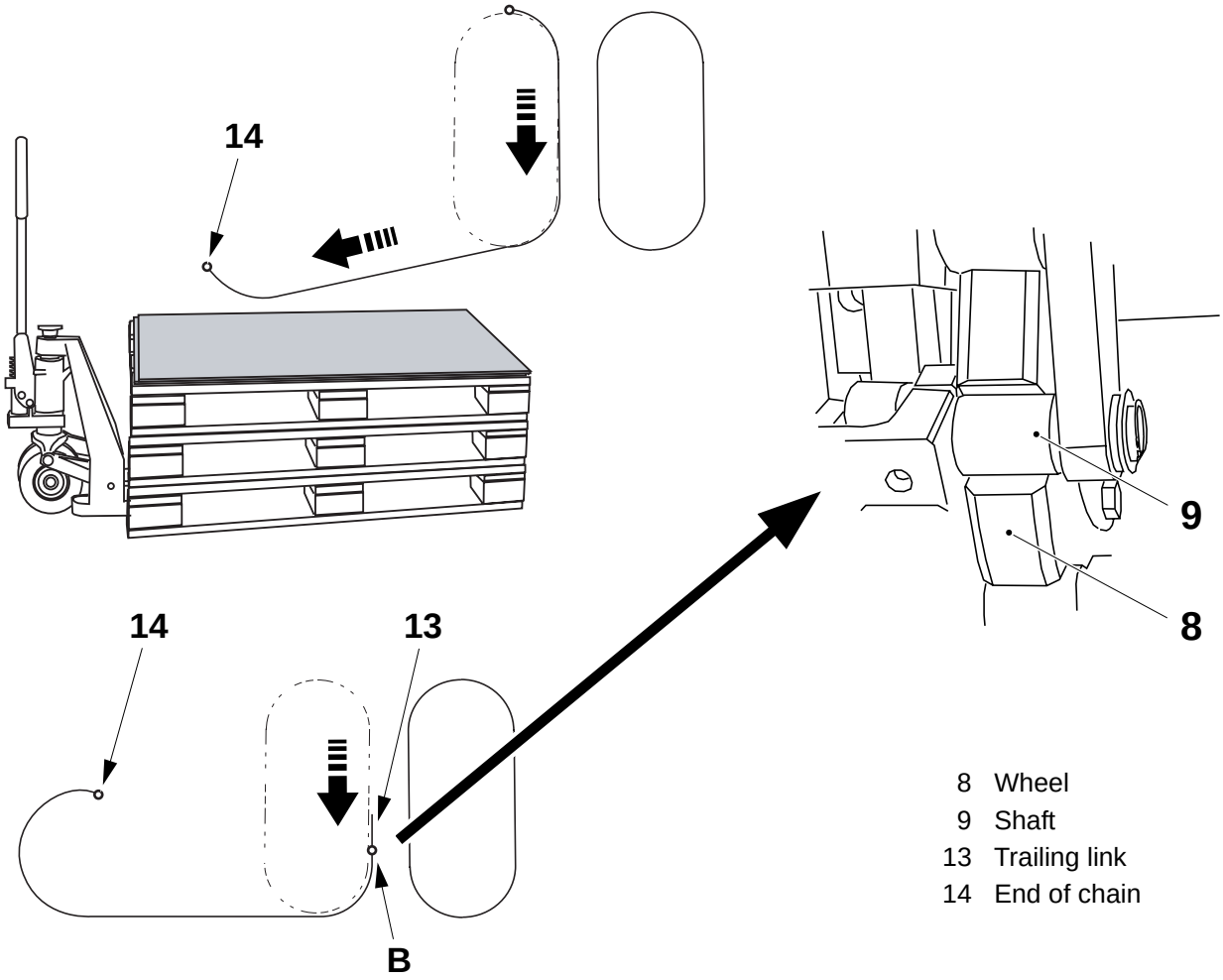

8 Wheel
9 Shaft
13 Trailing link
14 End of chain

(Cont'd)

(Cont'd)

Assembly

Note! When fitting the chains, seal the threads on the grease nipples with PTFE tape.

a) Crank the chain so the link (2) of the pressure link chain (1) is in position **A**.

b) Divide the chain to be fitted in two parts.

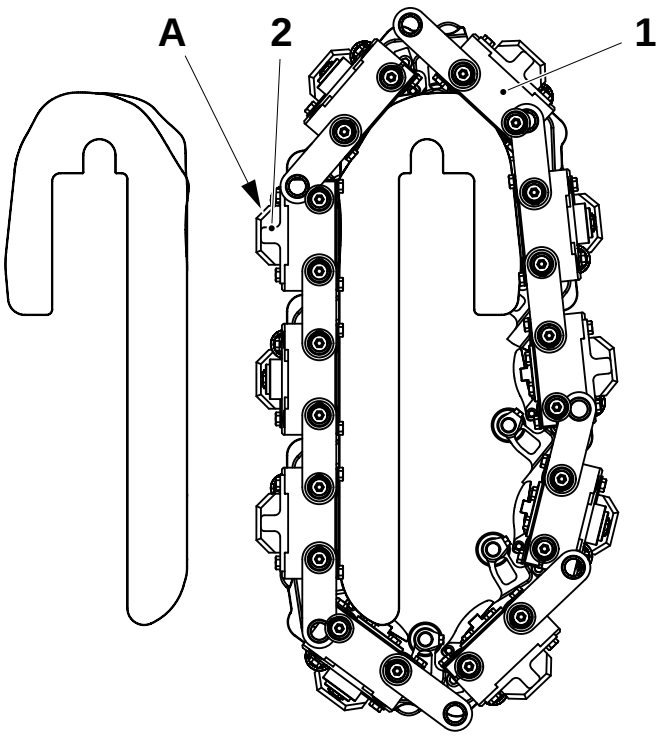

1 Pressure link chain
2 Link

(Cont'd)

(Cont'd)

c) Lift the first part of the sealing link chain (3) and place it on the cam.

d) Mate the leading link (4) of the sealing link chain (3) with the matching link (5) of the pressure link chain (1) (position **A**).

CAUTION

Never crank the jaw system backwards. Crank the jaw system very slowly to prevent injury to the persons guiding the chain links into the jaw system and damage to the equipment. Do not try to force the crank handle around. If the jaws become blocked, cease cranking and ascertain the cause of the problem.

e) Crank until the last link (6) of the sealing link chain is in position **B**.

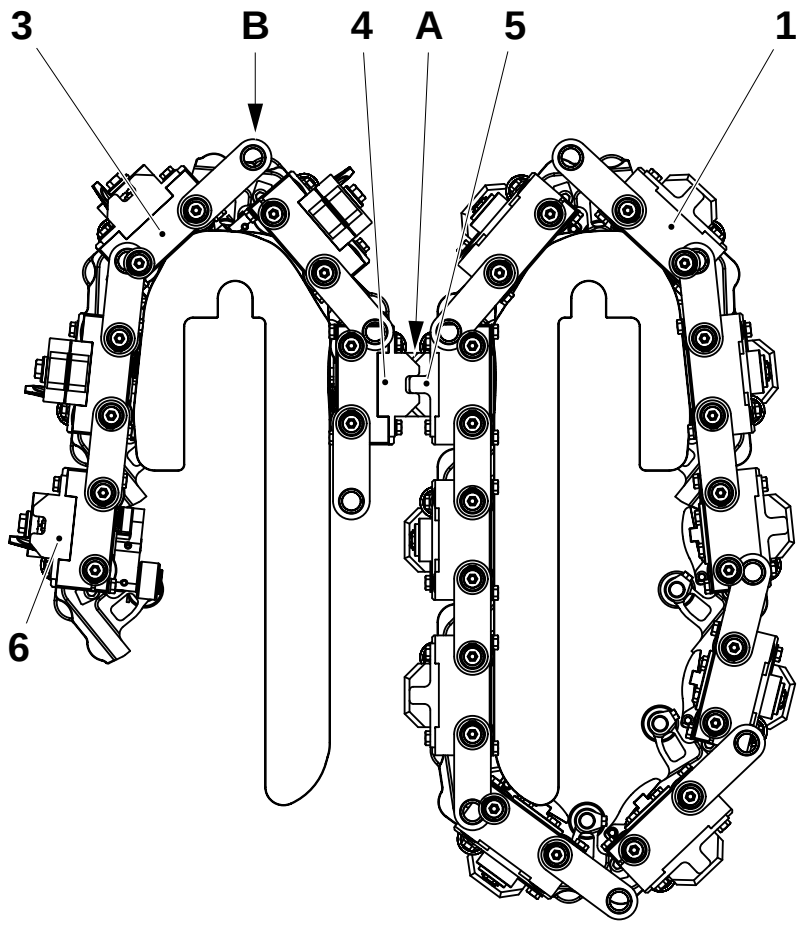

1 Pressure link chain
3 First part, sealing link chain
4 Leading link, sealing link chain
5 Matching link, pressure link chain
6 Last link, sealing link chain

(Cont'd)

(Cont'd)

f) Lift the second part of the sealing link chain (7) and place it on the cam. Hold it in position while the second person connects it to the first part (3) at point (**B**).

Note! While cranking keep the chain in tension by pulling it to keep the link shaft (9) in the sprocket (8).

g) Crank the jaw system until the end of the chain (10) is at the top in position (**B**).

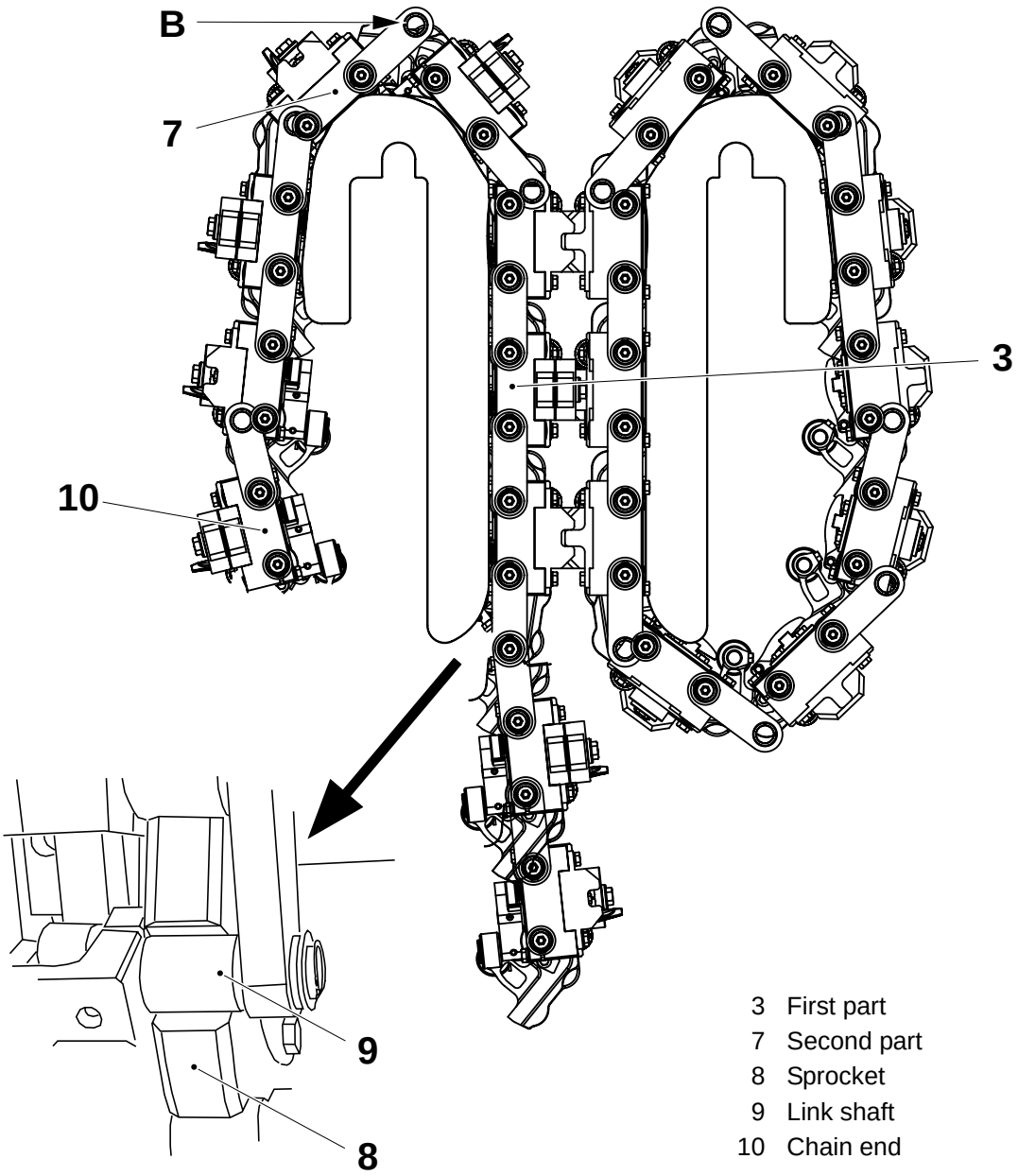

3 First part
7 Second part
8 Sprocket
9 Link shaft
10 Chain end

(Cont'd)

(Cont'd)

h) Bring the two ends of the chain (10) and (11) together and then link them.

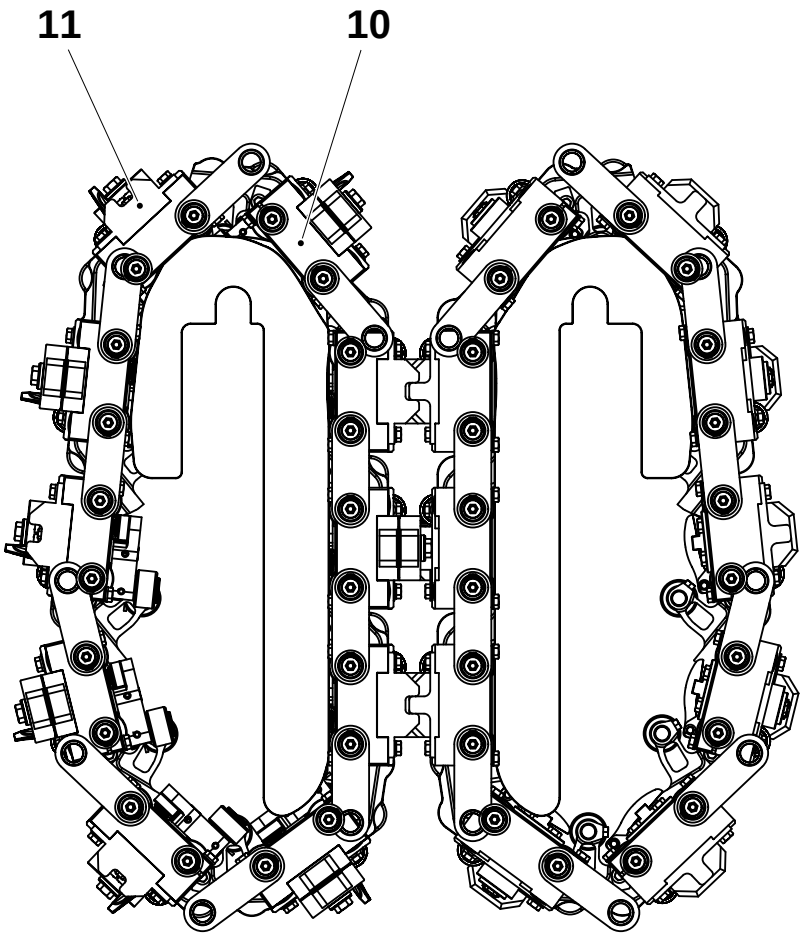

10 Chain end
11 Chain end

(Cont'd)

(Cont'd)

CAUTION
Do not forget to remove the screws (12) from the chain tensioning mechanism.

If necessary repeat from page 4-8 onwards to overhaul the other chain.

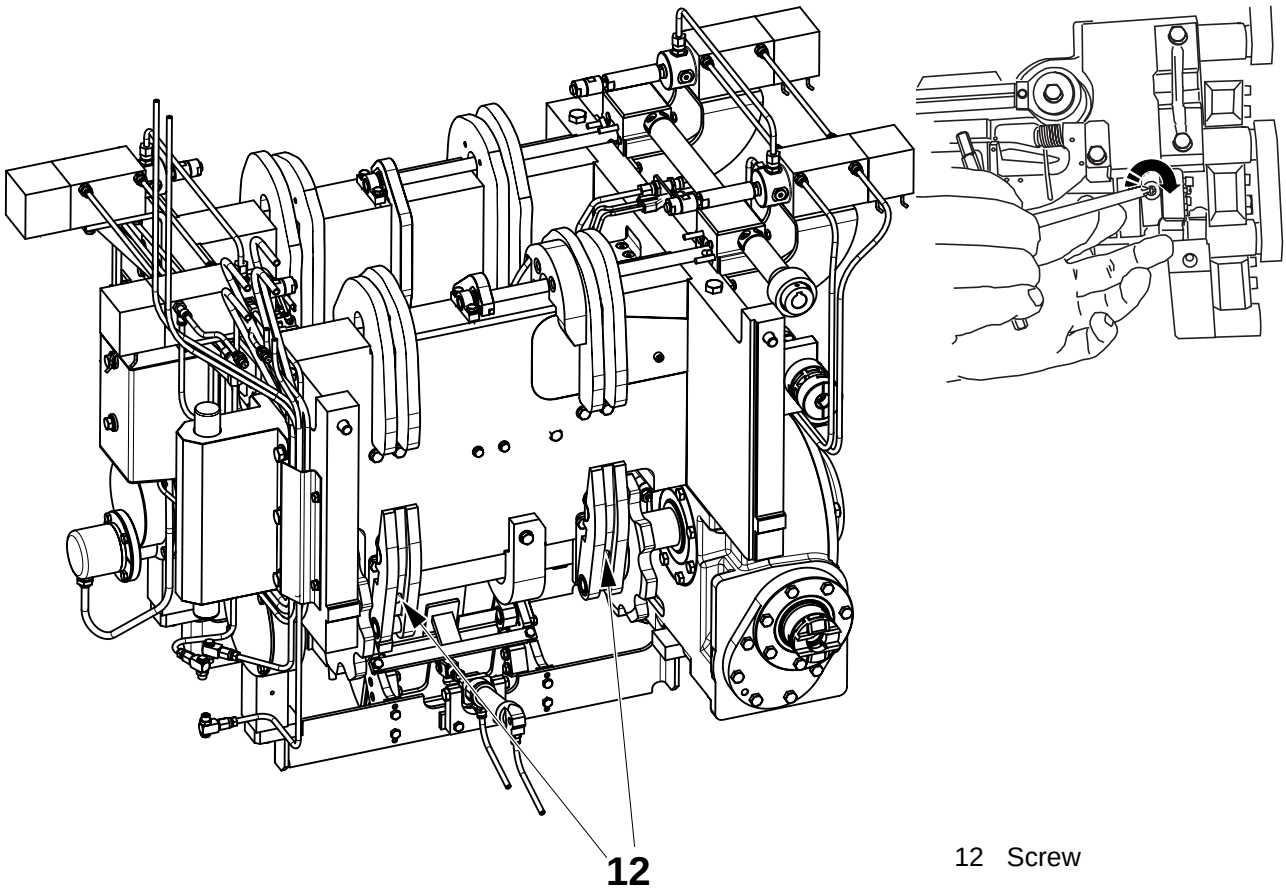

12 Screw

(Cont'd)

(Cont'd)

i) Secure the waste box assembly (13) in position beneath the jaw system with the screws (14).

j) Connect the air lines to the drop chute cylinder (15).

k) Fit the photocell brackets (16).

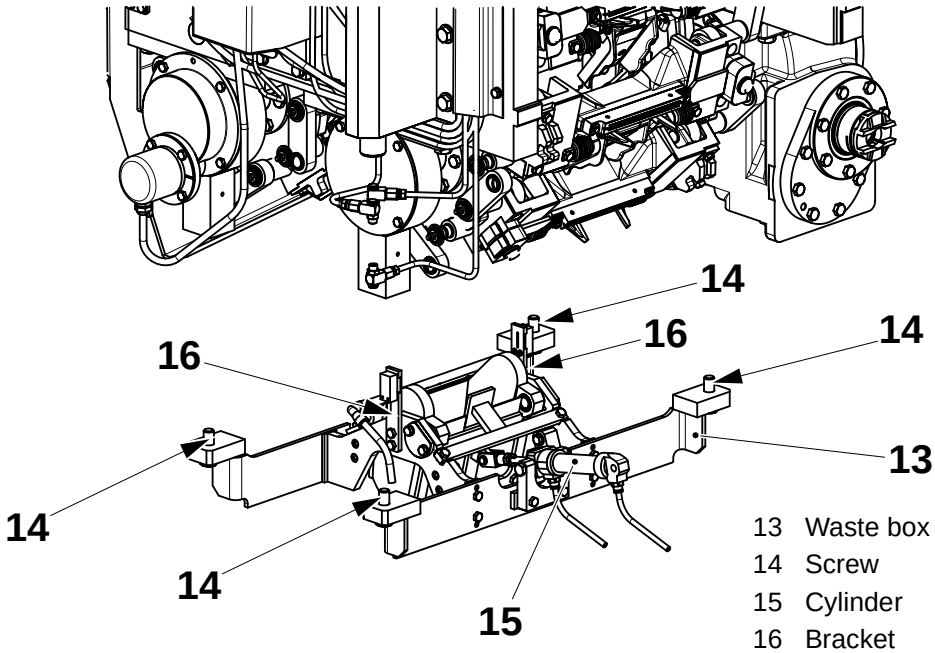

13 Waste box
14 Screw
15 Cylinder
16 Bracket

l) Swing the jaw system toward the plate and secure in position with the screws (17).

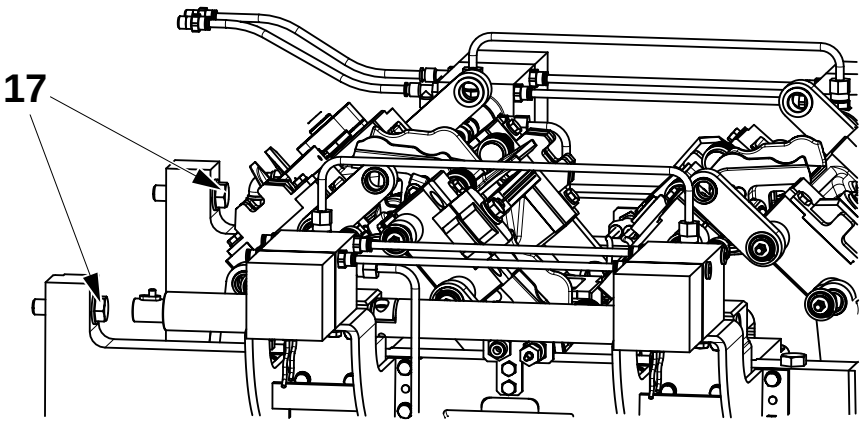

17 Screw

4-3 Jaw System - Grease Chains

Tools: - Pneumatic Grease Gun	TP No. 1512559
Consumables: - Grease Code R	
SPC Reference	648554-0100

Note! This procedure is valid for machines with no automatic greasing system.

Note! Apply grease until it comes out from the rollers (2).

a) Apply grease code **R**, see 10.3 Consumables, to the grease nipples (1) on each side of the two chains using a grease gun.

b) Apply grease code **R**, see 10.3 Consumables, to the grease nipples (3) on each side of the jaw system using a grease gun.

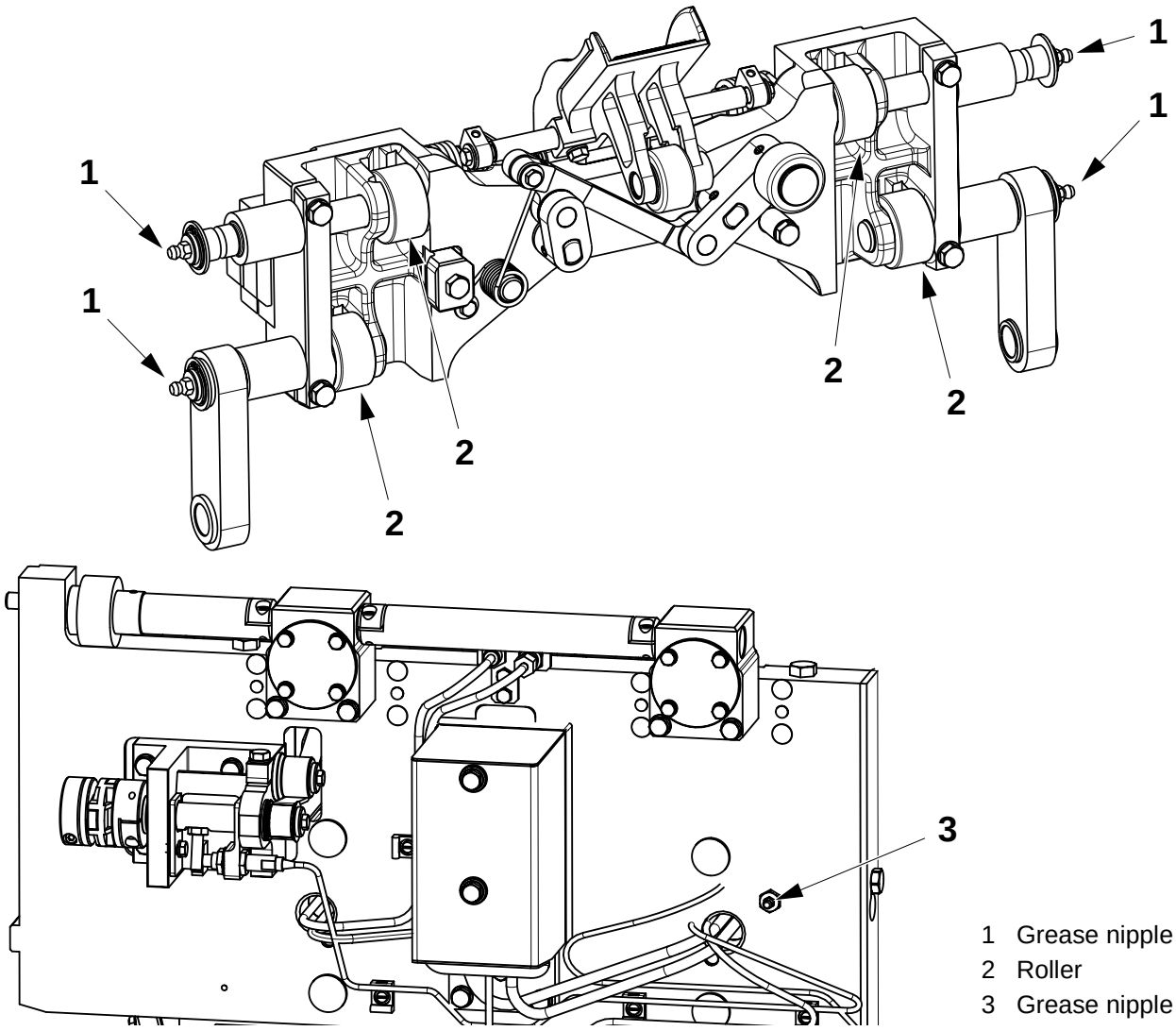

1 Grease nipple
2 Roller
3 Grease nipple

4-4 Jaw System - Check Couplings

SPC Reference	648554-0100

WARNING
Risk of burns!
Gearbox might be hot.

Valid for New Gearboxes
Check the couplings (1) and (2) for signs of ware, damage or play.
Change as required.

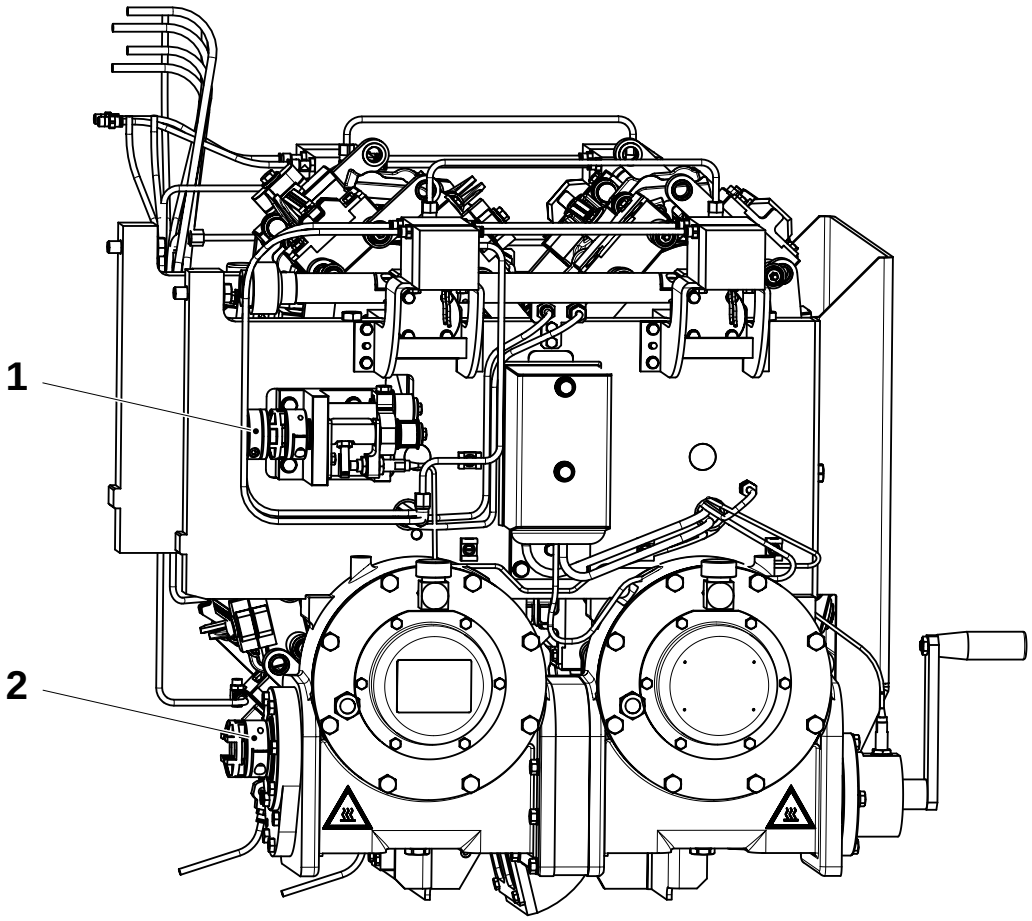

1 Coupling
2 Coupling

(Cont'd)

(Cont'd)

Valid for Old Gearboxes

Check the couplings (1), (2) and (3) for signs of ware, damage or play. Change as required.

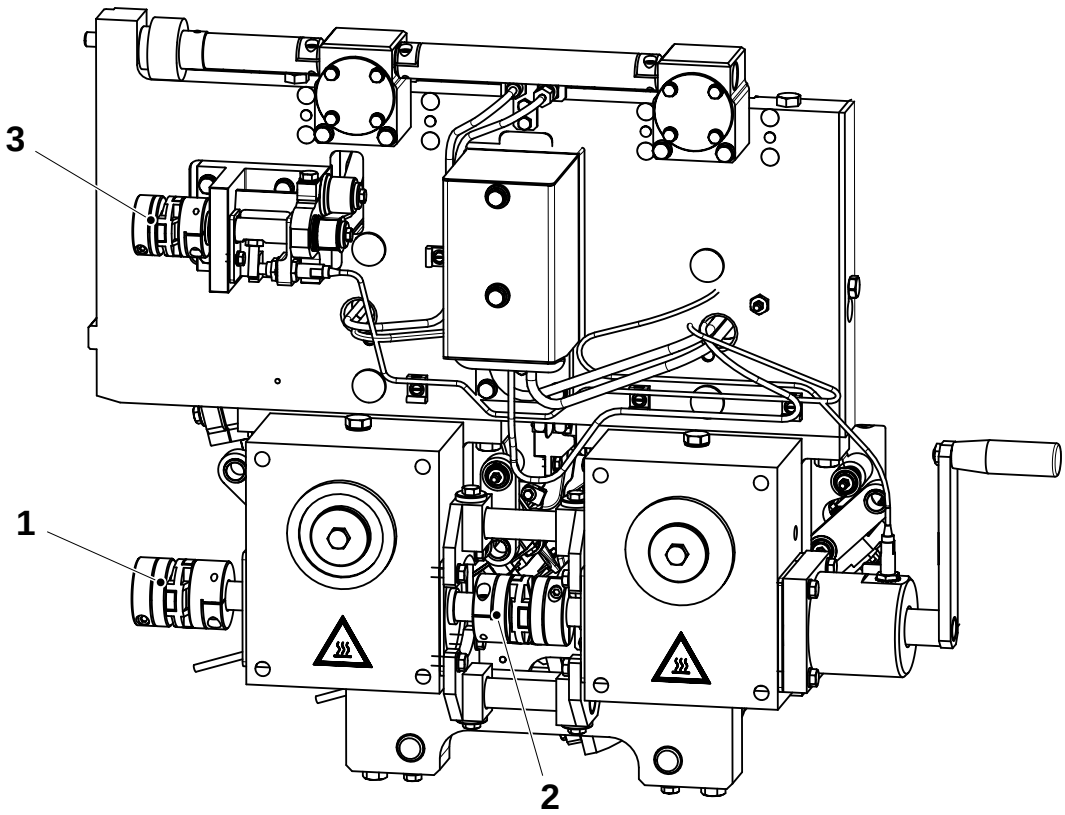

1 Coupling
2 Coupling
3 Coupling

4-5 Jaw System - Set Coupling

SPC Reference	648554-0100

WARNING
Risk of burns!
Gearbox might be hot.

Valid for New Gearboxes
Set the coupling (1), see Design Correction Coupling, Valid for All Machines.

Set the coupling (2), see Jaw Drive Coupling, Valid for New Gearboxes.

Valid for Old Gearboxes
Set the coupling (3), see Design Correction Coupling, Valid for All Machines.

Set the coupling (4), see Jaw Drive Coupling, Valid for Old Gearboxes.

Set the coupling (5), see Gearbox Coupling, Valid for Old Gearboxes.

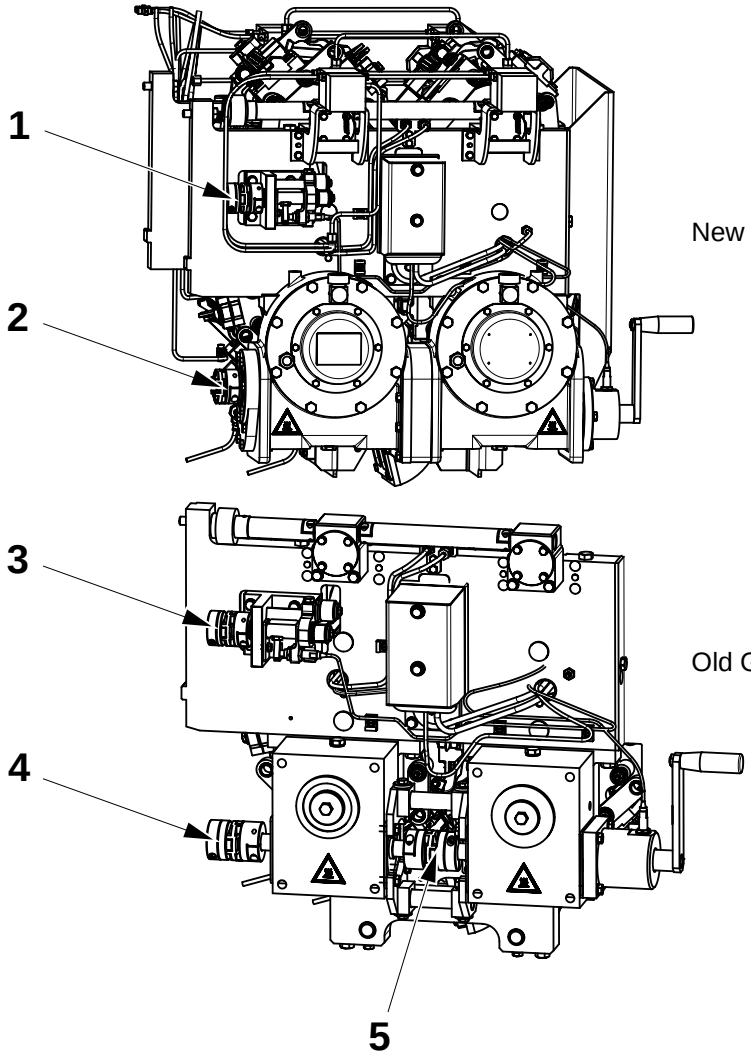

1 Coupling
2 Coupling
3 Coupling
4 Coupling
5 Coupling

(Cont'd)

(Cont'd)

Jaw Drive Coupling, Valid for New Gearboxes

a) Slide the central part of the coupling (1) until it touches the coupling part (2).

b) Set the gap **A** between the central part of the coupling (1) and the coupling part (3), then tighten the fixing screw (4) in the coupling part (3).

Package	A (mm)
TBA 200 B - TBA 200 M -TBA 200 S - TBA 250 B - TBA 250 S	0.2

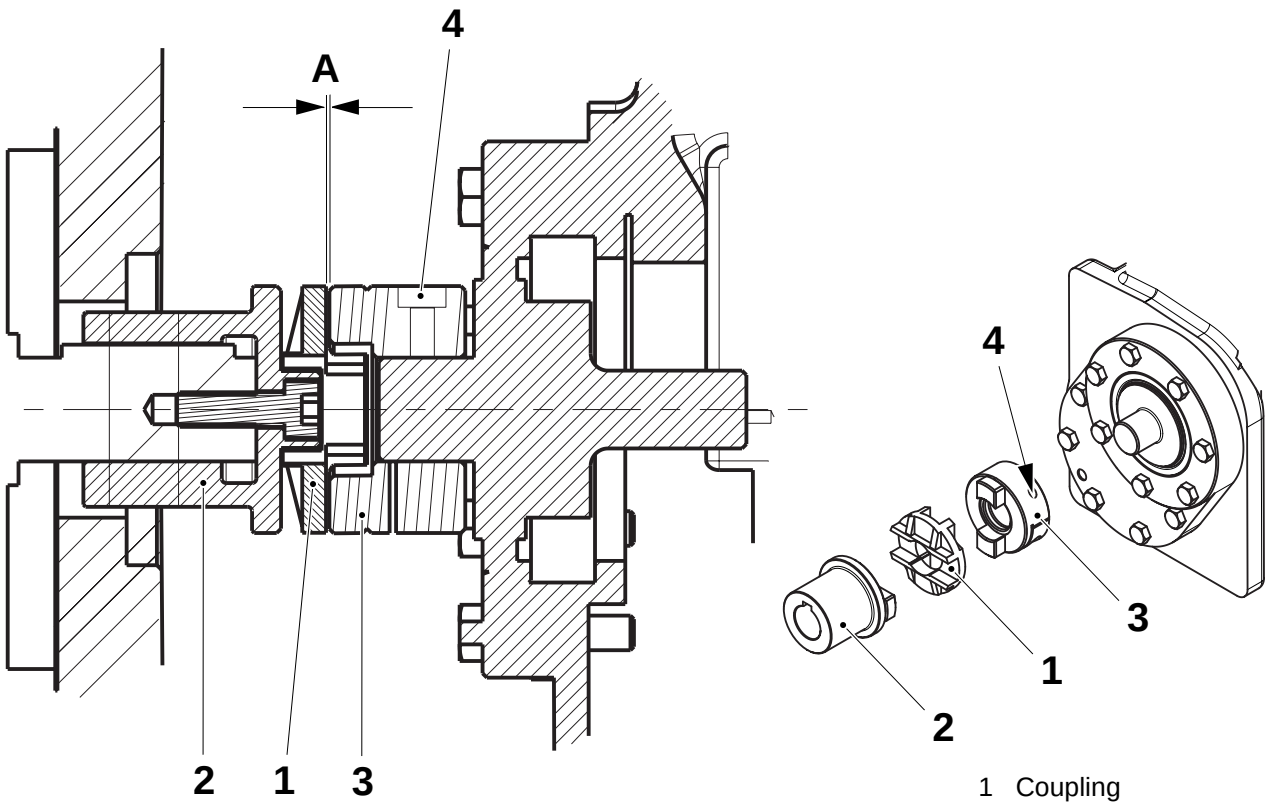

1 Coupling
2 Coupling part
3 Coupling part
4 Screw

(Cont'd)

(Cont'd)

Jaw Drive Coupling, Valid for Old Gearboxes

a) Loosen the screws (1) and set distance **A** between the spacer (2) and the coupling piece (3) according to the table below.

b) Tighten the screw (1).

c) Loosen the screws (4) and set distance **B** between the surfaces (5) and (6), according to the table below.

d) Tighten the screw (4).

Package	A ±0.5 (mm)	B (mm)
TBA 200 B - TBA 200 M	13	0.2
TBA 200 S	8	0.2
TBA 250 B	6	0.2
TBA 250 S	5.5	0.2

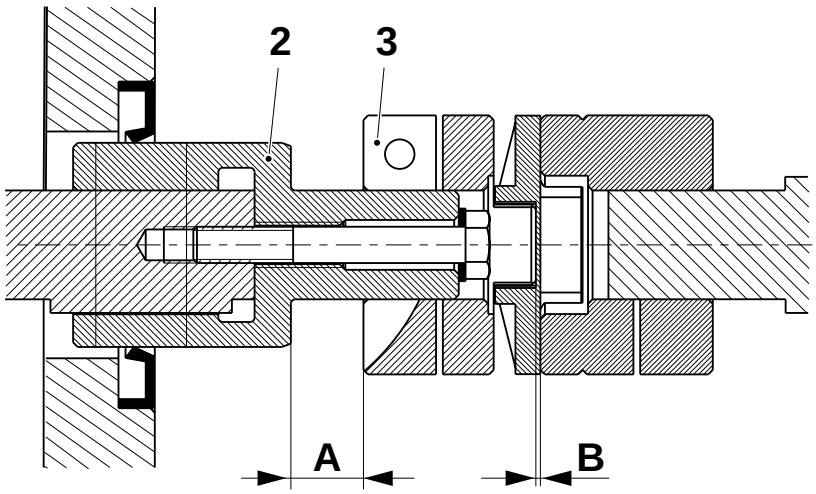

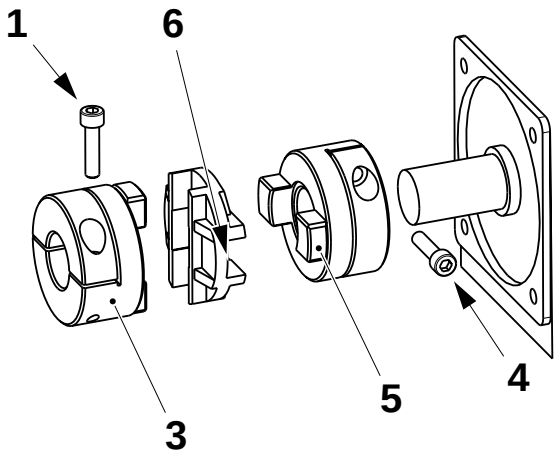

1 Screw
2 Spacer
3 Coupling piece
4 Shaft
5 Surface
6 Surface

(Cont'd)

(Cont'd)

Gearbox Coupling, Valid for Old Gearboxes

a) Loosen the screws (1) and (2).

b) Move the complete coupling so that distance **A** between the shoulder on the gearbox shaft (3) and the coupling piece (4) is approximately the same as distance **B** between the coupling piece (5) and the shoulder on the other gearbox shaft (6).

c) Tighten the screw (1).

d) Insert a feeler gauge (distance **C**) between the surfaces (7) and (8).

e) Hold the feeler gauge in position with the coupling piece (5) and tighten the screw (2).

Package	A = B	C (mm)
TBA 200 B - TBA 200 M - TBA 200 S - TBA 250 B - TBA 250 S	-	0.2

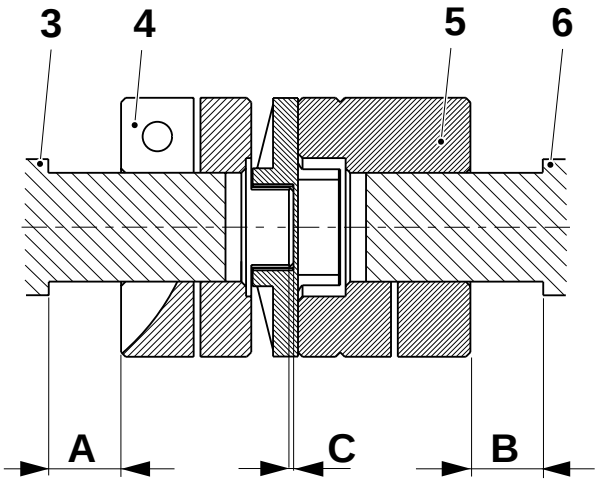

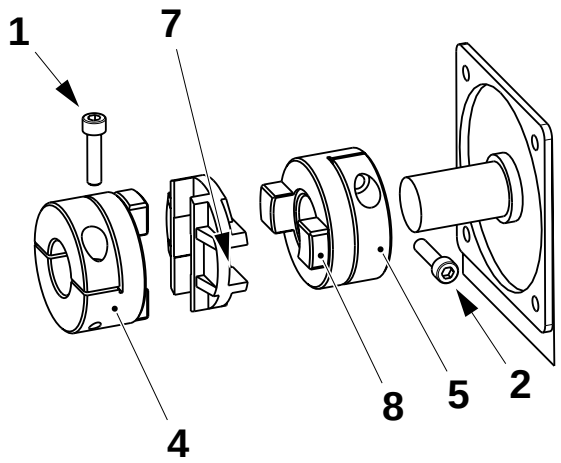

1 Screw
2 Screw
3 Shaft
4 Coupling piece
5 Coupling piece
6 Shaft
7 Surface
8 Surface

(Cont'd)

(Cont'd)

Design Correction Coupling, Valid for All Machines

a) Loosen the screws (1) and (2).

b) Push the pulley (3) and the coupling piece (4) toward each other as far as they will go and hold the components there.

c) Tighten the screw (1).

d) Fit the coupling pieces (5) and (6).

e) Insert feeler gauge (distance **A**) between the surfaces (7) and (8).

f) Hold the feeler gauge in position with the coupling piece (6) and tighten the screw (2).

Package	A (mm)
TBA 200 B - TBA 200 M -TBA 200 S - TBA 250 B - TBA 250 S	0.2

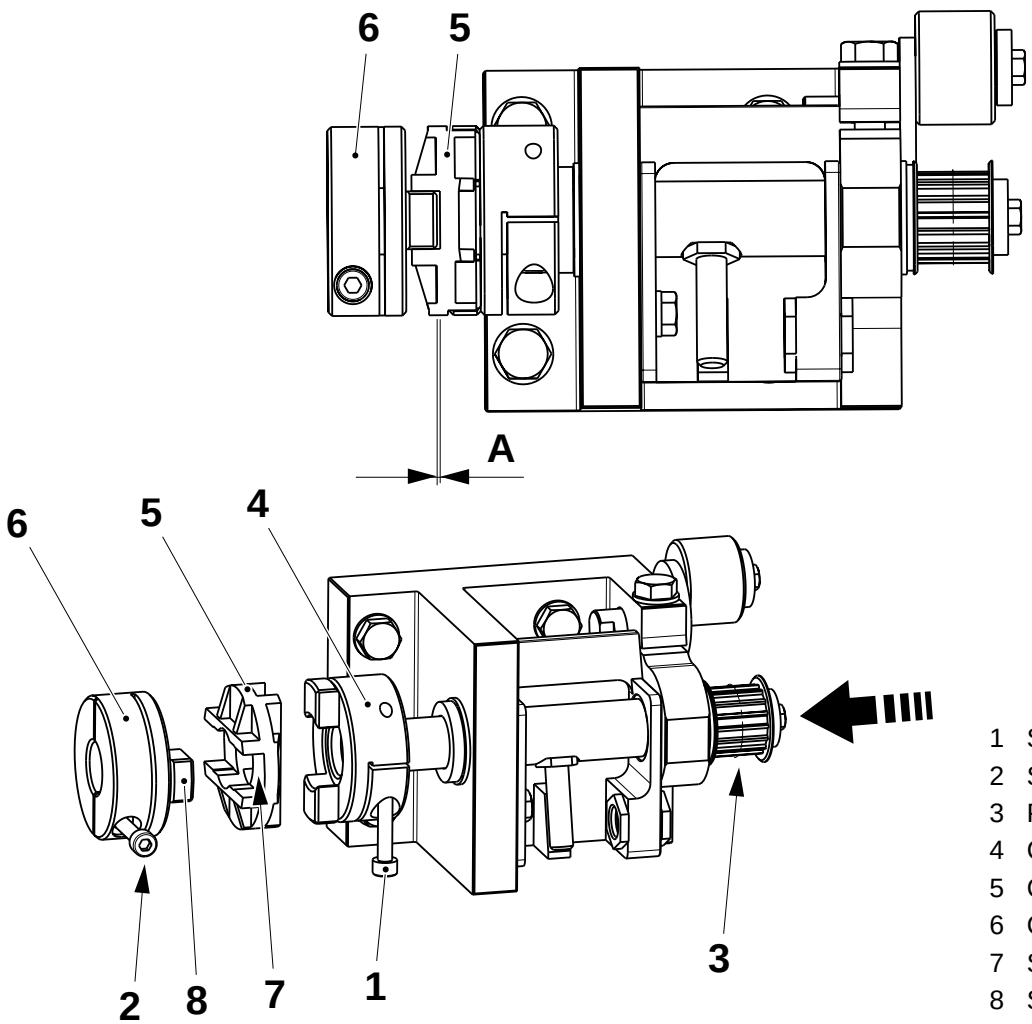

1 Screw
2 Screw
3 Pulley
4 Coupling piece
5 Coupling piece
6 Coupling piece
7 Surface
8 Surface

4.1 Sealing Jaw

SPC Reference	2529794-0100 2529795-0100

4.1-1 Sealing Jaw - Check Guides

SPC Reference	2529794-0100 2529795-0100

Note! The illustrations in this section show Titanium links. The procedure are valid for all types of links.

Crank the jaw system and check the guides (1) are not worn or damaged. If necessary, change the guides, see 4.1-9 Sealing Jaw - Change Guide.

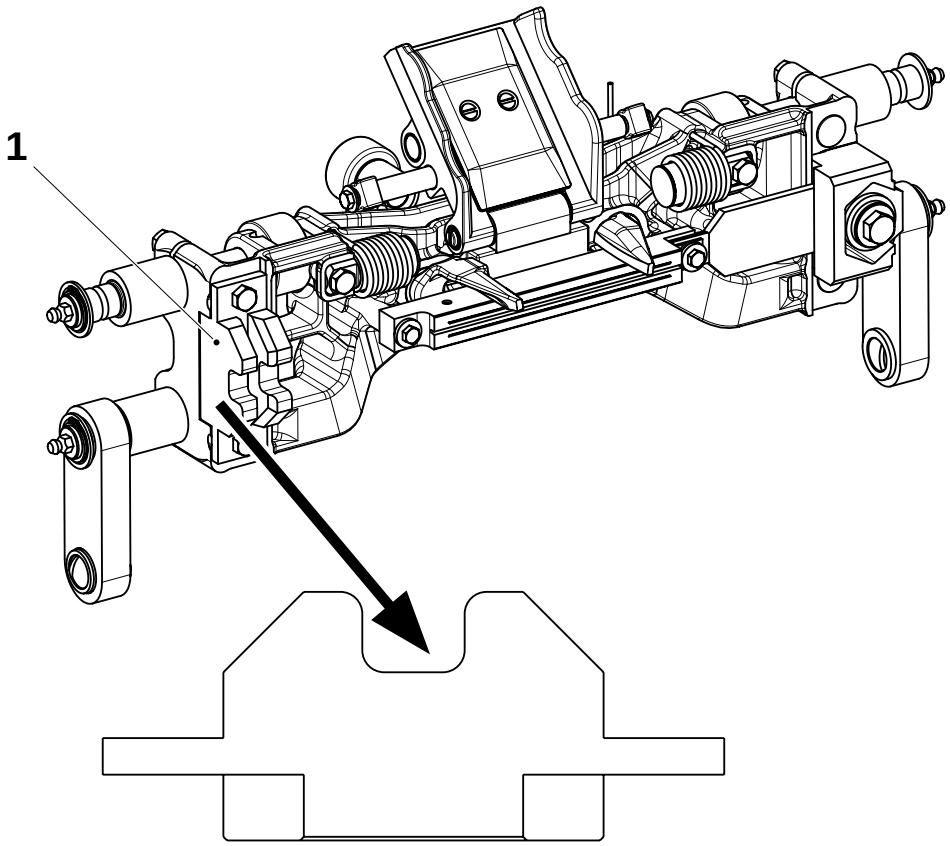

1 Guide

4.1-2 Sealing Jaw - Check Volume Flap Dampers

SPC Reference	2529794-0100 2529795-0100

Check volume flap damper, see 4.2-1 Pressure Jaw - Check Volume Flap Dampers.

4.1-3 Sealing Jaw - Check Volume Flap Springs, Holder And Bushings

SPC Reference	2529794-0100 2529795-0100

Check the volume flap springs, holder and bushing, see 4.2-2 Pressure Jaw - Check Volume Flap Springs, Holder and Bushings.

4.1-4 Sealing Jaw - Check Volume Flap Rollers

SPC Reference	2529794-0100 2529795-0100

Check the roller, see 4.2-3 Pressure Jaw - Check Volume Flap Rollers.

4.1-5 Sealing Jaw - Check Cam Followers

SPC Reference	2529794-0100 2529795-0100

Check the cam follower rollers, see 4.2-4 Pressure Jaw - Check Rollers.

4.1-6 Sealing Jaw - Check Flap Folding

SPC Reference	2529794-0100 2529795-0100

Check the shafts (1), (2), (3), (4) and (5) for wear or damage and replace as necessary. See 4.1-10 Sealing Jaw - Overhaul.

Check the spring (6) for wear or damage and replace as necessary. See 4.1-10 Sealing Jaw - Overhaul.

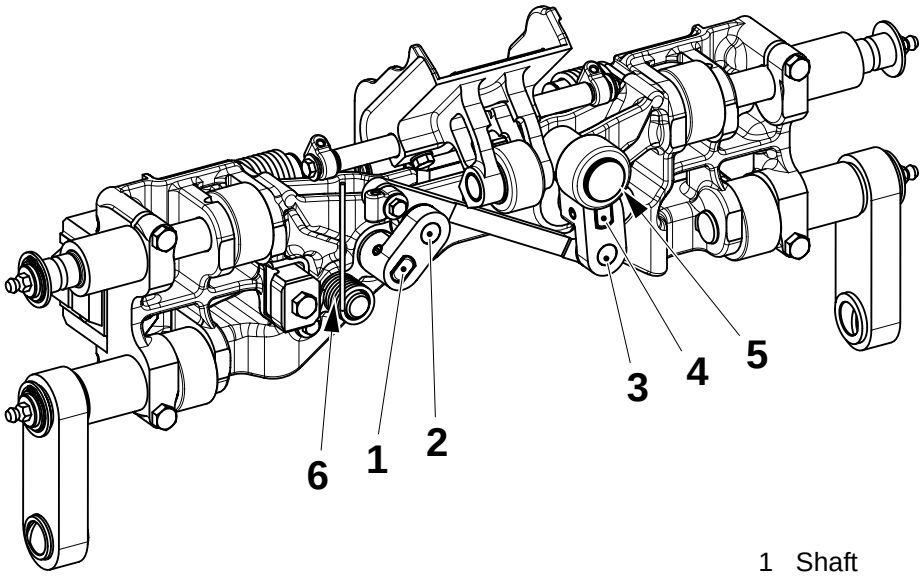

1 Shaft
2 Shaft
3 Shaft
4 Shaft
5 Shaft
6 Spring

4.1-7 Sealing Jaw - Check Inductor

SPC Reference	2529794-0100 2529795-0100

On one jaw, remove the screws (1) and the inductor (2).

Check the inductor (2) for wear or damage, change as required.

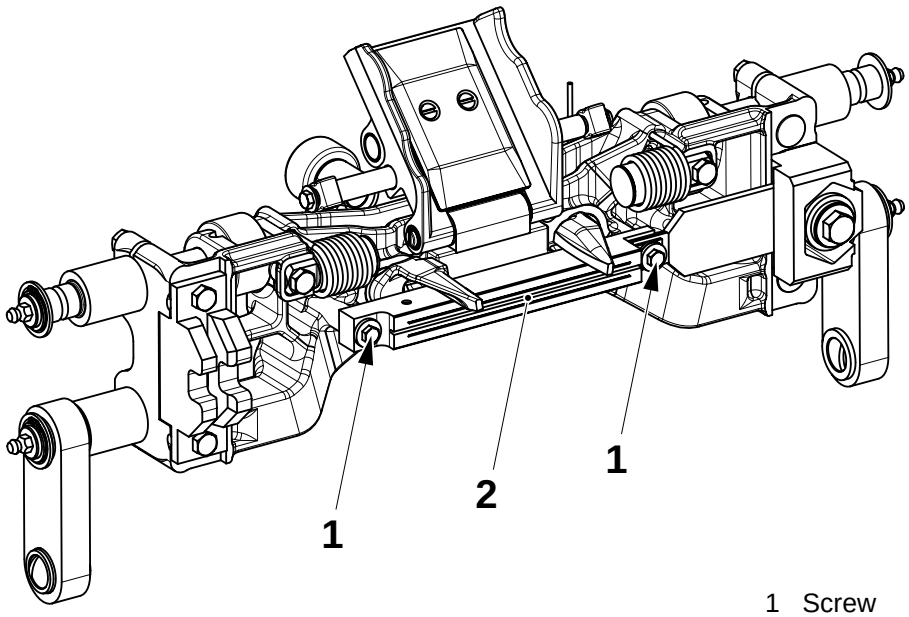

1 Screw
2 Inductor

4.1-8 Sealing Jaw - Check Carbon Brushes

SPC Reference	2529794-0100 2529795-0100

Rotatable Brushes

Check the carbon brushes (1) for wear or damage.

If the brushes are worn on one side rotate them, see below.

If the brushes are worn on all sides, change them, see below.

If the carbon brushes are not damaged, clean them with 400-grade abrasive paper.

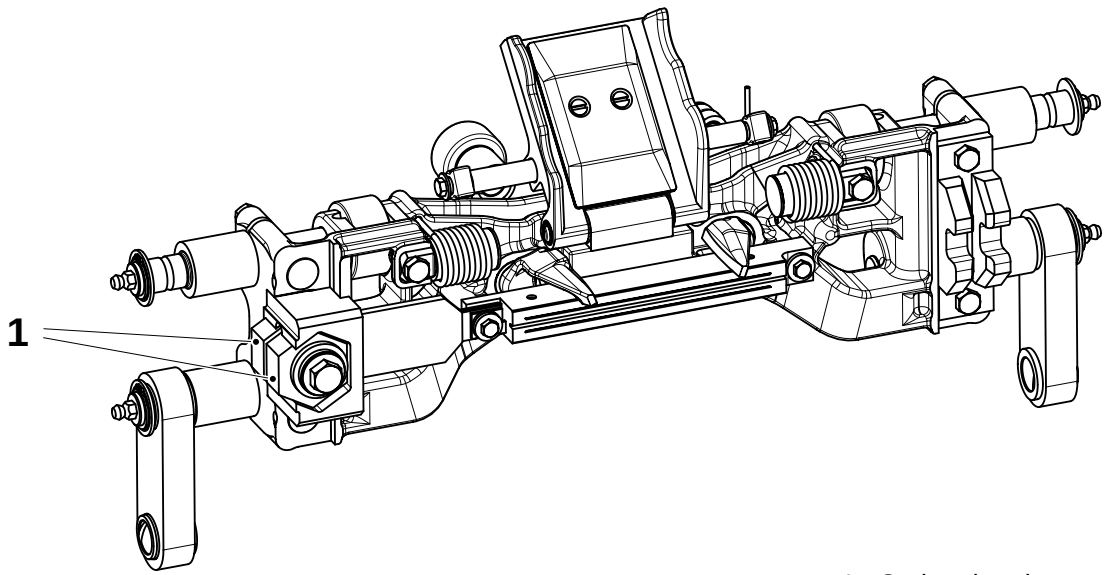

1 Carbon brushes

(Cont'd)

(Cont'd)

Note! Make sure the brushes are oriented correctly.

CAUTION
If the brushes are rotated, rotate them on every link. A different working thickness of the brush can cause damage to the equipment.

a) Remove the screw (1), washers (2), (3) and the insulator (4).
b) Slide out the brush holder (5) and remove the brushes (6).
c) If one side is worn, rotate the carbon brushes (6) through 120° and insert them again. If **all** sides are worn, change them.
d) Assemble in the reverse order.
e) Repeat the procedure on the other links.

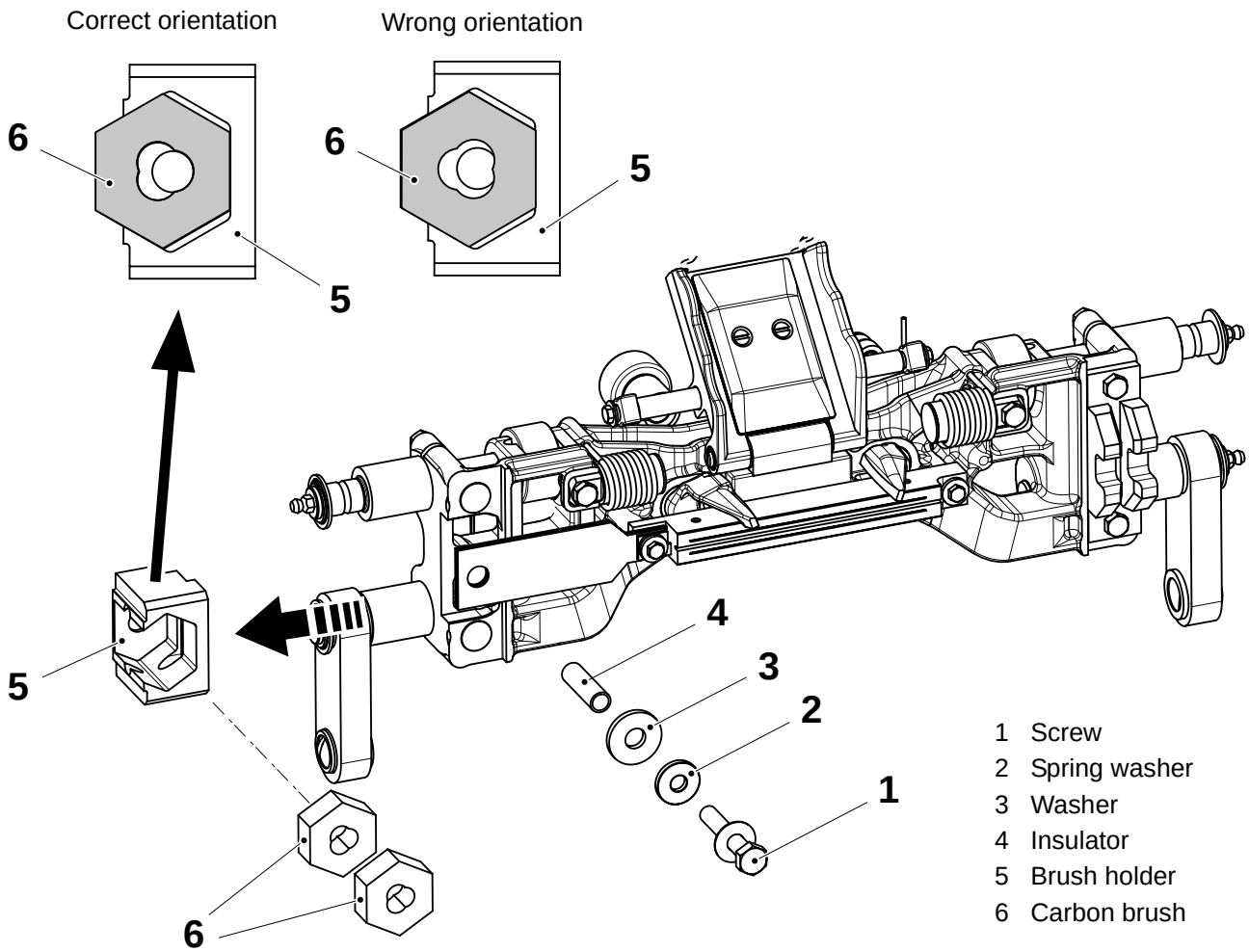

Fixed Brushes

Check the carbon brushes (1) for wear or damage.

If necessary, change the bushes, see below.

If the carbon brushes are not damaged, clean them with 400-grade abrasive paper.

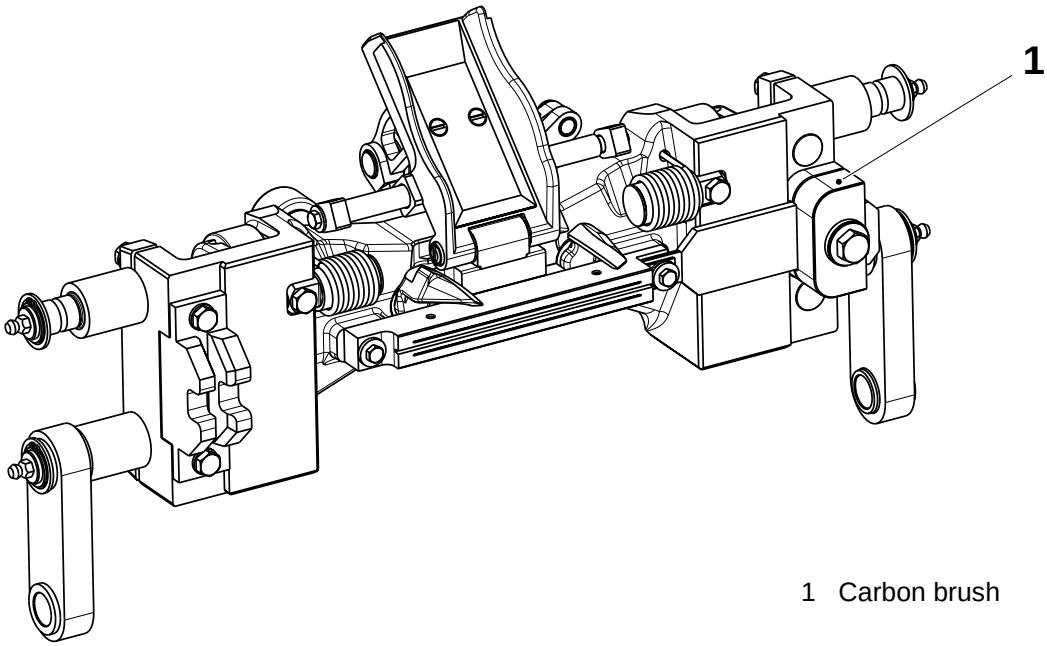

1 Carbon brush

a) On one jaw, remove the screw (1), spring washer (2), washer (3), insulator (4) and brush holder (5).

b) Change the carbon brushes (6).

c) Assemble in the reverse order.

d) Repeat the procedure at the other links.

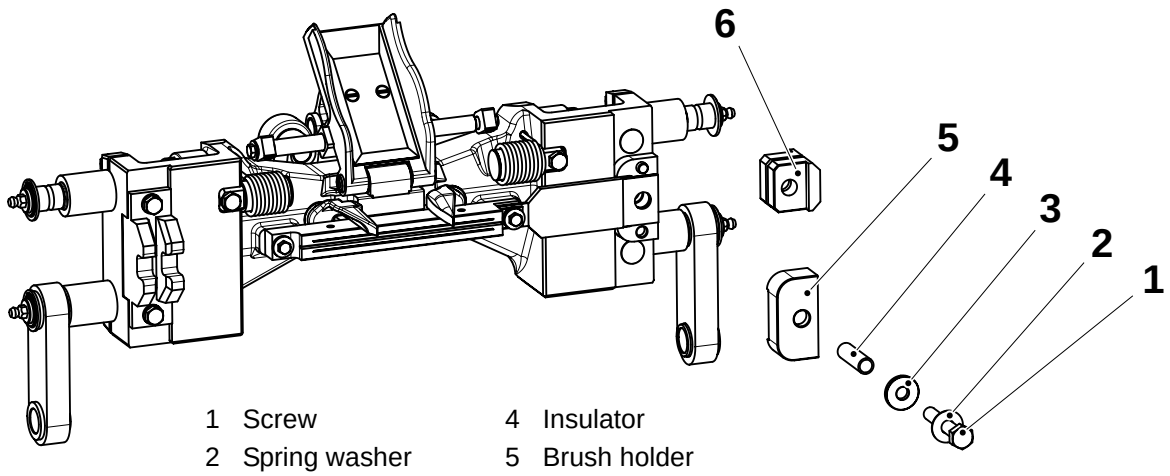

1 Screw
2 Spring washer
3 Washer
4 Insulator
5 Brush holder
6 Carbon brushes

4.1-9 Sealing Jaw - Change Guide

SPC Reference	2529794-0100 2529795-0100

a) On one of the jaws, remove the screws (1) and change the guide (2).

b) Assemble in reverse order.

c) Repeat the procedure on the other jaws.

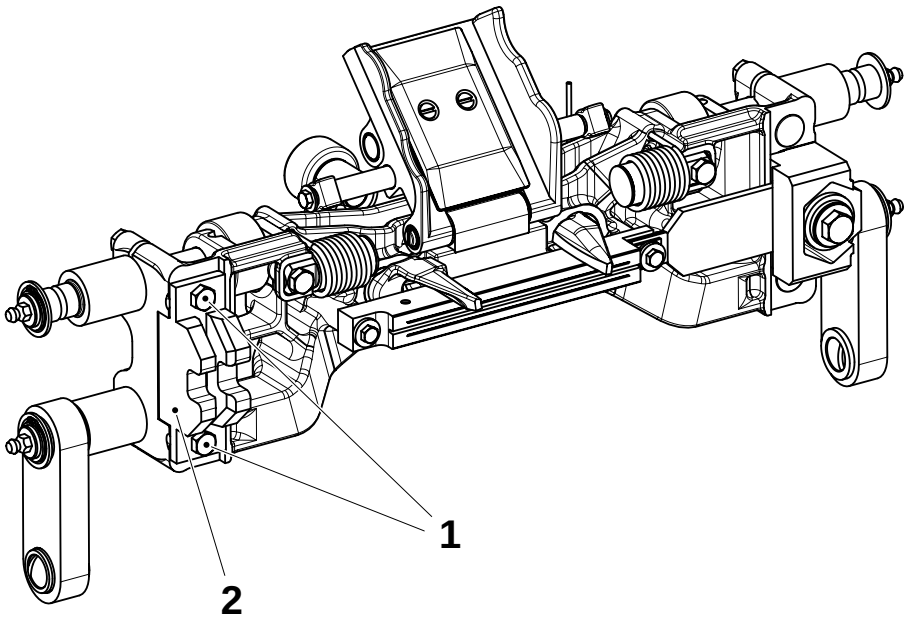

1 Screw
2 Guide

4.1-10 Sealing Jaw - Overhaul

Tools - Axle Extractor - Attachment	 TP. No. 1487215 TP. No. 1499129
SPC Reference	2529794-0100 2529795-0100

a) Remove the chains, see 4-2 Jaw System - Chain Disassembly and Reassembly.

b) Remove the grease nipples and retaining ring (1), then change the link (2).

c) Remove and change the guide (3), see 4.1-9 Sealing Jaw - Change Guide.

d) Remove and overhaul the volume flap springs, holders and bushings (4), see 4.1-6 Sealing Jaw - Check Flap Folding.

e) Remove the inductor (5). If it is damaged, change it, see 4.1-7 Sealing Jaw - Check Inductor.

f) Change the carbon brushes (6), see 4.1-8 Sealing Jaw - Check Carbon Brushes.

g) Overhaul the volume flap (7), see 4.2-5 Pressure Jaw - Change Volume Flap Springs, Holder and Bushings and 4.2-6 Pressure Jaw - Change Volume Flap Rollers.

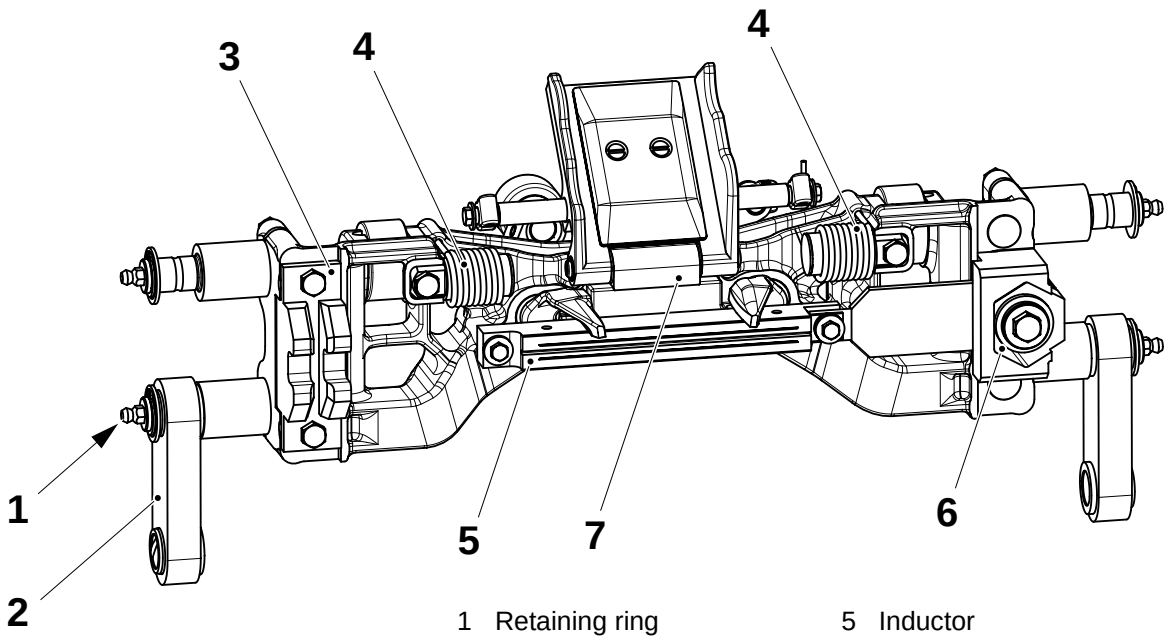

1 Retaining ring
2 Link
3 Guide
4 Spring, holder, bushing
5 Inductor
6 Carbon brushes
7 Volume flap

(Cont'd)

(Cont'd)

h) Remove the screw (8).

i) Remove the spring pins (9) and (10), and remove the design correction control link (11).

j) Remove and change the spring (12).

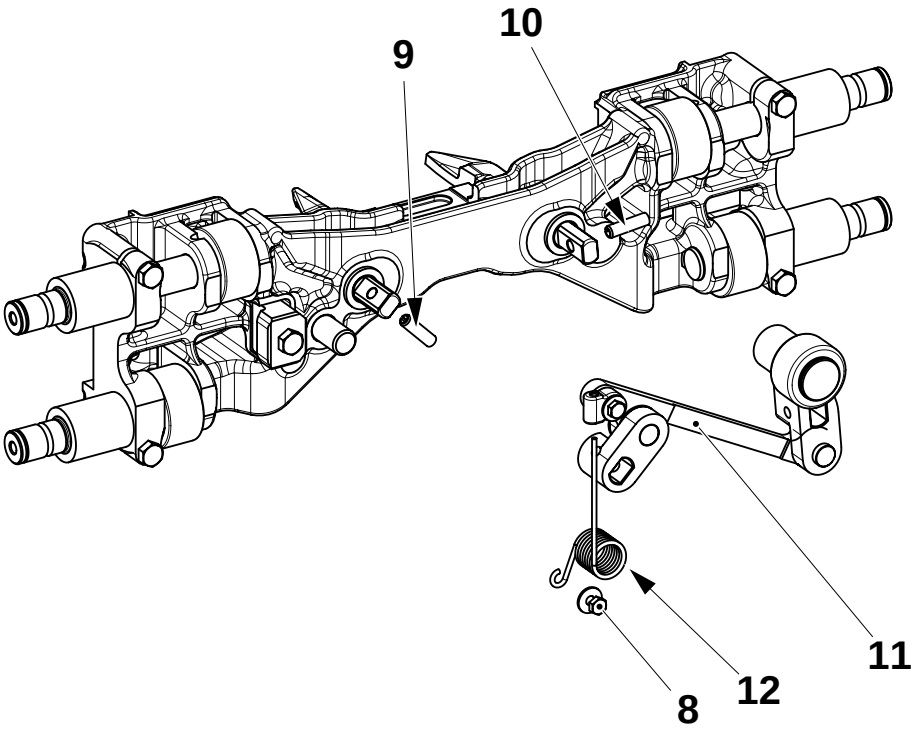

8 Screw
9 Spring pin
10 Spring pin
11 Control link
12 Spring

(Cont'd)

(Cont'd)

k) Remove the spring pin (13) and pull out the axle (14).

l) Change the bushings (15) and the roller (16).

m) Remove the retaining rings (17), (18) and change the bushings (19), (20) and the bracket (21).

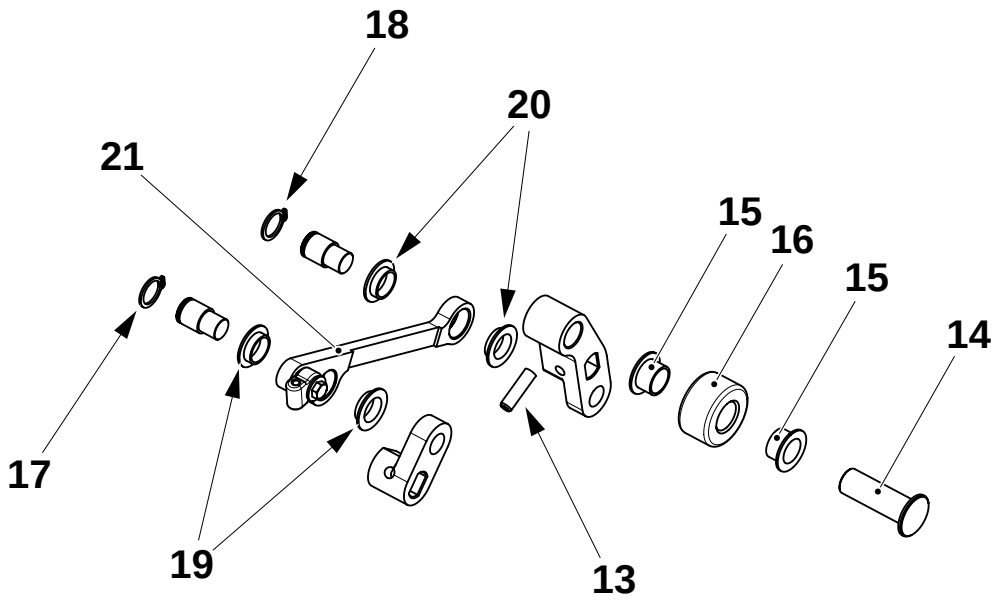

13	Spring pin	18	Retaining ring
14	Axle	19	Bushing
15	Bushing	20	Bushing
16	Roller	21	Bracket
17	Retaining ring		

(Cont'd)

(Cont'd)

n) Pull out the shafts (22) and change the bushings (23) and (24).

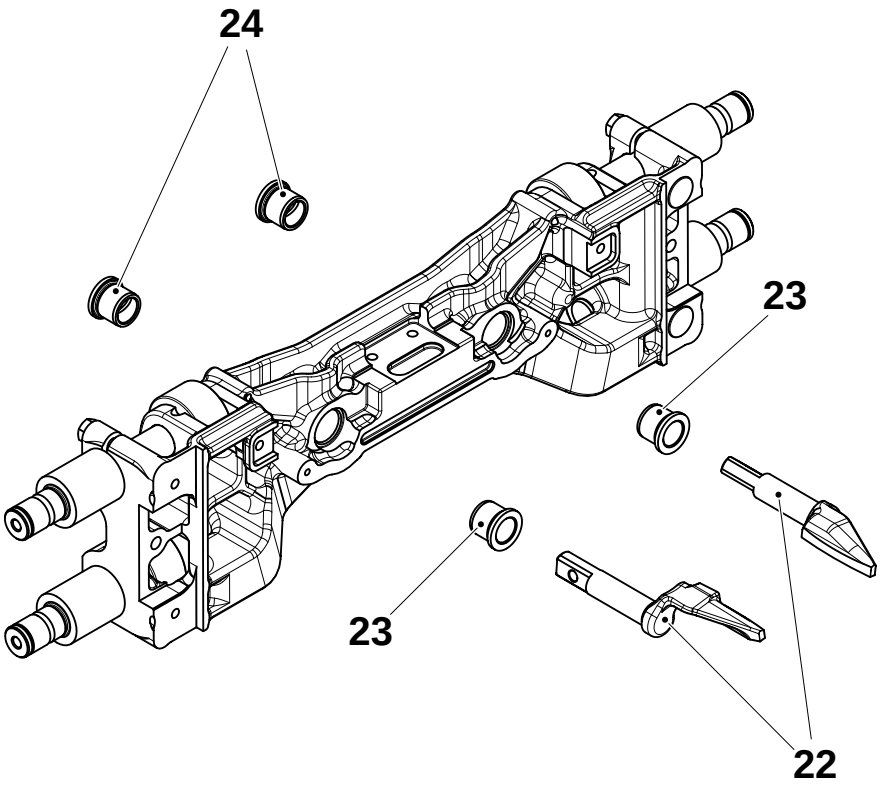

22 Shaft
23 Bushing
24 Bushing

(Cont'd)

(Cont'd)

o) Loosen the screws (25).

p) Slide the end of the tool (26), with the thicker of the two attachments, over the axle (27) until it touches the jaw (28).

q) Rotate the knurled part of the tool (29) counter-clockwise approximately ten turns.

r) Push the bolt (30) through the tool and screw it into the hole (31) where the grease nipple is normally fitted.
Do not over tighten.

Note! Do not try to split the link by inserting a tool in the groove (32).

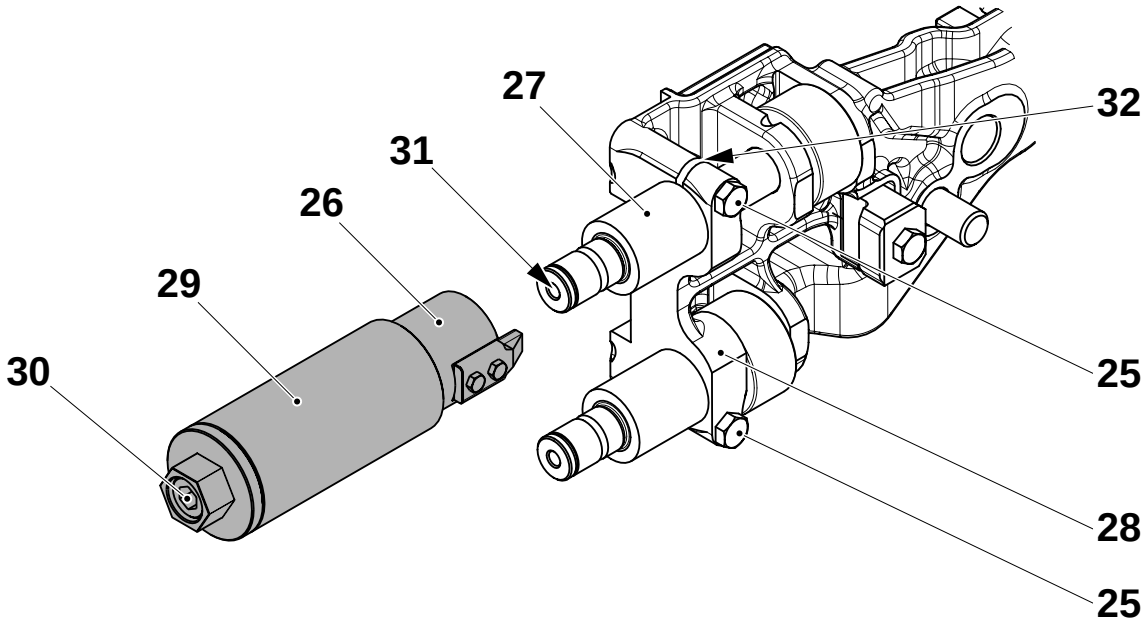

25	Screw	29	Knurled part
26	Tool	30	Bolt
27	Axle	31	Hole
28	Link	32	Groove

(Cont'd)

(Cont'd)

s) While preventing the bolt (30) from turning, rotate the knurled part (29) of the tool clockwise to extract the axle.

t) Change the roller (33).

u) Repeat steps o) to t) for the other rollers.

v) Assemble in the reverse order.

w) Fit and tension the chains, see 4-2 Jaw System - Chain Disassembly and Reassembly.

x) Grease the jaw system.

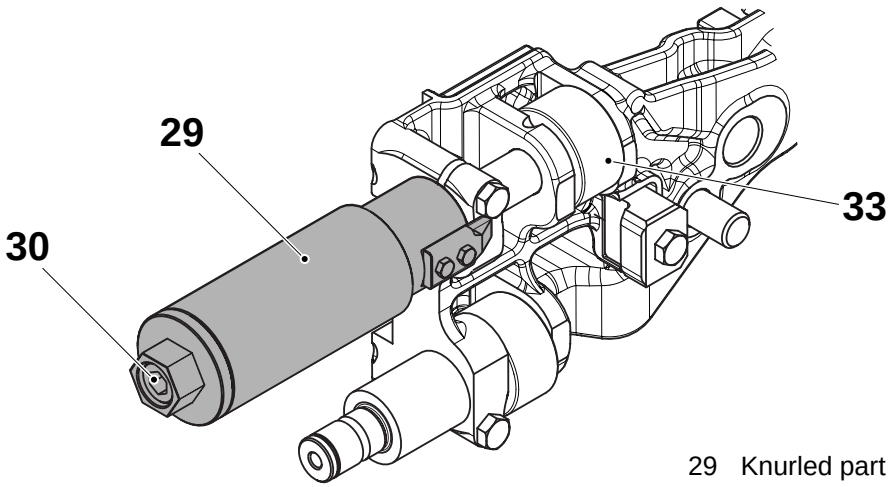

29 Knurled part
30 Bolt
33 Roller

4.2 Pressure Jaw

SPC Reference	2529791-0100 2529792-0100 2529793-0100

4.2-1 Pressure Jaw - Check Volume Flap Dampers

SPC Reference	2529791-0100 2529792-0100 2529793-0100

Note! The illustrations in this section show Titanium links. The procedure are valid for all types of links.

a) Lift the volume flap (1) and check the damper (2) for wear or damage.

b) Repeat on the other jaws.

If necessary, change the damper as follow:

c) Remove the screw (3) and change the damper (2).

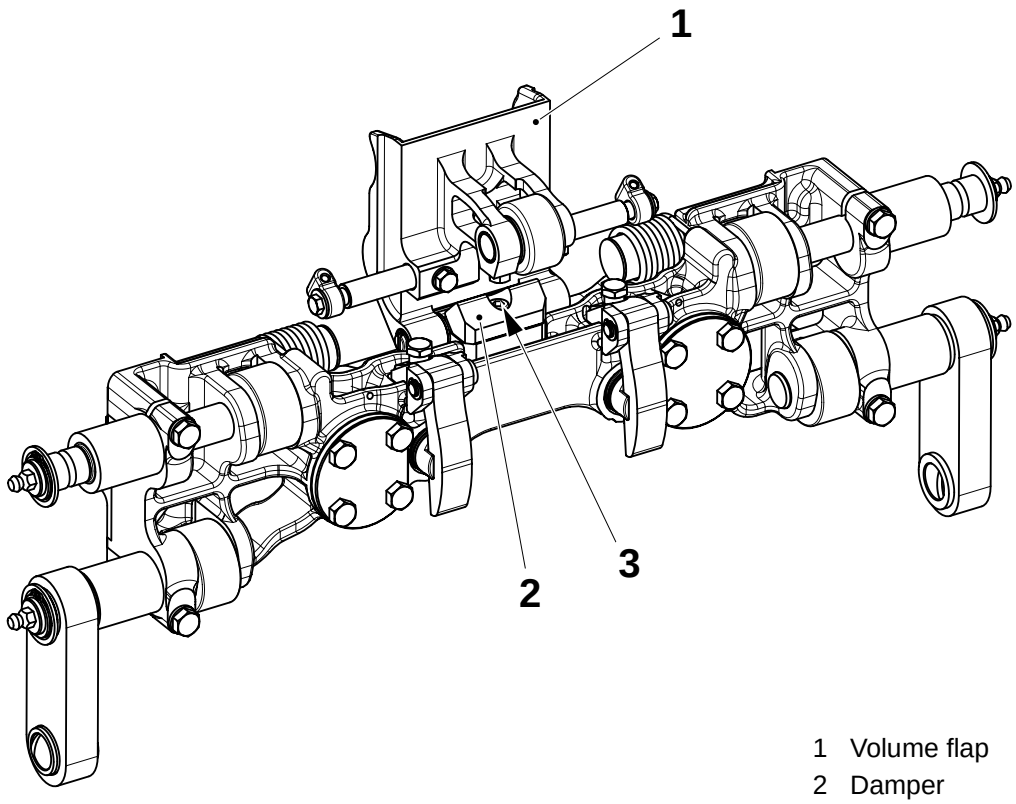

1 Volume flap
2 Damper
3 Screw

4.2-2 Pressure Jaw - Check Volume Flap Springs, Holder and Bushings

SPC Reference	2529791-0100 2529792-0100 2529793-0100

Check:

- the springs (1) for damage.
- for excessive play in the volume flap bushings (2).
- the bushings (3) for wear.
- the holder (4) for wear.

If necessary, change the springs, the bushings or the blocks, see 4.2-5 Pressure Jaw - Change Volume Flap Springs, Holder and Bushings.

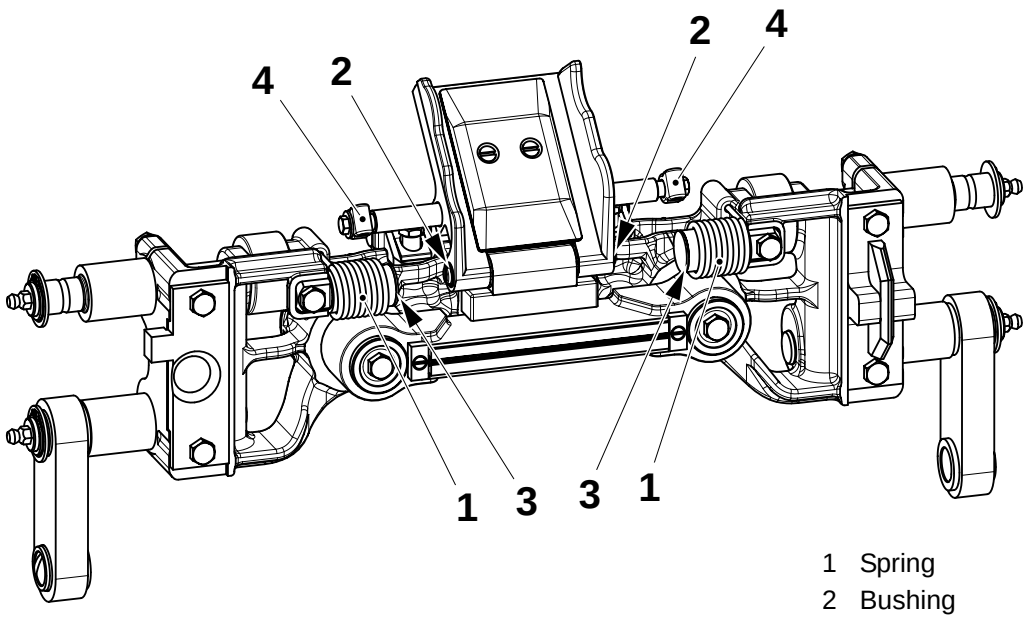

1 Spring
2 Bushing
3 Bushing
4 Holder

4.2-3 Pressure Jaw - Check Volume Flap Rollers

SPC Reference	2529791-0100 2529792-0100 2529793-0100

Check the roller (1) rotates freely.
If necessary, change the bushings, see 4.2-6 Pressure Jaw - Change Volume Flap Rollers.

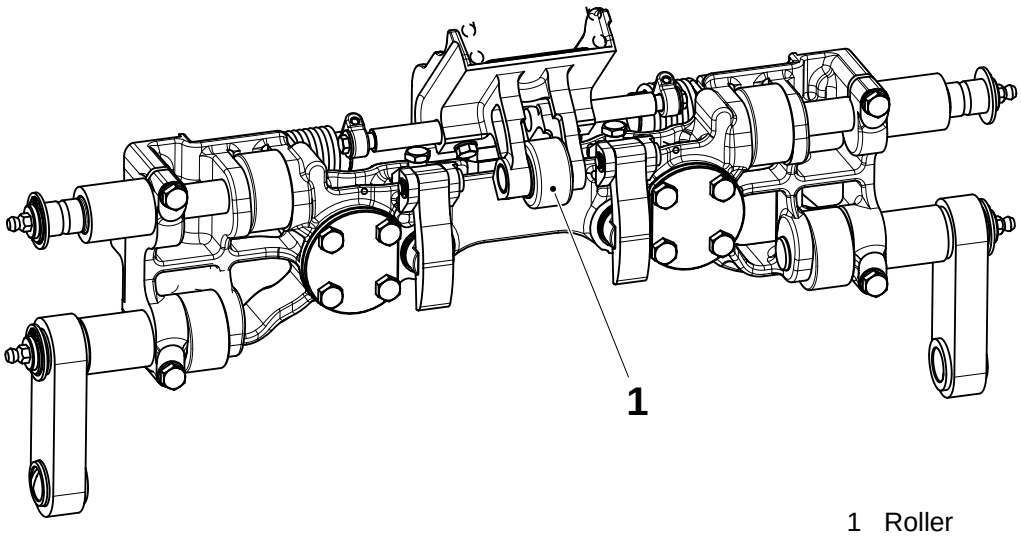

1 Roller

4.2-4 Pressure Jaw - Check Rollers

SPC Reference	2529791-0100 2529792-0100 2529793-0100

Check the rollers (1) for wear or damage and replace as necessary. See 4.2-10 Pressure Jaw - Overhaul.

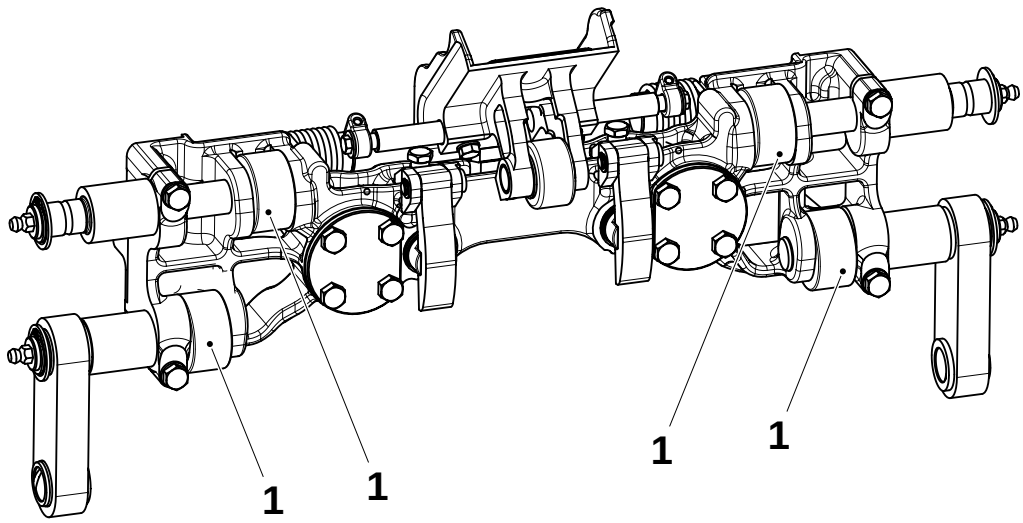

1 Roller

4.2-5 Pressure Jaw - Change Volume Flap Springs, Holder and Bushings

SPC Reference	2529791-0100 2529792-0100 2529793-0100

a) Remove the screw (1), shaft (2), bushing (3) and spring (4).

b) Change the bushing (3) and spring (4).

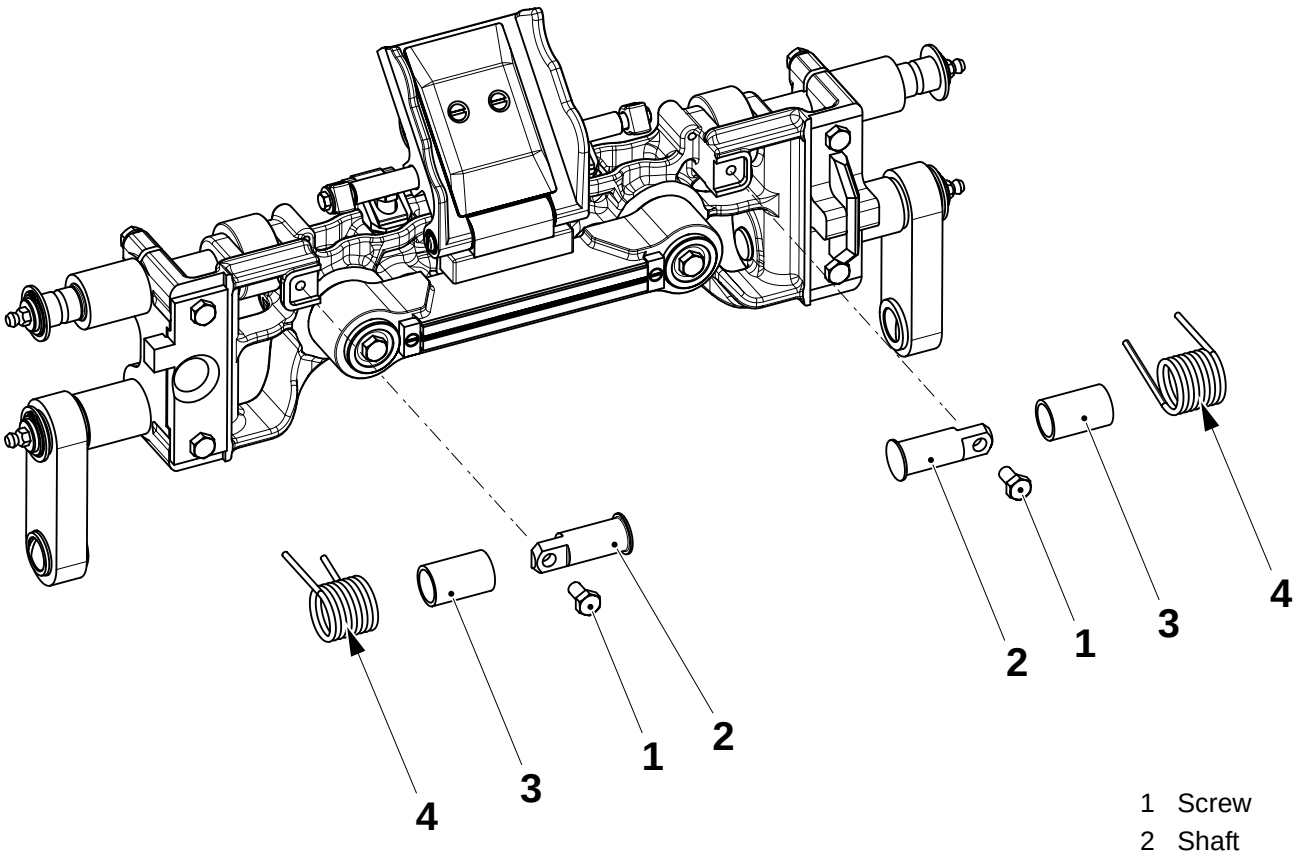

1 Screw
2 Shaft
3 Bushing
4 Spring

(Cont'd)

(Cont'd)

c) Lift the volume flap (5).
d) Remove the screw (6) and the damper (7).
e) Remove the screws (8) and the volume flap (5).

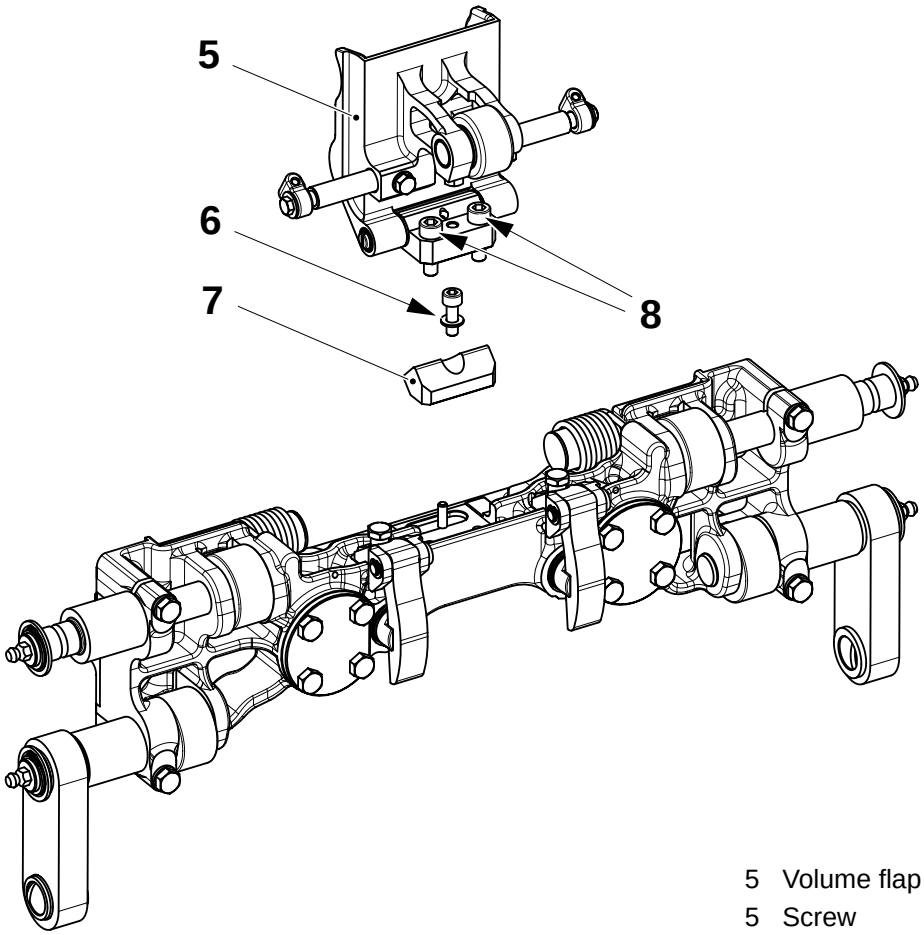

5 Volume flap
5 Screw
6 Screw
7 Holder

(Cont'd)

(Cont'd)

f) Remove the pin (8) and pull out the shaft (9) to separate the bracket (10) from the volume flap (5).

g) Remove the bushings (11) and (12).

h) Change the bushings (11) and (12).

i) Remove the screw (13) and change the holder (14).

j) Assemble in the reverse order.

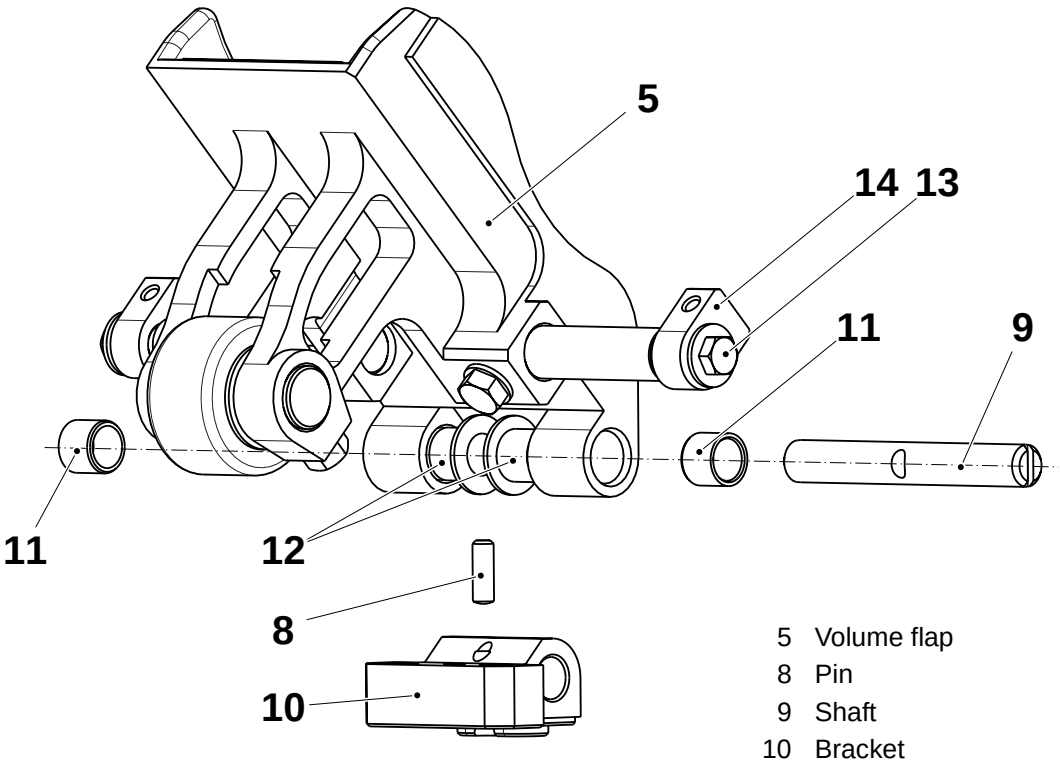

5 Volume flap
8 Pin
9 Shaft
10 Bracket
11 Bushing
12 Bushing
13 Screw
14 Holder

4.2-6 Pressure Jaw - Change Volume Flap Rollers

SPC Reference	2529791-0100 2529792-0100 2529793-0100

a) Remove the screw (1) and press out the shaft (2).

b) Pull out the roller (3) and change the bushings (4) and (5).

c) Assemble in the reverse order.

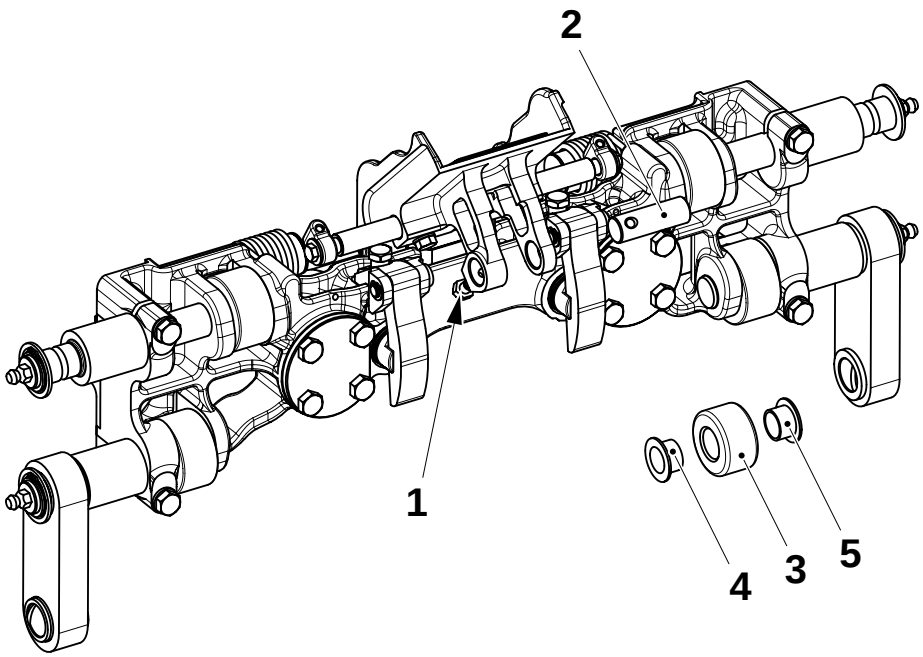

1 Screw
2 Shaft
3 Roller
4 Bushing
5 Bushing

4.2-7 Pressure Jaw - Check Pressure Bar Springs

SPC Reference	2529791-0100 2529792-0100 2529793-0100

a) Remove the screws (1), the washer (2) and the pressure bar (3).

b) Remove the sleeve (4).

c) Pull out and check the springs (5) for damage. Change as required.

d) Assemble in the reverse order.

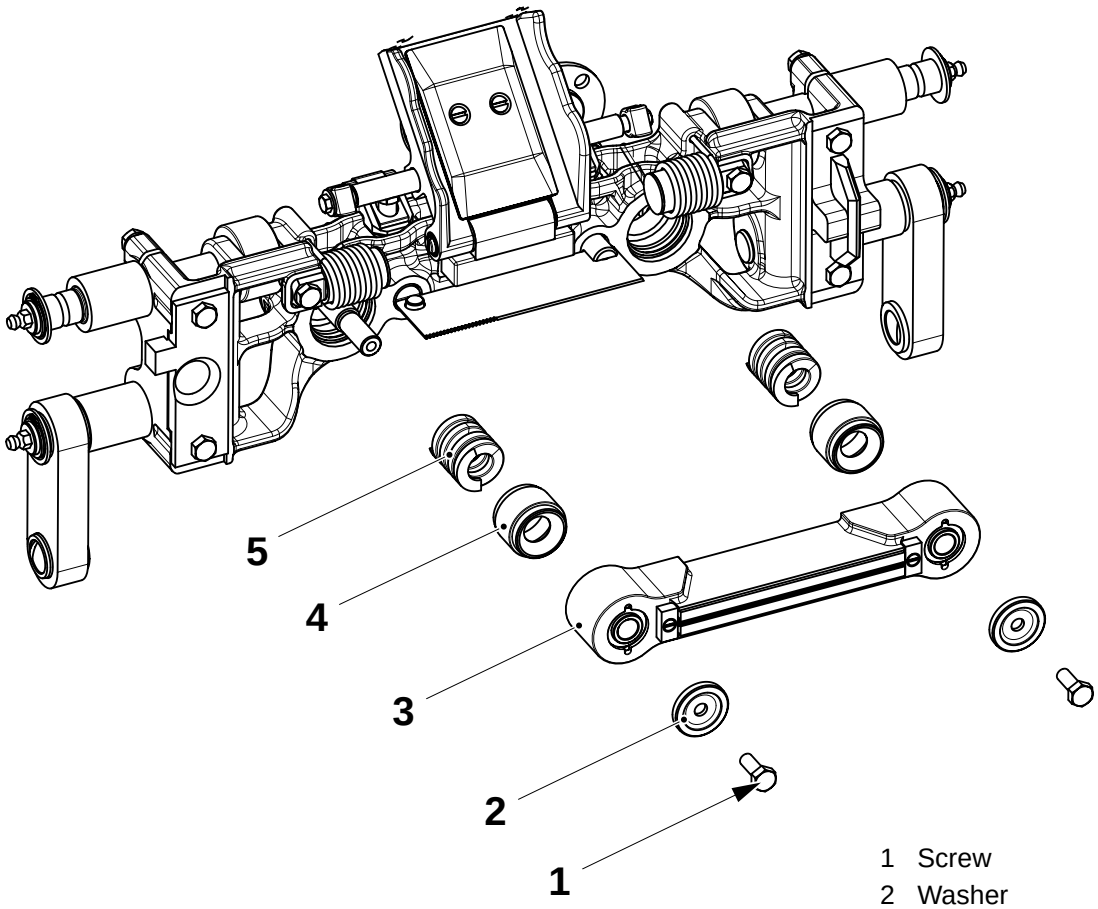

1 Screw
2 Washer
3 Pressure bar
4 Sleeve
5 Spring

4.2-8 Pressure Jaw - Change Knives

SPC Reference	2529791-0100 2529792-0100 2529793-0100

WARNING
Risk of cutting!
Knife is sharp.

a) Remove the screws (1), the washers (2) and the pressure bar (3).
b) Remove and change the knives (4).
c) Assemble in the reverse order.

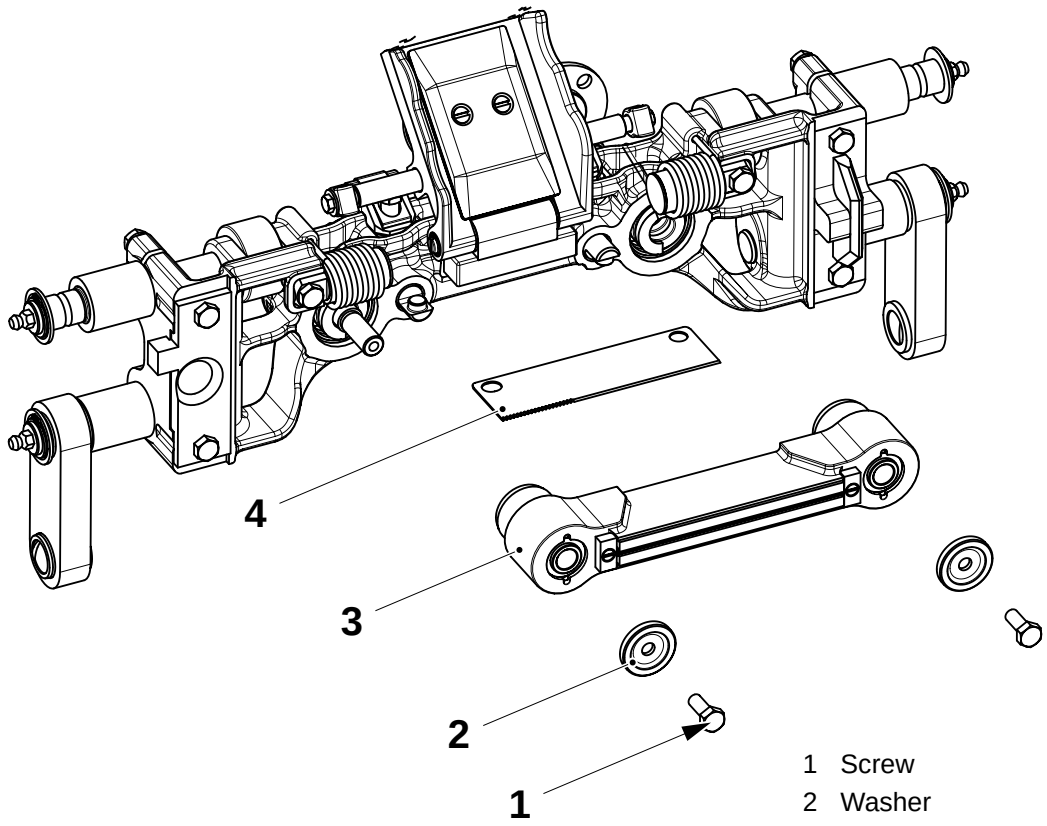

1 Screw
2 Washer
3 Pressure bar
4 Knife

4.2-9 Pressure Jaw - Change Sealing Dollies

SPC Reference	2529791-0100 2529792-0100 2529793-0100

Check the dollies (1) for wear or damages. Change them as required.

To remove the dollies, pull it out from the pressure bar (2).

To replace the dollies, insert it in the correct direction, making sure it is seated properly.

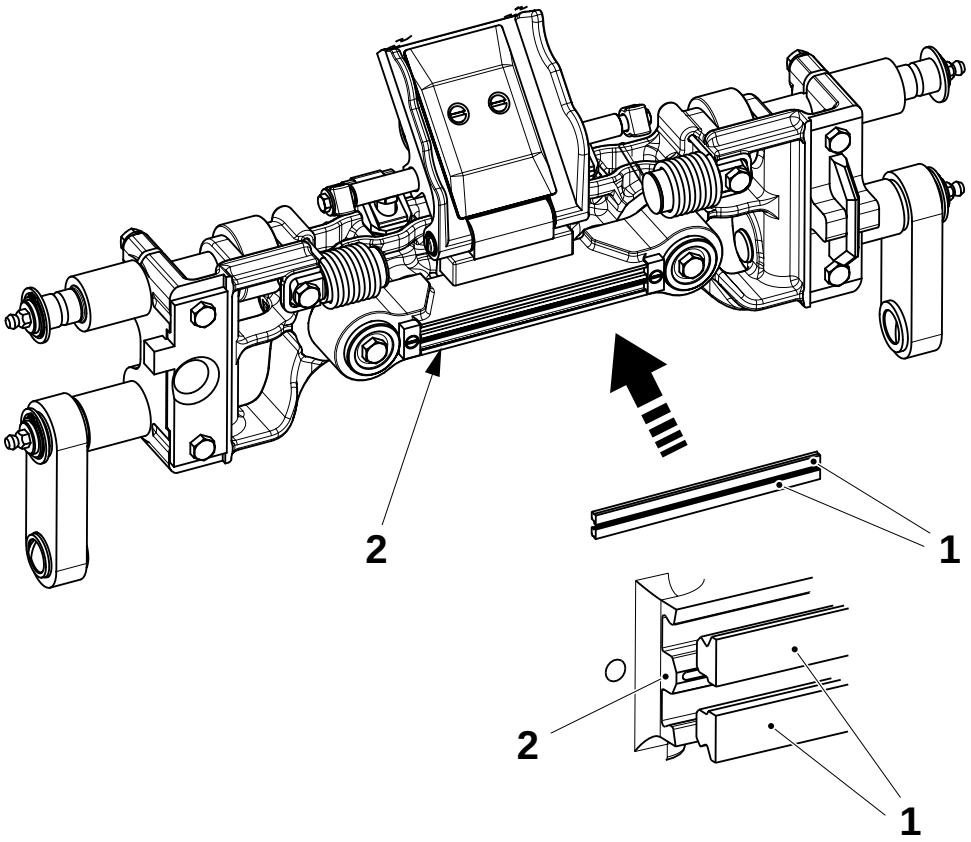

1 Sealing dolly
2 Pressure bar

4.2-10 Pressure Jaw - Overhaul

Tools - Axle Extractor - Attachment	 TP. No. 1487215 TP. No. 1499186
SPC Reference	2529791-0100 2529792-0100 2529793-0100

WARNING
Risk of cutting!
Knife is sharp.

a) Remove the chains, see 4-2 Jaw System - Chain Disassembly and Reassembly.

b) Overhaul the volume flap (1), see 4.2-5 Pressure Jaw - Change Volume Flap Springs, Holder and Bushings and 4.2-6 Pressure Jaw - Change Volume Flap Rollers.

c) Remove the screws (2), the washers (3) and the pressure bar (4).

d) Remove the sleeve (5).

e) Change the springs (6) and the seal rings (7).

f) Change the knife (8).

g) Remove the grease nipples and circlips then change the link (9).

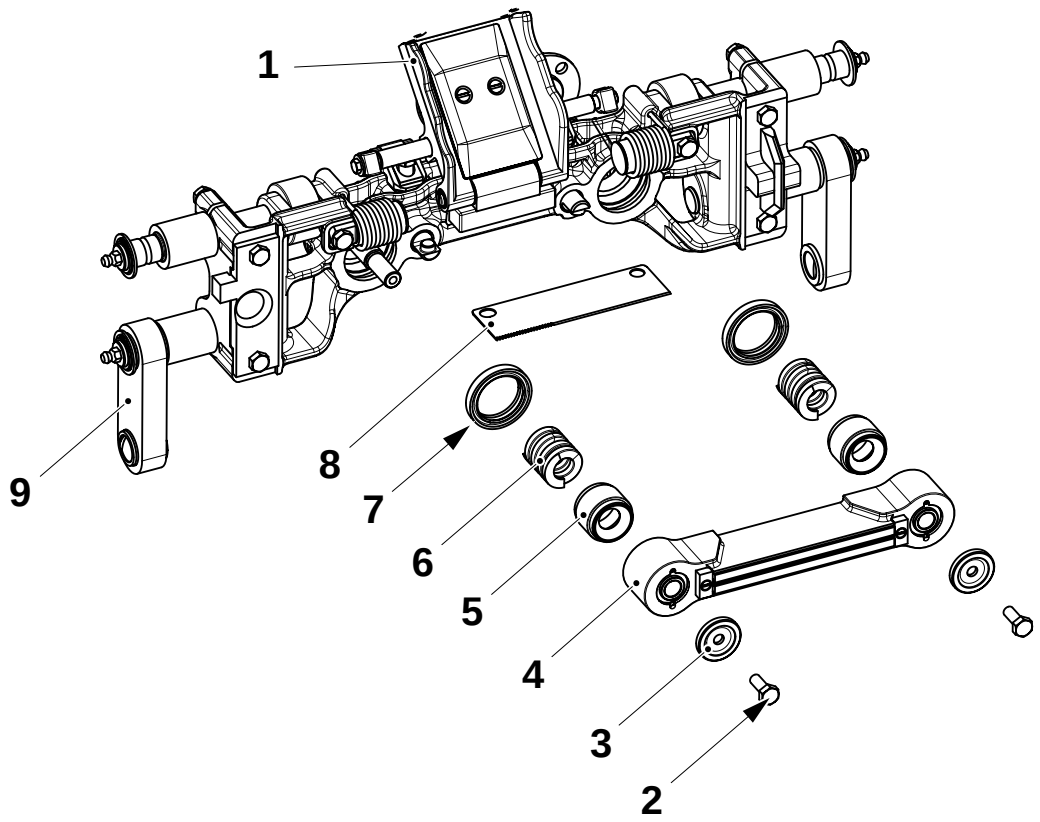

1 Volume flap
2 Screw
3 Washer
4 Pressure bar
5 Sleeve
6 Spring
7 Seal ring
8 Knife
9 Link

(Cont'd)

(Cont'd)

h) Remove the screws (10) and the cam assemblies (11).

i) Pull out the shafts (12).

j) Remove and change the springs (13) and bushings (14).

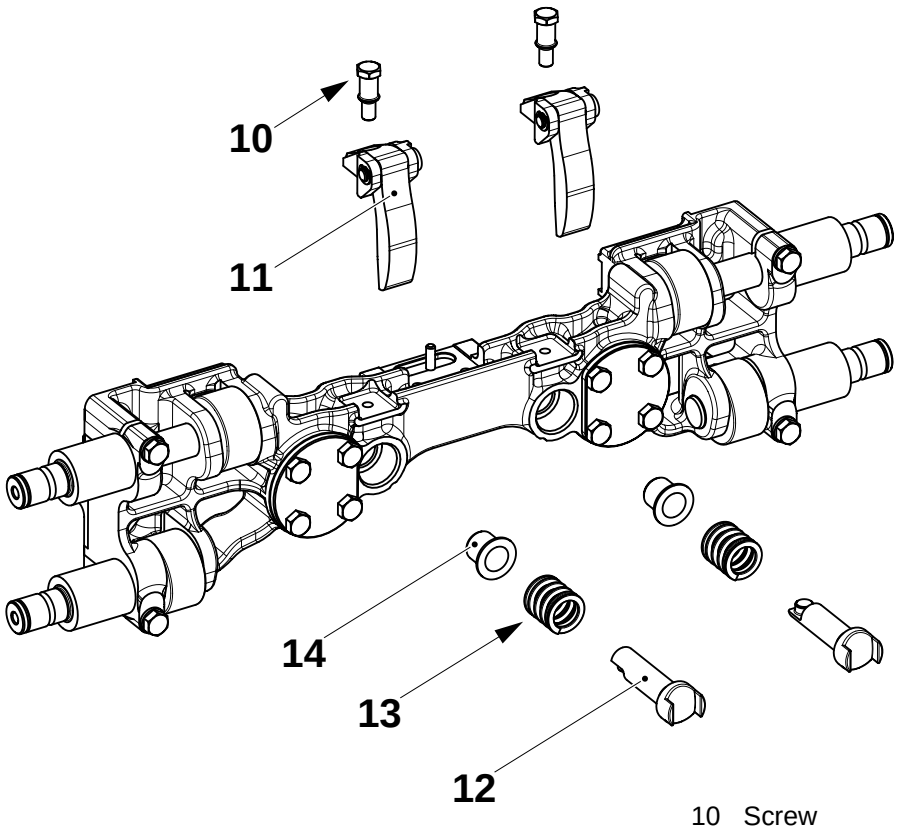

10 Screw
11 Cam assembly
12 Shaft
13 Spring
14 Bushing

(Cont'd)

(Cont'd)

k) Loosen the screws (15).

l) Slide the end of the tool (16), with the thinner of the two attachments, over the axle (17) until it touches the jaw (18).

m) Rotate the knurled part of the tool (19) counter-clockwise approximately ten turns.

n) Push the bolt (20) through the tool and screw it into the hole (21) where the grease nipple is normally fitted.
Do not over tighten.

Note! Do not try to split the link by inserting a tool in the groove (22).

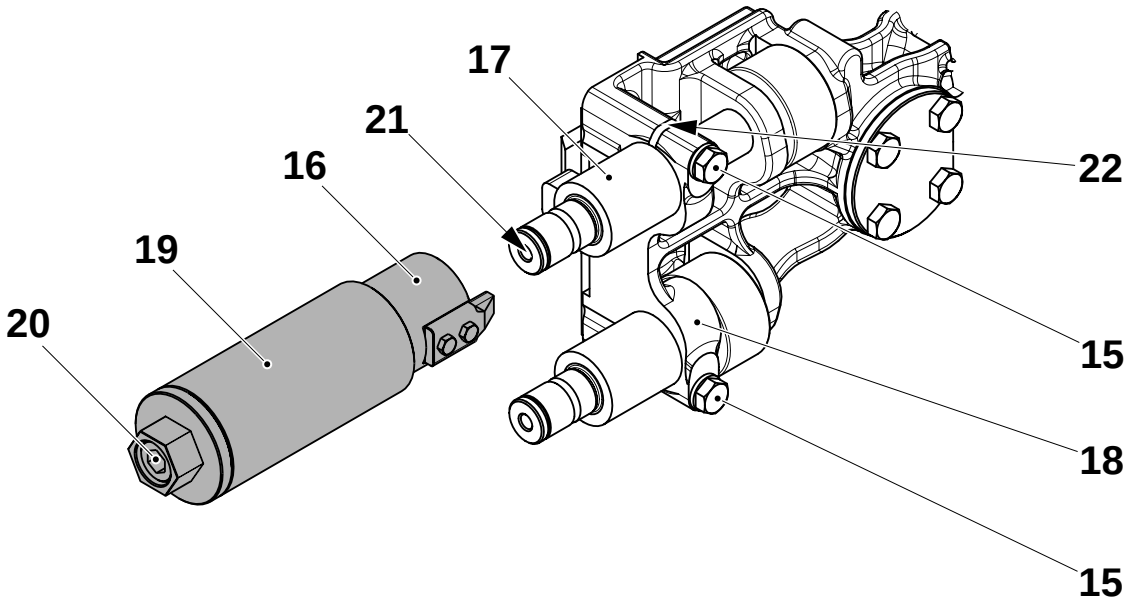

15	Screw	19	Knurled part
16	Tool	20	Bolt
17	Axle	21	Hole
18	Link	22	Groove

(Cont'd)

(Cont'd)

o) While preventing the bolt (20) from turning, rotate the knurled part (19) of the tool clockwise to extract the axle.

p) Change the roller (23).

q) Repeat steps o) to t) for the other rollers.

r) Assemble in the reverse order.

s) Fit and tension the chains, see 4-2 Jaw System - Chain Disassembly and Reassembly.

t) Grease the jaw system.

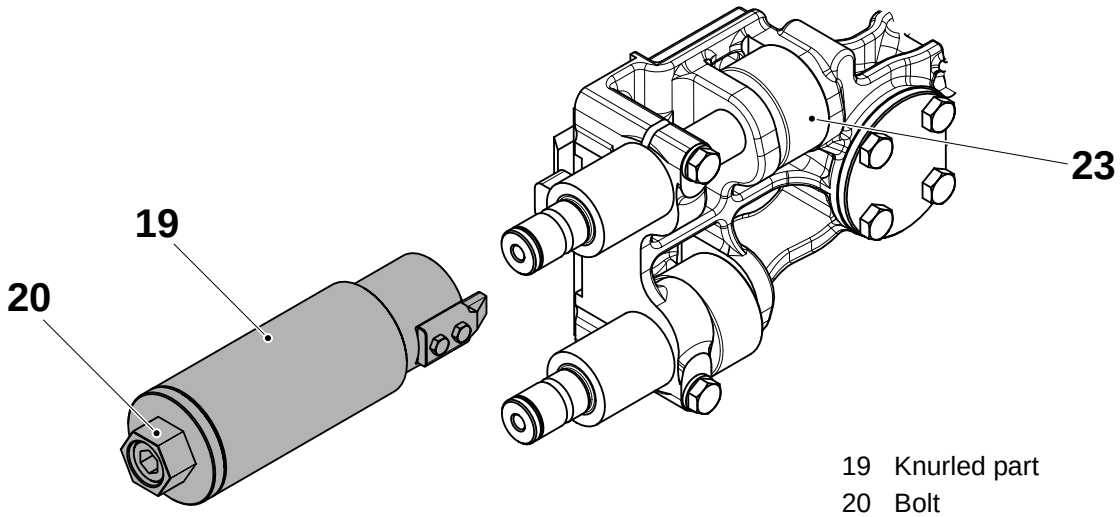

19 Knurled part
20 Bolt
23 Roller

4.2-11 Pressure Jaw - Set Jaw Unit Reference Sensor

Machine Status	Mains Power ON
SPC Reference	2529791-0100

a) Crank the jaw system until the flag (1) on pressure jaw **No. 10** is positioned in front of the inductive switch (2).

b) Set distance **A** between the flag (1) and inductive switch (2).

c) Crank the jaws system around and check the LED in the inductive switch comes **On** when the flag is just in front of the switch.

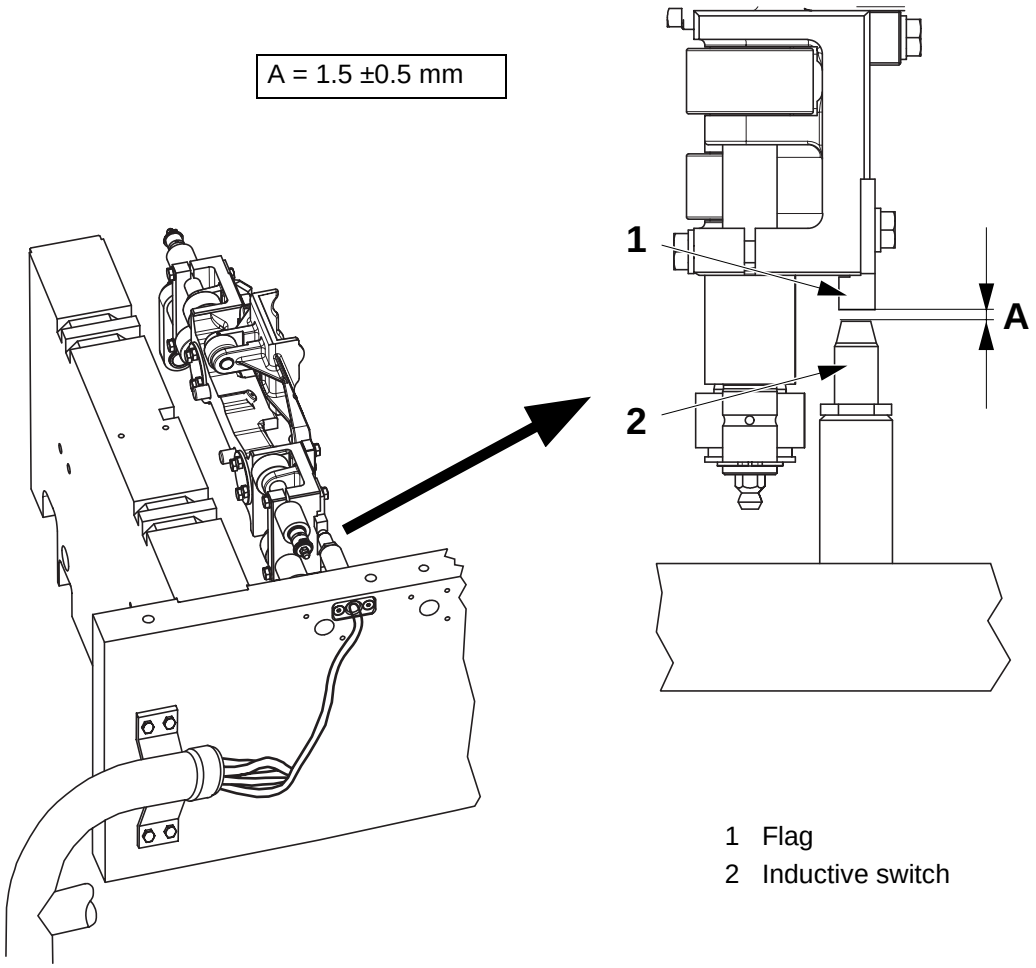

1 Flag
2 Inductive switch

4.3 Drive Unit

SPC Reference	2511256-0100

4.3-1 Drive Unit - Set Angle Encoder

Machine Status	Mains Power ON
SPC Reference	2511256-0100

Valid for New Gearboxes

a) Crank the jaws system to the home position, see 4.2-11 Pressure Jaw - Set Jaw Unit Reference Sensor from point c).

b) Loosen the four screws (1) and turn the angle encoder (2) until the angle display shows $200_{8.}$

Note! Do not move the angle encoder (2) when tightening the screws (1).

c) Tighten the screws (1).

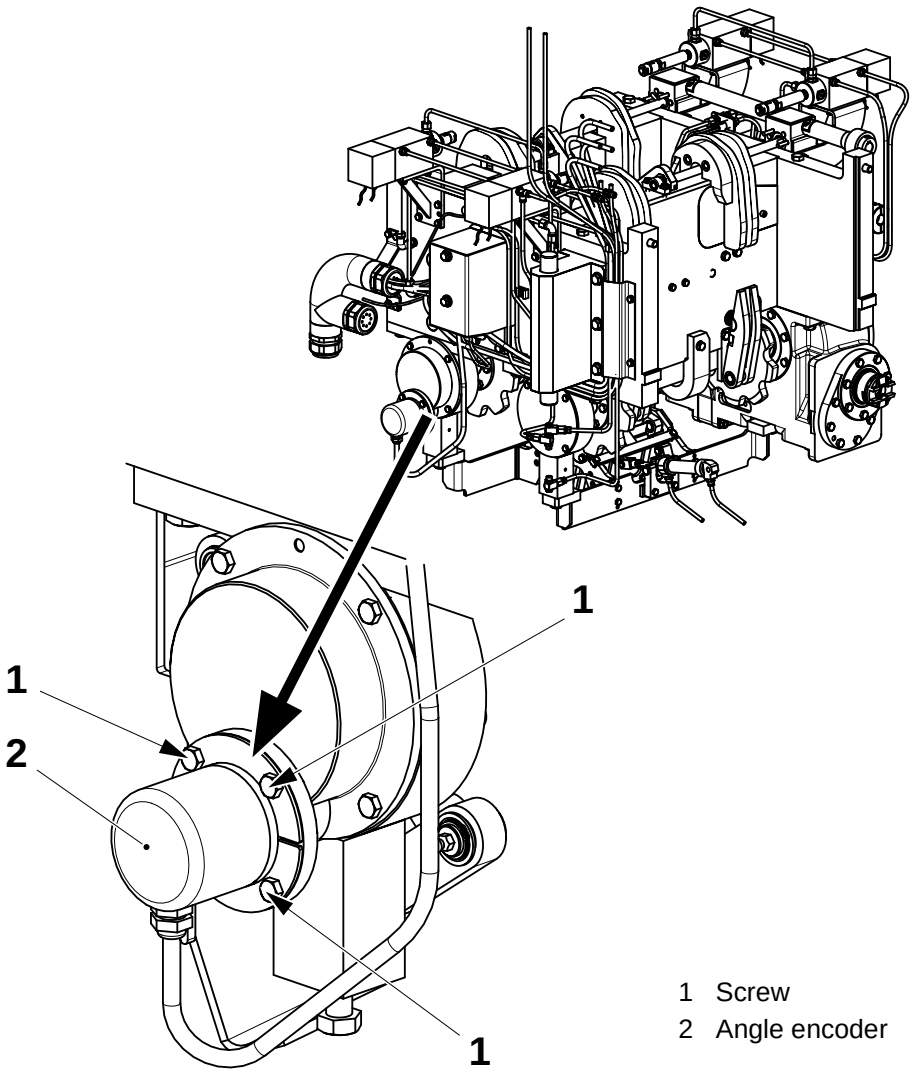

1 Screw
2 Angle encoder

(Cont'd)

(Cont'd)

Valid for Old Gearboxes

a) Crank the jaws system to the home position, see 4.2-11 Pressure Jaw - Set Jaw Unit Reference Sensor from point c).

b) Loosen the screws (1) and turn the angle encoder (2) until the angle display shows $200_{8.}$

Note! Do not move the angle encoder (2) when tightening the screws (1).

c) Tighten the screws (1).

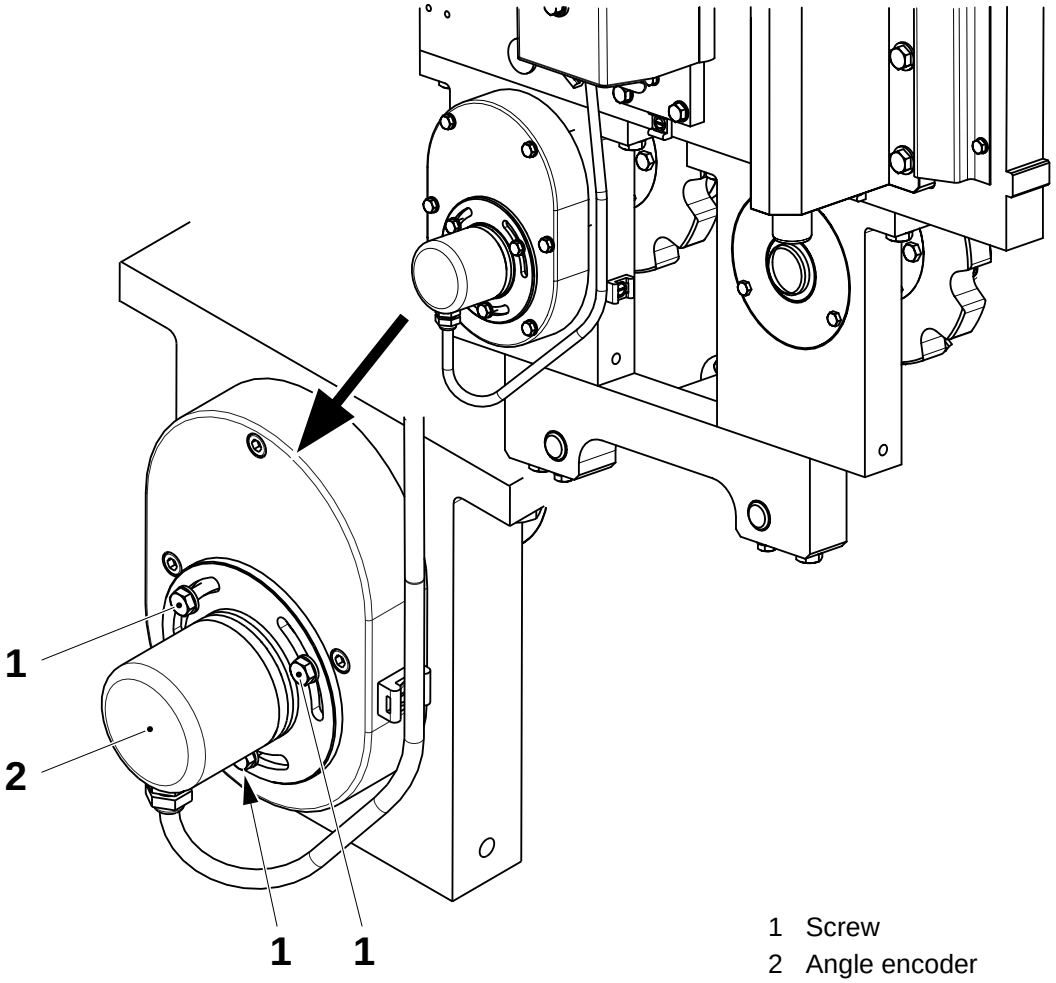

1 Screw
2 Angle encoder

4.3-2 Drive Unit - Overhaul (valid new gearboxes)

SPC Reference	2511256-0100

WARNING
Risk of burns!
Gearboxes might be hot.

a) Remove the waste box and chains, see 4-2 Jaw System - Chain Disassembly and Reassembly, step a) to l).

b) Remove the cam (1).

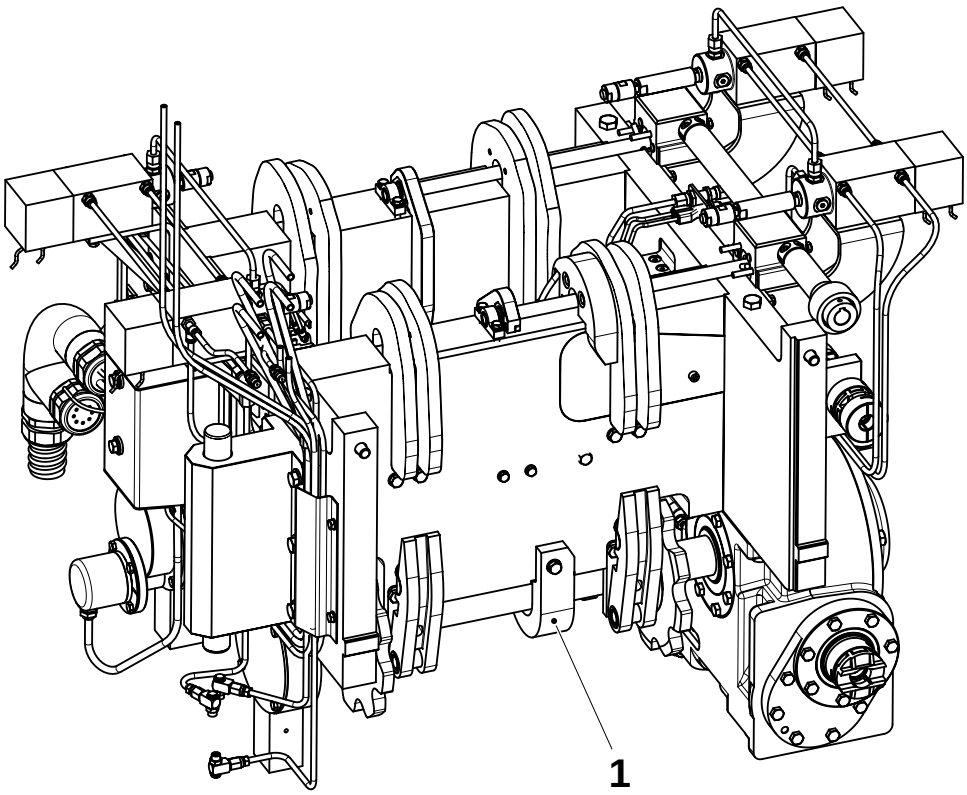

1 Cam

(Cont'd)

(Cont'd)

Note! Do not try to remove the sensor from the holder. Doing so may damage the cable.

c) Remove the crank handle holder and sensor (2).

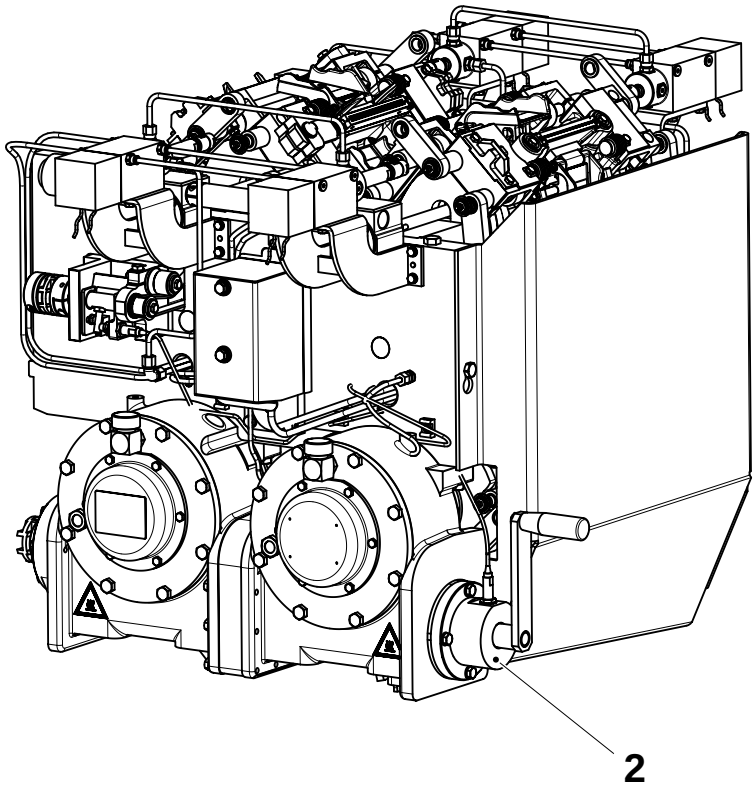

2 Sensor

(Cont'd)

(Cont'd)

d) Remove the four screws (3), the plates (4) and (5), and the angle encoder (6).

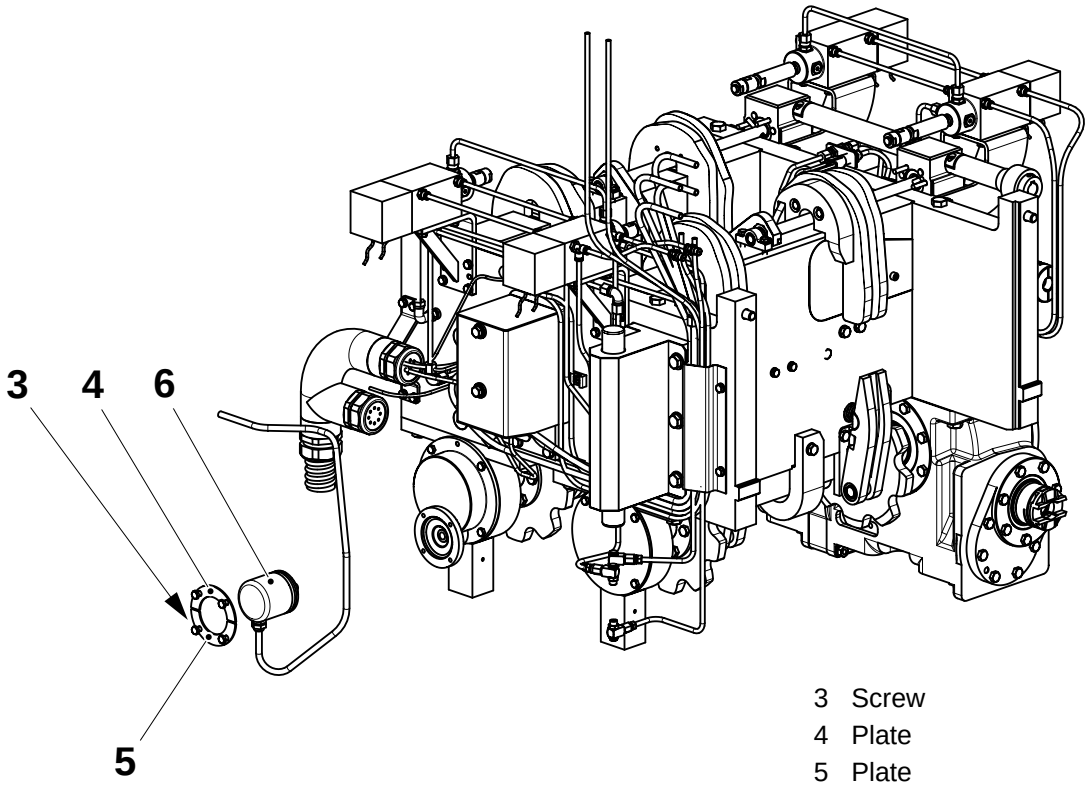

3 Screw
4 Plate
5 Plate
6 Angle encoder

e) Prepare a pallet truck and place it below the jaw unit.

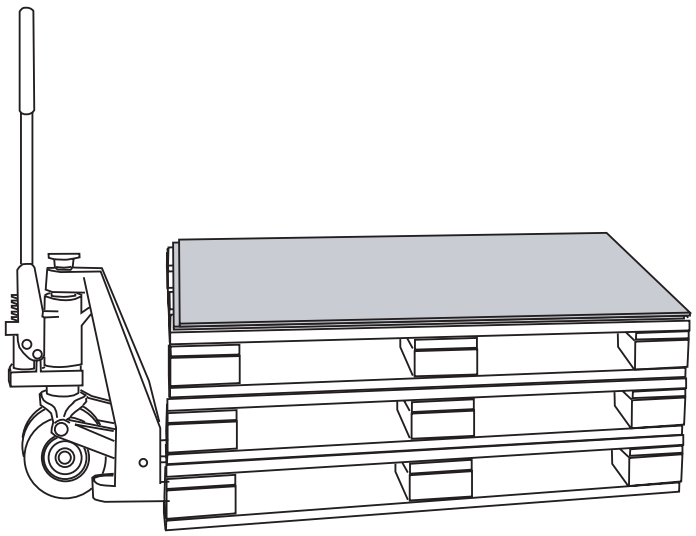

(Cont'd)

(Cont'd)

f) Remove the screws (7).

g) Remove the screws (8) separate the gearbox section (9) from the upper frame section (10).

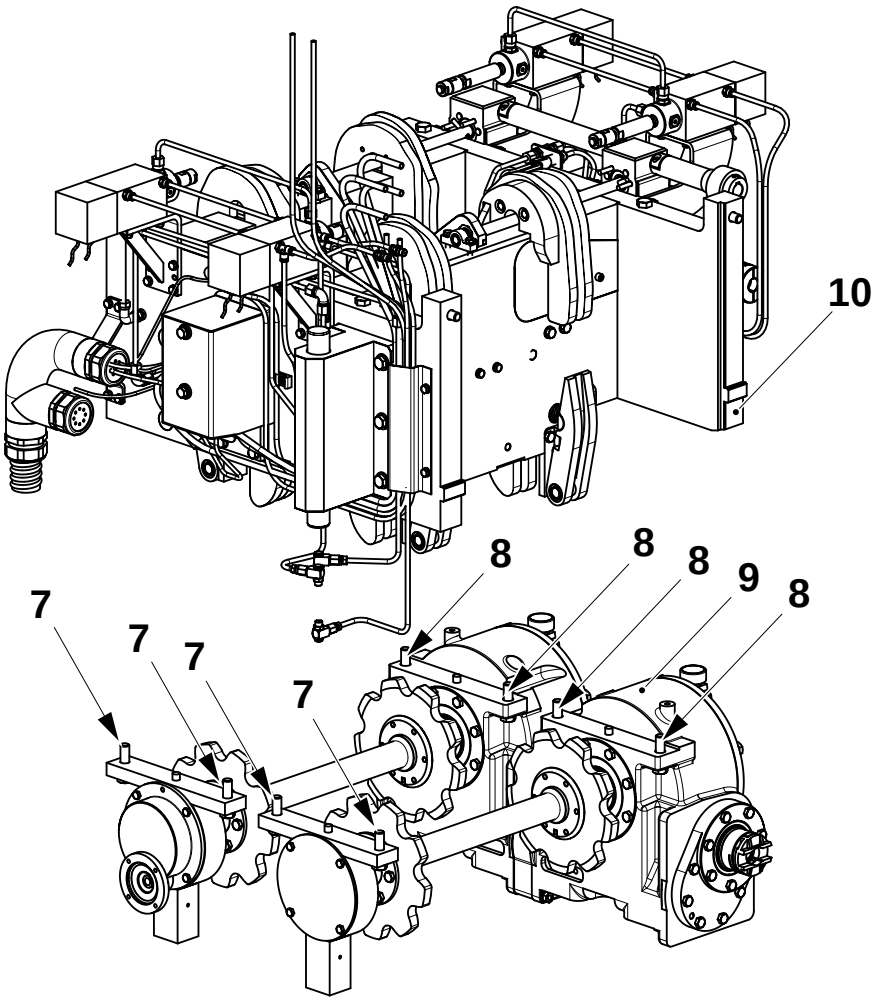

7 Screw
8 Screw
9 Gearbox section
10 Frame section

(Cont'd)

(Cont'd)

h) Remove the screws (11), the housing (12) and the seal ring (13).

i) Remove the screw (14) and the gear (15).

j) Remove the retaining ring (16), bearing (17) and seal ring (18) from the bracket (19).

k) Remove the screws (20), the cover (21) and the seal ring (22).

l) Remove the retaining ring (23), bearing (24) and seal ring (25) from the bracket (26).

m) Assemble in the reverse order.

n) Set the angle encoder, see 4.3-1 Drive Unit - Set Angle Encoder.

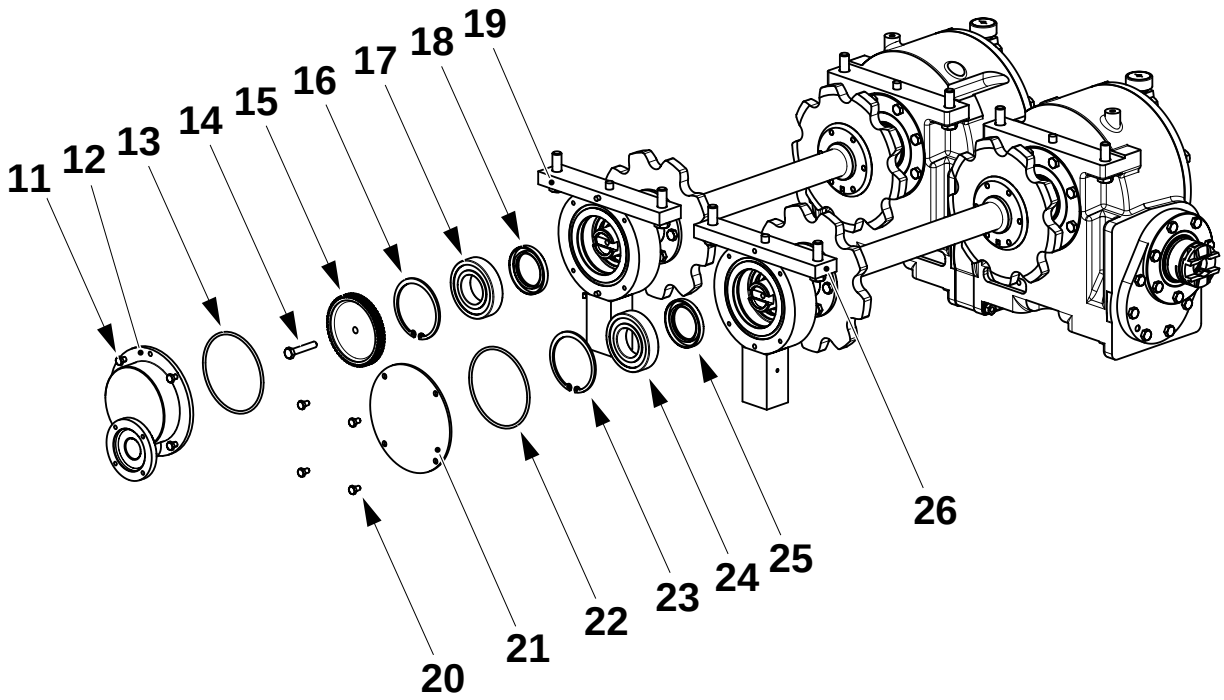

11	Screw	19	Bracket
12	Housing	20	Screw
13	Seal ring	21	Cover
14	Screw	22	Seal ring
15	Gear	23	Retaining ring
16	Retaining ring	24	Bearing
17	Bearing	25	Seal ring
18	Seal ring	26	Bracket

4.3-3 Drive Unit - Overhaul (valid for old gearboxes)

SPC Reference	2511256-0100

WARNING
Risk of burns!
Gearboxes might be hot.

Overhaul Gearboxes

a) Loosen the screw (1) and remove parts (2) and (3) of the coupling (4).

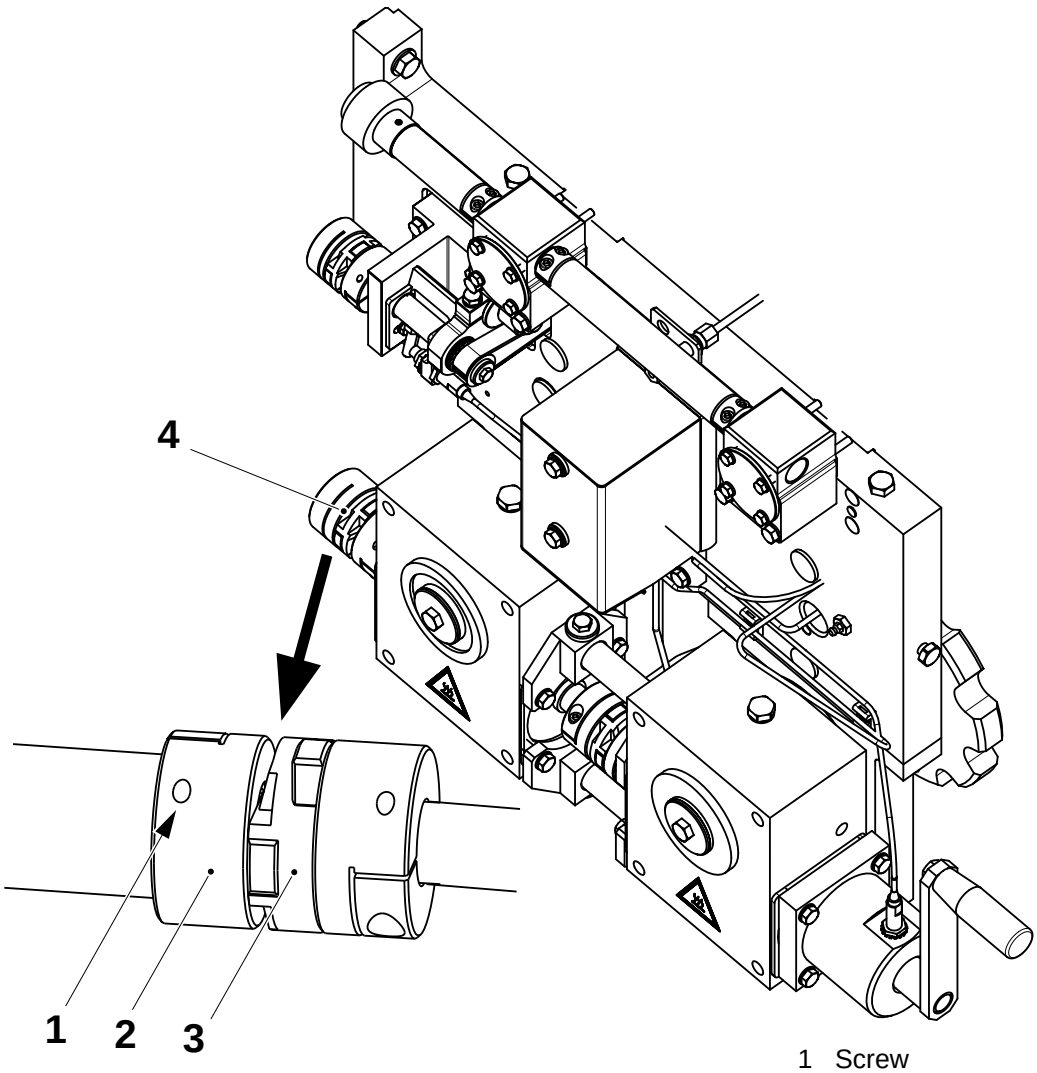

1 Screw
2 Part
3 Part
4 Coupling

(Cont'd)

(Cont'd)

b) Loosen the screws (5) at the side of both shafts (6).

c) Remove the screws (7) from both gearboxes and then remove the shafts (6) and supports (8).

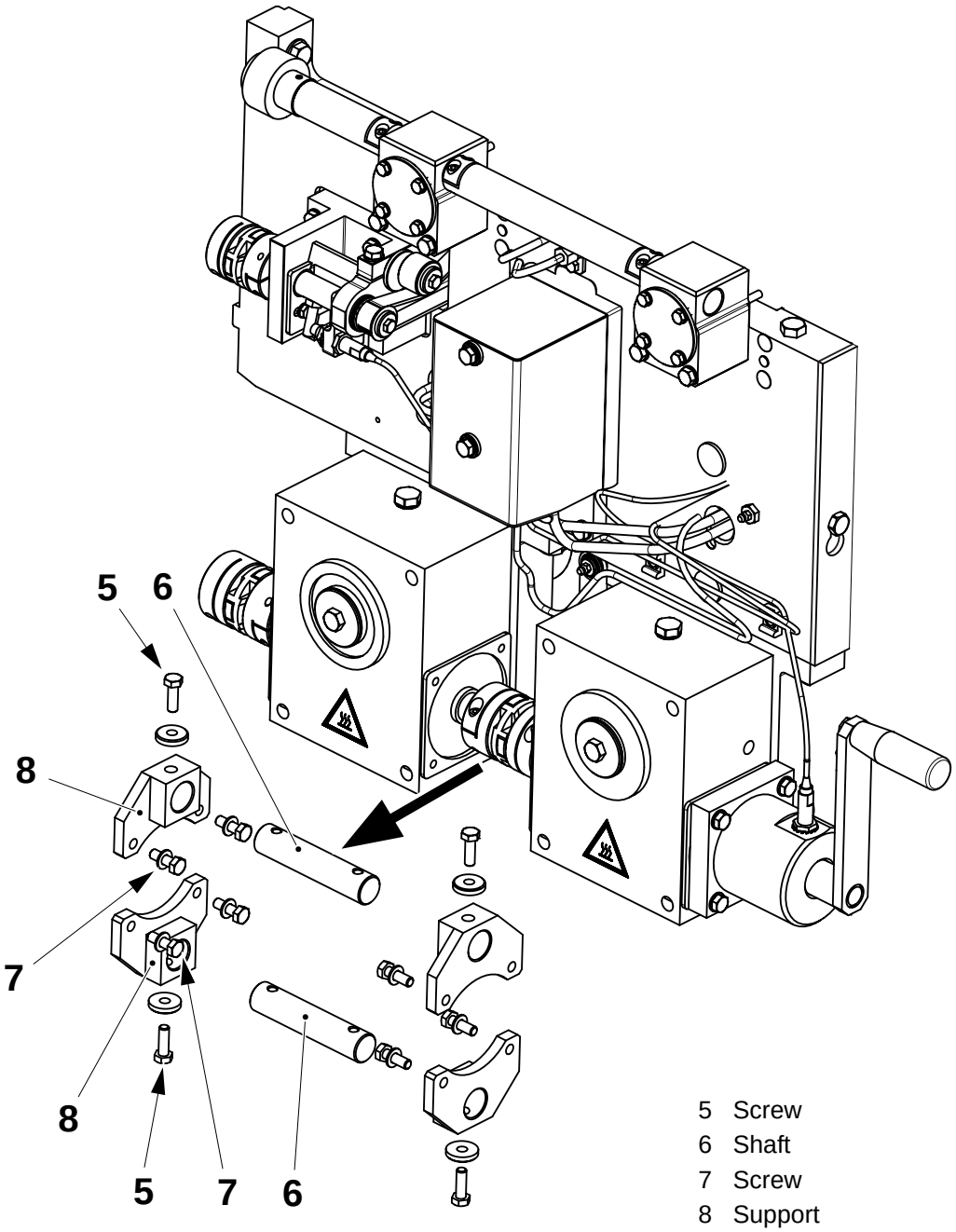

5 Screw
6 Shaft
7 Screw
8 Support

(Cont'd)

(Cont'd)

d) Crank the jaw system with the handle and turn the remaining part of the coupling (4) counter-clockwise by hand.
The gearboxes (9) and (10) will rotate splitting the central coupling (11).

e) Remove the central part (12) of the coupling (11).

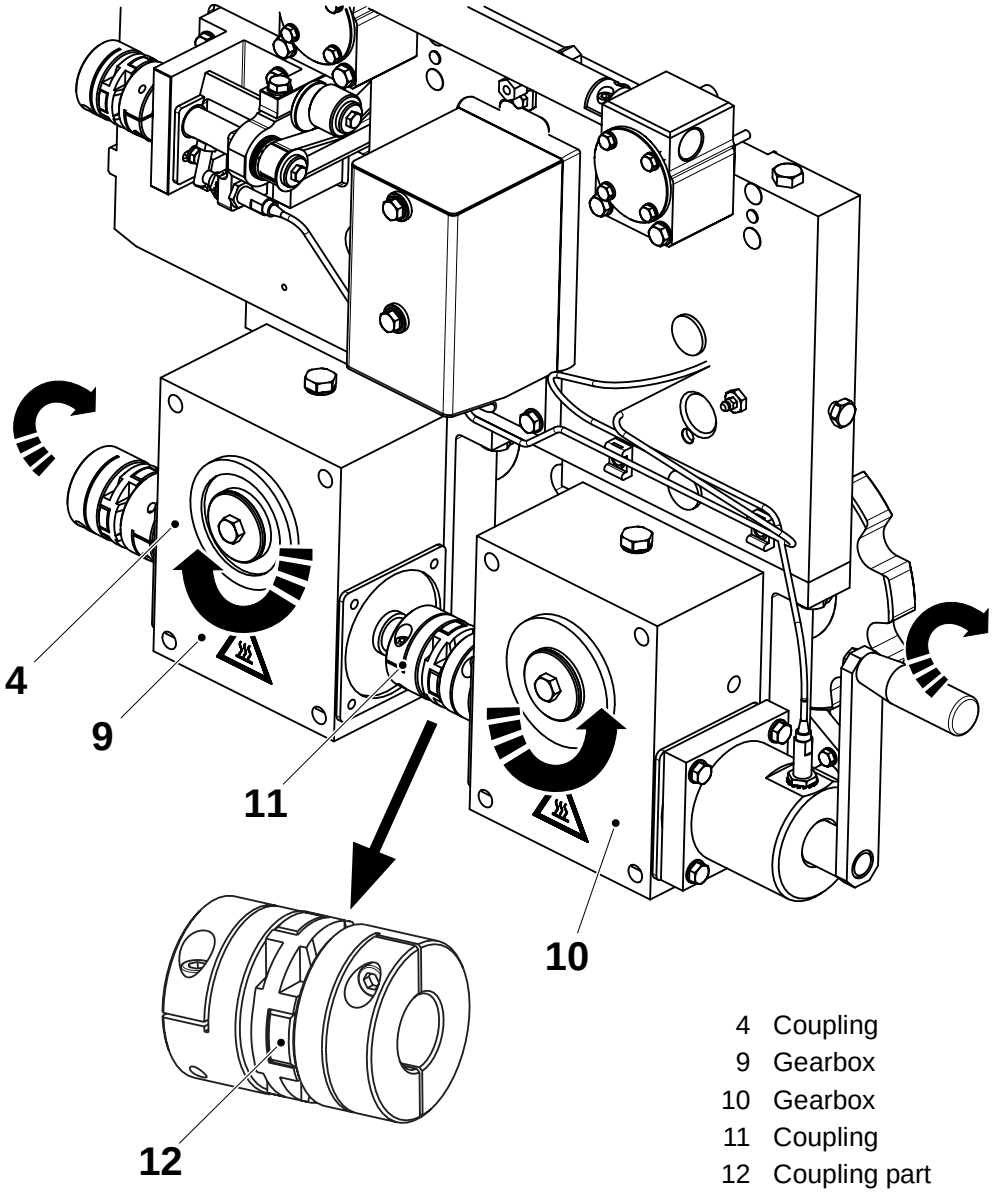

4 Coupling
9 Gearbox
10 Gearbox
11 Coupling
12 Coupling part

(Cont'd)

(Cont'd)

f) Remove the screws (13) and the crank handle holder (14).

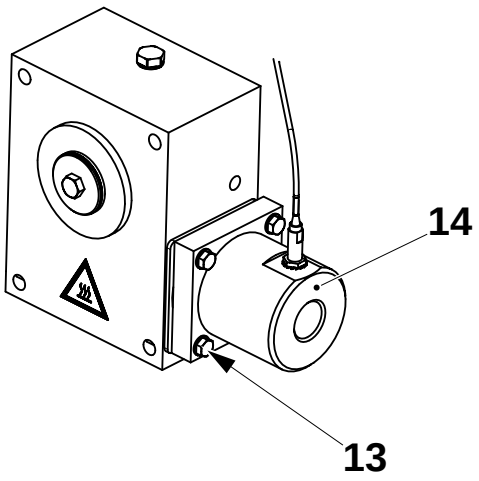

13 Screw
14 Holder

g) Remove the screws (15) and washers (16) and pull off the gearboxes (9) and (10).

h) Remove the keys (17).

i) Assemble in the reverse order.

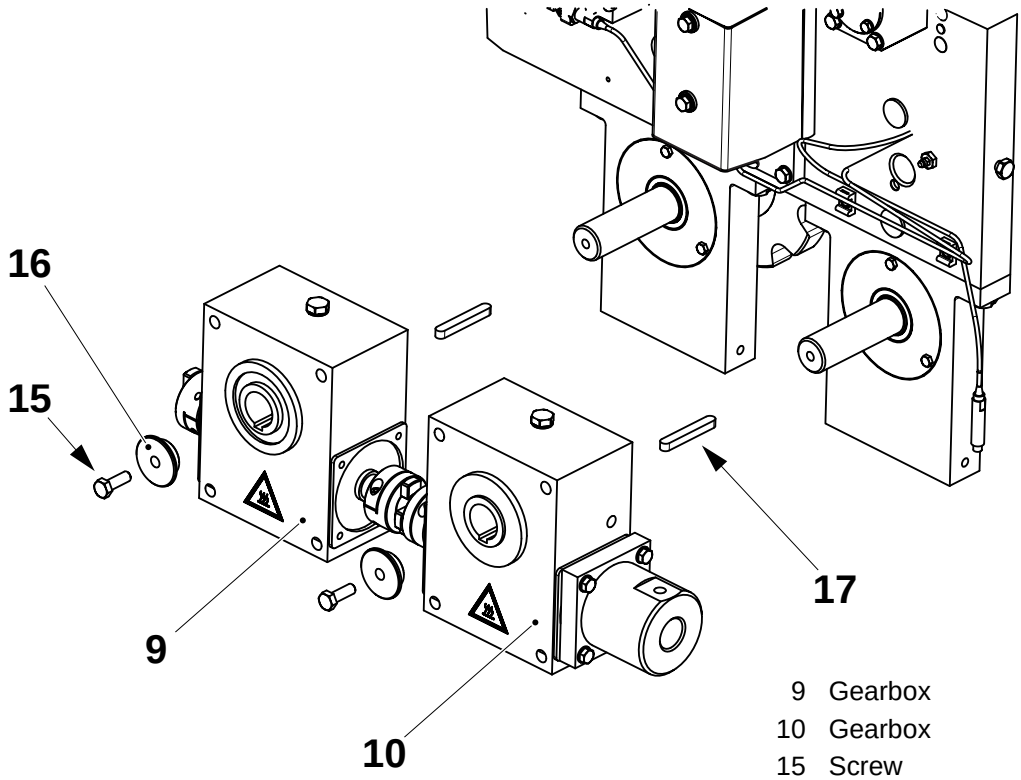

9 Gearbox
10 Gearbox
15 Screw
16 Washer
17 Key

(Cont'd)

(Cont'd)

Overhaul Angle Encoder

a) Remove the screws (1) and pull out the angle encoder (2) and gearwheel (3).

b) Check the gearwheel (3) for wear or damage.
If necessary remove the screw (4) and the change gearwheel (3).

c) Remove and change the O-ring (5).

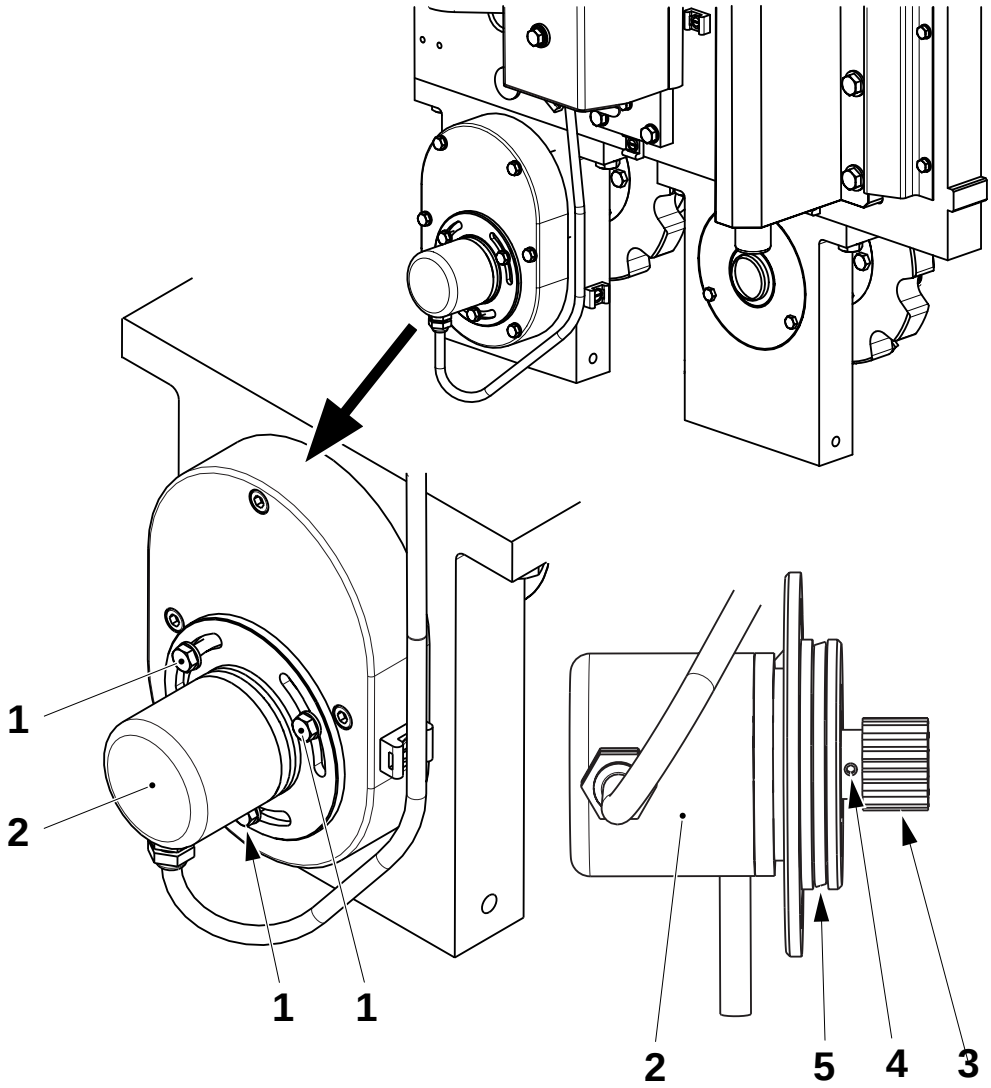

1 Screw
2 Angle encoder
3 Gearwheel
4 Screw
5 O-ring

(Cont'd)

(Cont'd)

d) Remove the screws (6) and cover (7).

e) Remove and change the seal (8).

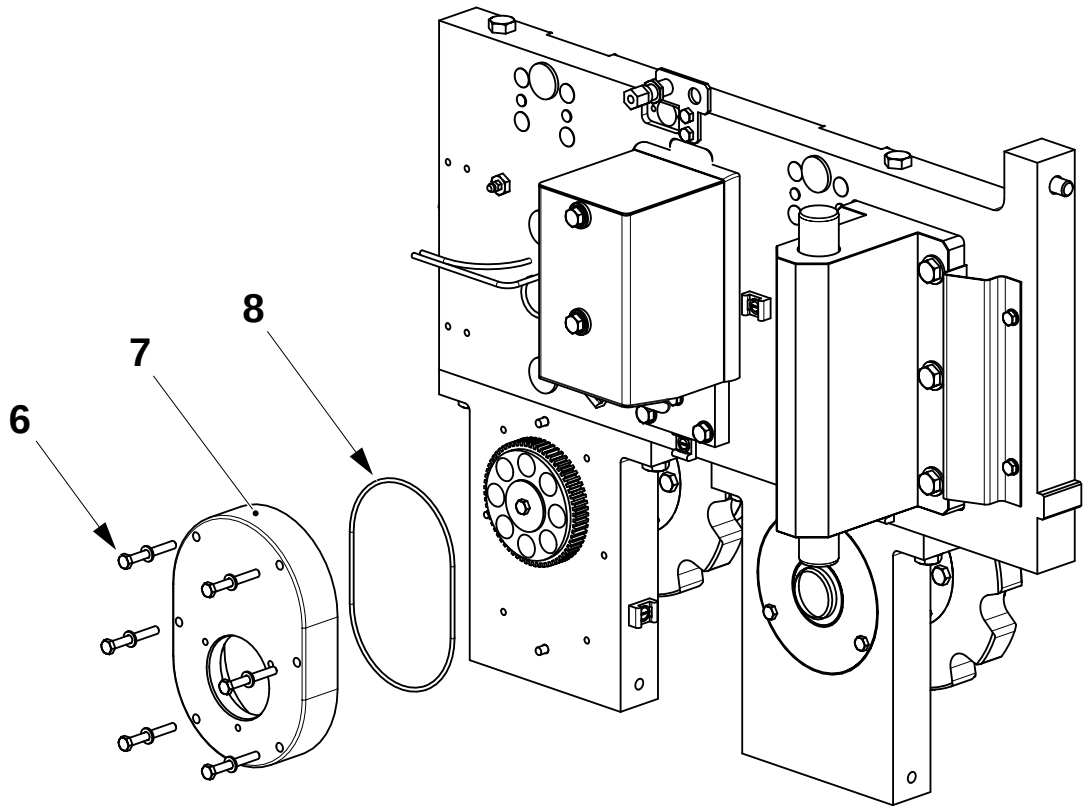

6 Screw
7 Cover
8 Seal

(Cont'd)

(Cont'd)

f) Remove the screw (9) and washer (10).
g) Remove and change the gearwheel (11).
h) Remove and retain the key (12).
i) Assemble in the reverse order.

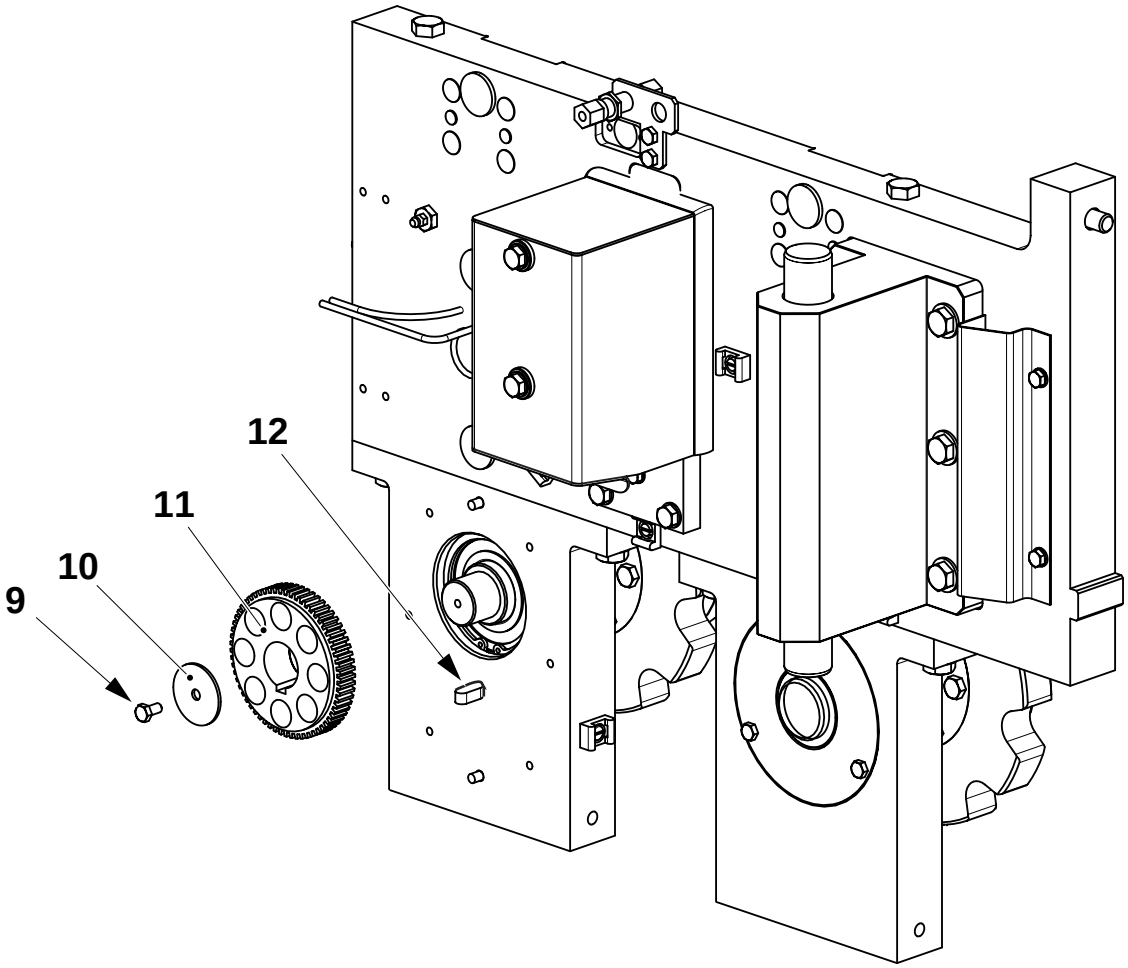

9 Screw
10 Washer
11 Gearwheel
12 Key

(Cont'd)

(Cont'd)

Overhaul Drive Shafts, Bearings and Seals

a) Remove the waste box and chains, see 4-2 Jaw System - Chain Disassembly and Reassembly, step a) to l).

b) Remove the cam (1).

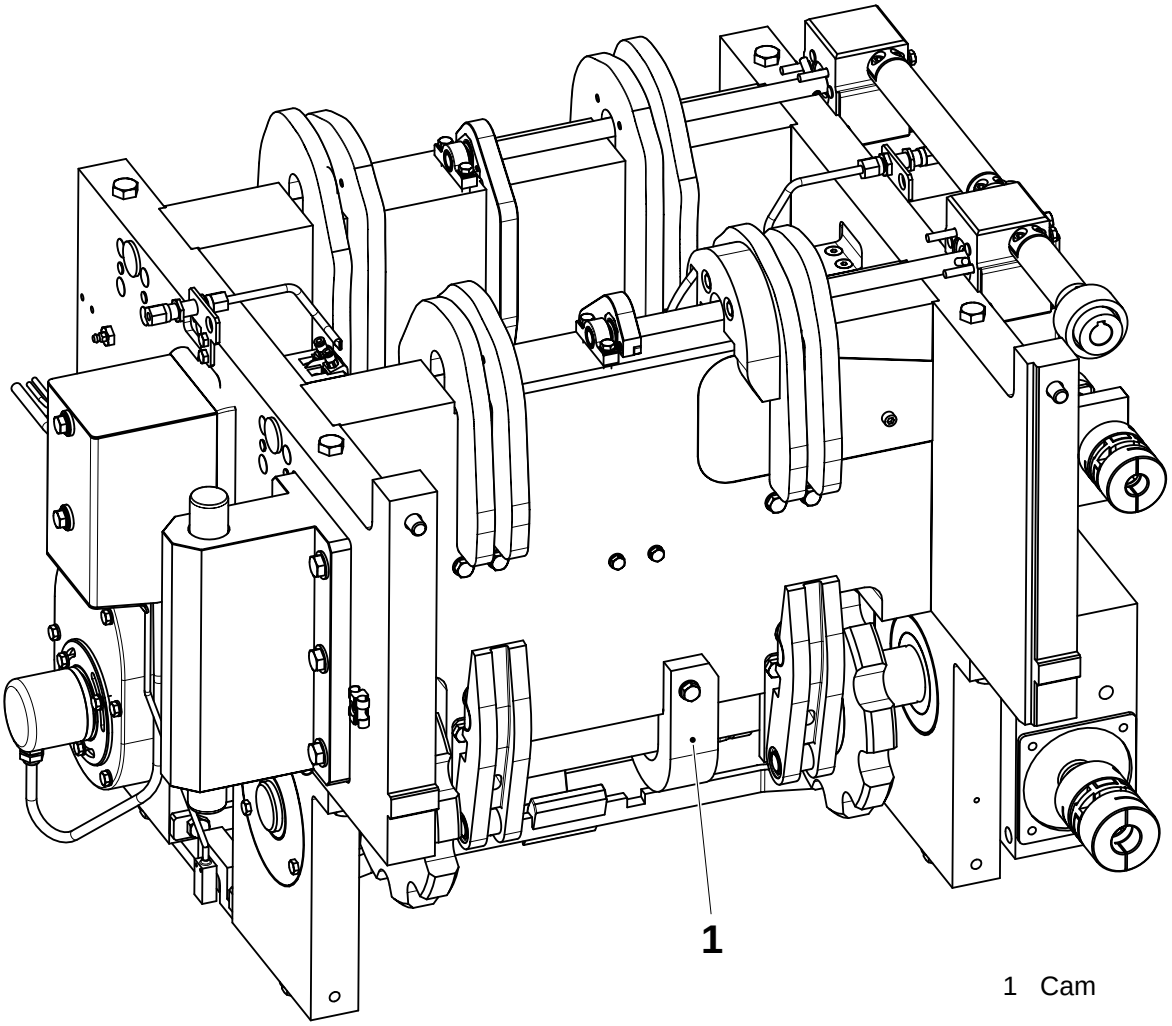

1 Cam

(Cont'd)

(Cont'd)

WARNING
Risk of crushing!
Be careful not to trap your fingers under the jaw unit.

c) Remove the gearboxes, see 4.3-3 Drive Unit - Overhaul (valid for old gearboxes) steps a) to h).

d) Remove the angle encoder, see 4.3-3 Drive Unit - Overhaul (valid for old gearboxes), Overhaul Angle Encoder, steps a) to h).

e) Prepare a pallet truck and place it below the jaw unit.

f) At both sides of the machine, remove the screws (2) and lower the frame (3) onto the pallet.

g) At both sides of the machine, remove the screws (4) and lower the frame (5) onto the pallet.

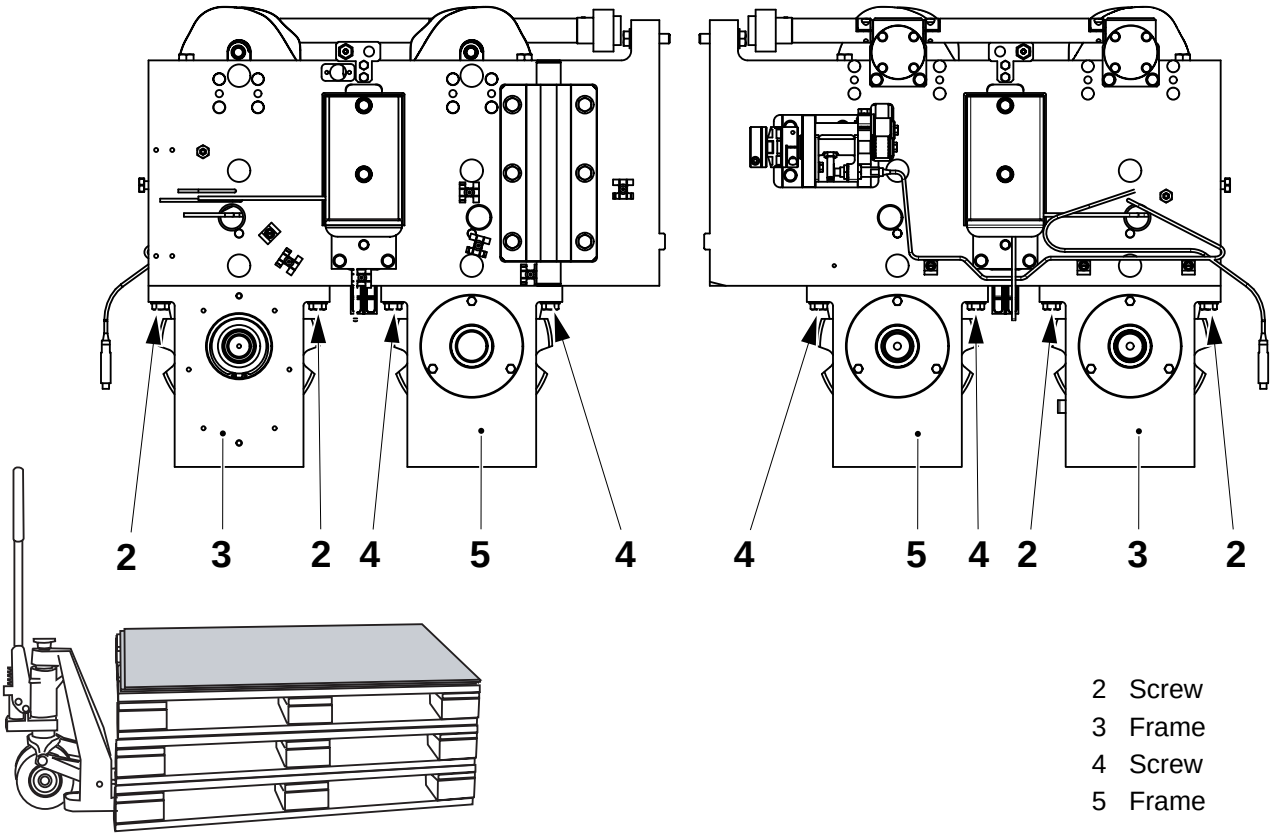

2 Screw
3 Frame
4 Screw
5 Frame

(Cont'd)

(Cont'd)

h) At the work bench, remove the retaining ring (6).
i) Remove the bearing (7).
j) Remove and change the seal ring (8).
k) Remove the screws (9) and cover (10).
l) Remove and change the seal ring (11).
m) Remove the housing (12).
n) Remove the bearing (13).
o) Remove and change the sealing rings (14).

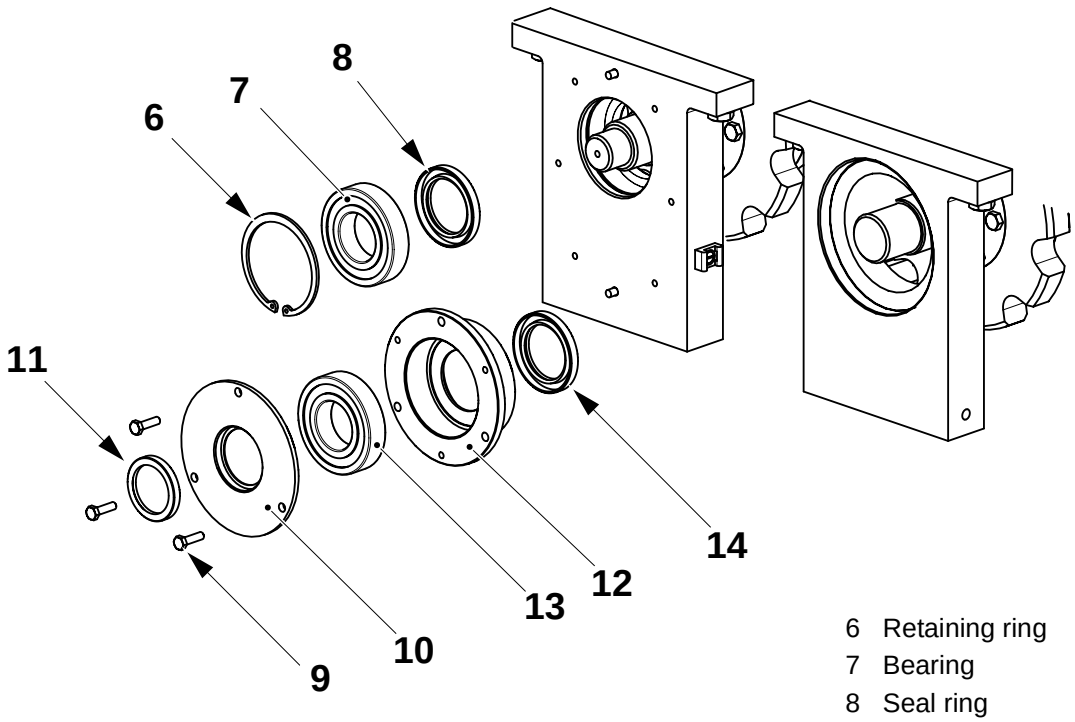

6 Retaining ring
7 Bearing
8 Seal ring
9 Screw
10 Cover
11 Seal ring
12 Housing
13 Bearing
14 Seal ring

(Cont'd)

(Cont'd)

p) Remove the screws (15) and covers (16).
q) Remove and change the seal rings (17).
r) Remove the retaining rings (18).
s) Remove the housings (19).
t) Remove the bearings (20).
u) Remove and change the seal rings (21).

Note! Before removing the drive shafts, note the orientation.

v) Separate the frames and remove the chain drive shafts (22).
w) If necessary change the chain drive wheels, see
x) Assemble in the reverse order.

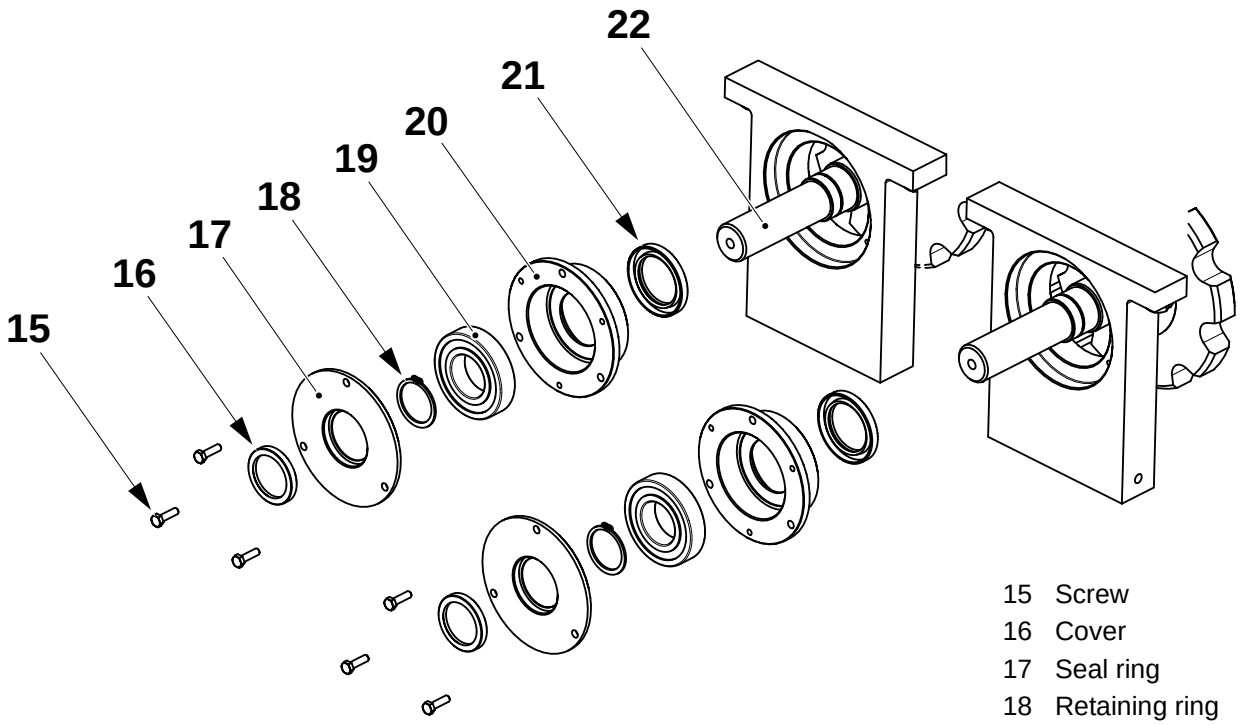

15 Screw
16 Cover
17 Seal ring
18 Retaining ring
19 Housing
20 Bearing
21 Seal ring
22 Shaft

4.3-4 Drive Unit - Change Wheels

Tools: - Forklift - Pallet	
SPC Reference	2511256-0100

Valid for New Gearboxes

a) Remove the gearboxes and the drive shafts, and separate the drives shafts from the gearboxes, see 4.3-2 Drive Unit - Overhaul (valid new gearboxes), and 4.3-6 Drive Unit - Change Gearboxes (valid for new gearboxes).

Valid for Old Gearboxes

Remove the drive shafts, see 4.3-3 Drive Unit - Overhaul (valid for old gearboxes).

Valid for All Gearboxes

a) Remove the screws (1), flange (2) and wheel (3) from the shaft (4).

b) Remove the bushings (5) and reference pin (6) from the wheel. Retain the bushings and pin.

c) Fit the bushings (5) and pin (6) in the new wheel (3).

d) Fit the wheel (3) on the shaft (4) so the reference pin (6) mates with the slot (7) in the shaft (4).

e) Fit the flange (2) and tighten the screws (1) crosswise to 30 +5/-0 Nm.

f) Repeat steps a) to e) at the other end of the shaft.

g) Repeat the procedure for the other shaft.

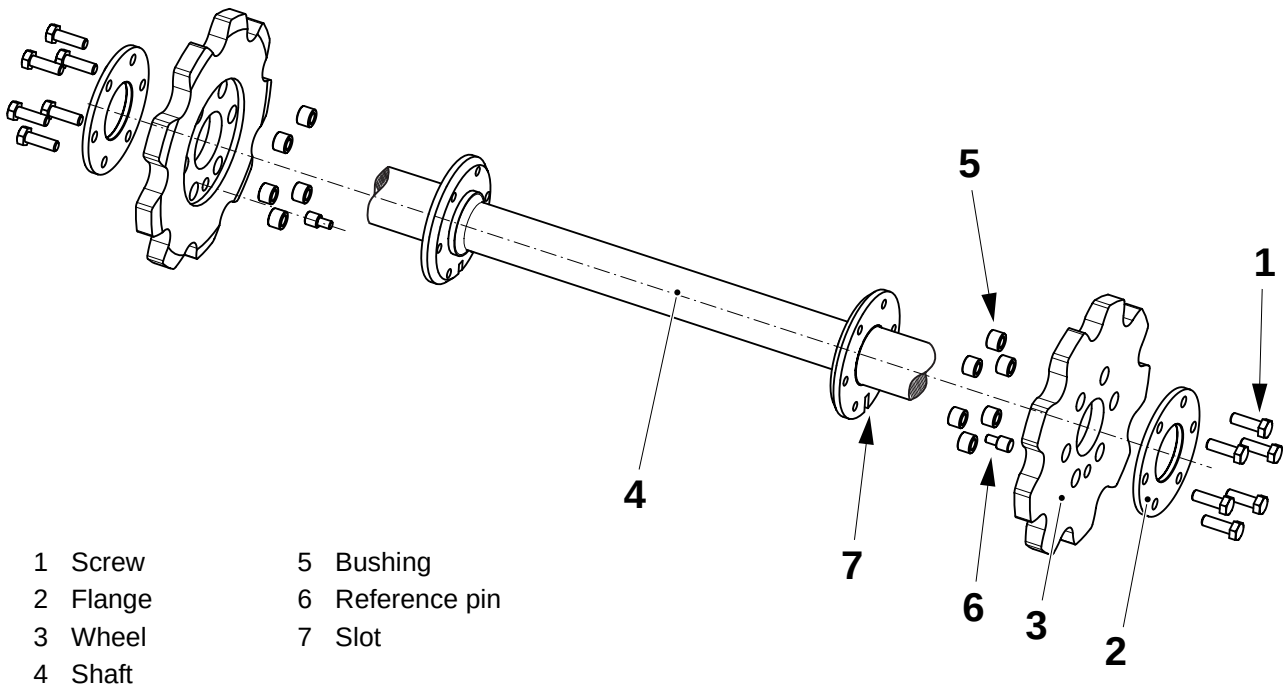

1 Screw
2 Flange
3 Wheel
4 Shaft
5 Bushing
6 Reference pin
7 Slot

4.3-5 Drive Unit - Change Gearboxes (valid for old gearboxes)

SPC Reference	2511256-0100

a) Remove the gearboxes, see 4.3-3 Drive Unit - Overhaul (valid for old gearboxes) steps a) to h).

b) Assemble in the reverse order.

4.3-6 Drive Unit - Change Gearboxes (valid for new gearboxes)

Tools: - Template	 2640362
SPC Reference	2511256-0100

Remove

a) Remove the gearboxes and drive shafts, see 4.3-2 Drive Unit - Overhaul (valid new gearboxes).

b) Remove the covers (1) and (2) from the gearboxes (3) and (4).

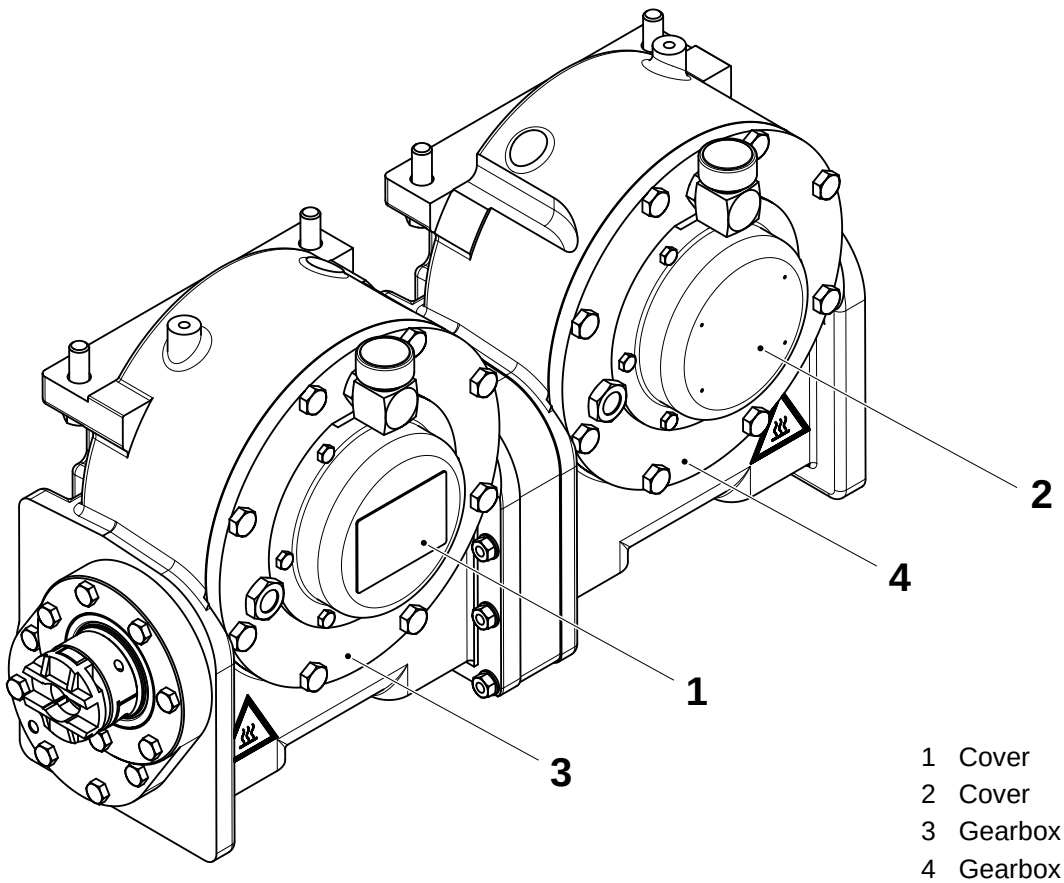

1 Cover
2 Cover
3 Gearbox
4 Gearbox

(Cont'd)

(Cont'd)

c) Loosen the screws (5) in the outer ring (6) of the clamp and pull off the clamp.

d) Pull the gearboxes off the drive shafts (7).
Change the gearboxes.

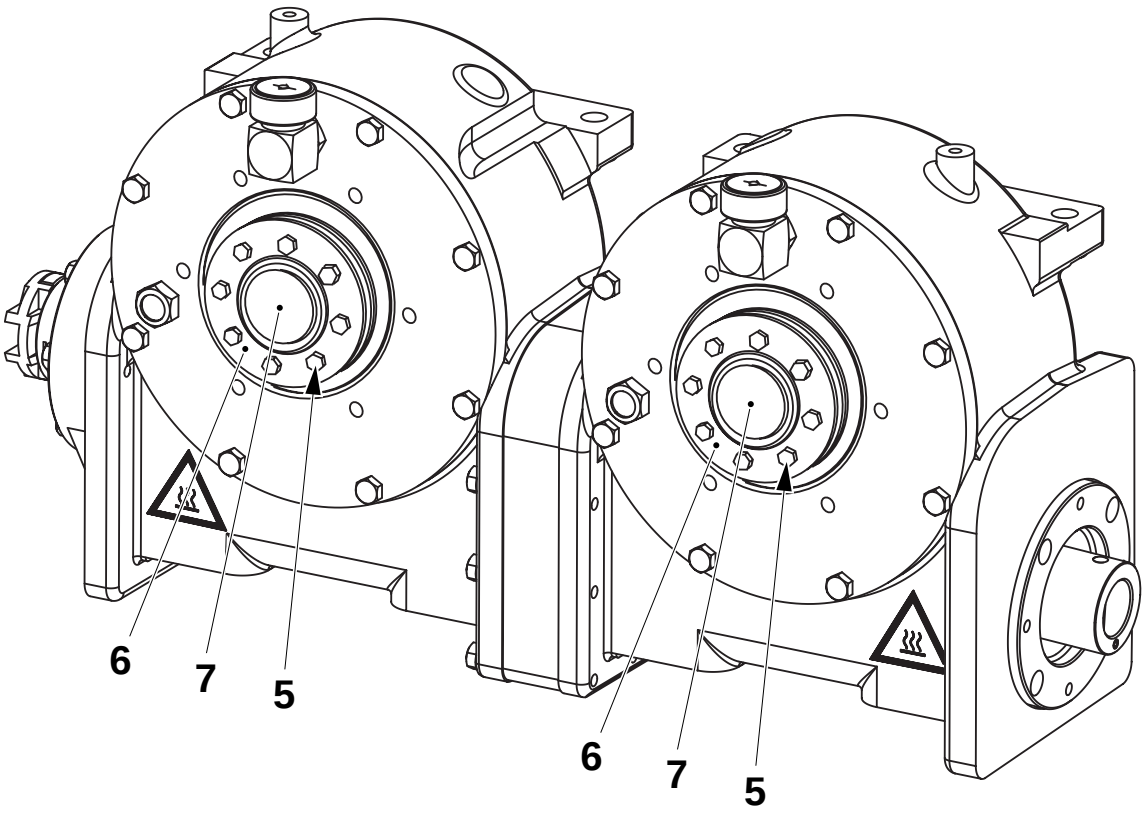

5 Screw
6 Clamp, outer ring
7 Drive shaft

(Cont'd)

(Cont'd)

Assemble

a) Remove the covers (1) and (2) from the gearboxes (3) and (4).

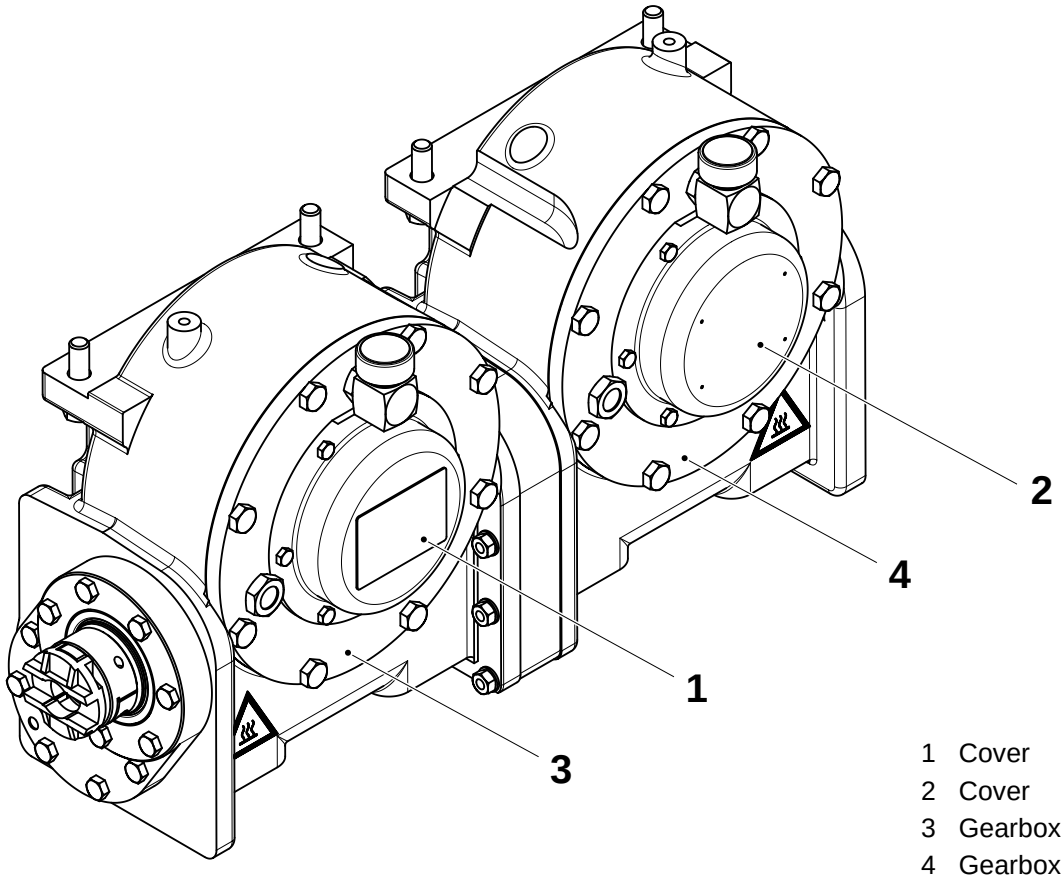

1 Cover
2 Cover
3 Gearbox
4 Gearbox

(Cont'd)

(Cont'd)

b) Loosen the screws (5) in the outer ring (6) of the clamp and pull off the clamp.

c) Separate the components of the clamp and clean them.

d) Fit the crank holder (7) and secure in position with the screws (8).

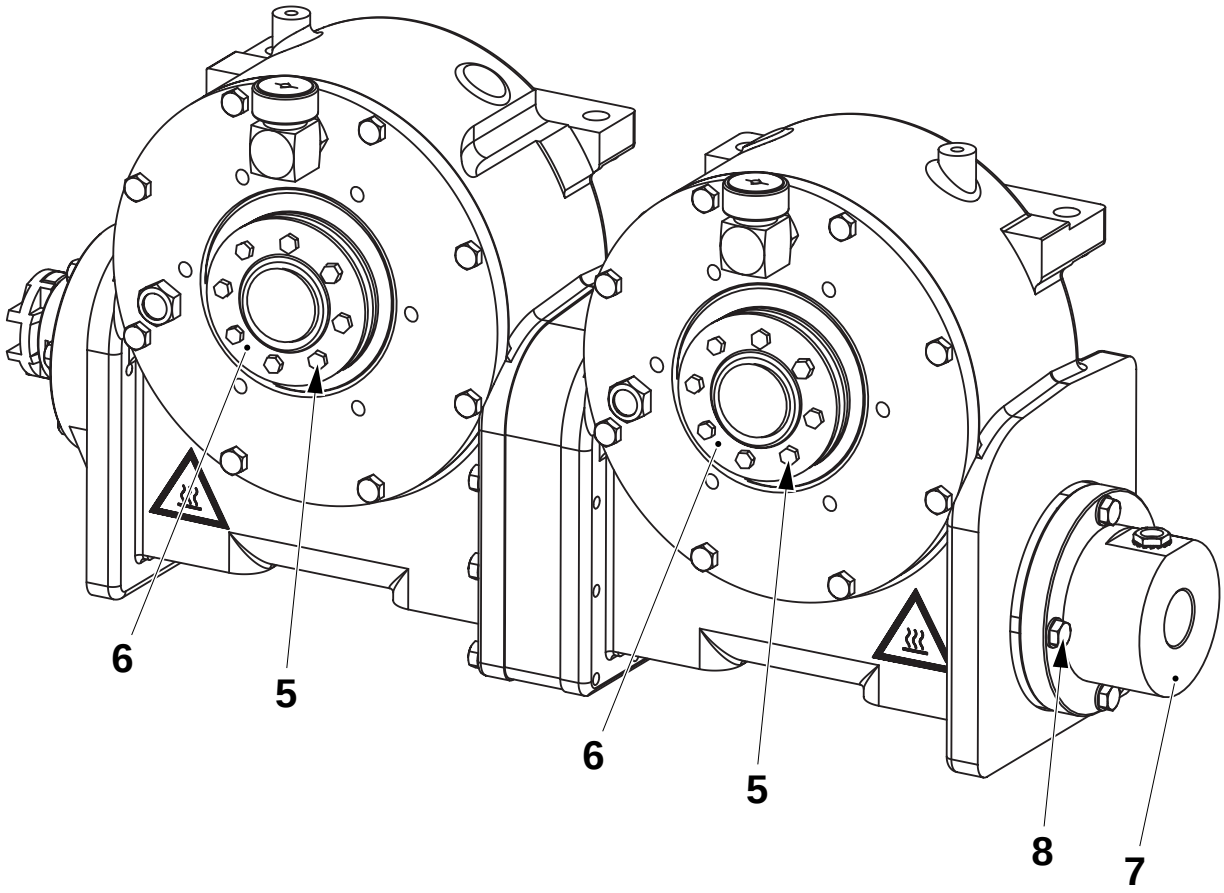

5 Screw
6 Clamp, outer ring
7 Crank holder
8 Screw

(Cont'd)

(Cont'd)

e) Fit the shafts (9) in the gearboxes (3) and (4).

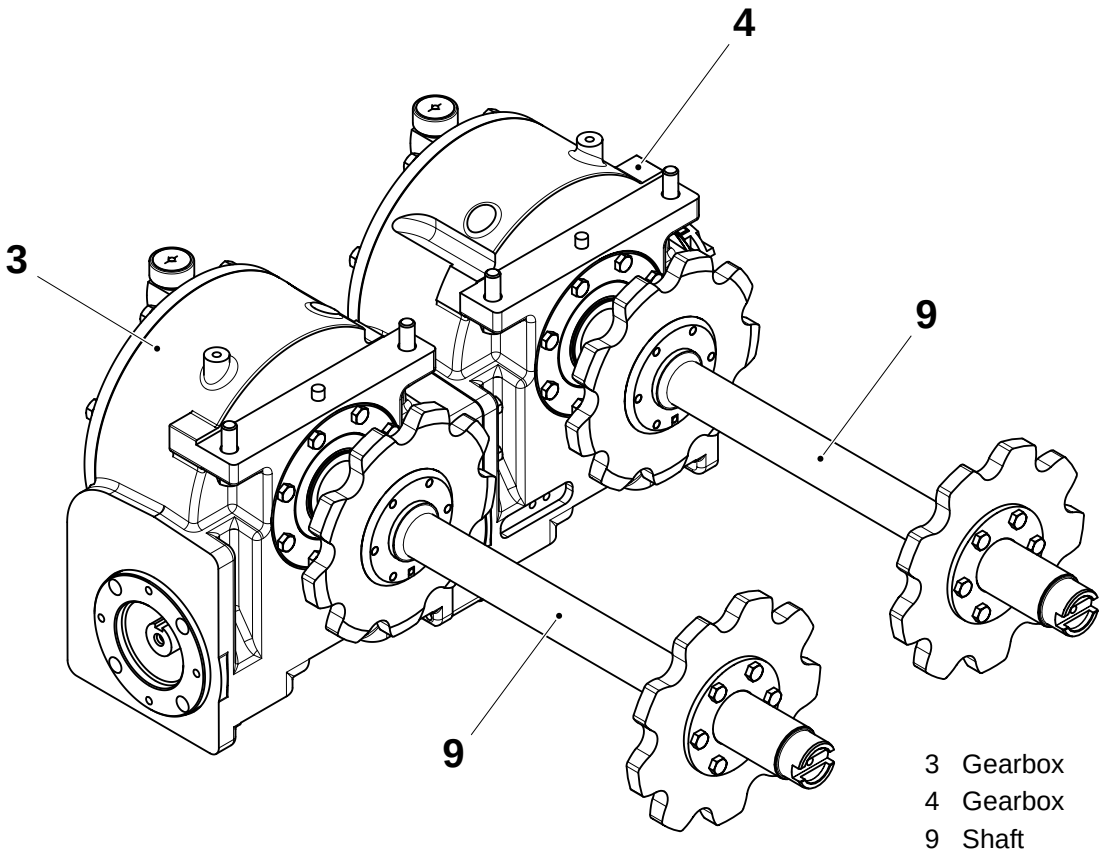

3 Gearbox
4 Gearbox
9 Shaft

(Cont'd)

(Cont'd)

f) Fit the seal ring (10), bearing (11) and retaining ring (12) in the bracket (13).

g) Fit the seal ring (14), cover (15) and screws (16).

h) Fit the seal ring (17), bearing (18) and retaining ring (19) in the bracket (20).

i) Fit the gear (21) and screw (22).

j) Fit the seal ring (23), housing (24) and screws (25).

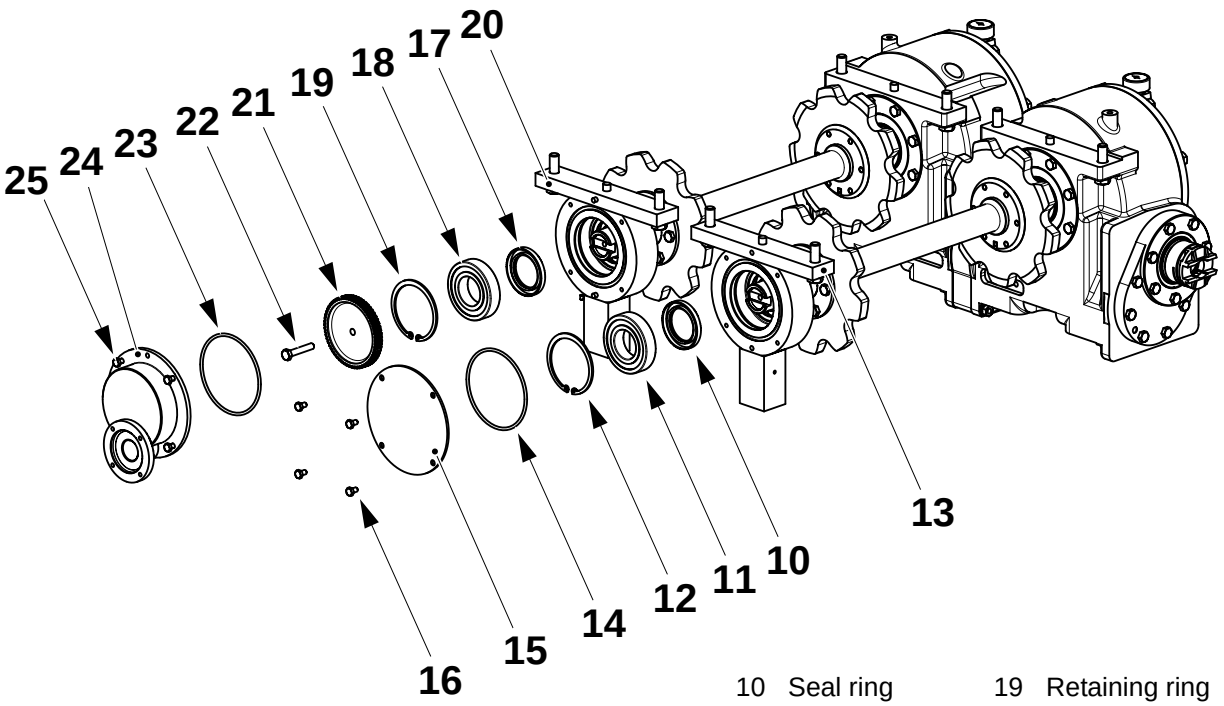

10	Seal ring	19	Retaining ring
11	Bearing	20	Bracket
12	Retaining ring	21	Gear
13	Bracket	22	Screw
14	Seal ring	23	Seal ring
15	Cover	24	Housing
16	Screw	25	Screw
17	Seal ring		
18	Bearing		

(Cont'd)

(Cont'd)

k) Connect the gearbox section (26) to upper frame section (27) with the screws (28).

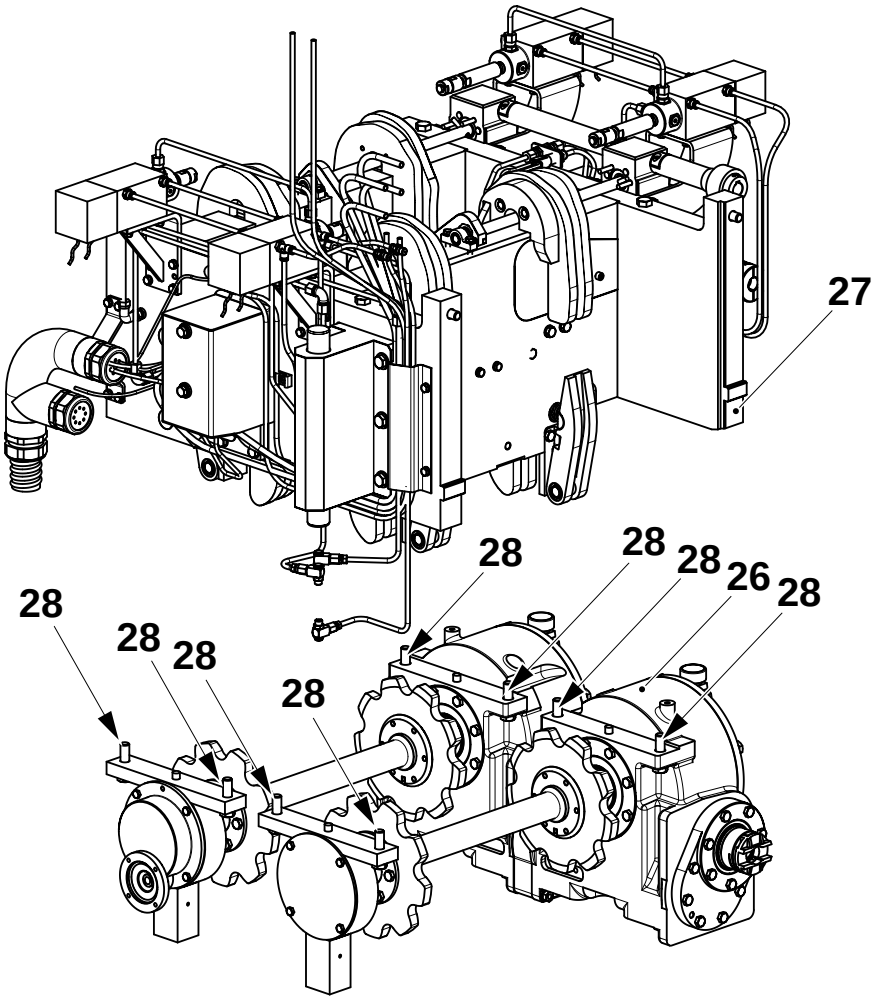

26 Gearbox section
27 Frame section
28 Screw

(Cont'd)

(Cont'd)

Set Position

a) Assemble the three parts of the clamp (1), (2) and (3) and slide them onto the gearbox shaft (4).

Note! Tighten the screws (5) by hand.

b) Push the clamp until the inner ring (3) presses against the shoulder (6) on the shaft (4) and tighten the screws (5).

c) Repeat for the other gearbox.

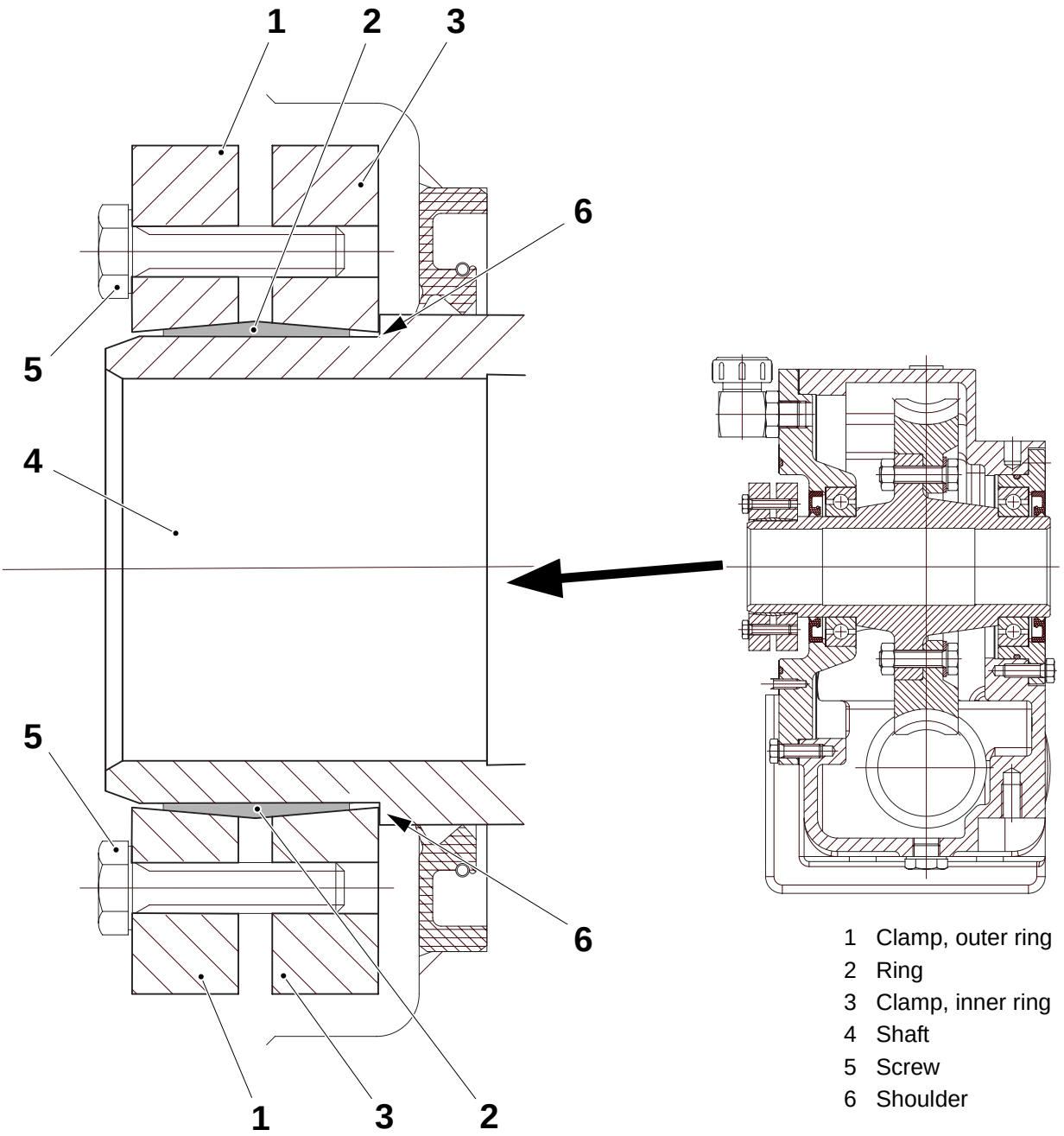

1 Clamp, outer ring
2 Ring
3 Clamp, inner ring
4 Shaft
5 Screw
6 Shoulder

(Cont'd)

(Cont'd)

d) At the sealing link side, insert the tool (7), oriented as shown, between the cam (8) and the wheel (9).

e) Push the wheel (9) so it clamps the tool (7) between itself and the cam (8).

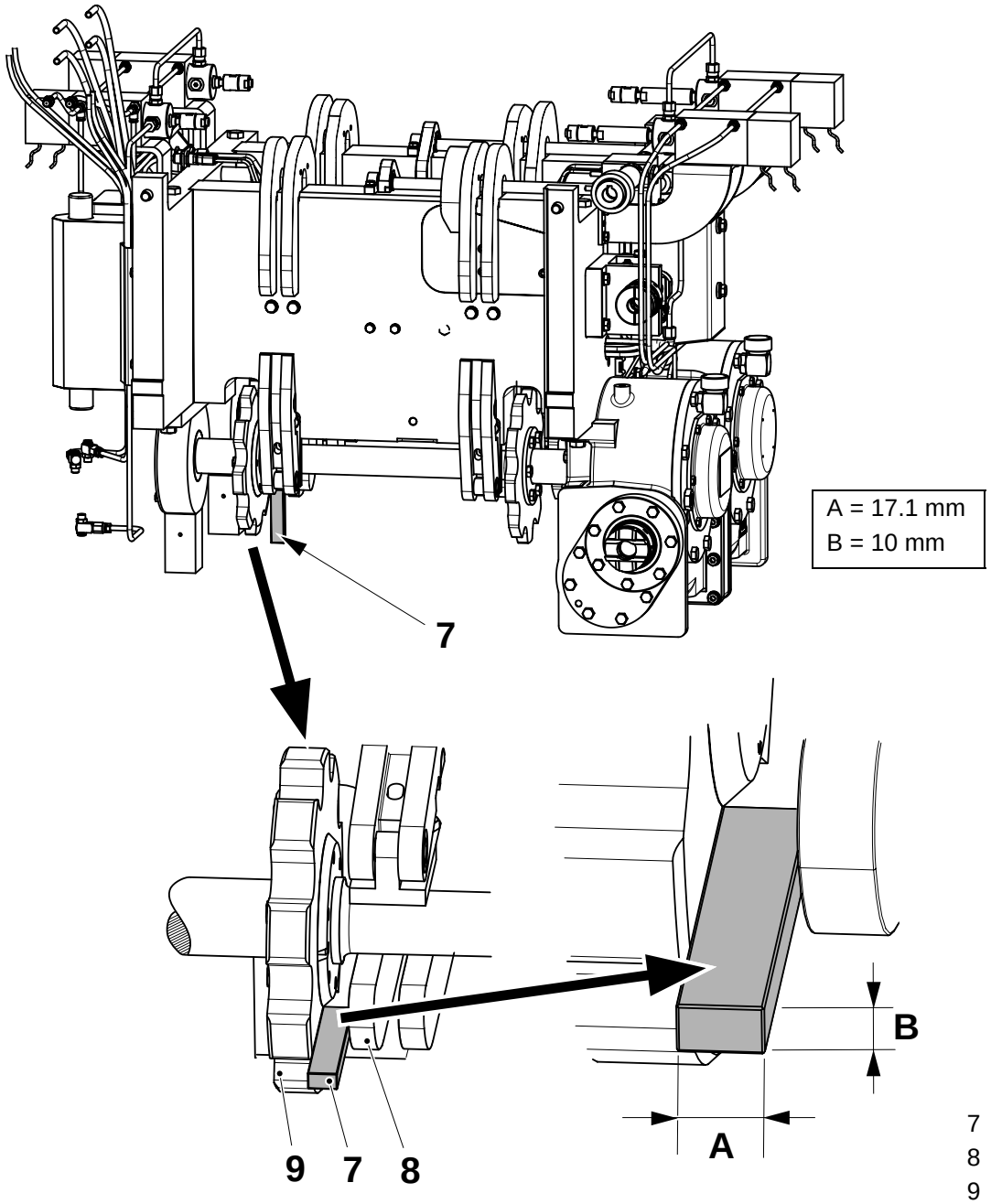

(Cont'd)

(Cont'd)

f) Tighten the screws (5) in the outer ring (1) to 17 +2/-0 Nm.

Note! Do not tighten the screws in the other gearbox.

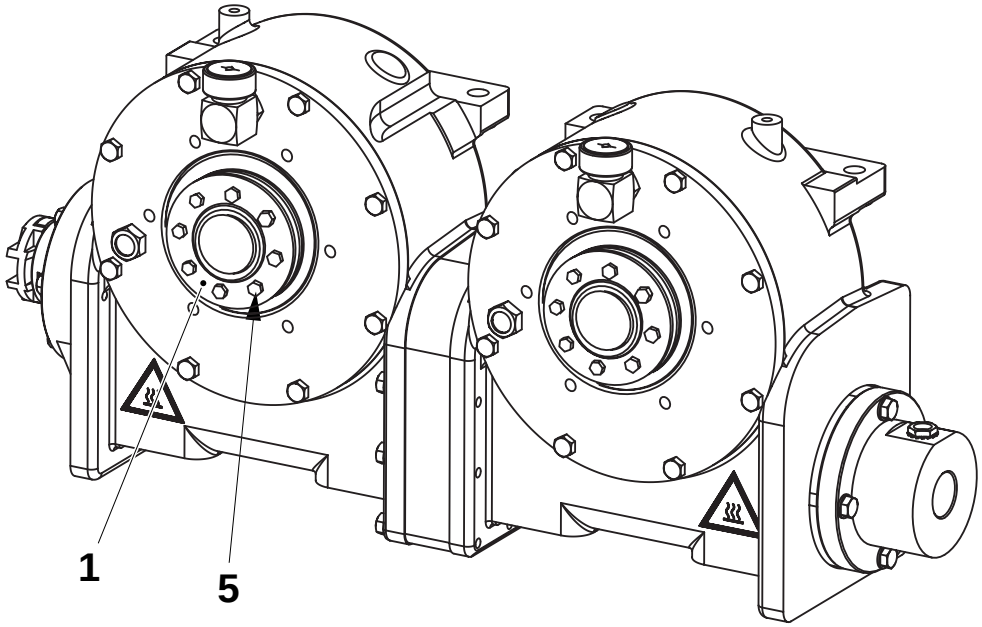

1 Outer ring
5 Screw

g) Remove the tool (7).

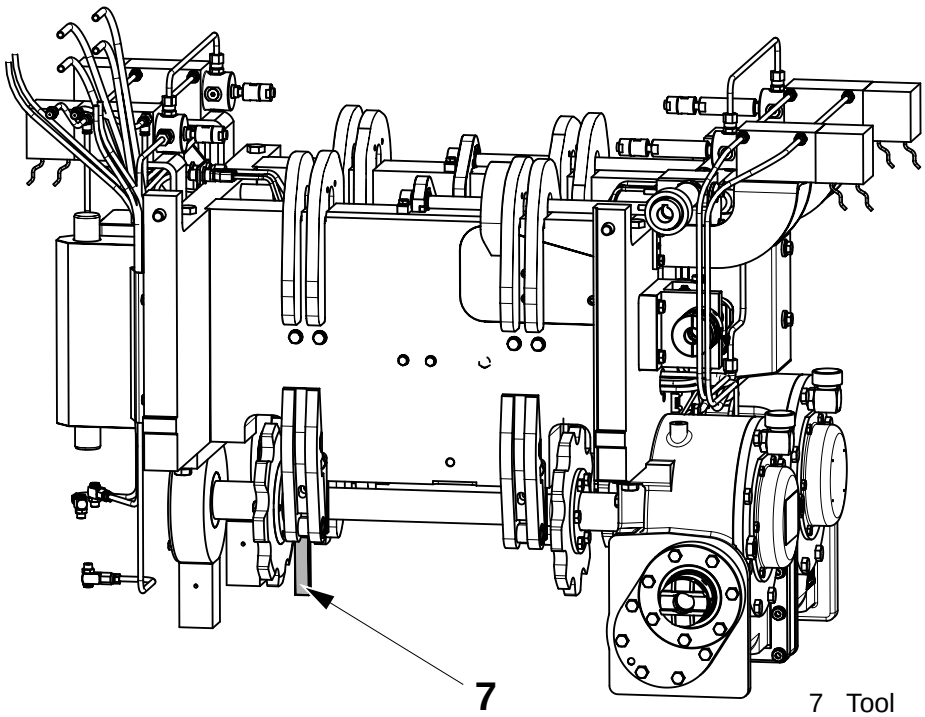

7 Tool

(Cont'd)

(Cont'd)

Completion

a) Fit the cam (1) on the jaw unit.

b) Fit the chains, see 4-2 Jaw System - Chain Disassembly and Reassembly.

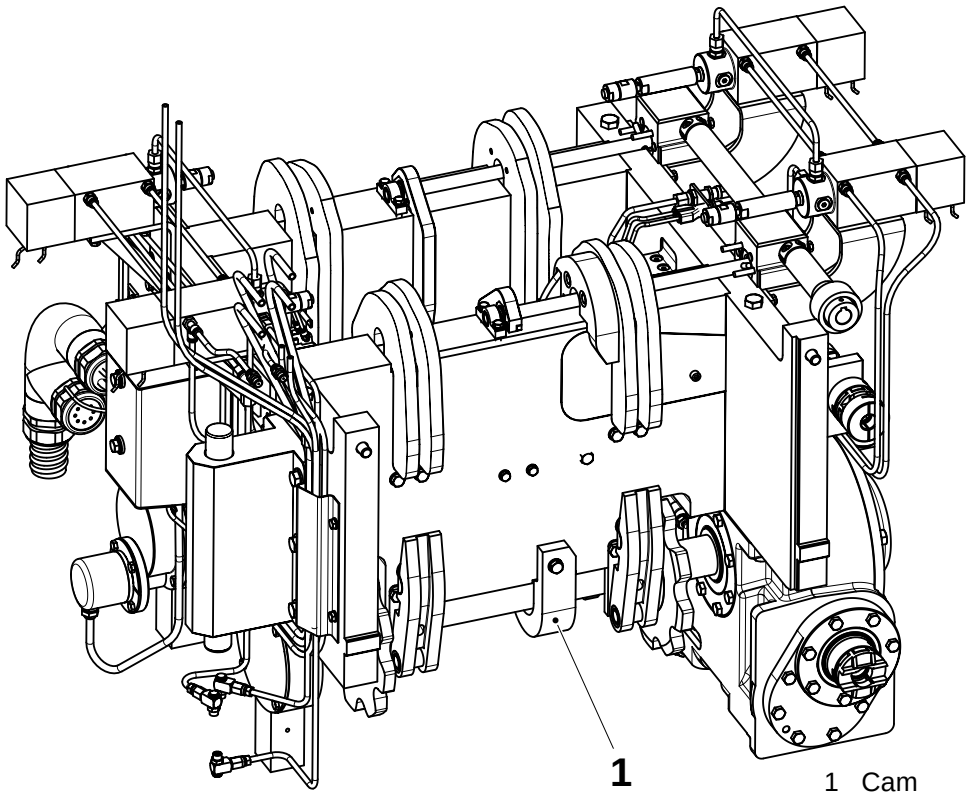

1 Cam

(Cont'd)

(Cont'd)

c) Crank the jaw system slowly until the chains have made two complete revolutions.

d) At the pressure link side, push the clamp until the inner ring (2) presses against the shoulder (3) on the shaft (4) and tighten the screws (5) to 17 +2/-0 Nm.

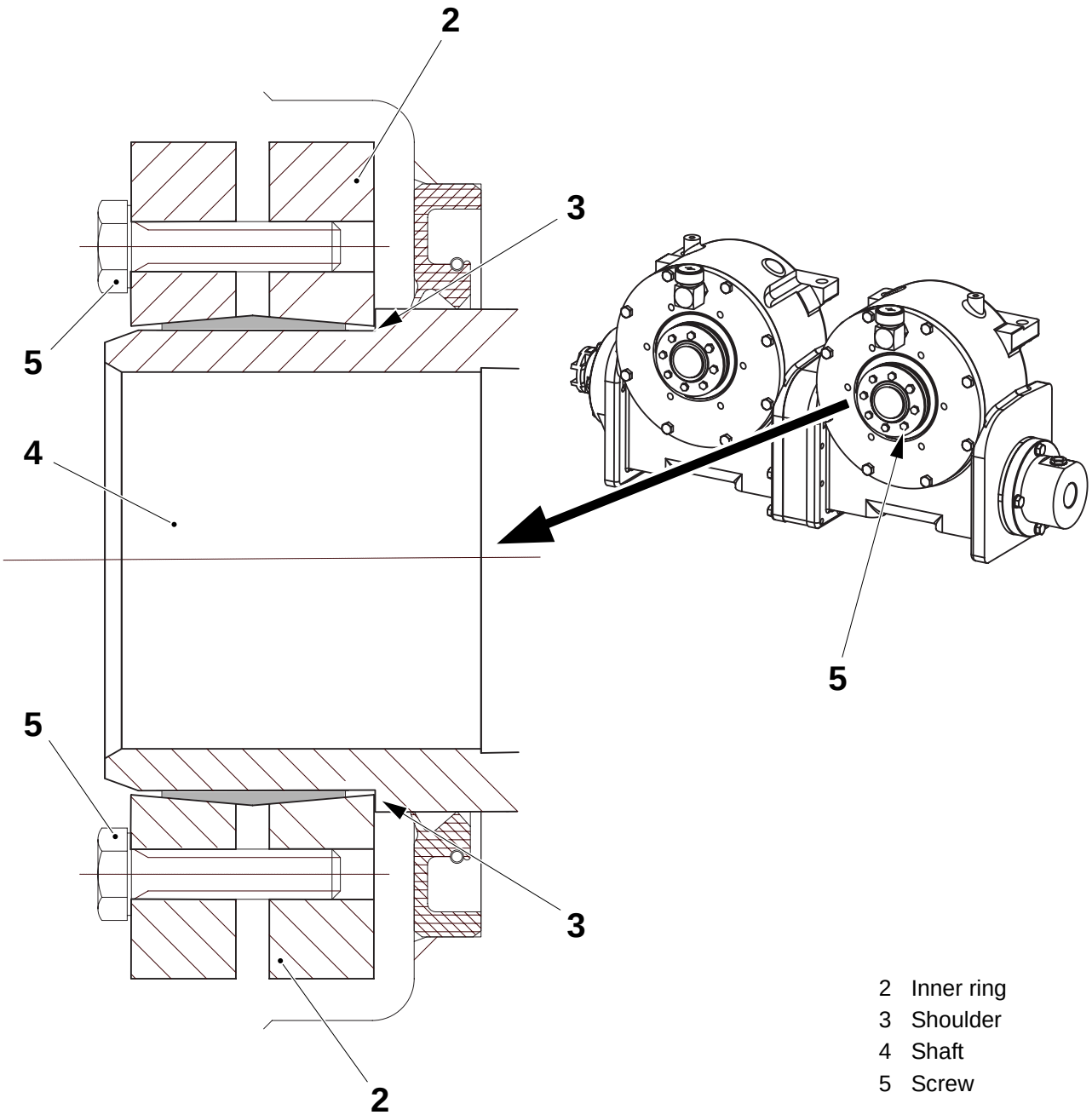

2 Inner ring
3 Shoulder
4 Shaft
5 Screw

(Cont'd)

(Cont'd)

e) Fit the covers (6) and (7) on the gearboxes (8) and (9).

f) Turn on the water, air and electrical supplies.

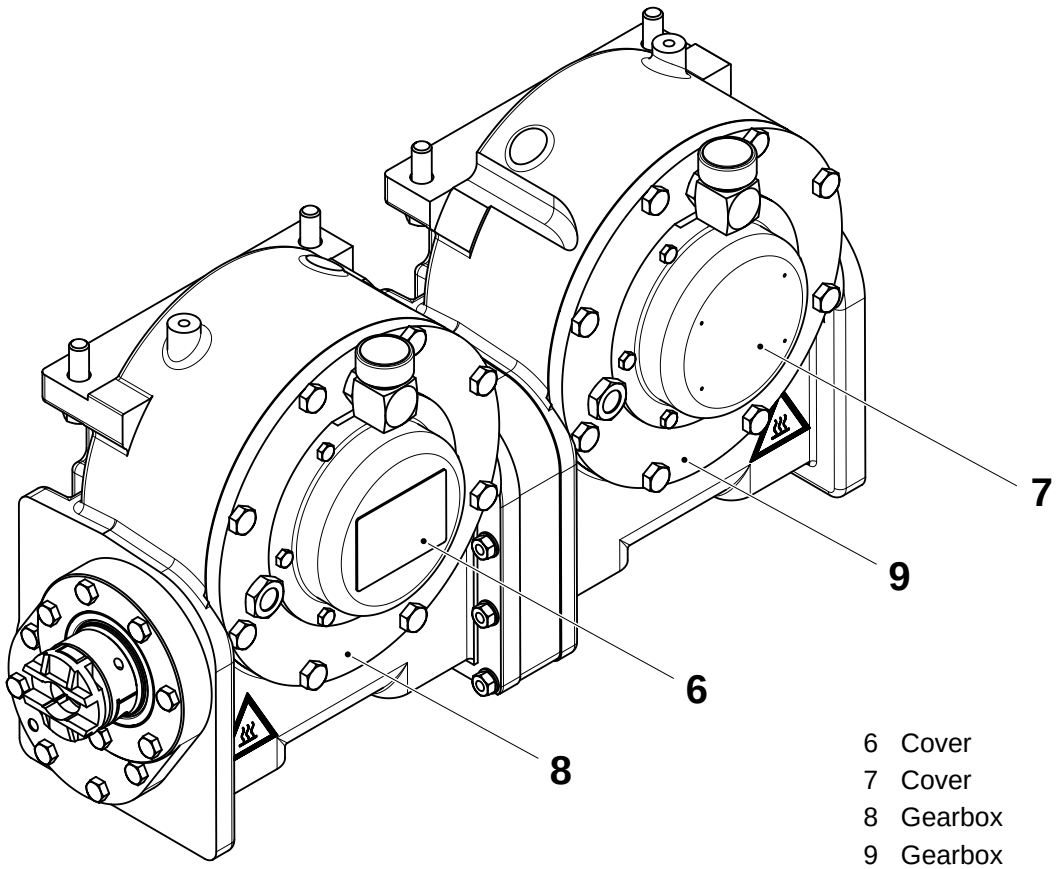

6 Cover
7 Cover
8 Gearbox
9 Gearbox

(Cont'd)

(Cont'd)

g) Fit the plates (10) and (11) on the angle encoder (12).

h) Fit the angle encoder (12) and secure it in position with the screws (13).

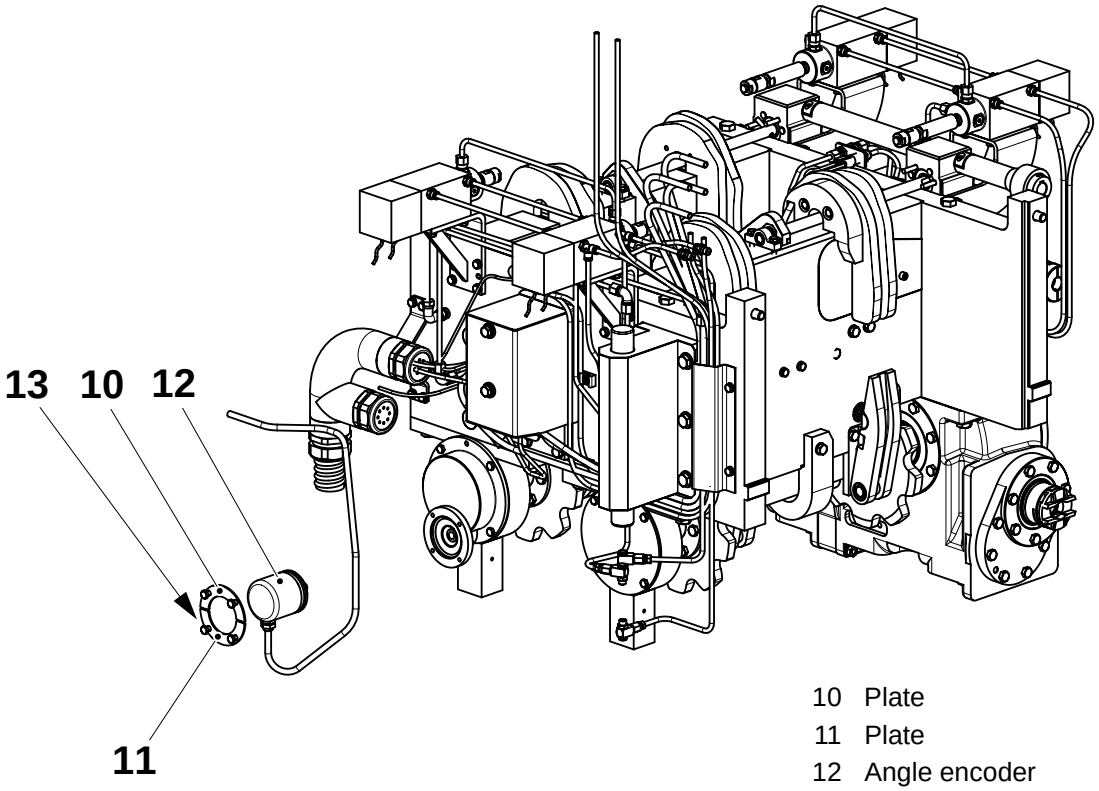

10 Plate
11 Plate
12 Angle encoder
13 Screw

(Cont'd)

(Cont'd)

i) Attach the waste box (14) to the jaw system with the screws (15).

j) Fit the photocell brackets (16).

k) Connect the air lines to the drop chute cylinder (17).

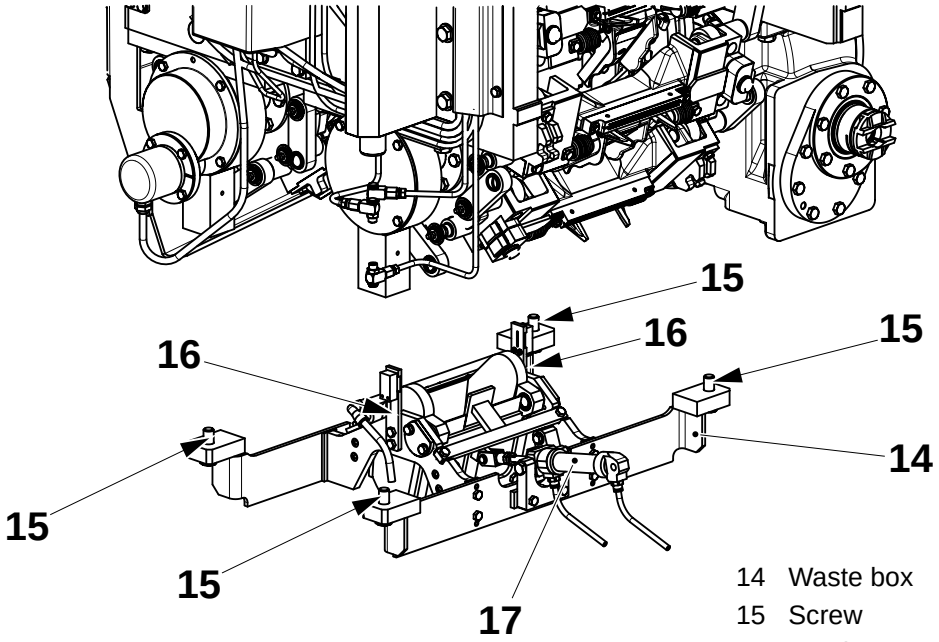

14 Waste box
15 Screw
16 Bracket
17 Cylinder

(Cont'd)

(Cont'd)

l) Swing the jaw system toward the plate and secure in position with the screws (18).

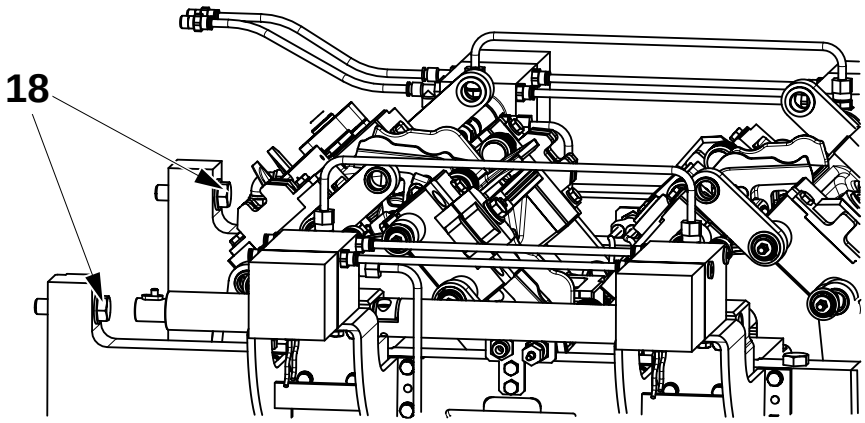

18 Screw

(Cont'd)

(Cont'd)

m) Fit the coupling part (19) on the gearbox shaft (20).

n) Insert the central part of the coupling (21).

o) Adjust the coupling, see 4-5 Jaw System - Set Coupling.

p) Set the angle encoder, see 4.3-1 Drive Unit - Set Angle Encoder.

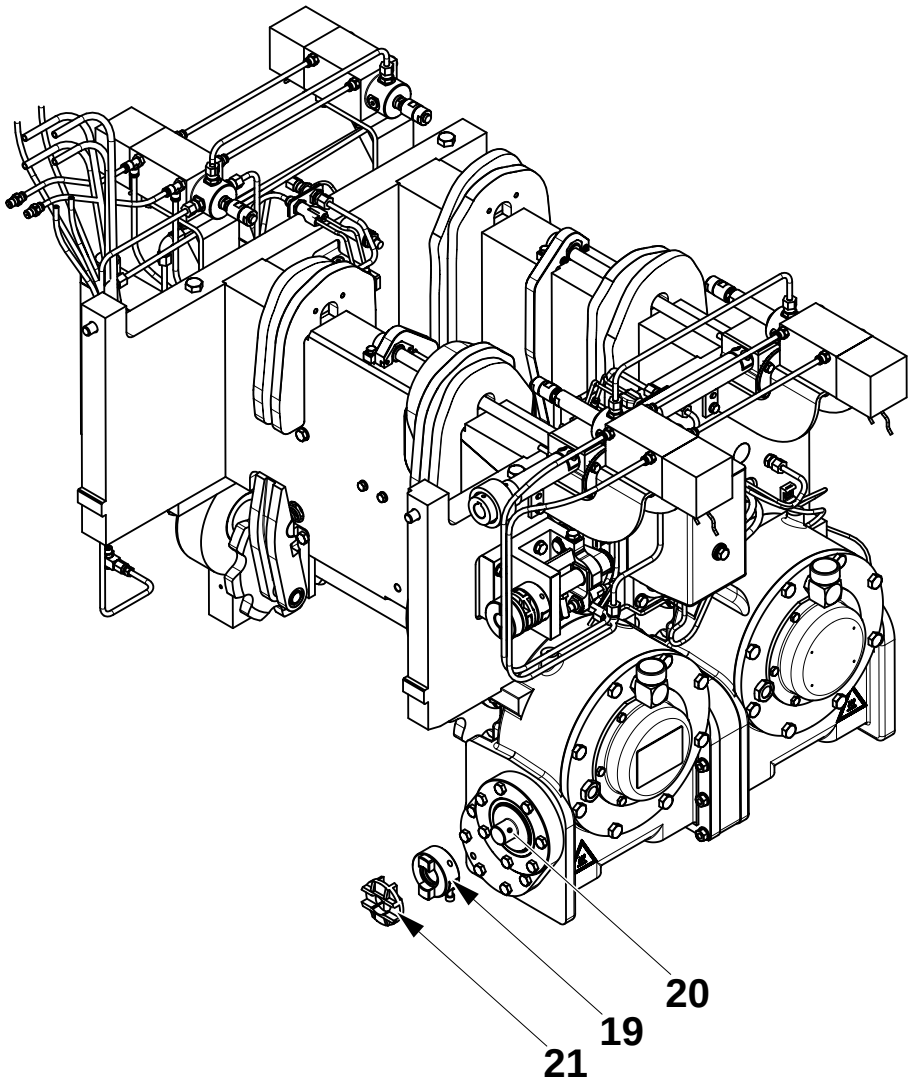

19 Coupling part
20 Shaft
21 Central coupling part

4.3-7 Drive Unit - Refill Gearbox Oil

Consumables: - Lubricant	 TP No. 904591041
SPC Reference	2511256-0100

Valid for New Gearboxes

a) Check the level of oil in the gearboxes.
The view below shows the correct level of oil in the gearboxes.

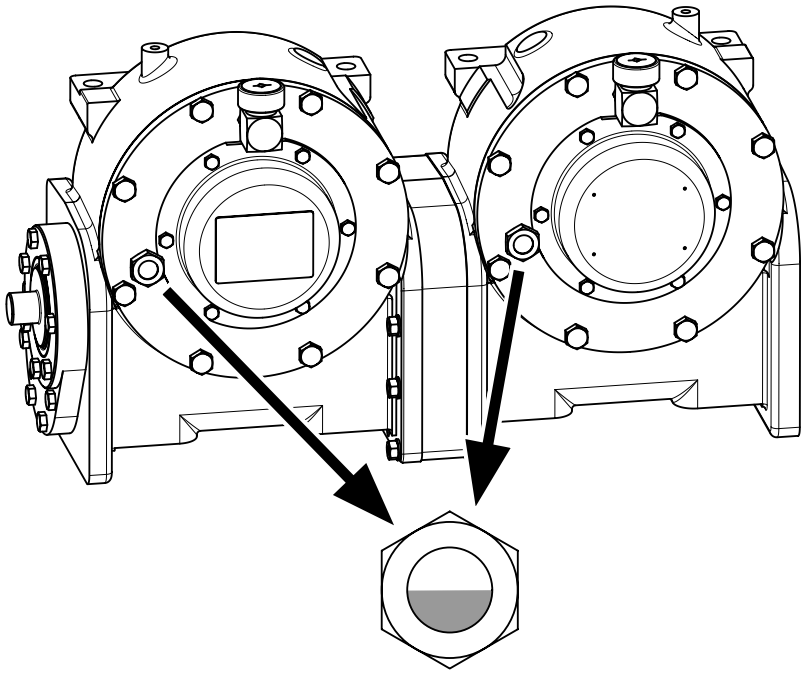

(Cont'd)

(Cont'd)

Note! Do not exceed the amount of oil stipulated below. Excess oil will cause overpressure and may lead to leakages. The correct amount of oil is **4.8 litres**.

Note! An alternative oil can be used, see 10.3 Consumables.

b) If the level is low, remove the filler caps (1) and (2) from the gearboxes (3) and (4).

c) Top up the oil level with the the correct lubricant, see 10.3 Consumables.

d) Fit the filler caps (1) and (2).

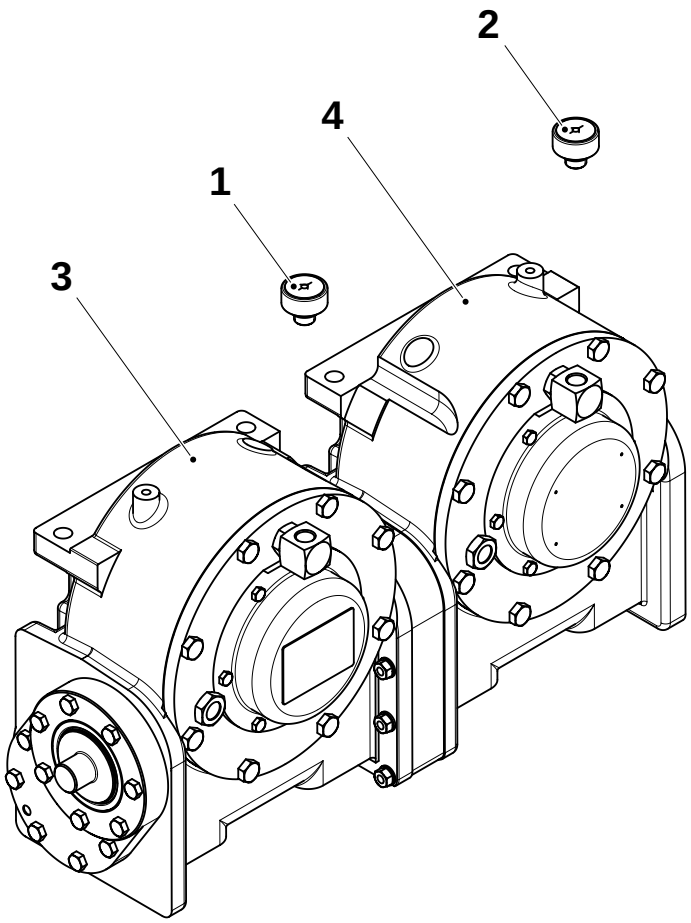

1 Cap
2 Cap
3 Gearbox
4 Gearbox

(Cont'd)

Valid for Old Gearboxes
Note! Do not remove the plug (4).

a) At the gearboxes (1) and (5), remove the plugs (2) and (3) to drain the oil.

b) When the oil has drained, fit the plug (3).

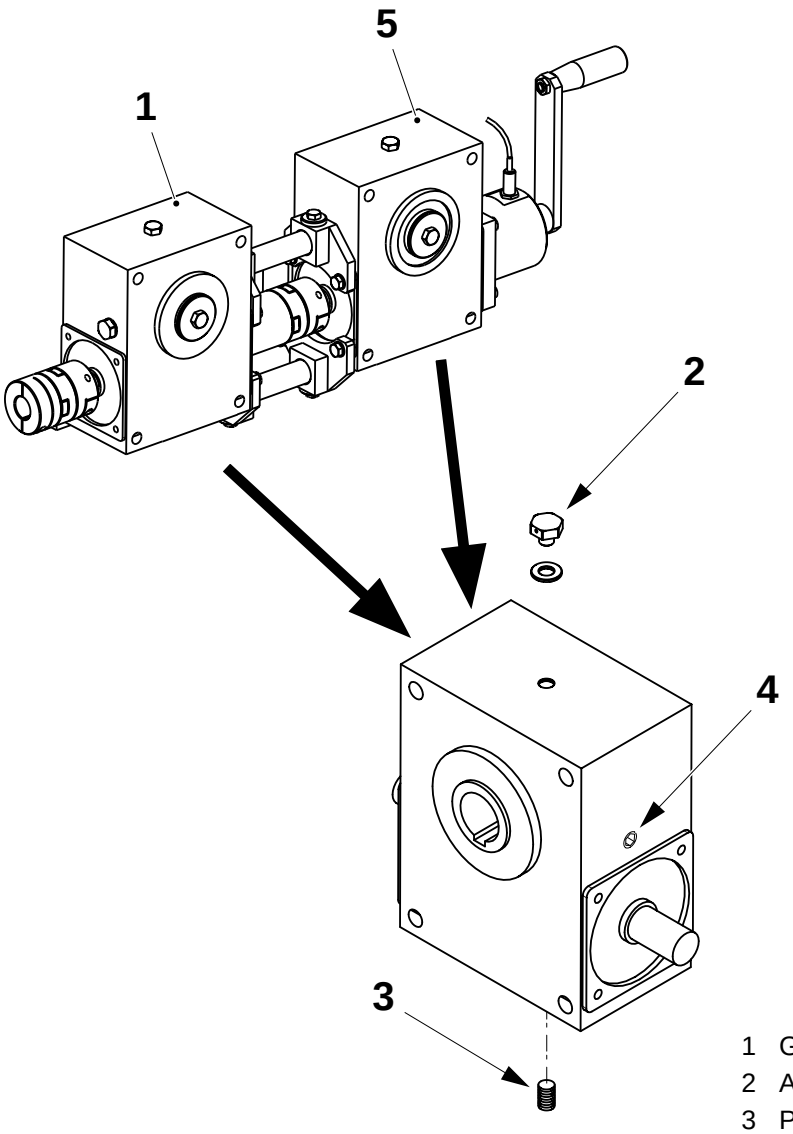

1 Gearbox
2 Air relief plug
3 Plug
4 Plug
5 Gearbox

(Cont'd)

(Cont'd)

Note! Do not exceed the amount of oil stipulated below. Excess oil will cause overpressure and may lead to leakages.

c) Fill the gearboxes with **0.75 litres** of lubricant code **H**, see 10.3 Consumables. The cut-away view below shows the correct level of oil in the gearboxes and the position of the plug (4).

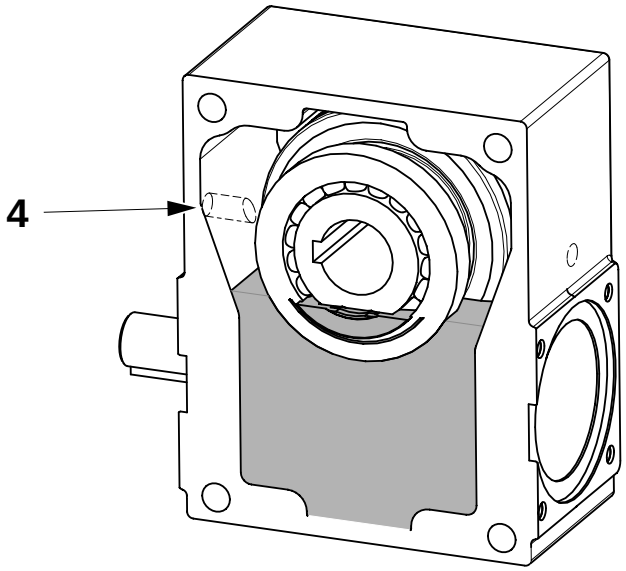

4 Plug

d) Fit the air relief plugs (2).

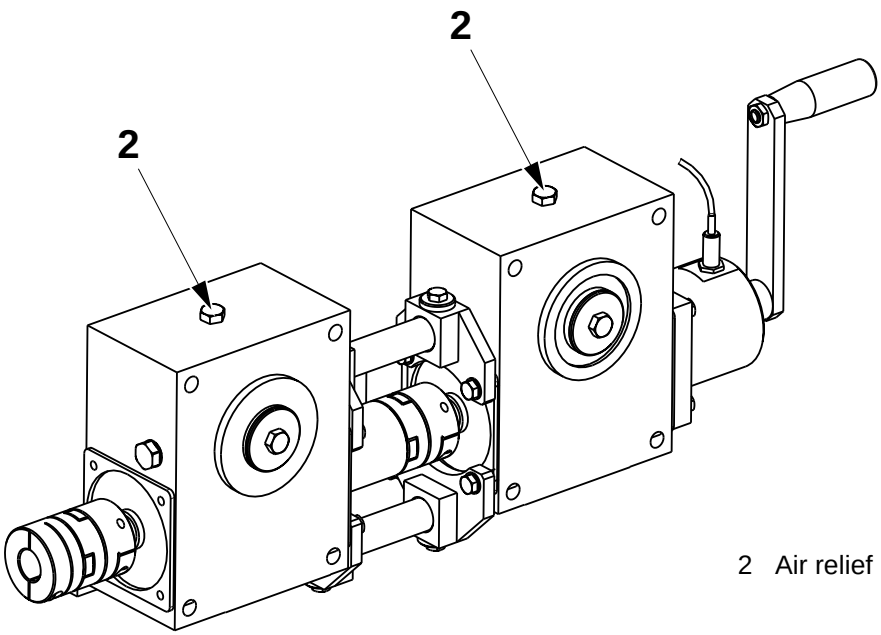

2 Air relief plug

4.3-8 Drive Unit - Set Gearbox Play (valid for old gearboxes)

Tools: - Template	 2566274-0100
SPC Reference	575238-0400 1348944-0100

Detect Play

Note! The illustration below shows the direction of movement of the main components in the jaw drive system. These are:

- coupling (1) jaw system drive shaft,
- sealing chain drive shaft (2),
- pressure chain drive shaft (3),
- crank handle (4).

Note! Using the crank handle to detect play in the jaw system is not recommended due to the play in the crank handle itself.

Rotate the coupling (1) in both directions, there should little or no play, i.e the drive shafts (2) and (3) should begin to move almost immediately the coupling (1) moves.
Too little play will cause gearbox wear and too much play will cause production problems, see Adjust Play.

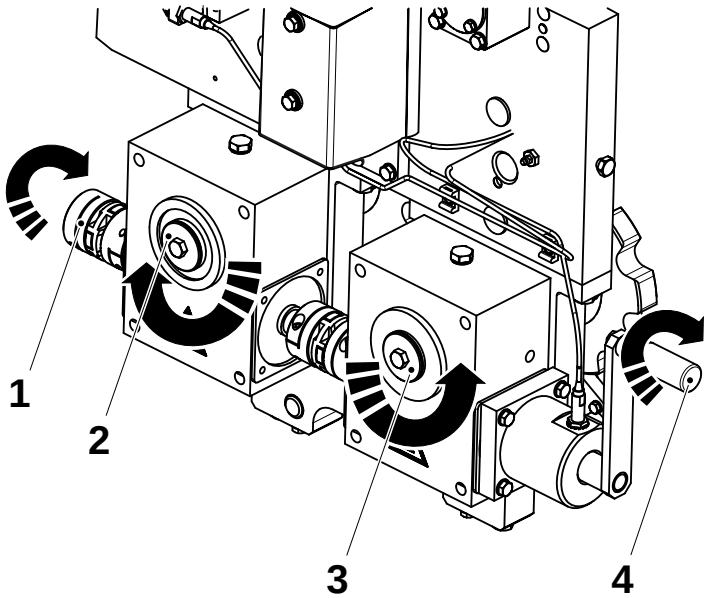

1 Coupling
2 Drive shaft
3 Drive shaft
4 Crank handle

(Cont'd)

(Cont'd)

Adjust Play

a) Remove the crank handle (1).

b) Loosen the screw in the right hand part of the coupling (2).

c) Stick the graduated strip (3) around the circumference of the crank handle holder (4) with zero mark (5) at the top.

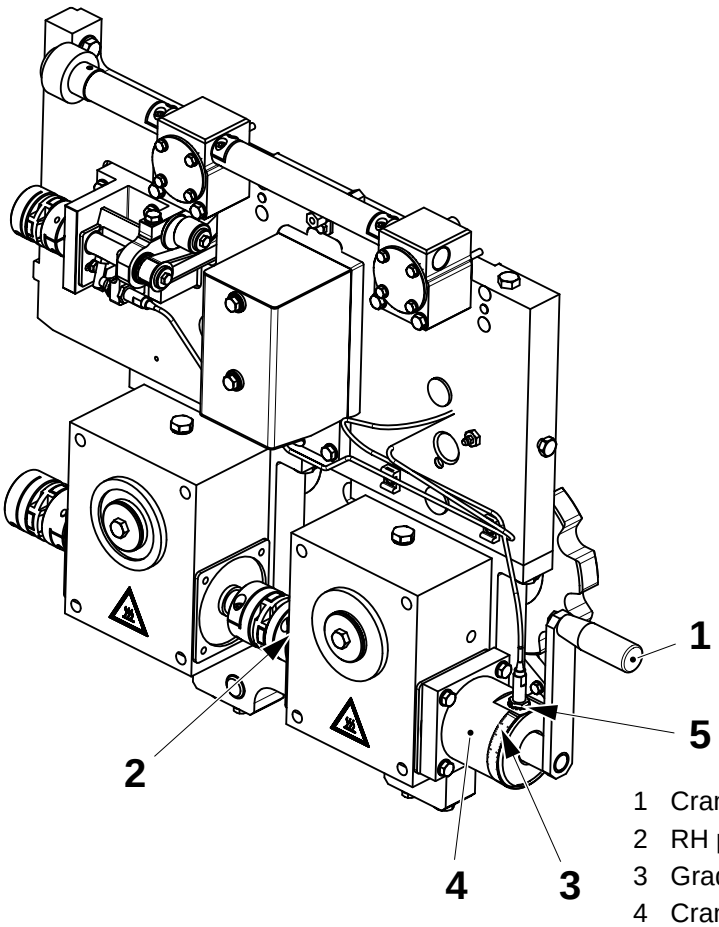

1 Crank handle
2 RH part of coupling
3 Graduated strip
4 Crank handle holder
5 Zero mark

(Cont'd)

(Cont'd)

d) Insert the shaft (6) of the tool into the crank handle holder (4) so it engages with the pin in the holder.

e) Using a torque wrench set to **6 Nm**, turn the shaft (6) clockwise until the torque wrench clicks.

f) Loosen the screw (7) and rotate the arm (8) until the pin (9) is aligned with the zero mark (5) on the graduated strip (3).

g) Without moving the arm (8), tighten the screw (7).

h) Turn the shaft (6) counter-clockwise until the torque wrench clicks.

i) Note the value on the strip (3) aligned with the pin (9).

j) Divide the value by two and move the arm (8) until the pin (9) is aligned with that value on the strip (3).

k) Without moving the arm (8), tighten the screw in the right hand part of the coupling (2).

l) Remove the tool.

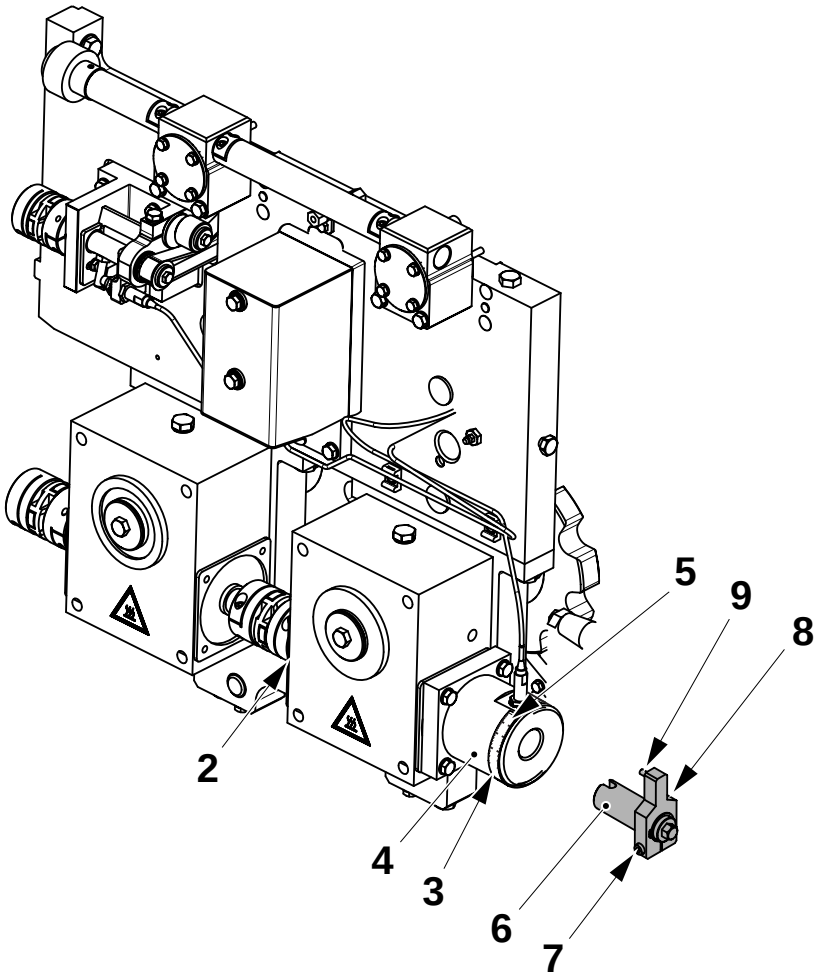

2 RH part of coupling
3 Graduated strip
4 Crank handle holder
5 Zero mark
6 Shaft
7 Screw
8 Arm
9 Pin

4.4 Volume Adjuster

SPC Reference	2511258-0100

4.4-1 Volume Adjuster - Set

SPC Reference	2511258-0100

a) Loosen the screws (2).

b) Turn the shaft (3) until the pin (4) reaches the outside stop as shown.

c) Turn the shaft (1) until the pin (5) reaches the outside stop as shown.

d) Tighten the screws (2).

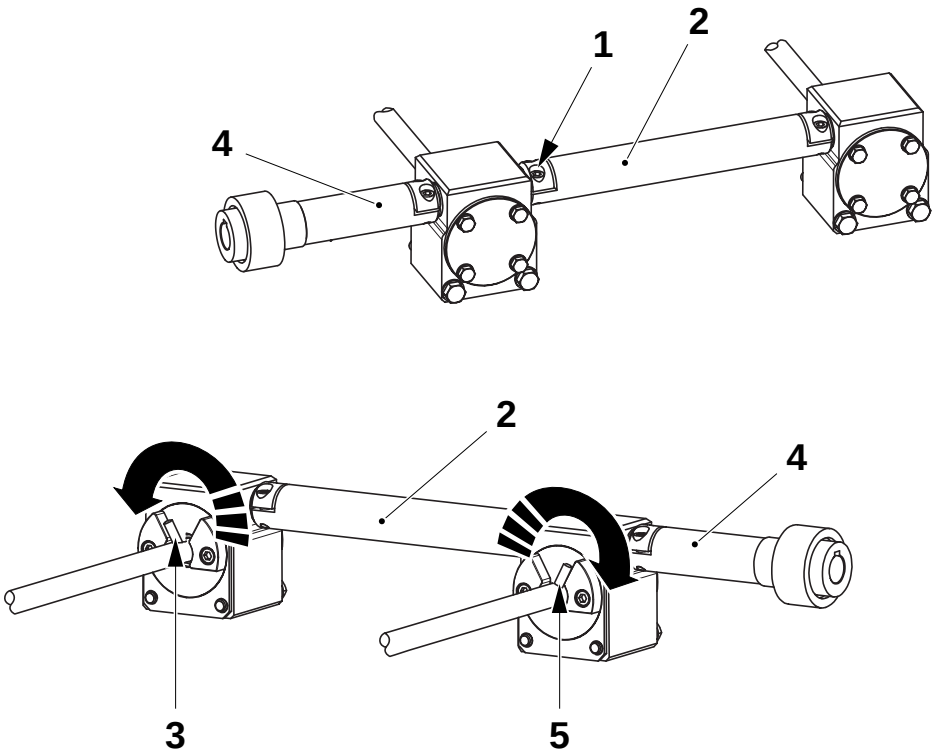

1 Shaft
2 Screw
3 Shaft
4 Stop pin
5 Stop pin

4.4-2 Volume Adjuster - Change Cams

SPC Reference	2511258-0100

a) Remove the two screws (1) holding the jaw system to the bulkhead. Then swing the jaw system away from the bulkhead.

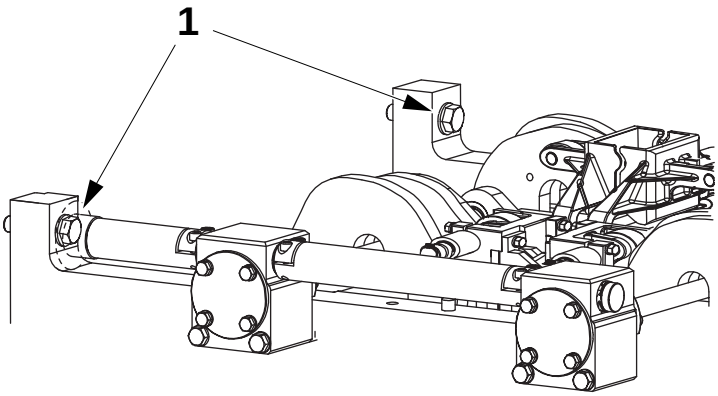

1 Screw

b) To release the chain tension, insert four M8 x 45 hexagonal socket head screws into the tensioner mechanism (2) and tighten them fully. Take care not to drop the bolts into the jaw mechanism.

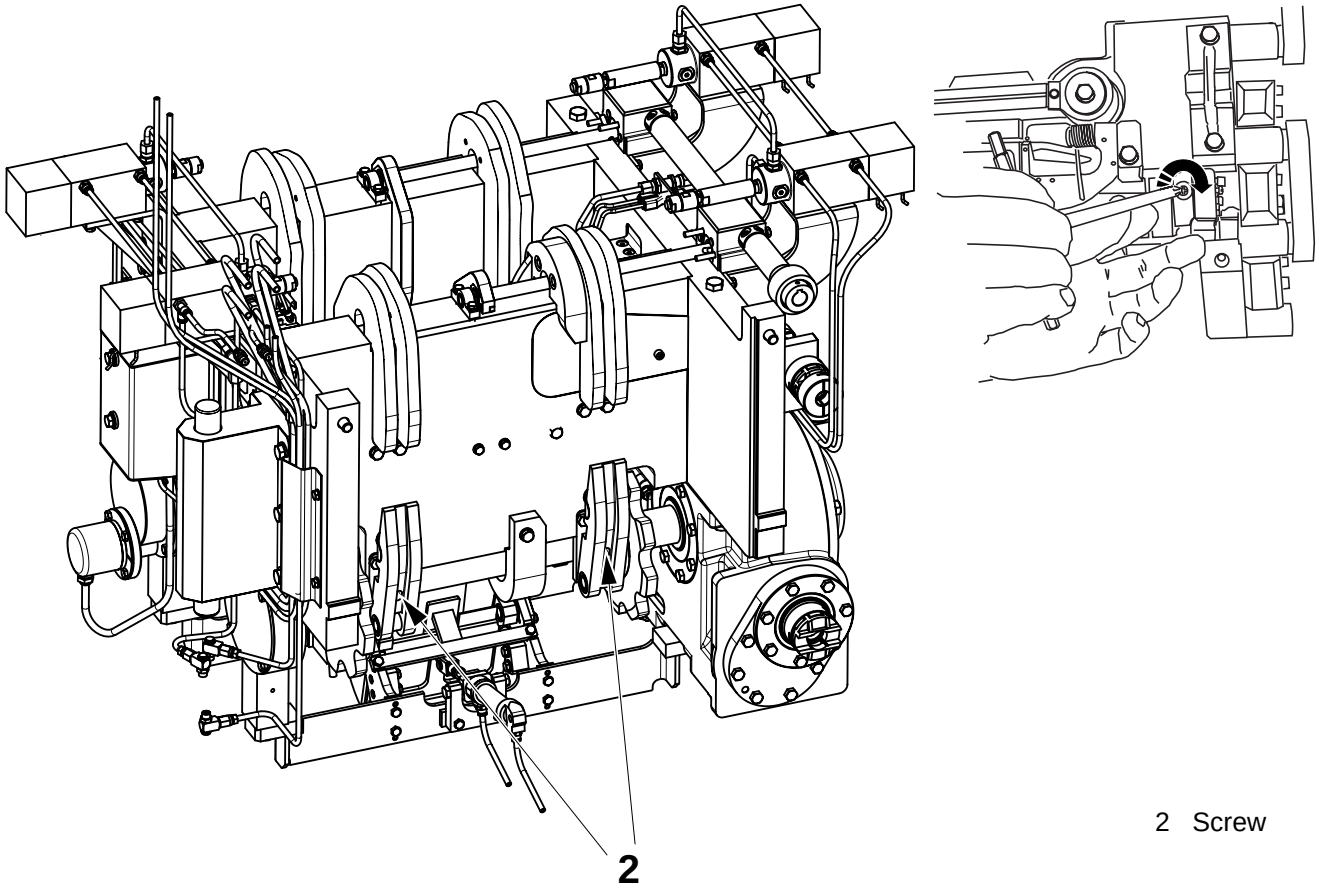

2 Screw

(Cont'd)

(Cont'd)

WARNING
Risk of personal injury!
Be careful not to trap your fingers between the links.

c) Separate the pressure link chain at the top.

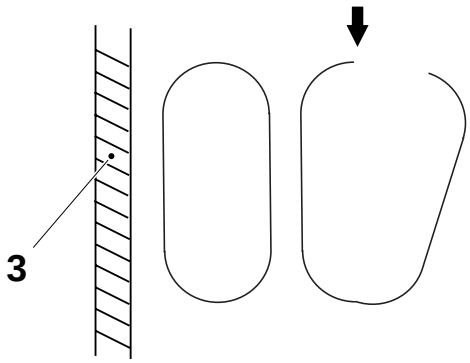

3 Bulkhead

d) To separate the chain, remove the retaining ring and washer. Then remove the chain link.

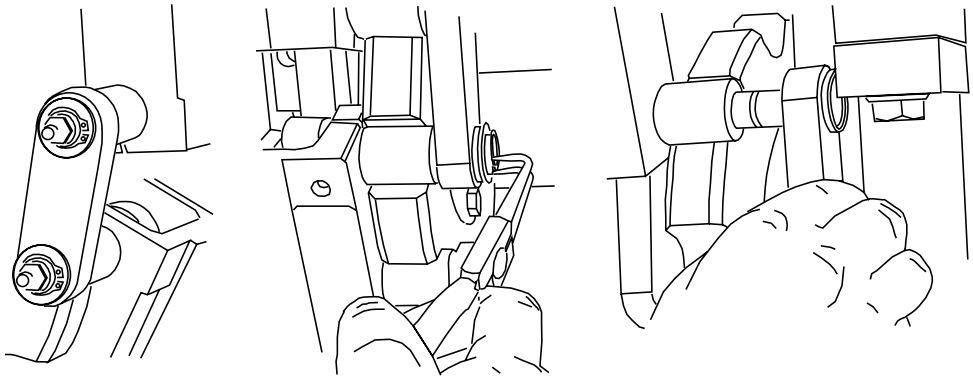

(Cont'd)

(Cont'd)

e) Remove the screws (4) and pull out the cam (5).
f) Remove the screws (6), support (7) and axle (8).
g) Change the cams (5).
h) Assemble in the reverse order.
i) Repeat on the sealing link chain.

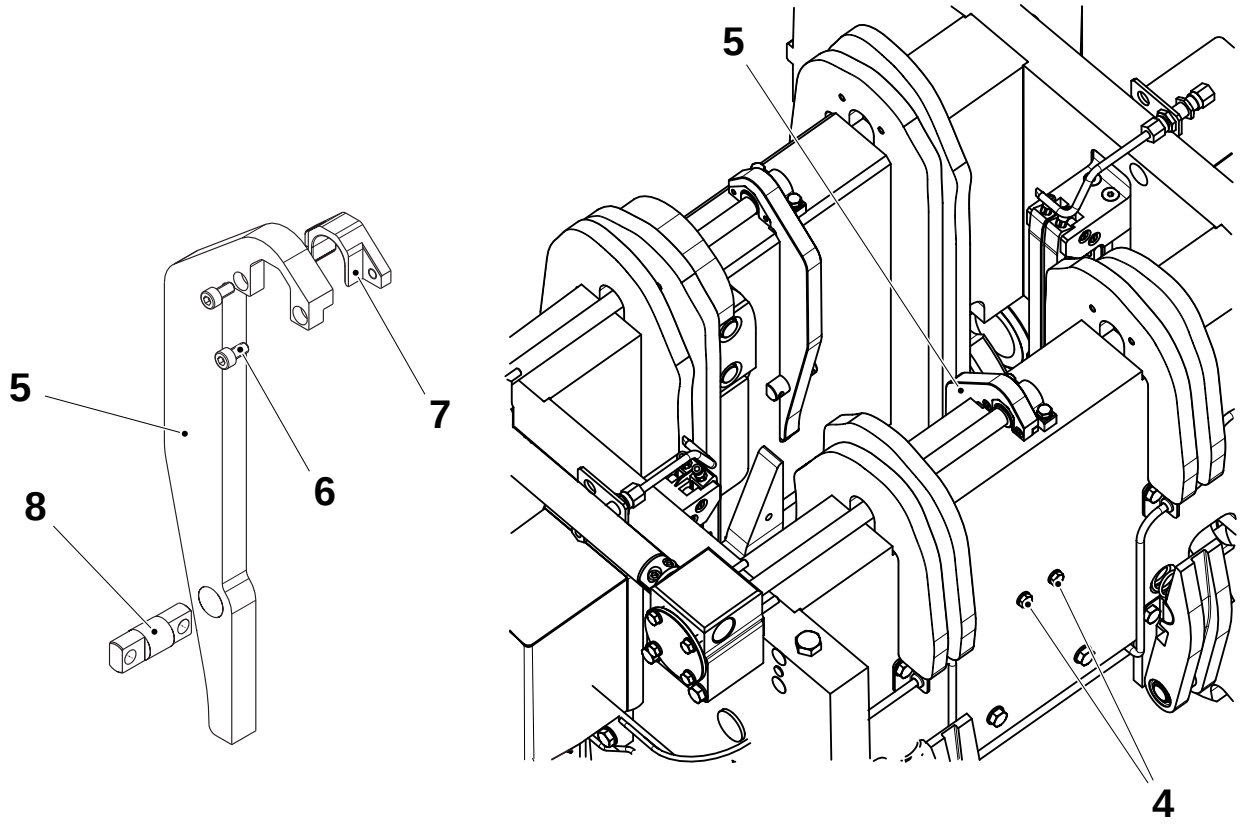

4 Screw
5 Cam
6 Screw
7 Support
8 Axle

4.5 Design Correction

SPC Reference	2511257-0100

4.5-1 Design Correction - Set Belt Tension

SPC Reference	2511257-0100

Check the belt deflection at the point **A** is 5 mm. Adjust as follows:

a) Loosen the screw (1).

b) With one hand press the roller (2) fully down.

c) Tighten the screw (1).

d) Check the belt tension.

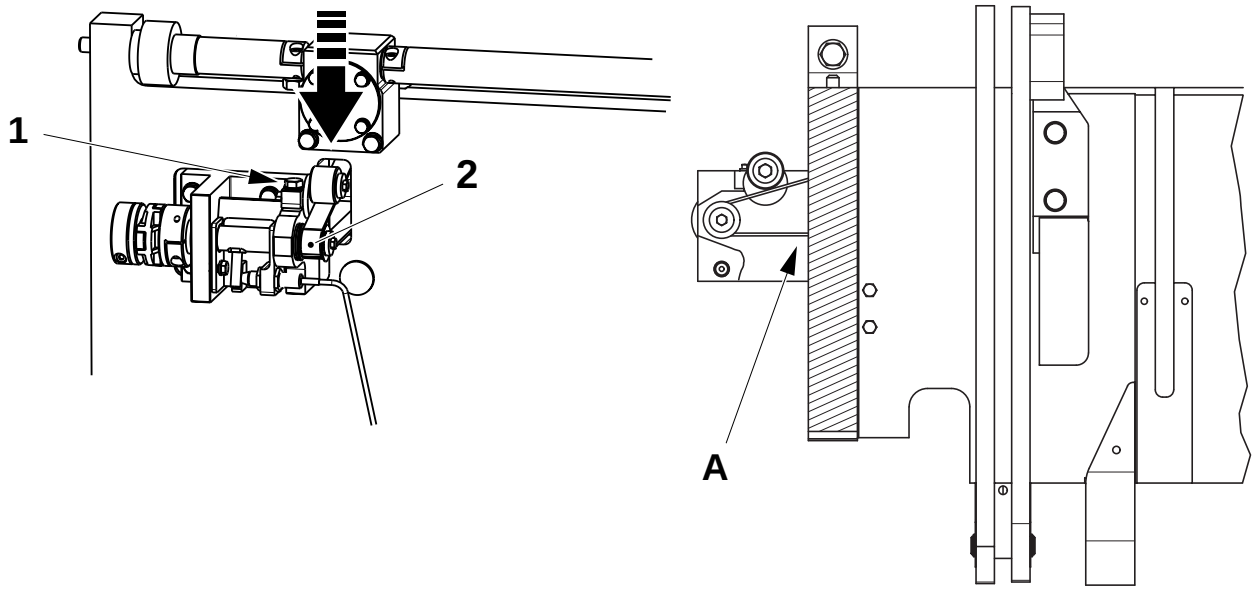

1 Screw
2 Roller

4.5-2 Design Correction - Check Belt

SPC Reference	2511257-0100

Check the belt (1) for wear or damage.
Change as required, see 4.5-3 Design Correction - Change Belt.

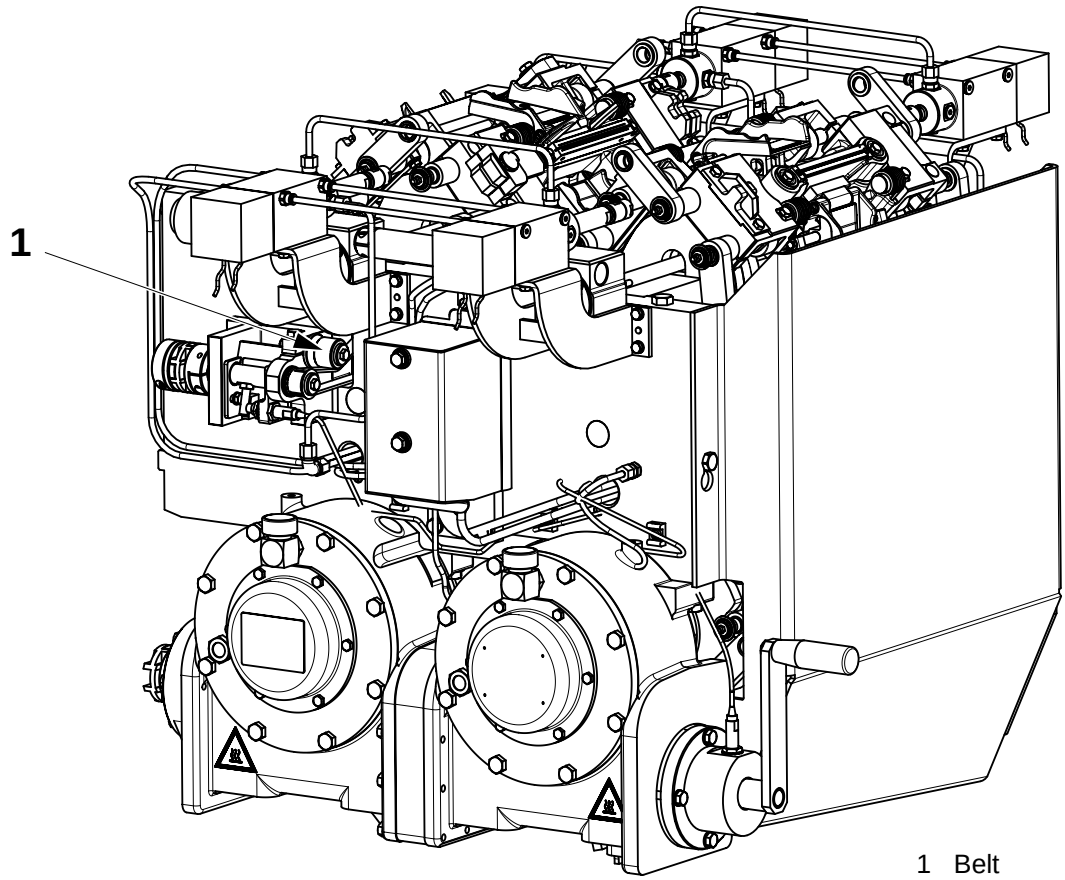

1 Belt

4.5-3 Design Correction - Change Belt

SPC Reference	2511257-0100

a) Remove the chains, see 4-2 Jaw System - Chain Disassembly and Reassembly.

b) Loosen the screw (1) and move the roller (2) to slacken the belt.

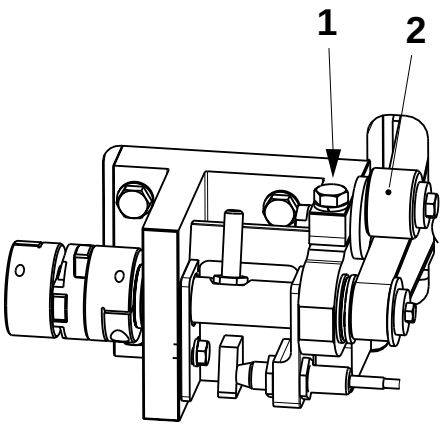

1 Screw
2 Roller

c) Remove the screws (3) and plate (4).

d) Remove and change the belt (5).

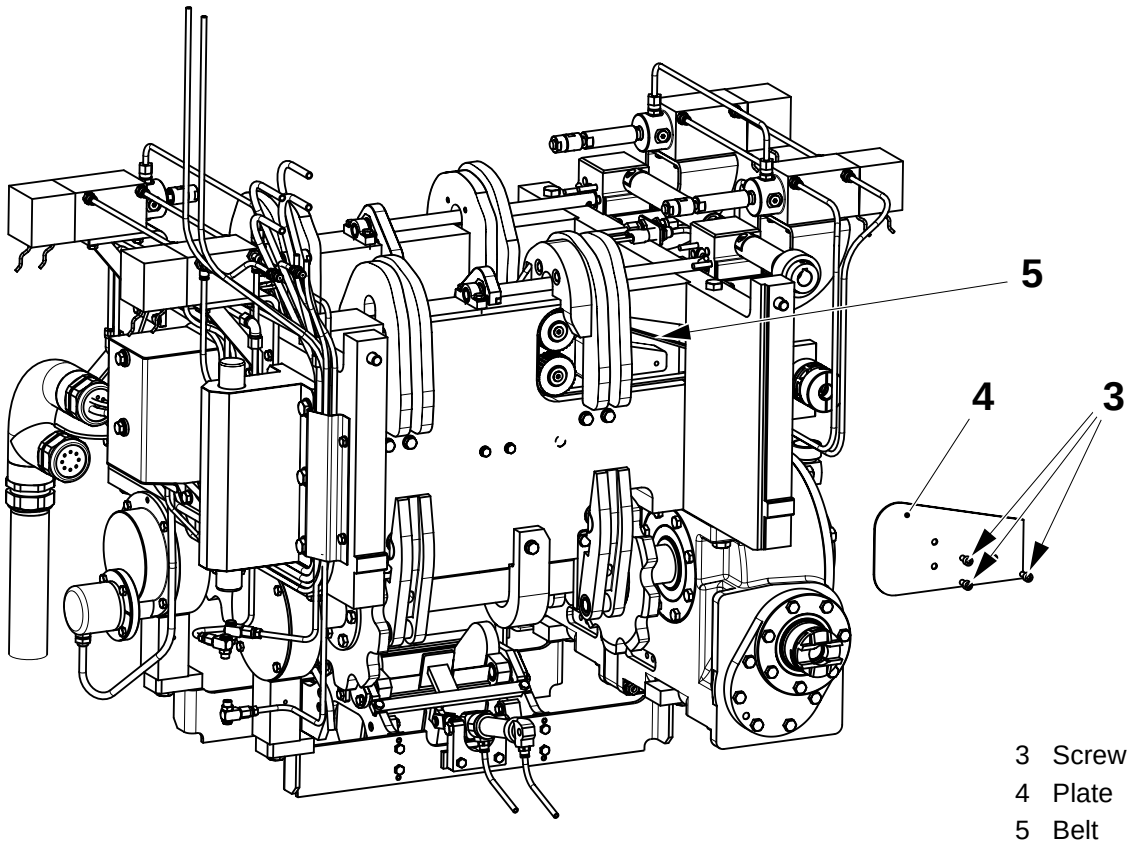

3 Screw
4 Plate
5 Belt

4.5-4 Design Correction - Overhaul

SPC Reference	2511257-0100

a) Remove the belt, see 4.5-3 Design Correction - Change Belt.
b) Remove the screws (1) and washers (2).
c) Remove the rollers (3).
d) Remove and change the bushings (4).
e) Remove and retain the key (5) for later use.

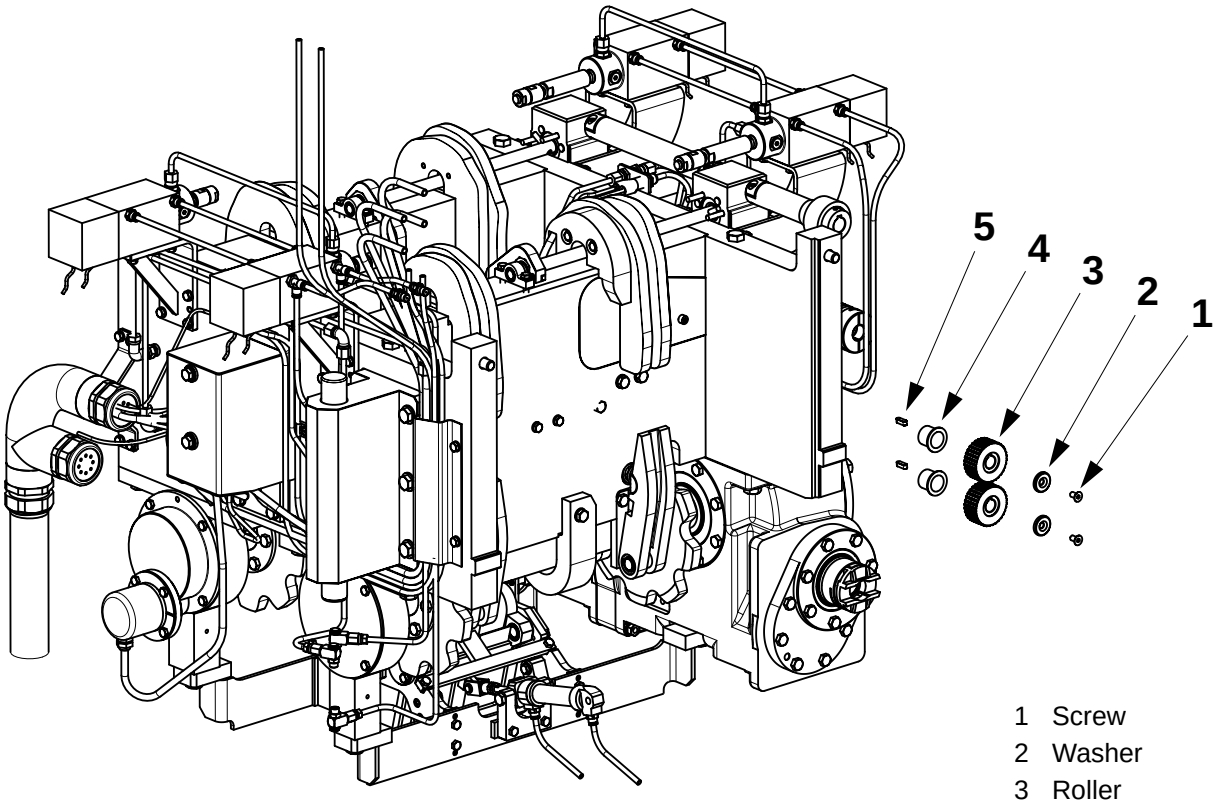

1 Screw
2 Washer
3 Roller
4 Bushing
5 Key

(Cont'd)

(Cont'd)

f) Remove the cam (6).

g) Remove and change the cam (7).

h) Remove the eccentrics (8).

i) Remove and change the bushings (9).

j) Assemble in reverse order.

k) Set the design correction, see 4.5-5 Design Correction - Set.

l) Fit the chains, see 4-2 Jaw System - Chain Disassembly and Reassembly.

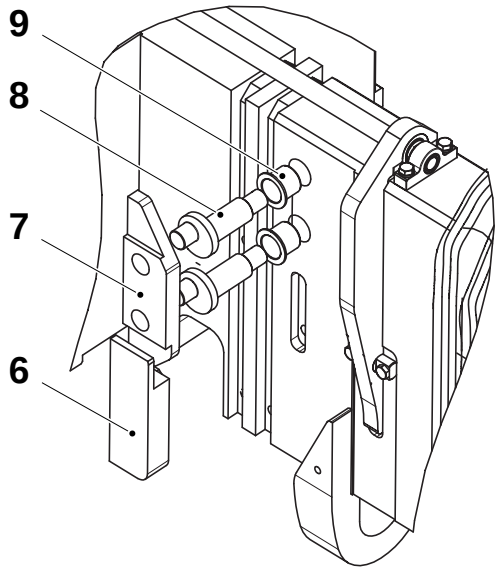

6 Cam
7 Cam
8 Eccentric
9 Bushing

4.5-5 Design Correction - Set

SPC Reference	2511257-0100

a) Loosen the screw (1) and release the roller (2).

b) Loosen the screw (3) and move the stop (4) on the adjuster fully against the support (5).

c) Rotate the design correction coupling (6) by hand so the shaft (7) is fully against the stop (4).

d) Pull the top of the belt (8) to fully retract the cam (9).

e) Tension the belt by hand by pressing the roller (2) fully down. Check if the shaft (7) still touches the stop (4). If the shaft (7) still touches the stop (4), pull the top of the belt (8) and move it one tooth on the pulley (10).

f) Repeat steps e) until the shaft (7) is one belt tooth away from the stop (4).

g) Set the belt tension, see 4.5-1 Design Correction - Set Belt Tension.

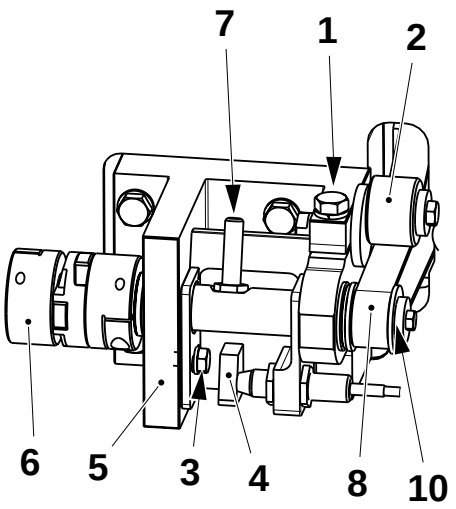

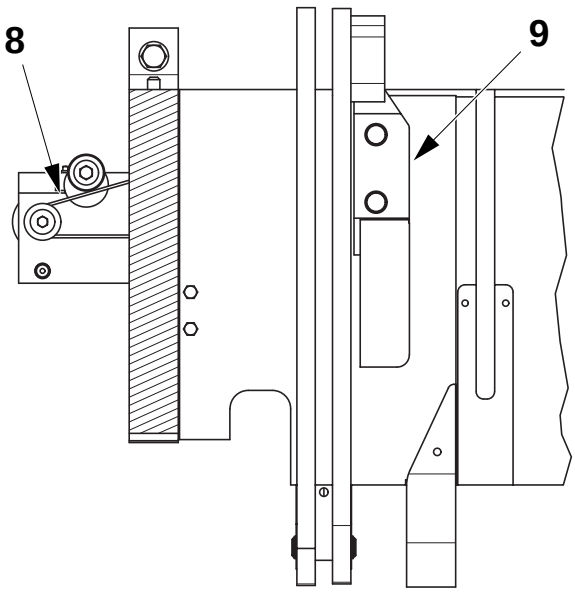

1	Screw	6	Coupling
2	Roller	7	Shaft
3	Screw	8	Belt
4	Stop	9	Cam
5	Support	10	Pulley

(Cont'd)

(Cont'd)

h) Rotate the design correction coupling (6) by hand so the shaft (7) is fully against the opposite stop (11).

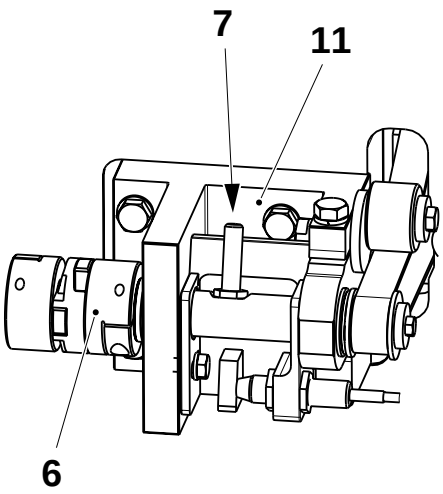

6 Coupling
7 Shaft
11 Stop

i) Insert a 0.5 mm feeler gauge in four points: between the folding flaps (12) and the inductor (13), and between the folding flaps and pressure rail (14). The minimum distance must be no less than 0.5 mm.

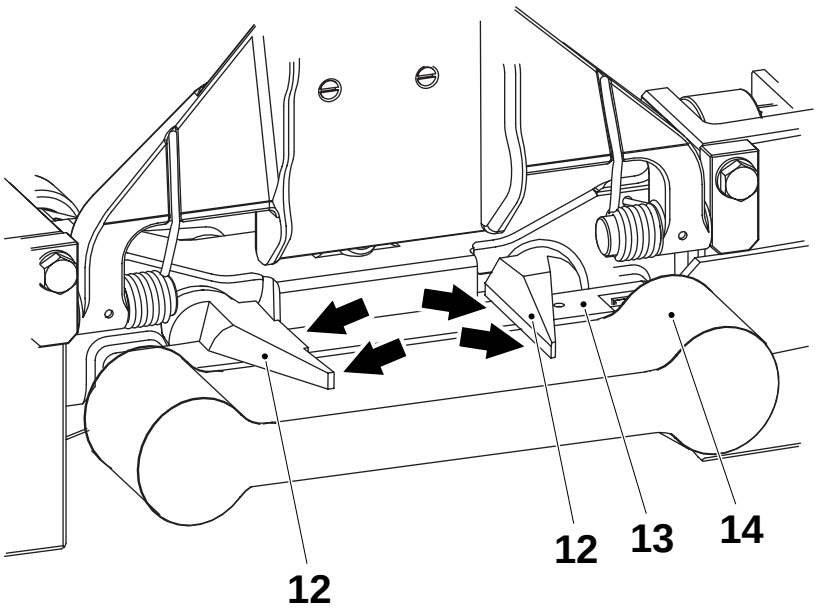

12 Folding flap
13 Inductor
14 Pressure rail

(Cont'd)

(Cont'd)

j) Tighten the screw (3) and check the folding flaps with a feeler gauge again.

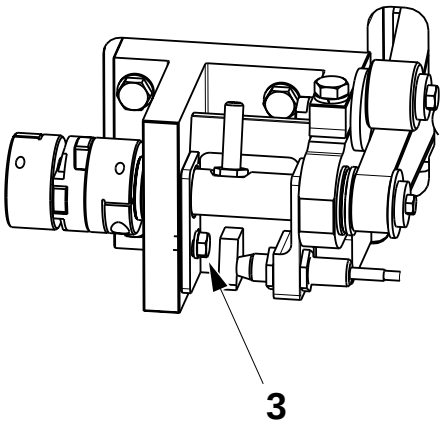

3 Screw

Fine Tuning the Design Correction

a) Touch the **MANOEUVRE SYSTEM** button on the TPOP.



b) Touch the **SUPERSTRUCTURE SETTINGS** button.

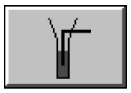

c) Touch the **DESIGN CORRECTION** button.

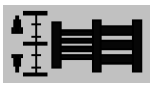

(Cont'd)

(Cont'd)

d) Set the **DESIGN CORRECTION OFFSET** (1) to **0** using the buttons (2) for coarse tuning and (3) for fine tuning.

e) Adjust the **DESIGN CORRECTION OFFSET** while the machine is running until the **ALIGNMENT PERCENTAGE** (4) shows the highest possible value.

f) Check the bottom creases are correctly positioned on the packages.

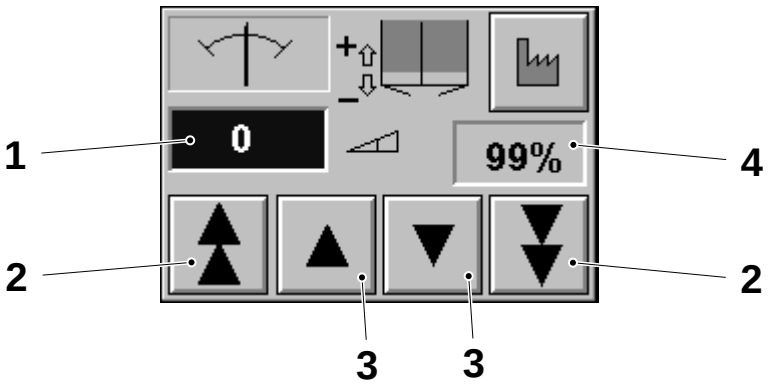

1 Design correction offset
2 Button (coarse increment)
3 Button (fine increment)
4 Percentage in design

g) Touch the **Exit** button.



4.6 Electrical Connection

SPC Reference	2522094-0100

4.6-1 Electrical Connection - Clean TS Rail

SPC Reference	2522094-0100

a) Close the cooling water valves (1).

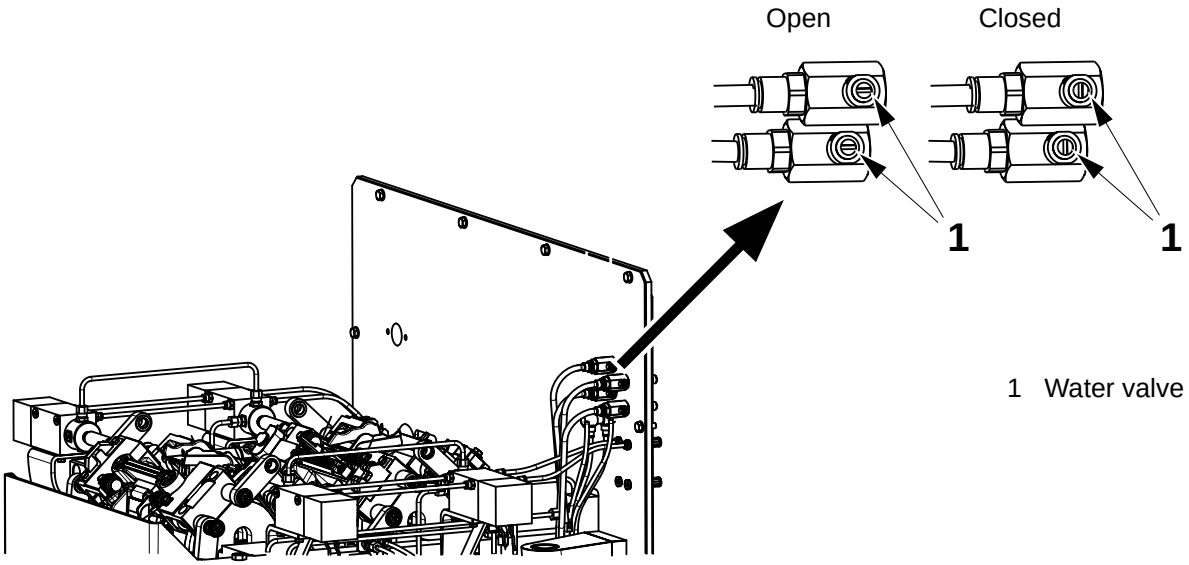

(Cont'd)

(Cont'd)

b) Remove the screws (2) and the cover (3).

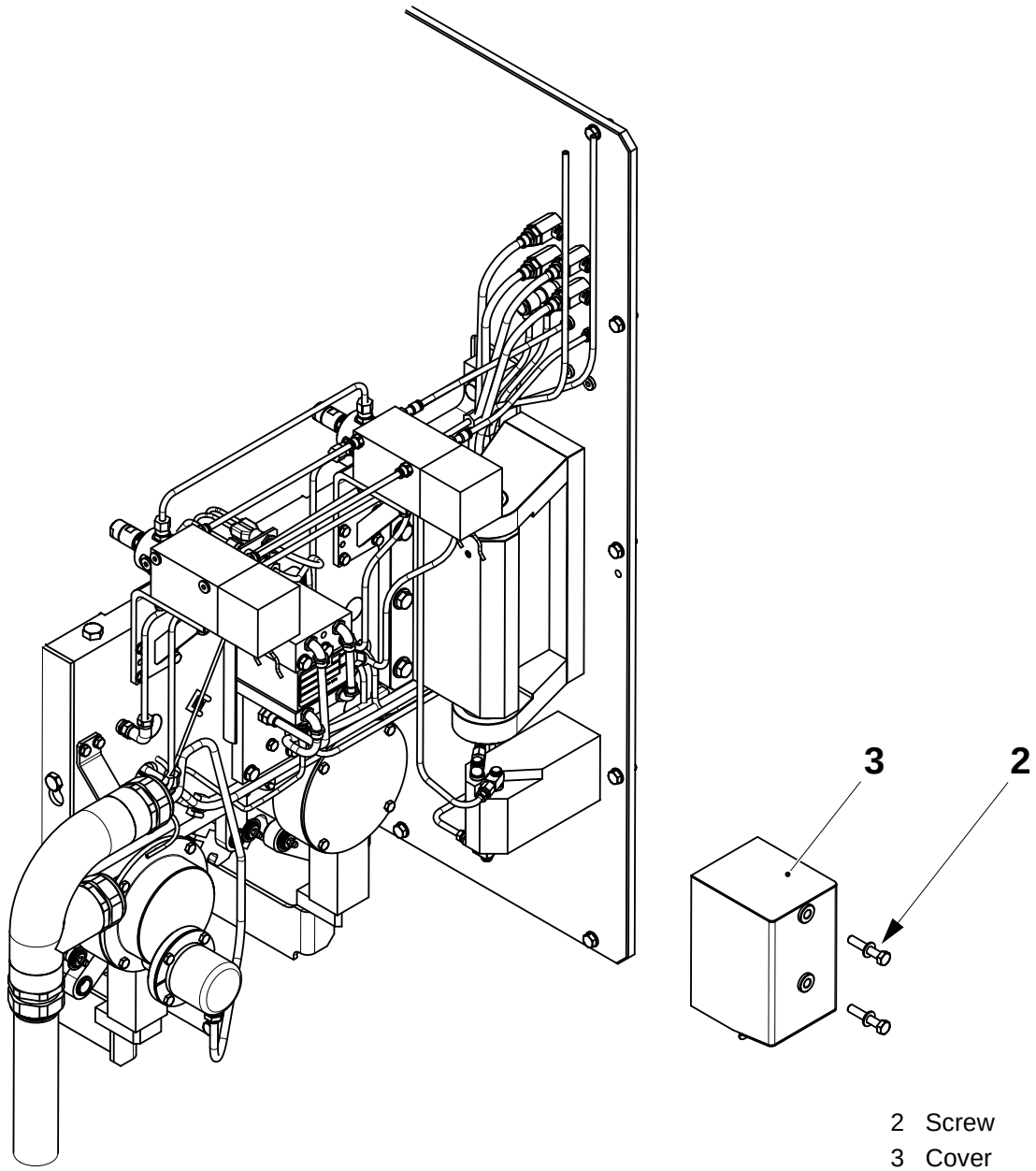

2 Screw
3 Cover

(Cont'd)

(Cont'd)

c) Disconnect the hoses (4) and (5).

d) Remove the connectors (6).

e) Remove the RF connector (7).

Note! Take care when removing the transformer/rail assembly, the plastic parts may be damaged.

Note! Do not remove the screws (10) and (11).

f) Remove the screws (8) and (9) and transformer/rail assembly (12).

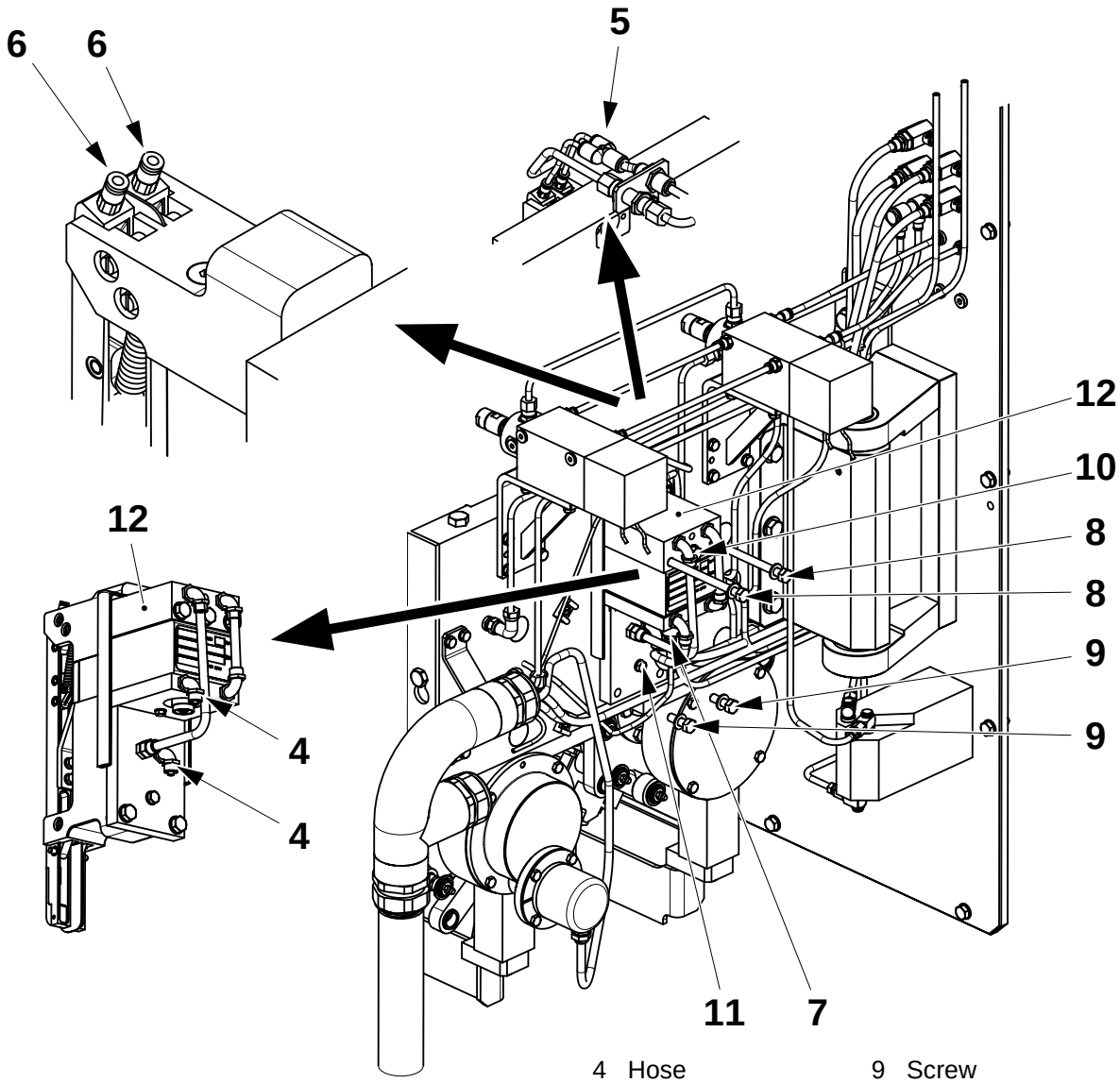

4	Hose	9	Screw
5	Hose	10	Screw
6	Connector	11	Screw
7	RF connector	12	Transformer/rail
8	Screw		

(Cont'd)

(Cont'd)

g) Clean the copper rails (13) and their leading edges (14) using 400-grade abrasive paper. Do not damage the plastic insulation (15).

h) Assemble in the reverse order.

i) Open the cooling water valves.

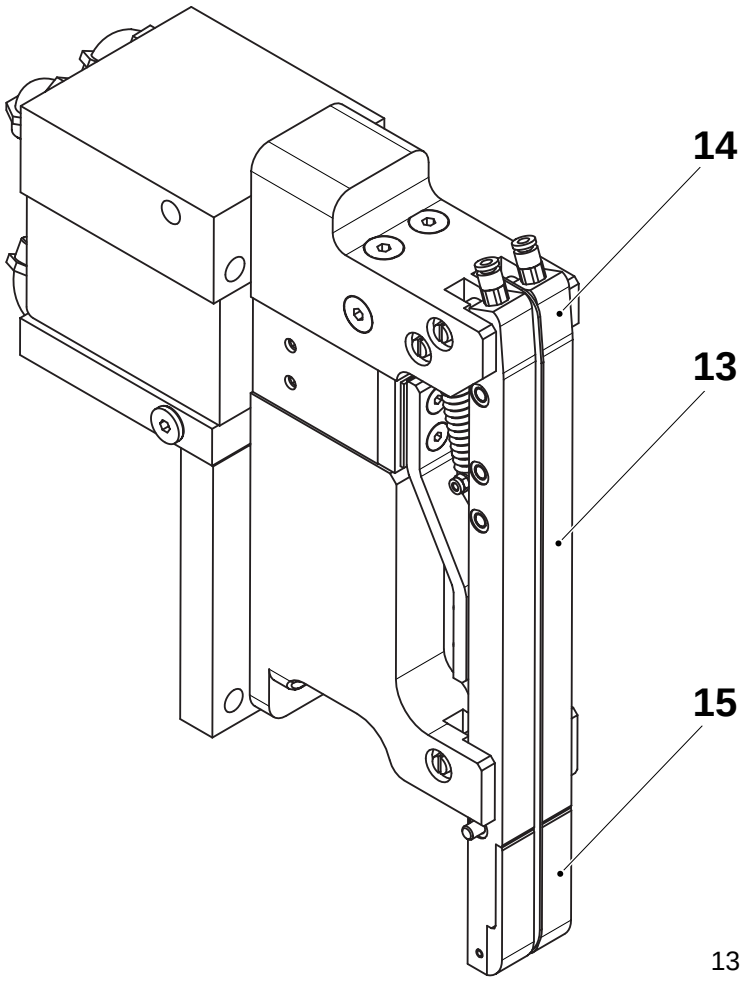

13 Copper rail
14 Leading edge
15 Insulation

4.6-2 Electrical Connection - Check TS Rail

SPC Reference	2522094-0100

From each side of the jaw unit, remove the TS transformer, see 4.6-1 Electrical Connection - Clean TS Rail.

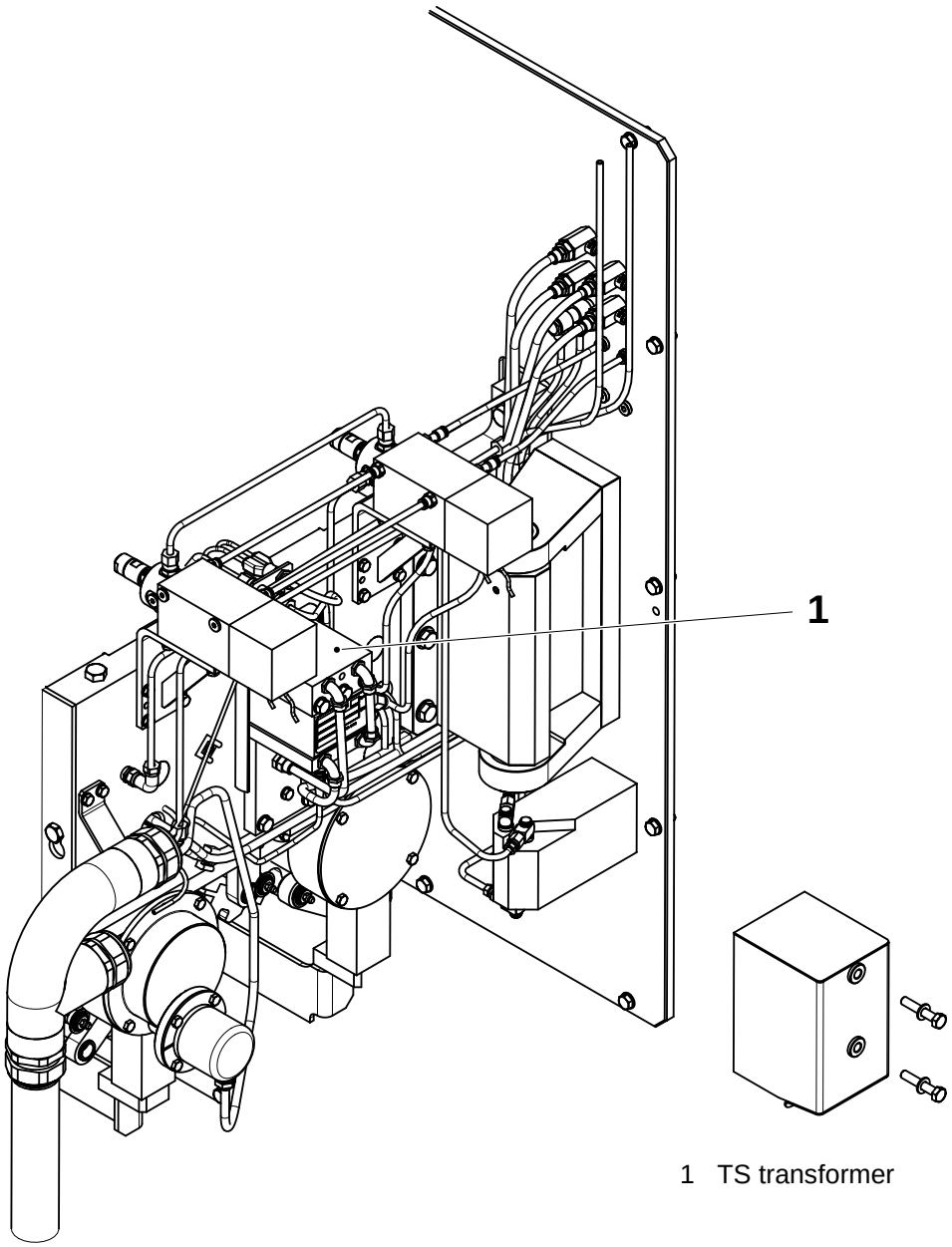

1 TS transformer

(Cont'd)

(Cont'd)

Check:

- the contact rails (2) and (3) are clean and undamaged.
  If they are dirty or show signs of arcing, clean them using 400-grade abrasive paper. Take care not to damage the insulating spacer (4).
  If they are damaged replace them.
- the insulating spacer (4) is undamaged.
  If necessary, change it.
- the cable (copper braid) (5) is undamaged.
  If necessary, change it.
- the tightness of the connections (6) and (7).
- the spring (8) is undamaged.
  If necessary, change it.
- the copper rails move freely when pushed.
  If necessary, disconnect the cable (5) and spring (8) and remove the screws (9) and (10) then clean the rails and pivots.

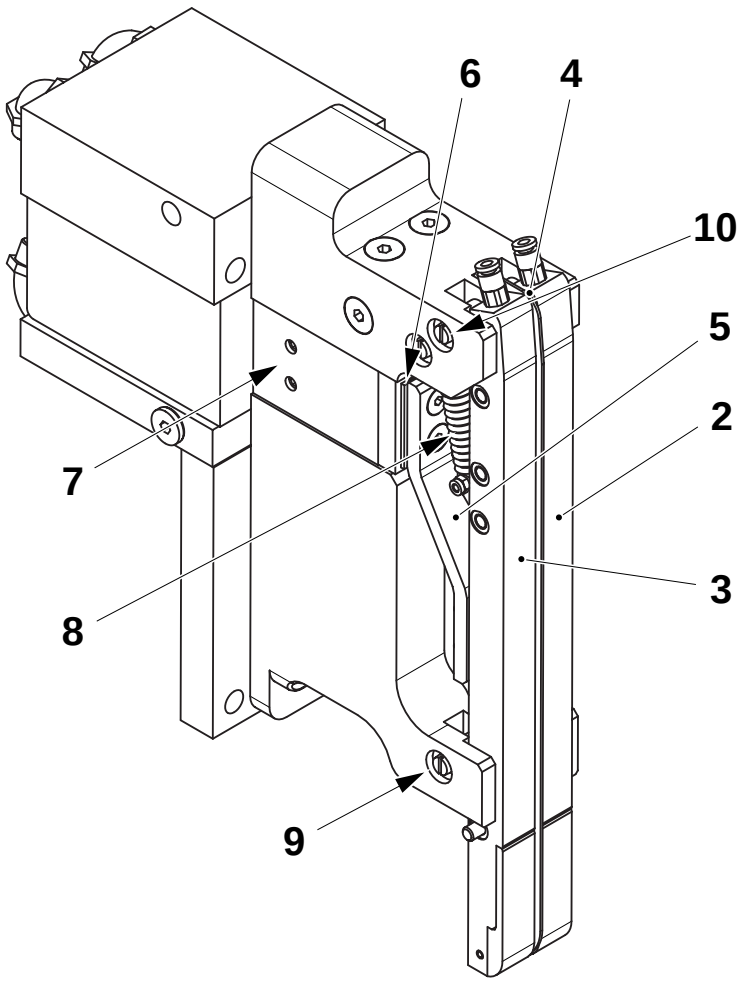

2 Rail
3 Rail
4 Insulation
5 Cable
6 Connection
7 Connection
8 Spring
9 Screw
10 Screw

4.6-3 Electrical Connection - Check Transformer

SPC Reference	2522094-0100

a) From each side of the jaw unit, remove the TS transformer (1), see 4.6-1 Electrical Connection - Clean TS Rail.

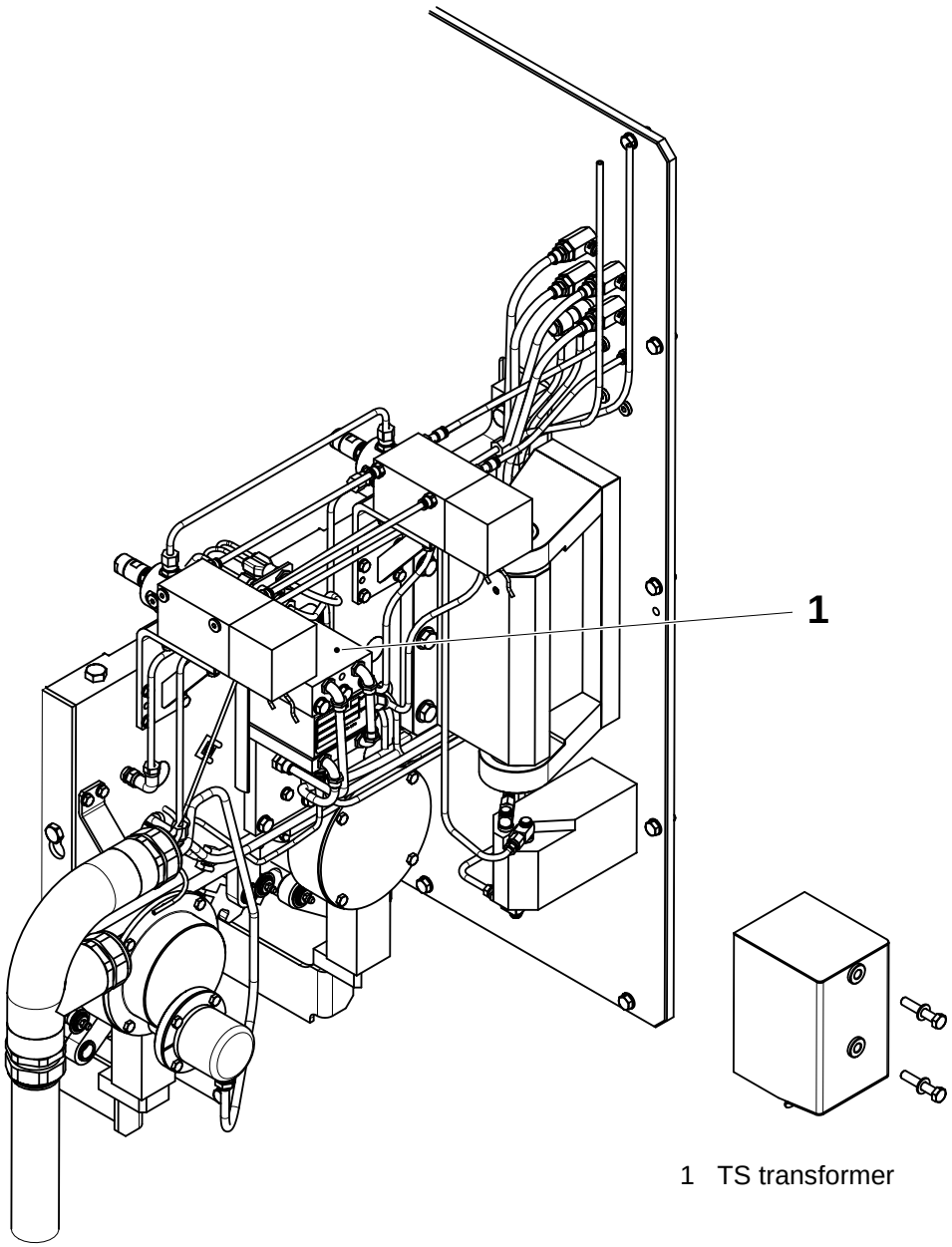

1 TS transformer

(Cont'd)

(Cont'd)

b) Remove the screws (2) and (3).

c) At both sides of the assembly, loosen the grub screws (4).

d) Separate the transformer section (5) from the rail section (6).

e) Change the O-rings (7).

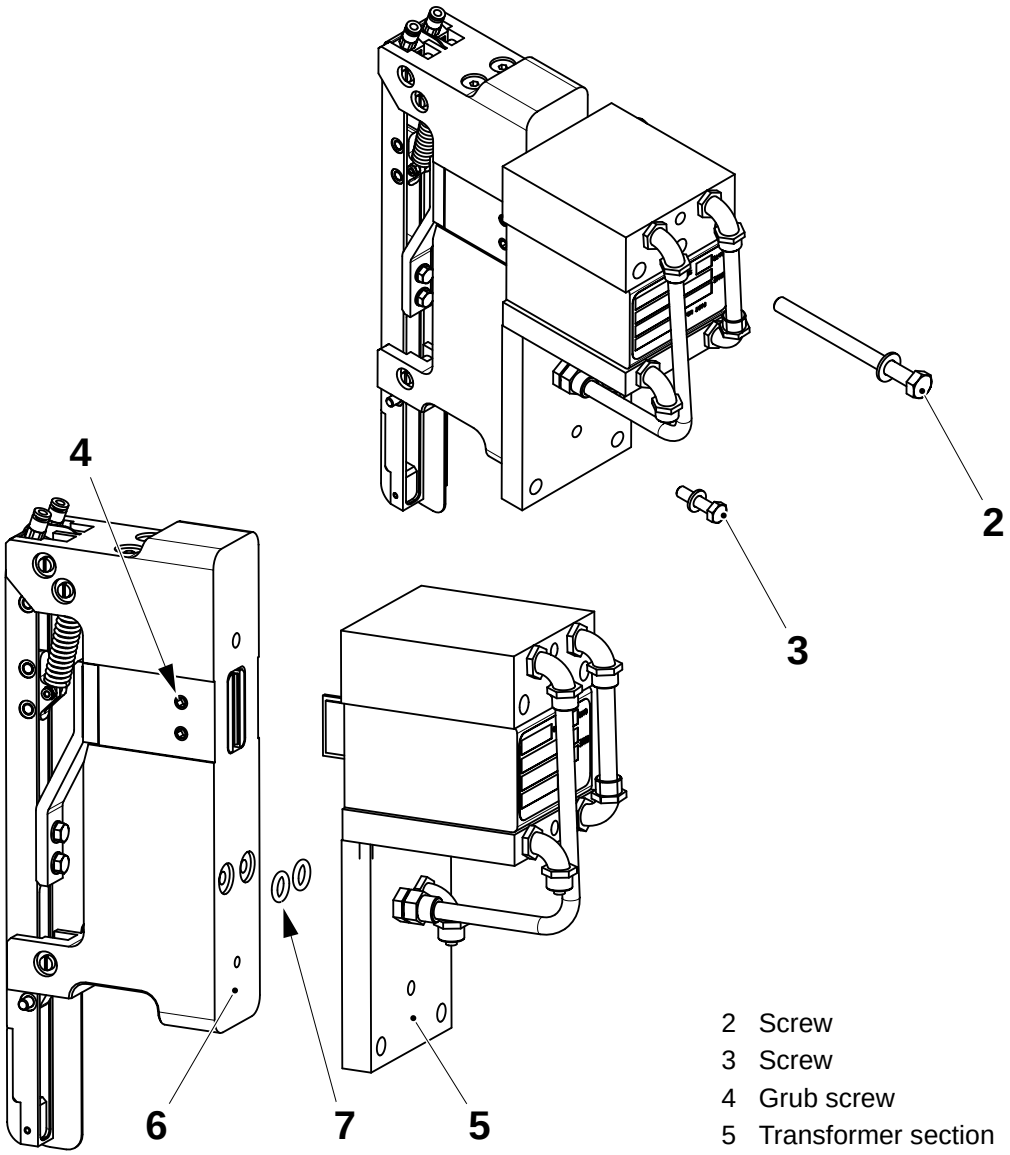

2 Screw
3 Screw
4 Grub screw
5 Transformer section
6 Rail section
7 O-ring

(Cont'd)

(Cont'd)

f) Check the transformer (8) is intact and clean.
Pay particular attention to the contact (9) and the coaxial connector (10).
Clean or change as necessary.

g) To change, remove the screw (11), lift off the block (12) and change the transformer (8).

h) Assemble in the reverse order.

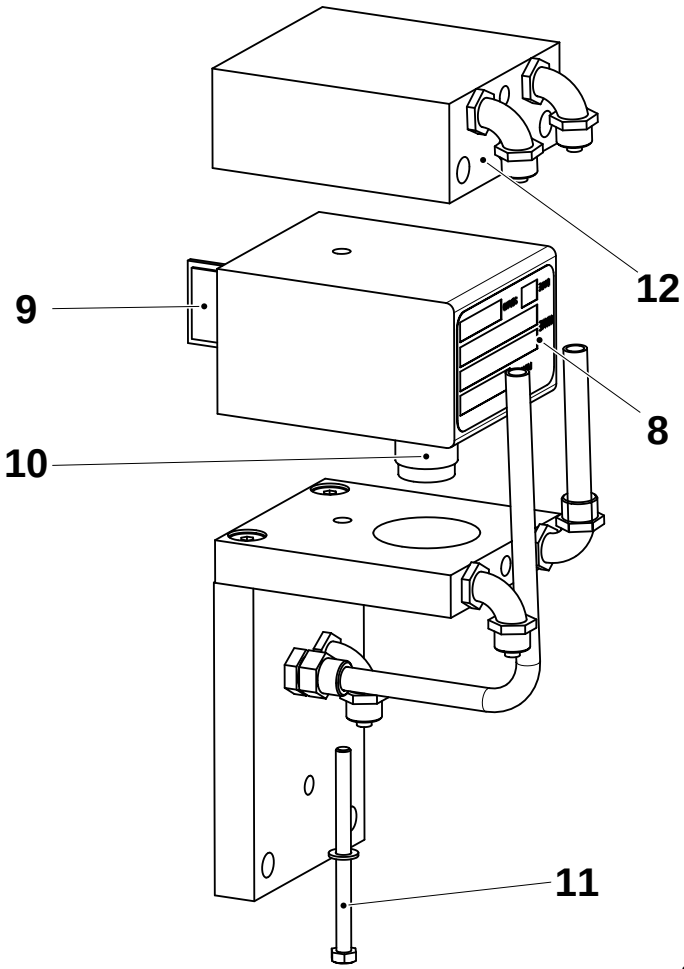

8 Transformer
9 Contact
10 Coaxial connector
11 Screw
12 Block

4.7 Waste Box

SPC Reference	2558853-0100

4.7-1 Waste Box - Check

SPC Reference	2558853-0100

Valid for New Waste Box

a) Check the rod and seal (1) for wear. If either component is worn, replace the pneumatic cylinder. See 4.7-2 Waste Box - Change Pneumatic Cylinder.

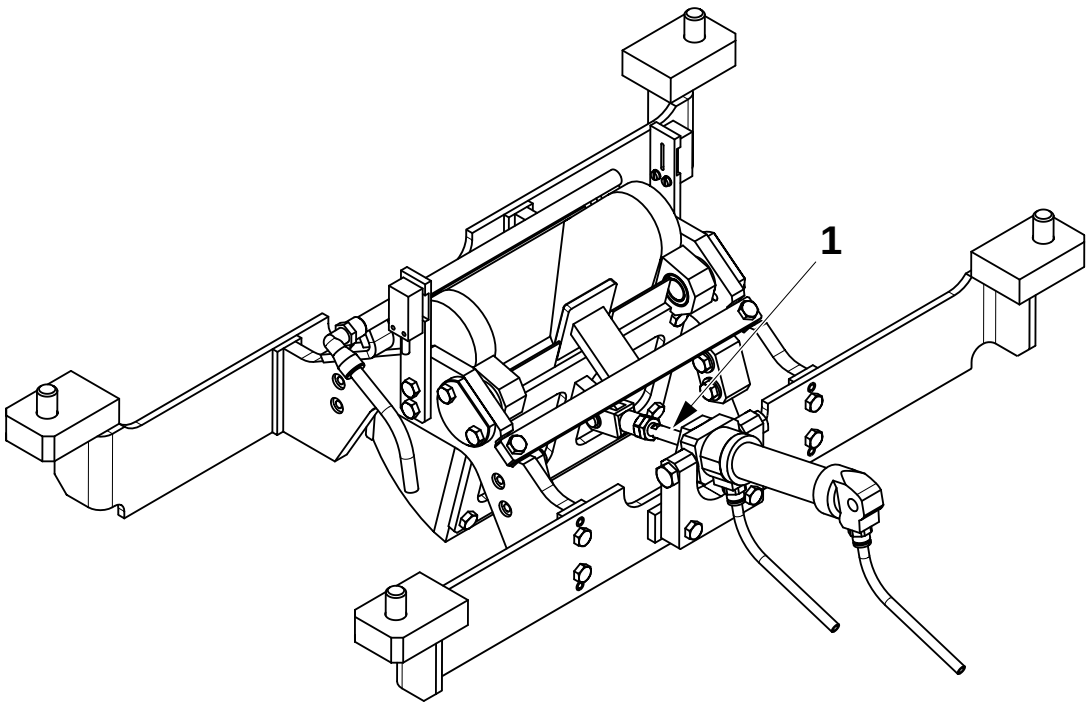

1 Rod/Seal

(Cont'd)

(Cont'd)

b) At both sides of the rod end (2), remove the retaining ring (3) and push out the pin (4).

c) Check the box (5) moves freely in both directions, if not change the bushings (6), see 4.7-4 Waste Box - Change Bushings.

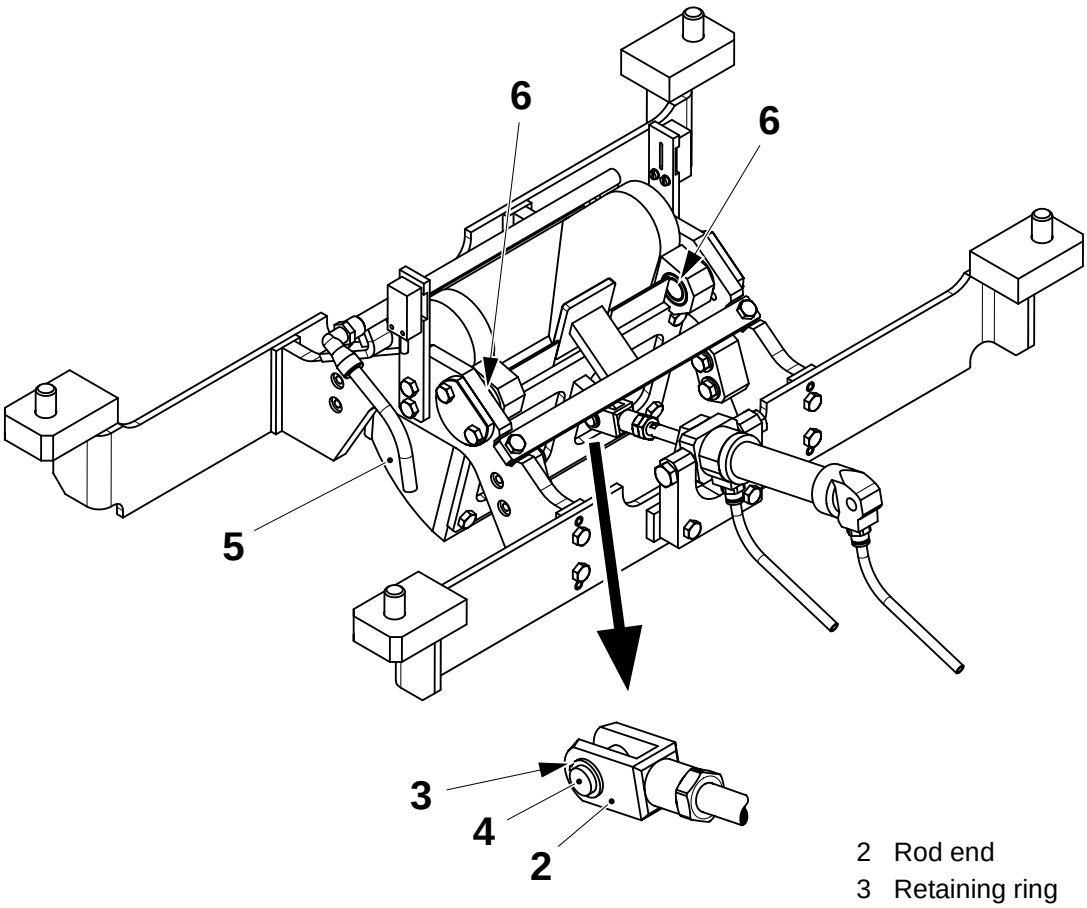

2 Rod end
3 Retaining ring
4 Pin
5 Box
6 Bushing

(Cont'd)

(Cont'd)

Valid for Old Waste Box

a) Check the rod and seal (1) for wear. If either component is worn, replace the pneumatic cylinder. See 4.7-2 Waste Box - Change Pneumatic Cylinder.

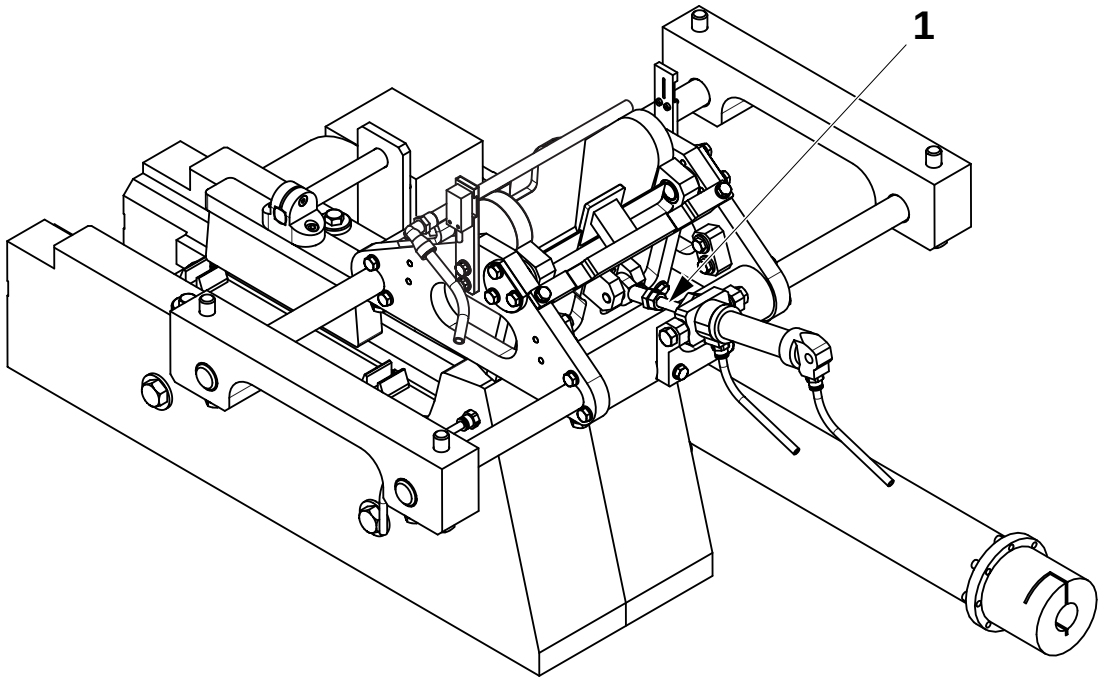

1 Rod/Seal

(Cont'd)

(Cont'd)

b) Remove the screw (2) and the pin (3).

c) Check the box (4) moves freely in both directions, if not change the bushings (5), see 4.7-4 Waste Box - Change Bushings.

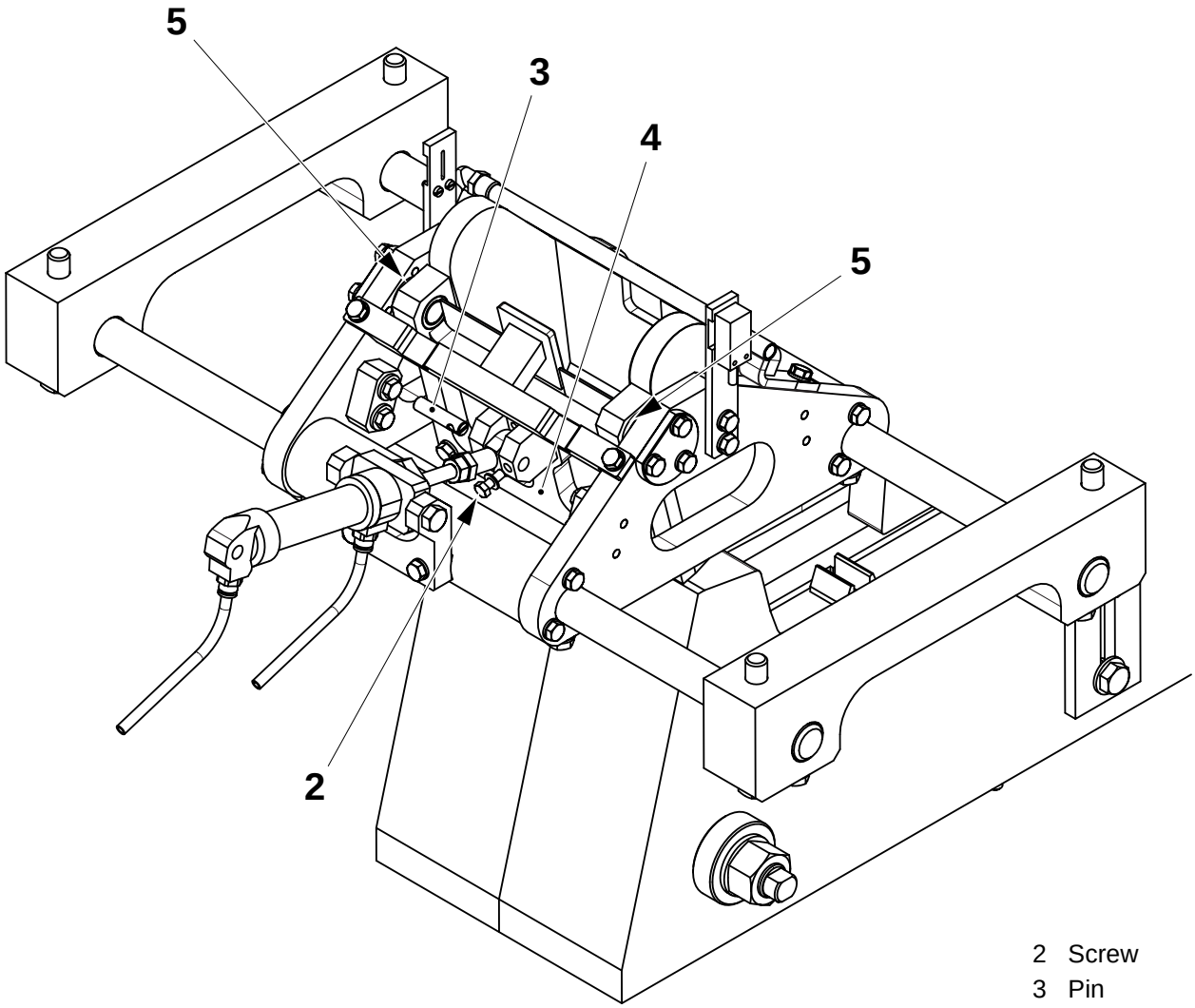

2 Screw
3 Pin
4 Box
5 Bushing

4.7-2 Waste Box - Change Pneumatic Cylinder

SPC Reference	2558853-0100

Note! Labelling items avoids confusion during assembly.

Valid for New Waste Box

a) Disconnect the rod end (1) from the box (2), see 4.7-1 Waste Box - Check.

b) Label and remove the air lines (3) and (4).

c) Remove the screws (5) and the cylinder (6).

d) If necessary, change the bushings (7).

e) Replace the pneumatic cylinder and assemble in the reverse order, taking care to refit the air lines correctly.

f) Set the pneumatic cylinder, see 4.7-3 Waste Box - Set Pneumatic Cylinder.

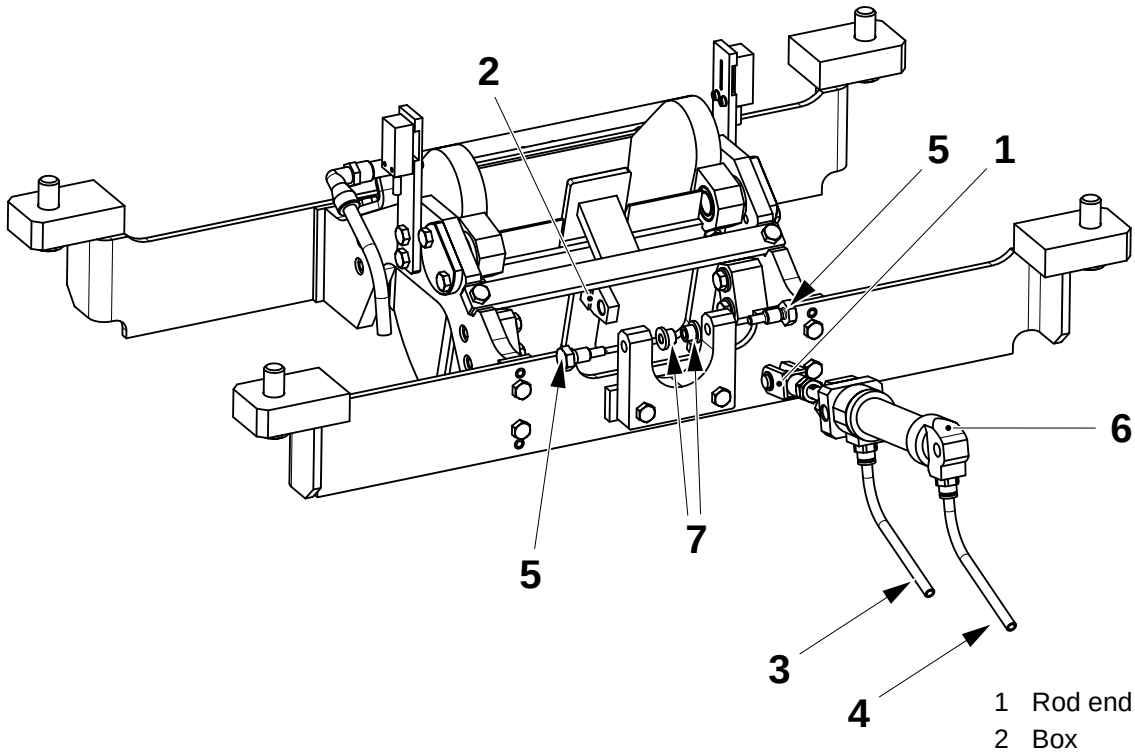

1 Rod end
2 Box
3 Air line
4 Air line
5 Screw
6 Cylinder
7 Bushing

(Cont'd)

(Cont'd)

Valid for Old Waste Box

a) Label and remove the air lines (1) and (2).

b) Remove the screw (3) and the pin (4).

c) Remove the screws (5) and the cylinder (6).

d) If necessary, change the bushings (7).

e) Replace the pneumatic cylinder and assemble in the reverse order, taking care to refit the air lines correctly.

f) Set the pneumatic cylinder, see 4.7-3 Waste Box - Set Pneumatic Cylinder.

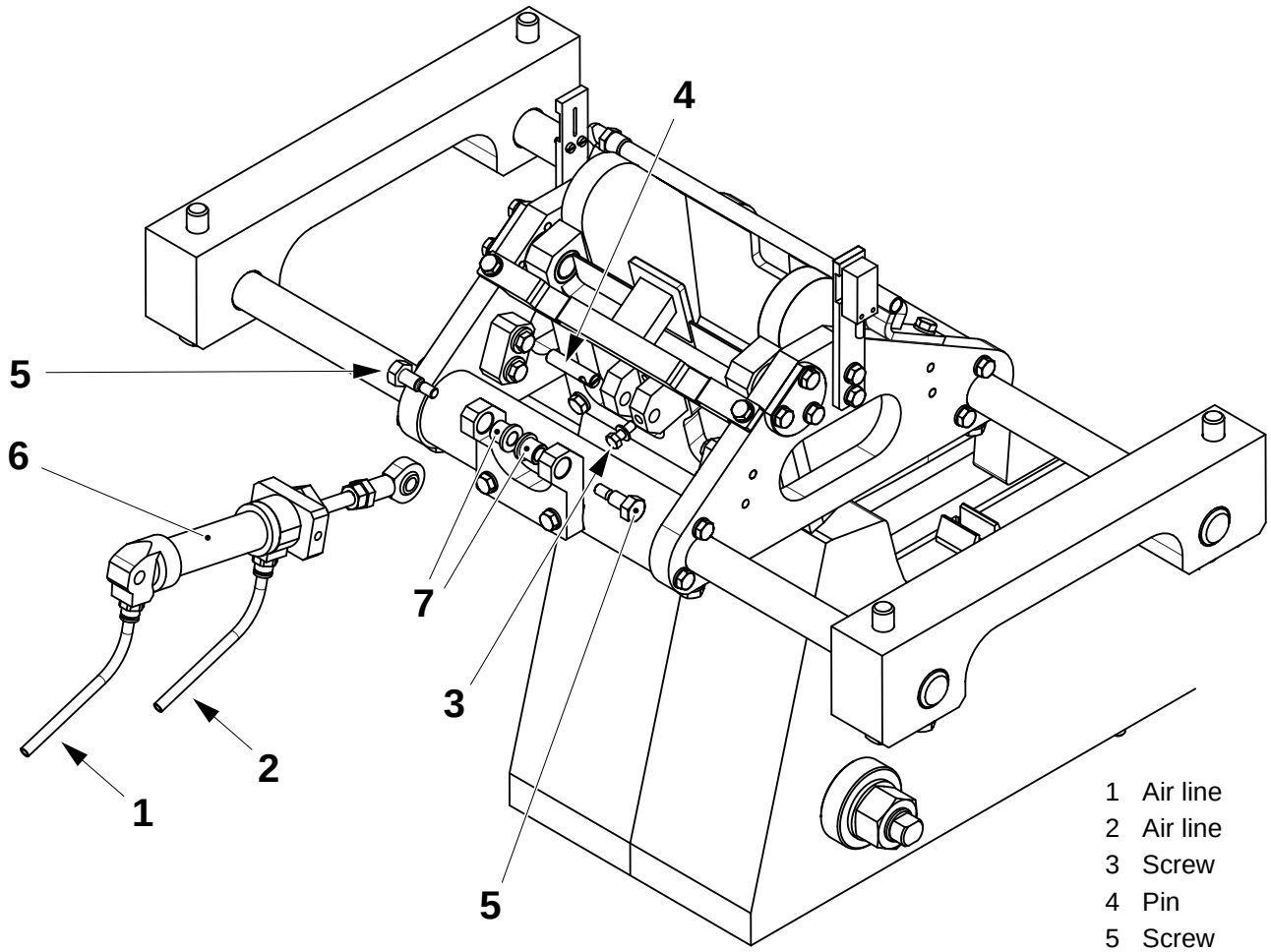

1 Air line
2 Air line
3 Screw
4 Pin
5 Screw
6 Cylinder
7 Bushing

4.7-3 Waste Box - Set Pneumatic Cylinder

SPC Reference	2558853-0100

Note! Labelling items avoids confusion during assembly.

Valid for New Waste Box

a) Disconnect the rod end (1) from the box (2), see 4.7-1 Waste Box - Check.

b) Label and remove the air lines (3) and (4).

c) Remove the screws (5) and the cylinder (6) taking care of the bushings (7).

d) When the pneumatic cylinder is in its fully extended position, check the locknut (9) is distance **A** from the cylinder seal. Set the position using the nut (8) and locknut (9).

e) Assemble in the reverse order.

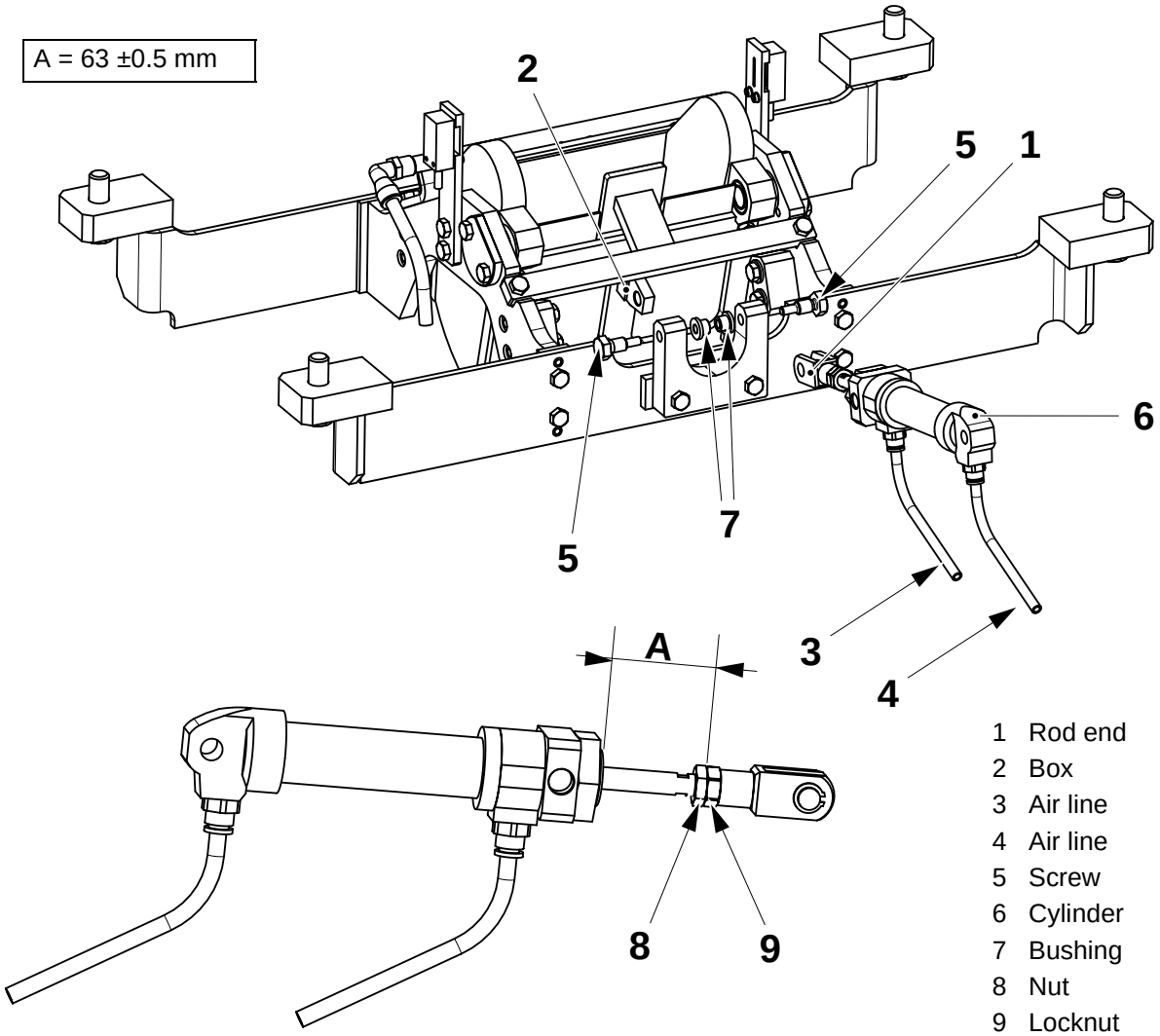

1 Rod end
2 Box
3 Air line
4 Air line
5 Screw
6 Cylinder
7 Bushing
8 Nut
9 Locknut

(Cont'd)

(Cont'd)

Valid for Old Waste Box

a) Remove:

- the two screws (1).
- the screw (2) and the pin (3).
- the pneumatic cylinder assembly (4) from the waste conveyor.

b) When the pneumatic cylinder is in its fully extended position, check the locknut (6) is distance **A** from the cylinder seal. Set the position using the nut (5) and locknut (6).

c) Assemble in the reverse order.

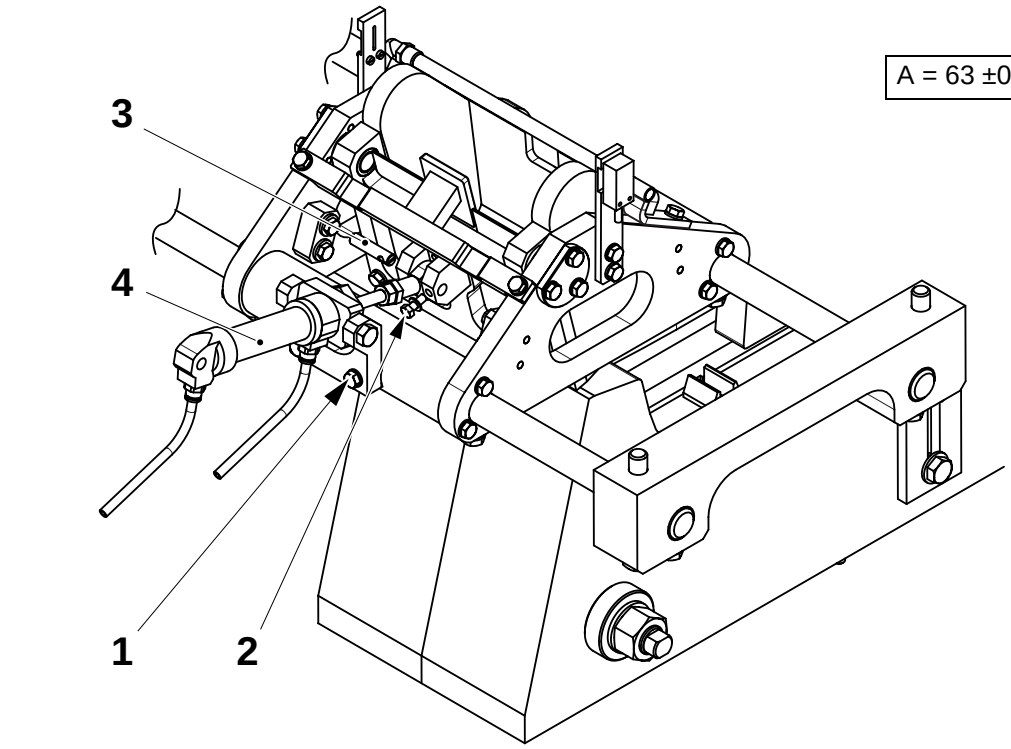

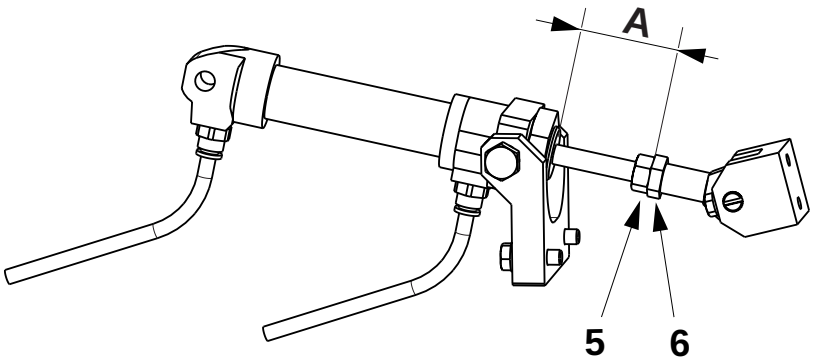

1 Screw
2 Screw
3 Pin
4 Cylinder assembly
5 Nut
6 Locknut

4.7-4 Waste Box - Change Bushings

SPC Reference	2558853-0100

Valid for New Waste Box

a) At both sides of the rod end (1), remove the retaining ring (2) and push out the pin (3).

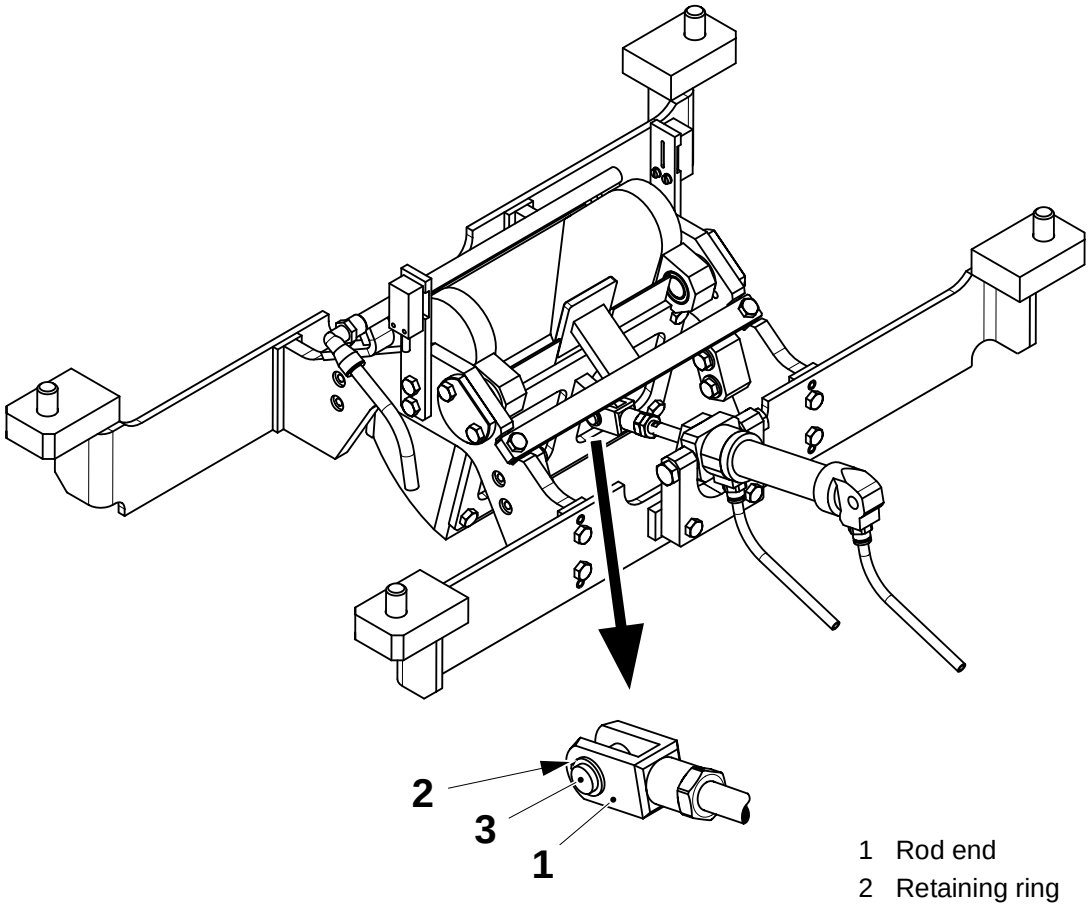

1 Rod end
2 Retaining ring
3 Pin

(Cont'd)

(Cont'd)

b) Remove the screws (4) and the package guide (5).

c) Remove the screws (6) and the package guide (7).

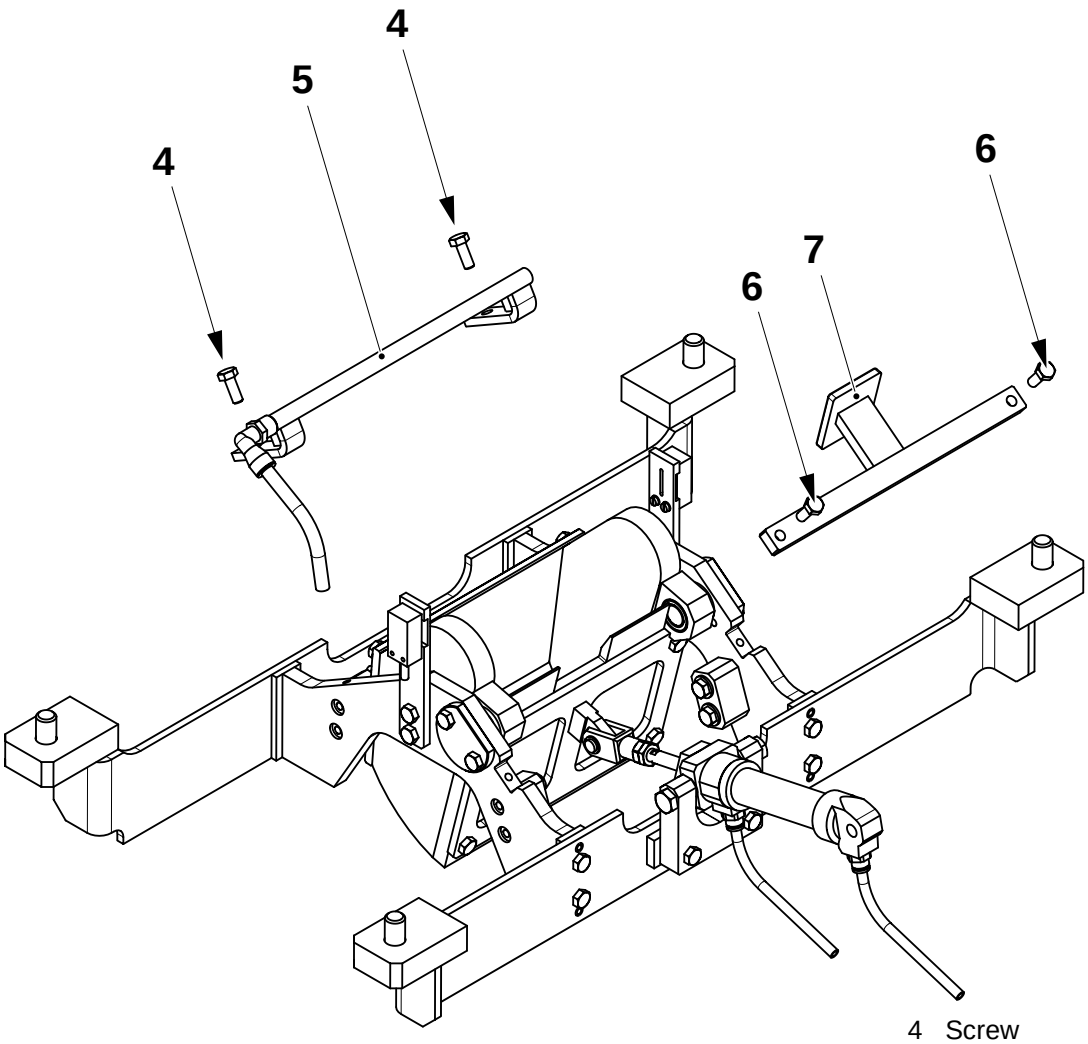

4 Screw
5 Guide
6 Screw
7 Guide

(Cont'd)

(Cont'd)

d) Remove the screws (8) and the shafts (9).
e) Lift out the drop box (10).
f) Remove and change the bushings (11).
g) Remove the screws (12) and change the blocks (13).
h) Assemble in the reverse order.

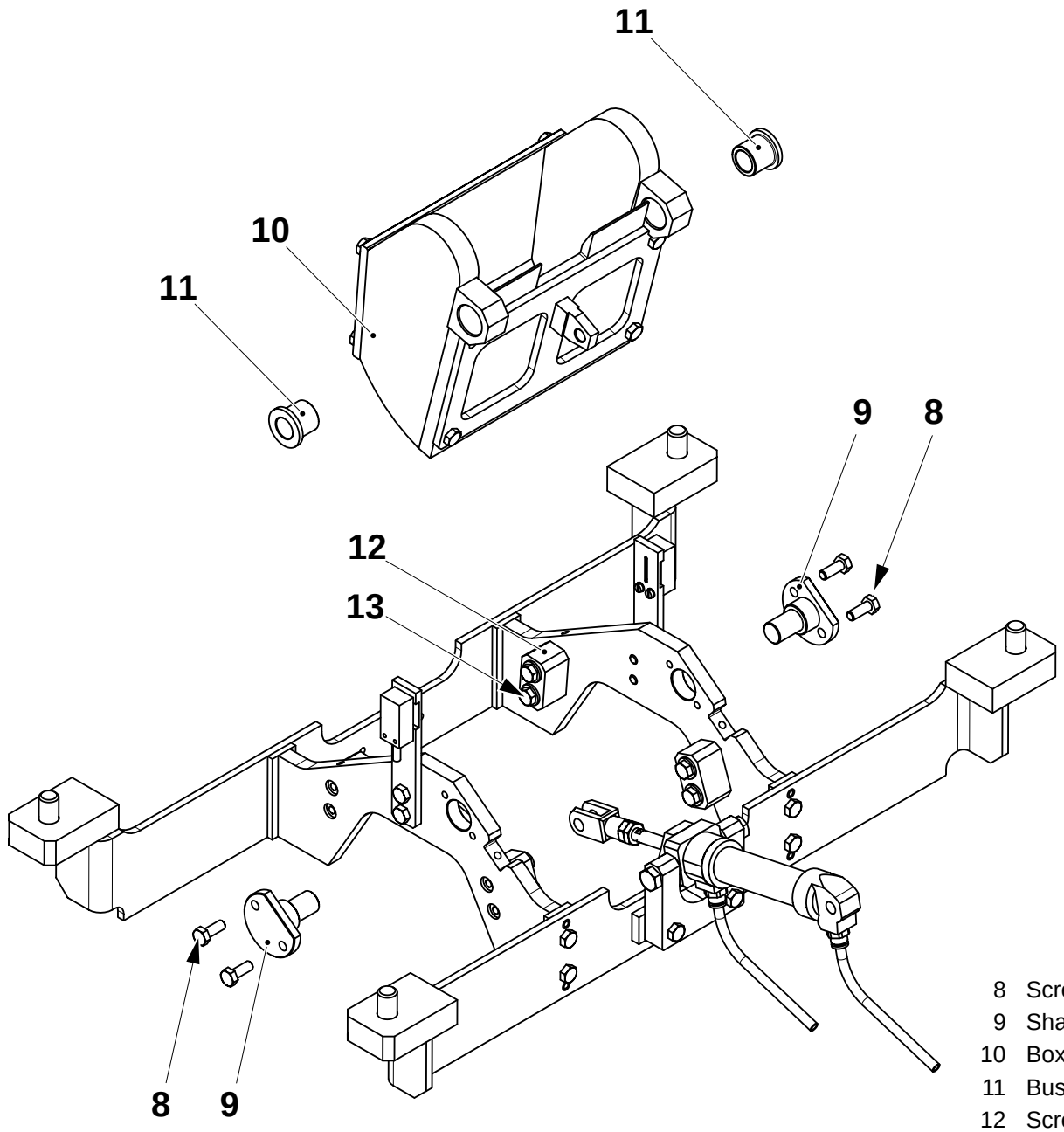

8 Screw
9 Shaft
10 Box
11 Bushing
12 Screw
13 Block

(Cont'd)

(Cont'd)

Valid for Old Waste Box

a) Remove the screw (1) and the pin (2).

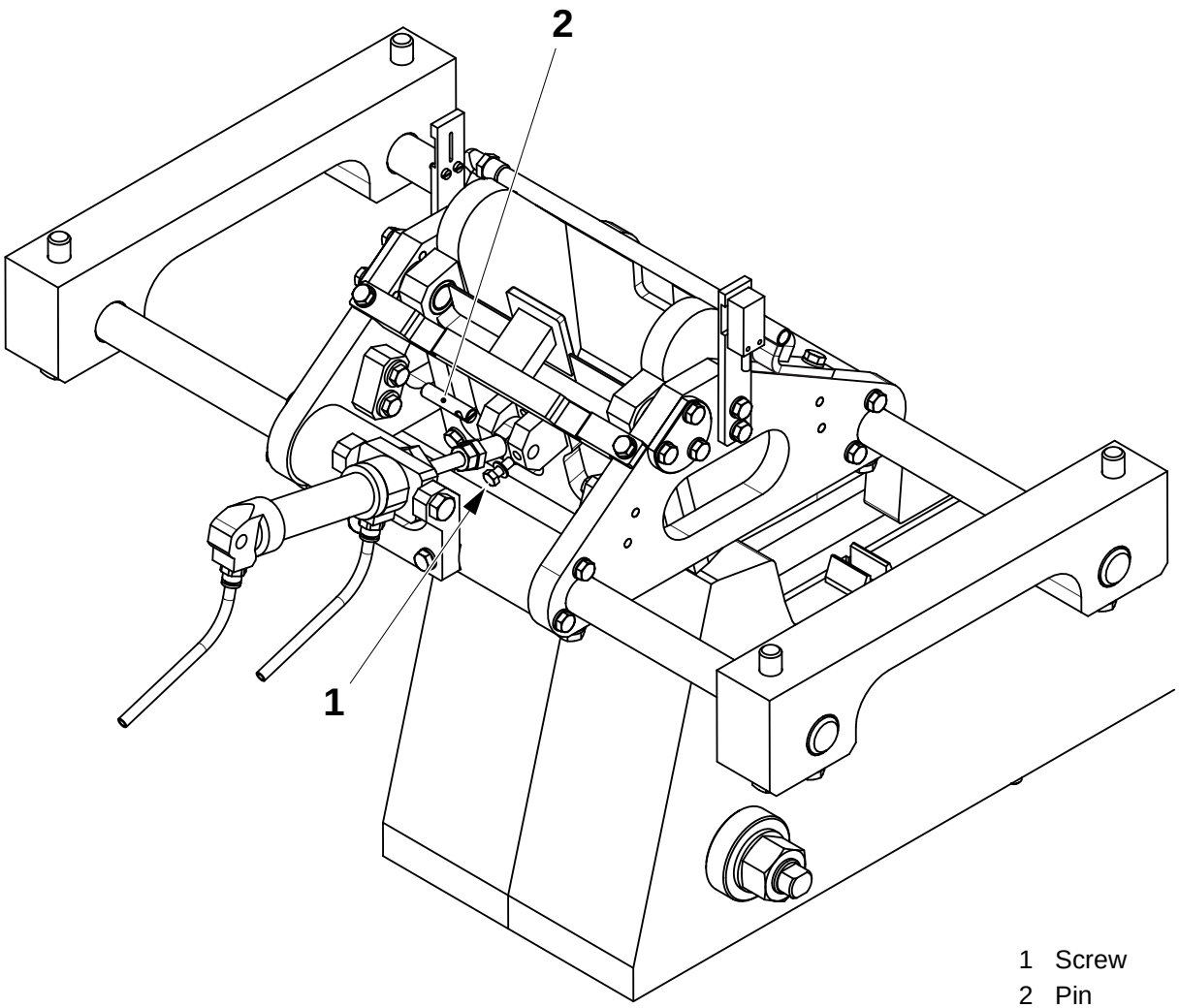

1 Screw
2 Pin

(Cont'd)

(Cont'd)

b) Remove the screws (3) and the package guides (4).

c) At both sides of the plate (5), remove the screws (6) and (7).

d) Slide the plate (5) in the direction shown.

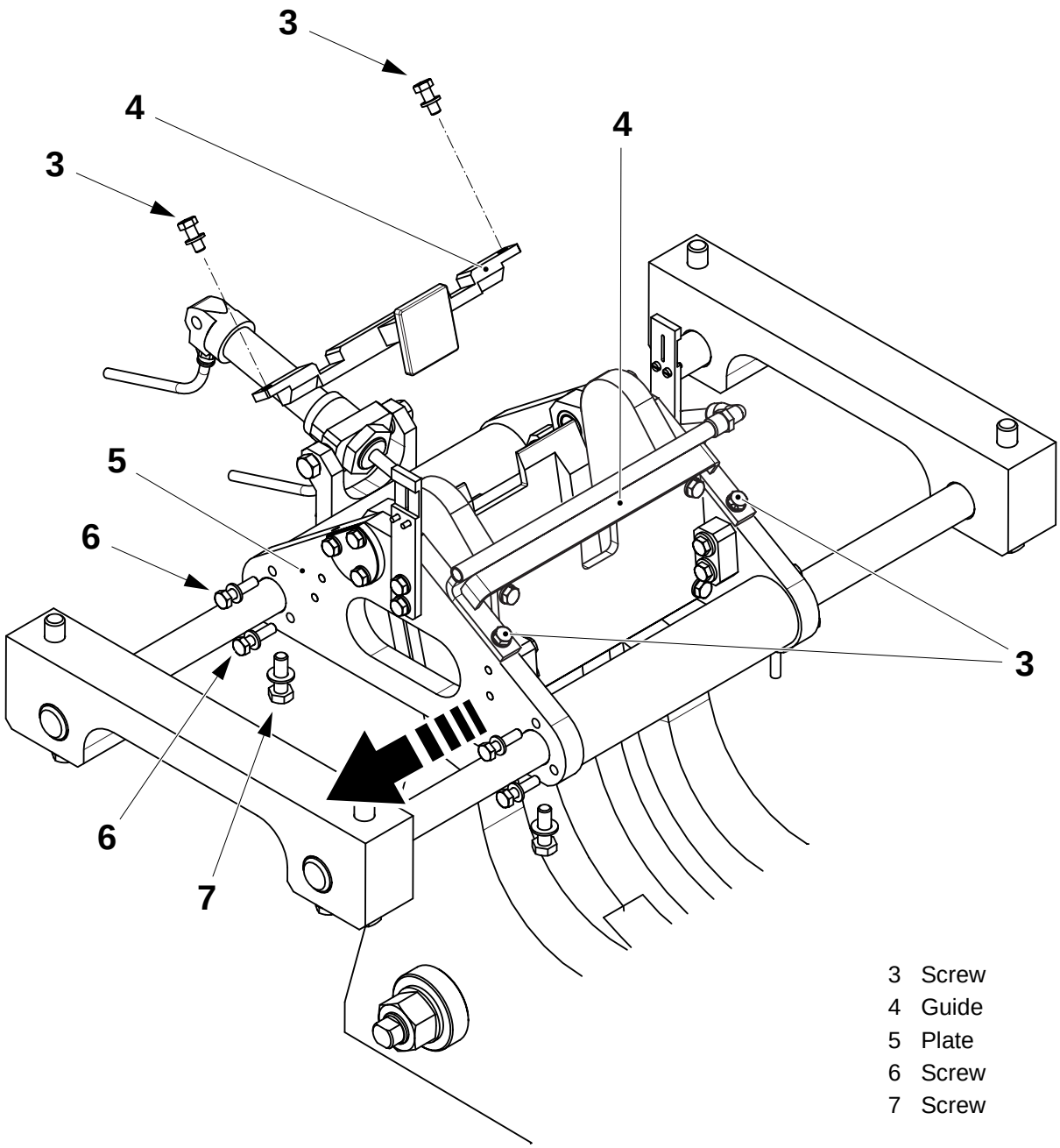

3 Screw
4 Guide
5 Plate
6 Screw
7 Screw

(Cont'd)

(Cont'd)

e) Lift out the drop box (8).

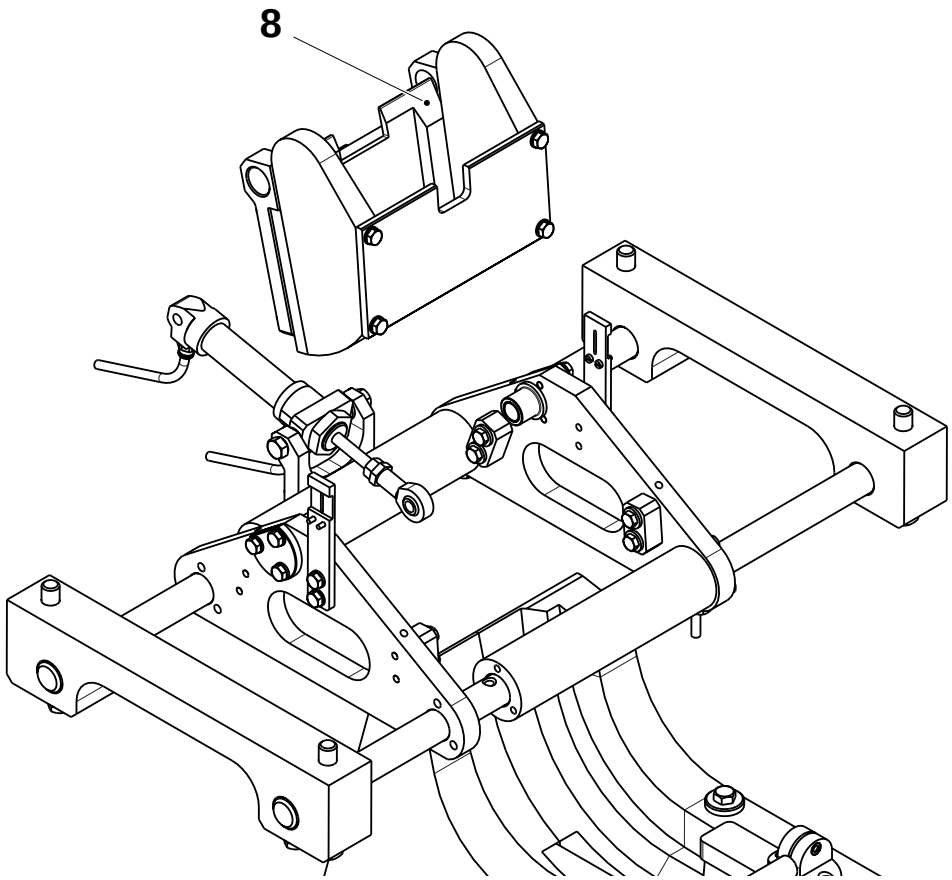

8 Box

(Cont'd)

(Cont'd)

f) Change the bushings (9) and (10).

g) Remove the screws (11) and change the stop block (12).

h) Change the other stop blocks.

i) Assemble in the reverse order.

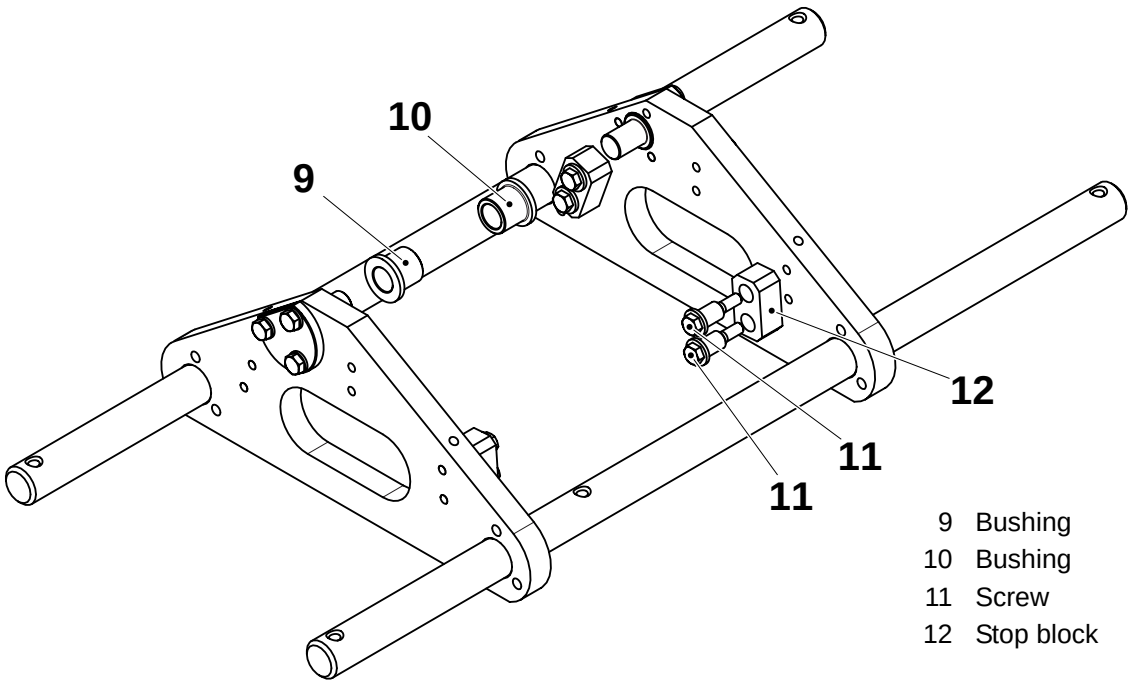

9 Bushing
10 Bushing
11 Screw
12 Stop block

4.7-5 Waste Box - Set Air Guide Pressure

SPC Reference	2558853-0100

Using the pressure regulator (1) on the machine body pneumatic panel (2), set the air pressure for the waste box air guide.

See the 10.1 Technical Data chapter for the pressure value.

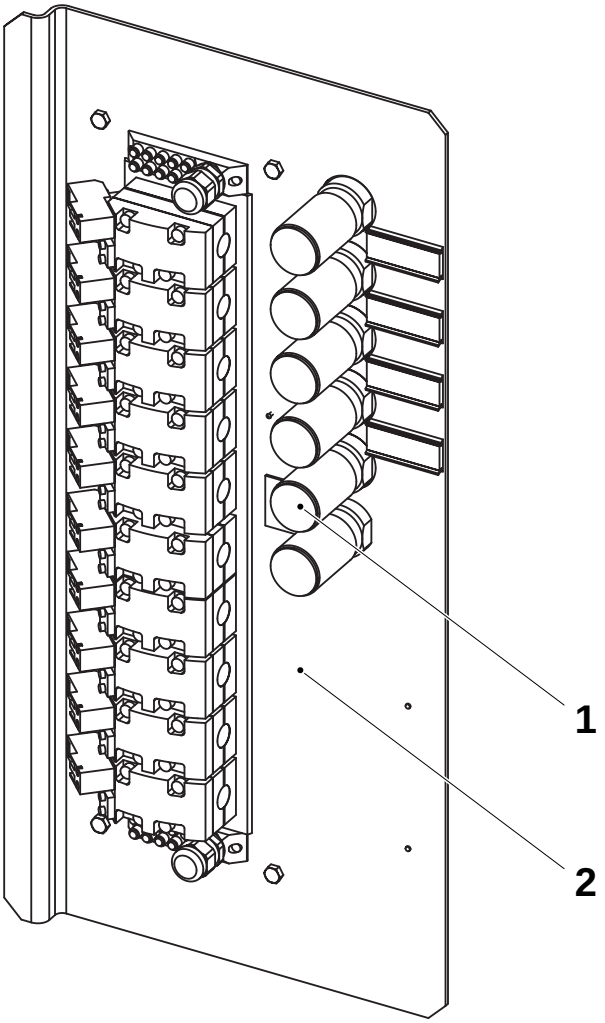

1 Pressure regulator
2 Pneumatic panel

4.8 Lubrication Unit

SPC reference	2564899-0100

4.8-1 Lubrication Unit - Change Cylinders

SPC Reference	2564899-0100

Note! This procedure is valid for all machines. The pipe layout and component design may differ.

a) Disconnect the air pipes (shaded grey) (1) from the cylinder to be changed.

b) Disconnect the grease pipes and connectors (2) from the cylinder to be changed.

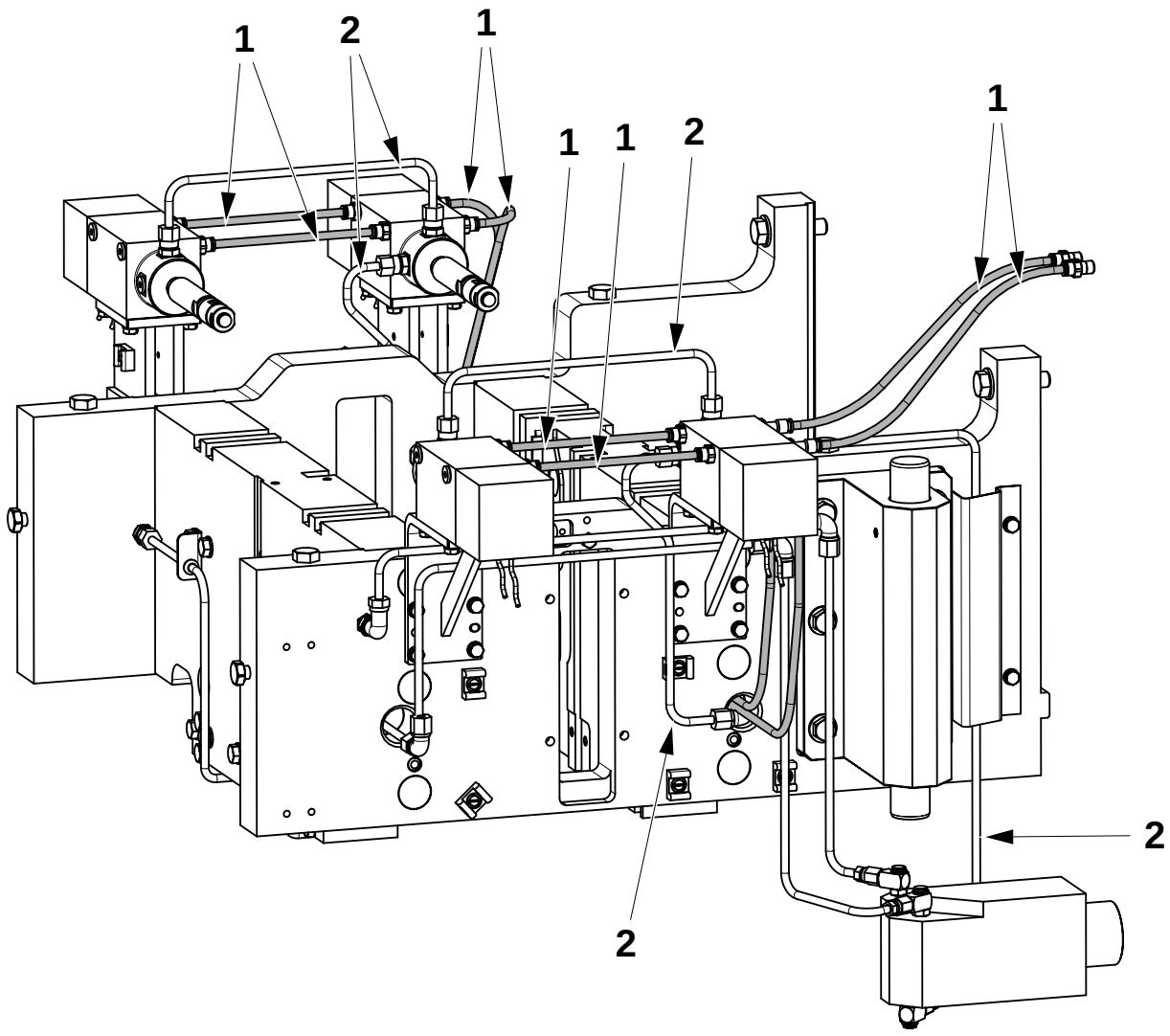

1 Air pipe
2 Grease pipe

(Cont'd)

(Cont'd)

c) Remove the cover (3).

d) Remove the screws (4) and the sensor bracket (5) from the cylinder (6).

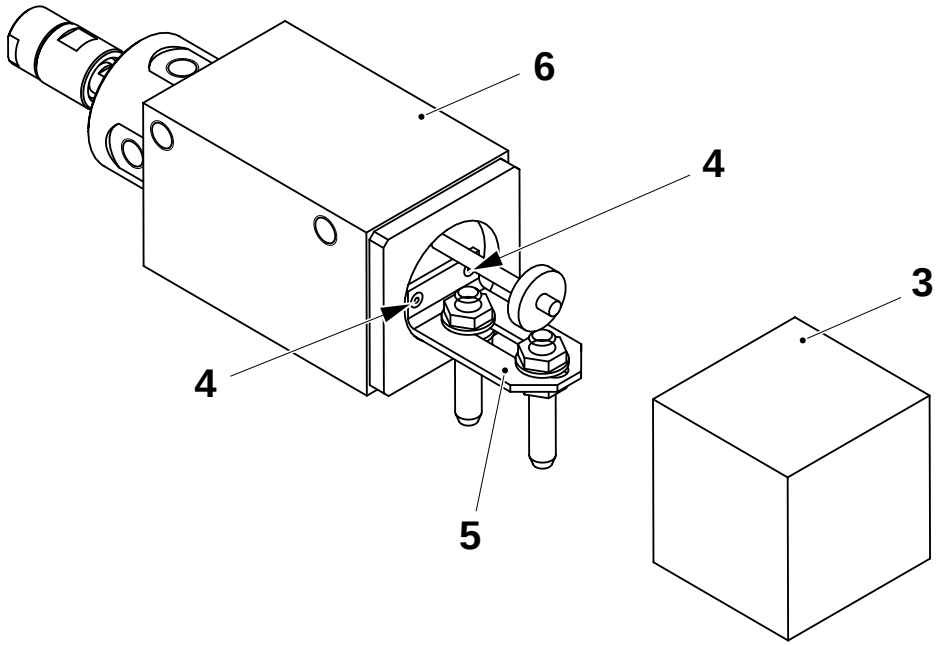

3 Cover
4 Screw
5 Bracket
6 Cylinder

(Cont'd)

(Cont'd)

e) Remove the screws (7) and the appropriate cylinder (8) from the plate (9).

f) Change the cylinder and assemble in the reverse order.

g) If a sensor is damaged, change it.

h) If a sensor has been changed, set the sensor, see 4.8-2 Lubrication Unit - Set Sensors.

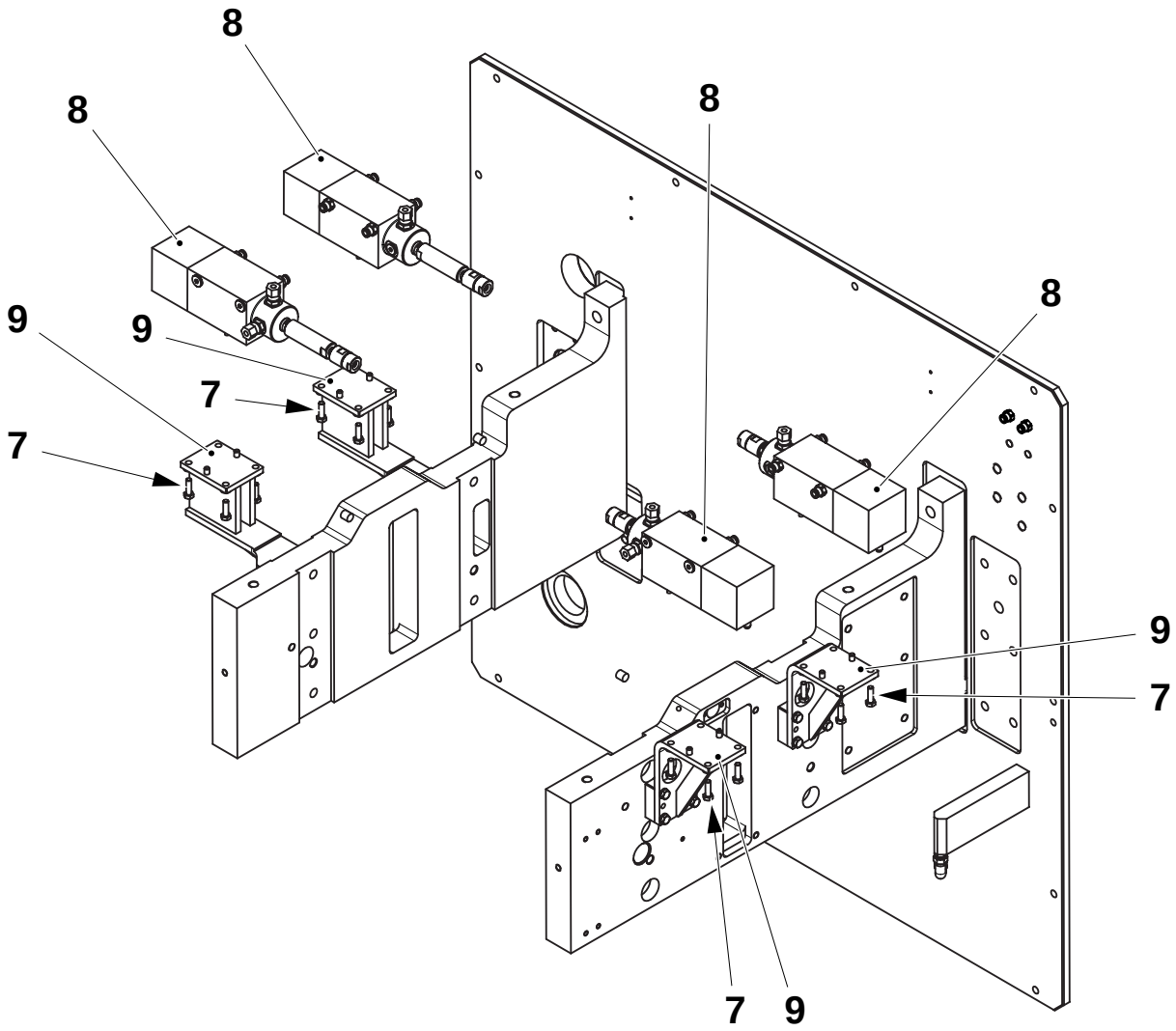

7 Screw
8 Cylinder
9 Plate

4.8-2 Lubrication Unit - Set Sensors

SPC Reference	2574380-0100
Machine Status	Mains Power ON Air ON

WARNING

Risk of crushing!

When about to move a cylinder, give warning to others to prevent injury.

a) Loosen the locknuts (1) and (2) on the sensors (3) and (4).

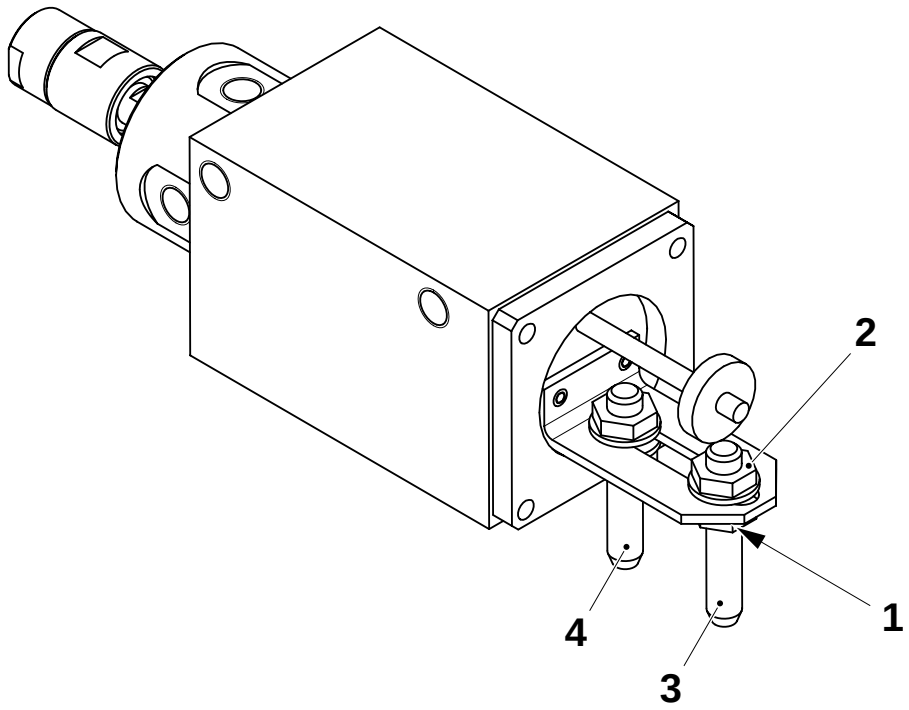

1 Locknut
2 Locknut
3 Sensor
4 Sensor

(Cont'd)

(Cont'd)

b) Push and hold the button (5) to activate valve V4260 (6).

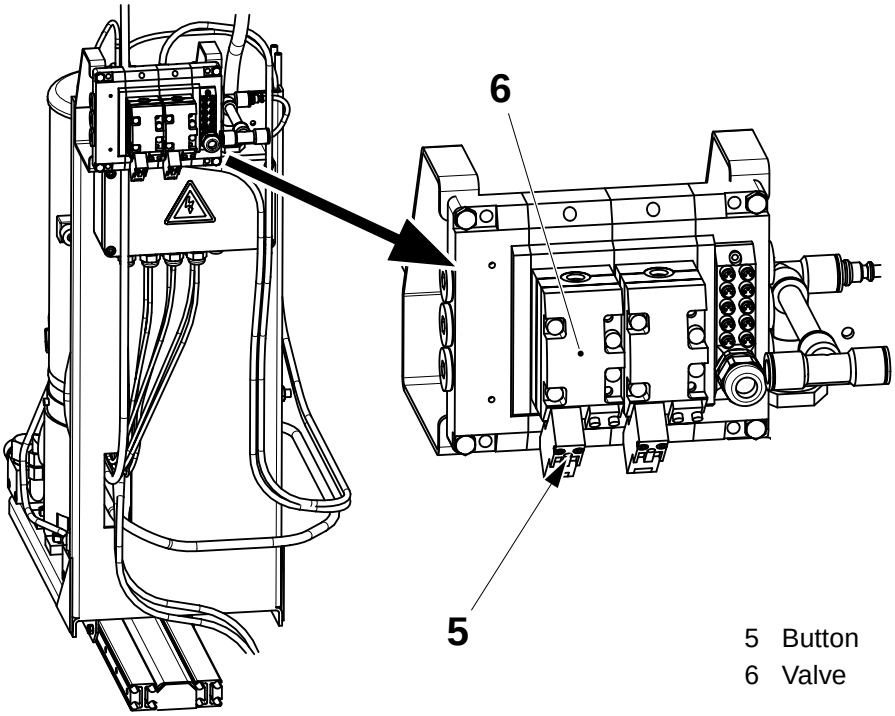

5 Button
6 Valve

Note! Distance **B** is the distance between the end of the plate (8) and the centre of the wheel (7). The centre of the sensor (4) must be aligned with the centre of the wheel (7).

c) When the cylinder piston stops moving, at the END POSITION SHAFT GREASING**,** move the inner sensor (4) to set distance **A** and **B**.

d) Tighten the lock nuts on the inner sensor (4) when the sensor is in the correct position.

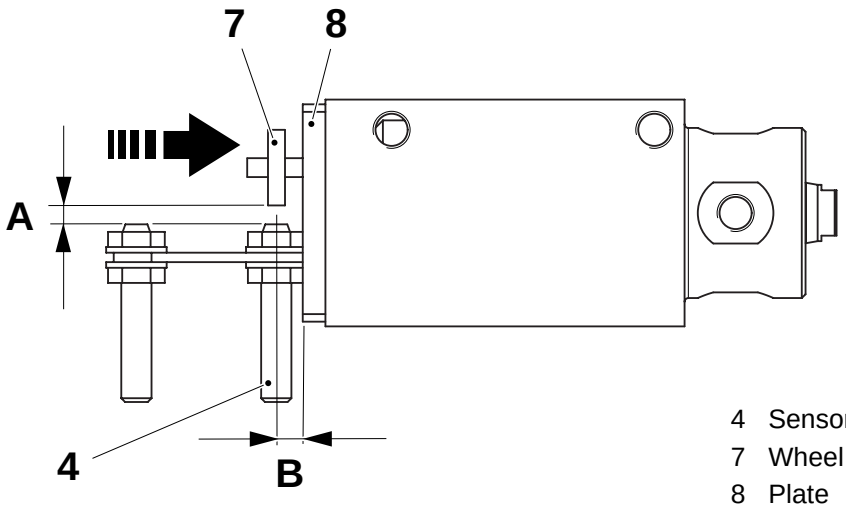

4 Sensor
7 Wheel
8 Plate

(Cont'd)

(Cont'd)

e) Release the button (5) to de-activate valve V4260 (6).

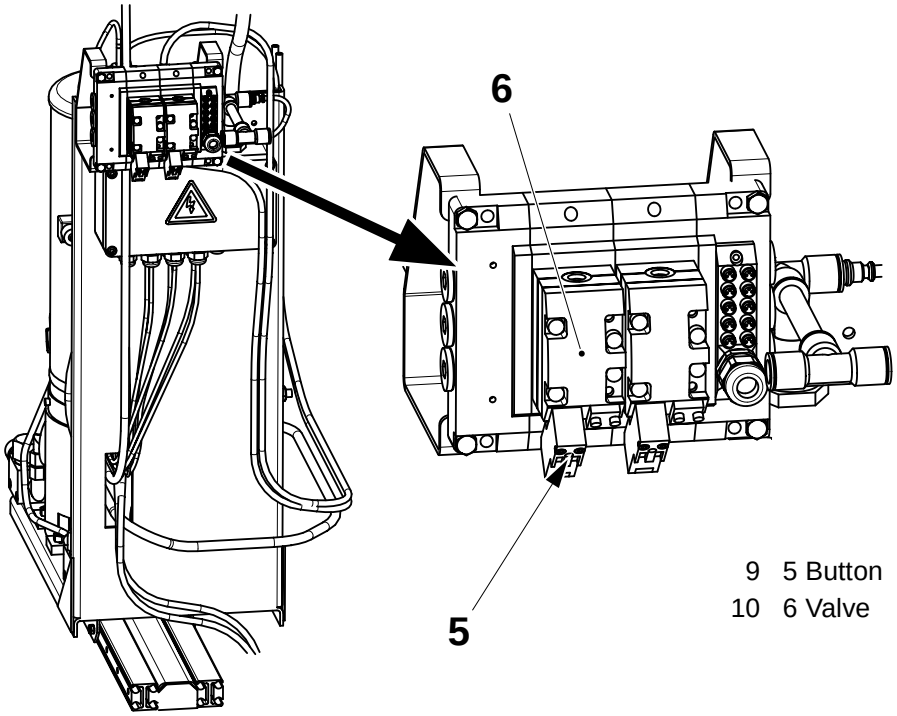

9 5 Button
10 6 Valve

Note! Distance **D** is the distance between the end of the plate (8) and the centre of the wheel (7). The centre of the sensor (3) must be aligned with the centre of the wheel (7).

f) When the cylinder piston stops moving, at the SHAFT GREASING CYCLE COMPLETE position**,** move the outer sensor (3) to set distance **C** and **D**.

g) Tighten the locknuts on the outer sensor (3) when the sensor is in the correct position.

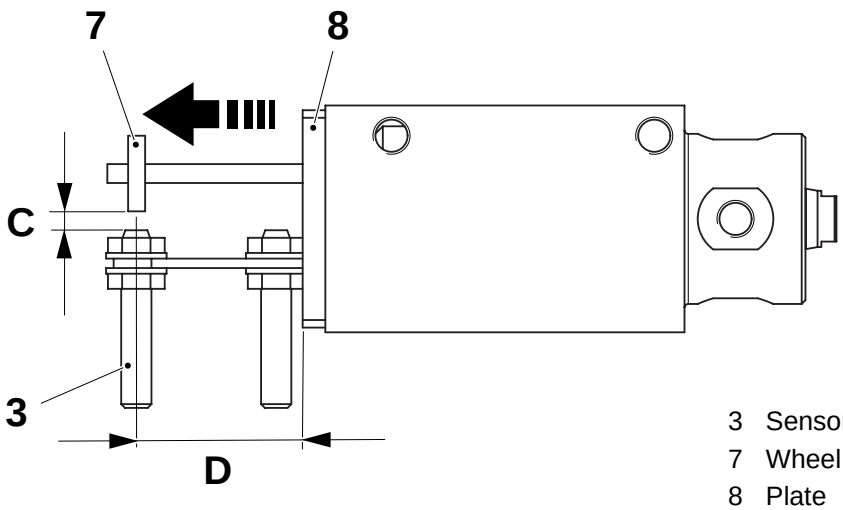

3 Sensor
7 Wheel
8 Plate

5 Final Folder Module

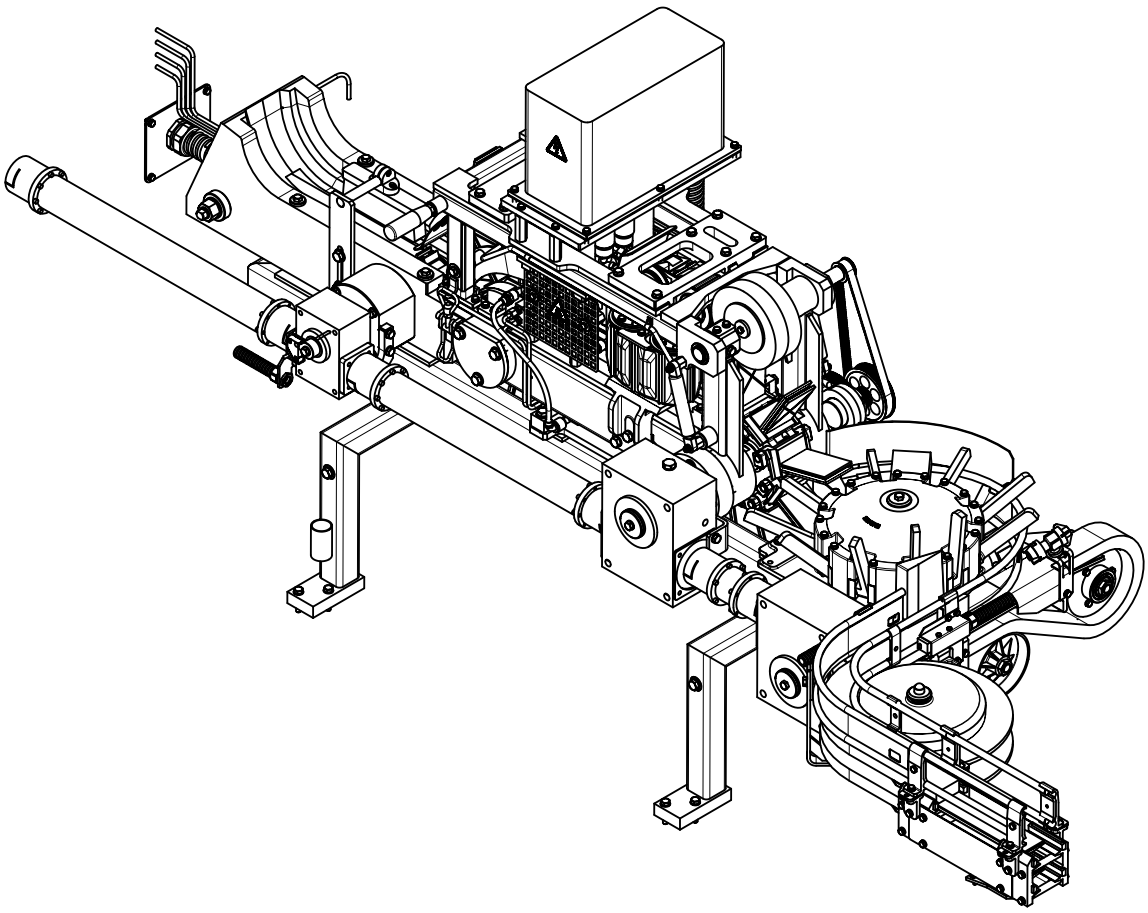

Final Folder Module - Description

SPC Reference	648525-0500

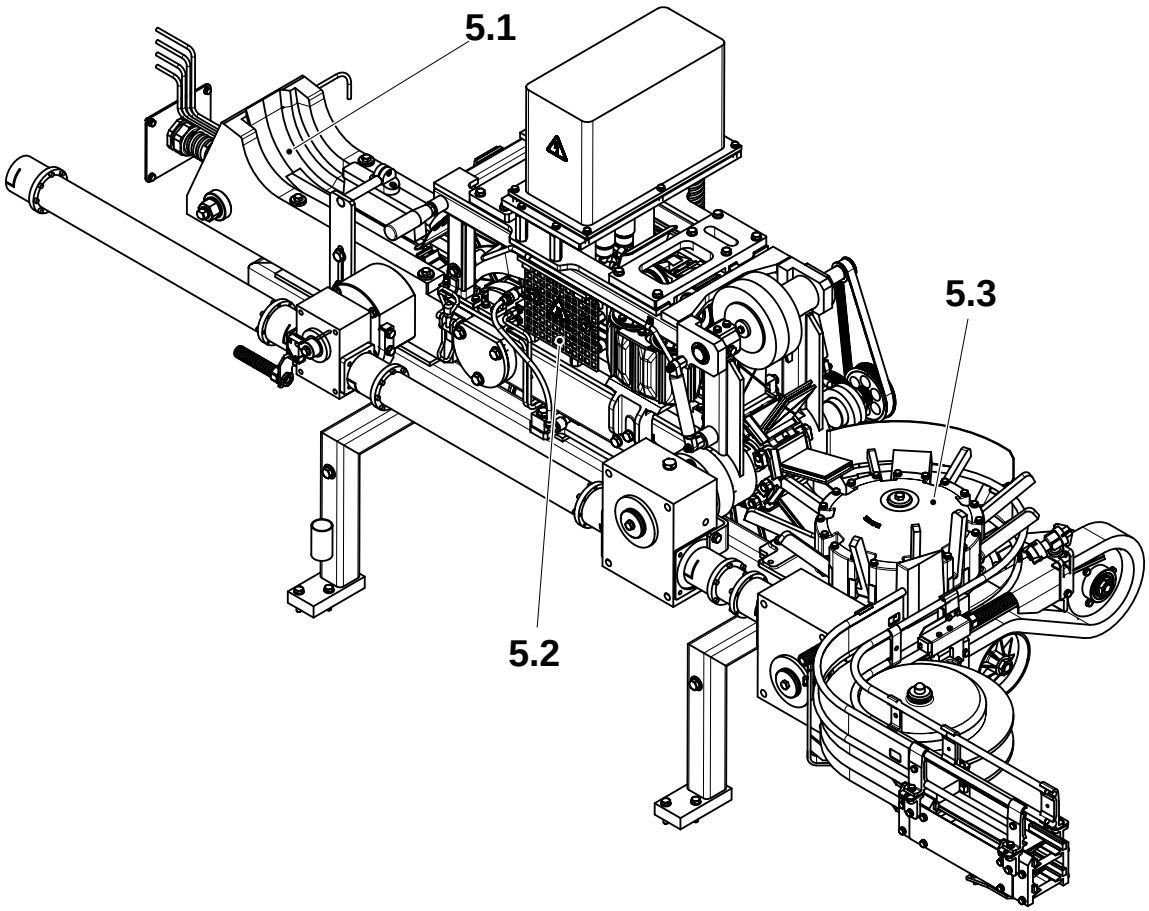

5.1 Conveyor
5.2 Final Folder
5.3 Discharge Device

5 Final Folder Module. . . . . 5 - 5

5-1 Final Folder Module - Synchronization . . . . . 5 - 5
5-2 Final Folder Module - Check Coupling . . . . . 5 - 9
5-3 Final Folder Module - Change Gearbox Oil . . . 5 - 10

5.1 Conveyor . . . . . 5 - 13

5.1-1 Conveyor - Check Belt . . . . . 5 - 13
5.1-2 Conveyor - Check Bearings . . . . . 5 - 14
5.1-3 Conveyor - Change Belt . . . . . 5 - 15
5.1-4 Conveyor - Overhaul . . . . . 5 - 17
5.1-5 Conveyor - Set Brush . . . . . 5 - 24

5.2 Final Folder . . . . . 5 - 25

5.2.1 Station Chain . . . . . 5 - 25

5.2.1-1 Station Chain - Change . . . . . 5 - 25
5.2.1-2 Station Chain - Overhaul . . . . . 5 - 27
5.2.1-3 Station Chain - Turn Shafts . . . . . 5 - 28
5.2.1-4 Station Chain - Check Sliders . . . . . 5 - 29

5.2.2 Swing Frame. . . . . 5 - 30

5.2.2-1 Swing Frame - Check Pulley . . . . . 5 - 30

5.2.3 Chain Support . . . . . 5 - 31

5.2.3-1 Chain Support - Check Condition . . . . . 5 - 31
5.2.3-2 Chain Support - Overhaul . . . . . 5 - 32
5.2.3-3 Chain Support - Change Chain Guide . . . . . 5 - 45
5.2.3-4 Chain Support - Change Brush . . . . . 5 - 49
5.2.3-6 Chain Support - Change Belt . . . . . 5 - 50
5.2.3-7 Chain Support - Set Belt . . . . . 5 - 51

5.2.4 Squeezer. . . . . 5 - 52

5.2.4-1 Squeezer - Set Position . . . . . 5 - 52
5.2.4-2 Squeezer - Check Side Pressure Belts . . . . . 5 - 54
5.2.4-3 Squeezer - Check Top Pressure Belt . . . . . 5 - 55
5.2.4-4 Squeezer - Change Side Squeezer Ball Bearings 5 - 56
5.2.4-5 Squeezer - Change Top Squeezer Ball Bearings 5 - 58
5.2.4-6 Squeezer - Check Side Squeezer Clearances . . . 5 - 60

5.2.4-7 Squeezer - Check Top Squeezer Clearances . . . 5 - 62

5.2.5 Heating Chamber. . . . . 5 - 64

5.2.5-1 Heating Chamber - Set Flap Sealing Nozzles . . 5 - 64

5.2.5-2 Heating Chamber - Overhaul . . . . . 5 - 66

5.3 Discharge Device. . . . . 5 - 70

5.3.1 Outfeed Unit. . . . . 5 - 70

5.3.1-1 Outfeed Unit - Check Bushings and Roller . . . . 5 - 70

5.3.1-2 Outfeed Unit - Change Ball Bearing . . . . . 5 - 72

5.3.2 Curve Wheel. . . . . 5 - 75

5.3.2-1 Curve Wheel - Set Transmitter And Receiver . . 5 - 75

5.3.2-2 Curve Wheel - Change Curve Wheel Bushing . 5 - 77

5 Final Folder Module

5-1 Final Folder Module - Synchronization

Machine Status	NORMAL STOP
Tools - Template	TP No. 1350716
SPC Reference	648525-0500

a) Loosen the screw (1) in the coupling.

b) Insert the template (2) into the hole in the plate.

c) Using the shaft (3), turn the discharger unit clockwise until one carrier (4) touches the template (2).

d) Turn the shaft (5) to align one carton station link (6) of the chain with the mark (7) on the conveyor.

e) Tighten the screw (1) and remove the template (2).

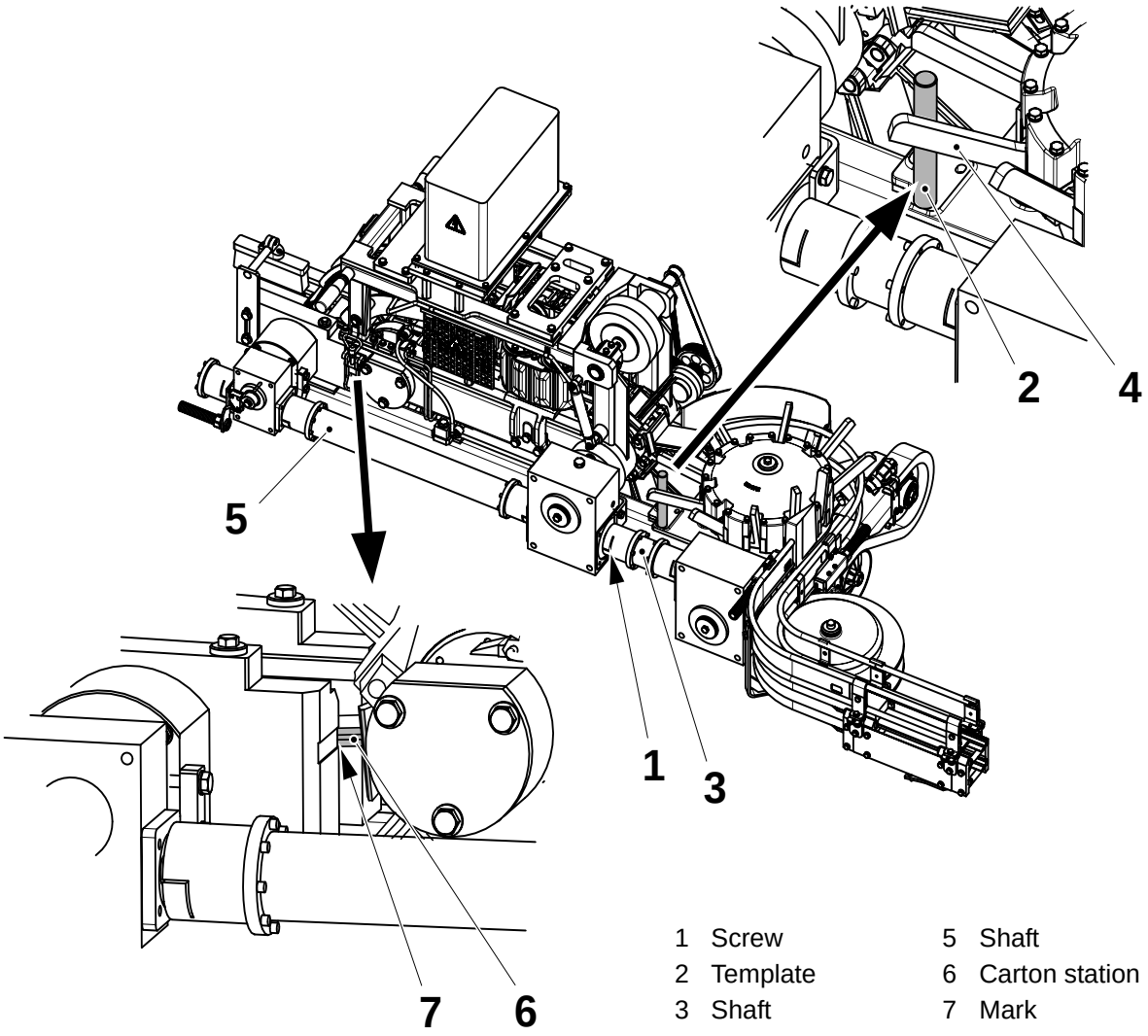

1 Screw
2 Template
3 Shaft
4 Carrier
5 Shaft
6 Carton station
7 Mark

(Cont'd)

5 Final Folder Module

(Cont'd)

f) Loosen the screw (8) in the coupling.

g) Turn the shaft (9) to align one carton station link (6) of the chain with the mark (7) on the conveyor.

h) While preventing the shaft (9) from moving, turn the shaft (10) to align the first tooth (11) on the belt with the marks (12) on the conveyor.

i) Tighten the screw (8).

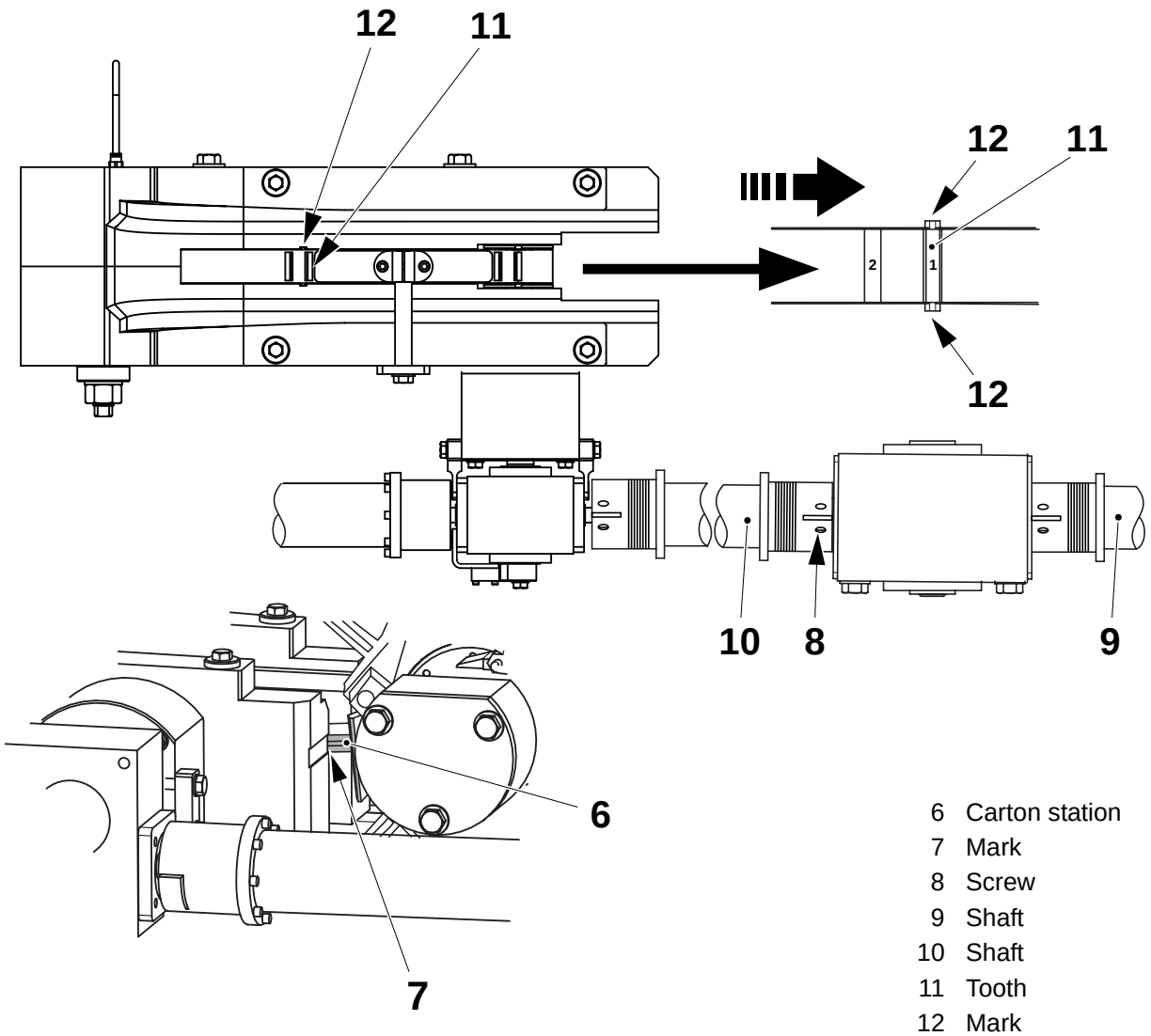

6 Carton station
7 Mark
8 Screw
9 Shaft
10 Shaft
11 Tooth
12 Mark

(Cont'd)

(Cont'd)

j) Step up the machine to **Preparation**.

k) On the TPOP:

- press the **Final folder settings** button (13),
- press the **Final folder synchronization** icon (14),
- press the **Factory setting** button (15).

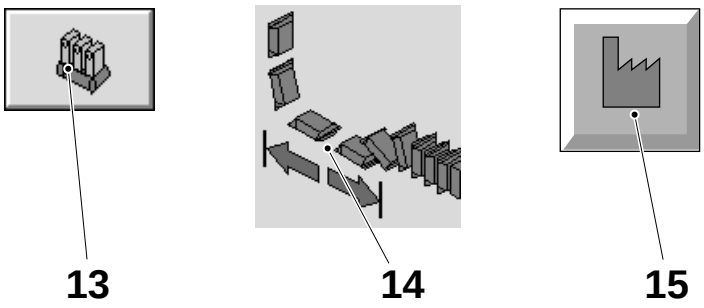

13 Final folder settings
14 Final folder synchronization
15 Factory setting

l) Then:

- press the **Package monitoring** button (16),
- press the **Home position check** button (17),

m) Press and hold the **Final folder inching** button (18) until the final folder stops moving.

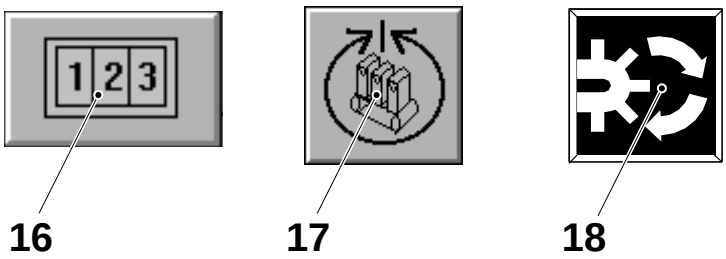

16 Package monitoring
17 Home position check
18 Final folder inching

(Cont'd)

5 Final Folder Module

(Cont'd)

n) Check distance **A** between the first tooth (11) and the conveyor body (19).

Package	A ±1 (mm)
TBA 200 B	190
TBA 200 M	200
TBA 200 S	240
TBA 250 B	175
TBA 250 S	225

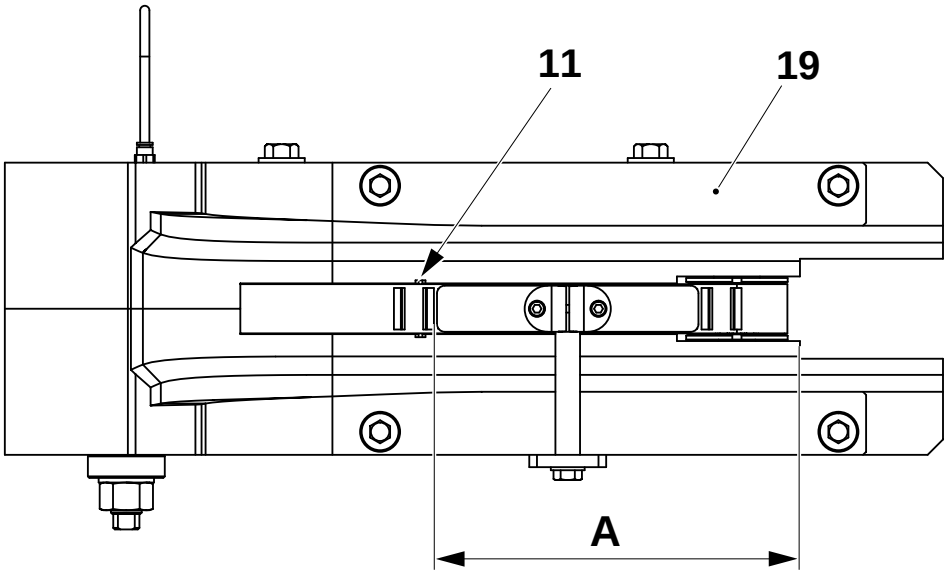

11 Tooth
19 Conveyor body

If necessary, fine adjust on the TPOP as follow:

- press the **Final folder settings** button (13),
- press the **Final folder synchronization** icon (14),
- change the value on the TPOP to fine adjust the position of the tooth.

o) Check the synchronization, repeat from step l).

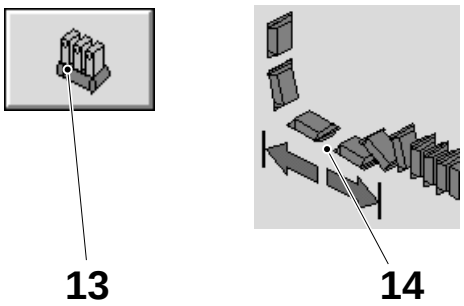

13 Final folder settings
14 Final folder synchronization

5-2 Final Folder Module - Check Coupling

SPC Reference	648525-0500

Check the couplings (1) to (6) for signs of ware, damage or play. Change as required.

After changing a coupling, synchronize the final folder module, see 5-1 Final Folder Module - Synchronization.

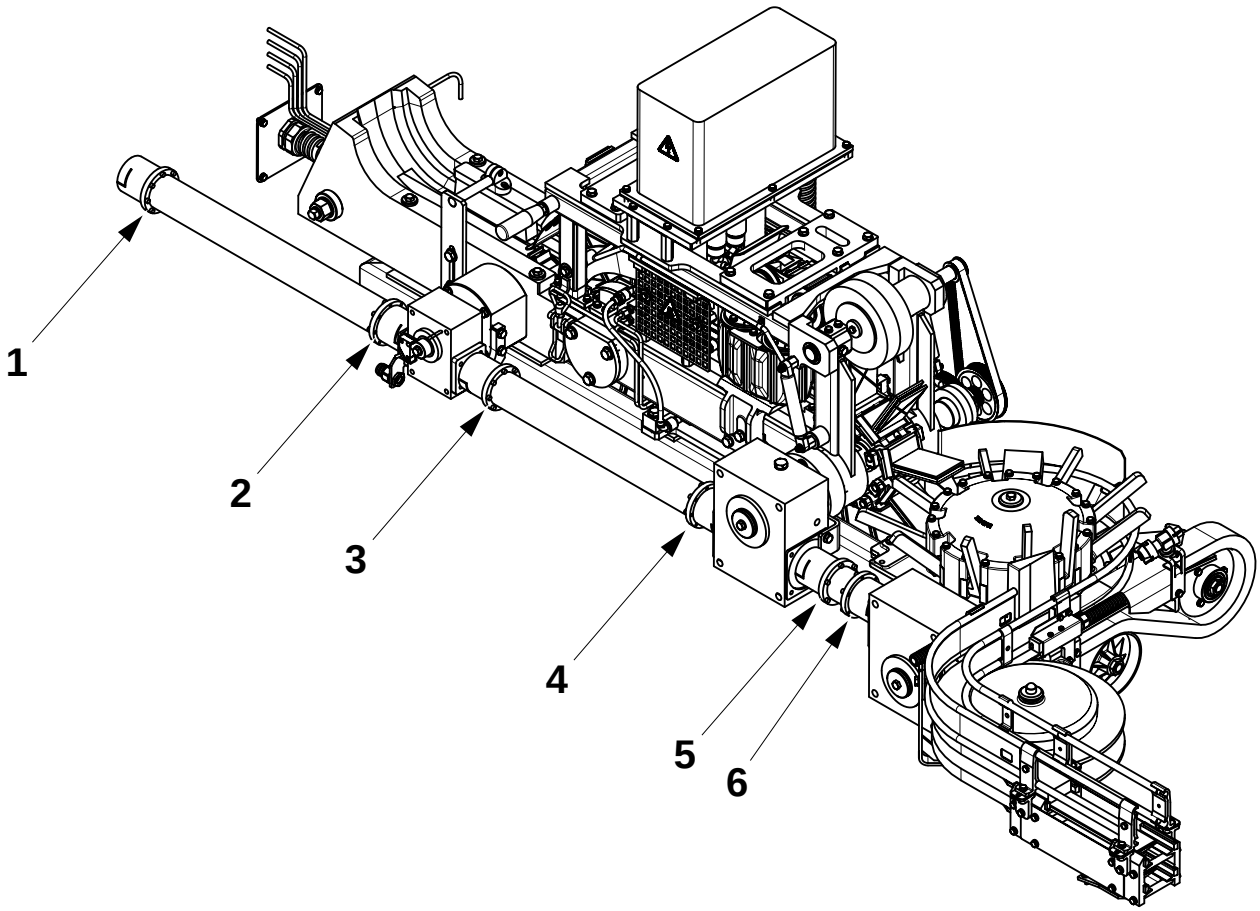

1 Coupling
2 Coupling
3 Coupling
4 Coupling
5 Coupling
6 Coupling

5-3 Final Folder Module - Change Gearbox Oil

Consumable: - Lubricant code H	
SPC Reference	648525-0500

Note! Do not remove the plug (4).

a) At the gearbox (1), remove the plugs (2) and (3) to drain the oil.

b) When the oil has been drained, fit the plug (3).

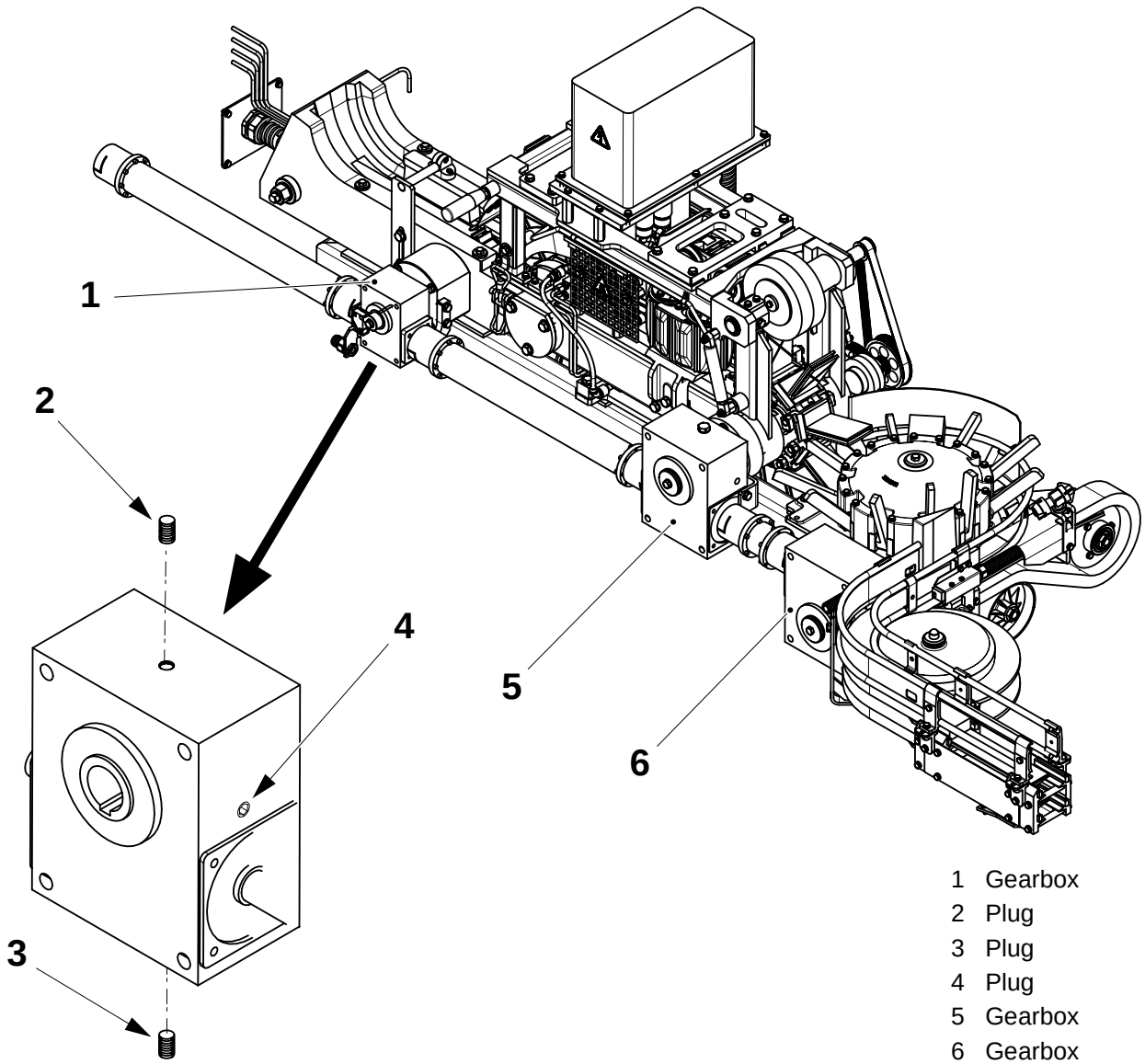

1 Gearbox
2 Plug
3 Plug
4 Plug
5 Gearbox
6 Gearbox

(Cont'd)

5 Final Folder Module

(Cont'd)

Note! Do not exceed the amount of oil stipulated below. Excess oil will cause overpressure and may lead to leakages.

c) Fill the gearbox with **0.2 litres** of lubricant code **H**, see 10.3 Consumables. The cut-away view below shows the correct level of oil in the gearboxes and the position of the plugs (4) for a gearbox mounted normally and inverted.

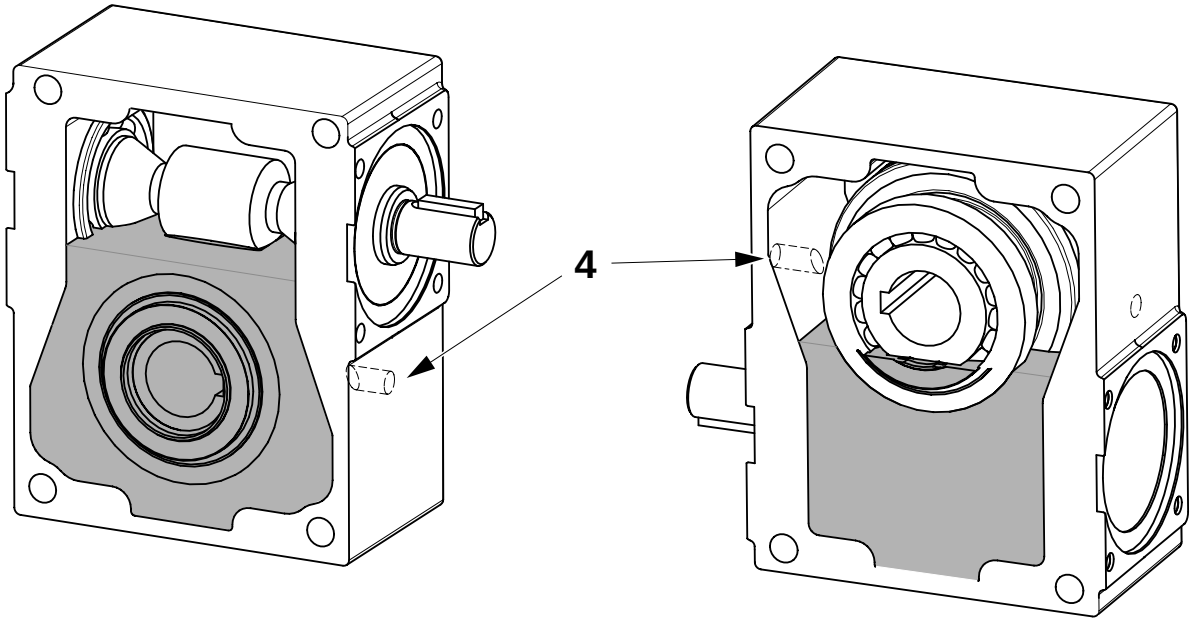

4 Plug

(Cont'd)

5 Final Folder Module

(Cont'd)

d) Fit the plug (2) in the gearbox (1).

e) Repeat the procedure for the other gearboxes (5) and (6) using **0.75 litres** of lubricant code **H**, see 10.3 Consumables.

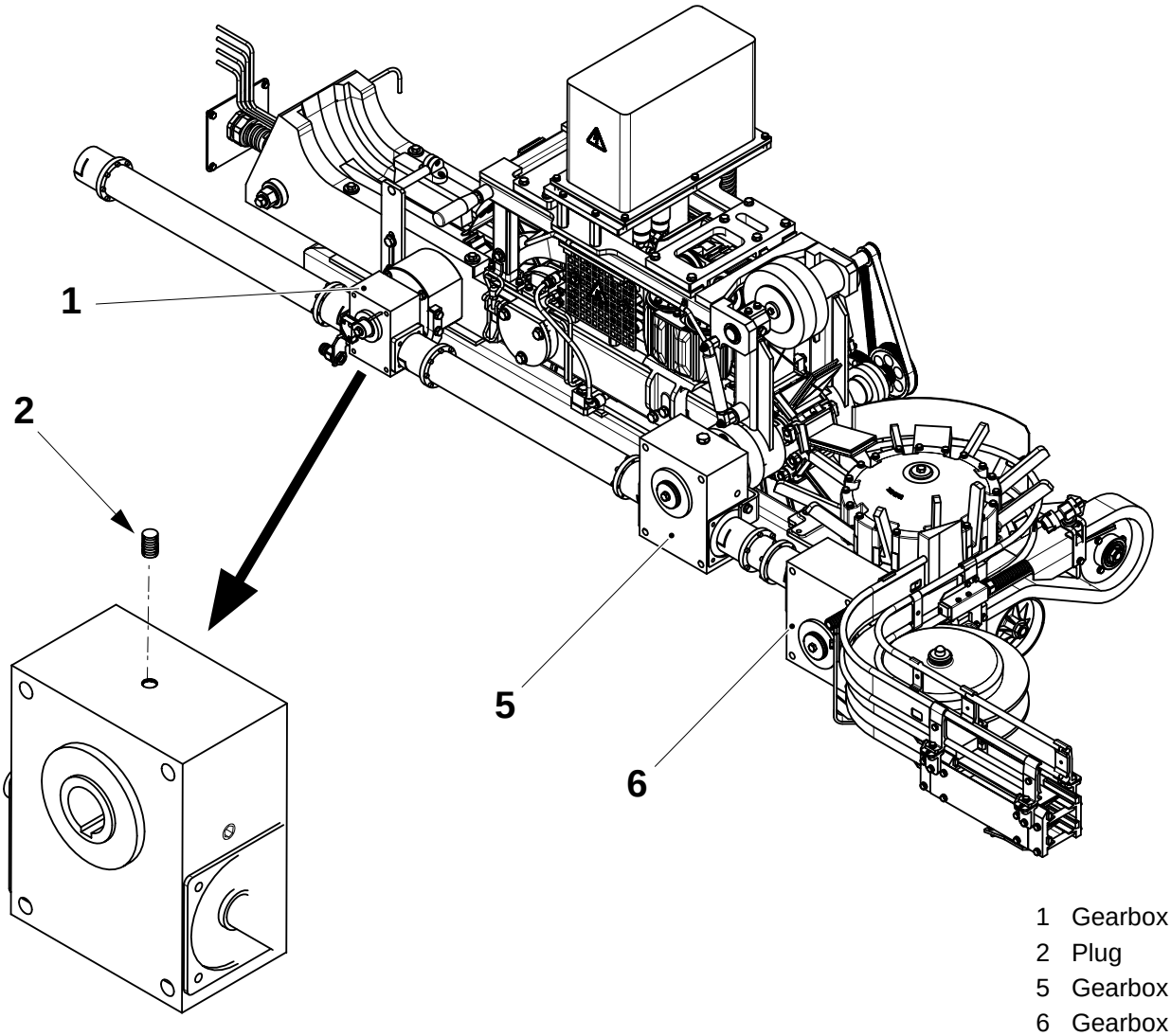

1 Gearbox
2 Plug
5 Gearbox
6 Gearbox

5.1 Conveyor

SPC Reference	577111-0400

5.1-1 Conveyor - Check Belt

SPC Reference	577111-0400

Check the belt and its teeth for wear or damage.

If necessary, change the belt, see 5.1-2 Conveyor - Check Bearings.

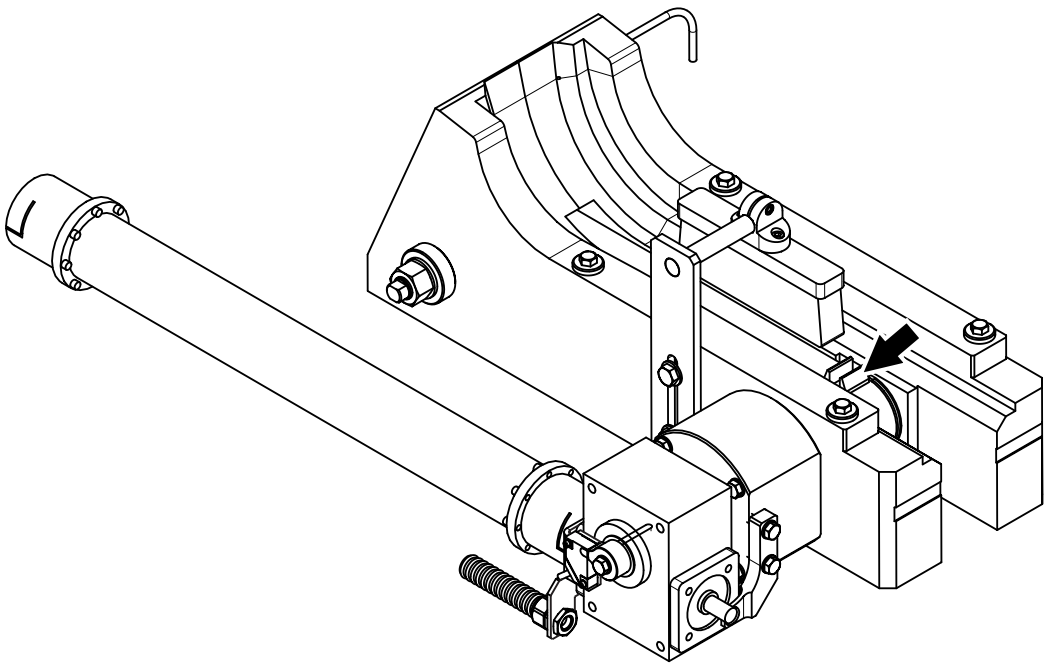

5.1-2 Conveyor - Check Bearings

SPC Reference	577111-0400

a) Reduce the belt tension by loosening the nut (1) and then turning the eccentric shaft (2).

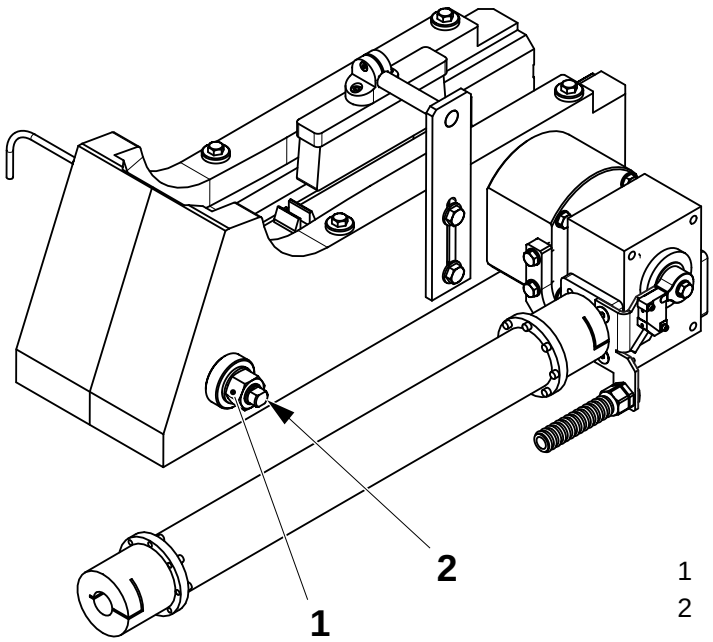

1 Nut
2 Eccentric shaft

b) Check the bearings (3) and (4) rotate smoothly in both directions.

c) Set the belt tension, see 5.1-4 Conveyor - Overhaul, from step x).

d) Synchronize the conveyor, see 5-1 Final Folder Module - Synchronization.

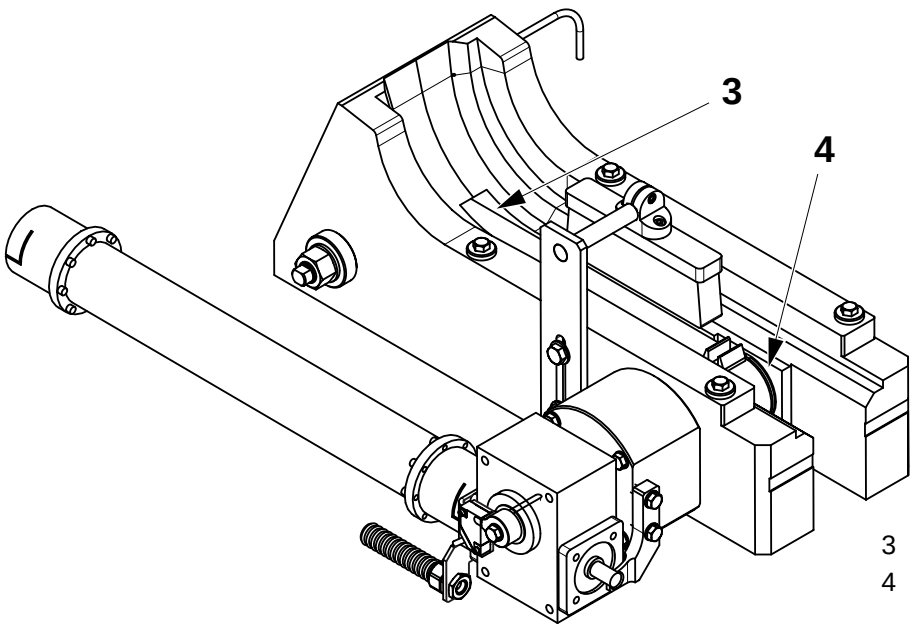

3 Bearing
4 Bearing

5.1-3 Conveyor - Change Belt

Tools - torque wrench	 min. 25 Nm
SPC Reference	577111-0400

Note! Labelling items avoids confusion during assembly.

a) Label and remove the water line (1).

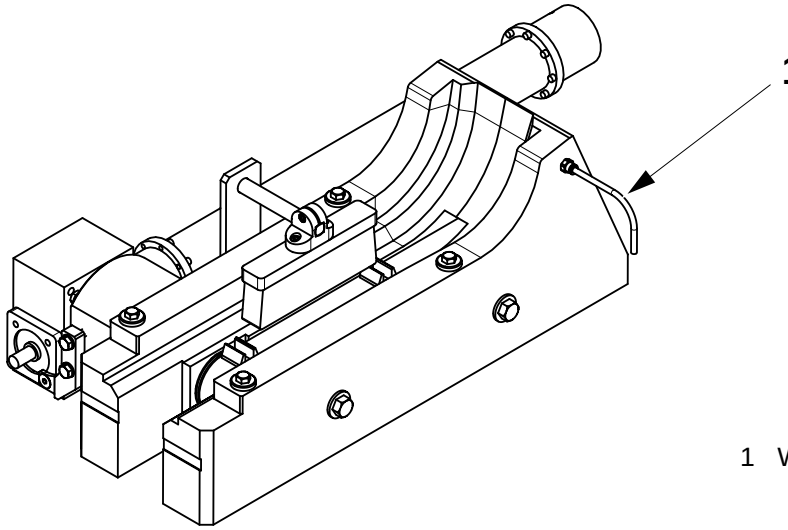

1 Water line

b) Remove the bolts (2), (3), (4) and (5).

c) Remove the frame (6).

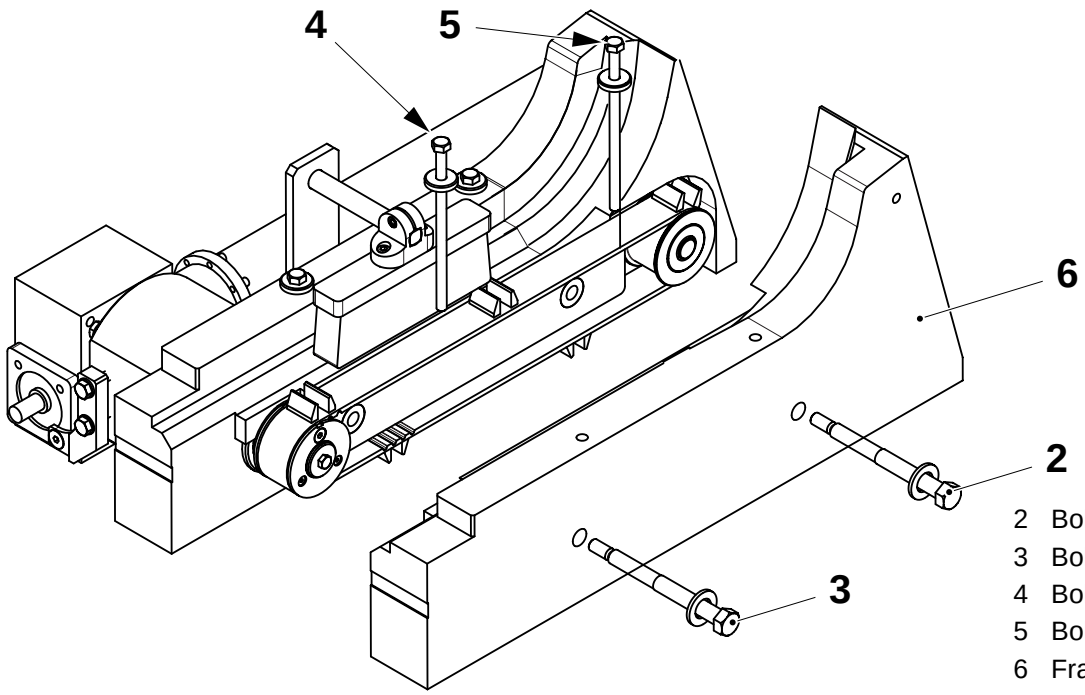

2 Bolt
3 Bolt
4 Bolt
5 Bolt
6 Frame

(Cont'd)

(Cont'd)

d) Reduce the belt tension by loosening the nut (7) and then turning the eccentric shaft (8).

e) Remove and change the belt (9).

f) Align the tooth (10) with the notch (11).

g) Using a torque wrench, tighten the eccentric shaft (8) to 25 Nm.

h) Tighten the nut (7) and assemble in the reverse order.

i) Synchronize the conveyor, see 5-1 Final Folder Module - Synchronization, from step f).

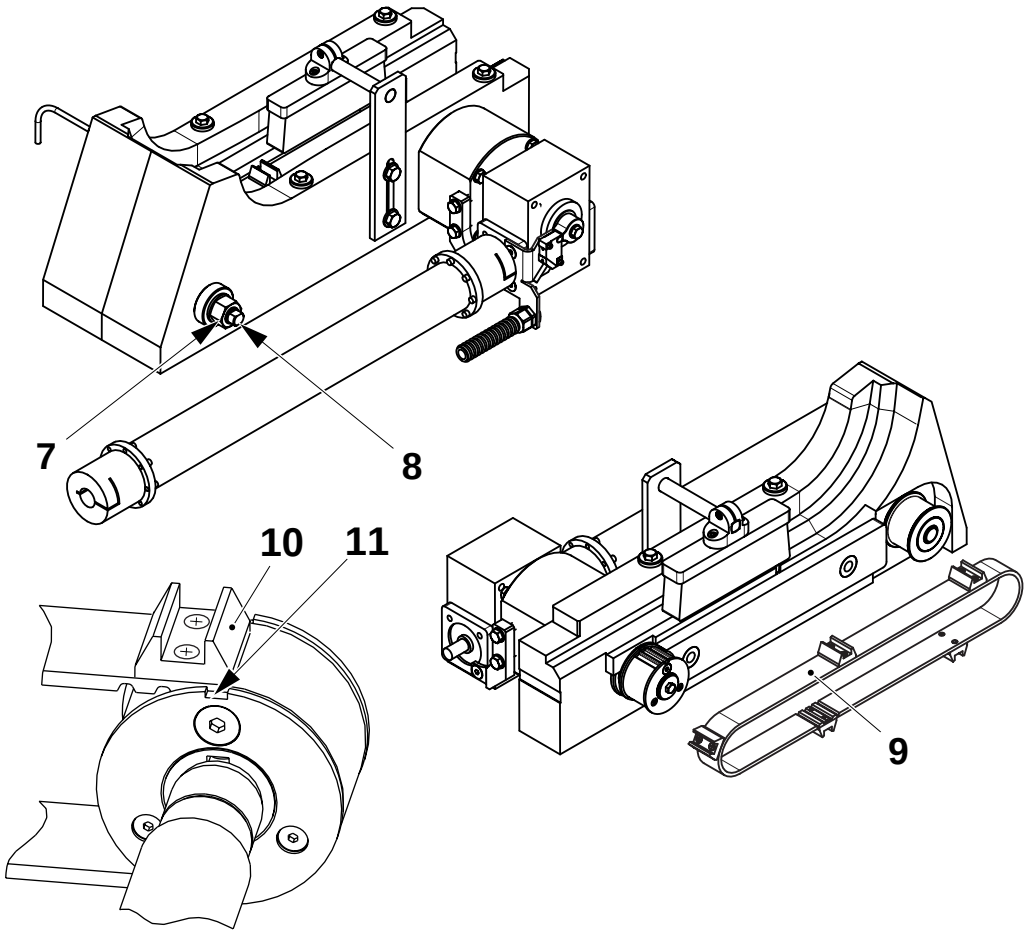

7 Nut
8 Shaft
9 Belt
10 Tooth
11 Notch

5.1-4 Conveyor - Overhaul

Tools - torque wrench	 min. 25 Nm
SPC Reference	577111-0400

Note! Labelling items avoids confusion during assembly.

a) Label and remove the water line (1).

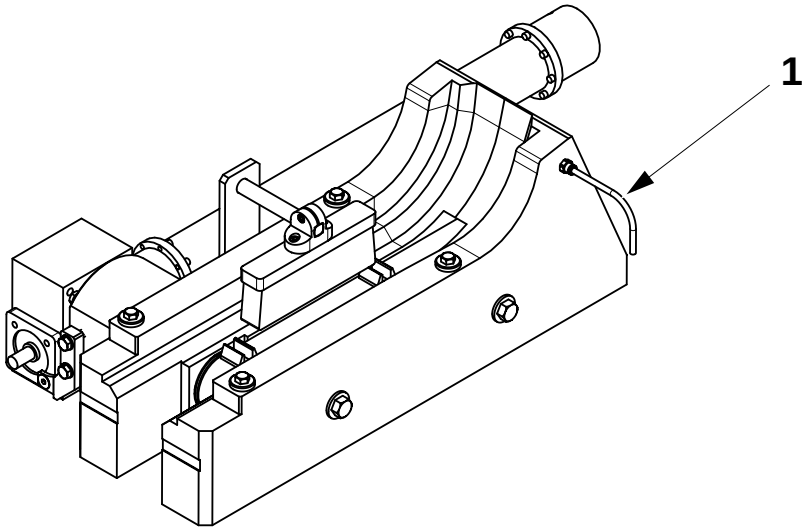

Water line

b) Remove the bolts (2), (3), (4) and (5).

c) Remove the frame (6).

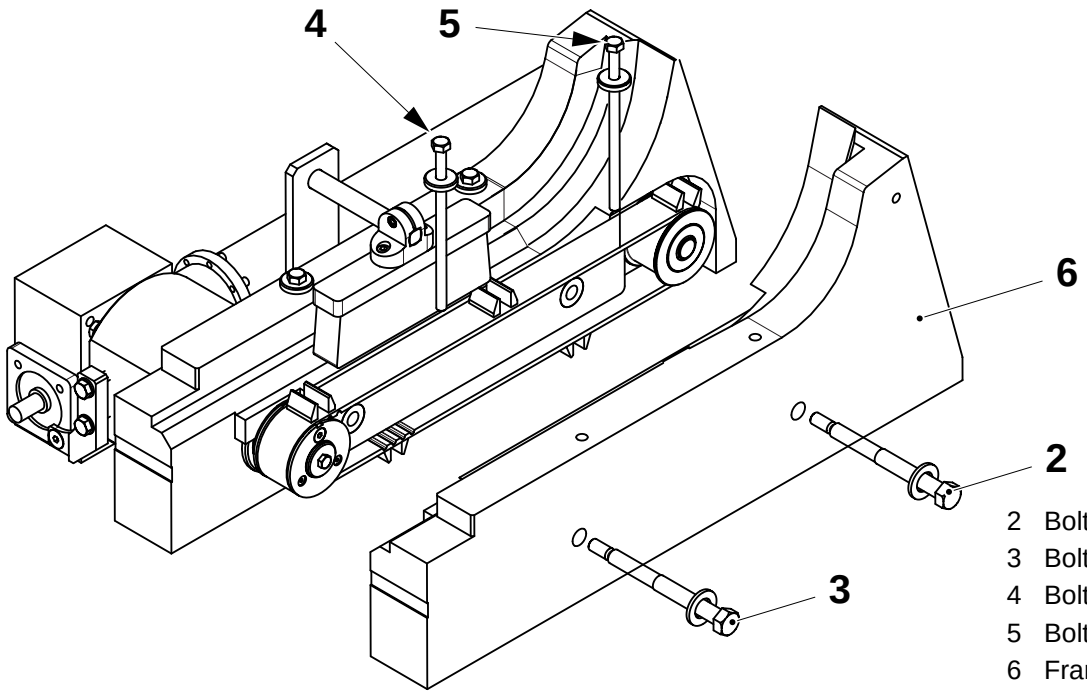

2 Bolt
3 Bolt
4 Bolt
5 Bolt
6 Frame

(Cont'd)

(Cont'd)

d) Remove the nut and washer (7) and the washer (8). Remove the belt (9) and pull out the pulley on the eccentric shaft (10).

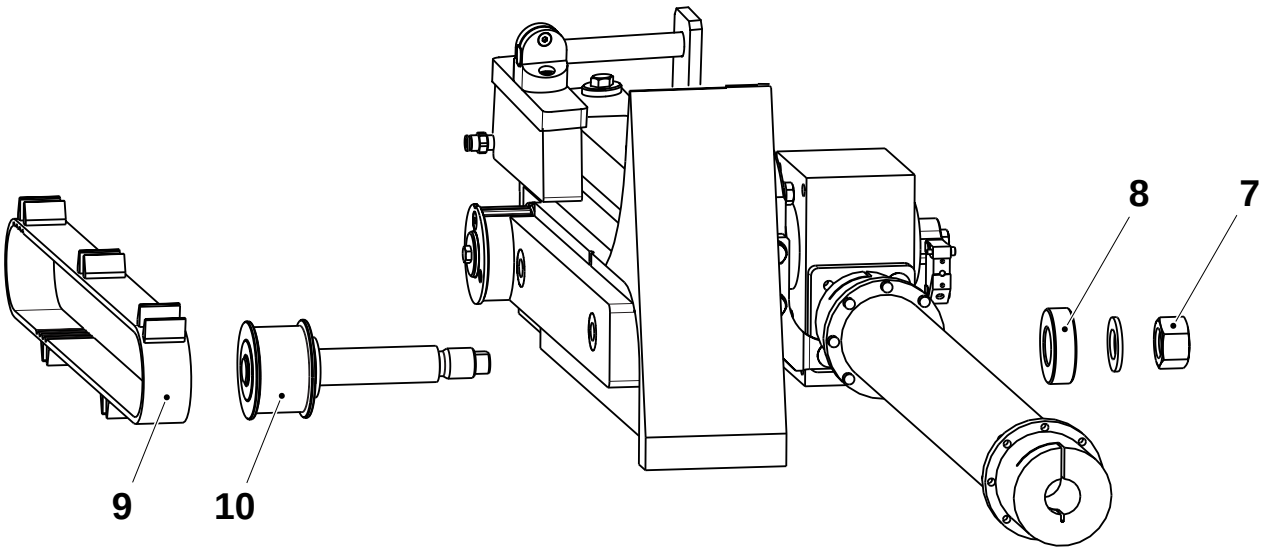

7 Nut
8 Washer
9 Belt
10 Pulley/Shaft

(Cont'd)

(Cont'd)

e) Pull out and change the seal (11).

f) Remove the retaining ring (12) and the pulley (14).

g) Remove and change the ball bearings (13) and (15) and the seal (16).

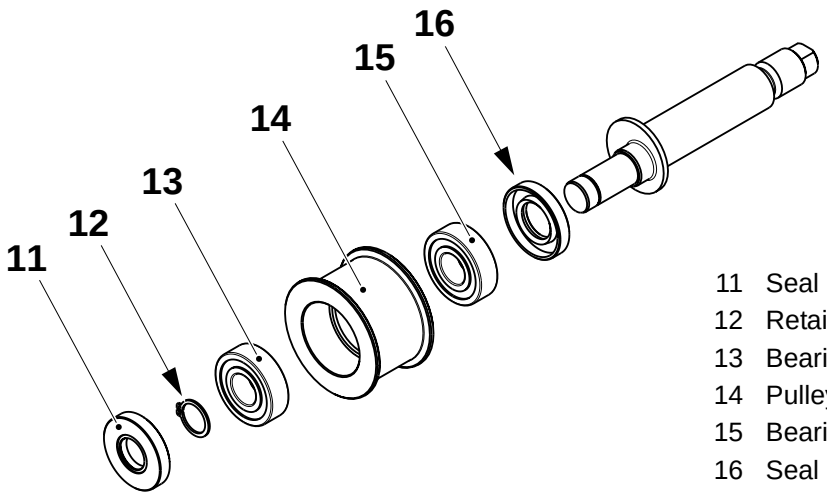

11 Seal
12 Retaining ring
13 Bearing
14 Pulley
15 Bearing
16 Seal

h) Remove the screw (17), pulley (18) and the key (19).

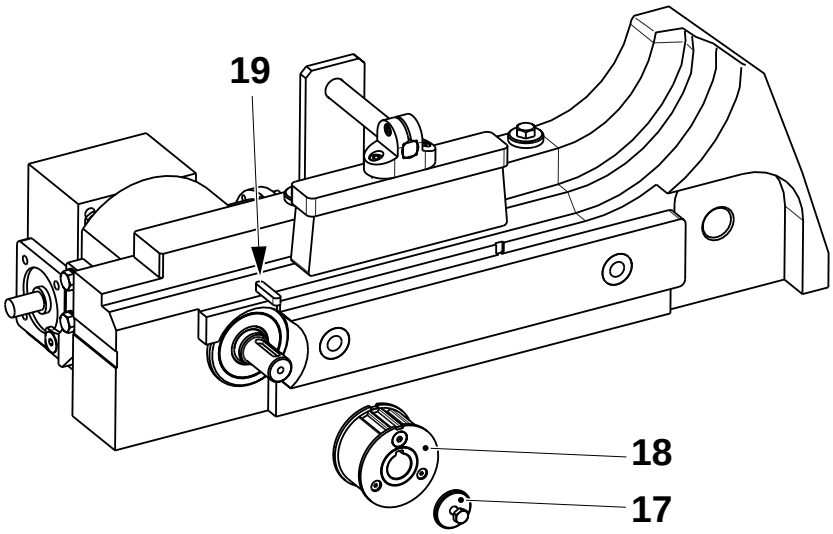

17 Screw
18 Pulley
19 Key

(Cont'd)

(Cont'd)

i) Remove the bracket with the switch (20) from the side of the gearbox (21).

j) Remove the screw (22) and cam (23).

k) Remove the screws (24) and (25) and remove the intermediate shafts (26) and (27).

Note! Before removing the couplings take note of the distance between the end of the gearbox and the end of the couplings. This will ensure the intermediate shaft is centralized between the two gearboxes when assembling.

l) Loosen the screws (28) and (29) and remove the couplings (30) and (31).

m) At both sides of the gear box, remove the screw (32) securing the gearbox (21) to the plate (33).

n) Pull off the gearbox (21).

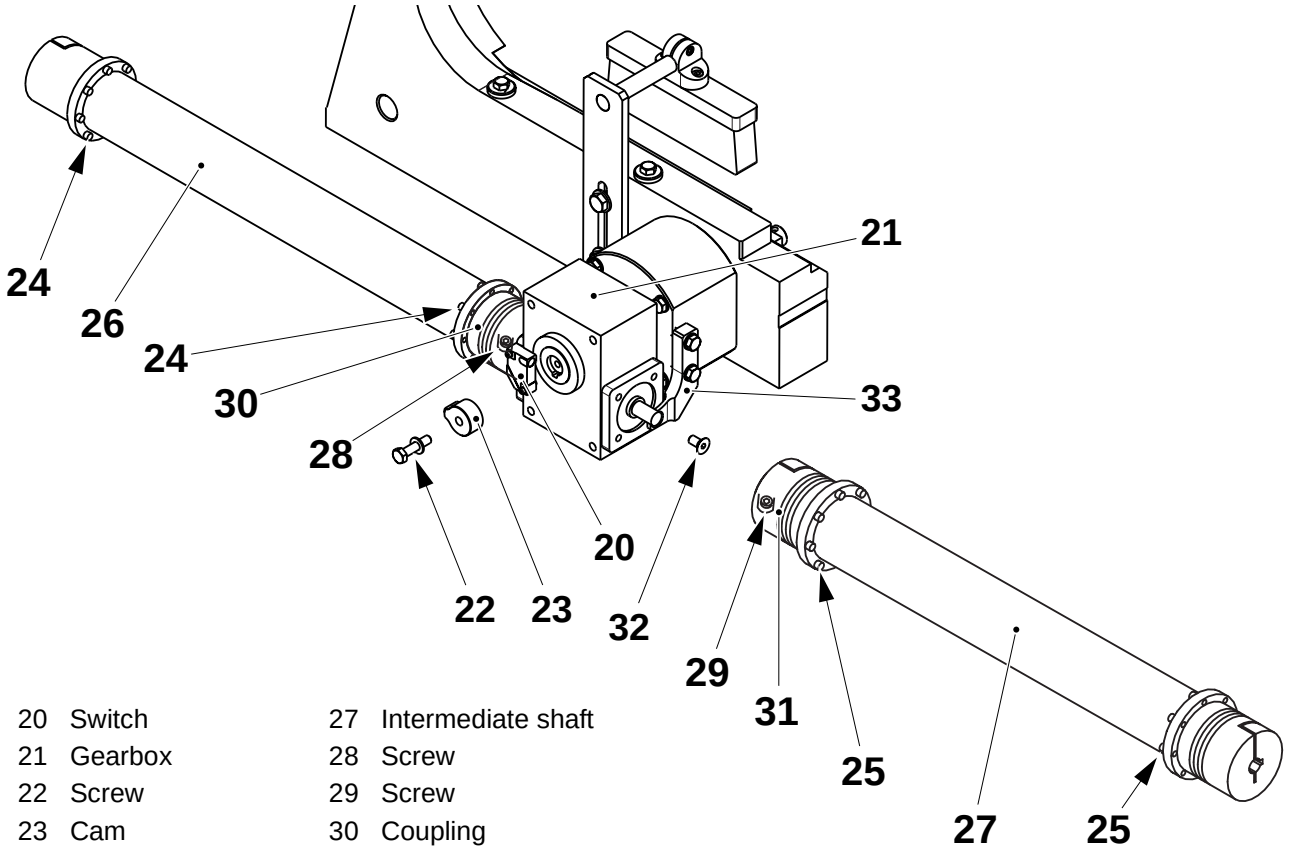

20	Switch	27	Intermediate shaft
21	Gearbox	28	Screw
22	Screw	29	Screw
23	Cam	30	Coupling
24	Screw	31	Coupling
25	Screw	32	Screw
26	Intermediate shaft	33	Plate

(Cont'd)

(Cont'd)

o) Remove the keys (34).

p) Remove the screws (35) and pull out the holder (36).

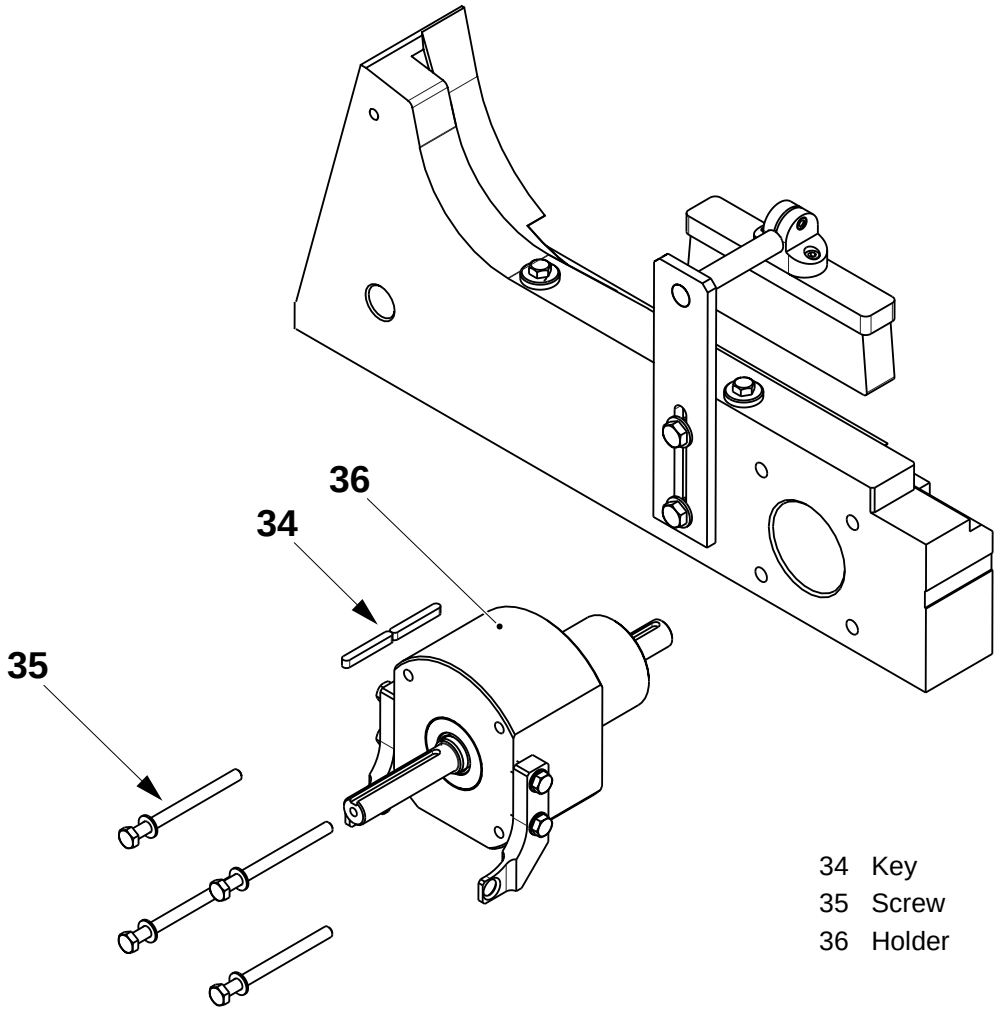

34 Key
35 Screw
36 Holder

(Cont'd)

(Cont'd)

q) Remove and change the seals (37) and (38).
r) Remove the retaining rings (39) and (40).
s) Pull out the shaft (41) in the direction shown.
t) Remove the retaining ring (42).
u) Remove and change the bearing (43).
v) Remove and change the bearing (44).

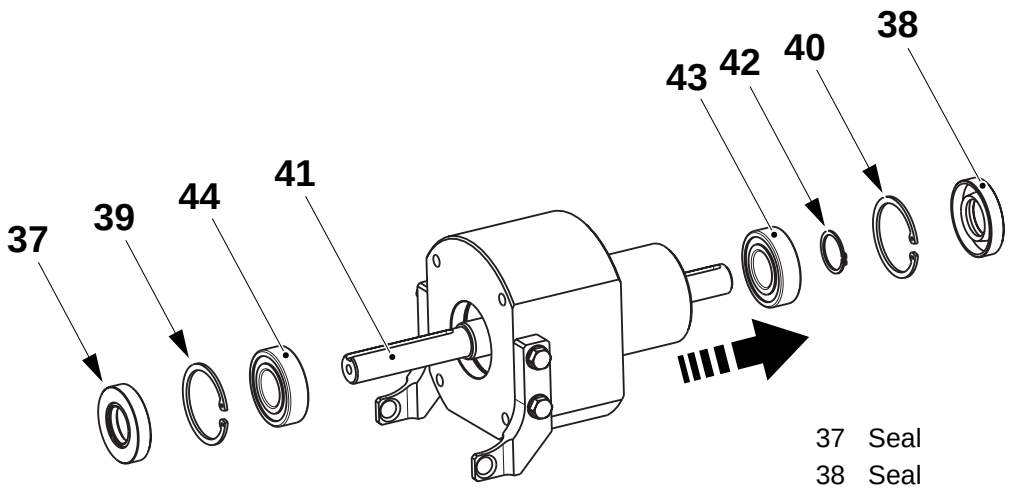

37 Seal
38 Seal
39 Retaining ring
40 Retaining ring
41 Shaft
42 Retaining ring
43 Bearing
44 Bearing

(Cont'd)

(Cont'd)

w) Assemble in the reverse order. When fitting the belt, align the tooth (45) with the notch (46).

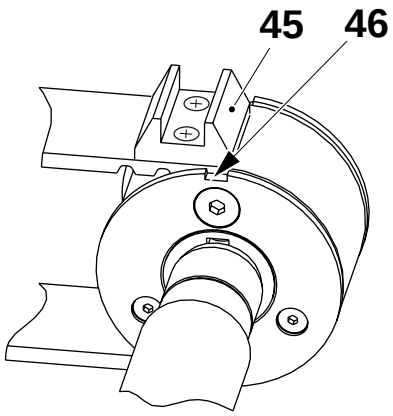

45 Tooth
46 Notch

x) Set the belt tension by loosening the nut (47) and then tightening the eccentric shaft (48) to 25 Nm with a torque wrench.

y) Tighten the nut (47).

z) Synchronize the conveyor, see 5-1 Final Folder Module - Synchronization, from step f).

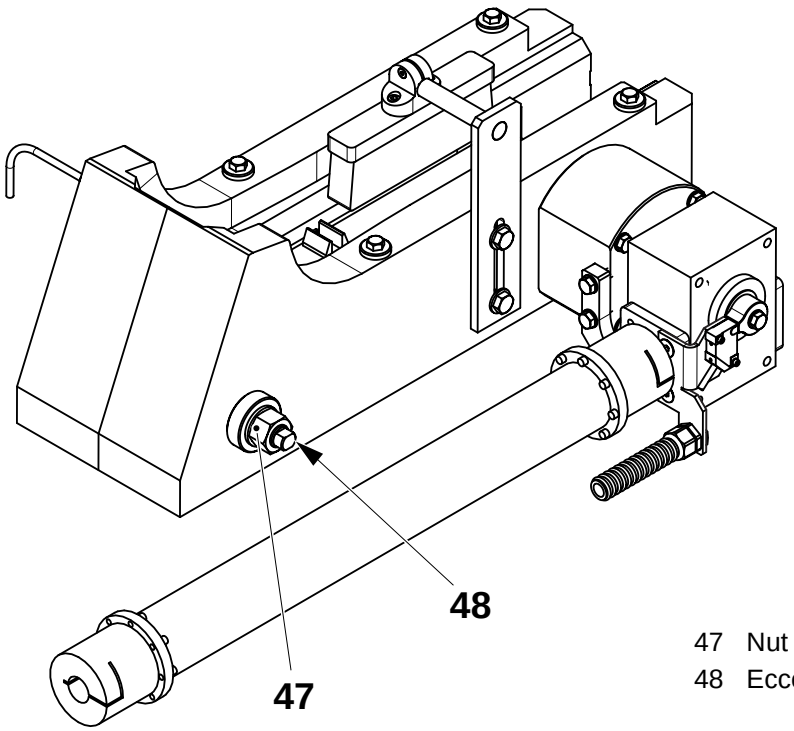

47 Nut
48 Eccentric shaft

5.1-5 Conveyor - Set Brush

SPC Reference	577111-0300

a) Loosen the screws (1) and set distance **A** between the top of the brush (2) and the top of the side plate (3).

b) Tighten the screws (1).

c) Place a package on the conveyor and make sure the brush slightly brakes it. Adjust as required.

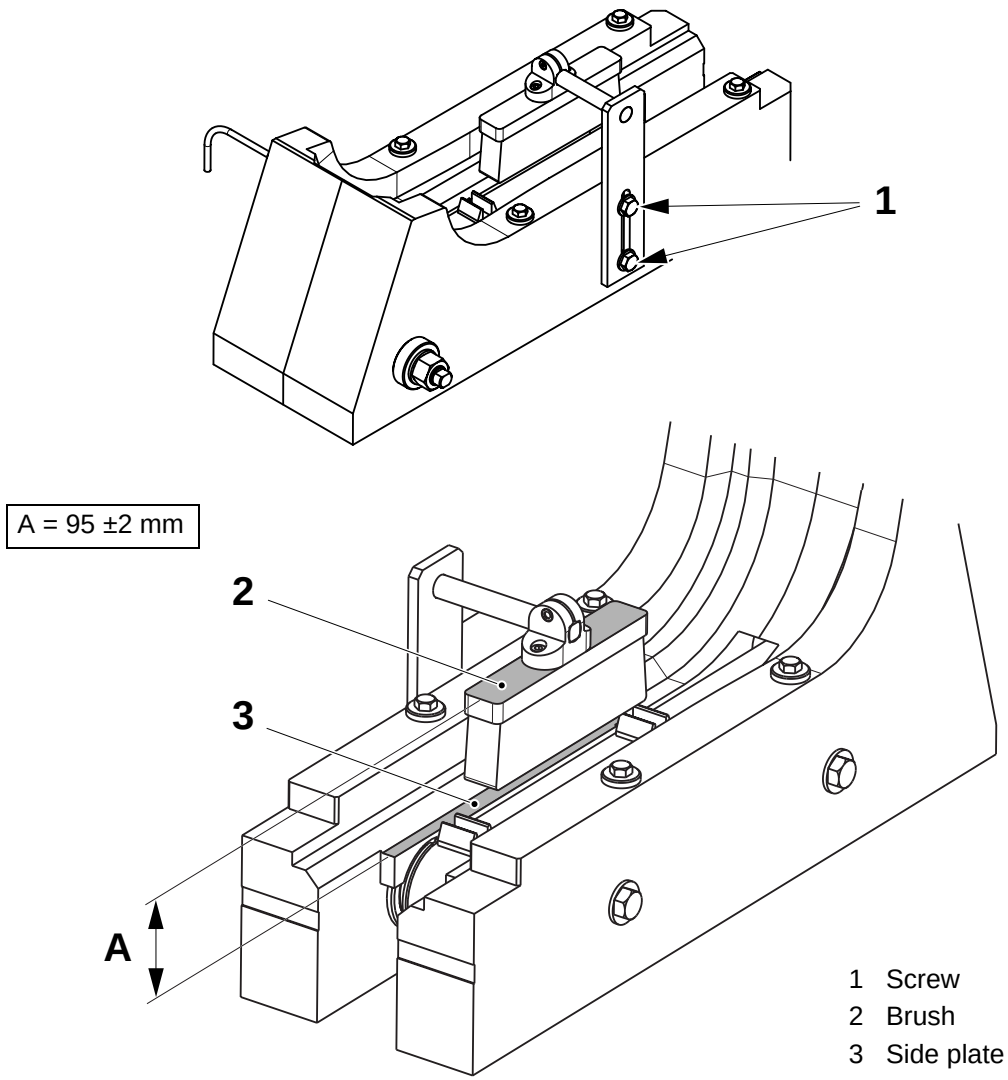

5.2 Final Folder

SPC Reference	577112-0400

5.2.1 Station Chain

5.2.1-1 Station Chain - Change

Consumables - Locking fluid	TP No. 90157-16
SPC Reference	1517715-0100

WARNING
Risk of burns!

a) Lift the swing frame.
b) Remove the screws (1) and the guide (2).
c) Repeat at the other side.

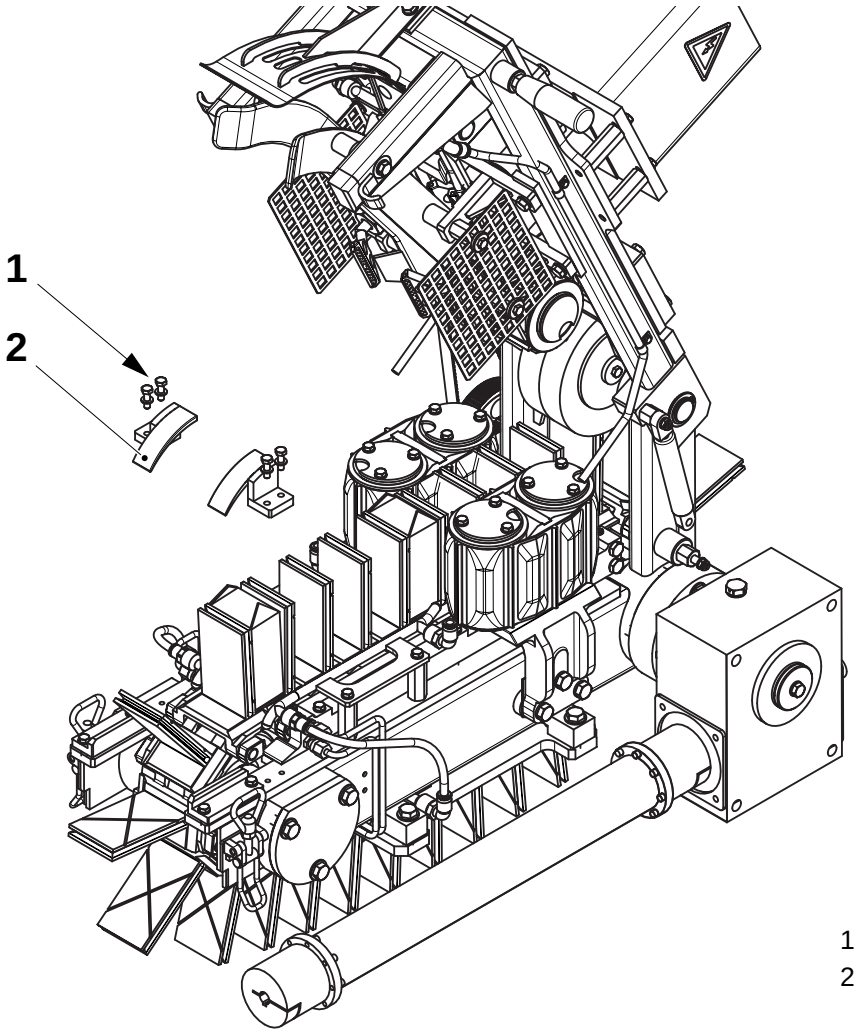

1 Screw
2 Guide

(Cont'd)

(Cont'd)

WARNING
Risk of cutting!
Be careful not to trap your fingers when removing the chain.

CAUTION
The chain is heavy, do not allow it to drop onto the waste conveyor.

d) Rotate the shaft (3) until a link in the station chain can be accessed at the infeed end of the folder.

e) At the link, remove the screws (4) and (5) and the slider (6).

f) Push out the shaft (7).

g) Remove and change the station chain. Do this by rotating the shaft (3).

Note! Apply locking fluid, see table, to screws (3) before assembly.

h) Assemble in the reverse order.

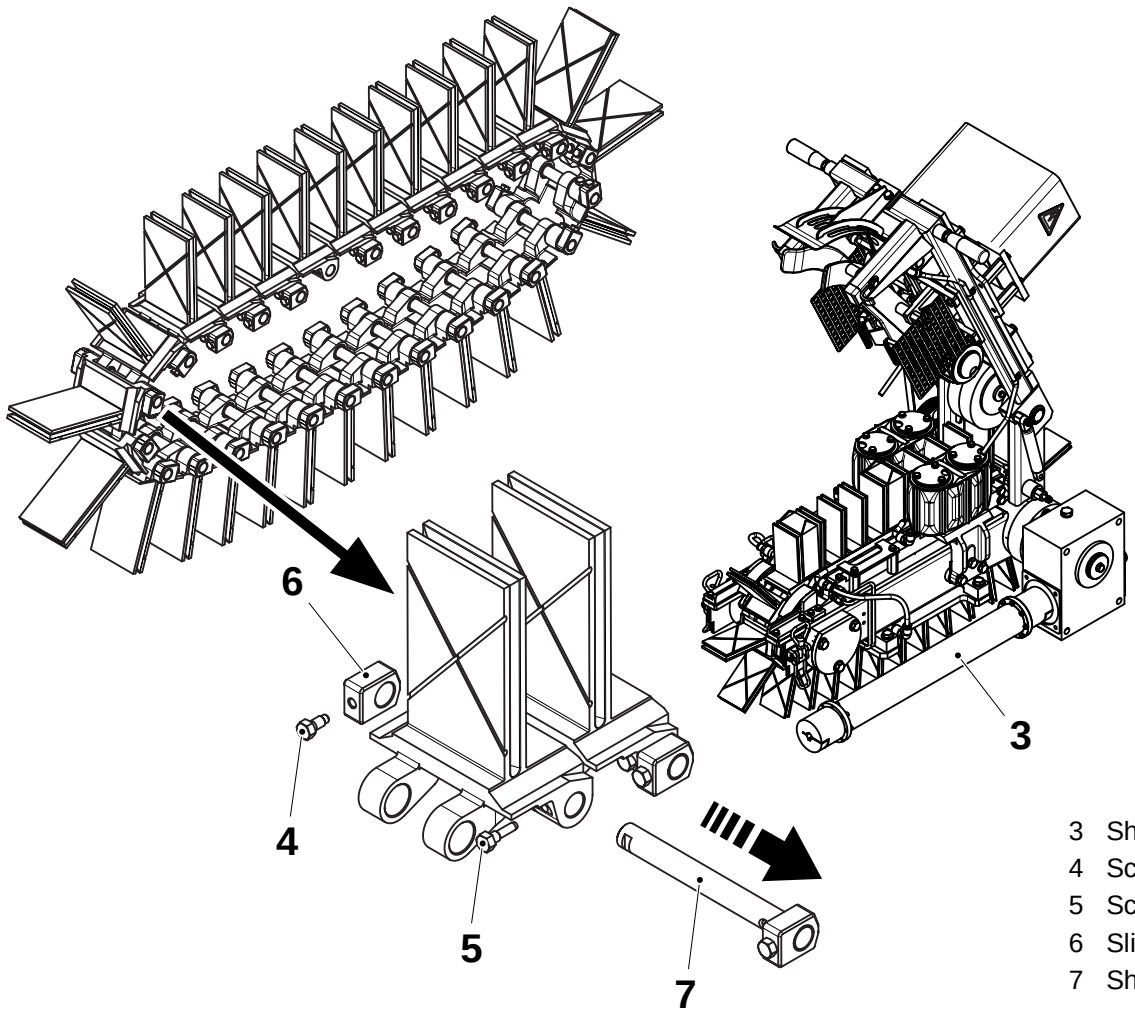

3 Shaft
4 Screw
5 Screw
6 Slider
7 Shaft

5.2.1-2 Station Chain - Overhaul

Consumables - Locking fluid	TP No. 90157-16
SPC Reference	1517715-0100

a) Remove the chain, see 5.2.1-1 Station Chain - Change.

b) Remove the screws (1) and (2).

c) Push out the shaft (3) and change:
   – the shaft (3),
   – the sliders (4).

Note! Apply locking fluid, see table, to screws (2) before assembly.

d) Assemble in the reverse order.

e) Repeat on the other links.

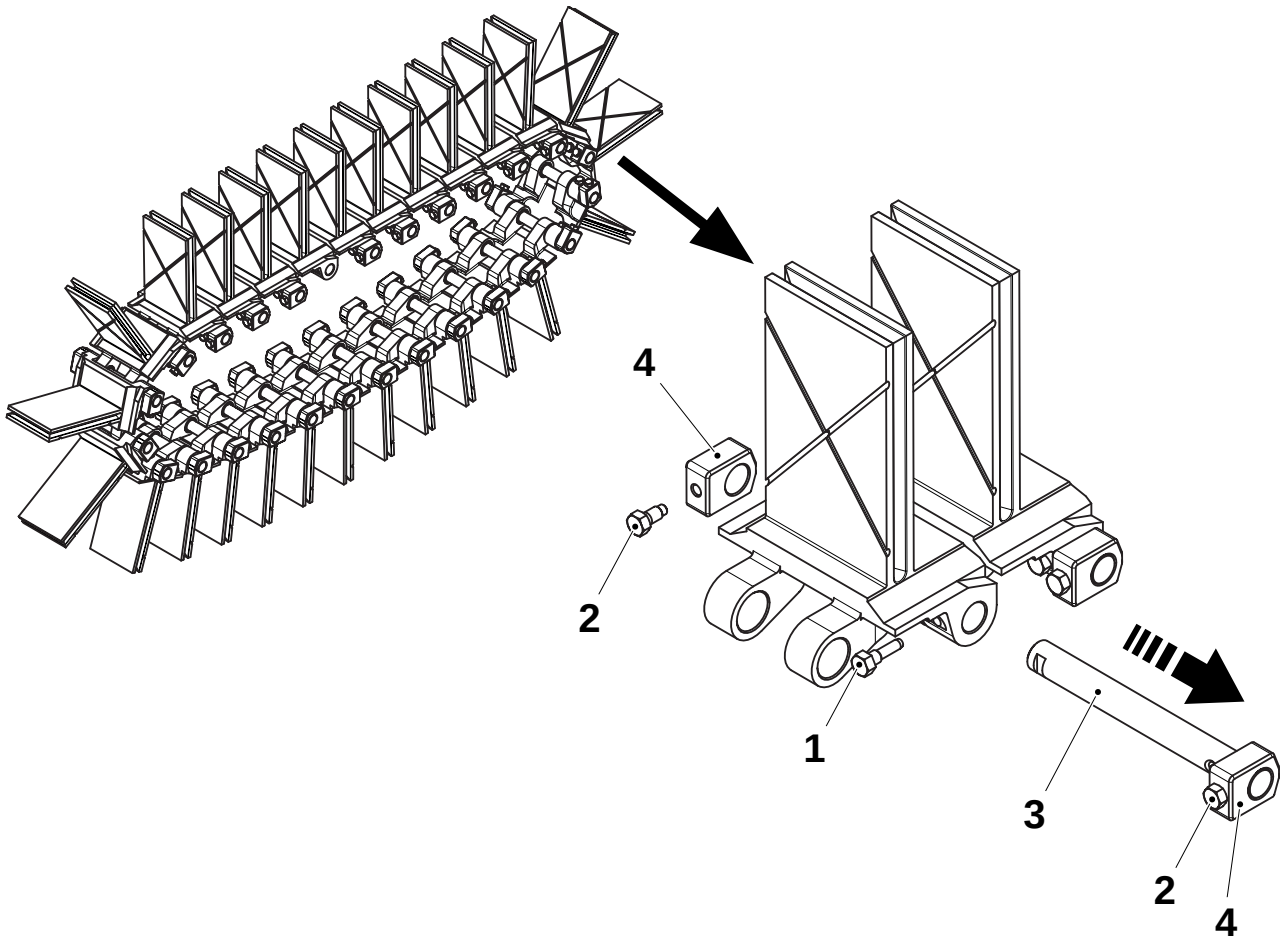

1 Screw
2 Screw
3 Shaft
4 Slider

5.2.1-3 Station Chain - Turn Shafts

Consumables - Locking fluid	TP No. 90157-16
SPC Reference	1517715-0100

a) Remove the screw (1).

b) At both sides of the chain, loosen the screws (2) and pull off the sliders (4)

c) Turn the shaft (3) through 180°.

Note! Apply locking fluid, see table, to screws (2) before assembly.

d) Fit the sliders, tighten the screws (2) and insert and tighten the screw (1).

e) Repeat for the other shafts.

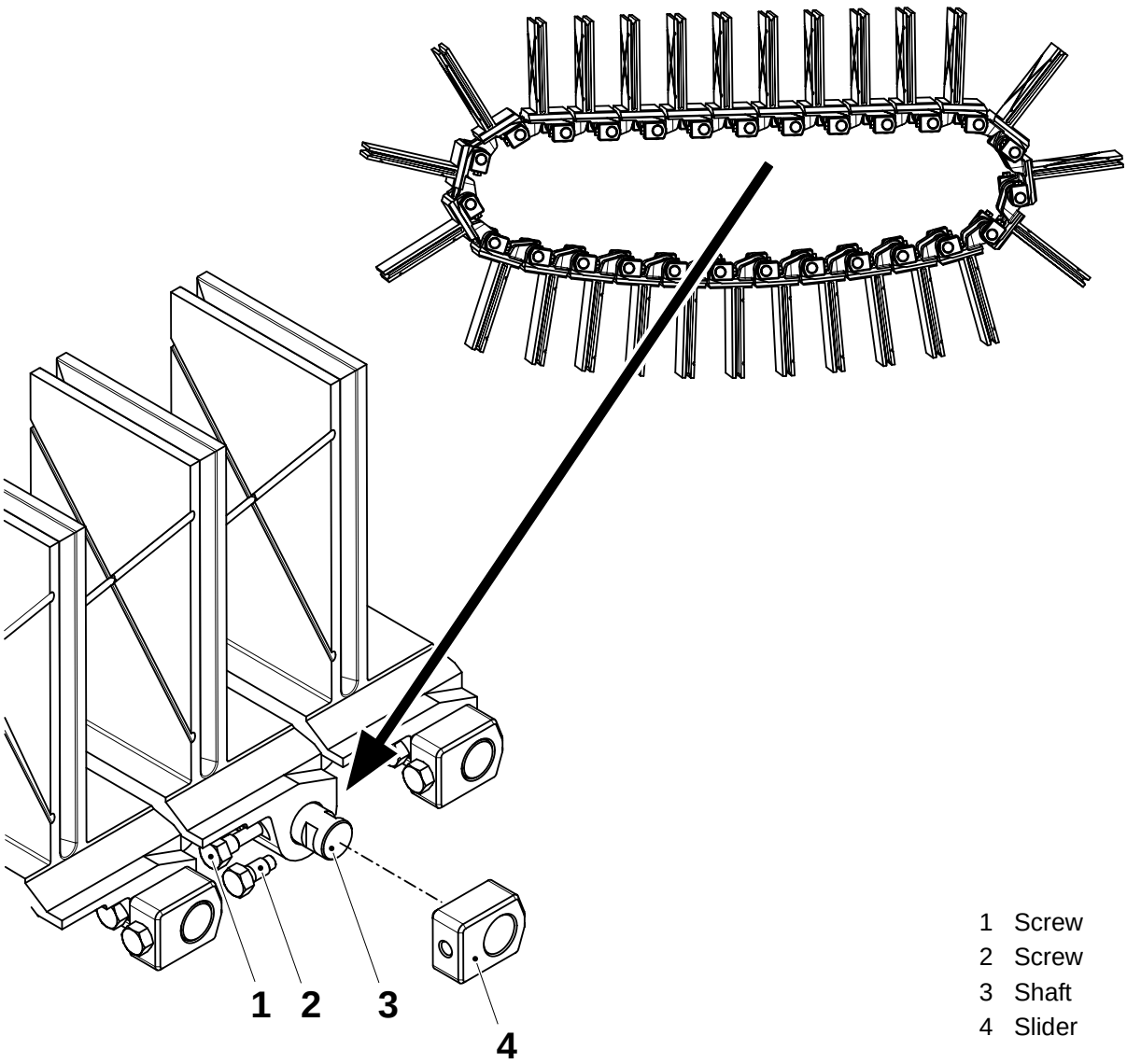

1 Screw
2 Screw
3 Shaft
4 Slider

5.2.1-4 Station Chain - Check Sliders

Consumables - Locking fluid	TP No. 90157-16
SPC Reference	1517715-0100

Check the surface (1) of the sliders (2) for wear. If required change the sliders as follow:

Note! Apply locking fluid, see table, to screws (3) before assembly.

Remove the screws (3) and change the sliders (2).

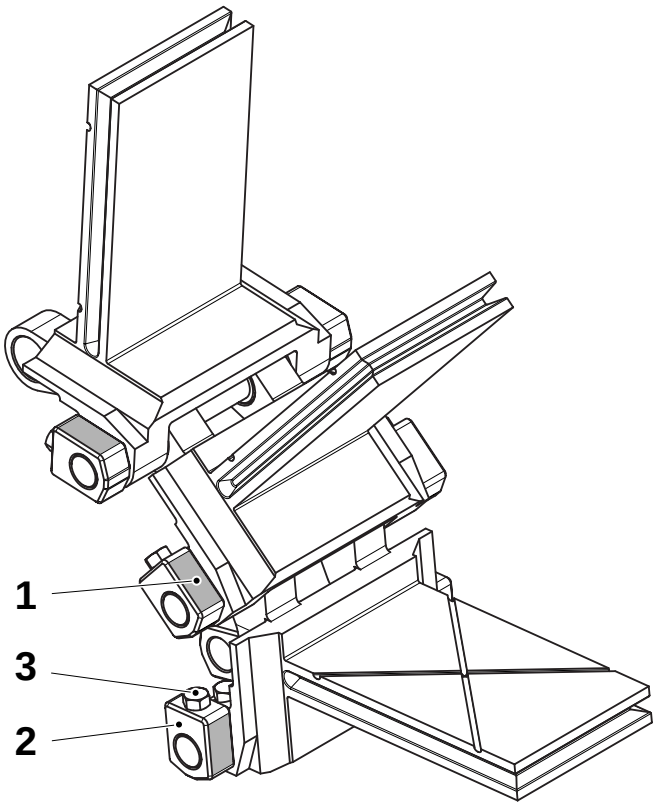

1 Surface
2 Slider
3 Screw

5.2.2 Swing Frame

5.2.2-1 Swing Frame - Check Pulley

SPC Reference	1517740-0100

Check the pulley (1) rotates freely, if not:

a) Remove the screws (2) and lift out the pulley bracket (3).

b) Remove the screw (4) and pull out the pin (5).

c) Change the bushings (6) and if necessary the pulley (1).

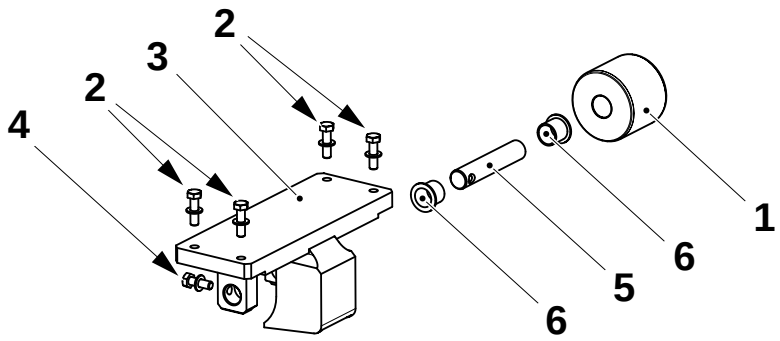

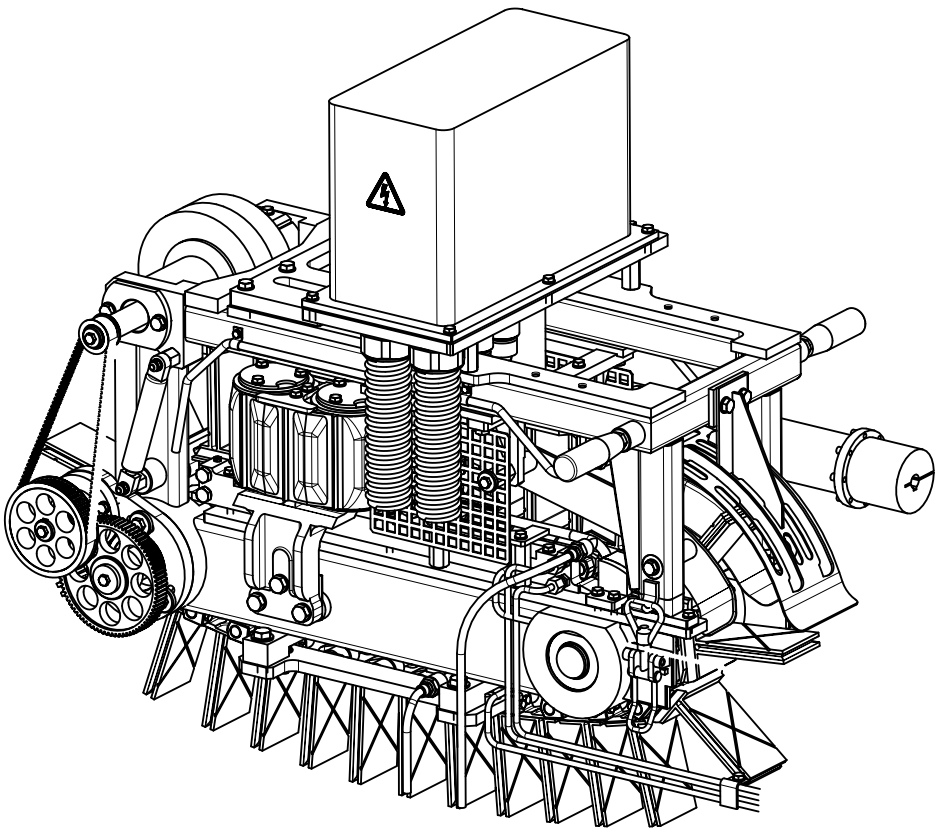

1 Pulley
2 Screw
3 Bracket
4 Screw
5 Pin
6 Bushing

5.2.3 Chain Support

5.2.3-1 Chain Support - Check Condition

SPC Reference	1517735-0100

Check the internal surfaces of the chain guide (1) at both sides of the folder for wear or damage. Change as required, see 5.2.3-3 Chain Support - Change Chain Guide.

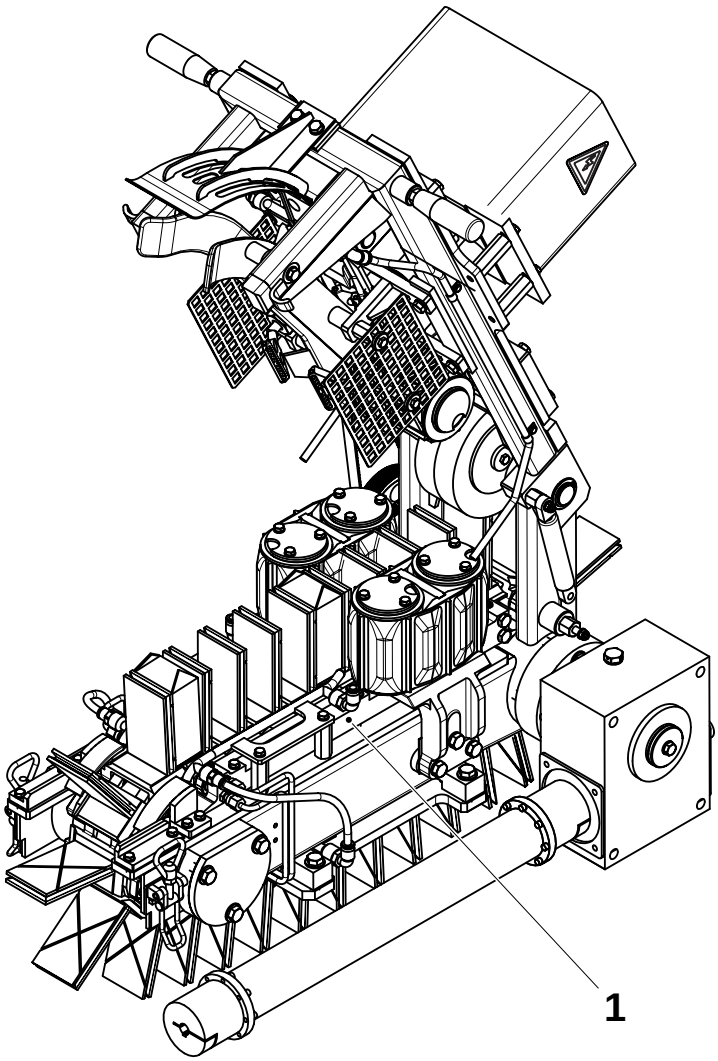

1 Chain guide

5.2.3-2 Chain Support - Overhaul

SPC Reference	1517735-0100

Close the water valves (1).

Remove the chain guides, see 5.2.3-3 Chain Support - Change Chain Guide.

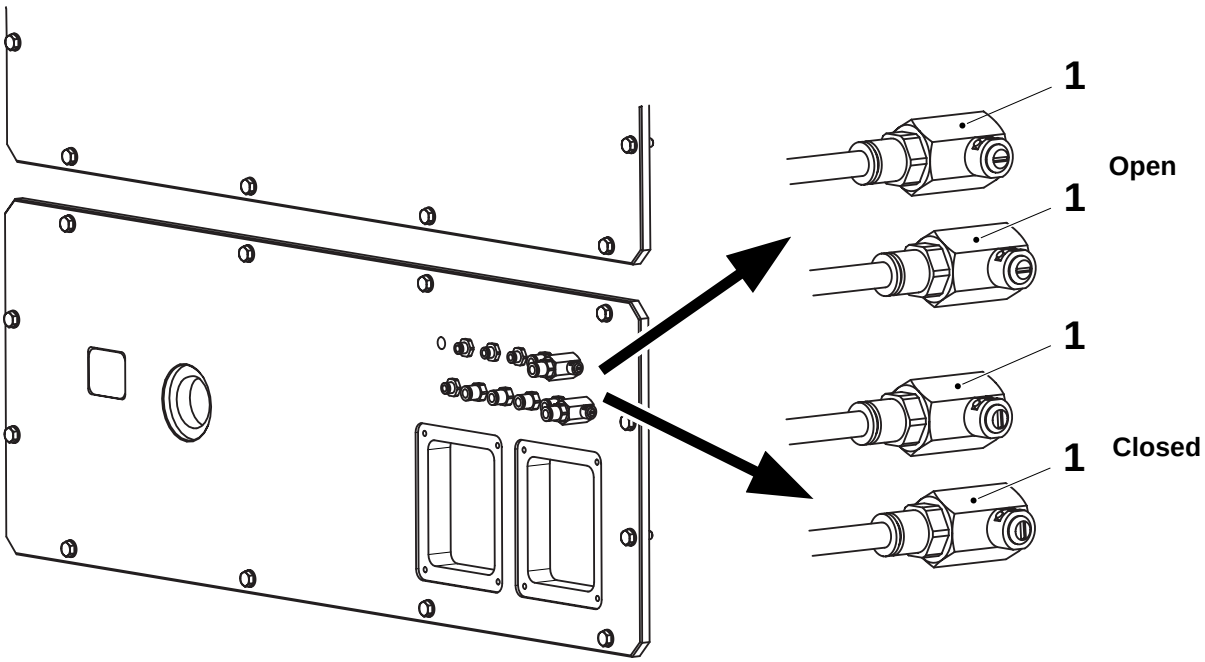

1 Water valve

(Cont'd)

(Cont'd)

Brush Drive and Pivot

a) Remove the screws (1) and (2) and the pulleys (3) and (4) together with the belt (5). Change the belt.

b) Remove the gear (6) and key (7).

c) Remove the key (8).

d) Remove the screw (9) and gear (10).

e) Remove the key (11).

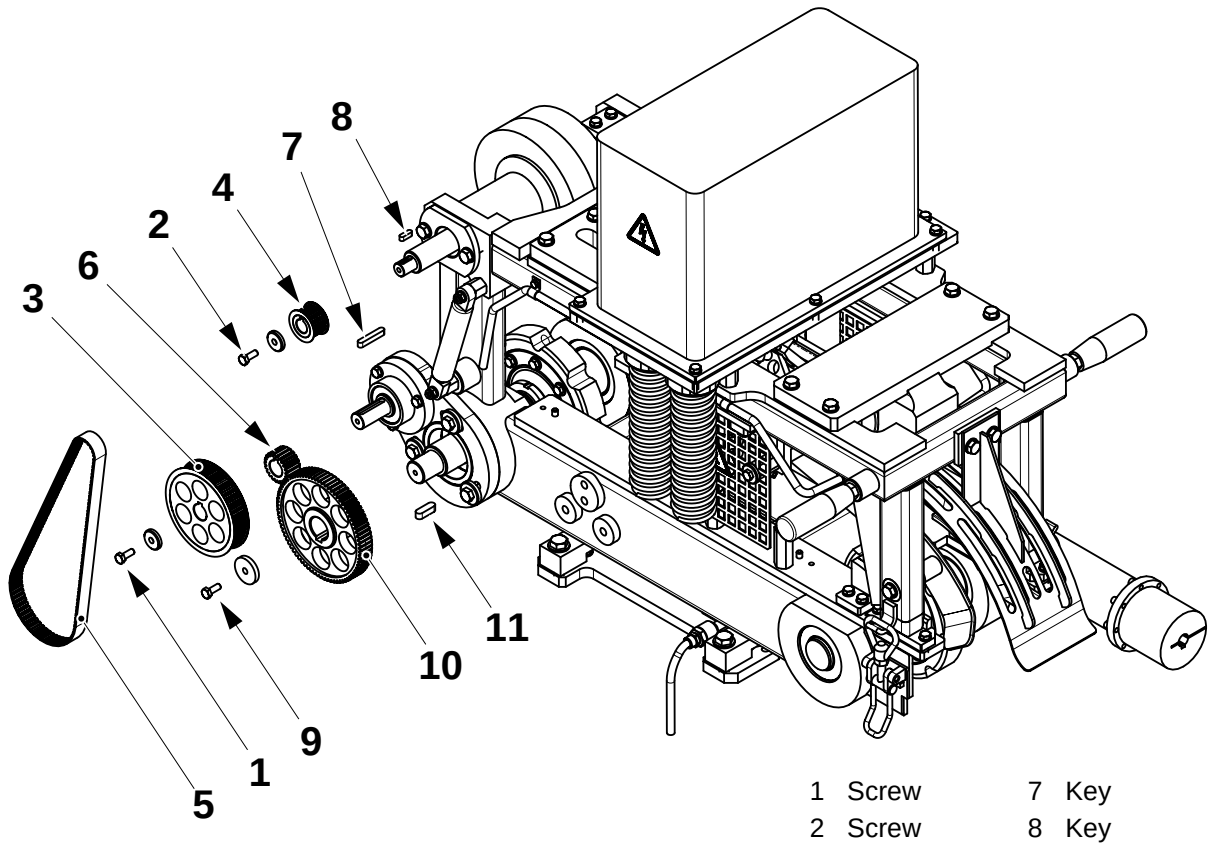

1	Screw	7	Key
2	Screw	8	Key
3	Pulley	9	Screw
4	Pulley	10	Gear
5	Belt	11	Key
6	Gear		

(Cont'd)

(Cont'd)

f) Remove the screw and washer (12).
g) Change the brushes (13) and (14).
h) Remove the keys (15).
i) Remove the screws (16) and flange (17)
j) Remove and change the O-ring (18).
k) Remove and change the seal (19).
l) Remove the retaining rings (20) and (21).

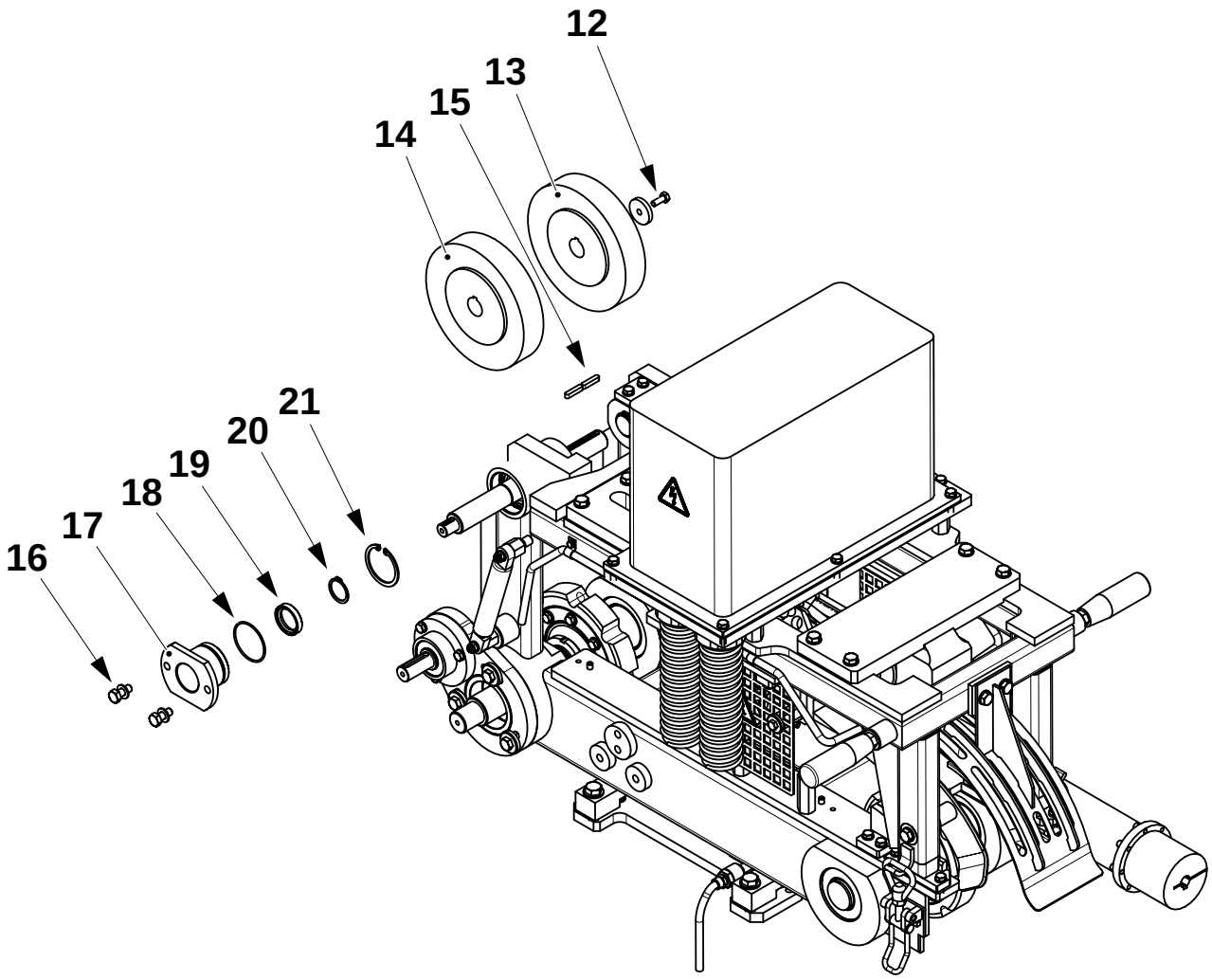

12	Screw	16	Screw	20	Retaining ring
13	Brush	17	Flange	21	Retaining ring
14	Brush	18	O-ring		
15	Key	19	Seal		

(Cont'd)

(Cont'd)

m) Pull out the shaft (22) and change the bearing (23).

n) Change the seal (24).

o) Remove the seal (25).

p) Remove and change the bearing (26).

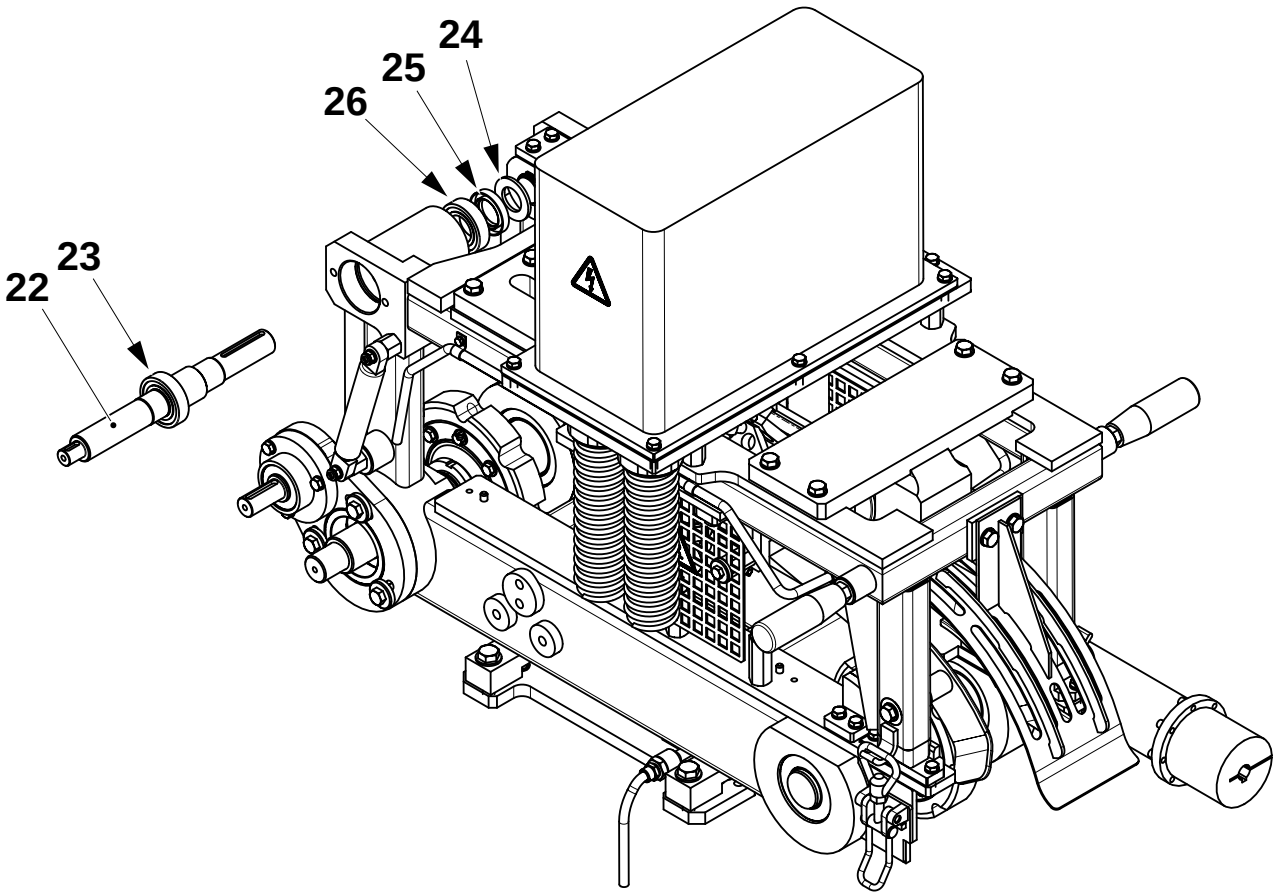

22 Shaft
23 Bearing
24 Seal
25 Seal ring
26 Bearing

(Cont'd)

(Cont'd)

q) Remove the screw (27).
r) Remove the retaining rings (28) and (29).
s) Remove the ring (30).
t) Remove the shaft (31).

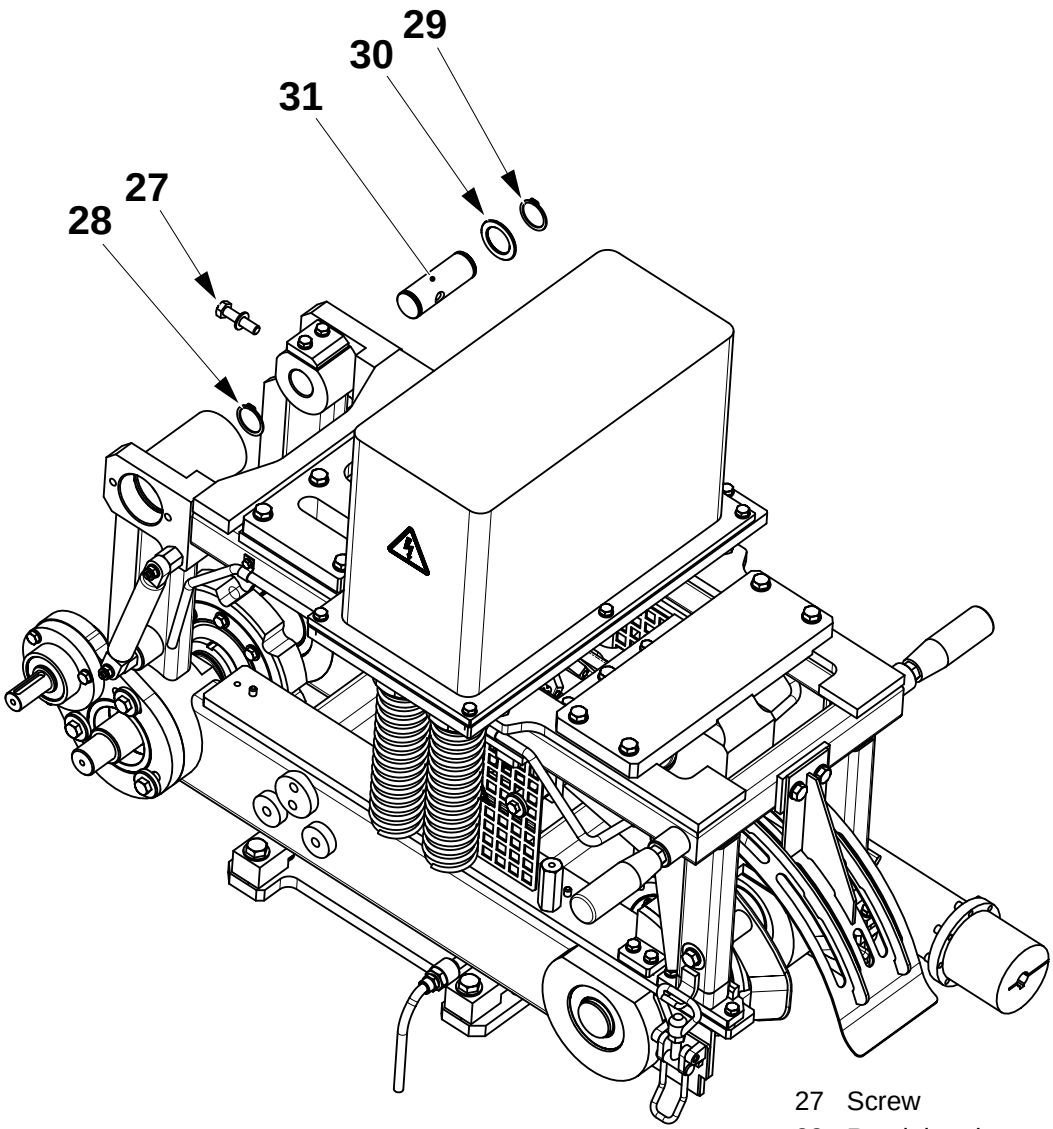

27 Screw
28 Retaining ring
29 Retaining ring
30 Ring
31 Shaft

(Cont'd)

(Cont'd)

u) Remove and change the bush (32).

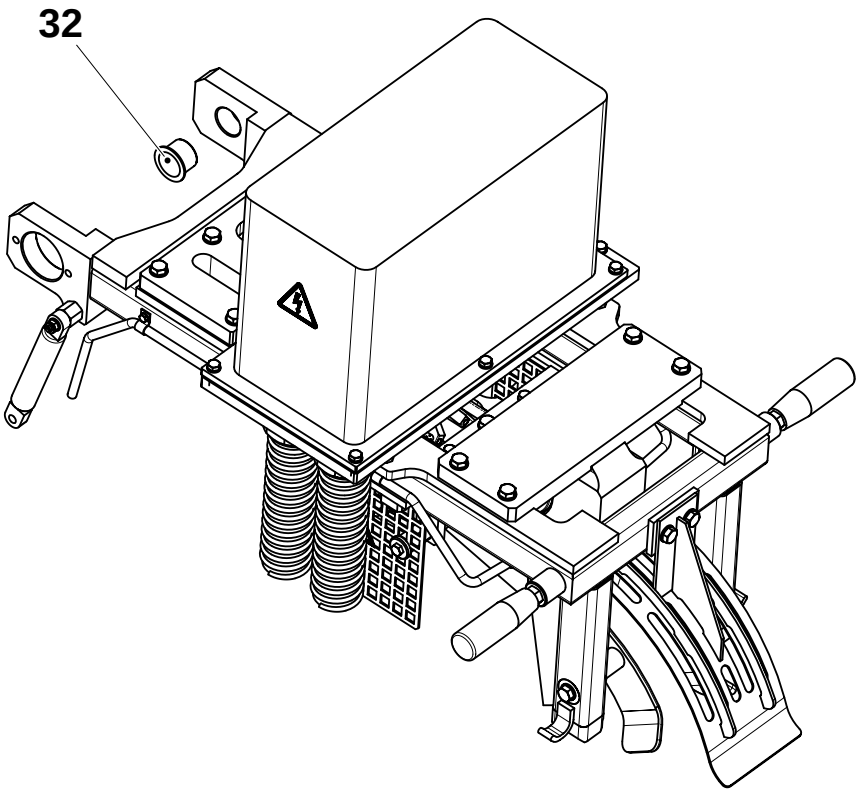

32 Bush

(Cont'd)

(Cont'd)

Chain Drive Outfeed End

a) Remove the screw (1) and washer (2).

b) Remove the screws (3) securing the gearbox (4) to the plate (5).

c) Pull off the gearbox (4).

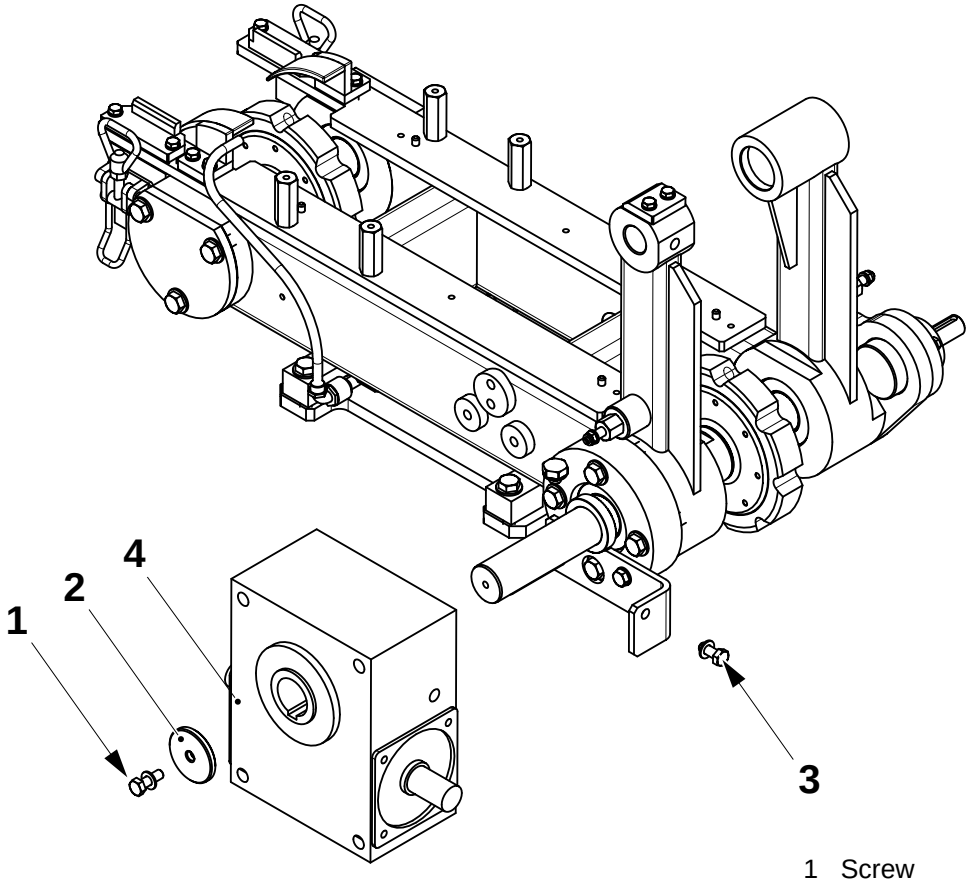

1 Screw
2 Washer
3 Screw
4 Gearbox

(Cont'd)

(Cont'd)

d) Remove the screws (5) and bracket (6).
e) Remove the spacer (7).
f) Remove the screws (8) and the housing (9).
g) Remove the and change the seal ring (10).
h) Remove and change the O-ring (11).
i) Remove the key (12).

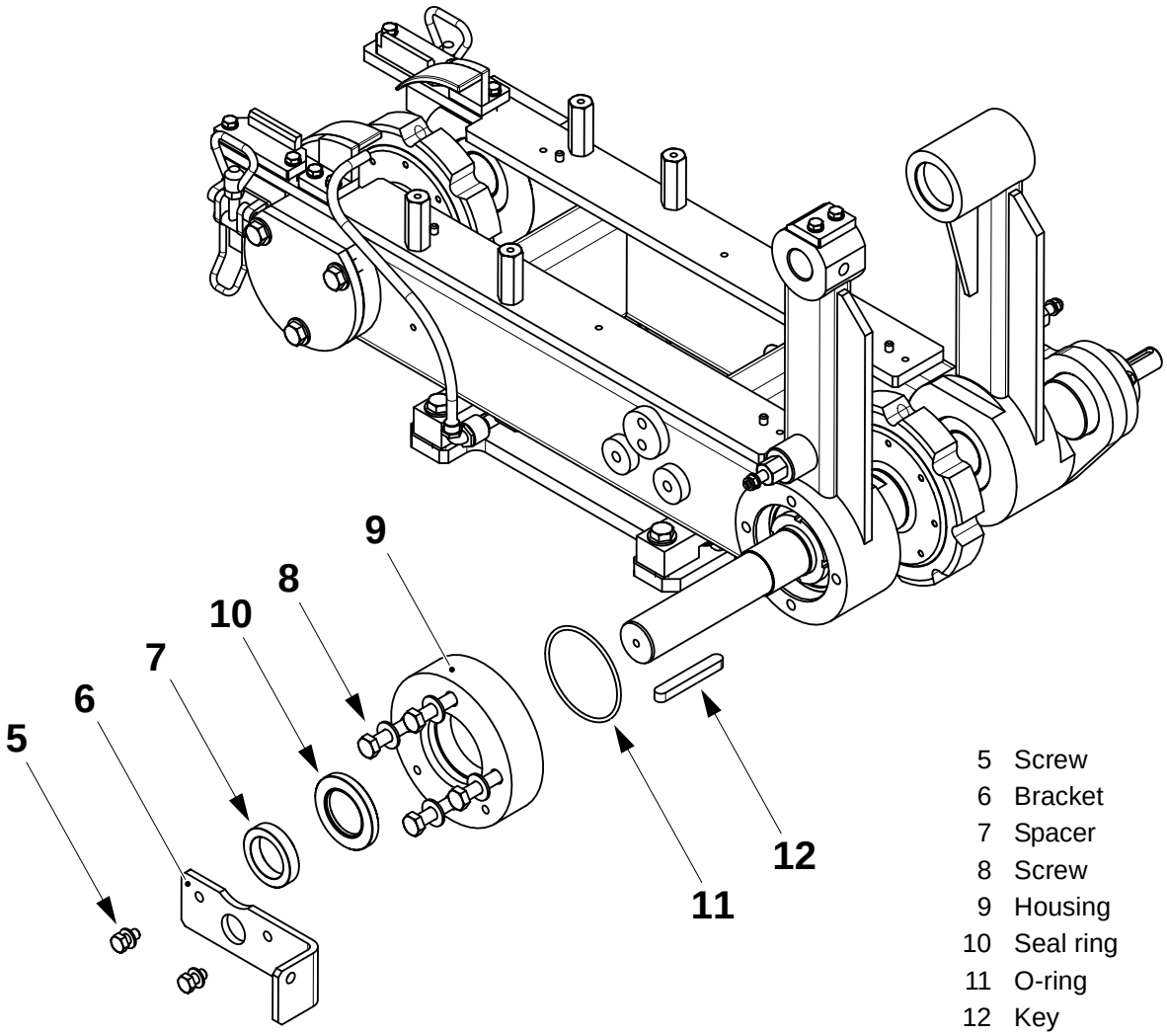

5 Screw
6 Bracket
7 Spacer
8 Screw
9 Housing
10 Seal ring
11 O-ring
12 Key

(Cont'd)

(Cont'd)

j) Remove the nut (13).
k) Pull out the shaft (14) and remove the sprocket (15).
l) Remove the key (16) from the shaft (14).
m) Remove the nut (17).
n) Remove and change the bearing (18).
o) Remove and change the seal (19).

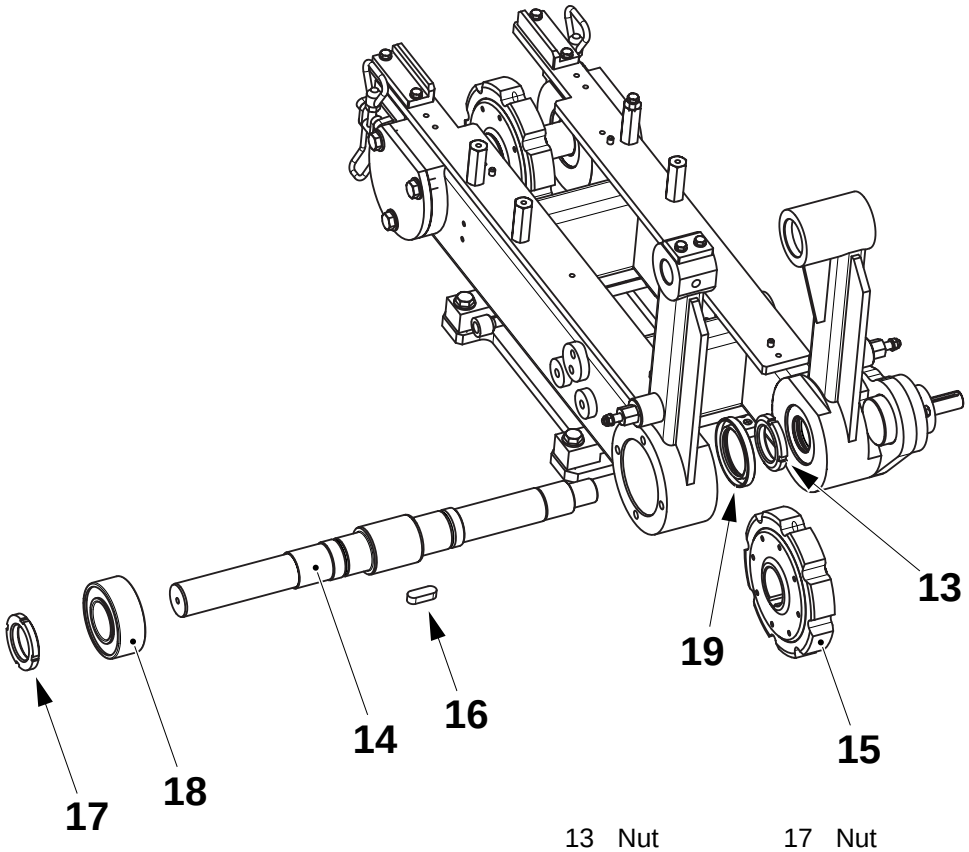

13	Nut	17	Nut
14	Shaft	18	Bearing
15	Sprocket	19	Seal
16	Key		

(Cont'd)

(Cont'd)

p) Remove the screws (20) and the plate (21).
q) Remove and change the seal (22).
r) Remove and change the seal (23).
s) Remove the retaining ring (24).
t) Pull out the shaft (25).
u) Remove and change the bearing (26).
v) Remove the retaining ring (27).
w) Remove and change the bearing (28).
x) Remove the spacer (29).

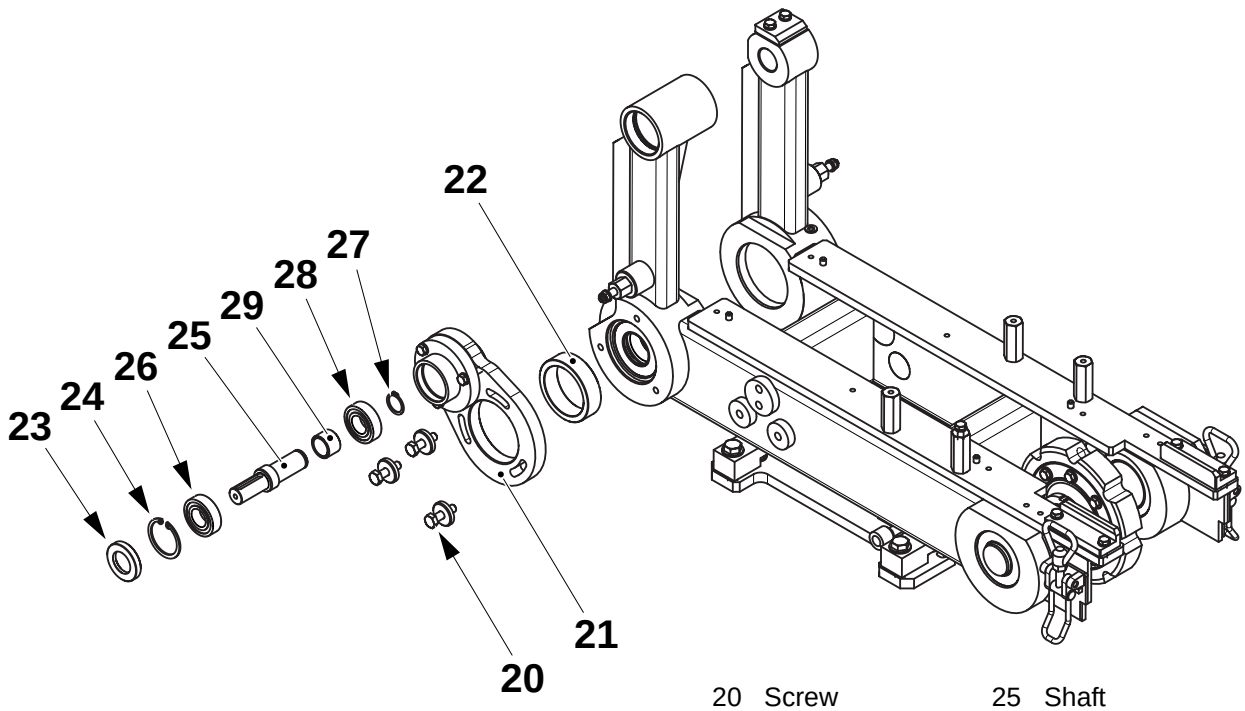

20	Screw	25	Shaft
21	Plate	26	Bearing
22	Seal ring	27	Retaining ring
23	Seal ring	28	Bearing
24	Retaining ring	29	Spacer

(Cont'd)

(Cont'd)

y) Remove and change the seals (30) and (33).
z) Remove the retaining rings (31) and (34).
aa) Remove and change the bearings (32) and (35).
ab) Remove the spacer (36).

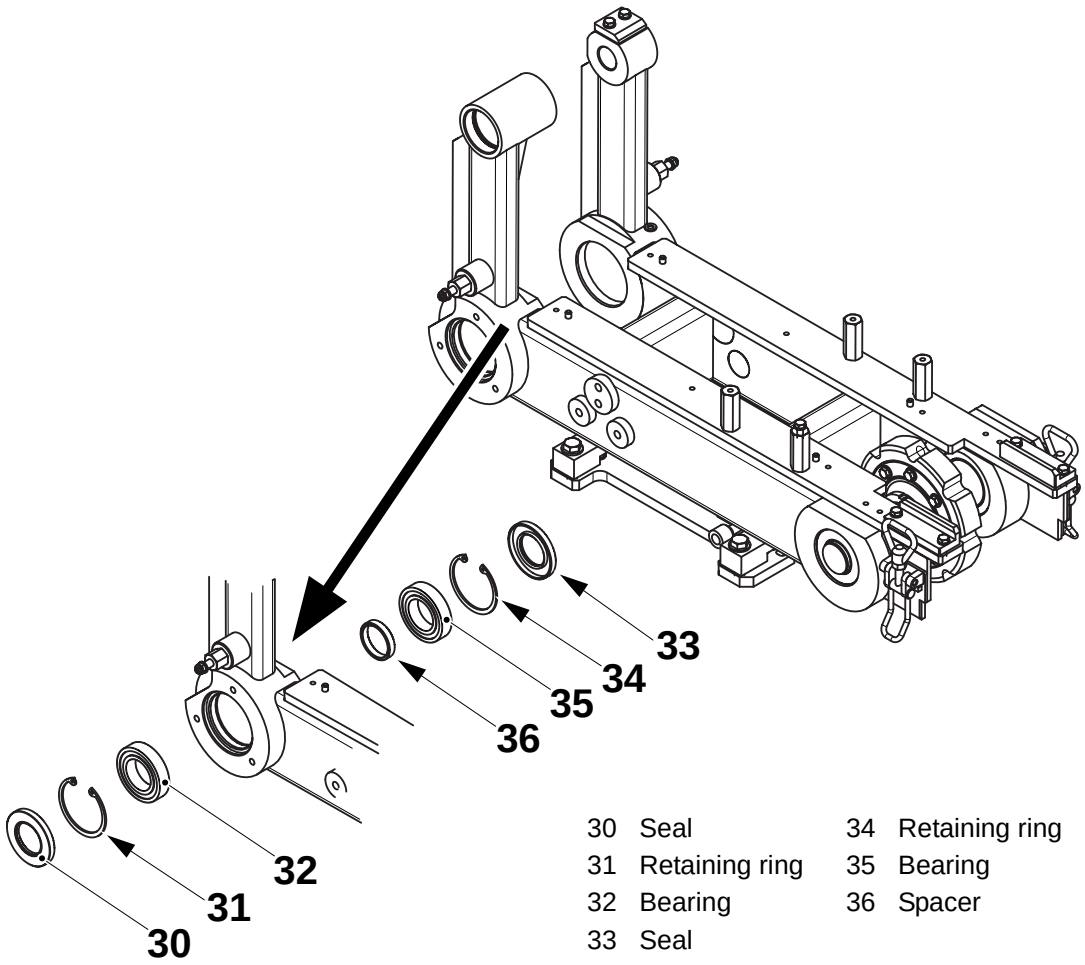

30	Seal	34	Retaining ring
31	Retaining ring	35	Bearing
32	Bearing	36	Spacer
33	Seal		

(Cont'd)

(Cont'd)

Chain Drive Infeed End

a) Remove the screws (1) and the cover (2).
b) Remove and change the O-ring (3).
c) Remove the nut (4).
d) Remove the shaft (5) and the sprocket (6).
e) Remove the key (7) from the shaft (5).
f) Remove the nut (8).
g) Remove and change the bearing (9).
h) Remove and change the seal (10).

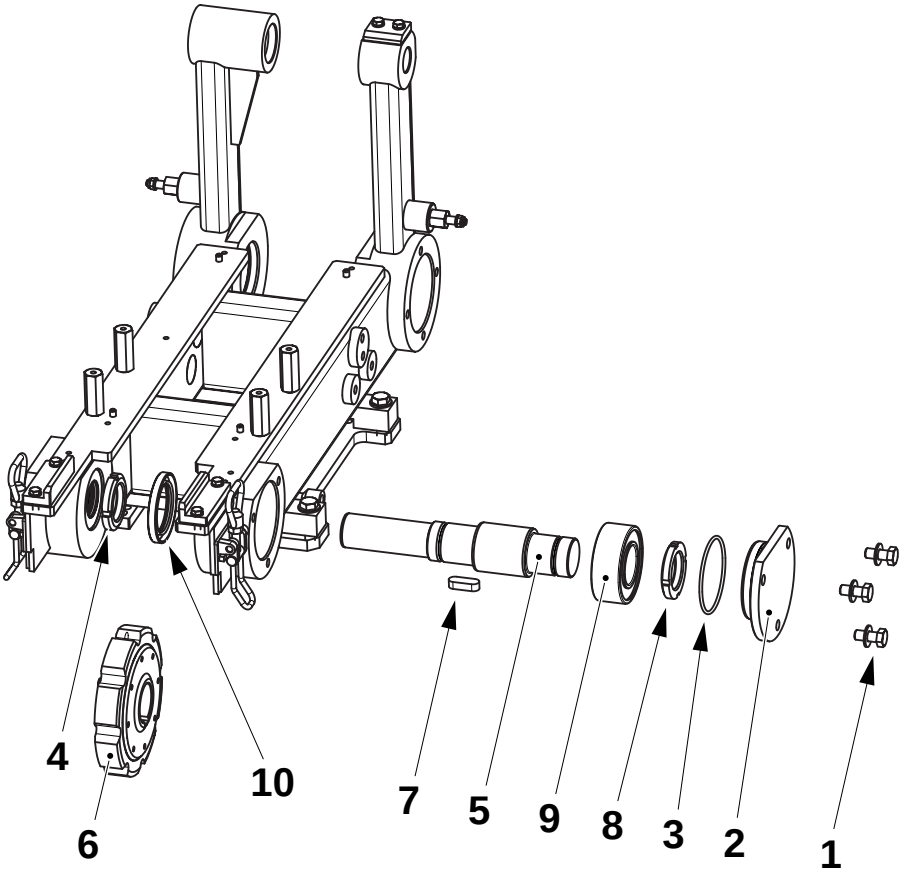

1 Screw	4 Nut	7 Key
2 Cover	5 Shaft	8 Nut
3 O-ring	6 Sprocket	9 Bearing
		10 Seal

(Cont'd)

(Cont'd)

i) Remove and change the seals (11) and (15).

j) Remove the retaining rings (12) and (16).

k) Remove and change the bearings (13) and (17).

l) Remove the spacer (14).

m) Assemble in the reverse order.

n) Set the squeezer position, see 5.2.4-1 Squeezer - Set Position.

o) Synchronize the final folder, see 4.7-1 Waste Box - Check and 5-1 Final Folder Module - Synchronization.

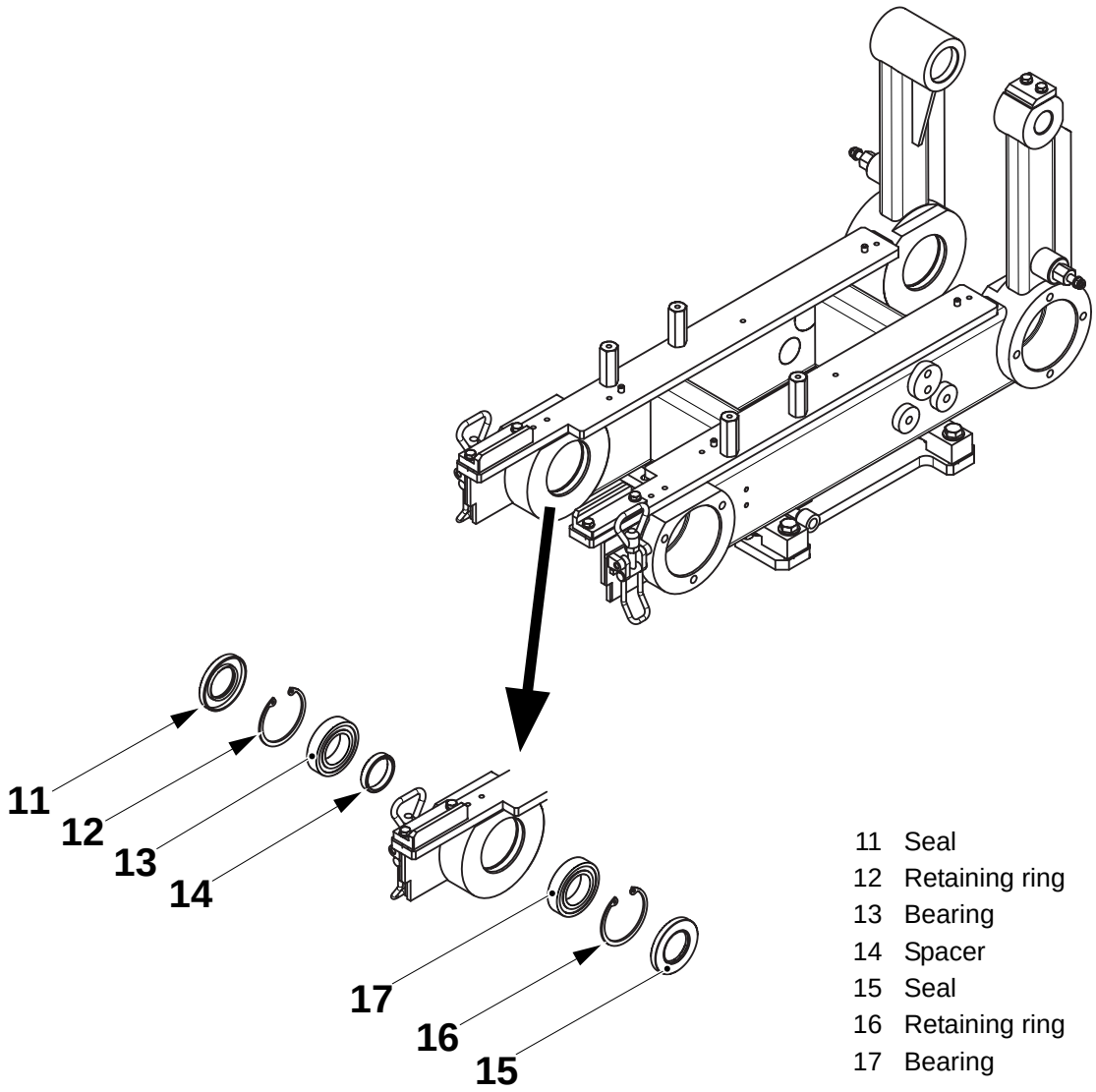

11 Seal
12 Retaining ring
13 Bearing
14 Spacer
15 Seal
16 Retaining ring
17 Bearing

5.2.3-3 Chain Support - Change Chain Guide

Consumable - grease	TP No. 90459-246
SPC Reference	1517735-0100

a) Lift the swing arm.

b) At both sides, remove the screws (1) and the side squeezers (2).

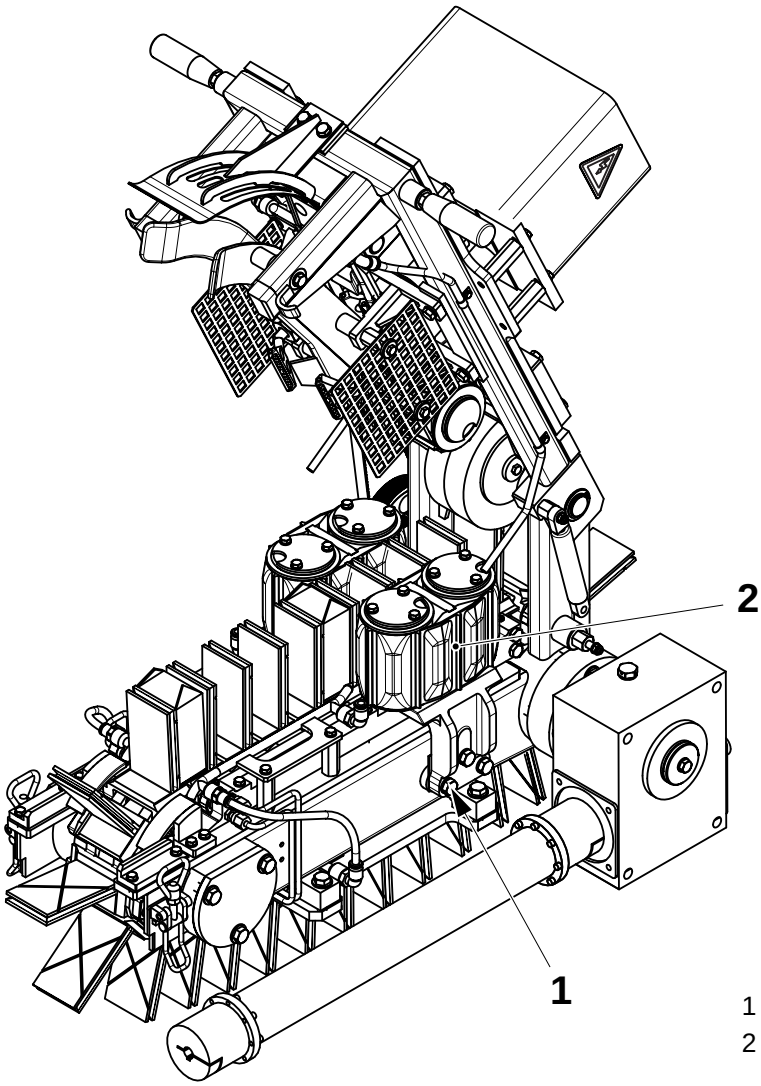

1 Screw
2 Side squeezer

(Cont'd)

(Cont'd)

c) At both sides, disconnect the water pipes from the guides (3).

d) At both sides, disconnect the grease pipes (4) connected to the chain guides (5).

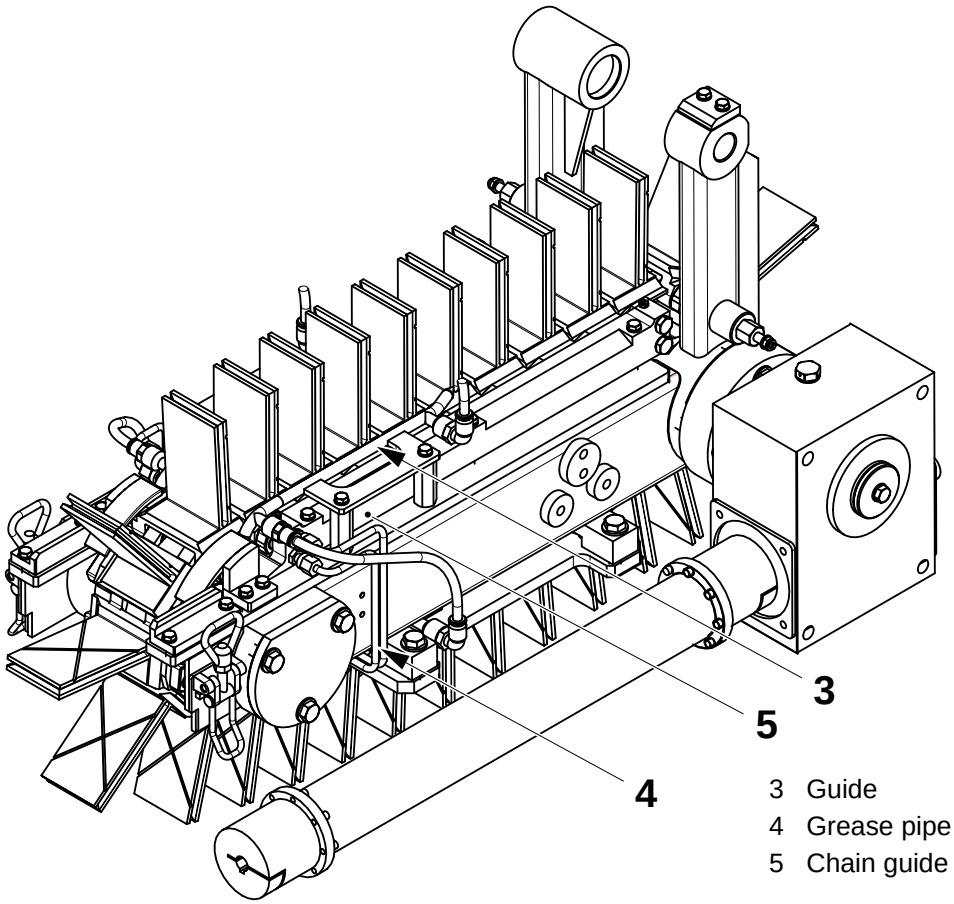

3 Guide
4 Grease pipe
5 Chain guide

(Cont'd)

(Cont'd)

e) At both sides, remove the screws (6) and the guide (3).

f) Remove the station chain, see 5.2.1-1 Station Chain - Change.

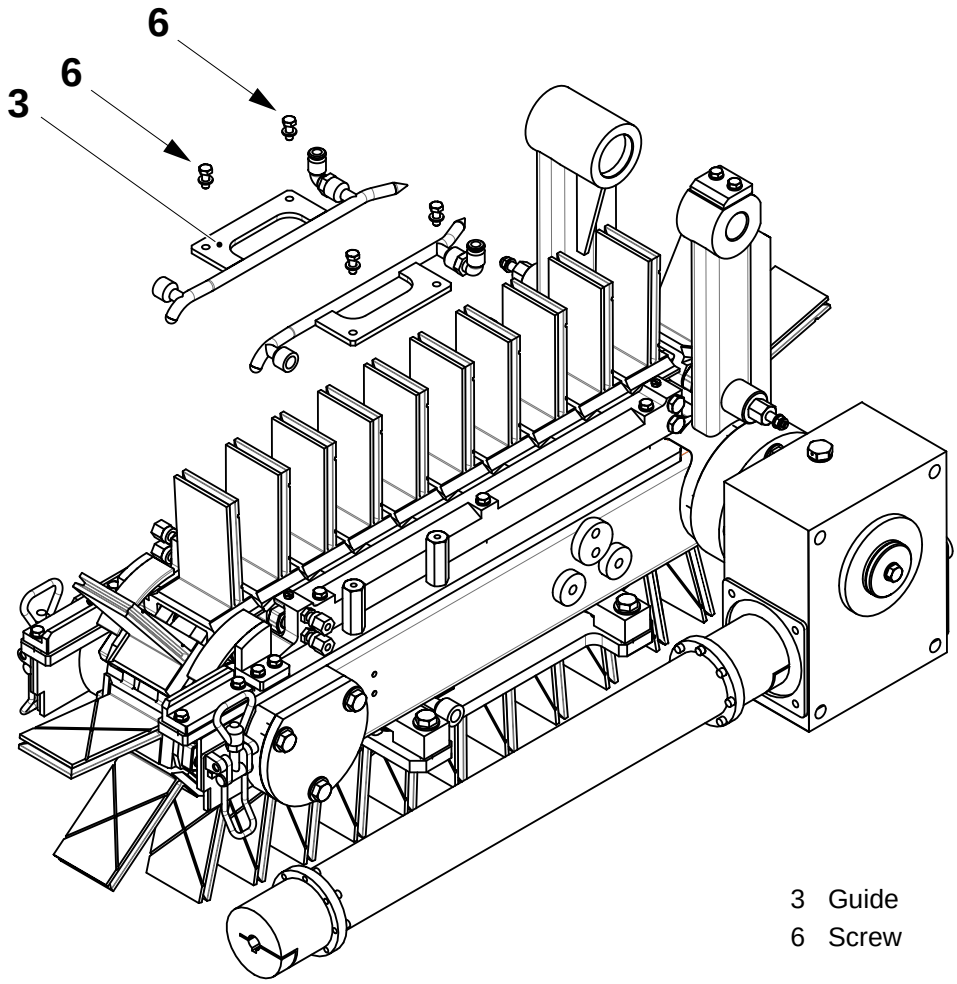

3 Guide
6 Screw

(Cont'd)

(Cont'd)

g) Remove the screws (7) and the chain guides (5).

h) Remove the couplings (8).

i) Change the chain guides (5).

j) Grease the chain guides, see table on page 5-45 for the correct type of grease.

k) Assemble in the reverse order.

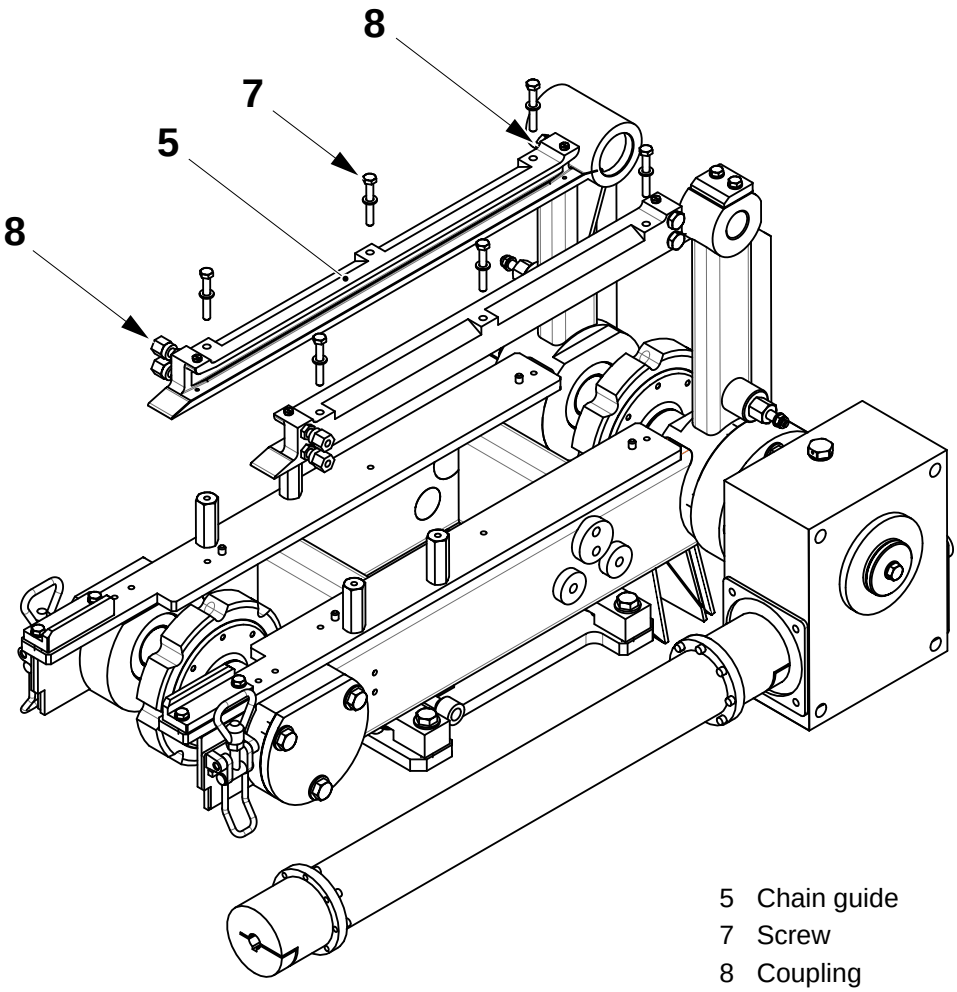

5 Chain guide
7 Screw
8 Coupling

5.2.3-4 Chain Support - Change Brush

SPC Reference	1517735-0100

a) Remove the screw and washer (1) from the shaft (2).

b) Remove the brushes (3) and (4).

c) Change the brushes and assemble in the reverse order.

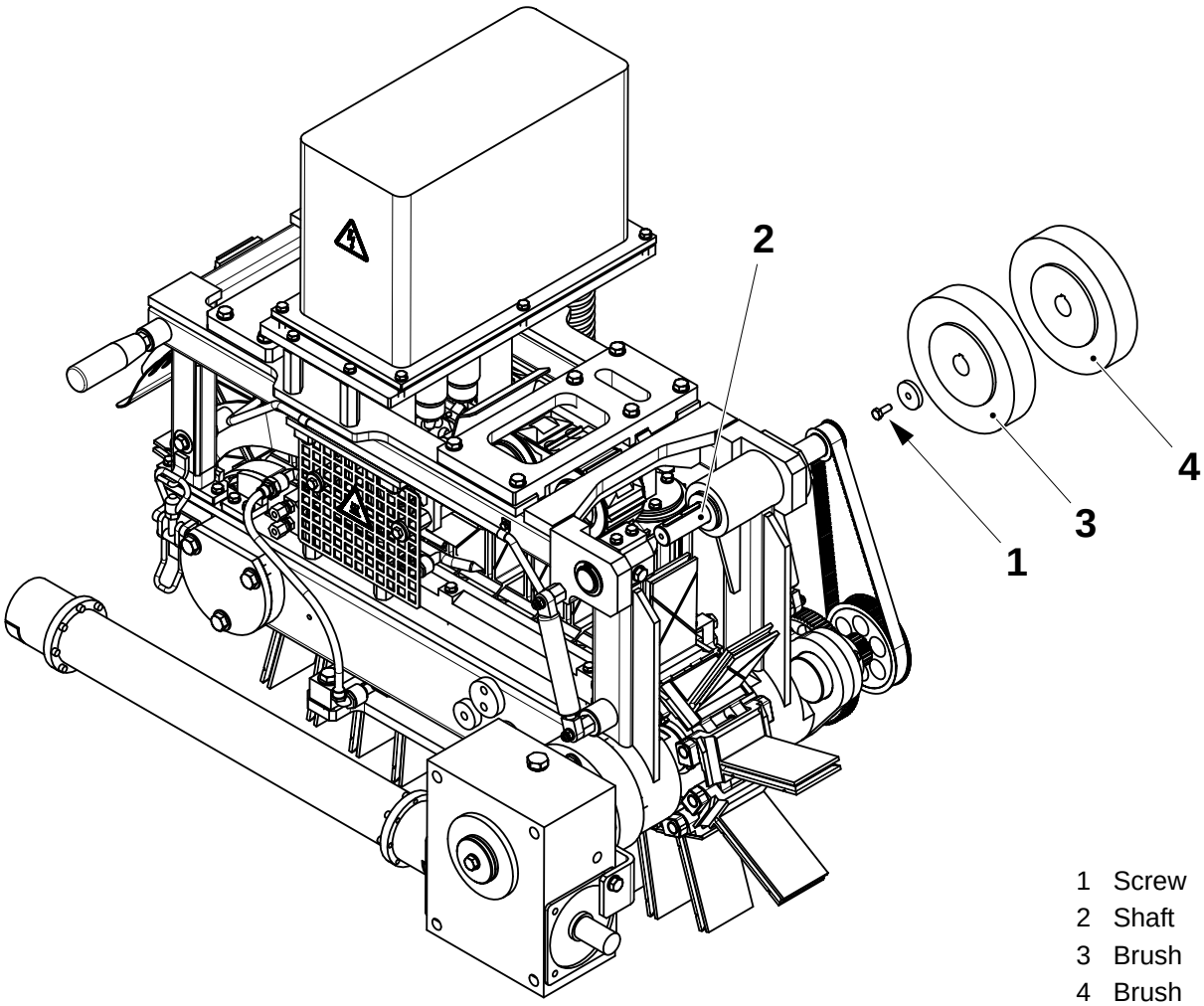

1 Screw
2 Shaft
3 Brush
4 Brush

5.2.3-6 Chain Support - Change Belt

SPC Reference	1517735-0100

Check the belt (3) for wear or damage. If required change the belt as follow:

- Loosen the screws (1).
- Turn the flange (2) clockwise to reduce the belt tension.
- Change the belt (3).
- Assemble in the reverse order.
- Set the belt tension, see 5.2.3-7 Chain Support - Set Belt.

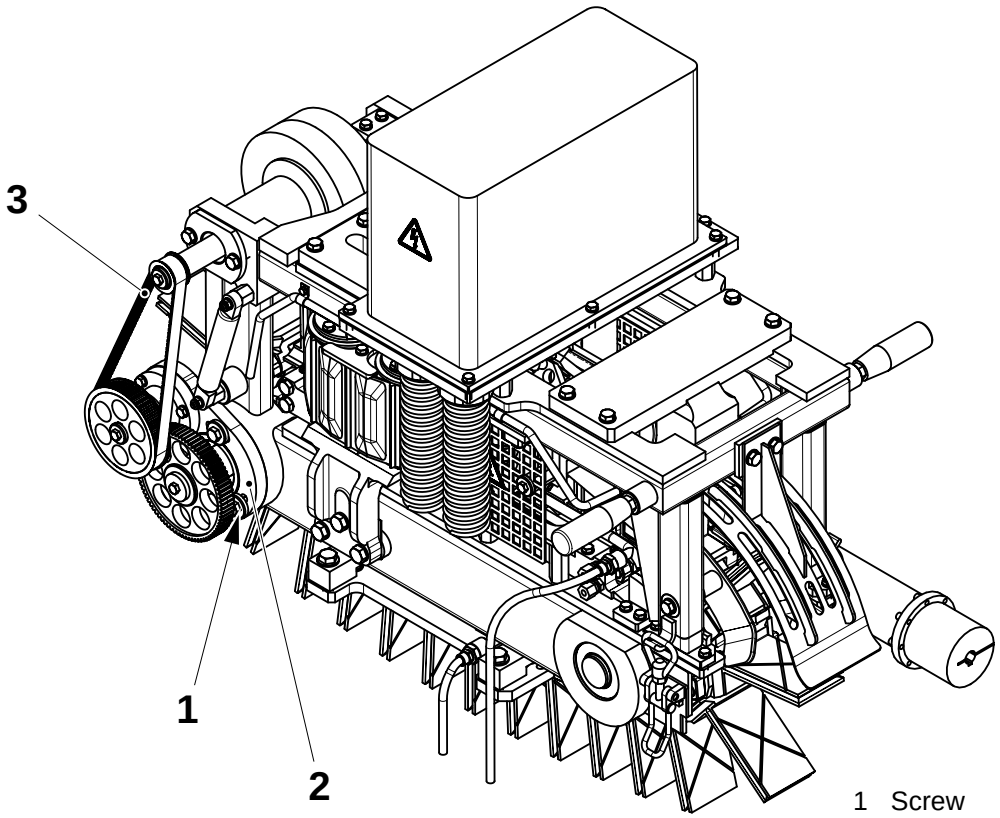

1 Screw
2 Flange
3 Belt

5.2.3-7 Chain Support - Set Belt

SPC Reference	1517735-0100

a) Loosen the screws (1).

b) Turn the flange (2) until the maximum deflection at the mid-point of the belt (3) is **between 5 and 10 mm**.

c) Tighten the screws (1).

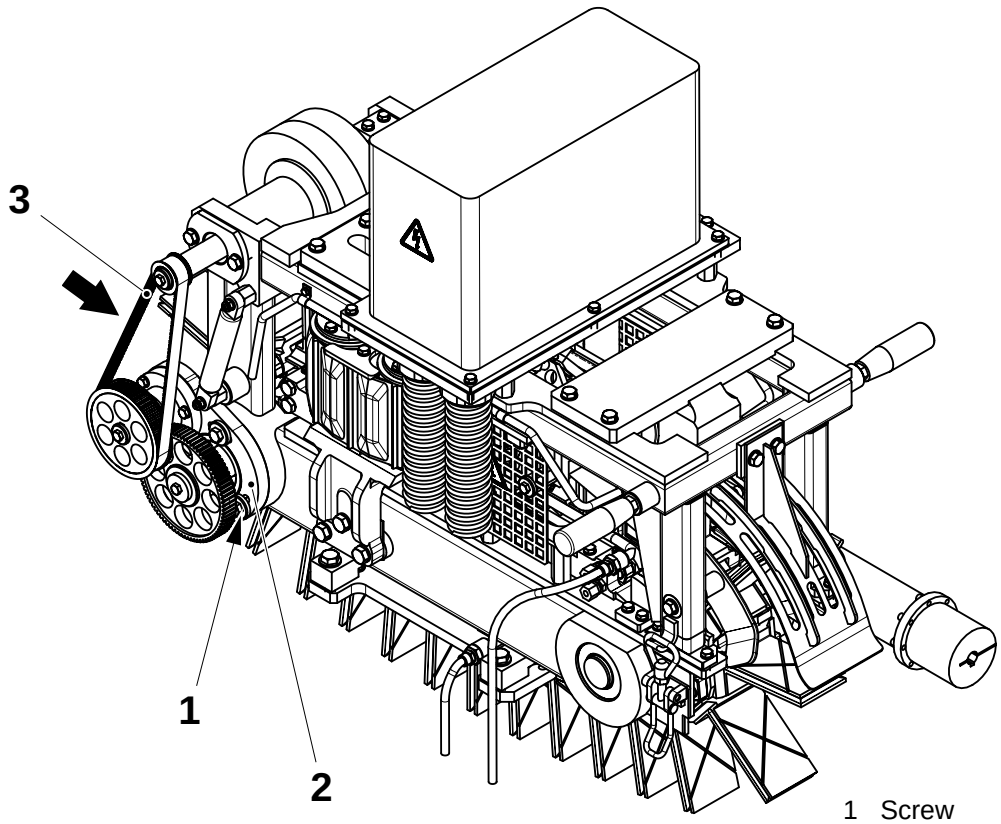

1 Screw
2 Flange
3 Belt

5.2.4 Squeezer

5.2.4-1 Squeezer - Set Position

SPC Reference	1499690-0200

WARNING
Risk of burns!
Some parts may be hot.

a) Lift the swing frame.

b) Check the teeth (1) in the side belts fit the slots at the side of the carton stations (2).
If not, loosen the screws (3) and turn the side belt until the teeth are aligned with the slots in the side of the carton stations.
Tighten the screws (3).

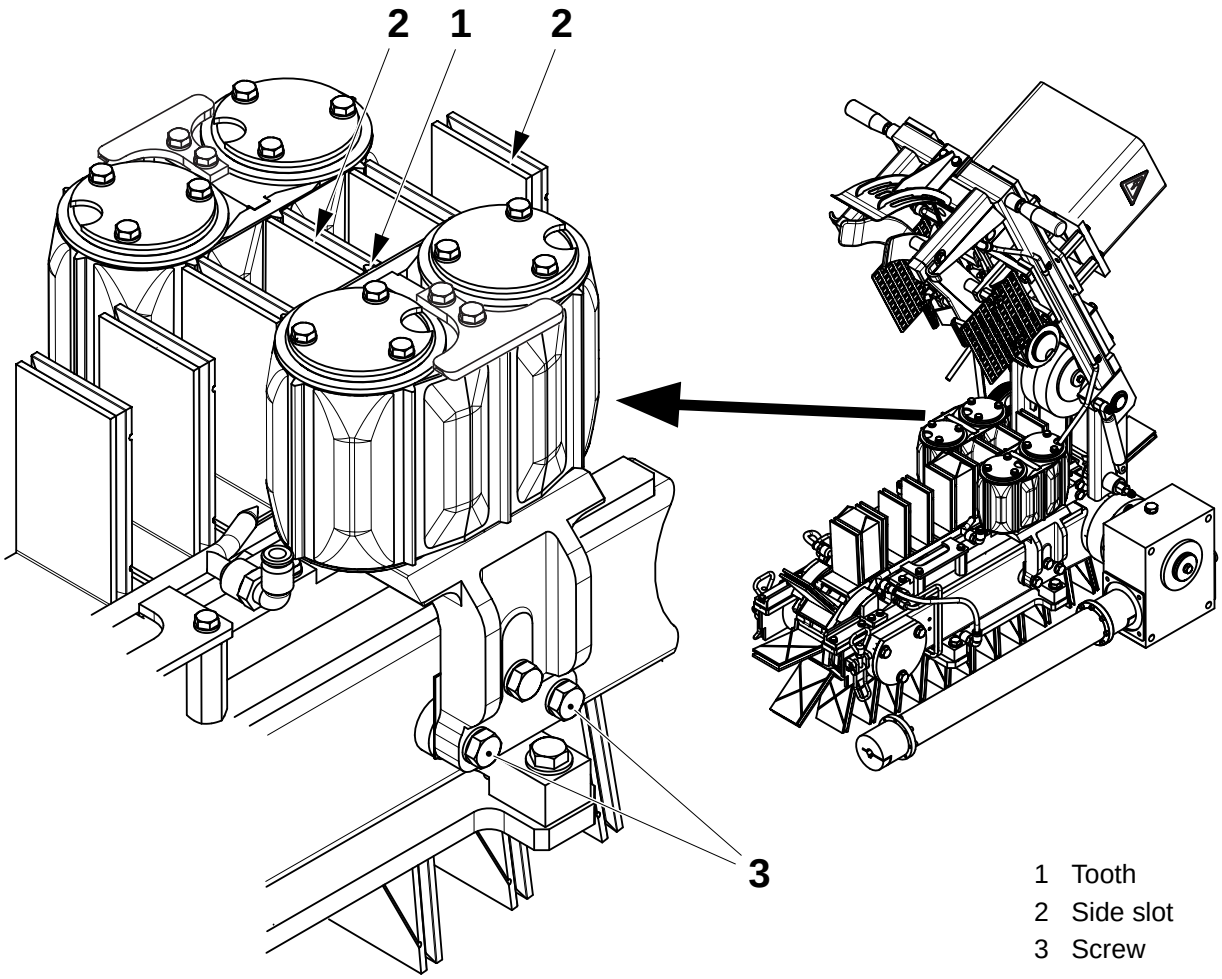

1 Tooth
2 Side slot
3 Screw

(Cont'd)

(Cont'd)

CAUTION
Carefully align the teeth in the top belt with the upper slots in the carton station, otherwise packages will be damaged.

c) While closing the swing frame, move the top squeezer belt by hand to align one of its teeth (4) with a slot (2) in the station chain.

d) Fasten the swing arm.

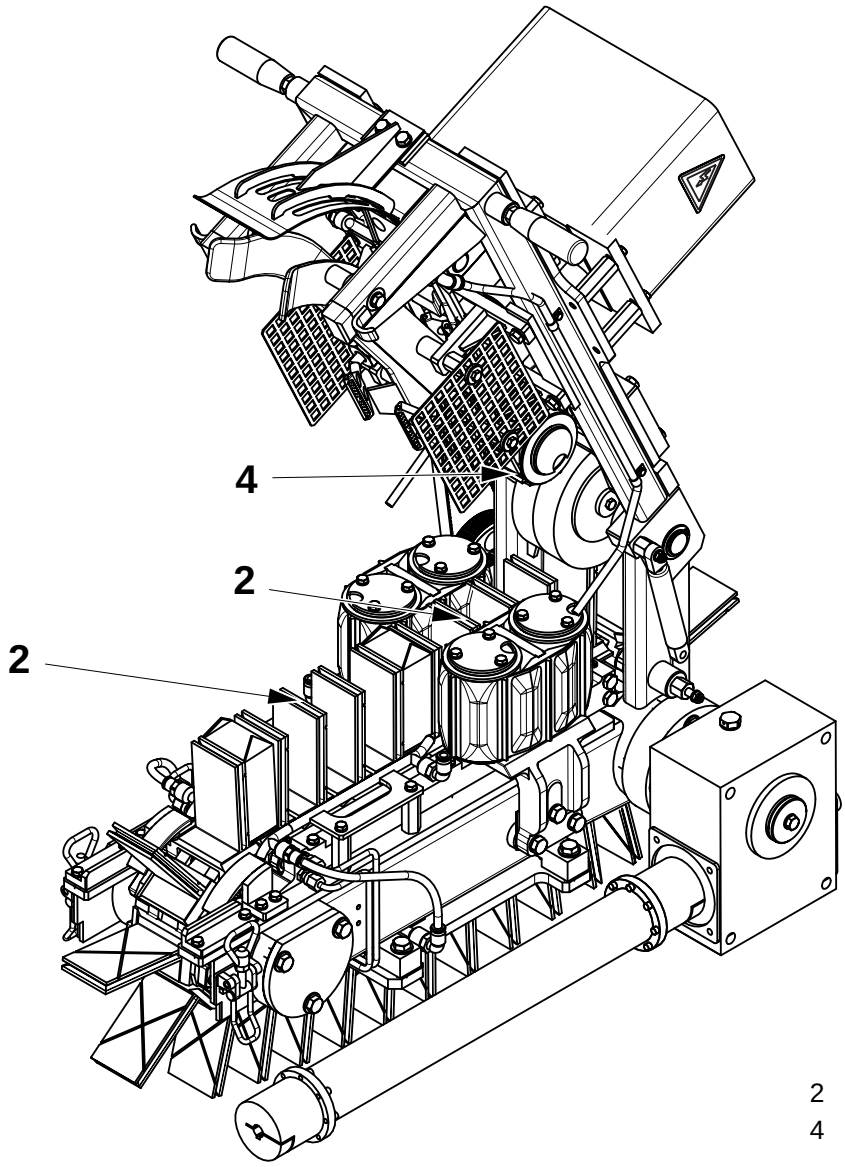

2 Slot
4 Tooth

5.2.4-2 Squeezer - Check Side Pressure Belts

SPC Reference	1499690-0200

Check the side pressure belts (5) for damage. If damaged, change them as follows:

a) Lift the swing frame.

b) On both sides, remove the screws (1) and the side squeezer (2).

c) Remove the screws (3) and the plate (4).

d) Remove the locking rings (5) and change them.

e) Remove the retaining rings (6) and change the belt (7).

f) Assemble in the reverse order and set the squeezer position, see 5.2.4-1 Squeezer - Set Position.

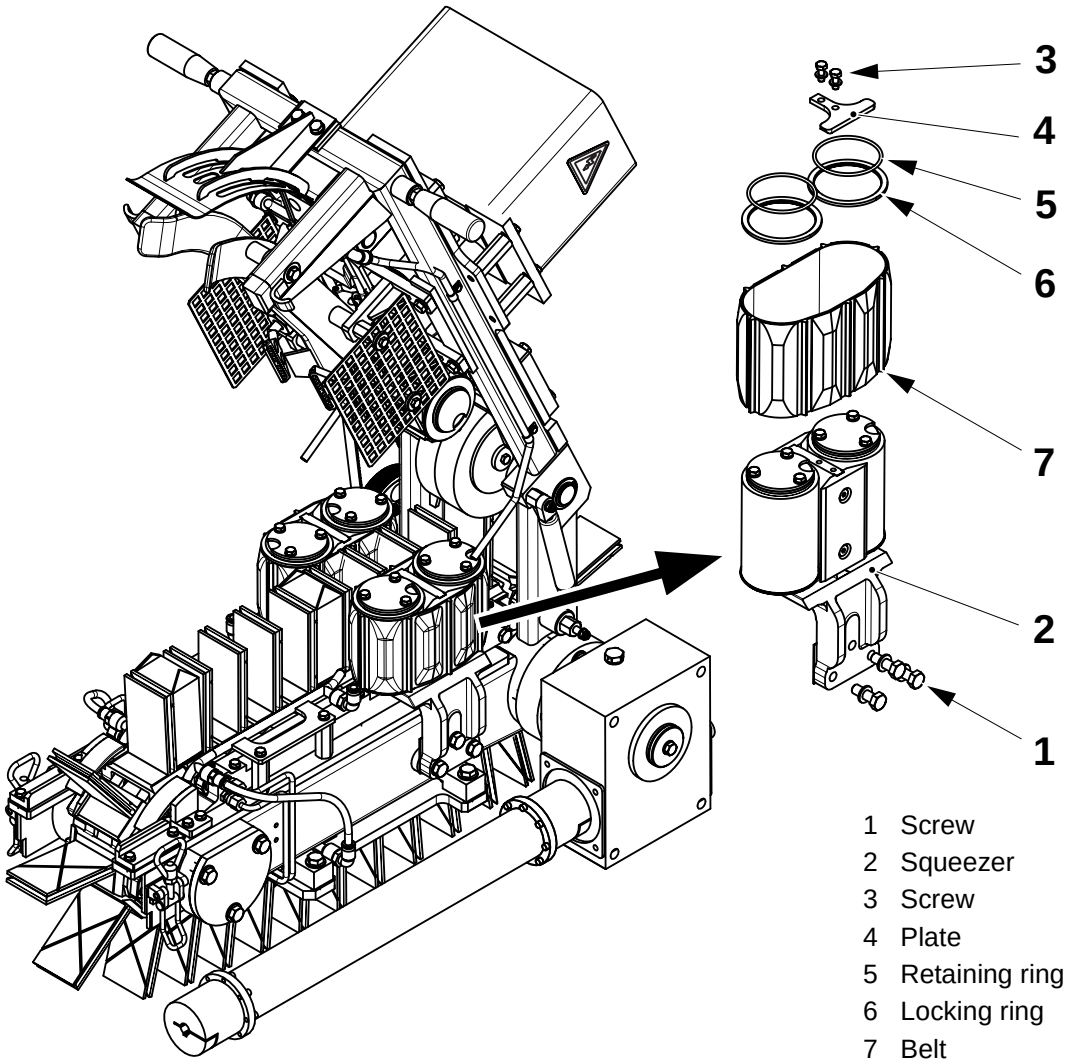

1 Screw
2 Squeezer
3 Screw
4 Plate
5 Retaining ring
6 Locking ring
7 Belt

5.2.4-3 Squeezer - Check Top Pressure Belt

SPC Reference	1499690-0200

WARNING
Risk of burns!
Some parts may be hot.

Check the top pressure belt (3) for damage. If damaged, change it as follows:

a) Lift the swing frame.

b) Remove the locking rings (1) and change them.

c) Remove the retaining rings (2) and change the belt (3).

d) Assemble in the reverse order and set the squeezer position, see 5.2.4-1 Squeezer - Set Position.

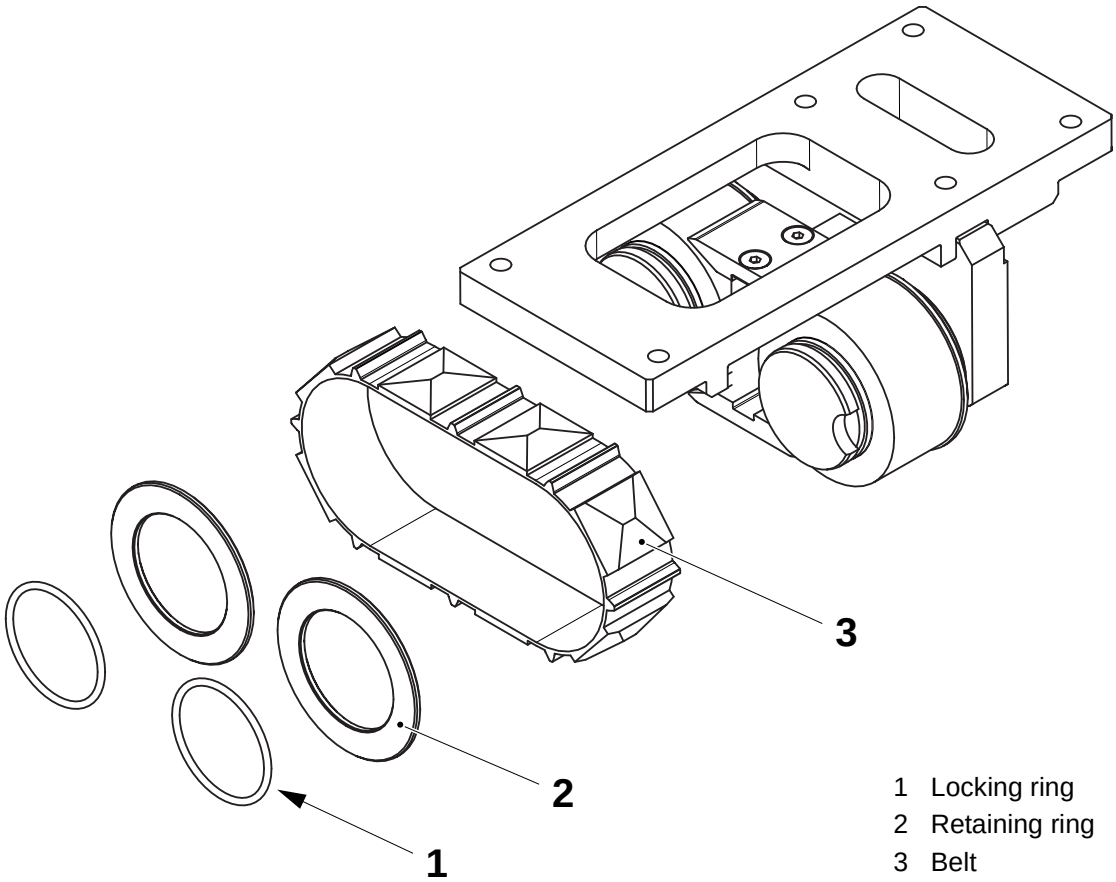

1 Locking ring
2 Retaining ring
3 Belt

5.2.4-4 Squeezer - Change Side Squeezer Ball Bearings

SPC Reference	1499690-0200

a) Lift the swing frame.

b) On both sides, remove the screws (1) and the side squeezer (2).

c) Remove the screws (3) and the plate (4).

d) Remove the locking rings (5) and change them.

e) Remove the retaining rings (6) and change the belt (7).

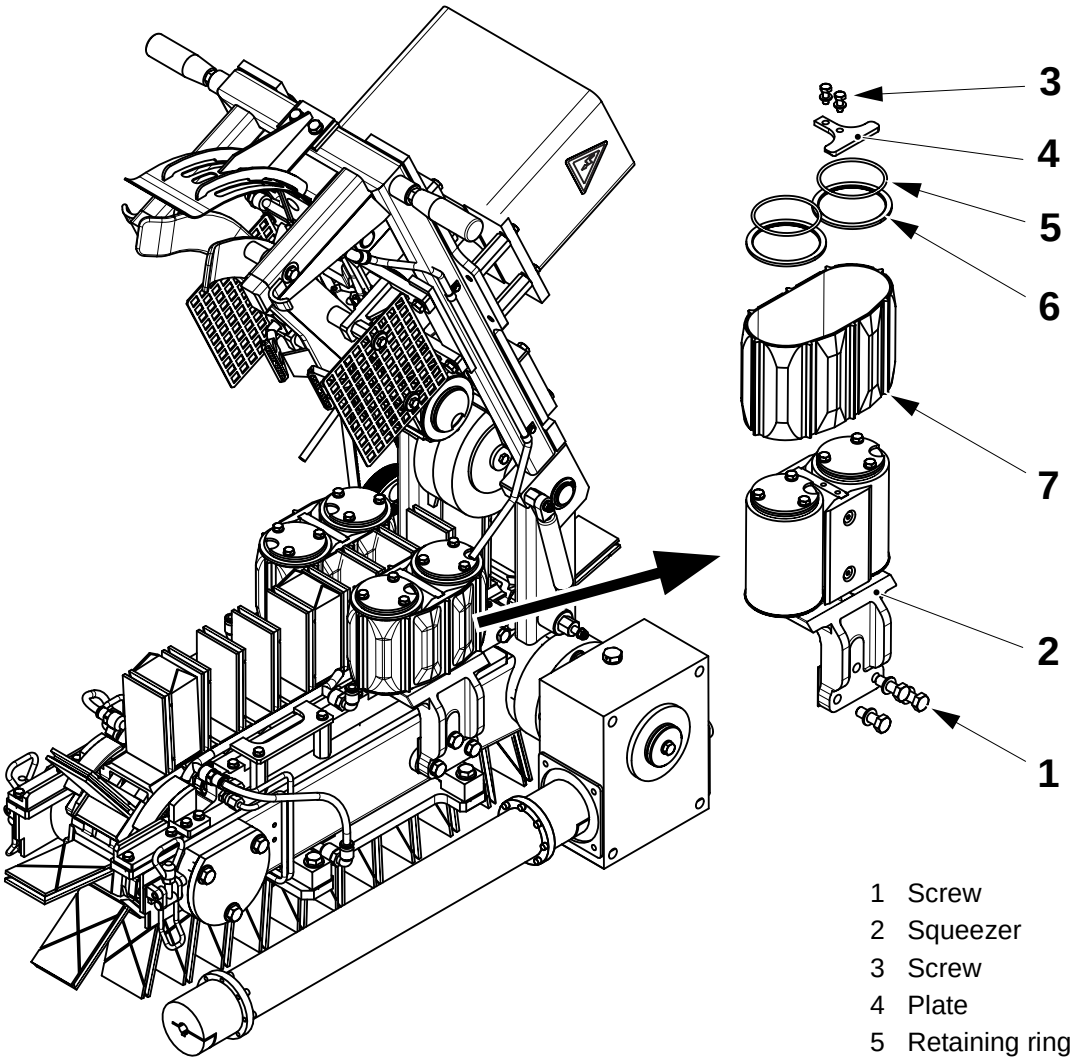

1 Screw
2 Squeezer
3 Screw
4 Plate
5 Retaining ring
6 Locking ring
7 Belt

(Cont'd)

(Cont'd)

f) Remove the screws (8).
g) Remove the cover (9) and replace the O-ring (10).
h) Unscrew the shaft (11) and remove the roller assembly.
i) Remove the seal (12) and retaining rings (13).
j) Push the shaft (11) out of the roller (14) in the direction shown by the arrow.
k) Remove the retaining ring (15).
l) Pull the ball bearings (16) and (17) and the spacer (18) off the shaft (11).
m) Change the ball bearings and assemble in the reverse order.
n) Repeat on the other roller.
o) Set the squeezer position, see 5.2.4-1 Squeezer - Set Position.

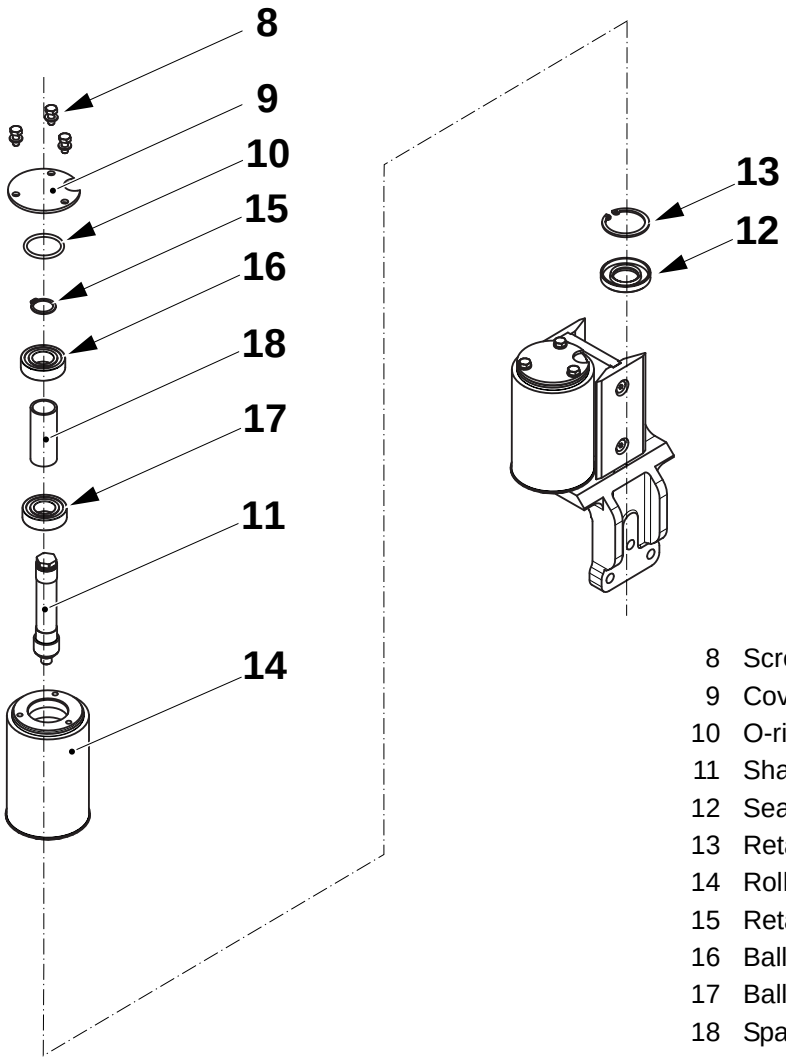

8 Screw
9 Cover
10 O-ring
11 Shaft
12 Seal
13 Retaining ring
14 Roller
15 Retaining ring
16 Ball bearing
17 Ball bearing
18 Spacer

5.2.4-5 Squeezer - Change Top Squeezer Ball Bearings

SPC Reference	1499690-0200

a) Remove the screws (1) and remove the top squeezer assembly (2).

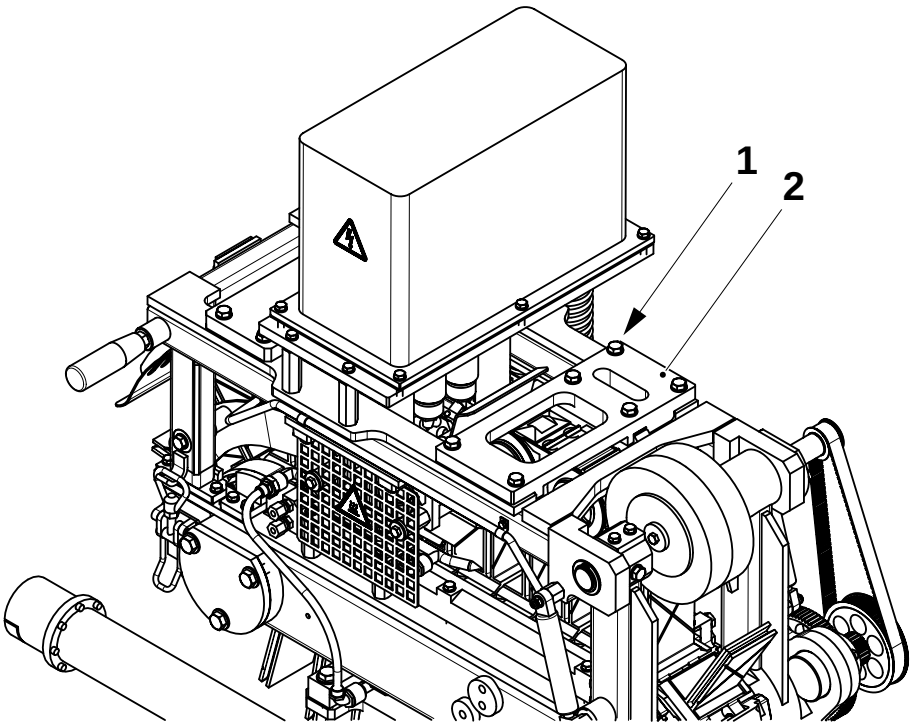

1 Screw
2 Top squeezer

b) Remove the locking rings (3) and change them.

c) Remove the retaining rings (4) and remove the belt (5).

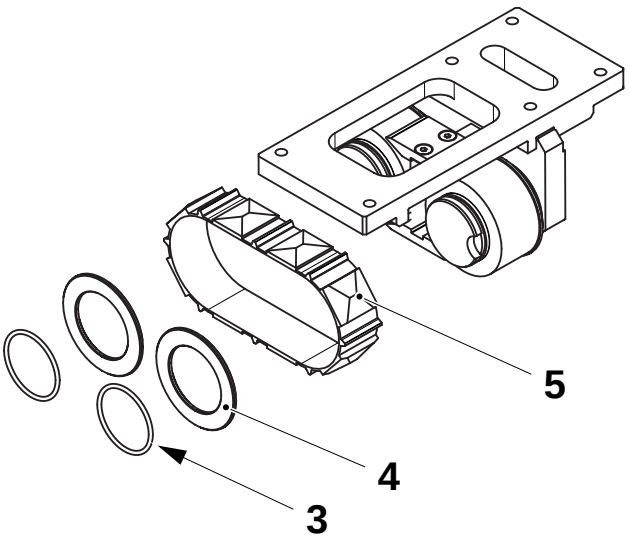

3 Locking ring
4 Retaining ring
5 Belt

(Cont'd)

(Cont'd)

d) Remove the screw (6) and the pulley assembly (7).

e) Remove the seal (8), and retaining ring (9).

f) Remove the shaft (10).

g) Remove the retaining ring (11) and pull the ball bearings (12) and (13) and the spacer (14) off the shaft (10).

h) Change the ball bearings and assemble in the reverse order.

i) Repeat on the other roller.

j) Set the squeezer position, see 5.2.4-1 Squeezer - Set Position.

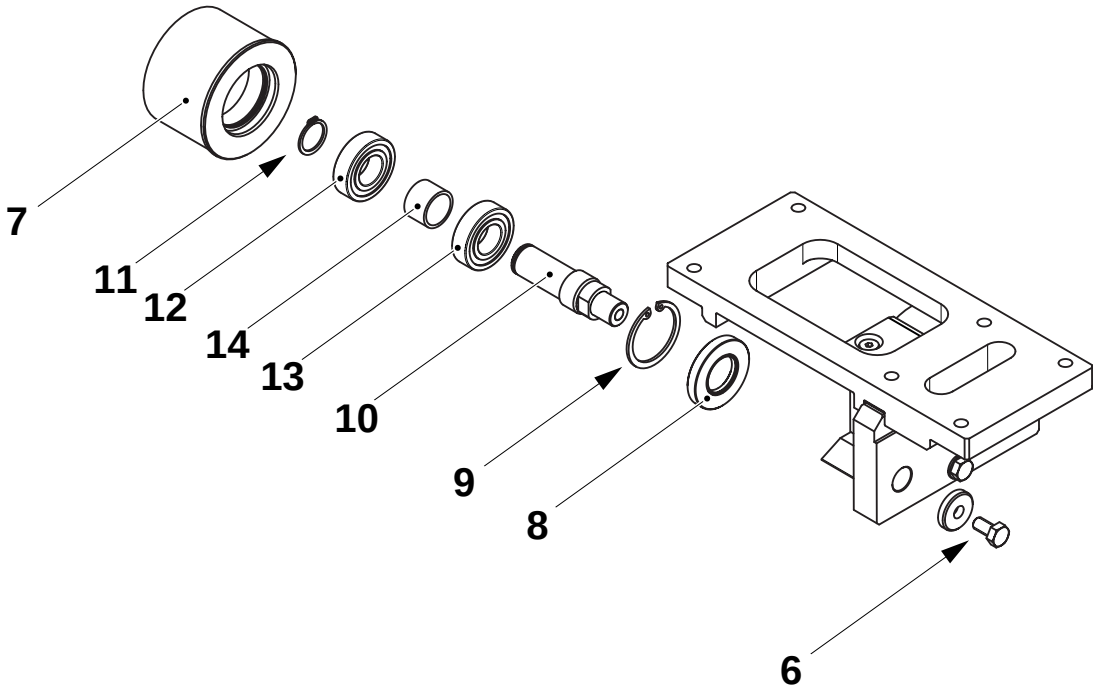

6	Screw	11	Retaining ring
7	Pulley	12	Ball bearing
8	Seal	13	Ball bearing
9	Retaining ring	14	Spacer
10	Shaft		

5.2.4-6 Squeezer - Check Side Squeezer Clearances

SPC Reference	1499690-0200

WARNING
Risk of burns!
Some parts may be hot.

a) Lift the swing frame.

b) Rotate the final folder drive shaft by hand until one of the links of the station chain is in line with the centre of the side squeezers.

c) Using two 0.5 mm feeler gauges (1), check the clearance between the station chain and the side squeezer on both sides of the machine.

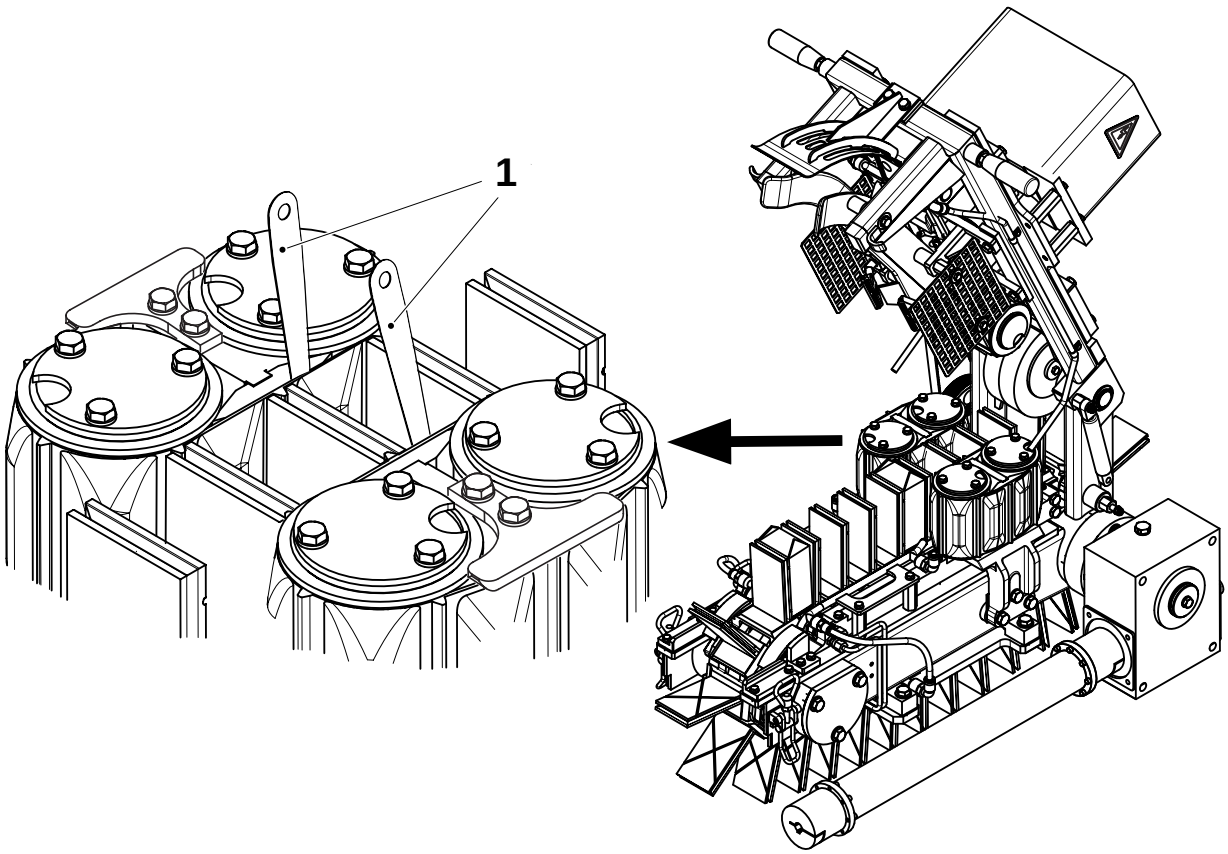

1 Feeler gauge

(Cont'd)

(Cont'd)

d) Adjust the clearance as follow:
- remove the screws (2),
- remove both side squeezers (3),
- change the spacers (4), then refit the side squeezers and screws.

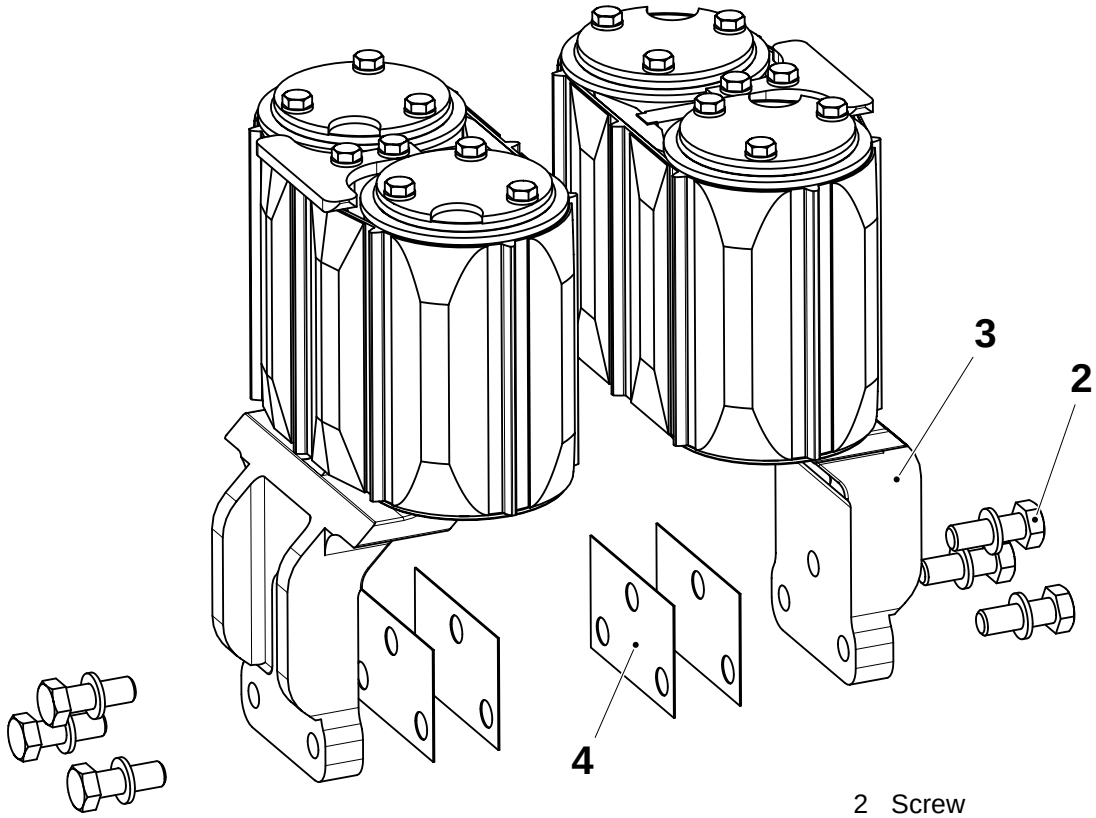

2 Screw
3 Squeezer
4 Spacer

5.2.4-7 Squeezer - Check Top Squeezer Clearances

SPC Reference	1499690-0200

a) Rotate the final folder drive shaft by hand until one of the links of the station chain is directly below the centre of the top squeezer assembly.

b) Remove the locking ring (1) and retaining ring (2).

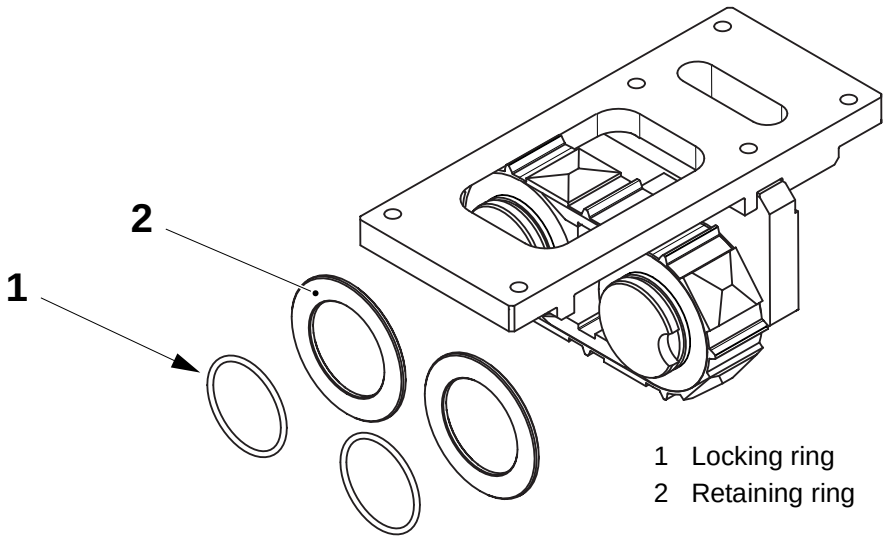

1 Locking ring
2 Retaining ring

c) Check the clearance between the station chain (3) and the top squeezer belt (4) is 0.5 mm at the centre of the belt.

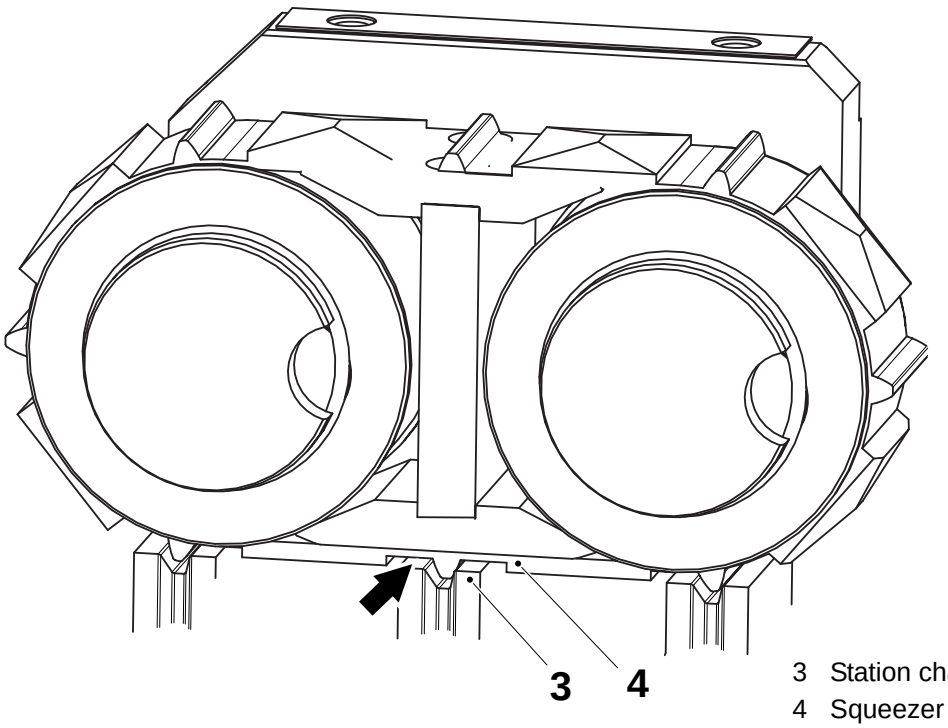

3 Station chain
4 Squeezer belt

(Cont'd)

(Cont'd)

d) Adjust the clearance as follow:
   – remove the screws (5) and lift out the top squeezer assembly (6).
   – Remove the screws (7) and change the spacers (8).

e) Refit the screws (7), refit the top squeezer assembly then refit the screws (5).

f) Tighten the screws (5).

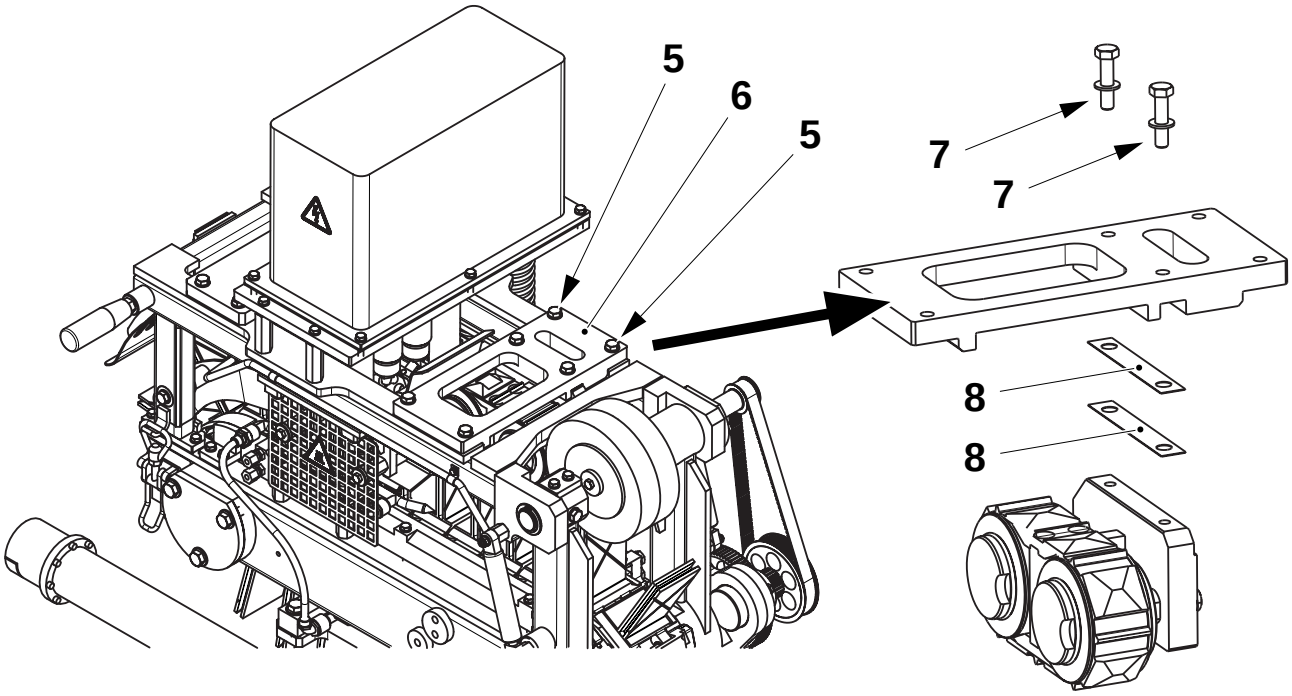

5 Screw
6 Squeezer assembly
7 Screw
8 Spacer

5.2.5 Heating Chamber

5.2.5-1 Heating Chamber - Set Flap Sealing Nozzles

Tools - template	 See table
SPC Reference	1478630-0100

a) Remove the screws (1) and lift out the top squeezer (2).

WARNING
Risk of burns!
Nozzles might be hot.

b) Lift the swing frame (3) and loosen the nozzles (4).

c) Fit the template (5), see table below, in the station chain, positioning the template below the nozzles.

Package	Template TP No.	Package	Template TP No.
TBA 200 B	2508395	TBA 250 B	2508396
TBA 200 M	2501229	TBA 250 S	2501230
TBA 200 S	2501225		

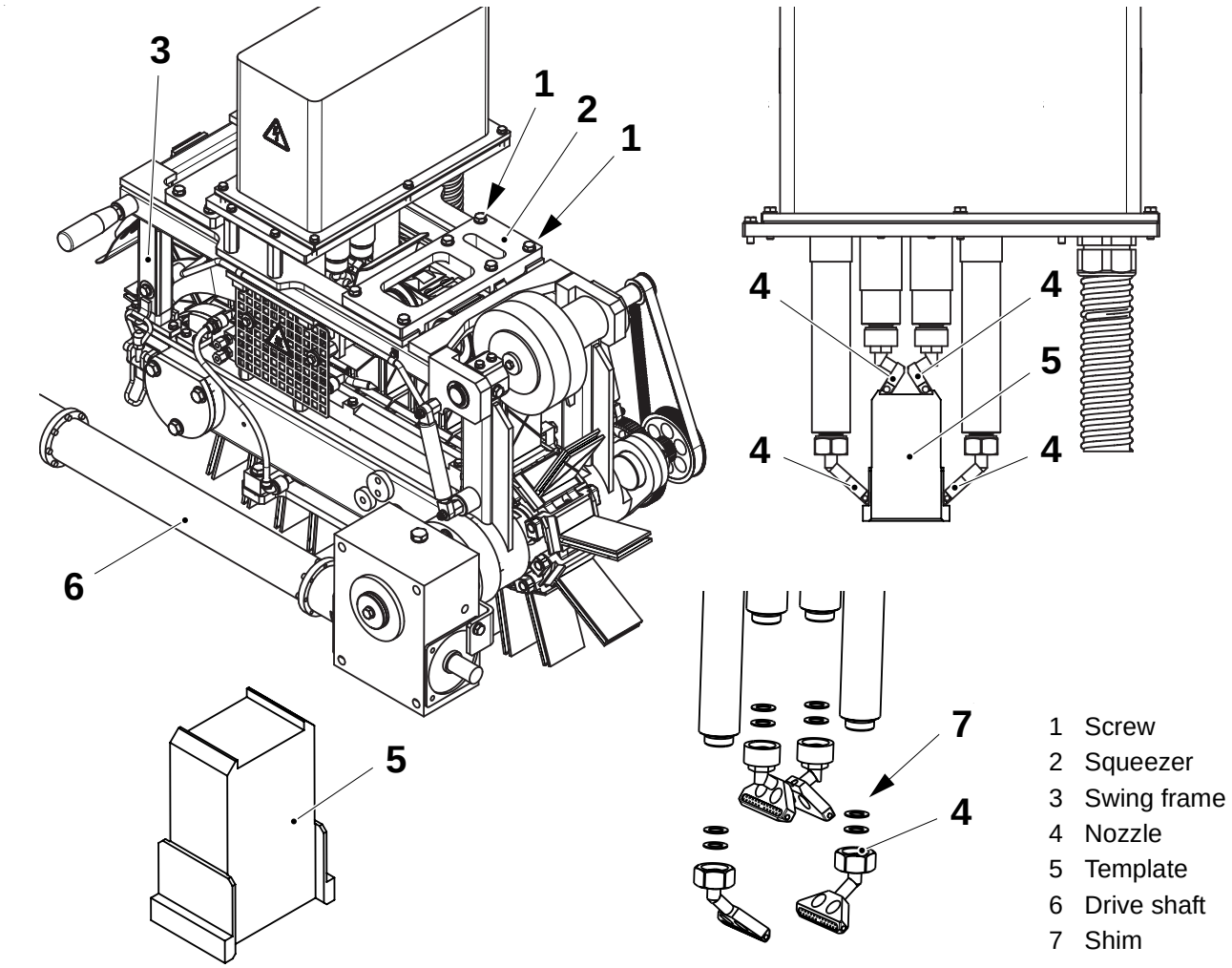

1 Screw
2 Squeezer
3 Swing frame
4 Nozzle
5 Template
6 Drive shaft
7 Shim

(Cont'd)

(Cont'd)

d) Carefully lower the swing frame and turn the drive shaft (6) until the template is below the nozzles.

e) Add or remove shims (7) until the nozzles (4) are as close as possible to the top of the template.

f) Set the nozzles sideways so they lightly touch the template.

g) Tighten the nozzles and remove the template.

h) Replace the top squeezer and set its position, see 5.2.4-1 Squeezer - Set Position.

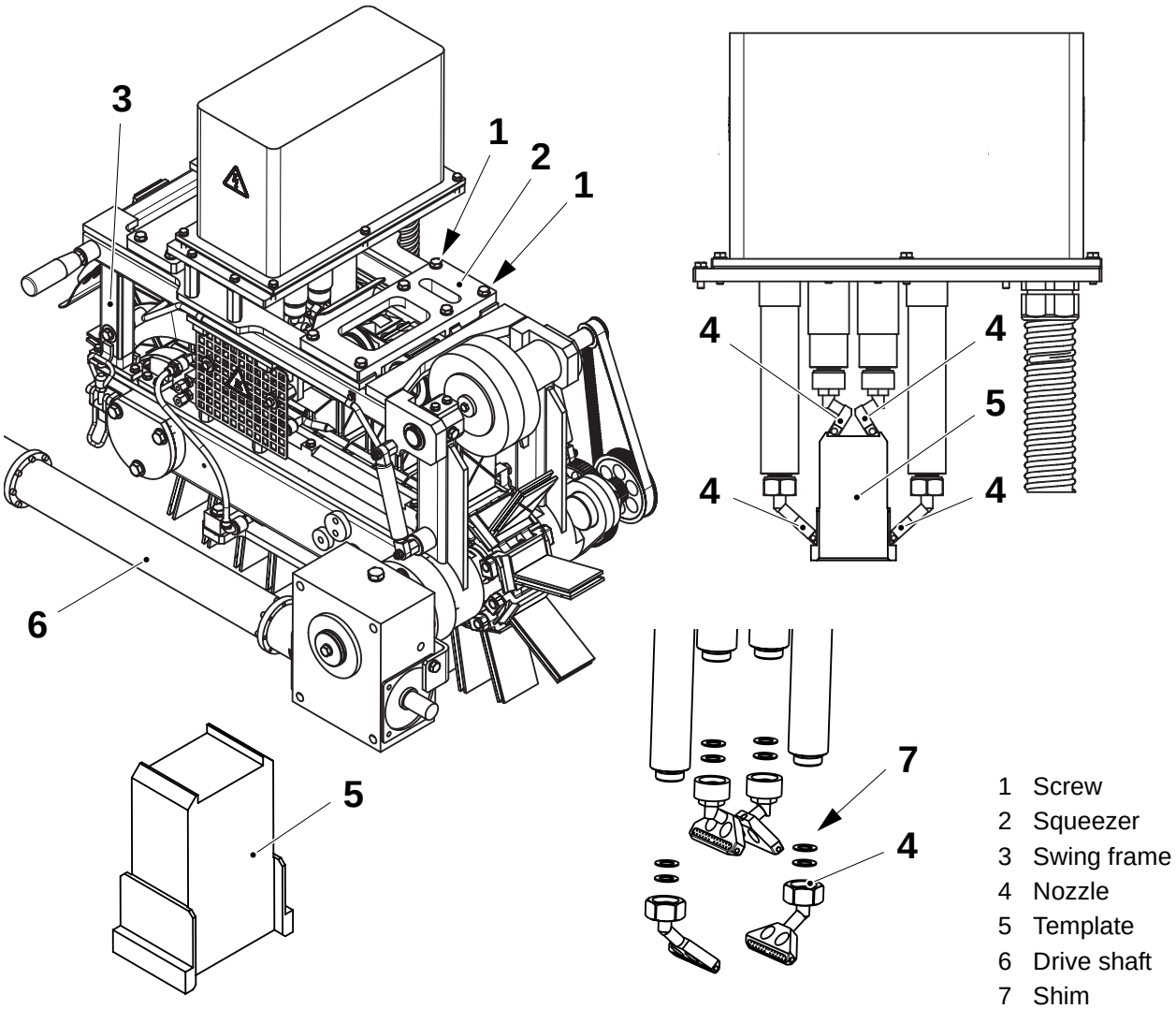

1 Screw
2 Squeezer
3 Swing frame
4 Nozzle
5 Template
6 Drive shaft
7 Shim

5.2.5-2 Heating Chamber - Overhaul

SPC Reference	1478630-0100

WARNING
Risk of electrocution!
Follow the Safety precautions.

a) Unscrew and remove the nozzles (1). Inspect them for damage and change as required.

b) Remove the screws (2) and lift off the top cover (3).

c) Change the gasket (4).

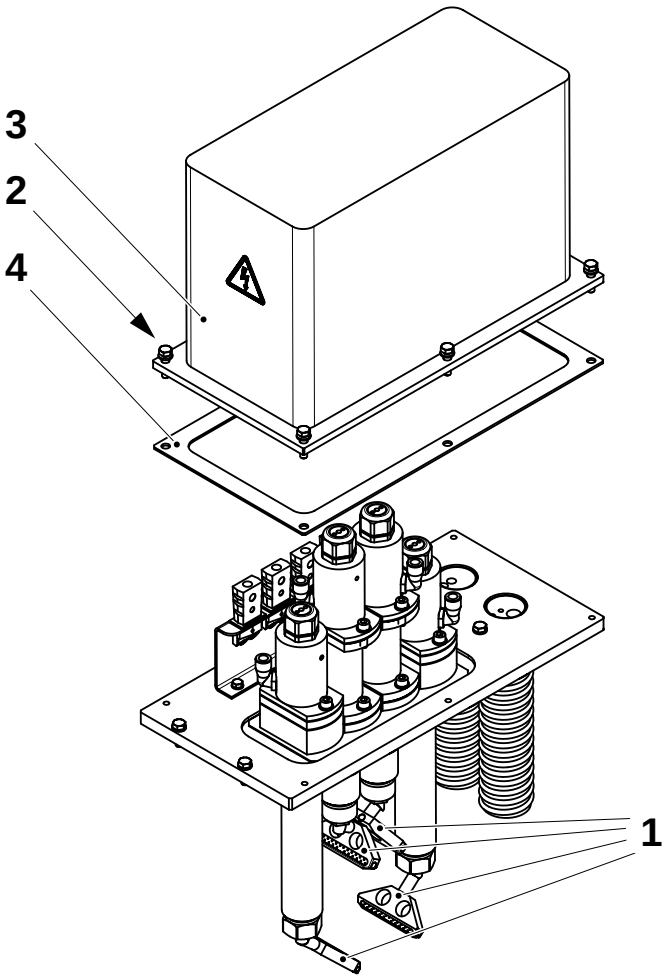

1 Nozzle
2 Screw
3 Cover
4 Gasket

(Cont'd)

(Cont'd)

d) Remove the screws (5) and (7) lift off the covers (6) and (8), pushing the cable through the gland as required. Do not pull the cables, to avoid damage to the connections.

e) Repeat for the other heaters.

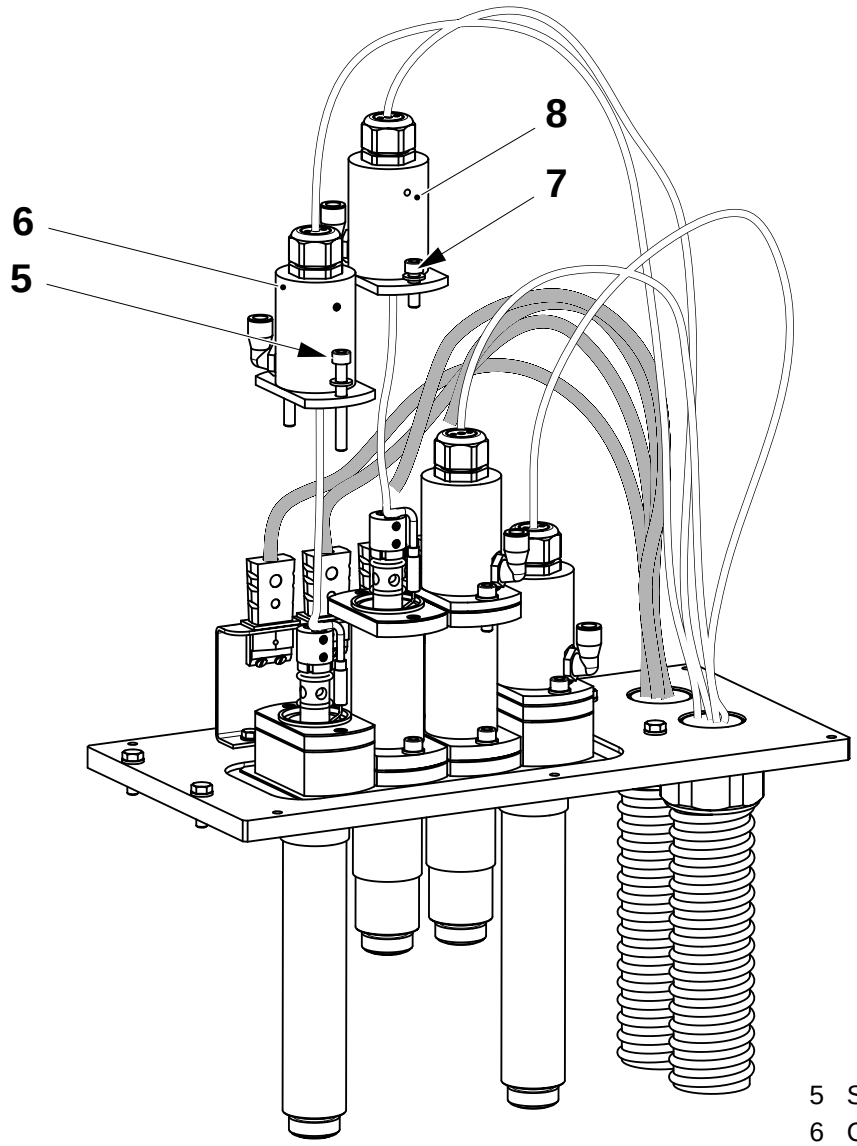

5 Screw
6 Cover
7 Screw
8 Covert

(Cont'd)

(Cont'd)

f) Loosen the upper screws (9) in the clamp (10) and pull out the heater wires (11).

g) Repeat for the other heaters.

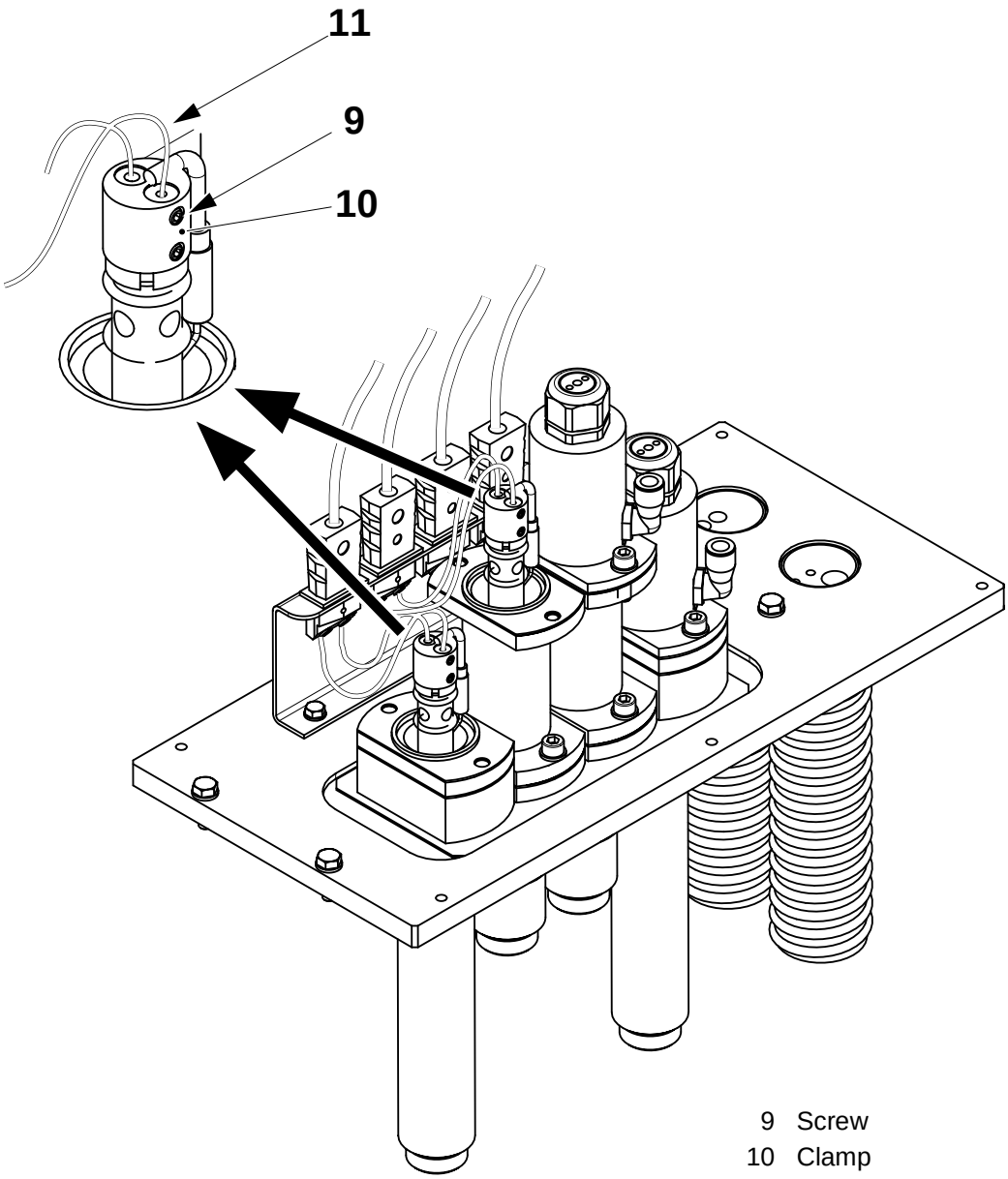

9 Screw
10 Clamp
11 Wire

(Cont'd)

(Cont'd)

h) Lift out the heating element (12).

i) Loosen the lower screws (13) and remove the clamp (10) from the heating element (12).

j) Change the element (12) and the rings (14) and (15).

k) Change the thermocouple (16).

l) Repeat for the other heaters.

m) Assemble in the reverse order

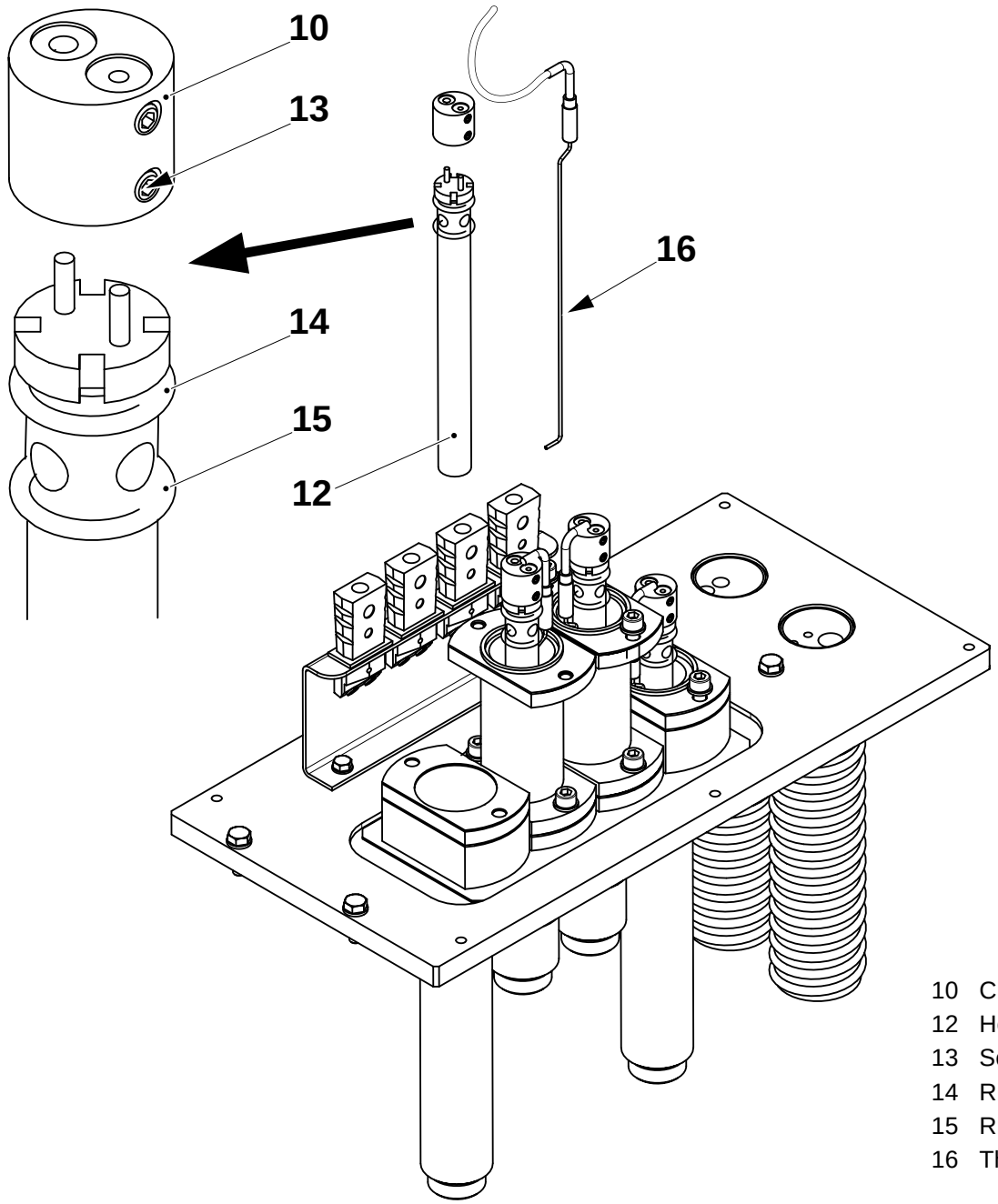

10 Clamp
12 Heating element
13 Screw
14 Ring
15 Ring
16 Thermocouple

5.3 Discharge Device

SPC Reference	577113-0300

5.3.1 Outfeed Unit

5.3.1-1 Outfeed Unit - Check Bushings and Roller

SPC Reference	1348751-0200

Check that each carrier moves freely with no horizontal play in its bushings. If you find a defective carrier, proceed as follows:

a) Turn the shaft (1) until the carrier is in the position shown in the picture.

b) Remove the screws (2) and remove the carrier (3).

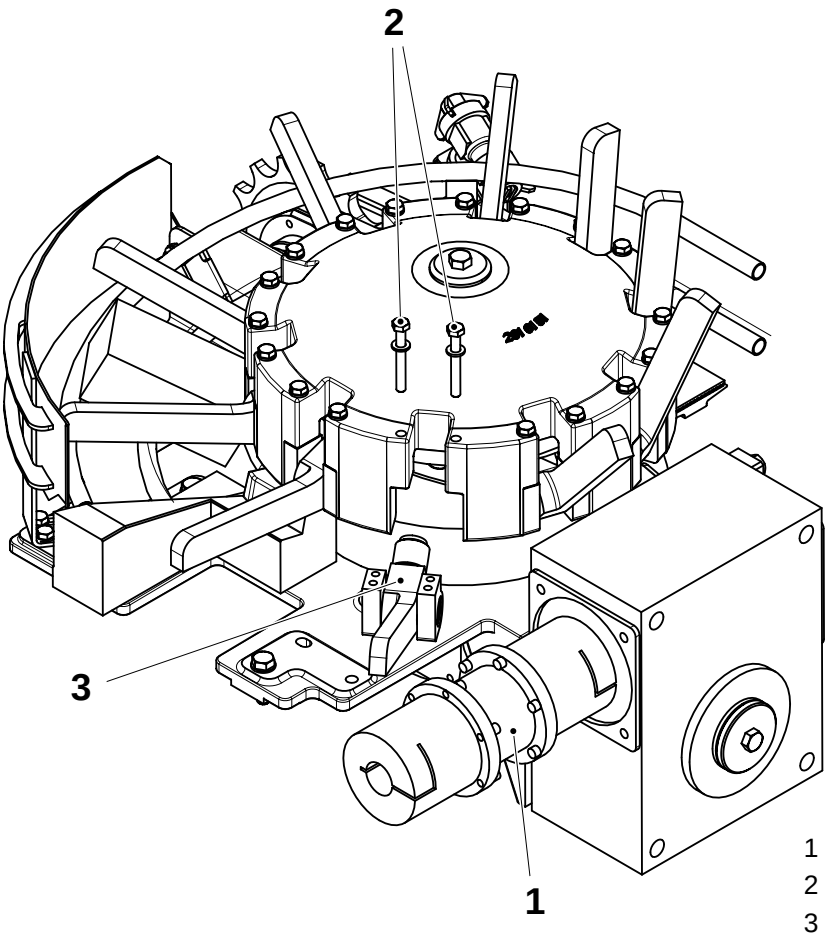

1 Shaft
2 Screw
3 Carrier

(Cont'd)

(Cont'd)

c) Remove the brackets (4) and change the bushings (5) as required.

d) Push out the pin (6), remove the shaft (7) and change the bushing (8) as required.

e) Change the rollers (9) if necessary.

f) Assemble in the reverse order.

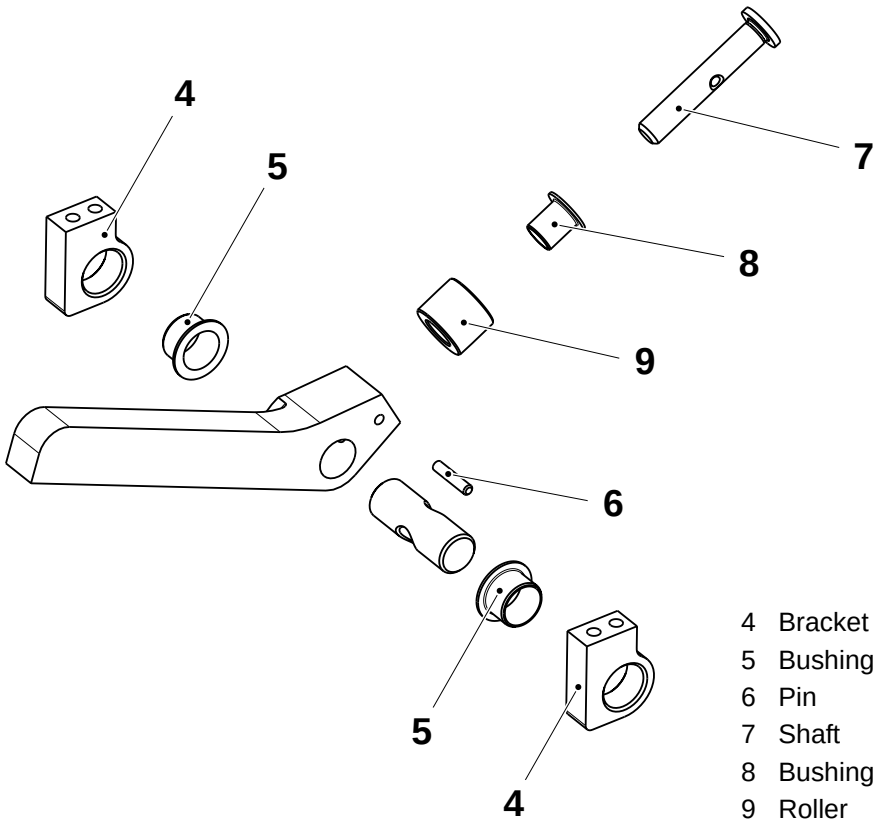

4 Bracket
5 Bushing
6 Pin
7 Shaft
8 Bushing
9 Roller

5.3.1-2 Outfeed Unit - Change Ball Bearing

SPC Reference	1348751-0200

a) Remove the screws (1) and pull out the carrier (2).

b) Using the shaft (3), turn the outfeed and remove all the carriers.

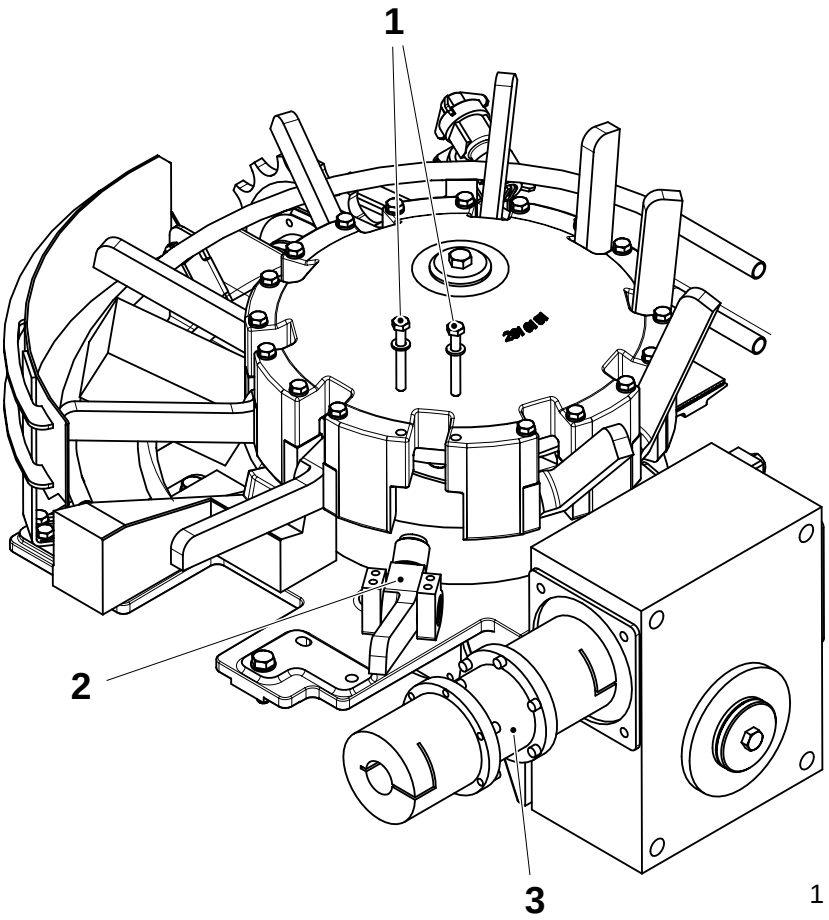

1 Screw
2 Carrier
3 Shaft

(Cont'd)

(Cont'd)

c) Remove the screw (4), the washer (5) and the cover (6).

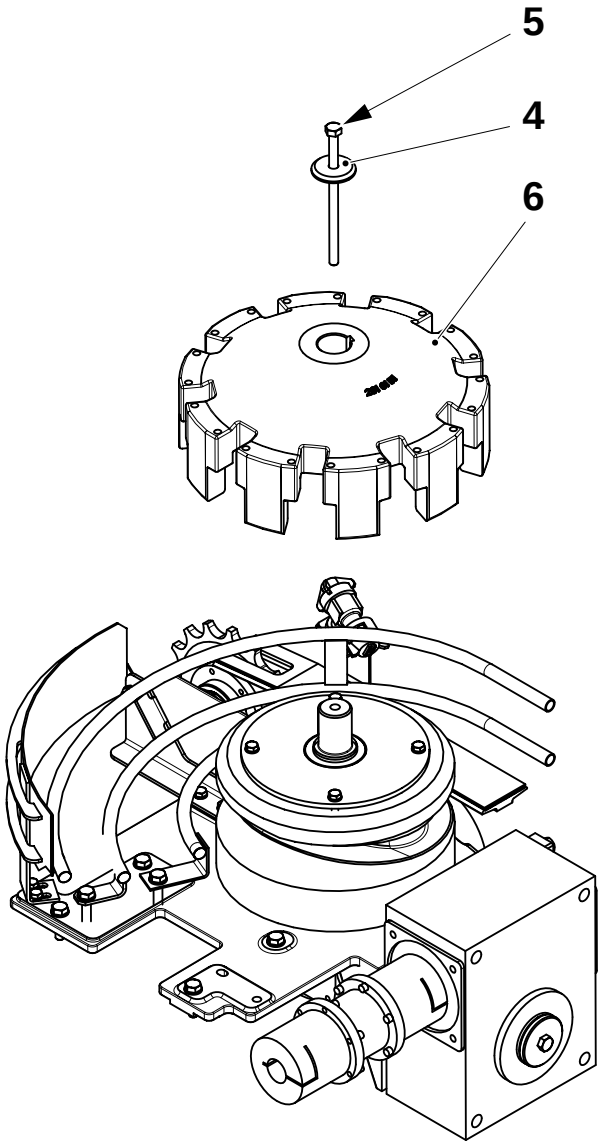

4 Screw
5 Washer
6 Cover

(Cont'd)

(Cont'd)

d) Remove the screws (7) and the housing (8).

e) Change the seal ring (9) and the ball bearing (10).

f) Assemble in the reverse order.

g) Using the shaft (3), turn the outfeed one full circle and check that all the carriers move correctly.

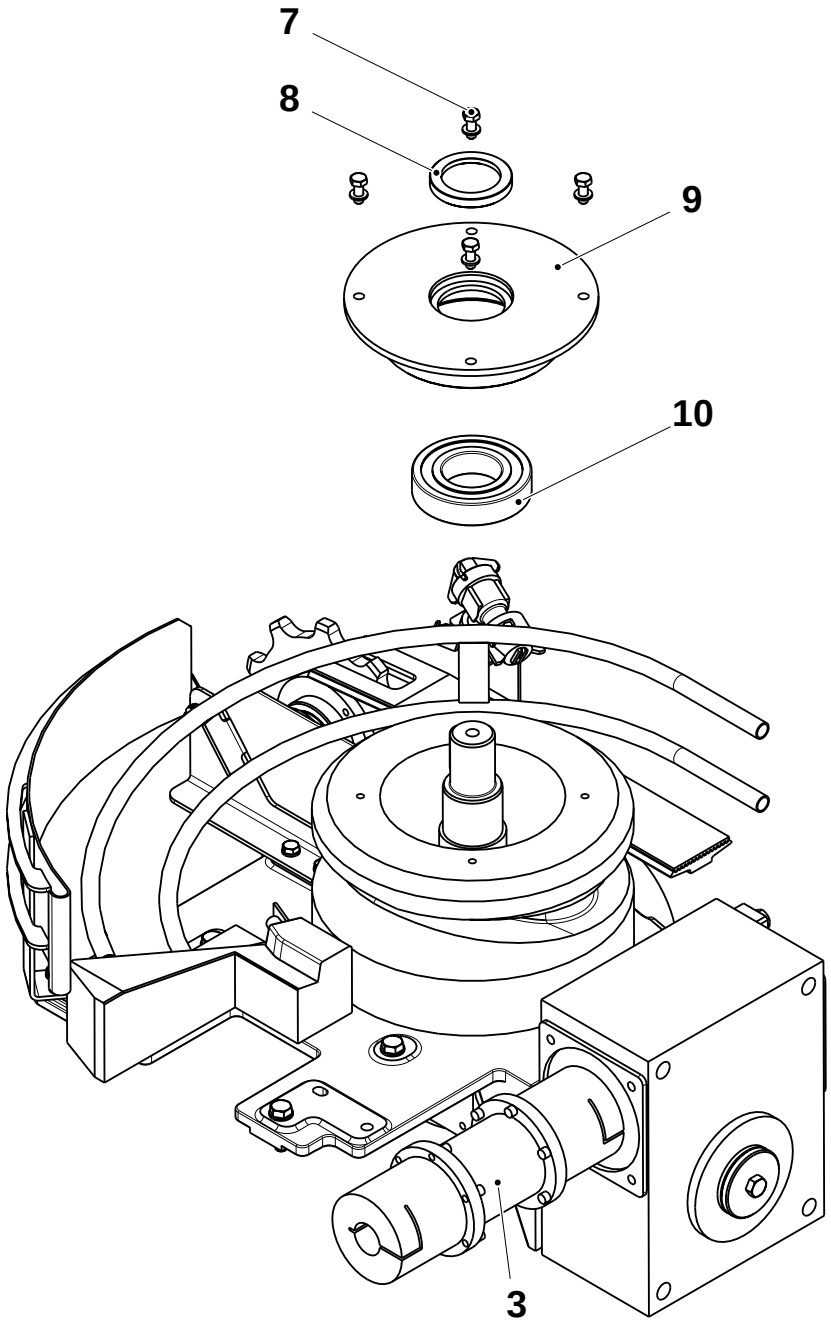

3 Shaft
7 Screw
8 Housing
9 Seal ring
10 Ball bearing

5.3.2 Curve Wheel

5.3.2-1 Curve Wheel - Set Transmitter And Receiver

Machine Status	Power ON
SPC Reference	1260142-0200

Set Alignment

a) Align the transmitter (1) and the receiver (2) opposite to each other.

b) Align the transmitter (3) and the receiver (4) opposite to each other.

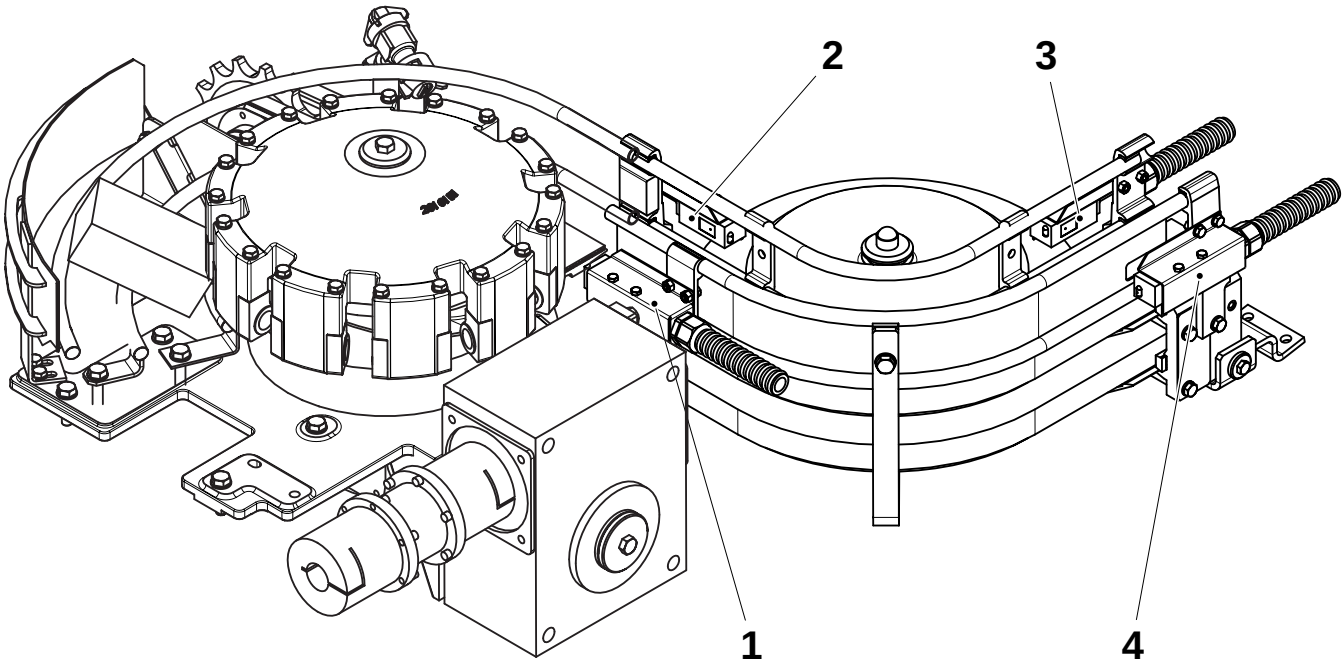

1 Transmitter
2 Receiver
3 Transmitter
4 Receiver

(Cont'd)

(Cont'd)

Set Sensitivity

a) Loosen the screw (1) and open the cover.

b) Set the polarity switch (5) to **PNP** position.

c) Set the mode switch (6) to **D-ON** position.

d) Turn the sensitivity screw (4) fully counter-clockwise and then clockwise until the red LED (2) lights up.

e) Turn the sensitivity screw (4) clockwise a little bit more.

f) Take a package, pass it on the conveyor between the transmitter and the receiver and check that on the receiver only the green LED (3) is **On**.

Note! When the power is **On**, the red LED on the transmitter must be **On**.
When a package is between the transmitter and the receiver the green LED on the receiver must be **On**.
When no packages are between the transmitter and the receiver, both LEDs on the receiver must be **On**.

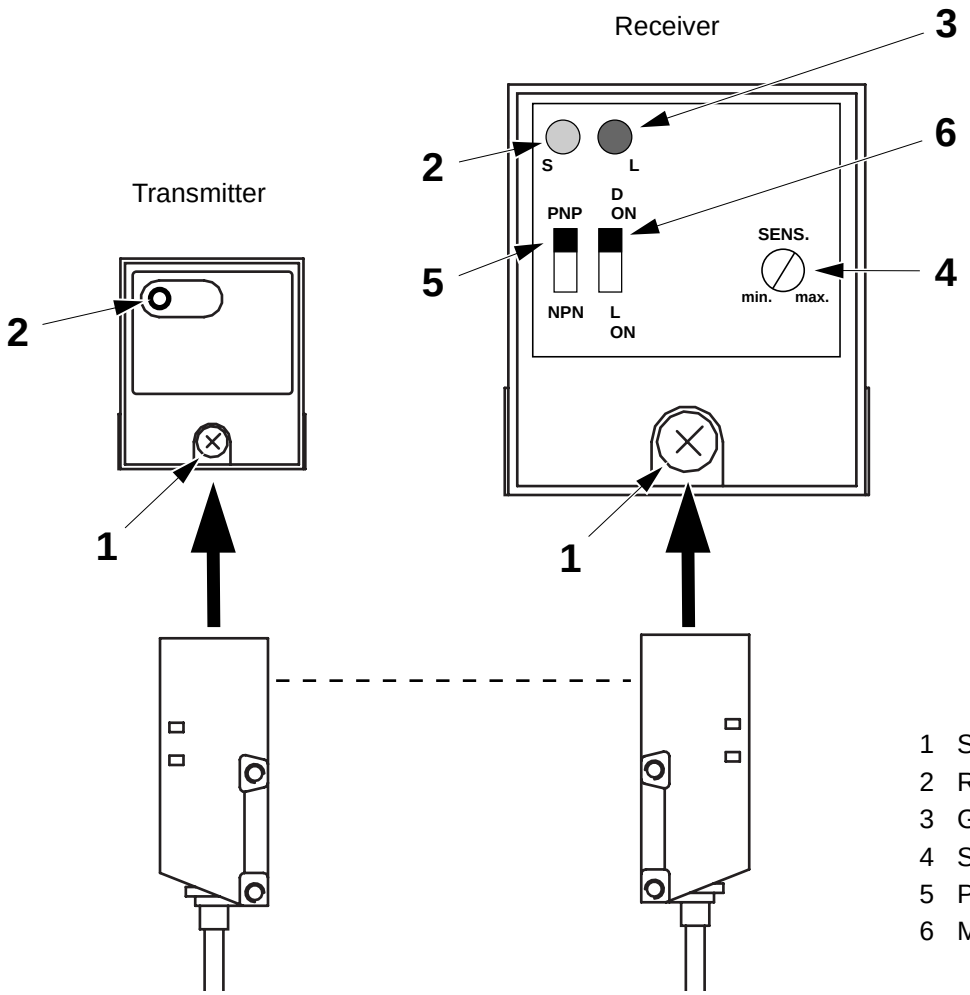

1 Screw
2 Red LED
3 Green LED
4 Sensitivity screw
5 Polarity switch
6 Mode switch

5.3.2-2 Curve Wheel - Change Curve Wheel Bushing

SPC Reference	1260142-0200

a) Remove the cap, screw and washer (1).

b) Remove the plate (2) and change the bushings (3) and (4).

c) Remove the washer (5).

d) Remove the plate (6) and change the bushings (7) and (8).

e) Check the shaft (9), if it is damaged or worn remove the screw (10) and change the shaft.

f) Assemble in the reverse order.

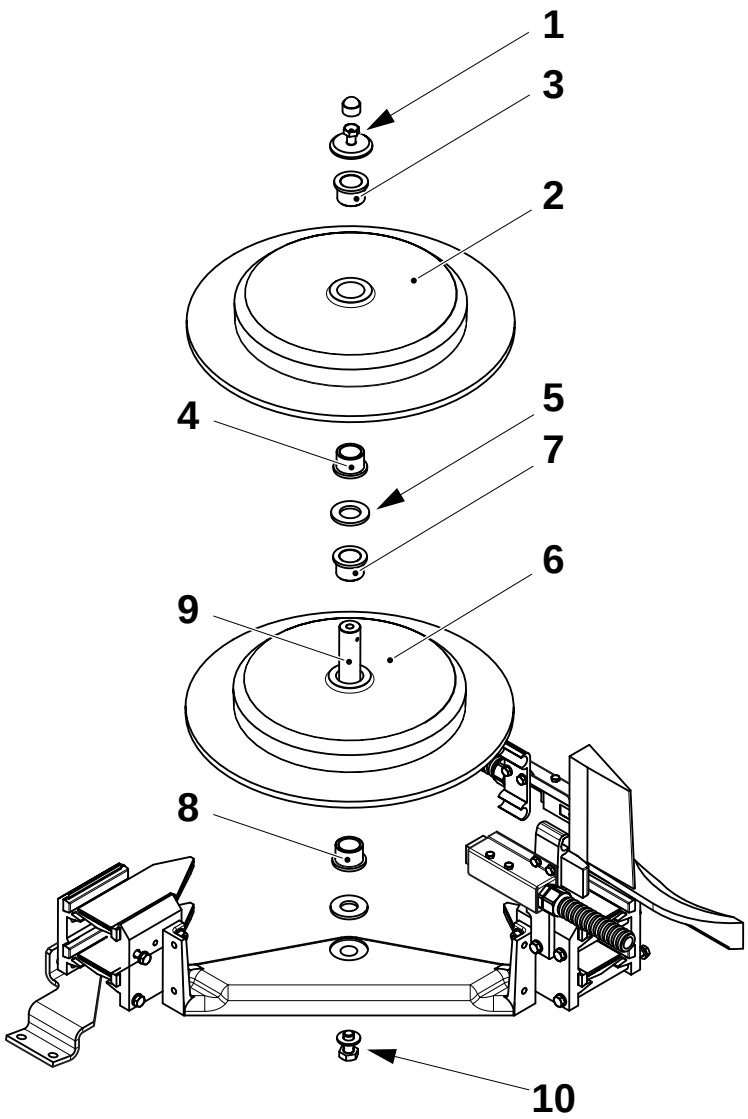

1 Screw
2 Bushing
3 Plate
4 Bushing
5 Washer
6 Plate
7 Bushing
8 Bushing
9 Shaft
10 Screw

This page intentionally left blank

6 Service Unit

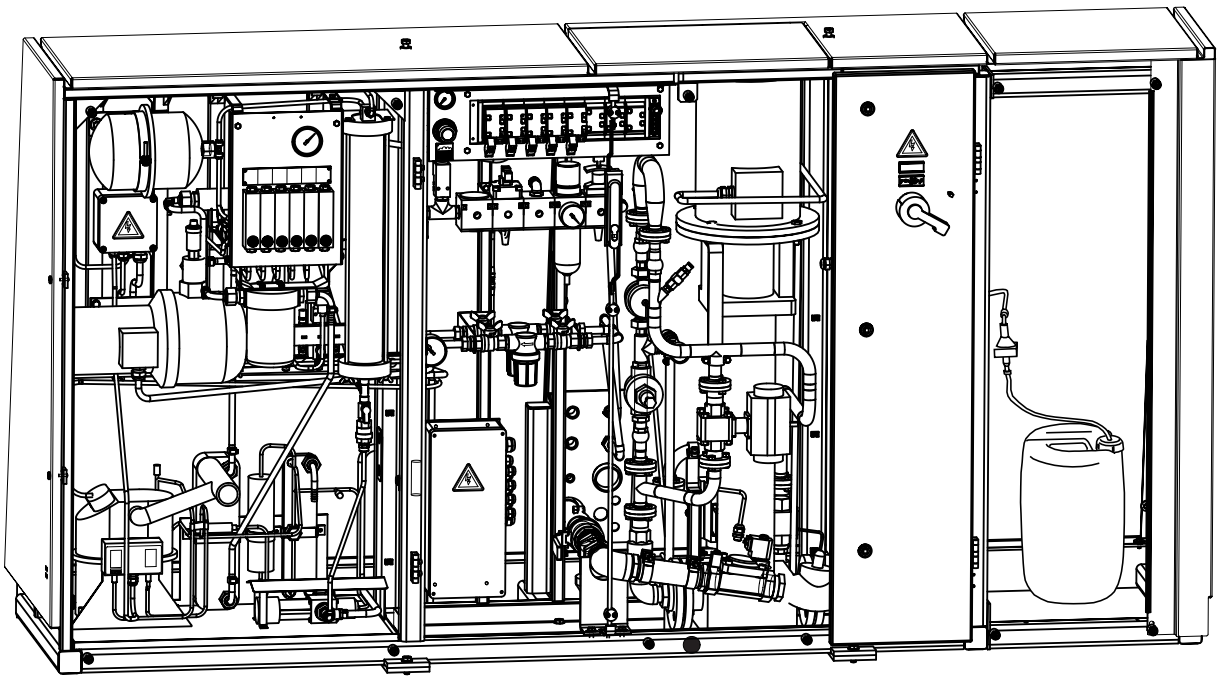

Service Unit - Description

SPC Reference	648506-0400

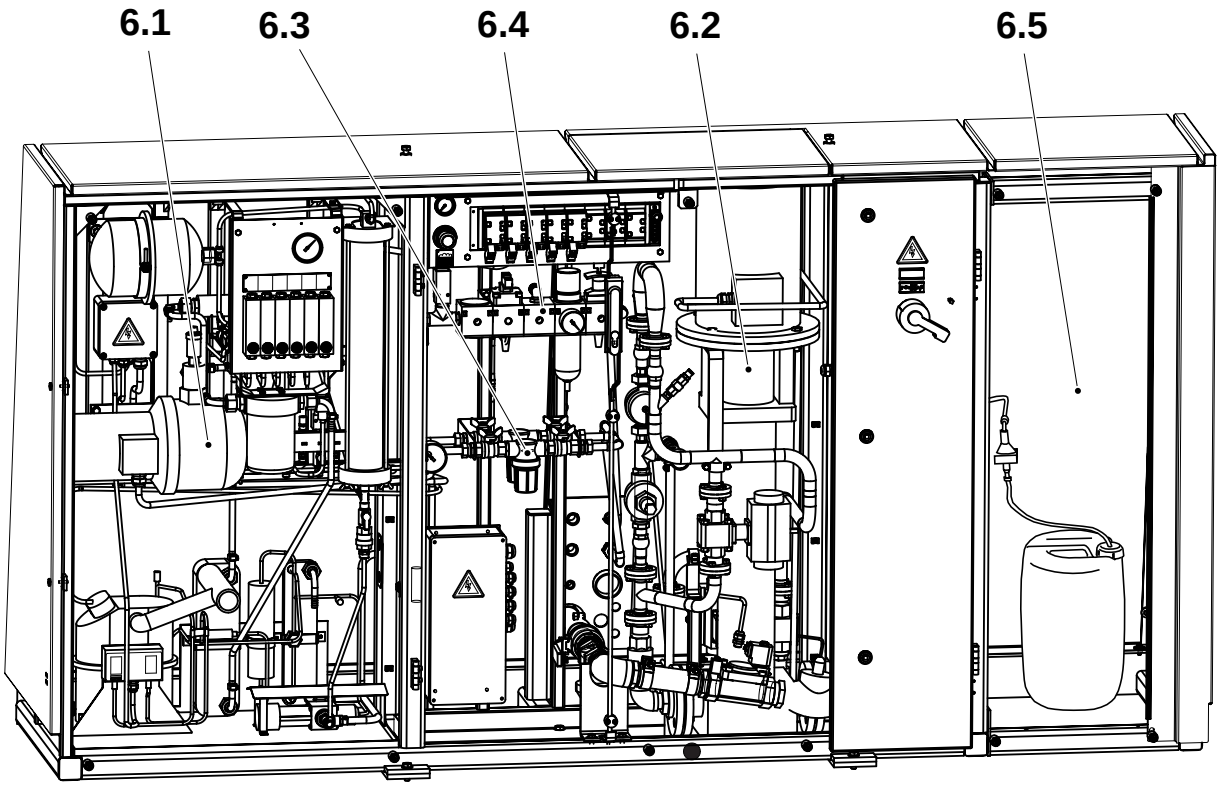

6.1 Cooling Water System
6.2 Foam Cleaning Unit
6.3 Water Panel
6.4 Supply System
6.5 Machine Body

6.1 Cooling Water System . . . . . 6 - 5

6.1-1 Cooling Water System - Check . . . . . 6 - 5

6.1-2 Cooling Water System - Fill . . . . . 6 - 7

6.1.1 Compressor Unit . . . . . 6 - 9

6.1.1-1 Compressor Unit - Check Sight Glass . . . . . 6 - 9

6.1.1-2 Compressor Unit - Check . . . . . 6 - 10

6.1.2 Flowmeter . . . . . 6 - 11

6.1.2-1 Flowmeter - Change Deionizer Cartridge . . . . . 6 - 11

6.1.2-2 Flowmeter - Set Flows . . . . . 6 - 13

6.1.2-3 Flowmeter - Change Filter Insert . . . . . 6 - 14

6.2 Foam Cleaning Unit . . . . . 6 - 17

6.2.1 Cleaning Pump . . . . . 6 - 17

6.2.1-1 Cleaning Pump - Check Connections . . . . . 6 - 17

6.2.1-2 Cleaning Pump - Set Pressure . . . . . 6 - 18

6.3 Water Panel . . . . . 6 - 19

6.3-1 Water Panel - Check Pressure Switch . . . . . 6 - 19

6.3-2 Water Panel - Clean Filters . . . . . 6 - 20

6.3-3 Water Panel - Set Tube Flushing Device . . . . . 6 - 22

6.4 Supply System . . . . . 6 - 23

6.4.1 Pneumatic Unit . . . . . 6 - 23

6.4.1-1 Pneumatic Unit - Check . . . . . 6 - 23

6.4.1-2 Pneumatic Unit - Set Pressure . . . . . 6 - 24

6.4.1-3 Pneumatic Unit - Set Pressure Switch . . . . . 6 - 24

6.4.1-4 Pneumatic Unit - Clean Filter Insert . . . . . 6 - 25

6.5 Machine Body . . . . . 6 - 26

6.5.1 Chemical Unit . . . . . 6 - 26

6.5.1-1 Chemical Unit - Check . . . . . 6 - 26

This page intentionally left blank

6.1 Cooling Water System

SPC Reference	1095612-0300

6.1-1 Cooling Water System - Check

Machine Status	PRODUCTION
SPC Reference	1095612-0300

WARNING

Risk of personal injury.

Cooling media R134A.

Carefully follow the supplier's instructions for handling and disposal of the R134A (freon).

Updated Cooling Circuit

Check that:

- there are no water leaks at the connections
- the pump (1) runs smoothly without excessive noise or vibrations
- the pressure gauge (2) shows the correct water pressure in the circuit, see 10.1 Technical Data.
- the flowmeters (3) values.
  Set flows as required, see 6.1.2-2 Flowmeter - Set Flows.

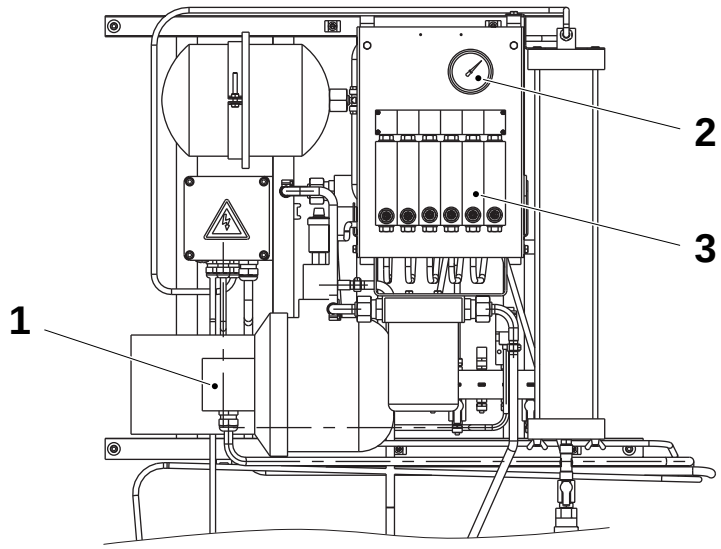

1 Pump
2 Pressure gauge
3 Flowmeter

(Cont'd)

(Cont'd)

Not Updated Cooling Circuit

Check that:

- there are no water leaks at the connections
- the expansion vessel (1) is half full
  Fill it as required, see 6.1-2 Cooling Water System - Fill.
- the pump (2) runs smoothly without excessive noise or vibrations
- the flowmeter (3) and the pressure gauge (4) values, see 10.1 Technical Data. Set the flows as required, see 6.1.2-2 Flowmeter - Set Flows.

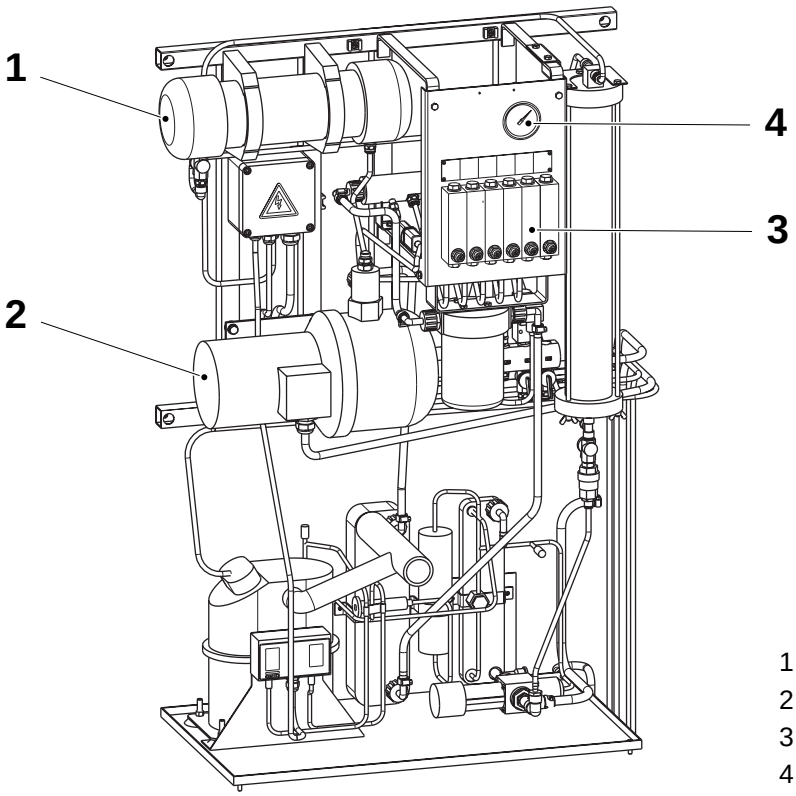

1 Expansion vessel
2 Pump
3 Flowmeters
4 Pressure gauge

6.1-2 Cooling Water System - Fill

Machine Status	Mains power ON Water ON Air ON
SPC Reference	1095612-0300

WARNING

Risk of personal injury.

Cooling media R134A.

Carefully follow the supplier's instructions for handling and disposal of the R134A (freon).

Updated Cooling Circuit

a) Open the valves (1).

b) Open the valve (2) to fill the circuit with water.

Note! Make sure the circuit is correctly connected and the valves located in the jaw unit/final folder compartment are open.

c) Leave the pump (3) running for approximately one minute.

d) When the water pressure gauge (4) reaches **200 kPa (2 bar)**, close the valve (2).

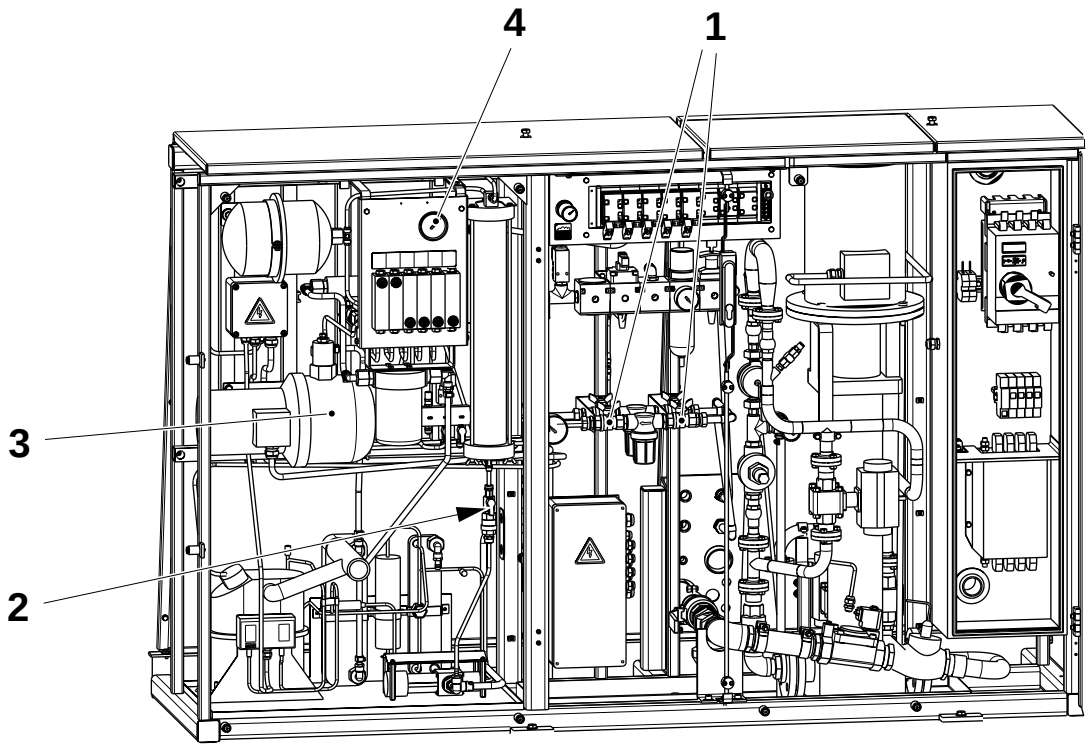

1 Valve
2 Valve
3 Pump
4 Pressure gauge

(Cont'd)

(Cont'd)

Not Updated Cooling Circuit

a) Open the valve (3) to fill the expansion vessel (1) with water. At the same time, bleed the air out of the system by means of the valve (2).

Note! Make sure the circuit is correctly connected and the valves, located in the jaw unit/final folder compartment, to supply the final folder and the jaw unit are open.

b) Leave the pump (4) running for approximately one minute and then repeat item a).

c) When the water pressure gauge (5) reaches **200 kPa (2 bar)**, close the valve (3).

d) Check the expansion vessel (1) is approximately half full.

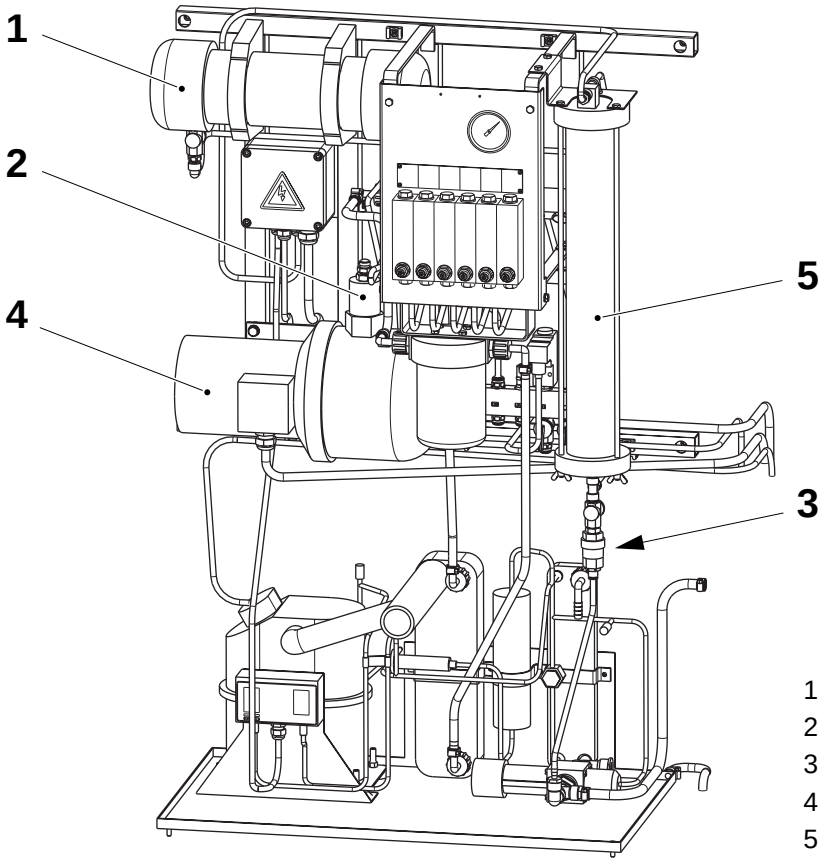

1 Expansion vessel
2 Valve
3 Valve
4 Pump
5 Pressure gauge

6.1.1 Compressor Unit

6.1.1-1 Compressor Unit - Check Sight Glass

Machine Status	Mains power ON Water ON Air ON
SPC Reference	1095710-0300

WARNING

Risk of personal injury.

Cooling media R134A.

Carefully follow the supplier's instructions for handling and disposal of the R134A (freon).

Check there are no gas bubbles in the sight glass (1). If air bubbles are present call the local Tetra Pak Service.

Check the pin inside the sight glass (1) is **green**. If the pin is **yellow** call a local authorized service for refrigerating units.

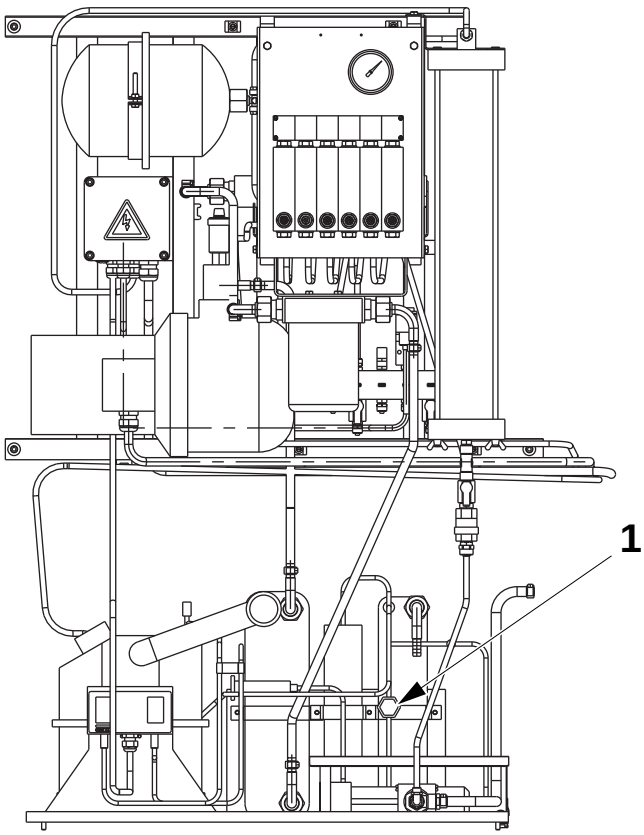

1 Sight glass

Figure shows the updated cooling circuit

6.1.1-2 Compressor Unit - Check

Machine status	PRODUCTION
Tools - thermometer	 min. 40°C
SPC Reference	1095710-0300

WARNING
Risk of personal injury.
Cooling media R134A.
Carefully follow the supplier's instructions for handling and disposal of the R134A (freon).

Use a thermometer to check the temperature of the water from the hose (1). The temperature must be between **30°C** and **35°C** when the compressor (2) is running.

If not, call the local Tetra Pak Service.

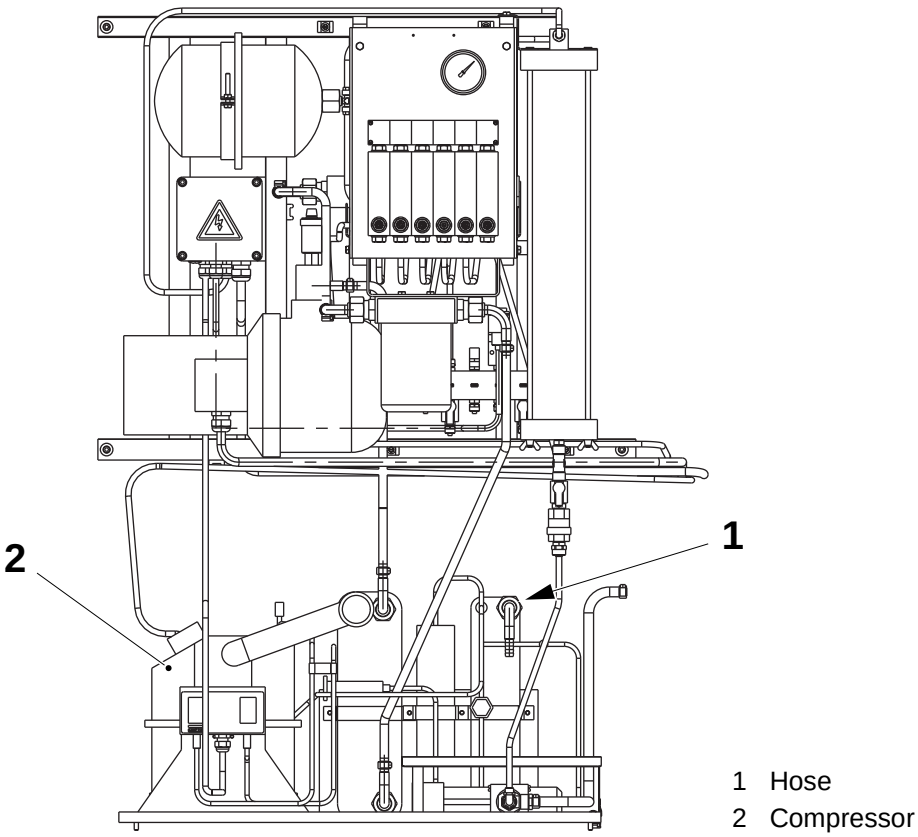

Figure shows the updated cooling circuit

6.1.2 Flowmeter

6.1.2-1 Flowmeter - Change Deionizer Cartridge

SPC Reference	1095705-0300

WARNING
Risk of personal injury.
Cooling media R134A.
Carefully follow the supplier's instructions for handling and disposal of the R134A (freon).

Updated Cooling Circuit

a) Close the DI-circuit flowmeter (1) by means of the screw (2).

b) Remove the wing nuts (3), lower the flange (4) and remove the deionizer cartridge (5).

c) Change the de-ioniser cartridge (5) and make sure the rubber seals located at the top and bottom of the flanges (5), are correctly positioned.

d) Change the rubber seals if damaged.

e) Fit the flange (4) and tighten the wing nuts (3).

f) Open the DI-circuit flowmeter (1) by means of the screw (2).

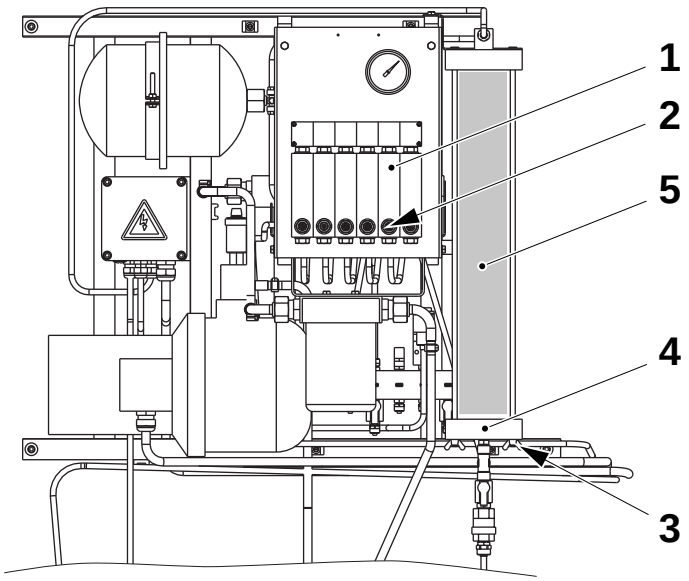

1 Flowmeter
2 Screw
3 Wing nut
4 Flange
5 Cartridge

(Cont'd)

(Cont'd)

Not Updated Cooling Circuit

a) Close the DI-circuit flowmeter (1) by means of the screw (2).

b) With the aid of a screwdriver close the valve (3).

c) Remove the wing nuts (4) and lower the flange (5) so the deionizer cartridge (6) can be removed.

d) Change the deionizer cartridge (6) and make sure the rubber seals, located at the top and on the bottom flanges (5), are correctly positioned.

e) Change the rubber seals if damaged.

f) Fit the flange (5) and tighten the wing nuts (4).

g) Open the valve (3).

h) Open the DI-circuit flowmeter (1) by means of the screw (2).

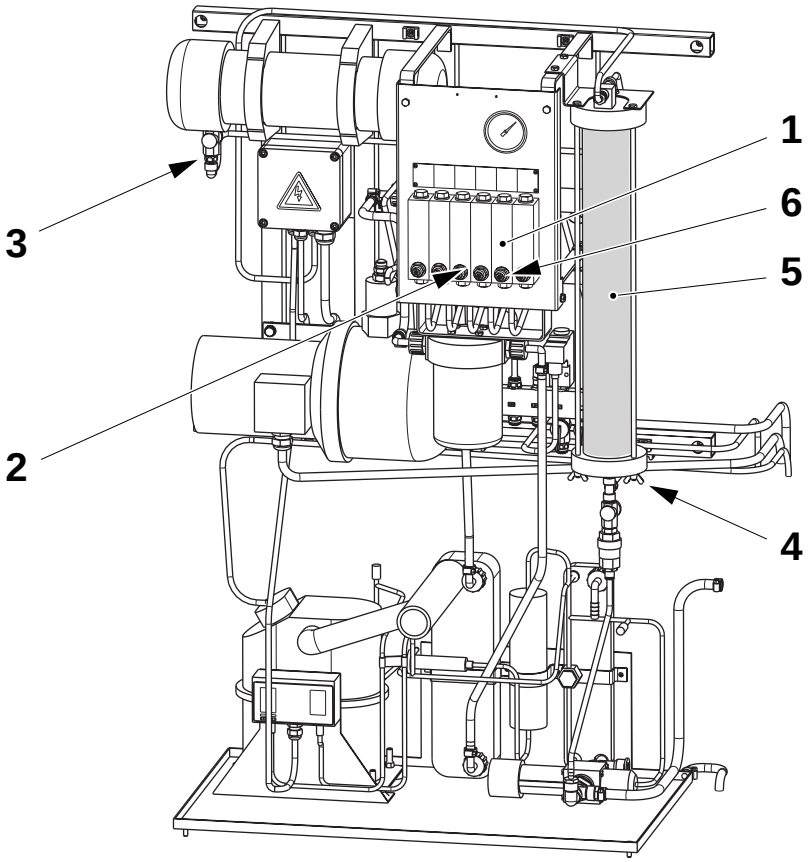

1 Flowmeter
2 Screw
3 Valve
4 Wing nut
5 Flange
6 Cartridge

6.1.2-2 Flowmeter - Set Flows

Machine Status	PRODUCTION
SPC Reference	1095705-0300

Set the flows by turning the setting screws (7) for the flowmeters (1), (2), (3), (4), (5) and (6) as indicated in the 10.1 Technical Data section.

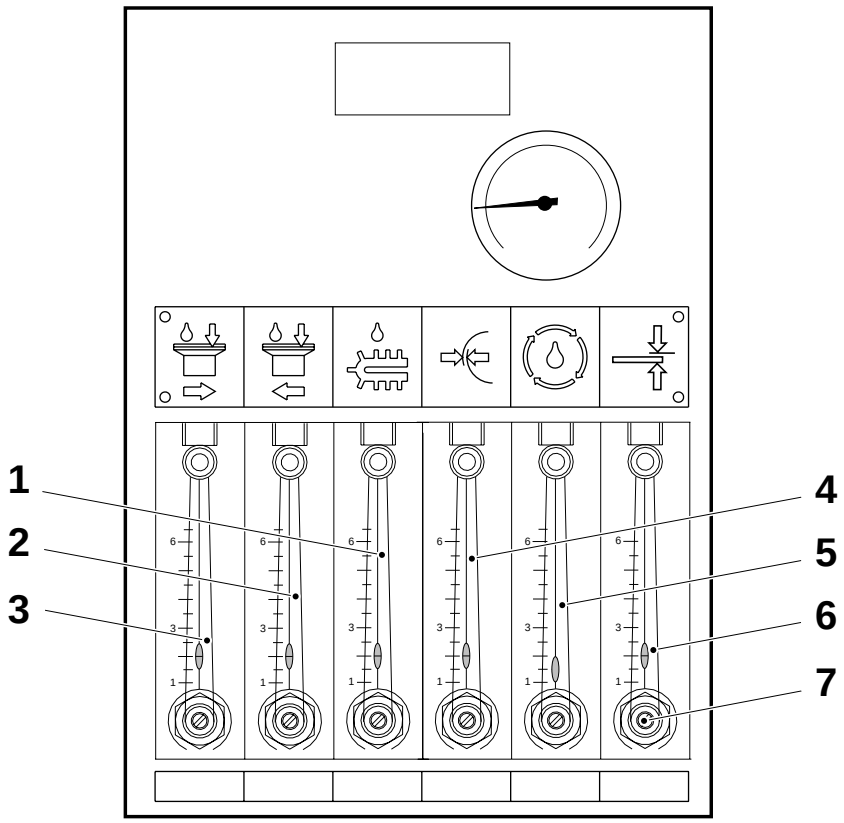

1 Flow meter (LH transverse seal transformer)
2 Flowmeter (RH transverse seal transformer)
3 Flowmeter (final folder)
4 Flowmeter (longitudinal sealing)
5 Flowmeter (DI circuit)
6 Flowmeter (strip applicator)
7 Setting screw

6.1.2-3 Flowmeter - Change Filter Insert

SPC Reference	1095705-0300

WARNING

Risk of personal injury.

Cooling media R134A.

Carefully follow the supplier's instructions for handling and disposal of the R134A (freon).

Updated Cooling Circuit

a) Drain the water from the circuit by disconnecting the hose (1) in the final folder unit. Approximately one liter of water must be discarded.

b) Re-connect the hose (1).

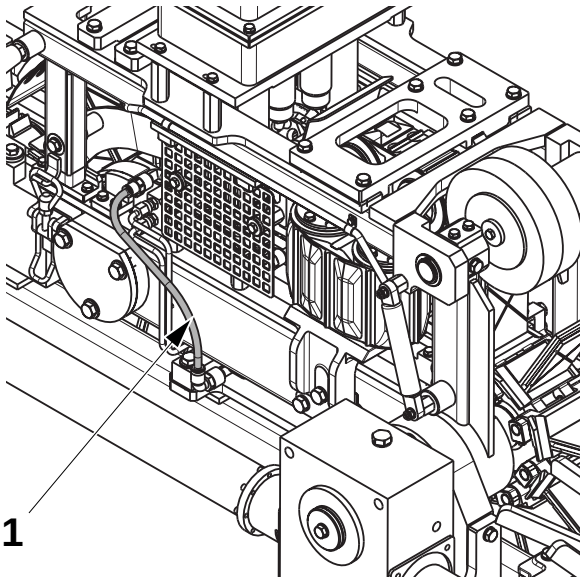

1 Hose

(Cont'd)

(Cont'd)

c) Screw out the filter housing (2) and remove the filter insert (4). Clean the filter insert with compressed air or change as required.

d) Check the O-ring (3) for damage. Change as required.

e) Fit the filter insert (4), the O-ring (3) and the filter housing (2).

f) Fill the system, see 6.1-2 Cooling Water System - Fill.

Note! Check during **Production** there are no leaks.

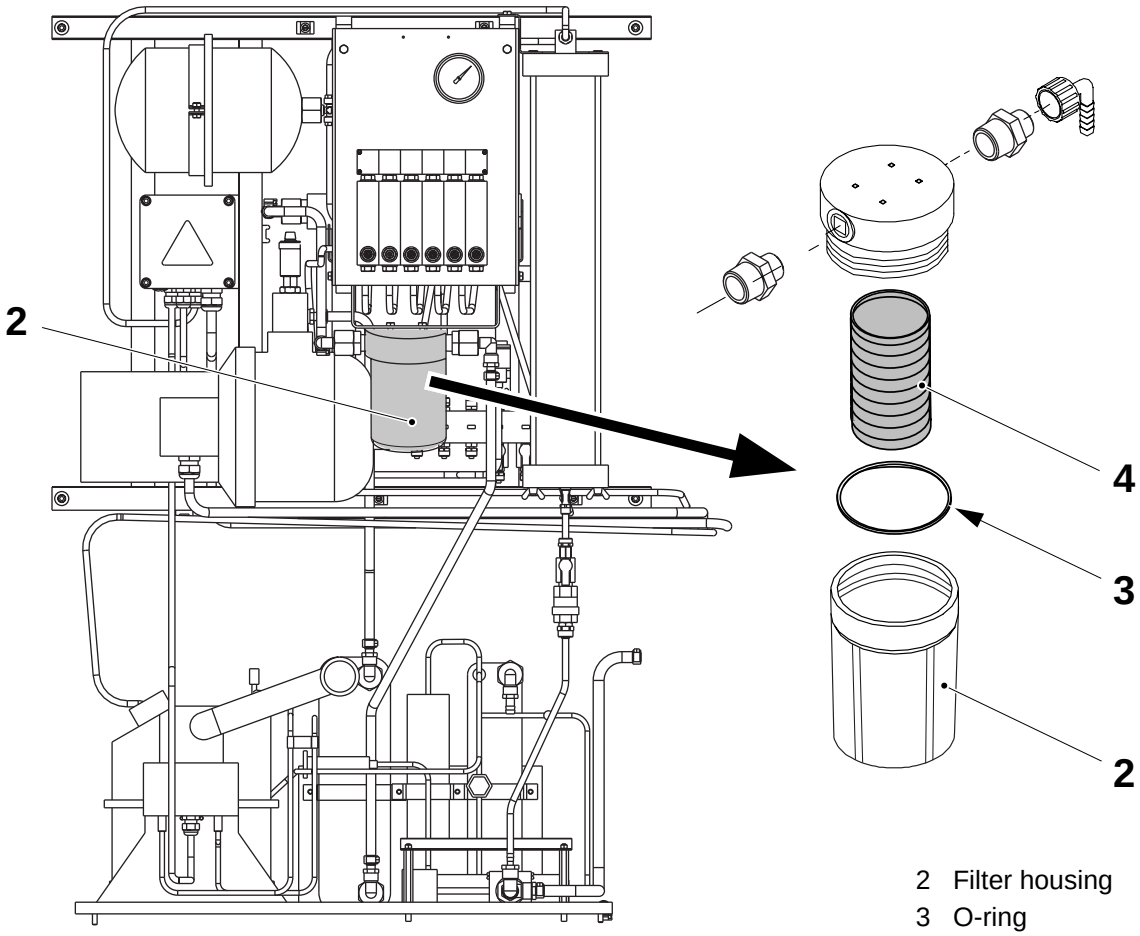

2 Filter housing
3 O-ring
4 Filter insert

(Cont'd)

(Cont'd)

Not Updated Cooling Circuit

a) Open the valve (1) to release the systems pressure. Approximately one litre of water must be discarded.

b) When the pressure gauge (2) shows **0 bar** close the valve (1).

c) Screw out the filter housing (3) and pull out the filter insert (5). Clean the filter insert with compressed air or change as required.

d) Check the O-ring (4) for damage. Change as required.

e) Fit the filter insert (5), the O-ring (4) and the filter housing (3).

f) Fill the system, see 6.1-2 Cooling Water System - Fill.

Note! Check during **Production** the new filter does not leak.

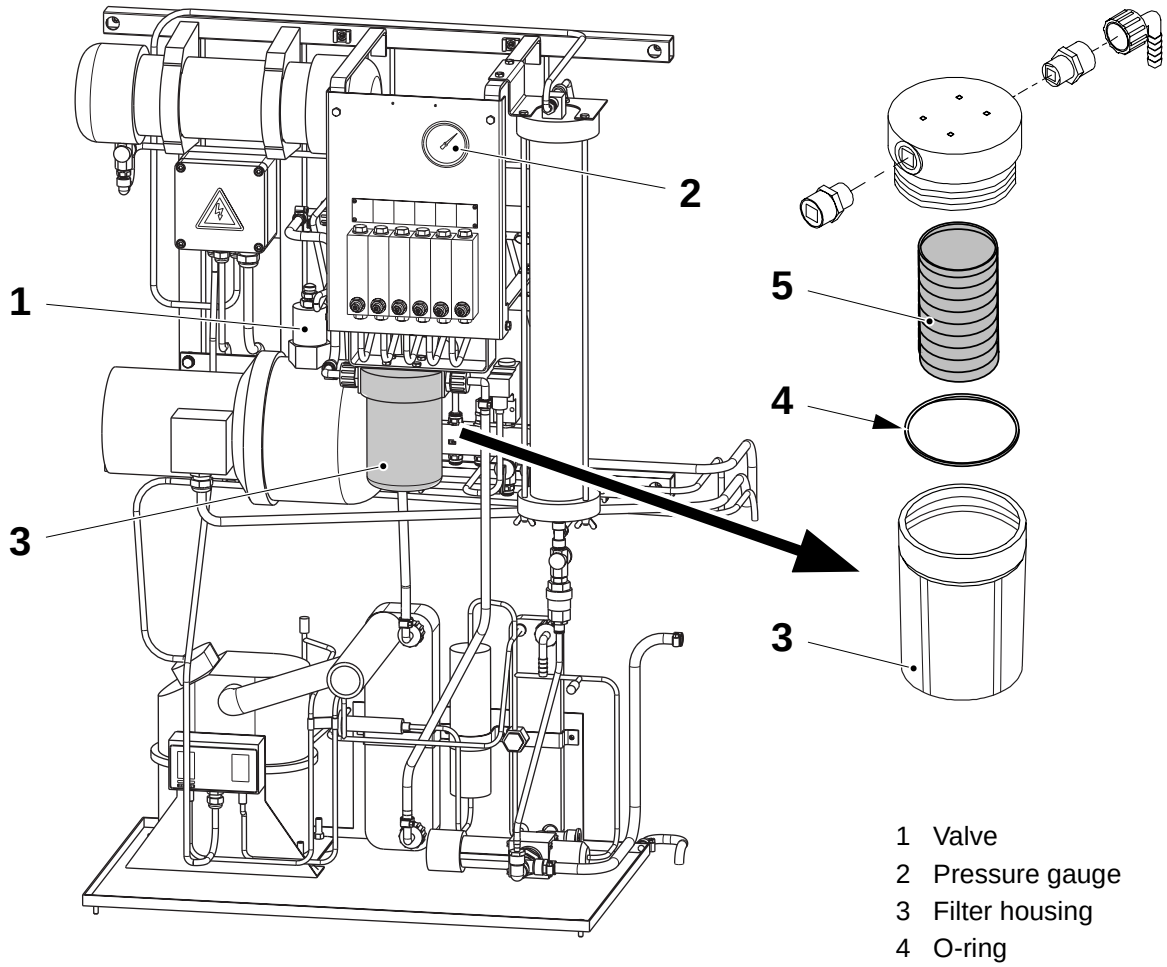

1 Valve
2 Pressure gauge
3 Filter housing
4 O-ring
5 Filter insert

6.2 Foam Cleaning Unit

SPC reference	1095627-0300

6.2.1 Cleaning Pump

6.2.1-1 Cleaning Pump - Check Connections

Machine Status	EXTERNAL CLEANING
SPC Reference	1095676-0100

Check for leakages in the:

- pipe connections, see arrows;
- cleaning pump connections, see arrows.

Change the seals as required.

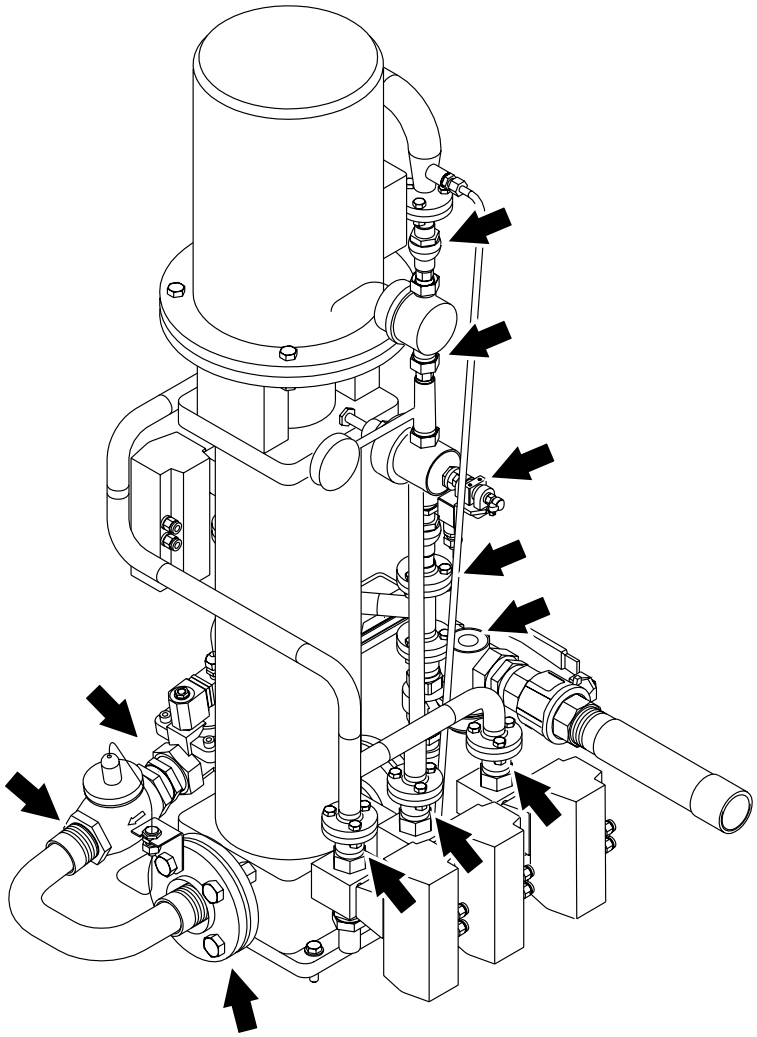

6.2.1-2 Cleaning Pump - Set Pressure

Tool - pressure gauge	 TP No.90043-86
SPC Reference	1095676-0100

a) Remove the plug from the T-connection and connect the pressure gauge (4) in its place.

b) Step up the machine to step **External cleaning**.

c) Set the cleaning pressure according to 10.1 Technical Data, by means of the adjustment screw (2) on the pressure regulator (1).

d) Remove the pressure gauge and fit the plug (4).

Foam Pressure

Set the foams pressure according to 10.1 Technical Data, by means of the pressure regulator (3).

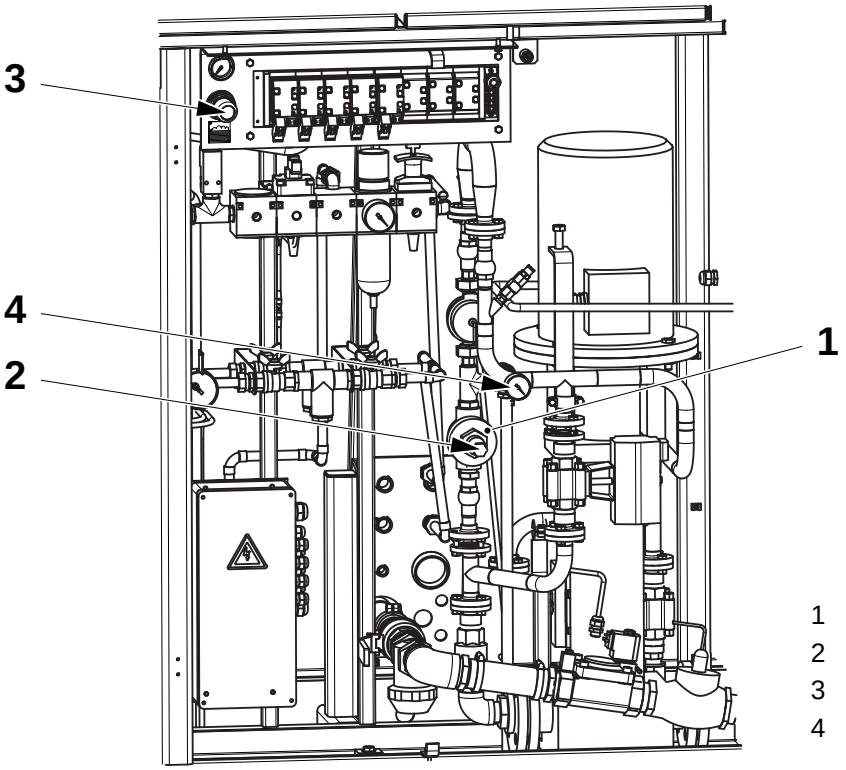

1 Pressure regulator
2 Adjustment screw
3 Pressure regulator
4 Pressure gauge

6.3 Water Panel

SPC Reference	1095608-0100

6.3-1 Water Panel - Check Pressure Switch

Machine Status	Air ON Water ON Mains power ON
SPC Reference	1095608-0100

a) Slowly close the valve (1) in the open line and check the **water supply** alarm on the TPOP panel lights up when the pressure gauge (2) drops below **2 bar**.

b) If not, change the pressure switch (3).

c) Open the valve (1).

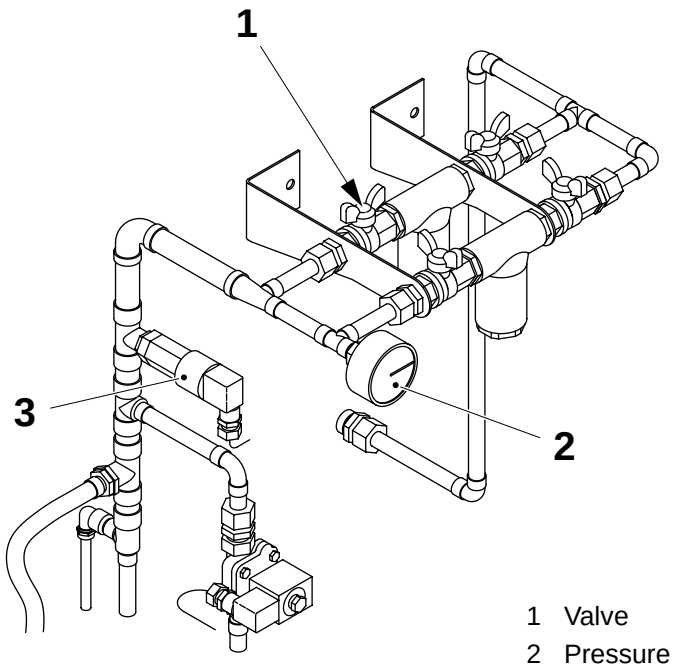

1 Valve
2 Pressure gauge
3 Pressure switch

6.3-2 Water Panel - Clean Filters

SPC Reference	1095608-0100

Cold Water

Note! During **Production** only one filtering line should be open at a time.

a) Close the four valves.

b) Remove the plug (5) or the filter housing (6) and remove the filter insert (3). Clean the filter insert (3) with compressed air or change as required.

c) Check the O-ring (4) for damage. Change as required.

d) Fit the filter insert (3), the O-ring (4) and the plug (5) or the filter housing (6).

e) Repeat for the other filter, items b) to d).

f) Open two valves in one filtering line.

g) Check during **Production** there are no leakages from the plugs (5) or the filter housings (6).

Production

Clean the filter in the closed line (2), then open the line and close the other line. Clean the other filter.

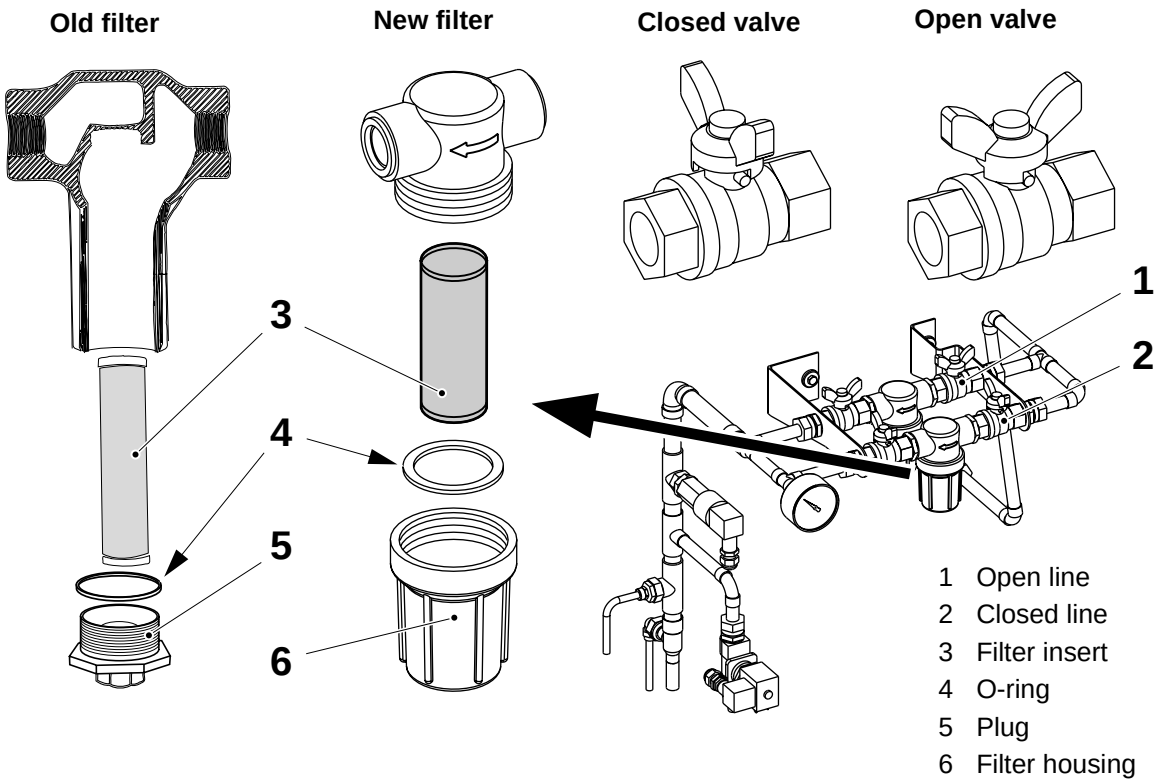

1 Open line
2 Closed line
3 Filter insert
4 O-ring
5 Plug
6 Filter housing

(Cont'd)

(Cont'd)

Hot Water

a) Close the valve (1).

b) Remove the plug (4) and pull out the filter insert (2). Clean the filter insert (2) with compressed air or change as required.

c) Check the O-ring (3) for damage. Change as required.

d) Fit the filter insert (2), the O-ring (3) and the plug (4).

e) Open the valve (1).

f) Check during **Production** there are no leakages in the plug (4).

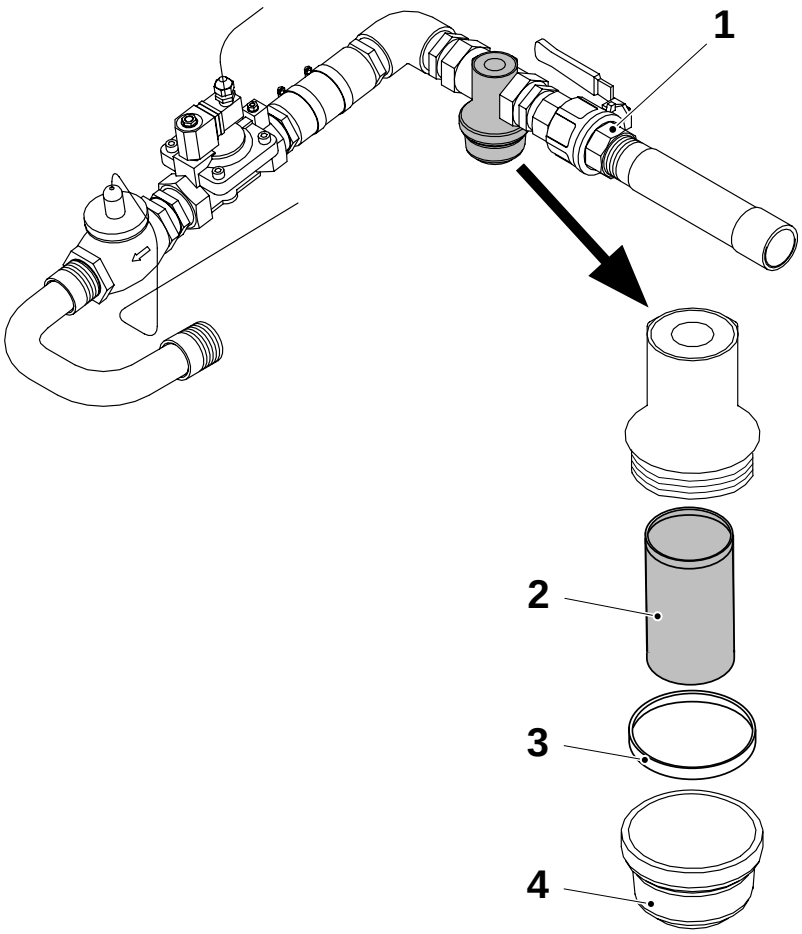

1 Valve
2 Filter insert
3 O-ring
4 Plug

6.3-3 Water Panel - Set Tube Flushing Device

Machine Status	PRODUCTION
SPC Reference	1095608-0100

Note! Make sure the nozzles (3) spray water onto the tube without splashing.
If not adjust the flow.

Using a screwdriver, adjust the valve (1) and (2) on the process panel to set the tube flushing water flow and the infeed conveyor water flow, see 10.1 Technical Data section for the correct value.

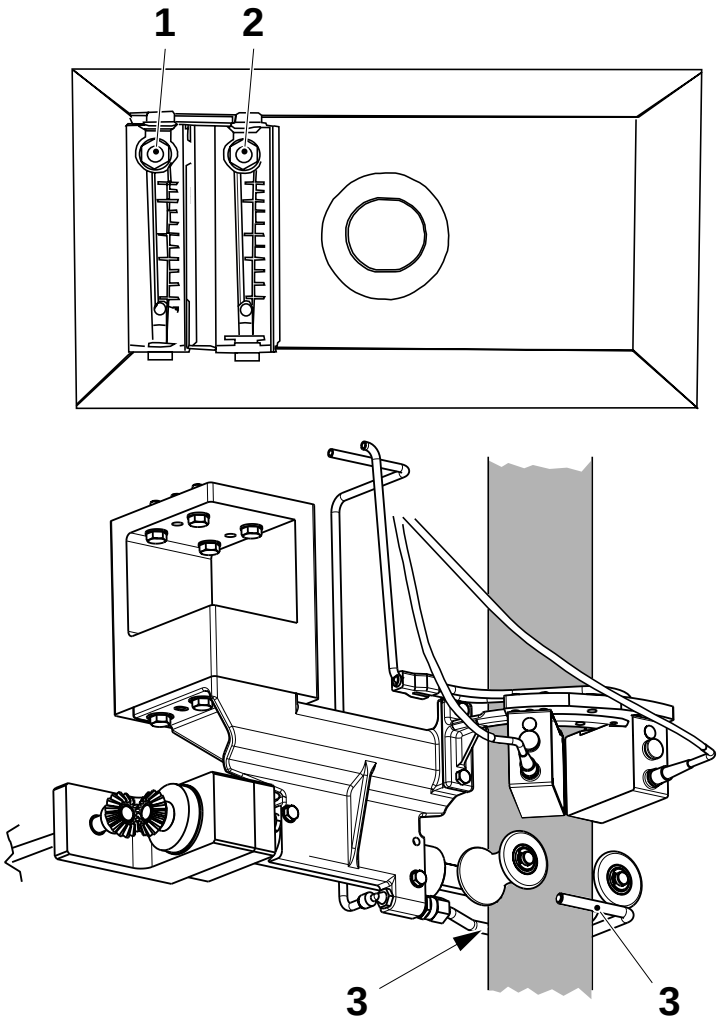

1 Valve, tube flushing water flow
2 Valve, infeed conveyor water flow
3 Nozzle

6.4 Supply System

SPC reference	1095714-0300

6.4.1 Pneumatic Unit

6.4.1-1 Pneumatic Unit - Check

Machine Status	Air ON Mains power ON
SPC Reference	1095609-0200

a) Check for leakages in the pneumatic unit.

b) Record the pressure on the pressure gauge (4). Drop the pressure to **4.5 bar** by means of the pressure regulator (2) and check the air supply alarm starts flashing on the TPOP panel. If not, set the pressure switch (1), see 6.4.1-3 Pneumatic Unit - Set Pressure Switch. Set the pressure to the previously recorded value.

c) Close the shut-off valve (3) and check the pressure gauge (4) indicates zero. If not change the shut-off valve (3) or the pressure gauge (4) as required.

d) Open the shut-off valve (3).

e) Check the filter insert (5). If the pressure is too low, clean or change it, see 6.4.1-4 Pneumatic Unit - Clean Filter Insert.

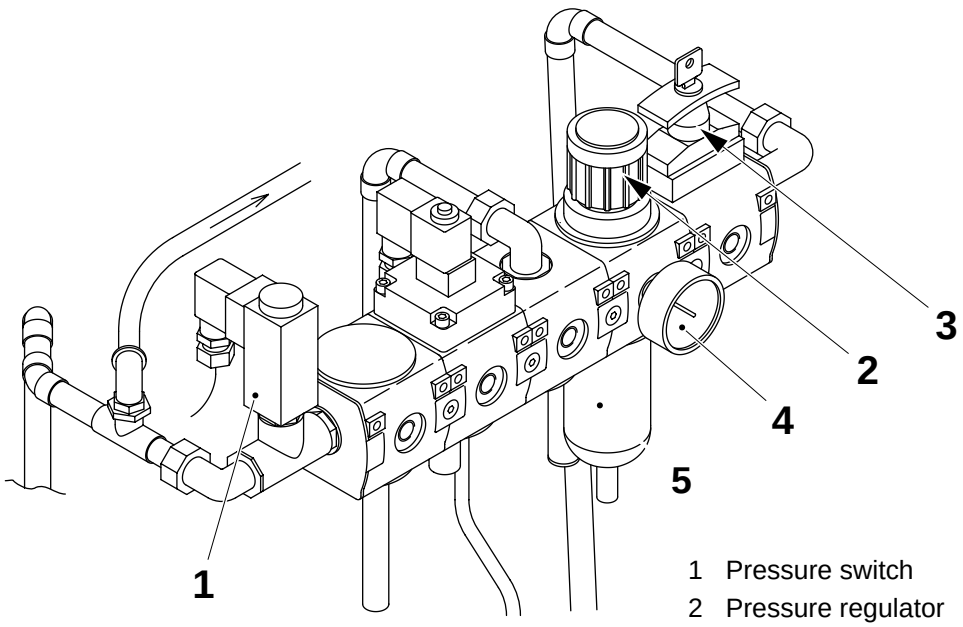

1 Pressure switch
2 Pressure regulator
3 Shut-off valve
4 Pressure gauge
5 Filter insert

6.4.1-2 Pneumatic Unit - Set Pressure

Machine Status	Air ON Mains power ON
SPC Reference	1095609-0200

Set the pressure regulator (2) so the pressure gauge (1) shows the air pressure according to 10.1 Technical Data.

6.4.1-3 Pneumatic Unit - Set Pressure Switch

Machine Status	Air ON Mains power ON
SPC Reference	1095609-0200

a) Turn the adjuster screw (4) at the top of the pressure switch (3) fully anti-clockwise.

b) By means of the pressure regulator (2) set the main input air pressure so the pressure gauge (1) shows **4.5 bar**.

c) Slowly turn the adjuster screw (4) clockwise until the filling machines main air supply alarm starts flashing on the TPOP panel.

d) By means of the pressure regulator (2) reset the main input air pressure so the pressure gauge (1) shows the air pressure according to 10.1 Technical Data.

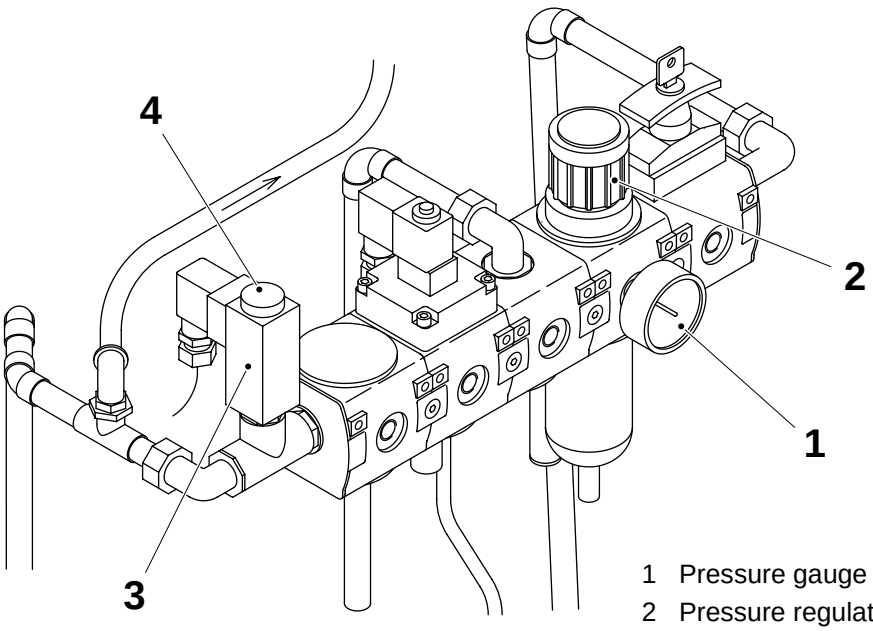

1 Pressure gauge
2 Pressure regulator
3 Pressure switch
4 Adjuster screw

6.4.1-4 Pneumatic Unit - Clean Filter Insert

Consumables - soap	
SPC Reference	1095609-0200

a) Turn **Off** the main air supply by means of the shut-off valve (1).

b) Remove the reservoir (2) and change the O-ring as required.

c) Clean the reservoir (2) with soapy water and rinse with plenty of water.

d) Remove and clean the filter insert inside the reservoir (2).
Change as required.

e) Fit back the reservoir (2) and make sure the O-ring is correctly fitted.

f) Open the air inlet valve and check for leakages in the reservoir (2).

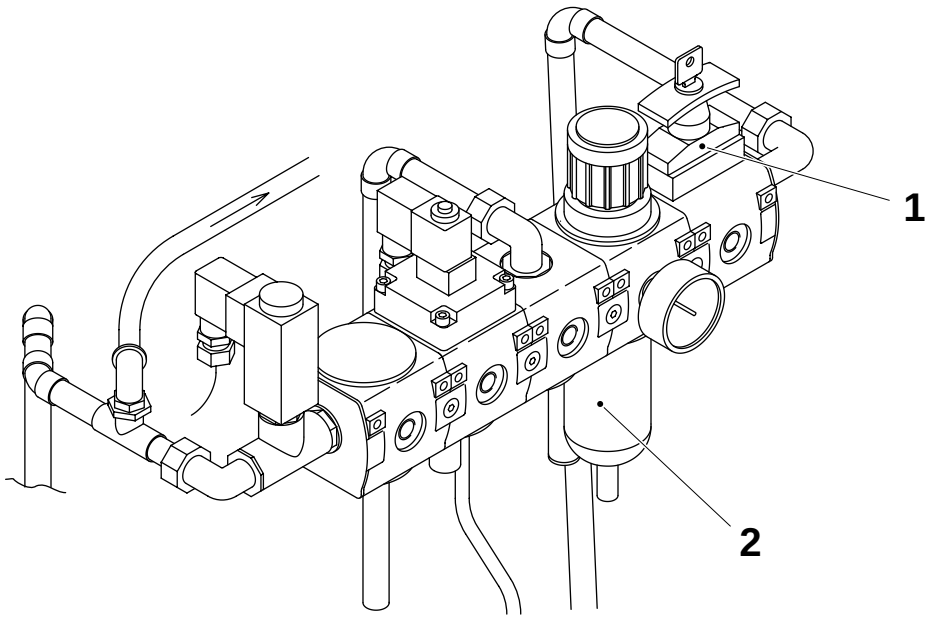

1 Shut-off valve
2 Reservoir

6.5 Machine Body

SPC Reference	1095606-0200

6.5.1 Chemical Unit

6.5.1-1 Chemical Unit - Check

Machine Status	Air ON Mains power ON
SPC Reference	1478943-0100

WARNING

Risk of skin irritation!

Before handling cleaning solutions, carefully read the Safety precautions.

Check the following for wear or damage:

- the pump (1),
- the connections for detergent residue. Clean as required,
- the pipe connections. Check for leaks,
- the filter (2). Clean with compressed air or change as required.

Consumption of Detergent

a) Mark the detergent level on the container with a piece of tape.

b) Run the detergent program.

c) Measure the distance between the detergent level and the tape: see 10.1 Technical Data for the correct consumption.

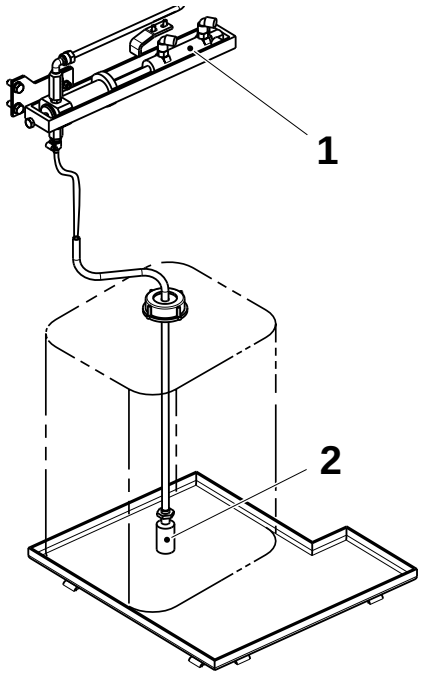

1 Pump
2 Filter

7 Conveyor Section

7-1 Conveyor Section - Set Photocells

SPC Reference	648568-0100

a) Open the cover (1) and make sure the output switch (2) is set to PNP and the mode switch (3) is set to D-ON.

b) Turn the sensitivity screw (4) to the middle of its range. Adjust the position of the photocells so they face each other. The green LED (5) light up.

c) Turn the sensitivity screw counter clockwise to its Min position and then turn it back until the green LED and the red LED (6) light up. To secure the setting, turn the sensitivity screw a little further.

d) When an object is being indicated, the red LED goes off and the green LED is still on. If not, turn the sensitivity screw to Min and make a new adjustment.

e) When the adjustment is done, make sure the cover (1) is properly closed to avoid damages to the photocells.

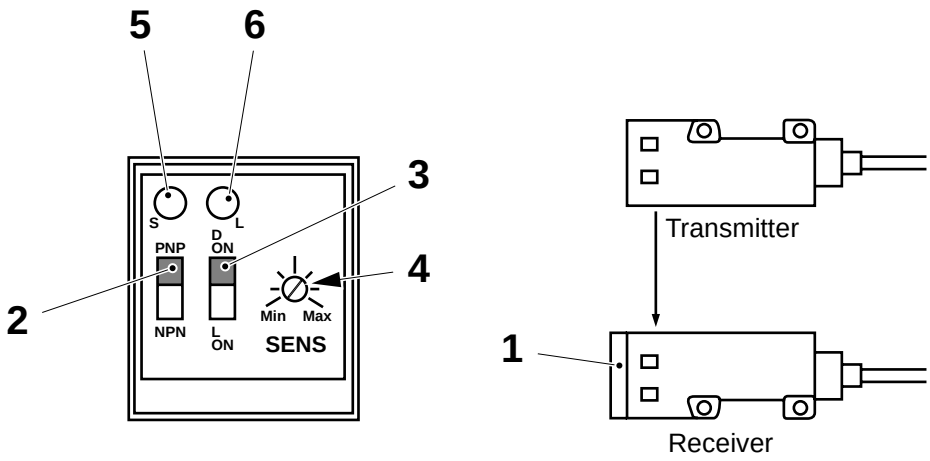

1 Cover
2 Output switch
3 Mode switch
4 Sensitivity screw
5 Stability LED (Light-emitting diode), green
6 Indication LED (Light-emitting diode), red

Do not edit or remove anything on this page

This page intentionally left blank

8 Automatic Splicing Unit

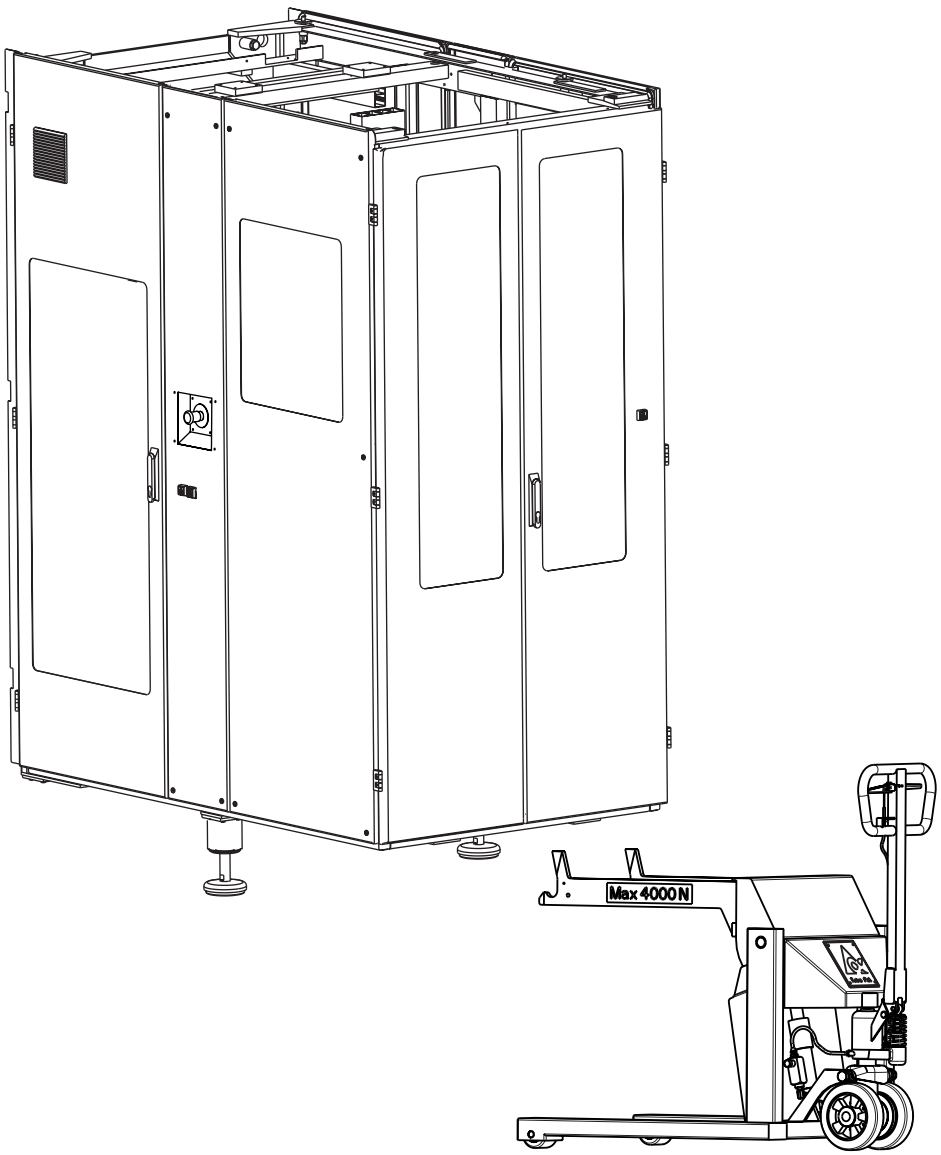

Automatic Splicing Unit - Description

SPC Reference	648528-0100

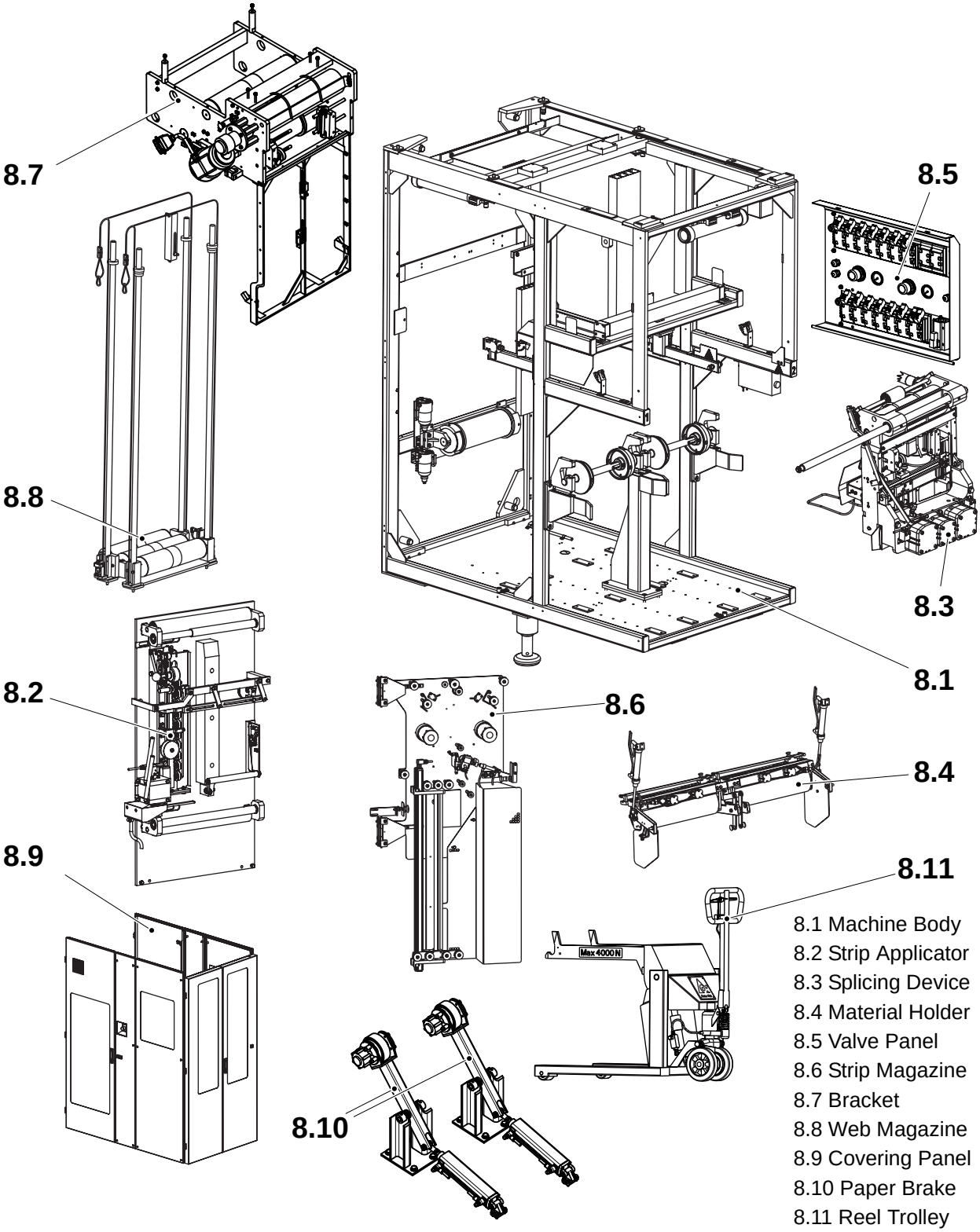

8.1 Machine Body
8.2 Strip Applicator
8.3 Splicing Device
8.4 Material Holder
8.5 Valve Panel
8.6 Strip Magazine
8.7 Bracket
8.8 Web Magazine
8.9 Covering Panel
8.10 Paper Brake
8.11 Reel Trolley

(Cont'd)

8-1 Automatic Splicing Unit - Setting Sequence . . . . 8 - 9
8-2 Asu - Check Function . . . . . 8 - 10

8.1 Machine Body . . . . . 8 - 14

8.1-1 Machine Body - Check Bearing Blocks . . . . . 8 - 14
8.1-2 Machine Body - Change Bearing Blocks . . . . . 8 - 15
8.1-3 Machine Body - Check Bending Roller . . . . . 8 - 16
8.1-4 Machine Body - Overhaul Bending Roller . . . . 8 - 17
8.1-5 Machine Body - Check Air Filter . . . . . 8 - 18
8.1-6 Machine Body - Change Air Filter . . . . . 8 - 19
8.1-7 Machine Body - Set Photocell Position . . . . . 8 - 20
8.1-8 Machine Body - Set Photocell Sensitivity . . . . . 8 - 21

8.1.1 Side Feeder. . . . . 8 - 22

8.1.1-1 Side Feeder - Change . . . . . 8 - 22
8.1.1-2 Side Feeder - Set Sensor Position . . . . . 8 - 24

8.2 Strip Applicator . . . . . 8 - 26

8.2.1 Splice Detector. . . . . 8 - 26

8.2.1-1 Splice Detector - Check . . . . . 8 - 26
8.2.1-2 Splice Detector - Set . . . . . 8 - 28

8.2.2 Inductor. . . . . 8 - 29

8.2.2-1 Inductor - Check . . . . . 8 - 29
8.2.2-2 Inductor - Change Transformer . . . . . 8 - 30
8.2.2-3 Inductor - Change Roller . . . . . 8 - 31
8.2.2-4 Inductor - Set Pressure Rollers . . . . . 8 - 32
8.2.2-5 Inductor - Set Volume . . . . . 8 - 33

8.2.3 Pressure Roller. . . . . 8 - 34

8.2.3-1 Pressure Roller - Check . . . . . 8 - 34
8.2.3-2 Pressure Roller - Change . . . . . 8 - 35
8.2.3-3 Pressure Roller - Set . . . . . 8 - 36
8.2.3-4 Pressure Roller - Set Proximity Switch . . . . . 8 - 37

8.2.4 Strip Guide . . . . . 8 - 38

8.2.4-1 Strip Guide - Check . . . . . 8 - 38
8.2.4-2 Strip Guide - Set . . . . . 8 - 39

8.3 Splicing Device . . . . . 8 - 41

8.3-1 Splicing Device - Check Drive Unit . . . . . 8 - 41
8.3-2 Splicing Device - Drive Unit Overhaul . . . . . 8 - 42
8.3-3 Splicing Device - Set Drive Unit Belt . . . . . 8 - 44
8.3-4 Splicing Device - Set Drive Unit . . . . . 8 - 45
8.3-5 Splicing Device - Change Photocell . . . . . 8 - 46
8.3-6 Splicing Device - Set Photocell Position . . . . . 8 - 47
8.3-7 Splicing Device - Set Photocell Sensitivity . . . 8 - 48

8.3.1 Web Guide . . . . . 8 - 49

8.3.1-1 Web Guide - Check . . . . . 8 - 49
8.3.1-2 Web Guide - Change . . . . . 8 - 50
8.3.1-3 Web Guide - Set . . . . . 8 - 51

8.3.2 Paper Guide . . . . . 8 - 53

8.3.2-1 Paper Guide - Check . . . . . 8 - 53
8.3.2-2 Paper Guide - Change . . . . . 8 - 53

8.3.3 Pressure Jaw . . . . . 8 - 54

8.3.3-1 Pressure Jaw - Check Knife . . . . . 8 - 54
8.3.3-2 Pressure Jaw - Change Knife . . . . . 8 - 55
8.3.3-3 Pressure Jaw - Check TPO-bar . . . . . 8 - 57
8.3.3-4 Pressure Jaw - Change TPO-bar . . . . . 8 - 58
8.3.3-5 Pressure Jaw - Change Cylinders . . . . . 8 - 59
8.3.3-6 Pressure Jaw - Change Dolly . . . . . 8 - 64

8.3.4 Pressure Roller . . . . . 8 - 66

8.3.4-1 Pressure Roller - Check . . . . . 8 - 66
8.3.4-2 Pressure Roller - Overhaul . . . . . 8 - 67

8.3.5 Bow Clamp . . . . . 8 - 68

8.3.5-1 Bow Clamp - Set Mechanical Stop . . . . . 8 - 68

8.4 Material Holder . . . . . 8 - 70

8.4-1 Material Holder - Check . . . . . 8 - 70
8.4-2 Material Holder - Check Cutting Table . . . . . 8 - 71
8.4-3 Material Holder - Set Cutting Table . . . . . 8 - 73
8.4-4 Material Holder - Overhaul . . . . . 8 - 75
8.4-5 Material Holder - Set . . . . . 8 - 76

8.4-6 Material Holder - Set Lock Cylinders . . . . . 8 - 78

8.5 Valve Panel . . . . . 8 - 79

8.5-1 Valve Panel - Set Valve Pressure . . . . . 8 - 79

8.6 Strip Magazine . . . . . 8 - 80

8.6-1 Strip Magazine - Check Rotation Monitor . . . . 8 - 80

8.6-2 Strip Magazine - Set Rotation Monitor . . . . . 8 - 81

8.6-3 Strip Magazine - Check Rollers . . . . . 8 - 82

8.6-4 Strip Magazine - Change Transducer . . . . . 8 - 83

8.6-5 Strip Magazine - Set Sensor and Spring . . . . . 8 - 84

8.6.1 Heating Device . . . . . 8 - 85

8.6.1-1 Heating Device - Check . . . . . 8 - 85

8.6.1-2 Heating Device - Set Position . . . . . 8 - 86

8.6.1-3 Heating Device - Change Plunger . . . . . 8 - 89

8.6.2 Hub . . . . . 8 - 90

8.6.2-1 Hub - Change Motor . . . . . 8 - 90

8.6.2-2 Hub - Set Spring Loaded Screw . . . . . 8 - 91

8.6.3 Strip Guide . . . . . 8 - 92

8.6.3-1 Strip Guide - Check . . . . . 8 - 92

8.6.4 Cutting Table . . . . . 8 - 93

8.6.4-1 Cutting Table - Check . . . . . 8 - 93

8.6.4-2 Cutting Table - Set . . . . . 8 - 94

8.7 Bracket . . . . . 8 - 95

8.7-1 Bracket - Change Roller Bearings . . . . . 8 - 95

8.7-2 Bracket - Set Proximity Switch . . . . . 8 - 98

8.7.1 Web Guide . . . . . 8 - 99

8.7.1-1 Web Guide - Check . . . . . 8 - 99

8.7.1-2 Web Guide - Change . . . . . 8 - 100

8.7.1-3 Web Guide - Set Position . . . . . 8 - 101

8.7.2 Pressure Roller. . . . . 8 - 103

8.7.2-1 Pressure Roller - Check . . . . . 8 - 103

8.7.2-2 Pressure Roller - Change Bearings . . . . . 8 - 104

8.7.2-3 Pressure Roller - Set . . . . . 8 - 105

8.8 Web Magazine . . . . . 8 - 106

8.8-1 Web Magazine - Check . . . . . 8 - 106
8.8-2 Web Magazine - Change Bearings . . . . . 8 - 107
8.8-3 Web Magazine - Set . . . . . 8 - 108
8.8-4 Web Magazine - Change Ropes . . . . . 8 - 109

8.9 Covering Panel. . . . . 8 - 114

8.9-1 Covering Panel - Check . . . . . 8 - 114
8.9-2 Covering Panel - Set Safety Switches . . . . . 8 - 116

8.10 Paper Brake . . . . . 8 - 117

8.10-1 Paper Brake - Set . . . . . 8 - 117
8.10-2 Paper Brake - Set Position and Velocity . . . . . 8 - 118

8.11 Reel Trolley . . . . . 8 - 120

8.11-1 Reel Trolley - Check . . . . . 8 - 120
8.11-2 Reel Trolley - Change Pump Cylinder . . . . . 8 - 121
8.11-3 Reel Trolley - Set Regulating Valve . . . . . 8 - 123
8.11-4 Reel Trolley - Change Sink Valve . . . . . 8 - 124
8.11-5 Reel Trolley - Overhaul Lifting Cylinder . . . . 8 - 126
8.11-6 Reel Trolley - Remove Fork Wheel . . . . . 8 - 127
8.11-7 Reel Trolley - Remove Guide Wheel . . . . . 8 - 128
8.11-8 Reel Trolley - Set Brake . . . . . 8 - 129

8-1 Automatic Splicing Unit - Setting Sequence

Machine Status	Mains power OFF Air OFF
SPC Reference	648528-0100

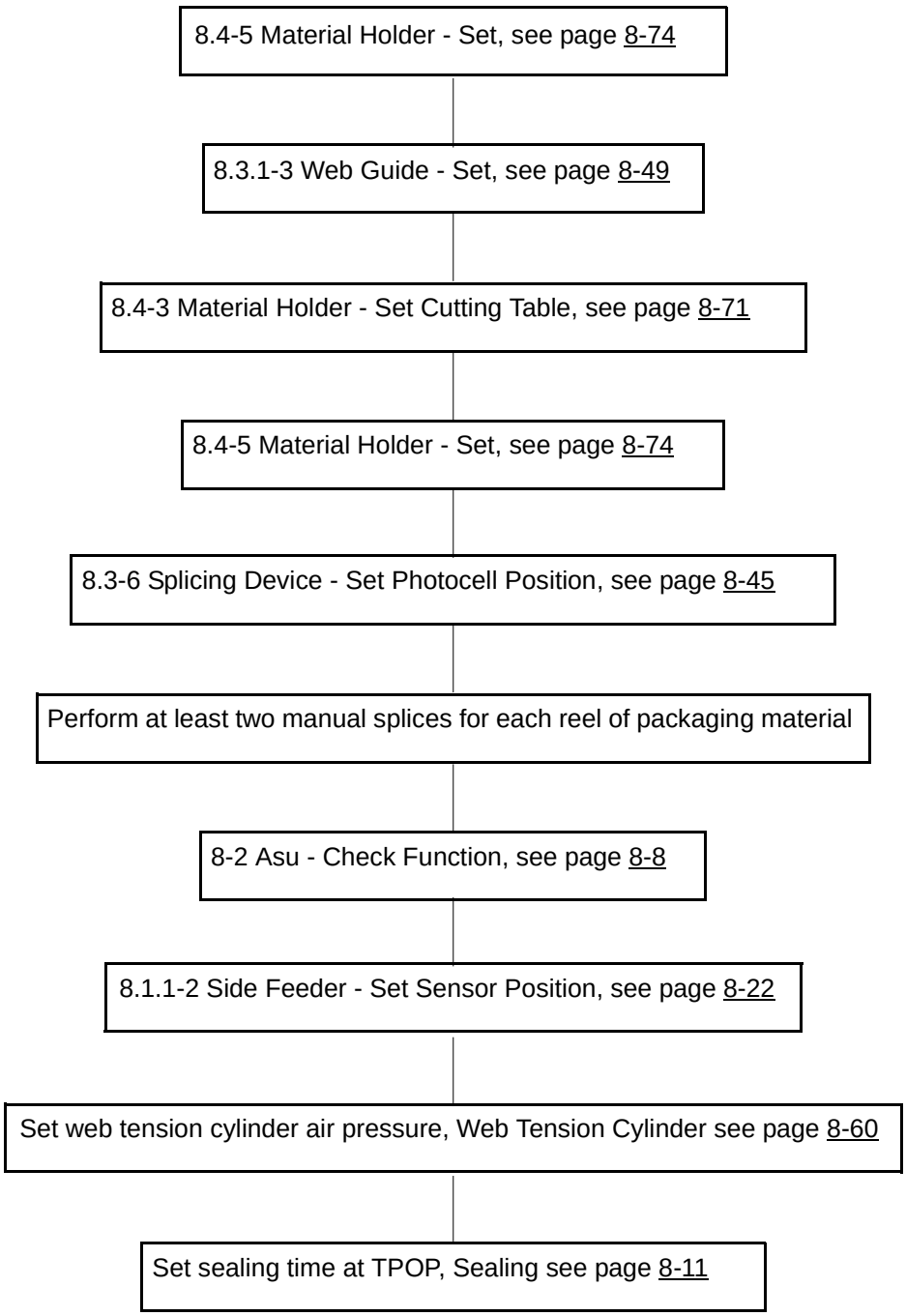

8-2 Asu - Check Function

Machine Status	Mains power ON Air ON
SPC Reference	648528-0200

Raise the empty material holder and thread the packaging material through the material holder. Push the **Material locking** button and check the packaging material is correctly locked.

Perform a manual splice for each reel of packaging material, and check the following:

- Sealing parallelism
- Sealing alignment
- Overlap
- Spliced package length
- Cutting
- Sealing

Sealing Parallelism

Check the parallelism, distance **A**, between the new and the old packaging material web.

With the aid of a straight edge (1) check the **new** packaging material web diverges distance **A** in **1 meter** from the splice.

If necessary, set the sealing parallelism,
see 8.4-5 Material Holder - Set.

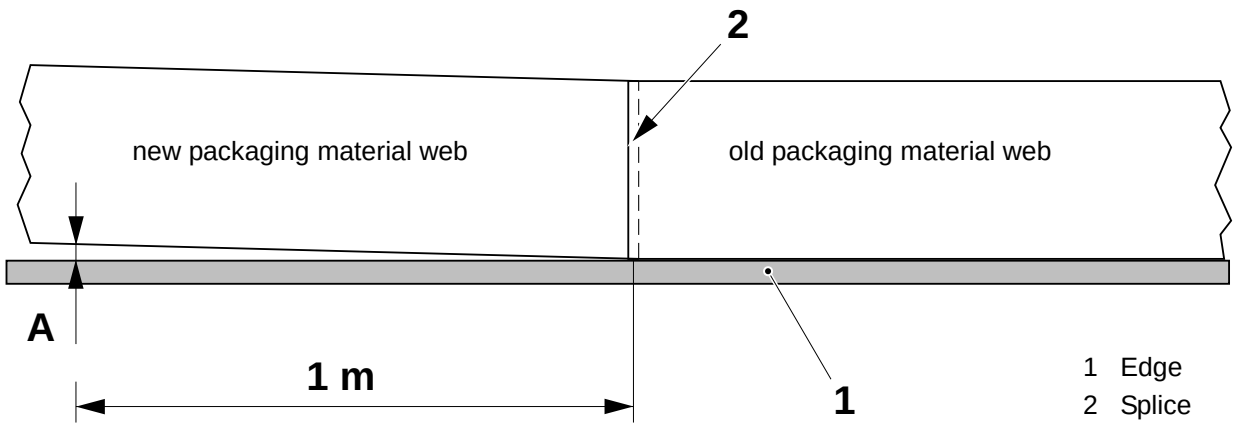

A = max 1 mm

(Cont'd)

(Cont'd)

Sealing Alignment (Sideways Alignment)

Check the new and old pieces of packaging material on the two packages with a splice are aligned within the tolerance (distance **B)**.

If necessary, set the sealing alignment, see:

- 8.3.1-3 Web Guide - Set
- 8.4-3 Material Holder - Set Cutting Table.

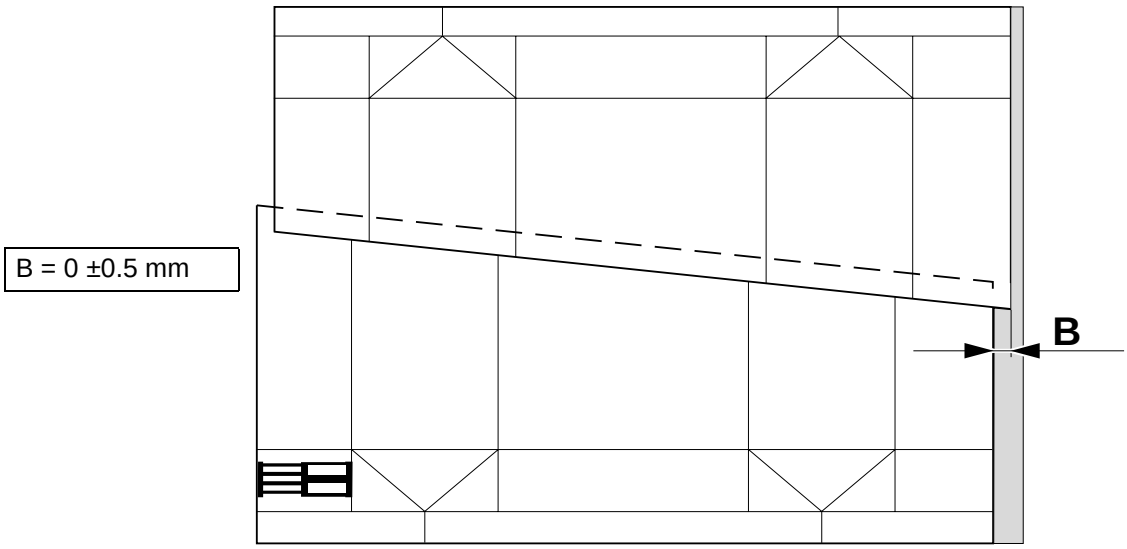

Overlap

Check the overlap, distance **C** between the edge cut manually (3) and the edge cut by the splicing device (4).

If necessary, set the material holder position, see 8.4-5 Material Holder - Set and Overlap - Fine Adjustment, page 8-74.

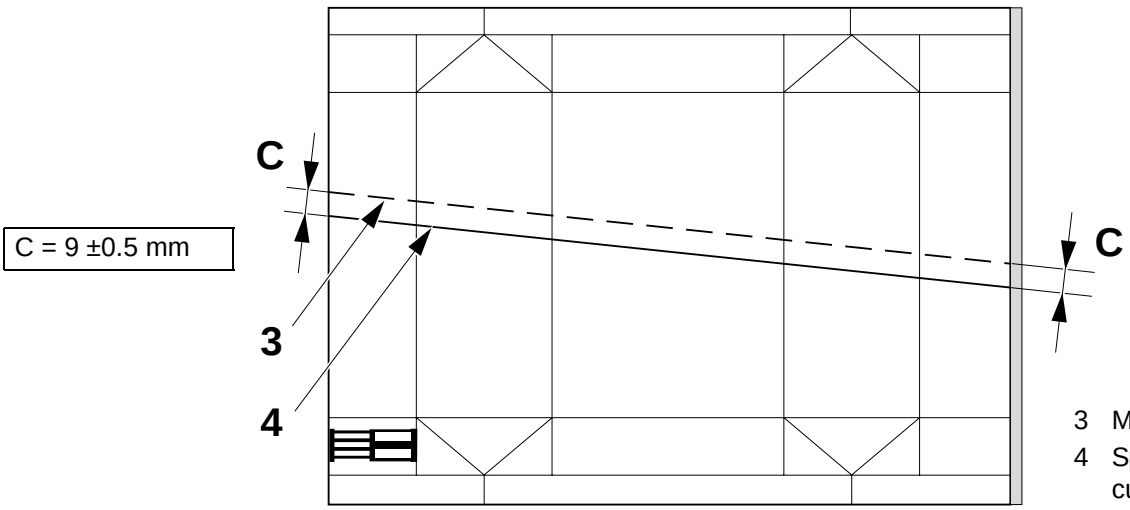

(Cont'd)

(Cont'd)

Spliced Package Length

Measure distance **D** between the top and the bottom creases of the package spliced by the ASU and compare it with a normal package.
If distance **D** diverges by **0.5 mm** from the normal package length, set the photocells, see 8.3-6 Splicing Device - Set Photocell Position.

D = ±0.5 mm

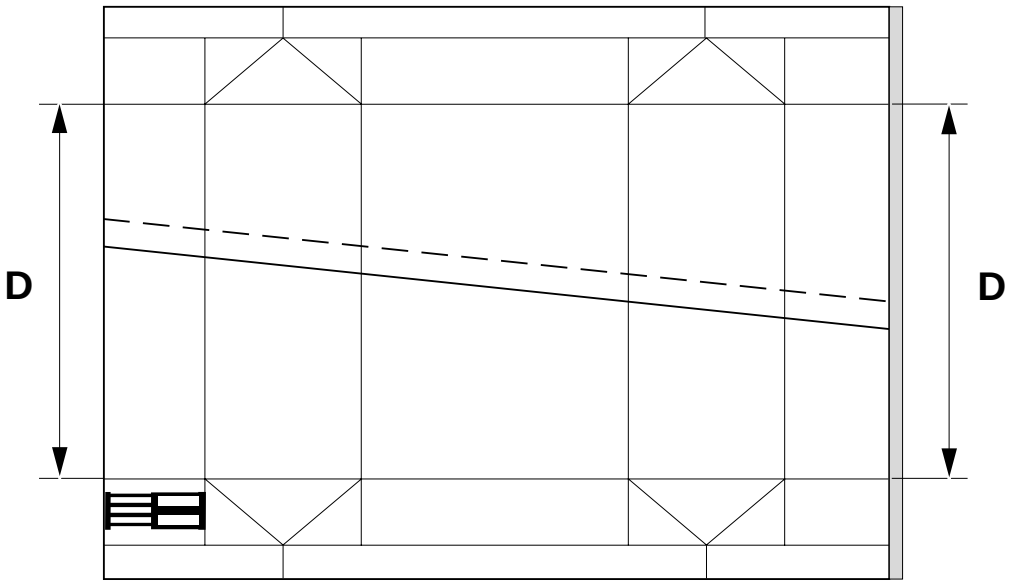

Cutting

Check the manually cut paper edge is OK. If not, change the material holder knife, see 8.4-4 Material Holder - Overhaul.

Check the automatically cut paper edge is OK. If not, change the splicing device knife, see 8.3.3-2 Pressure Jaw - Change Knife.

(Cont'd)

(Cont'd)

Sealing

Pull apart and examine the sealing (5).

The sealing is acceptable if it remains intact but:

- a delamination between the two inner coating takes place
- a rupture takes place in the printed paper board layer.

The sealing is defective if:

- the seal is so weak the two plastic layers separate without rupturing.

If the seal is defective, check the heating device,
see 8.3.3-3 Pressure Jaw - Check TPO-bar.

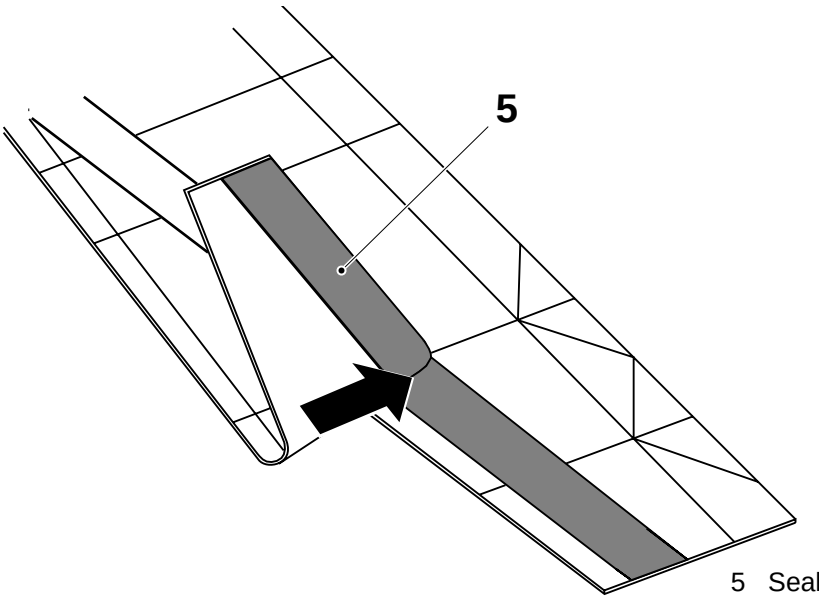

5 Sealing

If necessary, change the current value with the buttons (7) and (8), or reset to the factory value with the button (6).

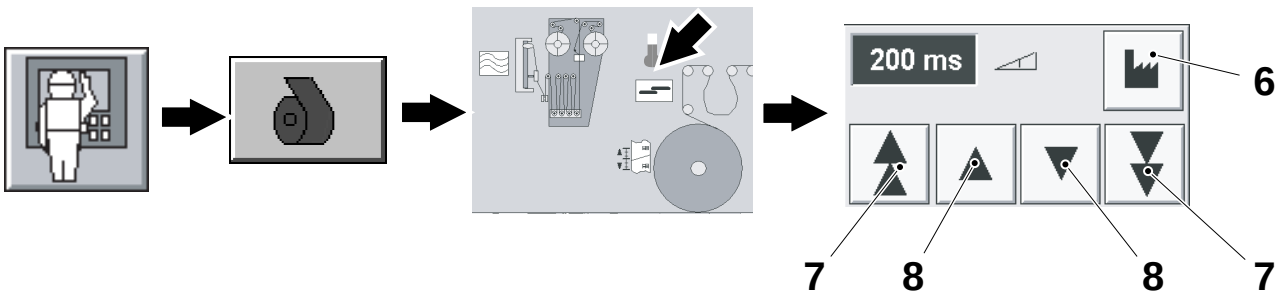

6 Button (factory setting)
7 Button (big step)
8 Button (small step)

8.1 Machine Body

SPC Reference	1487560-0100

8.1-1 Machine Body - Check Bearing Blocks

Machine Status	Mains power OFF Air OFF
SPC Reference	1487560-0100

Check if the bearing blocks (1) are worn or damaged.
If dimension **A** is less than the value given below, change the bearing block.
See 8.1-2 Machine Body - Change Bearing Blocks.

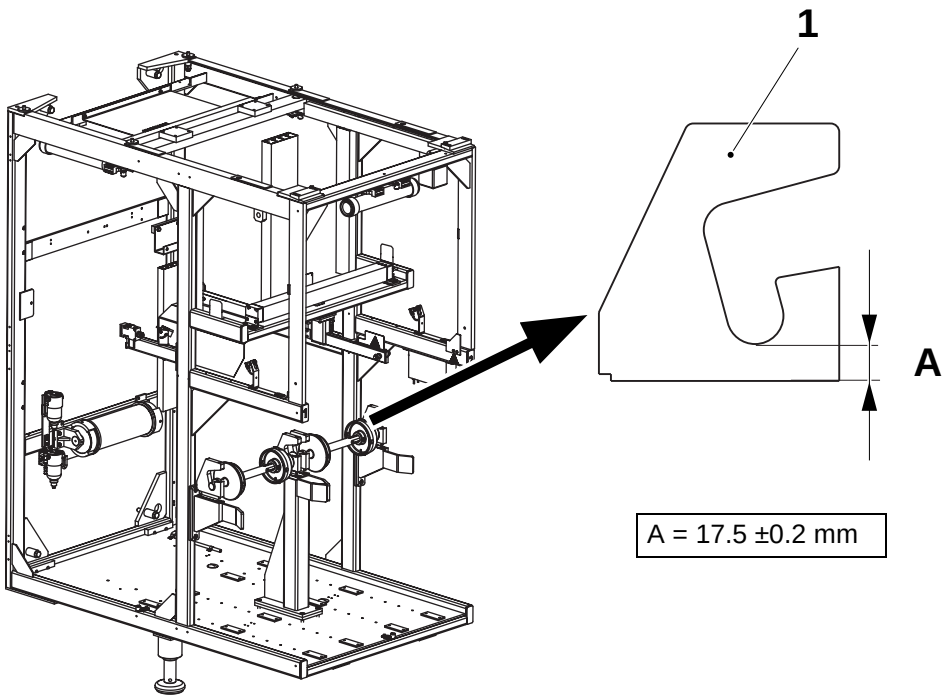

A = 17.5 ±0.2 mm

1 Bearing block

8.1-2 Machine Body - Change Bearing Blocks

Machine Status	Mains power OFF Air OFF
Tools - Shim	 TP No. 2538073
SPC Reference	1487560-0100

a) Remove the screws (1) and the bearing blocks (2).

b) Fit the new bearing blocks (2) on the original shims (3) and secure in position with the screws (1).

c) Check the top of the bearing blocks (2) are level in height. If not, add or remove shims (3) as required.

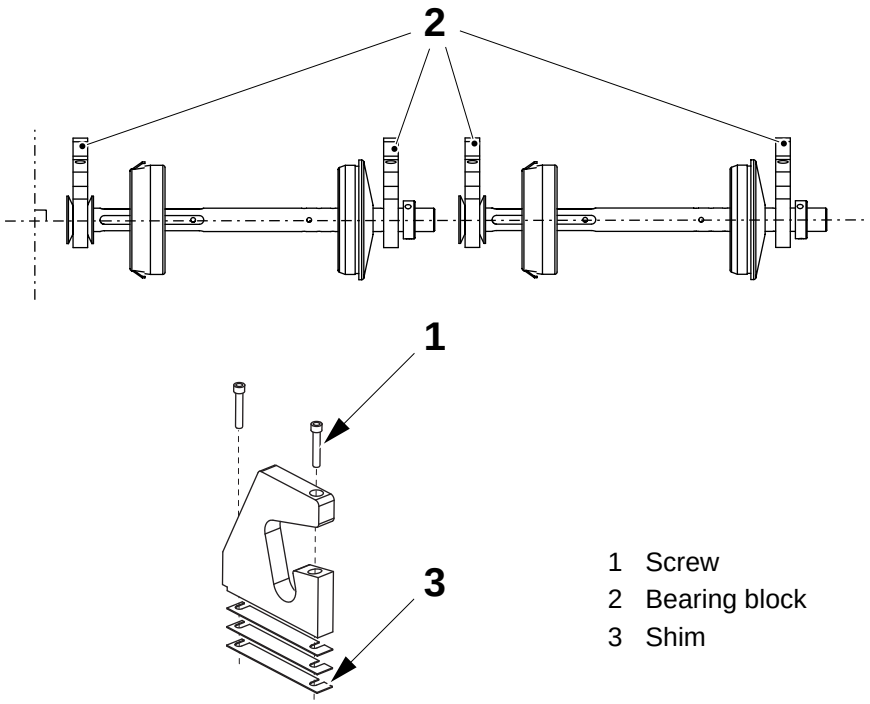

1 Screw
2 Bearing block
3 Shim

8.1-3 Machine Body - Check Bending Roller

Machine Status	Mains power OFF Air OFF
SPC Reference	2541083-0100

Check the bending roller (arrow) rotates freely without play and the surface of the roller is not worn or damaged.
If necessary, change the ball bearings and roller (arrow), see 8.1-4 Machine Body - Overhaul Bending Roller.

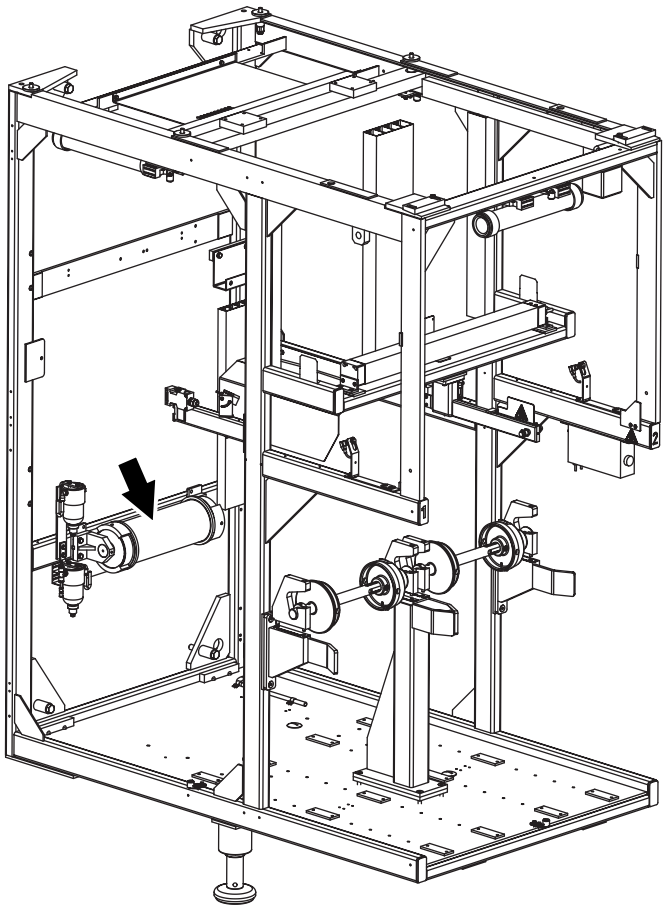

8.1-4 Machine Body - Overhaul Bending Roller

Machine Status	Mains power OFF Air OFF
SPC Reference	2541083-0100

Note! Volume dependent. Brackets (7) need to be changed when volume is changed.

a) Remove the grub screws (1).

b) Remove the axle pins (2) and the roller (3).

c) Remove and change the ball bearings (4).

d) If necessary, change the roller (3).

e) If necessary, remove the screws (5), flange (6) and change the brackets (7).

f) Assemble in the reverse order.

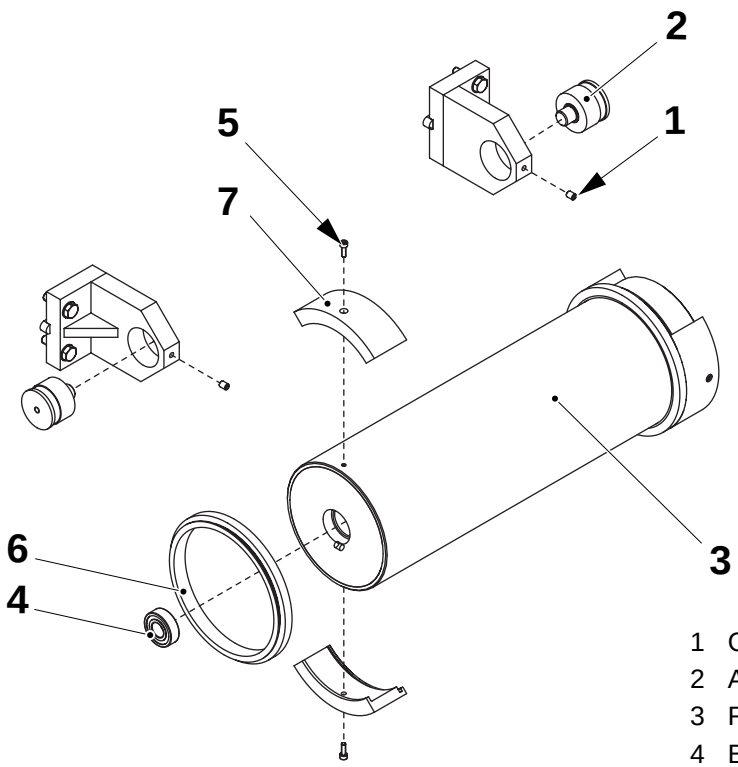

1 Grub screw
2 Axle pin
3 Roller
4 Ball bearing
5 Screw
6 Flange
7 Bracket

8.1-5 Machine Body - Check Air Filter

Machine Status	Mains power OFF Air OFF
SPC Reference	2541891-0100

Check if there is any liquid in the filter reservoir (1).

If liquid is present, unscrew the plug (2) and drain off the liquid.

If the filter cartridge (3) is soiled, change it.
See 8.1-6 Machine Body - Change Air Filter.

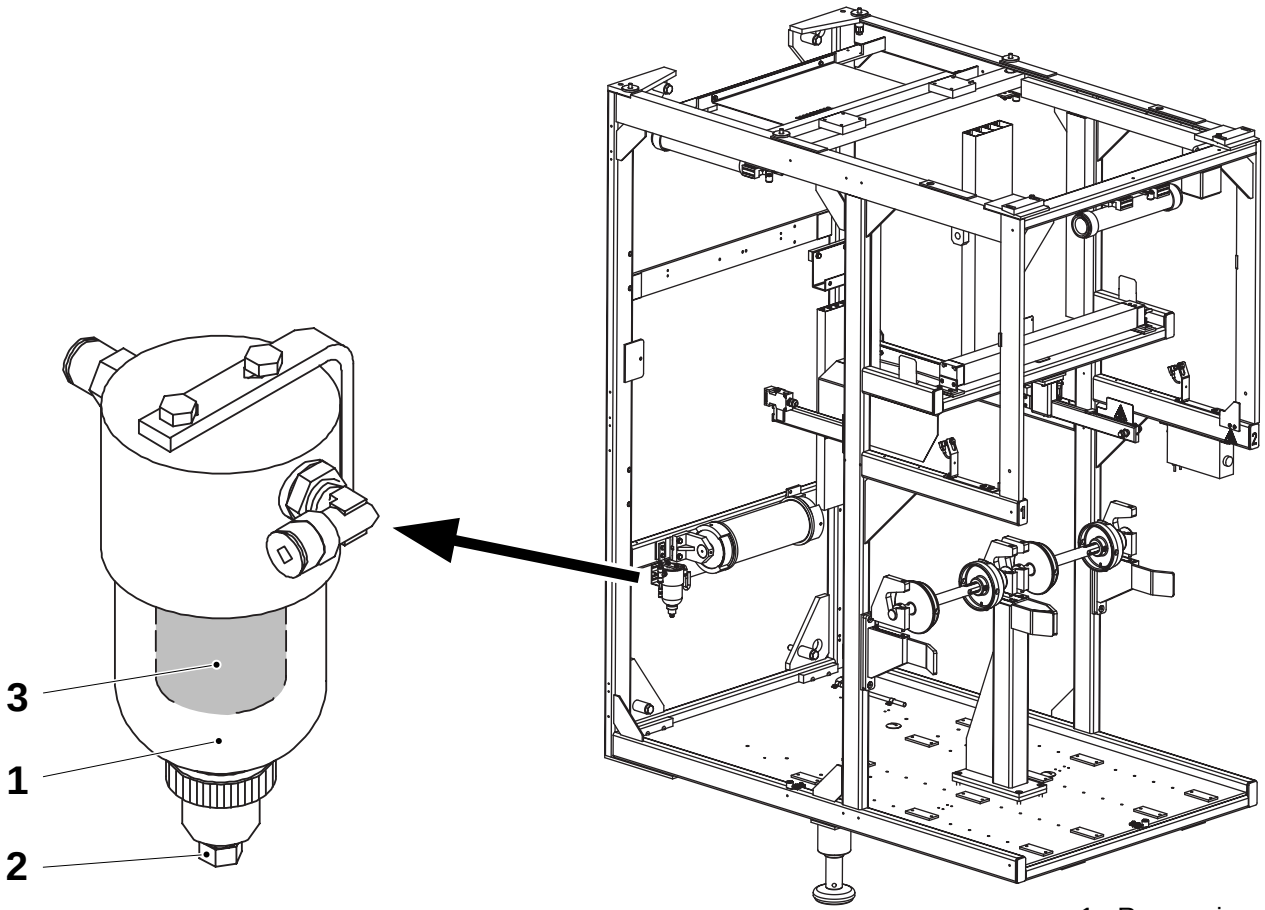

1 Reservoir
2 Plug
3 Cartridge

8.1-6 Machine Body - Change Air Filter

Machine Status	Mains power OFF Air OFF
SPC Reference	2541891-0100

a) Remove the plug (1).

b) Remove the reservoir (2).

c) Remove the filter cartridge (3) and change it.

d) Assemble in the reverse order.

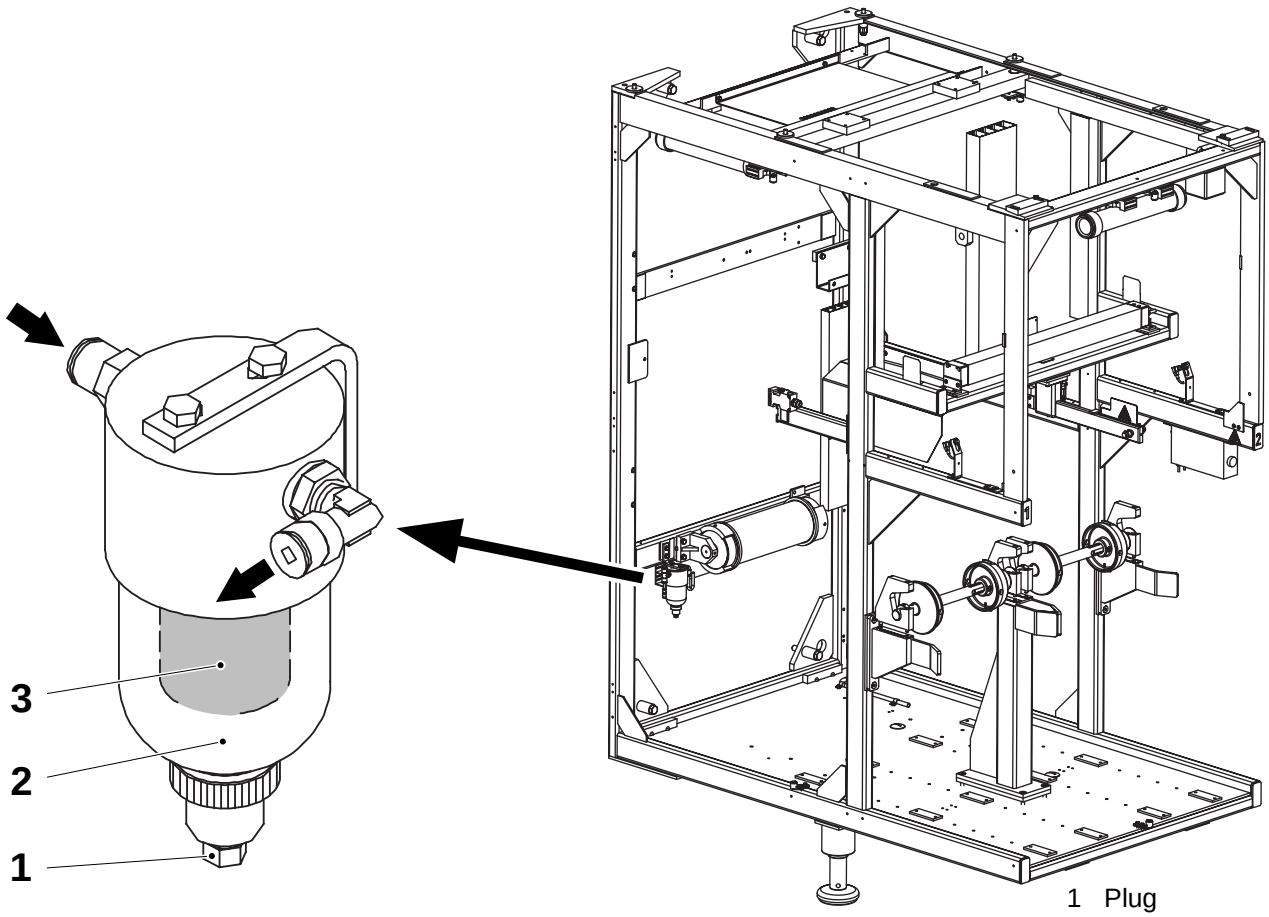

1 Plug
2 Reservoir
3 Cartridge

8.1-7 Machine Body - Set Photocell Position

Machine Status	Mains power ON Air OFF
SPC Reference	1487560-0100

Adjust the photocell (1) until it is level in height with the reflector (2)and both LEDs (3) and (4) are lit on the photocell (1).

Repeat the procedure for the photocell (5) and reflector (6).

Set the angle of the photocell (7) so the signal is received from the reflector (8) and both LEDs are lit. Repeat the procedure for the opposite side.

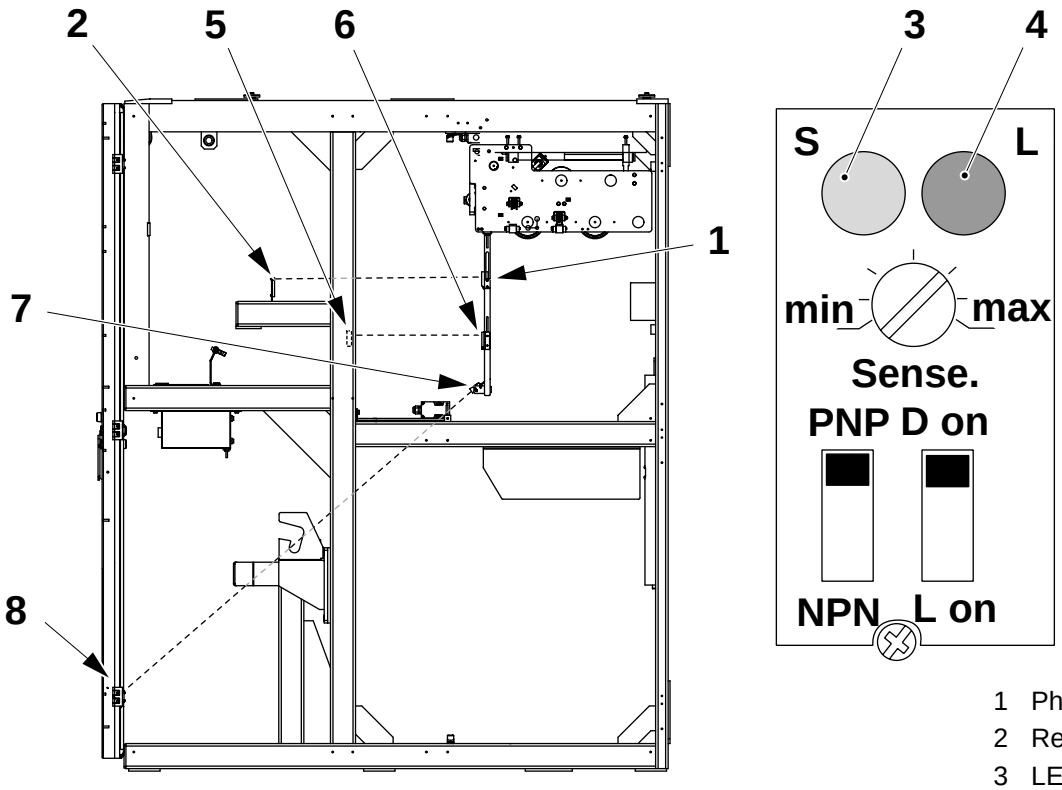

1 Photocell
2 Reflector
3 LED
4 LED
5 Photocell
6 Reflector
7 Photocell
8 Reflector

8.1-8 Machine Body - Set Photocell Sensitivity

Machine Status	Mains power ON Air OFF
SPC Reference	1487560-0200

Set Photocell (1) for Empty Loop Detection
Set switch (4) to **PNP** and switch (5) to **D On**. Turn screw (6) fully clockwise and then 1/4 turn counter clockwise.

Set Photocell (2) for Empty Bobbin Reel Detection on both Lines
Set switch (4) to **PNP** and switch (5) to **D On**. Turn screw (6) fully clockwise and then 1/4 turn counter clockwise.

Set Photocell (3) for Full Loop Detection
Set switch (4) to **PNP** and switch (5) to **L** on. Turn screw (6) fully clockwise and then 1/4 turn counter clockwise.

The green LED (7) indicates the power is **On**.
The red LED (8) indicates the signal is received form the reflector.

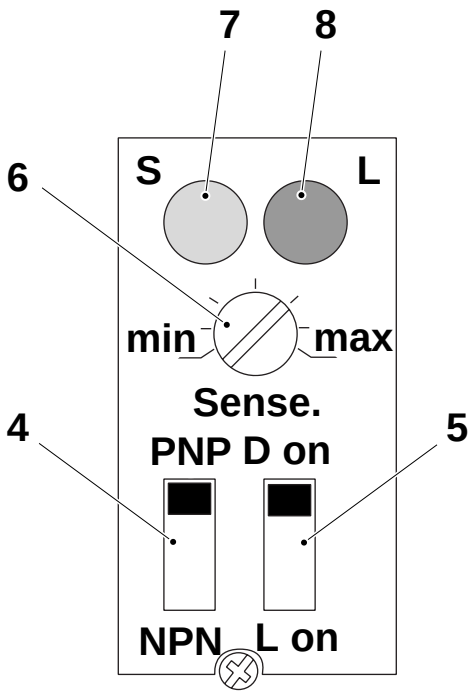

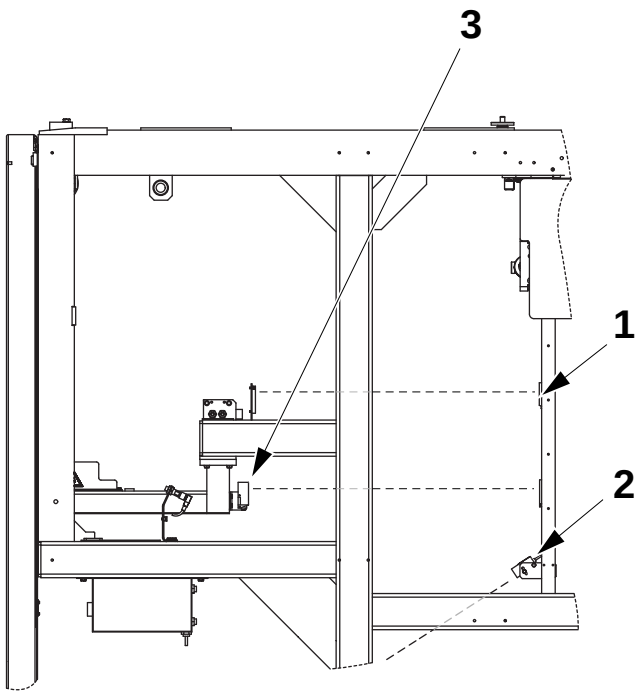

1	Photocell	5	Switch
2	Photocell	6	Screw
3	Photocell	7	Green LED
4	Switch	8	Red LED

8.1.1 Side Feeder

8.1.1-1 Side Feeder - Change

Machine Status	Mains power OFF Air OFF
Tools - ropes	 2.5 m
SPC Reference	1487544-0200

WARNING

Risk of crushing!

If the splicing device is moved out of position it will return **rapidly** to its former position when the doors are closed.

a) Attach ropes to the lower part of the splicing device (1) so it can be swung upwards when it is disconnected from the side feeder (2).

b) Remove the plate (3) and the reflector (4).

c) Remove the screws (5) securing the splicing device (1) to the side feeder (2).

d) Using the ropes, swing the splicing device (1) away from the side feeder (2) on the shaft (6).

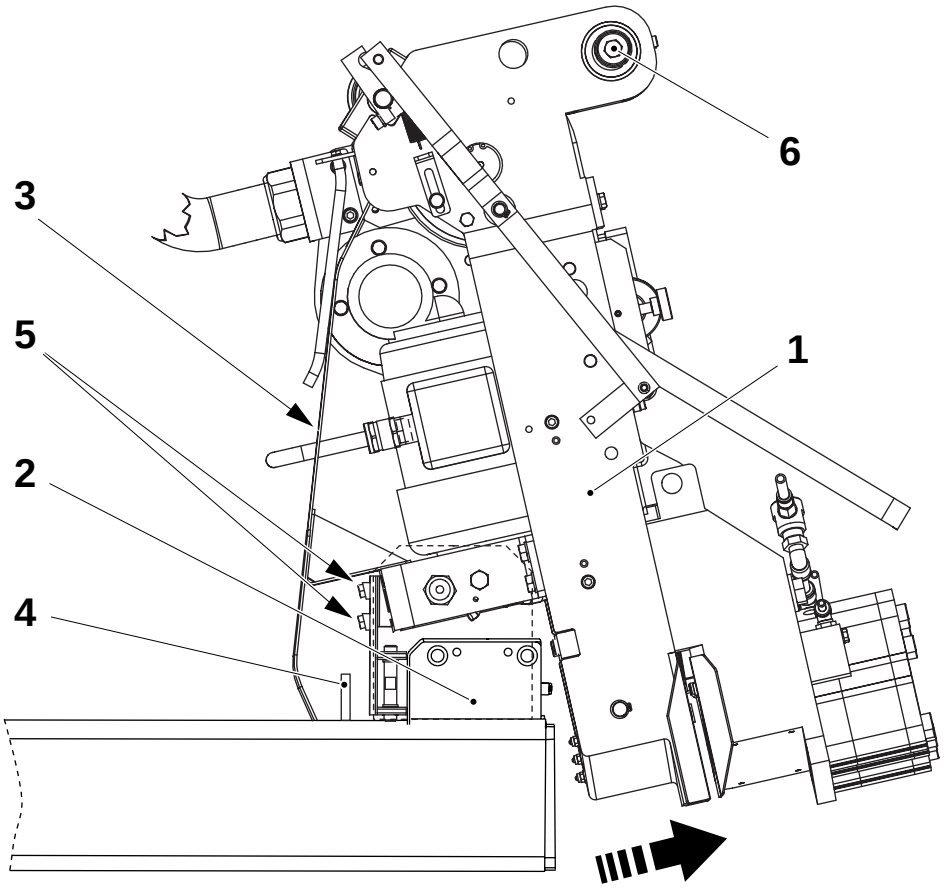

1 Splicing device
2 Side feeder
3 Plate
4 Reflector
5 Screw
6 Shaft

(Cont'd)

(Cont'd)

e) Remove the air connections (7).

f) Remove and change the end position sensors (8).

g) At both ends, remove the screws (9) securing the cylinder (10) to the brackets (11) and manoeuvre the cylinder (10) out of the ASU.

h) Assemble in the reverse order.

i) Set the end position sensors.
See 8.1.1-2 Side Feeder - Set Sensor Position.

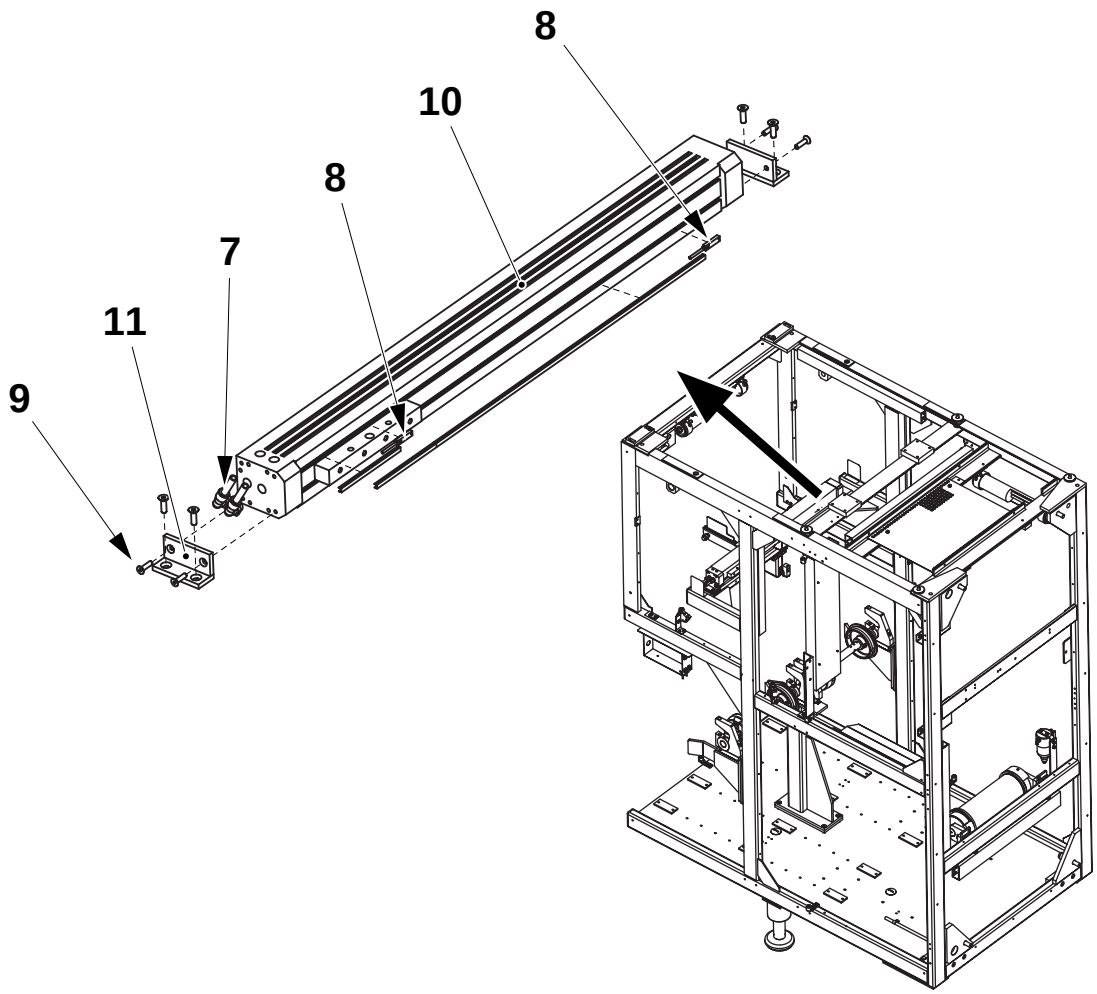

7 Air connection
8 Sensor
9 Screw
10 Cylinder
11 Bracket

8.1.1-2 Side Feeder - Set Sensor Position

Machine Status	Mains power ON Air OFF
SPC Reference	1487544-0100

WARNING

Risk of crushing!

If the splicing device is moved out of position it will return **rapidly** to its former position when the doors are closed.

a) Press the button (1) on the venting box and keep it pressed while moving the splicing device (2) by hand.

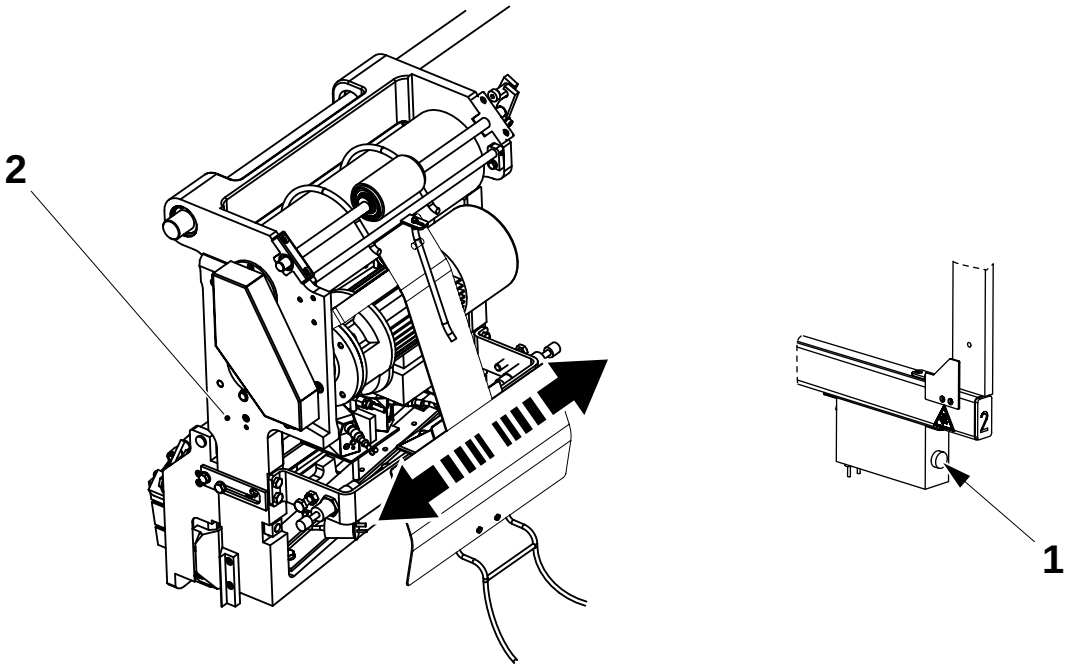

1 Button
2 Splicing device

(Cont'd)

(Cont'd)

b) Push the splicing device (2) to its left end position.

c) Loosen the screw (3) in the LH sensor (4) and push the sensor to the left.

d) Move the LH sensor to the right until the LED (5) is lit and a maximum of **1 mm** more, then tighten the screw (3).

e) Repeat the procedure at the opposite end of the side feeder for the other sensor (6).

f) Turn screws (7) and (8) fully counter clockwise. Then turn both screws 1/2 turn clockwise.

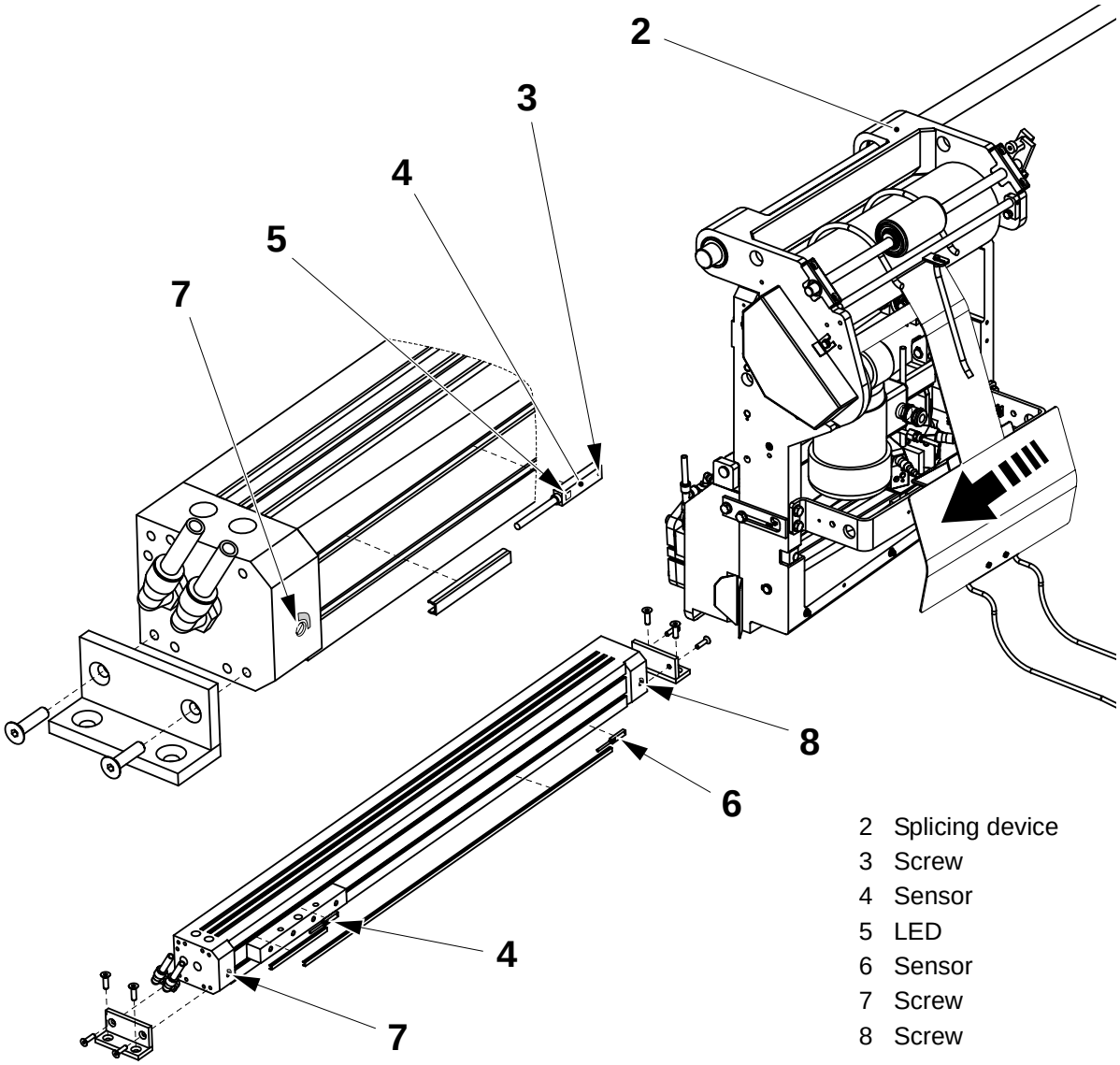

2 Splicing device
3 Screw
4 Sensor
5 LED
6 Sensor
7 Screw
8 Screw

8.2 Strip Applicator

SPC Reference	2506668-0100

8.2.1 Splice Detector

8.2.1-1 Splice Detector - Check

Machine Status	Mains power ON Air OFF
SPC Reference	2507022-0100

Check:

- the ball bearing (1) rotates easily, change if necessary;
- the spring (2) works correctly, change if necessary;
- the bracket (3) is easy to turn. If it is not, remove the retaining ring (4) and the spring (2) and pull out the bracket (3). Clean the bushings (5) and shaft (6). Assemble in the reverse order.

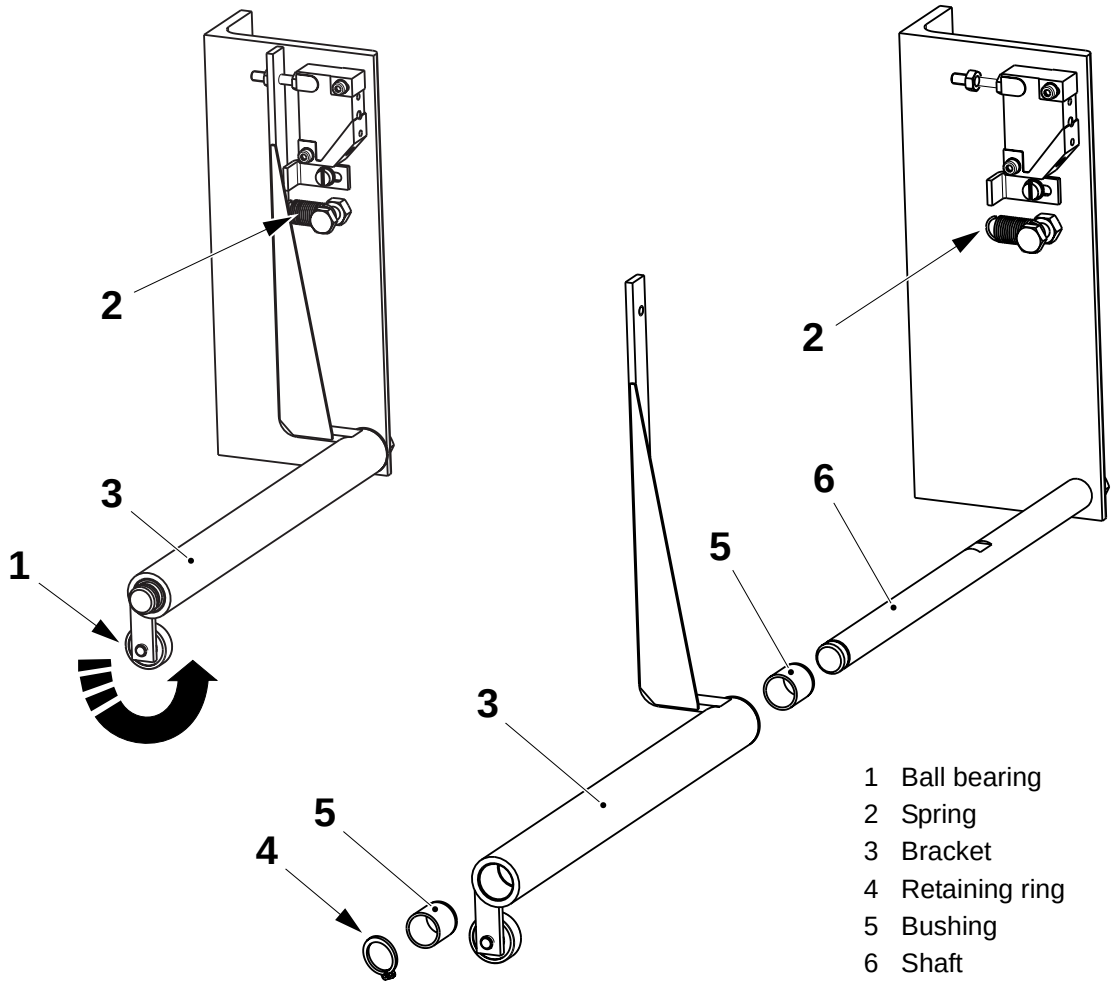

1 Ball bearing
2 Spring
3 Bracket
4 Retaining ring
5 Bushing
6 Shaft

(Cont'd)

(Cont'd)

Feed packaging material (7) passed the ball bearing (1) as if preparing the machine for production, check the LED (8) in the proximity switch is **On**.

Insert a second piece of packaging material (9) between the original packaging material and the ball bearing and check the LED (8) is **Off**. If not, set the splice detector, see 8.2.1-2 Splice Detector - Set.

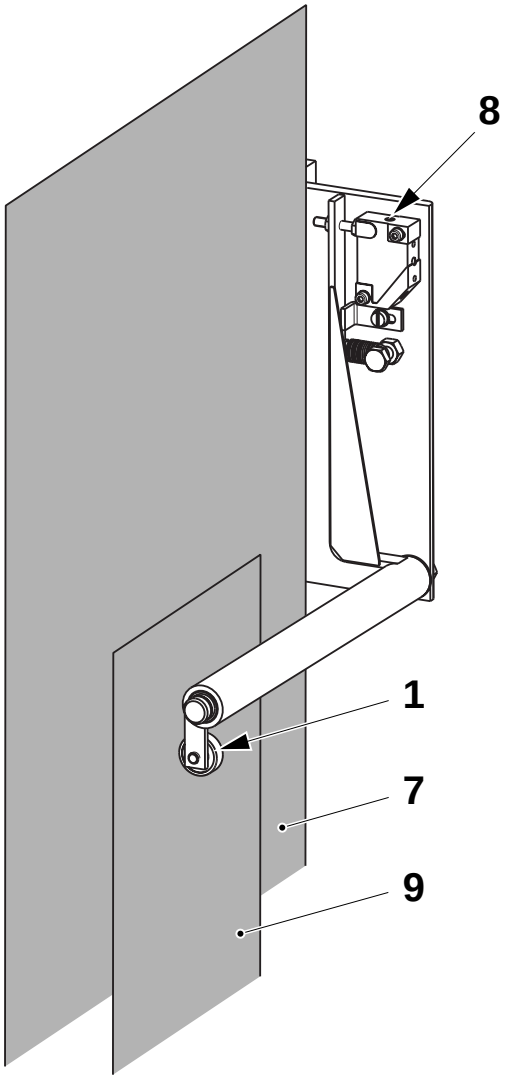

1 Ball bearing
7 Packaging material
8 LED
9 Packaging material

8.2.1-2 Splice Detector - Set

Machine Status	Mains power ON Air OFF
SPC Reference	2507022-0100

a) Turn the screw (1) until the LED (2) is **On**.

b) Feed packaging material (3) passed the ball bearing (4) as if preparing the machine for production and then insert a second piece of packaging material (5) between the original packaging material and the ball bearing.
This simulates a spliced piece of packaging material.

c) Turn the screw (1) until the LED is **Off**.

d) Remove the second piece of packaging material and check the LED is **On**.

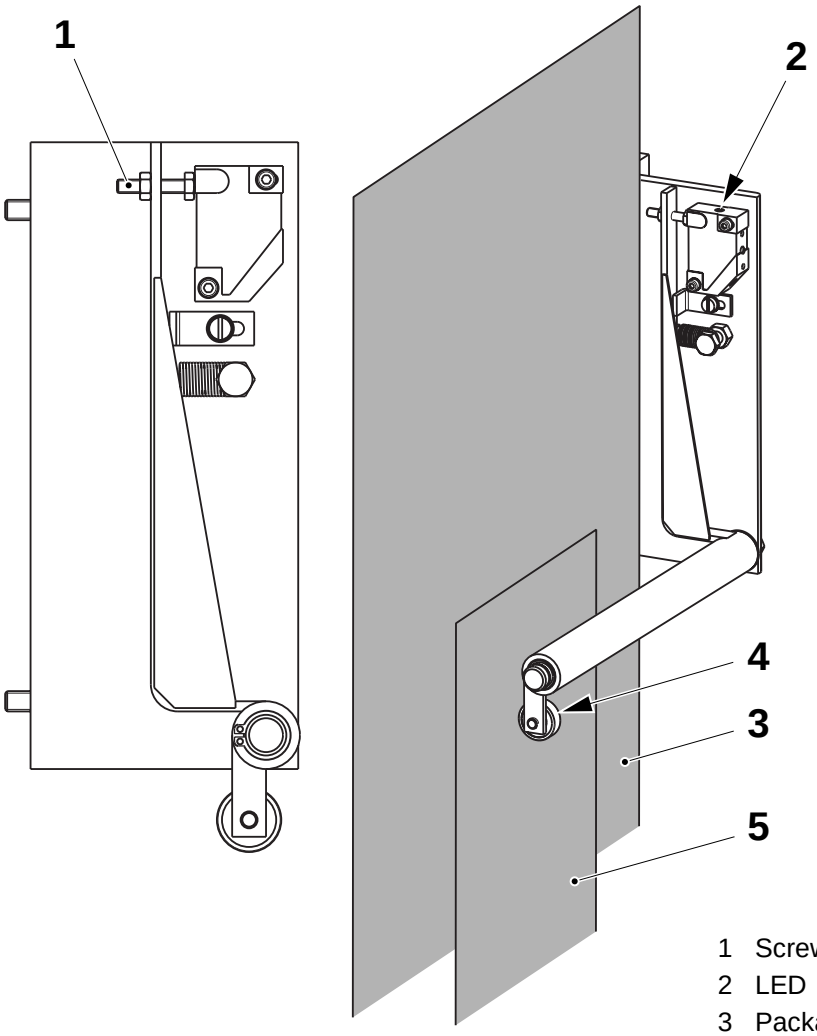

1 Screw
2 LED
3 Packaging material
4 Ball bearing
5 Packaging material

8.2.2 Inductor

8.2.2-1 Inductor - Check

Machine Status	Mains power OFF Air OFF
SPC Reference	2529569-0100

Check:

- the inductor (1) for wear or damage.
  If necessary, clean the inductor (1) by removing any plastic residue.
- the transformer (2) for wear or damage.
  If necessary, change the transformer (2).
- the rollers (3) for wear or damage.
  If necessary, change the roller (3), see 8.2.2-3 Inductor - Change Roller.
- the rollers (3) rotate freely without play and the silicon rubber layer on the surface of each roller is undamaged.
  If necessary, change the rollers, see 8.2.2-3 Inductor - Change Roller.

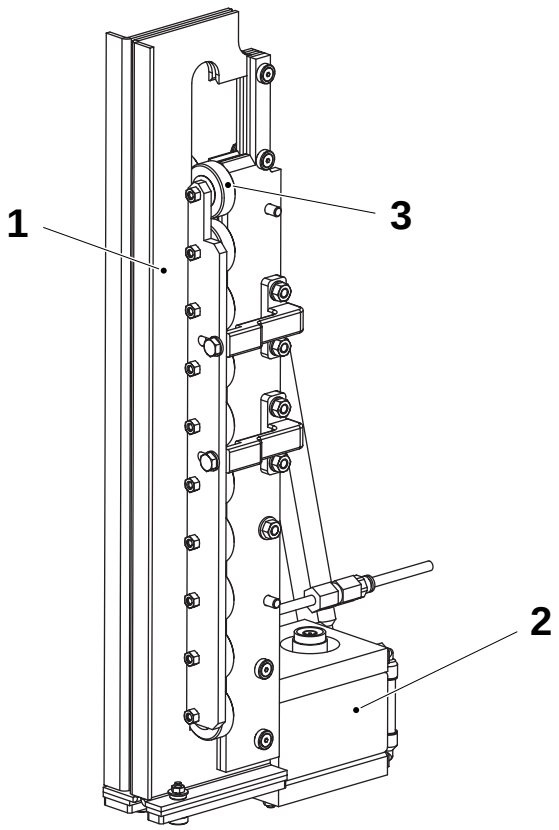

1 Inductor
2 Transformer
3 Roller

8.2.2-2 Inductor - Change Transformer

Machine Status	Mains power OFF Air OFF
SPC Reference	2529569-0100

a) Disconnect all the water connections (1) from the transformer.

b) Remove the screw (2), the nut (3) and the insulator (4).

c) Remove the nut (5) and the cooling plate (6).

d) Remove and change the transformer (7).

e) Assemble in the reverse order.

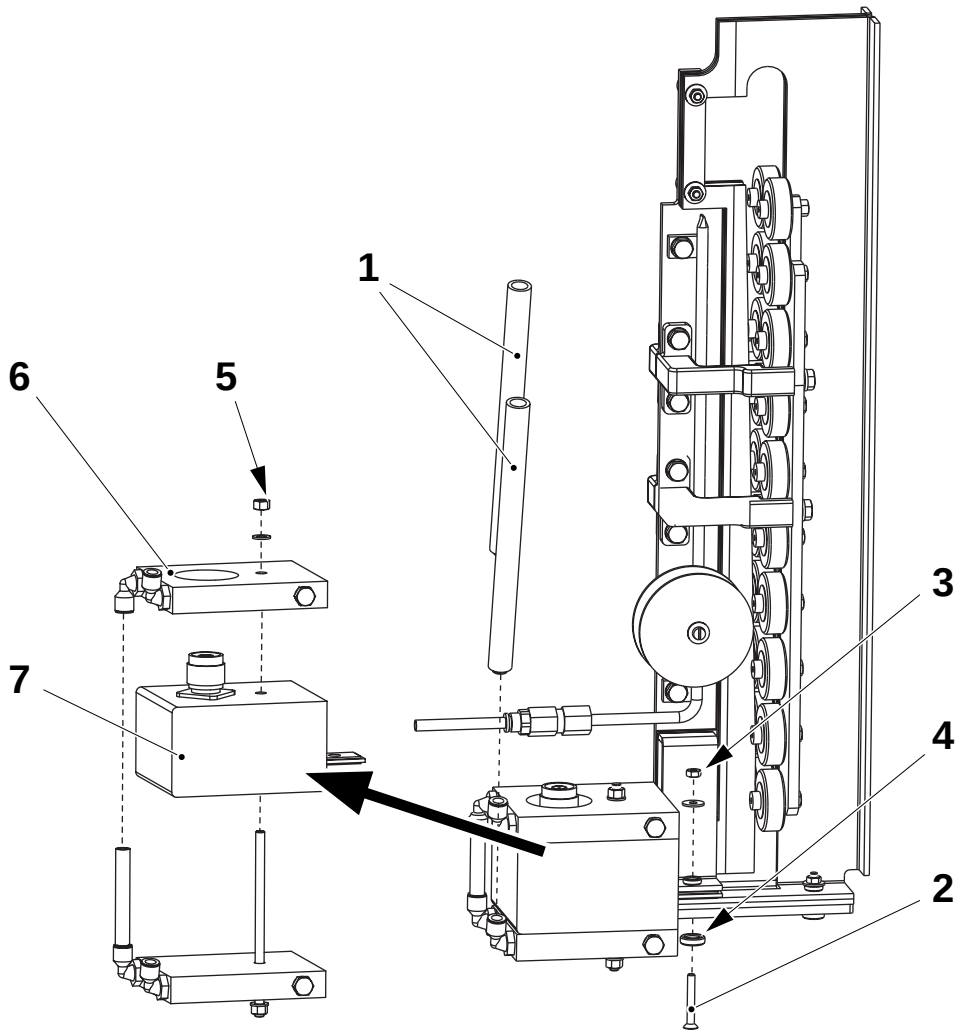

1 Water connection
2 Screw
3 Nut
4 Insulator
5 Nut
6 Cooling plate
7 Transformer

8.2.2-3 Inductor - Change Roller

Machine Status	Mains power OFF Air OFF
SPC Reference	2529569-0100

a) Remove the screws (1), the nuts (2) and the washers (3) and (4).
b) Remove the roller assembly (5).
c) Remove the screw (6), the nut (7) and the roller (8).
d) Change the ball bearing (9) and the roller (8).
e) Assemble in the reverse order.

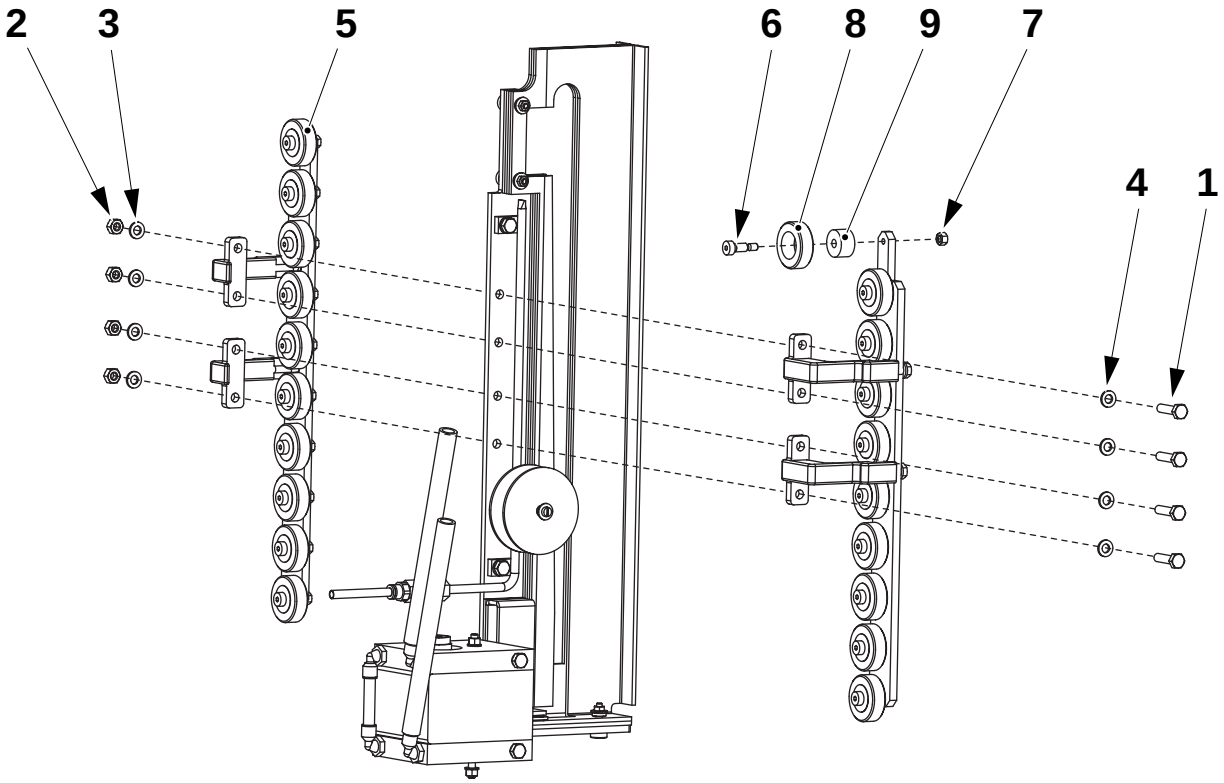

1 Screw
2 Nut
3 Washer
4 Washer
5 Roller assembly
6 Screw
7 Nut
8 Roller
9 Ball bearing

8.2.2-4 Inductor - Set Pressure Rollers

Machine Status	Mains power OFF Air OFF
Tools - Template	 TP No. 2522095
SPC Reference	2529569-0100

Note! This instruction must not be performed without the template.

a) Loosen the screws (1).

b) Insert the template (3) so it touches the surfaces on the sealing plate (2) and the plate (4).

c) Move the pressure rollers (5) so they rest against the template (3).

d) Tighten the screws (1).

e) Remove the template (3).

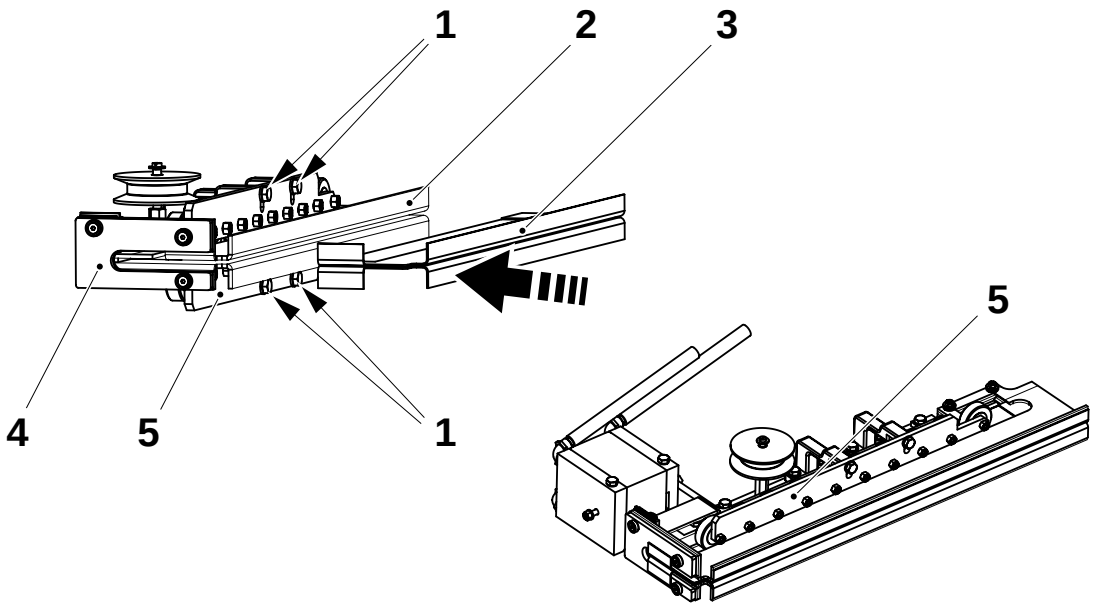

1 Screw
2 Sealing plate
3 Template
4 Plate
5 Pressure roller

8.2.2-5 Inductor - Set Volume

Machine Status	Mains power OFF Air OFF
SPC Reference	2529569-0100

Loosen the screws (1). Set distance **A** between the edge of the fastening bracket (2) and the edge of the bottom panel (3).

Package	**A ±0.5 (mm)**
TBA 200 B	89
TBA 250 B	89
TBA 200 S	108
TBA 250 S	100
TBA 200 M	100

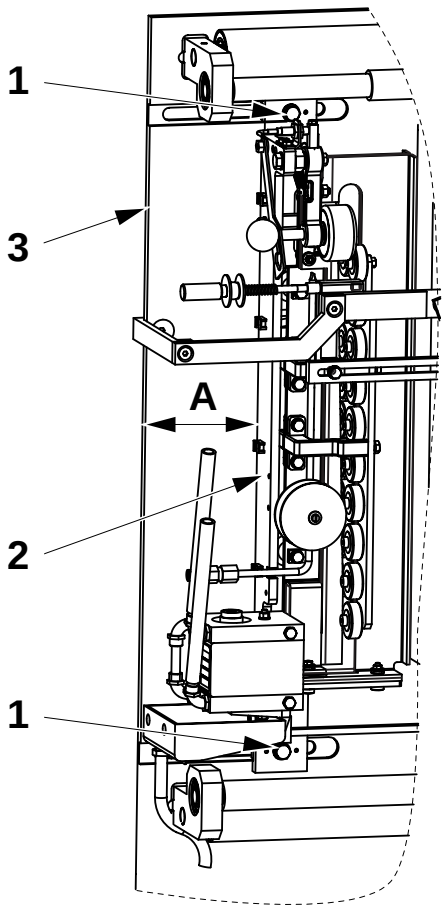

1 Screw
2 Fastening bracket
3 Bottom panel

8.2.3 Pressure Roller

8.2.3-1 Pressure Roller - Check

Machine Status	Mains power OFF Air OFF
SPC Reference	2529571-0100

Check the rollers (1) and (2) for excessive wear. The maximum allowable radial play is **0.3 mm**.

Check the rollers (1) and (2) rotate freely without play and the silicon rubber layer on the surface of each roller is undamaged.
If necessary, change the rollers, see 8.2.3-2 Pressure Roller - Change.

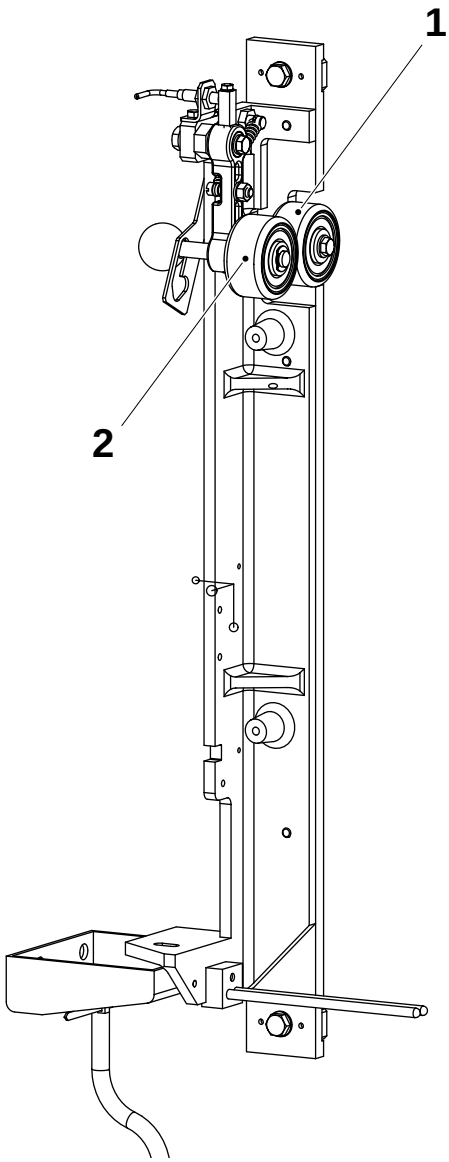

1 Roller
2 Roller

8.2.3-2 Pressure Roller - Change

Machine Status	Mains power OFF Air OFF
SPC Reference	2529571-0100

Note! The rollers (3) and (7) must be fitted with the magnetic (blue) side facing away from the handle ball (1).

a) Remove the handle ball (1), shaft (2), roller (3) and retaining ring (4).

b) Change the roller (3).

c) Remove the screw (5), washer (6) and roller (7).

d) Change the roller (7).

e) Assemble in the reverse order.

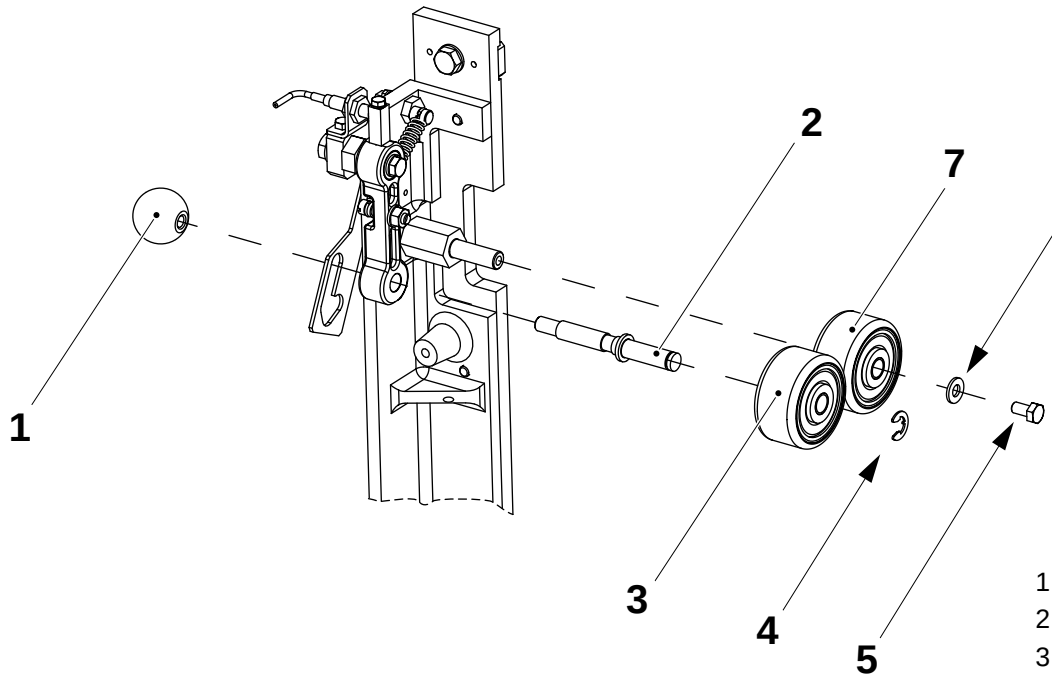

1 Handle ball
2 Shaft
3 Roller
4 Retaining ring
5 Screw
6 Washer
7 Roller

8.2.3-3 Pressure Roller - Set

Machine Status	Mains power OFF Air OFF
Tools - Dynamometer	 TP No. 74767-0102
SPC Reference	2529571-0100

a) Attach the dynamometer (1) to the holder (2) and measure the spring force.

b) The spring force is the value displayed on the dynamometer (1) when the roller (3) lifts from the roller (4). The value must be between **20 N and 21 N**. If necessary, set the spring force by loosening the nut (5) and turning the shaft (6).

c) Tighten the nut (5) when the correct spring force value is obtained.

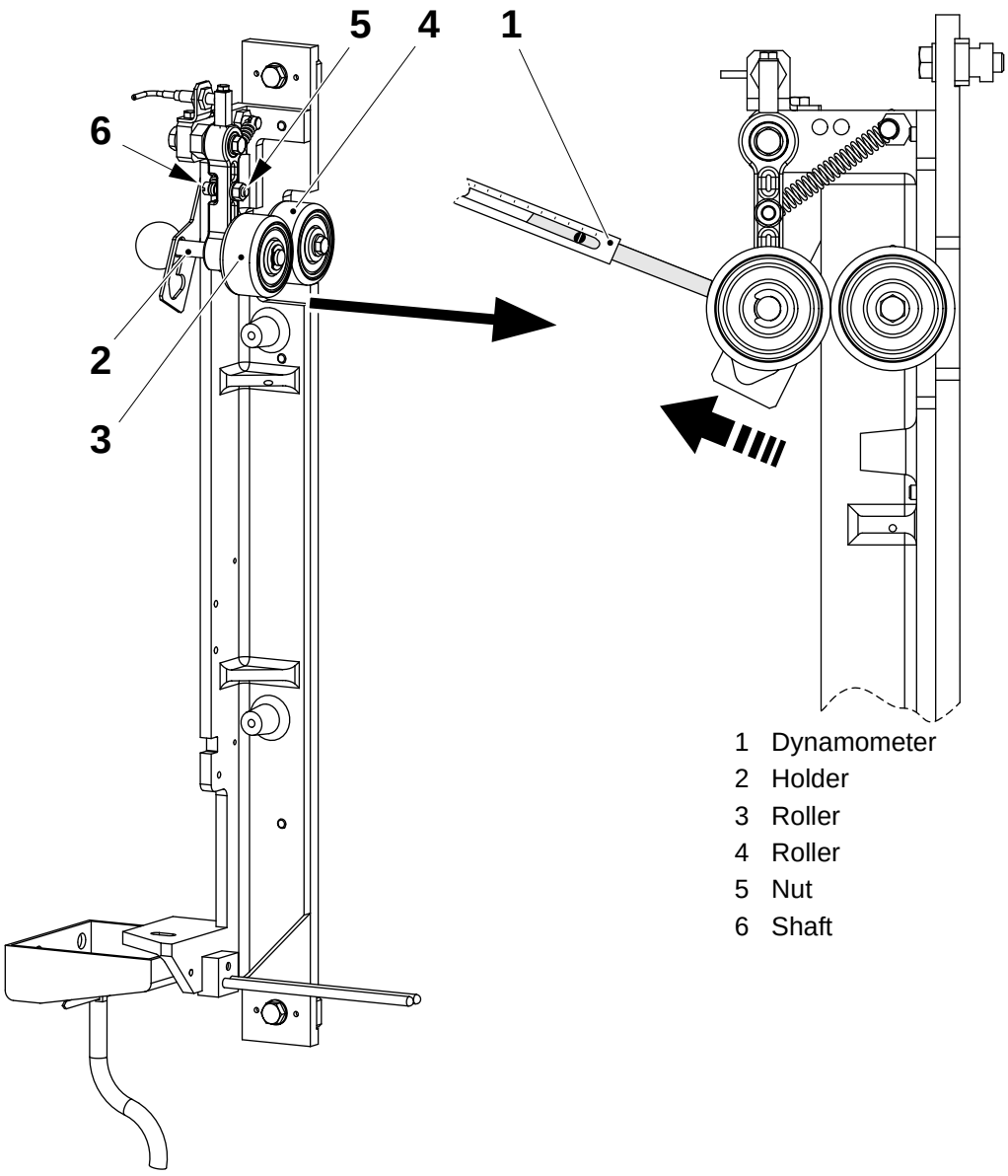

1 Dynamometer
2 Holder
3 Roller
4 Roller
5 Nut
6 Shaft

8.2.3-4 Pressure Roller - Set Proximity Switch

Machine Status	Mains power ON Air OFF
SPC Reference	2529571-0100

a) Loosen the nuts (1) and (2).

b) Set distance **A** between the head of the proximity switch (3) and the cam (4) by moving the proximity switch (3).

c) Tighten the nuts (1) and (2).

Note! Make sure the LED on the proximity switch (3) is still lit when manually moving the roller (5) sideways.

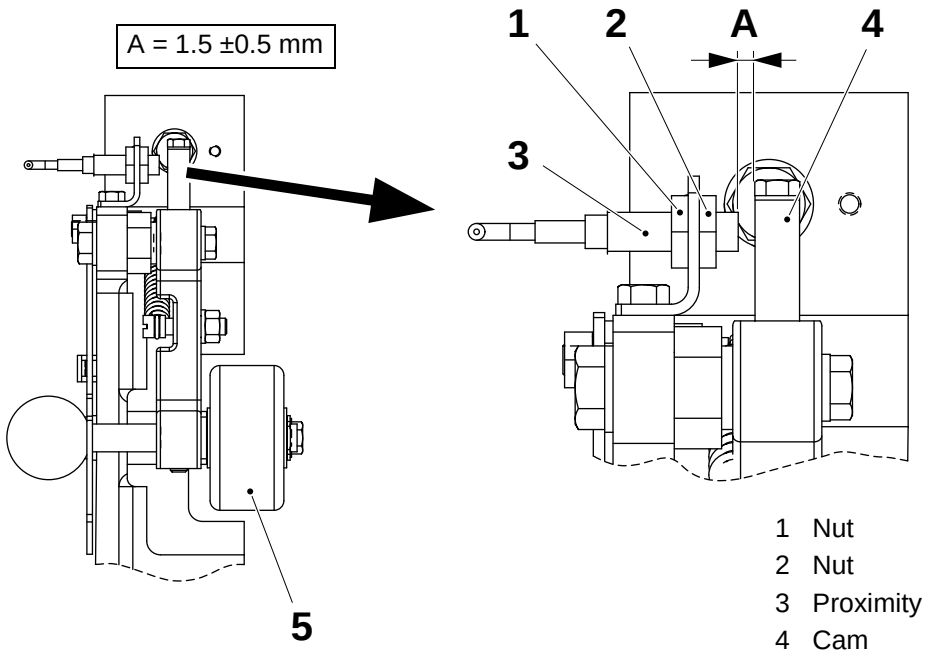

1 Nut
2 Nut
3 Proximity switch
4 Cam
5 Roller

8.2.4 Strip Guide

8.2.4-1 Strip Guide - Check

Machine Status	Mains power OFF Air OFF
SPC Reference	2530410-0100

Check that:

- the guide wheel (1) and the roller (2) rotate freely. The roller (2) may have a maximum radial play of **1.0 mm** and a maximum axial play of **0.5 mm**. If necessary, change the guide wheel and the roller;
- the surfaces of the guide wheel (1) and the roller (2) are undamaged;
- the LS strip lies in the centre of the roller (2). If not, adjust the position of the roller. See 8.2.4-2 Strip Guide - Set.

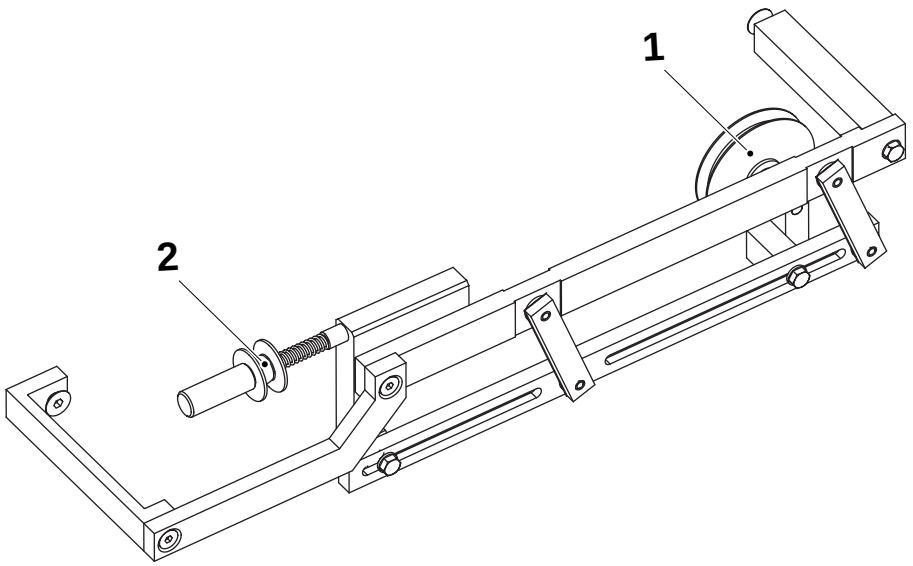

1 Guide wheel
2 Roller

8.2.4-2 Strip Guide - Set

Machine Status	Mains power OFF Air OFF
SPC Reference	2530410-0100

a) Loosen the screws (1) and (2).

b) Set distance **A** between the bracket (3) and the end of the rod (4) by moving the bracket (3). Tighten the screw (1).

c) Set distance **B** between the bracket (3) and the bracket (5) by moving the rod (4). Tighten the screw (2).

d) Set distance **C** between the bracket (5) and the roller (6) by turning the adjusting screw (7).

Package	A ±0.5 (mm)	B ±0.5 (mm)	C ±0.5 (mm)
TBA 200 B	110	175	55
TBA 250 B	110	175	55
TBA 200 S	120	136	55
TBA 250 S	119	152	55
TBA 200 M	119	152	55

Front view

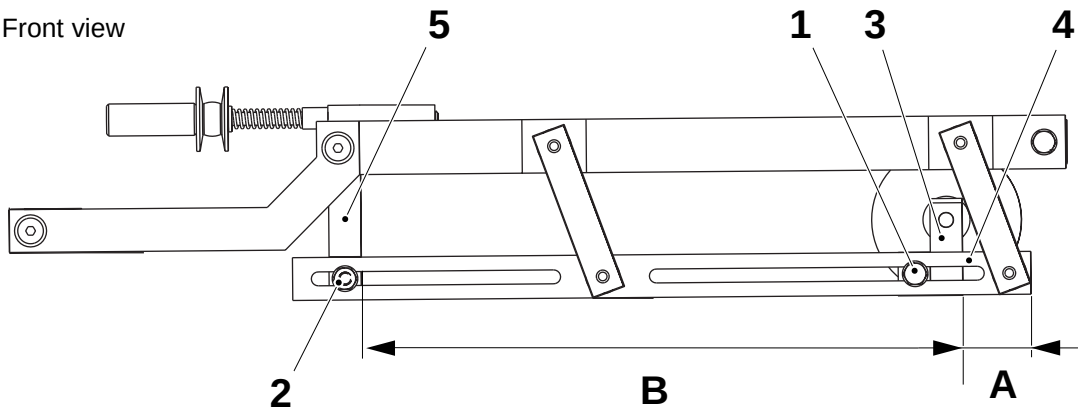

Rear view

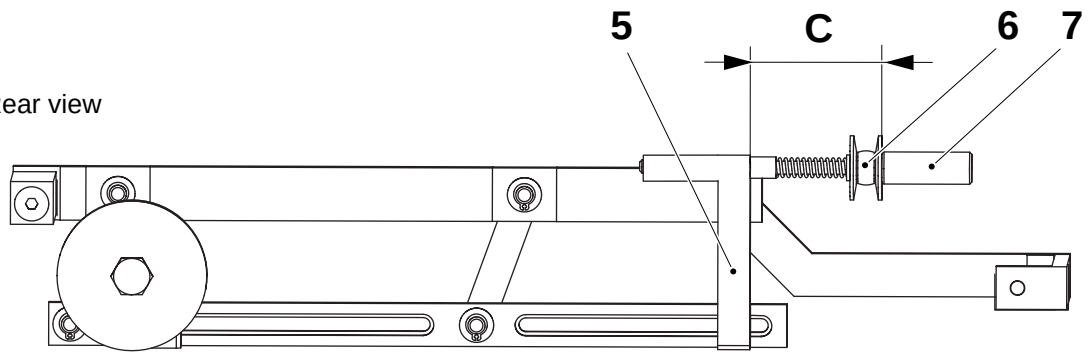

1 Screw
2 Screw
3 Bracket
4 Rod
5 Bracket
6 Roller
7 Adjusting screw

(Cont'd)

(Cont'd)

e) During **Production**, check the strip (8) is positioned symmetrically over the edge of the packaging material (9). If necessary, adjust the strips position by turning the adjusting screw (7).

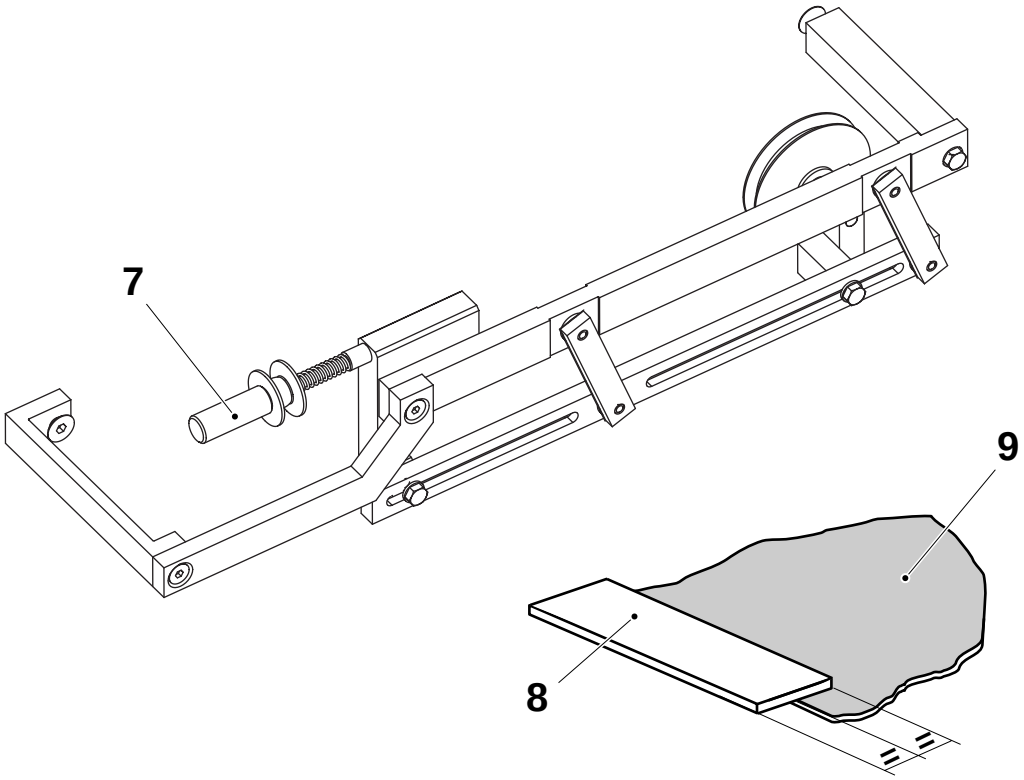

7 Adjusting screw
8 LS Strip
9 Packaging material

8.3 Splicing Device

SPC Reference	1484688-0200

8.3-1 Splicing Device - Check Drive Unit

Machine Status	Mains power OFF Air OFF
SPC Reference	1484688-0200

Remove the screws (1), the cover (2) and check the worm gear motor (3) for wear or damage.

Check:

- the bearings (4) and (5) for wear, damage or excessive radial play.
- the timing belt (6) for wear or damage.
- the timing belt tension, see 8.3-3 Splicing Device - Set Drive Unit Belt.

If necessary, change any worn or damaged part, see 8.3-2 Splicing Device - Drive Unit Overhaul.

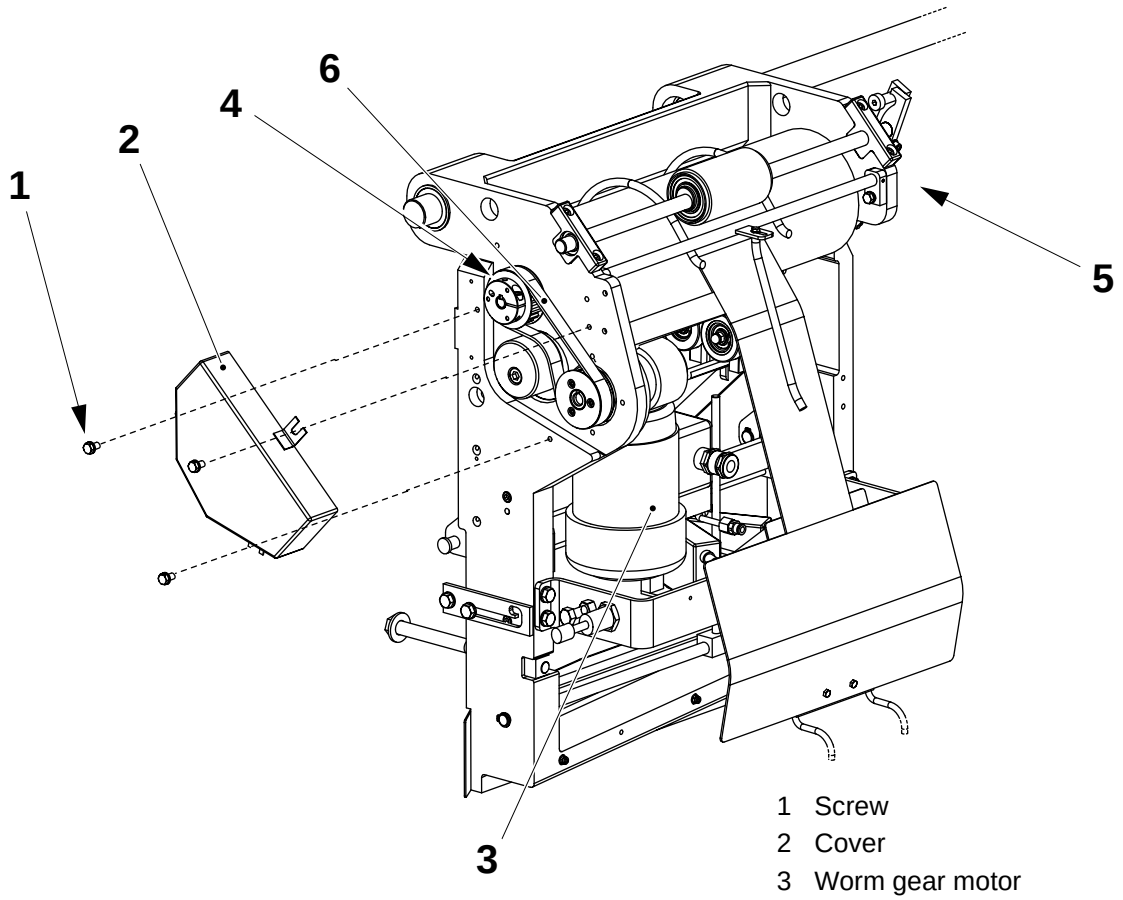

1 Screw
2 Cover
3 Worm gear motor
4 Bearing
5 Bearing
6 Timing belt

8.3-2 Splicing Device - Drive Unit Overhaul

Machine Status	Mains power OFF Air OFF
SPC Reference	1484688-0200

a) Remove the cover (1).

b) Loosen the screw (2) in the eccentric pulley (3).

c) Remove and change the timing belt (4).

d) Loosen the screw (5) and (6). Remove the toothed pulley (7) and the key (8).

e) Remove the retaining rings (9) and (10) and the shim (11).

f) Remove the axle pin (12).

g) Pull out the shaft (13) and remove the roller (14).

h) Remove and change the bearing (15).

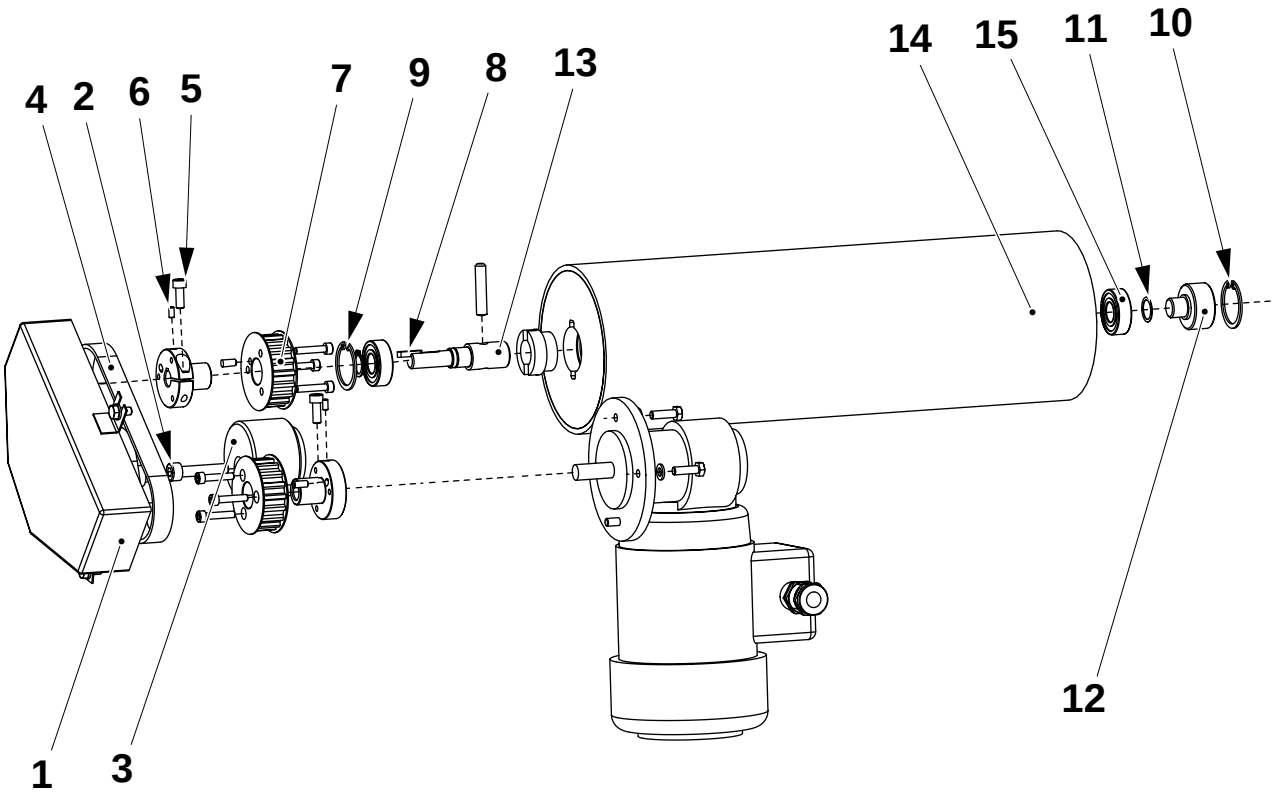

1	Cover	7	Pulley	13	Shaft
2	Screw	8	Key	14	Roller
3	Eccentric pulley	9	Retaining ring	15	Bearing
4	Timing belt	10	Retaining ring		
5	Screw	11	Shim		
6	Screw	12	Axle pin		

(Cont'd)

(Cont'd)

i) Remove the retaining ring (16) from the shaft (13).

j) Remove and change the bearing (17).

k) Remove and change the bushing (18).

l) Disconnect the motor (19).

m) Loosen the screw (20) and remove the toothed pulley (21).

n) Set the drive unit, see 8.3-4 Splicing Device - Set Drive Unit.

o) Set the timing belt tension, see 8.3-3 Splicing Device - Set Drive Unit Belt.

p) Assemble in the reverse order.

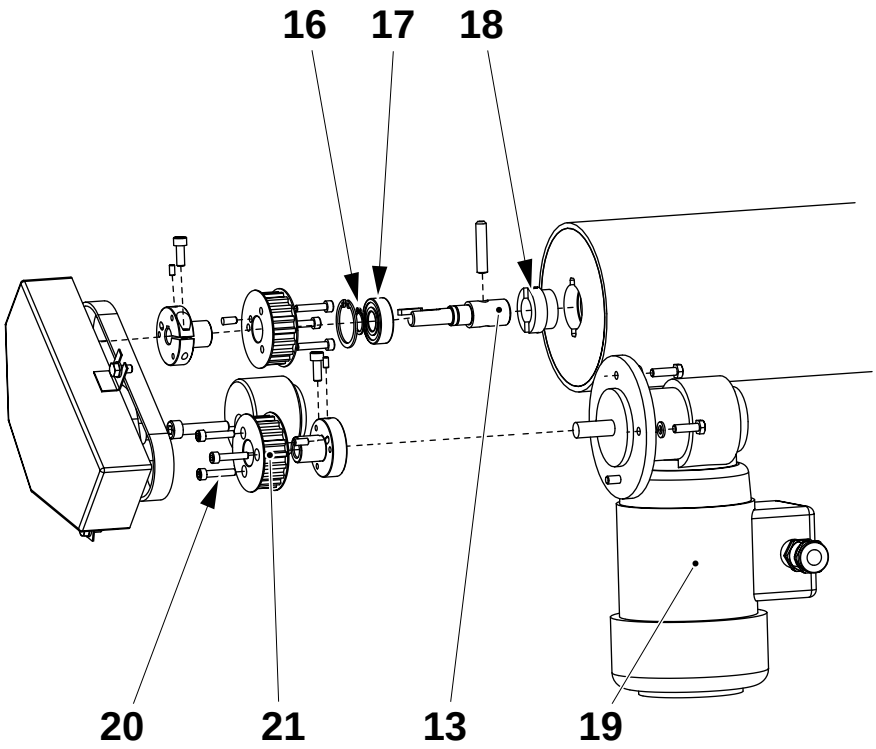

13	Shaft	19	Motor
16	Retaining ring	20	Screw
17	Bearing	21	Pulley
18	Bushing		

8.3-3 Splicing Device - Set Drive Unit Belt

Machine Status	Mains power OFF Air OFF
Tools - dynamometer	 TP No. 74767-0102
SPC Reference	1484688-0200

a) Remove the cover (1).

b) Using a dynamometer (2), check the belt tension.
The belt (3) should deflect by **5 mm** at the centre with a pressure of **40 N**.

c) To adjust the belt tension, loosen the screw (4) and turn the eccentric pulley (5).

d) Tighten the screw (4) and fit the cover (1).

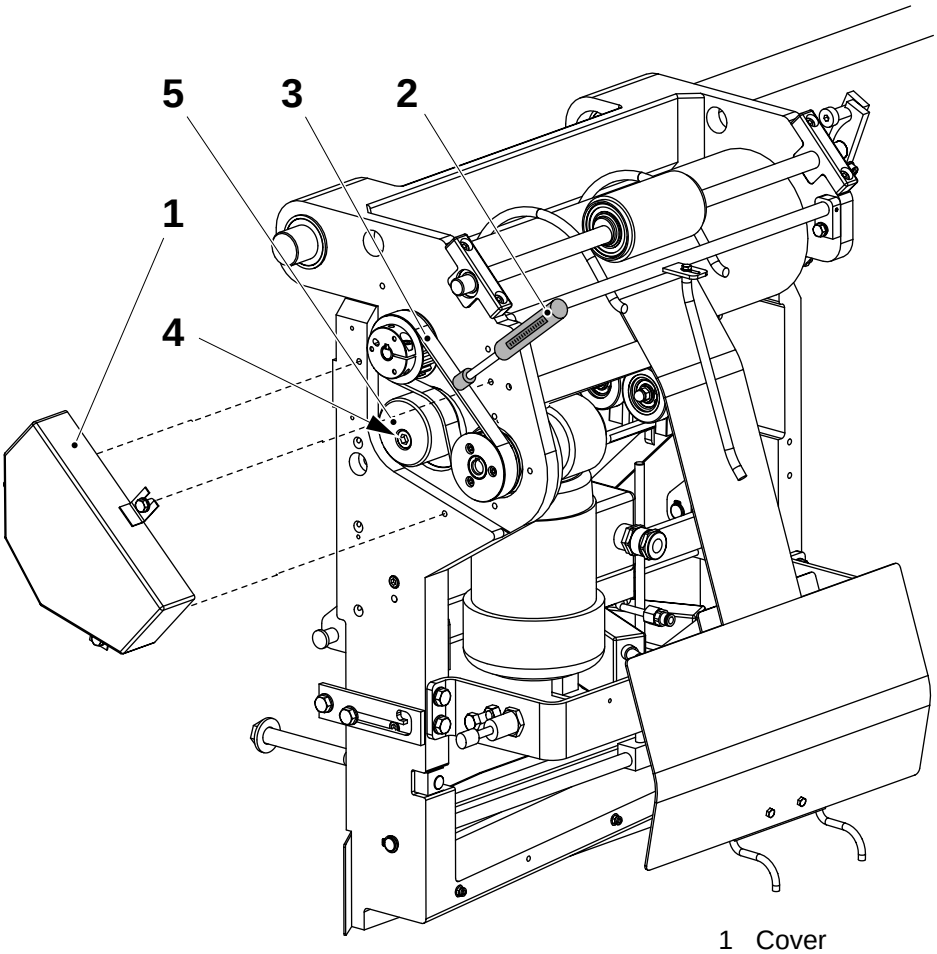

1 Cover
2 Dynamometer
3 Belt
4 Screw
5 Eccentric pulley

8.3-4 Splicing Device - Set Drive Unit

Machine Status	Mains power OFF Air OFF
SPC Reference	1484688-0200

a) Remove the cover (1).

b) Loosen the screw (2) and turn the eccentric pulley (3) to release the tension of the belt (4).

c) Set distance **A** between the pulley (5) and the frame (6). To adjust, use the screws on the pulleys.

d) Set distance **B** between the pulley (7) and the frame (6). To adjust, use the screws on the pulleys.

e) Set the drive unit belt, see 8.3-3 Splicing Device - Set Drive Unit Belt

f) Tighten the screw (2) and fit the cover (1).

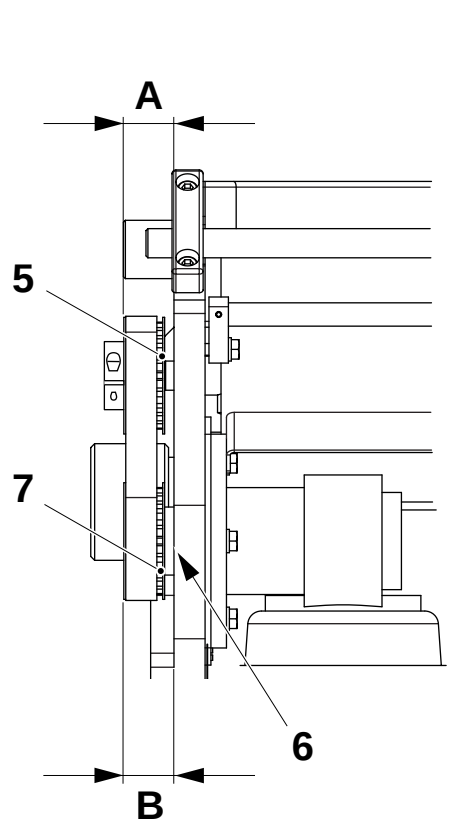

A = 25 ±1 mm
B = 25 ±1 mm

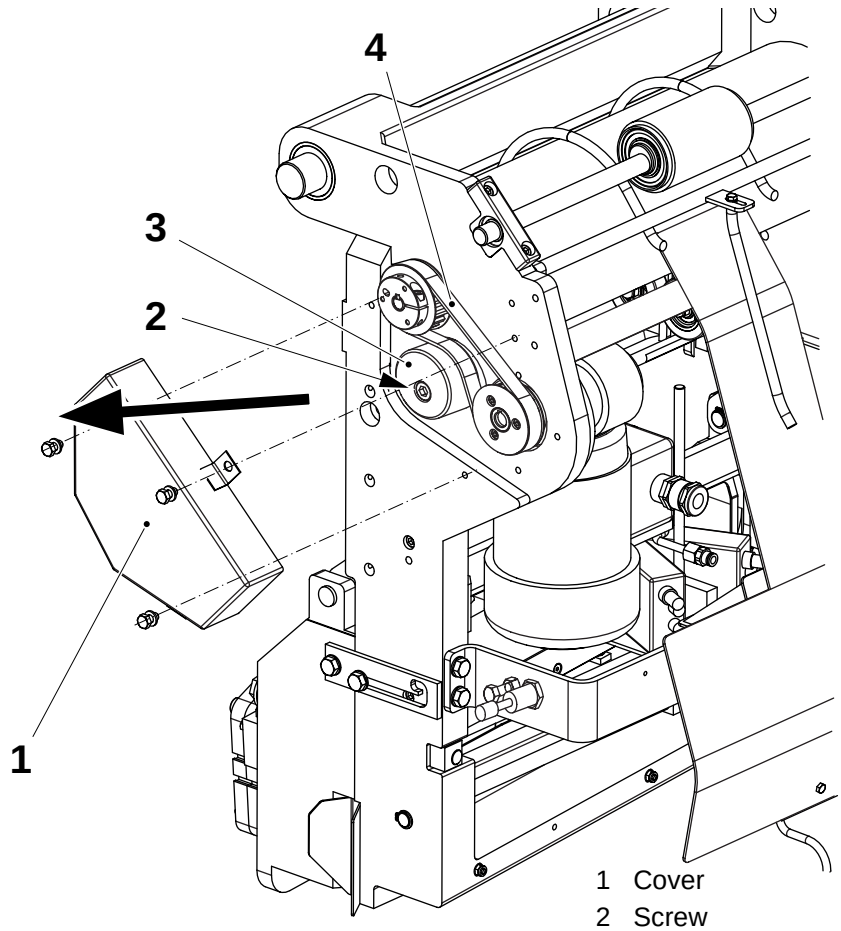

1 Cover
2 Screw
3 Eccentric pulley
4 Belt
5 Pulley
6 Frame
7 Pulley

8.3-5 Splicing Device - Change Photocell

Machine Status	Mains power OFF Air OFF
SPC Reference	1484688-0200

WARNING

Risk of crushing!

If the splicing device is moved out of position it will return **rapidly** to its former position when the doors are closed.

Disconnect the photocell cable from the electrical cabinet. Remove the screws (1) and change the photocell (2). Reconnect the photocell cable.

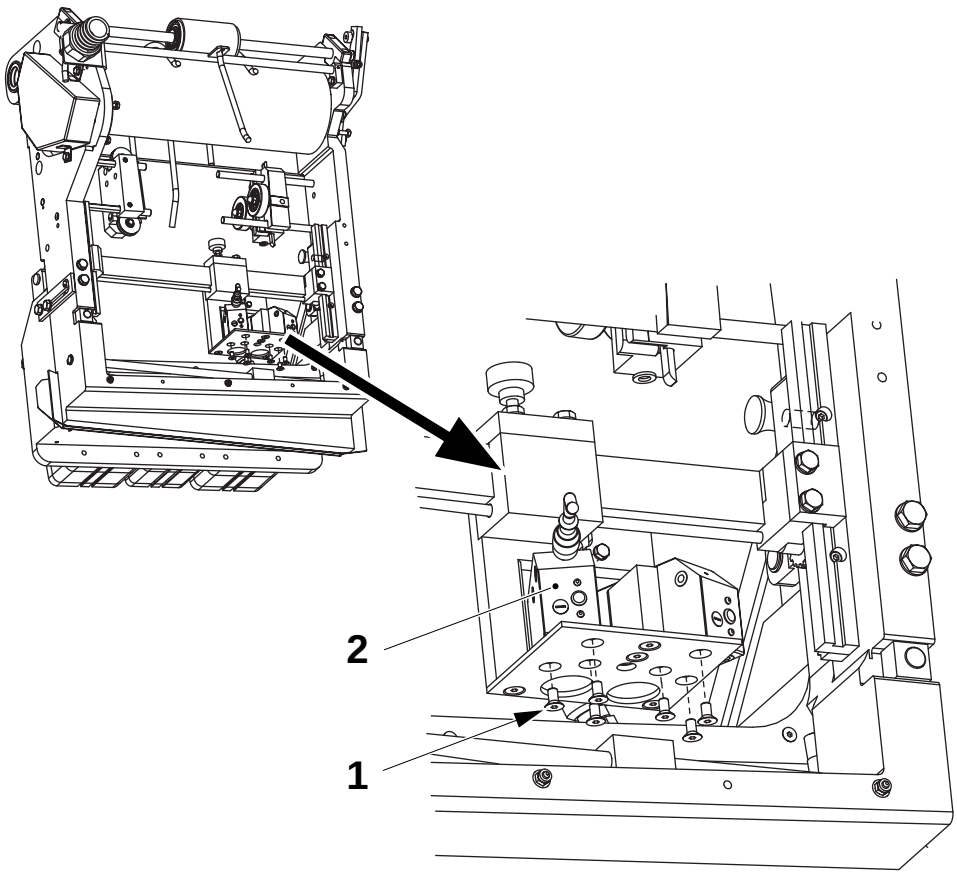

1 Screw
2 Photocell

8.3-6 Splicing Device - Set Photocell Position

Machine Status	Mains power OFF Air OFF
SPC Reference	1484688-0200

WARNING

Risk of crushing!

If the splicing device is moved out of position it will return **rapidly** to its former position when the doors are closed.

a) To change the position of the photocell, loosen the knob (1) and move the slider (2) until the left-hand side of the slider is aligned with value **A** on the ruler (3).

b) Tighten the knob (1).

c) To adjust the package length, loosen the screw (4) at both sides of the unit and move the rail (5) up or down until the top of the bracket (6) is aligned with value **B** on the ruler (7).

d) Tighten the screw (4).

Package	A ±0.5 (mm)	B ±0.5 (mm)
TBA 200 B	251	85
TBA 250 B	251	85
TBA 200 S	100	87
TBA 250 S	95	90
TBA 200 M	95	90

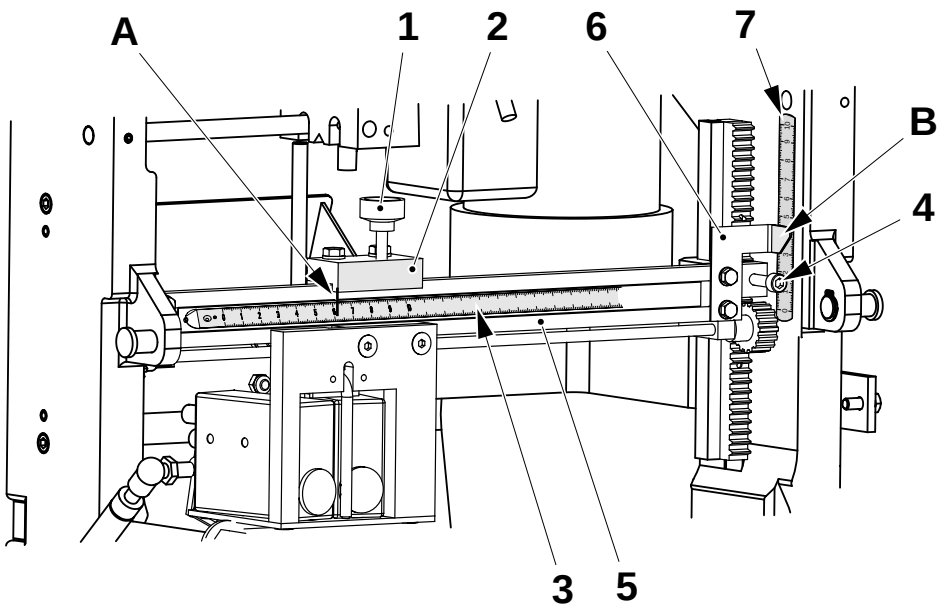

1 Knob
2 Slider
3 Ruler
4 Screw
5 Rail
6 Bracket
7 Ruler

8.3-7 Splicing Device - Set Photocell Sensitivity

Machine Status	Mains power ON Air OFF
SPC Reference	1484688-0200

Set the photocells, see 9.2.1-4 TMCC2 Controller - Set Photocells.

8.3.1 Web Guide

8.3.1-1 Web Guide - Check

Machine Status	Mains power OFF Air OFF
SPC Reference	1484745-0100

Check that:

- the surfaces of the rollers (1) and (2) are undamaged.
  If damaged, change the rollers see 8.7.1-2 Web Guide - Change.
- the rollers (1) and (2) rotate freely.
  If they do not, change the roller bearings, see 8.7.1-2 Web Guide - Change.
- the guide (3) is clean.
  If it is not, loosen the stop screw (4) and remove the locking washer (5). Screw the knob (6) out of the shaft (7). Remove the guide (3) and clean it.
  After cleaning, fit the guide (3) and screw the knob (6) into the shaft (7). Do not tighten.
  Set the web guide tension, see 8.3.1-3 Web Guide - Set.

Note! The guide (3) must be fitted so the packaging material web enters the guide from the chamfered side (8).

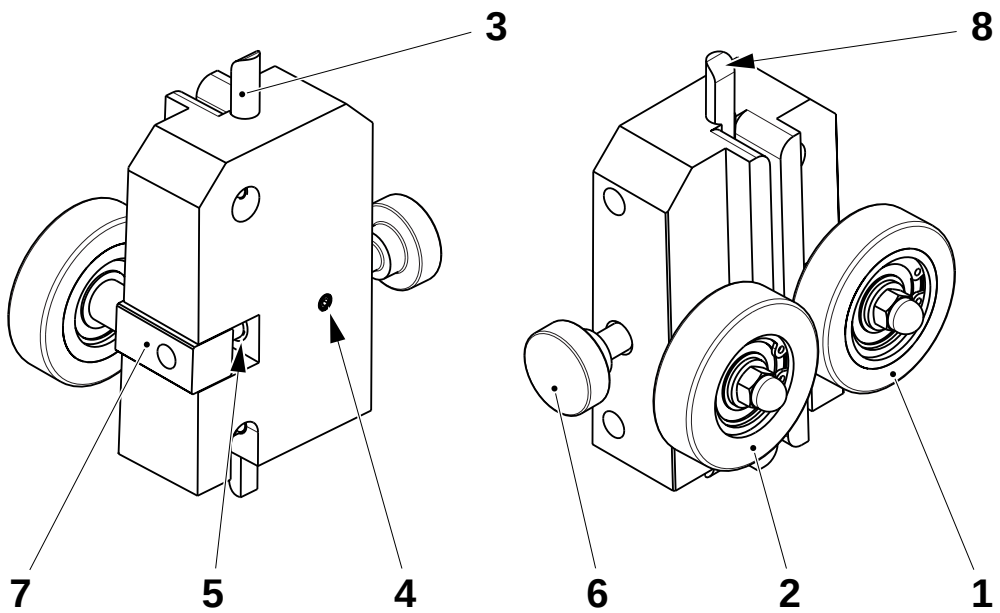

1 Rubber roller
2 Roller
3 Guide
4 Stop screw
5 Locking washer
6 Knob
7 Shaft
8 Chamfered side

8.3.1-2 Web Guide - Change

Machine Status	Mains power OFF Air OFF
SPC Reference	1484745-0100

a) Remove the nuts (1) and the retaining rings (2).

b) Remove and change the ball bearings (3) and the rollers (4) and (5).

Note! The rubber roller (4) must be fitted on the printed side of the packaging material web.

c) Assemble in the reverse order.

d) After assembly, check the rubber roller (4) rotates when the roller (5) is turned by hand. If not, set the rollers, see 8.3.1-3 Web Guide - Set.

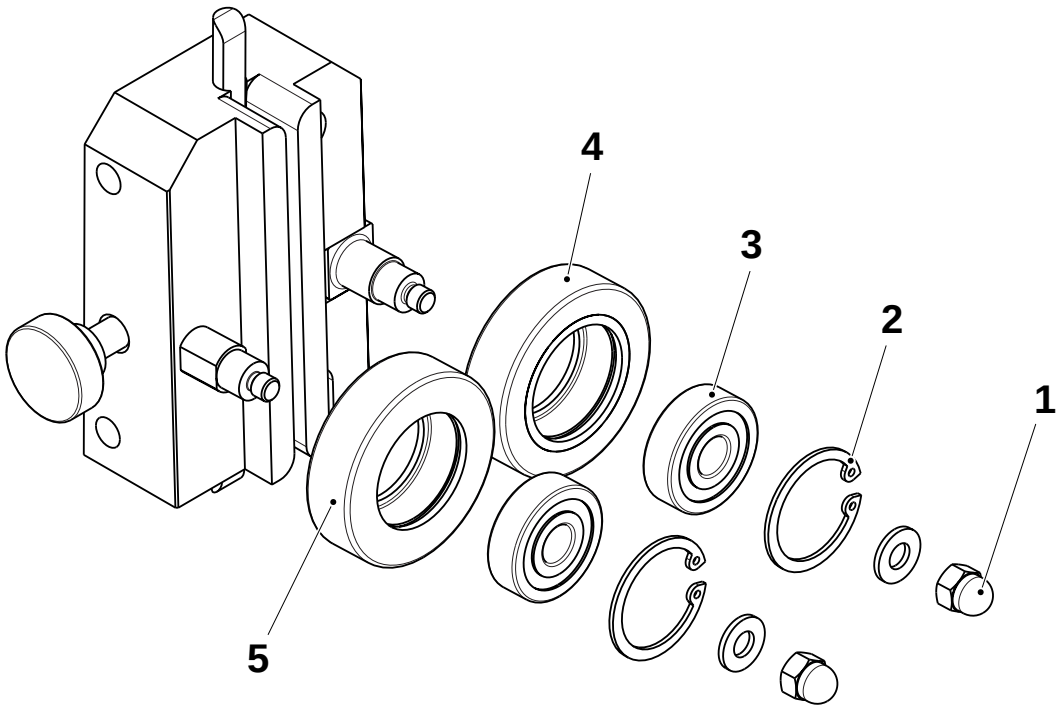

1 Nut
2 Retaining ring
3 Bearing
4 Rubber roller
5 Roller

8.3.1-3 Web Guide - Set

Machine Status	Mains power OFF Air OFF
SPC Reference	1484745-0100

a) Loosen the stop screws (1).

b) Centre the packaging material (2) over the roller (3) by moving the web guide (4) sideways.

c) Tighten the stop screws (1).

d) Loosen the screws (5) and position the paper guide (6) **1 mm** from the edge of the packaging material (2).

e) Tighten the screws (5).

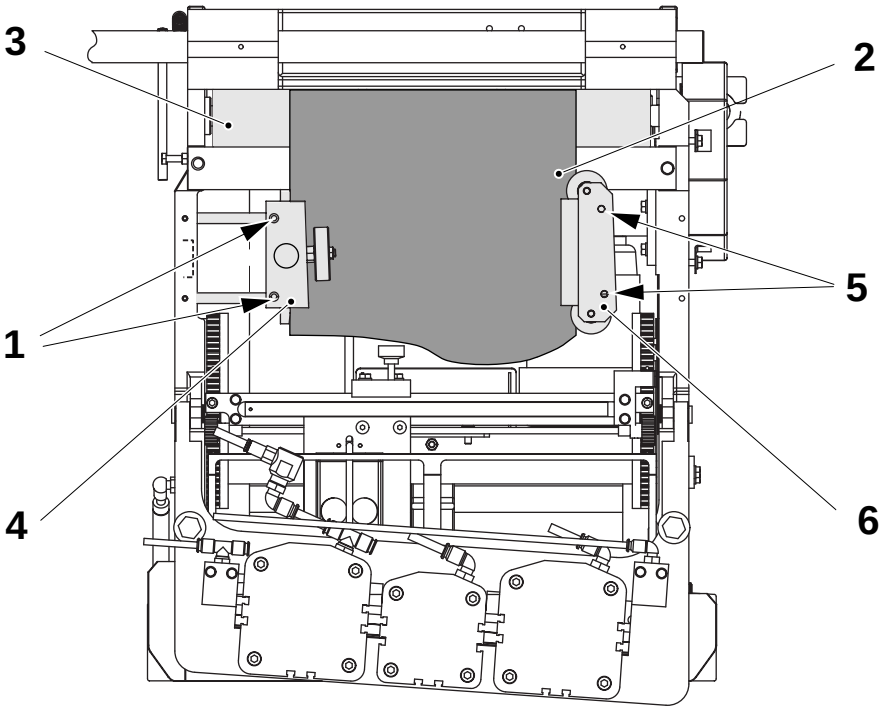

1 Stop screw
2 Packaging material
3 Roller
4 Web guide
5 Stop screw
6 Paper guide

(Cont'd)

(Cont'd)

f) Loosen the stop screw (7) and unscrew the knob (8) a little.

CAUTION
If the roller applies too much pressure when set, the packaging material will be damaged. If it applies too little pressure, the packaging material may slip out of the guide.

g) Turn the knob (8) clockwise until the rollers (9) and (10) grip the packaging material. The ideal setting has been found when the packaging material can be moved up and down causing the rollers to rotate without marking the packaging material.

h) When the ideal setting has been found, tighten the stop screw (7).

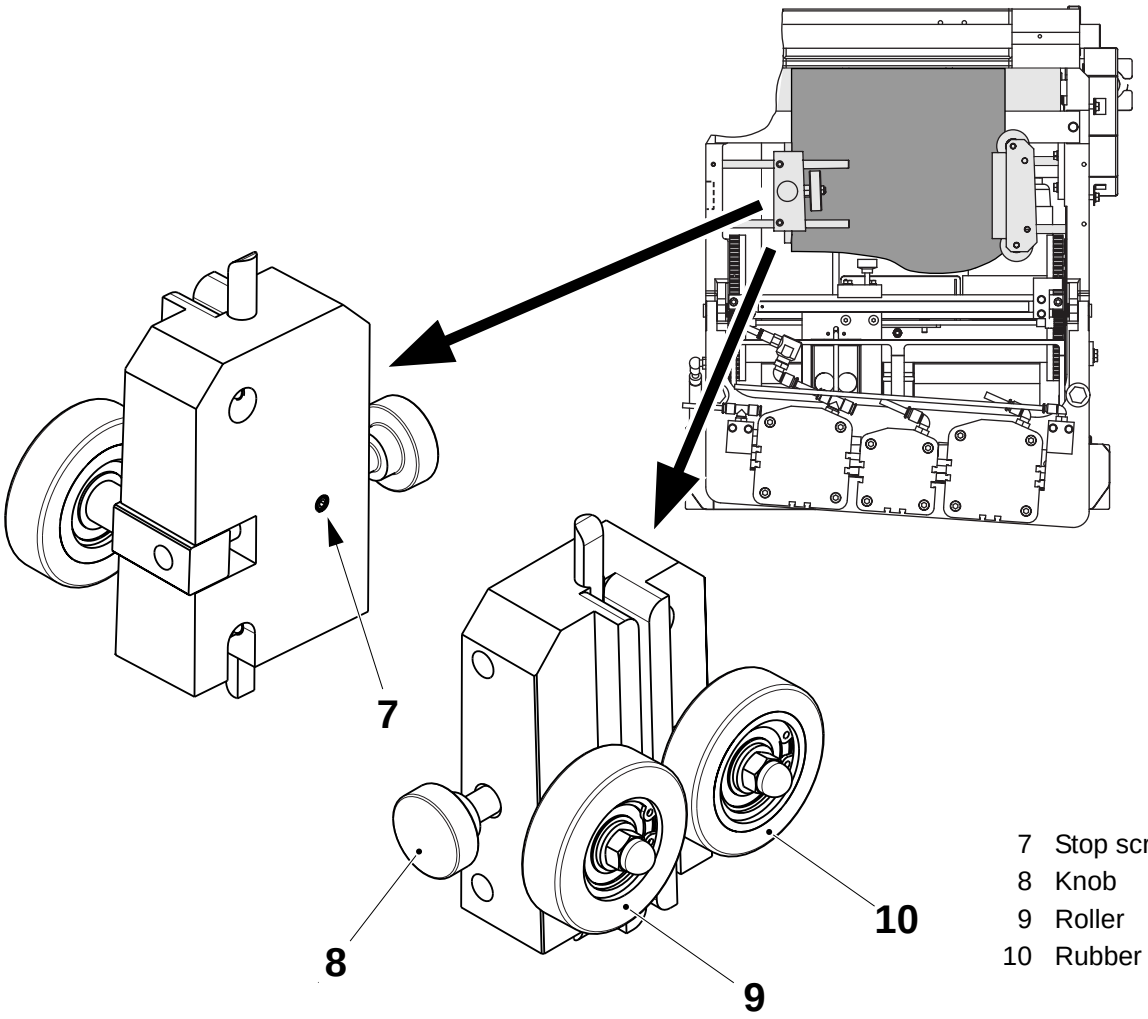

7 Stop screw
8 Knob
9 Roller
10 Rubber roller

8.3.2 Paper Guide

8.3.2-1 Paper Guide - Check

Machine Status	Mains power OFF Air OFF
SPC Reference	2529547-0100

Check the surfaces of the rollers (1) and (2) for wear or damage. Change the rollers if necessary, see 8.3.2-2 Paper Guide - Change.

Check the rollers (1) and (2) rotate freely. If they do not, change the roller bearings, see 8.3.2-2 Paper Guide - Change.

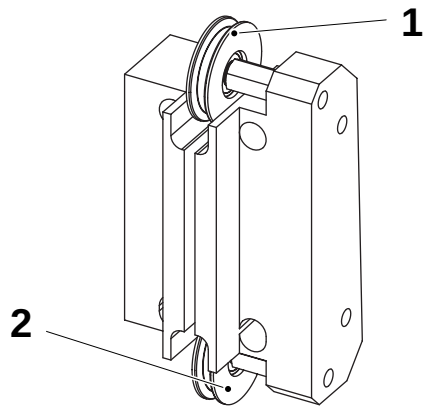

1 Roller
2 Roller

8.3.2-2 Paper Guide - Change

Machine Status	Mains power OFF Air OFF
SPC Reference	2529547-0100

Remove the screws (1). Remove and change the rollers (2) and ball bearings (3).

Assemble in the reverse order.

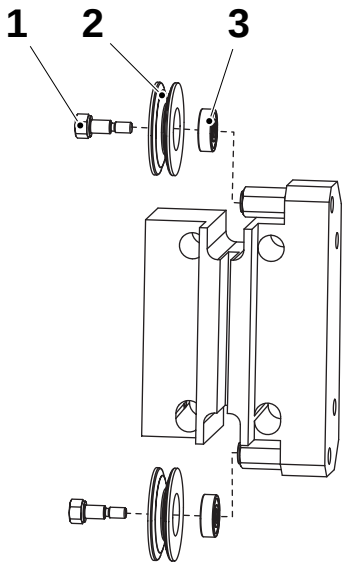

1 Screw
2 Roller
3 Ball bearing

8.3.3 Pressure Jaw

8.3.3-1 Pressure Jaw - Check Knife

Machine Status	Mains power OFF Air OFF
SPC Reference	1484690-0200

WARNING
Risk of crushing!
If the splicing device is moved out of position it will return **rapidly** to its former position when the doors are closed.

Loosen the tie rods (1). Lift the pressure jaw (2) and lock it in the cleaning position with the catch (3).

WARNING
Risk of cutting!
Knife is sharp.

Check if the knife (4) is worn or damaged. If it is, change it, see 8.3.3-2 Pressure Jaw - Change Knife.

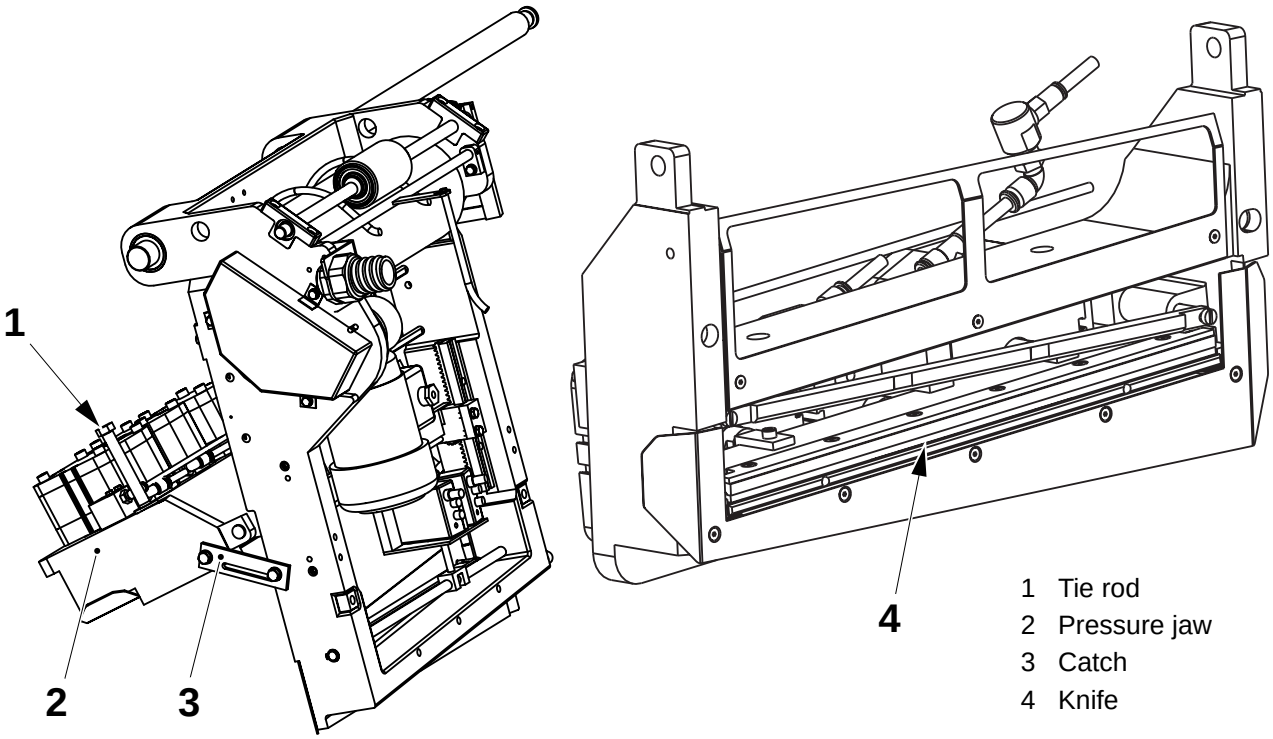

1 Tie rod
2 Pressure jaw
3 Catch
4 Knife

8.3.3-2 Pressure Jaw - Change Knife

Machine Status	Mains power OFF Air OFF
SPC Reference	1484690-0200

WARNING

Risk of crushing!

If the splicing device is moved out of position it will return **rapidly** to its former position when the doors are closed.

a) Loosen the tie rods (1).

b) Lift the pressure jaw (2) and lock it in the cleaning position with the catch (3).

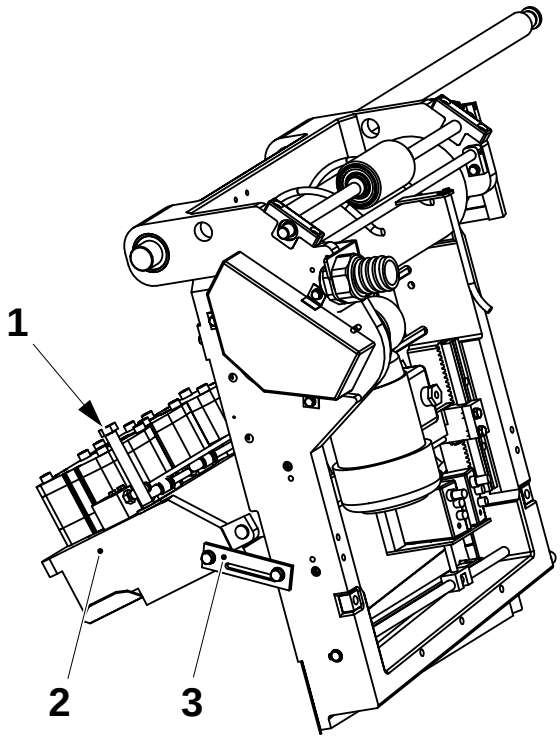

1 Tie rod
2 Pressure jaw
3 Catch

(Cont'd)

(Cont'd)

c) Remove the screws (4) and the rule plate (5).

d) Loosen the screws (6), accessible through the holes (7), and pull out the pressure rail (8).

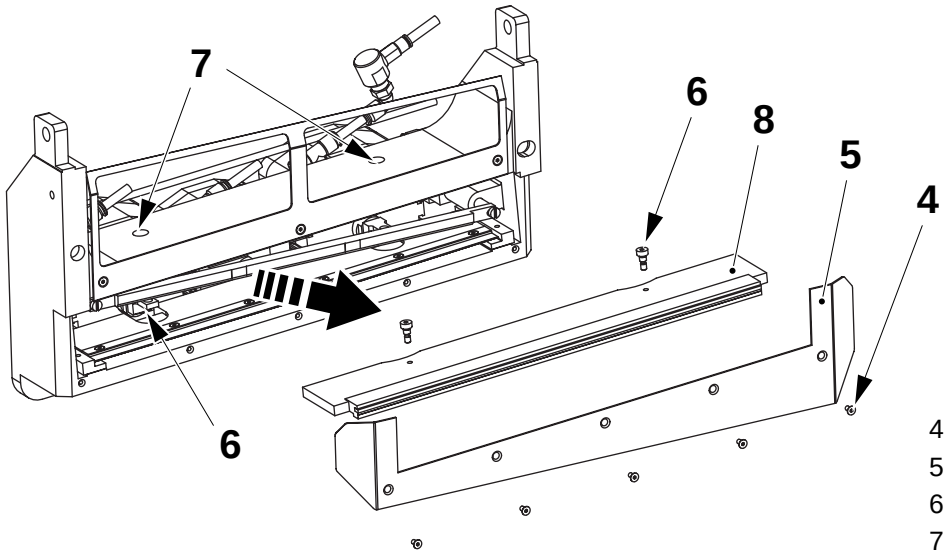

4 Screw
5 Rule plate
6 Screw
7 Hole
8 Pressure rail

WARNING
Risk of cutting!
Knife is sharp.

e) Remove the knife holder (9) from the cylinder rod (10).

f) Remove the screws (11) and clamp (12).

g) Change the knife (13) and assemble in the reverse order.

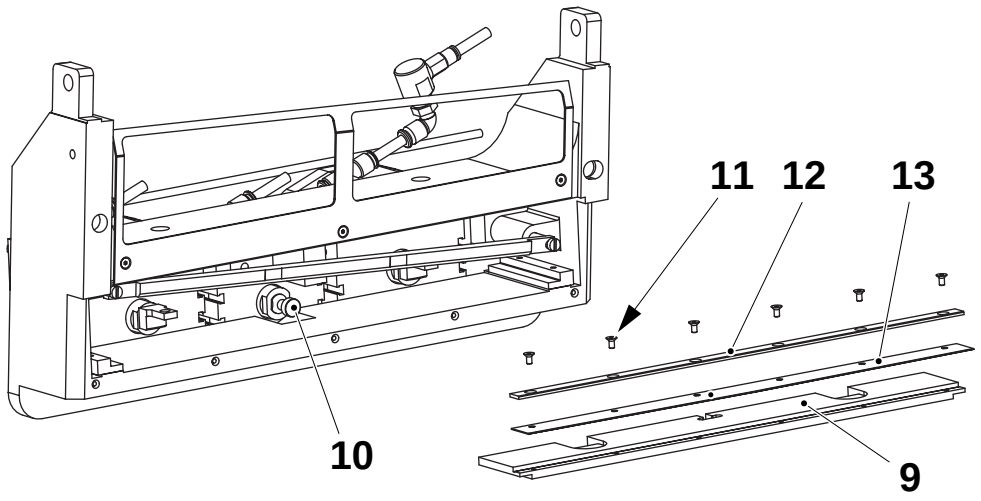

9 Knife holder
10 Cylinder rod
11 Screw
12 Clamp
13 Knife

8.3.3-3 Pressure Jaw - Check TPO-bar

Machine Status	Mains power OFF Air OFF
SPC Reference	1524389-0100

WARNING

Risk of crushing!

If the splicing device is moved out of position it will return **rapidly** to its former position when the doors are closed.

a) Loosen the tie rods (1).

b) Lift the pressure jaw (2) and lock it in the cleaning position with the catch (3).

c) Check if the TPO-bar (4) is worn or damaged. Change if necessary, see 8.3.3-4 Pressure Jaw - Change TPO-bar.

d) Check the TPO-bar (4) is free from packaging material deposits. Clean if necessary.

e) Assemble in the reverse order.

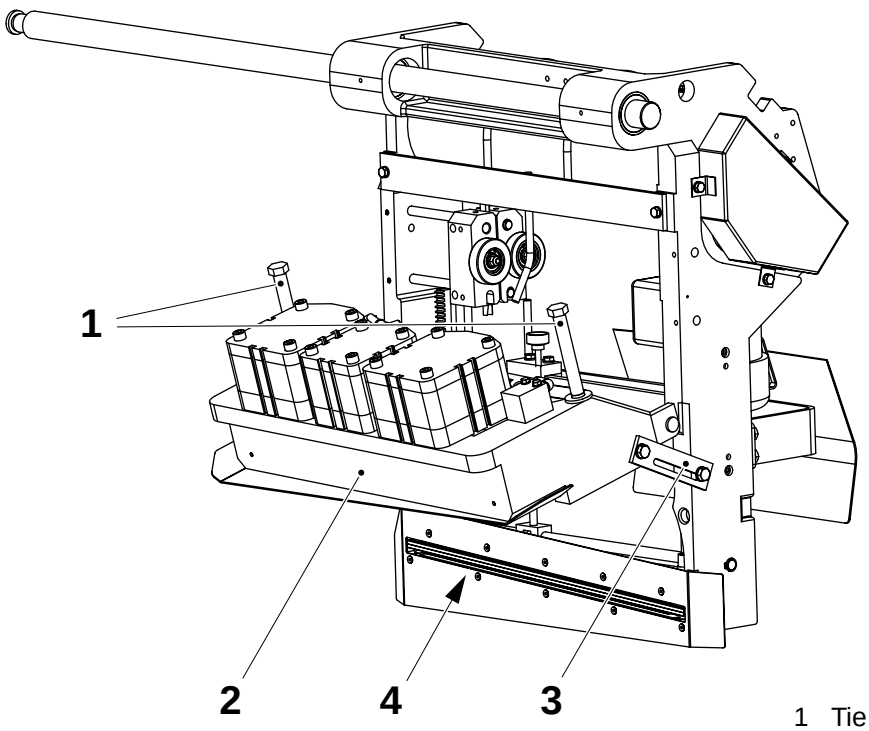

1 Tie rod
2 Pressure jaw
3 Catch
4 TPO-bar

8.3.3-4 Pressure Jaw - Change TPO-bar

Machine Status	Mains power OFF Air OFF
SPC Reference	1524389-0100

WARNING

Risk of crushing!

If the splicing device is moved out of position it will return **rapidly** to its former position when the doors are closed.

a) Loosen the tie rods (1).

b) Lift the pressure jaw (2) and lock it in the cleaning position with the catch (3).

c) Remove the screws (4) and the plate (5).

d) Remove the nut (6) and the TPO-bar (7).

e) Remove the screws (8) and the contact washers (9).

f) Remove the cable connections (10).

g) Change the TPO-bar and assemble in the reverse order.

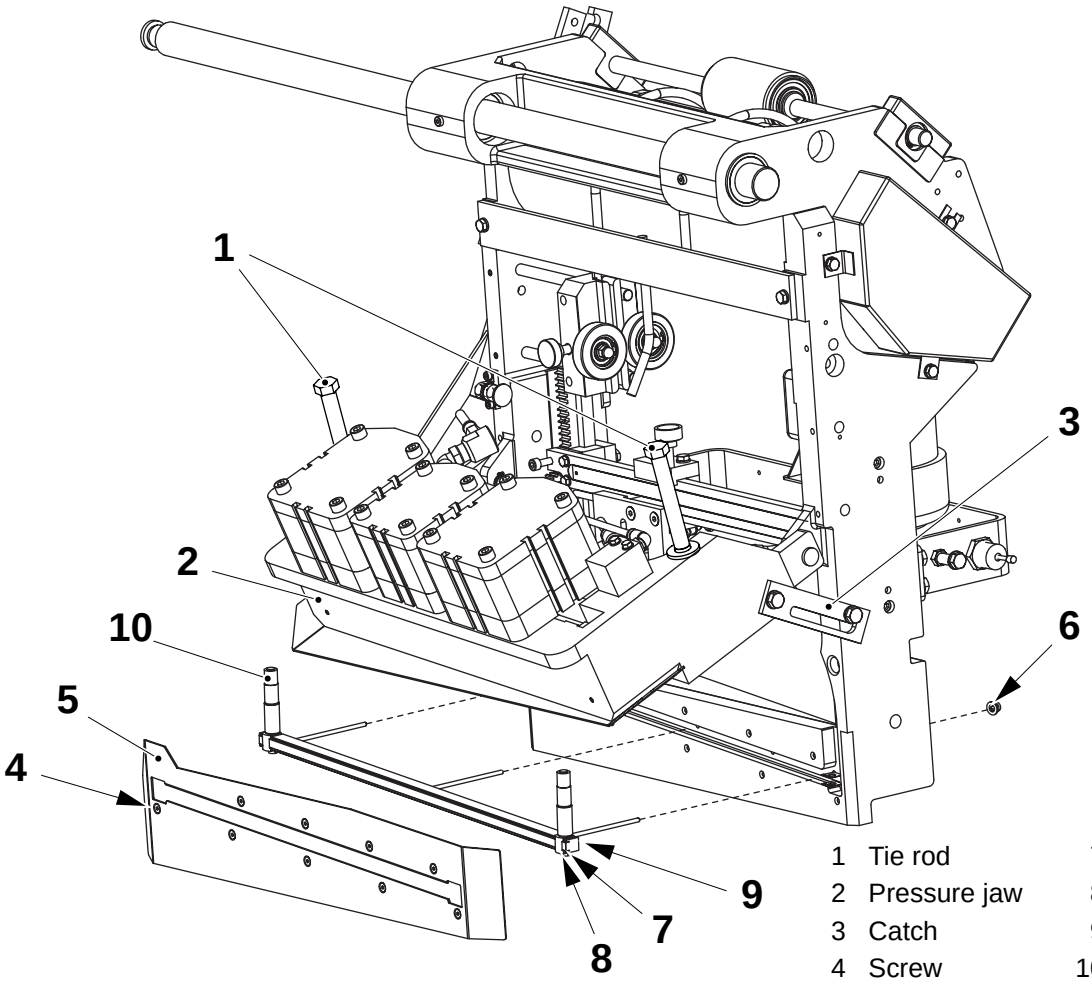

1 Tie rod
2 Pressure jaw
3 Catch
4 Screw
5 Plate
6 Nut
7 TPO-bar
8 Screw
9 Washer
10 Cable connection

8.3.3-5 Pressure Jaw - Change Cylinders

Machine Status	Mains power OFF Air OFF
Consumables - locking fluid	 TP No. 90157-16
SPC Reference	1484690-0200

WARNING

Risk of crushing!

If the splicing device is moved out of position it will return **rapidly** to its former position when the doors are closed.

Loosen the tie rods (1).

Lift the pressure jaw (2) and lock it in the cleaning position with the catch (3).

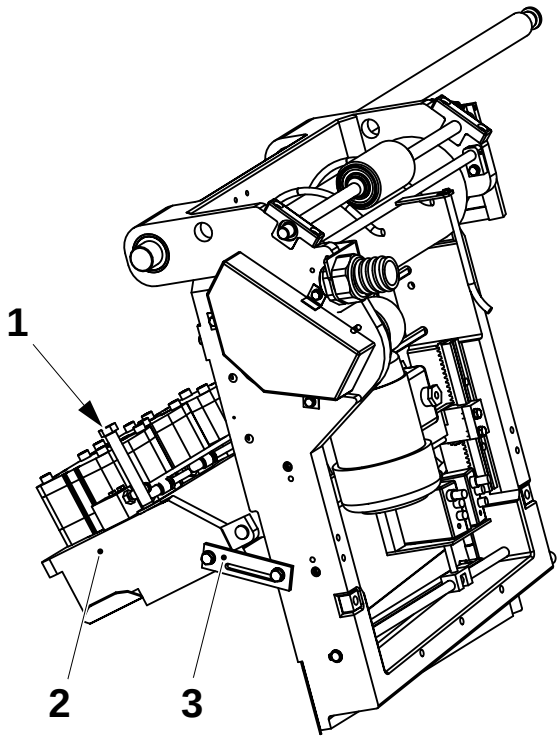

1 Tie rod
2 Pressure jaw
3 Catch

(Cont'd)

(Cont'd)

Pressure Cylinders

Note! Overhaul one cylinder completely before starting on the next. The pressure rail (7) and the knife holder (8) are connected to the pressure cylinder by the rods end connection (6).

a) Disconnect the air hose and remove the hose coupling (1).

b) Remove the screw (2) visible through the hole (3).

c) Remove the screws (4).

d) Remove and change the pressure cylinder (5).

e) Remove the rod end connection (6) from the old cylinder.

f) Apply the locking fluid to the threads of the rod end connection (6) and fit it in the new cylinder.

g) Assemble the in the reverse order.

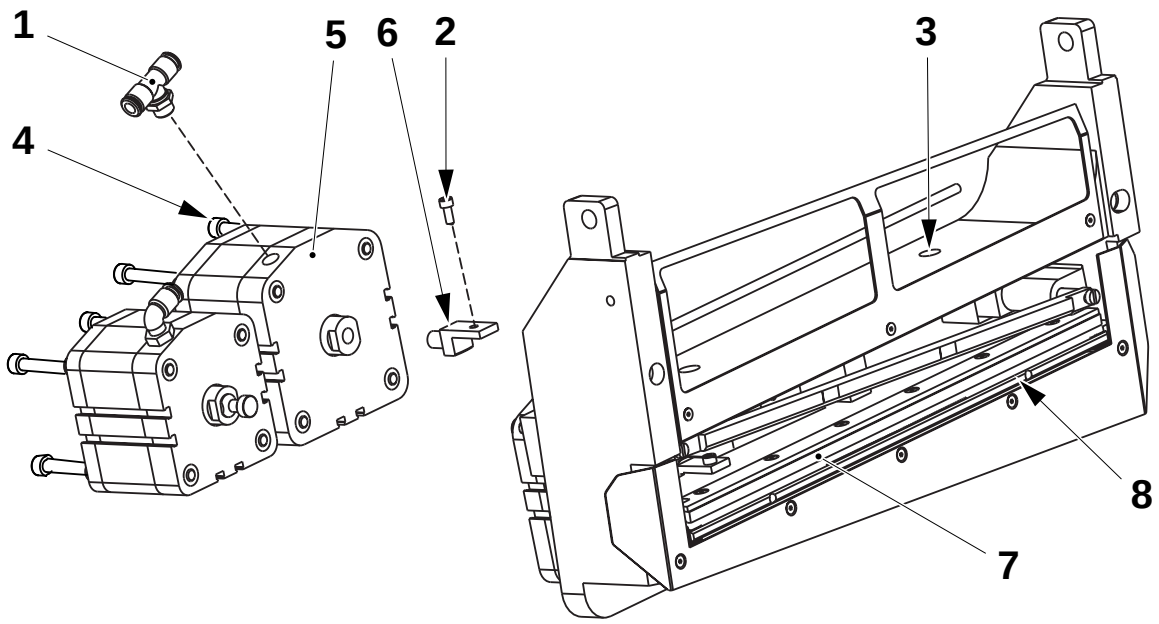

1 Hose coupling
2 Screw
3 Hole
4 Screw
5 Pressure cylinder
6 Rod end connection
7 Pressure rail
8 Knife holder

(Cont'd)

(Cont'd)

Cutting Cylinder

Note! The pressure rail (5) and the knife holder (5) are connected to the cutting cylinder by the rods end connection (6).

a) Disconnect the air hose and remove the hose connection (1).

b) Remove the screws (2).

c) Un-hook and remove the cutting cylinder (3) from the knife holder (5).

d) Remove the rod end connection (6) from the old cylinder.

e) Apply the locking fluid to the threads of the rod end connection (6) and fit it in the new cylinder.

f) Assemble the in the reverse order.

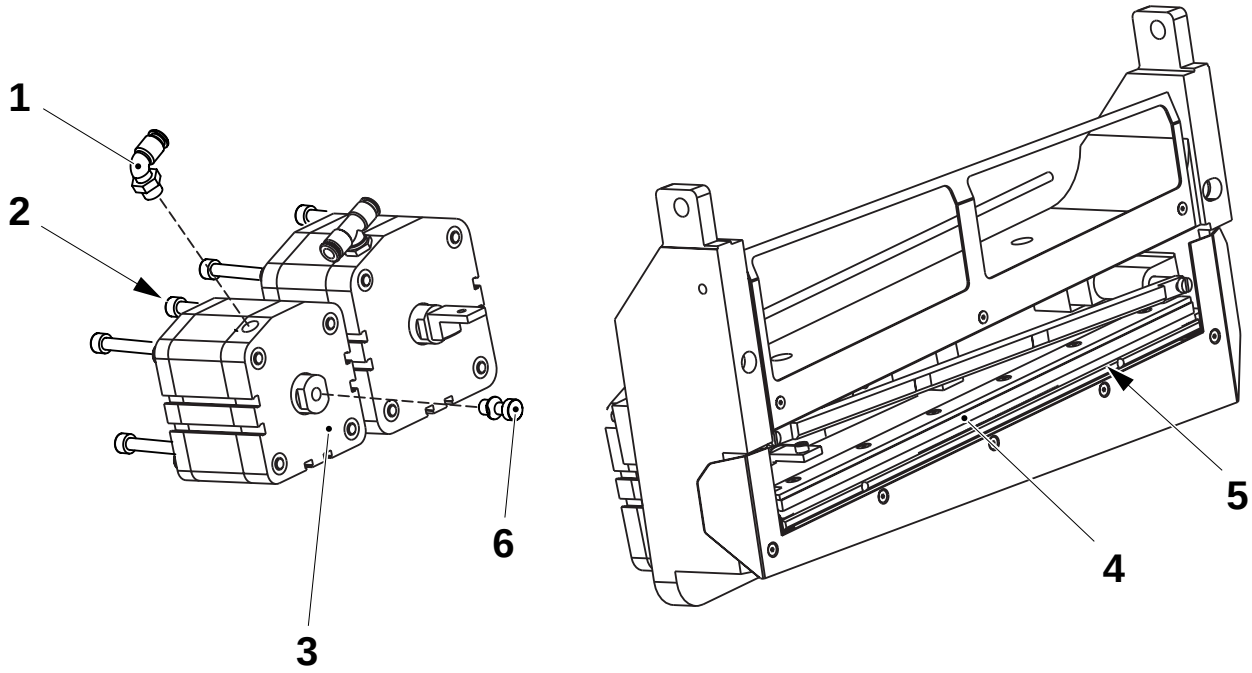

1 Hose connection
2 Screw
3 Cutting cylinder
4 Pressure rail
5 Knife holder
6 Rod end connection

(Cont'd)

(Cont'd)

Web Tension Cylinder

a) Remove the screws (1) and pull out the cylinder (2) as far as possible.

b) Hold the cylinder piston (3) with a spanner and turn the compression rod (4) to remove the cylinder (2).

c) Remove the pressure rail (5).

d) Remove the other cylinder in the same way.

e) Remove the nut (6) from the compression rod (4).

Note! When assembling, make sure that all components are tight.

f) Assemble in the reverse order.

g) Check the compression rods move smoothly.

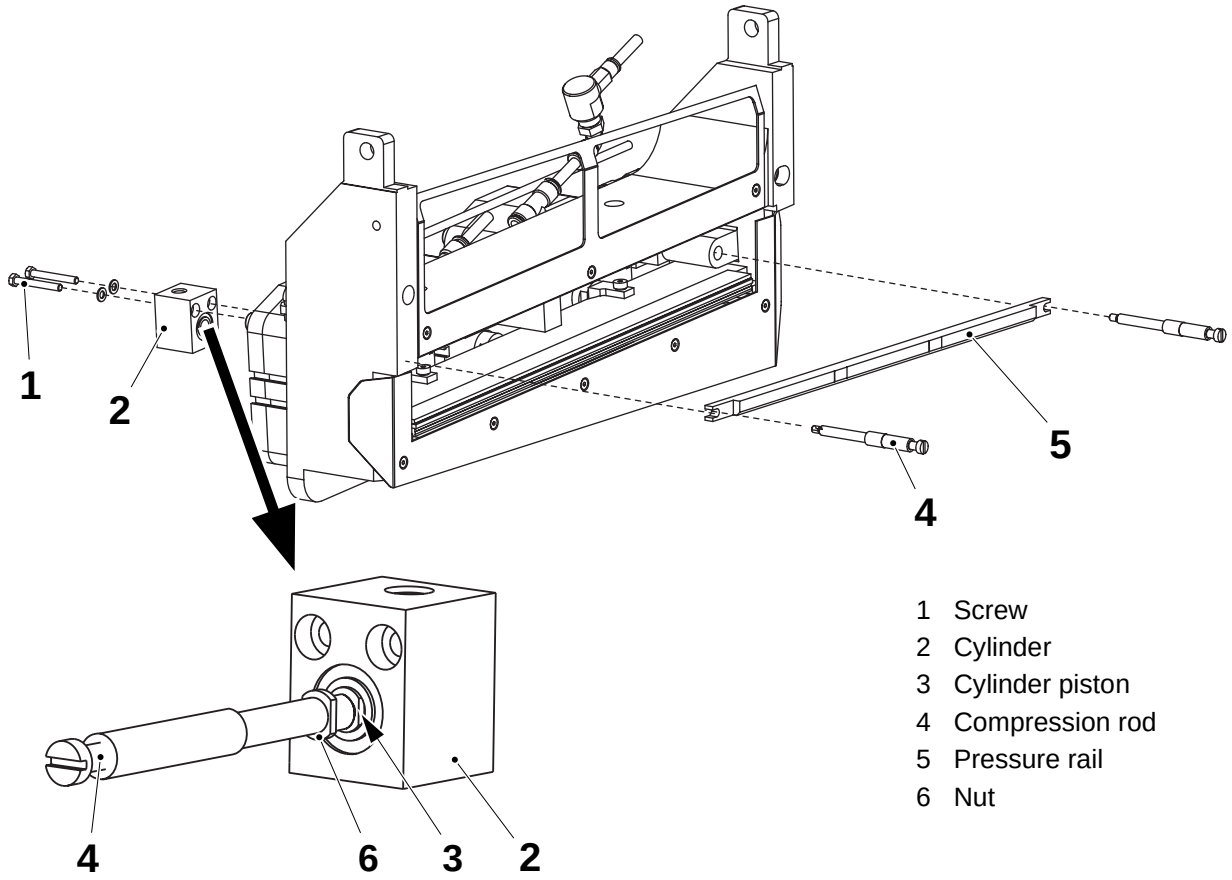

1 Screw
2 Cylinder
3 Cylinder piston
4 Compression rod
5 Pressure rail
6 Nut

(Cont'd)

(Cont'd)

h) Check the splicing device is set to the correct pressure, see 10.1 Technical Data. If it is not, turn the control knob (10) until the pressure gauge (9) indicates the correct pressure.

i) Check the air circuit is set to the correct pressure, see 10.1 Technical Data. If it is not, turn the control knob (8) until the pressure gauge (7) indicates the correct pressure.

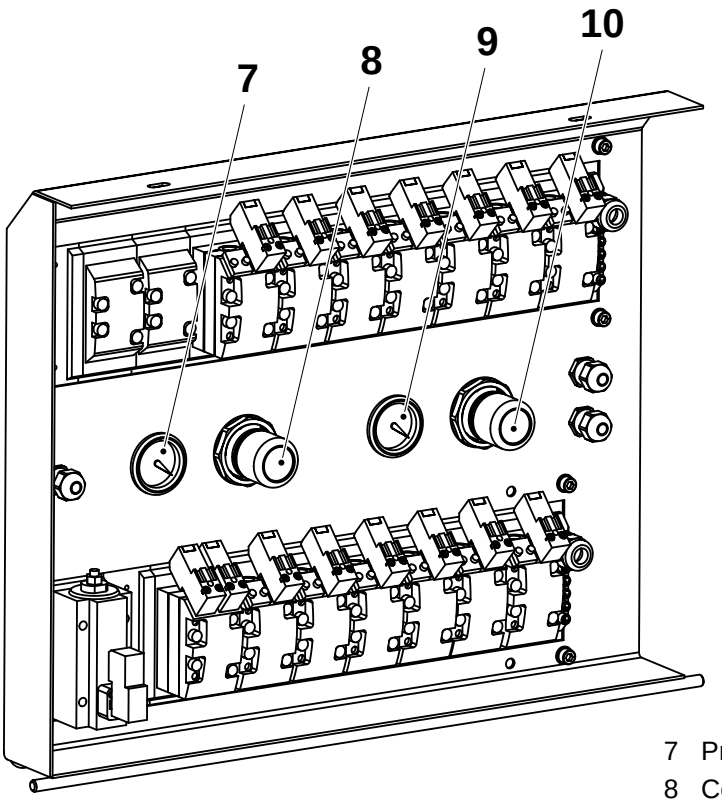

7 Pressure gauge
8 Control knob
9 Pressure gauge
10 Control knob

8.3.3-6 Pressure Jaw - Change Dolly

Machine Status	Mains power OFF Air OFF
SPC Reference	1484690-0100

WARNING

Risk of crushing!

If the splicing device is moved out of position it will return **rapidly** to its former position when the doors are closed.

a) Loosen the two tie rods (1).

b) Lift up the pressure jaw (2) and lock it in the cleaning position with the catch (3).

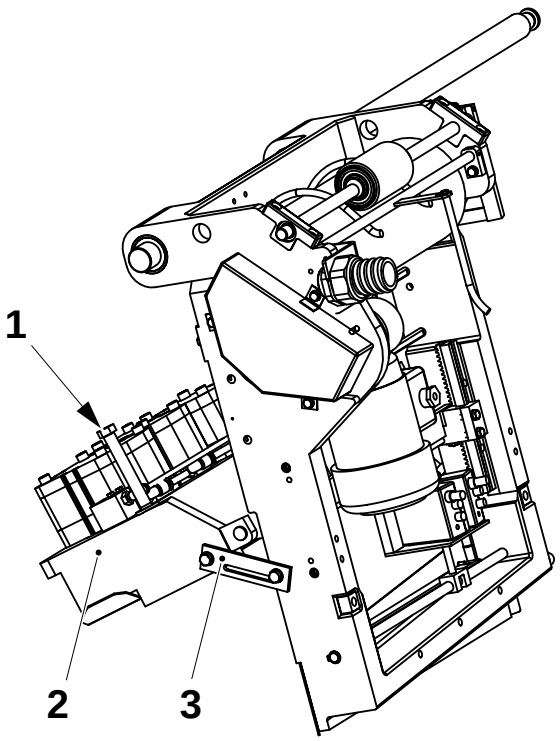

1 Tie rod
2 Pressure jaw
3 Catch

(Cont'd)

(Cont'd)

c) Remove the rule plate (4).

d) Loosen the screws (5),visible through the holes (6), and pull out the pressure rail (7).

e) Check the dolly (8) for wear or damage. If required change the dolly.

f) Assemble in the reverse order.

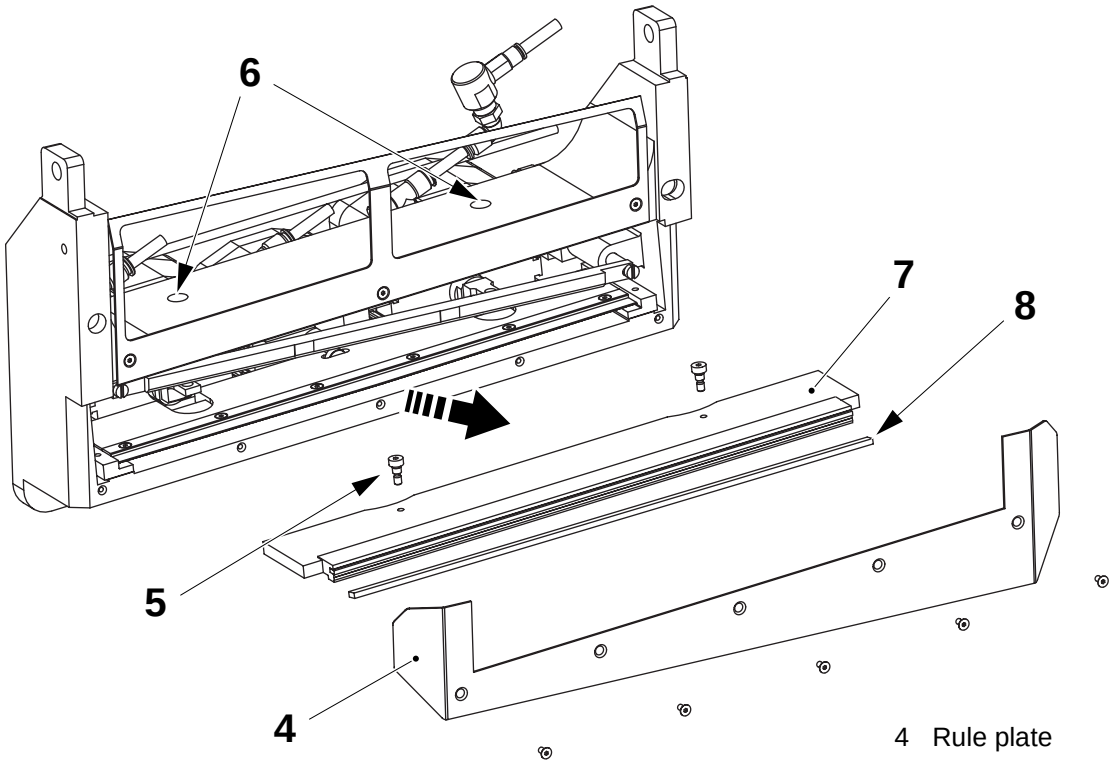

4 Rule plate
5 Screw
6 Hole
7 Pressure rail
8 Dolly

8.3.4 Pressure Roller

8.3.4-1 Pressure Roller - Check

Machine Status	Mains power OFF Air OFF
SPC Reference	2524600-0100

Move the handle (1) and check the spring (2), cam (3), roller (4) and shaft (5) work correctly.
If not, change the damaged or worn parts and clean the shafts attachment points, see 8.3.4-2 Pressure Roller - Overhaul.

Check the surface of the roller (6) is not worn or damaged and the ball bearings rotate freely.
If not, change any worn parts, see 8.3.4-2 Pressure Roller - Overhaul.

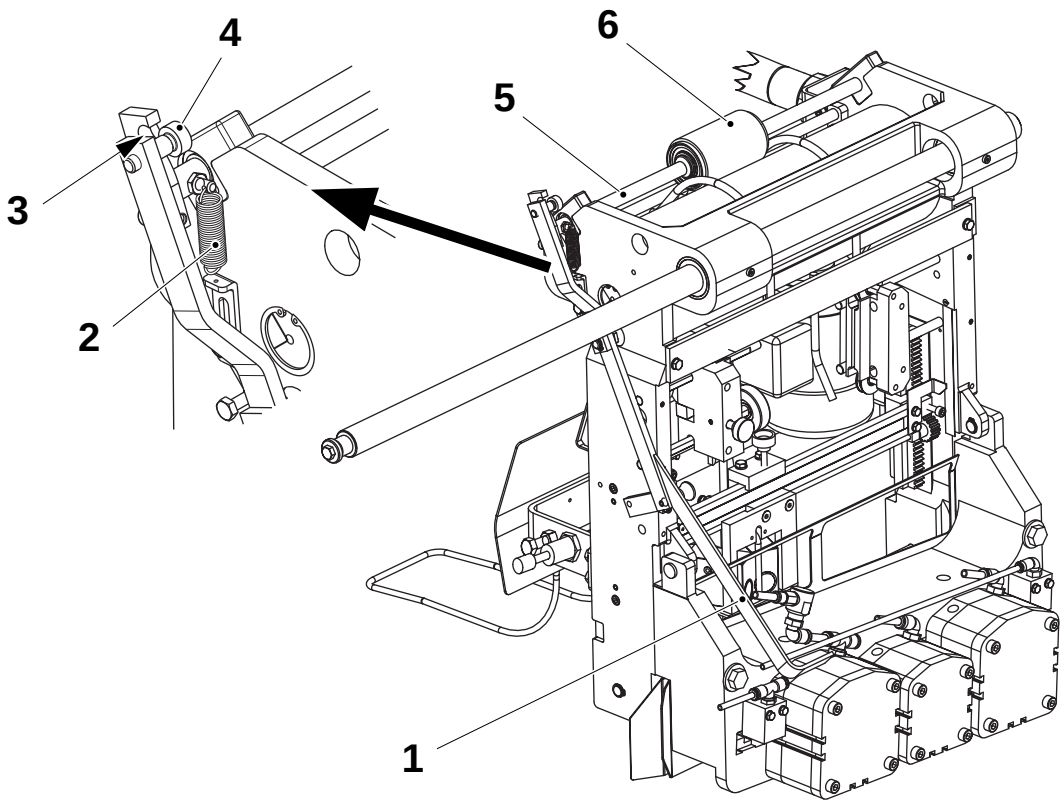

1 Handle
2 Spring
3 Cam surface
4 Roller
5 Shaft
6 Roller

8.3.4-2 Pressure Roller - Overhaul

Machine Status	Mains power OFF Air OFF
SPC Reference	2524600-0100

a) Remove the nut (1) and spring holder (2).
b) Remove the spring (3) and the screw (4).
c) Remove the screw (5) and the rocker arm (6).
d) Remove the screws (7) and the complete pressure roller assembly.
e) Remove the retaining rings (8).
f) Pull the brackets (9) from the shaft.
g) Remove the retaining rings (10).
h) Remove and change the ball bearings (11).
i) Remove and change the roller (12). If necessary, remove the screws (13) and change the eccentric bushing (14).
j) Assemble in the reverse order.

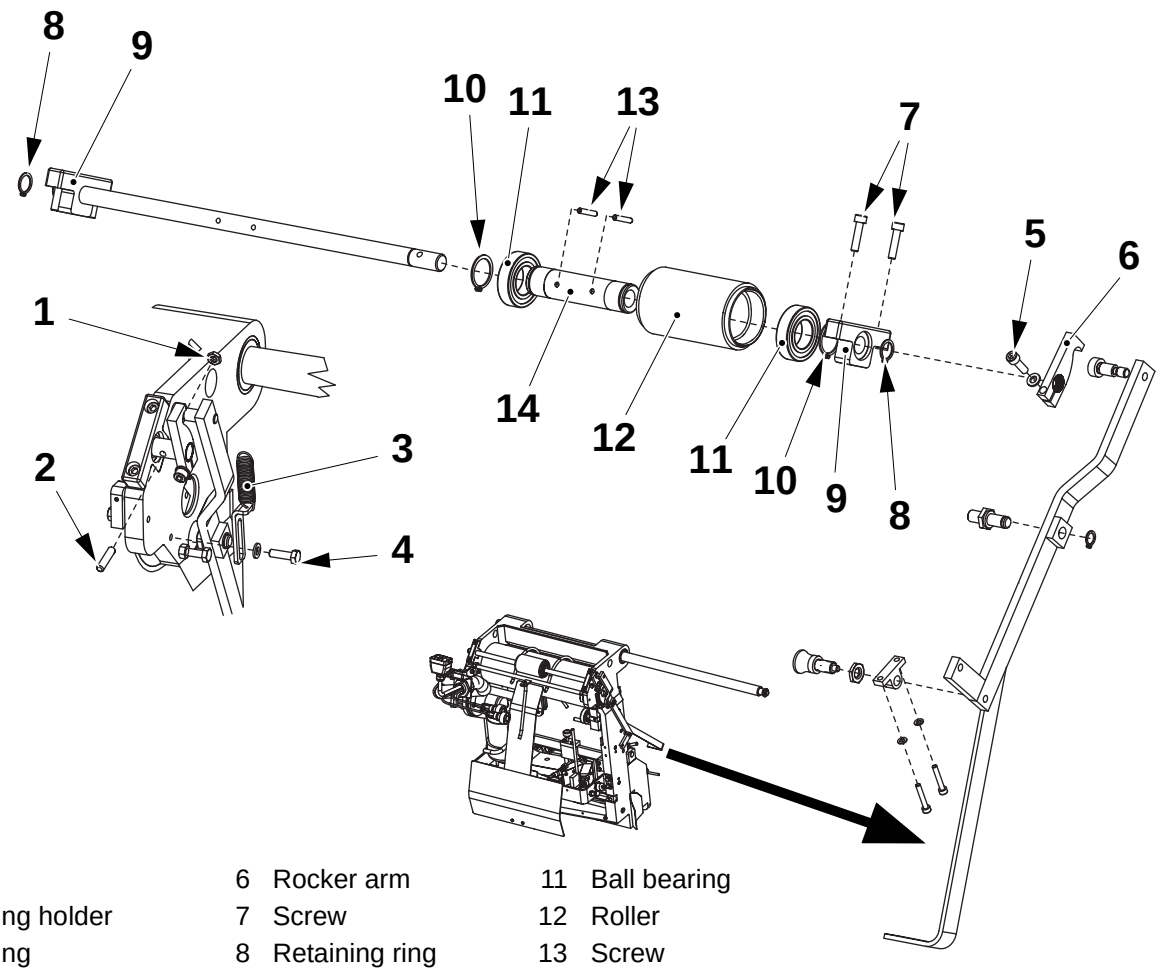

1 Nut
2 Spring holder
3 Spring
4 Screw
5 Screw
6 Rocker arm
7 Screw
8 Retaining ring
9 Bracket
10 Retaining ring
11 Ball bearing
12 Roller
13 Screw
14 Eccentric bushing

8.3.5 Bow Clamp

8.3.5-1 Bow Clamp - Set Mechanical Stop

Machine Status	Mains power OFF Air OFF
Tools - lead wire	
SPC Reference	1424386-0100

a) Centre the splicing device (1) over the packaging material reel by using the plumb line (2). Align the plumb line (2) with the frame (3). Distance **A** from the centre of the drive roller (4) to the plumb line (2) must be equal to distance **B** from the centre of the packaging material (5) to the plumb line (2).

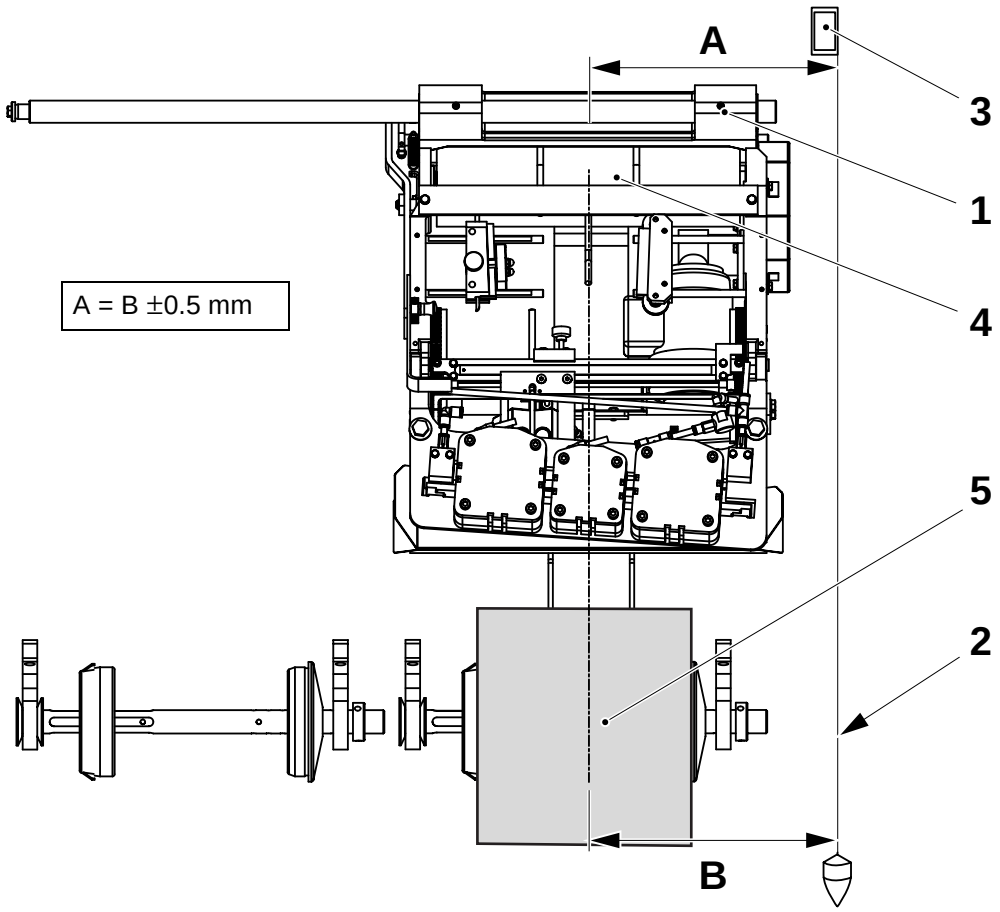

1 Splicing device
2 Plumb line
3 Frame
4 Drive roller
5 Packaging material

(Cont'd)

(Cont'd)

b) Rotate the screw (6) until it touches the bracket (7) on the ASU body.

c) Tighten the nut (8).

d) Set distance **C** between the front end of the shock absorber (9) and the bracket (7).

e) Repeat all instructions for the other line in the machine.

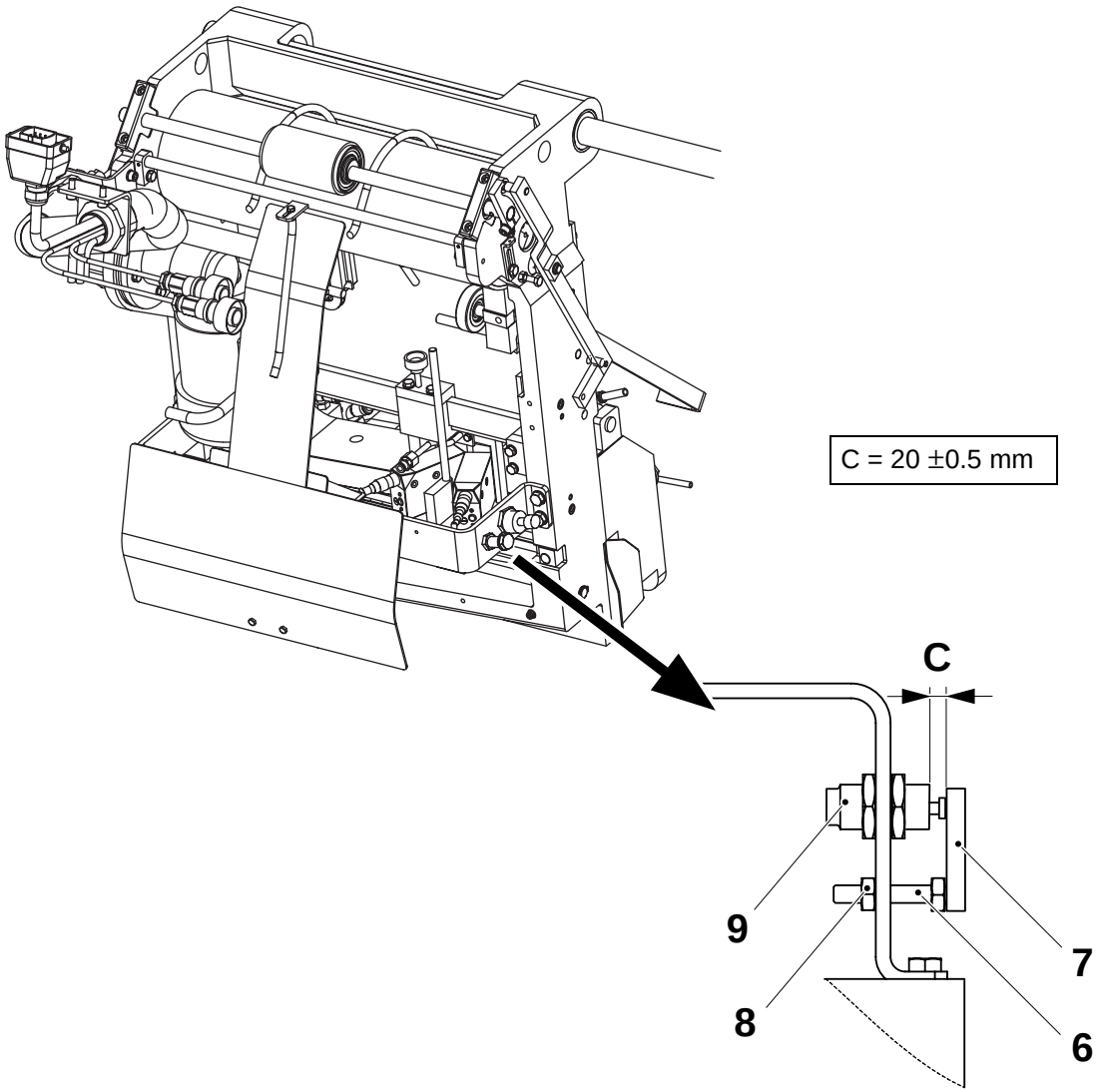

6 Bracket
7 Screw
8 Shock absorber
9 Nut

8.4 Material Holder

8.4-1 Material Holder - Check

Machine Status	Mains power ON Air ON
SPC Reference	1487785-0100 1484699-0100

WARNING
Risk of crushing!
If the splicing device is moved out of position it will return **rapidly** to its former position when the doors are closed.

Activate and de-activate the cylinder (1) and check its function. Replace the cylinder if necessary.

Lower the material holder and check the screw (2) rests against the frame and the bending roller (3) is levelled.
If not, set the holder, see 8.4-5 Material Holder - Set.

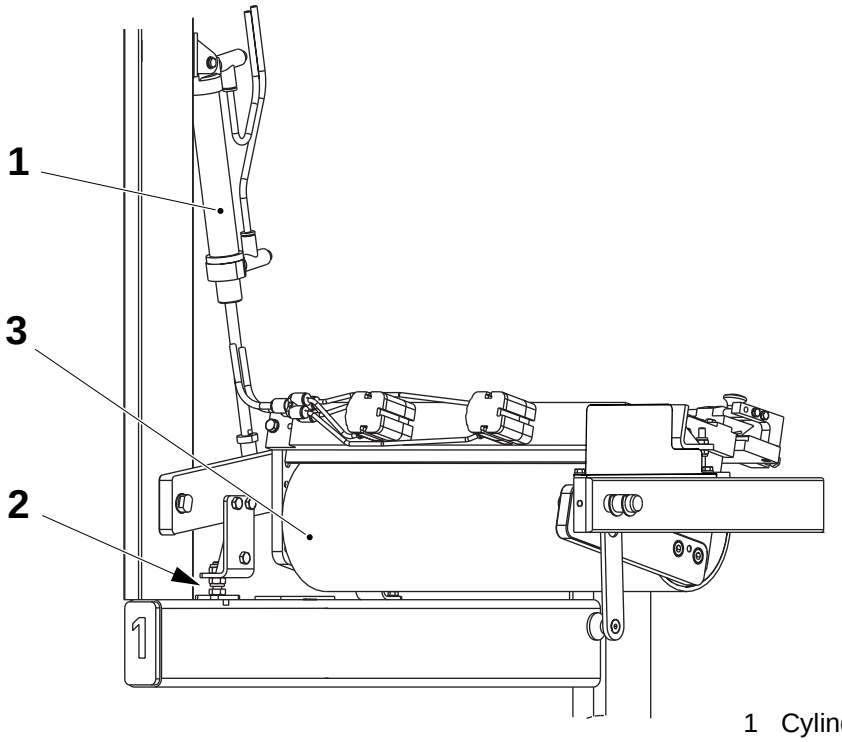

1 Cylinder
2 Screw
3 Bending roller

8.4-2 Material Holder - Check Cutting Table

Machine Status	Mains power OFF Air OFF
SPC Reference	1487785-0100 1484699-0100

WARNING
Risk of crushing!
If the splicing device is moved out of position it will return **rapidly** to its former position when the doors are closed.

WARNING
Risk of cutting!
Knife is sharp.

a) Check the sharpness of the knife (1) by moving the knife holder (2) in both directions over a piece of packaging material.
If required, change the knife:
   - Remove the screws (3), washers (4) and bracket (5).
   - Remove the screw (6) and slide the knife holder (2) off the shafts (7).
   - Remove the screw (8) and slide out and change the knife (1). Assemble in the reverse order.

b) Check the knife holder (2) slides easily. If necessary, clean the knife holder (2) and the shafts (7).

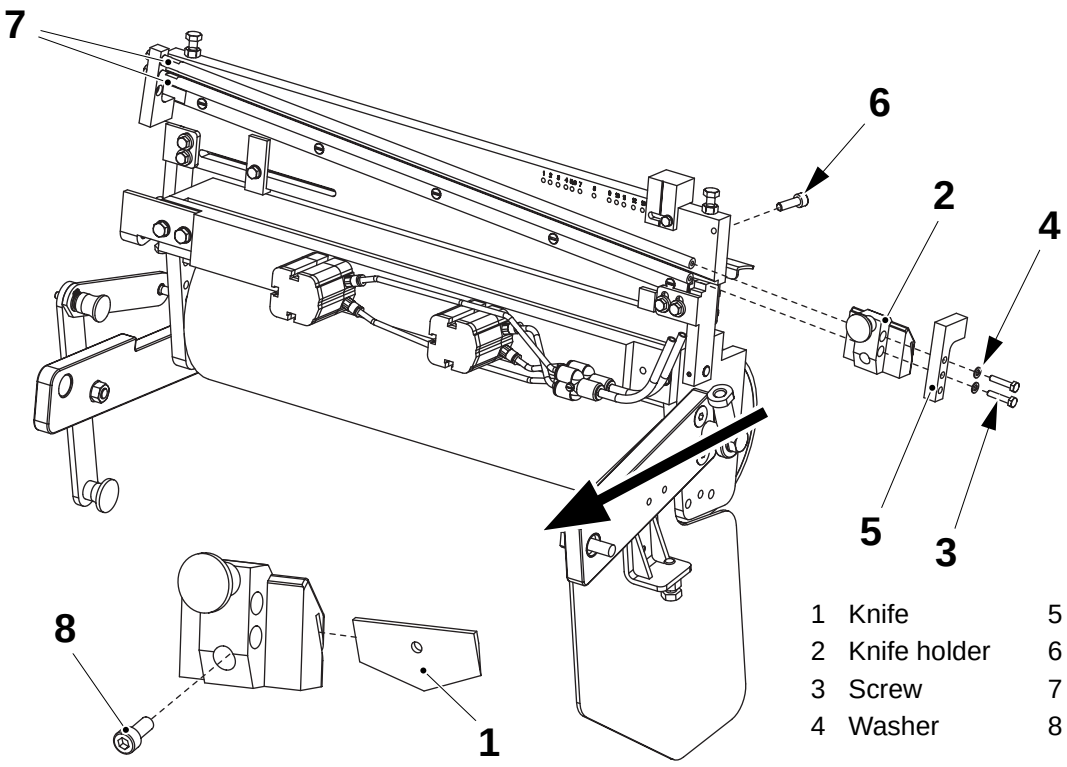

1	Knife	5	Bracket
2	Knife holder	6	Screw
3	Screw	7	Shaft
4	Washer	8	Screw

(Cont'd)

(Cont'd)

c) Lower the cutting table to its lowest position and check the cutting table (9) does not touch the proximity switch (10) and the proximity switch is activated.
If not, loosen the nuts (11) on the proximity switch (10) and rotate the nuts (11) until the distance between the reflector (11) and the proximity switch (10) is distance **A**.

d) Tighten the nuts (11).

e) Check if the LED on the proximity switch is **On**.

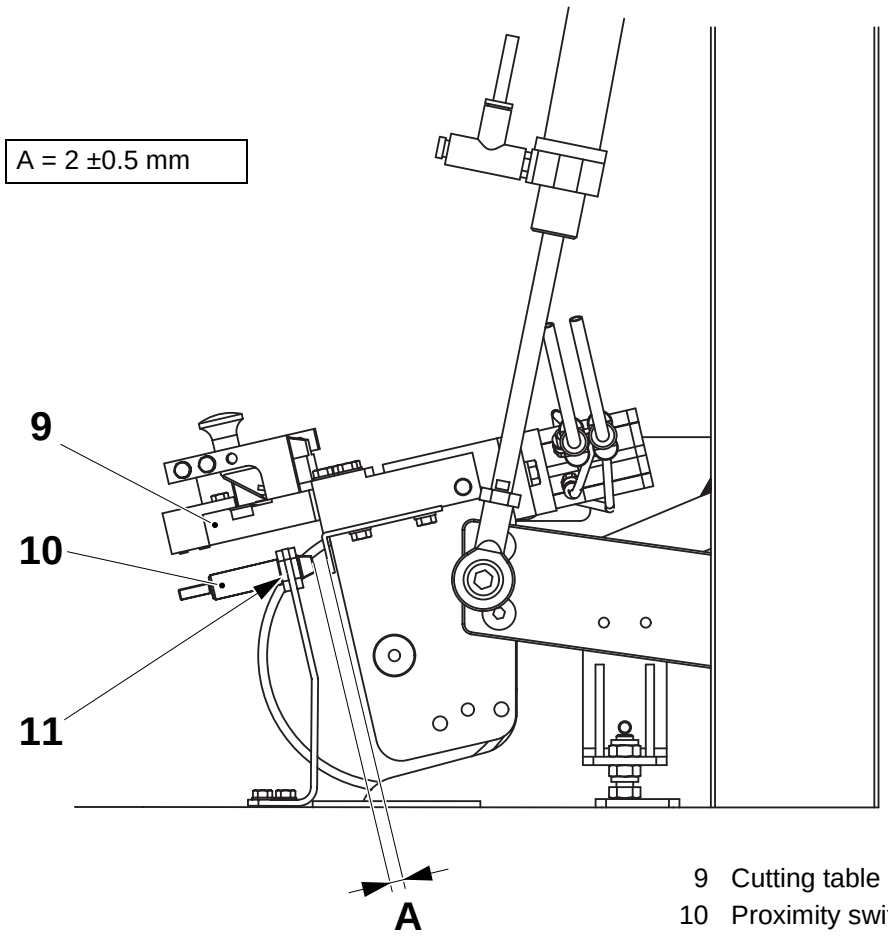

9 Cutting table
10 Proximity switch
11 Nut

8.4-3 Material Holder - Set Cutting Table

Machine Status	Mains power OFF Air OFF
SPC Reference	1487785-0100 1484699-0100

Basic Setting (Sideways Alignment)

Remove the screw (1) and move the angle guide (2) to the stop lug (3) for the size of packaging material to be used. See the table below.

Package	Stop lug position
TBA 200 B	5 - 6
TBA 250 B	5 - 6
TBA 200 S	2
TBA 250 S	3
TBA 200 M	3

a) Loosen the screw (4) and move the angle guide (5) until it just touches the edge of the packaging material.
Make sure the web is parallel between the two angle guides.

b) Repeat for the other material holder.

c) With the machine in **Production**, check the packaging material is spliced correctly, see Fine Setting (Sideways Alignment) on page 8-72.

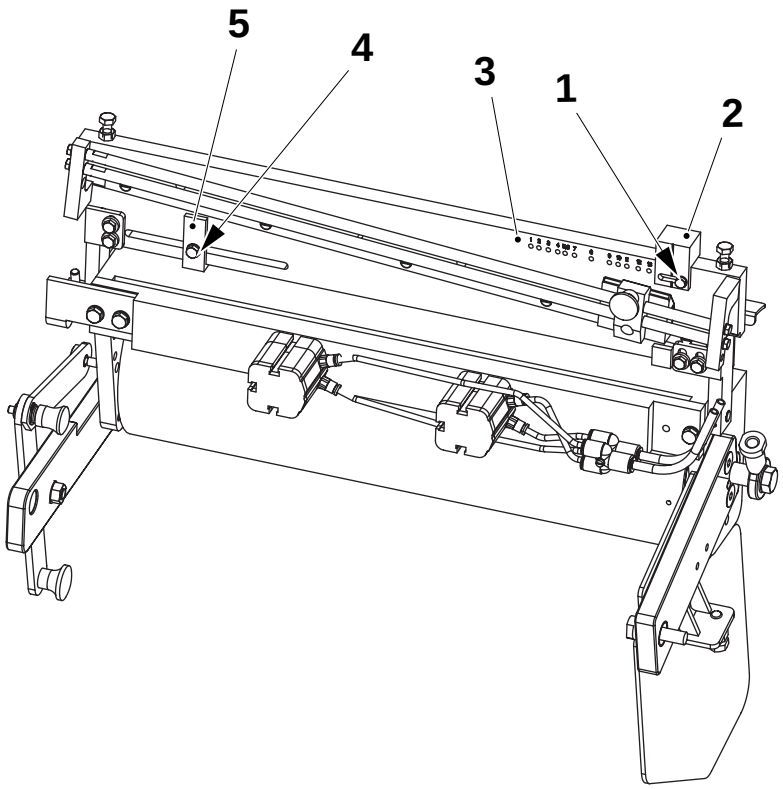

1 Screw
2 Angle guide
3 Stop lug
4 Angle guide
5 Screw

(Cont'd)

(Cont'd)

Fine Setting (Sideways Alignment)

Step up the machine to **Production** and perform a packaging material splice. Pick up the discarded package containing the splice and check the alignment of the splice on the package. Make sure the alignment is within tolerance. (distance **A**).

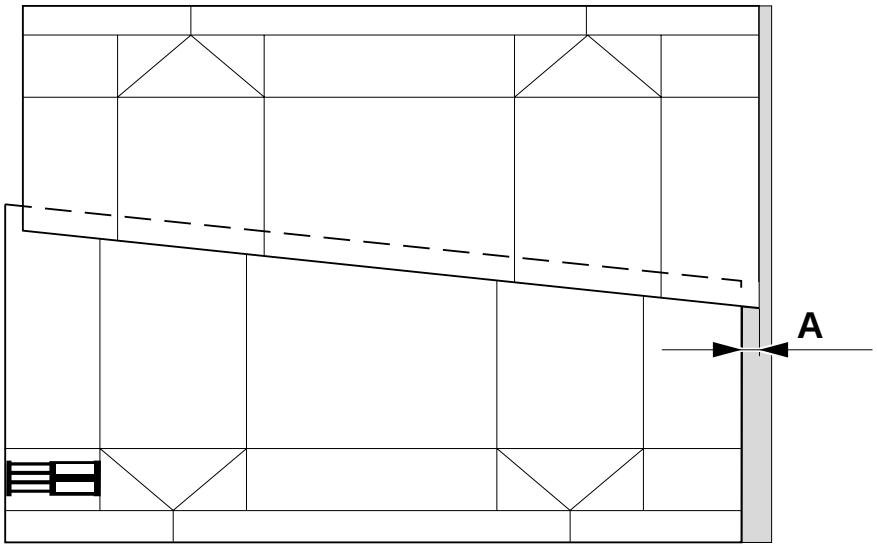

A = 0 ±0.5 mm

If an incorrect splice is obtained, loosen the screw (1) and move the angle guide (2) until an approved splice is obtained.

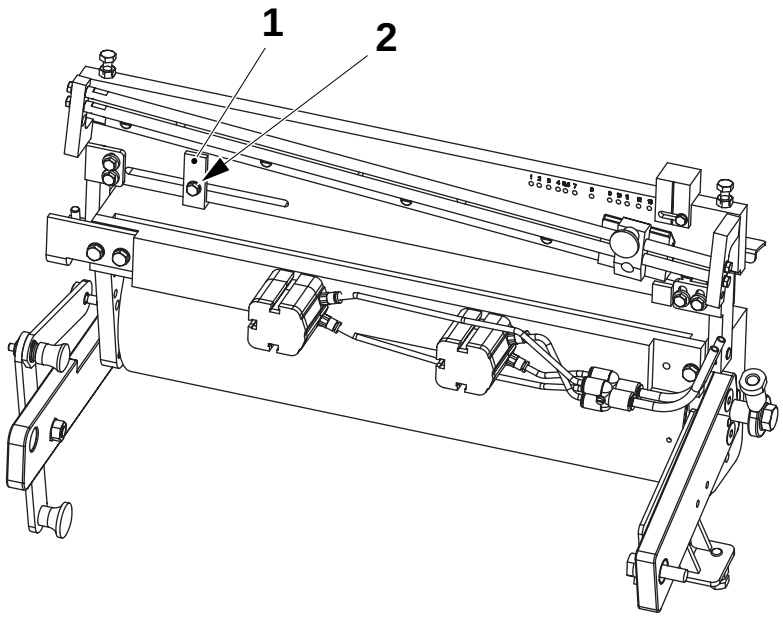

1 Screw
2 Angle guide

8.4-4 Material Holder - Overhaul

Machine Status	Mains power OFF Air OFF
SPC Reference	1487785-0100 1484699-0100

WARNING

Risk of crushing!

If the splicing device is moved out of position it will return **rapidly** to its former position when the doors are closed.

a) Remove the screws (1) and the axle pins (2).

b) Remove and change the ball bearings (3). If necessary, change the bending roller (4).

c) Assemble in the reverse order.

d) Set the material holder, see 8.4-5 Material Holder - Set.

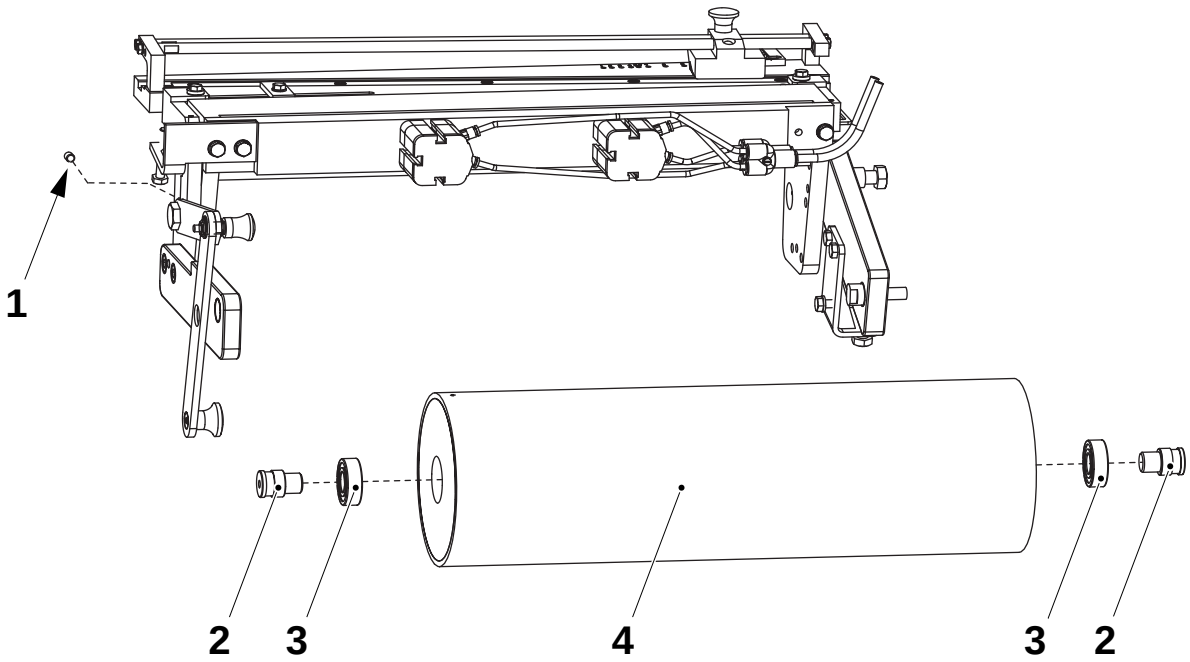

1 Stop screw
2 Axle pin
3 Ball bearing
4 Bending roller

8.4-5 Material Holder - Set

Machine Status	Mains power OFF Air OFF
SPC Reference	1487785-0100 1484699-0100

WARNING
Risk of crushing!
If the splicing device is moved out of position it will return **rapidly** to its former position when the doors are closed.

Note! Distance **A** is a basic setting required to obtain the correct overlap when splicing two pieces of packaging material, see Overlap - Fine Adjustment in this section.

a) With the table lowered, turn the screw (1) to set distance **A** between the end of the bracket (3) and the set square (4).

b) Level the dancing roller (2) with the machine and adjust it with the screws (1). Check the screw (5) still rests against the frame.

c) Move the material holder up and down a number of times and check that it remains levelled.

d) Move the splicing device to the other side and repeat the settings on the other material holder.

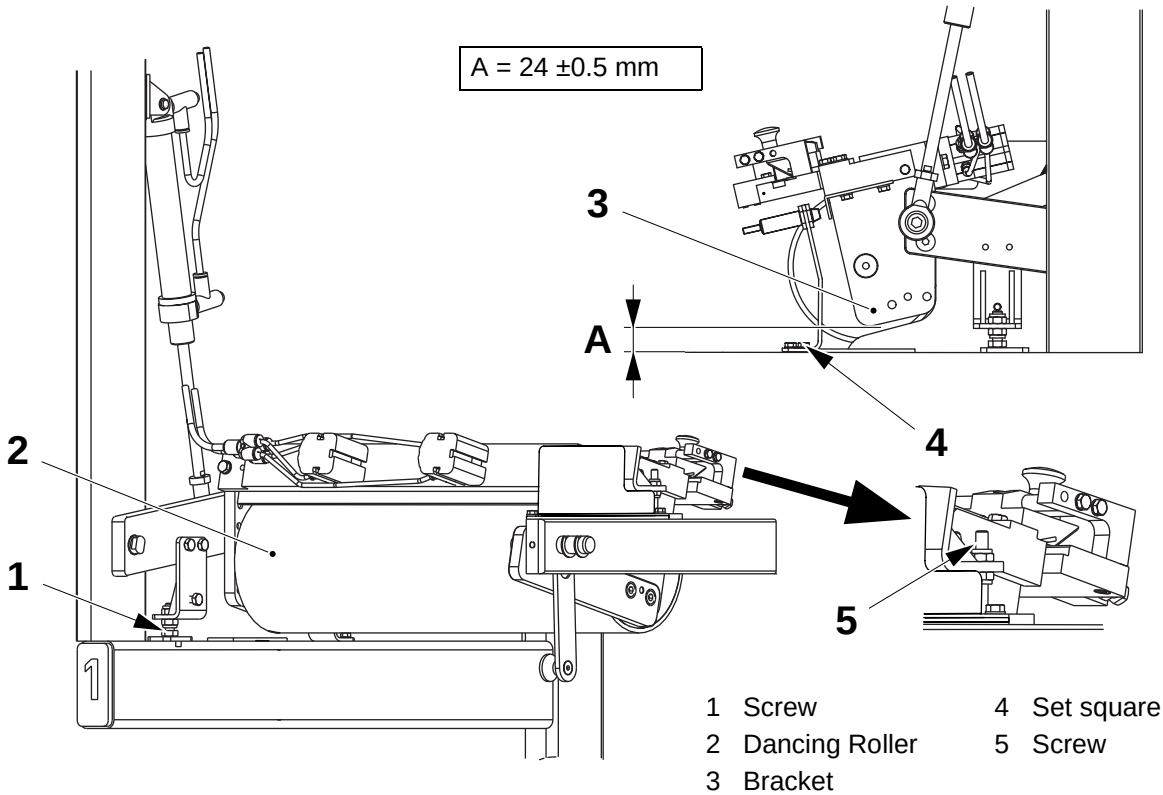

1 Screw
2 Dancing Roller
3 Bracket
4 Set square
5 Screw

(Cont'd)

(Cont'd)

Overlap - Fine Adjustment

a) Loosen the screw (1) and the lock nut (2) on the set screw (3) and adjust the position of the cutting table (4) by turning the set screw (3). Tighten the screws and lock the nut on completion.

b) Step up the machine to **Production** and perform a splice.

c) On the ejected package with a splice, check the pieces of packaging material overlap. See 8-2 Asu - Check Function - Overlap**.**

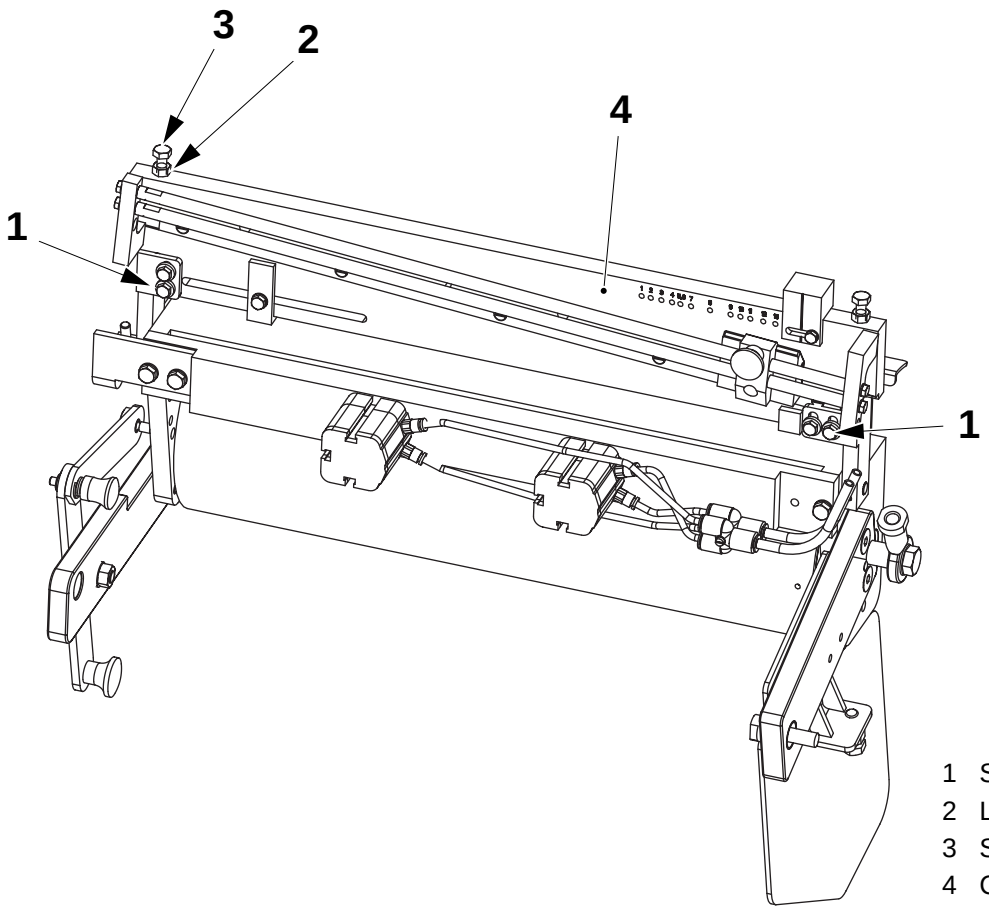

1 Screw
2 Lock nut
3 Set screw
4 Cutting table

8.4-6 Material Holder - Set Lock Cylinders

Machine Status	Mains power OFF Air OFF
SPC Reference	1487785-0100 1484699-0100

a) Remove the screws (1) and both cylinders (2).

b) Loosen the nut (3).

c) Set distance **A** between the cylinder edge and the top of the lock stud (4) by turning the lock stud (4).

d) Tighten the nut (3).

e) Assemble in the reverse order.

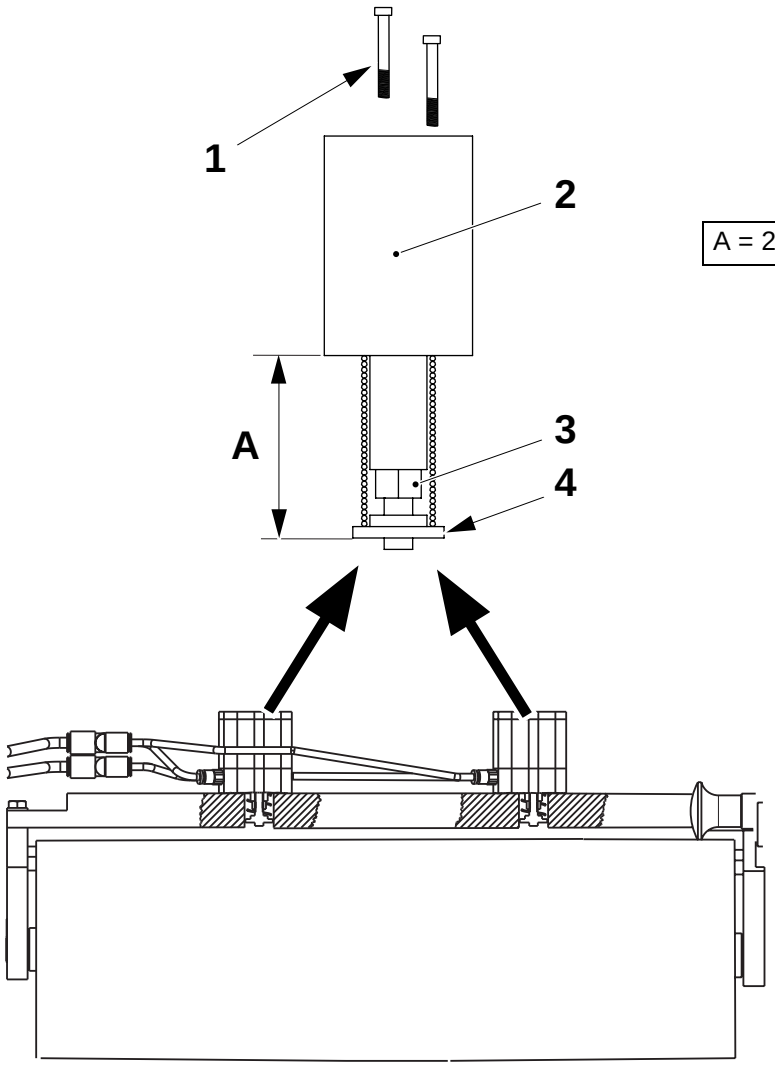

A = 27.5 - 28 mm

1 Screw
2 Cylinder
3 Nut
4 Lock stud

8.5 Valve Panel

SPC Reference	1487801-0200

8.5-1 Valve Panel - Set Valve Pressure

Machine Status	Mains power OFF Air OFF
SPC Reference	1487801-0200

Note! Turning the screw (2) changes the pressurisation time of the ASU.

Note! The pressure gauge (4) indicates the web tension cylinder pressure, see 8.3.3-5 Pressure Jaw - Change Cylinders - Web Tension Cylinder.

a) Loosen the nut (1).

b) Set distance **A** between the end of the screw and the valve support (3) by turning the screw (2).

c) Tighten the nut (1) making sure the screw (2) does not move.

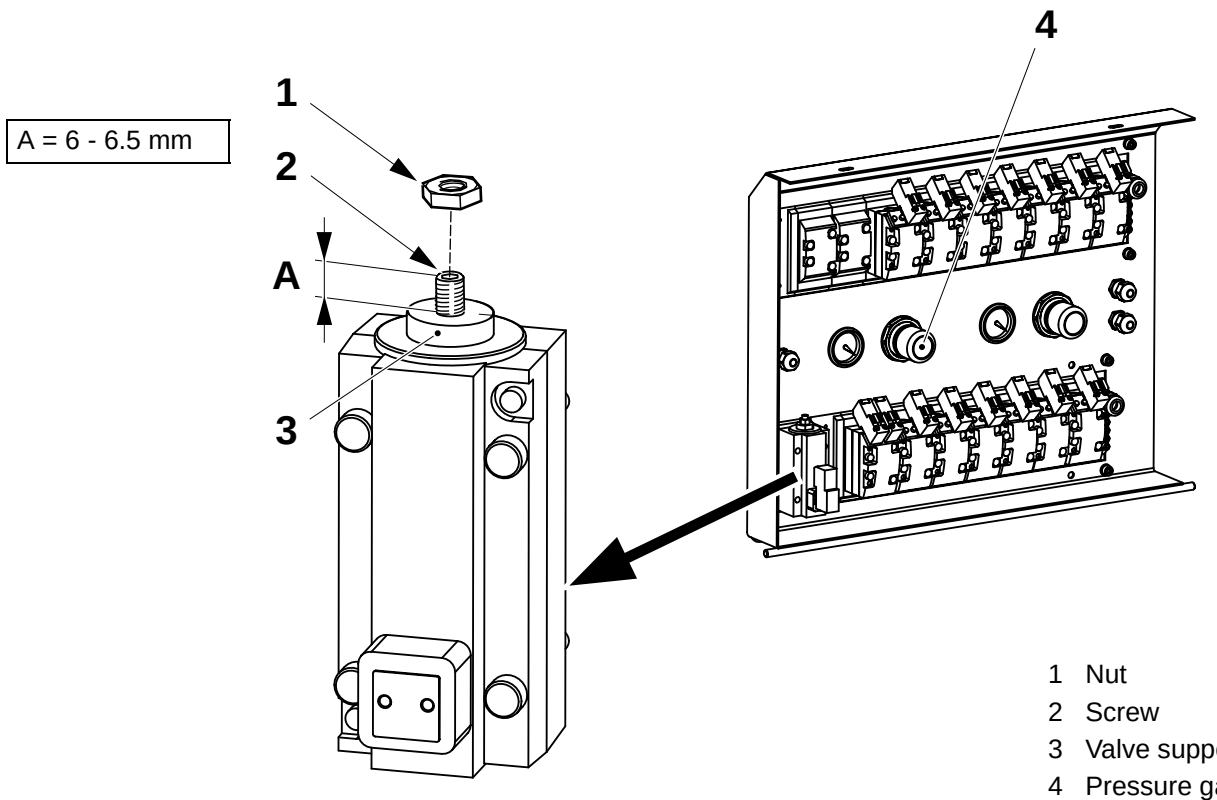

1 Nut
2 Screw
3 Valve support
4 Pressure gauge

8.6 Strip Magazine

SPC Reference	1484707-0200

8.6-1 Strip Magazine - Check Rotation Monitor

Machine Status	Mains power OFF Air OFF
SPC Reference	1484707-0200

Rotate the flag (1) and check the LED of the proximity switch (2) is **On**.

If not, loosen the nuts (3) and (4). Move the proximity switch (2) until distance **A** is obtained. Lock the nuts (3) and (4) making sure the proximity switch (2) does not move.

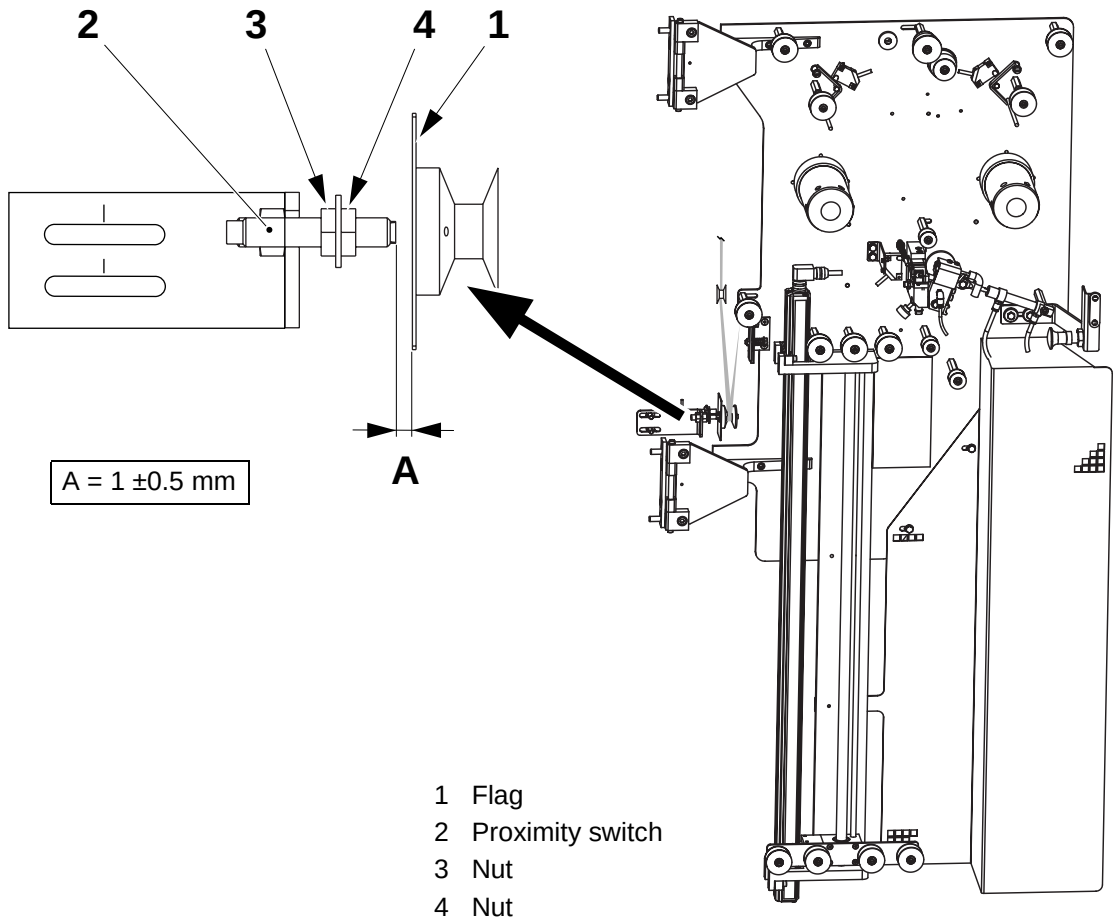

1 Flag
2 Proximity switch
3 Nut
4 Nut

8.6-2 Strip Magazine - Set Rotation Monitor

Machine Status	Mains power OFF Air OFF
SPC Reference	1484707-0200

a) Fix the roller holders (1) in position at the **LH** end of the slot (2).

b) Move the holder (3) so that the fixing screws (4) are in the centre of the slots (5).

c) Adjust the holder (3) so the strip (6) runs smoothly from the roller (7) to the roller (8) and from the roller (8) to roller (9). Tighten screws (4).

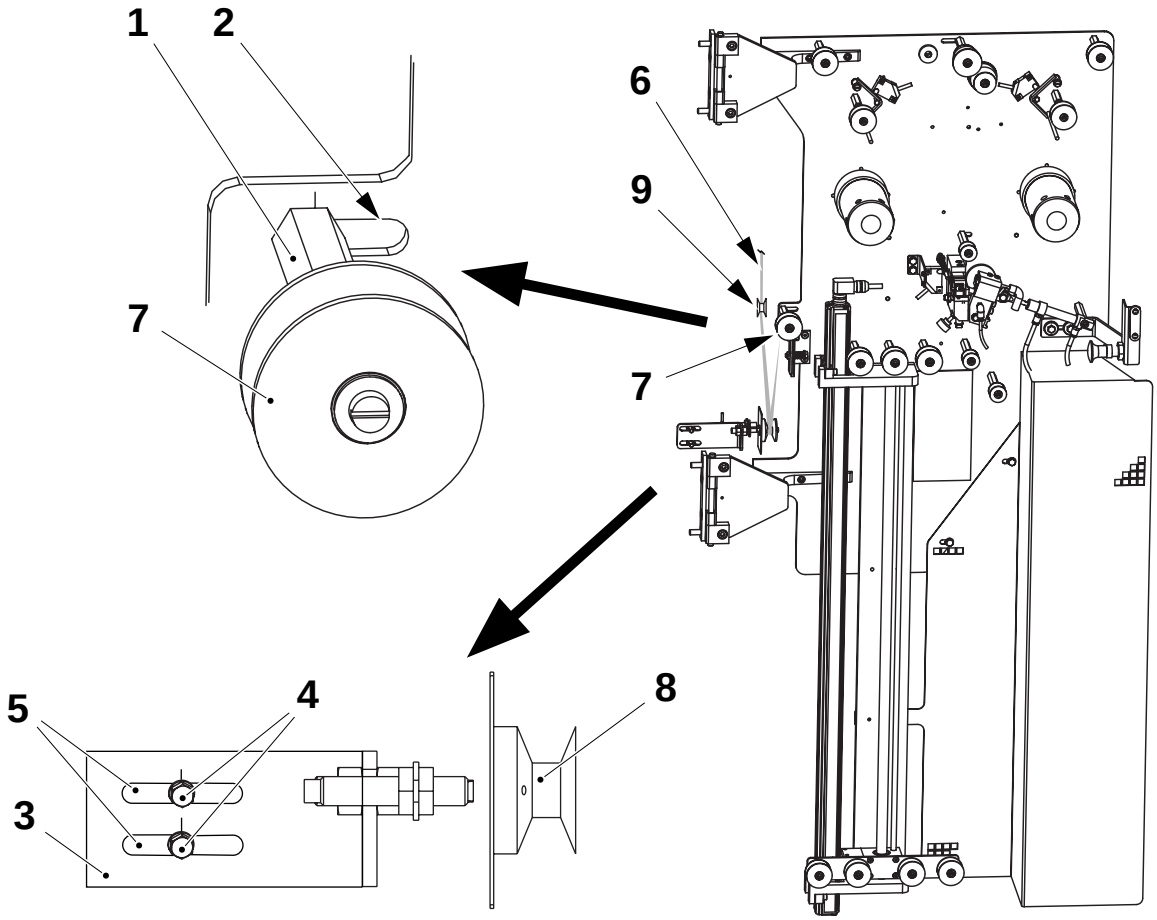

1 Holder
2 Slot
3 Holder
4 Screw
5 Slot
6 Strip
7 Roller
8 Roller
9 Roller

8.6-3 Strip Magazine - Check Rollers

Machine Status	Mains power OFF Air OFF
SPC Reference	1484707-0200

Check that all the rollers (arrows) in the strip magazine are intact and rotate freely. If necessary, remove the screw (1) and bushing (2) and change the roller (3).

Check the rollers are free from strip material. Clean the rollers if required.

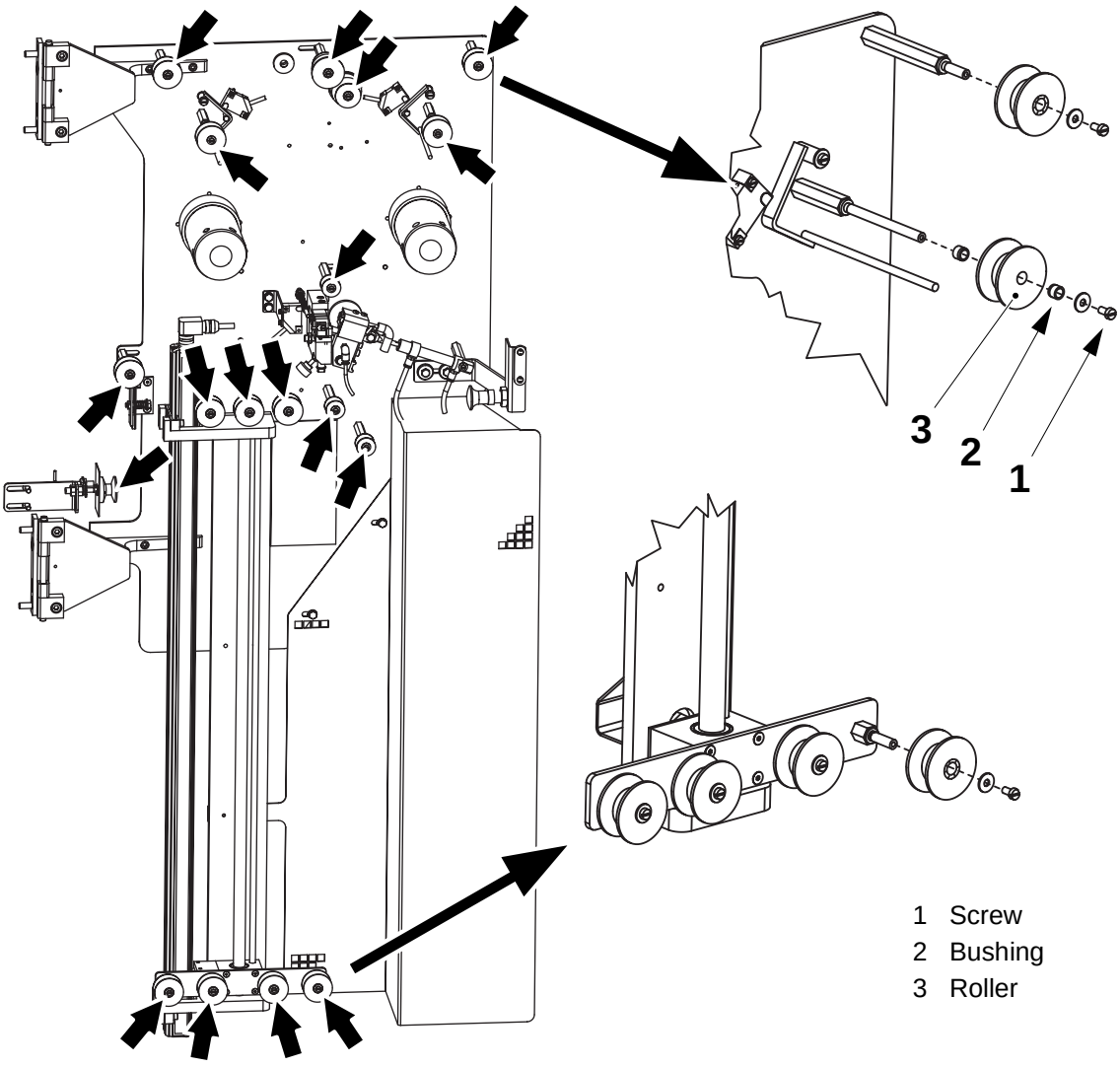

1 Screw
2 Bushing
3 Roller

8.6-4 Strip Magazine - Change Transducer

Machine Status	Mains power OFF Air OFF
SPC Reference	1484707-0200

a) Detach the electrical connection **X7022** (1).

b) Remove the screws (2) and the protection plate (3).

c) Remove the screws (4) and the strip guide (5).

d) Remove the screws (6) and slide out the transducer (7).

e) Fit the new transducer with the mark (8) on the upper side of the bracket (9).

f) Assemble in the reverse order.

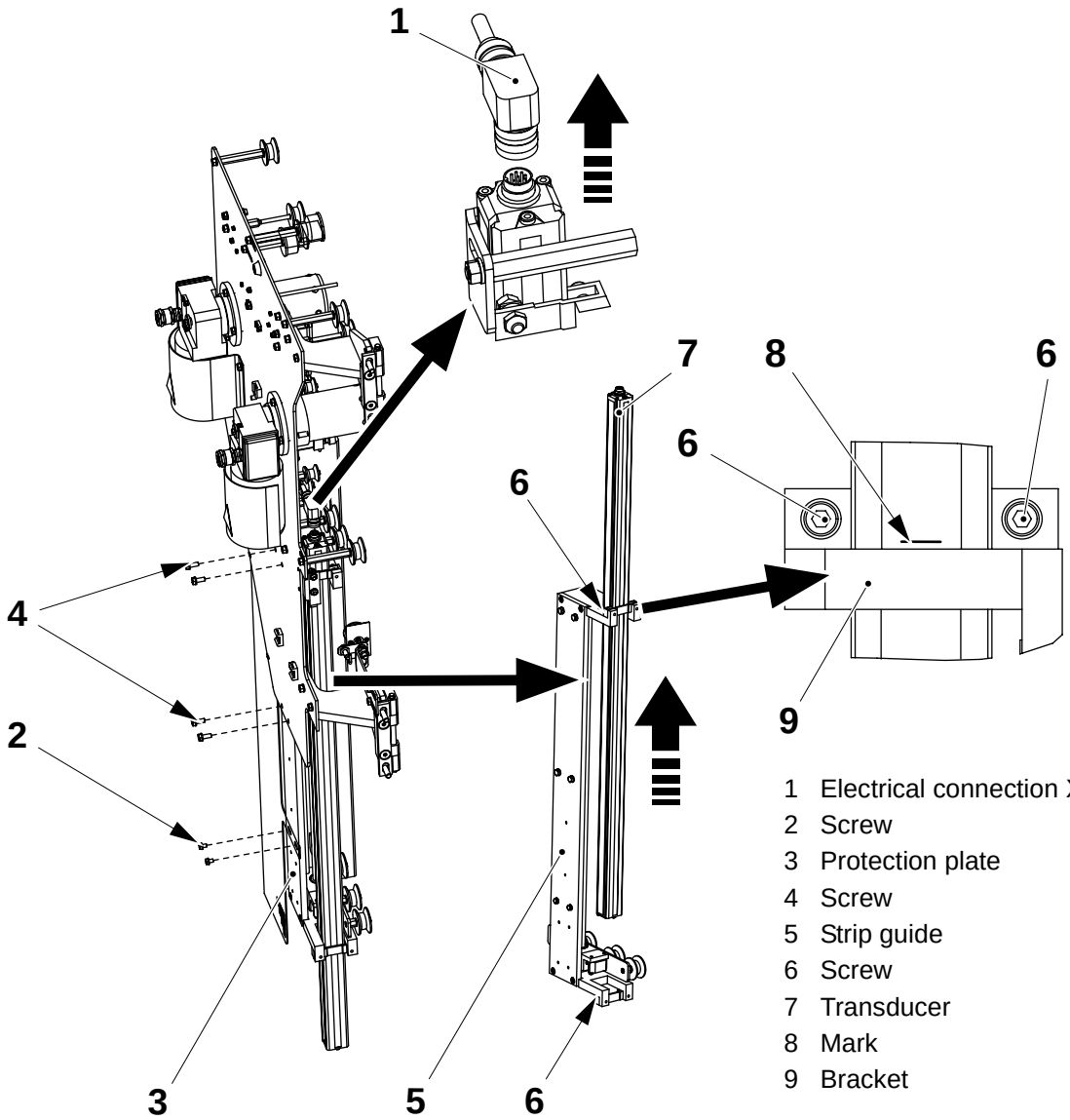

1 Electrical connection X7022
2 Screw
3 Protection plate
4 Screw
5 Strip guide
6 Screw
7 Transducer
8 Mark
9 Bracket

8.6-5 Strip Magazine - Set Sensor and Spring

Machine Status	Mains power ON Air OFF
SPC Reference	1484707-0200

Set the spring (1) in front of the symbol (2) on the sensor (3). If the LED on the sensor is **On**, when the strip is prepared, adjust the spring by turning it.

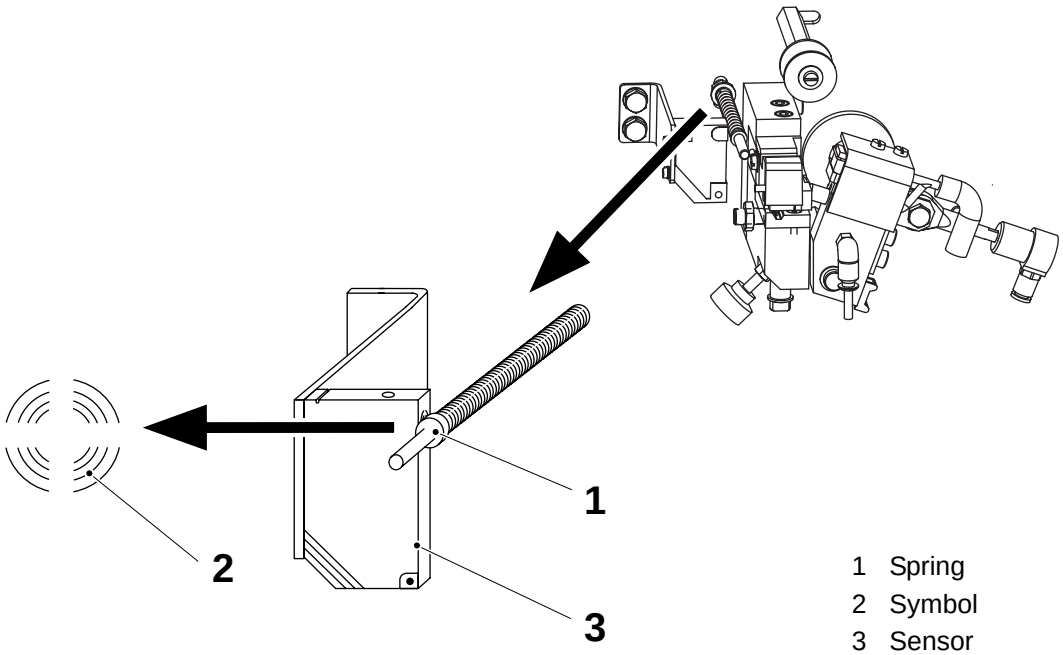

1 Spring
2 Symbol
3 Sensor

8.6.1 Heating Device

8.6.1-1 Heating Device - Check

Machine Status	Mains power OFF Air OFF
SPC Reference	1490806-0100

WARNING
Risk of burn!
Parts may be hot.

Note! When fitting the sealing block (1) make sure it is correctly positioned, see 8.6.1-2 Heating Device - Set Position.

Check that:

- the sealing block (1) is intact. If necessary remove the screws (2) and change the sealing block (1), see 8.6.1-2 Heating Device - Set Position,
- the cylinder piston (3) moves freely and smoothly,
- there are no air leaks in the air connections (4) and (5).

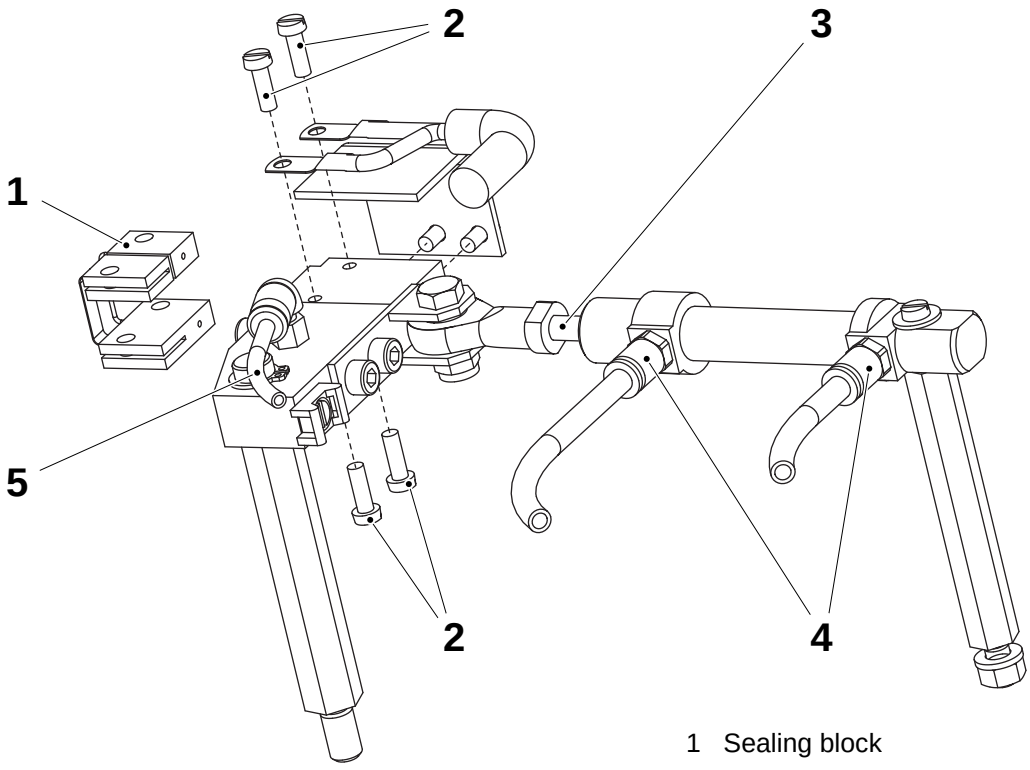

1 Sealing block
2 Screw
3 Cylinder piston
4 Air connection
5 Air connection

8.6.1-2 Heating Device - Set Position

Machine Status	Mains power OFF Air OFF
SPC Reference	1490806-0100

WARNING
Risk of burn!
Parts may be hot.

a) To position the strip sealing (1) for correct operation, loosen the screw (2).

b) Push the strip sealing (1) up and then to the left so the RH side of the strip sealing (1) is aligned with the edge of the holder (3).

c) Tighten the screw (2).

d) Make sure the connector block (4) does not touch the connector block (5). If necessary, loosen the screw (6) and move the connector block (5) away from the connector block (4) until there is a gap between the blocks.

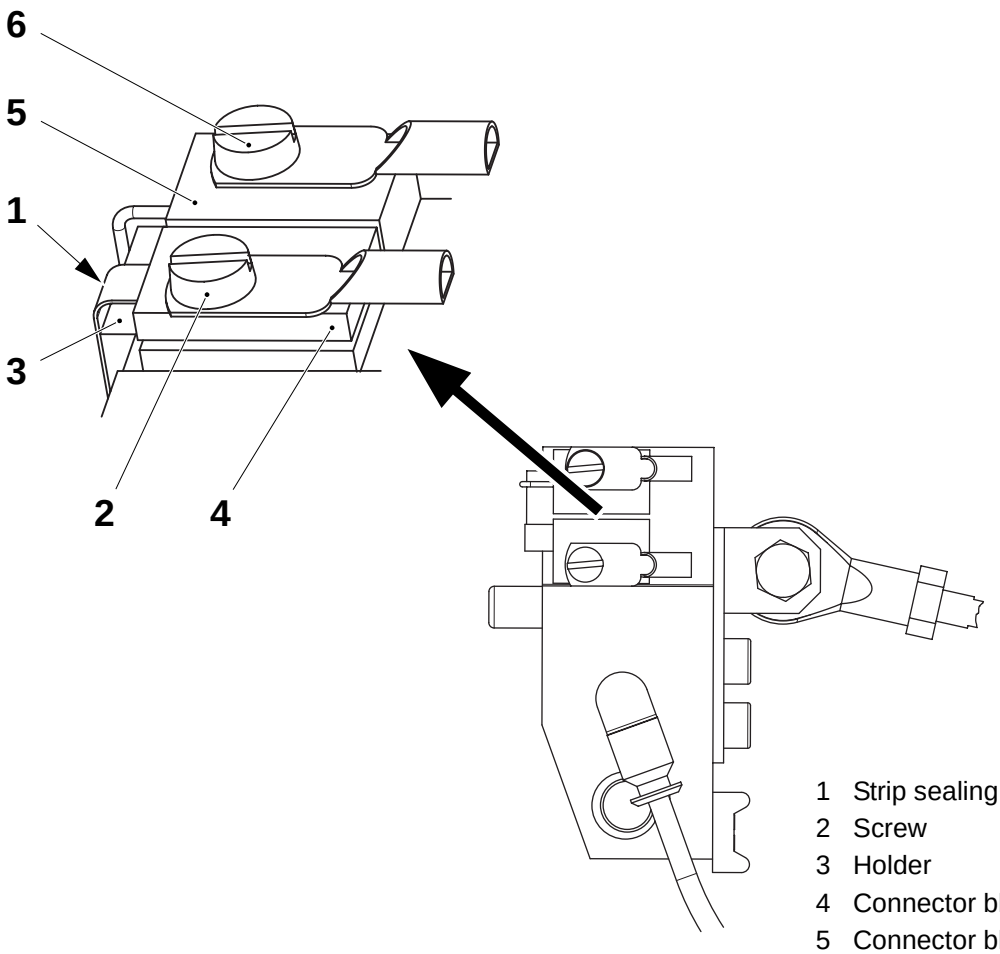

1 Strip sealing
2 Screw
3 Holder
4 Connector block
5 Connector block
6 Screw

(Cont'd)

(Cont'd)

e) Set the parallelism between the holder (3) and the pad (7) by means of the screws (8) at the rear of the plate (9).

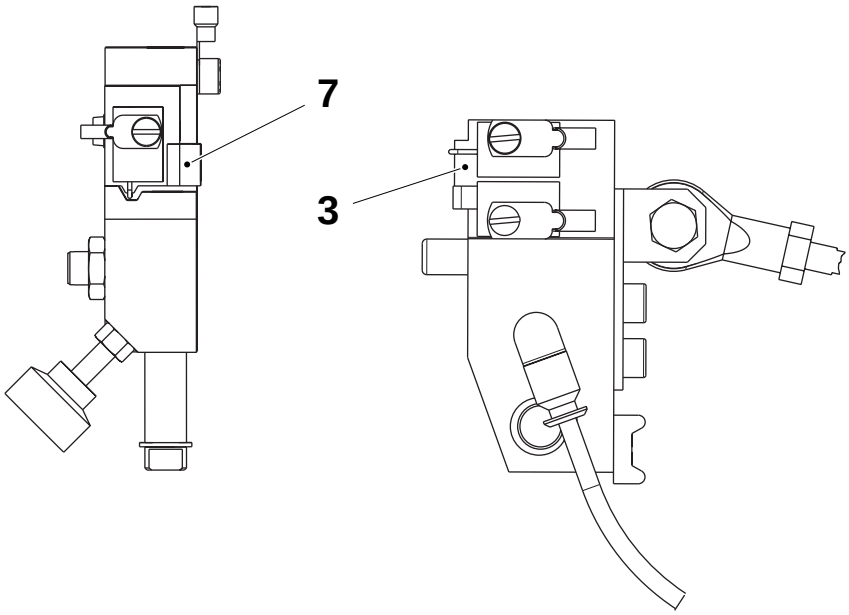

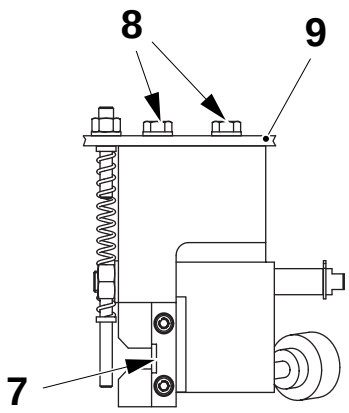

3 Holder
7 Pad
8 Screw
9 Plate

(Cont'd)

(Cont'd)

f) Move the piston of the cylinder (10) by hand until it is fully in.

g) Loosen the nut (11).

h) Set distance **A** between the plunger (12) and the slider (13) by turning the shaft (14).

i) Tighten the nut (11).

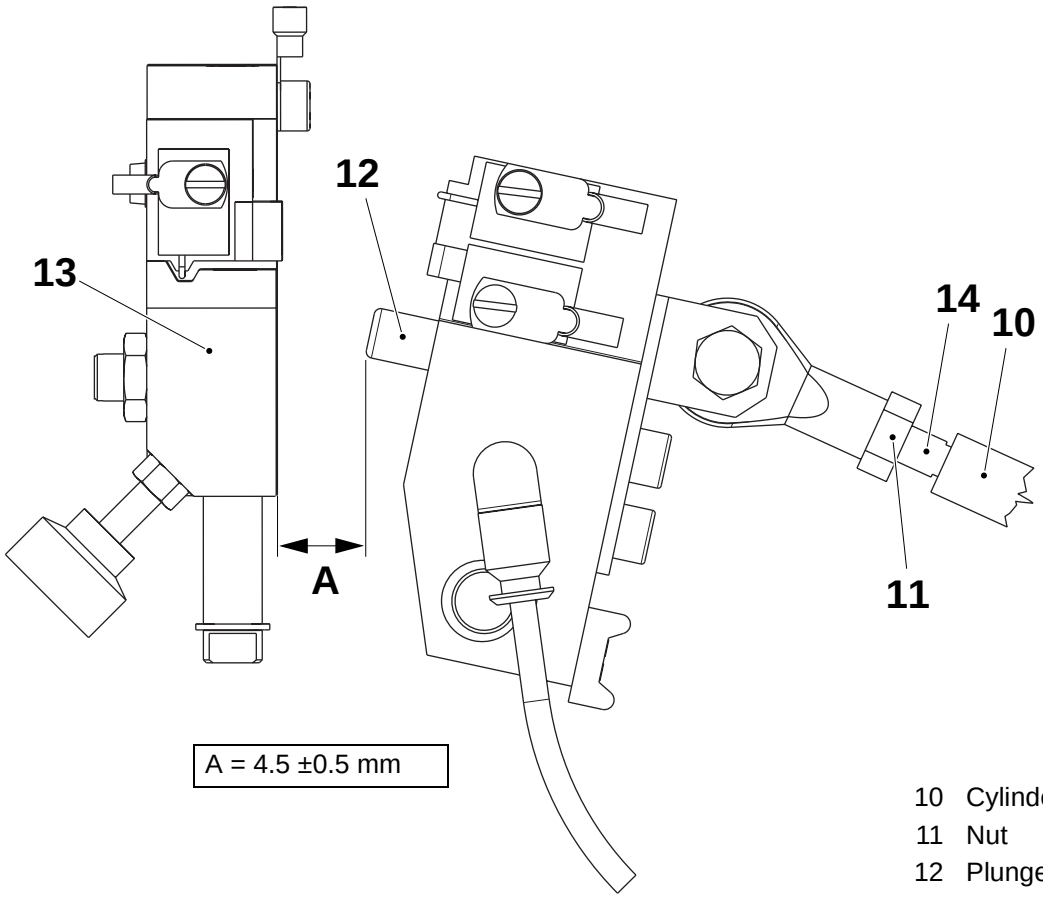

A = 4.5 ±0.5 mm

10 Cylinder
11 Nut
12 Plunger
13 Slider
14 Shaft

8.6.1-3 Heating Device - Change Plunger

Machine Status	Mains power OFF Air OFF
SPC Reference	1490806-0100

WARNING
Risk of burn!
Parts may be hot.

a) Remove the screws (1).
b) Remove the spring (2).
c) Remove and change the plunger (3).
d) Assemble in the reverse order.

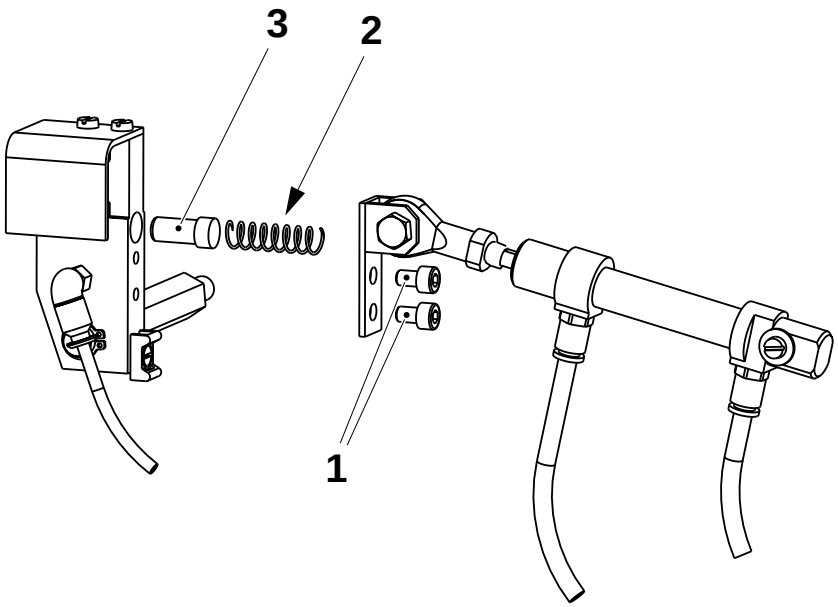

1 Screw
2 Spring
3 Plunger

8.6.2 Hub

8.6.2-1 Hub - Change Motor

Machine Status	Mains power OFF Air OFF
SPC Reference	1484725-0100

a) Remove the screws (1) and the cover (2).

b) Remove the screw (3) and the hub (4).

c) Disconnect the motor cable. See the Electrical Manual.

d) Remove the screws (5) and change the motor (6).

e) Assemble in the reverse order and check the axle rotation.

f) Fit the bobbins (7) on the hubs and check the bobbins are properly locked by the spring-loaded screws (8). If necessary, set the spring-loaded screws, see 8.6.2-2 Hub - Set Spring Loaded Screw.

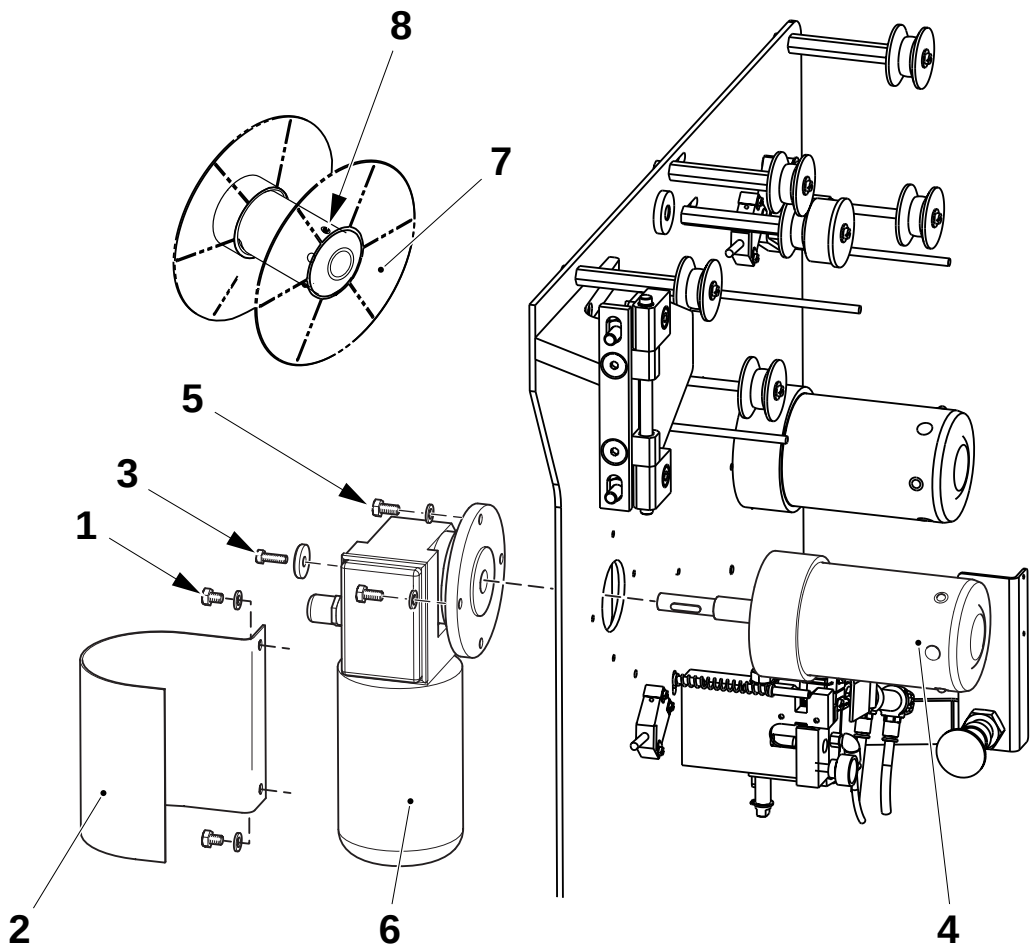

1 Screw
2 Cover
3 Screw
4 Hub
5 Screw
6 Motor
7 Bobbin
8 Spring loaded screw

8.6.2-2 Hub - Set Spring Loaded Screw

Machine Status	Mains power OFF Air OFF
Consumables - locking fluid	 TP No. 90157-16
SPC Reference	1484725-0100

a) Remove the old spring-loaded screw (1) from the hub (2) and clean the thread.

b) Apply locking fluid to the thread and fit the spring-loaded screw to the hub (2).

c) Turn the screw (1) to set distance **A** between the top of the screw and the surface of the hub (2).

d) Repeat steps a) to c) for the other spring-loaded screws on the two hubs.

e) Fit a bobbin on the hub. If the fit between the bobbin and the hub is to tight or to loose, adjust the spring loaded screws accordingly.

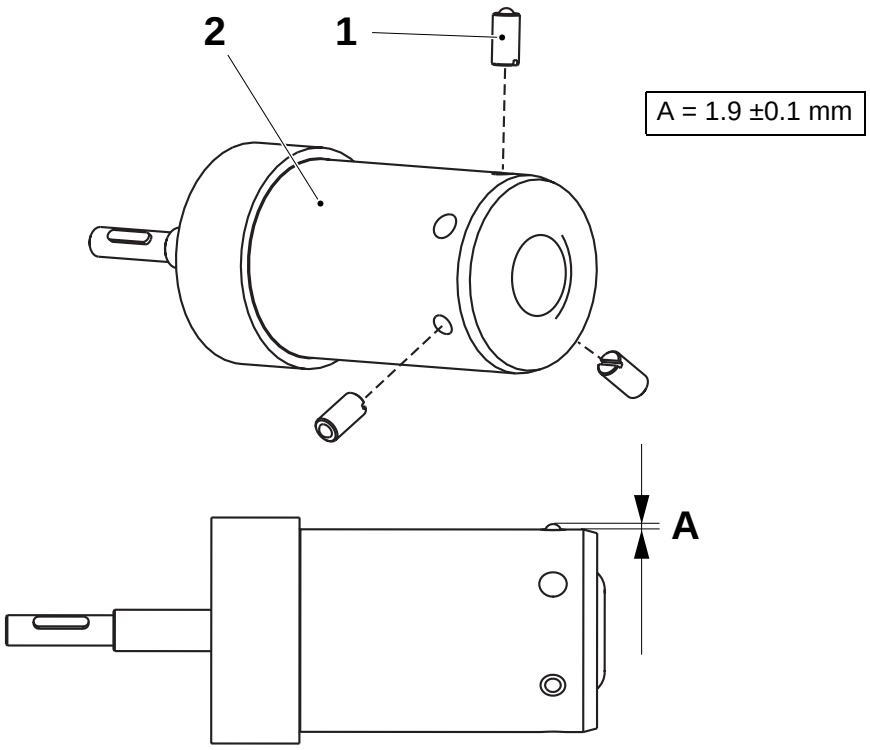

1 Spring-loaded screw
2 Hub

8.6.3 Strip Guide

8.6.3-1 Strip Guide - Check

Machine Status	Mains power OFF Air OFF
SPC Reference	1511585-0200

Lift the bracket (1) and check the bracket moves smoothly.
If not, clean the guides (2) and (3), and the transducer (4).

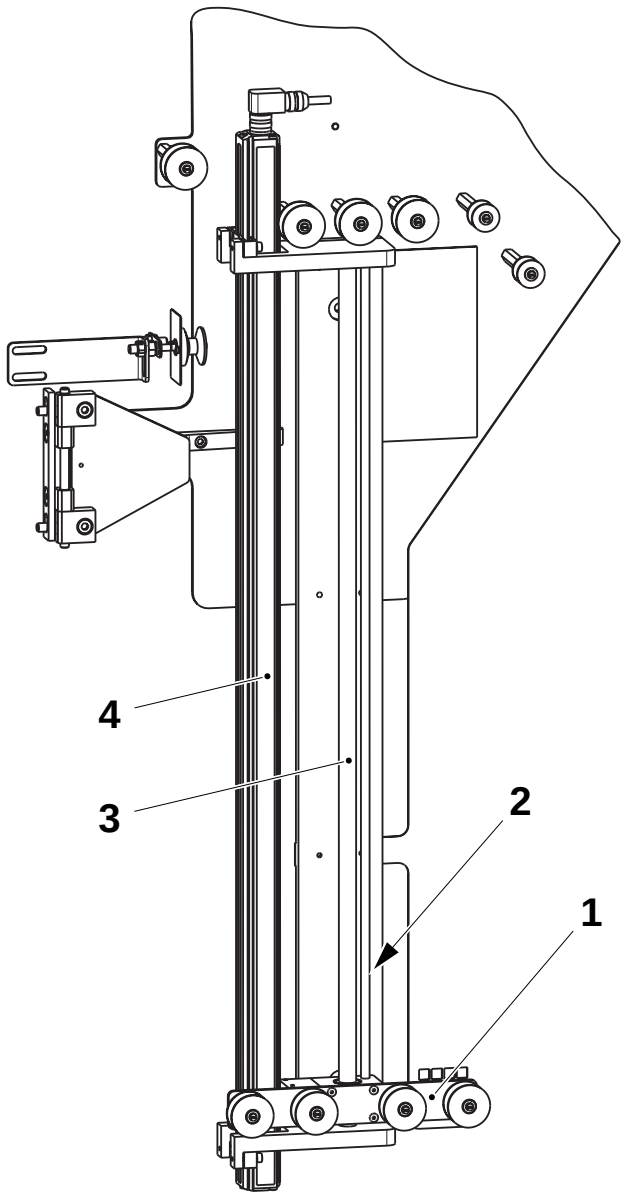

1 Bracket
2 Guide
3 Guide
4 Transducer

8.6.4 Cutting Table

8.6.4-1 Cutting Table - Check

Machine Status	Mains power OFF Air OFF
SPC Reference	1524477-0200

Lift the knob (1) up and down and check the slider (2) moves easily.
If not, clean the slider (2), shaft (3) and splicing table (4).

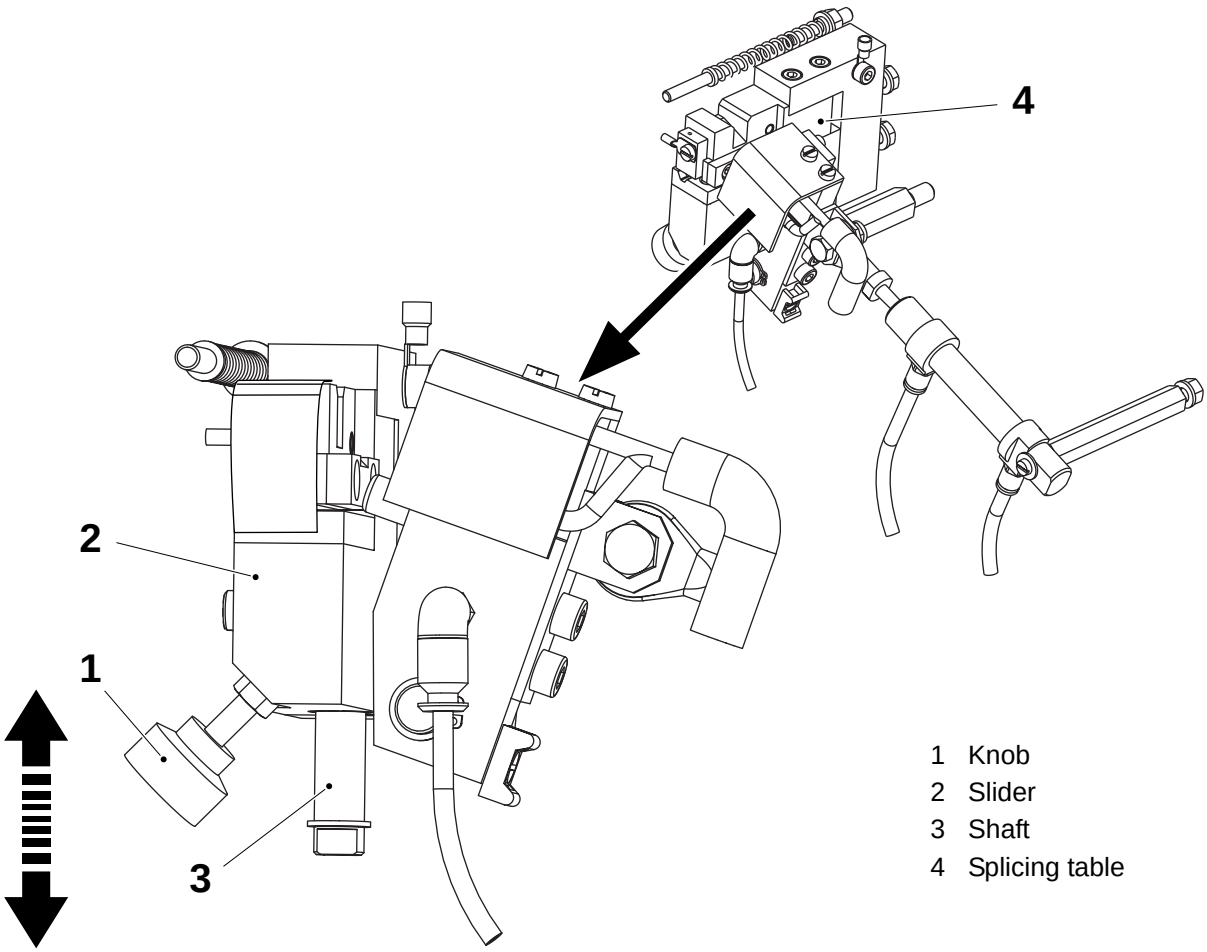

1 Knob
2 Slider
3 Shaft
4 Splicing table

8.6.4-2 Cutting Table - Set

Machine Status	Mains power OFF Air OFF
SPC Reference	1524477-0200

Loosen the nut (1) and the screw (2). Move the slider (3) up and down. Adjust the screw (2) until the block clicks into place.

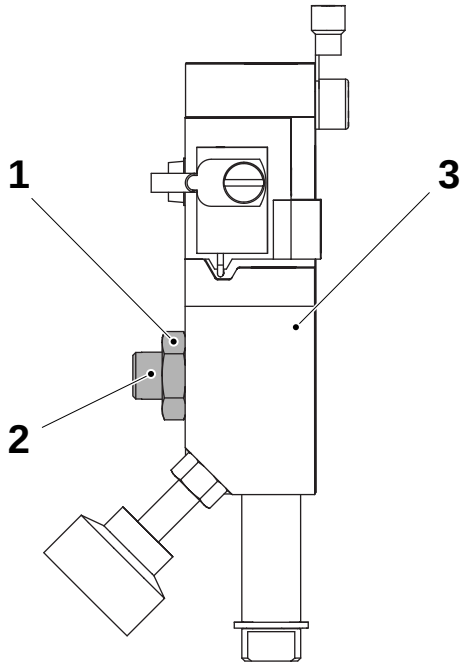

1 Nut
2 Screw
3 Slider

8.7 Bracket

SPC Reference	1487808-0200

8.7-1 Bracket - Change Roller Bearings

Machine Status	Mains power OFF Air OFF
Tools - ropes	 2.5 m
SPC Reference	1487808-0200

Driven Bending Roller

a) Use the handle (1) to release pressure from the pressure roller.

b) Remove the screws (2) and the motor (3).

c) Suspend the motor (3) on the side of the ASU using ropes.

d) Remove the coupling (4) and the key (5).

e) Remove the screws (6) and the rail (7).

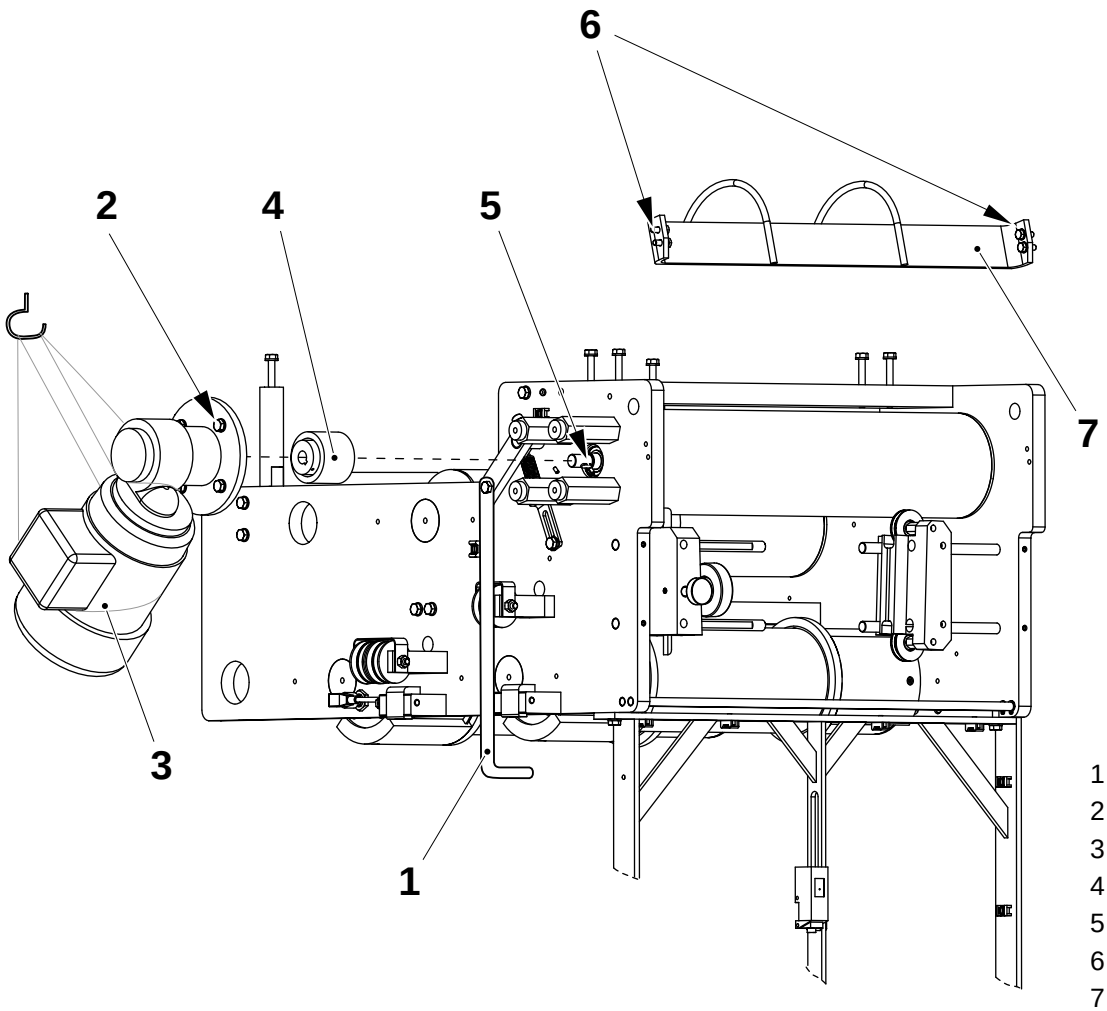

1 Handle
2 Screw
3 Motor
4 Coupling
5 Key
6 Screw
7 Rail

(Cont'd)

(Cont'd)

f) Remove the retaining rings (8) and (9).

g) Remove the axle pin (10).

h) Remove and change the ball bearings (11) and (12).

i) Assemble in the reverse order.

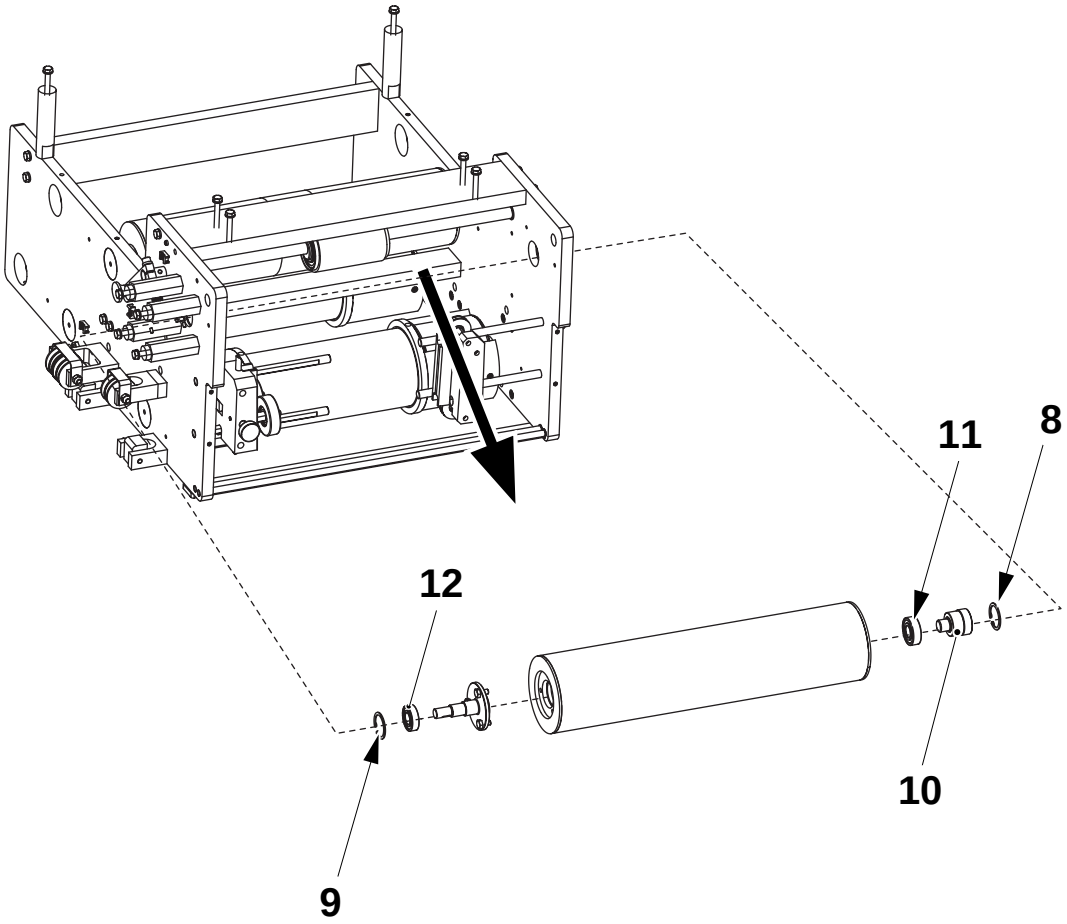

8 Retaining ring
9 Retaining ring
10 Axle pin
11 Ball bearing
12 Ball bearing

(Cont'd)

(Cont'd)

Bending Rollers

Remove the screws (1), axle pins (2) and the roller (3).

Remove and change the ball bearings (4).

Assemble in the reverse order.

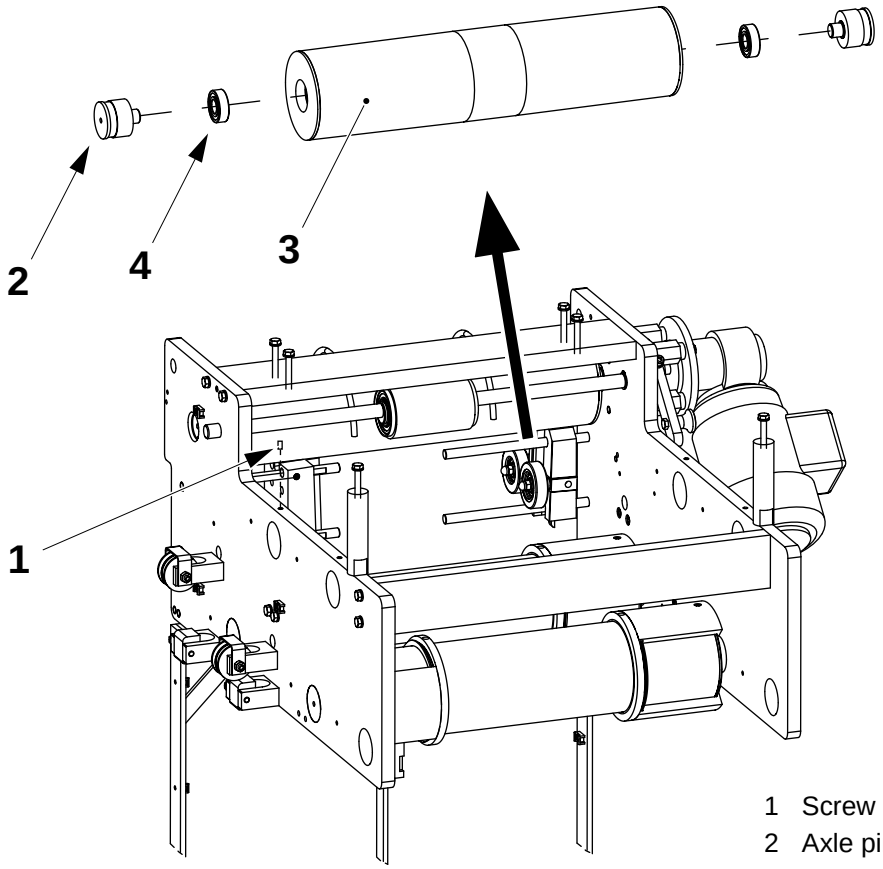

1 Screw
2 Axle pin
3 Roller
4 Ball bearing

8.7-2 Bracket - Set Proximity Switch

Machine Status	Mains power ON Air OFF
SPC Reference	1487808-0200

Rotate the proximity switch (1) to set distance **A** between the tip of the proximity switch (1) and the roller (2).

Rotate the roller (2) and check the LED of the proximity switch (1) is alternately **On** and **Off**.

A = 1.5 ±0.5 mm

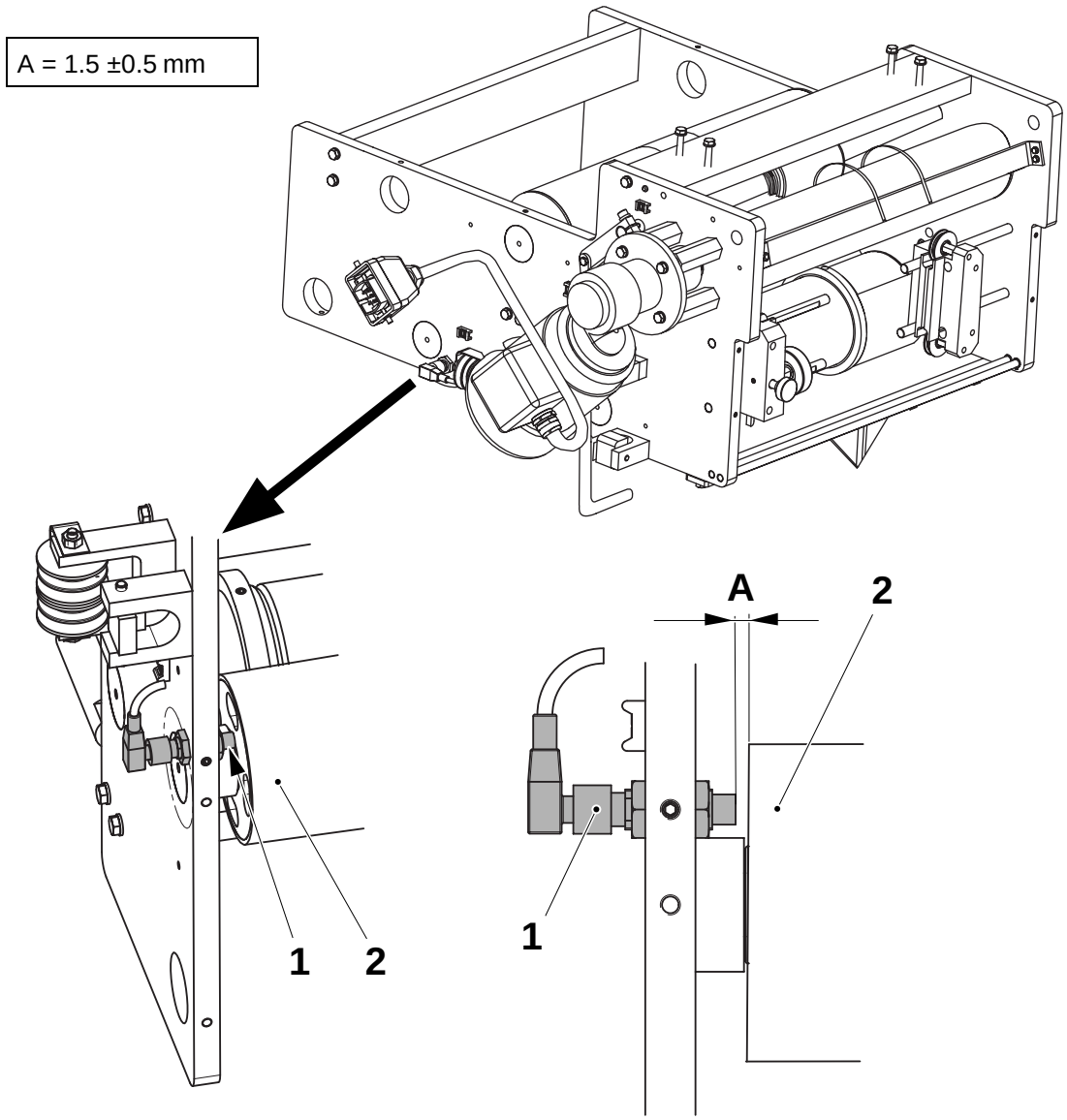

1 Proximity switch
2 Roller

8.7.1 Web Guide

8.7.1-1 Web Guide - Check

Machine Status	Mains power OFF Air OFF
SPC Reference	1484745-0100

Check that:

- the surfaces of the rollers (1) and (2) are undamaged.
  If not, change the rollers see 8.7.1-2 Web Guide - Change,
- the rollers (1) and (2) rotate freely.
  If they do not, change the roller bearings, see 8.7.1-2 Web Guide - Change,
- the guide (3) is clean. If not, loosen the stop screw (4), pull out the guide and clean it.

Note! The guide (3) must be fitted so the packaging material web enters the guide from the chamfered side (5).

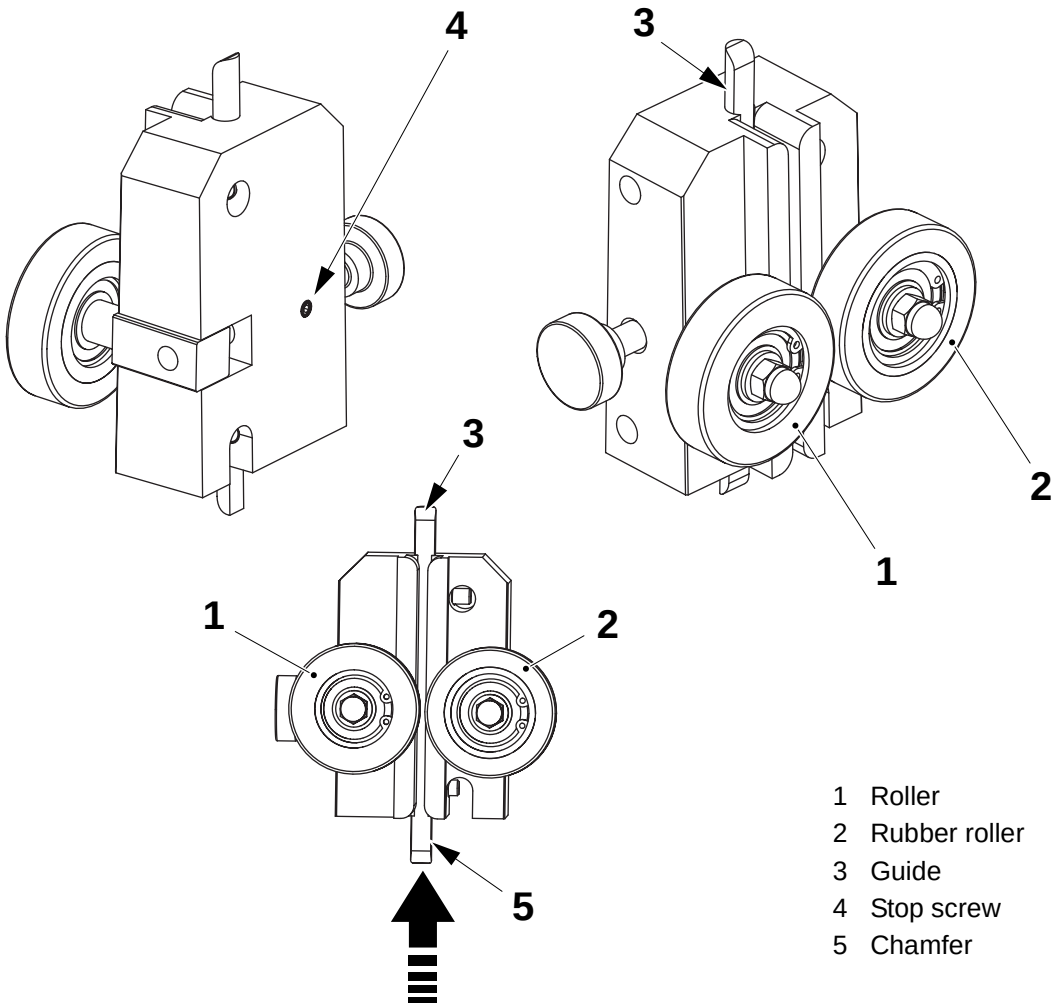

1 Roller
2 Rubber roller
3 Guide
4 Stop screw
5 Chamfer

8.7.1-2 Web Guide - Change

Machine Status	Mains power OFF Air OFF
SPC Reference	1484745-0100

a) Remove the nuts (1), washers (2) and retaining rings (3).

b) Remove and change the ball bearings (4) and rollers (5) and (6).

Note! The rubber roller (5) must be fitted on the printed side of the packaging material web.

c) Assemble in the reverse order.

d) After assembly, check the rubber roller (5) rotates when the roller (6) is turned by hand. If not, set the rollers, see 8.7.1-3 Web Guide - Set Position.

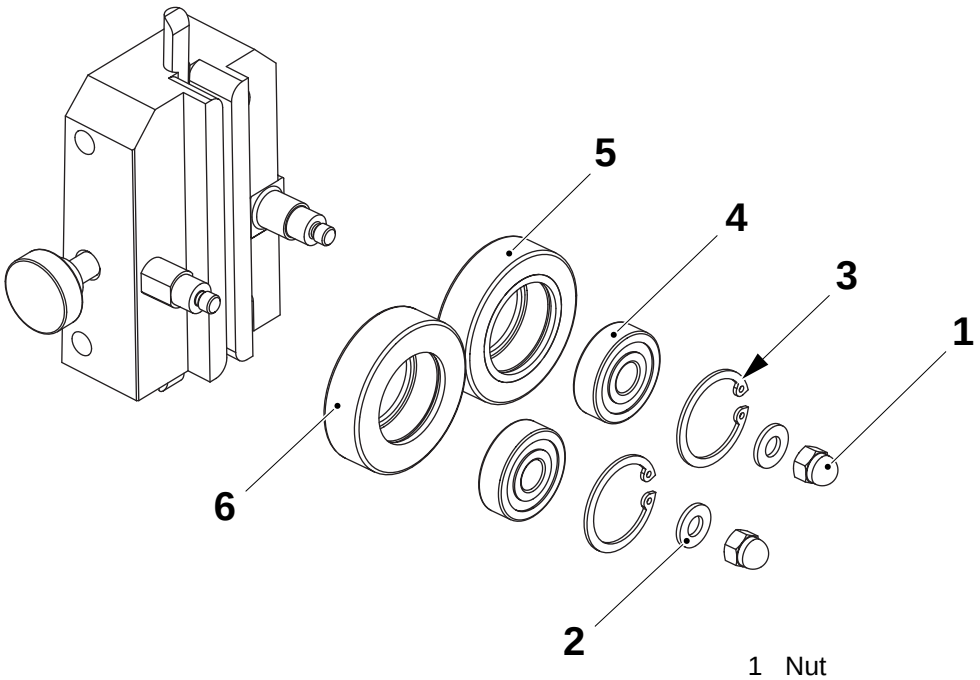

1 Nut
2 Washer
3 Retaining ring
4 Bearing
5 Rubber roller
6 Roller

8.7.1-3 Web Guide - Set Position

Machine Status	Mains power OFF Air OFF
SPC Reference	1484745-0100

a) Loosen the stop screws (1).

b) Centre the packaging material (2) between the plates (3) by moving the web guide (4) sideways.

c) Tighten the stop screws (1)

d) Loosen the stop screws (5) and position the paper guide (6) **1 mm** from the edge of the packaging material (2).

e) Tighten the stop screws (5).

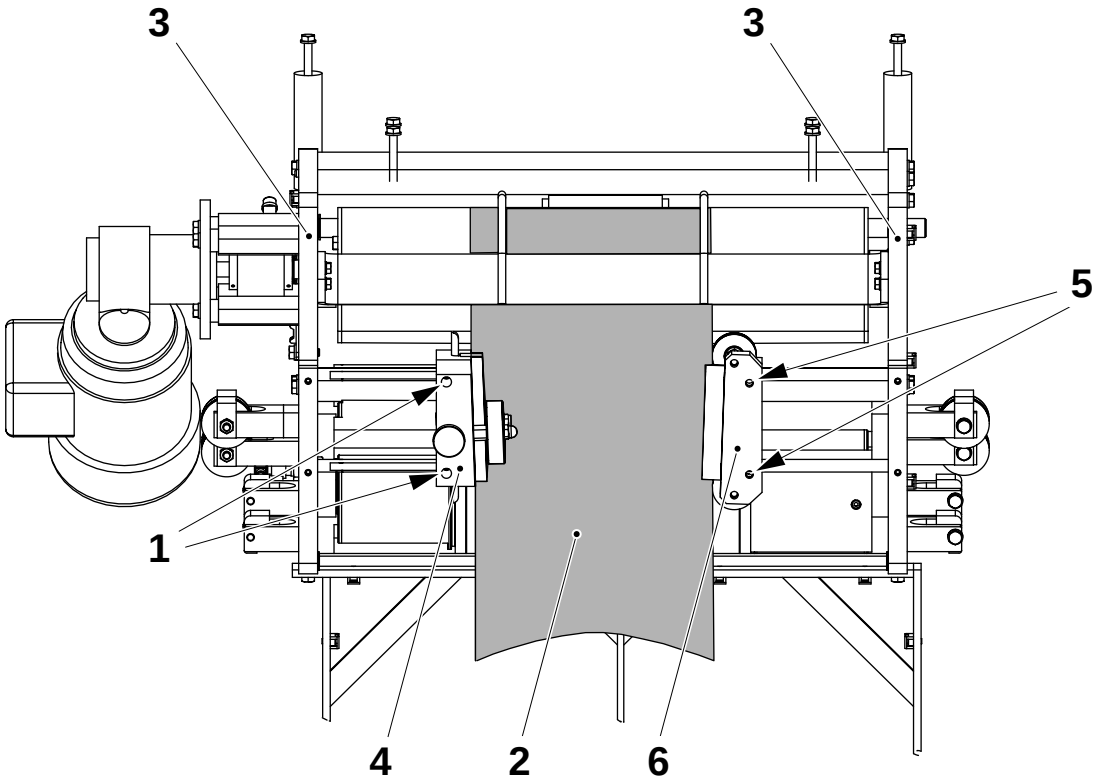

1 Stop screw
2 Packaging material
3 Plates
4 Web guide
5 Stop screw
6 Paper guide

(Cont'd)

(Cont'd)

Note! Only the roller (8) is mounted on an eccentric shaft.

f) Check the rubber roller (7) rotates when the roller (8) is turned by hand. If not, loosen the screw (9) and turn the eccentric shaft (10). Tighten the screw (9). Repeat step f).

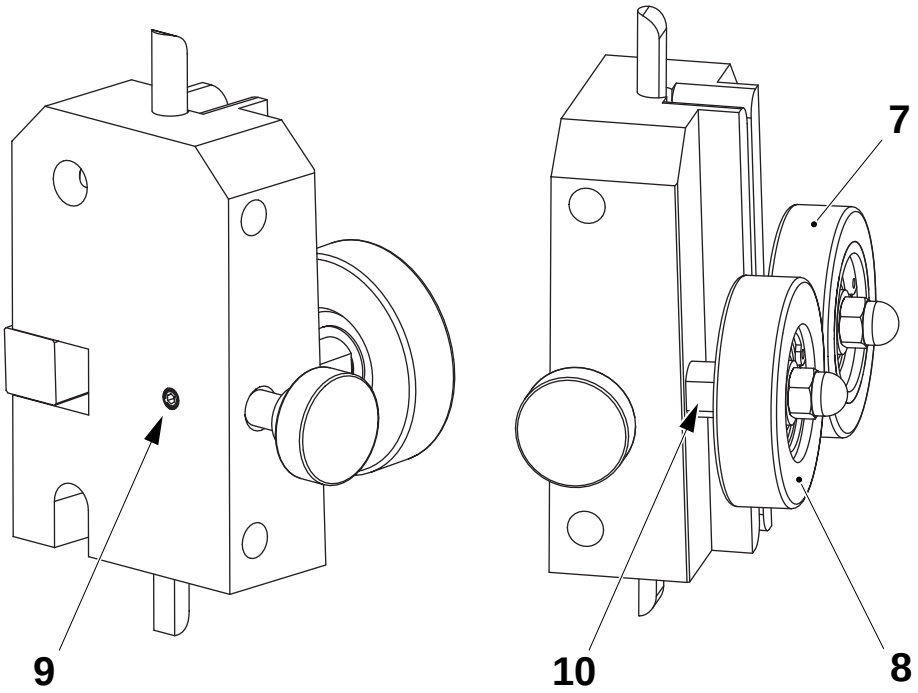

7 Rubber roller
8 Roller
9 Screw
10 Eccentric shaft

8.7.2 Pressure Roller

8.7.2-1 Pressure Roller - Check

Machine Status	Mains power OFF Air OFF
SPC Reference	1512429-0100

Check the handle (1) moves freely and that it returns to its rest position when it is released. If not change the spring (2).

Check the guide roller (3) rotates freely and that it is not worn or damaged. Change if necessary, see 8.7.2-2 Pressure Roller - Change Bearings.

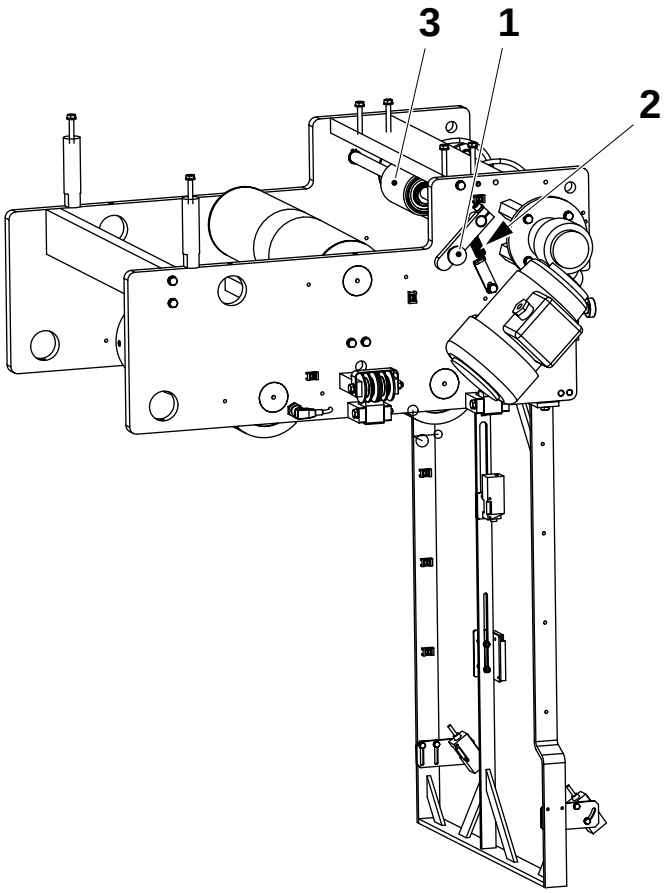

1 Handle
2 Spring
3 Roller

8.7.2-2 Pressure Roller - Change Bearings

Machine Status	Mains power OFF Air OFF
SPC Reference	1512429-0100

a) Remove the screw (1).

b) Remove the screw (2) and spring (3).

c) Loosen the screw (4) and pull off the handle (5).

d) Remove the retaining rings (6) from both ends of the shaft (7).

e) Remove the retaining ring (8) and pull the guide roller (9) and its internal components off the shaft (7) in the direction shown.

f) Remove the retaining ring (10) and the ball bearings (11) and (12) from the guide roller (9). Change the ball bearings (11) and (12).

g) If necessary, remove the pins (13) from the eccentric bushing (14) and change the eccentric bushing (14).

h) Assemble in the reverse order.

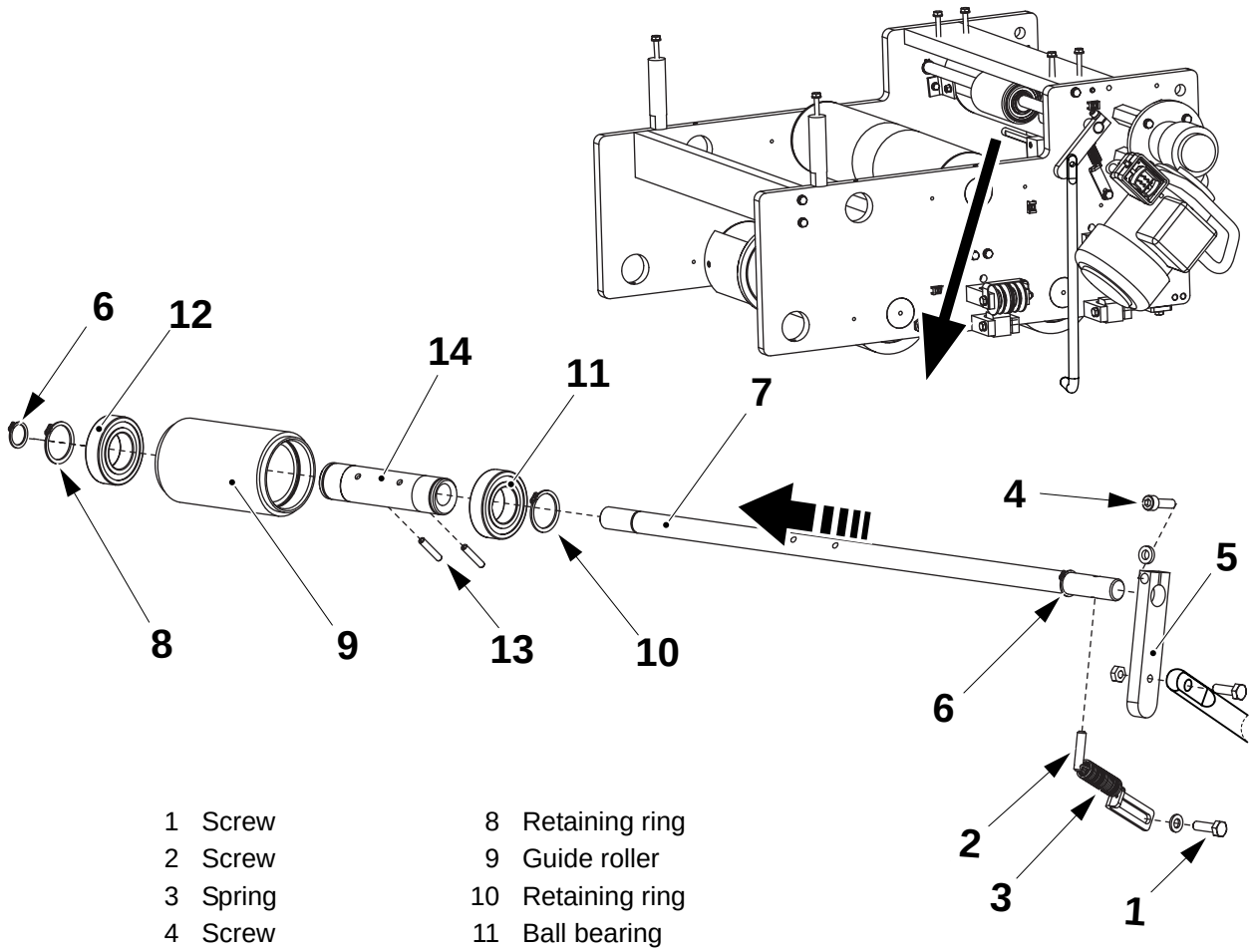

1	Screw	8	Retaining ring
2	Screw	9	Guide roller
3	Spring	10	Retaining ring
4	Screw	11	Ball bearing
5	Handle	12	Ball bearing
6	Retaining ring	13	Pin
7	Shaft	14	Eccentric bushing

8.7.2-3 Pressure Roller - Set

Machine Status	Mains power OFF Air OFF
SPC Reference	1512429-0100

a) Tension the spring (1).

b) Tighten the screw (2).

c) Check the pressure roller (3) is in constant contact with the roller (4) while the handle (5) is in its lowest position.
If not loosen the screw (2) and increase the spring tension until the correct result is obtained.

d) Tighten the screw (2).

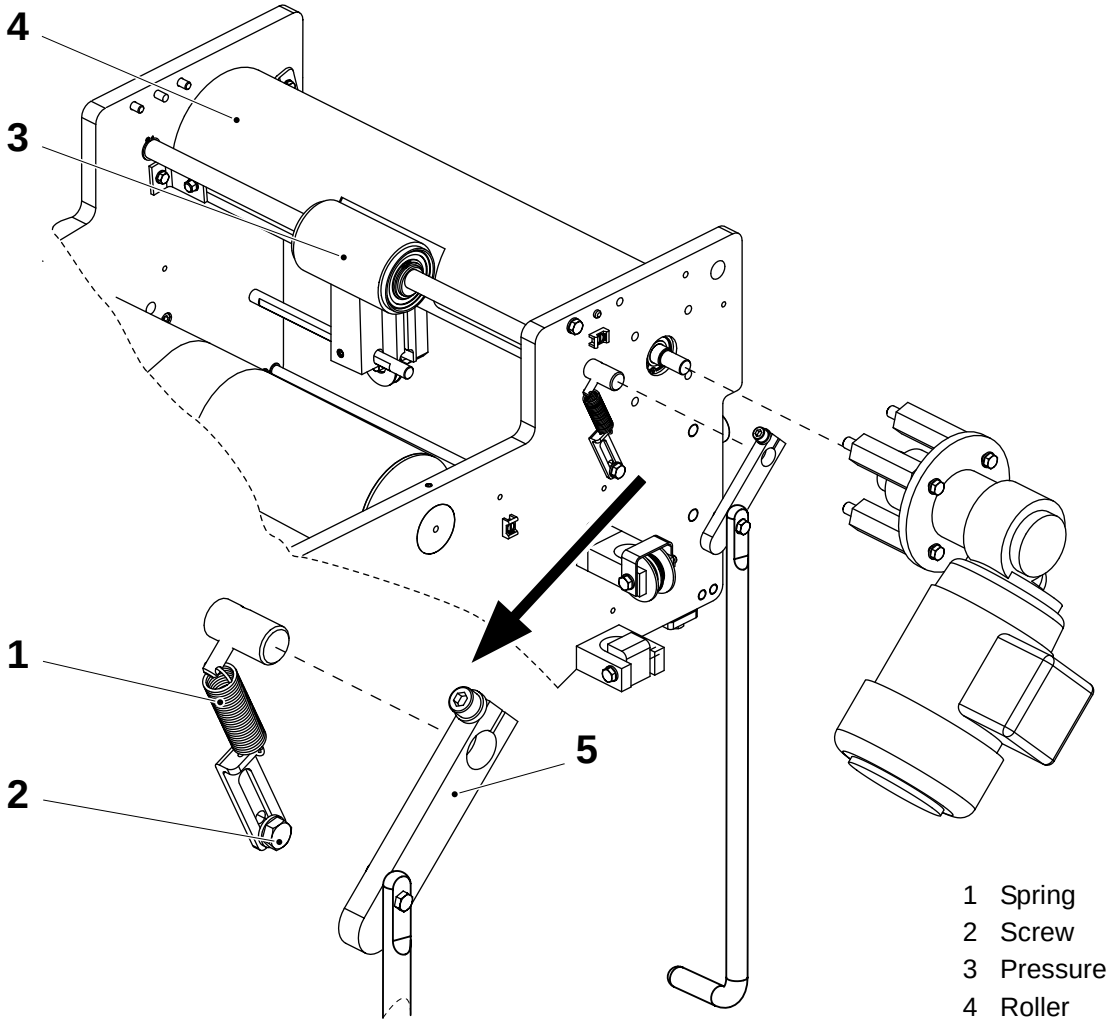

1 Spring
2 Screw
3 Pressure roller
4 Roller
5 Handle

8.8 Web Magazine

SPC Reference	1490831-0200

8.8-1 Web Magazine - Check

Machine Status	Mains power OFF Air OFF
SPC Reference	1490831-0200

a) Check the rollers (1) rotate freely without play and the surfaces of the rollers are not worn or damaged.
If worn or damaged, change the rollers, see 8.8-2 Web Magazine - Change Bearings.

b) Check the rollers rise and fall smoothly when they are moved by the ropes (2).

c) Move the rollers up and down and check that the LED of the proximity switch (3) is **On** when the bracket is at the upper and lower positions. If not set the proximity switches, see 8.8-3 Web Magazine - Set.

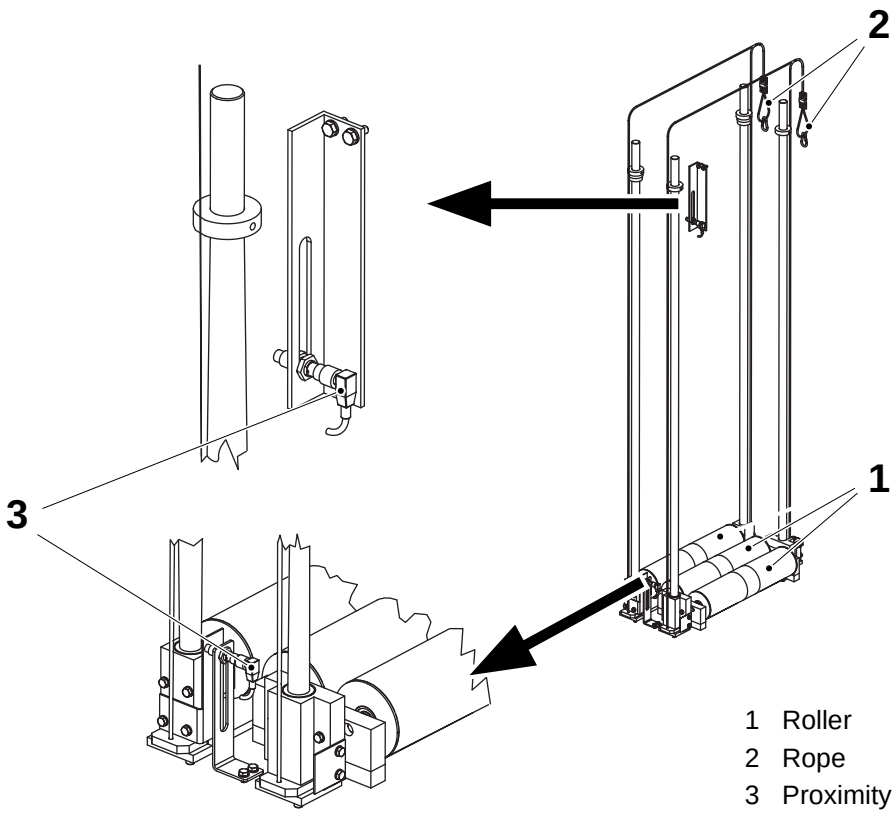

1 Roller
2 Rope
3 Proximity switch

8.8-2 Web Magazine - Change Bearings

Machine Status	Mains power OFF Air OFF
SPC Reference	1490831-0200

a) Remove the screw (1) and lift out the roller (2).

b) Remove the retaining rings (3).

c) Remove and change the bearings (4).

d) Assemble in the reverse order.

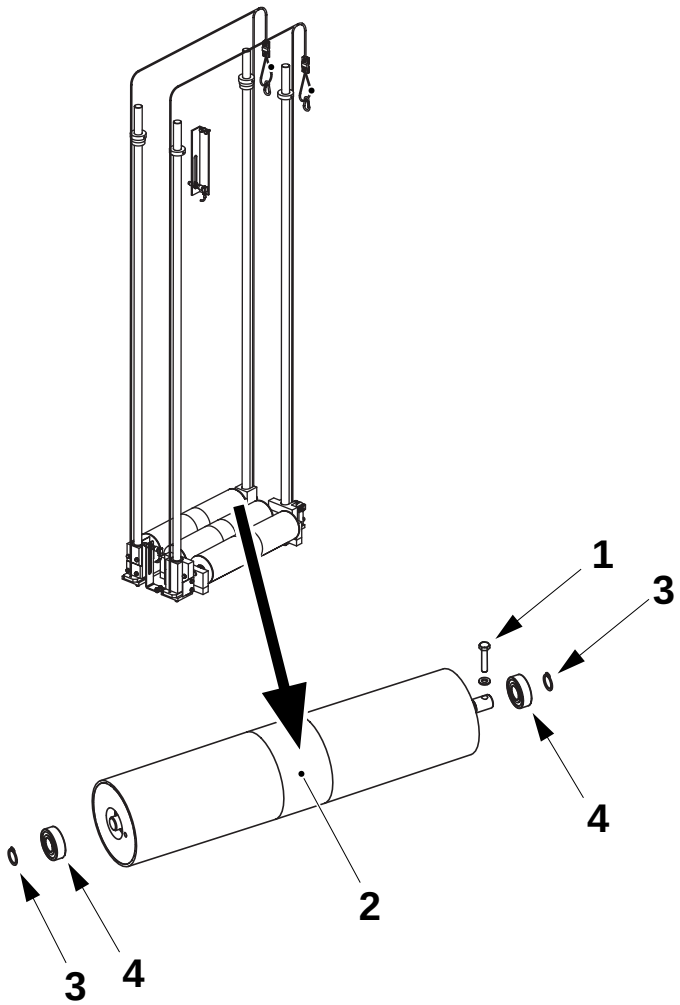

1 Screw
2 Roller
3 Retaining ring
4 Bearing

8.8-3 Web Magazine - Set

Machine Status	Mains power OFF Air OFF
SPC Reference	1490831-0200

With the single roller (1) in the lower position, loosen the nut (2) and move the proximity switch (3) to set distance **A** between the bracket (4) and the proximity switch (3). Check if the LED of the proximity switch (3) is **On**. If not, repeat the procedure.

Repeat procedure for upper proximity switch (5).

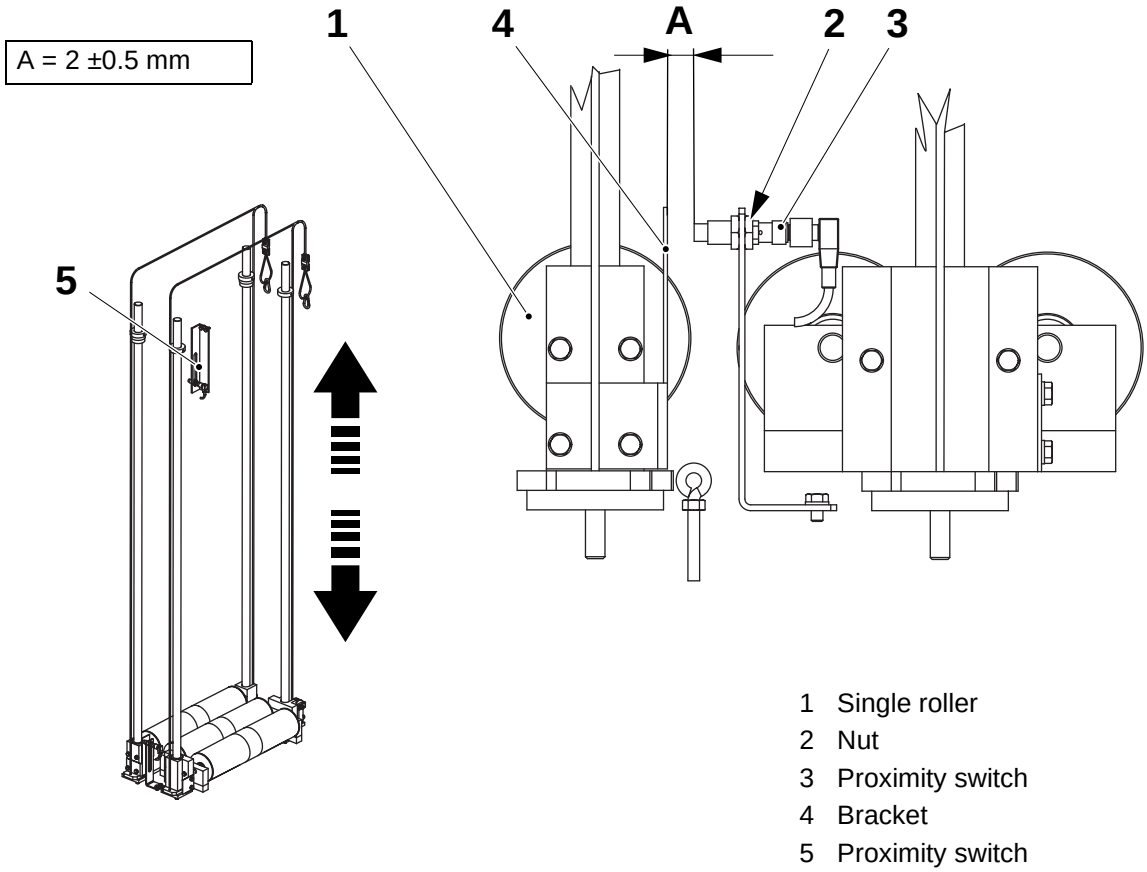

1 Single roller
2 Nut
3 Proximity switch
4 Bracket
5 Proximity switch

8.8-4 Web Magazine - Change Ropes

Machine Status	Mains power OFF Air OFF
Tools - Heat gun - Rope	 TP No. 90319
SPC Reference	1490831-0200

WARNING

Risk of crushing!

Make sure the rollers are properly secured in their upper position.

Note! Compensate for the elongation of the ropes by stretching the ropes before use.

Raise the rollers (1) and place a box under them to provide work space before performing any procedure. Remove the wire lock (3) and the old rope (2).

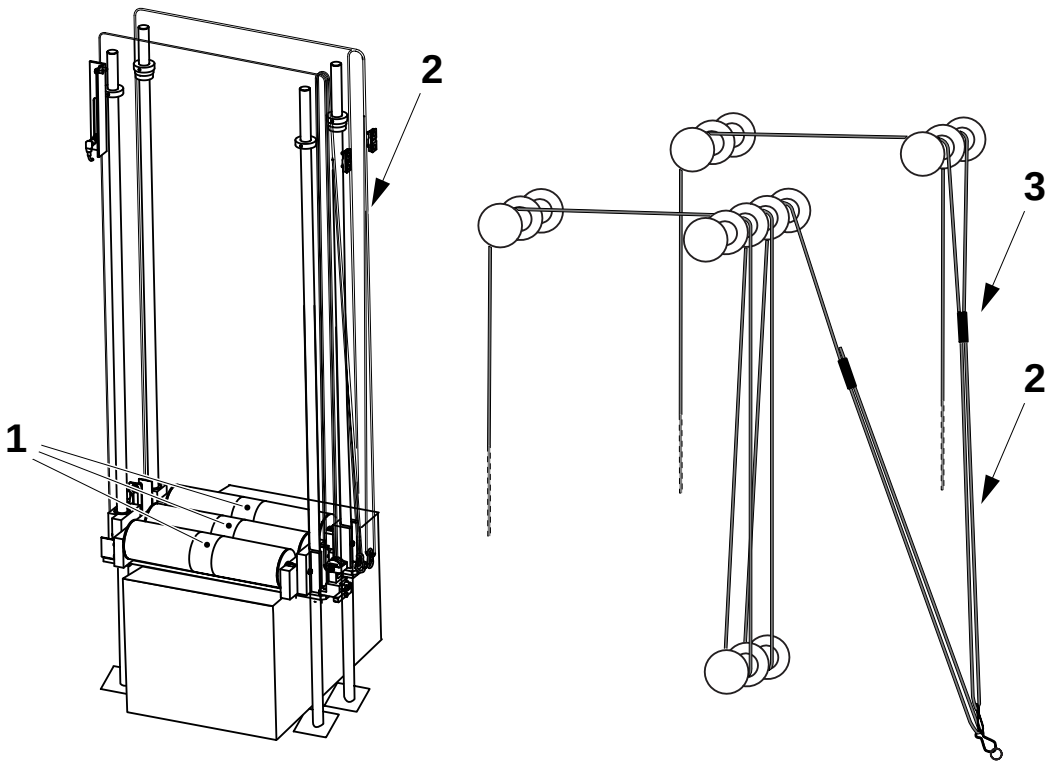

1 Roller
2 Rope
3 Wire lock

(Cont'd)

(Cont'd)

Single Roller

a) Pull the rope (1) through the plate (2) and use the heat gun to heat the rope until it melts. Use a flat object (3) and press the heated rope against the plate (2) to fill out the chamfered hole (4). Make sure the rope is shaped in the chamfered hole (4) when the rope is cold.

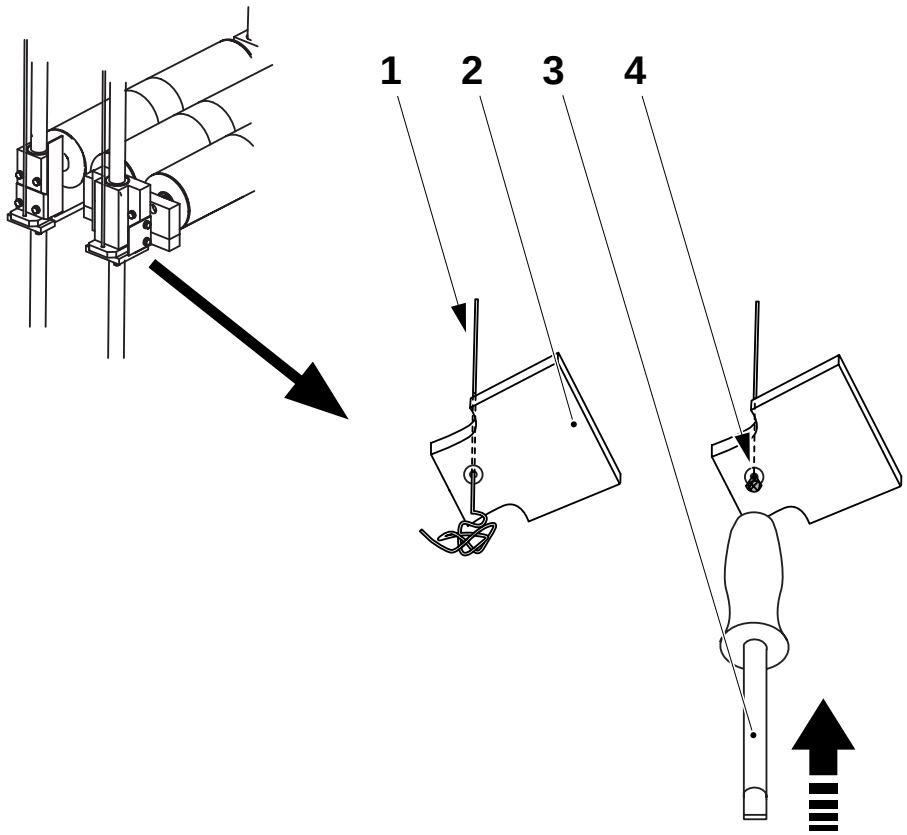

1 Rope
2 Plate
3 Flat object
4 Chamfered hole

(Cont'd)

(Cont'd)

b) Remove the box under the rollers.

c) Pull the attached rope over the rollers (5) and (6), continue through the upper snap hook (8) and return the rope to the roller (6). Pull the rope down to the opposite hole in the plate (2) and repeat the heating procedure in step a).

d) Make sure the rope is tight when attached.
The plate (2) must reach the floor in the ASU when the rope is attached.

e) Attach the wire lock (7) to the rope.

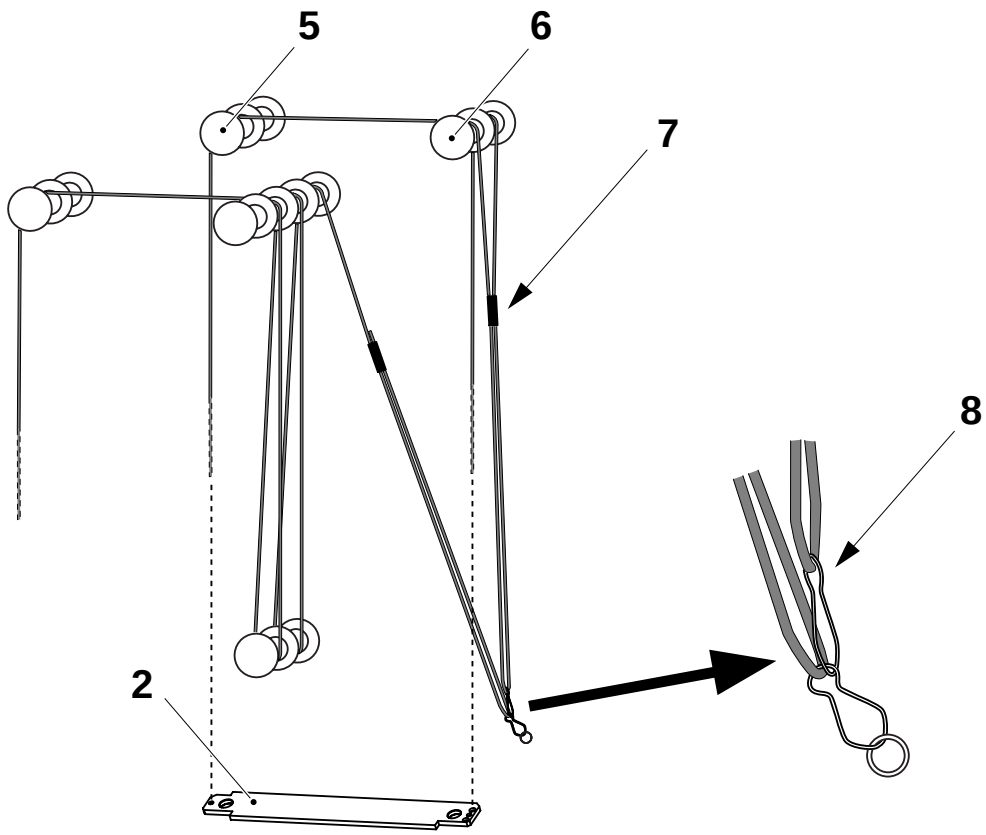

2 Plate
5 Roller
6 Roller
7 Wire lock
8 Snap hook

(Cont'd)

(Cont'd)

Double Rollers

a) Pull the rope (1) through the plate (2) and use the heat gun to heat the rope until it melts. Use a flat object (3) and press the heated rope against the plate (2). Make sure the rope is shaped in the chamfered hole (4) when the rope is cold.

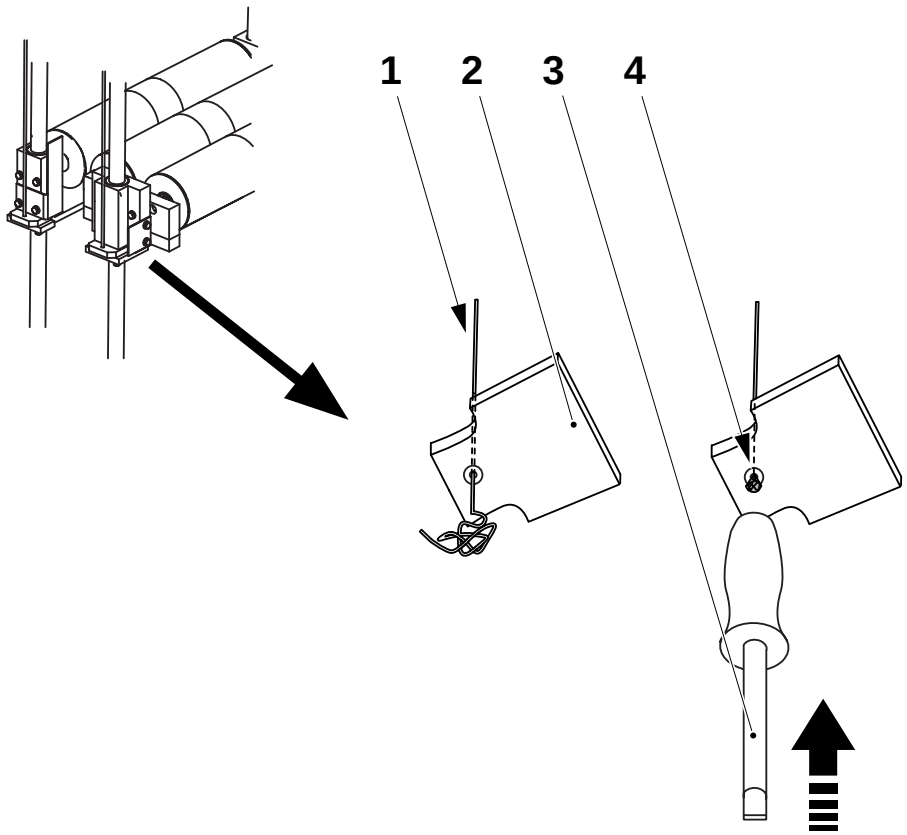

1 Rope
2 Plate
3 Flat object
4 Chamfered hole

(Cont'd)

(Cont'd)

b) Remove the box under the rollers.

c) Pull the attached rope over the rollers (5), (6) and (7) according to the picture. Continue through the lower snap hook (9).

d) Tighten the rope and use the wire lock (8) to fix the ropes.

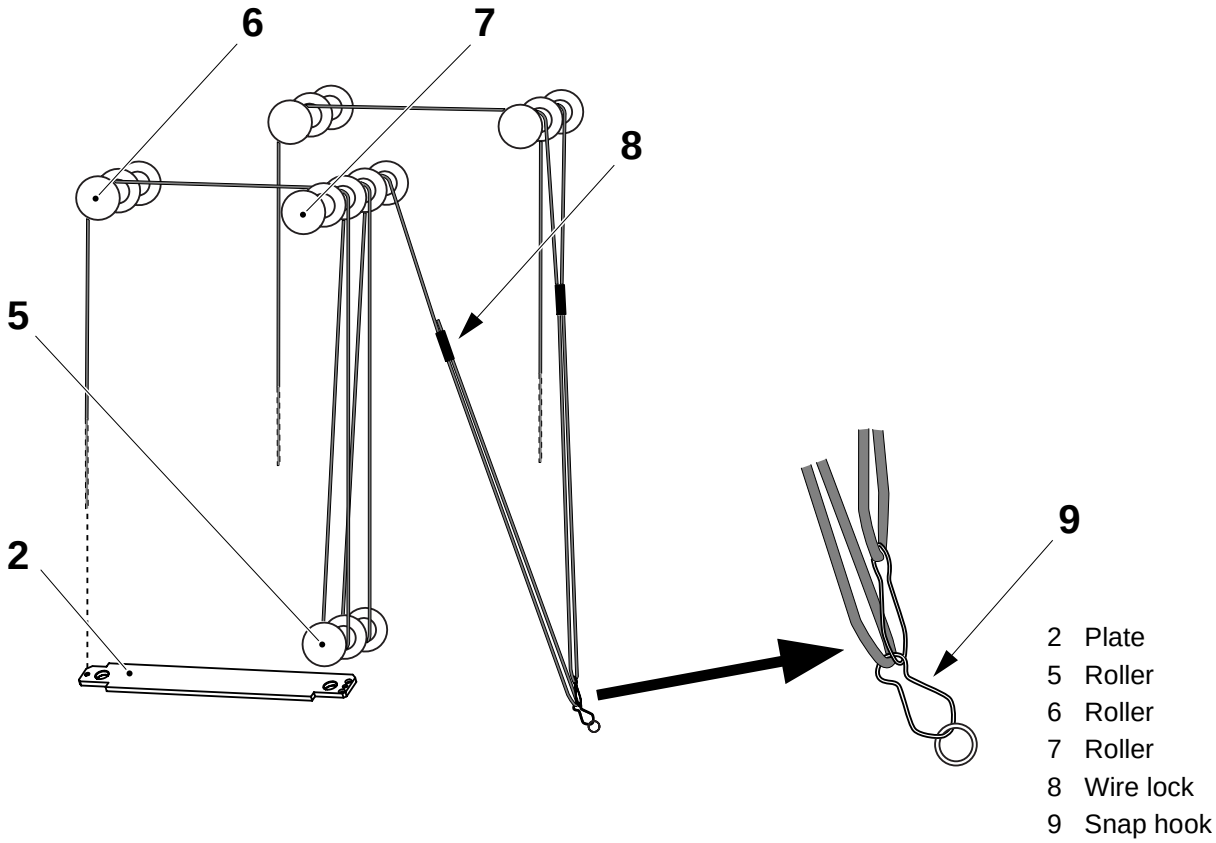

8.9 Covering Panel

SPC Reference	1490215-0200

8.9-1 Covering Panel - Check

Machine Status	Mains power OFF Air OFF
SPC Reference	1490215-0200

Check that:

- the rubber strip (1) is not worn or damaged. If necessary, change the strip,
- the rubber strip (1) is fitted correctly. If necessary, adjust the rubber strip,
- the locking arms (2) run smoothly in the guide lugs (3),
- the locking arms (2) engage with the locking plates (4) when the door is closed. See **A** in the illustration,
- the latch (5) locks when the door is closed,
- the locking arms (2) are free from the locking plates (4) when the door is opened. See **B** in the illustration.

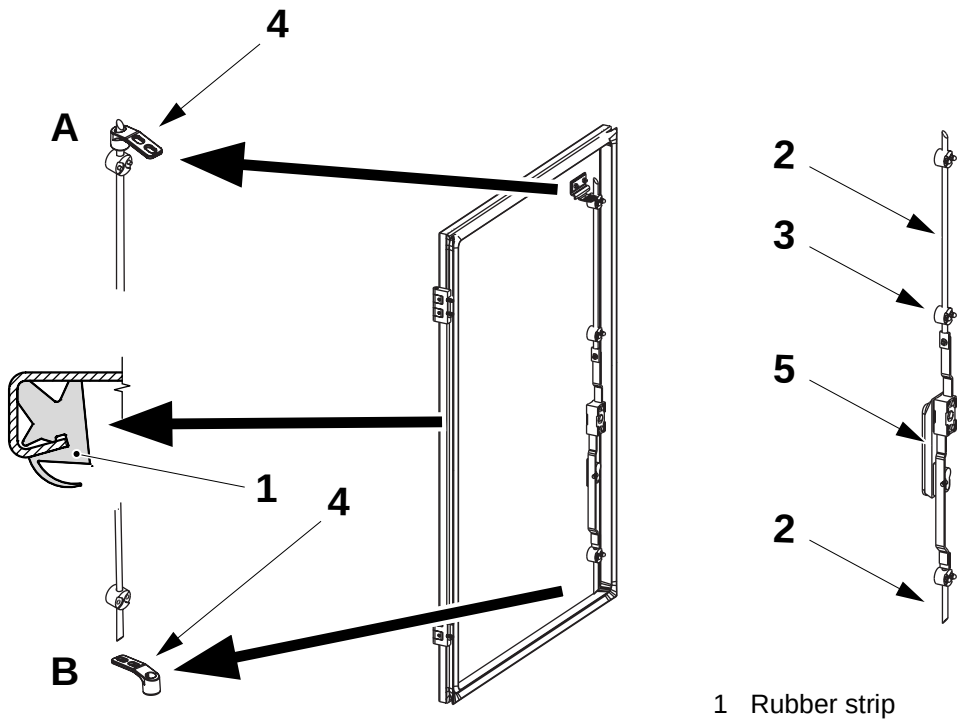

1 Rubber strip
2 Locking arm
3 Guide lug
4 Locking plate
5 Latch

(Cont'd)

(Cont'd)

– the safety switches operate when the doors are opened. If not, change the defective switch and set it, see 8.9-2 Covering Panel - Set Safety Switches.

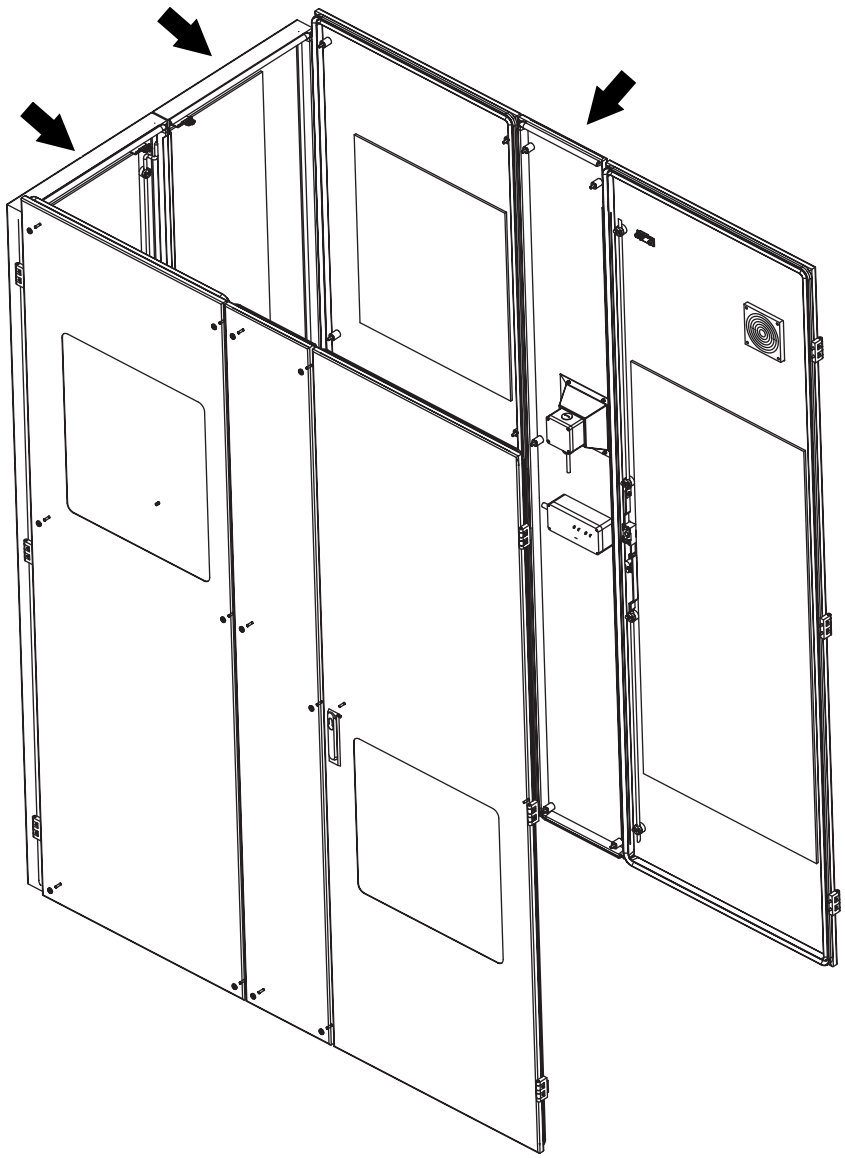

8.9-2 Covering Panel - Set Safety Switches

Machine Status	Mains power OFF Air OFF
SPC Reference	1490215-0200

Loosen the screws (1) and set distance **A** between the switch (2) and the key (3). Close the door. Check if the **Door open** alarm on the TPOP still is **On**. If the alarm is **On**, repeat the procedure until the doors can be closed without any alarm.

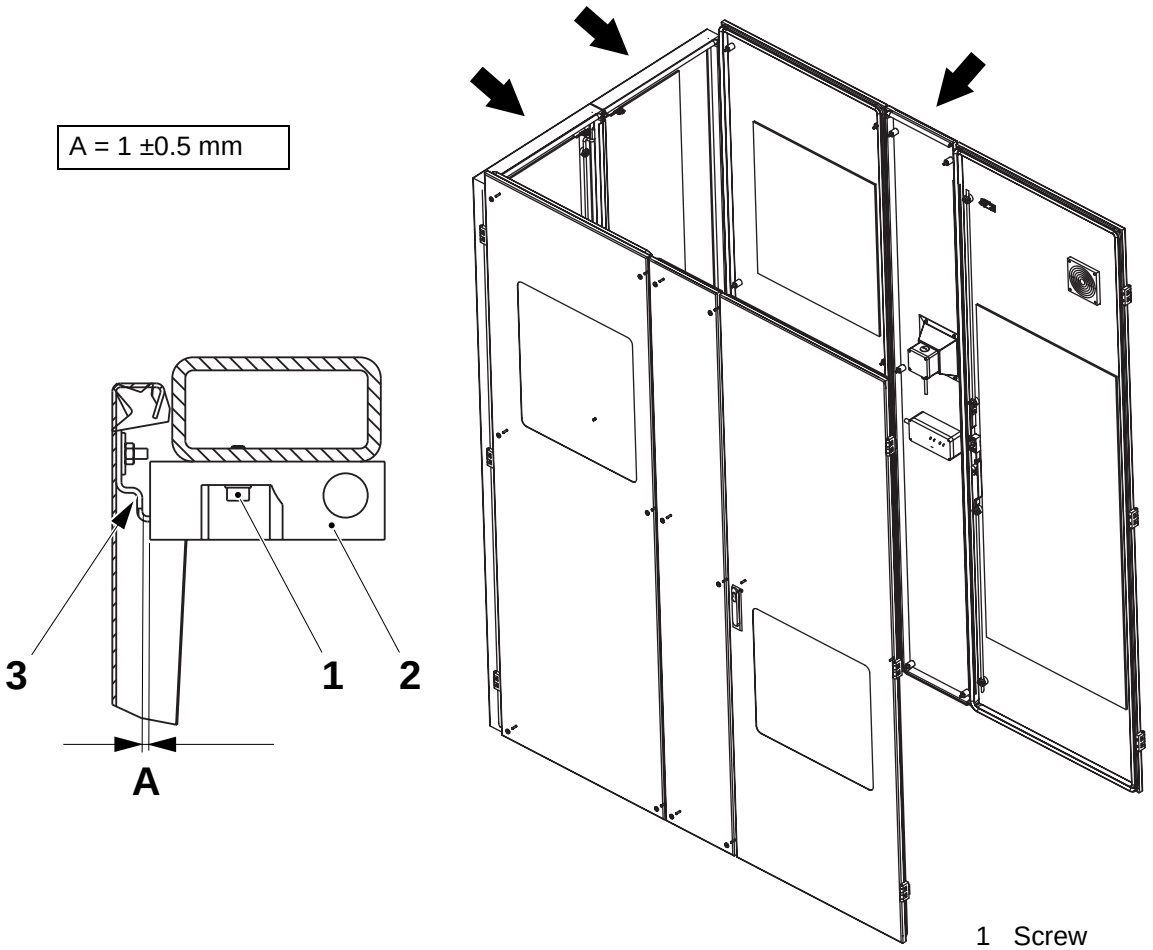

1 Screw
2 Switch
3 Key

8.10 Paper Brake

SPC Reference	2506614-0100 2506615-0100

8.10-1 Paper Brake - Set

Machine Status	Mains power OFF Air OFF
SPC Reference	2506614-0100 2506615-0100

Set the paper brake friction value to **10** (1) by rotating the dial (2).

Repeat on the other brake.

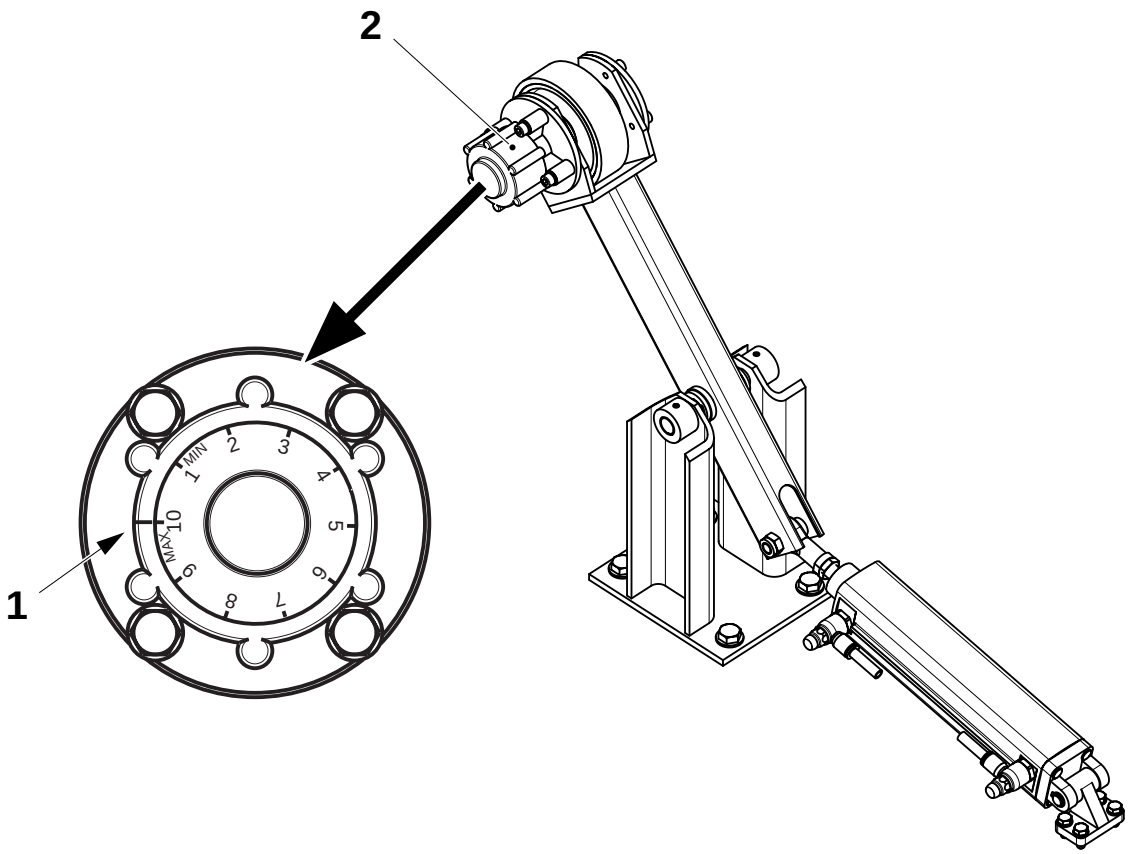

1 Indication
2 Dial

8.10-2 Paper Brake - Set Position and Velocity

Machine Status	Mains power OFF Air OFF
SPC Reference	2506614-0100 2506615-0100

a) Set distance **A** between the shaft (1) and the roller (2) by loosening the nut (3) and turning the connecting rod (4).

b) Tighten the nut (3).

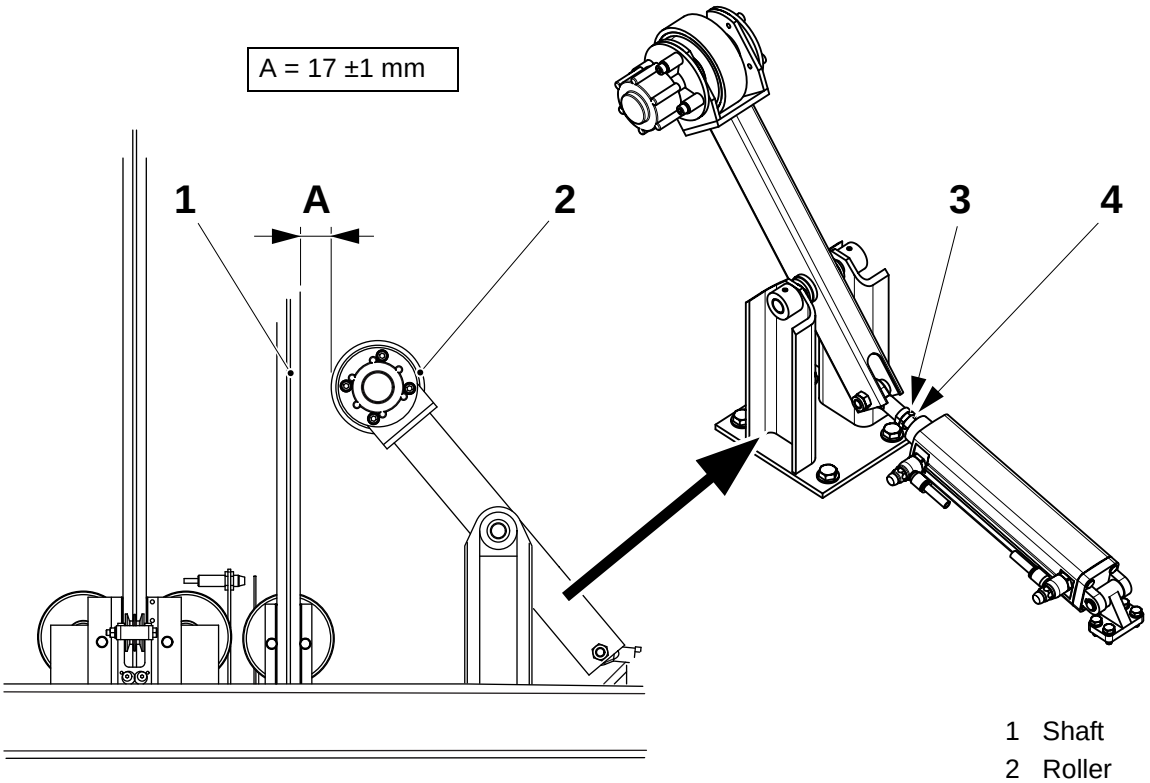

1 Shaft
2 Roller
3 Nut
4 Connecting rod

(Cont'd)

(Cont'd)

c) Loosen the nut (5).
d) Turn the screw (6) fully clockwise and then **5** turns counter clockwise.
e) Tighten the nut (5).
f) Turn the screw (7) fully clockwise and then **3/4** turn counter clockwise.
g) Loosen the nut (8).
h) Turn the screw (9) fully clockwise and then **3.5** turns counter clockwise.
i) Tighten the nut (8).
j) Turn the screw (10) fully clockwise and then **3/4** turn counter clockwise.

Repeat all instructions on the other brake.

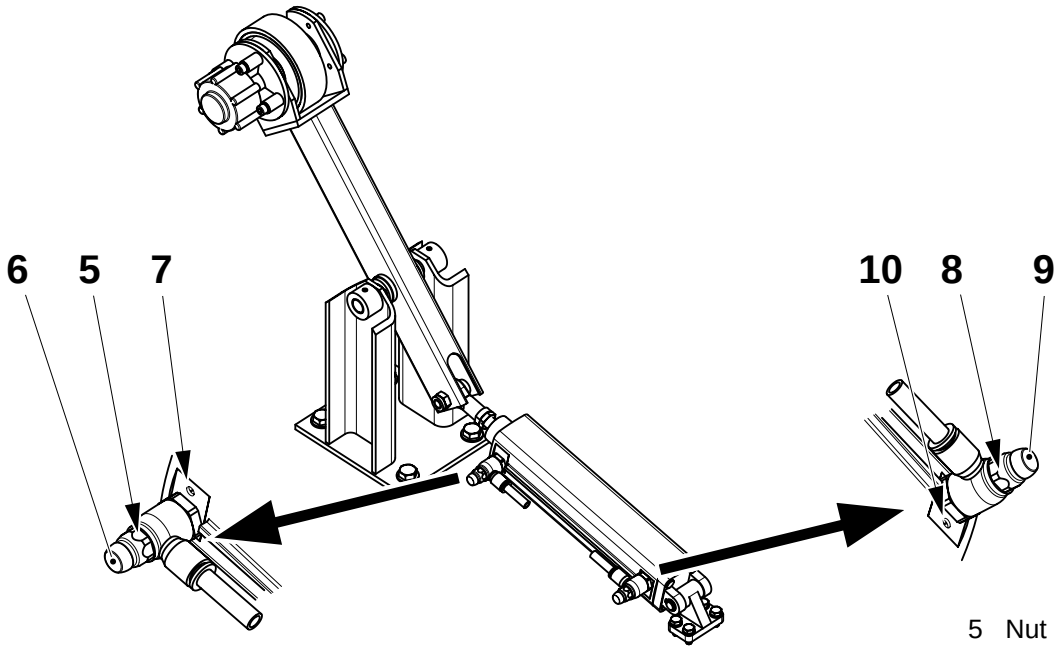

5 Nut
6 Screw
7 Screw
8 Nut
9 Screw
10 Screw

8.11 Reel Trolley

SPC Reference	1538186-0100

8.11-1 Reel Trolley - Check

Machine Status	Mains power OFF Air OFF
SPC Reference	1538186-0100

a) Pull the brake handle (1) and check if the brake releases. If not, see 8.11-8 Reel Trolley - Set Brake.

b) Check that all connections are free from oil. Clean if necessary.

c) Pump up the arms to their highest position and check the cylinder piston (3) is dry. Clean if necessary.

d) Put a packaging material reel in the trolley and pump up the arms until the reel lifts from the floor. Wait for 10 minutes. Make sure the reel does not sink. Sinking can be caused by a broken pump cylinder (2). Change if necessary, see 8.11-2 Reel Trolley - Change Pump Cylinder.

e) Pump up the arms again until the reel lifts from the floor and then let it down while pulling the handle (1). If the arms sink very quickly, set the regulating valve (4),
see 8.11-3 Reel Trolley - Set Regulating Valve.

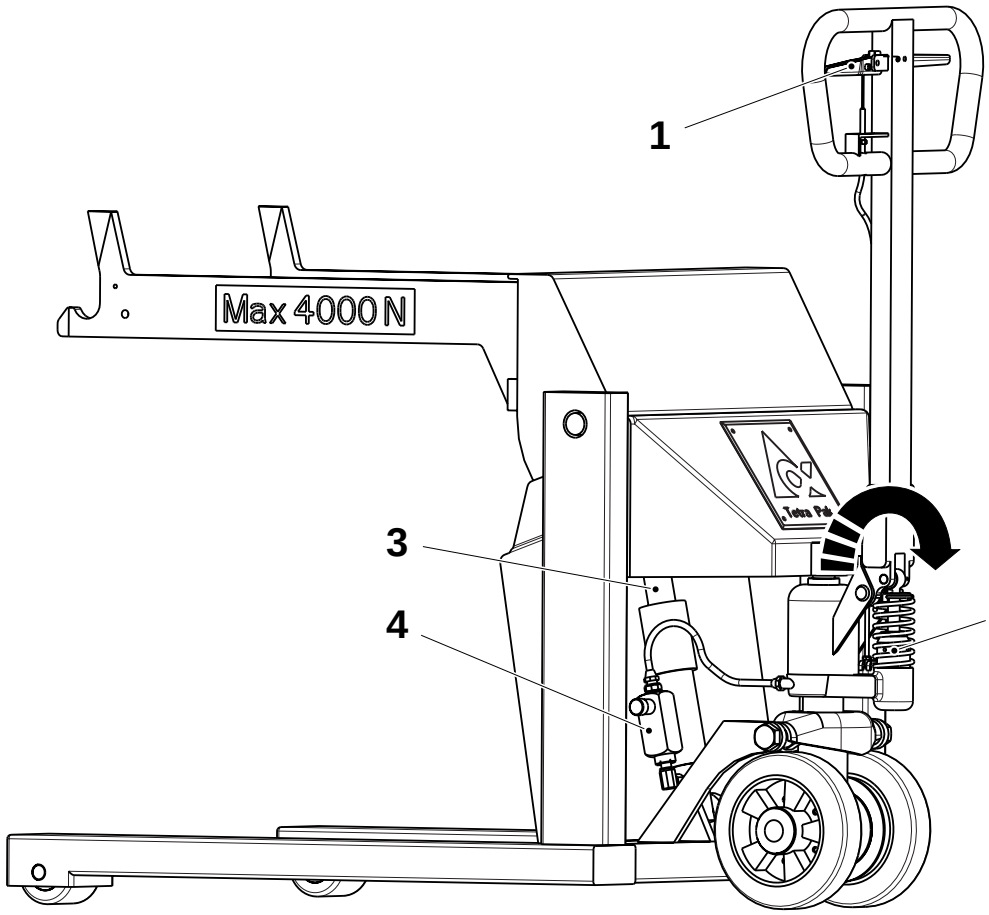

1 Handle
2 Pump cylinder
3 Cylinder piston
4 Regulating valve

8.11-2 Reel Trolley - Change Pump Cylinder

Machine Status	Mains power OFF Air OFF
Consumables - lubricant	code C
SPC Reference	1538186-0100

a) Release the tie rod (1) from the valve arm (2).

b) Remove the screw (3) from the axle pin (4).

c) Turn the axle pin (4) clockwise a little and pull out the tie rod (1).

d) Pull out the axle pin (4) and remove the handle (5).

e) Remove the split pin (6), the washer (7) and the spring (8).

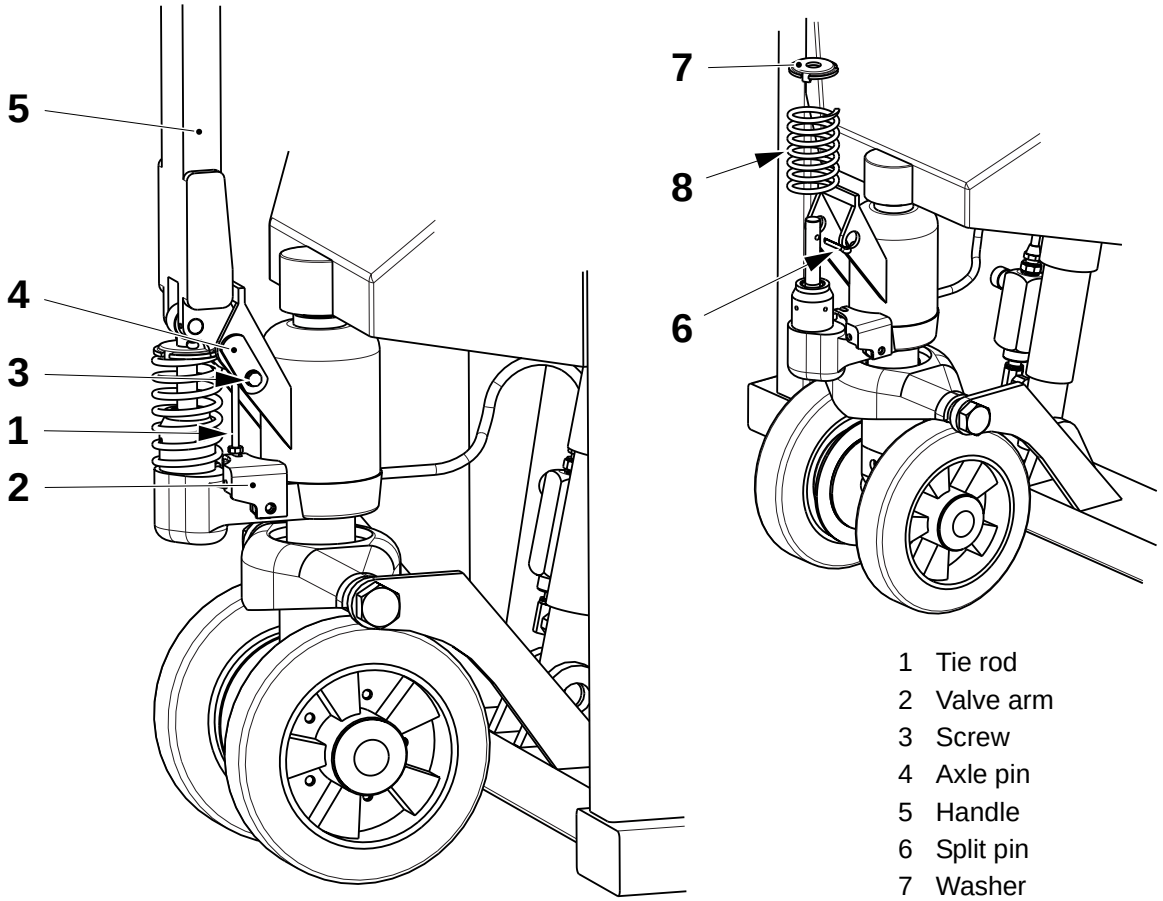

1 Tie rod
2 Valve arm
3 Screw
4 Axle pin
5 Handle
6 Split pin
7 Washer
8 Spring

(Cont'd)

(Cont'd)

f) Unscrew the cylinder (9).

g) Remove and change the O-ring (10).

h) Pull the axle (11) in the direction indicated by the arrow in the illustration.

i) Remove the oil seal (12), retaining ring (13), spacer (14) and the seal (15).

j) Change the oil seal (12) and the seal (15).

k) Assemble in the reverse order. Put the arms in lowered position. If necessary, remove the plug (16) and fill with oil, code **C**, see 10.3.1 Lubricants.

l) Fill until oil starts to flow out of the plug hole.

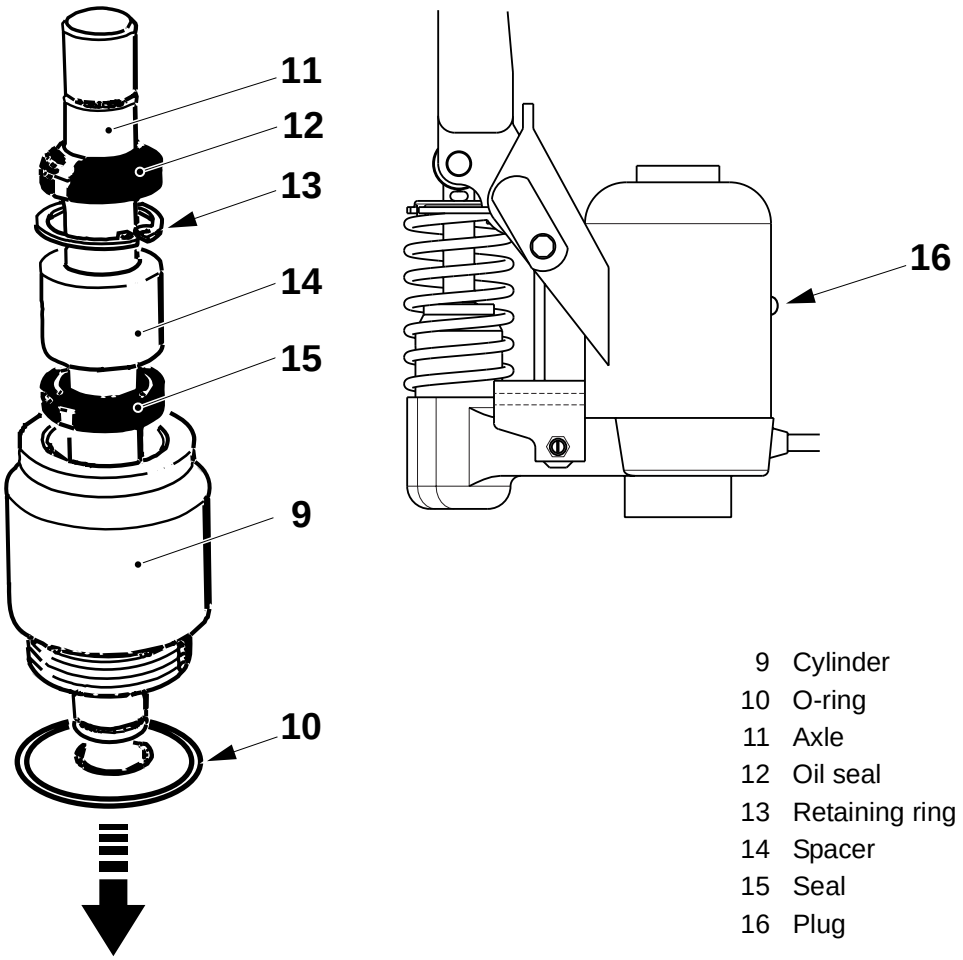

9 Cylinder
10 O-ring
11 Axle
12 Oil seal
13 Retaining ring
14 Spacer
15 Seal
16 Plug

8.11-3 Reel Trolley - Set Regulating Valve

Machine Status	Mains power OFF Air OFF
SPC Reference	1538186-0100

Pump up the handle (1) to lift the arms (2) to their highest position.

Pull in the handle (3) to lower the arms. Set the knob (4) so the arms reach the lowest position in **8 - 9 seconds**.

If it is not possible to set the correct value, change the sink valve, see 8.11-4 Reel Trolley - Change Sink Valve.

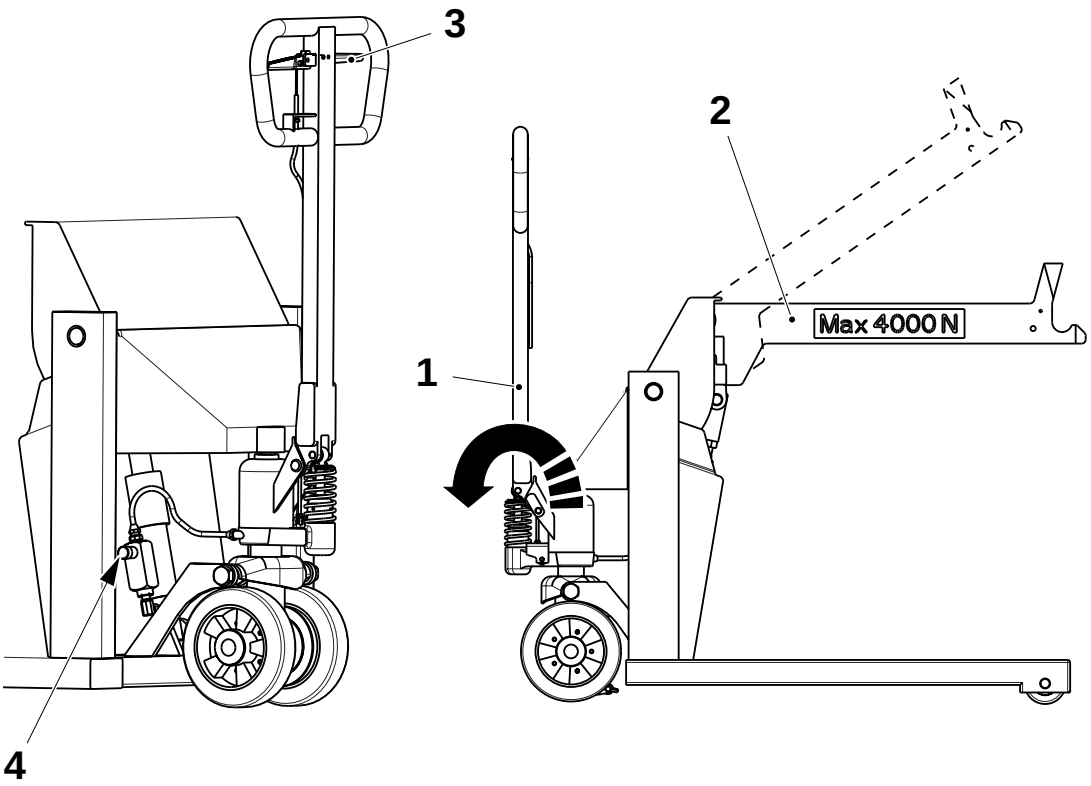

1 Handle
2 Arms
3 Handle
4 Knob

8.11-4 Reel Trolley - Change Sink Valve

Machine Status	Mains power OFF Air OFF
Consumables - lubricant	 code C
SPC Reference	1538186-0100

a) Release the tie rod (1) and drive out the spring pin (2).

b) Remove the valve arm (3).

c) Unscrew and remove the sink valve (4).

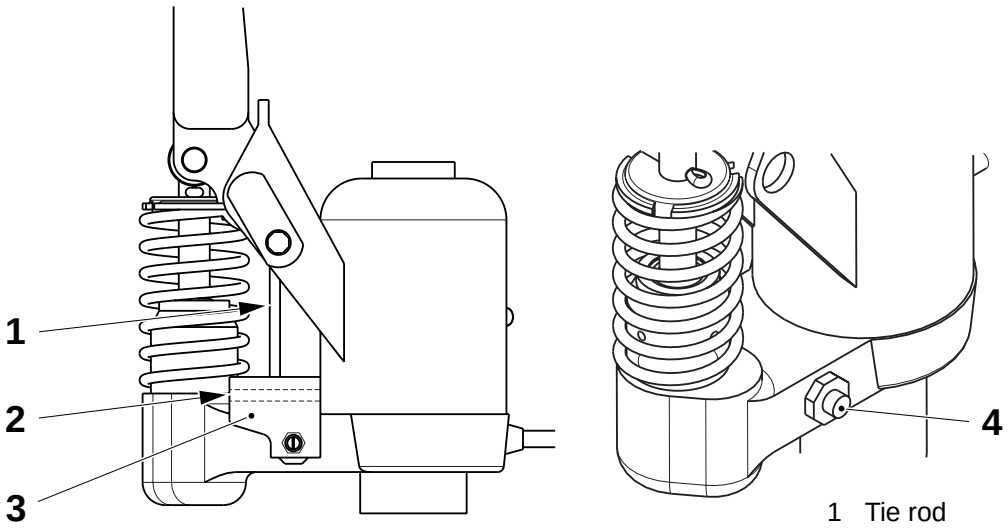

1 Tie rod
2 Spring pin
3 Valve arm
4 Sink valve

d) Remove and change the O-rings (5), copper washer (6) and teflon washer (7).

e) Assemble in the reverse order.

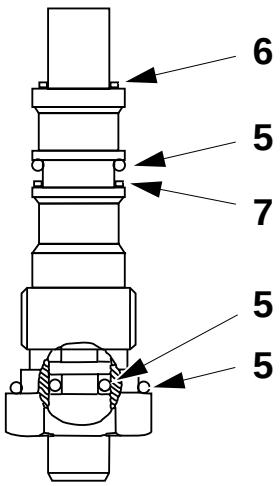

5 O-ring
6 Copper washer
7 Teflon washer

(Cont'd)

(Cont'd)

f) Pump up the arms to their highest position.

g) Loosen the lock nut (8).

h) Unscrew the setting screw (9).

i) Press in the handle (sink) and, at the same time, turn the screw (9) to point where the lifting arms start to sink.

j) Without moving the screw (9), tighten the lock nut (8).

k) Put the arms of the trolley in their lowest position.

If necessary, remove the plug (10) and fill up with oil, code **C**, see 10.3.1 Lubricants. Fill up until oil starts to flow out of the plug hole.

l) Set the sink time, see 8.11-3 Reel Trolley - Set Regulating Valve.

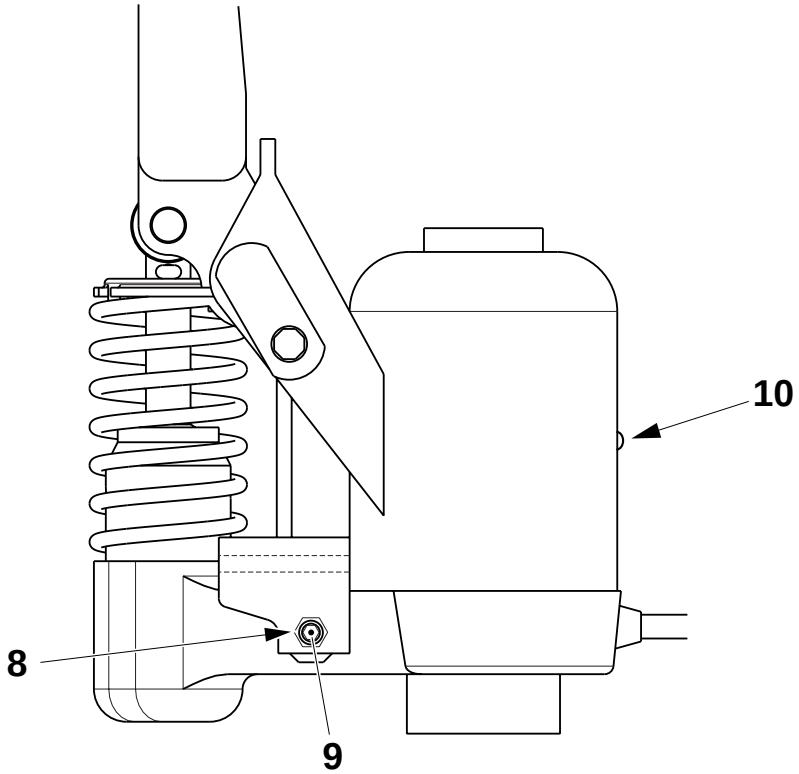

8 Lock nut
9 Setting screw
10 Plug

8.11-5 Reel Trolley - Overhaul Lifting Cylinder

Machine Status	Mains power OFF Air OFF
Consumables - lubricant	 code C
SPC Reference	1538186-0100

a) Disconnect the oil connection (1).

b) Drive out the spring pins (2).

c) Remove the axles (3).

d) Pull out the cylinder piston (4).

e) Change the seal (5).

f) Remove the retaining ring (6) and the spacer (7).

g) Change the seal (8).

h) Assemble in the reverse order and fill up through the plug (9) with oil, code **C**, see 10.3.1 Lubricants.

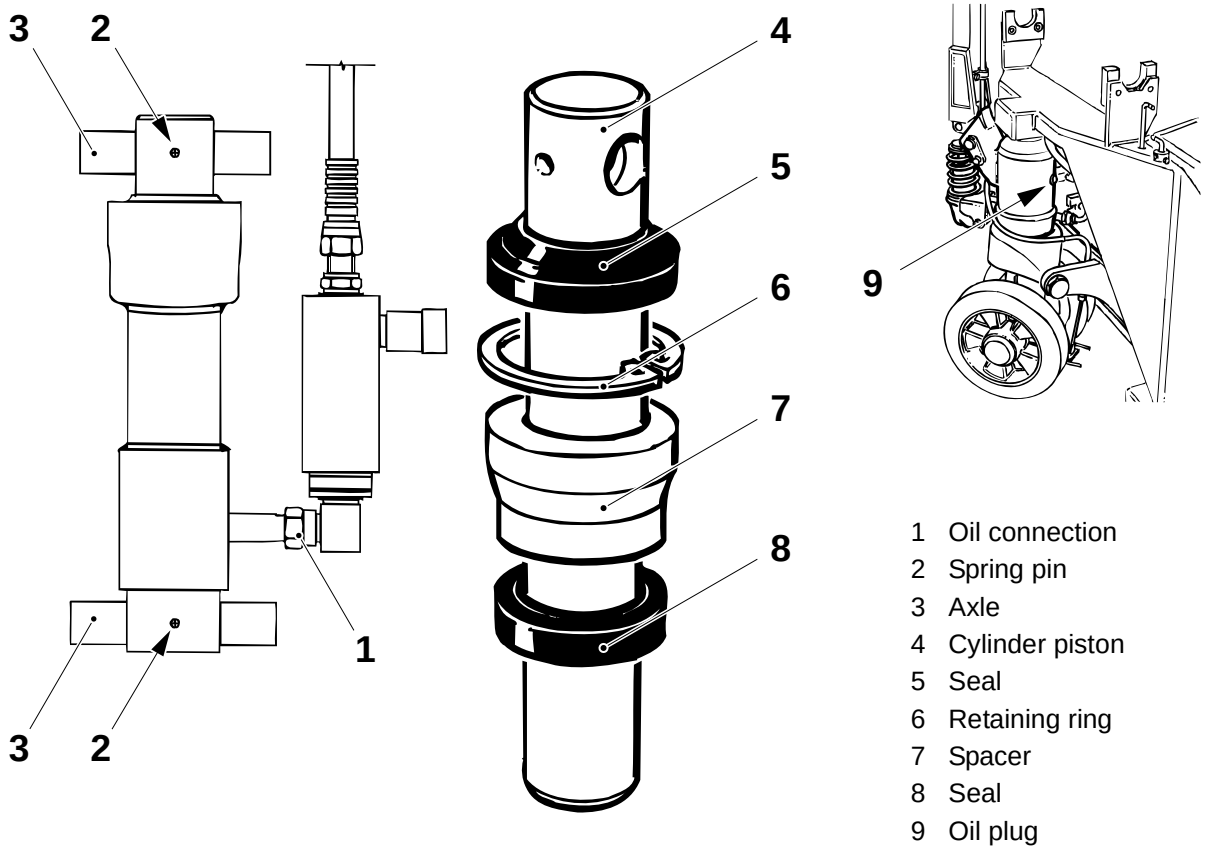

1 Oil connection
2 Spring pin
3 Axle
4 Cylinder piston
5 Seal
6 Retaining ring
7 Spacer
8 Seal
9 Oil plug

8.11-6 Reel Trolley - Remove Fork Wheel

Machine Status	Mains power OFF Air OFF
SPC Reference	1538186-0100

a) Position the trolley on its side.

b) Remove the pins (1) from the axle (2) and pull out the axle.

c) Remove the wheel (3) and the sleeves (4).

d) Assemble in the reverse order.

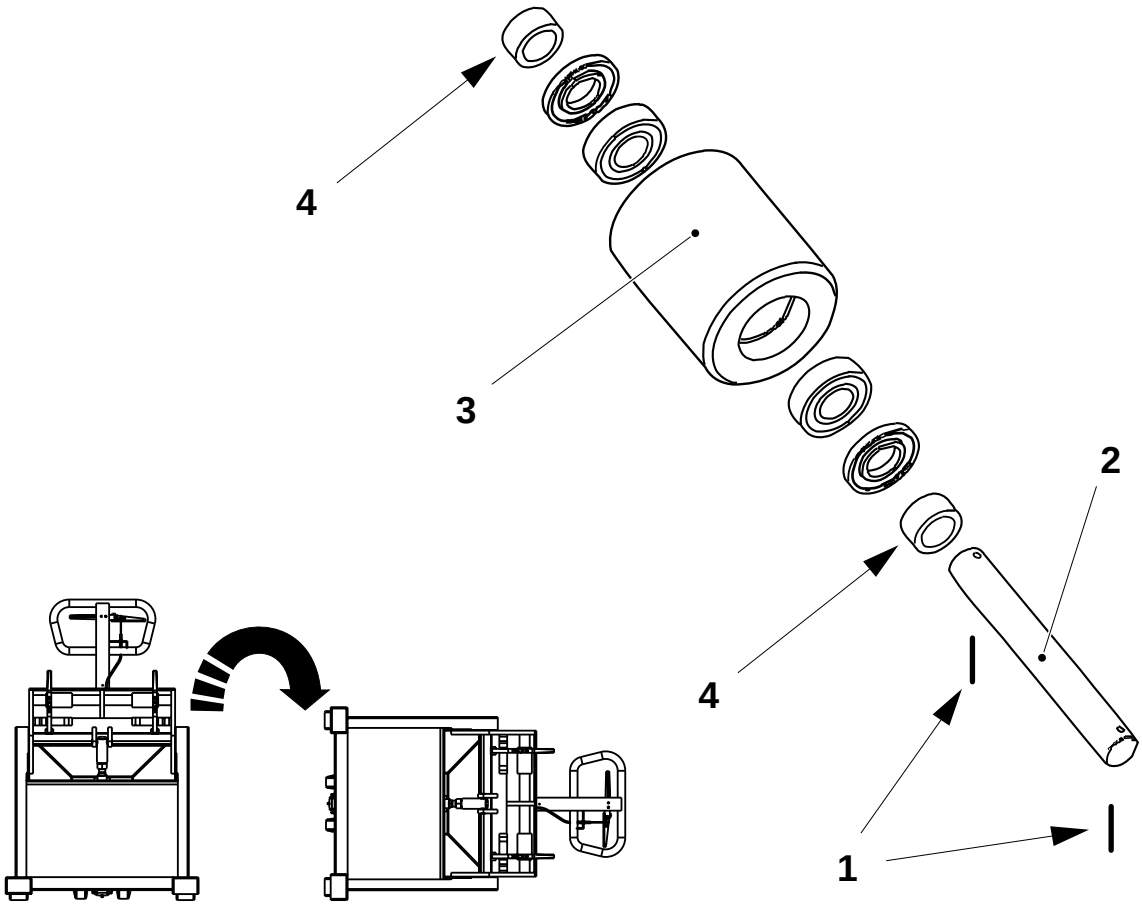

1 Pin
2 Axle
3 Wheel
4 Sleeve

8.11-7 Reel Trolley - Remove Guide Wheel

Machine Status	Mains power OFF Air OFF
SPC Reference	1538186-0100

a) Position the trolley on its side.

b) Remove the plastic plug (1), retaining ring (2) and the wheel (3).

c) Release the torsion spring (4).

d) Remove the cover (5).

e) Remove the springs (6) holding the two linings (7) of the brakes together.

f) Assemble in the reverse order.

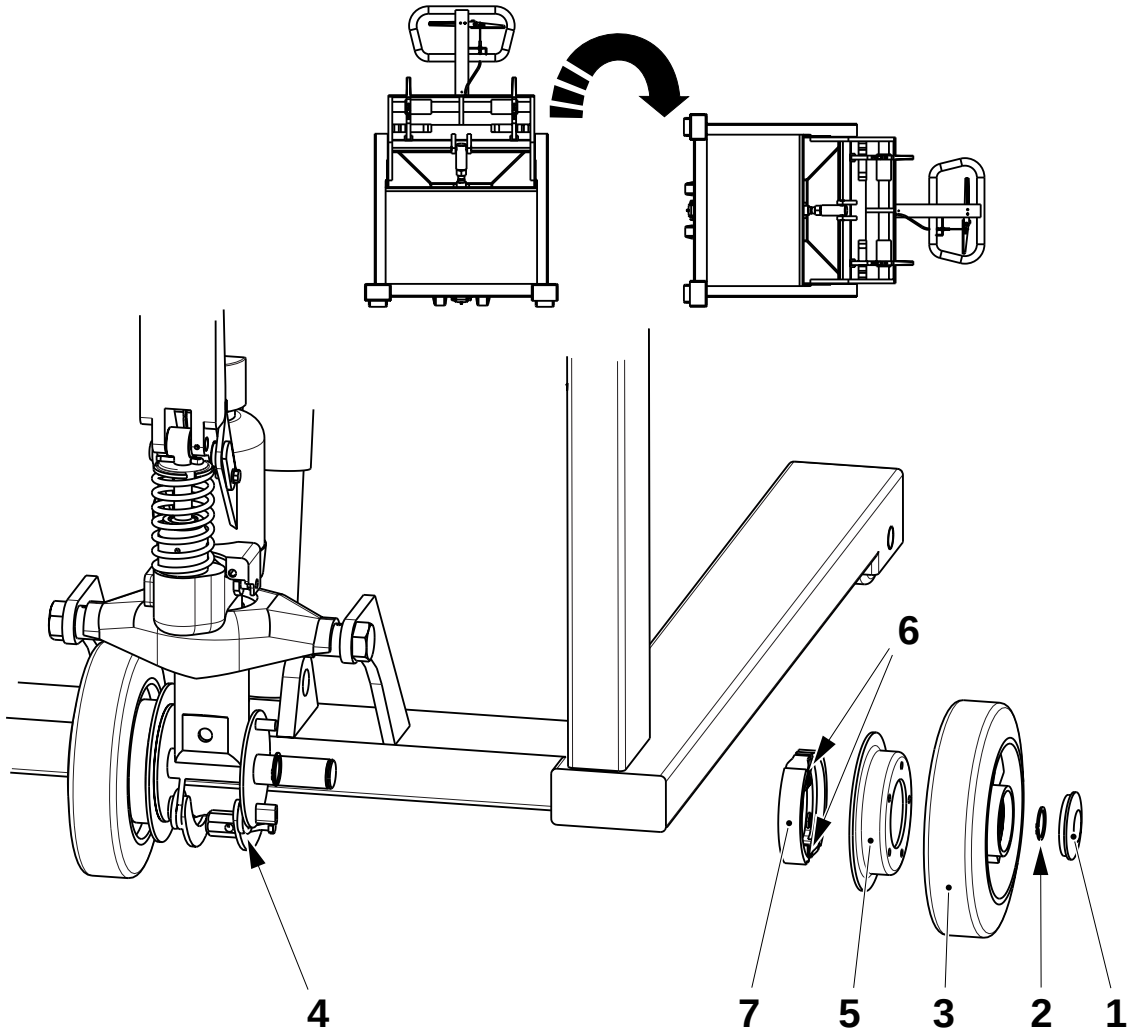

1 Plastic plug
2 Retaining ring
3 Wheel
4 Torsion spring
5 Cover
6 Spring
7 Brake lining

8.11-8 Reel Trolley - Set Brake

Machine Status	Mains power OFF Air OFF
SPC Reference	1538186-0100

Press in the brake handle to distance **A**.

Adjust the nuts (1) and (2) until the brake releases.

A = 35 ±2 mm

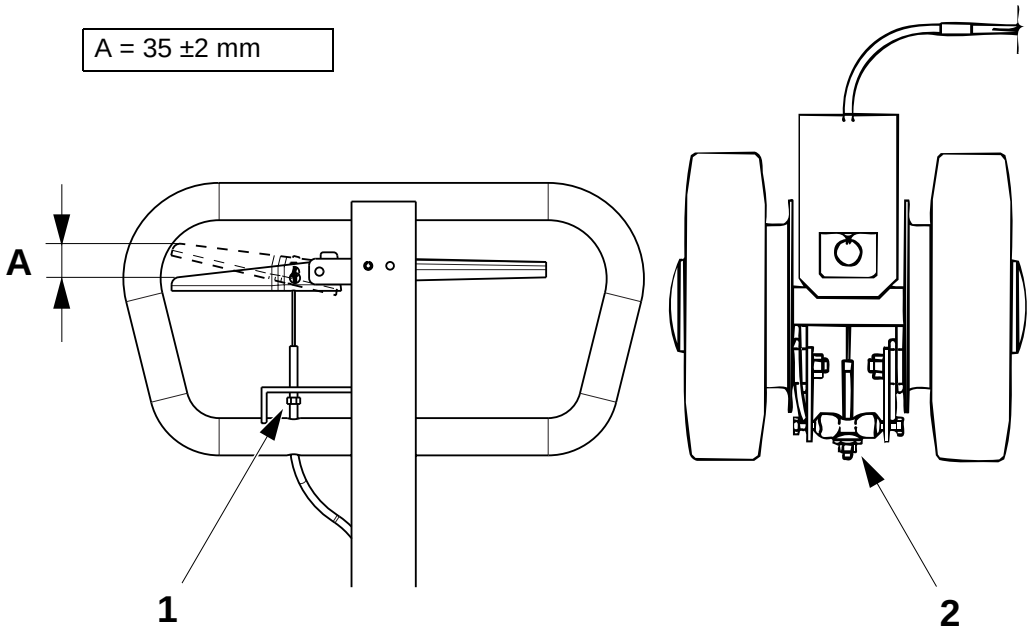

1 Nut
2 Nut

This page intentionally left blank

9 Electrical Cabinet

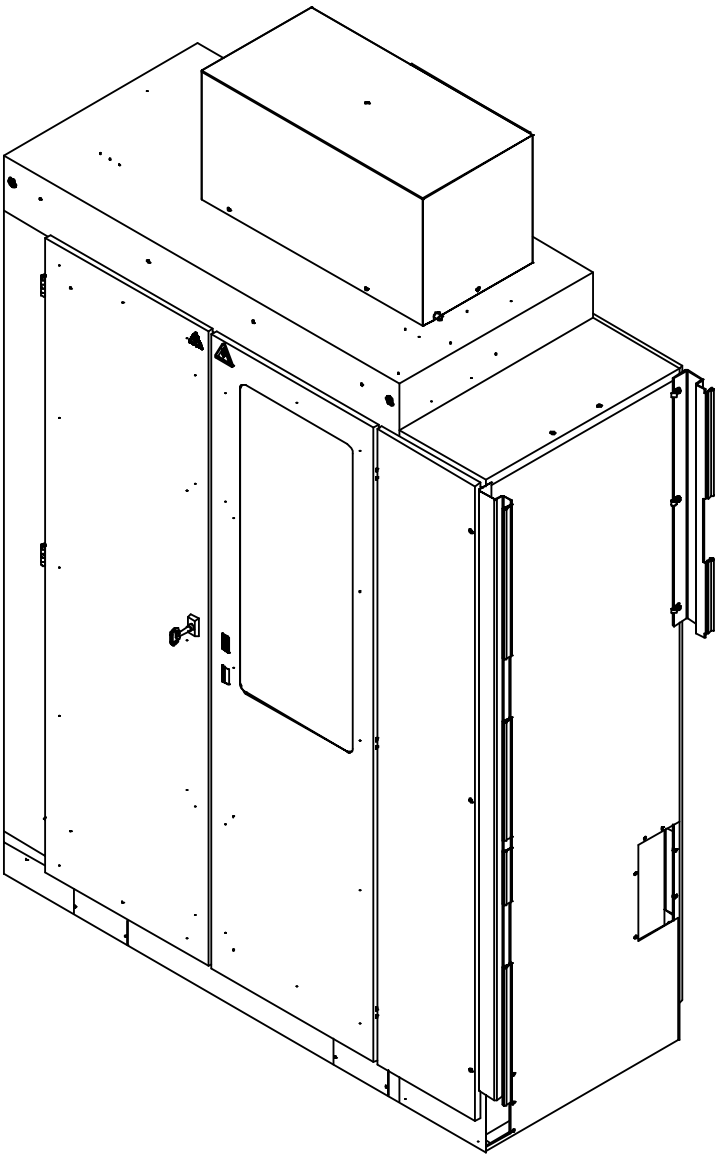

Electrical Cabinet - Description

SPC Reference	648538-0300

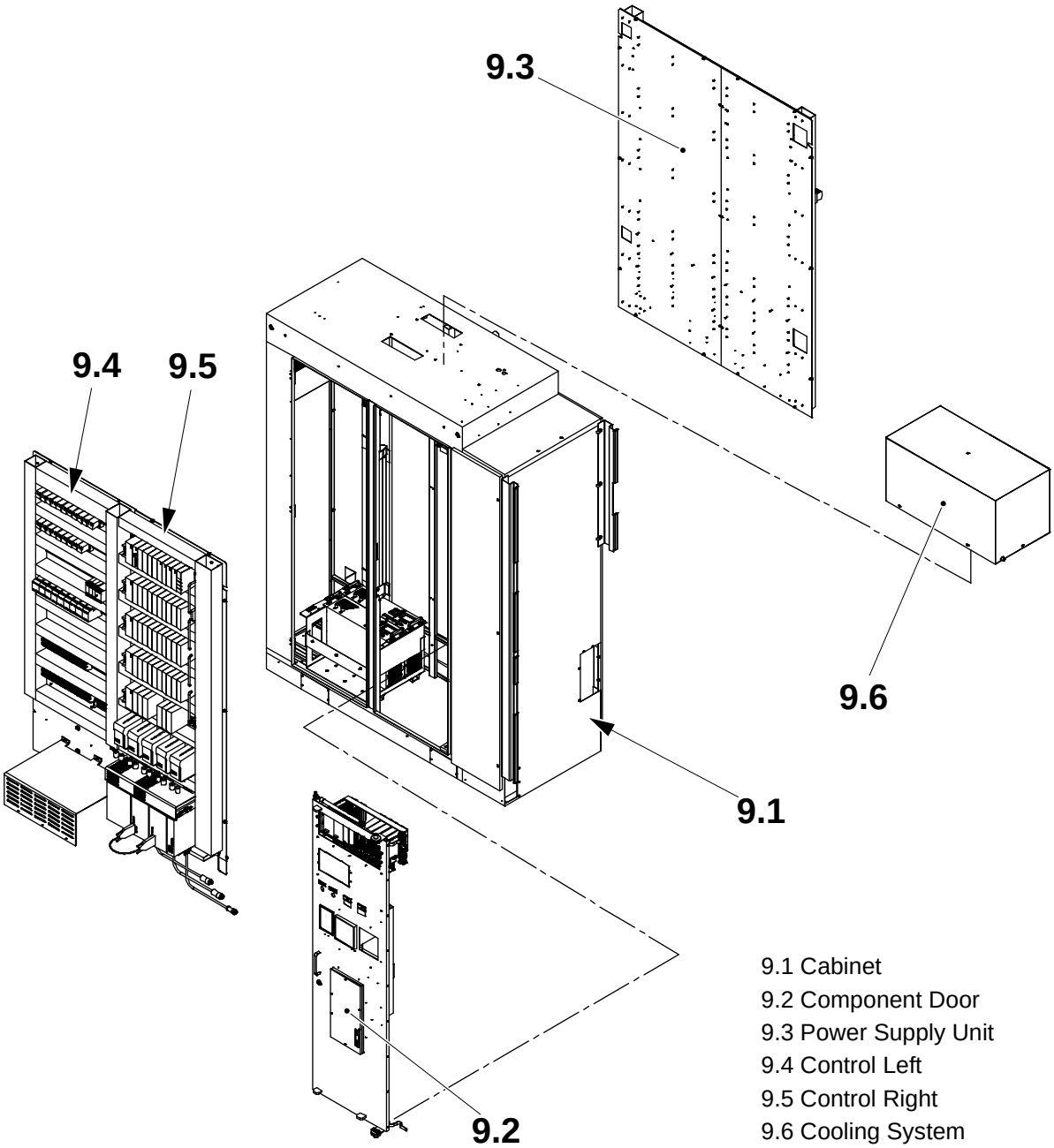

9.1 Cabinet
9.2 Component Door
9.3 Power Supply Unit
9.4 Control Left
9.5 Control Right
9.6 Cooling System

9.1 Cabinet . . . . . 9 - 7

9.1.1 IH Equipment . . . . . 9 - 7

9.1.1-1 IH Equipment - Function Description . . . . . 9 - 7
9.1.1-2 IH Equipment - LCD Display . . . . . 9 - 11
9.1.1-3 IH Equipment - Error Handling . . . . . 9 - 16
9.1.1-4 IH Equipment - Check Function . . . . . 9 - 21
9.1.1-5 IH Equipment - Check Cables . . . . . 9 - 24
9.1.1-6 IH Equipment - Change Generator . . . . . 9 - 25
9.1.1-7 IH Equipment - Set Sealing . . . . . 9 - 26
9.1.1-8 IH Equipment - Set CAN Communication . . . . 9 - 28

9.2 Component Door . . . . . 9 - 29

9.2.1 TMCC2 Controller. . . . . 9 - 29

9.2.1-1 TMCC2 Controller - Function Description . . . . 9 - 29
9.2.1-2 TMCC2 Controller - Set Communication . . . . . 9 - 59
9.2.1-3 TMCC2 Controller - Load Program . . . . . 9 - 60
9.2.1-4 TMCC2 Controller - Set Photocells . . . . . 9 - 62
9.2.1-5 TMCC2 Controller - Set Filling Window . . . . . 9 - 65
9.2.1-6 TMCC2 Controller - Display Report . . . . . 9 - 66

9.2.2 Stepper Motor Driver . . . . . 9 - 73

9.2.2-1 Stepper Motor Driver - Tube Positioning A425 . 9 - 73
9.2.2-2 Stepper Motor Driver - Volume Adjustment A424 9 - 74

9.2.3 Recorders (Honeywell) . . . . . 9 - 75

9.2.3-1 Recorders (Honeywell)- Process Recorder Description . . . . . 9 - 75
9.2.3-2 Recorders (Honeywell) - CIP Recorder Description 9 - 78
9.2.3-3 Recorders (Honeywell) - Set Chart Speed . . . . . 9 - 79
9.2.3-4 Recorders (Honeywell) - Set Date and Time . . . 9 - 80
9.2.3-5 Recorders (Honeywell) - Clean Chart Carriage . 9 - 81
9.2.3-6 Recorders (Honeywell) - Change Fuse . . . . . 9 - 82
9.2.3-7 Recorders (Honeywell) - Configuration Setting 9 - 83
9.2.3-8 Recorders (Honeywell) - Configuration File Name P002 . . . . . 9 - 84

9.2.3-9 Recorders (Honeywell) - Configuration File Name P003 . . . . . 9 - 88

9.2.4 Recorders (Jumo) . . . . . 9 - 91

9.2.4-1 Recorders (Jumo)- Process Recorder Description 9 - 91

9.2.4-2 Recorders (Jumo) - Set Recorder . . . . . 9 - 96

9.2.4-3 Recorders (Jumo) - Clean Chart Carriage . . . . 9 - 98

9.2.4-4 Recorders (Jumo) - Calibrate . . . . . 9 - 99

9.2.4-5 Recorders (Jumo) - Set Paper Record Alarm (Optional) . . . . . 9 - 104

9.2.5 Conductivity Meter . . . . . 9 - 105

9.2.5-1 Conductivity Meter - Description . . . . . 9 - 105

9.2.5-2 Conductivity Meter - Set . . . . . 9 - 106

9.2.5-3 Conductivity Meter - Change Conductivity Cell (Probe) . . . . . 9 - 109

9.2.6 TPOP. . . . . 9 - 112

9.2.6-1 TPOP - Functional Description PLMS . . . . . 9 - 112

9.2.6-2 TPOP - Copy Data PLMS . . . . . 9 - 113

9.2.6-3 TPOP - Set Date and Time PLMS . . . . . 9 - 122

9.2.6-4 TPOP - Change Display Unit . . . . . 9 - 123

9.2.6-5 TPOP - Calibrate Touch Screen . . . . . 9 - 125

9.2.6-6 TPOP - Change Flexbox Hard Disk . . . . . 9 - 129

9.2.6-7 TPOP - Install Software . . . . . 9 - 130

9.2.6-8 TPOP - Set Machine Number and DE Configuration . . . . . 9 - 147

9.2.6-9 TPOP - Configure and Check PLMS Line Supervision . . . . . 9 - 149

9.3 Power Supply Unit . . . . . 9 - 154

9.3.1 Fuse Boards. . . . . 9 - 154

9.3.1-1 Fuse Board 1 - Set Overload Protection . . . . . 9 - 154

9.3.1-2 Fuse Board 2 - Set Fuse . . . . . 9 - 155

9.4 Control Left. . . . . 9 - 156

9.4.1 Level Relays. . . . . 9 - 156

9.4.1-1 Level Relays - Description . . . . . 9 - 156

9.4.1-2 Level Relays - Set . . . . . 9 - 158

9.4.2 Safety Relays . . . . . 9 - 159

9.4.2-1 Safety Relays - Functional Description . . . . . 9 - 159

9.4.2-2 Safety Relays - Check Function . . . . . 9 - 163

9.4.2-3 Safety Relays - Troubleshoot . . . . . 9 - 167

9.5 Control Right . . . . . 9 - 171

9.5.1 PLC . . . . . 9 - 171

9.5.1-1 PLC - Functional Description . . . . . 9 - 171

9.5.1-2 PLC - Change Battery . . . . . 9 - 172

9.5.1-3 PLC - Load Program . . . . . 9 - 173

9.5.1-4 PLC - Print Program . . . . . 9 - 177

9.5.2 DMC2 Card . . . . . 9 - 179

9.5.2-1 DMC2 Card - Function Description . . . . . 9 - 179

9.5.2-2 DMC2 Card - Set Basic . . . . . 9 - 186

9.5.2-3 DMC2 Card - Load Program . . . . . 9 - 187

9.5.3 Frequency Converter . . . . . 9 - 189

9.5.3-1 Frequency Converter - Setting . . . . . 9 - 189

9.5.4 Calibrator (Micromite II) . . . . . 9 - 196

9.5.4-1 Calibrator (Micromite II) - Set . . . . . 9 - 196

9.5.5 Thermocouples . . . . . 9 - 197

9.5.5-1 Thermocouples - Check . . . . . 9 - 197

9.5.6 Temperature Regulator . . . . . 9 - 199

9.5.6-1 Temperature Regulator - Calibrate . . . . . 9 - 199

9.6 Cooling System . . . . . 9 - 206

9.6.1 Cooler . . . . . 9 - 206

9.6.1-1 Cooler - Check Filter . . . . . 9 - 206

This page intentionally left blank

9.1 Cabinet

SPC Reference	1279809-0300

9.1.1 IH Equipment

9.1.1-1 IH Equipment - Function Description

SPC Reference	2543221-0100

The three TPIH generators are used for:

- TS - transversal sealing (A 502),
- LS - longitudinal sealing (A 501),
- SA - strip applicator (A 7417).

The pulse duration is controlled by the PLC program.

The power level is set by controls located on the TPOP display.

Three phase 400V and 24V DC, are needed for the generator.

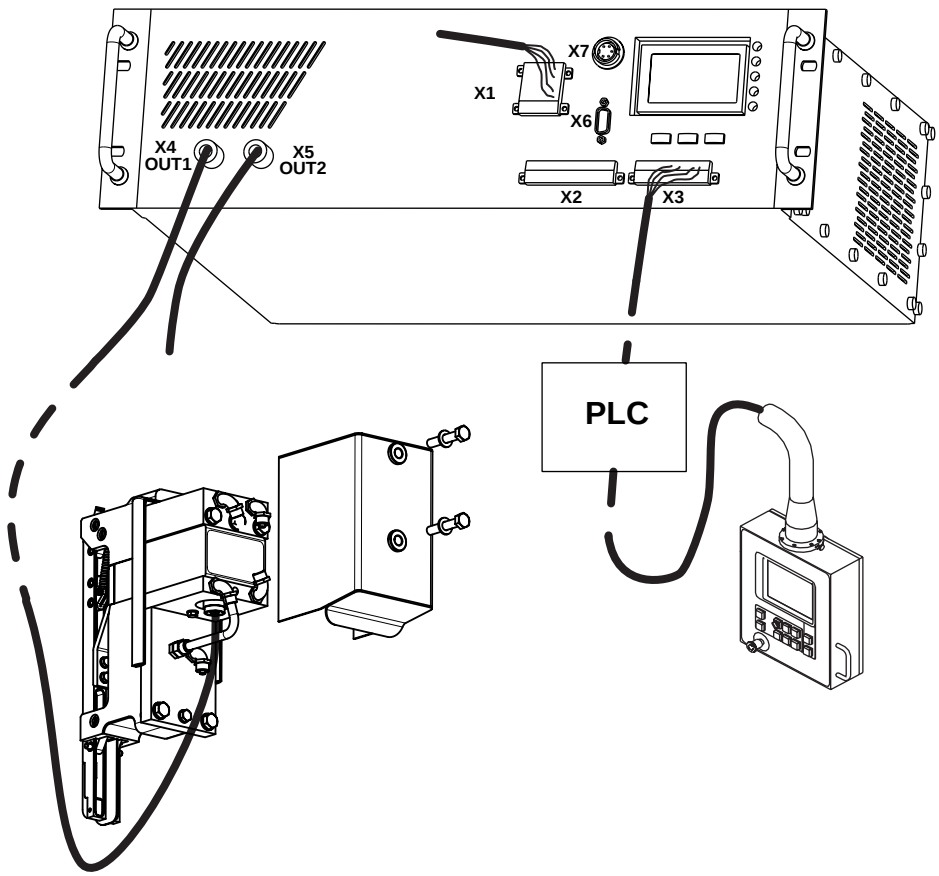

(Cont'd)

Each TPIH-2500 system is mainly composed by:

- TPOP panel (1) for power setting,
- TPIH 2500 generator (2),
- coaxial cable (3),
- impedance transformer (4).

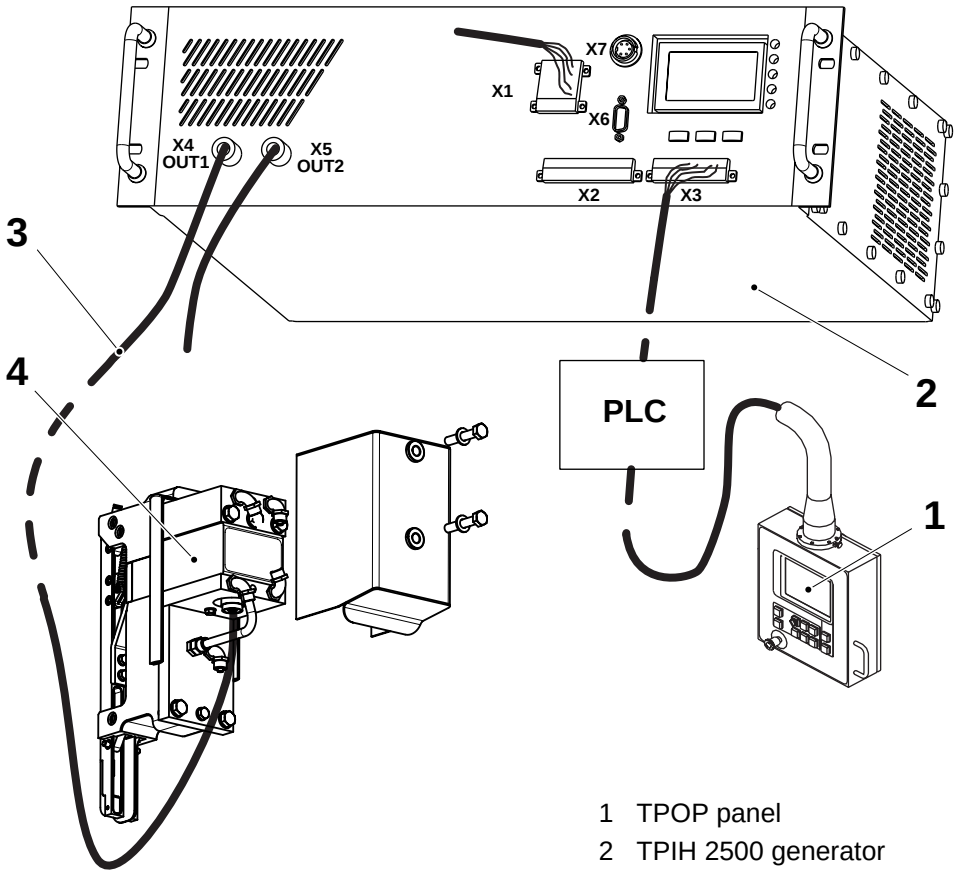

1 TPOP panel
2 TPIH 2500 generator
3 Coaxial cable
4 Impedance transformer

(Cont'd)

(Cont'd)

The TPIH 2500 generator is mainly composed by:

- output 1 X4 (5),
- output 2 X5 (6),
- serial connection X6 (7),
- 24V connection X3 (8),
- 400V connection X1 (9),
- Multi-functional buttons (10),
- Status LEDs (11),
- LCD display (12).

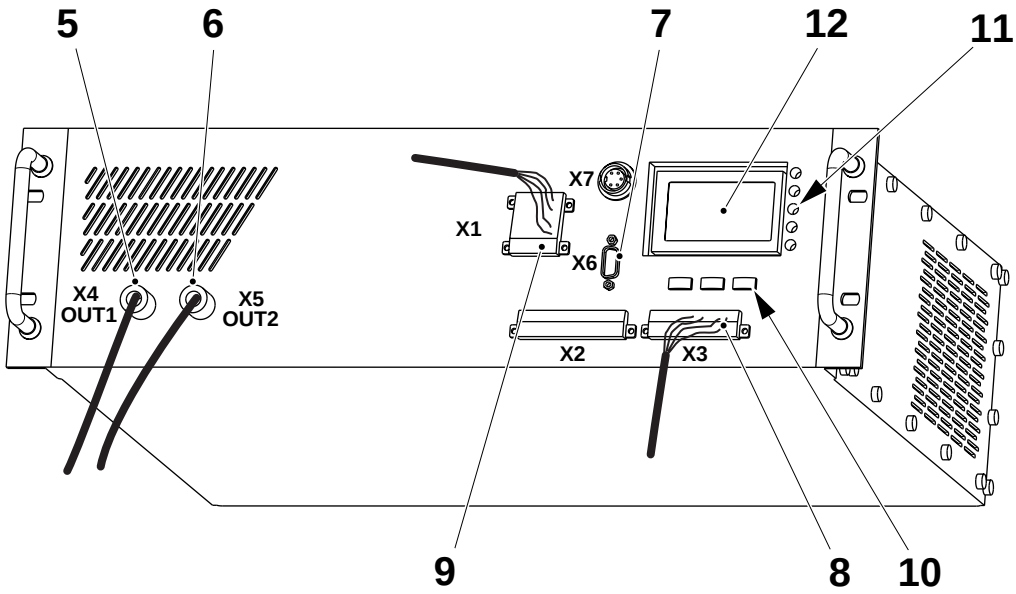

5 Output 1
6 Output 2
7 Serial connection
8 24V connection
9 400V connection
10 Multi functional button
11 LED
12 LCD display

(Cont'd)

(Cont'd)

LED's Description

WARNING

Risk of electrocution!

When the 400 VAC LED is OFF there can be still one or two phases present on the connector X1.

Colour	Label	Meaning
Green	+24 VDC	It is ON when the 24 V is present. It is OFF when there is no 24 V.
Green	400 VAC	It is ON when ALL of the 3-phases are present. It is OFF when AT LEAST one of the 3-phases is missed.
Red	Error	It is ON when one or more errors occurred. In this case on the LCD the operator can read which errors occurred. It is OFF when there are no error conditions.
Green	Out 1	It is ON while the generator is sending power through output 1 It is OFF when output 1 is inactive.
Green	Out 2	It is ON while the generator is sending power through output 2 It is OFF when output 2 is inactive.

9.1.1-2 IH Equipment - LCD Display

Machine Status	Mains Power ON
SPC Reference	2543221-0100

User's Menu

The TPIH 2500 provides the user with an easy way of accessing many information and settings through a menu that is shown on the display.

A generic page is usually made of three parts:

- the row on the top shows the page title,
- the six following rows can show either commands or informations,
- the row on the bottom shows the actions performed by the buttons. The symbol or word above each button explains which action will be performed if that same button is pressed.

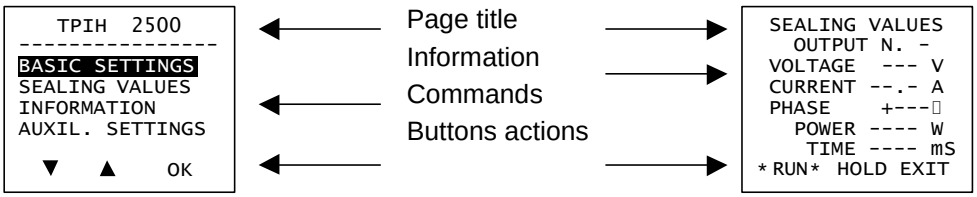

The page on the left has a list of possible commands. The currently selected command is displayed in reverse mode (white on black).

On the bottom line you can see that, by pressing the left button, the user can select the below command (in this case SEALING VALUES), whereas by pressing the centre button the selection will move one row upward.

When the user presses the right button, the command selected at that moment is executed.

(Cont'd)

(Cont'd)

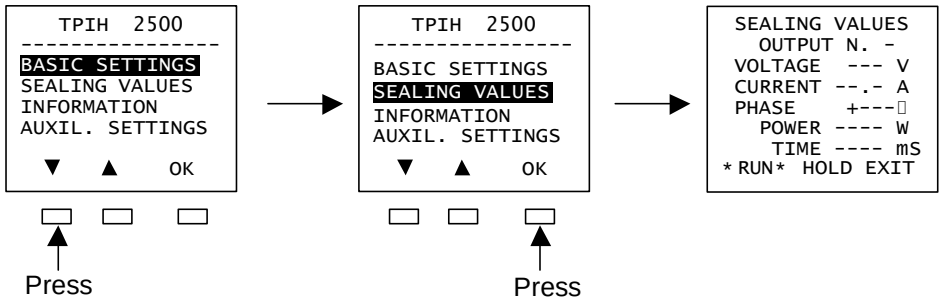

To access the page with the sealing values:

- on the main page, by pressing the left button, the user selects the command SEALING VALUES,
- then presses the right button that executes the command,
- as a result the requested page is now shown on the screen.

The page SEALING VALUES is an example of a page that shows informations instead of commands.

It is always possible to see what the buttons will do when pressed by reading the bottom line.

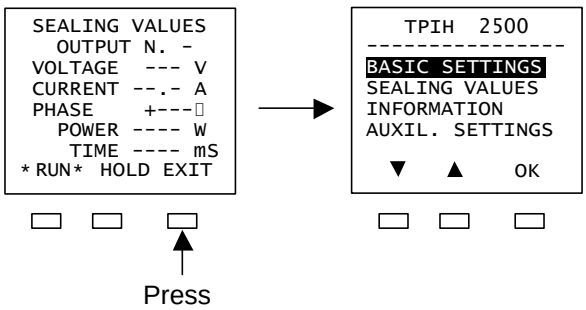

Every time a button is pressed the LCD back light turns on and, if no other button is pressed, turns off after about 10 seconds.

(Cont'd)

(Cont'd)

Menu Structure

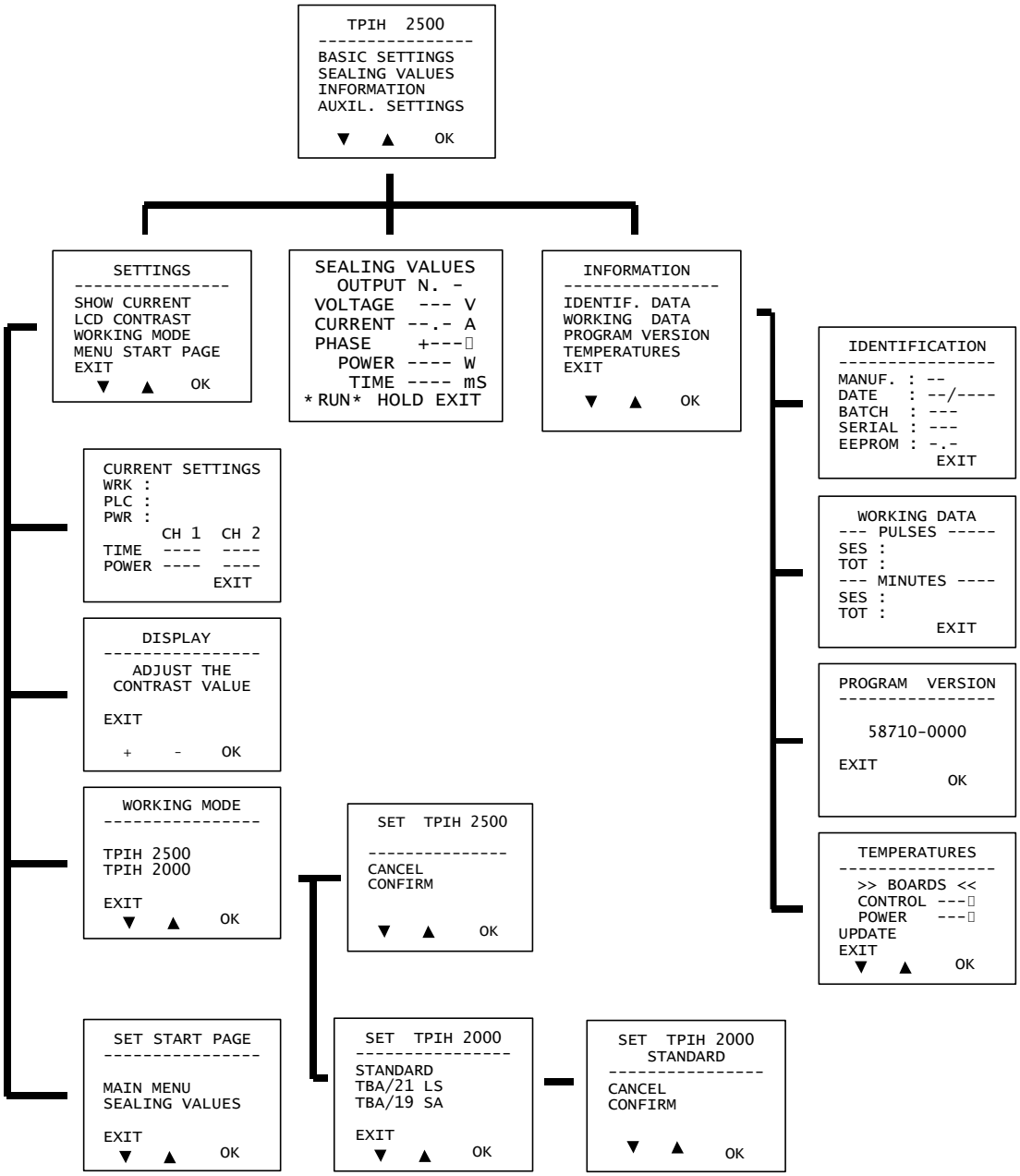

(Cont'd)

(Cont'd)

Basic Set

a) From the main menu select: BASIC SETTINGS then press OK.

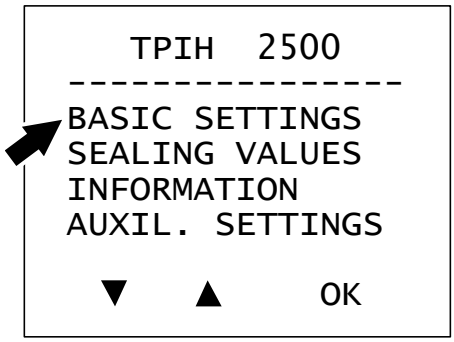

b) Select: WORKING MODE then press OK.

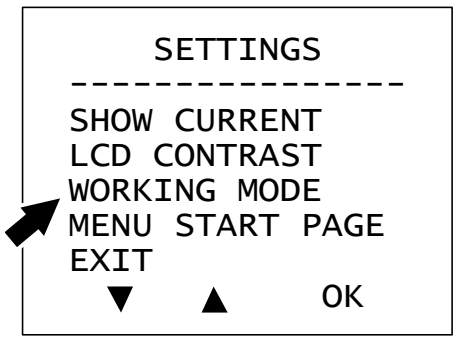

c) Select: SET TPIH 2500 then press OK.

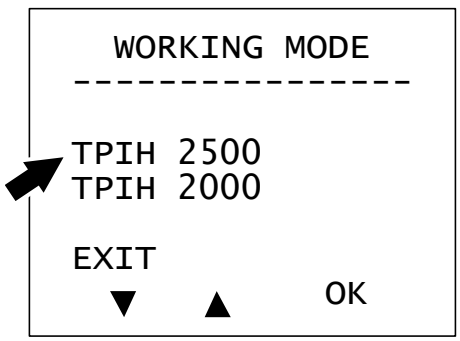

(Cont'd)

(Cont'd)

d) Select: CONFIRM then press OK.

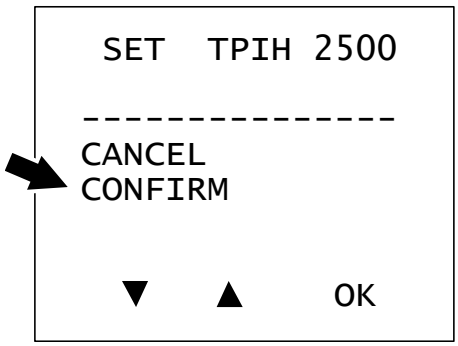

e) Go backward to the menu SETTINGS, select SHOW CURRENT and check if TPIH 2500 is activated.

9.1.1-3 IH Equipment - Error Handling

Machine Status	PRODUCTION
Tools - Test Instrument	 TP No. 68462-101
SPC Reference	2543221-0100

WARNING

Risk of electrocution!

The TPIH generator **must not** be opened. May cause shock, burns or even death. In case of accident, immediately call for medical advice.

When the generator is producing power, it keeps under control many parameters and, when some error occurs, it stops the pulse and shows on the display the error cause.

A specific message explaining the cause is shown on the LCD and the red LED on the front panel is turned ON.

Reset the error by pressing one of the multi-functional buttons

Power Setting Too Low

This error occurs when the generator is required to produce less power than the minimum level.

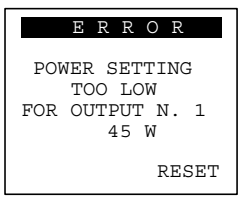

On the display the user can read on which channel the problem was encountered (in this case n. 1) and what was the power level read by the generator (in this case 45W that is below the minimum level which is 100 W).

Usually, when this error occurs, the problem is related to the power setting potentiometer of the channel shown in the error message.

It might be the potentiometer does not get the 10 VDC provided by the generator on pin 8 of connector X3 or the voltage from the central contact of the potentiometer does not reach the pin 1 or 2 (depending on the channel) of connector X3.

- the generator is faulty and must be replaced, or
- the +10 V DC to the potentiometer is missing, or
- the potentiometer setting is below the minimum value of 100W, or
- the potentiometer is broken (the output voltage from the potentiometer does not follow the movement of the potentiometer slider)

(Cont'd)

(Cont'd)

1 or More Phases are Missing

This error occurs when 1 or more phases are either not present at all or are absent for at least 100 milliseconds (power supply hole).

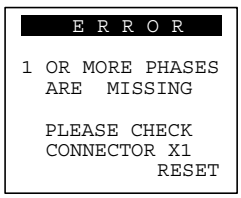

In this case the suggestion is to check that connector X1 is correctly plugged in the generator and then, if it looks fine, to check the fuses for the 400VAC of that generator.

CAUTION

When this error occurs there can be still at least one ACTIVE phase present on the connector X1

Temperature Too High

This error occurs when the temperatures inside the generator become too high.

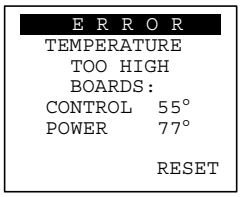

The limits are:

- 60° for the control board,
- 70° for the power board.

On the display the user can read the temperatures of both the boards.

- the cooling fan inside the generator is not working
- the ambient temperature is above 50°C

Change the generator if the fan does not operate.

(Cont'd)

(Cont'd)

Load Impedance Too High

This error occurs when the generator is not able to deliver the required power because the load impedance is too high (tends to be an open circuit).

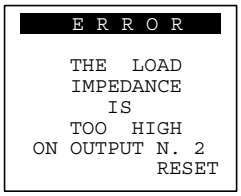

In this case the suggestion is to check all of the connections from the generator down to the inductor looking for some bad contact, loosened connector or broken cable.

If a single output is used make sure the load is connected to the correct one.

If both outputs are used make also sure they have not been swapped by mistake.

- open circuit in coaxial cable, busbar, inductor or impedance transformer
- no pressure applied to the inductor
- wrong type of impedance transformer installed
- wrong type of inductor installed

See 9.1.1-4 IH Equipment - Check Function.

Load Impedance Too Low

This error occurs when the generator is not able to deliver the required power because the load impedance is too low (tends to be a short circuit).

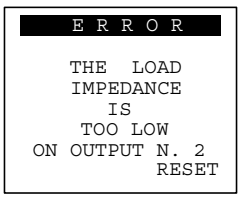

In this case the suggestion is to check all of the connections from the generator down to the inductor looking for some short circuit in the connectors or in the cables.

- short circuit in coaxial cable, busbar, inductor or impedance transformer
- no pressure applied to the inductor
- wrong type of impedance transformer installed
- wrong type of inductor installed

See, 9.1.1-4 IH Equipment - Check Function.

(Cont'd)

(Cont'd)

Phase Shift Too Big

This error occurs when the load has a phase shift >+40° or <-40°.

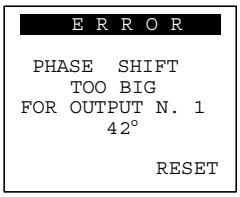

On the display the user can read on which channel the problem was encountered (in this case n. 1) and what was the phase shift read by the generator (in this case 42°).

Some of the causes may be a damaged inductor or transformer or a bad position of the inductor with respect to the packaging material.

See, 9.1.1-4 IH Equipment - Check Function.

Over Voltage

This error occurs when the voltage between the two main power stages of the generator becomes too high.

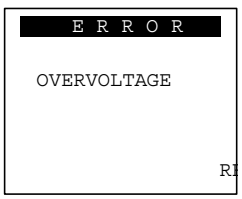

A possible cause is the failure of the generator.

If the error persists change the TPIH generator.

(Cont'd)

(Cont'd)

Not Initialized EPROM

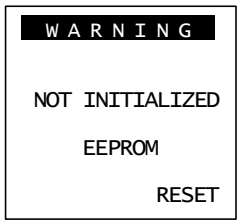

This error occurs when the generator is turned ON or reset if there is a failure in the test of EEPROM. In this case all the default values and parameters are set:

- Working mode: TPIH 2500 STD
- PLC mode: Driving
- Power set: External

The generator will work in these conditions. If others settings are needed they must entered from the display or from the PC through serial communications.

If the error persists change the TPIH generator.

Watchdog Reset

This error occurs when the generator is reset accidentally due to some problems in electronic components. In this case the generator, after the reset, keeps the previous parameter setting and can continue to work if the problem is not present any more.



If the error persists change the TPIH generator.

9.1.1-4 IH Equipment - Check Function

Machine Status	PRODUCTION
Tools - Test Instrument	 TP No. 68462-101
SPC Reference	2543221-0100

The origin of an error may be located with the aid of the test instrument, TPOP and sealing monitoring system.

With a load problem only short pulses are delivered by the generator. During the entire pulse the sample LED (2) lights, while the pulse LED (1) is OFF.

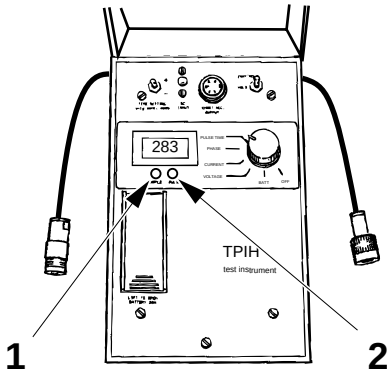

1 Pulse LED
2 Sample LED

Error link is shown on TPOP and TMCC2 sealing monitoring system, see TMCC2 Card A422 (Transversal Sealing Monitoring) on page 9-49.

Proceed as follows:

a) Make a NORMAL STOP.

b) Connect the test instrument (3) between the TPIH generator (4) and the impedance transformer (5).

c) Step up to PRODUCTION.

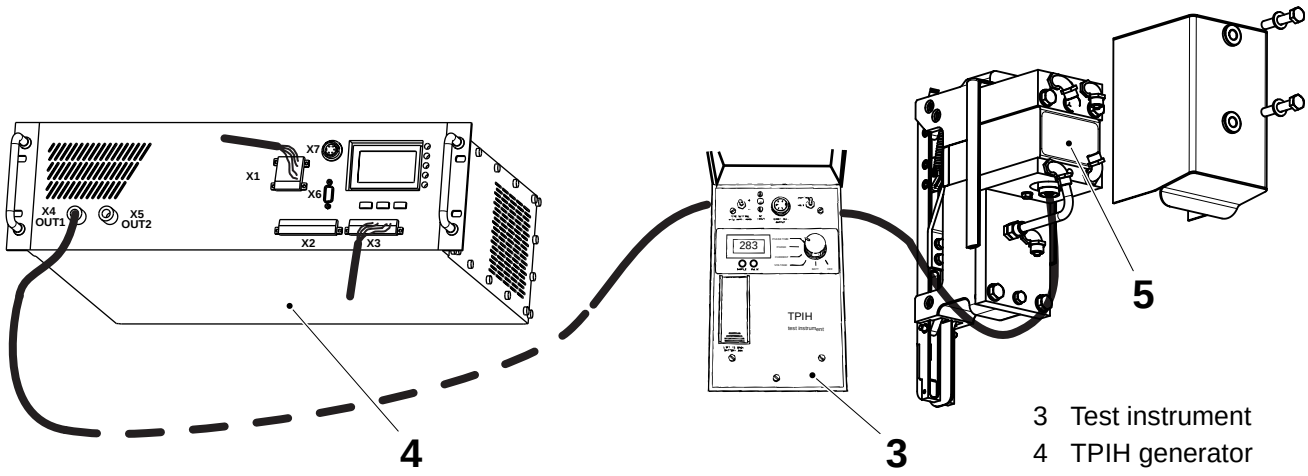

3 Test instrument
4 TPIH generator
5 Transformer

(Cont'd)

(Cont'd)

d) Measure the values of the voltage, current, phase angle, pulse time and compare with the values in the table below.

Load examples	Phase Angle	Voltage/Current
Optimal load	0°	50 Ω
Normal load	±15°	40 - 65 Ω
Short circuit in coaxial cable, contacts or primary of the IH transformer	pos (3)	1 - 10 Ω (1)
Open circuit in coaxial cable, contacts or primary of the IH transformer	neg (3)	200 - 2000 Ω (2)
Short circuit in inductor, current rail or secondary of the IH transformer	pos	10 - 20 Ω
Open circuit in inductor, current rail or secondary of the IH transformer	neg	2 - 5 Ω
No packaging material on the inductor	neg	5 - 15 Ω

Note! 1) Greater value = greater distance between problem and instrument.

2) Smaller value = shorter distance between problem and instrument.

3) Greater phase difference = greater distance between problem and instrument.

e) Repeat the procedure for the other inductor.

(Cont'd)

(Cont'd)

Test Instrument TP No. 68462-0101

The TPIH test instrument is used to check the available output power from the IH generator as well as the condition of the coaxial cable, the impedance transformer, the current rail and the inductor.
The test instrument is connected in series with the coaxial cable from the generator.

Note! Use the NORMAL STOP procedure to prevent the generator from pulsing when the instrument is connected or disconnected.

The instrument can be used for measurement of the following parameters:

- HF voltage (V)
- HF current (A)
- phase shift voltage/current (degrees)
- pulse duration

The results of these measurements can be used to calculate the available HF power.
The instrument should simplify work when trying to locate the origin of a problem.
One 9V battery is used for the instrument and an automatic power-off function is used to minimize battery consumption.
A test outlet allows connection of a printer, such as a Gould recorder.
Print-out of the HF voltage, HF current and the phase shift as a function of time are possible.
The instrument kit contains complete operating instructions as well as a printer cable and a battery eliminator (mains adapter).

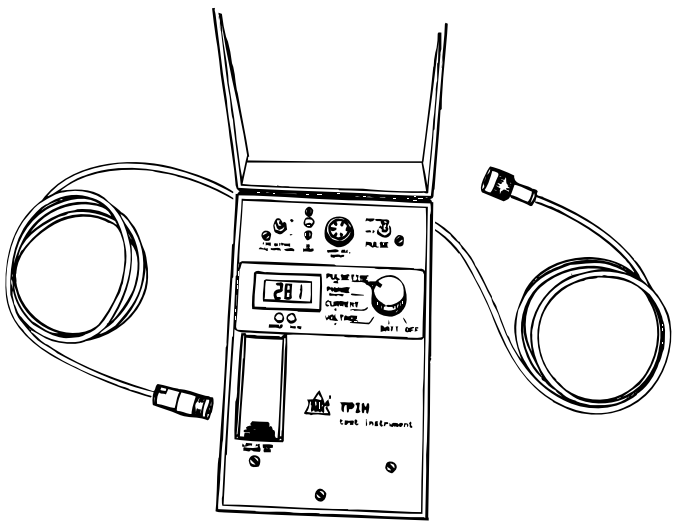

9.1.1-5 IH Equipment - Check Cables

SPC Reference	2543221-0100

Check for wear and damage that can affect machine efficiency:

- the coaxial connectors (2).
  Make sure there is no moisture between the male connector and the female connector.
- the rubber gasket (4) in the male connectors.
  Make sure that it seals properly (it should not be possible to turn the male connector easily).
- the coaxial cables (3).
  Make sure the cables are flexible and there are no cracks where they bend.
- the busbar (1).
  Check the rubber seal and the flat seal.
  Make sure there are no signs of damage.
- check for water/product residue inside the impedance transformer.

Clean or change as required.

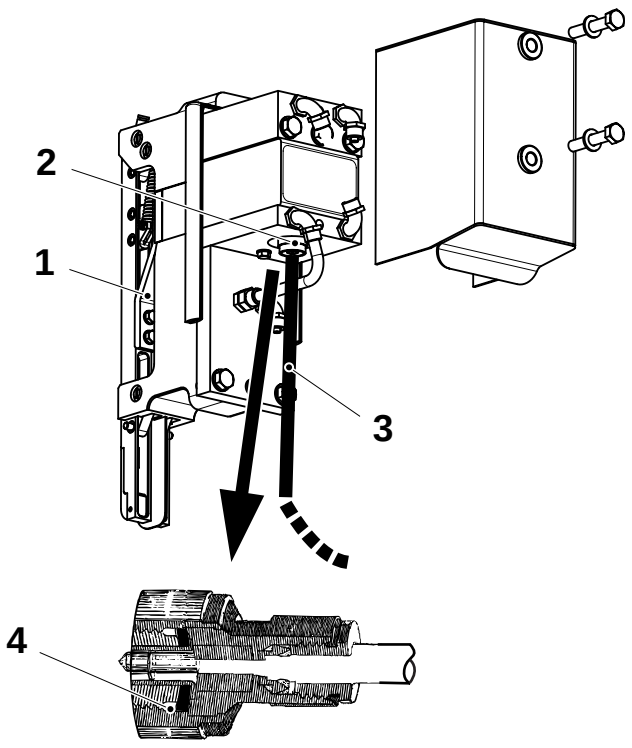

1 Busbar
2 Coaxial connector
3 Coaxial cable
4 Rubber gasket

9.1.1-6 IH Equipment - Change Generator

SPC Reference	2543221-0100

WARNING
High voltage!
Do not open the generator.

Remove the generator as follows:

a) Make sure the main power switch is OFF and that it has been padlocked.

b) Remove the connectors X1 (1) and X3 (2).

c) Remove the coaxial connector X4 (3).
Remove the coaxial connector X5 (4), only valid for A502.

d) Change the generator (5).

e) Assemble in the reverse order.

Note! Send the generator to the nearest Tetra Pak service station for cleaning or service.

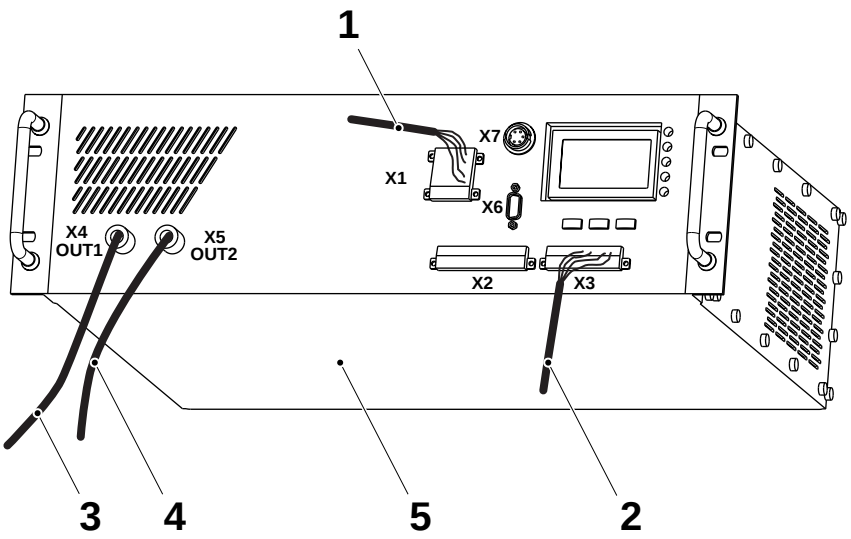

1 Connector X1
2 Connector X3
3 Coaxial connector X4
4 Coaxial connector X5
5 Generator

9.1.1-7 IH Equipment - Set Sealing

SPC reference	2543221-0100

The sealing power values for the TS, LS and SA are stored in the TPOP and are already factory set.

Evaluate the TS, LS and SA seals; see the OM, section PACKAGE CHECKS.

TS

If required, change the current value by means of the buttons (2) and (3), or reset to the factory value by means of the button (1).

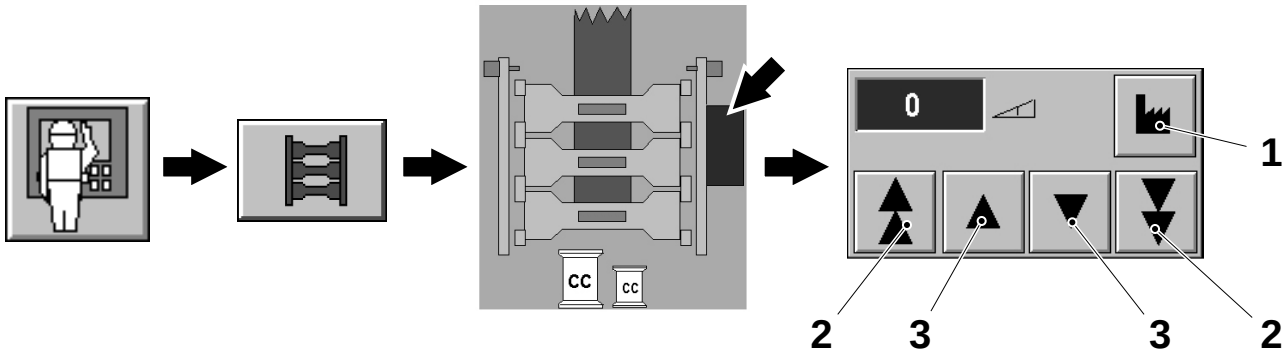

1 Button (factory setting)
2 Button (big step)
3 Button (small steps)

LS

If required, change the current value by means of the buttons (2) and (3), or reset to the factory value by means of the button (1).

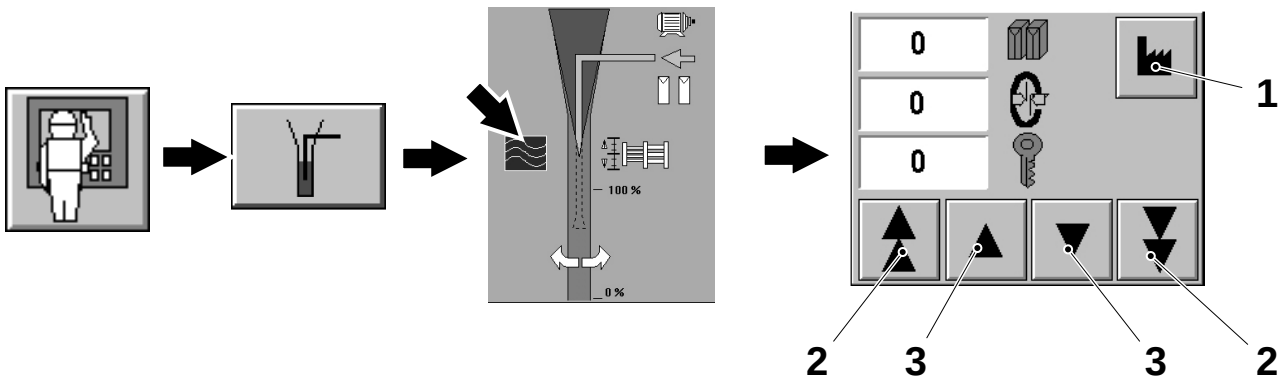

1 Button (factory setting)
2 Button (big step)
3 Button (small steps)

(Cont'd)

(Cont'd)

SA

If required, change the current value by means of the buttons (2) and (3), or reset to the factory value by means of the button (1).

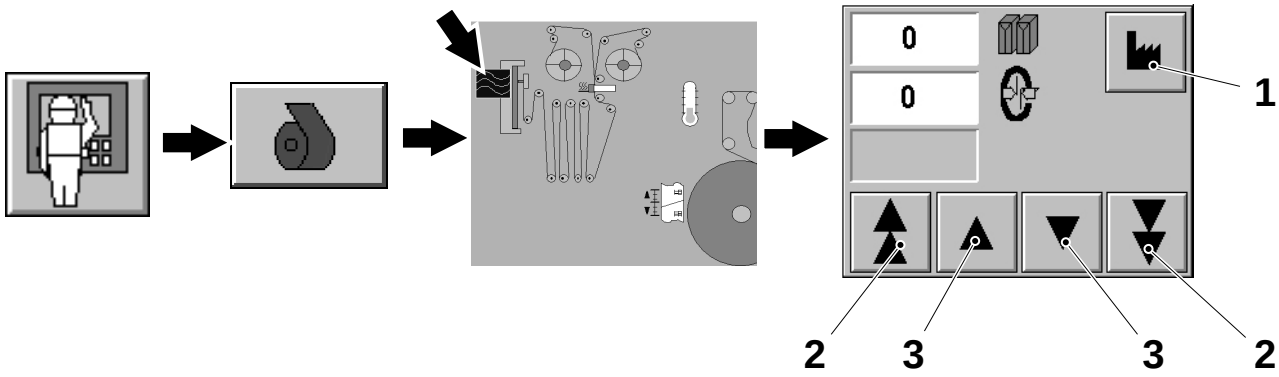

1 Button (factory setting)
2 Button (big step)
3 Button (small steps)

9.1.1-8 IH Equipment - Set CAN Communication

Machine Status	Mains Power ON
SPC Reference	1499642-0100

The TPIH 2500 generators are connected to a CAN bus together with the two TMCC2 cards A421 and A422. This network is used to monitor the sealing quality. See 9.2.1 TMCC2 Controller for details on the sealing monitoring.

Each TPIH 2500 generator should be assigned a unique node name. Recognized node names are: TS, LS, SA.

Select the appropriate node name for the generators by means of the TPIH 2500 display keyboard.

a) Use the arrow buttons (1) to select AUXIL. SETTINGS and press the OK button (2).

b) Select CAN PARAMETERS and press the OK button (2).

c) Select the appropriate node name with the “+” and “-” buttons (3). Press the EXIT button (4) to store the selected name.

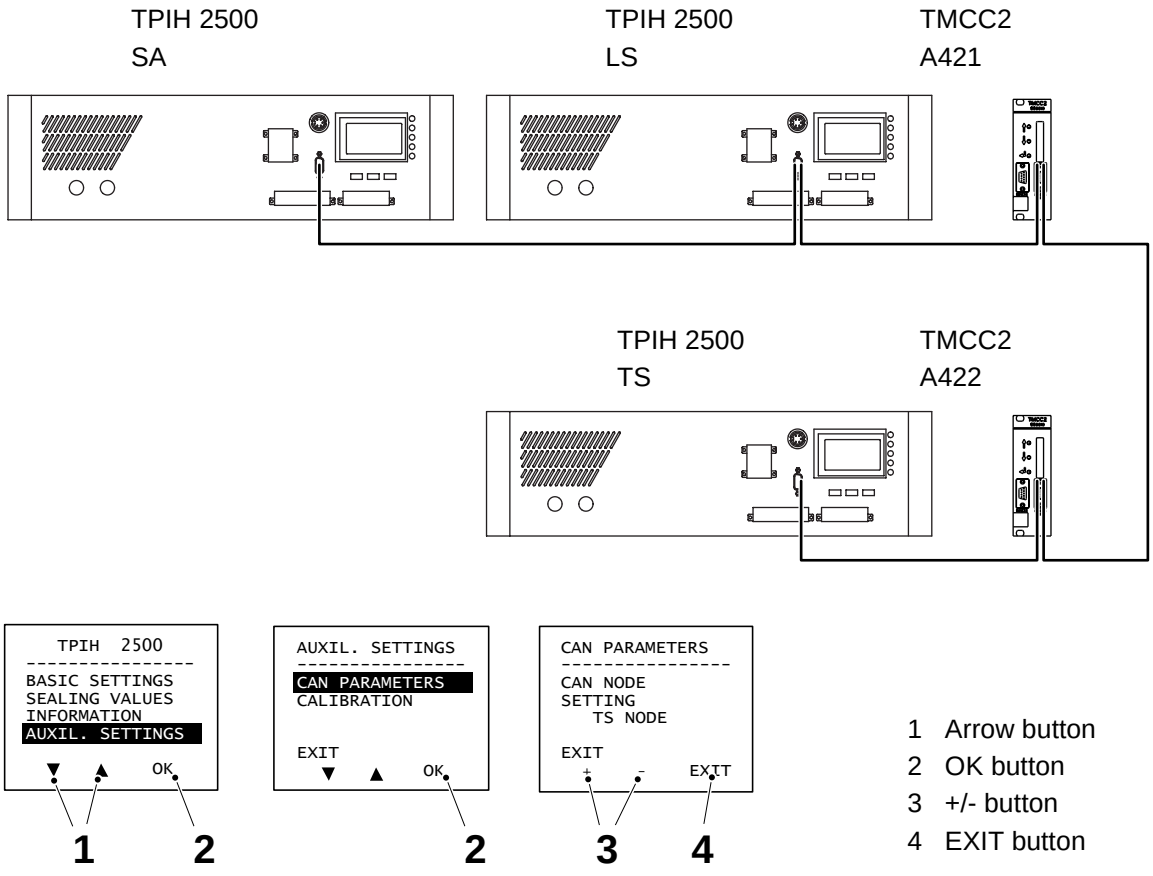

9.2 Component Door

SPC Reference	1346314-0200

9.2.1 TMCC2 Controller

9.2.1-1 TMCC2 Controller - Function Description

SPC Reference	559810-0101

The Tetra Pak Multi-purpose Compact Controllers (TMCC2) in the electrical cabinet are used to control and monitor photocells that are part of the packaging material positioning system.

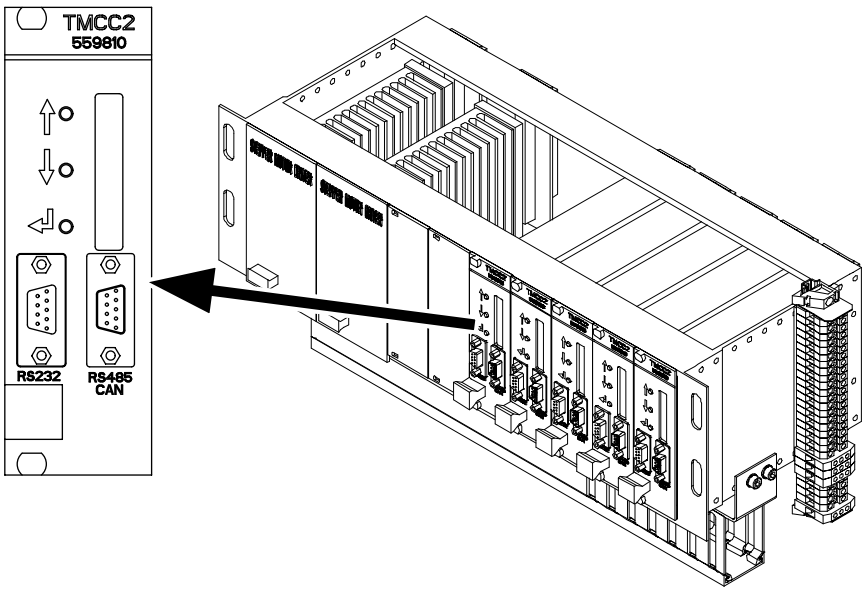

TMCC2 Card A418 (Design Control System)

The TMCC2 card A418 is a microprocessor card that has the following functions:

- decode the signals from the photocells and converting them into a readable signal,
- decode the angle values utilized in the design control,
- calculate the stroke of the folding flaps with design deviation by means of a PID algorithm,
- send data to the DMC for the folding flaps positioning,

(Cont'd)

(Cont'd)

- communication with PLC and terminal (PC),
- store volume-dependent parameters (values) retrieved by the TMCC2 from the PLC.

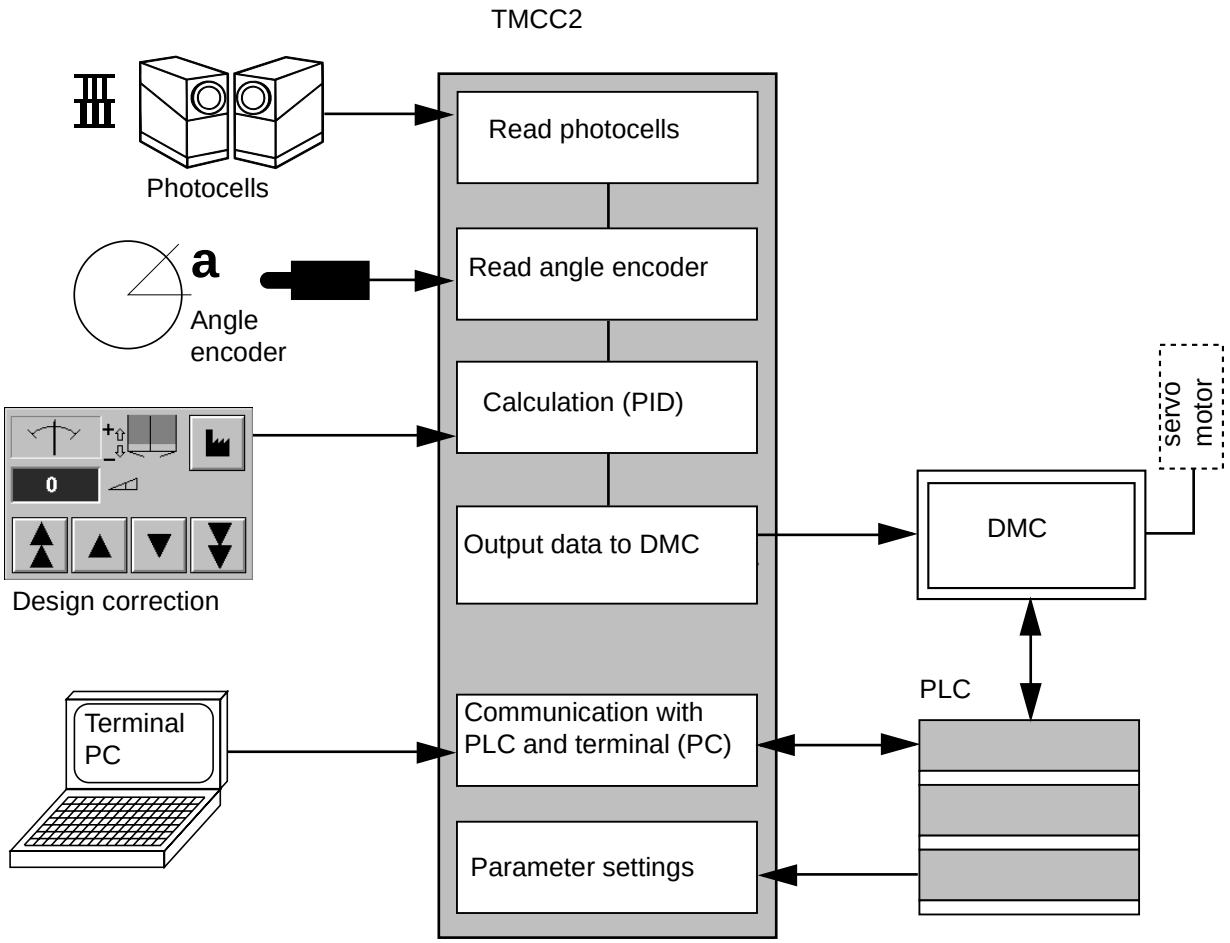

(Cont'd)

(Cont'd)

TMCC2 (DCS) Buttons and Display

The buttons (1) and the display (2) located on the front panel of the TMCC2 (DCS) are used to select one of several program functions.

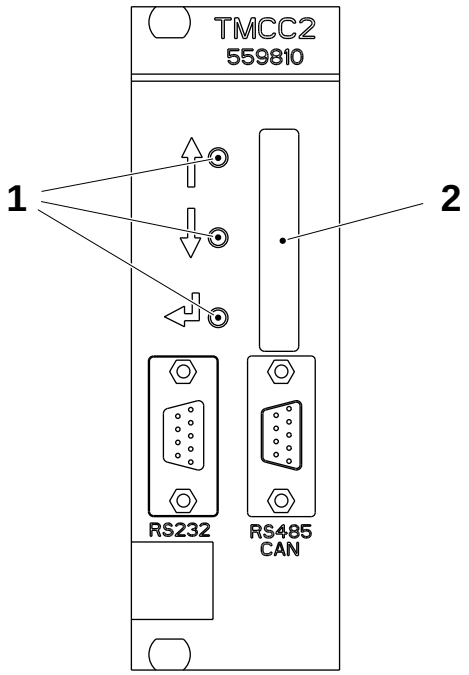

1 Button
2 Display

The display (2) is used for the following purposes:

- when the TMCC2 is idle the display (2) shows program information,
- when the TMCC2 is working the display (2) is used as LEDs to display the operation of the TMCC2,
- when you push any of the buttons (1) the display (2) is used to navigate through a menu structure that allows you to set up the TMCC2.

If the communication with the photocells fails an error message is displayed as follows:

Error message	Description
3 bar Ph.	if the communication to the 3 bar photocell fails
4 bar Ph.	if the communication to the 4 bar photocell fails
Ph. fail	if both photocells are in error status

(Cont'd)

(Cont'd)

TMCC2 (DCS) LED Display

The display, used as LEDs, provide the following information when the machine is in the normal PRODUCTION mode.

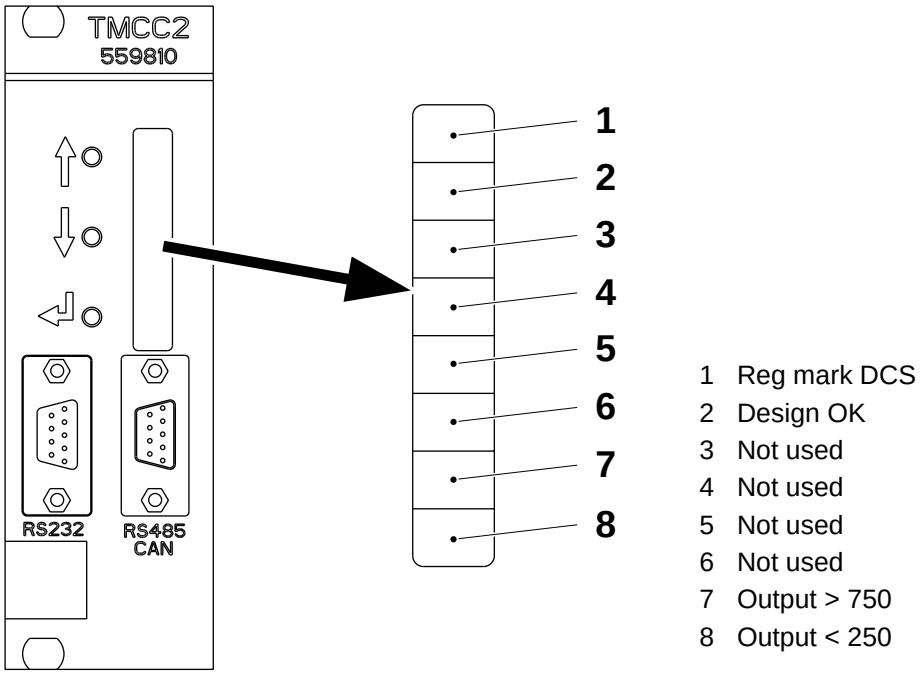

Card A418		
LED	**Function**	**Description**
1	Reg. mark DCS	The register code is being decoded
2	Design OK	When the design error is within ±1.5 mm
3	-	Not used
4	-	Not used
5	-	Not used
6	-	Not used
7	Output > 750	The design control works in the upper part of the regulation range, steps 750 - 1000
8	Output < 250	The design control works in the lower part of the regulation range, steps 0 - 250

(Cont'd)

(Cont'd)

TMCC2 (DCS) Menu System

By pushing any button on the TMCC2 (DCS) you enter the first level of the menu. Then you use the arrow buttons to select an item and the enter button to access the submenus to that item.

Card A418				
Menu level				**Description**
1	2	3	4	
MONITOR				Selects what data to monitor
	DES ERR			Monitors the design error
	MEAN DER			Monitors the average design error
	OUTPUT			Monitors the output
	BACK			Back to level 1
DIAG. OUT				Selects which signal to output on pin 6 (analogue out)
	DES ERR			Outputs the design error
	MEAN DER			Outputs the average design error
	OUTPUT			Outputs the output
	MEAN OUT			Outputs the average output
	BACK			Back to level 1
PHOT.				Sets up the photocells
	CONF? Y			Sets up the photocells
		GREEN		Sets the photocell colour to green
		BLUE		Sets the photocell colour to blue
		RED		Sets the photocell colour to red
		CALIB.		Calibrates the photocell (manual calibration)
			USE CAL.	Sends the taught values to both photocells
			RUN CAL.	Sets the photocells to teaching mode and waits for manual teaching
			BACK	Back to level 3
		BACK		Back to level 2
	CONF? N			Back to level 1
BACK				Exit menu

(Cont'd)

(Cont'd)

TMCC2 (DCS) System Data

Commands and parameters are entered in the DCS22 program and data can be read from the TMCC2 by using a PC, see 9.2.1-6 TMCC2 Controller - Display Report.

TMCC2 Card A419 (ASU)

The TMCC2 card A419 is a microprocessor card that has the following functions:

- decode the signals from the ASU and DCS photocells and converting them into a readable signal,
- communication with PLC and terminal (PC).

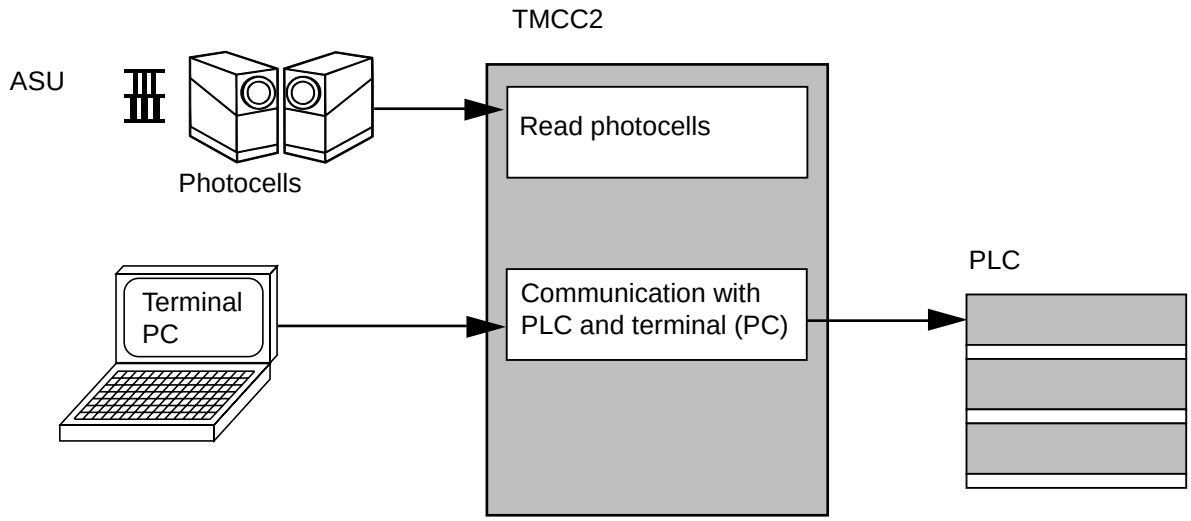

(Cont'd)

TMCC2 (ASU) Buttons and Display

The buttons (1) and the display (2) located on the front panel of the TMCC2 (ASU) are used to select one of several program functions.

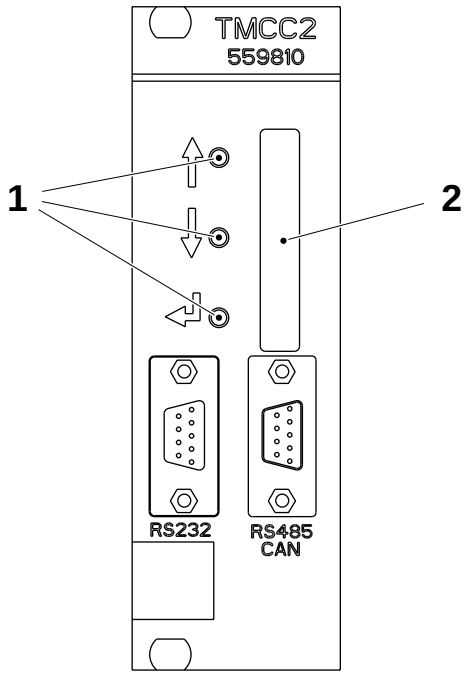

1 Button
2 Display

The display (2) is used for the following purposes:

- when the TMCC2 is idle the display (2) shows program information,
- when the TMCC2 is working the display (2) is used as LEDs to display the operation of the TMCC2,
- when you push any of the buttons (1) the display (2) is used to navigate through a menu structure that allows you to set up the TMCC2.

If the communication with the photocells fails an error message is displayed as follows:

Error message	Description
3 bar Ph.	if the communication to the 3 bar photocell fails
4 bar Ph.	if the communication to the 4 bar photocell fails
Ph. fail	if both photocells are in error status

(Cont'd)

(Cont'd)

TMCC2 (ASU) LED Display

The display, used as LEDs, provide the following information when the machine is in the normal PRODUCTION mode.

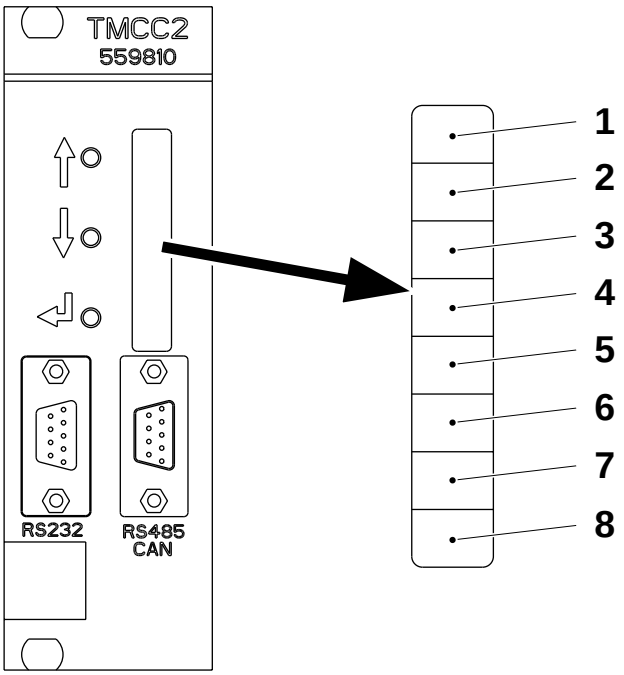

1 Register mark ASU
2 Not used
3 Not used
4 Not used
5 Not used
6 Not used
7 Not used
8 Not used

Card A419		
LED	**Function**	**Description**
1	Register mark ASU	ASU register mark signal, the flash is approx. 40 ms
2	-	Not used
3	-	Not used
4	-	Not used
5	-	Not used
6	-	Not used
7	-	Not used
8	-	Not used

(Cont'd)

(Cont'd)

TMCC2 (ASU) Menu System

By pushing any button on the TMCC2 (ASU) you enter the first level of the menu. Then you use the arrow buttons to select an item and the enter button to access the submenus to that item.

Card A419				
Menu level				**Description**
1	2	3	4	
PHOT.				Sets up the photocells
	CONF? Y			Sets up the photocells
		GREEN		Sets the photocell colour to green
		BLUE		Sets the photocell colour to blue
		RED		Sets the photocell colour to red
		CALIB.		Calibrates the photocell (manual calibration)
			USE CAL.	Sends the taught values to both photocells
			RUN CAL.	Sets the photocells to teaching mode and waits for manual teaching
			BACK	Back to level 3
		BACK		Back to level 2
	CONF? N			Back to level 1
BACK				Exit menu

TMCC2 (ASU) System Data

Commands and parameters are entered in the ASU program and data can be read from the TMCC2 by using a PC, see 9.2.1-6 TMCC2 Controller - Display Report.

(Cont'd)

(Cont'd)

TMCC2 Card A420 (Filling System)

The TMCC2 card A420 is a microprocessor card that has the following functions:

- read the product level from the level sonde sensor and calculate by means of the PID the analog output that control the IP transducer,
- communication with PLC and terminal (PC),
- store volume-dependent parameters (values) retrieved by the TMCC2 from the PLC.

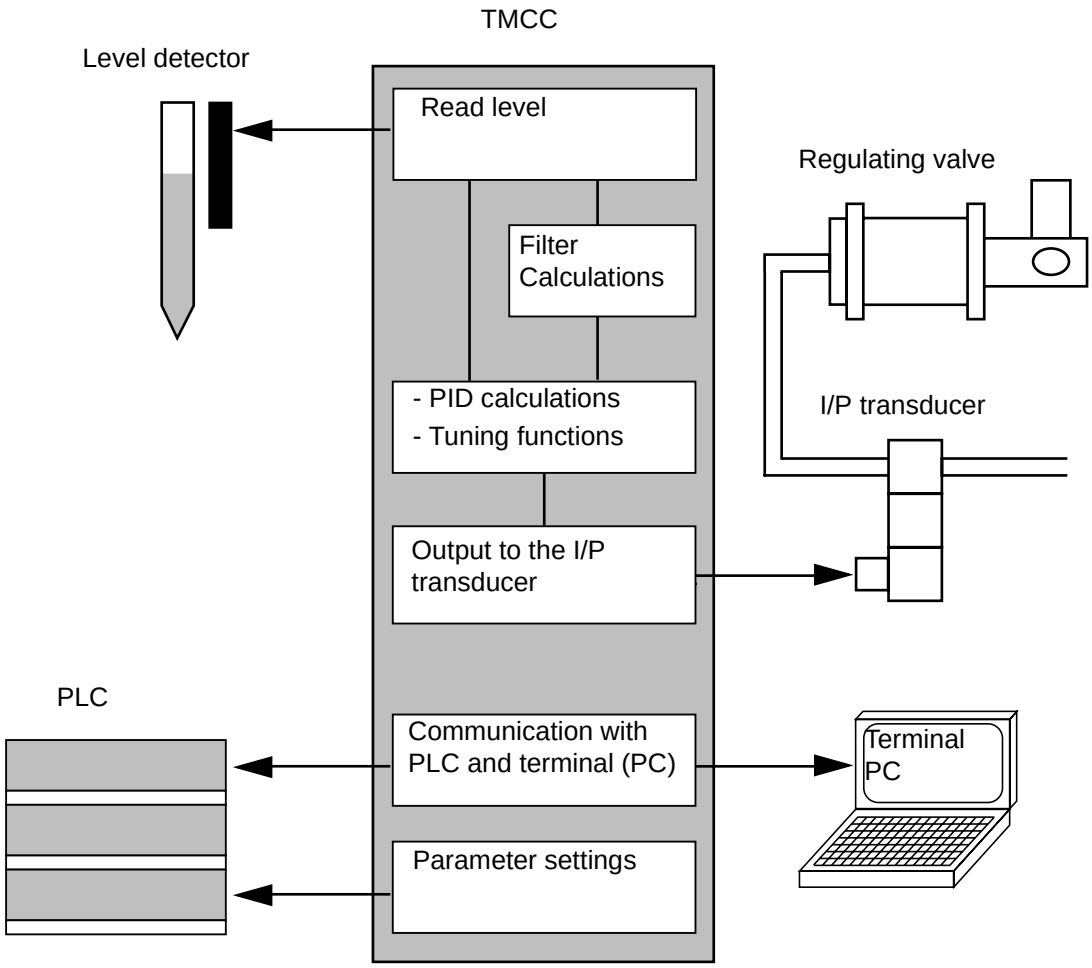

(Cont'd)

(Cont'd)

TMCC2 (Filling System) Buttons and Display

The buttons (1) and the display (2) located on the front panel of the TMCC2 (Filling system) are used to select one of several program functions.

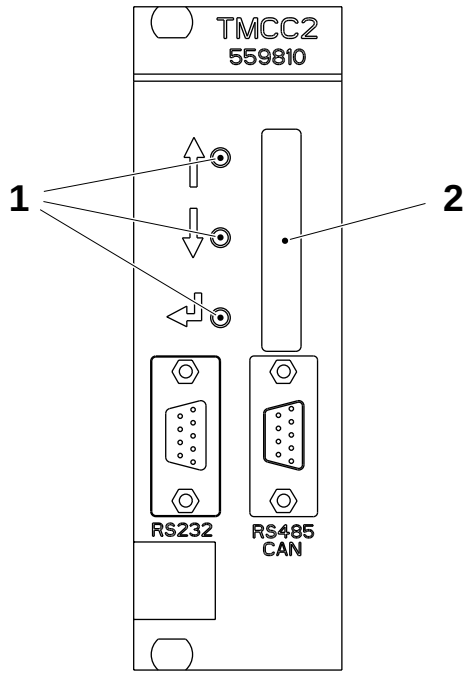

1 Button
2 Display

The display (2) is used for the following purposes:

- when the TMCC2 is idle the display (2) shows program information,
- when the TMCC2 is working the display (2) is used as LEDs to display the operation of the TMCC2,
- when you push any of the buttons (1) the display (2) is used to navigate through a menu structure that allows you to set up the TMCC2.

(Cont'd)

(Cont'd)

TMCC2 (Filling System) LED Display

The display, used as LEDs, provide the following information when the machine is in the normal PRODUCTION mode.

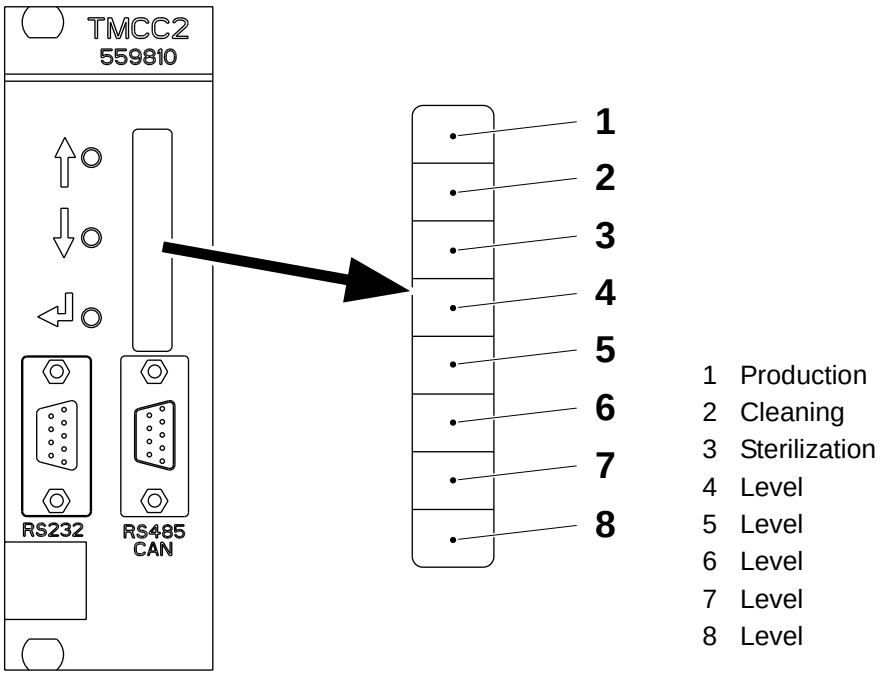

Card A420		
LED	**Function**	**Description**
1	Production	Flashes during normal or pre-filling starts. Always ON during PRODUCTION.
2	Cleaning	Always ON during CLEANING.
3	Sterilization	Always ON during STERILIZATION.
4	Level	Flashes if a high level alarm occurs. Turns ON if the level is bigger than 83%.
5	Level	Turns ON if the level is bigger than 66%.
6	Level	Turns ON if the level is bigger than 50%.
7	Level	Turns ON if the level is bigger than 33%.
8	Level	Flashes if a low level alarm occurred. Turns ON if the level is bigger than 16%.

(Cont'd)

(Cont'd)

TMCC2 (Filling System) Menu System

By pushing any button on the TMCC2 (Filling system) you enter the first level of the menu. Then you use the arrow buttons to select an item and the enter button to access the submenus to that item.

Card A420		
Menu level		**Description**
1	2	
FILL WIND		Filling window menu
	WIND=±XX%	Sets the filling window*
BACK		Exit menu

*) This value can be changed by using the up and down arrow keys on the TMCC2 front panel.

TMCC2 Card A421 (Longitudinal Sealing Monitoring)

The TMCC2 card A421 is a microprocessor card that has the following functions:

- communicate with the TPIH 2500 via the CAN bus to monitor the longitudinal sealing process
- communication with PLC and terminal (PC)

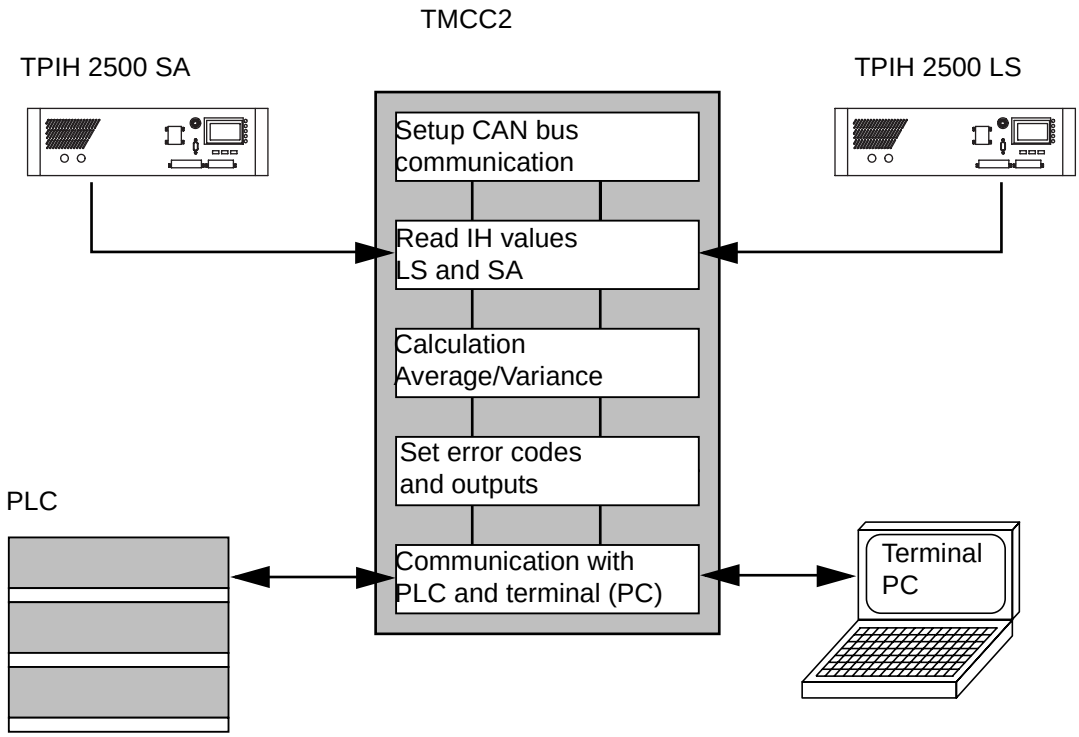

(Cont'd)

The system is able to detect wrong sealing conditions and warn the operator. The TMCC2 communicates with the TPIH2500 generator via the CAN bus. The internal monitoring system of the TPIH2500 is able to read the voltage, current and phase angle values of the generator with the same accuracy as the external monitor IH-I2 (TP No. 1511085-0101).

Before the CAN link can be used it must be set up, see 9.1.1-8 IH Equipment - Set CAN Communication.

The following parameters are logged by the card:

- voltage from the TPIH generator,
- current from the TPIH generator,
- phase angle from the TPIH generator,
- power setting from the TPIH generator,
- status of the filling machine (production & splice status).

Four digital lines are used to communicate the error condition to the PLC.

Information regarding the sealing process are available during production on the RS232 port on the TMCC2 card A421.

(Cont'd)

(Cont'd)

Program Functions

The following block diagram shows how the TMCC2 program runs.

The operation is to check the availability of the units on the field bus.

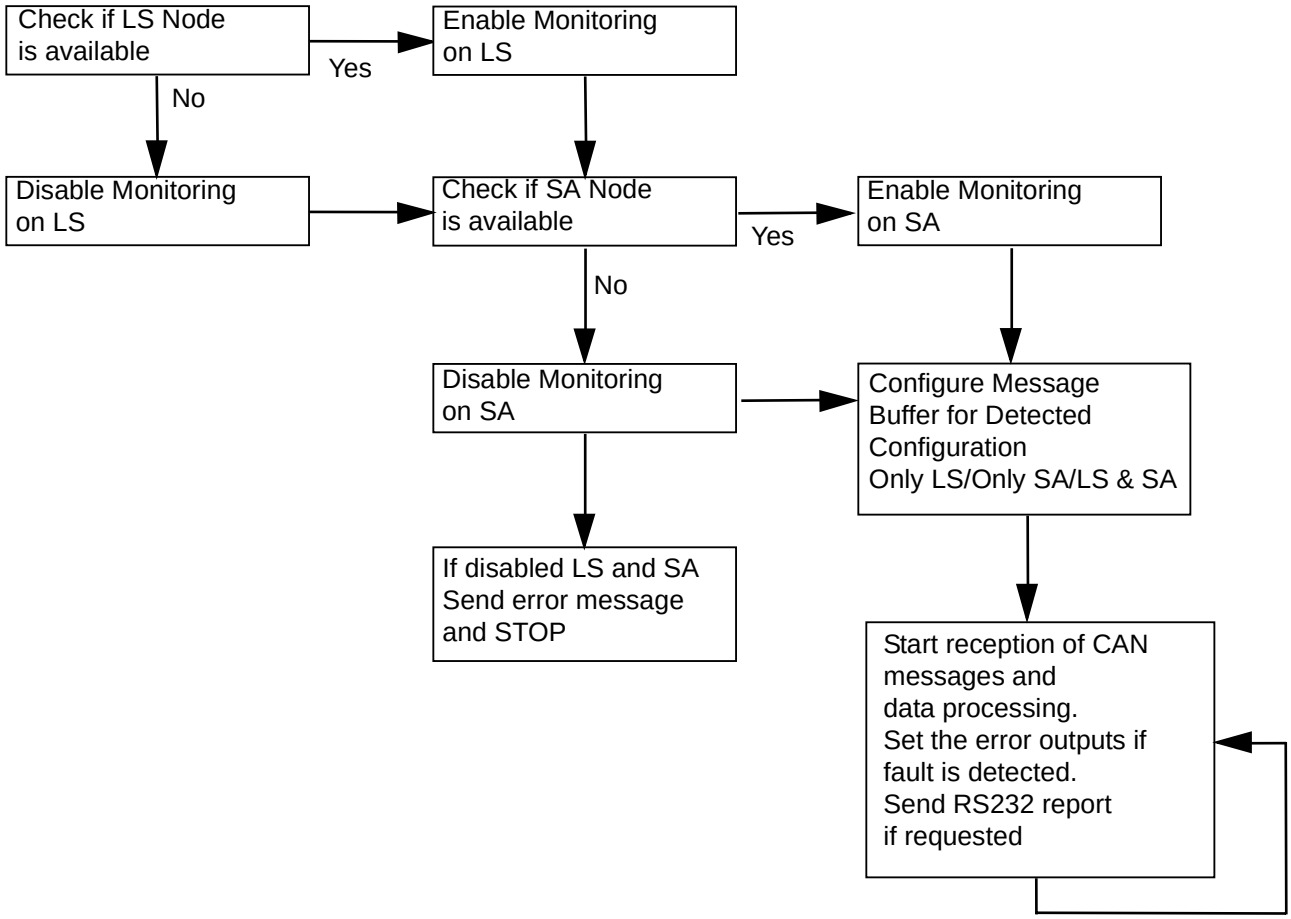

The detection procedure works as follows:

- Send a message READ_IH_ERR to the two generators to detect if the generator is present and detect any error messages.
- The answering unit is considered to be an active unit and it is requested to send unsolicited CAN messages during the sealing pulse.
- If a specific unit is not available, its monitoring is disabled and an error message is sent to the RS232 port and to the digital outputs.

When enabled and producing pulses, the LS and SA generators send a message every 100 ms.
Each message is stored in the TMCC2 buffer and analyzed for abnormal conditions.

(Cont'd)

(Cont'd)

The process values monitored are:

- Average RMS voltage (Volt)
- Average RMS current (Ampere)
- Average Phase angle (Degrees)
- Average Power (Delivered by the TPIH Generator, Watt)
- Average Power Set (requested by the operator, SU)
- Impedance of IH circuit (Ohm)
- Average Impedance of the previous sealing period (Ohm)
- Status byte
- Error code (internal value, 16 bit)

Predetermined limits are applied to these values and comparisons are made between the expected/requested values and the effective values (i.e the power requested and the power delivered).

The error conditions are defined as:

- Power delivered 20% higher than the requested power
- Power delivered 20% lower than the requested power
- Phase error too positive
- Phase error too negative
- Impedance too low
- Impedance too high
- Phase changing too quickly
- Impedance changing too quickly

After processing each message, the digital error lines are used to code the detected error condition and a message is sent on the RS232 to report the details

(Cont'd)

(Cont'd)

Error Codes

After each sealing pulse, the errors are sent on the RS232 (or CAN) and the outputs are set for at least 50 ms.

Type	Error code (internal)	Outputs
Power error High LS	128	0101
Power error Low LS	64	0101
Phase error LS (positive)	32	0110
Phase error LS (negative)	16	0011
LS Phase shift too High	8	0100
Impedance error LS (positive)	4	0111
Impedance error LS (negative)	2	0010
LS Impedance shift too High	1	0001
Power error High SA	128	1101
Power error Low SA	64	1101
Phase error SA (positive)	32	1110
Phase error SA (negative)	16	1011
SA Phase shift too High	8	1100
Impedance error SA (positive)	4	1010
Impedance error SA (negative)	2	1001
SA Impedance shift too High	1	1000
No error	0	1111

The limit values for the parameters are:

Type	Value
Impedance	35 - 70 Ohm
Phase angle	± 30 degrees
Tolerance on power	± 20%
Maximum allowable phase shift	20 degrees
Maximum allowable impedance shift	5 Ohm

(Cont'd)

(Cont'd)

If values are outside the defined parameters, an error condition is set.

Impedance and phase errors can occur when the values are outside the limits and also when the value is changing too quickly.

The program calculates the average value for the phase angle and impedance. Each new value is compared with the average value to detect anomalous shifts.

The program takes into account the heating up of the system and splices when comparing shifts with the average value.

If a generator (SA or LS) is not detected the error condition 0000 is maintained until the board is enabled. If no generators are detected, the board maintains the 0000 error condition.

RS232 Connection

Set up the RS232 link, see 9.2.1-2 TMCC2 Controller - Set Communication and load the TMCC2 software, see 9.2.1-3 TMCC2 Controller - Load Program.

RS232 Data

On the keyboard, type **H**.

The following will appear on the PC.

********** LSM+SAM CAN **********

D	toggle display
E	shows last error
H	shows available commands
L	toggle display
R	recall last LS waveform
S	recall last SA waveform

CanMsgs V I Ph W SU Impedance (Z) Status Errors

****

The last line shows the meaning of the report fields:

CanMsgs	Node name (LS, TS or SA)
V	Voltage (Volt)
I	Current (Ampere)
Ph	Phase angle (degree)
W	Power delivered (Watt, calculated by TMCC
SU	Power requested (Watt, requested from TPOP
Impedance (Z)	Impedance (Ohm)
Status	Status
Errors	Error code

(Cont'd)

(Cont'd)

RS232 Commands

Use the keyboard to give the following commands:

D Display report on RS232 ON/OFF
E Show last error condition
H Help menu
L Toggle display from LS to SA
R Recall LS waveform (last 120 messages)
S Recall SA waveform (last 120 messages)

The recall function can be used to retrieve the last 120 samples of voltage, current and phase angle. The values are given in the correct units (V, A and degree) and can be used to prepare chart and analysis data.

When the TMCC2 program starts, the following will appear on the PC screen:

```
**************************************
* SealMon LS & SA Program           *
* Date: 01:04:03                    *
**************************************

Stop monitoring LS
Checking generator LS
LS IH Generator found
Stop monitoring SA
Checking generator SA
SA IH Generator found

**************************************
```

If a generator is not found, check the following:

1 Setting of the “node name” of the TPIH2500 generators

2 Firmware version of the TPIH generators, see below

3 Connection of the TPIH2500 generators and the TMCC2 cards

4 CAN bus cables and connectors (there should be a 120 Ohm termination at the end of each side of the bus, inside the last connectors).

(Cont'd)

(Cont'd)

Firmware Version of the Generator

If the CAN bus connection is not working with the correct node name and all connections are correct, an old version of firmware may be installed in the generator. Old versions of firmware do not support CAN. For the monitoring system to work the firmware must be at least up to version S8710-0000.

The firmware version can be checked on the label attached to the generator, through the display or via the RS232.

If the command ID is entered on the keyboard, the generator will respond with:

**********Identification data**********

Manufacturer	SE
Manufact year	2002
Batch number	797
Serial number	10
EPROM version	1.0
Program version	S8710-0000 rev. 0.0

****

Generator of this version or newer support CAN.

TMCC2 (TSM) system data

Commands and parameters are entered in the TSM program and data can be read from the TMCC2 by using a PC, see 9.2.1-6 TMCC2 Controller - Display Report.

(Cont'd)

(Cont'd)

TMCC2 Card A422 (Transversal Sealing Monitoring)

The TMCC2 card A421 is a microprocessor card that has the following functions:

- communicate with the TPIH 2500 via the CAN bus to monitor the transversal sealing process
- communication with PLC and terminal (PC)

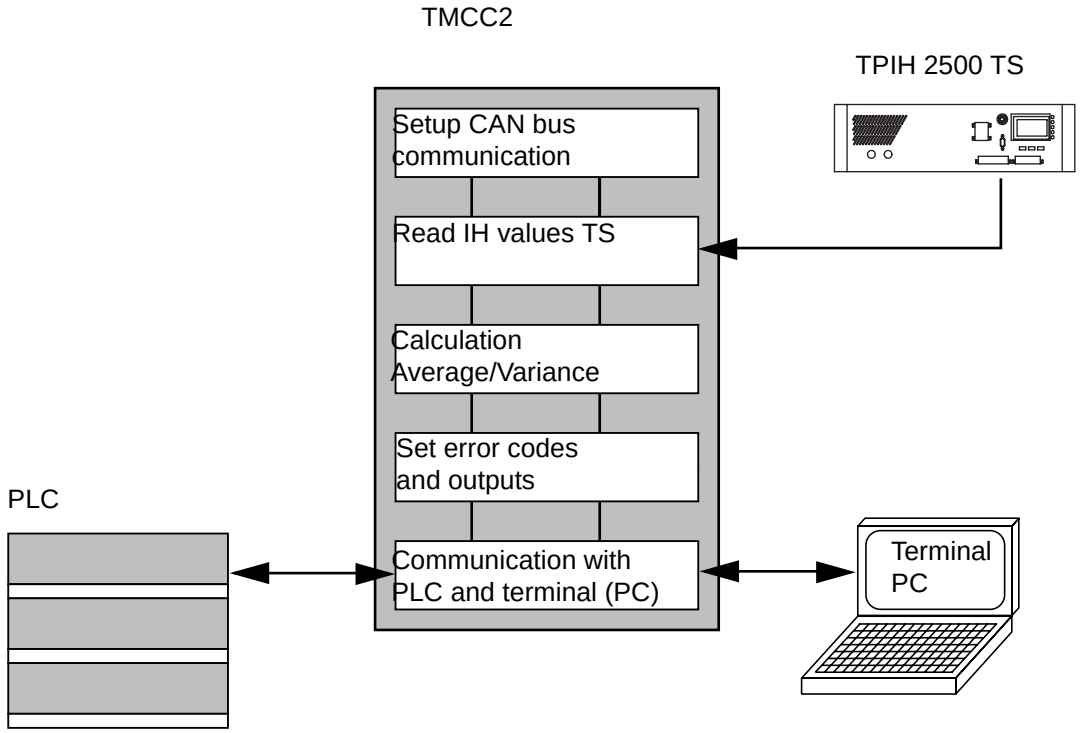

(Cont'd)

(Cont'd)

The system is able to detect wrong sealing conditions and warn the operator. The TMCC2 communicates with the TPIH2500 generator via the CAN bus. The internal monitoring system of the TPIH2500 is able to read the voltage, current and phase angle values of the generator with the same accuracy as the external monitor IH-I2 (TP No. 1511085-0101).

Before the CAN link can be used it must be set up, see 9.1.1-8 IH Equipment - Set CAN Communication.

The following parameters are logged by the card:

- voltage from the TPIH generator
- current from the TPIH generator
- phase angle from the TPIH generator
- power setting from the TPIH generator
- status of the filling machine (production & splice status)

Four digital lines are used to communicate the error condition to the PLC. Information regarding the sealing process are available during production on the RS232 port on the TMCC2 card TSM.

(Cont'd)

(Cont'd)

Program Functions

The following block diagram shows how the TMCC2 program runs.

The operation is to check the availability of the units on the field bus.

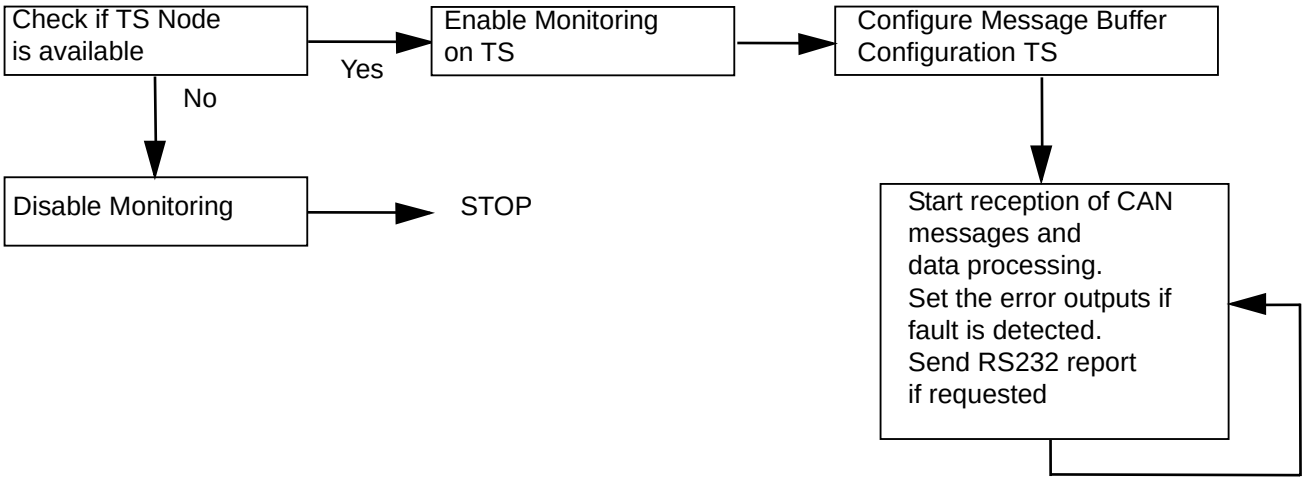

The detection procedure works as follows:

- Send a message READ_IH_ERR to the TS generator to detect if the generator is present and detect any error messages.
- If unit responds it is considered to be active and it is requested to send unsolicited CAN messages during the sealing pulse.
- If the unit is not available, its monitoring is disabled and an error message is sent to the RS232 port and to the digital outputs.

When enabled and producing pulses, the TS generator sends a message every 5 ms.
Each message is stored in the TMCC2 buffer and analyzed for abnormal conditions.

The process values monitored are:

- Average RMS voltage (Volt)
- Average RMS current (Ampere)
- Average Phase angle (Degrees)
- Average Power (Delivered by the TPIH Generator, Watt)
- Average Power Set (requested by the operator, SU)
- Impedance of IH circuit (Ohm)
- Average Impedance of the previous sealing period (Ohm)
- Status byte
- Error code (internal value, 16 bit)

(Cont'd)

(Cont'd)

Predetermined limits are applied to these values and comparisons are made between the expected/requested values and the effective values (i.e the power requested and the power delivered).

For each jaw of the chain, the average values of phase angle and impedance are calculated and stored.

At each sealing pulse, the acquired values are compared with previous value average values to detect wrong sealing conditions (dollies out of place, broken springs etc,).

The error conditions are defined as:

- Power delivered 20% higher than the requested power
- Power delivered 20% lower than the requested power
- Phase error too positive
- Phase error too negative
- Impedance too low
- Impedance too high
- Phase changing too quickly
- Impedance changing too quickly

After processing each message, the digital error lines are used to code the detected error condition and a message is sent on the RS232 to report the details.

(Cont'd)

(Cont'd)

Error Codes

After each sealing pulse, the errors are sent on the RS232 (or CAN) and the outputs are set for at least 50 ms.

Type	Error Code (Internal)	Outputs
Generator not detected	16384	0000
Not used	1	0001
Not used	2	0010
Phase change too low	4	0011
Phase change too big	8	0100
Phase too far from links average	16	0101
Z too far from links average	32	0110
Not used	64	0111
Z low	128	1000
Z high	256	1001
Ph high	512	1010
Ph low	1024	1011
Power low	2048	1100
Power high	4096	1101
Time error	8192	1110
No error	0	1111

The limit values for the parameters are:

Type	Value
Impedance	30 - 70 Ohm
Phase angle	± 35 degrees
Tolerance on power	± 20%
Maximum allowable phase shift	20 degrees
Maximum allowable impedance shift	5 Ohm

(Cont'd)

(Cont'd)

If values are outside the defined parameters, an error condition is set.

Impedance and phase errors can occur when the values are outside the limits and also when the value is changing too quickly.

The program calculates the average value for the phase angle and impedance for each link of the chain. Each new value is compared with the average value to detect anomalous shifts. The program takes into account the heating up of the system and splices when comparing shifts with the average value.

If the TS generator is not detected the error condition 0000 is maintained until the board is enabled.

RS232 Connection

Set up the RS232 link, see 9.2.1-2 TMCC2 Controller - Set Communication and load the TMCC2 software, see 9.2.1-3 TMCC2 Controller - Load Program.

RS232 Data

On the keyboard, type **H**.

The following will appear on the PC.

********** TSM CAN **********

D	toggle display
E	shows last error
H	shows available commands
L	link status (phase & impedance)
R	recall last TS waveform
S	show error list (recall from EPROM)

Seal time Side Jaw V I Ph Pow PowSet Impedance DeltaPhase Errors

****

The last line shows the meaning of the report fields:

Seal time	Length of sealing pulse
Side	Left/Right side
Jaw	Jaw number from 1 to 10
V	Voltage (V)
I	Current (I)
Ph	Phase angle (degree)
Pow	Power delivered (Watt, calculated by the TMCC)
PowSet	Power requested (Watt)
Impedance Z	Impedance (Ohm)
DeltaPhase	Variation of phase angle during sealing pulse
Errors	Error code

(Cont'd)

(Cont'd)

RS232 Commands

Use the keyboard to give the following commands:

D Display report on RS232 ON/OFF
E Show last error condition
H Help menu
L link status (phase & impedance)
R Recall TS waveform (one sample every 5ms, max 60 samples = 300 ms)
S Show the list of the last 100 errors. Error code and link are displayed starting from the “oldest” error

When the TMCC2 program starts, the following will appear on the PC screen:

```
**************************************
*            SealMon TS HS Program   *
*                 Date: 01:04:03       *
**************************************

Stop monitoring TS
Checking generator TS
TS IH Generator found

******************************************
```

If the generator is not found, check the following:

1 Setting of the “node name” of the TPIH2500 generators

2 Firmware version of the TPIH generators, see below

3 Connection of the TPIH2500 generators and the TMCC2 cards

4 CAN bus cables and connectors.

(Cont'd)

(Cont'd)

Firmware Version of the Generator

If the CAN bus connection is not working with the correct node name and all connections are correct, an old version of firmware may be installed in the generator. Old versions of firmware do not support CAN. For the monitoring system to work the firmware must be at least up to version S8710-0000. The firmware version can be checked on the label attached to the generator, through the display or via the RS232.

If the command ID is entered on the keyboard, the generator will respond with:

**********Identification data**********

Manufacturer	SE
Manufact year	2002
Batch number	797
Serial number	10
EPROM version	1.0
Program version	S8710-0000 rev. 0.0

****

Generators of this version or newer support CAN.

(Cont'd)

(Cont'd)

RS232 Outputs

The serial RS232 port allows production data or data stored in the TMCC2 to be retrieved and printed. The data printed during production appears as follows:

ms	S	J	V	I	Ph	W	Set	Z	dPh	Err
145	L	1	257.06	5.36	-0.06	1378.42	1456.08	47.94	14.00	0
140	R	2	262.03	5.40	0.17	1414.98	1445.31	48.52	9.00	0
145	L	3	256.79	5.36	-0.13	1376.93	1457.09	47.89	10.00	0
140	R	4	263.82	5.37	0.42	1417.05	1443.91	49.11	8.00	0
145	L	5	257.68	5.34	0.10	1377.30	1457.43	48.21	15.00	0
140	R	6	263.06	5.28	0.17	1362.76	1444.63	48.83	8.00	0
145	L	7	257.96	5.46	-0.42	1441.32	1457.17	48.21	9.00	0
140	R	8	263.54	5.28	0.62	1361.02	1443.62	48.70	16.00	0
145	L	9	257.48	5.34	-0.10	1375.31	1456.76	48.20	10.00	0
140	R	10	263.67	5.41	-0.03	1427.63	1443.56	48.70	9.00	0

The data available after each sealing pulse are:

- Last TS waveform: shows the behaviour of Voltage, Current and Phase Angle during the sealing pulse. Sampling period 5 ms.
- Last error conditions: shows the last error condition detected by the monitoring system and by the generator.
- Information about links: shows the average value of phase angle and impedance for each link.

Recalling the last waveform retrieves information with the following format, where the first column is voltage (V), the second current (I) and the third the phase angle (degrees): The waveform can be copied with *copy and paste* or *capture* from the PC.

0	0.30	2.00
0	0.30	0.00
69	2.00	-17.00
184	4.50	-9.00
216	5.09	-9.00
232	5.40	-10.00
240	5.59	-10.00
*		
*		
246	6.09	-1200
246	6.09	-12.00

(Cont'd)

(Cont'd)

Sealing Pulse TS

SEALING PULSE TS

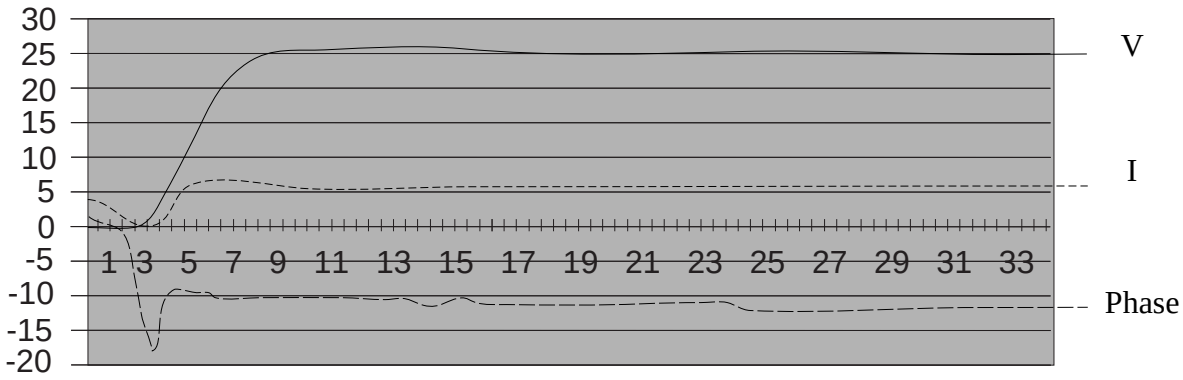

Giving the command L produces a table with the average values for the phase angle (degree) and impedance (Ohm) for each link as follows:

Link	Phase	Impedance
1	0.04	48.33
2	0.53	48.81
3	0.08	48.19
4	1.21	49.12
5	0.17	48.53
6	0.46	49.20
7	0.06	48.49
8	0.88	49.00
9	0.27	48.33
10	0.43	48.82

During production these values are compared with new values to detect anomalous variations in the electrical load.

9.2.1-2 TMCC2 Controller - Set Communication

Machine Status	PRODUCTION
Tools - Communication Cable - AT Compatible PC with Diskette Station	RS 232-C
SPC Reference	559810-0101

Note! The following procedure should be used to communicate with a TMCC2 card.

a) Connect the TMCC2 to a PC with the connection cable (1).

b) The connections required are:

PC 9-pin female	TMCC2 9-pin male
2	3
3	2
5	5

Note! Do **not** connect any other pin.

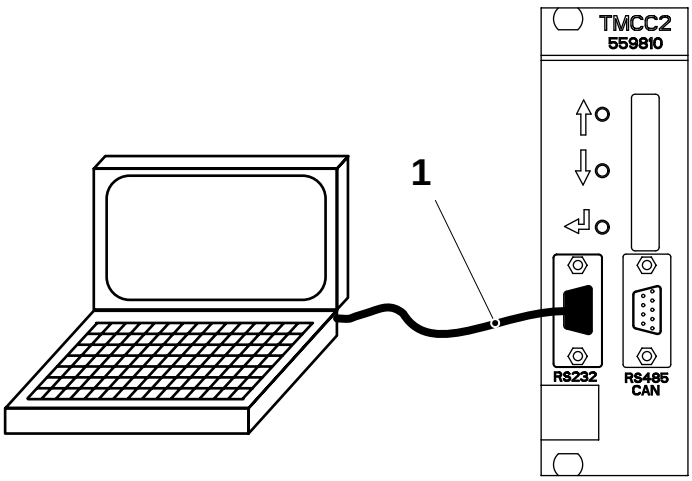

1 Connection cable

c) Set-up the program to use, e.g. Hyperterminal, as follows:

Baud rate	9600
Parity	None
Bits	8
Stop bits	1
Flow control	None

9.2.1-3 TMCC2 Controller - Load Program

Machine Status	PREPARATION
Tools -Communication Cable -AT Compatible PC with Diskette Station	RS 232-C
SPC Reference	559810-0101

Note! Do not swap the TMCC2 cards A418, A419, A420, A421 and A422 because they contain different programs!

a) Locate the appropriate TMCC2 in the electrical cabinet.
Card A418 (1) is for the design correction photocells in the jaw system. Card A419 (2) is for the barcode reader in the ASU. Card A420 (3) is for the filling system. Card A421 (4) is for longitudinal sealing monitoring. Card A422 (5) is for transversal sealing monitoring.

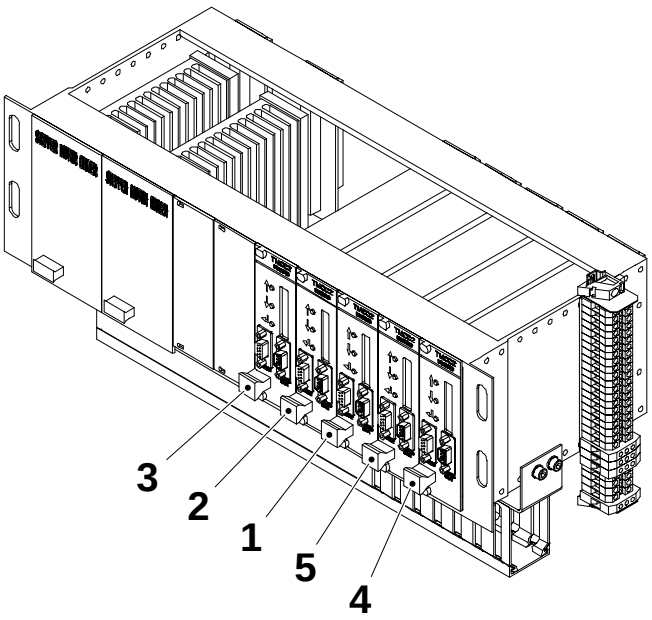

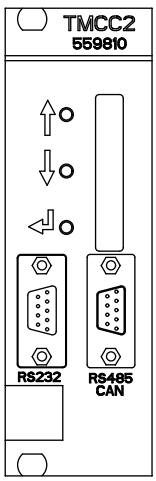

1 Card A418
2 Card A419
3 Card A420
4 Card A421
5 Card A422

(Cont'd)

(Cont'd)

b) Configure a PC to be used as a Hyperterminal and connect it to the TMCC2, see 9.2.1-2 TMCC2 Controller - Set Communication.

c) Connect the communication cable between the PC and the TMCC2 front panel connector (6).

d) Type **Stop** and press the enter key.

e) For the card A418, insert the program diskette marked **"2552317-xxxx"** into the PC diskette station.

f) For the card A419, insert the program diskette marked **"2552321-xxxx"** into the PC diskette station.

g) For the card A420, insert the program diskette marked **"2552329-xxxx"** into the PC diskette station.

h) For the card A421, insert the program diskette marked **"2552325-xxxx"** into the PC diskette station.

i) For the card A422, insert the program diskette marked **"2553136-xxxx"** into the PC diskette station.

Note! The **x** corresponds to the current program revision.

j) Type **E flash** and press ENTER.

k) When the TMCC2 prompt appears ("TMCC2->"), type **D** and press ENTER.

l) Select menu TRANSFERS and menu item SEND TEXT FILE.

m) Locate the file to be downloaded.

n) The downloading progress is displayed with dots on the screen.

o) At the TMCC2 prompt type **Run** and press the ENTER key.

p) Press the S key to verify the downloaded programs status.

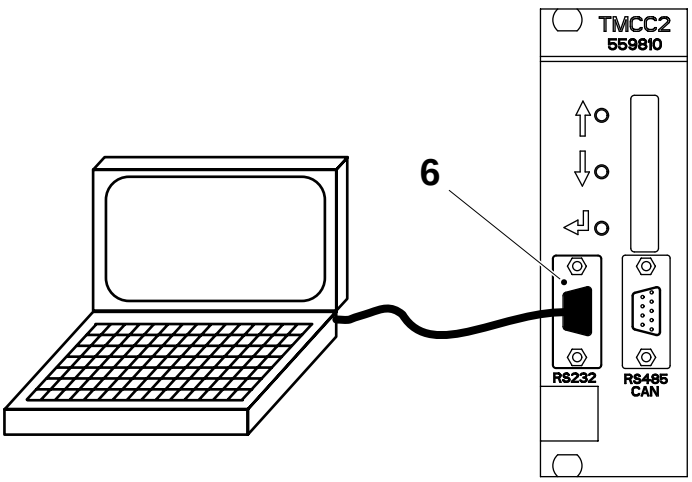

6 TMCC2 connector

9.2.1-4 TMCC2 Controller - Set Photocells

SPC Reference	559810-0101

Automatic Setting

By default, the photocell produces a green spotlight. For most packaging materials this is the correct setting and no further adjustment will be required.

If a packaging material is used and barcode reading errors occur, the colour of the light spot can be changed to match the foreground colour of the barcode. This is done through the menus on the TMCC2 card.

If errors continue to occur after the automatic setting, set the photocells manually, see Manual Setting on page 9-63.

DCS Photocells

a) Press any of the buttons on the TMCC2 (DCS) card.

b) Use the arrow buttons to select PHOT**.** and press ENTER.

c) Select CONF? Y and press ENTER.

d) Select a colour that suits the current packaging material, see the table below.

e) Exit the menu on the TMCC2 (DCS).

ASU Photocells

a) Press any of the buttons on the TMCC2 (ASU) card.

b) Use the arrow buttons to select PHOT. and press ENTER.

c) Select CONF? Y and press ENTER.

d) Select a colour that suits the current packaging material, see the table below.

e) Exit the menu on the TMCC2 (ASU).

Barcode Foreground Colour	**Spot Colour**
Black	Green, Red or Blue
Blue	Green or Red
Light blue/Cyan	Red
Green	Red or Blue
Yellow	Blue
Red	Green or Blue
Magenta	Green

(Cont'd)

(Cont'd)

Manual Setting

If errors continue to occur after the automatic setting, see Automatic Setting on page 9-62, set the photocells manually as described below.

DCS Photocells

a) Press any of the buttons on the TMCC2 (DCS) card.

b) Use the arrow buttons to select PHOT. and press ENTER.

c) Use the arrow buttons to select CONF? Y and press ENTER.

d) Use the arrow buttons to select CALIB. and press ENTER.

e) Use the arrow buttons to select RUN CAL. and press ENTER. This sets the photocells to teaching mode.

f) Move the packaging material until the photocell spot is focused on a white part of the packaging material.

g) Push and hold the TEACH button (1).

h) Move the packaging material until the complete barcode has passed in front of the photocell and then release the TEACH button.
The cell automatically calibrates itself.

Note! The LED (2) is lit when the photocell spot is focused on a dark area of the packaging material.

i) Repeat steps from f) to h) for the other photocell.

j) Use the arrow buttons to select USE CAL. and press ENTER.

k) Exit the menu on the TMCC2 (DCS).

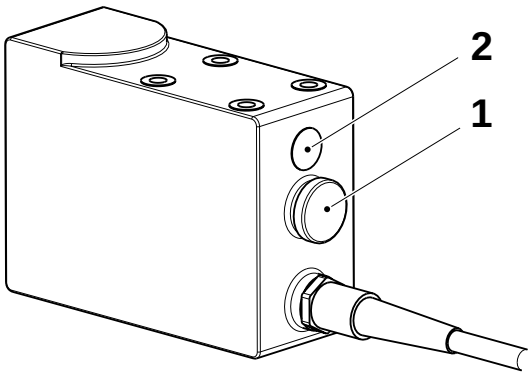

1 Teach button
2 LED

(Cont'd)

(Cont'd)

ASU Photocells

a) Press any of the buttons on the TMCC2 (ASU) card.

b) Use the arrow buttons to select PHOT. and press ENTER.

c) Use the arrow buttons to select CONF? Y and press ENTER.

d) Use the arrow buttons to select CALIB. and press ENTER.

e) Use the arrow buttons to select RUN CAL. and press ENTER. This sets the photocells to teaching mode.

f) Make sure the switch (3) is set to the position Q1.

g) Move the packaging material until the photocell spot is focused on a white part of the packaging material.

Note! The ON LED (5) is lit when power is supplied to the photocell.

h) Push and hold the TEACH button (4).

i) Move the packaging material until the complete barcode has passed in front of the photocell and then release the TEACH button.
The cell automatically calibrates itself.

Note! The LED (6) is lit when the photocell spot is focused on a dark area of the packaging material.

j) Repeat the steps from f) to i) for the other photocell.

k) Use the arrow buttons to select USE CAL. and press ENTER.

l) Exit the menu on the TMCC2 (ASU).

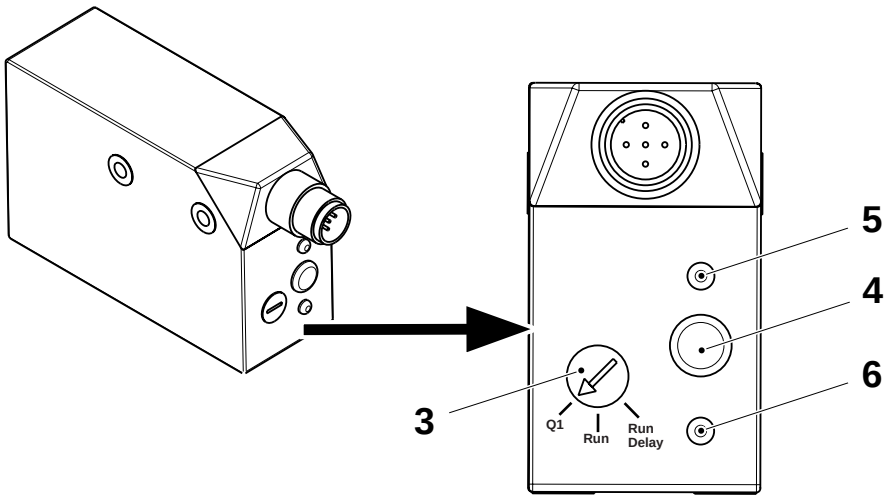

3 Switch
4 Teach button
5 ON LED
6 Q/ok LED

9.2.1-5 TMCC2 Controller - Set Filling Window

SPC Reference	559810-0101

Note! The suggested filling window amplitude (default value) is **30%**.

a) Press any of the buttons on the TMCC2 (Filling system) card.

b) Use the arrow buttons to select FILL WIND and press ENTER.

c) Use the arrow buttons to set a filling window amplitude and store the value by pressing the enter button.

d) Exit the menu on the TMCC2 (Filling system).

9.2.1-6 TMCC2 Controller - Display Report

Machine Status	PRODUCTION
Tools -AT Compatible PC -TMCC2 Connection Cable	RS 232-C
SPC Reference	559810-0101

TMCC2 (ASU)

Configure a PC to be used as Windows terminal and connect it to the TMCC2 (ASU), see 9.2.1-2 TMCC2 Controller - Set Communication.

Enter the commands and parameters into the ASU program via the keyboard and execute them by pressing the RETURN key.
(The commands and parameters are not replicated on the terminal).
The functions described below are available:

H Help Menu: displays the commands available.
L Description of the function of the display on the front panel.
S Shows the program version and if there is a failure of the photocells.
Y Displays a detailed status of the photocells for test and service purposes:

Commands OK: Commands failed:	Total number of commands executed by the photocells
Barcode decoded:	Total number of barcodes decoded by the TMCC2
Dynamic Threshold:	Photocell threshold
Light Spot:	Colour of the light spot used by the photocells
Output:	Logic of the photocell outputs (Light/Dark switching)
Photoswitch Working Hours	Number of hours that every LED of the photocell has been working
Photocell Software ver. / S.N.:	Software version of the photocell firmware and serial number

(Cont'd)

(Cont'd)

TMCC2 (DCS)

Configure a PC to be used as a Windows terminal and connect it to the TMCC2 (DSC), see 9.2.1-2 TMCC2 Controller - Set Communication.

Enter the commands and parameters into the DSC program via the keyboard and execute them by pressing the RETURN key.
(The commands and parameters are not replicated on the terminal).
The functions described below are available:

Annn **Angle nnn**. The Production Angle (=machine angle) may be set with this command. **nnn is the new angle value**, ranging from 0 to 255 decimal degrees. Normally the Production Angle is set from the PLC, but this command overrides the PLC setting. It may be used for test purpose to find the correct nominal Production Angle, which will later be set from the PLC. Note the Design Adjustment Value set by the potentiometer is added to this value.
For example: A72 sets the Production Angle to 72 degrees.

Dddd D-constant: Sets the **D parameter** with in the PID controller algorithm, in 1/100 units. The original value will be restored after the TMCC2 reset.

E Displays the current Encoder value, first the hexadecimal Gray code, then converted to decimal.

Fooo **Force ooo**. This command forces the analog output signal to a certain value which is (ooo). F0 resets the forcing:

F0 Reset (disable) output force.
F1 Force to precorrection (step 0).
F2 Force to output = 1 (step 1).
...
F1000 Force to output = 1000 (equals to 10v on the analog output to DMC).

Iiii **I-constan**t: Sets the **I parameter** in the PID controller algorithm, in 1/100 units. The original value will be restored after the TMCC2 reset.

(Cont'd)

(Cont'd)

Pppp **P-constant**: Sets the **P parameter** in the PID controller algorithm, in 1/100 units. The original value will be restored after the TMCC2 reset.

Rn **Reporting ON/OFF**. This command enables and disables the automatic reporting of a design error and output value for every package.

R0 Disable reporting.

R1 Enable reporting.

S Status: This command displays a list of parameters that may be of interest for test and service purposes:

Output status:	Show if the output is "Forced" or ready for “Production"
DesignError, mean:	A filtered* value in mm
Output, mean:	A filtered* value (0-1000)
Machine Speed, p/h:	In packages per hour
Repeat length, mm:	The repeat length of the packaging material transferred from PLC
Prod Angle, const:	The Production Angle set from the PLC
Pot:	A value 0-1000 depending on the DesignAdjustment Pot position
Pc=, Ic=, Dc=:	The constants for the PID controller algorithm
Photocell Status:	Show if there is a failure of the photocells
* = Filter algorithm: 90%(old values) + 10%(new values)	

H Help Menu: displays the commands available

L Description of the function of the display on the front panel.

(Cont'd)

(Cont'd)

Y Displays a detailed status of the photocells for test and service purposes:

Commands OK: Commands failed:	Total number of commands executed by the photocells
Barcode decoded:	Total number of barcodes decoded by the TMCC2
Barcode errors:	Total number of barcodes missed by the TMCC2
Dynamic Threshold:	Photocell threshold
Light Spot:	Colour of the light spot used by the photocells
Output:	Logic of the photocell outputs (Light/Dark switching)
Photoswitch Working Hours	Number of hours that every LED of the photocell has been working
Photocell Software ver. / S.N.:	Software version of the photocell firmware and serial number

TMCC2 (FCS)

Configure a PC to be used as Windows terminal and connect it to the TMCC2 (FCS), see 9.2.1-2 TMCC2 Controller - Set Communication.

Enter the commands and parameters into the FCS program via the keyboard and execute them by pressing the RETURN key.
(The commands and parameters are not replicated on the terminal).
The functions described below are available:

Pnnn This command allows to change the proportional factor of the PID algorithm only during the production phase. The proportional factor is automatically changed after fifteen seconds from the production start in order to reach the steady proportional factor. If during this changing the level exits from the Filling OK window, the default values, downloaded from the PLC, are automatically restored.

Innn This command is equivalent to the **Pnnn** command but for the integral factor.

Dnnn This command is equivalent to the **Pnnn** command but for the derivative factor.

(Cont'd)

(Cont'd)

Qnnn This command changes the Start flow parameter. It is stored in the internal EEPROM and it will be used for the future start sequences.

Gnnn This command changes the Production flow parameter. It is stored in the internal EEPROM and it will be used for the future start sequences.

Cnnn This command changes the Cleaning flow parameter. It is restored to the value downloaded from the PLC at power on or reset.

Bnnn This command changes the Sterilisation flow parameter. It is restored to the value downloaded from the PLC at power on or reset.

Lnnn This command changes the Set point level parameter. The value introduced is in the range 0-1000 that corresponds to 0-100%. It is restored to the value downloaded from the PLC at power on or reset.

Mnnn This command changes the Minimum output parameter. The value introduced is in the range 0-255. It is restored to the value of 52 (corresponding at 4 mA) or 0 at power on or reset.

Unnn This command changes the prefilling threshold level parameter. The value introduced is in the range 0-1000 that corresponds to 0-100%. It is stored in the internal EEPROM and it will be used for the future start sequences.

Gnnn This command forces the analog output to a certain value which is **nnn**. F0 resets the forcing:

F0 Reset (disable) output force.

F1 Force to output = 1.

F2 Force to output = 2

...

F255 Force to output = 255

(Cont'd)

(Cont'd)

Rn **Reporting ON/OFF**. This command enables and disables the automatic reporting of the level, filtered level and output.

R0 Disable reporting.

R1 Enable reporting in form of three columns on the screen of the terminal.

R2 Enable reporting in form of chart on the screen of the terminal.

S This command sends the status of the cards and the value of the current parameter to the terminal screen:

Filling Controller Status	
Output status	Shows if the output is **Normal** or **Forced**.
P constant	Proportional parameter of the PID algorithm.
I constant	Integral parameter of the PID algorithm.
D constant	Derivative parameter of the PID algorithm.
Start flow	Constant value sent to I/P during start up.
Production flow	Constant value sent to I/P during production.
Cleaning flow	Constant value sent to I/P during cleaning.
Sterilisation flow	Constant value sent to I/P during sterilisation.
Minimum output	4 mA in case of 4 - 20 mA I/P.
Mean production flow	Average output value during production.
Set point	Desired value of the level (0 - 1000).
PreFilling	Treshold for the prefilling level (0 - 1000).

(Cont'd)

(Cont'd)

X This command sends the current configuration of the cards onto the terminal screen:

Filling Controller Configuration	
Type of output	0 - 10V, 0 - 20 mA or 4 - 20 mA
PreFillingMode	Prefilling enabled = ON Prefilling disabled = OFF
Autotuning on Prefilling level	Autotuning ON or OFF
Autotuning on Production flow	Autotuning ON or OFF
Autotuning on Start flow	Autotuning ON or OFF
PID trigger on	PID triggered by level or filtered level.
PID trigger level	Level where the PID is triggered (0 - 1000).
Filling OK Window	Amplitude of the Filling OK Window in percentage.
Steady P constant	Proportional constant when the controlling function is stable.
Steady I constant	Integral constant when the controlling function is stable.
Steady D constant	Derivative constant when the controlling function is stable.

H This command sends the help of the available command to the terminal screen:

Help Menu	
p<value>	changes the proportional factor
i<value>	changes the integral factor
d<value>	changes the derivative factor
q<value>	changes the start flow
g<value>	changes the production flow
c<value>	changes the cleaning flow
b<value>	changes the sterilisation flow
m<value>	changes the minimum output value
l<value>	changes the set point (1/1000)
u<value>	changes the prefilling level (1/1000)
f<value>	force the analog output (0 = No forcing)
r<value>	0 = report off, 1 = report on, 2 = chart on
s	send the status of the card
x	send the configuration of the card
h	show the available commands

9.2.2 Stepper Motor Driver

9.2.2-1 Stepper Motor Driver - Tube Positioning A425

SPC Reference	68450-0101

Set the multiswitches from SW1 to SW14, located on the volume stepper motor driver card (1) as shown in the table below.

Switch	Position	Function
SW1	F	100% gain analog control
SW2	Right	analog control in direct mode
SW3	Right	analog control in direct mode
SW4	Open	analog control in direct mode
SW5	Right	no analog control of internal clock
SW6	Open	no start/stop ramp speed 1
SW7	Closed	no start/stop ramp speed 2
SW8	Right	external clock
SW9	0	clock rate speed 1
SW10	0	clock rate speed 2
SW11	0	clock rate speed 3
SW12	0	clock rate speed 4
SW13	0	2.5 A current
SW14	Open	terminal 32 current input 0-10 V

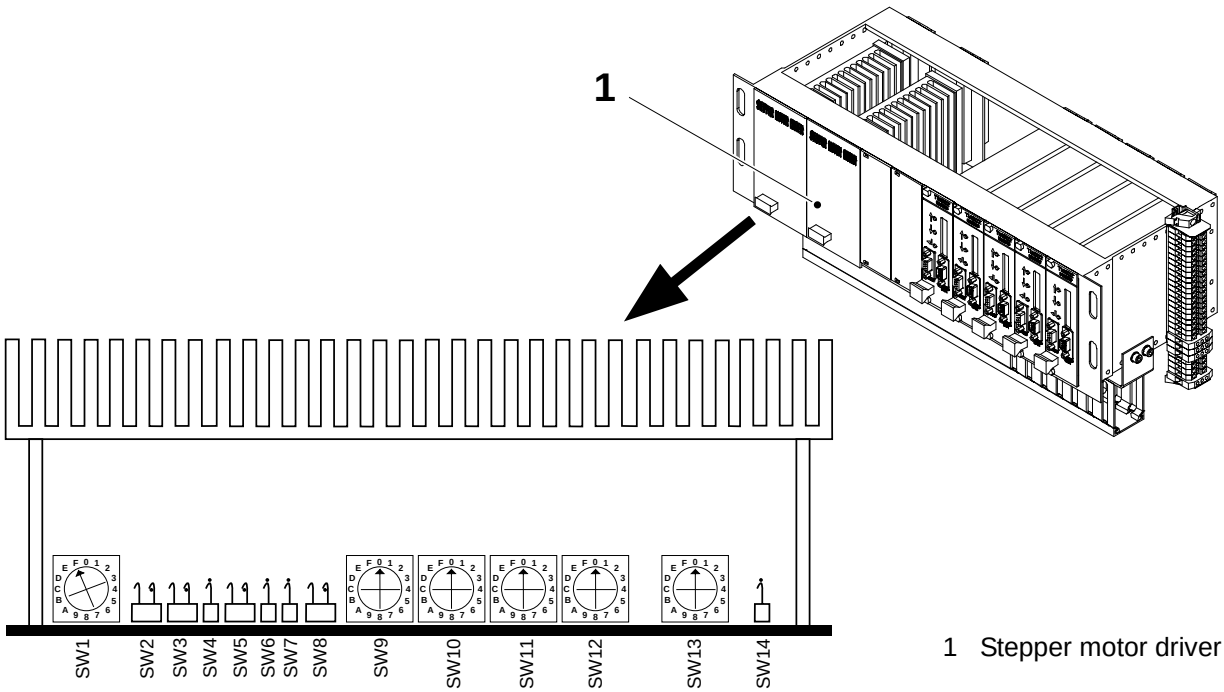

1 Stepper motor driver

9.2.2-2 Stepper Motor Driver - Volume Adjustment A424

SPC Reference	68450-0101

Set the multiswitches from SW1 to SW14, located on the paper guide stepper motor driver card (1) as shown in the table below.

Switch	Position	Function
SW1	F	100% gain analog control
SW2	Right	analog control in direct mode
SW3	Right	analog control in direct mode
SW4	Open	analog control in direct mode
SW5	Right	no analog control of internal clock
SW6	Open	no start/stop ramp speed 1
SW7	Closed	no start/stop ramp speed 2
SW8	Right	external clock
SW9	0	clock rate speed 1
SW10	0	clock rate speed 2
SW11	0	clock rate speed 3
SW12	0	clock rate speed 4
SW13	0	2.5 A current
SW14	Open	terminal 32 current input 0-10 V

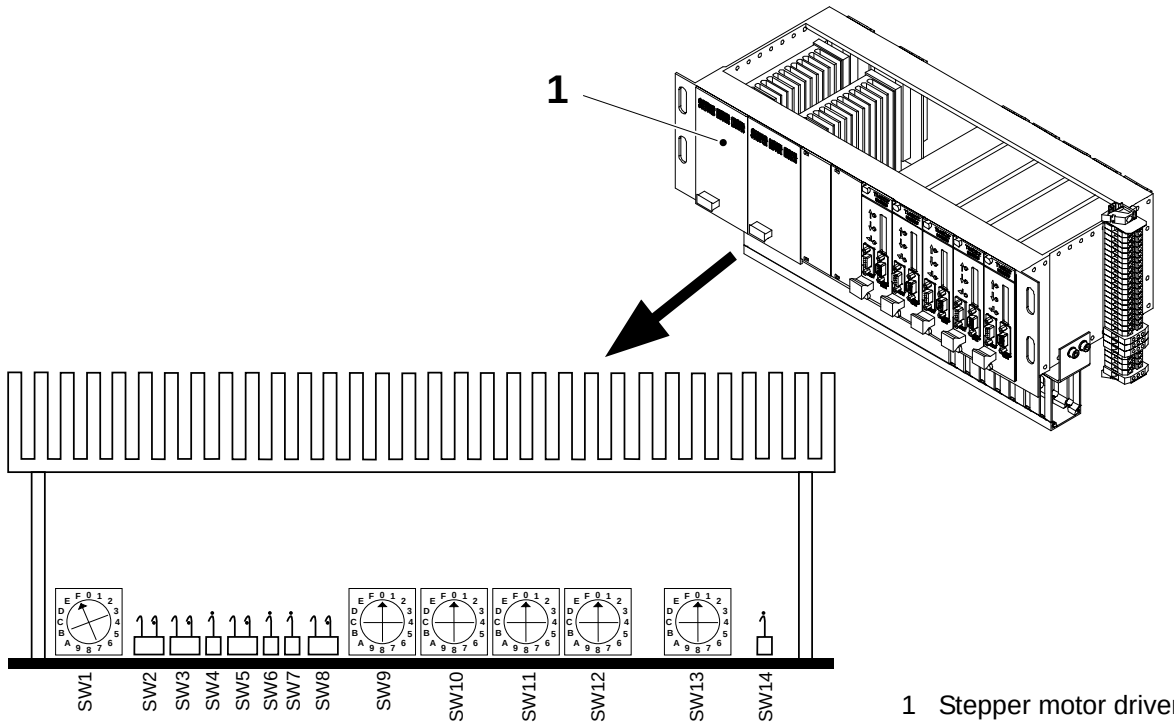

1 Stepper motor driver

9.2.3 Recorders (Honeywell)

9.2.3-1 Recorders (Honeywell)- Process Recorder Description

SPC Reference	90332-0020

Parameters

The process recorder registers the following parameters:

Channel No.	Type	Colour	Description
AN1	Analog	Blue	Hydrogen peroxide temperature. If the temperature of the sterile bath drops below its limit, the machine stops. The temperature range for this channel is 0° - 100°C, corresponding to the full paper range.
AN2	Analog	Brown	Top aseptic chamber temperature. If the temperature of the top aseptic chamber drops below its limit during PRODUCTION, the machine stops. The temperature range for this channel is 0°C - 200 °C, corresponding to the full paper range.
AN3	Analog	Black	Sterile air temperature. If the temperature of the air super heater drops below its limit, the machine shuts down. The temperature range for this channel is 0°C - 400 °C, corresponding to the full paper range.
AN4	Analog	Not defined	Not used
AN5	Analog	Not defined	Not used
AN6	Analog	Not defined	Not used
DI1	Digital	Purple	Sterile parameter caused machine shutdown (see Supervision, ...). Re-sterilisation is required. The process recorder records line 3 (from the zero reference) for 5 minutes after the stop. The normal position of this signal is line 5 (first thick line from the zero reference). On completion of filling machine sterilisation (drying finished), the process recorder records line 3 (status: on) for 30 seconds; see no. 1 on chart. The process recorder prints a supplementary batch text in conjunction with this signal. The batch text comprises five lines as follows: *Tetra Brik* *Aseptic* nr. ..... TBA/..... Batch (id No.) date - time (See no. 2 on chart) The operator can write the serial number and type of the filling machine on the dotted line.
DI2	Digital	Red	An operation parameter has caused the machine to stop (see Supervision,...). The process recorder records line 8 (from the zero reference) for 5 minutes after the stop. The normal position of this signal is line 10 (second thick line from the zero reference).
DI3	Digital	Green	Drive motor operating. When the main motor is ON, the process recorder records line 13. When the motor is OFF, it records line 15 (third thick line from the zero reference).
DI4	Digital	Black	Filling machine in production. When the filling machine is producing filled packages, the process recorder records line 18. When the machine is not in production, it records line 20 (forth thick line from the zero reference).

(Cont'd)

(Cont'd)

The figure below shows a sample process recorder printout.

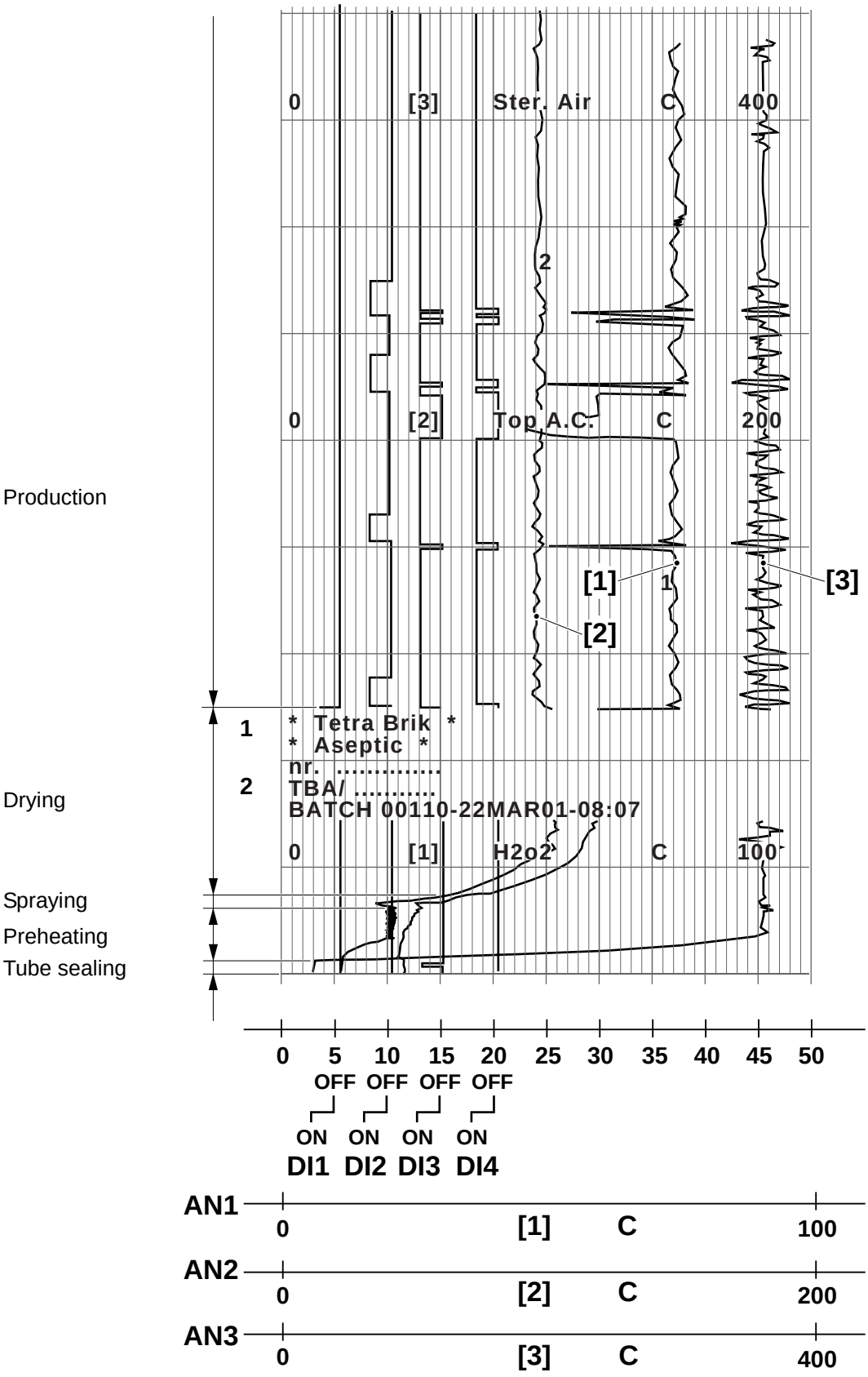

(Cont'd)

(Cont'd)

The power supply to the recorder is ON from PREPARATION to VENTING.

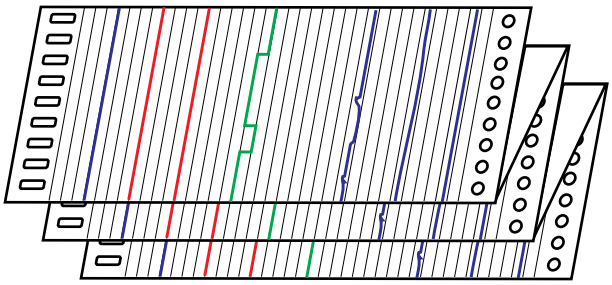

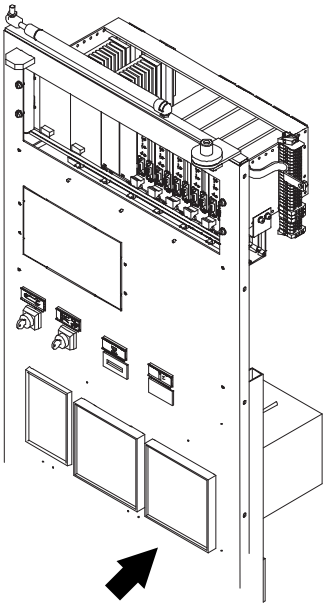

Passwords

The process recorder has two passwords, for different access privileges:

- Password #1 gives limited access to the configuration
- Password #2 gives full access

9.2.3-2 Recorders (Honeywell) - CIP Recorder Description

SPC Reference	90332-0020

Parameters

The CIP recorder registers the following parameters:

Channel No.	Type	Colour	Description
AN1	Analog	Not defined	Not used
AN2	Analog	Not defined	Not used
AN3	Analog	Not defined	Not used
AN4	Analog	Blue	It measures the concentration of the cleaning liquid during CIP. The signal is sent from the conductivity meter. The concentration range is 0-100 mS/cm full scale.
AN5	Analog	Brown	It measures the flow of the cleaning liquid during CIP. The signal comes from the flow meter. The flow range is 0-10 m^3/h full scale.
AN6	Analog	Black	It measures the temperature of the cleaning liquid during CIP. The signal comes from the conductivity meter. The temperature range is 0-100 C° full scale.

The power supply to the recorder is ON during cleaning.

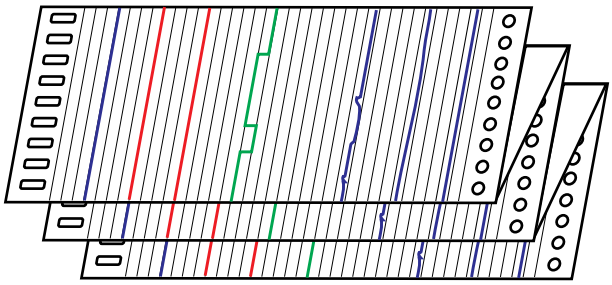

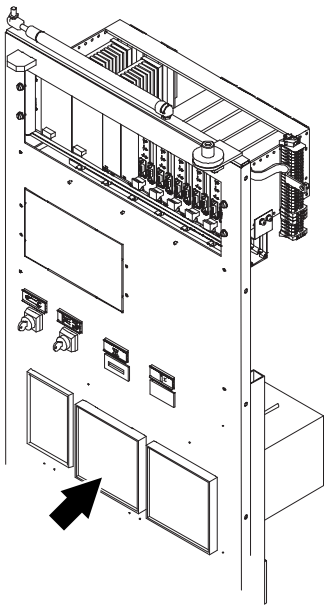

9.2.3-3 Recorders (Honeywell) - Set Chart Speed

SPC Reference	90332-0020

Note! For further information, see the Honeywell operator manual (Ref. EN1l-6136).

CAUTION
Any change to the process recorder program must be carried out by **skilled or instructed personnel** only! Changes should be carried out at a Tetra Pak service station.

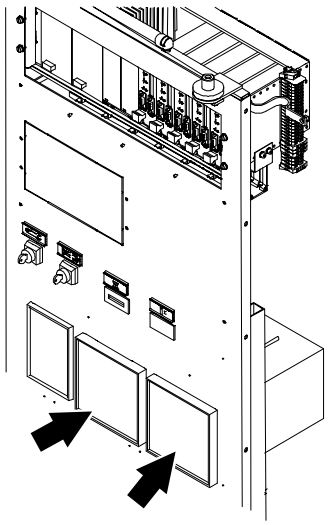

a) Open the front cover. Press SETUP (1).

b) Enter the password (password #1) and press ENTER (4).

c) Use the arrow keys (2) and (3) to select SPEED 1 (60 mm/h).

d) Press ENTER to confirm and then SETUP twice to return to normal operation. Close the front cover.

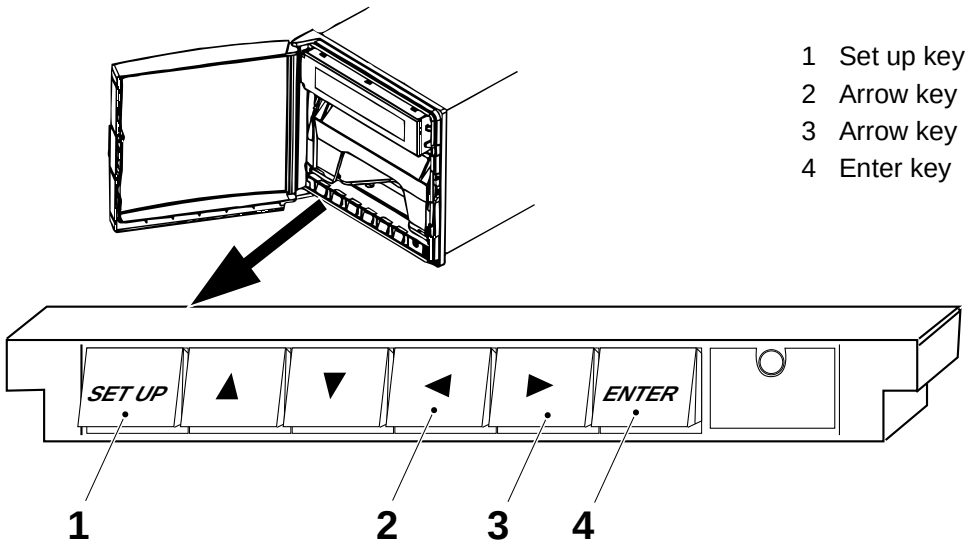

1 Set up key
2 Arrow key
3 Arrow key
4 Enter key

9.2.3-4 Recorders (Honeywell) - Set Date and Time

SPC Reference	90332-0020

Note! For further information, see the Honeywell operator manual (Ref. EN1l-6136).

a) Open the front cover. Press SETUP (1).

b) Press the arrow key (5) five times. The message R/W MISCEL appears on the display.

c) Press ENTER (6). The message MI1 TIME appears on the display.

d) Press ENTER twice to confirm. The time flashes on the display.

e) Use the arrow keys (2), (3), (4) and (5) to set the current time. Press ENTER to move from hours to minutes.

f) Press ENTER again to confirm.

g) Press the arrow key (5). The message MI1 DATE appears on the display.

h) Press ENTER to set the date.

i) Repeat items e) and f) to set the date.

j) Press SETUP (1) twice to return to normal operation. Close the front cover.

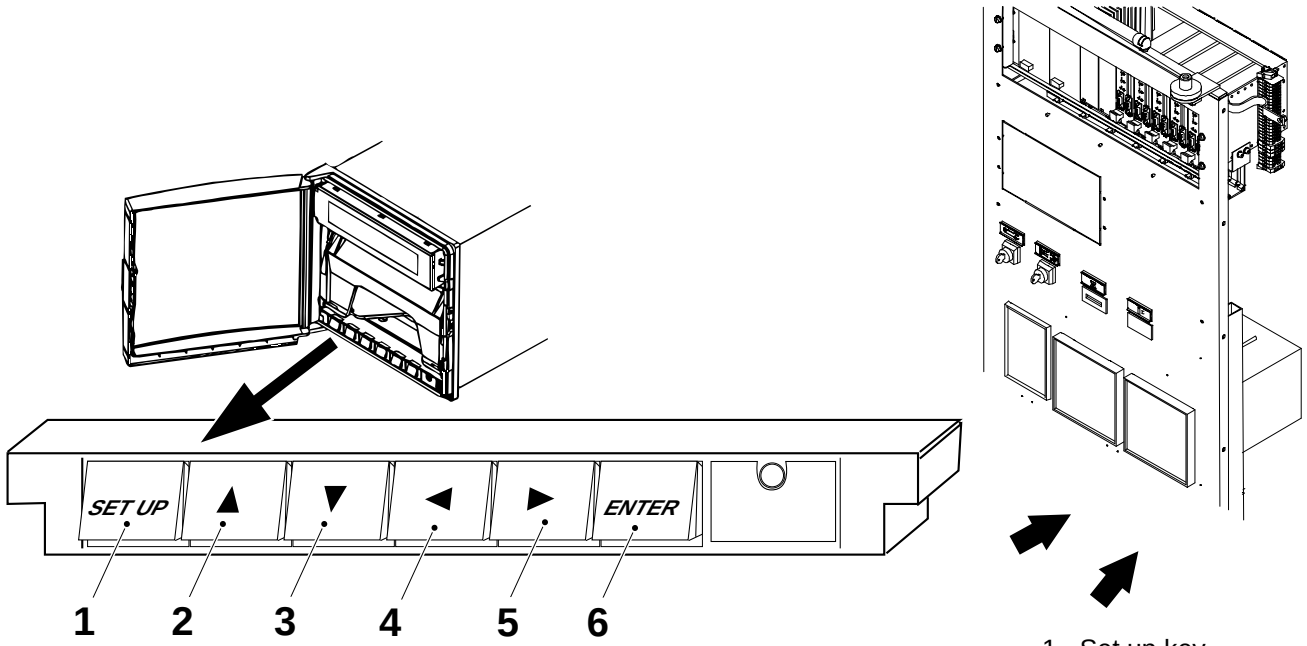

1 Set up key
2 Arrow key up
3 Arrow key down
4 Arrow key left
5 Arrow key right
6 Enter key

9.2.3-5 Recorders (Honeywell) - Clean Chart Carriage

SPC Reference	90332-0020

a) Open the front cover of the process recorder and pull out the chart cassette.

b) Open the cassette and remove the chart paper.

c) Clean the guide rods of the cassette with a dry cotton cloth.

d) Clean the cassette with a damp cloth.

Note! Do **not** lubricate!

e) Fit the chart paper. Close the cassette and fit it. Close the front cover of the recorder.

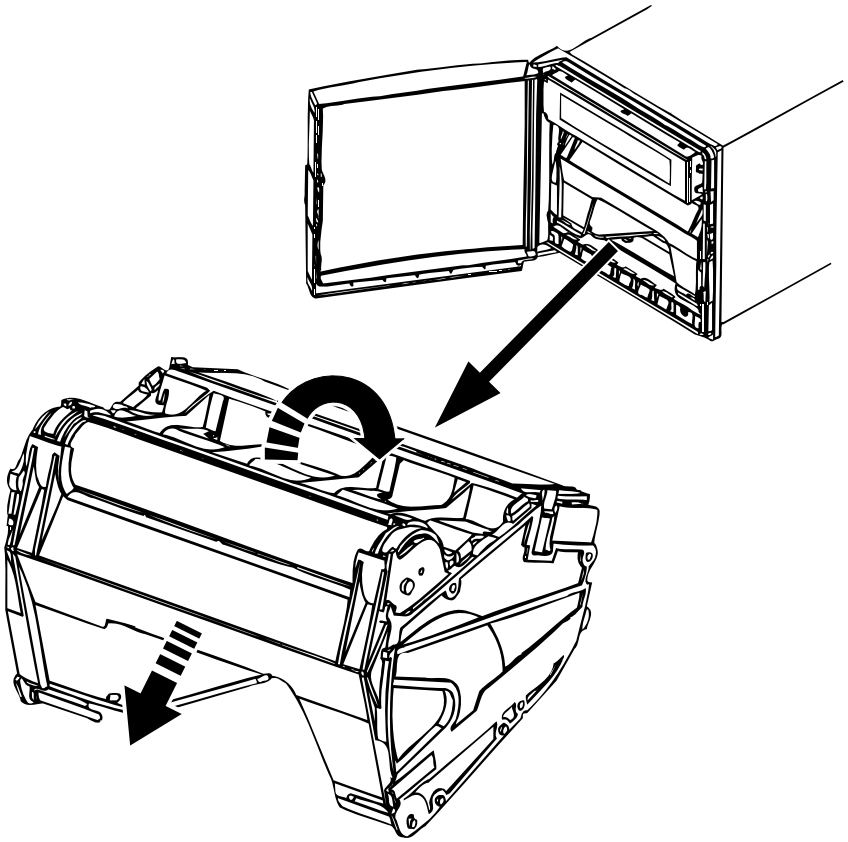

9.2.3-6 Recorders (Honeywell) - Change Fuse

SPC Reference	90332-0020

a) Swing out the panel of the electrical cabinet.

b) Change the fuse (1) at the rear of the process recorder.

c) Close the panel.

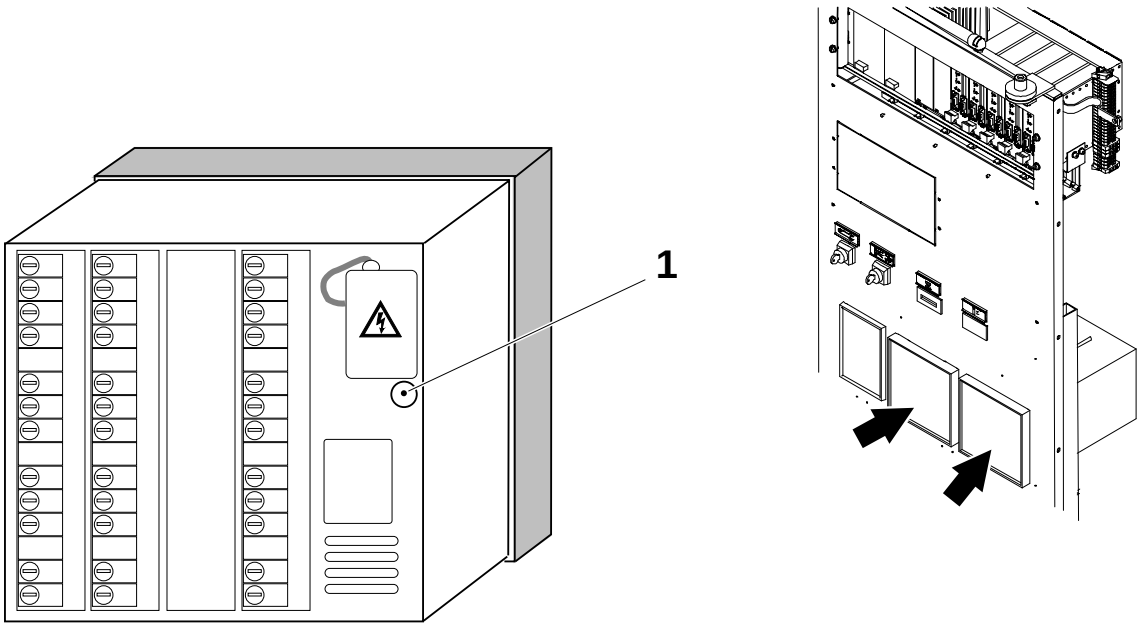

1 Fuse

9.2.3-7 Recorders (Honeywell) - Configuration Setting

SPC Reference	90332-0020

Note! For further information, see Honeywell Operator Manual

Parameter Selection

The ARROW keys (2) and (3) select the channel on which a parameter is to be read or written.

The ARROW keys (4) and (5) select parameters to be read or written.

Press ENTER to confirm a selection or press SETUP to return to main function.

If the recorder stops measuring and printing during configuration access, the CONFIRM message will be displayed.

Press ENTER to confirm or press SETUP to escape.

Value of Parameter

If you leave a key for a few seconds, the recorder will display alternately the name and the current value.

Parameter Modification

Press ENTER to begin the modification of a parameter.

The current value blinks.

Some parameters require text selection while others require numerical values.

The ARROW keys (2) and (3) select the appropriate text or increment/ decrement a numerical value.

The ARROW keys (4) and (5) shift the position of the digit to be changed.

Press ENTER to confirm a change.

Press SETUP to return to parameter selection.

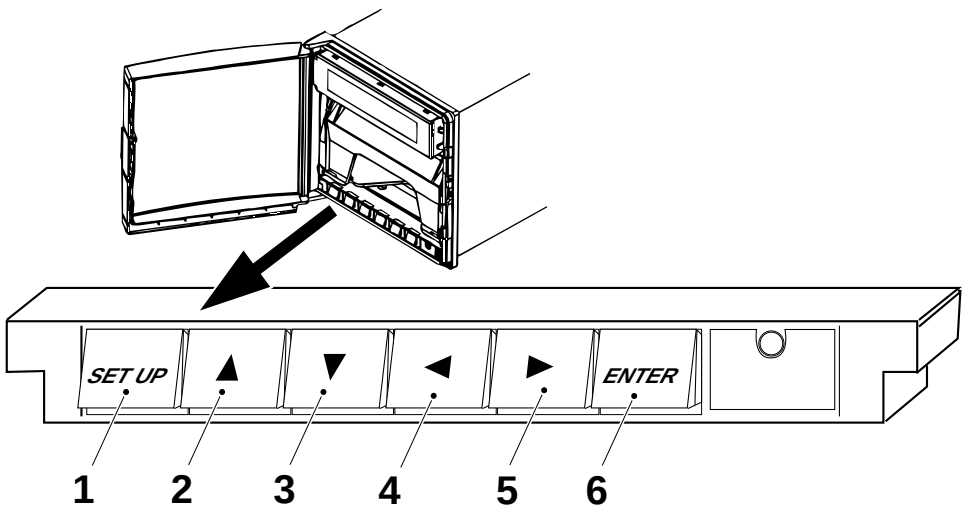

1 Set up key
2 Arrow key up
3 Arrow key down
4 Arrow key left
5 Arrow key right
6 Enter key

9.2.3-8 Recorders (Honeywell) - Configuration File Name P002

SPC Reference	90332-0020

Analog Inputs

CH #	Sensor	Range	T/C Comp	Filter	Low Val	High Val	Burnout	STD Math	CH #	Zero Adjust
Factory configuration	Thermocouple	J -50/150°C	None	0	-50	+150	No burnout	No	No	0
1	Thermocouple	K 0/400 C	None	0.000	0.000	400.000	No B.out	No opt math	Analog 1	0.000
2	Thermocouple	K 0/400 C	None	0.000	0.000	400.000	No B.out	No opt math	Analog 2	0.000
3	Thermocouple	K 0/400 C	None	0.000	0.000	400.000	No B.out	No opt math	Analog 3	0.000
4	No entry									
5	No entry									
6	No entry									

Analog Alarms

CH #	SP Value	Hysteres	Occurnce	Channel	AL Type	CH Diff	Relay #	Action	Message #	MSG Col	PRNT MSG	AL = Red
Factory configu-ration	0	0	0	1	None	1	No Relay	None	# 1	Red	No	No
1	0.000	0.000	0	Analog 1	None	Analog 1	No relay	No action	#12	Red	No message	No
2	0.000	0.000	0	Analog 1	None	Analog 1	No relay	No action	#12	Red	No message	No
3	0.000	0.000	0	Analog 1	None	Analog 1	No relay	No action	#12	Red	No message	No
4	0.000	0.000	0	Analog 1	None	Analog 1	No relay	No action	#12	Red	No message	No
5	0.000	0.000	0	Analog 1	None	Analog 1	No relay	No action	#12	Red	No message	No
6	0.000	0.000	0	Analog 1	None	Analog 1	No relay	No action	#12	Red	No message	No
7	0.000	0.000	0	Analog 1	None	Analog 1	No relay	No action	#12	Red	No message	No
8	0.000	0.000	0	Analog 1	None	Analog 1	No relay	No action	#12	Red	No message	No
9	0.000	0.000	0	Analog 1	None	Analog 1	No relay	No action	#12	Red	No message	No
10	0.000	0.000	0	Analog 1	None	Analog 1	No relay	No action	#12	Red	No message	No
11	0.000	0.000	0	Analog 1	None	Analog 1	No relay	No action	#12	Red	No message	No
12	0.000	0.000	0	Analog 1	None	Analog 1	No relay	No action	#12	Red	No message	No

(Cont'd)

(Cont'd)

Math

CH #	Function	Coef A	Coef B	Coef C	Var A	Var B	Var C	Start	Reset	Backup
Factory configuration	No	2.000	2.000	2.000	CH 1	CH 2	CH 3	Logic 1 closed	Logic 2 opened	Enable
1	No function	2.000	2.000	2.000	Analog 1	Analog 2	Analog 3	Log 1 closed	Logic 1 open	Enable
2	No function	2.000	2.000	2.000	Analog 1	Analog 2	Analog 3	Log 1 closed	Logic 1 open	Enable
3	No function	2.000	2.000	2.000	Analog 1	Analog 2	Analog 3	Log 1 closed	Logic 1 open	Enable
4	No function	2.000	2.000	2.000	Analog 1	Analog 2	Analog 3	Log 1 closed	Logic 1 open	Enable
5	No function	2.000	2.000	2.000	Analog 1	Analog 2	Analog 3	Log 1 closed	Logic 1 open	Enable
6	No function	2.000	2.000	2.000	Analog 1	Analog 2	Analog 3	Log 1 closed	Logic 1 open	Enable

Digital inputs

CH #	Type	CH Diff	Action	Relay #	Message #	MSG Col	PRNT MSG	TR Colour	Red TRAC	Trace	LOG CH Position
Factory configu-ration	0	0	0	1	None	1	No Relay	None	# 1	0	0
1	Dig closed	Digital 1	No action	No relay	#1	Purple	No std msg	Purple	No	Enable	7
2	Dig closed	Digital 2	No action	No relay	#2	Red	No std msg	Red	No	Enable	17
3	Dig closed	Digital 3	No action	No relay	#3	Green	No std msg	Green	No	Enable	27
4	Dig closed	Digital 4	No action	No relay	#4	Black	No std msg	Black	No	Enable	38

Messages

	MESSAGE #
Factory configuration	No message
1	Sterile P.
2	Operational P.
3	Main Motor on
4	Production
5	
6	
7	
8	
9	
10	
11	
12	

(Cont'd)

(Cont'd)

Chart

CH #	TAG Name	Eng Unit	Decimal	Min RG1	Max RG1	RG1 Col	Min RG2	Max RG2	RG2 Col	Zoning	Trace	RG Used
Factory configu-ration	No tag	No Eng.U.		-50	+150	*	-50	+150	**	0 to 100%	Analog input #	With RG1
1	H2O2	1/2C	XXX.X	0.00000	100.00000	Blue	-50.00000	150.00000	Purple	0..100% PAP	Analog 1	With R1
2	Top A.C.	1/2C	XXX.X	0.00000	200.00000	Brown	-50.00000	150.00000	Red	0..100% PAP	Analog 2	With R1
3	Ster. Air	1/2c	XXX.X	0.00000	400.00000	Black	-50.00000	150.00000	Black	0..100% PAP	Analog 3	With R1
4			XXXXX	0.00000	50.00000	Red	-50.00000	150.00000	Red	0..100% PAP	Analog 4	With R1
5			XXXXX	-50.00000	150.00000	Red	-50.00000	150.00000	Red	0..100% PAP	Analog 5	With R1
6			XXXXX	-50.00000	150.00000	Red	-50.00000	150.00000	Red	0..100% PAP	Analog 6	With R1

Miscellaneous

	Time	Date	Language	IDNTIF #	Frequency	PSSWRD 1	PSSWRD 2	Math Pak	Use Conf
Factory configuration	*	*	**	1	+50	None	None	None	Conf 1
			English		50 Hz				

Batch

	Start	Reset	Backup	Batch #	Line 1	Line 2	Line 3	Line 4
Factory configuration	None	No Reset	Enable	1	No	No	No	No
	Log 1 closed	No reset	13	0	TBA/.....	nr.....	*Aseptic*	*Tetra Brik*

Printer

	Chart LG	SPD Unit	Speed 1	Speed 2	SPD Used	TABU LAR 1	TABU LAR 2	Rec Mode	PRT Mode	PRT INTV	PRT PV	PRT Range	PRT Time	PRT TAG	Pen Off
Factory configu -ration	Roll = 24000 Fanfold =18000	mm/h	60	120	SPD1			Print	Trend	120 mm	Enable	Enable	Enable	Disable	Disable
	18000.00	Unit= mm/h	60.000	120.000	Speed 1 used			Print	Trend	60 mm	Disable	Enable	Enable	Disable	

Event

	Type	Relay #	Display
Factory configuration		No relay	Enable
1	Cassette out	Relay 1	Enable
2	End Paper	Relay 1	Enable
3	Battery	Relay 1	Enable
4	Alarm	No relay	Disable
5	Bumout	No relay	Disable
6	Shed time	No relay	Disable
7		No relay	Disable
8		No relay	Disable

MMI

	Key Down	Key Up	Key Left	Key Right	Display	Bright
Factory configuration	Enable	Enable	Enable	Disable	True	80%
	Enable	Disable	Enable	Disable	Trace & tag	>> (80%)

(Cont'd)

(Cont'd)

Communication

	Protocol	Connect	Address	Bauds	Bits	Parity	Stop	Schedtime	Phone Id	Phone #	Autodial
Factory configuration											
	Ascii	RS232	5	9600	10	None	1 Stop bit	3000	123456789012	1234567	No call

Report

	Start At	Paragraph	Freqeuncy
Factory configuration			
	12.00	1/4 hours	Never

Current output

Output	Ch #	Low Val	High Val
Factory configuration			
1	None	0.00000	100.00000
2	None	0.00000	100.00000
3	None	0.00000	100.00000
4	None	0.00000	100.00000
5	None	0.00000	100.00000
6	None	0.00000	100.00000

9.2.3-9 Recorders (Honeywell) - Configuration File Name P003

SPC Reference	90332-0020

Analog Inputs

Ch #	Sensor	Range	T/c Comp	Filter	Low Val	High Val	Burnout	Opt Math	Ch #	Zero Adjust
Factory configuration	Thermocouple	J -50/150°C	None	0	-50	+150	No burnout	No	No	0
1	No entry									
2	No entry									
3	No entry									
4	Tr linear	Lin 0/5V	Analog 4	0.000	0.000	100.000	No B.out	No opt math	Analog 4	0.000
5	Tr linear	Lin 0/5V	Analog 5	0.000	0.000	10.000	No B.out	No opt math	Analog 5	0.000
6	Tr linear	Lin 0/5V	None	0.000	0.000	100.000	No B.out	No opt math	None	0.000

Analog Alarms

Ch #	Sp Value	Hysteres	Occurnce	Channel	Al Type	Ch Diff	Relay #	Action	Message #	Msg Col	Prnt Msg	Al = Red
Factory configu-ration	0	0	0	1	None	1	No Relay	None	# 1	Red	No	No
1	0.000	0.000	0	Analog 1	None	Analog 1	No relay	No action	#12	Red	No message	No
2	0.000	0.000	0	Analog 1	None	Analog 1	No relay	No action	#12	Red	No message	No
3	0.000	0.000	0	Analog 1	None	Analog 1	No relay	No action	#12	Red	No message	No
4	0.000	0.000	0	Analog 1	None	Analog 1	No relay	No action	#12	Red	No message	No
5	0.000	0.000	0	Analog 1	None	Analog 1	No relay	No action	#12	Red	No message	No
6	0.000	0.000	0	Analog 1	None	Analog 1	No relay	No action	#12	Red	No message	No
7	0.000	0.000	0	Analog 1	None	Analog 1	No relay	No action	#12	Red	No message	No
8	0.000	0.000	0	Analog 1	None	Analog 1	No relay	No action	#12	Red	No message	No
9	0.000	0.000	0	Analog 1	None	Analog 1	No relay	No action	#12	Red	No message	No
10	0.000	0.000	0	Analog 1	None	Analog 1	No relay	No action	#12	Red	No message	No
11	0.000	0.000	0	Analog 1	None	Analog 1	No relay	No action	#12	Red	No message	No
12	0.000	0.000	0	Analog 1	None	Analog 1	No relay	No action	#12	Red	No message	No

Math

Ch #	Function	Coef A	Coef B	Coef C	Var A	Var B	Var C	Start	Reset	Backup
Factory configuration	No	2.000	2.000	2.000	CH 1	CH 2	CH 3	Logic 1 closed	Logic 2 opened	Enable
1	No function	2.000	2.000	2.000	Analog 1	Analog 2	Analog 3	Log 1 closed	Logic 1 open	Enable
2	No function	2.000	2.000	2.000	Analog 1	Analog 2	Analog 3	Log 1 closed	Logic 1 open	Enable
3	No function	2.000	2.000	2.000	Analog 1	Analog 2	Analog 3	Log 1 closed	Logic 1 open	Enable
4	No function	2.000	2.000	2.000	Analog 1	Analog 2	Analog 3	Log 1 closed	Logic 1 open	Enable
5	No function	2.000	2.000	2.000	Analog 1	Analog 2	Analog 3	Log 1 closed	Logic 1 open	Enable
6	No function	2.000	2.000	2.000	Analog 1	Analog 2	Analog 3	Log 1 closed	Logic 1 open	Enable

Digital Inputs

Ch #	Type	Ch Diff	Action	Relay #	Message #	Msg Col	Prnt Msg	TR Colour	Red Trac	Trace	Log Ch Position
Factory configuration	0	0	0	1	None	1	No Relay	None	# 1	0	0
1	Dig closed	Digital 1	No action	No relay	#1	Purple	No std msg	Purple	No	Disable	7
2	Dig closed	Digital 2	No action	No relay	#2	Red	No std msg	Red	No	Disable	17
3	Dig closed	Digital 3	No action	No relay	#3	Green	No std msg	Green	No	Disable	27
4	Dig closed	Digital 4	No action	No relay	#4	Black	No std msg	Black	No	Disable	38

(Cont'd)

(Cont'd)

Messages

	MESSAGE
Factory configuration	No message
1	
2	
3	
4	Conductivity
5	Flow
6	Temperature
7	
8	
9	
10	
11	
12	

Chart

Ch #	Tag Name	Eng Unit	Decimal	Min Rg1	Max Rg1	Rg1 Col	Min Rg2	Max Rg2	Rg2 Col	Zoning	Trace	Rg Used
Factory configu-ration	No tag	No Eng.U.		-50	+150	*	-50	+150	**	0 to 100%	Analog input #	With RG1
1			XXX.X	0.00000	100.00000	Blue	-50.00000	150.00000	Purple	0..100% PAP	No trace	With R1
2			XXX.X	0.00000	200.00000	Brown	-50.00000	150.00000	Red	0..100% PAP	No trace	With R1
3			XXX.X	0.00000	400.00000	Black	-50.00000	150.00000	Black	0..100% PAP	No trace	With R1
4	Cond. ty	mS/cm	XX.XX	0.00000	100.00000	Blue	-50.00000	150.00000	Red	0..100% PAP	Analog 4	With R1
5	Flow	m3/h	XXX.X	0.00000	10.00000	Brown	-50.00000	150.00000	Red	0..100% PAP	Analog 5	With R1
6	Temper.	1/2C	XXX.X	0.00000	100.00000	Black	-50.00000	150.00000	Red	0..100% PAP	Analog 6	With R1

Miscellaneous

	Time	Date	Language	Idntif #	Frequency	Psswrd 1	Psswrd 2	Math Pak	Use Conf
Factory configuration	*	*	**	1	+50	None	None	None	Conf 1
			English		50 Hz				

Batch

	Start	Reset	Backup	Batch #	Line 1	Line 2	Line 3	Line 4
Factory configuration	None	No Reset	Enable	1	No	No	No	No
	Log 1 closed	No reset	13	0	TBA/.....	nr.....	*Aseptic*	*Tetra Brik*

Printer

	Chart Lg	Spd Unit	Speed 1	Speed 2	Spd Used	Tab 1	Tab 2	Rec Mode	Prt Mode	Prt Intv	Prt Pv	Prt Rang	Prt Time	Prt Tag	Pen Off
Factory configu -ration	Roll = 24000 Fanfold =18000	mm/h	60	120	SPD1			Print	Trend	120 mm	Enable	Enable	Enable	Disable	Disable
	18000.00	mm/h	60.000	120.000	Speed 1			Print	Trend	60 mm	Disable	Enable	Enable	Disable	

(Cont'd)

(Cont'd)

Event

	Type	Relay #	Display
Factory configuration		No relay	Enable
1	Cassette out	Relay 1	Enable
2	End Paper	Relay 1	Enable
3	Battery	Relay 1	Enable
4	Alarm	No relay	Disable
5	Bumout	No relay	Disable
6	Shed time	No relay	Disable
7		No relay	Disable
8		No relay	Disable

MMI

	Key Down	Key Up	Key Left	Key Right	Display	Bright
Factory configuration	Enable	Enable	Enable	Disable	True	80%
	Enable	Disable	Enable	Disable	Trace & tag	>> (80%)

Communication

	Protocol	Connect	Address	Bauds	Bits	Parity	Stop	Schedtime	Phone Id	Phone #	Autodial
Factory configuration											
	Ascii	RS232	5	9600	10	None	1 Stop bit	3000	123456789012	1234567	No call

Report

	Start At	Paragraph	Frequncy
Factory configuration			
	12.00	1/4 hours	Never

Current Output

Output	Ch #	Low Val	High Val
Factory configuration			
1	None	0.00000	100.00000
2	None	0.00000	100.00000
3	None	0.00000	100.00000
4	None	0.00000	100.00000
5	None	0.00000	100.00000
6	None	0.00000	100.00000

9.2.4 Recorders (Jumo)

9.2.4-1 Recorders (Jumo)- Process Recorder Description

SPC Reference	1350702-0200

Parameters

The recorder registers the following parameters:

Record type	Channel No.	Type	Colour	Description
Process record	AN1	Analog	Blue	**Hydrogen peroxide temperature** If the temperature of the sterile bath drops below its limit (70°), the machine stops. The temperature range for this channel is 0 - 100 °C, corresponding to the full paper range.
Process record	AN2	Analog	Brown	**Top aseptic chamber temperature** If the temperature of the top aseptic chamber drops below 95 °C during Production, the machine stops. The temperature range for this channel is 0 - 200 °C, corresponding to the full paper range.
Process record	AN3	Analog	Black	**Sterile air temperature** If the temperature of the air super heater drops below its limit, the machine shuts down. The temperature range for this channel is 0 - 400 °C, corresponding to the full paper range.
CIP record	AN4	Analog	Blue	**Cleaning solution conductivity** It measures the conductivity of the cleaning solution during CIP. The signal is sent from the conductivity meter. The conductivity range for this channel is 0 - 100 mS full scale, corresponding to the full paper range.
CIP record	AN5	Analog	Brown	**Cleaning solution flow** It measures the flow of the cleaning solution during CIP. The signal comes from the flow meter. The flow range for this channel is 0 - 15 m^3/h full scale, corresponding to the full paper range.
CIP record	AN6	Analog	Black	**Cleaning solution temperature** It measures the temperature of the cleaning solution during CIP. The signal comes from the conductivity meter. The temperature range for this channel is 0 - 100 °C full scale, corresponding to the full paper range.

(Cont'd)

(Cont'd)

Record type	Channel No.	Type	Colour	Description
Process record	DI1	Digital	Purple	**Sterile parameter** Sterile parameter caused a machine shutdown (see Supervision, ...). Re-sterilisation is required. The process recorder records line 22 (100 unit paper) as long as the machine is sterile. The normal position of this signal is line 20 (100 unit paper).
Process record	DI2	Digital	Red	**Operation parameter** An operation parameter has caused the machine to stop (see Supervision, ...). The process recorder records line 25 (100 unit paper) for 5 minutes after the stop. This channel also records internal cleaning (Ready for CIP + Signal from CIP valve on). The normal position of this signal is line 23 (100 unit paper).
Process record	DI3	Digital	Green	**Drive motor operating** When the main motor is On, the process recorder records line 28 (100 unit paper). When the main motor is Off, it records line 26 (100 unit paper).
Process record	DI4	Digital	Black	**Filling machine in production** When the filling machine is producing filled packages, the process recorder records line 31 (100 unit paper). When the machine is not in production, it records line 29 (100 unit paper).

(Cont'd)

(Cont'd)

The figure below shows a sample from a printout of the process.

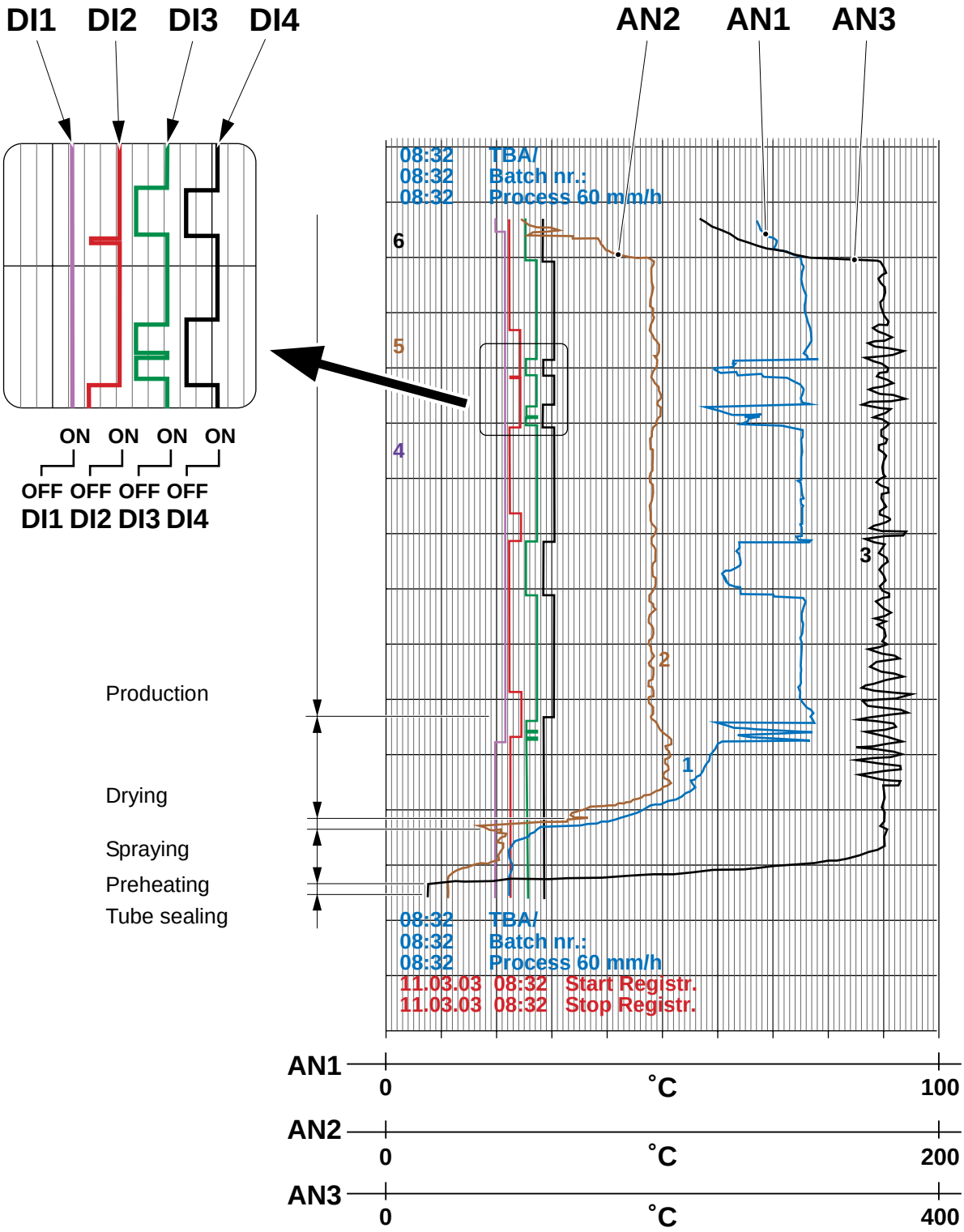

(Cont'd)

(Cont'd)

The figure below shows a sample from a printout of the CIP.

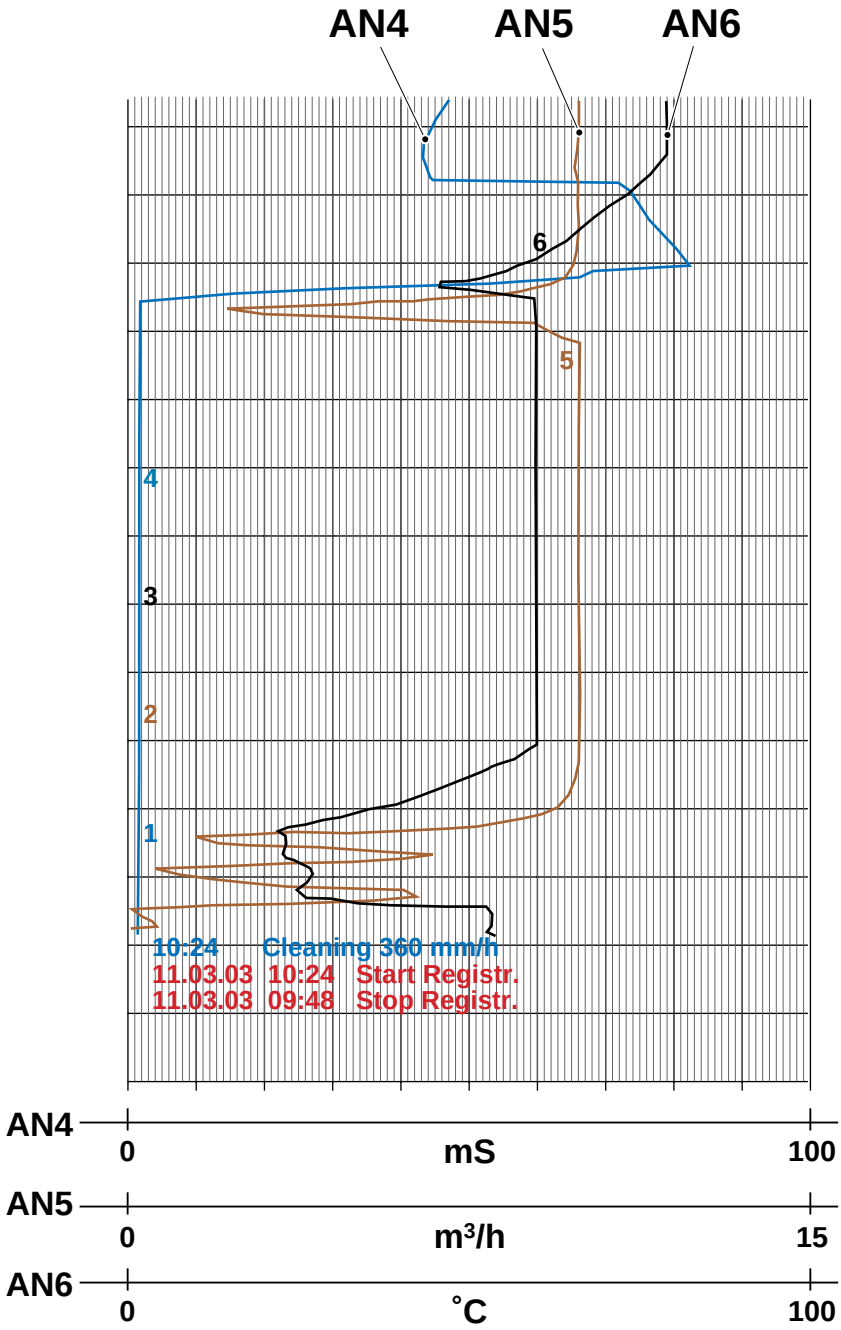

(Cont'd)

(Cont'd)

The paper cassette autonomy is about **10** days (paper length **16 m**).

The print head autonomy is about **5 months** at optimum conditions (with the recorder running 24 hours a day).

Passwords

The process recorder has two passwords, for different access privileges:

- Password #1 gives full access to the configuration of parameters
- Password #2 - is not used.



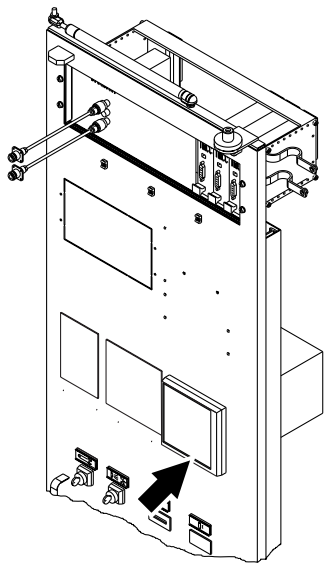

9.2.4-2 Recorders (Jumo) - Set Recorder

SPC Reference	1350702-0200

Note! For further information, see the JUMO operator manual.

Set Language

a) Open the front door (1) of the recorder.

b) Press both the ARROW DOWN button (2) and the ARROW UP button (3), at the same time, **twice**.

c) Enter the code password #1, four digits, by using the ARROW buttons (2), (3), (4) and (5).

d) Press the ENTER button (6). The message P-LEVEL appears on the display.

e) Press the ARROW UP button (3).

f) Press the ENTER button (6). Set the language by using the ARROW buttons (2) and (3).

g) Press the ENTER button (6) and then the EXIT button (7).

Note! In the parameter level the FAST FEED button works in the same way as the EXIT button (7).

h) Close the front door (1) and wait until the recorder is ready.

Note! As long as the display is flashing the recorder is initialized with the new data.

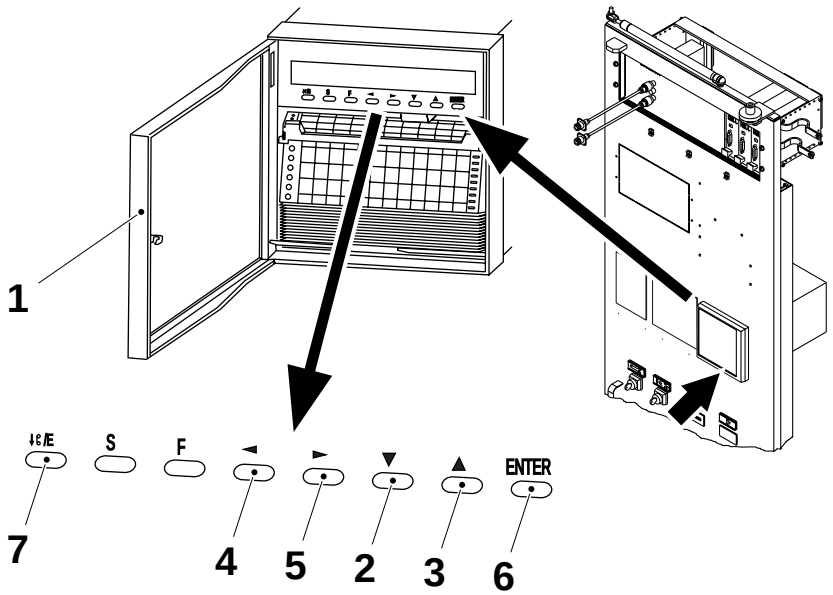

1 Door
2 Arrow down button
3 Arrow up button
4 Arrow left button
5 Arrow right button
6 Enter button
7 Exit button

(Cont'd)

(Cont'd)

Set Date and Time

a) Open the front door (1) of the recorder.

b) Press both the ARROW DOWN button (2) and the ARROW UP button (3), at the same time, **twice**.

c) Enter the code password #1, four digits, by using the ARROW buttons (2), (3), (4) and (5).

d) Press the ENTER button (6). The message P-LEVEL appears on the display.

e) Press the ARROW UP button (3) twice.

f) Press the ENTER button (6). Set the date by using the ARROW buttons (2), (3), (4) and (5), (day - month - year).

g) Press the ENTER button (6). Set the weekday by using the ARROW buttons (2) and (3).

h) Press the ENTER button (6). Set the time by using the ARROW buttons (2), (3), (4) and (5), (hours - minutes).

i) Press the ENTER button (6) and then the EXIT button (7).

Note! In the parameter level the FAST FEED button works in the same way as the EXIT button (7).

j) Close the front door (1) and wait until the recorder is ready.

Note! As long as the display is flashing the recorder is initialized with the new data.

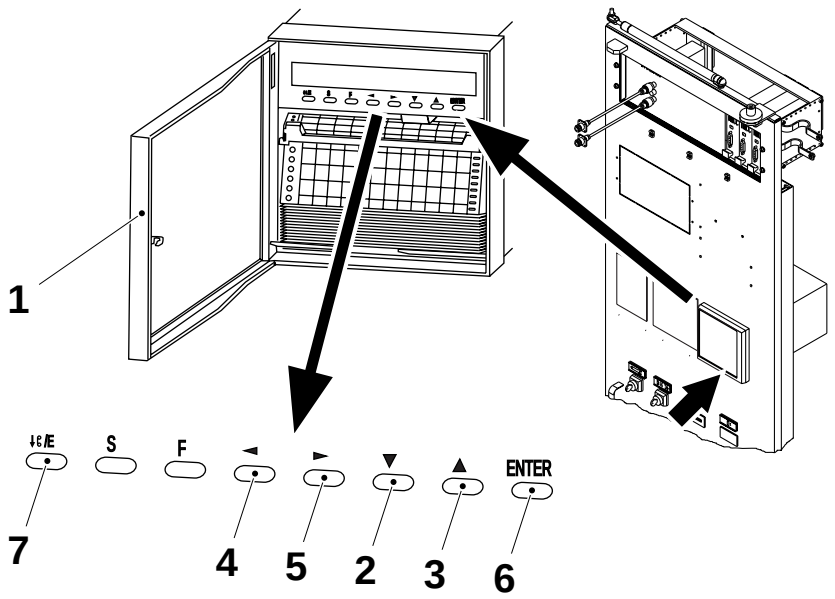

1 Door
2 Arrow down button
3 Arrow up button
4 Arrow left button
5 Arrow right button
6 Enter button
7 Exit button

9.2.4-3 Recorders (Jumo) - Clean Chart Carriage

SPC Reference	1350702-0200

a) Open the front door (1) of the recorder and push the button (2) downwards.

b) Pull out the chart cassette (3) and open the paper guides (4) and (5).

c) Remove the chart paper (6).

d) Clean the guide rods of the cassette (3) with a dry cotton cloth.

e) Clean the cassette (3) with a damp cloth.

Note! Do **not** lubricate!

f) Fit the chart paper (6) with the round holes (7) on the LH side.

g) Close the paper guides (4) and (5).

h) Fit the cassette (3) and close the front door (1).

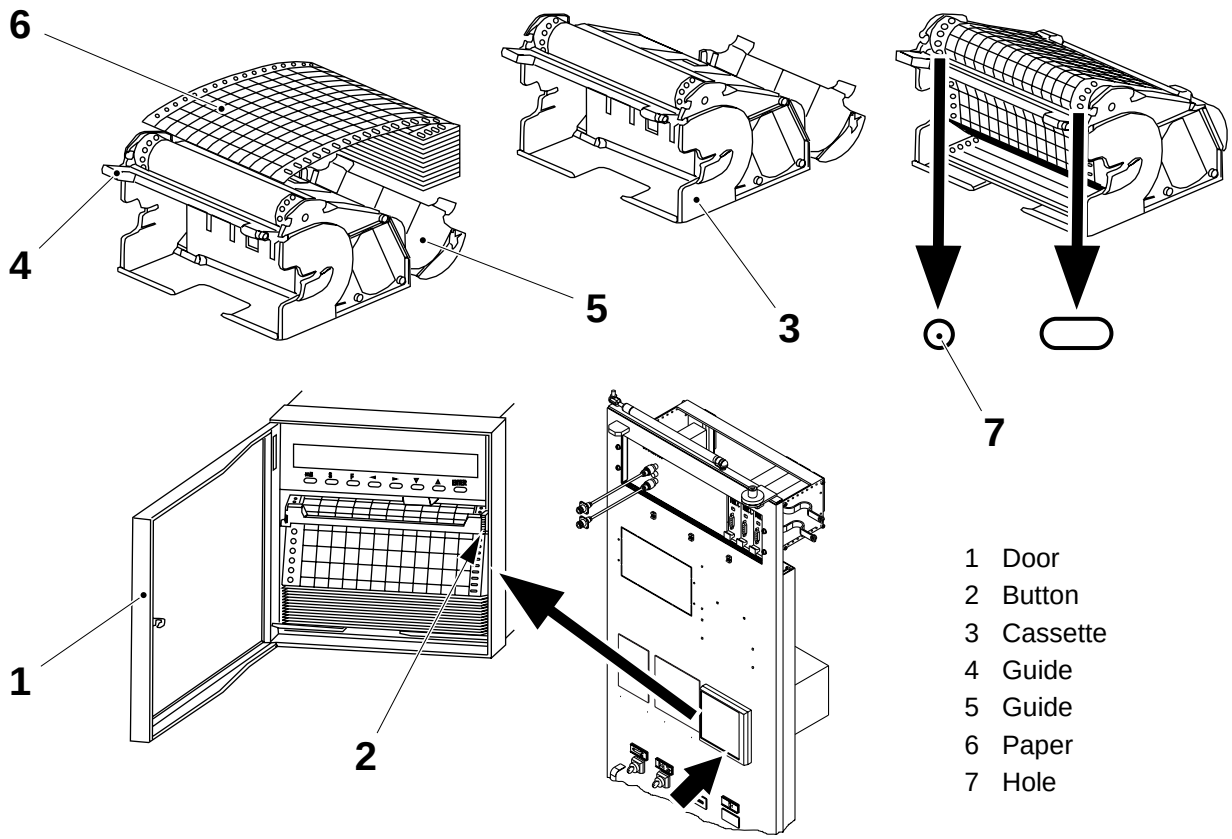

1 Door
2 Button
3 Cassette
4 Guide
5 Guide
6 Paper
7 Hole

9.2.4-4 Recorders (Jumo) - Calibrate

Tools - Calibrator (Micromite II) - Thermocouple Cable	 TP No. 90410-338 TP No. 90220-034
SPC Reference	1350702-0200

Note! Only the process recorder channels are able to calibrate.

a) Turn the mains power ON (at least 15 minute before setting).

b) Connect the thermocouple cable to the + input (1) (yellow lead) and the - input (2) (red lead).

c) Push the ON/OFF key (3) to switch ON the instrument.

Note! Make sure that the instrument is switched OFF. In the case of the AC-adapter it must be disconnected or the batteries removed. Failure to do so will cause the instrument to lose the set-up information.

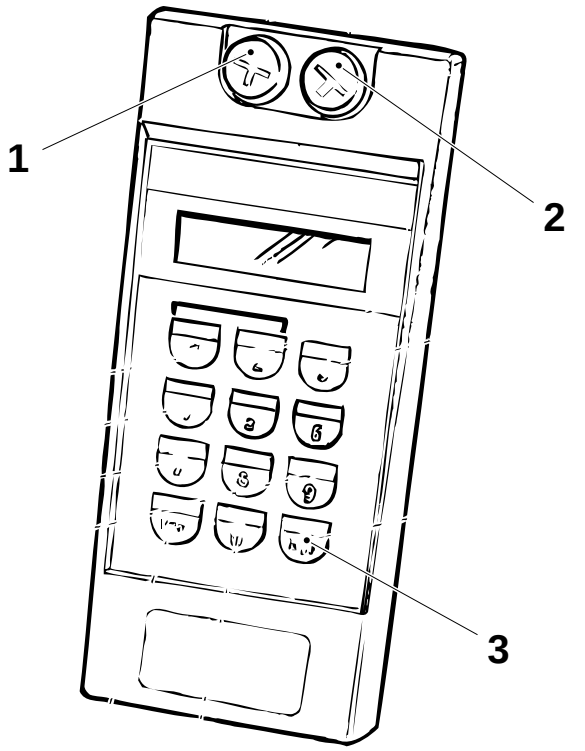

1 Input (+)
2 Input (-)
3 On/Off key

(Cont'd)

(Cont'd)

d) Push the F/C key (4) to select “centigrade”.

e) Push the SELECT key (5) and the SENSOR key (6).

f) Select the thermocouple type. Move the flashing cursor to the right or to the left by pushing the UP (7) or DOWN (8) keys.

g) Push the ENTER key (9) when the cursor is indicating TYPE K.

h) Push the SELECT key (5) and the OUTPUT **1** key (10) to set the output temperature. Use the numeric keys to type in the temperature to:

   – **100 °C** for channel **1**

   – **200 °C** for channel **2**

   – **400 °C** for channel **3**.

Push the ENTER key (9). To clear an output value, simultaneously push the INPUT key (11) and the SENSOR key (6).

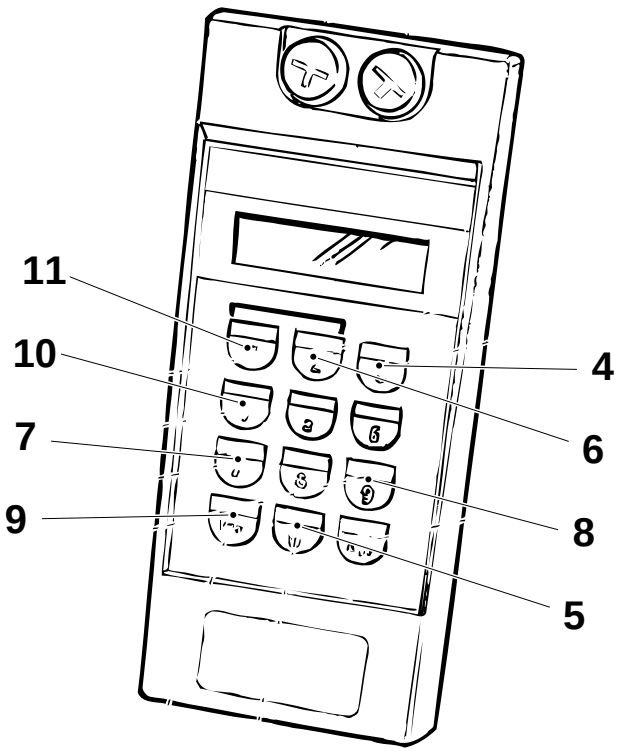

4 F/C key
5 Select key
6 Sensor key
7 Up key
8 Down key
9 Enter key
10 Output 1 key
11 Input key

(Cont'd)

(Cont'd)

i) Connect the micromite instrument as a replacement of a temperature sensor by means of the thermocouple cable to channel **1**.
   - remove the yellow cable from the channel connector (12) and fit the + input (1) (yellow lead) from the thermocouple cable
   - remove the red cable from the channel connector (12) and fit the - input (2) (red lead) from the thermocouple cable.

Note! Measure the channel **1** (100 °C), the channel **2** (200 °C) and the channel **3** (400 °C) one at the time.

j) Check that the value on the recorder display is correct for that channel. If the value is not correct then note the value for that channel.

k) Check also the channels **2** and **3** according to item i) and j).

l) Disconnect the micromite instrument and fit back all the yellow and red cables to the recorder. Check that all connections to the recorder are correct according to the EM.

m) If required, calibrate the channels **1**, **2** and **3**, see section Calibrate Channel on page 9-102.

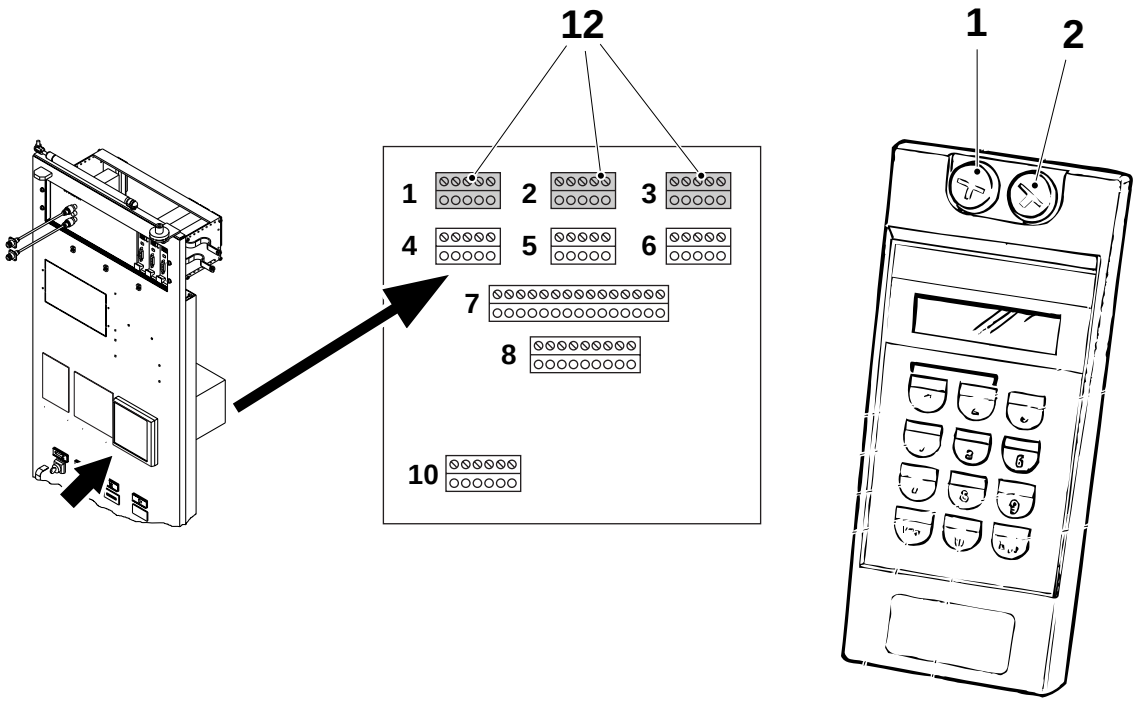

1 Input (+)
2 Input (-)
12 Channel connector

(Cont'd)

(Cont'd)

Calibrate Channel

a) Open the front door (1) of the recorder.

b) Press both the ARROW DOWN button (2) and the ARROW UP button (3), at the same time, **twice**.

c) Enter the code password #1, four digits, by using the ARROW buttons (2), (3), (4) and (5).

d) Press the ENTER button (6). The message P-LEVEL appears on the display.

e) Press both the ARROW DOWN button (2) and the ARROW UP button (3) at the same time, **three times**. The message **C3** appears on the display.

f) Press the ARROW DOWN button (2) until the message P appears on the display. Press the ENTER button (6).

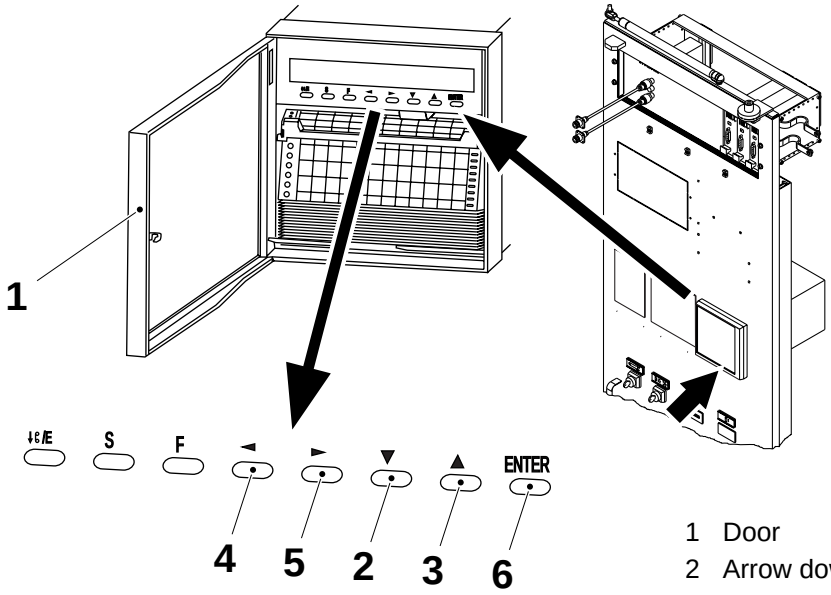

1 Door
2 Arrow down button
3 Arrow up button
4 Arrow left button
5 Arrow right button
6 Enter button

(Cont'd)

(Cont'd)

g) Select the analog channel 01 P, 02 P or 03 P by using the ARROW buttons (4) and (5).

h) Press the ENTER button (6) and calibrate the channel by using the ARROW buttons (2) and (3).

- **+2.000** if the recorder showed **98 °C** (the calibration value is **100 °C**)
- **-2.000** if the recorder showed **102 °C** (the calibration value is **100 °C**).

Press the ENTER button (6).

i) Repeat items g) to h) until the analog channels are calibrated

j) Press the ENTER button (6) and then the EXIT button (7) several times.

Note! The FAST FEED button works in the same way as the EXIT button (7) when not in the basic status.

k) Close the front door (1) and wait until the recorder is ready.

Note! As long as the display is flashing the recorder is initialized with the new data.

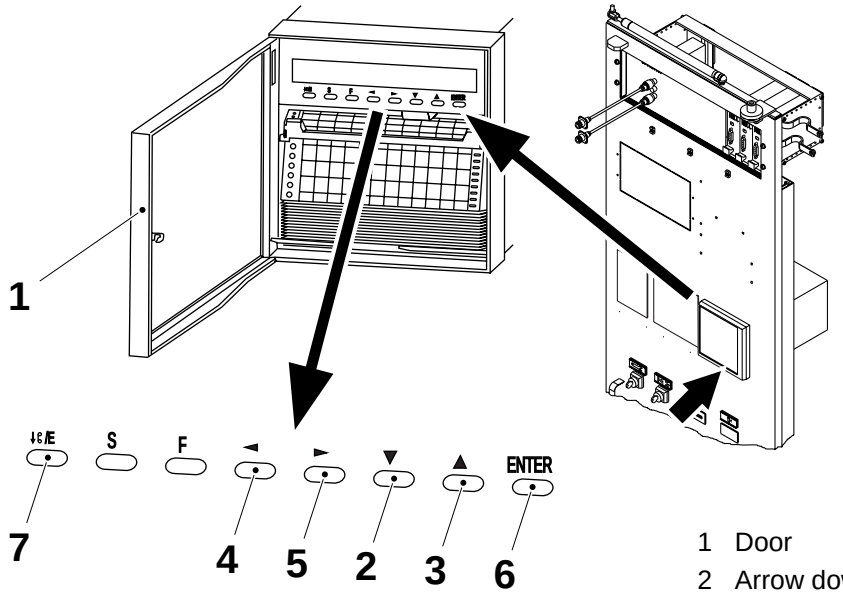

1 Door
2 Arrow down button
3 Arrow up button
4 Arrow left button
5 Arrow right button
6 Enter button
7 Exit button

9.2.4-5 Recorders (Jumo) - Set Paper Record Alarm (Optional)

Machine Status	Mains Power ON
SPC Reference	2629066-0100

Note! According to the US Food and Drug Administration (FDA), when packaging a low-acid food within the USA or for import into the USA, any production not accompanied by a correspondent processing record represents a **deviation from the scheduled process**.
All packages produced without a corresponding processing record must be placed on hold for subsequent evaluation by a Process Authority.

All the machines equipped with the JUMO recorder has the paper alarm for when the recorder run out of paper (yellow alarm in the TPOP panel appear). This alarm causes a machine stop that is mandatory according to the US FDA requirements. **The alarm should only be disabled at the request from the customer.**

Modify the PLC program parts indicated with the arrow.

- ALW_OFF to ALW_ON
- %008 to %007

Enabled alarm - normal case



Disabled alarm - at the request from customer



9.2.5 Conductivity Meter

9.2.5-1 Conductivity Meter - Description

SPC Reference	90243-0214

The conductivity is calculated by the measuring the current flowing through a fluid at a known reference voltage. The signal is converted to digital information and thereafter processed according to temperature and calibration values.

The conductivity meter (1) supplies the PLC with 6 digital signals: 3 conductivity threshold and 3 temperature threshold.

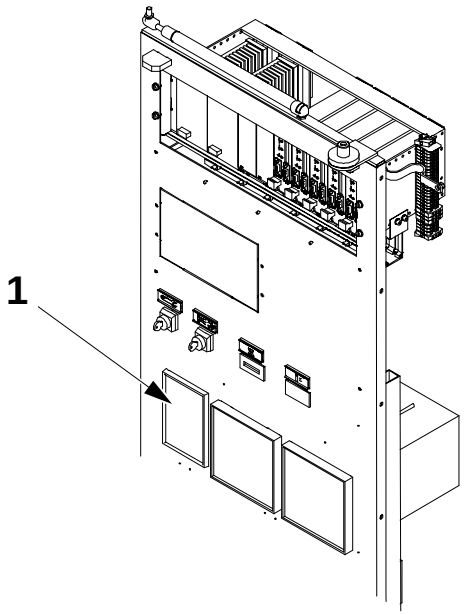

1 Conductivity meter

9.2.5-2 Conductivity Meter - Set

SPC Reference	1361330-0100

a) Turn the main switch to the OFF position.

b) Check the CIP pipes are empty and the supplies are closed.

c) Remove the conductivity probe; clean and dry it, see 1.2.8-1 Intermediate Part - Check Conductivity Sensor.

d) Turn the main switch to the ON position.

e) Set the conductivity meter according to the following Setting Table.

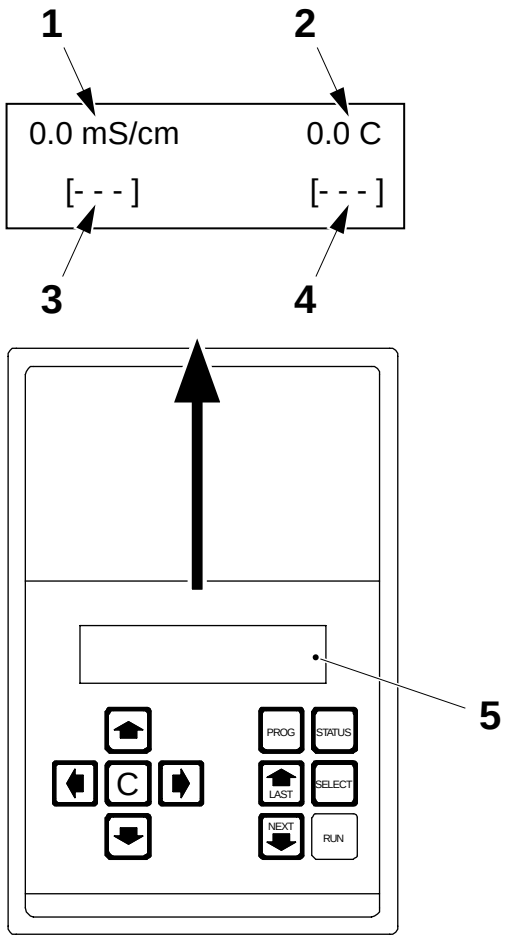

Legend	
RE 1	Conductivity value of clean water
RE 2	Conductivity value of alkali
RE 3	Conductivity value of nitric acid
RE 4	Temperature value of nitric acid
RE 5	Temperature value of alkali
RE 6	Temperature value of disinfection
ATC 1	Temperature correction factor
ATC 2	Temperature correction factor
ATC 3	Temperature correction factor

1 Conductivity value
2 Temperature value
3 Conductivity conditions RE1, RE2, RE3 (black rectangle means the present valve has been reached).
4 Temperature conditions RE4, RE5, RE6 (black rectangle means the preset value has been reached).
5 Display

(Cont'd)

(Cont'd)

Setting Table

Step	Push	Display	Input	Push
1.a	Prog	Password?		If no password is needed go to step 2
1.b	<	Password?		
1.c	Prog	Password OK		
2	Status	Status control		
3	Prog	Prog. control		
4	Next	mA1 Start Value 0.00 mA	0.00 mA	Up or Down
5	Next	mA1 Stop Value 20.00 mA	20.00 mA	Up or Down
6	Next	mA1 Start At 0.00 mS/cm	00.00 mA	Up or Down
7	Next	mA1 Stop At 100.00 mS/cm	100.00 mA	Up or Down
8.a	Next	RE.1 Function on/off	On/Off	Up or Down
8.b	Next	RE.1 Set Point 0.00 mS/cm	1.30mS/cm	Up or Down
8.c	Next	RE.1 Polarity norm.	norm.	Up or Down
9.a	Next	RE.2 Function on/off	On/Off	Up or Down
9.b	Next	RE.2 Set Point 00.00 mS/cm	62.00 mS/ cm	Up or Down
9.c	Next	RE.2 Polarity norm.	norm.	Up or Down
10.a	Next	RE.3 Function on/off	On/Off	Up or Down
10.b	Next	RE.3 Set Point 0.00 mS/cm	44.00 mS/ cm	Up or Down
10.c	Next	RE.3 Polarity norm.	norm.	Up or Down
11	Next	RE.4 SetPoint 0.00 C	58.00	Up or Down
12	Next	RE.5 Set Point 0.00 C	78.00	Up or Down
13	Next	RE.6 Set Point 0.00 C	88.00	Up or Down
14	Next	End control list Push RUN to exit		
15	Run	x.xxx mS, x.x C C. [---], T [---]		

(Cont'd)

(Cont'd)

A.T.C. Checking

- Check the conductivity C1 of inlet water by dipping the conductivity probe into a previously cleaned water tank.
- Fill another tank with water heated to more than 25°C, check the conductivity C2 is the same as C1. If not, the ATC value must be changed according to the instructions in A.T.C. Setting section.
- Repeat the same operations for acid and alkali solutions.

A.T.C. Setting

Step	Push	Display	Input	Push
16	Status	Status Control		
17	Select	Stat.Cal. Cond		
18	Select	Status Install		
19	Prog	Prog. Install		
20.a	Next	ATC 1 2.10% / C	new value	Up and Down
20.b	Next	ATC 2 = 1.70% / C	new value	Up and Down
20.c	Next	ATC 3 = 1.35% / C	new value	Up and Down
21	Next	End control list push RUN to exit		
22	Run	x.xxx C, x.x T C. [---], T. [---]		

9.2.5-3 Conductivity Meter - Change Conductivity Cell (Probe)

SPC reference	1361330-0100

a) Turn the main switch to the OFF position.

b) Remove the conductivity probe (2), see 1.2.8-1 Intermediate Part - Check Conductivity Sensor.

c) Disconnect the old conductivity probe from the conductivity meter.

d) Connect the new conductivity probe to the conductivity meter (1). For the connection of each individual conductor, see the figure below.

e) Turn the main switch to the ON position.

f) Calibrate the conductivity probe, see Calibrating Procedure.

Colour	
WH	White
RD	Red
BU	Blue
GY	Grey
YE	Yellow
BN	Brown
GN	Green

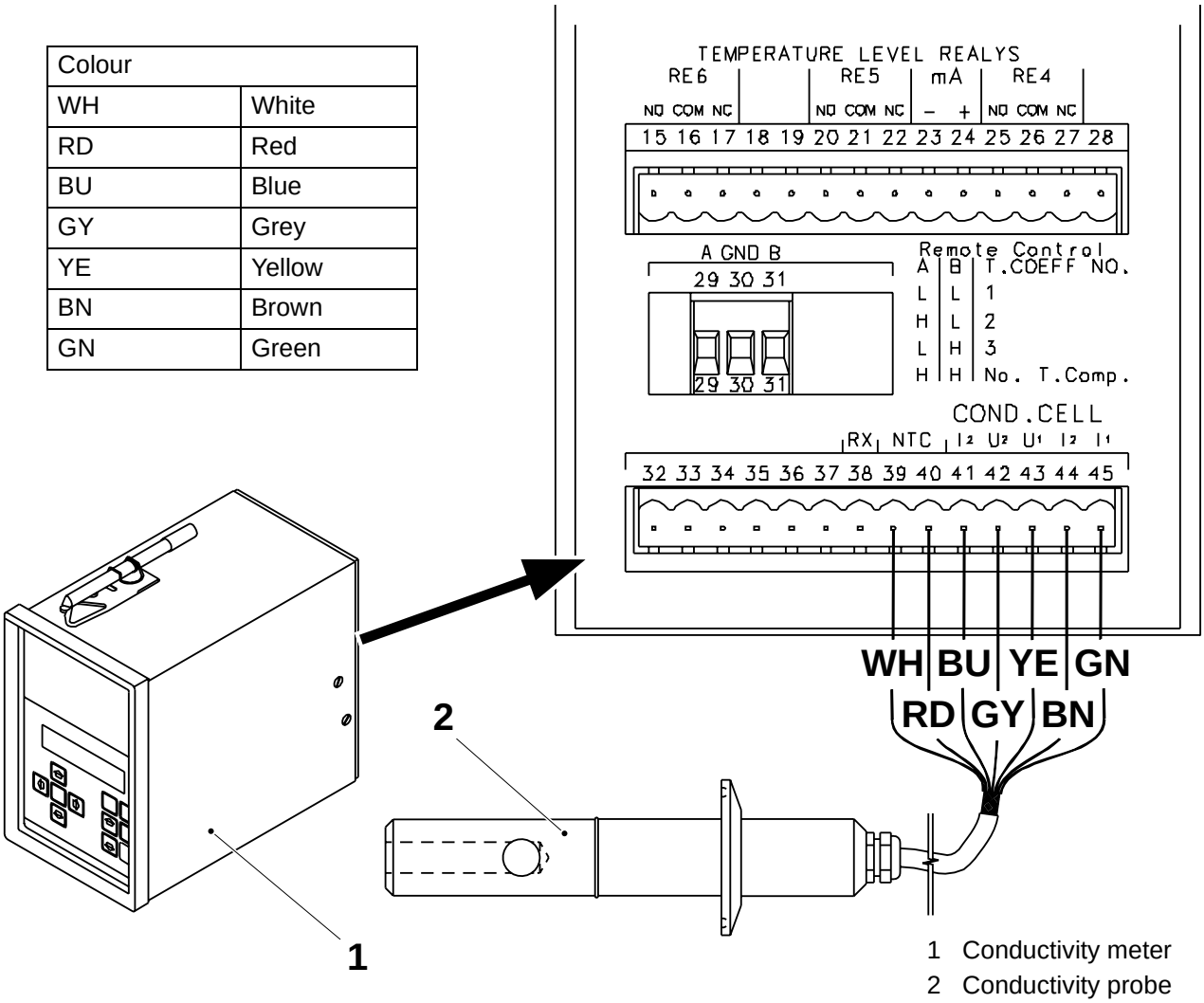

1 Conductivity meter
2 Conductivity probe

(Cont'd)

(Cont'd)

Calibrating Procedure

Note! It is very important the conductivity probe is completely dry before starting the calibration.

a) Press the PROG button (2), press ← button (4), then press PROG button (2) to unlock the system for calibration.

b) Press the C button (5) to enter the calibration mode. The display (1) shows:
FOR CAL. CELL 1
PUSH C. (NEXT)

c) Press the C button (5)**.** The display shows:
CONDUCT. CELL 1
IN AIR

d) Hold the conductivity probe in the air to calibrate the zero point.

e) Press the C button (5) to start the calibration. The display shows:
READING MS XX.XX
STABLE PUSH C

f) Press the C button (5) when the measuring value is stable. The display shows:
READING MS XX.XX
PLEASE WAIT!

g) When ready. The display shows:
CONDUCT. CELL 1
IN BUFF. MS=10.0

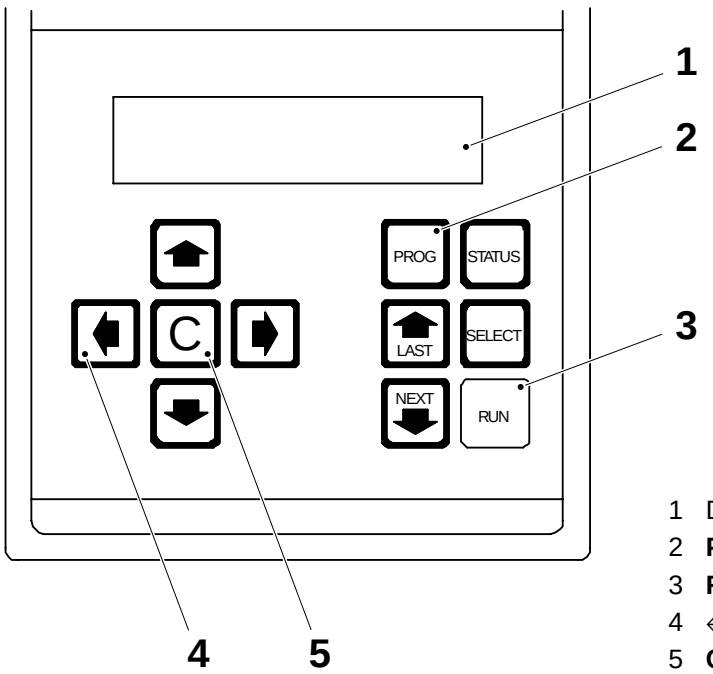

1 Display
2 **PROG** button
3 **RUN** button
4 ← button
5 **C** button

(Cont'd)

(Cont'd)

h) Put the conductivity probe in a standard solution (buffer), 10 mS/cm.

Note! The standard solution should have a temperature of approx. 25 °C. The measuring part of the conductivity probe should be covered with standard solution. A solution of 1 l water and approx. 0.3 l of cleaning compound code give approx. 10 mS/cm.

i) Press the C button (5) to start the calibration. The display shows:
READING MS XX.XX
STABLE PUSH C

j) Press the C button (5) when the measuring value is stable. The display shows:
READING MS XX.XX
PLEASE WAIT!

k) When ready. The display shows:
END CAL. MODE
PUSH RUN TO EXIT

l) Press RUN button (3) to end the sequence and return to the measuring mode.

m) After returning to the measuring mode check the conductivity meter measures the correct value of the standard solution (buffer), 10 mS/cm.

n) Fit the conductivity probe, follow the procedure in 1.2.8-1 Intermediate Part - Check Conductivity Sensor.

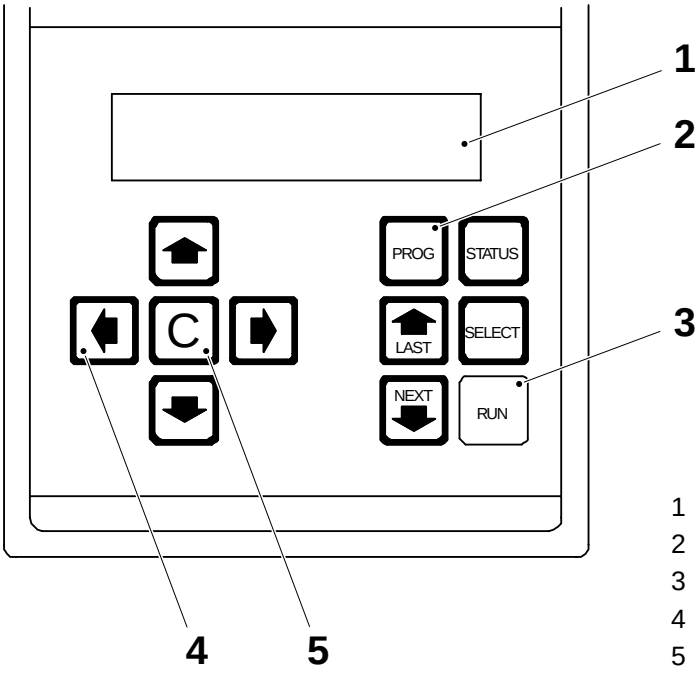

1 Display
2 **PROG** button
3 **RUN** button
4 ← button
5 **C** button

9.2.6 TPOP

9.2.6-1 TPOP - Functional Description PLMS

SPC Reference	1363288-0301

PLMS (Packaging Line Monitoring System) is a system for collecting data from Filling Machines and Production Lines.

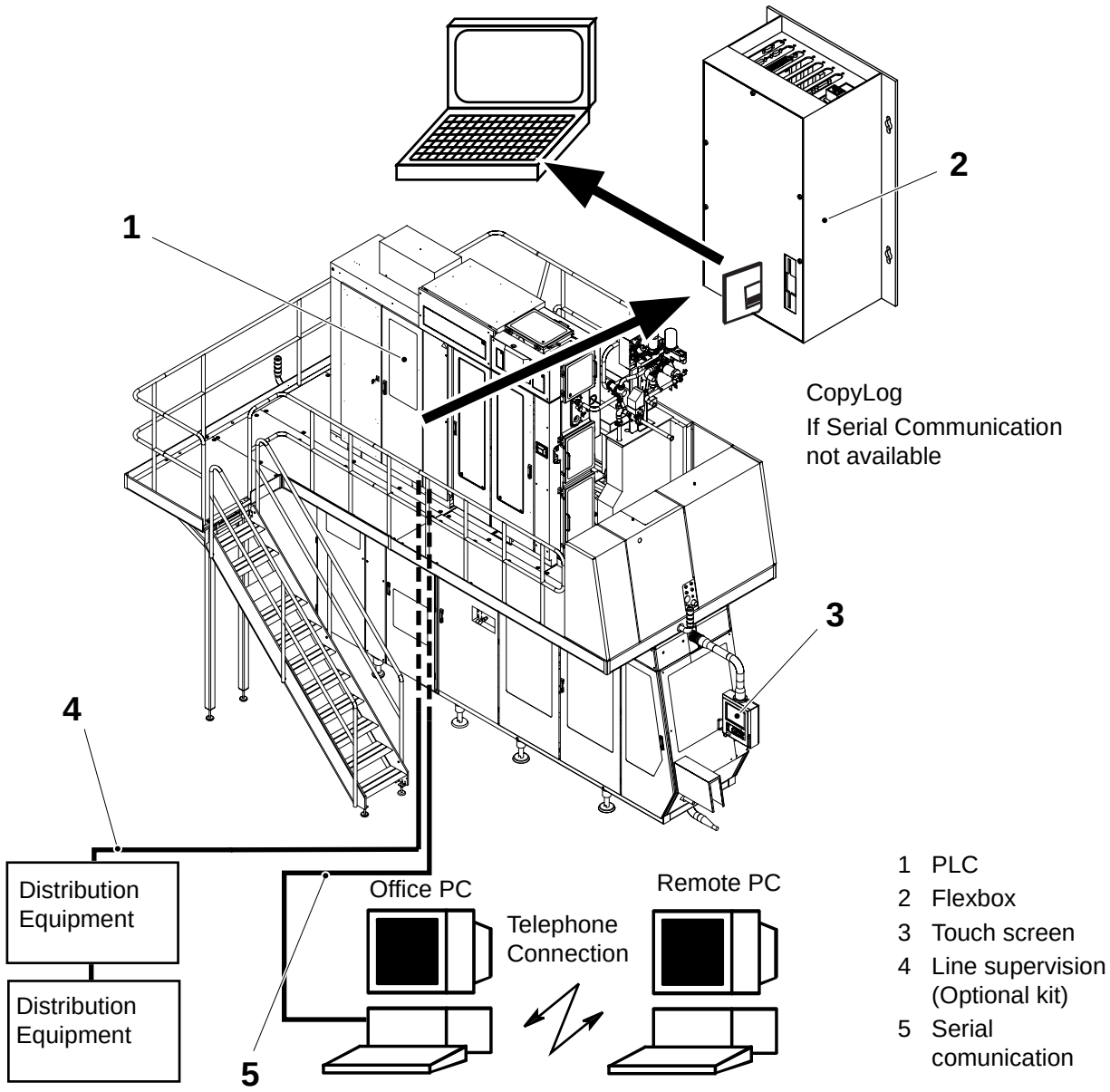

9.2.6-2 TPOP - Copy Data PLMS

SPC Reference	1363288-0301

Description

To analyse the data collected by the system, the data must be copied in an office PC. There are two possible ways:

- direct communication between the filling machine and an office PC using the Serial Communication kit (if installed). See the PLMS Send and Receive User Manual for the copying procedures.
- manual copying using a floppy disk.

This section only describes how to manually copy the data.

The copied data can be analysed in the office PC with the PLMS Off-Line Analysis program. For more informations, see PLMS Off-Line Analysis User Manual.

It is possible to copy different kinds of data for different purposes:

- data files in DBF format. Collected events to be analysed with the PLMS Off-Line Analysis program or any program with the possibility to read database files in DB4 format.
- data files in BIN format. Collected events to be analysed with the PLMS Off-Line Analysis program.
- PLMS Config. files with the configuration of the filling machine for all available languages.

Copy DBF files

a) Open the lower right-hand electrical cabinet door and insert a 1.44 Mb formatted floppy disk in the floppy disk drive.

Note! Make sure the disk is empty and not write protected.

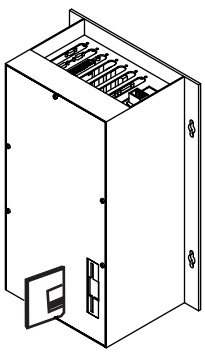

(Cont'd)

(Cont'd)

b) Touch the COLLECT SYSTEM button (1).

c) Touch the COPYLOG button (2).



1 Collect system button
2 Copy log button

Note! The COPYLOG STARTING DATE button (3) is set by default to the last down-loading date.
The COPYLOG ENDING DATE button (4) is set by default to the date of yesterday.

d) Touch the OK button (5) to down-load the following files:

- evntcode.dbf
- plmsdata.dbf
- smach.p00 - PLMS config. in English
- (smach.p** - PLMS Config. file of the selected language if different than English).

Note! The starting date is automatically updated every time the data log is copied.

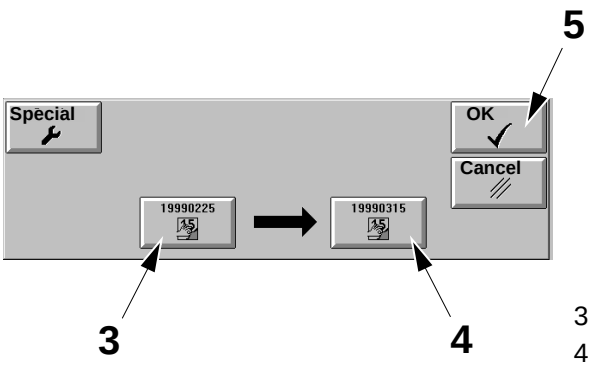

3 Copylog starting date button
4 Copylog ending date button
5 Ok button

(Cont'd)

(Cont'd)

Copy the Copylog Start/End Date

To down-load the data files from a different period of time follow the instructions below.

e) Touch the SPECIAL button (6).

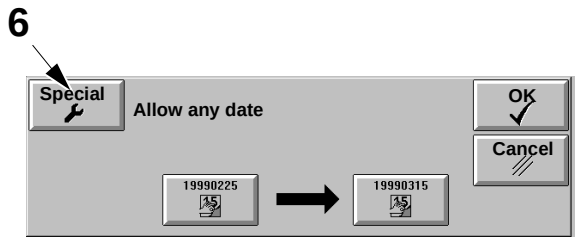

6 Special button

f) Touch the COPYLOG STARTING DATE button (3).

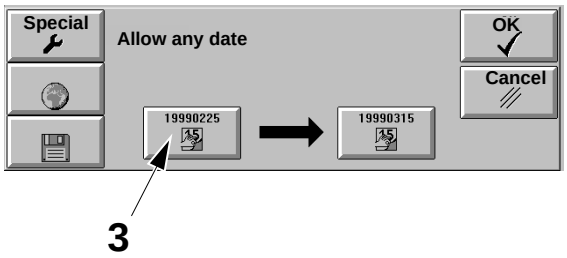

3 Copylog starting date button

g) Enter the starting date by using the ARROW keys.

h) Touch the OK button (7).

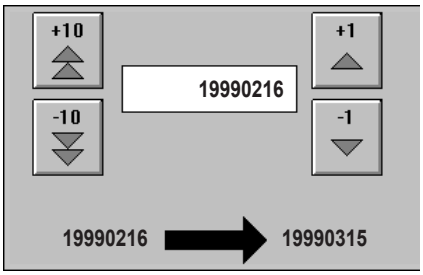

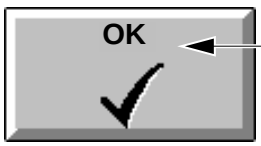

7 OK button

(Cont'd)

(Cont'd)

i) Touch the COPYLOG ENDING DATE button (4).

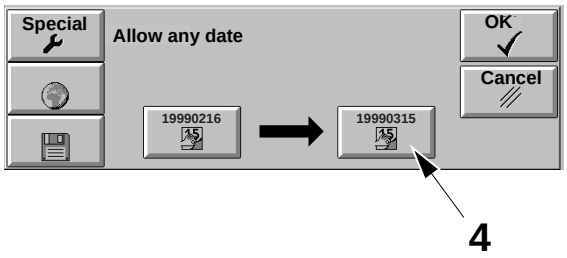

4 Copylog ending date button

j) Choose the correct ending date by using the ARROW keys.

k) Touch the OK button.

l) Touch the OK button (7) to start copying.

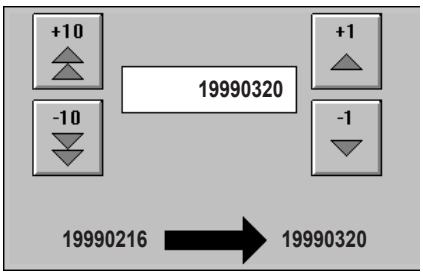

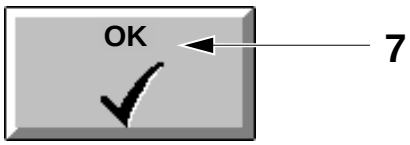

7 OK button

(Cont'd)

(Cont'd)

The following icons will be displayed on the screen. Perform a suitable action.

Icon	Meaning	Action
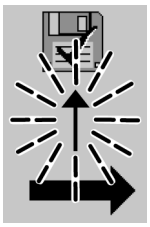	The flashing arrow indicates the copying procedure is in progress.	Wait
	Successful copy procedure	Touch the CLOSE button (8) and remove the floppy disk
	Failed copy procedure Check the floppy disk is: -inside the floppy disk drive -correctly formatted -not write protected -not full.	Touch the CLOSE button (8) and repeat the procedure

m) Touch the CLOSE button (8) and repeat the procedure.

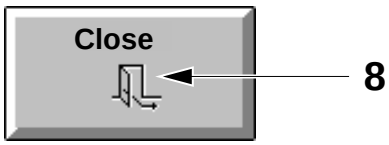

8 Close button

(Cont'd)

(Cont'd)

Copy BIN Files

a) Touch the SPECIAL button (1).

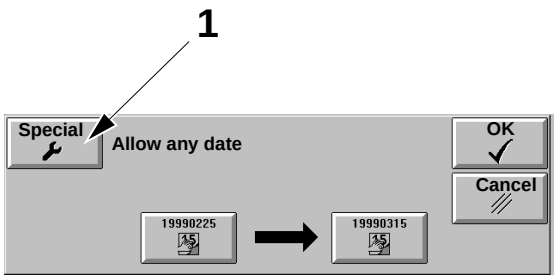

1 Special button

Note! The COPYLOG STARTING DATE button (2) is set by default to the last down-loading date.
The COPYLOG ENDING DATE button (3) is set by default to the date of yesterday.

b) Touch the BIN FILES button (4) to down-load the following files:

- smach.p00
- the files *bin for the selected period of time.

Note! The starting date is automatically updated every time the data log is copied.

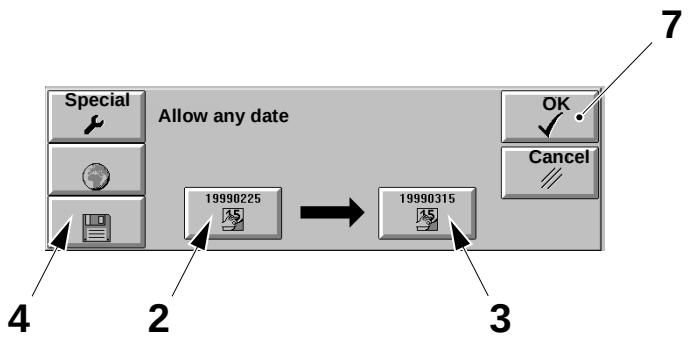

2 Copylog starting ate button
3 Copylog ending date button
4 Bin files button
7 OK button

c) Press the OK button (7) to start copying.

(Cont'd)

(Cont'd)

The following icons will be displayed on the screen. Perform a suitable action.

Icon	Meaning	Action
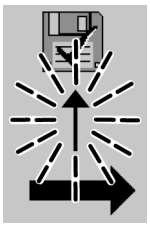	The flashing arrow indicates the copying procedure is in progress.	Wait
	Successful copy procedure	Touch the CLOSE button (8) and remove the floppy disk
	Failed copy procedure Check the floppy disk is: -inside the floppy disk drive -correctly formatted -not write protected -not full.	Touch the CLOSE button (8) and repeat the procedure

d) Touch the CLOSE button (8) and repeat the procedure.

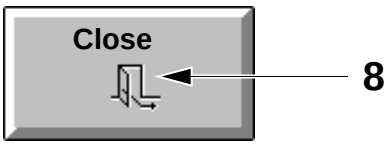

8 Close button

(Cont'd)

(Cont'd)

Copy PLMS Config. Files

a) Touch the SPECIAL button (1).

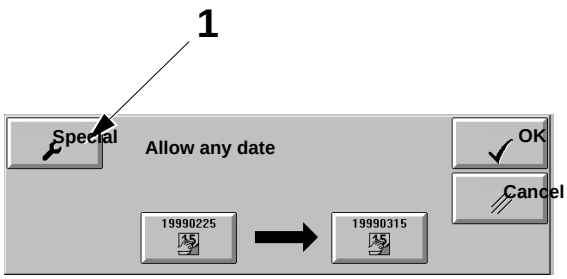

1 Special button

b) Touch the WORLD button (2) to copy all the PLMS config. files smach.p** for all available languages.

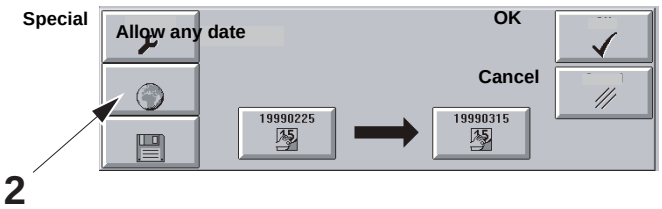

2 World button

(Cont'd)

(Cont'd)

The following icons will be displayed on the screen. Perform a suitable action.

Icon	Meaning	Action
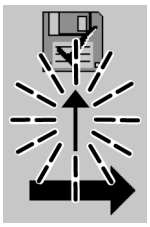	The flashing arrow indicates the copying procedure is in progress.	Wait
	Successful copy procedure	Touch the CLOSE button (8) and remove the floppy disk
	Failed copy procedure Check the floppy disk is: -inside the floppy disk drive -correctly formatted -not write protected -not full.	Touch the CLOSE button (8) and repeat the procedure

c) Touch the CLOSE button (8) and repeat the procedure.

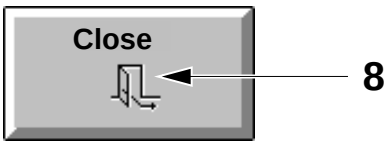

8 Close button

9.2.6-3 TPOP - Set Date and Time PLMS

SPC Reference	1363288-0301

Time can be set only in step ZERO and with the attendance stopped.

Note! Setting a past time or date may cause data loss

a) Touch the SYSTEM SETTING button (1).

b) Touch the CLOCK button (2).

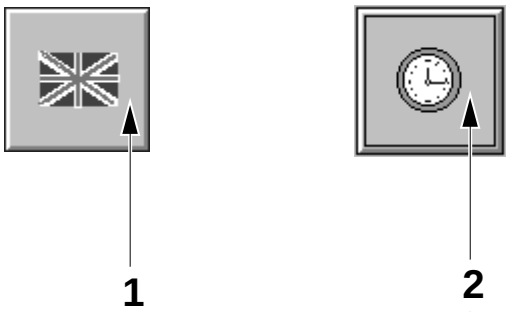

1 System setting button
2 Clock button

c) Set the time to 12:12 by means of the arrow buttons to be able to set the data. The date box appears also in the left window.

d) Set the current date in the left window.

e) Set the current time in the right window (left arrows for hours and right for minutes).

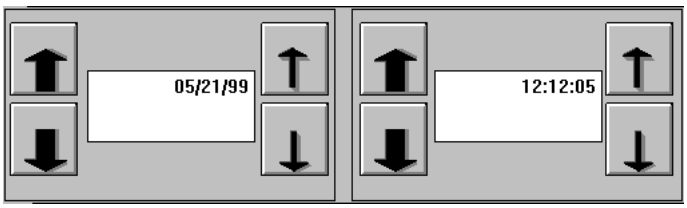

f) Touch the OK button (3).

g) Touch the EXIT button (4).

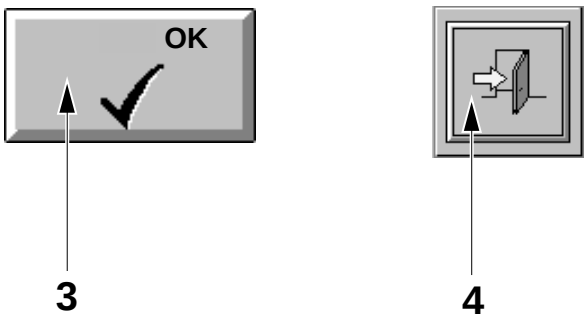

3 OK button
4 Exit button

9.2.6-4 TPOP - Change Display Unit

SPC Reference	1363288-0301

WARNING

Risk of electrocution!

Make sure the mains power is disconnected before opening the control panel.

a) Using the special key in the keyholes (2), open the door in the rear of the touch screen (1).

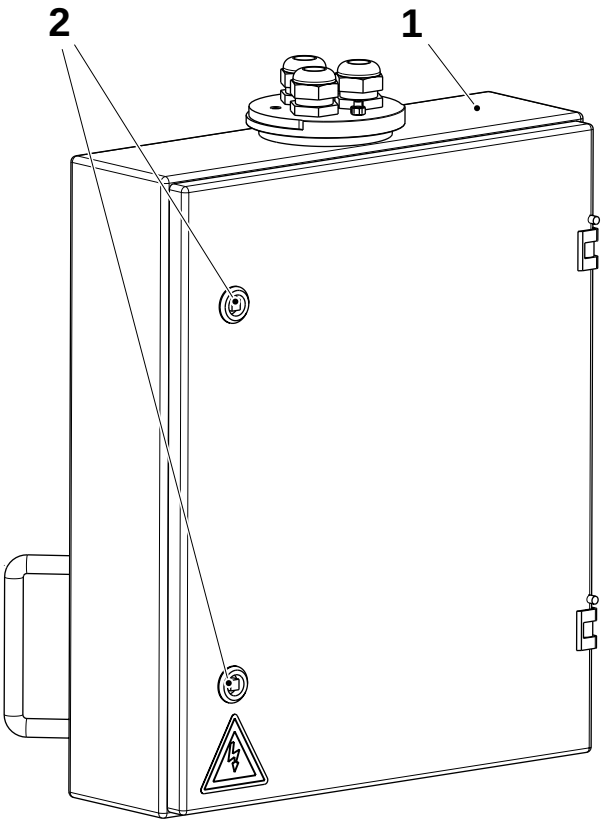

1 Touch screen
2 Keyhole

(Cont'd)

(Cont'd)

b) Remove the screws (3) and cover (4).

c) Remove the clamps (5) and wires (6).

d) Remove the nuts (7) and the display unit (8).

e) Fit the new display unit and assemble in the reverse order,

f) Calibrate the touch screen as required, see 9.2.6-5 TPOP - Calibrate Touch Screen.

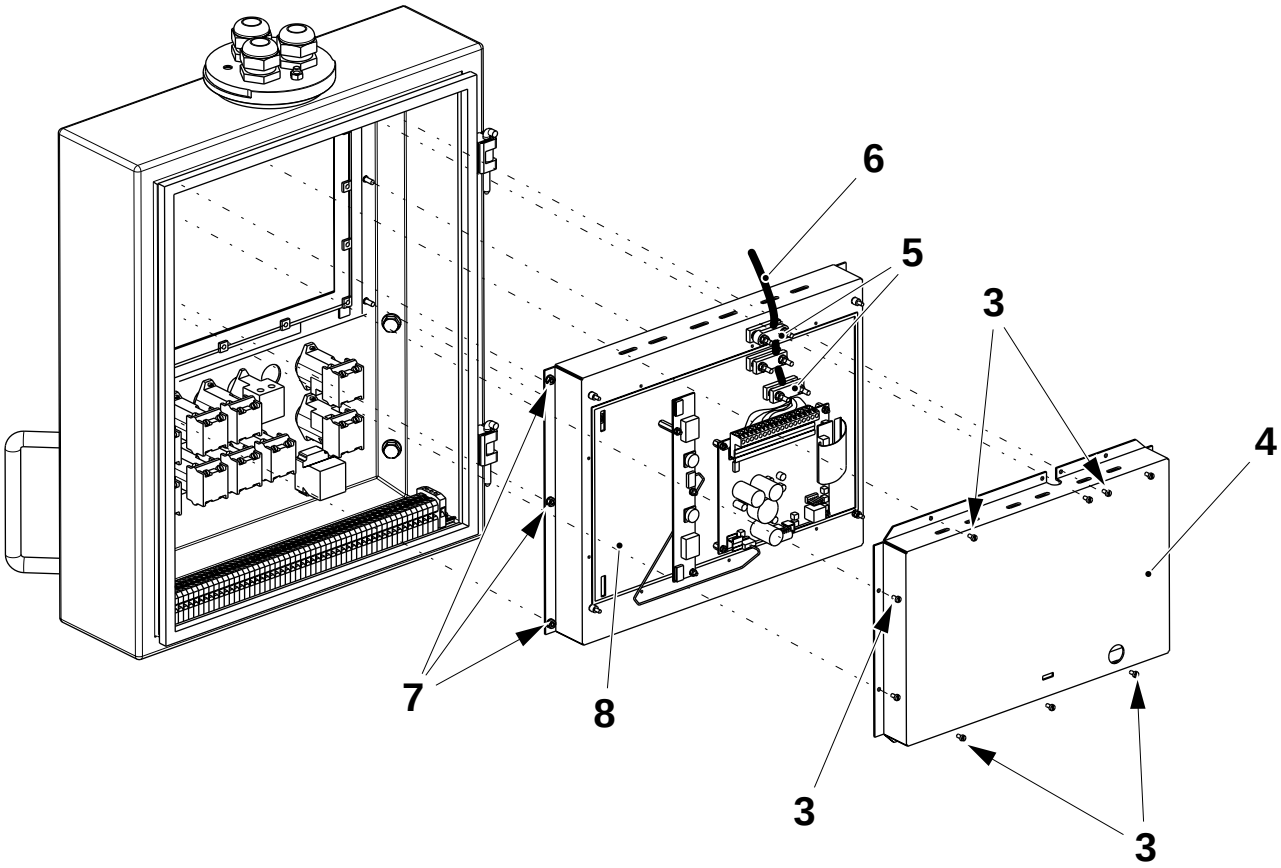

3 Screw
4 Cover
5 Clamp
6 Wire
7 Nut
8 Display Unit

9.2.6-5 TPOP - Calibrate Touch Screen

Tools - Keyboard with PS/2 Connector	
SPC Reference	1363288-0301

a) Using the special key in the keyholes (2), open the door in the rear of the touch screen (1).

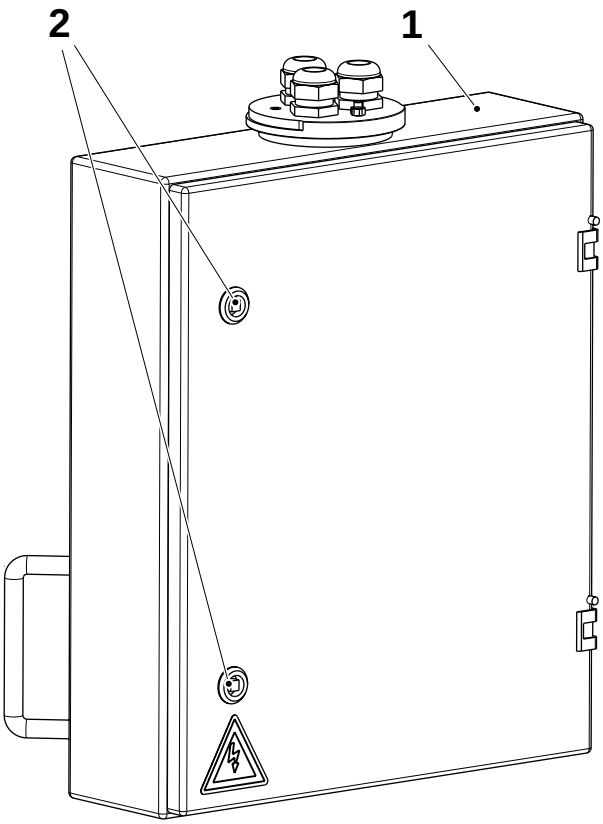

1 Touch screen
2 Keyhole

(Cont'd)

(Cont'd)

b) Connect a keyboard to the port (3) on the rear of the touch screen.

WARNING
Risk of electrocution!
The low voltage in the electrical components can cause injury.

c) Switch **On** the main power.

d) When the message STARTING MS-DOS**...** appears, press H to start **Windows 3.11.**

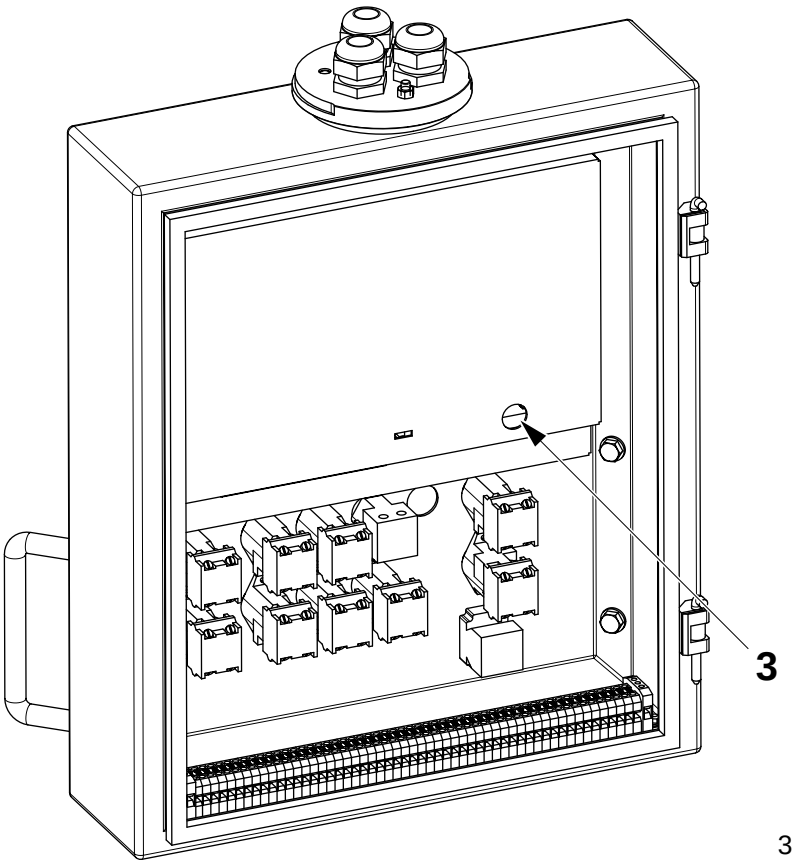

3 Port

(Cont'd)

(Cont'd)

e) Press ALT and then press the enter button.

f) From the FILE menu select RUN with the down arrow, and then press the enter button.

g) Type **control**, and then press the enter button.

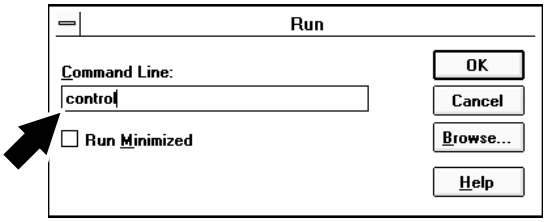

h) Select CITOUCHW, and then press the enter button.

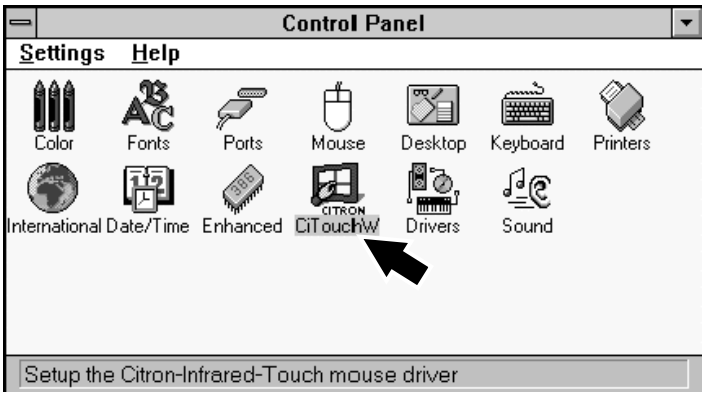

i) Press ALT + C (Calibrations).

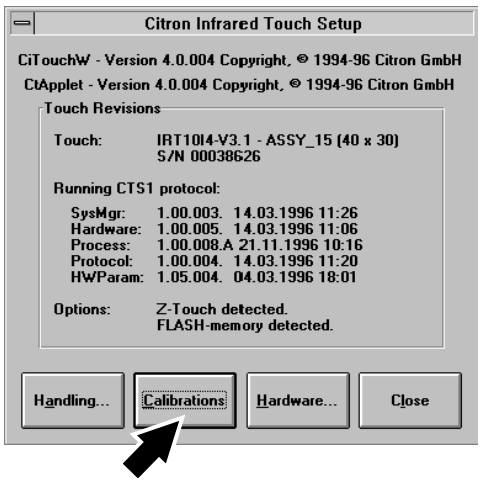

(Cont'd)

(Cont'd)

j) Touch with a finger the pointers (white arrows) that appear in sequence.

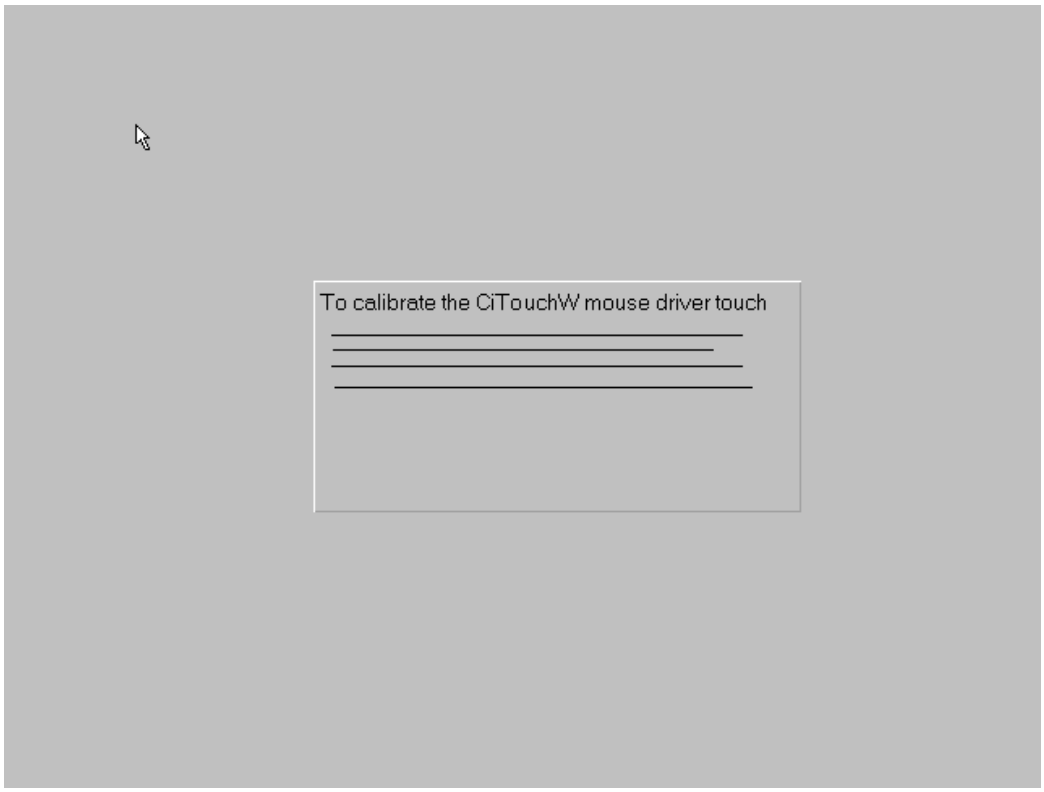

k) When the calibration is finished, the CITRON INFRARED TOUCH SETUP window appears. Press ALT + L (CLOSE) to save the setting and exit.

9.2.6-6 TPOP - Change Flexbox Hard Disk

SPC Reference	1363288-0301

Note! By removing the hard disk, all the data logged and the software installed are removed from the machine.

a) Remove the cover (1).

b) Pull out the hard disk (2) from the flexbox (3).

c) Fit the new hard disk to the flexbox (3).

Note! Make sure the new hard disk is correctly fitted.

d) Fit back the cover (2) and close the door.

e) Install the software, see 9.2.6-7 TPOP - Install Software.

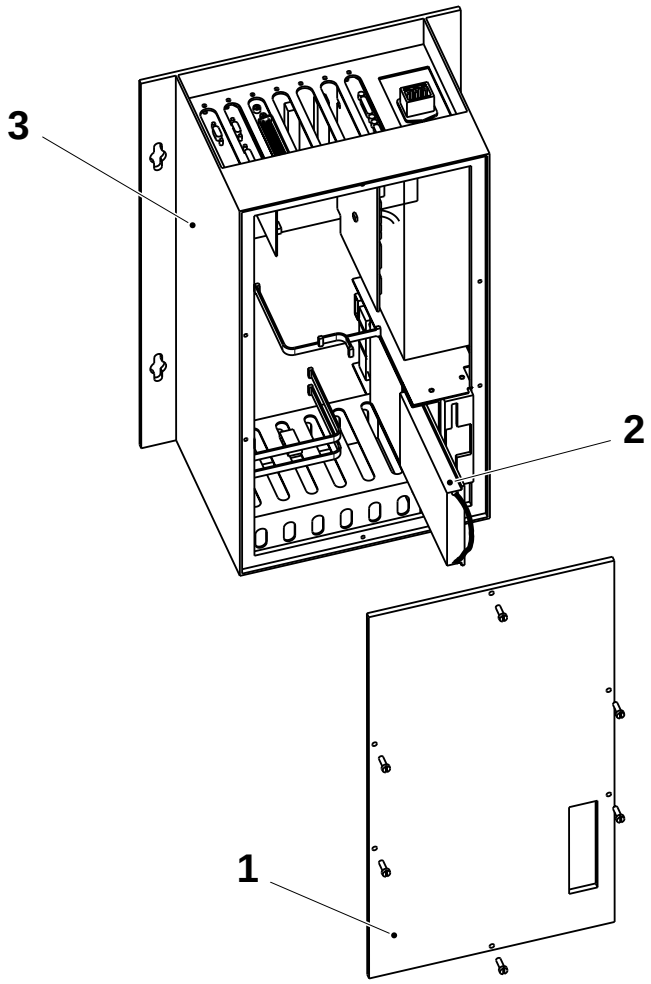

1 Cover
2 Hard disk
3 Flexbox

9.2.6-7 TPOP - Install Software

Tools - Keyboard with PS/2 Connector	
SPC Reference	1363288-0301

WARNING

Risk of electrocution!

There is high voltage in the electrical cabinet (up to 560 V).In case of accident call for medical attention immediately.

Fit Keyboard

a) Open the door in the rear of the TPOP panel (1) with the special key in the keyholes (2).

b) Connect a keyboard to the port (3) at the rear of the touch screen (4).

c) Switch **On** the main power.

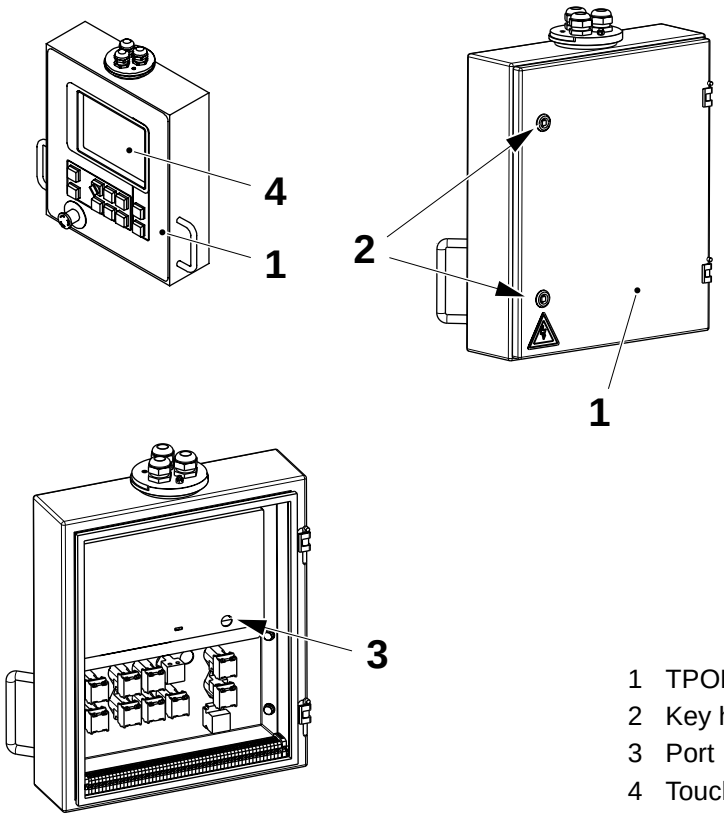

1 TPOP panel
2 Key hole
3 Port
4 Touch screen

(Cont'd)

(Cont'd)

Updating Previous Installed Programs

If updating one or more programs on a previous installation then jump directly to the specific software sections following the order shown below.

- Installation or Updating of MS-DOS 6.22 on page 9-131
- TPOP Basic on page 9-133
- Installation or Updating of Windows 3.11 on page 9-133
- InTouch 5.6b on page 9-133
- PLMS DDE on page 9-135
- HMI on page 9-136
- PLMS DDE config on page 9-137
- PLMS Send System on page 9-146

CAUTION

For a correct installation of the software on an empty hard disk, follow exactly the order of the instructions below.

Installation or Updating of MS-DOS 6.22

Note! By removing the MS-DOS, all the data logged and the software installed are deleted.

a) Insert the disk DOS DISK 1 - SETUP in drive A.

b) Reboot the system and press the DELETE key to enter the BIOS Setup program.

c) Select LOAD BIOS DEFAULTS, and then press the enter button. At the dialog box press Y, and then press the enter button. This sets the disk boot sequence to “A, C, SCSI”.

(Cont'd)

(Cont'd)

d) Select SAVE & EXIT SETUP, and then press the ENTER button. At the dialog box press Y, and then press the enter button. The parameters previously set are written in the CMOS memory and the system boots from drive A.

e) The MS-DOS 6.22 Setup starts. press the enter button.

- Installation of MS-DOS 6.22:
  Select CONFIGURE UNALLOCATED DISK SPACE **(recommended)**, and press the ENTER button twice. The system reboots formatting drive C.
- Updating of MS-DOS 6.22:
  Select CONTINUE SETUP AND REPLACE YOUR CURRENT VERSION OF DOS and press the ENTER button.

f) Accept or set the DATE/TIME, the COUNTRY to United States and the KEYBOARD LAYOUT to United States. Select THE SETTINGS ARE CORRECT and press the ENTER button.

g) Accept the default path for MS-DOS C:\DOS and then press the ENTER button.

h) When the installation is finished, remove the disk and press the enter button twice.

i) The system reboots. Press the DELETE key to enter the BIOS Setup program.

j) Select LOAD SETUP DEFAULTS, and then press the enter button. At the dialog box press Y, and then press the enter button. This sets the disk boot sequence to “C, A, SCSI”.

k) Select SAVE & EXIT SETUP, and then press the enter button. At the dialog box press Y, and then press the enter button. The parameters previously set are written in the CMOS memory and the system boots from drive C.

(Cont'd)

(Cont'd)

TPOP Basic

a) Reboot the system.
   - Installation of TPOP:
     Wait until the MS-DOS prompt appears.
   - Updating of TPOP:
     When, during the boot sequence, the message STARTING MS-DOS... appears, press D to stop the procedure.

b) Insert the disk TPOP BASIC DISK 1 in drive A.

c) At the MS-DOS prompt type **A:\install** and then press the ENTER button.

d) Press any key to continue.

Installation or Updating of Windows 3.11

a) Reboot the system.
   When, during the boot sequence, the message “Starting MS-DOS...” appears, press D to stop the procedure.

b) At the MS-DOS prompt type **C:\utility\setuptpw** and then press the ENTER button. This starts the TPOP Setup script.

c) Insert the disk Windows Disk 1 - Setup in drive A and press any key to continue.

d) The Windows 3.11 Setup starts. press the enter button to accept the default hardware configuration.

e) Follow the instructions on the screen, and change disk when required.

InTouch 5.6b

a) Reboot the system.
   When, during the boot sequence, the message STARTING MS-DOS... appears, press H to start Windows 3.11.

b) Insert the disk INTOUCH RUNTIME DISK 1 in drive A.

c) In the TPOP Administrator window select the TPOP installation icon, and then press the enter button.

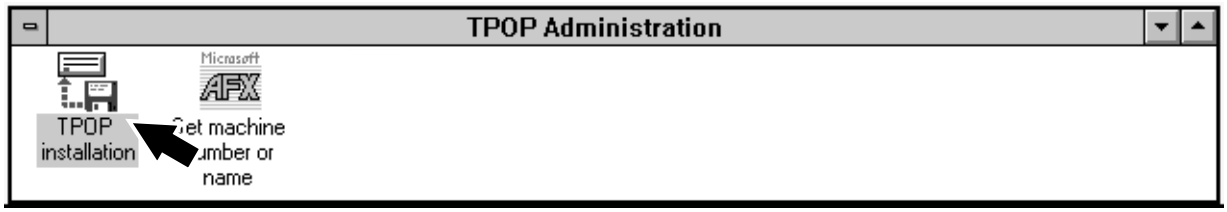

(Cont'd)

(Cont'd)

d) In the INSTALLATION WIZARD window change the installation directory to C:\INTOUCH.56 and make sure the check-box PROMPT ME FOR EACH APPLICATION DIRECTORY is **not** selected. press the ENTER button.

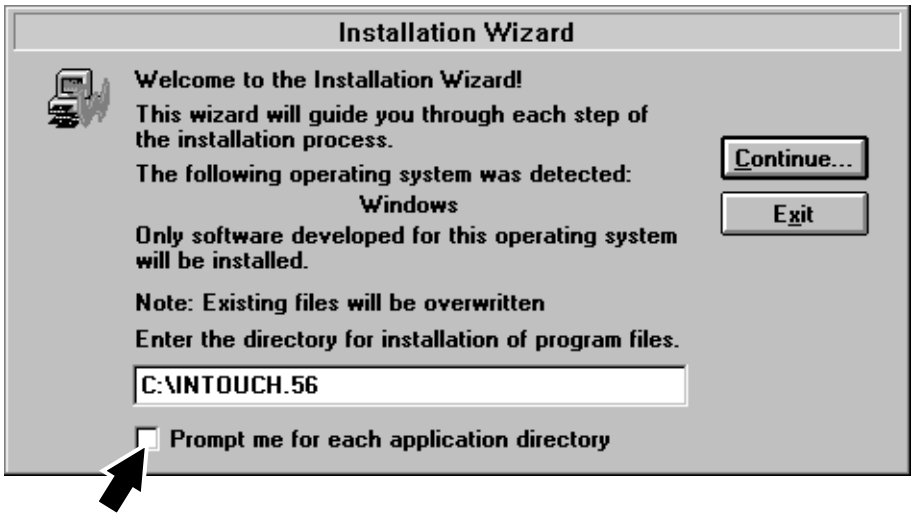

e) Un-select the INCLUDE HELP FILES check-box, and then press the ENTER button.

f) Follow the instruction on the screen, and change the disk when required.

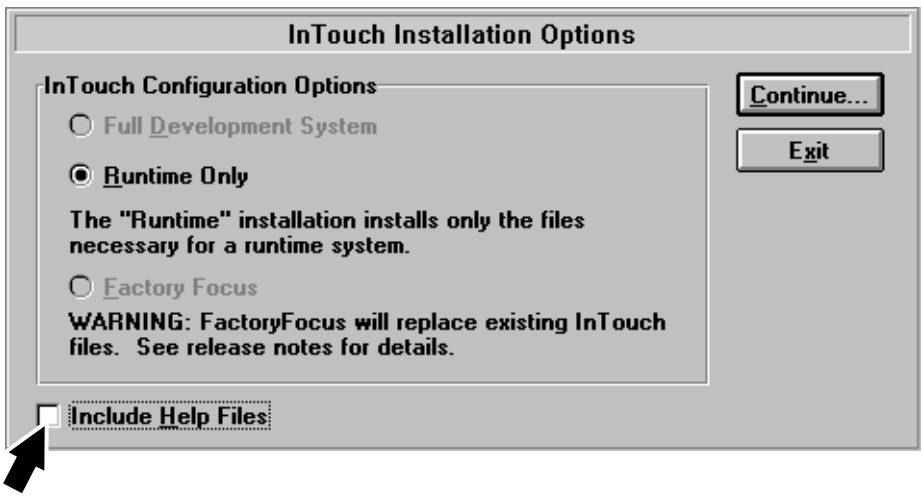

(Cont'd)

(Cont'd)

Note! The following software (PLMS DDE, HMI, PLMS DDE config, PLMS Send) can also be installed separately.

PLMS DDE

a) If the TPOP ADMINISTRATION window is available on the screen it is possible to continue installing the software. Continue with b) below.

If not, and more software is to be installed, reboot the system as follows:

– Press ALT-F4 until EXIT WINDOWS appears. Press OK.

– On the keyboard, press CTRL-ALT-DEL.

During the boot sequence, the message STARTING MS-DOS... appears, press H to start Windows 3.11.

b) Insert the disk marked PLMSDDE DISK 1 in drive A.

c) In the TPOP ADMINISTRATION window select the TPOP INSTALLATION icon, and then press the enter button.

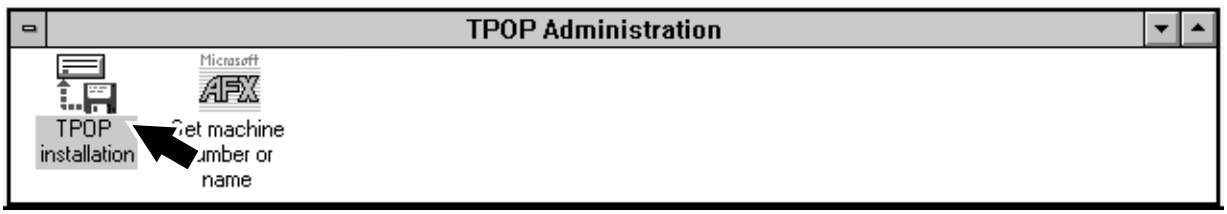

d) Follow the instructions on the screen, and then press the enter button to accept the default values.

e) Remove the installation disk from the drive.

If more software is to be installed, continue at the appropriate headline below.

When all new software has been installed, exit from Windows by pressing ALT-F4. Press OK in the EXIT WINDOW that appears. Press CTRL-ALT-DEL on the keyboard. The TPOP system will start up. Remove the keyboard from the TPOP panel and close the rear door.

(Cont'd)

(Cont'd)

HMI

a) If the TPOP ADMINISTRATION window is available on the screen it is possible to continue installing the software. Continue with b) below.

If not, and more software is to be installed, reboot the system as follows:

– Press ALT-F4 until EXIT WINDOWS appears. Press OK.

– On the keyboard, press CTRL-ALT-DEL.

During the boot sequence, the message STARTING MS-DOS...appears, press H to start Windows 3.11.

b) Insert the disk marked TPOPHMI22 DISK 1 in drive A.

c) In the TPOP ADMINISTRATION window select the TPOP INSTALLATION icon, and press the enter button.

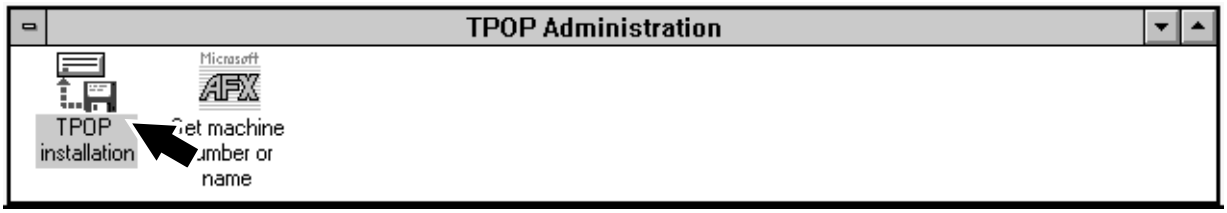

d) Follow the instructions on the screen, and press the enter button to accept the default values.

e) Remove the installation disk from the drive.

If more software is to be installed, continue at the appropriate headline below.

When all new software has been installed, exit from Windows by pressing ALT-F4. Press OK in the EXIT WINDOW that appears. Press CTRL-ALT-DEL on the keyboard. The TPOP system will start up. Remove the keyboard from the TPOP panel and close the rear door.

(Cont'd)

(Cont'd)

PLMS DDE config
Note! The PLMS DDE **must** be installed before installing the PLMS DDE config.

a) If the TPOP ADMINISTRATION window is available on the screen it is possible to continue installing the software. Continue with b) below.

   If not, and more software is to be installed, reboot the system as follows:

   – Press ALT-F4 until EXIT WINDOWS appears. Press OK.
   – On the keyboard, press CTRL-ALT-DEL.

   During the boot sequence, the message “Starting MS-DOS...” appears, press H to start Windows 3.11.

b) Insert the disk marked PLMSDC22 DISK 1 in drive A.

c) In the TPOP ADMINISTRATION window select the TPOP INSTALLATION icon, and then press the enter button.

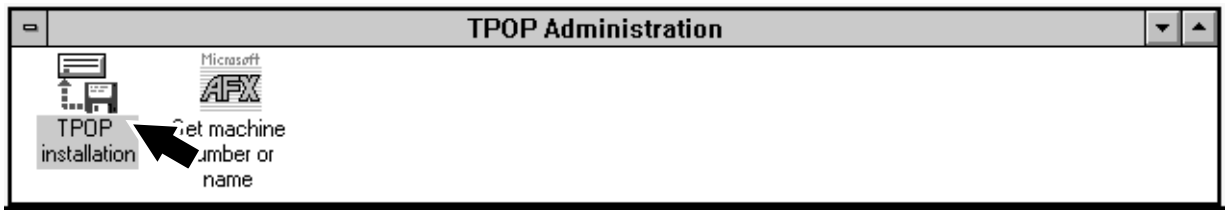

d) Press the enter button, click on YES, and then click on OK.

Note! If the software is already installed another window will appear with the text “C:\PLMS\DATA already exists! Continue?”.
Select “Yes” to continue the installation.
The old installation will be overwritten.

(Cont'd)

(Cont'd)

Entering Machine Identity Number

Note! The machine serial number is found on the LH side of the machine below the Control Panel on the identification sign.

Note! If a machine number has been previously entered, the serial number will be suggested.

The PLMS install window is used to enter the machine serial number. Touch the machine identification field (1) to activate it, then use the keyboard to enter the **last** four digits of the machine number followed by "/" and then the **first** five digits.

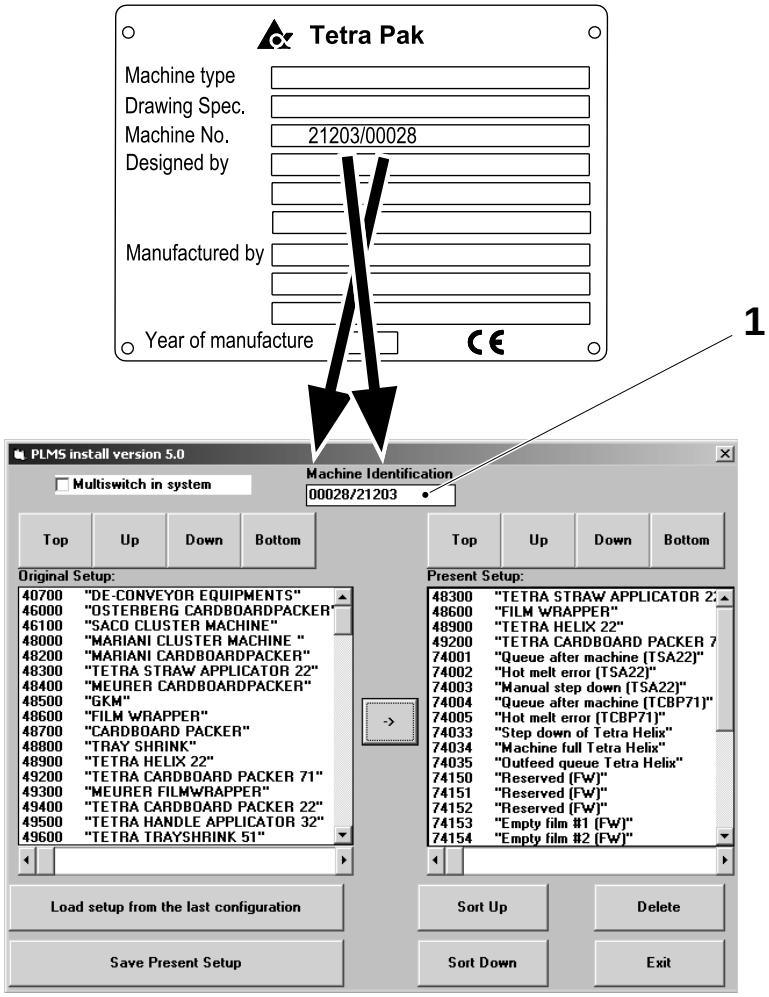

1 Machine identification field

(Cont'd)

(Cont'd)

Setting DDE Config for Multiple Packaging Lines
Note! When a multi switch is used, DE stop reasons cannot be automatically assigned to the filling machine conveyor congestion stop. Checking the MULTISWITCH IN SYSTEM box (1) disables automatic “DE stops catch” functionality.

If a multi switch is used to connect the filling machine to more than one packaging line, check the MULTISWITCH IN SYSTEM box (1).

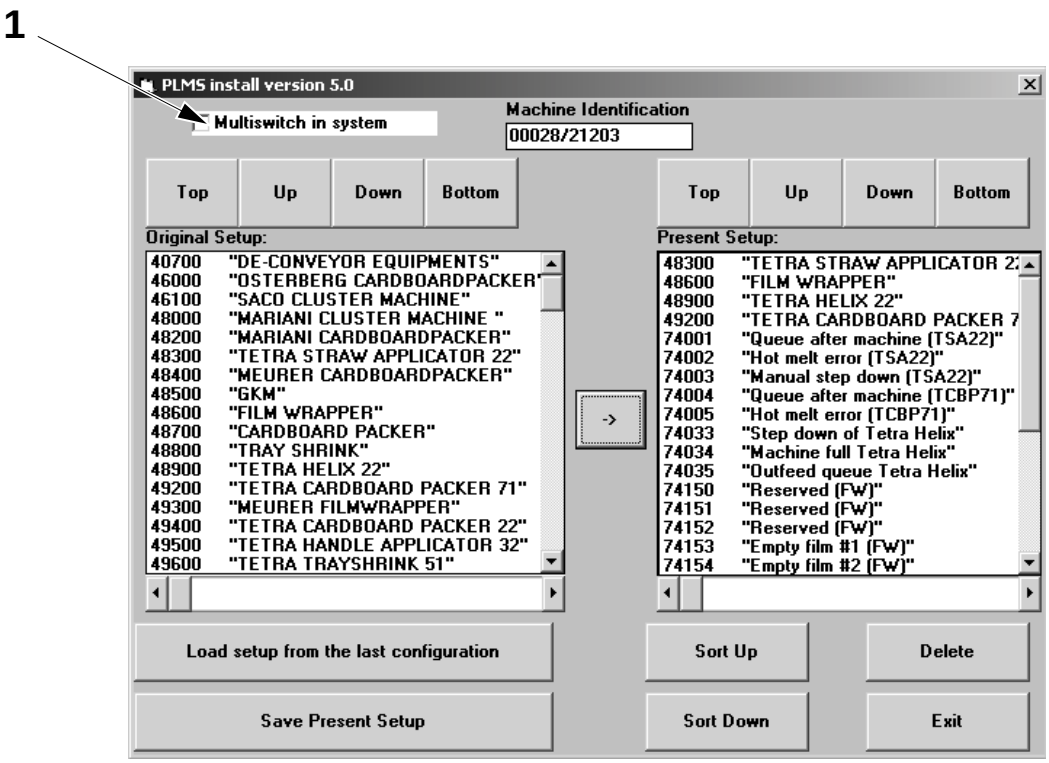

1 Multiswitch in system box

(Cont'd)

(Cont'd)

Setting the Actual DE Configuration

In the PLMS INSTALL window you can configure the PLMS operator list, the PRESENT SETUP (1) list, for the distribution equipment (DE) present in the packaging line.

If the LOAD SETUP FROM THE LAST CONFIGURATION (2) button is displayed, you can press it to load the previously saved setup into the PRESENT SETUP (1) list.

Note! Loading the previous configuration could take several minutes.

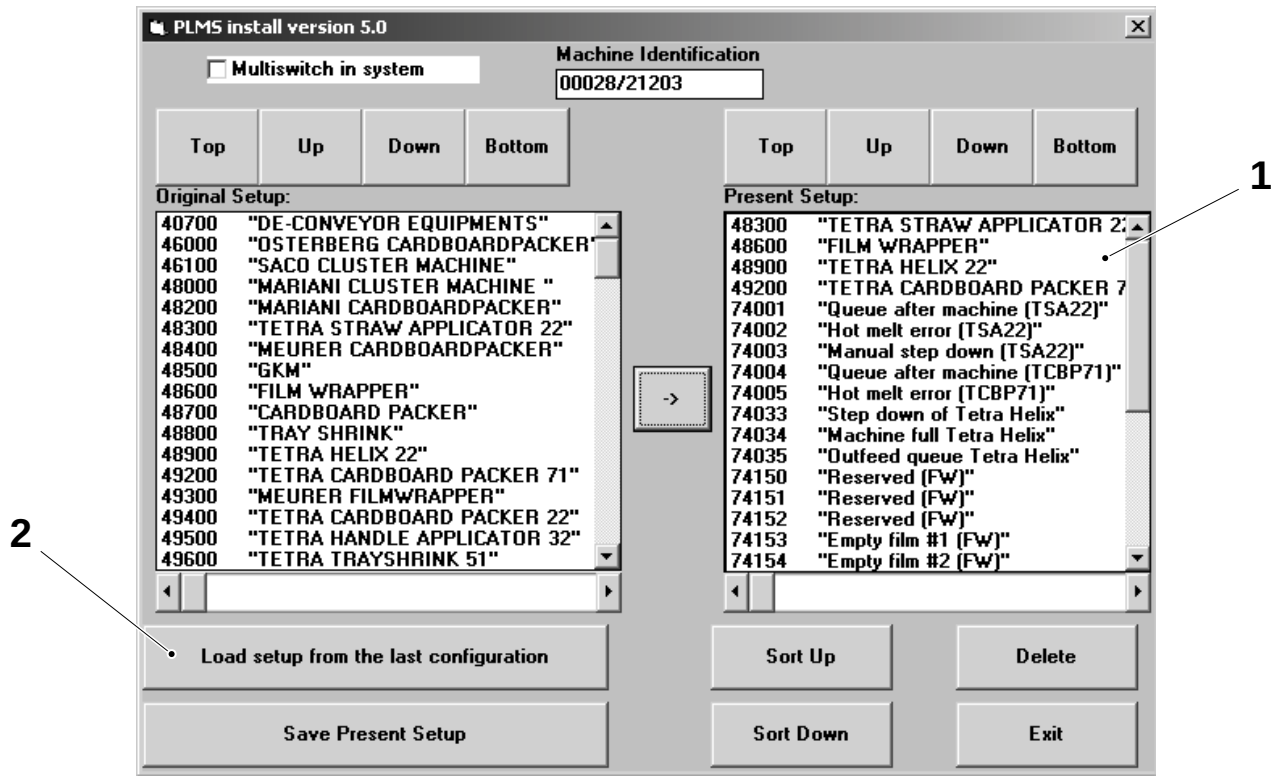

1 Present Setup
2 Load setup from the last configuration button

(Cont'd)

(Cont'd)

Configuration Criteria

The configuration shown in the PRESENT SETUP (1) list must fulfil the following demands:

- Each TP DE in the packaging line must be displayed in the PRESENT SETUP (1) list in a number of text rows:
  - One text ROW (preceded by 4xxxx code) stating the DE name (2).
  - One or more text rows (preceded by 74xxx codes) stating the DE acronym followed by an event description (3).
- The 4xxxx must be sorted in the same order the DE are placed in the line (you do not need to sort 74xxx codes).

The codes 40000, 40100 and 74000 are special codes to be ignored.

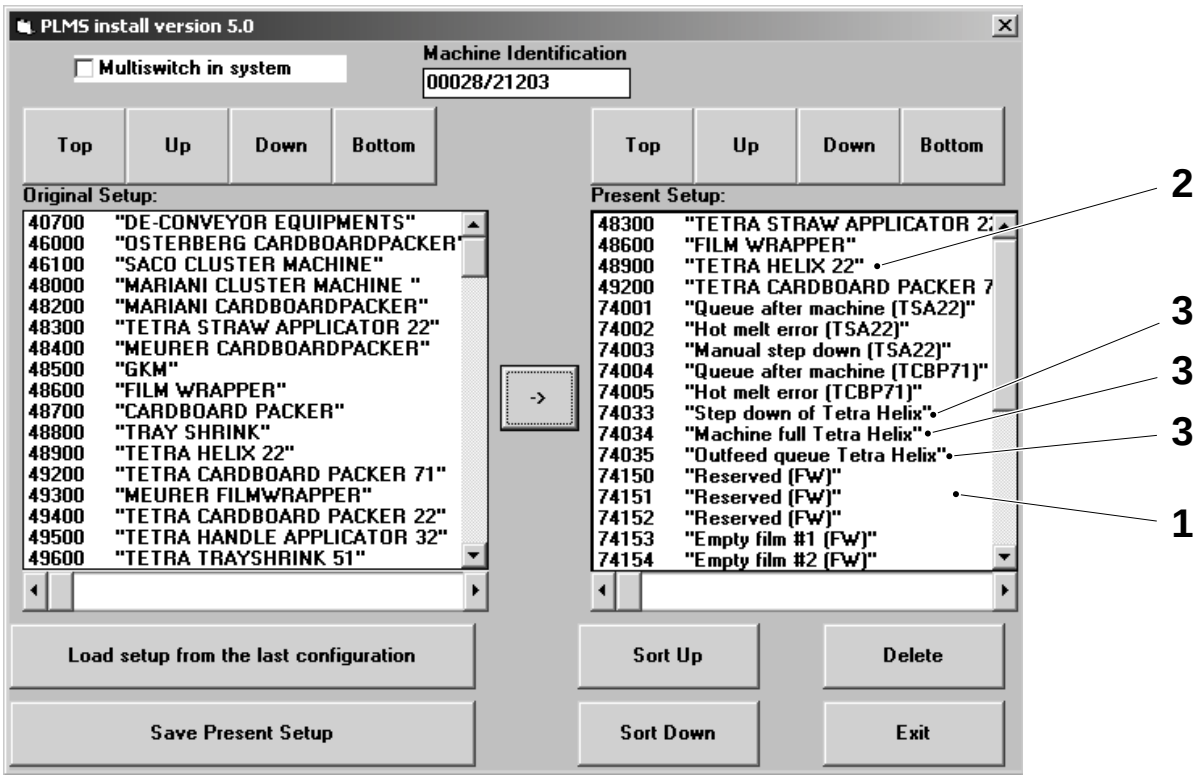

1 Present Setup
2 DE name
3 De acronym followed by an event description

(Cont'd)

(Cont'd)

Organizing the DE Configuration List

It is possible to arrange the PRESENT SETUP (1) list to match the order of DE in the line. To do that:

- Use the scroll buttons (2) to scroll through the list. Touch an item to mark it and press the appropriate COMMAND button (3) to sort or delete it.
- If an item is missing from the PRESENT SETUP (1) list it can be moved from the ORIGINAL SETUP (4) list into it. Use the scroll buttons (5) to scroll through the list. Touch the item to mark it and press the MOVE button (6) to move it to the PRESENT SETUP (1) list.

Note! If a 4xxxx code is selected from the ORIGINAL SETUP (4) the related 74xxx codes must also be selected. If a 4xxxx code is deleted from the PRESENT SETUP (1) list the related 74xxx codes must also be deleted.

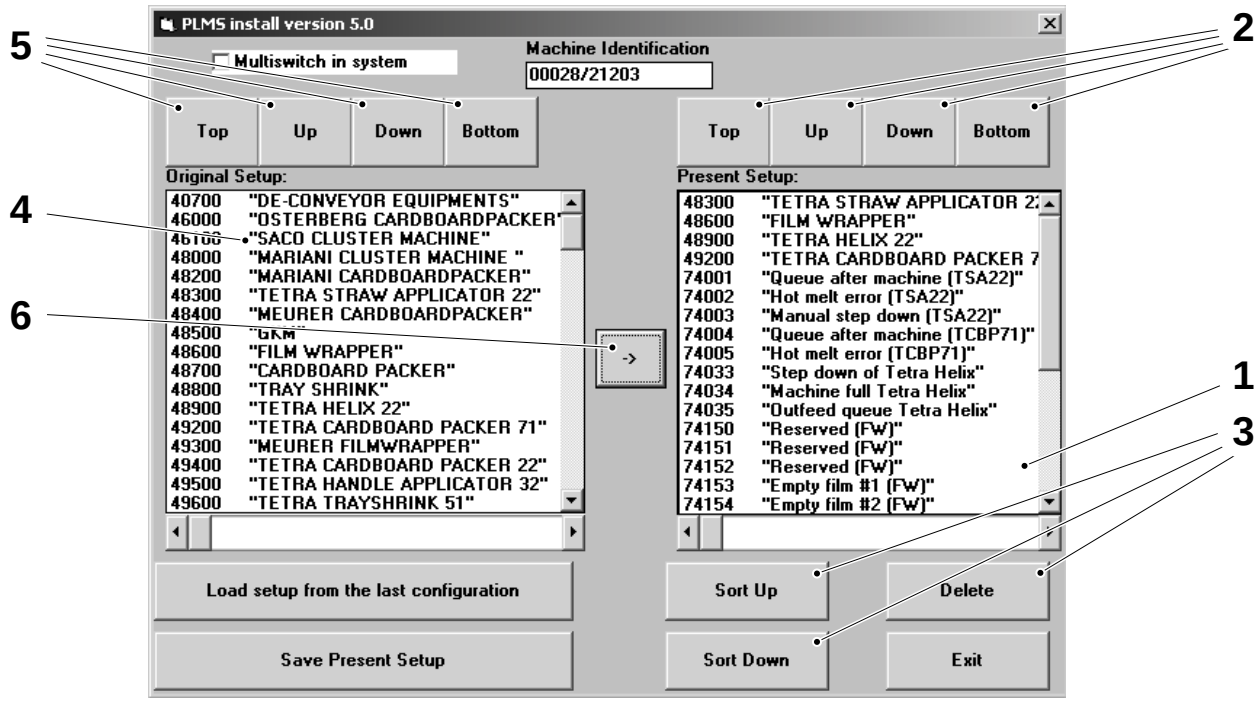

1 Present Setup
2 Scroll button
3 Command button
4 Original Setup
5 Scroll button
6 Move button

(Cont'd)

(Cont'd)

Saving DDE Configuration

Note! If you have loaded the last configuration or if you have changed the PRESENT SETUP (1) or the CUSTOM EVENT CODES and you touch the EXIT button (2) without touching the SAVE PRESENT SETUP button (3), all changes will be lost.

Note! If only the machine identification has been changed in the MACHINE IDENTIFICATION field (4) you do not need to touch the SAVE PRESENT SETUP button (3).

a) If you have loaded the last configuration or if you have modified the PRESENT SETUP (1), touch the SAVE PRESENT SETUP button (3) to save the configuration.

b) Touch the EXIT button (2). This will also save the machine identity and MULTISWITCH IN SYSTEM information.

c) Press OK to acknowledge, and then remove the installation disk from the drive.

If all new software has been installed, exit from Windows by pressing ALT-F4. Press OK in the EXIT WINDOW. Press CTRL-ALT-DEL on the keyboard. The TPOP system will start up. Remove the keyboard from the TPOP panel and close the rear door.

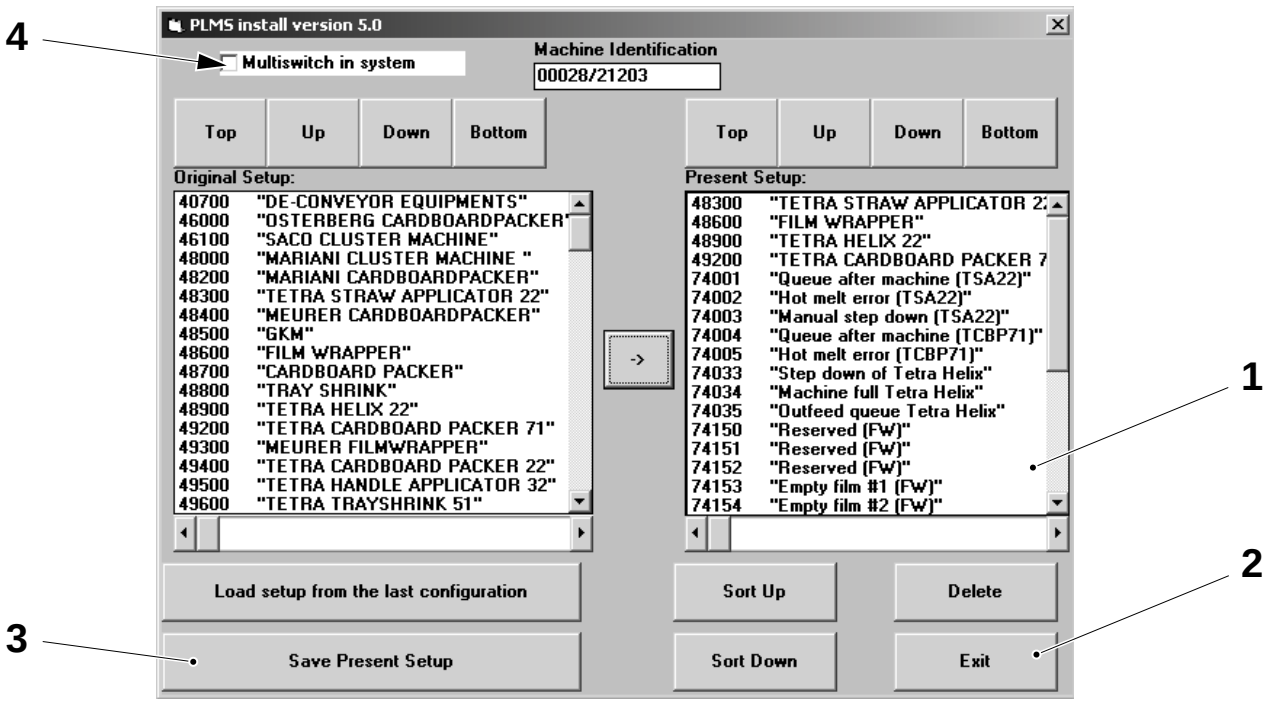

1 Present Setup
2 Exit button
3 Save Present Setup button
4 Machine Identification

(Cont'd)

(Cont'd)

Customizing the Operator List

In the PLMS install window it is possible to configure the PLMS Customized Operator List. This is a list of customer defined events that can be recorded in the PLMS log files at any time, with extra alphanumeric text input by the operator.

The Customer Operator list is composed of Event Code Description (2), associated with an Event Code (1) between 2100 and 2599. The list must be structured in groups (3) and details (4). A group (3) has a code ending with “00” (ex2300). Detail (4) codes are assigned to a group of 99 numbers (e.g. 2301 - 2399).

A Special Event code is 2000. When it is added to the list, the Engineer Attendance recording function is enabled. This allows the operator, at every machine stop, to log the stop with the extra information “Engineer Attendance” by checking the box in the PLMS display.

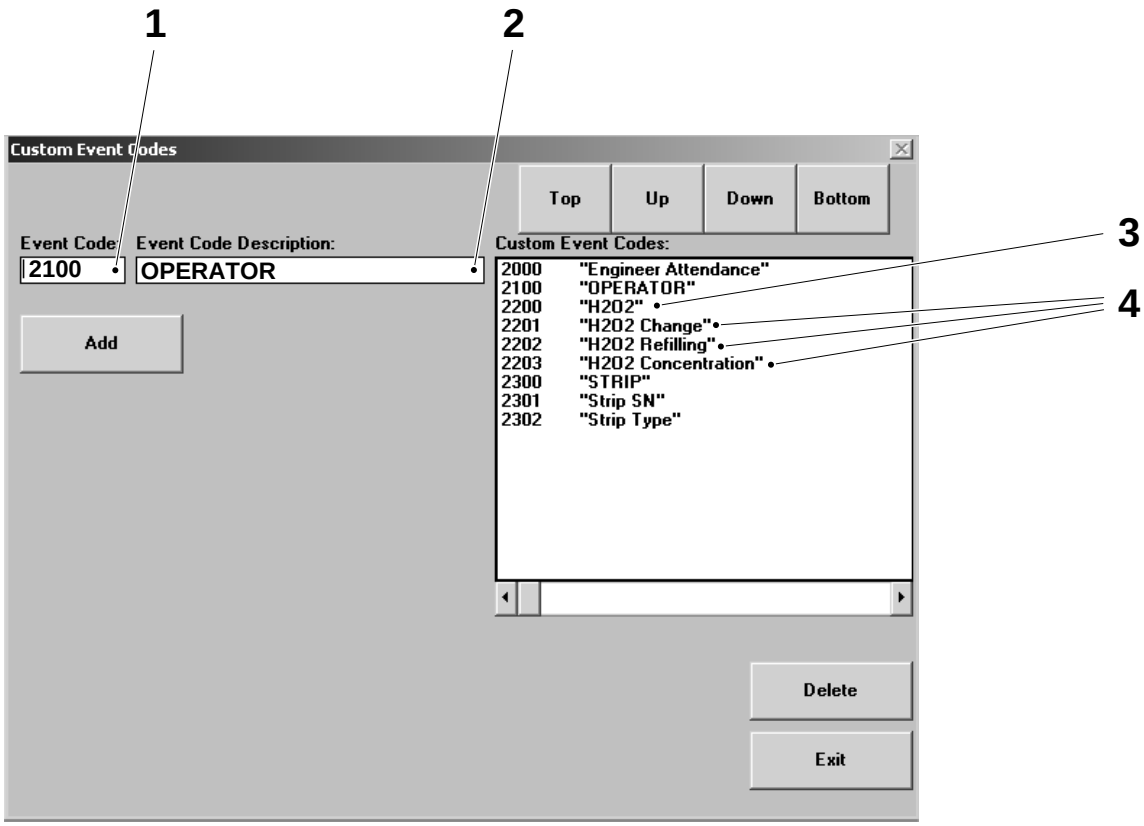

1 Event code
2 Event code description
3 Code group
4 Code details

(Cont'd)

(Cont'd)

a) Start the PLMS Installer again, see PLMS DDE config.

b) Touch the Custom button (5).

c) Enter the group code or detail code in the Event Code field (1) by using an external keyboard. Enter the event description in the Event Code Description field (2).

d) Touch the Add button (6) to add the event to the Custom Event Codes list (7).

e) If required, an event may be deleted by touching the Delete button (8).

f) Repeat items b) to e) until all the Custom event codes have been created.

g) Touch the Exit button (9).

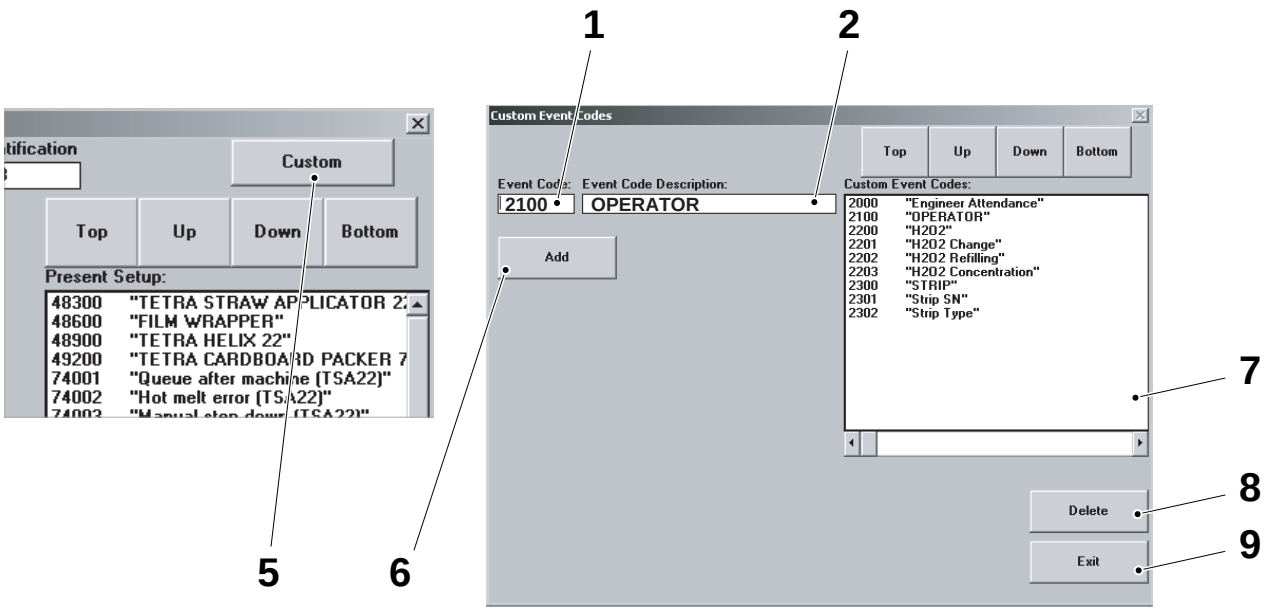

1 Event code
2 Event code description
5 Custom button
6 Add button
7 Custom event code list
8 Delete button
9 Exit button

(Cont'd)

PLMS Send System

a) Reboot the system as follows, without starting the TPOP programs:
   – Press ALT-F4 until EXIT WINDOWS appears. Press OK.
   – On the keyboard, press CTRL-ALT-DEL.

   When the text STARTING MS-DOS... appears during the rebooting sequence, press H to start Windows 3.11.

b) Insert the disk marked PLMSS in the in drive **A**.

c) In the TPOP ADMINISTRATION window, select the TPOP INSTALLATION icon, and press the enter button. The installation starts.

d) Follow the instructions on the screen. press the enter button to accept the default values.

e) Remove the installation disk from the drive.

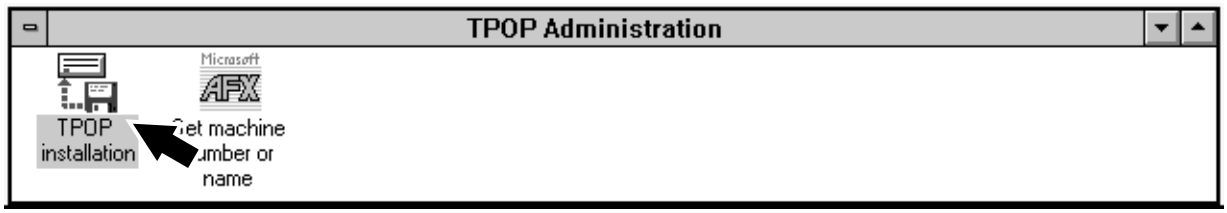

If installing new software have been finished, exit from Windows by pressing ALT-F4. Press OK in the EXIT WINDOW appearing. Press CTRL-ALT-DEL on the keyboard. The TPOP system will start up. Remove the keyboard from the TPOP panel and close the rear door.

9.2.6-8 TPOP - Set Machine Number and DE Configuration

Tools - Keyboard with PS/2 connector	
SPC reference	1363288-0301

a) Open the door in the rear of the TPOP panel (1) with the special key in the keyholes (2).

b) Connect a keyboard to the port (3) on the rear of the touch screen (4).

c) Switch ON the main power.

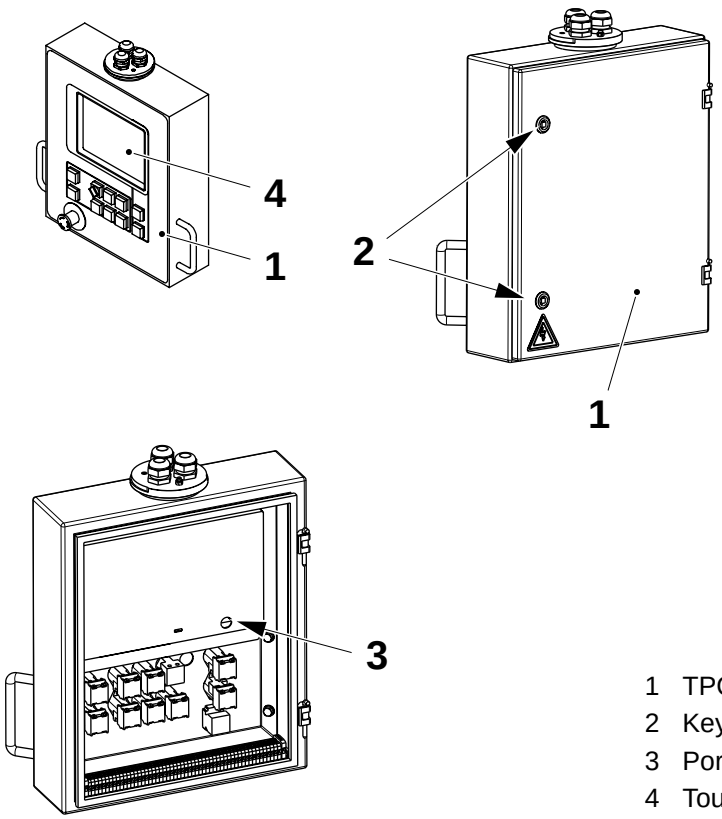

1 TPOP panel
2 Key hole
3 Port
4 Touch screen

(Cont'd)

(Cont'd)

In the Windows software, from the TPOP ADMINISTRATION window, it is possible to change machine number and distribution equipment configuration directly.

Note! If a new DE has been added in the line, see IM Line supervision at the Final assembly section for the cable connections.

Do as follows:

a) If the TPOP ADMINISTRATION window is available on the screen it is possible to continue directly. See item b) below

   If not, reboot the system as follows:

   – Press ALT-F4 until EXIT WINDOWS appears. Press OK.
   – On the keyboard, press CTRL-ALT-DEL.

   During the boot sequence, the message STARTING MS-DOS... appears, press H to start Windows 3.11.

b) In the TPOP ADMINISTRATION window, select SET MACHINE NUMBER OR NAME. press the enter button.

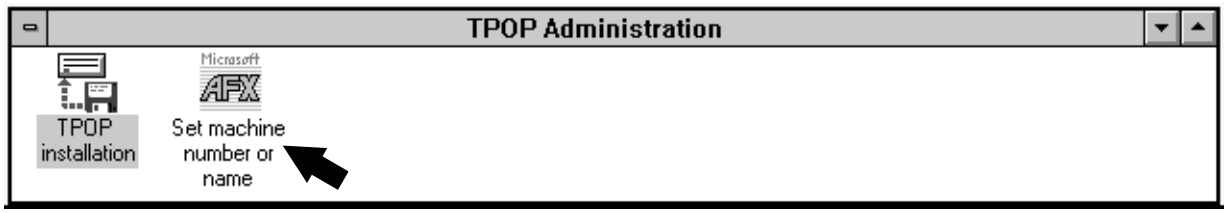

c) To set the machine number, follow the procedure in Entering Machine Identity Number on page 9-138.

d) To set the distribution equipment configuration, follow the procedure in Setting the Actual DE Configuration on page 9-140.

e) Reboot the system as follows:

   – Press ALT-F4 until EXIT WINDOWS appears. Press OK.
   – On the keyboard, press CTRL-ALT-DEL.

f) Remove the keyboard from the TPOP panel and close the rear door.

9.2.6-9 TPOP - Configure and Check PLMS Line Supervision

Tools - Keyboard with PS/2 connector	
SPC reference	1363288-0301

PLMS line supervision allows the PLMS to automatically collect data from Distribution Equipment (DE) connected to the Genius Bus (network).

The first time the filling machine is turned on with the network connected, each item of DE connected to the network is detected and its recognition code stored. On the TPOP DISTRIBUTION EQUIPMENT OVERVIEW screen, icons appear to represent each item of DE and its operating status. This information is intended for operators.

For technicians other screens are available allowing data transfer between the filling machine and each item of DE to be analysed.

Basic Check Using Operator Screens

To check the line using operator screens, do the following:

a) On the TPOP display, press the MANOEUVRE SYSTEM button (1).

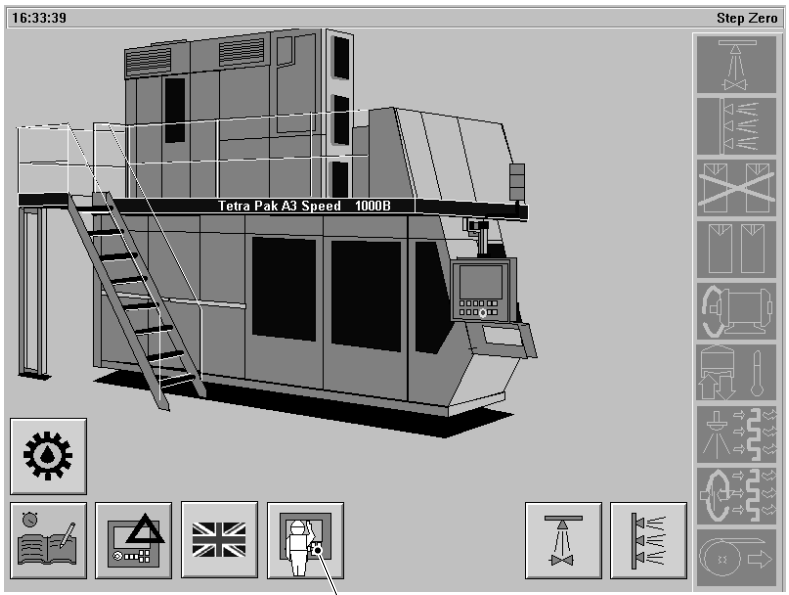

1 Manoeuvre system button

(Cont'd)

(Cont'd)

b) When the MANOEUVRE SYSTEM screen appears, press the DISTRIBUTION EQUIPMENT button (2).

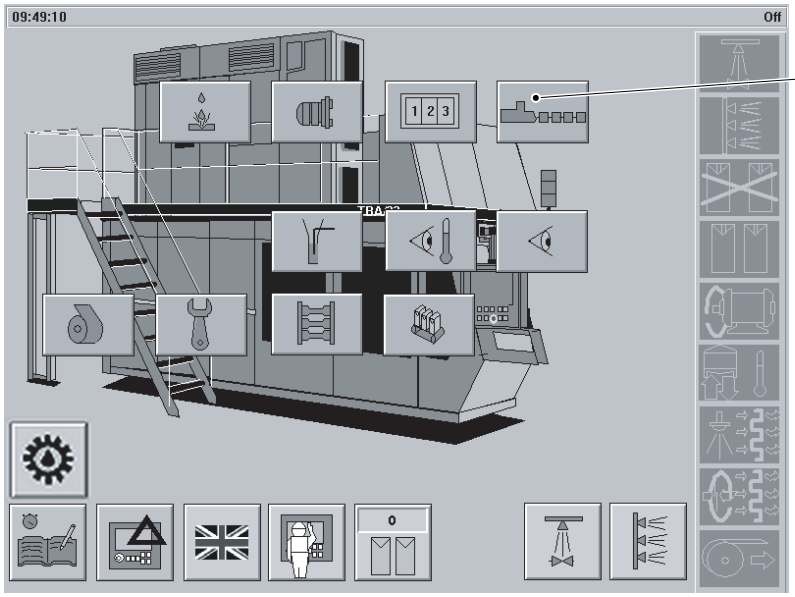

2 Distribution equipment button

c) The DISTRIBUTION EQUIPMENT screen appears. Press the UPDATE button (3) and keep it pressed for at least 5 seconds to update the line configuration window, in case machines has been added or removed from the line.

d) Check that icons representing all of the DE connected to the network are present.

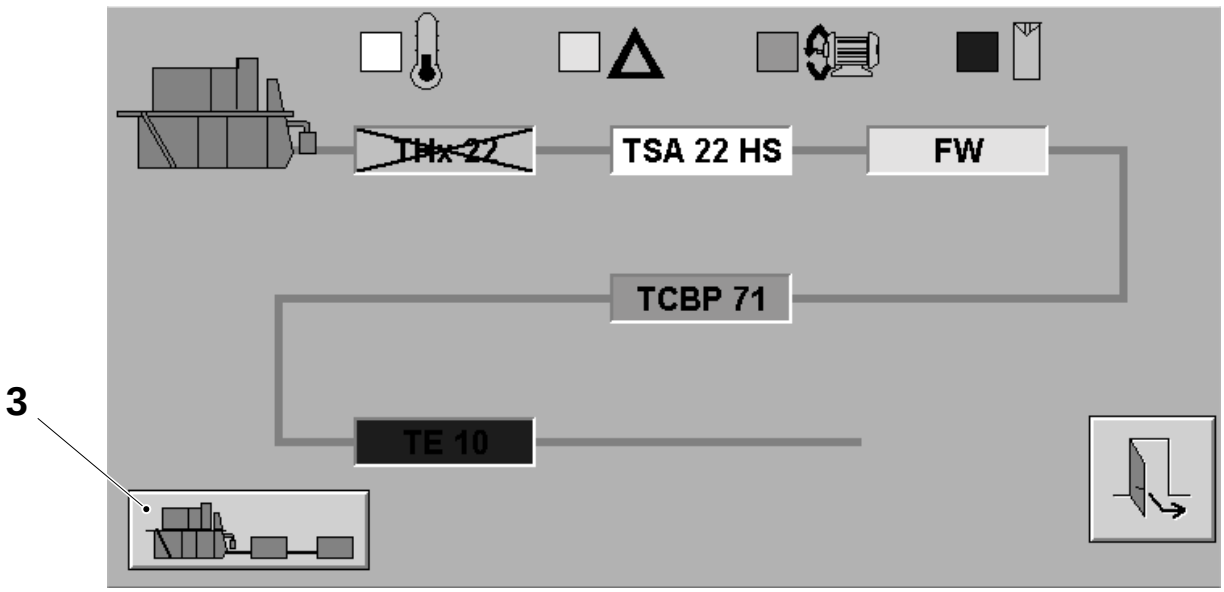

3 Update button

(Cont'd)

(Cont'd)

Advanced Check Using Analytical Screens

To check the line using the analytical screen, do the following:

a) On the TPOP display, press the hidden button (1).

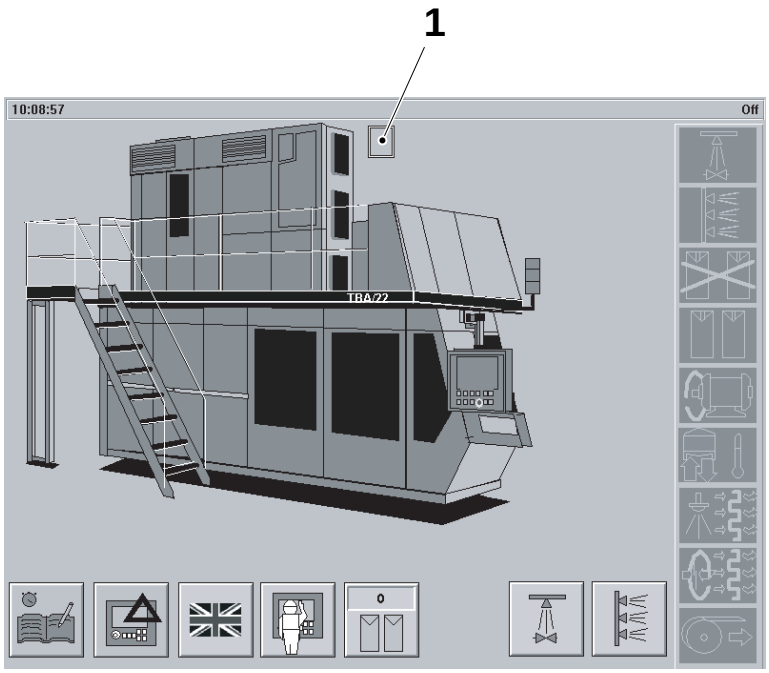

1 Hidden button

(Cont'd)

(Cont'd)

b) The TPOP displays the DE installed in the line. Press the icon of the DE to be analyzed. For example, touch TSA 22 HS button (2) to display the values of Tetra Straw Applicator TSA 22 HS.

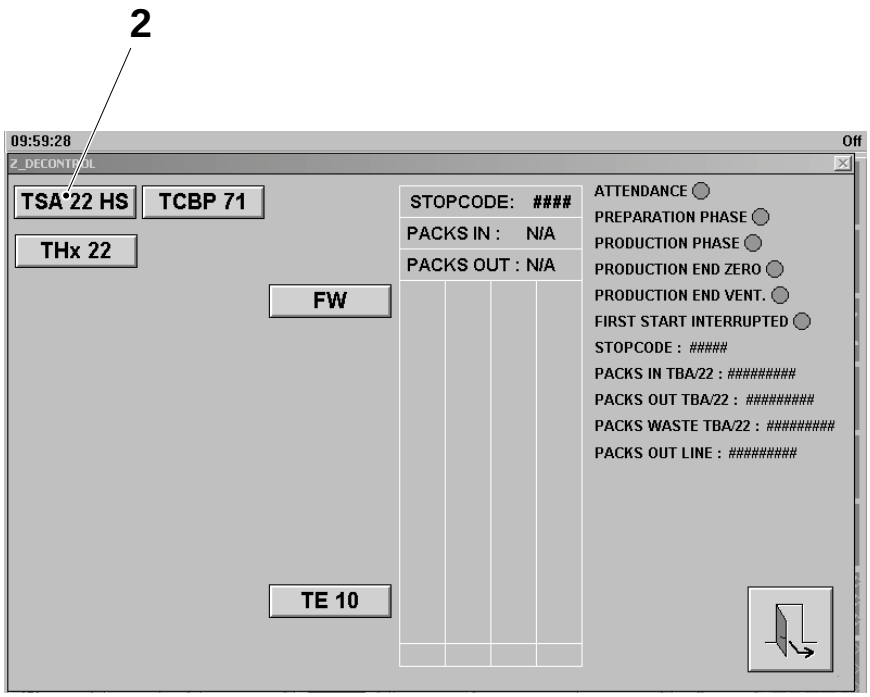

2 Tetra Straw Applicator TSA 22 HS button

(Cont'd)

(Cont'd)

c) The screen that appears shows the DE package counting (3), the DE stop code (4), the filling machine status (5), the filling machine package counting (6) and status of each of the 16 bits of the communication registers (7).

Note! The example given is for the Tetra Straw Applicator TSA 22 HS.

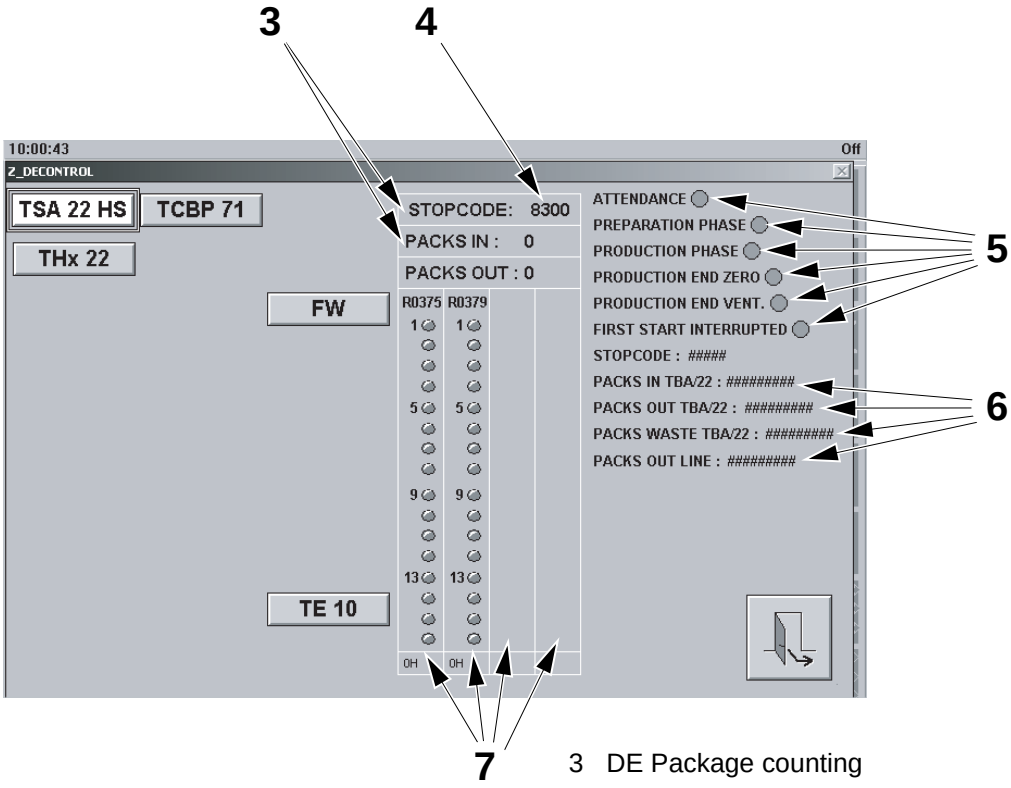

3 DE Package counting
4 DE Stop code
5 Filling machine status
6 Filling machine package counting
7 Status of communication registers

9.3 Power Supply Unit

SPC Reference	575237-0300

9.3.1 Fuse Boards

9.3.1-1 Fuse Board 1 - Set Overload Protection

SPC Reference	1285539-0300

Q001	Q002	Q003	Q009	Q011	Q016	Q020	Q022
0.9 A	1.4 A	15.0 A	0.28 A	2.5 A	1.2 A	8.8 A	1.6 A
Q023	Q024	F010	F011	F012	F014	F015	
1.65 A	20 A	25 A	10 A	10 A	10 A	6 A	

LH Cabinet

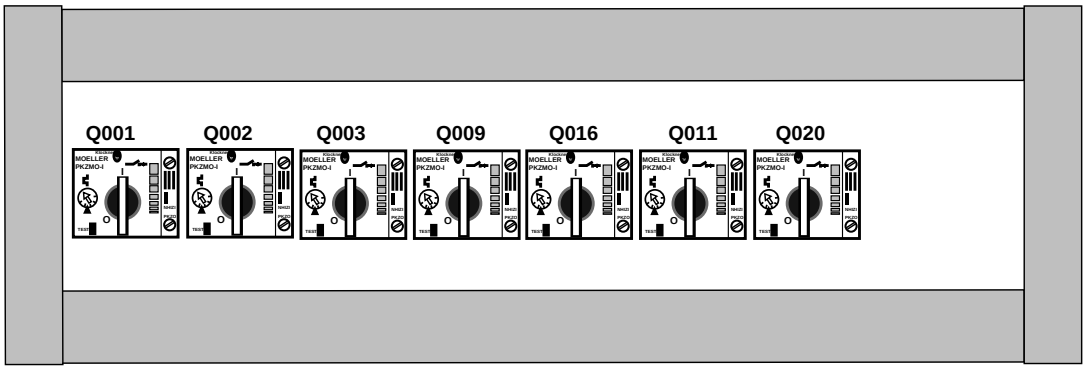

RH Cabinet

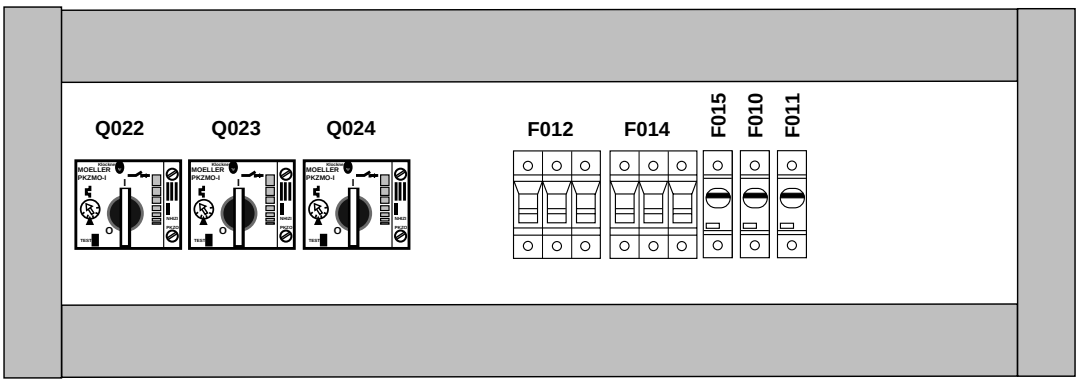

Q001: Circulation water peroxide bath
Q002: Circulation peroxide
Q003: Cleaning pump, external cleaning
Q009: Transport of waste
Q011: Circulation cooling media electrical cabinet
Q016: Belt brake outfeed conveyor
Q020: Compressor
Q022: Cooling water pump
Q023: Cooling media pump
Q024: DMC power supply
F010: ASU TPO bar
F011: ASU strip bobbin motor
F012: Sep. peroxide heating, heater 1
F014: Sep. peroxide heating, heater 2
F015: Sep. peroxide heating, water pump

9.3.1-2 Fuse Board 2 - Set Fuse

SPC Reference	1285528-0300

Set the fuse protections following the table below:

F002	F003	F004	F005	F006	F007	F008	F016	F028
6 A	10 A	10 A	10 A	10 A	10 A	6 A	6 A	6 A
F101	F102	F103	F104	F105	F106	F107	F108	F112
25 A	25 A	25 A	10 A	10 A	16 A	16 A	16 A	10 A

LH Cabinet

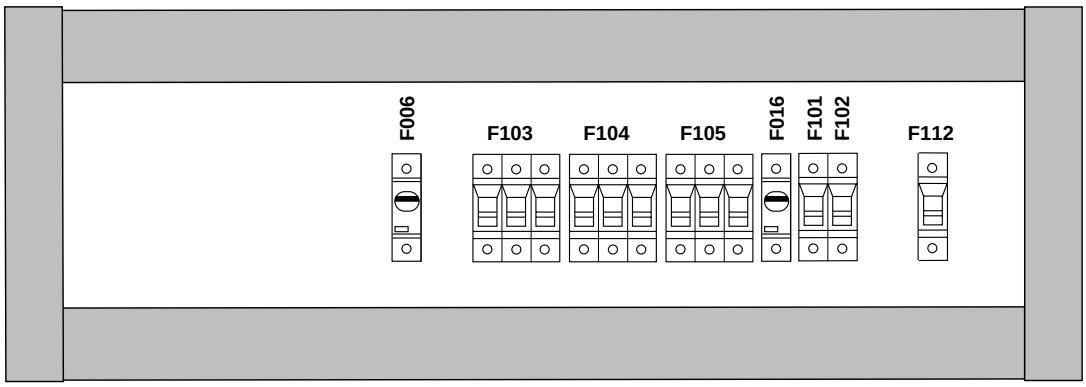

RH Cabinet

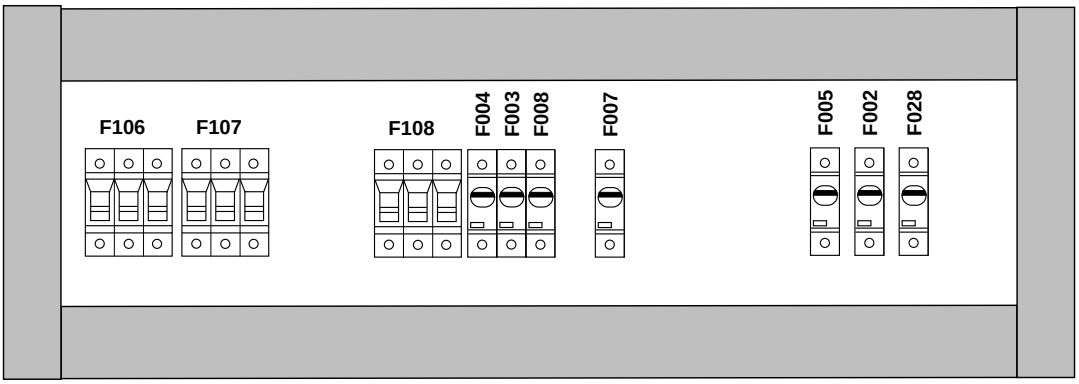

F002: 230 VAC lines L51- L52
F003: Cabinet lighting
F004: Pack. material drive roller
F005: Cooler electr. cabinet
F006: External conveyor
F007: ASU loop and magazine
F008: Lighting ASU, Jaw and FF
F016: Flow meter
F028: 24V power supply

F101: Flap heating top RH and LH
F102: Flap heating bottom, RH and LH
F103: Air super heater
F104: Bath water heater 1
F105: Bath water heater 2
F106: TPIH LS
F107: TPIH TS
F108: TPIH SA
F112: Splicing head ASSU

9.4 Control Left

SPC Reference	575235-0300

9.4.1 Level Relays

9.4.1-1 Level Relays - Description

SPC Reference	575235-0300 90458-2580

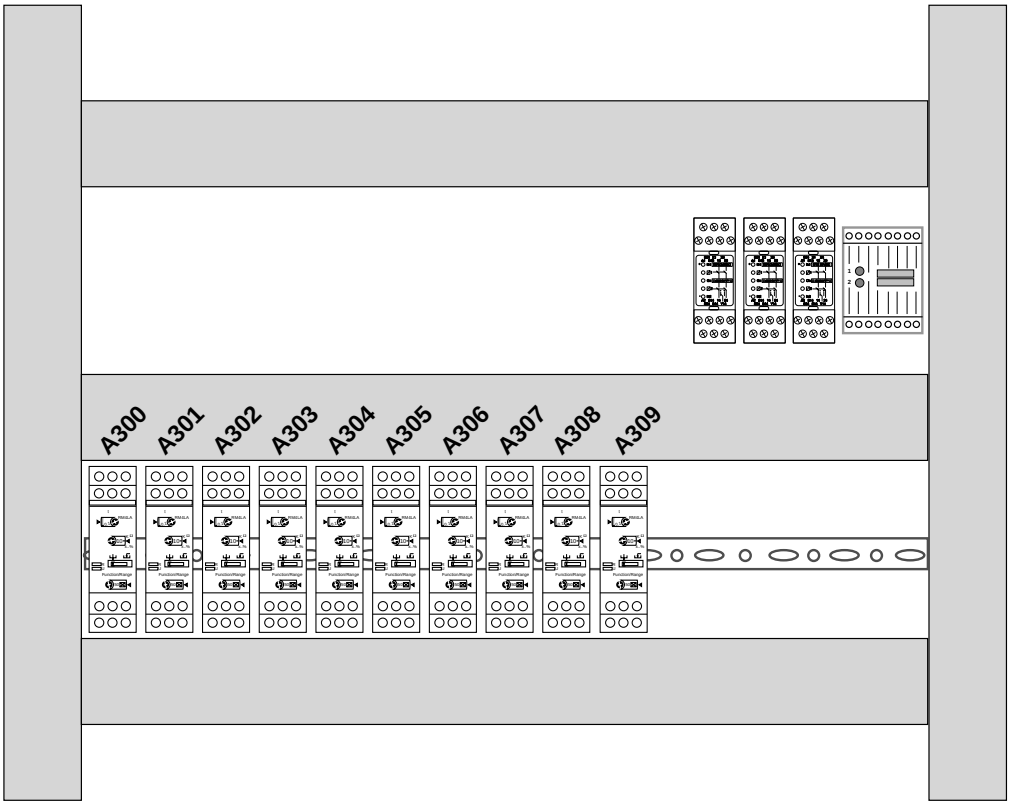

A 300: Hydrogen peroxide spray tank
A 301: Hydrogen peroxide bath
A 302: Water separator
A 303: Water bath
A 304: Cooling water
A 305: Membrane leakage
A 306: Level peroxide tank preheating
A 307: Safety level peroxide tank
A 308: Level peroxide tank production
A 309: Level HI spray tank

(Cont'd)

(Cont'd)

The level regulator relay (RM4-LA) monitors the product level by measuring the change in resistance of immersed and non immersed electrodes. The relay sensitivity must be set according to the conductivity of the product.

The level regulator parameters are set using the potentiometer and selectors shown in the illustration below:

a) The selector (3) sets the filling/empty functionality.
   – In the EMPTY FUNCTION position is the output relay activated when the high level electrode is immersed and deactivated when the low level electrode is “dry”.
   – In the FILL FUNCTION position is the output relay activated when the low level electrode is “dry” and deactivated when the high level electrode is immersed.

b) The potentiometer (2) fine adjusts the sensitivity as % of the sensitivity range (6).

c) The potentiometer (1) sets the delay.

d) The selector (6) sets the ON the level status of the relay and the sensitivity range.

e) The yellow LED (4) lights up when the relay is CLOSED.

f) The green LED (5) lights up when the power is ON.

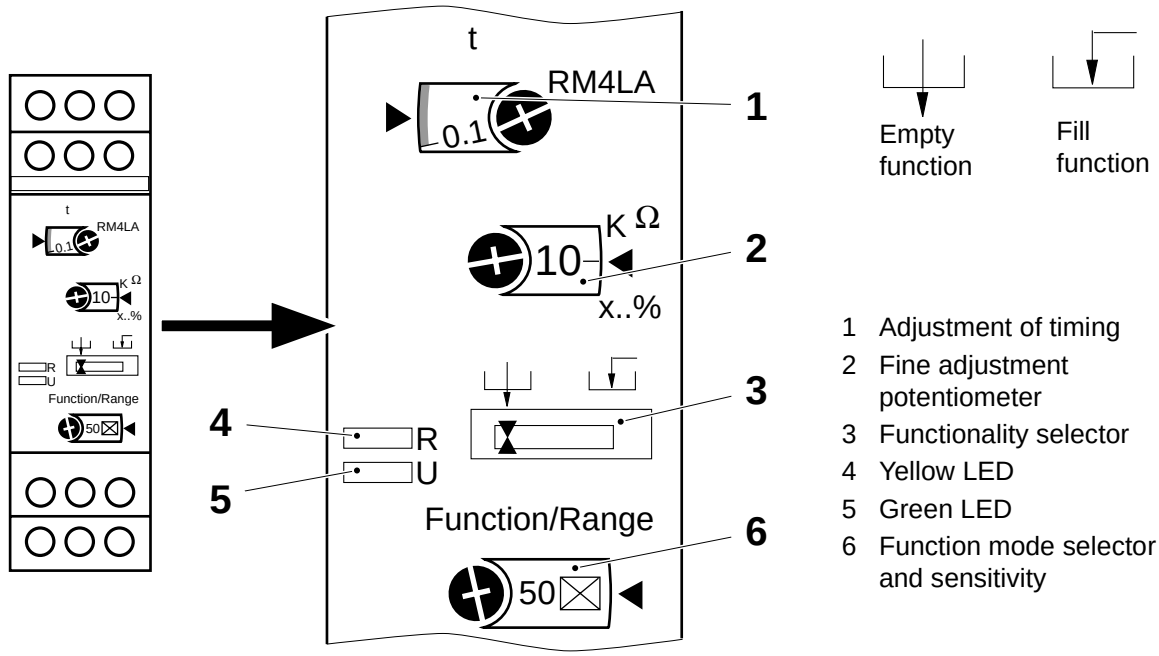

9.4.1-2 Level Relays - Set

Machine Status	Mains Power ON
SPC Reference	575235-0300 90458-2580

Set the display functions, see table below, with a screwdriver:

Description		**Time value** (1)	**R-value** (2)	**Functionality sector**(3)	**Function/ range** (4)
Hydrogen peroxide spray tank	A300	0	20		50
Hydrogen peroxide bath	A301	0	10		50
Water separator	A302	0	10		50
Water bath	A303	0	10		50
Cooling water	A304	0	10		500
Membrane leakage	A305	0	30		500
Level peroxide tank preheating	A306	0	10		50
Safety level peroxide tank	A307	0	10		50
Level peroxide tank, production	A308	0	10		50
Level HI spray tank	A309	0	10		50

Note! The functionality selector (3) is recommended to always be set according to the table to avoid problems.

If required, fine adjust by means of the potentiometer (2).

Make sure the yellow LED lights up when the level is obtained.

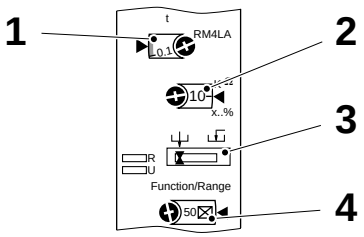

1 Adjustment of timing
2 Fine adjustment potentiometer
3 Functionality selector
4 Function mode selector and sensitivity

(Cont'd)

9.4.2 Safety Relays

9.4.2-1 Safety Relays - Functional Description

SPC Reference	575235-0300

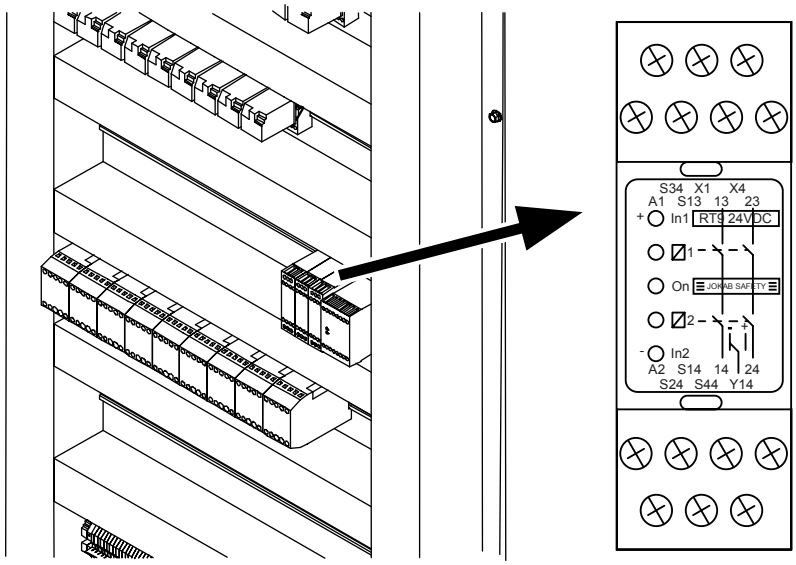

Safety Relay Layout A600, A601

The A600 is a two-channel relay with a supervised reset controlling the emergency stops.

The A601 is a two-channel relay with a supervised reset controlling the safety switches of the doors, except the ones in the ASU.

The two-channel relays A600 and A601 (see Fig. 1) are supplied with **24V** between A1 and A2.

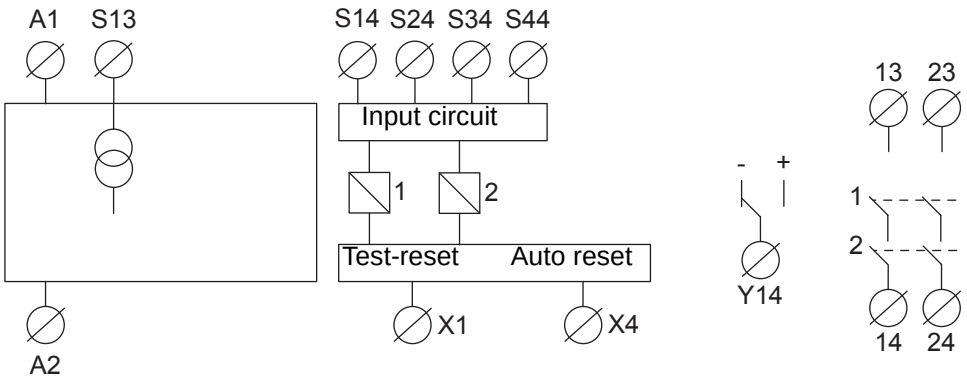

(Cont'd)

(Cont'd)

All the emergency stops/safety switches are connected together and their contacts are used to build up one separate circuit connected between S24 and A2(-). The other channel S14 is directly connected to a PLC output.

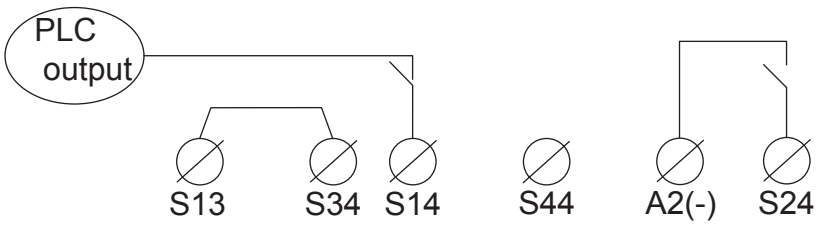

The auxiliary contacts of the contactors that get power from the relay's output and the reset relay (K118) for the safety relays are connected in a chain between L11 and X1.

As soon as both emergency stop / safety switches circuits are closed the 'In' and ' ⍁ ' LEDs will light again. This does not mean the relay has accepted the circuits to be OK. For the acceptance both circuits must be opened and closed at the same time.

To enable the outputs, the reset circuit between S13 and X1 must be closed and open. To get a closed circuit relay K118 is used connected in serial with all the auxiliary contacts of the contactors that are controlled by the safety relay. This is to make sure that all the contactors are functioning properly.

(Cont'd)

(Cont'd)

Safety Relay Layout A602

The A602 is a two-channel relay without a supervised reset controlling the safety switches of the doors in the ASU.

The two-channel relay A602 (see Fig. 2) is supplied with **24V** between A1 and A2. All the safety switches in the ASU are connected together and their two contacts are used to build up two separate circuits connected between S13 and S14 and between S24 and L10.

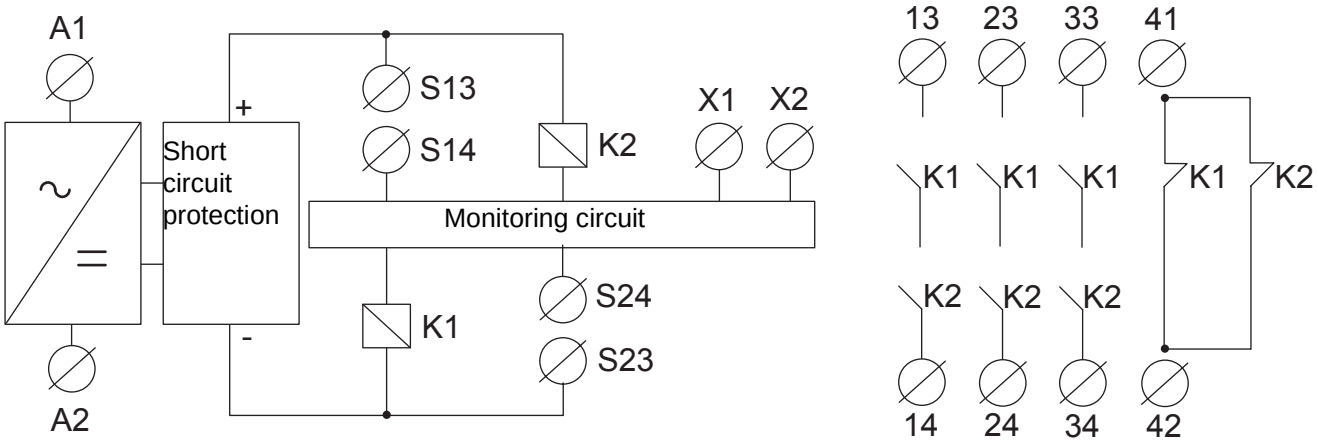

Fig. 2

This means that if one of the contacts in the safety switches open, the relay will turn off the outputs and the 'In' and ' ⊠ 'LEDs, located on the safety relay.

As soon as both safety switches circuits are closed the LEDs 'In' will light up again. This doesn't mean the relay has accepted the circuits to be OK. For the acceptance both circuits must be opened and closed at the same time.

This relay is automatically reset when the circuits are OK, a reset signal is not needed.

(Cont'd)

(Cont'd)

Safety Relay Layout A603

The A603 is a two-channel expansion relay used to delay (0.5 seconds) the power off of the main motor, to enable a controlled stop.

The two-channel timer relay A603 (see Fig. 3) is used in the TBA/22 application as a one-channel relay and therefore both channels are supplied using the same circuit. This circuit is connected in serial with the emergency stop relay (A600) and the door guard relay (A601).

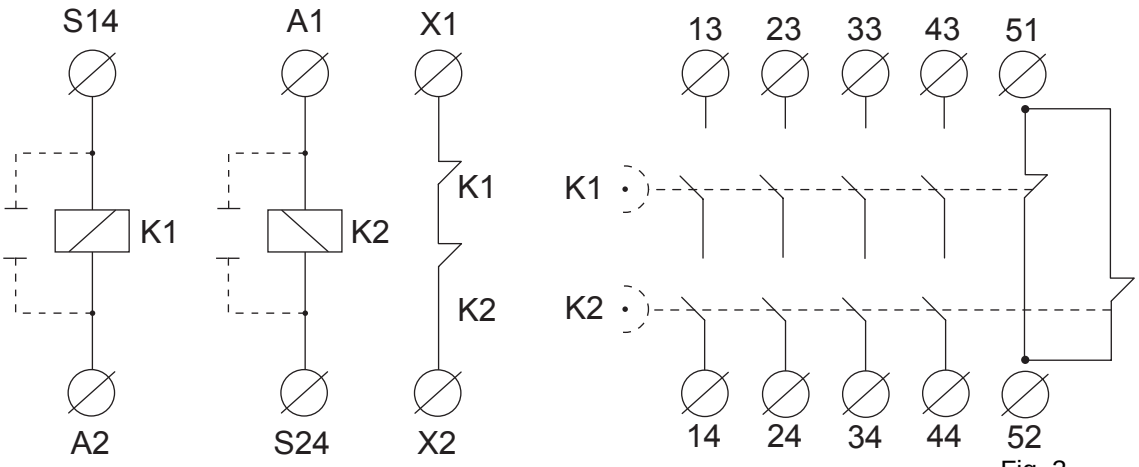

Fig. 3

This means that if the circuit open, the relay will turn off the outputs after 0.5 second and the LED '1' and '2', on the safety relay, will be turned off. During this time the servo drive has time to stop the main motor in a controlled way.

This relay is automatically reset when the circuits are OK, a reset signal is not needed.

9.4.2-2 Safety Relays - Check Function

SPC Reference	575235-0300

Note! Check the relays in case of a safety relay alarm in the TPOP panel.

Check that all the LEDs in the safety relays are activated.
If one or more LEDs of the following relays are not lit:

Safety Relay A600
Make sure that all emergency stop push buttons are deactivated and the alarms are reset.
Operate the emergency stop push buttons one by one and check that an alarm is displayed on the TPOP. Release the stop button that was used and reset the alarm after the test.

LH side

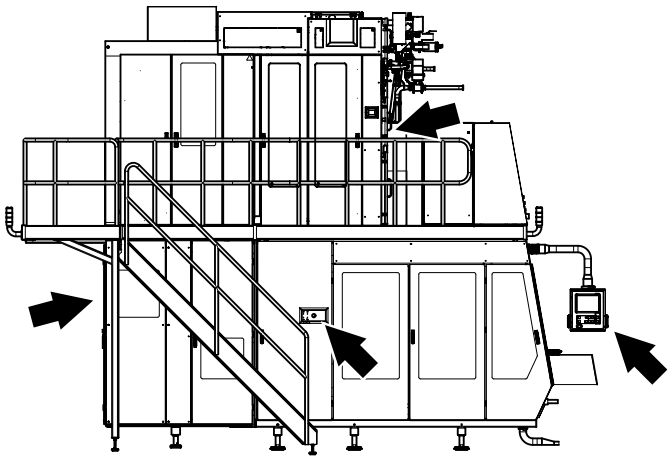

RH side

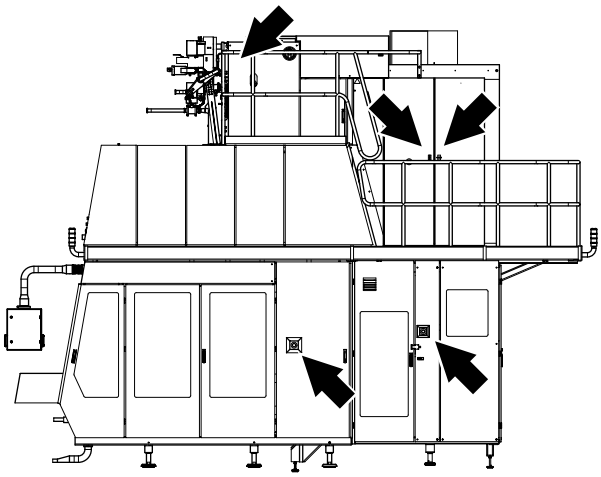

(Cont'd)

(Cont'd)

Safety Relay A601

Make sure that all the doors in the Final folder unit, Drive unit, and bottom Superstructure are closed. Check the alarms are reset.
Open the doors indicated by arrows, one by one, and check that an alarm is displayed on the TPOP. Close the door and reset the alarm after the test.

LH side

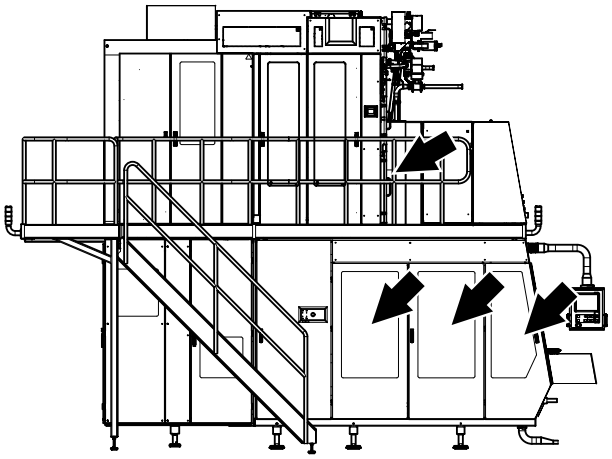

RH side

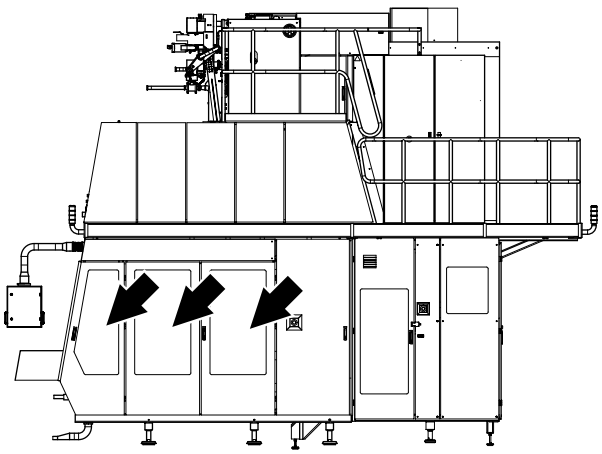

(Cont'd)

(Cont'd)

Safety Relay A602

Make sure that all the doors in the back of the ASU module are closed and any alarms are reset.

Open the doors of the ASU indicated by arrows, one by one, and check that an alarm is displayed on the TPOP. Close the door and reset the alarm after the test.

RH side

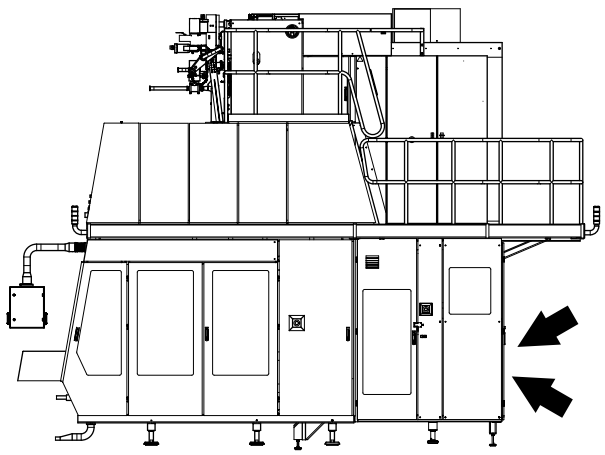

(Cont'd)

(Cont'd)

Safety Relay A603

Make sure the safety relays A600 and A601 are activated.

On completion, check the alarms are reset and that all the LEDs of the relay A600 and A601 are lit.

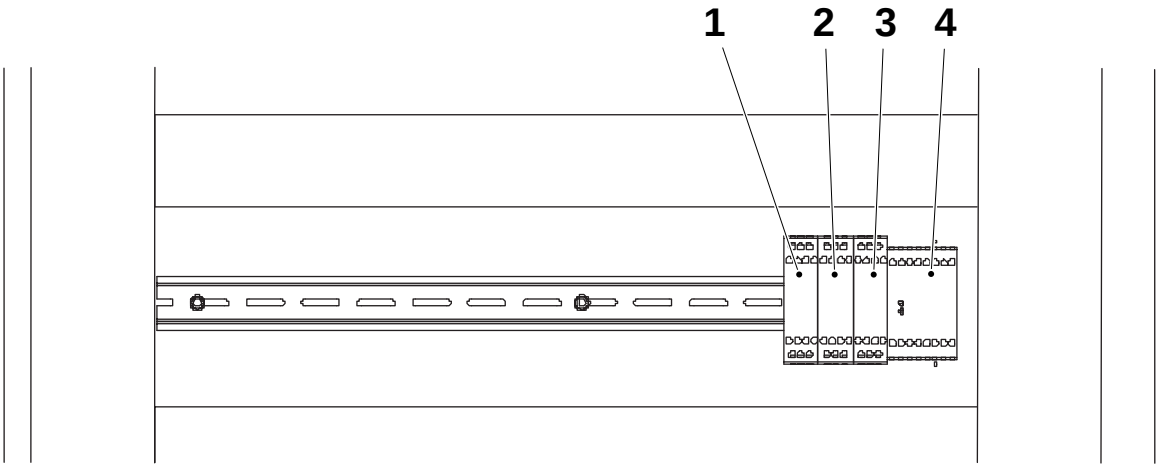

1 A 600: Emergency stop
2 A 601: Machine safety monitors
3 A 602: ASU safety monitors
4 A 603: Time relay main motor emergency stop

9.4.2-3 Safety Relays - Troubleshoot

SPC Reference	575235-0300

As the relays are connected in a serial circuit to each other they must be checked in a specific order, first A600 and then A601 and then A602 and finally A603.

Troubleshooting Flowchart Relay A600

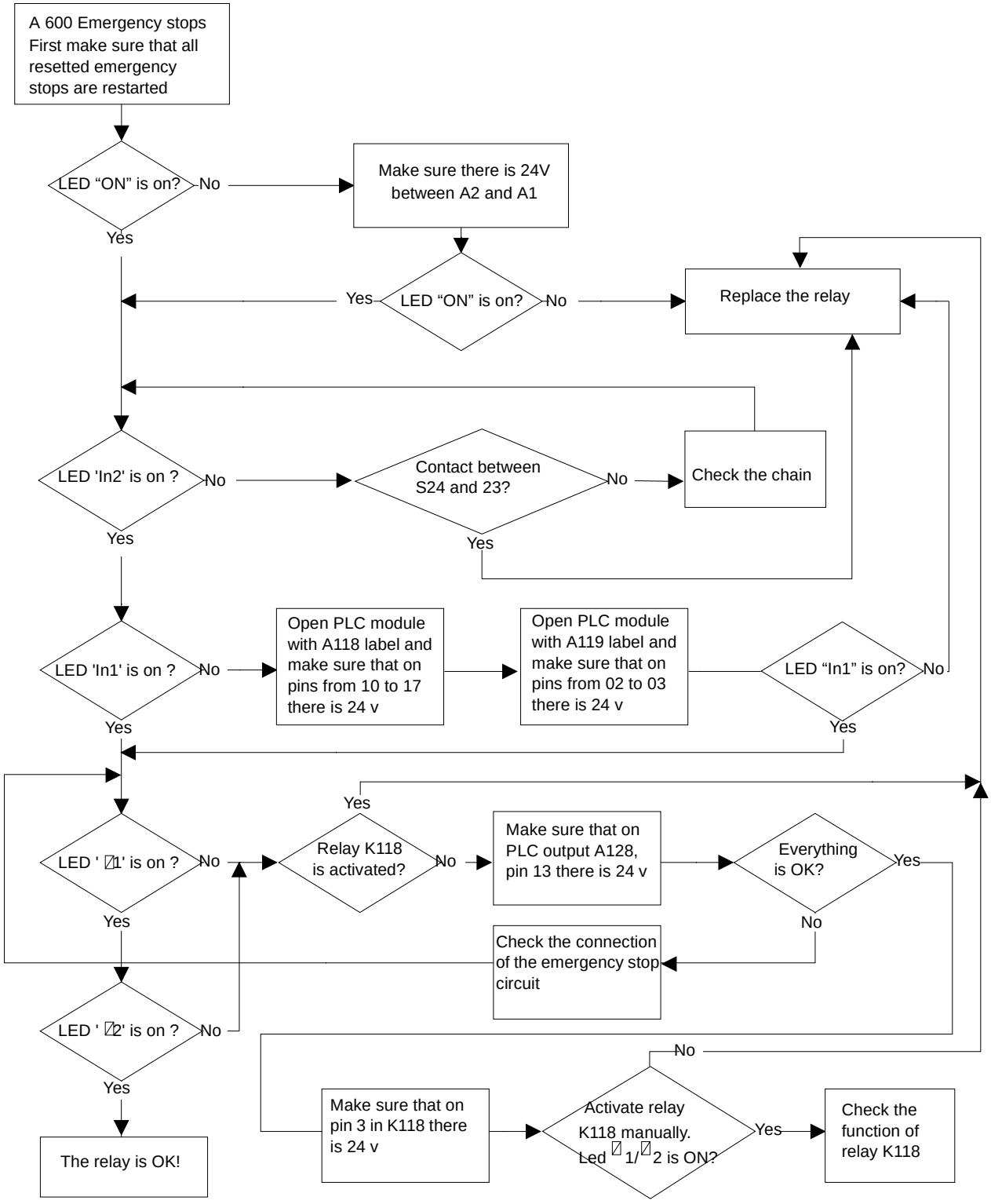

(Cont'd)

(Cont'd)

Troubleshooting Flowchart Relay A601

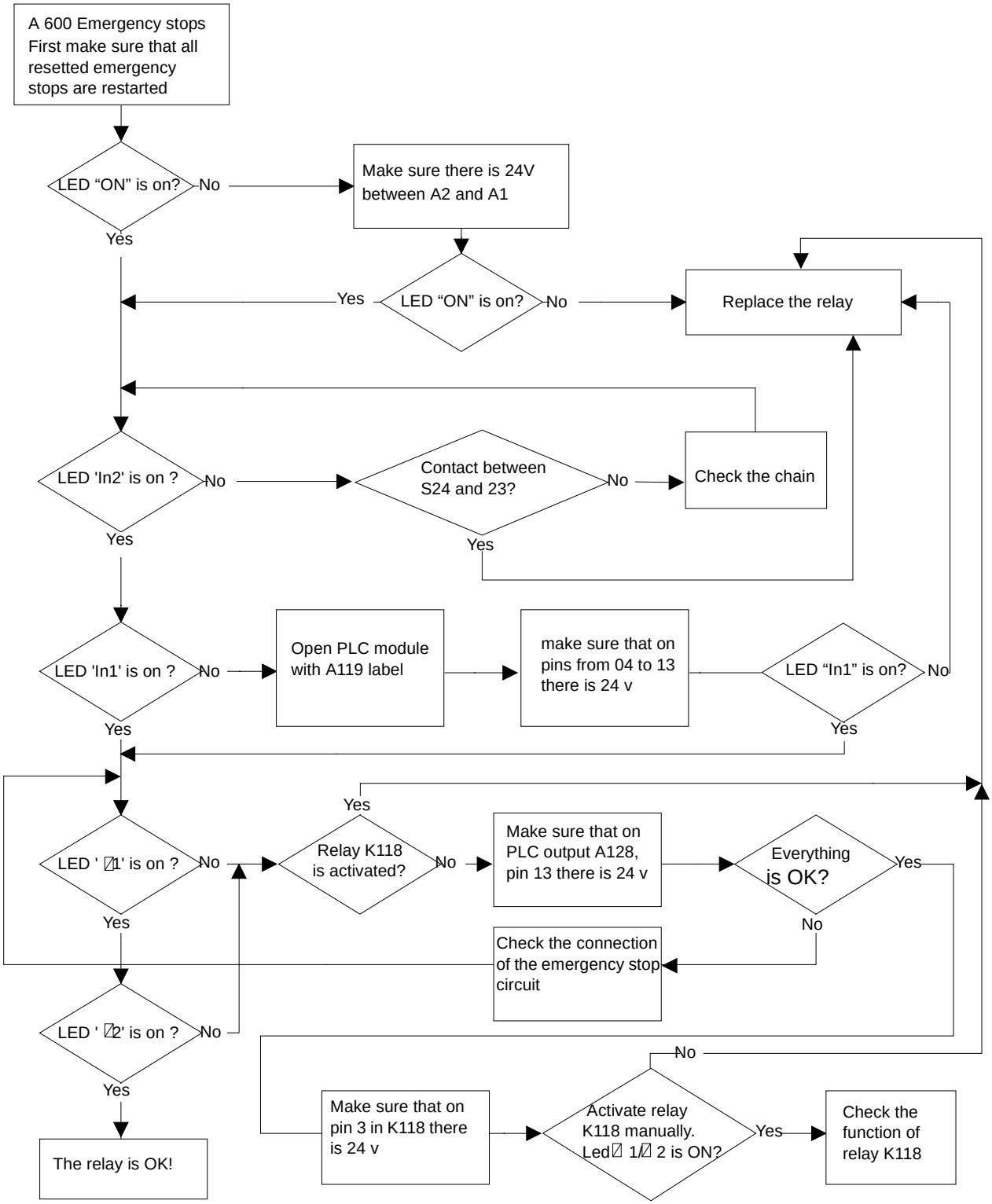

(Cont'd)

Troubleshooting Flowchart Relay A602

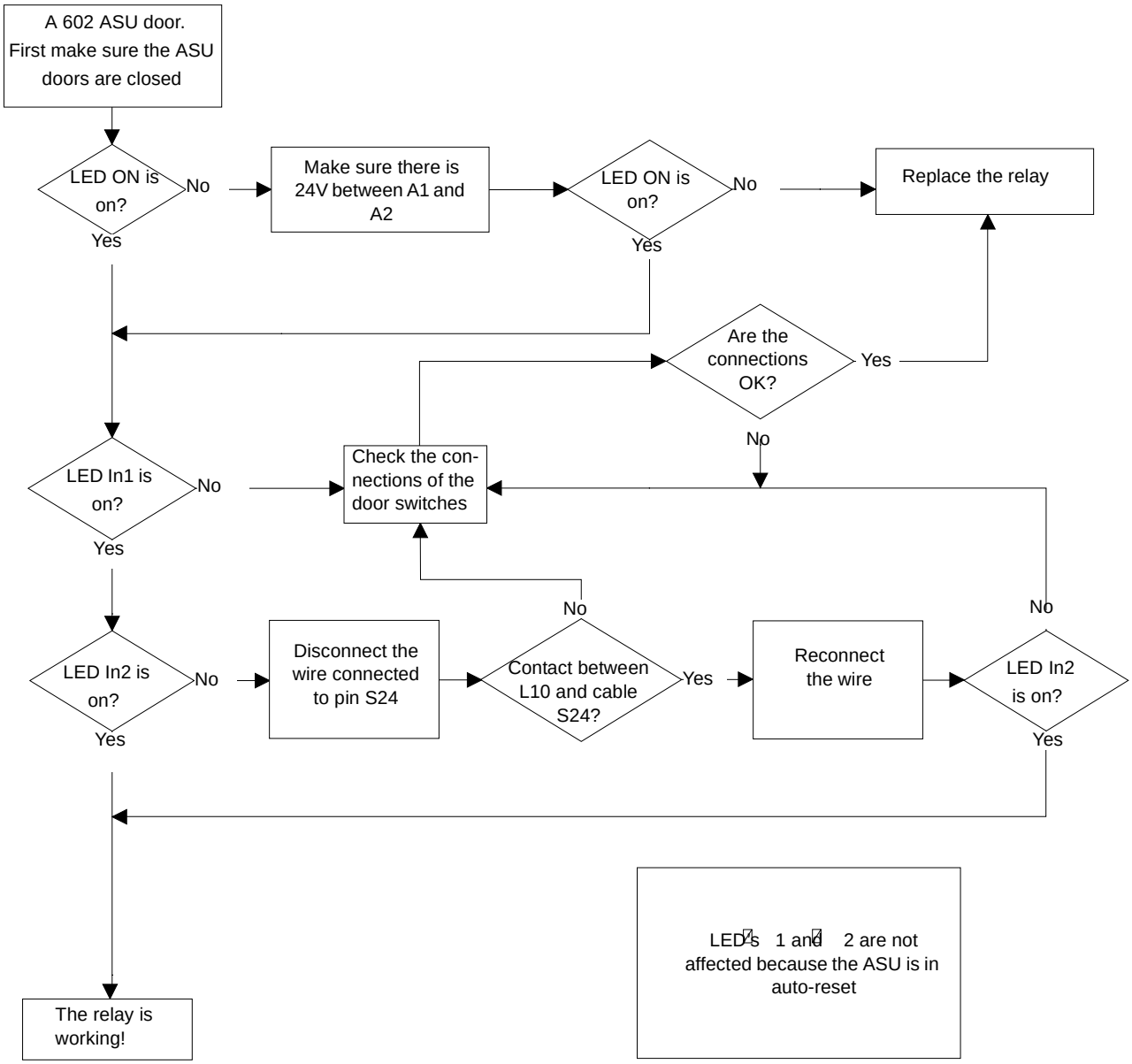

(Cont'd)

(Cont'd)

Troubleshooting Flowchart Relay A603

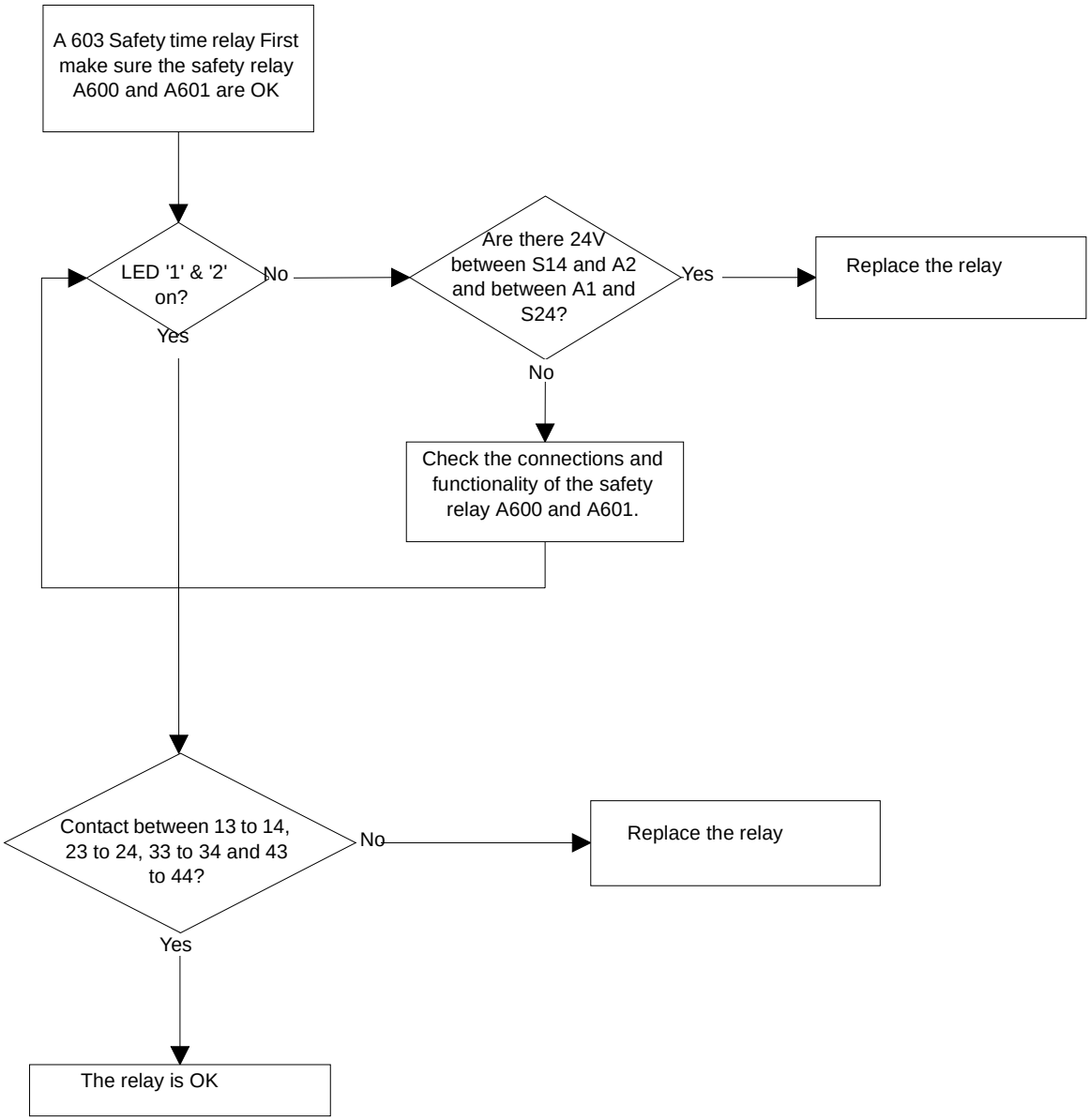

Note! This circuit is fed through the relay A600 and A601 and therefore these relays must be reset before this measurement is done!

9.5 Control Right

SPC Reference	575236-0300

9.5.1 PLC

9.5.1-1 PLC - Functional Description

SPC Reference	575236-0300

A copy of the PLC program for this machine is supplied on a diskette. If a printout is desired it is possible to make one from a diskette.

To prevent the original program from being damaged, make a directory on a PC, call it LM90, and copy the program file to that directory. It will then be possible to access, both On-line and Off-line, all lists, addresses, comments and logic.

Any change made to the PLC - program by a third party is not supported by TP. It is the responsibility of the third party to fully document and maintain every change made.

The PLC program is the master of the machine. It controls most of machine functions. This means the program is a very important part of the machine and anyone making changes must be aware of the risk of jeopardising the machine function.

9.5.1-2 PLC - Change Battery

Machine Status	Mains Power ON
Consumables - Battery	TP No.90031-68
SPC Reference	575236-0300

When the battery signal lamp (1) lights, the battery (4) must be changed.

Change the battery as follows.

a) Remove the battery cover (2).

b) **First** fit the cable of the new battery on the unused cable connector (5).

c) **Then** remove the old battery cable and then remove the battery from its mounting clip (3).

d) Firmly insert the new battery into the mounting clip.

e) Fit the battery cover.

f) Repeat items from a) *to* e) for the other power supply units (6).

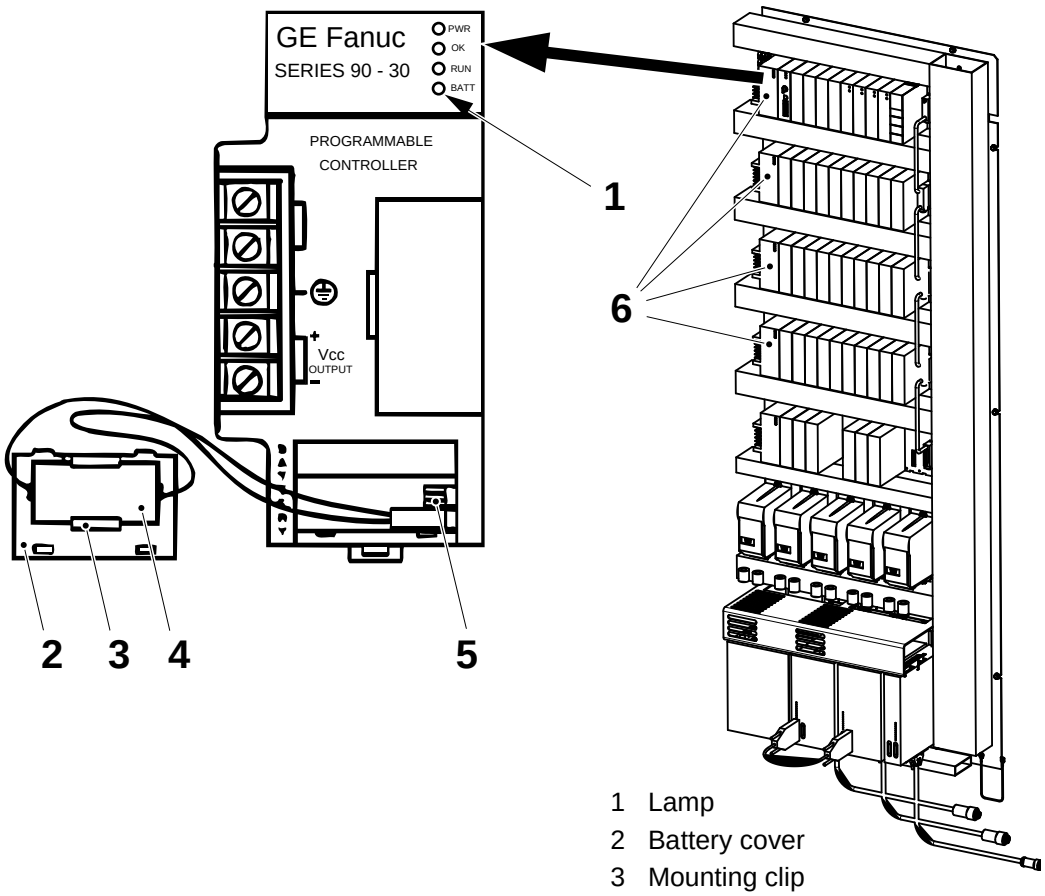

1 Lamp
2 Battery cover
3 Mounting clip
4 Battery
5 Cable connector
6 PLC power supply unit

9.5.1-3 PLC - Load Program

Machine Status	Mains Power ON
Tools - Communication Cable - AT Compatible PC with Diskette Station	RS 232 C
SPC Reference	575236-0300

Note! This instruction describes how to load the PLC program from a diskette.

a) Connect the communication cable between the PC and the PLC.

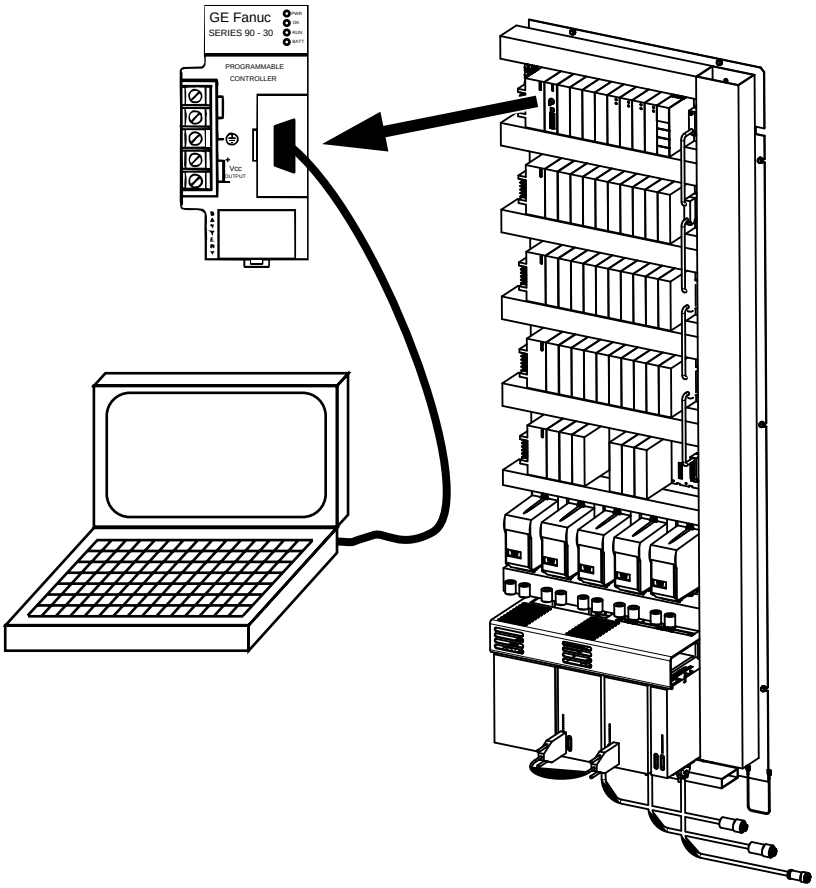

(Cont'd)

(Cont'd)

b) Start LM90 to enter the GE Fanuc PLC (Logicmaster 90).

c) Insert the program diskette in drive A.

d) From the main menu, press F1 to display the LOGICMASTER 90 PROGRAMMER PACKAGE window.

e) The SELECT OR CREATE A PROGRAM FOLDER menu will be displayed.

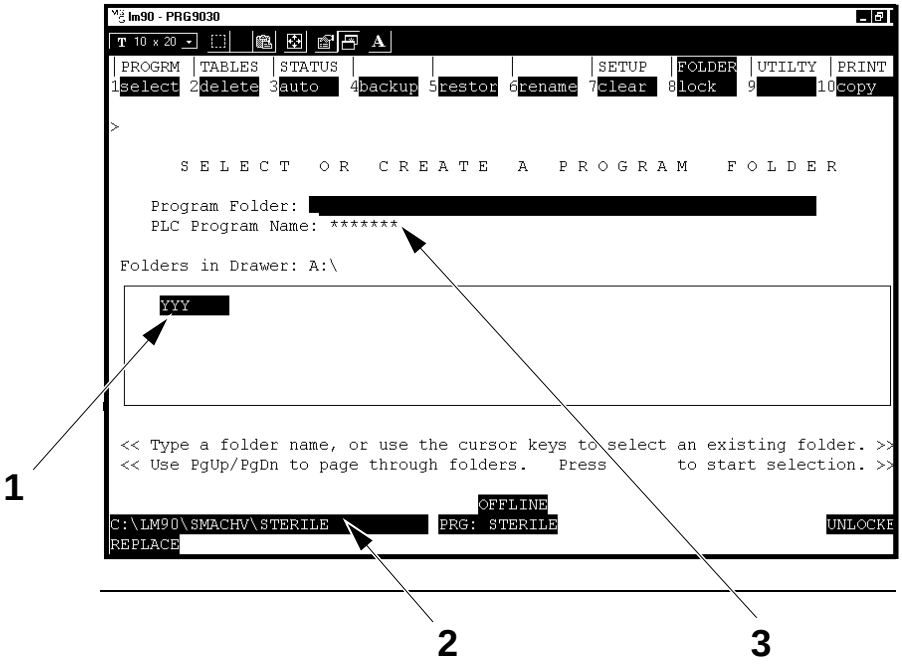

1 Program to be loaded (example)
2 Currently selected program folder (example)
3 PLC Program selected

f) Type **A:** and press the enter button.

g) With the ARROW keys, select the program to be loaded (1) into the PLC (YYY is an example). Program diskette marked 48191-0100.

h) press the enter button.

Note! If a program has been installed previously, the program name will appear in the PLC PROGRAM NUMBER field (3).

i) Press N to answer FOLDER FOUND: BACK UP ITS CONTENTS? (Y/N).

j) The SERIES 90-30/90-20 PROGRAMMING SOFTWARE menu will now be displayed.

k) Press F9 to display the UTILITY: LOAD/STORE/ETC window.

l) The PROGRAM UTILITY FUNCTIONS menu is displayed.

(Cont'd)

(Cont'd)

m) Check the status line (LM communication) shows ONLINE (8).
If not, press ALT + M until the status line shows ONLINE.

n) Check the status line (PLC status) shows STOP (7).
If not, press ALT + R until the status line shows STOP.

o) Check the status line shows LOGIC NOT EQ (9).

Note! If the status line shows LOGIC EQUAL, there is no need to load the program.

p) Press F2 to display the STORE FROM PROGRAMMER TO PLC window.

q) Select Y/N for the information to be stored (normal case):
- Program logic (4), Y
- Configuration (5), Y
- Reference tables (6), Y

r) press the enter button to store.

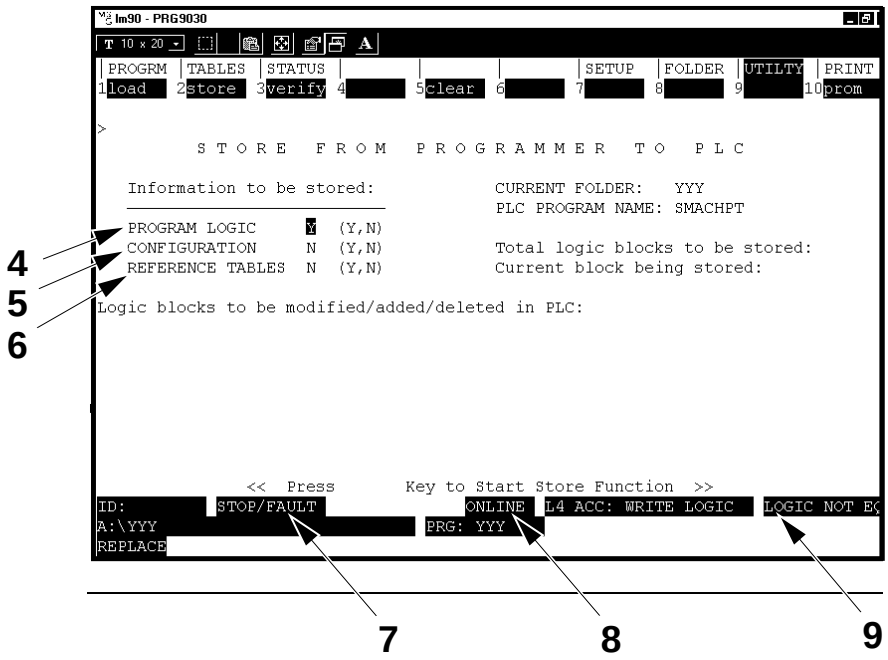

4 Program logic
5 Configuration
6 Reference tables
7 CPU status (STOP)
8 Connection mode status (ONLINE)
9 Program logic status (LOGIC NOT EQ)

(Cont'd)

(Cont'd)

s) Press Y to answer PROGRAM NAME IN PLC DOES NOT MATCH PROGRAM NAME IN FOLDER; CONTINUE? (Y/N).

t) Press Y to answer SELECTED ITEMS WILL BE OVERWRITTEN; CONTINUE STORE IN PLC? (Y/N). (Any other key will be taken as N.)

u) When STORE COMPLETE is displayed, the status line (9) should state LOGIC EQUAL.

v) Press ALT + R until the status line shows RUN (7).

w) Press ESC and then Y to answer EXIT LOGICMASTER 90 PROGRAMMER PACKAGE? (Y/N).

x) The program load is ready.

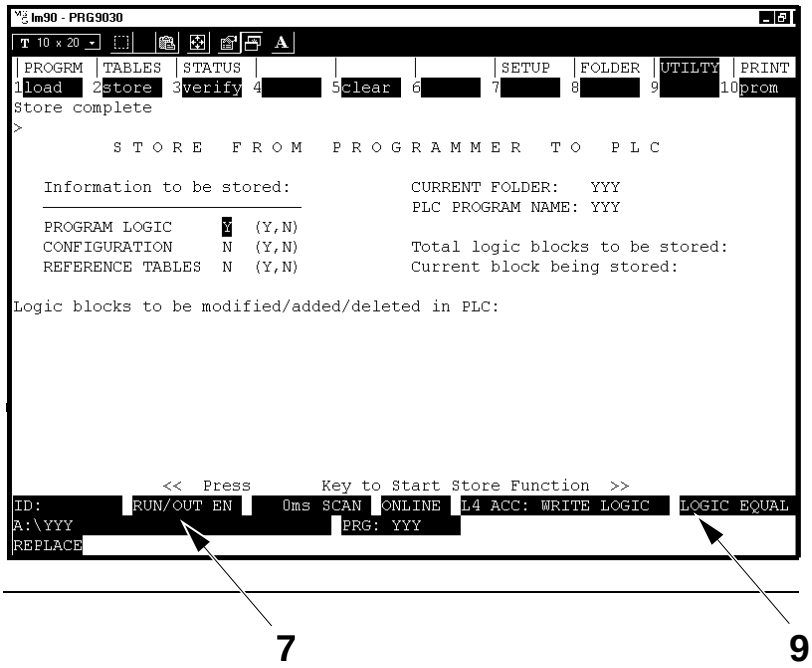

7 CPU status (RUN)

9 Program logic status (LOGIC EQ)

9.5.1-4 PLC - Print Program

SPC Reference	575236-0300

The following setup will give a printout in portrait and compromised text. Be very careful when you type in the leading and trailing statements. It is very important to use upper and lower case correct.

The setting is valid for HP Laser Jet III but it may work on other printers, if not see your printer manual for the correct printer codes.

a) Press F1 to display the PROGRAMMING PACKAGE window.

b) Press F10 to display the PRINT FUNCTIONS window.

c) Press F1 to display the SETUP PRINTER PARAMETERS window.

d) Select the printer parameters as follows:

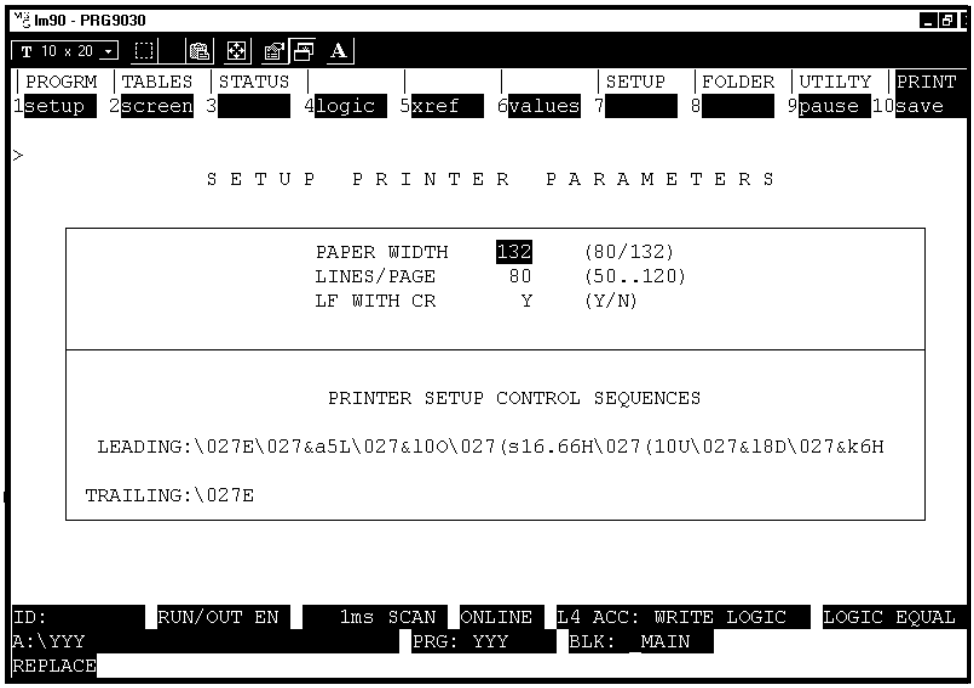

Description of Printer Codes	
\027E	Reset printer
\027&a5L	Left margin, # of columns (5)
\027&I5C	Vertical Motion Index, # of 1/48 Inch increments (5)
\027(10U	Primary Symbol Set, (PC-8)
\027(s20H	Primary Pitch, # of Characters / Inch (20)
\027(s4102T	Typelace Family, Letter Gothic

(Cont'd)

(Cont'd)

e) Press ESC to return to the LM90 MAIN MENU.

f) Press F4 to display the PRINT PROGRAM LOGIC menu.

g) Select the options required, see below.

h) Press the ENTER button to start the print out.

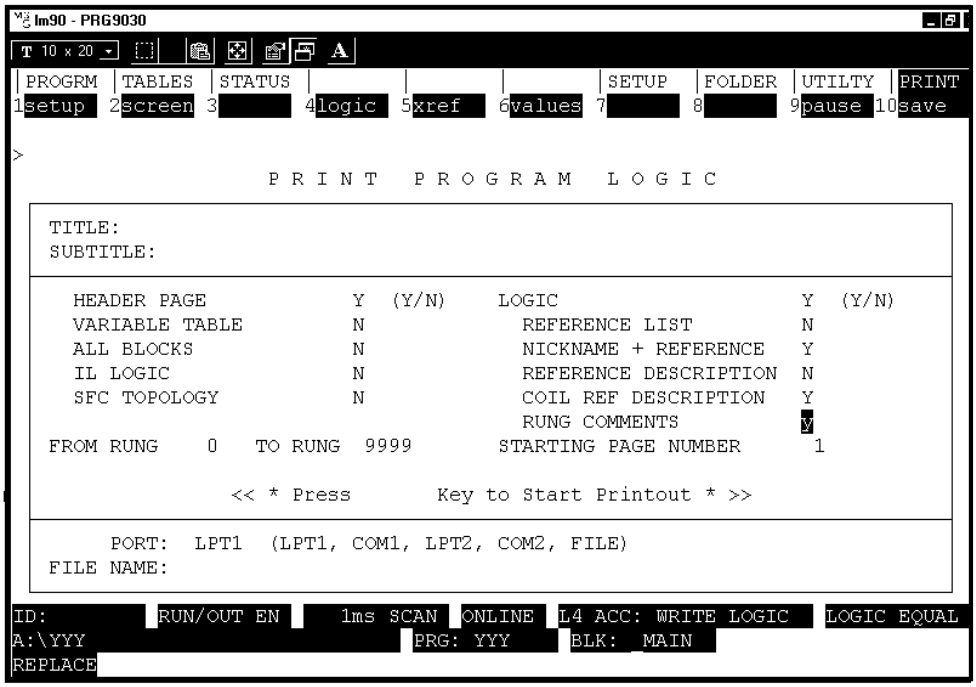

9.5.2 DMC2 Card

9.5.2-1 DMC2 Card - Function Description

Machine Status	Mains Power ON
SPC Reference	575236-0300

Main Motor Card A506 - Final Folder Card A507

The DMC2 cards A506 and A507 are used to move and control the speed and movement of the jaw unit and final folder.

The DMC2 controls the speed of the jaw unit and final folder to optimize the average value of the of the main motor torque.

The jaw unit and final folder are synchronised electronically and work as an electronic gear box.

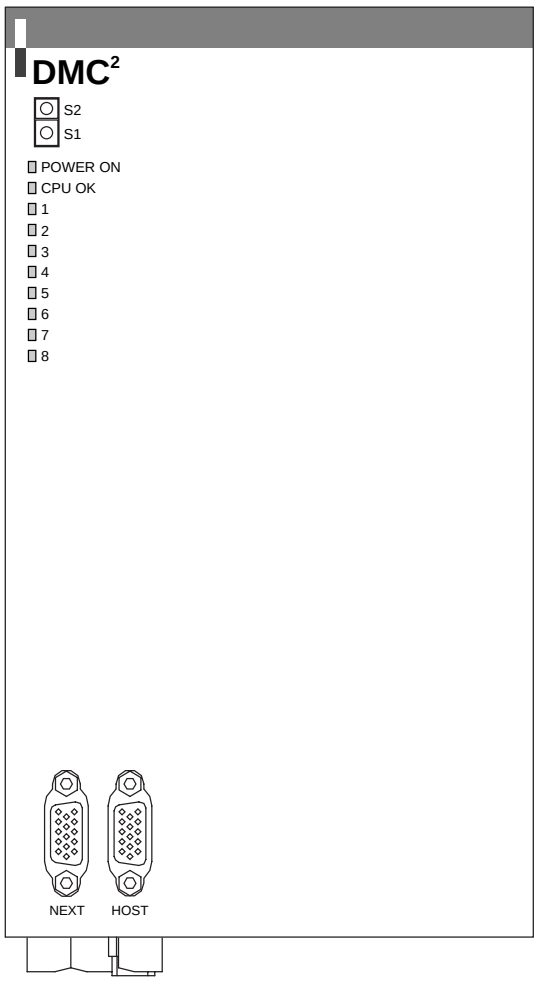

(Cont'd)

(Cont'd)

DMC2 Card A506 - A507			
LED	**Colour**	**card**	**Function**
POWER ON	Green	A506 - A507	Power On
CPU OK	Green	A506 - A507	CPU is OK
LED1	Green	A506 - A507	Ready: DMC2 initialized
LED2	Yellow	A506 - A507	Enable: Both hardware and software enable is high and powerstage is active
LED3	Yellow	A506	Shunt: indicate the main DMC unit is feeding energy to the bleeding resistor
		A507	Motor home: motor has reached its home position
LED4	Yellow	A506 - A507	Motor run: some of the motor run signals for the motor is high
LED5	Red	A506 - A507	See list next page
LED6	Red	A506 - A507	See list next page
LED7	Red	A506 - A507	See list next page
LED8	Red	A506 - A507	See list next page

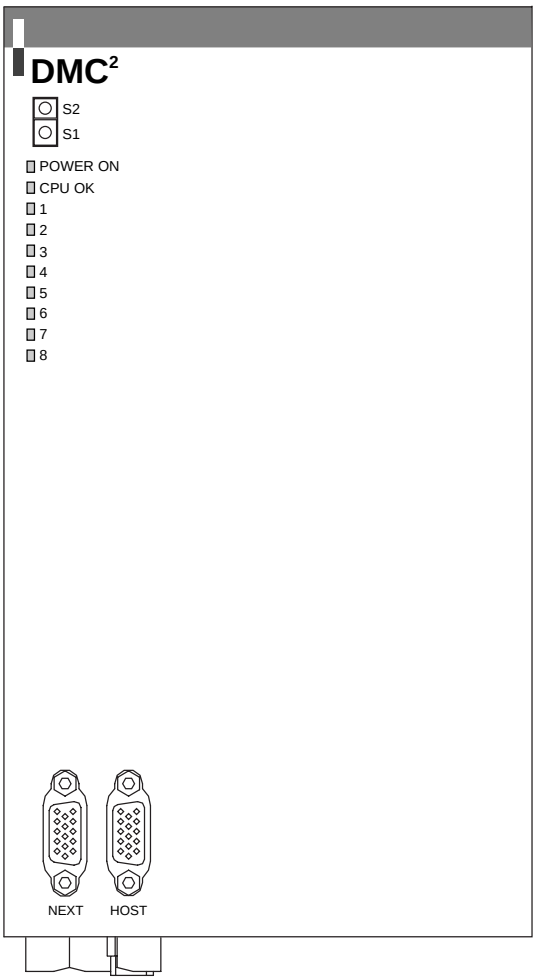

(Cont'd)

(Cont'd)

Main Motor and Final Folder Cards A506 - A507 Fault List

	Hardware disabled The hardware enable signal from the PLC is low. This is normally not an alarm. But if it happens in an abnormal situation check the connection to the DMC's hardware enable input.
	Internal hardware fault Try to restart, if the problem persists or comes back soon again change DMC driver.
	Position error fault The allowed error between the calculated position and the actual position of the axis of the motor is exceeded. Check for mechanical faults that can stop the motor from turning correctly such as bad bearings, lack of lubrication…
	Control C interrupt Ctrl-C has been pressed on a terminal connected to the drive. 1. Restart.
	Internal system fault Try to restart, if problem persists or comes back soon again change DMC driver.
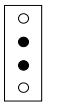	Temperature fault 1. In case of the motor check if the movement is too hard. 2. In case of the drive check the cooling system of the electrical cabinet
	Software disabled The software enable signal from the PLC is low. This is normally not an alarm. But if it seems to be a problem check the connection between the PLC's output and the DMC's software enable input.
	Torque limit exceed The maximum current limit is exceeded. Check for mechanical faults that can stop the motor from turning correctly such as bad bearings, lack of lubrication…
	Cyclical timer This alarm is triggered by internal faults in the drive, and is not an alarm if software and hardware enable is low. 1. Close the doors. 2. Check connections to the DMC's hardware and software enable.

Legend: ● = LED on

(Cont'd)

(Cont'd)

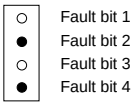	Direction fault Motor running in wrong direction. Check the resolver connection to the main power connection.
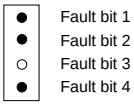	Resolver fault Problem with the resolver (the resolver sends information from the motor to the drive from where the drive can calculate the position of the axis). 1. Check the connections for the resolver cable. 2. Change drive or motor
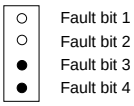	Stop position fault When stopping the FFU the home position sensor couldn't be found. Check sensor and connections to the DMC drive.
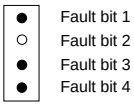	Shunt / bleeding resistor fault The switching transistor is broken in the power supply. Replace DMC module.

Legend: ● = LED on

(Cont'd)

(Cont'd)

Design Control System Card A508

The DMC2 card A508 is used to control the position and the movement of the folding flaps.

The DMC2 uses design correction error information to calculate the new position of the folding flaps.

DMC2 Card A508		
LED	**Colour**	**Function**
POWER ON	Green	Power On
CPU OK	Green	CPU is OK
LED1	Green	Ready: DMC2 initialized
LED2	Yellow	Enable: Both hardware and software enable is high and powerstage is active
LED3	Yellow	Motor home: motor has reached its home position
LED4	Yellow	Shunt: indicate the DCS of the DMC unit is feeding energy to the bleeding resistor
LED5	Red	See list next page
LED6	Red	See list next page
LED7	Red	See list next page
LED8	Red	See list next page

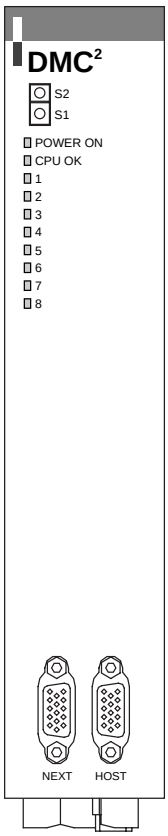

(Cont'd)

(Cont'd)

Design Control System Cards A508 Fault List

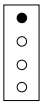	Hardware disabled The hardware enable signal from the PLC is low. This is normally not an alarm. But if it happens in an abnormal situation check the connection to the DMC's hardware enable input.
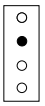	Internal hardware fault Try to restart, if the problem persists or comes back soon again change DMC driver.
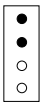	Position error fault The allowed error between the calculated position and the actual position of the axis of the motor is exceeded. Check for mechanical faults that can stop the motor from turning correctly such as bad bearings, lack of lubrication…
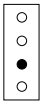	Control C interrupt Ctrl-C has been pressed on a terminal connected to the drive. 1. Restart.
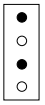	Internal system fault Try to restart, if problem persists or comes back soon again change DMC driver.
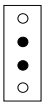	Temperature fault 1. In case of the motor check if the movement is too hard. 2. In case of the drive check the cooling system of the electrical cabinet
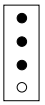	Software disabled The software enable signal from the PLC is low. This is normally not an alarm. But if it seems to be a problem check the connection between the PLC's output and the DMC's software enable input.
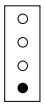	Torque limit exceed The maximum current limit is exceeded. Check for mechanical faults that can stop the motor from turning correctly such as bad bearings, lack of lubrication…
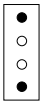	Cyclical timer This alarm is triggered by internal faults in the drive, and is not an alarm if software and hardware enable is low. 1. Close the doors. 2. Check connections to the DMC's hardware and software enable.

Legend: ● = LED on

(Cont'd)

(Cont'd)

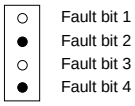	Direction fault Motor running in wrong direction. Check the resolver connection to the main power connection.
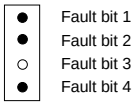	Resolver fault Problem with the resolver (the resolver sends information from the motor to the drive from where the drive can calculate the position of the axis). 1. Check the connections for the resolver cable. 2. Change drive or motor
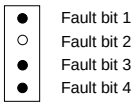	Shunt / bleeding resistor fault The switching transistor is broken in the power supply. Replace DMC module.

Legend: ● = LED on

9.5.2-2 DMC2 Card - Set Basic

Machine Status	PRODUCTION
Tools - Communication Cable - AT Compatible PC with Diskette Station	RS 232-C
SPC Reference	575236-0300

Connect the DMC to the PC terminal with the cable (1). Necessary connections are:

PC 9-pin female	DMC 15-pin high density male
2	3
3	2
5	7
	1 (*)

Note! (*) = shield connection

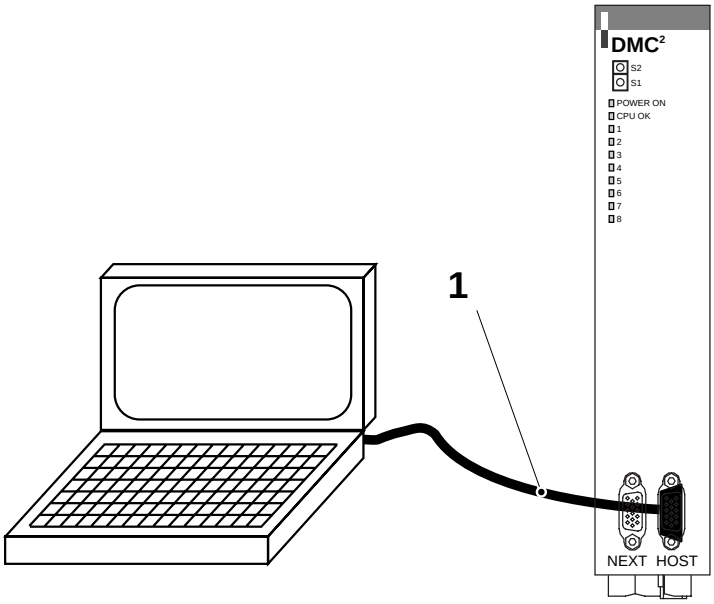

1 RS232 connection cable

Set-up the program to use, for example TIT or Windows terminal, as follows:

Baud rate	9600
Parity	None
Bits	8
Stop bits	1
Flow control	None

9.5.2-3 DMC2 Card - Load Program

Machine Status	Mains Power ON
Tools - Communication Cable - AT Compatible PC with Diskette Station - ECT Program	RS 232-C
SPC Reference	575236-0300

Note! Do not swap the DMC2 cards A506, A507 and A508 because they contain different programs!

a) Locate the appropriate DMC2 card in the electrical cabinet.
The card A506 is the driver of the main motor.
The card A507 is the driver of the final folder motor.
The card A508 is the driver of the design control system motor.

b) Connect the communication cable (1) between the PC and the DMC2 card HOST front panel connector.

c) Insert the MASTER diskette marked with the current revision number into the PC diskette station, **A/:drive**.

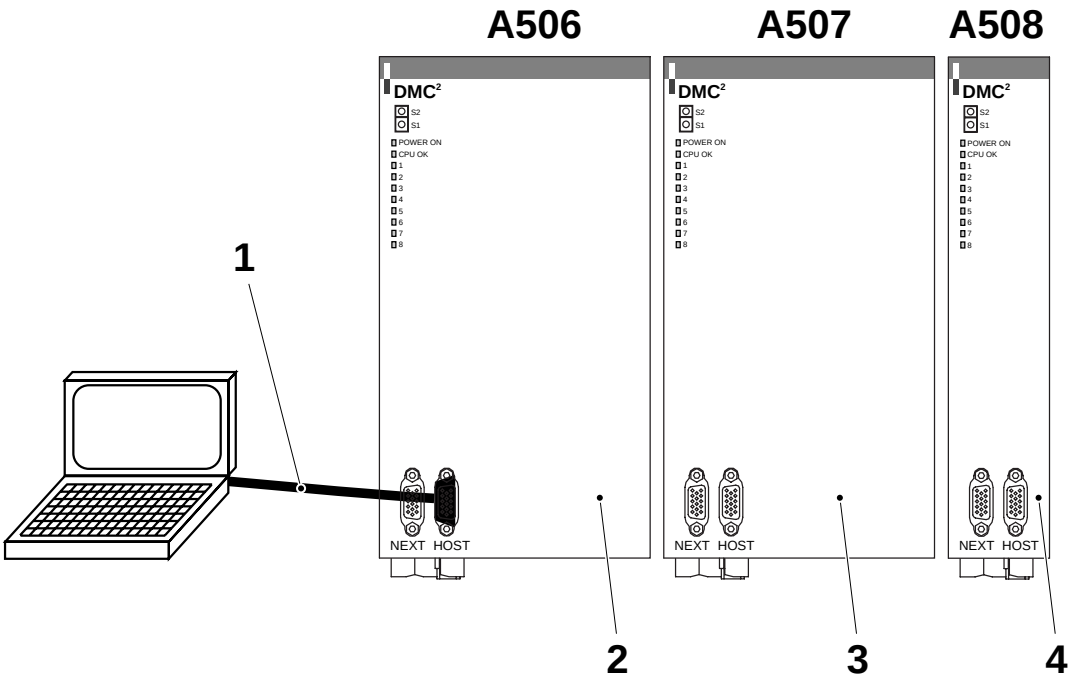

1 RS232 connection cable
2 Main motor card
3 FFU card
4 DCS card

(Cont'd)

(Cont'd)

d) Make sure the green LED “POWER ON” is lit on the DMC2 card.

e) Start the SW: ECT program.

f) Select TERMINAL program from the WINDOW menu.

g) Select STOP from the CONTROLLER menu.
If the program do not stop, indicated by a warning message, then retry to stop the program until in the bottom of the ECT window it is written “Program has stopped”.

h) Write at the prompt: NEW (to cancel the program) and press ENTER.

i) Write at the prompt: LIST (to check the program list) and press ENTER.

j) Select DOWNLOAD from the CONTROLLER menu.

k) Select path and file name for the program file on the MASTER diskette in the **A/:drive**. Press OK to start downloading.

l) Check on the bottom of the TERMINAL window if it is written FILE IS DOWN LOADED.

m) Write at the prompt: RESET SYSTEM and press ENTER.

n) Write at the prompt: FSTORE and press ENTER.

o) Write at the prompt: RUN and press ENTER.

p) Close the TERMINAL and ECT programs.

q) Remove the communication cable (1) between the PC and the DMC2 card.

9.5.3 Frequency Converter

9.5.3-1 Frequency Converter - Setting

Machine Status	Mains Power ON
SPC Reference	575236-0300

a) Press the PARAMETER button (3). The display (4) shows P000.

b) Select the parameter to set (see table below for both inverters) by means of the increase value button (1) and the decrease value button (2).

c) Press the PARAMETER button (3) to view the value of the parameter currently selected.

d) Press the INCREASE VALUE button (1) or the DECREASE VALUE button (2) to change the value of the parameter.

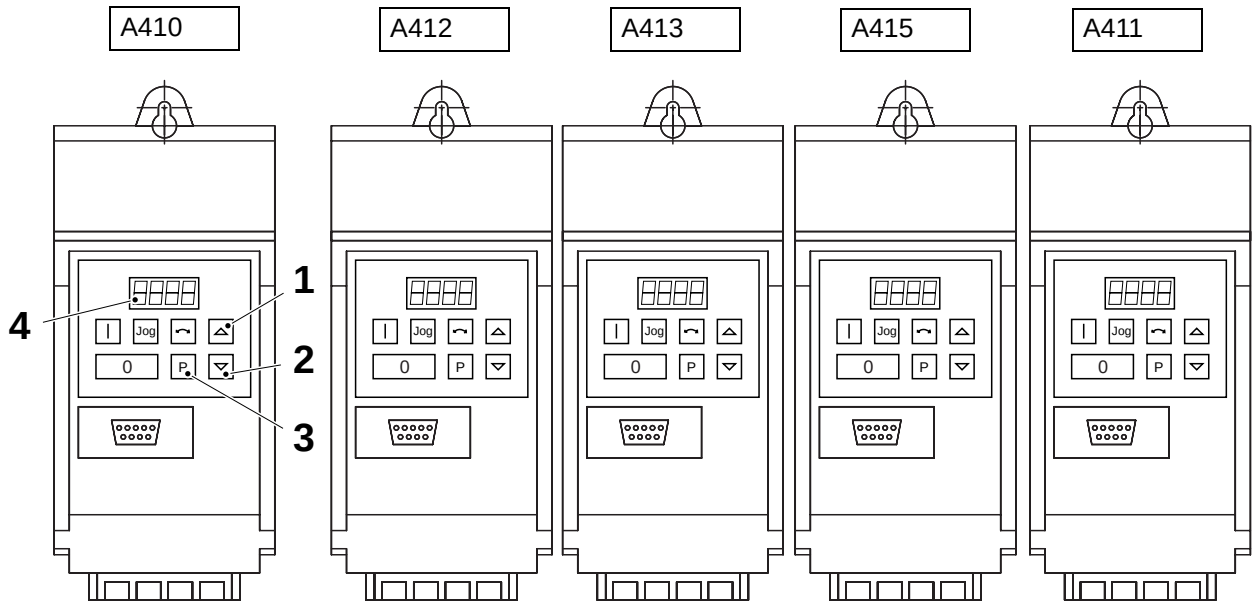

1 Up button
2 Down button
3 Parameter button
4 Display

(Cont'd)

(Cont'd)

e) Set the inverter values for all the parameters, see the table below.

f) When the setting is finished, go to P000 position and then press the parameter button (3).

Note! To increase the resolution to 0.01, keep the PARAMETER button (3) pressed until the display changes to **-**-.n0 (n = the current tenths value, for example if the parameter value = 055.8 then n=8). Press the buttons (1) or (2) to change the value and then press the PARAMETER button (3) twice to return to the parameter display.

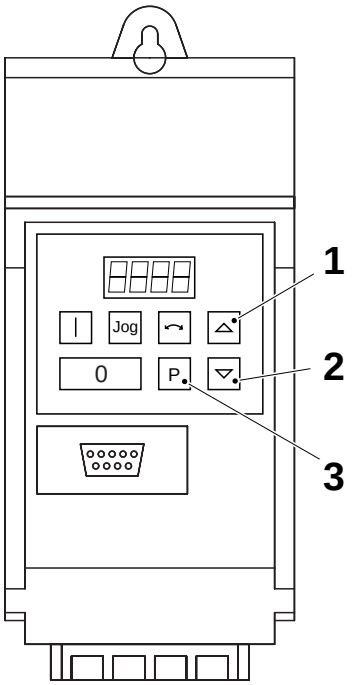

1 Up button
2 Down button
3 Parameter button

(Cont'd)

(Cont'd)

Table for Customized Inverters Values
Note! For parameters not included in the table, choose the default value. See chapter 5 of the “Siemens” manual for details.

Parameter	Description	Default	Drive Roller A410	ASU Loop A412	ASU Mag. A413	External Conveyor A415	Strip Reel A411
P001	Display mode	0					
P002	Ramp up seconds 0 - Max(P013)	10	1.0	0.4	2.0	2.0	1.5
P003	Ramp down seconds Max (P013) - 0	10	1.0	0.5	1.3	2.0	0.2
P004	Smoothing seconds	0					
P005	Digital set-point (Hz)	5	0	0	0	0	0
P006	Speed source (1=analog)	0	1	1	1	1	1
P007	Keypad (0=disabled)	1	0	0	0	0	0
P009	Parameter protection (3-no protect)	0	3	3	3	3	3
P010	Display scaling	1					
P011	Set-point memory	0					
P012	Minimum frequency	0					
P013	Maximum frequency	50	100	80	80	100	
P014	Skip frequency	0					
P015	Auto start	0					
P016	Start on the fly	0					
P017	Smoothing type	1					
P018	Auto restart after start	0	1			1	
P019	Skip frequency bandwidth	2					
P021	Min. frequency, analog input	0					
P022	Max. frequency, analog input	50	100	80	80	100	
P023	Analog input 1 type	0					
P024	Analog set-point addition	0					
P025	Analog output 1 scaling	0					
P026	Analog output 2 scaling	0					
P027	Skip frequency 2	0					
P028	Skip frequency 3	0					
P029	Skip frequency 4	0					
P031	Jog frequency right	5					
P032	Jog frequency left	5					
P033	Jog ramp-up time	10					
P034	Jog ramp-down time	10					

(Cont'd)

(Cont'd)

Parameter	Description	Default	Drive Roller A410	ASU Loop A412	ASU Mag. A413	External Conveyor A415	Strip Reel A411
P040	Positioning function	0					
P041	Fixed frequency 1	5					
P042	Fixed frequency 2	10					
P043	Fixed frequency 3	15					
P044	Fixed frequency 4	20					
P045	Directions for set-points 1-4	0					
P046	Fixed frequency 5	25					
P047	Fixed frequency 6	30					
P048	Fixed frequency 7	35					
P049	Fixed frequency 8	40					
P050	Directions for set-points 5-8	0					
P051	Selection control function DIN1	1	2				
P052	Selection control function DIN2	2	0	15		0	
P053	Selection control function DIN3	6	0			0	
P054	Selection control function DIN4	6	0				
P055	Selection control function DIN5	6	0				
P056	Digital input debounce time	0					
P057	Digital input watchdog trip	1					
P061	Selection relay output 1 function	6					
P062	Selection relay output 2 function	8					
P063	External brake release delay	1					
P064	External brake stopping time	1					
P065	Current threshold for relay	1					
P066	Compound braking	0					
P069	Ramp extension disabled	1					
P070	Braking resistor duty cycle	0					
P071	Slip compensation (%)	0			100		
P072	Slip limit (%)	250			400		
P073	DC injection braking (%)	0					
P074	I^2T motor de-rating	1	0			0	

(Cont'd)

(Cont'd)

Parameter	Description	Default	Drive Roller A410	ASU Loop A412	ASU Mag. A413	External Conveyor A415	Strip Reel A411
P075	Braking chopper enable	0					
P076	Pulse frequency	0					
P077	Control mode	1					
P078	Continuous boost (%)	100					
P079	Starting boost (%)	0					
P080	Nom. rating motor power factor (cos φ)	Read the figures from the motor rating plate					
P081	Nominal rating motor frequency (Hz)	50					
P082	Nominal rating motor speed (RPM)		2850	2800	2800	1390	2800
P083	Nominal rating motor current (A)		1.9	1.2	1.2	1.9	0.6
P084	Nominal rating motor voltage (V)		230	230	230	230	230
P085	Nominal rating motor power (kW)		0.5	0.25	0.25	0.37	0.07
P086	Motor current limit (%)	150					
P087	Motor PTC enable	0					
P088*	Automatic calibration			0	0		0
P089**	Stator resistance (about 25.0 in 0.25 and 17 in 0.55kW)			22.5	24		72.8
P091	Serial link slave address	0					
P092	Serial link baud rate	6					
P093	Serial line time-out	0					
P094	Serial link nominal system set-point (Hz)	50					
P095	USS compatibility	0					
P099	Option module type	0					
P101***	Operate in Europe or USA	0					

* Set P088 to 1 and press the run button, then the stator resistance is automatically calculated and putted in P089.

** Before setting P089, set P007 to 1.
After setting P089 set P007 again to the previous value.

*** For countries using 60 Hz, see the enclosed Siemens manual.

(Cont'd)

(Cont'd)

Parameter	Description	Default	Drive Roller A410	ASU Loop A412	ASU Mag. A413	External Conveyor A415	Strip Reel A411
P111	Inverter power rating	Read only					
P112	Inverter type	Read only					
P113	Drive model	Read only					
P121	Enable/disable RUN button	1					
P122	Enable/disable FORW/REV button	1					
P123	Enable/disable JOG button	1					
P124	Enable/disable Δ/∇ button	1					
P125	Reverse direction inhibit	1					
P128	Fan switch off delay time	120					
P131	Frequency set-point (Hz)	Read only					
P132	Motor current (A)	Read only					
P133	Motor torque (% of nominal)	Read only					
P134	DC link voltage (V)	Read only					
P135	Motor (RPM)	Read only					
P137	Output voltage (V)	Read only					
P138	Instantaneous rotor/shaft frequency (Hz)	Read only					
P139	Peak output current detect	Read only					
P140	Most recent fault code	Read only					
P141	Most recent fault code -1	Read only					
P142	Most recent fault code -2	Read only					
P143	Most recent fault code -3	Read only					
P186	Motor instantaneous current limit (%)	200		500	400		

(Cont'd)

(Cont'd)

Parameter	Description	Default	Drive Roller A410	ASU Loop A412	ASU Mag. A413	External Conveyor A415	Strip Reel A411
P201*	PID LOOP mode	0					
P202 - P220	No function when P201 = 0						
P321	Minimum analog frequency set point 2	0					
P322	Maximum analog frequency set point 2	50					
P323	Analog input 2 type	0					
P356	Selection control function DIN6	6					
P386	Sensorless vector speed loop gain - proportional term	1					
P387	Sensorless vector speed loop gain - integral term	1					
P700-P971	Miscellaneous						
P721	Analog input 1 voltage	Read only					
P723	Digital input state	Read only					
P725	Analog input 2 voltage	Read only					
P910	Local/USS mode	0					
P922	Software version	Read only					
P930	Most recent fault code	Read only					
P931	Most recent warning type	Read only					
P944	Reset to factory default settings	**					

* P201 = 0 PID Closed loop disabled

** Set to 1 parameter P944 and then press P to reset all parameters

9.5.4 Calibrator (Micromite II)

9.5.4-1 Calibrator (Micromite II) - Set

Tools - Calibrator (Micromite II)	 TP No. 90410-338

Thermocouple Type and Measuring Unit

a) Turn the mains power to the ON position (at least 15 minutes before setting).

b) Connect the type K thermocouple to the + input (1) (yellow lead) and the - input (2) (red lead).

c) Push the ON/OFF key (6) to switch ON the instrument.

Note! Make sure the instrument is switched OFF before disconnecting the
AC-adapter or removing the batteries. Failure to do so will cause the instrument to lose the set-up information.

d) Push the F/C key (4) to select “centigrade”.

e) Push the SELECT key (5) and the SENSOR key (3).

f) Select the thermocouple type. Move the flashing cursor to the right or to the left by pushing the UP (9) or DOWN (7) keys.

g) Push the **Enter** key (8) when the cursor is indicating TYPE K.

Temperature Output Value

Push the SELECT key (5) and the OUTPUT 1 key (10) to set the output temperature. Use the numeric keys to type in the temperature value and push the ENTER key. To clear an output value, simultaneously push the INPUT key (11) and the SENSOR key (3).

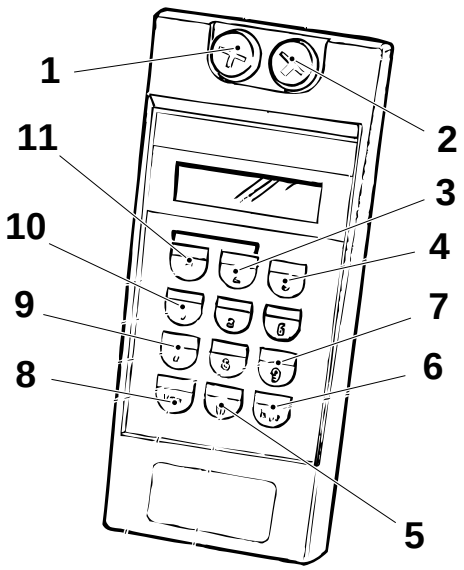

1 Input (+)
2 Input (-)
3 Sensor key
4 F/C key
5 Select key
6 On/Off key
7 Down key
8 Enter key
9 Up key
10 Output 1 key
11 Input key

9.5.5 Thermocouples

9.5.5-1 Thermocouples - Check

Tools - Calibration Oven - Extension Wire - Calibrator (Micromite II)	 TP No. 90410-337 TP No. 90410-309 TP No. 90410-338
SPC Reference	90410-51

a) Turn on the oven by connecting the mains plug.

b) Push the FUNC key (2) to select the SET-UP mode, indicated by the message SP flashing on the calibrator display (1).

c) Use the UP (3) or DOWN keys (4) to set the temperature value to **100°C**.

Note! Pushing the key once changes the value by 0.1°C.
Pushing the key for at least two seconds changes temperature value change more quickly.

d) Push the FUNC key again to select the RUN MODE.
The oven is now ready for measuring operations.

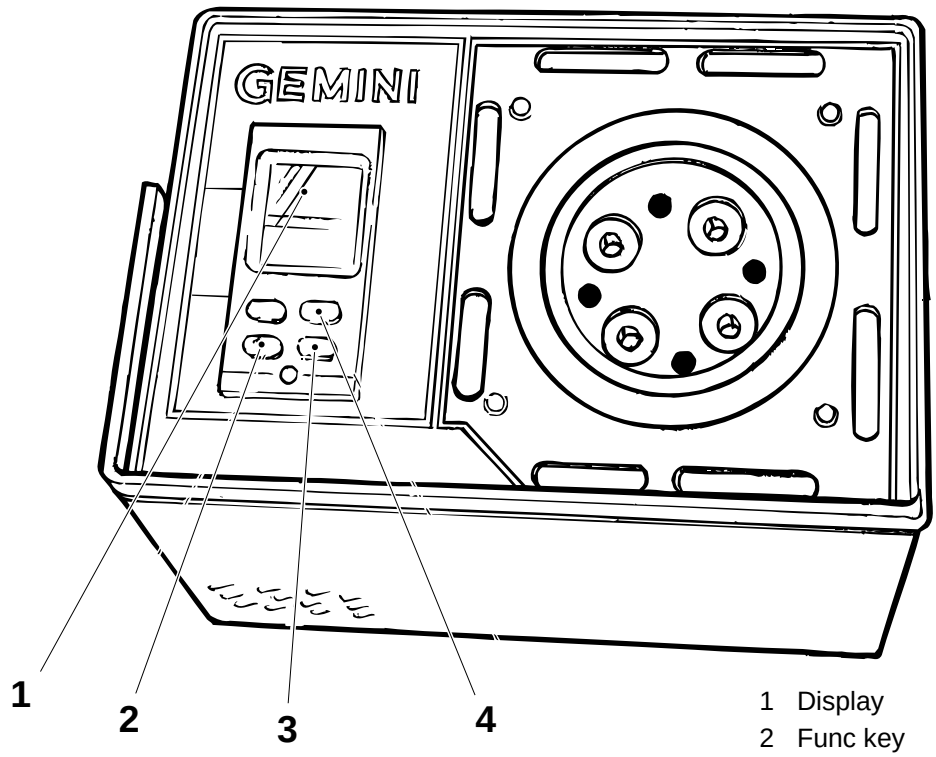

1 Display
2 Func key
3 Up key
4 Down key

(Cont'd)

(Cont'd)

e) Detach the machine thermocouple and place it in one of the cavities (5) in the oven.

f) Place the calibrated thermocouple (part of the calibration kit) in an adjacent cavity of the oven (6).

Note! Make sure the two thermocouples are inserted equally deeply.

g) Use the extension wire to connect the calibrator Micromite II (7) to the thermocouple from the machine. Note the temperature reading on the display (8) on the Micromite II (7).

h) Connect the Micromite II (7) to the calibrated thermocouple. Note the temperature reading on the display (8).

i) Obtain from the Pentronic Calibration Certificate the correction value for the calibrated thermocouple (thermocouple fault plus Micromite II fault).

j) If the value of the machine thermocouple deviates by **more than ± 1.1 °C** from the value of the calibrated thermocouple, change the machine thermocouple.

k) On completion of the measurement, leave the oven on and cool it by setting the temperature value to **0**. This cools down the oven more quickly.

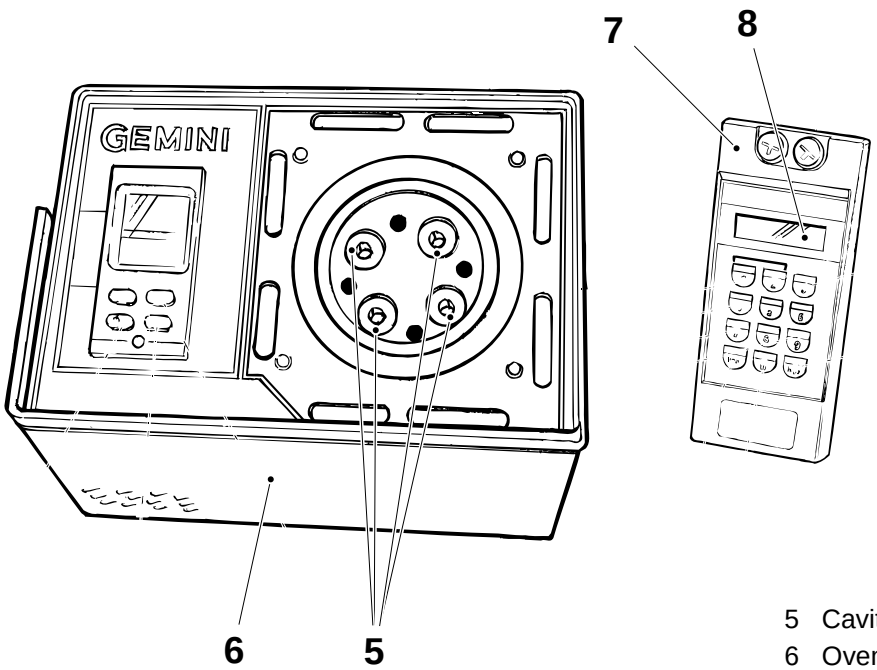

5 Cavity
6 Oven
7 Micromite II
8 Display

9.5.6 Temperature Regulator

9.5.6-1 Temperature Regulator - Calibrate

Machine Status	Mains Power ON
Tool - Calibrator (Micromite II) - Extension Wire - Adhesive Label - Calibration Kit	 TP No. 90410-338 TP No. 90410-308 TP No. 90194-131 TP No. 90031-312
SPC Reference	90031-0065

Note! Before calibration, make sure the calibrator has already been set, see 9.5.4-1 Calibrator (Micromite II) - Set.

Calibration must be performed when a thermocouple PLC module is changed or at least once a year.

a) Connect the micromite instrument as a replacement of a temperature sensor by means of the extension wire.

b) Open the cover of the temperature control input modules (1) named “thermocouple input”.

c) Connect the serial comunication cable from the PC to the temperature control input modules (1).

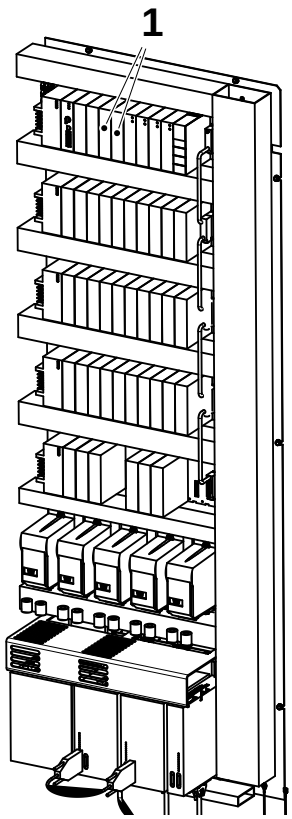

1 Temperature control input module

(Cont'd)

(Cont'd)

Perform the following instructions from the PC.

Note! Energize the module at least 30 minutes before calibration.

d) Run the program: **THM 884_K.bat**. The window shown below will appear.

e) Press F7 to deactivate NVRAM.

f) Press F6 to initialize the module.

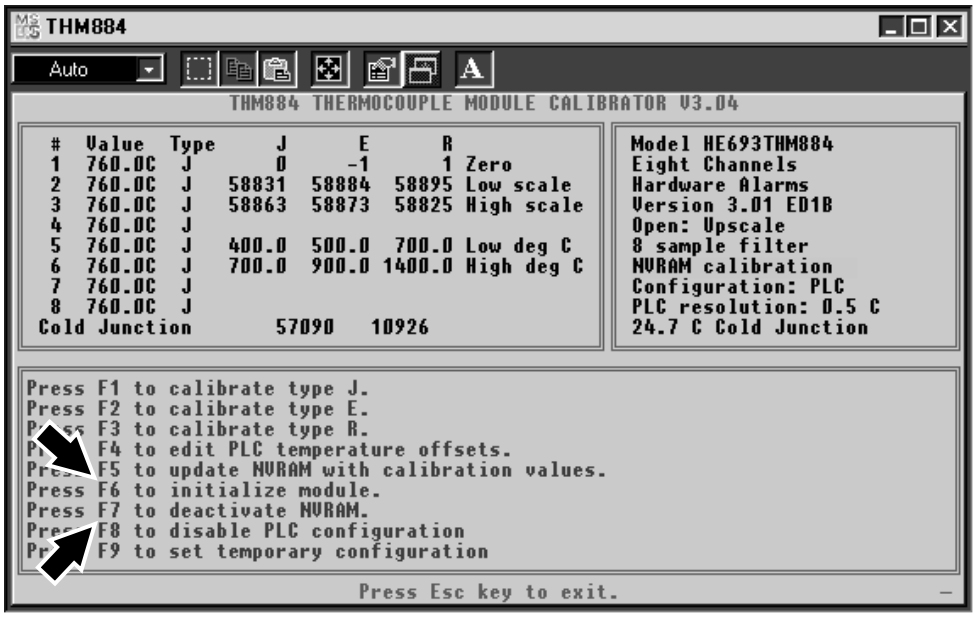

(Cont'd)

(Cont'd)

g) Press F8 to disable PLC configuration.

h) Press F1 to perform calibration and perform the following steps according to the software indications.

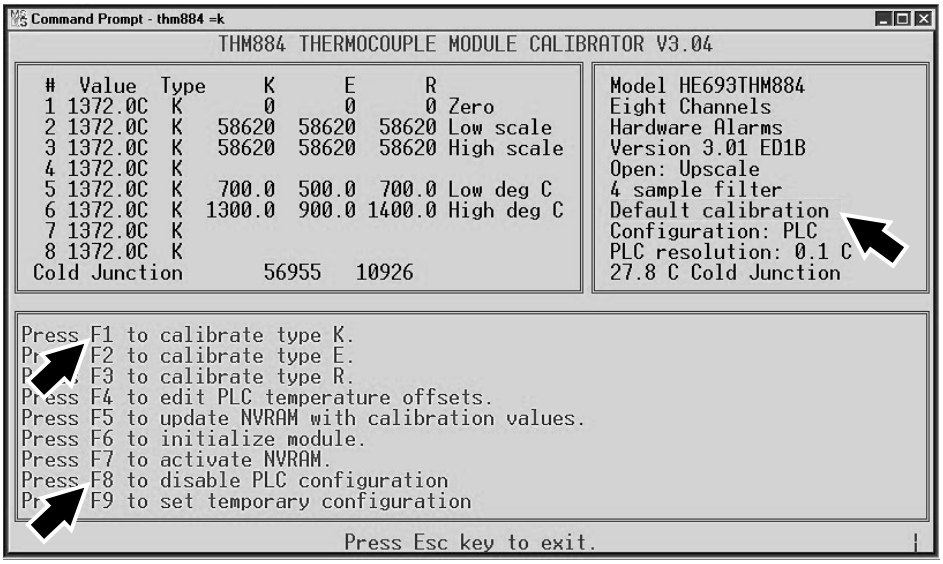

i) The first indication shown by the software is to place a bridge in channel 8 between 16^{-} and 18^{+}.

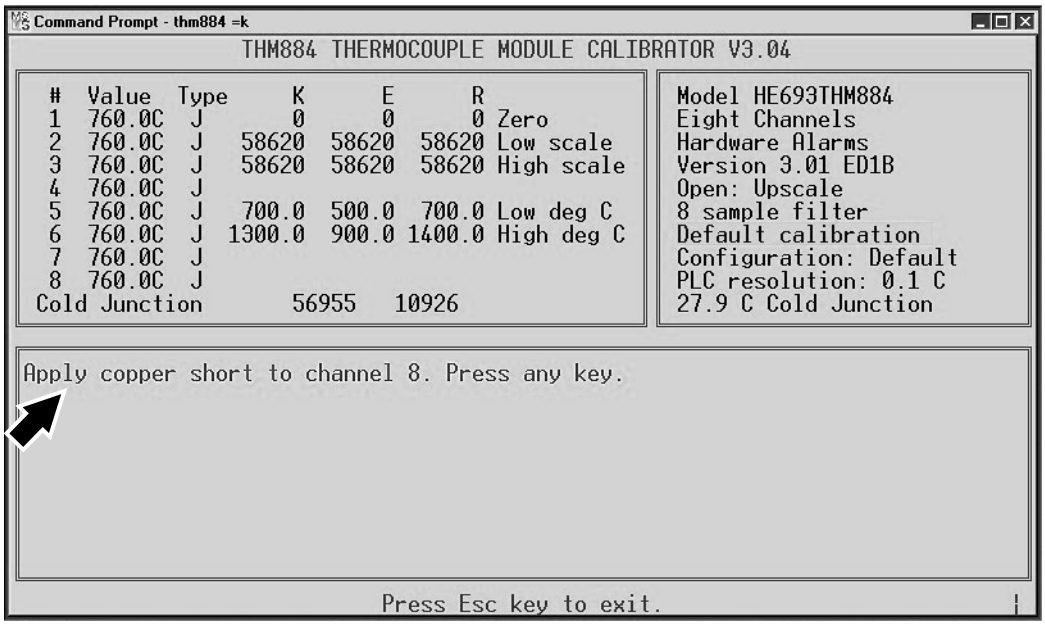

(Cont'd)

(Cont'd)

j) After having followed all the indications from the software press F5 to update NVRAM and chose YES.

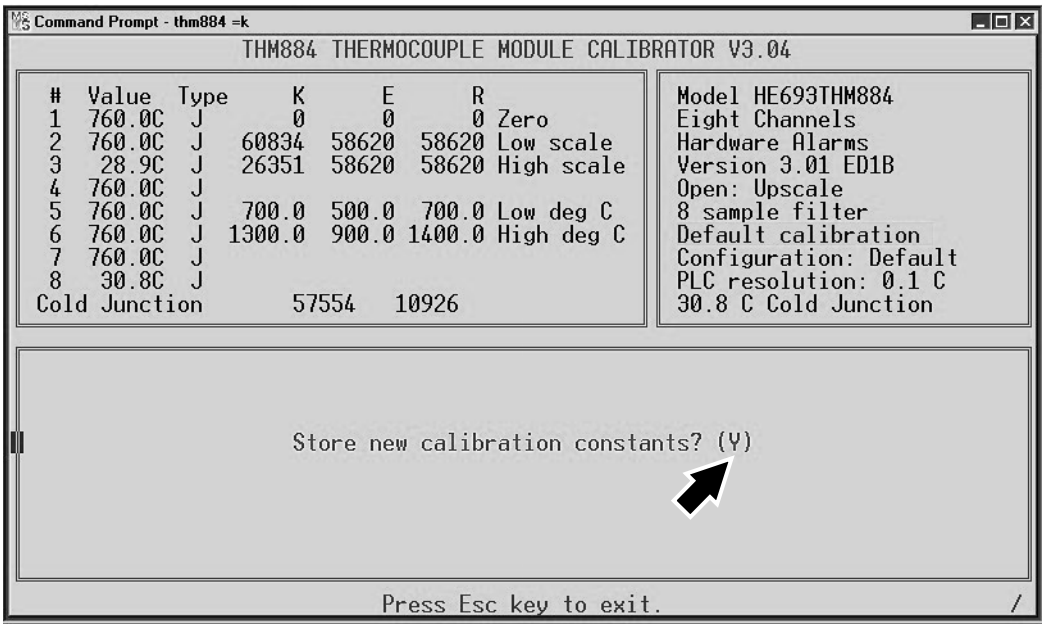

k) Press F7 to activate NVRAM.

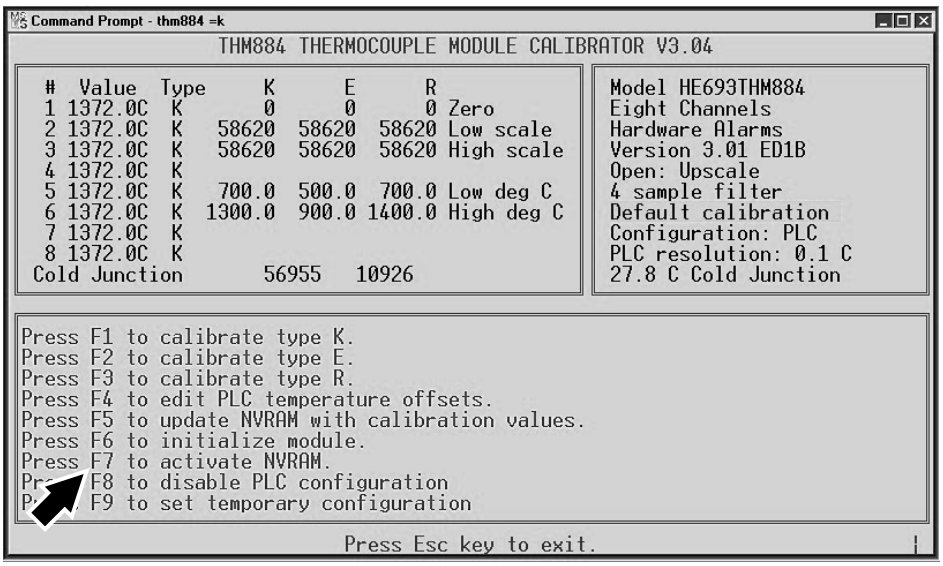

(Cont'd)

(Cont'd)

l) Press F6 to initialize the module.

m) Press F8 to enable PLC configuration.

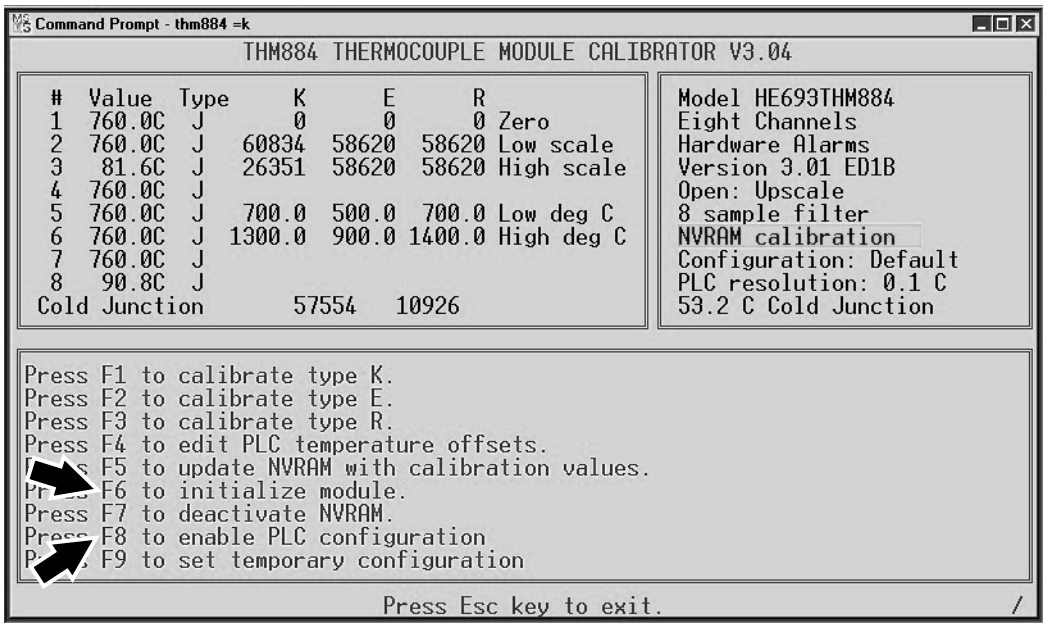

n) Check the temperature is stable and equal to “Cold Junction”.

Note! The tolerance is **0.3**° C, if the difference is more repeat the sequence from item e). In case the difference is still too much replace the module.

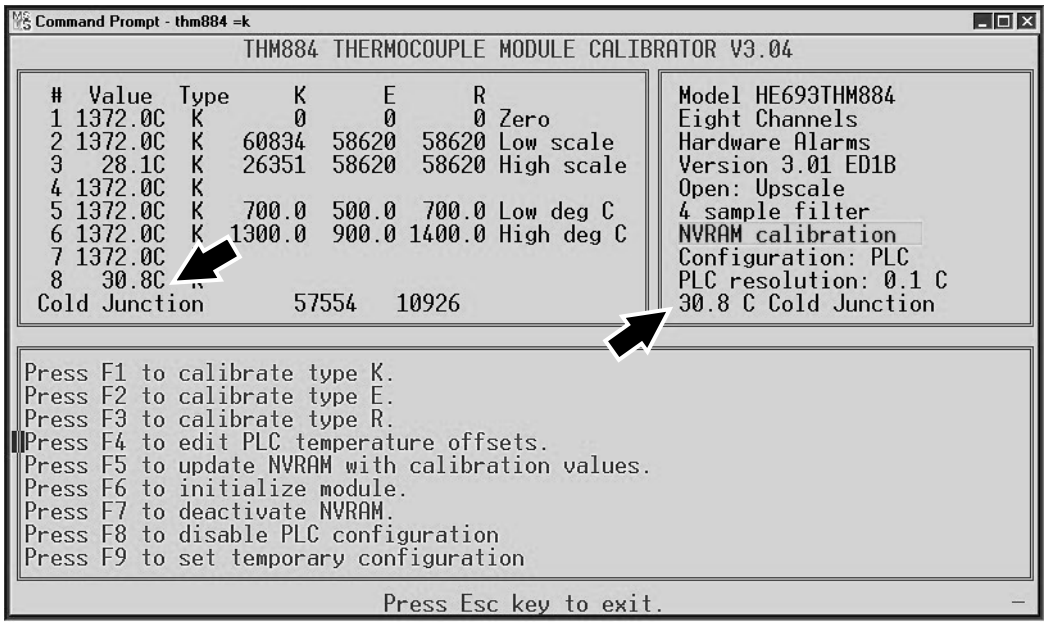

(Cont'd)

(Cont'd)

o) Remove the bridge in channel 8.

p) Press F4. The window shown below will appear.

q) Compare the pre-set temperature with the one shown on the screen then type the right offsets correction value and press ENTER (e.g. channel 1 offset: 3° C of difference).

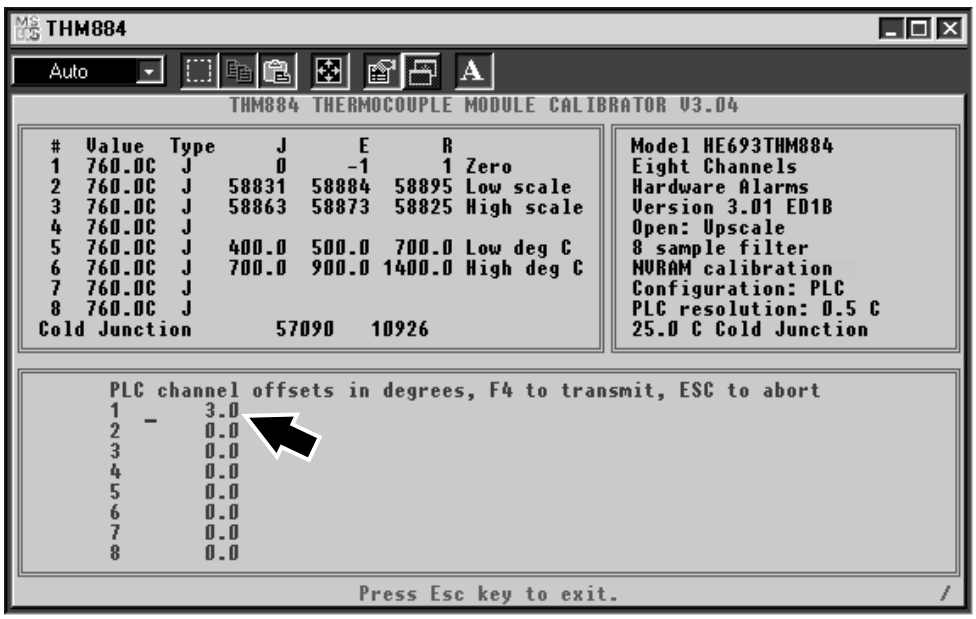

r) Press F4. The window shown below will appear.

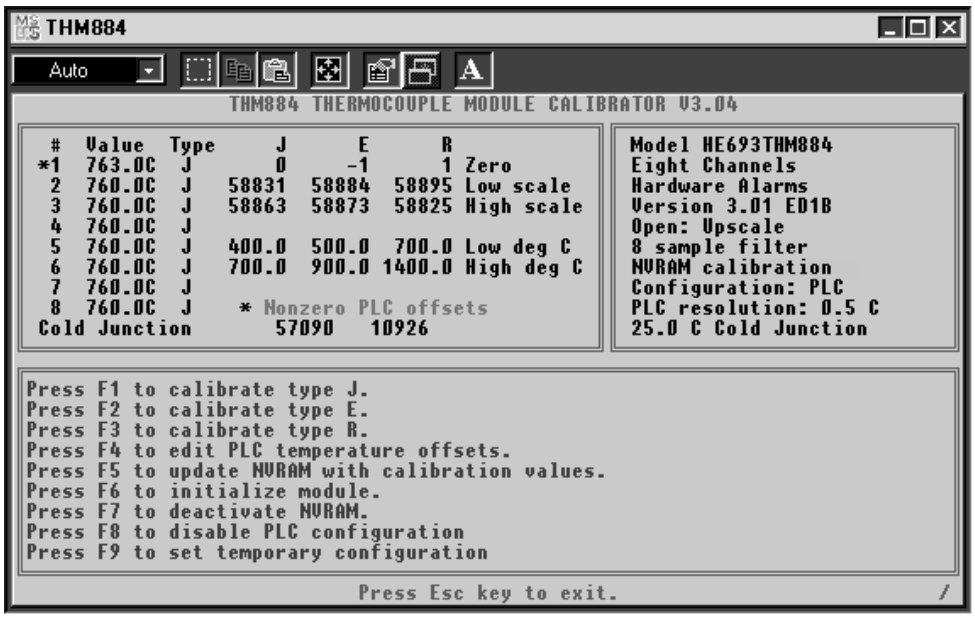

(Cont'd)

(Cont'd)

s) Press F5. The window shown below will appear.

t) Press Y to confirm the value introduced.

u) Press ENTER and then press ESC to exit from the program.

v) Repeat the procedure for the other thermocouple channels.



w) Apply the new label on the cover of the temperature control input modules (1) named “thermocouple input”.

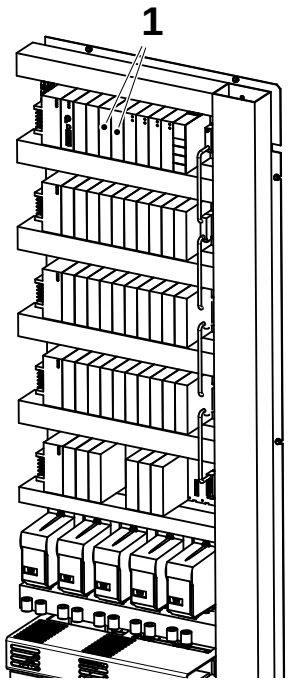

1 Temperature control input module

9.6 Cooling System

SPC Reference	1095954-0300

9.6.1 Cooler

9.6.1-1 Cooler - Check Filter

SPC Reference	1095954-0300

WARNING
Risk of personal injury!
Cooling media R134A.
Carefully follow the supplier's instructions for handling and disposal of the R134A (freon).

Loosen the screws, remove the cover (1) and the filter (2).

Check the filter. If required clean it or change it.

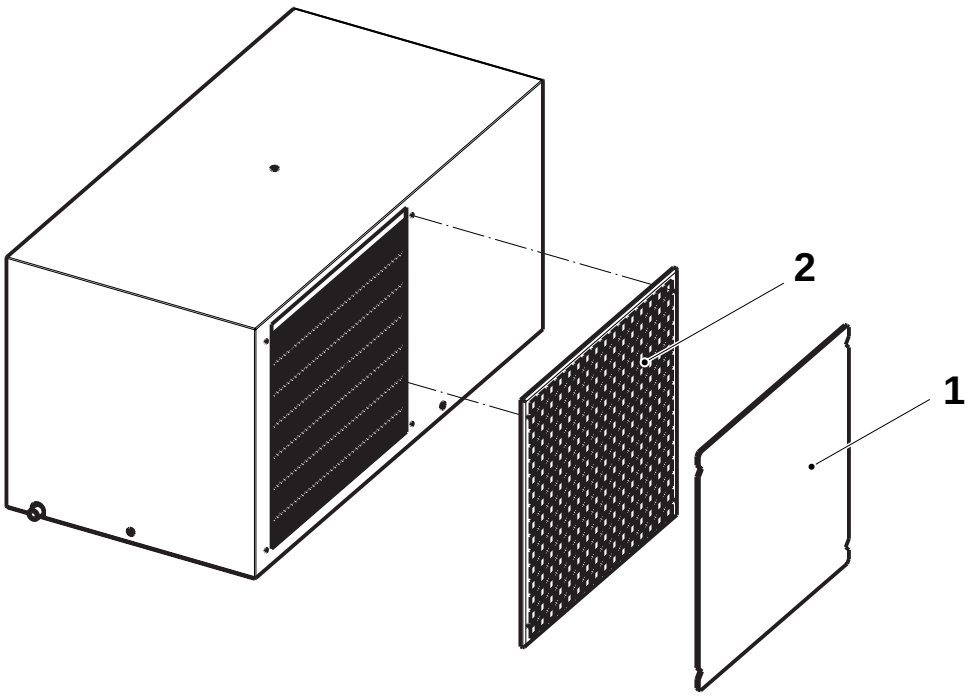

1 Cover
2 Filter

10 General

TechPub_2614345_0102B7647Y01en.fm

General - Description

SPC Reference	648570-0500

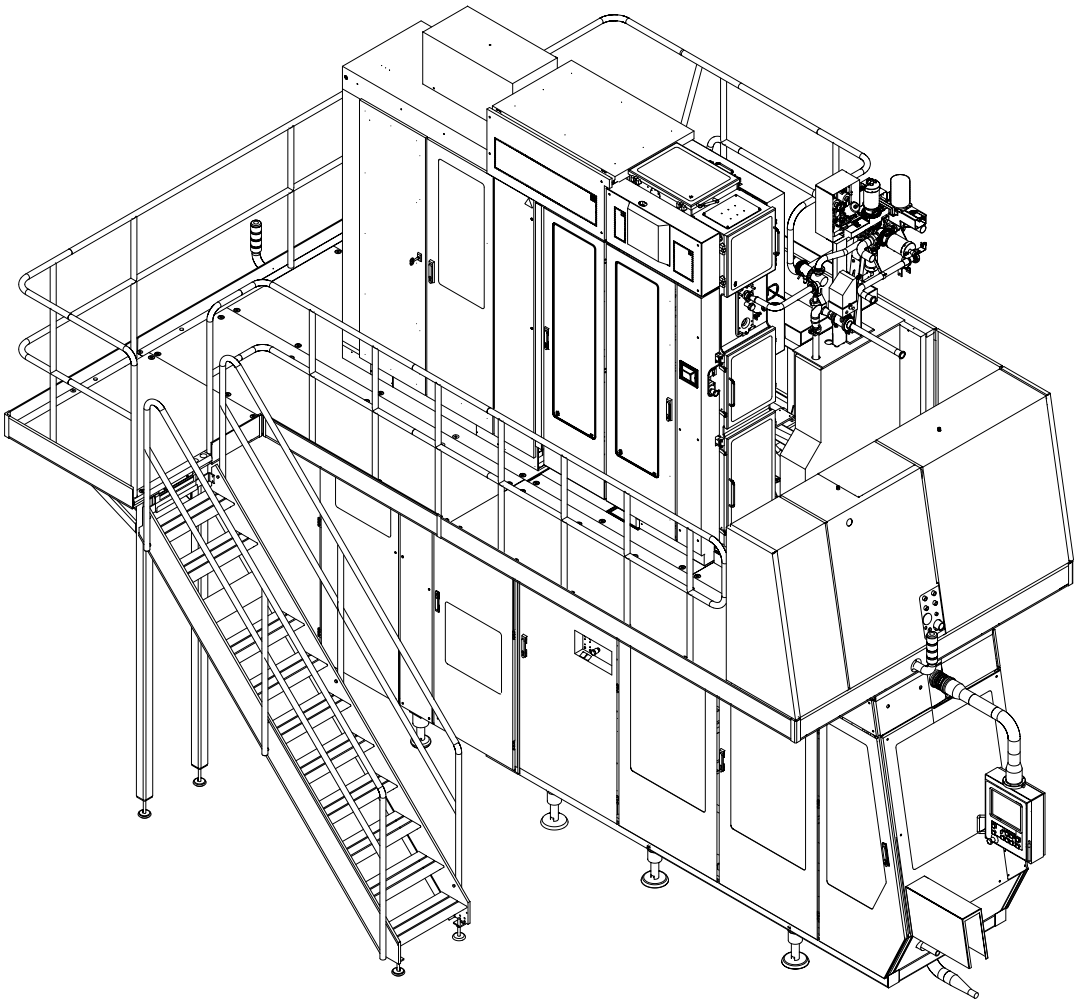

TechPub_2614345_0102B7647Y01en.fm

10.1 Technical Data
10.2 Templates and Tools
10.3 Consumables
10.4 Safety Functions

10.1 Technical Data . . . . . 10 - 5

10.2 Templates and Tools . . . . . 10 - 8

10.3 Consumables . . . . . 10 - 16

10.3.1 Lubricants . . . . . 10 - 16

10.3.2 Cleaning Compounds . . . . . 10 - 20

10.4 Safety Functions . . . . . 10 - 21

10.4-1 Safety Functions - Check Warning Signs . . . . . 10 - 21

TechPub_2614345_0102B7647Y01en.fm

This page intentionally left blank

TechPub_2614345_0102B7647Y01en.fm

10.1 Technical Data

Pressures	Unit	Value
Top left flap sealing	kPa (bar)	150 - 250 (1.5 - 2.5)
Top right flap sealing	kPa (bar)	150 - 250 (1.5 - 2.5)
Bottom left flap sealing	kPa (bar)	150 - 250 (1.5 - 2.5)
Bottom right flap sealing	kPa (bar)	150 - 250 (1.5 - 2.5)
Waste box air guide	kPa (bar)	250 - 300 (2.5 - 3.0)
Air peroxide spray	kPa (bar)	200 (2)
Peroxide tank filling	kPa (bar)	20 (0.2)
Photocells, design correction, air blast	kPa (bar)	see page 3-19
Pendulum roller	kPa (bar)	140 (1.4)
Calendar roller	kPa (bar)	250 (2.5)
Cooling water system	kPa (bar)	200 (2)
Sterile air system (water separator)	kPa (bar)	min 20 (0.2)
Anticondense regulating valve	kPa (bar)	max 30 (0.3)
Foaming	kPa (bar)	500 (5)
Cleaning pump	kPa (bar)	400 (4)
Water circulation - peroxide (Cold machine during start-up)	kPa (bar)	min. 70 (0.7)
Air	kPa (bar)	500 - 600 (5 - 6)
Warm water	kPa (bar)	300 - 450 (3 - 4.5)
Cold water	kPa (bar)	300 - 450 (3 - 4.5)
Steam	kPa (bar)	170 ±30 (1.7 ±0.3)
Product pressure, permitted variation during **Production**	kPa (bar)	160 ±40 (1.6 ±0.4)
Web tension, ASU	kPa (bar)	50 - 100 (0.5 - 1)

Pressure switches	Unit	Value
Incoming air	kPa (bar)	450 (4.5)
Incoming cooling water	kPa (bar)	100 - 200 (1.0 - 2.0)
Sterile air	kPa (bar)	14 (0.14)
Incoming water alarm	kPa (bar)	200 (2.0)

(Cont'd)

TechPub_2614345_0102B7647Y01en.fm

(Cont'd)

Induction heating	Unit	Value
Induction heating, transversal sealing (left / right) depending on packaging material type		See section IH equipment - set sealing in Electrical cabinet chapter.
Induction heating, longitudinal sealing depending on packaging material type		See section IH equipment - set sealing in Electrical cabinet chapter.
Induction heating, strip applicator		See section IH equipment - set sealing in Electrical cabinet chapter.

Temperature	Unit	Value
Heat sterilization	°C	280
Heat exchanger	°C	max 93
Peroxide bath	°C	min 76
Water bath	°C	max 90
Peroxide tank	°C	80
Top aseptic chamber	°C	95
Cooling water	°C	7 - 12
Cooler electrical cabinet	°C	28 - 34
Flap sealing air nozzles (top left)	°C	450
Flap sealing air nozzles (top right))	°C	450
Flap sealing air nozzles (bottom left)	°C	450
Flap sealing air nozzles (bottom right)	°C	450
Steam	°C	125
Air superheater	°C	360
Warm water (external cleaning)	°C	55 - 60

Incoming media	Unit	Value
Electric voltage	V	400 ±10%
Electric frequency	Hz	50 or 60* ±2%

Note! *60 Hz kit required.

(Cont'd)

TechPub_2614345_0102B7647Y01en.fm

(Cont'd)

Flows	Unit	Value
Cooling water, TS right	l/min.	2.0
Cooling water, TS left	l/min.	2.0
Cooling water, final folder	l/min.	2.0
Cooling water, DI circuit	l/min.	2.0
Cooling water, IH SA	l/min.	2.0
Cooling water, IH LS	l/min.	2.0
Tube flushing	l/min.	0.5
Conveyor flushing	l/min.	0.5
Cooling water, TS rail right	l/min.	0.5
Cooling water, TS rail left	l/min.	0.5

Miscellaneous	Unit	Value
Noise declaration	dB	see IM manual

Consumption	Unit	Value
Hydrogen peroxide (% w/w 35)	l/h	3.0 - 5.0
Detergent, external cleaning	l/cycle	1.2 (1.8*)

Note! * If **External cleaning Superstructure** is also running.

TechPub_2614345_0102B7647Y01en.fm

10.2 Templates and Tools

Fig.	Description
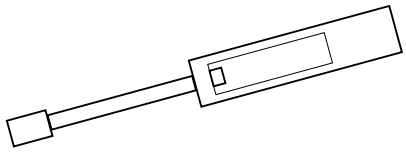	**Dynamometer** TP No. 74767-0102 1 Superstructure 4 Jaw system 5 Final folder module
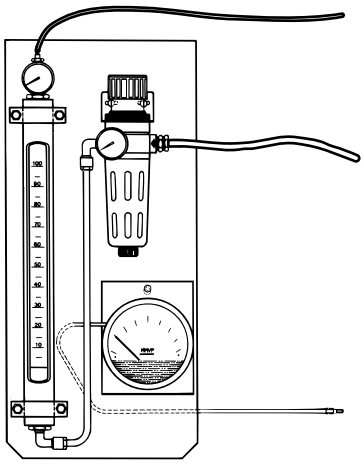	**Leak finding equipment** TP No. 533014-0101 1 Superstructure
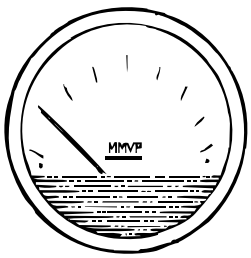	**Pressure gauge** TP No. 90243-0137 1 Superstructure
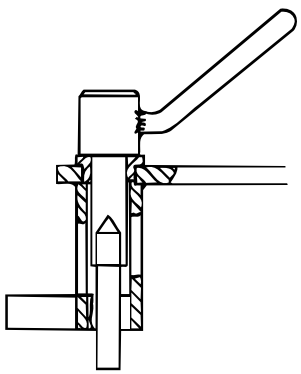	**Removal tool for AP-valve** TP No. 449969-0101 1 Superstructure

TechPub_2614345_0102B7647Y01en.fm

Fig.	Description
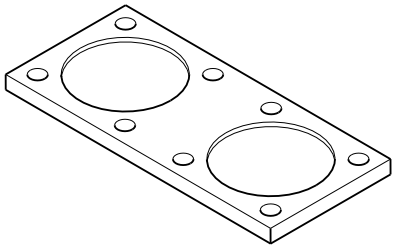	**Heat exchanger bottom blank-off flange** TP No. 1348263 1 Superstructure
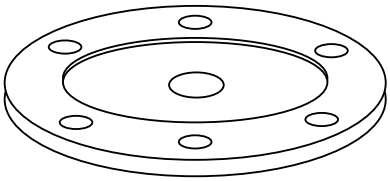	**Heat exchanger top blank-off flange** TP No. 979951 1 Superstructure
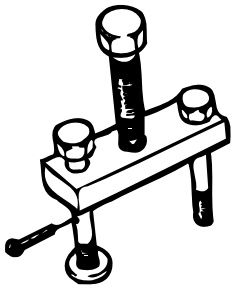	**Extractor** TP No. 74305-0101 1 Superstructure
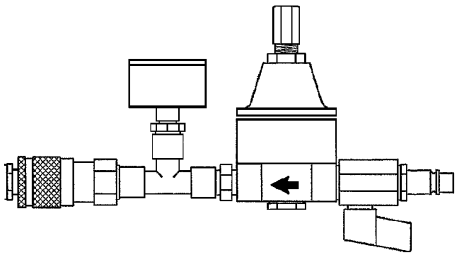	**Hydrostatic test instrument** TP No. 565536-0101 1 Superstructure
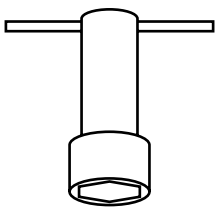	**Socket wrench** TP No. 90206-0330 1 Superstructure
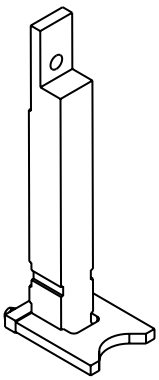	**Filling pipe alignment (level probe)** TP No. 1498676-0100 1 Superstructure

TechPub_2614345_0102B7647Y01en.fm

Fig.	Description
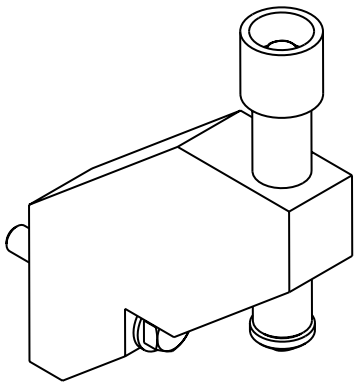	**Filling pipe alignment (level probe)** TP No. 1498674-0100 1 Superstructure
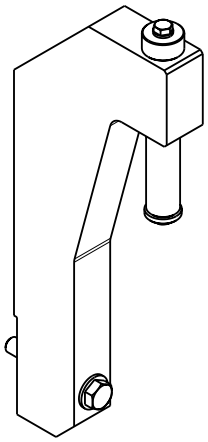	**Filling pipe alignment (float)** TP No. 1498674-0100 1 Superstructure
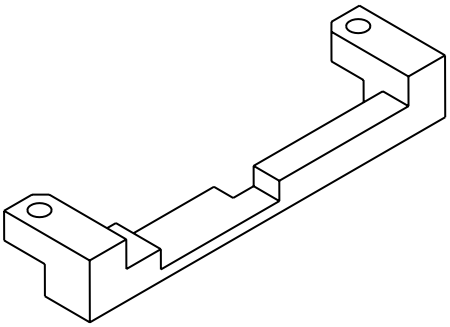	**LS roller adjustment template** TP No. 1498687 (200B, 250B, 250S and 200M) TP No. 2500588 (200 S) 1 Superstructure
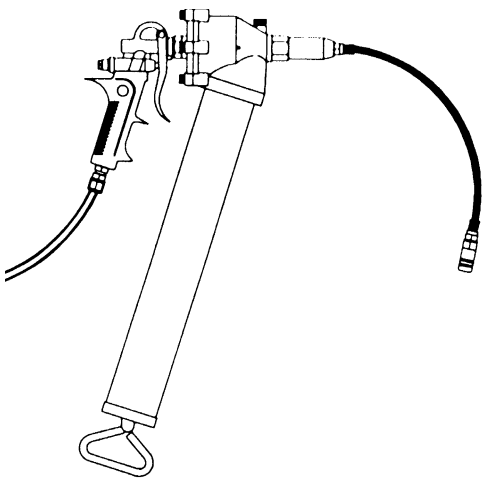	**Pneumatic grease-gun** TP No. 1512559 4 Jaw system

TechPub_2614345_0102B7647Y01en.fm

Fig.	Description
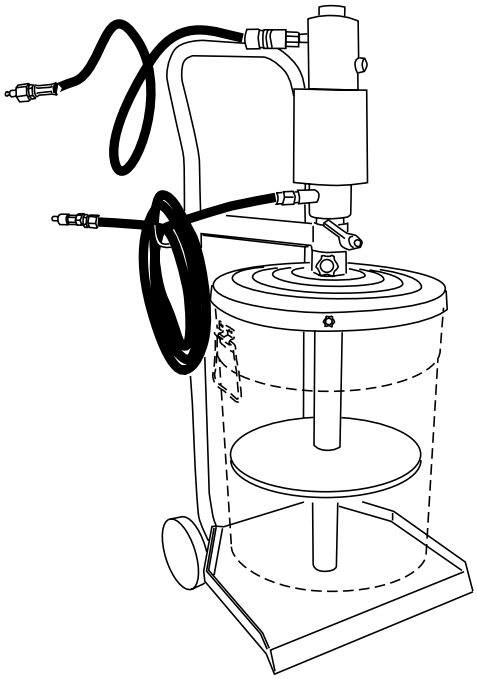	**Portable grease pump** TP No. 90459-2334 4 Jaw system
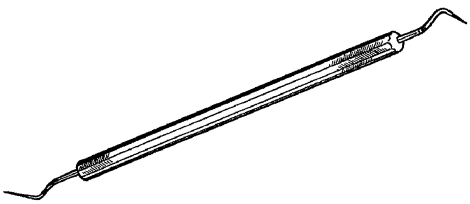	**Tool** TP No. 90243-0146 4 Jaw system
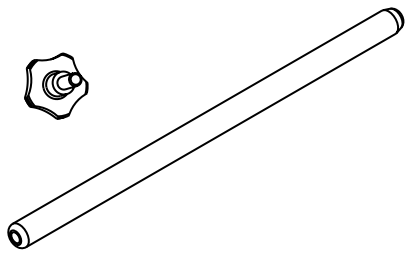	**Knives synchronisation template** TP No. 1317922 TP No. 90051-81 4 Jaw system
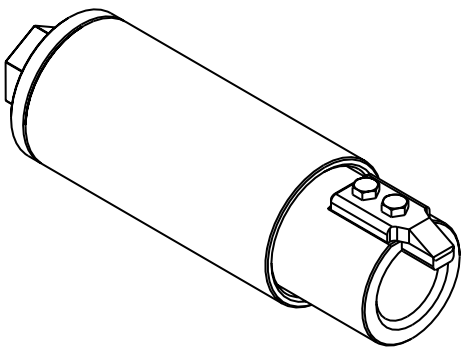	**Jaw bearing extraction tool** TP No. 1487215 Attachment for sealing jaws, 1499129 (thick) Attachment for pressure jaws, 1499186 (thin) 4 Jaw system

TechPub_2614345_0102B7647Y01en.fm

Fig.	Description
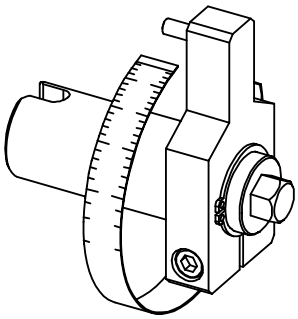	**Gearbox play** TP No. 2566274-0100 4 Jaw system
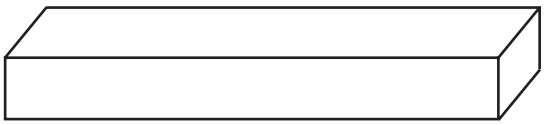	**Template** TP No. 2640362 4 Jaw system
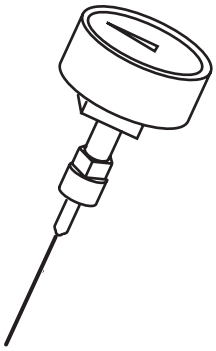	**Needle pressure gauge** TP No. 1478583-0100 5 Final folder module
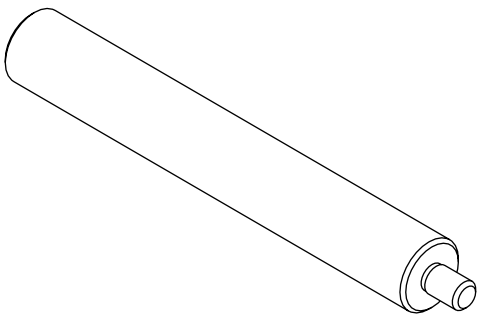	**Template** TP No. 1350716 5 Final folder module
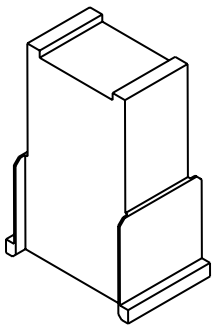	**Heat applicator template** TP No. 2508395 (200B) TP No. 2508396 (250B) TP No. 2501225 (200S) TP No. 2501229 (200M) TP No. 2501230 (250S) 5 Final folder module

TechPub_2614345_0102B7647Y01en.fm

Fig.	Description
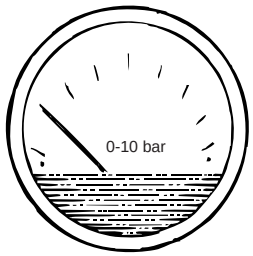	**Pressure gauge** TP No. 90043-0086 (0-10bar) 6 Service unit
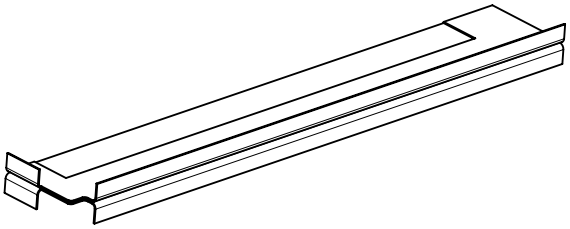	**Tool** TP No. 2522095 8 Automatic splicing unit
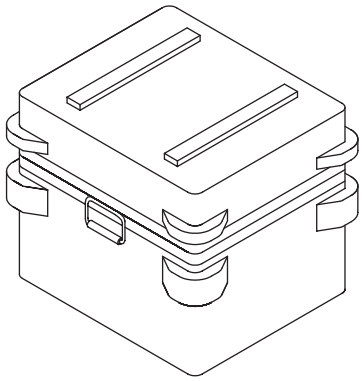	**Calibration equipment** TP No. 567732-0101 9 Electrical cabinet
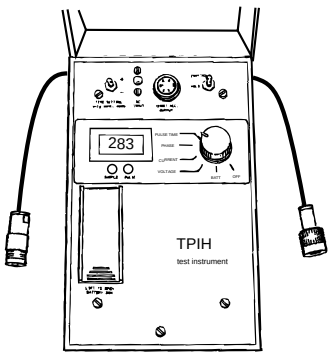	**Test instrument** TP No. 68462-0101 9 Electrical cabinet
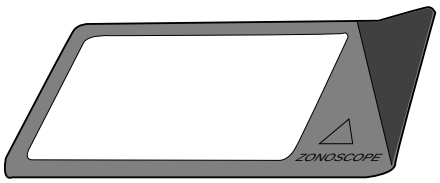	**Tool** TP No. 90243-203 9 Electrical cabinet

TechPub_2614345_0102B7647Y01en.fm

Fig.	Description
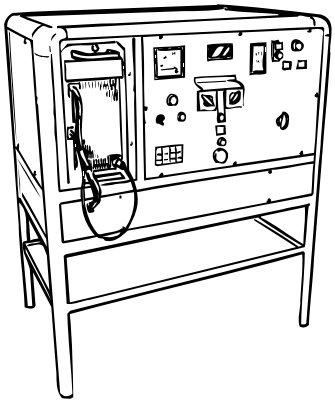	**Test instrument** TP No. 68466 9 Electrical cabinet
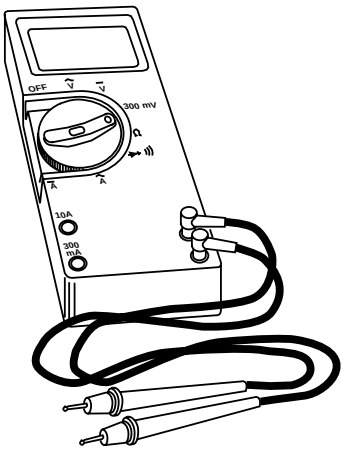	**Digital multimeter** TP No. 90220-078 9 Electrical cabinet
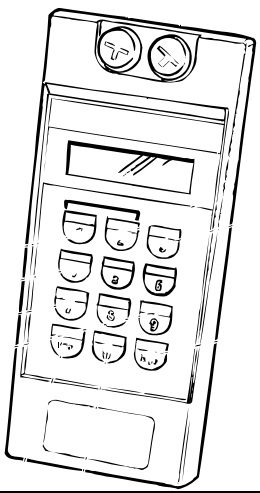	**Calibration equipment** **Temperature calibrator (Micromite instrument)** TP No. 90410-0338 **Extension wire male 5m. (temp.controller)** TP No. 90410-0308 **Extension wire female 1m. (oven)** TP No. 90410-0309 **Label** TP No. 90194-0113 9 Electrical cabinet

TechPub_2614345_0102B7647Y01en.fm

Fig.	Description
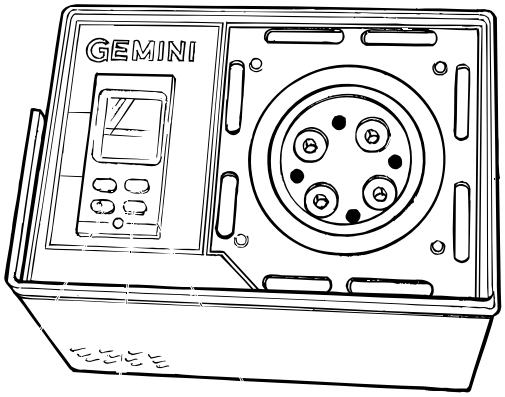	**Calibration equipment** **Temperature calibrator oven (Gemini)** TP No. 90410-0337 **Calibrated thermocouple type K** TP No. 90410-0310 9 Electrical cabinet

TechPub_2614345_0102B7647Y01en.fm

10.3 Consumables

10.3.1 Lubricants

WARNING

Risk of personal injury!

Certain lubricants can cause injury if they come into contact with the eyes, skin, mucous membranes, or clothing. Always follow the manufacturer's instructions for handling chemical products.

The table below lists only a selection of lubricants with their respective designations.

Lubricant specifications may be ordered from:
Tetra Pak Global Technical Support AB, Ruben Rausings gata, SE-221 86 LUND, Sweden.

Lubricant Code	Part No. (used when ordering from Tetra Pak)	Example	
		Supplier	Product Designation (2002-10)
A Motor oil	90 296-28	BP Esso Statoil Mobil Shell Caltex/Texaco Optimol	Vanellus FE 10W-30 Essolube XD-3 10W-30 PowerWay D2 10W-30 Delvac 1400 Super 10W-30 Myrina TX 10W-30 Ursa LA 10W-30 Non Plus Ultra 10W-40
B High-pressure oil	90 296-73 90 296-78	BP Esso Statoil Mobil Shell Caltex/Texaco Imperial Kluber Optimol	Energol GR-XP 220 Spartan EP 220 LoadWay EP 220 Mobilgear 630 Omala oil 220 Meropa Lubricant 220 Tribol ET 280-220 Lamora 220 Optigear 5150 VG 220
	90 296-72 For use in production plant with start temperature below 5° C.	BP Esso Statoil Mobil Shell Caltex/Texaco Imperial Kluber Optimol	Energol GR-XP 150 Spartan EP 150 LoadWay EP 150 Mobilgear 629 Omala oil 150 Meropa Lubricant 150 Tribol ET 280-150 Lamora 150 Optigear 5120 VG 150

TechPub_2614345_0102B7647Y01en.fm

Lubricant Code	Part No. (used when ordering from Tetra Pak)	Example	
		Supplier	Product Designation (2002-10)
C Hydraulic oil	90 296-53	BP Esso Statoil Mobil Shell	Bartran HV 32 Univis N 32 HydraWay HV 32 DTE Oil 13 Tellus Oil T 32
D Mist lubrication oil	90 296-80	BP Esso Statoil Mobil Shell Caltex/Texaco	Autran GM-MP ATF Dextron TransWay DX II ATF 220 ATF Dextron II Texamatic fluid (DEXTRON II)
E Compounded cylinder oil	90 296-77 90 296-2	BP Esso Statoil Mobil Shell Caltex/Texaco	Energol AC-C460 Cylesso TK 460 CylWay FZ 460 600W Super Cylinder Oil Valvata Oil J460 Vanguard Cylinder Oil
F Lithium grease, EP type	90 296-68	BP Esso Statoil Mobil Shell Kluber Optimol	Energrease LS EP 2 Esso MP Grease/Beacon EP 2 UniWay EP 2 N Mobillux EP 2 Grease 1344 LiEP 2 Centoplex 2 EP Longtime PD 2
H High-pressure oil	90 296-75 90 296-76	BP Esso Statoil Mobil Shell Caltex/Texaco Imperial Kluber Optimol	Energol GR-XP 320 Spartan EP 320 LoadWay EP 320 Mobilgear 632 Omala oil 320 Meropa Lubricant 320 Tribol ET 280-320 Lamora 320 Optigear 5180 VG 320
	90 296-73 90 296-78 For use in production plant with start temperature below 5° C.	BP Esso Statoil Mobil Shell Caltex/Texaco Imperial Kluber Optimol	Energol GR-XP 220 Spartan EP 220 LoadWay EP 220 Mobilgear 630 Omala oil 220 Meropa Lubricant 220 Tribol ET 280-220 Lamora 220 Optigear 5150 VG 220

TechPub_2614345_0102B7647Y01en.fm

Lubricant Code	Part No. (used when ordering from Tetra Pak)	Example	
		Supplier	Product Designation (2002-10)
K Circulation oil	90 296-15	BP Esso Statoil Mobil Shell Caltex/Texaco Imperial Kluber	Energol CS 100 Turbesso 100 TurbWay 100 DTE Oil Heavy Tellu Oil 100 Regal Oil R & O 100 Tribol 775 Crucolan 100
L Silicon grease	90 296-9	Dow Kluber	Dow Corning 7 Compound Unisilikon L 250L
M Lithium grease, EP type	90 296-70	BP Esso Statoil Mobil Kluber Optimol	Energrease LS EP 1 Beacon EP 1 UniWay EP 1 Mobillux EP 1 Centoplex 1 EP Longtime PD 1
N PTFE grease	90 296-91	Sikema	Fluolub 210
O Lithium complex grease	90 296-61	BP Esso Statoil Imperial	Energrease LS 3 Unirex N3 UniWay HT-63 Molub-Alloy ET 860-220
P Synthetic compressor oil	90 296-54	BP Esso Statoil Mobil Shell Caltex/Texaco	Energol RC-R68 Compressor Oil 68 CompWay 68 Rarus 427 Corena Oil H68 Compressor Oil VDL 68
Q Low friction assembly paste	90 296-12	Dow Kluber	Molykote G-N Plus Unimoly Plus
R Synthetic grease	90 459-246	Kluber	Klubersynth UH1 14-1600
S Synthetic hydrocarbon grease	90 296-10	Mecman Mobil	435-1 Mobilgrease 28
T Synthetic lubricating grease	90 459-0340	Shell	Cassida HDS2

TechPub_2614345_0102B7647Y01en.fm

Lubricant Code	Part No. (used when ordering from Tetra Pak)	Example	
		Supplier	Product Designation (2002-10)
U Hydraulic fluid	90 459-1310	Shell	Cassida Fluid HF32
Lubricant (New gear box)	90459-1041	Shell	Tivella SD 65173
	-	Shell	Tivella S 460)
	90459-1062	Mobil	Glycoyle HE 460

TechPub_2614345_0102B7647Y01en.fm

10.3.2 Cleaning Compounds

CAUTION
Do **not** use chlorine or iodine-based cleaning compounds when cleaning such parts which will come into contact with hydrogen peroxide.

Comparable qualities from other suppliers may be selected in compliance with the technical requirements listed in the table.
All cleaning compounds must comply with local legal requirements.
The supplier recommendations for concentration and temperature should be followed. When dosing the products automatically, their concentrations should be checked.

Note! Hard water>5° f (French degree of hardness).

Cleaning	Code		Example			
			Type of product	Pure Chemicals	Formulated products	
					Henkel	DiverseyLever
Cleaning CIP	**A**		Alkali	NaOH 1.5%	P3-mip RC P3-N 421	VC13 (Soft water) VC7 (Hard water)
	B	**1**	Acid	HNO_3 1%	P3-Horolith L31	VA5
		2	Acid	H_3PO_4 1%	P3-Horolith FPC P3-Horolith MSW	VA3
		3	Acid	$HNO_3 + H_3PO_4$		VA4
External cleaning (Automatic)	**C**	**1**	Alkali foam TBA/21, 22		P3-Topax 12	VF9
		2	Alkali solution TBA/8, 19		P3-mip FPC P3-FPC	VK12
Manual cleaning (Wiping)	**D**	**1**	Alkali solution		P3-mip FPC P3-FPC	VK12
	E	**1**	Acid solution	HNO_3 0.5%		VA5 (1%)
		2	Acid solution	H_3PO_4 0.5%		VA3 (1%)
		3	Acid solution	Acetic Acid 0.5%		VF12
Manual disinfection (Immersion)	**F**	**1**	Low alkali foam		P3-Topax 99	VS1
		2	Low alkali solution		P3-Steril BG *KL-HC 34 UKES*	VT1
		3	Acid Solution	Hydrogen peroxide Peracetic acid	Oxonia Aktiv 30	VT6
Manual disinfection (Spray)	**G**	**1**	Alcoholic solution	Isopropanol 70%	Al-des Alcodes	VT10
		2	Alcoholic solution	Ethanol 70%		
		3	Acid Solution	Hydrogen peroxide Peracetic acid	Oxonia Aktiv 30	VT6
Hand disinfection	**H**				Spitacid	H4 H5

TechPub_2614345_0102B7647Y01en.fm

10.4 Safety Functions

10.4-1 Safety Functions - Check Warning Signs

Warning Signs - Electrical

Check the warning signs indicated in the illustration are present and readable. Replace missing and/or illegible signs. The warning sign corresponding to the respective position numbers is given in the table.

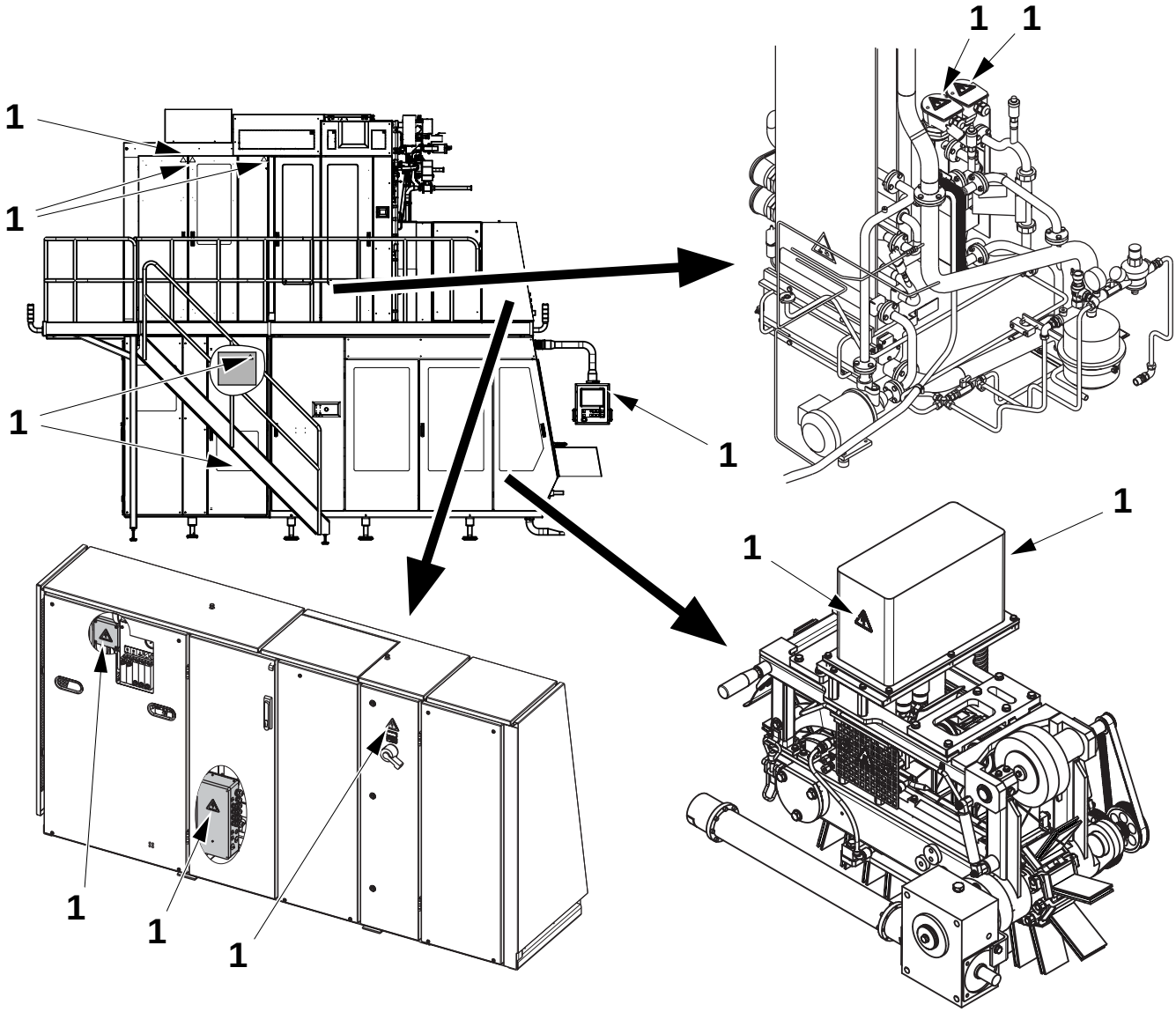

Position	1
Warning sign	

(Cont'd)

TechPub_2614345_0102B7647Y01en.fm

(Cont'd)

Check the warning signs indicated in the illustration are present and readable. Replace missing and/or illegible signs. The warning sign corresponding to the respective position numbers is given in the table.

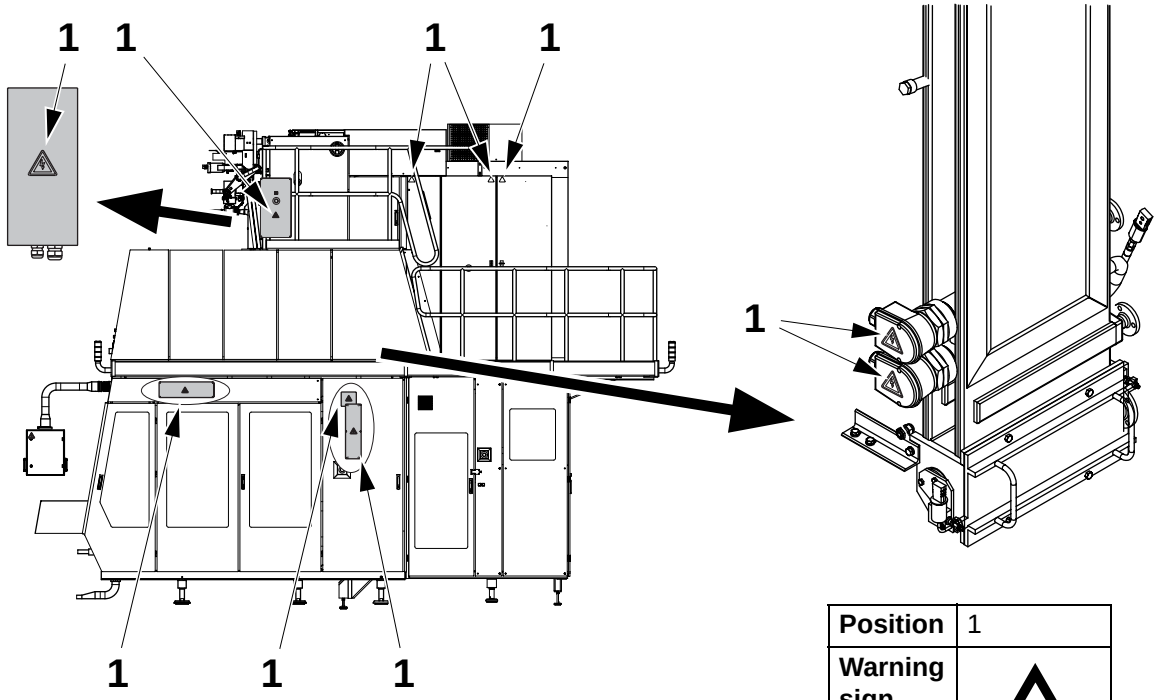

Position	1
Warning sign	

(Cont'd)

TechPub_2614345_0102B7647Y01en.fm

(Cont'd)

Warning Signs - Hot Surfaces and Chemicals

Check the warning signs indicated in the illustration are present and readable. Replace missing and/or illegible signs. The warning sign corresponding to the respective position numbers is given in the table.

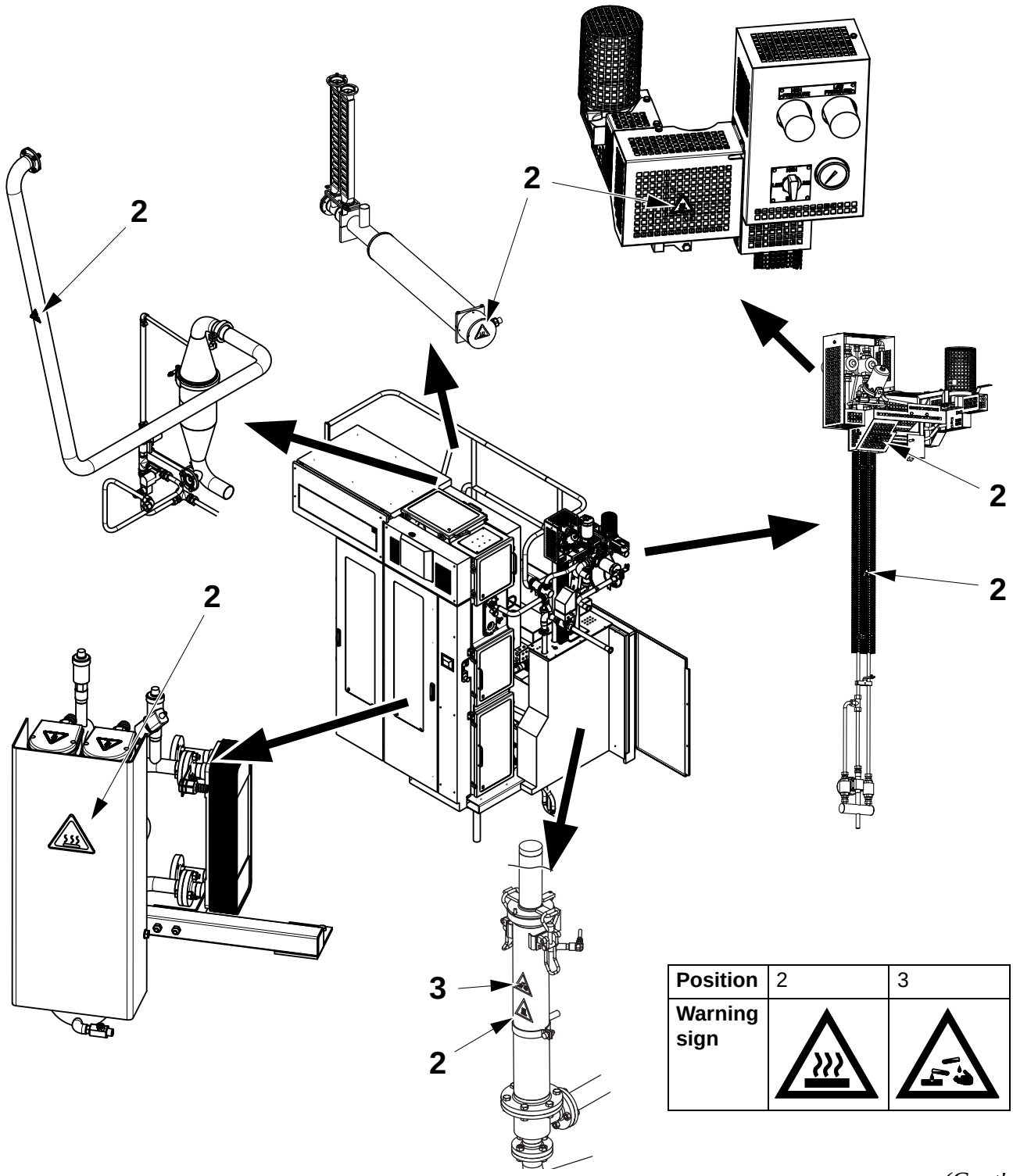

Position	2	3
Warning sign		

(Cont'd)

TechPub_2614345_0102B7647Y01en.fm

(Cont'd)

Check the warning signs indicated in the illustration are present and readable. Replace missing and/or illegible signs. The warning sign corresponding to the respective position numbers is given in the table.

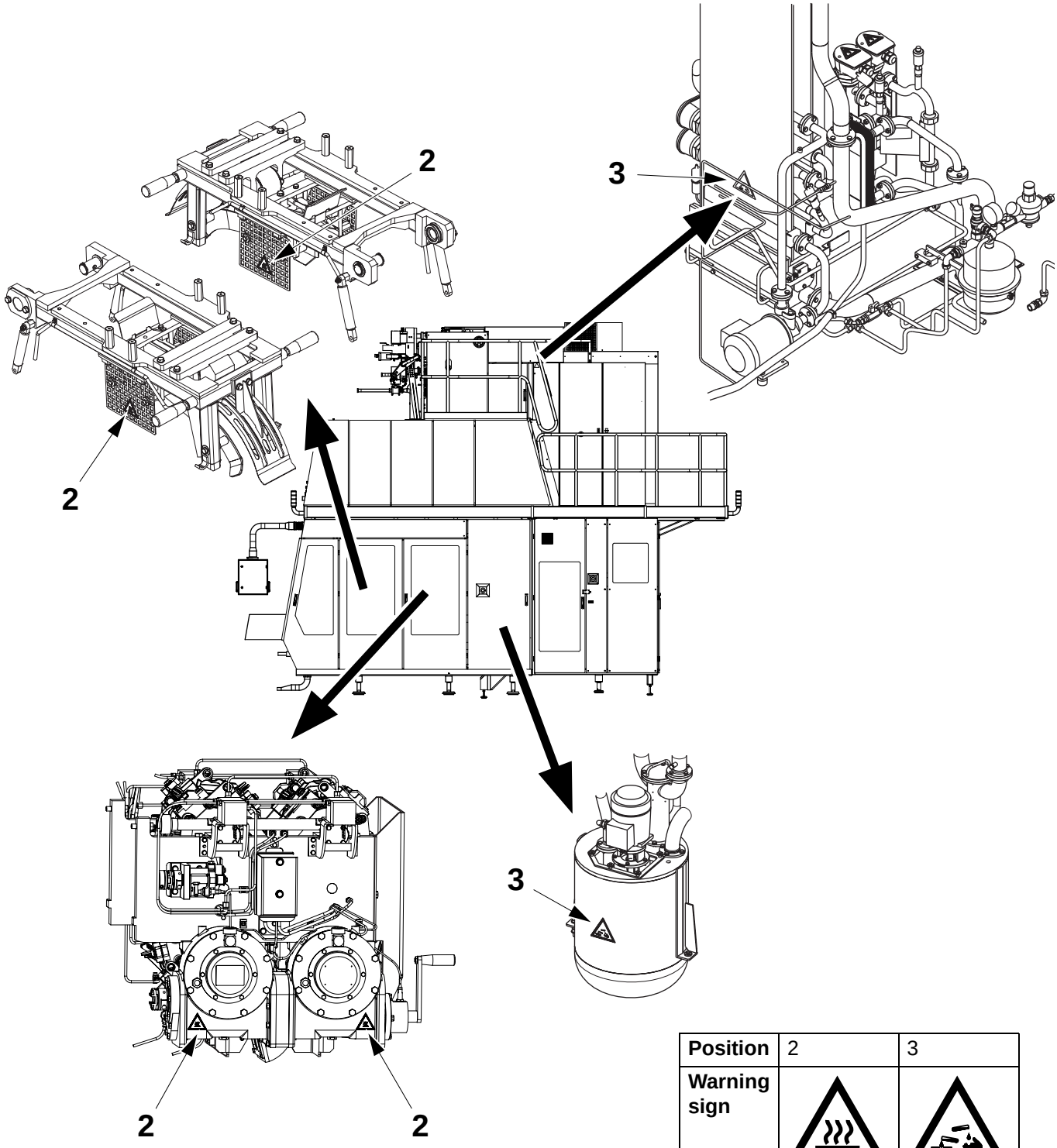

Position	2	3
Warning sign		

(Cont'd)

TechPub_2614345_0102B7647Y01en.fm

(Cont'd)

Warning Signs - Hot Surfaces, Moving Parts

Check the warning signs indicated in the illustration are present and readable. Replace missing and/or illegible signs. The warning sign corresponding to the respective position numbers is given in the table.

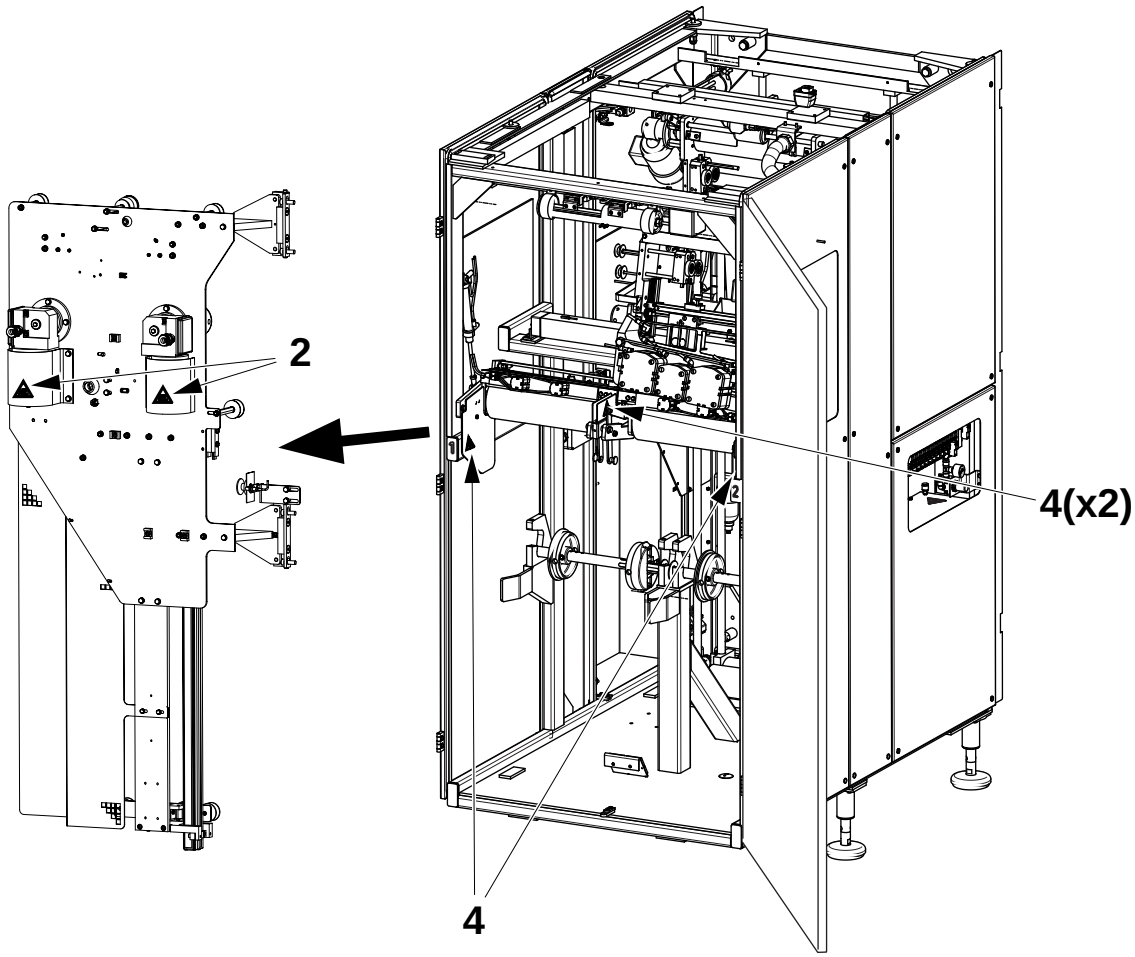

Position	2	4
Warning sign		

(Cont'd)

TechPub_2614345_0102B7647Y01en.fm

(Cont'd)

Warning Signs - Electrical, Hot Surfaces (For Machines with HI)
Check the warning signs indicated in the illustration are present and readable. Replace missing and/or illegible signs. The warning sign corresponding to the respective position numbers is given in the table.

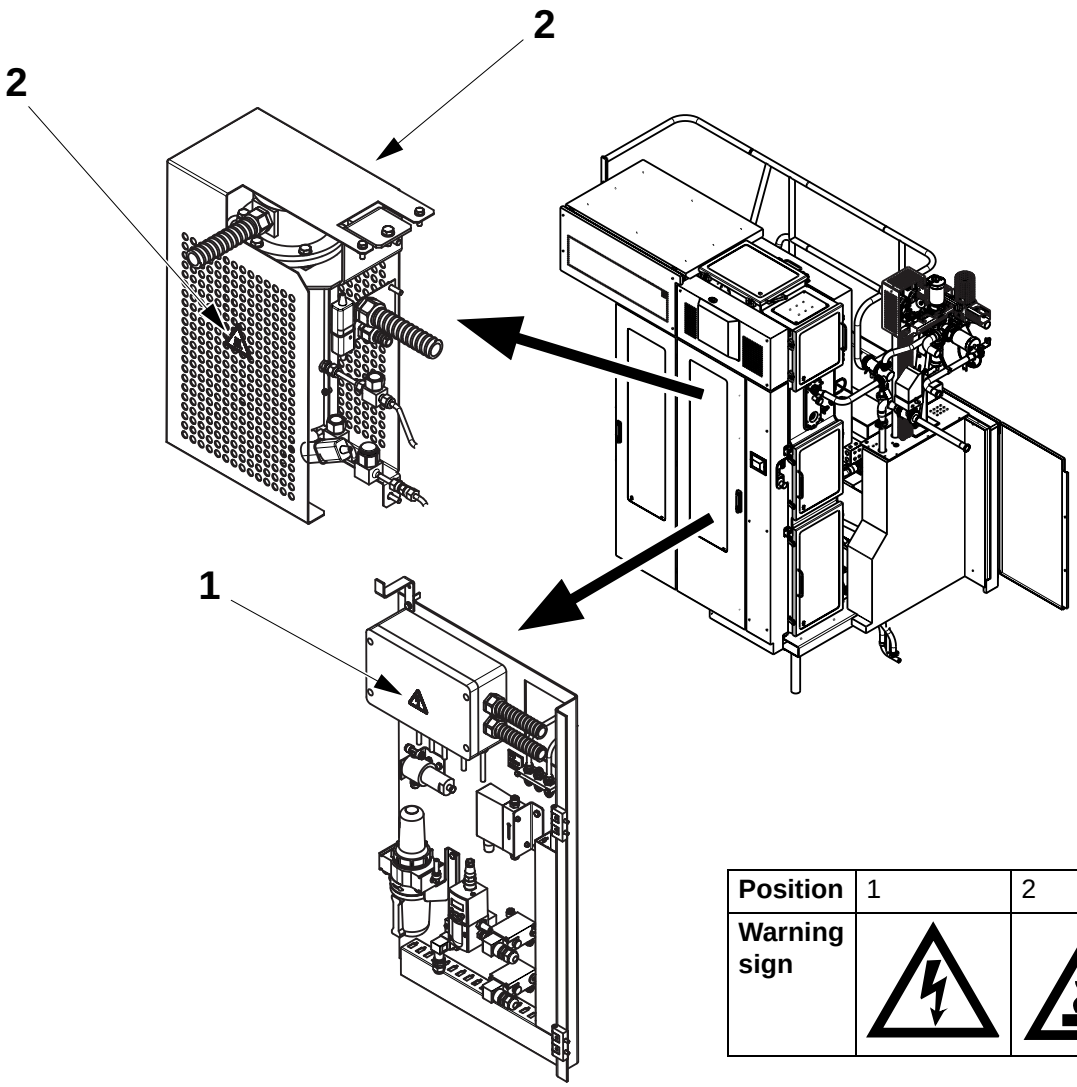

Position	1	2
Warning sign		

TechPub_2614345_0102B7647Y01en.fm

11 Checklist Overview

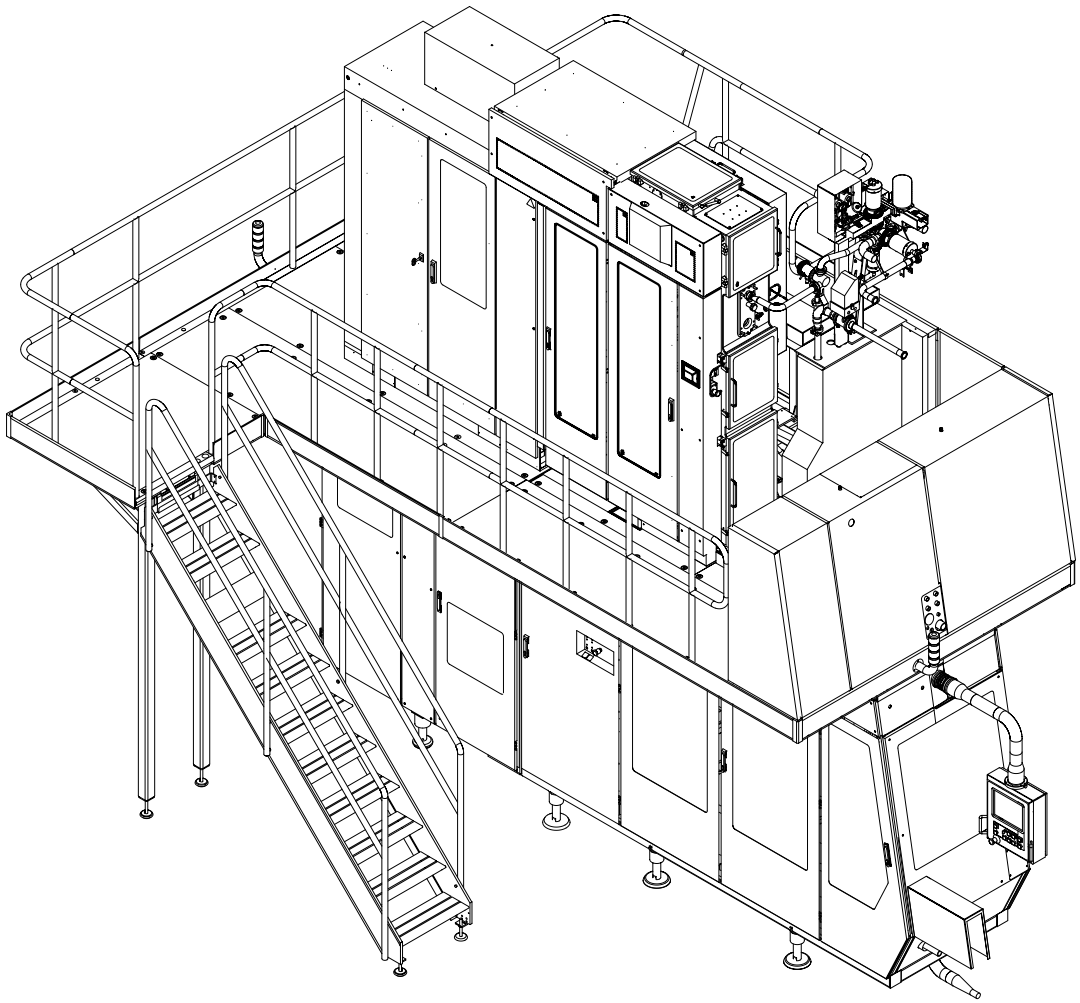

TechPub_2614345_0102B7647Z00en.fm

Checklist Overview - Description

This section of the MM, **is intended for customers who do NOT use the Tetra Pak Maintenance System (TPMS).** The checklist overview contains all the check points for a specified machine type or equipment which are needed to keep the equipment in good condition. The following items can be found in the checklist:

- **MM code** – shows where you can find more information about the check point.
- **Text** – name of unit and type of activity. For further information, see MM code.
- **Action** – type of activity.
- **Interval** – how often the check item should be performed in production hours.

Note! The checklist overview in this manual **may differ from the TPMS checklists** delivered by your local service station, due to the fact that TPMS checklists are continuously updated and adapted to local demands.

TPMS - Description

The maintenance system used for equipment from Tetra Pak is called the **Tetra Pak Maintenance System (TPMS)**. If you are using TPMS, the checklists will be delivered directly from your local Tetra Pak service station.

The TPMS checklists are designed to match and keep pace with the ongoing development of new and existing equipment from Tetra Pak, and to meet the demands set by our customers for even higher efficiency and better economy.

Some of the advantages of TPMS are:

- TPMS maintains complete production lines.
- TPMS reduces down-time to a minimum each time maintenance is carried out.
- Updates of the maintenance schedule based on experience gained, improvements, modifications and specific customer requirements are issued.
- Recommendations regarding spare parts, rotation units, tools and templates, etc. are included.

(Cont'd)

TechPub_2614345_0102B7647Z00en.fm

(Cont'd)

The service life of each item in the equipment is predicted and all items are checked before they affect the efficiency of the equipment. This leads to different maintenance intervals for each item and the check list is unique for each maintenance occasion.

The results of the maintenance are sent back to the Tetra Pak service station. Statistics are evaluated regularly, giving a continuously updated maintenance system.

If you require further information regarding TPMS, please do not hesitate to contact your local Tetra Pak office.

TechPub_2614345_0102B7647Z00en.fm

Checklist Overview

MM code	Test	Action	Interval (h)
	Superstructure - Weekly check		
OM	Superstructure; FILLING PIPE WITH FLOAT; Lower filling pipe	Clean	125
OM	Superstructure; Filling pipe; Lower filling pipe	Clean	125
OM	Superstructure; Filling pipe; LS Pressure roller	Check	125
OM & MM	Superstructure LS inductor	Clean	125
1.1.14	Superstructure; Squee-gee roller	Clean	125
1-1	Superstructure	Clean	125
	Machine body - Weekly check		
OM	Machine body; Hydrogen peroxide Concentration	Check	125
2.5.1-2	Machine body Peroxide tank Strainer	Clean	125
	Drive unit - Weekly check		
OM	Drive unit; Photocell unit Water Nozzles	Clean	125
	Jaw system - Weekly check		
OM & 4.2-9	Jaw system; Pressure Link Dollies	Check	125
4.2-8	Jaw system; Pressure Link Knives	Check	125
4.2-7	Jaw system; Pressure link; Spring & Grease	Check	125
4.1-7	Jaw system; Sealing link Inductors	Clean	125
4.1-8	Jaw system; Sealing link Carbon brushes	Clean	125
4-4	Jaw system	Lubricate	125
	Final folder - Weekly check		
5.2.1	Final folder Station chain	Lubricate	125
5.2.5-1	Final folder; Nozzles	Clean	125
	Service unit - Weekly check		
6.3-2	Service unit Water filters	Clean	125
	ASU - Weekly check		
OM	Automatic splicing unit & Strip applicator unit; Photocell unit	Clean	125
OM & 8.2.2-1	Automatic splicing unit & Strip applicator unit; Strip applicator Inductor	Clean	125
	Pre-Maintenance checks		
MM	WARNING! Before starting any service work, read the safety precaution in the corresponding Maintenance Manual. Doc No: MM 050V	Check	250
MM	WARNING! Before starting any service work, read the safety precaution in the corresponding Maintenance Manual. Doc No: MM 050V	Check	1000

TechPub_2614345_0102B7647Z00en.fm

MM code	Test	Action	Interval (h)
	Go through the lists carried out by the customer since the last service, discuss with customer technician	Check	1000
OM	LS and TS seal quality	Check	1000
1.1.14-1	Superstructure; Aseptic chamber - Calender rollers	Check	1000
1.1.13-1	Superstructure; Aseptic chamber - Pendulum Roller	Check	1000
OM & 1.1.4-3	Superstructure; Aseptic chamber; Lower forming ring Overlap	Check & Record	1000
OM	Superstructure; Aseptic chamber; Lower forming ring Short stop function - Longitudinal sealing	Check	1000
1.3.2-2	Superstructure; Sterile air system; Compressor unit Leaks, noise and vibrations	Check	1000
1.3-1	Superstructure; Sterile air system - Leakage	Check	1000
1.3.2-1	Superstructure; Sterile air system; Compressor unit Pressure	Record	1000
2.5-2	Machine body; Hydrogen peroxide; Peroxide pump Noise and vibrations	Check	1000
6.4.1-1	Service unit; Supply system - Pneumatic unit	Check	1000
6.1.1-2	Service unit; Cooling water system Compressor unit	Check	2000
1.6-1	Superstructure; Aseptic chamber; Connection box Pressure switch	Check	1000
	Superstructure		
1-1	Superstrucutre Aseptic chamber - Window Seal	Check	1000
1.1-1	Aseptic chamber; Forming rings Rollers; Rotation	Check	1000
1.1.1-1	Aseptic chamber; Upper forming ring - Bushings; Shafts; Washer	Check	2000
1.1.1-1	Aseptic chamber; Upper forming ring; Rollers	Check	10000
1.1.2-1	Superstrucutre Aseptic chamber; Movable forming ring - Bushings; Shafts ; Washer	Check	2000
1.1.2-1	Superstructure Aseptic chamber; Movable forming ring; Rollers	Check	10000
1.1.2-2	Superstructure Aseptic chamber; Movable forming ring; Mechanism	Check	10000
1.1.3-1	Aseptic chamber; Forming ring Bushings; Shafts; Washers	Check	2000
1.1.3-1	Aseptic chamber; Forming ring; Rollers	Check	10000
1.1.4-2	Aseptic chamber; Lower forming ring; Bushings; Shafts; Washer; Roll	Check	2000
1.1.4-2	Aseptic chamber; Lower forming ring; Rollers	Check	10000
1.1.4-1	Aseptic chamber; Lower forming ring; Setting	Check	1000
1.1.5-1	Aseptic chamber; Tube support; Shafts, ball bearing	Check	2000
1.1.5-1	Aseptic chamber; Tube support; Roller	Check	10000
1.1.14-1 1.1.14-3	Aseptic chamber; Calender roller; Bushing; Ball bearings	Change	1500
1.1.15-1 1.1.15-2	Aseptic chamber; Driven Calender roller; Ball bearing	Change	1500
1.1.13-3	Aseptic chamber; Pendulum Roller; Ball bearing	Change	1500
1.1.10-1	Aseptic chamber; Paper guide Roller; Ball bearing	Change	1500
1.1.7-1	Aseptic chamber; Pillar; Gasket & O-ring	Check	6000
MM	Superstructure Aseptic chamber Ball	Check	6000
1.1.7-2	Aseptic chamber; Pillar Paper guide	Clean	1000
1.1.9-1	Aseptic chamber; Bending roller Ball bearing	Change	1500

TechPub_2614345_0102B7647Z00en.fm

MM code	Test	Action	Interval (h)
1.1.11-1	Aseptic chamber; Bending roller Seal & O-rings	Check	1000
1.1.12-1	Aseptic chamber; Seal	Check	3000
1.1.8-2 1.1.8-4	Aseptic chamber; Spray system Filters	Clean	1500
1.1.8-2 1.1.8-4	Aseptic chamber; Spray system Filters	Check	6000
1.1.8-1	Aseptic chamber; Spray system; O-rings	Change	2000
1.2.3-3	Superstructure Filling system; Flow Regulator; Gaskets Regulating valve Diaphragms	Change	2000
1.2.2-2 1.2.2-3	Superstructure Filling system; product valve group; Gaskets	Change	2000
1.2.2-2 1.2.2-3	Superstructure Filling system; product valve group A-cylinder;O-rings Seal rings	Change	2000
1.2.2-2 1.2.2-3	Superstructure Filling system; product valve group B-cylinder;O-rings Seal rings	Change	2000
1.2.2-2 1.2.2-3	Superstructure Filling system; product valve group C-cylinder;O-rings Seal rings	Change	2000
1.2.6-2	Filling system; Cleaning in place Pipe; Gaskets	Change	2000
1.2.8	Filling system; Intermediate part; Gaskets	Change	2000
1.2.7-2	Filling system; Steam system Filter	Clean	1000
1.2.7-2	Filling system; Steam system Filter	Change	10000
1.2.5	FILLING PIPE WITH FLOAT	Check	3000
1.2.1-1	FILLING PIPE WITH FLOAT; CLEANING SLEEVE	Check	3000
1.2.5-7	FILLING PIPE WITH FLOAT; Level control device Level probe;O-ring	Check	3000
1.2.5	Filling pipe	Check	3000
1.2.4-1	Filling system Fastening plate;Gaskets	Check	5000
1.2.1-1	Superstructure Filling pipe; Cleaning sleeve	Check	3000
1.3.3-1	Superstructure Sterile air system; Valve Heat exchanger	Overhaul	6000
1.3.7-2	Superstructure Sterile air system; Separator Filter	Clean	1000
1.3.7-2	Superstructure Sterile air system; Separator Filter	Change	5000
1.3.7-3	Superstructure Sterile air system; Separator Gaskets,O-rings	Change	2000
1.3.8-2	Superstructure Sterile air system; Pipe line; Gaskets, Spray nozzle injector	Check	2000
1.3.5-1	Superstructure Sterile air system; Pre-heating Valve	Overhaul	6000
1.3.6-2	Superstructure Sterile air system; Scrubber;Filters	Clean	1000
1.3.6-2	Superstructure Sterile air system; Scrubber;Filters	Change	5000
1.3.6-2	Superstructure Sterile air system; Scrubber;Gaskets, O-rings	Change	2000
1.3.1	Superstructure Sterile air system Air super heater;Gaskets	Check	6000
1.3.9	Superstructure Sterile air system Pressure regulator;Gasket,O-ring	Check	2000
1.3.4	Superstructure Sterile air system Butterfly valve;Gaskets	Check	2000
1.3.2	ON REQUEST ONLY Superstructure Sterile air system;Compressor unit - replace rotator	Replace	10000
1.4-1	Superstructure Hydrogen peroxide; Water circulation; Gaskets	Check	1000
1.4.1-1	Superstructure Hydrogen peroxide; Bath; Roller	Check	1000
1.4.1-3	Superstructure Hydrogen peroxide; Bath; Roller bushings	Change	1000

TechPub_2614345_0102B7647Z00en.fm

MM code	Test	Action	Interval (h)
1.4.1-1	Superstructure Hydrogen peroxide; Bath; Turn roller shaft 180°	Turn	1000
1.4.1-1	Superstructure Hydrogen peroxide; Bath; Roller shaft	Change	2000
1.4.1	Superstructure Hydrogen peroxide; Bath; Gaskets, O-rings	Check	2000
1.4	Superstructure Hydrogen peroxide; Peroxide pipe; Gaskets, O-rings	Check	2000
1.4.2	Superstructure Hydrogen peroxide; Heating unit; Gaskets	Check	2000
1.5.1-7	Superstructure; Frame; Bending roller; Ball bearings	Change	1500
1.5.1-6	Superstructure; Frame; Bending roller; Web guide	Check	3000
1.5.1-3	Superstructure; Frame section; Upper bending roller; Splice detector	Change	3000
	Machine body		
2-1	Machine body; Pneumatic system; Valve panel; Filters	Check	3000
2.6	Machine body; External cleaning system; Cleaning pipework upper, Cleaning pipework, Cleaning pipe; Gaskets	Check	3000
2.5.4-1	ON REQUEST ONLY Machine body; Hydrogen Peroxide; Pump, Rotator	Replace	1500
2.5.5-1	Machine body; Hydrogen peroxide; Peroxide tank; Seal rings, Orings	Check	3000
2.5.1	Machine body; Hydrogen peroxide; Peroxide pipe; Gaskets	Check	3000
2.5.3	Machine body; Hydrogen peroxide; Pump; Gaskets, Orings	Check	3000
2.2.5	Machine body; Hydrogen peroxide; Tank; Gaskets	Check	3000
2.5.6	Machine body; Hydrogen peroxide; Hydrogen peroxide concentration meter	Overhaul	3000
2.7.2	Machine body; Waste conveyor; Coupling	Check	3000
	Drive unit		
3.2-1	Drive unit; Design correction device	Overhaul	10000
3.3-1	Drive unit; Volume adjuster	Change	10000
3.4-1	Drive unit; Photocell unit	Overhaul	6000
3.1-1	Drive unit; Plate Gaskets	Change	1000
3.5-1	Drive unit; Automatic Lubrication System	Check	3000
	Jaw system		
4.3-2 4.3.3	Jaw system; Drive unit	Overhaul	6000
4.3-2 4-6	Jaw system; Drive unit; Coupling disc	Change	1500
4.1	Jaw system; Frame; Curve	Change	10000
4.1	Jaw system; Frame; Spring	Check	6000
MM	Jaw system; Frame; Bearing roller	Check	4000
4.5.4	Jaw system; Design correction	Overhaul	5000
4.5	Jaw system; Design correction; Coupling disc	Change	1500
4.4-2	Jaw system; Volume adjuster; Cams	Check	1000
4.4	Jaw system; Volume adjuster	Overhaul	5000
4.6	Jaw system; Electrical connection; Contact rails	Clean	500
4.6	Jaw system; Electrical connection; Contact rails	Change	15000

TechPub_2614345_0102B7647Z00en.fm

MM code	Test	Action	Interval (h)
4.6	Jaw system; Electrical connection; Cable, Tension spring, Link arm	Check	3000
4-3	Jaw system; Chains	Clean	1000
4.2-10	Jaw system; Pressure jaw	Overhaul	3000
4.2	Jaw system; Pressure jaw; Integrated cutting device; Shafts, Cams	Check	6000
4.2	Jaw system; Pressure jaw; Integrated cutting device; Spring	Check	3000
4.2-8	Jaw system; Pressure jaw; Knife	Change	1000
4.2.4	Jaw system; Pressure jaw; Bearing roller	Check	4000
4.1-11	Jaw system; Sealing jaw;	Overhaul	3000
4.1.6	Jaw system; Sealing jaw; Folding flaps; Arms, Shafts	Change	6000
4.1.5	Jaw system; Sealing jaw; Bearing roller	Check	4000
4.1.7	Jaw system; Sealing jaw; Inductors	Change	1500
4.1-10	Jaw system; Sealing jaw; Carbon brushes	Change	1000
4.7-4	Jaw system; Waste box; Bushings	Check	1000
	Final folder		
5.1-2 5.1-4	Final folder; Conveyor; Ball bearings, Seal rings, Parallel keys, Pulleys	Change	3000
5.1-1 5.1-3 5.1-5	Final folder; Conveyor; Belt & Brush	Check	2000
5.1	Final folder; Conveyor; Intermediary shaft	Check	2000
5.2.1	Final folder; Station chain	Change	3000
5.2.1-3	Final folder; Station chain; Shafts - Turn the shafts 180°	Turn	3000
5.2.3-2	Final folder; Chain support; Radial seal, Ball bearings, Keys, O-rings	Change	3000
5.2.3-2 5.2.3-3	Final folder; Chain support; Guides, Pulleys, Gears	Change	10000
5.2.3	Final folder; Chain support; Intermediary shaft	Check	7000
5.2.3-4 5.2.3-6	Final folder; Chain support; Timing belt, Brush	Check	2000
5.2.2-1	Final folder; Swing frame; Pulley, Bushings, Slider, Pin, O-ring, Radial seal	Change	3000
5.2.5	Final folder; Heating chamber	Check	3000
5.2.4-3	Final folder; Squeezer; Top belt	Check	500
5.2.4-2	Final folder; Squeezer; Side belt	Change	1000
5.2.4-4 5.2.4-5	Final folder; Squeezer; Ball bearings, Radial seal, O-rings, Slider	Overhaul	3000
5.3.1	Final folder; Discharge device; Outfeed unit	Overhaul	3000
5.3.1	Final folder; Discharge device; Outfeed unit; Intermediary shaft	Check	7000
5-2	Final folder; Synchronisation	Check	1000
5-4	Final folder; Gear box - oil	Check	2000
	Service unit		
6.1.1	Service unit; Cooling water system; Compressor unit	Check	3000

TechPub_2614345_0102B7647Z00en.fm

MM code	Test	Action	Interval (h)
6..1.2	Service unit; Cooling water system; Flow meter	Check	3000
6.1	Service unit; Cooling water system; Cooling water pump	Check	3000
6.2	Service unit; Foam cleaning unit; Pipe	Check	3000
6.2	Service unit; Foam cleaning unit; Side	Check	3000
6.2	Service unit; Foam cleaning unit; Pipe	Check	3000
6.2.1-1	Service unit; Foam cleaning unit; Pump	Check	3000
6.2.1-1	Service unit; Foam cleaning unit; Pump; Gaskets, Seals	Check	3000
6.2	Service unit; Foam cleaning unit; Branching pipe	Check	3000
6.2	Service unit; Foam cleaning unit; Ball valve	Check	3000
6.5.1	Service unit; Machine body; Chemical unit; Pump	Check	3000
6.3	Service unit; Water panel	Check	1000
6.4.1-1	Service unit; Supply system; Pneumatic unit	Change	3000
	ASU & Strip applicator unit		
8.1-5 8.1-6	Automatic splicing unit; Machine body; Filter	Check	3000
8.1-4	Automatic splicing unit & Strip applicator; Machine body; Bending roller	Check	3000
8.2	Automatic splicing unit; & Strip applicator	Check	3000
8.2.4	Automatic splicing unit & Strip applicator; Strip guide	Check	3000
8.2.2-4	Automatic splicing unit & Strip applicatorn; Inductor; Roller	Check	3000
8.2.3	Automatic splicing unit & Strip applicator; Inductor; Pressure roller	Check	2000
8.3.4-1	Automatic splicing unit & Strip applicator; Pressure roller	Change	1500
8.2	Automatic splicing unit & Strip applicator; Roller	Check	3000
8.2.1	Automatic splicing unit & Strip applicator; Splice detector	Check	3000
8.6	Automatic splicing unit & Strip applicator; Strip magazine; Mounting sheet	Check	3000
8.6.1	Automatic splicing unit & Strip applicator; Strip magazine; Heating device	Check	3000
8.6.3	Automatic splicing unit & Strip applicator; Strip guide	Check	3000
8.6.4	Automatic splicing unit & Strip applicator; Strip magazine; Cutting table	Check	3000
8.6	Automatic splicing unit & Strip applicator; Strip magazine; Holder	Check	3000
8.3	Automatic splicing unit & Strip applicator; Splicing device	Check	3000
8.3.1	Automatic splicing unit & Strip applicator; Splicing device; Web guide	Check	3000
8.3.3-1	Automatic splicing unit & Strip applicator; Splicing device; Pressure jaw; Knife	Check	1000
8.3.3-6	Automatic splicing unit & Strip applicator; Splicing device; Pressure jaw; Dolly	Change	500
8.3.2	Automatic splicing unit & Strip applicator; Splicing device; Paper guide	Check	3000
8.3.4	Automatic splicing unit & Strip applicator; Splcing device; Pressure roller	Check	3000
8.3.3-4	Automatic splicing unit & Strip applicator; Splicing device; TPO bar	Change	500
8.3.5	Automatic splicing unit & Strip applicator; Splicing device; Bow clamp	Check	3000
8.3-6	Automatic splicing unit & Strip applicator; Splicing device; Bar code reader	Check	3000

TechPub_2614345_0102B7647Z00en.fm

MM code	Test	Action	Interval (h)
8.3-1	Automatic splicing unit & Strip applicator; Splicing device; Drive unit rear	Check	3000
8.4	Automatic splicing unit & Strip applicator; Material holder Line 1	Check	3000
8.4	Automatic splicing unit & Strip applicator; Material holder Line 1; Material holder	Check	3000
8.4	Automatic splicing unit & Strip applicator; Material holder Line 2	Check	3000
8.4	Automatic splicing unit & Strip applicator; Material holder Line 2; Material holder	Check	3000
8,7	Automatic splicing unit & Strip applicator; Bracket	Check	3000
8.7	Automatic splicing unit & Strip applicator; Bracket; Pressure roller	Check	3000
8.7	Automatic splicing unit & Strip applicator; Drive unit	Check	3000
8.7	Automatic splicing unit & Strip applicator; Bracket; Paper guide	Check	3000
8,7	Automatic splicing unit & Strip applicator; Bracket; Web guide	Check	3000
8.8	Automatic splicing unit & Strip applicator; Magazine	Check	3000
8.10	Automatic splicing unit & Strip applicator; Bobbin brake	Check	3000
8.11	Automatic splicing unit & Strip applicator; Reel trolley	Check	1000
	Start-up checks		
9.4.2-2	Safety relays - Function	Check	1000
	After-Maintenance Checks		
OM	LS,TS and flap seal quality	Check	1000
OM	Package - Appearance	Check	1000
OM	Aseptic chamber; Lower forming ring, Short stop function- Longitudinal sealing	Check	1000
OM	Longitudinal sealing - Strip Position	Check	1000
1.1-3	Aseptic chamber - Over-pressure	Check	2000
1.1.14-1 1.1.15-1	Aseptic chamber - Calender rollers	Check	1000
	If pre-maintenance checks have not been done-do them now	Check	1000

TechPub_2614345_0102B7647Z00en.fm

A

Air Preheating Valve - Overhaul . . . . . 1 - 205
Air Preheating Valve - Set By-pass Position 1 - 209
Air Preheating Valve - Set Proximity Switches 1 - 207
Air Superheater - Check . . . . . 1 - 185
Air Superheater - Check Heat Exchanger . . 1 - 186
Aseptic Chamber - Check Bending Rollers . . 1 - 11
Aseptic Chamber - Check Forming Ring Rollers 1 - 10
Aseptic Chamber - Check Overpressure . . . . 1 - 12
Aseptic Chamber - Leakage Detection . . . . . 1 - 14
Asu - Check Function . . . . . 8 - 8
Automatic Splicing Unit - Setting Sequence . . 8 - 7

B

Bath - Change Heating Element . . . . . 1 - 229
Bath - Change Roller Bushings . . . . . 1 - 230
Bath - Check Roller . . . . . 1 - 228
Bending Roller - Change Bearings . . 1 - 43, 1 - 244
Bending Roller - Check . . . . . 1 - 238
Bending Roller - Check Splice Detector . . . . 1 - 240
Bending Roller - Check Web Guide . . . . . 1 - 243
Bending Roller - Set Brake . . . . . 1 - 239
Bending Roller - Set Packaging Material Track 1 - 246
Bending Roller - Set Splice Detector . . . . . 1 - 241
Bending Roller - Set Web Guide Position . . 1 - 242
Bending Roller (Rotation) - Change Bearings 1 - 47
Bending Roller (Rotation) - Set Angle . . . . . 1 - 50
Bow Clamp - SetMechanical Stop . . . . . 8 - 66
Bracket - Change Roller Bearings . . . . . 8 - 93
Bracket - Set Proximity Switch . . . . . 8 - 96
Butterfly Valve - Change Bushings . . . . . 1 - 201
Butterfly Valve - Change Cylinder . . . . . 1 - 200
Butterfly Valve - Set . . . . . 1 - 203
Butterfly Valve - Set Sensor . . . . . 1 - 204

C

Calender Roller - Change Bushings and Bearings . . . . . 1 - 61
Calender Roller - Check . . . . . 1 - 59
Calender Roller - Check Pneumatic Cylinder . 1 - 64
Calender Roller - Set Pressure . . . . . 1 - 60
Calender Roller - Set Proximity Switch . . . . . 1 - 63
Calibrator (Micromite II) - Set . . . . . 9 - 196
Chain Support - Change Belt . . . . . 5 - 50
Chain Support - Change Brush . . . . . 5 - 49
Chain Support - Change Chain Guide . . . . . 5 - 45
Chain Support - Check Condition . . . . . 5 - 31
Chain Support - Overhaul . . . . . 5 - 32
Chain Support - Set Belt . . . . . 5 - 51
Chemical Unit - Check . . . . . 6 - 26
Cleaning Pipe - Check Gaskets . . . . . 1 - 169
Cleaning Pipe - Set . . . . . 1 - 168
Cleaning Pump - Check Connections . . . . . 6 - 17
Cleaning Pump - Set Pressure . . . . . 6 - 18
Cleaning Sleeve - Check Gasket . . . . . 1 - 82
Cleaning Sleeve - Set . . . . . 1 - 85
Compressor Unit - Change Seals . . . . . 1 - 192
Compressor Unit - Check . . . . . 6 - 10
Compressor Unit - Check for Leaks and Vibrations . . . . . 1 - 191
Compressor Unit - Check Pressure . . . . . 1 - 190
Compressor Unit - Check Sight Glass . . . . . 6 - 9
Conductivity Meter - Change Conductivity Cell (Probe) . . . . . 9 - 109
Conductivity Meter - Description . . . . . 9 - 105
Conductivity Meter - Set . . . . . 9 - 106
Connection Box - Check Pressure Switch . . 1 - 247
Connection Box - Set Pressure Switch . . . . . 1 - 247
Conveyor - Change Belt . . . . . 5 - 15
Conveyor - Check Bearings . . . . . 5 - 14
Conveyor - Check Belt . . . . . 5 - 13
Conveyor - Overhaul . . . . . 5 - 17
Conveyor - Set Brush . . . . . 5 - 24
Conveyor Section Set Photocells . . . . . 7 - 2
Cooler - Check Filter . . . . . 9 - 206
Cooling Water System - Check . . . . . 6 - 5
Cooling Water System - Fill . . . . . 6 - 7
Covering Panel - Check . . . . . 8 - 112
Covering Panel - Set Safety Switches . . . . . 8 - 114
Crank - Check Chain . . . . . 1 - 34
Curve Wheel - Change Curve Wheel Bushing 5 - 77

TechPub_2614345_0102817640l7frolOM.fm

Curve Wheel - Set Transmitter And Receiver 5 - 75
Cutting Table - Check . . . . . 8 - 91
Cutting Table - Set . . . . . 8 - 92

D

Design Correction - Change Belt . . . . . 4 - 105
Design Correction - Check Belt . . . . . 4 - 104
Design Correction - Overhaul . . . . . 4 - 106
Design Correction - Set . . . . . 4 - 108
Design Correction - Set Belt Tension . . . . . 4 - 103
Design Correction Device - Overhaul . . . . . 3 - 9
Dilution Tank - Check . . . . . 2 - 10
DMC2 Card - Function Description . . . . . 9 - 179
DMC2 Card - Load Program . . . . . 9 - 187
DMC2 Card - Set Basic . . . . . 9 - 186
Drive Unit - Change Gearboxes (valid for new gearboxes) . . . . . 4 - 75
Drive Unit - Change Gearboxes (valid for old gearboxes) . . . . . 4 - 75
Drive Unit - Change Wheels . . . . . 4 - 74
Drive Unit - Overhaul (valid for old gearboxes) 4 - 63
Drive Unit - Overhaul (valid new gearboxes) . 4 - 58
Drive Unit - Refill Gearbox Oil . . . . . 4 - 92
Drive Unit - Set Angle Encoder . . . . . 4 - 56
Drive Unit - Set Gearbox Play (valid for old gearboxes) . . . . . 4 - 96
Driven Calender Roller - Change Roller Bearings 1 - 66
Driven Calender Roller - Check . . . . . 1 - 65

E

Electrical Connection - Check Transformer . 4 - 118
Electrical Connection - Check TS Rail . . . . . 4 - 116
Electrical Connection - Clean TS Rail . . . . . 4 - 112
External Cleaning System - Check Nozzles . . 2 - 35

F

Fastening Plate - Check . . . . . 1 - 109
Filling Pipe - Change Fitting (Level Probe) . 1 - 165
Filling Pipe - Change Level Probe . . . . . 1 - 166
Filling Pipe - Check . . . . . 1 - 163
Filling Pipe - Fit . . . . . 1 - 118
Filling Pipe - Remove . . . . . 1 - 110
Filling Pipe - Set Level Control Device . . . . . 1 - 158
Filling Pipe - Set Level Probe . . . . . 1 - 156
Filling Pipe - Set Position (Float) . . . . . 1 - 144
Filling Pipe - Set Position (Level Probe) . . . . 1 - 130
Filling Pipe - Set Pressure Roller . . . . . 1 - 155
Filling System - Description . . . . . 1 - 80
Final Folder Module - Change Gearbox Oil . . . 5 - 10
Final Folder Module - Check Coupling . . . . . 5 - 9
Final Folder Module - Synchronization . . . . . 5 - 5
Flow Regulator - Change Diaphragm . . . . . 1 - 107
Flow Regulator - Overhaul Regulating Valve 1 - 100
Flow Regulator - Set Overpressure . . . . . 1 - 108
Flow Regulator - Set Proximity Switch . . . . . 1 - 106
Flowmeter - Change Deionizer Cartridge . . . . 6 - 11
Flowmeter - Change Filter Insert . . . . . 6 - 14
Flowmeter - Set Flows . . . . . 6 - 13
Forming Ring - Change Bushings . . . . . 1 - 25
Frequency Converter - Setting . . . . . 9 - 189
Fuse Board 1 - Set Overload Protection . . . . 9 - 154
Fuse Board 2 - Set Fuse . . . . . 9 - 155

H

Heating Chamber - Overhaul . . . . . 5 - 66
Heating Chamber - Set Flap Sealing Nozzles . 5 - 64
Heating Device - Change Plunger . . . . . 8 - 87
Heating Device - Check . . . . . 8 - 83
Heating Device - Set Position . . . . . 8 - 84
Heating Unit - Check Pump . . . . . 1 - 236
Heating Unit - Drain . . . . . 1 - 235
Heating Unit Change Heat Exchanger . . . . . 1 - 233
HeatingUnit - Change Heating Elements . . . 1 - 231
HOConcentration Meter - Change O-ring . . . . 2 - 28
HOConcentration Meter - Check Desiccant Cartridge . . . . . 2 - 27
HOConcentration Meter - Check Prism and Led 2 - 34
HOConcentration Meter - Check Pt100 Sensor 2 - 32
HOConcentration Meter - Remove . . . . . 2 - 30

TechPub_2614345_0102817640017froIOM.fm

Hub - Change Motor . . . . . 8 - 88
Hub - Set Spring Loaded Screw . . . . . 8 - 89
Hydrogen Peroxide - Check Leakages . . . . . 2 - 5
Hydrogen Peroxide - Check Pump . . . . . 2 - 6
Hydrogen Peroxide - Check Water Circulation 1 - 225
Hydrogen Peroxide - Fill Water Circulation . 1 - 226
Hydrogen Peroxide - Set Pressure . . . . . 2 - 7

I

IH Equipment - Set CAN Communication . . . 9 - 28
IH Equipment Function Description . . . . . 9 - 7
IH EquipmentChange Generator . . . . . 9 - 25
IH EquipmentCheck Cables . . . . . 9 - 24
IH EquipmentCheck Function . . . . . 9 - 21
IH EquipmentError Handling . . . . . 9 - 16
IH EquipmentLCD Display . . . . . 9 - 11
IH EquipmentSet Sealing . . . . . 9 - 26
Inductor - Change Roller . . . . . 8 - 29
Inductor - Change Transformer . . . . . 8 - 28
Inductor - Check . . . . . 8 - 27
Inductor - Set Pressure Rollers . . . . . 8 - 30
Inductor - Set Volume . . . . . 8 - 31
Intermediate Part - Check Conductivity Sensor 1 - 180
Intermediate Part - Set Flow Meter . . . . . 1 - 181

J

Jaw System - Chain Disassembly and Reassembly . . . . . 4 - 6
Jaw System - Check Couplings . . . . . 4 - 19
Jaw System - Grease Chains . . . . . 4 - 18
Jaw System - Set Coupling . . . . . 4 - 21
Jaw System - Setting Sequence . . . . . 4 - 5

L

Level Relays - Description . . . . . 9 - 156
Level Relays - Set . . . . . 9 - 158
Lid - Check . . . . . 1 - 67
Lower Forming Ring - Change Bushings . . . . 1 - 29
Lower Forming Ring - Set Overlap . . . . . 1 - 30
Lower Forming Ring - Set Position . . . . . 1 - 26
LS Inductor - Change, Set and Fix . . . . . 1 - 68
Lubrication Unit - Change Cylinders . . . . . 4 - 137
Lubrication Unit - Set Sensors . . . . . 4 - 140

M

Machine Body - Change Air Filter . . . . . 8 - 17
Machine Body - Change Bearing Blocks . . . . . 8 - 13
Machine Body - Check Air Filter . . . . . 8 - 16
Machine Body - Check Bearing Blocks . . . . . 8 - 12
Machine Body - Check Bending Roller . . . . . 8 - 14
Machine Body - Overhaul Bending Roller . . . . 8 - 15
Machine Body - Set Photocell Position . . . . . 8 - 18
Machine Body - Set Photocell Sensitivity . . . . 8 - 19
Material Holder - Check . . . . . 8 - 68
Material Holder - Check Cutting Table . . . . . 8 - 69
Material Holder - Overhaul . . . . . 8 - 73
Material Holder - Set . . . . . 8 - 74
Material Holder - Set Cutting Table . . . . . 8 - 71
Material Holder - Set Lock Cylinders . . . . . 8 - 76
Movable Forming Ring - Change Bushings . . 1 - 19
Movable Forming Ring - Change Motor Bushing 1 - 22
Movable Forming Ring - Check Motor Bushings 1 - 20

O

Outfeed Unit - Change Ball Bearing . . . . . 5 - 72
Outfeed Unit - Check Bushings and Roller . . . 5 - 70

P

Paper Brake - Set . . . . . 8 - 115
Paper Brake - Set Position and Velocity . . . . 8 - 116
Paper Guide - Change . . . . . 8 - 51
Paper Guide - Check . . . . . 8 - 51
Paper Guide - Check Bearings . . . . . 1 - 45
Pendulum Roller - Change Bearings . . . . . 1 - 55
Pendulum Roller - Check . . . . . 1 - 53
Pendulum Roller - Check Pneumatic Cylinder 1 - 58

TechPub_2614345_0102817640l7frolOM.fm

Pendulum roller - set pressure . . . . . 1 - 54
Pendulum Roller - Set Proximity Switch . . . . . 1 - 57
Peroxide Pipe - Check . . . . . 2 - 8
Peroxide Pipe - Clean Strainer . . . . . 2 - 9
Peroxide Pump - Change Pump . . . . . 2 - 14
Peroxide Pump - Overhaul Pump . . . . . 2 - 16
Peroxide Pump - Set Impeller . . . . . 2 - 23
Peroxide Tank - Check . . . . . 2 - 26
Photocell Unit - Check . . . . . 3 - 16
Photocell Unit - Set . . . . . 3 - 17
Pillar - Change Bearings . . . . . 1 - 36
Pillar - Check Gasket and Seal . . . . . 1 - 35
Pillar - Set Proximity Switch . . . . . 1 - 37
Pipe Line - Check Spray Nozzle . . . . . 1 - 222
Pipe Line - Clean Spray Nozzle . . . . . 1 - 219
Plates - Overhaul . . . . . 3 - 5
PLC - Change Battery . . . . . 9 - 172
PLC - Functional Description . . . . . 9 - 171
PLC - Load Program . . . . . 9 - 173
PLC - Print Program . . . . . 9 - 177
Pneumatic Unit - Check . . . . . 6 - 23
Pneumatic Unit - Clean Filter Insert . . . . . 6 - 25
Pneumatic Unit - Set Pressure . . . . . 6 - 24
Pneumatic Unit - Set Pressure Switch . . . . . 6 - 24
Pressure Jaw - Change Cylinders . . . . . 8 - 57
Pressure Jaw - Change Dolly . . . . . 8 - 62
Pressure Jaw - Change Knife . . . . . 8 - 53
Pressure Jaw - Change Knives . . . . . 4 - 49
Pressure Jaw - Change Sealing Dollies . . . . . 4 - 50
Pressure Jaw - Change TPO-bar . . . . . 8 - 56
Pressure Jaw - Change Volume Flap Rollers 4 - 47
Pressure Jaw - Change Volume Flap Springs, Holder and Bushings . . . . . 4 - 44
Pressure Jaw - Check Knife . . . . . 8 - 52
Pressure Jaw - Check Pressure Bar Springs . 4 - 48
Pressure Jaw - Check Rollers . . . . . 4 - 43
Pressure Jaw - Check TPO-bar . . . . . 8 - 55
Pressure Jaw - Check Volume Flap Dampers 4 - 40
Pressure Jaw - Check Volume Flap Rollers . . 4 - 42
Pressure Jaw - Check Volume Flap Springs, Holder and Bushings . . . . . 4 - 41
Pressure Jaw - Overhaul . . . . . 4 - 51
Pressure Jaw - Set Jaw Unit Reference Sensor 4 - 55
Pressure Regulator (60 Hz) - Set By-pass Valve . . . . . 1 - 224
Pressure Roller - Change . . . . . 8 - 33
Pressure Roller - Change Bearings . . . . . 8 - 102
Pressure Roller - Check . . . . 8 - 32, 8 - 64, 8 - 101
Pressure Roller - Overhaul . . . . . 8 - 65
Pressure Roller - Set . . . . . 8 - 34, 8 - 103
Pressure Roller - Set Proximity Switch . . . . . 8 - 35
Product Valve Group - Change O-Rings, AP-Valve . . . . . 1 - 93
Product Valve Group - Change Seals and Diaphragms, AP-Valve . . . . . 1 - 89
Product Valve Group - Remove Pneumatic Cylinders, AP-Valve . . . . . 1 - 87
Product Valve Group - Set Proximity Switches 1 - 99
Pump - Change Gasket and Non Return Valve 2 - 12
Pump - Check . . . . . 2 - 11
Pump - Clean Filter . . . . . 2 - 13
Pump unit - Change Pump . . . . . 2 - 40

R

Recorders (Honeywell) - Change Fuse . . . . . 9 - 82
Recorders (Honeywell) - CIP Recorder Description . . . . . 9 - 78
Recorders (Honeywell) - Clean Chart Carriage 9 - 81
Recorders (Honeywell) - Configuration File Name P002 . . . . . 9 - 84
Recorders (Honeywell) - Configuration File Name P003 . . . . . 9 - 88
Recorders (Honeywell) - Configuration Setting 9 - 83
Recorders (Honeywell) - Set Chart Speed . . . 9 - 79
Recorders (Honeywell) - Set Date and Time . . 9 - 80
Recorders (Honeywell)- Process Recorder Description . . . . . 9 - 75
Recorders (Jumo) - Calibrate . . . . . 9 - 99
Recorders (Jumo) - Clean Chart Carriage . . . 9 - 98
Recorders (Jumo) - Set Paper Record Alarm (Optional) . . . . . 9 - 104
Recorders (Jumo) - Set Recorder . . . . . 9 - 96
Recorders (Jumo)- Process Recorder Description . . . . . 9 - 91
Reel Trolley - Change Pump Cylinder . . . . . 8 - 119

TechPub_2614345_0102817640017froIOM.fm

Reel Trolley - Change Sink Valve . . . . . 8 - 122
Reel Trolley - Check . . . . . 8 - 118
Reel Trolley - Overhaul Lifting Cylinder . . . . 8 - 124
Reel Trolley - Remove Fork Wheel . . . . . 8 - 125
Reel Trolley - Remove Guide Wheel . . . . . 8 - 126
Reel Trolley - Set Brake . . . . . 8 - 127
Reel Trolley - Set Regulating Valve . . . . . 8 - 121

S

Safety Functions - Check Warning Signs . . 10 - 21
Safety Relays - Check Function . . . . . 9 - 163
Safety Relays - Functional Description . . . . 9 - 159
Safety Relays - Troubleshoot . . . . . 9 - 167
Scrubber - Clean Constant Flow Valve . . . . 1 - 210
Scrubber - Clean Filters . . . . . 1 - 211
Seal - check . . . . . 1 - 51
Seal - Overhaul . . . . . 1 - 52
Sealing Jaw - Change Guide . . . . . 4 - 33
Sealing Jaw - Check Cam Followers . . . . . 4 - 27
Sealing Jaw - Check Carbon Brushes . . . . . 4 - 30
Sealing Jaw - Check Flap Folding . . . . . 4 - 28
Sealing Jaw - Check Guides . . . . . 4 - 26
Sealing Jaw - Check Inductor . . . . . 4 - 29
Sealing Jaw - Check Volume Flap Dampers . 4 - 27
Sealing Jaw - Check Volume Flap Rollers . . . 4 - 27
Sealing Jaw - Check Volume Flap Springs, Holder And Bushings . . . . . 4 - 27
Sealing Jaw - Overhaul . . . . . 4 - 34
Separator - Check Pressure Guard . . . . . 1 - 213
Separator - Clean Filter and Float . . . . . 1 - 214
Separator - Overhaul . . . . . 1 - 217
Separator - Set Float Unit . . . . . 1 - 218
Side Feeder - Change . . . . . 8 - 20
Side Feeder - Set Sensor Position . . . . . 8 - 22
Splice Detector - Check . . . . . 8 - 24
Splice Detector - Set . . . . . 8 - 26
Splicing Device - Change Photocell . . . . . 8 - 44
Splicing Device - Check Drive Unit . . . . . 8 - 39
Splicing Device - Drive Unit Overhaul . . . . . 8 - 40
Splicing Device - Set Drive Unit . . . . . 8 - 43
Splicing Device - Set Drive Unit Belt . . . . . 8 - 42
Splicing Device - Set Photocell Position . . . . . 8 - 45
Splicing Device - Set Photocell Sensitivity . . . 8 - 46
Spray System - Check . . . . . 1 - 38
Spray System - Clean Filter . . . . . 1 - 42
Spray System - Clean Peroxide Filter . . . . . 1 - 39
Spray System - Set Pressure . . . . . 1 - 41
Squeezer - Change Side Squeezer Ball Bearings . . . . . 5 - 56
Squeezer - Change Top Squeezer Ball Bearings . . . . . 5 - 58
Squeezer - Check Side Pressure Belts . . . . . 5 - 54
Squeezer - Check Side Squeezer Clearances 5 - 60
Squeezer - Check Top Pressure Belt . . . . . 5 - 55
Squeezer - Check Top Squeezer Clearances . 5 - 62
Squeezer - Set Position . . . . . 5 - 52
Station Chain - Change . . . . . 5 - 25
Station Chain - Check Sliders . . . . . 5 - 29
Station Chain - Overhaul . . . . . 5 - 27
Station Chain - Turn Shafts . . . . . 5 - 28
Steam System - Check Membrane . . . . . 1 - 179
Steam System - Clean Filter . . . . . 1 - 171
Steam System - Clean Steam Trap . . . . . 1 - 170
Steam System - Overhaul Pressure Regulator 1 - 174
Steam System - Set Pressure Regulator . . . 1 - 178
Stepper Motor Driver - Tube Positioning A425 9 - 73
Stepper Motor Driver - Volume Adjustment A424 . . . . . 9 - 74
Sterile Air System - Check Leakages . . . . . 1 - 184
Strip Guide - Check . . . . . 8 - 36, 8 - 90
Strip Guide - Set . . . . . 8 - 37
Strip Magazine - Change Transducer . . . . . 8 - 81
Strip Magazine - Check Rollers . . . . . 8 - 80
Strip Magazine - Check Rotation Monitor . . . . 8 - 78
Strip Magazine - Set Rotation Monitor . . . . . 8 - 79
Strip Magazine - Set Sensor and Spring . . . . . 8 - 82
Superstructure Settings - Setting Sequence . . . 1 - 9
Swing Frame - Check Pulley . . . . . 5 - 30

T

Temperature Regulator - Calibrate . . . . . 9 - 199
Thermocouples - Check . . . . . 9 - 197

TechPub_2614345_0102817640l7frolOM.fm

TMCC2 Controller - Display Report . . . . . 9 - 66
TMCC2 Controller - Function Description . . . 9 - 29
TMCC2 Controller - Load Program . . . . . 9 - 60
TMCC2 Controller - Set Communication . . . . 9 - 59
TMCC2 Controller - Set Filling Window . . . . . 9 - 65
TMCC2 Controller - Set Photocells . . . . . 9 - 62
TPOP - Calibrate Touch Screen . . . . . 9 - 125
TPOP - Change Display Unit . . . . . 9 - 123
TPOP - Change Flexbox Hard Disk . . . . . 9 - 129
TPOP - Configure and Check PLMSLine Supervision 9 - 149
TPOP - Copy Data PLMS . . . . . 9 - 113
TPOP - Functional Description PLMS . . . . . 9 - 112
TPOP - Install Software . . . . . 9 - 130
TPOP - Set Date and Time PLMS . . . . . 9 - 122
TPOP - Set Machine Number and DE Configuration . . . . . 9 - 147
Tube Support - Change Ball Bearing . . . . . 1 - 33

U

Upper Forming Ring - Change Bushing . . . . . 1 - 18

V

Valve Heat Exchanger - Overhaul . . . . . 1 - 195
Valve Heat Exchanger - Set Bypass Position 1 - 197
Valve Panel - Set Valve Pressure . . . . . 8 - 77
Volume Adjuster - Change Cams . . . . . 4 - 100
Volume Adjuster - Set . . . . . 4 - 99
Volume Adjuster - Stepper Motor Overhaul . . 3 - 12

W

Waste Box - Change Bushings . . . . . 4 - 129
Waste Box - Change Pneumatic Cylinder . . 4 - 125
Waste Box - Check . . . . . 4 - 121
Waste Box - Set Air Guide Pressure . . . . . 4 - 136
Waste Box - Set Pneumatic Cylinder . . . . . 4 - 127
Waste Conveyor - Change Conveyor Belt . . . 2 - 39
Waste Conveyor - Change Coupling . . . . . 2 - 37
Waste conveyor - check . . . . . 2 - 36
Water Circulation - Set Pressure . . . . . 1 - 237
Water Panel - Check Pressure Switch . . . . . 6 - 19
Water Panel - Clean Filters . . . . . 6 - 20
Water Panel - Set Tube Flushing Device . . . . 6 - 22
Web Guide - Change . . . . . 8 - 48, 8 - 98
Web Guide - Check . . . . . 8 - 47, 8 - 97
Web Guide - Set . . . . . 8 - 49
Web Guide - Set Position . . . . . 8 - 99
Web Magazine - Change Bearings . . . . . 8 - 105
Web Magazine - Change Ropes . . . . . 8 - 107
Web Magazine - Check . . . . . 8 - 104
Web Magazine - Set . . . . . 8 - 106

TechPub_2614345_0102817640017froIOM.fm

Tetra Pak

*MM binder labels. 40 mm Full width Note! This page is generated **automatically**. using the **variable definitions** made in the **front page** file!!*

TBA/22 050V

648571-0500

Issue 2003-10 Doc. No. MM-81764-0107

TBA/22 050V

648571-0500

Issue 2003-10 Doc. No. MM-81764-0107

TBA/22 050V

648571-0500

Issue 2003-10 Doc. No. MM-81764-0107

TBA/22 050V

648571-0500

Issue 2003-10 Doc. No. MM-81764-0107

TBA/22 050V

648571-0500

Issue 2003-10 Doc. No. MM-81764-0107

TBA/22 050V

648571-0500

Issue 2003-10 Doc. No. MM-81764-0107

TBA/22 050V

648571-0500

Issue 2003-10 Doc. No. MM-81764-0107

TBA/22 050V

648571-0500

Issue 2003-10 Doc. No. MM-81764-0107

TBA/22 050V

648571-0500

Issue 2003-10 Doc. No. MM-81764-0107

TBA/22 050V

648571-0500

Issue 2003-10 Doc. No. MM-81764-0107

TBA/22 050V

648571-0500

Issue 2003-10 Doc. No. MM-81764-0107

If the text does not fit; **change the font on "B TitleFull" to min 18 p, and the left indent to 0.5 cm** (**on all three components**). **Make "Update All"**

*MM binder labels. 30mm Halfwidth Note! This page is generated **automatically**. using the **variable definitions** made in the **front page** file!!*

TBA/22 050V
648571-0500

Issue 2003-10 Doc. No. MM-81764-0107

TBA/22 050V
648571-0500

Issue 2003-10 Doc. No. MM-81764-0107

TBA/22 050V
648571-0500

Issue 2003-10 Doc. No. MM-81764-0107

TBA/22 050V
648571-0500

Issue 2003-10 Doc. No. MM-81764-0107

TBA/22 050V
648571-0500

Issue 2003-10 Doc. No. MM-81764-0107

TBA/22 050V
648571-0500

Issue 2003-10 Doc. No. MM-81764-0107

TBA/22 050V
648571-0500

Issue 2003-10 Doc. No. MM-81764-0107

TBA/22 050V
648571-0500

Issue 2003-10 Doc. No. MM-81764-0107

TBA/22 050V
648571-0500

Issue 2003-10 Doc. No. MM-81764-0107

TBA/22 050V
648571-0500

Issue 2003-10 Doc. No. MM-81764-0107

TBA/22 050V
648571-0500

Issue 2003-10 Doc. No. MM-81764-0107

TBA/22 050V
648571-0500

Issue 2003-10 Doc. No. MM-81764-0107

If the text does not fit; **change the font on “B TitleHalf” to min 18 p, and the left indent to 0.5 cm (on all three components)**. **Make “Update All”**