SPC
Spare Parts Catalogue

TBA/22 050V

648571-0500

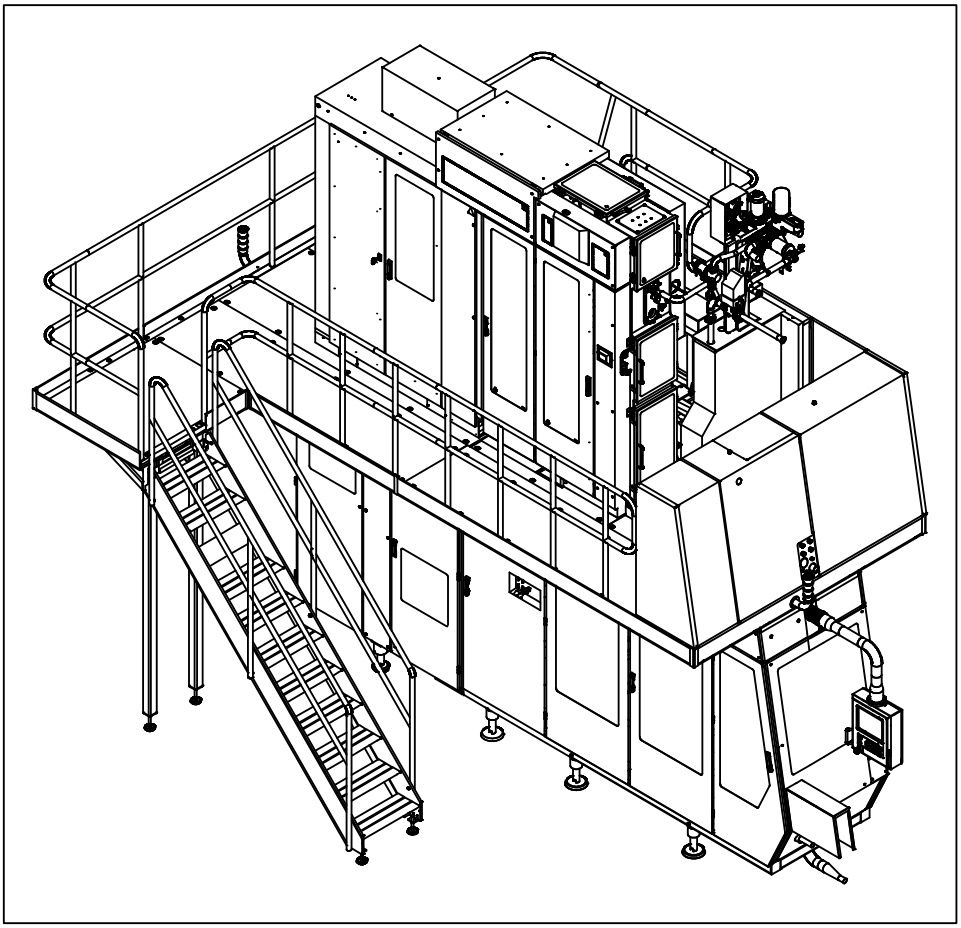

Tetra Pak

Doc. No: SPC-81765-0106

Main Groups of the Machine

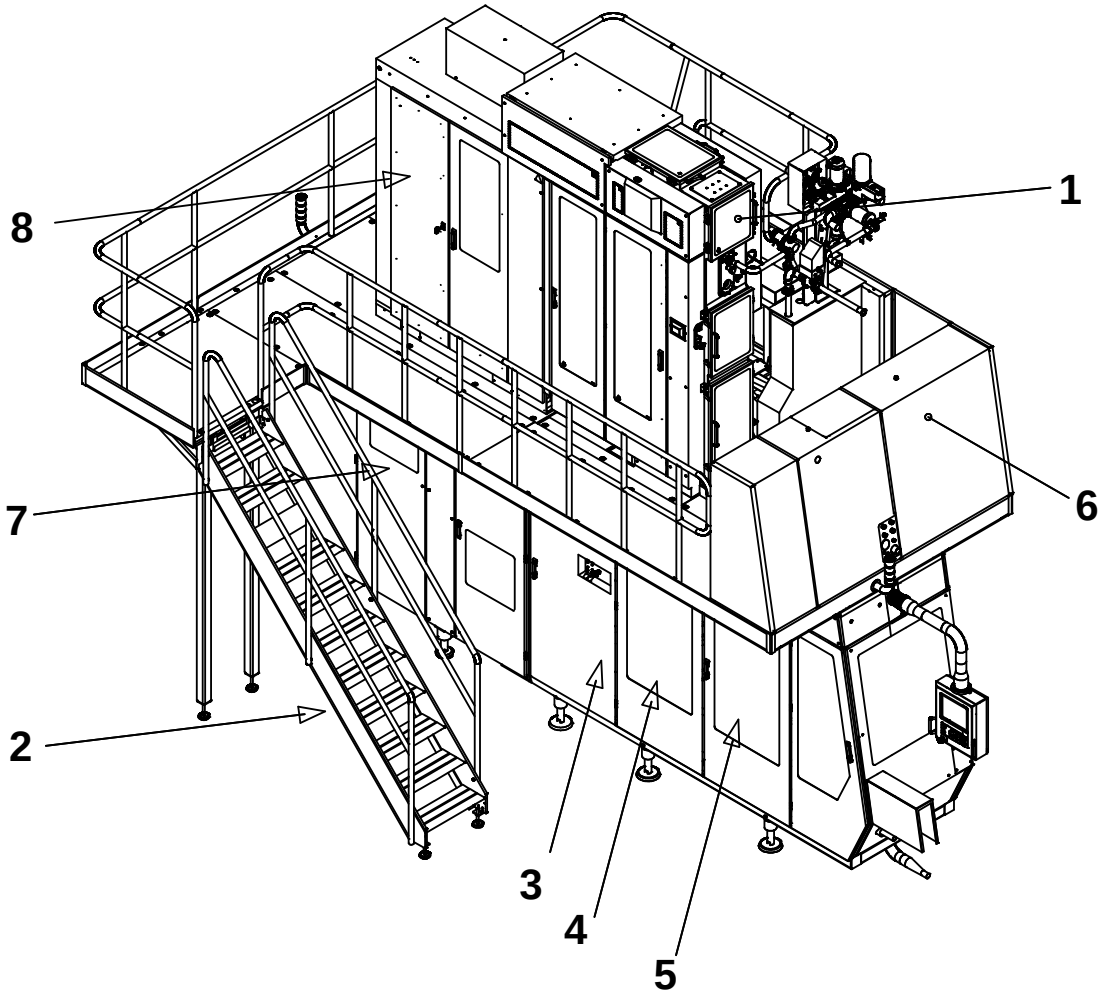

1 - Superstructure
2 - Machine Body
3 - Drive
4 - Jaw System
5 - Final Folder
6 - Service Unit
7 - Automatic Splicing Unit
8 - Electrical Cabinet

For the correct machine data, check your machine specification, supplied with the machine!

This document is valid for:

Series No/Machine No Sign.

SPC
Spare Parts Catalogue

Tetra Brik Aseptic
TBA/22
648571-0500

Valid from machine series No.:
21203/18

Table of Content:

Introduction ..... , **5**

Superstructure
B- 648521-0400 ..... , **9**

Machine Body
B- 648522-0600 ..... , **207**

Drive
B- 648563-0100 ..... , **319**

Jaw System
B- 648554-0100 ..... , **343**

Final Folder
B- 648525-0500 ..... , **387**

Service Unit
B- 648506-0400 ..... , **417**

Electrical Cabinet
B- 648538-0300 ..... , **485**

Automatic Splicing Unit
B- 648528-0200 ..... , **549**

Regular Accessories
B- 648547-0200 ..... , **713**

Part Number Index ..... , **753**

Electrical Parts Index ..... , **807**

Doc. No: SPC-81765-0106

Issue 2002-11

Tetra Pak

Tetra Pak Carton Ambient S.p.A.

General information

Manufacturer

This machine is produced by:
Tetra Pak Carton Ambient S.p.A.
Via Delfini 1
41100 Modena /Italy

Document producer

This document has been produced by:
Tetra Pak Carton Ambient S.p.A.
Technical Publications
Via Delfini 1
41100 Modena / Italy

Number of pages

This document contains totally **822** pages, including the first 8 introduction pages.

Copyright © 2002 Tetra Pak Carton Ambient S.p.A.

All rights reserved. No parts of this document may be reproduced or copied in any forms or by any means, without written permission from Tetra Pak Carton Ambient S.p.A.

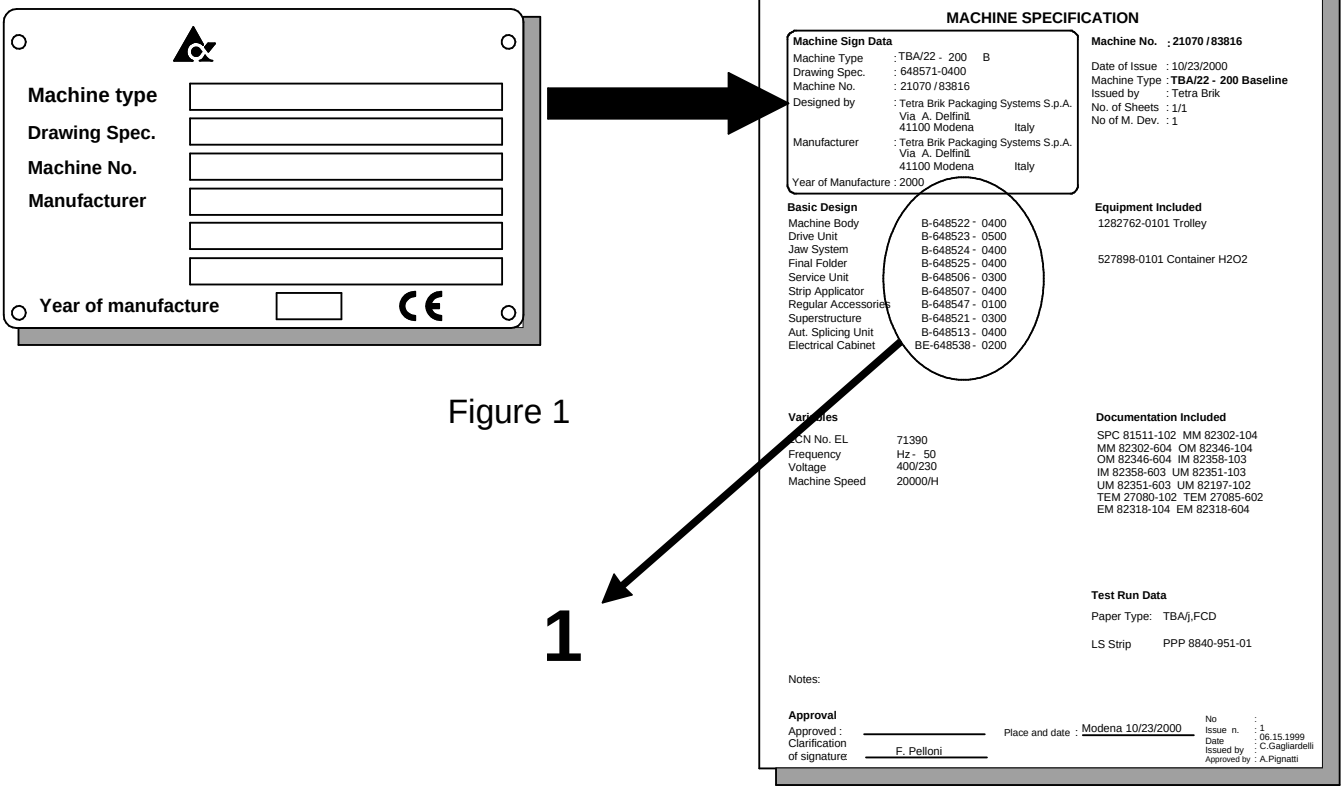

Figure 1

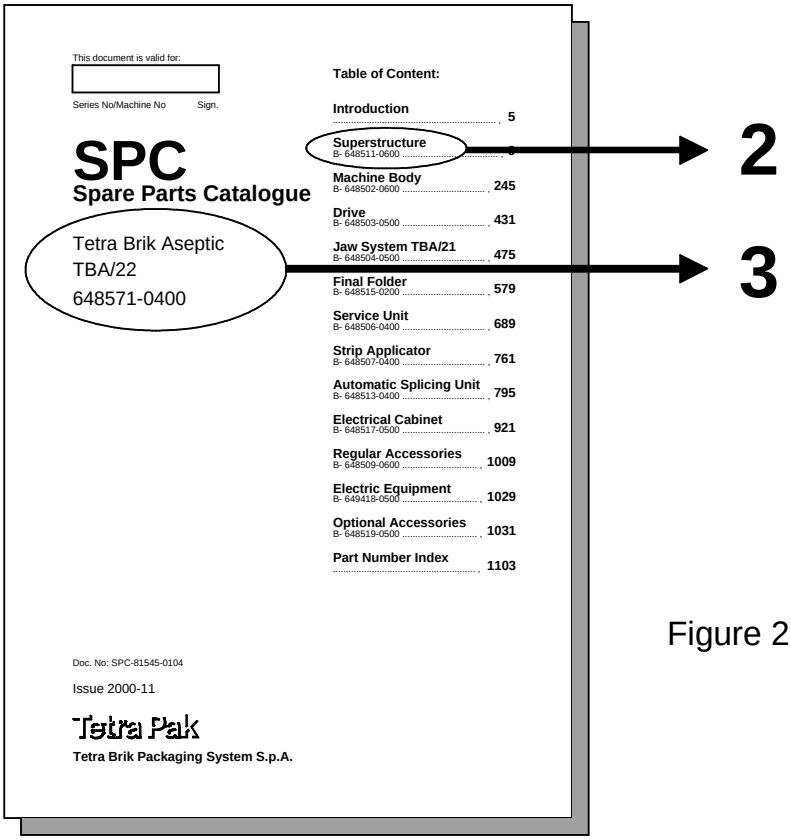

Figure 2

Figure 3 A-648571-0400

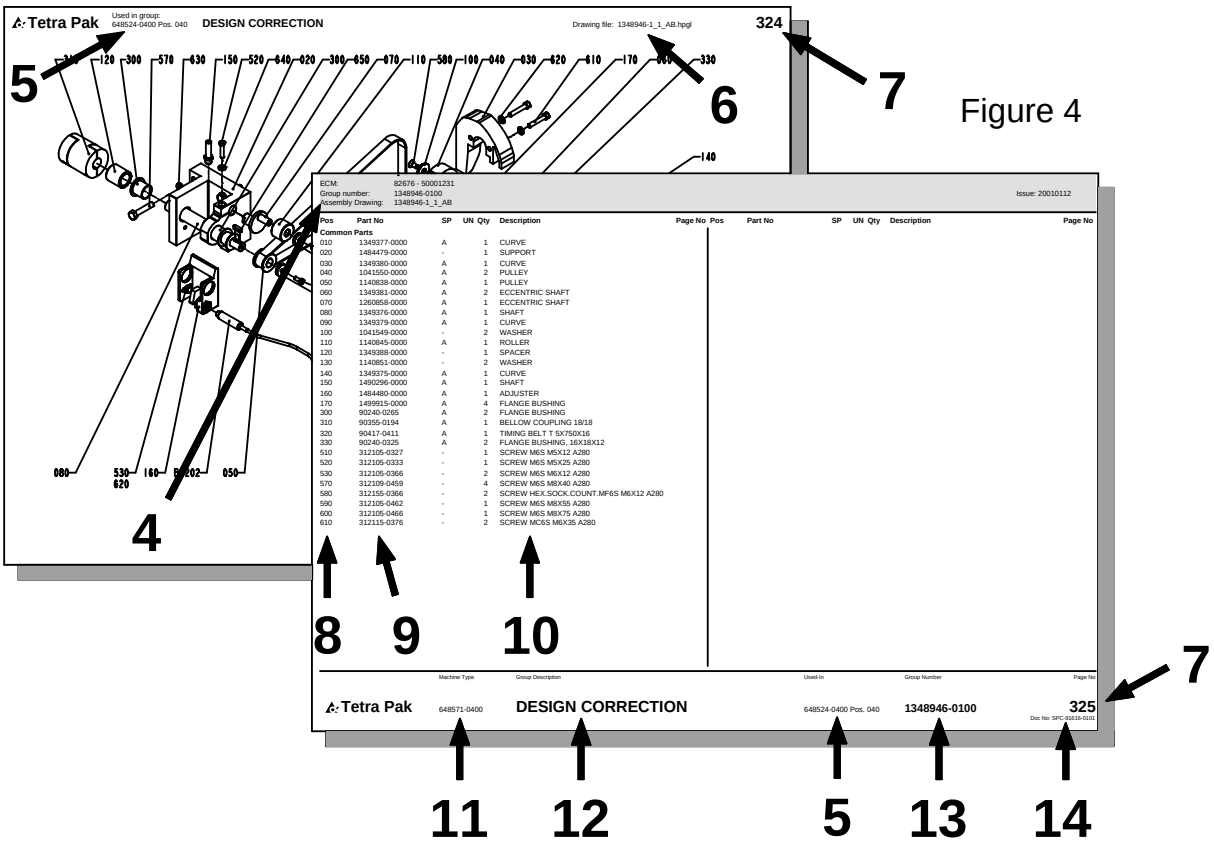

Figure 4

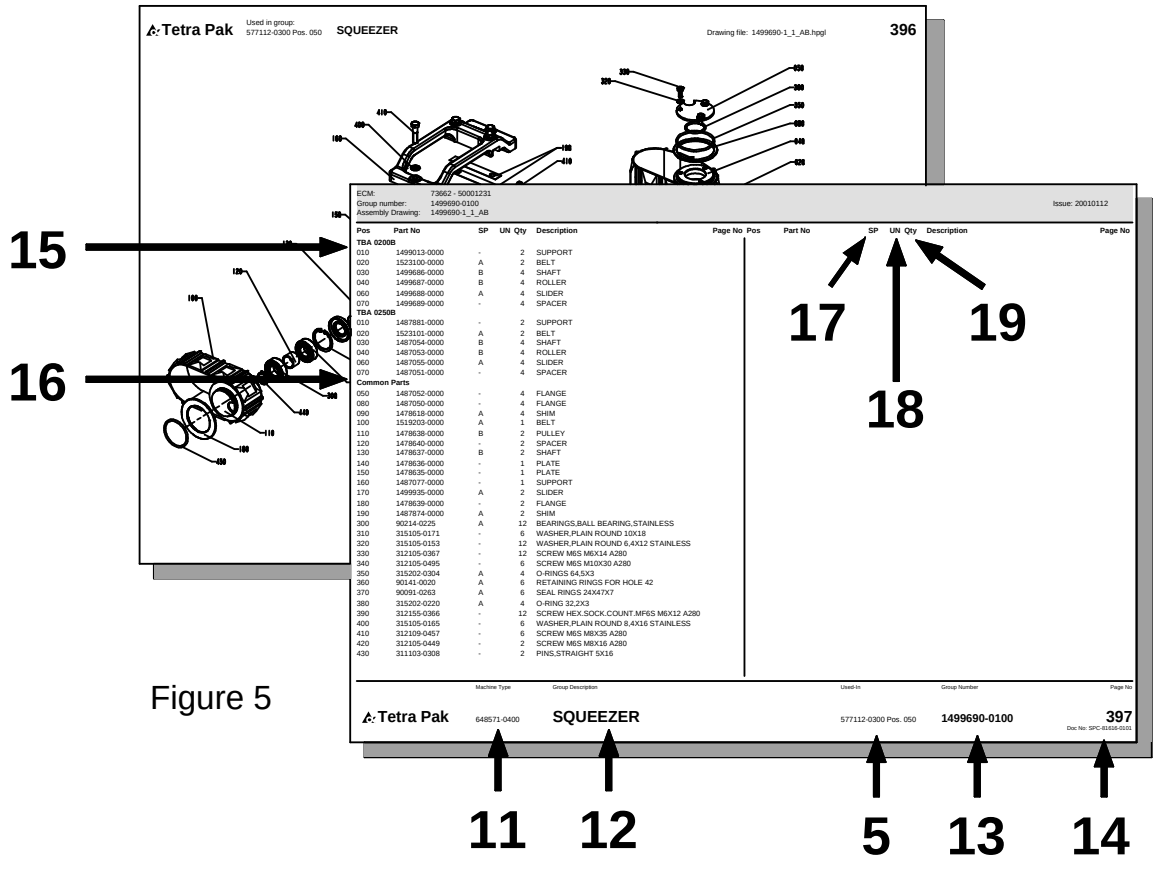

Figure 5

General information

Service

When ordering spare parts for your machine, contact the nearest Tetra Pak service station.

Machine identification

This machine plate is an example of the type of machine plate, attached to the machine frame. The plate carries data needed when contacting Tetra Pak concerning this particular machine **(see Figure 1).**

Purpose of the Spare Parts Catalogue

The purpose of the Spare Parts Catalogue (SPC) is to provide the technicians and contact personnel with information on how to find and order spare parts for maintenance and service of the machine.
For instructions of how to replace parts and adjust machine setup, see the Maintenance Manual (MM).

Delivered documentation

The technical documentation delivered with this machine is started in the Machine Specification.
Note! If any of these documents is missing, it must be reported in the document **Start Up Machine Quality Report**. For more information, see chapter 8 Preparation for Commissioning in the Installation Manual.
It is important that you keep these documents for the life of the equipment, and pass the documents on to any subsequent holder or user of the equipment.

Design modification

The content of this document is in accordance with the design and construction of the machine at the time it was delivered from the Tetra Pak machine production facility.

Further copies

Additional copies can be ordered from the nearst Tetra Pak service station. When ordering technical publications, always quote the document number printed on the front cover of the document concerned.

Tetra Pak Part numbering system

The third and forth digits in the sub-number, specify one unique group which can be ordered. If the forth digit is replaced by a "0", the number combination only points to a bill-of-material document.
The first and second digits in the sub-number, specify the development step (model) of the machine or group. **(see fig. 3)**
Main number of machine /group /article, depending on level.
Prefix, giving information about level, eg.
A = Machine
B = Main section (*)
C = Groups and subgroups
*) Customized distribution machines are registered as B-level as well.

How to find the correct Spare Part Number

A. Check that the data on your machine sign, and/or machine specification, corresponds with the catalogue. **(see fig.1)**

1) Main groups of the machine

B. The second catalogue sheet contains a table of content for the main groups, included in the catalogue. The information regarding machine and main group page status MUST correspond with your machine specification.
Locate and choose the main groups page number (1), in which you want to search for spare parts. **(see fig.2)**

2) Main group
3) Machine type

C. Search in the main group illustration, the item number, which may hold your wanted spare part. Go to the text page below and find the page number for the actual group. **(see fig. 4)**

4) Internal information, such as latest Engineering Change, Bill-of-Material included in the catalogue page and the Assembly Drawing required
5) Used-In reference to next higher level in the machine structure
6) Assembly drawing number including the archive file extension
7) Continuous page numbering through the document
8) Pos number corresponding to illustration
9) Group or article number
10) Group or article description. The letter "B" in front of some article numbers indicates that this article contains other parts, directly listed below the B-article. Letter "A" indicates a subgroup number with an own page directly after the actual page
11) Machine type including development status
12) Group description
13) Group number (bill-of-material) including development status
14) Document number

D. Continue to the found page number, and search in the illustration for your spare part. Go to the text row for the found item number, and read the part number. Take eventual variant headings in consideration; if you are unsure, read your machine specification. **(see fig. 5)**

15) Variant heading, eg volume, left/right etc.
16) Heading for common parts
17) SP = Code for articles, which are included into various spare part kits.
    A = Critical Spare Part
    B = Non Critical Spares Part
    C = Don't stop function, can bypassed
    D = Seldom break, long time production
18) UN = Short code for measure units, eg mm, kg etc.
19) Qty = Number of items needed in the complete assembly.

SPC
Spare Parts Catalogue

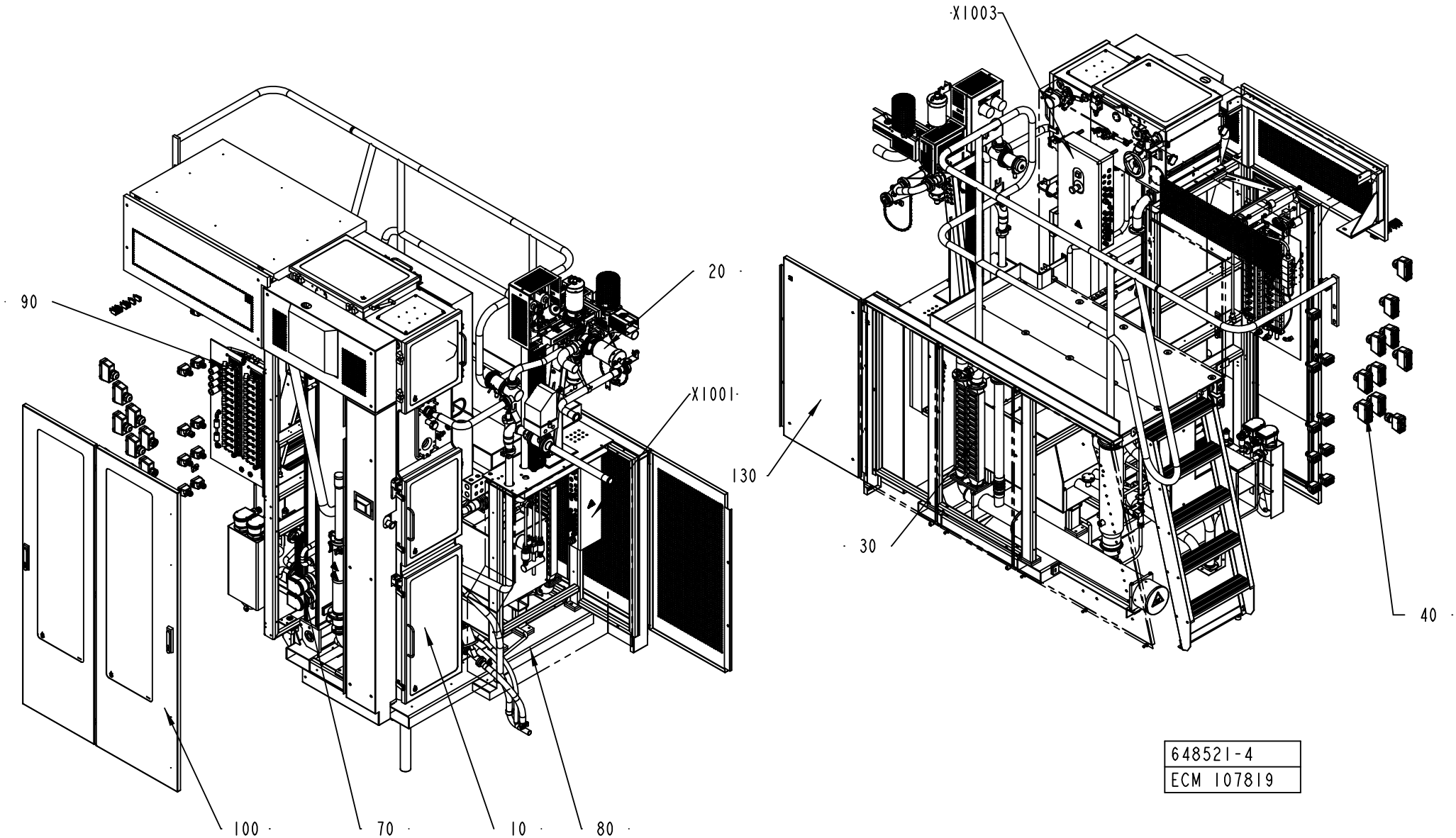

648521-4
ECM 107819

ECM: 108606 - 20010926
Group number: 648521-0400
Assembly Drawing: 648521-4_1_AB

Issue: 20021015

Pos	Part No	SP	UN	Qty	Description	Page No
Common Parts						
010	A577102-0400	-		1	ASEPTIC CHAMBER	**13**
020	A577103-0300	-		1	FILLING SYSTEM	**77, 79**
030	A577104-0300	-		1	STERILE AIR SYSTEM	**129**
040	A1347140-0200	-		1	CABLE TRENCH	**151, 153, 155, 157**
070	A1347171-0200	-		1	HYDROGEN PEROXIDE	**159**
080	A1279802-0200	-		1	FRAME	**171**
090	A1347547-0200	-		1	PNEUMATIC SYSTEM	**183**
100	A1285400-0300	-		1	COVERING PANEL	**197**
130	A1347615-0100	-		1	COVERING PANEL	**199**
X1001	A1347191-0200	-		1	CONNECTION BOX	**201**
X1003	A1296847-0300	-		1	CONNECTION BOX	**203, 205**

Pos	Part No	SP	UN	Qty	Description	Page No

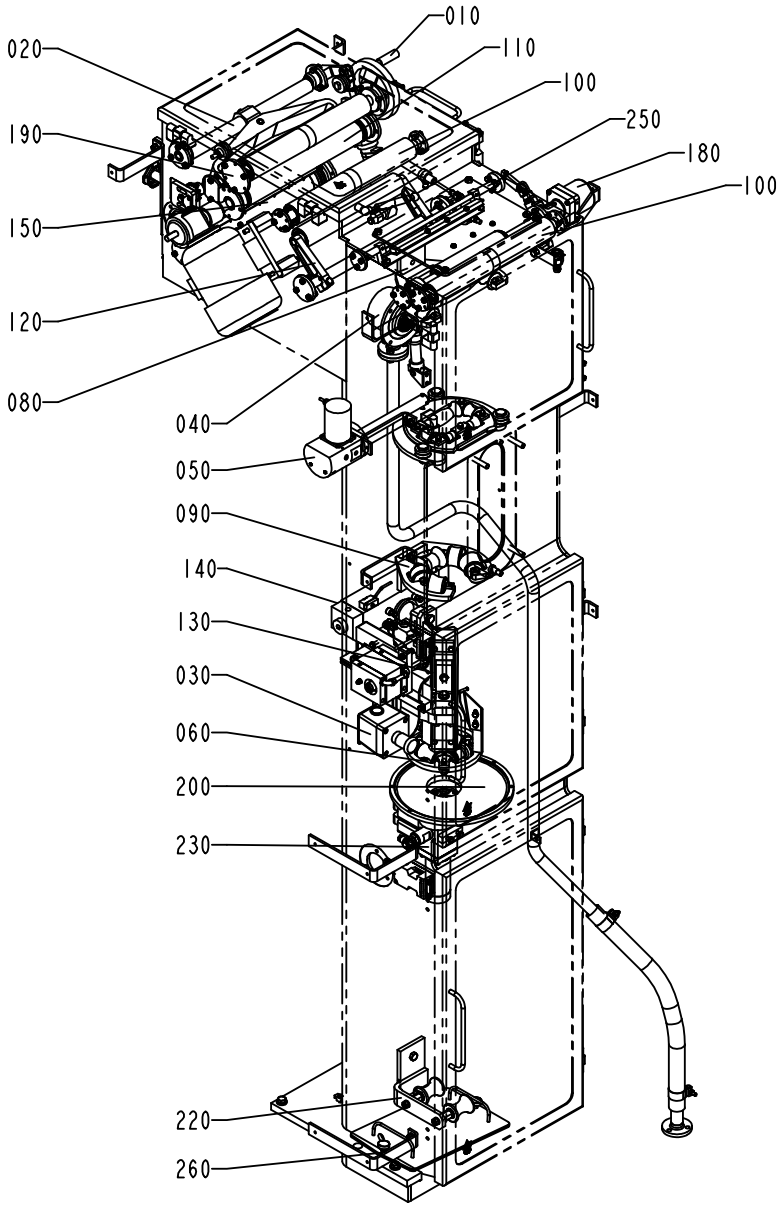

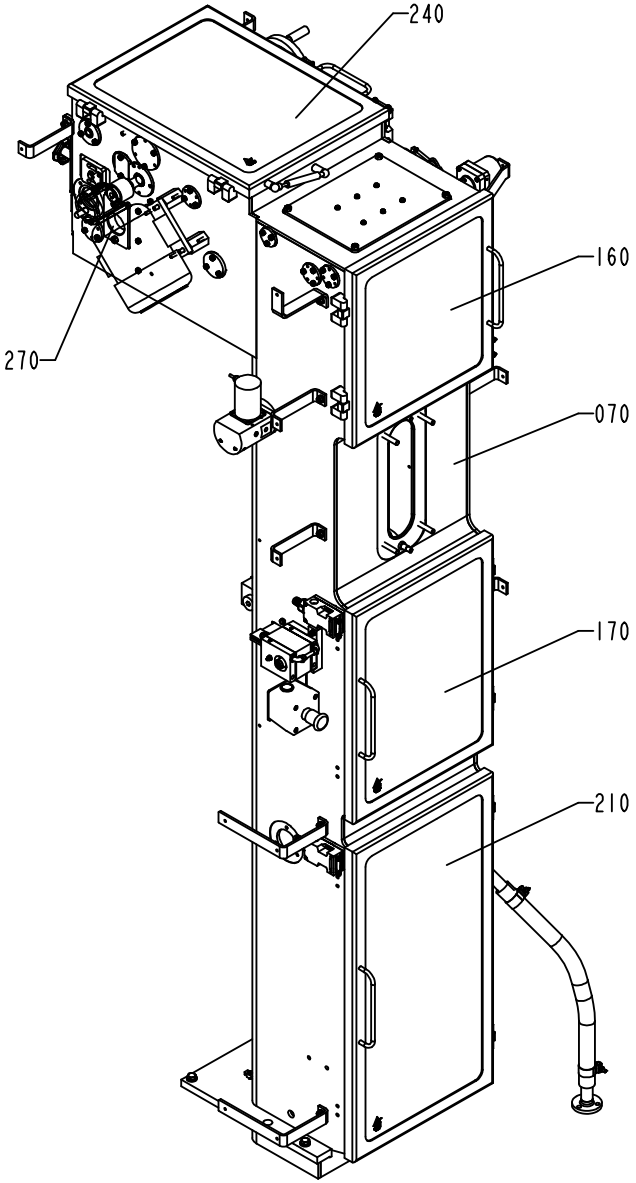

577102-4
ECM 106392

ECM: 107361 - 20010925
Group number: 577102-0400
Assembly Drawing: 577102-4_1_AB

Issue: 20021015

Pos	Part No	SP	UN	Qty	Description	Page No
Common Parts						
010	A996451-0100	-		1	CRANK	**15**
020	A1334008-0200	-		1	CALENDER ROLLER	**17**
030	A1035382-0100	-		1	EMERGENCY STOP	**19**
040	A1347875-0100	-		1	BALL	**21**
050	A1195161-0300	-		1	MOVABLE FORMING RING	**23, 25**
060	A1195162-0100	-		1	LOWER FORMING RING	**27**
070	A1195163-0300	-		1	PILLAR	**29**
080	A1195164-0200	-		1	UPPER FORMING RING	**31, 33**
090	A1195165-0200	-		1	FORMING RING	**35, 37**
100	A1195166-0200	-		2	PAPER GUIDE	**39**
110	A1347485-0100	-		1	DRIVEN CALENDER ROLLER	**41**
120	A1195173-0300	-		1	PENDULUM ROLLER	**43**
130	A1195174-0300	-		1	LONGITUDINAL SEALING	**45**
140	A1195175-0200	-		1	SHORT STOP	**47**
150	A1195180-0100	-		1	BENDING ROLLER	**49**
160	A1195181-0100	-		1	DOOR	**51**
170	A1195182-0100	-		1	DOOR	**53**
180	A2506842-0100	-		1	BENDING ROLLER	**55**
190	A1195209-0200	-		1	BENDING ROLLER	**57**
200	A1195214-0100	-		1	SEAL	**59**
210	A1195269-0100	-		1	DOOR	**61**
220	A2525541-0100	-		1	TUBE SUPPORT	**63**
230	A2515213-0100	-		1	SPRAY SYSTEM	**65**
240	A1347493-0100	-		1	DOOR	**67**
250	A1095790-0200	-		1	COVERING PLATE	**69, 71**
260	A2522161-0100	-		1	LID	**73**
270	A2517372-0100	-		1	LID	**75**

Pos	Part No	SP	UN	Qty	Description	Page No

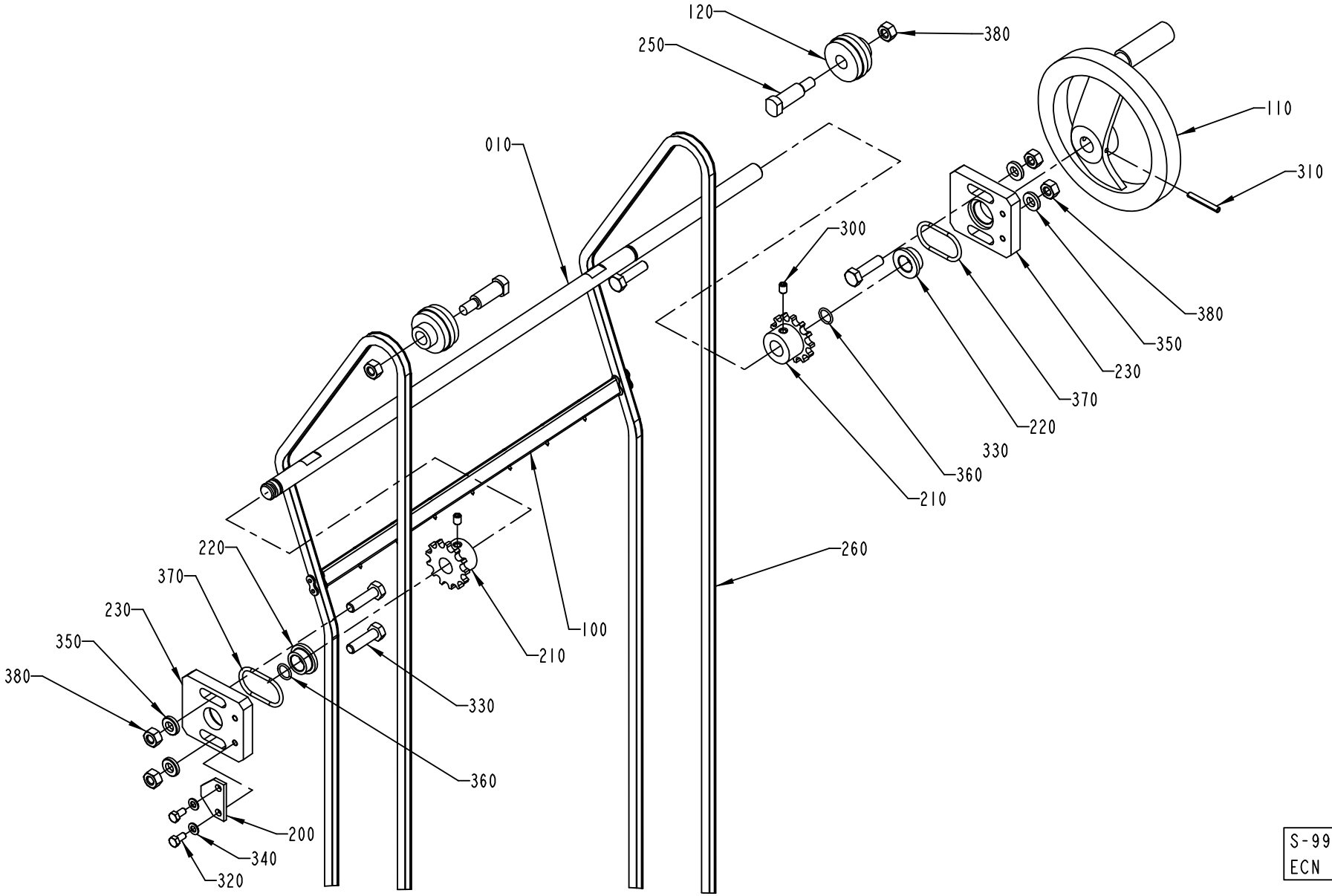

S-996451-1
ECN 73102

ECM: 111159 - 20020628
Group number: 996451-0100
Assembly Drawing: 996451-1_1_AB

Issue: 20021015

Pos	Part No	SP	UN	Qty	Description	Page No
Common Parts						
010	1036841-0000	-		1	SHAFT	
100	1040777-0000	-		1	CARRIER	
110	247358-0000	-		1	SHIFTER HANDLE	
120	1036832-0000	B		2	WHEEL	
200	247355-0000	-		1	LOCK WASHER	
210	1038464-0000	-		2	SPROCKET	
220	531191-0000	B		2	BUSHING	
230	1484823-0000	-		2	PLATE	
250	1036833-0000	-		2	SCREW	
260	1036868-0000	A		2	CHAIN	
300	312318-0362	-		2	SCREW SOCK.SET CUP P MSK6SS M6X8 A4	
310	311112-0262	-		1	PIN, STRAIGHT SLOTTED SPRING FRP 4X32	
320	312105-0325	-		2	SCREW M6S ISO 4017 M5X10 A480	
330	312105-0455	-		4	SCREW M6S ISO 4017 M8X30 A480	
340	315105-0146	-		2	WASHER PLAIN, BRB, 5,3/10,H=1	
350	315115-0165	-		4	WASHER PLAIN, TBRB 8,4/16 H=3	
360	315204-0109	B		2	O-RING 11,1X1,6 MM	
370	315204-0221	B		2	O-RING 34,2X3 MM	
380	312605-0318	-		6	HEXAGON NUT, M6M M8 A280	

Pos	Part No	SP	UN	Qty	Description	Page No

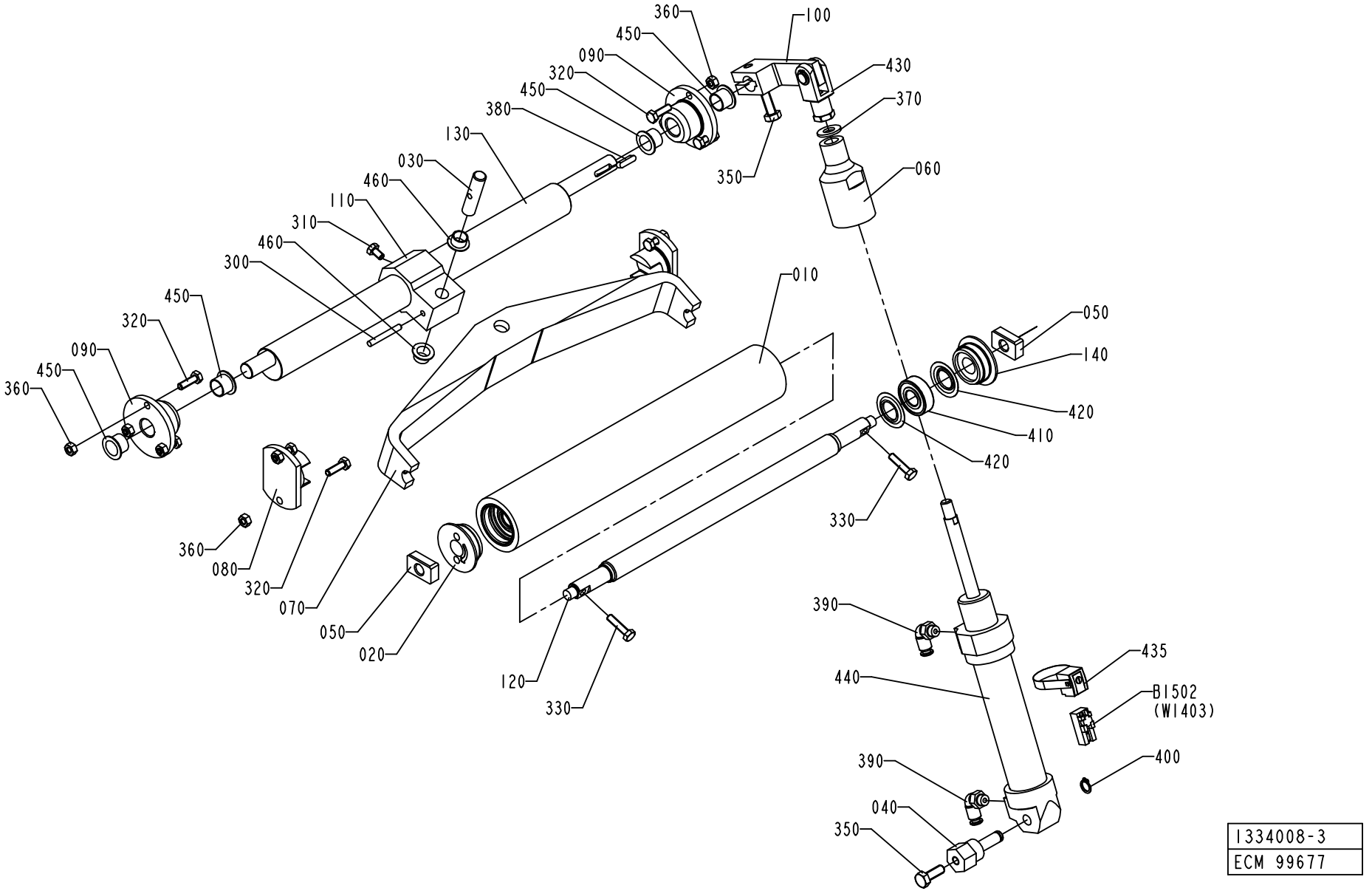
360
450
090
320
450
380
130
030
460
110
310
460
300
450
320
090
450
360
360
080
320
070
050
020
010
120
330
100
430
370
060
350
050
140
420
410
420
330
390
435
440
B1502
(W1403)
390
400
040
350
1334008-3
ECM 99677

ECM: 113456 - 20020911
Group number: 1334008-0200
Assembly Drawing: 1334008-3_1_AC

Issue: 20021015

Pos	Part No	SP	UN	Qty	Description	Page No
Common Parts						
010	1498644-0000	A		1	CALENDER ROLLER	
020	1498646-0000	A		1	BEARING COVER	
030	1317997-0000	A		1	SHAFT	
040	1317998-0000	-		1	BRACKET	
050	1317999-0000	A		2	BLOCK	
060	1334000-0000	B		1	STOP	
070	1334001-0000	-		1	BRACKET	
080	1347499-0000	A		2	BEARING BUSHING	
090	1334003-0000	-		2	FLANGE	
100	1334004-0000	A		1	ARM	
110	1334005-0000	-		1	LINK	
120	1334006-0000	A		1	SHAFT	
130	1347500-0000	A		1	SHAFT	
140	1498647-0000	A		1	BEARING COVER	
300	311103-0318	-		1	PARALLELL PIN, M6, 5X40 MM	
310	312105-0364	-		1	SCREW M6S ISO 4017 M6X10 A480	
320	312105-0370	-		10	SCREW M6S ISO 4017 M6X20 A480	
330	312105-0372	-		2	SCREW M6S ISO 4017 M6X25 A480	
350	312105-0452	-		2	SCREW M6S ISO 4017 M8X22 A480	
360	312605-0316	-		10	HEXAGON NUT, M6M M6 A280	
370	315105-0173	-		1	WASHER PLAIN, BRB, 10,5/22,H=2	
380	315705-0201	A		1	PARALLEL KEY W. ROUND ENDS 5X5X20 MM	
390	342732-0102	-		2	ELBOW PIPE JOINT, EXT.THREAD, D=6MM-G1/8	
400	90141-0016	B		1	RETAIN. RING, 10	
410	90458-1704	A		2	BALL BEARING, 15X35X11 MM	
420	90214-0303	B		4	SEALING RING, 18,6X35X2 MM	
430	90239-0516	A		1	ROD END,CLEVIS WITH AXLE M10X1,25	
435	90239-0582	A		1	SENSOR,BRACKET,FOR CYL 32	
440	90239-0837	A		1	DOUBLE ACTING, MINI-ISO, CYL. 32-100	
450	90240-0263	A		4	FLANGE BUSHING, 15X17X12 MM	
460	90240-0261	A		2	FLANGE BUSHING, 12X14X9 MM	
B1502	90457-0047	A		1	SENSOR,2750-1-5111-1 INCL. ADAPTER, PNP	

Pos	Part No	SP	UN	Qty	Description	Page No

Machine Type | Group Description | Used-In | Group Number | Page No

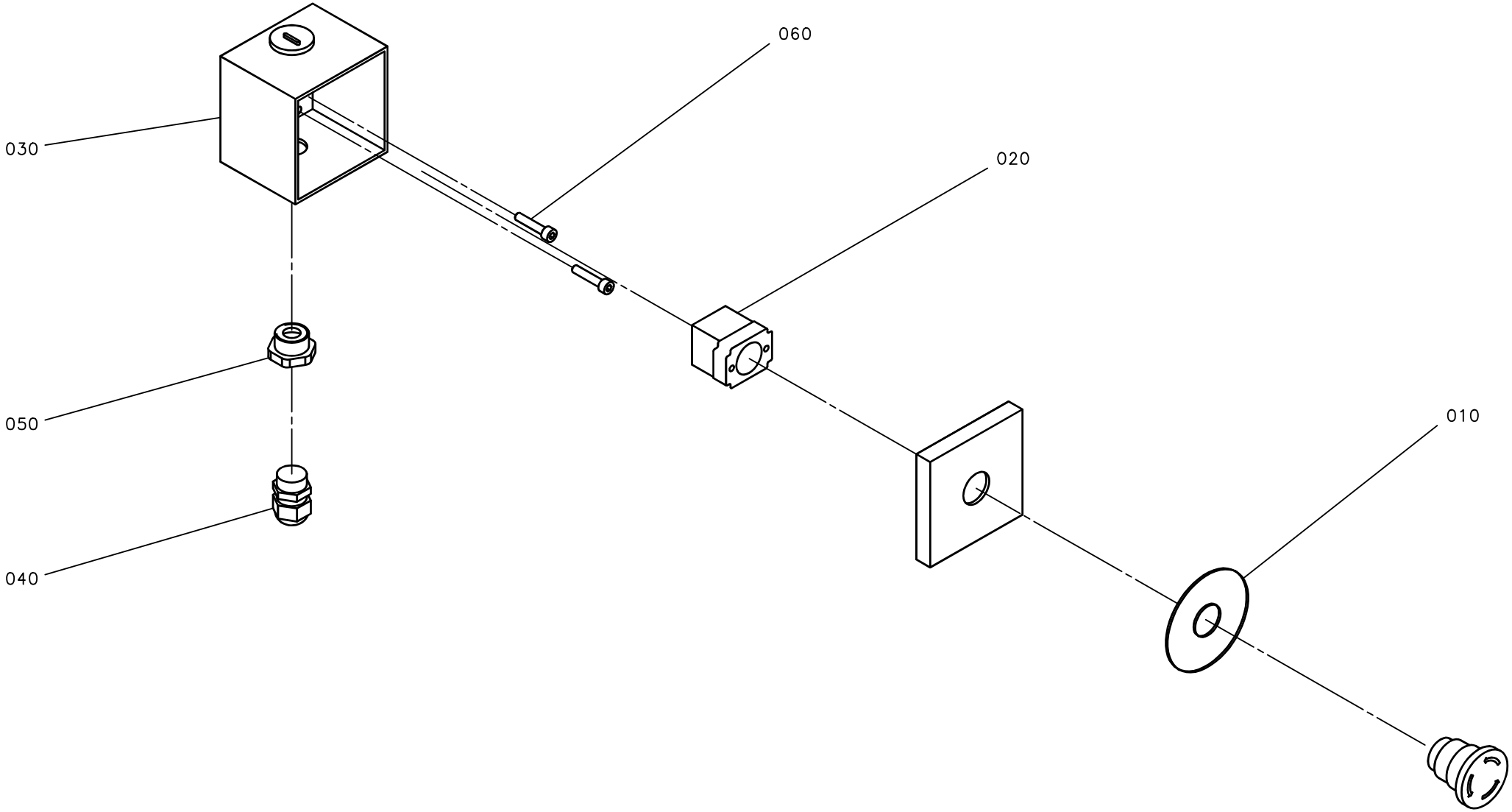
060
030
020
050
010
040

ECM: 96603 - 20010920
Group number: 1035382-0100
Assembly Drawing: 1035382-1_1_AA

Issue: 20021015

Pos	Part No	SP	UN	Qty	Description	Page No
Common Parts						
010	486826-0001	-		1	SIGN "EMERGENCY STOP"	
020	90064-0124	B		1	SWITCH, EM. STOP, ZB2-BS844+ZB2-BZ1045	
030	90066-0021	-		1	PUSH BUTTON BOX XAP-M1501	
040	90012-0071	-		1	GLAND FITTING	
050	90089-0021	-		1	REDUCTION SLEEVE,PLASTIC GREY	
060	312115-0333	-		2	SCREW MC6S M5X25 A280	

Pos	Part No	SP	UN	Qty	Description	Page No

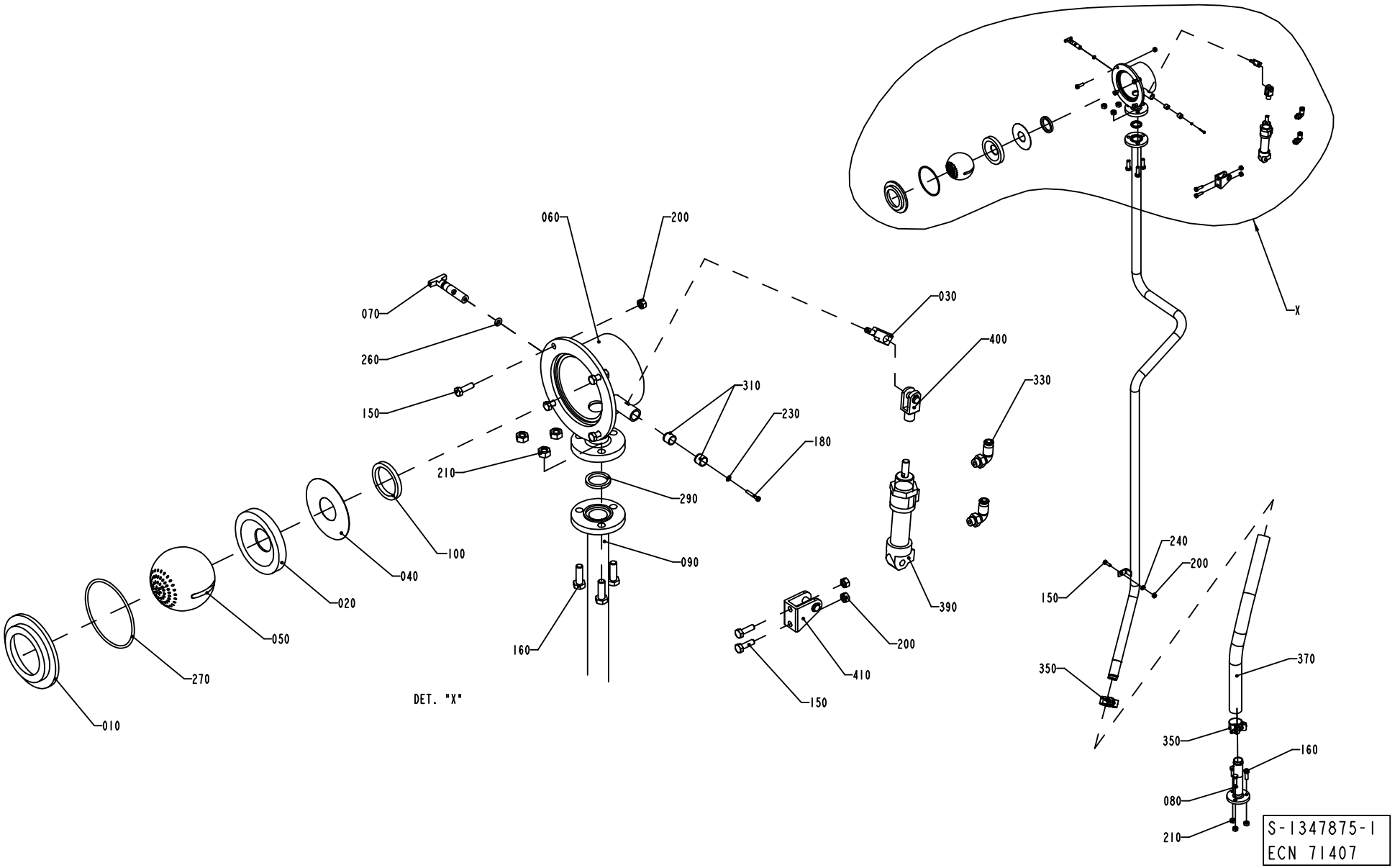
060
200
070
260
150
030
400
310
230
180
330
210
290
100
040
020
050
270
010
090
160
DET. "X"
200
410
150
390
X
240
200
150
350
370
350
160
080
210
S-1347875-1
ECN 71407

ECM: 83708 - 20020911
Group number: 1347875-0100
Assembly Drawing: 1347875-1_1_AA

Issue: 20021015

Pos	Part No	SP	UN	Qty	Description	Page No
Common Parts						
010	1037423-0000	B		1	SEAT RING	
020	1037424-0000	B		1	SEAT RING	
030	1037425-0000	-		1	LEVER	
040	1038409-0000	-		1	WASHER	
050	1129837-0000	-		1	BALL	
060	1129855-0000	-		1	HOUSE	
070	1129871-0000	-		1	SPINDLE	
080	1255504-0000	-		1	PIPE	
090	1348941-0000	-		1	PIPE	
100	12242-0003	-		1	GASKET 48X38X5,5	
150	312105-0370	-		7	SCREW M6S ISO 4017 M6X20 A480	
160	312105-0453	-		6	SCREW M6S ISO 4017 M8X25 A480	
180	312125-0230	-		1	SCREW PAN HEAD MCS M3X20 SS	
200	312605-0316	-		7	HEXAGON NUT, M6M M6 A280	
210	312605-0318	-		6	HEXAGON NUT, M6M M8 A280	
230	315105-0124	-		1	WASHER PLAIN, BRB, 3,2/6,H=0,5	
240	315105-0153	-		1	WASHER PLAIN, BRB, 6,4/12,H=1,5	
260	315202-0204	B		1	O-RING 5,3X2,4 MM	
270	315202-0308	B		1	O-RING 84,5X3 MM	
290	315229-0103	B		1	GASKETS, 23,1X30,1X3,7 MM 1" FDA	
310	321120-0104	-		2	BEARING BUSHING WITHOUT FLANGE,10/12X10	
330	342732-0102	-		2	ELBOW PIPE JOINT, EXT.THREAD, D=6MM-G1/8	
350	90165-0147	B		2	HOSE CLIP	
370	90166-0233	-	MM	600	HOSE	
390	90239-0487	-		1	REAR,CLEVIS,MINI-ISO 20-25	
400	90239-0490	-		1	ROD END,CLEVIS WITH AXLE M8	
410	90239-0847	-		1	DOUBLE ACTING, MINI-ISO, CYL.20-50	

Pos	Part No	SP	UN	Qty	Description	Page No

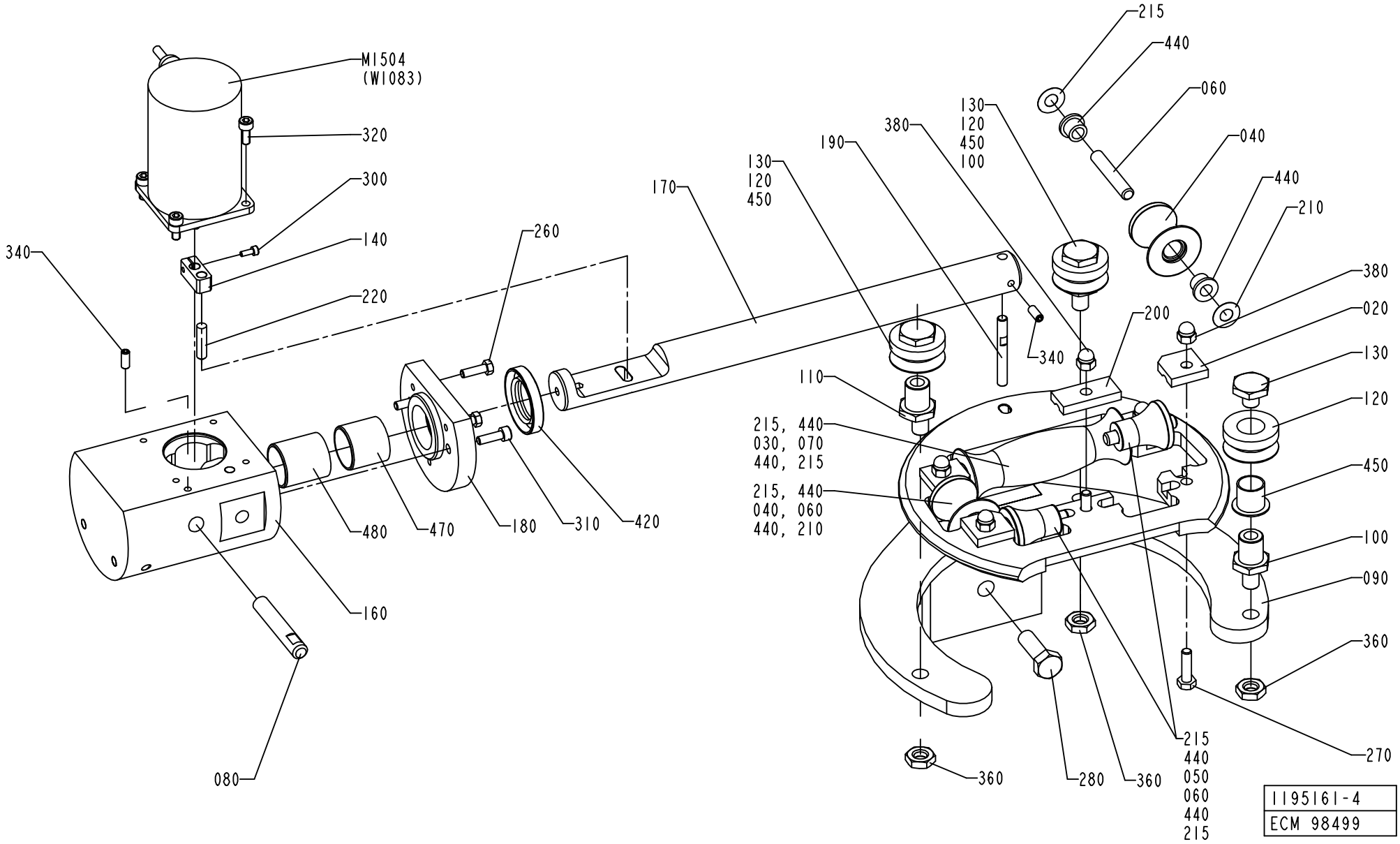
M1504
(W1083)
320
300
140
220
340
260
170
130
120
450
190
380
215
440
060
040
440
210
380
020
130
120
450
100
090
360
270
200
340
110
215, 440
030, 070
440, 215
215, 440
040, 060
440, 210
480
470
180
310
420
160
080
360
280
360
215
440
050
060
440
215
1195161-4
ECM 98499

ECM: 113457 - 20020911
Group number: 1195161-0300
Assembly Drawing: 1195161-4_1_AA

Issue: 20021015

Pos	Part No	SP	UN	Qty	Description	Page No
TBA 0200S						
010	752156-0000	A		4	FLANGE BUSHING	
020	1279091-0000	B		4	LOCKING PLATE	
030	752126-0000	A		1	FORMING ROLLER	
040	752127-0000	A		2	FORMING ROLLER	
050	752128-0000	A		2	FORMING ROLLER	
055	752186-0002	A		2	SHAFT	
060	752186-0006	A		2	SHAFT	
070	752186-0008	A		1	SHAFT	
090	1487830-0000	-		1	MOVABLE FORMING RING	
150	1517318-0000	-		1	MOVABLE FORMING RING	
170	1487700-0000	-		1	SHAFT	
200	1487689-0000	A		1	LOCK PLATE	
215	2033-0011	A		10	WASHER	
440	90240-0172	A		6	FLANGE BUSHING,8X12X10 MM NFB	
TBA 0200B OR TBA 0250B						
020	456139-0000	A		4	LOCK PLATE	
030	751491-0000	A		1	ROLL	
040	751492-0000	A		2	ROLL	
050	751493-0000	A		2	ROLL	
060	752186-0005	A		4	SHAFT	
070	752186-0009	A		1	SHAFT	
090	1195191-0000	-		1	MOVABLE FORMING RING	
150	1347557-0000	-		1	MOVABLE FORMING RING	
170	1347559-0000	-		1	SHAFT	
200	1487687-0000	A		1	LOCK PLATE	
210	2033-0007	A		2	WASHER	
215	2033-0011	A		8	WASHER	
440	90240-0172	A		10	FLANGE BUSHING,8X12X10 MM NFB	
Common Parts						
080	1519510-0000	-		1	AXLE PIN	
100	1296754-0000	-		2	SHAFT	
110	1296755-0000	-		1	SHAFT	
120	1296758-0000	A		3	ROLL	
130	1296760-0000	-		3	NUT	
140	1347556-0000	-		1	ECCENTRIC	
160	1347558-0000	-		1	SUPPORT	
180	1478182-0000	-		1	SPACER	
190	1478570-0000	B		1	AXLE PIN	
220	311103-0355	B		1	PARALLELL PIN, M6, 6X25 MM	
260	312105-0329	-		3	SCREW M6S ISO 4017 M5X16 A480	
270	312105-0371	-		5	SCREW M6S ISO 4017 M6X22 A480	
280	312105-0495	-		1	SCREW M6S ISO 4017 M10X30 A480	
300	312115-0287	-		1	SCREW MC6S M4X8 A280	
310	312115-0329	-		2	SCREW MC6S M5X16 A280	
320	312115-0327	-		4	SCREW MC6S M5X12 A280	
340	312318-0327	-		2	SCREW SOCK.SET CUP P MSK6SS M5X12 A4	
360	312625-0320	-		3	NUT HEX. M10 SS	
380	312705-0316	-		5	NUT HEX. DOMED CAP MHM-6 M6 A280	
420	90091-0322	A		1	RADIAL SEAL 25X42X7 MM DUST LIP	
450	90240-0264	A		3	FLANGE BUSHING, 15X17X17 MM	
470	90240-0321	A		1	BUSHING	
480	90240-0322	A		1	BUSHING	
M1504	90045-0189	A		1	STEP MOTOR E22NSLT-LNN-NS-02	

Machine Type	Group Description	Used-In	Group Number	Page No

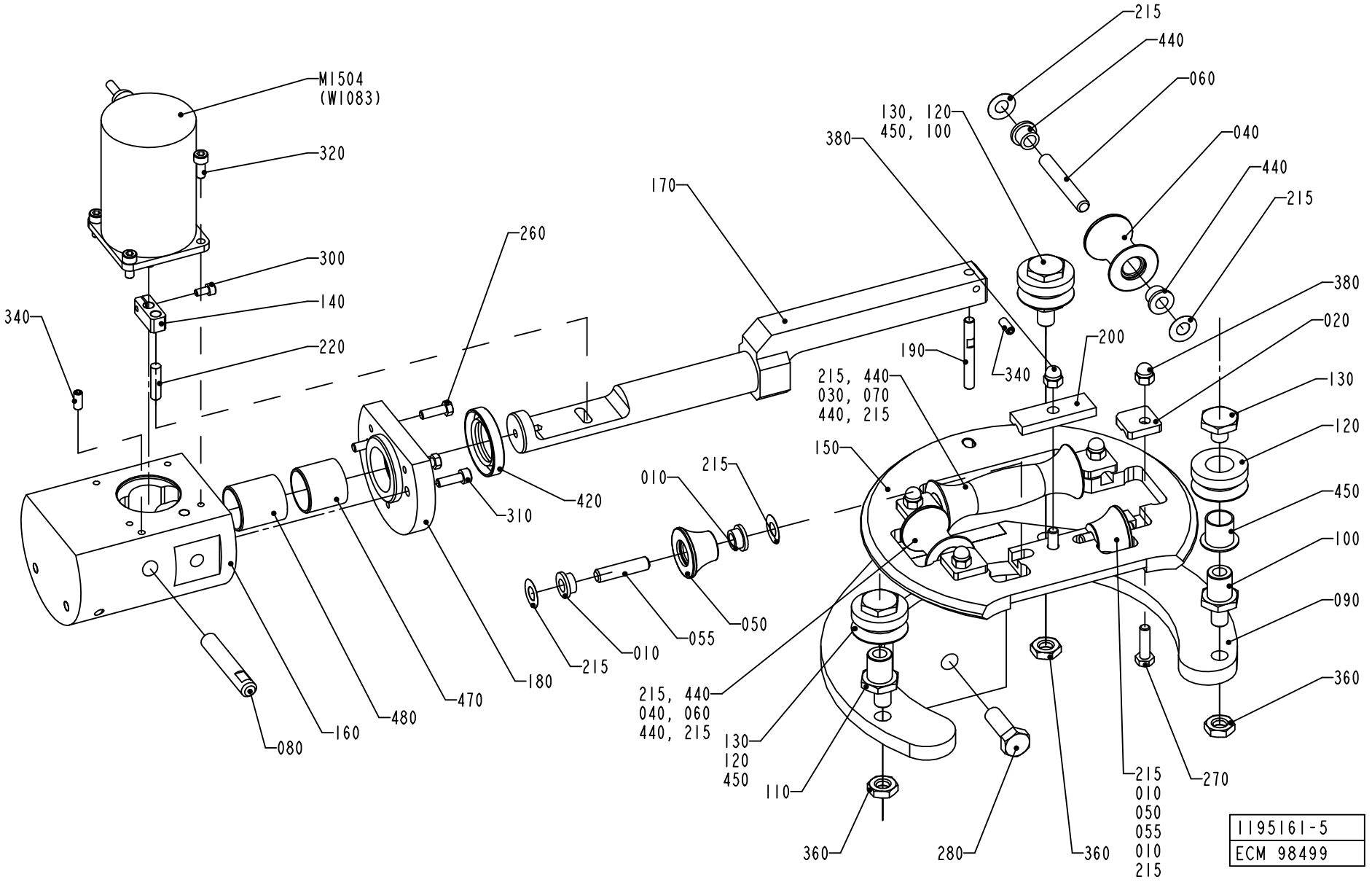
M1504
(W1083)
320
300
140
220
340
260
170
420
310
180
470
480
160
080
010
215
055
050
215, 440
040, 060
440, 215
130
120
450
110
360
280
360
215
010
050
055
010
215
270
215
440
060
040
440
215
130, 120
450, 100
380
190
340
200
215, 440
030, 070
440, 215
150
380
020
130
120
450
100
090
360
1195161-5
ECM 98499

ECM: 113457 - 20020911
Group number: 1195161-0300
Assembly Drawing: 1195161-5_1_AA

Issue: 20021015

Pos	Part No	SP	UN	Qty	Description	Page No
TBA 0200S						
010	752156-0000	A		4	FLANGE BUSHING	
020	1279091-0000	B		4	LOCKING PLATE	
030	752126-0000	A		1	FORMING ROLLER	
040	752127-0000	A		2	FORMING ROLLER	
050	752128-0000	A		2	FORMING ROLLER	
055	752186-0002	A		2	SHAFT	
060	752186-0006	A		2	SHAFT	
070	752186-0008	A		1	SHAFT	
090	1487830-0000	-		1	MOVABLE FORMING RING	
150	1517318-0000	-		1	MOVABLE FORMING RING	
170	1487700-0000	-		1	SHAFT	
200	1487689-0000	A		1	LOCK PLATE	
215	2033-0011	A		10	WASHER	
440	90240-0172	A		6	FLANGE BUSHING,8X12X10 MM NFB	
TBA 0200B OR TBA 0250B						
020	456139-0000	A		4	LOCK PLATE	
030	751491-0000	A		1	ROLL	
040	751492-0000	A		2	ROLL	
050	751493-0000	A		2	ROLL	
060	752186-0005	A		4	SHAFT	
070	752186-0009	A		1	SHAFT	
090	1195191-0000	-		1	MOVABLE FORMING RING	
150	1347557-0000	-		1	MOVABLE FORMING RING	
170	1347559-0000	-		1	SHAFT	
200	1487687-0000	A		1	LOCK PLATE	
210	2033-0007	A		2	WASHER	
215	2033-0011	A		8	WASHER	
440	90240-0172	A		10	FLANGE BUSHING,8X12X10 MM NFB	
Common Parts						
080	1519510-0000	-		1	AXLE PIN	
100	1296754-0000	-		2	SHAFT	
110	1296755-0000	-		1	SHAFT	
120	1296758-0000	A		3	ROLL	
130	1296760-0000	-		3	NUT	
140	1347556-0000	-		1	ECCENTRIC	
160	1347558-0000	-		1	SUPPORT	
180	1478182-0000	-		1	SPACER	
190	1478570-0000	B		1	AXLE PIN	
220	311103-0355	B		1	PARALLELL PIN, M6, 6X25 MM	
260	312105-0329	-		3	SCREW M6S ISO 4017 M5X16 A480	
270	312105-0371	-		5	SCREW M6S ISO 4017 M6X22 A480	
280	312105-0495	-		1	SCREW M6S ISO 4017 M10X30 A480	
300	312115-0287	-		1	SCREW MC6S M4X8 A280	
310	312115-0329	-		2	SCREW MC6S M5X16 A280	
320	312115-0327	-		4	SCREW MC6S M5X12 A280	
340	312318-0327	-		2	SCREW SOCK.SET CUP P MSK6SS M5X12 A4	
360	312625-0320	-		3	NUT HEX. M10 SS	
380	312705-0316	-		5	NUT HEX. DOMED CAP MHM-6 M6 A280	
420	90091-0322	A		1	RADIAL SEAL 25X42X7 MM DUST LIP	
450	90240-0264	A		3	FLANGE BUSHING, 15X17X17 MM	
470	90240-0321	A		1	BUSHING	
480	90240-0322	A		1	BUSHING	
M1504	90045-0189	A		1	STEP MOTOR E22NSLT-LNN-NS-02	

Machine Type	Group Description	Used-In	Group Number	Page No

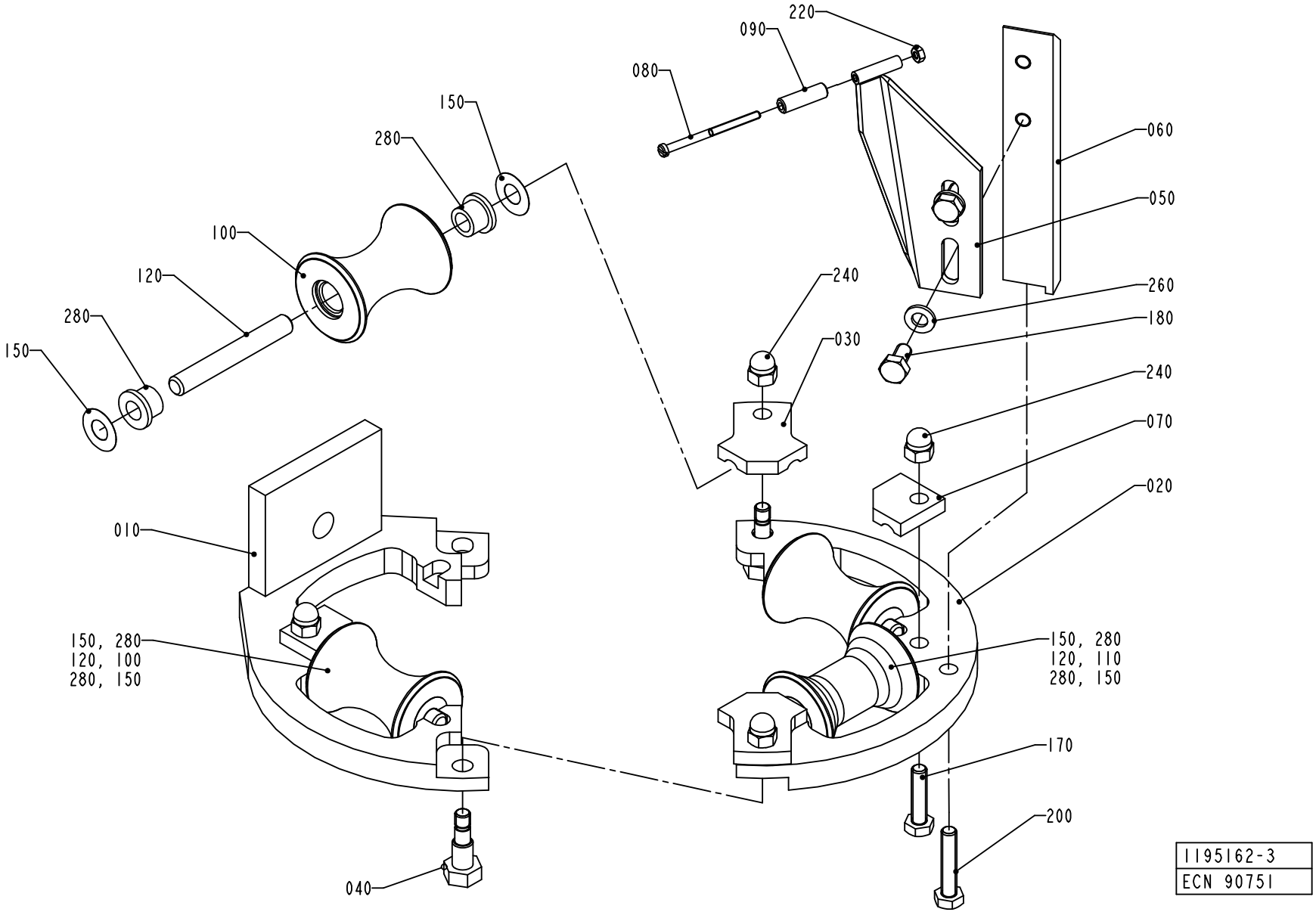
220
090
080
150
280
060
050
100
120
240
260
280
180
150
030
240
070
020
010
150, 280
120, 100
280, 150
150, 280
120, 110
280, 150
170
200
040
1195162-3
ECN 90751

ECM: 113458 - 20020911
Group number: 1195162-0100
Assembly Drawing: 1195162-3_1_AB

Issue: 20021015

Pos	Part No	SP	UN	Qty	Description	Page No
TBA 0200S						
010	1539580-0000	-		1	FORMING RING	
020	1539579-0000	-		1	FORMING RING	
060	1519496-0000	-		1	BRACKET	
100	1558186-0000	-		3	ROLLER	
110	1558162-0000	A		1	ROLLER	
120	752186-0006	A		4	SHAFT	
TBA 0200B OR TBA 0250B						
010	1484862-0000	-		1	FORMING RING	
020	1484863-0000	-		1	FORMING RING	
060	1296110-0000	-		1	SUPPORT	
100	1484859-0000	A		3	ROLLER	
110	1548796-0000	A		1	ROLLER	
120	752186-0016	A		4	SHAFT	
150	2033-0011	A		8	WASHER	
Common Parts						
030	1484860-0000	A		2	LOCK PLATE	
040	1195319-0000	-		2	FITTING BOLT	
050	1296109-0000	A		1	BRACKET	
070	1484861-0000	A		2	LOCK PLATE	
080	257050-0000	A		1	SHAFT	
090	1478267-0000	A		1	ROLL	
170	312105-0372	-		2	SCREW M6S ISO 4017 M6X25 A480	
180	312105-0366	-		2	SCREW M6S M6X12 A280	
200	312109-0374	-		1	SCREW M6S ISO 4017 M6X30 A480	
220	312605-0310	-		1	HEXAGON NUT, M6M M3 A280	
240	312705-0316	-		4	NUT HEX. DOMED CAP MHM-6 M6 A280	
260	315105-0153	-		2	WASHER PLAIN, BRB, 6,4/12,H=1,5	
280	90240-0172	A		8	FLANGE BUSHING,8X12X10 MM NFB	

Pos	Part No	SP	UN	Qty	Description	Page No

Machine Type | Group Description | Used-In | Group Number | Page No

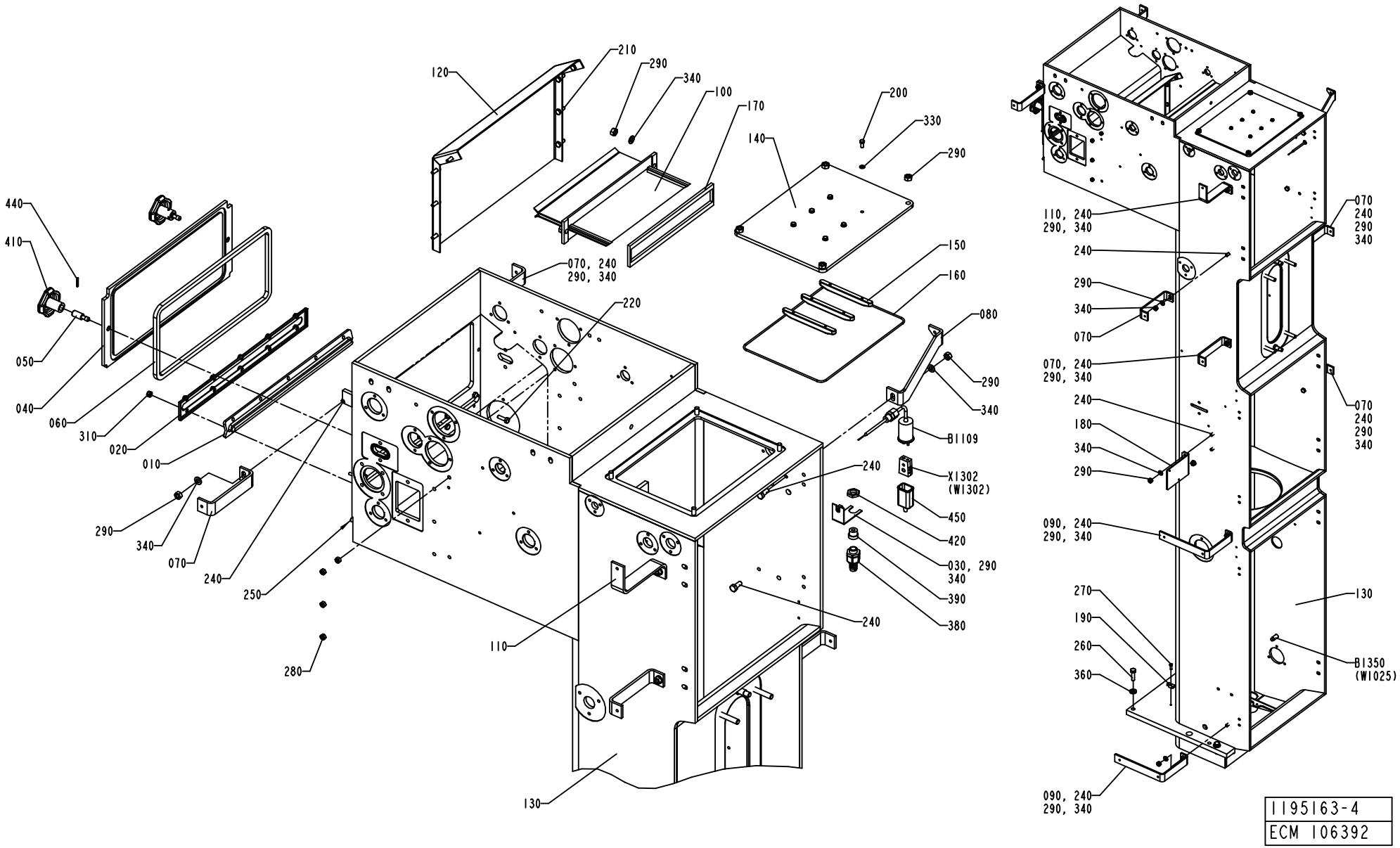
120
210
290
340
100
170
200
330
290
140
440
410
050
040
060
310
020
010
290
340
070
240
250
280
070, 240
290, 340
220
150
160
080
290
340
B1109
240
X1302
(W1302)
450
420
030, 290
340
390
380
240
110
130
110, 240
290, 340
070
240
290
340
240
290
340
070
070, 240
290, 340
070
240
290
340
240
180
340
290
090, 240
290, 340
270
190
260
360
130
B1350
(W1025)
090, 240
290, 340
1195163-4
ECM 106392

ECM: 113459 - 20020911
Group number: 1195163-0300
Assembly Drawing: 1195163-4_1_AC

Issue: 20021015

Pos	Part No	SP	UN	Qty	Description	Page No
Common Parts						
010	273961-0000	A		1	SEAL	
020	476087-0000	-		1	LID	
030	1036373-0000	B		1	HOLDER	
040	1036465-0000	-		1	LID	
050	1036475-0000	B		2	PIN	
060	1036478-0000	B		1	GASKET	
070	1037456-0000	-		6	BRACKET	
080	2514285-0000	-		1	PLATE	
090	2531273-0000	-		2	BRACKET	
100	1519304-0000	-		1	TUNNEL	
110	1195322-0000	-		1	BRACKET	
120	1347513-0000	-		1	SHEET	
130	2506839-0000	-		1	COLUMN	
140	1498670-0000	-		1	LID	
150	1498671-0000	A		3	PAPER GUIDE	
160	1348622-0000	B		1	O-RING	
170	1519303-0000	-		1	GASKET	
180	1490902-0000	-		1	BRACKET	
190	2539463-0000	-		2	BRACKET	
200	312105-0327	-		6	SCREW M6S ISO 4017 M5X12 A480	
210	312105-0368	-		8	SCREW M6S M6X16 A280	
220	312105-0370	-		10	SCREW M6S ISO 4017 M6X20 A480	
240	312105-0451	-		13	SCREW M6S ISO 4017 M8X20 A480	
250	312105-0453	-		3	SCREW M6S ISO 4017 M8X25 A480	
260	312105-0497	-		4	SCREW M6S ISO 4017 M10X35 A480	
270	312105-0329	-		2	SCREW M6S ISO 4017 M5X16 A480	
280	312605-0316	-		8	HEXAGON NUT, M6M M6 A280	
290	312605-0318	-		19	HEXAGON NUT, M6M M8 A280	
310	312812-0316	-		10	HEXAGON NUT, NY-LOCK M6 A480	
330	315105-0146	-		6	WASHER PLAIN, BRB, 5,3/10,H=1	
340	315105-0165	-		15	WASHER PLAIN, BRB, 8,4/16,H=1,5	
360	315115-0173	-		4	WASHER PLAIN, TBRB 10,5/22 H=4	
380	353243-0001	-		1	EXTENDED WITHOUT INSERT, PG9	
390	353249-0008	-		1	INSERT, SINGEL HOLE, EK 152/7	
410	90051-0045	-		2	STELLAR KNOB, NO. 8323-2575	
420	90099-0104	-		1	NUT, PR 15,2 (PG9)	
430	90153-0023	-		1	ADHESIVE	
440	90258-0031	-		2	PIN, STRAIGHT SLOTTED SPRING FRP 3X20	
450	90326-0012	B		1	PROTECTIVE COVER, T31A4618	
B1109	90458-0341	A		1	THERMOCOUPLE, 5130050-001	
B1350	90458-0672	A		1	PROXIMITY SENSOR E2E2-X5MB1-5M	
X1302	90326-0020	B		1	PLUG, FEMALE YELLOW CR-AL	

Machine Type	Group Description	Used-In	Group Number	Page No

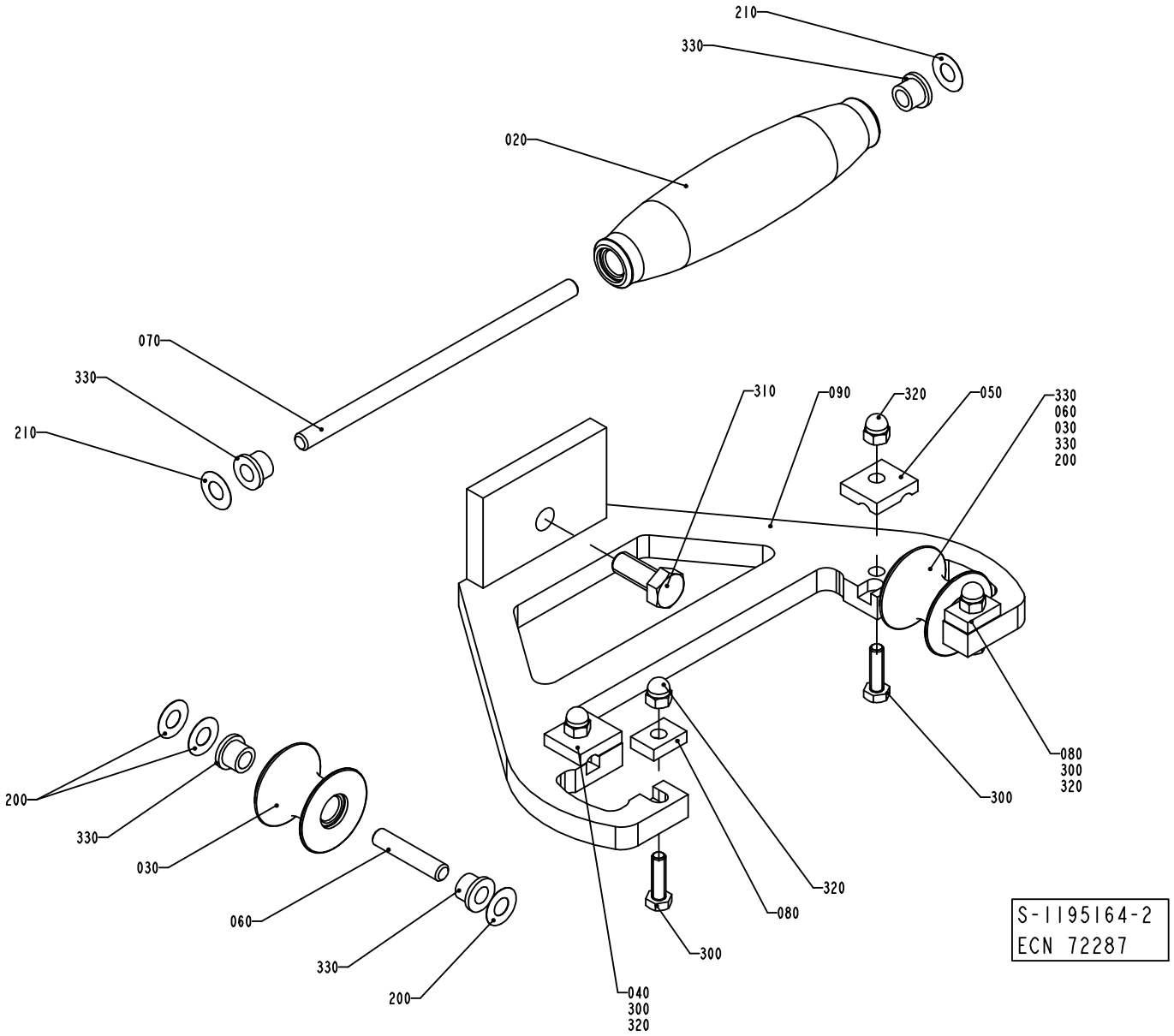
210
330
020
070
330
210
310
090
320
050
330
060
030
330
200
080
300
320
200
330
030
060
330
200
320
080
300
040
300
320
S-1195164-2
ECN 72287

ECM: 113461 - 20020911
Group number: 1195164-0200
Assembly Drawing: 1195164-2_1_AB

Issue: 20021015

Pos	Part No	SP	UN	Qty	Description	Page No
TBA 0200S						
020	752129-0000	A		1	FORMING ROLLER	
030	752130-0000	A		2	FORMING ROLLER	
040	1279089-0000	A		1	LOCKING PLATE	
050	1279088-0000	A		1	LOCKING PLATE	
060	752186-0004	A		2	SHAFT	
070	752186-0010	A		1	SHAFT	
090	1548598-0000	-		1	FORMING RING	
200	2033-0007	A		2	WASHER	
210	2033-0011	A		4	WASHER	
TBA 0200B OR TBA 0250B						
020	1350904-0000	A		1	ROLL	
030	751284-0000	A		2	ROLL	
040	1350905-0000	A		1	LOCKING PLATE	
050	1350906-0000	A		1	LOCKING PLATE	
060	752186-0003	A		2	SHAFT	
070	752186-0017	A		1	SHAFT	
090	1350907-0000	-		1	UPPER FORMING RING	
200	2033-0007	A		6	WASHER	
210	2033-0011	A		2	WASHER	
Common Parts						
080	1038428-0000	A		2	LOCK PLATE	
300	312105-0371	-		4	SCREW M6S ISO 4017 M6X22 A480	
310	312105-0493	-		1	SCREW M6S ISO 4017 M10X25 A480	
320	312705-0316	-		4	NUT HEX. DOMED CAP MHM-6 M6 A280	
330	90240-0172	A		6	FLANGE BUSHING,8X12X10 MM NFB	

Pos	Part No	SP	UN	Qty	Description	Page No

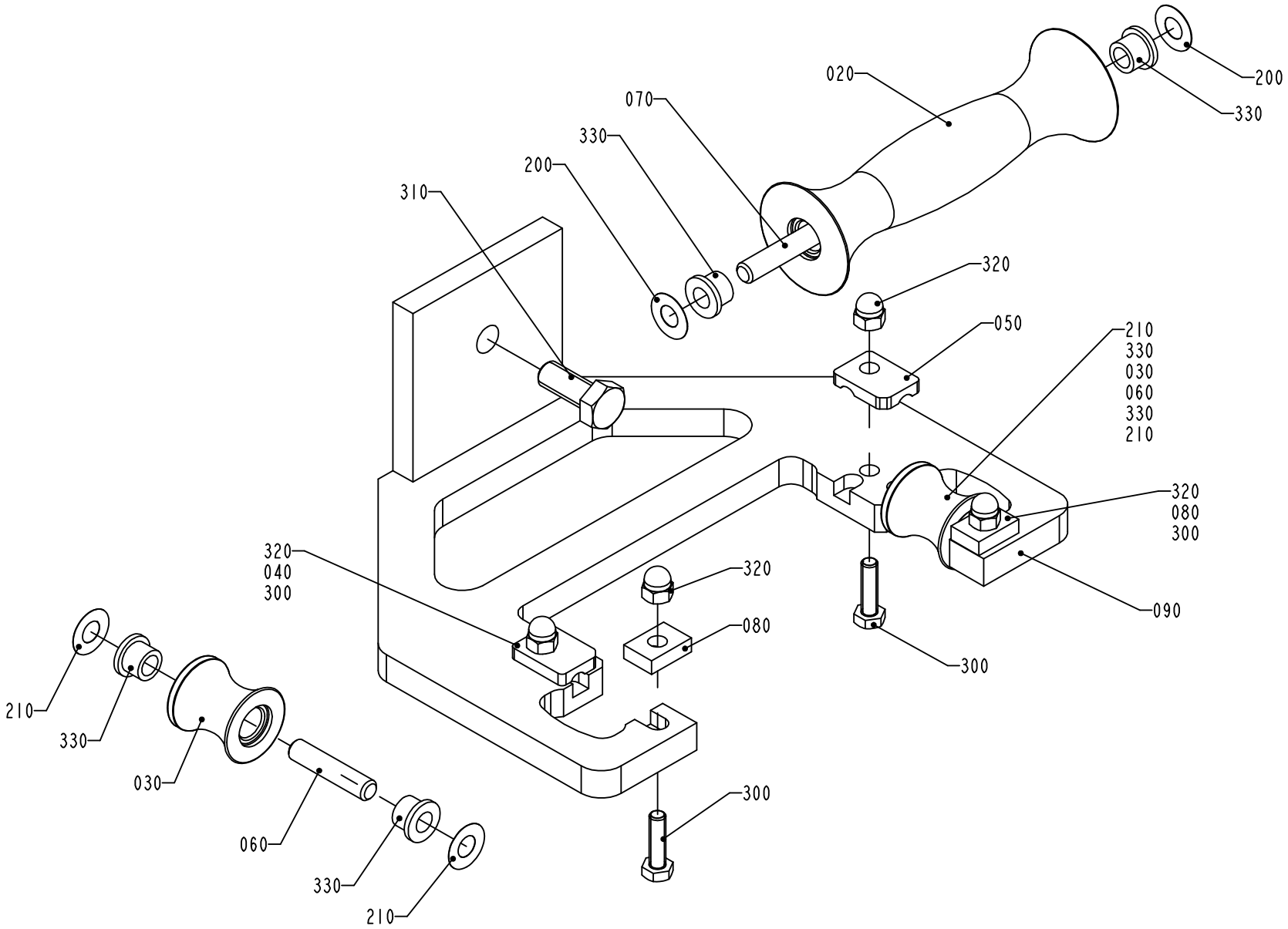

1195164-3
ECN 73368

ECM: 113461 - 20020911
Group number: 1195164-0200
Assembly Drawing: 1195164-3_1_AA

Issue: 20021015

Pos	Part No	SP	UN	Qty	Description	Page No
TBA 0200S						
020	752129-0000	A		1	FORMING ROLLER	
030	752130-0000	A		2	FORMING ROLLER	
040	1279089-0000	A		1	LOCKING PLATE	
050	1279088-0000	A		1	LOCKING PLATE	
060	752186-0004	A		2	SHAFT	
070	752186-0010	A		1	SHAFT	
090	1548598-0000	-		1	FORMING RING	
200	2033-0007	A		2	WASHER	
210	2033-0011	A		4	WASHER	
TBA 0200B OR TBA 0250B						
020	1350904-0000	A		1	ROLL	
030	751284-0000	A		2	ROLL	
040	1350905-0000	A		1	LOCKING PLATE	
050	1350906-0000	A		1	LOCKING PLATE	
060	752186-0003	A		2	SHAFT	
070	752186-0017	A		1	SHAFT	
090	1350907-0000	-		1	UPPER FORMING RING	
200	2033-0007	A		6	WASHER	
210	2033-0011	A		2	WASHER	
Common Parts						
080	1038428-0000	A		2	LOCK PLATE	
300	312105-0371	-		4	SCREW M6S ISO 4017 M6X22 A480	
310	312105-0493	-		1	SCREW M6S ISO 4017 M10X25 A480	
320	312705-0316	-		4	NUT HEX. DOMED CAP MHM-6 M6 A280	
330	90240-0172	A		6	FLANGE BUSHING,8X12X10 MM NFB	

Pos	Part No	SP	UN	Qty	Description	Page No

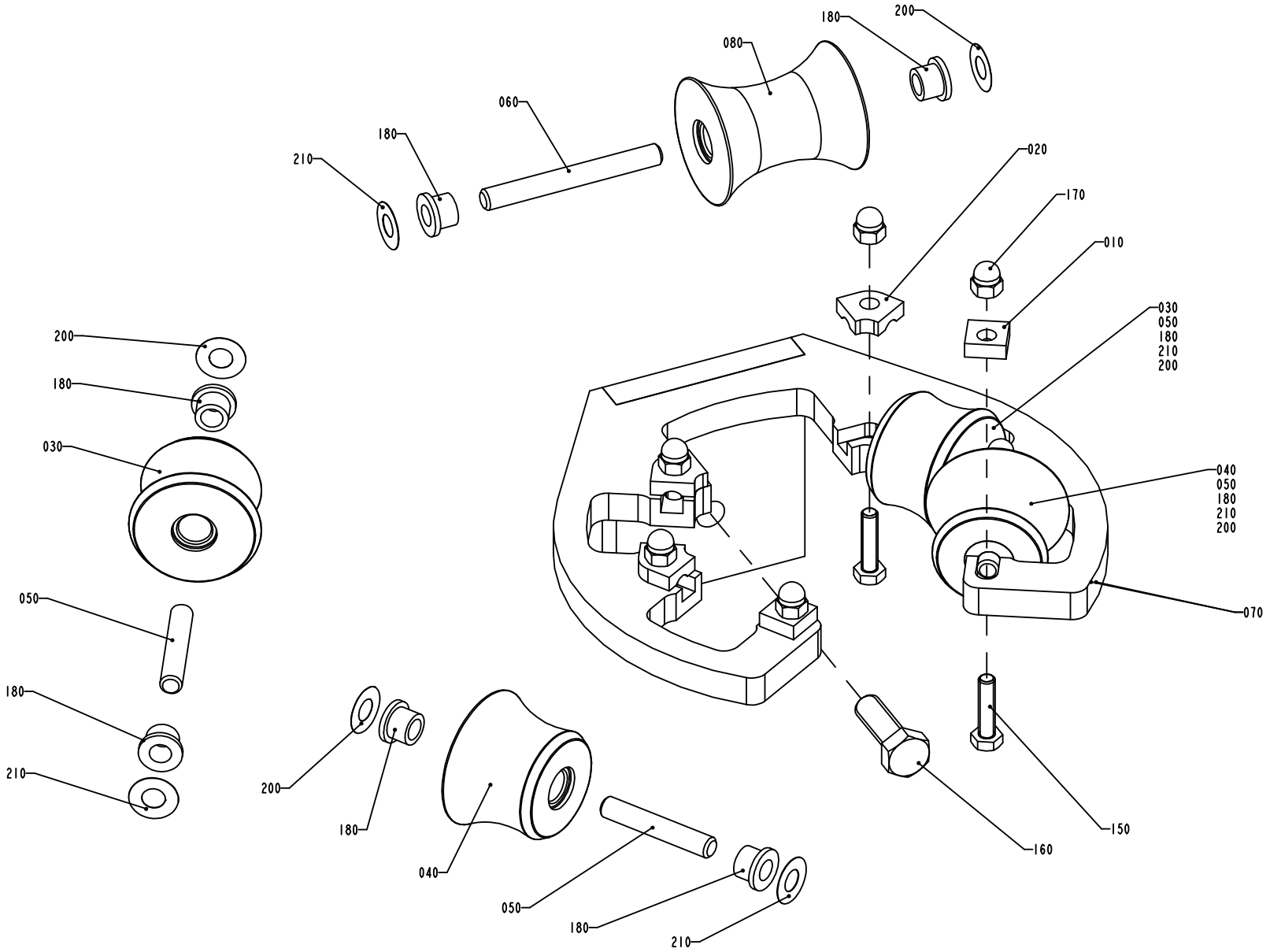

S-1195165-2
ECN 72287

ECM: 113460 - 20020911
Group number: 1195165-0200
Assembly Drawing: 1195165-2_1_AB

Issue: 20021015

Pos	Part No	SP	UN	Qty	Description	Page No
TBA 0200S						
020	1348938-0000	A		2	LOCK PLATE	
030	752132-0000	A		2	FORMING ROLLER	
040	752134-0000	A		2	FORMING ROLLER	
050	752186-0003	A		4	SHAFT	
060	752186-0006	A		1	SHAFT	
070	1517319-0000	-		1	FORMING RING	
080	1517316-0000	A		1	ROLL	
090	1519491-0000	A		1	LOCK PLATE	
100	1519492-0000	A		1	LOCK PLATE	
200	2033-0011	A		10	WASHER	
TBA 0200B OR TBA 0250B						
020	1348938-0000	A		4	LOCK PLATE	
030	751499-0000	A		2	ROLL	
040	751500-0000	A		2	ROLL	
050	752186-0005	A		4	SHAFT	
060	752186-0007	A		1	SHAFT	
070	1347601-0000	-		1	DIVIDED FORMING RING	
080	1350289-0000	A		1	ROLL	
200	2033-0011	A		5	WASHER	
210	2033-0007	A		5	WASHER	
Common Parts						
010	1347881-0000	A		2	LOCK PLATE	
150	312105-0372	-		6	SCREW M6S ISO 4017 M6X25 A480	
160	312105-0495	-		1	SCREW M6S ISO 4017 M10X30 A480	
170	312705-0316	-		6	NUT HEX. DOMED CAP MHM-6 M6 A280	
180	90240-0172	A		10	FLANGE BUSHING,8X12X10 MM NFB	

Pos	Part No	SP	UN	Qty	Description	Page No

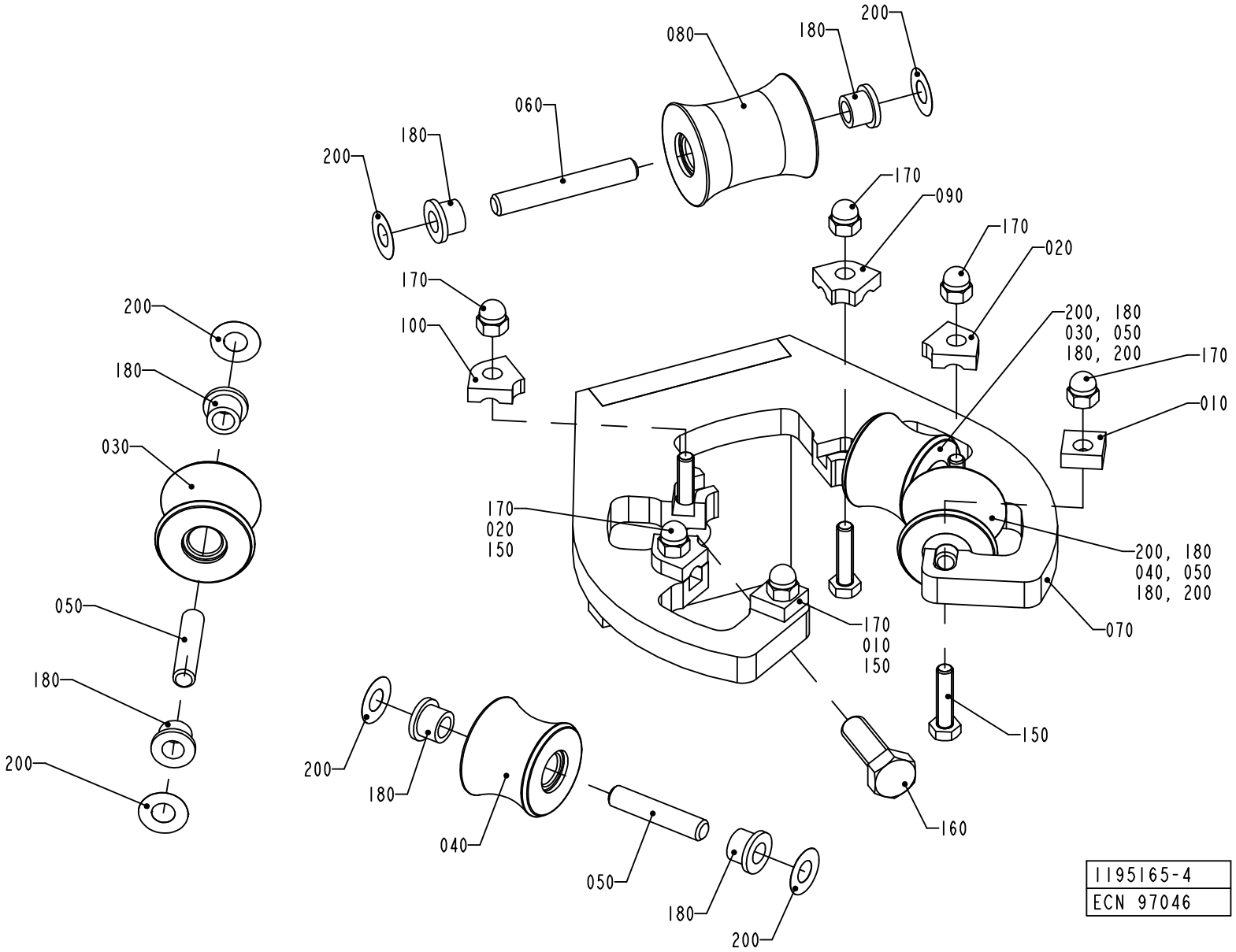
200
180
080
060
180
200
170
090
170
020
200
180
100
200, 180
030, 050
180, 200
170
010
200
180
030
170
020
150
200, 180
040, 050
180, 200
070
050
180
170
010
150
150
200
180
040
050
180
200
160
1195165-4
ECN 97046

ECM: 113460 - 20020911
Group number: 1195165-0200
Assembly Drawing: 1195165-4_1_AA

Issue: 20021015

Pos	Part No	SP	UN	Qty	Description	Page No
TBA 0200S						
020	1348938-0000	A		2	LOCK PLATE	
030	752132-0000	A		2	FORMING ROLLER	
040	752134-0000	A		2	FORMING ROLLER	
050	752186-0003	A		4	SHAFT	
060	752186-0006	A		1	SHAFT	
070	1517319-0000	-		1	FORMING RING	
080	1517316-0000	A		1	ROLL	
090	1519491-0000	A		1	LOCK PLATE	
100	1519492-0000	A		1	LOCK PLATE	
200	2033-0011	A		10	WASHER	
TBA 0200B OR TBA 0250B						
020	1348938-0000	A		4	LOCK PLATE	
030	751499-0000	A		2	ROLL	
040	751500-0000	A		2	ROLL	
050	752186-0005	A		4	SHAFT	
060	752186-0007	A		1	SHAFT	
070	1347601-0000	-		1	DIVIDED FORMING RING	
080	1350289-0000	A		1	ROLL	
200	2033-0011	A		5	WASHER	
210	2033-0007	A		5	WASHER	
Common Parts						
010	1347881-0000	A		2	LOCK PLATE	
150	312105-0372	-		6	SCREW M6S ISO 4017 M6X25 A480	
160	312105-0495	-		1	SCREW M6S ISO 4017 M10X30 A480	
170	312705-0316	-		6	NUT HEX. DOMED CAP MHM-6 M6 A280	
180	90240-0172	A		10	FLANGE BUSHING,8X12X10 MM NFB	

Pos	Part No	SP	UN	Qty	Description	Page No

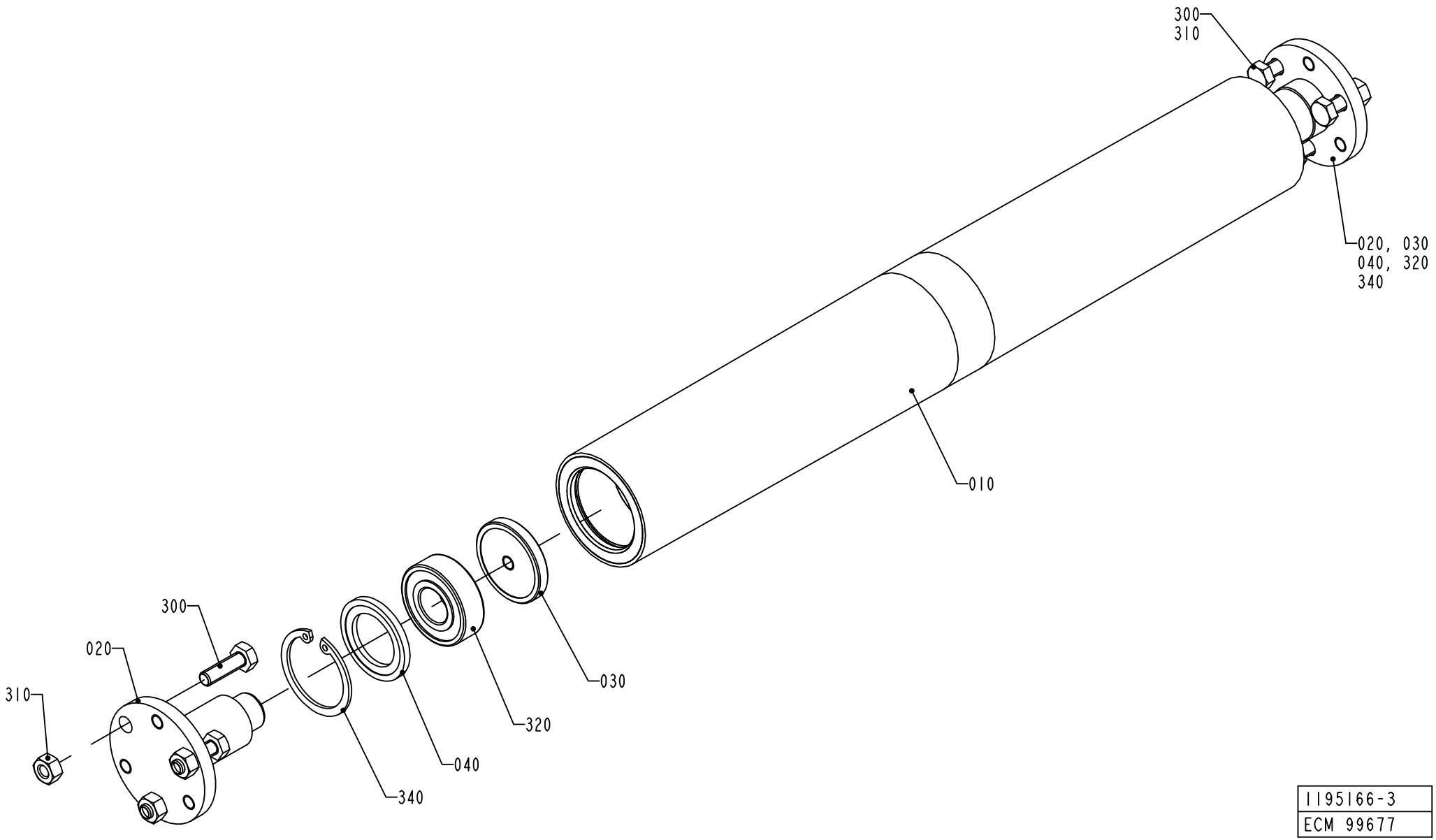

1195166-3
ECM 99677

ECM: 102585 - 20011123
Group number: 1195166-0200
Assembly Drawing: 1195166-3_1_AB

Issue: 20021015

Pos	Part No	SP	UN	Qty	Description	Page No
Common Parts						
010	1490405-0000	A		1	ROLLER	
020	1490408-0000	-		2	SHAFT	
030	1490407-0000	-		2	WASHER	
040	1490406-0000	-		2	WASHER	
300	312105-0370	-		6	SCREW M6S ISO 4017 M6X20 A480	
310	312605-0316	-		6	HEXAGON NUT, M6M M6 A280	
320	90458-1704	A		2	BALL BEARING, 15X35X11 MM	
340	315753-0124	-		2	RETAIN. RING, 35	

Pos	Part No	SP	UN	Qty	Description	Page No

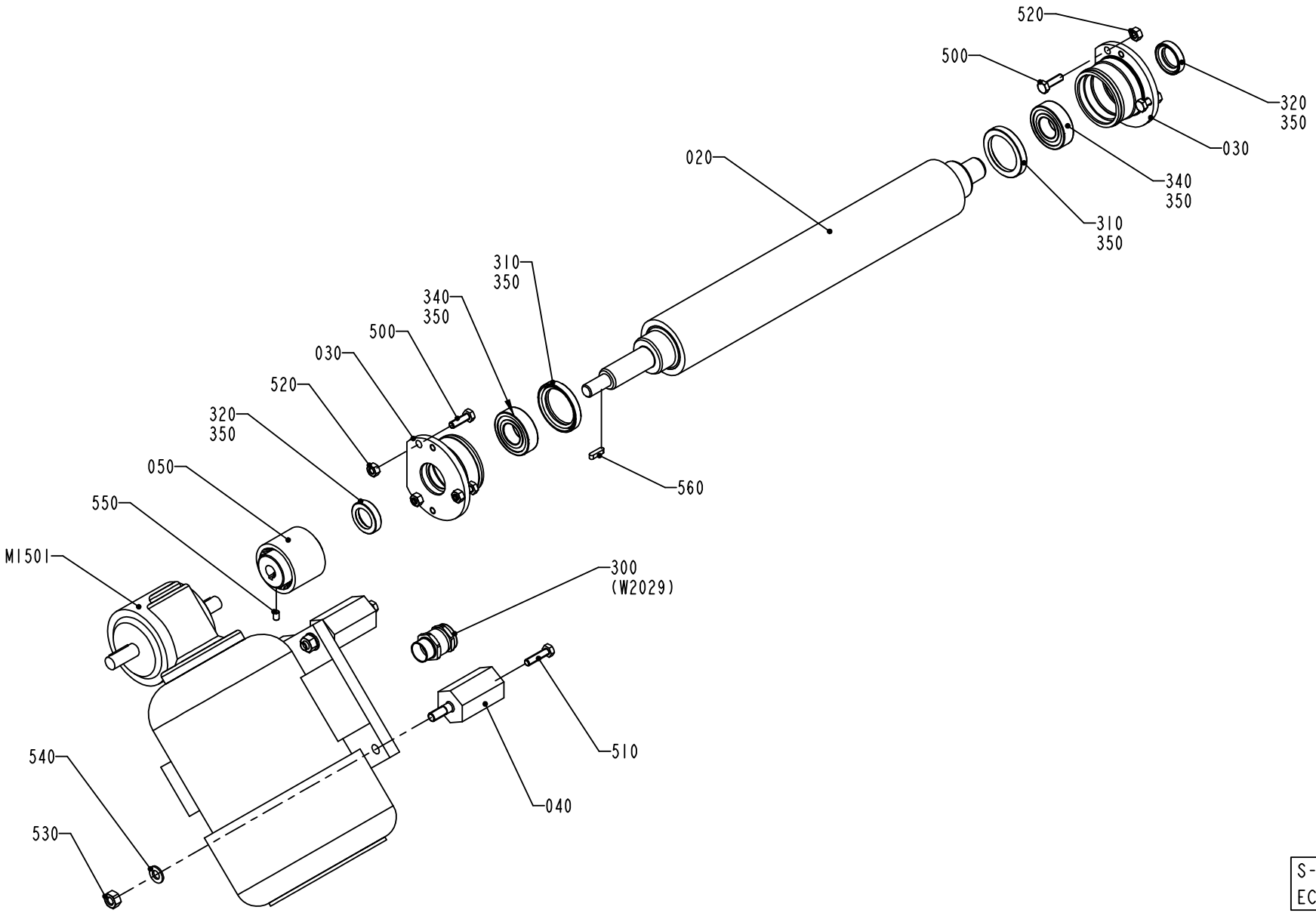

S-1347485-1
ECN 72287

ECM: 113471 - 20020911
Group number: 1347485-0100
Assembly Drawing: 1347485-1_1_AB

Issue: 20021015

Pos	Part No	SP	UN	Qty	Description	Page No
Common Parts						
020	1387381-0000	A		1	CALENDER ROLLER	
030	1484514-0000	A		2	HOUSING	
040	1347484-0000	-		4	SPACER	
050	1129298-0000	-		1	SHAFT COUPLING	
300	90012-0137	-		1	GLAND, EXTENDED WITH INSERT, PG11	
310	90091-0297	B		2	RADIAL SEAL 35X47X7 MM DUST LIP	
320	90091-0320	-		2	RADIAL SEAL 20X30X7 MM DUST LIP	
340	90214-0225	A		2	BALL BEARING SOLID OIL 20X42X12 MM	
350	90296-0091	-		1	LUBRICATION GREASE	
500	312105-0370	-		6	SCREW M6S ISO 4017 M6X20 A480	
510	312105-0372	-		4	SCREW M6S ISO 4017 M6X25 A480	
520	312605-0316	-		6	HEXAGON NUT, M6M M6 A280	
530	312605-0318	-		4	HEXAGON NUT, M6M M8 A280	
540	315105-0165	-		4	WASHER PLAIN, BRB, 8,4/16,H=1,5	
550	312318-0323	-		2	SCREW SOCK.SET CUP P MSK6SS M5X8 A4	
560	315701-0168	A		1	PARALLEL KEY W. ROUND ENDS 4X4X16 MM	
M1501	90069-0608	A		1	GEARS, WORM MOTOR ODM120-60KE3	

Pos	Part No	SP	UN	Qty	Description	Page No

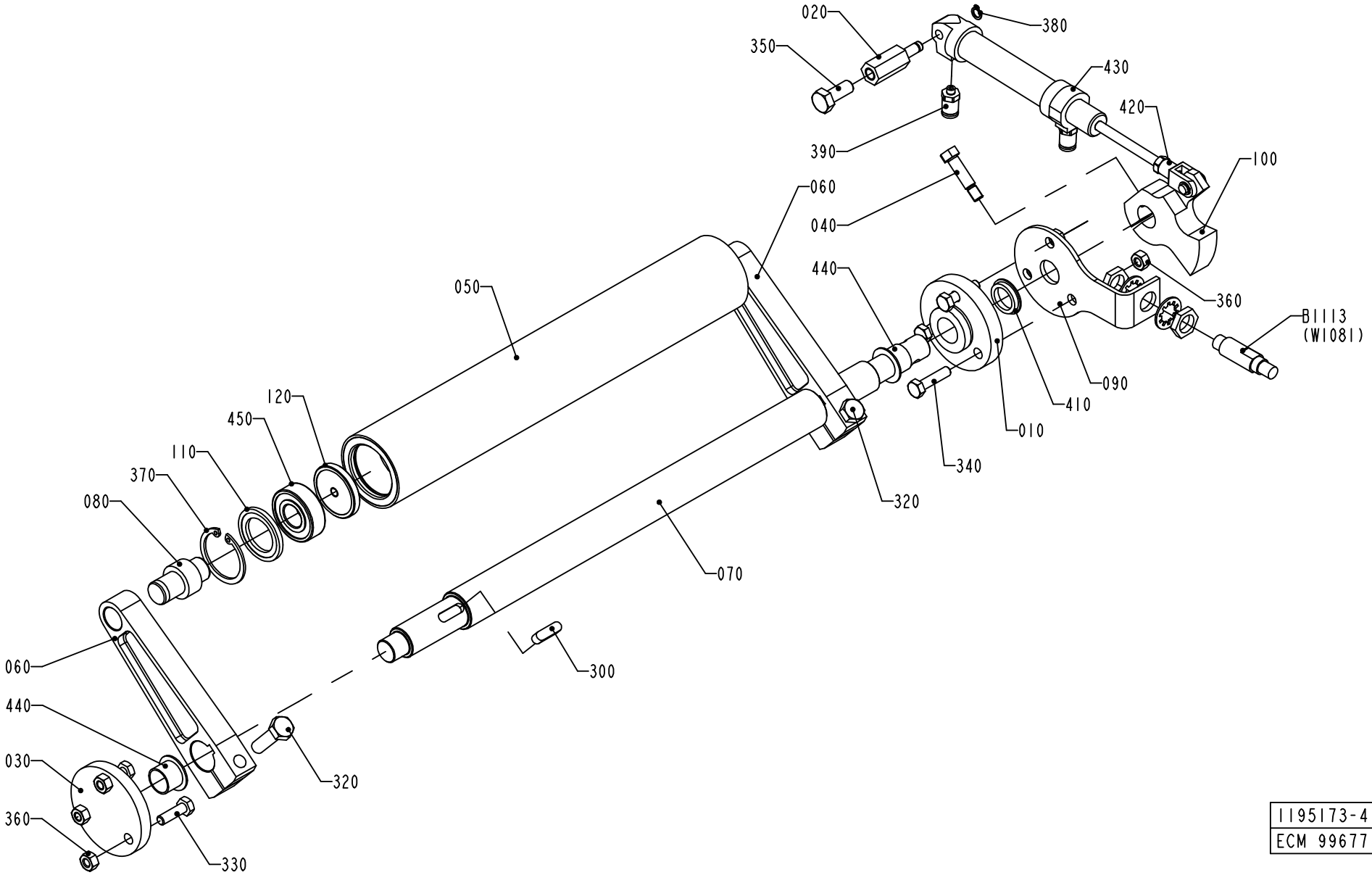

1195173-4
ECM 99677

Pos	Part No	SP	UN	Qty	Description	Page No
Common Parts						
010	1036174-0000	A		1	BEARING COVER	
020	1036178-0000	-		1	SHAFT	
030	1036328-0000	-		1	LID	
040	1041688-0000	-		1	FITTING BOLT	
050	1490409-0000	A		1	ROLLER	
060	1347938-0000	A		2	PENDULUM ARM	
070	1347940-0000	-		1	SHAFT	
080	1490410-0000	-		2	SHAFT	
090	1347941-0000	-		1	LID	
100	1348063-0000	-		1	LEVER	
110	1490406-0000	-		2	WASHER	
120	1490407-0000	-		2	WASHER	
300	315705-0232	A		2	PARALLEL KEY W. ROUND ENDS 6X6X20 MM	
320	312105-0455	-		2	SCREW M6S ISO 4017 M8X30 A480	
330	312105-0370	-		3	SCREW M6S ISO 4017 M6X20 A480	
340	312105-0372	-		3	SCREW M6S ISO 4017 M6X25 A480	
350	312105-0451	-		1	SCREW M6S ISO 4017 M8X20 A480	
360	312605-0316	-		6	HEXAGON NUT, M6M M6 A280	
370	315753-0124	-		2	RETAIN. RING, 35	
380	315751-0103	-		1	RETAIN. RING, 6	
390	342722-0197	-		2	STRAIGHT COUPLING	
410	90091-0357	A		1	VARISEAL ROTO 15X23X4 MM	
420	90239-0489	-		1	ROD END,CLEVIS WITH AXLE M6	
430	90239-0817	A		1	DOUBLE ACTING, MINI-ISO, CYL.16-50	
440	90240-0263	A		2	FLANGE BUSHING, 15X17X12 MM	
450	90458-1704	A		2	BALL BEARING, 15X35X11 MM	
B1113	90458-0675	-		1	PROXIMITY SENSOR, E2EG-X5MB1-5M	

Pos	Part No	SP	UN	Qty	Description	Page No

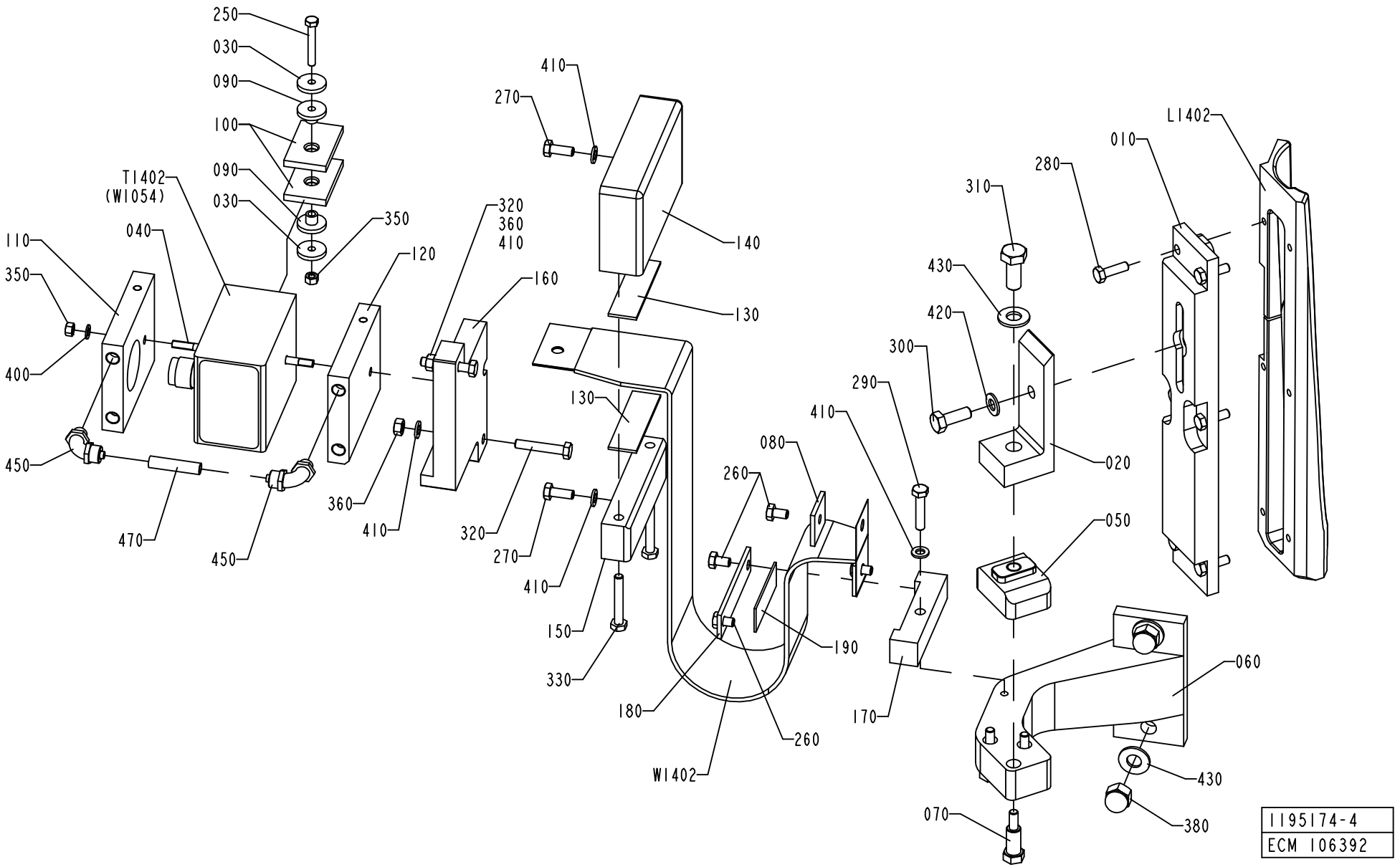
250
030
090
100
090
030
T1402
(W1054)
040
110
350
400
450
470
450
350
120
320
360
410
160
410
270
410
140
130
130
360
410
320
270
410
150
330
180
W1402
260
190
080
260
410
290
300
420
430
310
280
010
L1402
020
050
060
170
430
380
070
1195174-4
ECM 106392

ECM: 101023 - 20020911
Group number: 1195174-0300
Assembly Drawing: 1195174-4_1_AB

Issue: 20021015

Pos	Part No	SP	UN	Qty	Description	Page No
TBA 0200B						
010	1296114-0000	-		1	BRACKET	
020	1296112-0000	-		1	BRACKET	
L1402	1296113-0000	A		1	INDUCTOR	
TBA 0200S						
010	2523666-0000	-		1	BRACKET	
020	2527477-0000	-		1	BRACKET	
L1402	2550315-0000	A		1	INDUCTOR	
T1402	67379-0407	-		1	TRANSFORMER	
TBA 0250B						
010	1296114-0000	-		1	BRACKET	
020	1296112-0000	-		1	BRACKET	
L1402	1296113-0000	A		1	INDUCTOR	
Common Parts						
030	263311-0000	-		2	WASHER	
040	1140515-0000	-		1	SCREW	
050	1260773-0000	-		1	SPACER	
060	1296111-0000	-		1	HOLDER	
070	1296996-0000	-		3	SCREW	
080	1296997-0000	-		2	WASHER	
090	1539174-0000	A		2	BUSHING	
100	1539175-0000	-		2	PLATE	
110	1539354-0000	-		1	COOLING PLATE	
120	1539355-0000	-		1	COOLING PLATE	
130	2522188-0000	-		2	GASKET	
140	2522189-0000	-		1	PLATE	
150	2522190-0000	-		1	PLATE	
160	2522261-0000	-		1	PLATE	
170	2523723-0000	-		1	BRACKET	
180	2523724-0000	-		1	PLATE	
190	2540806-0000	-		1	GASKET	
250	312105-0337	-		1	SCREW M6S ISO 4014 M5X35 A480	
260	312105-0364	-		4	SCREW M6S ISO 4017 M6X10 A480	
270	312105-0368	-		2	SCREW M6S M6X16 A280	
280	312105-0371	-		6	SCREW M6S ISO 4017 M6X22 A480	
290	312105-0374	-		1	SCREW M6S ISO 4014 M6X30 A480	
300	312105-0452	-		1	SCREW M6S ISO 4017 M8X22 A480	
310	312105-0493	-		1	SCREW M6S ISO 4017 M10X25 A480	
320	312109-0376	-		2	SCREW M6S ISO 4017 M6X35 A480	
330	312109-0378	-		2	SCREW M6S ISO 4017 M6X40 A480	
350	312605-0314	-		2	HEXAGON NUT, M6M M5 A280	
360	312605-0316	-		2	HEXAGON NUT, M6M M6 A280	
380	312705-0320	-		2	NUT HEX. DOMED CAP MHM-6 M10 A280	
400	315105-0146	-		1	WASHER PLAIN, BRB, 5,3/10,H=1	
410	315105-0153	-		5	WASHER PLAIN, BRB, 6,4/12,H=1,5	
420	315105-0165	-		1	WASHER PLAIN, BRB, 8,4/16,H=1,5	
430	315105-0173	-		3	WASHER PLAIN, BRB, 10,5/22,H=2	
450	342931-0121	-		2	ELBOW 90 COUPL.,EXT.THREAD 8/6-G1/8"	
470	90166-0118	-	MM	36	TUBE 8 MM PA BLACK	
W1402	1520726-0000	A		1	BUSBAR	

Machine Type | Group Description | Used-In | Group Number | Page No

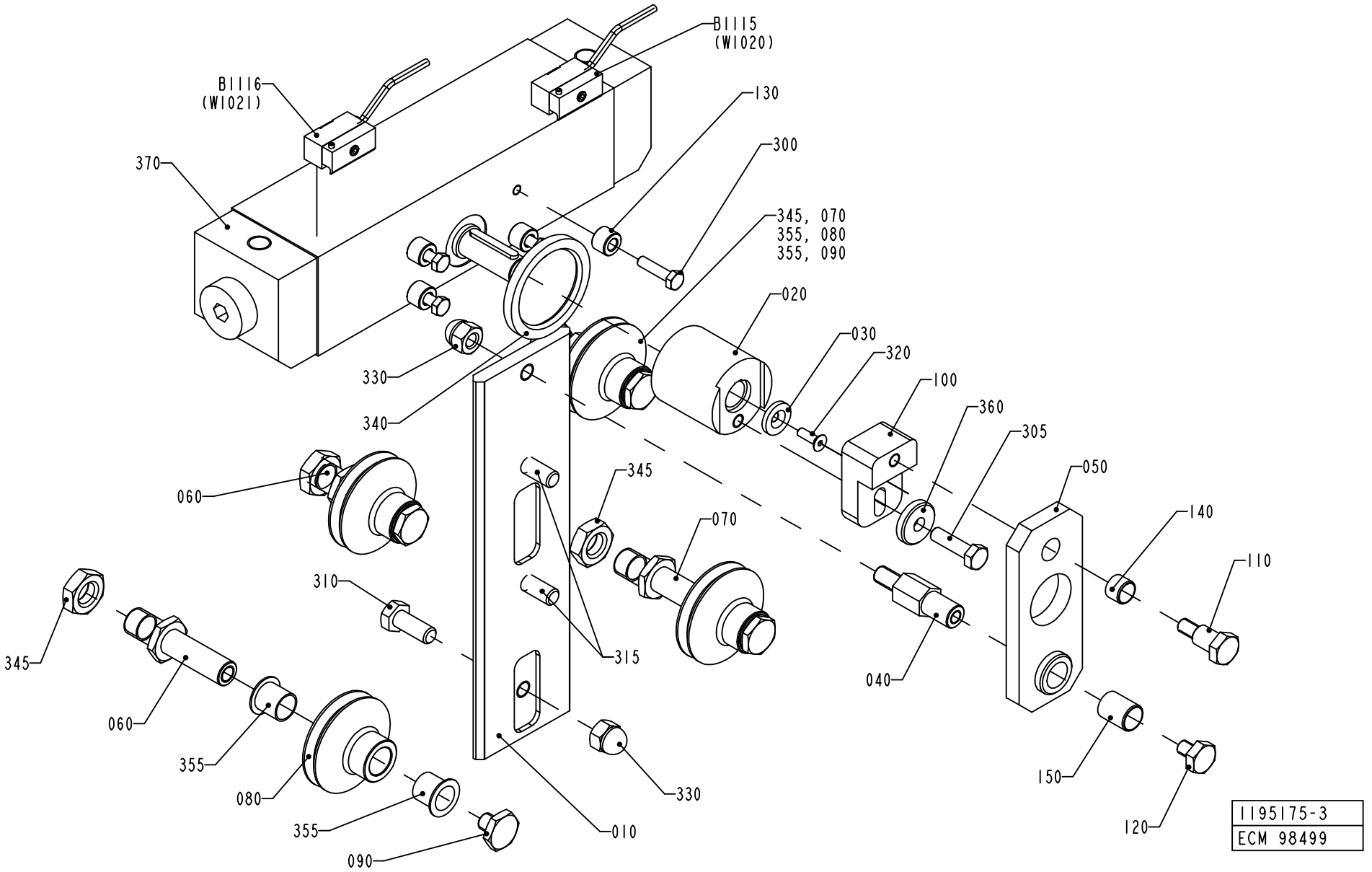
B1115
(W1020)
B1116
(W1021)
130
300
370
345, 070
355, 080
355, 090
020
030
320
100
360
305
050
140
110
330
340
060
345
070
310
315
040
345
060
355
080
355
090
010
330
150
120
1195175-3
ECM 98499

Pos	Part No	SP	UN	Qty	Description	Page No
Common Parts						
010	1296764-0000	A		1	RAIL	
020	1349915-0000	-		1	SHAFT	
030	1255970-0000	-		1	WASHER	
040	1487167-0000	-		1	AXLE PIN	
050	1487168-0000	-		1	PLATE	
060	1296756-0000	-		2	SHAFT	
070	1296757-0000	-		2	SHAFT	
080	1296759-0000	A		4	ROLL	
090	1296760-0000	-		4	NUT	
100	1487164-0000	-		1	PLATE	
110	1487165-0000	-		1	SCREW	
120	1487166-0000	-		1	SCREW	
130	1349397-0000	-		4	SHIM	
140	1498615-0000	A		1	BUSHING	
150	1498616-0000	A		1	BUSHING	
300	312105-0372	-		4	SCREW M6S ISO 4017 M6X25 A480	
305	312105-0455	-		1	SCREW M6S ISO 4017 M8X30 A480	
310	312105-0493	-		1	SCREW M6S ISO 4017 M10X25 A480	
315	312105-0495	-		2	SCREW M6S ISO 4017 M10X30 A480	
320	312155-0329	-		1	SCREW HEX.SOCK.COUNT.MF6S M5X16 A280	
330	312705-0320	-		2	NUT HEX. DOMED CAP MHM-6 M10 A280	
340	90091-0143	A		1	RADIAL SEAL 47X62X6 MM	
345	90099-0131	-		4	NUT HEX. M16X2 SS	
355	90240-0264	A		8	FLANGE BUSHING, 15X17X17 MM	
360	315125-0165	-		1	WASHER PLAIN ROUND,CHAMF. 8,4/26, H=5	
370	90450-0509	A		1	CYLINDER	
B2115	1498614-0000	A		1	SENSOR	
B2116	1498614-0000	A		1	SENSOR	

Pos	Part No	SP	UN	Qty	Description	Page No

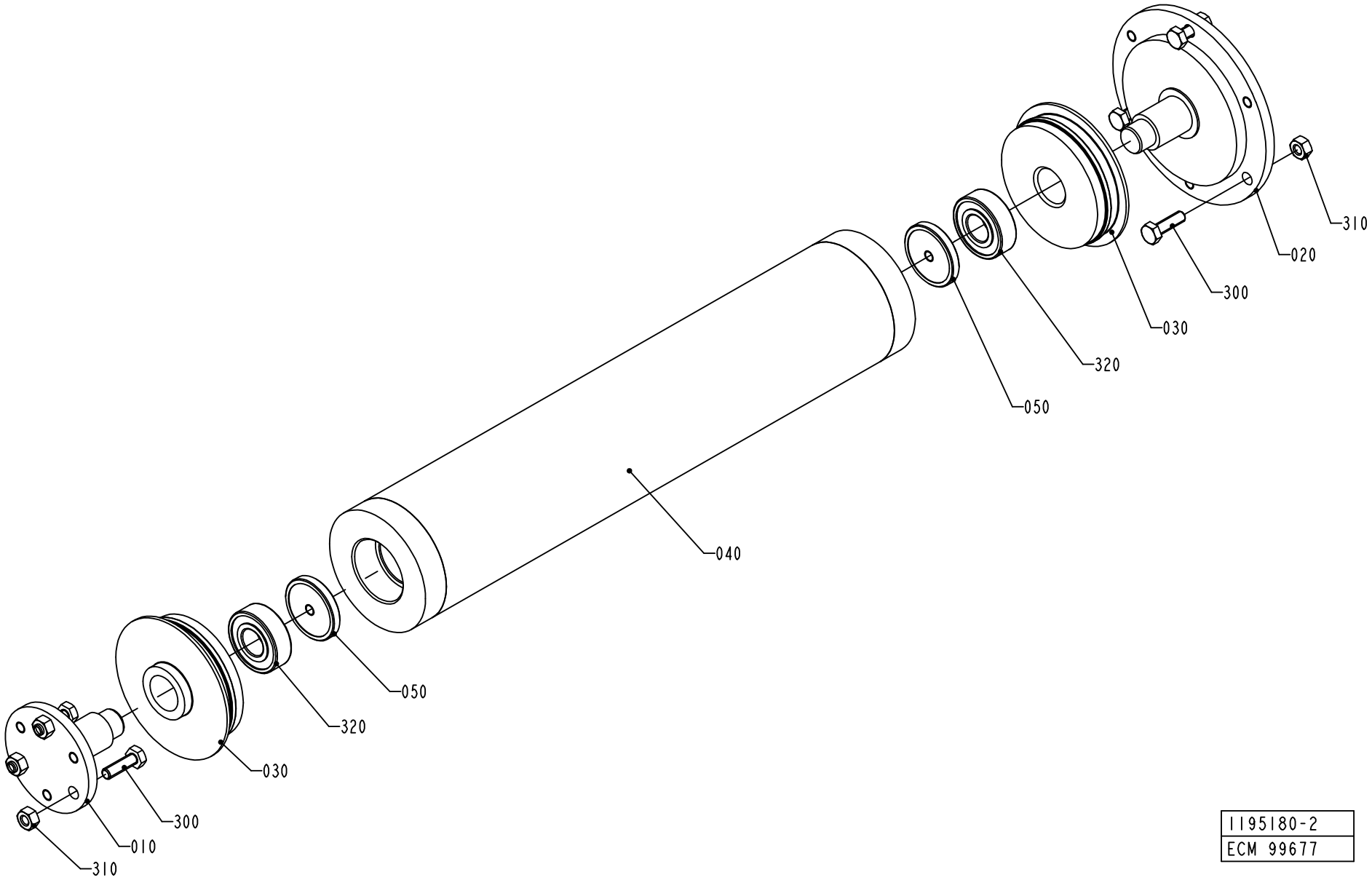

1195180-2
ECM 99677

ECM: 102587 - 20011123
Group number: 1195180-0100
Assembly Drawing: 1195180-2_1_AB

Issue: 20021015

Pos	Part No	SP	UN	Qty	Description	Page No
Common Parts						
010	1490413-0000	A		1	SHAFT	
020	1490412-0000	-		1	SHAFT	
030	1036496-0000	-		2	WHEEL	
040	1490411-0000	A		1	ROLLER	
050	1490407-0000	-		2	WASHER	
300	312105-0370	-		6	SCREW M6S ISO 4017 M6X20 A480	
310	312605-0316	-		6	HEXAGON NUT, M6M M6 A280	
320	90458-1704	A		2	BALL BEARING, 15X35X11 MM	

Pos	Part No	SP	UN	Qty	Description	Page No

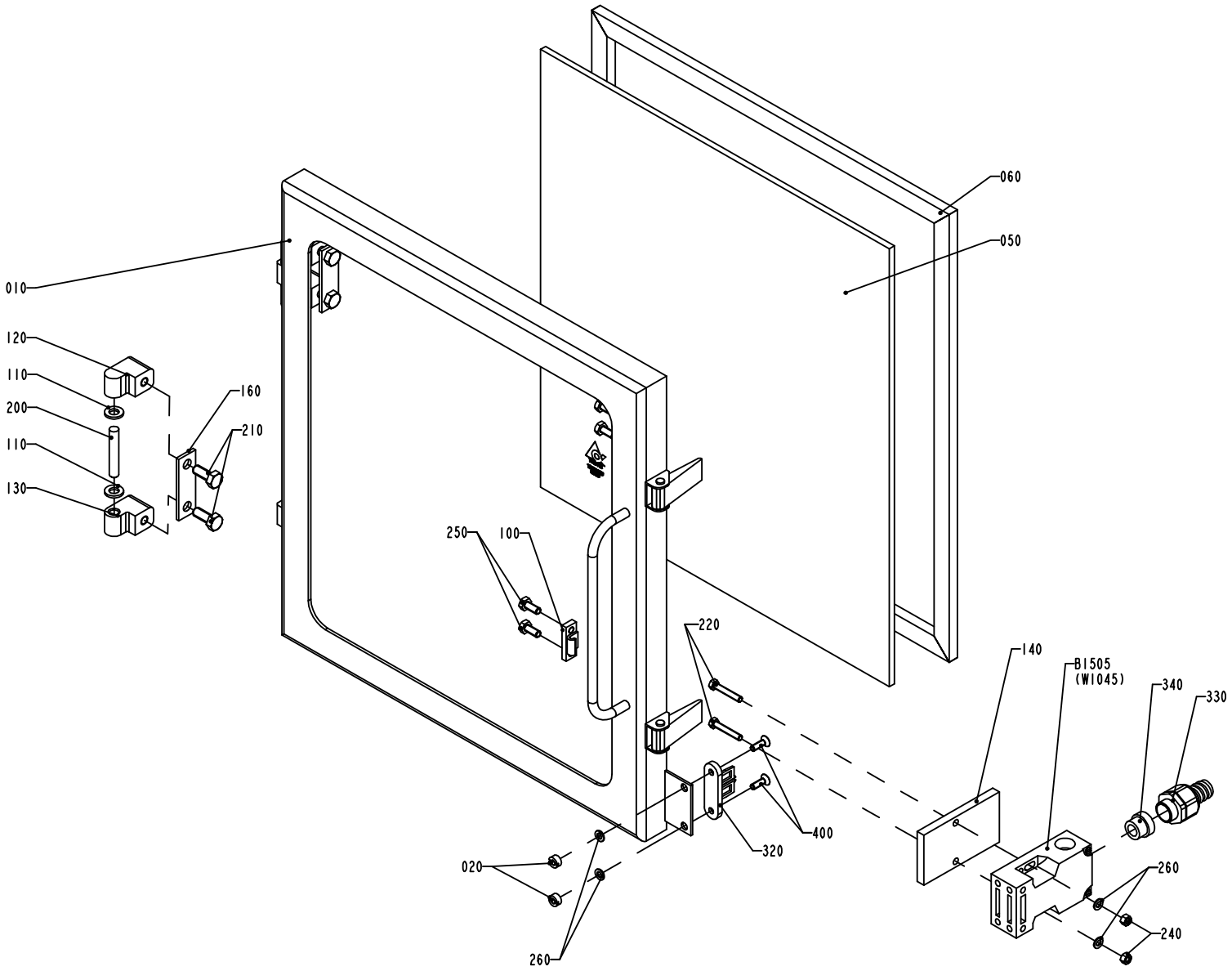

S-1195181-1
ECN 73068

ECM: 113474 - 20020911
Group number: 1195181-0100
Assembly Drawing: 1195181-1_1_AB

Issue: 20021015

Pos	Part No	SP	UN	Qty	Description	Page No
Common Parts						
010	1195270-0000	-		1	FRAME	
020	575034-0000	-		2	ROUND NUT	
050	1195271-0000	-		1	GLASS PANE	
060	1195272-0000	-		1	GASKET	
100	271860-0000	-		2	CLAMP BLOCK	
110	441739-0000	-		4	WASHER	
120	1041979-0000	-		2	HINGE FLANGE	
130	1041978-0000	-		2	HINGE FLANGE	
140	1037048-0000	-		1	PLATE	
160	441737-0000	-		2	WASHER	
200	311103-0413	-		2	PARALLELL PIN, M6, 8X50 MM	
210	312105-0451	-		4	SCREW M6S ISO 4017 M8X20 A480	
220	312109-0335	-		2	SCREW M6S ISO 4017 M5X30 A480	
240	312605-0314	-		2	HEXAGON NUT, M6M M5 A280	
250	312105-0367	-		4	SCREW M6S M6X14 A280	
260	315105-0146	-		4	WASHER PLAIN, BRB, 5,3/10,H=1	
320	90044-0310	-		1	KEY FOR SAFETY SWITCH, AZ 15/16 B1	
330	353243-0003	-		1	EXTENDED WITHOUT INSERT, PG11	
340	353249-0011	-		1	INSERT, SINGEL HOLE, EK 153/11	
400	312155-0329	-		2	SCREW HEX.SOCK.COUNT.MF6S M5X16 A280	
420	90153-0023	-		1	ADHESIVE	
B1505	90044-0139	A		1	KEY SAF.SW. AZ16-02 ZVR K-2254	

Pos	Part No	SP	UN	Qty	Description	Page No

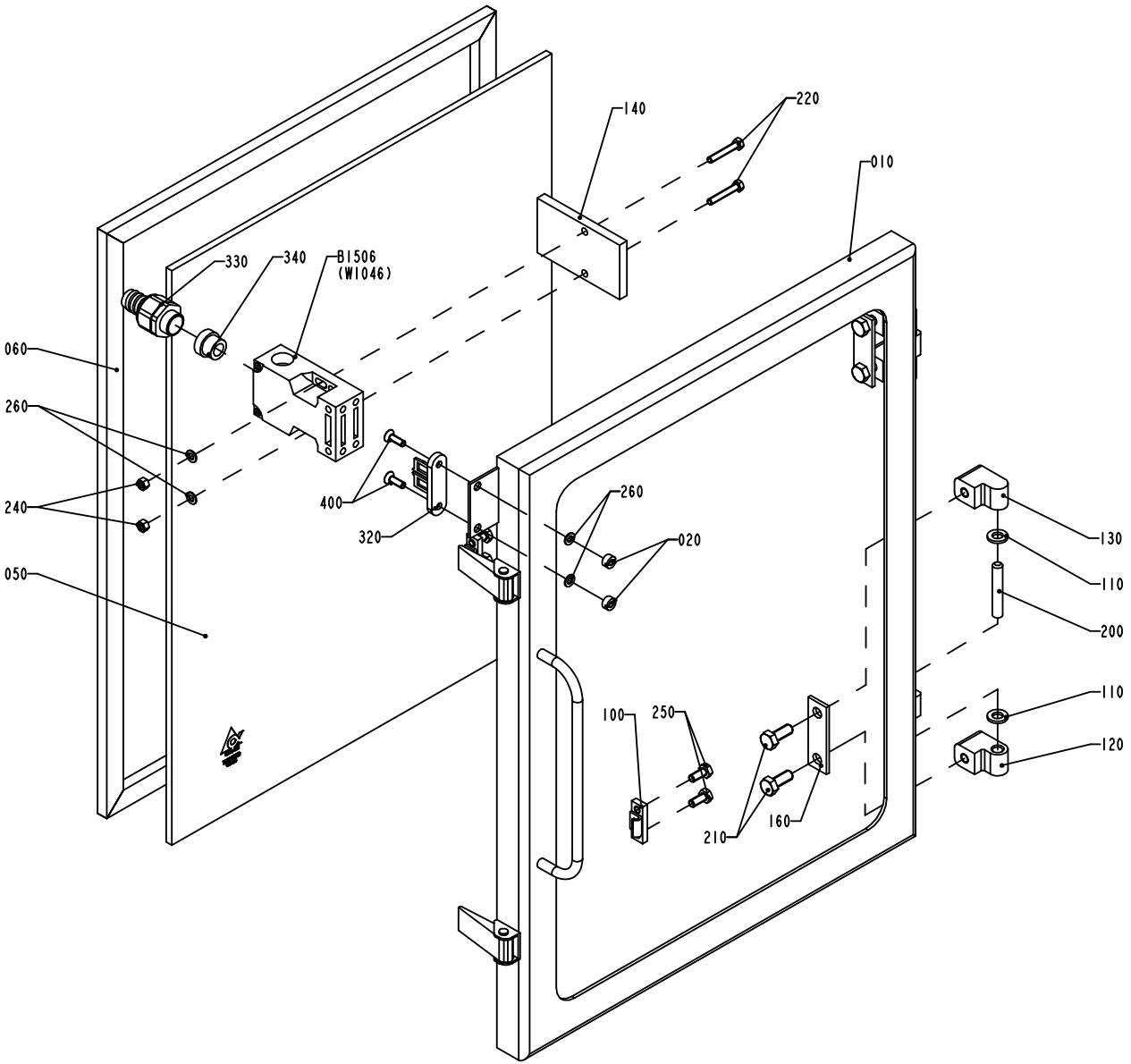

S-1195182-1
ECN 73068

Pos	Part No	SP	UN	Qty	Description	Page No
Common Parts						
010	1195273-0000	-		1	FRAME	
020	575034-0000	-		2	ROUND NUT	
050	1195274-0000	-		1	GLASS PANE	
060	1195275-0000	B		1	GASKET	
100	271860-0000	-		2	CLAMP BLOCK	
110	441739-0000	-		4	WASHER	
120	1041979-0000	-		2	HINGE FLANGE	
130	1041978-0000	-		2	HINGE FLANGE	
140	1037048-0000	-		1	PLATE	
160	441737-0000	-		2	WASHER	
200	311103-0413	-		2	PARALLELL PIN, M6, 8X50 MM	
210	312105-0451	-		4	SCREW M6S ISO 4017 M8X20 A480	
220	312109-0335	-		2	SCREW M6S ISO 4017 M5X30 A480	
240	312605-0314	-		2	HEXAGON NUT, M6M M5 A280	
250	312105-0367	-		4	SCREW M6S M6X14 A280	
260	315105-0146	-		4	WASHER PLAIN, BRB, 5,3/10,H=1	
320	90044-0310	-		1	KEY FOR SAFETY SWITCH, AZ 15/16 B1	
330	353243-0003	B		1	EXTENDED WITHOUT INSERT, PG11	
340	353249-0011	B		1	INSERT, SINGEL HOLE, EK 153/11	
400	312155-0329	-		2	SCREW HEX.SOCK.COUNT.MF6S M5X16 A280	
420	90153-0023	-		1	ADHESIVE	
B1506	90044-0139	A		1	KEY SAF.SW. AZ16-02 ZVR K-2254	

Pos	Part No	SP	UN	Qty	Description	Page No

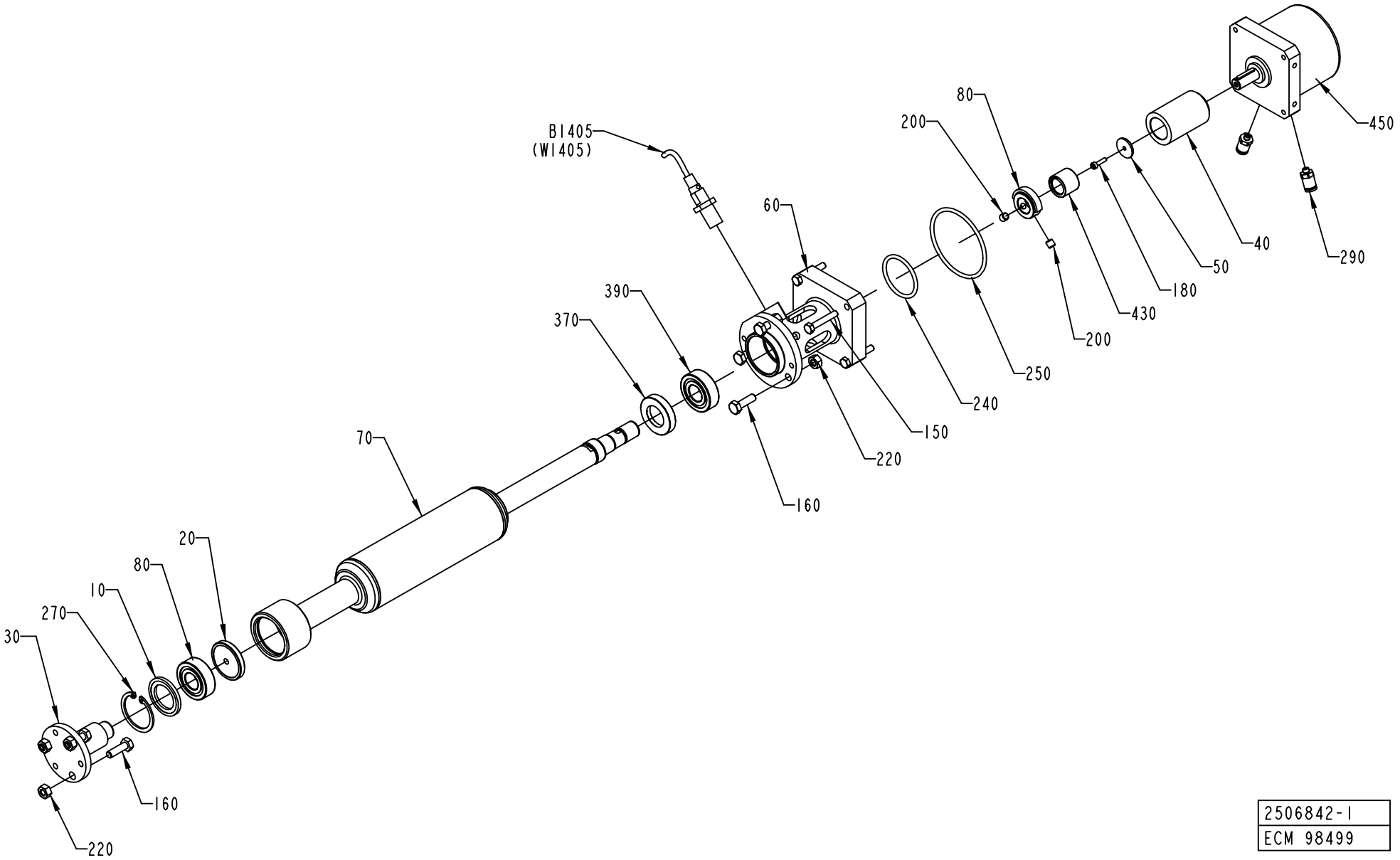

2506842-1
ECM 98499

Pos	Part No	SP	UN	Qty	Description	Page No
TBA 0200B OR TBA 0250B						
070	2517065-0000	A		1	ROLLER	
TBA 0200S						
070	2506841-0000	A		1	ROLLER	
Common Parts						
010	1490406-0000	A		1	WASHER	
020	1490407-0000	A		1	WASHER	
030	1490408-0000	A		1	SHAFT	
040	1490886-0000	-		1	SHAFT	
050	1490887-0000	-		1	WASHER	
060	2506840-0000	-		1	FLANGE	
080	2514281-0000	-		1	COUNTER	
150	312105-0335	-		4	SCREW M6S ISO 4014 M5X30 A480	
160	312105-0370	-		6	SCREW M6S ISO 4017 M6X20 A480	
180	312115-0226	-		1	SCREW MC6S M3X12 A280	
200	312318-0360	-		2	SCREW HEX.SOCK.SET CUP P.MSK6SS6X6 SS	
220	312605-0316	-		6	HEXAGON NUT, M6M M6 A280	
240	315202-0221	B		1	O-RING 34,2X3 MM	
250	315202-0303	B		1	O-RING 59,5X3 MM	
270	315753-0124	B		1	RETAIN. RING, 35	
290	342722-0197	-		2	STRAIGHT COUPLING	
370	90091-0303	-		1	RADIAL SEAL 20X35X7 MM DUST LIP	
390	90458-1704	A		2	BALL BEARING, 15X35X11 MM	
430	90458-1792	-		1	FREE-WHEEL COUPLING, 14X14 MM	
450	90458-2290	-		1	ROTARY ACTUATOR DSM-16-270-P	
B1405	90044-0191	A		1	PROX.SW. E2EG-X2B1	

Pos	Part No	SP	UN	Qty	Description	Page No

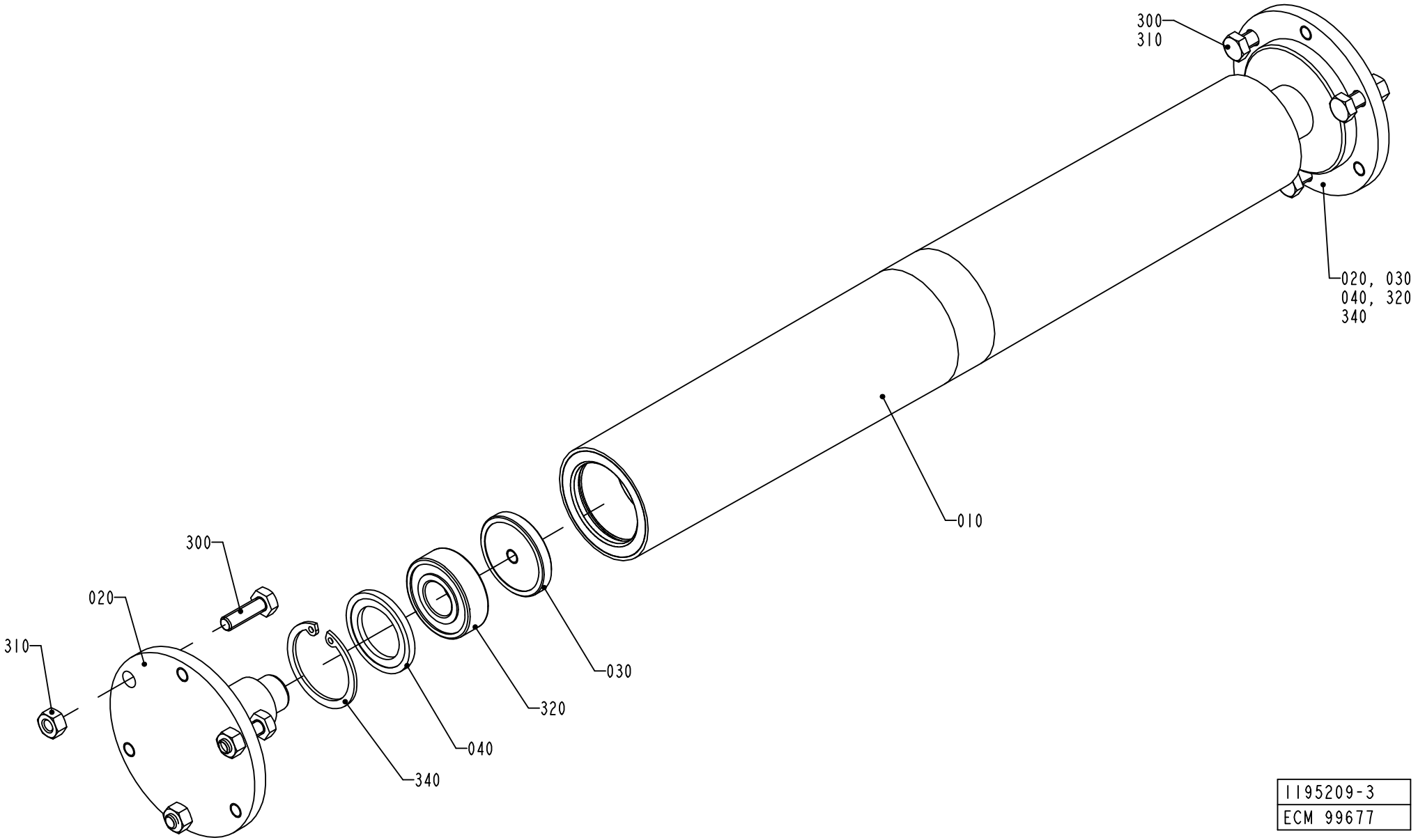

1195209-3
ECM 99677

ECM: 113478 - 20020911
Group number: 1195209-0200
Assembly Drawing: 1195209-3_1_AB

Issue: 20021015

Pos	Part No	SP	UN	Qty	Description	Page No
Common Parts						
010	1490405-0000	A		1	ROLLER	
020	1490415-0000	A		2	SHAFT	
030	1490407-0000	-		2	WASHER	
040	1490406-0000	-		2	WASHER	
300	312105-0370	-		6	SCREW M6S ISO 4017 M6X20 A480	
310	312605-0316	-		6	HEXAGON NUT, M6M M6 A280	
320	90458-1704	A		2	BALL BEARING, 15X35X11 MM	
340	315753-0124	B		2	RETAIN. RING, 35	

Pos	Part No	SP	UN	Qty	Description	Page No

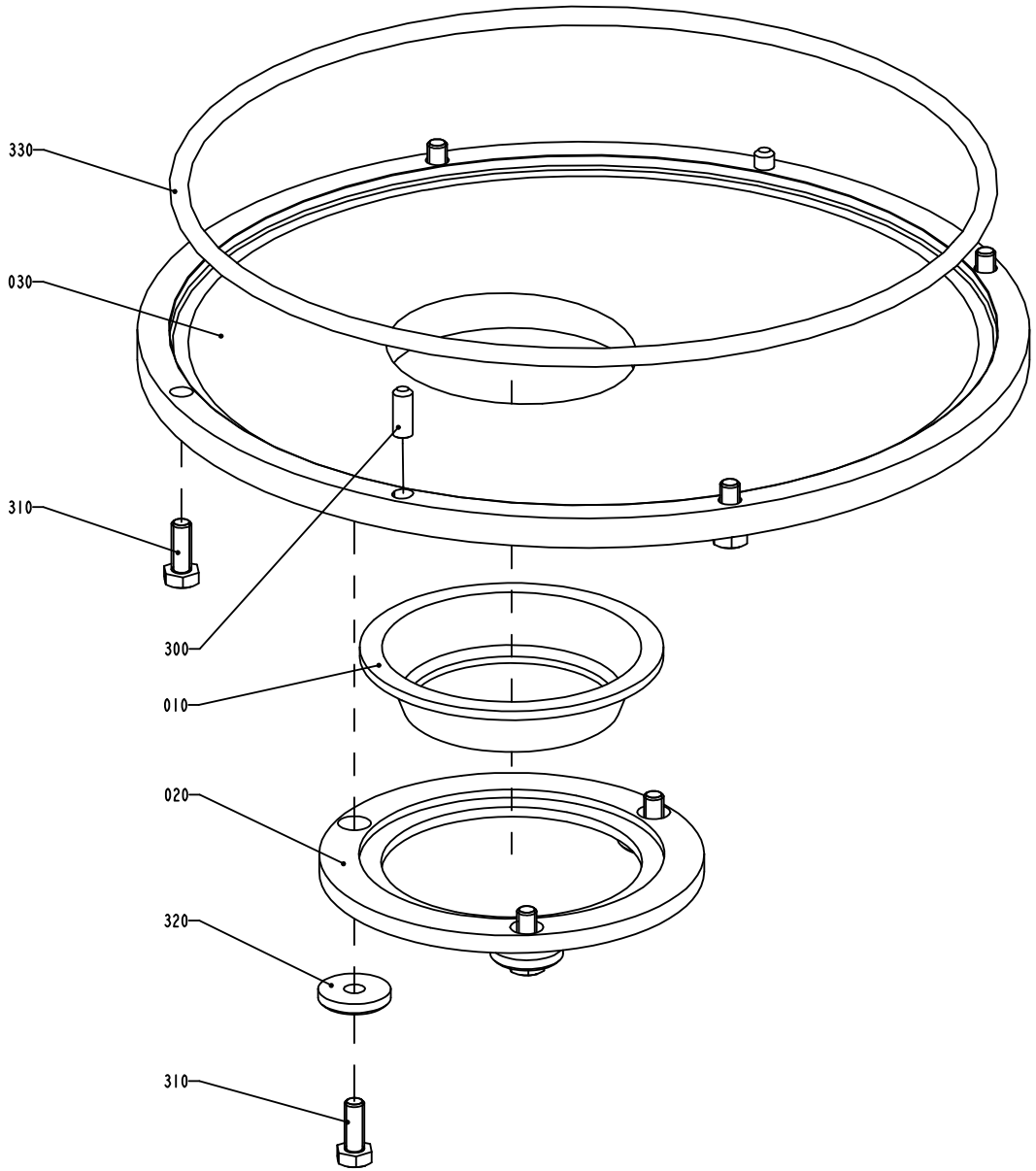
330
030
310
300
010
020
320
310

ECM: 113479 - 20020911
Group number: 1195214-0100
Assembly Drawing: 1195214-1_1_AA

Issue: 20021015

Pos	Part No	SP	UN	Qty	Description	Page No
TBA 0200B OR TBA 0250B						
010	273953-0000	A		1	SEAL	
020	1255975-0000	-		1	SEAL HOLDER	
030	1255976-0000	-		1	SEAL HOLDER	
TBA 0200S						
010	490901-0000	A		1	SEAL	
020	1519503-0000	-		1	SEAL HOLDER	
030	1519502-0000	-		1	SEAL HOLDER	
Common Parts						
300	311103-0351	-		2	PARALLELL PIN, M6, 6X16 MM	
310	312105-0368	-		7	SCREW M6S M6X16 A280	
320	315125-0153	-		3	WASHER PLAIN ROUND,CHAMF. 6,4/22, H=4	
330	315202-0335	B		1	O-RING 239,3X5,7 MM	

Pos	Part No	SP	UN	Qty	Description	Page No

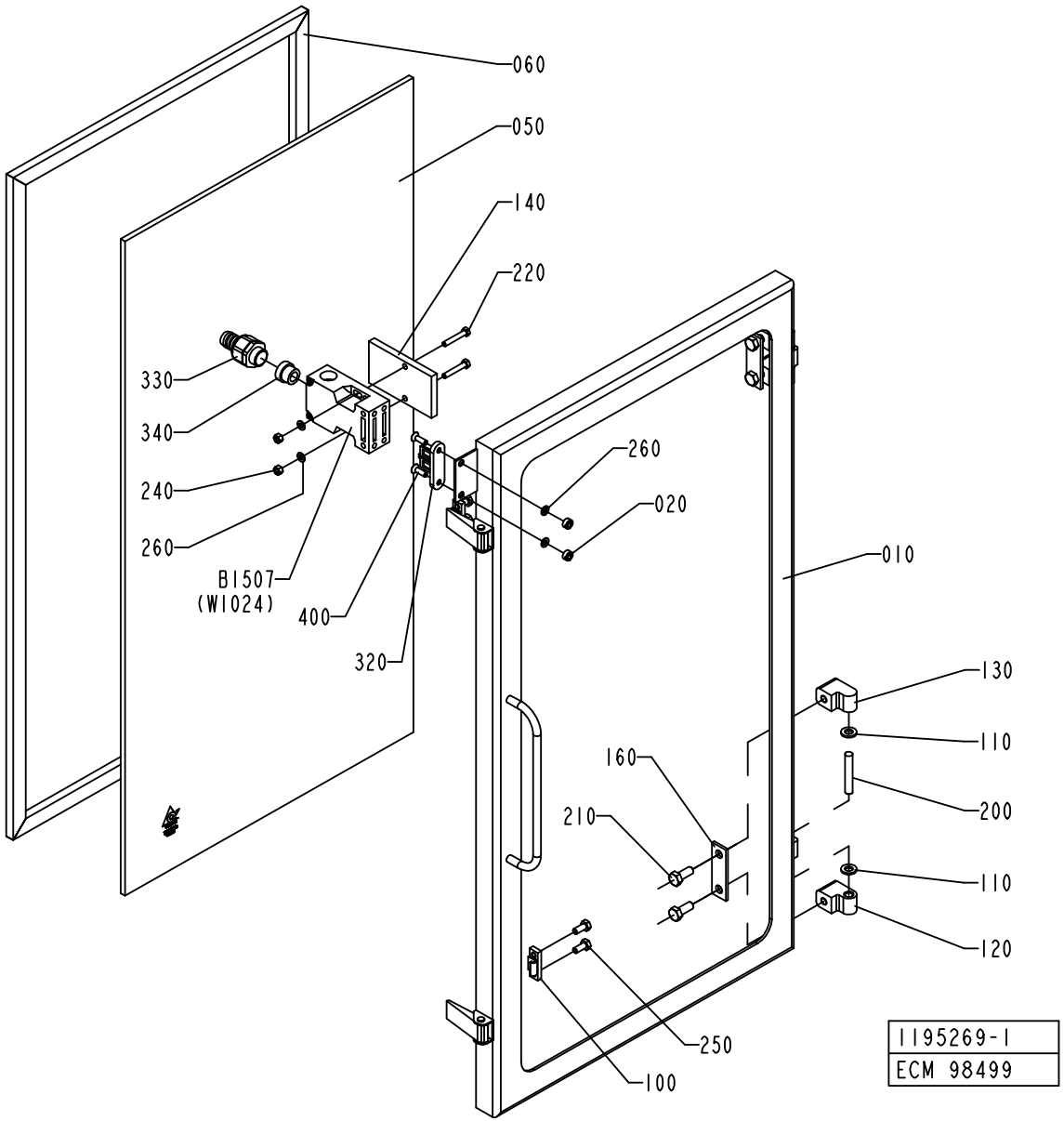
060
050
140
220
330
340
240
260
B1507
(W1024)
400
320
260
020
010
130
110
200
110
120
160
210
250
100
1195269-1
ECM 98499

ECM: 113476 - 20020911
Group number: 1195269-0100
Assembly Drawing: 1195269-1_1_AC

Issue: 20021015

Pos	Part No	SP	UN	Qty	Description	Page No
Common Parts						
010	1195276-0000	-		1	FRAME	
020	575034-0000	-		2	ROUND NUT	
050	1195277-0000	-		1	GLASS PANE	
060	1195278-0000	B		1	GASKET	
100	271860-0000	-		2	CLAMP BLOCK	
110	441739-0000	-		4	WASHER	
120	1041979-0000	-		2	HINGE FLANGE	
130	1041978-0000	-		2	HINGE FLANGE	
140	1037048-0000	-		1	PLATE	
160	441737-0000	-		2	WASHER	
200	311103-0413	-		2	PARALLELL PIN, M6, 8X50 MM	
210	312105-0451	-		4	SCREW M6S ISO 4017 M8X20 A480	
220	312109-0335	-		2	SCREW M6S ISO 4017 M5X30 A480	
240	312605-0314	-		2	HEXAGON NUT, M6M M5 A280	
250	312105-0367	-		4	SCREW M6S M6X14 A280	
260	315105-0146	-		4	WASHER PLAIN, BRB, 5,3/10,H=1	
320	90044-0310	A		1	KEY FOR SAFETY SWITCH, AZ 15/16 B1	
330	353243-0003	B		1	EXTENDED WITHOUT INSERT, PG11	
340	353249-0011	B		1	INSERT, SINGEL HOLE, EK 153/11	
400	312155-0329	-		2	SCREW HEX.SOCK.COUNT.MF6S M5X16 A280	
420	90153-0023	-		1	ADHESIVE	
B1507	90044-0139	A		1	KEY SAF.SW. AZ16-02 ZVR K-2254	

Pos	Part No	SP	UN	Qty	Description	Page No

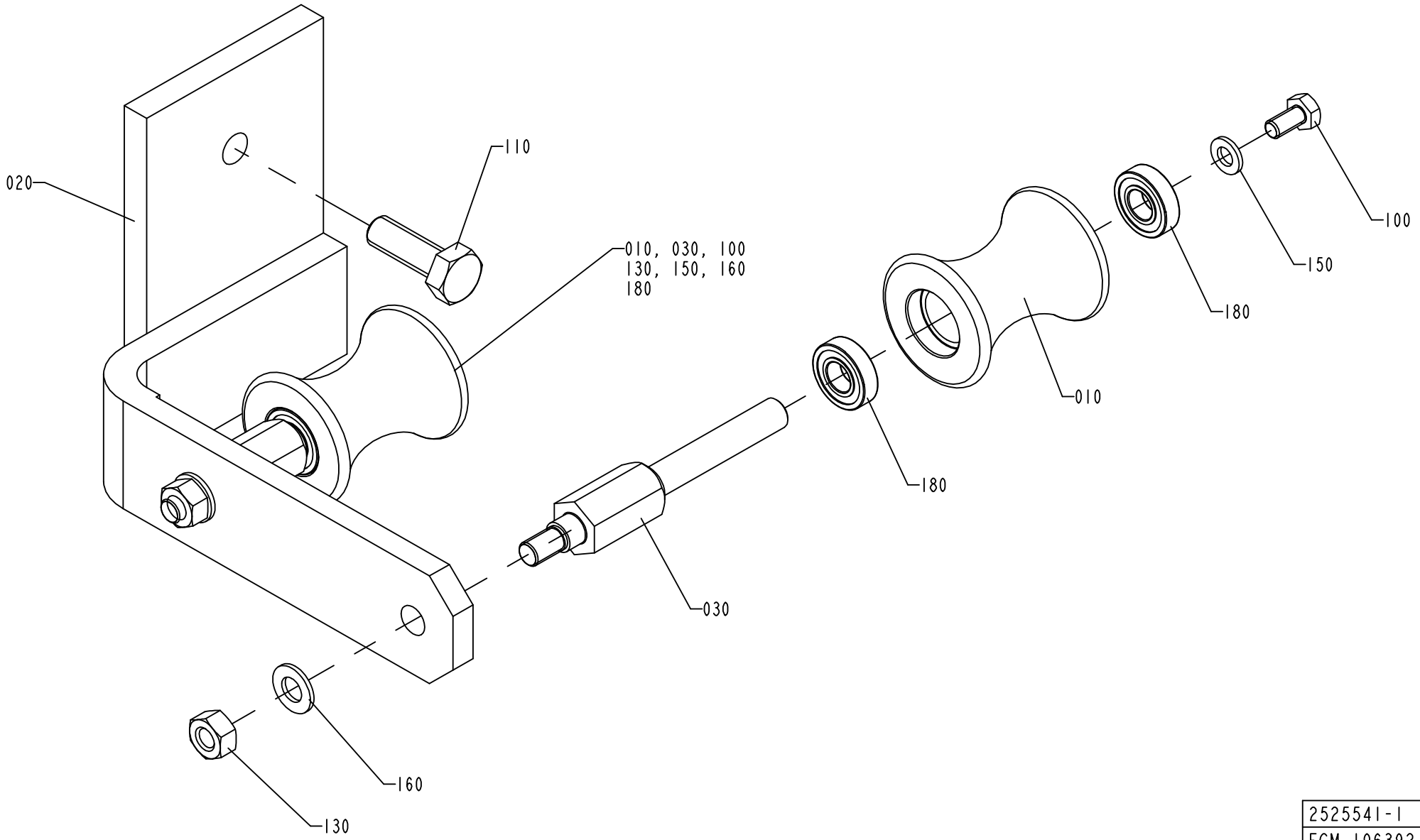

2525541-1
ECM 106392

Pos	Part No	SP	UN	Qty	Description	Page No
TBA 0200S						
010	1487209-0000	A		2	ROLLER	
020	2540804-0000	-		1	BRACKET	
TBA 0200B OR TBA 0250B						
010	1347521-0000	A		2	ROLLER	
020	2525539-0000	-		1	BRACKET	
Common Parts						
030	2525540-0000	B		2	SHAFT	
100	312105-0366	-		2	SCREW M6S M6X12 A280	
110	312105-0495	-		1	SCREW M6S ISO 4017 M10X30 A480	
130	312605-0318	-		2	HEXAGON NUT, M6M M8 A280	
150	315105-0153	-		2	WASHER PLAIN, BRB, 6,4/12,H=1,5	
160	315105-0165	-		2	WASHER PLAIN, BRB, 8,4/16,H=1,5	
180	90214-0036	A		4	BALL BEARING, 10X22X6 MM	

Pos	Part No	SP	UN	Qty	Description	Page No

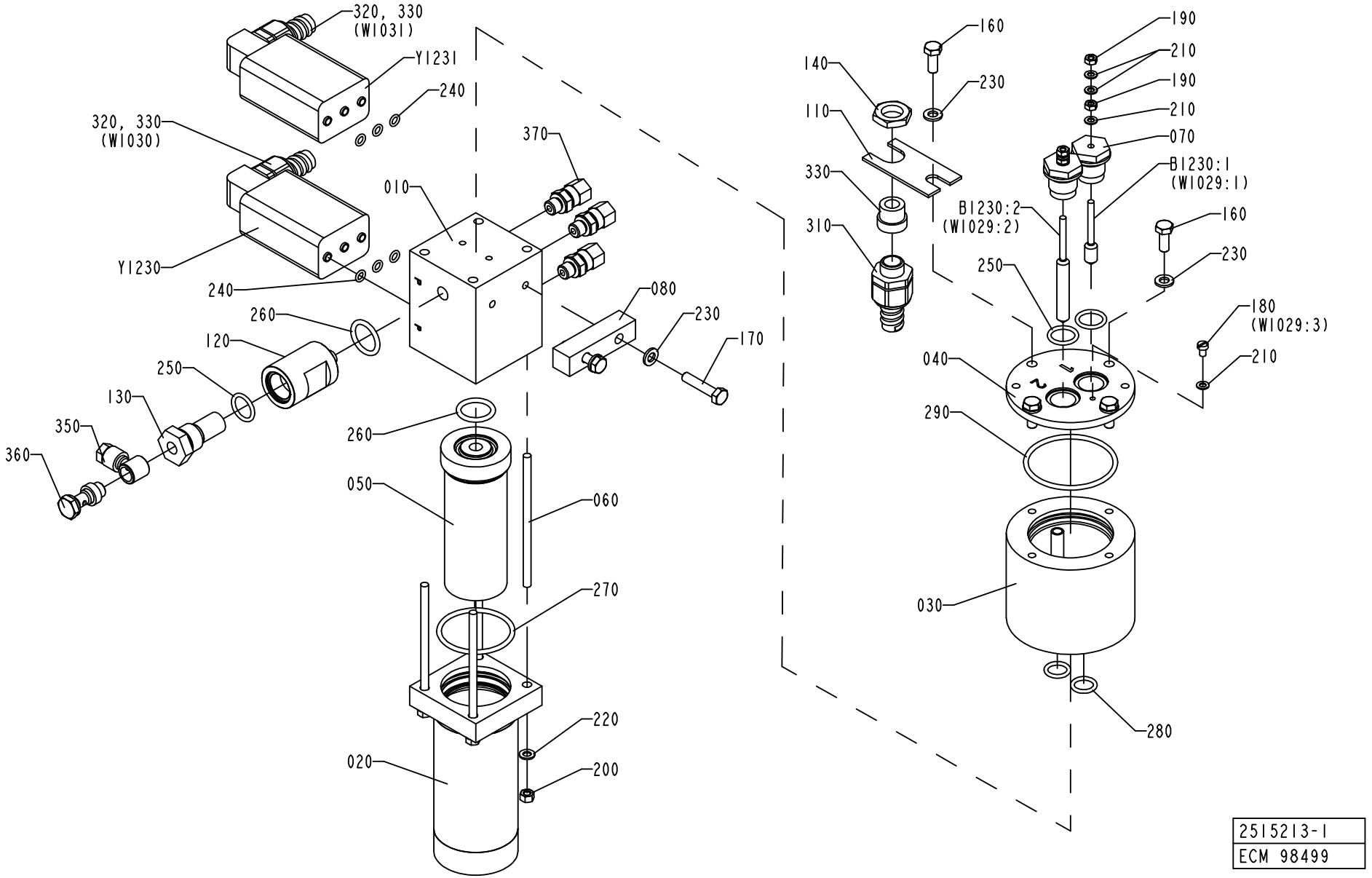
320, 330
(W1031)
Y1231
240
320, 330
(W1030)
370
010
Y1230
240
080
230
260
120
170
250
130
350
360
260
050
060
270
220
020
200
160
190
210
140
230
190
110
210
070
330
B1230:1
(W1029:1)
B1230:2
(W1029:2)
160
310
250
230
180
(W1029:3)
210
040
290
030
280
2515213-1
ECM 98499

Pos	Part No	SP	UN	Qty	Description	Page No
Common Parts						
010	1487114-0000	A		1	BLOCK	
020	554142-0000	A		1	FILTER HOUSING	
030	1478170-0000	A		1	CONTAINER	
040	549267-0000	A		1	LID	
050	554141-0000	A		1	FILTER	
060	554585-0000	-		4	STUD SCREW	
070	560931-0000	-		2	BRACKET	
080	560932-0000	-		1	INTERMEDIATE PART	
110	1040970-0000	-		1	BRACKET	
120	1519486-0000	-		1	FILTER HOUSE	
130	450833-0000	A		1	FILTER	
140	90099-0104	-		1	NUT, PR 15,2 (PG9)	
160	312105-0368	-		4	SCREW M6S M6X16 A280	
170	312109-0374	-		2	SCREW M6S ISO 4017 M6X30 A480	
180	312125-0285	-		1	SCREW SLOT.PAN HD. MCS 4X6 A480	
190	312605-0312	-		4	HEXAGON NUT, M6M M4 A280	
200	312605-0314	-		4	HEXAGON NUT, M6M M5 A280	
210	315105-0136	-		7	WASHER PLAIN, BRB, 4,3/8,H=0,8	
220	315105-0146	-		4	WASHER PLAIN, BRB, 5,3/10,H=1	
230	315105-0153	-		6	WASHER PLAIN, BRB, 6,4/12,H=1,5	
240	927420-0001	A		6	O-RING 5.1X1.6 SILICON	
250	927421-0004	A		3	O-RING 15.3X2.4 SILICON	
260	927422-0001	A		2	O-RING 19.2X3 SILICON	
270	927422-0007	A		1	O-RING 44.2X3 SILICON	
280	927421-0002	A		2	O-RING 12.3X2.4 SILICON	
290	927422-0009	A		1	O-RING 54.5X3 SILICON	
310	353243-0001	-		1	EXTENDED WITHOUT INSERT, PG9	
320	353243-0002	-		2	EXTENDED WITHOUT INSERT, PG11	
330	353249-0009	-		3	INSERT, SINGEL HOLE, EK 152/9	
350	342797-0121	-		1	CONN. BANJO, RINGPIECE 6-1/8	
360	342980-0303	-		1	BANJO-HOLLOW BOLT COUPL,EXT.THR.01-G1/8"	
370	90030-0184	-		3	CONN. STR. GA-6-G1/8	
B1230:1	567070-0013	A		1	ELECTRODE	
B1230:2	567070-0019	A		1	ELECTRODE	
Y1230	90042-0203	A		1	SOLENOID VALVE BURKERT	
Y1231	90042-0203	A		1	SOLENOID VALVE BURKERT	

Pos	Part No	SP	UN	Qty	Description	Page No

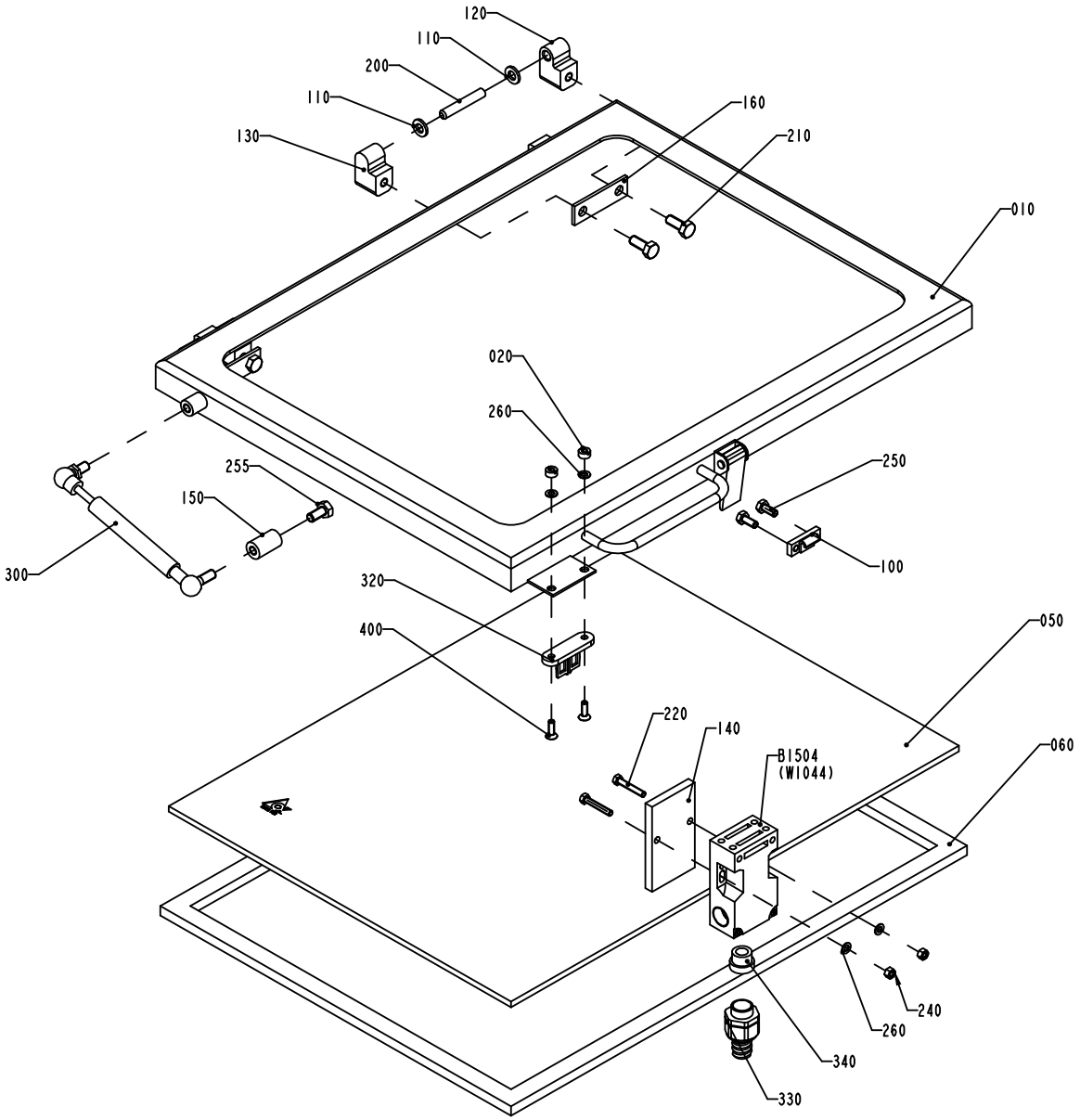

S-1347493-1
ECN 73068

ECM: 115198 - 20020911
Group number: 1347493-0100
Assembly Drawing: 1347493-1_1_AB

Issue: 20021015

Pos	Part No	SP	UN	Qty	Description	Page No
Common Parts						
010	1347494-0000	-		1	FRAME	
020	575034-0000	-		2	ROUND NUT	
050	1037080-0000	-		1	GLASS PANE	
060	1037081-0000	-		1	GASKET	
100	271860-0000	-		1	CLAMP BLOCK	
110	441739-0000	-		4	WASHER	
120	1041979-0000	-		2	HINGE FLANGE	
130	1041978-0000	-		2	HINGE FLANGE	
140	1037048-0000	-		1	PLATE	
150	1037089-0000	-		1	SPACER	
160	441737-0000	-		2	WASHER	
200	311103-0413	-		2	PARALLELL PIN, M6, 8X50 MM	
210	312105-0451	-		4	SCREW M6S ISO 4017 M8X20 A480	
220	312109-0335	-		2	SCREW M6S ISO 4017 M5X30 A480	
240	312605-0314	-		2	HEXAGON NUT, M6M M5 A280	
250	312105-0367	-		2	SCREW M6S M6X14 A280	
255	312105-0449	-		1	SCREW M6S ISO 4017 M8X16 A480	
260	315105-0146	-		4	WASHER PLAIN, BRB, 5,3/10,H=1	
300	90347-0039	-		1	DAMPER	
320	90044-0310	-		1	KEY FOR SAFETY SWITCH, AZ 15/16 B1	
330	353243-0003	-		1	EXTENDED WITHOUT INSERT, PG11	
340	353249-0011	-		1	INSERT, SINGEL HOLE, EK 153/11	
400	312155-0329	-		2	SCREW HEX.SOCK.COUNT.MF6S M5X16 A280	
420	90153-0023	-		1	ADHESIVE	
B1504	90044-0139	A		1	KEY SAF.SW. AZ16-02 ZVR K-2254	

Pos	Part No	SP	UN	Qty	Description	Page No

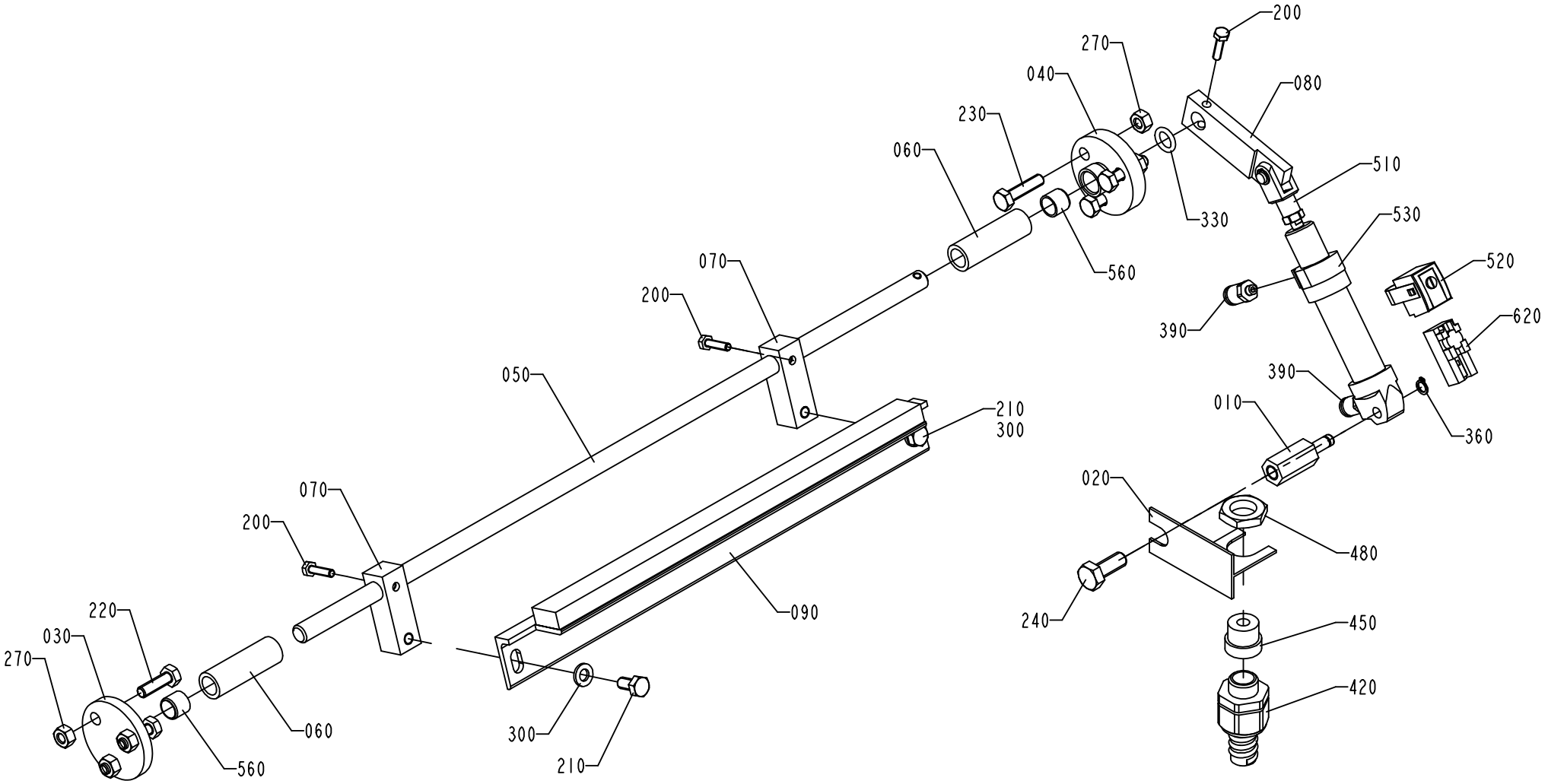

1095790-3
ECN 81466

Pos	Part No	SP	UN	Qty	Description	Page No
FULLYEQUIP						
010	1036178-0000	-		1	SHAFT	
020	1037199-0000	-		1	BRACKET	
030	1519184-0000	-		1	FLANGE	
040	1519185-0000	-		1	FLANGE	
050	1519186-0000	-		1	SHAFT	
060	1519187-0000	-		2	SPACER	
070	1519188-0000	-		2	ARM	
080	1519189-0000	-		1	LEVER	
090	1519190-0000	B		1	LID	
200	312105-0293	-		3	SCREW M6S ISO 4017 M4X16 A480	
210	312105-0366	-		2	SCREW M6S M6X12 A280	
220	312105-0370	-		3	SCREW M6S ISO 4017 M6X20 A480	
230	312105-0372	-		3	SCREW M6S ISO 4017 M6X25 A480	
240	312105-0451	-		1	SCREW M6S ISO 4017 M8X20 A480	
300	315105-0153	-		2	WASHER PLAIN, BRB, 6,4/12,H=1,5	
330	315204-0208	A		1	O-RING 9,3X2,4 MM	
360	315751-0103	B		1	RETAIN. RING, 6	
390	342722-0197	-		2	STRAIGHT COUPLING	
420	353243-0001	-		1	EXTENDED WITHOUT INSERT, PG9	
450	353249-0008	-		1	INSERT, SINGEL HOLE, EK 152/7	
480	90099-0104	-		1	NUT, PR 15,2 (PG9)	
510	90239-0489	-		1	ROD END,CLEVIS WITH AXLE M6	
520	90239-0579	A		1	SENSOR,BRACKET,FOR CYL 16	
530	90239-0816	A		1	DOUBLE ACTING, MINI-ISO, CYL.16-25	
560	90240-0302	B		2	BUSHING	
590	90296-0091	-		1	LUBRICATION GREASE	
620	90457-0047	A		1	SENSOR,2750-1-5111-1 INCL. ADAPTER, PNP	
HIGH HYGIEN. OR STD						
100	1038249-0000	-		2	BUSHING	
190	312105-0364	-		2	SCREW M6S ISO 4017 M6X10 A480	
220	312105-0370	-		6	SCREW M6S ISO 4017 M6X20 A480	
250	312105-0447	-		1	SCREW M6S ISO 4017 M8X12 A480	
Common Parts						
270	312605-0316	-		6	HEXAGON NUT, M6M M6 A280	

Pos	Part No	SP	UN	Qty	Description	Page No

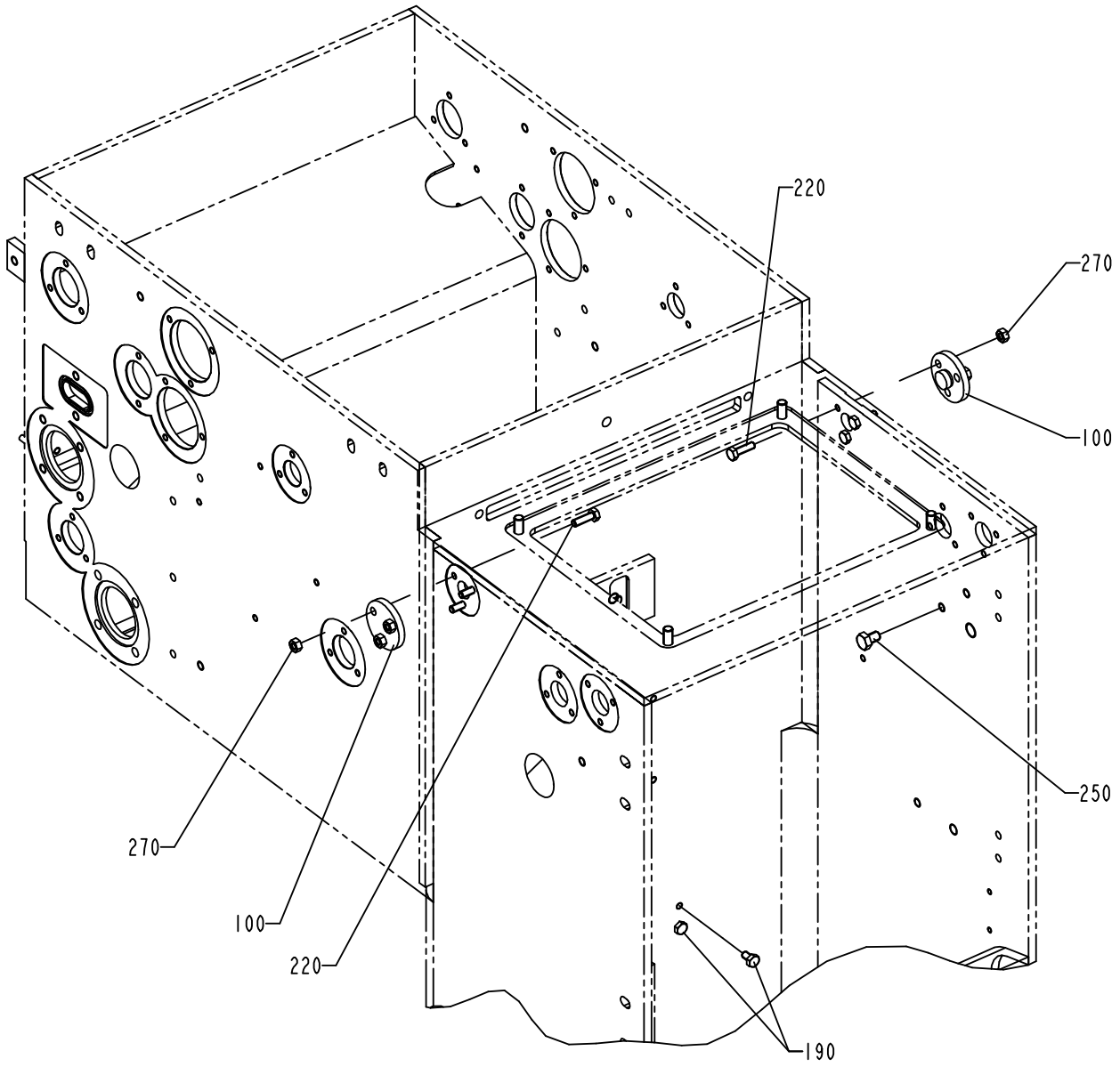

1095790-4
ECN 81466

ECM: 113453 - 20020911
Group number: 1095790-0200
Assembly Drawing: 1095790-4_1_AA

Issue: 20021015

Pos	Part No	SP	UN	Qty	Description	Page No
FULLYEQUIP						
010	1036178-0000	-		1	SHAFT	
020	1037199-0000	-		1	BRACKET	
030	1519184-0000	-		1	FLANGE	
040	1519185-0000	-		1	FLANGE	
050	1519186-0000	-		1	SHAFT	
060	1519187-0000	-		2	SPACER	
070	1519188-0000	-		2	ARM	
080	1519189-0000	-		1	LEVER	
090	1519190-0000	B		1	LID	
200	312105-0293	-		3	SCREW M6S ISO 4017 M4X16 A480	
210	312105-0366	-		2	SCREW M6S M6X12 A280	
220	312105-0370	-		3	SCREW M6S ISO 4017 M6X20 A480	
230	312105-0372	-		3	SCREW M6S ISO 4017 M6X25 A480	
240	312105-0451	-		1	SCREW M6S ISO 4017 M8X20 A480	
300	315105-0153	-		2	WASHER PLAIN, BRB, 6,4/12,H=1,5	
330	315204-0208	A		1	O-RING 9,3X2,4 MM	
360	315751-0103	B		1	RETAIN. RING, 6	
390	342722-0197	-		2	STRAIGHT COUPLING	
420	353243-0001	-		1	EXTENDED WITHOUT INSERT, PG9	
450	353249-0008	-		1	INSERT, SINGEL HOLE, EK 152/7	
480	90099-0104	-		1	NUT, PR 15,2 (PG9)	
510	90239-0489	-		1	ROD END,CLEVIS WITH AXLE M6	
520	90239-0579	A		1	SENSOR,BRACKET,FOR CYL 16	
530	90239-0816	A		1	DOUBLE ACTING, MINI-ISO, CYL.16-25	
560	90240-0302	B		2	BUSHING	
590	90296-0091	-		1	LUBRICATION GREASE	
620	90457-0047	A		1	SENSOR,2750-1-5111-1 INCL. ADAPTER, PNP	
HIGH HYGIEN. OR STD						
100	1038249-0000	-		2	BUSHING	
190	312105-0364	-		2	SCREW M6S ISO 4017 M6X10 A480	
220	312105-0370	-		6	SCREW M6S ISO 4017 M6X20 A480	
250	312105-0447	-		1	SCREW M6S ISO 4017 M8X12 A480	
Common Parts						
270	312605-0316	-		6	HEXAGON NUT, M6M M6 A280	

Pos	Part No	SP	UN	Qty	Description	Page No

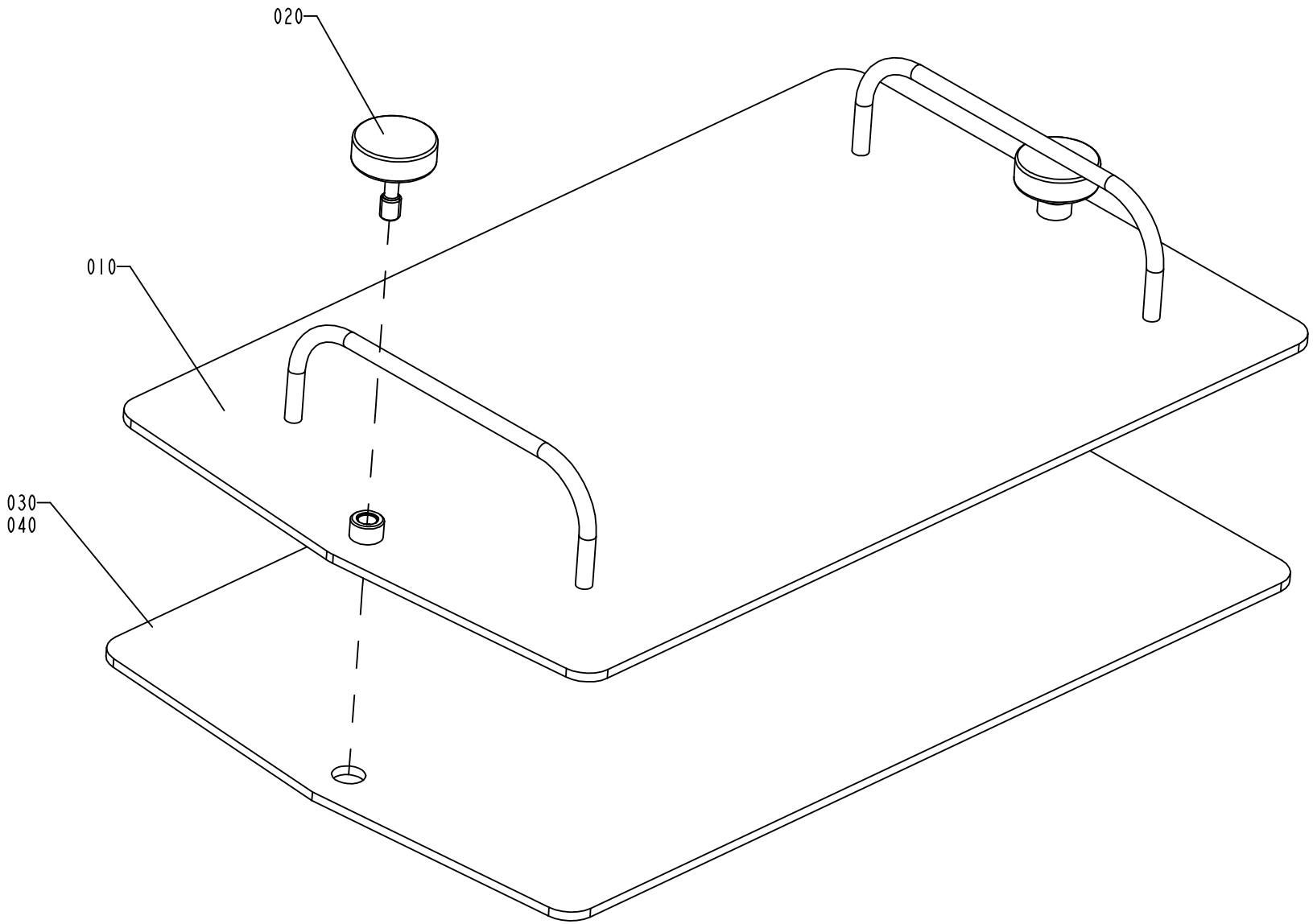

2522161-1
ECM 98499

ECM: 113494 - 20020911
Group number: 2522161-0100
Assembly Drawing: 2522161-1_1_AA

Issue: 20021015

Pos	Part No	SP	UN	Qty	Description	Page No
Common Parts						
010	2522150-0000	-		1	PLATE	
020	1490279-0000	-		2	SCREW	
030	2522151-0000	A		1	GASKET	
040	90153-0023	A		1	ADHESIVE	

Pos	Part No	SP	UN	Qty	Description	Page No

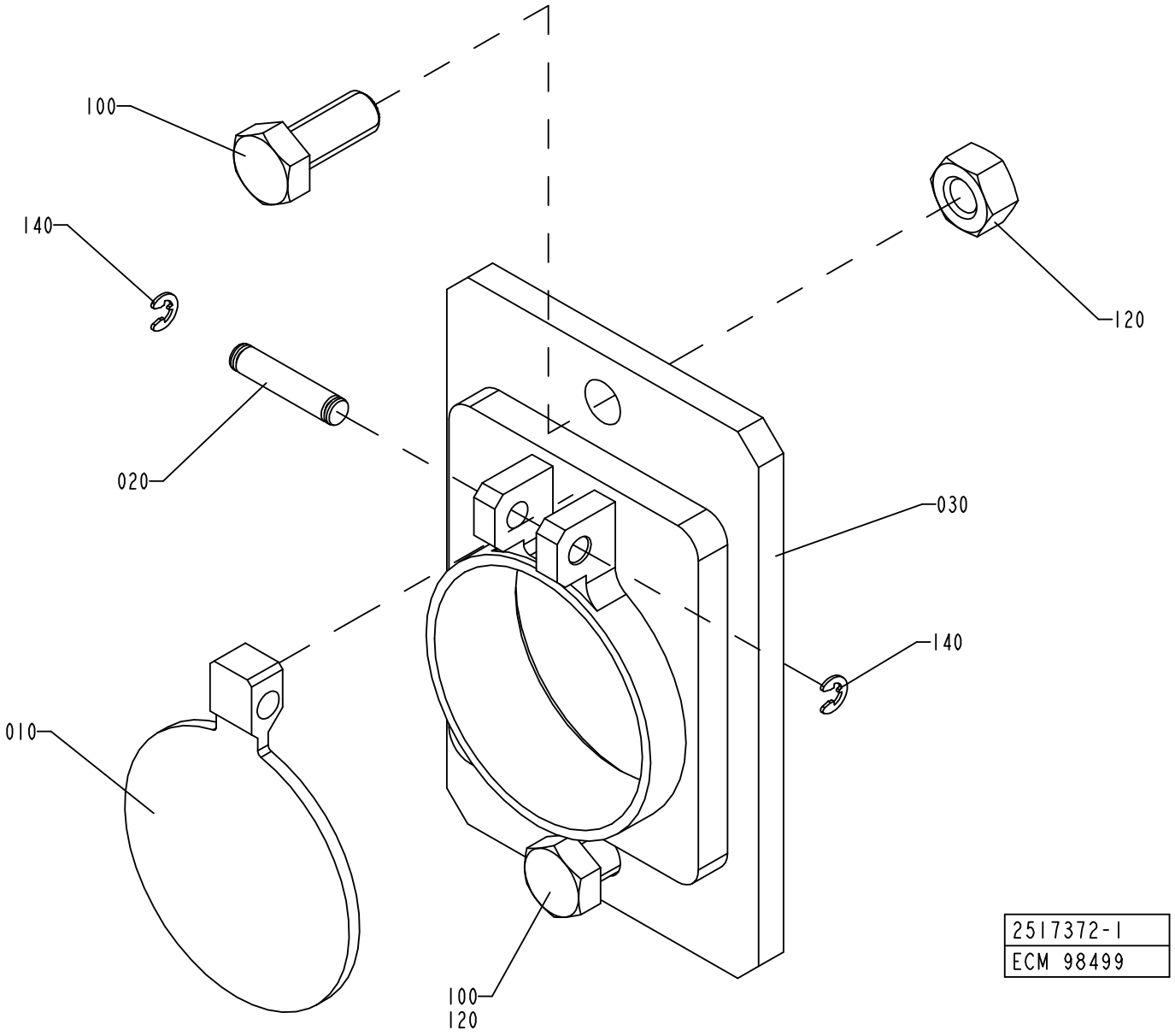
100
140
020
120
030
140
010
100
120
2517372-1
ECM 98499

ECM: 113495 - 20020911
Group number: 2517372-0100
Assembly Drawing: 2517372-1_1_AA

Issue: 20021015

Pos	Part No	SP	UN	Qty	Description	Page No
Common Parts						
010	1538494-0000	A		1	LID	
020	1558418-0000	-		1	SHAFT	
030	2517373-0000	-		1	FLANGE	
100	312105-0451	-		2	SCREW M6S ISO 4017 M8X20 A480	
120	312605-0318	-		2	HEXAGON NUT, M6M M8 A280	
140	315755-0105	B		2	LOCKING WASHER 3,2	

Pos	Part No	SP	UN	Qty	Description	Page No

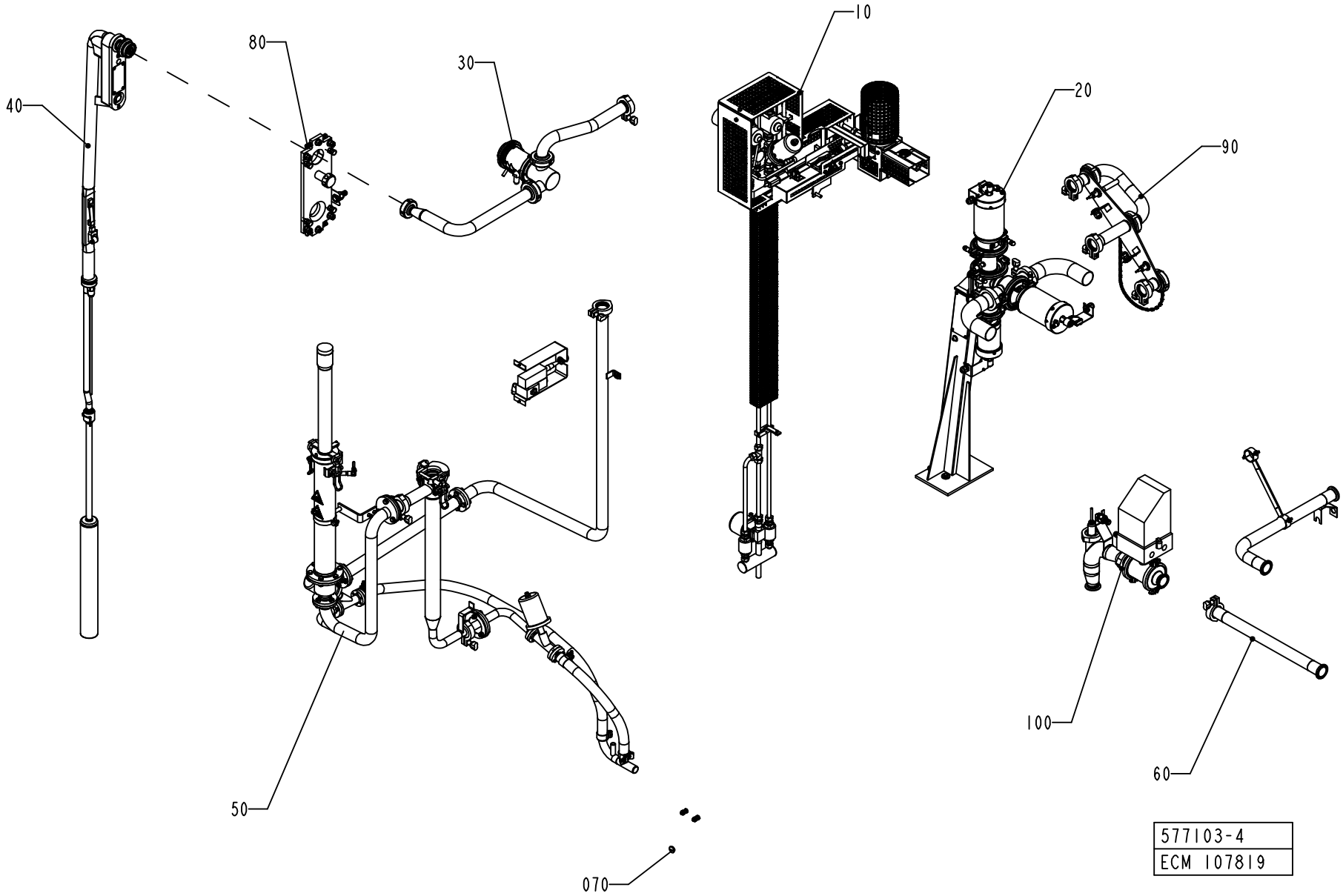
10
20
30
40
50
60
70
80
90
100
577103-4
ECM 107819

Pos	Part No	SP	UN	Qty	Description	Page No
FLOATER						
040	A2523670-0200	-		1	FILLING PIPE	**81**
050	A2540802-0100	-		1	CLEANING SLEEVE	**83**
070	A1519975-0100	-		1	LEVEL CONTROL DEVICE	**85**
LEVELPROBE						
040	A1498668-0200	-		1	FILLING PIPE	**91**
050	A1498673-0200	-		1	CLEANING SLEEVE	**93**
070	A2547150-0100	-		1	PLUG	**95**
Common Parts						
010	A2523644-0100	-		1	STEAM SYSTEM	**97**
020	A1255980-0200	-		1	PRODUCT VALVE GROUP	**99**
030	A1498700-0200	-		1	FLOW REGULATOR	**113**
060	A1255984-0300	-		1	CLEANING PIPE	**117**
080	A1498667-0100	-		1	FASTENING PLATE	**119, 121**
090	A2525518-0100	-		1	CLEANING PIPE	**123**
100	A1035259-0200	-		1	INTERMEDIATE PART	**125, 127**

Pos	Part No	SP	UN	Qty	Description	Page No

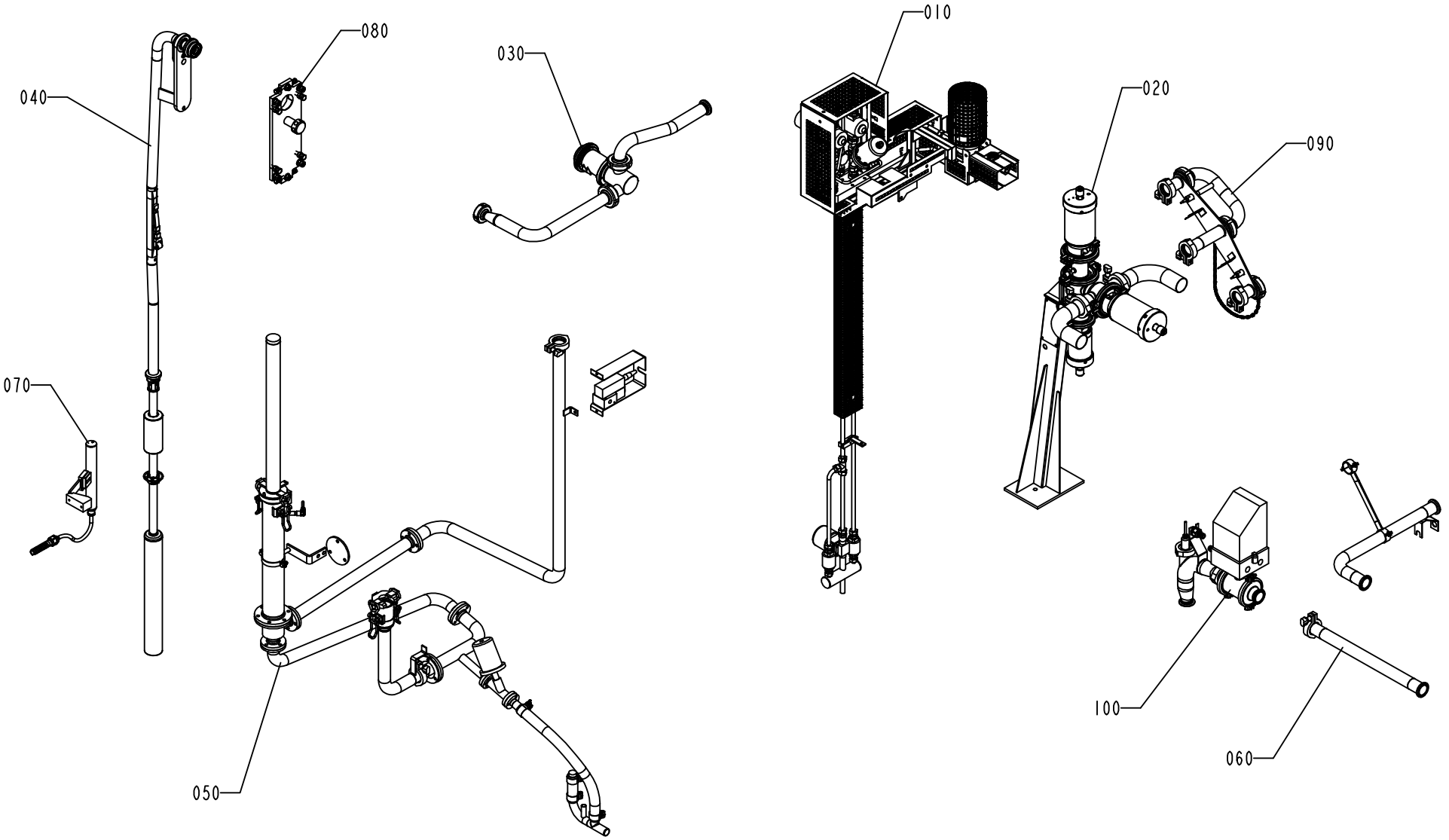

577103-5
ECM 106392

Pos	Part No	SP	UN	Qty	Description	Page No
FLOATER						
040	A2523670-0200	-		1	FILLING PIPE	**81**
050	A2540802-0100	-		1	CLEANING SLEEVE	**83**
070	A1519975-0100	-		1	LEVEL CONTROL DEVICE	**85**
LEVELPROBE						
040	A1498668-0200	-		1	FILLING PIPE	**91**
050	A1498673-0200	-		1	CLEANING SLEEVE	**93**
070	A2547150-0100	-		1	PLUG	**95**
Common Parts						
010	A2523644-0100	-		1	STEAM SYSTEM	**97**
020	A1255980-0200	-		1	PRODUCT VALVE GROUP	**99**
030	A1498700-0200	-		1	FLOW REGULATOR	**113**
060	A1255984-0300	-		1	CLEANING PIPE	**117**
080	A1498667-0100	-		1	FASTENING PLATE	**119, 121**
090	A2525518-0100	-		1	CLEANING PIPE	**123**
100	A1035259-0200	-		1	INTERMEDIATE PART	**125, 127**

Pos	Part No	SP	UN	Qty	Description	Page No

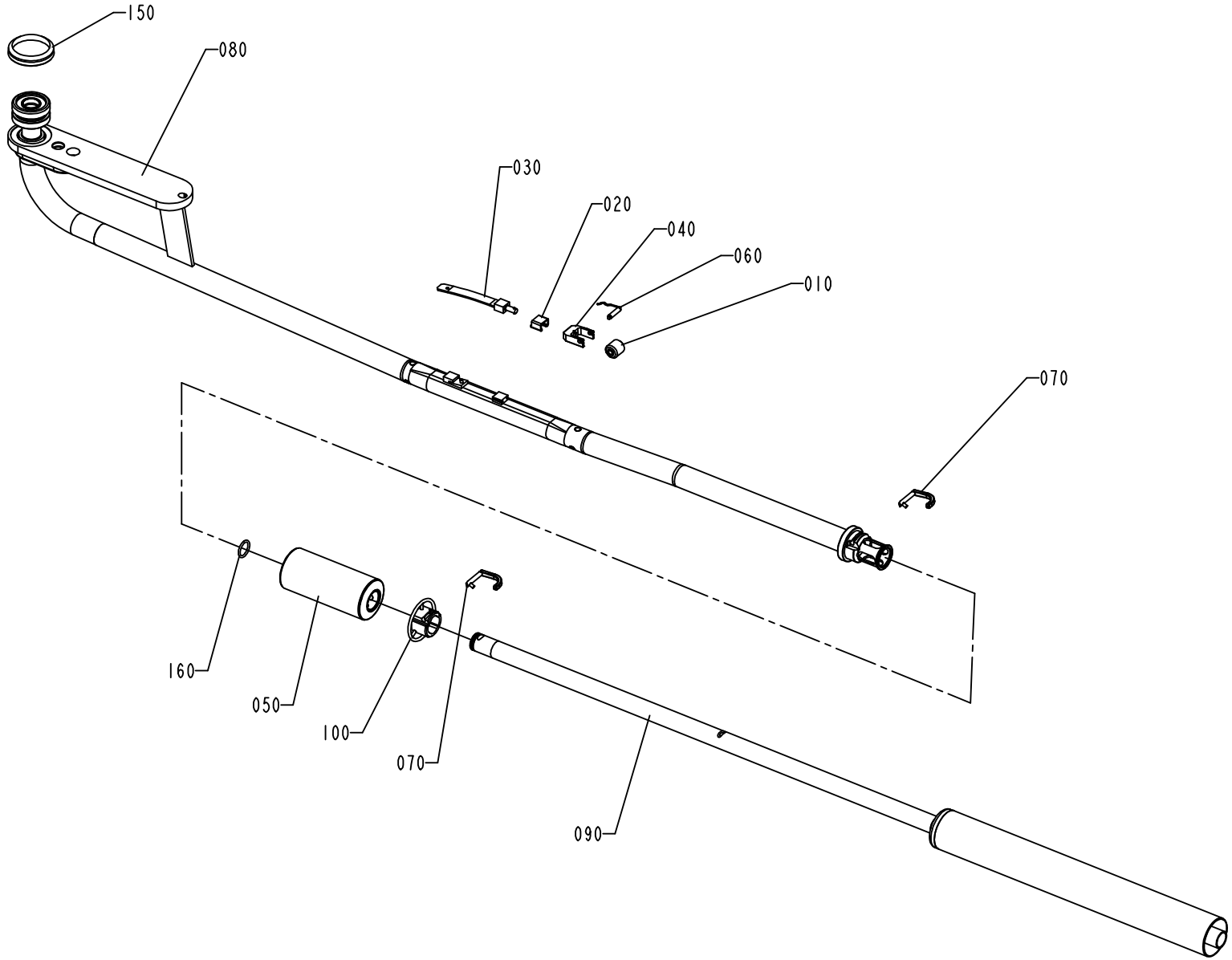

2523670-2
ECM 116831

Pos	Part No	SP	UN	Qty	Description	Page No
TBA 0200B						
090	2569800-0000	A		1	FILLING PIPE	
TBA 0250B						
090	2569801-0000	A		1	FILLING PIPE	
Common Parts						
010	257330-0000	A		1	PRESSURE ROLLER	
020	295377-0001	A		1	HOOD	
030	544894-0000	A		1	SPRING	
040	568583-0000	A		1	FORK	
050	979326-0000	A		1	FLOAT	
060	295376-0000	A		1	SHAFT	
070	1487378-0000	A		2	LOCKING PIN	
080	2506837-0000	A		1	FILLING PIPE	
100	2525537-0000	A		1	LOCKING RING	
150	315220-0198	B		1	V-RINGS 45X55X13 MM V-50S	
160	90459-0328	A		1	O-RING 20,29X2,62 MM	

Pos	Part No	SP	UN	Qty	Description	Page No

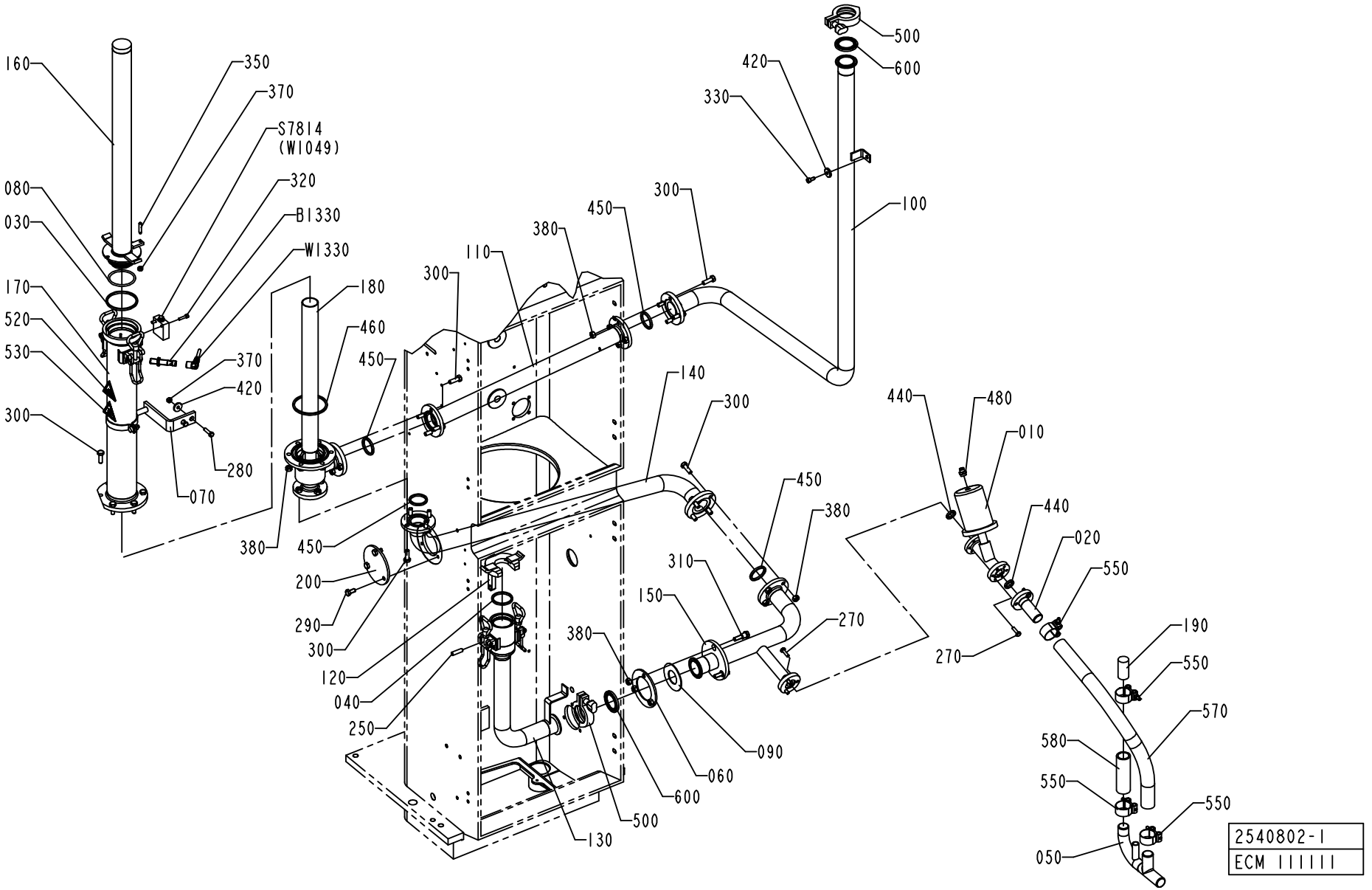
160
350
370
S7814
(W1049)
320
B1330
W1330
080
030
170
520
530
300
280
070
370
420
180
460
450
380
450
200
290
300
120
040
250
130
500
600
060
090
110
300
450
380
300
100
420
330
500
600
140
300
450
380
310
150
270
380
270
440
480
010
440
020
550
190
550
570
580
550
550
050
2540802-1
ECM 111111

ECM: 116847 - 20021014
Group number: 2540802-0100
Assembly Drawing: 2540802-1_1_AB

Issue: 20021015

Pos	Part No	SP	UN	Qty	Description	Page No
TBA 0200B						
160	2569805-0000	-		1	CLEANING PIPE	
TBA 0250B						
160	2569806-0000	-		1	CLEANING PIPE	
Common Parts						
010	1038905-0000	-		1	VALVE	
020	1285329-0000	-		1	PIPE	
030	1348474-0000	-		1	GASKET	
040	1348475-0000	A		1	GASKET	
050	1487198-0000	-		1	PIPE	
060	1499127-0000	-		1	FLANGE	
070	1538787-0000	-		1	SUPPORT	
080	1538794-0000	A		1	O-RING	
090	1538846-0000	-		1	SEAL	
100	2500016-0000	-		1	PIPE	
110	2500017-0000	-		1	PIPE	
120	2501527-0000	-		1	CLAMP	
130	2506843-0000	-		1	CLEANING SLEEVE	
140	2523647-0000	-		1	PIPE	
150	2523648-0000	-		1	PIPE	
170	2527740-0000	-		1	CLEANING PIPE	
180	2527741-0000	-		1	CLEANING PIPE	
190	2537835-0000	-		1	PLUG	
200	2506832-0000	-		1	PLUG	
250	311103-0405	-		1	PARALLELL PIN, M6, 8X30 MM	
270	312105-0370	-		6	SCREW M6S ISO 4017 M6X20 A480	
280	312105-0372	-		2	SCREW M6S ISO 4017 M6X25 A480	
290	312105-0449	-		3	SCREW M6S ISO 4017 M8X16 A480	
300	312105-0453	-		22	SCREW M6S ISO 4017 M8X25 A480	
310	2558848-0000	-		3	SCREW	
320	312115-0331	-		2	SCREW MC6S M5X20 A280	
330	312115-0366	-		1	SCREW MC6S M6X12 A280	
350	312311-0374	-		1	SCREW, SOCK.SET DOGPOINT M6X30	
370	312605-0316	-		3	HEXAGON NUT, M6M M6 A280	
380	312605-0318	-		25	HEXAGON NUT, M6M M8 A280	
420	315125-0153	-		3	WASHER PLAIN ROUND,CHAMF. 6,4/22, H=4	
440	315229-0102	-		2	GASKETS, 16,8X23,8X3,7 MM 3/4" FDA	
450	315229-0104	-		4	GASKETS, 35,8X42,8X3,7 MM 1"1/2 FD	
460	315229-0107	-		1	GASKETS, 73,9X80,9X3,7 MM 2"1/2 FD	
480	342722-0203	-		1	STRAIGHT COUPLING	
500	342840-0103	-		2	CLAMPING PIECE	
520	359705-0003	-		1	WARNING SIGN ISO, DANGEROUS CHEMICALS	
530	359705-0007	-		1	WARNING SIGN ISO, HOT SURFACE	
550	90165-0147	-		4	HOSE CLIP	
570	90166-0233	-	MM	500	HOSE	
580	90166-0233	-	MM	100	HOSE	
600	90217-0307	A		2	GASKET 35,8X50,5X5,5 MM	
B1330	90459-0252	A		1	PROXIMITY SWITCH	
S7814	90044-0084	A		1	LIMIT SW. 14 CE1-4	
W1330	90459-0253	A		1	CONNECTOR W. CABLE S12-3FVW-050	

Machine Type | Group Description | Used-In | Group Number | Page No

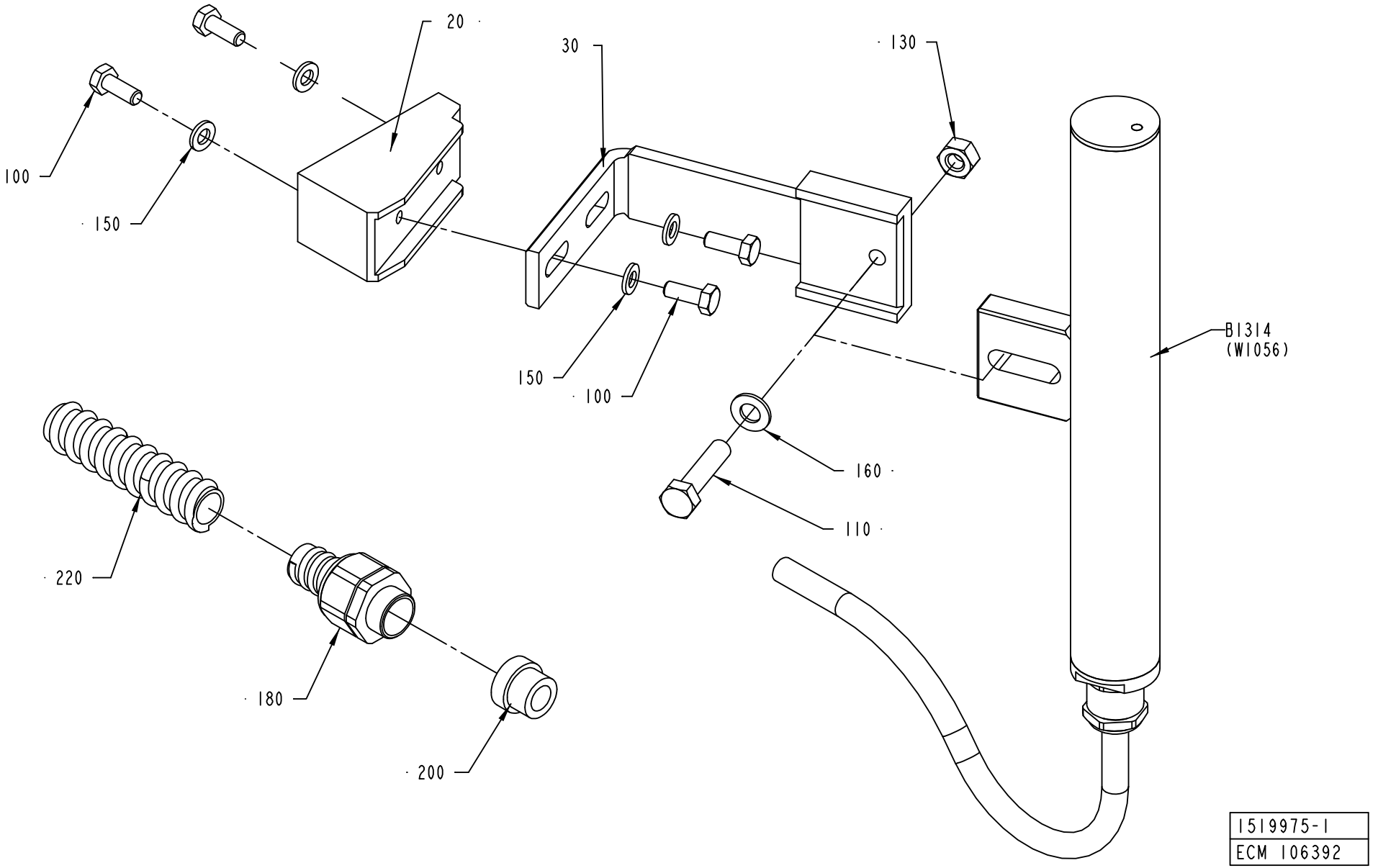
20
30
130
100
150
150
100
B1314
(W1056)
160
110
220
180
200
1519975-1
ECM 106392

Pos	Part No	SP	UN	Qty	Description	Page No
Common Parts						
020	2511665-0000	-		1	BRACKET	
030	2511666-0000	-		1	HOLDER	
100	312105-0368	-		4	SCREW M6S M6X16 A280	
110	312105-0457	-		1	SCREW M6S ISO 4014 M8X35 A480	
130	312605-0318	-		1	HEXAGON NUT, M6M M8 A280	
150	315105-0153	-		4	WASHER PLAIN, BRB, 6,4/12,H=1,5	
160	315105-0165	-		1	WASHER PLAIN, BRB, 8,4/16,H=1,5	
180	353243-0003	-		1	EXTENDED WITHOUT INSERT, PG11	
200	353249-0011	-		1	INSERT, SINGEL HOLE, EK 153/11	
220	90152-0050	-	M	1	SPIRAL CONDUIT, 20X13, UL 1313	
B1314	A1334989-0100	A		1	LEVEL PROBE	**87**

Pos	Part No	SP	UN	Qty	Description	Page No

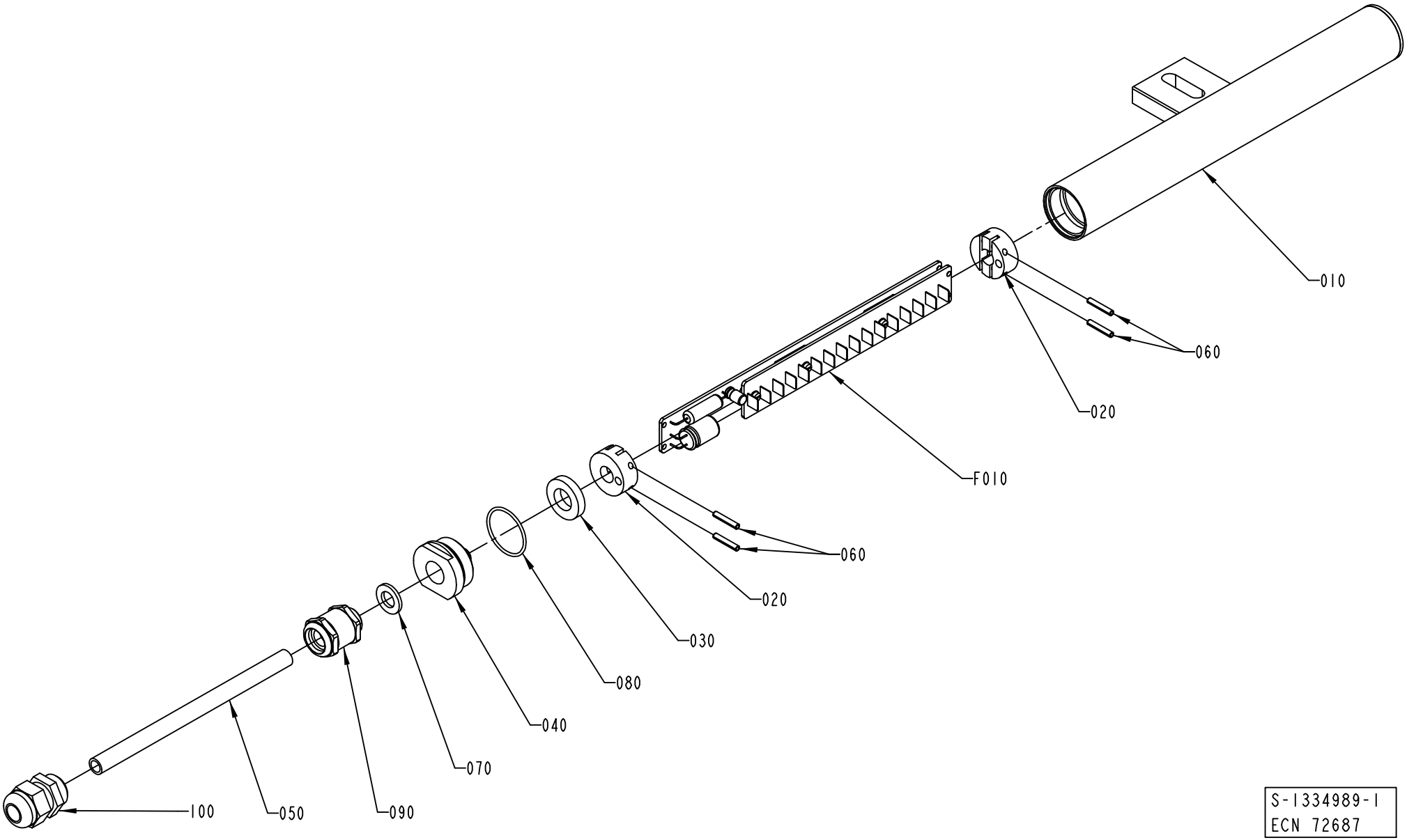
010
060
020
F010
060
020
030
080
040
070
090
050
100
S-1334989-1
ECN 72687

ECM: 72687 - 20000214
Group number: 1334989-0100
Assembly Drawing: 1334989-1_1_AA

Issue: 20021015

Pos	Part No	SP	UN	Qty	Description	Page No
Common Parts						
010	925999-0000	C		1	PROTECTION PIPE	
020	925877-0000	C		2	SUPPORT	
030	736514-0000	C		1	SHOCK ABSORBER	
040	926820-0000	C		1	PLUG	
050	90220-0085	-	M	11	CABLES, MULTI-CONDUCTOR SCREENED	
060	311111-0209	-		4	PIN, STRAIGHT SLOTTED SPRING FRP 3X18	
070	315105-0171	-		1	WASHER PLAIN, BRB, 10/18,H=2	
080	315202-0120	C		1	O-RING 27,1X1,6 MM	
090	90012-0119	-		1	GLAND, EXTENDED WITH INSERT, PG9	
100	352103-0106	-		1	CABLE GLAND, ST 11, PR18,6/PG11	
F010	A42063-0100	C		1	LEVEL DETECTOR	**89**

Pos	Part No	SP	UN	Qty	Description	Page No

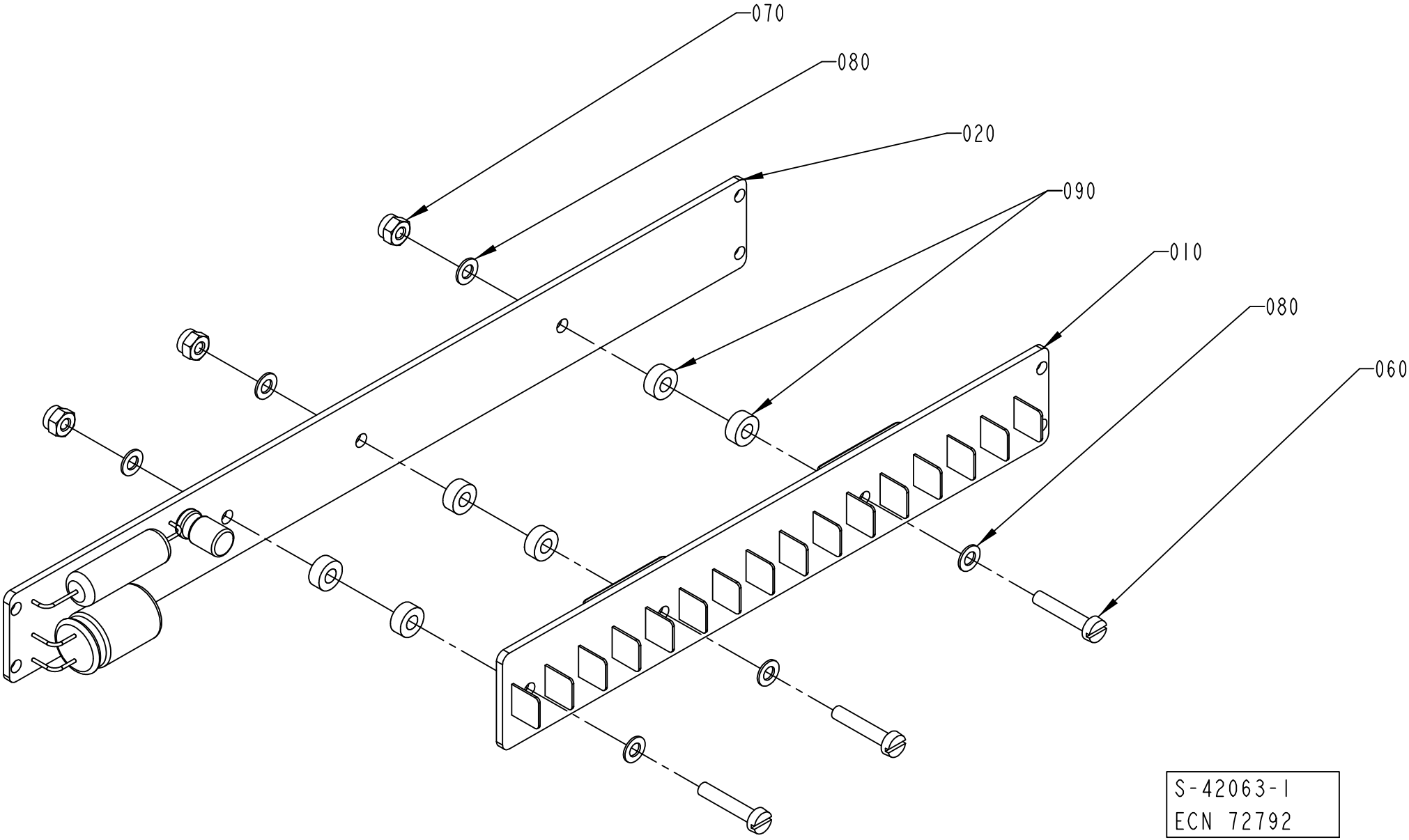
070
080
020
090
010
080
060
S-42063-I
ECN 72792

ECM: 114546 - 20020930
Group number: 42063-0100
Assembly Drawing: 42063-1_1_AA

Issue: 20021015

Pos	Part No	SP	UN	Qty	Description	Page No
Common Parts						
010	A42067-0100	-		1	SENSOR BOARD	
020	A42068-0100	-		1	CONVERTER BOARD	
060	312125-0228	-		3	SCREW PAN HEAD MCS M3X16 A480	
070	312812-0310	-		3	HEXAGON NUT, NY-LOCK M3 A480	
080	315105-0124	-		6	WASHER PLAIN, BRB, 3,2/6,H=0,5	
090	90005-0143	-		6	SPACER 3,3/7, H=3	

Pos	Part No	SP	UN	Qty	Description	Page No

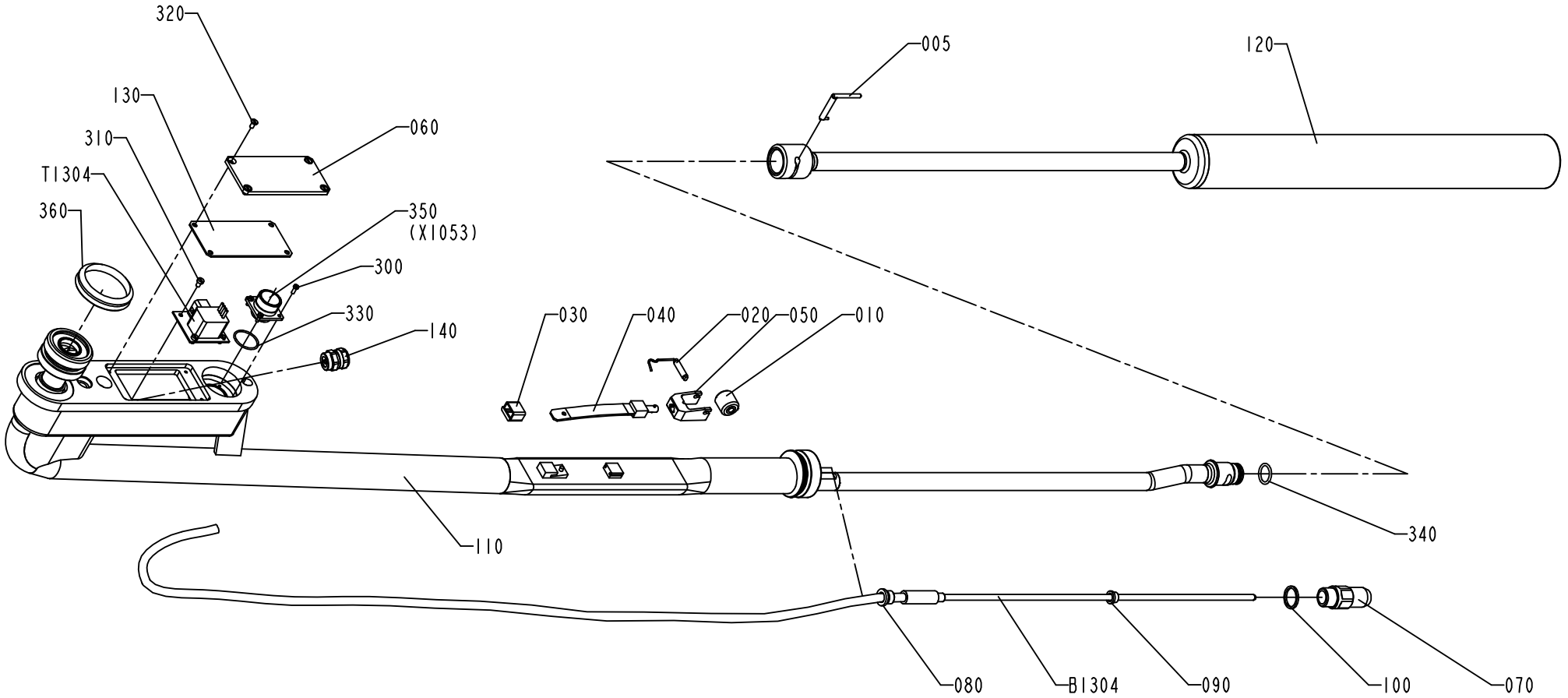

1498668-2
ECM 116831

ECM: 116845 - 20021014
Group number: 1498668-0200
Assembly Drawing: 1498668-2_1_AA

Issue: 20021015

Pos	Part No	SP	UN	Qty	Description	Page No
TBA 0200B						
010	257330-0000	A		1	PRESSURE ROLLER	
020	1334051-0000	A		1	SHAFT	
040	544894-0000	A		1	SPRING	
050	1317438-0000	A		1	FORK	
120	2558854-0000	A		1	FILLING PIPE	
TBA 0200S						
010	272479-0000	A		1	PRESSURE ROLLER	
020	255977-0000	A		1	SHAFT	
040	751604-0000	A		1	SPRING	
050	255978-0000	A		1	FORK	
120	1519501-0000	A		1	FILLING PIPE	
TBA 0250B						
010	257330-0000	A		1	PRESSURE ROLLER	
020	1334051-0000	A		1	SHAFT	
040	544894-0000	A		1	SPRING	
050	1317438-0000	A		1	FORK	
120	2558855-0000	A		1	FILLING PIPE	
Common Parts						
005	38535-0001	A		1	LOCKING FINGER	
030	295377-0001	A		1	HOOD	
060	1484515-0000	-		1	LID	
070	1347511-0000	A		1	FITTING	
080	1349913-0000	A		1	BUSHING	
090	1348639-0000	A		1	SEALING GASKET	
100	1348555-0000	A		1	SEALING RING	
110	1498697-0000	A		1	FILLING PIPE	
130	1484516-0000	B		1	GASKET	
140	1334056-0000	-		1	COMPRESSION GLAND	
300	312125-0222	-		4	SCREW PAN HEAD MCS M3X8 SS	
310	312125-0285	-		4	SCREW SLOT.PAN HD. MCS 4X6 A480	
320	312145-0287	-		4	SCREW COUNTERS.SLOT.HD. MFS 4X8 SS	
330	315204-0119	B		1	O-RING 25,1X1,6 MM	
340	315204-0214	A		1	O-RING 17,3X2,4 MM	
350	90110-0222	B		1	SOCKET FEMALE, MS 3102 E 16S-1S	
360	315220-0198	B		1	V-RINGS 45X55X13 MM V-50S	
400	90296-0091	B		1	LUBRICATION GREASE	
410	90157-0044	B		1	SEALING COMPOUND	
B1304	90274-0096	A		1	LEVEL PROBE, Z8778/1	
T1304	90245-0043	A		1	TRANSFORMER, Z-8782	

Machine Type | Group Description | Used-In | Group Number | Page No

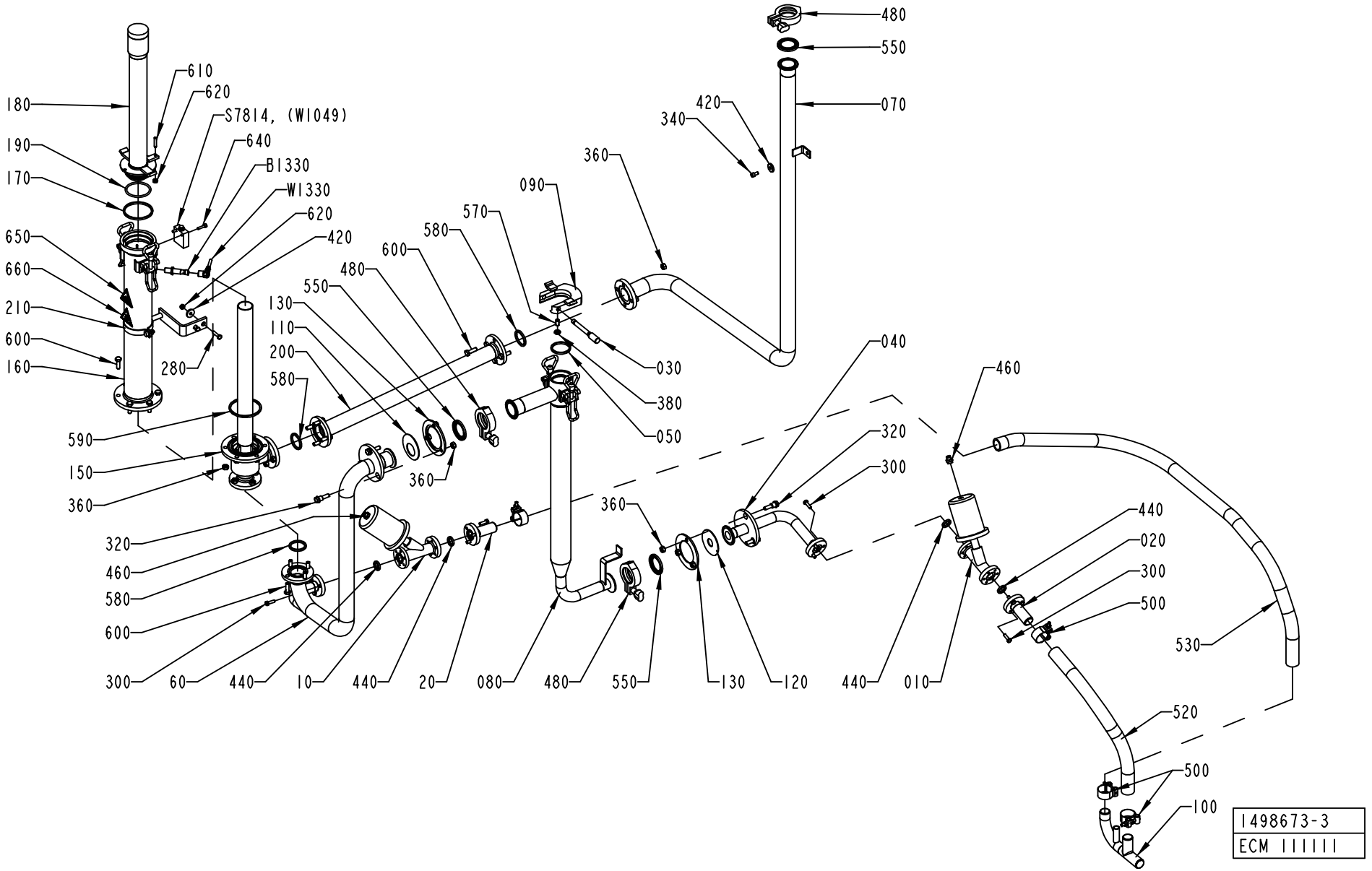
480
550
070
420
340
360
090
570
580
600
480
550
130
110
200
580
590
150
360
280
180
190
170
650
660
210
600
160
610
620
S7814, (WI049)
640
BI330
WI330
620
420
030
380
050
040
460
320
300
360
440
020
300
500
530
520
500
100
320
460
580
600
300
60
440
10
440
20
080
480
550
130
120
440
010
1498673-3
ECM IIIIII

ECM: 116848 - 20021014
Group number: 1498673-0200
Assembly Drawing: 1498673-3_1_AC

Issue: 20021015

Pos	Part No	SP	UN	Qty	Description	Page No
TBA 0200B						
150	2527741-0000	-		1	CLEANING PIPE	
160	2527740-0000	-		1	CLEANING PIPE	
180	2569802-0000	-		1	CLEANING PIPE	
210	1538787-0000	-		1	SUPPORT	
590	315229-0107	A		1	GASKETS, 73,9X80,9X3,7 MM 2"1/2 FD	
TBA 0200S						
150	2531430-0000	-		1	CLEANING PIPE	
160	2531429-0000	-		1	CONTAINER	
180	2531428-0000	-		1	CLEANING PIPE	
210	B2545016-0000	-		1	SUPPORT	
	2545431-0000	*-*		*1*	*SUPPORT*	
	2545430-0000	*-*		*1*	*CLAMP*	
	312115-0368	*-*		*2*	*SCREW MC6S M6X16 A280*	
590	315229-0106	A		1	GASKETS, 61,2X68,2X3,7 MM 2"1/2 FD	
TBA 0250B						
150	2527741-0000	-		1	CLEANING PIPE	
160	2527740-0000	-		1	CLEANING PIPE	
180	2569803-0000	-		1	CLEANING PIPE	
210	1538787-0000	-		1	SUPPORT	
590	315229-0107	A		1	GASKETS, 73,9X80,9X3,7 MM 2"1/2 FD	
Common Parts						
010	1038905-0000	A		2	VALVE	
020	1285329-0000	-		2	PIPE	
030	1346353-0000	A		1	LOCK PIN	
040	1348099-0000	-		1	PIPE	
050	1348475-0000	A		1	GASKET	
060	2500015-0000	-		1	PIPE	
070	2500016-0000	-		1	PIPE	
080	2540803-0000	A		1	CLEANING SLEEVE	
090	1487037-0000	A		1	FLANGE	
100	1487198-0000	-		1	PIPE	
110	1499125-0000	B		1	SEAL	
120	1499126-0000	B		1	SEAL	
130	1499127-0000	-		2	FLANGE	
170	1348474-0000	A		1	GASKET	
190	1538794-0000	A		1	O-RING	
200	2500017-0000	-		1	PIPE	
280	312105-0372	-		2	SCREW M6S ISO 4017 M6X25 A480	
300	312105-0370	-		12	SCREW M6S ISO 4017 M6X20 A480	
320	2558848-0000	-		6	SCREW	
340	312115-0366	-		1	SCREW MC6S M6X12 A280	
360	312605-0318	-		24	HEXAGON NUT, M6M M8 A280	
380	312625-0318	-		1	NUT HEX. M8 SS	
420	315125-0153	-		3	WASHER PLAIN ROUND,CHAMF. 6,4/22, H=4	
440	315229-0102	A		4	GASKETS, 16,8X23,8X3,7 MM 3/4" FDA	
460	342722-0203	-		2	STRAIGHT COUPLING	
480	342840-0103	-		3	CLAMPING PIECE	
500	90165-0147	-		4	HOSE CLIP	
520	90166-0233	-	MM	500	HOSE	
530	90166-0233	-	MM	1500	HOSE	
550	90217-0307	A		3	GASKET 35,8X50,5X5,5 MM	
570	90287-0112	-		1	SCREW SPRINGLOAD. SLOTTED HEAD M8X16	
580	315229-0104	A		3	GASKETS, 35,8X42,8X3,7 MM 1"1/2 FD	
600	312105-0453	-		18	SCREW M6S ISO 4017 M8X25 A480	
610	312311-0374	-		1	SCREW, SOCK.SET DOGPOINT M6X30	
620	312605-0316	-		3	HEXAGON NUT, M6M M6 A280	
640	312115-0331	-		2	SCREW MC6S M5X20 A280	
650	359705-0003	-		1	WARNING SIGN ISO, DANGEROUS CHEMICALS	
660	359705-0007	-		1	WARNING SIGN ISO, HOT SURFACE	
B1330	90459-0252	A		1	PROXIMITY SWITCH	
S7814	90044-0084	A		1	LIMIT SW. 14 CE1-4	
W1330	90459-0253	A		1	CONNECTOR W. CABLE S12-3FVW-050	

Machine Type | Group Description | Used-In | Group Number | Page No

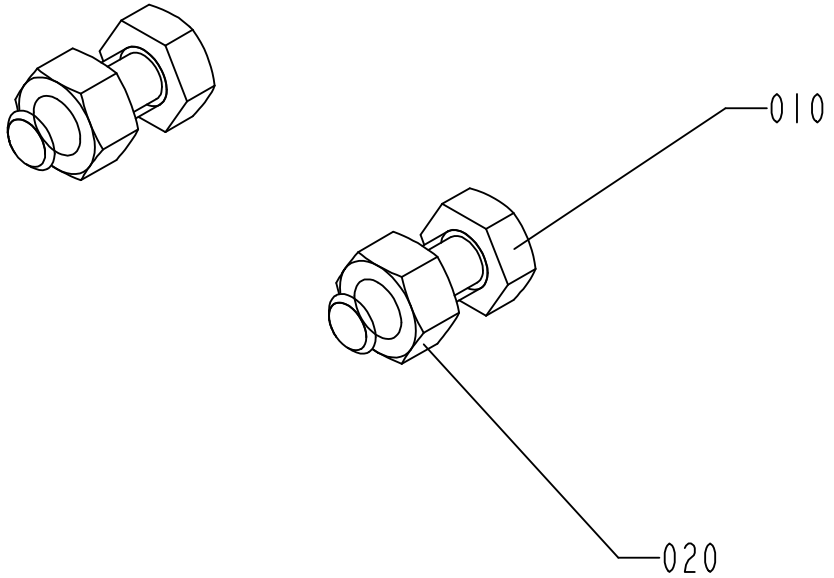

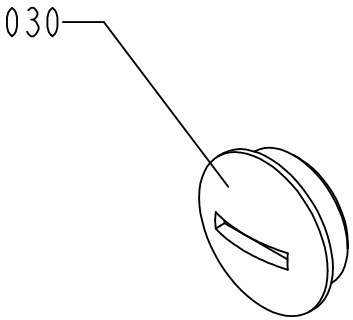

2547150-1
ECM 107819

ECM: 108871 - 20010926
Group number: 2547150-0100
Assembly Drawing: 2547150-1_1_AA

Issue: 20021015

Pos	Part No	SP	UN	Qty	Description	Page No
Common Parts						
010	312105-0451	-		2	SCREW M6S ISO 4017 M8X20 A480	
020	312605-0318	-		2	HEXAGON NUT, M6M M8 A280	
030	90002-0009	-		1	BLANK-OFF PLUG, PR 18.6 SKINDICHT-BLK11	

Pos	Part No	SP	UN	Qty	Description	Page No

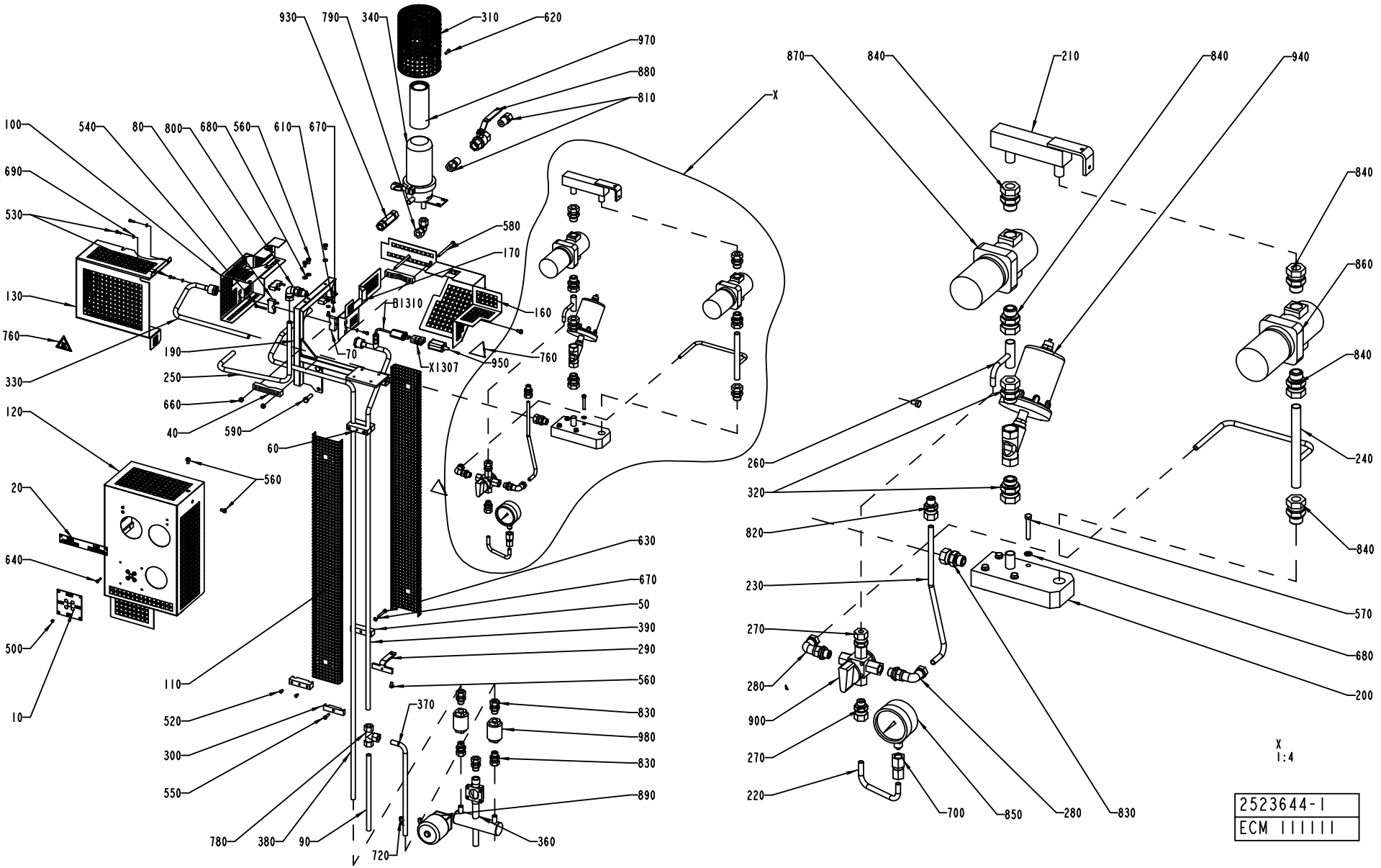
930
790
340
310
620
970
880
810
X
870
840
210
840
940
100
540
80
800
680
560
610
670
690
530
580
170
130
B1310
160
760
190
70
X1307
950
760
330
250
660
40
590
60
120
560
20
640
500
10
110
520
300
550
780
380
90
720
370
630
670
50
390
290
560
830
980
830
890
360
840
860
840
240
840
570
680
200
260
320
820
230
270
280
900
270
220
700
850
280
830
X
1:4
2523644-1
ECM 111111

Pos	Part No	SP	UN	Qty	Description	Page No
Common Parts						
010	1255924-0000	-		1	LABEL	
020	1279456-0000	-		1	LABEL	
040	1487200-0000	-		2	CLAMP	
050	1487837-0000	-		2	CLAMP	
060	1487838-0000	-		2	CLAMP	
070	1487839-0000	-		2	CLAMP	
080	1487840-0000	-		2	CLAMP	
090	1524474-0000	-		1	PIPE	
100	2546215-0000	-		1	COVER	
110	2511410-0000	-		2	TOUCH GUARD	
120	2546211-0000	-		1	COVER	
130	2546212-0000	-		1	COVER	
160	2546213-0000	-		1	COVER	
170	2546214-0000	-		1	COVER	
190	2511418-0000	-		1	BRACKET	
200	2511419-0000	-		1	DISTRIBUTOR BLOCK	
210	2511420-0000	-		1	DISTRIBUTOR BLOCK	
220	2511421-0000	-		1	PIPE	
230	2511422-0000	-		1	PIPE	
240	2511423-0000	-		1	PIPE	
250	2511424-0000	-		1	PIPE	
260	2511426-0000	-		1	PIPE	
270	2517368-0000	-		2	STRAIGHT CONNECTION	
280	2517369-0000	-		2	CONNECTION	
290	2517370-0000	-		1	CLAMP	
300	2517371-0000	-		1	CLAMP	
310	2517375-0000	-		1	COVER	
320	2522195-0000	-		2	CONNECTION	
330	2523642-0000	-		1	PIPE	
340	2523645-0000	-		1	FILTER	
360	2523663-0000	-		1	PIPE	
370	2525531-0000	-		1	PIPE	
380	2525532-0000	-		1	STEAM PIPE	
390	2525533-0000	-		1	STEAM PIPE	
500	311521-0142	-		8	BLANK RIVET 3,2X6	
520	312105-0287	-		8	SCREW M6S ISO 4017 M4X8 A480	
530	312105-0291	-		6	SCREW M6S ISO 4017 M4X12 A480	
540	312105-0299	-		4	SCREW M6S ISO 4017 M4X30 A480	
550	312105-0333	-		1	SCREW M6S ISO 4017 M5X25 A480	
560	312105-0364	-		7	SCREW M6S ISO 4017 M6X10 A480	
570	312105-0378	-		4	SCREW M6S ISO 4014 M6X40 A480	
580	312105-0386	-		2	SCREW M6S ISO 4014 M6X80 A480	
590	312105-0455	-		2	SCREW M6S ISO 4017 M8X30 A480	
610	312105-0323	-		2	SCREW M6S ISO 4017 M5X8 A480	
620	312105-0329	-		1	SCREW M6S ISO 4017 M5X16 A480	
630	312115-0337	-		2	SCREW MC6S M5X35 A280	
640	312155-0295	-		4	SCREW HEX.SOCK.COUNT.MF6S M4X20 A480	
660	312605-0316	-		2	HEXAGON NUT, M6M M6 A280	
670	315105-0146	-		4	WASHER PLAIN, BRB, 5,3/10,H=1	
680	315105-0153	-		7	WASHER PLAIN, BRB, 6,4/12,H=1,5	
690	315105-0136	-		2	WASHER PLAIN, BRB, 4,3/8,H=0,8	
700	342725-0103	-		1	CONN. STR. PIPE GI-8-G1/4	
720	90458-2956	-		2	ELBOW PIPE JOINT, EXT.THREAD, D=6MM-G1/8	
760	359705-0007	-		3	WARNING SIGN ISO, HOT SURFACE	
780	90030-0058	-		1	CONN. T-PIPE T-12	
790	90030-0096	-		1	CONN. ELBOW W-12	
800	90030-0136	-		1	ADJUSTABLE ELBOW CONNECTION,EXT 12-G3/8	
810	90030-0180	-		2	CONN. STR. GE 12-1/2-14 NPTF	
820	90030-0185	-		1	CONN. STR. GA-8-G1/4	
830	90030-0187	-		6	CONN. STR. GA-12-G3/8	
840	90030-0188	-		5	CONN. STR. GA-15-G1/2	
850	90043-0082	-		1	PRESSURE GAUGE, 2740, D=63 MM	
860	2558133-0000	A		1	PRESSURE REGULATOR	
870	2558134-0000	A		1	PRESSURE REGULATOR	
880	90187-0082	-		1	BALL VALVE G1/2	
890	90187-0110	A		1	DIAPHRAGM VALVE DN15, N.C. WELD CONN.	
900	90187-0112	-		1	COCK VALVE, G1/4, 4-WAY, VITON	
930	90230-0025	A		1	NON-RETURN VALVE, 12MM, L=85	
940	90235-0261	A		1	VALVE	
950	90326-0012	-		1	PROTECTIVE COVER, T31A4618	
970	90337-0315	A		1	FILTERINSERT / MCS 4463	
980	B90360-0020	A		2	STEAM TRAP / MK36/51 3/8"	
	90360-0309	-		*1*	*STRAINER, FOR STEAM TRAP 90360-20*	
	90360-0310	-		*1*	*CAPSULE, FOR STEAM TRAP 90360-20*	
B1310	90326-0089	A		1	THERMOCOUPLE, 5110-089-000	
X1307	90326-0020	-		1	PLUG, FEMALE YELLOW CR-AL	

Machine Type | Group Description | Used-In | Group Number | Page No

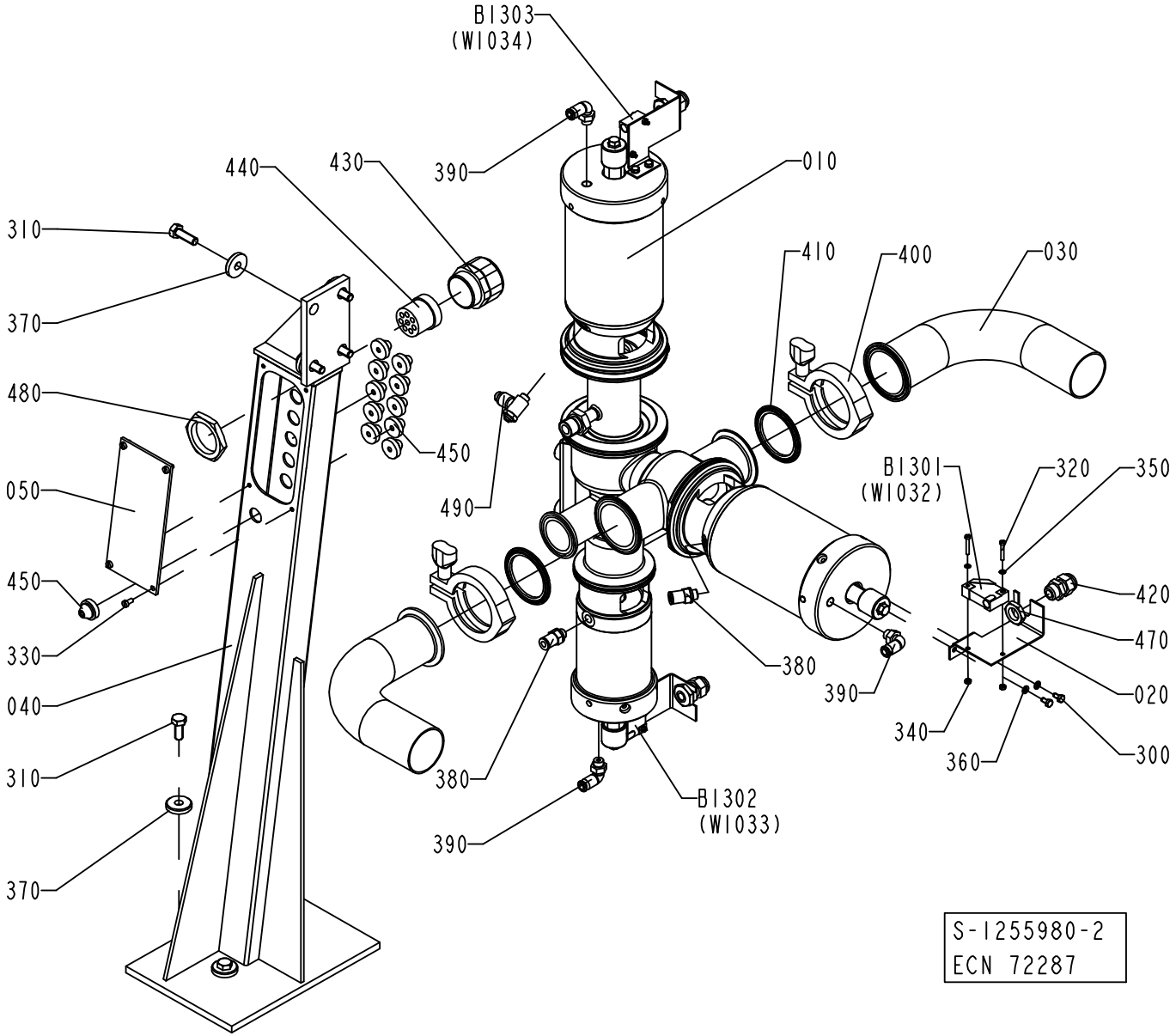
BI303
(WI034)
440
430
390
010
310
410
400
030
370
480
450
050
490
BI301
(WI032)
320
350
450
420
330
380
470
040
390
020
340
310
360
300
380
BI302
(WI033)
390
370
S-1255980-2
ECN 72287

ECM: 113496 - 20020911
Group number: 1255980-0200
Assembly Drawing: 1255980-2_1_AB

Issue: 20021015

Pos	Part No	SP	UN	Qty	Description	Page No
TBA 0200B OR TBA 0200S OR TBA 0250B						
010	A576434-0100	-		1	AP-VALVE 51-38	**101**
030	1129801-0000	-		2	PIPE	
400	342840-0105	-		2	CLAMPING PIECE	
410	342850-0305	A		2	GASKET 47,8X62,6X5,2 MM 2" FDA	
Common Parts						
020	1037093-0000	-		3	SENSOR BRACKET	
040	1255986-0000	-		1	VALVE BRACKET	
050	1255987-0000	-		1	COVER	
300	312105-0287	-		6	SCREW M6S ISO 4017 M4X8 A480	
310	312105-0453	-		8	SCREW M6S ISO 4017 M8X25 A480	
320	312125-0230	-		6	SCREW PAN HEAD MCS M3X20 SS	
330	312125-0287	-		4	SCREW PAN HEAD MCS M4X8 SS	
340	312605-0310	-		6	HEXAGON NUT, M6M M3 A280	
350	315105-0124	-		6	WASHER PLAIN, BRB, 3,2/6,H=0,5	
360	315105-0136	-		6	WASHER PLAIN, BRB, 4,3/8,H=0,8	
370	315125-0165	-		8	WASHER PLAIN ROUND,CHAMF. 8,4/26, H=5	
380	342722-0202	-		2	PIPE COUPLING 1/8" D=6MM	
390	342732-0102	-		3	ELBOW PIPE JOINT, EXT.THREAD, D=6MM-G1/8	
420	352103-0101	-		3	CABLE GLAND, ST 9, PR15,2/PG9	
430	353240-0006	-		1	NORMAL WITHOUT INSERT, PG 29	
440	353249-0079	-		1	INSERT, MULTI HOLE, E155M8X5,5	
450	90015-0020	-		11	LEAD-IN, TET5-7, E-1458016	
470	90099-0104	-		3	NUT, PR 15,2 (PG9)	
480	90099-0120	-		1	NUT, PR 37 (PG29)	
490	90235-0288	-		1	VALVE	
B1301	90044-0104	A		1	PROX.SWITCH IFM IN 3002	
B1302	90044-0104	A		1	PROX.SWITCH IFM IN 3002	
B1303	90044-0104	A		1	PROX.SWITCH IFM IN 3002	

Pos	Part No	SP	UN	Qty	Description	Page No

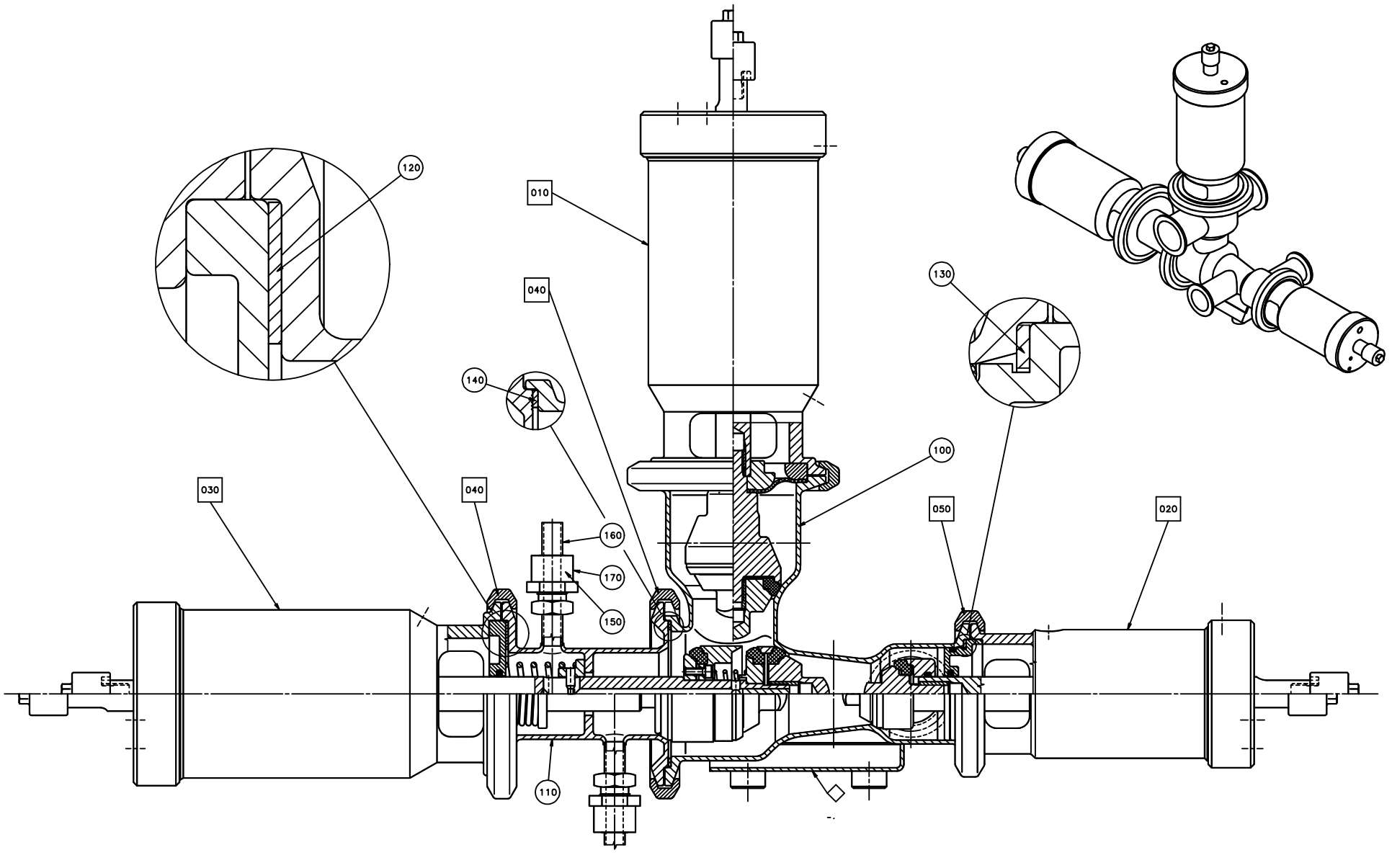
120
010
040
130
140
100
030
040
050
020
160
170
150
110

ECM: 111173 - 20020628
Group number: 576434-0100
Assembly Drawing: 576434-1_1_AA

Issue: 20021015

Pos	Part No	SP	UN	Qty	Description	Page No
Common Parts						
010	A576436-0100	-		1	A-CYLINDER	**103**
020	A576438-0100	-		1	B-CYLINDER	**105**
030	A576437-0100	-		1	C-CYLINDER	**107**
040	A541163-0200	-		3	CLAMP RING	**109**
050	A541164-0200	-		1	CLAMP RING	**111**
100	556702-0000	A		1	AP-VALVE-BODY (51-38)	
110	567018-0000	A		1	STEAM HOUSE	
120	539212-0000	A		1	GASKET	
130	90207-0365	A		1	GASKET	
140	90207-0363	A		1	GASKET	
150	90091-0266	A		2	SEAL RING 10,4X16,3X2,5 MM	
160	90030-0336	-		2	CONN. STRAIGHT, 316L-12M-BVCO-3	
170	90030-0338	-		2	NUT, PIPE & CONNECTORS, SS-8-BVCO-4	

Pos	Part No	SP	UN	Qty	Description	Page No

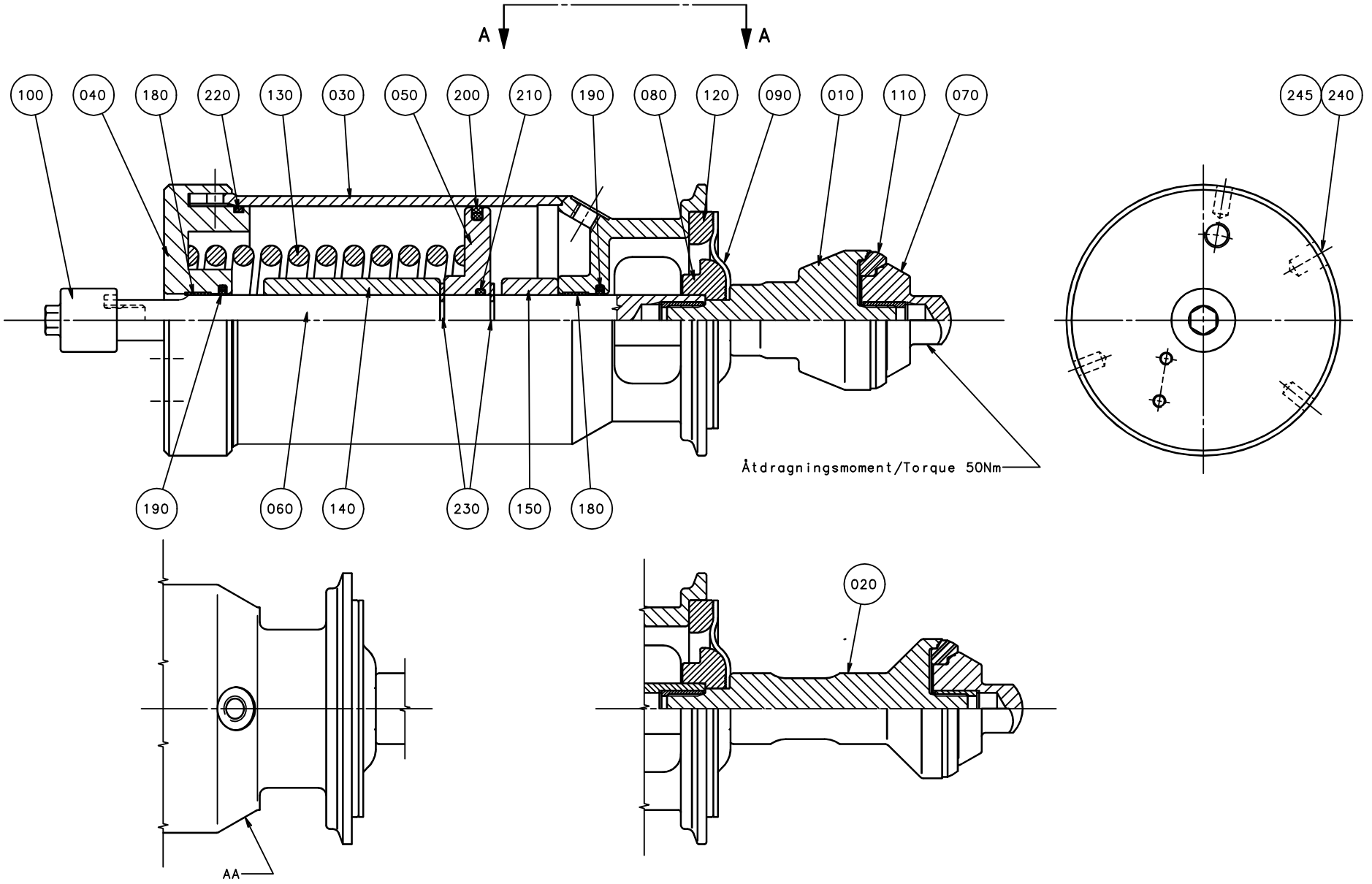
A
A
100
040
180
220
130
030
050
200
210
190
080
120
090
010
110
070
245
240
190
060
140
230
150
180
Åtdragningsmoment/Torque 50Nm
020
AA

Pos	Part No	SP	UN	Qty	Description	Page No
2"						
010	530592-0000	A		1	SEAL RING HOLDER	
3"						
010	530595-0000	A		1	SEAL RING HOLDER	
Common Parts						
030	576439-0000	-		1	CYLINDER HOUSING	
040	576440-0000	-		1	END SECTION	
050	576441-0000	A		1	PISTON	
060	576446-0000	A		1	PISTON ROD	
070	530590-0000	A		1	VALVE CONE	
080	541166-0000	A		1	WASHER	
090	533169-0000	A		1	DIAPHRAGM	
100	553607-0000	-		1	SLEEVE	
110	530589-0000	A		1	SEAL RING	
120	440655-0000	A		1	RING	
130	440663-0000	A		1	COMPRESSION SPRING	
140	576448-0000	-		1	SPACER	
150	576449-0000	-		1	SPACER	
180	90091-0238	A		2	WEAR RING 20X22X10 MM	
190	90091-0237	A		2	ROD SEAL, GLIDORING 20X27,5X3 MM	
200	90091-0336	A		1	PISTON SEAL, GLIDORING 79X90X4 MM	
210	315204-0215	A		1	O-RING 19,2X3 MM	
220	315202-0308	A		1	O-RING 84,5X3 MM	
230	315754-0113	-		2	LOCKING WAE 15	
240	312125-0323	-		1	SCREW PAN HEAD MCS M5X8 SS	
245	315233-0101	-		1	WASHER PL.RND.NYL.5,2/8,H=1	

Pos	Part No	SP	UN	Qty	Description	Page No

Machine Type | Group Description | Used-In | Group Number | Page No

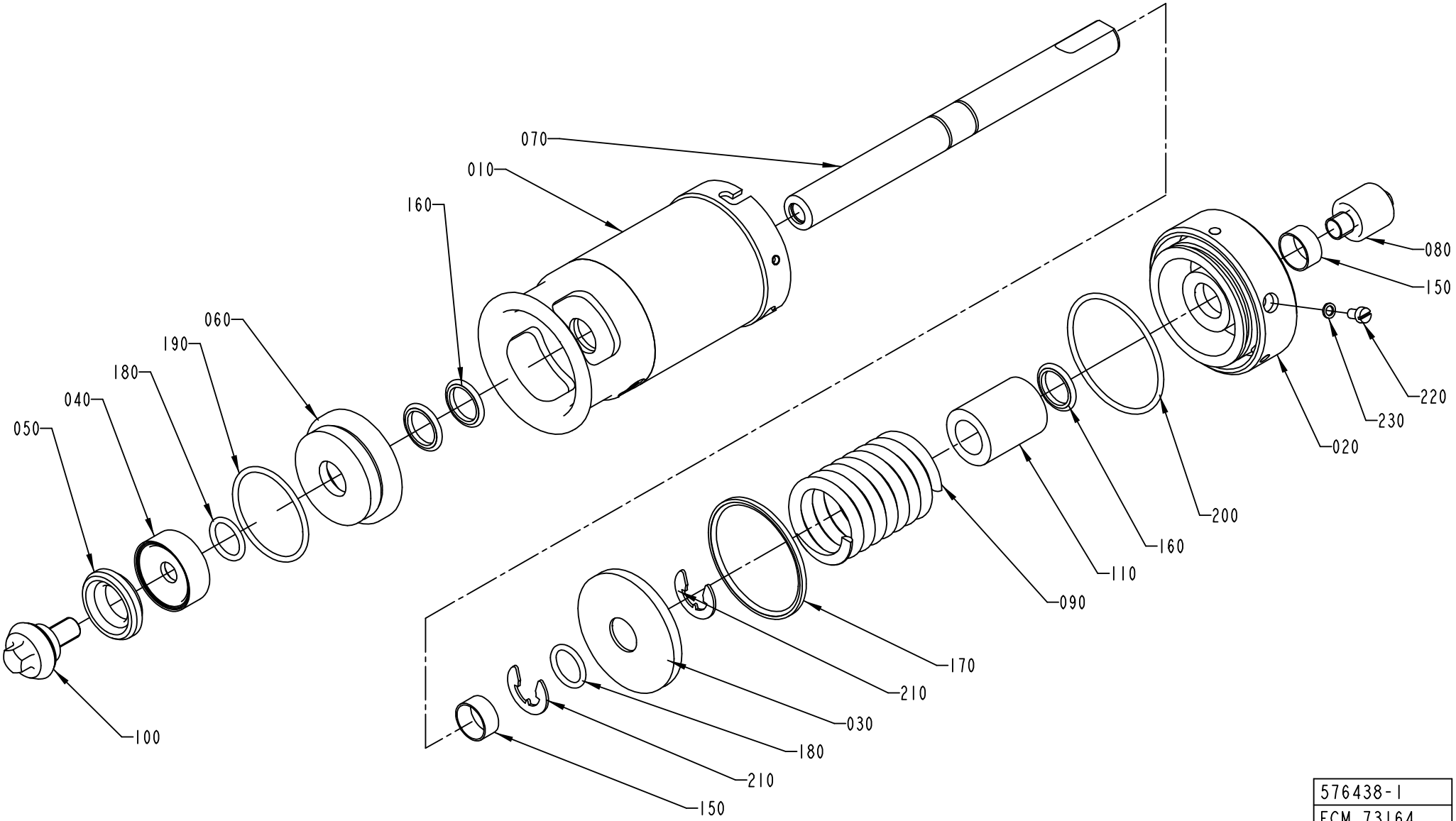

576438-1
ECM 73164

Pos	Part No	SP	UN	Qty	Description	Page No
Common Parts						
010	576443-0000	-		1	CYLINDER HOUSING	
020	576444-0000	-		1	END SECTION	
030	576445-0000	A		1	PISTON	
040	530587-0000	A		1	WASHER	
050	530588-0000	A		1	SEAL RING	
060	556133-0000	-		1	SEALING WASHER	
070	576447-0000	A		1	PISTON ROD	
080	553607-0000	-		1	SLEEVE	
090	440662-0000	A		1	COMPRESSION SPRING	
100	476185-0000	A		1	VALVE CONE	
110	576451-0000	-		1	SPACER	
150	90091-0238	A		2	WEAR RING 20X22X10 MM	
160	90091-0237	A		3	ROD SEAL, GLIDORING 20X27,5X3 MM	
170	90091-0335	A		1	PISTON SEAL,GLIDORING 62,5X70X3 MM	
180	315204-0215	A		2	O-RING 19,2X3 MM	
190	315204-0301	A		1	O-RING 49,5X3 MM	
200	315202-0304	A		1	O-RING 64,5X3 MM	
210	315754-0113	-		2	LOCKING WAE 15	
220	312125-0323	-		1	SCREW PAN HEAD MCS M5X8 SS	
230	315233-0101	-		1	WASHER PL.RND.NYL.5,2/8,H=1	

Pos	Part No	SP	UN	Qty	Description	Page No

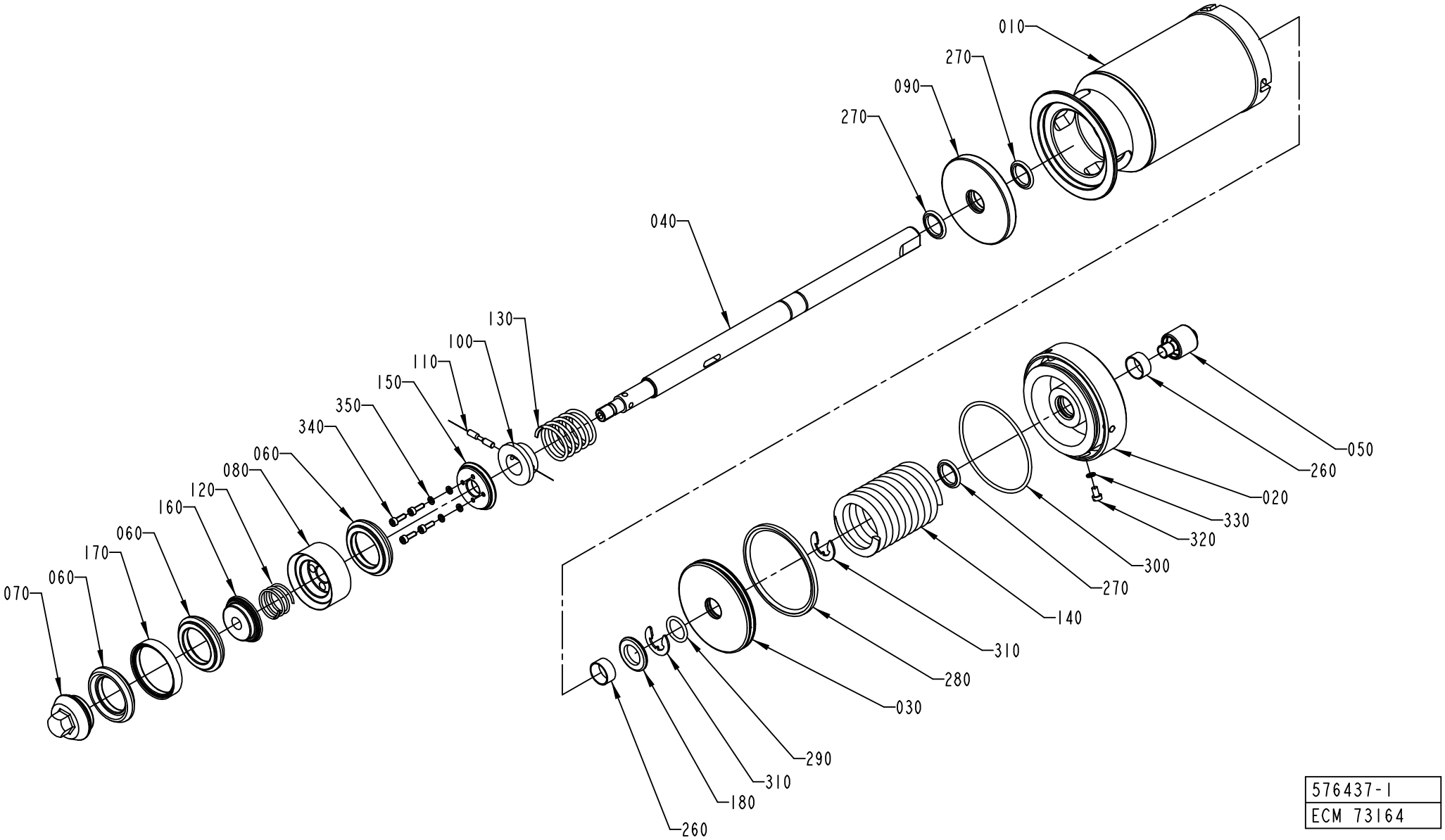

576437-1
ECM 73164

ECM: 114415 - 20020930
Group number: 576437-0100
Assembly Drawing: 576437-1_1_AB

Issue: 20021015

Pos	Part No	SP	UN	Qty	Description	Page No
Common Parts						
010	576439-0000	-		1	CYLINDER HOUSING	
020	576440-0000	-		1	END SECTION	
030	576441-0000	A		1	PISTON	
040	576442-0000	A		1	PISTON ROD	
050	553607-0000	-		1	SLEEVE	
060	530589-0000	A		3	SEAL RING	
070	530590-0000	A		1	VALVE CONE	
080	530591-0000	-		1	HOLDER	
090	555458-0000	-		1	SEALING WASHER	
100	440650-0000	-		1	WASHER	
110	440659-0000	-		1	CYLINDRICAL PIN	
120	440660-0000	A		1	COMPRESSION SPRING	
130	440661-0000	A		1	COMPRESSION SPRING	
140	440663-0000	A		1	COMPRESSION SPRING	
150	530597-0000	-		1	WASHER	
160	530598-0000	-		1	WASHER	
170	530599-0000	-		2	RING	
180	576450-0000	-		1	SPACER	
260	90091-0238	A		2	WEAR RING 20X22X10 MM	
270	90091-0237	A		3	ROD SEAL, GLIDORING 20X27,5X3 MM	
280	90091-0336	A		1	PISTON SEAL, GLIDORING 79X90X4 MM	
290	315204-0215	A		1	O-RING 19,2X3 MM	
300	315202-0308	A		1	O-RING 84,5X3 MM	
310	315754-0113	-		2	LOCKING WAE 15	
320	312125-0323	-		1	SCREW PAN HEAD MCS M5X8 SS	
330	315233-0101	-		1	WASHER PL.RND.NYL.5,2/8,H=1	
340	312115-0291	-		4	SCREW MC6S M4X12 A280	
350	315402-0136	-		4	LOCK WASHER FBB 4,1	

Pos	Part No	SP	UN	Qty	Description	Page No

Machine Type | Group Description | Used-In | Group Number | Page No

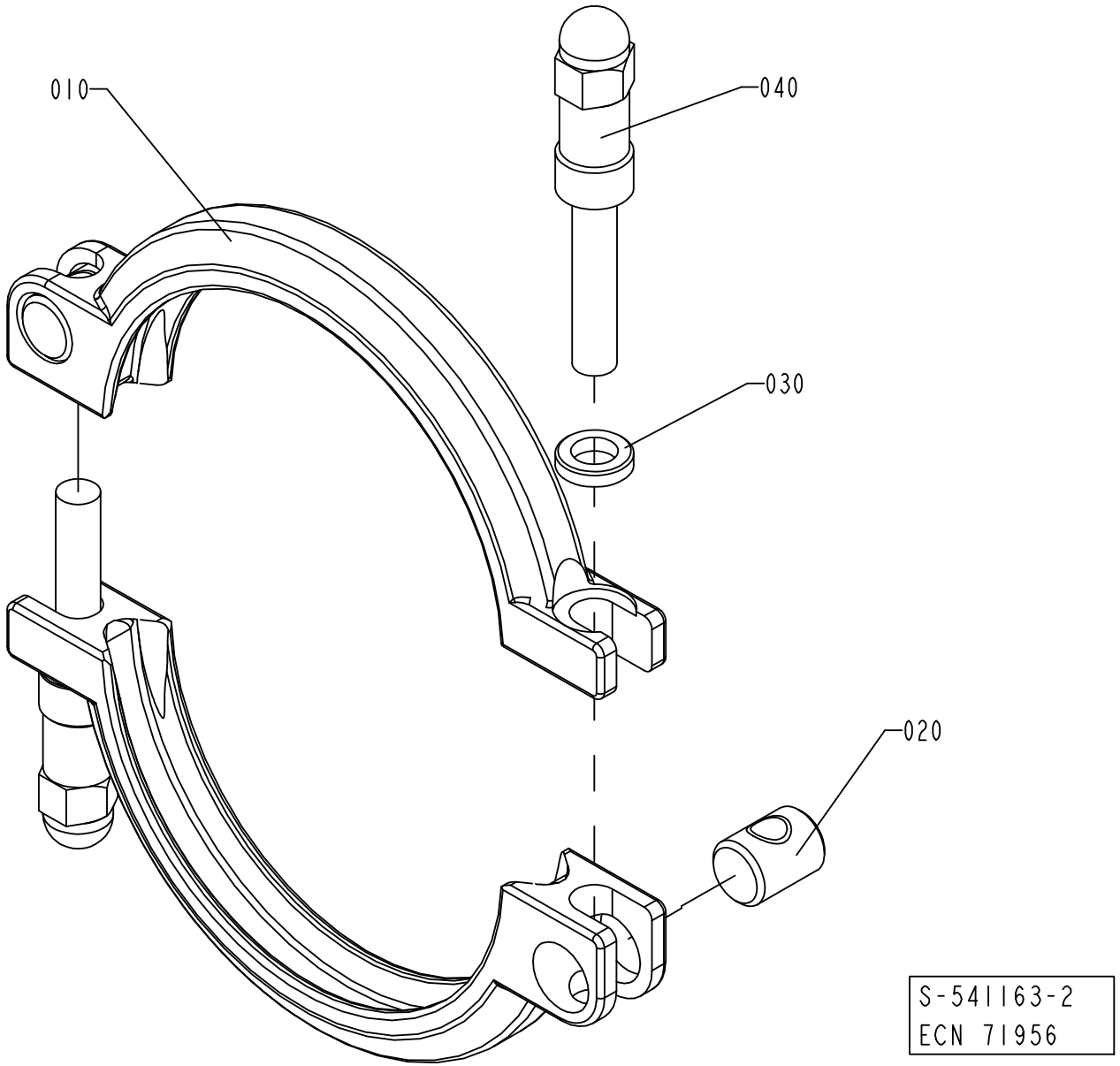
010
040
030
020
S-541163-2
ECN 71956

ECM: 114417 - 20020930
Group number: 541163-0200
Assembly Drawing: 541163-2_1_AB

Issue: 20021015

Pos	Part No	SP	UN	Qty	Description	Page No
Common Parts						
010	532117-0000	A		2	CLAMP RING	
020	497748-0000	A		2	PIN	
030	541165-0000	A		2	WASHER	
040	554162-0000	A		2	SCREW	

Pos	Part No	SP	UN	Qty	Description	Page No

Machine Type	Group Description	Used-In	Group Number	Page No

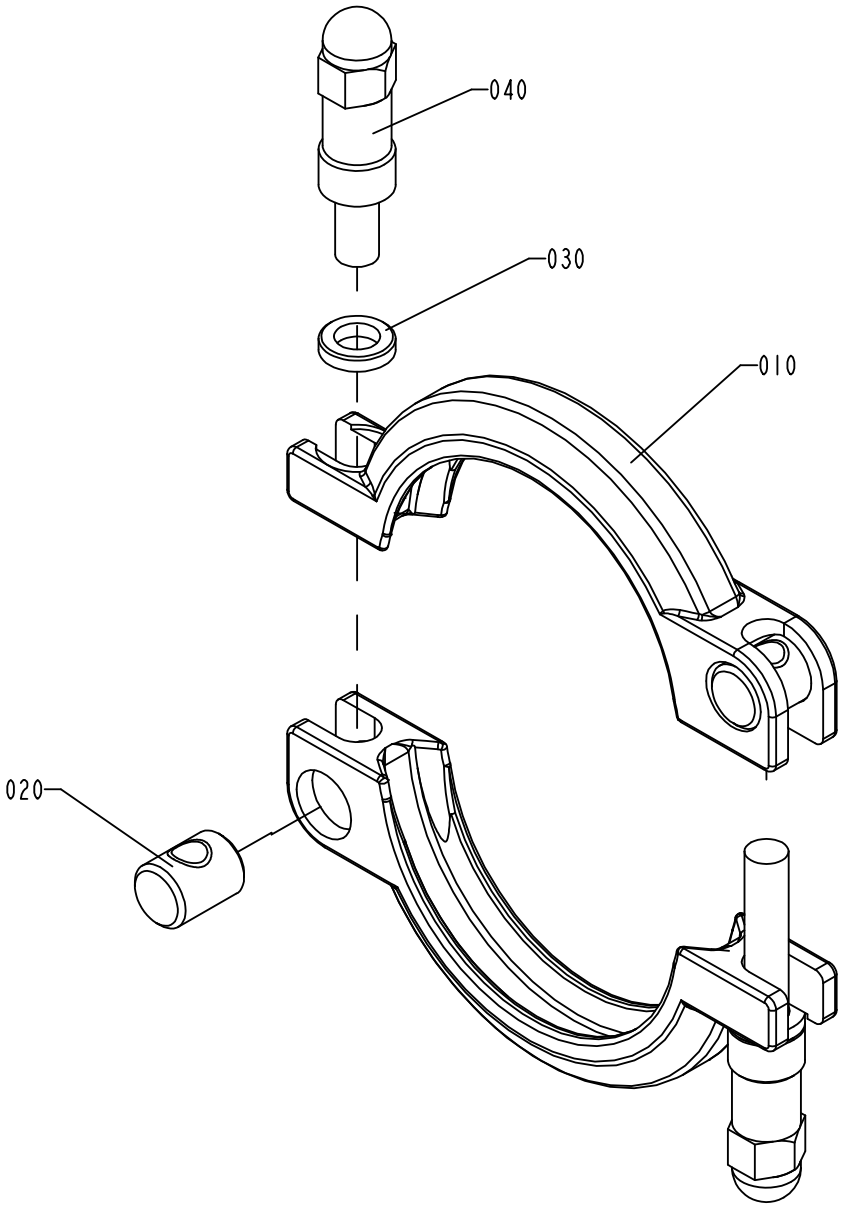
040
030
010
020
S-541164-2
ECN 71956

Pos	Part No	SP	UN	Qty	Description	Page No
Common Parts						
010	532118-0000	A		2	CLAMP RING	
020	497748-0000	A		2	PIN	
030	541165-0000	A		2	WASHER	
040	554162-0000	A		2	SCREW	

Pos	Part No	SP	UN	Qty	Description	Page No

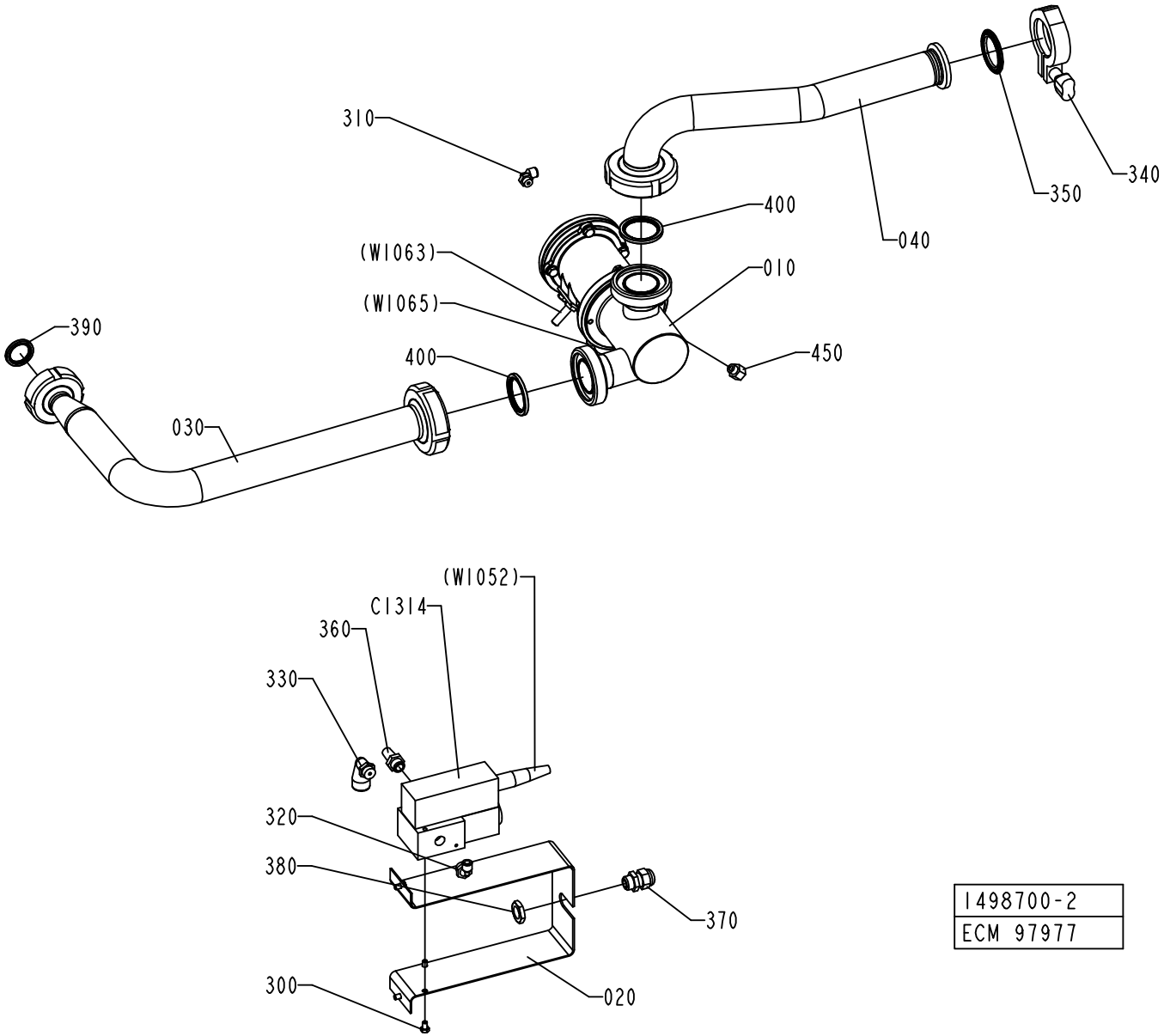

1498700-2
ECM 97977

ECM: 113497 - 20020911
Group number: 1498700-0200
Assembly Drawing: 1498700-2_1_AA

Issue: 20021015

Pos	Part No	SP	UN	Qty	Description	Page No
Common Parts						
010	A1498669-0100	-		1	REGULATING VALVE	**115**
020	2519472-0000	-		1	BRACKET	
030	1498699-0000	-		1	PIPE	
040	1498698-0000	-		1	PIPE	
300	312105-0323	-		4	SCREW M6S ISO 4017 M5X8 A480	
310	90458-2956	-		1	ELBOW PIPE JOINT, EXT.THREAD, D=6MM-G1/8	
320	90458-2957	-		1	ELBOW PIPE JOINT, EXT.THREAD, D=6MM-G1/4	
330	90458-2959	-		1	ELBOW PIPE JOINT, EXT.THREAD,D=12MM-G1/4	
340	342840-0103	-		1	CLAMPING PIECE	
350	342850-0304	A		1	GASKET 35,4X49,1X5,2 MM 1"1/2 FDA	
360	346800-0110	-		1	SILENCER FILTER R1/4"	
370	352103-0101	-		1	CABLE GLAND, ST 9, PR15,2/PG9	
380	90099-0104	-		1	NUT, PR 15,2 (PG9)	
390	90217-0347	A		1	GASKET 32X22,6X3,6 MM	
400	90217-0348	A		2	GASKET 35,4X46,8X4 MM	
450	90030-0212	-		1	NIPPLES, REDUSING, INT. THR. NO. 2521	
C1314	90274-0099	A		1	IP-TRANSDUCER	

Pos	Part No	SP	UN	Qty	Description	Page No

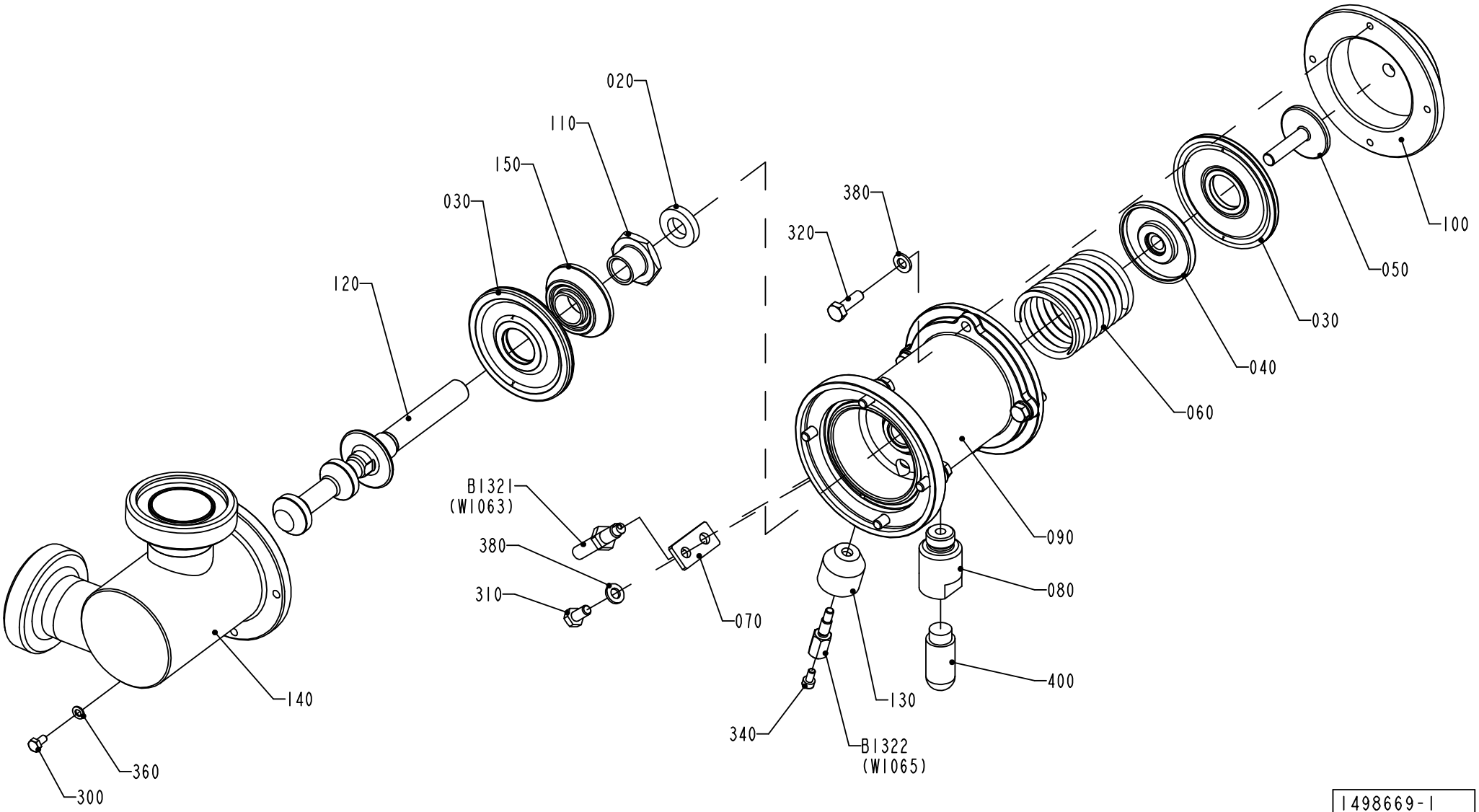

1498669-1
ECM 97977

Pos	Part No	SP	UN	Qty	Description	Page No
Common Parts						
020	736514-0000	A		1	SHOCK ABSORBER	
030	925998-0000	A		2	DIAPHRAGM	
040	926906-0000	-		1	SPACER	
050	926907-0000	-		1	SCREW	
060	926909-0000	A		1	COMPRESSION SPRING	
070	926934-0000	-		1	SUPPORT	
080	927044-0000	-		1	SPACER	
090	927194-0000	-		1	BODY	
100	927203-0000	-		1	COVER	
110	979434-0000	A		1	FERRULE	
120	1129321-0000	A		1	SHUTTER	
130	1478813-0000	-		1	SPACER	
140	1498526-0000	-		1	REGULATOR BODY	
150	1511600-0000	-		1	SPACER	
300	312105-0287	-		1	SCREW M6S ISO 4017 M4X8 A480	
310	312105-0366	-		1	SCREW M6S M6X12 A280	
320	312105-0370	-		8	SCREW M6S ISO 4017 M6X20 A480	
340	312115-0287	-		1	SCREW MC6S M4X8 A280	
360	315105-0136	-		1	WASHER PLAIN, BRB, 4,3/8,H=0,8	
380	315105-0153	-		9	WASHER PLAIN, BRB, 6,4/12,H=1,5	
400	90328-0026	B		1	SILENCER G1/4	
B1321	90044-0145	A		1	PROX.SW. 922 AAIY-A9P-050-LZ876	
B1322	1478814-0000	A		1	SENSOR	

Pos	Part No	SP	UN	Qty	Description	Page No

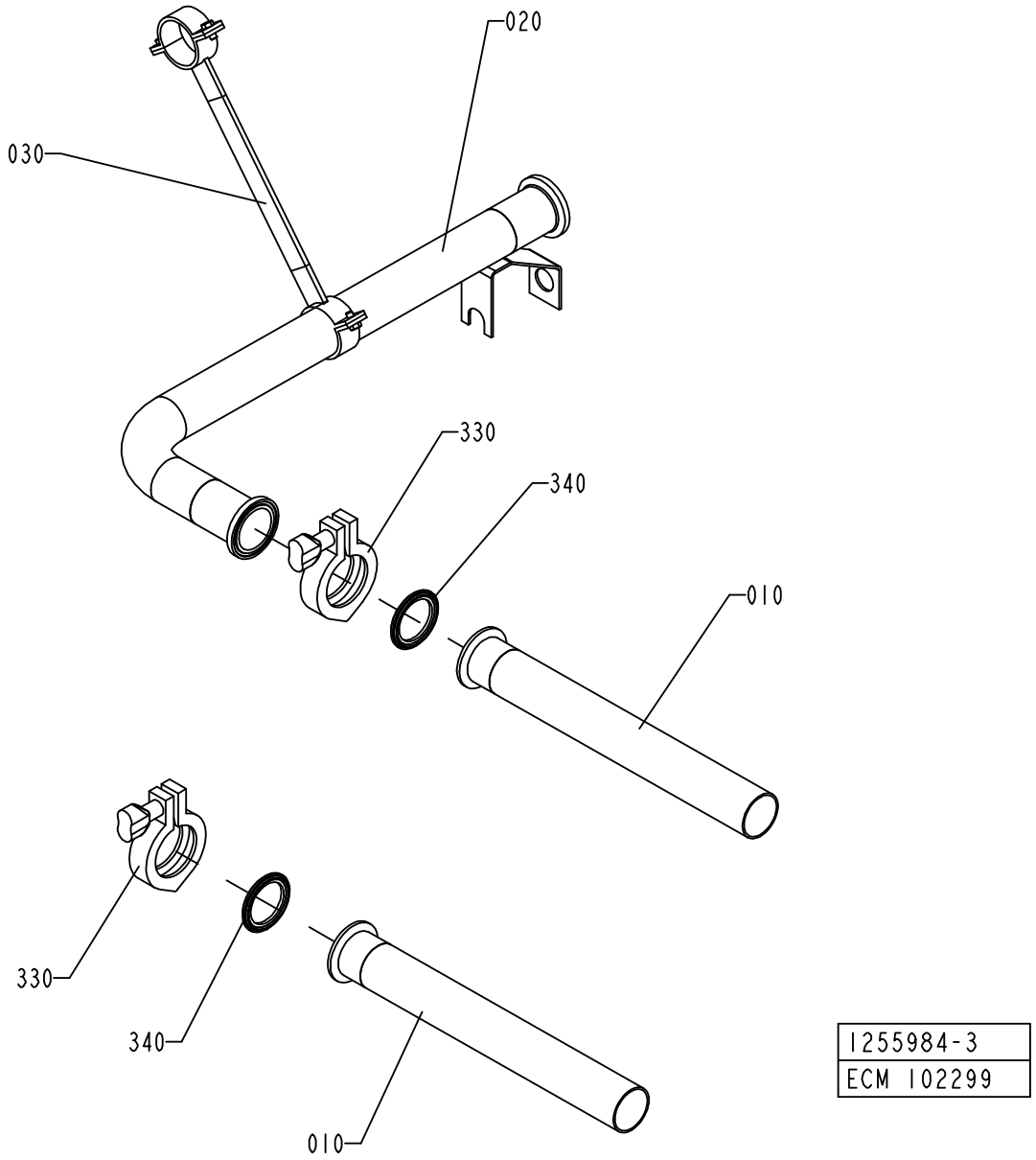

1255984-3
ECM 102299

ECM: 113455 - 20020911
Group number: 1255984-0300
Assembly Drawing: 1255984-3_1_AB

Issue: 20021015

Pos	Part No	SP	UN	Qty	Description	Page No
Common Parts						
010	2551115-0000	-		2	PIPE	
020	1038964-0000	-		1	INTERMEDIATE PART	
030	1038965-0000	-		1	HOLDER	
330	342840-0103	-		2	CLAMPING PIECE	
340	342850-0304	B		2	GASKET 35,4X49,1X5,2 MM 1"1/2 FDA	

Pos	Part No	SP	UN	Qty	Description	Page No

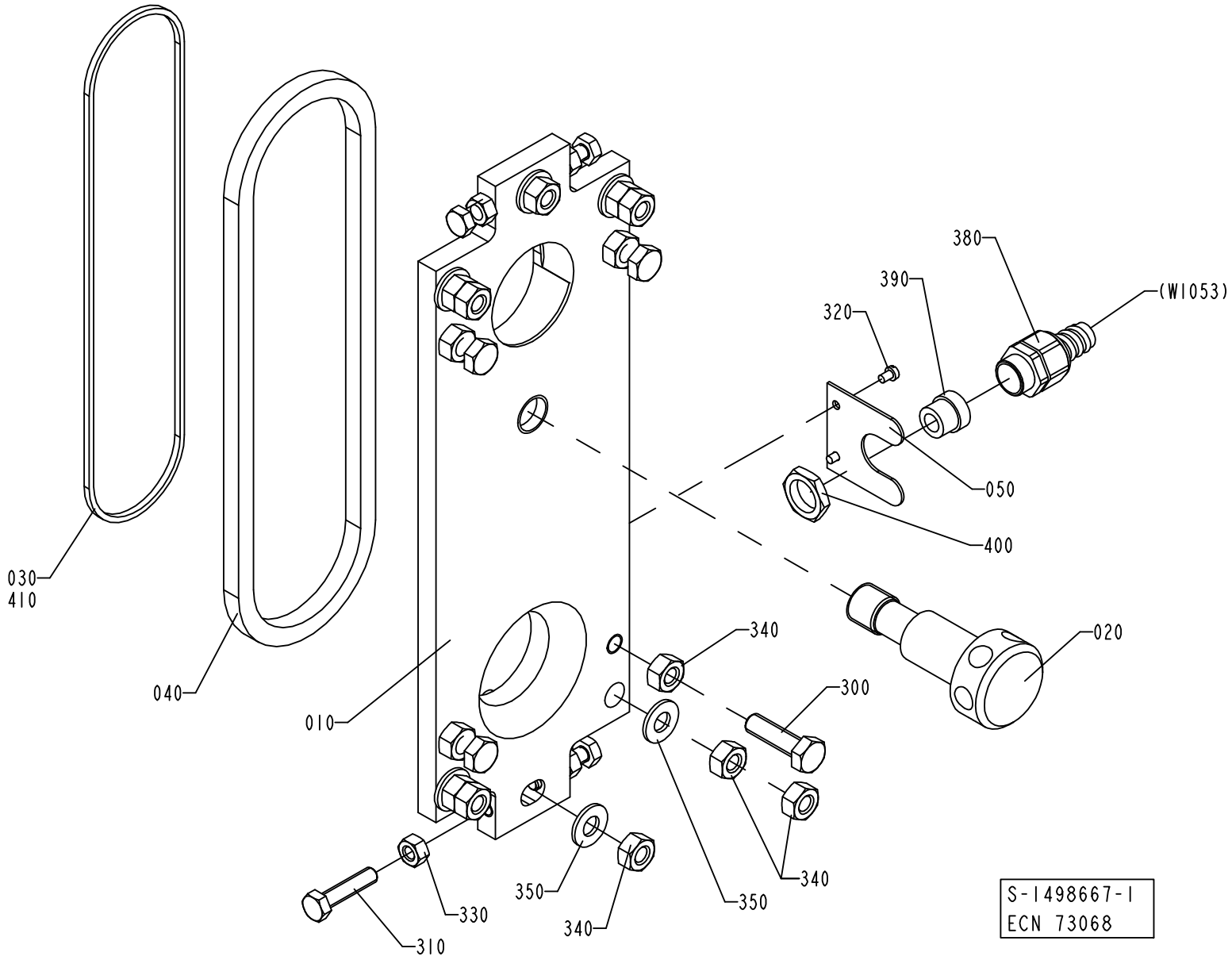
380
390
320
(W1053)
050
400
020
340
300
010
040
030
410
340
350
350
330
310
S-1498667-1
ECN 73068

ECM: 113499 - 20020911
Group number: 1498667-0100
Assembly Drawing: 1498667-1_1_AA

Issue: 20021015

Pos	Part No	SP	UN	Qty	Description	Page No
FLOATER						
010	1548861-0000	-		1	MOUNTING PLATE	
LEVELPROBE						
010	1498527-0000	-		1	MOUNTING PLATE	
050	1036782-0000	-		1	HOLDER	
320	312125-0285	-		2	SCREW SLOT.PAN HD. MCS 4X6 A480	
380	353243-0002	-		1	EXTENDED WITHOUT INSERT, PG11	
390	353249-0009	-		1	INSERT, SINGEL HOLE, EK 152/9	
400	90099-0117	-		1	NUT, PR 18,6 (PG11)	
Common Parts						
020	1484285-0000	-		1	SCREW	
030	1036777-0000	B		1	GASKET	
040	1036778-0000	B		1	GASKET	
300	312105-0497	-		4	SCREW M6S ISO 4017 M10X35 A480	
310	312109-0457	-		4	SCREW M6S ISO 4017 M8X35 A480	
330	312605-0318	-		4	HEXAGON NUT, M6M M8 A280	
340	312605-0320	-		14	HEXAGON NUT, M6M M10 A280	
350	315105-0173	-		6	WASHER PLAIN, BRB, 10,5/22,H=2	
410	90153-0016	-	L	1	ADHESIVE TUBE 100G RHODORSIL CAF 3	

Pos	Part No	SP	UN	Qty	Description	Page No

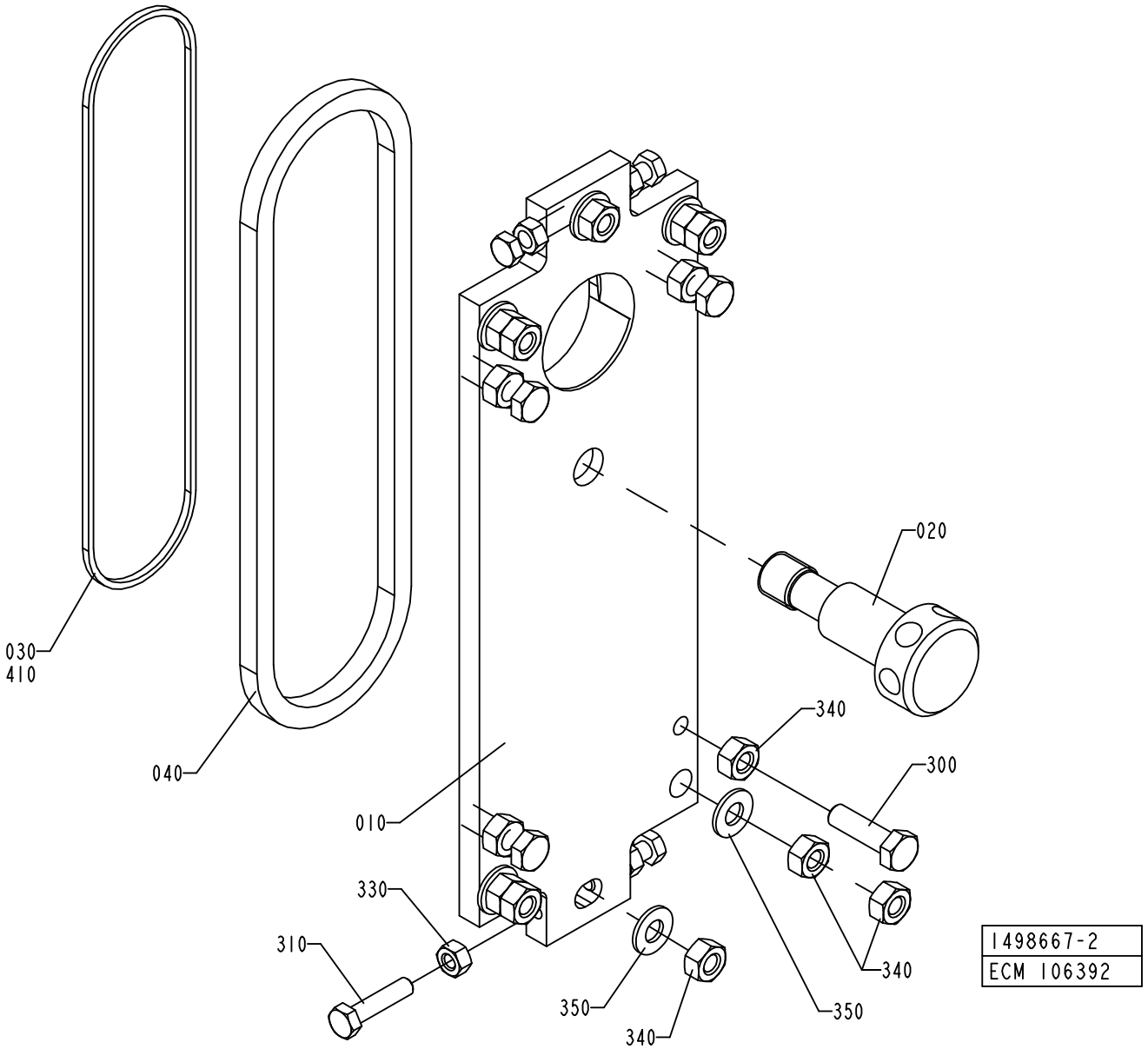
030
410
040
020
340
300
010
330
310
350
340
350
340
1498667-2
ECM 106392

ECM: 113499 - 20020911
Group number: 1498667-0100
Assembly Drawing: 1498667-2_1_AA

Issue: 20021015

Pos	Part No	SP	UN	Qty	Description	Page No
FLOATER						
010	1548861-0000	-		1	MOUNTING PLATE	
LEVELPROBE						
010	1498527-0000	-		1	MOUNTING PLATE	
050	1036782-0000	-		1	HOLDER	
320	312125-0285	-		2	SCREW SLOT.PAN HD. MCS 4X6 A480	
380	353243-0002	-		1	EXTENDED WITHOUT INSERT, PG11	
390	353249-0009	-		1	INSERT, SINGEL HOLE, EK 152/9	
400	90099-0117	-		1	NUT, PR 18,6 (PG11)	
Common Parts						
020	1484285-0000	-		1	SCREW	
030	1036777-0000	B		1	GASKET	
040	1036778-0000	B		1	GASKET	
300	312105-0497	-		4	SCREW M6S ISO 4017 M10X35 A480	
310	312109-0457	-		4	SCREW M6S ISO 4017 M8X35 A480	
330	312605-0318	-		4	HEXAGON NUT, M6M M8 A280	
340	312605-0320	-		14	HEXAGON NUT, M6M M10 A280	
350	315105-0173	-		6	WASHER PLAIN, BRB, 10,5/22,H=2	
410	90153-0016	-	L	1	ADHESIVE TUBE 100G RHODORSIL CAF 3	

Pos	Part No	SP	UN	Qty	Description	Page No

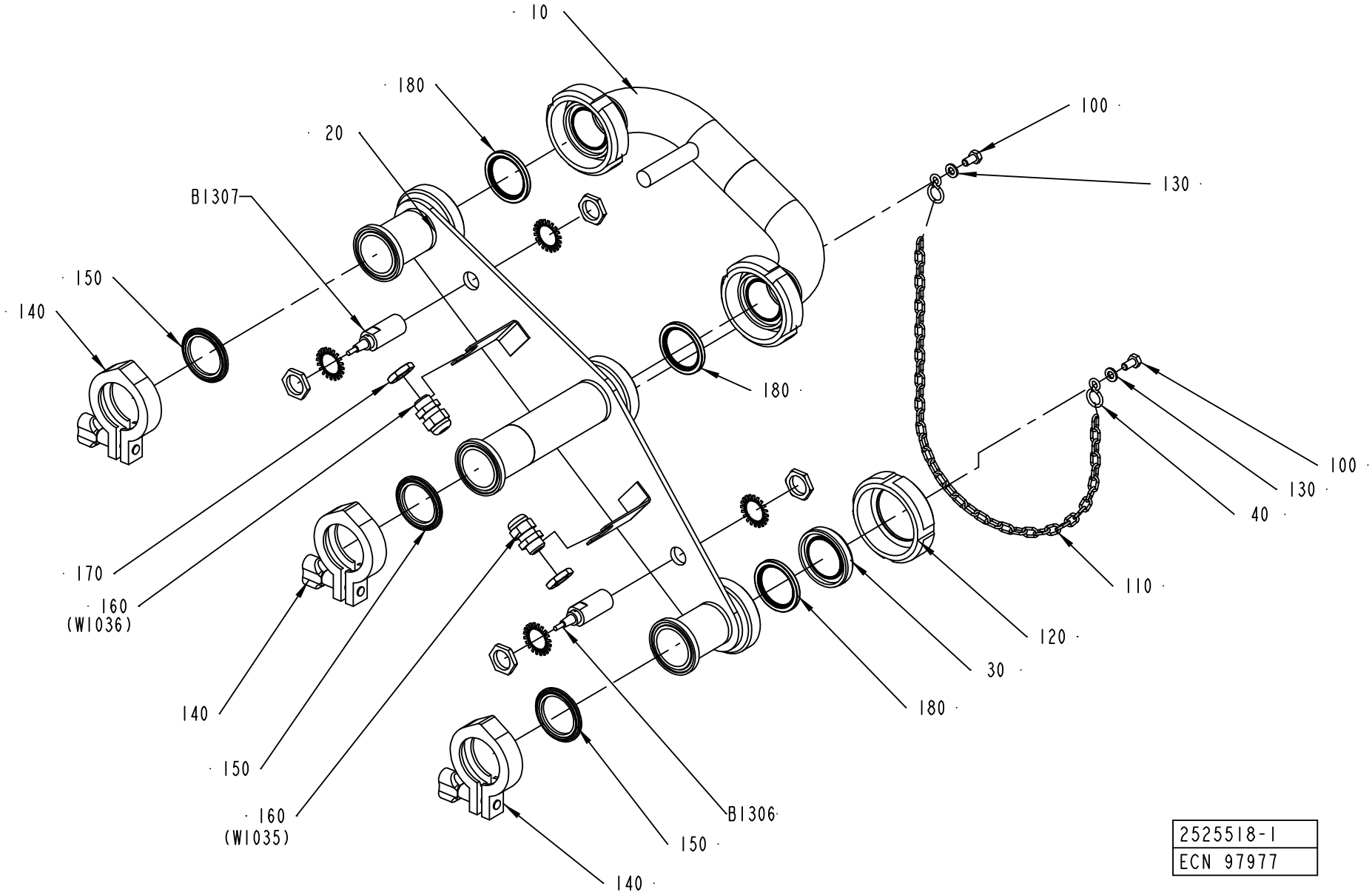

2525518-1
ECN 97977

ECM: 113454 - 20020911
Group number: 2525518-0100
Assembly Drawing: 2525518-1_1_AA

Issue: 20021015

Pos	Part No	SP	UN	Qty	Description	Page No
Common Parts						
010	2524349-0000	-		1	CONNECTING PIPE	
020	2524351-0000	-		1	PIPE SUPPORT	
030	2525338-0000	-		1	PLUG	
040	209183-0000	-		2	RING	
100	312105-0366	-		2	SCREW M6S M6X12 A280	
110	90155-0008	-	MM	500	HANGER CHAIN, 18	
120	90217-0206	-		1	UNION NUT, 1 1/2 APV, 07-01-376/17	
130	315105-0153	-		2	WASHER PLAIN, BRB, 6,4/12,H=1,5	
140	342840-0103	-		3	CLAMPING PIECE	
150	342850-0304	-		3	GASKET 35,4X49,1X5,2 MM 1"1/2 FDA	
160	352103-0101	-		2	CABLE GLAND, ST 9, PR15,2/PG9	
170	90099-0104	-		2	NUT, PR 15,2 (PG9)	
180	90217-0348	B		3	GASKET 35,4X46,8X4 MM	
B1306	90458-0676	A		1	PROXIMITY SWITCH,E2EG-X5B1-6M	
B1307	90458-0676	A		1	PROXIMITY SWITCH,E2EG-X5B1-6M	

Pos	Part No	SP	UN	Qty	Description	Page No

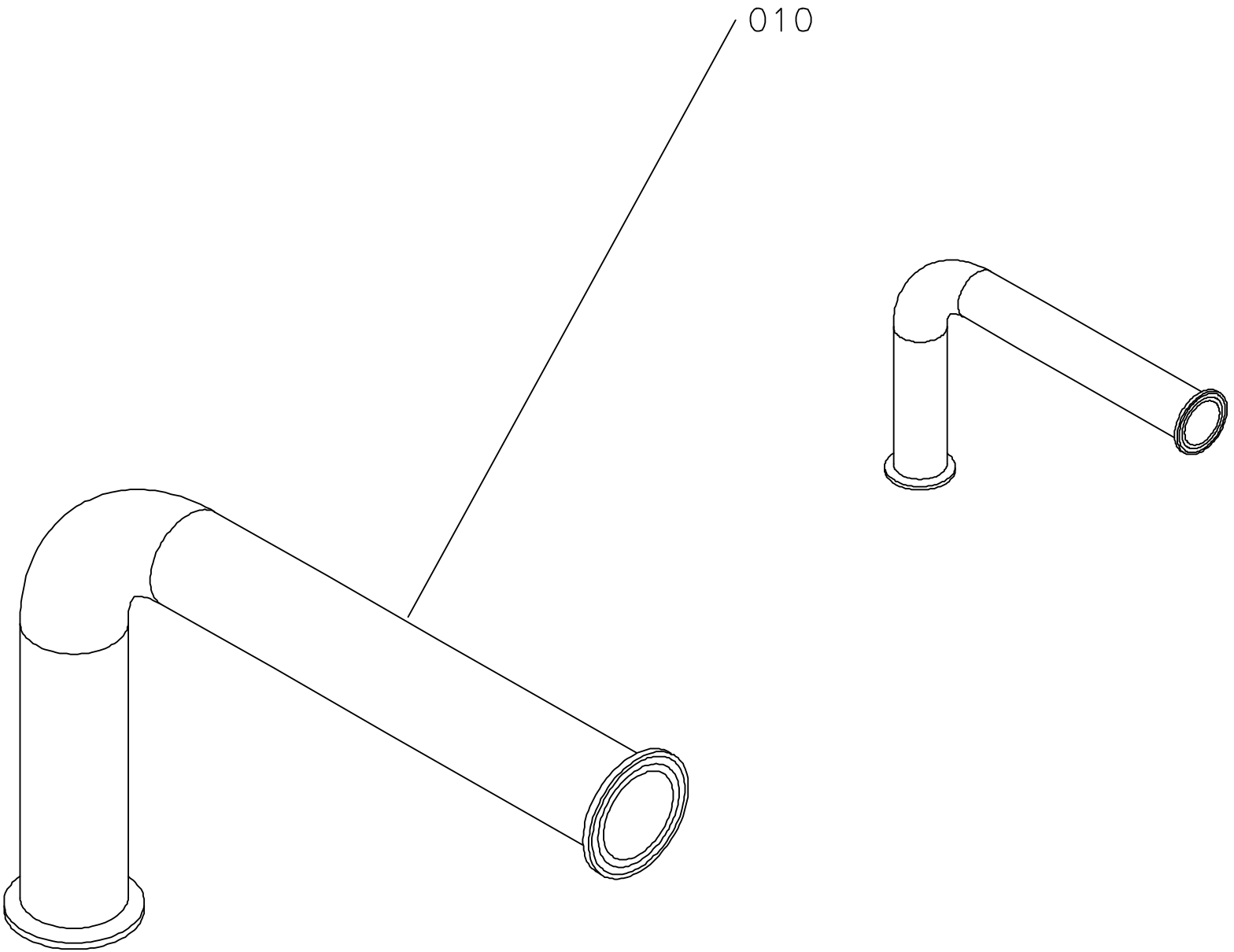
010

Pos	Part No	SP	UN	Qty	Description	Page No
CIPSUPERV						
020	1037461-0000	-		1	CONDUCTIVITY PIPE	
300	342840-0103	-		2	CLAMPING PIECE	
310	342850-0304	-		2	GASKET 35,4X49,1X5,2 MM 1"1/2 FDA	
600	353243-0003	-		1	EXTENDED WITHOUT INSERT, PG11	
605	353249-0011	-		1	INSERT, SINGEL HOLE, EK 153/11	
610	353244-0002	-		2	EXTENDED WITHOUT INSERT, HIGH TEMP, PG13	
620	90099-0117	-		1	NUT, PR 18,6 (PG11)	
650	353249-0018	-		2	INSERT, SINGEL HOLE, HI.TEMP, EK152I9	
B1315	B90243-0321	-		1	CONDUCTIVITY SENSOR, TP5EL. 00343-10803	
	90242-0198	*-*		*1*	*O-RING*	
B1316	B90243-0430	-		1	FLOW METER, MAG 1100 FOOD PFA	
	90458-1617	*-*		*1*	*GASKET, DN40 FOR MAG 1100 FOOD*	
NOCIPSUPERV						
010	1038334-0000	-		1	PIPE	

Pos	Part No	SP	UN	Qty	Description	Page No

Machine Type | Group Description | Used-In | Group Number | Page No

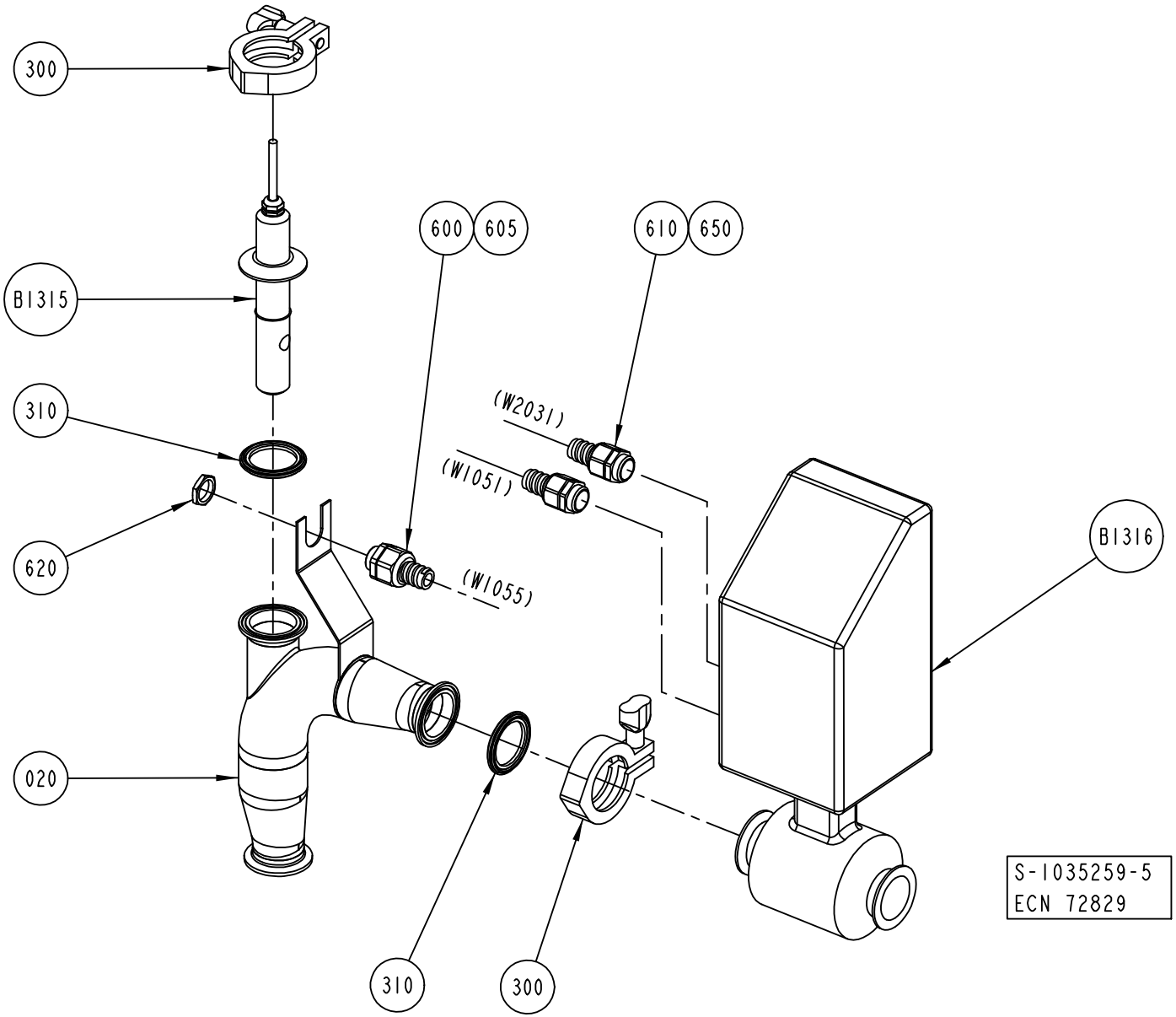
300
B1315
310
620
020
600
605
610
650
(W2031)
(W1051)
(W1055)
B1316
310
300
S-1035259-5
ECN 72829

Pos	Part No	SP	UN	Qty	Description	Page No
CIPSUPERV						
020	1037461-0000	-		1	CONDUCTIVITY PIPE	
300	342840-0103	-		2	CLAMPING PIECE	
310	342850-0304	-		2	GASKET 35,4X49,1X5,2 MM 1"1/2 FDA	
600	353243-0003	-		1	EXTENDED WITHOUT INSERT, PG11	
605	353249-0011	-		1	INSERT, SINGEL HOLE, EK 153/11	
610	353244-0002	-		2	EXTENDED WITHOUT INSERT, HIGH TEMP, PG13	
620	90099-0117	-		1	NUT, PR 18,6 (PG11)	
650	353249-0018	-		2	INSERT, SINGEL HOLE, HI.TEMP, EK152I9	
B1315	B90243-0321	-		1	CONDUCTIVITY SENSOR, TP5EL. 00343-10803	
	90242-0198	*-*		*1*	*O-RING*	
B1316	B90243-0430	-		1	FLOW METER, MAG 1100 FOOD PFA	
	90458-1617	*-*		*1*	*GASKET, DN40 FOR MAG 1100 FOOD*	
NOCIPSUPERV						
010	1038334-0000	-		1	PIPE	

Pos	Part No	SP	UN	Qty	Description	Page No

Machine Type | Group Description | Used-In | Group Number | Page No

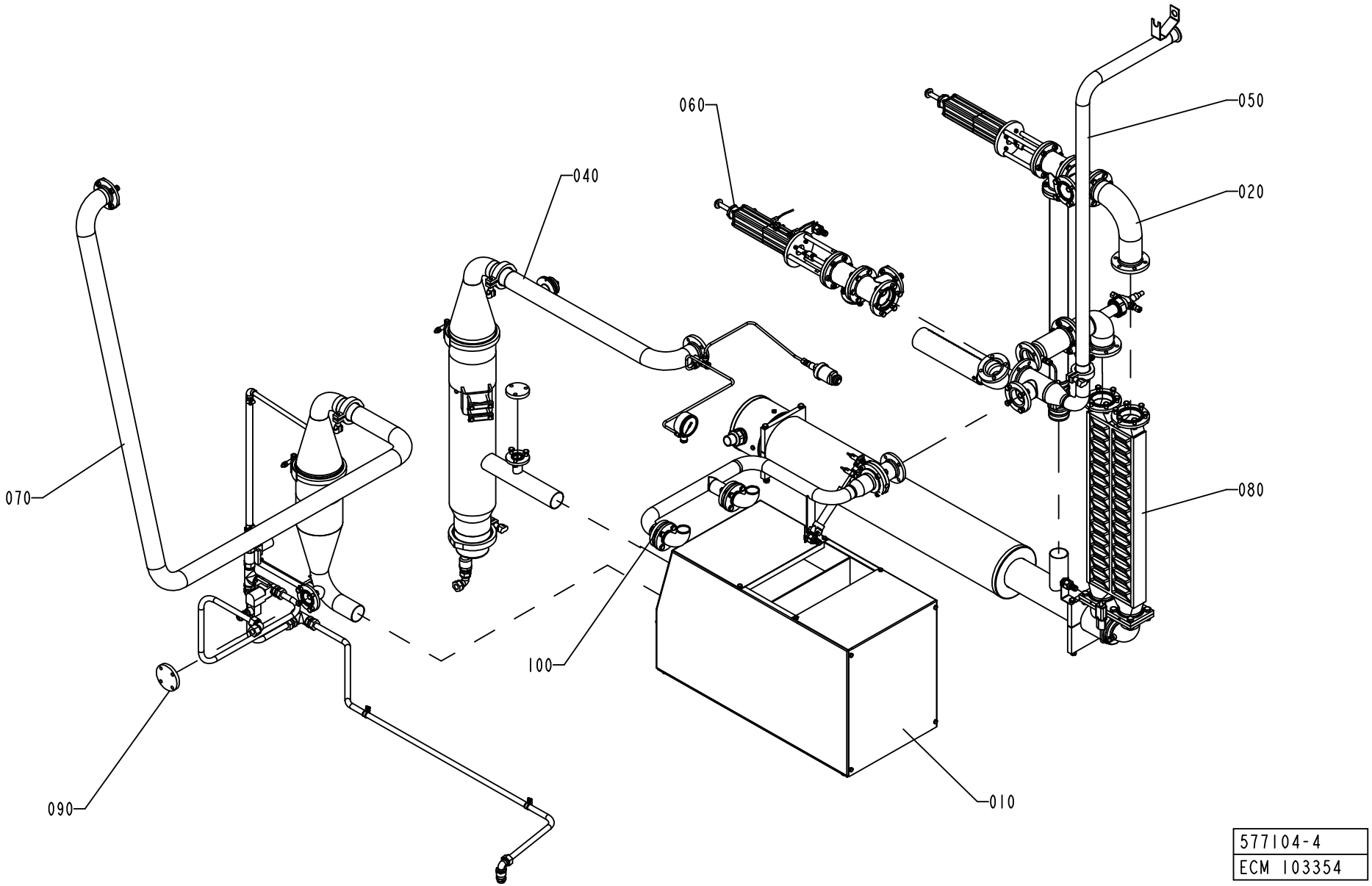
060
050
040
020
070
080
100
090
010
577104-4
ECM 103354

ECM: 98112 - 20010925
Group number: 577104-0300
Assembly Drawing: 577104-4_1_AA

Issue: 20021015

Pos	Part No	SP	UN	Qty	Description	Page No
Common Parts						
010	A996475-0200	-		1	COMPRESSOR UNIT	**131**
020	A1347141-0100	-		1	VALVE HEAT EXCHANGER	**133**
040	A1347142-0200	-		1	SEPARATOR	**135**
050	A1195284-0300	-		1	PIPE-LINE	**137**
060	A1195285-0300	-		1	PRE-HEATING VALVE	**139**
070	A1255979-0300	-		1	SCRUBBER	**141**
080	A1347246-0100	-		1	AIR SUPER-HEATER	**143**
090	A1478765-0100	-		1	PRESSURE REGULATOR	**145, 147**
100	A2523664-0100	-		1	BUTTERFLY VALVE	**149**

Pos	Part No	SP	UN	Qty	Description	Page No

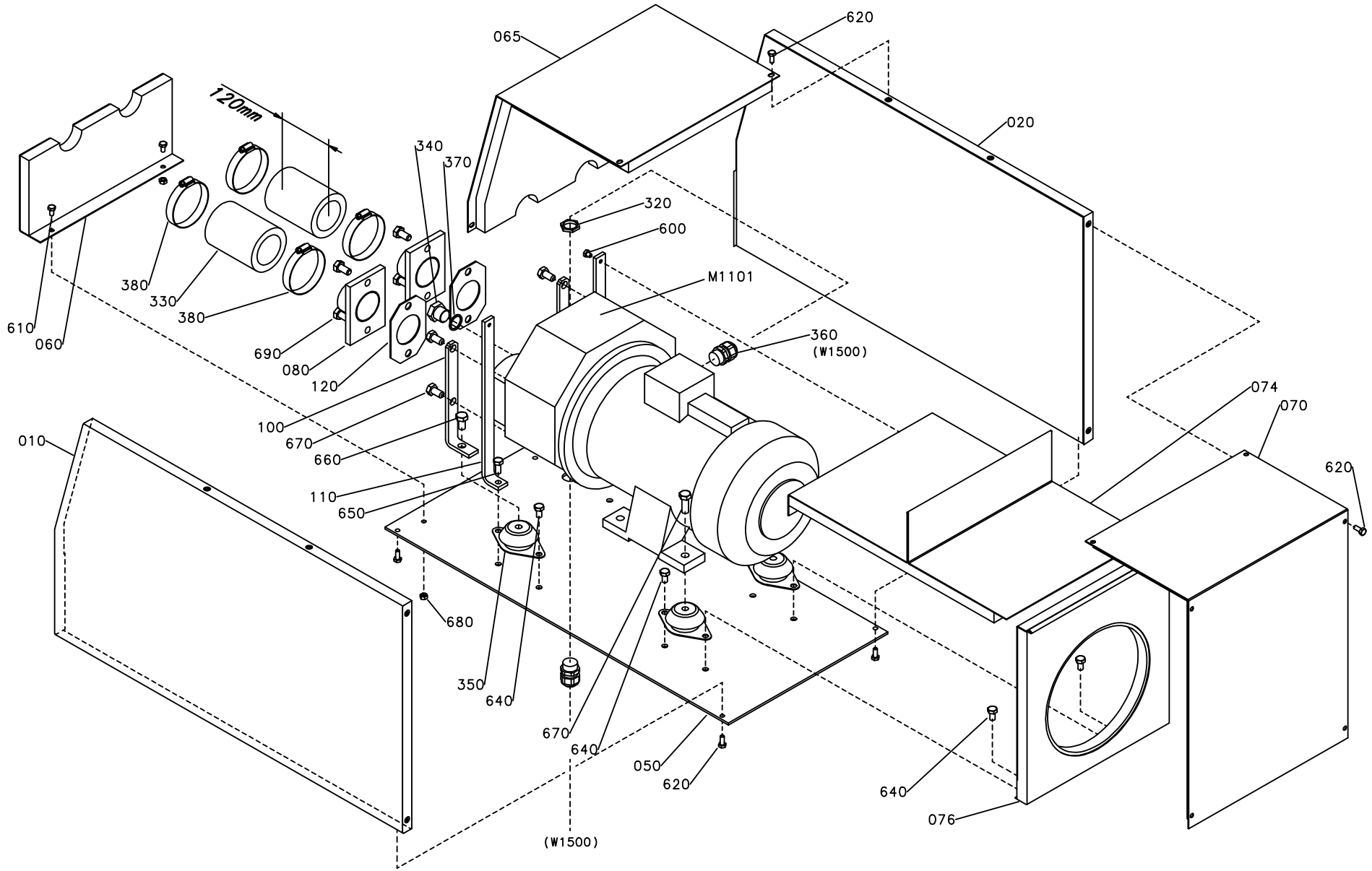
065
620
020
120mm
340
370
320
600
M1101
360
(W1500)
380
330
380
610
060
690
080
120
100
670
660
110
650
010
074
070
620
680
350
640
670
640
050
620
640
076
(W1500)

ECM: 111160 - 20020628
Group number: 996475-0200
Assembly Drawing: 996475-2_1_AB

Issue: 20021015

Pos	Part No	SP	UN	Qty	Description	Page No
Common Parts						
010	1040859-0000	-		1	COVER	
020	1040874-0000	-		1	COVER	
050	1036314-0000	-		1	BOTTOM PANEL	
060	1036315-0000	-		1	FRONT PLATE	
065	1040875-0000	-		1	COVER	
070	1040876-0000	-		1	COVER	
074	1040877-0000	-		1	PLATE	
076	1040878-0000	-		1	PLATE	
080	1036318-0000	-		2	PIPE	
100	269859-0000	-		2	BRACKET	
110	1036319-0000	-		2	BRACKET	
120	230551-0000	A		2	GASKET	
320	90099-0110	-		1	NUT, PR 22,5 (PG16)	
330	90166-0199	A	MM	240	RUBBER HOSE	
340	342713-0213	-		1	PLUG, EXT THREAD HEX SOCKET 8638-00-120	
350	90347-0144	-		4	VIBRATION DAMPER, NO. RA 40EM-A	
360	352103-0111	-		2	CABLE GLAND, ST 16, PR22,5/PG16	
370	315234-0113	A		1	WASHER PL.RND.CU.21,3//26 H=1,5	
380	342991-0111	-		4	HOSE CLIP,WORM DRIVE TYPE (63)-73	
600	312105-0362	-		2	SCREW M6S ISO 4017 M6X8 A480	
610	312105-0366	-		2	SCREW M6S M6X12 A280	
620	312105-0368	-		14	SCREW M6S M6X16 A280	
640	312105-0449	-		6	SCREW M6S ISO 4017 M8X16 A480	
650	312105-0451	-		2	SCREW M6S ISO 4017 M8X20 A480	
660	312105-0491	-		2	SCREW M6S ISO 4017 M10X20 A480	
670	312105-0495	-		6	SCREW M6S ISO 4017 M10X30 A480	
680	312605-0316	-		2	HEXAGON NUT, M6M M6 A280	
690	312105-0493	-		4	SCREW M6S ISO 4017 M10X25 A480	
M1101	90270-0017	A		1	COMPRESSOR NASH/ELMO 112 MB/4-2083	

Pos	Part No	SP	UN	Qty	Description	Page No

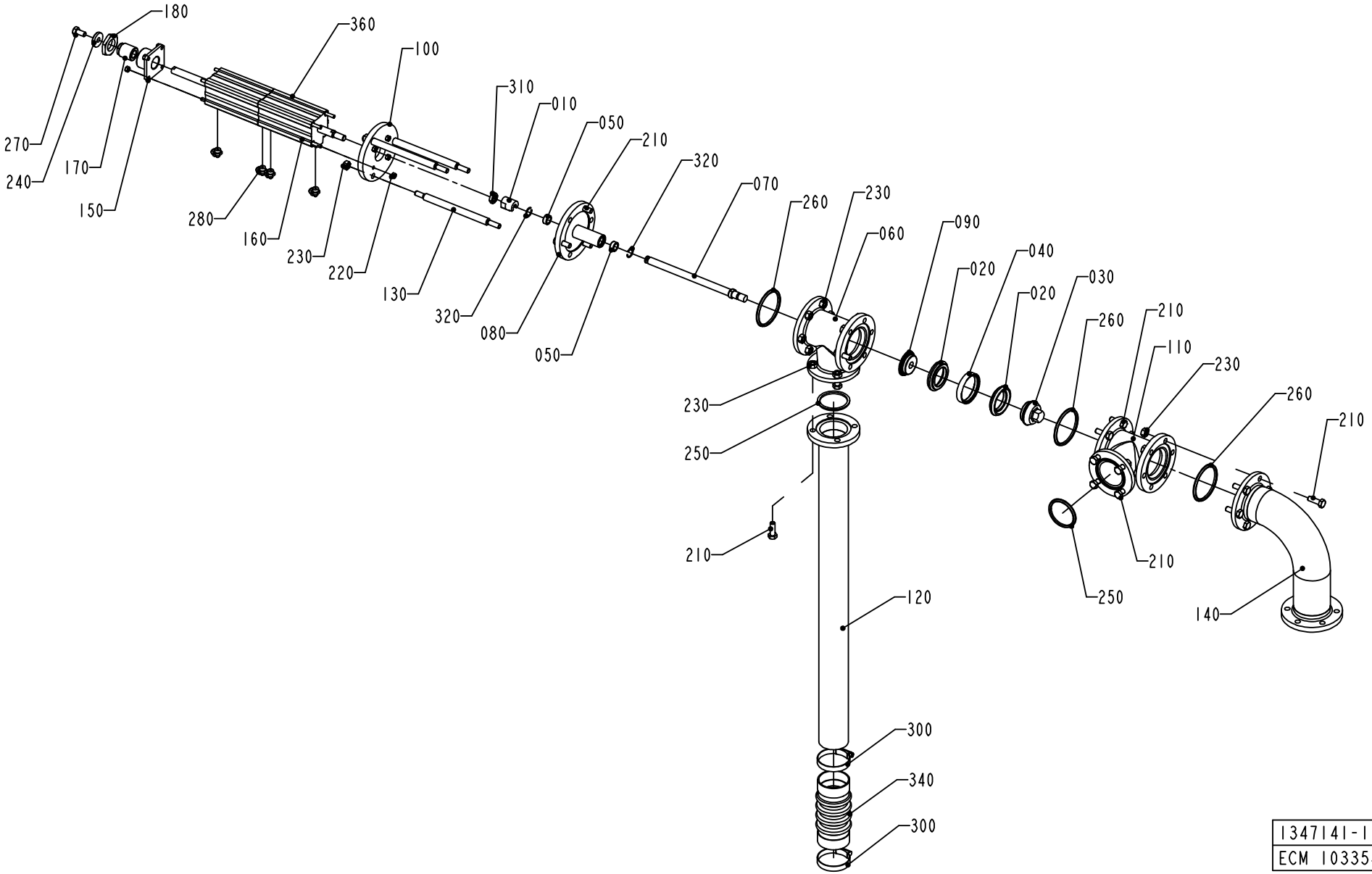
180
360
100
310
010
050
210
320
070
260
230
060
090
020
040
020
030
260
210
110
230
260
210
270
240
170
150
280
160
230
220
130
320
080
050
230
250
210
120
300
340
300
210
250
140
1347141-1
ECM 103354

ECM: 113503 - 20020911
Group number: 1347141-0100
Assembly Drawing: 1347141-1_1_AD

Issue: 20021015

Pos	Part No	SP	UN	Qty	Description	Page No
Common Parts						
010	441871-0000	B		1	PENDULUM SUSPENSION	
020	530589-0000	A		2	SEAL RING	
030	530590-0000	-		1	VALVE CONE	
040	530599-0000	-		1	RING	
050	532349-0000	A		2	PLAIN BEARING	
060	1036187-0000	-		1	T-PIPE	
070	1036188-0000	B		1	SHAFT	
080	1036189-0000	-		1	SPINDLE GUIDE	
090	1036191-0000	-		1	SEAL HOLDER	
100	1346657-0000	-		1	CYLINDER BRACKET	
110	1036194-0000	-		1	T-PIPE	
120	1036587-0000	-		1	PIPE	
130	1548760-0000	B		3	SPACER ROD	
140	1347113-0000	-		1	PIPE	
150	1346658-0000	-		1	BRACKET	
160	1346656-0000	-		4	ROD	
170	1346659-0000	B		1	SCREW	
180	1349398-0000	-		1	NUT	
210	312105-0453	-		23	SCREW M6S ISO 4017 M8X25 A480	
220	312605-0314	-		8	HEXAGON NUT, M6M M5 A280	
230	312605-0318	-		29	HEXAGON NUT, M6M M8 A280	
240	315125-0165	-		1	WASHER PLAIN ROUND,CHAMF. 8,4/26, H=5	
250	315229-0205	A		2	GASKET 47,5X55,5X3,7 MM 2"	
260	315229-0206	A		3	GASKET 60,2X68,2X3,7 MM 2"1/2	
270	312105-0449	-		1	SCREW M6S ISO 4017 M8X16 A480	
280	90458-2956	-		4	ELBOW PIPE JOINT, EXT.THREAD, D=6MM-G1/8	
300	342991-0109	-		2	HOSE CLIP,WORM DRIVE TYPE (48)-50	
310	90099-0051	-		1	NUT HEX. M10X1,25, FE FZB	
320	90141-0022	B		2	SNAP RING B 16	
340	90342-0022	B		1	BELLOWS	
360	1346677-0000	A		1	CYLINDER	

Pos	Part No	SP	UN	Qty	Description	Page No

Machine Type | Group Description | Used-In | Group Number | Page No

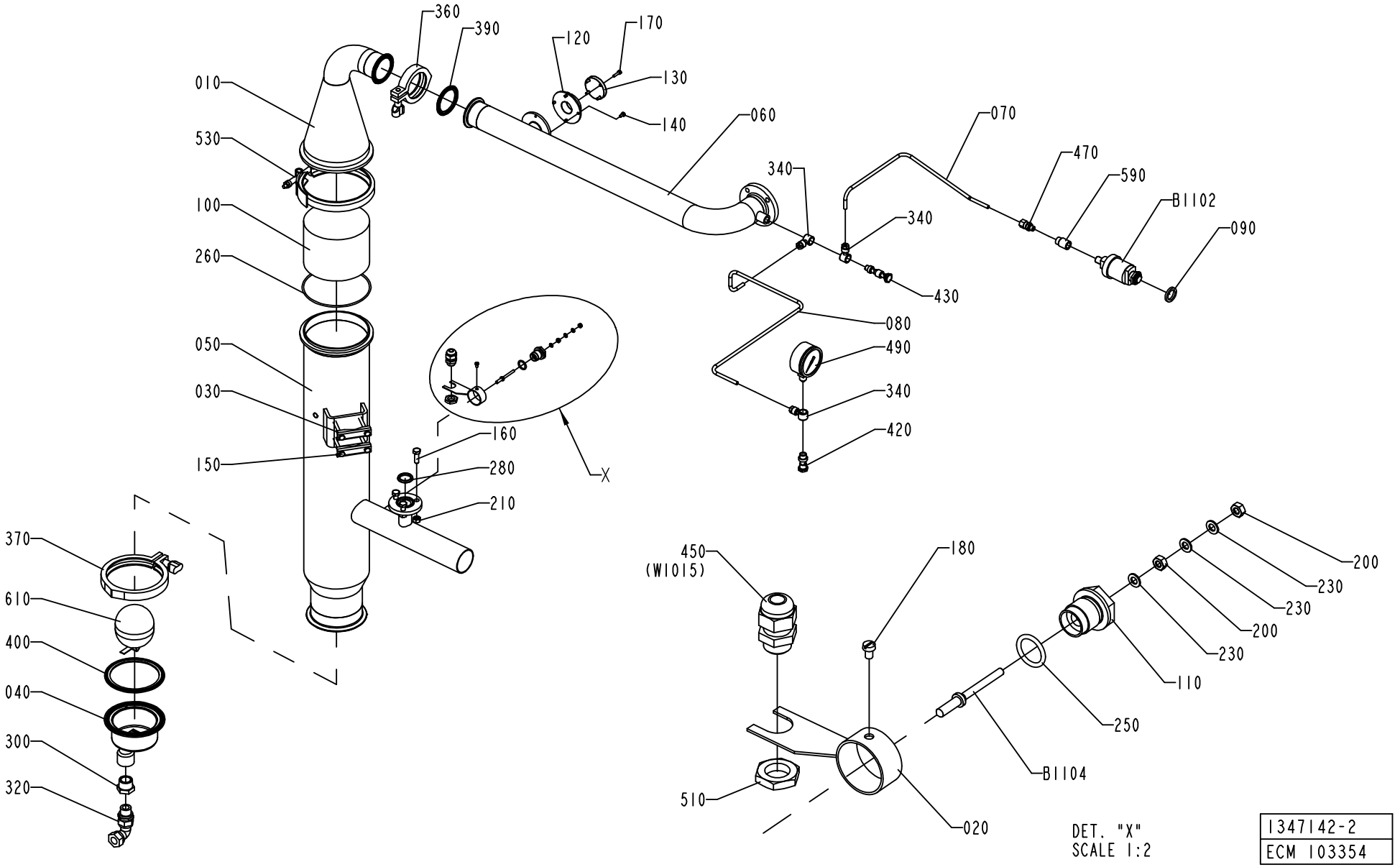
360
390
120
170
130
140
060
070
470
590
B1102
090
010
530
100
260
050
030
150
160
280
210
X
340
340
430
080
490
340
420
370
610
400
040
300
320
450
(W1015)
180
200
230
230
200
230
110
250
B1104
510
020
DET. "X"
SCALE 1:2
1347142-2
ECM 103354

ECM: 113500 - 20020911
Group number: 1347142-0200
Assembly Drawing: 1347142-2_1_AA

Issue: 20021015

Pos	Part No	SP	UN	Qty	Description	Page No
Common Parts						
010	1036753-0000	-		1	UPPER SECTION	
020	1036810-0000	-		1	HOLDER	
030	1036811-0000	-		2	CLAMP	
040	1038634-0000	A		1	DRAINING	
050	1038866-0000	-		1	INTERMEDIARY SECTION	
060	2506828-0000	-		1	PIPE	
070	1347135-0000	-		1	PIPE	
080	1347136-0000	-		1	PIPE	
090	479234-0000	-		1	WASHER	
100	546929-0000	B		1	FILTER	
110	560931-0000	B		1	BRACKET	
120	1558771-0000	-		1	FLANGE	
130	2540801-0000	-		1	PLUG	
140	312105-0287	-		4	SCREW M6S ISO 4017 M4X8 A480	
150	312105-0381	-		4	SCREW M6S ISO 4014 M6X55 A480	
160	312105-0453	-		3	SCREW M6S ISO 4017 M8X25 A480	
170	312115-0293	-		4	SCREW MC6S M4X16 A280	
180	312125-0285	-		1	SCREW SLOT.PAN HD. MCS 4X6 A480	
200	312605-0312	-		2	HEXAGON NUT, M6M M4 A280	
210	312605-0318	-		3	HEXAGON NUT, M6M M8 A280	
230	315105-0136	-		3	WASHER PLAIN, BRB, 4,3/8,H=0,8	
250	315204-0213	B		1	O-RING 15,2X2,4 MM	
260	315204-0317	B		1	O-RING 129,5X3 MM	
280	315229-0203	B		1	GASKET 34,8X42,8X3,7 MM 1"1/2	
300	342206-0109	-		1	BUSHING, TAPERED, INT/EXT. THRÿNO. R211	
320	342738-0221	-		1	ADJUSTABLE ELBOW CONNECTION,EXT 15-G1/2	
340	342797-0122	-		3	CONN. BANJO, RINGPIECE 6-1/4	
360	342840-0105	-		1	CLAMPING PIECE	
370	342840-0108	-		1	CLAMP, 101,6 MM 3-A PCS+PMCS	
390	342850-0405	A		1	GASKET 47,8X62,6X5,2 MM 2" FDA	
400	342850-0408	A		1	GASKET 97X117,7X5,2 MM 4" FDA	
420	342980-0304	-		1	BANJO-HOLLOW BOLT COUPL,EXT.THR.01-G1/4"	
430	342980-0314	-		1	BANJO-HOLLOW BOLT COUPL,EXT.THR.02-G1/4"	
450	352103-0101	-		1	CABLE GLAND, ST 9, PR15,2/PG9	
470	90030-0184	-		1	CONN. STR. GA-6-G1/8	
490	90043-0095	A		1	PRESSURE GAUGE, 2740, D=63 MM, GLYC.	
510	90099-0104	-		1	NUT, PR 15,2 (PG9)	
530	90132-0030	-		1	HOLDER MV 87177 KS 580T	
540	90144-0073	-		1	TREBOFLON-TAPE W=13MM	
590	90330-0012	-		1	SLEEVE, REDUCTION, INT, R-2021/4X1/8	
610	90360-0305	A		1	FLOAT, ART NO 10739920	
620	90157-0037	-		1	SEALING COMPOUND	
B1102	90274-0045	A		1	PRESSURE GUARD, 14 KPA	
B1104	979500-0003	A		1	ELECTRODE	

Machine Type | Group Description | Used-In | Group Number | Page No

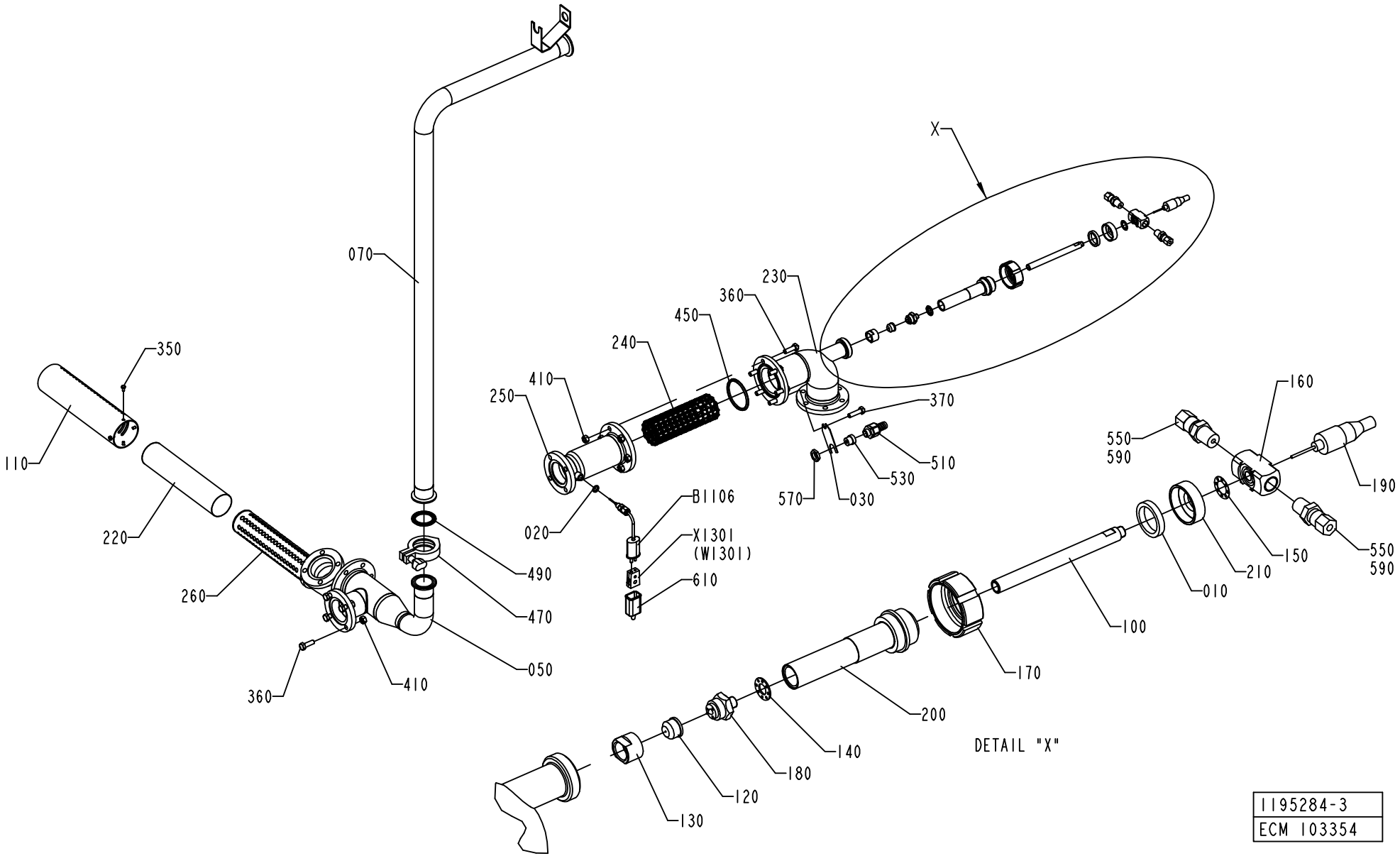
X
070
350
110
220
260
360
410
050
470
490
020
250
410
240
450
360
230
370
510
530
570
030
B1106
X1301
(W1301)
610
160
550
590
190
550
590
150
210
010
100
170
200
140
180
120
130
DETAIL "X"
1195284-3
ECM 103354

Pos	Part No	SP	UN	Qty	Description	Page No
Common Parts						
010	12242-0001	A		1	GASKET 32X25X5,5	
020	273429-0000	-		1	WASHER	
030	1036293-0000	-		1	HOLDER	
050	1347116-0000	-		1	PIPE	
070	1347134-0000	-		1	PIPE	
100	1499634-0000	-		1	INTERNAL PIPE	
110	1511503-0000	-		1	PIPE	
120	1512299-0000	A		1	SPRAY NOZZLE DOME	
130	1512300-0000	-		1	SPRAY NOZZLE NUT	
140	1512301-0000	A		1	SPACER	
150	1512302-0000	A		1	SPRAY NOZZLE GASKET	
160	1512319-0000	-		1	SPRAY NOZZLE BODY	
170	1512405-0000	-		1	NUT	
180	1512409-0000	A		1	SPRAY NOZZLE INJECTOR	
190	1512410-0000	-		1	SPRAY NOZZLE PLUG	
200	1512835-0000	-		1	EXTERNAL PIPE	
210	1512836-0000	-		1	LID	
220	1517483-0000	-		1	NET	
230	2501515-0000	-		1	PIPE	
240	2501516-0000	-		1	CONTAINER	
250	2501518-0000	-		1	PIPE	
260	2501519-0000	-		1	PIPE	
350	312105-0287	-		4	SCREW M6S ISO 4017 M4X8 A480	
360	312105-0453	-		10	SCREW M6S ISO 4017 M8X25 A480	
370	312105-0455	-		1	SCREW M6S ISO 4017 M8X30 A480	
410	312605-0318	-		10	HEXAGON NUT, M6M M8 A280	
450	315229-0206	B		1	GASKET 60,2X68,2X3,7 MM 2"1/2	
470	342840-0103	-		1	CLAMPING PIECE	
490	342850-0304	B		1	GASKET 35,4X49,1X5,2 MM 1"1/2 FDA	
510	353243-0001	-		1	EXTENDED WITHOUT INSERT, PG9	
530	353249-0008	-		1	INSERT, SINGEL HOLE, EK 152/7	
550	90030-0062	-		2	CONN. STR. GE 6-1/4-18 NPTF	
570	90099-0104	-		1	NUT, PR 15,2 (PG9)	
590	90144-0073	-		1	TREBOFLON-TAPE W=13MM	
610	90326-0012	-		1	PROTECTIVE COVER, T31A4618	
B1106	90326-0051	A		1	THERMOCOUPLE, 12826-33	
X1301	90326-0020	A		1	PLUG, FEMALE YELLOW CR-AL	

Pos	Part No	SP	UN	Qty	Description	Page No

Machine Type | Group Description | Used-In | Group Number | Page No

PRE-HEATING VALVE

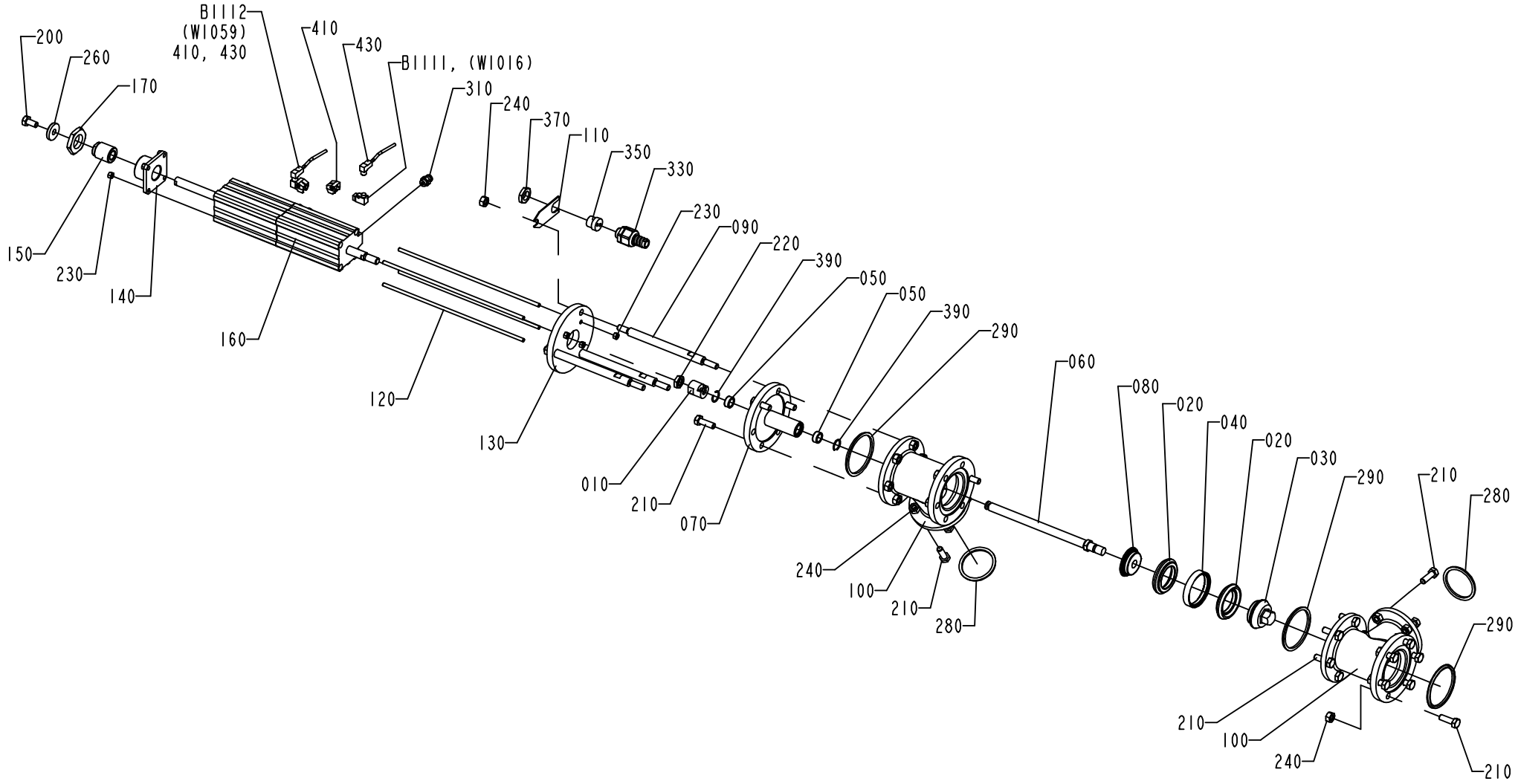

1195285-3
ECM 103354

ECM: 113466 - 20020911
Group number: 1195285-0300
Assembly Drawing: 1195285-3_1_AA

Issue: 20021015

Pos	Part No	SP	UN	Qty	Description	Page No
Common Parts						
010	441871-0000	B		1	PENDULUM SUSPENSION	
020	530589-0000	A		2	SEAL RING	
030	530590-0000	-		1	VALVE CONE	
040	530599-0000	B		1	RING	
050	532349-0000	A		2	PLAIN BEARING	
060	1036188-0000	-		1	SHAFT	
070	1036189-0000	-		1	SPINDLE GUIDE	
080	1036191-0000	-		1	SEAL HOLDER	
090	1548760-0000	B		3	SPACER ROD	
100	1036194-0000	-		2	T-PIPE	
110	1036293-0000	-		1	HOLDER	
120	1346656-0000	-		4	ROD	
130	1346657-0000	-		1	CYLINDER BRACKET	
140	1346658-0000	-		1	BRACKET	
150	1346659-0000	B		1	SCREW	
160	1346677-0000	A		1	CYLINDER	
170	1349398-0000	-		1	NUT	
200	312105-0449	-		1	SCREW M6S ISO 4017 M8X16 A480	
210	312105-0453	-		23	SCREW M6S ISO 4017 M8X25 A480	
220	90099-0051	-		1	NUT HEX. M10X1,25, FE FZB	
230	312605-0314	-		8	HEXAGON NUT, M6M M5 A280	
240	312605-0318	-		29	HEXAGON NUT, M6M M8 A280	
260	315125-0165	-		1	WASHER PLAIN ROUND,CHAMF. 8,4/26, H=5	
280	315229-0205	A		2	GASKET 47,5X55,5X3,7 MM 2"	
290	315229-0206	A		3	GASKET 60,2X68,2X3,7 MM 2"1/2	
310	342722-0202	-		4	PIPE COUPLING 1/8" D=6MM	
330	353243-0001	-		1	EXTENDED WITHOUT INSERT, PG9	
350	353249-0036	-		1	INSERT, MULTI HOLE, EK152 M 2X4	
370	90099-0104	-		1	NUT, PR 15,2 (PG9)	
390	90141-0022	B		2	SNAP RING B 16	
410	90450-0816	A		2	SENSOR, BRACKET,SERIES 2700/2702	
430	1484470-0000	-		2	CABLE	
B1111	90044-0193	A		1	SENSOR, 32-31 0310	
B1112	90044-0193	A		1	SENSOR, 32-31 0310	

Pos	Part No	SP	UN	Qty	Description	Page No

Machine Type | Group Description | Used-In | Group Number | Page No

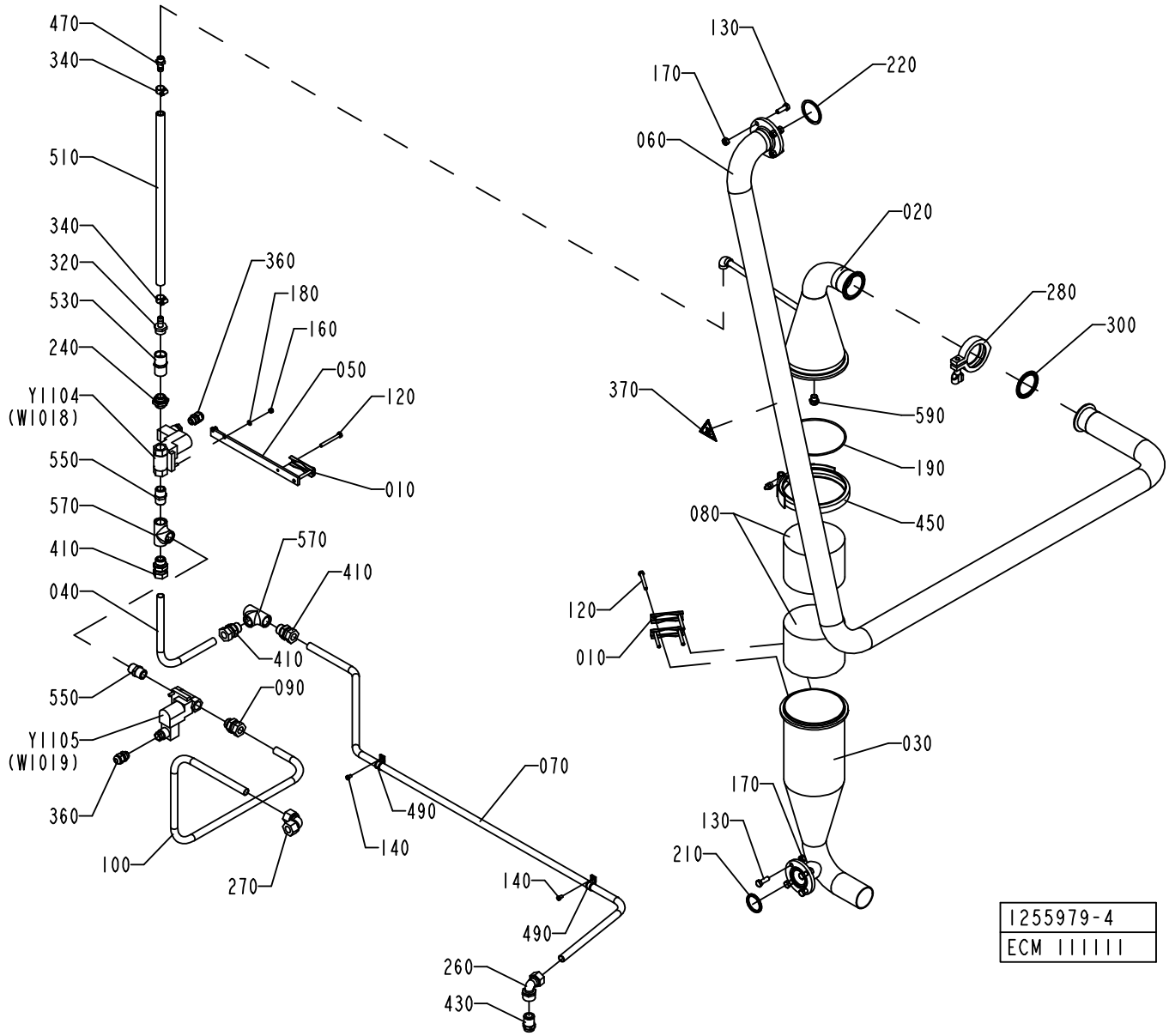
470
340
510
340
320
530
240
Y1104
(W1018)
550
570
410
040
550
Y1105
(W1019)
360
100
270
360
180
160
050
120
010
570
410
410
090
490
140
070
140
490
260
430
130
170
060
220
020
280
300
370
590
190
450
080
120
010
030
170
130
210
1255979-4
ECM 111111

ECM: 113515 - 20020911
Group number: 1255979-0300
Assembly Drawing: 1255979-4_1_AB

Issue: 20021015

Pos	Part No	SP	UN	Qty	Description	Page No
Common Parts						
010	1036811-0000	-		3	CLAMP	
020	1036910-0000	B		1	UPPER SECTION	
030	1036911-0000	-		1	CONTAINER	
040	1037011-0000	-		1	PIPE	
050	1037041-0000	-		1	HOLDER	
060	2506846-0000	-		1	PIPE	
070	1347129-0000	-		1	PIPE	
080	546929-0000	B		2	FILTER	
090	1038659-0000	-		1	STRAIGHT PIPE UNION	
100	1498524-0000	-		1	PIPE	
120	312105-0381	-		6	SCREW M6S ISO 4014 M6X55 A480	
130	312105-0453	-		8	SCREW M6S ISO 4017 M8X25 A480	
140	312125-0323	-		2	SCREW PAN HEAD MCS M5X8 SS	
160	312605-0314	-		2	HEXAGON NUT, M6M M5 A280	
170	312605-0318	-		8	HEXAGON NUT, M6M M8 A280	
180	315105-0146	-		2	WASHER PLAIN, BRB, 5,3/10,H=1	
190	315204-0317	B		1	O-RING 129,5X3 MM	
210	315229-0204	B		1	GASKET 34,8X42,8X3,7 MM 1"1/2	
220	315229-0205	B		1	GASKET 47,5X55,5X3,7 MM 2"	
240	479261-0000	-		1	NIPPLE	
260	342733-0114	-		1	CONN. ELBOW WI-15-G1/2	
270	342737-0221	-		1	CONN. ELBOW W-15 LRFR	
280	342840-0105	-		1	CLAMPING PIECE	
300	342850-0405	B		1	GASKET 47,8X62,6X5,2 MM 2" FDA	
320	342901-0105	-		1	HOSE NIPPLE, EXT.THR. R1/2-12 MM	
340	342991-0101	-		2	HOSE CLIP,WORM DRIVE TYPE (13)-16	
360	352103-0101	-		2	CABLE GLAND, ST 9, PR15,2/PG9	
370	359705-0007	-		1	WARNING SIGN ISO, HOT SURFACE	
410	90030-0188	-		3	CONN. STR. GA-15-G1/2	
430	90055-0097	-		1	STRAIGHT COUPLING	
450	90132-0030	-		1	HOLDER MV 87177 KS 580T	
470	90163-0052	-		1	HOSE NIPPLE, EXT.THR. 1/4-12 MM	
490	90165-0039	-		2	PIPE CLAMP, RSGU 1.15/12, D=15 MM	
510	90166-0121	-	MM	450	HOSE	
530	90270-0349	A		1	CONSTANT FLOW VALVE, 1/2"X1/2" 2GPM	
550	90330-0021	-		2	NIPPLES, EXT. THREAD. R-207R1/2	
570	90330-0049	-		2	T-PIPE, INT. THREAD, R-221R1/2	
590	90424-0054	A		1	SPRAY NOZZLE 120 DEG	
610	90144-0073	-		1	TREBOFLON-TAPE W=13MM	
620	90157-0037	-		1	SEALING COMPOUND	
Y1104	B90042-0172	A		1	SOLENOID VALVE 4023/1005/1032 24VDC	
	90042-0467	*A*		*1*	*COIL 24VDC GSR*	
Y1105	B90042-0172	A		1	SOLENOID VALVE 4023/1005/1032 24VDC	
	90042-0467	*A*		*1*	*COIL 24VDC GSR*	

Machine Type	Group Description	Used-In	Group Number	Page No

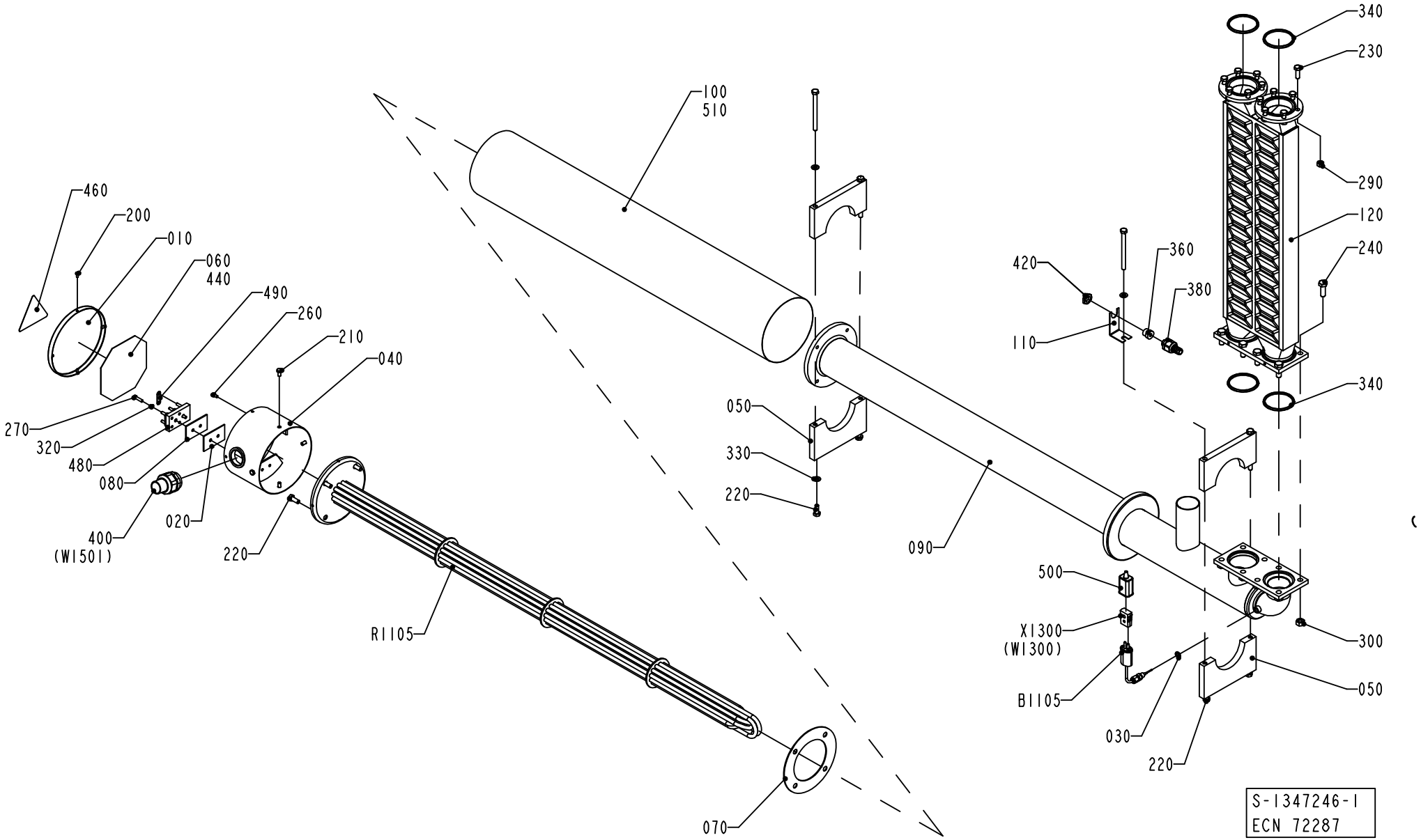
460
200
010
060
440
490
260
210
040
270
320
480
080
400
(W1501)
020
220
R1105
100
510
050
330
220
070
090
340
230
290
120
240
420
360
380
110
340
500
X1300
(W1300)
B1105
030
220
300
050
S-1347246-1
ECN 72287

ECM: 113516 - 20020911
Group number: 1347246-0100
Assembly Drawing: 1347246-1_1_AB

Issue: 20021015

Pos	Part No	SP	UN	Qty	Description	Page No
Common Parts						
010	29876-0000	-		1	COVER	
020	30298-0000	-		1	INSULATION	
030	273429-0000	-		1	WASHER	
040	B451430-0000	-		1	CONNECTION HOUS.(MINOR)	
	312605-0312	*-*		*4*	*HEXAGON NUT, M6M M4 A280*	
050	B456123-0000	-		2	SUPPORT	
	312105-0471	*-*		*2*	*SCREW M6S ISO 4014 M8X100 A480*	
	315105-0165	*-*		*2*	*WASHER PLAIN, BRB, 8,4/16,H=1,5*	
060	491305-0000	-		1	CONN.DIAGRAM AIR SUPERH.	
070	531731-0000	A		1	GASKET	
080	751009-0000	-		1	INSULATION	
090	1035942-0000	-		1	HEATING PIPE	
100	1036372-0000	-		1	PIPE	
110	1036373-0000	-		1	HOLDER	
120	1347245-0000	A		1	HEAT EXCHANGER	
200	312105-0287	-		4	SCREW M6S ISO 4017 M4X8 A480	
210	312105-0366	-		4	SCREW M6S M6X12 A280	
220	312105-0451	-		8	SCREW M6S ISO 4017 M8X20 A480	
230	312105-0453	-		12	SCREW M6S ISO 4017 M8X25 A480	
240	312105-0495	-		8	SCREW M6S ISO 4017 M10X30 A480	
260	312125-0323	-		1	SCREW PAN HEAD MCS M5X8 SS	
270	312125-0331	-		2	SCREW PAN HEAD MCS M5X20 SS	
290	312605-0318	-		12	HEXAGON NUT, M6M M8 A280	
300	312605-0320	-		8	HEXAGON NUT, M6M M10 A280	
320	315105-0146	-		2	WASHER PLAIN, BRB, 5,3/10,H=1	
330	315105-0165	-		2	WASHER PLAIN, BRB, 8,4/16,H=1,5	
340	315229-0206	A		4	GASKET 60,2X68,2X3,7 MM 2"1/2	
360	353243-0001	-		1	EXTENDED WITHOUT INSERT, PG9	
380	353249-0008	-		1	INSERT, SINGEL HOLE, EK 152/7	
400	90012-0126	-		1	NORMAL WITHOUT INSERT, PG29	
420	90099-0104	-		1	NUT, PR 15,2 (PG9)	
440	90153-0020	-	L	1	ADHESIVE BOSTIK 1782 125ML	
460	90194-0075	-		1	WARNING SIGN ISO, HOT SURFACE	
480	90195-0028	A		1	TERM.BLOCK 6-POLE STEATIT	
490	90195-0029	A		3	CONN. LINK NO324 FOR -28	
500	90326-0012	-		1	PROTECTIVE COVER, T31A4618	
510	90411-0005	-	MM	900	INSULATOR	
B1105	90326-0051	A		1	THERMOCOUPLE, 12826-33	
R1105	B449939-0001	A		1	HEATING ELEMENT 15KW	
	449938-0003	*C*		*2*	*HEATING PIPE*	
	449938-0002	*C*		*2*	*HEATING PIPE*	
	449938-0001	*C*		*2*	*HEATING PIPE*	
X1300	90326-0020	A		1	PLUG, FEMALE YELLOW CR-AL	

Machine Type	Group Description	Used-In	Group Number	Page No

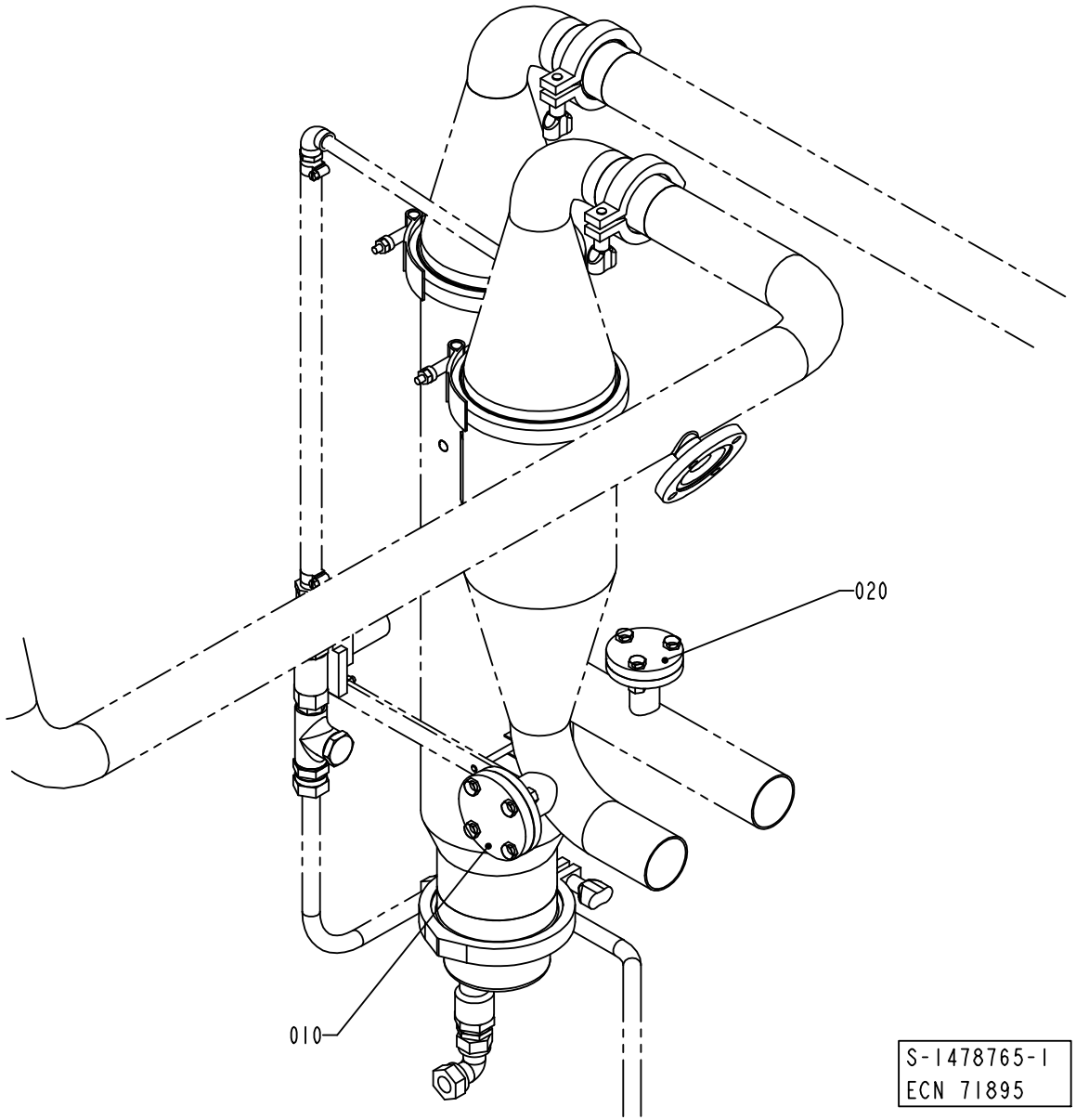
020
010
S-1478765-1
ECN 71895

ECM: 113517 - 20020911
Group number: 1478765-0100
Assembly Drawing: 1478765-1_1_AA

Issue: 20021015

Pos	Part No	SP	UN	Qty	Description	Page No
50HZ						
010	1037268-0000	-		1	LID	
020	1037129-0000	-		1	LID	
60HZ						
050	1478766-0000	-		1	PIPE	
060	1037267-0000	-		1	PIPE	
070	442237-0000	-		1	NUT	
080	490998-0000	A		1	THROTTLE SCREW	
600	312105-0453	-		3	SCREW M6S ISO 4017 M8X25 A480	
610	312605-0318	-		3	HEXAGON NUT, M6M M8 A280	
620	315202-0119	A		1	O-RING 25,1X1,6 MM	
630	315229-0203	A		1	GASKET 34,8X42,8X3,7 MM 1"1/2	

Pos	Part No	SP	UN	Qty	Description	Page No

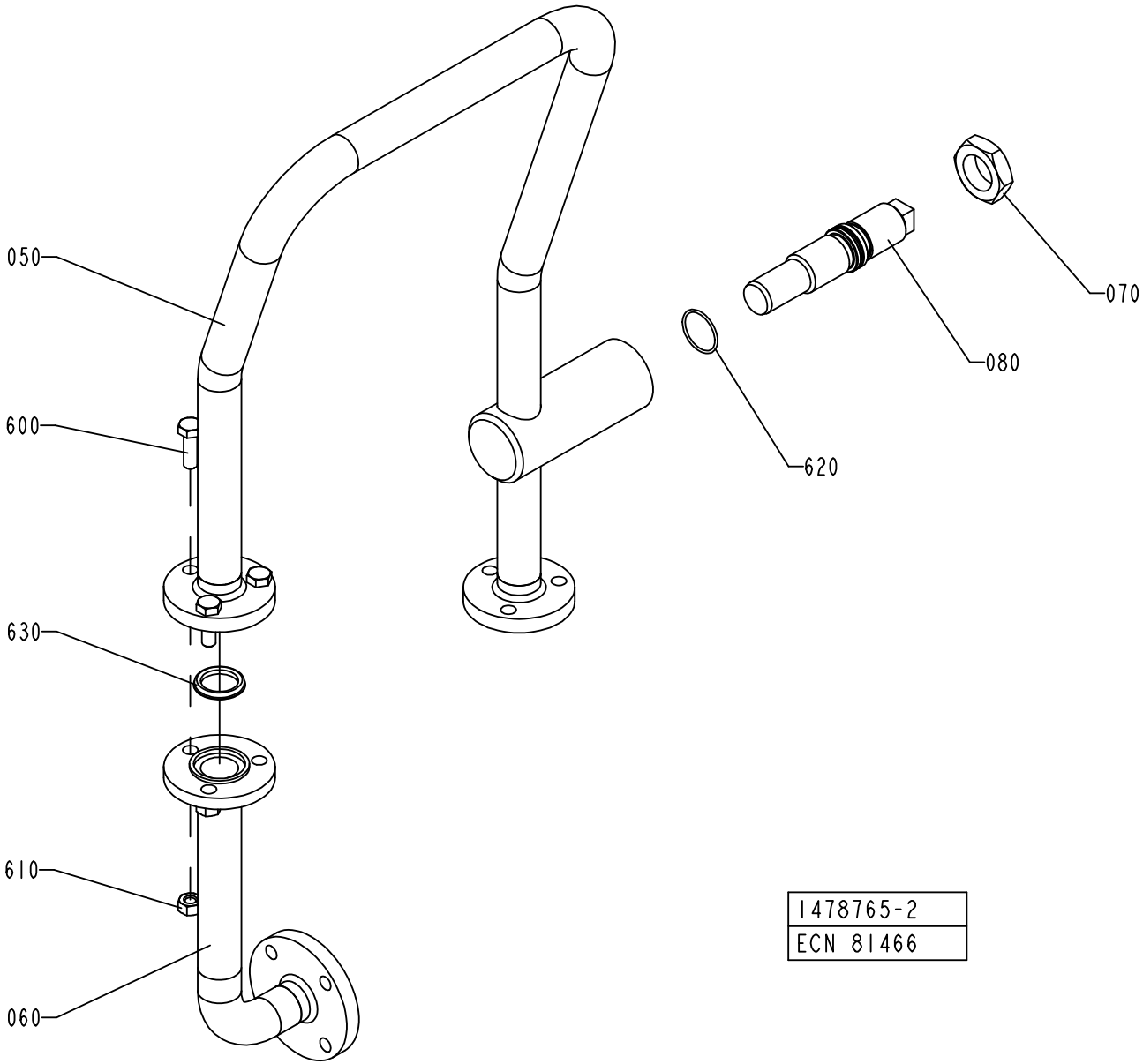
050
600
630
610
060
070
080
620
1478765-2
ECN 81466

ECM: 113517 - 20020911
Group number: 1478765-0100
Assembly Drawing: 1478765-2_1_AB

Issue: 20021015

Pos	Part No	SP	UN	Qty	Description	Page No
50HZ						
010	1037268-0000	-		1	LID	
020	1037129-0000	-		1	LID	
60HZ						
050	1478766-0000	-		1	PIPE	
060	1037267-0000	-		1	PIPE	
070	442237-0000	-		1	NUT	
080	490998-0000	A		1	THROTTLE SCREW	
600	312105-0453	-		3	SCREW M6S ISO 4017 M8X25 A480	
610	312605-0318	-		3	HEXAGON NUT, M6M M8 A280	
620	315202-0119	A		1	O-RING 25,1X1,6 MM	
630	315229-0203	A		1	GASKET 34,8X42,8X3,7 MM 1"1/2	

Pos	Part No	SP	UN	Qty	Description	Page No

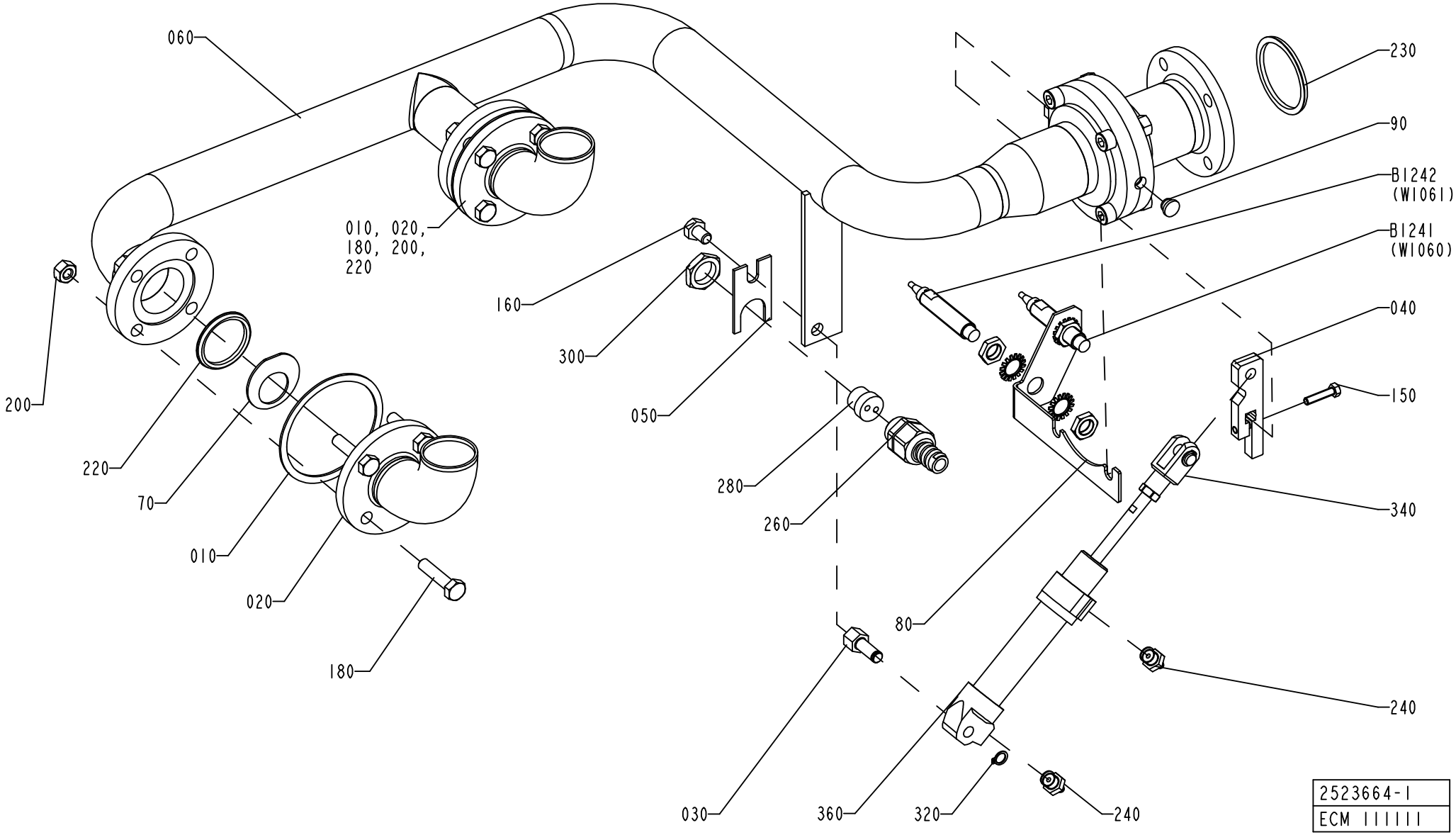
060
010, 020, 180, 200, 220
230
90
B1242 (W1061)
B1241 (W1060)
040
150
340
240
160
300
050
280
260
200
220
70
010
020
180
80
030
360
320
240
2523664-1
ECM 111111

ECM: 113518 - 20020911
Group number: 2523664-0100
Assembly Drawing: 2523664-1_1_AB

Issue: 20021015

Pos	Part No	SP	UN	Qty	Description	Page No
Common Parts						
010	1036294-0000	-		2	GASKET	
020	1347223-0000	-		2	PIPE	
030	1349762-0000	-		1	SHAFT	
040	2523665-0000	-		1	ARM	
050	1487263-0000	-		1	BRACKET	
060	1548249-0000	-		1	PIPE	
070	1548241-0005	-		2	WASHER	
080	2531434-0000	-		1	BRACKET	
090	2531435-0000	-		1	PLUG	
150	312105-0332	-		1	SCREW M6S ISO 4017 M5X22 A480	
160	312105-0447	-		1	SCREW M6S ISO 4017 M8X12 A480	
180	312109-0457	-		8	SCREW M6S ISO 4017 M8X35 A480	
200	312605-0318	-		8	HEXAGON NUT, M6M M8 A280	
220	315229-0204	A		2	GASKET 34,8X42,8X3,7 MM 1"1/2	
230	315229-0205	A		1	GASKET 47,5X55,5X3,7 MM 2"	
240	90458-2956	-		2	ELBOW PIPE JOINT, EXT.THREAD, D=6MM-G1/8	
260	353243-0002	-		1	EXTENDED WITHOUT INSERT, PG11	
280	353249-0036	-		1	INSERT, MULTI HOLE, EK152 M 2X4	
300	90099-0117	-		1	NUT, PR 18,6 (PG11)	
320	90141-0015	B		1	RETAIN. RING, 8	
340	90239-0532	-		1	ROD END,CLEVIS WITH AXLE M8	
360	90239-0822	A		1	DOUBLE ACTING, MINI-ISO, CYL.20-50	
B1241	90458-0672	A		1	PROXIMITY SENSOR E2E2-X5MB1-5M	
B1242	90458-0672	A		1	PROXIMITY SENSOR E2E2-X5MB1-5M	

Pos	Part No	SP	UN	Qty	Description	Page No

Machine Type | Group Description | Used-In | Group Number | Page No

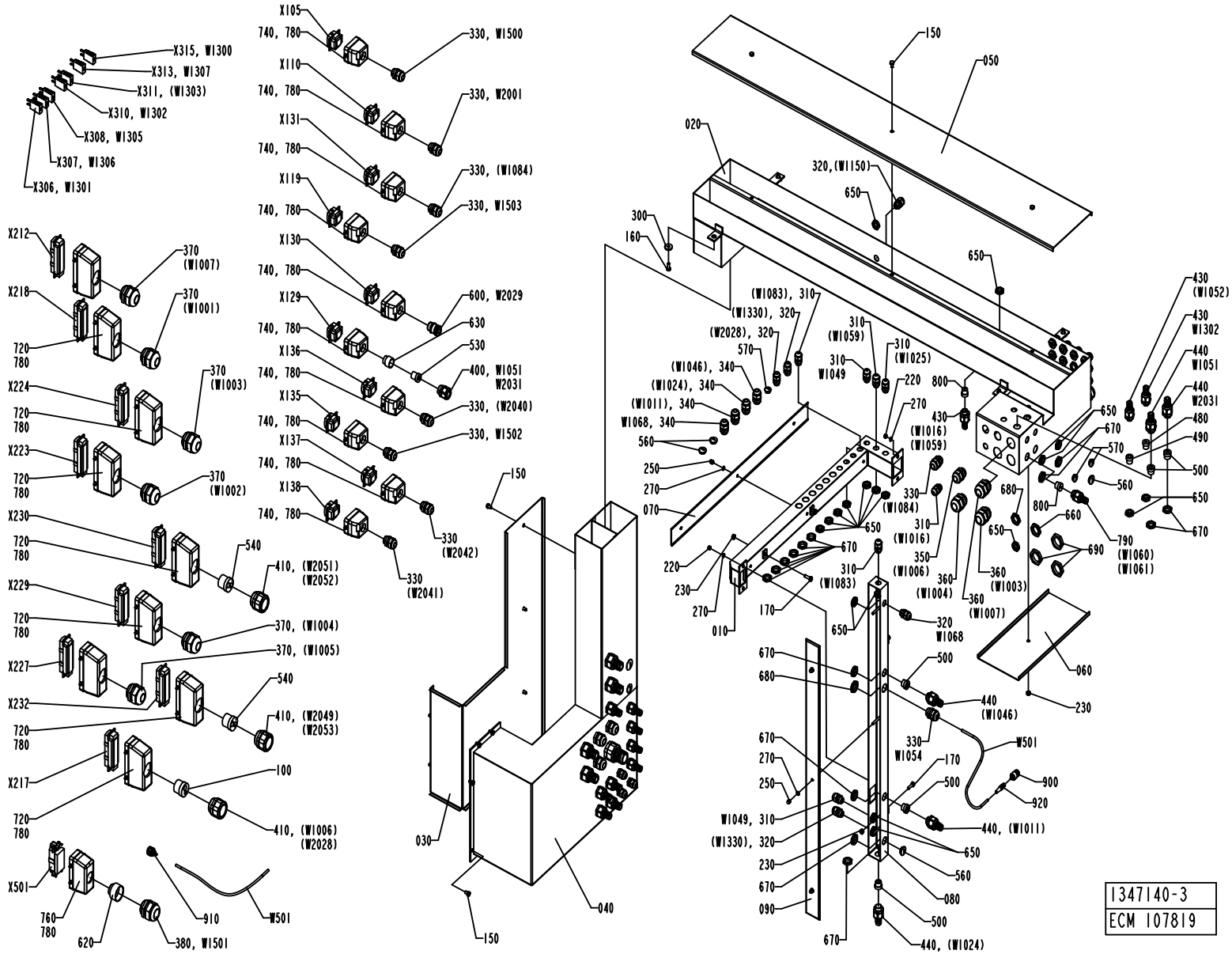
X315, W1300
X313, W1307
X311, (W1303)
X310, W1302
X308, W1305
X307, W1306
X306, W1301
X105
740, 780
330, W1500
X110
330, W2001
X131
330, (W1084)
X119
330, W1503
X130
600, W2029
X129
630
X136
530
400, W1051
W2031
X135
330, (W2040)
X137
330, W1502
X138
330
(W2042)
330
(W2041)
X212
370
(W1007)
X218
370
(W1001)
720
780
X224
370
(W1003)
X223
370
(W1002)
X230
540
410, (W2051)
(W2052)
X229
370, (W1004)
X227
370, (W1005)
X232
540
410, (W2049)
(W2053)
X217
100
410, (W1006)
(W2028)
X501
760
780
620
910
380, W1501
W501
150
030
040
150
050
020
320,(W1150)
650
300
160
650
(W1083), 310
(W1330), 320
(W2028), 320
570
(W1046), 340
(W1024), 340
(W1011), 340
W1068, 340
560
250
270
070
310
(W1059)
310
W1049
310
(W1025)
220
800
270
430
(W1016)
(W1059)
650
670
570
560
800
660
690
790
(W1060)
(W1061)
680
650
650
330
(W1084)
310
(W1016)
350
(W1006)
360
(W1004)
360
(W1003)
360
(W1007)
650
670
310
(W1083)
220
230
270
010
170
650
320
W1068
670
680
500
440
(W1046)
330
W1054
W501
060
230
670
270
250
W1049, 310
(W1330), 320
230
670
090
170
500
900
920
440, (W1011)
650
560
080
500
670
440, (W1024)
430
(W1052)
430
W1302
440
W1051
440
W2031
480
490
500
650
670
1347140-3
ECM 107819

ECM: 108003 - 20010926
Group number: 1347140-0200
Assembly Drawing: 1347140-3_1_AC

Issue: 20021015

Pos	Part No	SP	UN	Qty	Description	Page No
FLOATER						
340	352103-0106	-		5	CABLE GLAND, ST 11, PR18,6/PG11	
440	353243-0003	-		11	EXTENDED WITHOUT INSERT, PG11	
500	353249-0011	-		11	INSERT, SINGEL HOLE, EK 153/11	
560	90002-0009	-		3	BLANK-OFF PLUG, PR 18.6 SKINDICHT-BLK11	
LEVELPROBE						
340	352103-0106	-		4	CABLE GLAND, ST 11, PR18,6/PG11	
440	353243-0003	-		10	EXTENDED WITHOUT INSERT, PG11	
500	353249-0011	-		10	INSERT, SINGEL HOLE, EK 153/11	
560	90002-0009	-		5	BLANK-OFF PLUG, PR 18.6 SKINDICHT-BLK11	
Common Parts						
010	2524453-0000	-		1	CABLE DUCT	
020	2524454-0000	-		1	CABLE DUCT	
030	1347195-0000	-		1	LID	
040	1538847-0000	-		1	CABLE DUCT	
050	1347193-0000	-		1	LID	
060	1347192-0000	-		1	LID	
070	1347872-0000	-		1	LID	
080	1347873-0000	-		1	CABLE DUCT	
090	1347874-0000	-		1	LID	
100	1347880-0000	-		1	INSERT	
150	312105-0364	-		12	SCREW M6S ISO 4017 M6X10 A480	
160	312105-0367	-		4	SCREW M6S M6X14 A280	
170	312105-0370	-		4	SCREW M6S ISO 4017 M6X20 A480	
220	312605-0314	-		4	HEXAGON NUT, M6M M5 A280	
230	312605-0316	-		5	HEXAGON NUT, M6M M6 A280	
250	312705-0314	-		6	NUT HEX. DOMED CAP MHM-6 M5 A280	
270	315105-0146	-		10	WASHER PLAIN, BRB, 5,3/10,H=1	
300	315125-0153	-		4	WASHER PLAIN ROUND,CHAMF. 6,4/22, H=4	
310	352103-0100	-		8	CABLE GLAND, STR 9, PR15,2/PG9	
320	352103-0101	-		16	CABLE GLAND, ST 9, PR15,2/PG9	
330	352103-0108	-		10	CABLE GLAND, ST 13,5 , PR20,4/PG13,5	
350	352103-0111	-		3	CABLE GLAND, ST 16, PR22,5/PG16	
360	352103-0116	-		6	CABLE GLAND, ST 21, PR28,3/PG21	
370	352103-0120	-		6	CABLE GLAND, STR 29, PR37,0/PG29	
380	352103-0121	-		1	CABLE GLAND, ST 29, PR37,0/PG29	
390	352103-0110	-		1	CABLE GLAND, STR 16, PR22,5/PG16	
400	353240-0004	-		1	NORMAL WITHOUT INSERT, PG 16	
410	353240-0006	-		3	NORMAL WITHOUT INSERT, PG 29	
430	353243-0001	-		8	EXTENDED WITHOUT INSERT, PG9	
450	353243-0004	-		4	EXTENDED WITHOUT INSERT, PG13,5	
460	353243-0007	-		1	EXTENDED WITHOUT INSERT, PG21	
480	353249-0008	-		6	INSERT, SINGEL HOLE, EK 152/7	
490	353249-0009	-		1	INSERT, SINGEL HOLE, EK 152/9	
510	353249-0013	-		4	INSERT, SINGEL HOLE, EK 154/13	
520	353249-0061	-		1	INSERT, SINGEL HOLE, EK 155/20	
530	353249-0028	-		1	INSERT, MULTI HOLE, E153M2X8	
540	353249-0060	-		2	INSERT, MULTI HOLE, E155M2X13	
550	90002-0004	-		1	BLANK-OFF PLUG, PR 22,5 SKINDICHT-BLK16	
570	90002-0013	-		5	BLANK-OFF PLUG, PR 15,2 SKINDICHT-BLK9	
600	90012-0138	-		1	GLAND, EXTENDED WITH INSERT, PG13,5	
620	90089-0015	-		1	REDUCING SLEEVE, PR37M/PR28,3F	
630	90089-0029	-		1	ENLARGING SLEEVE	
650	90099-0104	-		36	NUT, PR 15,2 (PG9)	
660	90099-0110	-		5	NUT, PR 22,5 (PG16)	
670	90099-0117	-		21	NUT, PR 18,6 (PG11)	
680	90099-0118	-		6	NUT, PR 20,4 (PG13,5)	
690	90099-0119	-		7	NUT, PR 28,3 (PG21)	
720	90110-0152	-		9	CABLE HOOD 24-POL 70.352.2428.1	
740	90110-0157	-		10	CABLE HOOD 6-POL 70.352.0628.1	
760	90110-0160	-		1	CABLE HOOD 6-16-POL 70.352.1628.1	
780	90110-0385	-		20	HOLDER	
790	353243-0002	-		1	EXTENDED WITHOUT INSERT, PG11	
800	353249-0036	-		2	INSERT, MULTI HOLE, EK152 M 2X4	
810	359005-0050	-		2	MARKING LABEL KIT X, 04.841.4550.0	
820	359005-0010	-		20	MARKING LABEL KIT 0 - 9, 04.841.2150.0	
850	90152-0051	-	MM	3200	SPIRAL CONDUIT, 25X18, UL 1816	
870	90152-0070	-	MM	1000	METAL HOSE, 32,5X26, UL 2621	
880	90152-0050	-	M	16	SPIRAL CONDUIT, 20X13, UL 1313	
900	90458-2893	A		1	SLEEVE, 78 Z-0-3-4	
W1049	351150-0403	-	M	4	CABLE OLFLEX 3X0,75 MM2 LIGHT/GREY	
W1051	90220-0092	-	MM	6000	PAIR TWISTED CABLE 3X2X0,25MM2	
W1068	351150-0405	-	M	4	CABLE OLFLEX 5X0,75 MM2 LIGHT/GREY	
W1300	90220-0034	-	MM	5700	THERMOCOUPLE CABLE K/ 2X0,5MM2	
W1301	90220-0034	-	MM	6300	THERMOCOUPLE CABLE K/ 2X0,5MM2	
W1302	90220-0034	-	MM	6700	THERMOCOUPLE CABLE K/ 2X0,5MM2	
W1305	90220-0034	-	MM	5400	THERMOCOUPLE CABLE K/ 2X0,5MM2	
W1306	90220-0034	-	MM	5300	THERMOCOUPLE CABLE K/ 2X0,5MM2	
W1307	90220-0034	-	MM	7000	THERMOCOUPLE CABLE K/ 2X0,5MM2	
W1500	351150-0418	-	MM	5100	CABLE OLFLEX 4X2,5 MM2 LIGHT/GREY	
W1501	351120-0168	-	MM	4000	CABLE SIHF 4X10MM2 GREEN/YELLOW	
W1502	351120-0165	-	MM	4500	CABLE SIHF 4X25MM2 GREEN/YELLOW	

Machine Type | Group Description | Used-In | Group Number | Page No

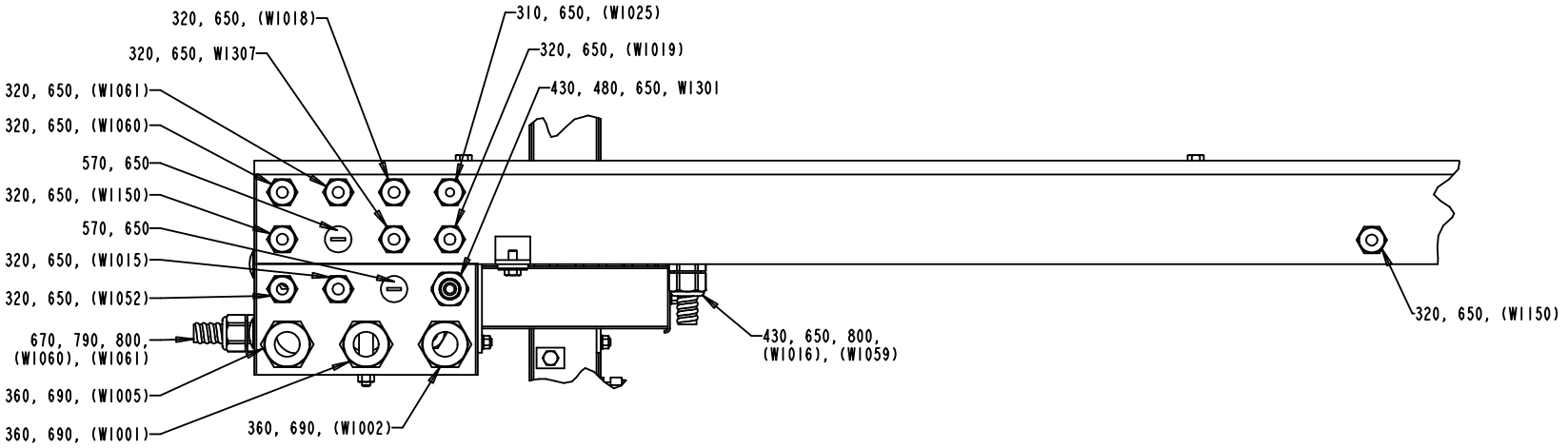

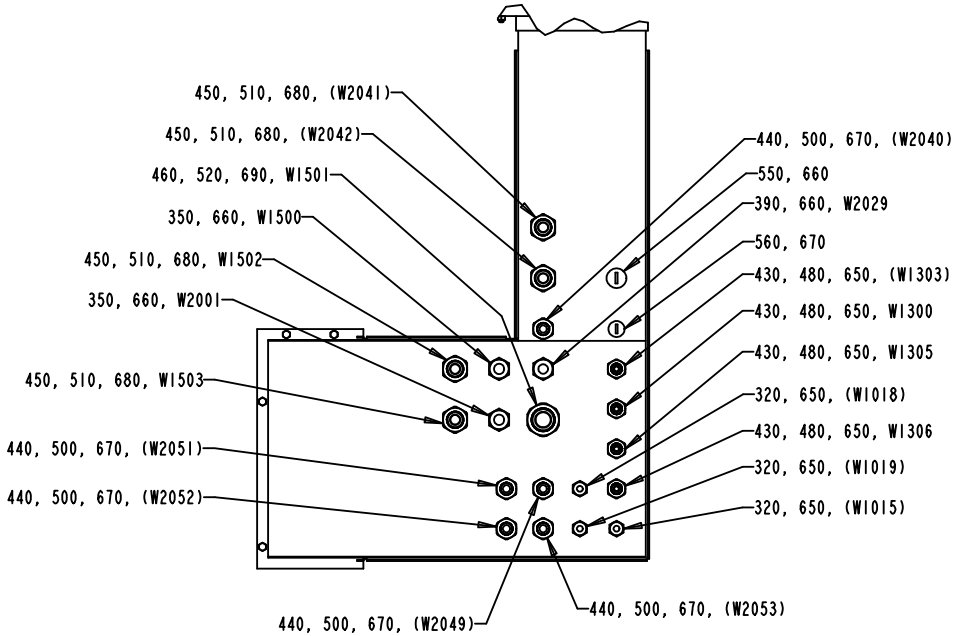

1347140-3
ECM 107819

Pos	Part No	SP	UN	Qty	Description	Page No
Common Parts (Cont'd)						
W1503	351120-0165	-	MM	4500	CABLE SIHF 4X25MM2 GREEN/YELLOW	
W2001	351150-0418	-	MM	4300	CABLE OLFLEX 4X2,5 MM2 LIGHT/GREY	
W2029	90220-0104	-	MM	6500	SCR. CABLE 4X1,5MM2	
W2031	351150-0412	-	MM	6000	CABLE OLFLEX 3X1,5 MM2 LIGHT/GREY	
W501	90458-2895	A	M	10	COAXIAL CABLE RG 400/U BROWN	
X105	90110-0159	-		1	MALE INSERT 70.310.0640.0	
X110	90110-0159	-		1	MALE INSERT 70.310.0640.0	
X119	90110-0159	-		1	MALE INSERT 70.310.0640.0	
X129	90110-0159	-		1	MALE INSERT 70.310.0640.0	
X130	90110-0159	-		1	MALE INSERT 70.310.0640.0	
X131	90110-0159	-		1	MALE INSERT 70.310.0640.0	
X135	90110-0159	-		1	MALE INSERT 70.310.0640.0	
X136	90110-0159	-		1	MALE INSERT 70.310.0640.0	
X137	90110-0159	-		1	MALE INSERT 70.310.0640.0	
X138	90110-0159	-		1	MALE INSERT 70.310.0640.0	
X140	90458-2890	A		1	CONNECTOR, 21N-50N12N133NE	
X212	90110-0150	-		1	MALE INSERT 121110 0000	
X217	90110-0150	-		1	MALE INSERT 121110 0000	
X218	90110-0150	-		1	MALE INSERT 121110 0000	
X223	90110-0150	-		1	MALE INSERT 121110 0000	
X224	90110-0150	-		1	MALE INSERT 121110 0000	
X227	90110-0150	-		1	MALE INSERT 121110 0000	
X229	90110-0150	-		1	MALE INSERT 121110 0000	
X230	90110-0150	-		1	MALE INSERT 121110 0000	
X232	90110-0150	-		1	MALE INSERT 121110 0000	
X306	90326-0022	-		1	PLUG, MALE YELLOW CR-AL	
X307	90326-0022	-		1	PLUG, MALE YELLOW CR-AL	
X308	90326-0022	-		1	PLUG, MALE YELLOW CR-AL	
X310	90326-0022	-		1	PLUG, MALE YELLOW CR-AL	
X311	90326-0022	-		1	PLUG, MALE YELLOW CR-AL	
X313	90326-0022	-		1	PLUG, MALE YELLOW CR-AL	
X315	90326-0022	-		1	PLUG, MALE YELLOW CR-AL	
X501	90110-0156	-		1	MALE INSERT 70.210.0653.0	
X511	90458-2892	A		1	CONNECTOR, 11 N-50-3-31/133 NE	

Pos	Part No	SP	UN	Qty	Description	Page No

CABLE TRENCH

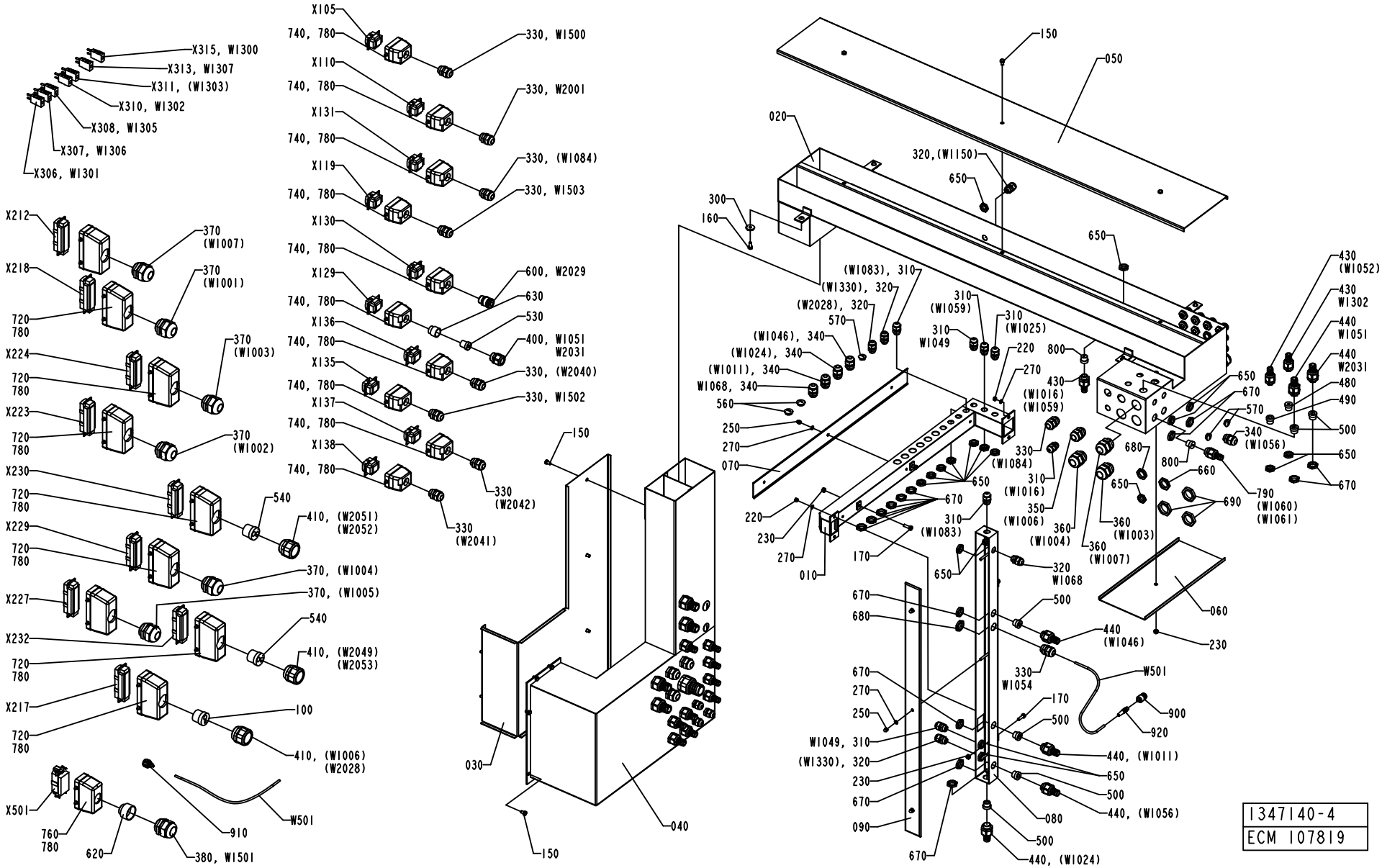

Pos	Part No	SP	UN	Qty	Description	Page No

SEE PREVIOUS LISTS PAGES: 151, 153.

Pos	Part No	SP	UN	Qty	Description	Page No

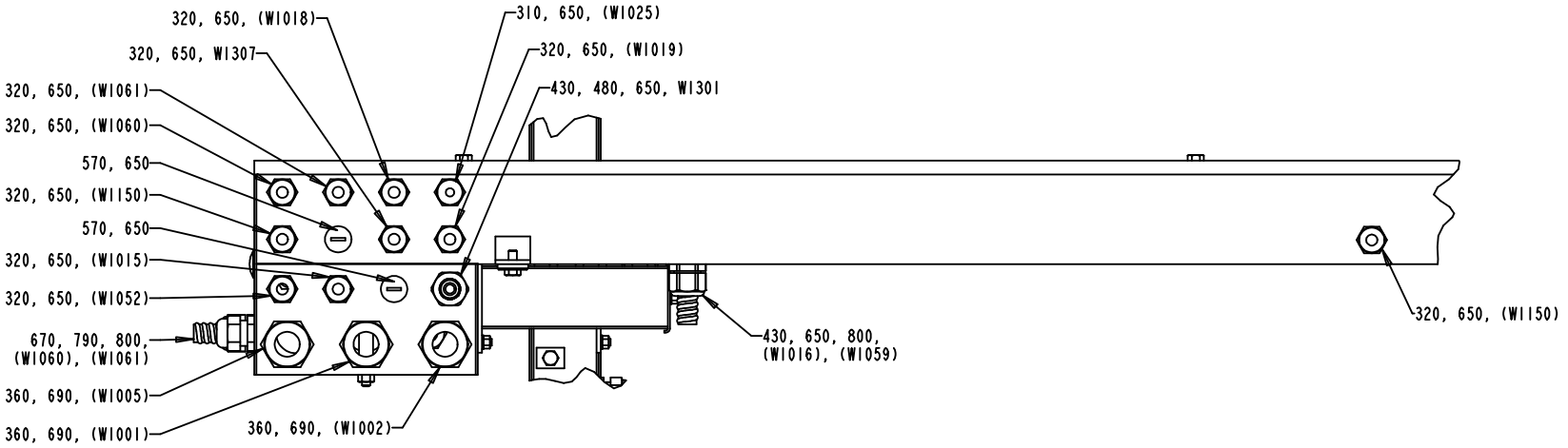

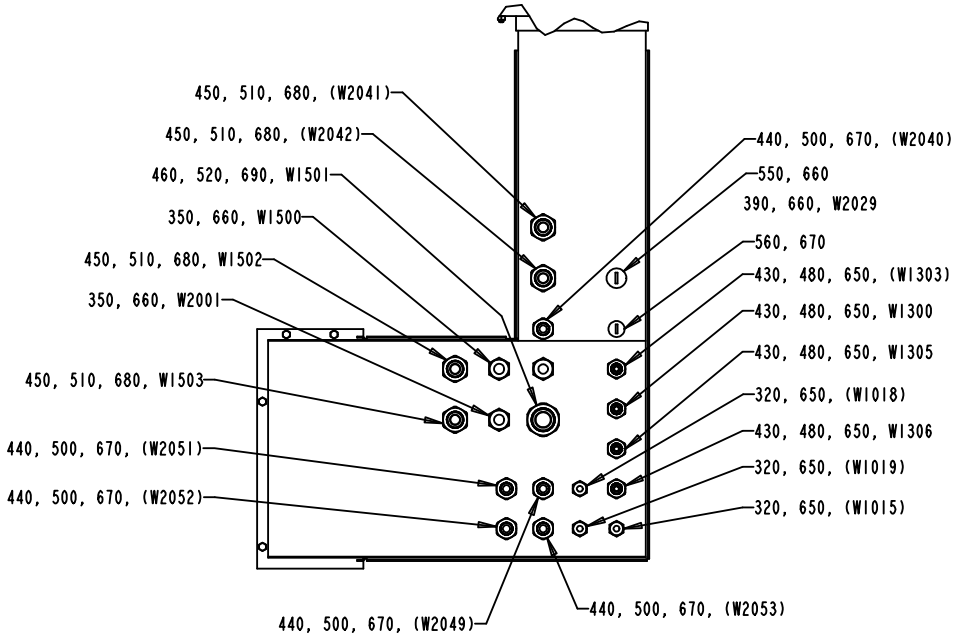

1347140-4
ECM 107819

Pos	Part No	SP	UN	Qty	Description	Page No
SEE PREVIOUS LISTS PAGES: 151, 153.						

Pos	Part No	SP	UN	Qty	Description	Page No

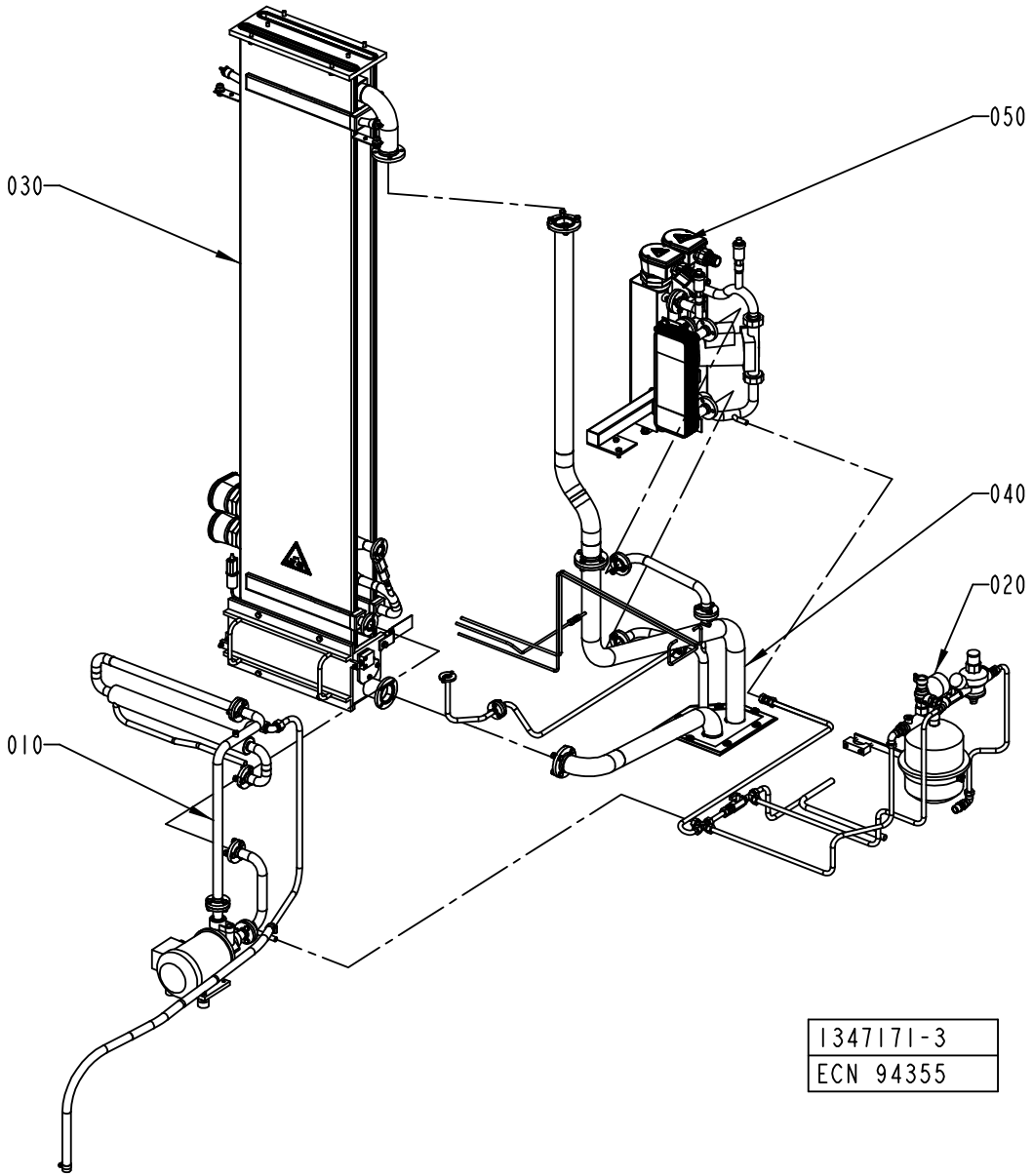
050
030
040
020
010
1347171-3
ECN 94355

ECM: 94389 - 20010925
Group number: 1347171-0200
Assembly Drawing: 1347171-3_1_AA

Issue: 20021015

Pos	Part No	SP	UN	Qty	Description	Page No
Common Parts						
010	A1490265-0100	-		1	WATER CIRCULATION	**161**
020	A1347174-0200	-		1	WATER CIRCULATION	**163**
030	A1035008-0400	-		1	BATH	**165**
040	A1347172-0200	-		1	PEROXIDE PIPE	**167**
050	A1334506-0200	-		1	HEATING UNIT	**169**

Pos	Part No	SP	UN	Qty	Description	Page No

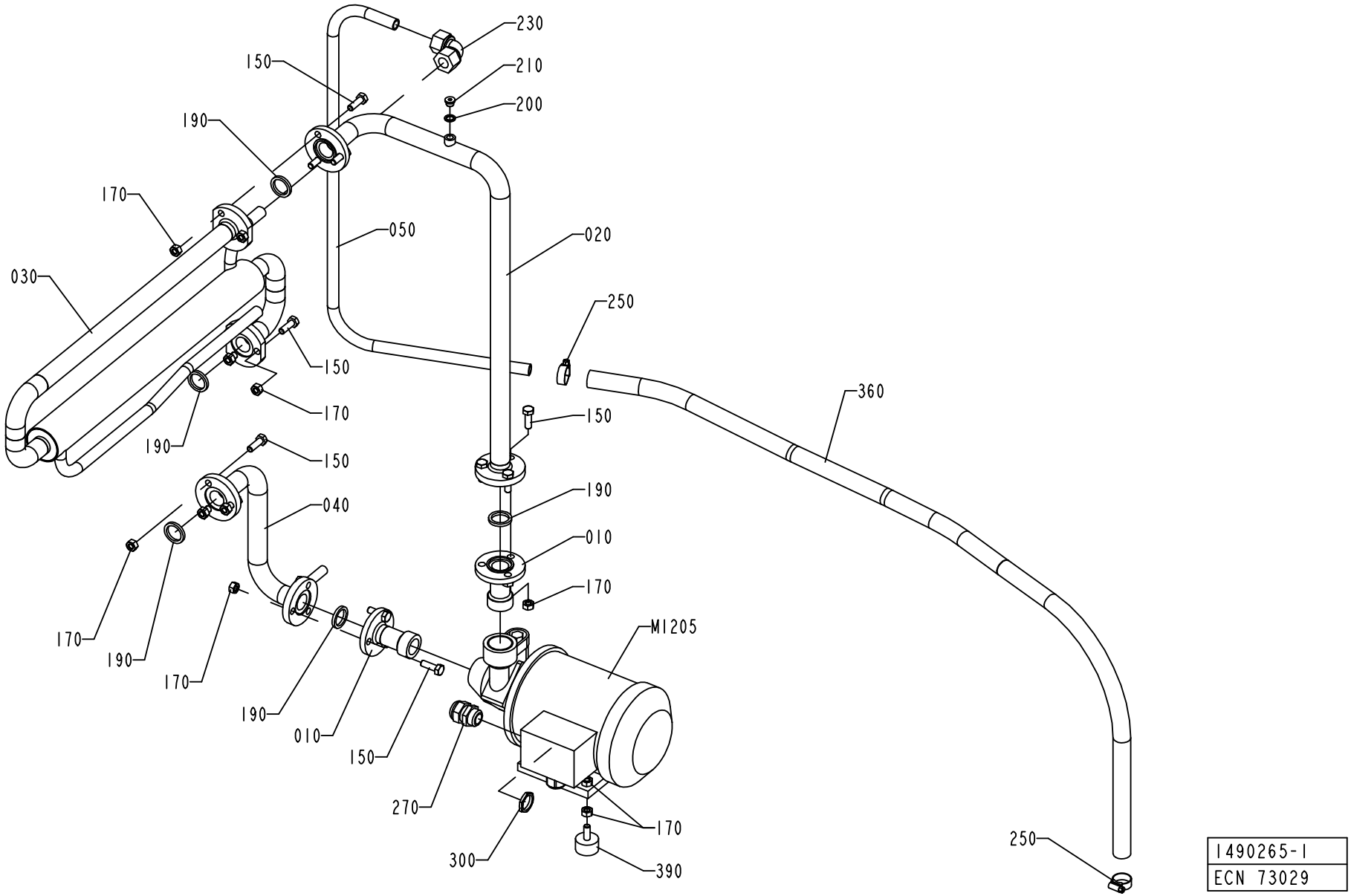
230
150
210
200
190
170
050
020
030
250
150
360
170
150
190
150
040
190
010
170
170
190
170
M1205
190
010
150
270
170
300
390
250
1490265-1
ECN 73029

ECM: 113502 - 20020911
Group number: 1490265-0100
Assembly Drawing: 1490265-1_1_AA

Issue: 20021015

Pos	Part No	SP	UN	Qty	Description	Page No
50HZ						
M1205	B90321-0100	A		1	PUMP PBK 16/A 220/380V 50 HZ 3 PH.	
	90321-0569	*-*		*1*	*O-RING*	
	90321-0568	*-*		*1*	*SEAL*	
	90321-0567	*-*		*1*	*IMPELLER*	
60HZ						
M1205	B90321-0127	A		1	CENTRIFUGAL PUMP LOWARA	
	90459-0044	*A*		*1*	*IMPELLER WHEEL, 260720310 FOR 90321-0127*	
	90321-0569	*A*		*1*	*O-RING*	
	90321-0568	*A*		*1*	*SEAL*	
Common Parts						
010	1037314-0000	-		2	PIPE CONNECTION	
020	1103391-0000	-		1	PIPE	
030	1282902-0000	-		1	HEAT EXCHANGER	
040	1347126-0000	-		1	PIPE	
050	1350705-0000	-		1	PIPE	
150	312105-0453	-		15	SCREW M6S ISO 4017 M8X25 A480	
170	312605-0318	-		19	HEXAGON NUT, M6M M8 A280	
190	315229-0103	B		5	GASKETS, 23,1X30,1X3,7 MM 1" FDA	
200	315237-0109	B		1	WASHER,PL.RND.AL.10/14,H=1,5	
210	342713-0209	B		1	PLUG, EXT THREAD HEX SOCKET 8638-00-180	
230	342737-0221	-		1	CONN. ELBOW W-15 LRFR	
250	342991-0103	-		2	HOSE CLIP,WORM DRIVE TYPE (19)-23	
270	352103-0111	-		1	CABLE GLAND, ST 16, PR22,5/PG16	
300	90099-0003	-		1	NUT	
320	90144-0073	-	MM	1	TREBOFLON-TAPE W=13MM	
330	90157-0037	-		1	SEALING COMPOUND	
360	90166-0087	-	MM	1200	HOSE 15/23 REINF.PVC TRANSP.	
390	90347-0004	-		2	VIBRATION DAMPER D=30 TH=M8 H=17 H2=21MM	

Pos	Part No	SP	UN	Qty	Description	Page No

Machine Type | Group Description | Used-In | Group Number | Page No

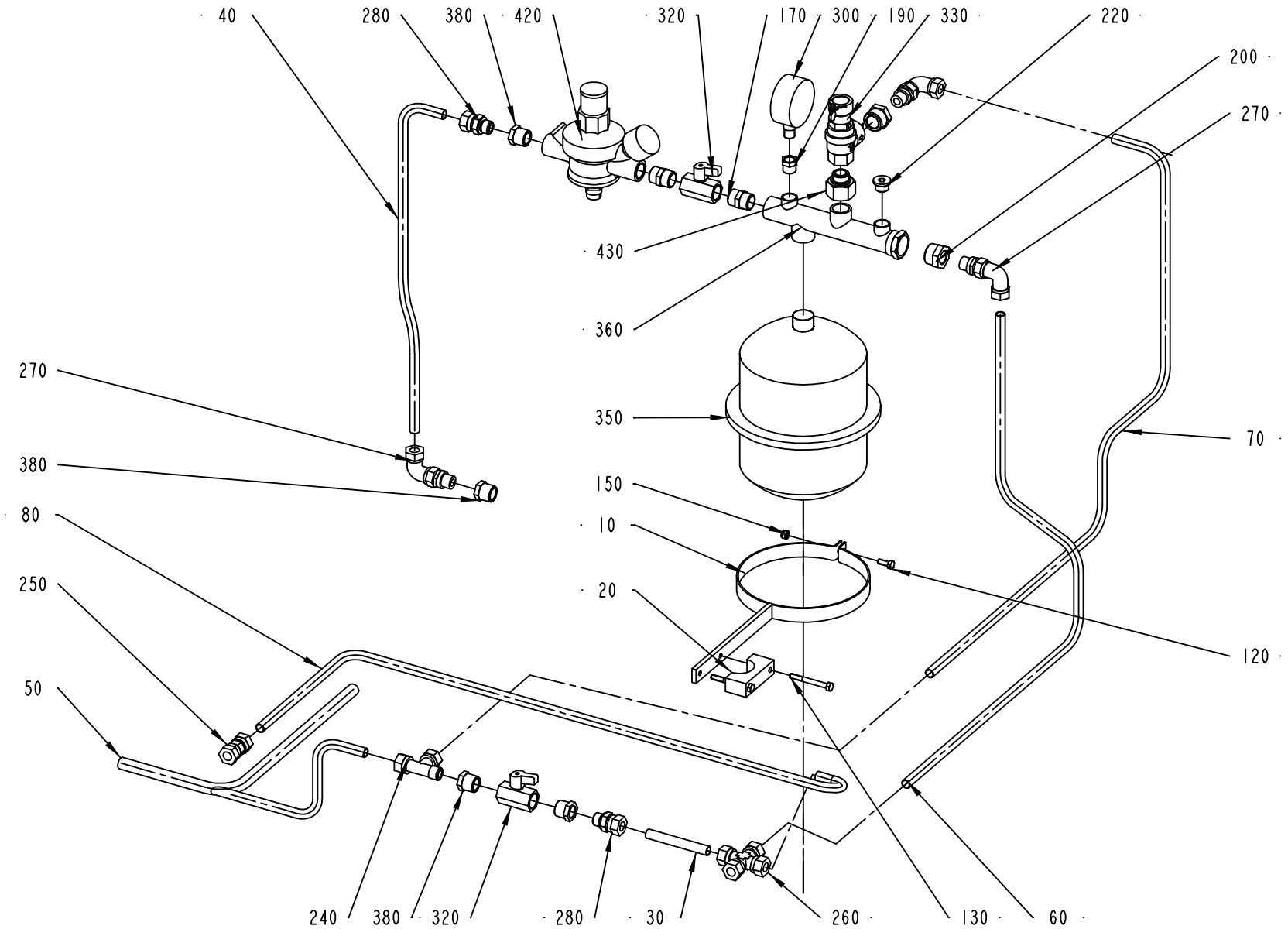

1347174-3
ECN 94355

Pos	Part No	SP	UN	Qty	Description	Page No
Common Parts						
010	1129101-0000	-		1	BRACKET	
020	1140645-0000	-		1	BRACKET	
030	1347124-0000	-		1	PIPE	
040	2501520-0000	-		1	PIPE	
050	1347130-0000	-		1	PIPE	
060	1347131-0000	-		1	PIPE	
070	2501521-0000	-		1	PIPE	
080	1487848-0000	-		1	PIPE	
120	312105-0368	-		1	SCREW M6S M6X16 A280	
130	312105-0381	-		2	SCREW M6S ISO 4014 M6X55 A480	
150	312812-0316	-		1	HEXAGON NUT, NY-LOCK M6 A480	
170	342700-0113	-		2	NIPPLES,HEXAGON,EXT.G-THREAD G1/2"-G1/2"	
190	342701-0203	-		1	BUSHING, INT/EXT. G-THREAD NO. 3/8-1/4	
200	342701-0209	-		2	BUSHING,INT./EXT.G-THREAD G3/4"-G3/8"	
220	342713-0211	-		1	PLUG, EXT THREAD HEX SOCKET 8638-00-380	
240	342751-0215	-		1	CONN. L-PIPE, EXT. LE-12-R3/8	
250	90030-0106	-		1	CONN. PIPE G-12	
260	90030-0599	-		1	CONN. CROSS, 12	
270	90030-0136	-		3	ADJUSTABLE ELBOW CONNECTION,EXT 12-G3/8	
280	90030-0187	-		2	CONN. STR. GA-12-G3/8	
300	90043-0002	A		1	PRESSURE GAUGE, 2040 D=63 MM	
320	90187-0062	B		2	BALL VALVE G1/2, NPBR	
330	90458-0200	A		1	PEROX. SAFETY VALVE, NO. 527-430 1/2X3/4	
350	90304-0020	A		1	LIQUID CONTAINER	
360	90304-0307	A		1	ATTACHMENT PIPE	
380	90330-0048	-		4	BUSHING, INT/EXT. THR. R1/2-RP3/8	
400	90144-0073	-	MM	1	TREBOFLON-TAPE W=13MM	
410	90157-0037	-		1	SEALING COMPOUND	
420	90458-0201	A		1	FLUID AUT. FEEDER, ALINOX 1/2 46.04.00	
430	90458-0751	-		1	BUSHING,INT./EXT.G-THREAD G3/4"-G1/2"	

Pos	Part No	SP	UN	Qty	Description	Page No

Machine Type	Group Description	Used-In	Group Number	Page No

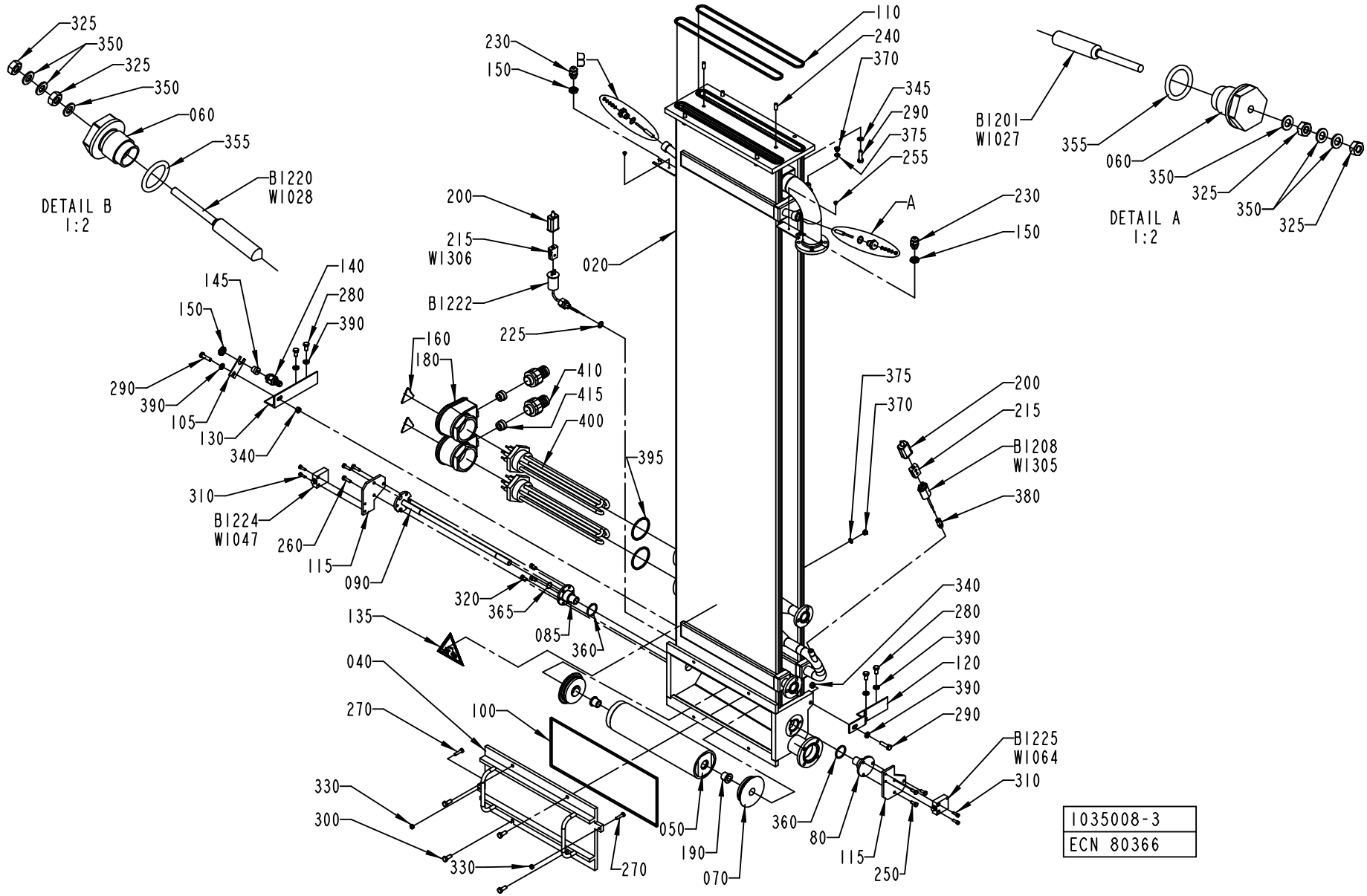
325
350
325
350
060
355
B1220
W1028
DETAIL B
1:2
230
150
B
110
240
370
345
290
375
255
A
B1201
W1027
355
060
350
325
350
325
DETAIL A
1:2
200
215
W1306
B1222
020
225
140
280
390
145
150
290
390
105
130
340
160
180
410
415
400
395
375
370
200
215
B1208
W1305
380
310
B1224
W1047
260
115
090
320
365
085
360
135
340
280
390
120
390
290
040
270
100
330
300
330
270
050
190
070
360
80
115
250
B1225
W1064
310
1035008-3
ECN 80366

ECM: 80521 - 20010301
Group number: 1035008-0400
Assembly Drawing: 1035008-3_1_AC

Issue: 20021015

Pos	Part No	SP	UN	Qty	Description	Page No
Common Parts						
020	1346571-0000	-		1	BATH	
040	1346558-0000	-		1	COVER	
050	541177-0000	A		1	BENDING ROLLER	
060	1484428-0000	-		2	PLASTIC PLUG	
070	1036553-0000	A		2	WHEEL	
080	1038857-0000	A		1	FLANGE	
085	1038858-0000	-		1	FLANGE	
090	1255839-0000	A		1	SHAFT	
100	1347671-0000	A		1	GASKET	
105	1040970-0000	-		1	BRACKET	
110	1346557-0000	A		2	GASKET	
115	1195460-0000	-		2	BRACKET	
120	1038860-0000	-		1	BRACKET	
130	1038861-0000	-		1	BRACKET	
135	359705-0004	-		1	WARNING SIGN ISO, DANGEROUS CHEMICALS	
140	353243-0001	-		1	EXTENDED WITHOUT INSERT, PG9	
145	353249-0008	-		1	INSERT, SINGEL HOLE, EK 152/7	
150	90099-0104	-		3	NUT, PR 15,2 (PG9)	
160	359705-0015	-		2	WARNING SIGN ISO, RISK OF ELECTRIC SHOCK	
180	90206-0326	-		2	JUNCTION BOX FOR 90206-56	
190	90240-0146	A		2	FLANGE BUSHING,15X21X20 MM	
200	90326-0012	-		2	PROTECTIVE COVER, T31A4618	
215	90326-0020	-		2	PLUG, FEMALE YELLOW CR-AL	
225	315237-0110	A		1	WASHER,PL.RND.AL.13,5/18,H=1,5	
230	352103-0101	-		2	CABLE GLAND, ST 9, PR15,2/PG9	
240	311103-0401	-		2	PARALLELL PIN, M6, 8X20 MM	
250	312105-0368	-		3	SCREW M6S M6X16 A280	
255	312132-0284	-		2	SCREW SLOT. PAN HEAD MSCS M4X5	
260	312105-0371	-		3	SCREW M6S ISO 4017 M6X22 A480	
270	312105-0372	-		2	SCREW M6S ISO 4017 M6X25 A480	
280	312105-0449	-		4	SCREW M6S ISO 4017 M8X16 A480	
290	312105-0455	-		6	SCREW M6S ISO 4017 M8X30 A480	
300	312105-0451	-		4	SCREW M6S ISO 4017 M8X20 A480	
310	312115-0329	-		4	SCREW MC6S M5X16 A280	
320	312115-0366	-		3	SCREW MC6S M6X12 A280	
325	312605-0312	-		4	HEXAGON NUT, M6M M4 A280	
330	312605-0316	-		2	HEXAGON NUT, M6M M6 A280	
340	312605-0318	-		2	HEXAGON NUT, M6M M8 A280	
345	315105-0165	-		4	WASHER PLAIN, BRB, 8,4/16,H=1,5	
350	315105-0136	-		6	WASHER PLAIN, BRB, 4,3/8,H=0,8	
355	927421-0004	A		2	O-RING 15.3X2.4 SILICON	
360	90242-0265	A		2	O-RING 32,2X3 MM	
365	90242-0264	A		1	O-RING 16,1X1,6 MM	
370	342713-0209	-		2	PLUG, EXT THREAD HEX SOCKET 8638-00-180	
375	315234-0109	-		2	WASHER,PL.RND.CU.10,3/13,5 H=1,0	
380	90326-0306	-		1	GLAND FITTING 9041-45-KS-KR.1/8" D=4,5MM	
390	315115-0165	-		6	WASHER PLAIN, TBRB 8,4/16 H=3	
395	90269-0308	A		2	GASKET 59X68X3 MM	
400	90157-0034	-			SEALING COMPOUND LOCTITE 572 50 ML	
410	353243-0007	-		2	EXTENDED WITHOUT INSERT, PG21	
415	353249-0013	-		2	INSERT, SINGEL HOLE, EK 154/13	
B1201	567070-0011	A		1	ELECTRODE	
B1208	90326-0038	A		1	THERMOCOUPLE, CR-AL	
B1220	567070-0011	A		1	ELECTRODE	
B1222	90326-0053	A		1	THERMOCOUPLE, 12826-35	
B1224	90044-0084	A		1	LIMIT SW. 14 CE1-4	
B1225	90044-0084	A		1	LIMIT SW. 14 CE1-4	
R1206	B90206-0070	A		1	HEATING ELEMENT 6000W 380/220V	
	90269-0308	-		*1*	*GASKET 59X68X3 MM*	
	90206-0326	-		*1*	*JUNCTION BOX FOR 90206-56*	
	90269-0308	-		*1*	*GASKET 59X68X3 MM*	
R1207	B90206-0070	A		1	HEATING ELEMENT 6000W 380/220V	
	90269-0308	-		*1*	*GASKET 59X68X3 MM*	
	90206-0326	-		*1*	*JUNCTION BOX FOR 90206-56*	
	90269-0308	-		*1*	*GASKET 59X68X3 MM*	

Machine Type | Group Description | Used-In | Group Number | Page No

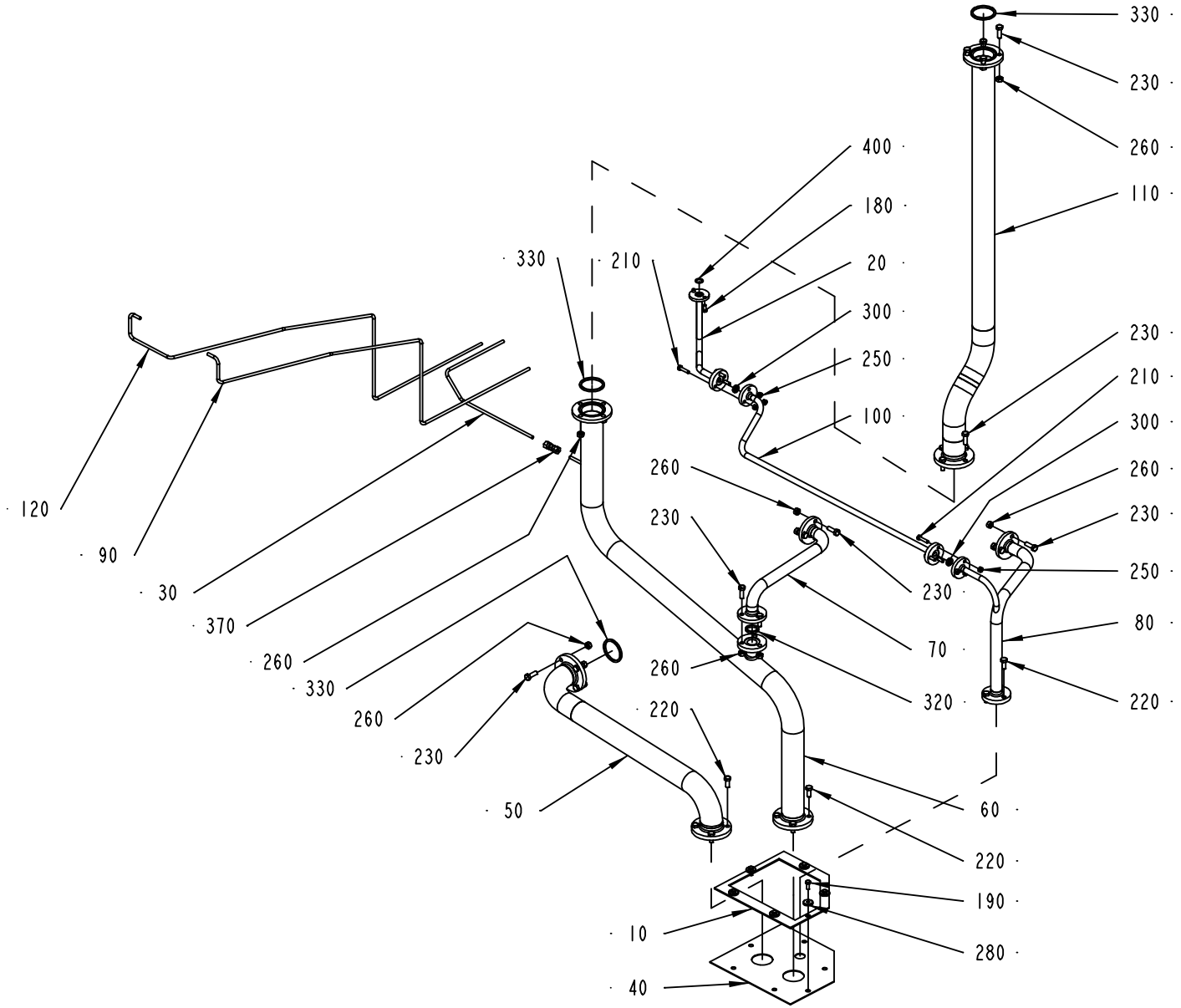

1347172-2
ECN 94355

ECM: 113520 - 20020911
Group number: 1347172-0200
Assembly Drawing: 1347172-2_1_AA

Issue: 20021015

Pos	Part No	SP	UN	Qty	Description	Page No
Common Parts						
010	1038688-0000	-		1	HOLDER	
020	1038879-0000	-		1	PIPE	
030	2501524-0000	-		1	PIPE	
040	1255551-0000	-		1	SEAL CLOTH	
050	1282889-0000	-		1	PIPE	
060	1334510-0000	-		1	PIPE	
070	1334511-0000	-		1	PIPE	
080	1334512-0000	-		1	PIPE	
090	2501522-0000	-		1	PIPE	
100	1334513-0000	-		1	PIPE	
110	1334514-0000	-		1	PIPE	
120	2501523-0000	-		1	PIPE	
180	312105-0366	-		2	SCREW M6S M6X12 A280	
190	312105-0368	-		6	SCREW M6S M6X16 A280	
210	312105-0372	-		6	SCREW M6S ISO 4017 M6X25 A480	
220	312105-0451	-		11	SCREW M6S ISO 4017 M8X20 A480	
230	312105-0453	-		21	SCREW M6S ISO 4017 M8X25 A480	
250	312605-0316	-		6	HEXAGON NUT, M6M M6 A280	
260	312605-0318	-		21	HEXAGON NUT, M6M M8 A280	
280	315125-0153	-		6	WASHER PLAIN ROUND,CHAMF. 6,4/22, H=4	
300	315229-0101	B		2	GASKETS, 10,4X17,4X3,7 MM 1/2" FDA	
320	315229-0103	B		1	GASKETS, 23,1X30,1X3,7 MM 1" FDA	
330	315229-0105	B		3	GASKETS, 48,5X55,5X3,7 MM 2" FDA	
370	90030-0075	-		1	PIPE CONNECTION G-6	
400	927421-0003	B		1	O-RING 13.3X2.4 SILICON	

Pos	Part No	SP	UN	Qty	Description	Page No

Machine Type | Group Description | Used-In | Group Number | Page No

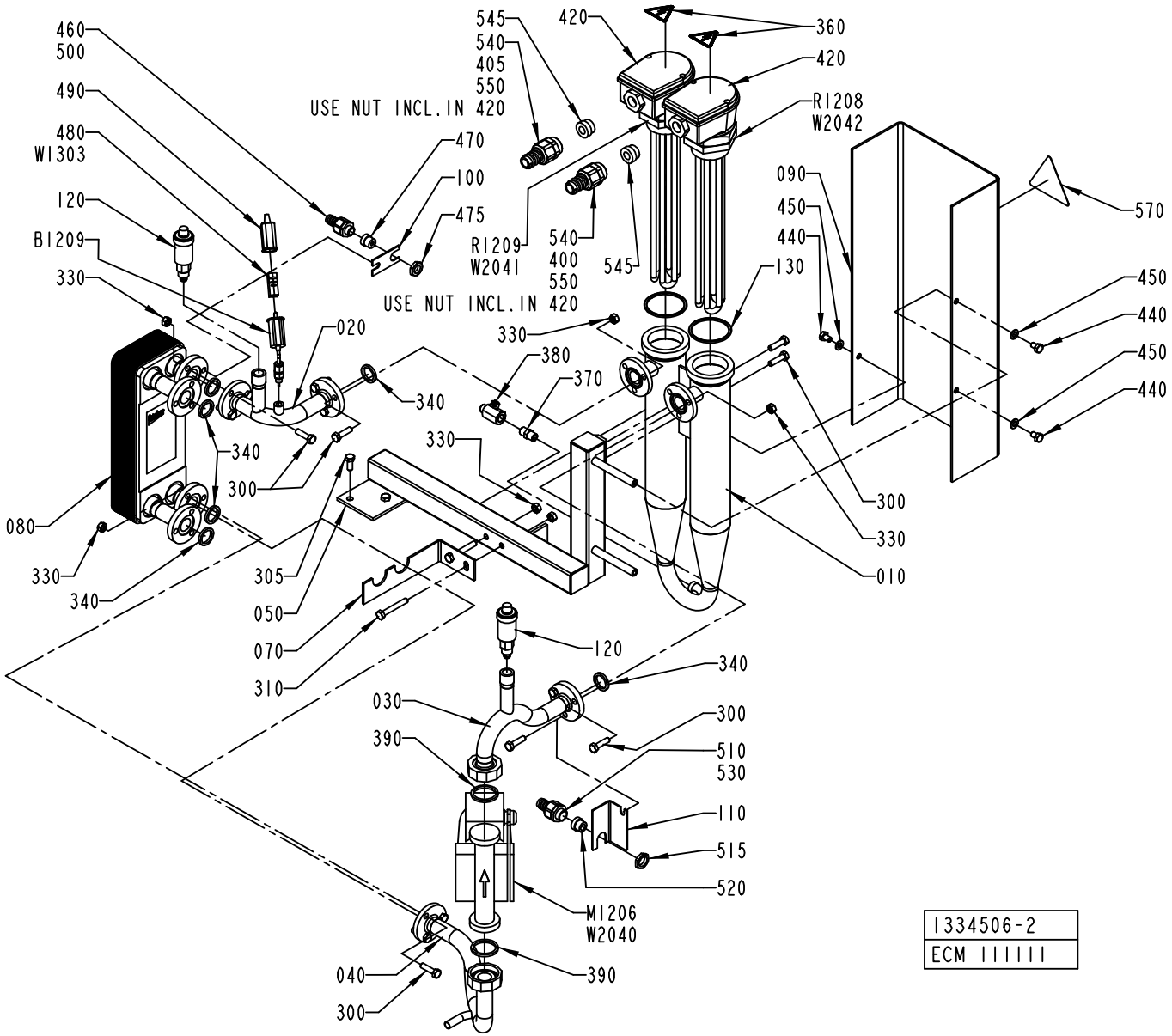
460
500
490
480
W1303
120
B1209
330
080
330
340
340
300
020
340
305
050
070
310
USE NUT INCL.IN 420
545
540
405
550
470
100
475
R1209
W2041
540
400
550
545
420
360
420
R1208
W2042
090
450
440
130
570
450
440
450
440
330
380
370
330
300
330
010
120
340
030
300
390
510
530
110
515
520
M1206
W2040
040
300
390
1334506-2
ECM IIIIII

ECM: 111765 - 20020911
Group number: 1334506-0200
Assembly Drawing: 1334506-2_1_AE

Issue: 20021015

Pos	Part No	SP	UN	Qty	Description	Page No
50HZ						
M1206	90321-0134	A		1	CIRC. PUMP TMB 40/2 230V50HZ	
60HZ						
M1206	90321-0135	A		1	CIRC. PUMP TMB 40/2 230V60HZ	
Common Parts						
010	1334507-0000	-		1	TUBE	
020	1538048-0000	-		1	PIPE	
030	1538049-0000	-		1	PIPE	
040	1334516-0000	-		1	PIPE	
050	1349505-0000	-		1	FRAME	
070	1349608-0000	-		1	HOLDER	
080	1346568-0000	A		1	HEAT EXCHANGER	
090	1346574-0000	-		1	PROTECTION	
100	1040970-0000	-		1	BRACKET	
110	1517707-0000	-		1	BRACKET	
120	90187-0105	A		2	PURGING VALVE, G3/8 FOR WATER	
130	90269-0308	A		2	GASKET 59X68X3 MM	
300	312105-0455	-		14	SCREW M6S ISO 4017 M8X30 A480	
305	312105-0451	-		2	SCREW M6S ISO 4017 M8X20 A480	
310	312105-0462	-		2	SCREW M6S ISO 4014 M8X55 A480	
330	312605-0318	-		14	HEXAGON NUT, M6M M8 A280	
340	315229-0103	A		6	GASKETS, 23,1X30,1X3,7 MM 1" FDA	
360	359705-0015	-		2	WARNING SIGN ISO, RISK OF ELECTRIC SHOCK	
370	90330-0043	-		1	NIPPLES, EXT. THREAD. R-207R1/4	
380	90187-0158	A		1	THROTTLE BALL VALVE G1/4, R1/4	
390	315229-0104	-		2	GASKETS, 35,8X42,8X3,7 MM 1"1/2 FD	
400	90152-0051	-	MM	1800	SPIRAL CONDUIT, 25X18, UL 1816	
405	90152-0051	-	MM	1800	SPIRAL CONDUIT, 25X18, UL 1816	
420	90206-0326	-		2	JUNCTION BOX FOR 90206-56	
440	312105-0447	-		3	SCREW M6S ISO 4017 M8X12 A480	
450	315105-0165	-		3	WASHER PLAIN, BRB, 8,4/16,H=1,5	
460	353243-0001	-		1	EXTENDED WITHOUT INSERT, PG9	
470	353249-0008	-		1	INSERT, SINGEL HOLE, EK 152/7	
475	90099-0104	-		1	NUT, PR 15,2 (PG9)	
480	90326-0020	-		1	PLUG, FEMALE YELLOW CR-AL	
490	90326-0012	-		1	PROTECTIVE COVER, T31A4618	
500	90152-0050	-	MM	1500	SPIRAL CONDUIT, 20X13, UL 1313	
510	353243-0003	-		1	EXTENDED WITHOUT INSERT, PG11	
515	90099-0117	-		1	NUT, PR 18,6 (PG11)	
520	353249-0011	-		1	INSERT, SINGEL HOLE, EK 153/11	
530	90152-0050	-	MM	1750	SPIRAL CONDUIT, 20X13, UL 1313	
540	90012-0131	-		2	NORMAL WITHOUT INSERT, PG21	
545	353249-0013	-		2	INSERT, SINGEL HOLE, EK 154/13	
550	90157-0034	-			SEALING COMPOUND LOCTITE 572 50 ML	
570	90194-0075	-		1	WARNING SIGN ISO, HOT SURFACE	
B1209	90326-0057	A		1	THERMOCOUPLE, CR-AL	
R1208	B90206-0070	A		1	HEATING ELEMENT 6000W 380/220V	
	90269-0308	-		*1*	*GASKET 59X68X3 MM*	
	90206-0326	-		*1*	*JUNCTION BOX FOR 90206-56*	
	90269-0308	-		*1*	*GASKET 59X68X3 MM*	
R1209	B90206-0070	A		1	HEATING ELEMENT 6000W 380/220V	
	90269-0308	-		*1*	*GASKET 59X68X3 MM*	
	90206-0326	-		*1*	*JUNCTION BOX FOR 90206-56*	
	90269-0308	-		*1*	*GASKET 59X68X3 MM*	
W1303	90220-0034	-	M	5	THERMOCOUPLE CABLE K/ 2X0,5MM2	
W2040	351150-0412	-	M	4	CABLE OLFLEX 3X1,5 MM2 LIGHT/GREY	
W2041	351120-0164	-	M	4	CABLE SIHF 4X1,5MM2 GREEN/YELLOW	
W2042	351120-0164	-	M	4	CABLE SIHF 4X1,5MM2 GREEN/YELLOW	

Machine Type | Group Description | Used-In | Group Number | Page No

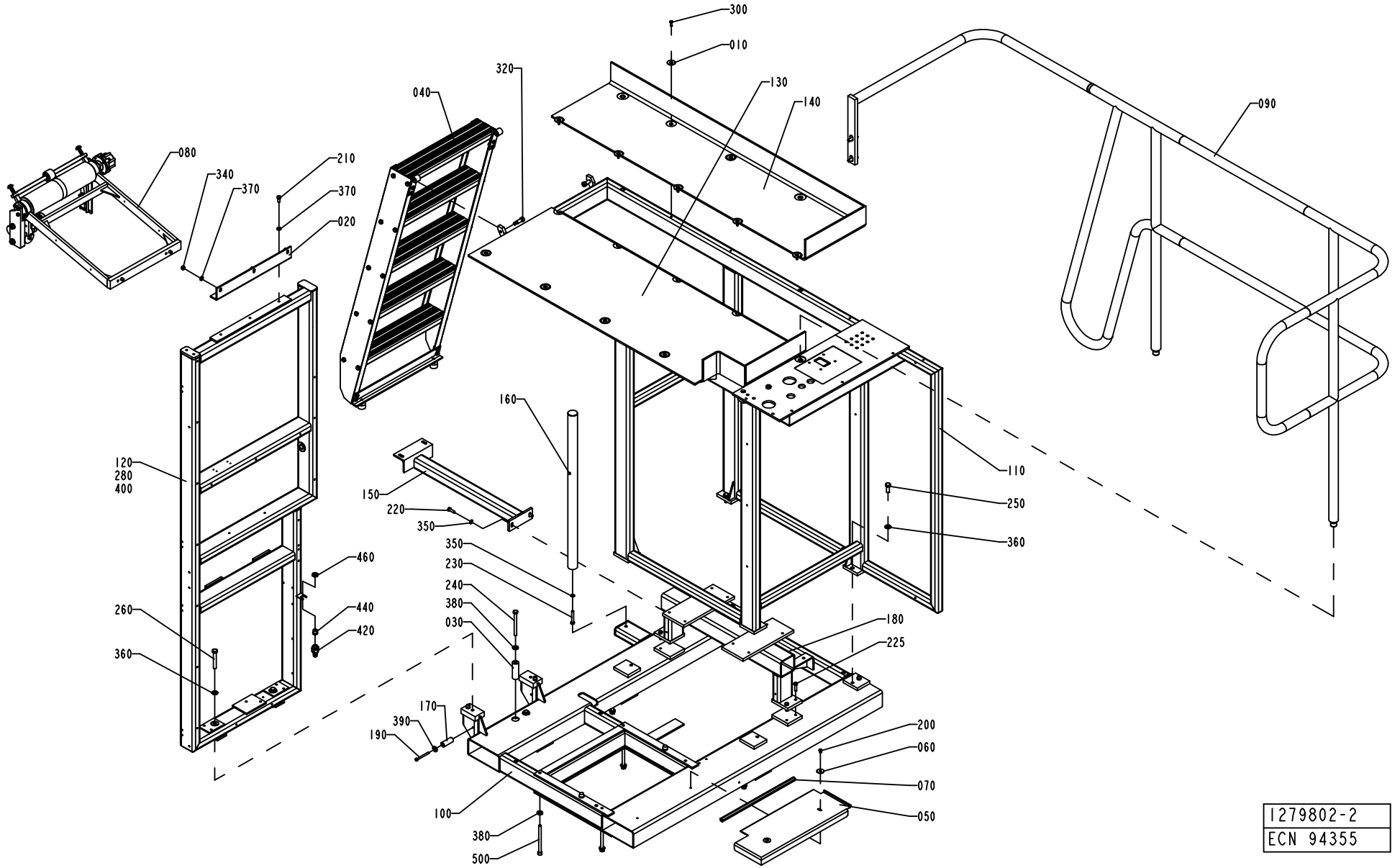
300
010
320
040
130
140
090
080
340
370
210
370
020
120
280
400
160
110
150
220
350
250
360
350
230
240
380
030
460
440
420
260
360
180
225
170
390
190
200
060
070
050
100
380
500
1279802-2
ECN 94355

ECM: 103446 - 20010926
Group number: 1279802-0200
Assembly Drawing: 1279802-2_1_AD

Issue: 20021015

Pos	Part No	SP	UN	Qty	Description	Page No
Common Parts						
010	1036241-0000	-		13	WASHER	
020	1038850-0000	-		1	ANGLE BRACKET	
030	1040856-0000	-		2	SPACER	
040	A1095862-0100	-		1	LADDER	**173**
050	1129637-0000	-		1	COVER PLATE	
060	1129638-0000	-		2	WASHER	
070	1129641-0000	-		1	SILICON RUBBER PROFILE	
080	A1279803-0200	-		1	BENDING ROLLER	**175**
090	A1347639-0100	-		1	RAILING	**181**
100	1347695-0000	-		1	FRAME	
110	1347696-0000	-		1	FRAME	
120	1347697-0000	-		1	FRAME	
130	1347867-0000	-		1	CHECKER PLATE	
140	1347868-0000	-		1	CHECKER PLATE	
150	1347869-0000	-		1	BRACKET	
160	1347870-0000	-		1	BRACKET	
170	1519521-0000	-		1	SPACER	
180	1490893-0000	-		1	BRACKET	
190	312105-0383	-		1	SCREW M6S ISO 4014 M6X65 A480	
200	312105-0362	-		2	SCREW M6S ISO 4017 M6X8 A480	
210	312105-0451	-		3	SCREW M6S ISO 4017 M8X20 A480	
220	312105-0453	-		2	SCREW M6S ISO 4017 M8X25 A480	
225	312105-0455	-		4	SCREW M6S ISO 4017 M8X30 A480	
230	312105-0462	-		1	SCREW M6S ISO 4014 M8X55 A480	
240	312105-0513	-		2	SCREW M6S ISO 4014 M10X110 A480	
250	312105-0536	-		4	SCREW M6S ISO 4017 M12X30 A480	
260	312105-0548	-		2	SCREW M6S ISO 4014 M12X80 A480	
280	312125-0366	-		37	SCREW PAN HEAD MCS M6X12 SS	
300	312155-0370	-		13	SCREW HEX.SOCK.COUNT.MF6S M6X20 A280	
320	312180-0534	-		2	SCREW, HEX.SOCK.HEAD SHOULD. M10/12X25	
340	312605-0318	-		3	HEXAGON NUT, M6M M8 A280	
350	315105-0165	-		3	WASHER PLAIN, BRB, 8,4/16,H=1,5	
360	315105-0178	-		6	WASHER PLAIN, BRB, 13/24,H=2	
370	315115-0165	-		6	WASHER PLAIN, TBRB 8,4/16 H=3	
380	315115-0173	-		8	WASHER PLAIN, TBRB 10,5/22 H=4	
390	315125-0153	-		1	WASHER PLAIN ROUND,CHAMF. 6,4/22, H=4	
400	352113-0204	-		37	ANCHOR PLATES FOR STRIPS, TYPE TM3S25-M	
420	353243-0001	-		1	EXTENDED WITHOUT INSERT, PG9	
440	353249-0008	-		1	INSERT, SINGEL HOLE, EK 152/7	
460	90099-0104	-		1	NUT, PR 15,2 (PG9)	
480	90153-0023	-		1	ADHESIVE	
500	90287-0349	-		6	SCREW	

Machine Type | Group Description | Used-In | Group Number | Page No

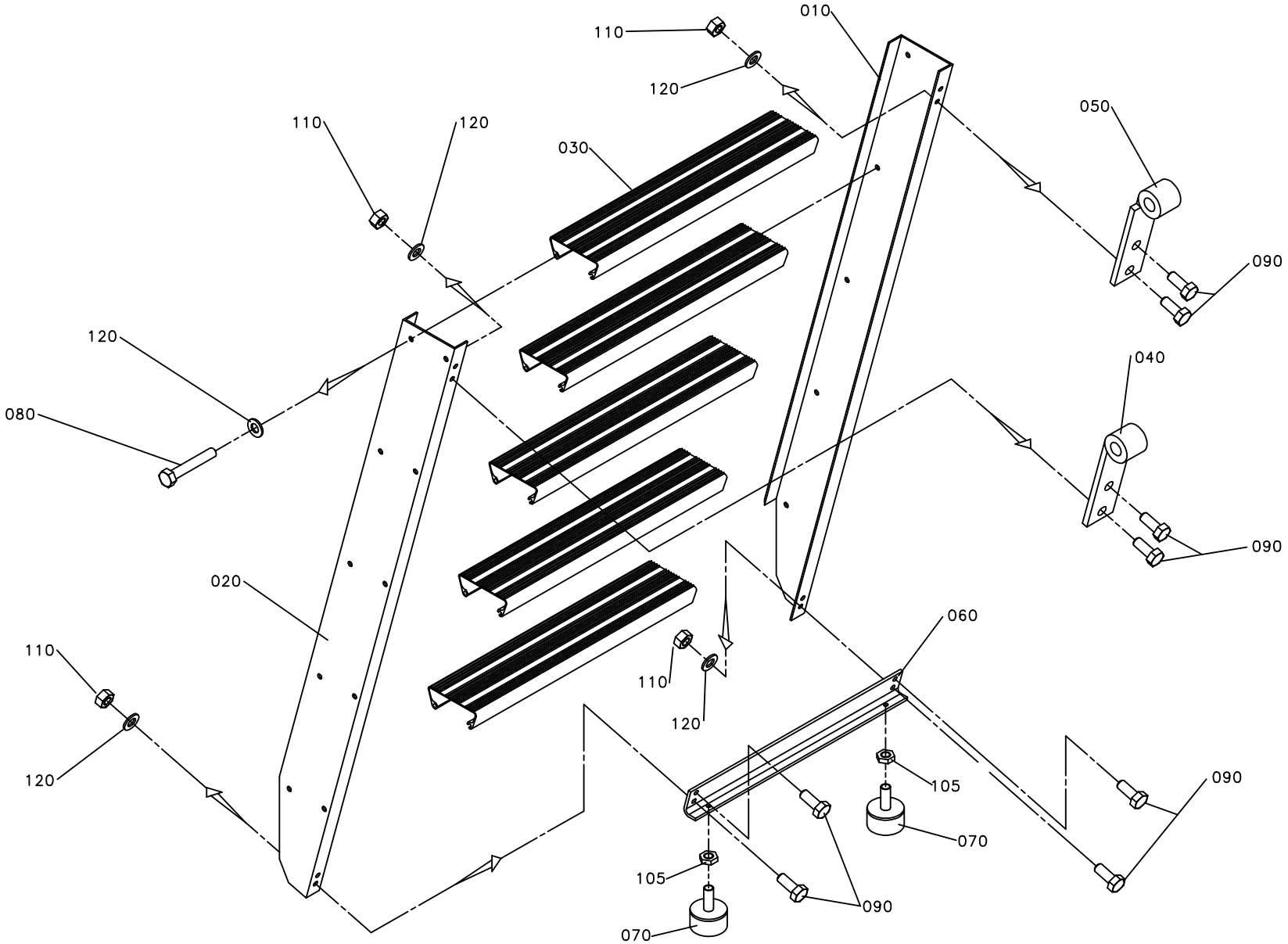
010
110
120
050
110
120
030
090
120
080
040
090
020
060
110
120
105
090
070
105
090
070

Pos	Part No	SP	UN	Qty	Description	Page No
Common Parts						
010	1036939-0000	-		1	SIDE PIECE	
020	1036940-0000	-		1	SIDE PIECE	
030	1129643-0000	-		5	STAIR	
040	1036963-0000	-		1	HOOK HOLDER	
050	1036965-0000	-		1	HOOK HOLDER	
060	1129644-0000	-		2	BRACKET	
070	90347-0004	-		2	VIBRATION DAMPER D=30 TH=M8 H=17 H2=21MM	
080	312104-0461	-		20	SCREW M6S M8X50H FZB	
090	312105-0451	-		8	SCREW M6S ISO 4017 M8X20 A480	
105	312625-0318	-		2	NUT HEX. M8 SS	
110	312605-0318	-		8	HEXAGON NUT, M6M M8 A280	
120	315101-0165	-		28	WASHER PLAIN, BRB, 8,4/16 H=1,5	

Pos	Part No	SP	UN	Qty	Description	Page No

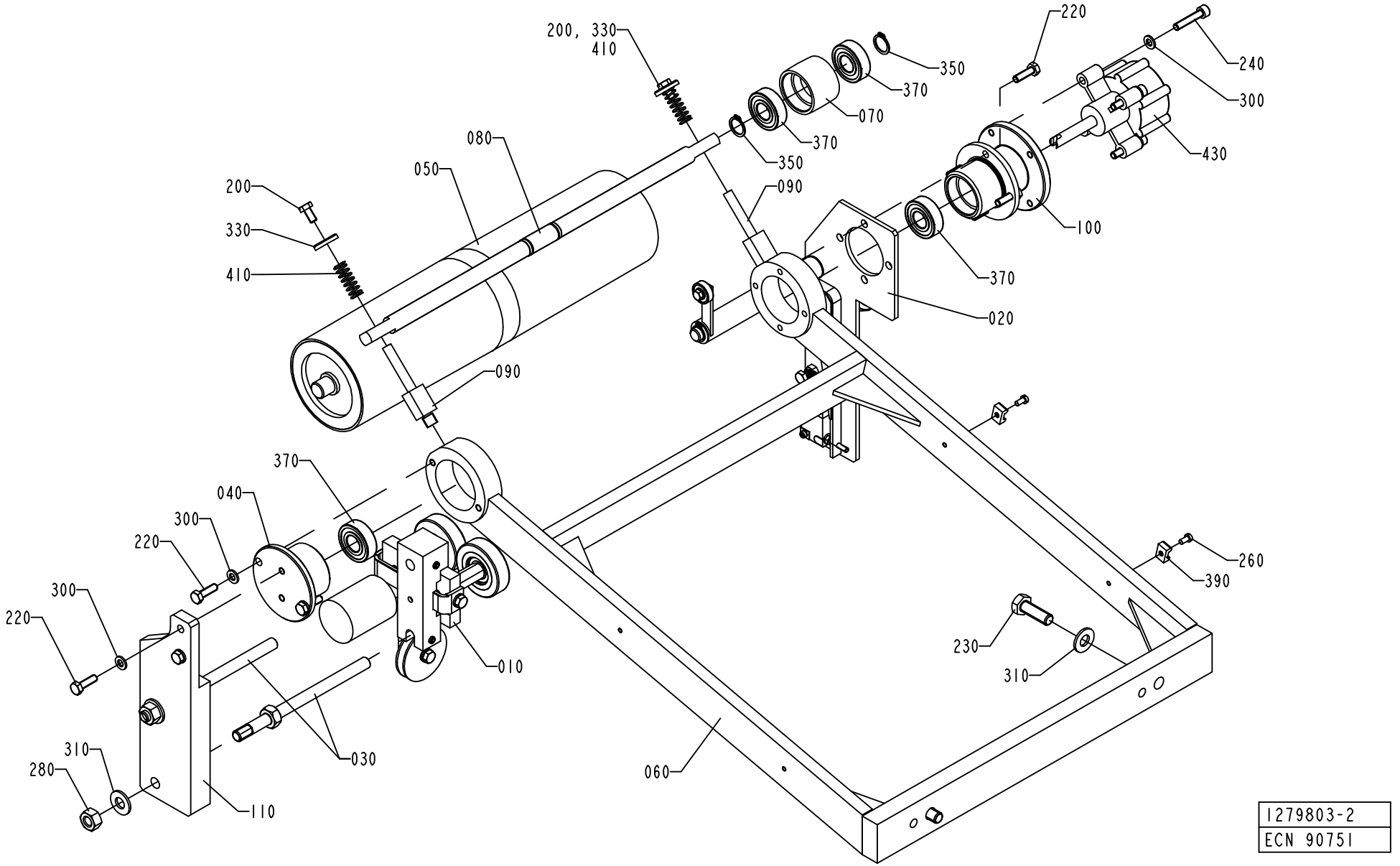
200, 330
410
350
370
070
370
350
080
050
090
200
330
410
090
220
240
300
430
100
370
020
370
040
300
220
300
220
010
260
390
230
310
310
280
030
110
060
1279803-2
ECN 90751

ECM: 113521 - 20020911
Group number: 1279803-0200
Assembly Drawing: 1279803-2_1_AB

Issue: 20021015

Pos	Part No	SP	UN	Qty	Description	Page No
Common Parts						
010	A1498624-0100	-		1	WEB GUIDE	**177**
020	A1538809-0100	-		1	SPLICE DETECTOR	**179**
030	1279603-0000	-		2	SHAFT	
040	1538011-0000	-		1	FLANGE	
050	1538012-0000	A		1	ROLLER	
060	1538013-0000	-		1	BRACKET	
070	1538014-0000	-		1	ROLLER	
080	1538015-0000	-		1	SHAFT	
090	1538016-0000	-		2	SHAFT	
100	1538017-0000	-		1	SPACER	
110	1538040-0000	-		1	PLATE	
200	312105-0366	-		2	SCREW M6S M6X12 A280	
220	312105-0370	-		8	SCREW M6S ISO 4017 M6X20 A480	
230	312105-0495	-		2	SCREW M6S ISO 4017 M10X30 A480	
240	312115-0374	-		4	SCREW MC6S M6X30 A280	
260	312125-0287	-		2	SCREW PAN HEAD MCS M4X8 SS	
280	312605-0320	-		2	HEXAGON NUT, M6M M10 A280	
300	315105-0153	-		8	WASHER PLAIN, BRB, 6,4/12,H=1,5	
310	315105-0173	-		4	WASHER PLAIN, BRB, 10,5/22,H=2	
330	315125-0153	-		2	WASHER PLAIN ROUND,CHAMF. 6,4/22, H=4	
350	315751-0112	B		2	RETAIN. RING, 15	
370	321313-0102	A		4	BALL BEARING, 2 SEALS, 15X35X11 MM	
390	352113-0205	B		2	ANCHOR PLATES FOR STRIPS, TYPE TM2S8-C10	
410	90335-0012	A		2	SPRING	
430	90347-0054	B		1	DAMPER	

Pos	Part No	SP	UN	Qty	Description	Page No

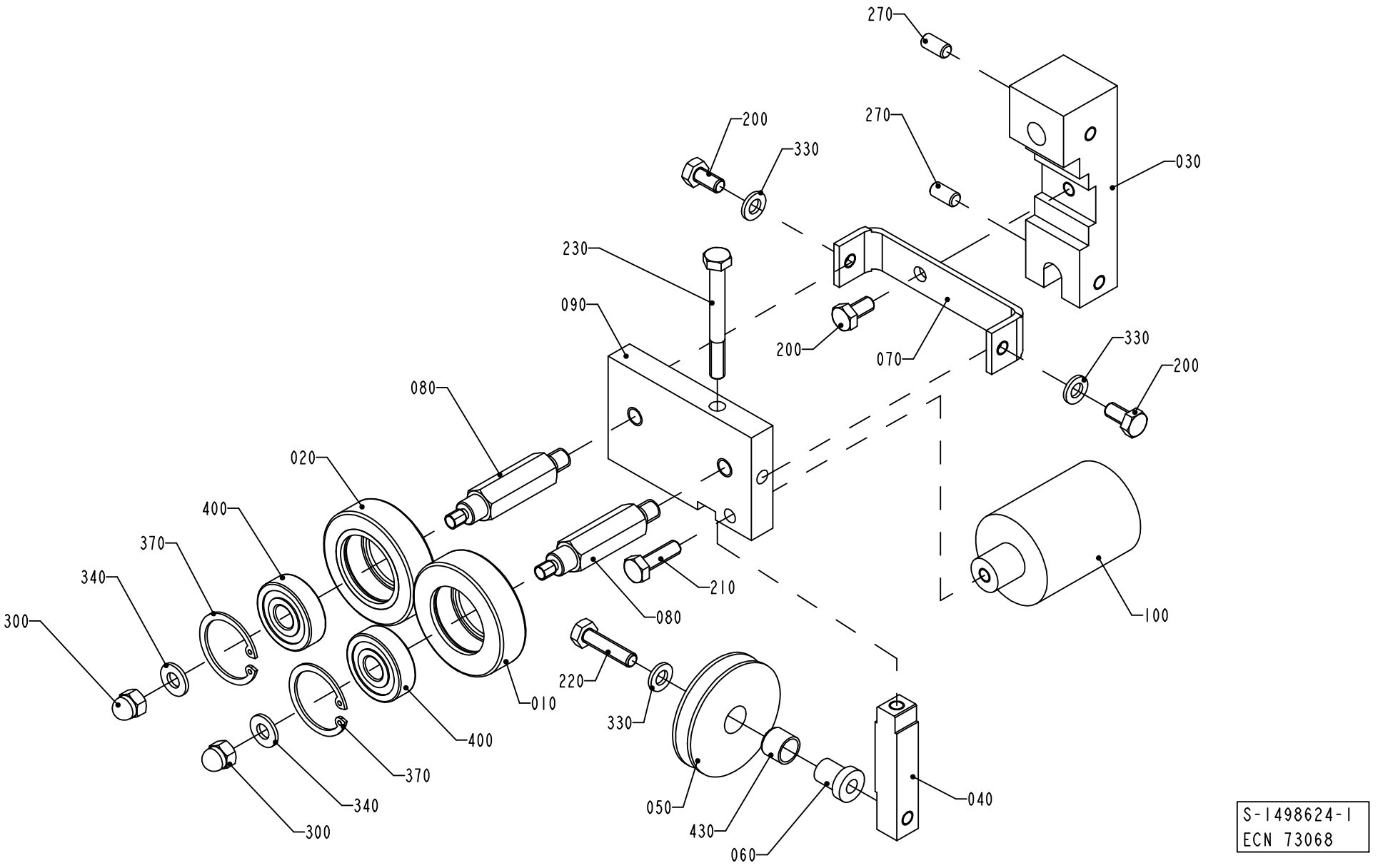
270
270
200
330
030
230
090
200
070
330
200
080
020
400
370
340
300
210
080
100
220
330
010
400
370
340
300
050
430
060
040
S-1498624-1
ECN 73068

ECM: 113523 - 20020911
Group number: 1498624-0100
Assembly Drawing: 1498624-1_1_AA

Issue: 20021015

Pos	Part No	SP	UN	Qty	Description	Page No
Common Parts						
010	1036622-0000	A		1	GUIDE ROLLER	
020	1036623-0000	A		1	GUIDE ROLLER	
030	1511002-0000	-		1	HOLDER	
040	1499024-0000	-		1	BAR	
050	1499025-0000	A		1	ROLLER	
060	1499026-0000	-		1	SHAFT	
070	1499027-0000	-		1	BRACKET	
080	1511001-0000	-		2	SHAFT	
090	1511000-0000	-		1	PLATE	
100	1511003-0000	-		1	WEIGHT	
200	312105-0366	-		3	SCREW M6S M6X12 A280	
210	312105-0370	-		1	SCREW M6S ISO 4017 M6X20 A480	
220	312105-0372	-		1	SCREW M6S ISO 4017 M6X25 A480	
230	312105-0381	-		1	SCREW M6S ISO 4014 M6X55 A480	
270	312318-0366	-		2	SCREW SOCK.SET CUP P MSK6SS M6X12 A4	
300	312705-0316	-		2	NUT HEX. DOMED CAP MHM-6 M6 A280	
330	315105-0153	-		3	WASHER PLAIN, BRB, 6,4/12,H=1,5	
340	315105-0156	-		2	WASHER PLAIN, BRB, 6,7/14,H=1,5	
370	315753-0122	-		2	RETAIN. RING, 30	
400	321313-0100	A		2	BALL BEARING, 2 SEALS, 10X30X9 MM	
430	90240-0287	A		1	BUSHING, 10X12X10 MM	

Pos	Part No	SP	UN	Qty	Description	Page No

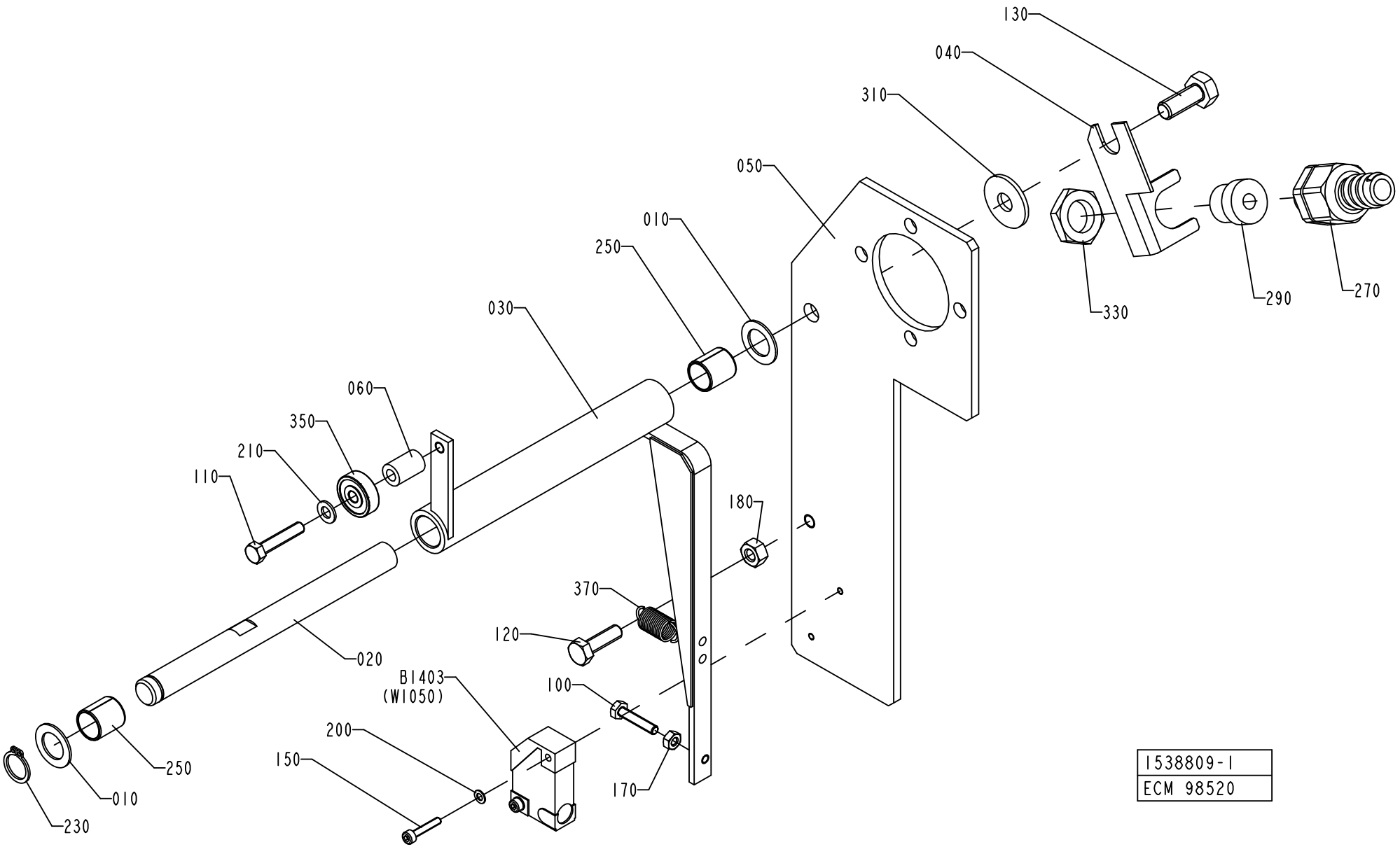
130
040
310
050
010
250
030
060
350
210
110
180
370
120
020
B1403
(W1050)
100
200
150
170
250
010
230
330
290
270
1538809-1
ECM 98520

ECM: 113522 - 20020911
Group number: 1538809-0100
Assembly Drawing: 1538809-1_1_AC

Issue: 20021015

Pos	Part No	SP	UN	Qty	Description	Page No
Common Parts						
010	266737-0000	-		2	WASHER	
020	1035897-0000	-		1	SHAFT	
030	1035898-0000	-		1	BRACKET	
040	1036610-0000	-		1	BRACKET	
050	1538041-0000	-		1	PLATE	
060	2515238-0000	-		1	SPACER	
100	312105-0295	-		1	SCREW M6S ISO 4017 M4X20 A480	
110	312105-0333	-		1	SCREW M6S ISO 4017 M5X25 A480	
120	312105-0370	-		1	SCREW M6S ISO 4017 M6X20 A480	
130	312105-0451	-		1	SCREW M6S ISO 4017 M8X20 A480	
150	312115-0228	-		2	SCREW MC6S M3X16 A280	
170	312605-0312	-		1	HEXAGON NUT, M6M M4 A280	
180	312605-0316	-		1	HEXAGON NUT, M6M M6 A280	
200	315105-0124	-		2	WASHER PLAIN, BRB, 3,2/6,H=0,5	
210	315105-0146	-		1	WASHER PLAIN, BRB, 5,3/10,H=1	
230	315751-0109	B		1	RETAIN. RING, 12	
250	321120-0111	-		2	BEARING BUSHING WITHOUT FLANGE,12/14X15	
270	353243-0001	-		1	EXTENDED WITHOUT INSERT, PG9	
290	353249-0008	-		1	INSERT, SINGEL HOLE, EK 152/7	
310	90005-0116	-		1	WASHER PLAIN ROUND 8,4(M8)/24, H=2	
330	90099-0104	-		1	NUT, PR 15,2 (PG9)	
350	90214-0138	B		1	BALL BEARING, 5X19X6 MM	
370	90335-0089	B		1	TENSION SPRING 41490, 0,9X10X23	
B1403	90044-0104	A		1	PROX.SWITCH IFM IN 3002	

Pos	Part No	SP	UN	Qty	Description	Page No

Machine Type | Group Description | Used-In | Group Number | Page No

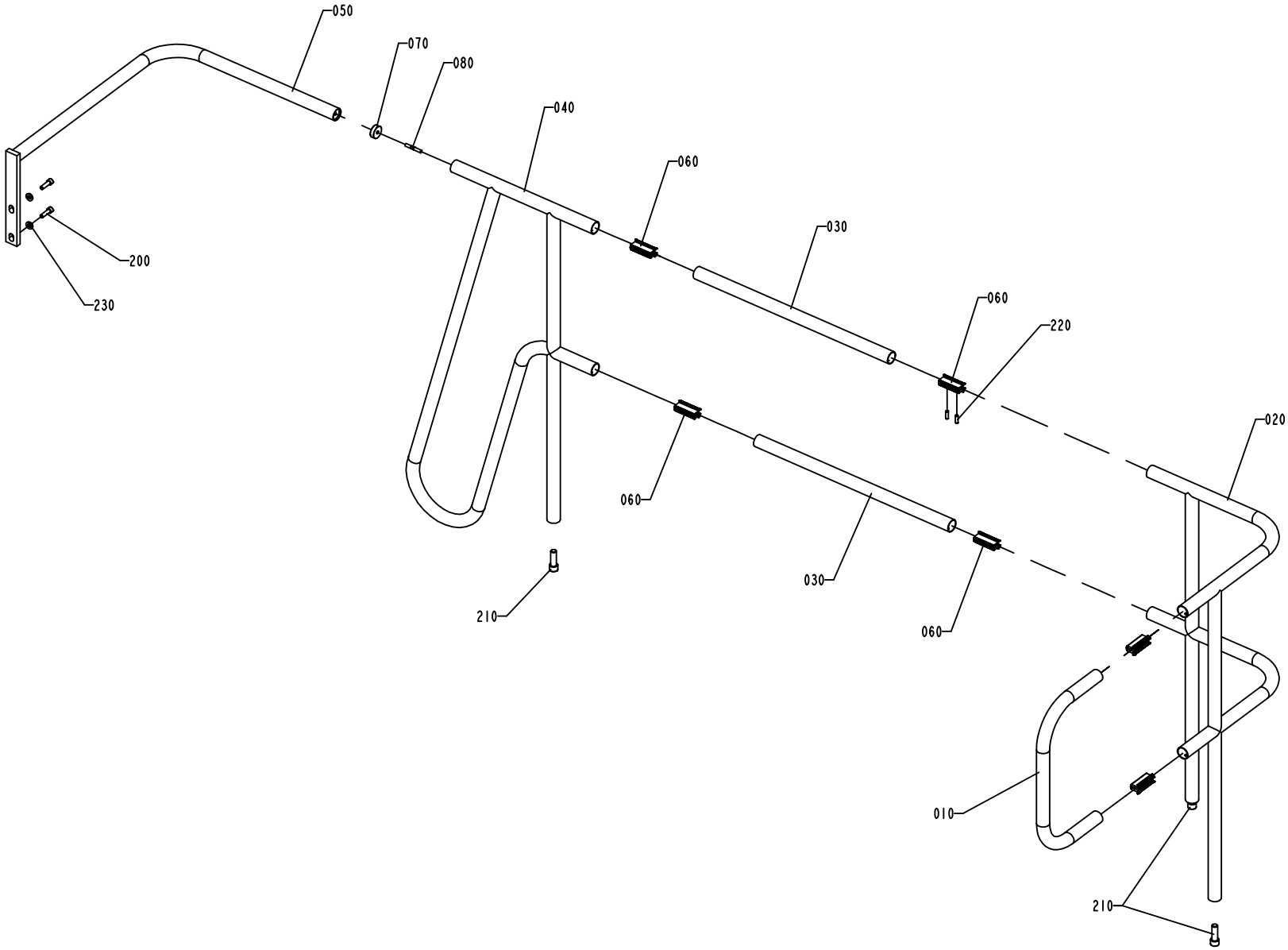

1347639-1
ECN 81466

Pos	Part No	SP	UN	Qty	Description	Page No
TBA 0200B OR TBA 0250B						
050	1347640-0000	-		1	RAILING	
Common Parts						
010	1347641-0000	-		1	RAILING	
020	B1010822-0000	-		1	RAILING	
	1140619-0000	-		*2*	*PLUG*	
030	1037044-0000	-		2	RAILING	
040	1129741-0000	-		1	RAILING	
060	B1035654-0000	-		6	CONNECTION	
	1035653-0000	-		*1*	*PROFILE*	
070	578640-0000	-		1	CLAMPING RING	
080	751485-0000	-		1	SCREW	
200	312115-0497	-		2	SCREW MC6S M10X35 A280	
210	312115-0630	-		3	SCREW MC6S M16X50 A280	
220	312318-0453	-		12	SCREW SOCK.SET CUP P MSK6SS M8X25 A4	
230	315115-0173	-		2	WASHER PLAIN, TBRB 10,5/22 H=4	

Pos	Part No	SP	UN	Qty	Description	Page No

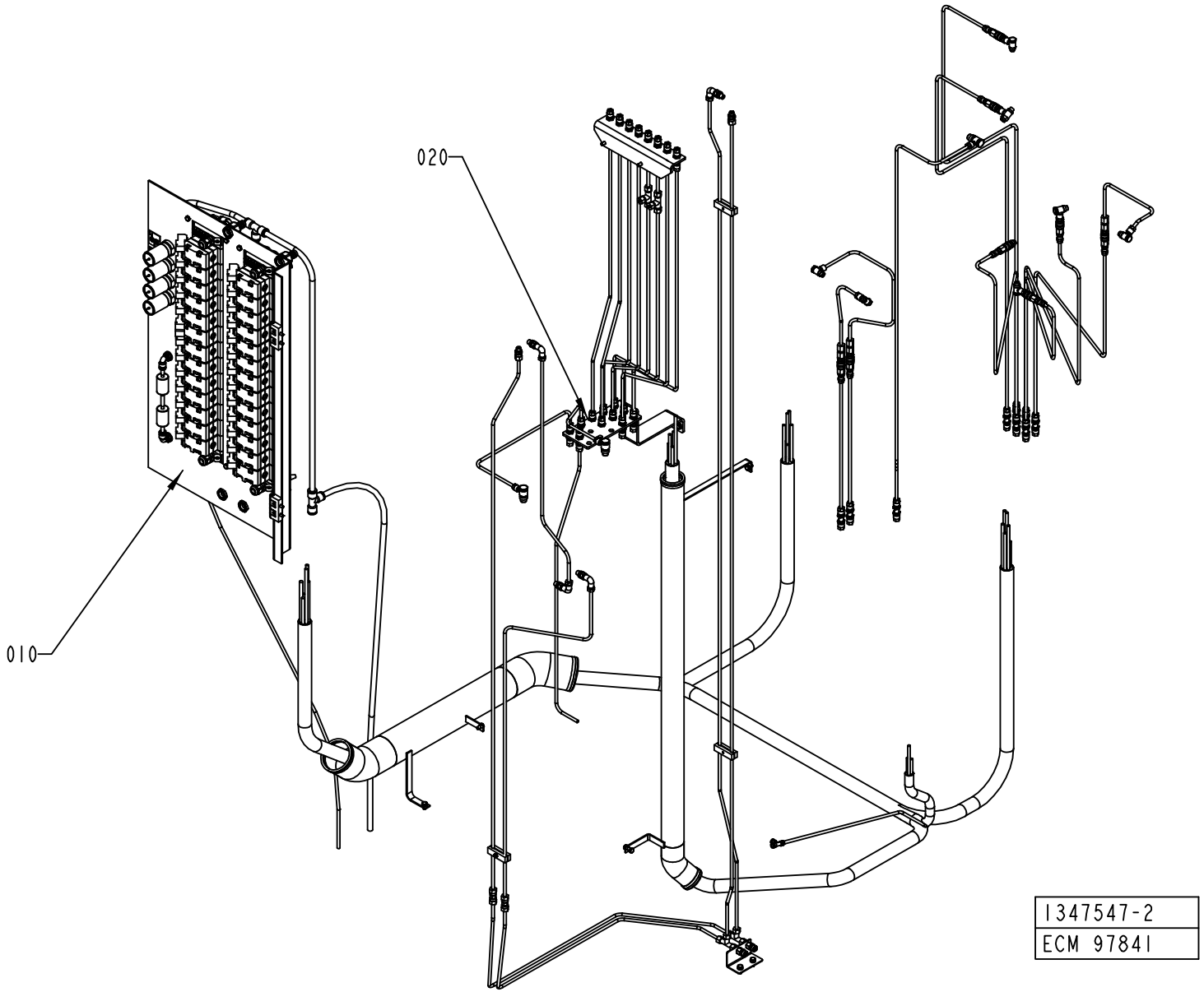
020
010
1347547-2
ECM 97841

Pos	Part No	SP	UN	Qty	Description	Page No
Common Parts						
010	A1347548-0300	-		1	VALVE PANEL	**185**
020	A1347551-0200	-		1	HOSE INSTALLATION	**191, 193, 195**

Pos	Part No	SP	UN	Qty	Description	Page No

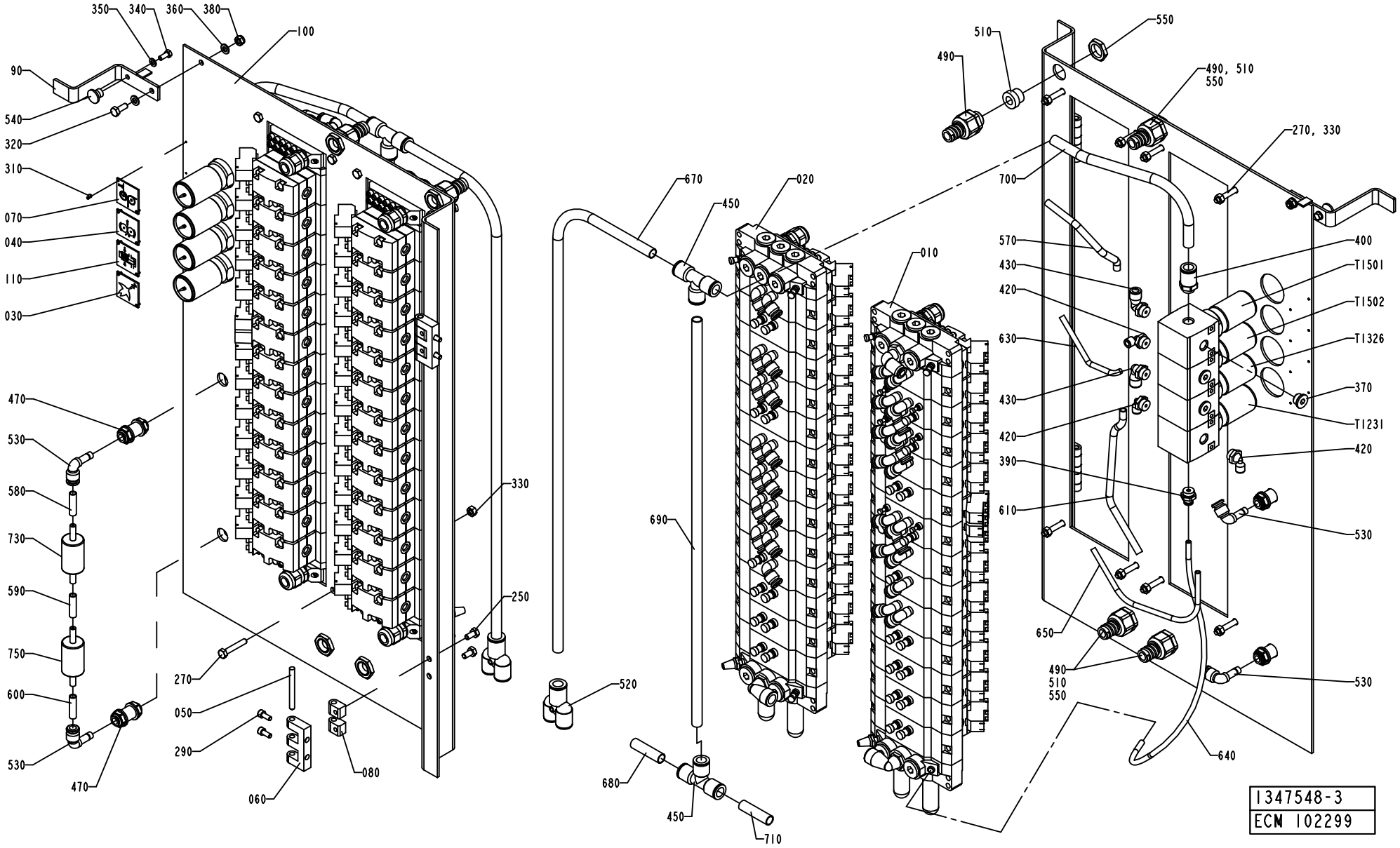
350
340
360
380
100
90
540
320
310
070
040
110
030
470
530
580
730
590
750
600
530
470
270
050
290
060
080
330
250
670
450
020
010
690
520
680
450
710
510
490
550
490, 510
550
270, 330
700
570
430
420
630
430
420
390
610
400
T1501
T1502
T1326
370
T1231
420
530
650
490
510
550
530
640
1347548-3
ECN 102299

ECM: 113524 - 20020911
Group number: 1347548-0300
Assembly Drawing: 1347548-3_1_AC

Issue: 20021015

Pos	Part No	SP	UN	Qty	Description	Page No
Common Parts						
000	2506845-0000	-		1	DIAGRAM	
010	A1347549-0300	-		1	VALVE RAMP	**187**
020	A1347550-0300	-		1	VALVE RAMP	**189**
030	273450-0000	-		1	SIGN	
040	273452-0000	-		1	SIGN	
050	988685-0000	-		2	PIN	
060	1035792-0000	-		2	E-HINGE	
070	1041937-0000	-		1	SIGN	
080	1129770-0000	-		4	BLOCKING PIECE	
090	2552246-0000	-		1	CATCH HANDLE	
100	2506844-0000	-		1	PLATE	
110	1548001-0000	-		1	SIGN	
250	312105-0366	-		4	SCREW M6S M6X12 A280	
270	312109-0376	-		8	SCREW M6S ISO 4017 M6X35 A480	
290	312115-0327	-		4	SCREW MC6S M5X12 A280	
310	312502-0120	-		8	DRIVE SCREW ROUND HEAD KDS 0X5	
320	312105-0368	-		1	SCREW M6S M6X16 A280	
330	312605-0316	-		8	HEXAGON NUT, M6M M6 A280	
340	312105-0327	-		1	SCREW M6S ISO 4017 M5X12 A480	
350	315105-0146	-		1	WASHER PLAIN, BRB, 5,3/10,H=1	
360	315105-0153	-		2	WASHER PLAIN, BRB, 6,4/12,H=1,5	
370	342713-0210	-		3	PLUG, EXT THREAD HEX SOCKET 8638-00-140	
380	312812-0316	-		1	HEXAGON NUT, NY-LOCK M6 A480	
390	342722-0203	-		1	STRAIGHT COUPLING	
400	342722-0209	-		1	STRAIGHT COUPLING D=12-G1/4"	
420	90458-2957	-		3	ELBOW PIPE JOINT, EXT.THREAD, D=6MM-G1/4	
430	90458-2958	-		2	ELBOW PIPE JOINT, EXT.THREAD, D=8MM-G1/4	
450	342748-0109	-		2	T-CONNECTION 12MM	
470	342768-0103	-		2	BULKHEAD CONNECTOR, 8 MM	
490	353243-0003	-		4	EXTENDED WITHOUT INSERT, PG11	
510	353249-0011	-		4	INSERT, SINGEL HOLE, EK 153/11	
520	90055-0147	-		1	HOSE,Y-CONNECTION,PARALLEL,FPT, 12X12MM	
530	90055-0118	-		4	ELBOW PIPE JOINT -8MM	
540	90051-0026	-		1	KNOB, CIRKUL, THREADED BUSH, M5 17X14 MM	
550	90099-0117	-		4	NUT, PR 18,6 (PG11)	
570	90166-0013	-	MM	150	TUBE 8 MM PA BLUE	
580	90166-0013	-	MM	30	TUBE 8 MM PA BLUE	
590	90166-0013	-	MM	30	TUBE 8 MM PA BLUE	
600	90166-0013	-	MM	30	TUBE 8 MM PA BLUE	
610	90166-0013	-	MM	300	TUBE 8 MM PA BLUE	
630	90166-0081	-	MM	250	TUBE 6 MM PA BLUE	
640	90166-0081	-	MM	450	TUBE 6 MM PA BLUE	
650	90166-0081	-	MM	300	TUBE 6 MM PA BLUE	
670	90166-0153	-	MM	1000	TUBE 12 MM PA BLACK	
680	90166-0153	-	MM	40	TUBE 12 MM PA BLACK	
690	90166-0153	-	MM	600	TUBE 12 MM PA BLACK	
700	90166-0153	-	MM	250	TUBE 12 MM PA BLACK	
710	90166-0153	-	MM	40	TUBE 12 MM PA BLACK	
730	90277-0045	-		1	FILTER / 9900-05-BK	
750	90277-0046	-		1	FILTER / 9933-05-101	
T1231	90113-0095	A		1	PRESSURE REGULATOR	
T1326	90113-0097	A		1	PRESSURE REGULATOR	
T1501	90113-0096	A		1	PRESSURE REGULATOR	
T1502	90113-0095	A		1	PRESSURE REGULATOR	

Machine Type	Group Description	Used-In	Group Number	Page No

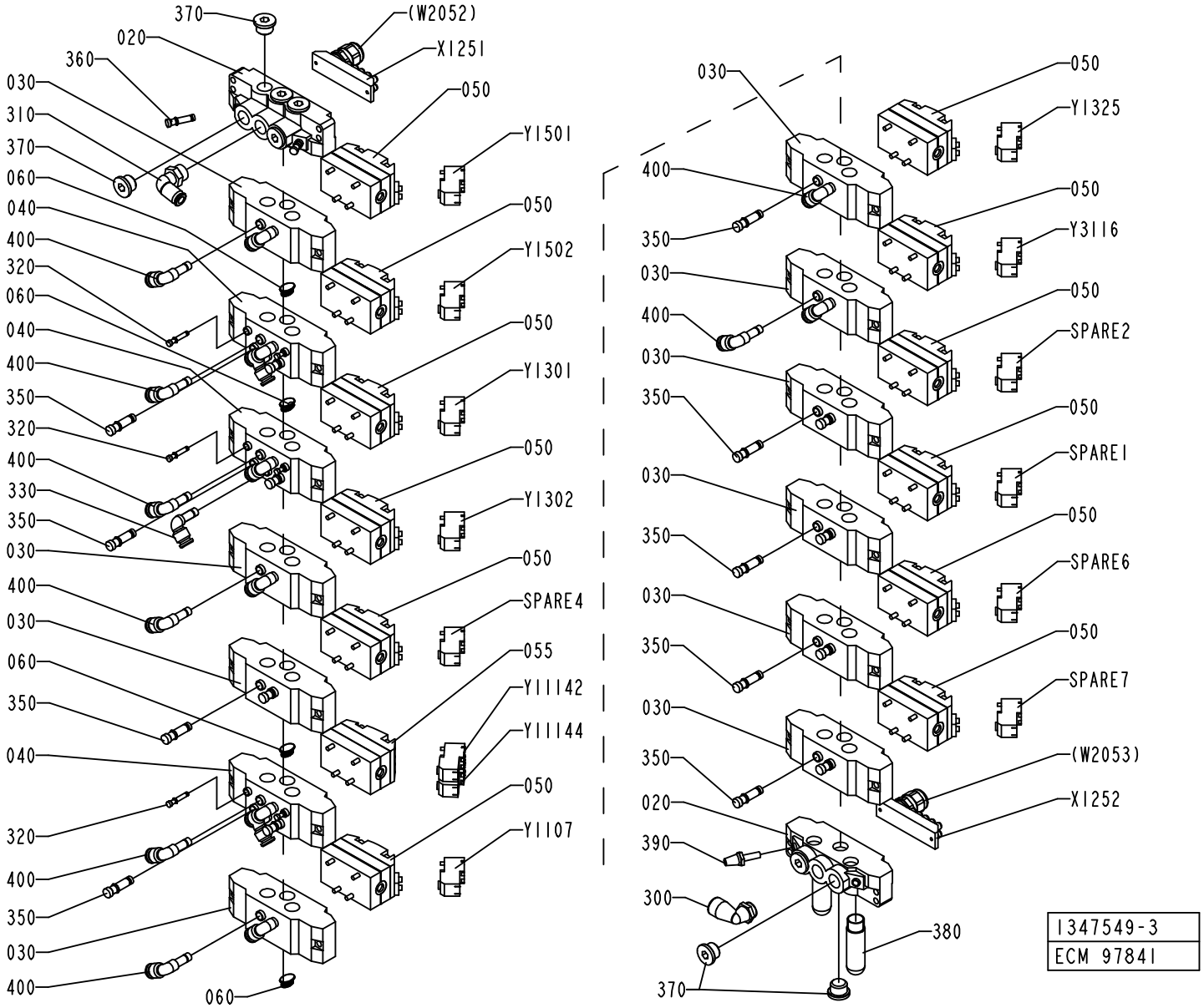
370
020
360
030
310
370
060
040
400
320
060
040
400
350
320
400
330
350
030
400
030
060
350
040
320
400
350
030
400
060
(W2052)
X1251
050
Y1501
050
Y1502
050
Y1301
050
Y1302
050
SPARE4
055
Y11142
Y11144
050
Y1107
030
400
350
030
400
030
350
030
400
030
350
030
350
020
390
300
370
380
050
Y1325
050
Y3116
050
SPARE2
050
SPARE1
050
SPARE6
050
SPARE7
(W2053)
X1252
1347549-3
ECM 97841

Pos	Part No	SP	UN	Qty	Description	Page No
Common Parts						
020	90042-0522	-		2	PORTED END PIECE ISO SIZE 1	
030	90042-0532	-		10	BASE PLATE ISO SIZE 1	
040	90042-0520	-		3	BASE PLATE ISO SIZE 1	
050	90042-0215	A		12	VALVE BODY 5/2 UNISTABLE	
055	90042-0230	A		1	VALVE BODY 5/3 OPEN CENTRE	
060	90042-0528	-		4	BLANKING KIT SEALS ISO SIZE 1	
300	90458-2960	-		1	ELBOW PIPE JOINT, EXT.THREAD,D=12MM-G3/8	
310	342732-0105	-		1	ELBOW PIPE D8-R3/8"	
320	342715-0100	-		6	BLIND PLUG 4 MM	
330	90055-0118	-		1	ELBOW PIPE JOINT -8MM	
350	342715-0103	-		17	BLIND PLUG 8 MM	
360	342715-0102	-		2	BLIND PLUG 6 MM	
370	342713-0211	-		8	PLUG, EXT THREAD HEX SOCKET 8638-00-380	
380	90328-0024	B		2	SILENCER G3/8	
390	90328-0017	B		1	SILENCER, D=6 MM	
400	90055-0173	-		17	ELBOW WITH TAILPIECE 8/6 MM	
SPARE1	90042-0538	-		1	PILOT VALVE L=500MM	
SPARE2	90042-0538	-		1	PILOT VALVE L=500MM	
SPARE4	90042-0538	A		1	PILOT VALVE L=500MM	
SPARE6	90042-0538	A		1	PILOT VALVE L=500MM	
SPARE7	90042-0538	A		1	PILOT VALVE L=500MM	
X1251	90042-0535	-		1	TERMINAL BOARD 19 CORDS	
X1252	90042-0535	-		1	TERMINAL BOARD 19 CORDS	
Y1107	90042-0538	A		1	PILOT VALVE L=500MM	
Y11142	90042-0538	A		1	PILOT VALVE L=500MM	
Y11144	90042-0538	A		1	PILOT VALVE L=500MM	
Y1301	90042-0538	A		1	PILOT VALVE L=500MM	
Y1302	90042-0538	A		1	PILOT VALVE L=500MM	
Y1325	90042-0538	A		1	PILOT VALVE L=500MM	
Y1501	90042-0538	A		1	PILOT VALVE L=500MM	
Y1502	90042-0538	A		1	PILOT VALVE L=500MM	
Y3116	90042-0538	A		1	PILOT VALVE L=500MM	

Pos	Part No	SP	UN	Qty	Description	Page No

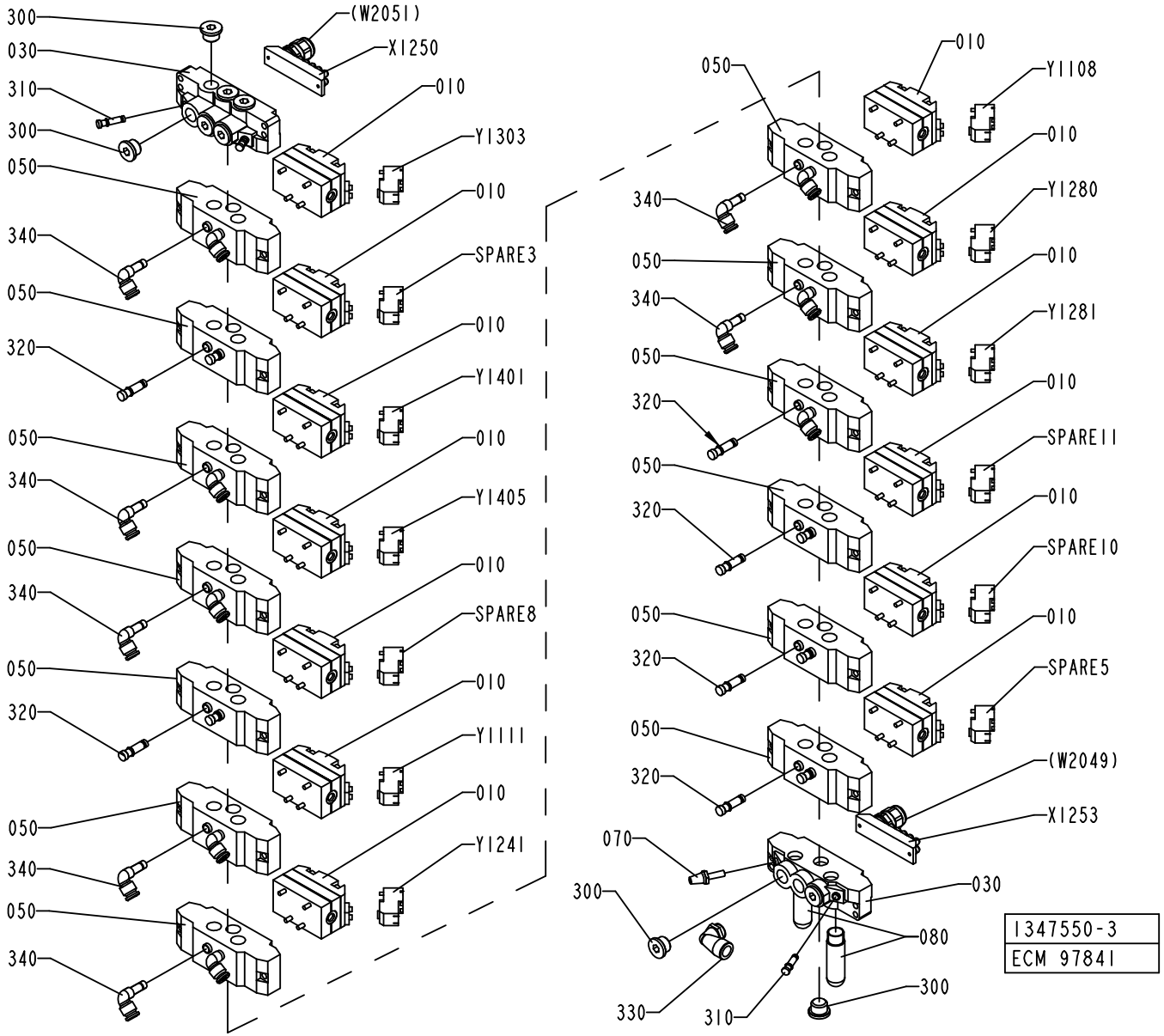
300
030
310
300
050
340
050
320
050
340
050
340
050
320
050
340
050
340
(W2051)
X1250
010
Y1303
010
SPARE3
010
Y1401
010
Y1405
010
SPARE8
010
Y1111
010
Y1241
050
340
050
320
050
320
050
340
050
320
050
320
050
320
070
300
330
310
010
Y1108
010
Y1280
010
Y1281
010
SPARE11
010
SPARE10
010
SPARE5
(W2049)
X1253
030
080
300
1347550-3
ECM 97841

Pos	Part No	SP	UN	Qty	Description	Page No
Common Parts						
010	90042-0215	A		13	VALVE BODY 5/2 UNISTABLE	
030	90042-0522	-		2	PORTED END PIECE ISO SIZE 1	
050	90042-0532	-		13	BASE PLATE ISO SIZE 1	
070	90328-0017	B		1	SILENCER, D=6 MM	
080	90328-0024	B		2	SILENCER G3/8	
300	342713-0211	-		9	PLUG, EXT THREAD HEX SOCKET 8638-00-380	
310	342715-0102	-		3	BLIND PLUG 6 MM	
320	342715-0103	-		11	BLIND PLUG 8 MM	
330	90458-2960	-		1	ELBOW PIPE JOINT, EXT.THREAD,D=12MM-G3/8	
340	90055-0173	-		15	ELBOW WITH TAILPIECE 8/6 MM	
SPARE 8	90042-0538	A		1	PILOT VALVE L=500MM	
SPARE10	90042-0538	A		1	PILOT VALVE L=500MM	
SPARE11	90042-0538	A		1	PILOT VALVE L=500MM	
SPARE3	90042-0538	A		1	PILOT VALVE L=500MM	
SPARE5	90042-0538	A		1	PILOT VALVE L=500MM	
X1250	90042-0535	-		1	TERMINAL BOARD 19 CORDS	
X1253	90042-0535	-		1	TERMINAL BOARD 19 CORDS	
Y1108	90042-0538	A		1	PILOT VALVE L=500MM	
Y1111	90042-0538	A		1	PILOT VALVE L=500MM	
Y1241	90042-0538	A		1	PILOT VALVE L=500MM	
Y1280	90042-0538	A		1	PILOT VALVE L=500MM	
Y1281	90042-0538	A		1	PILOT VALVE L=500MM	
Y1303	90042-0538	A		1	PILOT VALVE L=500MM	
Y1401	90042-0538	A		1	PILOT VALVE L=500MM	
Y1405	90042-0538	A		1	PILOT VALVE L=500MM	

Pos	Part No	SP	UN	Qty	Description	Page No

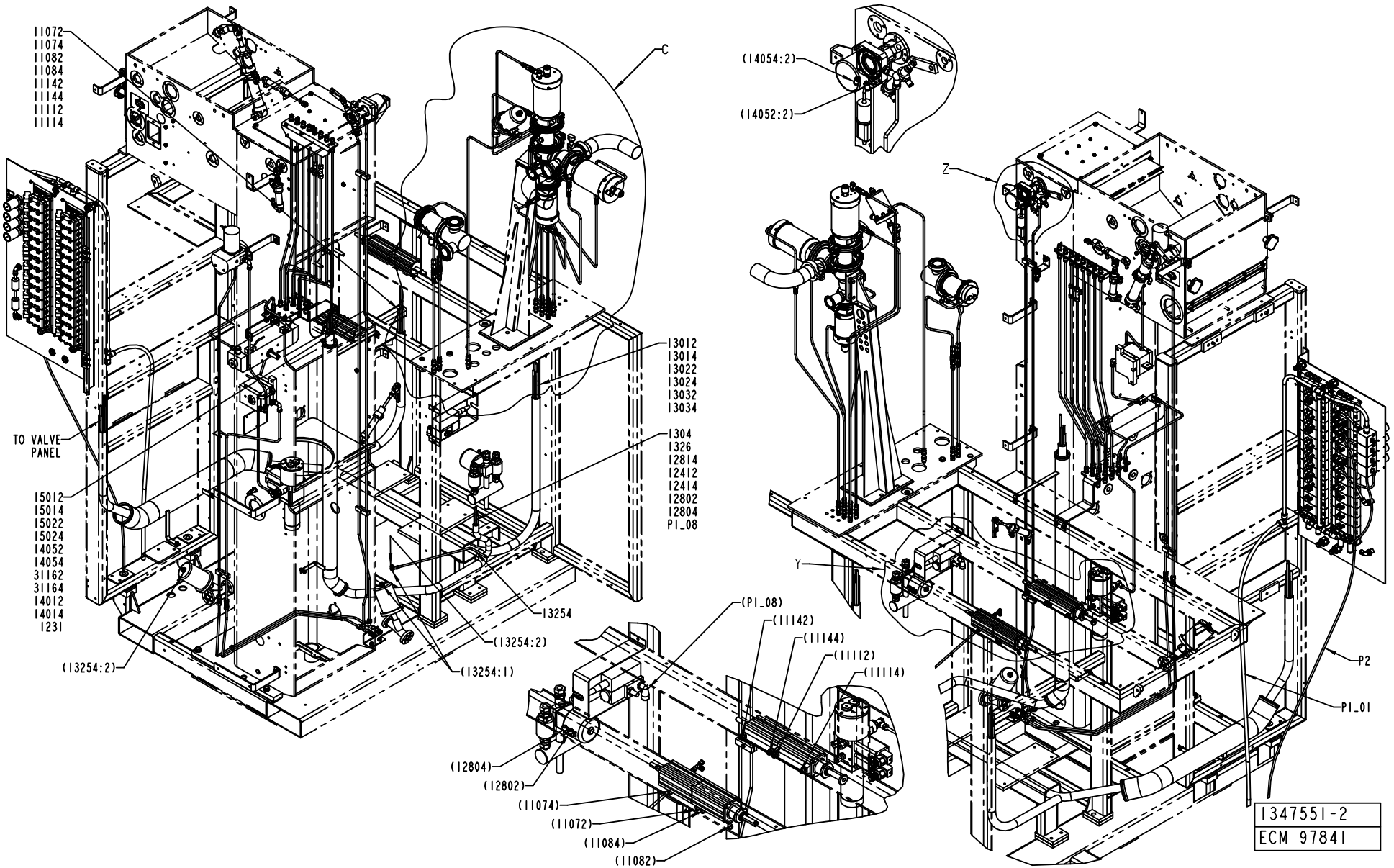
11072
11074
11082
11084
11142
11144
11112
11114
C
13012
13014
13022
13024
13032
13034
1304
1326
12814
12412
12414
12802
12804
P1_08
TO VALVE PANEL
15012
15014
15022
15024
14052
14054
31162
31164
14012
14014
1231
13254
(13254:2)
(13254:1)
(13254:2)
(14054:2)
(14052:2)
Z
Y
(P1_08)
(11142)
(11144)
(11112)
(11114)
(12804)
(12802)
(11074)
(11072)
(11084)
(11082)
P2
P1_01
1347551-2
ECM 97841

Pos	Part No	SP	UN	Qty	Description	Page No
Common Parts						
010	1348940-0000	-		1	PIPE	
020	1484425-0000	-		2	PIPE	
030	1538800-0000	-		1	PIPE	
040	1538826-0000	-		1	PIPE	
050	1538827-0000	-		1	PIPE	
060	1538828-0000	-		1	PIPE	
070	1538829-0000	-		1	PIPE	
080	1538830-0000	-		1	PIPE	
090	1538831-0000	-		1	PIPE	
100	1548245-0000	-		2	PIPE	
110	2500423-0000	-		1	PIPE	
11072	90166-0081	-	MM	3900	TUBE 6 MM PA BLUE	
11074	90166-0081	-	MM	3900	TUBE 6 MM PA BLUE	
11082	90166-0081	-	MM	3900	TUBE 6 MM PA BLUE	
11084	90166-0081	-	MM	3900	TUBE 6 MM PA BLUE	
11112	90166-0081	-	MM	3900	TUBE 6 MM PA BLUE	
11114	90166-0081	-	MM	3900	TUBE 6 MM PA BLUE	
11142	90166-0081	-	MM	3900	TUBE 6 MM PA BLUE	
11144	90166-0081	-	MM	3900	TUBE 6 MM PA BLUE	
120	2500424-0000	-		2	PIPE	
1231	90166-0081	-	MM	5900	TUBE 6 MM PA BLUE	
12412	90166-0081	-	MM	5500	TUBE 6 MM PA BLUE	
12414	90166-0081	-	MM	5500	TUBE 6 MM PA BLUE	
12802	90166-0081	-	MM	5900	TUBE 6 MM PA BLUE	
12804	90166-0081	-	MM	5900	TUBE 6 MM PA BLUE	
12814	90166-0081	-	MM	5900	TUBE 6 MM PA BLUE	
130	2500425-0000	-		2	PIPE	
13012	90166-0081	-	MM	5000	TUBE 6 MM PA BLUE	
13014	90166-0081	-	MM	5100	TUBE 6 MM PA BLUE	
13022	90166-0081	-	MM	5300	TUBE 6 MM PA BLUE	
13024	90166-0081	-	MM	5100	TUBE 6 MM PA BLUE	
13032	90166-0081	-	MM	4900	TUBE 6 MM PA BLUE	
13034	90166-0081	-	MM	4900	TUBE 6 MM PA BLUE	
1304	90166-0081	-	MM	500	TUBE 6 MM PA BLUE	
13254	90166-0081	-	MM	4400	TUBE 6 MM PA BLUE	
13254:1	90166-0081	-	MM	250	TUBE 6 MM PA BLUE	
13254:2	90166-0081	-	MM	1000	TUBE 6 MM PA BLUE	
1326	90166-0081	-	MM	4800	TUBE 6 MM PA BLUE	
140	2500426-0000	-		1	PIPE	
14012	90166-0081	-	MM	5900	TUBE 6 MM PA BLUE	
14014	90166-0081	-	MM	5900	TUBE 6 MM PA BLUE	
14052	90166-0081	-	MM	6000	TUBE 6 MM PA BLUE	
14052:2	90166-0081	-	MM	650	TUBE 6 MM PA BLUE	
14054	90166-0081	-	MM	6000	TUBE 6 MM PA BLUE	
14054:2	90166-0081	-	MM	650	TUBE 6 MM PA BLUE	
150	2500427-0000	-		1	PIPE	
15012	90166-0081	-	MM	5800	TUBE 6 MM PA BLUE	
15012:2	90166-0081	-	MM	600	TUBE 6 MM PA BLUE	
15014	90166-0081	-	MM	6000	TUBE 6 MM PA BLUE	
15014:2	90166-0081	-	MM	300	TUBE 6 MM PA BLUE	
15022	90166-0081	-	MM	5900	TUBE 6 MM PA BLUE	
15022:2	90166-0081	-	MM	400	TUBE 6 MM PA BLUE	
15024	90166-0081	-	MM	6100	TUBE 6 MM PA BLUE	
15024:2	90166-0081	-	MM	450	TUBE 6 MM PA BLUE	
160	2500428-0000	-		2	PIPE	
170	2500432-0000	-		1	PIPE	
180	2500433-0000	-		1	PIPE	
190	2500434-0000	-		1	PIPE	
200	2500435-0000	-		1	BRACKET	
210	2500436-0000	-		1	PLATE	
220	2500437-0000	-		1	BRACKET	
230	2501513-0000	-		1	PIPE	
240	2517363-0000	-		1	PIPE	
250	2519471-0000	-		1	PIPE	
260	2520475-0000	-		1	PIPE	
270	2520476-0000	-		1	PIPE	
280	2520562-0000	-		1	PIPE	
290	2520563-0000	-		1	PIPE	
300	2522125-0000	-		3	CLAMP	
310	2522126-0000	-		3	CLAMP	
31162	90166-0081	-	MM	6000	TUBE 6 MM PA BLUE	
31162:1	90166-0081	-	MM	400	TUBE 6 MM PA BLUE	
31162:2	90166-0081	-	MM	600	TUBE 6 MM PA BLUE	
31164	90166-0081	-	MM	6000	TUBE 6 MM PA BLUE	
31164:1	90166-0081	-	MM	400	TUBE 6 MM PA BLUE	
31164:2	90166-0081	-	MM	600	TUBE 6 MM PA BLUE	
320	2524403-0000	-		1	PIPE	
330	2524404-0000	-		1	PIPE	
340	2511417-0000	-		1	PIPE	
450	312105-0329	-		3	SCREW M6S ISO 4017 M5X16 A480	
470	312105-0366	-		5	SCREW M6S M6X12 A280	
480	312105-0368	-		4	SCREW M6S M6X16 A280	
490	312105-0370	-		1	SCREW M6S ISO 4017 M6X20 A480	

Machine Type Group Description Used-In Group Number Page No

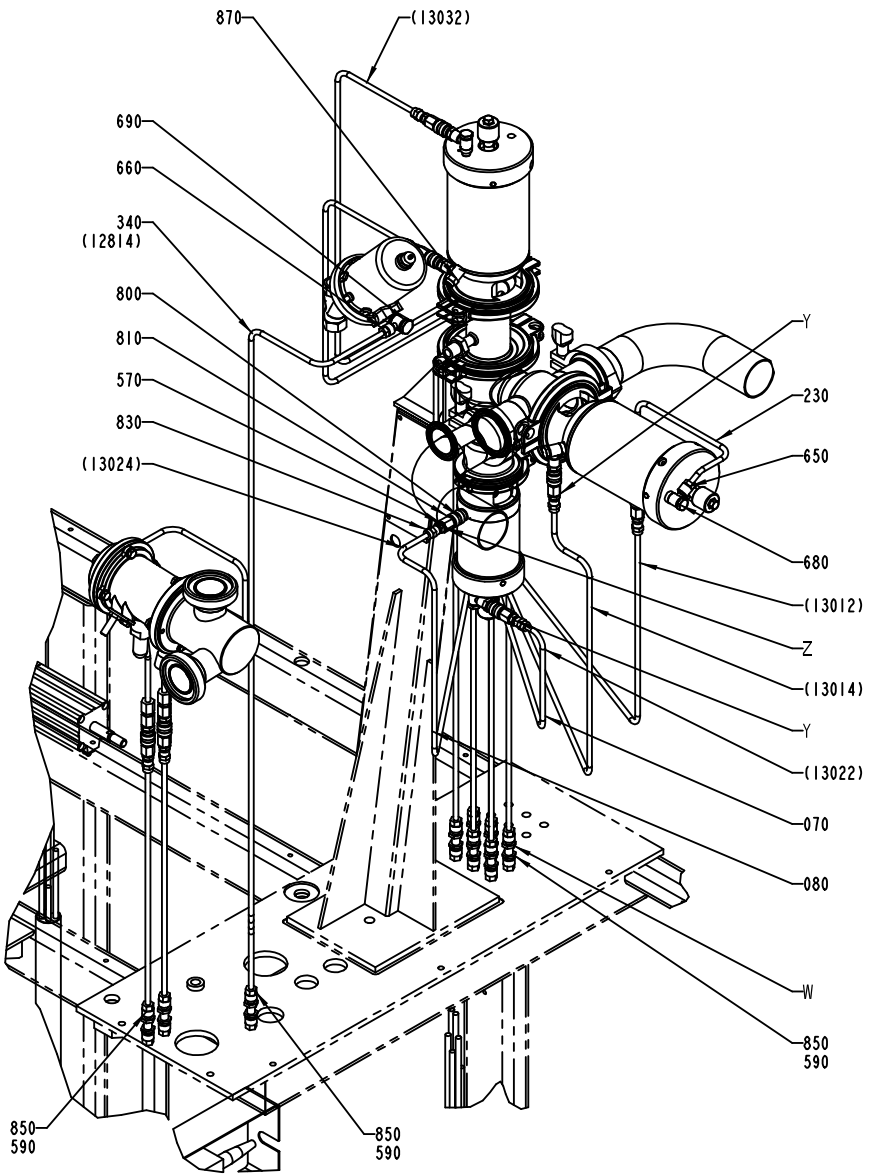

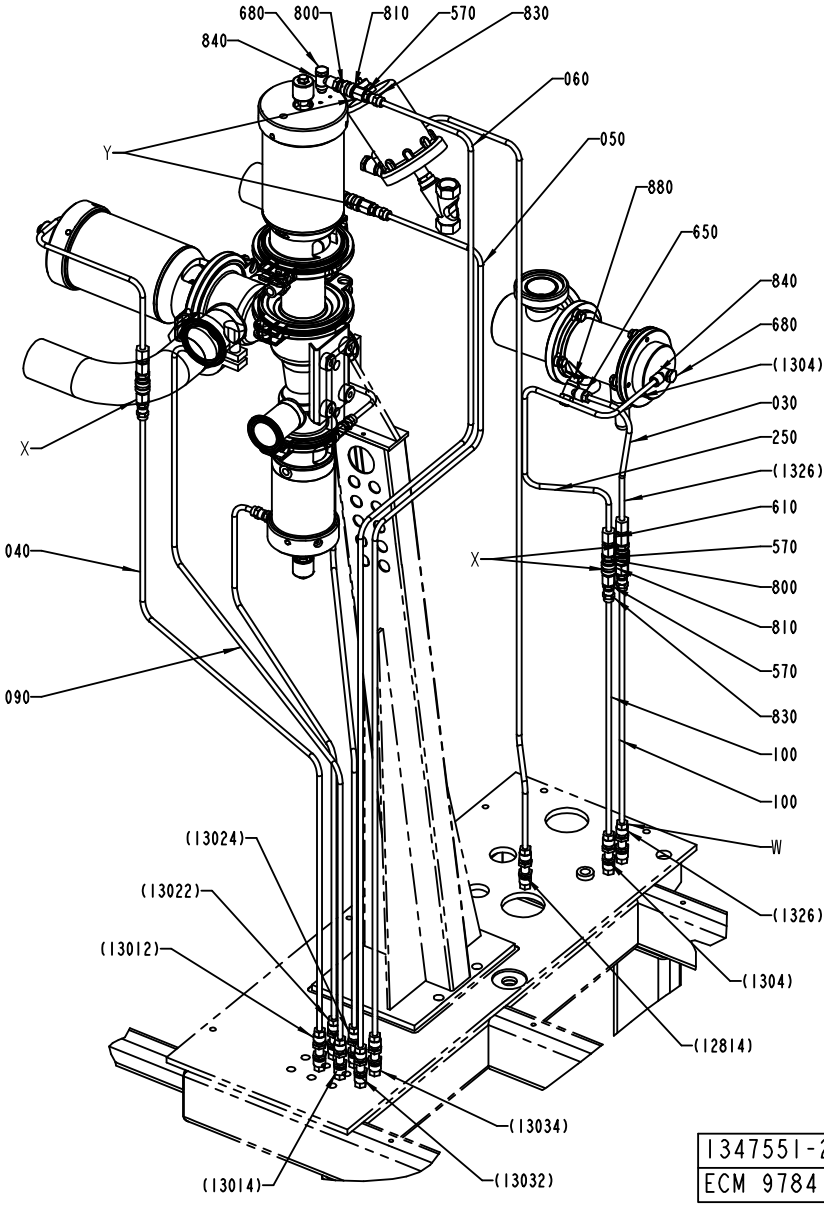

1347551-2
ECM 97841

Pos	Part No	SP	UN	Qty	Description	Page No
Common Parts (Cont'd)						
510	312605-0316	-		1	HEXAGON NUT, M6M M6 A280	
530	315105-0153	-		8	WASHER PLAIN, BRB, 6,4/12,H=1,5	
550	315115-0153	-		2	WASHER PLAIN, TBRB 6,4/12 H=3	
570	315237-0109	-		11	WASHER,PL.RND.AL.10/14,H=1,5	
590	342706-0130	-		28	ACCESSORIES, INSERT SLEEVE 6 MM	
610	342724-0102	-		3	CONN. STR. PIPE GI 6-G1/8	
630	342759-0102	-		2	CONN. L-PIPE ADJ.,EVL,EXT,T-6-G1/8	
650	342797-0121	-		2	CONN. BANJO, RINGPIECE 6-1/8	
660	342797-0122	-		3	CONN. BANJO, RINGPIECE 6-1/4	
670	342923-0121	-		2	STRAIGHT COUPL.,INT.THREADED 8/6-G1/8"	
680	342980-0303	-		5	BANJO-HOLLOW BOLT COUPL,EXT.THR.01-G1/8"	
690	342980-0304	-		3	BANJO-HOLLOW BOLT COUPL,EXT.THR.01-G1/4"	
710	90030-0075	-		2	PIPE CONNECTION G-6	
720	90030-0076	-		2	CONN. T-PIPE T-6	
730	90030-0171	-		4	ADJUSTABLE ELBOW CONNECTION,EXT 6-G1/8	
740	90030-0184	-		2	CONN. STR. GA-6-G1/8	
780	90143-0059	-	MM	700	SEAL STRIP 4610069	
800	90163-0057	-		8	NIPPLE 1/8" BRASS	
810	90163-0062	-		8	QUICK COUPLING, (F) 5053-1/8	
830	90458-1849	-		8	CONN. STR., 6-R1/8, EXT. THREAD	
840	90224-0308	-		5	CONN. BANJO, ART. NO. 2023-1/8-1/8	
850	90224-0349	-		28	BULKHEAD LEAD-IN	
870	90235-0274	-		1	THROTTLE CHECK VALVES,G1/8"	
880	90235-0282	-		1	THROTTLE CHECK VALVES,G1/8	
890	342748-0102	-		1	T-CONNECTION 6MM	
P1_01	90166-0068	-	MM	2000	TUBE 12 MM PA BLUE	
P1_08	90166-0068	-	MM	3800	TUBE 12 MM PA BLUE	
P2	90166-0013	-	MM	2000	TUBE 8 MM PA BLUE	

Pos	Part No	SP	UN	Qty	Description	Page No

Machine Type | Group Description | Used-In | Group Number | Page No

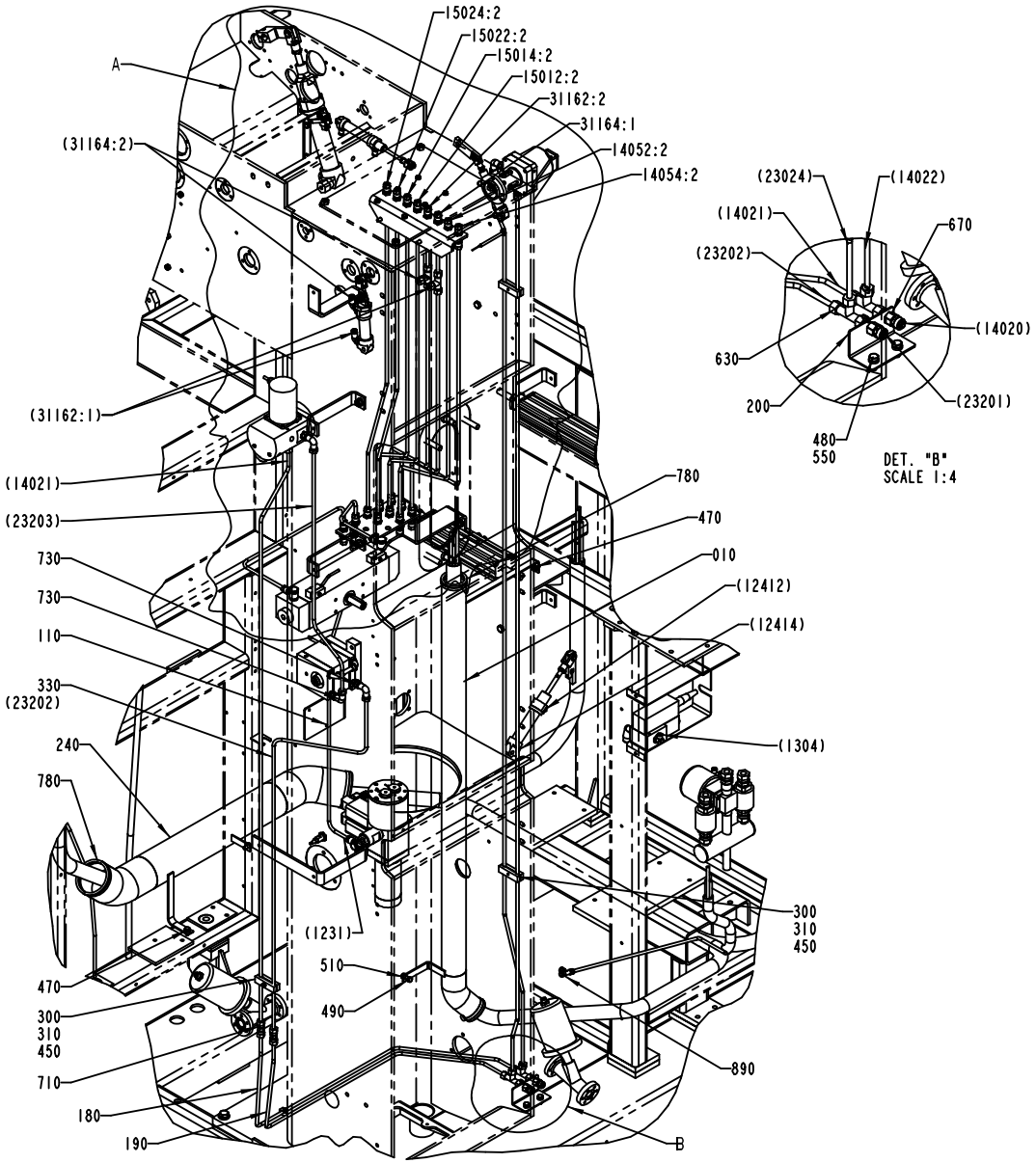
15024:2
15022:2
15014:2
15012:2
31162:2
31164:1
14052:2
14054:2
A
(31164:2)
(31162:1)
(14021)
(23203)
730
730
110
330
(23202)
240
780
470
300
310
450
710
180
190
780
470
010
(12412)
(12414)
(1304)
300
310
450
(1231)
510
490
890
B
(23024)
(14022)
(14021)
670
(23202)
(14020)
630
(23201)
200
480
550
DET. "B"
SCALE 1:4

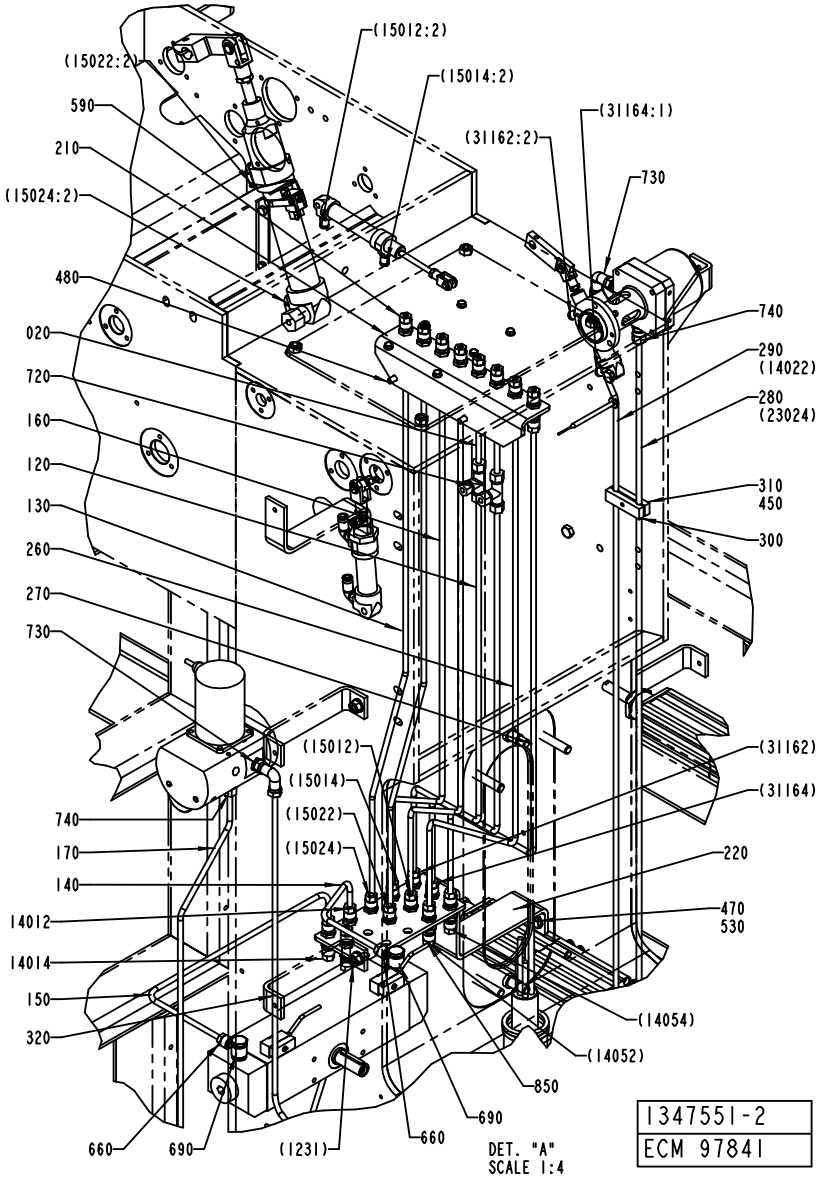
(15012:2)
(15022:2)
(15014:2)
590
(31164:1)
(31162:2)
210
730
(15024:2)
480
740
020
290
(14022)
720
280
(23024)
160
310
450
120
300
130
260
270
730
(15012)
(31162)
(15014)
(31164)
740
(15022)
(15024)
220
170
140
470
530
14012
14014
150
320
(14054)
(14052)
850
690
660
660
690
(1231)
DET. "A"
SCALE 1:4
1347551-2
ECM 97841

Pos	Part No	SP	UN	Qty	Description	Page No
SEE PREVIOUS LISTS PAGES: 191, 193.						

Pos	Part No	SP	UN	Qty	Description	Page No

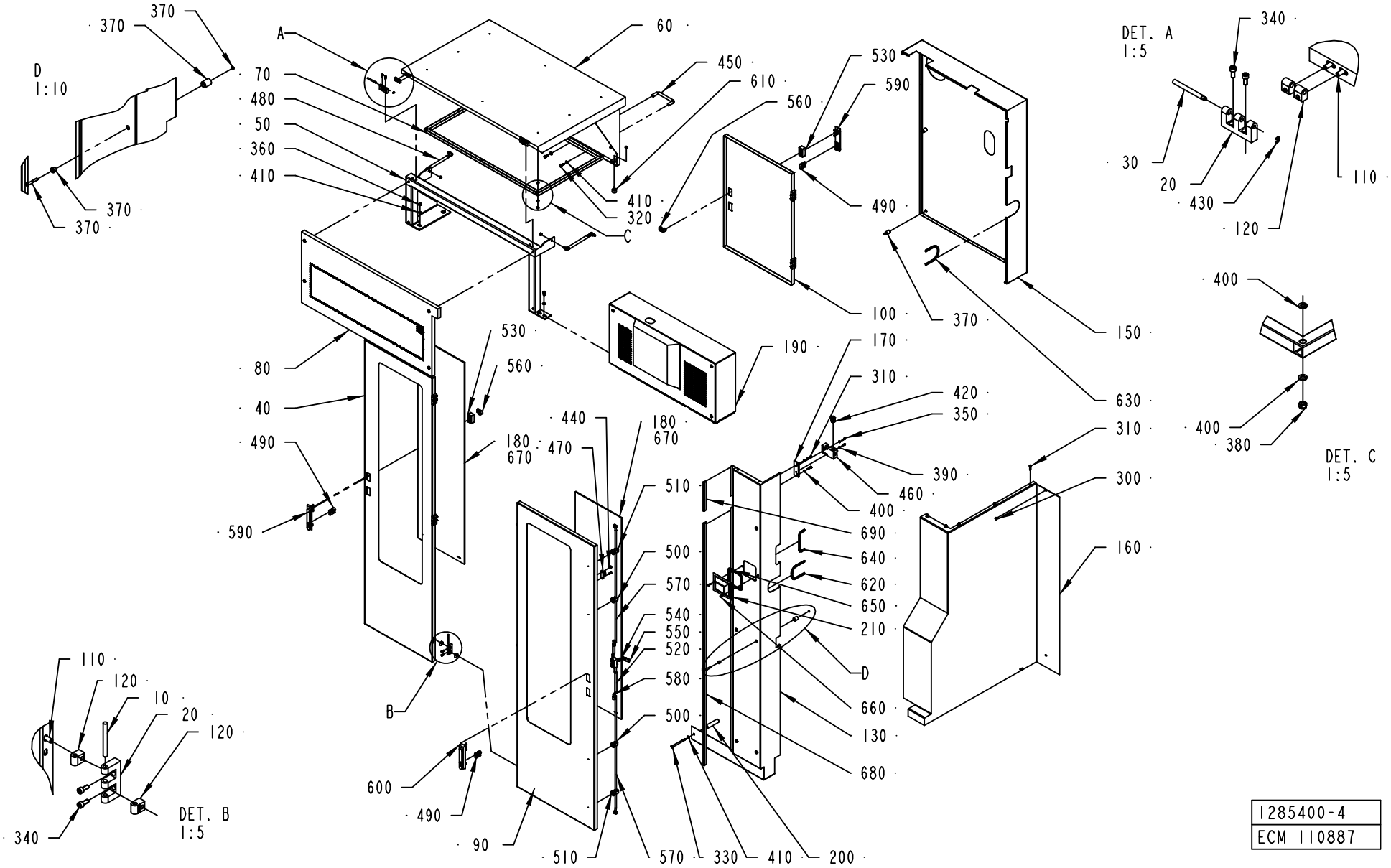
D
1:10
DET. A
1:5
DET. B
1:5
DET. C
1:5
A
B
C
D
60
70
480
50
360
410
450
610
560
530
590
490
100
150
370
630
340
30
20
430
120
110
400
380
80
40
490
590
530
560
190
170
310
420
350
390
460
400
180
670
440
470
510
690
640
620
650
210
660
130
680
500
570
540
550
520
580
600
90
330
200
160
300
1285400-4
ECM 110887

ECM: 113452 - 20020911
Group number: 1285400-0300
Assembly Drawing: 1285400-4_1_AC

Issue: 20021015

Pos	Part No	SP	UN	Qty	Description	Page No
Common Parts						
010	988685-0000	-		5	PIN	
020	1035792-0000	-		7	E-HINGE	
030	1036329-0000	-		2	PIN	
040	2531269-0000	-		1	DOOR	
050	1129194-0000	-		1	FRAME	
060	1129195-0000	-		1	OPENING	
070	1129196-0000	-		1	FRAME	
080	1129197-0000	-		1	OPENING	
090	2531270-0000	-		1	DOOR	
100	1129199-0000	-		1	DOOR	
110	1129767-0000	-		14	SCREW	
120	1129770-0000	-		14	BLOCKING PIECE	
130	2531271-0000	-		1	COVERING	
150	1285403-0000	-		1	COVERING	
160	1478236-0000	-		1	COVERING	
170	1548253-0000	-		1	PLATE	
180	2546451-0000	-		2	GLASS PANE	
190	2531272-0000	-		1	TOP COVER	
200	2531502-0000	-		1	SPACER	
210	2547013-0000	-		1	CAP	
300	312105-0362	-		2	SCREW M6S ISO 4017 M6X8 A480	
310	312105-0372	-		7	SCREW M6S ISO 4017 M6X25 A480	
320	312105-0449	-		4	SCREW M6S ISO 4017 M8X16 A480	
330	312105-0471	-		1	SCREW M6S ISO 4014 M8X100 A480	
340	312115-0327	-		14	SCREW MC6S M5X12 A280	
350	312125-0329	-		2	SCREW PAN HEAD MCS M5X16 SS	
360	312605-0318	-		4	HEXAGON NUT, M6M M8 A280	
370	90226-0458	-		18	MOUNTING SCREW	
380	312812-0316	-		10	HEXAGON NUT, NY-LOCK M6 A480	
390	315105-0146	-		2	WASHER PLAIN, BRB, 5,3/10,H=1	
400	315105-0153	-		18	WASHER PLAIN, BRB, 6,4/12,H=1,5	
410	315105-0165	-		7	WASHER PLAIN, BRB, 8,4/16,H=1,5	
420	352103-0106	-		1	CABLE GLAND, ST 11, PR18,6/PG11	
430	315755-0106	-		2	LOCKING WASHER 4	
440	312155-0329	-		2	SCREW HEX.SOCK.COUNT.MF6S M5X16 A280	
450	90017-0016	-		1	HANDLE, NO. 14.4012.02.120	
460	90044-0139	A		1	KEY SAF.SW. AZ16-02 ZVR K-2254	
470	90044-0310	A		1	KEY FOR SAFETY SWITCH, AZ 15/16 B1	
480	90347-0127	-		2	DAMPER	
490	90237-0128	-		3	LOCK CYLINDER, 1109-U3	
500	90237-0151	-		2	GUIDE, 1001-U11	
510	90237-0152	-		2	GUIDE, 1001-U12	
520	90237-0153	-		1	LOCK HOUSING, 1121-U26-0B	
530	90237-0154	-		2	LOCK HOUSING, 1121-U60-0C	
540	90237-0155	-		1	LOCK ADAPTER, 1121-U40	
550	90237-0156	-		1	LOCK BOLT, 1000-16	
560	90237-0165	-		2	LATCH	
570	90459-1004	-		2	ROUND BAR W. END WHEEL, 1049-U18-L820	
580	90237-0169	-		2	LOCK ADAPTER, 1000-U49	
590	90237-0175	-		2	TURNING HANDLE	
600	90237-0176	-		1	TURNING HANDLE	
610	90347-0034	-		2	VIBRATION DAMPER	
620	90143-0060	-	MM	250	EDGE STRIP 9,5X6,3MM BLACK PVC	
630	90143-0060	-	MM	260	EDGE STRIP 9,5X6,3MM BLACK PVC	
640	90143-0060	-	MM	195	EDGE STRIP 9,5X6,3MM BLACK PVC	
650	90143-0060	-	MM	380	EDGE STRIP 9,5X6,3MM BLACK PVC	
660	312155-0327	-		2	SCREW HEX.SOCK.COUNT.MF6S M5X12 A280	
670	90157-0041	-		1	SEALING COMPOUND	
680	90143-0057	-	MM	1690	STRIP EMKA 1011-05 21X11MM	
690	90143-0057	-	MM	200	STRIP EMKA 1011-05 21X11MM	

Machine Type | Group Description | Used-In | Group Number | Page No

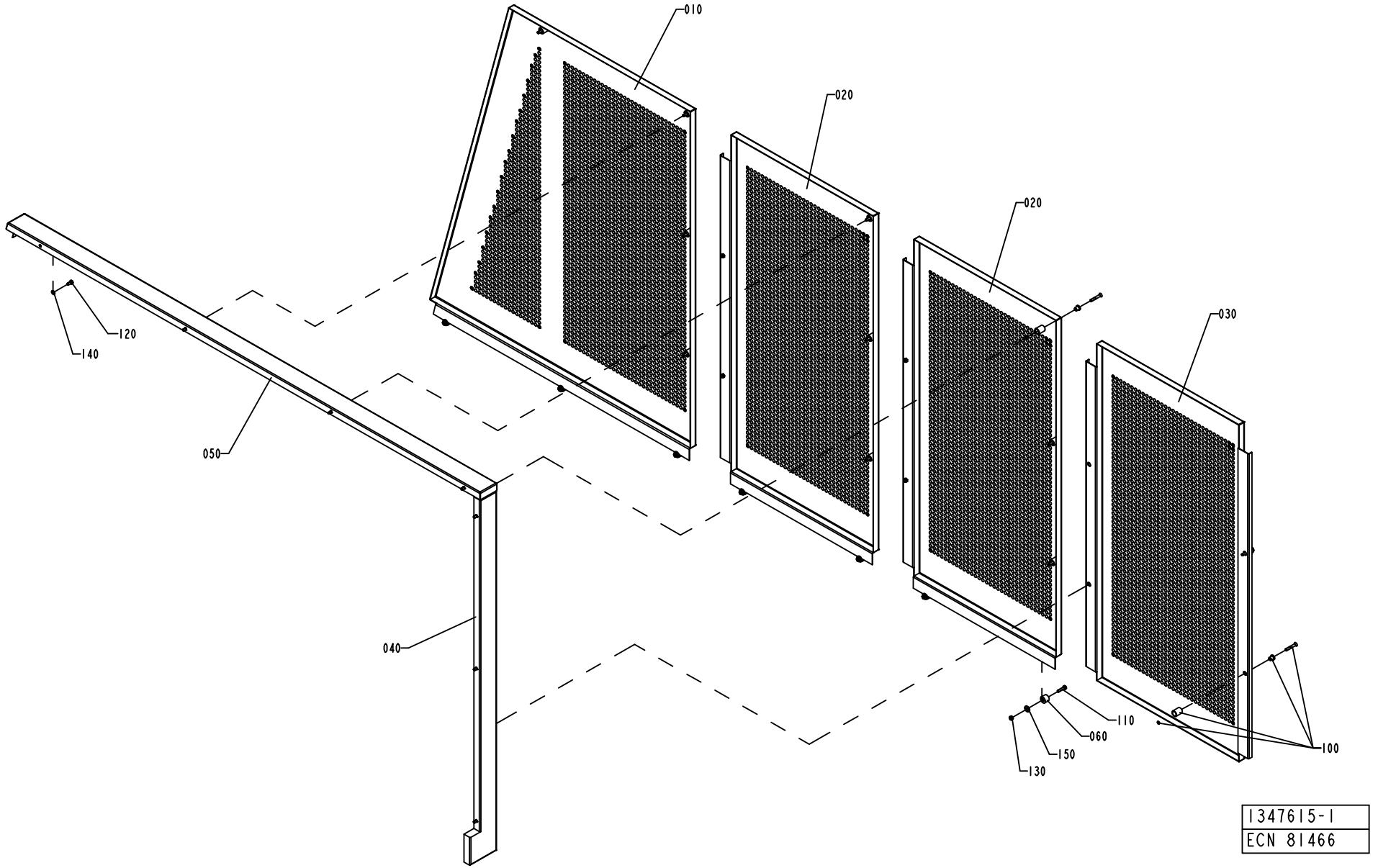
010
020
020
030
120
140
050
040
110
060
150
130
100
1347615-1
ECN 81466

ECM: 81479 - 20001012
Group number: 1347615-0100
Assembly Drawing: 1347615-1_1_AB

Issue: 20021015

Pos	Part No	SP	UN	Qty	Description	Page No
Common Parts						
010	1037502-0000	-		1	COVERING PLATE	
020	1037508-0000	-		2	COVERING PLATE	
030	1037528-0000	-		1	COVERING PLATE	
040	1347616-0000	-		1	COVERING PLATE	
050	1347617-0000	-		1	COVERING PLATE	
060	1037552-0000	-		7	SPACER	
100	90226-0458	-		12	MOUNTING SCREW	
110	312105-0372	-		7	SCREW M6S ISO 4017 M6X25 A480	
120	312105-0366	-		7	SCREW M6S M6X12 A280	
130	312605-0316	-		7	HEXAGON NUT, M6M M6 A280	
140	315105-0153	-		7	WASHER PLAIN, BRB, 6,4/12,H=1,5	
150	1260303-0000	-		7	WASHER	

Pos	Part No	SP	UN	Qty	Description	Page No

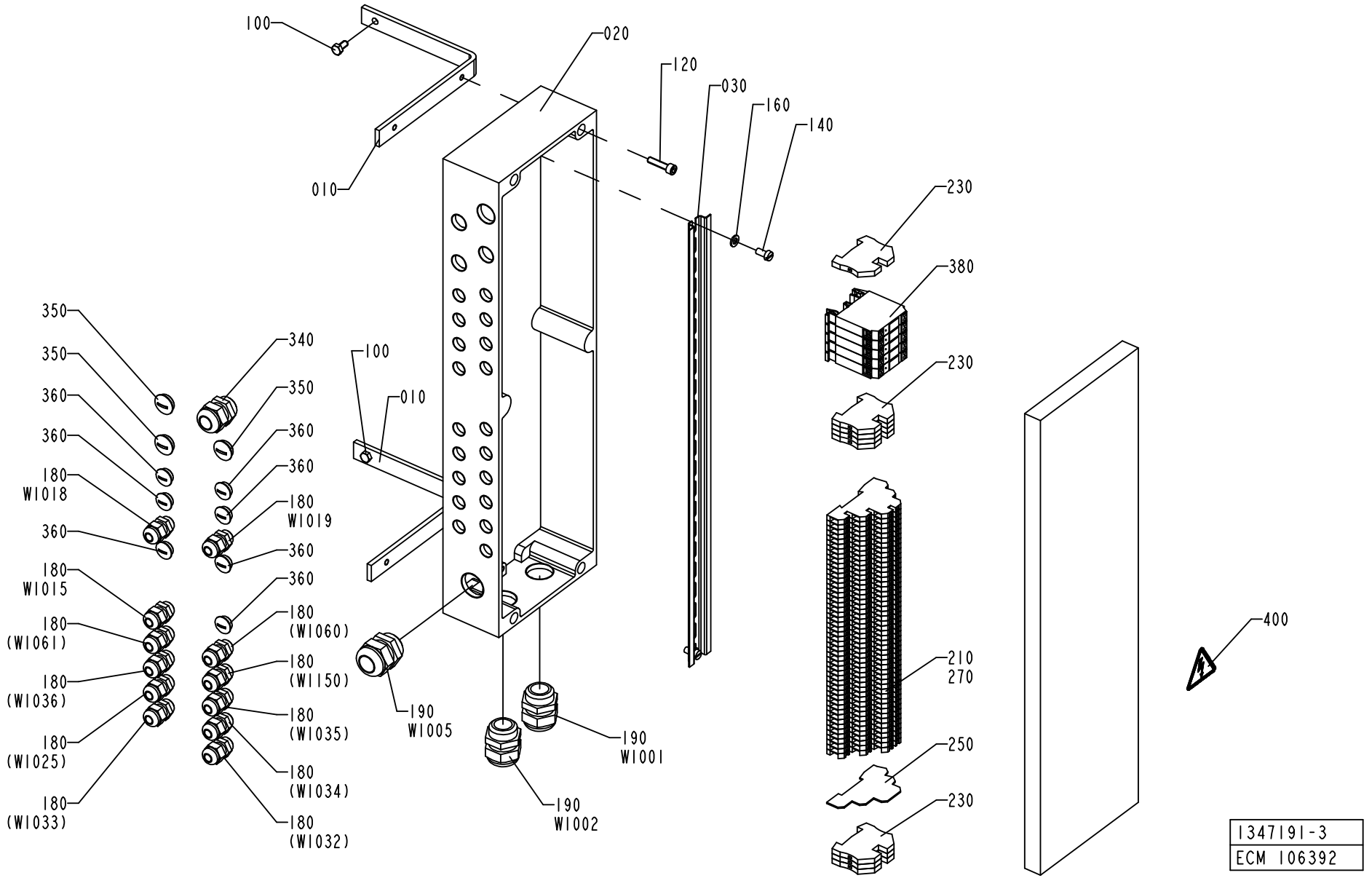
100
020
120
030
160
140
010
230
380
230
400
350
350
360
360
180
W1018
360
180
W1015
180
(W1061)
180
(W1036)
180
(W1025)
180
(W1033)
340
350
360
360
180
W1019
360
360
180
(W1060)
180
(W1150)
180
(W1035)
180
(W1034)
180
(W1032)
100
010
190
W1005
190
W1001
190
W1002
210
270
250
230
1347191-3
ECM 106392

ECM: 114233 - 20020911
Group number: 1347191-0200
Assembly Drawing: 1347191-3_1_AB

Issue: 20021015

Pos	Part No	SP	UN	Qty	Description	Page No
Common Parts						
010	1347877-0000	-		2	HOLDER	
020	2517364-0000	-		1	CONNECTION BOX	
030	2517365-0000	-		1	RAIL	
100	312105-0366	-		2	SCREW M6S M6X12 A280	
120	312115-0372	-		4	SCREW MC6S M6X25 A280	
140	312125-0366	-		2	SCREW PAN HEAD MCS M6X12 SS	
160	315105-0153	-		2	WASHER PLAIN, BRB, 6,4/12,H=1,5	
180	352103-0101	-		12	CABLE GLAND, ST 9, PR15,2/PG9	
190	352103-0116	-		3	CABLE GLAND, ST 21, PR28,3/PG21	
210	353021-0302	-		49	TERMINALS,TRIPLE-LEVEL, DLD 2,5/35 PA	
230	353024-0205	-		8	EARTH TERMINAL, 1010.1	
250	353032-0302	-		1	END PLATE WAP	
270	353034-0404	-		10	BRIDGE CONNECTOR Q10, 13131.0	
290	359011-0823	-		2	SET OF SIGNS 6-FW 101-150	
300	359011-0832	-		2	SET OF SIGNS 6-GW (+)	
310	359011-0833	-		2	SET OF SIGNS 6-GW (-)	
320	359011-0834	-		1	SET OF SIGNS 6-GW(EARTH)	
340	352103-0111	-		1	CABLE GLAND, ST 16, PR22,5/PG16	
350	90002-0009	-		3	BLANK-OFF PLUG, PR 18.6 SKINDICHT-BLK11	
360	90002-0013	-		7	BLANK-OFF PLUG, PR 15,2 SKINDICHT-BLK9	
380	90119-0063	B		5	OPTO-RELAY, DC/DC AMMS-10-1/30VDC	
400	359705-0015	-		1	WARNING SIGN ISO, RISK OF ELECTRIC SHOCK	
W1001	351150-0425	-	MM	6000	CABLE OLFLEX 25X0,75 MM2 LIGHT/GREY	
W1002	351150-0425	-	MM	6000	CABLE OLFLEX 25X0,75 MM2 LIGHT/GREY	
W1005	351150-0425	-	MM	6000	CABLE OLFLEX 25X0,75 MM2 LIGHT/GREY	
W1015	351150-0403	-	MM	3600	CABLE OLFLEX 3X0,75 MM2 LIGHT/GREY	
W1018	351150-0403	-	MM	3400	CABLE OLFLEX 3X0,75 MM2 LIGHT/GREY	
W1019	351150-0403	-	MM	3400	CABLE OLFLEX 3X0,75 MM2 LIGHT/GREY	

Pos	Part No	SP	UN	Qty	Description	Page No

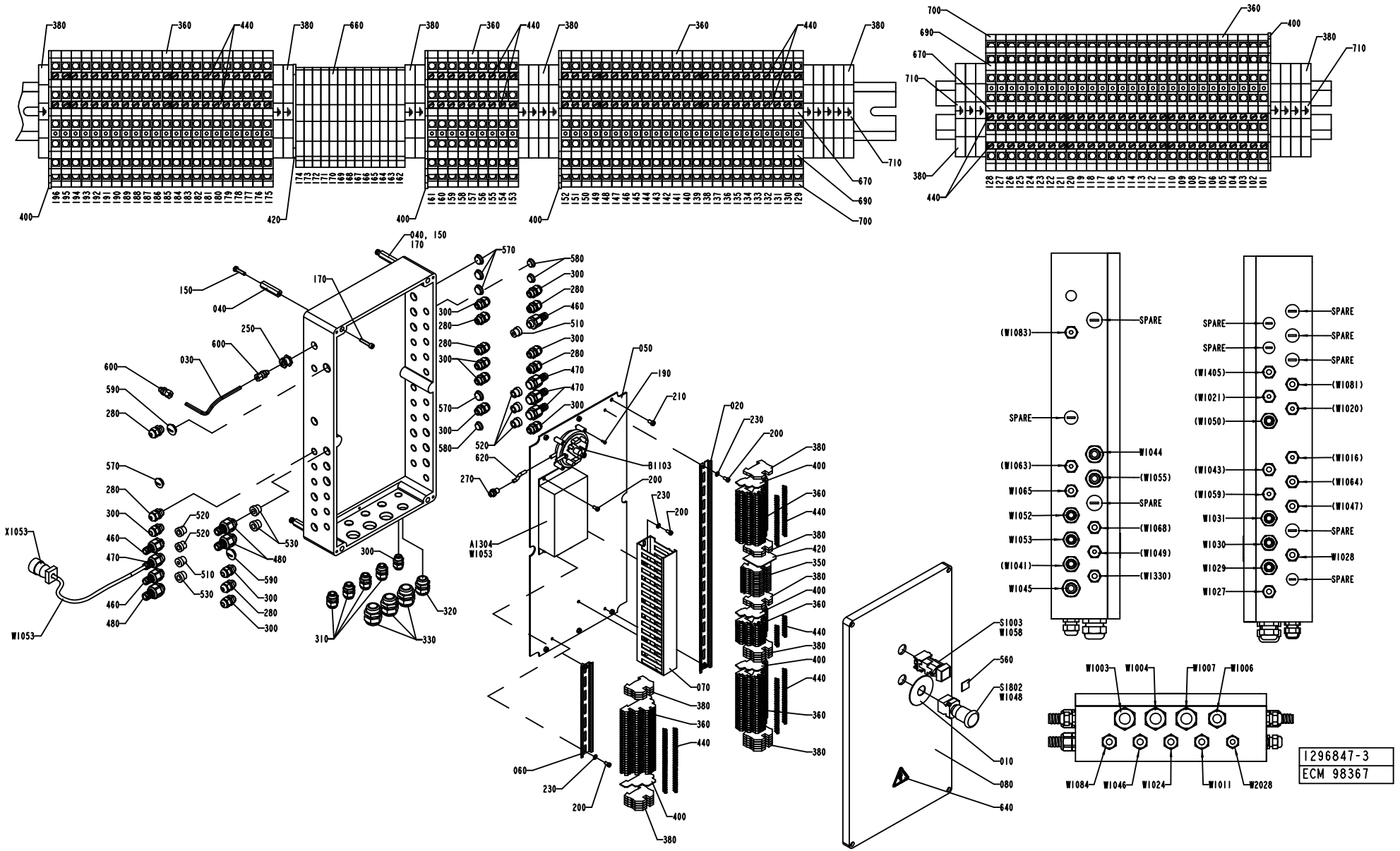
1296847-3
ECM 98367

ECM: 114234 - 20020911
Group number: 1296847-0300
Assembly Drawing: 1296847-3_1_AA

Issue: 20021015

Pos	Part No	SP	UN	Qty	Description	Page No
FLOATER						
200	312125-0325	-		6	SCREW SLOT.PAN HD. MCS 5X10 A480	
310	352103-0106	-		5	CABLE GLAND, ST 11, PR18,6/PG11	
470	353243-0002	-		3	EXTENDED WITHOUT INSERT, PG11	
520	353249-0009	-		4	INSERT, SINGEL HOLE, EK 152/9	
LEVELPROBE						
200	312125-0325	-		10	SCREW SLOT.PAN HD. MCS 5X10 A480	
310	352103-0106	-		4	CABLE GLAND, ST 11, PR18,6/PG11	
470	353243-0002	-		4	EXTENDED WITHOUT INSERT, PG11	
520	353249-0009	-		5	INSERT, SINGEL HOLE, EK 152/9	
A1304	90314-0044	A		1	SIGNAL CONVERTER	
W1053	90220-0092	-	MM	1100	PAIR TWISTED CABLE 3X2X0,25MM2	
X1053	90110-0223	A		1	CONTACT MALE, MS 3106 E 16S-1P	
Common Parts						
010	486826-0001	-		1	SIGN "EMERGENCY STOP"	
020	2517376-0000	-		1	RAIL	
030	1038358-0000	-		1	PIPE	
040	1129475-0000	-		3	HOLDER	
050	1349872-0000	-		1	MOUNTING PLATE	
060	2523660-0000	-		1	RAIL	
070	1129480-0000	-		1	CABLE DUCT	
080	2523661-0000	-		1	CONNECTION BOX	
150	312105-0372	-		3	SCREW M6S ISO 4017 M6X25 A480	
170	312115-0374	-		3	SCREW MC6S M6X30 A280	
190	312125-0222	-		4	SCREW PAN HEAD MCS M3X8 SS	
210	312125-0364	-		6	SCREW SLOT.PAN HD. MCS 6X10 A480	
230	315105-0146	-		6	WASHER PLAIN, BRB, 5,3/10,H=1	
250	342767-0100	-		1	CONN. BULKHEAD G1/8	
270	342921-0113	-		1	STRAIGHT COUPLING,EXT.THREADED 6/4-G1/8"	
280	352103-0100	-		7	CABLE GLAND, STR 9, PR15,2/PG9	
300	352103-0101	-		11	CABLE GLAND, ST 9, PR15,2/PG9	
320	352103-0111	-		1	CABLE GLAND, ST 16, PR22,5/PG16	
330	352103-0116	-		3	CABLE GLAND, ST 21, PR28,3/PG21	
350	353021-0216	-		13	FEED THROUGH TERMINAL, 10200.8	
360	353021-0302	-		83	TERMINALS,TRIPLE-LEVEL, DLD 2,5/35 PA	
380	353024-0205	-		21	EARTH TERMINAL, 1010.1	
400	353032-0302	-		4	END PLATE WAP	
420	353033-0106	-		1	PARTITITION, 10501.8	
440	353034-0404	-		18	BRIDGE CONNECTOR Q10, 13131.0	
460	353243-0001	-		3	EXTENDED WITHOUT INSERT, PG9	
480	353243-0003	-		3	EXTENDED WITHOUT INSERT, PG11	
510	353249-0008	-		2	INSERT, SINGEL HOLE, EK 152/7	
530	353249-0011	-		3	INSERT, SINGEL HOLE, EK 153/11	
560	359301-0110	-		1	SIGN "SHORT STOP"	
570	90002-0009	-		5	BLANK-OFF PLUG, PR 18.6 SKINDICHT-BLK11	
580	90002-0013	-		3	BLANK-OFF PLUG, PR 15,2 SKINDICHT-BLK9	
590	90002-0016	-		2	BLANK-OFF PLUG PR 20.4 SKINDICHT-BLK13,5	
600	90030-0184	-		2	CONN. STR. GA-6-G1/8	
620	90166-0176	-	MM	50	RUBBER HOSE	
640	359705-0015	-		1	WARNING SIGN ISO, RISK OF ELECTRIC SHOCK	
660	359011-0810	-		2	MARKING PLATES 5-FW 151-200	
670	359011-0823	-		2	SET OF SIGNS 6-FW 101-150	
680	359011-0824	-		2	SET OF SIGNS 6-FW 151-200	
690	359011-0832	-		4	SET OF SIGNS 6-GW (+)	
700	359011-0833	-		4	SET OF SIGNS 6-GW (-)	
710	359011-0834	-		1	SET OF SIGNS 6-GW(EARTH)	
760	351160-0102	-	MM	3500	CABLE AWM 1X0,75 MM2 DARKBLUE	
770	90152-0050	-	MM	9000	SPIRAL CONDUIT, 20X13, UL 1313	
780	90152-0059	-	MM	350	SPIRAL CONDUIT, 18X12, UL 1211	
B1103	90274-0088	A		1	PRESSURE GUARD, 1,5 KPA	
S1003	90064-0085	A		1	PUSH BUTTON, RED	
S1802	90064-0124	A		1	SWITCH, EM. STOP, ZB2-BS844+ZB2-BZ1045	
W1003	351150-0425	-	MM	6000	CABLE OLFLEX 25X0,75 MM2 LIGHT/GREY	
W1004	351150-0425	-	MM	5800	CABLE OLFLEX 25X0,75 MM2 LIGHT/GREY	
W1006	351150-0407	-	MM	5800	CABLE OLFLEX 12X0,75 MM2 LIGHT/GREY	
W1007	351150-0425	-	MM	5800	CABLE OLFLEX 25X0,75 MM2 LIGHT/GREY	
W1011	351150-0405	-	MM	3000	CABLE OLFLEX 5X0,75 MM2 LIGHT/GREY	
W1024	351150-0405	-	MM	3000	CABLE OLFLEX 5X0,75 MM2 LIGHT/GREY	
W1027	351150-0403	-	MM	2000	CABLE OLFLEX 3X0,75 MM2 LIGHT/GREY	
W1028	351150-0403	-	MM	3000	CABLE OLFLEX 3X0,75 MM2 LIGHT/GREY	
W1029	351150-0404	-	MM	3000	CABLE OLFLEX 4X0,75 MM2 LIGHT/GREY	
W1030	351150-0403	-	MM	3000	CABLE OLFLEX 3X0,75 MM2 LIGHT/GREY	
W1031	351150-0403	-	MM	3000	CABLE OLFLEX 3X0,75 MM2 LIGHT/GREY	
W1044	351150-0405	-	MM	2500	CABLE OLFLEX 5X0,75 MM2 LIGHT/GREY	
W1045	351150-0405	-	MM	2000	CABLE OLFLEX 5X0,75 MM2 LIGHT/GREY	
W1046	351150-0405	-	MM	3000	CABLE OLFLEX 5X0,75 MM2 LIGHT/GREY	
W1048	351150-0405	-	MM	1000	CABLE OLFLEX 5X0,75 MM2 LIGHT/GREY	
W1052	351150-0404	-	MM	3000	CABLE OLFLEX 4X0,75 MM2 LIGHT/GREY	
W1058	351150-0403	-	MM	1000	CABLE OLFLEX 3X0,75 MM2 LIGHT/GREY	
W1065	351150-0403	-	MM	2500	CABLE OLFLEX 3X0,75 MM2 LIGHT/GREY	
W1084	90220-0107	-	MM	6500	SCR. CABLE 5X0,75MM2	
W2028	90220-0162	-	MM	6200	SCR. CABLE 10X0,25MM2	

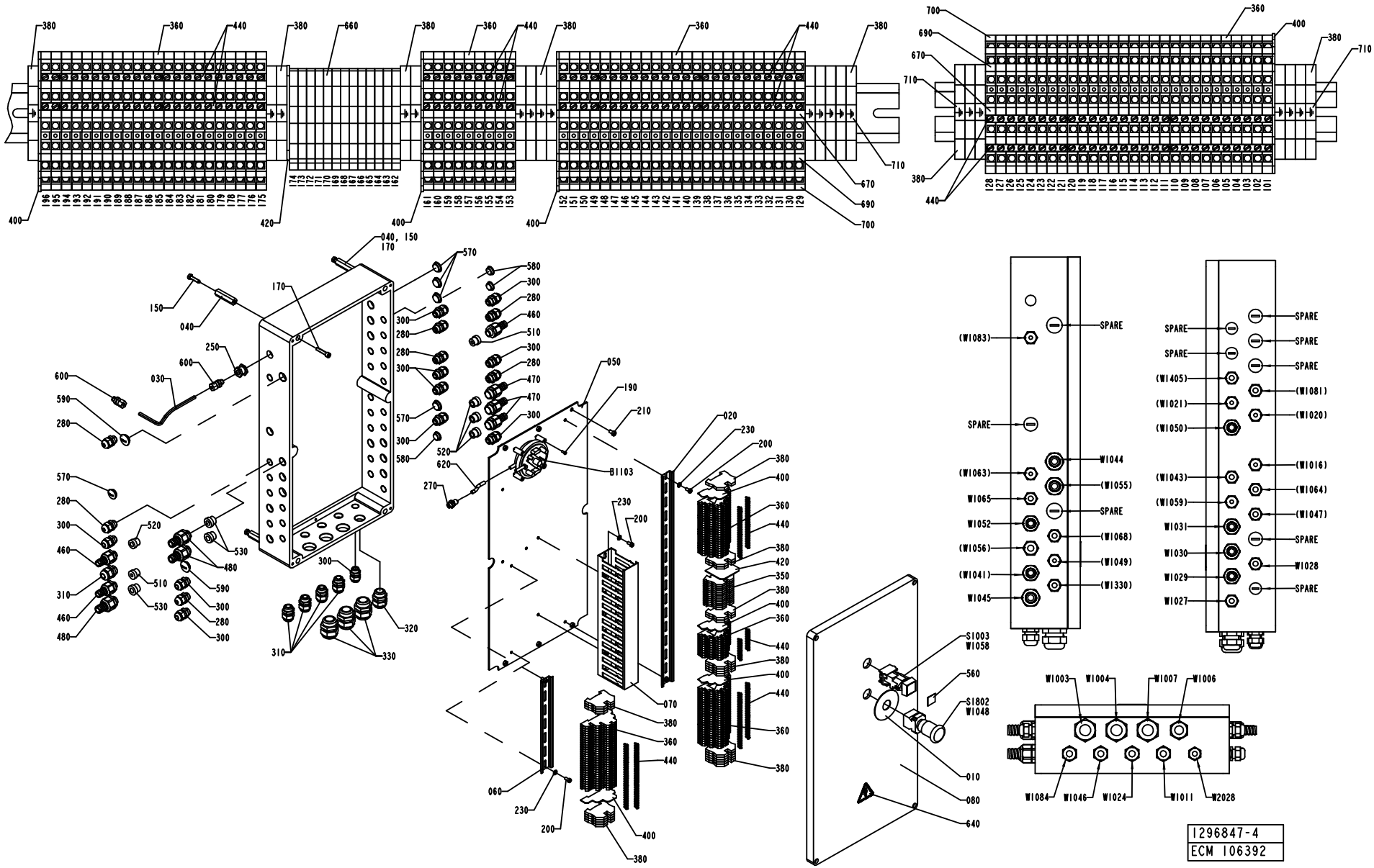
1296847-4
ECM 106392

ECM: 114234 - 20020911
Group number: 1296847-0300
Assembly Drawing: 1296847-4_1_AA

Issue: 20021015

Pos	Part No	SP	UN	Qty	Description	Page No
FLOATER						
200	312125-0325	-		6	SCREW SLOT.PAN HD. MCS 5X10 A480	
310	352103-0106	-		5	CABLE GLAND, ST 11, PR18,6/PG11	
470	353243-0002	-		3	EXTENDED WITHOUT INSERT, PG11	
520	353249-0009	-		4	INSERT, SINGEL HOLE, EK 152/9	
LEVELPROBE						
200	312125-0325	-		10	SCREW SLOT.PAN HD. MCS 5X10 A480	
310	352103-0106	-		4	CABLE GLAND, ST 11, PR18,6/PG11	
470	353243-0002	-		4	EXTENDED WITHOUT INSERT, PG11	
520	353249-0009	-		5	INSERT, SINGEL HOLE, EK 152/9	
A1304	90314-0044	A		1	SIGNAL CONVERTER	
W1053	90220-0092	-	MM	1100	PAIR TWISTED CABLE 3X2X0,25MM2	
X1053	90110-0223	A		1	CONTACT MALE, MS 3106 E 16S-1P	
Common Parts						
010	486826-0001	-		1	SIGN "EMERGENCY STOP"	
020	2517376-0000	-		1	RAIL	
030	1038358-0000	-		1	PIPE	
040	1129475-0000	-		3	HOLDER	
050	1349872-0000	-		1	MOUNTING PLATE	
060	2523660-0000	-		1	RAIL	
070	1129480-0000	-		1	CABLE DUCT	
080	2523661-0000	-		1	CONNECTION BOX	
150	312105-0372	-		3	SCREW M6S ISO 4017 M6X25 A480	
170	312115-0374	-		3	SCREW MC6S M6X30 A280	
190	312125-0222	-		4	SCREW PAN HEAD MCS M3X8 SS	
210	312125-0364	-		6	SCREW SLOT.PAN HD. MCS 6X10 A480	
230	315105-0146	-		6	WASHER PLAIN, BRB, 5,3/10,H=1	
250	342767-0100	-		1	CONN. BULKHEAD G1/8	
270	342921-0113	-		1	STRAIGHT COUPLING,EXT.THREADED 6/4-G1/8"	
280	352103-0100	-		7	CABLE GLAND, STR 9, PR15,2/PG9	
300	352103-0101	-		11	CABLE GLAND, ST 9, PR15,2/PG9	
320	352103-0111	-		1	CABLE GLAND, ST 16, PR22,5/PG16	
330	352103-0116	-		3	CABLE GLAND, ST 21, PR28,3/PG21	
350	353021-0216	-		13	FEED THROUGH TERMINAL, 10200.8	
360	353021-0302	-		83	TERMINALS,TRIPLE-LEVEL, DLD 2,5/35 PA	
380	353024-0205	-		21	EARTH TERMINAL, 1010.1	
400	353032-0302	-		4	END PLATE WAP	
420	353033-0106	-		1	PARTITITION, 10501.8	
440	353034-0404	-		18	BRIDGE CONNECTOR Q10, 13131.0	
460	353243-0001	-		3	EXTENDED WITHOUT INSERT, PG9	
480	353243-0003	-		3	EXTENDED WITHOUT INSERT, PG11	
510	353249-0008	-		2	INSERT, SINGEL HOLE, EK 152/7	
530	353249-0011	-		3	INSERT, SINGEL HOLE, EK 153/11	
560	359301-0110	-		1	SIGN "SHORT STOP"	
570	90002-0009	-		5	BLANK-OFF PLUG, PR 18.6 SKINDICHT-BLK11	
580	90002-0013	-		3	BLANK-OFF PLUG, PR 15,2 SKINDICHT-BLK9	
590	90002-0016	-		2	BLANK-OFF PLUG PR 20.4 SKINDICHT-BLK13,5	
600	90030-0184	-		2	CONN. STR. GA-6-G1/8	
620	90166-0176	-	MM	50	RUBBER HOSE	
640	359705-0015	-		1	WARNING SIGN ISO, RISK OF ELECTRIC SHOCK	
660	359011-0810	-		2	MARKING PLATES 5-FW 151-200	
670	359011-0823	-		2	SET OF SIGNS 6-FW 101-150	
680	359011-0824	-		2	SET OF SIGNS 6-FW 151-200	
690	359011-0832	-		4	SET OF SIGNS 6-GW (+)	
700	359011-0833	-		4	SET OF SIGNS 6-GW (-)	
710	359011-0834	-		1	SET OF SIGNS 6-GW(EARTH)	
760	351160-0102	-	MM	3500	CABLE AWM 1X0,75 MM2 DARKBLUE	
770	90152-0050	-	MM	9000	SPIRAL CONDUIT, 20X13, UL 1313	
780	90152-0059	-	MM	350	SPIRAL CONDUIT, 18X12, UL 1211	
B1103	90274-0088	A		1	PRESSURE GUARD, 1,5 KPA	
S1003	90064-0085	A		1	PUSH BUTTON, RED	
S1802	90064-0124	A		1	SWITCH, EM. STOP, ZB2-BS844+ZB2-BZ1045	
W1003	351150-0425	-	MM	6000	CABLE OLFLEX 25X0,75 MM2 LIGHT/GREY	
W1004	351150-0425	-	MM	5800	CABLE OLFLEX 25X0,75 MM2 LIGHT/GREY	
W1006	351150-0407	-	MM	5800	CABLE OLFLEX 12X0,75 MM2 LIGHT/GREY	
W1007	351150-0425	-	MM	5800	CABLE OLFLEX 25X0,75 MM2 LIGHT/GREY	
W1011	351150-0405	-	MM	3000	CABLE OLFLEX 5X0,75 MM2 LIGHT/GREY	
W1024	351150-0405	-	MM	3000	CABLE OLFLEX 5X0,75 MM2 LIGHT/GREY	
W1027	351150-0403	-	MM	2000	CABLE OLFLEX 3X0,75 MM2 LIGHT/GREY	
W1028	351150-0403	-	MM	3000	CABLE OLFLEX 3X0,75 MM2 LIGHT/GREY	
W1029	351150-0404	-	MM	3000	CABLE OLFLEX 4X0,75 MM2 LIGHT/GREY	
W1030	351150-0403	-	MM	3000	CABLE OLFLEX 3X0,75 MM2 LIGHT/GREY	
W1031	351150-0403	-	MM	3000	CABLE OLFLEX 3X0,75 MM2 LIGHT/GREY	
W1044	351150-0405	-	MM	2500	CABLE OLFLEX 5X0,75 MM2 LIGHT/GREY	
W1045	351150-0405	-	MM	2000	CABLE OLFLEX 5X0,75 MM2 LIGHT/GREY	
W1046	351150-0405	-	MM	3000	CABLE OLFLEX 5X0,75 MM2 LIGHT/GREY	
W1048	351150-0405	-	MM	1000	CABLE OLFLEX 5X0,75 MM2 LIGHT/GREY	
W1052	351150-0404	-	MM	3000	CABLE OLFLEX 4X0,75 MM2 LIGHT/GREY	
W1058	351150-0403	-	MM	1000	CABLE OLFLEX 3X0,75 MM2 LIGHT/GREY	
W1065	351150-0403	-	MM	2500	CABLE OLFLEX 3X0,75 MM2 LIGHT/GREY	
W1084	90220-0107	-	MM	6500	SCR. CABLE 5X0,75MM2	
W2028	90220-0162	-	MM	6200	SCR. CABLE 10X0,25MM2	

Tetra Pak

SPC
Spare Parts Catalogue

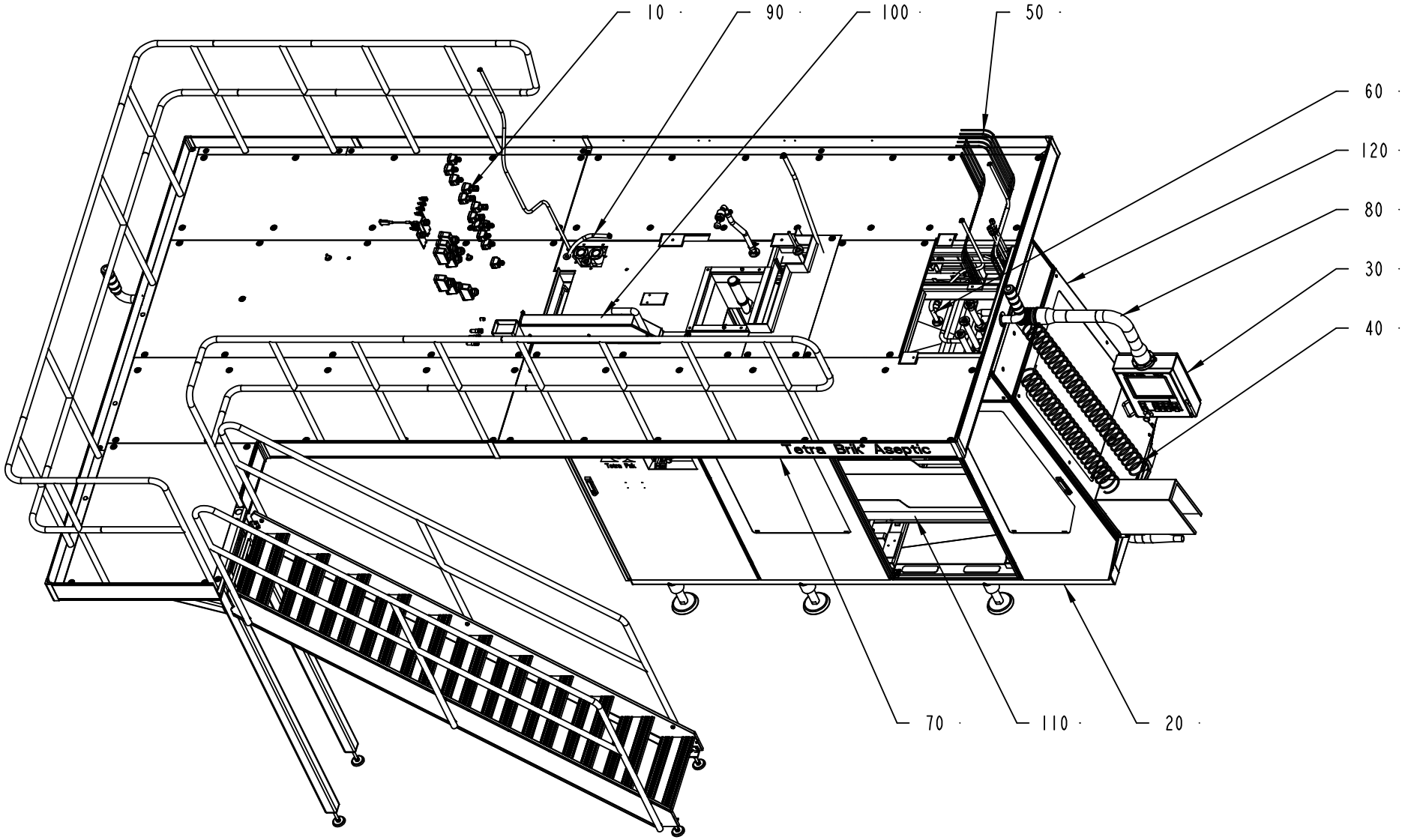

648522-6
ECM 104856

ECM: 102336 - 20010925
Group number: 648522-0600
Assembly Drawing: 648522-6_1_AA

Issue: 20021030

Pos	Part No	SP	UN	Qty	Description	Page No
Common Parts						
010	A577117-0300	-		1	ELECTRICAL SUPPLY	**211**
020	A577118-0500	-		1	MACHINE BODY	**223, 225**
030	A1349772-0100	-		1	TPOP PANEL 12"	**231**
040	A577119-0400	-		1	PNEUMATIC SYSTEM	**239, 241**
050	A577121-0400	-		1	PIPE WORK	**247**
060	A577122-0300	-		1	EXTERNAL CLEANING SYSTEM	**255**
070	A1524871-0100	-		1	PLATFORM	**263**
080	A1095863-0100	-		1	PIVOT ARM	**275**
090	A1317102-0100	-		1	HYDROGEN PEROXIDE	**277**
100	A1095876-0100	-		1	CABLE DUCT	**295**
110	A577114-0300	-		1	WASTE CONVEYOR	**297**
120	A577120-0400	-		1	DOORS AND COVERS	**299**

Pos	Part No	SP	UN	Qty	Description	Page No

Machine Type | Group Description | Used-In | Group Number | Page No

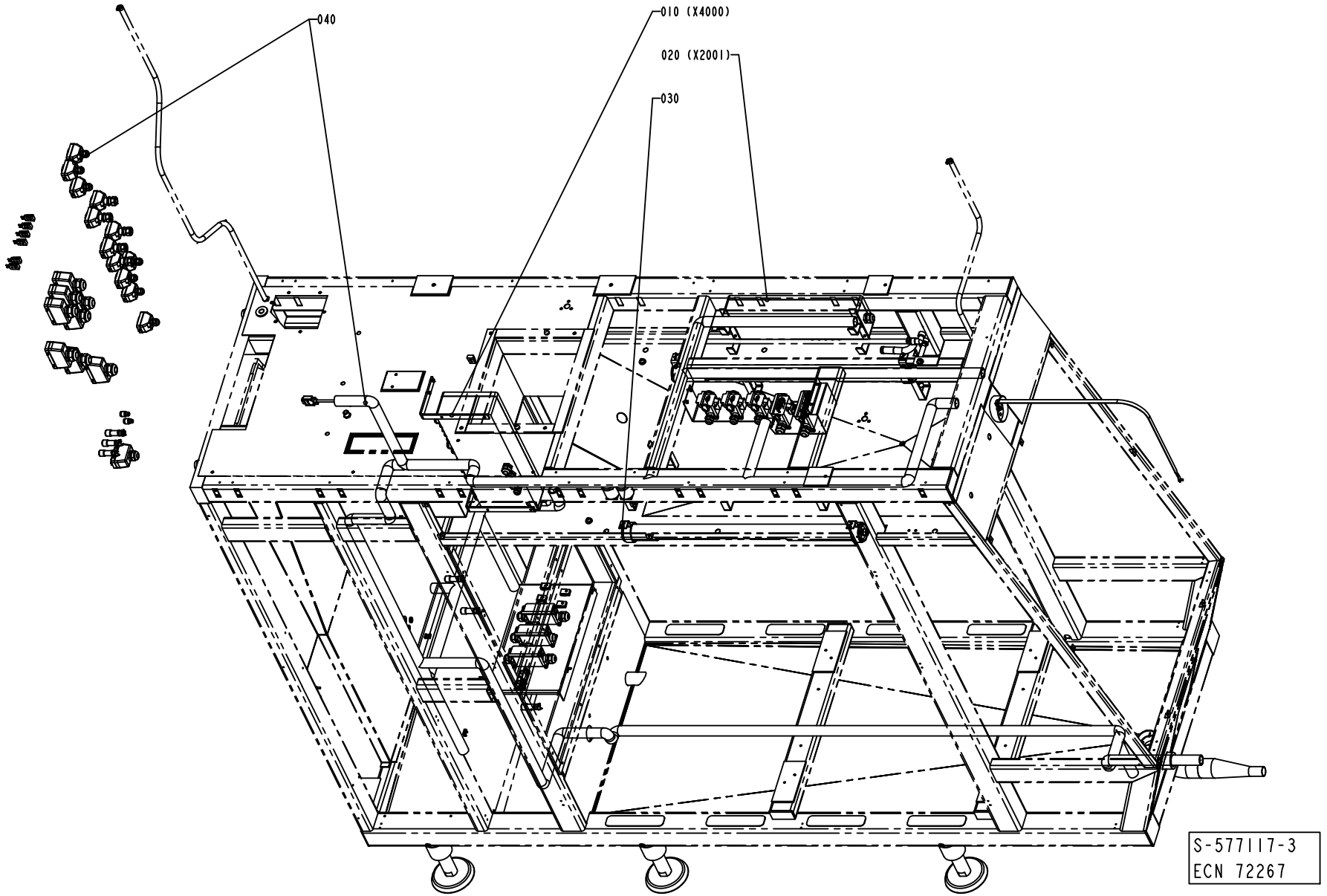
040
010 (X4000)
020 (X2001)
030
S-577117-3
ECN 72267

ECM: 72267 - 19990419
Group number: 577117-0300
Assembly Drawing: 577117-3_1_AB

Issue: 20021030

Pos	Part No	SP	UN	Qty	Description	Page No
Common Parts						
010	A1348496-0100	-		1	CONNECTION BOX	**213**
020	A1348497-0100	-		1	CONNECTION BOX	**215**
030	A1095861-0100	-		1	LIGHT FIXTURE	**217**
040	A1348090-0100	-		1	CABLE HARNESS	**219, 221**

Pos	Part No	SP	UN	Qty	Description	Page No

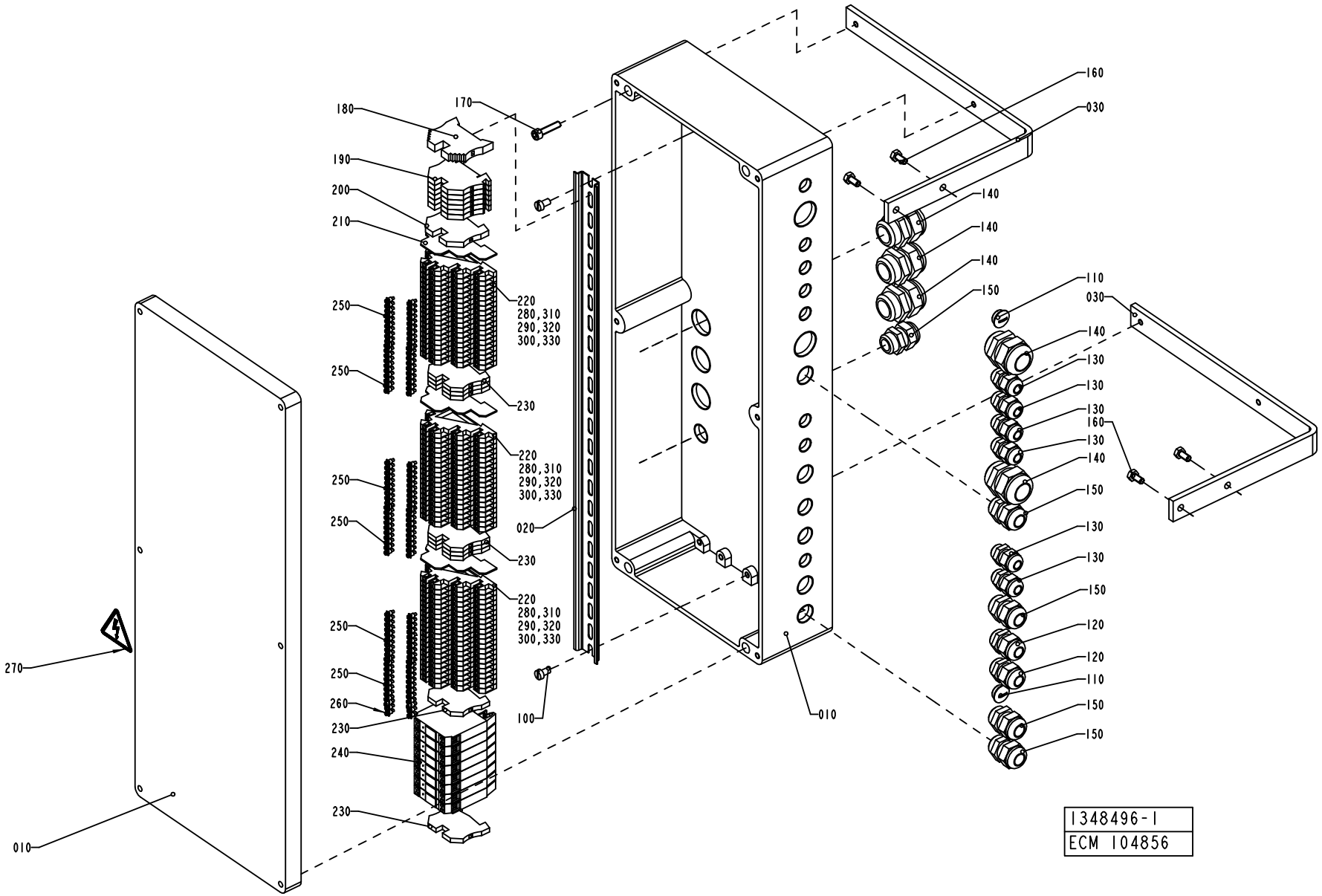
160
030
140
140
140
150
110
030
140
130
130
130
160
130
140
150
130
130
150
120
120
110
150
150
180
170
190
200
210
250
250
220
280,310
290,320
300,330
230
250
250
220
280,310
290,320
300,330
020
230
250
250
220
280,310
290,320
300,330
260
230
240
230
100
010
270
010
1348496-1
ECM 104856

ECM: 105689 - 20010925
Group number: 1348496-0100
Assembly Drawing: 1348496-1_1_AD

Issue: 20021030

Pos	Part No	SP	UN	Qty	Description	Page No
Common Parts						
010	1348500-0000	-		1	CONNECTION BOX	
020	1347878-0000	-		1	RAIL	
030	1348498-0000	-		2	HOLDER	
100	312121-0364	-		2	SCREW SLOT.PAN HD. MCS 6X10 FZB	
110	90002-0013	-		2	BLANK-OFF PLUG, PR 15,2 SKINDICHT-BLK9	
120	352103-0106	-		2	CABLE GLAND, ST 11, PR18,6/PG11	
130	352103-0101	-		6	CABLE GLAND, ST 9, PR15,2/PG9	
140	352103-0116	-		5	CABLE GLAND, ST 21, PR28,3/PG21	
150	352103-0108	-		5	CABLE GLAND, ST 13,5 , PR20,4/PG13,5	
160	312105-0366	-		4	SCREW M6S M6X12 A280	
170	312115-0372	-		4	SCREW MC6S M6X25 A280	
180	353031-0203	-		1	END SUPPORT, WEW 35/2	
190	353021-0213	-		6	FEED THROUGH TERMINAL, 10201.0	
200	353024-0205	-		1	EARTH TERMINAL, 1010.1	
210	353032-0302	-		3	END PLATE WAP	
220	353021-0302	-		59	TERMINALS,TRIPLE-LEVEL, DLD 2,5/35 PA	
230	353024-0204	-		8	EARTH TERMINAL WPE 2,5	
240	90119-0063	-		8	OPTO-RELAY, DC/DC AMMS-10-1/30VDC	
250	353034-0404	-		12	BRIDGE CONNECTOR Q10, 13131.0	
260	353034-0402	-		2	BRIDGE CONNECTOR Q3, 13126.0	
270	359705-0015	-		1	WARNING SIGN ISO, RISK OF ELECTRIC SHOCK	
280	359011-0823	-		2	SET OF SIGNS 6-FW 101-150	
290	359011-0819	-		1	MARKING PLATES 5-GW (EARTH)	
300	359011-0834	-		1	SET OF SIGNS 6-GW(EARTH)	
310	359011-0832	-		3	SET OF SIGNS 6-GW (+)	
320	359011-0833	-		3	SET OF SIGNS 6-GW (-)	
330	359011-0824	-		2	SET OF SIGNS 6-FW 151-200	
340	359011-0821	-		2	SET OF SIGNS 6-FW 1-50	

Pos	Part No	SP	UN	Qty	Description	Page No

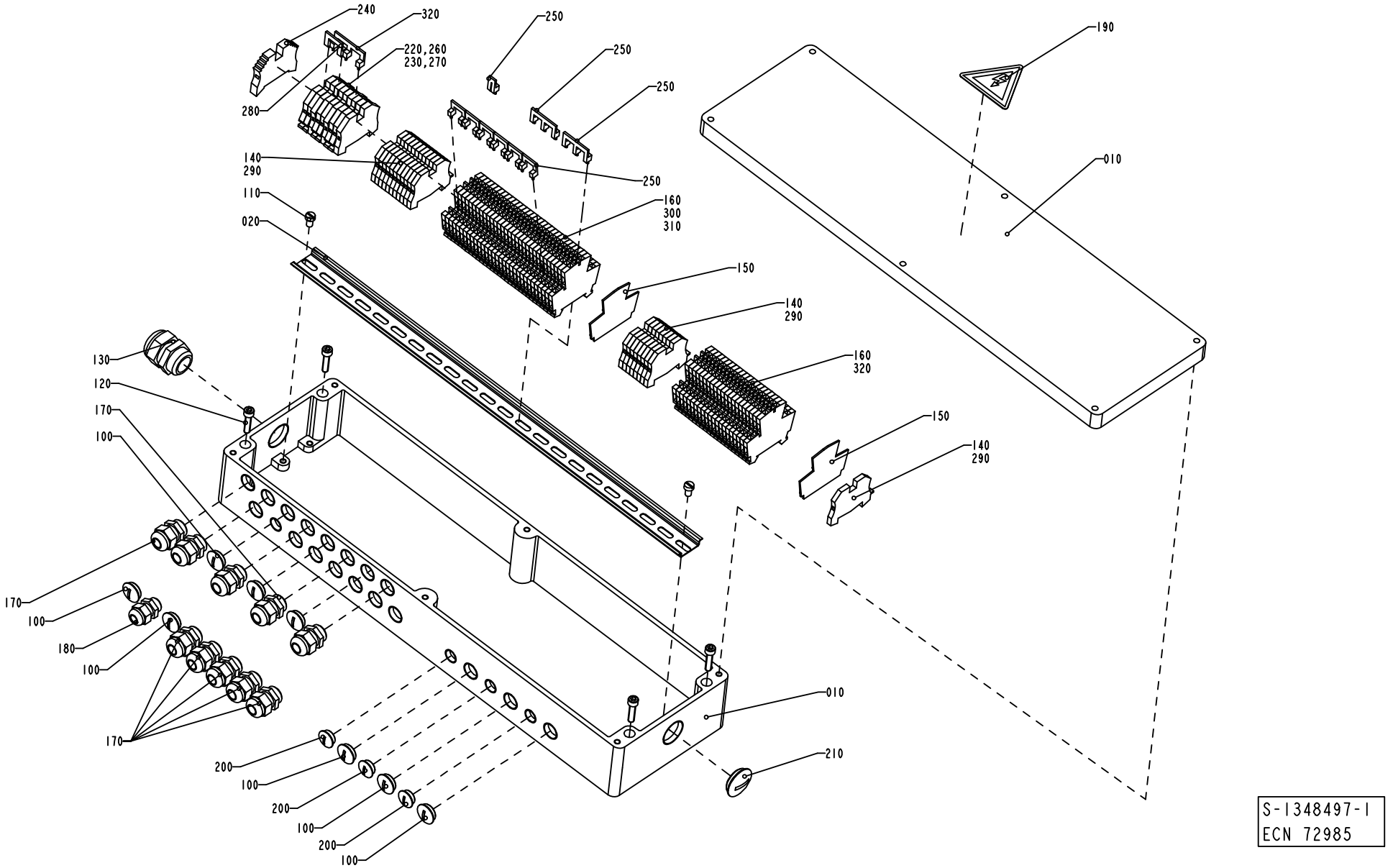
240
320
220,260
230,270
280
250
250
250
140
290
250
110
020
160
300
310
190
010
150
140
290
160
320
150
140
290
130
120
170
100
170
100
180
100
170
010
210
200
100
200
100
200
100
S-1348497-I
ECN 72985

ECM: 72985 - 20000201
Group number: 1348497-0100
Assembly Drawing: 1348497-1_1_AC

Issue: 20021030

Pos	Part No	SP	UN	Qty	Description	Page No
Common Parts						
010	1348499-0000	-		1	CONNECTION BOX	
020	1129504-0000	-		1	MOUNTING RAIL	
100	90002-0009	-		8	BLANK-OFF PLUG, PR 18.6 SKINDICHT-BLK11	
110	312125-0364	-		2	SCREW SLOT.PAN HD. MCS 6X10 A480	
120	312115-0372	-		4	SCREW MC6S M6X25 A280	
130	352103-0116	-		1	CABLE GLAND, ST 21, PR28,3/PG21	
140	353024-0204	-		20	EARTH TERMINAL WPE 2,5	
150	353032-0010	-		2	END PLATE WAP	
160	353021-0120	-		52	FEED THROUGH TERMINAL, 10215.8	
170	352103-0106	-		10	CABLE GLAND, ST 11, PR18,6/PG11	
180	352103-0101	-		1	CABLE GLAND, ST 9, PR15,2/PG9	
190	90194-0016	-		1	SIGN, FLASH, ELECTRIC EQUIPMENT SYMBOL	
200	90002-0013	-		3	BLANK-OFF PLUG, PR 15,2 SKINDICHT-BLK9	
210	90002-0012	-		1	BLANK-OFF PLUG, PR 28,3 SKINDICHT-BLK21	
220	353024-0205	-		3	EARTH TERMINAL, 1010.1	
230	353021-0213	-		6	FEED THROUGH TERMINAL, 10201.0	
240	353031-0203	-		1	END SUPPORT, WEW 35/2	
250	353034-0030	-		10	BRIDGE CONNECTOR WQV 2,5/10, 10544.6	
260	359011-0821	-		2	SET OF SIGNS 6-FW 1-50	
270	359011-0834	-		1	SET OF SIGNS 6-GW(EARTH)	
280	353034-0039	-		1	BRIDGE CONN. WQV 4/4	
290	359011-0819	-		1	MARKING PLATES 5-GW (EARTH)	
300	359011-0809	-		2	MARKING PLATES 5-FW 101-150	
310	359011-0810	-		2	MARKING PLATES 5-FW 151-200	
320	353034-0031	-		1	BRIDGE CONNECTOR, WQV 4/10, 10520.6	
330	359011-0821	-		2	SET OF SIGNS 6-FW 1-50	

Pos	Part No	SP	UN	Qty	Description	Page No

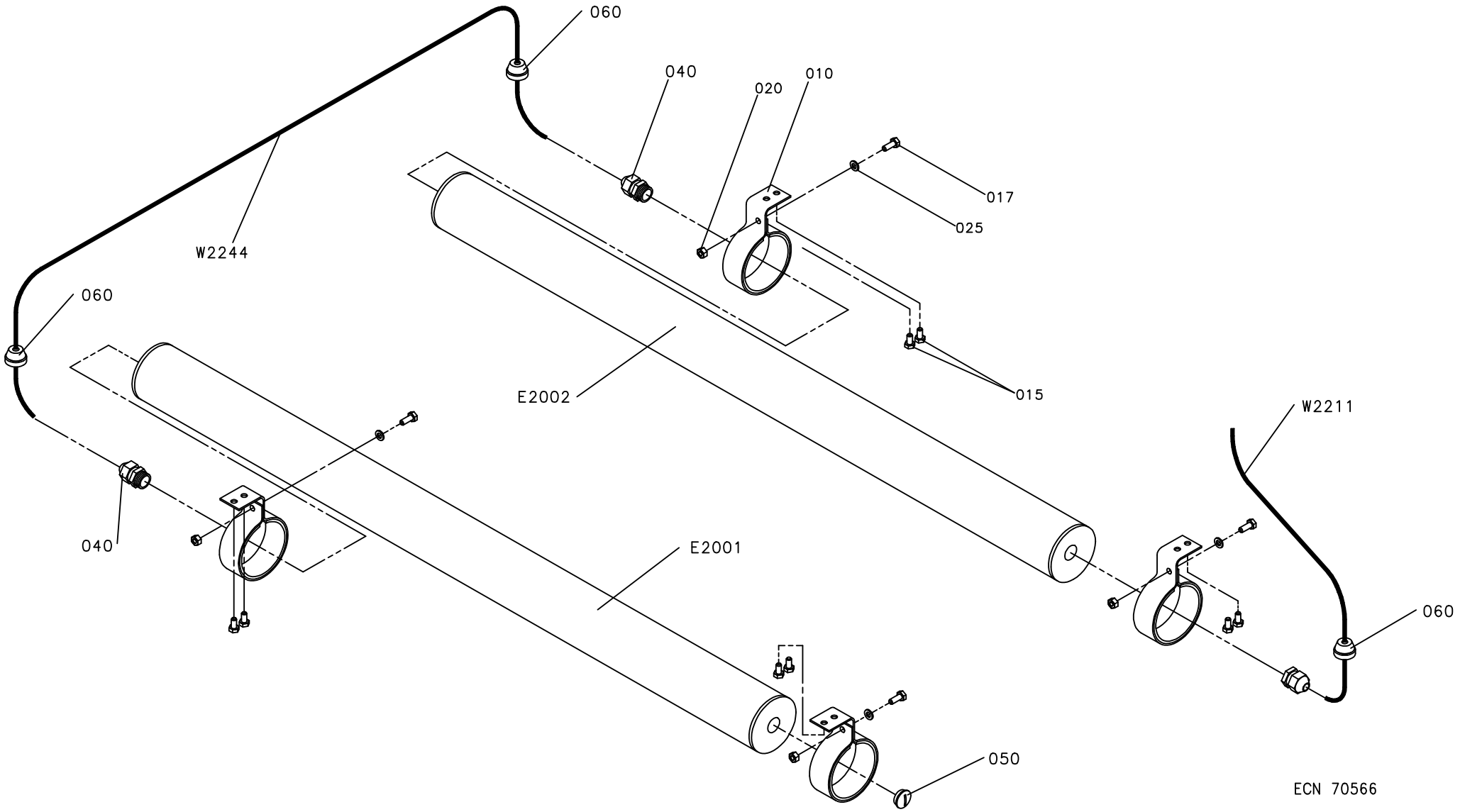
060
040
020
010
017
025
W2244
060
E2002
015
W2211
040
E2001
060
050
ECN 70566

ECM: 81705 - 20001031
Group number: 1095861-0100
Assembly Drawing: 1095861-1_1_AB

Issue: 20021030

Pos	Part No	SP	UN	Qty	Description	Page No
Common Parts						
010	1140129-0000	-		4	HOLDER	
015	312105-0366	-		8	SCREW M6S M6X12 A280	
017	312105-0368	-		4	SCREW M6S M6X16 A280	
020	312605-0316	-		4	HEXAGON NUT, M6M M6 A280	
025	315105-0153	-		4	WASHER PLAIN, BRB, 6,4/12,H=1,5	
040	352103-0106	-		3	CABLE GLAND, ST 11, PR18,6/PG11	
050	90002-0009	-		1	BLANK-OFF PLUG, PR 18.6 SKINDICHT-BLK11	
060	90015-0023	-		3	LEAD-IN, TET7-10, E-1458019	
E 2001	B90457-0149	B		1	LIGHT FIXTURE, DWDV 118D/230V 50 HZ	
	90297-0002	*-*		*1*	*FLUORESCENT TUBE, TLD 18/33*	
	90164-0303	*-*		*1*	*BRACKET SK2202 WALDMANN*	
	90164-0302	*-*		*1*	*BRACKET*	
E 2002	B90457-0149	B		1	LIGHT FIXTURE, DWDV 118D/230V 50 HZ	
	90297-0002	*-*		*1*	*FLUORESCENT TUBE, TLD 18/33*	
	90164-0303	*-*		*1*	*BRACKET SK2202 WALDMANN*	
	90164-0302	*-*		*1*	*BRACKET*	
W 2211	351150-0412	-	MM	1800	CABLE OLFLEX 3X1,5 MM2 LIGHT/GREY	
W 2244	351150-0412	-	MM	2000	CABLE OLFLEX 3X1,5 MM2 LIGHT/GREY	

Pos	Part No	SP	UN	Qty	Description	Page No

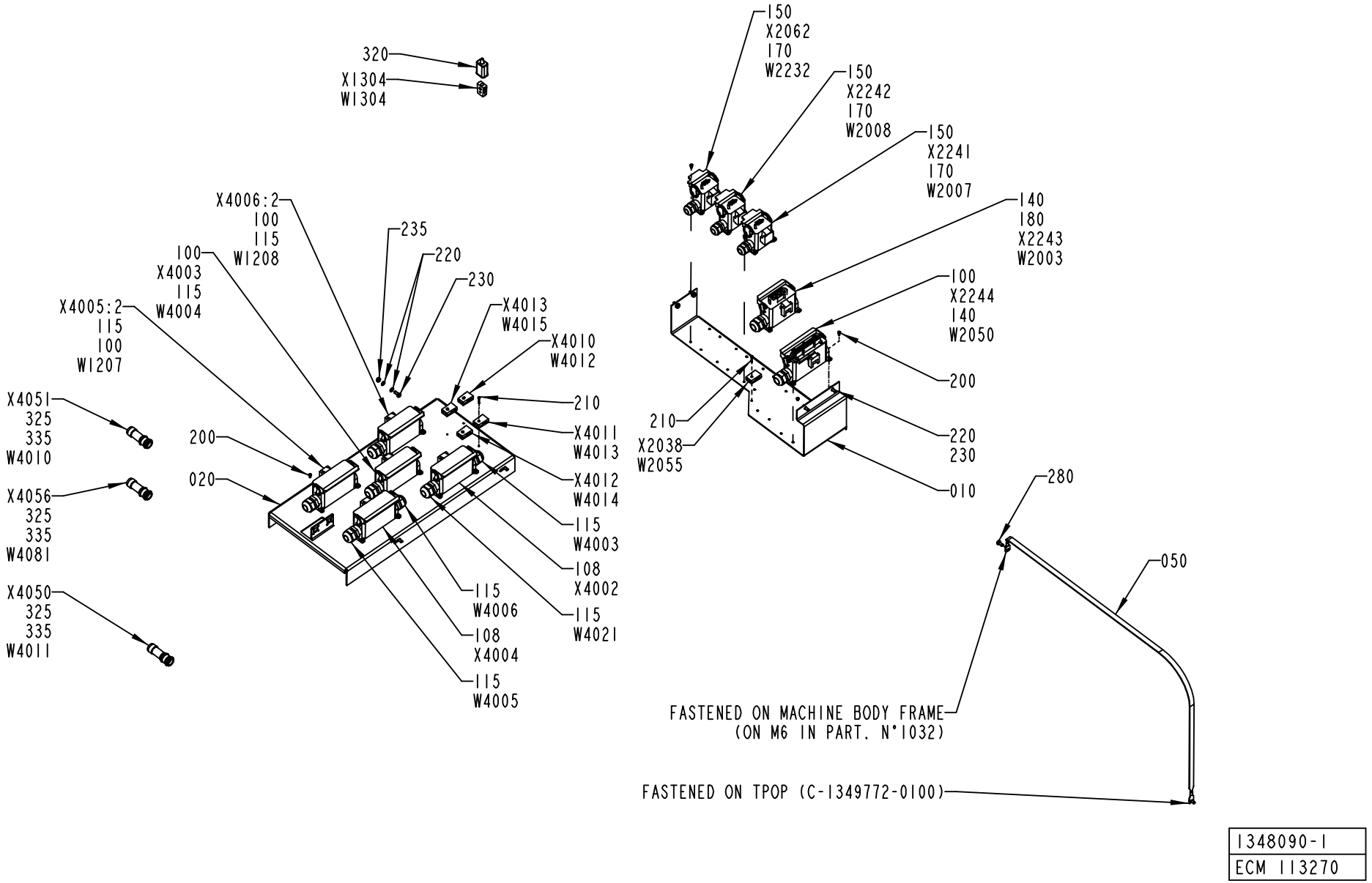

1348090-1
ECM 113270

ECM: 113364 - 20020915
Group number: 1348090-0100
Assembly Drawing: 1348090-1_1_AG

Issue: 20021030

Pos	Part No	SP	UN	Qty	Description	Page No
Common Parts						
010	1129710-0000	-		1	CANTILEVER	
020	2529030-0000	-		1	PLATE	
030	90110-0152	-		9	CABLE HOOD 24-POL 70.352.2428.1	
040	352103-0121	-		8	CABLE GLAND, ST 29, PR37,0/PG29	
050	1129600-0000	-		1	BRAID	
060	90110-0157	-		12	CABLE HOOD 6-POL 70.352.0628.1	
070	352103-0108	-		9	CABLE GLAND, ST 13,5 , PR20,4/PG13,5	
075	353245-0004	-		3	GLAND, EXTENDED WITH INSERT, PG16/PR 22,	
080	1038876-0000	-		2	COVERING PLATE	
085	1129550-0000	-		2	GASKET	
095	353245-0005	-		2	GLAND, EXTENDED WITH INSERT, PG16/PR 22,	
100	90110-0225	-		4	CHASSIS HOUSING 310168-33	
105	90089-0029	-		5	ENLARGING SLEEVE	
108	90110-0513	A		2	CHASSIS CONTACT	
115	352103-0115	-		9	CABLE GLAND, STR 21, PR28,3/PG21	
120	90099-0004	-		2	NUT	
140	352103-0116	-		3	CABLE GLAND, ST 21, PR28,3/PG21	
150	90110-0221	-		3	CHASSIS HOUSING 310162-33	
170	352103-0111	-		3	CABLE GLAND, ST 16, PR22,5/PG16	
180	90110-0224	-		1	CHASSIS HOUSING 310166-33	
200	312125-0287	-		48	SCREW PAN HEAD MCS M4X8 SS	
210	312125-0230	-		5	SCREW PAN HEAD MCS M3X20 SS	
220	315105-0153	-		10	WASHER PLAIN, BRB, 6,4/12,H=1,5	
230	312105-0367	-		8	SCREW M6S M6X14 A280	
235	312605-0316	-		2	HEXAGON NUT, M6M M6 A280	
240	90110-0160	-		1	CABLE HOOD 6-16-POL 70.352.1628.1	
270	1037673-0000	-		2	SLEEVE	
275	2503209-0000	-		2	GASKET	
280	312105-0366	-		2	SCREW M6S M6X12 A280	
290	312125-0226	-		8	SCREW PAN HEAD MCS M3X12 SS	
300	315105-0124	-		8	WASHER PLAIN, BRB, 3,2/6,H=0,5	
320	90326-0012	-		1	PROTECTIVE COVER, T31A4618	
325	90012-0117	-		6	GLAND, EXTENDED WITH INSERT, PG11	
330	90110-0380	-		21	CONTACT PIN	
335	90110-0209	-		21	CONTACT PIN, RC20M13K	
337	353240-0006	-		1	NORMAL WITHOUT INSERT, PG 29	
338	353249-0060	-		1	INSERT, MULTI HOLE, E155M2X13	
W0001	351150-0426	-	M	6	CABLE OLFLEX 5X25 MM2 LIGHT/GREY	
W1207	351150-0407	-	M	8	CABLE OLFLEX 12X0,75 MM2 LIGHT/GREY	
W1208	351150-0407	-	M	8	CABLE OLFLEX 12X0,75 MM2 LIGHT/GREY	
W1304	90220-0034	B	M	5	THERMOCOUPLE CABLE K/ 2X0,5MM2	
W2002	351150-0418	-	M	5	CABLE OLFLEX 4X2,5 MM2 LIGHT/GREY	
W2003	351150-0166	-	M	4	CABLE OLFLEX 4X4 MM2 LIGHT/GREY	
W2004	90220-0107	-	M	5	SCR. CABLE 5X0,75MM2	
W2005	351150-0412	-	M	7	CABLE OLFLEX 3X1,5 MM2 LIGHT/GREY	
W2007	351150-0418	-	M	6	CABLE OLFLEX 4X2,5 MM2 LIGHT/GREY	
W2008	351150-0418	-	M	6	CABLE OLFLEX 4X2,5 MM2 LIGHT/GREY	
W2014	351150-0418	-	M	9	CABLE OLFLEX 4X2,5 MM2 LIGHT/GREY	
W2015	90220-0105	-	M	16	SCR. CABLE 4X2,5MM2	
W2050	351150-0425	-	M	4	CABLE OLFLEX 25X0,75 MM2 LIGHT/GREY	
W2054	351150-0425	-	M	7	CABLE OLFLEX 25X0,75 MM2 LIGHT/GREY	
W2055	90220-0034	-	M	6	THERMOCOUPLE CABLE K/ 2X0,5MM2	
W2056	351150-0425	-	M	5	CABLE OLFLEX 25X0,75 MM2 LIGHT/GREY	
W2057	351150-0425	-	M	5	CABLE OLFLEX 25X0,75 MM2 LIGHT/GREY	
W2062	351150-0425	-	M	5	CABLE OLFLEX 25X0,75 MM2 LIGHT/GREY	
W2064	90220-0091	-	MM	6500	PAIR TWISTED CABLE 2X2X0,25MM2	
W2066	351150-0425	-	M	7	CABLE OLFLEX 25X0,75 MM2 LIGHT/GREY	
W2067	351150-0425	-	M	7	CABLE OLFLEX 25X0,75 MM2 LIGHT/GREY	
W2068	1363297-0000	-		1	CABLE LVDS 10M	
W2232	351150-0406	-	M	3	CABLE OLFLEX 7X0,75 MM2 LIGHT/GREY	
W2233	351150-0406	-	M	3	CABLE OLFLEX 7X0,75 MM2 LIGHT/GREY	
W4000	90220-0084	-	MM	5500	MOTOR CABLE 4X2,5+2(2X0.75)+SHIELD	
W4001	90220-0116	-	M	5	MOTOR CABLE 4X1,0+2(2X0,5)+SHIELD	
W4002	90220-0084	-	MM	4500	MOTOR CABLE 4X2,5+2(2X0.75)+SHIELD	
W4003	351150-0407	-	M	3	CABLE OLFLEX 12X0,75 MM2 LIGHT/GREY	
W4004	351150-0425	-	M	3	CABLE OLFLEX 25X0,75 MM2 LIGHT/GREY	
W4005	351150-0419	-	M	6	CABLE OLFLEX 5X2,5 MM2 LIGHT/GREY	
W4006	351150-0419	-	M	6	CABLE OLFLEX 5X2,5 MM2 LIGHT/GREY	
W4010	90220-0131	-	M	4	PAIR TWISTED CABLE 3X2X0,25MM2	
W4011	90220-0131	-	M	4	PAIR TWISTED CABLE 3X2X0,25MM2	
W4012	90220-0034	B	M	7	THERMOCOUPLE CABLE K/ 2X0,5MM2	
W4013	90220-0034	B	M	7	THERMOCOUPLE CABLE K/ 2X0,5MM2	
W4014	90220-0034	B	M	7	THERMOCOUPLE CABLE K/ 2X0,5MM2	
W4015	90220-0034	B	M	7	THERMOCOUPLE CABLE K/ 2X0,5MM2	
W4016	90220-0107	-	M	6	SCR. CABLE 5X0,75MM2	
W4017	90220-0107	-	M	6	SCR. CABLE 5X0,75MM2	
W4018	351150-0407	-	MM	4500	CABLE OLFLEX 12X0,75 MM2 LIGHT/GREY	
W4021	351150-0407	-	MM	3500	CABLE OLFLEX 12X0,75 MM2 LIGHT/GREY	
W4054	351150-0405	-	M	3	CABLE OLFLEX 5X0,75 MM2 LIGHT/GREY	
W4081	90220-0131	-	M	3	PAIR TWISTED CABLE 3X2X0,25MM2	
X101	90110-0159	A		1	MALE INSERT 70.310.0640.0	
X102	90110-0159	-		1	MALE INSERT 70.310.0640.0	
X103	90110-0159	-		1	MALE INSERT 70.310.0640.0	

Machine Type | Group Description | Used-In | Group Number | Page No

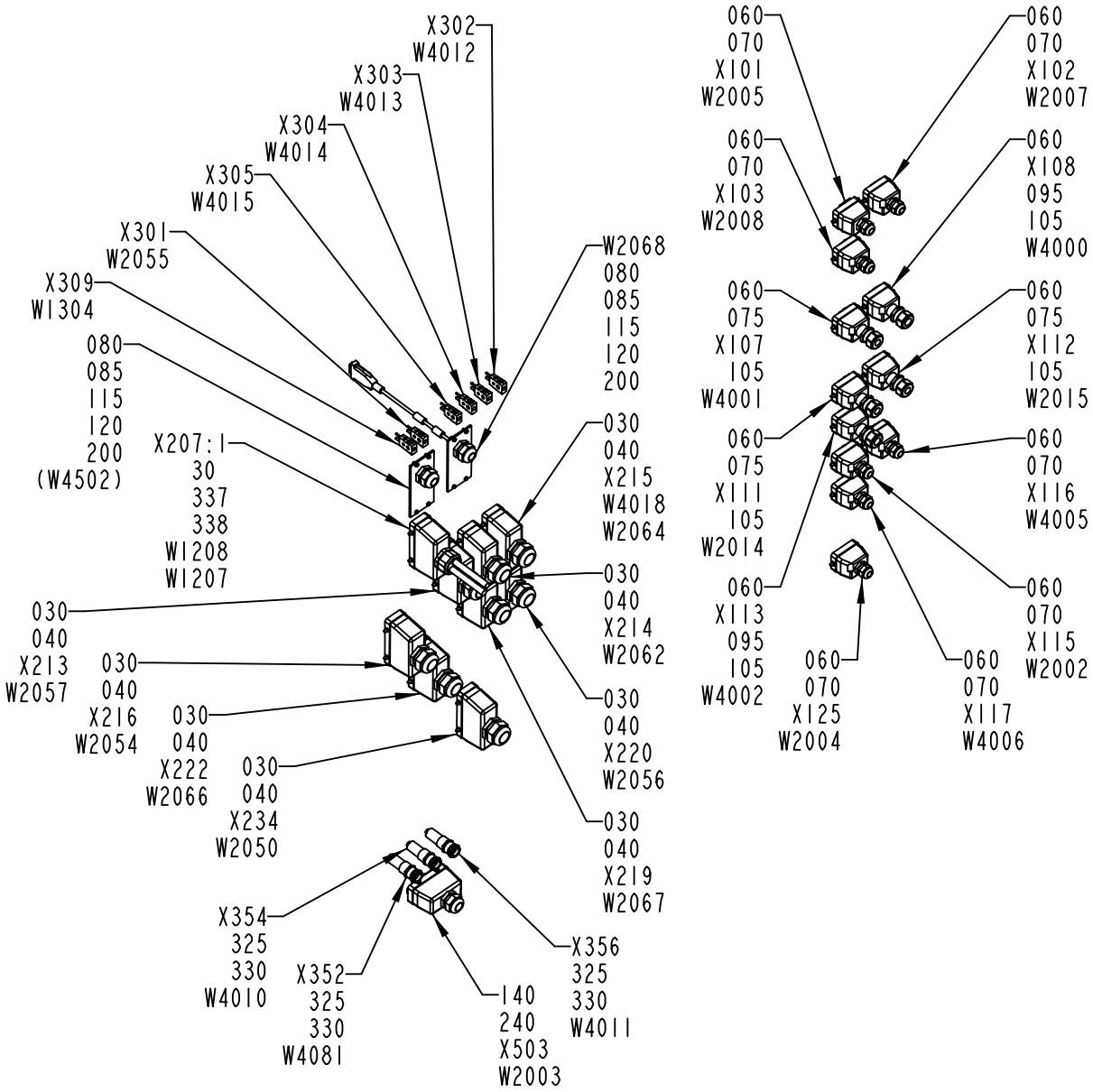

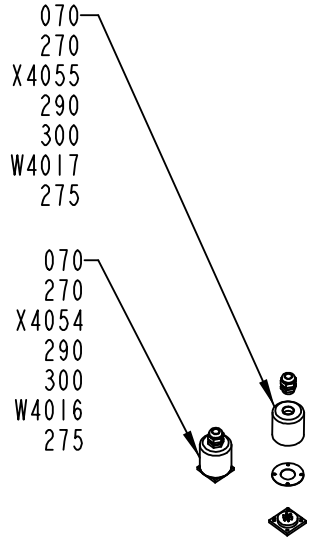

1348090-1
ECM 113270

Pos	Part No	SP	UN	Qty	Description	Page No
Common Parts (Cont'd)						
X107	90110-0159	-		1	MALE INSERT 70.310.0640.0	
X108	90110-0159	-		1	MALE INSERT 70.310.0640.0	
X111	90110-0159	-		1	MALE INSERT 70.310.0640.0	
X112	90110-0159	-		1	MALE INSERT 70.310.0640.0	
X113	90110-0159	-		1	MALE INSERT 70.310.0640.0	
X115	90110-0159	-		1	MALE INSERT 70.310.0640.0	
X116	90110-0159	-		1	MALE INSERT 70.310.0640.0	
X117	90110-0159	-		1	MALE INSERT 70.310.0640.0	
X125	90110-0159	-		1	MALE INSERT 70.310.0640.0	
X1304	90326-0020	-		1	PLUG, FEMALE YELLOW CR-AL	
X2038	90326-0020	-		1	PLUG, FEMALE YELLOW CR-AL	
X2062	90110-0163	-		1	FEMALE INSERT 70 300 0640 0	
X207:1	90110-0150	-		1	MALE INSERT 121110 0000	
X213	90110-0150	-		1	MALE INSERT 121110 0000	
X214	90110-0150	-		1	MALE INSERT 121110 0000	
X215	90110-0150	-		1	MALE INSERT 121110 0000	
X216	90110-0150	-		1	MALE INSERT 121110 0000	
X219	90110-0150	-		1	MALE INSERT 121110 0000	
X220	90110-0150	-		1	MALE INSERT 121110 0000	
X222	90110-0150	-		1	MALE INSERT 121110 0000	
X2241	90110-0163	-		1	FEMALE INSERT 70 300 0640 0	
X2242	90110-0163	-		1	FEMALE INSERT 70 300 0640 0	
X2243	90110-0247	-		1	FEMALE INSERT 70.200.0653.0	
X2244	90110-0151	-		1	FEMALE INSERT 24-POL 121130 0000	
X234	90110-0150	-		1	MALE INSERT 121110 0000	
X301	90326-0022	-		1	PLUG, MALE YELLOW CR-AL	
X302	90326-0022	-		1	PLUG, MALE YELLOW CR-AL	
X303	90326-0022	-		1	PLUG, MALE YELLOW CR-AL	
X304	90326-0022	-		1	PLUG, MALE YELLOW CR-AL	
X305	90326-0022	-		1	PLUG, MALE YELLOW CR-AL	
X309	90326-0022	-		1	PLUG, MALE YELLOW CR-AL	
X352	90110-0504	A		1	CABLE CONTACT	
X354	90110-0504	-		1	CABLE CONTACT	
X356	90110-0504	-		1	CABLE CONTACT	
X4002	90110-0151	-		1	FEMALE INSERT 24-POL 121130 0000	
X4003	90110-0151	-		1	FEMALE INSERT 24-POL 121130 0000	
X4004	90110-0151	-		1	FEMALE INSERT 24-POL 121130 0000	
X4005:2	90110-0151	-		1	FEMALE INSERT 24-POL 121130 0000	
X4006:2	90110-0151	-		1	FEMALE INSERT 24-POL 121130 0000	
X4010	90326-0020	-		1	PLUG, FEMALE YELLOW CR-AL	
X4011	90326-0020	-		1	PLUG, FEMALE YELLOW CR-AL	
X4012	90326-0020	-		1	PLUG, FEMALE YELLOW CR-AL	
X4013	90326-0020	-		1	PLUG, FEMALE YELLOW CR-AL	
X4050	90110-0208	A		1	CABLE CONTACT	
X4051	90110-0208	-		1	CABLE CONTACT	
X4054	90110-0236	A		1	CHASSIS CONTACT PX0767/S	
X4055	90110-0236	-		1	CHASSIS CONTACT PX0767/S	
X4056	90110-0208	-		1	CABLE CONTACT	
X503	90110-0156	A		1	MALE INSERT 70.210.0653.0	

Machine Type | Group Description | Used-In | Group Number | Page No

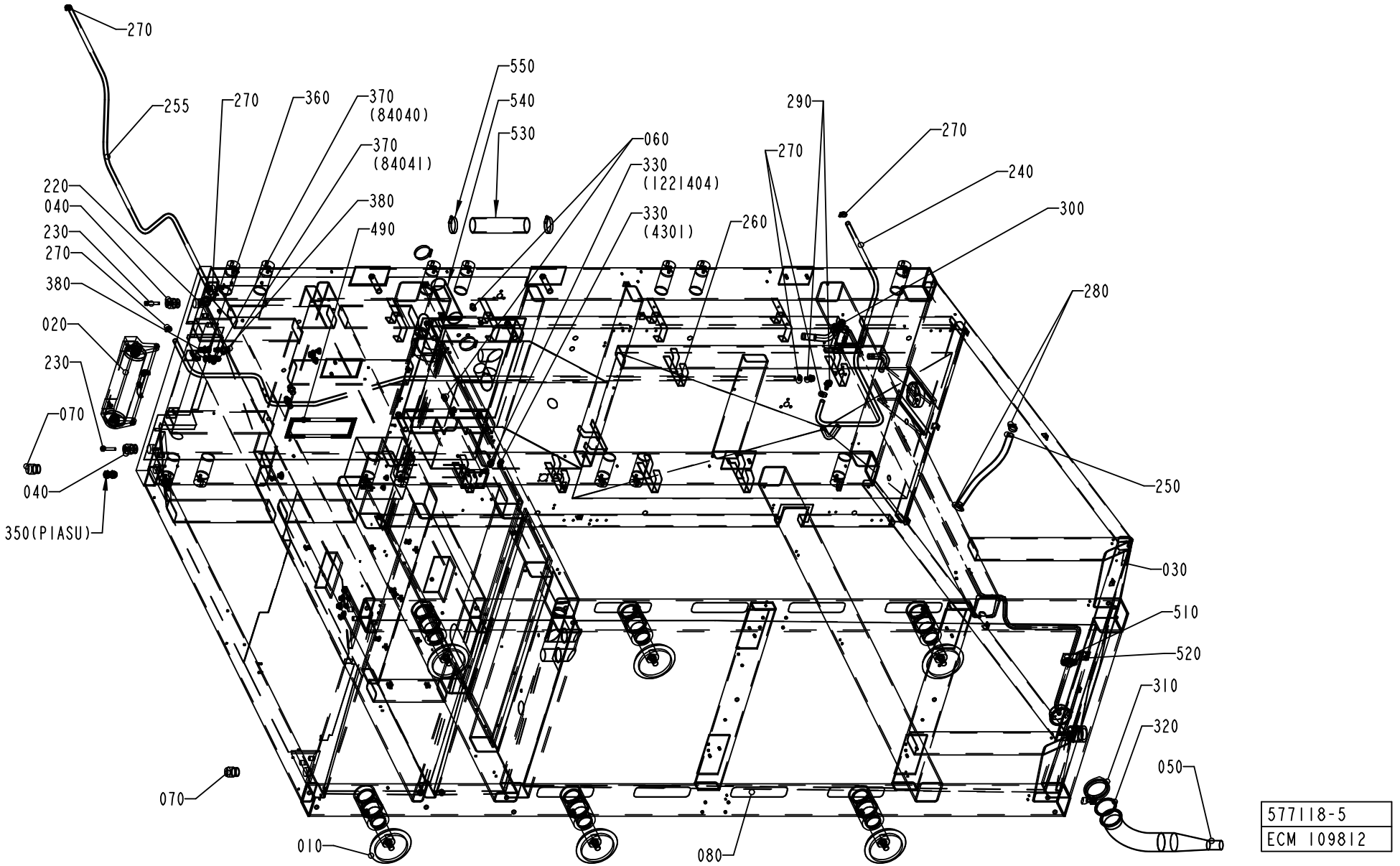
270
255
270
360
370 (84040)
370 (84041)
550
540
530
380
490
060
330 (1221404)
330 (4301)
290
270
270
240
300
260
280
220
040
230
270
380
020
230
070
040
350(PIASU)
250
030
510
520
310
320
050
070
010
080
577118-5
ECM 109812

Pos	Part No	SP	UN	Qty	Description	Page No
Common Parts						
010	A1035076-0100	-		6	LEG	**227**
020	A1095803-0100	-		1	BENDING ROLLER	**229**
030	1549124-0000	-		1	FRAME	
040	591341-0000	-		2	PIN	
050	1347638-0000	-		1	PIPE	
060	1037761-0000	-		2	PIN	
070	1037762-0000	-		2	PIN	
080	1103300-0000	-		8	NON-SKID	
200	90015-0021	-		3	LEAD-IN, TET10-14, E-1458023	
205	90015-0020	-		5	LEAD-IN, TET5-7, E-1458016	
210	90015-0023	-		3	LEAD-IN, TET7-10, E-1458019	
215	90015-0022	-		1	LEAD-IN, TET14-20, E-1458029	
220	90015-0024	-		1	LEAD-IN, TET20-26, E-1458035	
230	312115-0501	-		2	SCREW MC6S M10X50 A280	
240	90166-0121	-	MM	1600	HOSE	
250	90166-0151	-	MM	500	HOSE	
255	90166-0121	-	MM	2100	HOSE	
260	90166-0121	-	MM	3000	HOSE	
270	342991-0101	-		6	HOSE CLIP,WORM DRIVE TYPE (13)-16	
280	342991-0105	-		2	HOSE CLIP,WORM DRIVE TYPE (27)-30	
290	342901-0105	-		2	HOSE NIPPLE, EXT.THR. R1/2-12 MM	
300	90140-0012	-		1	ELBOW, 90 INT/EXT, 2020-1/2-1/2	
310	342840-0107	-		1	CLAMPING PIECE	
320	342850-0107	-		1	GASKET, FDA, 3-A, 3	
330	342768-0102	-		2	BULKHEAD CONNECTOR, 6 MM	
340	90330-0026	-		2	PLUG, EXT. G-THREAD, G1/4	
350	90458-2602	-		3	BULKHEAD CONNECTOR, 12 MM	
360	342767-0104	-		2	CONN. BULKHEAD G1/4	
370	90187-0158	-		2	THROTTLE BALL VALVE G1/4, R1/4	
380	342921-0122	-		4	STRAIGHT COUPLING,EXT.THREADED 8/6-G1/4"	
390	342716-0209	-		1	REDUCER 8-12	
400	352113-0204	-		21	ANCHOR PLATES FOR STRIPS, TYPE TM3S25-M	
410	315237-0110	-		2	WASHER,PL.RND.AL.13,5/18,H=1,5	
440	312605-0314	-		2	HEXAGON NUT, M6M M5 A280	
450	312125-0327	-		21	SCREW PAN HEAD MCS M5X12 SS	
490	90143-0059	-	MM	800	SEAL STRIP 4610069	
500	311103-0399	-		4	PARALLELL PIN, CP, M6, 8X16 MM	
510	1498502-0000	-		1	BRACKET	
520	312105-0366	-		2	SCREW M6S M6X12 A280	
530	90459-0250	-	MM	235	HOSE , SILICONE, 53,8/62 MM	
540	90459-0250	-	MM	220	HOSE , SILICONE, 53,8/62 MM	
550	342991-0110	-		4	HOSE CLIP,WORM DRIVE TYPE (54)-63	

Machine Type | Group Description | Used-In | Group Number | Page No

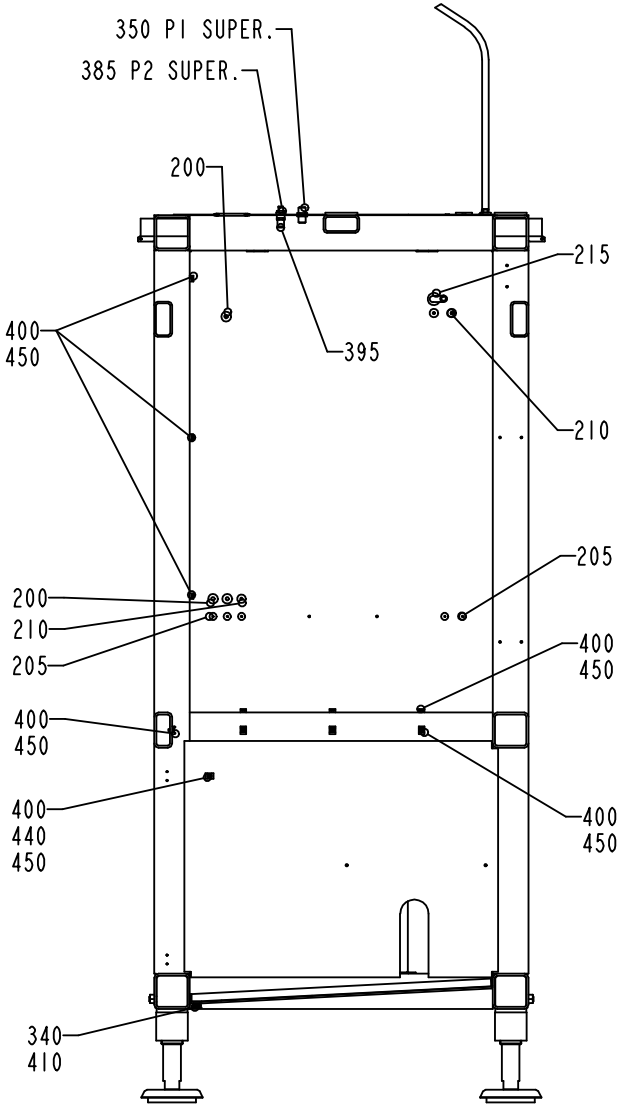

B-B
7:100

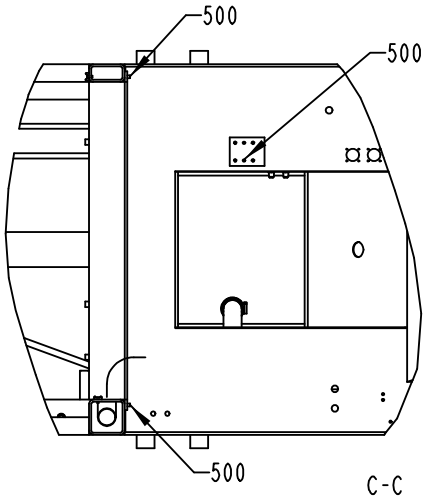

C-C
7:100

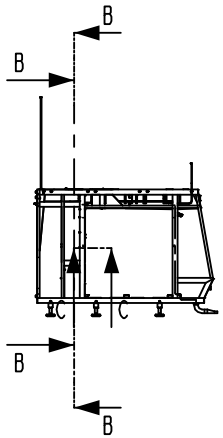

1:100

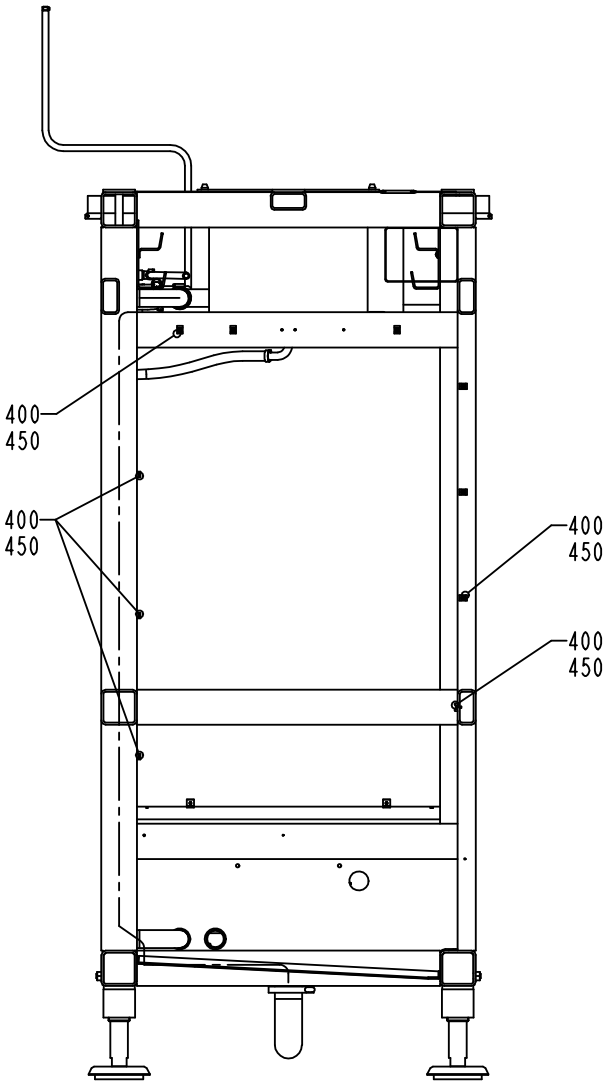

B-B
7:100

577118-5
ECM 109812

ECM: 114612 - 20020916
Group number: 577118-0500
Assembly Drawing: 577118-5_2_AC

Issue: 20021030

Pos	Part No	SP	UN	Qty	Description	Page No
Common Parts						
010	A1035076-0100	-		6	LEG	**227**
020	A1095803-0100	-		1	BENDING ROLLER	**229**
030	1549124-0000	-		1	FRAME	
040	591341-0000	-		2	PIN	
050	1347638-0000	-		1	PIPE	
060	1037761-0000	-		2	PIN	
070	1037762-0000	-		2	PIN	
080	1103300-0000	-		8	NON-SKID	
200	90015-0021	-		3	LEAD-IN, TET10-14, E-1458023	
205	90015-0020	-		5	LEAD-IN, TET5-7, E-1458016	
210	90015-0023	-		3	LEAD-IN, TET7-10, E-1458019	
215	90015-0022	-		1	LEAD-IN, TET14-20, E-1458029	
220	90015-0024	-		1	LEAD-IN, TET20-26, E-1458035	
230	312115-0501	-		2	SCREW MC6S M10X50 A280	
240	90166-0121	-	MM	1600	HOSE	
250	90166-0151	-	MM	500	HOSE	
255	90166-0121	-	MM	2100	HOSE	
260	90166-0121	-	MM	3000	HOSE	
270	342991-0101	-		6	HOSE CLIP,WORM DRIVE TYPE (13)-16	
280	342991-0105	-		2	HOSE CLIP,WORM DRIVE TYPE (27)-30	
290	342901-0105	-		2	HOSE NIPPLE, EXT.THR. R1/2-12 MM	
300	90140-0012	-		1	ELBOW, 90 INT/EXT, 2020-1/2-1/2	
310	342840-0107	-		1	CLAMPING PIECE	
320	342850-0107	-		1	GASKET, FDA, 3-A, 3	
330	342768-0102	-		2	BULKHEAD CONNECTOR, 6 MM	
340	90330-0026	-		2	PLUG, EXT. G-THREAD, G1/4	
350	90458-2602	-		3	BULKHEAD CONNECTOR, 12 MM	
360	342767-0104	-		2	CONN. BULKHEAD G1/4	
370	90187-0158	-		2	THROTTLE BALL VALVE G1/4, R1/4	
380	342921-0122	-		4	STRAIGHT COUPLING,EXT.THREADED 8/6-G1/4"	
390	342716-0209	-		1	REDUCER 8-12	
400	352113-0204	-		21	ANCHOR PLATES FOR STRIPS, TYPE TM3S25-M	
410	315237-0110	-		2	WASHER,PL.RND.AL.13,5/18,H=1,5	
440	312605-0314	-		2	HEXAGON NUT, M6M M5 A280	
450	312125-0327	-		21	SCREW PAN HEAD MCS M5X12 SS	
490	90143-0059	-	MM	800	SEAL STRIP 4610069	
500	311103-0399	-		4	PARALLELL PIN, CP, M6, 8X16 MM	
510	1498502-0000	-		1	BRACKET	
520	312105-0366	-		2	SCREW M6S M6X12 A280	
530	90459-0250	-	MM	235	HOSE , SILICONE, 53,8/62 MM	
540	90459-0250	-	MM	220	HOSE , SILICONE, 53,8/62 MM	
550	342991-0110	-		4	HOSE CLIP,WORM DRIVE TYPE (54)-63	

Machine Type	Group Description	Used-In	Group Number	Page No

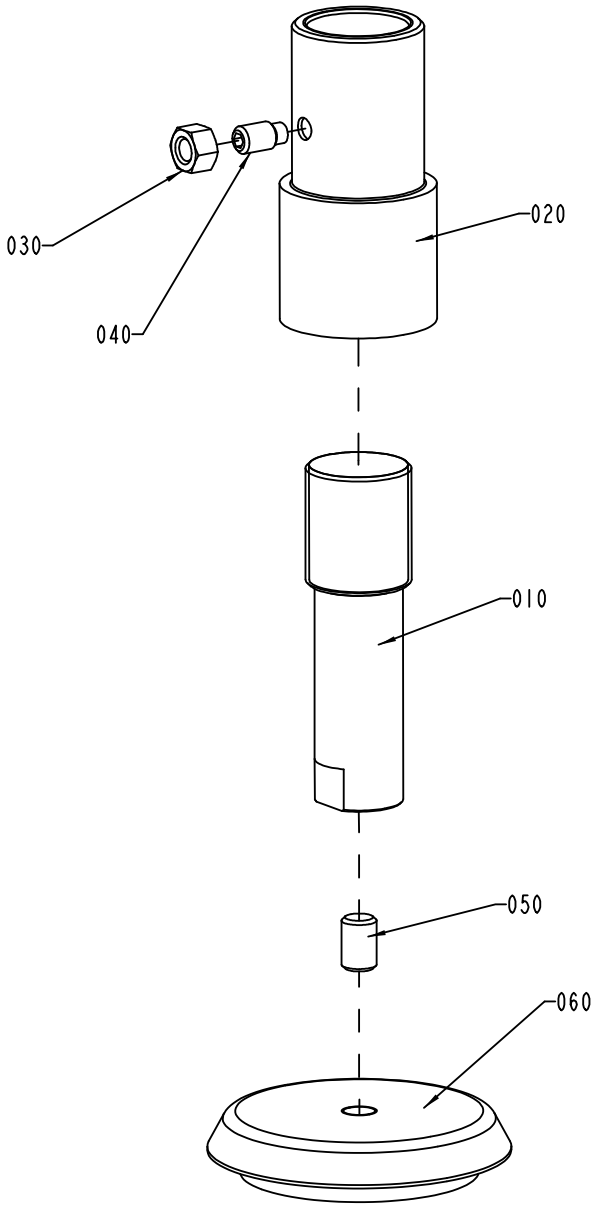

S-1035076-1
ECN 71019

ECM: 71870 - 19981029
Group number: 1035076-0100
Assembly Drawing: 1035076-1_1_AB

Issue: 20021030

Pos	Part No	SP	UN	Qty	Description	Page No
Common Parts						
010	1036119-0000	-		1	LEG	
020	1036120-0000	-		1	SLEEVE	
030	312605-0324	-		1	HEXAGON NUT, M6M M16 A280	
040	312311-0624	-		1	SCREW HEX.SOCK.SET DOG P.MT6SS 16X30 FZB	
050	90347-0029	-		1	DAMPER	
060	90287-0130	-		1	SCREW HEX.SOCK.SET FLATPT. MP6SS M20X30	

Pos	Part No	SP	UN	Qty	Description	Page No

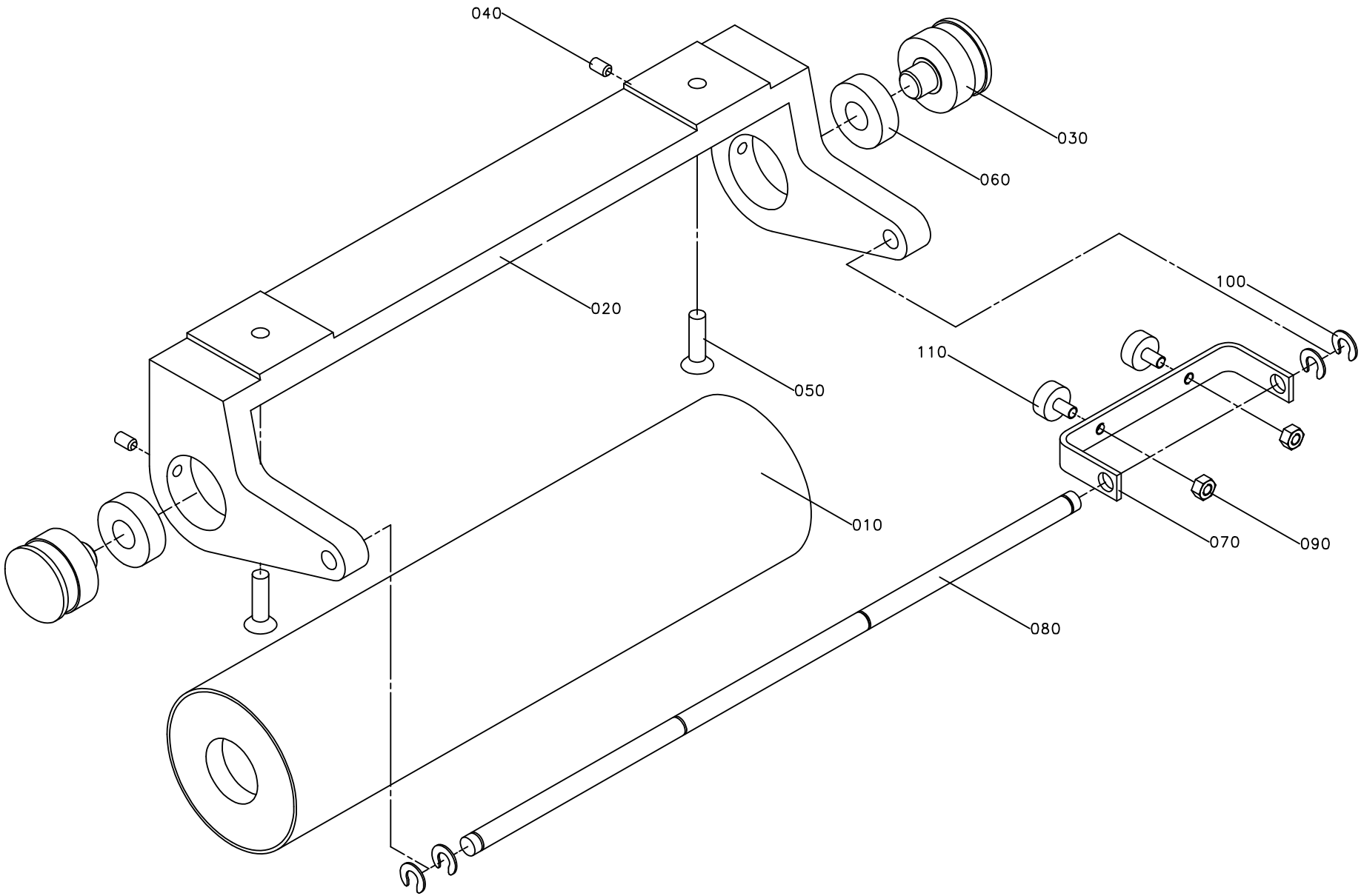
040
030
060
020
100
110
050
010
070
090
080

ECM: 71742 - 19980903
Group number: 1095803-0100
Assembly Drawing: 1095803-1_1_AA

Issue: 20021030

Pos	Part No	SP	UN	Qty	Description	Page No
Common Parts						
010	1035882-0000	D		1	BENDING ROLLER	
020	1036516-0000	-		1	CANTILEVER	
030	1037012-0000	D		2	AXLE PIN	
040	312318-0364	-		2	SCREW HEX.SOCK.SET CUP P.MSK6SS6X10 SS	
050	312155-0453	-		2	SCREW HEX.SOCK.COUNT.MF6S M8X25 A280	
060	321313-0102	C		2	BALL BEARING, 2 SEALS, 15X35X11 MM	
070	1041603-0000	-		1	BRACKET	
080	1041606-0000	D		1	SHAFT	
090	312605-0316	-		2	HEXAGON NUT, M6M M6 A280	
100	315755-0801	-		4	LOCKING WASHER 8	
110	90347-0007	D		2	VIBRATION DAMPER	

Pos	Part No	SP	UN	Qty	Description	Page No

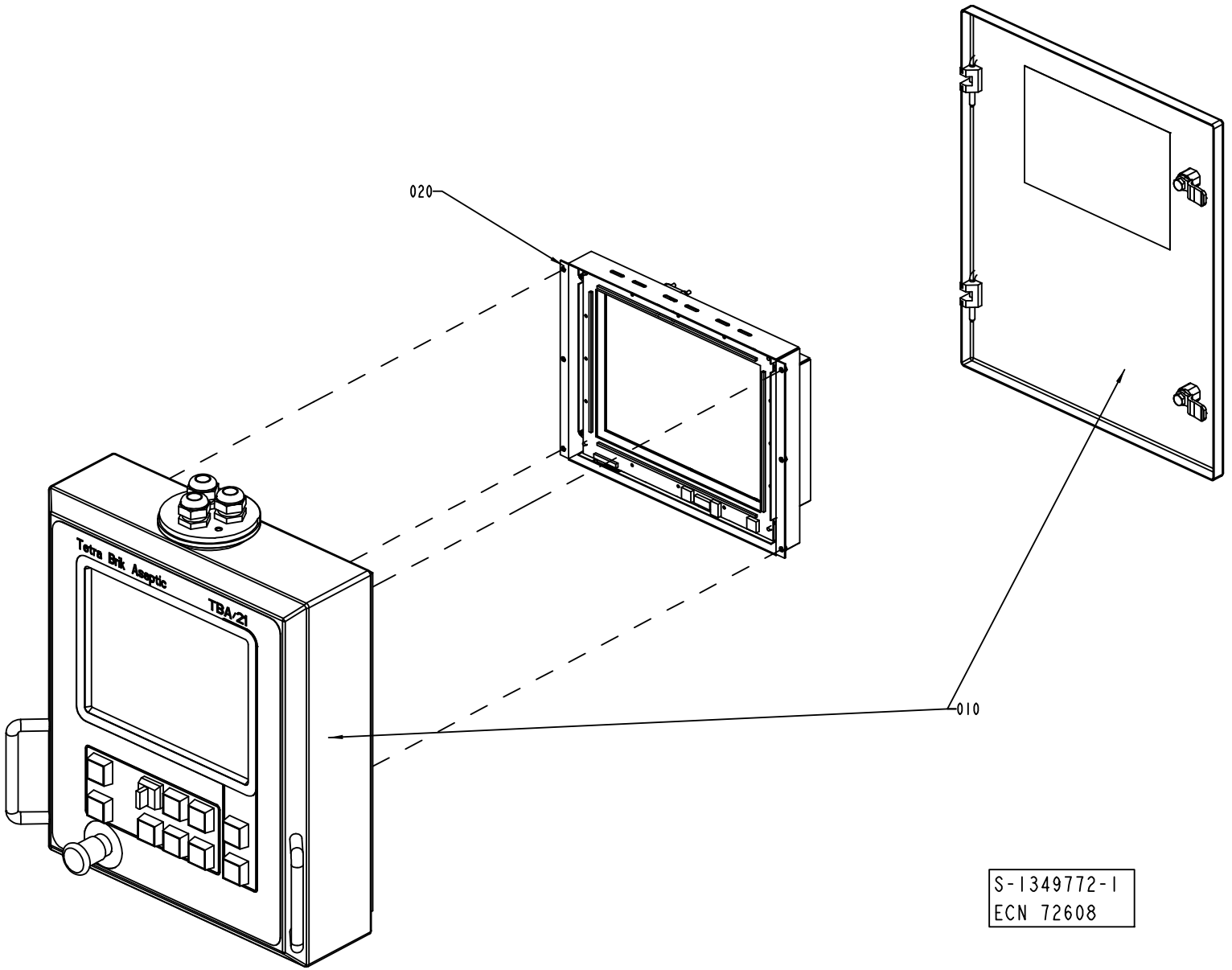
020
010
Tetra Brik Aseptic
TBA/21
S-1349772-I
ECN 72608

ECM: 72608 - 19990604
Group number: 1349772-0100
Assembly Drawing: 1349772-1_1_AB

Issue: 20021030

Pos	Part No	SP	UN	Qty	Description	Page No
Common Parts						
010	A1349774-0100	-		1	PANEL UNIT 12"	**233**
020	A1348707-0100	-		1	DISPLAY UNIT 12"	**237**

Pos	Part No	SP	UN	Qty	Description	Page No

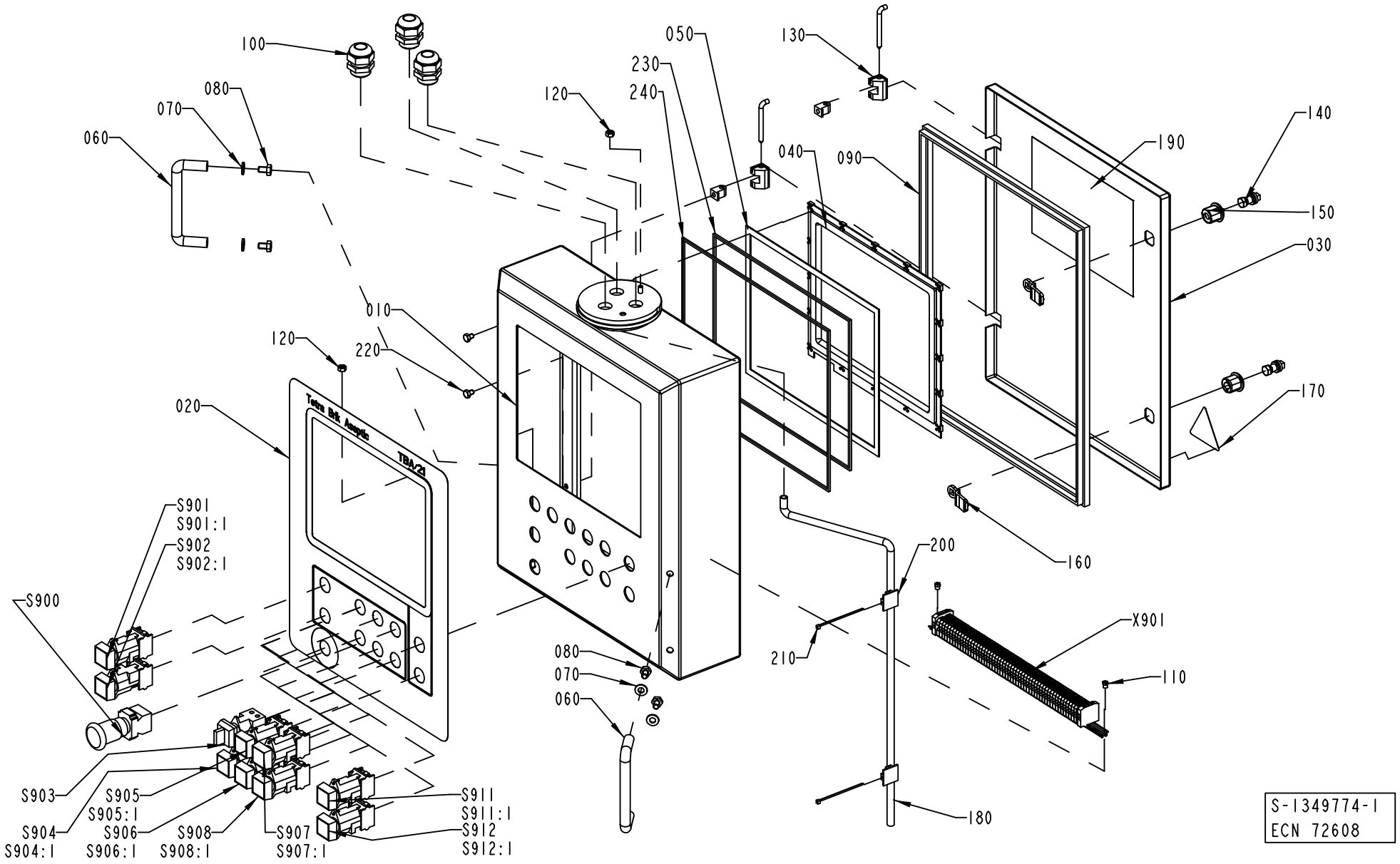
100
080
070
060
120
050
230
240
130
140
190
040
090
150
030
010
120
220
020
170
160
200
210
X901
110
180
080
070
060
S901
S901:1
S902
S902:1
S900
S903
S905
S905:1
S904
S906
S908
S907
S904:1
S906:1
S908:1
S907:1
S911
S911:1
S912
S912:1
S-1349774-1
ECN 72608

ECM: 72941 - 19991027
Group number: 1349774-0100
Assembly Drawing: 1349774-1_1_AB

Issue: 20021030

Pos	Part No	SP	UN	Qty	Description	Page No
Common Parts						
010	1349773-0000	-		1	PANEL	
020	1349778-0000	-		1	FOIL	
030	1349777-0000	-		1	DOOR	
040	90041-0095	-		1	FRAME 12" , 12I1-V2.0	
060	90017-0016	-		2	HANDLE, NO. 14.4012.02.120	
070	90005-0077	-		4	WASHER PL.RND.NYL.8,4/7, H=2	
080	312105-0447	-		4	SCREW M6S ISO 4017 M8X12 A480	
090	90143-0057	-	MM	1800	STRIP EMKA 1011-05 21X11MM	
100	352103-0115	-		3	CABLE GLAND, STR 21, PR28,3/PG21	
110	1041609-0000	-		2	NUT	
120	312605-0316	-		1	HEXAGON NUT, M6M M6 A280	
130	90248-0047	-		2	HINGE, 1150-U50	
140	90237-0320	-		2	LOCK HOUSING, 1000-U136	
150	90237-0319	-		2	LOCK HOUSING, 1000-U134	
160	90237-0157	-		2	LOCK BOLT, 1000-230	
170	90194-0016	-		1	SIGN, FLASH, ELECTRIC EQUIPMENT SYMBOL	
180	90166-0008	-	MM	650	HOSE 7/10 PVC TRANSP.	
190	90194-0133	-		1	SIGN "DELIVERED DESIGN"	
200	352113-0206	-		2	ANCHOR PLATES FOR STRIPS, TYPE ABM100-AT	
210	90182-0005	-		2	CLIP STRIP 79X2,3MM REPL.BY 352113-101	
220	312105-0362	-		2	SCREW M6S ISO 4017 M6X8 A480	
230	90144-0075	-		1	SHIELDING SEAL STRIP EMC, 1,02X3,18 MM	
240	90144-0075	-		1	SHIELDING SEAL STRIP EMC, 1,02X3,18 MM	
S900	90064-0124	D		1	SWITCH, EM. STOP, ZB2-BS844+ZB2-BZ1045	
S901	B90064-0082	D		1	PUSH BUTTON, WHITE	
	90036-0057	*B*		*1*	*LIGHT BULB, BA9S 28V*	
S901:1	359301-0519	-		1	SIGN "TPOP RESET"	
S902	B90064-0082	D		1	PUSH BUTTON, WHITE	
	90036-0057	*B*		*1*	*LIGHT BULB, BA9S 28V*	
S902:1	359301-0130	-		1	SIGN "LAMPTEST"	
S903	90111-0120	D		1	SWITCH, 2 POS.704.510 .0A+704.901.5/A	
S904	B90064-0082	D		1	PUSH BUTTON, WHITE	
	90036-0057	*B*		*1*	*LIGHT BULB, BA9S 28V*	
S904:1	359301-0170	-		1	SIGN "MANUAL FLUSHING FFU"	
S905	90064-0098	D		1	PUSH BUTTON, CLEAR	
S905:1	359301-0091	-		1	SIGN "INCHING FFU"	
S906	B90064-0082	D		1	PUSH BUTTON, WHITE	
	90036-0057	*B*		*1*	*LIGHT BULB, BA9S 28V*	
S906:1	359301-0050	-		1	SIGN "DROP CHUTE"	
S907	90064-0098	D		1	PUSH BUTTON, CLEAR	
S907:1	359301-0090	-		1	SIGN "INCHING"	
S908	90064-0084	D		1	PUSH BUTTON, YELLOW	
S908:1	359301-0110	-		1	SIGN "SHORT STOP"	
S911	B90064-0093	D		1	PUSH BUTTON, GREEN	
	90036-0057	*C*		*1*	*LIGHT BULB, BA9S 28V*	
S911:1	359301-0001	-		1	SIGN "UP"	
S912	B90064-0082	D		1	PUSH BUTTON, WHITE	
	90036-0057	*B*		*1*	*LIGHT BULB, BA9S 28V*	
S912:1	359301-0005	-		1	SIGN "DOWN"	
X901	A1095597-0100	-		1	TERMINAL	**235**

Machine Type	Group Description	Used-In	Group Number	Page No

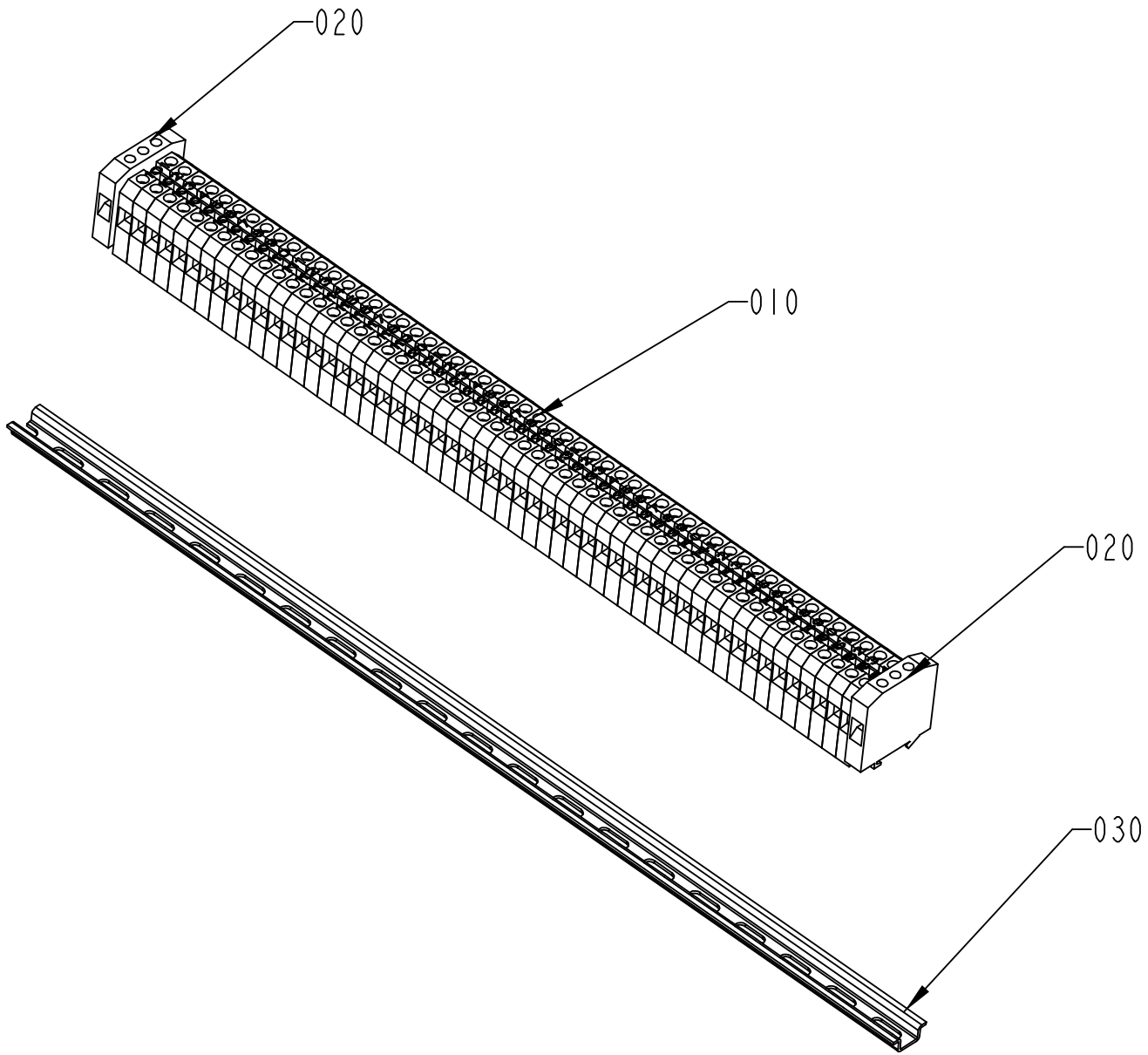

S-1095597-1
ECN 72608

ECM: 72608 - 19990604
Group number: 1095597-0100
Assembly Drawing: 1095597-1_1_AB

Issue: 20021030

Pos	Part No	SP	UN	Qty	Description	Page No
Common Parts						
010	90077-0079	-		56	FEED THROUGH TERMINAL, 02943.6	
020	90135-0026	-		2	EARTH TERMINAL, 3802.6	
030	90077-0328	-	MM	390	RAIL TS15/5	
040	359011-0821	-		2	SET OF SIGNS 6-FW 1-50	
050	359011-0819	-		1	MARKING PLATES 5-GW (EARTH)	

Pos	Part No	SP	UN	Qty	Description	Page No

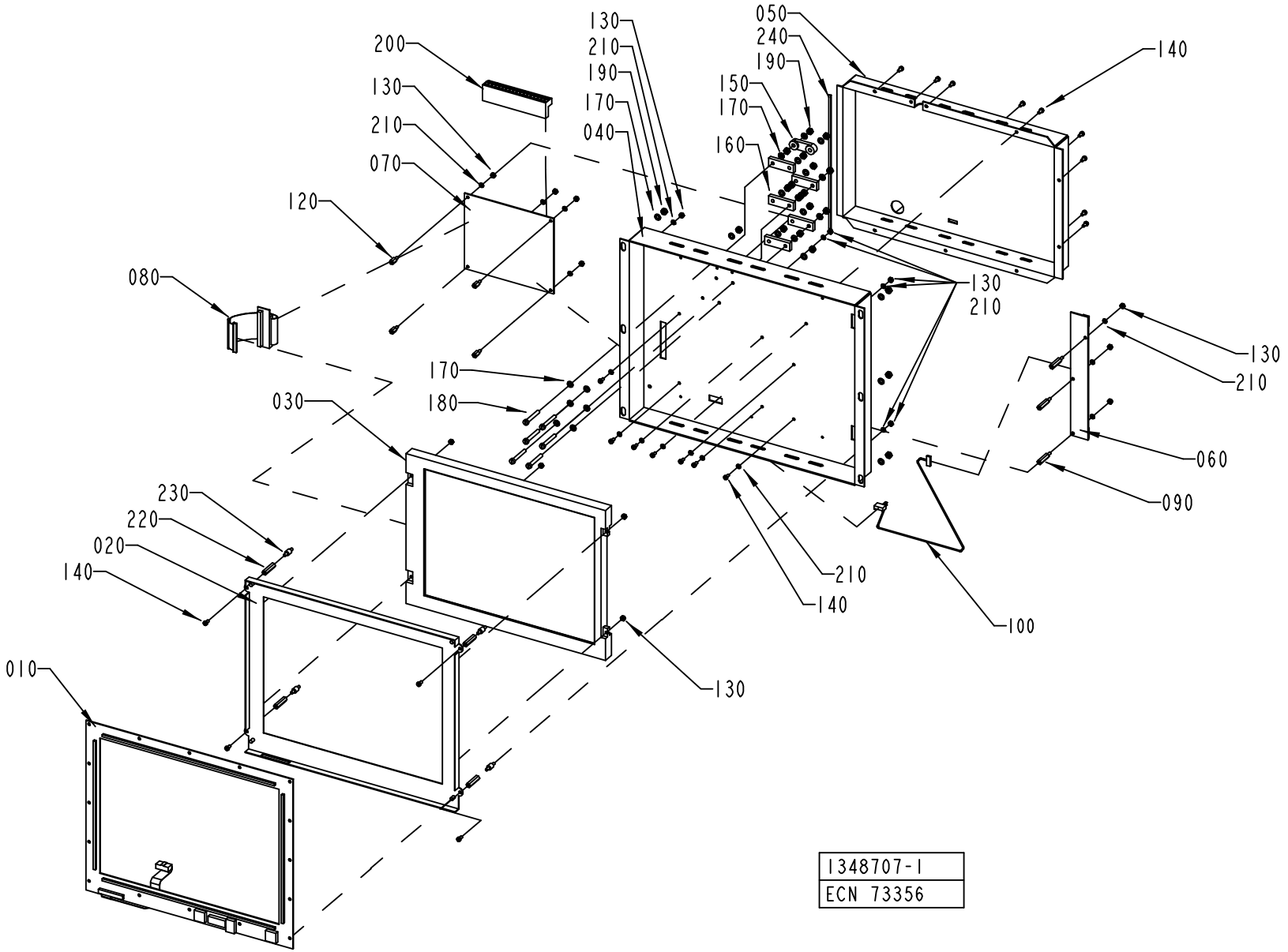
130
210
190
170
040
050
240
190
150
170
160
140
200
130
210
070
120
080
130
210
170
180
030
130
210
060
090
230
220
020
140
210
140
100
010
130
1348707-1
ECN 73356

Pos	Part No	SP	UN	Qty	Description	Page No
Common Parts						
010	90041-0099	A		1	IR TOUCH PCB, 12.1" , IRT 12I1-V2.1	
020	90041-0104	-		1	CHASSIS FOR TOUCH, 12,1" , M0089A39	
030	90041-0093	A		1	DISPLAY, TOSHIBA 12,1"	
040	1348708-0000	-		1	COVER PLATE	
050	1348709-0000	-		1	COVER PLATE	
060	90041-0079	A		1	ADAPTER BACKLIGHT, 50000007	
070	90041-0078	A		1	REMOTE COMMUNIKATION LINK BOARD,E000014B	
080	90041-0103	A		1	DATA CABLE DISPLAY, E000018B	
090	90316-0022	-		3	SPACER NUT DSNF M3060X20	
100	90041-0082	A		1	CABLE, DISPLAY POWER, 2223-0022-018	
120	90316-0023	-		4	SPACER NUT DSM M3055X8	
130	312605-0310	-		15	HEXAGON NUT, M6M M3 A280	
140	312125-0220	-		16	SCREW SLOT.PAN HD. MCS 3X6 A480	
150	90220-0302	-		1	CLAMP FOR SCR.CABLE, 16MM, 55-016-89	
160	90220-0304	-		5	CLAMP FOR SCR.CABLE, 24MM,	
170	315105-0136	-		24	WASHER PLAIN, BRB, 4,3/8,H=0,8	
180	312125-0299	-		6	SCREW PAN HEAD MCS M4X30 SS	
190	312605-0312	-		20	HEXAGON NUT, M6M M4 A280	
200	B1129570-0000	-		1	LDS, LVDS TERMINAL 1	
	90194-0154	-		*1*	*TERM. MARKING LABEL KIT, BLA-BSTB, 1-24*	
	90110-0282	-		*1*	*PLINTH, BLA18, 128336*	
210	315105-0124	-		18	WASHER PLAIN, BRB, 3,2/6,H=0,5	
220	90316-0029	-		4	SPACER NUT, M3X16	
230	90316-0030	-		4	ELASTIC SCREW, 15060002	
240	90144-0074	-		1	SHIELDING SEAL STRIP EMC, 3,17X3,17 MM	

Pos	Part No	SP	UN	Qty	Description	Page No

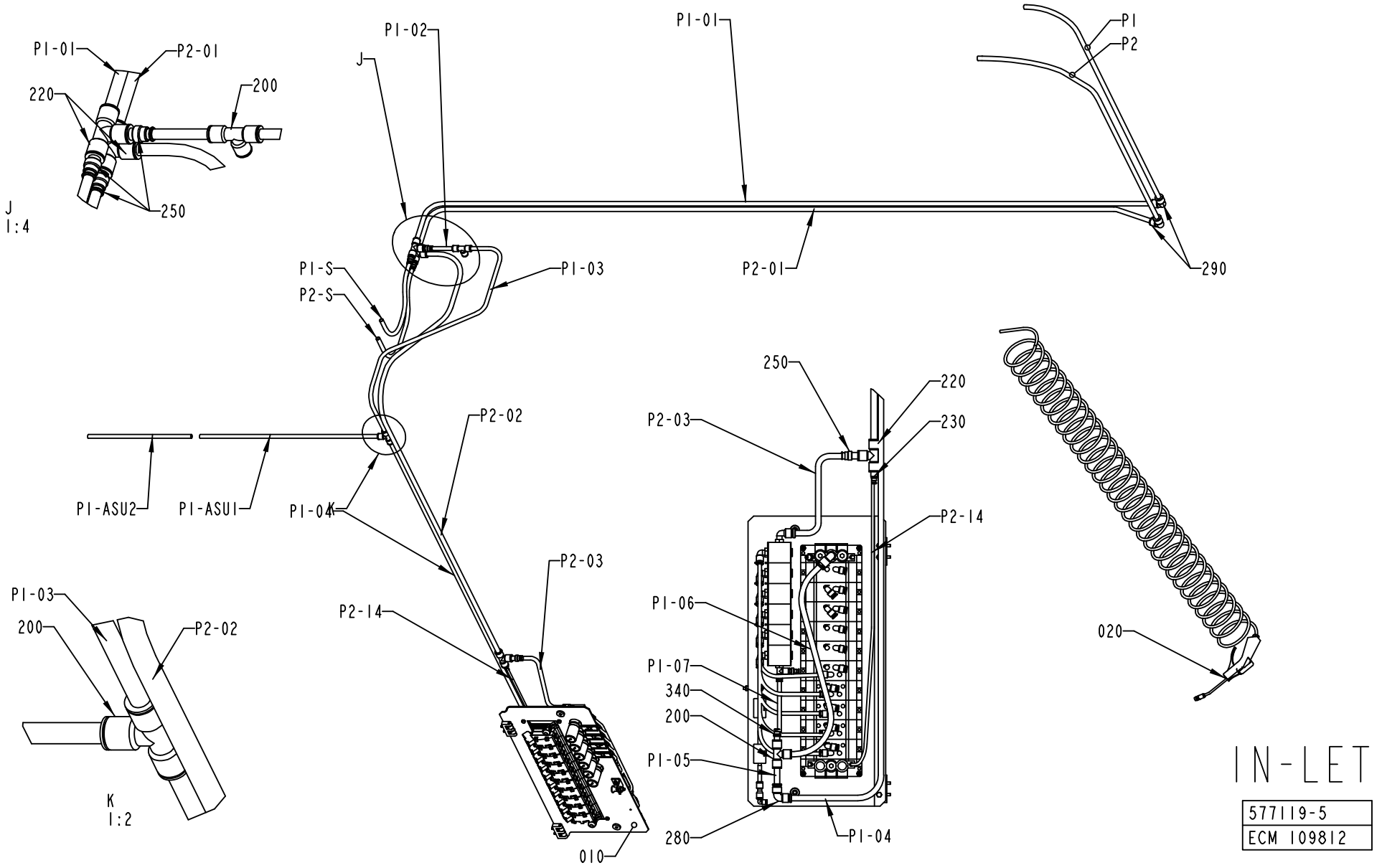
P1-01
P2-01
220
200
250
J
1:4
P1-02
J
P1-01
P1
P2
P1-S
P2-S
P1-03
P2-01
290
P1-ASU2
P1-ASU1
P1-04
P2-02
P2-03
P2-14
P1-03
200
P2-02
K
1:2
010
250
220
230
P2-03
P2-14
P1-06
P1-07
340
200
P1-05
280
P1-04
020
IN-LET
577119-5
ECM 109812

ECM: 110679 - 20020916
Group number: 577119-0400
Assembly Drawing: 577119-5_1_AD

Issue: 20021030

Pos	Part No	SP	UN	Qty	Description	Page No
Common Parts						
010	A1346613-0200	-		1	VALVE PANEL	**243**
020	A1095682-0100	-		1	AIR JET GUN	**245**
1210-01	90166-0081	-	MM	1200	TUBE 6 MM PA BLUE	
12204	90166-0081	-	MM	2800	TUBE 6 MM PA BLUE	
12214	90166-0081	-	MM	2800	TUBE 6 MM PA BLUE	
200	342748-0109	-		3	T-CONNECTION 12MM	
21044	90166-0081	-	MM	460	TUBE 6 MM PA BLUE	
210441	90166-0081	-	MM	200	TUBE 6 MM PA BLUE	
210442	90166-0081	-	MM	1500	TUBE 6 MM PA BLUE	
220	342748-0110	-		3	T-CONNECTION 14MM	
230	90055-0116	-		1	REDUCER 6-14	
240	342748-0102	-		1	T-CONNECTION 6MM	
250	342716-0211	-		4	REDUCER 12-14	
280	342735-0109	-		1	ELBOW PIPE JOINT	
290	342735-0110	-		2	ELBOW PIPE	
340	342716-0209	-		1	REDUCER 8-12	
350	359000-0400	-		38	MARKING CO2/4"0"	
360	359000-0401	-		32	MARKING COLLAR 2/4 "1" YELLOW	
370	359000-0402	-		42	MARKING COLLAR 2/4 "2" YELLOW	
380	359000-0403	-		6	MARKING COLLAR PA2/4 "3" YELLOW	
390	359000-0404	-		42	MARKING COLLAR PA2/4 "4" YELLOW	
400	359000-0405	-		18	MARKING CO2/4"5"	
410	359000-0406	-		2	MARKING COLLAR PA2/4 "6" YELLOW	
420	359000-0765	-		4	MARKING CO2/4"P"	
42002	90166-0013	-	MM	2100	TUBE 8 MM PA BLUE	
42102	90166-0013	-	MM	2100	TUBE 8 MM PA BLUE	
42202	90166-0013	-	MM	2100	TUBE 8 MM PA BLUE	
42302	90166-0013	-	MM	2100	TUBE 8 MM PA BLUE	
430	359000-0024	-		6	MARKING CO2/4 "-"	
4301-04	90166-0081	-	MM	3500	TUBE 6 MM PA BLUE	
440	359000-0501	-		16	MARKING COLLAR 3/6 "1" YELLOW	
450	359000-0502	-		13	MARKING CO3/6"2"	
460	359000-0503	-		2	MARKING CO3/6"3"	
470	359000-0815	-		21	MARKING CO3/6"P"	
480	359000-0800	-		3	MARKING CO3/6"A"	
490	359000-0818	-		7	MARKING CO3/6"S"	
500	359000-0820	-		3	MARKING CO3/6"U"	
510	359000-0025	-		17	MARKING CO3/6 "-"	
520	359000-0500	-		10	MARKING COLLAR 3/6 "0" YELLOW	
53064	90166-0013	-	MM	1800	TUBE 8 MM PA BLUE	
55012	90166-0013	-	MM	2000	TUBE 8 MM PA BLUE	
55014	90166-0013	-	MM	2000	TUBE 8 MM PA BLUE	
55042	90166-0081	-	MM	1800	TUBE 6 MM PA BLUE	
55044	90166-0081	-	MM	1800	TUBE 6 MM PA BLUE	
P1	90166-0196	-	MM	1075	TUBE 14 MM PA BLUE	
P1-01	90166-0195	-	MM	2600	TUBE 12 MM PA BLUE	
P1-02	90166-0195	-	MM	100	TUBE 12 MM PA BLUE	
P1-03	90166-0195	-	MM	1030	TUBE 12 MM PA BLUE	
P1-04	90166-0195	-	MM	2140	TUBE 12 MM PA BLUE	
P1-05	90166-0195	-	MM	100	TUBE 12 MM PA BLUE	
P1-06	90166-0195	-	MM	500	TUBE 12 MM PA BLUE	
P1-07	90166-0013	-	MM	140	TUBE 8 MM PA BLUE	
P1-ASU1	90166-0195	-	MM	550	TUBE 12 MM PA BLUE	
P1-ASU2	90166-0195	-	MM	1500	TUBE 12 MM PA BLUE	
P1-S	90166-0195	-	MM	450	TUBE 12 MM PA BLUE	
P2	90166-0196	-	MM	1240	TUBE 14 MM PA BLUE	
P2-01	90166-0196	-	MM	2600	TUBE 14 MM PA BLUE	
P2-02	90166-0195	-	MM	2000	TUBE 12 MM PA BLUE	
P2-14	90166-0081	-	MM	700	TUBE 6 MM PA BLUE	
P2-S	90166-0195	-	MM	500	TUBE 12 MM PA BLUE	

Machine Type | Group Description | Used-In | Group Number | Page No

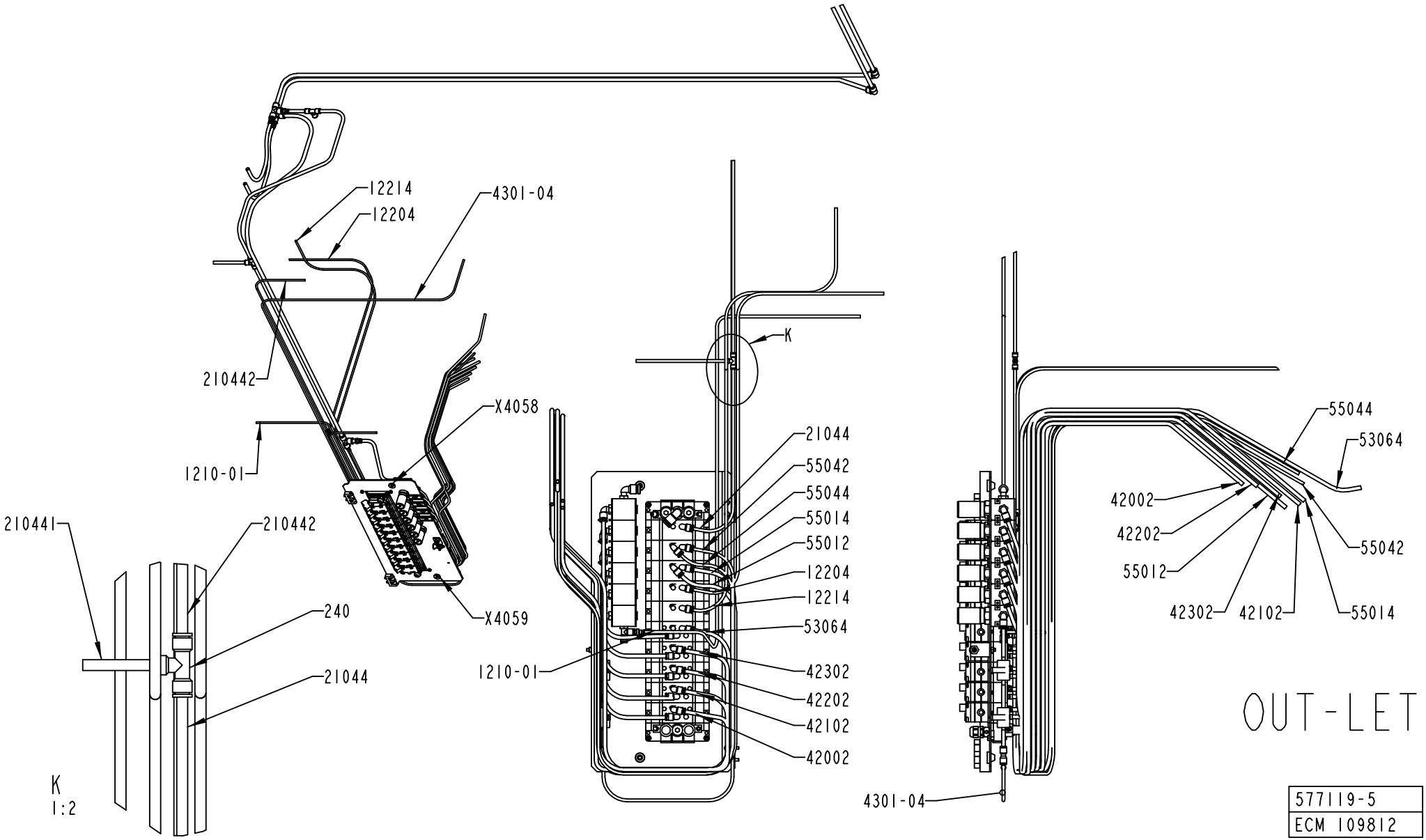

577119-5
ECM 109812

ECM: 110679 - 20020916
Group number: 577119-0400
Assembly Drawing: 577119-5_2_AD

Issue: 20021030

Pos	Part No	SP	UN	Qty	Description	Page No
Common Parts						
010	A1346613-0200	-		1	VALVE PANEL	**243**
020	A1095682-0100	-		1	AIR JET GUN	**245**
1210-01	90166-0081	-	MM	1200	TUBE 6 MM PA BLUE	
12204	90166-0081	-	MM	2800	TUBE 6 MM PA BLUE	
12214	90166-0081	-	MM	2800	TUBE 6 MM PA BLUE	
200	342748-0109	-		3	T-CONNECTION 12MM	
21044	90166-0081	-	MM	460	TUBE 6 MM PA BLUE	
210441	90166-0081	-	MM	200	TUBE 6 MM PA BLUE	
210442	90166-0081	-	MM	1500	TUBE 6 MM PA BLUE	
220	342748-0110	-		3	T-CONNECTION 14MM	
230	90055-0116	-		1	REDUCER 6-14	
240	342748-0102	-		1	T-CONNECTION 6MM	
250	342716-0211	-		4	REDUCER 12-14	
280	342735-0109	-		1	ELBOW PIPE JOINT	
290	342735-0110	-		2	ELBOW PIPE	
340	342716-0209	-		1	REDUCER 8-12	
350	359000-0400	-		38	MARKING CO2/4"0"	
360	359000-0401	-		32	MARKING COLLAR 2/4 "1" YELLOW	
370	359000-0402	-		42	MARKING COLLAR 2/4 "2" YELLOW	
380	359000-0403	-		6	MARKING COLLAR PA2/4 "3" YELLOW	
390	359000-0404	-		42	MARKING COLLAR PA2/4 "4" YELLOW	
400	359000-0405	-		18	MARKING CO2/4"5"	
410	359000-0406	-		2	MARKING COLLAR PA2/4 "6" YELLOW	
420	359000-0765	-		4	MARKING CO2/4"P"	
42002	90166-0013	-	MM	2100	TUBE 8 MM PA BLUE	
42102	90166-0013	-	MM	2100	TUBE 8 MM PA BLUE	
42202	90166-0013	-	MM	2100	TUBE 8 MM PA BLUE	
42302	90166-0013	-	MM	2100	TUBE 8 MM PA BLUE	
430	359000-0024	-		6	MARKING CO2/4 "-"	
4301-04	90166-0081	-	MM	3500	TUBE 6 MM PA BLUE	
440	359000-0501	-		16	MARKING COLLAR 3/6 "1" YELLOW	
450	359000-0502	-		13	MARKING CO3/6"2"	
460	359000-0503	-		2	MARKING CO3/6"3"	
470	359000-0815	-		21	MARKING CO3/6"P"	
480	359000-0800	-		3	MARKING CO3/6"A"	
490	359000-0818	-		7	MARKING CO3/6"S"	
500	359000-0820	-		3	MARKING CO3/6"U"	
510	359000-0025	-		17	MARKING CO3/6 "-"	
520	359000-0500	-		10	MARKING COLLAR 3/6 "0" YELLOW	
53064	90166-0013	-	MM	1800	TUBE 8 MM PA BLUE	
55012	90166-0013	-	MM	2000	TUBE 8 MM PA BLUE	
55014	90166-0013	-	MM	2000	TUBE 8 MM PA BLUE	
55042	90166-0081	-	MM	1800	TUBE 6 MM PA BLUE	
55044	90166-0081	-	MM	1800	TUBE 6 MM PA BLUE	
P1	90166-0196	-	MM	1075	TUBE 14 MM PA BLUE	
P1-01	90166-0195	-	MM	2600	TUBE 12 MM PA BLUE	
P1-02	90166-0195	-	MM	100	TUBE 12 MM PA BLUE	
P1-03	90166-0195	-	MM	1030	TUBE 12 MM PA BLUE	
P1-04	90166-0195	-	MM	2140	TUBE 12 MM PA BLUE	
P1-05	90166-0195	-	MM	100	TUBE 12 MM PA BLUE	
P1-06	90166-0195	-	MM	500	TUBE 12 MM PA BLUE	
P1-07	90166-0013	-	MM	140	TUBE 8 MM PA BLUE	
P1-ASU1	90166-0195	-	MM	550	TUBE 12 MM PA BLUE	
P1-ASU2	90166-0195	-	MM	1500	TUBE 12 MM PA BLUE	
P1-S	90166-0195	-	MM	450	TUBE 12 MM PA BLUE	
P2	90166-0196	-	MM	1240	TUBE 14 MM PA BLUE	
P2-01	90166-0196	-	MM	2600	TUBE 14 MM PA BLUE	
P2-02	90166-0195	-	MM	2000	TUBE 12 MM PA BLUE	
P2-14	90166-0081	-	MM	700	TUBE 6 MM PA BLUE	
P2-S	90166-0195	-	MM	500	TUBE 12 MM PA BLUE	

Machine Type | Group Description | Used-In | Group Number | Page No

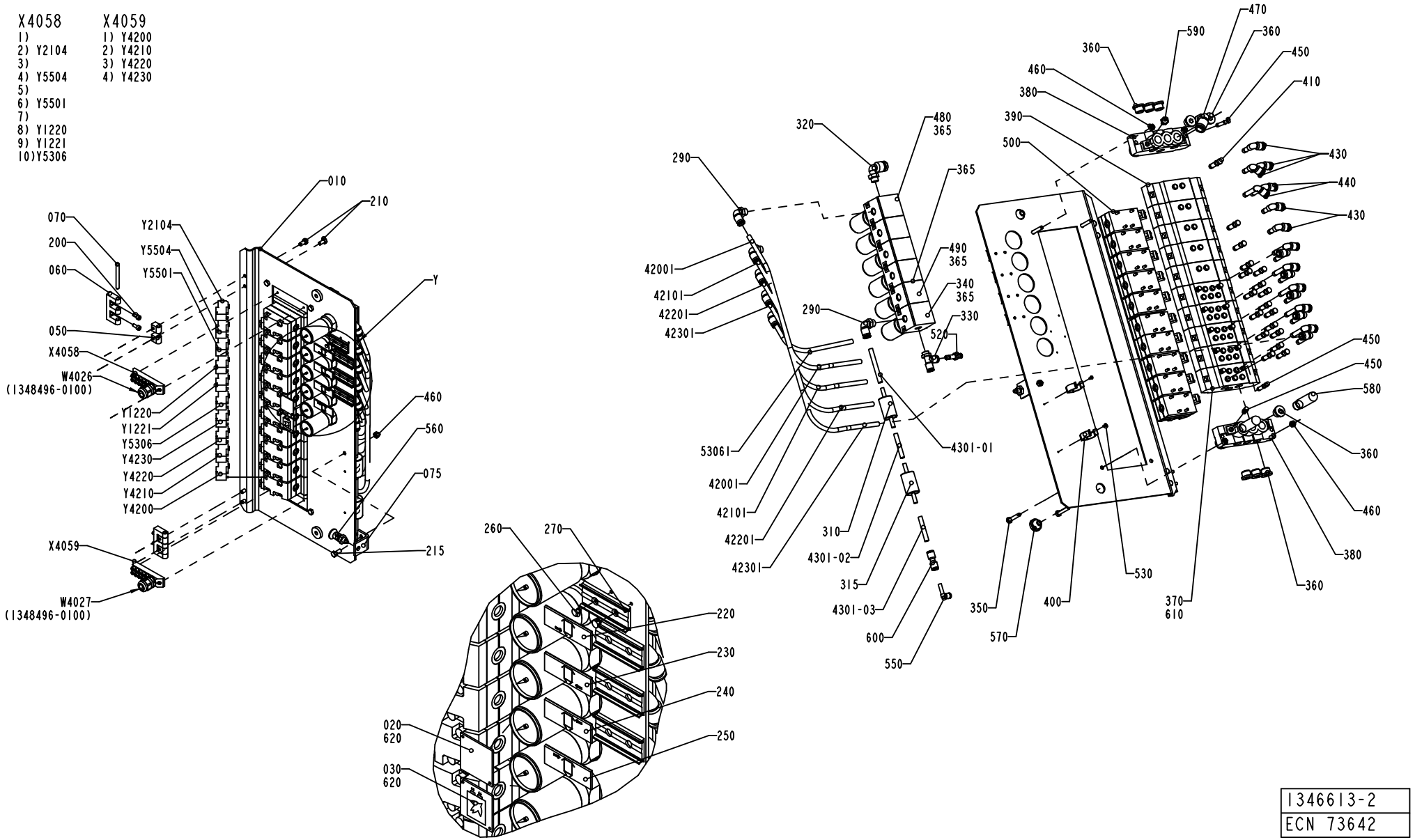

1346613-2
ECN 73642

ECM: 72985 - 20000201
Group number: 1346613-0200
Assembly Drawing: 1346613-2_1_AB

Issue: 20021030

Pos	Part No	SP	UN	Qty	Description	Page No
Common Parts						
005	1512376-0000	-		1	PNEUMATIC DIAGRAM	
010	1512321-0000	-		1	PLATE	
020	1487126-0000	-		1	SIGN	
030	978603-0000	-		1	SIGN	
050	1129770-0000	-		4	BLOCKING PIECE	
060	1035792-0000	-		2	E-HINGE	
070	988685-0000	-		2	PIN	
075	1348197-0000	-		1	HOLDER	
200	312115-0327	-		4	SCREW MC6S M5X12 A280	
210	312105-0366	-		4	SCREW M6S M6X12 A280	
215	312105-0368	-		1	SCREW M6S M6X16 A280	
220	1511522-0000	-		1	LABEL	
230	1511521-0000	-		1	LABEL	
240	1511525-0000	-		1	LABEL	
250	1511526-0000	-		1	LABEL	
260	311520-0329	-		8	RIVET, BLANK 2,4X8	
270	359240-0100	-		4	SIGN HOLDER FOR 359240-0001	
290	342732-0104	-		6	ELBOW PIPE JOINT, EXT.THREAD, D=8MM-G1/4	
310	90277-0045	B		1	FILTER / 9900-05-BK	
315	90277-0046	B		1	FILTER / 9933-05-101	
320	342732-0109	-		1	ELBOW PIPE JOINT, EXT.THREAD, D=1MM-G1/4	
330	342772-0122	-		1	ELBOW FITTING, 8 - G1/4	
340	90113-0097	B		1	PRESSURE REGULATOR	
350	312109-0376	-		4	SCREW M6S ISO 4017 M6X35 A480	
360	342713-0211	-		9	PLUG, EXT THREAD HEX SOCKET 8638-00-380	
365	342713-0210	-		7	PLUG, EXT THREAD HEX SOCKET 8638-00-140	
370	90042-0520	-		5	BASE PLATE ISO SIZE 1	
380	90042-0522	-		2	PORTED END PIECE ISO SIZE 1	
390	90042-0532	-		5	BASE PLATE ISO SIZE 1	
400	90165-0019	-		2	TOOL CLIP, 81/3, OPEN, 20 - 30 MM	
410	342715-0103	-		18	BLIND PLUG 8 MM	
42001	90166-0013	-	MM	600	TUBE 8 MM PA BLUE	
42101	90166-0013	-	MM	600	TUBE 8 MM PA BLUE	
42201	90166-0013	-	MM	600	TUBE 8 MM PA BLUE	
42301	90166-0013	-	MM	600	TUBE 8 MM PA BLUE	
430	90055-0173	-		5	ELBOW WITH TAILPIECE 8/6 MM	
4301-01	90166-0013	-	MM	70	TUBE 8 MM PA BLUE	
4301-02	90166-0013	-	MM	50	TUBE 8 MM PA BLUE	
4301-03	90166-0013	-	MM	50	TUBE 8 MM PA BLUE	
440	90055-0204	-		12	ELBOW WITH TAILPIECE 8/8 MM LONG	
450	342715-0102	-		12	BLIND PLUG 6 MM	
460	312605-0316	-		5	HEXAGON NUT, M6M M6 A280	
470	342732-0110	-		1	ELBOW PIPE JOINT, EXT.THREAD,D=12MM-G3/8	
480	90113-0096	B		4	PRESSURE REGULATOR	
490	90113-0095	B		1	PRESSURE REGULATOR	
500	90042-0215	B		10	VALVE BODY 5/2 UNISTABLE	
520	342716-0203	-		1	REDUCER 6-8	
530	312125-0220	-		2	SCREW SLOT.PAN HD. MCS 3X6 A480	
53061	90166-0013	-	MM	450	TUBE 8 MM PA BLUE	
550	90055-0217	-		1	ELBOW PIPE JOINT	
560	90051-0112	-		1	LOCK KNOB, NO. GN 617 NIK5	
570	90015-0023	-		2	LEAD-IN, TET7-10, E-1458019	
580	90328-0024	B		2	SILENCER G3/8	
590	90328-0017	B		1	SILENCER, D=6 MM	
600	90055-0189	-		1	HOSE,NIPPLE,REDUCER,TUBE, 6/8M	
610	90042-0528	B		5	BLANKING KIT SEALS ISO SIZE 1	
620	312502-0120	-		4	DRIVE SCREW ROUND HEAD KDS 0X5	
630	359000-0400	-		24	MARKING CO2/4"0"	
640	359000-0401	-		18	MARKING COLLAR 2/4 "1" YELLOW	
650	359000-0402	-		12	MARKING COLLAR 2/4 "2" YELLOW	
660	359000-0403	-		12	MARKING COLLAR PA2/4 "3" YELLOW	
670	359000-0404	-		14	MARKING COLLAR PA2/4 "4" YELLOW	
680	359000-0405	-		2	MARKING CO2/4"5"	
690	359000-0406	-		2	MARKING COLLAR PA2/4 "6" YELLOW	
700	359000-0024	-		6	MARKING CO2/4 "-"	
X4058	90042-0535	-		1	TERMINAL BOARD 19 CORDS	
X4059	90042-0535	-		1	TERMINAL BOARD 19 CORDS	
Y1220	90042-0538	B		1	PILOT VALVE L=500MM	
Y1221	90042-0538	B		1	PILOT VALVE L=500MM	
Y2104	90042-0538	B		1	PILOT VALVE L=500MM	
Y4200	90042-0538	B		1	PILOT VALVE L=500MM	
Y4210	90042-0538	B		1	PILOT VALVE L=500MM	
Y4220	90042-0538	B		1	PILOT VALVE L=500MM	
Y4230	90042-0538	B		1	PILOT VALVE L=500MM	
Y5306	90042-0538	B		1	PILOT VALVE L=500MM	
Y5501	90042-0538	B		1	PILOT VALVE L=500MM	
Y5504	90042-0538	B		1	PILOT VALVE L=500MM	

Machine Type | Group Description | Used-In | Group Number | Page No

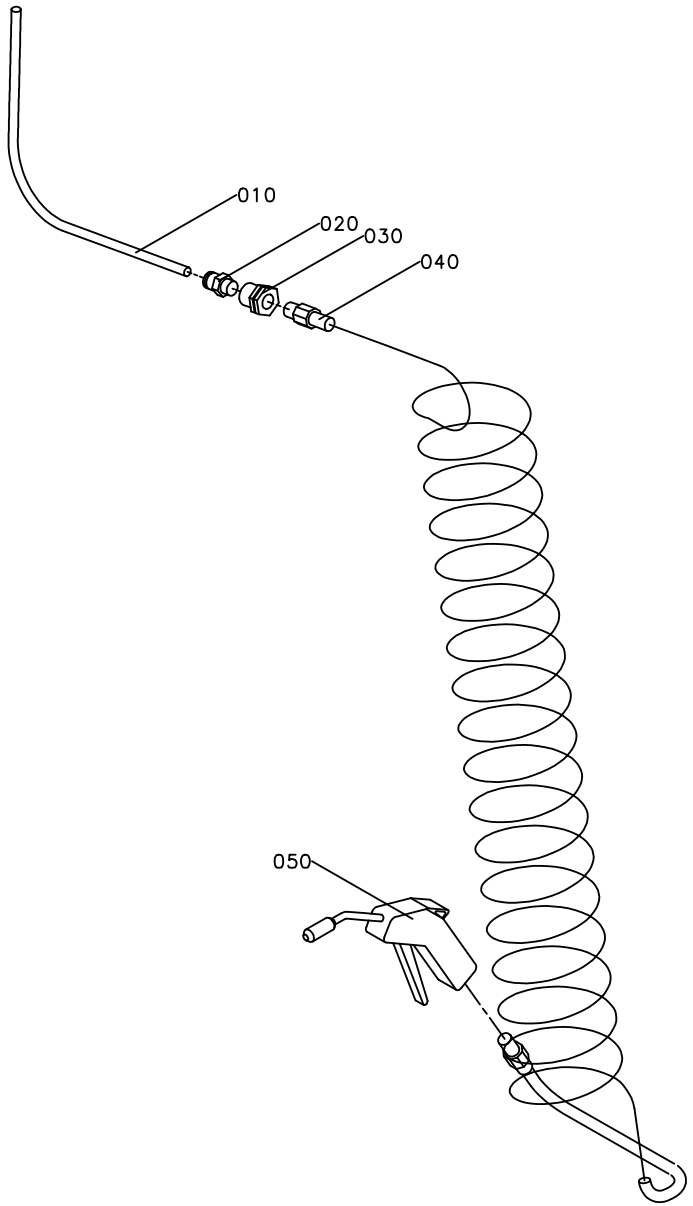
010
020
030
040
050

ECM: 71742 - 19980903
Group number: 1095682-0100
Assembly Drawing: 1095682-1_1_AA

Issue: 20021030

Pos	Part No	SP	UN	Qty	Description	Page No
Common Parts						
010	90166-0013	-	MM	1800	TUBE 8 MM PA BLUE	
020	342920-0122	-		1	STRAIGHT COUPLING,EXT.THREADED 8/6-R1/4"	
030	342767-0104	-		1	CONN. BULKHEAD G1/4	
040	90152-0016	-		1	HOSE	
050	90243-0061	-		1	AIR GUN, CEJN SERIE 204 ED: 90459-0173	

Pos	Part No	SP	UN	Qty	Description	Page No

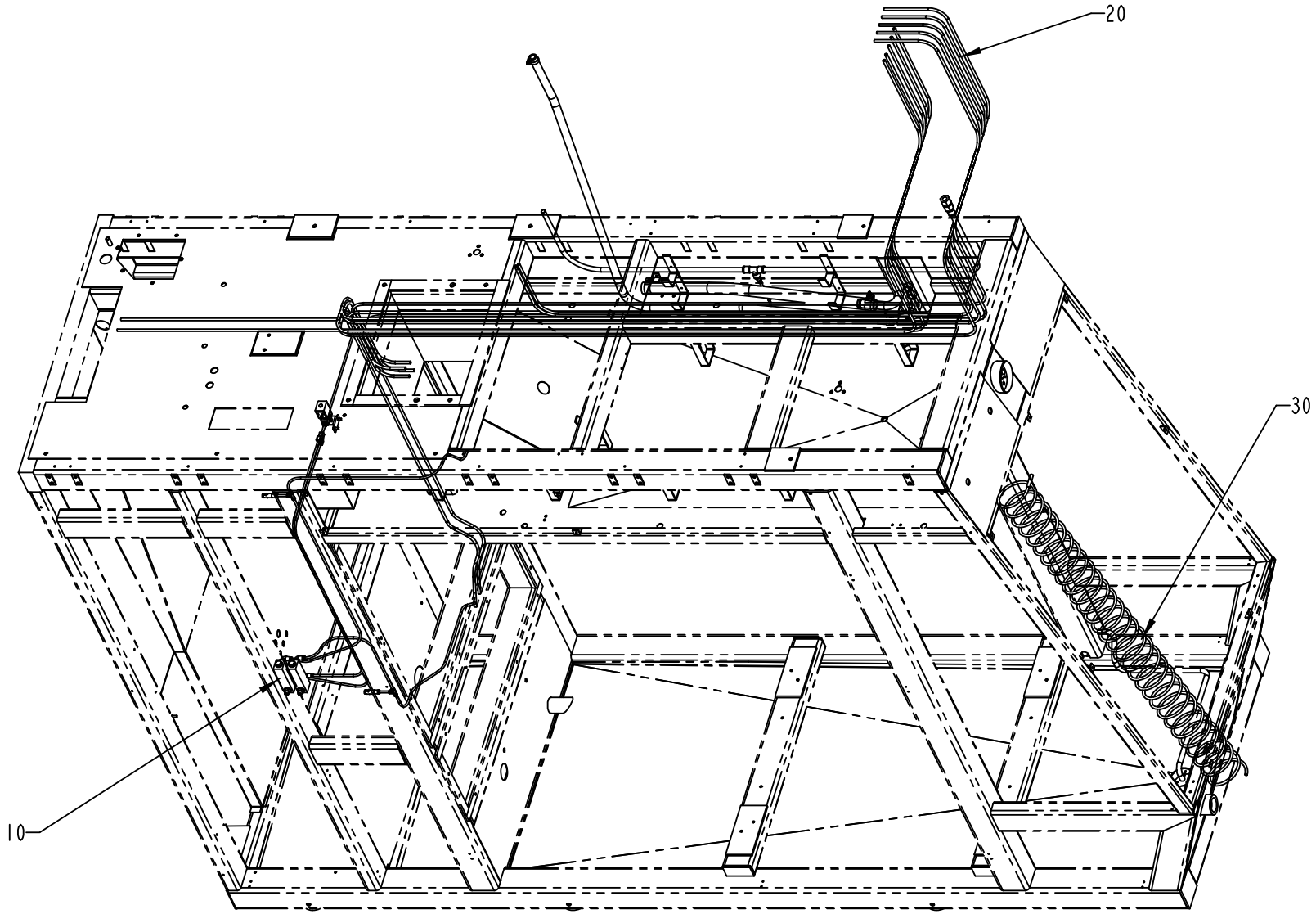

S-577121-4
ECN 72985

ECM: 72985 - 20000201
Group number: 577121-0400
Assembly Drawing: 577121-4_1_AA

Issue: 20021030

Pos	Part No	SP	UN	Qty	Description	Page No
Common Parts						
010	A1334810-0200	-		1	PIPE WORK	**249**
020	A1334812-0100	-		1	COOLING HOSES	**251**
030	A1095681-0100	-		1	SPRAY GUN	**253**

Pos	Part No	SP	UN	Qty	Description	Page No

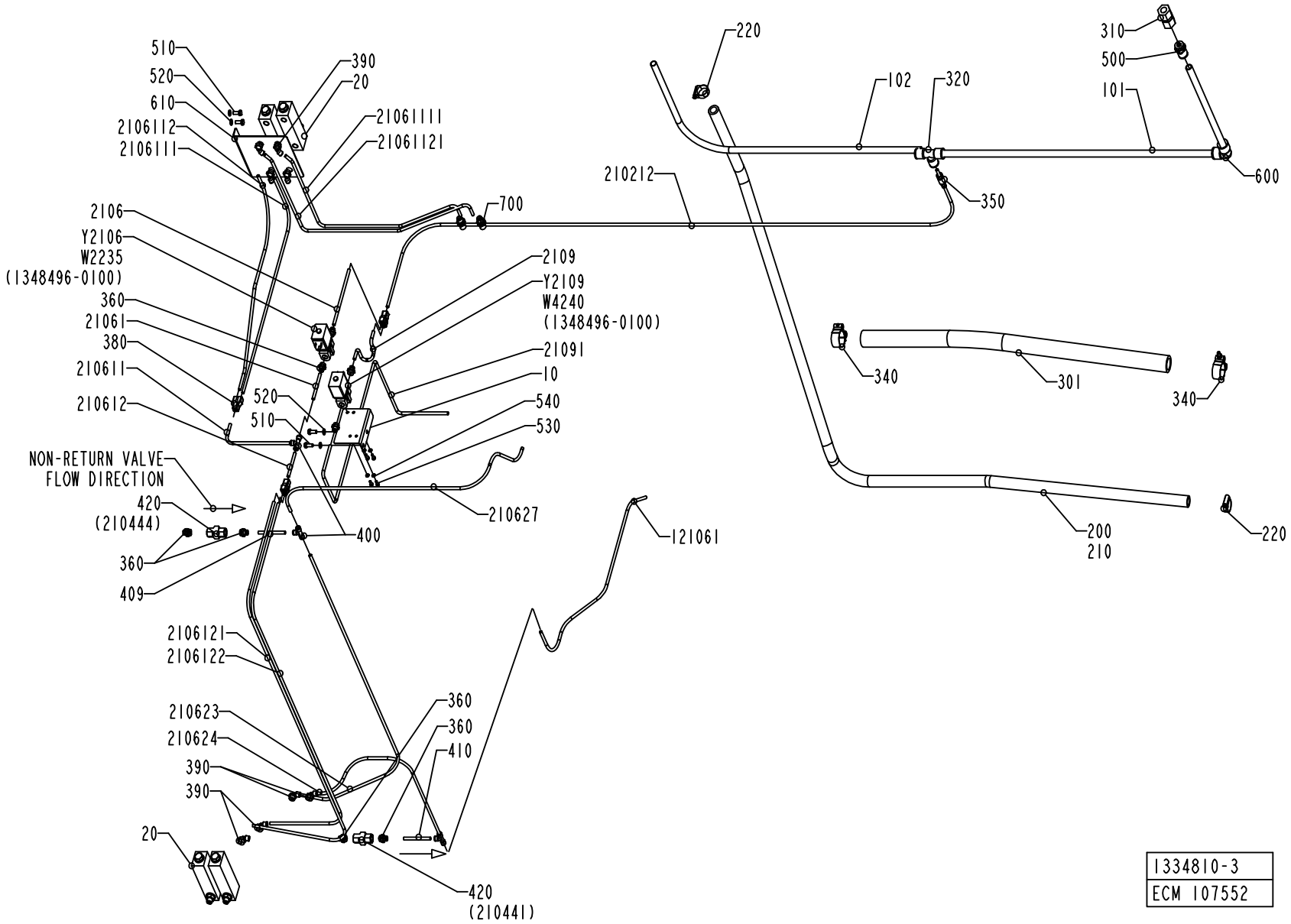
510
520
610
2106112
2106111
390
20
21061111
21061121
700
2106
Y2106
W2235
(1348496-0100)
360
21061
380
210611
210612
520
510
2109
Y2109
W4240
(1348496-0100)
21091
10
540
530
210627
NON-RETURN VALVE
FLOW DIRECTION
420
(210444)
360
409
400
121061
2106121
2106122
210623
210624
390
390
20
360
360
410
420
(210441)
220
102
320
210212
350
310
500
101
600
340
301
340
200
210
220
1334810-3
ECM 107552

ECM: 108899 - 20010926
Group number: 1334810-0200
Assembly Drawing: 1334810-3_1_AD

Issue: 20021030

Pos	Part No	SP	UN	Qty	Description	Page No
Common Parts						
010	1548539-0000	-		1	CANTILEVER	
020	90243-0112	-		4	FLOW METER	
101	90166-0196	-	MM	1650	TUBE 14 MM PA BLUE	
102	90166-0196	-	MM	1000	TUBE 14 MM PA BLUE	
121061	90166-0132	-	MM	2100	TUBE 6 MM PA,TRANSP.	
200	90166-0260	-	MM	2000	HOSE	
210	90411-0020	-	MM	2000	INSULATING TUBE	
210212	90166-0132	-	MM	1800	TUBE 6 MM PA,TRANSP.	
21061	90166-0132	-	MM	75	TUBE 6 MM PA,TRANSP.	
210611	90166-0132	-	MM	235	TUBE 6 MM PA,TRANSP.	
2106111	90166-0132	-	MM	665	TUBE 6 MM PA,TRANSP.	
21061111	90166-0132	-	MM	700	TUBE 6 MM PA,TRANSP.	
2106112	90166-0132	-	MM	635	TUBE 6 MM PA,TRANSP.	
210612	90166-0132	-	MM	75	TUBE 6 MM PA,TRANSP.	
2106122	90166-0132	-	MM	1350	TUBE 6 MM PA,TRANSP.	
210621	90166-0132	-	MM	1450	TUBE 6 MM PA,TRANSP.	
210623	90166-0132	-	MM	1050	TUBE 6 MM PA,TRANSP.	
210624	90166-0132	-	MM	1000	TUBE 6 MM PA,TRANSP.	
210627	90166-0132	-	MM	1000	TUBE 6 MM PA,TRANSP.	
2109	90166-0132	-	MM	160	TUBE 6 MM PA,TRANSP.	
21091	90166-0132	-	MM	900	TUBE 6 MM PA,TRANSP.	
220	342991-0104	-		2	HOSE CLIP,WORM DRIVE TYPE (23)-27	
301	90166-0233	-	MM	1000	HOSE	
310	342725-0114	-		1	CONN. STR. PIPE GI-15-G1/2	
320	342748-0110	-		1	T-CONNECTION 14MM	
340	90165-0147	-		2	HOSE CLIP	
350	90055-0116	-		1	REDUCER 6-14	
360	342722-0203	-		8	STRAIGHT COUPLING	
380	90055-0100	-		3	Y-CONNECTION, 6-6	
390	90458-2957	-		8	ELBOW PIPE JOINT, EXT.THREAD, D=6MM-G1/4	
400	342748-0102	-		3	T-CONNECTION 6MM	
4061121	90166-0132	-	MM	800	TUBE 6 MM PA,TRANSP.	
420	90235-0151	-		2	NON-RETURN VALVE	
500	90055-0097	-		1	STRAIGHT COUPLING	
510	312105-0368	-		4	SCREW M6S M6X16 A280	
520	315105-0153	-		4	WASHER PLAIN, BRB, 6,4/12,H=1,5	
530	312105-0289	-		4	SCREW M6S ISO 4017 M4X10 A480	
540	315105-0136	-		4	WASHER PLAIN, BRB, 4,3/8,H=0,8	
550	359000-0815	-		4	MARKING CO3/6"P"	
560	359000-0500	-		4	MARKING COLLAR 3/6 "0" YELLOW	
600	342735-0110	-		1	ELBOW PIPE	
610	2542343-0000	-		1	BRACKET	
700	342768-0102	-		2	BULKHEAD CONNECTOR, 6 MM	
W2235	351150-0403	-	MM	3000	CABLE OLFLEX 3X0,75 MM2 LIGHT/GREY	
W4240	351150-0403	-	MM	3000	CABLE OLFLEX 3X0,75 MM2 LIGHT/GREY	
Y2106	90042-0248	-		1	SOLENOID VALVE OFFICIENE DI ENSINO	
Y2109	90042-0248	-		1	SOLENOID VALVE OFFICIENE DI ENSINO	

Machine Type | Group Description | Used-In | Group Number | Page No

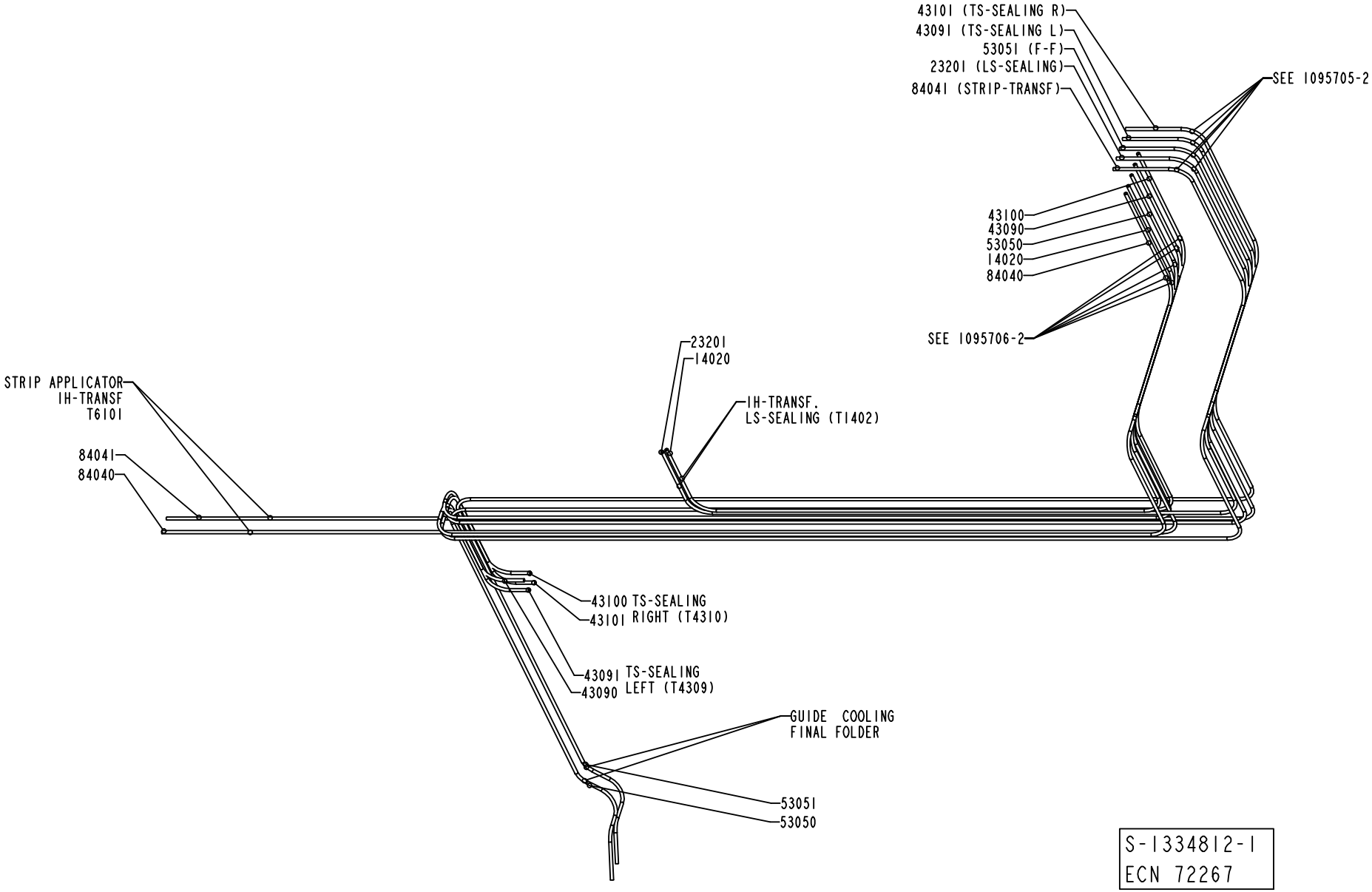
43101 (TS-SEALING R)
43091 (TS-SEALING L)
53051 (F-F)
23201 (LS-SEALING)
84041 (STRIP-TRANSF)
SEE 1095705-2
43100
43090
53050
14020
84040
SEE 1095706-2
23201
14020
IH-TRANSF.
LS-SEALING (T1402)
STRIP APPLICATOR
IH-TRANSF
T6101
84041
84040
43100 TS-SEALING
43101 RIGHT (T4310)
43091 TS-SEALING
43090 LEFT (T4309)
GUIDE COOLING
FINAL FOLDER
53051
53050
S-1334812-1
ECN 72267

ECM: 72985 - 20000201
Group number: 1334812-0100
Assembly Drawing: 1334812-1_1_AB

Issue: 20021030

Pos	Part No	SP	UN	Qty	Description	Page No
Common Parts						
100	359000-0400	-		30	MARKING CO2/4"0"	
110	359000-0401	-		16	MARKING COLLAR 2/4 "1" YELLOW	
120	359000-0402	-		6	MARKING COLLAR 2/4 "2" YELLOW	
130	359000-0403	-		14	MARKING COLLAR PA2/4 "3" YELLOW	
140	359000-0404	-		18	MARKING COLLAR PA2/4 "4" YELLOW	
14020	90166-0118	-	MM	2800	TUBE 8 MM PA BLACK	
150	359000-0405	-		8	MARKING CO2/4"5"	
160	359000-0408	-		4	MARKING COLLAR PA2/4 "8" YELLOW	
170	359000-0409	-		4	MARKING COLLAR PA2/4 "9" YELLOW	
23201	90166-0118	-	MM	3500	TUBE 8 MM PA BLACK	
43090	90166-0118	-	MM	4000	TUBE 8 MM PA BLACK	
43091	90166-0118	-	MM	4550	TUBE 8 MM PA BLACK	
43100	90166-0118	-	MM	4000	TUBE 8 MM PA BLACK	
43101	90166-0118	-	MM	4500	TUBE 8 MM PA BLACK	
53050	90166-0118	-	MM	5200	TUBE 8 MM PA BLACK	
53051	90166-0118	-	MM	5400	TUBE 8 MM PA BLACK	
84040	90166-0118	-	MM	4200	TUBE 8 MM PA BLACK	
84041	90166-0118	-	MM	4600	TUBE 8 MM PA BLACK	

Pos	Part No	SP	UN	Qty	Description	Page No

Machine Type | Group Description | Used-In | Group Number | Page No

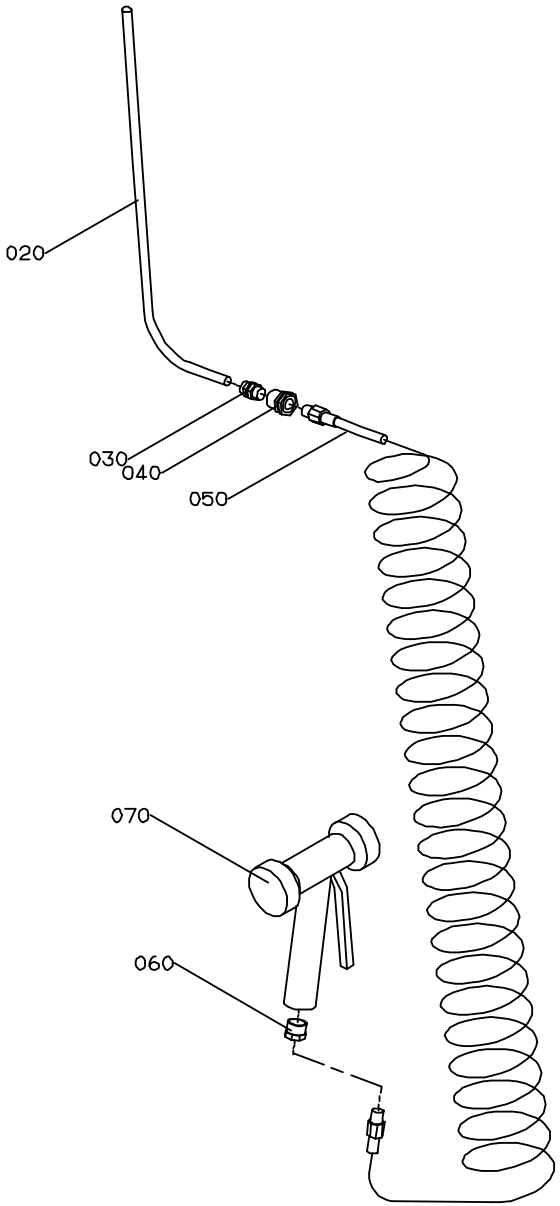

S-1095681-1
ECN 21960

ECM: - -
Group number: 1095681-0100
Assembly Drawing: 1095681-1_1_AA

Issue: 20021030

Pos	Part No	SP	UN	Qty	Description	Page No
Common Parts						
020	90166-0135	-	MM	1000	TUBE 10 MM PA BLACK	
030	342920-0132	-		1	STRAIGHT COUPL.,EXT.THREADED 10/8-R1/4"	
040	342767-0104	-		1	CONN. BULKHEAD G1/4	
050	90152-0017	-		1	HOSE	
060	342701-0205	-		1	BUSHING,INT./EXT.G-THREAD G1/2"-G1/4"	
070	90426-0003	-		1	HAND SHOWER	

Pos	Part No	SP	UN	Qty	Description	Page No

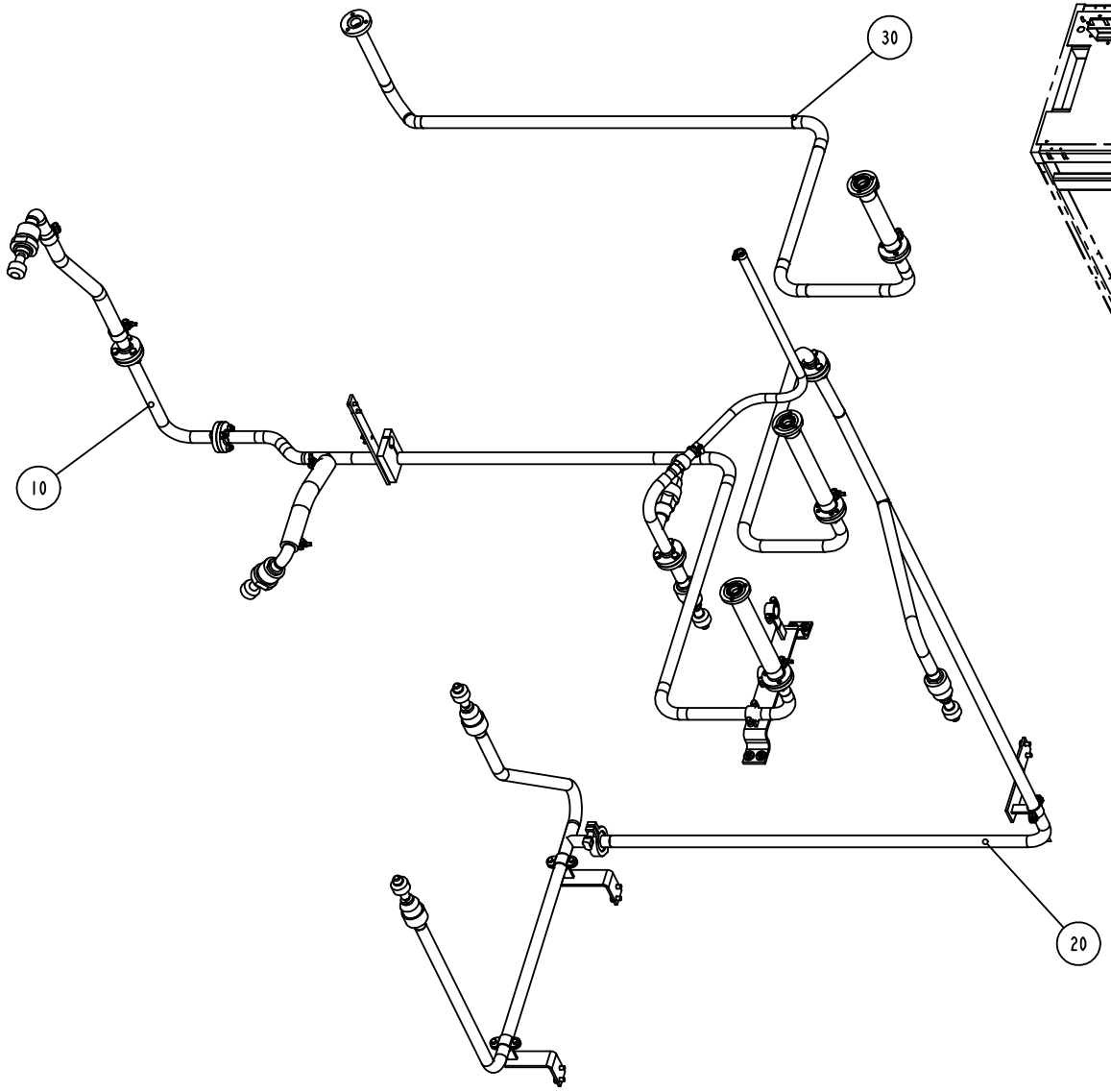

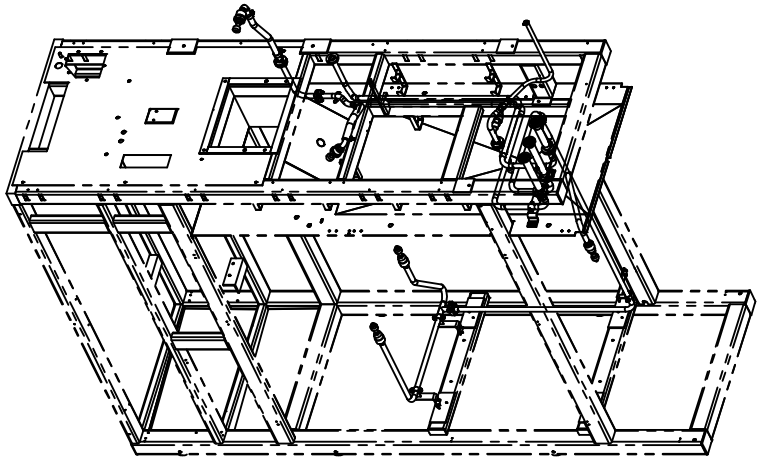

577122-3
ECN 84210

ECM: 84808 - 20000913
Group number: 577122-0300
Assembly Drawing: 577122-3_1_AB

Issue: 20021030

Pos	Part No	SP	UN	Qty	Description	Page No
Common Parts						
010	A1260097-0300	-		1	CLEANING PIPEWORK UPPER	**257**
020	A1260098-0300	-		1	CLEANING PIPEWORK	**259**
030	A1095853-0300	-		1	CLEANING PIPE	**261**

Pos	Part No	SP	UN	Qty	Description	Page No

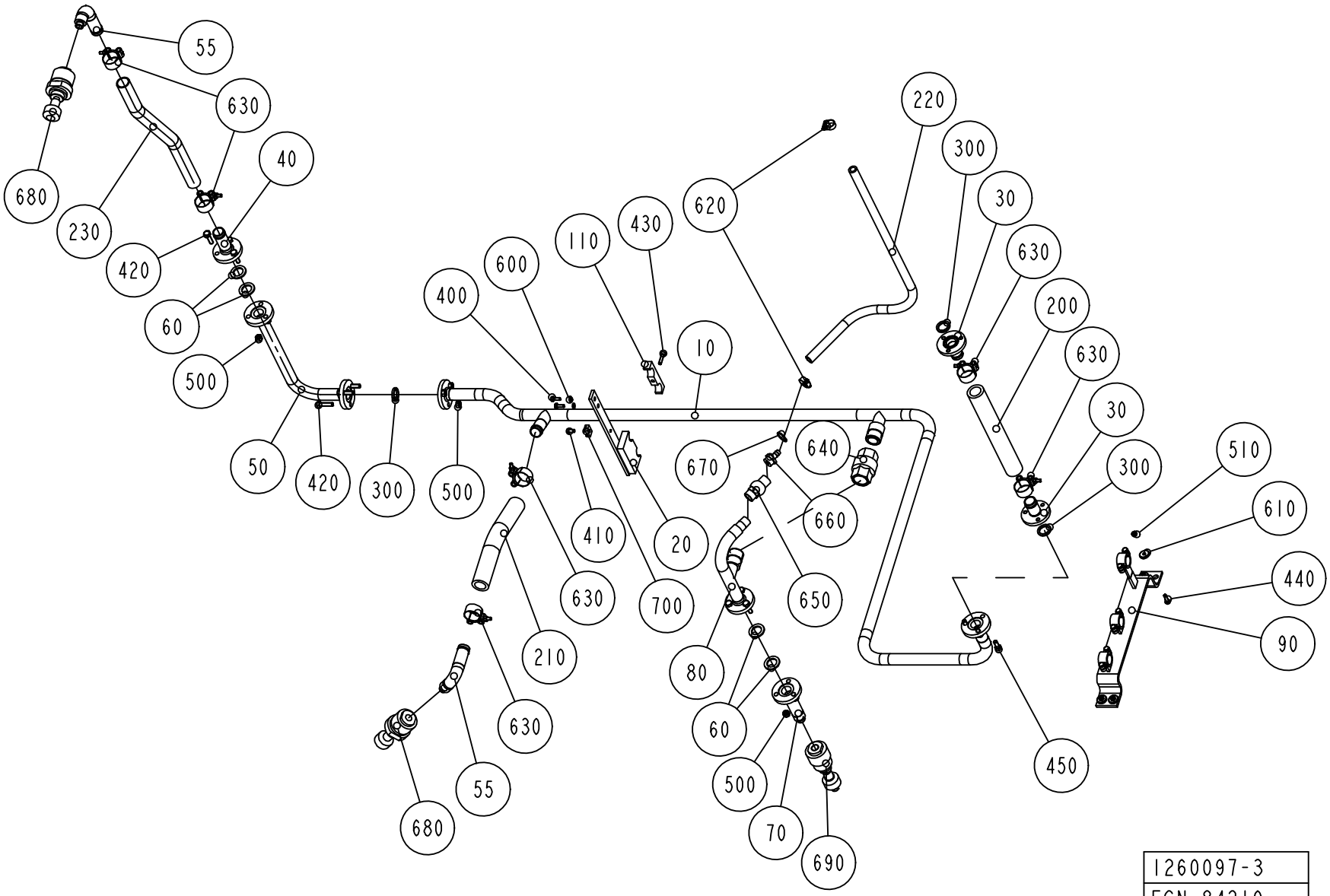
55
630
40
680
230
420
60
500
50
420
300
500
400
600
110
430
620
10
220
300
30
630
200
630
30
300
510
610
440
90
640
670
660
650
410
20
630
700
210
630
55
680
80
60
500
70
690
450
1260097-3
ECN 84210

ECM: 84215 - 20000913
Group number: 1260097-0300
Assembly Drawing: 1260097-3_1_AD

Issue: 20021030

Pos	Part No	SP	UN	Qty	Description	Page No
Common Parts						
010	1538962-0000	-		1	PIPE	
020	1317453-0000	-		1	BRACKET	
030	1195466-0000	-		2	PIPE	
040	1346665-0000	-		1	PIPE	
050	1260101-0000	-		1	PIPE	
055	B1129383-0000	-		2	PIPE	
	1129269-0000	*-*		*1*	*HOSE CONNECTION*	
	1129438-0000	*-*		*1*	*ADAPTOR*	
060	1037443-0000	B		4	GASKET	
070	B1129379-0000	-		1	PIPE	
	1129438-0000	*-*		*1*	*ADAPTOR*	
080	B1255493-0000	-		1	PIPE	
	343421-0103	*-*		*1*	*FLANGE FOR AIR & PER. PIPE F D=25,4 MM*	
	90330-0059	*-*		*1*	*NIPPLES, EXT. THREAD WELD. R-208/KR1/2*	
	90217-0129	*-*		*1*	*WELD. T - PIPE D=25,4 MM PMCS 3-A*	
	90217-0097	*-*		*1*	*PIPE ELBOW 90 DEGR. D=12,7 MM PMCS 3-A*	
090	B1129378-0000	-		1	BRACKET	
	90165-0089	*-*		*3*	*PIPE CLAMP*	
110	1317486-0000	-		1	BRACKET	
200	90166-0233	B	MM	340	HOSE	
210	90166-0233	B	MM	300	HOSE	
220	90166-0121	-	MM	1000	HOSE	
230	90166-0233	-	MM	630	HOSE	
300	315229-0103	B		2	GASKETS, 23,1X30,1X3,7 MM 1" FDA	
400	312105-0368	-		2	SCREW M6S M6X16 A280	
410	312125-0366	-		1	SCREW PAN HEAD MCS M6X12 SS	
420	312105-0455	-		6	SCREW M6S ISO 4017 M8X30 A480	
430	312115-0372	-		1	SCREW MC6S M6X25 A280	
440	312105-0370	-		4	SCREW M6S ISO 4017 M6X20 A480	
450	312105-0451	-		3	SCREW M6S ISO 4017 M8X20 A480	
500	312605-0318	-		9	HEXAGON NUT, M6M M8 A280	
510	312605-0316	-		4	HEXAGON NUT, M6M M6 A280	
600	315105-0153	-		2	WASHER PLAIN, BRB, 6,4/12,H=1,5	
610	315125-0153	-		4	WASHER PLAIN ROUND,CHAMF. 6,4/22, H=4	
620	342991-0102	-		2	HOSE CLIP,WORM DRIVE TYPE (16)-19	
630	90165-0147	-		6	HOSE CLIP	
640	B90230-0044	B		1	NON-RETURN VALVE 1"	
	90230-0308	*C*		*1*	*GASKET KIT*	
650	90230-0042	B		1	NON-RETURN VALVE 1/2"	
660	342901-0105	-		1	HOSE NIPPLE, EXT.THR. R1/2-12 MM	
670	315233-0113	-		1	WASHER PL.RND.NYL.21,4/27,H=1,2	
680	90424-0071	B		2	ROT.SPRAY NOZZLE, D40140-R3/8-PVDF 4.5	
690	90424-0066	B		1	ROT.SPRAY NOZZLE, D26984-R3/8-PVDF 4.5	
700	352113-0204	-		1	ANCHOR PLATES FOR STRIPS, TYPE TM3S25-M	

Machine Type | Group Description | Used-In | Group Number | Page No

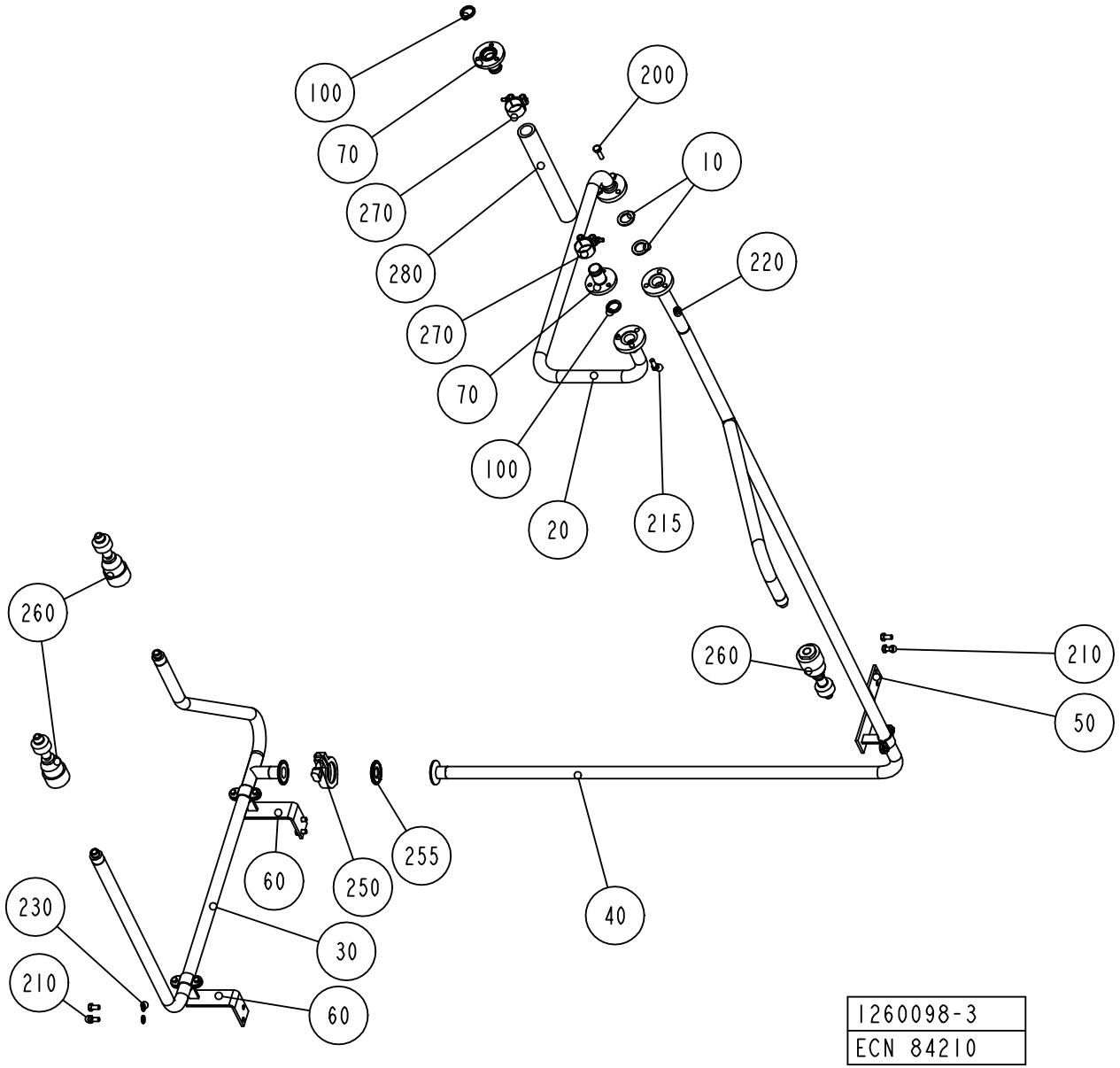
100
70
270
280
270
70
100
20
215
200
10
220
260
260
210
50
40
255
250
60
230
30
210
60
1260098-3
ECN 84210

ECM: 84216 - 20000913
Group number: 1260098-0300
Assembly Drawing: 1260098-3_1_AB

Issue: 20021030

Pos	Part No	SP	UN	Qty	Description	Page No
Common Parts						
010	1037443-0000	B		2	GASKET	
020	1538960-0000	-		1	PIPE	
030	1260185-0000	-		1	PIPE	
040	1317447-0000	-		1	PIPE	
050	1317451-0000	-		1	BRACKET	
060	1317450-0000	-		2	BRACKET	
070	1195466-0000	-		2	PIPE	
100	315229-0103	B		1	GASKETS, 23,1X30,1X3,7 MM 1" FDA	
200	312105-0455	-		3	SCREW M6S ISO 4017 M8X30 A480	
210	312105-0449	-		6	SCREW M6S ISO 4017 M8X16 A480	
215	312105-0451	-		3	SCREW M6S ISO 4017 M8X20 A480	
220	312605-0318	-		3	HEXAGON NUT, M6M M8 A280	
230	315105-0165	-		4	WASHER PLAIN, BRB, 8,4/16,H=1,5	
250	342840-0103	-		1	CLAMPING PIECE	
255	342850-0103	B		1	GASKET 22,7X49,1X5,2 MM 1" FDA	
260	90424-0066	B		3	ROT.SPRAY NOZZLE, D26984-R3/8-PVDF 4.5	
270	90165-0147	-		2	HOSE CLIP	
280	90166-0233	B	MM	340	HOSE	

Pos	Part No	SP	UN	Qty	Description	Page No

Machine Type | Group Description | Used-In | Group Number | Page No

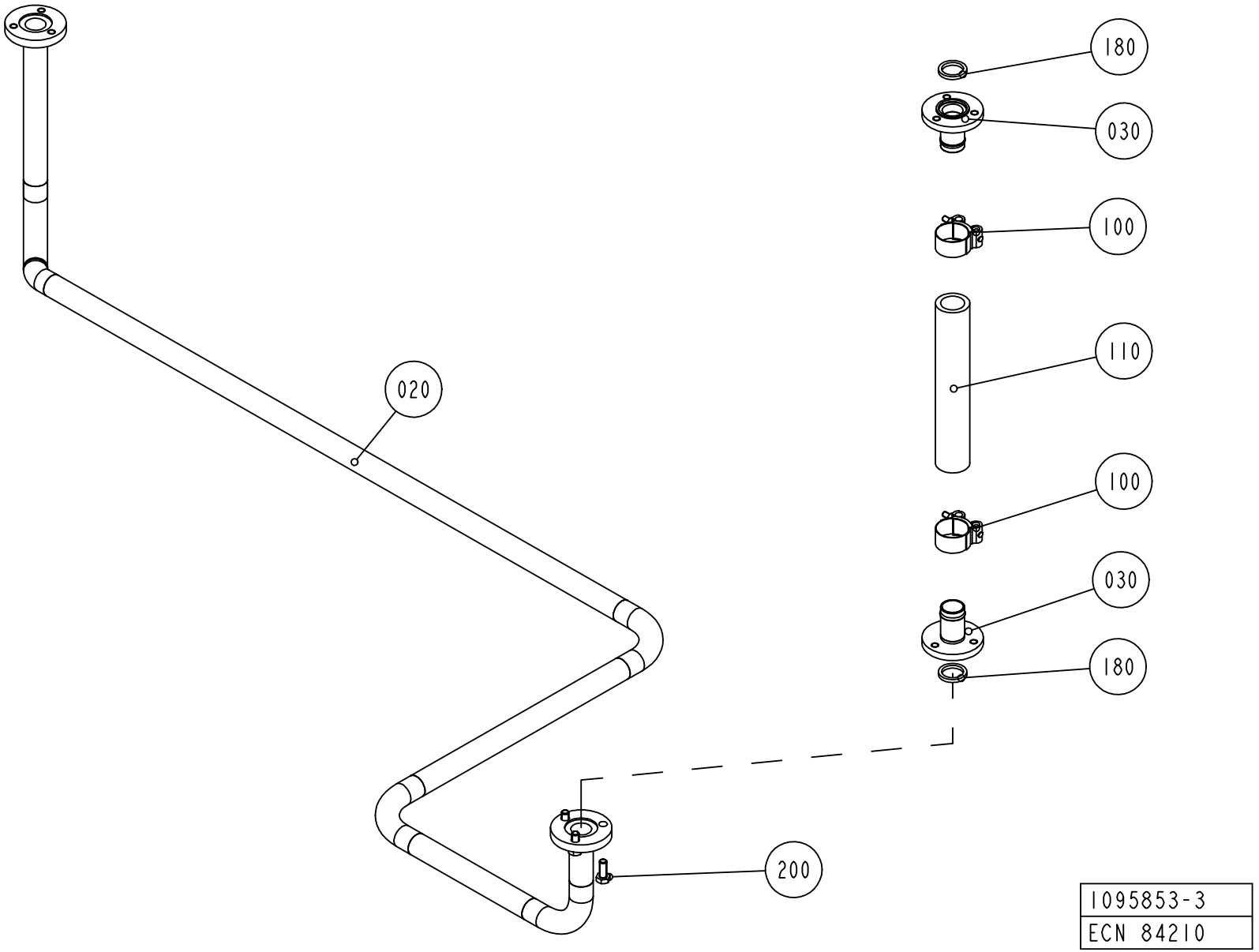
180
030
100
110
100
030
180
020
200
1095853-3
ECN 84210

ECM: 84217 - 20000913
Group number: 1095853-0300
Assembly Drawing: 1095853-3_1_AA

Issue: 20021030

Pos	Part No	SP	UN	Qty	Description	Page No
Common Parts						
020	1538961-0000	-		1	PIPE	
030	1195466-0000	-		2	PIPE	
100	90165-0147	-		2	HOSE CLIP	
110	90166-0233	B	MM	300	HOSE	
180	315229-0103	B		2	GASKETS, 23,1X30,1X3,7 MM 1" FDA	
200	312105-0451	-		3	SCREW M6S ISO 4017 M8X20 A480	

Pos	Part No	SP	UN	Qty	Description	Page No

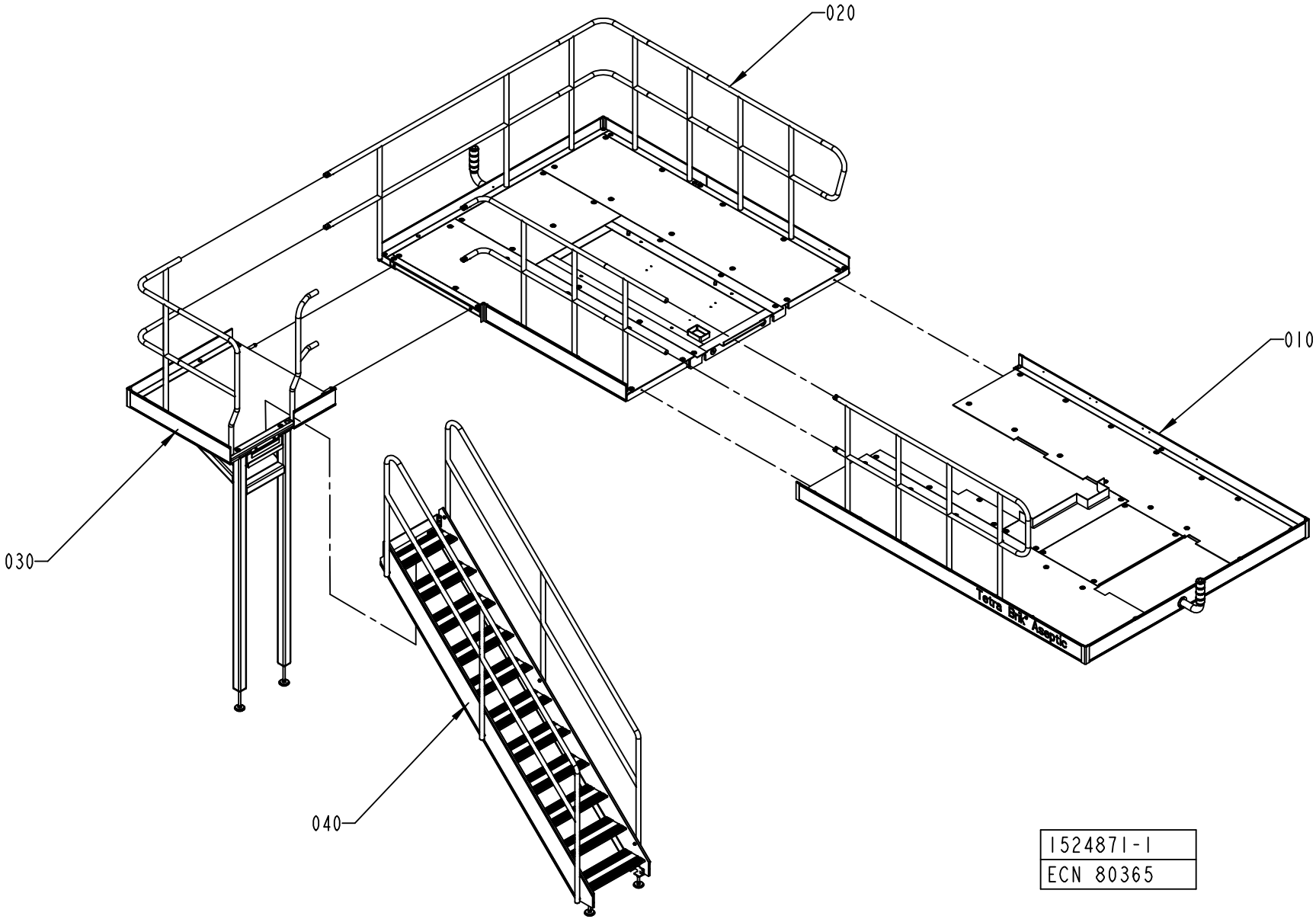

1524871-1
ECN 80365

ECM: 80427 - 20010221
Group number: 1524871-0100
Assembly Drawing: 1524871-1_1_AA

Issue: 20021030

Pos	Part No	SP	UN	Qty	Description	Page No
Common Parts						
010	A1524866-0100	-		1	FRONT PLATFORM	**265**
020	A1524845-0100	-		1	BACK PLATFORM	**269**
030	A1538870-0100	-		1	PLATFORM	**271**
040	A1523777-0100	-		1	STAIR CASE	**273**

Pos	Part No	SP	UN	Qty	Description	Page No

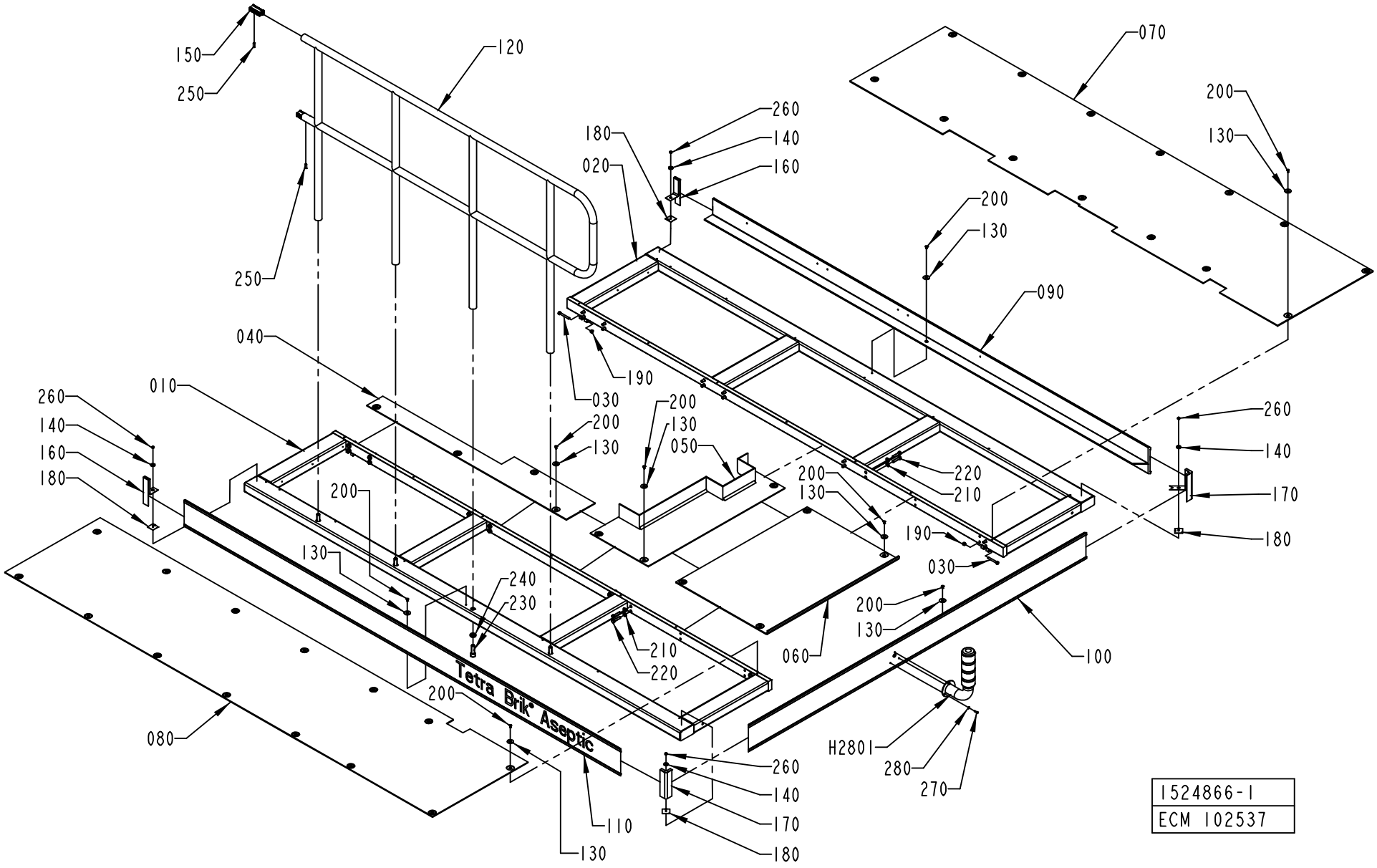
150
250
120
250
040
010
260
140
160
180
080
180
020
260
140
160
200
130
030
190
200
130
050
200
130
240
230
210
220
200
110
130
260
140
170
180
070
200
130
090
200
130
220
210
190
030
200
130
060
100
H2801
280
270
260
140
170
180
Tetra Brik Aseptic
1524866-1
ECM 102537

Pos	Part No	SP	UN	Qty	Description	Page No
Common Parts						
010	1524867-0000	-		1	PLATFORM	
020	1524868-0000	-		1	PLATFORM	
030	1523780-0000	-		4	SHAFT	
040	1254118-0000	-		1	CHECKER PLATE	
050	1041949-0000	-		1	CHECKER PLATE	
060	1254030-0000	-		1	CHECKER PLATE	
070	1523781-0000	-		1	CHECKER PLATE	
080	1523782-0000	-		1	CHECKER PLATE	
090	1523783-0000	-		1	TOE PLATE	
100	1523784-0000	-		1	TOE PLATE	
110	1524869-0000	-		1	TOE PLATE	
120	1524870-0000	-		1	RAILING	
130	1036241-0000	-		42	WASHER	
140	315125-0153	-		4	WASHER PLAIN ROUND,CHAMF. 6,4/22, H=4	
150	B985328-0000	-		2	CONNECTION	
	985327-0000	-		*1*	*PROFILE*	
160	1254025-0000	-		2	STRIP	
170	1254027-0000	-		2	CORNER STRIP	
180	1254028-0000	-		4	FASTENING PLATE	
190	312812-0318	-		4	HEXAGON NUT, NY-LOCK M8 A480	
200	312155-0366	-		42	SCREW HEX.SOCK.COUNT.MF6S M6X12 A280	
210	315105-0173	-		28	WASHER PLAIN, BRB, 10,5/22,H=2	
220	90458-2845	-		28	SCREW,HEXAGON HEAD M6S ISO 4017 M10X45	
230	312115-0630	-		4	SCREW MC6S M16X50 A280	
240	315111-0186	-		4	WASHER PLAIN, TBRB 17/30 H=6	
250	312318-0453	-		4	SCREW SOCK.SET CUP P MSK6SS M8X25 A4	
260	312605-0316	-		4	HEXAGON NUT, M6M M6 A280	
270	312115-0329	-		3	SCREW MC6S M5X16 A280	
280	315105-0146	-		3	WASHER PLAIN, BRB, 5,3/10,H=1	
H2801	A1317983-0100	-		1	ALARM BEACON	**267**

Pos	Part No	SP	UN	Qty	Description	Page No

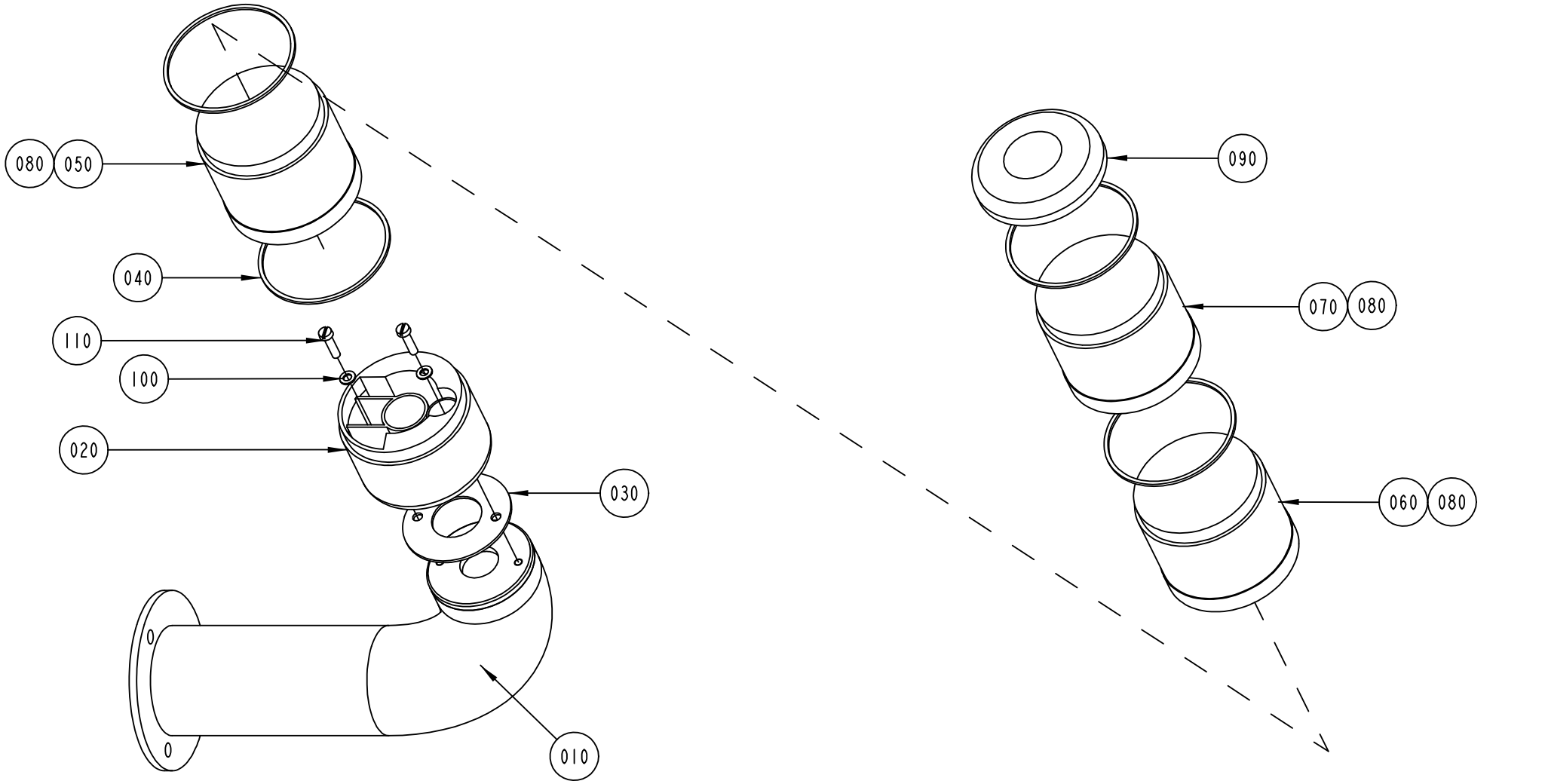

S-1317983-1
ECN 71634

ECM: 90290 - 20010302
Group number: 1317983-0100
Assembly Drawing: 1317983-1_1_AA

Issue: 20021030

Pos	Part No	SP	UN	Qty	Description	Page No
Common Parts						
010	1317793-0000	B		1	BASE	
020	1317794-0000	-		1	BASE	
030	90419-0310	A		1	GASKET	
040	90419-0307	A		4	GASKET	
050	90419-0013	B		1	LIGHT ELEMENT, BLUE	
060	90419-0014	B		1	LIGHT ELEMENT, YELLOW	
070	90419-0012	B		1	LIGHT ELEMENT, RED	
080	90036-0068	A		3	BULB 6.5W 24V	
090	90419-0017	-		1	BASE	
100	315105-0136	-		2	WASHER PLAIN, BRB, 4,3/8,H=0,8	
110	312125-0293	-		2	SCREW PAN HEAD MCS M4X16 SS	

Pos	Part No	SP	UN	Qty	Description	Page No

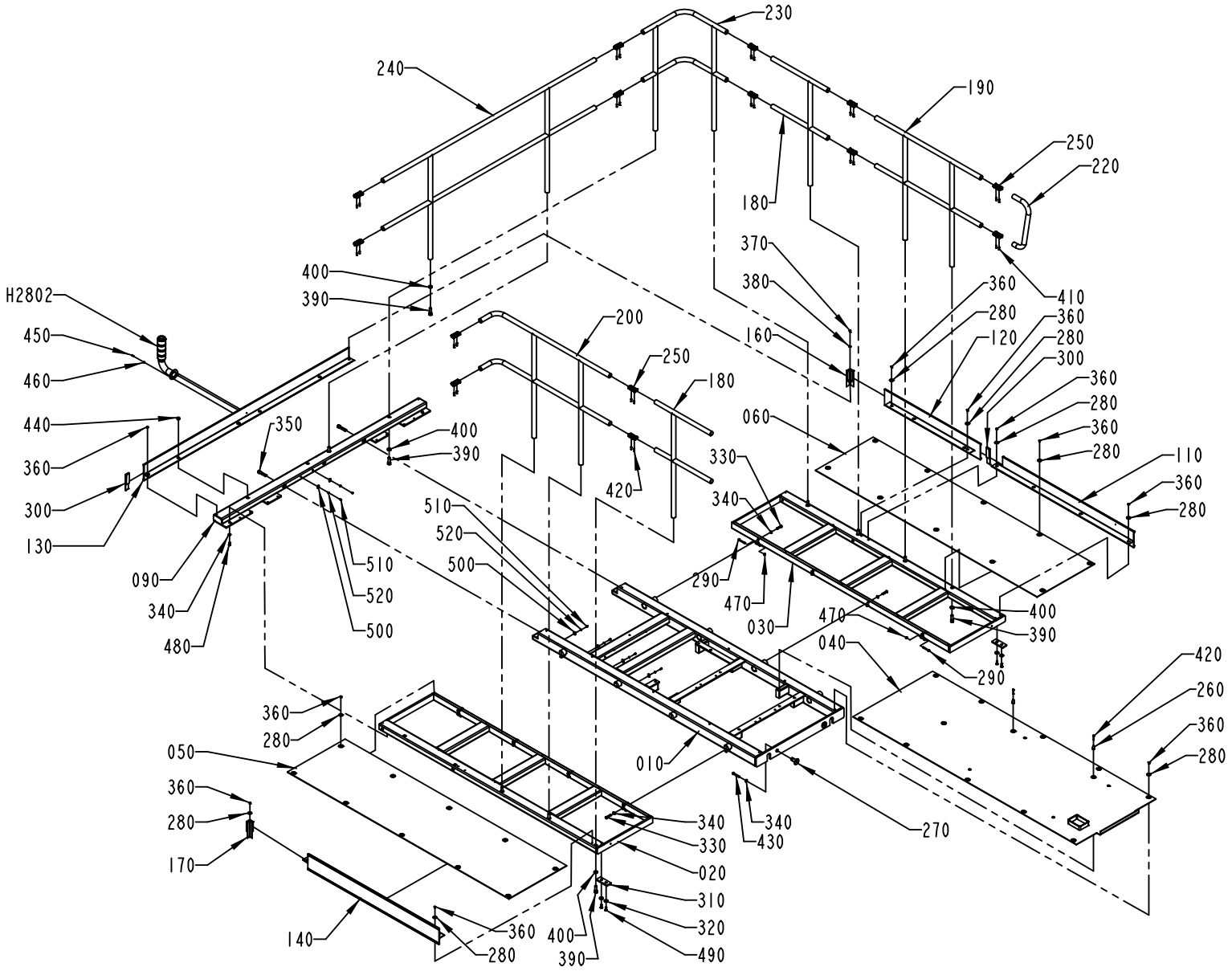

1524845-1
ECN 102537

Pos	Part No	SP	UN	Qty	Description	Page No
Common Parts						
010	1535043-0000	-		1	PLATFORM	
020	1524847-0000	-		1	PLATFORM	
030	1524848-0000	-		1	PLATFORM	
040	1535038-0000	-		1	CHECKER PLATE	
050	1524850-0000	-		1	CHECKER PLATE	
060	1524851-0000	-		1	CHECKER PLATE	
090	1524854-0000	-		1	BEAM	
110	1524855-0000	-		1	TOE PLATE	
120	1524856-0000	-		1	TOE PLATE	
130	1523793-0000	-		1	TOE PLATE	
140	1524857-0000	-		1	TOE PLATE	
160	1524167-0000	-		1	CORNER STRIP	
170	1524168-0000	-		1	CORNER STRIP	
180	1524859-0000	-		2	RAILING	
190	1524860-0000	-		1	RAILING	
200	1524861-0000	-		1	RAILING	
220	1558795-0000	-		1	RAILING	
230	B1010822-0000	-		1	RAILING	
	1140619-0000	-		*2*	*PLUG*	
240	1548211-0000	-		1	RAILING	
250	B985328-0000	-		14	CONNECTION	
	985327-0000	-		*1*	*PROFILE*	
260	1037571-0000	-		2	GUIDE BUSHING	
270	1116048-0000	-		2	SPACER	
280	1036241-0000	-		38	WASHER	
290	1523780-0000	-		4	SHAFT	
300	1558947-0000	-		2	STRIP	
310	1535036-0000	-		2	PLATE	
320	1535042-0000	-		4	WASHER	
330	90458-2845	-		16	SCREW,HEXAGON HEAD M6S ISO 4017 M10X45	
340	315105-0173	-		20	WASHER PLAIN, BRB, 10,5/22,H=2	
350	312115-0634	-		2	SCREW MC6S M16X70 A280	
360	312155-0366	-		38	SCREW HEX.SOCK.COUNT.MF6S M6X12 A280	
370	312105-0366	-		1	SCREW M6S M6X12 A280	
380	315105-0165	-		1	WASHER PLAIN, BRB, 8,4/16,H=1,5	
390	312115-0630	-		10	SCREW MC6S M16X50 A280	
400	315111-0186	-		10	WASHER PLAIN, TBRB 17/30 H=6	
410	312318-0453	-		28	SCREW SOCK.SET CUP P MSK6SS M8X25 A4	
420	312109-0378	-		2	SCREW M6S ISO 4017 M6X40 A480	
430	312105-0505	-		2	SCREW M6S ISO 4014 M10X70 A480	
440	90261-0033	-		3	PLUG, BLIND, PLASTIC GPN300F182	
450	312115-0329	-		3	SCREW MC6S M5X16 A280	
460	315105-0146	-		3	WASHER PLAIN, BRB, 5,3/10,H=1	
470	312812-0318	-		4	HEXAGON NUT, NY-LOCK M8 A480	
480	312105-0491	-		2	SCREW M6S ISO 4017 M10X20 A480	
490	312155-0495	-		4	SCREW HEX.SOCK.COUNT.MF6S M10X30 A280	
500	352113-0204	-		6	ANCHOR PLATES FOR STRIPS, TYPE TM3S25-M	
510	312125-0366	-		6	SCREW PAN HEAD MCS M6X12 SS	
520	315105-0153	-		6	WASHER PLAIN, BRB, 6,4/12,H=1,5	
H2802	A1317983-0100	-		1	ALARM BEACON	**267**

Machine Type | Group Description | Used-In | Group Number | Page No

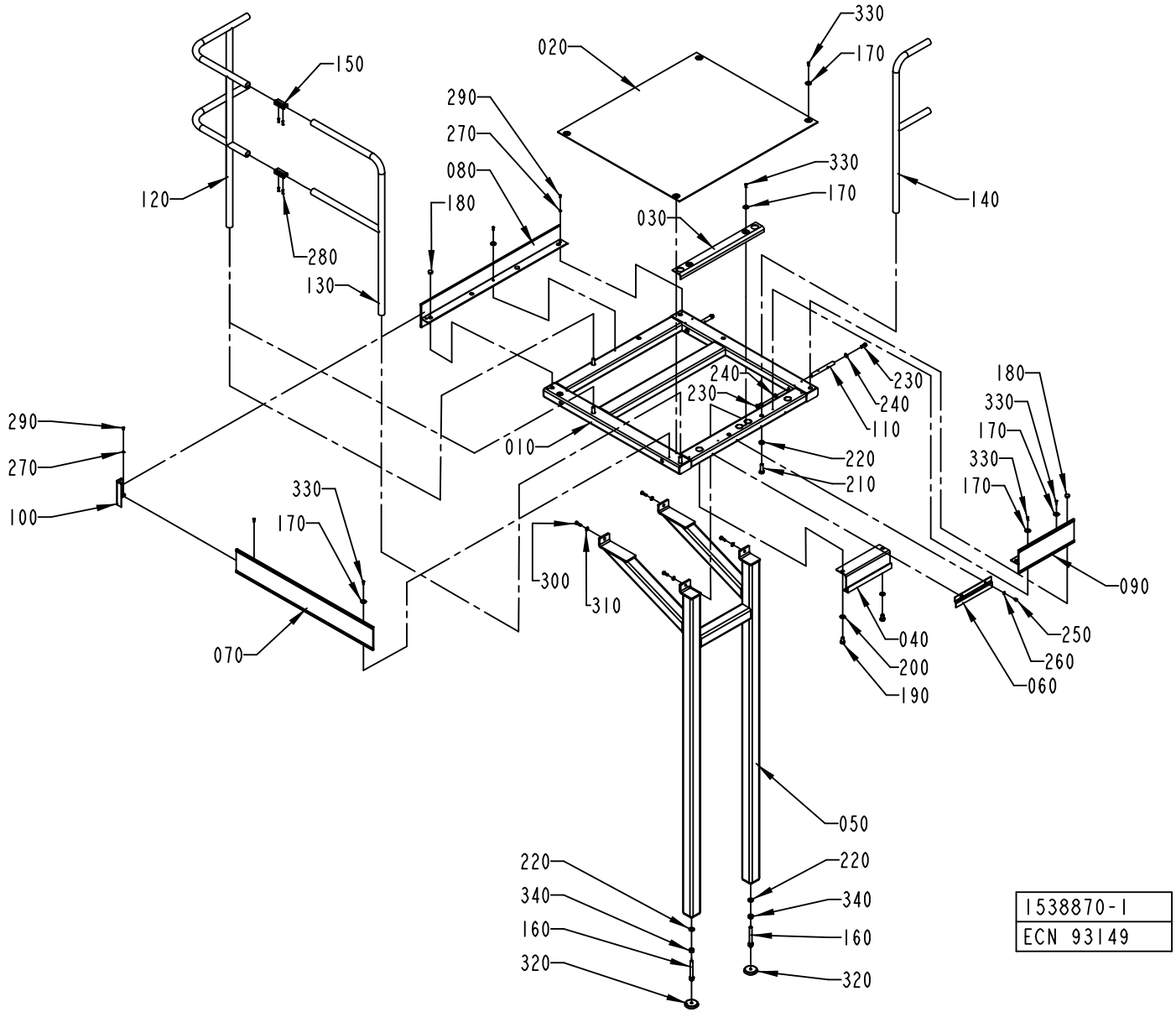
330
020
170
150
290
270
080
330
120
180
170
140
030
280
130
240
230
180
230
330
240
290
110
170
270
220
330
210
170
100
010
090
300
310
040
250
070
200
260
190
060
050
220
220
340
340
160
160
320
320
1538870-1
ECN 93149

ECM: 93183 - 20010715
Group number: 1538870-0100
Assembly Drawing: 1538870-1_1_AB

Issue: 20021030

Pos	Part No	SP	UN	Qty	Description	Page No
Common Parts						
010	1524171-0000	-		1	FRAME	
020	1524172-0000	-		1	CHECKER PLATE	
030	1524173-0000	-		1	CHECKER PLATE	
040	1524174-0000	-		1	HOOK	
050	1524175-0000	-		1	LEG	
060	1524176-0000	-		1	CLAMP	
070	1524177-0000	-		1	TOE PLATE	
080	1524178-0000	-		1	TOE PLATE	
090	1524179-0000	-		1	TOE PLATE	
100	1524167-0000	-		1	CORNER STRIP	
110	1524181-0000	-		2	PIN	
120	B1010822-0000	-		1	RAILING	
	1140619-0000	-		*2*	*PLUG*	
130	1524182-0000	-		1	RAILING	
140	1524864-0000	-		1	RAILING	
150	B985328-0000	-		2	CONNECTION	
	985327-0000	-		*1*	*PROFILE*	
160	1524185-0000	-		2	EXTENSION PIECE	
170	1036241-0000	-		11	WASHER	
180	90261-0033	-		3	PLUG, BLIND, PLASTIC GPN300F182	
190	312105-0622	-		2	SCREW M6S ISO 4017 M16X25 A480	
200	315105-0186	-		2	WASHER PLAIN, BRB, 17/30,H=3	
210	312101-0630	-		4	SCREW M6S M16X50 FZB	
220	315111-0186	-		6	WASHER PLAIN, TBRB 17/30 H=6	
230	312105-0536	-		4	SCREW M6S ISO 4017 M12X30 A480	
240	315105-0178	-		4	WASHER PLAIN, BRB, 13/24,H=2	
250	312105-0447	-		2	SCREW M6S ISO 4017 M8X12 A480	
260	315105-0165	-		2	WASHER PLAIN, BRB, 8,4/16,H=1,5	
270	315105-0153	-		2	WASHER PLAIN, BRB, 6,4/12,H=1,5	
280	312318-0453	-		4	SCREW SOCK.SET CUP P MSK6SS M8X25 A4	
290	90458-0072	-		2	SCREW, HEX.SOCK.BUTTON HEAD M6X12	
300	312105-0495	-		4	SCREW M6S ISO 4017 M10X30 A480	
310	315105-0173	-		4	WASHER PLAIN, BRB, 10,5/22,H=2	
320	90347-0009	-		2	FLOOR PLATE, NO 1256730	
330	312155-0370	-		11	SCREW HEX.SOCK.COUNT.MF6S M6X20 A280	
340	312605-0324	-		2	HEXAGON NUT, M6M M16 A280	

Pos	Part No	SP	UN	Qty	Description	Page No

Machine Type	Group Description	Used-In	Group Number	Page No

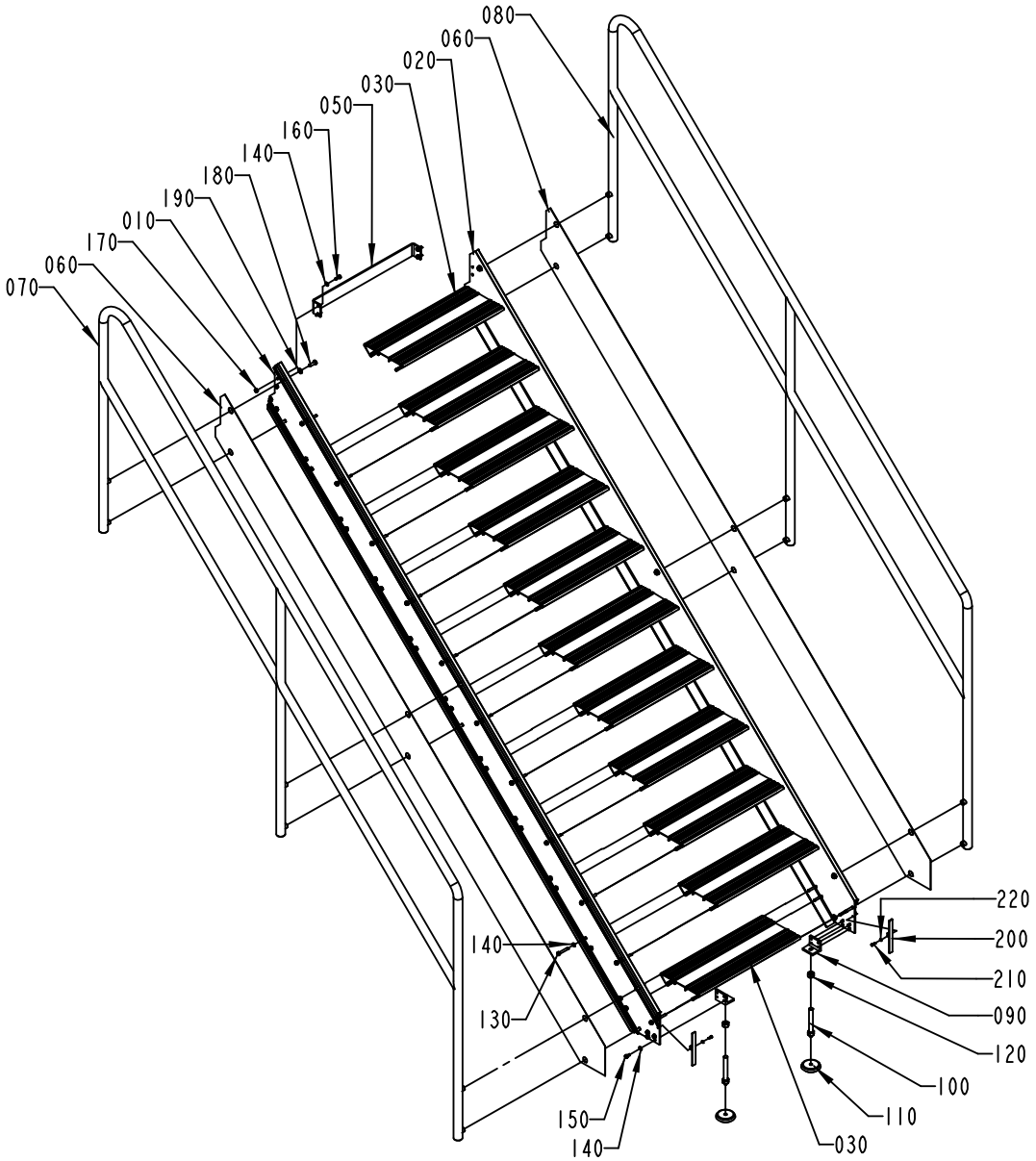

1523777-1
ECN 93149

Pos	Part No	SP	UN	Qty	Description	Page No
Common Parts						
010	1524186-0000	-		1	PROFILE	
020	1524187-0000	-		1	PROFILE	
030	1524188-0000	-		10	STAIR	
050	1524190-0000	-		1	BRACKET	
060	1524191-0000	-		2	RIM	
070	1524192-0000	-		1	RAILING	
080	1524193-0000	-		1	RAILING	
090	1037391-0000	-		2	CANTILEVER	
100	1524185-0000	-		2	EXTENSION PIECE	
110	90347-0009	-		2	FLOOR PLATE, NO 1256730	
120	312605-0324	-		2	HEXAGON NUT, M6M M16 A280	
130	312104-0461	-		88	SCREW M6S M8X50H FZB	
140	315105-0165	-		94	WASHER PLAIN, BRB, 8,4/16,H=1,5	
150	312105-0449	-		8	SCREW M6S ISO 4017 M8X16 A480	
160	312105-0451	-		6	SCREW M6S ISO 4017 M8X20 A480	
170	312605-0318	-		4	HEXAGON NUT, M6M M8 A280	
180	312105-0495	-		12	SCREW M6S ISO 4017 M10X30 A480	
190	315105-0173	-		12	WASHER PLAIN, BRB, 10,5/22,H=2	
200	1558946-0000	-		2	PLUG	
210	312115-0327	-		2	SCREW MC6S M5X12 A280	
220	315105-0146	-		2	WASHER PLAIN, BRB, 5,3/10,H=1	

Pos	Part No	SP	UN	Qty	Description	Page No

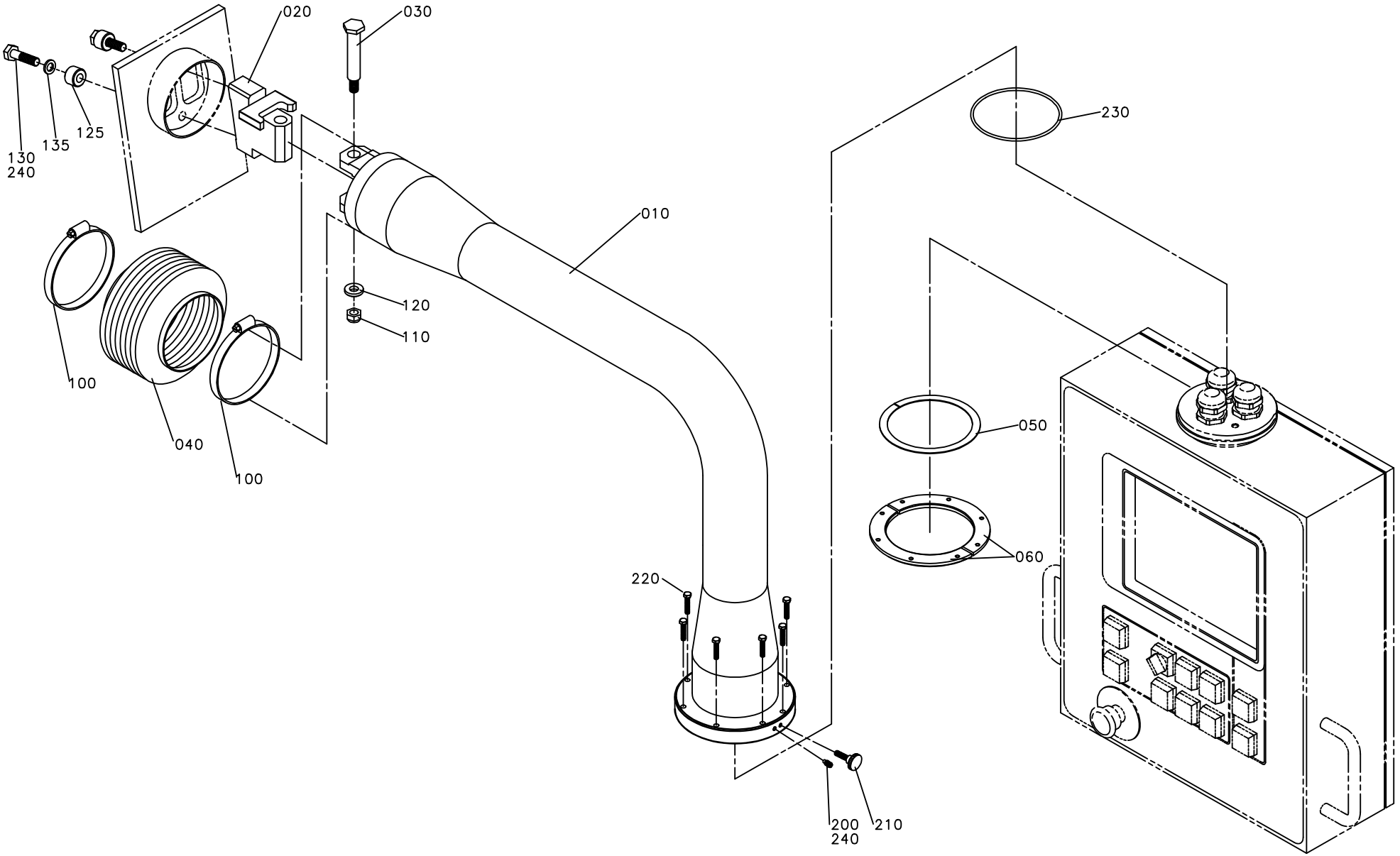
020
030
125
135
130
240
010
230
120
110
100
040
100
050
060
220
200
240
210

ECM: 72625 - 19991105
Group number: 1095863-0100
Assembly Drawing: 1095863-1_1_AC

Issue: 20021030

Pos	Part No	SP	UN	Qty	Description	Page No
Common Parts						
010	1129493-0000	-		1	PIPE BRACKET	
020	1129494-0000	-		1	BLOCKING PIECE	
030	1041598-0000	-		1	FITTING BOLT	
040	90342-0024	C		1	RUBBER BELLOWS, 100X100 MM	
050	1129633-0000	C		2	RING	
060	1041597-0000	C		2	PLATE	
100	342991-0114	-		2	HOSE CLIP,WORM DRIVE TYPE (93)-110	
110	312812-0320	-		1	HEXAGON NUT, NY-LOCK M10 A480	
120	315115-0173	-		1	WASHER PLAIN, TBRB 10,5/22 H=4	
125	1254494-0000	-		2	SPACER	
130	312115-0499	-		2	SCREW MC6S M10X40 A280	
135	315402-0173	-		2	LOCK WASHER FBB 10,2	
200	312311-0327	-		1	SCREW, SOCK.SET DOGPOINT M5X12	
210	318860-0106	-		1	KNOB, ADJUST.HI.EXT.THREAD, NO 8324-3674	
220	312105-0333	-		8	SCREW M6S ISO 4017 M5X25 A480	
230	315202-0312	C		1	O-RING 104,5X3 MM	
240	90157-0021	-	KG	1	LOCKING FLUID	

Pos	Part No	SP	UN	Qty	Description	Page No

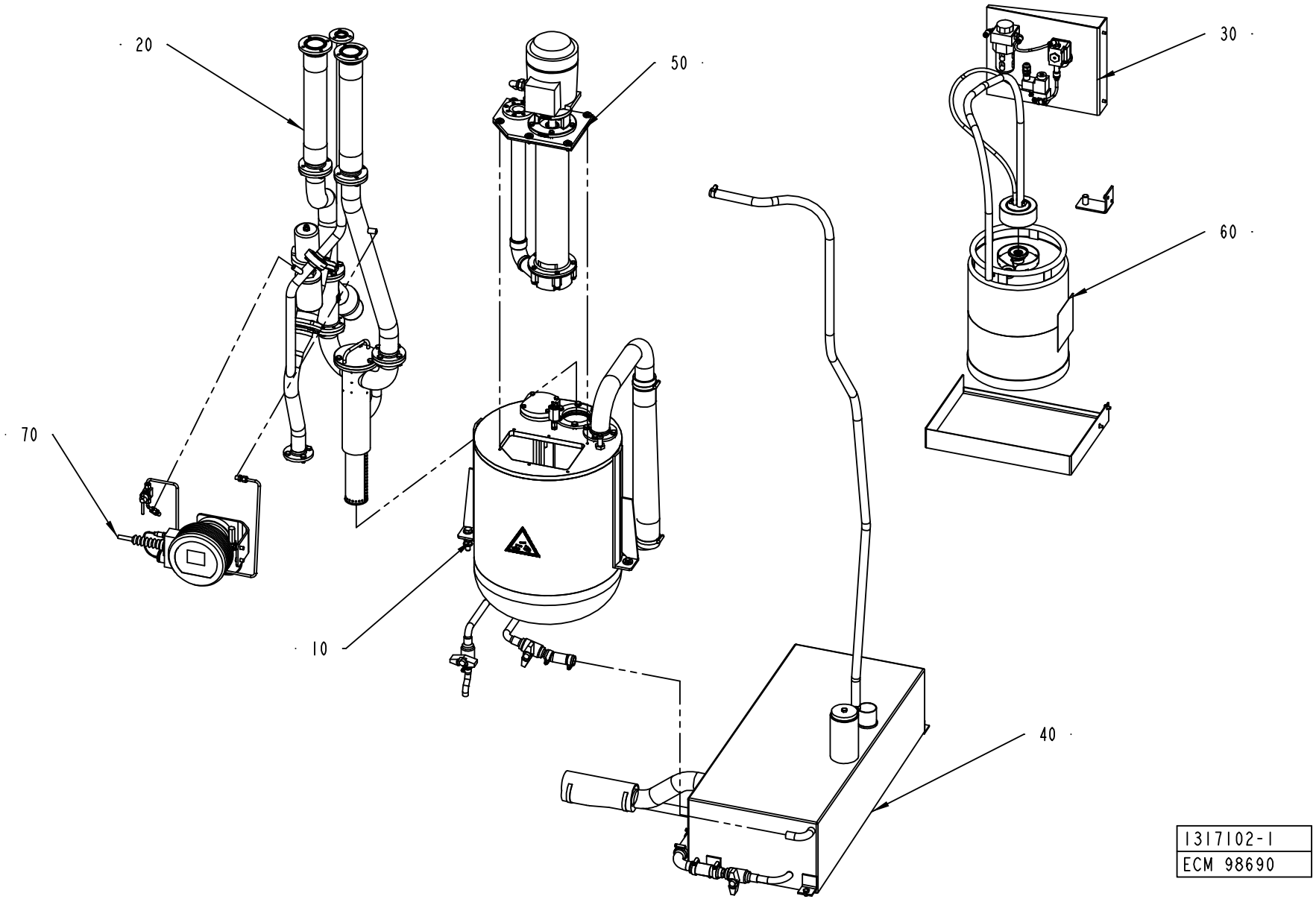
20
50
30
60
70
10
40
1317102-1
ECM 98690

ECM: 98812 - 20010925
Group number: 1317102-0100
Assembly Drawing: 1317102-1_1_AB

Issue: 20021030

Pos	Part No	SP	UN	Qty	Description	Page No
Common Parts						
010	A1282894-0100	-		1	PEROXIDE TANK	**279**
020	A1282895-0200	-		1	PEROXIDE PIPE	**281**
030	A1317103-0100	-		1	PUMP	**283**
040	A1282896-0100	-		1	TANK	**285**
050	A996388-0400	-		1	PEROXIDE PUMP	**289**
060	A527898-0100	-		1	CONTAINER H2O2	**291**
070	A2519574-0100	-		1	HYDROGEN PEROXIDE CONCENTRATION METER	**293**

Pos	Part No	SP	UN	Qty	Description	Page No

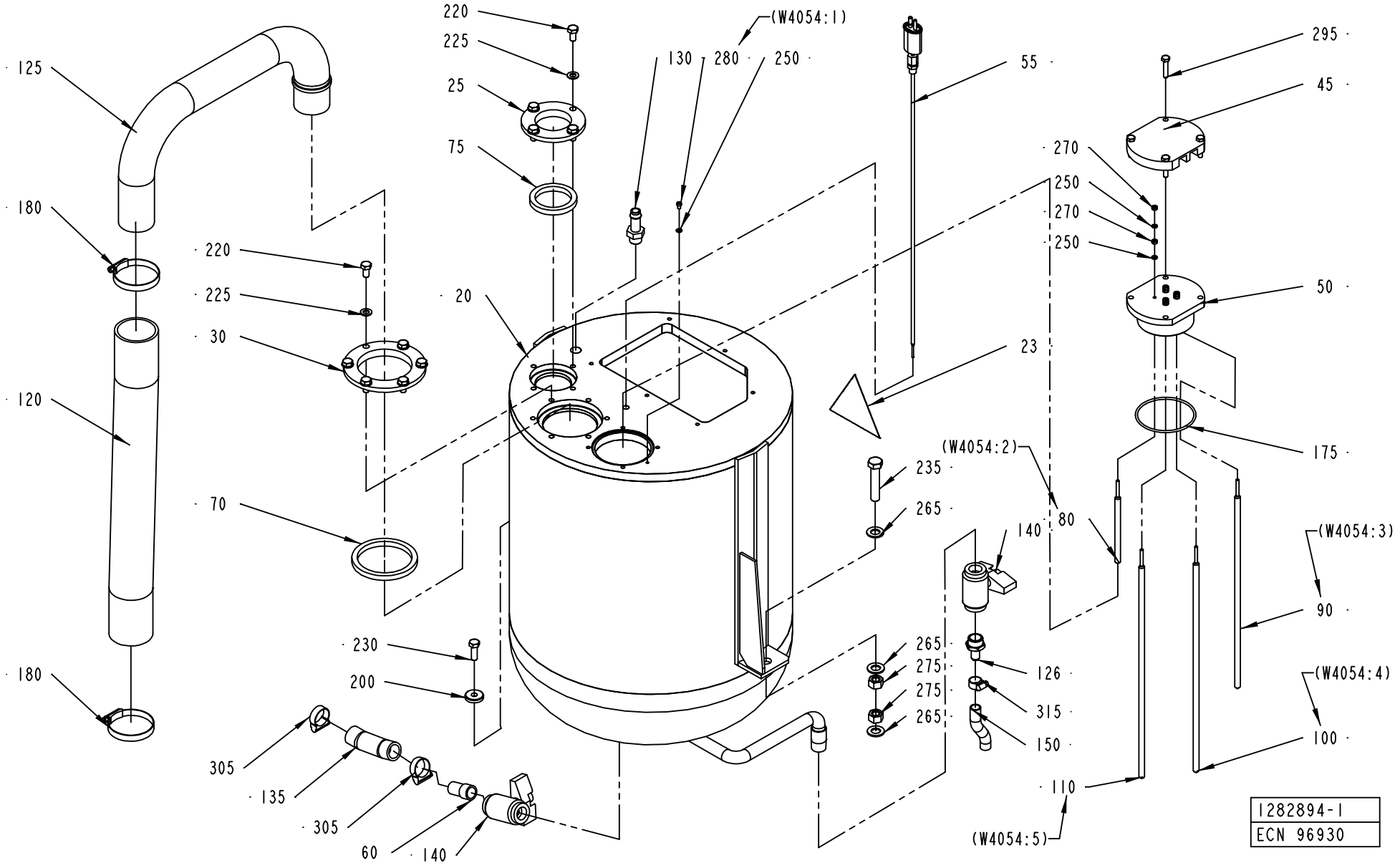
125
180
120
180
220
225
30
70
230
200
305
135
305
60
140
220
225
25
75
20
130
280
250
(W4054:1)
55
23
235
265
140
80
(W4054:2)
265
275
275
265
126
315
150
110
(W4054:5)
295
45
270
250
270
250
50
175
(W4054:3)
90
(W4054:4)
100
1282894-1
ECN 96930

Pos	Part No	SP	UN	Qty	Description	Page No
Common Parts						
020	1255559-0000	-		1	PEROXIDE TANK	
023	359705-0004	-		1	WARNING SIGN ISO, DANGEROUS CHEMICALS	
025	1040840-0000	-		1	FLANGE	
030	1040841-0000	-		1	FLANGE	
045	1282903-0000	-		1	FLANGE	
050	1282904-0000	-		1	LID	
055	B1347704-0000	D		1	THERMOCOUPLE	
	1040890-0000	*D*		*1*	*THERMOCOUPLE*	
	90326-0306	*-*		*1*	*GLAND FITTING 9041-45-KS-KR.1/8" D=4,5MM*	
060	1037102-0000	-		1	SPACER PIPE	
070	1040852-0000	C		1	SEALING RING	
075	1040853-0000	C		1	SEALING RING	
080	1129441-0001	D		1	ELECTRODE	
090	1129441-0002	D		1	ELECTRODE	
100	1129441-0003	D		1	ELECTRODE	
110	1129441-0004	D		1	ELECTRODE	
120	1282899-0000	C		1	HOSE	
125	1282891-0000	-		1	PIPE	
126	1282906-0000	-		1	NIPPLE	
130	90055-0051	-		1	HOSE NIPPLE, EXT.THR. R3/8X13 MM	
135	90166-0151	C	MM	140	HOSE	
140	90187-0059	C		2	BALL VALVE FOR HYDR.PER. G1/2 3MM HOLE	
150	90166-0138	C	MM	85	HOSE	
175	927422-0016	C		1	O-RING 79.5X3 SILICON	
180	342991-0110	-		2	HOSE CLIP,WORM DRIVE TYPE (54)-63	
200	315125-0165	-		1	WASHER PLAIN ROUND,CHAMF. 8,4/26, H=5	
220	312105-0449	-		10	SCREW M6S ISO 4017 M8X16 A480	
225	315105-0165	-		10	WASHER PLAIN, BRB, 8,4/16,H=1,5	
230	312105-0453	-		1	SCREW M6S ISO 4017 M8X25 A480	
235	312109-0544	-		1	SCREW M6S ISO 4017 M12X60 A480	
250	315105-0136	-		9	WASHER PLAIN, BRB, 4,3/8,H=0,8	
265	315105-0178	-		3	WASHER PLAIN, BRB, 13/24,H=2	
270	312605-0312	-		8	HEXAGON NUT, M6M M4 A280	
275	312605-0322	-		2	HEXAGON NUT, M6M M12 A280	
280	312125-0285	-		1	SCREW SLOT.PAN HD. MCS 4X6 A480	
295	312109-0374	-		4	SCREW M6S ISO 4017 M6X30 A480	
305	342991-0104	-		2	HOSE CLIP,WORM DRIVE TYPE (23)-27	
315	342991-0101	-		1	HOSE CLIP,WORM DRIVE TYPE (13)-16	

Pos	Part No	SP	UN	Qty	Description	Page No

Machine Type | Group Description | Used-In | Group Number | Page No

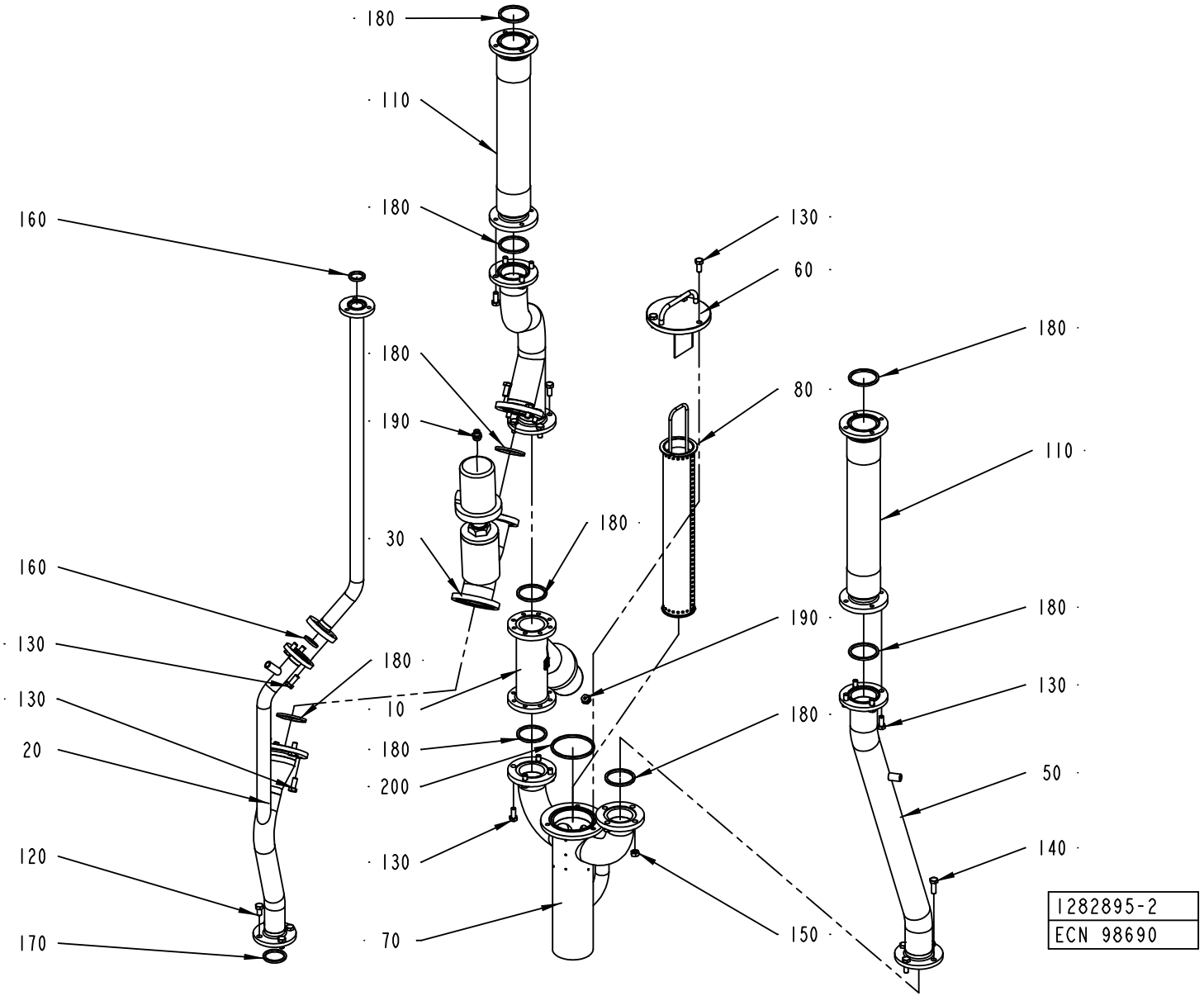
180
110
180
160
130
60
180
180
80
190
110
30
180
160
180
190
130
180
10
180
180
20
200
50
130
140
120
150
170
70
1282895-2
ECN 98690

Pos	Part No	SP	UN	Qty	Description	Page No
Common Parts						
010	B978999-0000	A		1	VALVE	
	90235-0483	*C*		*1*	*WASHER,PL.RND.AL, 60/68,H=2,5*	
020	2519554-0000	-		1	PIPE	
030	B1346565-0000	A		1	VALVE	
	90235-0483	*C*		*1*	*WASHER,PL.RND.AL, 60/68,H=2,5*	
040	1282876-0000	-		1	PIPE	
050	2519555-0000	-		1	PIPE	
060	1348530-0000	-		1	LID	
070	1282879-0000	-		1	CONNECTING PIPE	
080	1348529-0000	B		1	STRAINER	
100	1282901-0000	-		1	PIPE	
110	1285426-0000	B		2	PIPE	
120	312105-0449	-		4	SCREW M6S ISO 4017 M8X16 A480	
130	312105-0451	-		30	SCREW M6S ISO 4017 M8X20 A480	
140	312105-0453	-		4	SCREW M6S ISO 4017 M8X25 A480	
150	312605-0318	-		4	HEXAGON NUT, M6M M8 A280	
160	315229-0103	B		2	GASKETS, 23,1X30,1X3,7 MM 1" FDA	
170	315229-0104	B		1	GASKETS, 35,8X42,8X3,7 MM 1"1/2 FD	
180	315229-0105	B		9	GASKETS, 48,5X55,5X3,7 MM 2" FDA	
190	342722-0203	-		2	STRAIGHT COUPLING	
200	315229-0107	B		1	GASKETS, 73,9X80,9X3,7 MM 2"1/2 FD	

Pos	Part No	SP	UN	Qty	Description	Page No

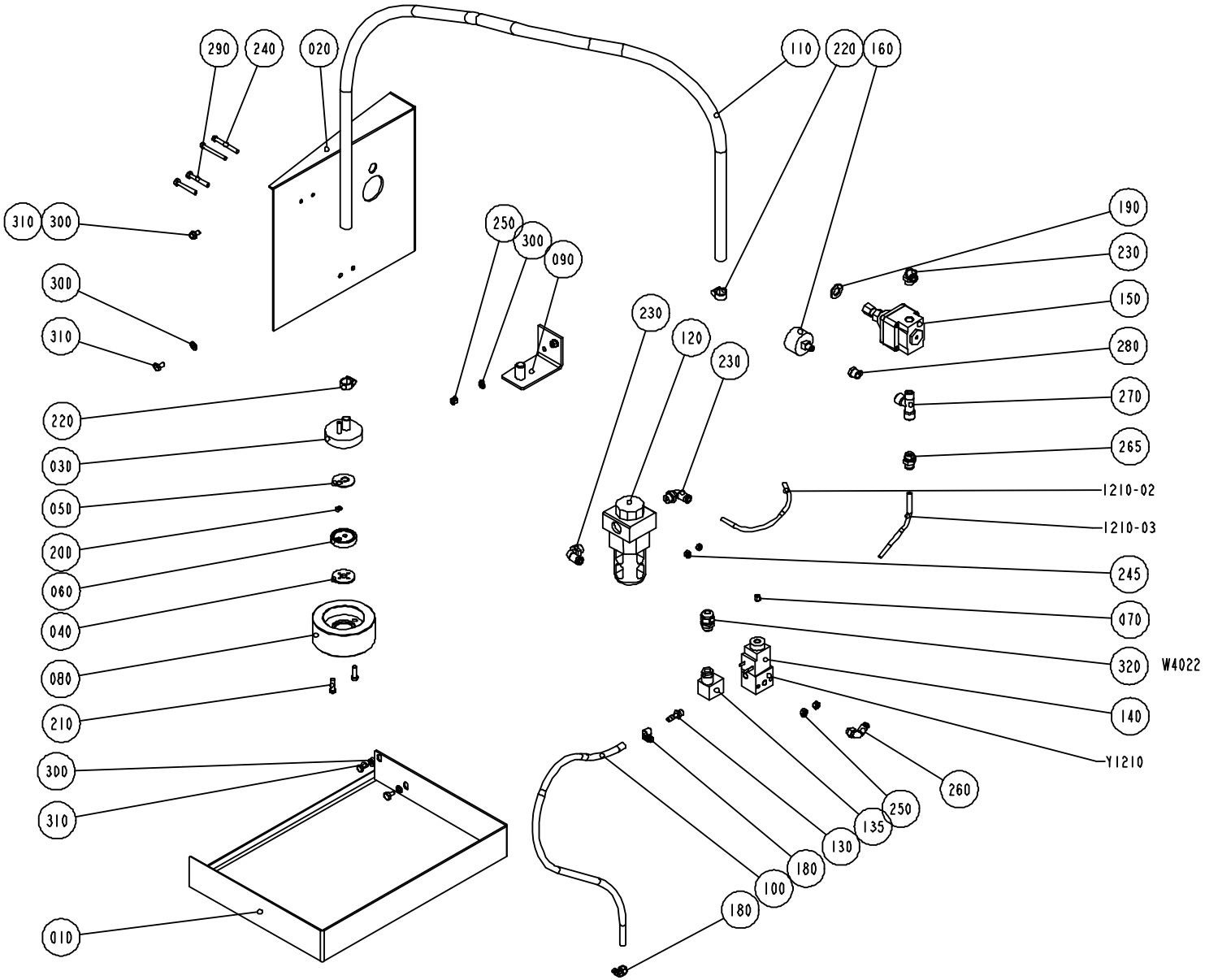

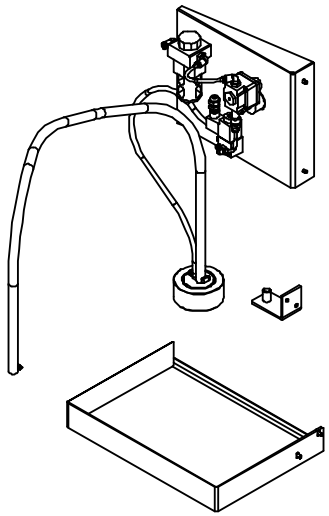

S - 1317103-1
ECN 71406

Pos	Part No	SP	UN	Qty	Description	Page No
Common Parts						
010	1317104-0000	-		1	BRACKETS, FASTENING PLATES, - BRACKETS	
020	1317105-0000	-		1	BRACKET	
030	1129328-0000	B		1	ATTACHMENT	
040	273981-0000	B		1	GASKET	
050	527912-0000	B		1	NON-RETURN VALVE	
060	530551-0000	B		1	WASHER	
070	563285-0000	-		1	BLIND PLUG	
080	1317226-0000	B		1	WEIGHT	
090	1317784-0000	-		1	BRACKET	
100	90166-0101	B	MM	680	HOSE, SILICONE, 60 SHORE, 6/10 MM	
110	90166-0161	B	MM	1500	HOSE	
120	B90277-0039	B		1	FILTER TYP LF -1/4-S-5M-B	
	90234-0328	*C*		*1*	*COVER*	
	90277-0346	*C*		*1*	*FILTER CARTRIDGE / LFP-1/4-S-5M*	
1210-02	90166-0081	B	MM	210	TUBE 6 MM PA BLUE	
1210-03	90166-0081	B	MM	150	TUBE 6 MM PA BLUE	
130	342901-0101	-		1	HOSE NIPPLE, EXT.THR. R1/8-7 MM	
135	90042-0398	B		1	CONTACT 3 POLE+EARTH	
140	90042-0487	B		1	COIL 24 VDC MECMAN	
150	90113-0056	B		1	REGULATOR	
160	90043-0021	B		1	PRESSURE GAUGE WIEGAND 0-1 BAR 1/8"	
180	90132-0021	-		2	HOSE CLIP 6-10MM	
190	315105-0178	-		1	WASHER PLAIN, BRB, 13/24,H=2	
200	315204-0103	B		1	O-RING 5,1X1,6 MM	
210	312125-0370	-		2	SCREW PAN HEAD MCS M6X20 SS	
220	342991-0101	-		2	HOSE CLIP,WORM DRIVE TYPE (13)-16	
230	342732-0103	-		3	ELBOW PIPE JOINT, EXT.THREAD, D=6MM-G1/4	
240	312125-0341	-		2	SCREW SLOT.PAN HD. MCS 5X50 A480	
245	312605-0314	-		2	HEXAGON NUT, M6M M5 A280	
250	312605-0316	-		4	HEXAGON NUT, M6M M6 A280	
260	342732-0102	-		1	ELBOW PIPE JOINT, EXT.THREAD, D=6MM-G1/8	
265	342722-0203	-		1	STRAIGHT COUPLING	
270	342245-0102	-		1	T-PIPE, INT. THREAD, R1/4XKR1/4	
280	342701-0201	-		1	BUSHING,INT./EXT.G-THREAD G1/4"-G1/8"	
290	312105-0378	-		2	SCREW M6S ISO 4014 M6X40 A480	
300	315105-0153	-		6	WASHER PLAIN, BRB, 6,4/12,H=1,5	
310	312105-0366	-		4	SCREW M6S M6X12 A280	
W4022	351150-0403	-	MM	2500	CABLE OLFLEX 3X0,75 MM2 LIGHT/GREY	
Y1210	90042-0206	B		1	SOLENOID VALVE 444-111-000-1	

Pos	Part No	SP	UN	Qty	Description	Page No

Machine Type | Group Description | Used-In | Group Number | Page No

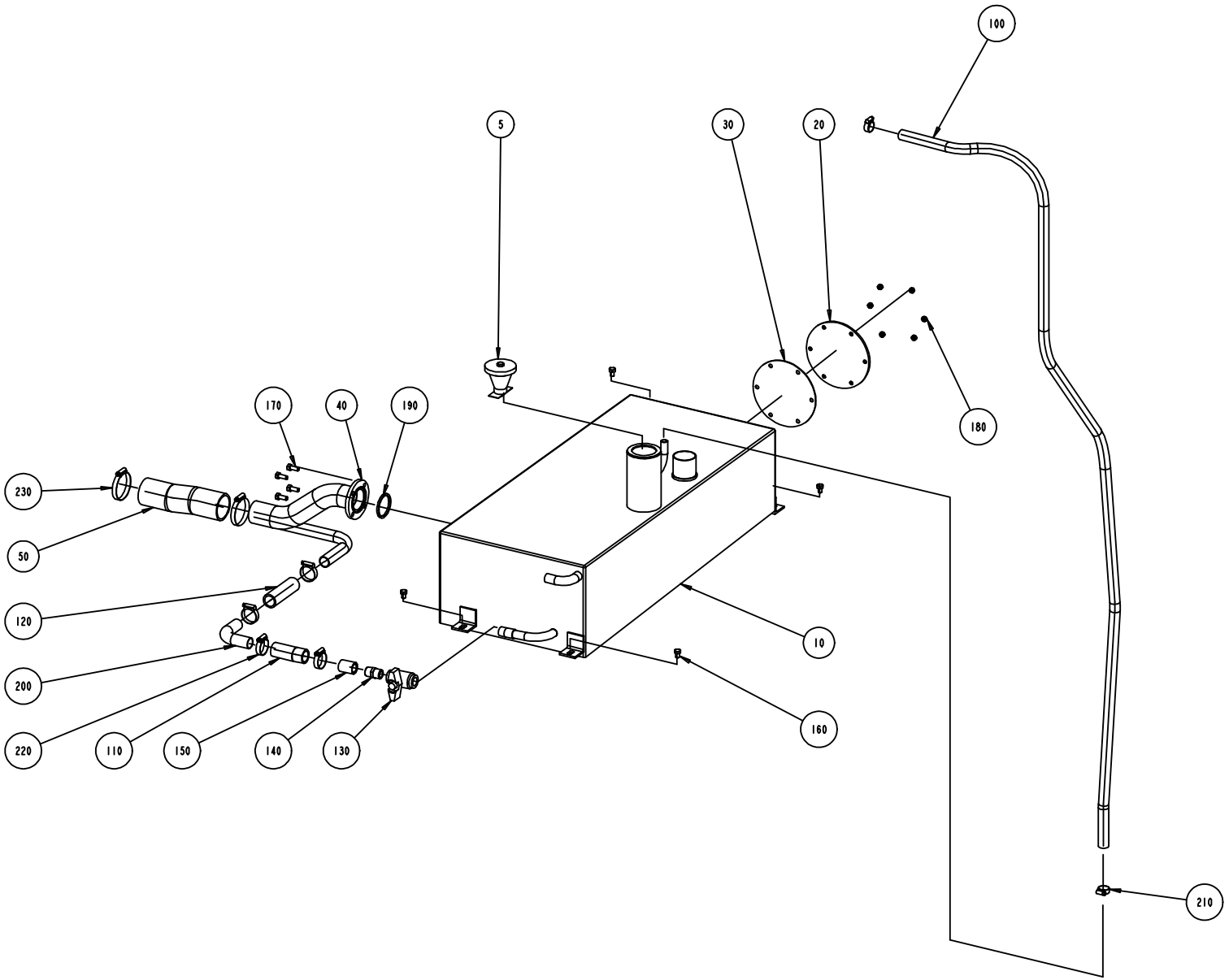
100
5
30
20
180
170
40
190
230
50
120
200
220
110
150
140
130
10
160
210

ECM: 71742 - 19980903
Group number: 1282896-0100
Assembly Drawing: 1282896-1_1_AA

Issue: 20021030

Pos	Part No	SP	UN	Qty	Description	Page No
Common Parts						
005	A566196-0100	-		1	LID WITH WEIGHT	**287**
010	1282892-0000	-		1	TANK	
020	1040807-0000	-		1	LID	
030	1040808-0000	C		1	GASKET	
040	1282893-0000	-		1	PIPE	
050	1282898-0000	C		1	HOSE	
100	90166-0087	C	MM	2500	HOSE 15/23 REINF.PVC TRANSP.	
110	90166-0158	C	MM	85	HOSE	
120	90166-0158	C	MM	105	HOSE	
130	90187-0059	-		1	BALL VALVE FOR HYDR.PER. G1/2 3MM HOLE	
140	90330-0021	-		1	NIPPLES, EXT. THREAD. R-207R1/2	
150	90330-0054	-		1	SLEEVE, INT. THREAD, NO. R-201R1/2	
160	312105-0447	-		4	SCREW M6S ISO 4017 M8X12 A480	
170	312105-0451	-		4	SCREW M6S ISO 4017 M8X20 A480	
180	312605-0316	-		6	HEXAGON NUT, M6M M6 A280	
190	315229-0105	C		1	GASKETS, 48,5X55,5X3,7 MM 2" FDA	
200	342844-0303	-		1	PIPE ELBOW 90 DEGR. D=25,4 MM PCS 3-A	
210	342991-0103	-		2	HOSE CLIP,WORM DRIVE TYPE (19)-23	
220	342991-0106	-		4	HOSE CLIP,WORM DRIVE TYPE (30)-36	
230	342991-0110	-		2	HOSE CLIP,WORM DRIVE TYPE (54)-63	

Pos	Part No	SP	UN	Qty	Description	Page No

Machine Type | Group Description | Used-In | Group Number | Page No

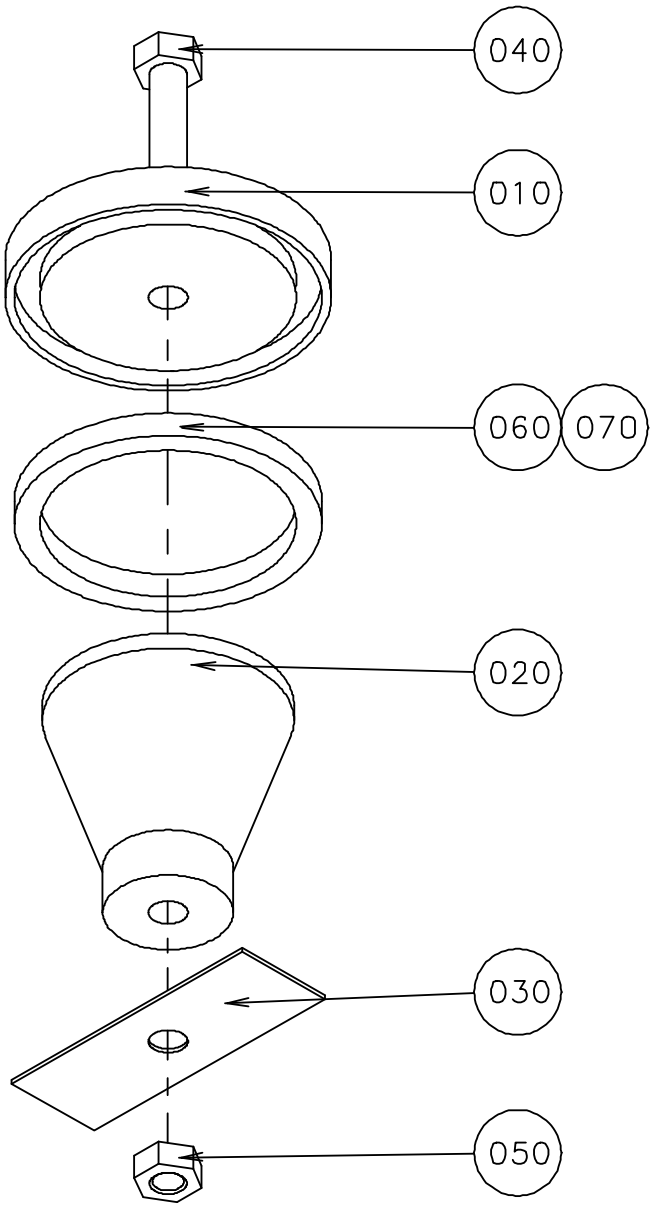

S-566196-1
ECN 70662

ECM: 72091 - 19981216
Group number: 566196-0100
Assembly Drawing: 566196-1_1_AA

Issue: 20021030

Pos	Part No	SP	UN	Qty	Description	Page No
Common Parts						
010	566195-0000	-		1	LID	
020	566194-0000	-		1	WEIGHT	
030	566171-0000	-		1	CUP SPRING	
040	312105-0466	-		1	SCREW M6S ISO 4014 M8X75 A480	
050	312605-0318	-		1	HEXAGON NUT, M6M M8 A280	
060	90143-0020	-	MM	190	STRIP	
070	90153-0023	-		1	ADHESIVE	

Pos	Part No	SP	UN	Qty	Description	Page No

Machine Type | Group Description | Used-In | Group Number | Page No

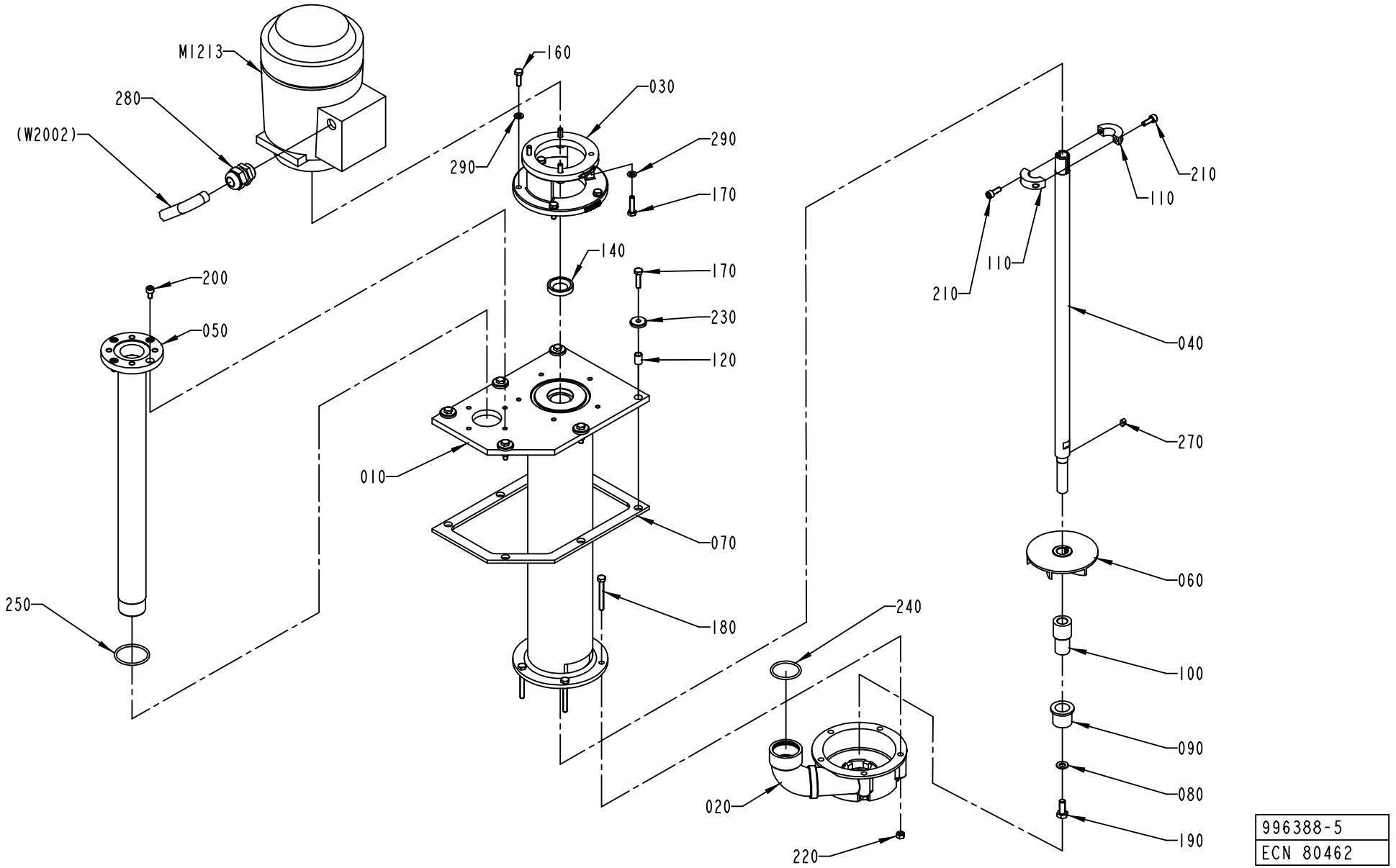

996388-5
ECN 80462

ECM: 81844 - 20000812
Group number: 996388-0400
Assembly Drawing: 996388-5_1_AA

Issue: 20021030

Pos	Part No	SP	UN	Qty	Description	Page No
Common Parts						
010	1255558-0000	-		1	EXTENSION PIPE	
020	1036755-0000	C		1	PUMP HOUSING	
030	751395-0000	-		1	FLANGE	
040	1040797-0000	C		1	SHAFT	
050	1040796-0000	-		1	PIPE	
060	491929-0000	C		1	IMPELLER WHEEL	
070	1255557-0000	C		1	GASKET	
080	315105-0165	-		1	WASHER PLAIN, BRB, 8,4/16,H=1,5	
090	1478171-0000	C		1	BUSHING	
100	1478048-0000	C		1	SLEEVE	
110	1282905-0000	D		2	CLAMP	
120	1041980-0000	C		6	SPACER	
140	90091-0412	C		1	SEAL RING	
160	312105-0370	-		5	SCREW M6S ISO 4017 M6X20 A480	
170	312105-0372	-		10	SCREW M6S ISO 4017 M6X25 A480	
180	312109-0380	-		5	SCREW M6S ISO 4017 M6X50 A480	
190	312105-0451	-		1	SCREW M6S ISO 4017 M8X20 A480	
200	312115-0364	-		4	SCREW HEX.SOCK.HD.MC6S-TT 6X10 A480	
210	312115-0368	-		2	SCREW MC6S M6X16 A280	
220	312605-0316	-		5	HEXAGON NUT, M6M M6 A280	
230	315125-0153	-		6	WASHER PLAIN ROUND,CHAMF. 6,4/22, H=4	
240	927422-0005	-		1	O-RING 36.2X3 SILICON	
250	927422-0006	-		1	O-RING 42.2X3 SILICON	
270	315705-0196	-		1	PARALLEL KEY W. ROUND ENDS 5X5X10 MM	
280	352103-0110	-		1	CABLE GLAND, STR 16, PR22,5/PG16	
290	315105-0153	-		9	WASHER PLAIN, BRB, 6,4/12,H=1,5	
M 1213	90045-0087	D		1	MOTOR 3GAA 071002-CSA M2AA 71B	
W 2002	351150-0418	-	M	4	CABLE OLFLEX 4X2,5 MM2 LIGHT/GREY	

Pos	Part No	SP	UN	Qty	Description	Page No

Machine Type | Group Description | Used-In | Group Number | Page No

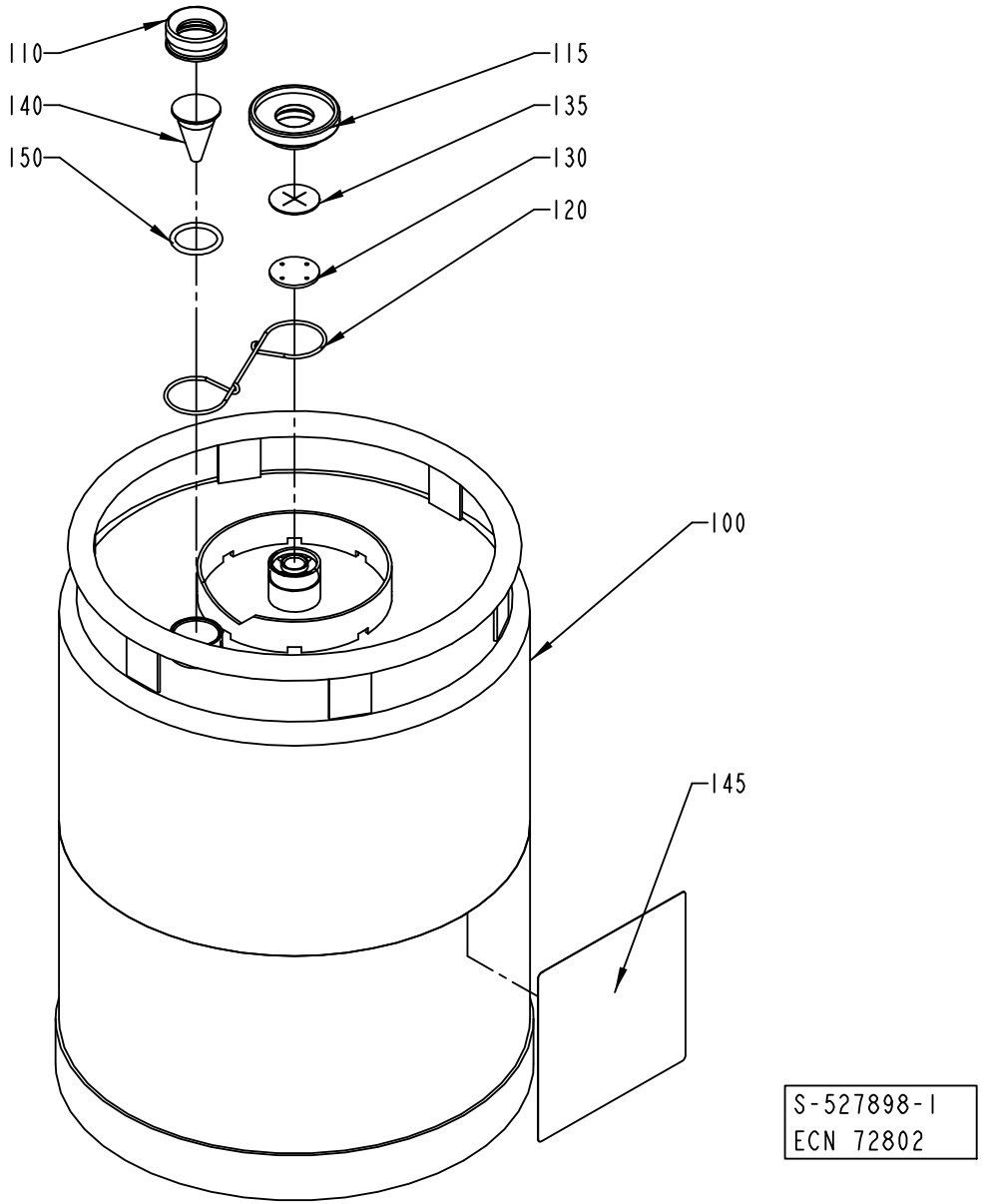
110
140
150
115
135
130
120
100
145
S-527898-1
ECN 72802

ECM: 82106 - 20000814
Group number: 527898-0100
Assembly Drawing: 527898-1_1_AB

Issue: 20021030

Pos	Part No	SP	UN	Qty	Description	Page No
Common Parts						
100	561427-0000	A		1	CONTAINER	
110	273977-0000	A		1	NUT	
115	273996-0000	A		1	NUT	
120	273980-0000	A		1	SPRING	
130	565250-0000	A		1	WASHER	
135	565251-0000	A		1	VALVE	
140	273978-0000	A		1	LEVEL GLASS	
145	532655-0000	B		1	CAUTION SIGN	
150	927422-0003	A		1	O.RING 24.2X3 SILICON	

Pos	Part No	SP	UN	Qty	Description	Page No

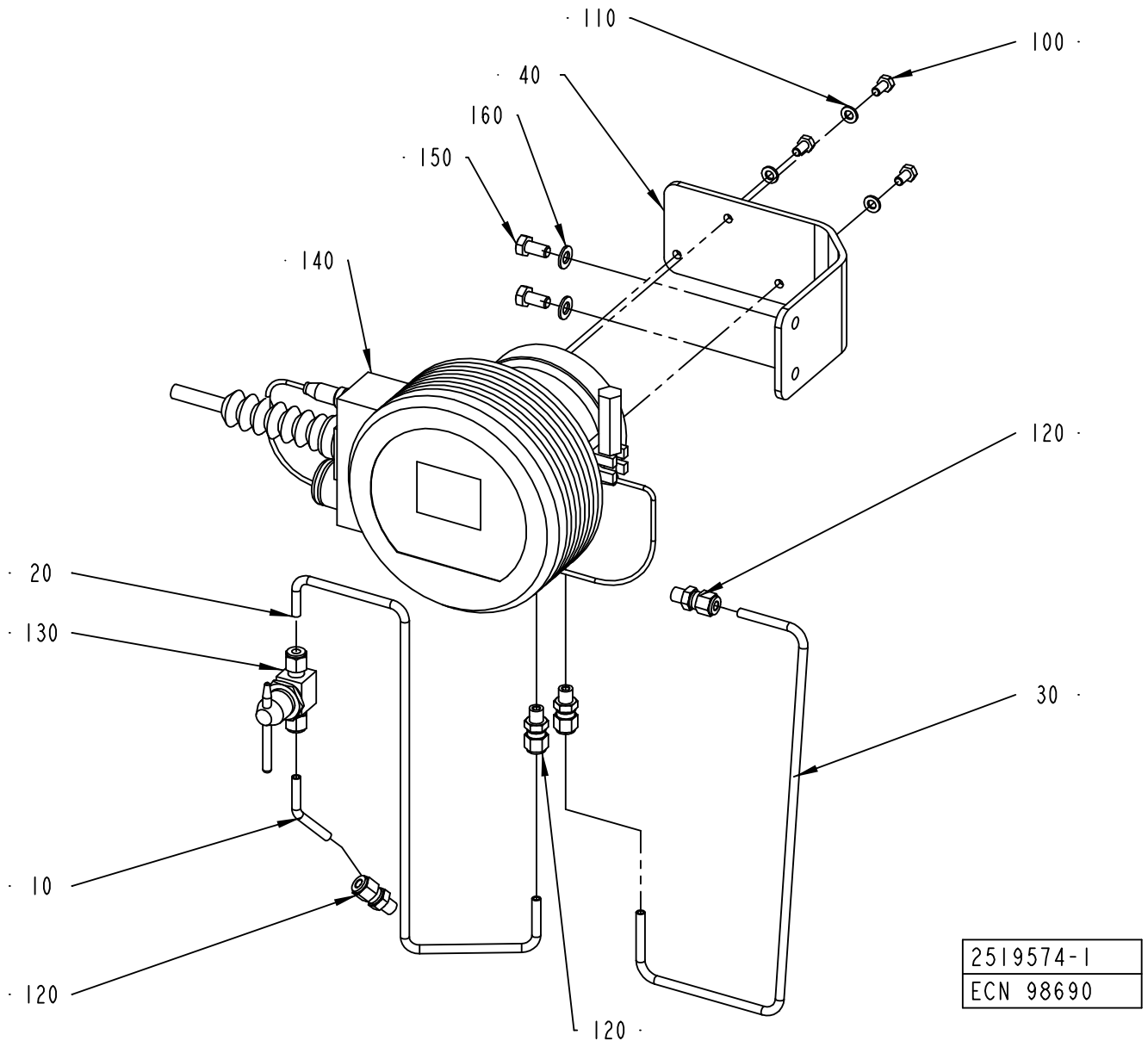
110
100
40
160
150
140
120
20
130
30
10
120
120
2519574-1
ECN 98690

ECM: 98810 - 20010925
Group number: 2519574-0100
Assembly Drawing: 2519574-1_1_AA

Issue: 20021030

Pos	Part No	SP	UN	Qty	Description	Page No
Common Parts						
010	2501378-0000	-		1	PIPE	
020	2531500-0000	-		1	PIPE	
030	2531501-0000	-		1	PIPE	
040	2519556-0000	-		1	BRACKET	
100	312105-0366	-		3	SCREW M6S M6X12 A280	
110	315105-0153	-		3	WASHER PLAIN, BRB, 6,4/12,H=1,5	
120	90458-1477	-		4	CONNECTOR 6-1/8 NPT, EXT. TAPERED	
130	90458-1478	-		1	BALL VALVE SS-43T6MM-SH-10147	
140	B90458-1977	-		1	REFRACTOMETER SET DA15FC15A DFTP A	
	90458-1950	-		*1*	*PROBE A0804272 IPT100 1/8" GAS TRIC-B*	
	90458-1976	-		*1*	*CABLE A0804273*	
	90458-1979	-		*1*	*BELLOWS A0710020*	
	90458-1980	-		*1*	*REFRACTOMETER DA16FC16B*	
	90458-2269	-		*1*	*DEFLECTOR A0808137*	
	90458-1892	-		*1*	*GASKET A0539066 80,5X90,5X2 MM*	
	90458-1893	-		*1*	*FILTER CARTRIDGE A0111004*	
	90458-1940	-		*1*	*CLAMP A0515170 3" AISI 304*	
	90458-1941	-		*1*	*O-RING A0701180 10,82X1,78 MM*	
	90458-1943	-		*1*	*O-RING A0701145 53,65X2,62 MM*	
150	312105-0449	-		2	SCREW M6S ISO 4017 M8X16 A480	
160	315105-0165	-		2	WASHER PLAIN, BRB, 8,4/16,H=1,5	

Pos	Part No	SP	UN	Qty	Description	Page No

Machine Type | Group Description | Used-In | Group Number | Page No

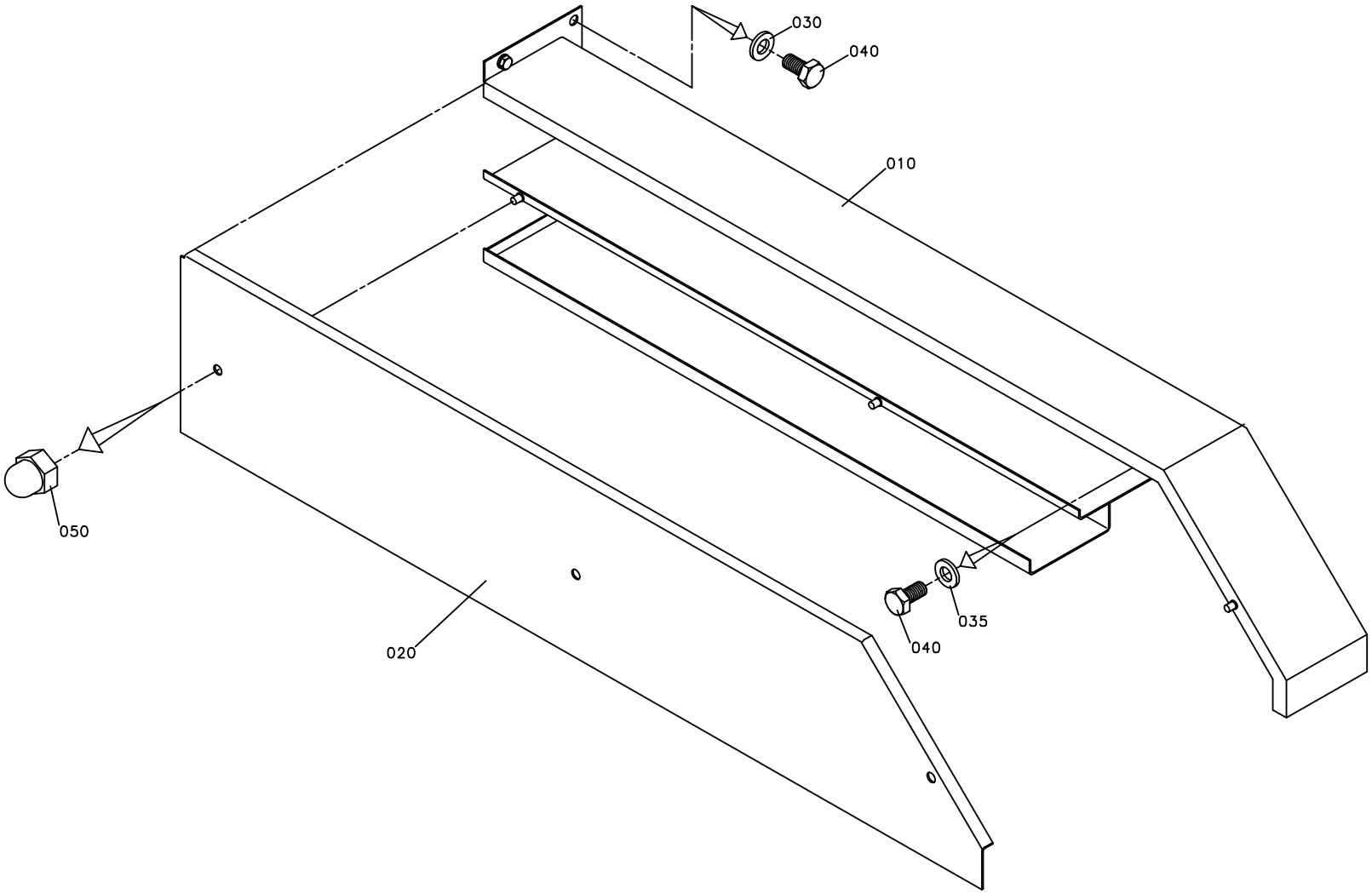
030
040
010
050
020
035
040

ECM: - -
Group number: 1095876-0100
Assembly Drawing: 1095876-1_1_AA

Issue: 20021030

Pos	Part No	SP	UN	Qty	Description	Page No
Common Parts						
010	1129443-0000	-		1	CABLE DUCT	
020	1129444-0000	-		1	LID	
030	315105-0153	-		4	WASHER PLAIN, BRB, 6,4/12,H=1,5	
035	315125-0153	-		1	WASHER PLAIN ROUND,CHAMF. 6,4/22, H=4	
040	312105-0366	-		5	SCREW M6S M6X12 A280	
050	312705-0316	-		3	NUT HEX. DOMED CAP MHM-6 M6 A280	

Pos	Part No	SP	UN	Qty	Description	Page No

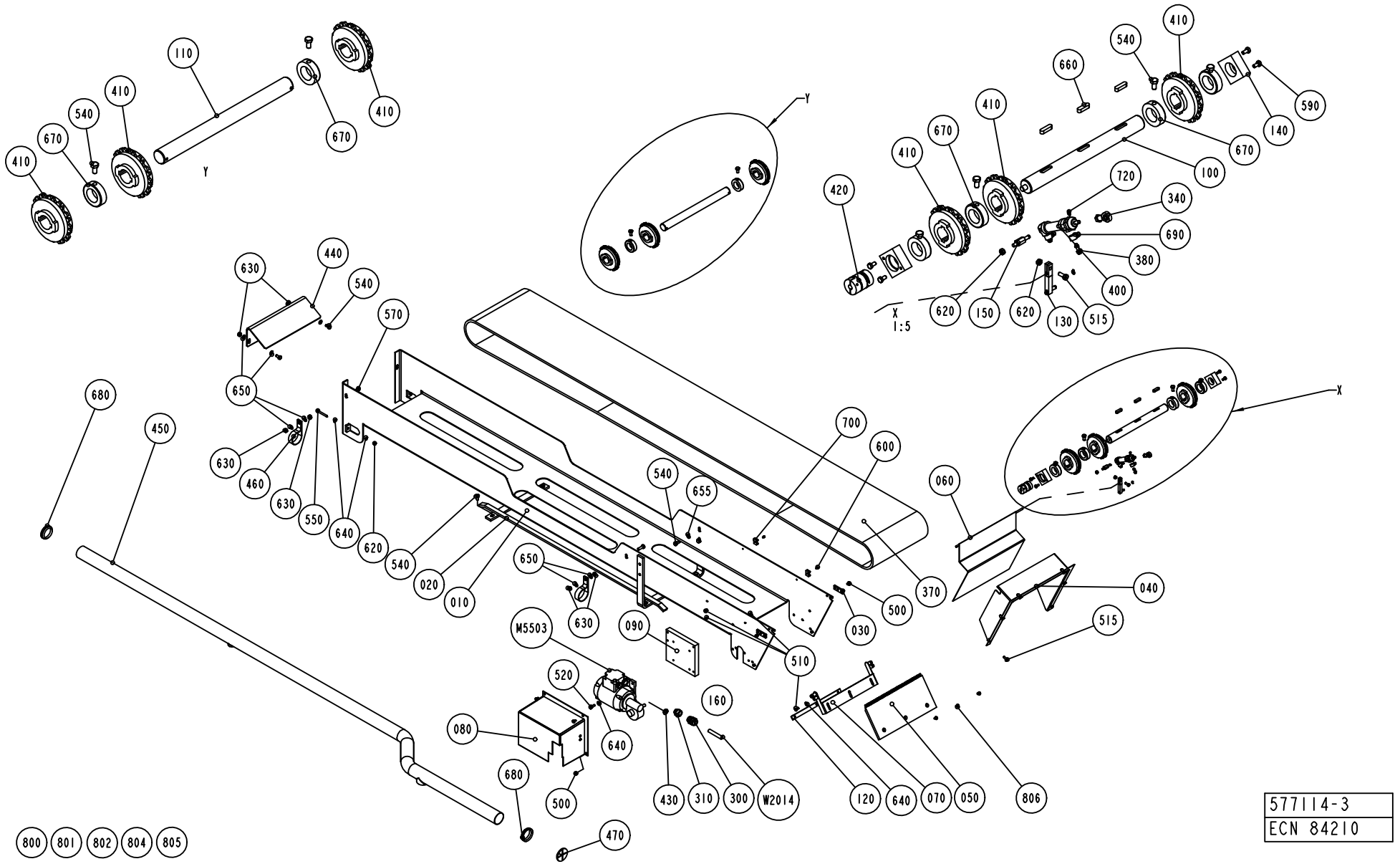
110
410
540
670
410
Y
410
540
660
590
140
670
100
410
670
410
420
720
340
690
380
400
620
150
620
130
515
X
1:5
630
440
540
570
650
680
450
630
460
630
550
640
620
540
020
010
650
630
M5503
090
700
600
540
655
370
500
030
510
060
040
515
520
640
080
680
500
160
430
310
300
W2014
120
640
070
050
806
470
800
801
802
804
805
577114-3
ECN 84210

Pos	Part No	SP	UN	Qty	Description	Page No
Common Parts						
010	1346523-0000	-		1	CHUTE	
020	1195266-0000	-		1	BRACKET	
030	1140208-0000	-		2	BRACKET	
040	1129247-0000	-		1	FRAME	
050	1129248-0001	-		1	GUARD PLATE	
060	1346524-0000	-		1	HATCH	
070	1129594-0000	-		1	BRACKET	
080	1517055-0000	-		1	MOTOR COVER	
090	1548789-0000	-		1	MOTOR PLATE	
100	1512584-0000	B		1	DRIVE SHAFT	
110	1037562-0000	B		1	SHAFT	
120	1129253-0000	-		1	FASTENING PLATE	
130	1140641-0000	-		1	ARM	
140	1037565-0000	B		2	BEARING UNIT	
150	1346822-0000	B		1	SHAFT	
300	352103-0111	-		1	CABLE GLAND, ST 16, PR22,5/PG16	
310	90089-0017	-		1	REDUCING SLEEVE, PR18,6/PR22,5	
340	90115-0173	B		1	ROD END, ID=6 MM, M6X1	
370	1346541-0000	A		1	CONVEYOR CHAIN	
380	90235-0290	-		2	THROTTLE CHECK VALVES M5	
400	90239-0842	B		1	DOUBLE ACTING, MINI-ISO, CYL.16-50	
410	90267-0027	B		6	CONVEYOR WHEEL, 12T	
420	90457-0090	B		1	FLEXIBLE COUPLING, 10X10 MM	
430	90002-0009	-		1	BLANK-OFF PLUG, PR 18.6 SKINDICHT-BLK11	
440	1346525-0000	-		1	COVER	
450	1346526-0000	-		1	PIPE	
460	1346527-0000	-		2	CLAMP	
470	1346528-0000	-		1	RUBBER	
500	312105-0362	-		5	SCREW M6S ISO 4017 M6X8 A480	
510	312105-0366	-		12	SCREW M6S M6X12 A280	
515	312105-0368	-		7	SCREW M6S M6X16 A280	
520	312105-0370	-		4	SCREW M6S ISO 4017 M6X20 A480	
540	312105-0449	-		16	SCREW M6S ISO 4017 M8X16 A480	
550	312109-0380	-		2	SCREW M6S ISO 4017 M6X50 A480	
55042	90166-0132	-	MM	3000	TUBE 6 MM PA,TRANSP.	
55044	90166-0132	-	MM	3000	TUBE 6 MM PA,TRANSP.	
570	312105-0453	-		2	SCREW M6S ISO 4017 M8X25 A480	
590	312115-0366	-		3	SCREW MC6S M6X12 A280	
600	312125-0285	-		2	SCREW SLOT.PAN HD. MCS 4X6 A480	
620	312605-0316	-		3	HEXAGON NUT, M6M M6 A280	
630	312605-0318	-		6	HEXAGON NUT, M6M M8 A280	
640	315105-0153	-		10	WASHER PLAIN, BRB, 6,4/12,H=1,5	
650	315105-0165	-		8	WASHER PLAIN, BRB, 8,4/16,H=1,5	
655	315115-0165	-		4	WASHER PLAIN, TBRB 8,4/16 H=3	
660	315705-0267	-		3	PARALLEL KEY W. ROUND ENDS 8X7X30 MM	
670	315742-0122	B		6	COLLAR, 30/55, H=15	
680	315220-0198	-		2	V-RINGS 45X55X13 MM V-50S	
690	342980-0112	-		2	BANJO-CONNECTION,RING 6/4-M6	
700	352113-0203	-		2	ANCHOR PLATES FOR STRIPS, TYPE TM3S8-M0	
720	315751-0103	B		2	RETAIN. RING, 6	
800	359000-0400	-		6	MARKING CO2/4"0"	
801	359000-0401	-		2	MARKING COLLAR 2/4 "1" YELLOW	
802	359000-0402	-		4	MARKING COLLAR 2/4 "2" YELLOW	
804	359000-0404	-		8	MARKING COLLAR PA2/4 "4" YELLOW	
805	359000-0405	-		8	MARKING CO2/4"5"	
806	312155-0366	-		3	SCREW HEX.SOCK.COUNT.MF6S M6X12 A280	
M5503	90069-0257	A		1	GEARS, WORM MOTOR WKM/DM90-60WE2A	
W2014	351150-0418	-	M	3	CABLE OLFLEX 4X2,5 MM2 LIGHT/GREY	

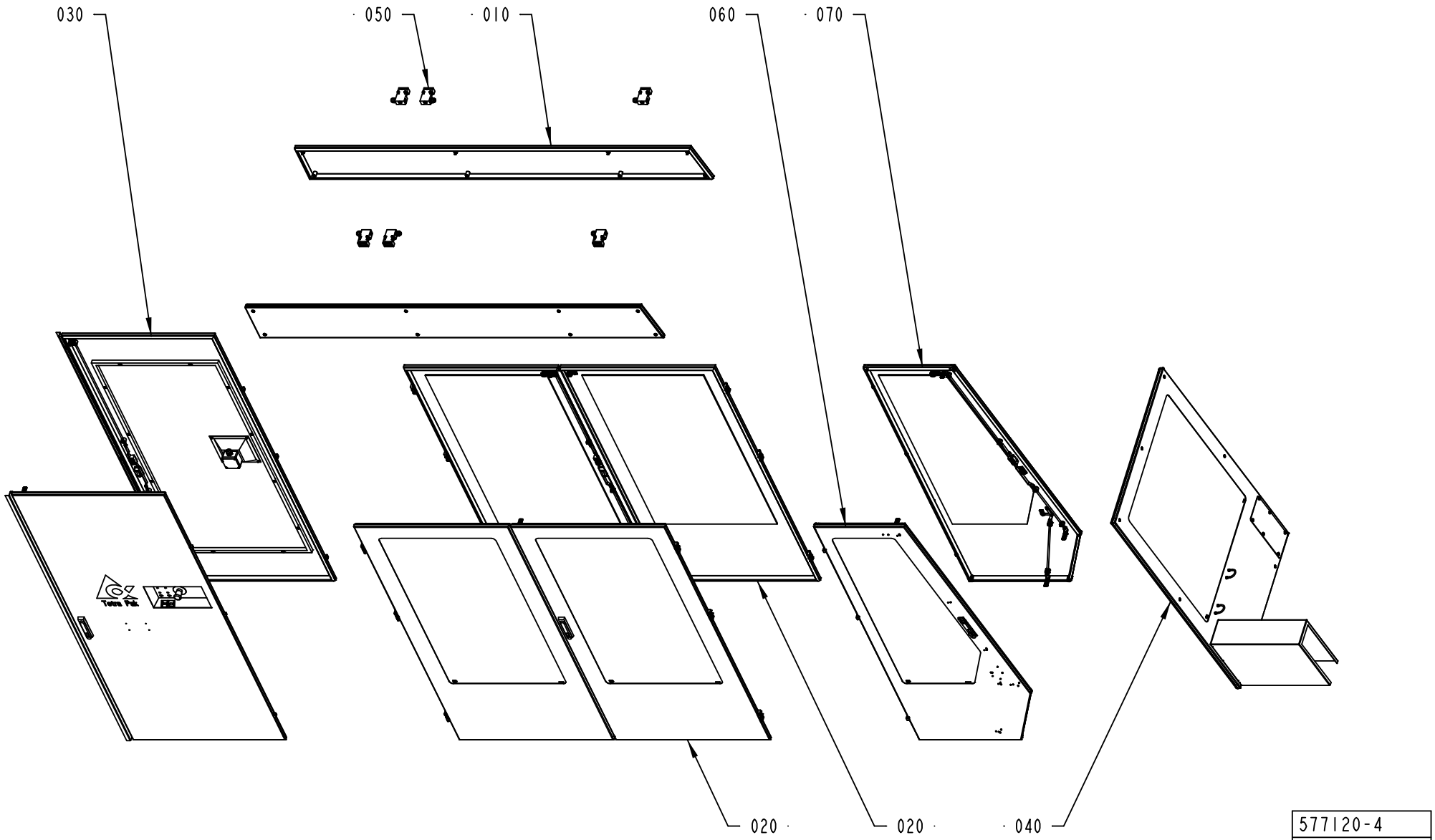
030
050
010
060
070
020
020
040
577120-4
ECM 104856

ECM: 105014 - 20010925
Group number: 577120-0400
Assembly Drawing: 577120-4_1_AA

Issue: 20021030

Pos	Part No	SP	UN	Qty	Description	Page No
Common Parts						
010	A1317268-0100	-		1	COVERS	**301**
020	A1317273-0200	-		2	DOOR	**303**
030	A1317388-0100	-		1	DOORS	**305**
040	A1346823-0200	-		1	FRONT COVER	**309**
050	A1347069-0100	-		1	SAFETY SWITCH	**313**
060	A2533725-0100	-		1	DOOR	**315**
070	A2533726-0100	-		1	DOOR	**317**

Pos	Part No	SP	UN	Qty	Description	Page No

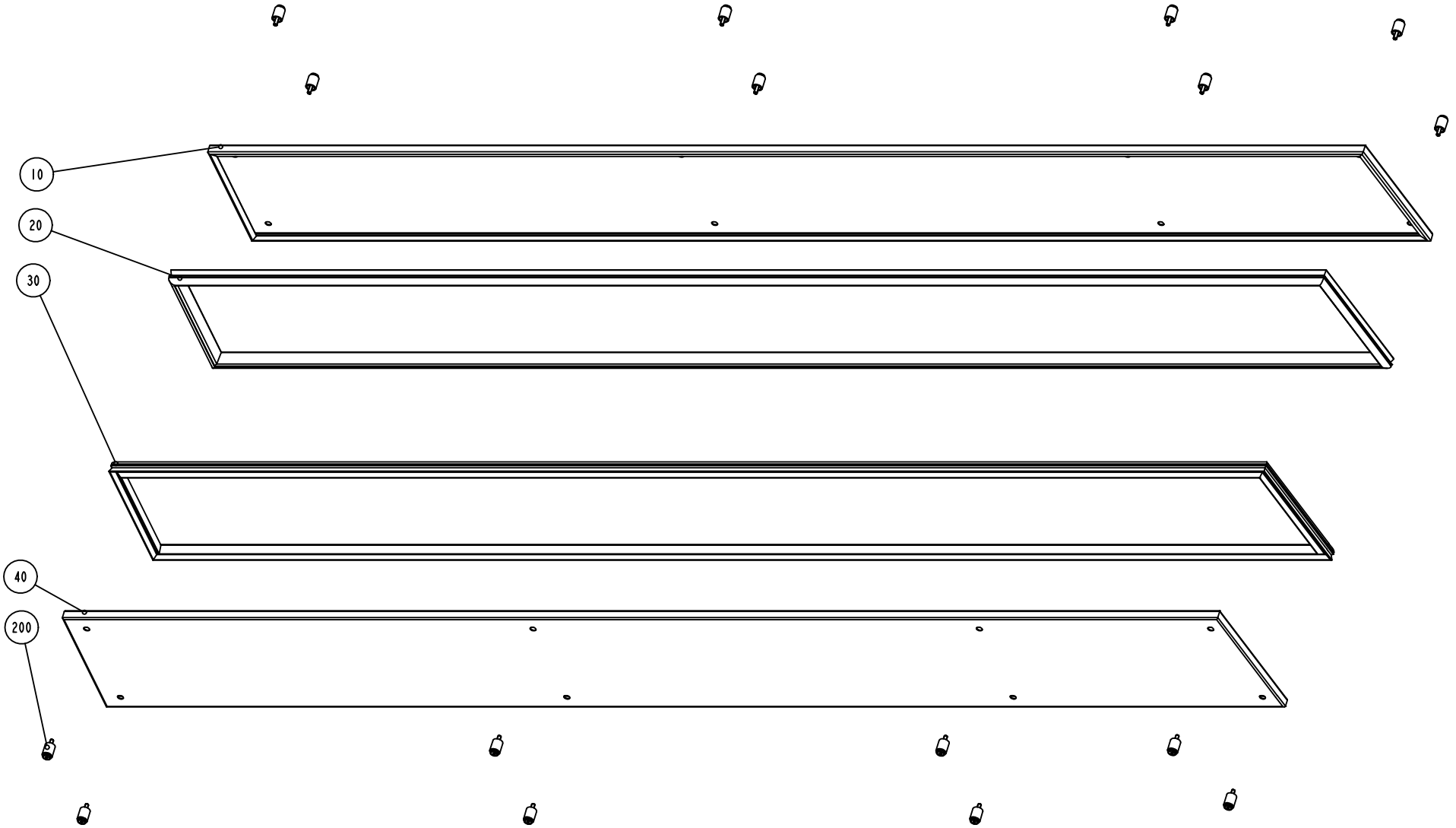

S-1317268-1
ECN 71879

ECM: 71879 - 19981005
Group number: 1317268-0100
Assembly Drawing: 1317268-1_1_AA

Issue: 20021030

Pos	Part No	SP	UN	Qty	Description	Page No
Common Parts						
010	1346758-0000	-		1	COVER	
020	1346759-0000	-		1	GASKET	
030	1346757-0000	-		1	GASKET	
040	1346756-0000	-		1	COVER	
200	90226-0458	-		16	MOUNTING SCREW	

Pos	Part No	SP	UN	Qty	Description	Page No

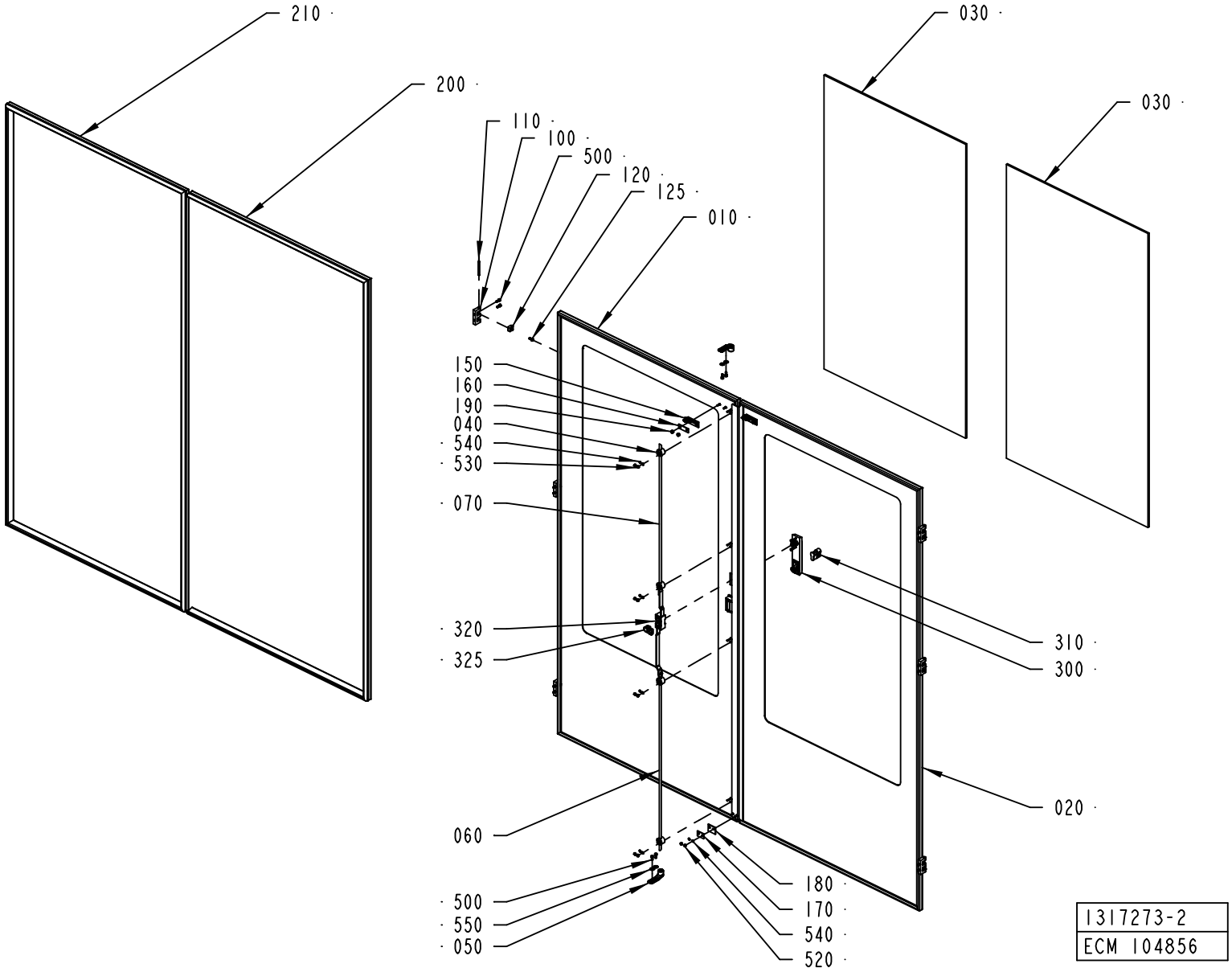
210
200
030
030
110
100
500
120
125
010
150
160
190
040
540
530
070
320
325
310
300
020
060
500
550
050
180
170
540
520
1317273-2
ECM 104856

ECM: 105010 - 20010925
Group number: 1317273-0200
Assembly Drawing: 1317273-2_1_AA

Issue: 20021030

Pos	Part No	SP	UN	Qty	Description	Page No
Common Parts						
010	1317271-0000	-		1	DOOR	
020	1317272-0000	-		1	DOOR	
030	2533626-0000	-		2	GLASS PANE	
040	1129274-0000	-		4	GUIDE LUG	
050	1538868-0000	-		2	BRACKET	
060	1036304-0006	-		1	LOCKING ARM	
070	1036304-0013	-		1	LOCKING ARM	
100	1035792-0000	-		6	E-HINGE	
110	988685-0000	-		6	PIN	
120	1129770-0000	-		6	BLOCKING PIECE	
125	1129767-0000	-		6	SCREW	
150	1129042-0000	-		2	KEY	
160	1036563-0000	-		2	WASHER	
170	1129324-0000	-		1	WASHER	
180	1129325-0000	-		1	SEALING FLANGE	
190	1512644-0000	-		4	ROUND NUT	
200	1317274-0000	-		1	SEALING STRIP	
210	1317275-0000	-		1	SEALING STRIP	
300	90237-0176	A		1	TURNING HANDLE	
310	90237-0128	-		1	LOCK CYLINDER, 1109-U3	
320	90237-0153	-		1	LOCK HOUSING, 1121-U26-0B	
325	90237-0165	-		1	LATCH	
350	90157-0041	-		1	SEALING COMPOUND	
360	90153-0049	-			ADHESIVE	
500	312115-0327	-		16	SCREW MC6S M5X12 A280	
520	312812-0312	-		2	HEXAGON NUT, NY-LOCK M4 A480	
530	312705-0312	-		8	NUT HEX. DOMED CAP MHM-6 M4 A280	
540	315105-0136	-		10	WASHER PLAIN, BRB, 4,3/8,H=0,8	
550	90005-0114	-		4	WASHER PLAIN ROUND 5,3(M5)/15, H=1	

Pos	Part No	SP	UN	Qty	Description	Page No

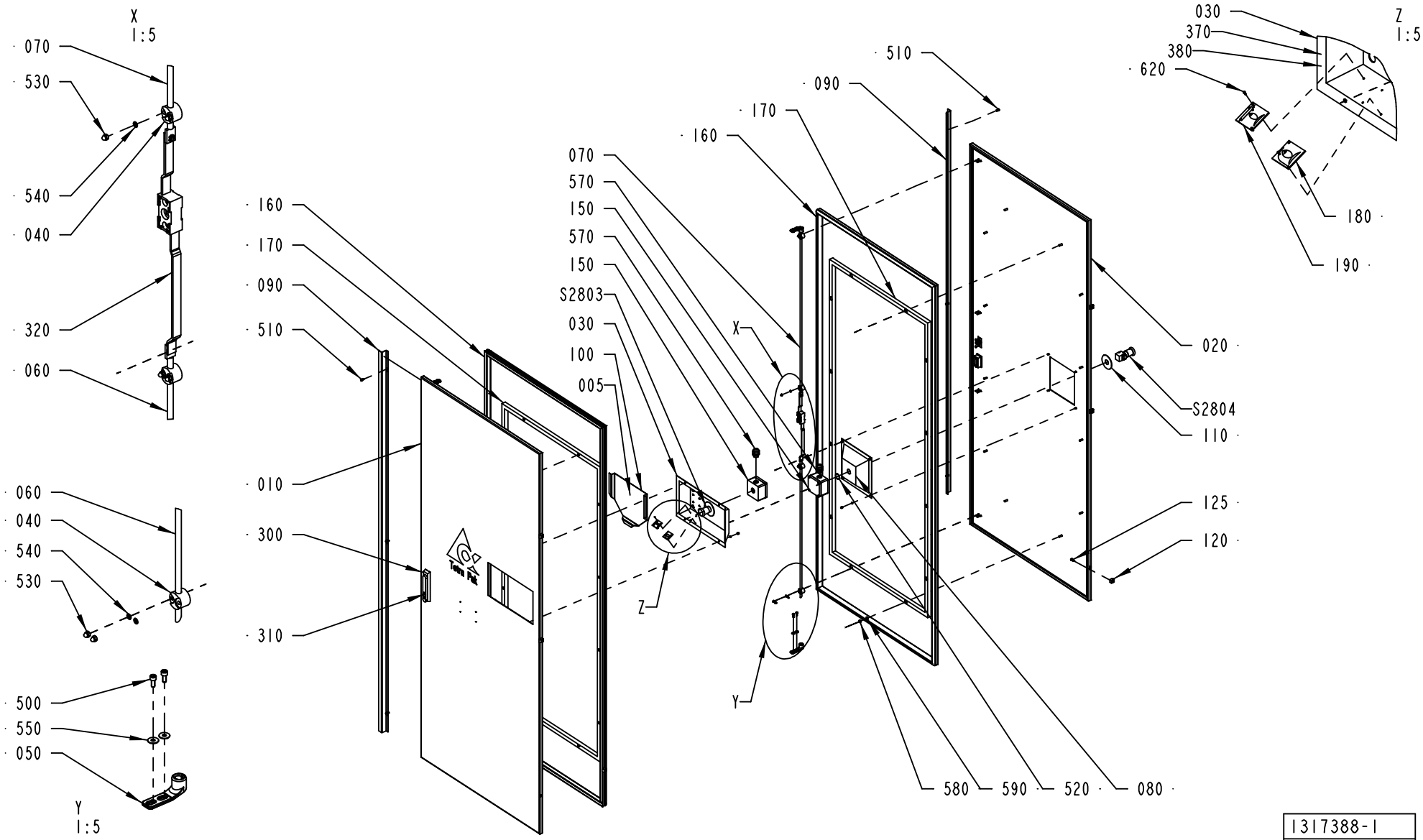

1317388-1
ECM 104856

ECM: 99039 - 20011123
Group number: 1317388-0100
Assembly Drawing: 1317388-1_1_AD

Issue: 20021030

Pos	Part No	SP	UN	Qty	Description	Page No
Common Parts						
005	A1512398-0100	-		1	DIAGRAM	**307**
010	1317386-0000	-		1	DOOR	
020	1317387-0000	-		1	DOOR	
030	1317389-0000	-		1	COVER	
040	1129274-0000	-		8	GUIDE LUG	
050	1538868-0000	-		4	BRACKET	
060	1036304-0006	-		2	LOCKING ARM	
070	1036304-0007	-		2	LOCKING ARM	
080	1317390-0000	-		1	COVER	
090	1317392-0000	-		2	COVER	
100	1129275-0000	-		1	BOX FOR DIAGRAM	
110	486826-0001	-		2	SIGN "EMERGENCY STOP"	
120	1129770-0000	-		6	BLOCKING PIECE	
125	1129767-0000	-		6	SCREW	
150	1037130-0000	-		2	CONNECTION BOX	
160	1317391-0000	-		2	SEALING STRIP	
170	1348232-0000	-		2	FRAME	
180	1347766-0000	-		1	SIGN	
190	1347767-0000	-		1	SIGN	
300	90237-0176	-		2	TURNING HANDLE	
310	90237-0128	-		2	LOCK CYLINDER, 1109-U3	
320	90237-0153	-		2	LOCK HOUSING, 1121-U26-0B	
370	90157-0041	-		1	SEALING COMPOUND	
380	90153-0049	-		1	ADHESIVE	
500	312115-0327	-		8	SCREW MC6S M5X12 A280	
510	312115-0323	-		6	SCREW MC6S M5X8 A280	
520	315202-0119	-		2	O-RING 25,1X1,6 MM	
530	312705-0312	-		24	NUT HEX. DOMED CAP MHM-6 M4 A280	
540	315105-0136	-		24	WASHER PLAIN, BRB, 4,3/8,H=0,8	
550	90005-0114	-		8	WASHER PLAIN ROUND 5,3(M5)/15, H=1	
570	352103-0110	-		2	CABLE GLAND, STR 16, PR22,5/PG16	
580	312605-0316	-		24	HEXAGON NUT, M6M M6 A280	
590	315105-0153	-		24	WASHER PLAIN, BRB, 6,4/12,H=1,5	
620	312502-0120	-		4	DRIVE SCREW ROUND HEAD KDS 0X5	
S2803	90064-0124	-		1	SWITCH, EM. STOP, ZB2-BS844+ZB2-BZ1045	
S2804	90064-0124	-		1	SWITCH, EM. STOP, ZB2-BS844+ZB2-BZ1045	
W2254	351150-0405	-	MM	2000	CABLE OLFLEX 5X0,75 MM2 LIGHT/GREY	
W2255	351150-0405	-	MM	3000	CABLE OLFLEX 5X0,75 MM2 LIGHT/GREY	

Pos	Part No	SP	UN	Qty	Description	Page No

Machine Type | Group Description | Used-In | Group Number | Page No

This page is intentionally left blank.

ECM: 72985 - 20000201
Group number: 1512398-0100
Assembly Drawing:

Issue: 20021030

Pos	Part No	SP	UN	Qty	Description	Page No
Common Parts						
010	1512376-0000	-		1	PNEUMATIC DIAGRAM	
020	1484892-0000	-		1	PNEUMATIC DIAGRAM	
030	1347585-0000	-		1	DIAGRAM	
040	1484511-0000	-		1	WATER DIAGRAM	
050	1484893-0000	-		1	EXTERNAL CLEANING DIAGRAM	
060	1129998-0000	-		1	PNEUMATIC DIAGRAM	

Pos	Part No	SP	UN	Qty	Description	Page No

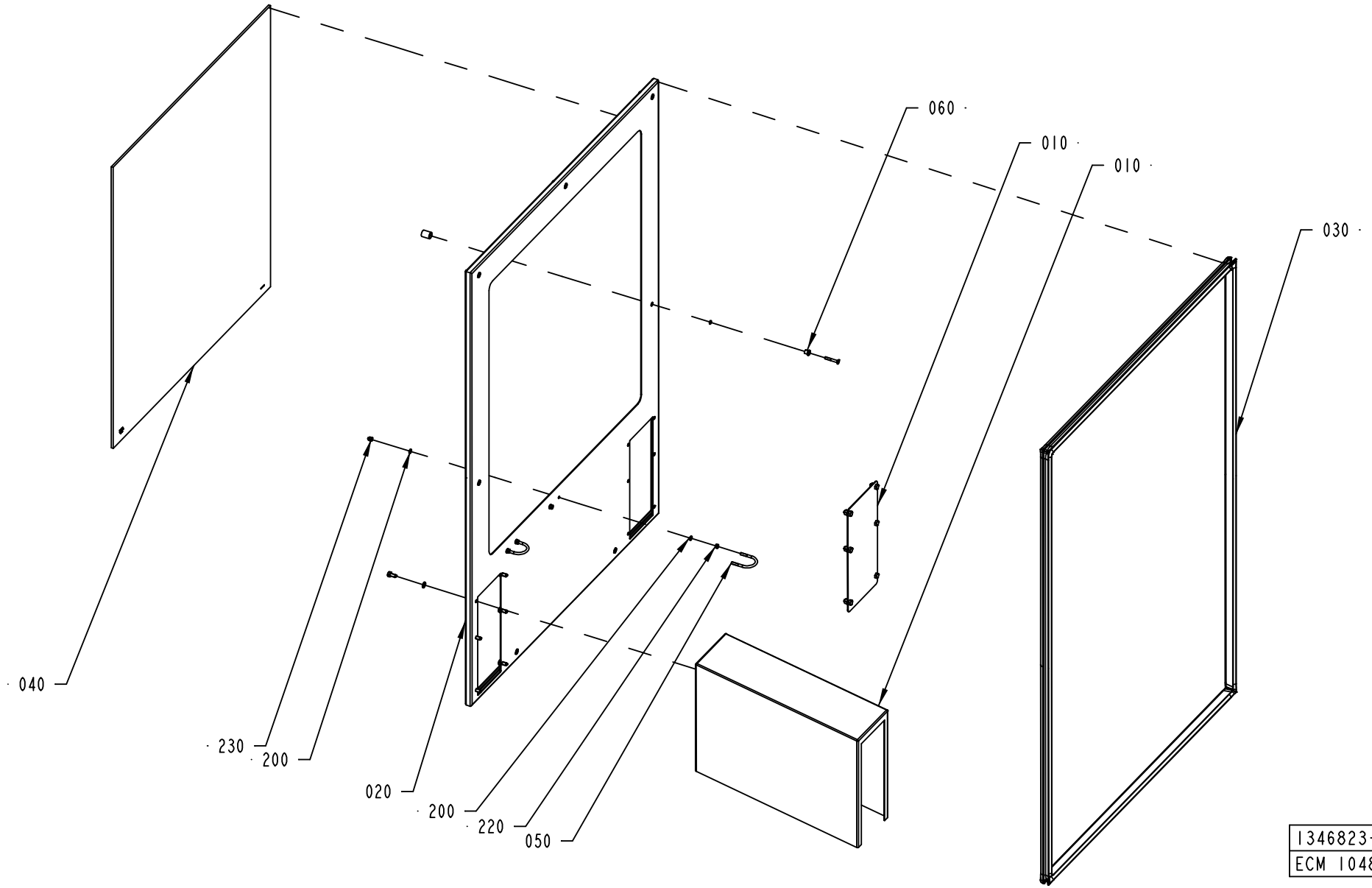
060
010
010
030
040
230
200
020
200
220
050
1346823-2
ECM 104856

ECM: 105011 - 20010925
Group number: 1346823-0200
Assembly Drawing: 1346823-2_1_AA

Issue: 20021030

Pos	Part No	SP	UN	Qty	Description	Page No
Common Parts						
010	A1346959-0100	-		1	LID	**311**
020	1346819-0000	-		1	COVER	
030	1296219-0000	-		1	SEALING STRIP	
040	2533625-0000	-		1	GLASS PANE	
050	531616-0000	-		2	HOLDER	
060	90226-0458	-		7	MOUNTING SCREW	
070	90157-0041	-		1	SEALING COMPOUND	
200	315105-0153	-		8	WASHER PLAIN, BRB, 6,4/12,H=1,5	
220	312605-0316	-		4	HEXAGON NUT, M6M M6 A280	
230	312705-0316	-		4	NUT HEX. DOMED CAP MHM-6 M6 A280	

Pos	Part No	SP	UN	Qty	Description	Page No

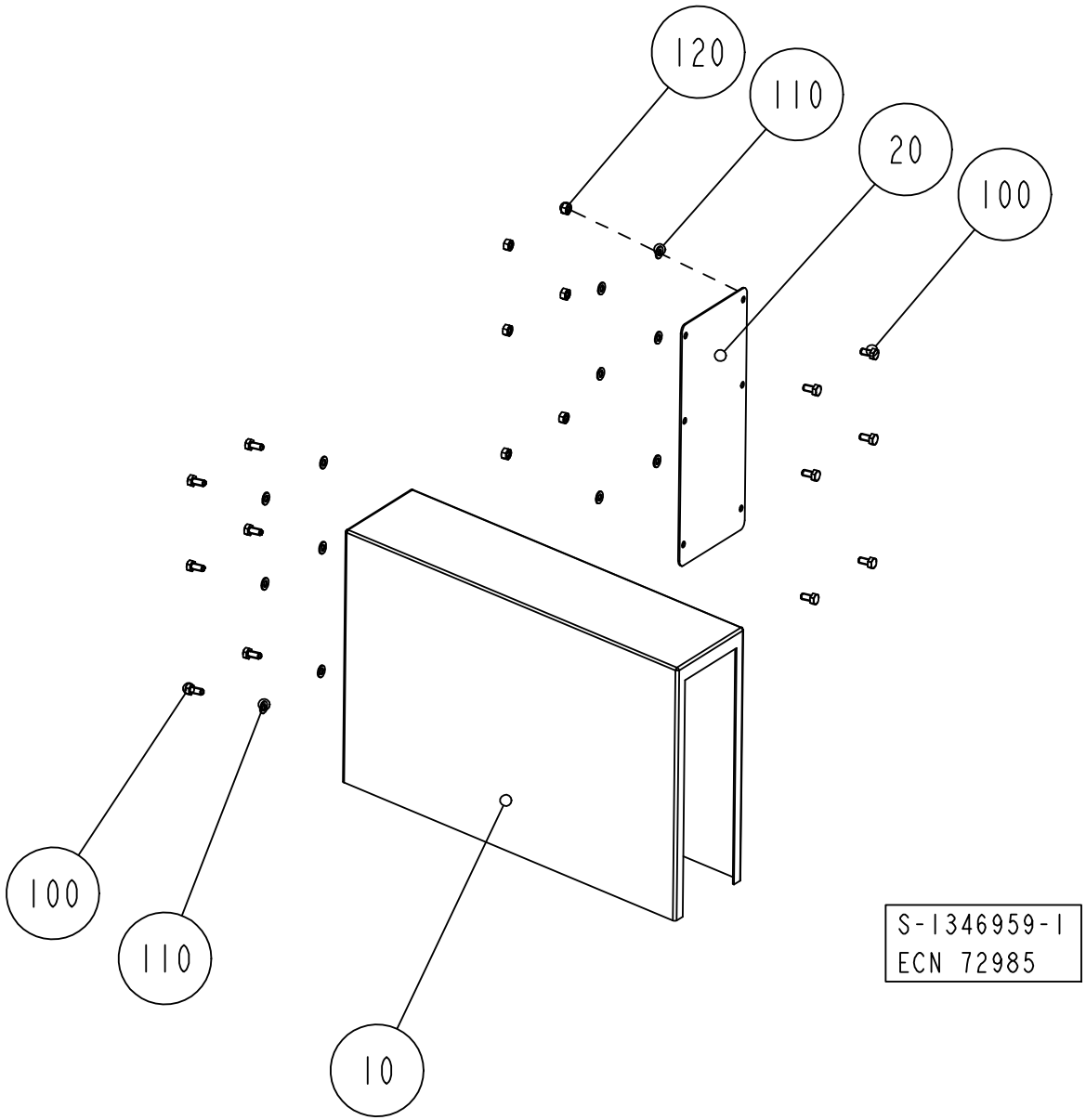
120
110
20
100
100
110
10
S-1346959-1
ECN 72985

ECM: 72985 - 20000201
Group number: 1346959-0100
Assembly Drawing: 1346959-1_1_AB

Issue: 20021030

Pos	Part No	SP	UN	Qty	Description	Page No
Common Parts						
010	1346957-0000	-		1	TUNNEL	
020	1346958-0000	-		1	PLATE	
100	312105-0449	-		12	SCREW M6S ISO 4017 M8X16 A480	
110	315105-0165	-		12	WASHER PLAIN, BRB, 8,4/16,H=1,5	
120	312605-0318	-		6	HEXAGON NUT, M6M M8 A280	

Pos	Part No	SP	UN	Qty	Description	Page No

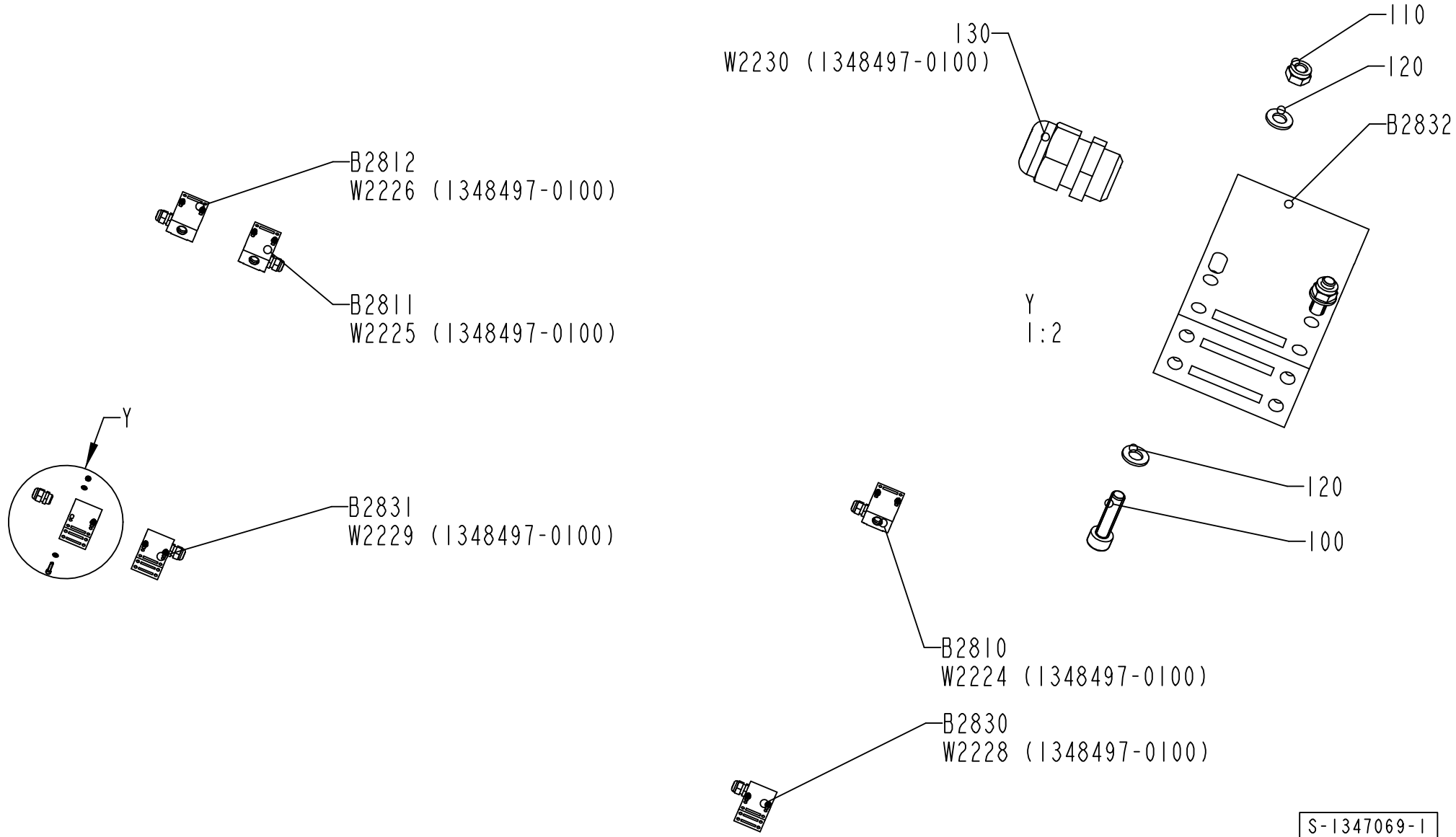
B2812
W2226 (1348497-0100)
B2811
W2225 (1348497-0100)
Y
B2831
W2229 (1348497-0100)
130
W2230 (1348497-0100)
110
120
B2832
Y
1:2
120
100
B2810
W2224 (1348497-0100)
B2830
W2228 (1348497-0100)
S-1347069-1
ECN 72267

ECM: 72267 - 19990419
Group number: 1347069-0100
Assembly Drawing: 1347069-1_1_AB

Issue: 20021030

Pos	Part No	SP	UN	Qty	Description	Page No
Common Parts						
100	312125-0331	-		12	SCREW PAN HEAD MCS M5X20 SS	
110	312812-0314	-		12	HEXAGON NUT, NY-LOCK M5 A480	
120	315105-0146	-		24	WASHER PLAIN, BRB, 5,3/10,H=1	
130	352103-0106	-		6	CABLE GLAND, ST 11, PR18,6/PG11	
B2810	90044-0139	C		1	KEY SAF.SW. AZ16-02 ZVR K-2254	
B2811	90044-0139	C		1	KEY SAF.SW. AZ16-02 ZVR K-2254	
B2812	90044-0139	C		1	KEY SAF.SW. AZ16-02 ZVR K-2254	
B2830	90044-0139	C		1	KEY SAF.SW. AZ16-02 ZVR K-2254	
B2831	90044-0139	C		1	KEY SAF.SW. AZ16-02 ZVR K-2254	
B2832	90044-0139	C		1	KEY SAF.SW. AZ16-02 ZVR K-2254	
W2224	351150-0405	-	MM	2500	CABLE OLFLEX 5X0,75 MM2 LIGHT/GREY	
W2225	351150-0405	-	MM	2500	CABLE OLFLEX 5X0,75 MM2 LIGHT/GREY	
W2226	351150-0405	-	MM	2500	CABLE OLFLEX 5X0,75 MM2 LIGHT/GREY	
W2228	351150-0405	-	MM	4500	CABLE OLFLEX 5X0,75 MM2 LIGHT/GREY	
W2229	351150-0405	-	MM	3500	CABLE OLFLEX 5X0,75 MM2 LIGHT/GREY	
W2230	351150-0405	-	MM	3500	CABLE OLFLEX 5X0,75 MM2 LIGHT/GREY	

Pos	Part No	SP	UN	Qty	Description	Page No

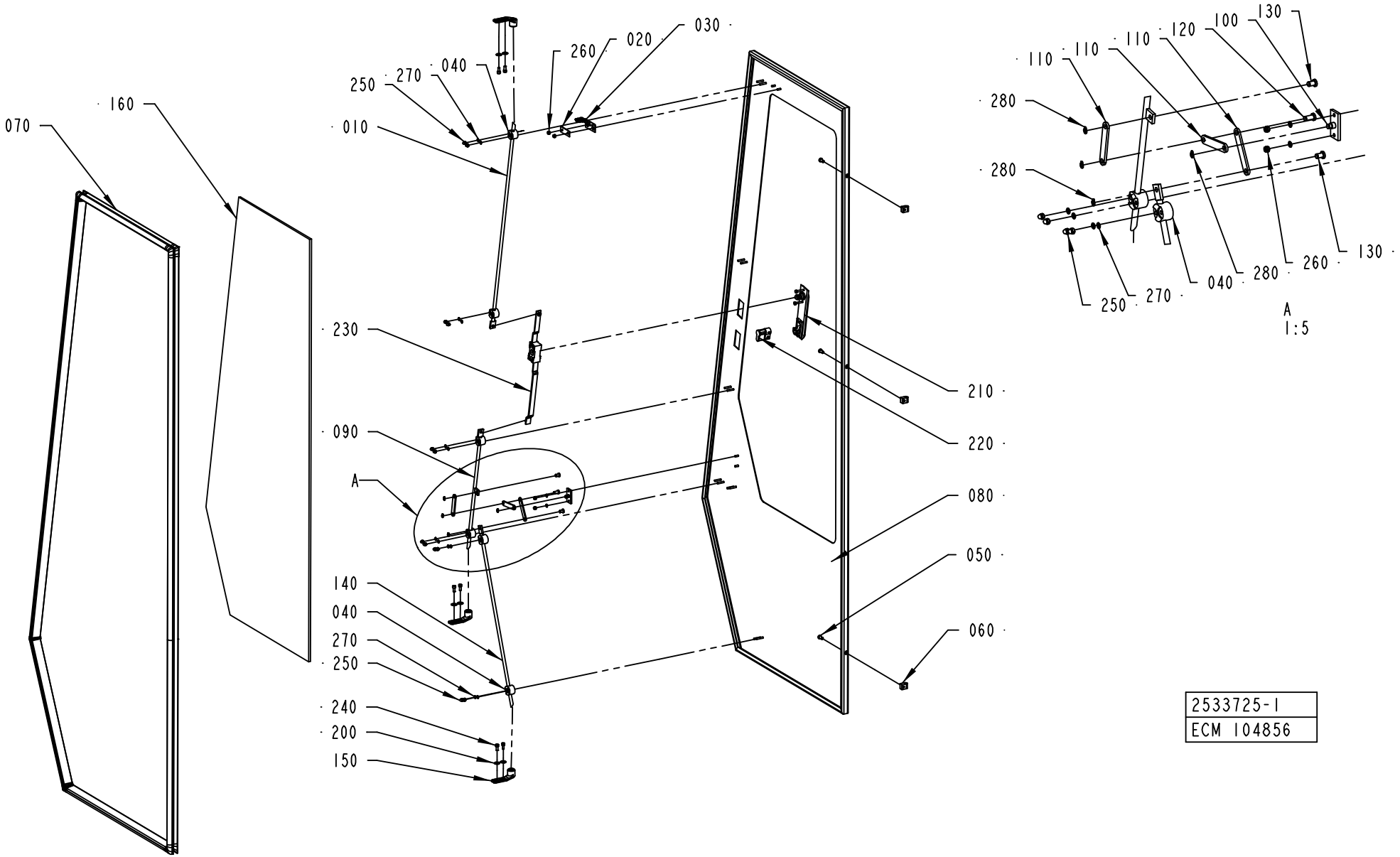
070
160
010
250
270
040
260
020
030
230
090
A
140
040
270
250
240
200
150
210
220
080
050
060
280
280
110
110
110
120
100
130
250
270
040
280
260
130
A
1:5
2533725-1
ECM 104856

ECM: 105013 - 20010925
Group number: 2533725-0100
Assembly Drawing: 2533725-1_1_AA

Issue: 20021030

Pos	Part No	SP	UN	Qty	Description	Page No
Common Parts						
010	1036304-0018	-		1	LOCKING ARM	
020	1036563-0000	-		1	WASHER	
030	1129042-0000	-		1	KEY	
040	1129274-0000	-		6	GUIDE LUG	
050	1129767-0000	-		3	SCREW	
060	1129770-0000	-		3	BLOCKING PIECE	
070	1279076-0000	-		1	SEALING STRIP	
080	2541130-0000	-		1	DOOR	
090	1285844-0000	-		1	LOCKING ARM	
100	1285845-0000	-		1	BRACKET	
110	1285846-0000	-		3	LINK	
120	1285847-0000	-		1	SHAFT	
130	1285848-0000	-		2	SHAFT	
140	1350708-0000	-		1	LOCKING ARM	
150	1538868-0000	-		3	BRACKET	
160	2533624-0000	-		1	GLASS PANE	
200	90005-0114	-		6	WASHER PLAIN ROUND 5,3(M5)/15, H=1	
210	90237-0175	-		1	TURNING HANDLE	
220	90237-0128	-		1	LOCK CYLINDER, 1109-U3	
230	90237-0153	-		1	LOCK HOUSING, 1121-U26-0B	
240	312115-0327	-		6	SCREW MC6S M5X12 A280	
250	312705-0312	-		12	NUT HEX. DOMED CAP MHM-6 M4 A280	
260	312812-0312	-		4	HEXAGON NUT, NY-LOCK M4 A480	
270	315105-0136	-		14	WASHER PLAIN, BRB, 4,3/8,H=0,8	
280	315751-0103	-		4	RETAIN. RING, 6	
290	90153-0049	-		1	ADHESIVE	
300	90157-0041	-		1	SEALING COMPOUND	

Pos	Part No	SP	UN	Qty	Description	Page No

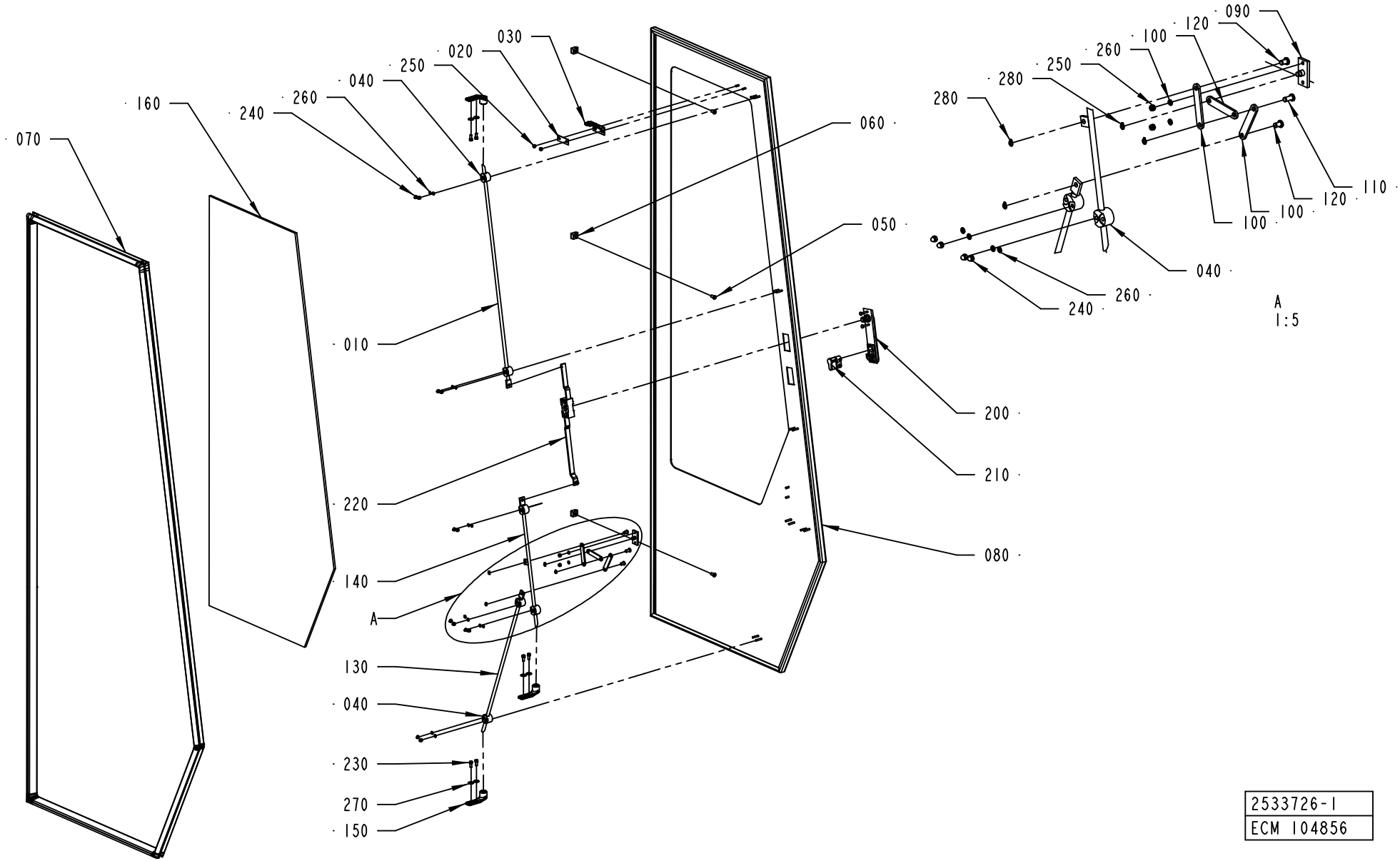

2533726-1
ECM 104856

ECM: 105012 - 20010925
Group number: 2533726-0100
Assembly Drawing: 2533726-1_1_AA

Issue: 20021030

Pos	Part No	SP	UN	Qty	Description	Page No
Common Parts						
010	1036304-0018	-		1	LOCKING ARM	
020	1036563-0000	-		1	WASHER	
030	1129042-0000	-		1	KEY	
040	1129274-0000	-		6	GUIDE LUG	
050	1129767-0000	-		3	SCREW	
060	1129770-0000	-		3	BLOCKING PIECE	
070	1279075-0000	-		1	SEALING STRIP	
080	2541129-0000	-		1	DOOR	
090	1285845-0000	-		1	BRACKET	
100	1285846-0000	-		3	LINK	
110	1285847-0000	-		1	SHAFT	
120	1285848-0000	-		2	SHAFT	
130	1350708-0000	-		1	LOCKING ARM	
140	1478005-0000	-		1	LOCKING ARM	
150	1538868-0000	-		3	BRACKET	
160	2533724-0000	-		1	GLASS PANE	
200	90237-0175	-		1	TURNING HANDLE	
210	90237-0128	-		1	LOCK CYLINDER, 1109-U3	
220	90237-0153	-		1	LOCK HOUSING, 1121-U26-0B	
230	312115-0327	-		6	SCREW MC6S M5X12 A280	
240	312705-0312	-		12	NUT HEX. DOMED CAP MHM-6 M4 A280	
250	312812-0312	-		4	HEXAGON NUT, NY-LOCK M4 A480	
260	315105-0136	-		14	WASHER PLAIN, BRB, 4,3/8,H=0,8	
270	90005-0114	-		6	WASHER PLAIN ROUND 5,3(M5)/15, H=1	
280	315751-0103	-		4	RETAIN. RING, 6	
290	90153-0049	-		1	ADHESIVE	
300	90157-0041	-		1	SEALING COMPOUND	

Pos	Part No	SP	UN	Qty	Description	Page No

Tetra Pak

SPC
Spare Parts Catalogue

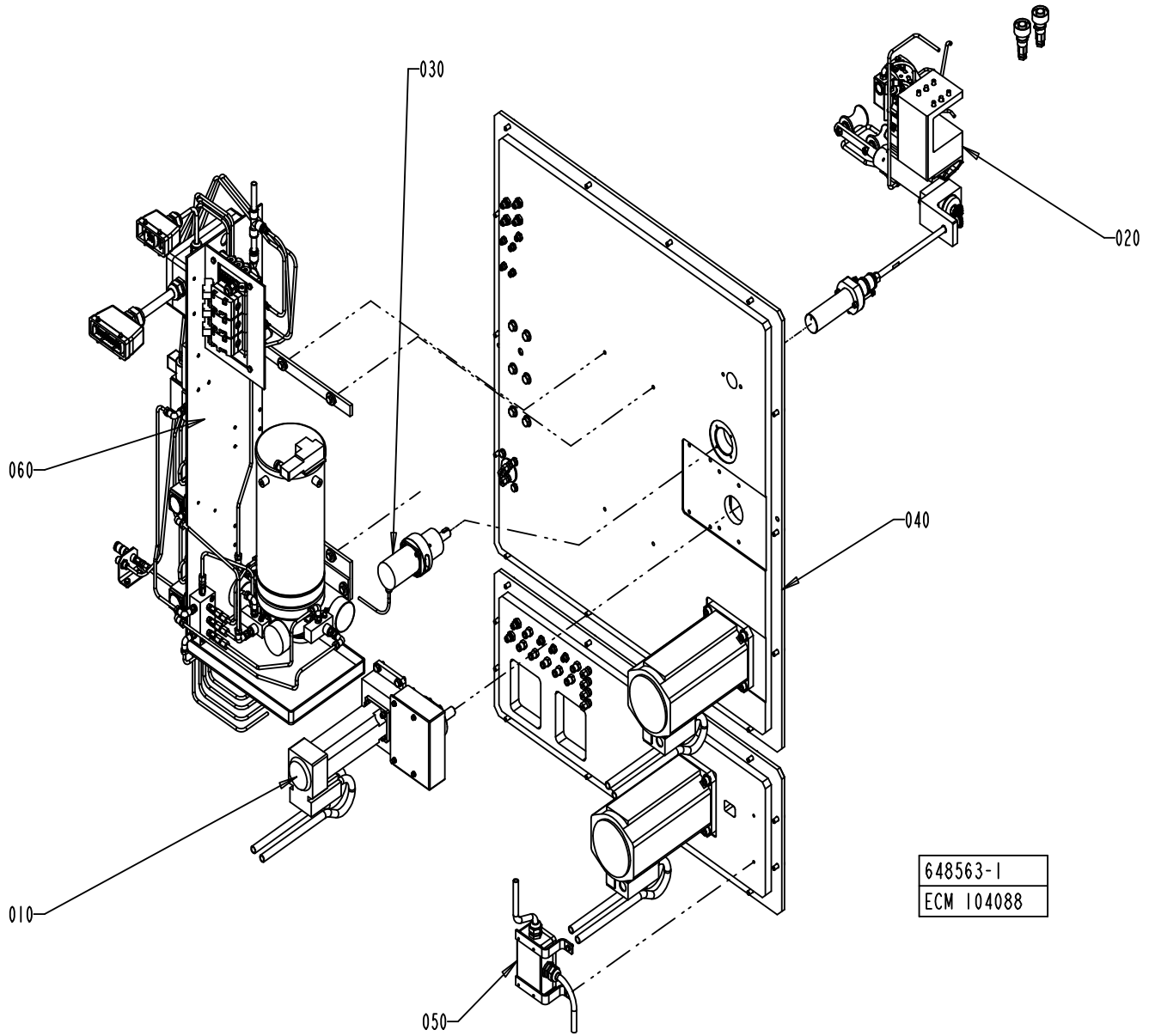
030
020
060
040
010
050
648563-1
ECM 104088

ECM: 113087 - 20020830
Group number: 648563-0100
Assembly Drawing: 648563-1_1_AB

Issue: 20020902

Pos	Part No	SP	UN	Qty	Description	Page No
Common Parts						
010	A2511247-0100	-		1	DESIGN CORRECTION DEVICE	**323**
020	A2511249-0100	-		1	PHOTOCELL UNIT	**325, 327**
030	A1260120-0100	-		1	VOLUME ADJUSTER	**329**
040	A2511248-0100	-		1	PLATE	**331**
050	A1349464-0300	-		1	CONNECTION BOX	**333**
060	A2531643-0100	-		1	GREASE LUBRICATION SYST	**337**

Pos	Part No	SP	UN	Qty	Description	Page No

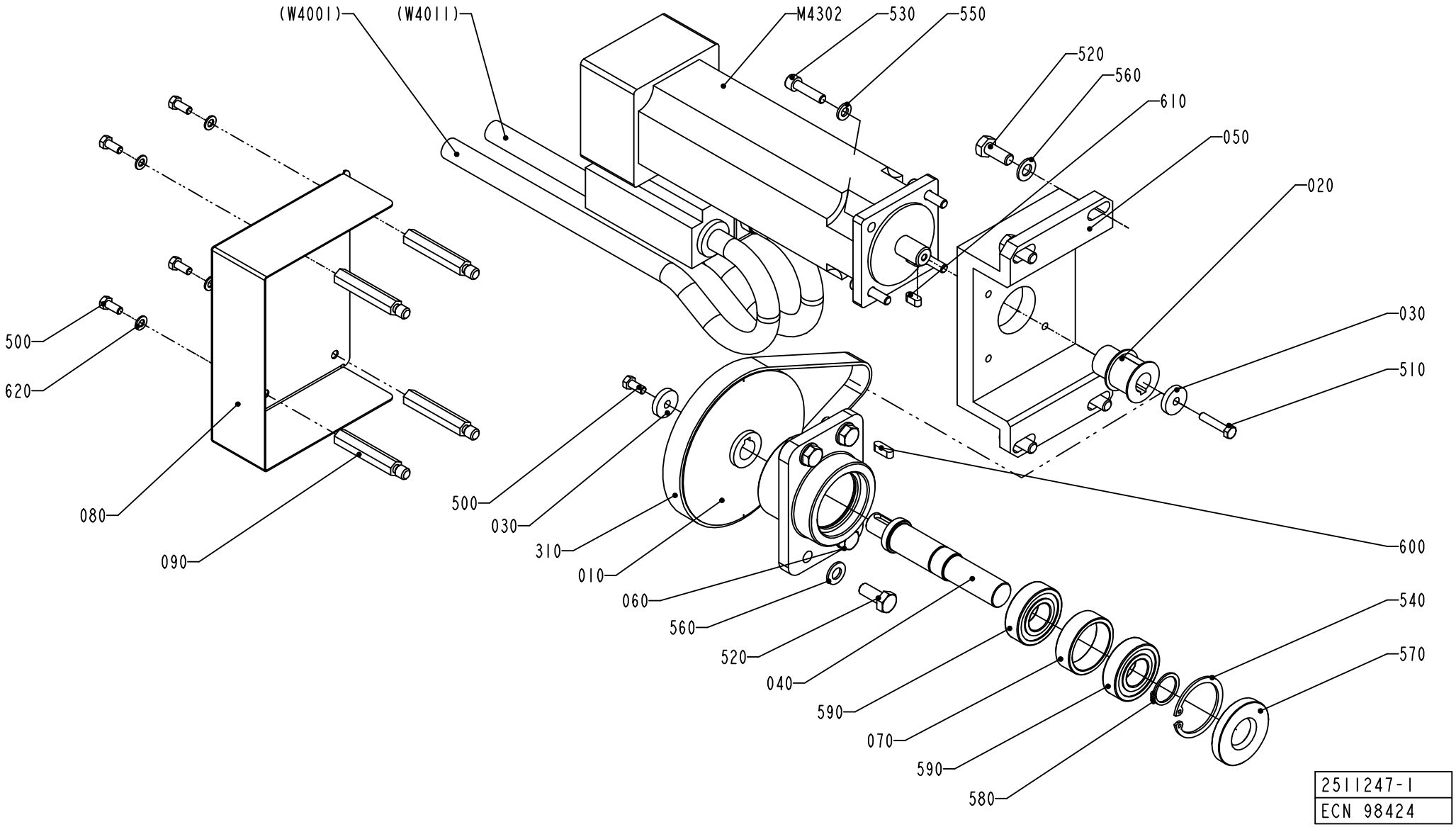
(W4001)
(W4011)
M4302
530
550
520
560
610
050
020
030
510
600
500
620
080
090
500
030
310
010
060
560
520
040
590
070
590
580
540
570
2511247-1
ECN 98424

Pos	Part No	SP	UN	Qty	Description	Page No
TBA 0200B						
040	2525660-0000	-		1	SHAFT	
TBA 0250B						
040	2525661-0000	-		1	SHAFT	
TBA 0200S						
040	1512649-0000	-		1	SHAFT	
Common Parts						
010	1140839-0000	A		1	PULLEY	
020	1140837-0000	A		1	PULLEY	
030	1140851-0000	-		2	WASHER	
050	1260863-0000	-		1	PLATE	
060	1512650-0000	-		1	BEARING HOUSING	
070	1260865-0000	-		1	SPACER	
080	1487099-0000	-		1	COVER	
090	1487127-0000	-		4	SPACER SCREW	
310	90252-0047	A		1	TIMING BELT AT5 450X16 MM	
500	312105-0327	-		5	SCREW M6S ISO 4017 M5X12 A480	
510	312105-0333	-		1	SCREW M6S ISO 4017 M5X25 A480	
520	312105-0451	-		8	SCREW M6S ISO 4017 M8X20 A480	
530	312115-0372	-		4	SCREW MC6S M6X25 A280	
540	90141-0020	-		1	RETAIN. RING, 42	
550	315105-0153	-		4	WASHER PLAIN, BRB, 6,4/12,H=1,5	
560	315105-0165	-		8	WASHER PLAIN, BRB, 8,4/16,H=1,5	
570	315221-0147	B		1	RADIAL SEAL 20X47X7 MM	
580	315751-0116	-		1	RETAIN. RING, 20	
590	321308-0204	A		2	BALL BEARING, 2 SEALS, 20X42X12 MM	
600	315701-0199	A		1	PARALLEL KEY W. ROUND ENDS 5X5X16 MM	
610	315701-0197	A		1	PARALLEL KEY W. ROUND ENDS 5X5X12 MM	
620	315105-0146	-		4	WASHER PLAIN, BRB, 5,3/10,H=1	
M4302	90045-0164	A		1	SERVO MOTOR EP 075-112-44T3B	

Pos	Part No	SP	UN	Qty	Description	Page No

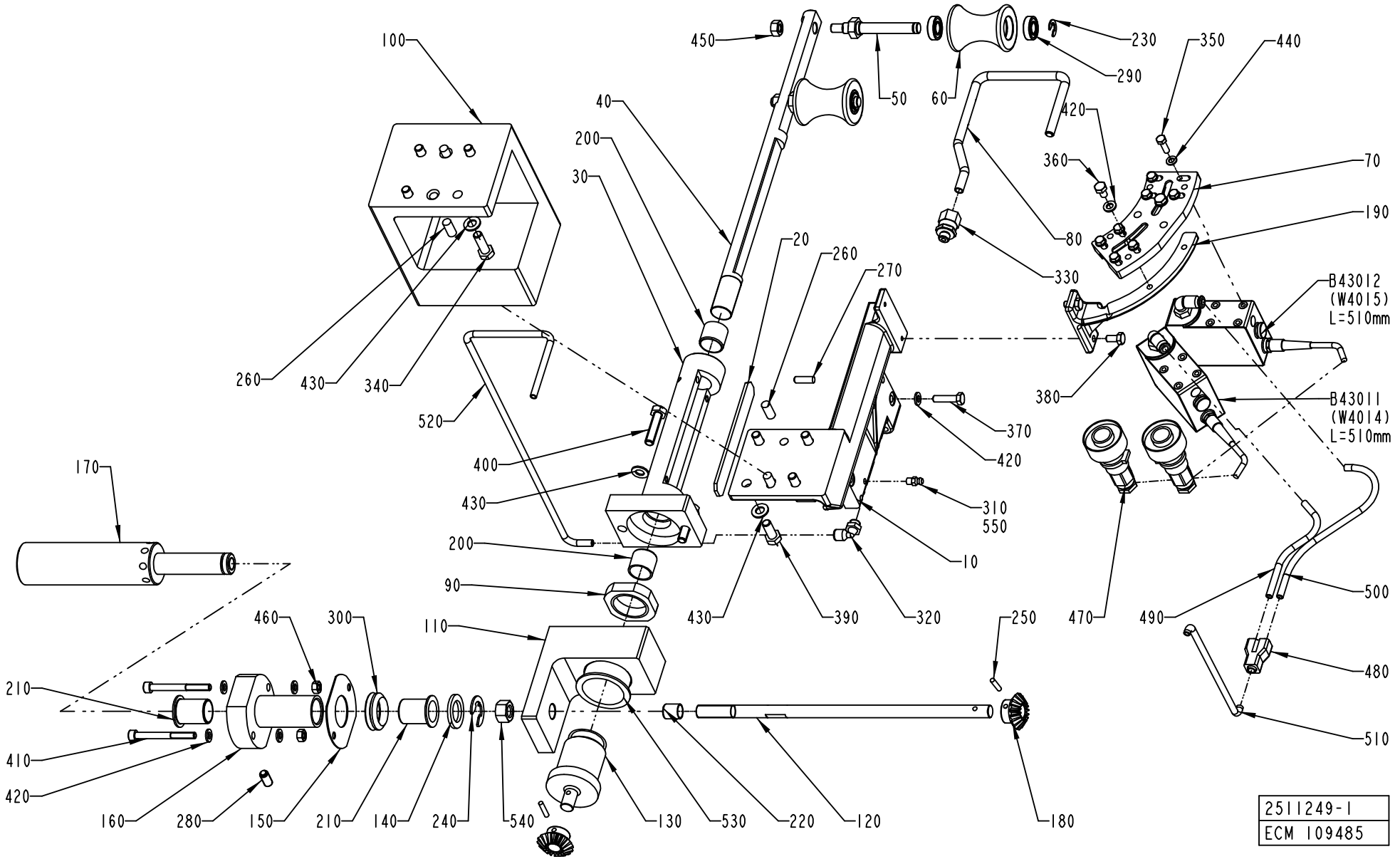
100
450
230
350
440
290
50
60
40
200
30
420
360
70
190
80
20
260
270
330
B43012
(W4015)
L=510mm
260
430
340
520
380
B43011
(W4014)
L=510mm
370
420
400
430
310
550
10
170
200
90
430
390
320
470
490
500
460
300
110
250
480
210
410
420
510
160
280
150
210
140
240
540
130
530
220
120
180
2511249-1
ECM 109485

ECM: 112863 - 20020830
Group number: 2511249-0100
Assembly Drawing: 2511249-1_1_AB

Issue: 20020902

Pos	Part No	SP	UN	Qty	Description	Page No
TBA 0200B						
040	2504430-0000	-		1	GUIDE ROD	
060	1347521-0000	A		2	ROLLER	
070	978735-0000	-		1	FASTENING PLATE	
080	1347522-0000	-		1	NOZZLE	
100	1517278-0000	-		1	SPACER	
190	751457-0000	-		1	CANTILEVER	
340	312105-0453	-		4	SCREW M6S ISO 4017 M8X25 A480	
390	312105-0451	-		4	SCREW M6S ISO 4017 M8X20 A480	
430	315105-0165	-		10	WASHER PLAIN, BRB, 8,4/16,H=1,5	
490	90166-0013	-	MM	200	TUBE 8 MM PA BLUE	
500	90166-0013	-	MM	150	TUBE 8 MM PA BLUE	
510	90166-0013	-	MM	350	TUBE 8 MM PA BLUE	
520	90166-0132	-	MM	520	TUBE 6 MM PA,TRANSP.	
TBA 0200S						
040	2527133-0000	-		1	GUIDE ROD	
060	1487209-0000	A		2	ROLLER	
070	491880-0000	-		1	FASTENING PLATE	
080	1512658-0000	-		1	NOZZLE	
100	1519178-0000	-		1	SPACER	
190	1487204-0000	-		1	CANTILEVER	
340	312105-0453	-		4	SCREW M6S ISO 4017 M8X25 A480	
390	312105-0451	-		4	SCREW M6S ISO 4017 M8X20 A480	
430	315105-0165	-		10	WASHER PLAIN, BRB, 8,4/16,H=1,5	
490	90166-0013	-	MM	200	TUBE 8 MM PA BLUE	
500	90166-0013	-	MM	150	TUBE 8 MM PA BLUE	
510	90166-0013	-	MM	280	TUBE 8 MM PA BLUE	
520	90166-0132	-	MM	450	TUBE 6 MM PA,TRANSP.	
TBA 0250B						
040	2504430-0000	-		1	GUIDE ROD	
060	1347521-0000	A		2	ROLLER	
070	978735-0000	-		1	FASTENING PLATE	
080	1347522-0000	-		1	NOZZLE	
100	1517277-0000	-		1	SPACER	
190	751457-0000	-		1	CANTILEVER	
340	312105-0453	-		4	SCREW M6S ISO 4017 M8X25 A480	
390	312105-0451	-		4	SCREW M6S ISO 4017 M8X20 A480	
430	315105-0165	-		10	WASHER PLAIN, BRB, 8,4/16,H=1,5	
490	90166-0013	-	MM	200	TUBE 8 MM PA BLUE	
500	90166-0013	-	MM	150	TUBE 8 MM PA BLUE	
510	90166-0013	-	MM	280	TUBE 8 MM PA BLUE	
520	90166-0132	-	MM	450	TUBE 6 MM PA,TRANSP.	
Common Parts						
010	1538139-0000	-		1	HOLDER	
020	1538138-0000	A		1	SPACER	
030	2504429-0000	-		1	GUIDE HOLDER	
050	2506317-0000	-		2	SHAFT	
090	2504427-0000	-		1	ROUND NUT	
110	2504428-0000	-		1	SUPPORT	
120	2504431-0000	-		1	SHAFT	
130	2504426-0000	-		1	SHAFT	
140	2506263-0000	-		1	WASHER	
150	2506264-0000	-		1	GASKET	
160	2504433-0000	-		1	BEARING HOUSING	
170	2504434-0000	-		1	KNOB	
180	2510243-0000	B		2	GEAR WHEEL	
200	321136-0260	A		2	BUSHING, 20X23X20 MM	
210	321156-0270	A		2	FLANGE BUSHING, 20X23X30 MM	
220	321136-0183	A		1	BUSHING, 12X14X15 MM	
230	315755-0801	-		2	LOCKING WASHER 8	
240	315755-0113	-		1	LOCKING WASHER 15	
250	311103-0272	-		2	PARALLELL PIN, M6, 4X20 MM	
260	311103-0401	-		4	PARALLELL PIN, M6, 8X20 MM	
270	311103-0353	-		2	PARALLELL PIN, M6, 6X20 MM	
280	90287-0112	-		1	SCREW SPRINGLOAD. SLOTTED HEAD M8X16	
290	90214-0036	A		4	BALL BEARING, 10X22X6 MM	
300	315220-0167	-		1	V-RINGS 27X35X10,5 MM V-30S	
310	90286-0013	-		1	GREASE NIPPLE STRAIGHT M6	
320	90458-2956	-		1	ELBOW PIPE JOINT, EXT.THREAD, D=6MM-G1/8	
330	342720-0103	-		1	CONN. STR. GA-8-G1/8	
350	312105-0329	-		8	SCREW M6S ISO 4017 M5X16 A480	
360	312105-0364	-		2	SCREW M6S ISO 4017 M6X10 A480	
370	312105-0372	-		2	SCREW M6S ISO 4017 M6X25 A480	
380	312105-0366	-		2	SCREW M6S M6X12 A280	
400	312109-0457	-		2	SCREW M6S ISO 4017 M8X35 A480	
410	312115-0382	-		2	SCREW MC6S M6X60 A280	
420	315105-0153	-		8	WASHER PLAIN, BRB, 6,4/12,H=1,5	
440	315105-0146	-		8	WASHER PLAIN, BRB, 5,3/10,H=1	
450	312605-0318	-		2	HEXAGON NUT, M6M M8 A280	
460	312605-0316	-		2	HEXAGON NUT, M6M M6 A280	
470	90110-0235	-		2	CABLE CONTACT, PX0739/S	

Machine Type | Group Description | Used-In | Group Number | Page No

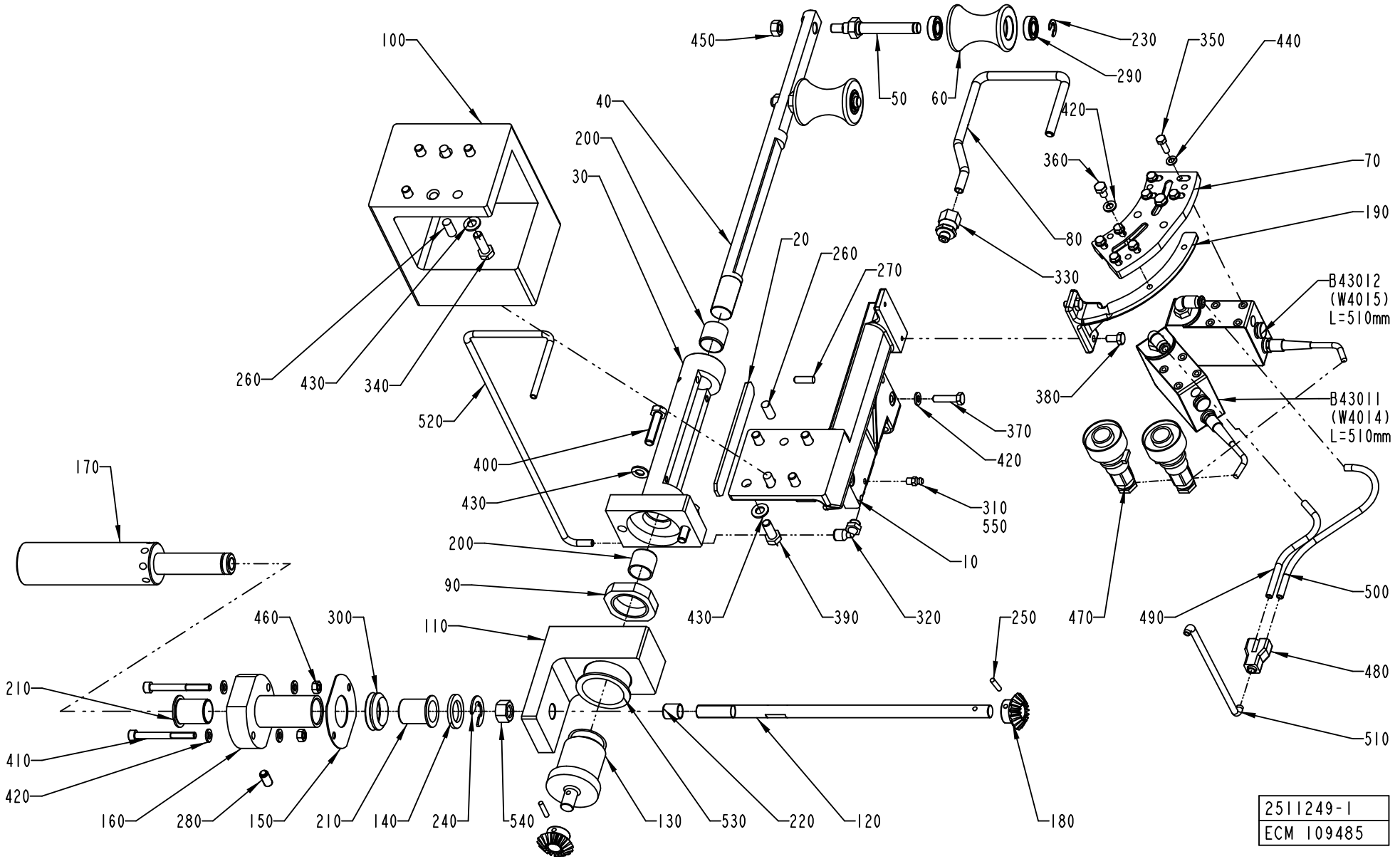
100
450
230
350
440
290
50
60
40
200
30
420
360
70
190
80
20
260
270
330
B43012
(W4015)
L=510mm
260
430
340
520
380
B43011
(W4014)
L=510mm
370
420
400
430
310
550
10
170
200
90
430
390
320
470
490
500
460
300
110
250
480
210
410
420
510
160
280
150
210
140
240
540
130
530
220
120
180
2511249-1
ECM 109485

Pos	Part No	SP	UN	Qty	Description	Page No
Common Parts (Cont'd)						
480	90055-0100	-		1	Y-CONNECTION, 6-6	
530	321156-0420	A		1	FLANGE BUSHING, 40X44X40 MM	
540	312605-0322	-		1	HEXAGON NUT, M6M M12 A280	
550	90296-0070	-		1	GREASE	
B43011	B90458-0601	A		1	PHOTOCELL, SICK PHOTOCELL 1	
	342732-0102	-		*1*	*ELBOW PIPE JOINT, EXT.THREAD, D=6MM-G1/8*	
B43012	B90458-0601	A		1	PHOTOCELL, SICK PHOTOCELL 1	
	342732-0102	-		*1*	*ELBOW PIPE JOINT, EXT.THREAD, D=6MM-G1/8*	

Pos	Part No	SP	UN	Qty	Description	Page No

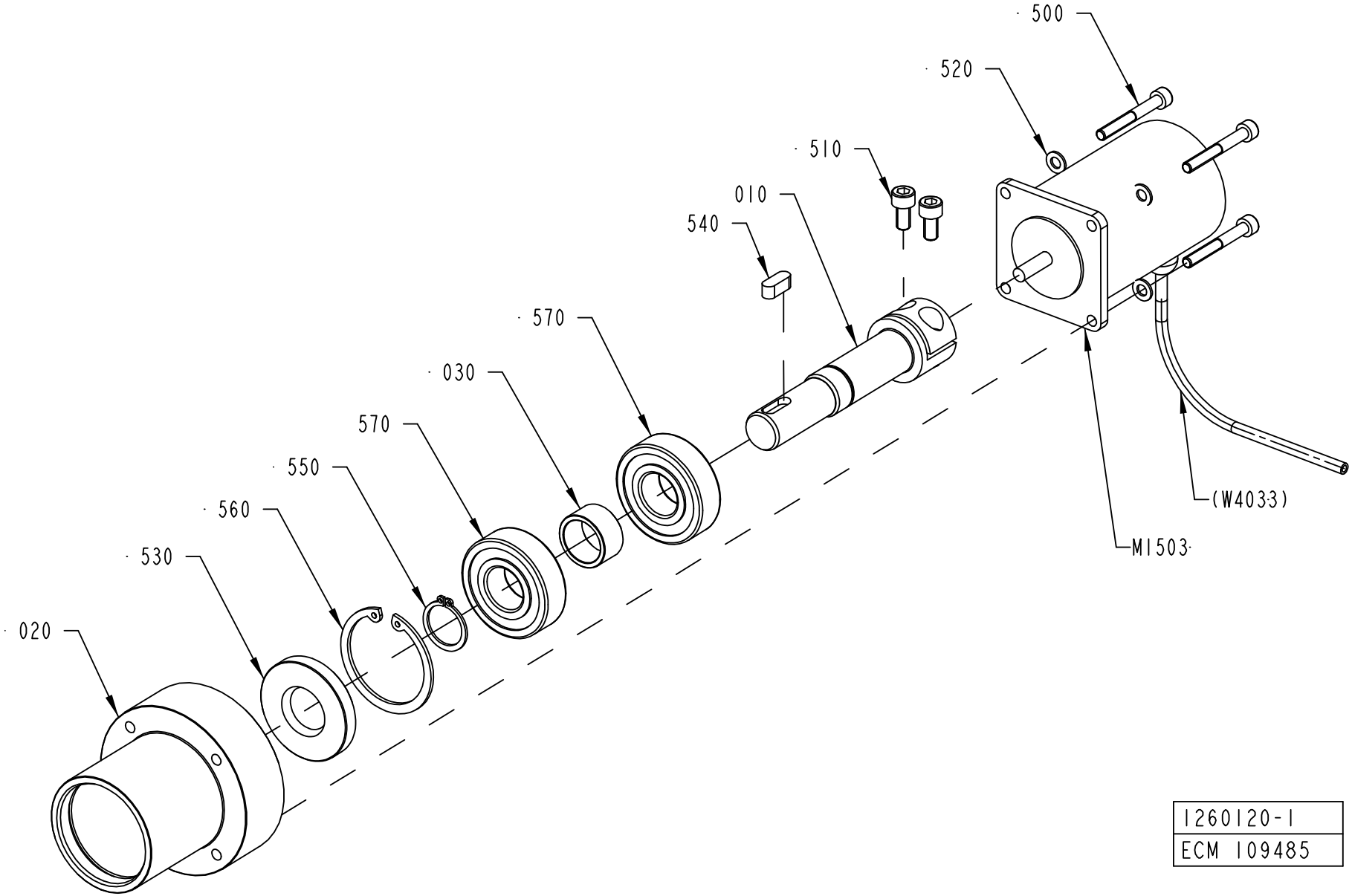

1260120-1
ECM 109485

Pos	Part No	SP	UN	Qty	Description	Page No
Common Parts						
010	1260171-0000	-		1	SHAFT	
020	1260172-0000	-		1	BUSHING	
030	1260187-0000	-		1	SPACER	
500	312115-0339	-		4	SCREW MC6S M5X40 A280	
510	312115-0366	-		2	SCREW MC6S M6X12 A280	
520	315105-0146	-		4	WASHER PLAIN, BRB, 5,3/10,H=1	
530	315221-0147	A		1	RADIAL SEAL 20X47X7 MM	
540	315705-0230	A		1	PARALLEL KEY W. ROUND ENDS 6X6X16 MM	
550	315751-0116	-		1	RETAIN. RING, 20	
560	315753-0130	-		1	RETAINING RING FOR HOLE, 47X1,75 MM	
570	321313-0104	A		2	BALL BEARING, 2 SEALS, 20X47X14 MM	
M1503	90045-0189	A		1	STEP MOTOR E22NSLT-LNN-NS-02	

Pos	Part No	SP	UN	Qty	Description	Page No

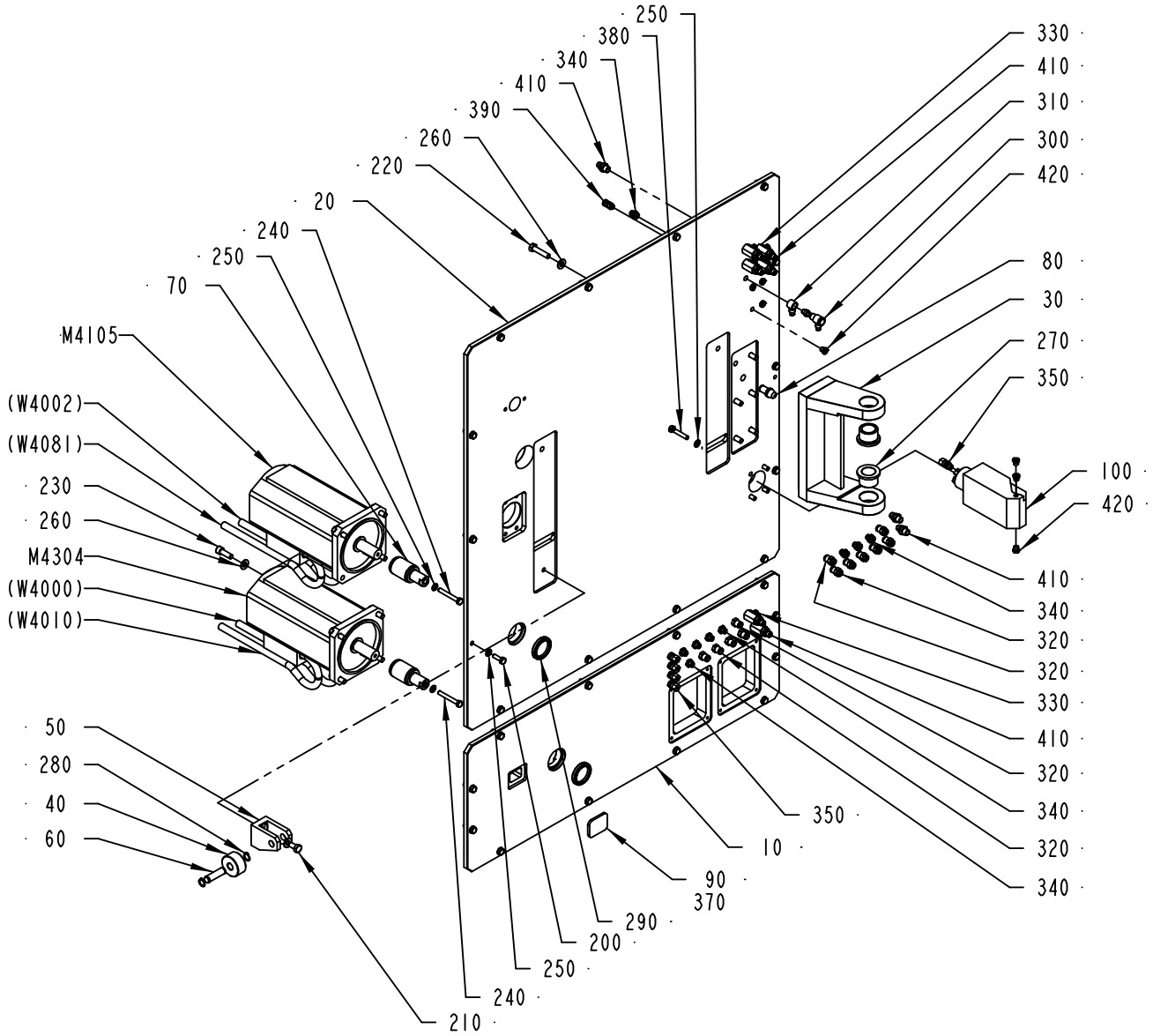

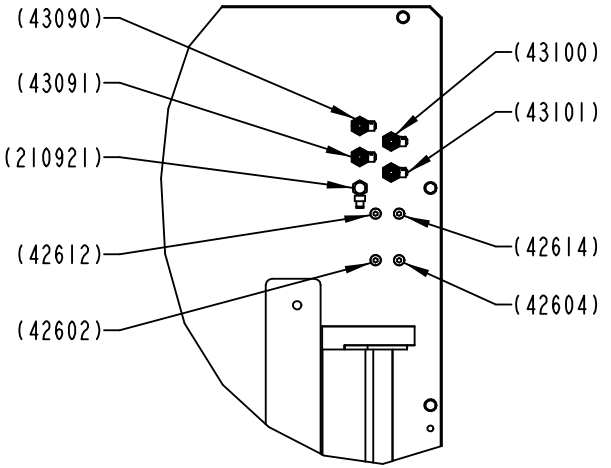

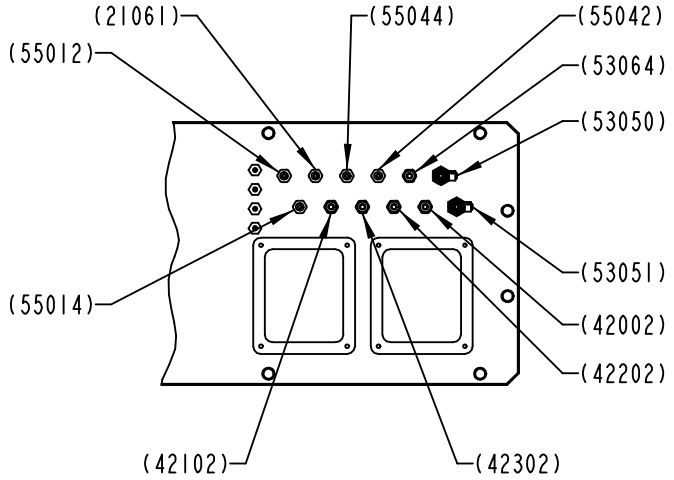

2511248-1
ECM 109485

ECM: 110605 - 20020830
Group number: 2511248-0100
Assembly Drawing: 2511248-1_1_AC

Issue: 20020902

Pos	Part No	SP	UN	Qty	Description	Page No
TBA 0200B						
020	2523319-0000	-		1	PLATE	
TBA 0250B						
020	2523494-0000	-		1	PLATE	
TBA 0200S						
020	2511243-0000	-		1	PLATE	
Common Parts						
010	2500366-0000	-		1	PLATE	
030	1260750-0000	-		1	HINGE	
040	1140865-0000	-		1	ROLL	
050	1140866-0000	-		1	BRACKET	
060	1041216-0000	-		1	SHAFT	
070	2500369-0000	-		2	SHAFT	
080	1260753-0000	-		1	PIN	
090	1350902-0000	-		1	GLASS PANE	
100	2527401-0000	-		1	DISTRIBUTOR BLOCK	
200	312105-0453	-		26	SCREW M6S ISO 4017 M8X25 A480	
210	312105-0491	-		1	SCREW M6S ISO 4017 M10X20 A480	
220	312105-0500	-		6	SCREW M6S ISO 4014 M10X45 A480	
230	312115-0495	-		8	SCREW MC6S M10X30 A280	
240	312105-0463	-		2	SCREW M6S ISO 4014 M8X60 A480	
250	315105-0165	-		32	WASHER PLAIN, BRB, 8,4/16,H=1,5	
260	315105-0173	-		15	WASHER PLAIN, BRB, 10,5/22,H=2	
270	321101-0273	-		2	FLANGE BUS 30F7X30	
280	315751-0112	-		2	RETAIN. RING, 15	
290	90091-0449	B		2	VARILIP 40X52X7 MM	
300	342980-0314	-		1	BANJO-HOLLOW BOLT COUPL,EXT.THR.02-G1/4"	
310	342981-0114	-		2	BANJO CONNEC,RING,FOR PLAST.TUBE 6-G1/4"	
320	342722-0205	-		12	STRAIGHT COUPLING D=8-G1/4"	
330	90187-0158	-		6	THROTTLE BALL VALVE G1/4, R1/4	
340	342722-0203	-		9	STRAIGHT COUPLING	
350	90030-0184	-		11	CONN. STR. GA-6-G1/8	
370	90153-0016	-		1	ADHESIVE TUBE 100G RHODORSIL CAF 3	
380	312105-0460	-		4	SCREW M6S ISO 4014 M8X45 A480	
390	342722-0204	-		4	PIPE COUPLING	
410	342921-0122	-		12	STRAIGHT COUPLING,EXT.THREADED 8/6-G1/4"	
420	90201-0450	-		7	PLUG	
M4105	90045-0197	A		1	SERVO MOTOR EP 165-090-66T3B	
M4304	90045-0197	A		1	SERVO MOTOR EP 165-090-66T3B	

Pos	Part No	SP	UN	Qty	Description	Page No

Machine Type | Group Description | Used-In | Group Number | Page No

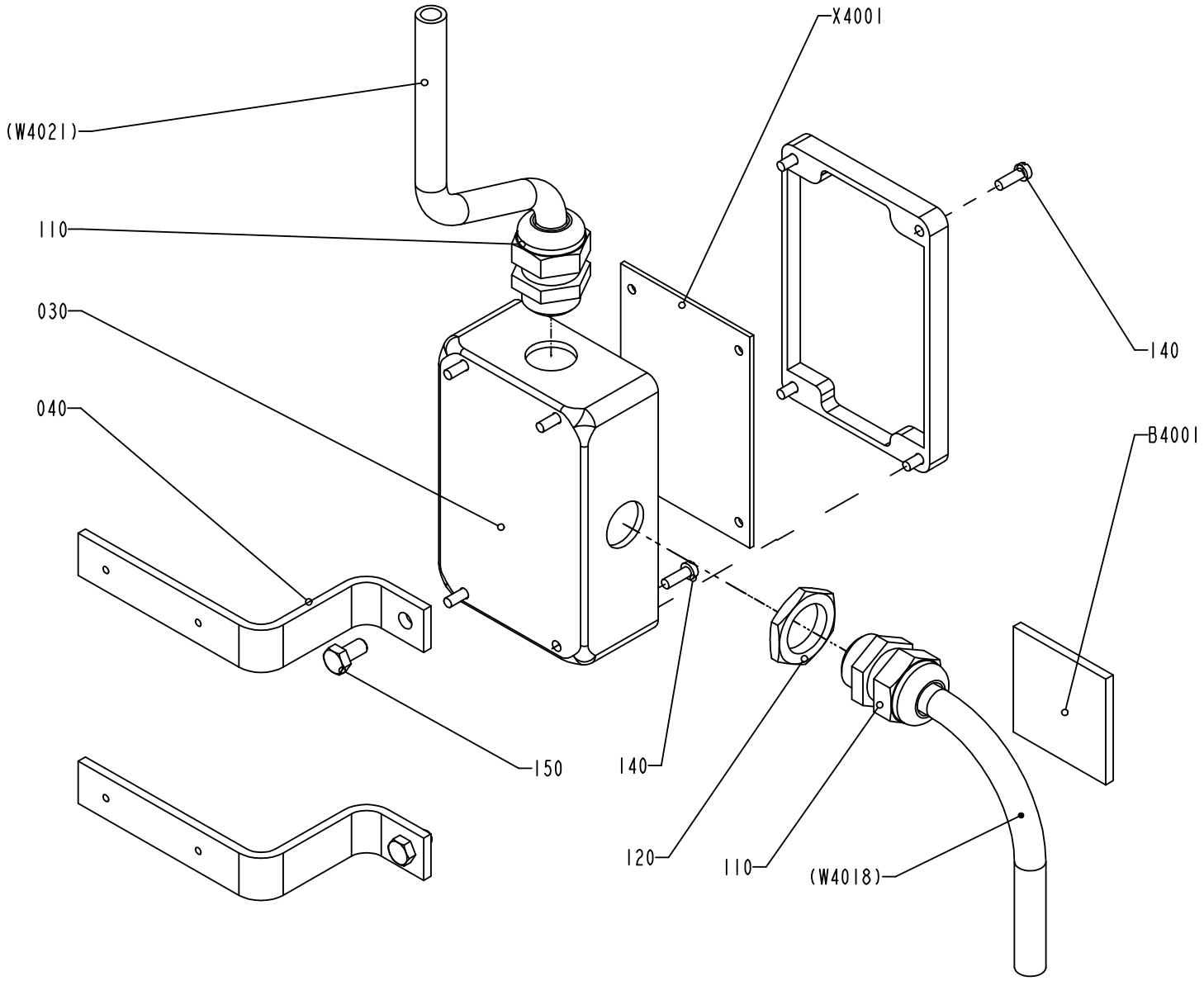

S-1349464-3
ECN 73159

ECM: 113433 - 20020830
Group number: 1349464-0300
Assembly Drawing: 1349464-3_1_AA

Issue: 20020902

Pos	Part No	SP	UN	Qty	Description	Page No
Common Parts						
030	1349465-0000	-		1	CONNECTION BOX	
040	1511673-0000	-		2	BRACKET	
110	352103-0111	-		2	CABLE GLAND, ST 16, PR22,5/PG16	
120	90099-0110	-		1	NUT, PR 22,5 (PG16)	
140	312125-0291	-		8	SCREW PAN HEAD MCS M4X12 SS	
150	312105-0366	-		2	SCREW M6S M6X12 A280	
B 4001	A68917-0100	A		1	ANGLE INDICATOR	**335**
X 4001	451423-0000	A		1	CIRCUIT BOARD	

Pos	Part No	SP	UN	Qty	Description	Page No

This page is intentionally left blank.

ECM: - -
Group number: 68917-0100
Assembly Drawing:

Issue: 20020902

Pos	Part No	SP	UN	Qty	Description	Page No
Common Parts						
010	540306-0001	-		1	COMPONENTS WITHOUT TP-NO	
020	540307-0000	-		1	PRINTED CIRCUIT BOARD	

Pos	Part No	SP	UN	Qty	Description	Page No

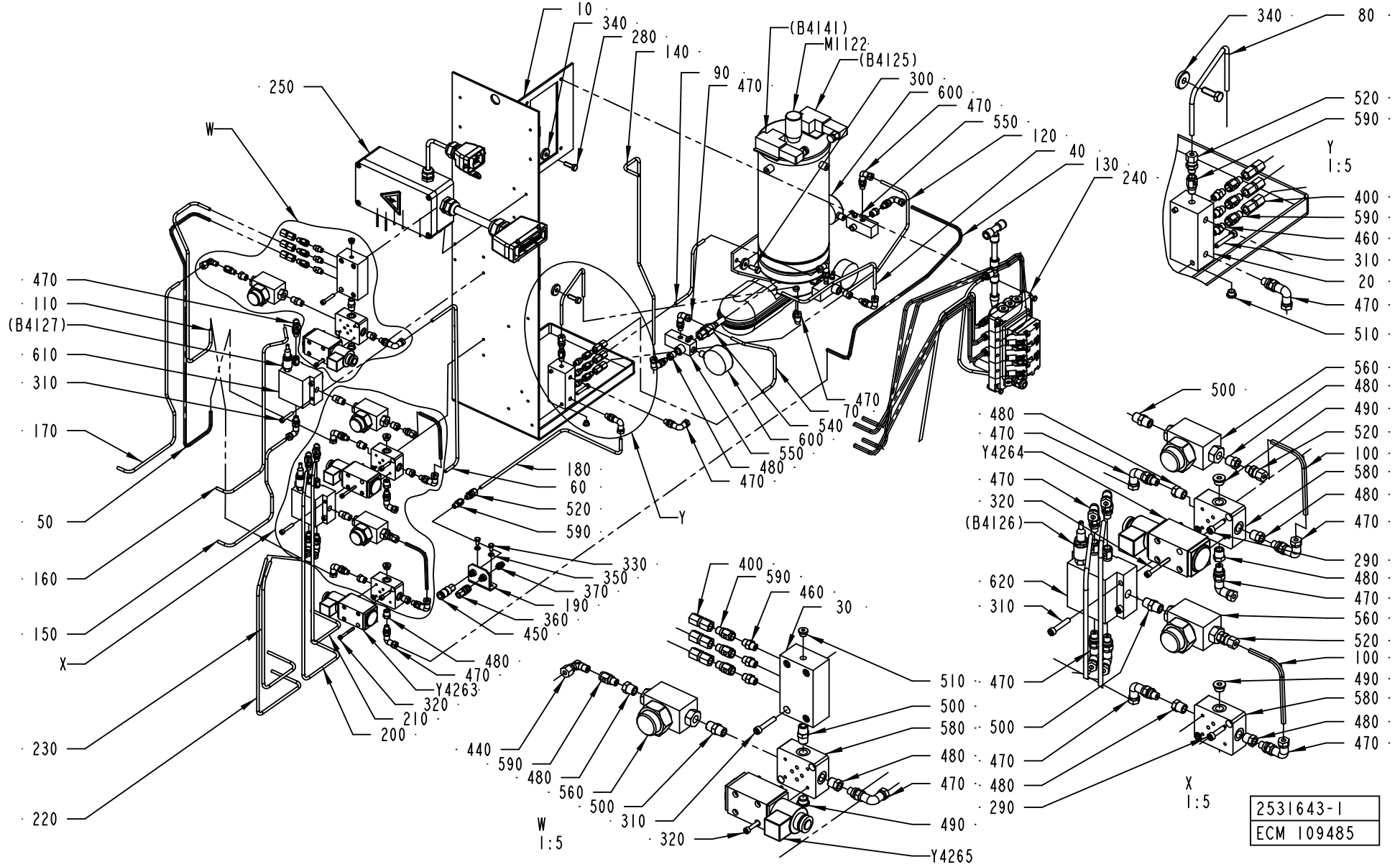
10
340
280
140
90
470
(B4141)
M1122
(B4125)
300
600
470
550
120
40
130
240
250
W
470
110
(B4127)
610
310
170
50
160
150
X
230
220
180
60
520
590
330
350
370
190
360
450
480
470
Y4263
320
210
200
Y
540
70
600
550
480
470
340
80
520
590
Y
1:5
400
590
460
310
20
470
510
500
560
480
490
520
100
580
480
470
Y4264
470
320
(B4126)
620
310
290
480
470
560
520
100
490
580
480
470
400
590
460
30
510
500
580
480
470
490
440
590
480
560
500
310
320
W
1:5
Y4265
X
1:5
2531643-1
ECM 109485

Pos	Part No	SP	UN	Qty	Description	Page No
Common Parts						
005	2543215-0000	-		1	HYDRAULIC DIAGRAM	
006	2541711-0000	-		1	PNEUMATIC DIAGRAM	
010	2531644-0000	-		1	FRAME	
020	2531645-0000	-		1	BLOCK	
030	2531646-0000	-		1	DISTRIBUTOR BLOCK	
040	2552792-0000	-		1	PIPE	
050	2552533-0000	-		1	PIPE	
060	2531649-0000	-		1	PIPE	
070	2531650-0000	-		1	PIPE	
080	2531651-0000	-		1	PIPE	
090	2531652-0000	-		1	PIPE	
100	2552534-0000	-		2	PIPE	
110	2552791-0000	-		1	PIPE	
120	2535648-0000	-		1	PIPE	
130	2552535-0000	-		1	PIPE	
140	2535650-0000	-		1	PIPE	
150	2535651-0000	-		1	PIPE	
160	2535652-0000	-		1	PIPE	
170	2535653-0000	-		1	PIPE	
180	2535654-0000	-		1	PIPE	
190	2535655-0000	-		1	BRACKET	
200	2535656-0000	-		1	PIPE	
210	2535657-0000	-		1	PIPE	
220	2535658-0000	-		1	PIPE	
230	2535659-0000	-		1	PIPE	
240	A2529039-0100	-		1	VALVE PANEL	**339**
250	A2531409-0100	-		1	ELECTRIC EQUIPMENT	**341**
280	312105-0453	-		4	SCREW M6S ISO 4017 M8X25 A480	
290	312115-0372	-		4	SCREW MC6S M6X25 A280	
300	312105-0451	-		2	SCREW M6S ISO 4017 M8X20 A480	
310	312115-0376	-		14	SCREW MC6S M6X35 A280	
320	312115-0340	-		12	SCREW MC6S M5X45 A280	
330	312105-0366	-		2	SCREW M6S M6X12 A280	
340	315125-0165	-		6	WASHER PLAIN ROUND,CHAMF. 8,4/26, H=5	
350	315105-0153	-		2	WASHER PLAIN, BRB, 6,4/12,H=1,5	
360	90163-0062	-		1	QUICK COUPLING, (F) 5053-1/8	
370	342722-0202	-		1	PIPE COUPLING 1/8" D=6MM	
400	342725-0102	-		6	CONN. STR. PIPE GI-6-G1/8	
440	90030-0200	-		1	CONN. ELBOW, 6-M10X1, EXT.THREAD	
450	90163-0046	-		1	SLEEVE LP-004-0-WR 0510-21-1 BRASS	
460	90330-0032	-		6	NIPPLES, EXT. THREAD. ISO 7/1 R1/8-R1/8	
470	90030-0171	-		22	ADJUSTABLE ELBOW CONNECTION,EXT 6-G1/8	
480	90330-0025	-		13	BUSHING, INT/EXT. THR. R1/4-RP1/8	
490	342713-0210	-		3	PLUG, EXT THREAD HEX SOCKET 8638-00-140	
500	90330-0043	-		4	NIPPLES, EXT. THREAD. R-207R1/4	
510	342713-0209	-		2	PLUG, EXT THREAD HEX SOCKET 8638-00-180	
520	90030-0184	-		4	CONN. STR. GA-6-G1/8	
540	90459-0002	-		2	PUMP PISTON, 888042	
550	90459-0003	B		3	PRESSURE RELIEF VALVE, 888036	
560	90459-0004	B		3	FILTER , 1113230	
580	90459-0006	B		3	VALVE PLATE, 44451	
590	90459-0007	B		9	NON-RETURN VALVE, 519335	
600	90459-0008	-		3	GAUGE, 3292116	
610	90459-0009	B		1	LUBRICANT DISTRIBUTOR, 16LRX.25VCP-C	
620	90459-0010	B		1	LUBRICANT DISTRIBUTOR, 25LR.25V.50VCP-C	
M1122	90459-0001	B		1	PUMP UNIT, FIXED STROKE 888211	
Y4263	90459-0005	B		1	SOLENOID VALVE, 44487	
Y4264	90459-0005	B		1	SOLENOID VALVE, 44487	
Y4265	90459-0005	B		1	SOLENOID VALVE, 44487	

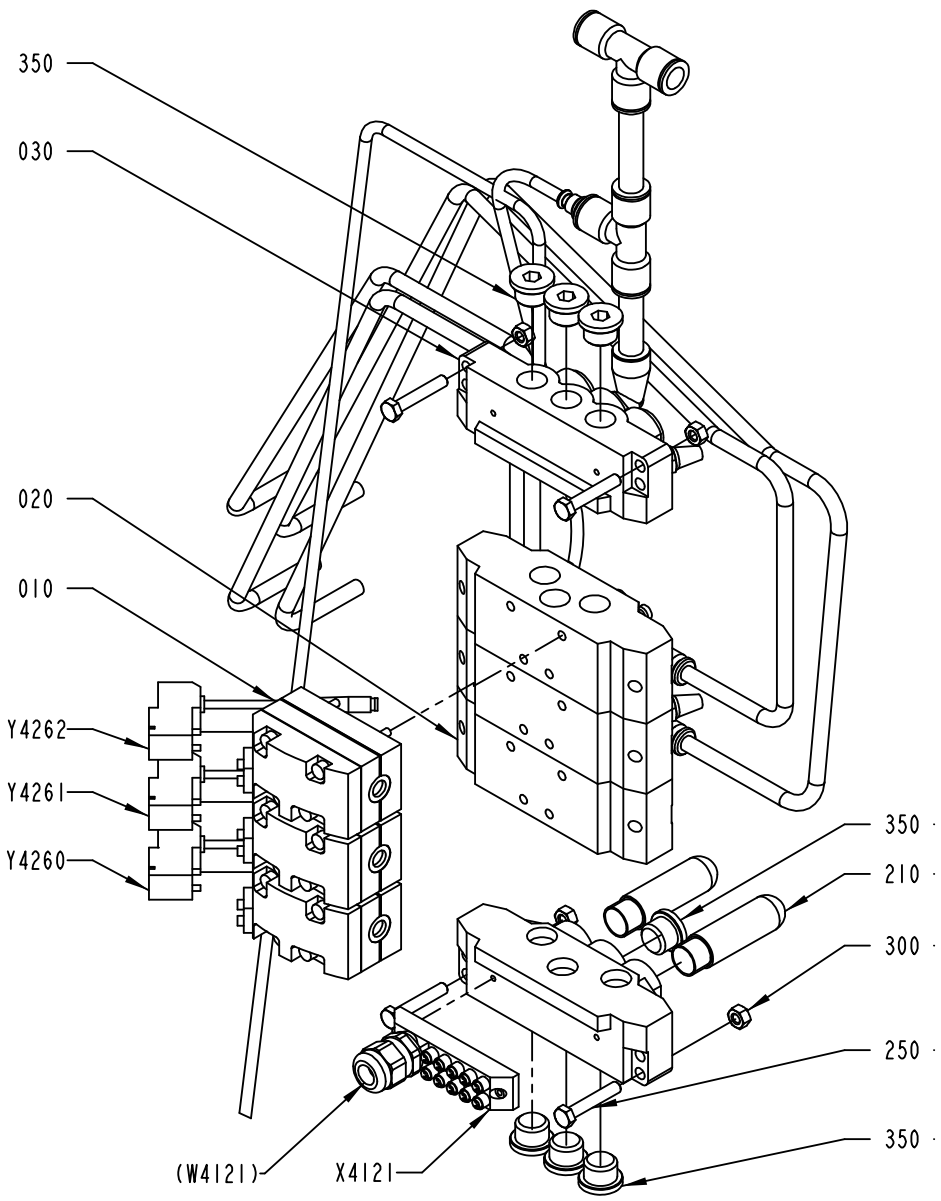
350
030
020
010
Y4262
Y4261
Y4260
350
210
300
250
350
(W4121)
X4121

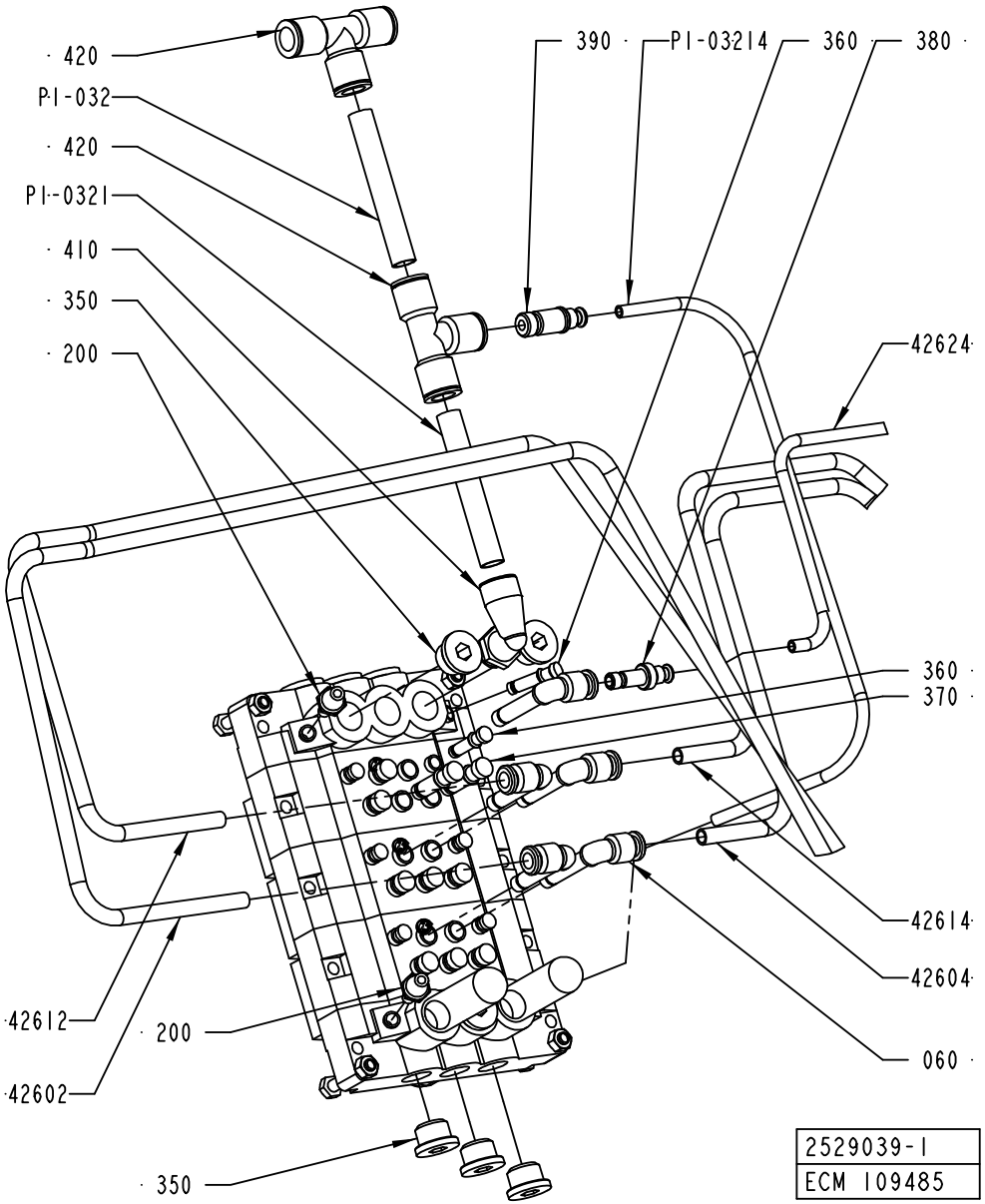
420
PI-032
420
PI-0321
410
350
200
390
PI-03214
360
380
42624
360
370
42614
42604
060
42612
200
42602
350
2529039-1
ECM 109485

ECM: 109787 - 20020830
Group number: 2529039-0100
Assembly Drawing: 2529039-1_1_AB

Issue: 20020902

Pos	Part No	SP	UN	Qty	Description	Page No
Common Parts						
010	90042-0215	B		3	VALVE BODY 5/2 UNISTABLE	
020	90042-0520	-		3	BASE PLATE ISO SIZE 1	
030	90042-0522	-		2	PORTED END PIECE ISO SIZE 1	
060	90055-0204	-		5	ELBOW WITH TAILPIECE 8/8 MM LONG	
200	90328-0017	-		2	SILENCER, D=6 MM	
210	90328-0024	-		2	SILENCER G3/8	
250	312109-0376	-		4	SCREW M6S ISO 4017 M6X35 A480	
300	312605-0316	-		4	HEXAGON NUT, M6M M6 A280	
350	342713-0211	-		9	PLUG, EXT THREAD HEX SOCKET 8638-00-380	
360	342715-0102	-		7	BLIND PLUG 6 MM	
370	342715-0103	-		10	BLIND PLUG 8 MM	
380	342716-0203	-		1	REDUCER 6-8	
390	342716-0210	-		1	REDUCER 6-12	
410	90458-2960	-		1	ELBOW PIPE JOINT, EXT.THREAD,D=12MM-G3/8	
420	342748-0109	-		2	T-CONNECTION 12MM	
42602	90166-0013	-	MM	1000	TUBE 8 MM PA BLUE	
42604	90166-0013	-	MM	750	TUBE 8 MM PA BLUE	
42612	90166-0013	-	MM	900	TUBE 8 MM PA BLUE	
42614	90166-0013	-	MM	700	TUBE 8 MM PA BLUE	
42624	90166-0081	-	MM	1800	TUBE 6 MM PA BLUE	
P-03214	90166-0081	-	MM	450	TUBE 6 MM PA BLUE	
P1-032	90166-0195	-	MM	2000	TUBE 12 MM PA BLUE	
P1-0321	90166-0195	-	MM	80	TUBE 12 MM PA BLUE	
X4121	90042-0535	-		1	TERMINAL BOARD 19 CORDS	
Y4260	90042-0538	B		1	PILOT VALVE L=500MM	
Y4261	90042-0538	B		1	PILOT VALVE L=500MM	
Y4262	90042-0538	B		1	PILOT VALVE L=500MM	

Pos	Part No	SP	UN	Qty	Description	Page No

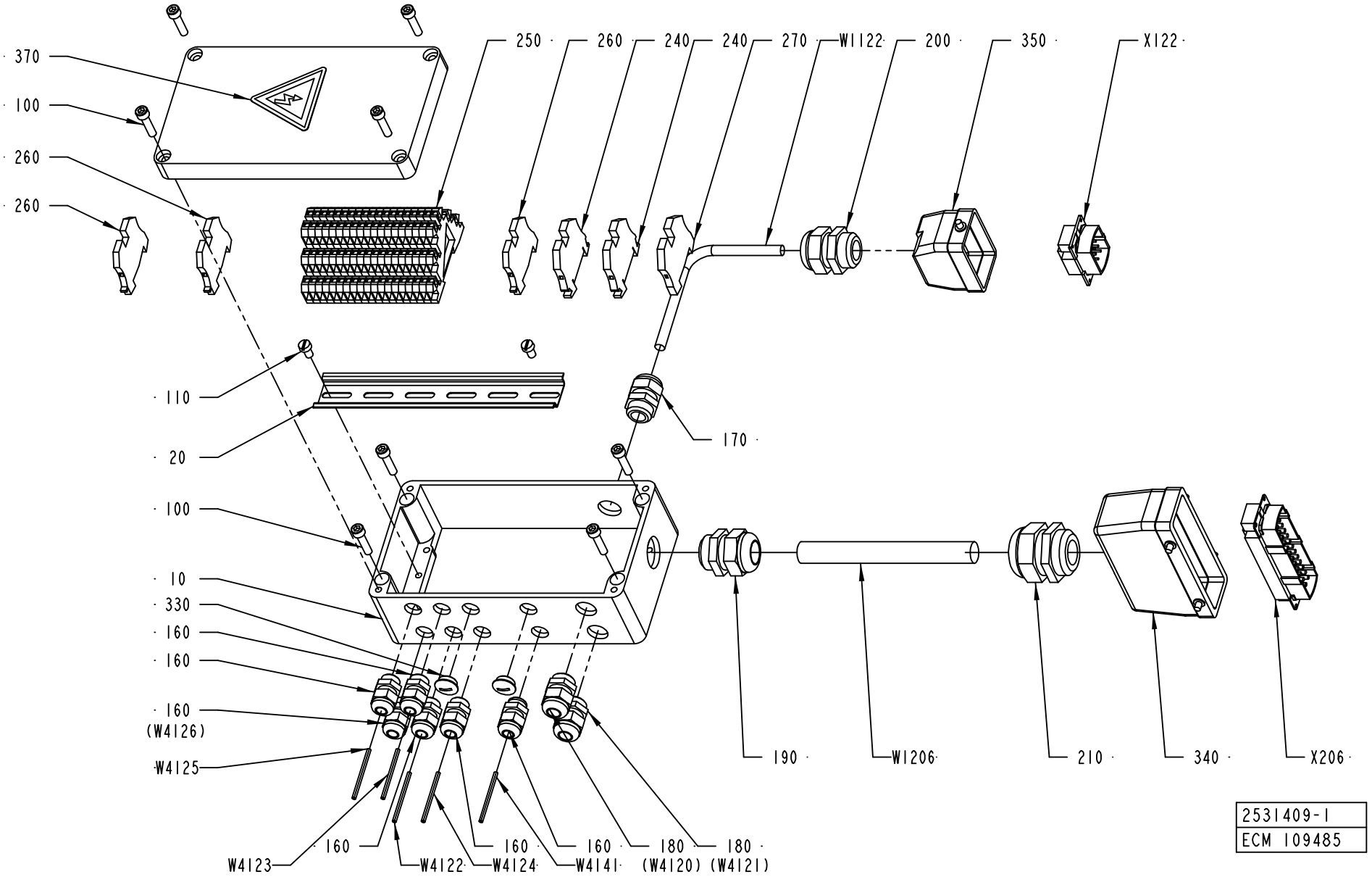
370
100
260
260
250
260
240
240
270
W1122
200
350
X122
110
20
100
10
330
160
160
160
(W4126)
W4125
170
190
W1206
210
340
X206
160
160
160
180
180
W4123
W4122
W4124
W4141
(W4120)
(W4121)
2531409-1
ECM 109485

Pos	Part No	SP	UN	Qty	Description	Page No
Common Parts						
010	2531410-0000	-		1	CONNECTION BOX	
020	2531417-0000	-		1	RAIL	
100	312115-0372	-		8	SCREW MC6S M6X25 A280	
110	312125-0364	-		2	SCREW SLOT.PAN HD. MCS 6X10 A480	
160	352103-0101	-		5	CABLE GLAND, ST 9, PR15,2/PG9	
170	352103-0108	-		1	CABLE GLAND, ST 13,5 , PR20,4/PG13,5	
180	352103-0106	-		2	CABLE GLAND, ST 11, PR18,6/PG11	
190	352103-0116	-		1	CABLE GLAND, ST 21, PR28,3/PG21	
200	352103-0115	-		1	CABLE GLAND, STR 21, PR28,3/PG21	
210	352103-0120	-		1	CABLE GLAND, STR 29, PR37,0/PG29	
240	353021-0213	-		2	FEED THROUGH TERMINAL, 10201.0	
250	353021-0302	-		19	TERMINALS,TRIPLE-LEVEL, DLD 2,5/35 PA	
260	353024-0204	-		3	EARTH TERMINAL WPE 2,5	
270	353024-0205	-		1	EARTH TERMINAL, 1010.1	
330	90002-0013	-		4	BLANK-OFF PLUG, PR 15,2 SKINDICHT-BLK9	
340	90110-0152	-		1	CABLE HOOD 24-POL 70.352.2428.1	
350	90110-0157	-		1	CABLE HOOD 6-POL 70.352.0628.1	
370	359705-0015	-		1	WARNING SIGN ISO, RISK OF ELECTRIC SHOCK	
W1122	351150-0412	-	M	5	CABLE OLFLEX 3X1,5 MM2 LIGHT/GREY	
W1206	351150-0425	-	M	5	CABLE OLFLEX 25X0,75 MM2 LIGHT/GREY	
W4122	351150-0403	-	MM	1000	CABLE OLFLEX 3X0,75 MM2 LIGHT/GREY	
W4123	351150-0403	-	MM	1000	CABLE OLFLEX 3X0,75 MM2 LIGHT/GREY	
W4124	351150-0403	-	MM	1000	CABLE OLFLEX 3X0,75 MM2 LIGHT/GREY	
W4125	351150-0403	-	MM	1000	CABLE OLFLEX 3X0,75 MM2 LIGHT/GREY	
W4141	351150-0403	-	MM	1000	CABLE OLFLEX 3X0,75 MM2 LIGHT/GREY	
X122	90110-0159	-		1	MALE INSERT 70.310.0640.0	
X206	90110-0150	-		1	MALE INSERT 121110 0000	

Pos	Part No	SP	UN	Qty	Description	Page No

Tetra Pak

SPC
Spare Parts Catalogue

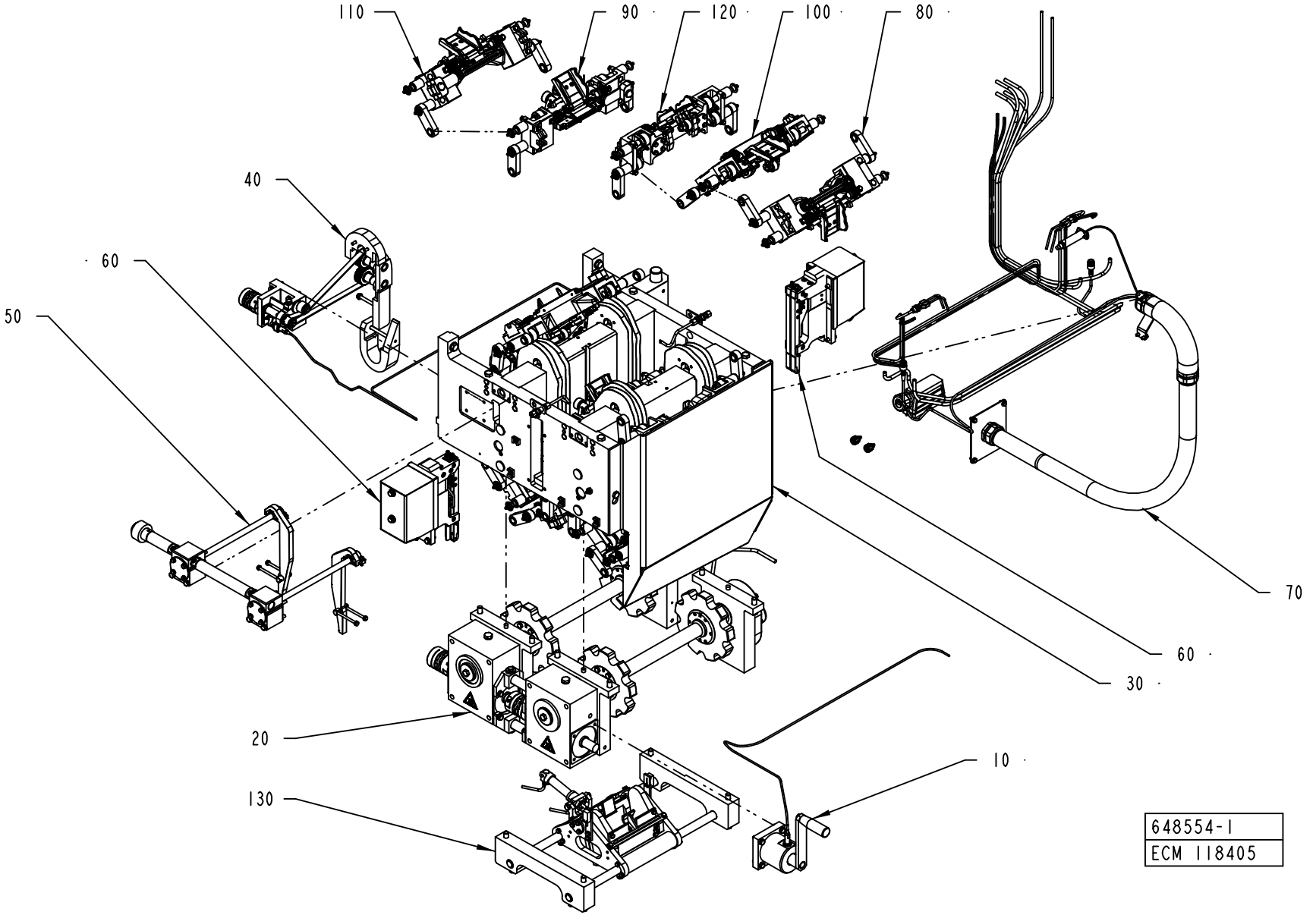
110
90
120
100
80
40
60
50
70
60
30
20
10
130
648554-1
ECM 118405

Pos	Part No	SP	UN	Qty	Description	Page No
Common Parts						
010	A575203-0100	-		1	HAND CRANK	**347**
020	A2511256-0100	-		1	DRIVE UNIT	**349, 351**
030	A2511255-0100	-		1	FRAME	**353, 355**
040	A2511257-0100	-		1	DESIGN CORRECTION	**357**
050	A2511258-0100	-		1	VOLUME ADJUSTER	**359**
060	A2522094-0100	-		2	ELECTRICAL CONNECTION	**361**
070	A2511260-0100	-		1	CABLE HARNESS	**363**
080	A2511251-0100	-		4	PRESSURE JAW	**365, 367**
090	A2511253-0100	-		5	SEALING JAW	**369, 371**
100	A2511252-0100	-		5	PRESSURE JAW	**373, 375**
110	A2511254-0100	-		5	SEALING JAW	**377, 379**
120	A2511250-0100	-		1	PRESSURE JAW	**381, 383**
130	A2558853-0100	-		1	WASTE BOX	**385**

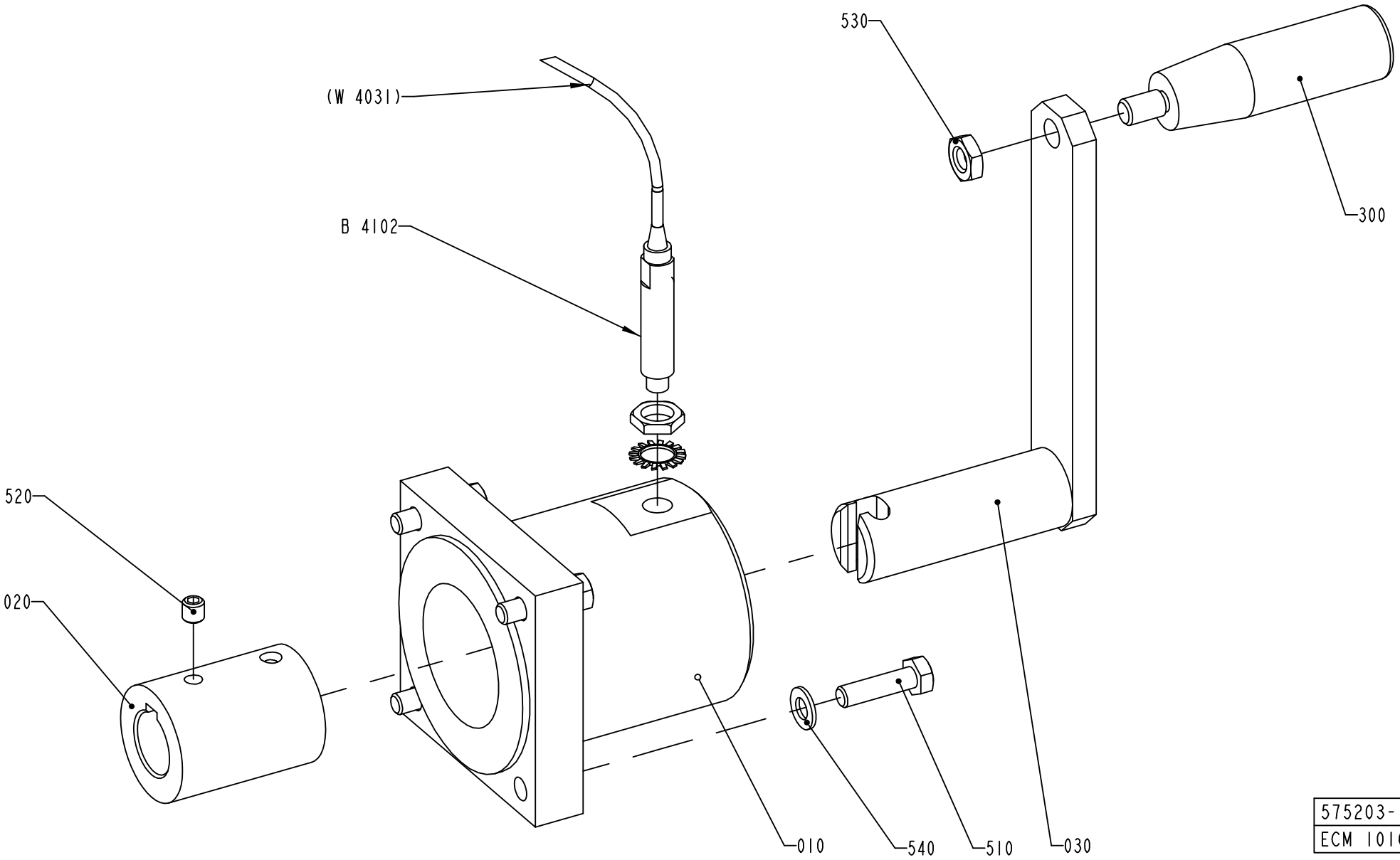
530
(W 4031)
B 4102
300
520
020
010
540
510
030
575203-1
ECM 101699

ECM: 101899 - 20011123
Group number: 575203-0100
Assembly Drawing: 575203-1_1_AC

Issue: 20021105

Pos	Part No	SP	UN	Qty	Description	Page No
Common Parts						
010	1082973-0000	-		1	STEERING	
020	B1538133-0000	-		1	SLEEVE	
	311103-0409	*-*		*1*	*PARALLELL PIN, M6, 8X40 MM*	
	1082972-0000	*-*		*1*	*SLEEVE*	
030	1082974-0000	B		1	CRANK	
300	90051-0127	B		1	HANDLE, NO. .601/90+X-M10-INOX	
510	312105-0455	-		4	SCREW M6S ISO 4017 M8X30 A480	
520	312318-0443	-		1	SCREW SOCK.SET CUP P MSK6SS M8X8 A4	
530	312625-0320	-		1	NUT HEX. M10 SS	
540	315105-0165	-		4	WASHER PLAIN, BRB, 8,4/16,H=1,5	
B4102	90458-0672	A		1	PROXIMITY SENSOR E2E2-X5MB1-5M	

Pos	Part No	SP	UN	Qty	Description	Page No

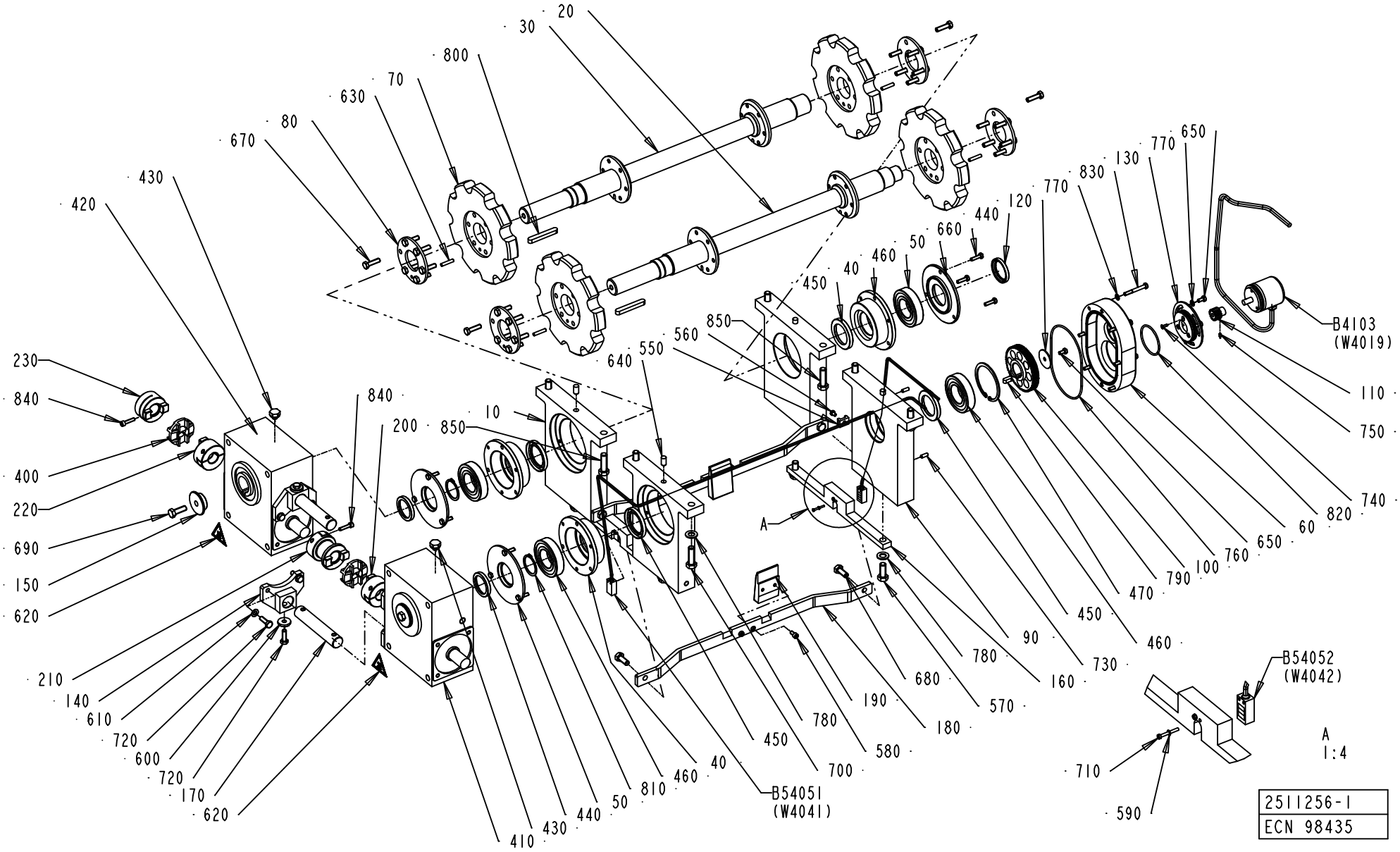
20
30
800
70
630
80
670
430
420
230
840
400
220
690
150
620
210
140
610
720
600
720
170
620
410
430
440
50
810
460
40
B54051
(W4041)
700
580
450
780
190
180
570
680
780
90
160
730
450
460
470
790
100
760
650
60
820
740
750
110
B4103
(W4019)
770
830
130
770
650
120
440
660
50
460
40
450
850
560
550
640
840
200
850
10
A
710
590
B54052
(W4042)
A
1:4
2511256-1
ECN 98435

ECM: 106849 - 20010927
Group number: 2511256-0100
Assembly Drawing: 2511256-1_1_AA

Issue: 20021105

Pos	Part No	SP	UN	Qty	Description	Page No
TBA 0200B						
070	1478191-0000	A		4	WHEEL	
170	1538130-0000	A		2	SHAFT	
210	1524438-0000	-		1	HUB	
230	1512613-0000	-		1	HUB	
700	312105-0540	-		6	SCREW M6S ISO 4017 M12X40 A480	
780	315105-0178	-		8	WASHER PLAIN, BRB, 13/24,H=2	
850	312105-0538	-		2	SCREW M6S ISO 4017 M12X35 A480	
TBA 0200S						
070	1511258-0000	A		4	WHEEL	
160	2520189-0000	-		2	SUPPORT	
170	1487429-0000	A		2	SHAFT	
180	2523658-0000	-		2	SUPPORT	
190	2520190-0000	-		2	GUIDE	
210	1512613-0000	-		1	HUB	
230	1524438-0000	-		1	HUB	
570	312105-0536	-		4	SCREW M6S ISO 4017 M12X30 A480	
580	312115-0366	-		4	SCREW MC6S M6X12 A280	
590	315105-0124	-		4	WASHER PLAIN, BRB, 3,2/6,H=0,5	
680	312105-0493	-		4	SCREW M6S ISO 4017 M10X25 A480	
700	312105-0540	-		8	SCREW M6S ISO 4017 M12X40 A480	
710	312125-0232	-		4	SCREW PAN HEAD MCS M3X25 SS	
780	315105-0178	-		12	WASHER PLAIN, BRB, 13/24,H=2	
TBA 0250B						
070	1140767-0000	A		4	WHEEL	
160	2520191-0000	-		2	SUPPORT	
170	1532952-0000	A		2	SHAFT	
180	1532938-0000	-		2	GUIDE	
210	1524438-0000	-		1	HUB	
230	1524438-0000	-		1	HUB	
570	312105-0536	-		4	SCREW M6S ISO 4017 M12X30 A480	
590	315105-0124	-		4	WASHER PLAIN, BRB, 3,2/6,H=0,5	
680	312105-0493	-		4	SCREW M6S ISO 4017 M10X25 A480	
700	312105-0540	-		8	SCREW M6S ISO 4017 M12X40 A480	
710	312125-0232	-		4	SCREW PAN HEAD MCS M3X25 SS	
780	315105-0178	-		12	WASHER PLAIN, BRB, 13/24,H=2	
Common Parts						
010	1499387-0000	-		3	PLATE	
020	1511256-0000	-		1	SHAFT	
030	1511257-0000	-		1	SHAFT	
040	1348704-0000	-		3	BEARING HOUSING	
050	1348703-0000	-		3	COVER	
060	1532961-0000	-		1	BRACKET	
080	1140751-0000	-		4	RING	
090	1532960-0000	-		1	PLATE	
100	2504640-0000	-		1	GEAR WHEEL	
110	2504641-0000	-		1	GEAR WHEEL	
120	1499391-0000	-		1	WASHER	
130	1532947-0000	-		1	BRACKET	
140	1524442-0000	-		4	SUPPORT	
150	1334793-0000	-		2	WASHER	
200	1524438-0000	-		1	HUB	
220	1524438-0000	-		1	HUB	
400	90458-0685	A		2	COUPLING DISC 25/57 COD.236.57-F25	
410	90056-0164	A		1	WORM GEAR BS 71-F-TT	
420	90056-0163	A		1	WORM GEAR BS 71-F-TT	
430	90458-0270	-		2	VENTING DEVICETCDF 1/8G ELESA 58669	
440	90091-0296	A		3	RADIAL SEAL 40X52X7 MM DUST LIP	
450	90091-0298	A		4	RADIAL SEAL 45X65X8 MM DUST LIP	
460	90214-0236	A		4	BALL BEARING, 2 SEALS, 40X80X18 MM	
470	90458-0181	A		1	RETAINING RING FOR HOLE, 80X2,5 MM	
550	352113-0204	-		2	ANCHOR PLATES FOR STRIPS, TYPE TM3S25-M	
560	312132-0323	-		2	SCREW SLOT. PAN HEAD MSCS M5X8	
600	315125-0165	-		4	WASHER PLAIN ROUND,CHAMF. 8,4/26, H=5	
610	315105-0165	-		8	WASHER PLAIN, BRB, 8,4/16,H=1,5	
620	359710-0001	-		2	WARNING SIGN ISO, HOT SURFACE	
630	311103-0357	-		4	PARALLELL PIN, M6, 6X30 MM	
640	311103-0454	-		4	PARALLELL PIN, M6, 10X20 MM	
650	312105-0366	-		4	SCREW M6S M6X12 A280	
660	312105-0371	-		9	SCREW M6S ISO 4017 M6X22 A480	
670	312105-0455	-		24	SCREW M6S ISO 4017 M8X30 A480	
690	312105-0495	-		2	SCREW M6S ISO 4017 M10X30 A480	
720	312105-0453	-		12	SCREW M6S ISO 4017 M8X25 A480	
730	311103-0351	-		2	PARALLELL PIN, M6, 6X16 MM	
740	312155-0291	-		3	SCREW HEX.SOCK.COUNT.MF6S M4X12 A480	
750	312318-0285	-		1	SCREW SOCK.SET CUP P MSK6SS M4X6 A4	
760	315204-0319	-		1	O-RING 139,5X3 MM	
770	315105-0153	-		9	WASHER PLAIN, BRB, 6,4/12,H=1,5	
790	315705-0263	-		1	PARALLEL KEY W. ROUND ENDS 8X7X20 MM	
800	315705-0307	A		2	PARALLEL KEY W. ROUND ENDS 10X8X70 MM	
810	315751-0127	-		2	RETAIN. RING, 40	

Machine Type | Group Description | Used-In | Group Number | Page No

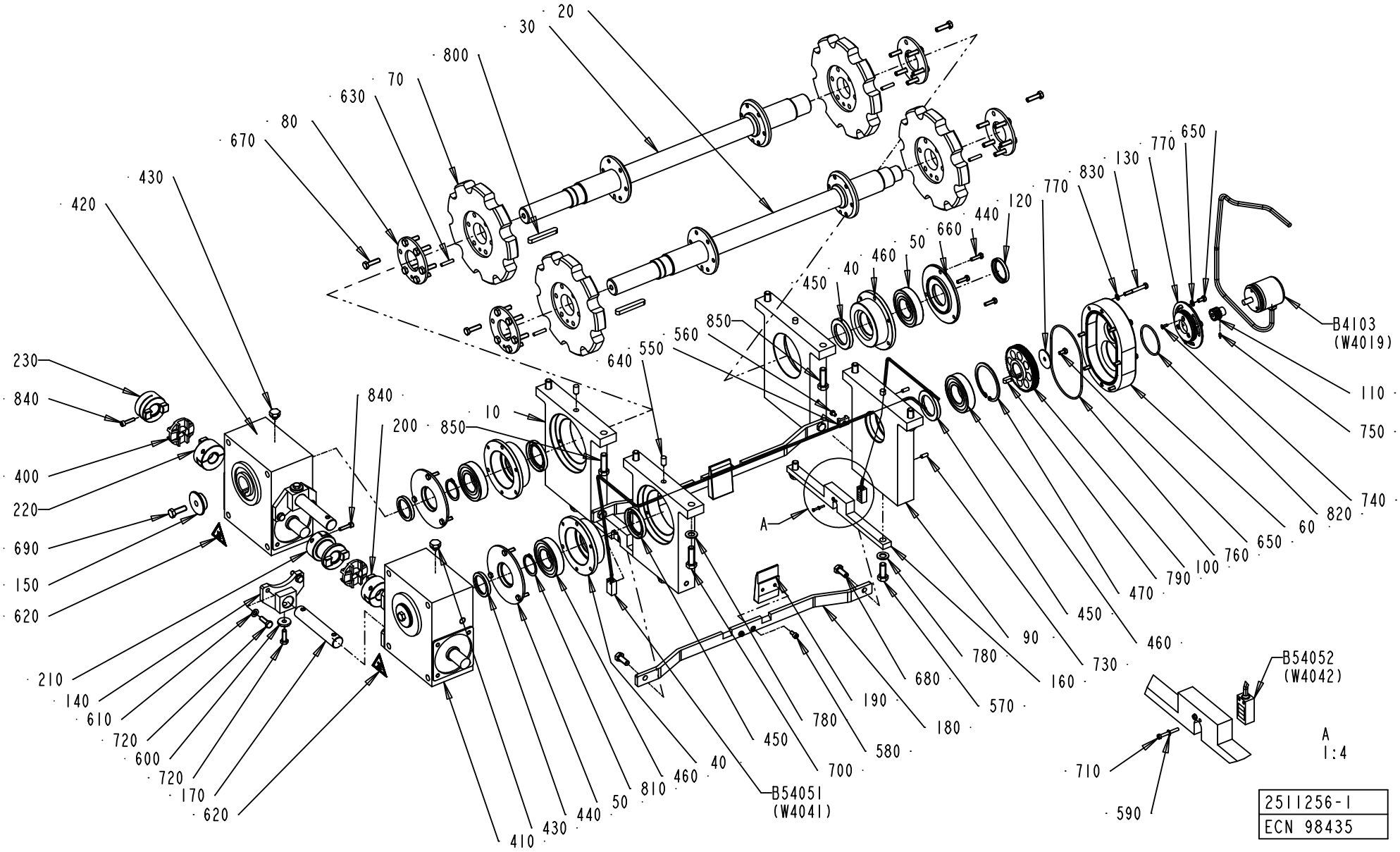
20
30
800
70
630
80
670
430
420
230
840
400
220
690
150
620
210
140
610
720
600
720
170
620
410
430
440
50
810
460
40
B54051
(W4041)
450
780
700
580
190
180
680
570
780
90
160
730
450
460
470
790
100
760
650
60
820
740
750
110
B4103
(W4019)
770
830
130
770
650
120
440
660
50
460
40
450
850
560
550
640
840
200
850
10
A
B54052
(W4042)
A
1:4
710
590
2511256-1
ECN 98435

Pos	Part No	SP	UN	Qty	Description	Page No
Common Parts (Cont'd)						
820	315204-0303	-		1	O-RING 59,5X3 MM	
830	312105-0380	-		6	SCREW M6S ISO 4014 M6X50 A480	
840	312115-0372	-		4	SCREW MC6S M6X25 A280	
B4103	90061-0027	A		1	ANGLE ENCODER 670900035	
B54051	90458-1159	A		1	PH.CELL WS4-2D135	
B54052	90458-1160	A		1	PH.CELL WE4-2P135	

Pos	Part No	SP	UN	Qty	Description	Page No

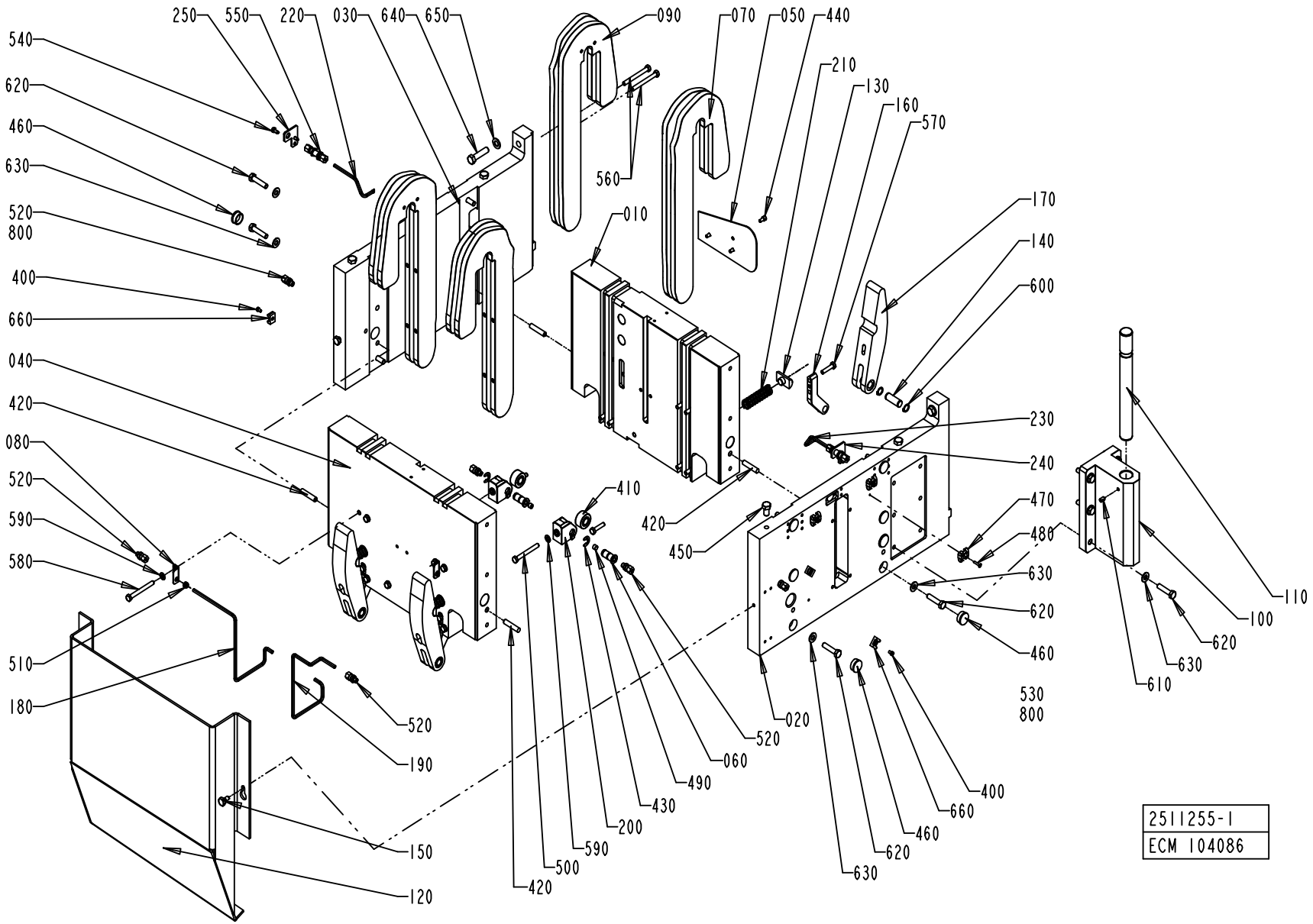
250
550
220
030
640
650
090
070
050
440
210
130
160
570
540
620
460
630
520
800
400
660
560
010
170
140
600
040
420
080
520
590
580
230
240
410
420
450
470
480
630
620
460
530
800
110
100
620
630
610
510
180
520
190
150
120
420
500
590
200
430
490
060
520
020
630
620
460
660
400
2511255-1
ECM 104086

Pos	Part No	SP	UN	Qty	Description	Page No
TBA 0200B						
010	2523614-0000	-		1	PLATE	
020	2523617-0000	-		1	PLATE	
030	2523616-0000	-		1	PLATE	
040	2523615-0000	-		1	PLATE	
070	1511397-0000	-		4	CAM	
090	1511396-0000	-		4	CAM	
120	2523618-0000	B		1	PROTECTION	
160	1349367-0000	-		4	BRACKET	
170	1487219-0000	A		4	CURVE	
180	1512600-0000	-		1	PIPE	
190	1512601-0000	-		1	PIPE	
220	2523622-0000	-		1	PIPE	
250	2523621-0000	-		1	PLATE	
400	312125-0323	-		4	SCREW PAN HEAD MCS M5X8 SS	
460	90261-0011	-		11	PLUG, BLIND, PLASTIC GPN300F233	
470	90165-0076	-		6	T-CLIP T8 FOR TUBE D=8 - 9 MM	
480	312155-0295	-		6	SCREW HEX.SOCK.COUNT.MF6S M4X20 A480	
500	312109-0457	-		2	SCREW M6S ISO 4017 M8X35 A480	
560	312115-0459	-		2	SCREW MC6S M8X40 A280	
570	312105-0455	-		8	SCREW M6S ISO 4017 M8X30 A480	
580	312105-0465	-		14	SCREW M6S ISO 4014 M8X70 A480	
590	315105-0165	-		18	WASHER PLAIN, BRB, 8,4/16,H=1,5	
620	312105-0500	-		17	SCREW M6S ISO 4014 M10X45 A480	
630	315105-0173	-		17	WASHER PLAIN, BRB, 10,5/22,H=2	
660	352113-0204	-		4	ANCHOR PLATES FOR STRIPS, TYPE TM3S25-M	
680	90458-0289	-		14	PLUG,GPN 340-SW-5 MM	
TBA 0200S						
010	2502402-0000	-		1	PLATE	
020	2502404-0000	-		1	PLATE	
030	2502405-0000	-		1	PLATE	
040	2502403-0000	-		1	PLATE	
070	1499604-0000	-		4	CAM	
090	1499603-0000	-		4	CAM	
120	2502406-0000	B		1	PROTECTION	
160	1512365-0000	-		4	BRACKET	
170	1499602-0000	A		4	CAM	
180	2502415-0000	-		1	PIPE	
190	2508408-0000	-		1	PIPE	
220	2508420-0000	-		1	PIPE	
250	2511239-0000	-		1	PLATE	
400	312125-0323	-		5	SCREW PAN HEAD MCS M5X8 SS	
460	90261-0011	-		12	PLUG, BLIND, PLASTIC GPN300F233	
470	90165-0076	-		7	T-CLIP T8 FOR TUBE D=8 - 9 MM	
480	312155-0295	-		7	SCREW HEX.SOCK.COUNT.MF6S M4X20 A480	
500	312105-0466	-		2	SCREW M6S ISO 4014 M8X75 A480	
560	312105-0467	-		2	SCREW M6S ISO 4014 M8X80 A480	
570	312105-0457	-		8	SCREW M6S ISO 4014 M8X35 A480	
580	312105-0467	-		14	SCREW M6S ISO 4014 M8X80 A480	
590	315105-0165	-		18	WASHER PLAIN, BRB, 8,4/16,H=1,5	
620	312105-0500	-		18	SCREW M6S ISO 4014 M10X45 A480	
630	315105-0173	-		18	WASHER PLAIN, BRB, 10,5/22,H=2	
660	352113-0204	-		5	ANCHOR PLATES FOR STRIPS, TYPE TM3S25-M	
680	90458-0289	-		16	PLUG,GPN 340-SW-5 MM	
TBA 0250B						
010	2523610-0000	-		1	PLATE	
020	2523613-0000	-		1	PLATE	
030	2523612-0000	-		1	PLATE	
040	2523611-0000	-		1	PLATE	
070	1140287-0000	-		4	CAM	
090	1140288-0000	-		4	CAM	
120	2511245-0000	B		1	PROTECTION	
160	1140872-0000	-		4	BRACKET	
170	1498278-0000	A		4	CAM	
180	1524763-0000	-		1	PIPE	
190	1524764-0000	-		1	PIPE	
220	2508420-0000	-		1	PIPE	
250	2511239-0000	-		1	PLATE	
400	312125-0323	-		4	SCREW PAN HEAD MCS M5X8 SS	
460	90261-0011	-		12	PLUG, BLIND, PLASTIC GPN300F233	
470	90165-0076	-		6	T-CLIP T8 FOR TUBE D=8 - 9 MM	
480	312155-0295	-		6	SCREW HEX.SOCK.COUNT.MF6S M4X20 A480	
500	312105-0462	-		2	SCREW M6S ISO 4014 M8X55 A480	
560	312105-0467	-		2	SCREW M6S ISO 4014 M8X80 A480	
580	312105-0467	-		14	SCREW M6S ISO 4014 M8X80 A480	
590	315105-0165	-		10	WASHER PLAIN, BRB, 8,4/16,H=1,5	
620	312105-0500	-		18	SCREW M6S ISO 4014 M10X45 A480	
630	315105-0173	-		18	WASHER PLAIN, BRB, 10,5/22,H=2	
660	352113-0204	-		4	ANCHOR PLATES FOR STRIPS, TYPE TM3S25-M	
680	90458-0289	-		16	PLUG,GPN 340-SW-5 MM	
Common Parts						

Machine Type | Group Description | Used-In | Group Number | Page No

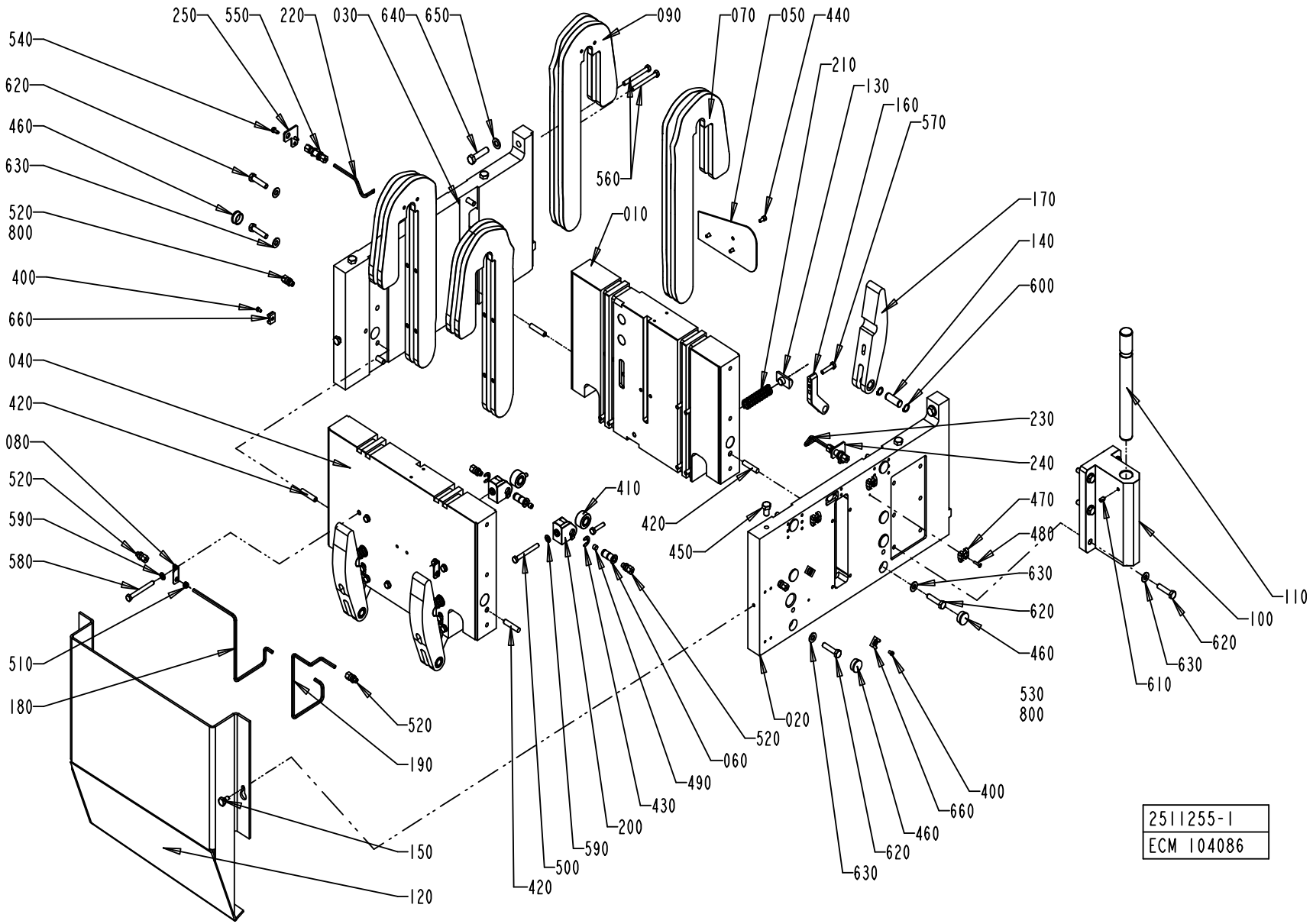
250
550
220
030
640
650
090
070
050
440
210
130
160
570
540
620
460
630
520
800
400
660
560
010
170
140
600
040
420
080
520
590
580
230
240
410
420
450
470
480
630
620
460
530
800
110
100
620
630
610
510
180
520
190
150
120
420
500
590
200
430
490
060
520
020
630
620
460
660
400
2511255-1
ECM 104086

Pos	Part No	SP	UN	Qty	Description	Page No
Common Parts (Cont'd)						
050	1140856-0000	-		1	PROTECTION	
060	1524260-0000	-		2	SHAFT	
080	1524752-0000	A		2	BRACKET	
100	1260751-0000	A		1	HINGE	
110	1260752-0000	A		1	SHAFT	
130	1041215-0000	A		4	BLOCKING PIECE	
140	1498279-0000	A		4	SHAFT	
150	1282995-0000	A		2	SCREW	
200	1524267-0000	-		2	HOLDER	
210	1487205-0000	A		4	SPRING	
230	2508421-0000	-		1	PIPE	
240	2511239-0000	-		1	PLATE	
260	1487898-0000	-		2	PLUG	
410	90083-0055	A		2	BEARING ROLLER, 2 SEALS, 15X35X19 MM	
420	311103-0466	A		4	PARALLELL PIN, M6, 10X50 MM	
430	315755-0112	-		2	LOCKING WASHER 12	
440	312115-0366	-		3	SCREW MC6S M6X12 A280	
450	312105-0532	-		4	SCREW M6S ISO 4017 M12X20 A480	
490	90087-0010	-		2	PLUG, EXT. THREAD, HEX. SOCKET NR. M10-	
510	90015-0027	-		2	RUBBER BUSHING DI=6MM	
520	90030-0184	-		4	CONN. STR. GA-6-G1/8	
540	312105-0366	-		4	SCREW M6S M6X12 A280	
550	90030-0066	-		2	CONN. BULKHEAD SV 6-L/SY	
600	315751-0112	A		8	RETAIN. RING, 15	
610	312318-0447	-		1	SCREW SOCK.SET CUP P MSK6SS M8X12 A4	
640	312105-0542	-		2	SCREW M6S ISO 4014 M12X50 A480	
650	315105-0178	-		2	WASHER PLAIN, BRB, 13/24,H=2	
670	90261-0071	-		8	PLUG, BLIND, PLASTIC, NO. GPN500B58	
690	90286-0013	-		2	GREASE NIPPLE STRAIGHT M6	
800	90296-0070	-		1	GREASE	

Pos	Part No	SP	UN	Qty	Description	Page No

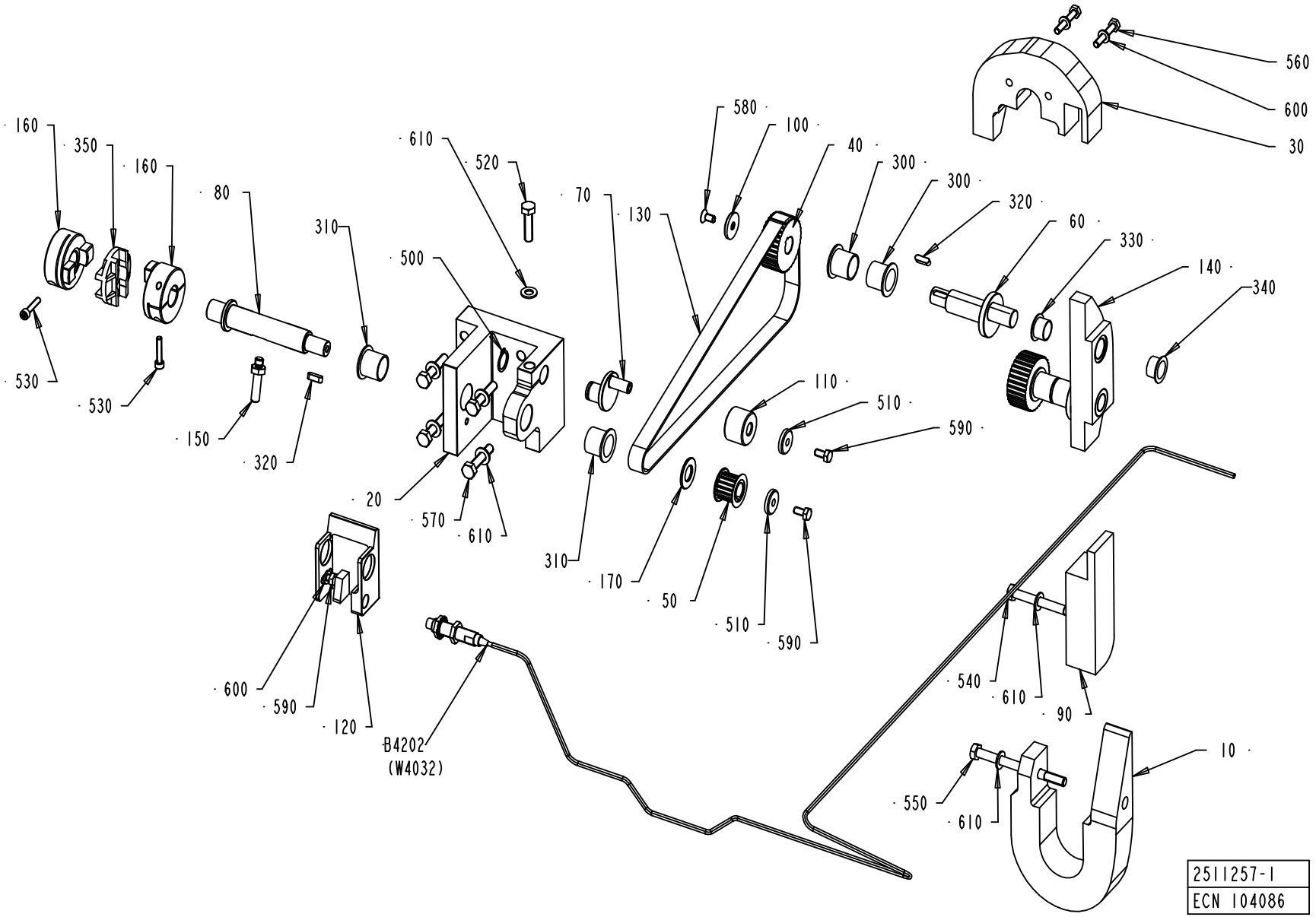
160
350
160
530
530
80
150
320
310
610
520
500
20
570
610
580
100
70
130
310
170
40
300
300
320
60
330
140
340
110
510
590
50
510
590
560
600
30
600
590
120
B4202
(W4032)
540
610
90
10
550
610
2511257-1
ECN 104086

ECM: 106848 - 20010927
Group number: 2511257-0100
Assembly Drawing: 2511257-1_1_AB

Issue: 20021105

Pos	Part No	SP	UN	Qty	Description	Page No
TBA 0200B						
010	1349377-0000	A		1	CURVE	
030	1349380-0000	A		1	CURVE	
060	1349381-0000	A		2	ECCENTRIC SHAFT	
090	1349379-0000	A		1	CURVE	
140	1349375-0000	A		1	CURVE	
300	1499915-0000	A		4	FLANGE BUSHING	
540	312105-0462	-		1	SCREW M6S ISO 4014 M8X55 A480	
550	312105-0466	-		1	SCREW M6S ISO 4014 M8X75 A480	
560	312115-0376	-		2	SCREW MC6S M6X35 A280	
TBA 0200S						
010	1512346-0000	A		1	CURVE	
030	1512651-0000	A		1	CURVE	
060	1512368-0000	A		2	ECCENTRIC SHAFT	
090	1512367-0000	A		1	CURVE	
140	1512366-0000	A		1	CURVE	
300	90240-0265	-		4	FLANGE BUSHING, 20X23X21 MM	
340	90240-0325	A		2	FLANGE BUSHING, 16X18X12 MM	
540	312105-0467	-		1	SCREW M6S ISO 4014 M8X80 A480	
550	312105-0471	-		1	SCREW M6S ISO 4014 M8X100 A480	
560	312109-0376	-		2	SCREW M6S ISO 4017 M6X35 A480	
TBA 0250B						
010	1140844-0000	A		1	CURVE	
030	1260950-0000	A		1	CURVE	
060	1140846-0000	A		2	ECCENTRIC SHAFT	
090	2525678-0000	A		1	CURVE	
140	1350718-0000	A		1	CURVE	
300	90240-0265	-		4	FLANGE BUSHING, 20X23X21 MM	
540	312105-0467	-		1	SCREW M6S ISO 4014 M8X80 A480	
550	312105-0471	-		1	SCREW M6S ISO 4014 M8X100 A480	
560	312109-0376	-		2	SCREW M6S ISO 4017 M6X35 A480	
Common Parts						
020	1484479-0000	-		1	SUPPORT	
040	1539376-0000	A		2	PULLEY	
050	1548769-0000	A		1	PULLEY	
070	1519814-0000	A		1	ECCENTRIC SHAFT	
080	1548767-0000	A		1	SHAFT	
100	1041549-0000	-		2	WASHER	
110	1140845-0000	A		1	ROLLER	
120	1484480-0000	A		1	ADJUSTER	
130	1548798-0000	A		1	TIMING BELT	
150	1519813-0000	A		1	SHAFT	
160	1538302-0000	-		2	HUB	
170	1511242-0000	-		1	WASHER	
310	90240-0265	A		2	FLANGE BUSHING, 20X23X21 MM	
320	90458-0548	A		3	PARALLEL KEY W. ROUND ENDS 5X5X16 MM	
330	90240-0325	A		2	FLANGE BUSHING, 16X18X12 MM	
350	90458-0274	A		1	DISC FOR COUPLING, HUCO 236.50T	
500	315751-0113	-		1	RETAIN. RING, 16	
510	315125-0153	-		2	WASHER PLAIN ROUND,CHAMF. 6,4/22, H=4	
520	312105-0455	-		1	SCREW M6S ISO 4017 M8X30 A480	
530	312115-0333	-		2	SCREW MC6S M5X25 A280	
570	312109-0459	-		4	SCREW M6S ISO 4017 M8X40 A480	
580	312155-0366	-		2	SCREW HEX.SOCK.COUNT.MF6S M6X12 A280	
590	312105-0366	-		3	SCREW M6S M6X12 A280	
600	315105-0153	-		3	WASHER PLAIN, BRB, 6,4/12,H=1,5	
610	315105-0165	-		7	WASHER PLAIN, BRB, 8,4/16,H=1,5	
B4202	90458-0672	A		1	PROXIMITY SENSOR E2E2-X5MB1-5M	

VOLUME ADJUSTER

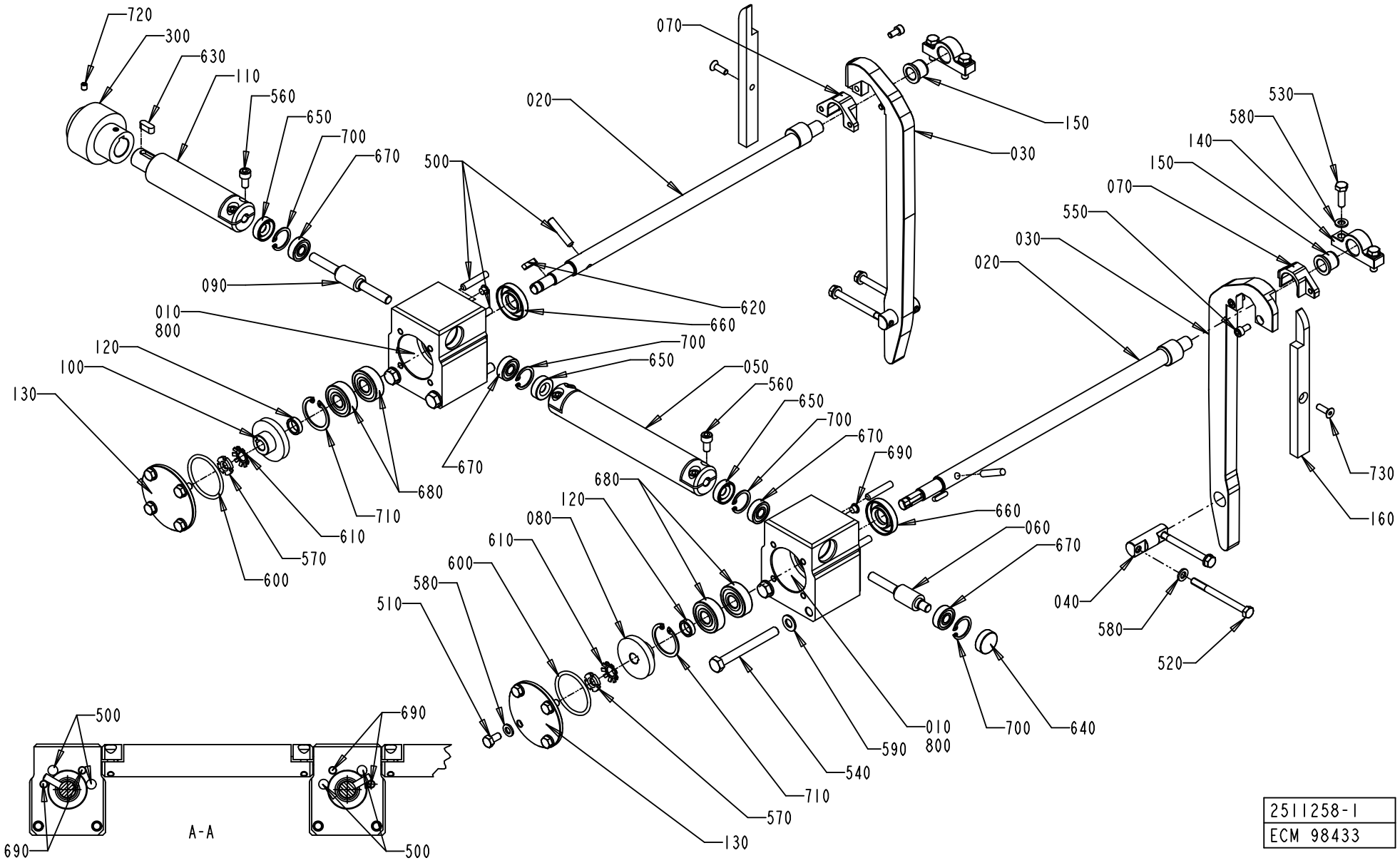

2511258-1
ECM 98433

ECM: 106847 - 20010927
Group number: 2511258-0100
Assembly Drawing: 2511258-1_1_AA

Issue: 20021105

Pos	Part No	SP	UN	Qty	Description	Page No
TBA 0200B						
030	1512599-0000	-		2	VOLUME CAM	
050	1349386-0000	-		1	SHAFT	
110	1349387-0000	A		1	SHAFT	
160	1512598-0000	-		2	GUIDE	
520	312105-0384	-		4	SCREW M6S ISO 4014 M6X70 A480	
730	312155-0329	-		2	SCREW HEX.SOCK.COUNT.MF6S M5X16 A280	
TBA 0200S						
030	2523609-0000	A		2	VOLUME CAM	
050	1512652-0000	A		1	SHAFT	
110	1512653-0000	A		1	SHAFT	
520	312105-0386	-		4	SCREW M6S ISO 4014 M6X80 A480	
TBA 0250B						
030	1523368-0000	-		2	VOLUME CAM	
050	1260050-0000	-		1	SHAFT	
110	1260170-0000	A		1	SHAFT	
520	312105-0386	-		4	SCREW M6S ISO 4014 M6X80 A480	
Common Parts						
010	1260051-0000	-		2	HOUSING	
020	1260148-0000	A		2	ECCENTRIC SHAFT	
040	1548810-0000	-		2	PIVOT PIN	
060	1260149-0000	A		1	WORM SCREW	
070	1348287-0000	A		2	GUIDE	
080	1260152-0000	A		1	WORM WHEEL	
090	1260154-0000	A		1	WORM SCREW	
100	1260169-0000	A		1	WORM WHEEL	
120	1260153-0000	A		2	SPACER	
130	1260177-0000	-		2	COVER	
140	1260151-0000	A		2	BRACKET	
150	1140437-0000	A		2	BUSHING	
300	90355-0195	A		1	TORQUE RIGID COUPLING, 18X18 MM	
500	311103-0358	A		6	PIN,STRIGHT M6 6X32 RFR	
510	312105-0366	-		8	SCREW M6S M6X12 A280	
530	312105-0370	-		4	SCREW M6S ISO 4017 M6X20 A480	
540	312105-0466	-		4	SCREW M6S ISO 4014 M8X75 A480	
550	312115-0325	-		4	SCREW HEX.SOCK.HD.MC6S-TT 5X10 A480	
560	312115-0366	-		6	SCREW MC6S M6X12 A280	
570	312805-0100	-		2	NUT ROUND WITH SLOTS M10X0,75 FE	
580	315105-0153	-		16	WASHER PLAIN, BRB, 6,4/12,H=1,5	
590	315105-0165	-		4	WASHER PLAIN, BRB, 8,4/16,H=1,5	
600	315202-0223	B		2	O-RING 39,2X3 MM	
610	315410-0100	B		2	LOCK WASHER MB 0 D=10 H=1	
620	315701-0168	A		2	PARALLEL KEY W. ROUND ENDS 4X4X16 MM	
630	315705-0230	A		1	PARALLEL KEY W. ROUND ENDS 6X6X16 MM	
640	90355-0369	-		1	COVER PLUG, 22X19X7 MM	
650	90091-0431	B		3	RADIAL SEAL 8X22X7 MM	
660	90091-0430	B		2	RADIAL SEAL 15X35X7 MM DUST LIP	
670	321302-0298	A		4	BALL BEARING, 2 SEALS, 8X22X7 MM	
680	321313-0101	A		4	BALL BEARING, 2 SEALS, 12X32X10 MM	
690	90261-0071	-		4	PLUG, BLIND, PLASTIC, NO. GPN500B58	
700	315753-0117	A		4	RETAIN. RING, 22	
710	315753-0123	A		2	RETAINING RING FOR HOLE, 32X1,2 MM	
720	312318-0321	-		2	SCREW HEX.SOCK.SET CUP P.MSK6SS 5X6 SS	
800	90296-0070	A		1	GREASE	

Machine Type | Group Description | Used-In | Group Number | Page No

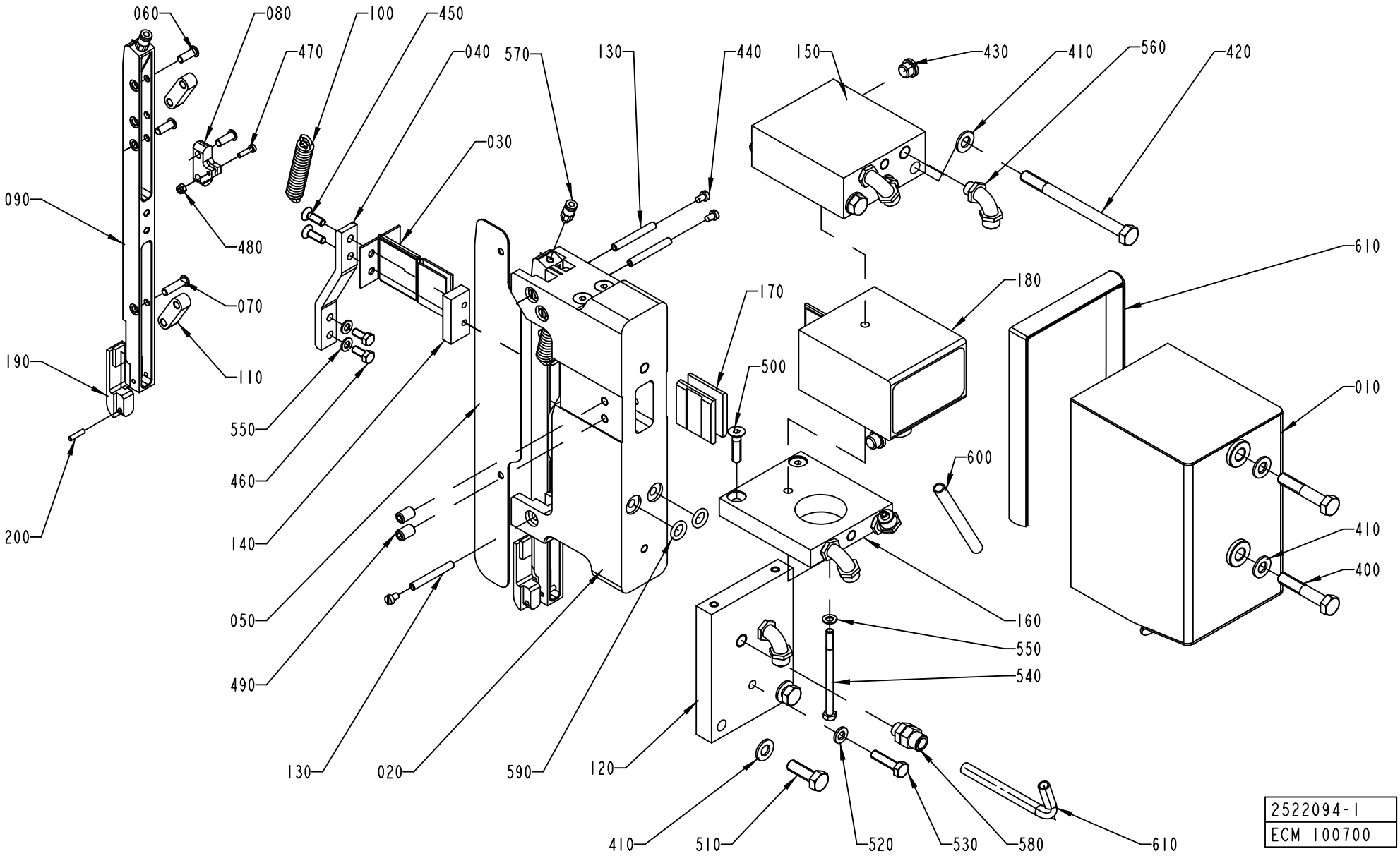
060
080
100
450
470
040
570
130
440
150
430
410
560
420
030
090
480
070
110
190
200
550
460
140
050
490
130
020
590
120
410
510
520
530
580
610
170
500
180
610
010
600
410
400
160
550
540
2522094-1
ECM 100700

ECM: 99348 - 20010926
Group number: 2522094-0100
Assembly Drawing: 2522094-1_1_AA

Issue: 20021105

Pos	Part No	SP	UN	Qty	Description	Page No
TBA 0200B						
020	2526931-0000	A		1	BRACKET	
050	2526932-0000	A		1	SPACER	
090	2526930-0000	A		2	CONTACT RAIL	
120	2527290-0000	-		1	PLATE	
190	2529735-0000	A		2	BRACKET	
TBA 0200S						
020	2529496-0000	A		1	BRACKET	
050	2529677-0000	A		1	SPACER	
090	2529495-0000	A		2	CONTACT RAIL	
120	2527729-0000	-		1	PLATE	
180	67379-0248	A		1	TRANSFORMER	
190	2527141-0000	A		2	BRACKET	
TBA 0250B						
020	2527727-0000	A		1	BRACKET	
050	2527728-0000	A		1	SPACER	
090	2527726-0000	A		2	CONTACT RAIL	
120	2527729-0000	-		1	PLATE	
190	2527141-0000	A		2	BRACKET	
Common Parts						
010	1532496-0000	-		1	COVER	
030	1533428-0000	A		1	BUSBAR	
040	2517171-0000	A		2	CABLE	
060	1140716-0000	A		6	PIN	
070	1140717-0000	A		2	PIN	
080	1548818-0000	A		2	BRACKET	
100	243989-0000	A		2	TENSION SPRING	
110	1548813-0000	A		4	LINK ARM	
130	1487332-0000	A		3	SHAFT	
140	1487373-0000	A		2	WASHER	
150	1532492-0000	-		1	COOLING PLATE	
160	1532493-0000	-		1	COOLING PLATE	
170	1487249-0000	A		2	WASHER	
200	311103-0235	A		2	PARALLELL PIN, CP, M6, 3X14 MM	
400	312105-0460	-		2	SCREW M6S ISO 4014 M8X45 A480	
410	315105-0165	-		6	WASHER PLAIN, BRB, 8,4/16,H=1,5	
420	312105-0471	-		3	SCREW M6S ISO 4014 M8X100 A480	
430	342713-0209	-		2	PLUG, EXT THREAD HEX SOCKET 8638-00-180	
440	312125-0285	-		6	SCREW SLOT.PAN HD. MCS 4X6 A480	
450	312155-0329	-		4	SCREW HEX.SOCK.COUNT.MF6S M5X16 A280	
460	312105-0327	-		4	SCREW M6S ISO 4017 M5X12 A480	
470	312125-0226	-		2	SCREW PAN HEAD MCS M3X12 SS	
480	312812-0310	-		2	HEXAGON NUT, NY-LOCK M3 A480	
490	312318-0447	-		4	SCREW SOCK.SET CUP P MSK6SS M8X12 A4	
500	312155-0372	-		2	SCREW HEX.SOCK.COUNT.MF6S M6X25 A280	
510	312105-0453	-		2	SCREW M6S ISO 4017 M8X25 A480	
520	315105-0153	-		1	WASHER PLAIN, BRB, 6,4/12,H=1,5	
530	312105-0372	-		1	SCREW M6S ISO 4017 M6X25 A480	
540	1532495-0000	-		1	SCREW	
550	315105-0146	-		4	WASHER PLAIN, BRB, 5,3/10,H=1	
560	342931-0121	-		5	ELBOW 90 COUPL.,EXT.THREAD 8/6-G1/8"	
570	342722-0198	-		2	STRAIGHT COUPLING	
580	342921-0121	-		1	STRAIGHT COUPLING,EXT.THREADED 8/6-G1/8"	
590	315205-0508	B		2	O-RING 9,19X2,62 MM	
600	90166-0118	-	MM	80	TUBE 8 MM PA BLACK	
610	90143-0098	-	MM	395	RUBBER STRIP, CLAMPING, NO. 1038-02	

Machine Type | Group Description | Used-In | Group Number | Page No

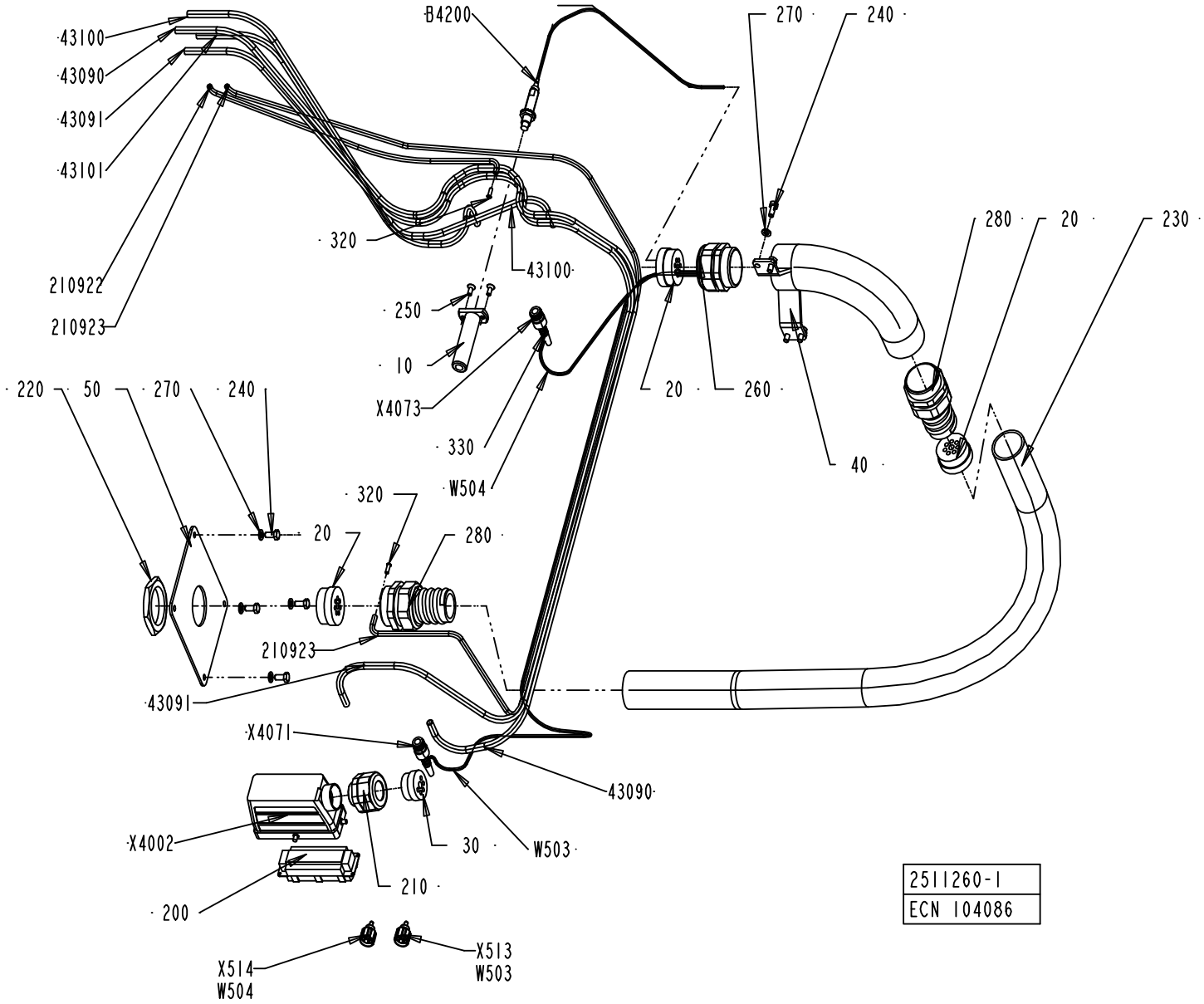
B4200
270
240
43100
43090
43091
43101
320
280
20
230
210922
210923
250
10
X4073
330
W504
220
50
260
40
210923
43091
X4071
43090
X4002
30
W503
210
200
X514
W504
X513
W503
2511260-1
ECN 104086

ECM: 106345 - 20010927
Group number: 2511260-0100
Assembly Drawing: 2511260-1_1_AB

Issue: 20021105

Pos	Part No	SP	UN	Qty	Description	Page No
TBA 0200B						
21061111	90166-0266	-	MM	2300	TUBE, 6 MM PA BLACK	
21061111	90458-0061	-	MM	130	TUBE, 4 MM PA BLACK	
21061111	20458-0061	-	MM	130	TUBE, 4 MM PA BLACK	
21061121	90166-0266	-	MM	1550	TUBE, 6 MM PA BLACK	
21061121	90458-0061	-	MM	90	TUBE, 4 MM PA BLACK	
21061121	20458-0061	-	MM	90	TUBE, 4 MM PA BLACK	
TBA 0200S						
21061111	90166-0266	-	MM	2350	TUBE, 6 MM PA BLACK	
21061111	90458-0061	-	MM	100	TUBE, 4 MM PA BLACK	
21061111	20458-0061	-	MM	100	TUBE, 4 MM PA BLACK	
21061121	90166-0266	-	MM	1650	TUBE, 6 MM PA BLACK	
21061121	90458-0061	-	MM	100	TUBE, 4 MM PA BLACK	
21061121	20458-0061	-	MM	100	TUBE, 4 MM PA BLACK	
TBA 0250B						
21061111	90166-0266	-	MM	2350	TUBE, 6 MM PA BLACK	
21061111	90458-0061	-	MM	100	TUBE, 4 MM PA BLACK	
21061111	20458-0061	-	MM	100	TUBE, 4 MM PA BLACK	
21061121	90166-0266	-	MM	1650	TUBE, 6 MM PA BLACK	
21061121	90458-0061	-	MM	100	TUBE, 4 MM PA BLACK	
21061121	20458-0061	-	MM	100	TUBE, 4 MM PA BLACK	
Common Parts						
010	1260749-0000	-		1	HOLDER	
020	2500329-0000	-		3	INSERT	
030	2500363-0000	-		1	INSERT	
040	1348657-0000	-		1	HOUSING	
050	1348510-0000	-		1	PLATE	
200	90110-0150	-		1	MALE INSERT 121110 0000	
210	353241-0003	-		1	EXTENDED WITHOUT INSERT, PG 21	
210922	90166-0132	-	MM	550	TUBE 6 MM PA,TRANSP.	
210923	90166-0132	-	MM	1900	TUBE 6 MM PA,TRANSP.	
220	90099-0103	-		1	NUT, PR 47 (PG36)	
230	90152-0060	-	MM	1100	SPIRAL CONDUIT, 42X35, UL3529	
240	312105-0367	-		8	SCREW M6S M6X14 A280	
250	312155-0327	-		2	SCREW HEX.SOCK.COUNT.MF6S M5X12 A280	
260	353240-0007	-		1	NORMAL WITHOUT INSERT, PG 36	
270	315105-0153	-		8	WASHER PLAIN, BRB, 6,4/12,H=1,5	
280	353242-0004	-		2	NORMAL WITHOUT INSERT, PG36	
320	342706-0130	-		2	ACCESSORIES, INSERT SLEEVE 6 MM	
330	90458-2893	-		2	SLEEVE, 78 Z-0-3-4	
340	342768-0102	-		2	BULKHEAD CONNECTOR, 6 MM	
350	90055-0154	-		2	HOSE COUPLING	
360	90166-0266	-	MM	50	TUBE, 6 MM PA BLACK	
43090	90166-0118	A	MM	1800	TUBE 8 MM PA BLACK	
43091	90166-0118	A	MM	2000	TUBE 8 MM PA BLACK	
43100	90166-0118	A	MM	1000	TUBE 8 MM PA BLACK	
43101	90166-0118	A	MM	850	TUBE 8 MM PA BLACK	
B4200	90458-0672	A		1	PROXIMITY SENSOR E2E2-X5MB1-5M	
W503	90458-2895	-	M	12	COAXIAL CABLE RG 400/U BROWN	
W504	90458-2895	-	M	12	COAXIAL CABLE RG 400/U BROWN	
X4002	90110-0228	A		1	CABLE HOOD 24-POL 71.350.2428.0	
X4071	90458-2890	-		1	CONNECTOR, 21N-50N12N133NE	
X4072	90110-0125	A		1	ELECTRIC PLUG	
X4073	90110-0126	A		1	COAXIAL CONNECTOR, GE 15021 C10BN	
X4073	90458-2890	-		1	CONNECTOR, 21N-50N12N133NE	
X513	90458-2892	-		1	CONNECTOR, 11 N-50-3-31/133 NE	
X514	90458-2892	-		1	CONNECTOR, 11 N-50-3-31/133 NE	

PRESSURE JAW

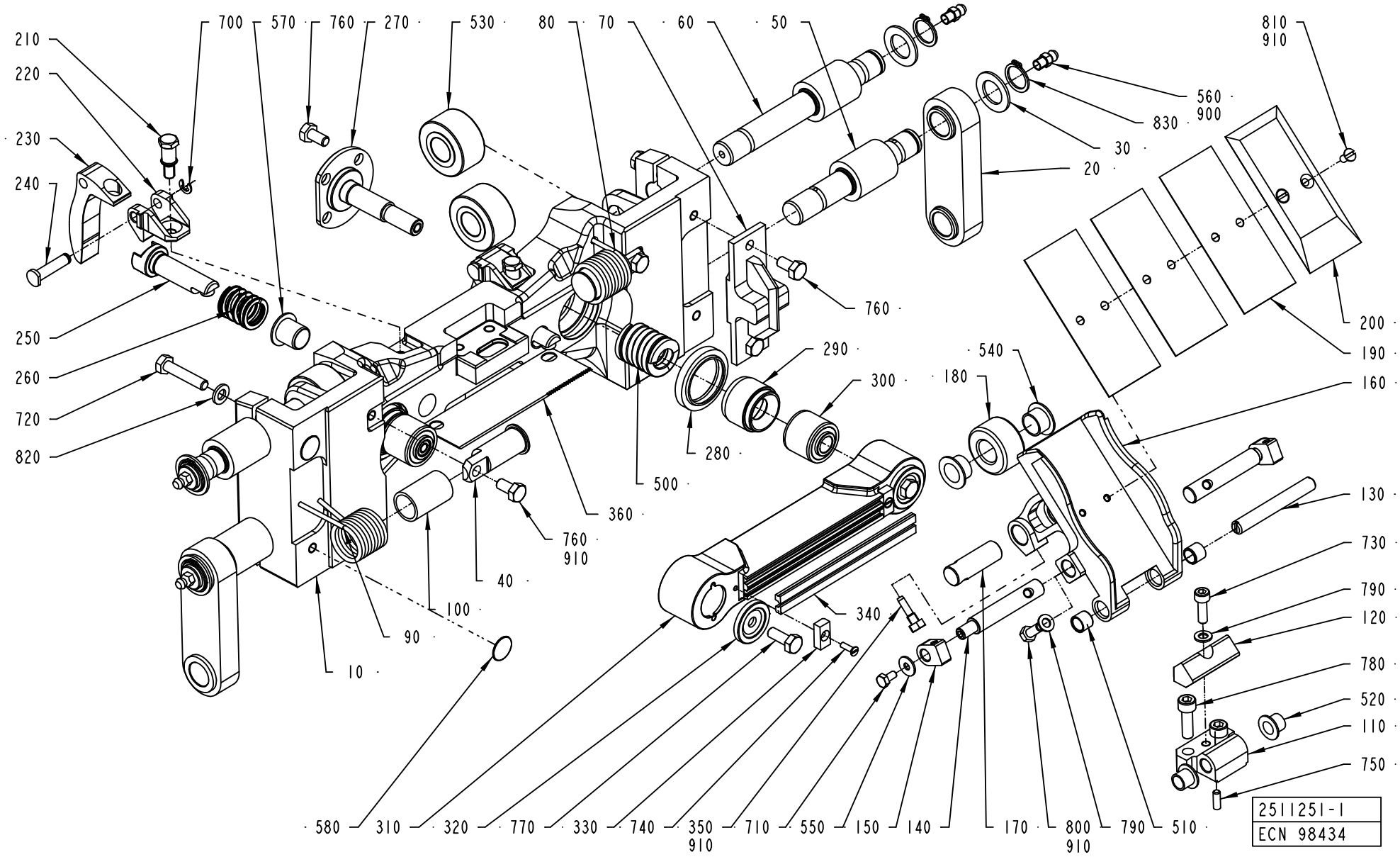

ECM: 99520 - 20010925
Group number: 2511251-0100
Assembly Drawing: 2511251-1_1_AA

Issue: 20021105

Pos	Part No	SP	UN	Qty	Description	Page No
TBA 0200B						
010	2524506-0000	A		1	LINK	
020	B1349360-0000	A		2	LINK	
	1349361-0000	-		*1*	*LINK*	
	1195204-0000	-		*2*	*BUSHING*	
110	1512605-0000	A		1	BRACKET	
130	1512604-0000	A		1	SHAFT	
160	1539924-0000	A		1	VOLUME FLAP	
190	1498609-0000	B		2	VOLUME SHIM	
200	1498608-0000	A		1	VOLUME BULGE	
TBA 0200S						
010	2511261-0000	A		1	LINK	
020	B1511305-0000	A		2	LINK	
	1511306-0000	-		*1*	*LINK*	
	1195204-0000	-		*2*	*BUSHING*	
110	1538134-0000	A		1	BRACKET	
130	1538135-0000	A		1	SHAFT	
160	1539993-0000	A		1	VOLUME FLAP	
190	272991-0000	B		3	VOLUME SHIM	
200	272990-0000	A		1	VOLUME BULGE	
TBA 0250B						
010	2525673-0000	A		1	LINK	
020	B1195208-0000	A		2	LINK	
	1195207-0000	-		*1*	*LINK*	
	1195204-0000	-		*2*	*BUSHING*	
110	1512605-0000	A		1	BRACKET	
130	1512604-0000	A		1	SHAFT	
160	1539992-0000	A		1	VOLUME FLAP	
190	1348257-0000	B		3	VOLUME SHIM	
200	1348256-0000	A		1	VOLUME BULGE	
Common Parts						
030	1548817-0000	A		4	WASHER	
040	1519811-0000	-		2	SHAFT	
050	1140312-0000	A		2	SHAFT	
060	1140313-0000	A		2	SHAFT	
070	1523980-0000	A		1	MOUNTING BLOCK	
080	1538149-0000	A		1	SPRING	
090	1538148-0000	A		1	SPRING	
100	1538521-0000	A		2	BUSHING	
120	1538141-0000	A		1	DAMPER	
140	1548215-0000	A		2	SHAFT	
150	1539348-0000	A		2	HOLDER	
170	1548766-0000	A		1	SHAFT	
180	1140479-0000	A		1	ROLLER	
210	1549412-0000	A		2	SCREW	
220	1517290-0000	A		2	HOLDER	
230	1499397-0000	A		2	CAM	
240	1517291-0000	A		2	SHAFT	
250	2502408-0000	A		2	SHAFT	
260	2502413-0000	A		2	SPRING	
270	1195293-0000	A		2	SHAFT	
280	1195317-0000	A		2	SEALING RING	
290	1195294-0000	A		2	SLEEVE	
300	1512590-0000	A		2	RUBBER BUSHING	
310	1558062-0000	A		1	PRESSURE RAIL	
320	1549601-0000	A		2	WASHER	
330	1140233-0000	A		2	WASHER	
340	1520564-0000	A		2	DOLLY	
350	491230-0000	A		1	GRUB SCREW	
360	1517289-0000	A		1	KNIFE	
500	90335-0253	A		2	SPRING	
510	90458-0353	A		2	BUSHING, 8X10X8 MM	
520	90240-0260	A		2	FLANGE BUSHING, 8X10X9 MM	
530	90083-0055	A		4	BEARING ROLLER, 2 SEALS, 15X35X19 MM	
540	90240-0261	A		2	FLANGE BUSHING, 12X14X9 MM	
550	90005-0082	-		2	WASHER PLAIN ROUND 4,3(M4)/12,H=1	
560	90286-0013	A		4	GREASE NIPPLE STRAIGHT M6	
570	90458-0060	A		2	FLANGE BUSHING, 12X14X15 MM	
580	90458-0289	-		2	PLUG,GPN 340-SW-5 MM	
700	315755-0106	-		2	LOCKING WASHER 4	
710	312105-0287	-		2	SCREW M6S ISO 4017 M4X8 A480	
720	312109-0374	-		4	SCREW M6S ISO 4017 M6X30 A480	
730	312115-0329	-		1	SCREW MC6S M5X16 A280	
740	312145-0224	-		2	SCREW COUNTERS.SLOT.HD. MFS 3X10 SS	
750	311103-0268	-		1	PARALLELL PIN, M6, 4X12 MM	
760	312105-0366	-		12	SCREW M6S M6X12 A280	
770	312105-0368	-		2	SCREW M6S M6X16 A280	
780	312115-0370	-		2	SCREW MC6S M6X20 A280	
790	315105-0146	-		3	WASHER PLAIN, BRB, 5,3/10,H=1	
800	312105-0327	-		2	SCREW M6S ISO 4017 M5X12 A480	
810	312145-0287	A		2	SCREW COUNTERS.SLOT.HD. MFS 4X8 SS	

Machine Type | Group Description | Used-In | Group Number | Page No

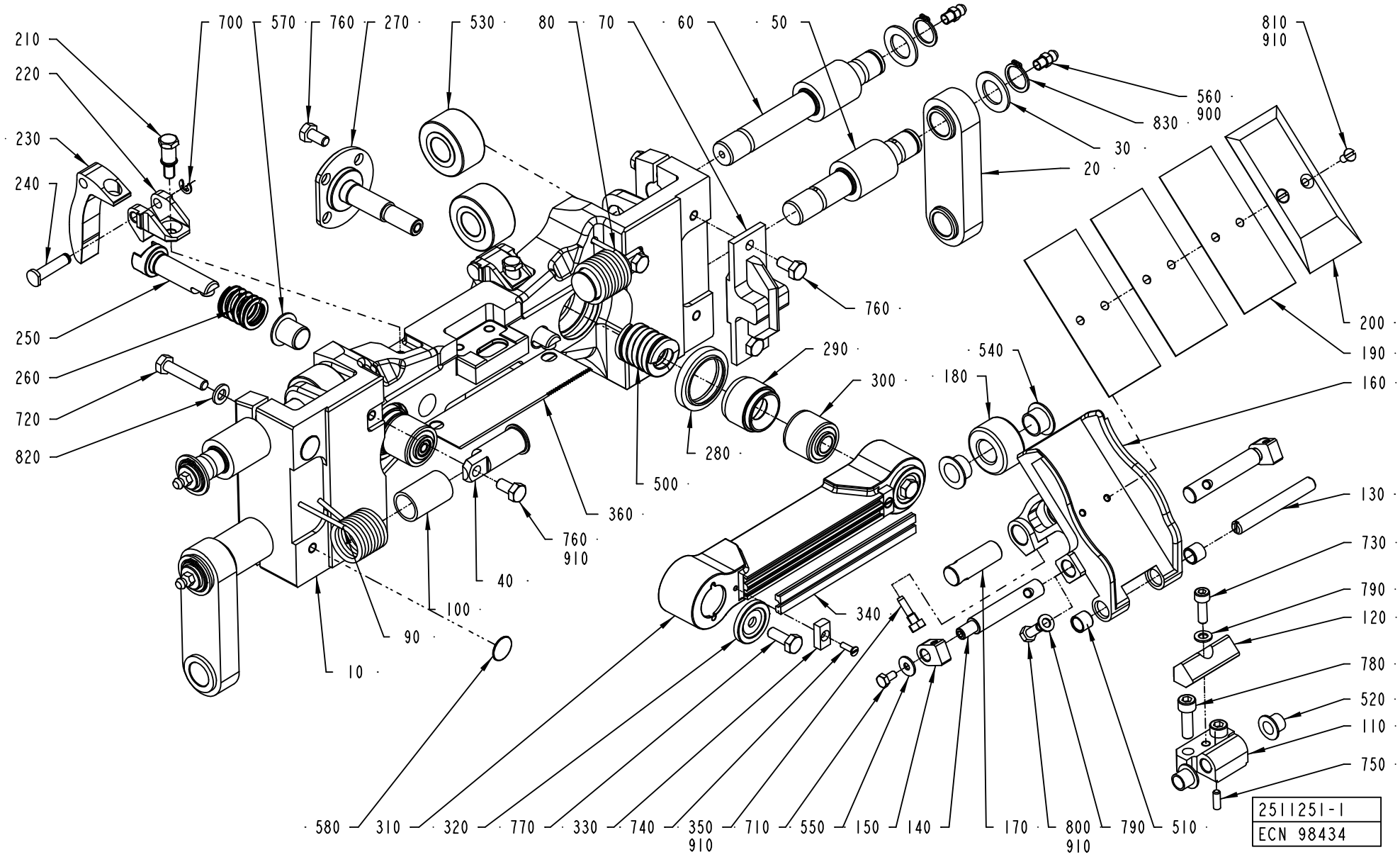
210
220
230
240
250
260
720
820
700
570
760
270
530
80
70
60
50
810
910
560
900
830
30
20
760
290
300
280
500
360
760
910
40
100
90
10
540
180
160
200
190
130
730
790
120
780
520
110
750
340
580
310
320
770
330
740
350
910
710
550
150
140
170
800
910
790
510
2511251-1
ECN 98434

Pos	Part No	SP	UN	Qty	Description	Page No
Common Parts (Cont'd)						
820	315105-0153	-		4	WASHER PLAIN, BRB, 6,4/12,H=1,5	
830	315751-0112	A		4	RETAIN. RING, 15	
900	90296-0070	A		1	GREASE	
910	90157-0035	-		1	LOCKING FLUID 641	

Pos	Part No	SP	UN	Qty	Description	Page No

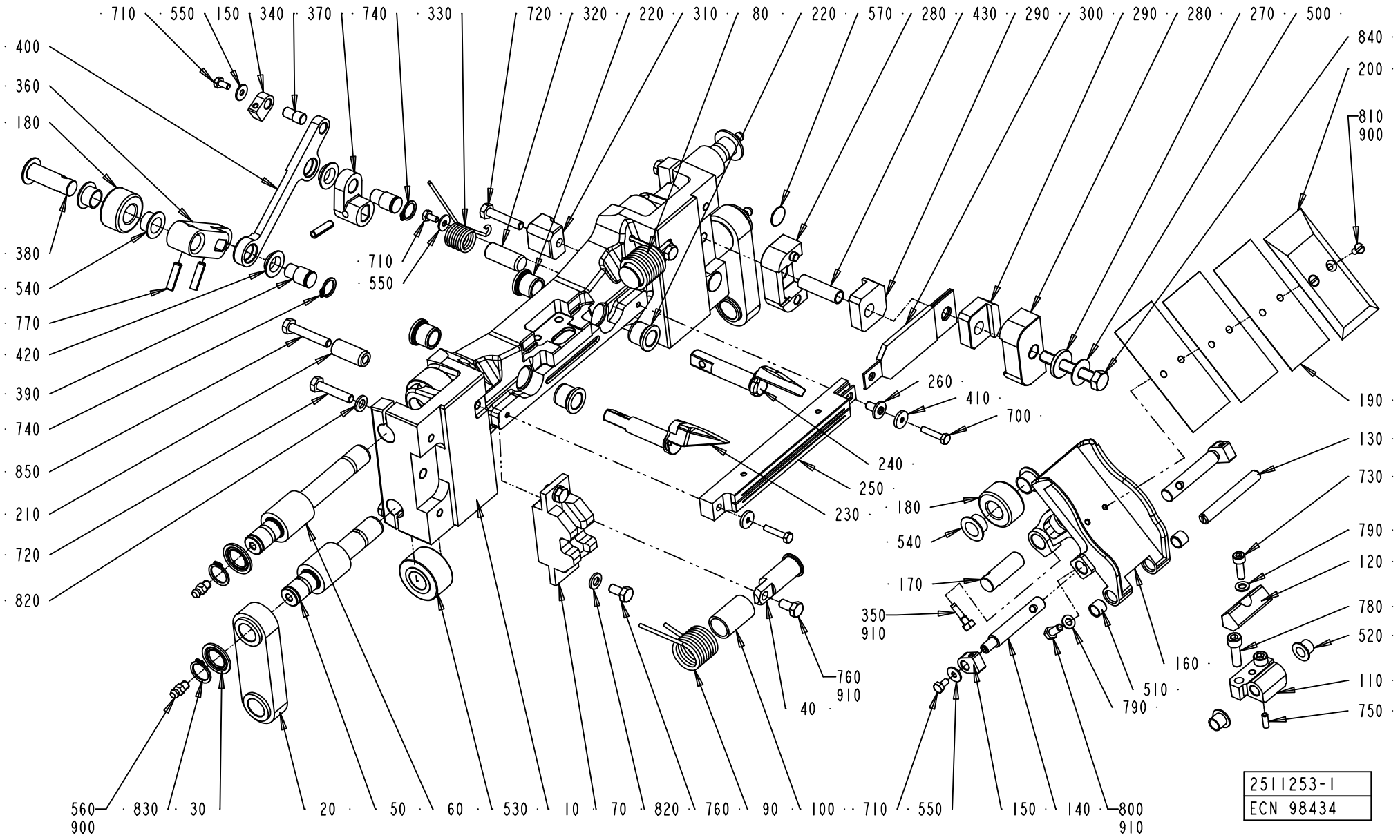

2511253-1
ECN 98434

Pos	Part No	SP	UN	Qty	Description	Page No
TBA 0200B						
010	2524617-0000	A		1	LINK	
020	B1349360-0000	A		2	LINK	
	1349361-0000	-		*1*	*LINK*	
	1195204-0000	-		*2*	*BUSHING*	
110	1512605-0000	A		1	BRACKET	
130	1512604-0000	A		1	SHAFT	
160	1539924-0000	A		1	VOLUME FLAP	
190	1498609-0000	B		3	VOLUME SHIM	
200	1498608-0000	A		1	VOLUME BULGE	
230	1512626-0000	A		1	FOLDING FLAP	
240	1512627-0000	A		1	FOLDING FLAP	
250	1533002-0000	A		1	INDUCTOR	
360	2500375-0000	A		1	ARM	
370	2500376-0000	A		1	ARM	
400	2500377-0000	A		1	LINK ARM	
TBA 0200S						
010	2511262-0000	A		1	LINK	
020	B1511305-0000	A		2	LINK	
	1511306-0000	-		*1*	*LINK*	
	1195204-0000	-		*2*	*BUSHING*	
110	1538134-0000	A		1	BRACKET	
130	1538135-0000	A		1	SHAFT	
160	1539993-0000	A		1	VOLUME FLAP	
190	272991-0000	B		3	VOLUME SHIM	
200	272990-0000	A		1	VOLUME BULGE	
210	2511246-0000	A		1	BUSHING	
230	1511400-0000	A		1	FOLDING FLAP	
240	1511399-0000	A		1	FOLDING FLAP	
250	1533000-0000	A		1	INDUCTOR	
360	1511398-0000	A		1	ARM	
370	1478959-0000	A		1	ARM	
400	2509551-0000	A		1	LINK ARM	
850	312109-0376	-		1	SCREW M6S ISO 4017 M6X35 A480	
TBA 0250B						
010	2525282-0000	A		1	LINK	
020	B1195208-0000	A		2	LINK	
	1195207-0000	-		*1*	*LINK*	
	1195204-0000	-		*2*	*BUSHING*	
110	1512605-0000	A		1	BRACKET	
130	1512604-0000	A		1	SHAFT	
160	1539992-0000	A		1	VOLUME FLAP	
190	1348257-0000	B		3	VOLUME SHIM	
200	1348256-0000	A		1	VOLUME BULGE	
230	1487599-0000	A		1	FOLDING FLAP	
240	1487600-0000	A		1	FOLDING FLAP	
250	1533002-0000	A		1	INDUCTOR	
360	2500375-0000	A		1	ARM	
370	2500376-0000	A		1	ARM	
400	2500377-0000	A		1	LINK ARM	
Common Parts						
030	1548817-0000	A		4	WASHER	
040	1519811-0000	A		2	SHAFT	
050	1140312-0000	A		2	SHAFT	
060	1140313-0000	A		2	SHAFT	
070	1523981-0000	A		1	GUIDE	
080	1538149-0000	A		1	SPRING	
090	1538148-0000	A		1	SPRING	
100	1538521-0000	A		2	BUSHING	
120	1538141-0000	A		1	DAMPER	
140	1548215-0000	A		2	SHAFT	
150	1539348-0000	A		3	HOLDER	
170	1548766-0000	A		1	SHAFT	
180	1140479-0000	A		2	ROLLER	
220	1140437-0000	A		4	BUSHING	
260	32544-0000	A		1	INSULATION NUT	
270	2511263-0000	A		1	WASHER	
280	2523606-0000	A		2	CARBON BRUSH HOLDER	
290	2523607-0000	A		2	CARBON BRUSH	
300	2523608-0000	A		1	BUSBAR	
310	1498479-0000	A		1	GUIDE	
320	1140492-0000	A		1	PIN	
330	1140485-0000	A		1	SPRING	
340	1549123-0000	A		1	PIVOT PIN	
350	491230-0000	A		1	GRUB SCREW	
380	1195305-0000	A		1	SHAFT	
390	1140488-0000	A		2	SHAFT	
410	1349399-0000	A		2	WASHER	
420	1549122-0000	A		4	FLANGE BEARING	
430	2511242-0000	A		1	PROTECTION	
500	90016-0024	A		1	DISC SPRING, CONICAL 20X8,2X0,8 MM	

Machine Type | Group Description | Used-In | Group Number | Page No

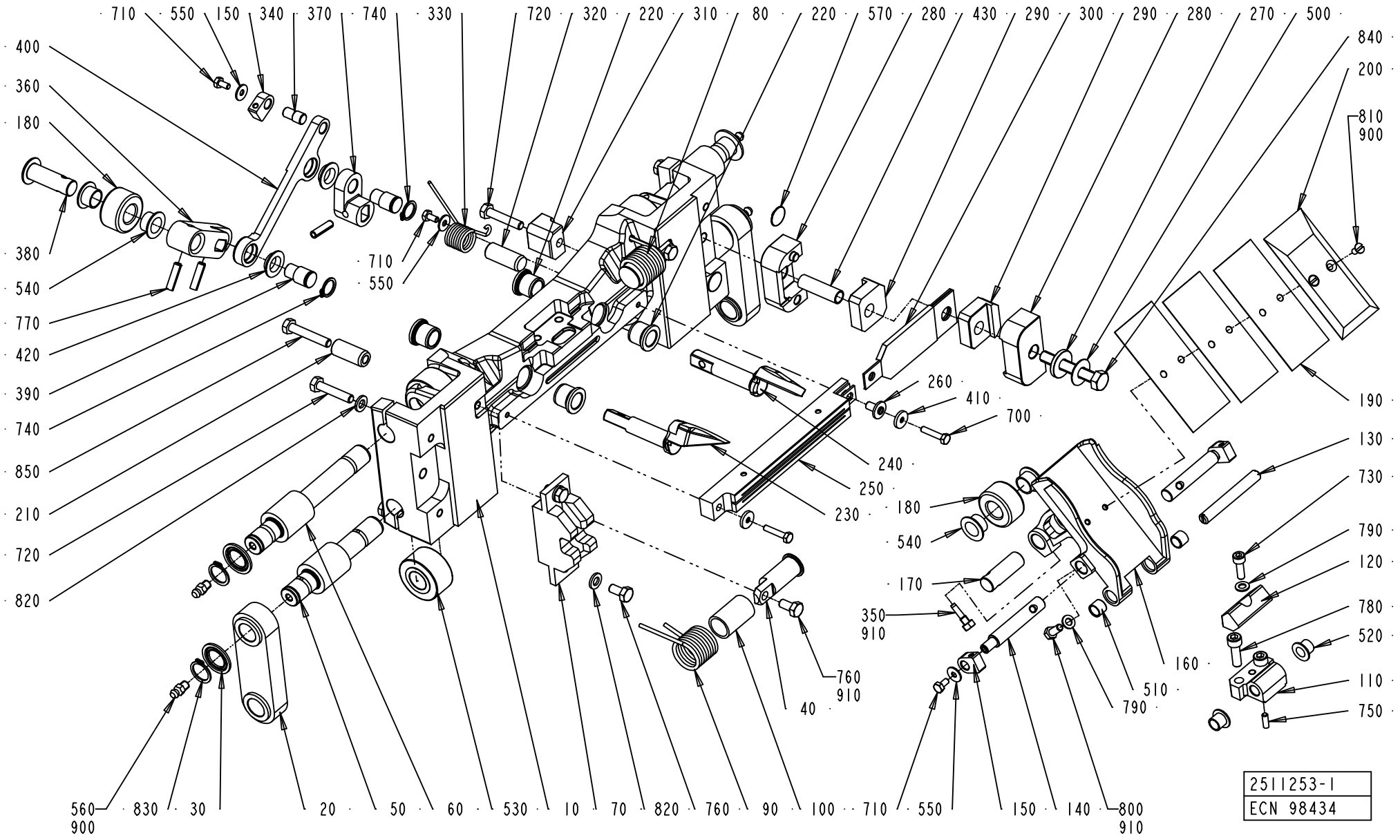

2511253-1
ECN 98434

Pos	Part No	SP	UN	Qty	Description	Page No
Common Parts (Cont'd)						
510	90458-0353	A		2	BUSHING, 8X10X8 MM	
520	90240-0260	A		2	FLANGE BUSHING, 8X10X9 MM	
530	90083-0055	A		4	BEARING ROLLER, 2 SEALS, 15X35X19 MM	
540	90240-0261	A		4	FLANGE BUSHING, 12X14X9 MM	
550	90005-0082	-		4	WASHER PLAIN ROUND 4,3(M4)/12,H=1	
560	90286-0013	A		4	GREASE NIPPLE STRAIGHT M6	
570	90458-0289	A		2	PLUG,GPN 340-SW-5 MM	
700	312105-0295	-		2	SCREW M6S ISO 4017 M4X20 A480	
710	312105-0287	-		4	SCREW M6S ISO 4017 M4X8 A480	
720	312109-0374	-		5	SCREW M6S ISO 4017 M6X30 A480	
730	312115-0329	-		1	SCREW MC6S M5X16 A280	
740	315751-0109	A		2	RETAIN. RING, 12	
750	311103-0268	A		1	PARALLELL PIN, M6, 4X12 MM	
760	312105-0366	-		4	SCREW M6S M6X12 A280	
770	311112-0308	A		3	PIN, STRAIGHT SLOTTED SPRING FRP 5X20	
780	312115-0370	-		2	SCREW MC6S M6X20 A280	
790	315105-0146	-		3	WASHER PLAIN, BRB, 5,3/10,H=1	
800	312105-0327	-		2	SCREW M6S ISO 4017 M5X12 A480	
810	312145-0287	A		2	SCREW COUNTERS.SLOT.HD. MFS 4X8 SS	
820	315105-0153	-		6	WASHER PLAIN, BRB, 6,4/12,H=1,5	
830	315751-0112	A		4	RETAIN. RING, 15	
840	312105-0461	-		1	SCREW M6S ISO 4014 M8X50 A480	
900	90296-0070	A		1	GREASE	
910	90157-0035	A		1	LOCKING FLUID 641	

Pos	Part No	SP	UN	Qty	Description	Page No

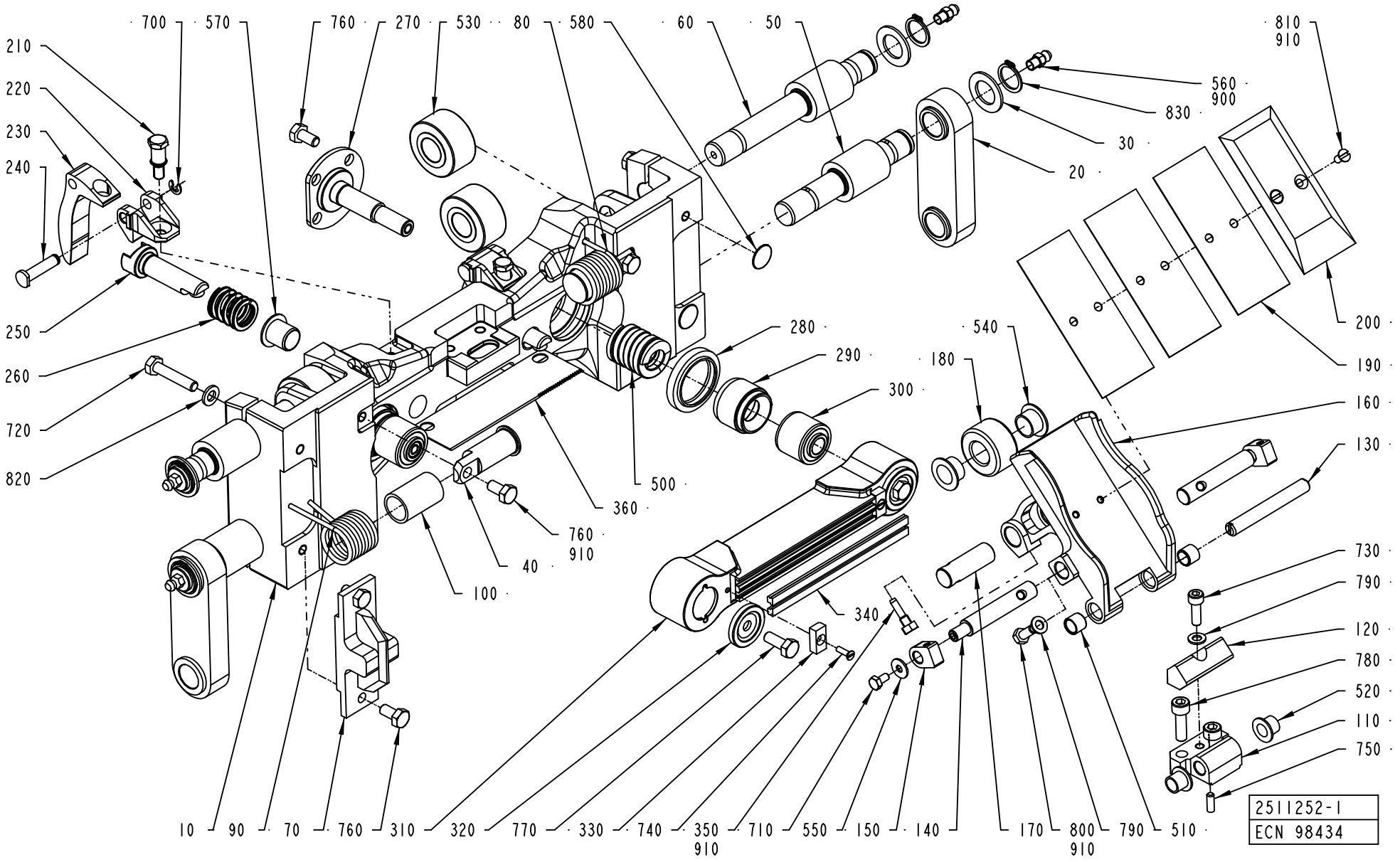
700
570
760
270
530
80
580
60
50
810
910
210
220
230
240
560
900
830
30
20
250
260
720
820
280
290
300
540
180
200
190
160
130
500
360
760
910
40
100
730
790
120
780
520
110
750
340
10
90
70
760
310
320
770
330
740
350
910
710
550
150
140
170
800
910
790
510
2511252-1
ECN 98434

ECM: 99521 - 20010925
Group number: 2511252-0100
Assembly Drawing: 2511252-1_1_AA

Issue: 20021105

Pos	Part No	SP	UN	Qty	Description	Page No
TBA 0200B						
010	2524506-0000	A		1	LINK	
020	B1349360-0000	A		2	LINK	
	1349361-0000	-		*1*	*LINK*	
	1195204-0000	-		*2*	*BUSHING*	
110	1512605-0000	A		1	BRACKET	
130	1512604-0000	A		1	SHAFT	
160	1539924-0000	A		1	VOLUME FLAP	
190	1498609-0000	B		2	VOLUME SHIM	
200	1498608-0000	A		1	VOLUME BULGE	
TBA 0200S						
010	2511261-0000	A		1	LINK	
020	B1511305-0000	A		2	LINK	
	1511306-0000	-		*1*	*LINK*	
	1195204-0000	-		*2*	*BUSHING*	
110	1538134-0000	A		1	BRACKET	
130	1538135-0000	A		1	SHAFT	
160	1539993-0000	A		1	VOLUME FLAP	
190	272991-0000	B		3	VOLUME SHIM	
200	272990-0000	A		1	VOLUME BULGE	
TBA 0250B						
010	2525673-0000	A		1	LINK	
020	B1195208-0000	A		2	LINK	
	1195207-0000	-		*1*	*LINK*	
	1195204-0000	-		*2*	*BUSHING*	
110	1512605-0000	A		1	BRACKET	
130	1512604-0000	A		1	SHAFT	
160	1539992-0000	A		1	VOLUME FLAP	
190	1348257-0000	B		3	VOLUME SHIM	
200	1348256-0000	A		1	VOLUME BULGE	
Common Parts						
030	1548817-0000	A		4	WASHER	
040	1519811-0000	-		2	SHAFT	
050	1140312-0000	A		2	SHAFT	
060	1140313-0000	A		2	SHAFT	
070	1523980-0000	A		1	MOUNTING BLOCK	
080	1538149-0000	A		1	SPRING	
090	1538148-0000	A		1	SPRING	
100	1538521-0000	A		2	BUSHING	
120	1538141-0000	A		1	DAMPER	
140	1548215-0000	A		2	SHAFT	
150	1539348-0000	A		2	HOLDER	
170	1548766-0000	A		1	SHAFT	
180	1140479-0000	A		1	ROLLER	
210	1549412-0000	A		2	SCREW	
220	1517290-0000	A		2	HOLDER	
230	1499397-0000	A		2	CAM	
240	1517291-0000	A		2	SHAFT	
250	2502408-0000	A		2	SHAFT	
260	2502413-0000	A		2	SPRING	
270	1195293-0000	A		2	SHAFT	
280	1195317-0000	A		2	SEALING RING	
290	1195294-0000	A		2	SLEEVE	
300	1512590-0000	A		2	RUBBER BUSHING	
310	1558062-0000	A		1	PRESSURE RAIL	
320	1549601-0000	A		2	WASHER	
330	1140233-0000	A		2	WASHER	
340	1520564-0000	A		2	DOLLY	
350	491230-0000	A		1	GRUB SCREW	
360	1517289-0000	A		1	KNIFE	
500	90335-0253	A		2	SPRING	
510	90458-0353	A		2	BUSHING, 8X10X8 MM	
520	90240-0260	A		2	FLANGE BUSHING, 8X10X9 MM	
530	90083-0055	A		4	BEARING ROLLER, 2 SEALS, 15X35X19 MM	
540	90240-0261	A		2	FLANGE BUSHING, 12X14X9 MM	
550	90005-0082	-		2	WASHER PLAIN ROUND 4,3(M4)/12,H=1	
560	90286-0013	A		4	GREASE NIPPLE STRAIGHT M6	
570	90458-0060	A		2	FLANGE BUSHING, 12X14X15 MM	
580	90458-0289	-		2	PLUG,GPN 340-SW-5 MM	
700	315755-0106	-		2	LOCKING WASHER 4	
710	312105-0287	-		2	SCREW M6S ISO 4017 M4X8 A480	
720	312109-0374	-		4	SCREW M6S ISO 4017 M6X30 A480	
730	312115-0329	-		1	SCREW MC6S M5X16 A280	
740	312145-0224	-		2	SCREW COUNTERS.SLOT.HD. MFS 3X10 SS	
750	311103-0268	-		1	PARALLELL PIN, M6, 4X12 MM	
760	312105-0366	-		12	SCREW M6S M6X12 A280	
770	312105-0368	-		2	SCREW M6S M6X16 A280	
780	312115-0370	-		2	SCREW MC6S M6X20 A280	
790	315105-0146	-		3	WASHER PLAIN, BRB, 5,3/10,H=1	
800	312105-0327	-		2	SCREW M6S ISO 4017 M5X12 A480	
810	312145-0287	A		2	SCREW COUNTERS.SLOT.HD. MFS 4X8 SS	

Machine Type | Group Description | Used-In | Group Number | Page No

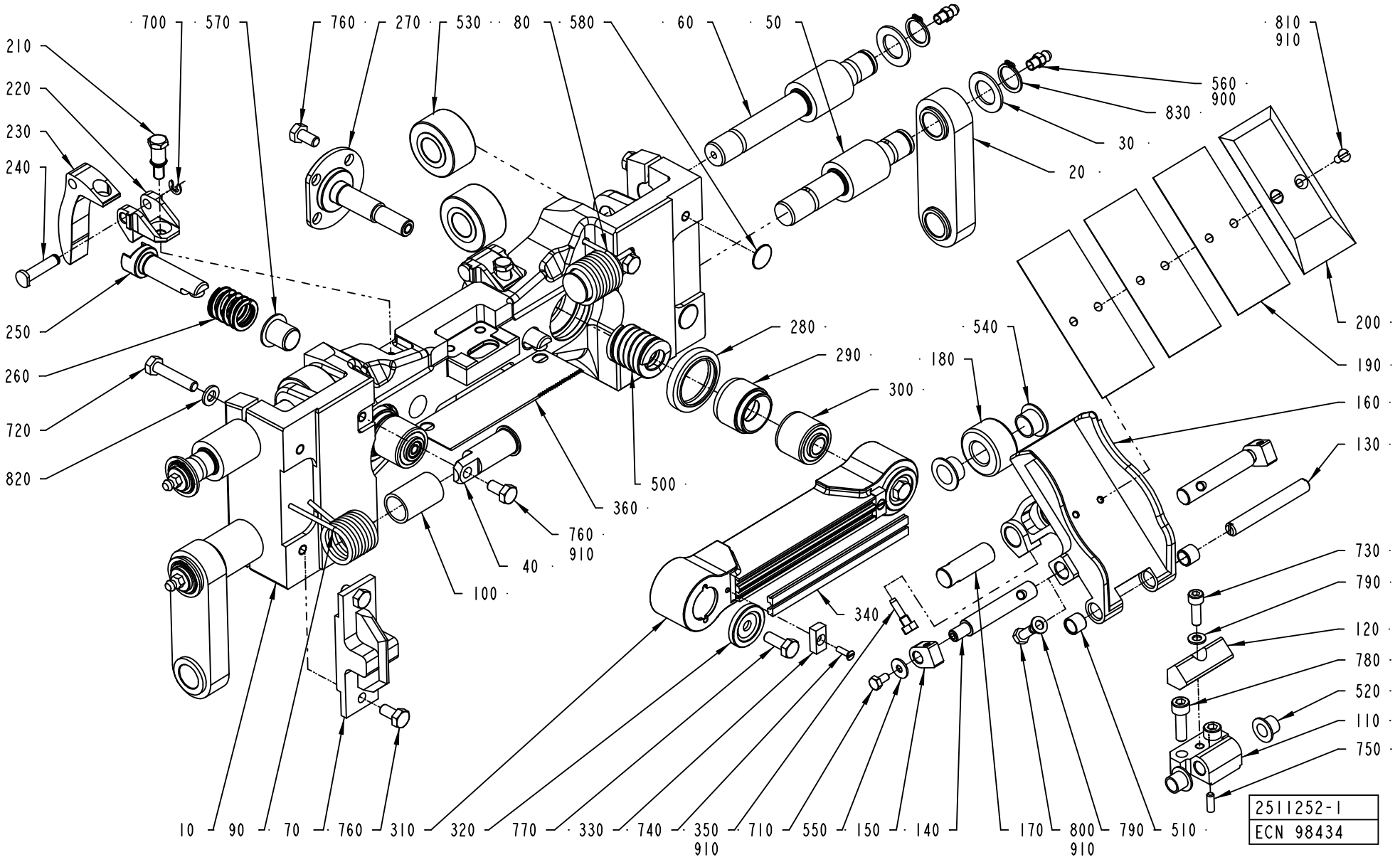
700
570
760
270
530
80
580
60
50
810
910
210
220
230
240
560
900
830
30
20
250
260
720
820
280
290
300
540
180
200
190
160
130
500
360
760
910
40
100
730
790
120
780
520
110
750
340
10
90
70
760
310
320
770
330
740
350
910
710
550
150
140
170
800
910
790
510
2511252-1
ECN 98434

Pos	Part No	SP	UN	Qty	Description	Page No
Common Parts (Cont'd)						
820	315105-0153	-		4	WASHER PLAIN, BRB, 6,4/12,H=1,5	
830	315751-0112	A		4	RETAIN. RING, 15	
900	90296-0070	A		1	GREASE	
910	90157-0035	-		1	LOCKING FLUID 641	

Pos	Part No	SP	UN	Qty	Description	Page No

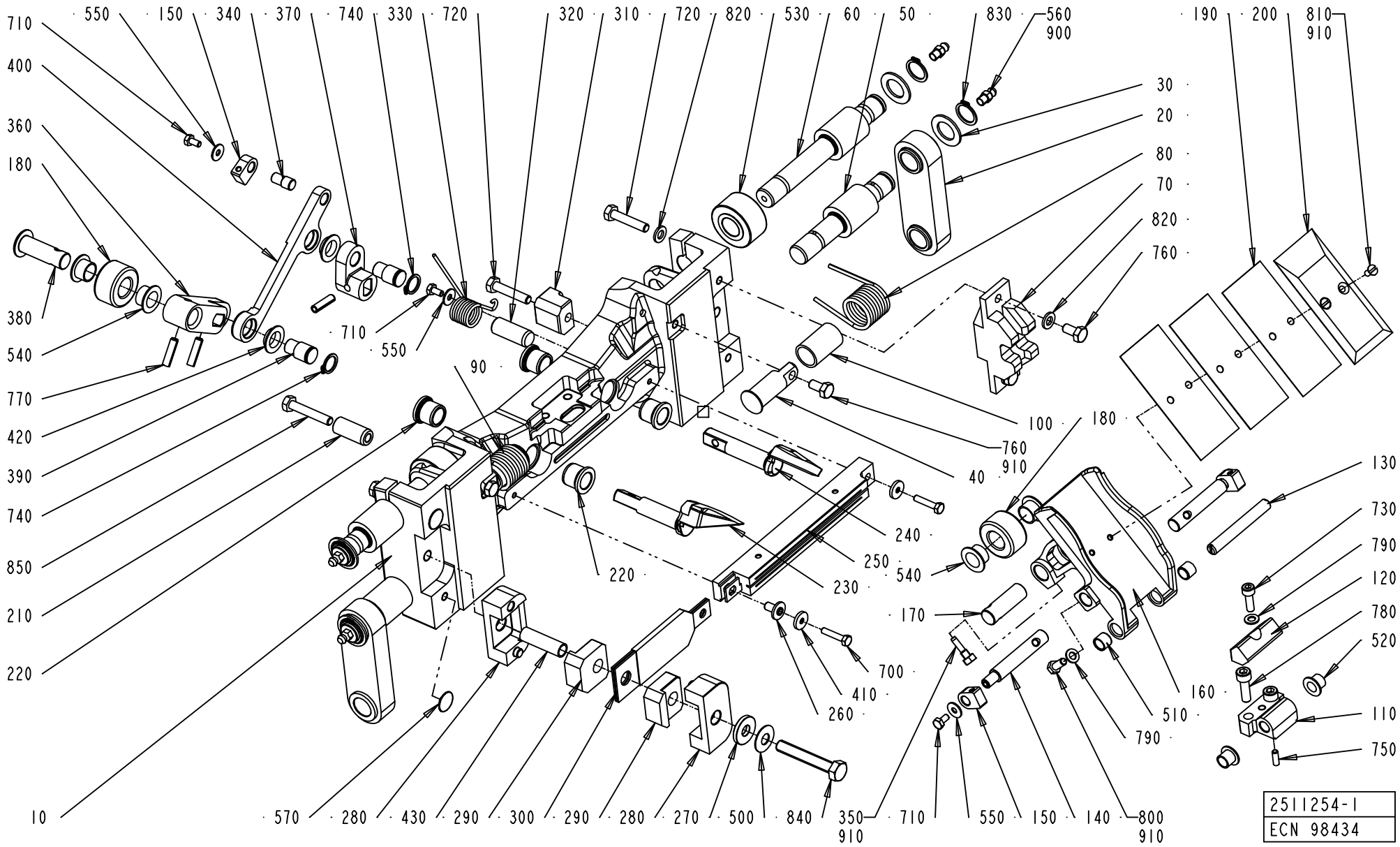
710
400
360
180
380
540
770
420
390
740
850
210
220
10
550
150
340
370
740
330
720
320
310
720
820
530
60
50
830
560
900
190
200
810
910
30
20
80
70
820
760
710
550
90
100
760
910
40
180
240
250
540
230
220
170
700
410
260
130
730
790
120
780
520
160
510
790
110
750
570
280
430
290
300
290
280
270
500
840
350
910
710
550
150
140
800
910
2511254-1
ECN 98434

ECM: 99523 - 20010925
Group number: 2511254-0100
Assembly Drawing: 2511254-1_1_AA

Issue: 20021105

Pos	Part No	SP	UN	Qty	Description	Page No
TBA 0200B						
010	2524617-0000	A		1	LINK	
020	B1349360-0000	A		2	LINK	
	1349361-0000	-		*1*	*LINK*	
	1195204-0000	-		*2*	*BUSHING*	
110	1512605-0000	A		1	BRACKET	
130	1512604-0000	A		1	SHAFT	
160	1539924-0000	A		1	VOLUME FLAP	
190	1498609-0000	B		3	VOLUME SHIM	
200	1498608-0000	A		1	VOLUME BULGE	
230	1512626-0000	A		1	FOLDING FLAP	
240	1512627-0000	A		1	FOLDING FLAP	
250	1533002-0000	A		1	INDUCTOR	
360	2500375-0000	A		1	ARM	
370	2500376-0000	A		1	ARM	
400	2500377-0000	A		1	LINK ARM	
TBA 0200S						
010	2511262-0000	A		1	LINK	
020	B1511305-0000	A		2	LINK	
	1511306-0000	-		*1*	*LINK*	
	1195204-0000	-		*2*	*BUSHING*	
110	1538134-0000	A		1	BRACKET	
130	1538135-0000	A		1	SHAFT	
160	1539993-0000	A		1	VOLUME FLAP	
190	272991-0000	B		3	VOLUME SHIM	
200	272990-0000	A		1	VOLUME BULGE	
210	2511246-0000	A		1	BUSHING	
230	1511400-0000	A		1	FOLDING FLAP	
240	1511399-0000	A		1	FOLDING FLAP	
250	1533000-0000	A		1	INDUCTOR	
360	1511398-0000	A		1	ARM	
370	1478959-0000	A		1	ARM	
400	2509551-0000	A		1	LINK ARM	
850	312109-0376	-		1	SCREW M6S ISO 4017 M6X35 A480	
TBA 0250B						
010	2525282-0000	A		1	LINK	
020	B1195208-0000	A		2	LINK	
	1195207-0000	-		*1*	*LINK*	
	1195204-0000	-		*2*	*BUSHING*	
110	1512605-0000	A		1	BRACKET	
130	1512604-0000	A		1	SHAFT	
160	1539992-0000	A		1	VOLUME FLAP	
190	1348257-0000	B		3	VOLUME SHIM	
200	1348256-0000	A		1	VOLUME BULGE	
230	1487599-0000	A		1	FOLDING FLAP	
240	1487600-0000	A		1	FOLDING FLAP	
250	1533002-0000	A		1	INDUCTOR	
360	2500375-0000	A		1	ARM	
370	2500376-0000	A		1	ARM	
400	2500377-0000	A		1	LINK ARM	
Common Parts						
030	1548817-0000	A		4	WASHER	
040	1519811-0000	A		2	SHAFT	
050	1140312-0000	A		2	SHAFT	
060	1140313-0000	A		2	SHAFT	
070	1523981-0000	A		1	GUIDE	
080	1538149-0000	A		1	SPRING	
090	1538148-0000	A		1	SPRING	
100	1538521-0000	A		2	BUSHING	
120	1538141-0000	A		1	DAMPER	
140	1548215-0000	A		2	SHAFT	
150	1539348-0000	A		3	HOLDER	
170	1548766-0000	A		1	SHAFT	
180	1140479-0000	A		2	ROLLER	
220	1140437-0000	A		4	BUSHING	
260	32544-0000	A		1	INSULATION NUT	
270	2511263-0000	A		1	WASHER	
280	2523606-0000	A		2	CARBON BRUSH HOLDER	
290	2523607-0000	A		2	CARBON BRUSH	
300	2523608-0000	A		1	BUSBAR	
310	1498479-0000	A		1	GUIDE	
320	1140492-0000	A		1	PIN	
330	1140485-0000	A		1	SPRING	
340	1549123-0000	A		1	PIVOT PIN	
350	491230-0000	A		1	GRUB SCREW	
380	1195305-0000	A		1	SHAFT	
390	1140488-0000	A		2	SHAFT	
410	1349399-0000	A		2	WASHER	
420	1549122-0000	A		4	FLANGE BEARING	
430	2511242-0000	A		1	PROTECTION	
500	90016-0024	A		1	DISC SPRING, CONICAL 20X8,2X0,8 MM	

Machine Type | Group Description | Used-In | Group Number | Page No

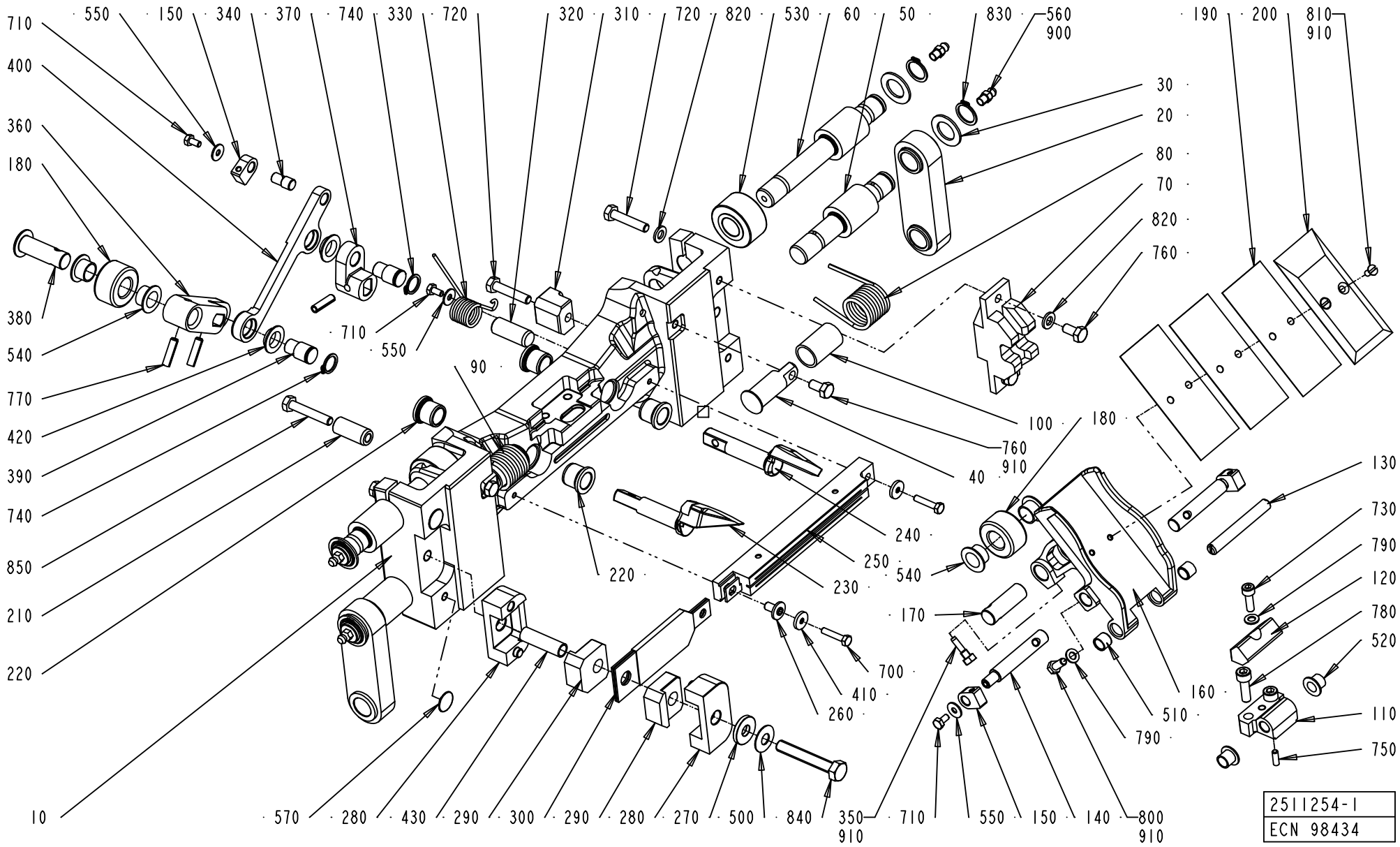
710
400
360
180
380
540
770
420
390
740
850
210
220
10
550
150
340
370
740
330
720
320
310
720
820
530
60
50
830
560
900
190
200
810
910
30
20
80
70
820
760
710
550
90
100
760
910
40
180
240
250
230
540
220
170
700
410
260
130
730
790
120
780
520
160
510
790
110
750
570
280
430
290
300
290
280
270
500
840
350
910
710
550
150
140
800
910
2511254-1
ECN 98434

Pos	Part No	SP	UN	Qty	Description	Page No
Common Parts (Cont'd)						
510	90458-0353	A		2	BUSHING, 8X10X8 MM	
520	90240-0260	A		2	FLANGE BUSHING, 8X10X9 MM	
530	90083-0055	A		4	BEARING ROLLER, 2 SEALS, 15X35X19 MM	
540	90240-0261	A		4	FLANGE BUSHING, 12X14X9 MM	
550	90005-0082	-		4	WASHER PLAIN ROUND 4,3(M4)/12,H=1	
560	90286-0013	A		4	GREASE NIPPLE STRAIGHT M6	
570	90458-0289	A		2	PLUG,GPN 340-SW-5 MM	
700	312105-0295	-		2	SCREW M6S ISO 4017 M4X20 A480	
710	312105-0287	-		4	SCREW M6S ISO 4017 M4X8 A480	
720	312109-0374	-		5	SCREW M6S ISO 4017 M6X30 A480	
730	312115-0329	-		1	SCREW MC6S M5X16 A280	
740	315751-0109	A		2	RETAIN. RING, 12	
750	311103-0268	A		1	PARALLELL PIN, M6, 4X12 MM	
760	312105-0366	-		4	SCREW M6S M6X12 A280	
770	311112-0308	A		3	PIN, STRAIGHT SLOTTED SPRING FRP 5X20	
780	312115-0370	-		2	SCREW MC6S M6X20 A280	
790	315105-0146	-		3	WASHER PLAIN, BRB, 5,3/10,H=1	
800	312105-0327	-		2	SCREW M6S ISO 4017 M5X12 A480	
810	312145-0287	A		2	SCREW COUNTERS.SLOT.HD. MFS 4X8 SS	
820	315105-0153	-		6	WASHER PLAIN, BRB, 6,4/12,H=1,5	
830	315751-0112	A		4	RETAIN. RING, 15	
840	312105-0461	-		1	SCREW M6S ISO 4014 M8X50 A480	
900	90296-0070	A		1	GREASE	
910	90157-0035	A		1	LOCKING FLUID 641	

Pos	Part No	SP	UN	Qty	Description	Page No

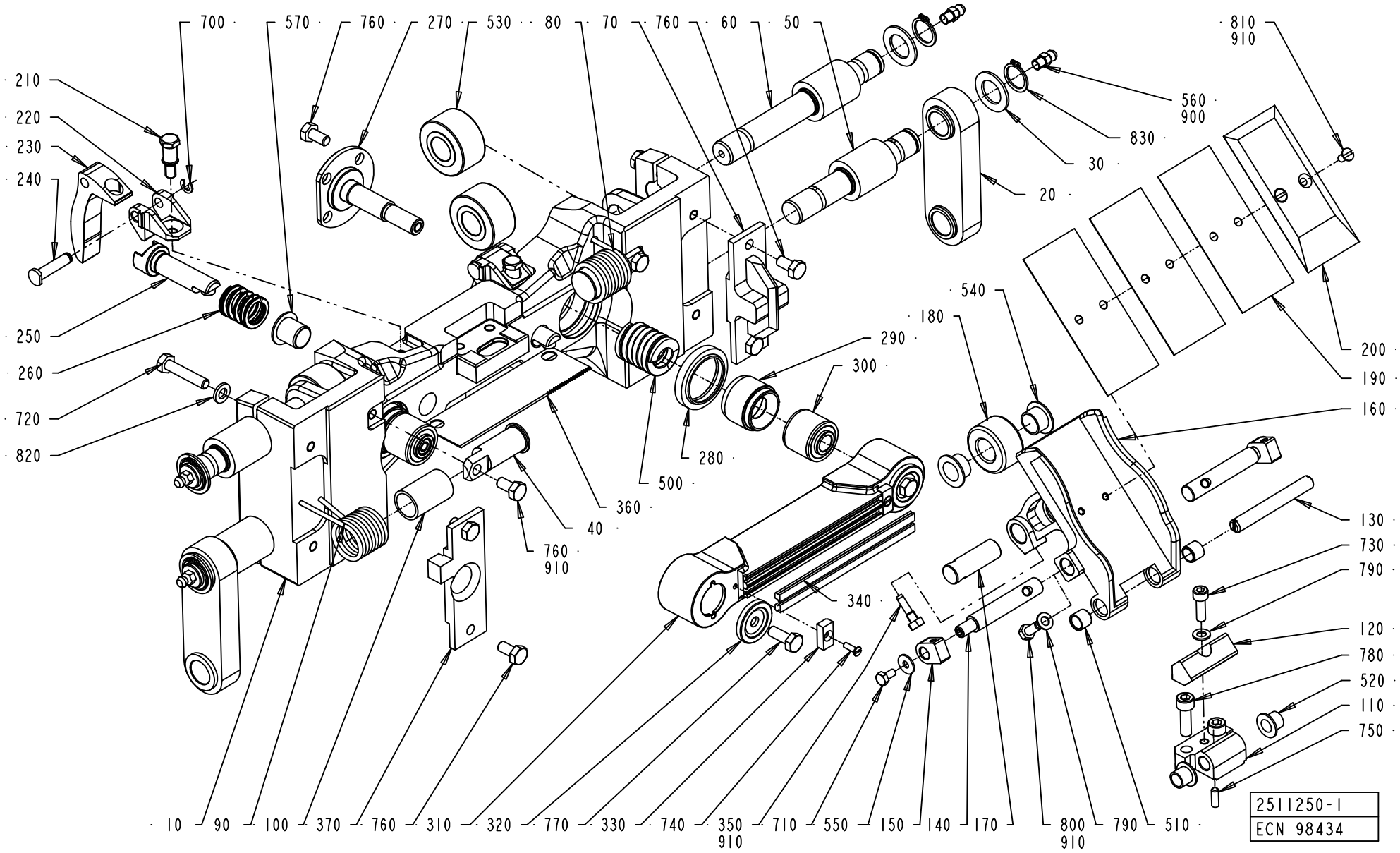
700
570
760
270
530
80
70
760
60
50
810
910
210
220
230
240
560
900
830
30
20
250
260
720
820
540
180
290
300
200
190
160
280
500
360
40
760
910
130
730
790
340
120
780
520
110
750
10
90
100
370
760
310
320
770
330
740
350
910
710
550
150
140
170
800
910
790
510
2511250-1
ECN 98434

ECM: 99519 - 20010925
Group number: 2511250-0100
Assembly Drawing: 2511250-1_1_AA

Issue: 20021105

Pos	Part No	SP	UN	Qty	Description	Page No
TBA 0200B						
010	2524506-0000	A		1	LINK	
020	B1349360-0000	A		2	LINK	
	1349361-0000	-		*1*	*LINK*	
	1195204-0000	-		*2*	*BUSHING*	
110	1512605-0000	A		1	BRACKET	
130	1512604-0000	A		1	SHAFT	
160	1539924-0000	A		1	VOLUME FLAP	
190	1498609-0000	B		2	VOLUME SHIM	
200	1498608-0000	A		1	VOLUME BULGE	
370	1532949-0000	-		1	FLAG	
TBA 0200S						
010	2511261-0000	A		1	LINK	
020	B1511305-0000	A		2	LINK	
	1511306-0000	-		*1*	*LINK*	
	1195204-0000	-		*2*	*BUSHING*	
110	1538134-0000	A		1	BRACKET	
130	1538135-0000	A		1	SHAFT	
160	1539993-0000	A		1	VOLUME FLAP	
190	272991-0000	B		3	VOLUME SHIM	
200	272990-0000	A		1	VOLUME BULGE	
370	1532946-0000	-		1	FLAG	
TBA 0250B						
010	2525673-0000	A		1	LINK	
020	B1195208-0000	A		2	LINK	
	1195207-0000	-		*1*	*LINK*	
	1195204-0000	-		*2*	*BUSHING*	
110	1512605-0000	A		1	BRACKET	
130	1512604-0000	A		1	SHAFT	
160	1539992-0000	A		1	VOLUME FLAP	
190	1348257-0000	B		3	VOLUME SHIM	
200	1348256-0000	A		1	VOLUME BULGE	
370	1532946-0000	-		1	FLAG	
Common Parts						
030	1548817-0000	A		4	WASHER	
040	1519811-0000	-		2	SHAFT	
050	1140312-0000	A		2	SHAFT	
060	1140313-0000	A		2	SHAFT	
070	1523980-0000	A		1	MOUNTING BLOCK	
080	1538149-0000	A		1	SPRING	
090	1538148-0000	A		1	SPRING	
100	1538521-0000	A		2	BUSHING	
120	1538141-0000	A		1	DAMPER	
140	1548215-0000	A		2	SHAFT	
150	1539348-0000	A		2	HOLDER	
170	1548766-0000	A		1	SHAFT	
180	1140479-0000	A		1	ROLLER	
210	1549412-0000	A		2	SCREW	
220	1517290-0000	A		2	HOLDER	
230	1499397-0000	A		2	CAM	
240	1517291-0000	A		2	SHAFT	
250	2502408-0000	A		2	SHAFT	
260	2502413-0000	A		2	SPRING	
270	1195293-0000	A		2	SHAFT	
280	1195317-0000	A		2	SEALING RING	
290	1195294-0000	A		2	SLEEVE	
300	1512590-0000	A		2	RUBBER BUSHING	
310	1558062-0000	A		1	PRESSURE RAIL	
320	1549601-0000	A		2	WASHER	
330	1140233-0000	A		2	WASHER	
340	1520564-0000	A		2	DOLLY	
350	491230-0000	A		1	GRUB SCREW	
360	1517289-0000	A		1	KNIFE	
500	90335-0253	A		2	SPRING	
510	90458-0353	A		2	BUSHING, 8X10X8 MM	
520	90240-0260	A		2	FLANGE BUSHING, 8X10X9 MM	
530	90083-0055	A		4	BEARING ROLLER, 2 SEALS, 15X35X19 MM	
540	90240-0261	A		2	FLANGE BUSHING, 12X14X9 MM	
550	90005-0082	-		2	WASHER PLAIN ROUND 4,3(M4)/12,H=1	
560	90286-0013	A		4	GREASE NIPPLE STRAIGHT M6	
570	90458-0060	A		2	FLANGE BUSHING, 12X14X15 MM	
700	315755-0106	-		2	LOCKING WASHER 4	
710	312105-0287	-		2	SCREW M6S ISO 4017 M4X8 A480	
720	312109-0374	-		4	SCREW M6S ISO 4017 M6X30 A480	
730	312115-0329	-		1	SCREW MC6S M5X16 A280	
740	312145-0224	-		2	SCREW COUNTERS.SLOT.HD. MFS 3X10 SS	
750	311103-0268	-		1	PARALLELL PIN, M6, 4X12 MM	
760	312105-0366	-		14	SCREW M6S M6X12 A280	
770	312105-0368	-		2	SCREW M6S M6X16 A280	
780	312115-0370	-		2	SCREW MC6S M6X20 A280	
790	315105-0146	-		3	WASHER PLAIN, BRB, 5,3/10,H=1	

Machine Type | Group Description | Used-In | Group Number | Page No

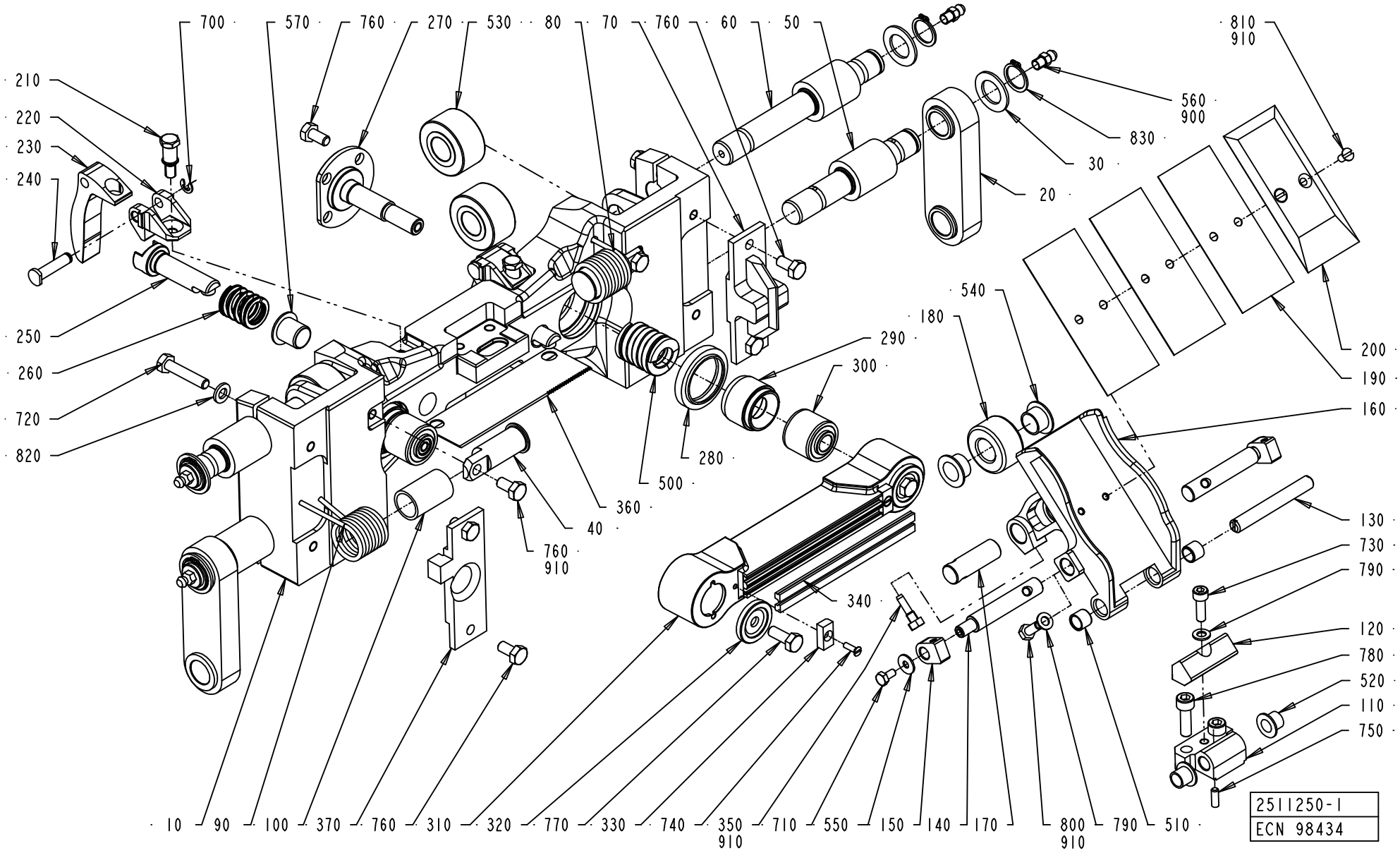
700
570
760
270
530
80
70
760
60
50
810
910
210
220
230
240
560
900
830
30
20
250
260
720
820
540
180
290
300
280
500
360
40
760
910
200
190
160
130
730
790
340
120
780
520
110
750
10
90
100
370
760
310
320
770
330
740
350
910
710
550
150
140
170
800
910
790
510
2511250-1
ECN 98434

Pos	Part No	SP	UN	Qty	Description	Page No
Common Parts (Cont'd)						
800	312105-0327	-		2	SCREW M6S ISO 4017 M5X12 A480	
810	312145-0287	A		2	SCREW COUNTERS.SLOT.HD. MFS 4X8 SS	
820	315105-0153	-		4	WASHER PLAIN, BRB, 6,4/12,H=1,5	
830	315751-0112	A		4	RETAIN. RING, 15	
900	90296-0070	A		1	GREASE	
910	90157-0035	-		1	LOCKING FLUID 641	

Pos	Part No	SP	UN	Qty	Description	Page No

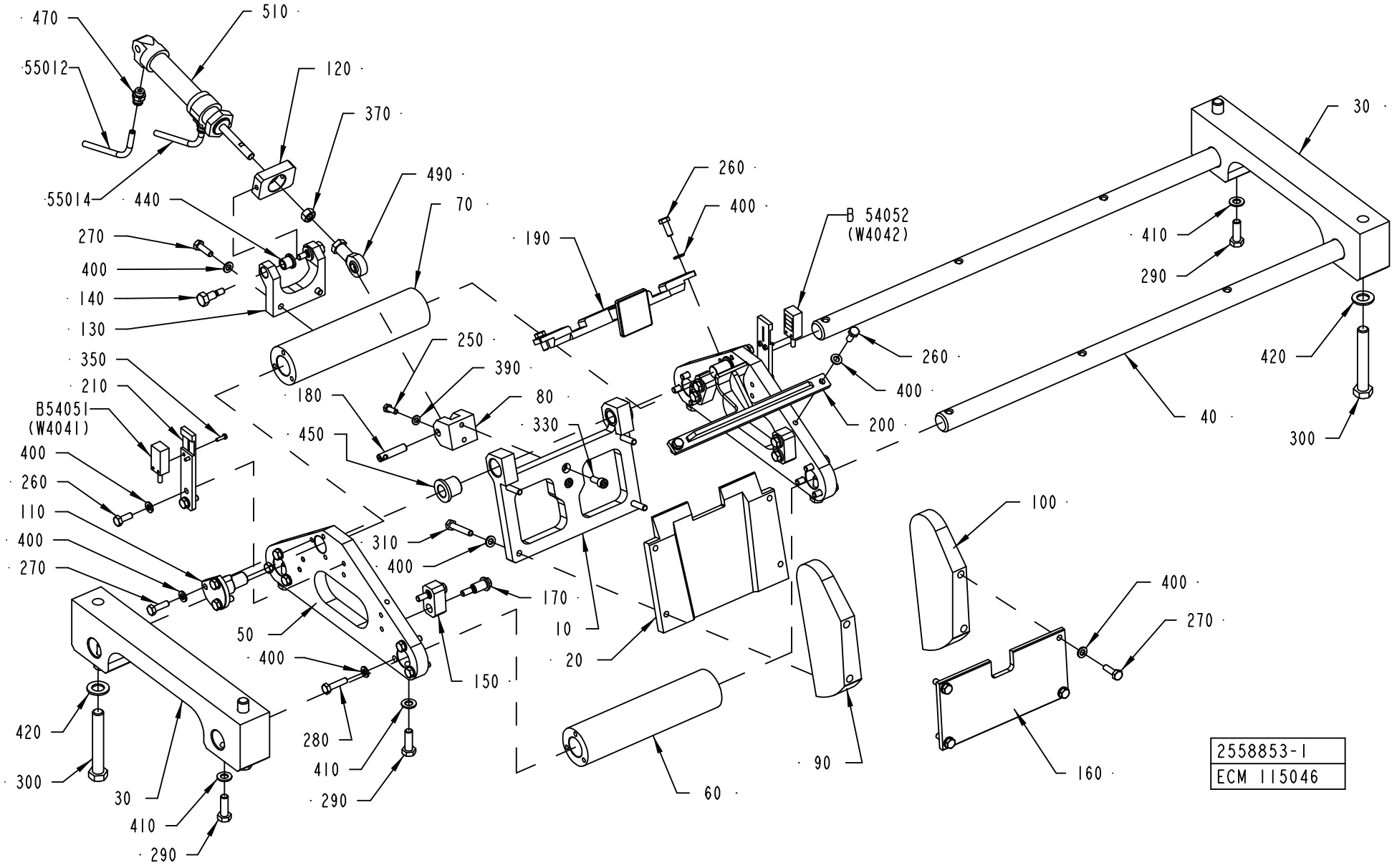
470
510
55012
120
370
490
55014
440
70
270
400
140
130
350
210
B54051
(W4041)
400
260
110
400
270
420
300
30
410
290
280
410
290
50
400
150
180
450
250
390
80
330
310
400
170
10
20
90
60
190
260
400
B 54052
(W4042)
260
400
200
410
290
420
300
40
30
100
400
270
160
2558853-1
ECM 115046

ECM: 115573 - 20021021
Group number: 2558853-0100
Assembly Drawing: 2558853-1_1_AA

Issue: 20021105

Pos	Part No	SP	UN	Qty	Description	Page No
TBA 0200B						
010	2506689-0000	B		1	PLATE	
020	2506690-0000	B		1	PLATE	
030	2506691-0000	B		2	PLATE	
040	2506692-0000	B		2	SHAFT	
060	2506694-0000	B		1	SPACER	
070	2506695-0000	B		1	SPACER	
160	2506704-0000	B		1	PLATE	
190	2514125-0000	B		1	GUIDE	
200	2514126-0000	B		1	GUIDE	
300	312105-0548	-		4	SCREW M6S ISO 4014 M12X80 A480	
TBA 0200S						
010	2514114-0000	B		1	PLATE	
020	2514115-0000	B		1	PLATE	
030	2511360-0000	B		2	PLATE	
040	2514117-0000	B		2	SHAFT	
060	2514119-0000	B		1	SPACER	
070	2514121-0000	B		1	SPACER	
160	2514122-0000	B		1	PLATE	
190	2521069-0000	B		1	GUIDE	
200	2521070-0000	B		1	GUIDE	
300	312105-0542	-		4	SCREW M6S ISO 4014 M12X50 A480	
TBA 0250B						
010	2506689-0000	B		1	PLATE	
020	2506690-0000	B		1	PLATE	
030	2511354-0000	B		2	PLATE	
040	2506692-0000	B		2	SHAFT	
060	2506694-0000	B		1	SPACER	
070	2506695-0000	B		1	SPACER	
160	2506704-0000	B		1	PLATE	
190	2514125-0000	B		1	GUIDE	
200	2514126-0000	B		1	GUIDE	
300	312105-0552	-		4	SCREW M6S ISO 4014 M12X100 A480	
Common Parts						
050	2506693-0000	B		2	PLATE	
080	2506696-0000	B		1	SUPPORT	
090	2506697-0000	B		1	PLATE	
100	2506698-0000	B		1	PLATE	
110	2506699-0000	A		2	SHAFT	
120	2506700-0000	-		1	PLATE	
130	2506701-0000	B		1	PLATE	
140	2506702-0000	A		2	SCREW	
150	2506703-0000	B		4	LOCK COMPONENT	
170	2506705-0000	B		8	PIN	
180	2506713-0000	A		1	PIN	
210	2514127-0000	B		2	SUPPORT	
250	312105-0328	-		1	SCREW M6S ISO 4017 M5X14 A480	
260	312105-0368	-		8	SCREW M6S M6X16 A280	
270	312105-0370	-		12	SCREW M6S ISO 4017 M6X20 A480	
280	312105-0372	-		12	SCREW M6S ISO 4017 M6X25 A480	
290	312105-0453	-		8	SCREW M6S ISO 4017 M8X25 A480	
310	312109-0376	-		4	SCREW M6S ISO 4017 M6X35 A480	
330	312115-0368	-		2	SCREW MC6S M6X16 A280	
350	312125-0224	-		4	SCREW SLOT.PAN HD. MCS 3X10 A480	
370	312605-0318	-		1	HEXAGON NUT, M6M M8 A280	
380	315105-0124	-		4	WASHER PLAIN, BRB, 3,2/6,H=0,5	
390	315105-0146	-		1	WASHER PLAIN, BRB, 5,3/10,H=1	
400	315105-0153	-		36	WASHER PLAIN, BRB, 6,4/12,H=1,5	
410	315105-0165	-		8	WASHER PLAIN, BRB, 8,4/16,H=1,5	
420	315105-0179	-		4	WASHER PLAIN, BRB, 13,5/24,H=2	
440	321111-0097	A		2	BEAR.BUSHING WITH FLANGE, 8/12X12 MM	
450	321111-0188	A		2	FLANGE BUSHING, 14X20X20 MM	
470	342722-0202	A		2	PIPE COUPLING 1/8" D=6MM	
490	90115-0020	B		1	ROD END, ID=8 MM, M8X1,25	
510	90239-0822	A		1	DOUBLE ACTING, MINI-ISO, CYL.20-50	
55012	90166-0089	-	MM	1500	HOSE 4/6.2 PE BLUE	
55014	90166-0089	-	MM	1500	HOSE 4/6.2 PE BLUE	
B54051	90458-1159	A		1	PH.CELL WS4-2D135	
B54052	90458-1160	A		1	PH.CELL WE4-2P135	

Machine Type | Group Description | Used-In | Group Number | Page No

Tetra Pak

SPC
Spare Parts Catalogue

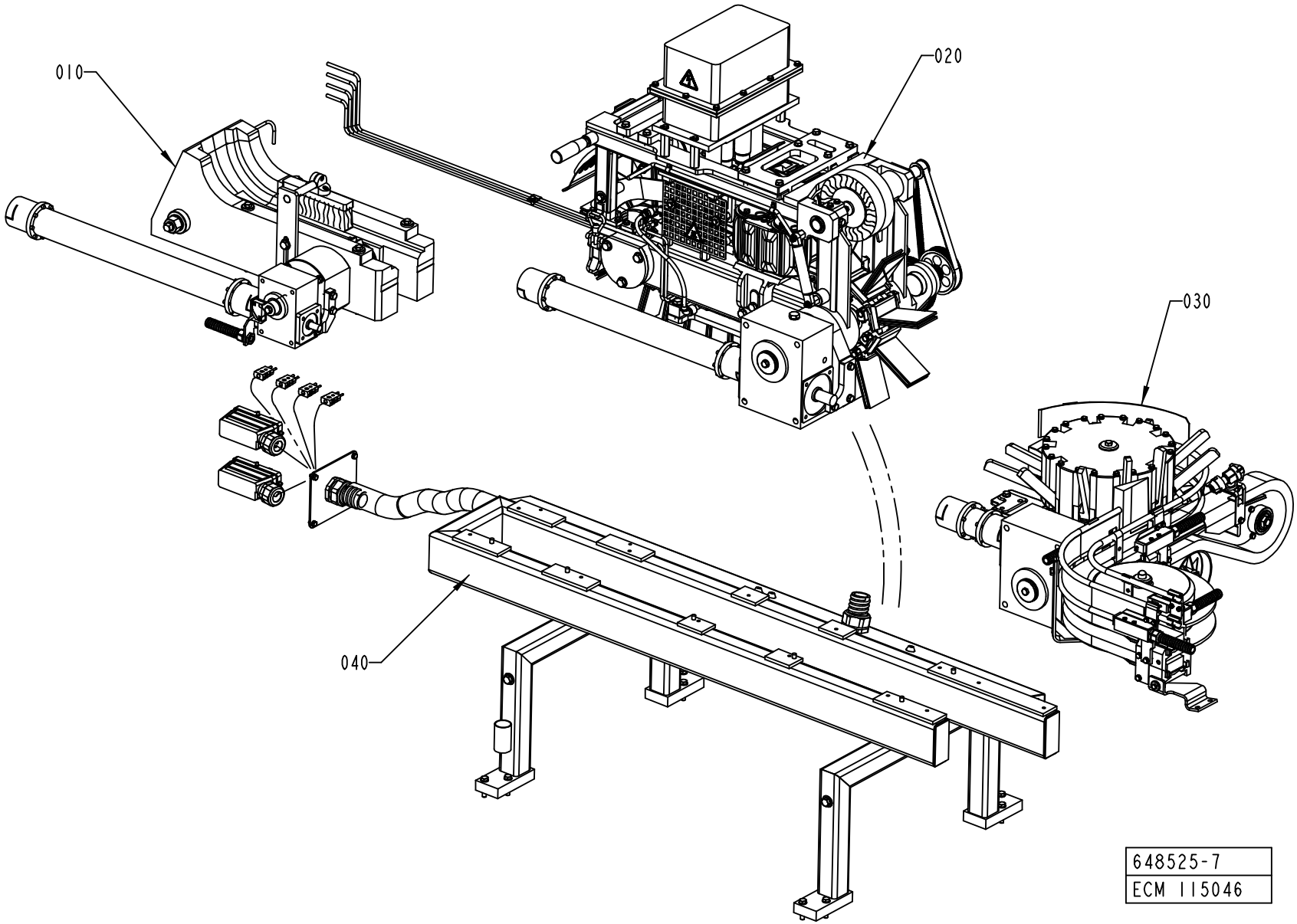
010
020
030
040
648525-7
ECM 115046

ECM: 116403 - 20021021
Group number: 648525-0500
Assembly Drawing: 648525-7_1_AB

Issue: 20021105

Pos	Part No	SP	UN	Qty	Description	Page No
Common Parts						
010	A577111-0400	-		1	CONVEYOR	**391**
020	A577112-0400	-		1	FINAL FOLDER	**393**
030	A577113-0300	-		1	DISCHARGE DEVICE	**407**
040	A577115-0300	-		1	FRAME	**415**

Pos	Part No	SP	UN	Qty	Description	Page No

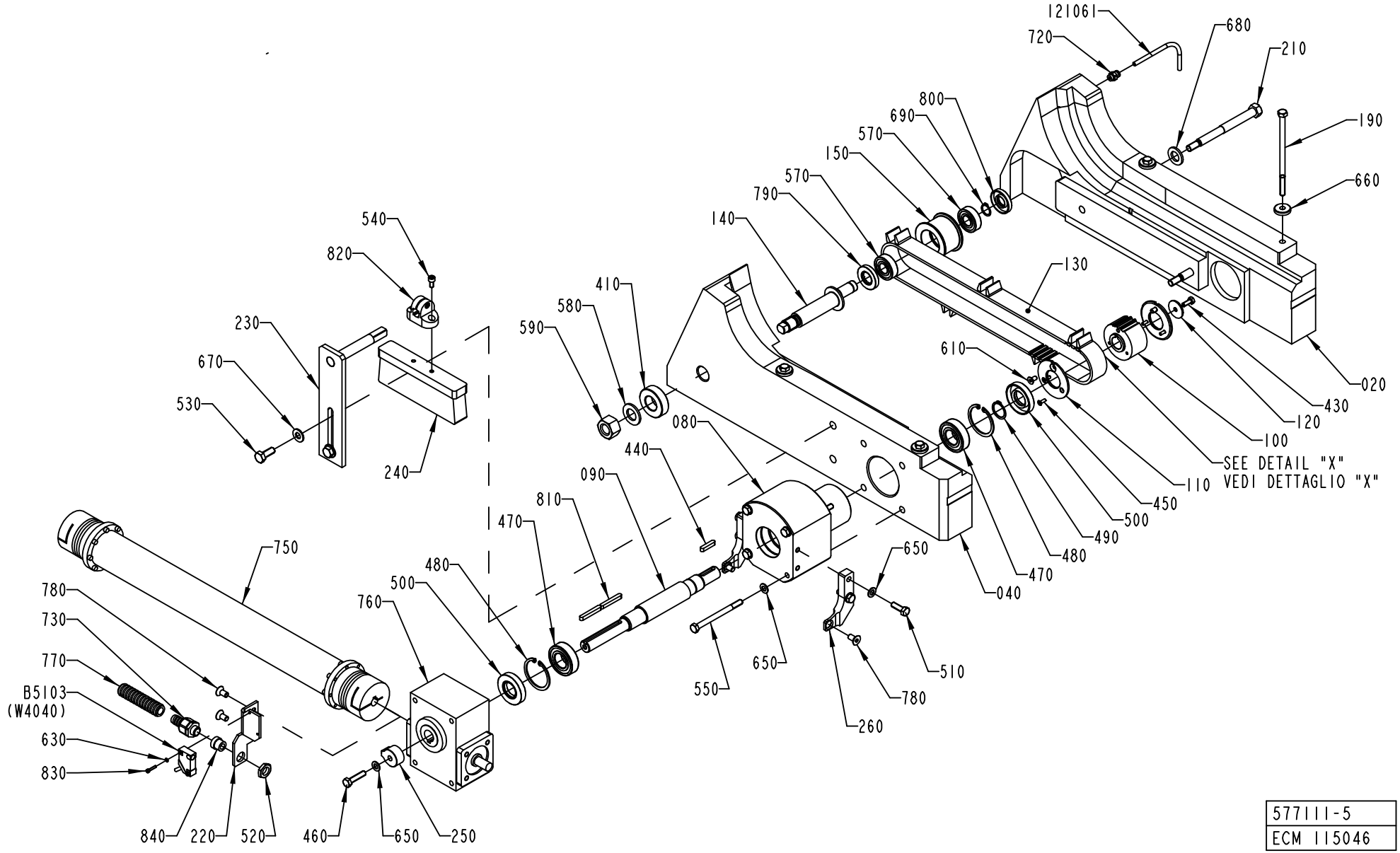

577111-5
ECM 115046

ECM: 115372 - 20021021
Group number: 577111-0400
Assembly Drawing: 577111-5_1_AA

Issue: 20021105

Pos	Part No	SP	UN	Qty	Description	Page No
TBA 0200B						
020	2506707-0000	B		1	FRAME	
040	2506706-0000	B		1	FRAME	
100	1499908-0000	A		1	PULLEY	
110	1499909-0000	B		2	FLANGE	
130	1260168-0000	A		1	BELT	
150	1260129-0000	A		1	PULLEY	
750	B2564030-0000	A		1	INTERMEDIARY SHAFT	
	1524431-0000	*A*		*1*	*HUB*	
	1538304-0000	*A*		*1*	*HUB*	
TBA 0200S						
020	2514124-0000	B		1	FRAME	
040	2514123-0000	B		1	FRAME	
100	1498551-0000	B		1	PULLEY	
110	1498552-0000	B		2	FLANGE	
130	1498553-0000	A		1	BELT	
150	1498554-0000	A		1	PULLEY	
750	B2525675-0000	A		1	INTERMEDIARY SHAFT	
	1538304-0000	*A*		*1*	*HUB*	
	1524431-0000	*A*		*1*	*HUB*	
TBA 0250B						
020	2511353-0000	B		1	FRAME	
040	2511352-0000	B		1	FRAME	
100	1499908-0000	A		1	PULLEY	
110	1499909-0000	B		2	FLANGE	
130	1260168-0000	A		1	BELT	
150	1260129-0000	A		1	PULLEY	
750	B2523695-0000	A		1	INTERMEDIARY SHAFT	
	1538304-0000	*A*		*1*	*HUB*	
	1524431-0000	*A*		*1*	*HUB*	
Common Parts						
080	2504723-0000	B		1	HOLDER	
090	2504724-0000	A		1	SHAFT	
1000	312155-0291	-		4	SCREW HEX.SOCK.COUNT.MF6S M4X12 A480	
1140	90296-0068	B		1	GREASE UNIWAY LI 62 CARTRIDGE 400 GR.	
120	1260167-0000	-		1	WASHER	
121061	90166-0119	A	MM	1500	HOSE PUR 4/6 BLACK	
140	1260128-0000	B		1	SHAFT	
190	1260139-0000	B		4	BOLT	
210	1260174-0000	B		2	BOLT	
220	2504725-0000	-		1	SUPPORT	
230	1478631-0000	B		1	SUPPORT	
240	1347077-0000	A		1	BRUSH	
250	1548854-0000	-		1	CAM	
260	2504722-0000	B		2	PLATE	
410	2506714-0000	B		1	WASHER	
460	312109-0457	-		1	SCREW M6S ISO 4017 M8X35 A480	
470	90214-0096	A		2	BALL BEARING, 2 SEALS, 25X52X15 MM	
480	315753-0132	B		2	RETAINING RING FOR HOLE, 52X2 MM	
490	315751-0119	B		1	RETAIN. RING, 25	
500	90091-0438	A		2	RADIAL SEAL 25X52X10 MM DUST LIP	
510	312105-0453	B		4	SCREW M6S ISO 4017 M8X25 A480	
520	90099-0104	-		1	NUT, PR 15,2 (PG9)	
530	312105-0493	-		2	SCREW M6S ISO 4017 M10X25 A480	
540	312115-0366	-		2	SCREW MC6S M6X12 A280	
550	312105-0471	-		4	SCREW M6S ISO 4014 M8X100 A480	
570	90214-0189	A		2	BALL BEARING, 2 SEALS, 17X40X12 MM	
580	315105-0191	-		1	WASHER PLAIN, BRB, 20/36 H=3	
590	312605-0326	-		1	HEXAGON NUT, M6M M20 A280	
610	312155-0366	-		2	SCREW HEX.SOCK.COUNT.MF6S M6X12 A280	
630	315105-0124	-		2	WASHER PLAIN, BRB, 3,2/6,H=0,5	
650	315105-0165	-		9	WASHER PLAIN, BRB, 8,4/16,H=1,5	
660	315125-0165	-		4	WASHER PLAIN ROUND,CHAMF. 8,4/26, H=5	
670	315105-0173	-		2	WASHER PLAIN, BRB, 10,5/22,H=2	
680	315105-0186	-		2	WASHER PLAIN, BRB, 17/30,H=3	
690	90141-0017	B		1	RETAIN. RING, 17	
720	342722-0202	A		1	PIPE COUPLING 1/8" D=6MM	
730	353243-0001	-		1	EXTENDED WITHOUT INSERT, PG9	
760	90056-0170	A		1	WORM GEAR BS 40 AL-TT ENV RH	
770	90152-0059	-	M	2	SPIRAL CONDUIT, 18X12, UL 1211	
780	312155-0449	-		4	SCREW HEX.SOCK.COUNT.MF6S M8X16 A280	
790	90091-0436	A		1	RADIAL SEAL 20X40X7 MM DUST LIP	
800	90091-0437	A		1	RADIAL SEAL 17X40X7 MM DUST LIP	
810	315705-0240	A		2	PARALLEL KEY W. ROUND ENDS 6X6X45 MM	
820	90236-0045	A		1	SUPPORT	
830	312115-0228	-		2	SCREW MC6S M3X16 A280	
840	353249-0009	-		1	INSERT, SINGEL HOLE, EK 152/9	
880	312105-0368	-		1	SCREW M6S M6X16 A280	
890	315705-0236	A		1	PARALLEL KEY W. ROUND ENDS 6X6X30 MM	
B5103	90044-0194	A		1	PROX.SW. IN5329/IN3002-BPKG	

Machine Type | Group Description | Used-In | Group Number | Page No

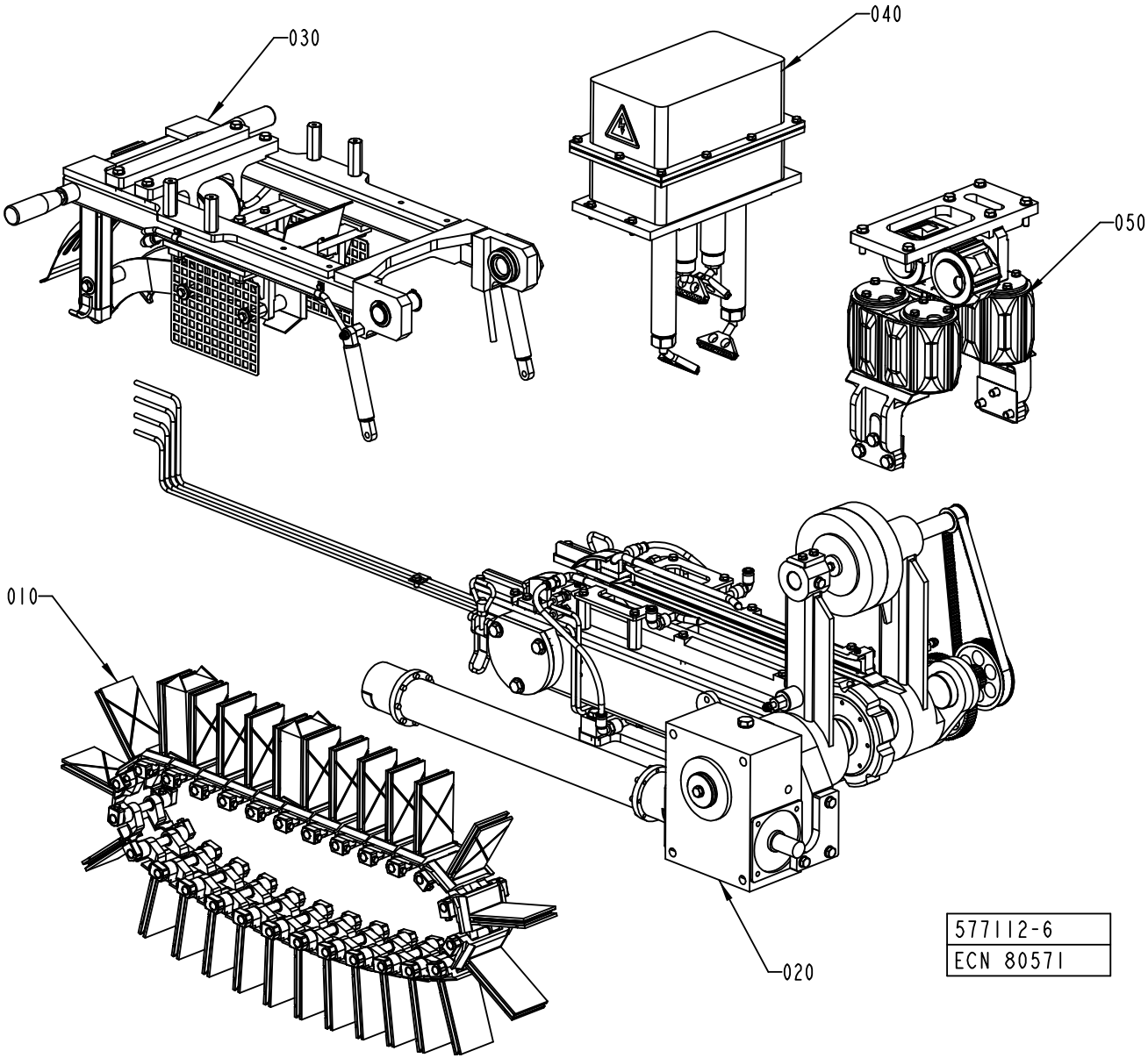
030
040
050
010
020
577112-6
ECN 80571

Pos	Part No	SP	UN	Qty	Description	Page No
Common Parts						
010	A1517715-0100	-		1	STATION CHAIN	**395**
020	A1517735-0100	-		1	CHAIN SUPPORT	**397, 399**
030	A1517740-0100	-		1	SWING FRAME	**401**
040	A1478630-0100	-		1	HEATING CHAMBER	**403**
050	A1499690-0200	-		1	SQUEEZER	**405**

Pos	Part No	SP	UN	Qty	Description	Page No

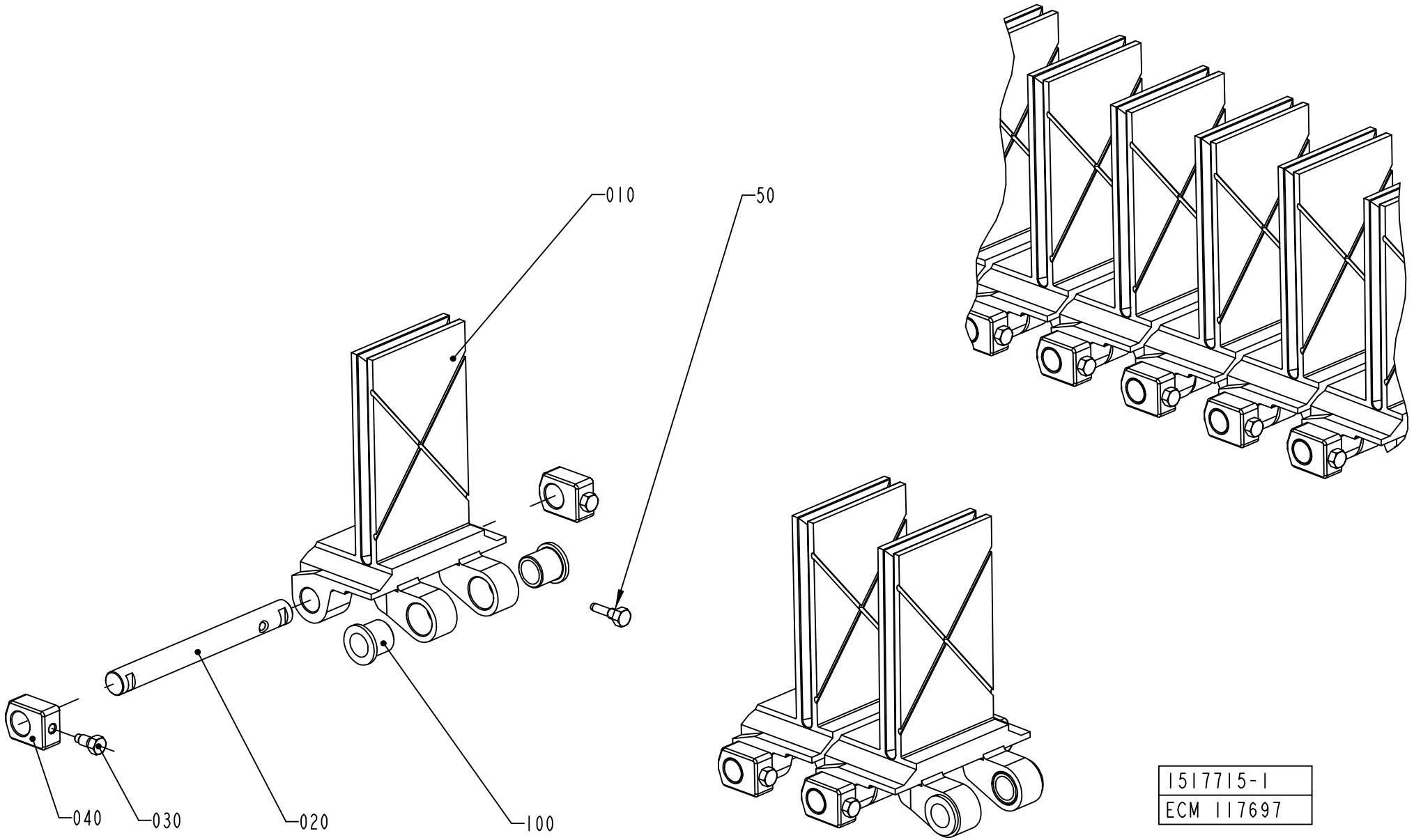

1517715-1
ECM 117697

Pos	Part No	SP	UN	Qty	Description	Page No
TBA 0200B						
010	1548020-0000	A		27	CARTON STATION	
TBA 0200S						
010	1538567-0000	A		27	CARTON STATION	
TBA 0250B						
010	2530121-0000	A		27	CARTON STATION	
Common Parts						
	90157-0016	-		1	LOCKING FLUID	
020	1517717-0000	A		27	SHAFT	
030	1517718-0000	B		54	SCREW	
040	1517719-0000	A		54	SLIDER	
050	2564953-0000	B		27	GRUB SCREW	
100	90458-1404	A		54	BEAR.BUSH. WITH FLANGE, 12/16X16 MM	

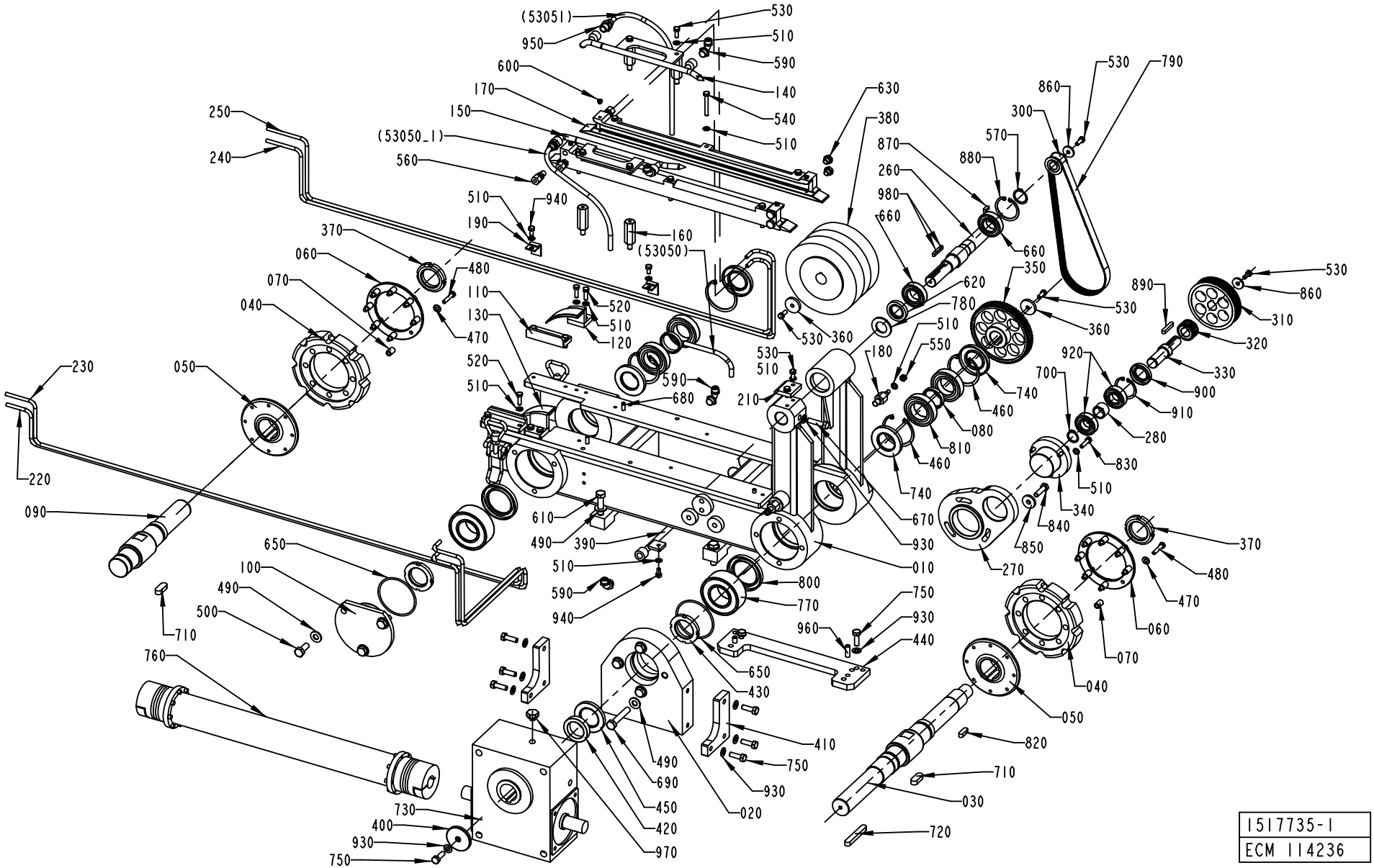

1517735-1
ECM 114236

ECM: 116406 - 20021021
Group number: 1517735-0100
Assembly Drawing: 1517735-1_1_AB

Issue: 20021105

Pos	Part No	SP	UN	Qty	Description	Page No
TBA 0200B						
010	1548019-0000	-		1	FRAME	
120	1517736-0000	B		1	GUIDE	
130	1517737-0000	B		1	GUIDE	
140	1517733-0000	B		1	GUIDE	
150	1517734-0000	B		1	GUIDE	
220	2531713-0000	-		1	TUBE	
230	2531712-0000	-		1	TUBE	
240	2531710-0000	-		1	TUBE	
250	2531711-0000	-		1	TUBE	
760	B2523693-0000	A		1	INTERMEDIARY SHAFT	
	1538304-0000	*A*		*1*	*HUB*	
	1524431-0000	*A*		*1*	*HUB*	
790	90458-1385	A		1	TIMING BELT T5X620X16 POLYURETHANE	
TBA 0200S						
010	1538570-0000	-		1	FRAME	
120	1548012-0000	B		1	GUIDE	
130	1548011-0000	B		1	GUIDE	
140	1538569-0000	B		1	GUIDE	
150	1538568-0000	B		1	GUIDE	
220	2520228-0000	-		1	TUBE	
230	2520227-0000	-		1	TUBE	
240	2520225-0000	-		1	TUBE	
250	2520226-0000	-		1	TUBE	
760	B2525676-0000	A		1	INTERMEDIARY SHAFT	
	1538304-0000	*A*		*1*	*HUB*	
	1524431-0000	*A*		*1*	*HUB*	
790	90458-2518	A		1	TIMING BELT T5X690X16 POLYURETHANE	
TBA 0250B						
010	1517720-0000	-		1	FRAME	
120	1517736-0000	B		1	GUIDE	
130	1517737-0000	B		1	GUIDE	
140	1517733-0000	B		1	GUIDE	
150	1517734-0000	B		1	GUIDE	
220	2510419-0000	-		1	TUBE	
230	2510418-0000	-		1	TUBE	
240	2510416-0000	-		1	TUBE	
250	2510417-0000	-		1	TUBE	
760	B2523694-0000	A		1	INTERMEDIARY SHAFT	
	1524431-0000	*A*		*1*	*HUB*	
	1538304-0000	*A*		*1*	*HUB*	
790	90458-1386	A		1	TIMING BELT T5X660X16 POLYURETHANE	
Common Parts						
020	2504711-0000	-		1	SUPPORT	
030	1548021-0000	A		1	SHAFT	
040	1517714-0000	A		2	SPROCKET	
050	1517721-0000	-		2	FLANGE	
060	1517722-0000	-		2	FLANGE	
070	1517723-0000	-		16	SPACER	
080	1517724-0000	-		2	SPACER	
090	1548022-0000	B		1	SHAFT	
100	1517727-0000	-		1	FLANGE	
110	1498078-0000	-		2	PLATE	
160	1517732-0000	-		4	SPACER	
170	1517738-0000	A		2	GUIDE	
180	1524520-0000	-		2	PIN	
190	2514258-0000	-		2	TUBE HOLDER	
210	1519443-0000	-		1	PLATE	
260	1524518-0000	-		1	SHAFT	
270	1524519-0000	-		1	PLATE	
280	1524532-0000	-		1	SPACER	
300	2512991-0000	A		1	PULLEY	
310	2512992-0000	A		1	PULLEY	
320	2504727-0000	A		1	GEAR	
330	1524525-0000	A		1	SHAFT	
340	1524526-0000	-		1	FLANGE	
350	2520199-0000	A		1	GEAR	
360	1524529-0000	-		2	WASHER	
370	1512823-0000	-		2	NUT	
380	2501231-0000	A		2	BRUSH	
390	1548013-0000	-		1	PIPE	
400	1548186-0000	-		1	WASHER	
410	2504712-0000	-		2	PLATE	
420	1548432-0000	-		1	SPACER	
430	1548433-0000	-		2	ROUND NUT	
440	1519444-0000	-		2	PLATE	
450	90458-1387	A		1	RADIAL SEAL 38X62X7 MM DUST LIP	
460	90458-0048	-		4	RETAINING RING FOR HOLE, 62X2 MM	
470	315105-0156	-		16	WASHER PLAIN, BRB, 6,7/14,H=1,5	
480	312105-0374	-		16	SCREW M6S ISO 4014 M6X30 A480	
490	315105-0173	-		11	WASHER PLAIN, BRB, 10,5/22,H=2	

Machine Type | Group Description | Used-In | Group Number | Page No

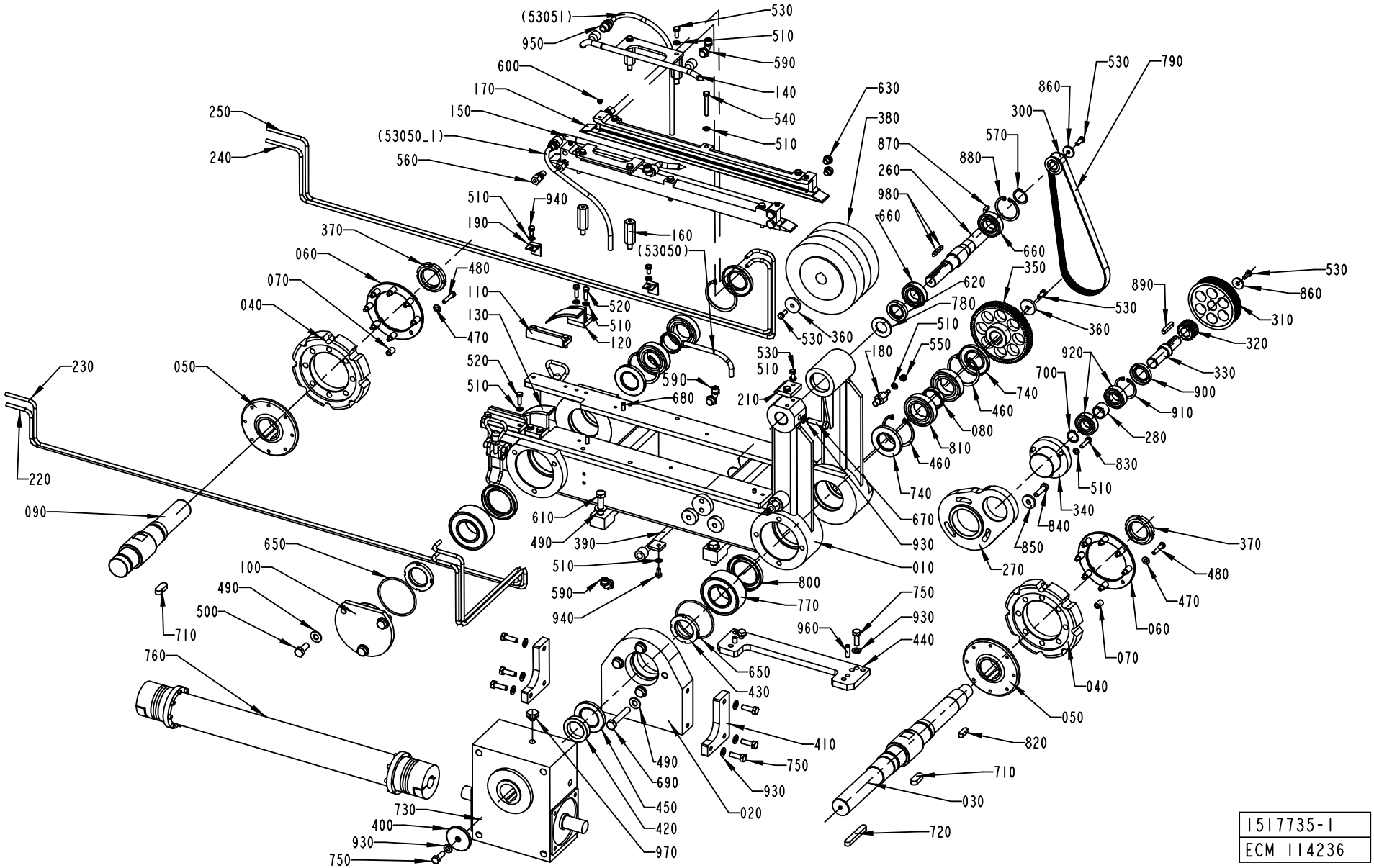
(53051)
950
530
510
590
600
140
170
540
150
510
(53050_1)
560
250
240
630
380
870
260
980
660
860
530
790
300
570
880
660
620
350
780
510
550
180
740
460
080
810
460
740
670
930
010
800
770
750
930
440
960
650
430
410
750
930
490
690
450
420
970
020
730
400
930
750
710
760
490
500
100
650
610
490
390
510
590
940
510
940
190
160
(53050)
370
060
070
040
480
110
130
470
520
510
120
530
360
530
510
590
680
210
230
050
220
090
890
530
860
310
320
330
900
910
280
830
510
340
840
850
270
920
700
370
480
470
060
070
040
050
820
710
030
720
1517735-1
ECM 114236

Pos	Part No	SP	UN	Qty	Description	Page No
Common Parts (Cont'd)						
500	312105-0493	-		3	SCREW M6S ISO 4017 M10X25 A480	
510	315105-0153	-		29	WASHER PLAIN, BRB, 6,4/12,H=1,5	
520	312105-0370	-		8	SCREW M6S ISO 4017 M6X20 A480	
530	312105-0368	-		10	SCREW M6S M6X16 A280	
53050	90166-0118	A	MM	2000	TUBE 8 MM PA BLACK	
53050_1	90166-0118	A	MM	500	TUBE 8 MM PA BLACK	
53051	90166-0118	A	MM	2000	TUBE 8 MM PA BLACK	
540	312105-0379	-		6	SCREW M6S ISO 4014 M6X45 A480	
550	312812-0316	-		2	HEXAGON NUT, NY-LOCK M6 A480	
560	90030-0208	-		4	CONN. STR. GE 6-1/8-27 NPTF	
570	315751-0119	-		1	RETAIN. RING, 25	
590	342931-0122	-		4	ELBOW 90 COUPL.,EXT.THREAD 8/6-G1/4"	
600	90458-1382	-		4	PLUG, M5X3.5 SMC - MS-5P	
610	312105-0499	-		4	SCREW M6S ISO 4014 M10X40 A480	
620	90091-0406	A		1	RADIAL SEAL 25X40X7 MM DUST LIP	
630	90330-0066	-		4	PLUG, EXT. G-THREAD, G1/8	
650	315204-0306	A		2	O-RING 74,5X3 MM	
660	90214-0165	A		2	BALL BEARING, 2 SEALS, 25X47X12 MM	
670	312105-0457	-		1	SCREW M6S ISO 4014 M8X35 A480	
680	311103-0351	-		4	PARALLELL PIN, M6, 6X16 MM	
690	312105-0503	-		4	SCREW M6S ISO 4014 M10X60 A480	
700	315751-0116	-		1	RETAIN. RING, 20	
710	315705-0330	A		2	PARALLEL KEY W. ROUND ENDS 12X8X32 MM	
720	315705-0307	A		1	PARALLEL KEY W. ROUND ENDS 10X8X70 MM	
730	90056-0164	A		1	WORM GEAR BS 71-F-TT	
740	90091-0439	A		4	RADIAL SEAL 35X62X7 MM DUST LIP	
750	312105-0453	-		11	SCREW M6S ISO 4017 M8X25 A480	
770	321330-0108	A		2	ANG. BALL BEAR, 40X80X30,2 MM	
780	315105-0195	-		1	WASHER PLAIN ROUND 23/40, H=3	
800	90091-0441	A		2	RADIAL SEAL 50X72X8 MM DUST LIP	
810	90458-0068	A		4	BALL BEARING, STAINLESS 35X62X14 MM	
820	315705-0265	A		1	PARALLEL KEY W. ROUND ENDS 8X7X25 MM	
830	312105-0372	-		3	SCREW M6S ISO 4017 M6X25 A480	
840	312105-0455	-		3	SCREW M6S ISO 4017 M8X30 A480	
850	315125-0165	-		3	WASHER PLAIN ROUND,CHAMF. 8,4/26, H=5	
860	315125-0153	-		2	WASHER PLAIN ROUND,CHAMF. 6,4/22, H=4	
870	315701-0199	A		1	PARALLEL KEY W. ROUND ENDS 5X5X16 MM	
880	315753-0130	-		1	RETAINING RING FOR HOLE, 47X1,75 MM	
890	315705-0238	A		1	PARALLEL KEY W. ROUND ENDS 6X6X36 MM	
900	90091-0322	A		1	RADIAL SEAL 25X42X7 MM DUST LIP	
910	90141-0020	-		1	RETAIN. RING, 42	
920	90214-0225	A		2	BALL BEARING SOLID OIL 20X42X12 MM	
930	315105-0165	-		12	WASHER PLAIN, BRB, 8,4/16,H=1,5	
940	312105-0366	-		4	SCREW M6S M6X12 A280	
950	342921-0122	-		2	STRAIGHT COUPLING,EXT.THREADED 8/6-G1/4"	
960	311103-0403	-		2	PARALLELL PIN, M6, 8X25 MM	
970	90458-0270	-		1	VENTING DEVICETCDF 1/8G ELESA 58669	
980	315705-0202	A		2	PARALLEL KEY W. ROUND ENDS 5X5X25 MM	

Machine Type | Group Description | Used-In | Group Number | Page No

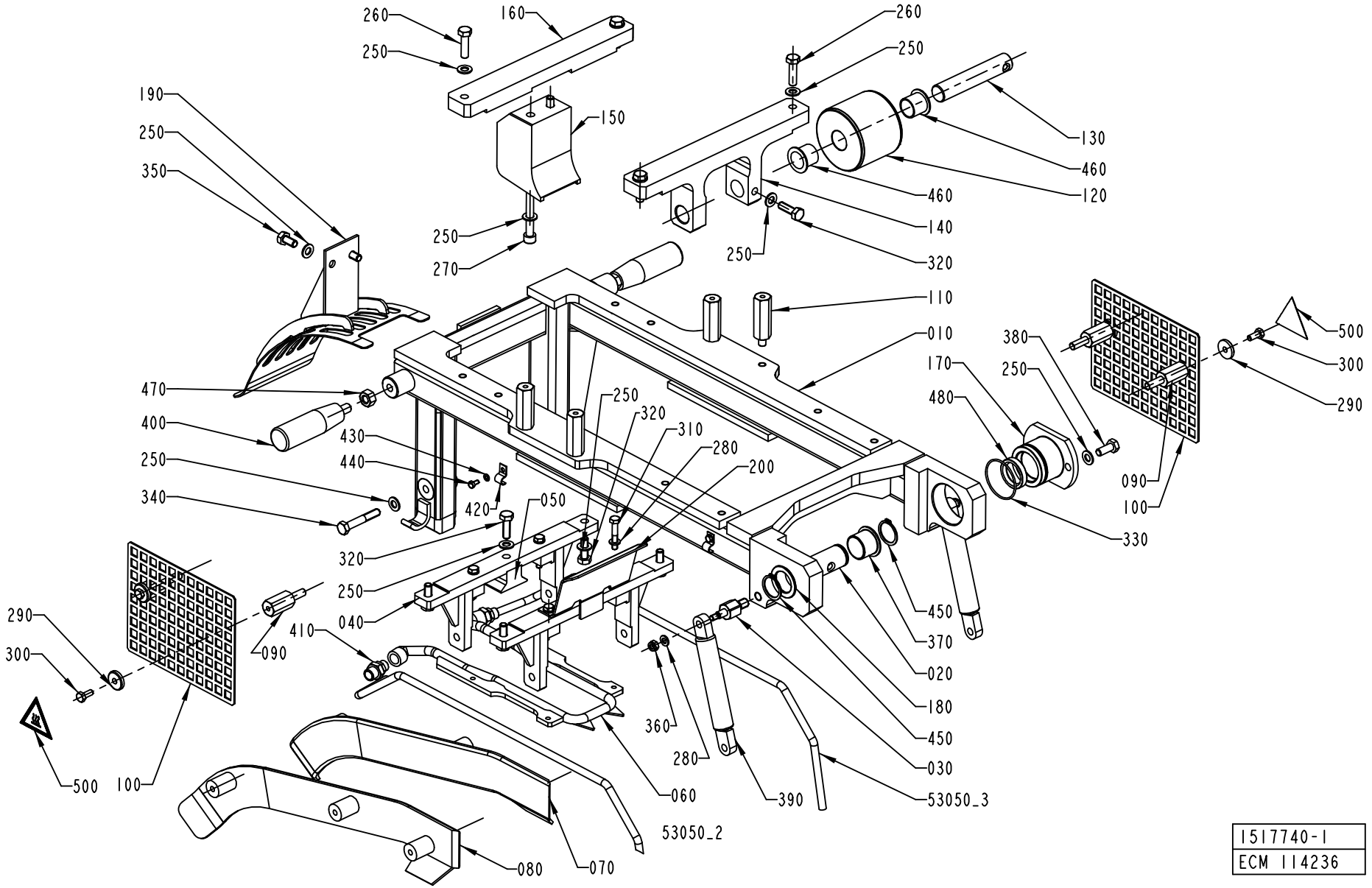

1517740-1
ECM 114236

ECM: 116407 - 20021021
Group number: 1517740-0100
Assembly Drawing: 1517740-1_1_AB

Issue: 20021105

Pos	Part No	SP	UN	Qty	Description	Page No
TBA 0200B						
010	1548015-0000	-		1	SWING FRAME	
050	1519435-0000	-		1	PLATE	
060	1519434-0000	-		1	GUIDE	
070	1548016-0000	-		1	GUIDE	
080	1548017-0000	-		1	GUIDE	
120	1347073-0000	A		1	PULLEY	
150	1519433-0000	-		1	SLIDER	
160	1519432-0000	-		1	BRACKET	
190	1548018-0000	-		1	TOP SECTION	
TBA 0200S						
010	1538571-0000	-		1	SWING FRAME	
050	1538577-0000	-		1	PLATE	
060	1538572-0000	-		1	GUIDE	
070	1538576-0000	-		1	GUIDE	
080	1538575-0000	-		1	GUIDE	
120	1538578-0000	A		1	PULLEY	
150	1538573-0000	-		1	SLIDER	
160	1538574-0000	-		1	BRACKET	
190	1538579-0000	-		1	TOP SECTION	
TBA 0250B						
010	1519430-0000	-		1	SWING FRAME	
050	1519435-0000	-		1	PLATE	
060	1519434-0000	-		1	GUIDE	
070	1519429-0000	-		1	GUIDE	
080	1519428-0000	-		1	GUIDE	
120	1347073-0000	A		1	PULLEY	
150	1519433-0000	-		1	SLIDER	
160	1519432-0000	-		1	BRACKET	
190	1524531-0000	-		1	TOP SECTION	
Common Parts						
020	1517731-0000	-		1	PIN	
030	1524520-0000	A		2	PIN	
040	1524528-0000	A		2	BRACKET	
090	1519450-0000	-		4	SPACER	
100	1519442-0000	-		2	TOUCH GUARD	
110	1519438-0000	-		4	SPACER	
130	2514132-0000	A		1	PIN	
140	2514131-0000	-		1	BRACKET	
170	1524521-0000	-		1	FLANGE	
180	1282796-0000	-		1	WASHER	
200	1524539-0000	-		1	PROTECTION	
250	315105-0165	-		18	WASHER PLAIN, BRB, 8,4/16,H=1,5	
260	312105-0455	-		4	SCREW M6S ISO 4017 M8X30 A480	
270	312115-0467	-		2	SCREW MC6S M8X80 A280	
280	315105-0153	-		6	WASHER PLAIN, BRB, 6,4/12,H=1,5	
290	315125-0153	-		4	WASHER PLAIN ROUND,CHAMF. 6,4/22, H=4	
300	312105-0367	-		4	SCREW M6S M6X14 A280	
310	312105-0376	-		4	SCREW M6S ISO 4014 M6X35 A480	
320	312105-0453	-		6	SCREW M6S ISO 4017 M8X25 A480	
330	315202-0803	B		1	O-RING 44,17X1,78 MM	
340	312105-0461	-		2	SCREW M6S ISO 4014 M8X50 A480	
350	312105-0449	-		2	SCREW M6S ISO 4017 M8X16 A480	
360	312812-0316	-		2	HEXAGON NUT, NY-LOCK M6 A480	
370	321153-0296	A		1	FLANGE BUSHING, 25X28X21,5 MM	
380	312105-0451	-		2	SCREW M6S ISO 4017 M8X20 A480	
390	90347-0183	A		2	GAS SPRING NO. A1 A1N-52-060-205/800N	
400	90051-0127	A		2	HANDLE, NO. .601/90+X-M10-INOX	
410	342921-0122	-		2	STRAIGHT COUPLING,EXT.THREADED 8/6-G1/4"	
420	316810-0106	-		4	PIPE CLIP FOR TUBE D=8 MM	
430	315105-0136	-		4	WASHER PLAIN, BRB, 4,3/8,H=0,8	
440	312105-0287	-		4	SCREW M6S ISO 4017 M4X8 A480	
450	315751-0119	A		2	RETAIN. RING, 25	
460	90240-0265	A		4	FLANGE BUSHING, 20X23X21 MM	
470	312605-0320	-		2	HEXAGON NUT, M6M M10 A280	
480	315221-0156	A		1	RADIAL SEAL 25X35X7 MM	
490	312605-0320	-		2	HEXAGON NUT, M6M M10 A280	
500	359705-0007	-		2	WARNING SIGN ISO, HOT SURFACE	
53050_2	90166-0118	A	MM	1000	TUBE 8 MM PA BLACK	
53050_3	90166-0118	A	MM	1000	TUBE 8 MM PA BLACK	

Machine Type | Group Description | Used-In | Group Number | Page No

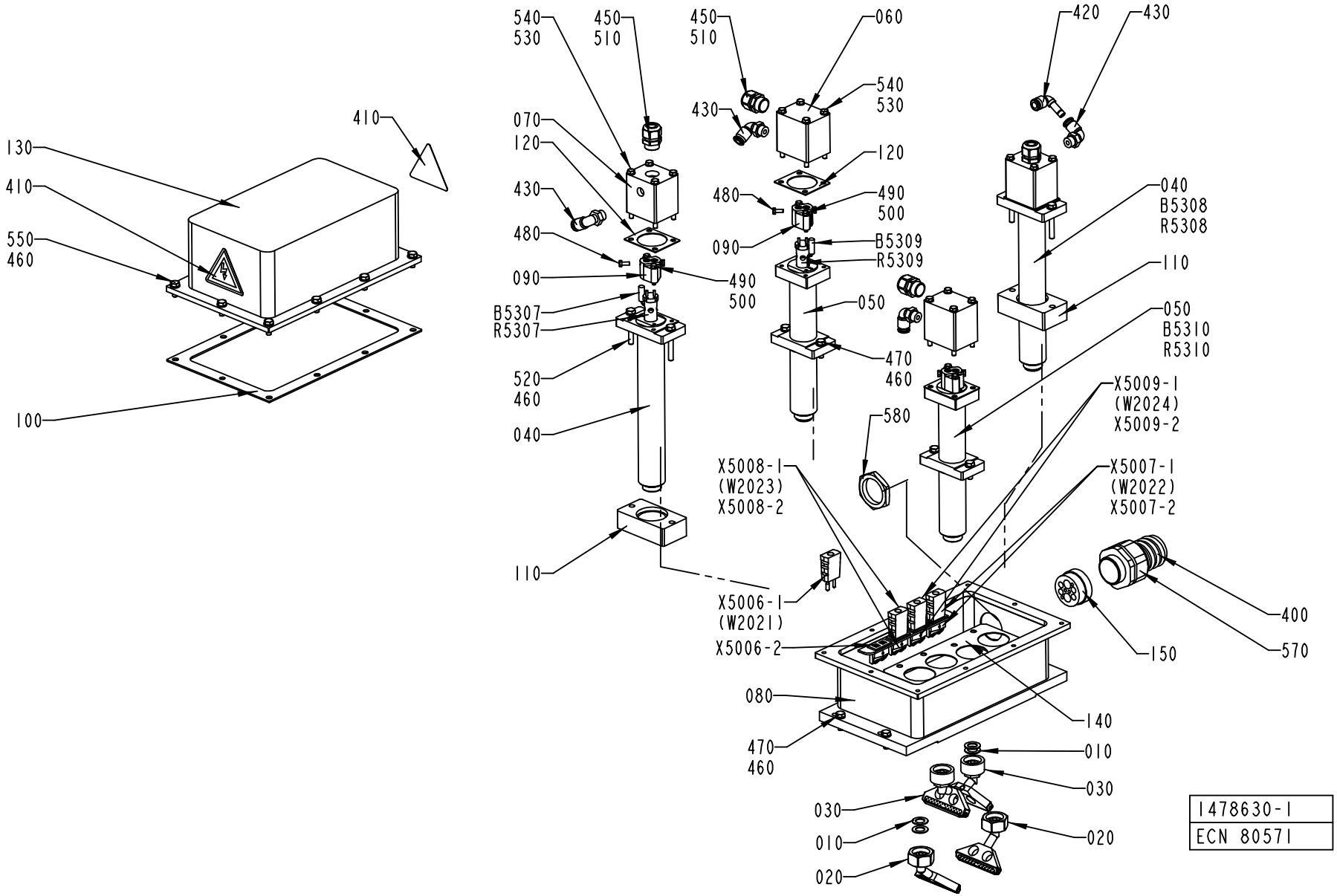
410
130
410
550
460
100
540
530
450
510
070
120
430
480
090
B5307
R5307
520
460
040
110
450
510
060
540
530
430
120
480
490
500
090
B5309
R5309
050
470
460
420
430
040
B5308
R5308
110
050
B5310
R5310
X5009-1
(W2024)
X5009-2
580
X5008-1
(W2023)
X5008-2
X5007-1
(W2022)
X5007-2
X5006-1
(W2021)
X5006-2
400
150
570
080
140
470
460
010
030
030
010
020
020
1478630-1
ECN 80571

ECM: 116443 - 20021021
Group number: 1478630-0100
Assembly Drawing: 1478630-1_1_AB

Issue: 20021105

Pos	Part No	SP	UN	Qty	Description	Page No
TBA 0200B						
010	1010947-0000	A		8	GASKET	
020	2508263-0000	A		2	NOZZLE	
030	2508265-0000	A		2	NOZZLE	
110	1478627-0000	-		2	SPACER	
TBA 0200S						
010	1010947-0000	A		8	GASKET	
020	1548041-0000	A		2	NOZZLE	
030	1548040-0000	A		2	NOZZLE	
110	1498969-0000	-		2	SPACER	
TBA 0250B						
010	1010947-0000	A		8	GASKET	
020	2508263-0000	A		2	NOZZLE	
030	2508265-0000	A		2	NOZZLE	
110	1478623-0000	-		2	SPACER	
Common Parts						
040	1478616-0000	-		2	HEATING PIPE	
050	1478617-0000	-		2	HEATING PIPE	
060	1478629-0000	-		2	CAP	
070	1478619-0000	-		2	CAP	
080	1478620-0000	-		1	BRACKET	
090	1478621-0000	-		4	CLAMP	
100	1487075-0000	A		1	GASKET	
120	1487076-0000	A		4	GASKET	
130	1478625-0000	-		1	COVER HOUSING	
140	1478626-0000	A		1	GASKET	
150	1498980-0000	-		1	INSERT	
400	90152-0060	-	MM	800	SPIRAL CONDUIT, 42X35, UL3529	
410	359705-0015	-		2	WARNING SIGN ISO, RISK OF ELECTRIC SHOCK	
420	90055-0118	-		1	ELBOW PIPE JOINT -8MM	
430	90458-2958	-		4	ELBOW PIPE JOINT, EXT.THREAD, D=8MM-G1/4	
450	353240-0002	-		4	NORMAL WITHOUT INSERT, PG 11	
460	315105-0153	-		22	WASHER PLAIN, BRB, 6,4/12,H=1,5	
470	312105-0370	-		8	SCREW M6S ISO 4017 M6X20 A480	
480	312105-0289	-		8	SCREW M6S ISO 4017 M4X10 A480	
490	315105-0136	-		8	WASHER PLAIN, BRB, 4,3/8,H=0,8	
500	312105-0297	-		8	SCREW M6S ISO 4017 M4X25 A480	
510	353249-0041	-		4	INSERT, SOLID, E151G	
520	312105-0379	-		4	SCREW M6S ISO 4014 M6X45 A480	
530	315105-0146	-		16	WASHER PLAIN, BRB, 5,3/10,H=1	
540	312101-0344	-		16	SCREW M6S M5X65 FZB	
550	312105-0368	-		10	SCREW M6S M6X16 A280	
570	353243-0008	-		1	EXTENDED WITHOUT INSERT, PG29	
580	90099-0120	-		1	NUT, PR 37 (PG29)	
B5307	1512463-0000	A		1	THERMOCOUPLE	
B5308	1512463-0000	A		1	THERMOCOUPLE	
B5309	1512463-0000	A		1	THERMOCOUPLE	
B5310	1512463-0000	A		1	THERMOCOUPLE	
R5307	90206-0132	A		1	HOT AIR ELEMENT	
R5308	90206-0132	A		1	HOT AIR ELEMENT	
R5309	90206-0132	A		1	HOT AIR ELEMENT	
R5310	90206-0132	A		1	HOT AIR ELEMENT	
X5006-1	90326-0022	-		1	PLUG, MALE YELLOW CR-AL	
X5006-2	90326-0077	-		1	CONTACT	
X5007-1	90326-0022	-		1	PLUG, MALE YELLOW CR-AL	
X5007-2	90326-0077	-		1	CONTACT	
X5008-1	90326-0022	-		1	PLUG, MALE YELLOW CR-AL	
X5008-2	90326-0077	-		1	CONTACT	
X5009-1	90326-0022	-		1	PLUG, MALE YELLOW CR-AL	
X5009-2	90326-0077	-		1	CONTACT	

Machine Type | Group Description | Used-In | Group Number | Page No

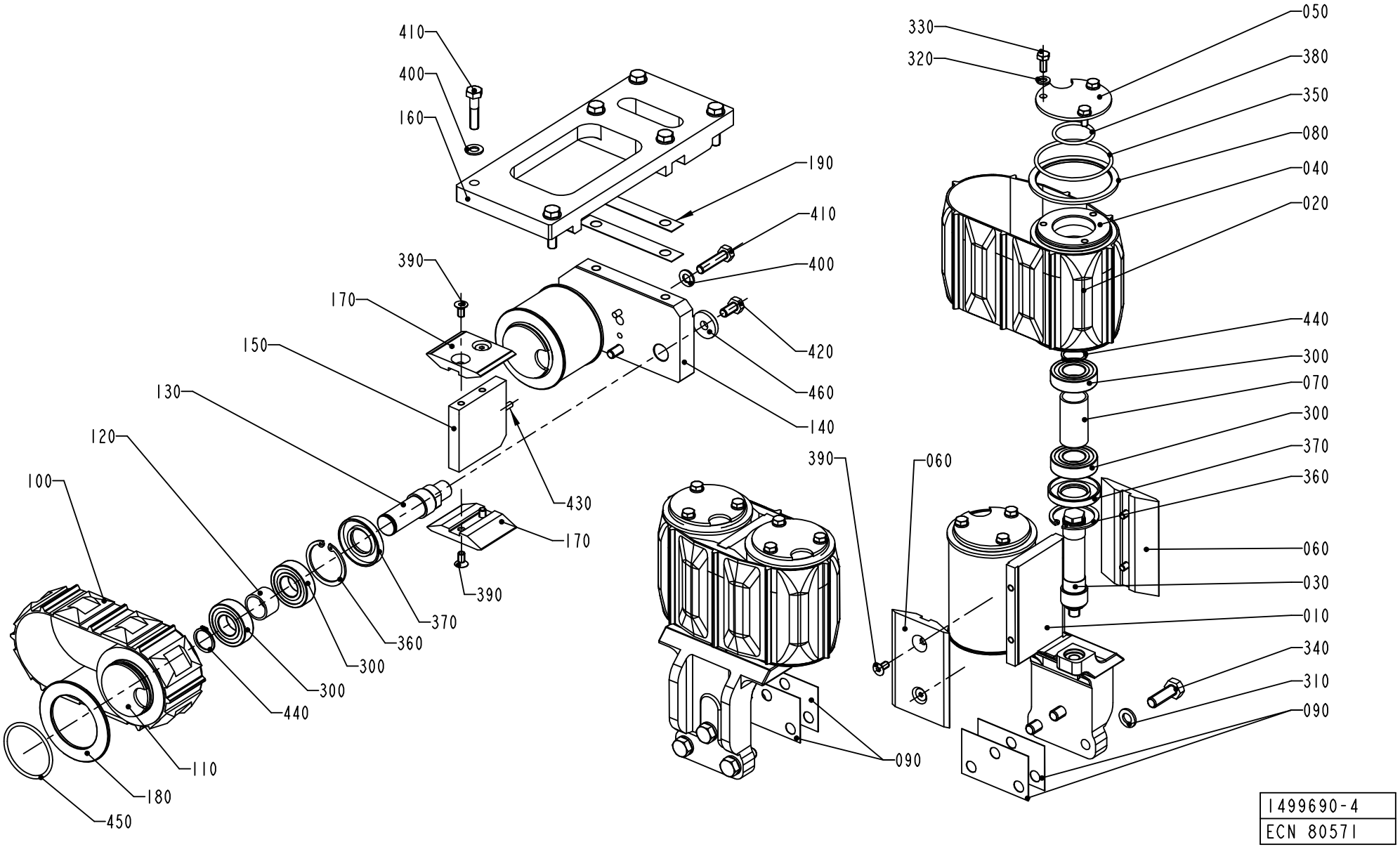
410
400
160
190
410
400
390
170
150
130
120
100
420
460
140
430
170
390
370
360
300
300
440
110
180
450
330
320
050
380
350
080
040
020
440
300
070
300
370
360
390
060
060
030
010
340
310
090
090
1499690-4
ECN 80571

ECM: 116444 - 20021021
Group number: 1499690-0200
Assembly Drawing: 1499690-4_1_AA

Issue: 20021105

Pos	Part No	SP	UN	Qty	Description	Page No
TBA 0200B						
010	1499013-0000	-		2	SUPPORT	
020	1523100-0000	A		2	BELT	
030	1499686-0000	B		4	SHAFT	
040	1499687-0000	B		4	ROLLER	
060	1499688-0000	A		4	SLIDER	
070	1499689-0000	-		4	SPACER	
100	1519203-0000	A		1	BELT	
110	1478638-0000	A		2	PULLEY	
150	1478635-0000	-		1	PLATE	
170	1499935-0000	A		2	SLIDER	
190	1487874-0000	A		2	SHIM	
TBA 0200S						
010	1499007-0000	-		2	SUPPORT	
020	B1532490-0000	A		2	BELT	
	1532489-0000	*-*		*8*	*PUSHER*	
	1499012-0000	*-*		*1*	*BELT*	
	1532489-0000	*-*		*8*	*PUSHER*	
030	1499008-0000	B		4	SHAFT	
040	1499009-0000	B		4	ROLLER	
060	1499010-0000	A		4	SLIDER	
070	1499011-0000	-		4	SPACER	
100	1499919-0000	A		1	BELT	
110	1499016-0000	A		2	PULLEY	
150	1511652-0000	-		1	PLATE	
170	1517968-0000	A		2	SLIDER	
TBA 0250B						
010	1487881-0000	-		2	SUPPORT	
020	1523101-0000	A		2	BELT	
030	1487054-0000	B		4	SHAFT	
040	1487053-0000	B		4	ROLLER	
060	1487055-0000	A		4	SLIDER	
070	1487051-0000	-		4	SPACER	
100	1519203-0000	A		1	BELT	
110	1478638-0000	A		2	PULLEY	
150	1478635-0000	-		1	PLATE	
170	1499935-0000	A		2	SLIDER	
190	1487874-0000	A		2	SHIM	
Common Parts						
050	1487052-0000	-		4	FLANGE	
080	2502969-0000	-		4	FLANGE	
090	1478618-0000	A		4	SHIM	
120	1478640-0000	-		2	SPACER	
130	1478637-0000	-		2	SHAFT	
140	1478636-0000	-		1	PLATE	
160	1524517-0000	-		1	SUPPORT	
180	1478639-0000	-		2	FLANGE	
200	2556248-0000	-		2	STOPPER	
300	90214-0225	A		12	BALL BEARING SOLID OIL 20X42X12 MM	
310	315105-0171	-		6	WASHER PLAIN, BRB, 10/18,H=2	
320	315105-0153	-		16	WASHER PLAIN, BRB, 6,4/12,H=1,5	
330	312105-0367	-		12	SCREW M6S M6X14 A280	
340	312105-0495	-		6	SCREW M6S ISO 4017 M10X30 A480	
350	315202-0304	A		4	O-RING 64,5X3 MM	
360	90141-0020	A		6	RETAIN. RING, 42	
370	90091-0263	A		6	RADIAL SEAL 24X47X7 MM DUST LIP	
380	315202-0220	A		4	O-RING 32,2X3 MM	
390	312155-0366	-		12	SCREW HEX.SOCK.COUNT.MF6S M6X12 A280	
400	315105-0165	-		8	WASHER PLAIN, BRB, 8,4/16,H=1,5	
410	312109-0457	-		8	SCREW M6S ISO 4017 M8X35 A480	
420	312105-0449	-		2	SCREW M6S ISO 4017 M8X16 A480	
430	311103-0308	-		2	PARALLELL PIN, M6, 5X16 MM	
440	315751-0116	A		6	RETAIN. RING, 20	
450	315202-0301	A		2	O-RING 49,5X3 MM	
460	315125-0165	-		2	WASHER PLAIN ROUND,CHAMF. 8,4/26, H=5	
470	90157-0016	-		1	LOCKING FLUID	
480	312105-0368	-		4	SCREW M6S M6X16 A280	

Machine Type | Group Description | Used-In | Group Number | Page No

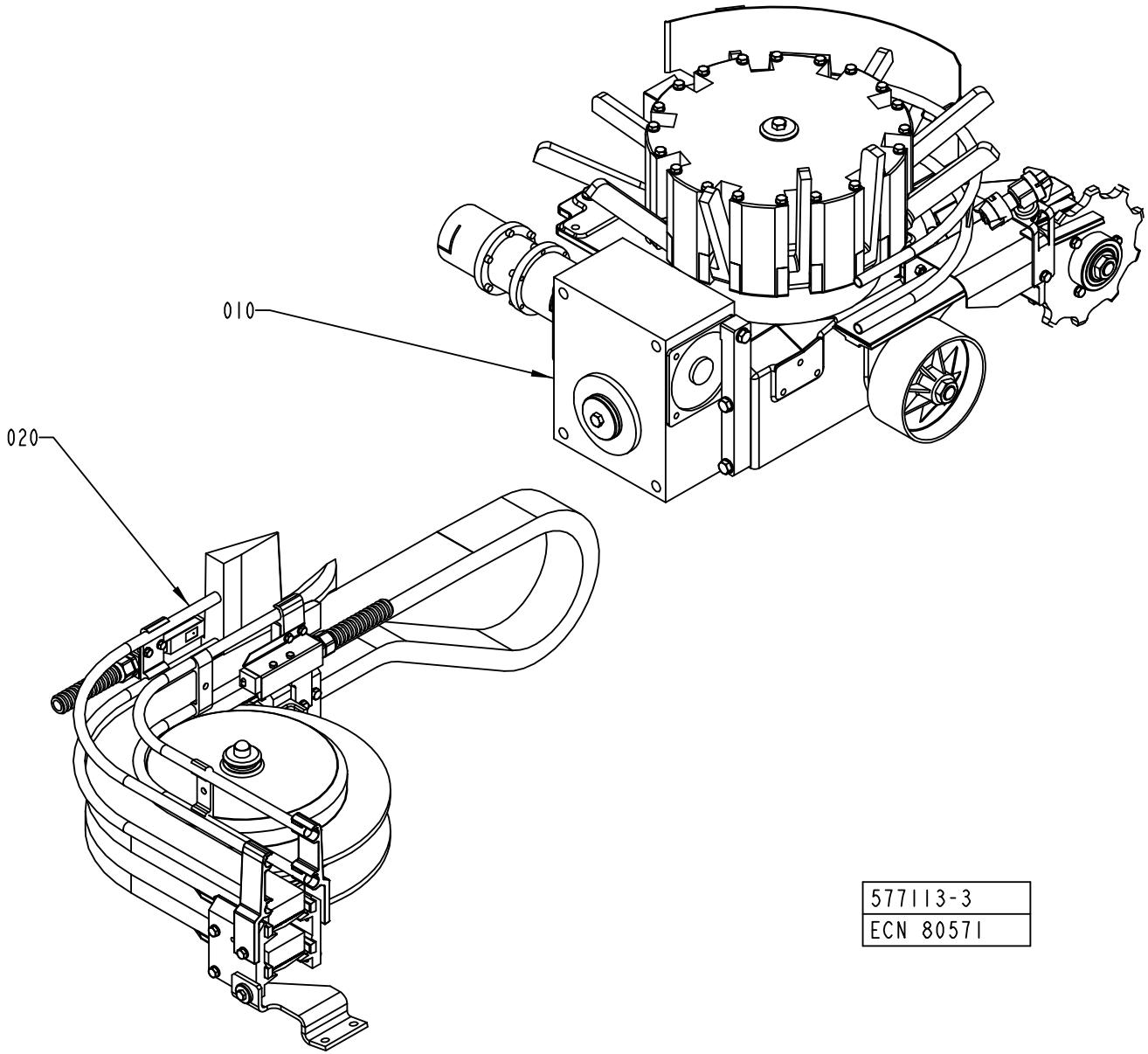
010
020
577113-3
ECN 80571

Pos	Part No	SP	UN	Qty	Description	Page No
Common Parts						
010	A1348751-0200	-		1	OUTFEED UNIT	**409, 411**
020	A1260142-0200	-		1	CURVE WHEEL	**413**

Pos	Part No	SP	UN	Qty	Description	Page No

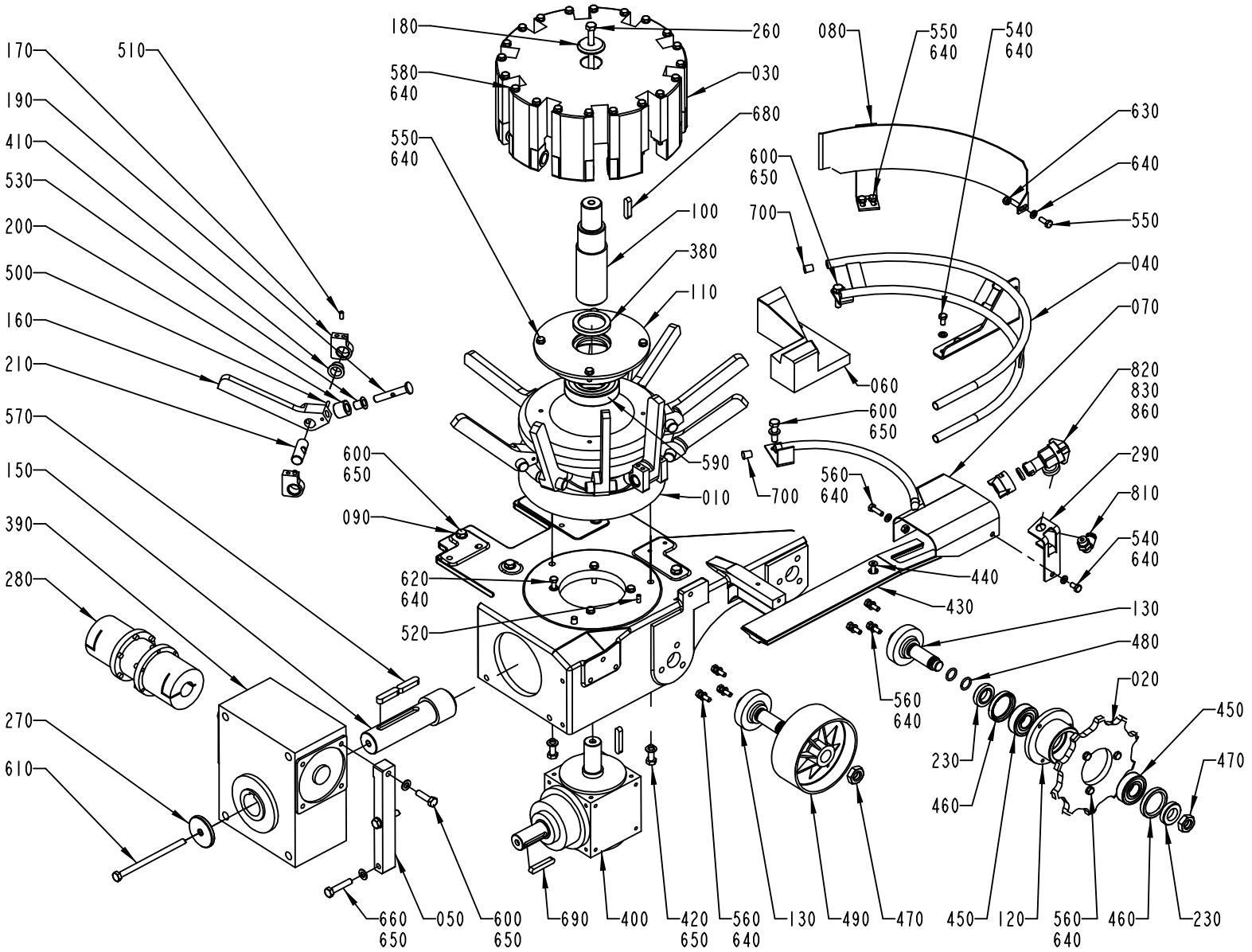

1348751-3
ECN 80571

ECM: 116446 - 20021021
Group number: 1348751-0200
Assembly Drawing: 1348751-3_1_AA

Issue: 20021105

Pos	Part No	SP	UN	Qty	Description	Page No
TBA 0200B						
140	1549972-0000	-		2	FOOT	
160	2523581-0000	A		10	CARRIER	
220	1549971-0000	-		1	FASTENING PLATE	
240	1549969-0000	-		1	SLIDE PLATE	
250	1549970-0000	A		1	SLIDER	
540	312105-0366	-		1	SCREW M6S M6X12 A280	
550	312105-0368	-		6	SCREW M6S M6X16 A280	
560	312105-0370	-		9	SCREW M6S ISO 4017 M6X20 A480	
600	312105-0455	-		6	SCREW M6S ISO 4017 M8X30 A480	
640	315105-0153	-		42	WASHER PLAIN, BRB, 6,4/12,H=1,5	
650	315105-0165	-		12	WASHER PLAIN, BRB, 8,4/16,H=1,5	
710	90266-0154	-	MM	200	PIPE	
720	312105-0449	-		1	SCREW M6S ISO 4017 M8X16 A480	
730	312115-0449	-		2	SCREW MC6S M8X16 A280	
740	312115-0455	-		2	SCREW MC6S M8X30 A280	
750	312105-0372	-		1	SCREW M6S ISO 4017 M6X25 A480	
760	312605-0316	-		1	HEXAGON NUT, M6M M6 A280	
770	1524431-0000	A		2	HUB	
780	2523679-0000	-		1	CONNECTION	
790	312105-0327	-		12	SCREW M6S ISO 4017 M5X12 A480	
800	312115-0453	-		2	SCREW MC6S M8X25 A280	
840	90458-2957	-		1	ELBOW PIPE JOINT, EXT.THREAD, D=6MM-G1/4	
850	90187-0158	-		1	THROTTLE BALL VALVE G1/4, R1/4	
TBA 0200S						
040	2501223-0000	-		1	RAIL	
060	1498973-0000	A		1	BRACKET	
070	2514128-0000	-		1	GUIDE	
080	2514140-0000	-		1	GUIDE	
160	1498997-0000	A		10	CARRIER	
280	B2525677-0000	A		1	INTERMEDIARY SHAFT	
	1524431-0000	*A*		*2*	*HUB*	
290	2514139-0000	-		1	SUPPORT	
540	312105-0366	-		3	SCREW M6S M6X12 A280	
550	312105-0368	-		7	SCREW M6S M6X16 A280	
560	312105-0370	-		10	SCREW M6S ISO 4017 M6X20 A480	
600	312105-0455	-		8	SCREW M6S ISO 4017 M8X30 A480	
630	312812-0316	-		1	HEXAGON NUT, NY-LOCK M6 A480	
640	315105-0153	-		44	WASHER PLAIN, BRB, 6,4/12,H=1,5	
650	315105-0165	-		13	WASHER PLAIN, BRB, 8,4/16,H=1,5	
700	484701-0000	-		5	SHUTTER	
810	342931-0122	-		1	ELBOW 90 COUPL.,EXT.THREAD 8/6-G1/4"	
820	B90230-0027	-		1	NON-RETURN VALVE QJ 8355-1/4"	
	90230-0300	*C*		*1*	*STRAINER*	
	90230-0301	*C*		*1*	*DIAPHRAGM*	
830	534310-0001	-		1	NOZZLE	
860	90005-0094	-		1	GASKET C 19438-EPR	
TBA 0250B						
040	2501223-0000	-		1	RAIL	
060	2514133-0000	A		1	BRACKET	
070	1348746-0000	-		1	GUIDE	
080	2506711-0000	-		1	GUIDE	
160	1260067-0000	A		10	CARRIER	
280	B2523696-0000	A		1	INTERMEDIARY SHAFT	
	1524431-0000	*A*		*2*	*HUB*	
290	2514139-0000	-		1	SUPPORT	
540	312105-0366	-		3	SCREW M6S M6X12 A280	
550	312105-0368	-		7	SCREW M6S M6X16 A280	
560	312105-0370	-		10	SCREW M6S ISO 4017 M6X20 A480	
600	312105-0455	-		8	SCREW M6S ISO 4017 M8X30 A480	
630	312812-0316	-		1	HEXAGON NUT, NY-LOCK M6 A480	
640	315105-0153	-		44	WASHER PLAIN, BRB, 6,4/12,H=1,5	
650	315105-0165	-		13	WASHER PLAIN, BRB, 8,4/16,H=1,5	
700	484701-0000	-		5	SHUTTER	
810	342931-0122	-		1	ELBOW 90 COUPL.,EXT.THREAD 8/6-G1/4"	
820	B90230-0027	-		1	NON-RETURN VALVE QJ 8355-1/4"	
	90230-0300	*C*		*1*	*STRAINER*	
	90230-0301	*C*		*1*	*DIAPHRAGM*	
830	534310-0001	-		1	NOZZLE	
860	90005-0094	-		1	GASKET C 19438-EPR	
Common Parts						
010	1348744-0000	A		1	CAM	
020	1348242-0000	B		1	SPROCKET	
030	1260064-0000	-		1	DRUM	
050	2504726-0000	A		1	PLATE	
090	1348244-0000	-		1	BRACKET	
100	2506686-0000	B		1	SHAFT	
110	1260061-0000	-		1	HOUSING	
120	1348241-0000	B		1	HOSE CLAMP	
130	1347910-0000	B		2	SHAFT	
150	2528454-0000	A		1	SHAFT	

Machine Type | Group Description | Used-In | Group Number | Page No

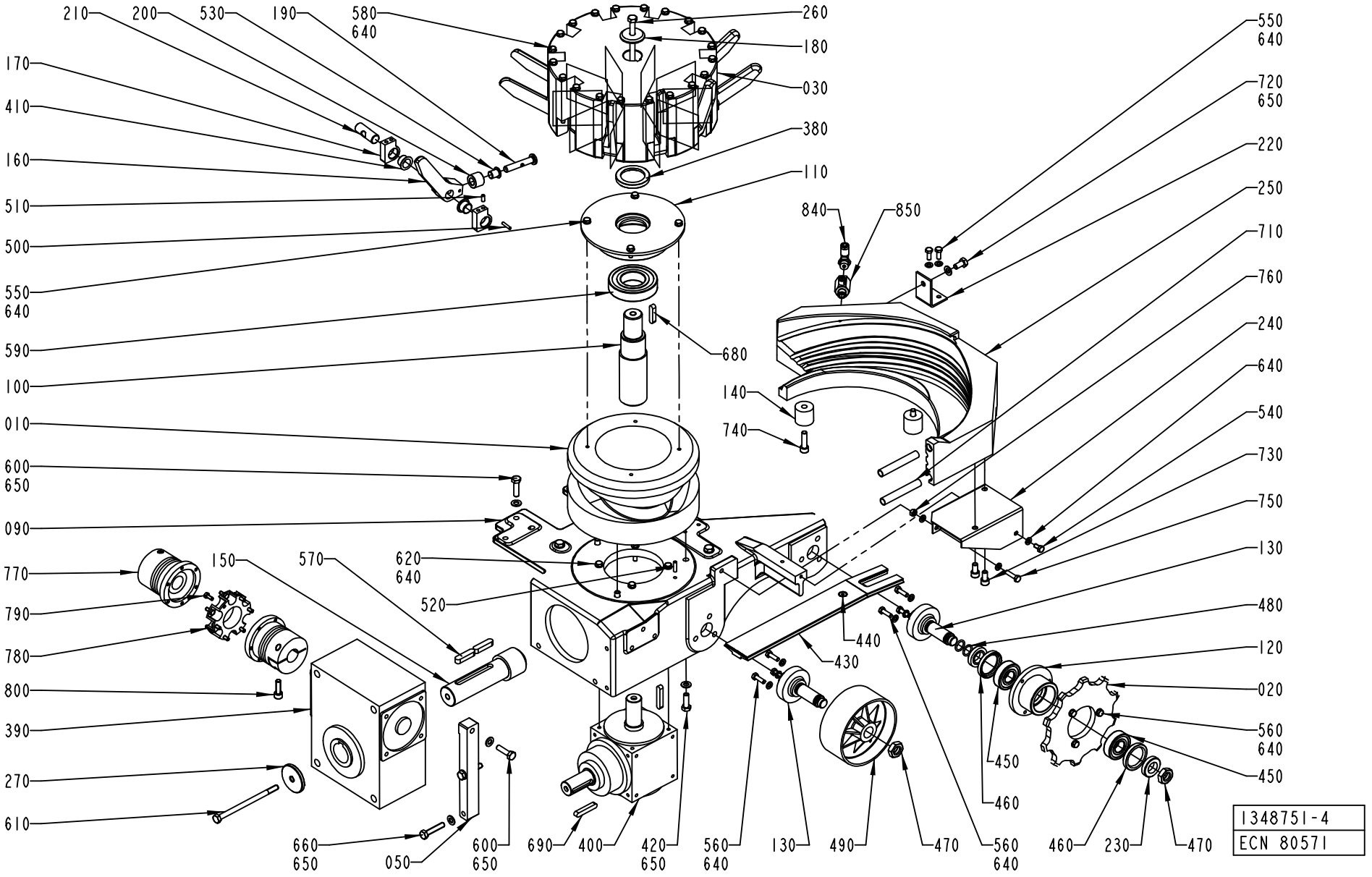
210
200
530
190
580
640
260
180
030
380
110
170
410
160
510
500
550
640
590
100
010
600
650
090
770
790
780
800
390
270
610
150
570
620
640
520
680
140
740
840
850
550
640
720
650
220
250
710
760
240
640
540
730
750
130
480
120
020
560
640
450
460
440
430
660
650
050
600
650
690
400
420
650
560
640
130
490
470
560
640
460
230
470
1348751-4
ECN 80571

Pos	Part No	SP	UN	Qty	Description	Page No
Common Parts (Cont'd)						
170	1260065-0000	-		20	BRACKET	
180	1260066-0000	-		1	WASHER	
190	1260068-0000	A		10	SHAFT	
200	1538306-0000	A		10	ROLLER	
210	1260070-0000	A		10	SHAFT	
230	1348243-0000	-		2	SPACER	
260	1548044-0000	-		1	SCREW	
270	1548186-0000	-		1	WASHER	
380	90091-0305	A		1	RADIAL SEAL 40X55X7 MM DUST LIP	
390	90056-0171	A		1	WORM GEAR BS71 F ENV RH	
400	90458-1888	A		1	GEARS, BEVEL Z10-CY-1.25-ILT-1-N	
410	90240-0332	A		20	BUSHING	
420	312105-0453	-		3	SCREW M6S ISO 4017 M8X25 A480	
430	531503-0000	-		1	SLIDE RAIL	
440	312155-0370	-		1	SCREW HEX.SOCK.COUNT.MF6S M6X20 A280	
450	90214-0232	A		2	BALL BEARING, 2 SEALS, 20X47X14 MM	
460	315221-0175	A		2	RADIAL SEAL 35X47X7 MM	
470	90099-0131	-		2	NUT HEX. M16X2 SS	
480	315202-0213	A		2	O-RING 15,3X2,4 MM	
490	476975-0000	A		1	WHEEL	
500	311103-0272	-		10	PARALLELL PIN, M6, 4X20 MM	
510	311103-0306	-		20	PARALLELL PIN, M6, 5X12 MM	
520	311103-0310	-		1	PARALLELL PIN, M6, 5X20 MM	
530	321156-0145	A		10	FLANGE BUSHING, 10X12X15 MM	
570	315705-0301	A		2	PARALLEL KEY W. ROUND ENDS 10X8X40 MM	
580	312105-0388	-		20	SCREW M6S ISO 4014 M6X90 A480	
590	90214-0236	A		1	BALL BEARING, 2 SEALS, 40X80X18 MM	
610	312105-0477	-		1	SCREW M6S ISO 4014 M8X130 A480	
620	312109-0374	-		4	SCREW M6S ISO 4017 M6X30 A480	
660	312109-0459	-		2	SCREW M6S ISO 4017 M8X40 A480	
670	90296-0068	B		1	GREASE UNIWAY LI 62 CARTRIDGE 400 GR.	
680	315705-0269	A		1	PARALLEL KEY W. ROUND ENDS 8X7X35 MM	
690	315705-0271	A		2	PARALLEL KEY W. ROUND ENDS 8X7X45 MM	

Pos	Part No	SP	UN	Qty	Description	Page No

Machine Type | Group Description | Used-In | Group Number | Page No

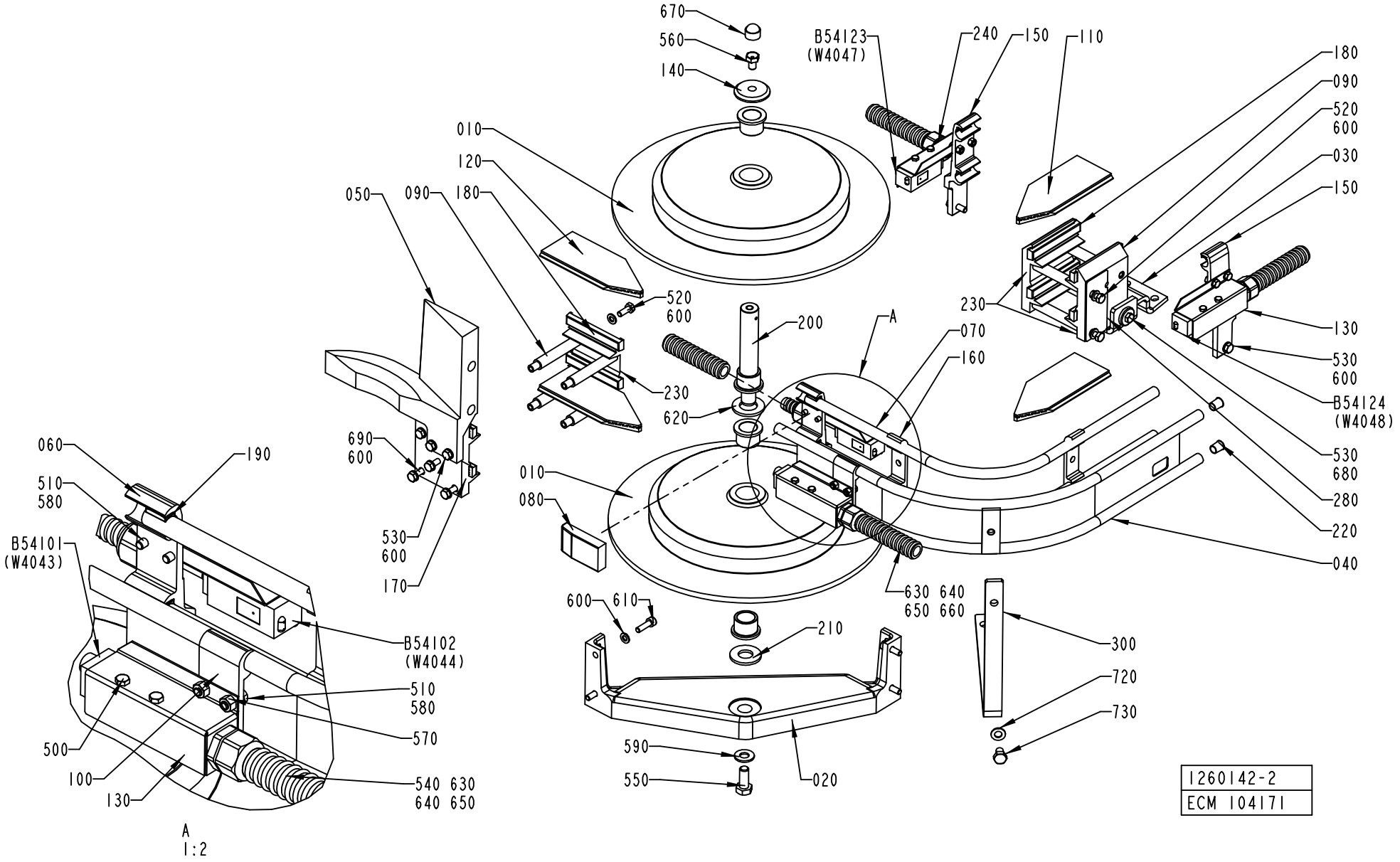
670
560
140
010
120
050
090
180
B54123
(W4047)
240
150
110
180
090
520
600
030
150
230
520
600
200
A
070
160
130
530
600
B54124
(W4048)
530
680
280
220
040
230
620
690
600
530
600
170
060
190
510
580
B54101
(W4043)
B54102
(W4044)
510
580
570
500
100
130
540 630
640 650
A
1:2
010
080
600
610
210
630 640
650 660
300
720
730
590
550
020
1260142-2
ECM 104171

ECM: 104176 - 20010926
Group number: 1260142-0200
Assembly Drawing: 1260142-2_1_AC

Issue: 20021105

Pos	Part No	SP	UN	Qty	Description	Page No
TBA 0200B						
030	1478634-0000	-		1	SUPPORT	
070	2546322-0000	-		2	ARCH	
080	1347090-0000	-		1	CHUTE	
160	1020635-0001	-		2	HOLDER	
TBA 0200S						
030	1511651-0000	-		1	SUPPORT	
070	2514134-0000	-		1	GUIDE	
080	2514136-0000	-		1	CHUTE	
TBA 0250B						
030	1347902-0000	-		1	SUPPORT	
070	2546322-0000	-		2	ARCH	
080	1347090-0000	-		1	CHUTE	
160	1020635-0001	-		2	HOLDER	
Common Parts						
010	B561650-0102	-		2	CURVE WHEEL	
010 2	*497991-0000*	-		*1*	*CURVE WHEEL*	
020 2	*321111-0304*	-		*2*	*BEAR.BUSHING WITH FLANGE, 20/26X20 MM*	
020	476243-0000	-		1	BOTTOM PLATE	
040	2546189-0000	-		1	GUIDE	
050	2503573-0000	-		1	GUIDE	
060	1347905-0000	-		1	HOLDER	
090	1347900-0000	-		8	SPACER	
100	1020637-0000	-		1	HOLDER	
110	B1086625-0000	-		2	SLIDE RAIL	
	499101-0000	-		*1*	*SLIDE RAIL*	
120	B1086626-0000	-		2	SLIDE RAIL	
	499101-0000	-		*1*	*SLIDE RAIL*	
130	1347907-0000	-		3	HOLDER	
140	1260066-0000	-		1	WASHER	
150	2546203-0000	-		2	HOLDER	
170	1348750-0000	-		1	BRACKET	
180	466074-0002	-		8	SLIDER	
190	1020146-0000	-		6	LOCKING BLOCK REPL BY 1020290-101	
200	476978-0000	-		1	SHAFT	
210	476979-0000	-		1	WASHER	
220	484701-0000	-		6	SHUTTER	
230	457696-0001	-		3	JOINT PIECE	
240	2546227-0000	-		1	HOLDER	
280	1549865-0000	-		1	SPACER	
300	2532808-0000	-		1	HOLDER	
500	312105-0291	-		8	SCREW M6S ISO 4017 M4X12 A480	
510	312105-0327	-		8	SCREW M6S ISO 4017 M5X12 A480	
520	312105-0368	-		5	SCREW M6S M6X16 A280	
530	312105-0370	-		6	SCREW M6S ISO 4017 M6X20 A480	
540	90152-0059	-	MM	3000	SPIRAL CONDUIT, 18X12, UL 1211	
550	312105-0493	-		1	SCREW M6S ISO 4017 M10X25 A480	
560	526767-0000	-		1	SCREW	
570	312605-0314	-		6	HEXAGON NUT, M6M M5 A280	
580	315105-0146	-		8	WASHER PLAIN, BRB, 5,3/10,H=1	
590	315105-0173	-		1	WASHER PLAIN, BRB, 10,5/22,H=2	
600	315105-0153	-		18	WASHER PLAIN, BRB, 6,4/12,H=1,5	
610	312115-0370	-		4	SCREW MC6S M6X20 A280	
620	315105-0191	-		1	WASHER PLAIN, BRB, 20/36 H=3	
630	353243-0001	-		4	EXTENDED WITHOUT INSERT, PG9	
640	353249-0008	-		4	INSERT, SINGEL HOLE, EK 152/7	
650	90099-0104	-		2	NUT, PR 15,2 (PG9)	
660	90152-0059	-	MM	3000	SPIRAL CONDUIT, 18X12, UL 1211	
670	90261-0038	-		1	HOOD GPN 1000/893	
680	315125-0153	-		1	WASHER PLAIN ROUND,CHAMF. 6,4/22, H=4	
690	312105-0372	-		4	SCREW M6S ISO 4017 M6X25 A480	
720	315105-0165	-		1	WASHER PLAIN, BRB, 8,4/16,H=1,5	
730	312105-0447	-		1	SCREW M6S ISO 4017 M8X12 A480	
B54101	90232-0103	A		1	PH.CELL E3S-CT61-L-5M	
B54102	90232-0104	A		1	PH.CELL E3S-CT61-D-5M	
B54123	90232-0104	A		1	PH.CELL E3S-CT61-D-5M	
B54124	90232-0103	A		1	PH.CELL E3S-CT61-L-5M	

Machine Type | Group Description | Used-In | Group Number | Page No

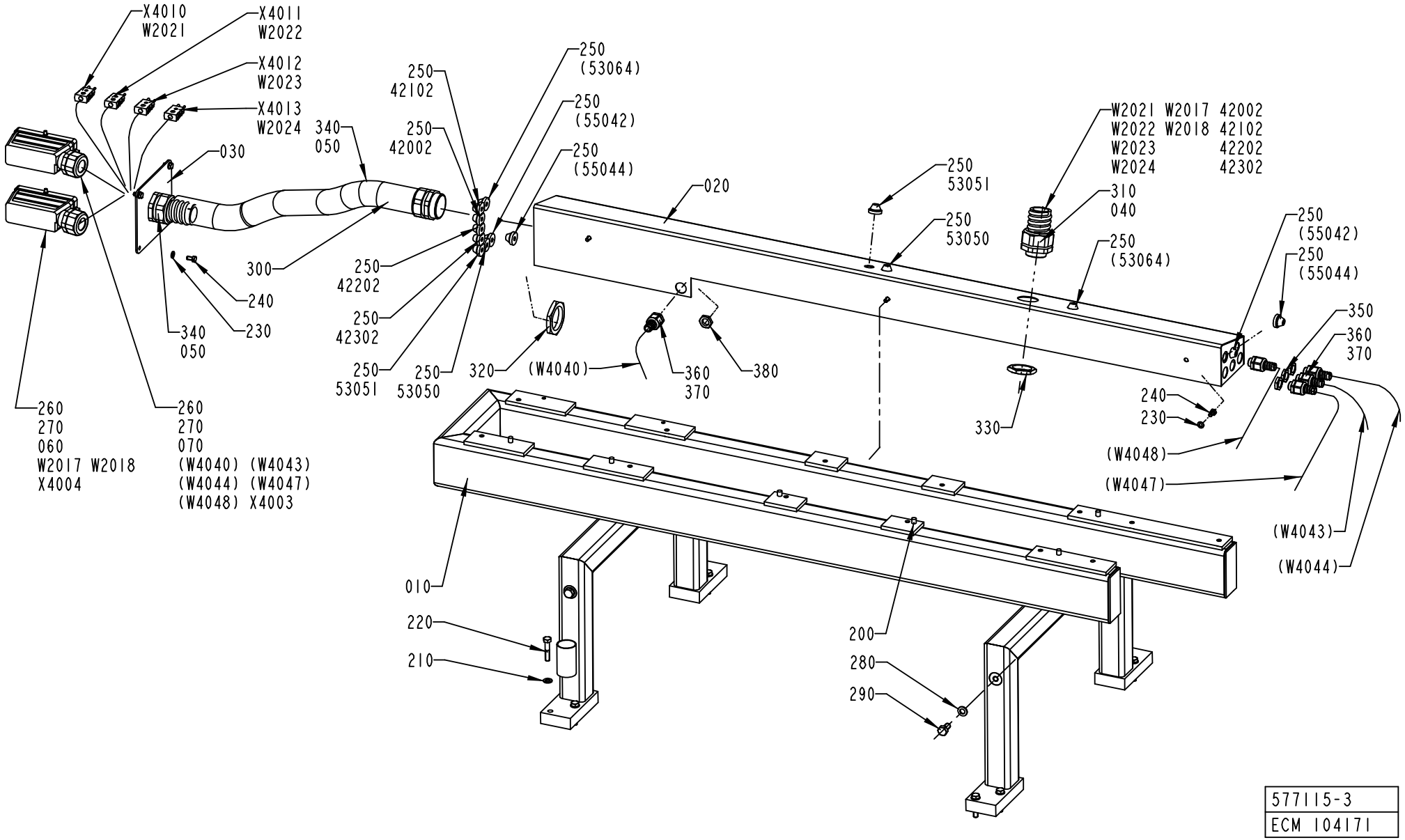

577115-3
ECM 104171

ECM: 108081 - 20010926
Group number: 577115-0300
Assembly Drawing: 577115-3_1_AB

Issue: 20021105

Pos	Part No	SP	UN	Qty	Description	Page No
TBA 0200B						
010	1487048-0000	-		1	FRAME	
TBA 0200S						
010	1498953-0000	-		1	FRAME	
TBA 0250B						
010	1260052-0000	-		1	FRAME	
Common Parts						
020	1348752-0000	-		1	BOX	
030	1348510-0000	-		1	PLATE	
040	1498980-0000	-		1	INSERT	
050	2547143-0000	-		2	INSERT	
060	1499089-0000	-		1	INSERT	
070	2535745-0000	-		1	INSERT	
200	311103-0403	-		6	PARALLELL PIN, M6, 8X25 MM	
210	315105-0165	-		8	WASHER PLAIN, BRB, 8,4/16,H=1,5	
220	312105-0459	-		8	SCREW M6S ISO 4014 M8X40 A480	
230	315105-0153	-		7	WASHER PLAIN, BRB, 6,4/12,H=1,5	
240	312105-0366	-		7	SCREW M6S M6X12 A280	
250	90015-0020	-		14	LEAD-IN, TET5-7, E-1458016	
260	90110-0150	-		2	MALE INSERT 121110 0000	
270	353241-0003	-		2	EXTENDED WITHOUT INSERT, PG 21	
280	315105-0171	-		4	WASHER PLAIN, BRB, 10/18,H=2	
290	312105-0491	-		4	SCREW M6S ISO 4017 M10X20 A480	
300	90152-0060	-	MM	550	SPIRAL CONDUIT, 42X35, UL3529	
310	353243-0008	-		1	EXTENDED WITHOUT INSERT, PG29	
320	90099-0103	-		2	NUT, PR 47 (PG36)	
330	90099-0120	-		1	NUT, PR 37 (PG29)	
340	353242-0004	-		2	NORMAL WITHOUT INSERT, PG36	
350	90099-0104	-		3	NUT, PR 15,2 (PG9)	
360	353243-0001	-		5	EXTENDED WITHOUT INSERT, PG9	
370	353249-0008	-		5	INSERT, SINGEL HOLE, EK 152/7	
42002	90166-0013	-	MM	3000	TUBE 8 MM PA BLUE	
42102	90166-0013	-	MM	3000	TUBE 8 MM PA BLUE	
42202	90166-0013	-	MM	3000	TUBE 8 MM PA BLUE	
42302	90166-0013	-	MM	3000	TUBE 8 MM PA BLUE	
53050	90166-0118	-	MM	2000	TUBE 8 MM PA BLACK	
53051	90166-0118	-	MM	2000	TUBE 8 MM PA BLACK	
W2017	351150-0419	-	MM	5000	CABLE OLFLEX 5X2,5 MM2 LIGHT/GREY	
W2018	351150-0419	-	MM	5000	CABLE OLFLEX 5X2,5 MM2 LIGHT/GREY	
W2021	90220-0034	-	MM	5000	THERMOCOUPLE CABLE K/ 2X0,5MM2	
W2022	90220-0034	-	MM	5000	THERMOCOUPLE CABLE K/ 2X0,5MM2	
W2023	90220-0034	-	MM	5000	THERMOCOUPLE CABLE K/ 2X0,5MM2	
W2024	90220-0034	-	MM	5000	THERMOCOUPLE CABLE K/ 2X0,5MM2	
X4003	90110-0228	-		1	CABLE HOOD 24-POL 71.350.2428.0	
X4004	90110-0228	-		1	CABLE HOOD 24-POL 71.350.2428.0	
X4010	90326-0022	-		1	PLUG, MALE YELLOW CR-AL	
X4011	90326-0022	-		1	PLUG, MALE YELLOW CR-AL	
X4012	90326-0022	-		1	PLUG, MALE YELLOW CR-AL	
X4013	90326-0022	-		1	PLUG, MALE YELLOW CR-AL	

Tetra Pak

SPC
Spare Parts Catalogue

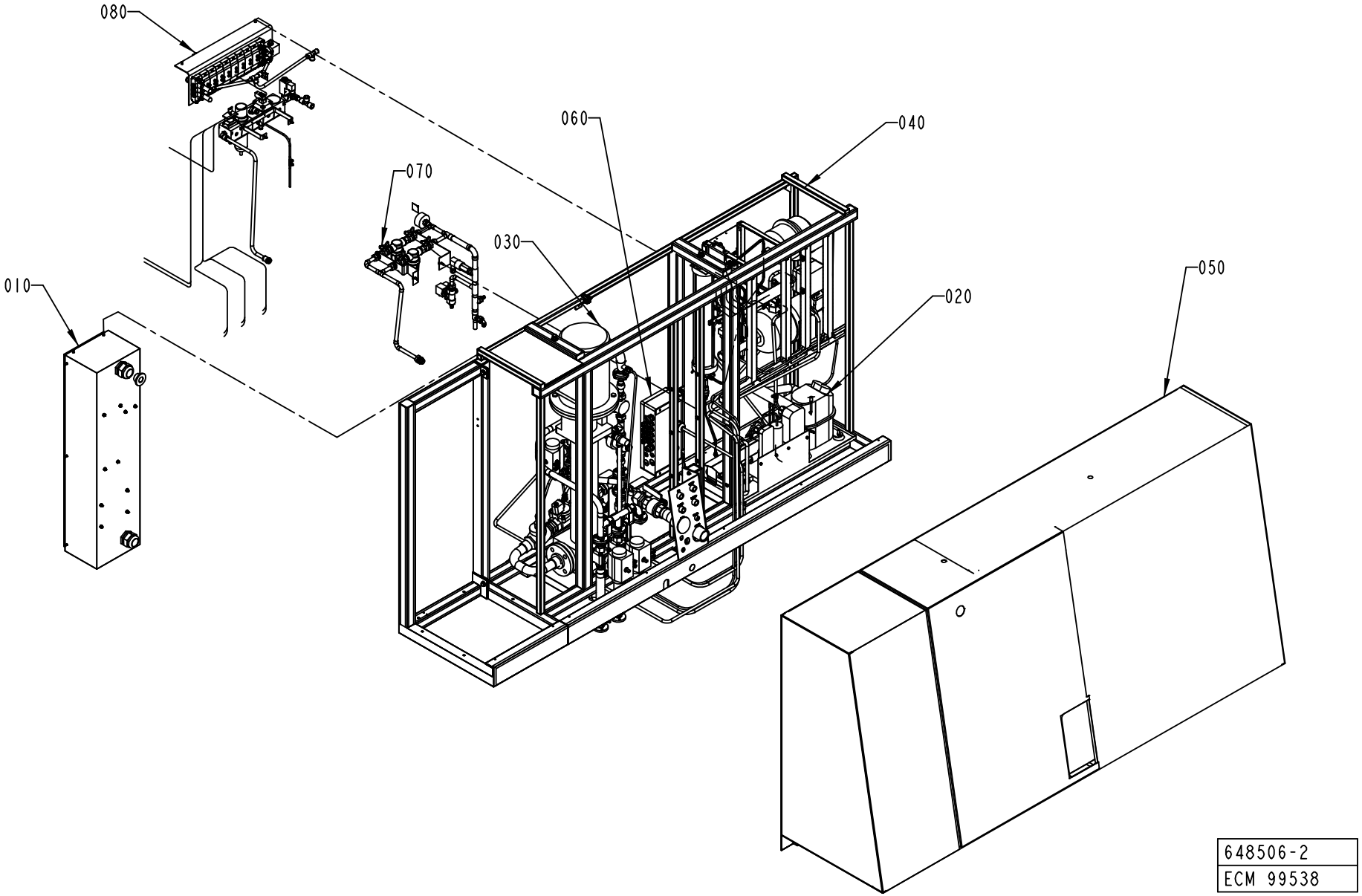
080
060
040
070
030
010
020
050
648506-2
ECM 99538

Pos	Part No	SP	UN	Qty	Description	Page No
Common Parts						
010	A1095610-0300	-		1	MAIN SWITCH	**421**
020	A1095612-0300	-		1	COOLING WATER SYSTEM	**423**
030	A1095627-0300	-		1	FOAM CLEANING UNIT	**435**
040	A1095606-0200	-		1	MACHINE BODY	**451**
050	A1095607-0200	-		1	COVERING PANEL	**457**
060	A1095630-0200	-		1	CONNECTION BOX	**473**
070	A1095608-0100	-		1	WATER PANEL	**475**
080	A1095714-0300	-		1	SUPPLY SYSTEM	**477**

Pos	Part No	SP	UN	Qty	Description	Page No

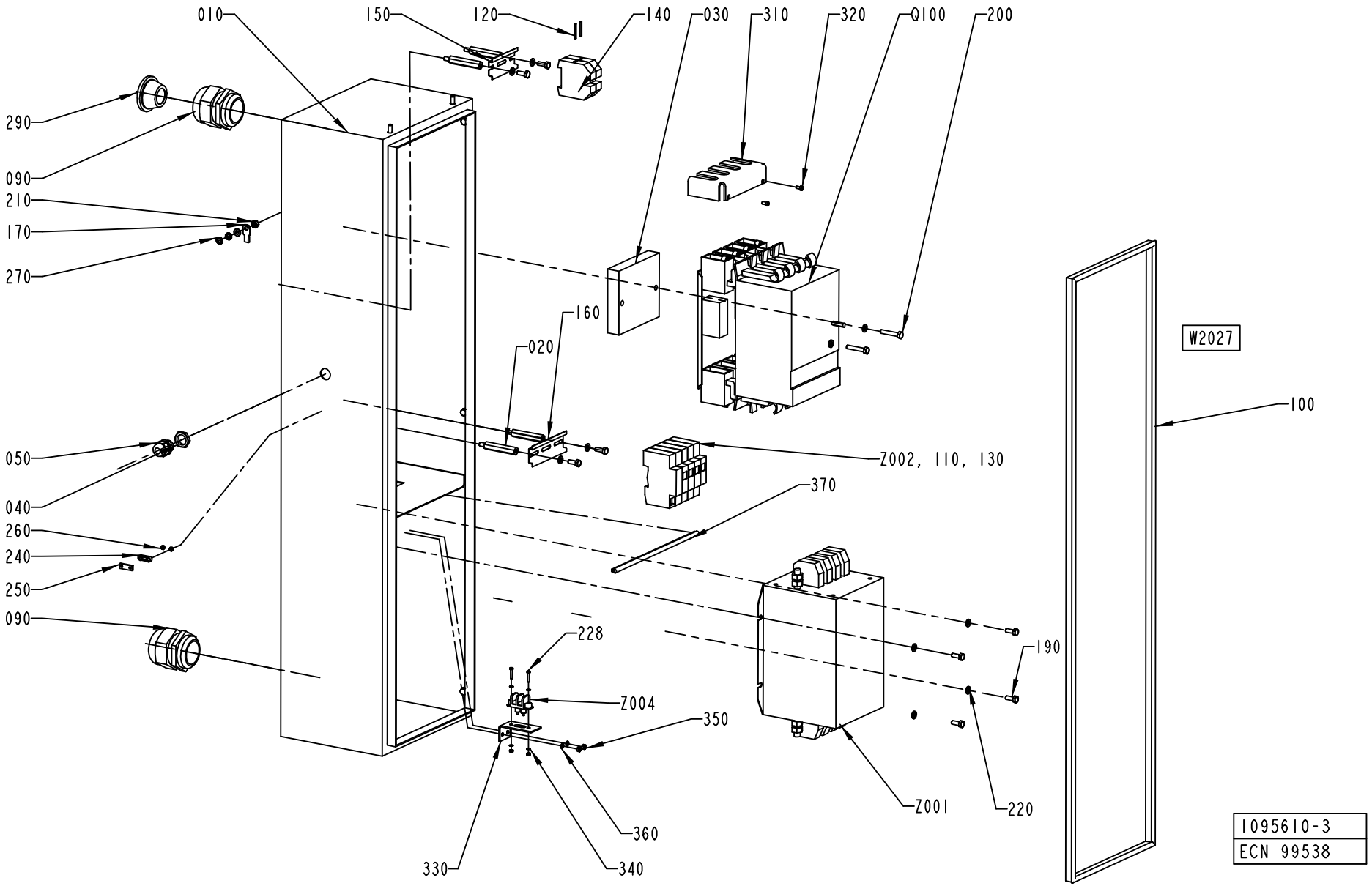
010
150
120
140
030
310
320
Q100
200
290
090
210
170
270
160
020
W2027
100
050
040
260
240
250
090
Z002, 110, 130
370
228
Z004
350
190
220
Z001
360
330
340
1095610-3
ECN 99538

ECM: 101424 - 20020812
Group number: 1095610-0300
Assembly Drawing: 1095610-3_1_AA

Issue: 20021030

Pos	Part No	SP	UN	Qty	Description	Page No
Common Parts						
010	2524515-0000	-		1	CABINET	
020	1037184-0000	-		4	SPACER SCREW	
030	1037531-0000	-		1	SPACER PLATE	
040	90099-0117	-		1	NUT, PR 18,6 (PG11)	
050	352103-0106	-		1	CABLE GLAND, ST 11, PR18,6/PG11	
060	90099-0085	-		1	NUT	
070	90099-0096	-		1	NUT	
090	352103-0123	-		2	CABLE GLAND, ST 42, PR54,0/PG42	
100	90143-0057	-	MM	2600	STRIP EMKA 1011-05 21X11MM	
110	351173-0110	-	MM	2400	CABLE AWM 1X25 MM2 LIGHT-BLUE	
120	351175-0109	-	MM	850	CABLE AWM 1X16 MM2 YELLOW-GREEN	
130	351179-0110	-	MM	6000	CABLE AWM 1X25 MM2 BLACK	
140	353024-0209	-		2	EARTH TERMINAL, 1010.5	
150	353042-0005	-	MM	75	RAIL TS 35/7.5	
160	353042-0005	-	MM	100	RAIL TS 35/7.5	
170	353104-0168	-		1	CABLE SHO YAV 16 M6*	
180	353105-0200	-		9	PIN CABLE SKO A4630SR	
190	312105-0368	-		13	SCREW M6S M6X16 A280	
200	312105-0376	-		2	SCREW M6S ISO 4014 M6X35 A480	
210	312605-0316	-		1	HEXAGON NUT, M6M M6 A280	
220	315105-0153	-		16	WASHER PLAIN, BRB, 6,4/12,H=1,5	
230	90143-0060	-	MM	600	EDGE STRIP 9,5X6,3MM BLACK PVC	
240	90220-0303	-		1	CLAMP FOR SCR.CABLE, 10MM, 55-016-22	
250	90220-0305	-		1	CLAMP FOR SCR.CABLE, 16MM,	
260	312605-0310	-		2	HEXAGON NUT, M6M M3 A280	
270	90062-0015	-		2	LOCK WASHER SERRAT.EXT.GEAR,6,4/11 H=0,7	
280	90166-0232	-	MM	500	SHRINKABLE HOSE	
290	90015-0025	-		1	LEAD-IN, TET26-35, E-1458041	
300	1129402-0000	-		4	SPACER SCREW	
310	1255866-0000	-		1	PROTECTION	
320	312125-0287	-		2	SCREW PAN HEAD MCS M4X8 SS	
330	1349864-0000	-		1	BRACKET	
340	315105-0124	-		4	WASHER PLAIN, BRB, 3,2/6,H=0,5	
350	312601-0312	-		2	NUT M6M 4-8 FZB	
360	315101-0136	-		2	WASHER PLAIN, BRB, 4,3/8 H=0,8	
370	90143-0060	-	MM	250	EDGE STRIP 9,5X6,3MM BLACK PVC	
Q100	90111-0173	A		1	MAIN SW.NZM64-100/ZM64-100-760+AS4-NZM64	
W2027	90220-0095	-	MM	3000	SCR. CABLE 3X0,75MM2	
Z001	90024-0060	-		1	POWER LINE FILTER, 80 A 250/440 VAC	
Z002	B90082-0013	A		1	OVERVOLTAGE PROTECTOR	
	90082-0301	*A*		*3*	*OVERVOLTOLTAGE PROTECTOR*	
Z004	90024-0036	A		1	FILTERED TERMINAL BLOCK	

Machine Type	Group Description	Used-In	Group Number	Page No

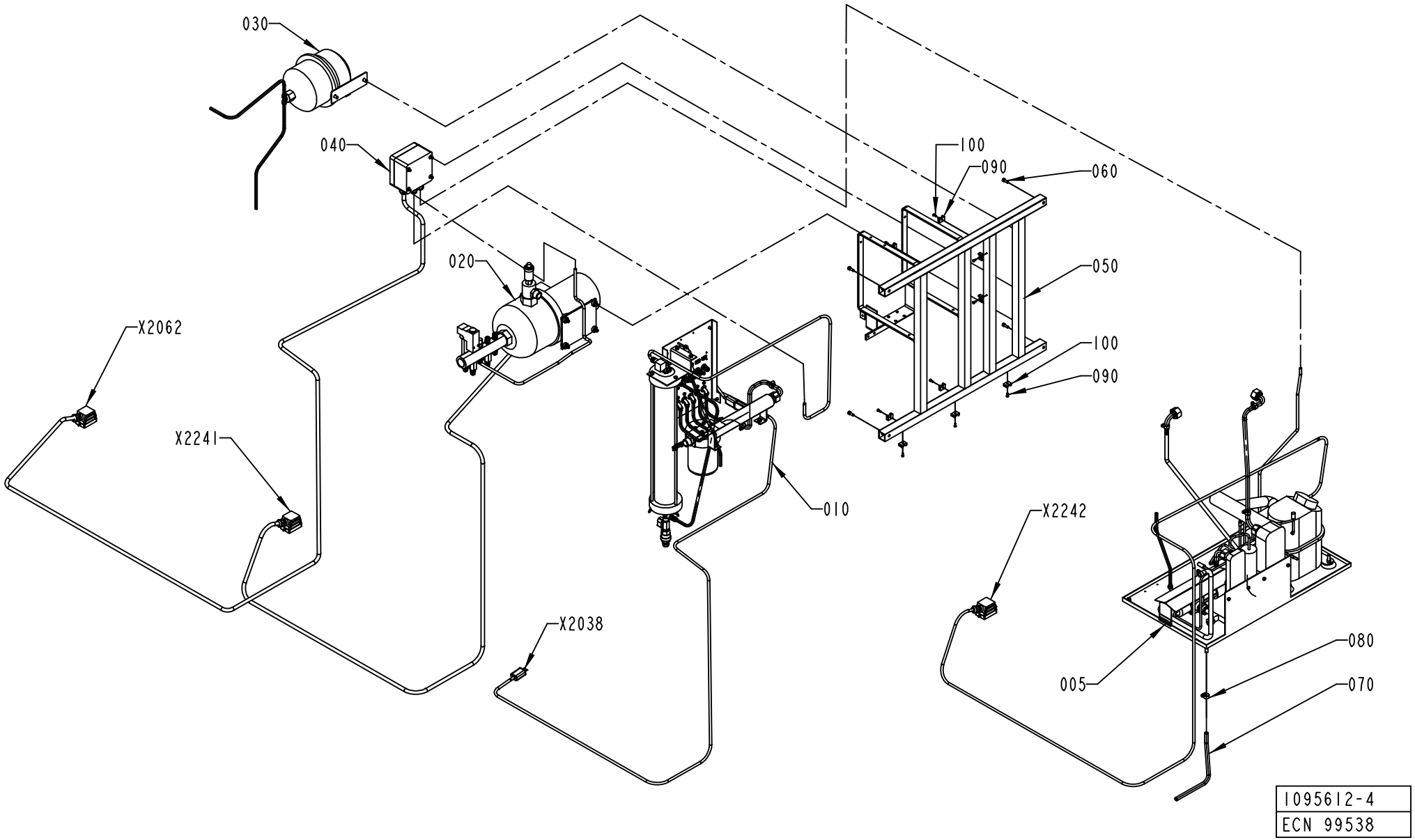
030
040
020
X2062
X2241
X2038
010
100
090
060
050
100
090
X2242
005
080
070
1095612-4
ECN 99538

ECM: 89738 - 20020812
Group number: 1095612-0300
Assembly Drawing: 1095612-4_1_AC

Issue: 20021030

Pos	Part No	SP	UN	Qty	Description	Page No
COMPRESSOR						
005	A1095710-0300	A		1	COMPRESSOR UNIT	**425**
Common Parts						
010	A1095705-0300	-		1	FLOW METER	**427**
020	A1095706-0300	-		1	COOLING WATER PUMP	**429**
030	A2514077-0100	-		1	EXPANSION VESSEL	**431**
040	A1095709-0200	-		1	CONNECTION BOX	**433**
050	1129141-0000	-		1	MACHINE BODY	
060	312115-0368	-		4	SCREW MC6S M6X16 A280	
070	90166-0121	-	MM	1000	HOSE	
080	342991-0101	-		1	HOSE CLIP,WORM DRIVE TYPE (13)-16	
090	352113-0203	-		9	ANCHOR PLATES FOR STRIPS, TYPE TM3S8-M0	
100	312125-0289	-		9	SCREW SLOT.PAN HD. MCS 4X10 A480	

Pos	Part No	SP	UN	Qty	Description	Page No

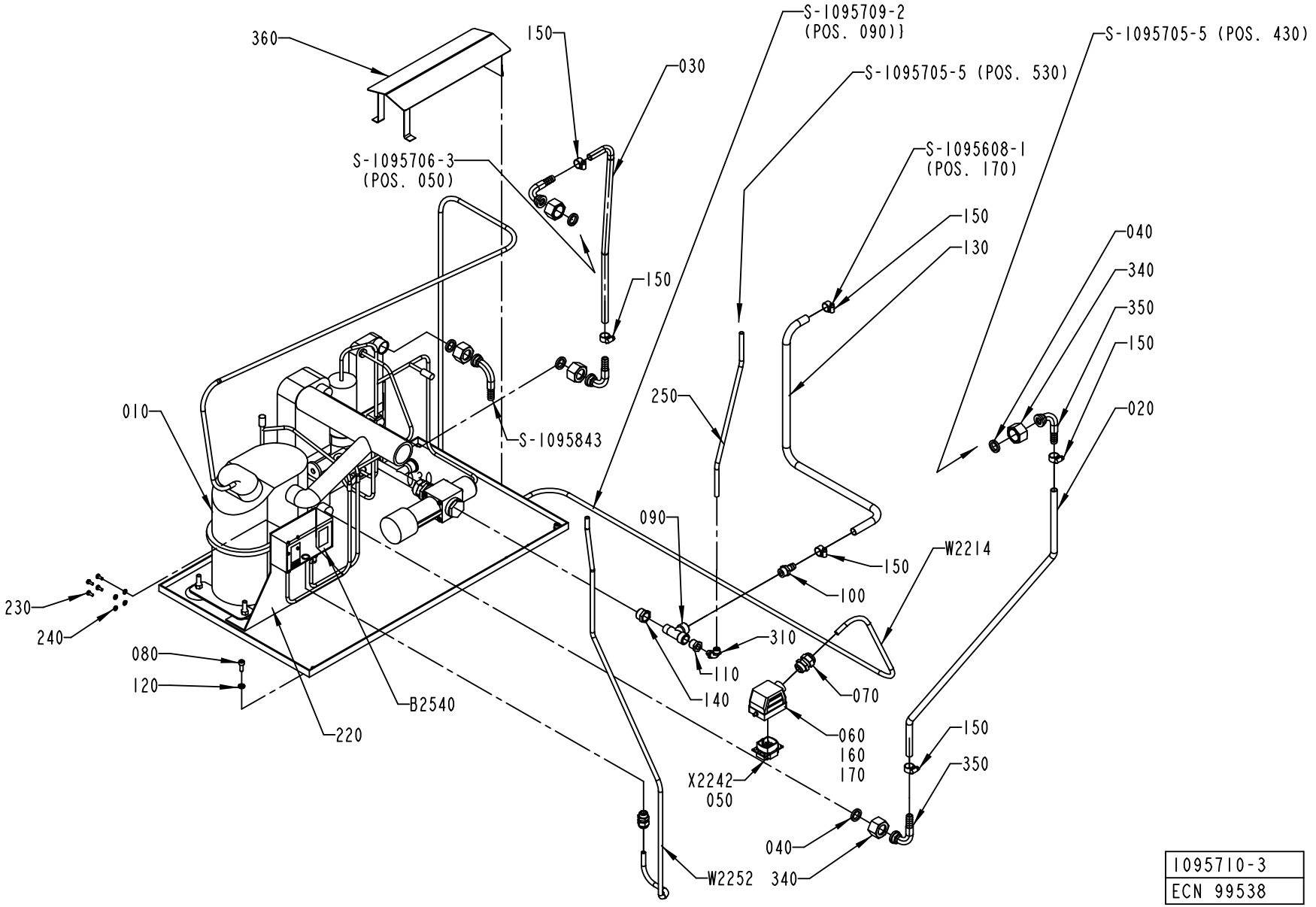

1095710-3
ECN 99538

ECM: 100249 - 20020812
Group number: 1095710-0300
Assembly Drawing: 1095710-3_1_AC

Issue: 20021030

Pos	Part No	SP	UN	Qty	Description	Page No
Common Parts						
010	1140603-0000	A		1	COMPRESSOR UNIT	
020	90166-0121	-	MM	930	HOSE	
030	90166-0121	-	MM	840	HOSE	
040	315229-0102	-		5	GASKETS, 16,8X23,8X3,7 MM 3/4" FDA	
050	90110-0159	A		1	MALE INSERT 70.310.0640.0	
060	90110-0226	A		1	CABLE HOOD 6-POL 70.350.0628.0	
070	352103-0108	-		1	CABLE GLAND, ST 13,5 , PR20,4/PG13,5	
080	312115-0368	-		2	SCREW MC6S M6X16 A280	
090	90140-0023	-		1	T-PIPE, INT. THREAD, NO. 2070-3/8-3/8	
100	90163-0041	-		1	HOSE NIPPLE, EXT.THR. 3/8-12 MM	
110	342701-0202	-		1	BUSHING,INT./EXT.G-THREAD G3/8"-G1/8"	
120	315115-0153	-		2	WASHER PLAIN, TBRB 6,4/12 H=3	
130	90166-0121	-	MM	705	HOSE	
140	342701-0206	-		1	BUSHING,INT./EXT.G-THREAD G1/2"-G3/8"	
150	342991-0101	-		6	HOSE CLIP,WORM DRIVE TYPE (13)-16	
160	359005-0050	-		1	MARKING LABEL KIT X, 04.841.4550.0	
170	359005-0010	-		1	MARKING LABEL KIT 0 - 9, 04.841.2150.0	
220	1361560-0000	-		1	PLATE	
230	312132-0289	-		4	SCREW SLOT. PAN HEAD MSCS M4X10	
240	90062-0029	-		4	WASHER LOCK 5,1X 8,6, T= 1,5 DIN 7980	
250	90166-0118	-	MM	500	TUBE 8 MM PA BLACK	
310	342931-0121	-		1	ELBOW 90 COUPL.,EXT.THREAD 8/6-G1/8"	
340	2531423-0000	-		5	NUT	
350	2531245-0000	-		5	HOSE NIPPLE	
360	2532574-0000	-		1	COVER	
B2540	90274-0108	A		1	DUAL PRESSURE GUARD, -20 - 2800 KPA	
W 2214	351150-0418	-	MM	3500	CABLE OLFLEX 4X2,5 MM2 LIGHT/GREY	
W2252	351150-0431	-	MM	1000	CABLE OLFLEX 2X0,75 MM2 LIGHT/GREY	

Pos	Part No	SP	UN	Qty	Description	Page No

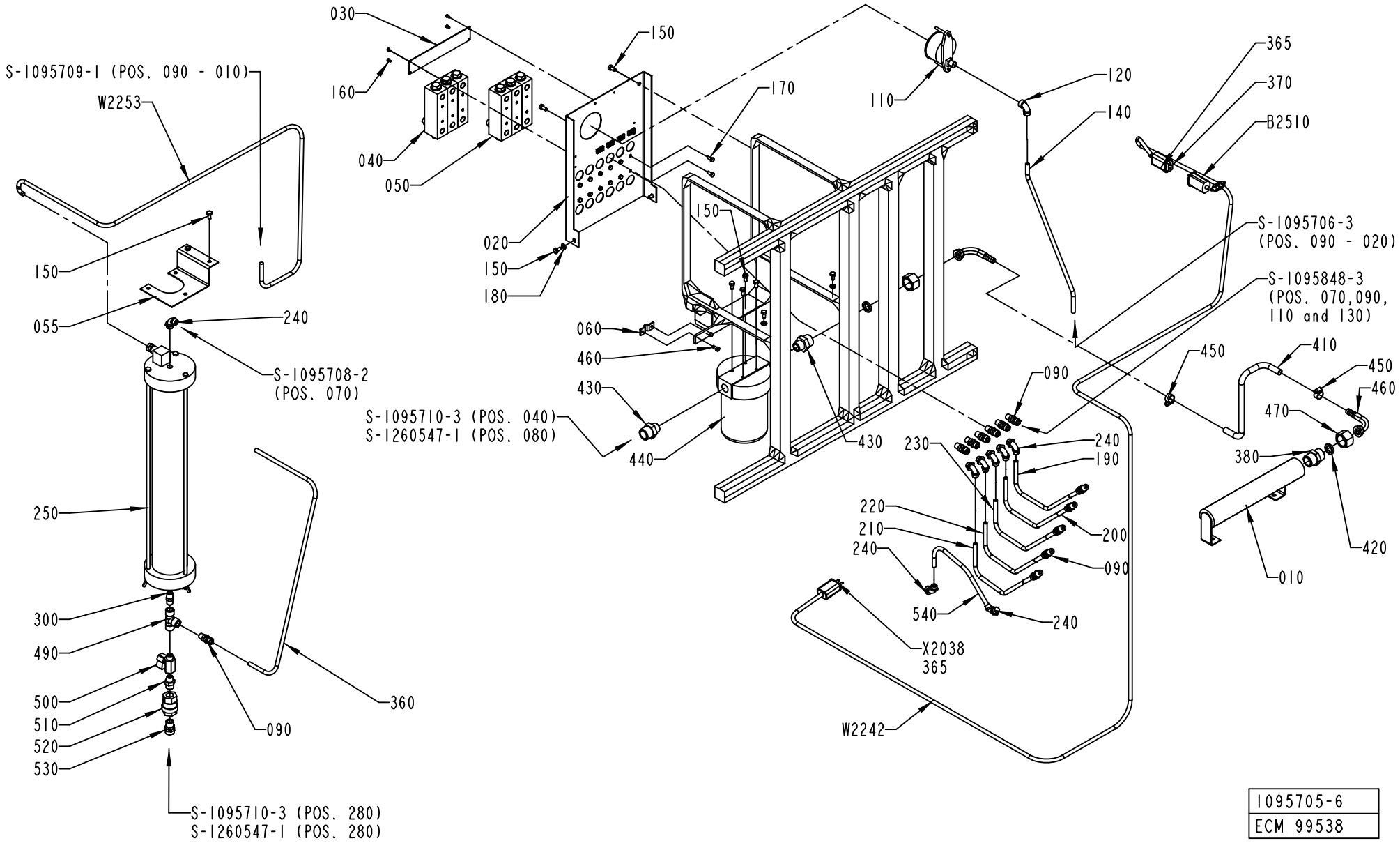

1095705-6
ECM 99538

ECM: 100735 - 20020812
Group number: 1095705-0300
Assembly Drawing: 1095705-6_1_AA

Issue: 20021030

Pos	Part No	SP	UN	Qty	Description	Page No
TBA/22						
030	1129004-0000	-		1	SIGN LANGUAGEINDEPENDENT	
050	B1041046-0000	-		3	FLOW METER	
	90243-0113	*-*		*1*	*FLOW METER*	
090	342922-0122	-		12	STRAIG.COUPL.,ADJUST.,EXT.THRE.8/6-R1/4"	
170	312105-0327	-		14	SCREW M6S ISO 4017 M5X12 A480	
240	342931-0122	-		8	ELBOW 90 COUPL.,EXT.THREAD 8/6-G1/4"	
540	90166-0118	-	MM	700	TUBE 8 MM PA BLACK	
Common Parts						
010	1041984-0000	-		1	ATTACHMENT PIPE	
020	1041959-0000	-		1	PIVOT BRACKET	
040	B1041046-0000	A		3	FLOW METER	
	90243-0113	*-*		*1*	*FLOW METER*	
055	1041944-0000	-		1	BRACKET	
060	1260248-0000	-		1	CLAMP	
110	90043-0100	B		1	PRESSURE GAUGE, 2948 D=63 MM	
120	342933-0122	-		1	ELBOW 90 COUPL.,INT.THREAD 8/6-G1/4"	
140	90166-0118	-	MM	490	TUBE 8 MM PA BLACK	
150	312105-0366	-		12	SCREW M6S M6X12 A280	
160	312125-0220	-		4	SCREW SLOT.PAN HD. MCS 3X6 A480	
180	315105-0153	-		4	WASHER PLAIN, BRB, 6,4/12,H=1,5	
190	90166-0118	-	MM	255	TUBE 8 MM PA BLACK	
200	90166-0118	-	MM	255	TUBE 8 MM PA BLACK	
210	90166-0118	-	MM	255	TUBE 8 MM PA BLACK	
220	90166-0118	-	MM	255	TUBE 8 MM PA BLACK	
230	90166-0118	-	MM	255	TUBE 8 MM PA BLACK	
250	B90415-0060	A		1	DEIONIZER FILTER, 190035	
	90415-0354	*C*		*1*	*DEIONIZER CARTRIDGE / ART.NO. 190055*	
270	90099-0110	-		1	NUT, PR 22,5 (PG16)	
300	90330-0043	-		1	NIPPLES, EXT. THREAD. R-207R1/4	
320	342722-0206	-		1	STRAIGHT COUPLING D=8-G3/8"	
360	90166-0118	-	MM	800	TUBE 8 MM PA BLACK	
365	90326-0012	-		2	PROTECTIVE COVER, T31A4618	
370	90326-0020	-		1	PLUG, FEMALE YELLOW CR-AL	
380	90330-0004	-		1	NIPPLES,HEXAGON,EXT.R-THREAD R3/4"-R3/4"	
410	90166-0121	-	MM	400	HOSE	
420	315229-0102	-		2	GASKETS, 16,8X23,8X3,7 MM 3/4" FDA	
430	90330-0080	-		2	NIPPLES, EXT. THREAD. R3/4-R1/2	
440	B90415-0065	A		1	FILTER	
010	*90415-0357*	*-*		*1*	*FILTER INSERT*	
450	342991-0101	-		2	HOSE CLIP,WORM DRIVE TYPE (13)-16	
460	2531245-0000	-		2	HOSE NIPPLE	
470	2531423-0000	-		2	NUT	
490	90140-0018	-		1	T-PIPE, INT. THREAD, 2003-1/4	
500	90187-0045	-		1	BALL VALVE G1/4 CR PL	
510	90330-0083	-		1	NIPPLES, EXT. THREAD. R3/8-R1/4	
520	90230-0028	-		1	NON-RETURN VALVE H 151 R 3/8"	
530	342920-0123	-		1	STRAIGHT COUPLING,EXT.THREADED 8/6-R3/8"	
B 2510	90326-0057	A		1	THERMOCOUPLE, CR-AL	
B 2520	90326-0020	A		1	PLUG, FEMALE YELLOW CR-AL	
W 2242	90220-0034	A	MM	3000	THERMOCOUPLE CABLE K/ 2X0,5MM2	
W 2253	351150-0431	-	MM	1400	CABLE OLFLEX 2X0,75 MM2 LIGHT/GREY	
X 2038	90326-0022	A		1	PLUG, MALE YELLOW CR-AL	

Machine Type	Group Description	Used-In	Group Number	Page No

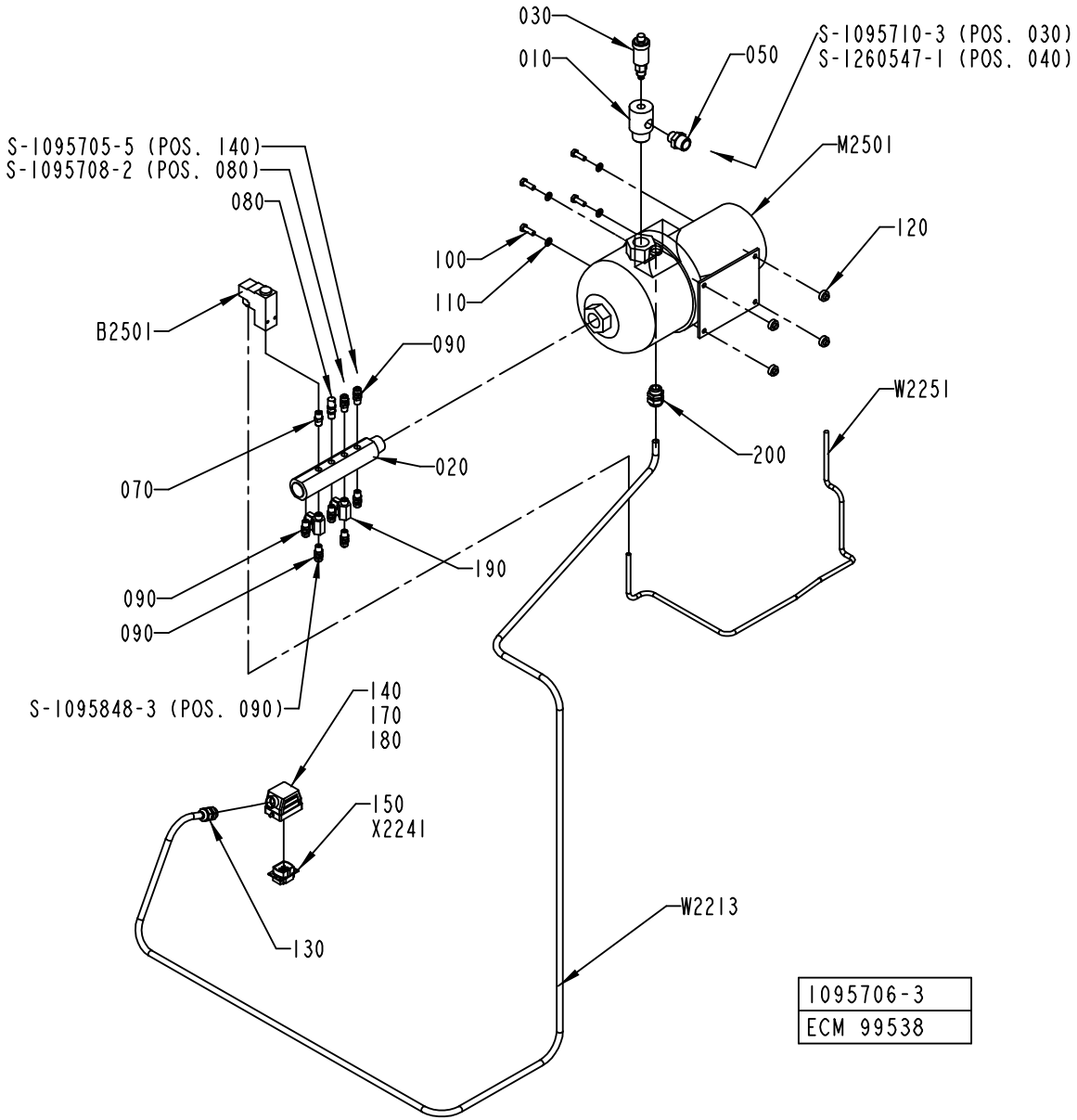
030
010
050
S-1095710-3 (POS. 030)
S-1260547-1 (POS. 040)
M2501
120
S-1095705-5 (POS. 140)
S-1095708-2 (POS. 080)
080
100
110
B2501
090
W2251
200
020
070
190
090
090
S-1095848-3 (POS. 090)
140
170
180
150
X2241
130
W2213
1095706-3
ECM 99538

ECM: 100819 - 20020812
Group number: 1095706-0300
Assembly Drawing: 1095706-3_1_AC

Issue: 20021030

Pos	Part No	SP	UN	Qty	Description	Page No
Common Parts						
010	2532806-0000	B		1	ATTACHMENT PIPE	
020	1129066-0000	-		1	RETURN PIPE	
030	90187-0105	-		1	PURGING VALVE, G3/8 FOR WATER	
050	90330-0080	-		1	NIPPLES, EXT. THREAD. R3/4-R1/2	
070	90330-0043	-		1	NIPPLES, EXT. THREAD. R-207R1/4	
080	90230-0041	A		1	OVERPRESSURE VALVE SS-4 CPA2-RTDG-3	
090	342922-0122	-		7	STRAIG.COUPL.,ADJUST.,EXT.THRE.8/6-R1/4"	
100	312105-0453	-		4	SCREW M6S ISO 4017 M8X25 A480	
110	315105-0165	-		4	WASHER PLAIN, BRB, 8,4/16,H=1,5	
120	90015-0037	B		4	RUBBER BUSHING	
130	352103-0108	-		1	CABLE GLAND, ST 13,5 , PR20,4/PG13,5	
140	90110-0226	A		1	CABLE HOOD 6-POL 70.350.0628.0	
150	90110-0159	A		1	MALE INSERT 70.310.0640.0	
170	359005-0050	-		1	MARKING LABEL KIT X, 04.841.4550.0	
180	359005-0010	-		1	MARKING LABEL KIT 0 - 9, 04.841.2150.0	
190	90187-0045	-		2	BALL VALVE G1/4 CR PL	
200	352103-0110	-		1	CABLE GLAND, STR 16, PR22,5/PG16	
B 2501	90274-0056	A		1	PRESSURE SWITCH, 100 - 1200 KPA	
M 2501	B90321-0116	A		1	PUMP GRUNDFOSS CHI 2-60	
	90321-0618	-		*1*	*SEAL KIT FOR REPAIR OF PUMP*	
W 2213	351150-0418	-	MM	3000	CABLE OLFLEX 4X2,5 MM2 LIGHT/GREY	
W 2251	351150-0122	-	MM	1000	CABLE " REPL.BY 351150-431"	

Pos	Part No	SP	UN	Qty	Description	Page No

Machine Type | Group Description | Used-In | Group Number | Page No

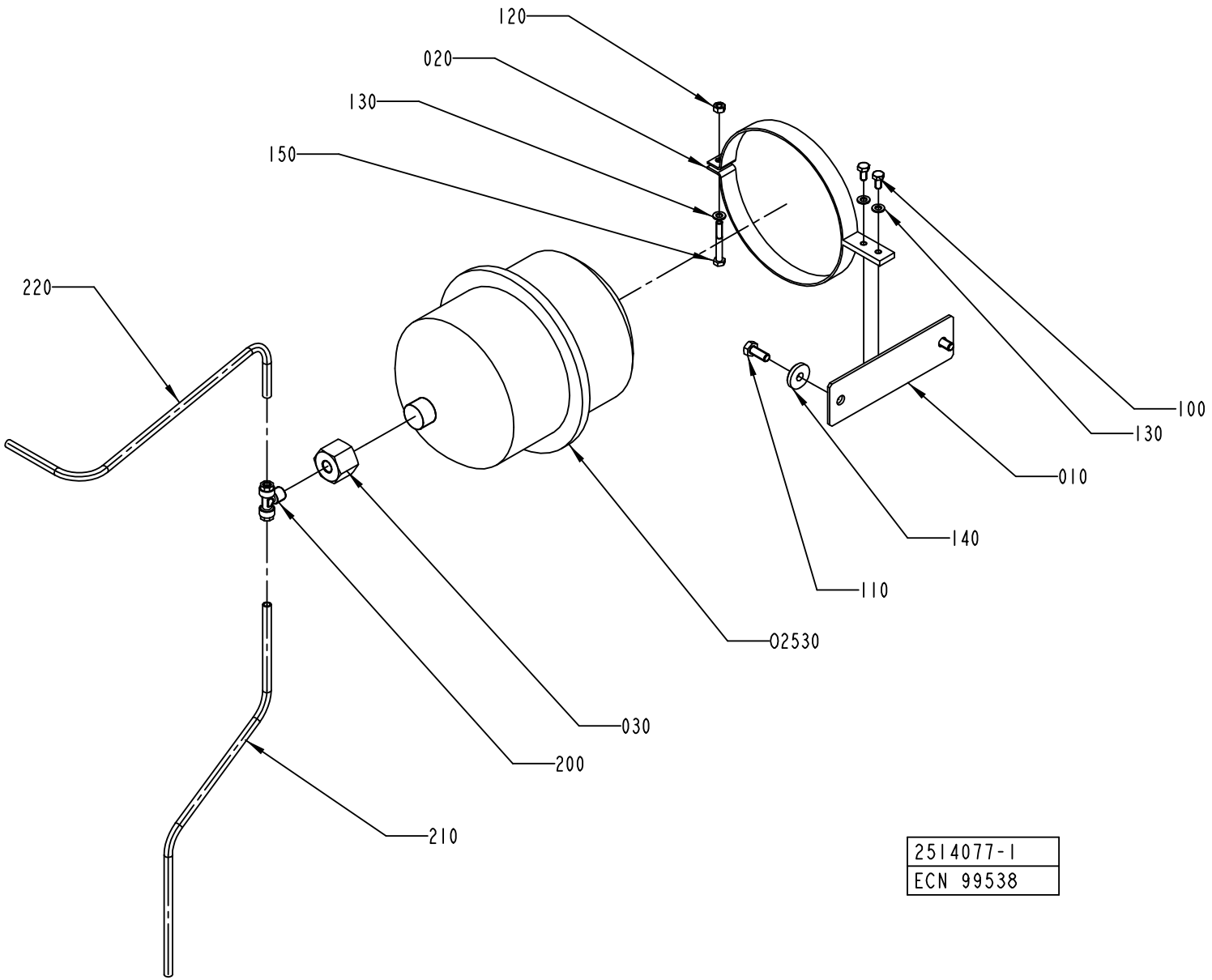
120
020
130
150
220
100
130
010
140
110
02530
030
200
210
2514077-1
ECN 99538

ECM: 99575 - 20020812
Group number: 2514077-0100
Assembly Drawing: 2514077-1_1_AA

Issue: 20021030

Pos	Part No	SP	UN	Qty	Description	Page No
Common Parts						
010	2514087-0000	-		1	PLATE	
020	1484081-0000	-		1	BRACKET	
030	2514083-0000	-		1	REDUCTION NIPPLE	
100	312105-0366	-		2	SCREW M6S M6X12 A280	
110	312105-0451	-		2	SCREW M6S ISO 4017 M8X20 A480	
120	312605-0316	-		1	HEXAGON NUT, M6M M6 A280	
130	315105-0153	-		3	WASHER PLAIN, BRB, 6,4/12,H=1,5	
140	315125-0165	-		2	WASHER PLAIN ROUND,CHAMF. 8,4/26, H=5	
150	312105-0379	-		1	SCREW M6S ISO 4014 M6X45 A480	
200	342940-0122	-		1	T-COUPLING,EXT.THREAD 8/6-R1/4"	
210	90166-0118	-	MM	450	TUBE 8 MM PA BLACK	
220	90166-0118	-	MM	500	TUBE 8 MM PA BLACK	
O2530	90304-0020	-		1	LIQUID CONTAINER	

Pos	Part No	SP	UN	Qty	Description	Page No

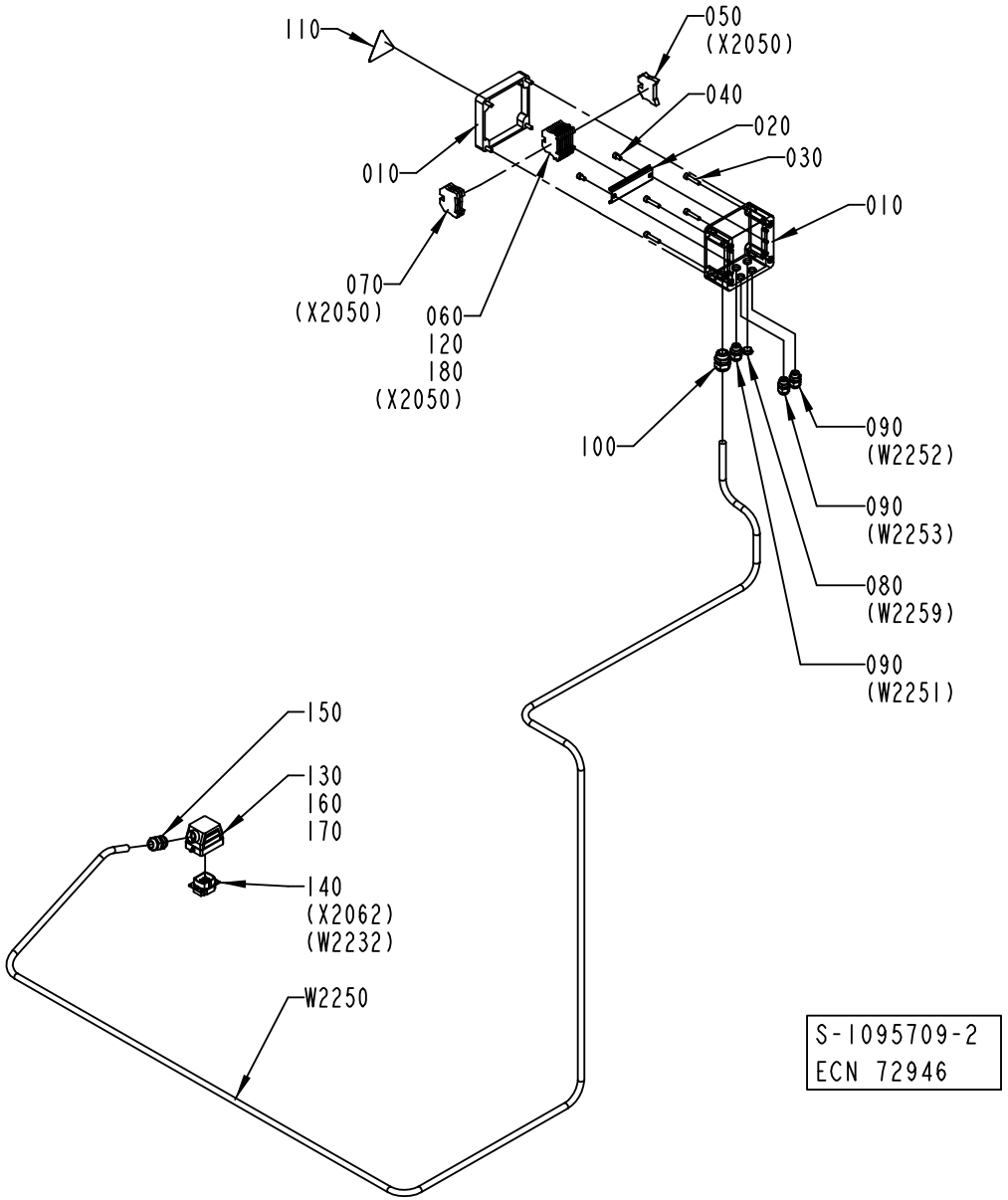
110
050
(X2050)
040
020
030
010
010
070
(X2050)
060
120
180
(X2050)
100
090
(W2252)
090
(W2253)
080
(W2259)
090
(W2251)
150
130
160
170
140
(X2062)
(W2232)
W2250
S-1095709-2
ECN 72946

ECM: 89428 - 20010203
Group number: 1095709-0200
Assembly Drawing: 1095709-2_1_AB

Issue: 20021030

Pos	Part No	SP	UN	Qty	Description	Page No
Common Parts						
010	1041943-0000	-		1	CONNECTION BOX	
020	1129210-0000	-		1	MOUNTING RAIL	
030	312115-0374	-		4	SCREW MC6S M6X30 A280	
040	312115-0364	-		2	SCREW HEX.SOCK.HD.MC6S-TT 6X10 A480	
050	353031-0203	-		1	END SUPPORT, WEW 35/2	
060	353021-0216	-		8	FEED THROUGH TERMINAL, 10200.8	
070	353024-0205	-		3	EARTH TERMINAL, 1010.1	
080	90002-0013	-		1	BLANK-OFF PLUG, PR 15,2 SKINDICHT-BLK9	
090	352103-0101	-		3	CABLE GLAND, ST 9, PR15,2/PG9	
100	352103-0110	-		1	CABLE GLAND, STR 16, PR22,5/PG16	
110	90194-0016	-		1	SIGN, FLASH, ELECTRIC EQUIPMENT SYMBOL	
120	359011-0809	-		1	MARKING PLATES 5-FW 101-150	
130	90110-0226	A		1	CABLE HOOD 6-POL 70.350.0628.0	
140	90110-0159	A		1	MALE INSERT 70.310.0640.0	
150	352103-0108	-		1	CABLE GLAND, ST 13,5 , PR20,4/PG13,5	
160	359005-0050	-		1	MARKING LABEL KIT X, 04.841.4550.0	
170	359005-0010	-		1	MARKING LABEL KIT 0 - 9, 04.841.2150.0	
180	353034-0030	-		1	BRIDGE CONNECTOR WQV 2,5/10, 10544.6	
W2250	351150-0406	-	MM	3500	CABLE OLFLEX 7X0,75 MM2 LIGHT/GREY	

Pos	Part No	SP	UN	Qty	Description	Page No

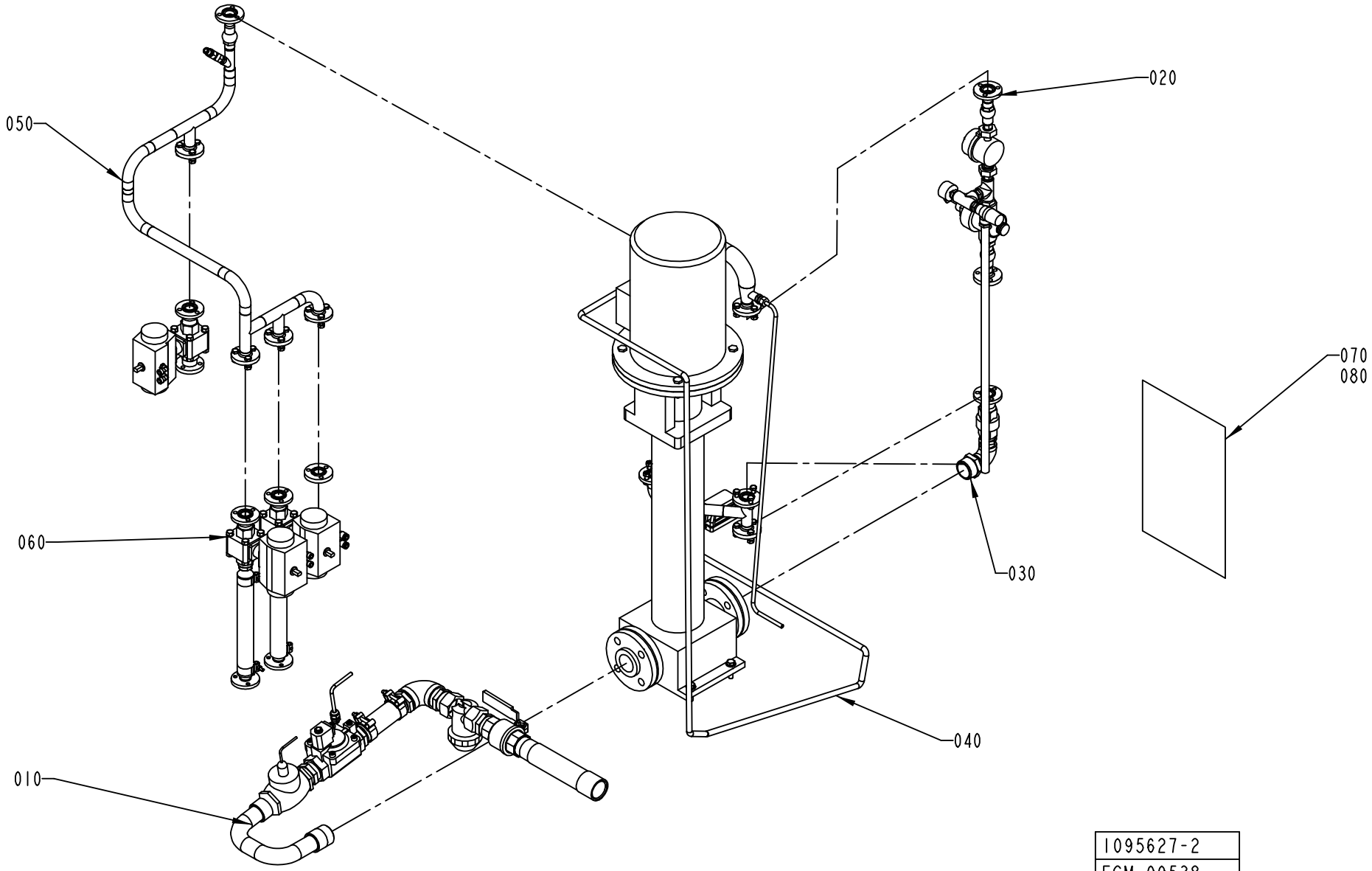

1095627-2
ECM 99538

ECM: 102578 - 20020812
Group number: 1095627-0300
Assembly Drawing: 1095627-2_1_AB

Issue: 20021030

Pos	Part No	SP	UN	Qty	Description	Page No
Common Parts						
010	A1095672-0100	-		1	PIPE	**437**
020	A1095673-0100	-		1	SIDE	**439**
030	A1095675-0100	-		1	PIPE	**441**
040	A1095676-0100	-		1	PUMP	**443, 445**
050	A1095677-0100	-		1	BRANCHING PIPE	**447**
060	A1095678-0300	-		1	BALL VALVE	**449**
080	1129456-0000	-		1	EXTERNAL CLEANING DIAGRAM	

Pos	Part No	SP	UN	Qty	Description	Page No

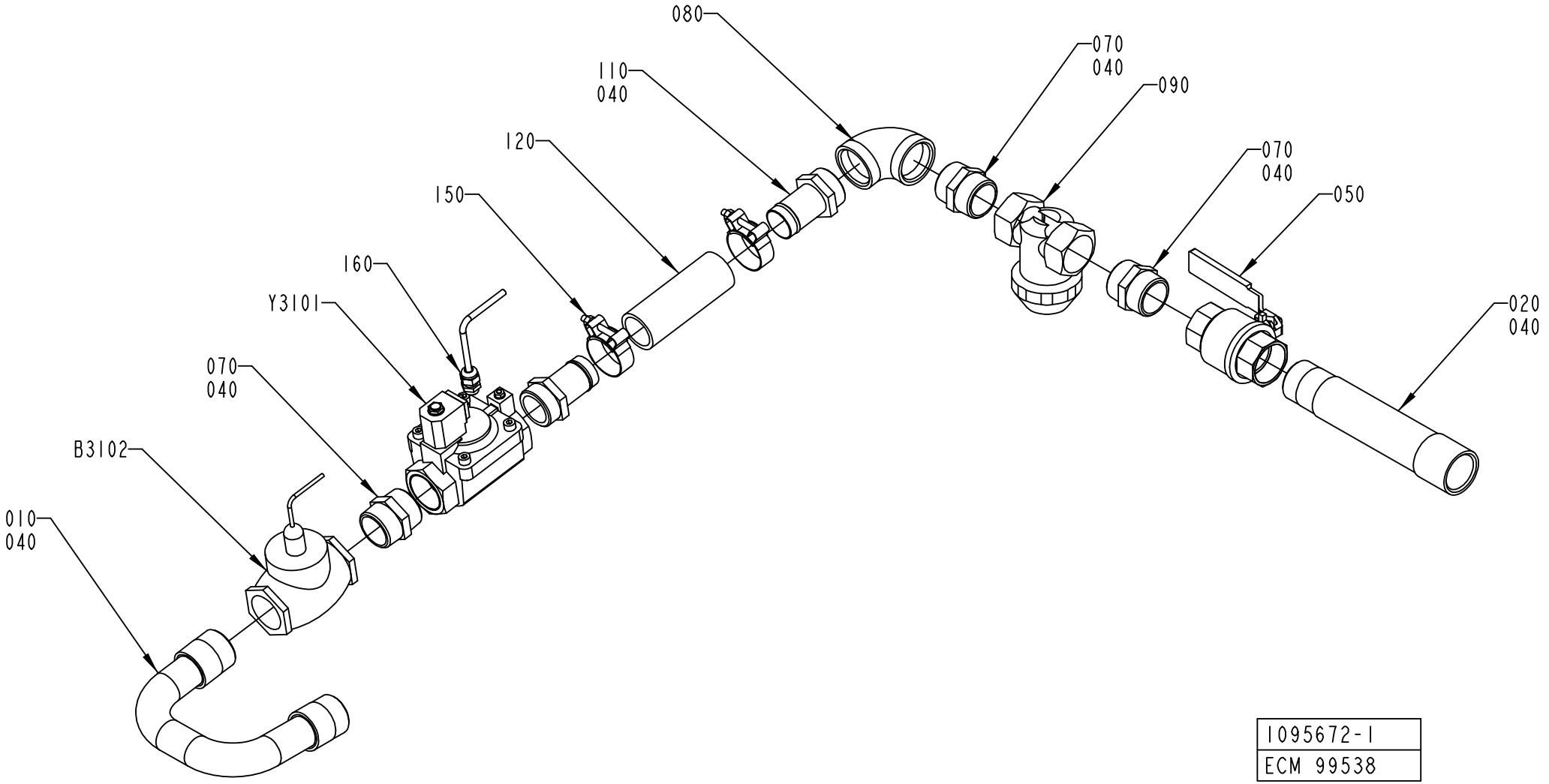
080
070
040
090
110
040
120
070
040
050
150
160
Y3101
020
040
070
040
B3102
010
040
1095672-1
ECM 99538

ECM: 102579 - 20020812
Group number: 1095672-0100
Assembly Drawing: 1095672-1_1_AD

Issue: 20021030

Pos	Part No	SP	UN	Qty	Description	Page No
Common Parts						
010	1041925-0000	-		1	PIPE	
020	1041926-0000	-		1	PIPE	
040	90144-0007	-	MM	1	TAPE	
050	90187-0147	B		1	BALL VALVE G11/2	
070	90330-0056	-		3	NIPPLES, EXT. THREAD. R-207 KR11/2	
080	90330-0057	-		1	ELBOW, 90 INT. THREAD, R-222R11/2	
090	B90415-0032	A		1	FILTER / 3-02-00-1 1/2"	
	90415-0328	*C*		*1*	*FILTER INSERT*	
110	90055-0166	-		2	HOSE NIPPLE, EXT.THR. R11/2X38 MM	
120	90166-0236	-	MM	150	HOSE, 38/51 REINFORCED RUBBER	
150	90458-2850	-		2	HOSE CLIP , 51 MM	
160	352103-0101	-		1	CABLE GLAND, ST 9, PR15,2/PG9	
B3102	B90274-0082	A		1	FLOW SWITCH, 2 - 3 L/MIN	
	90274-0322	*C*		*1*	*SPARE PART KIT*	
W2222	351150-0403	-	M	2	CABLE OLFLEX 3X0,75 MM2 LIGHT/GREY	
Y3101	B90042-0254	A		1	SOLENOID VALVE, R1 1/2	
	90042-0557	*-*		*1*	*COIL V24DC-N3*	
	90458-2575	*-*		*1*	*DIAPHRAGM, R450466/B FOR 90042-0254*	

Pos	Part No	SP	UN	Qty	Description	Page No

Machine Type | Group Description | Used-In | Group Number | Page No

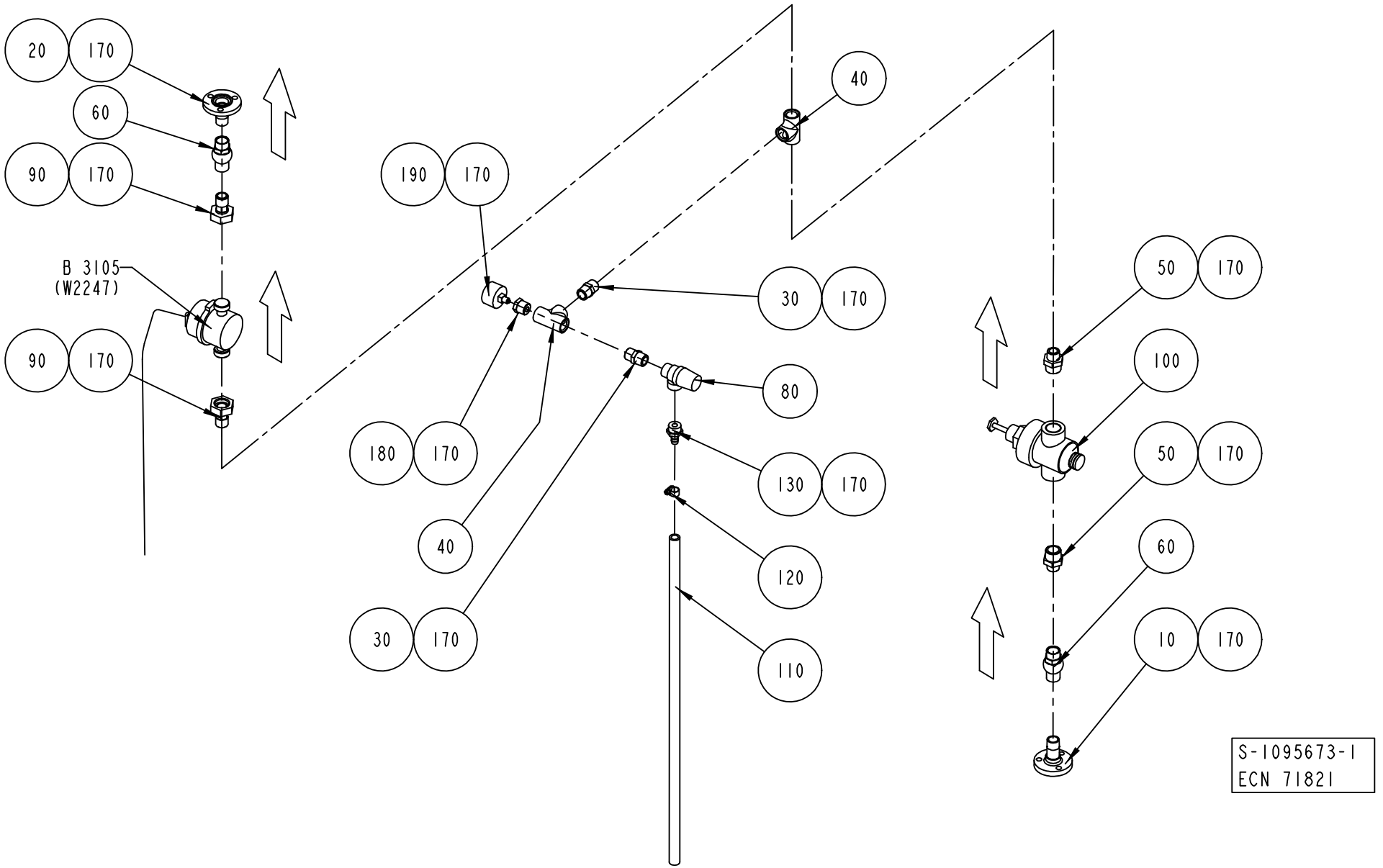
20
170
60
90
170
B 3105
(W2247)
90
170
190
170
40
30
170
80
180
170
130
170
40
120
30
170
110
50
170
100
50
170
60
10
170
S-1095673-1
ECN 71821

ECM: 89430 - 20010203
Group number: 1095673-0100
Assembly Drawing: 1095673-1_1_AD

Issue: 20021030

Pos	Part No	SP	UN	Qty	Description	Page No
Common Parts						
010	1036826-0000	-		1	PIPE	
020	1036827-0000	-		1	PIPE	
030	90330-0021	-		2	NIPPLES, EXT. THREAD. R-207R1/2	
040	90330-0049	-		2	T-PIPE, INT. THREAD, R-221R1/2	
050	90330-0080	-		2	NIPPLES, EXT. THREAD. R3/4-R1/2	
060	90230-0042	-		2	NON-RETURN VALVE 1/2"	
080	90187-0133	-		1	SAFETY VALVE, 10 BARS, R1/2, R1/2	
090	B90030-0465	-		2	STRAIGHT CONNECTION, MAD DN 15	
	90005-0156	*C*		*1*	*WASHER PLAIN ROUND 16/24, H=1,5*	
100	90113-0098	A		1	PRESSURE REGULATOR	
110	90166-0121	-	MM	700	HOSE	
120	342991-0100	-		1	HOSE CLIP,WORM DRIVE TYPE 10-13	
130	342901-0105	-		1	HOSE NIPPLE, EXT.THR. R1/2-12 MM	
170	90144-0007	-	MM	1	TAPE	
180	90330-0036	-		1	BUSHING, INT/EXT. THR. RP1/8-RP1/2	
190	90043-0043	B		1	PRESSURE GAUGE WIEGAND 0-10 BAR 1/8"	
B3105	90243-0245	A		1	MEASURING INSTRUMENT	

Pos	Part No	SP	UN	Qty	Description	Page No

Machine Type | Group Description | Used-In | Group Number | Page No

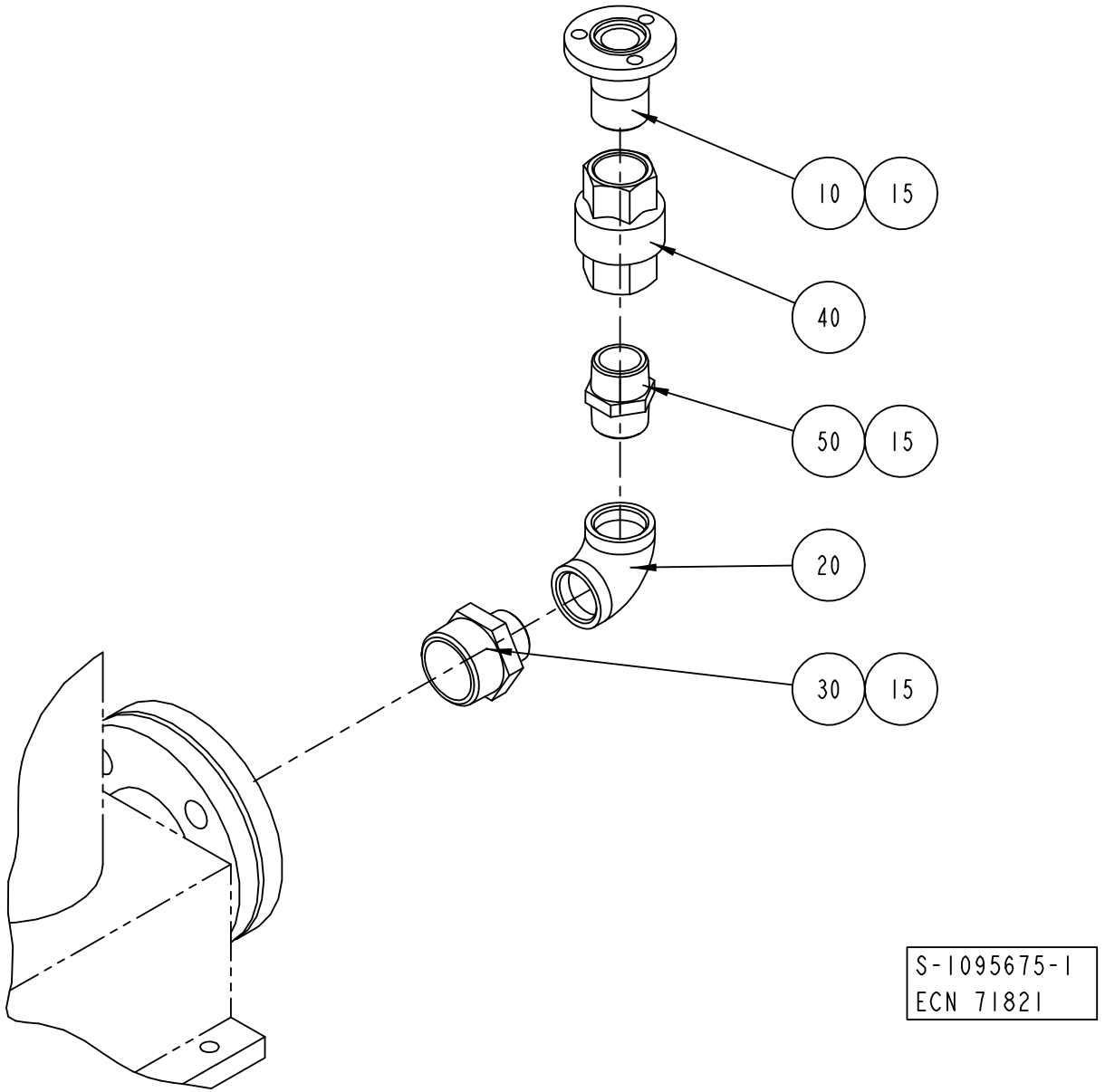
10
15
40
50
15
20
30
15
S-1095675-1
ECN 71821

ECM: 89431 - 20010203
Group number: 1095675-0100
Assembly Drawing: 1095675-1_1_AB

Issue: 20021030

Pos	Part No	SP	UN	Qty	Description	Page No
Common Parts						
010	1036794-0000	-		1	PIPE	
015	90144-0007	-	MM	1	TAPE	
020	90330-0014	-		1	ELBOW, 90 INT. THREAD, R-222R1	
030	90330-0045	-		1	NIPPLES, EXT. THREAD. R-209 KR11/2- KR1	
040	B90230-0044	A		1	NON-RETURN VALVE 1"	
	90230-0308	*C*		*1*	*GASKET KIT*	
050	342203-0120	-		1	NIPPLES, EXT. THREAD, HEXAGON,ÿNO. 209	

Pos	Part No	SP	UN	Qty	Description	Page No

Machine Type | Group Description | Used-In | Group Number | Page No

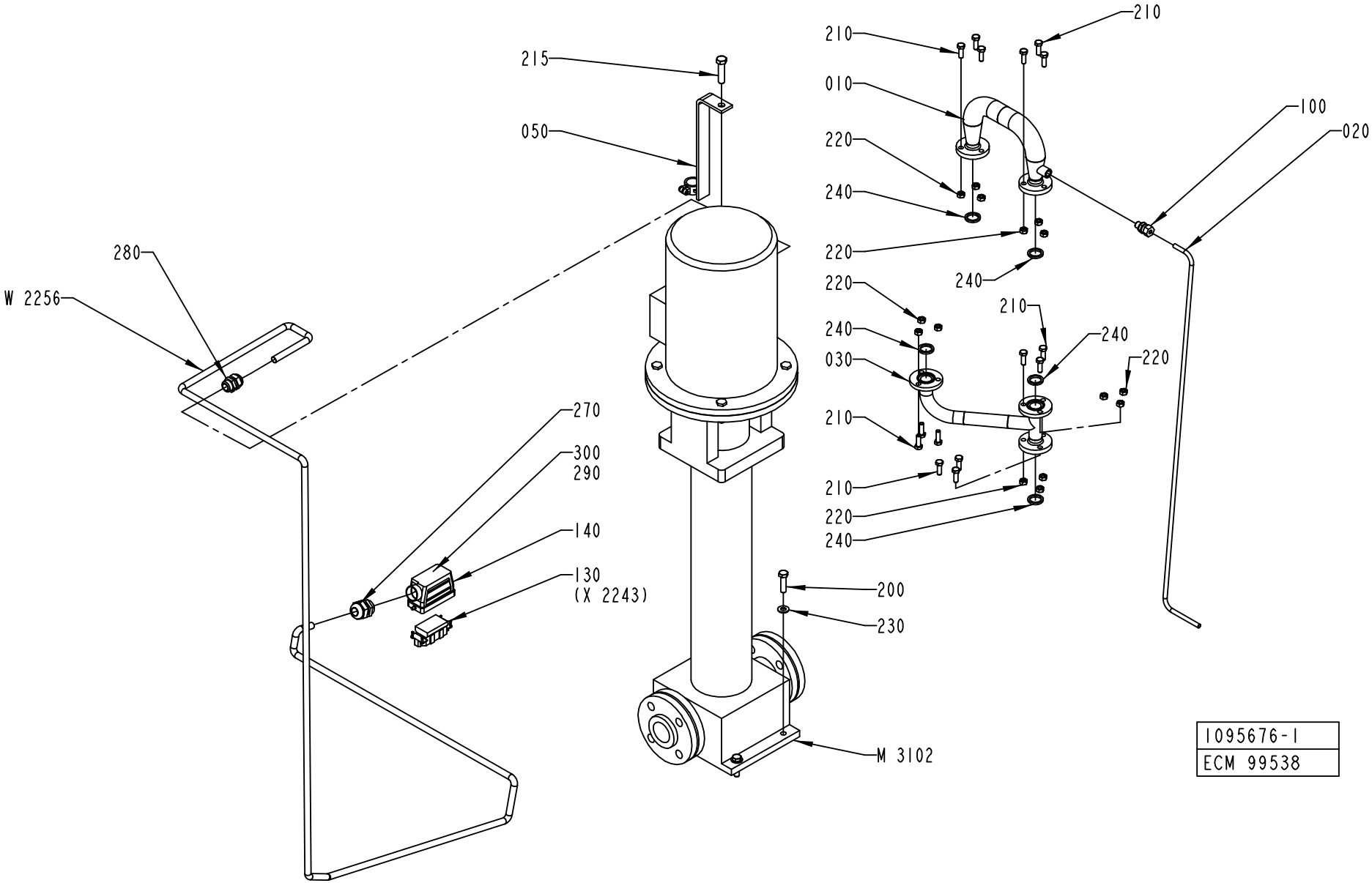
210
210
215
010
050
220
240
100
020
280
220
240
W 2256
220
210
240
240
030
220
270
210
300
290
140
210
130
(X 2243)
220
240
200
230
M 3102
1095676-1
ECM 99538

Pos	Part No	SP	UN	Qty	Description	Page No
TBA/22 50HZ						
050	1140670-0000	-		1	BRACKET	
M3102	B90321-0117	A		1	PUMP LOWARA SV8-14 F75T	
	90321-0593	*-*		*1*	*SEAL*	
TBA/22 60HZ						
050	1499786-0000	-		1	BRACKET	
M3102	B90321-0120	A		1	PUMP SV8-09 F756T, 380V60HZ	
	90321-0593	*-*		*1*	*SEAL*	
Common Parts						
010	1036828-0000	B		1	TANK	
030	1041946-0000	-		1	PIPE	
100	90030-0185	-		1	CONN. STR. GA-8-G1/4	
130	90110-0156	A		1	MALE INSERT 70.210.0653.0	
140	90110-0227	A		1	CABLE HOOD 6-16-POL 71.350.1628.0	
200	312105-0499	-		4	SCREW M6S ISO 4014 M10X40 A480	
210	312105-0453	-		15	SCREW M6S ISO 4017 M8X25 A480	
215	312105-0542	-		1	SCREW M6S ISO 4014 M12X50 A480	
220	312605-0318	-		15	HEXAGON NUT, M6M M8 A280	
230	315105-0173	-		4	WASHER PLAIN, BRB, 10,5/22,H=2	
240	315229-0103	A		5	GASKETS, 23,1X30,1X3,7 MM 1" FDA	
270	352103-0115	-		1	CABLE GLAND, STR 21, PR28,3/PG21	
280	352103-0111	-		1	CABLE GLAND, ST 16, PR22,5/PG16	
290	359005-0010	-		2	MARKING LABEL KIT 0 - 9, 04.841.2150.0	
300	359005-0050	-		1	MARKING LABEL KIT X, 04.841.4550.0	
W2256	351150-0166	-	MM	3300	CABLE OLFLEX 4X4 MM2 LIGHT/GREY	

Pos	Part No	SP	UN	Qty	Description	Page No

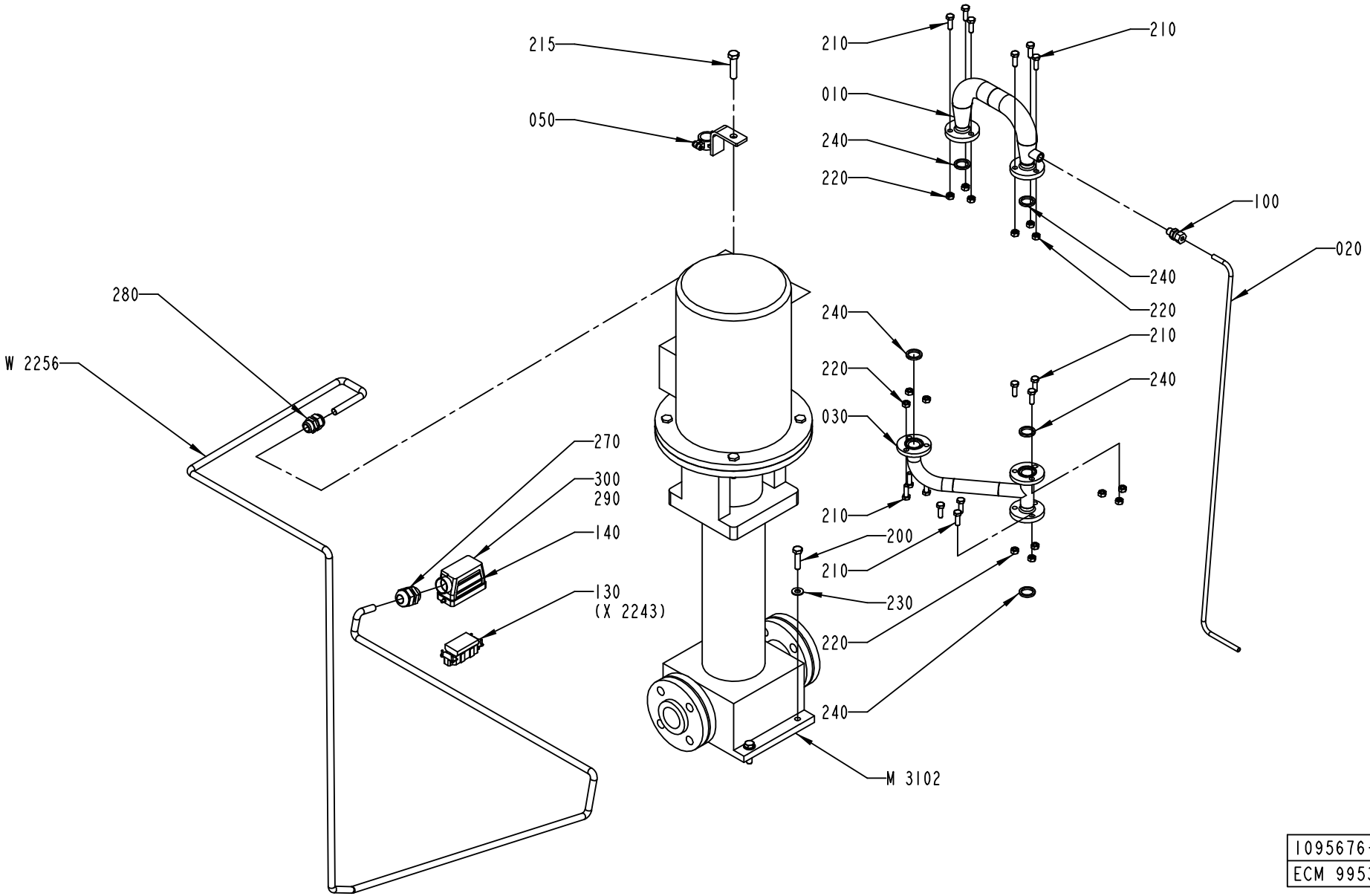

1095676-2
ECM 99538

ECM: 100900 - 20020812
Group number: 1095676-0100
Assembly Drawing: 1095676-2_1_AA

Issue: 20021030

Pos	Part No	SP	UN	Qty	Description	Page No
TBA/22 50HZ						
050	1140670-0000	-		1	BRACKET	
M3102	B90321-0117	A		1	PUMP LOWARA SV8-14 F75T	
	90321-0593	*-*		*1*	*SEAL*	
TBA/22 60HZ						
050	1499786-0000	-		1	BRACKET	
M3102	B90321-0120	A		1	PUMP SV8-09 F756T, 380V60HZ	
	90321-0593	*-*		*1*	*SEAL*	
Common Parts						
010	1036828-0000	B		1	TANK	
030	1041946-0000	-		1	PIPE	
100	90030-0185	-		1	CONN. STR. GA-8-G1/4	
130	90110-0156	A		1	MALE INSERT 70.210.0653.0	
140	90110-0227	A		1	CABLE HOOD 6-16-POL 71.350.1628.0	
200	312105-0499	-		4	SCREW M6S ISO 4014 M10X40 A480	
210	312105-0453	-		15	SCREW M6S ISO 4017 M8X25 A480	
215	312105-0542	-		1	SCREW M6S ISO 4014 M12X50 A480	
220	312605-0318	-		15	HEXAGON NUT, M6M M8 A280	
230	315105-0173	-		4	WASHER PLAIN, BRB, 10,5/22,H=2	
240	315229-0103	A		5	GASKETS, 23,1X30,1X3,7 MM 1" FDA	
270	352103-0115	-		1	CABLE GLAND, STR 21, PR28,3/PG21	
280	352103-0111	-		1	CABLE GLAND, ST 16, PR22,5/PG16	
290	359005-0010	-		2	MARKING LABEL KIT 0 - 9, 04.841.2150.0	
300	359005-0050	-		1	MARKING LABEL KIT X, 04.841.4550.0	
W2256	351150-0166	-	MM	3300	CABLE OLFLEX 4X4 MM2 LIGHT/GREY	

Pos	Part No	SP	UN	Qty	Description	Page No

Machine Type | Group Description | Used-In | Group Number | Page No

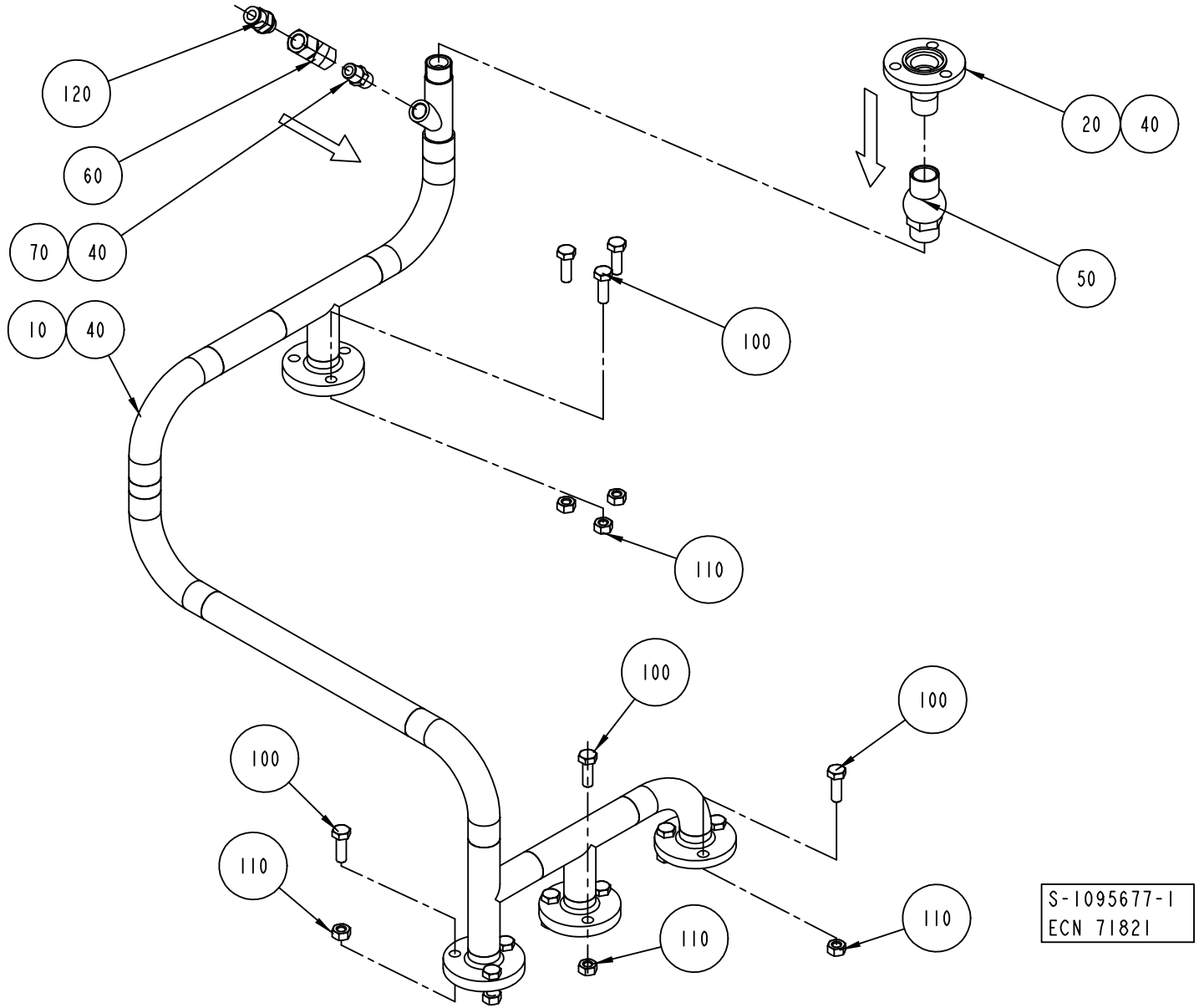
120
60
70
40
10
40
20
40
50
100
110
100
100
100
110
110
110
S-1095677-1
ECN 71821

ECM: 89433 - 20010203
Group number: 1095677-0100
Assembly Drawing: 1095677-1_1_AB

Issue: 20021030

Pos	Part No	SP	UN	Qty	Description	Page No
Common Parts						
010	1041934-0000	-		1	PIPE	
020	1036827-0000	-		1	PIPE	
040	90144-0007	-	MM	1	TAPE	
050	90230-0042	A		1	NON-RETURN VALVE 1/2"	
060	90235-0151	A		1	NON-RETURN VALVE	
070	90330-0043	-		1	NIPPLES, EXT. THREAD. R-207R1/4	
100	312115-0453	-		12	SCREW MC6S M8X25 A280	
110	312605-0318	-		12	HEXAGON NUT, M6M M8 A280	
120	342722-0205	-		1	STRAIGHT COUPLING D=8-G1/4"	

Pos	Part No	SP	UN	Qty	Description	Page No

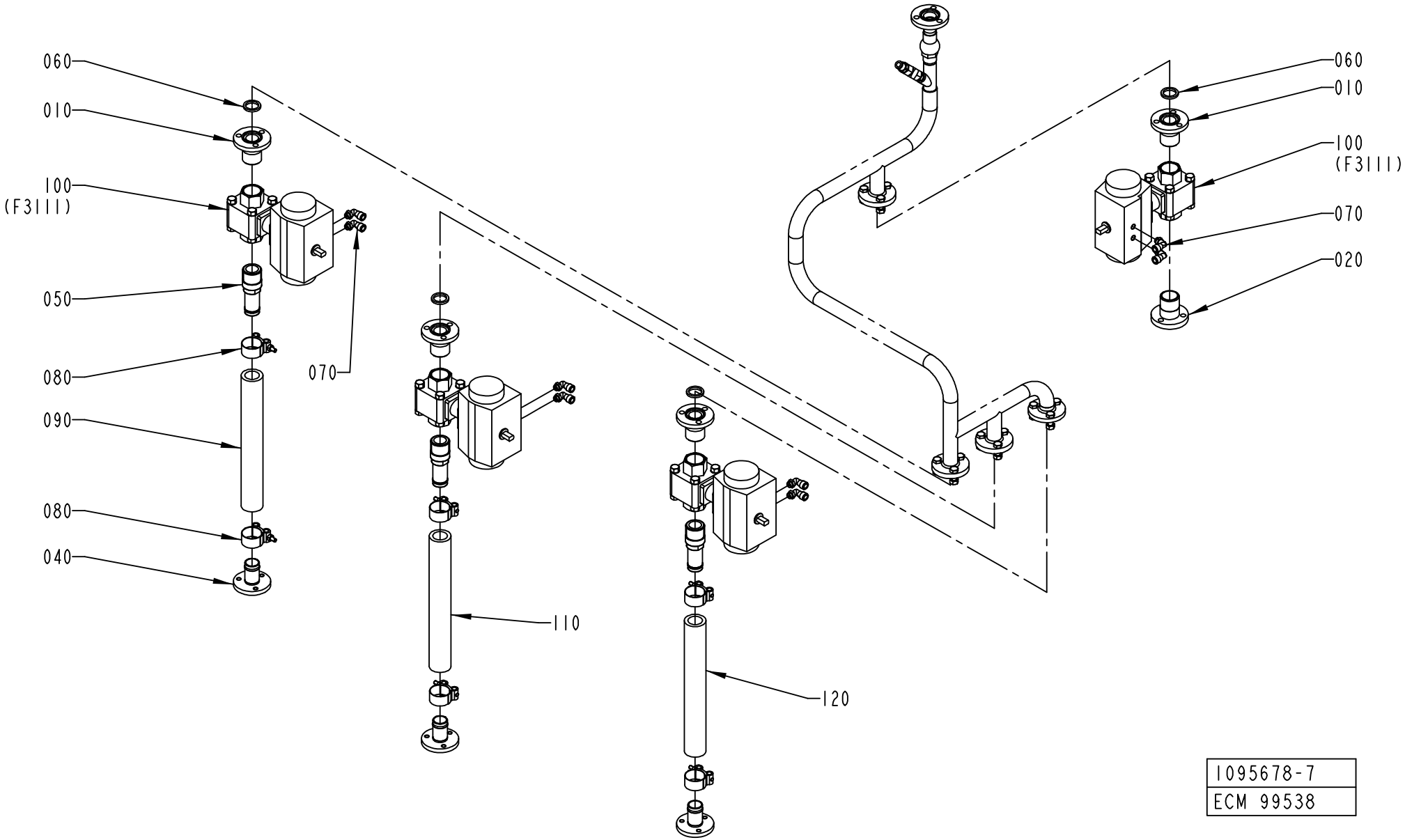

1095678-7
ECM 99538

Pos	Part No	SP	UN	Qty	Description	Page No
TBA/22						
010	2522148-0000	-		4	PIPE	
020	2522184-0000	-		2	PIPE	
040	1195466-0000	-		3	PIPE	
050	1487023-0000	-		3	PIPE	
070	90458-2964	-		8	ELBOW PIPE JOINT, EXT.THREAD, D=8MM-G1/8	
080	90165-0147	-		6	HOSE CLIP	
100	B90187-0148	-		4	BALL VALVE G1	
	90187-0319	*-*		*1*	*GASKET UNIT*	
120	90166-0233	-	MM	300	HOSE	
Common Parts						
060	315229-0103	A		4	GASKETS, 23,1X30,1X3,7 MM 1" FDA	
090	90166-0233	-	MM	300	HOSE	
110	90166-0233	-	MM	300	HOSE	

Pos	Part No	SP	UN	Qty	Description	Page No

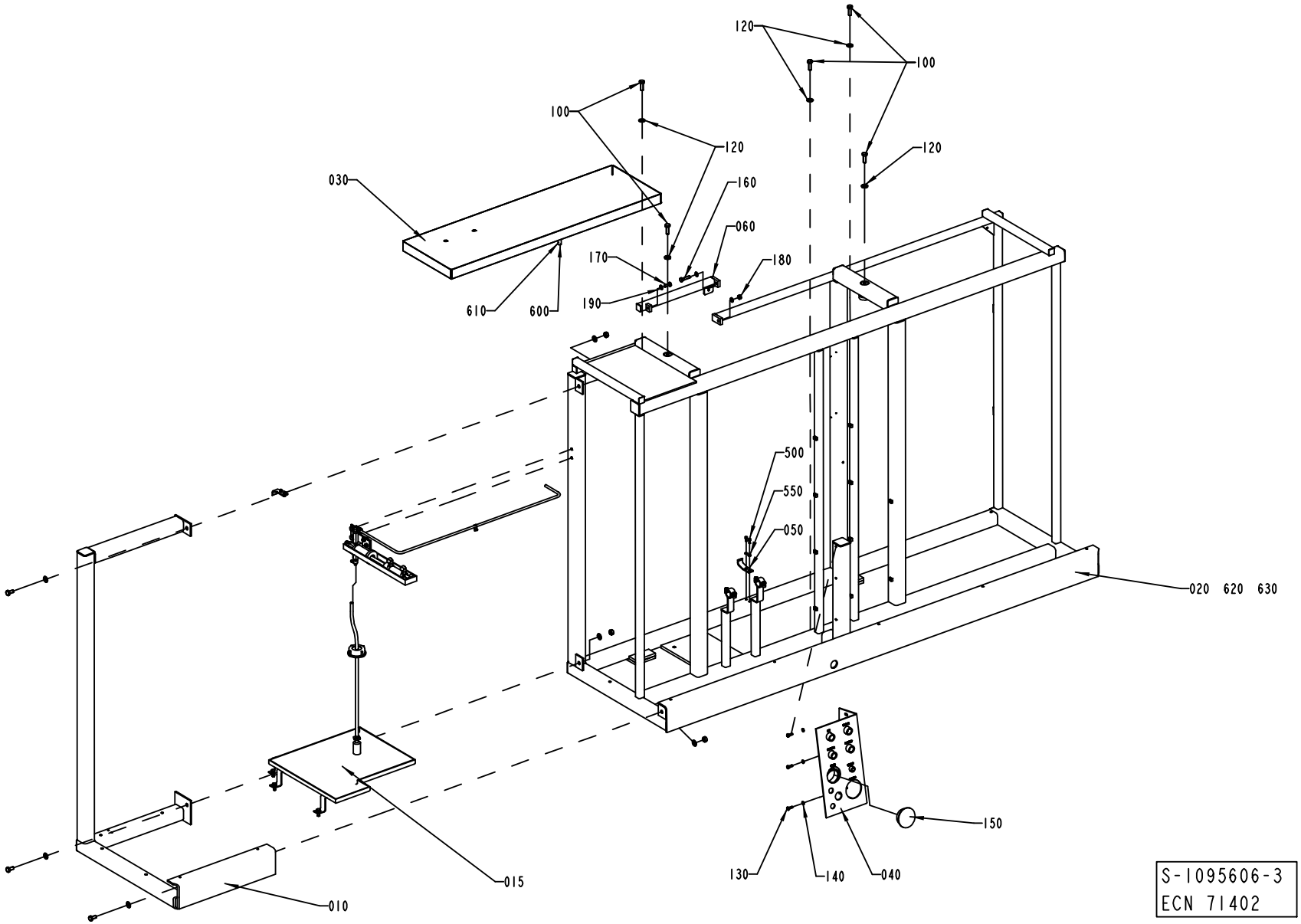
120
100
100
120
120
030
160
060
170
180
610
600
190
500
550
050
020 620 630
015
010
150
130
140
040
S-1095606-3
ECN 71402

Pos	Part No	SP	UN	Qty	Description	Page No
TBA/22						
015	A1478943-0100	-		1	CHEMICALS UNIT	**453**
Common Parts						
010	A1095882-0200	-		1	FRAME SECTION	**455**
020	1255295-0000	-		1	MACHINE BODY	
030	1041963-0000	-		1	WASTE BOX	
040	1129387-0000	-		1	CONNECTION TABLE	
050	1036227-0000	-		1	BRACKET	
060	1255293-0000	-		1	CROSS BAR	
100	312105-0495	-		5	SCREW M6S ISO 4017 M10X30 A480	
120	315105-0173	-		5	WASHER PLAIN, BRB, 10,5/22,H=2	
130	312105-0368	-		3	SCREW M6S M6X16 A280	
140	315105-0153	-		3	WASHER PLAIN, BRB, 6,4/12,H=1,5	
150	90261-0069	-		1	PLUG, BLIND, PLASTIC, NO. 055-0615	
160	312109-0457	-		1	SCREW M6S ISO 4017 M8X35 A480	
170	315105-0165	-		3	WASHER PLAIN, BRB, 8,4/16,H=1,5	
180	312605-0318	-		1	HEXAGON NUT, M6M M8 A280	
190	312105-0451	-		1	SCREW M6S ISO 4017 M8X20 A480	
200	312105-0449	-		2	SCREW M6S ISO 4017 M8X16 A480	
210	315105-0165	-		2	WASHER PLAIN, BRB, 8,4/16,H=1,5	
220	2524363-0000	-		1	HANGER	
500	312115-0327	-		2	SCREW MC6S M5X12 A280	
550	315105-0146	-		2	WASHER PLAIN, BRB, 5,3/10,H=1	
600	90166-0121	-	MM	500	HOSE	
610	342991-0102	-		1	HOSE CLIP,WORM DRIVE TYPE (16)-19	
620	352113-0205	-		15	ANCHOR PLATES FOR STRIPS, TYPE TM2S8-C10	
630	312125-0287	-		15	SCREW PAN HEAD MCS M4X8 SS	

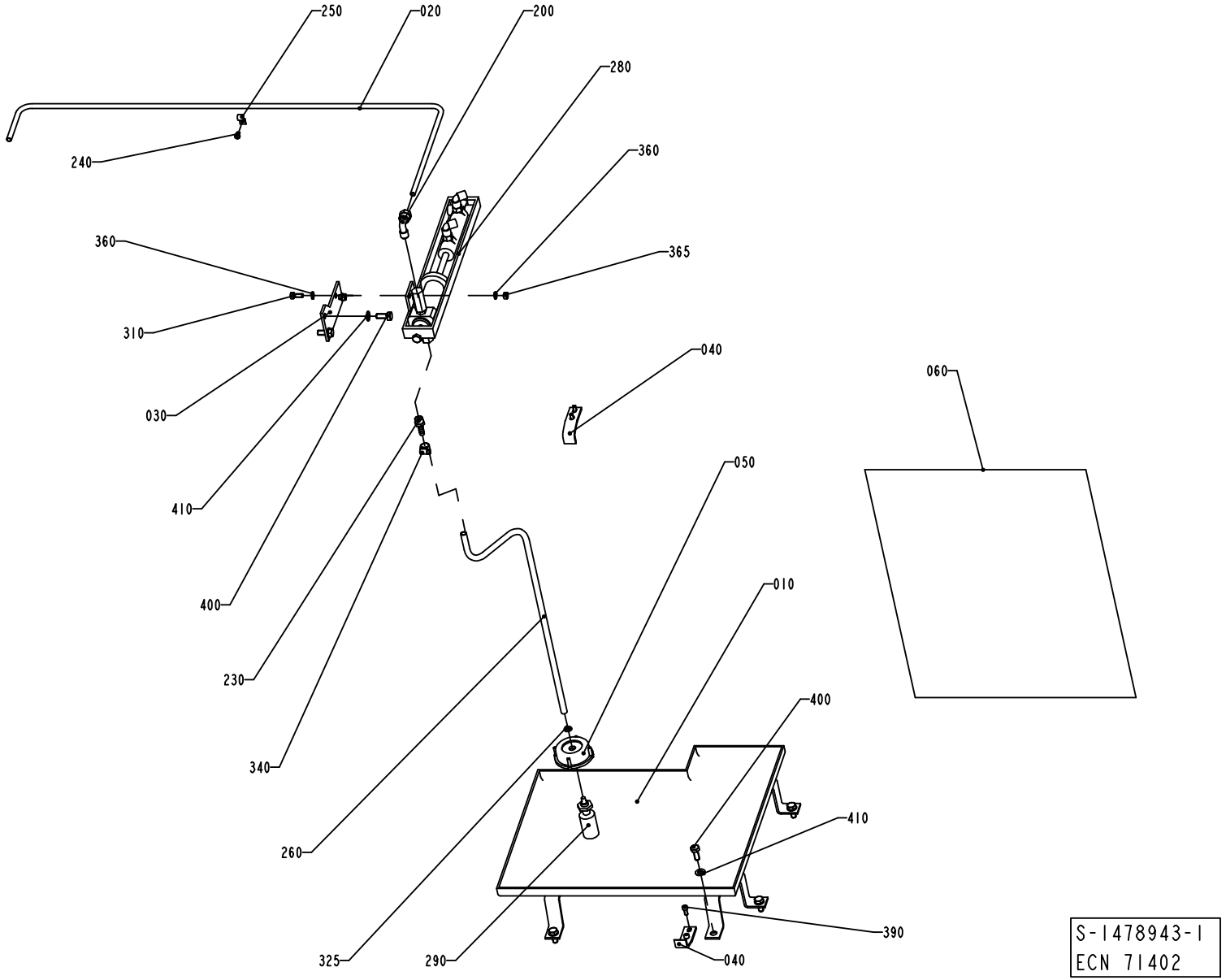
250
020
200
280
240
360
360
365
310
040
030
060
050
410
400
010
230
400
340
410
260
390
325
290
040
S-1478943-1
ECN 71402

ECM: 89435 - 20010203
Group number: 1478943-0100
Assembly Drawing: 1478943-1_1_AA

Issue: 20021030

Pos	Part No	SP	UN	Qty	Description	Page No
Common Parts						
010	1484885-0000	-		1	SPLASH PLATE	
020	1484888-0000	-		1	PIPE	
030	1484887-0000	-		1	PLATE	
040	1036227-0000	-		2	BRACKET	
050	1129432-0000	-		1	LID	
060	1484511-0000	-		1	WATER DIAGRAM	
200	90030-0071	-		1	CONN. ELBOW WA 8-R1/4	
230	90055-0132	-		1	HOSE NIPPLE, EXT.THR. R1/4X7,8 MM	
240	312125-0323	-		1	SCREW PAN HEAD MCS M5X8 SS	
250	316810-0106	-		1	PIPE CLIP FOR TUBE D=8 MM	
260	90166-0008	-	MM	750	HOSE 7/10 PVC TRANSP.	
280	1038628-0000	A		1	PUMP	
290	90321-0396	A		1	FILTER	
310	312105-0368	-		2	SCREW M6S M6X16 A280	
325	315204-0207	A		1	O-RING 8,3X2,4 MM	
340	342991-0100	-		1	HOSE CLIP,WORM DRIVE TYPE 10-13	
360	315105-0153	-		4	WASHER PLAIN, BRB, 6,4/12,H=1,5	
365	312605-0316	-		2	HEXAGON NUT, M6M M6 A280	
390	312115-0327	-		4	SCREW MC6S M5X12 A280	
400	312105-0451	-		7	SCREW M6S ISO 4017 M8X20 A480	
410	315105-0165	-		7	WASHER PLAIN, BRB, 8,4/16,H=1,5	

Pos	Part No	SP	UN	Qty	Description	Page No

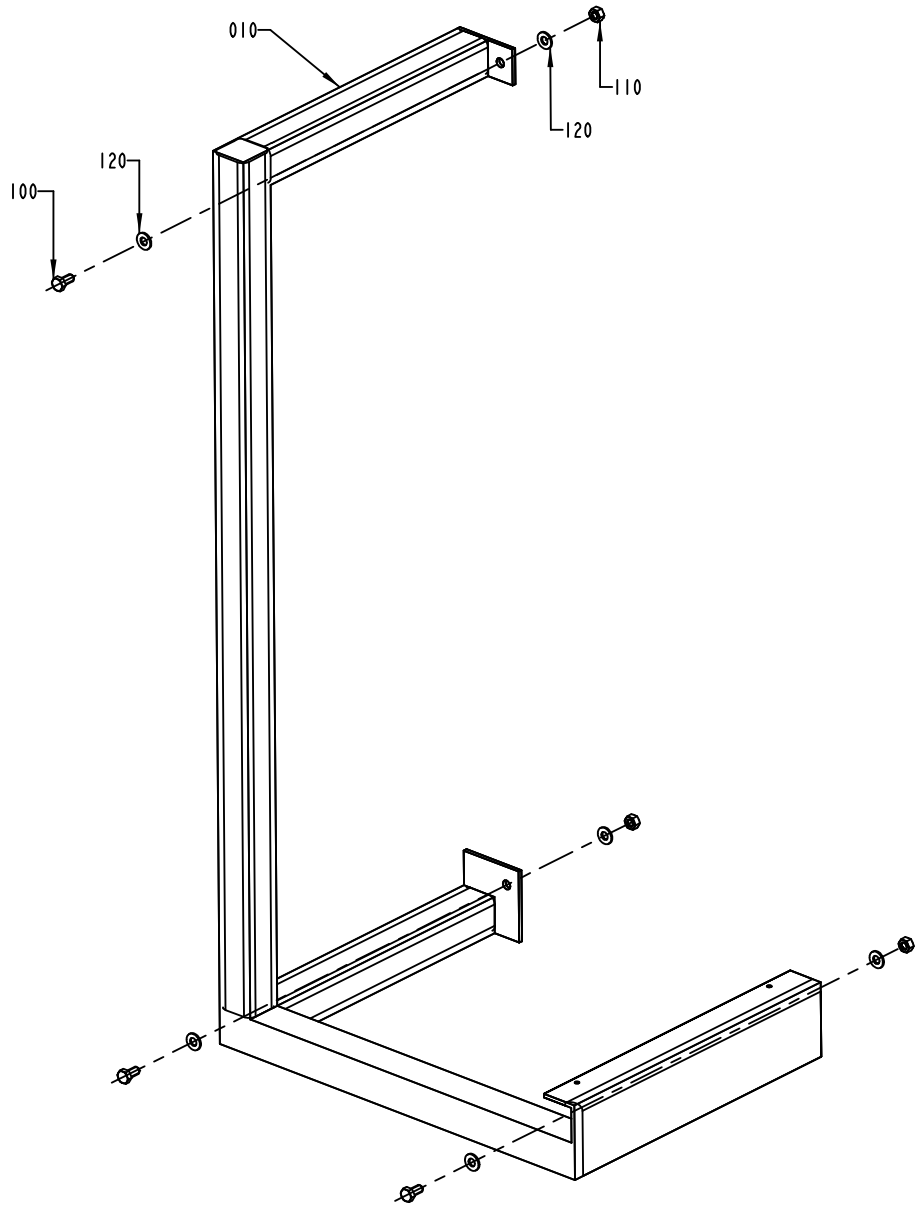
010
110
120
120
100

ECM: 70357 - 19970613
Group number: 1095882-0200
Assembly Drawing: 1095882-2_1_AB

Issue: 20021030

Pos	Part No	SP	UN	Qty	Description	Page No
Common Parts						
010	1255294-0000	-		1	FRAME SECTION	
100	312105-0491	-		3	SCREW M6S ISO 4017 M10X20 A480	
110	312605-0320	-		3	HEXAGON NUT, M6M M10 A280	
120	315105-0173	-		6	WASHER PLAIN, BRB, 10,5/22,H=2	

Pos	Part No	SP	UN	Qty	Description	Page No

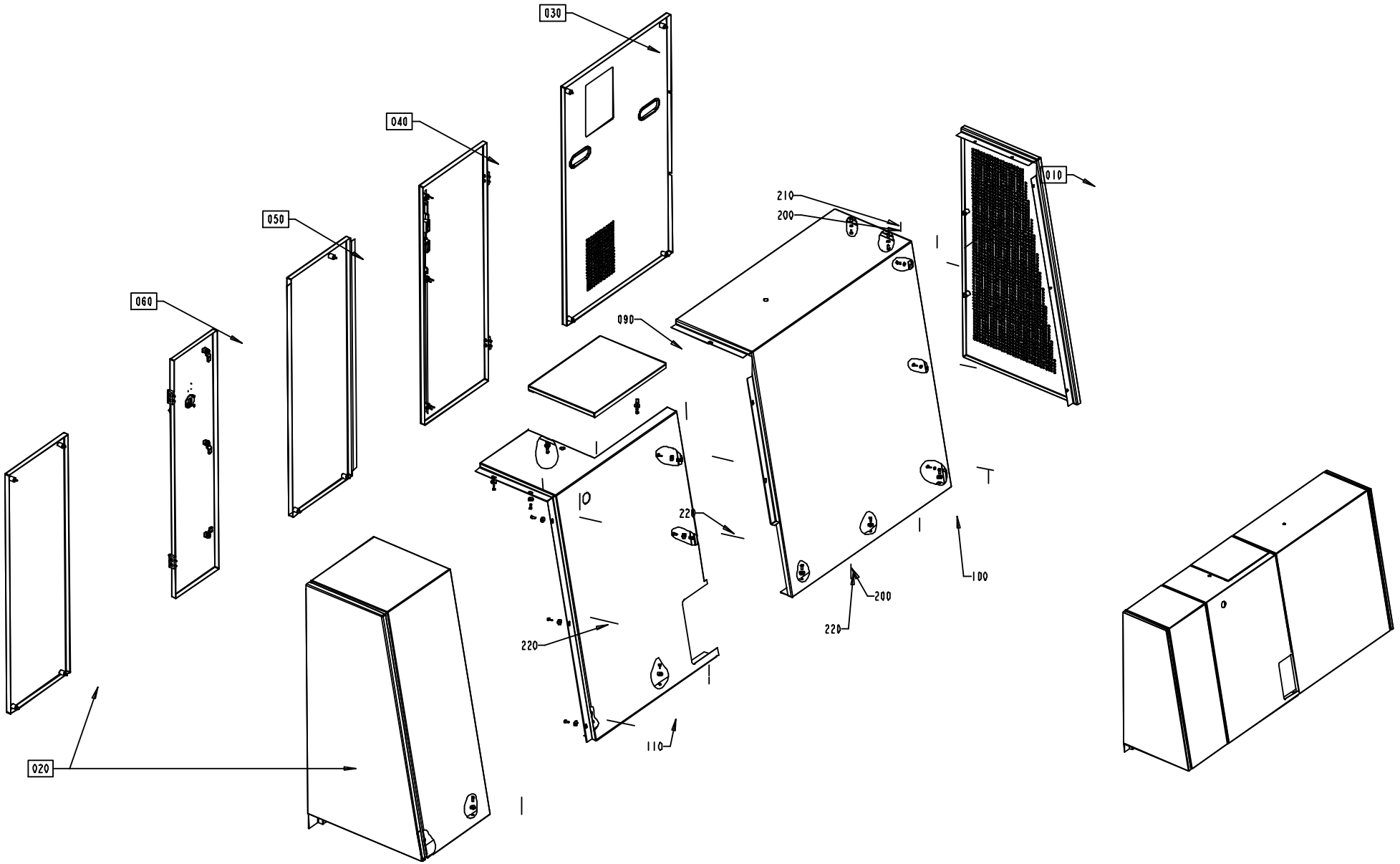
030
040
050
060
010
210
200
090
220
100
200
220
220
110
020

ECM: 101249 - 20020812
Group number: 1095607-0200
Assembly Drawing: 1095607-2_1_AB

Issue: 20021030

Pos	Part No	SP	UN	Qty	Description	Page No
Common Parts						
010	A1095883-0200	-		1	GABLE PLATE	**459**
020	A1095886-0200	-		1	COVERING PANEL	**461**
030	A1095888-0200	-		1	HATCH	**465**
040	A1095889-0100	-		1	DOOR	**467**
050	A1095890-0200	-		1	HATCH	**469**
060	A1095891-0200	-		1	DOOR	**471**
090	1255637-0000	-		1	COVER	
100	1255636-0000	-		1	COVERING PANEL	
110	1255638-0000	-		1	COVERING PANEL	
200	312105-0368	-		19	SCREW M6S M6X16 A280	
210	315105-0153	-		5	WASHER PLAIN, BRB, 6,4/12,H=1,5	
220	315125-0153	-		14	WASHER PLAIN ROUND,CHAMF. 6,4/22, H=4	

Pos	Part No	SP	UN	Qty	Description	Page No

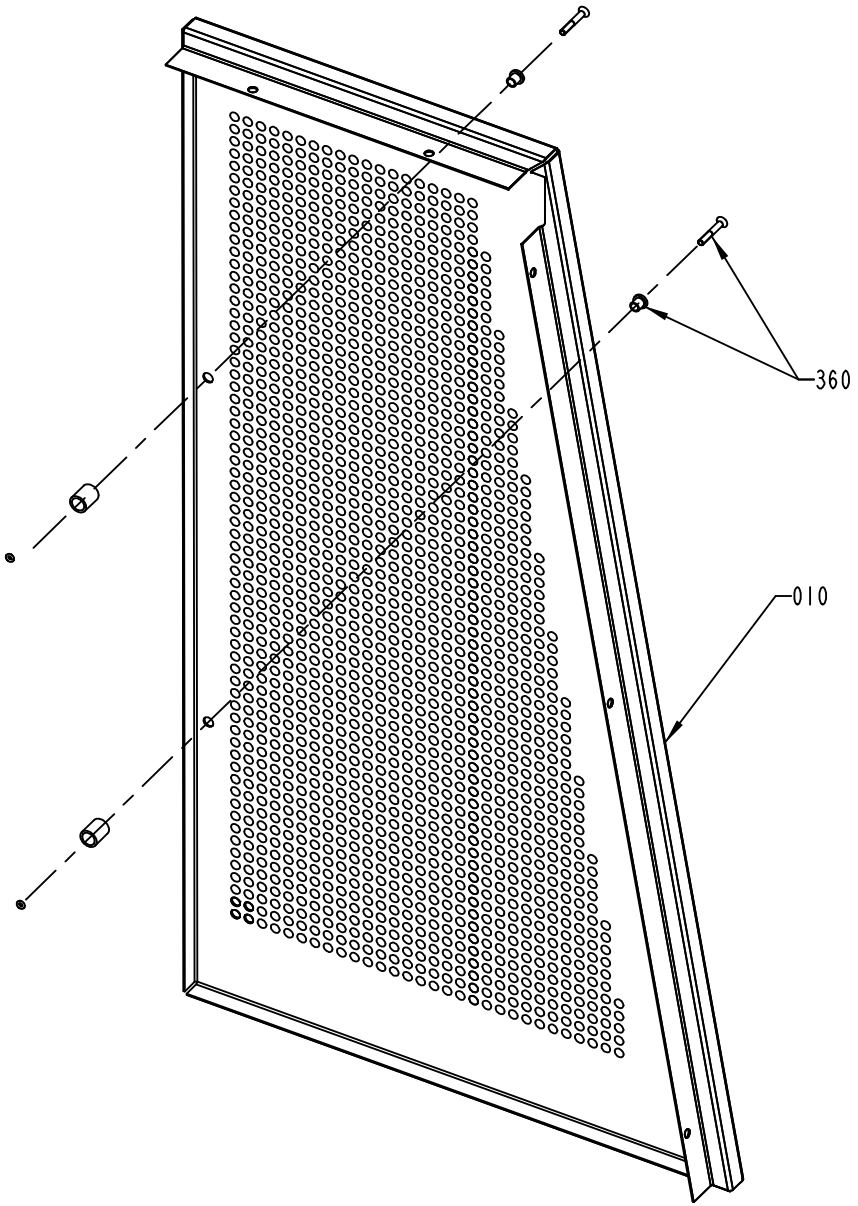
360
010

Pos	Part No	SP	UN	Qty	Description	Page No
Common Parts						
010	1255671-0000	-		1	GABLE PLATE	
360	90226-0458	-		2	MOUNTING SCREW	

Pos	Part No	SP	UN	Qty	Description	Page No

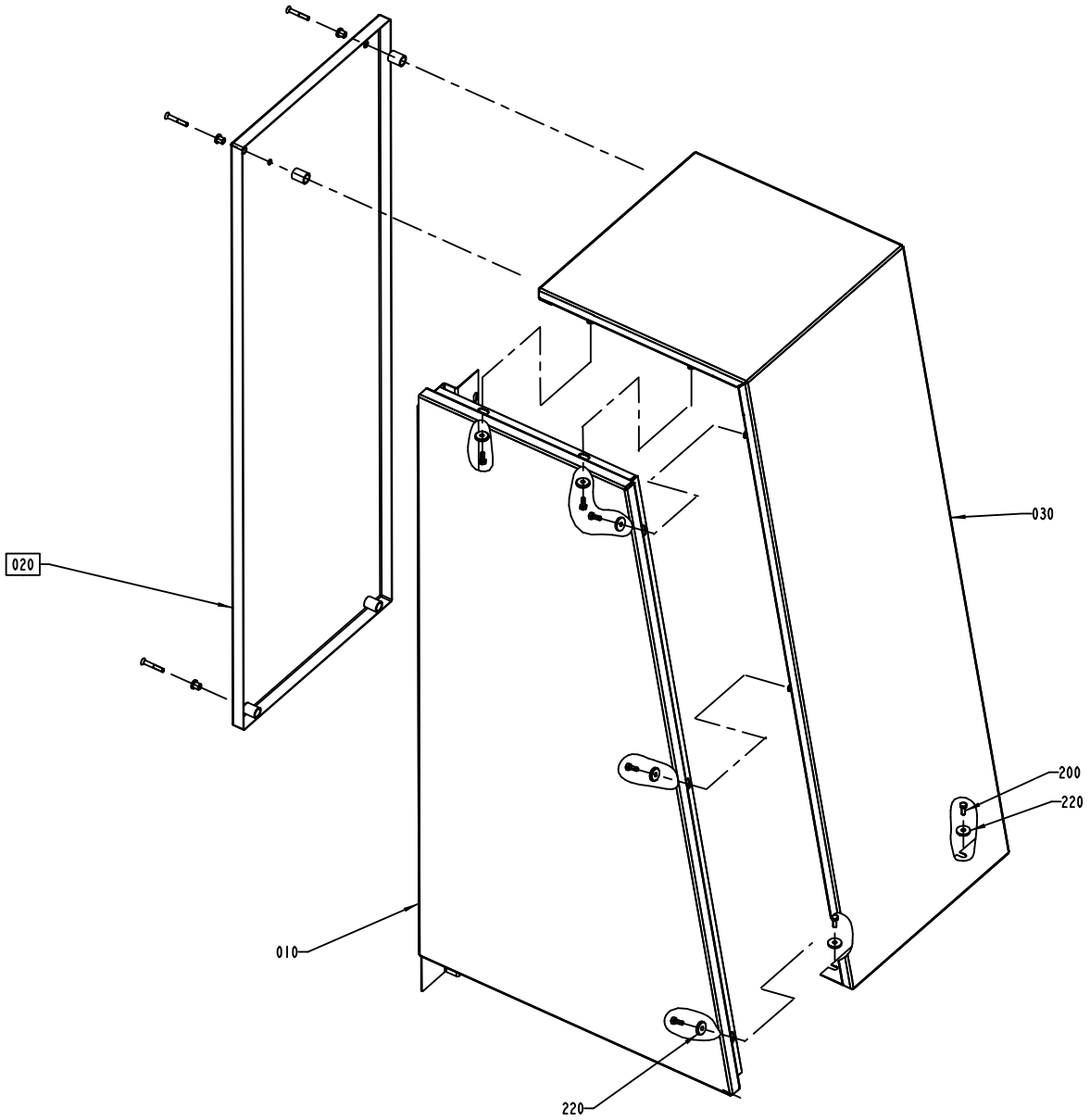
020
030
200
220
010
220

Pos	Part No	SP	UN	Qty	Description	Page No
TBA/22						
020	A1484889-0100	-		1	DOOR	**463**
Common Parts						
010	1255670-0000	-		1	GABLE PLATE	
030	1041967-0000	-		1	COVERING PANEL	
200	312105-0368	-		7	SCREW M6S M6X16 A280	
220	315125-0153	-		7	WASHER PLAIN ROUND,CHAMF. 6,4/22, H=4	

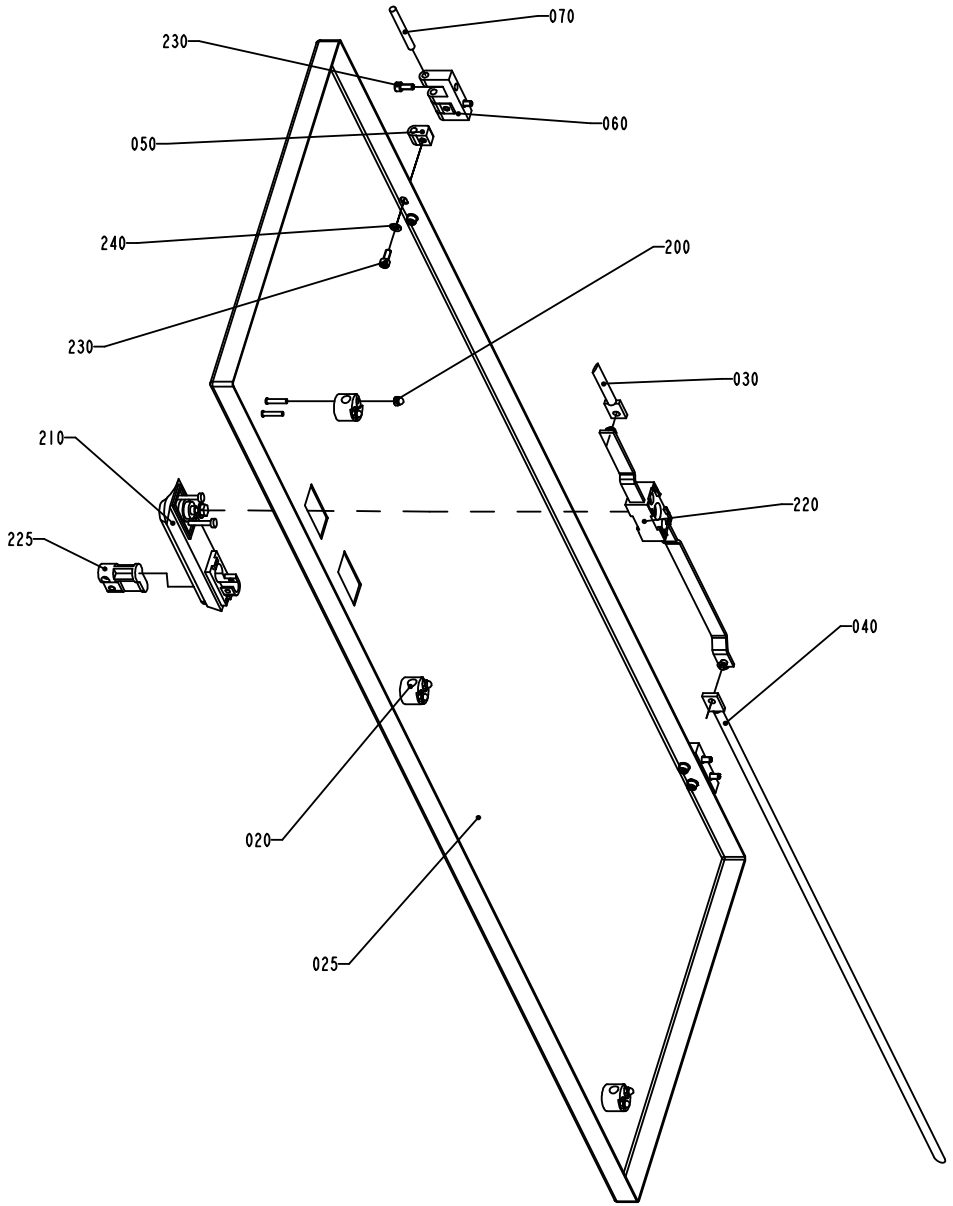

S-1484889-1
ECN 71402

Pos	Part No	SP	UN	Qty	Description	Page No
Common Parts						
020	1129274-0000	-		3	GUIDE LUG	
025	1484890-0000	-		1	DOOR	
030	1036304-0001	-		1	LOCKING ARM	
040	1484891-0000	-		1	LOCKING ARM	
050	1035794-0000	-		4	BLOCKING PIECE	
060	1035792-0000	-		2	E-HINGE	
070	988685-0000	-		2	PIN	
200	312705-0312	-		6	NUT HEX. DOMED CAP MHM-6 M4 A280	
210	90237-0126	B		1	TURNING HANDLE "REPBY 90237-175"	
220	90237-0153	-		1	LOCK HOUSING, 1121-U26-0B	
225	90237-0128	-		1	LOCK CYLINDER, 1109-U3	
230	312115-0327	-		8	SCREW MC6S M5X12 A280	
240	315105-0146	-		4	WASHER PLAIN, BRB, 5,3/10,H=1	

Pos	Part No	SP	UN	Qty	Description	Page No

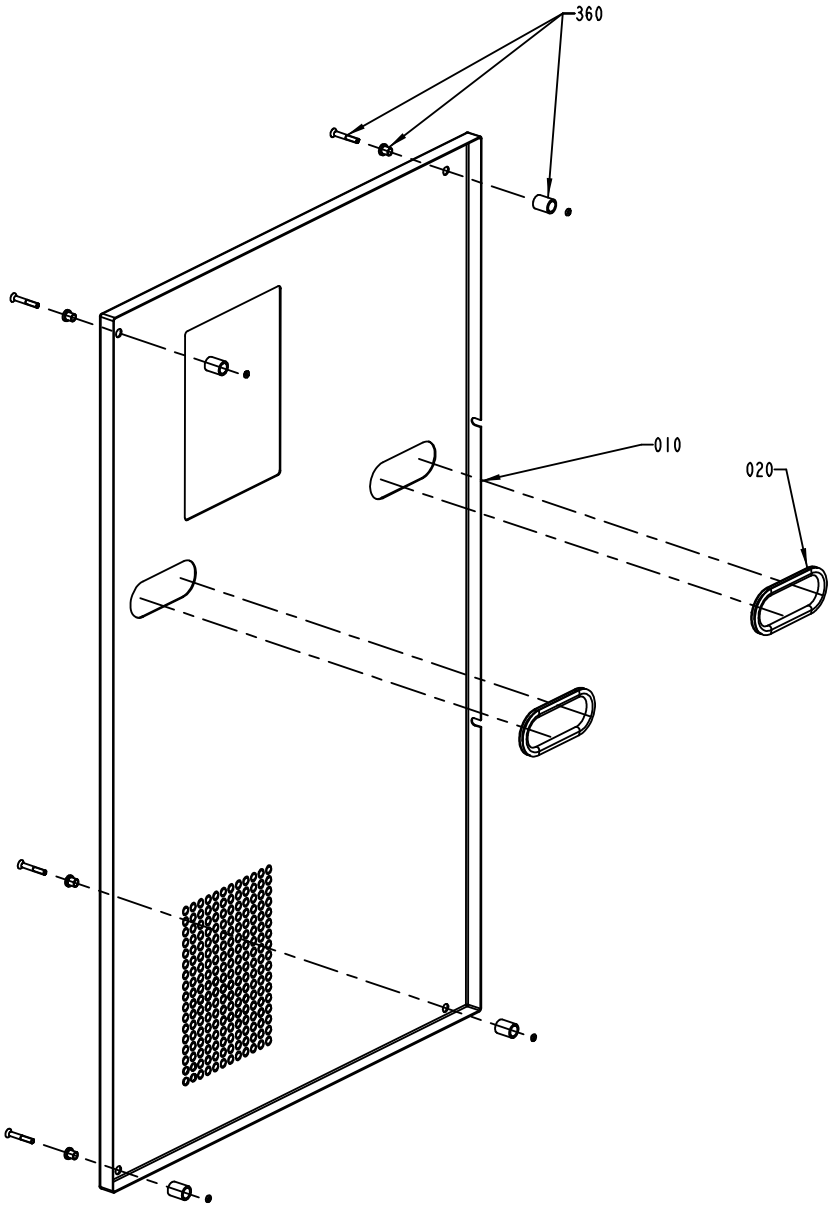
360
010
020

Pos	Part No	SP	UN	Qty	Description	Page No
Common Parts						
010	1255633-0000	-		1	HATCH	
020	90143-0060	-	M	1	EDGE STRIP 9,5X6,3MM BLACK PVC	
360	90226-0458	-		4	MOUNTING SCREW	

Pos	Part No	SP	UN	Qty	Description	Page No

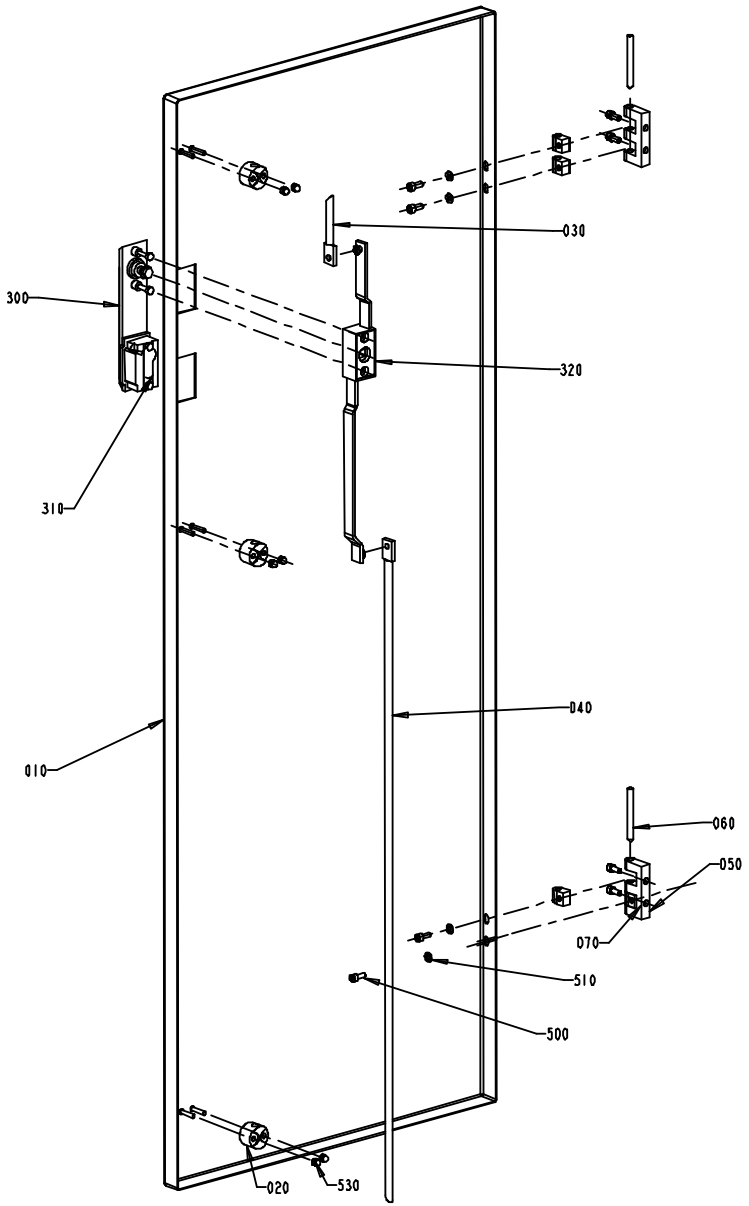
030
300
320
310
040
010
060
050
070
510
500
020
530

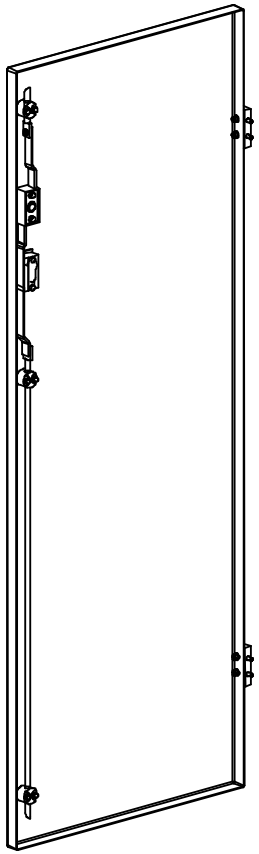

ECM: 89436 - 20010203
Group number: 1095889-0100
Assembly Drawing: 1095889-1_1_AA

Issue: 20021030

Pos	Part No	SP	UN	Qty	Description	Page No
Common Parts						
010	1041970-0000	-		1	DOOR	
020	1129274-0000	-		1	GUIDE LUG	
030	1036304-0001	-		1	LOCKING ARM	
040	1036304-0014	-		1	LOCKING ARM	
050	1035792-0000	-		2	E-HINGE	
060	988685-0000	-		2	PIN	
070	1035794-0000	-		4	BLOCKING PIECE	
300	90237-0126	B		1	TURNING HANDLE "REPBY 90237-175"	
310	90237-0128	-		1	LOCK CYLINDER, 1109-U3	
320	90237-0153	-		1	LOCK HOUSING, 1121-U26-0B	
500	312115-0327	-		8	SCREW MC6S M5X12 A280	
510	315105-0146	-		4	WASHER PLAIN, BRB, 5,3/10,H=1	
530	312705-0312	-		6	NUT HEX. DOMED CAP MHM-6 M4 A280	

Pos	Part No	SP	UN	Qty	Description	Page No

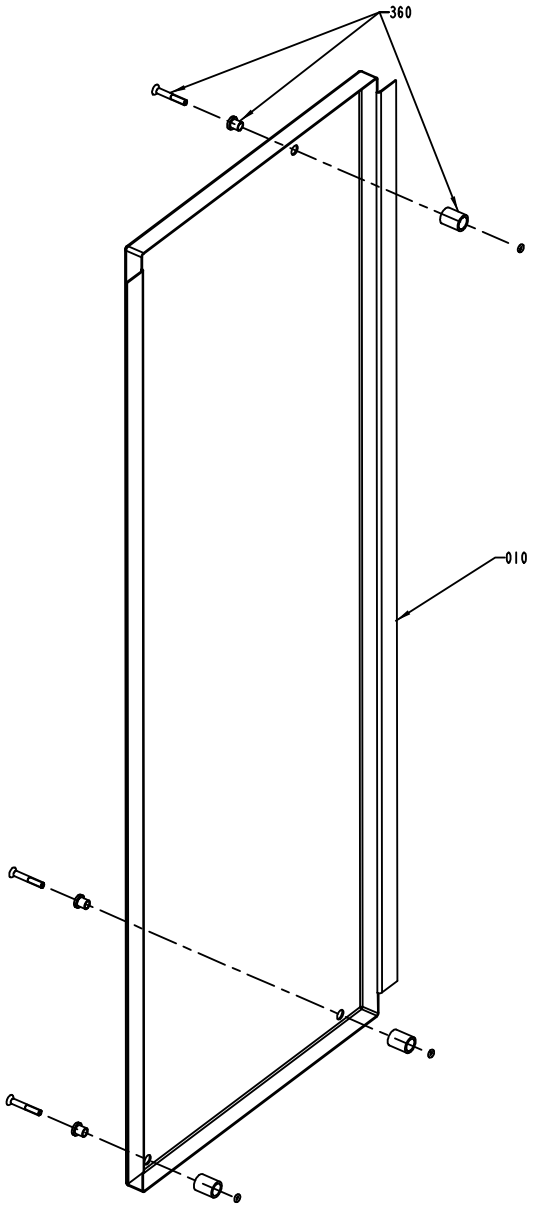
360
010

Pos	Part No	SP	UN	Qty	Description	Page No
Common Parts						
010	1255635-0000	-		1	HATCH	
360	90226-0458	-		3	MOUNTING SCREW	

Pos	Part No	SP	UN	Qty	Description	Page No

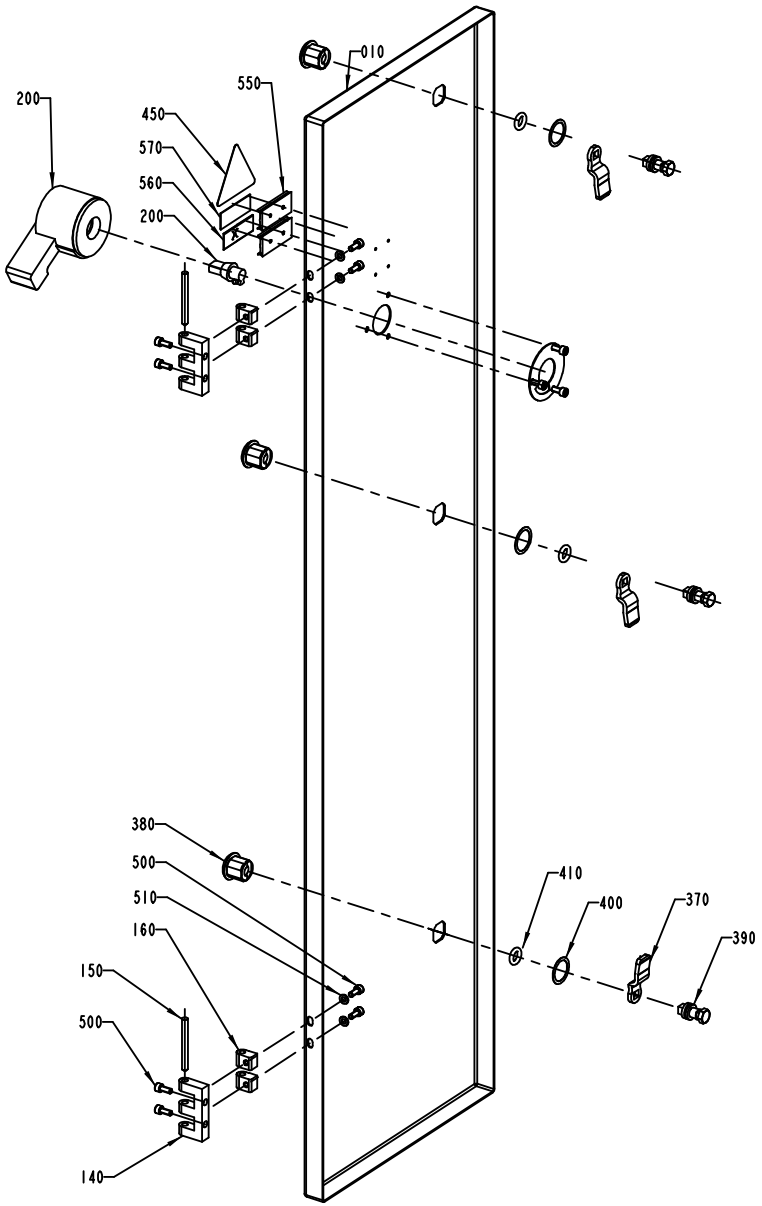
010
550
200
450
570
560
200
380
500
510
160
150
500
140
410
400
370
390

Pos	Part No	SP	UN	Qty	Description	Page No
50HZ						
570	359243-0917	-		1	SIGN"400V, 50HZ, 100A"	
60HZ						
570	359243-0918	-		1	SIGN"400V, 60HZ, 100A"	
Common Parts						
010	1041972-0000	-		1	DOOR	
140	1035792-0000	-		2	E-HINGE	
150	988685-0000	-		2	PIN	
160	1035794-0000	-		4	BLOCKING PIECE	
200	90051-0106	B		1	COCK HANDLE, NO. H6	
370	90237-0157	-		3	LOCK BOLT, 1000-230	
380	90237-0319	-		3	LOCK HOUSING, 1000-U134	
390	90237-0320	-		3	LOCK HOUSING, 1000-U136	
400	90237-0322	-		3	LOCK GASKET, 1000-U137	
410	90237-0323	A		3	LOCK O-RINGT, 1000-24	
450	90194-0016	-		1	SIGN, FLASH, ELECTRIC EQUIPMENT SYMBOL	
490	311520-0329	-		4	RIVET, BLANK 2,4X8	
500	312115-0327	-		8	SCREW MC6S M5X12 A280	
510	315105-0146	-		4	WASHER PLAIN, BRB, 5,3/10,H=1	
550	359240-0100	-		2	SIGN HOLDER FOR 359240-0001	
560	359241-0431	-		1	SIGN "MAIN SWITCH"	

Pos	Part No	SP	UN	Qty	Description	Page No

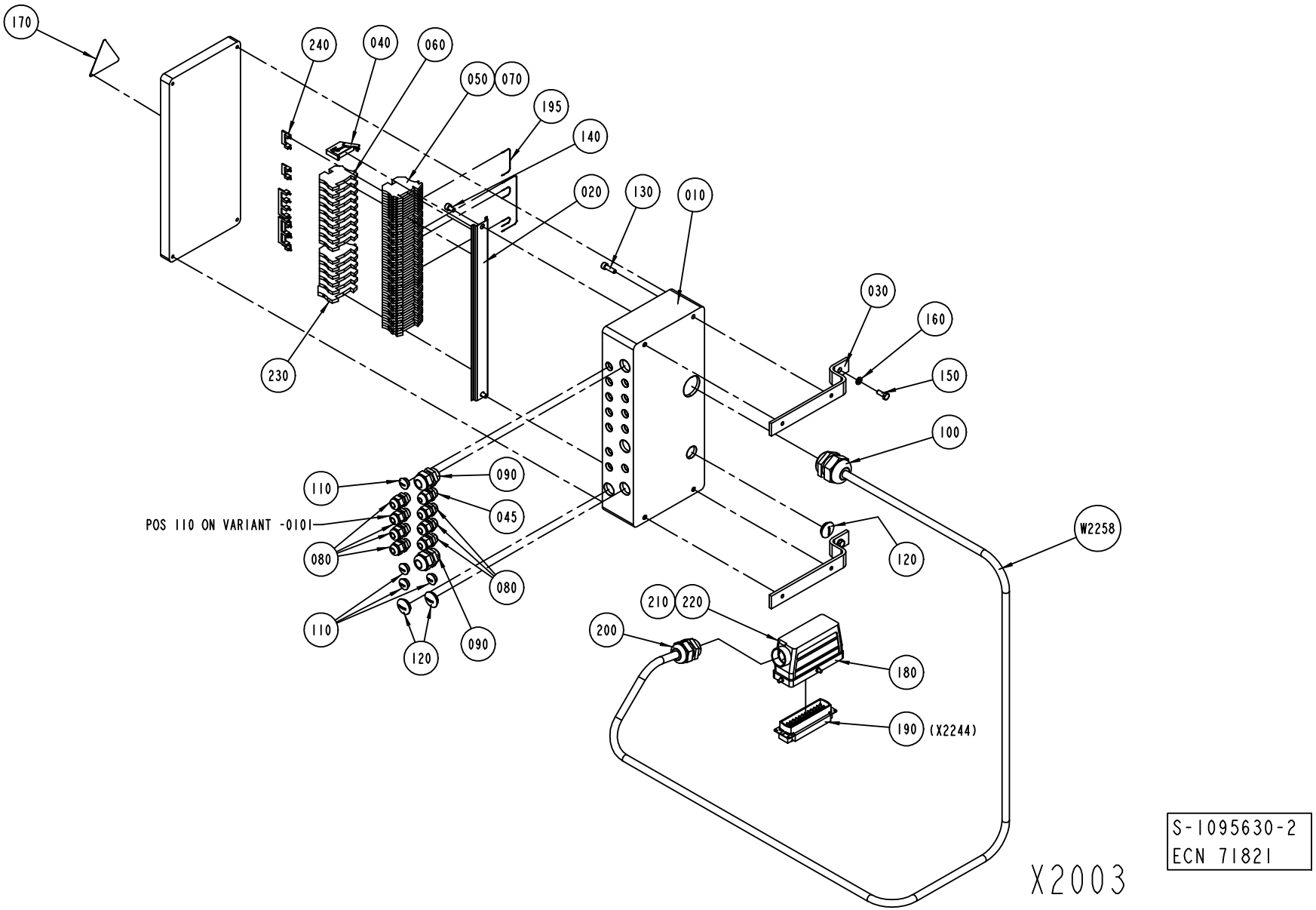
170
240
040
060
050
070
195
140
020
130
010
030
160
150
100
W2258
120
230
110
090
045
080
POS 110 ON VARIANT -0101
080
110
120
090
210
220
200
180
190
(X2244)
X2003
S-1095630-2
ECN 71821

ECM: 89439 - 20010203
Group number: 1095630-0200
Assembly Drawing: 1095630-2_1_AC

Issue: 20021030

Pos	Part No	SP	UN	Qty	Description	Page No
Common Parts						
010	1129202-0000	-		1	CONNECTION BOX	
020	1129209-0000	-		1	MOUNTING RAIL	
030	1129182-0000	-		2	BRACKET	
040	353031-0201	-		1	END BRACKET EW35	
045	352103-0100	-		1	CABLE GLAND, STR 9, PR15,2/PG9	
050	353021-0216	-		40	FEED THROUGH TERMINAL, 10200.8	
060	353024-0204	-		14	EARTH TERMINAL WPE 2,5	
070	359011-0809	-		2	MARKING PLATES 5-FW 101-150	
080	352103-0101	-		6	CABLE GLAND, ST 9, PR15,2/PG9	
090	352103-0110	-		2	CABLE GLAND, STR 16, PR22,5/PG16	
100	352103-0120	-		1	CABLE GLAND, STR 29, PR37,0/PG29	
110	90002-0013	-		5	BLANK-OFF PLUG, PR 15,2 SKINDICHT-BLK9	
120	90002-0004	-		3	BLANK-OFF PLUG, PR 22,5 SKINDICHT-BLK16	
130	312115-0370	-		4	SCREW MC6S M6X20 A280	
140	312115-0364	-		2	SCREW HEX.SOCK.HD.MC6S-TT 6X10 A480	
150	312105-0368	-		2	SCREW M6S M6X16 A280	
160	315105-0153	-		2	WASHER PLAIN, BRB, 6,4/12,H=1,5	
170	90194-0016	-		1	SIGN, FLASH, ELECTRIC EQUIPMENT SYMBOL	
180	90110-0228	A		1	CABLE HOOD 24-POL 71.350.2428.0	
190	90110-0150	A		1	MALE INSERT 121110 0000	
195	351172-0102	-	M	1	CABLE AWM 1X 0,75 MM2 DARK-BLUE	
200	352103-0116	-		1	CABLE GLAND, ST 21, PR28,3/PG21	
210	359005-0050	-		1	MARKING LABEL KIT X, 04.841.4550.0	
220	359005-0010	-		1	MARKING LABEL KIT 0 - 9, 04.841.2150.0	
230	353024-0205	-		1	EARTH TERMINAL, 1010.1	
240	353034-0030	-		4	BRIDGE CONNECTOR WQV 2,5/10, 10544.6	
W2258	351150-0425	-	MM	2300	CABLE OLFLEX 25X0,75 MM2 LIGHT/GREY	

Pos	Part No	SP	UN	Qty	Description	Page No

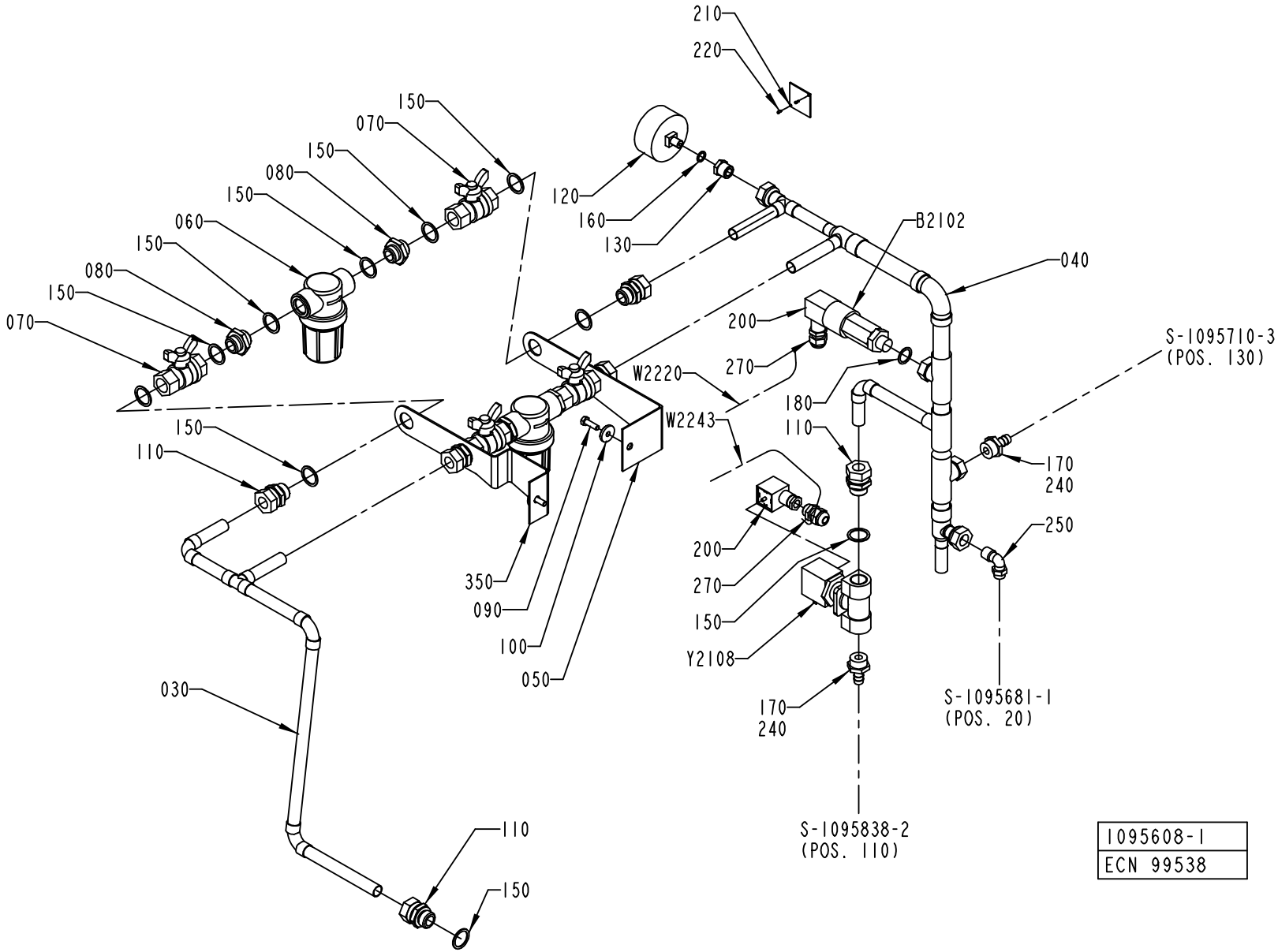
210
220
150
070
150
080
150
060
150
080
150
070
120
160
130
B2102
040
200
270
W2220
W2243
180
110
S-1095710-3
(POS. 130)
170
240
250
150
110
200
270
150
Y2108
350
090
100
050
030
110
150
170
240
S-1095681-1
(POS. 20)
S-1095838-2
(POS. 110)
1095608-1
ECN 99538

ECM: 101013 - 20020812
Group number: 1095608-0100
Assembly Drawing: 1095608-1_1_AF

Issue: 20021030

Pos	Part No	SP	UN	Qty	Description	Page No
COMPRESSOR						
170	342901-0105	-		2	HOSE NIPPLE, EXT.THR. R1/2-12 MM	
330	1499776-0000	-		1	WATER DIAGRAM	
Common Parts						
030	1041932-0000	-		1	PIPE	
040	1041933-0000	-		1	PIPE	
050	1037583-0000	-		1	HOLDER	
060	B90458-0921	-		2	FILTER SP 122-200	
	90458-2541	-		*1*	*FILTER, CP23174-7-304SS*	
070	90187-0029	B		4	BALL VALVE G1/2, NPBR	
080	479261-0000	-		4	NIPPLE	
090	312105-0370	-		2	SCREW M6S ISO 4017 M6X20 A480	
100	315125-0153	-		2	WASHER PLAIN ROUND,CHAMF. 6,4/22, H=4	
110	342720-0114	-		6	CONN. STR. GA-15-G1/2	
120	90043-0006	B		1	PRESSURE GAUGE, 2041 D=63 MM	
130	342701-0202	-		1	BUSHING,INT./EXT.G-THREAD G3/8"-G1/8"	
150	315233-0113	-		18	WASHER PL.RND.NYL.21,4/27,H=1,2	
160	315233-0109	-		1	WASHER PL.RND.NYL.10,3/14,H=1	
180	315233-0111	-		1	WASHER PL.RND.NYL.17/22,H=1	
200	90110-0095	A		1	CONNECTOR 3 POLE + EARTH	
210	273455-0000	-		1	LABEL (COLD WATER)	
220	312502-0120	-		2	DRIVE SCREW ROUND HEAD KDS 0X5	
240	90157-0016	-		1	LOCKING FLUID	
250	342930-0133	-		1	ELBOW 90 COUPL.,EXT.THREAD 10/8-R3/8"	
270	352103-0101	-		2	CABLE GLAND, ST 9, PR15,2/PG9	
350	2547061-0000	-		1	HOLDER	
B 2102	90274-0042	A		1	PRESSURE GUARD, 200 KPA	
W 2220	351150-0403	-	MM	2000	CABLE OLFLEX 3X0,75 MM2 LIGHT/GREY	
W 2243	351150-0403	-	MM	2000	CABLE OLFLEX 3X0,75 MM2 LIGHT/GREY	
Y 2108	90042-0249	A		1	SOLENOID VALVE OFFICINE DI ENSINO	

Pos	Part No	SP	UN	Qty	Description	Page No

Machine Type | Group Description | Used-In | Group Number | Page No

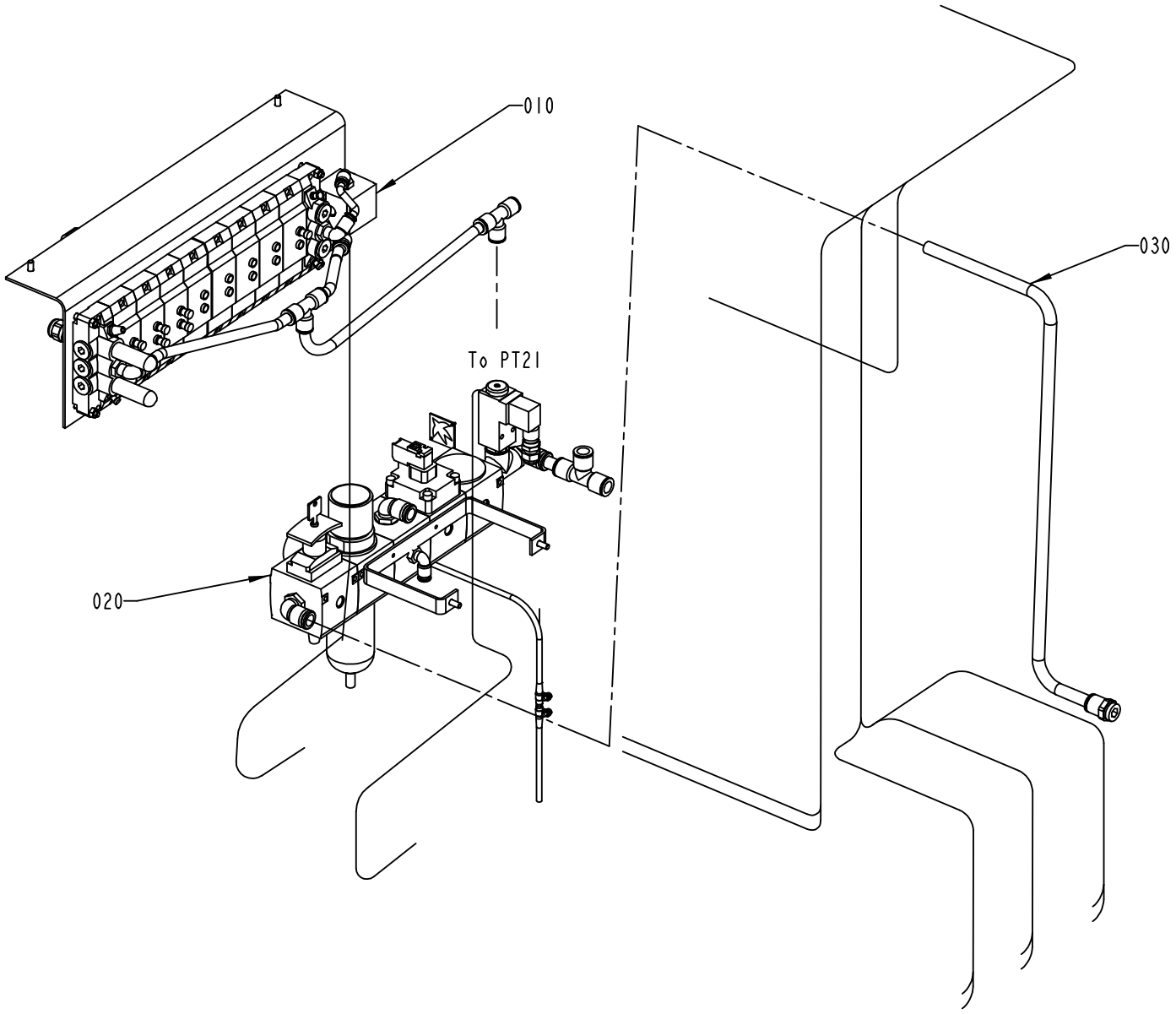

1095714-2
ECN 99538

ECM: 101165 - 20020812
Group number: 1095714-0300
Assembly Drawing: 1095714-2_1_AC

Issue: 20021030

Pos	Part No	SP	UN	Qty	Description	Page No
Common Parts						
010	A1095611-0300	-		1	VALVE PANEL	**479**
020	A1095609-0200	-		1	PNEUMATIC UNIT	**481**
030	A1095716-0100	-		1	PIPE WORK-AIR	**483**

Pos	Part No	SP	UN	Qty	Description	Page No

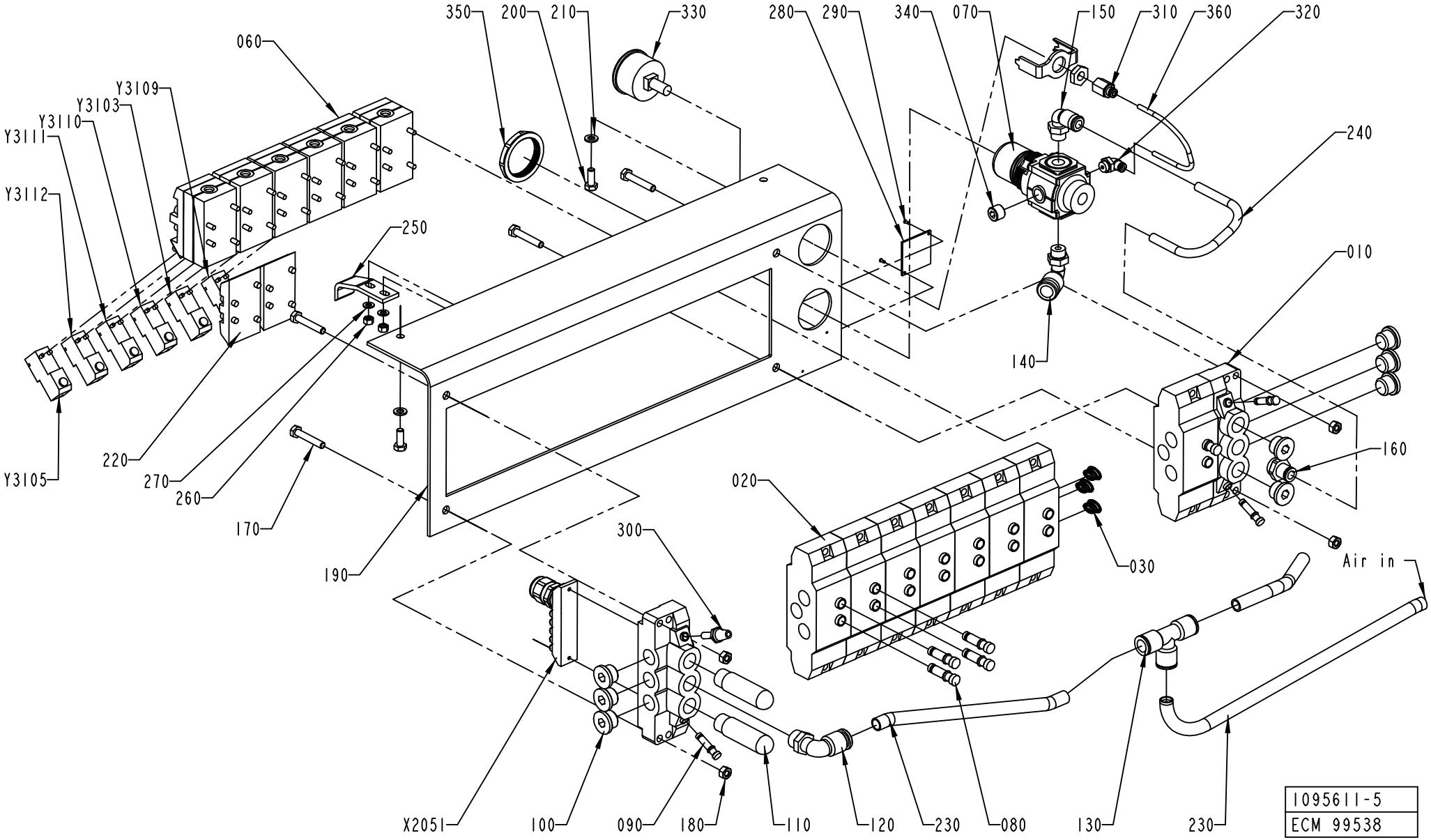
350
200
210
330
280
290
340
070
150
310
360
320
060
Y3109
Y3103
Y3110
Y3111
240
Y3112
250
010
140
160
Y3105
220
270
260
170
190
020
030
300
Air in
X2051
100
090
180
110
120
230
080
130
230
1095611-5
ECM 99538

Pos	Part No	SP	UN	Qty	Description	Page No
TBA/22						
005	1484892-0000	-		1	PNEUMATIC DIAGRAM	
060	90042-0215	-		6	VALVE BODY 5/2 UNISTABLE	
080	342715-0103	-		5	BLIND PLUG 8 MM	
220	90042-0519	-		2	BLANK PLATE ISO SIZE 1	
Y3105	90042-0538	-		1	PILOT VALVE L=500MM	
Common Parts						
010	90042-0522	A		2	PORTED END PIECE ISO SIZE 1	
020	90042-0532	A		8	BASE PLATE ISO SIZE 1	
030	90042-0528	A		1	BLANKING KIT SEALS ISO SIZE 1	
050	90042-0526	-		5	PROTECTIVE SLEEVE MECMAN	
070	90113-0470	A		1	MANIFOLD REGULATOR 10 BAR	
090	342715-0102	-		3	BLIND PLUG 6 MM	
100	342713-0211	-		8	PLUG, EXT THREAD HEX SOCKET 8638-00-380	
110	90328-0024	B		2	SILENCER G3/8	
120	342732-0110	-		1	ELBOW PIPE JOINT, EXT.THREAD,D=12MM-G3/8	
130	342748-0109	-		1	T-CONNECTION 12MM	
140	342732-0109	-		1	ELBOW PIPE JOINT, EXT.THREAD, D=1MM-G1/4	
150	342732-0104	-		1	ELBOW PIPE JOINT, EXT.THREAD, D=8MM-G1/4	
160	342722-0206	-		1	STRAIGHT COUPLING D=8-G3/8"	
170	312105-0376	-		4	SCREW M6S ISO 4014 M6X35 A480	
180	312605-0316	-		4	HEXAGON NUT, M6M M6 A280	
190	1517295-0000	-		1	SHEET	
200	312105-0368	-		2	SCREW M6S M6X16 A280	
210	315105-0153	-		2	WASHER PLAIN, BRB, 6,4/12,H=1,5	
230	90166-0068	-	MM	1000	TUBE 12 MM PA BLUE	
240	90166-0194	-	MM	400	TUBE 8 MM PUR BLUE	
250	1036227-0000	-		1	BRACKET	
260	312605-0314	-		2	HEXAGON NUT, M6M M5 A280	
270	315105-0146	-		2	WASHER PLAIN, BRB, 5,3/10,H=1	
280	1041938-0000	-		1	SIGN	
290	312502-0120	-		2	DRIVE SCREW ROUND HEAD KDS 0X5	
300	90328-0017	-		1	SILENCER, D=6 MM	
310	342770-0101	-		1	STRAIGHT COUPLING INT, D=4 MM - G1/8	
320	342732-0100	-		1	ELBOW PIPE JOINT, EXT.THREAD, D=4MM-G1/8	
330	90043-0065	B		1	PRESSURE GAUGE, 2048 D=40 MM	
340	90087-0036	-		1	PLUG	
350	90457-0078	-		1	PANEL NUT	
360	90166-0095	-	MM	200	TUBE 4 MM PA BLUE	
X2051	90042-0535	-		1	TERMINAL BOARD 19 CORDS	
Y3103	90042-0538	A		1	PILOT VALVE L=500MM	
Y3109	90042-0538	A		1	PILOT VALVE L=500MM	
Y3111	90042-0538	A		1	PILOT VALVE L=500MM	
Y3112	90042-0538	A		1	PILOT VALVE L=500MM	

Machine Type	Group Description	Used-In	Group Number	Page No

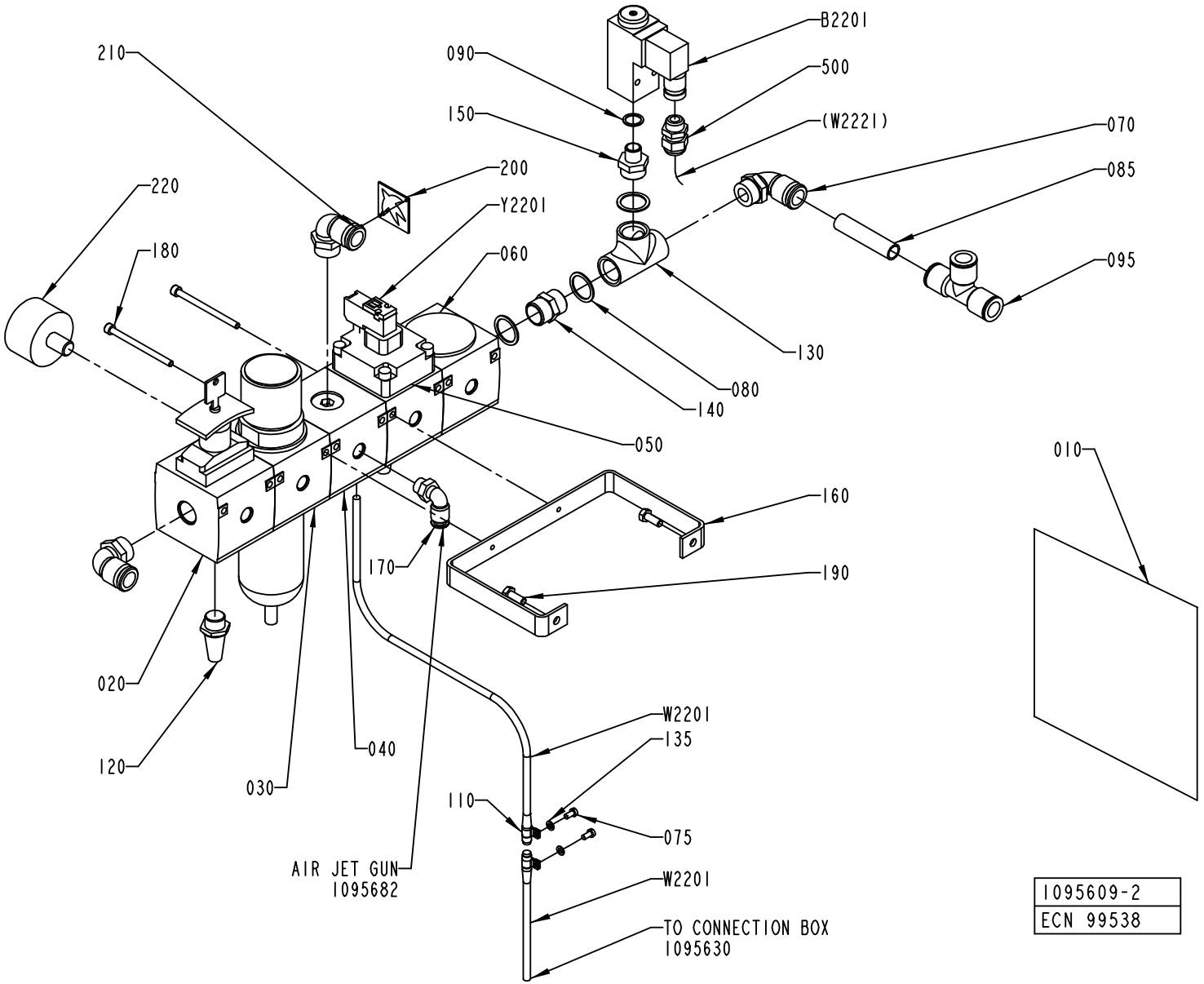
B2201
210
090
500
150
(W2221)
070
200
085
220
Y2201
060
180
095
130
080
140
050
010
160
170
190
020
W2201
040
135
120
030
110
075
AIR JET GUN
1095682
W2201
TO CONNECTION BOX
1095630
1095609-2
ECN 99538

ECM: 101225 - 20020812
Group number: 1095609-0200
Assembly Drawing: 1095609-2_1_AE

Issue: 20021030

Pos	Part No	SP	UN	Qty	Description	Page No
Common Parts						
010	1129150-0000	-		1	PNEUMATIC DIAGRAM	
020	90113-0377	A		1	SHUT-OFF VALVE	
030	B90113-0072	A		1	PRESSURE REGULATOR	
	90113-0387	*A*		*1*	*FILTER ELEMENT 40æM FOR 90113-0094*	
	90113-0459	*A*		*1*	*O-RING*	
040	90113-0375	A		1	PRESSURE DISTRIBUTION	
050	90113-0423	A		1	HIGH SPEED VENTING VALVE	
060	90113-0374	A		1	SLOW STARTING VALVE	
070	342732-0161	-		3	ELBOW PIPE JOINT,EXT.THREAD,D=14 MM-G1/2	
075	312125-0287	-		2	SCREW PAN HEAD MCS M4X8 SS	
080	315233-0113	-		3	WASHER PL.RND.NYL.21,4/27,H=1,2	
085	90166-0196	-	MM	70	TUBE 14 MM PA BLUE	
090	315233-0110	-		1	WASHER PL.RND.NYL.13,3/17,H=1	
095	342748-0110	-		1	T-CONNECTION 14MM	
110	90074-0025	-		2	CLIPS, CABLE CLIPS DI=8 MM	
120	90328-0007	B		1	SILENCER	
130	90330-0049	-		1	T-PIPE, INT. THREAD, R-221R1/2	
135	315105-0136	-		2	WASHER PLAIN, BRB, 4,3/8,H=0,8	
140	342700-0113	-		1	NIPPLES,HEXAGON,EXT.G-THREAD G1/2"-G1/2"	
150	342700-0205	-		1	NIPPLES,HEXAGON,EXT.G-THREAD G1/2"-G1/4"	
160	1041921-0000	-		1	HOLDER	
170	342732-0104	-		1	ELBOW PIPE JOINT, EXT.THREAD, D=8MM-G1/4	
180	90287-0073	-		2	SCREW MC6S M5X70 129	
190	312105-0368	-		2	SCREW M6S M6X16 A280	
200	273458-0000	-		1	LABEL (AIR)	
210	312502-0120	-		2	DRIVE SCREW ROUND HEAD KDS 0X5	
220	90043-0107	B		1	PRESSURE GAUGE	
500	352103-0101	-		1	CABLE GLAND, ST 9, PR15,2/PG9	
B2201	90274-0074	A		1	PRESSURE GUARD, 530 KPA	
W2201	90042-0583	A		1	CABLE MECMAN 440-827 000-1	
Y2201	90042-0585	A		1	PILOT VALVE L=5M	

Pos	Part No	SP	UN	Qty	Description	Page No

Machine Type | Group Description | Used-In | Group Number | Page No

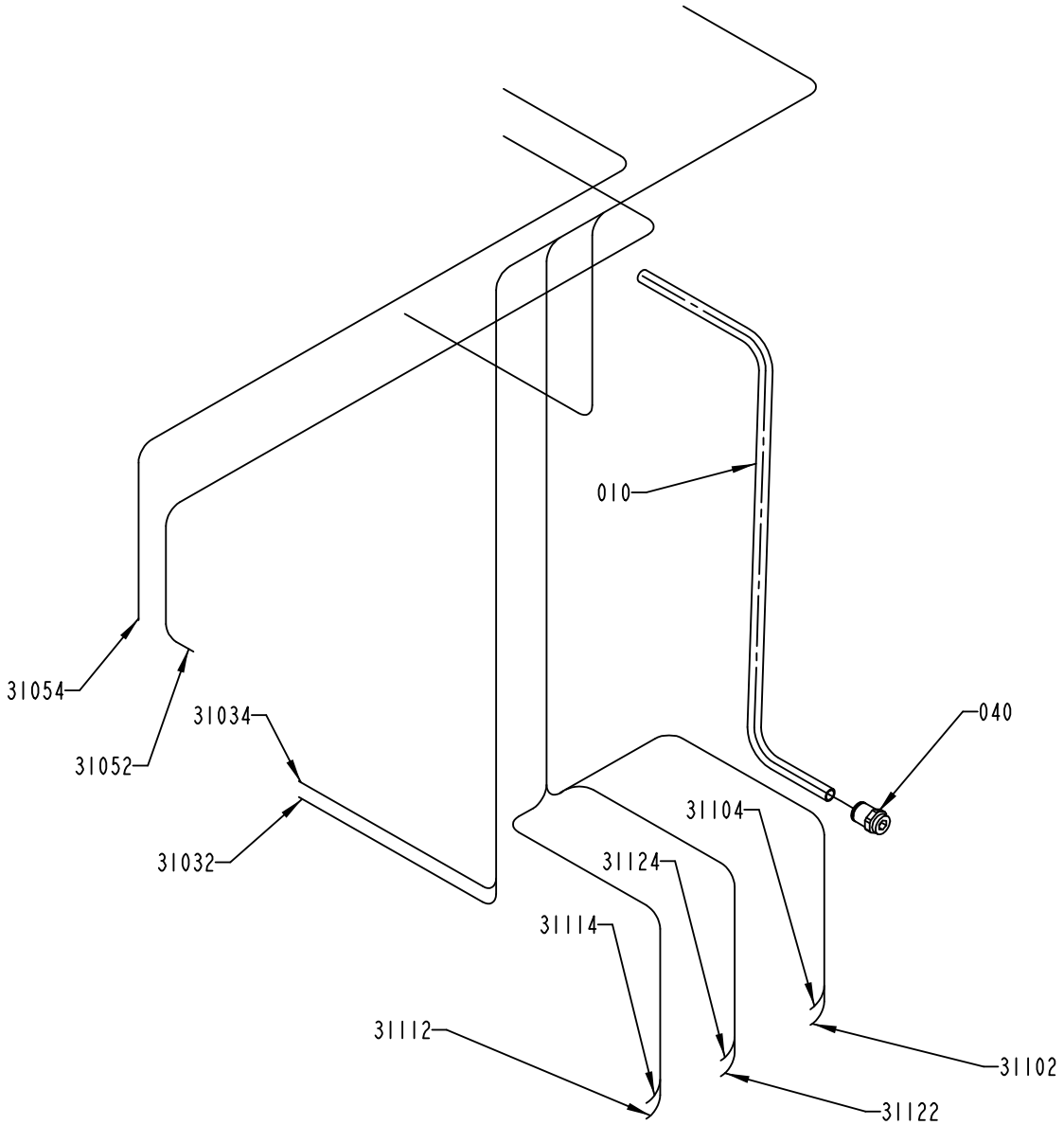

1095716-2
ECM 99538

Pos	Part No	SP	UN	Qty	Description	Page No
TBA/22						
31052	90166-0013	-	MM	1700	TUBE 8 MM PA BLUE	
31054	90166-0013	-	MM	1700	TUBE 8 MM PA BLUE	
Common Parts						
010	90166-0196	-	MM	770	TUBE 14 MM PA BLUE	
040	90055-0097	-		1	STRAIGHT COUPLING	
31032	90166-0013	-	MM	1400	TUBE 8 MM PA BLUE	
31034	90166-0013	-	MM	1400	TUBE 8 MM PA BLUE	
31094	90166-0013	-	MM	1400	TUBE 8 MM PA BLUE	
31102	90166-0013	-	MM	1500	TUBE 8 MM PA BLUE	
31104	90166-0013	-	MM	1500	TUBE 8 MM PA BLUE	
31112	90166-0013	-	MM	1500	TUBE 8 MM PA BLUE	
31114	90166-0013	-	MM	1500	TUBE 8 MM PA BLUE	
31122	90166-0013	-	MM	1500	TUBE 8 MM PA BLUE	
31124	90166-0013	-	MM	1500	TUBE 8 MM PA BLUE	

Pos	Part No	SP	UN	Qty	Description	Page No

Tetra Pak

SPC
Spare Parts Catalogue

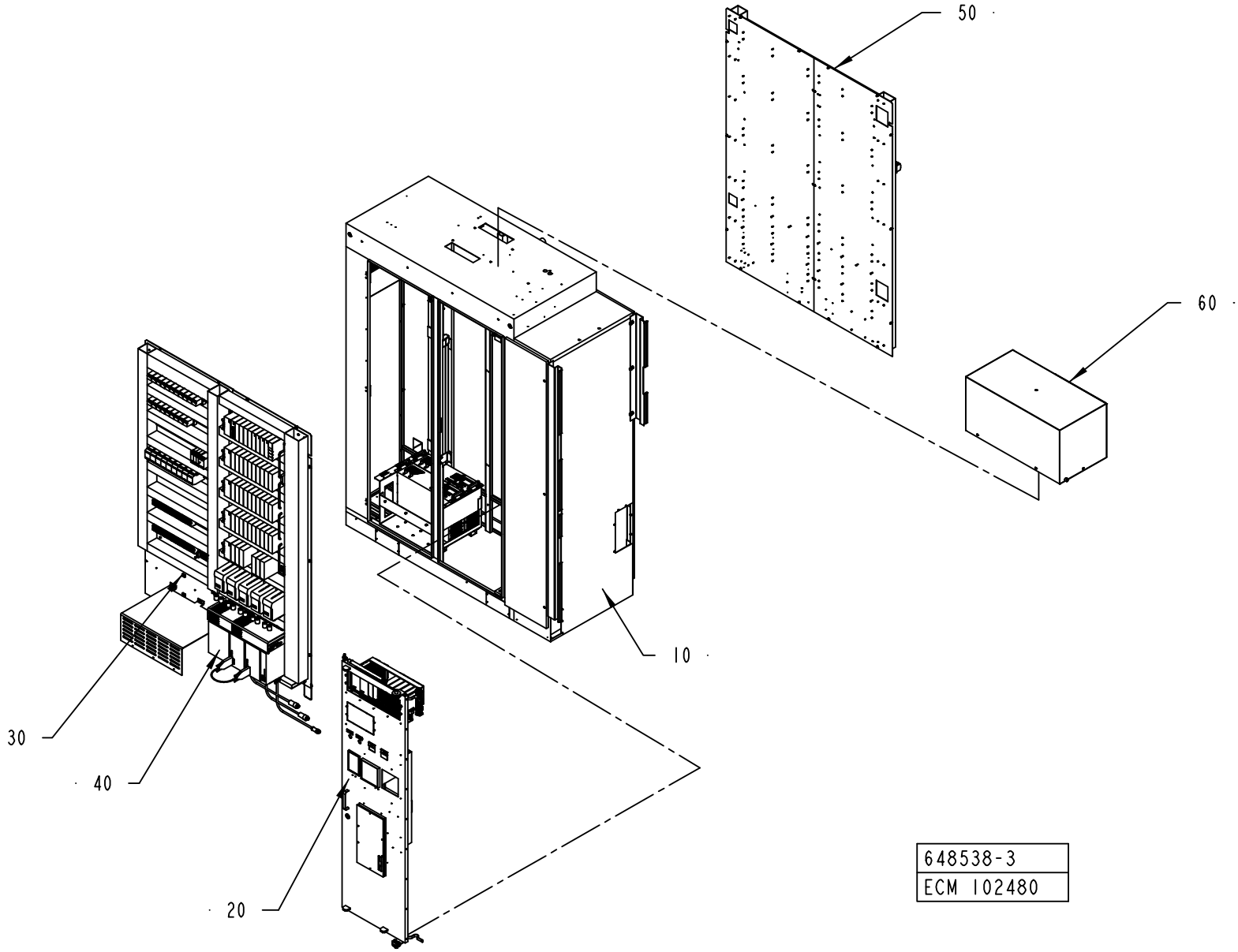
50
60
10
30
40
20
648538-3
ECM 102480

ECM: 99704 - 20010926
Group number: 648538-0300
Assembly Drawing: 648538-3_1_AA

Issue: 20021023

Pos	Part No	SP	UN	Qty	Description	Page No
Common Parts						
010	A1279809-0300	-		1	CABINET	**489, 491, 493**
020	A1346314-0200	-		1	COMPONENT DOOR	**513, 515**
030	A575235-0300	-		1	CONTROL PANEL	**523**
040	A575236-0300	-		1	CONTROL PANEL	**529, 531, 533**
050	A575237-0300	-		1	POWER SIDE	**535**
060	A1095954-0300	-		1	COOLING SYSTEM	**547**

Pos	Part No	SP	UN	Qty	Description	Page No

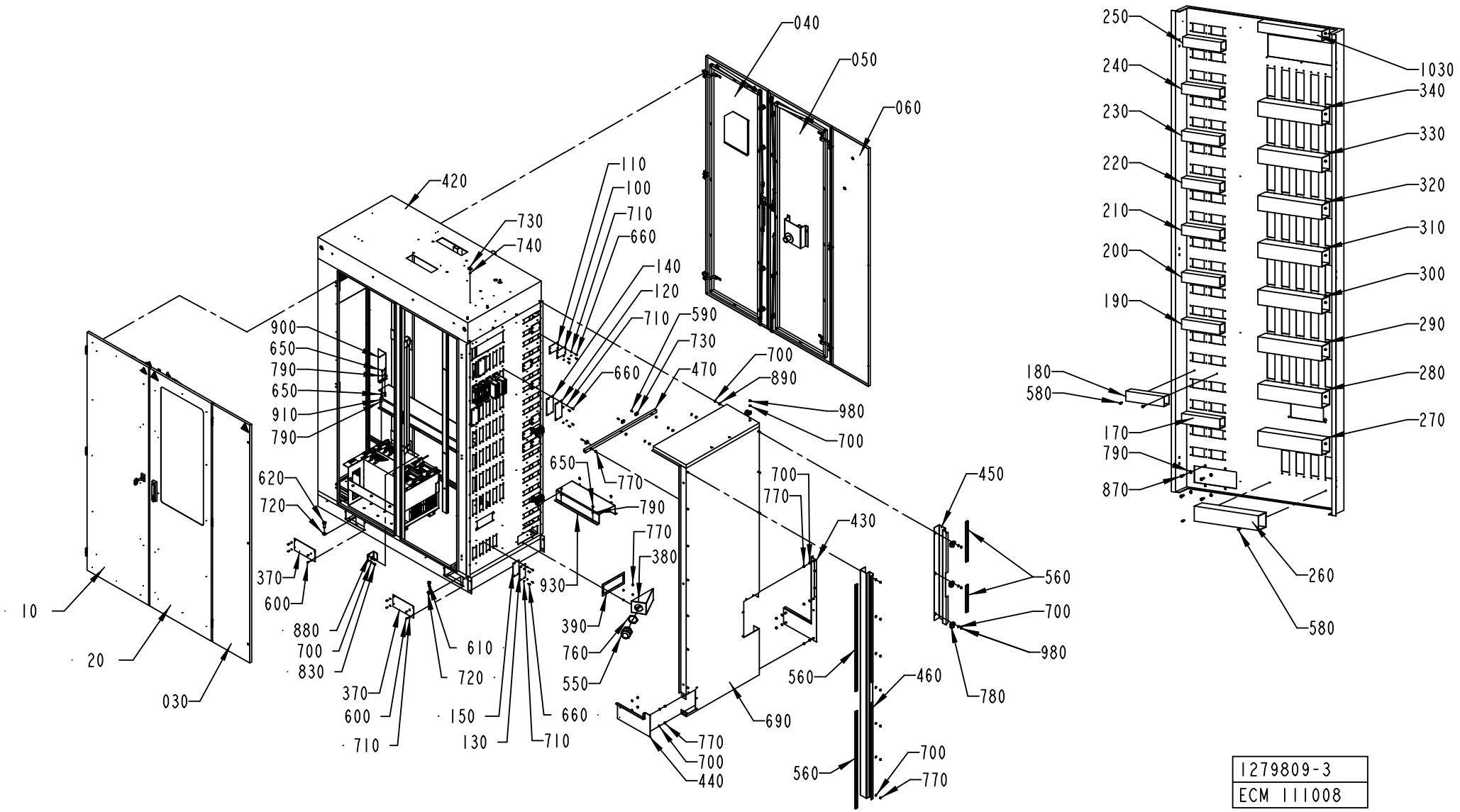
040
050
060
420
730
740
110
100
710
660
140
120
710
590
730
660
470
700
890
980
700
900
650
790
650
910
790
620
720
370
600
650
770
790
770
380
930
390
760
550
700
770
450
430
560
700
980
780
460
690
560
560
700
770
770
700
440
880
700
830
370
600
710
610
720
150
130
660
710
10
20
030
250
240
230
220
210
200
190
180
580
170
790
870
1030
340
330
320
310
300
290
280
270
260
580
1279809-3
ECM 111008

ECM: 111655 - 20020916
Group number: 1279809-0300
Assembly Drawing: 1279809-3_1_AB

Issue: 20021023

Pos	Part No	SP	UN	Qty	Description	Page No
Common Parts						
010	A1282034-0200	-		1	DOOR	**495**
020	A1282031-0200	-		1	DOOR	**497**
030	A1095634-0100	-		1	DOOR	**499**
040	A1282037-0200	-		1	DOOR	**501**
050	A1282036-0200	-		1	DOOR	**503**
060	A1095637-0100	-		1	DOOR	**505**
080	A1095778-0100	-		1	PLINTH	**507**
090	A2543221-0100	-		1	IH EQUIPMENT	**509**
100	1037572-0000	-		12	COVER PLATE	
1000	2511667-0000	-		1	COVER PLATE	
1010	352103-0111	-		2	CABLE GLAND, ST 16, PR22,5/PG16	
1020	352103-0116	-		1	CABLE GLAND, ST 21, PR28,3/PG21	
1030	90181-0045	-	MM	285	CABLE DUCT, 40X60MM	
110	1037573-0000	-		12	GASKET	
120	1037574-0000	-		8	COVER PLATE	
130	1129481-0000	-		1	COVERING PLATE	
140	1037575-0000	-		8	GASKET	
150	1129478-0000	-		1	GASKET	
160	1037576-0000	-		1	GASKET	
170	90181-0038	-	MM	170	CABLE DUCT, 40X40MM	
180	90181-0038	-	MM	170	CABLE DUCT, 40X40MM	
190	90181-0038	-	MM	170	CABLE DUCT, 40X40MM	
200	90181-0038	-	MM	170	CABLE DUCT, 40X40MM	
210	90181-0038	-	MM	170	CABLE DUCT, 40X40MM	
220	90181-0038	-	MM	170	CABLE DUCT, 40X40MM	
230	90181-0038	-	MM	170	CABLE DUCT, 40X40MM	
240	90181-0038	-	MM	170	CABLE DUCT, 40X40MM	
250	90181-0038	-	MM	170	CABLE DUCT, 40X40MM	
260	90181-0046	-	MM	285	CABLE DUCT, 60X60MM	
270	90181-0046	-	MM	285	CABLE DUCT, 60X60MM	
280	90181-0046	-	MM	285	CABLE DUCT, 60X60MM	
290	90181-0046	-	MM	285	CABLE DUCT, 60X60MM	
300	90181-0046	-	MM	285	CABLE DUCT, 60X60MM	
310	90181-0046	-	MM	285	CABLE DUCT, 60X60MM	
320	90181-0046	-	MM	285	CABLE DUCT, 60X60MM	
330	90181-0046	-	MM	285	CABLE DUCT, 60X60MM	
340	90181-0046	-	MM	285	CABLE DUCT, 60X60MM	
350	1140519-0000	-		1	PROTECTION	
360	1129318-0000	-		1	BRACKET	
370	1038408-0000	-		4	COVERING PLATE	
380	1038518-0000	-		1	BRACKET	
390	1038519-0000	-		1	GASKET	
400	985842-0000	-		1	BRACKET	
410	1350704-0000	-		1	BRACKET	
420	2539502-0000	-		1	WELDED CABINET	
430	1129155-0000	-		1	COVERING PLATE	
440	1129156-0000	-		1	COVERING PLATE	
450	1129157-0000	-		1	PROFILE	
460	2555684-0000	-		1	PROFILE	
470	1129159-0000	-		6	BRACKET	
490	2547146-0000	-		1	PLATE	
500	1129322-0000	-		1	BRACKET	
510	353042-0003	-	MM	280	RAIL TS35/15/1,5	
520	90110-0166	-		26	CHASSIS HOUSING 310144-33	
530	90110-0167	-		3	CHASSIS HOUSING 310133-33	
540	90110-0153	-		23	CHASSIS HOUSING 24-P CHI 24, 121240 0000	
550	352103-0123	-		1	CABLE GLAND, ST 42, PR54,0/PG42	
560	90143-0057	A	M	30	STRIP EMKA 1011-05 21X11MM	
570	312115-0325	-		2	SCREW HEX.SOCK.HD.MC6S-TT 5X10 A480	
580	90287-0124	-		38	SCREW PAN HEAD MSCS M4X12 NYLON	
590	312125-0289	-		18	SCREW SLOT.PAN HD. MCS 4X10 A480	
600	312105-0287	-		16	SCREW M6S ISO 4017 M4X8 A480	
610	312105-0534	-		2	SCREW M6S ISO 4017 M12X25 A480	
620	312105-0538	-		2	SCREW M6S ISO 4017 M12X35 A480	
630	312125-0222	-		38	SCREW PAN HEAD MCS M3X8 SS	
640	315105-0124	-		14	WASHER PLAIN, BRB, 3,2/6,H=0,5	
650	312115-0323	-		8	SCREW MC6S M5X8 A280	
660	312115-0289	-		312	SCREW HEX.SOCK.HD.MC6S-TT 4X10 A480	
670	312115-0299	-		2	SCREW MC6S M4X30 A280	
680	90099-0110	-		2	NUT, PR 22,5 (PG16)	
690	1129973-0000	-		1	COVERING PANEL	
700	315105-0153	-		34	WASHER PLAIN, BRB, 6,4/12,H=1,5	
710	315105-0136	-		328	WASHER PLAIN, BRB, 4,3/8,H=0,8	
720	315105-0178	-		4	WASHER PLAIN, BRB, 13/24,H=2	
730	352113-0203	-		19	ANCHOR PLATES FOR STRIPS, TYPE TM3S8-M0	
740	312605-0312	-		1	HEXAGON NUT, M6M M4 A280	
760	90099-0096	-		1	NUT	
770	312605-0316	-		36	HEXAGON NUT, M6M M6 A280	
780	90165-0159	-		1	PIPE CLAMP, RSGU 1 25/20-W4, D=25 MM	
790	315105-0146	-		28	WASHER PLAIN, BRB, 5,3/10,H=1	
800	1129550-0000	-		4	GASKET	
810	1129549-0000	-		1	SHEET	
820	90099-0119	-		1	NUT, PR 28,3 (PG21)	

Machine Type | Group Description | Used-In | Group Number | Page No

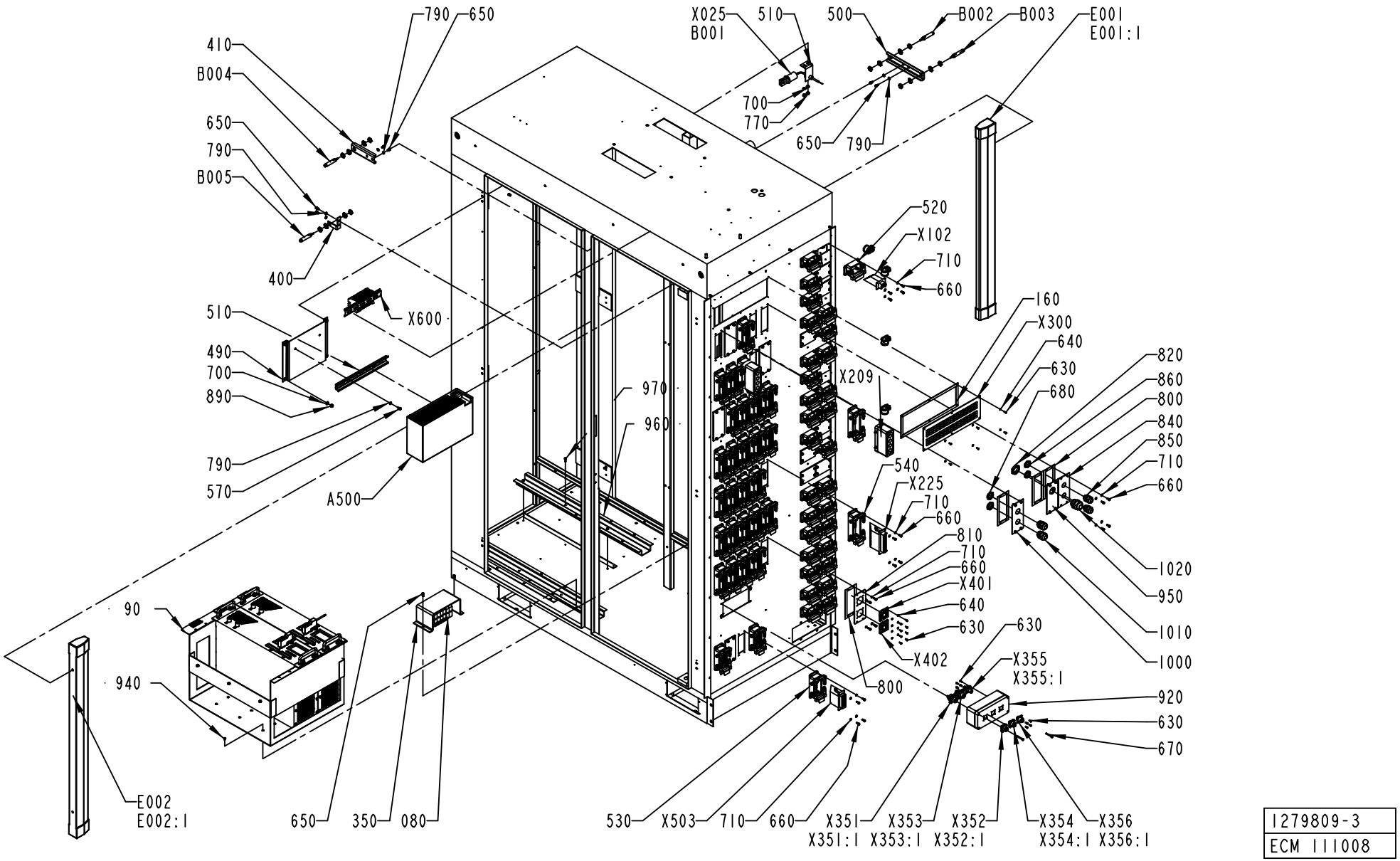

1279809-3
ECM 111008

Pos	Part No	SP	UN	Qty	Description	Page No
Common Parts (Cont'd)						
830	312105-0364	-		4	SCREW M6S ISO 4017 M6X10 A480	
840	1038820-0000	-		1	COVER PLATE	
850	352103-0108	-		2	CABLE GLAND, ST 13,5 , PR20,4/PG13,5	
860	90099-0118	-		2	NUT, PR 20,4 (PG13,5)	
870	312115-0329	-		4	SCREW MC6S M5X16 A280	
880	1140769-0000	-		2	DOOR STOPPER	
890	312812-0316	-		11	HEXAGON NUT, NY-LOCK M6 A480	
900	1140529-0000	-		1	PROTECTION PLATE	
910	1140523-0000	-		1	PROTECTION PLATE	
920	1285523-0000	-		1	CONNECTION BOX	
930	1140527-0000	-		1	PROTECTION PLATE	
940	312141-0287	-		12	SCREW COUNTERS.SLOT.HD. MFS 4X8 FZB	
950	1038876-0000	-		1	COVERING PLATE	
960	2543220-0000	-		1	PROFILE	
970	312115-0291	-		6	SCREW MC6S M4X12 A280	
980	312810-0316	-		1	HEXAGON NUT, NY-LOCK M6 FZB	
A500	90458-0724	B		1	STABILIZED POWER SUPPLY, SITOP 40A 24VDC	
B001	90326-0053	A		1	THERMOCOUPLE, 12826-35	
B002	90458-0672	-		1	PROXIMITY SENSOR E2E2-X5MB1-5M	
B003	90458-0672	-		1	PROXIMITY SENSOR E2E2-X5MB1-5M	
B004	90458-0672	-		1	PROXIMITY SENSOR E2E2-X5MB1-5M	
B005	90458-0672	-		1	PROXIMITY SENSOR E2E2-X5MB1-5M	
E001	90164-0018	-		1	LIGHT FIXTURE, FK 130	
E001:1	90297-0011	A		1	FLUORESCENT TUBE, TDL 30W/840	
E002	90164-0018	-		1	LIGHT FIXTURE, FK 130	
E002:1	90297-0011	A		1	FLUORESCENT TUBE, TDL 30W/840	
X025	90326-0020	-		1	PLUG, FEMALE YELLOW CR-AL	
X101	90110-0161	-		1	FEMALE INSERT 70 105 0653 0	
X102	90110-0161	-		1	FEMALE INSERT 70 105 0653 0	
X103	90110-0161	-		1	FEMALE INSERT 70 105 0653 0	
X105	90110-0161	-		1	FEMALE INSERT 70 105 0653 0	
X107	90110-0161	-		1	FEMALE INSERT 70 105 0653 0	
X108	90110-0161	-		1	FEMALE INSERT 70 105 0653 0	
X110	90110-0161	-		1	FEMALE INSERT 70 105 0653 0	
X111	90110-0161	-		1	FEMALE INSERT 70 105 0653 0	
X112	90110-0161	-		1	FEMALE INSERT 70 105 0653 0	
X113	90110-0161	-		1	FEMALE INSERT 70 105 0653 0	
X115	90110-0161	-		1	FEMALE INSERT 70 105 0653 0	
X116	90110-0161	-		1	FEMALE INSERT 70 105 0653 0	
X117	90110-0161	-		1	FEMALE INSERT 70 105 0653 0	
X118	90110-0161	-		1	FEMALE INSERT 70 105 0653 0	
X119	90110-0161	-		1	FEMALE INSERT 70 105 0653 0	
X122	90110-0161	-		1	FEMALE INSERT 70 105 0653 0	
X125	90110-0161	-		1	FEMALE INSERT 70 105 0653 0	
X126	90110-0161	-		1	FEMALE INSERT 70 105 0653 0	
X127	90110-0161	-		1	FEMALE INSERT 70 105 0653 0	
X128	90110-0161	-		1	FEMALE INSERT 70 105 0653 0	
X129	90110-0161	-		1	FEMALE INSERT 70 105 0653 0	
X130	90110-0161	-		1	FEMALE INSERT 70 105 0653 0	
X131	90110-0161	-		1	FEMALE INSERT 70 105 0653 0	
X132	90110-0161	-		1	FEMALE INSERT 70 105 0653 0	
X133	90110-0161	-		1	FEMALE INSERT 70 105 0653 0	
X134	90110-0161	-		1	FEMALE INSERT 70 105 0653 0	
X135	90110-0161	-		1	FEMALE INSERT 70 105 0653 0	
X136	90110-0161	-		1	FEMALE INSERT 70 105 0653 0	
X137	90110-0161	-		1	FEMALE INSERT 70 105 0653 0	
X138	90110-0161	-		1	FEMALE INSERT 70 105 0653 0	
X203	90110-0164	-		1	FEMALE INSERT 70 105 2453 3	
X206	90110-0164	-		1	FEMALE INSERT 70 105 2453 3	
X207	90110-0164	-		1	FEMALE INSERT 70 105 2453 3	
X208	90110-0381	-		1	COVER	
X209	90110-0381	-		1	COVER	
X212	90110-0164	-		1	FEMALE INSERT 70 105 2453 3	
X213	90110-0164	-		1	FEMALE INSERT 70 105 2453 3	
X214	90110-0164	-		1	FEMALE INSERT 70 105 2453 3	
X215	90110-0164	-		1	FEMALE INSERT 70 105 2453 3	
X216	90110-0164	-		1	FEMALE INSERT 70 105 2453 3	
X217	90110-0164	-		1	FEMALE INSERT 70 105 2453 3	
X218	90110-0164	-		1	FEMALE INSERT 70 105 2453 3	
X219	90110-0164	-		1	FEMALE INSERT 70 105 2453 3	
X220	90110-0164	-		1	FEMALE INSERT 70 105 2453 3	
X221	90110-0164	-		1	FEMALE INSERT 70 105 2453 3	
X222	90110-0164	-		1	FEMALE INSERT 70 105 2453 3	
X223	90110-0164	-		1	FEMALE INSERT 70 105 2453 3	
X224	90110-0164	-		1	FEMALE INSERT 70 105 2453 3	
X225	90110-0164	-		1	FEMALE INSERT 70 105 2453 3	
X226	90110-0164	-		1	FEMALE INSERT 70 105 2453 3	
X227	90110-0164	-		1	FEMALE INSERT 70 105 2453 3	
X228	90110-0164	-		1	FEMALE INSERT 70 105 2453 3	
X229	90110-0164	-		1	FEMALE INSERT 70 105 2453 3	
X230	90110-0164	-		1	FEMALE INSERT 70 105 2453 3	
X231	90110-0164	-		1	FEMALE INSERT 70 105 2453 3	
X232	90110-0164	-		1	FEMALE INSERT 70 105 2453 3	

Machine Type | Group Description | Used-In | Group Number | Page No

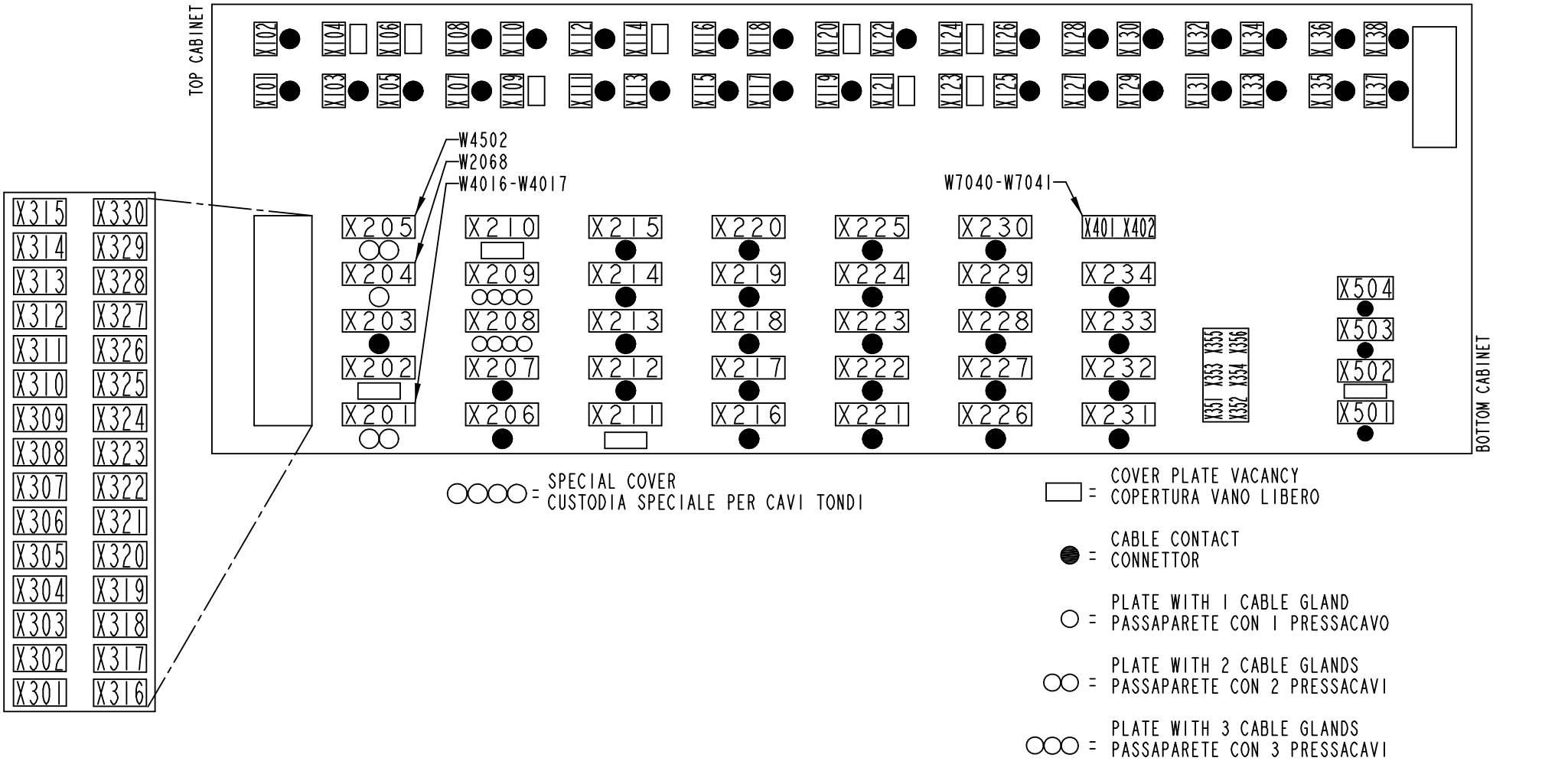

1279809-3
ECM 111008

Pos	Part No	SP	UN	Qty	Description	Page No
Common Parts (Cont'd)						
X233	90110-0164	-		1	FEMALE INSERT 70 105 2453 3	
X234	90110-0164	-		1	FEMALE INSERT 70 105 2453 3	
X300	90326-0316	-		1	THERMO CONTACT PANEL	
X351	90110-0507	-		1	CHASSIES CONTACT	
X351:1	90110-0380	-		7	CONTACT PIN	
X352	90110-0505	-		1	CHASSIES CONTACT	
X352:1	90110-0209	-		7	CONTACT PIN, RC20M13K	
X353	90110-0507	-		1	CHASSIES CONTACT	
X353:1	90110-0380	-		11	CONTACT PIN	
X354	90110-0505	-		1	CHASSIES CONTACT	
X354:1	90110-0209	-		7	CONTACT PIN, RC20M13K	
X355	90110-0506	-		1	CHASSIES CONTACT	
X355:1	90110-0380	-		7	CONTACT PIN	
X356	90110-0505	-		1	CHASSIES CONTACT	
X356:1	90110-0209	-		7	CONTACT PIN, RC20M13K	
X401	90110-0236	-		1	CHASSIS CONTACT PX0767/S	
X402	90110-0236	-		1	CHASSIS CONTACT PX0767/S	
X501	90110-0165	-		1	FEMALE INSERT 70.005.0653.0	
X503	90110-0165	-		1	FEMALE INSERT 70.005.0653.0	
X600	A2541122-0100	-		1	DISTRIBUTION TERMINAL	**511**

Pos	Part No	SP	UN	Qty	Description	Page No

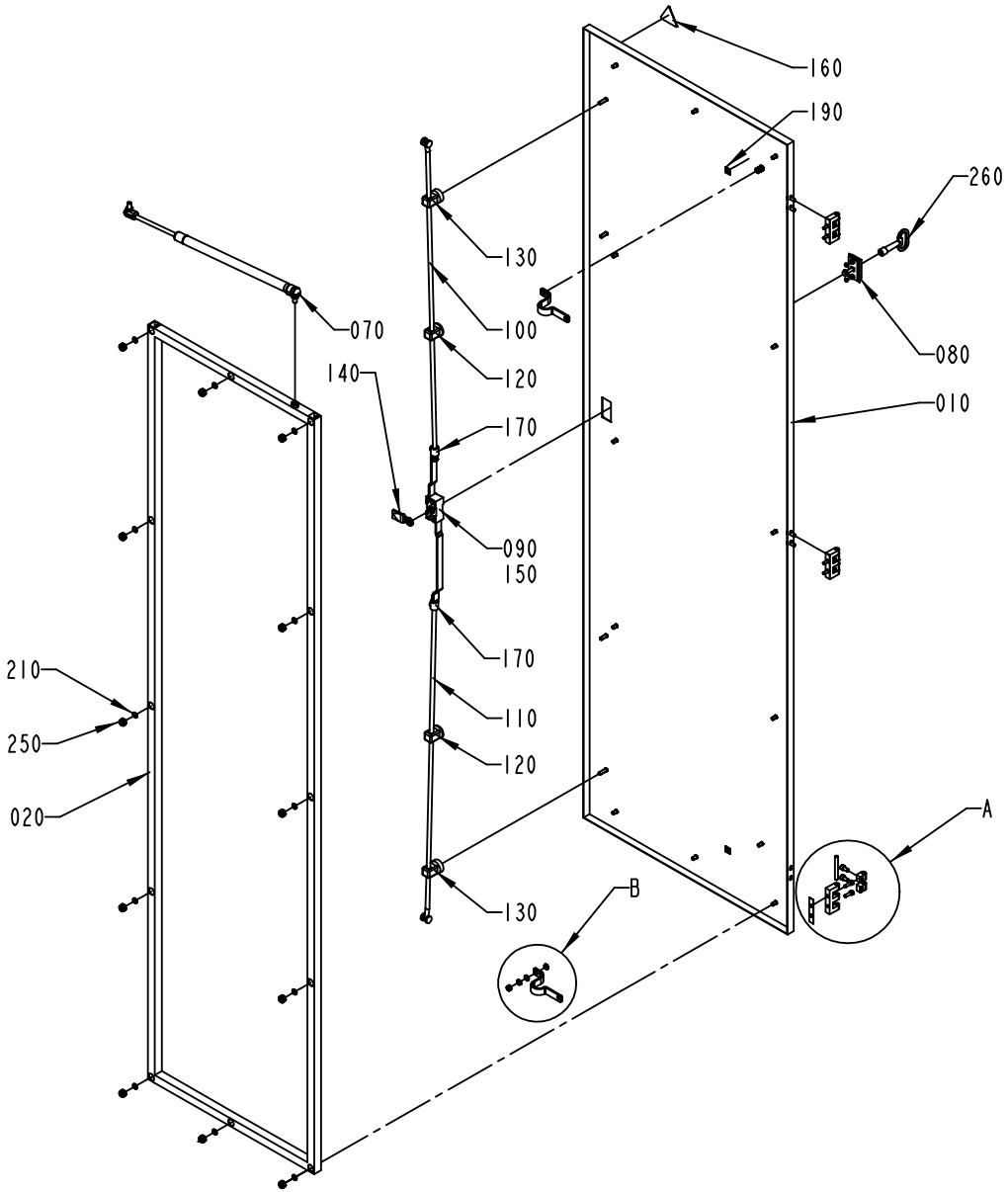

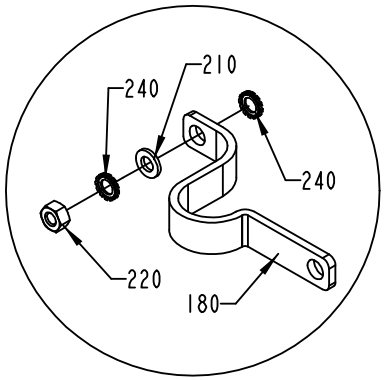

B
13:25

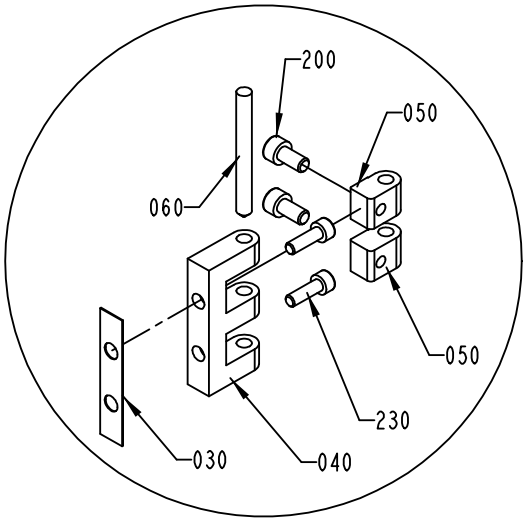

A
13:25

1282034-2
ECM 94660

Pos	Part No	SP	UN	Qty	Description	Page No
Common Parts						
010	1346468-0000	-		1	DOOR	
020	2506829-0000	-		1	FRAME	
030	988666-0000	-		3	GASKET	
040	1035792-0000	-		3	E-HINGE	
050	1129770-0000	-		6	BLOCKING PIECE	
060	988685-0000	-		3	PIN	
070	90347-0163	-		1	GAS-DAMPER	
080	90237-0160	-		1	ESCUTCHEON WITH SQUARE, 1121-U23/U13	
090	90237-0153	-		1	LOCK HOUSING, 1121-U26-0B	
100	90237-0168	-		1	ROUND BAR WITH END WHEEL, 1049-U5	
110	1348846-0000	-		1	ROD	
120	90237-0151	-		2	GUIDE, 1001-U11	
130	90237-0152	-		2	GUIDE, 1001-U12	
140	90237-0156	-		1	LOCK BOLT, 1000-16	
150	90237-0155	-		1	LOCK ADAPTER, 1121-U40	
160	359705-0015	-		1	WARNING SIGN ISO, RISK OF ELECTRIC SHOCK	
170	90237-0169	-		2	LOCK ADAPTER, 1000-U49	
180	90135-0035	-		2	EARTH WIRE, L=250 MM 16 MM2	
190	90194-0152	-		2	SIGN, EARTH	
200	312115-0366	-		6	SCREW MC6S M6X12 A280	
210	315105-0153	-		14	WASHER PLAIN, BRB, 6,4/12,H=1,5	
220	312605-0316	-		2	HEXAGON NUT, M6M M6 A280	
230	312115-0329	-		6	SCREW MC6S M5X16 A280	
240	90062-0015	-		4	LOCK WASHER SERRAT.EXT.GEAR,6,4/11 H=0,7	
250	312812-0318	-		12	HEXAGON NUT, NY-LOCK M8 A480	
260	90237-0324	-		1	KEY, 1104-02 FOR SQUARE 8 MM	

Pos	Part No	SP	UN	Qty	Description	Page No

Machine Type | Group Description | Used-In | Group Number | Page No

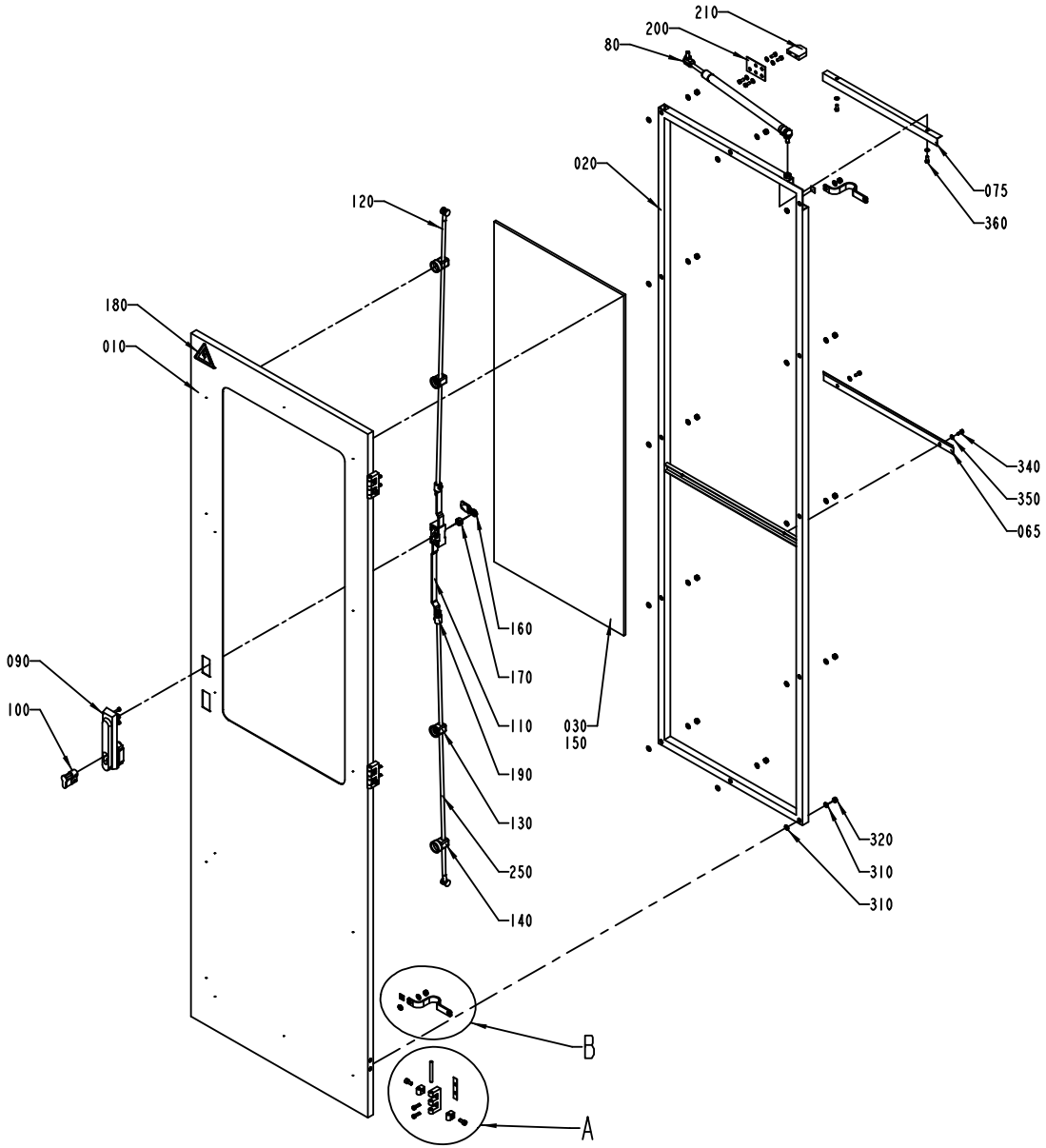

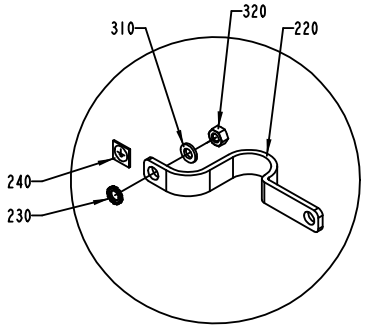

B
1:2

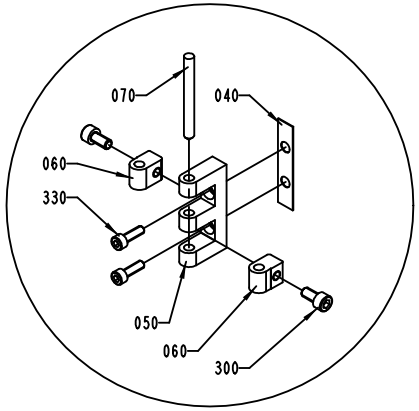

A
1:2

S-1282031-2
ECN 70798

ECM: 70798 - 19981211
Group number: 1282031-0200
Assembly Drawing: 1282031-2_1_AA

Issue: 20021023

Pos	Part No	SP	UN	Qty	Description	Page No
Common Parts						
010	1041905-0000	-		1	DOOR	
020	1282030-0000	-		1	FRAME	
030	1129047-0000	-		1	GLASS PANE	
040	988666-0000	-		3	GASKET	
050	1035792-0000	-		3	E-HINGE	
060	1129770-0000	-		6	BLOCKING PIECE	
065	1282028-0000	-		1	BRACKET	
070	988685-0000	-		3	PIN	
075	1282029-0000	-		1	BRACKET	
080	90347-0163	-		1	GAS-DAMPER	
090	90237-0176	-		1	TURNING HANDLE	
100	90237-0128	-		1	LOCK CYLINDER, 1109-U3	
110	90237-0153	-		1	LOCK HOUSING, 1121-U26-0B	
120	90237-0168	-		1	ROUND BAR WITH END WHEEL, 1049-U5	
130	90237-0151	-		2	GUIDE, 1001-U11	
140	90237-0152	-		2	GUIDE, 1001-U12	
150	90157-0041	-		1	SEALING COMPOUND	
160	90237-0156	-		1	LOCK BOLT, 1000-16	
170	90237-0155	-		1	LOCK ADAPTER, 1121-U40	
180	90194-0016	-		1	SIGN, FLASH, ELECTRIC EQUIPMENT SYMBOL	
190	90237-0169	-		2	LOCK ADAPTER, 1000-U49	
200	985851-0000	-		1	BRACKET	
210	970215-0000	-		1	STOP BLOCK	
220	90135-0035	-		2	EARTH WIRE, L=250 MM 16 MM2	
230	90062-0015	-		2	LOCK WASHER SERRAT.EXT.GEAR,6,4/11 H=0,7	
240	90194-0152	-		2	SIGN, EARTH	
250	1348846-0000	-		1	ROD	
300	312115-0366	-		6	SCREW MC6S M6X12 A280	
310	315105-0153	-		24	WASHER PLAIN, BRB, 6,4/12,H=1,5	
320	312605-0316	-		12	HEXAGON NUT, M6M M6 A280	
330	312115-0329	-		6	SCREW MC6S M5X16 A280	
340	312125-0327	-		7	SCREW PAN HEAD MCS M5X12 SS	
350	315105-0146	-		9	WASHER PLAIN, BRB, 5,3/10,H=1	
360	312121-0327	-		2	SCREW SLOT.PAN HD. MCS 5X12 FZB	

Pos	Part No	SP	UN	Qty	Description	Page No

Machine Type | Group Description | Used-In | Group Number | Page No

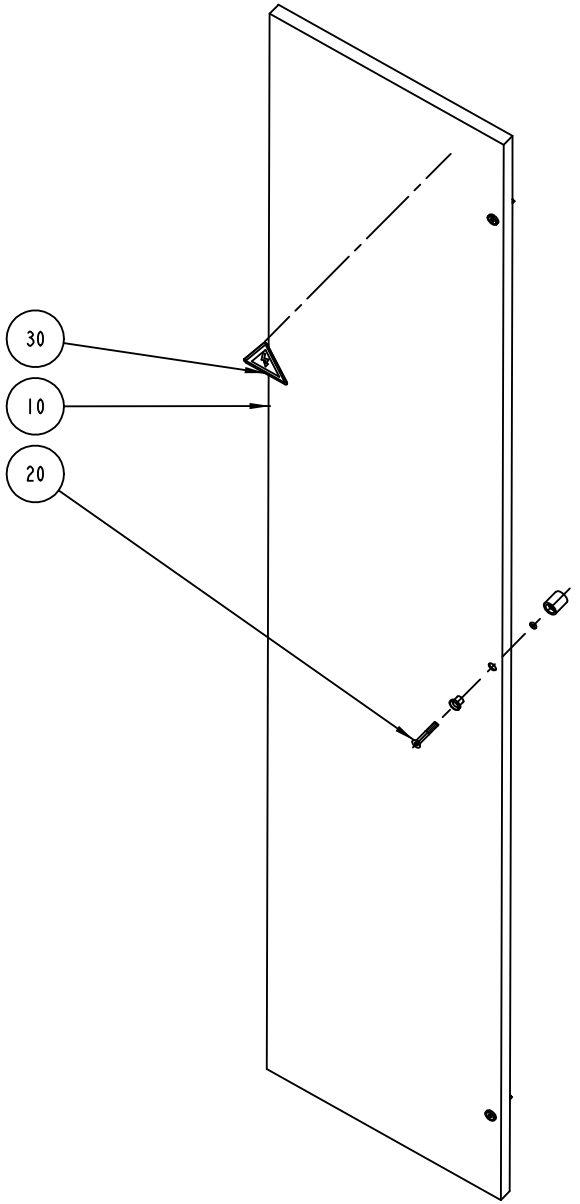
30
10
20

ECM: - -
Group number: 1095634-0100
Assembly Drawing: 1095634-1_1_AA

Issue: 20021023

Pos	Part No	SP	UN	Qty	Description	Page No
Common Parts						
010	1041939-0000	-		1	DOOR	
020	90226-0458	-		3	MOUNTING SCREW	
030	90194-0016	-		1	SIGN, FLASH, ELECTRIC EQUIPMENT SYMBOL	

Pos	Part No	SP	UN	Qty	Description	Page No

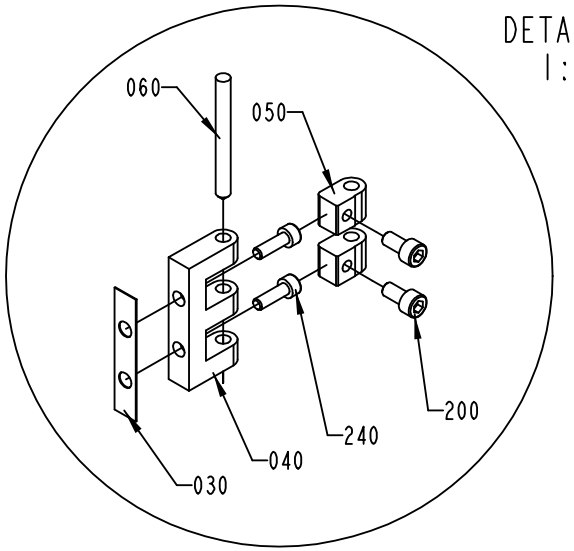
DETAIL A
1:2
060
050
200
240
040
030

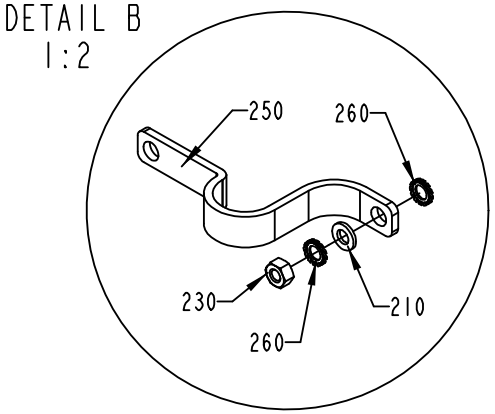
DETAIL B
1:2
250
260
230
210
260

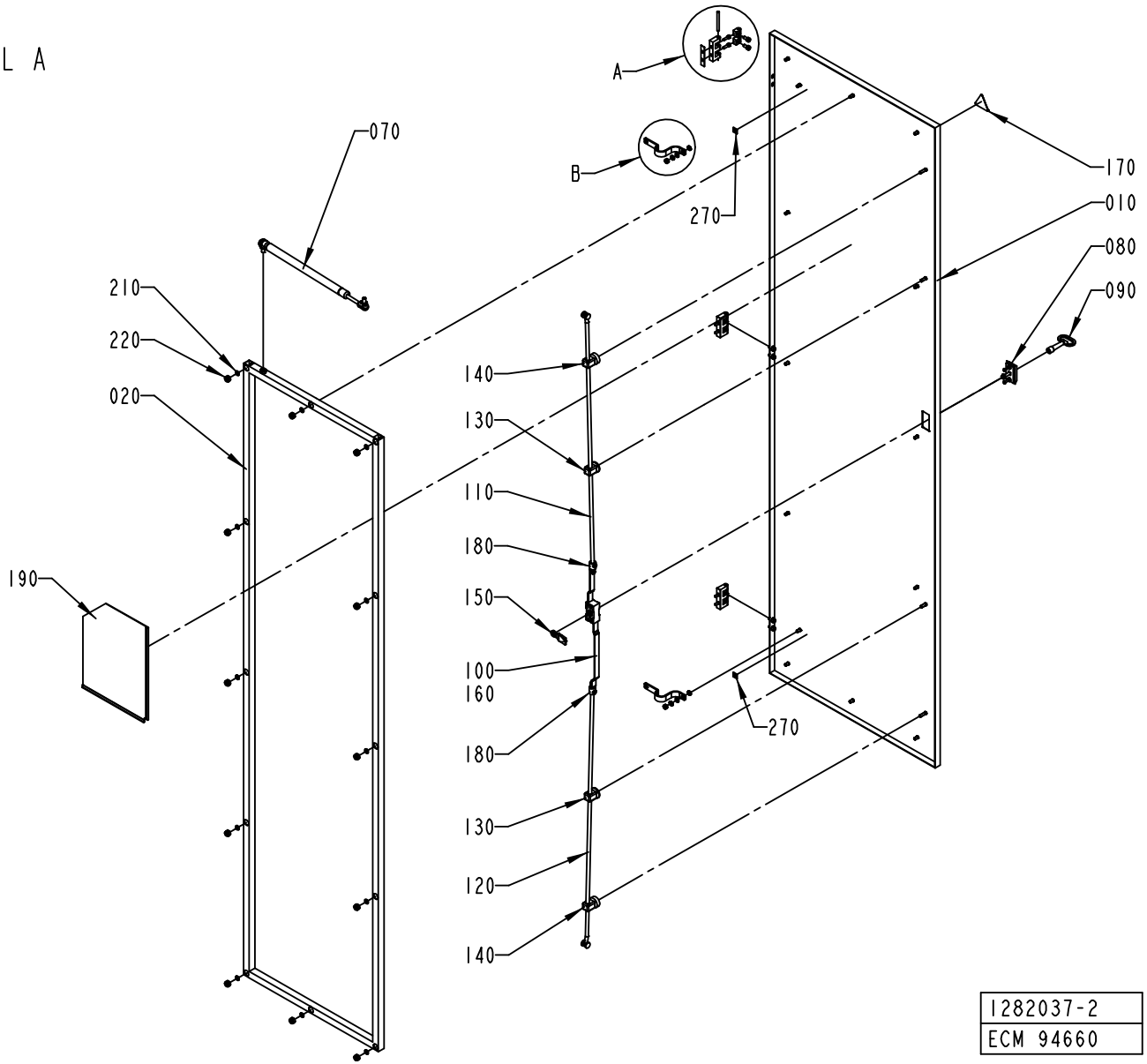
A
B
070
270
170
010
080
090
210
220
020
140
130
110
180
150
190
100
160
180
270
130
120
140
1282037-2
ECM 94660

Pos	Part No	SP	UN	Qty	Description	Page No
Common Parts						
010	1041977-0000	-		1	DOOR	
020	1282350-0000	-		1	FRAME	
030	988666-0000	-		3	GASKET	
040	1035792-0000	-		3	E-HINGE	
050	1129770-0000	-		6	BLOCKING PIECE	
060	988685-0000	-		3	PIN	
070	90347-0163	-		1	GAS-DAMPER	
080	90237-0160	-		1	ESCUTCHEON WITH SQUARE, 1121-U23/U13	
090	90237-0324	-		1	KEY, 1104-02 FOR SQUARE 8 MM	
100	90237-0153	-		1	LOCK HOUSING, 1121-U26-0B	
110	90237-0168	-		1	ROUND BAR WITH END WHEEL, 1049-U5	
120	1348846-0000	-		1	ROD	
130	90237-0151	-		2	GUIDE, 1001-U11	
140	90237-0152	-		2	GUIDE, 1001-U12	
150	90237-0156	-		1	LOCK BOLT, 1000-16	
160	90237-0155	-		1	LOCK ADAPTER, 1121-U40	
170	359705-0015	-		1	WARNING SIGN ISO, RISK OF ELECTRIC SHOCK	
180	90237-0169	-		2	LOCK ADAPTER, 1000-U49	
190	1036977-0000	-		1	HOLDER	
200	312115-0366	-		6	SCREW MC6S M6X12 A280	
210	315105-0153	-		14	WASHER PLAIN, BRB, 6,4/12,H=1,5	
220	312812-0318	-		12	HEXAGON NUT, NY-LOCK M8 A480	
230	312605-0316	-		2	HEXAGON NUT, M6M M6 A280	
240	312115-0329	-		6	SCREW MC6S M5X16 A280	
250	90135-0035	-		2	EARTH WIRE, L=250 MM 16 MM2	
260	90062-0015	-		4	LOCK WASHER SERRAT.EXT.GEAR,6,4/11 H=0,7	
270	90194-0152	-		2	SIGN, EARTH	

Pos	Part No	SP	UN	Qty	Description	Page No

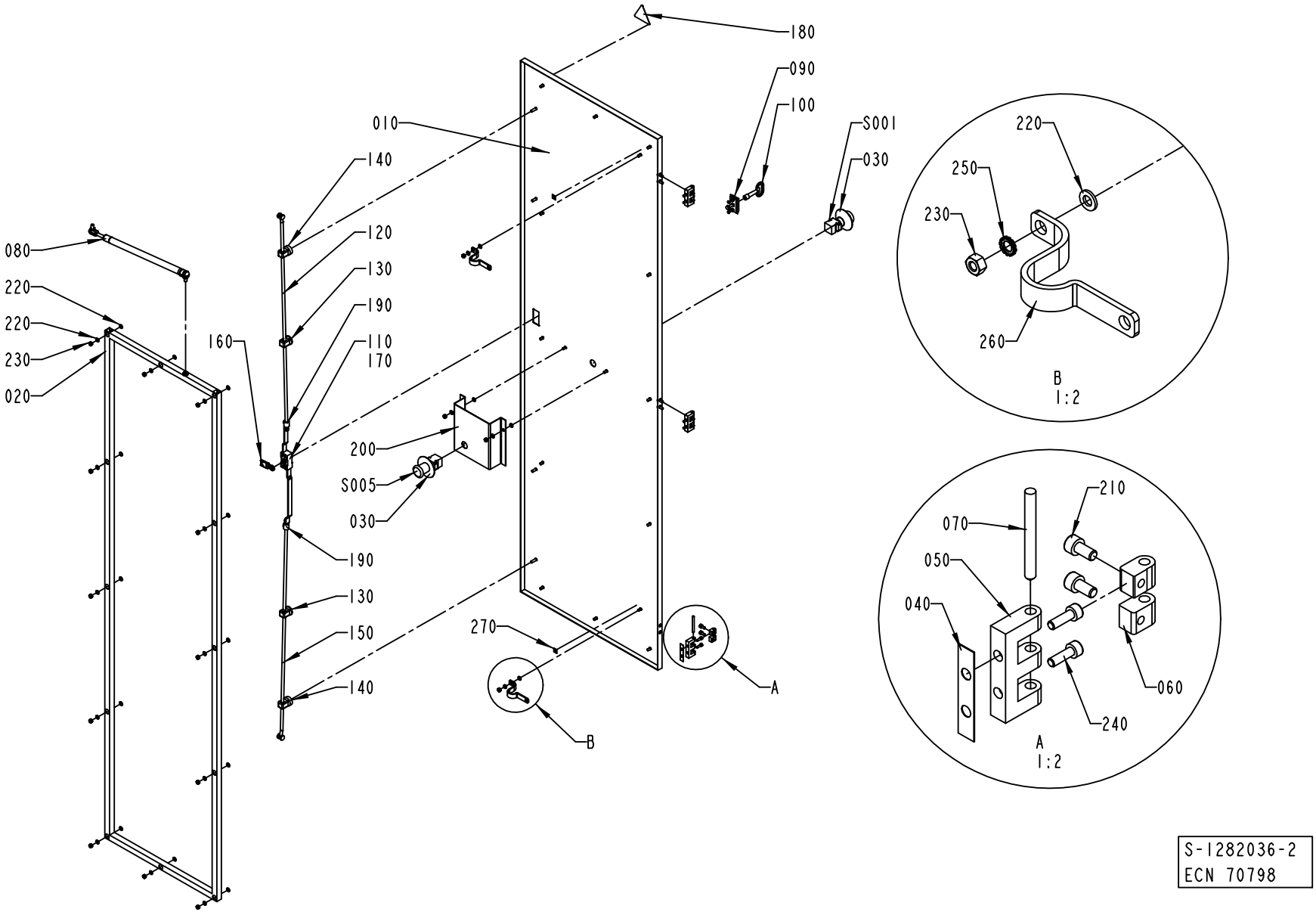

S-1282036-2
ECN 70798

ECM: 70798 - 19981211
Group number: 1282036-0200
Assembly Drawing: 1282036-2_1_AA

Issue: 20021023

Pos	Part No	SP	UN	Qty	Description	Page No
Common Parts						
010	1041920-0000	-		1	DOOR	
020	1285521-0000	-		1	FRAME	
030	486826-0001	-		2	SIGN "EMERGENCY STOP"	
040	988666-0000	-		3	GASKET	
050	1035792-0000	-		3	E-HINGE	
060	1129770-0000	-		6	BLOCKING PIECE	
070	988685-0000	-		3	PIN	
080	90347-0163	-		1	GAS-DAMPER	
090	90237-0160	-		1	ESCUTCHEON WITH SQUARE, 1121-U23/U13	
100	90237-0324	-		1	KEY, 1104-02 FOR SQUARE 8 MM	
110	90237-0153	-		1	LOCK HOUSING, 1121-U26-0B	
120	90237-0168	-		2	ROUND BAR WITH END WHEEL, 1049-U5	
130	90237-0151	-		2	GUIDE, 1001-U11	
140	90237-0152	-		2	GUIDE, 1001-U12	
150	1348846-0000	-		1	ROD	
160	90237-0156	-		1	LOCK BOLT, 1000-16	
170	90237-0155	-		1	LOCK ADAPTER, 1121-U40	
180	90194-0016	-		1	SIGN, FLASH, ELECTRIC EQUIPMENT SYMBOL	
190	90237-0169	-		2	LOCK ADAPTER, 1000-U49	
200	1140555-0000	-		1	BRACKET	
210	312115-0366	-		6	SCREW MC6S M6X12 A280	
220	315105-0153	-		30	WASHER PLAIN, BRB, 6,4/12,H=1,5	
230	312605-0316	-		16	HEXAGON NUT, M6M M6 A280	
240	312115-0329	-		6	SCREW MC6S M5X16 A280	
250	90062-0015	-		2	LOCK WASHER SERRAT.EXT.GEAR,6,4/11 H=0,7	
260	90135-0035	-		2	EARTH WIRE, L=250 MM 16 MM2	
270	90194-0152	-		2	SIGN, EARTH	
S001	90064-0124	-		1	SWITCH, EM. STOP, ZB2-BS844+ZB2-BZ1045	
S005	90064-0124	-		1	SWITCH, EM. STOP, ZB2-BS844+ZB2-BZ1045	

Pos	Part No	SP	UN	Qty	Description	Page No

Machine Type | Group Description | Used-In | Group Number | Page No

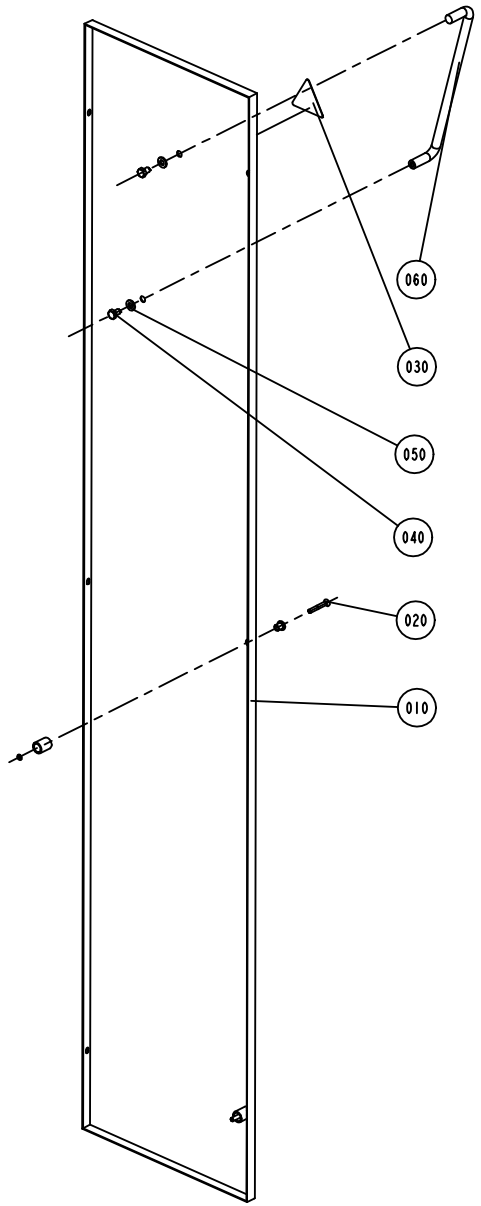
060
030
050
040
020
010

ECM: - -
Group number: 1095637-0100
Assembly Drawing: 1095637-1_1_AA

Issue: 20021023

Pos	Part No	SP	UN	Qty	Description	Page No
Common Parts						
010	1041948-0000	-		1	DOOR	
020	90226-0458	-		3	MOUNTING SCREW	
030	90194-0016	-		1	SIGN, FLASH, ELECTRIC EQUIPMENT SYMBOL	
040	312105-0447	-		2	SCREW M6S ISO 4017 M8X12 A480	
050	90005-0077	-		2	WASHER PL.RND.NYL.8,4/7, H=2	
060	90017-0015	-		1	HANDLE, NO. 14.4012.02.308	

Pos	Part No	SP	UN	Qty	Description	Page No

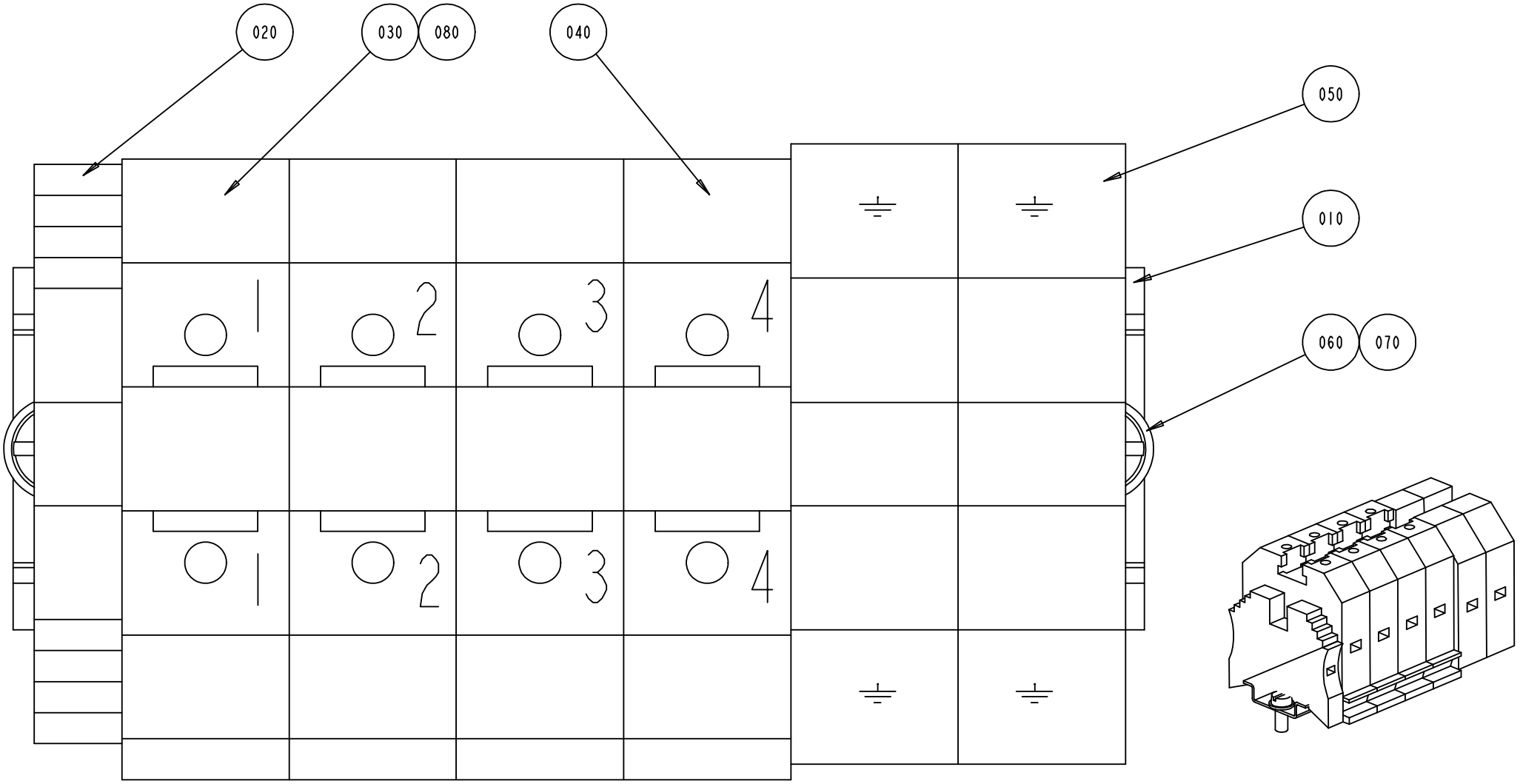
020
030
080
040
050
010
060
070
1
2
3
4
1
2
3
4

ECM: - -
Group number: 1095778-0100
Assembly Drawing: 1095778-1_1_AA

Issue: 20021023

Pos	Part No	SP	UN	Qty	Description	Page No
Common Parts						
010	353042-0005	-	MM	130	RAIL TS 35/7.5	
020	353031-0203	-		1	END SUPPORT, WEW 35/2	
030	353021-0219	-		3	FEED THROUGH TERMINAL, 10205.0	
040	353021-0226	-		1	BY-PASS TERMINAL WDU 35	
050	353024-0209	-		2	EARTH TERMINAL, 1010.5	
060	312125-0327	-		2	SCREW PAN HEAD MCS M5X12 SS	
070	315105-0146	-		2	WASHER PLAIN, BRB, 5,3/10,H=1	
080	359011-0807	-		2	MARKING PLATES 5-FW 1-50	

Pos	Part No	SP	UN	Qty	Description	Page No

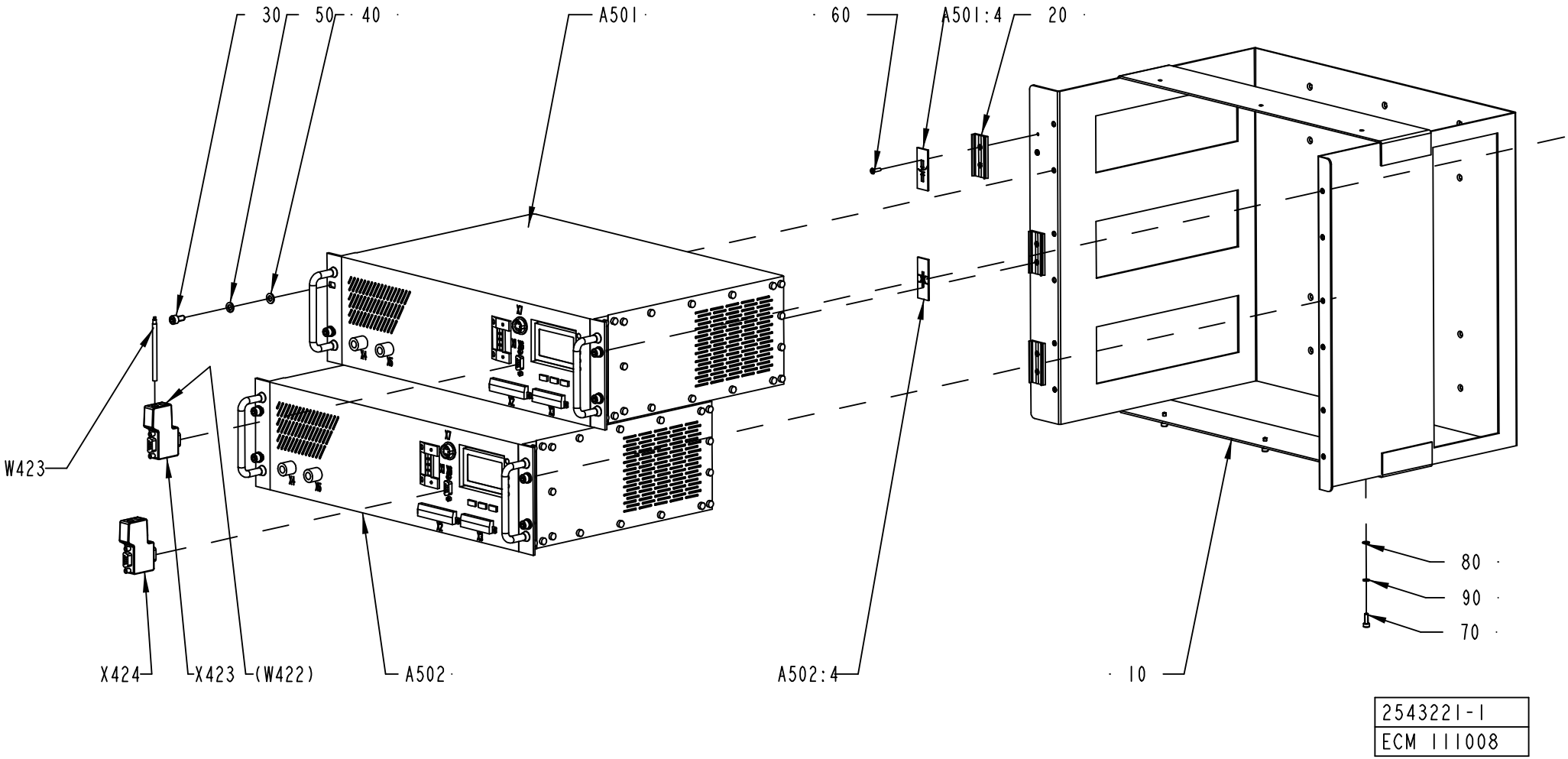
30
50
40
A501
60
A501:4
20
W423
X424
X423
(W422)
A502
A502:4
10
80
90
70
2543221-1
ECM 111008

ECM: 111620 - 20020916
Group number: 2543221-0100
Assembly Drawing: 2543221-1_1_AB

Issue: 20021023

Pos	Part No	SP	UN	Qty	Description	Page No
Common Parts						
010	2542330-0000	-		1	SUPPORT	
020	359240-0100	-		3	SIGN HOLDER FOR 359240-0001	
030	312115-0366	-		8	SCREW MC6S M6X12 A280	
040	315105-0153	-		8	WASHER PLAIN, BRB, 6,4/12,H=1,5	
050	315402-0156	-		8	LOCK WASHER FBB 6,5	
060	311521-0146	-		6	BLANK RIVET 3,2X12	
070	312115-0291	-		3	SCREW MC6S M4X12 A280	
080	315105-0136	-		3	WASHER PLAIN, BRB, 4,3/8,H=0,8	
090	315402-0136	-		3	LOCK WASHER FBB 4,1	
A501	1499642-0101	-		1	TPIH 2500 HORIZONTAL MOUNTING	
A501:4	359241-0131	-		1	SIGN, TEMP. LS HEATER	
A502	1499642-0101	-		1	TPIH 2500 HORIZONTAL MOUNTING	
A502:4	359241-0135	-		1	SIGN, TRANSVERSAL SEALING	
W423	90458-2894	-	MM	400	PAIR TWISTED CABLE 1X2X0,2MM2	
X423	90459-0184	-		1	INTERFACE CONNECTOR FOR TPIH 2500 GENER.	
X424	90459-0184	-		1	INTERFACE CONNECTOR FOR TPIH 2500 GENER.	

Pos	Part No	SP	UN	Qty	Description	Page No

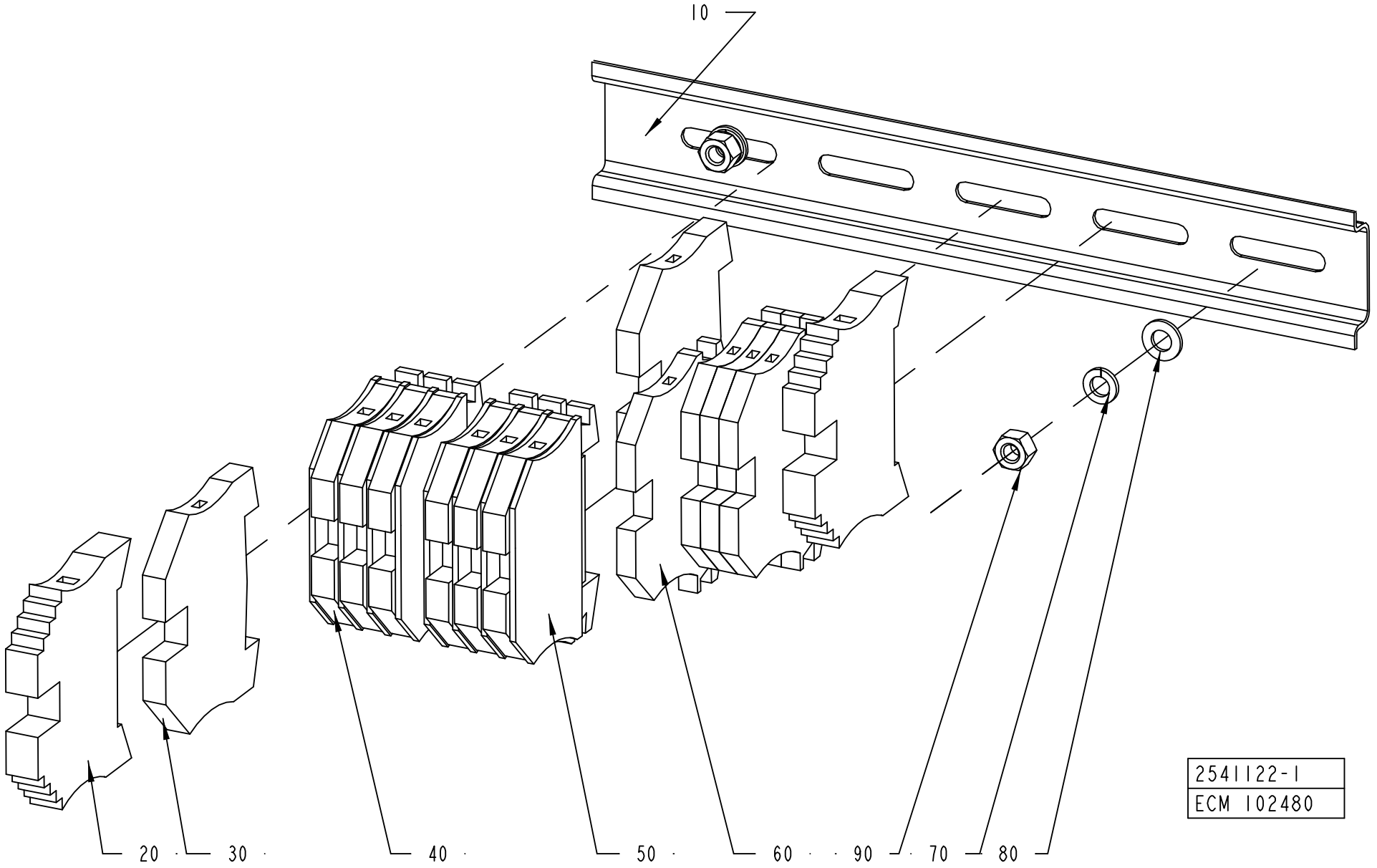
10
20
30
40
50
60
90
70
80
2541122-1
ECM 102480

ECM: 105174 - 20010926
Group number: 2541122-0100
Assembly Drawing: 2541122-1_1_AA

Issue: 20021023

Pos	Part No	SP	UN	Qty	Description	Page No
Common Parts						
010	353042-0004	-	MM	200	RAIL TS 35/7,5	
020	353031-0203	-		2	END SUPPORT, WEW 35/2	
030	353024-0205	-		2	EARTH TERMINAL, 1010.1	
040	353021-0213	-		6	FEED THROUGH TERMINAL, 10201.0	
050	353032-0004	-		8	END PLATE WAP 2,5-10 BEIGE	
060	353021-0212	-		4	FEED THROUGH TERMINAL, 10200.0	
070	315402-0146	-		2	LOCK WASHER FBB 5,1	
080	315101-0146	-		2	WASHER PLAIN, BRB, 5,3/10 H=1	
090	312605-0314	-		2	HEXAGON NUT, M6M M5 A280	

Pos	Part No	SP	UN	Qty	Description	Page No

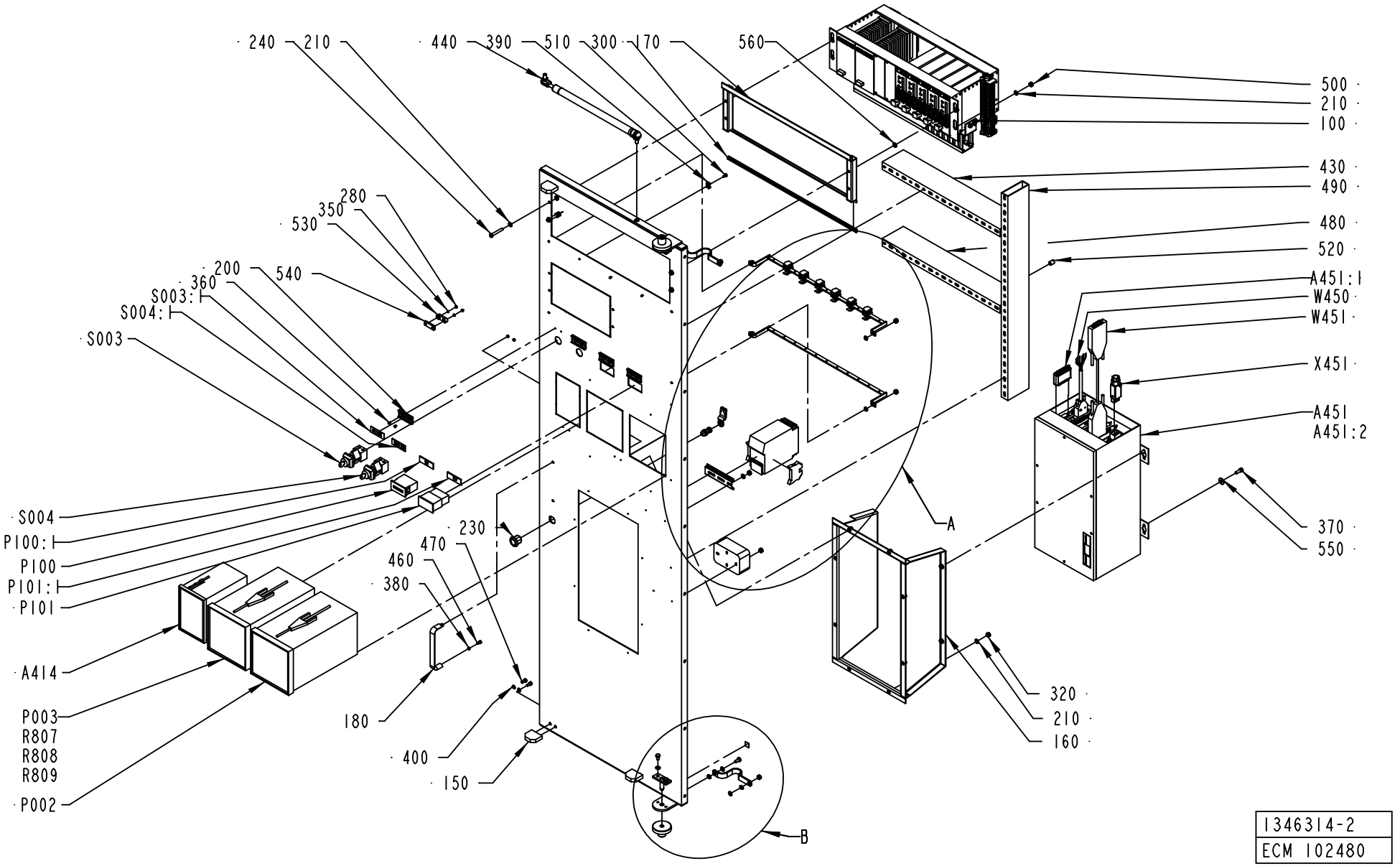
240
210
440
390
510
300
170
560
500
210
100
430
490
480
520
A451:1
W450
W451
X451
A451
A451:2
370
550
320
210
160
280
350
530
200
540
360
S003:1
S004:1
S003
S004
P100:1
P100
P101:1
P101
A414
P003
R807
R808
R809
P002
230
470
460
380
180
400
150
A
B
1346314-2
ECM 102480

ECM: 114701 - 20020916
Group number: 1346314-0200
Assembly Drawing: 1346314-2_1_AA

Issue: 20021023

Pos	Part No	SP	UN	Qty	Description	Page No
CIPSUPERV						
A414	90243-0214	A		1	CONDUCTIVITY METER	
A451	B1363288-0301	-		1	FLEXBOX TETRA BRIK	
100	*B90041-0092*	*A*		*1*	*FLEX BOX INNOSCAN E100006A*	
	90458-0266	*A*		*1*	*POWER SUPPLY UNIT, U036407A*	
	90264-0064	*A*		*1*	*FAN / FL 12G308*	
	90041-0091	*A*		*1*	*PC 2,5" HD BAY, 3016-0028-013*	
	90041-0029	*A*		*1*	*FLOPPY DISC UNIT FD-235HF 1,4MB*	
	90041-0027	*A*		*1*	*BACK PLANE CARD 7-SLOT, 2120-0037-015*	
110	*90041-0083*	*A*		*1*	*HOST COMM. LINK BOARD LVDS, E000013A-02*	
120	*90458-0259*	*A*		*1*	*PROCESSOR BOARD PMMX E000032B*	
130	*90041-0087*	*A*		*1*	*SERIAL CARD 2 CHANNEL RS486/422 BOARD*	
140	*90041-0090*	*A*		*1*	*HARD DISC 2,5" , U036403A*	
150	*90041-0080*	*A*		*1*	*CABLE, CPU-LVDSCARD+DISPLAY-LVDSCARD*	
160	*90041-0086*	*A*		*1*	*CABLE, COM 2, 2223-0012-015*	
P003	B90332-0020	A		1	RECORDER HONEYWELL	
	90332-0328	*-*		*1*	*RECORDER CASSETTE PAPER ROLL FOR 90332-2*	
	90332-0326	*-*		*1*	*DOWNLOADE INTRFACE FOR RECORDER 90332-20*	
	90332-0325	*-*		*1*	*PAPER FOR RECORDER 90332-20*	
	90332-0324	*-*		*1*	*INK WHEEL*	
NOCIPSUPERV						
A451	B1363288-0301	-		1	FLEXBOX TETRA BRIK	
100	*B90041-0092*	*A*		*1*	*FLEX BOX INNOSCAN E100006A*	
	90458-0266	*A*		*1*	*POWER SUPPLY UNIT, U036407A*	
	90264-0064	*A*		*1*	*FAN / FL 12G308*	
	90041-0091	*A*		*1*	*PC 2,5" HD BAY, 3016-0028-013*	
	90041-0029	*A*		*1*	*FLOPPY DISC UNIT FD-235HF 1,4MB*	
	90041-0027	*A*		*1*	*BACK PLANE CARD 7-SLOT, 2120-0037-015*	
110	*90041-0083*	*A*		*1*	*HOST COMM. LINK BOARD LVDS, E000013A-02*	
120	*90458-0259*	*A*		*1*	*PROCESSOR BOARD PMMX E000032B*	
130	*90041-0087*	*A*		*1*	*SERIAL CARD 2 CHANNEL RS486/422 BOARD*	
140	*90041-0090*	*A*		*1*	*HARD DISC 2,5" , U036403A*	
150	*90041-0080*	*A*		*1*	*CABLE, CPU-LVDSCARD+DISPLAY-LVDSCARD*	
160	*90041-0086*	*A*		*1*	*CABLE, COM 2, 2223-0012-015*	
Common Parts						
100	A1285524-0300	-		1	RACK	**517, 519**
110	1484235-0000	-		1	SWING FRAME	
120	495377-0000	-		2	BUSH	
130	971346-0000	-		2	GUIDE PIN	
140	1116536-0000	-		2	BRACKET	
150	970215-0000	-		3	STOP BLOCK	
170	2544302-0000	-		1	FRAME	
180	90017-0017	-		1	HANDLE, NO. 547-128	
190	90237-0320	-		1	LOCK HOUSING, 1000-U136	
200	359240-0100	-		4	SIGN HOLDER FOR 359240-0001	
210	315105-0153	-		24	WASHER PLAIN, BRB, 6,4/12,H=1,5	
220	90135-0035	-		2	EARTH WIRE, L=250 MM 16 MM2	
230	90237-0319	-		1	LOCK HOUSING, 1000-U134	
240	312125-0378	-		4	SCREW PAN HEAD MCS M6X40 SS	
250	90237-0157	-		1	LOCK BOLT, 1000-230	
260	90135-0039	-		6	SHIELD CLIP KLBU 4-13.5	
270	312105-0364	-		4	SCREW M6S ISO 4017 M6X10 A480	
280	312605-0310	-		4	HEXAGON NUT, M6M M3 A280	
290	312101-0366	-		2	SCREW M6S M6X12 FZB	
300	90143-0060	-	MM	485	EDGE STRIP 9,5X6,3MM BLACK PVC	
310	315101-0153	-		2	WASHER PLAIN, BRB, 6,4/12 H=1,5	
320	312812-0316	-		12	HEXAGON NUT, NY-LOCK M6 A480	
330	353042-0004	-	MM	100	RAIL TS 35/7,5	
340	353031-0203	-		2	END SUPPORT, WEW 35/2	
350	315105-0124	-		4	WASHER PLAIN, BRB, 3,2/6,H=0,5	
360	311520-0329	-		8	RIVET, BLANK 2,4X8	
370	312115-0368	-		4	SCREW MC6S M6X16 A280	
380	315105-0136	-		2	WASHER PLAIN, BRB, 4,3/8,H=0,8	
390	352113-0205	-		3	ANCHOR PLATES FOR STRIPS, TYPE TM2S8-C10	
400	315105-0146	-		6	WASHER PLAIN, BRB, 5,3/10,H=1	
410	312601-0316	-		2	NUT M6M 6-8 FZB	
420	90062-0022	-		8	LOCKING WASHER D=6,4/11	
430	90181-0052	-	MM	445	CABLE DUCT, 25X80MM	
440	90347-0163	-		1	GAS-DAMPER	
450	90194-0152	-		2	SIGN, EARTH	
460	312115-0287	-		2	SCREW MC6S M4X8 A280	
470	312115-0325	-		6	SCREW HEX.SOCK.HD.MC6S-TT 5X10 A480	
480	90181-0052	-	MM	445	CABLE DUCT, 25X80MM	
490	90181-0052	-	MM	675	CABLE DUCT, 25X80MM	
500	312605-0316	-		8	HEXAGON NUT, M6M M6 A280	
510	312132-0287	-		3	SCREW SLOT. PAN HEAD MSCS M4X8	
520	1285109-0000	-		7	NUT	
530	90220-0302	-		2	CLAMP FOR SCR.CABLE, 16MM, 55-016-89	
540	90220-0304	-		2	CLAMP FOR SCR.CABLE, 24MM,	
550	90457-0192	-		4	WASHER PLAIN ROUND, 6,5/18, H=1,5	
560	90062-0015	-		4	LOCK WASHER SERRAT.EXT.GEAR,6,4/11 H=0,7	
A450	90453-0002	-		1	MODEM MD-12 DC	

Machine Type | Group Description | Used-In | Group Number | Page No

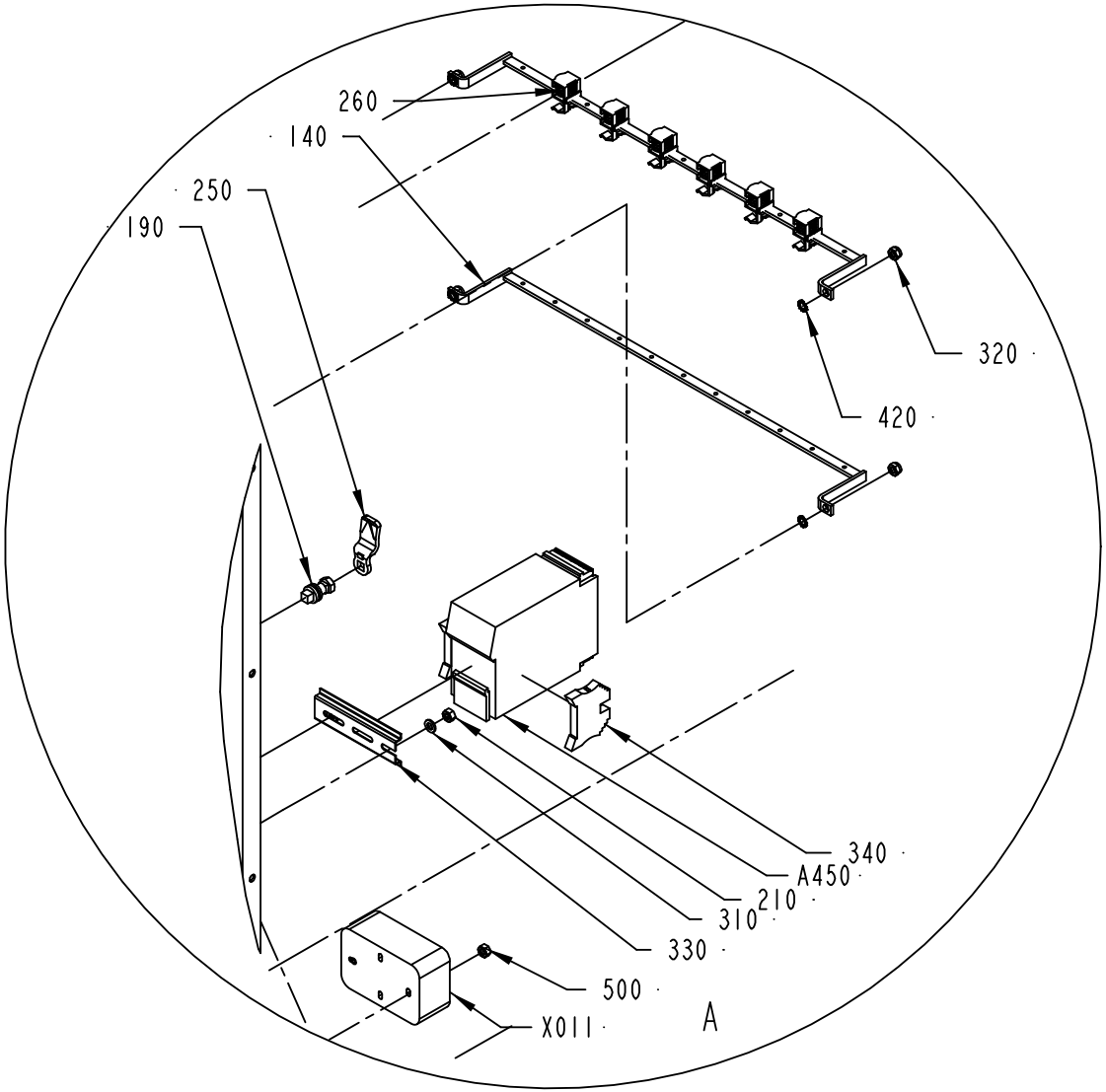

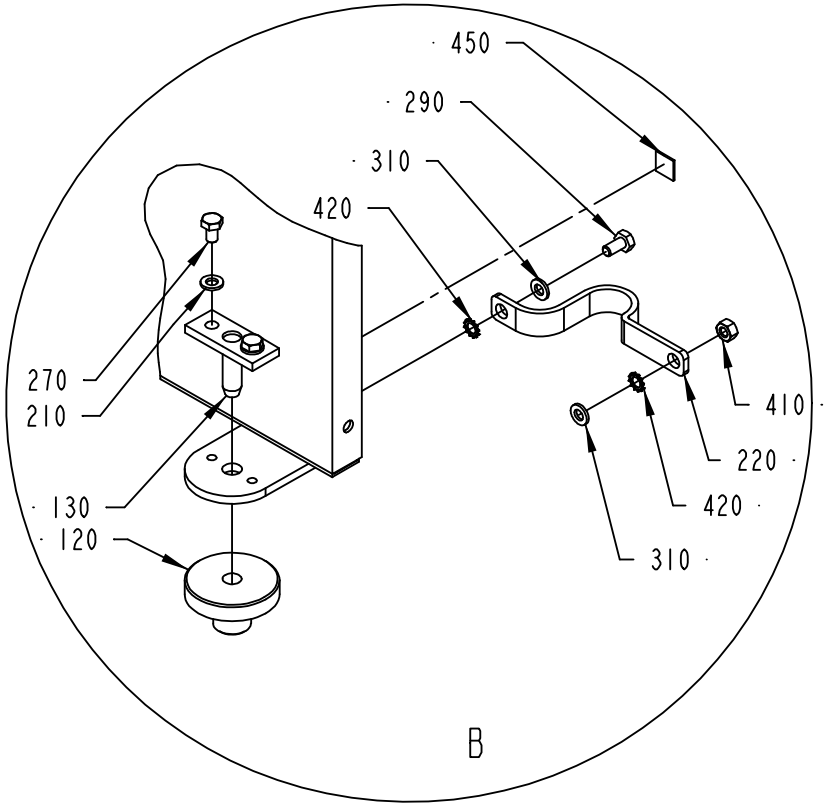

1346314-2
ECM 102480

Pos	Part No	SP	UN	Qty	Description	Page No
Common Parts (Cont'd)						
A451:1	90456-0001	-		1	INTOUCH OEM 2000 V.5.6B/6.0B HW KEY	
A451:2	A2505518-0200	-		1	SOFTWARE	
P002	B90332-0020	A		1	RECORDER HONEYWELL	
	90332-0328	*-*		*1*	*RECORDER CASSETTE PAPER ROLL FOR 90332-2*	
	90332-0326	*-*		*1*	*DOWNLOADE INTRFACE FOR RECORDER 90332-20*	
	90332-0325	*-*		*1*	*PAPER FOR RECORDER 90332-20*	
	90332-0324	*-*		*1*	*INK WHEEL*	
P100	90053-0031	A		1	HOUR COUNTER, B 609.10 10-50VDC	
P100:1	359241-0201	-		1	SIGN "HOUR GLASS"	
P101	90053-0029	A		1	COUNTER, F524.800FA3C 24VDC	
P101:1	359241-0482	-		1	SIGN "PACKAGE COUNTER"	
R807	90121-0120	-		1	RESISTANCE FIXED, 0,25 KOHM, 0,125 W	
R808	90121-0120	-		1	RESISTANCE FIXED, 0,25 KOHM, 0,125 W	
R809	90121-0120	-		1	RESISTANCE FIXED, 0,25 KOHM, 0,125 W	
S003	90111-0122	A		1	KEY SWITCH, 2 NO CONTACTS	
S003:1	359241-0133	-		1	SIGN, SERVICE SWITCH	
S004	90111-0124	A		1	KEY SWITCH, 1NO,1NC CONTACT	
S004:1	359241-0122	-		1	SIGN, CIP OF STEAM BARRIER SPACE	
W450	1524442-0000	-		1	SUPPORT	
W451	1317252-0000	-		1	CABLE SERIAL	
X011	90001-0033	-		1	WALL SOCKET OUTLET	
X451	90110-0028	-		1	CONTACT UNIT 4-POLE	

Pos	Part No	SP	UN	Qty	Description	Page No

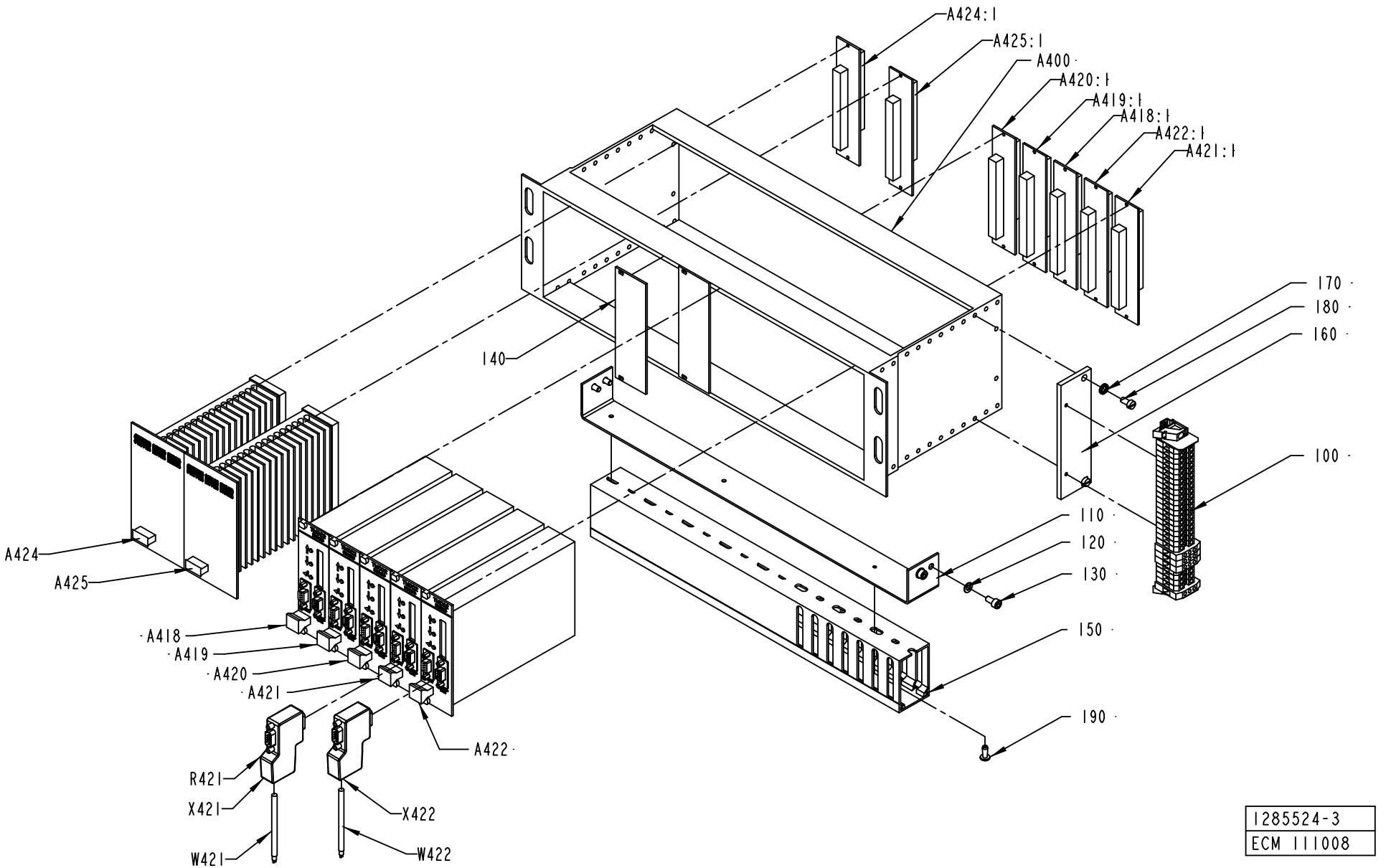

1285524-3
ECM 111008

Pos	Part No	SP	UN	Qty	Description	Page No
Common Parts						
100	A1484277-0100	-		1	PLINTH	**521**
110	1285525-0000	-		1	BRACKET	
120	315101-0146	-		4	WASHER PLAIN, BRB, 5,3/10 H=1	
130	312115-0325	-		4	SCREW HEX.SOCK.HD.MC6S-TT 5X10 A480	
140	2545250-0000	-		2	COVER PLATE	
150	90181-0045	-	MM	410	CABLE DUCT, 40X60MM	
160	1129642-0000	-		1	CANTILEVER	
170	90062-0060	-		2	LOCK WASHER SERRAT.EXT.GEAR,5,3/10 H=0,6	
180	312121-0325	-		2	SCREW SLOT.PAN HD. MCS 5X10 FZB	
190	90181-0313	-		2	RIVET DUCTAFIX R4	
A400	B67388-0102	-		1	RACK FRONTMOUNTED 84TE	
020 2	*542038-0002*	-		*1*	*COMPONENTS WITHOUT TP-NO*	
A418	B559810-0101	-		1	TMCC2 CONTROLLER	
010	*B559809-0101*	-		*1*	*CIRCUIT BOARD*	
150	*559807-0000*	-		*1*	*PRINTED CIRCUIT BOARD*	
180	*B559811-0101*	-		*1*	*CIRCUIT BOARD*	
130	*559808-0000*	-		*1*	*PRINTED CIRCUIT BOARD*	
020	*2524654-0000*	-		*1*	*PLATE*	
030	*2524660-0000*	-		*1*	*CASING*	
070	*2524662-0000*	-		*1*	*COOLING BLOCK*	
100	*2524658-0000*	-		*1*	*COVER*	
170	*2524659-0000*	-		*1*	*CABLE*	
A418:1	B68262-0101	-		1	BACKPLANE FRONT RACK 8TE	
100	*543371-0000*	-		*1*	*CIRCUIT BOARD 8TE*	
110	*551927-0001*	-		*1*	*COMPONENTS WITHOUT TP-NO*	
120	*551928-0000*	-		*1*	*TERMINAL LABELS 8TE*	
A418:2	B2552317-0001	-		1	TMCC PROGRAMME	
0010	*2552317-1001*	-		*1*	*PROGRAM OBJECT CODE*	
0020	*2552320-0000*	-		*1*	*LABEL DISKETTE*	
0030	*90458-2027*	-		*1*	*FLOPPY DISK, 3,5" 1,44MB FOR PC*	
A419	B559810-0101	-		1	TMCC2 CONTROLLER	
010	*B559809-0101*	-		*1*	*CIRCUIT BOARD*	
150	*559807-0000*	-		*1*	*PRINTED CIRCUIT BOARD*	
180	*B559811-0101*	-		*1*	*CIRCUIT BOARD*	
130	*559808-0000*	-		*1*	*PRINTED CIRCUIT BOARD*	
020	*2524654-0000*	-		*1*	*PLATE*	
030	*2524660-0000*	-		*1*	*CASING*	
070	*2524662-0000*	-		*1*	*COOLING BLOCK*	
100	*2524658-0000*	-		*1*	*COVER*	
170	*2524659-0000*	-		*1*	*CABLE*	
A419:1	B68262-0101	-		1	BACKPLANE FRONT RACK 8TE	
100	*543371-0000*	-		*1*	*CIRCUIT BOARD 8TE*	
110	*551927-0001*	-		*1*	*COMPONENTS WITHOUT TP-NO*	
120	*551928-0000*	-		*1*	*TERMINAL LABELS 8TE*	
A419:2	B2552321-0001	-		1	TMCC PROGRAMME	
0010	*2552321-1001*	-		*1*	*PROGRAM OBJECT CODE*	
0020	*2552324-0000*	-		*1*	*LABEL DISKETTE*	
0030	*90458-2027*	-		*1*	*FLOPPY DISK, 3,5" 1,44MB FOR PC*	
A420	B559810-0101	-		1	TMCC2 CONTROLLER	
010	*B559809-0101*	-		*1*	*CIRCUIT BOARD*	
150	*559807-0000*	-		*1*	*PRINTED CIRCUIT BOARD*	
180	*B559811-0101*	-		*1*	*CIRCUIT BOARD*	
130	*559808-0000*	-		*1*	*PRINTED CIRCUIT BOARD*	
020	*2524654-0000*	-		*1*	*PLATE*	
030	*2524660-0000*	-		*1*	*CASING*	
070	*2524662-0000*	-		*1*	*COOLING BLOCK*	
100	*2524658-0000*	-		*1*	*COVER*	
170	*2524659-0000*	-		*1*	*CABLE*	
A420:1	B68262-0101	-		1	BACKPLANE FRONT RACK 8TE	
100	*543371-0000*	-		*1*	*CIRCUIT BOARD 8TE*	
110	*551927-0001*	-		*1*	*COMPONENTS WITHOUT TP-NO*	
120	*551928-0000*	-		*1*	*TERMINAL LABELS 8TE*	
A420:2	B2552329-0001	-		1	TMCC PROGRAMME	
0010	*2552329-1001*	-		*1*	*PROGRAM OBJECT CODE*	
0020	*2552332-0000*	-		*1*	*LABEL DISKETTE*	
0030	*90458-2027*	-		*1*	*FLOPPY DISK, 3,5" 1,44MB FOR PC*	
A421	B559810-0101	-		1	TMCC2 CONTROLLER	
010	*B559809-0101*	-		*1*	*CIRCUIT BOARD*	
150	*559807-0000*	-		*1*	*PRINTED CIRCUIT BOARD*	
180	*B559811-0101*	-		*1*	*CIRCUIT BOARD*	
130	*559808-0000*	-		*1*	*PRINTED CIRCUIT BOARD*	
020	*2524654-0000*	-		*1*	*PLATE*	
030	*2524660-0000*	-		*1*	*CASING*	
070	*2524662-0000*	-		*1*	*COOLING BLOCK*	
100	*2524658-0000*	-		*1*	*COVER*	
170	*2524659-0000*	-		*1*	*CABLE*	
A421:1	B68262-0101	-		1	BACKPLANE FRONT RACK 8TE	
100	*543371-0000*	-		*1*	*CIRCUIT BOARD 8TE*	
110	*551927-0001*	-		*1*	*COMPONENTS WITHOUT TP-NO*	
120	*551928-0000*	-		*1*	*TERMINAL LABELS 8TE*	
A422	B559810-0101	-		1	TMCC2 CONTROLLER	
010	*B559809-0101*	-		*1*	*CIRCUIT BOARD*	
150	*559807-0000*	-		*1*	*PRINTED CIRCUIT BOARD*	

Machine Type | Group Description | Used-In | Group Number | Page No

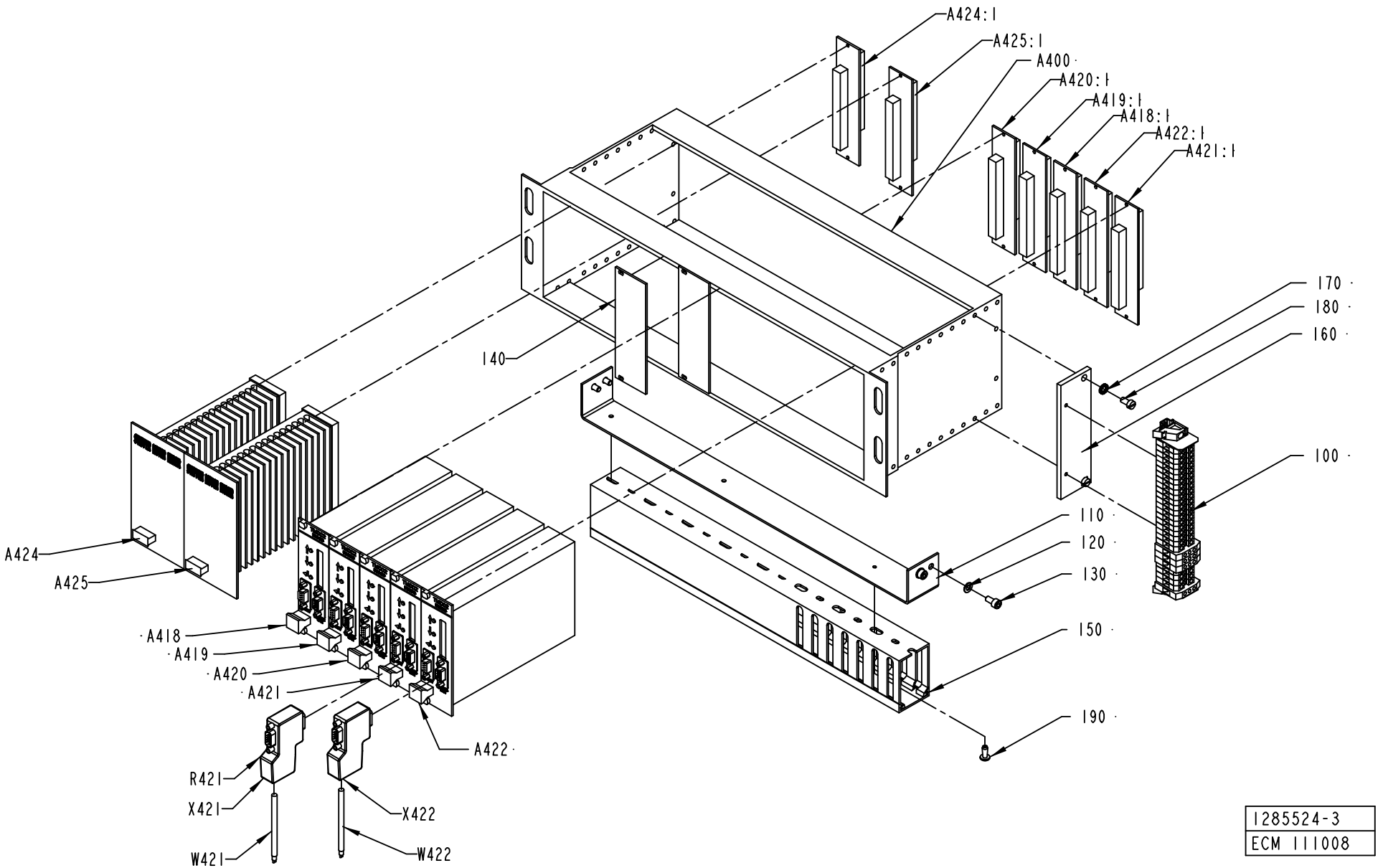

1285524-3
ECM 111008

Pos	Part No	SP	UN	Qty	Description	Page No
Common Parts (Cont'd)						
A422:1	B68262-0101	-		1	BACKPLANE FRONT RACK 8TE	
100	*543371-0000*	-		*1*	*CIRCUIT BOARD 8TE*	
110	*551927-0001*	-		*1*	*COMPONENTS WITHOUT TP-NO*	
120	*551928-0000*	-		*1*	*TERMINAL LABELS 8TE*	
A424	B68450-0101	-		1	STEPPER MOTOR DRIVER	
040	*543326-0000*	-		*1*	*COVERPLATE HANDLE 5TE*	
700	*543897-0001*	-		*1*	*COMPONENTS WITHOUT TP-NO*	
710	*543898-0000*	-		*1*	*FRONT PANEL 14TE*	
720	*543899-0000*	-		*1*	*COOLING FLANGE*	
730	*543900-0000*	-		*1*	*COOLING FLANGE DISTANCE*	
740	*543901-0000*	-		*1*	*COOLING BLOCK*	
750	*543902-0000*	-		*1*	*SIGN BOARD*	
760	*556502-0000*	-		*1*	*LAYOUTS FOR PLATES,LABLES*	
F100	*B68451-0101*	-		*1*	*STEP. MOT. DR. MAIN CARD*	
400	*543903-0001*	-		*1*	*COMPONENTS WITHOUT TP-NO*	
410	*543880-0000*	-		*1*	*PRINTED CIRCUIT BOARD*	
F110	*B68452-0101*	-		*1*	*STEP. MOT. DR. AUX. CARD*	
600	*551913-0001*	-		*1*	*COMPONENTS WITHOUT TP-NO*	
610	*543881-0000*	-		*1*	*PRINTED CIRCUIT BOARD*	
620	*551914-0000*	-		*1*	*MACHINING OF DRIVER MODUL*	
A424:1	B68262-0101	-		1	BACKPLANE FRONT RACK 8TE	
100	*543371-0000*	-		*1*	*CIRCUIT BOARD 8TE*	
110	*551927-0001*	-		*1*	*COMPONENTS WITHOUT TP-NO*	
120	*551928-0000*	-		*1*	*TERMINAL LABELS 8TE*	
A425	B68450-0101	-		1	STEPPER MOTOR DRIVER	
040	*543326-0000*	-		*1*	*COVERPLATE HANDLE 5TE*	
700	*543897-0001*	-		*1*	*COMPONENTS WITHOUT TP-NO*	
710	*543898-0000*	-		*1*	*FRONT PANEL 14TE*	
720	*543899-0000*	-		*1*	*COOLING FLANGE*	
730	*543900-0000*	-		*1*	*COOLING FLANGE DISTANCE*	
740	*543901-0000*	-		*1*	*COOLING BLOCK*	
750	*543902-0000*	-		*1*	*SIGN BOARD*	
760	*556502-0000*	-		*1*	*LAYOUTS FOR PLATES,LABLES*	
F100	*B68451-0101*	-		*1*	*STEP. MOT. DR. MAIN CARD*	
400	*543903-0001*	-		*1*	*COMPONENTS WITHOUT TP-NO*	
410	*543880-0000*	-		*1*	*PRINTED CIRCUIT BOARD*	
F110	*B68452-0101*	-		*1*	*STEP. MOT. DR. AUX. CARD*	
600	*551913-0001*	-		*1*	*COMPONENTS WITHOUT TP-NO*	
610	*543881-0000*	-		*1*	*PRINTED CIRCUIT BOARD*	
620	*551914-0000*	-		*1*	*MACHINING OF DRIVER MODUL*	
A425:1	B68262-0101	-		1	BACKPLANE FRONT RACK 8TE	
100	*543371-0000*	-		*1*	*CIRCUIT BOARD 8TE*	
110	*551927-0001*	-		*1*	*COMPONENTS WITHOUT TP-NO*	
120	*551928-0000*	-		*1*	*TERMINAL LABELS 8TE*	
A504:1	B68262-0101	-		1	BACKPLANE FRONT RACK 8TE	
100	*543371-0000*	-		*1*	*CIRCUIT BOARD 8TE*	
110	*551927-0001*	-		*1*	*COMPONENTS WITHOUT TP-NO*	
120	*551928-0000*	-		*1*	*TERMINAL LABELS 8TE*	
R421	90459-1250	-		1	RESISTANCE FIXED, 120 OHM, 0,5 W 1%	
W421	90458-2894	-	MM	250	PAIR TWISTED CABLE 1X2X0,2MM2	
W422	90458-2894	-	MM	4000	PAIR TWISTED CABLE 1X2X0,2MM2	
X421	90459-0182	-		1	INTERFACE CONNECTOR FOR TMCC2	
X422	90459-0182	-		1	INTERFACE CONNECTOR FOR TMCC2	

Machine Type | Group Description | Used-In | Group Number | Page No

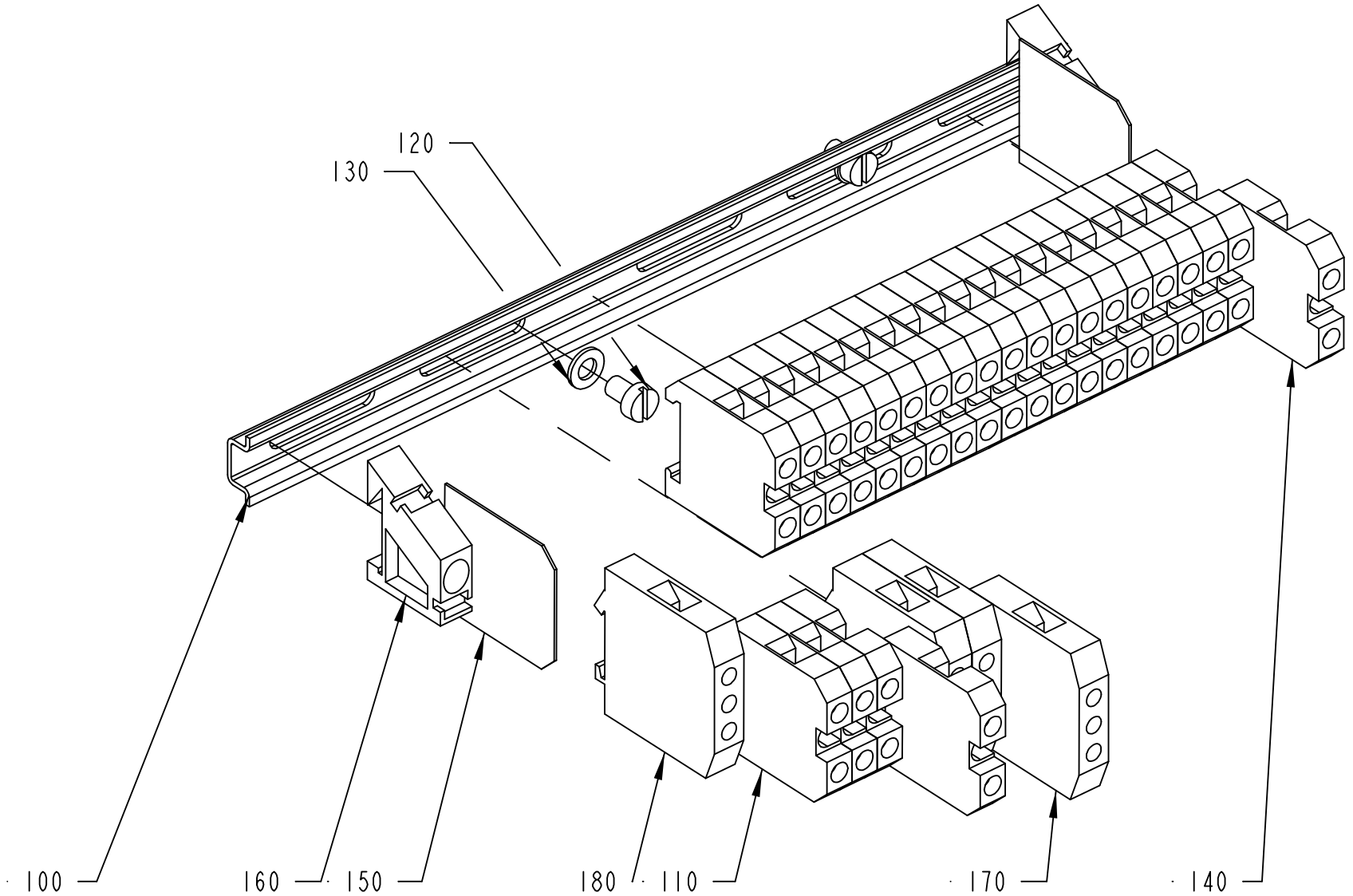

1484277-1
ECM 102480

ECM: 108678 - 20010926
Group number: 1484277-0100
Assembly Drawing: 1484277-1_1_AB

Issue: 20021023

Pos	Part No	SP	UN	Qty	Description	Page No
Common Parts						
100	90077-0328	-	MM	195	RAIL TS15/5	
110	90077-0079	-		24	FEED THROUGH TERMINAL, 02943.6	
120	312121-0285	-		2	SCREW SLOT.PAN HD. MCS 4X6 FZB	
130	315101-0136	-		2	WASHER PLAIN, BRB, 4,3/8 H=0,8	
140	359011-0807	-		2	MARKING PLATES 5-FW 1-50	
150	90077-0307	-		2	END PLATE	
160	90077-0308	-		2	END PLATE, 10-00038286-1	
170	90135-0026	-		4	EARTH TERMINAL, 3802.6	
180	359011-0819	-		1	MARKING PLATES 5-GW (EARTH)	

Pos	Part No	SP	UN	Qty	Description	Page No

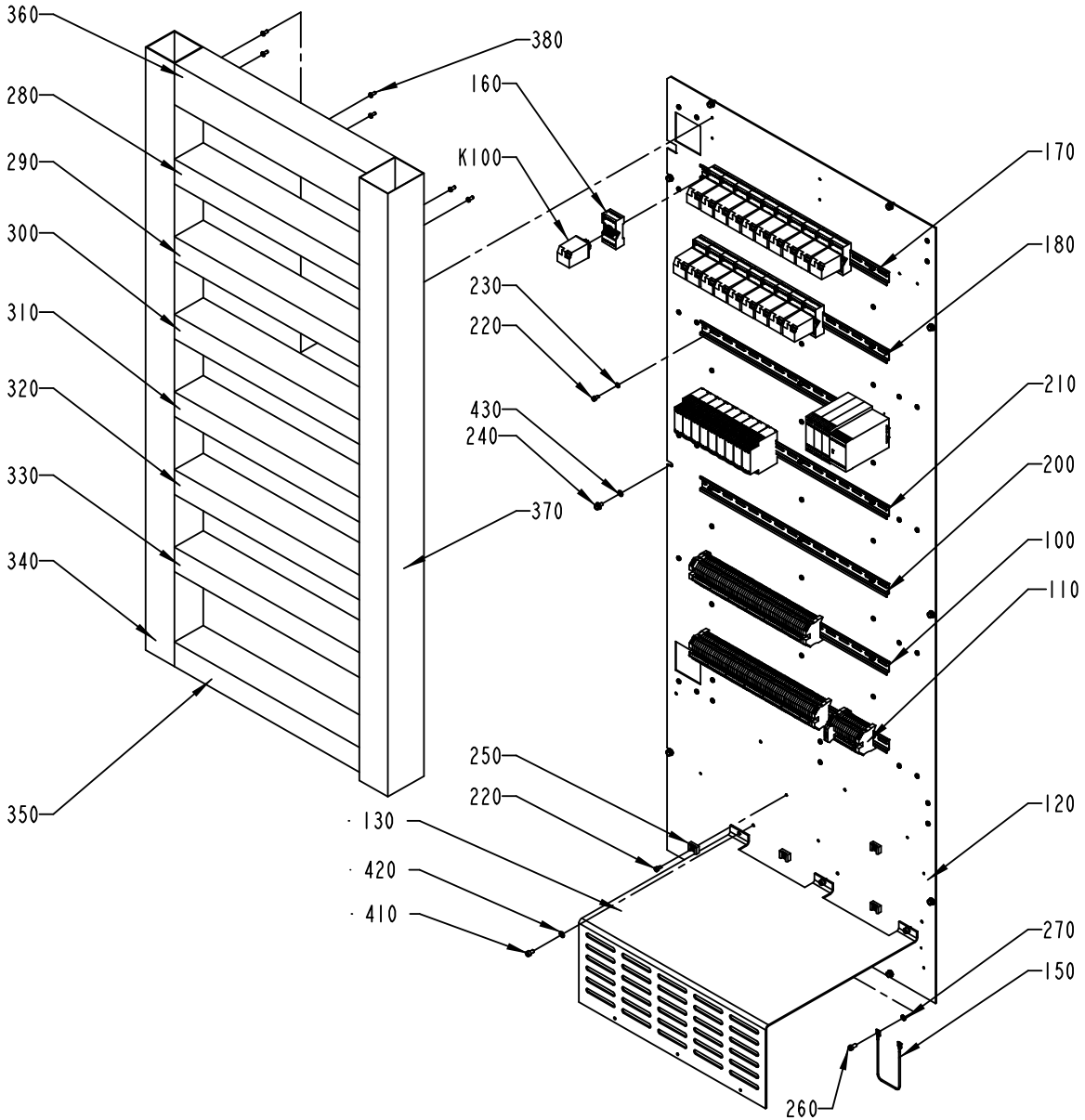

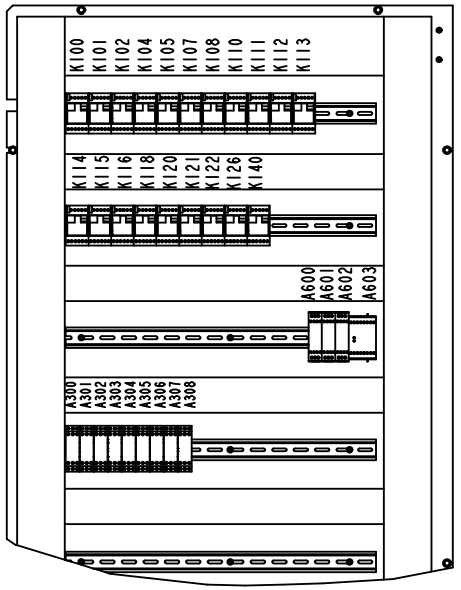

575235-3
ECM 111008

Pos	Part No	SP	UN	Qty	Description	Page No
Common Parts						
100	A1285530-0100	-		1	DISTRIBUTION TERMINAL	**525**
110	A1285532-0100	-		1	DISTRIBUTION TERMINAL	**527**
120	2543342-0000	-		1	MOUNTING PLATE	
130	2543222-0000	-		1	PROTECTION	
150	B1038714-0000	-		1	CABLE	
	353104-0168	-		*2*	*CABLE SHO YAV 16 M6**	
	351175-0109	-	*MM*	*275*	*CABLE AWM 1X16 MM2 YELLOW-GREEN*	
160	90129-0006	-		19	BASE, S3-B	
170	353042-0004	-	MM	520	RAIL TS 35/7,5	
180	353042-0004	-	MM	520	RAIL TS 35/7,5	
190	353042-0004	-	MM	520	RAIL TS 35/7,5	
200	353042-0004	-	MM	520	RAIL TS 35/7,5	
210	353042-0004	-	MM	520	RAIL TS 35/7,5	
220	312115-0323	-		19	SCREW MC6S M5X8 A280	
230	315105-0146	-		15	WASHER PLAIN, BRB, 5,3/10,H=1	
240	90287-0157	-		10	SCREW M6SF FLAT HEAD M6X10 88	
250	352113-0204	-		4	ANCHOR PLATES FOR STRIPS, TYPE TM3S25-M	
260	312121-0366	-		1	SCREW SLOT.PAN HD. MCS 6X12 FZB	
270	90062-0022	-		1	LOCKING WASHER D=6,4/11	
280	90181-0054	-	MM	535	CABLE DUCT, 60X80MM	
290	90181-0054	-	MM	535	CABLE DUCT, 60X80MM	
300	90181-0054	-	MM	535	CABLE DUCT, 60X80MM	
310	90181-0054	-	MM	535	CABLE DUCT, 60X80MM	
320	90181-0054	-	MM	535	CABLE DUCT, 60X80MM	
330	90181-0054	-	MM	535	CABLE DUCT, 60X80MM	
340	90181-0055	-	MM	1470	CABLE DUCT, 80X80MM	
350	90181-0054	-	MM	535	CABLE DUCT, 60X80MM	
360	90181-0056	-	MM	535	CABLE DUCT, 100X80MM	
370	90181-0056	-	MM	1470	CABLE DUCT, 100X80MM	
380	90181-0313	-		52	RIVET DUCTAFIX R4	
400	359240-0100	-		1	SIGN HOLDER FOR 359240-0001	
410	312115-0364	-		3	SCREW HEX.SOCK.HD.MC6S-TT 6X10 A480	
420	315105-0153	-		3	WASHER PLAIN, BRB, 6,4/12,H=1,5	
430	315103-0153	-		10	WASHER PLAIN, BRB, 6,4/12,H=1,5 NIPL BR	
A300	90458-2580	A		1	LEVEL CONTROL RELAY RM4-LA32MW	
A301	90458-2580	A		1	LEVEL CONTROL RELAY RM4-LA32MW	
A302	90458-2580	A		1	LEVEL CONTROL RELAY RM4-LA32MW	
A303	90458-2580	A		1	LEVEL CONTROL RELAY RM4-LA32MW	
A304	90458-2580	A		1	LEVEL CONTROL RELAY RM4-LA32MW	
A305	90458-2580	A		1	LEVEL CONTROL RELAY RM4-LA32MW	
A306	90458-2580	A		1	LEVEL CONTROL RELAY RM4-LA32MW	
A307	90458-2580	A		1	LEVEL CONTROL RELAY RM4-LA32MW	
A308	90458-2580	A		1	LEVEL CONTROL RELAY RM4-LA32MW	
A600	90457-0092	-		1	SAFETY RELAY RT9-24VDC	
A601	90457-0092	-		1	SAFETY RELAY RT9-24VDC	
A602	90457-0092	-		1	SAFETY RELAY RT9-24VDC	
A603	90119-0084	A		1	EXPANSION RELAY, JSR1T-500MS	
A605	90457-0092	-		1	SAFETY RELAY RT9-24VDC	
K100	90119-0056	A		1	RELAY, AUXILIARY MK3P5-S 24VDC	
K101	90119-0056	A		1	RELAY, AUXILIARY MK3P5-S 24VDC	
K102	90119-0056	A		1	RELAY, AUXILIARY MK3P5-S 24VDC	
K104	90119-0056	A		1	RELAY, AUXILIARY MK3P5-S 24VDC	
K105	90119-0056	A		1	RELAY, AUXILIARY MK3P5-S 24VDC	
K107	90119-0056	A		1	RELAY, AUXILIARY MK3P5-S 24VDC	
K108	90119-0056	A		1	RELAY, AUXILIARY MK3P5-S 24VDC	
K110	90119-0056	A		1	RELAY, AUXILIARY MK3P5-S 24VDC	
K111	90119-0056	A		1	RELAY, AUXILIARY MK3P5-S 24VDC	
K112	90119-0056	-		1	RELAY, AUXILIARY MK3P5-S 24VDC	
K113	90119-0056	A		1	RELAY, AUXILIARY MK3P5-S 24VDC	
K114	90119-0056	A		1	RELAY, AUXILIARY MK3P5-S 24VDC	
K115	90119-0056	A		1	RELAY, AUXILIARY MK3P5-S 24VDC	
K116	90119-0056	-		1	RELAY, AUXILIARY MK3P5-S 24VDC	
K118	90119-0056	A		1	RELAY, AUXILIARY MK3P5-S 24VDC	
K120	90119-0056	A		1	RELAY, AUXILIARY MK3P5-S 24VDC	
K121	90119-0056	A		1	RELAY, AUXILIARY MK3P5-S 24VDC	
K126	90119-0056	A		1	RELAY, AUXILIARY MK3P5-S 24VDC	
K140	90119-0056	-		1	RELAY, AUXILIARY MK3P5-S 24VDC	

Machine Type | Group Description | Used-In | Group Number | Page No

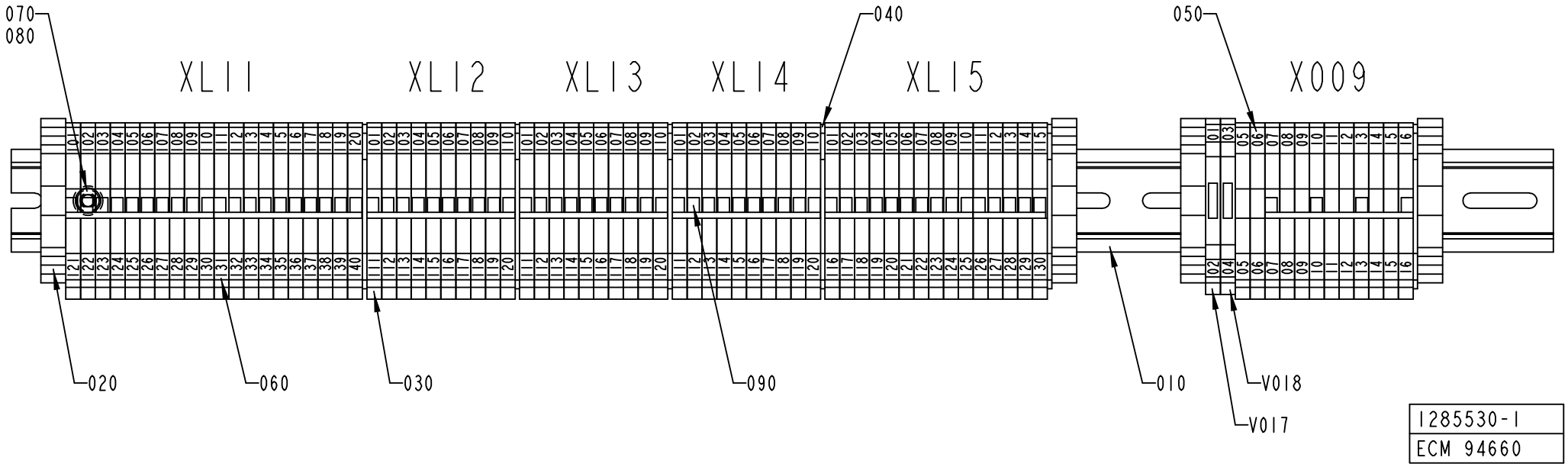
070
080
040
050
XL11
XL12
XL13
XL14
XL15
X009
020
060
030
090
010
V018
V017
1285530-1
ECM 94660

ECM: 104294 - 20011123
Group number: 1285530-0100
Assembly Drawing: 1285530-1_1_AB

Issue: 20021023

Pos	Part No	SP	UN	Qty	Description	Page No
Common Parts						
010	353042-0005	-	MM	520	RAIL TS 35/7.5	
020	353031-0203	-		4	END SUPPORT, WEW 35/2	
030	353021-0216	-		77	FEED THROUGH TERMINAL, 10200.8	
040	353032-0005	-		6	END PLATE WAP 2,5-10 BLUE	
050	359011-0807	-		2	MARKING PLATES 5-FW 1-50	
060	359011-0809	-		5	MARKING PLATES 5-FW 101-150	
070	312115-0323	-		3	SCREW MC6S M5X8 A280	
080	315101-0146	-		3	WASHER PLAIN, BRB, 5,3/10 H=1	
090	353034-0030	-		8	BRIDGE CONNECTOR WQV 2,5/10, 10544.6	
V017	353021-0122	-		1	TERMINAL DISCONNECTBLE, WTR 2,5 D	
V018	353021-0122	-		1	TERMINAL DISCONNECTBLE, WTR 2,5 D	

Pos	Part No	SP	UN	Qty	Description	Page No

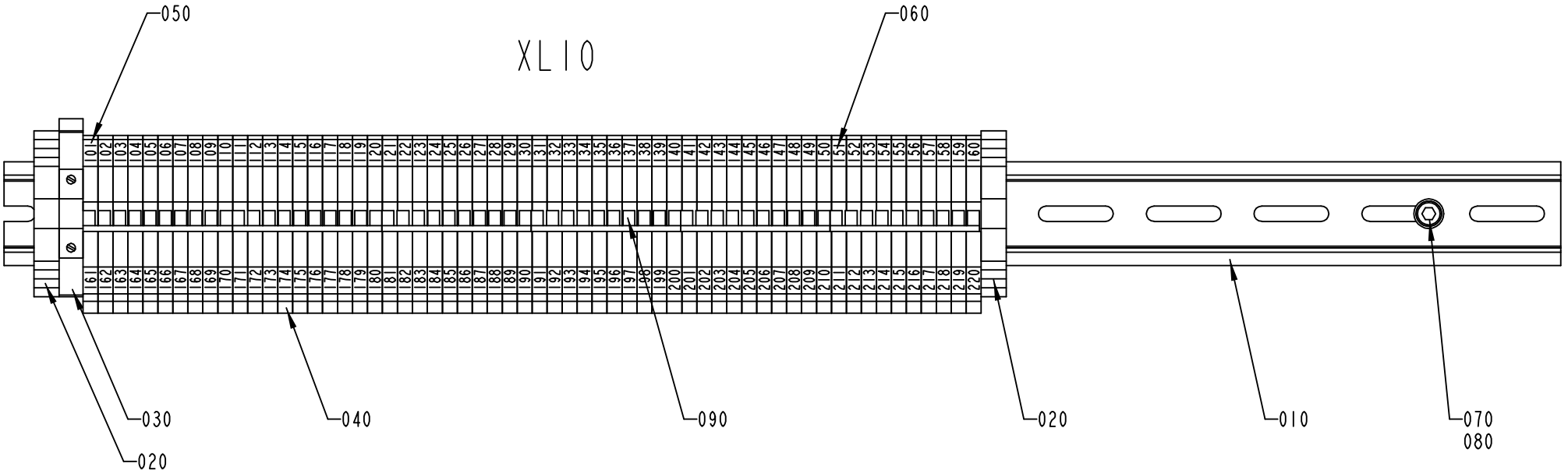

1285532-1
ECM 94660

ECM: 104295 - 20011123
Group number: 1285532-0100
Assembly Drawing: 1285532-1_1_AB

Issue: 20021023

Pos	Part No	SP	UN	Qty	Description	Page No
Common Parts						
010	353042-0005	-	MM	520	RAIL TS 35/7.5	
020	353031-0203	-		2	END SUPPORT, WEW 35/2	
030	353021-0223	-		1	FEED THROUGH TERMINAL, 10202.8	
040	353021-0216	-		60	FEED THROUGH TERMINAL, 10200.8	
050	359011-0809	-		1	MARKING PLATES 5-FW 101-150	
060	359011-0810	-		1	MARKING PLATES 5-FW 151-200	
070	312115-0323	-		3	SCREW MC6S M5X8 A280	
080	315101-0146	-		3	WASHER PLAIN, BRB, 5,3/10 H=1	
090	353034-0030	-		6	BRIDGE CONNECTOR WQV 2,5/10, 10544.6	

Pos	Part No	SP	UN	Qty	Description	Page No

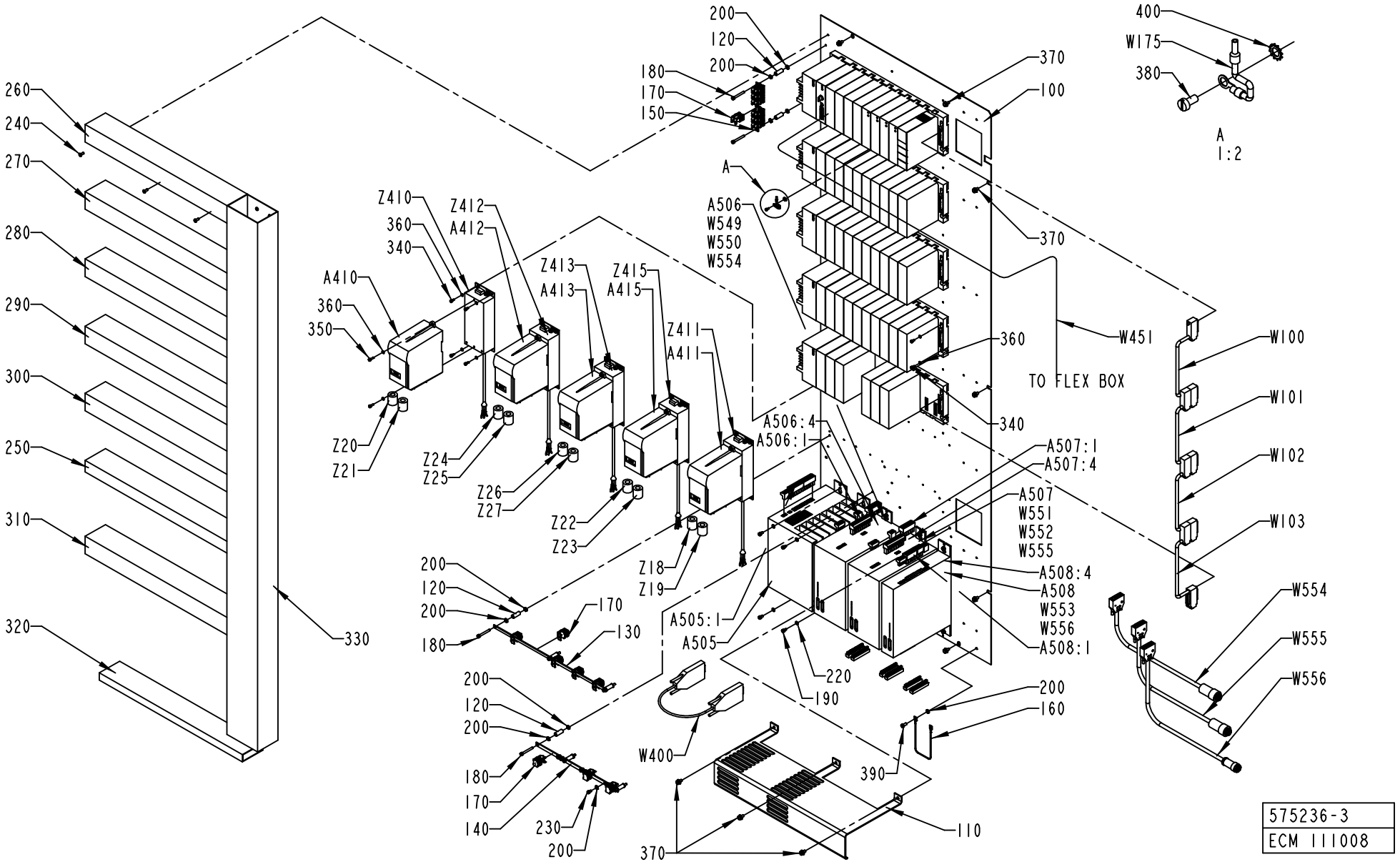
260
240
270
280
290
300
250
310
320
330
200
120
200
180
170
150
370
100
400
W175
380
A
1:2
A
A506
W549
W550
W554
370
360
W451
TO FLEX BOX
340
W100
W101
W102
W103
W554
W555
W556
Z410
360
340
A410
360
350
Z412
A412
Z413
A413
Z415
A415
Z411
A411
Z20
Z21
Z24
Z25
Z26
Z27
Z22
Z23
Z18
Z19
A506:4
A506:1
A507:1
A507:4
A507
W551
W552
W555
A508:4
A508
W553
W556
A508:1
A505:1
A505
220
190
200
160
390
200
120
200
180
170
130
200
120
200
180
170
140
230
200
W400
370
110
575236-3
ECM 111008

ECM: 114770 - 20020916
Group number: 575236-0300
Assembly Drawing: 575236-3_1_AB

Issue: 20021023

Pos	Part No	SP	UN	Qty	Description	Page No
Common Parts						
100	1285535-0000	-		1	MOUNTING PLATE	
110	1350916-0000	-		1	PROTECTION	
120	1140053-0000	-		8	SPACER	
130	1484170-0000	-		1	EARTH BAR	
140	1538889-0000	-		1	EARTH BAR	
150	1490742-0000	-		1	EARTH BAR	
160	B1038714-0000	-		1	CABLE	
	353104-0168	-		*2*	*CABLE SHO YAV 16 M6**	
	351175-0109	-	*MM*	*275*	*CABLE AWM 1X16 MM2 YELLOW-GREEN*	
170	90135-0039	-		15	SHIELD CLIP KLBU 4-13.5	
180	312115-0339	-		8	SCREW MC6S M5X40 A280	
190	312115-0323	-		10	SCREW MC6S M5X8 A280	
200	90062-0022	-		23	LOCKING WASHER D=6,4/11	
220	315105-0146	-		10	WASHER PLAIN, BRB, 5,3/10,H=1	
230	312121-0323	-		6	SCREW SLOT.PAN HD. MCS 5X8 FZB	
240	90181-0313	-		38	RIVET DUCTAFIX R4	
250	90181-0040	-	MM	555	CABLE DUCT, 80X40MM	
260	90181-0054	-	MM	555	CABLE DUCT, 60X80MM	
270	90181-0054	-	MM	555	CABLE DUCT, 60X80MM	
280	90181-0054	-	MM	555	CABLE DUCT, 60X80MM	
290	90181-0054	-	MM	555	CABLE DUCT, 60X80MM	
300	90181-0054	-	MM	555	CABLE DUCT, 60X80MM	
310	90181-0054	-	MM	555	CABLE DUCT, 60X80MM	
320	90181-0052	-	MM	560	CABLE DUCT, 25X80MM	
330	90181-0057	-	MM	1810	CABLE DUCT, 120X80MM	
340	312115-0287	-		42	SCREW MC6S M4X8 A280	
350	312115-0291	-		10	SCREW MC6S M4X12 A280	
360	315105-0136	-		52	WASHER PLAIN, BRB, 4,3/8,H=0,8	
370	90287-0157	-		13	SCREW M6SF FLAT HEAD M6X10 88	
380	312122-0287	-		6	SCREW PAN HEAD MCS M4X8 NL. PL.	
390	312121-0366	-		1	SCREW SLOT.PAN HD. MCS 6X12 FZB	
400	90062-0021	-		6	LOCKING WASHER A 5,3	
A101	90031-0058	A		1	PLC, DIGITAL INPUT MODULE	
A102	90031-0059	A		1	PLC, DIGITAL OUTPUT MODULE	
A103	90031-0065	A		1	PLC,TEMPERATUR CONTROL,INPUT MODULE 8 PT	
A104	90031-0065	A		1	PLC,TEMPERATUR CONTROL,INPUT MODULE 8 PT	
A105	90031-0061	A		1	PLC,ANALOG INPUT MODULE 16 PT/CURRENT	
A106	90031-0060	A		1	PLC,ANALOG INPUT MODULE 16 PT/VOLTAGE	
A107	90031-0062	A		1	PLC, ANALOG OUTPUT MODULE 8PT/CURR/VOLT	
A108	90031-0062	A		1	PLC, ANALOG OUTPUT MODULE 8PT/CURR/VOLT	
A109	90031-0031	A		1	ENHANCED GENIUS COMMUNICATION MODULE	
A110	90031-0057	-		1	PLC, DIGITAL INPUT MODULE	
A111	90031-0057	-		1	PLC, DIGITAL INPUT MODULE	
A112	90031-0057	A		1	PLC, DIGITAL INPUT MODULE	
A113	90031-0057	A		1	PLC, DIGITAL INPUT MODULE	
A114	90031-0057	A		1	PLC, DIGITAL INPUT MODULE	
A115	90031-0057	A		1	PLC, DIGITAL INPUT MODULE	
A116	90031-0057	A		1	PLC, DIGITAL INPUT MODULE	
A117	90031-0057	A		1	PLC, DIGITAL INPUT MODULE	
A118	90031-0057	A		1	PLC, DIGITAL INPUT MODULE	
A119	90031-0057	A		1	PLC, DIGITAL INPUT MODULE	
A120	90031-0057	A		1	PLC, DIGITAL INPUT MODULE	
A121	90031-0057	A		1	PLC, DIGITAL INPUT MODULE	
A122	90031-0057	A		1	PLC, DIGITAL INPUT MODULE	
A123	90031-0057	A		1	PLC, DIGITAL INPUT MODULE	
A124	90031-0057	A		1	PLC, DIGITAL INPUT MODULE	
A125	90031-0057	A		1	PLC, DIGITAL INPUT MODULE	
A126	90031-0059	A		1	PLC, DIGITAL OUTPUT MODULE	
A127	90031-0059	A		1	PLC, DIGITAL OUTPUT MODULE	
A128	90031-0059	A		1	PLC, DIGITAL OUTPUT MODULE	
A129	90031-0059	A		1	PLC, DIGITAL OUTPUT MODULE	
A130	90031-0059	A		1	PLC, DIGITAL OUTPUT MODULE	
A131	90031-0059	A		1	PLC, DIGITAL OUTPUT MODULE	
A132	90031-0059	A		1	PLC, DIGITAL OUTPUT MODULE	
A133	90031-0059	A		1	PLC, DIGITAL OUTPUT MODULE	
A134	90031-0059	A		1	PLC, DIGITAL OUTPUT MODULE	
A135	90031-0059	A		1	PLC, DIGITAL OUTPUT MODULE	
A136	90031-0059	A		1	PLC, DIGITAL OUTPUT MODULE	
A137	90031-0059	A		1	PLC, DIGITAL OUTPUT MODULE	
A138	90031-0059	A		1	PLC, DIGITAL OUTPUT MODULE	
A139	90031-0059	-		1	PLC, DIGITAL OUTPUT MODULE	
A140	90031-0057	-		1	PLC, DIGITAL INPUT MODULE	
A141	90031-0057	-		1	PLC, DIGITAL INPUT MODULE	
A142	90031-0057	-		1	PLC, DIGITAL INPUT MODULE	
A145	90031-0059	-		1	PLC, DIGITAL OUTPUT MODULE	
A146	90031-0059	-		1	PLC, DIGITAL OUTPUT MODULE	
A147	90031-0059	-		1	PLC, DIGITAL OUTPUT MODULE	
A160	90031-0051	A		1	BASEPLATE, 10-SLOT	
A161	B90031-0053	A		1	BASEPLATE,10-SLOT	
	90031-0302	-		*1*	*I/O BUS TERMINATION PLUG*	
A162	B90031-0053	A		1	BASEPLATE,10-SLOT	
	90031-0302	-		*1*	*I/O BUS TERMINATION PLUG*	
A163	B90031-0053	A		1	BASEPLATE,10-SLOT	

Machine Type | Group Description | Used-In | Group Number | Page No

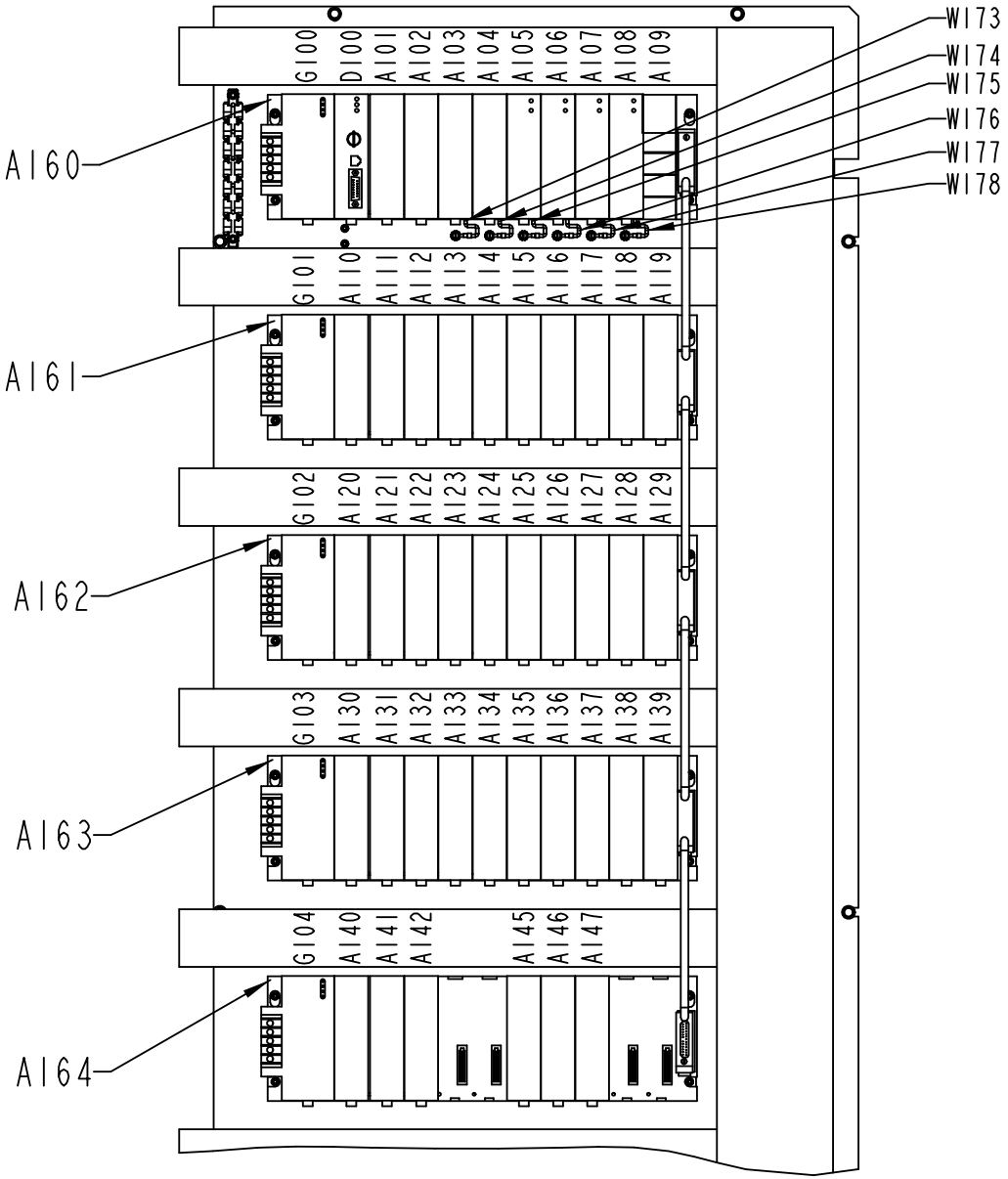

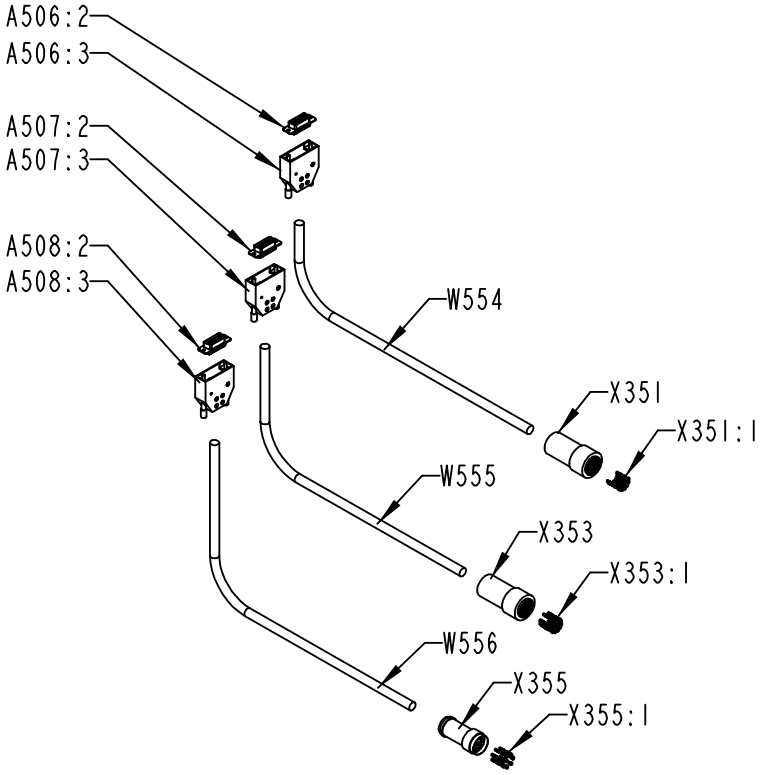

575236-3
ECM 111008

Pos	Part No	SP	UN	Qty	Description	Page No
Common Parts (Cont'd)						
A164	B90031-0053	-		1	BASEPLATE,10-SLOT	
	90031-0302	-		*1*	*I/O BUS TERMINATION PLUG*	
A410	90430-0070	A		1	FREQ.CONV. 6SE3213-6CA40	
A411	90430-0070	-		1	FREQ.CONV. 6SE3213-6CA40	
A412	90430-0070	A		1	FREQ.CONV. 6SE3213-6CA40	
A413	90430-0070	A		1	FREQ.CONV. 6SE3213-6CA40	
A415	90430-0070	A		1	FREQ.CONV. 6SE3213-6CA40	
A505	90045-0397	A		1	POWER SUPPLY 80 A	
A505:1	90458-0033	A		1	CONNECTOR KIT 9-032-010-851	
A506	90458-0399	A		1	SERVO DRIVE DMC2 51540	
A506:1	90458-0032	A		1	CONNECTOR KIT 9-032-010-496	
A506:2	90110-0142	A		1	PLUG DA15P064TX	
A506:3	90110-0145	A		1	COVER 8630-5169014-15-01	
A506:4	B2510917-0001	-		1	DMC PROGRAMME	
0010	*2510917-1001*	-		*1*	*PROGRAM OBJECT CODE*	
0020	*2510918-0000*	-		*1*	*LABEL DISKETTE*	
0030	*90458-2027*	-		*1*	*FLOPPY DISK, 3,5" 1,44MB FOR PC*	
A507	90458-0399	A		1	SERVO DRIVE DMC2 51540	
A507:1	90458-0032	A		1	CONNECTOR KIT 9-032-010-496	
A507:2	90110-0142	A		1	PLUG DA15P064TX	
A507:3	90110-0145	A		1	COVER 8630-5169014-15-01	
A507:4	B2510909-0001	-		1	DMC PROGRAMME	
0010	*2510909-1001*	-		*1*	*PROGRAM OBJECT CODE*	
0020	*2510910-0000*	-		*1*	*LABEL DISKETTE*	
0030	*90458-2027*	-		*1*	*FLOPPY DISK, 3,5" 1,44MB FOR PC*	
A508	90458-0396	A		1	SERVO DRIVE DMC2 50720	
A508:1	90458-0031	A		1	CONNECTOR KIT 9032 010 353	
A508:2	90110-0142	A		1	PLUG DA15P064TX	
A508:3	90110-0145	A		1	COVER 8630-5169014-15-01	
A508:4	B2553140-0001	-		1	DMC PROGRAMME	
0010	*2553140-1001*	-		*1*	*PROGRAM OBJECT CODE*	
0020	*2553143-0000*	-		*1*	*LABEL DISKETTE*	
0030	*90458-2027*	-		*1*	*FLOPPY DISK, 3,5" 1,44MB FOR PC*	
D100	90031-0075	A		1	CPU363, SERIAL COMMUNICATION	
G100	B90031-0068	A		1	PLC, POWER SUPPLY	
	352551-0134	*A*		*1*	*FINE-WIRE FUSE 2 A SLOW;5X20MM*	
	90031-0301	*A*		*1*	*SPARE BATTERY CPU,PCM,2PCS*	
G101	B90031-0068	A		1	PLC, POWER SUPPLY	
	352551-0134	*A*		*1*	*FINE-WIRE FUSE 2 A SLOW;5X20MM*	
	90031-0301	*A*		*1*	*SPARE BATTERY CPU,PCM,2PCS*	
G102	B90031-0068	A		1	PLC, POWER SUPPLY	
	352551-0134	*A*		*1*	*FINE-WIRE FUSE 2 A SLOW;5X20MM*	
	90031-0301	*A*		*1*	*SPARE BATTERY CPU,PCM,2PCS*	
G103	B90031-0068	A		1	PLC, POWER SUPPLY	
	352551-0134	*A*		*1*	*FINE-WIRE FUSE 2 A SLOW;5X20MM*	
	90031-0301	*A*		*1*	*SPARE BATTERY CPU,PCM,2PCS*	
G104	B90031-0068	-		1	PLC, POWER SUPPLY	
	352551-0134	*A*		*1*	*FINE-WIRE FUSE 2 A SLOW;5X20MM*	
	90031-0301	*A*		*1*	*SPARE BATTERY CPU,PCM,2PCS*	
W100	90031-0305	A		1	I/O EXPANSION CABLE	
W101	90031-0305	A		1	I/O EXPANSION CABLE	
W102	90031-0305	A		1	I/O EXPANSION CABLE	
W103	90031-0305	-		1	I/O EXPANSION CABLE	
W173	1512322-0000	-		1	COPPER BRAID	
W174	1512322-0000	-		1	COPPER BRAID	
W175	1512322-0000	-		1	COPPER BRAID	
W176	1512322-0000	-		1	COPPER BRAID	
W177	1512322-0000	-		1	COPPER BRAID	
W178	1512322-0000	-		1	COPPER BRAID	
W400	1348067-0000	-		1	CABLE	
W549	90220-0084	A	MM	3000	MOTOR CABLE 4X2,5+2(2X0.75)+SHIELD	
W550	90220-0084	A	MM	1300	MOTOR CABLE 4X2,5+2(2X0.75)+SHIELD	
W551	90220-0084	A	MM	3000	MOTOR CABLE 4X2,5+2(2X0.75)+SHIELD	
W552	90220-0084	A	MM	300	MOTOR CABLE 4X2,5+2(2X0.75)+SHIELD	
W553	90220-0116	A	MM	3000	MOTOR CABLE 4X1,0+2(2X0,5)+SHIELD	
W554	90220-0131	-	MM	700	PAIR TWISTED CABLE 3X2X0,25MM2	
W555	90220-0131	-	MM	600	PAIR TWISTED CABLE 3X2X0,25MM2	
W556	90220-0131	-	MM	600	PAIR TWISTED CABLE 3X2X0,25MM2	
X351	90110-0508	-		1	CABLE CONTACT	
X351:1	90110-0209	-		7	CONTACT PIN, RC20M13K	
X353	90110-0508	-		1	CABLE CONTACT	
X353:1	90110-0209	-		11	CONTACT PIN, RC20M13K	
X355	90110-0208	-		1	CABLE CONTACT	
X355:1	90110-0209	-		7	CONTACT PIN, RC20M13K	
Z18	90024-0047	-		1	EMI SUPPRESSION FERRITE	
Z19	90024-0047	-		1	EMI SUPPRESSION FERRITE	
Z20	90024-0047	-		1	EMI SUPPRESSION FERRITE	
Z21	90024-0047	-		1	EMI SUPPRESSION FERRITE	
Z22	90024-0047	-		1	EMI SUPPRESSION FERRITE	
Z23	90024-0047	-		1	EMI SUPPRESSION FERRITE	
Z24	90024-0047	-		1	EMI SUPPRESSION FERRITE	
Z25	90024-0047	-		1	EMI SUPPRESSION FERRITE	
Z26	90024-0047	-		1	EMI SUPPRESSION FERRITE	

See previous drawings pages: 528, 530.

Pos	Part No	SP	UN	Qty	Description	Page No
Common Parts (Cont'd)						
Z26	90024-0047	-		1	EMI SUPPRESSION FERRITE	
Z27	90024-0047	-		1	EMI SUPPRESSION FERRITE	
Z410	90430-0326	-		1	FILTER 6SE3290-0BA87-0FB2	
Z411	90430-0326	-		1	FILTER 6SE3290-0BA87-0FB2	
Z412	90430-0326	-		1	FILTER 6SE3290-0BA87-0FB2	
Z413	90430-0326	-		1	FILTER 6SE3290-0BA87-0FB2	
Z415	90430-0326	-		1	FILTER 6SE3290-0BA87-0FB2	

Pos	Part No	SP	UN	Qty	Description	Page No

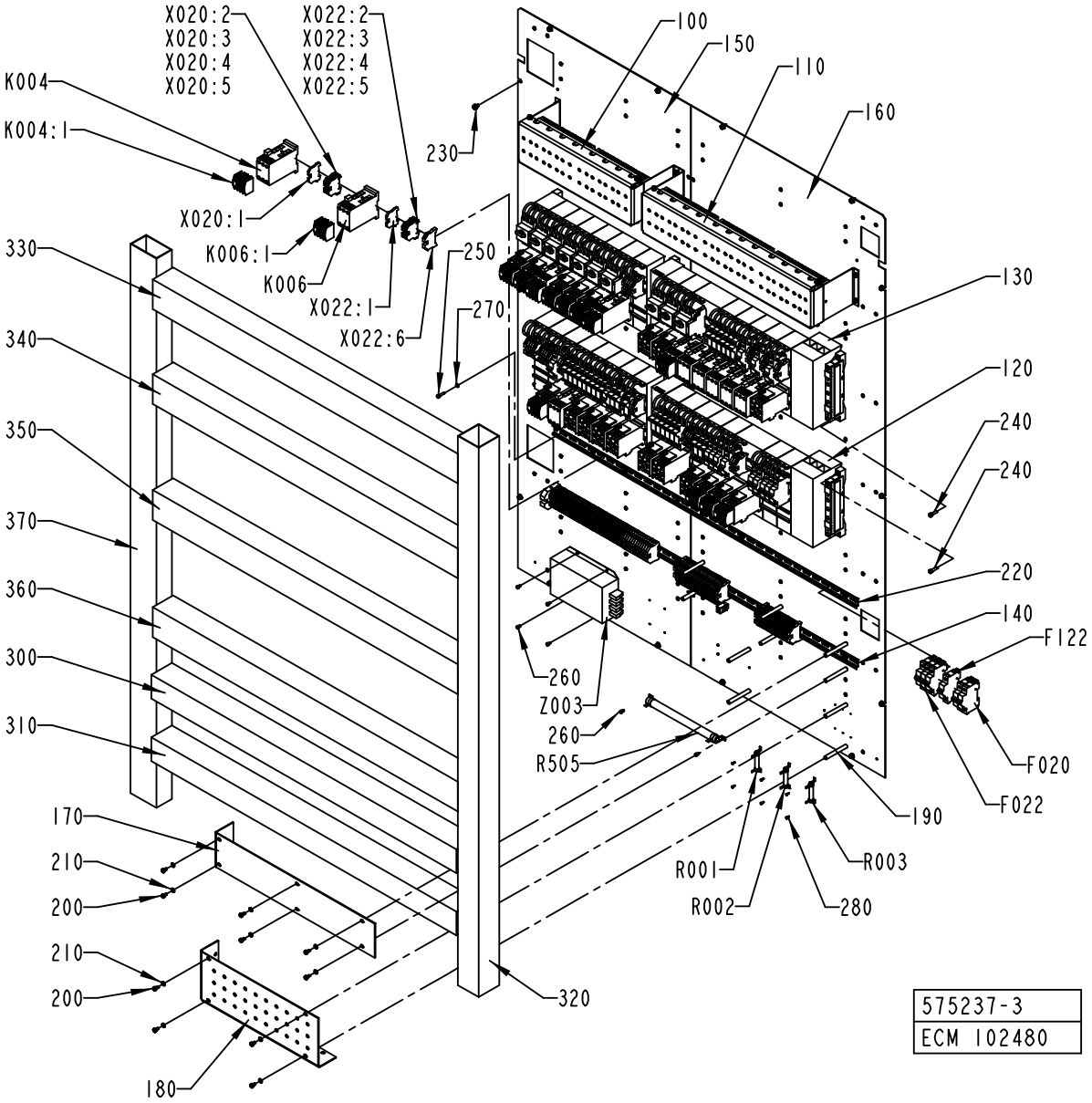
X020:2
X020:3
X020:4
X020:5
X022:2
X022:3
X022:4
X022:5
K004
K004:1
X020:1
K006:1
K006
X022:1
X022:6
230
250
270
100
150
110
160
130
120
240
240
220
140
F122
F020
F022
190
330
340
350
370
360
300
310
170
210
200
210
200
180
320
260
Z003
260
R505
R001
R002
280
R003
575237-3
ECM 102480

ECM: 105171 - 20010926
Group number: 575237-0300
Assembly Drawing: 575237-3_1_AA

Issue: 20021023

Pos	Part No	SP	UN	Qty	Description	Page No
Common Parts						
100	A2524337-0200	-		1	RELAY UNIT 1	**537**
110	A1285537-0300	-		1	RELAY UNIT 2	**539**
120	A1285539-0300	-		1	FUSE BOARD 1	**541**
130	A1285528-0300	-		1	FUSE BOARD 2	**543**
140	A1285538-0100	-		1	PLINTH	**545**
150	1484466-0000	-		1	MOUNTING PLATE	
160	1484467-0000	-		1	MOUNTING PLATE	
170	1129341-0000	-		1	PROTECTION	
180	1254091-0000	-		1	PROTECTION	
190	1038275-0012	-		10	SPACER	
200	312101-0364	-		10	SCREW M6S M6X10 FZB	
210	315101-0153	-		10	WASHER PLAIN, BRB, 6,4/12 H=1,5	
220	353042-0005	-	MM	1170	RAIL TS 35/7.5	
230	90287-0157	-		14	SCREW M6SF FLAT HEAD M6X10 88	
240	312111-0370	-		12	SCREW HEX.SOCK.HD.MC6S-TT 6X20 88 FZB	
250	312115-0331	-		14	SCREW MC6S M5X20 A280	
260	312121-0323	-		6	SCREW SLOT.PAN HD. MCS 5X8 FZB	
270	315101-0146	-		14	WASHER PLAIN, BRB, 5,3/10 H=1	
280	312121-0222	-		6	SCREW SLOT.PAN HD. MCS 3X8 FZB	
290	90181-0313	-		102	RIVET DUCTAFIX R4	
300	90181-0055	-	MM	1175	CABLE DUCT, 80X80MM	
310	90181-0055	-	MM	1175	CABLE DUCT, 80X80MM	
320	90181-0055	-	MM	1850	CABLE DUCT, 80X80MM	
330	90181-0056	-	MM	1175	CABLE DUCT, 100X80MM	
340	90181-0056	-	MM	1175	CABLE DUCT, 100X80MM	
350	90181-0056	-	MM	1175	CABLE DUCT, 100X80MM	
360	90181-0056	-	MM	1175	CABLE DUCT, 100X80MM	
370	90181-0048	-	MM	1850	CABLE DUCT, 100X60MM	
F020	90007-0138	-		1	CIRCUIT BREAKER, 2P 10 A K	
F022	90007-0147	-		1	CIRCUIT BREAKER, 3P 10 A K	
F122	90007-0129	-		1	CIRCUIT BREAKER, 1P 10 A K	
K004	90075-0128	A		1	CONTACTOR, 7,5KW 24VDC	
K004:1	90075-0313	-		1	AUXILIARY CONTACT K&M 22 DILM.2NO;2NC	
K006	90075-0128	A		1	CONTACTOR, 7,5KW 24VDC	
K006:1	90075-0313	-		1	AUXILIARY CONTACT K&M 22 DILM.2NO;2NC	
R001	90121-0114	A		1	RESISTANCE FIXED, 0,22 KOHM, 25 W	
R002	90121-0114	A		1	RESISTANCE FIXED, 0,22 KOHM, 25 W	
R003	90121-0114	A		1	RESISTANCE FIXED, 0,22 KOHM, 25 W	
R505	90121-0115	A		1	RESISTANCE FIXED, 0,047 KOHM, 200 W	
X020:1	353024-0204	-		1	EARTH TERMINAL WPE 2,5	
X020:2	353021-0212	-		1	FEED THROUGH TERMINAL, 10200.0	
X020:3	353021-0212	-		1	FEED THROUGH TERMINAL, 10200.0	
X020:4	353021-0212	-		1	FEED THROUGH TERMINAL, 10200.0	
X020:5	353021-0212	-		1	FEED THROUGH TERMINAL, 10200.0	
X022:1	353024-0204	-		1	EARTH TERMINAL WPE 2,5	
X022:2	353021-0212	-		1	FEED THROUGH TERMINAL, 10200.0	
X022:3	353021-0212	-		1	FEED THROUGH TERMINAL, 10200.0	
X022:4	353021-0212	-		1	FEED THROUGH TERMINAL, 10200.0	
X022:5	353021-0212	-		1	FEED THROUGH TERMINAL, 10200.0	
X022:6	353031-0203	-		1	END SUPPORT, WEW 35/2	
Z003	90024-0039	A		1	INPUT FILTER, 50 A	

Machine Type | Group Description | Used-In | Group Number | Page No

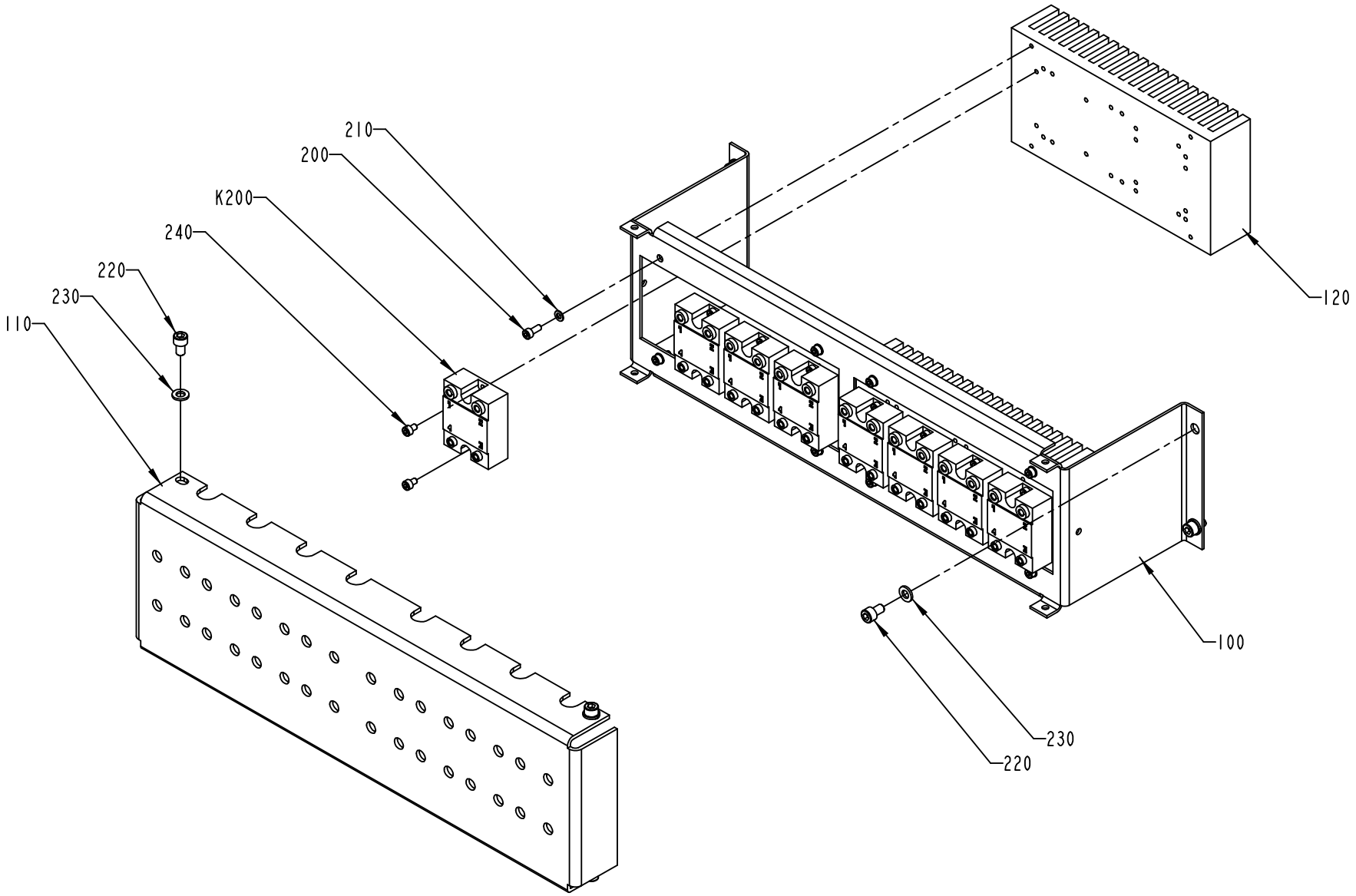

2524337-2
ECM 102480

Pos	Part No	SP	UN	Qty	Description	Page No
Common Parts						
100	1347673-0000	-		1	BRACKET	
110	1129342-0000	-		1	PROTECTION	
120	495495-0000	-		2	COOLING ELEMENT SSR	
200	312115-0289	-		8	SCREW HEX.SOCK.HD.MC6S-TT 4X10 A480	
210	315101-0136	-		8	WASHER PLAIN, BRB, 4,3/8 H=0,8	
220	312115-0364	-		8	SCREW HEX.SOCK.HD.MC6S-TT 6X10 A480	
230	315101-0153	-		8	WASHER PLAIN, BRB, 6,4/12 H=1,5	
240	312115-0285	-		16	SCREW HEX.SOCK.HD.MC6S-TTS 4X6 A480	
K200	90119-0067	-		1	SOLID-STATE RELAY, H12WD4850	
K201	90119-0067	-		1	SOLID-STATE RELAY, H12WD4850	
K202	90119-0067	-		1	SOLID-STATE RELAY, H12WD4850	
K203	90119-0067	-		1	SOLID-STATE RELAY, H12WD4850	
K204	90119-0067	-		1	SOLID-STATE RELAY, H12WD4850	
K205	90119-0067	-		1	SOLID-STATE RELAY, H12WD4850	
K206	90119-0067	-		1	SOLID-STATE RELAY, H12WD4850	
K207	90119-0067	-		1	SOLID-STATE RELAY, H12WD4850	

Pos	Part No	SP	UN	Qty	Description	Page No

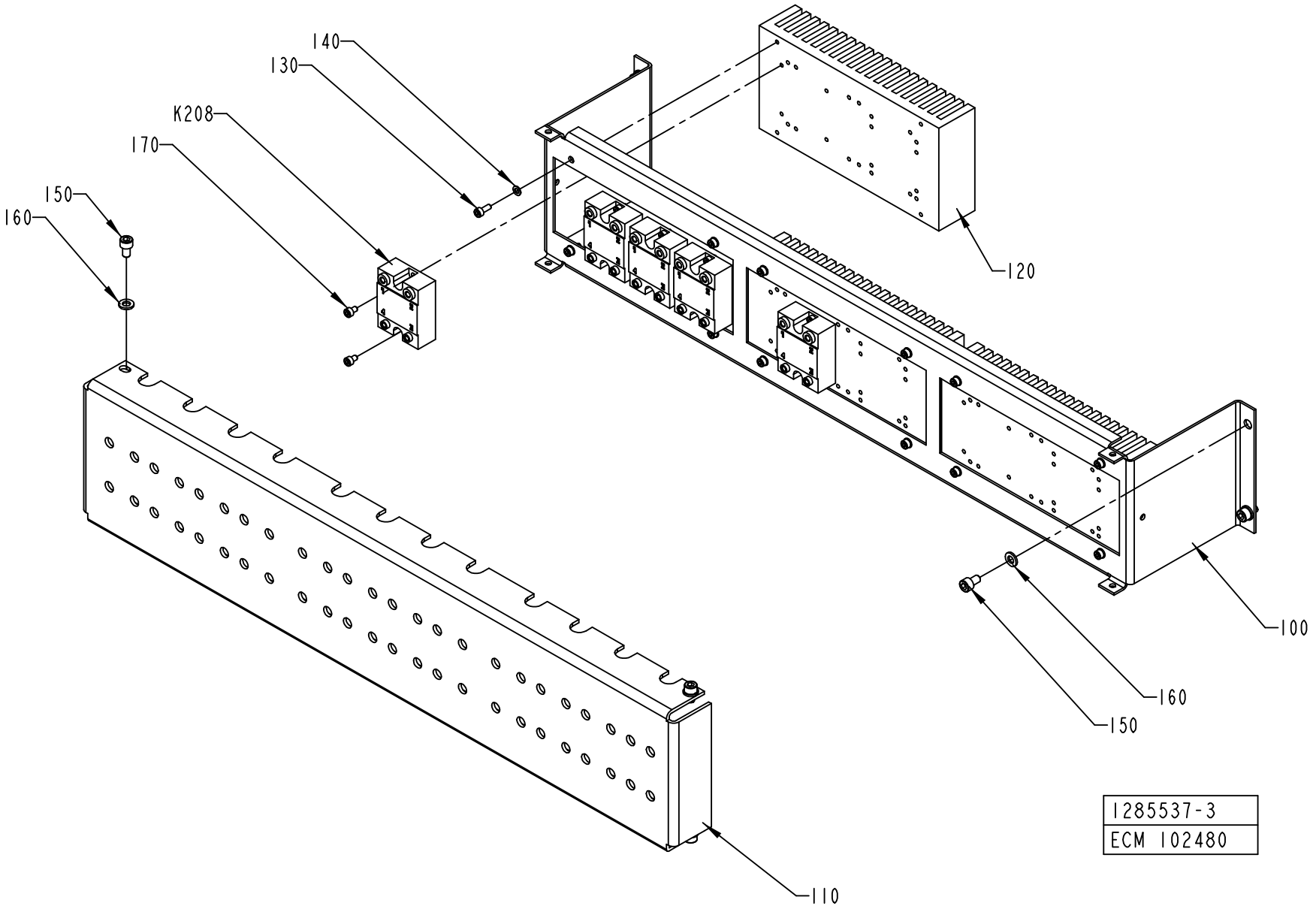
140
130
K208
170
150
160
120
100
160
150
110
1285537-3
ECM 102480

Pos	Part No	SP	UN	Qty	Description	Page No
Common Parts						
100	1129338-0000	-		1	BRACKET	
110	1129343-0000	-		1	PROTECTION	
120	495495-0000	-		3	COOLING ELEMENT SSR	
130	312115-0289	-		12	SCREW HEX.SOCK.HD.MC6S-TT 4X10 A480	
140	315101-0136	-		12	WASHER PLAIN, BRB, 4,3/8 H=0,8	
150	312115-0364	-		8	SCREW HEX.SOCK.HD.MC6S-TT 6X10 A480	
160	315101-0153	-		8	WASHER PLAIN, BRB, 6,4/12 H=1,5	
170	312115-0285	-		10	SCREW HEX.SOCK.HD.MC6S-TTS 4X6 A480	
K208	90119-0067	A		1	SOLID-STATE RELAY, H12WD4850	
K209	90119-0067	A		1	SOLID-STATE RELAY, H12WD4850	
K210	90119-0067	A		1	SOLID-STATE RELAY, H12WD4850	
K211	90119-0067	A		1	SOLID-STATE RELAY, H12WD4850	
K213	90119-0067	-		1	SOLID-STATE RELAY, H12WD4850	

Pos	Part No	SP	UN	Qty	Description	Page No

FUSE BOARD 1

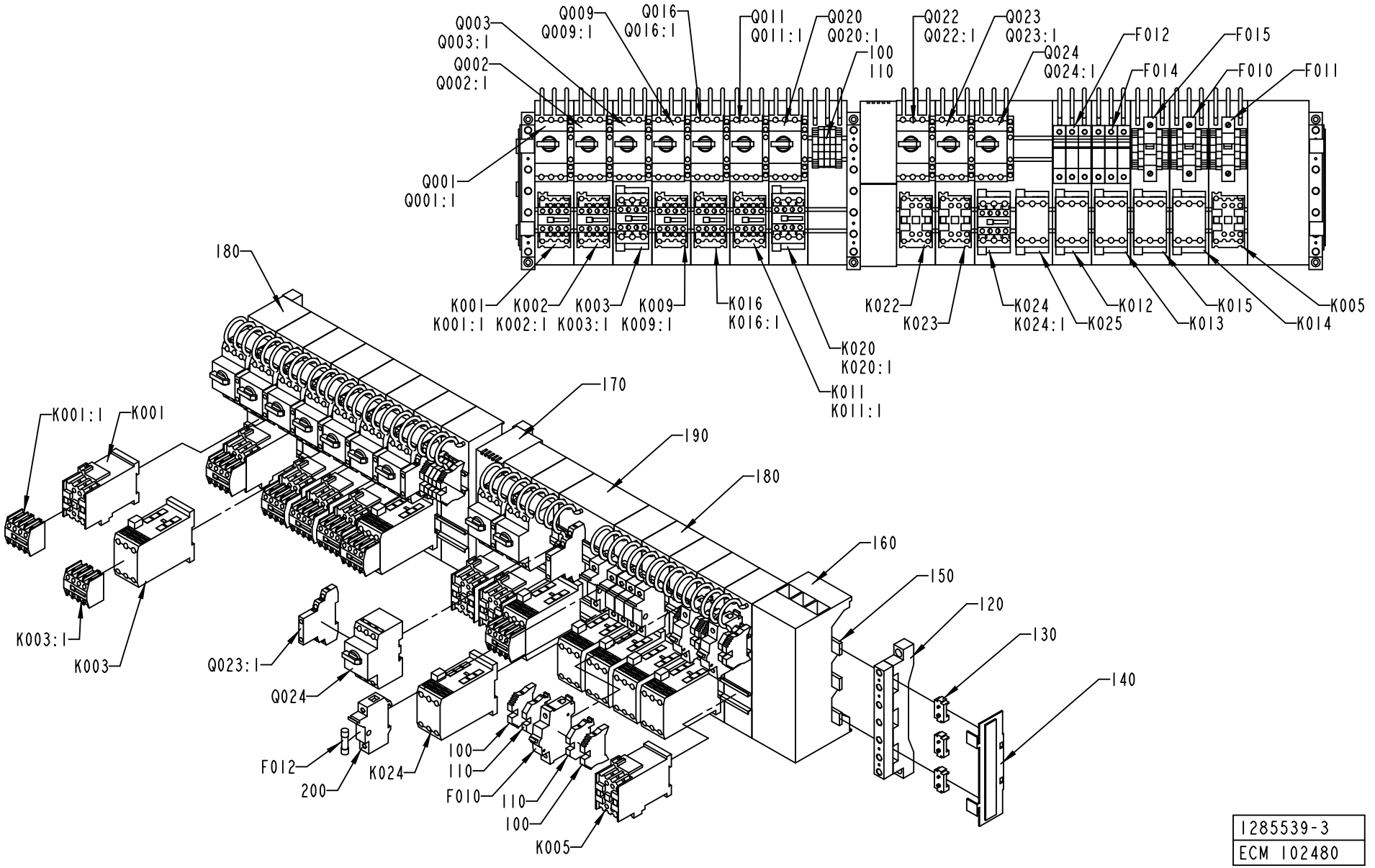

1285539-3
ECM 102480

ECM: 105170 - 20010926
Group number: 1285539-0300
Assembly Drawing: 1285539-3_1_AA

Issue: 20021023

Pos	Part No	SP	UN	Qty	Description	Page No
Common Parts						
100	353031-0203	-		12	END SUPPORT, WEW 35/2	
110	353021-0214	-		19	FEED THROUGH TERMINAL, 10202.0	
120	1129925-0000	-		3	BUSBAR	
130	353042-0010	-		3	BUSBAR HÅLLARE	
140	353042-0012	-		9	ADJUSTMENTPLATTA	
150	353042-0019	-		2	SIDE GUARD	
160	353042-0016	-		1	CONNECTIONSADAPTER	
170	353042-0013	-		1	PROTECTIVE CASING	
180	353042-0014	-		15	BUSBAR ADA ADAPTER	
190	353042-0015	-		1	BUSBAR ADAPTER	
200	90233-0303	-		6	FUSE HOLDER, ST10	
F010	90007-0133	-		1	CIRCUIT BREAKER, 1P 25 A K	
F011	90007-0129	-		1	CIRCUIT BREAKER, 1P 10 A K	
F012	90233-0028	-		3	TUBE FUSE, 10A	
F014	90233-0028	-		3	TUBE FUSE, 10A	
F015	90007-0128	-		1	CIRCUIT BREAKER, 1P 6 A K	
K001	90075-0127	A		1	CONTACTOR, 4KW 24VDC	
K001:1	90075-0313	A		1	AUXILIARY CONTACT K&M 22 DILM.2NO;2NC	
K002	90075-0127	A		1	CONTACTOR, 4KW 24VDC	
K002:1	90075-0313	A		1	AUXILIARY CONTACT K&M 22 DILM.2NO;2NC	
K003	90075-0128	A		1	CONTACTOR, 7,5KW 24VDC	
K003:1	90075-0313	A		1	AUXILIARY CONTACT K&M 22 DILM.2NO;2NC	
K005	90075-0127	-		1	CONTACTOR, 4KW 24VDC	
K009	90075-0127	A		1	CONTACTOR, 4KW 24VDC	
K009:1	90075-0313	A		1	AUXILIARY CONTACT K&M 22 DILM.2NO;2NC	
K011	90075-0127	A		1	CONTACTOR, 4KW 24VDC	
K011:1	90075-0313	A		1	AUXILIARY CONTACT K&M 22 DILM.2NO;2NC	
K012	90075-0128	-		1	CONTACTOR, 7,5KW 24VDC	
K013	90075-0128	-		1	CONTACTOR, 7,5KW 24VDC	
K014	90075-0128	-		1	CONTACTOR, 7,5KW 24VDC	
K015	90075-0128	-		1	CONTACTOR, 7,5KW 24VDC	
K016	90075-0127	-		1	CONTACTOR, 4KW 24VDC	
K016:1	90075-0313	-		1	AUXILIARY CONTACT K&M 22 DILM.2NO;2NC	
K020	90075-0128	A		1	CONTACTOR, 7,5KW 24VDC	
K020:1	90075-0313	A		1	AUXILIARY CONTACT K&M 22 DILM.2NO;2NC	
K022	90075-0127	A		1	CONTACTOR, 4KW 24VDC	
K023	90075-0127	A		1	CONTACTOR, 4KW 24VDC	
K024	90075-0128	A		1	CONTACTOR, 7,5KW 24VDC	
K024:1	90075-0313	A		1	AUXILIARY CONTACT K&M 22 DILM.2NO;2NC	
K025	90075-0128	A		1	CONTACTOR, 7,5KW 24VDC	
Q001	90095-0072	A		1	OVERLOAD PROTECTION, PKZM 1,0 A	
Q001:1	90259-0313	A		1	AUX. CONTACT K&M NHI21-PKZM0	
Q002	90095-0073	A		1	OVERLOAD PROTECTION, PKZM 1,6 A	
Q002:1	90259-0313	A		1	AUX. CONTACT K&M NHI21-PKZM0	
Q003	90095-0078	A		1	OVERLOAD PROTECTION, PKZM0-16	
Q003:1	90259-0313	A		1	AUX. CONTACT K&M NHI21-PKZM0	
Q009	90095-0070	A		1	OVERLOAD PROTECTION, PKZM 0,4 A	
Q009:1	90259-0313	A		1	AUX. CONTACT K&M NHI21-PKZM0	
Q011	90095-0074	A		1	OVERLOAD PROTECTION, PKZM 2,5 A	
Q011:1	90259-0313	A		1	AUX. CONTACT K&M NHI21-PKZM0	
Q016	90095-0073	-		1	OVERLOAD PROTECTION, PKZM 1,6 A	
Q016:1	90259-0313	-		1	AUX. CONTACT K&M NHI21-PKZM0	
Q020	90095-0077	A		1	OVERLOAD PROTECTION, PKZM 6-10 A	
Q020:1	90259-0313	A		1	AUX. CONTACT K&M NHI21-PKZM0	
Q022	90095-0074	A		1	OVERLOAD PROTECTION, PKZM 2,5 A	
Q022:1	90259-0313	A		1	AUX. CONTACT K&M NHI21-PKZM0	
Q023	90095-0074	A		1	OVERLOAD PROTECTION, PKZM 2,5 A	
Q023:1	90259-0313	A		1	AUX. CONTACT K&M NHI21-PKZM0	
Q024	90095-0080	A		1	OVERLOAD PROTECTION, PKZM 25 A	
Q024:1	90259-0313	A		1	AUX. CONTACT K&M NHI21-PKZM0	

Machine Type | Group Description | Used-In | Group Number | Page No

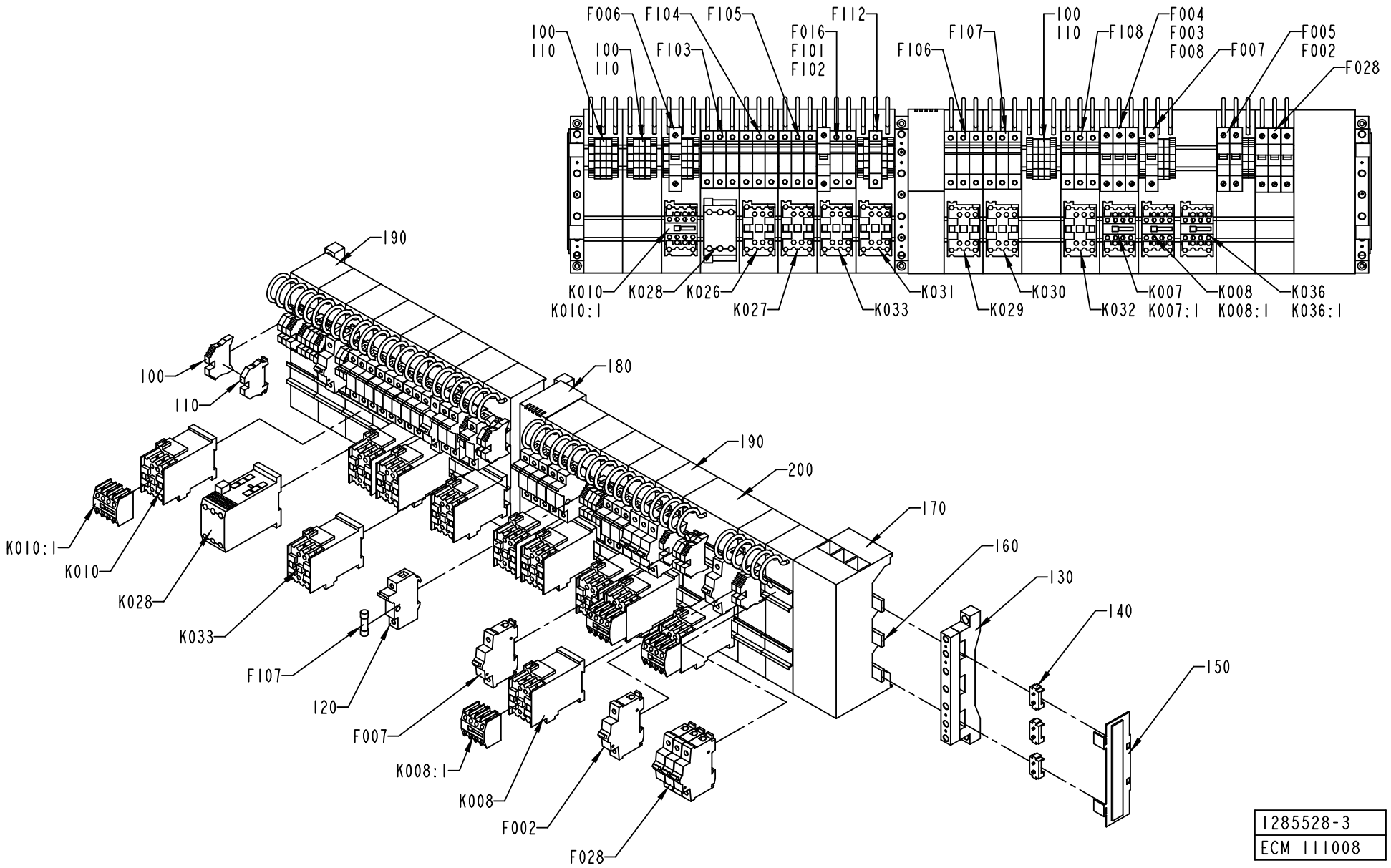
F006
F104
F105
F112
100
110
100
110
F103
F016
F101
F102
F107
100
110
F108
F004
F003
F008
F007
F005
F002
F028
F106
K010
K010:1
K028
K026
K027
K033
K031
K029
K030
K032
K007
K007:1
K008
K008:1
K036
K036:1
190
100
110
180
190
200
170
160
130
140
150
K010:1
K010
K028
K033
F107
120
F007
K008:1
K008
F002
F028
1285528-3
ECM 111008

ECM: 111621 - 20020916
Group number: 1285528-0300
Assembly Drawing: 1285528-3_1_AB

Issue: 20021023

Pos	Part No	SP	UN	Qty	Description	Page No
Common Parts						
100	353031-0203	-		14	END SUPPORT, WEW 35/2	
110	353021-0214	-		15	FEED THROUGH TERMINAL, 10202.0	
120	90233-0303	-		21	FUSE HOLDER, ST10	
130	353042-0010	-		3	BUSBAR HÅLLARE	
140	353042-0012	-		9	ADJUSTMENTPLATTA	
150	353042-0019	-		2	SIDE GUARD	
160	1129925-0000	-		3	BUSBAR	
170	353042-0016	-		1	CONNECTIONSADAPTER	
180	353042-0013	-		1	PROTECTIVE CASING	
190	353042-0014	-		15	BUSBAR ADA ADAPTER	
200	353042-0015	-		1	BUSBAR ADAPTER	
F002	90007-0128	-		1	CIRCUIT BREAKER, 1P 6 A K	
F003	90007-0129	-		1	CIRCUIT BREAKER, 1P 10 A K	
F004	90007-0129	-		1	CIRCUIT BREAKER, 1P 10 A K	
F005	90007-0129	-		1	CIRCUIT BREAKER, 1P 10 A K	
F006	90007-0129	-		1	CIRCUIT BREAKER, 1P 10 A K	
F007	90007-0129	-		1	CIRCUIT BREAKER, 1P 10 A K	
F008	90007-0128	-		1	CIRCUIT BREAKER, 1P 6 A K	
F016	90007-0128	-		1	CIRCUIT BREAKER, 1P 6 A K	
F028	90007-0146	-		1	CIRCUIT BREAKER, 3P 6 A K	
F101	90233-0029	-		1	TUBE FUSE, 25A	
F102	90233-0029	-		1	TUBE FUSE, 25A	
F103	90233-0029	-		3	TUBE FUSE, 25A	
F104	90233-0028	-		3	TUBE FUSE, 10A	
F105	90233-0028	-		3	TUBE FUSE, 10A	
F106	B90233-0027	-		3	TUBE FUSE, 16A	
	90233-0305	*C*		*1*	*INDICATOR*	
F107	B90233-0027	-		3	TUBE FUSE, 16A	
	90233-0305	*C*		*1*	*INDICATOR*	
F108	B90233-0027	-		3	TUBE FUSE, 16A	
	90233-0305	*C*		*1*	*INDICATOR*	
F112	90233-0028	-		1	TUBE FUSE, 10A	
K007	90075-0127	A		1	CONTACTOR, 4KW 24VDC	
K007:1	90075-0313	A		1	AUXILIARY CONTACT K&M 22 DILM.2NO;2NC	
K008	90075-0127	A		1	CONTACTOR, 4KW 24VDC	
K008:1	90075-0313	A		1	AUXILIARY CONTACT K&M 22 DILM.2NO;2NC	
K010	90075-0127	A		1	CONTACTOR, 4KW 24VDC	
K010:1	90075-0313	A		1	AUXILIARY CONTACT K&M 22 DILM.2NO;2NC	
K026	90075-0127	A		1	CONTACTOR, 4KW 24VDC	
K027	90075-0127	A		1	CONTACTOR, 4KW 24VDC	
K028	90075-0128	A		1	CONTACTOR, 7,5KW 24VDC	
K029	90075-0127	A		1	CONTACTOR, 4KW 24VDC	
K030	90075-0127	A		1	CONTACTOR, 4KW 24VDC	
K031	90075-0127	A		1	CONTACTOR, 4KW 24VDC	
K032	90075-0127	A		1	CONTACTOR, 4KW 24VDC	
K033	90075-0127	A		1	CONTACTOR, 4KW 24VDC	
K036	90075-0127	A		1	CONTACTOR, 4KW 24VDC	
K036:1	90075-0313	A		1	AUXILIARY CONTACT K&M 22 DILM.2NO;2NC	

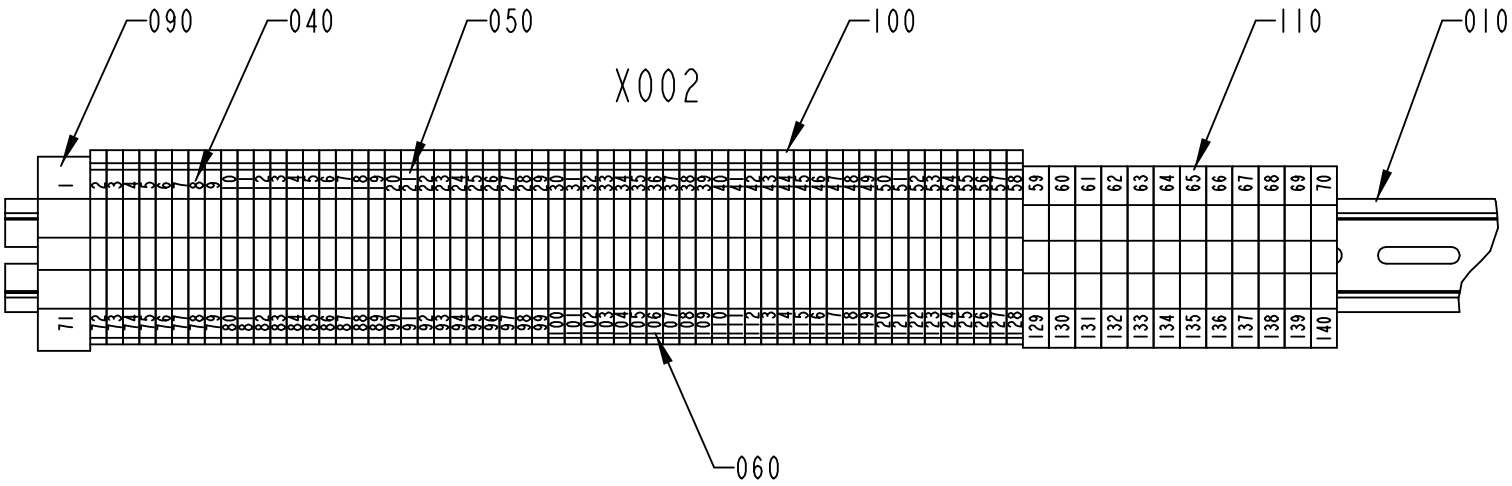

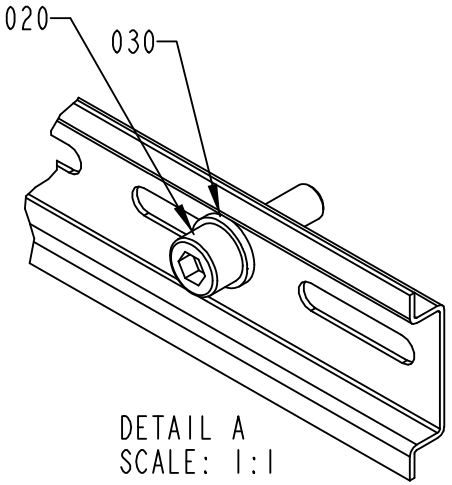

DETAIL A
SCALE: 1:1

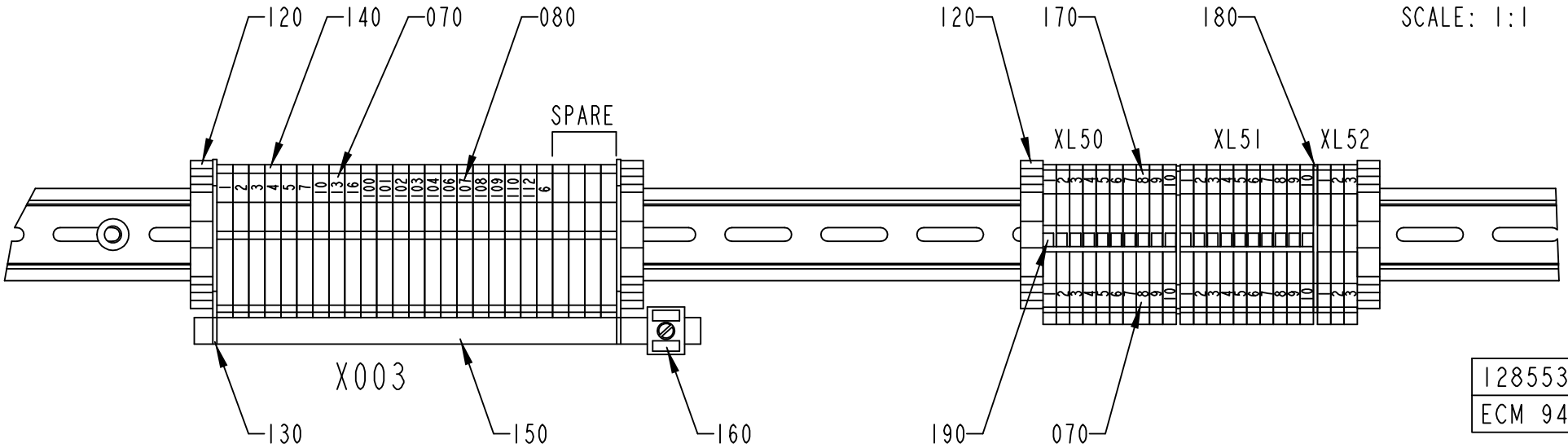

1285538-1
ECM 94660

ECM: 103467 - 20011123
Group number: 1285538-0100
Assembly Drawing: 1285538-1_1_AB

Issue: 20021023

Pos	Part No	SP	UN	Qty	Description	Page No
Common Parts						
010	353042-0005	-	MM	1170	RAIL TS 35/7.5	
020	312115-0370	-		6	SCREW MC6S M6X20 A280	
030	315101-0153	-		6	WASHER PLAIN, BRB, 6,4/12 H=1,5	
040	359011-0807	-		1	MARKING PLATES 5-FW 1-50	
050	359011-0808	-		1	MARKING PLATES 5-FW 51-100	
060	359011-0809	-		1	MARKING PLATES 5-FW 101-150	
070	359011-0821	-		1	SET OF SIGNS 6-FW 1-50	
080	359011-0823	-		1	SET OF SIGNS 6-FW 101-150	
090	353024-0209	-		1	EARTH TERMINAL, 1010.5	
100	353024-0204	-		57	EARTH TERMINAL WPE 2,5	
110	353024-0206	-		12	EARTH TERMINAL, 1010.2	
120	353031-0203	-		4	END SUPPORT, WEW 35/2	
130	353033-0104	-		2	END PLATE, 10502.8	
140	353022-0002	-		26	NEUTRAL TERMINAL, 10107.8	
150	353041-0001	-	MM	180	RAIL 10X3MM SSCH	
160	353041-0106	-		1	HOLDER ZB35 K 5026.8	
170	353021-0212	-		23	FEED THROUGH TERMINAL, 10200.0	
180	353032-0004	-		2	END PLATE WAP 2,5-10 BEIGE	
190	353034-0030	-		2	BRIDGE CONNECTOR WQV 2,5/10, 10544.6	

Pos	Part No	SP	UN	Qty	Description	Page No

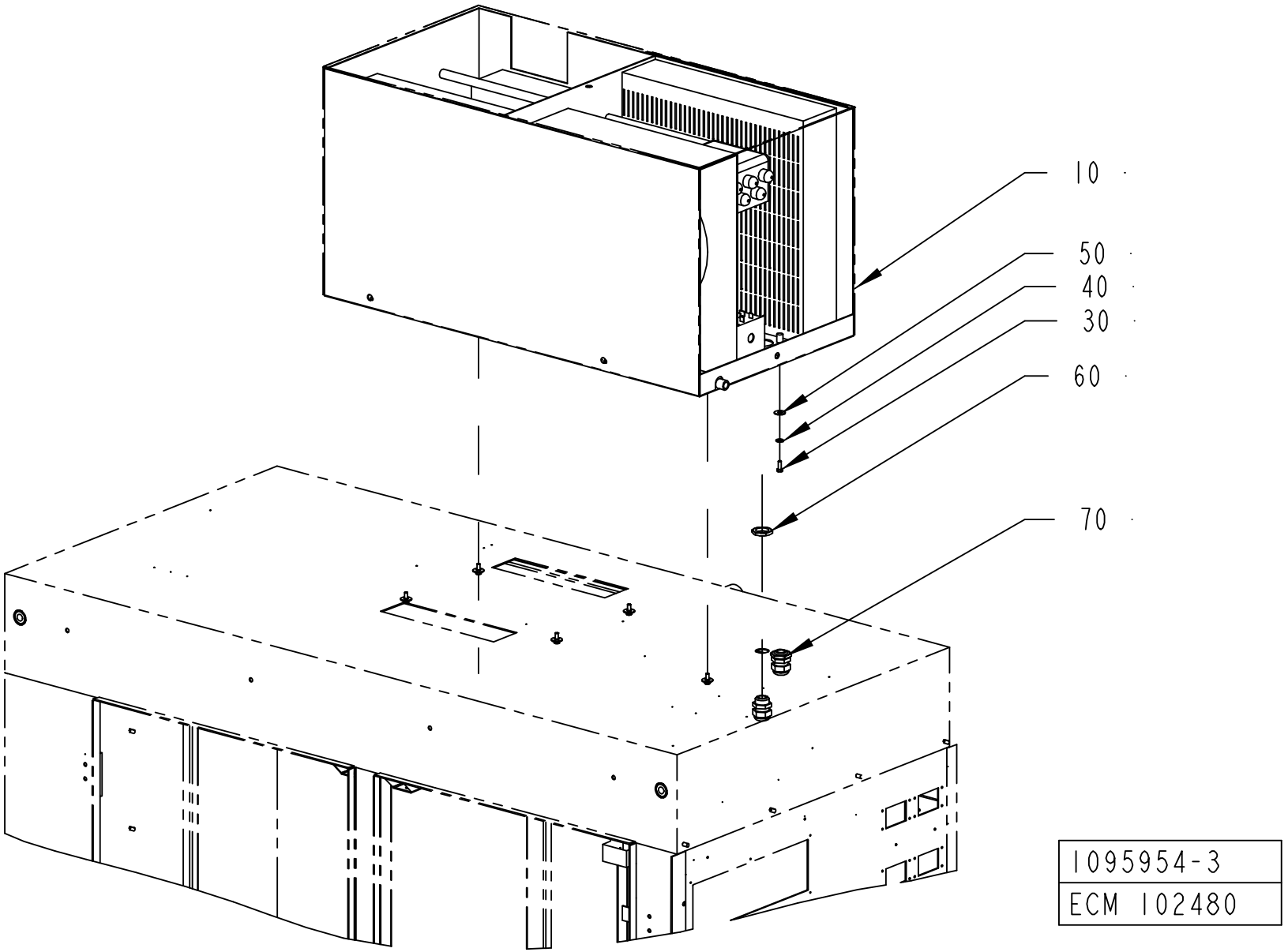
10
50
40
30
60
70
1095954-3
ECM 102480

ECM: 108192 - 20010926
Group number: 1095954-0300
Assembly Drawing: 1095954-3_1_AA

Issue: 20021023

Pos	Part No	SP	UN	Qty	Description	Page No
Common Parts						
010	B90459-0363	-		1	COOLING UNIT, KB40A0721.01	
	90459-0364	*B*		*1*	*FILTER KB20/30/40 POLYURETH. FILTER 2001*	
030	312105-0328	-		6	SCREW M6S ISO 4017 M5X14 A480	
040	315401-0153	-		6	WASHER FBH6,1FZB	
050	90457-0192	-		6	WASHER PLAIN ROUND, 6,5/18, H=1,5	
060	90099-0110	-		2	NUT, PR 22,5 (PG16)	
070	352103-0110	-		2	CABLE GLAND, STR 16, PR22,5/PG16	

Pos	Part No	SP	UN	Qty	Description	Page No

Tetra Pak

SPC
Spare Parts Catalogue

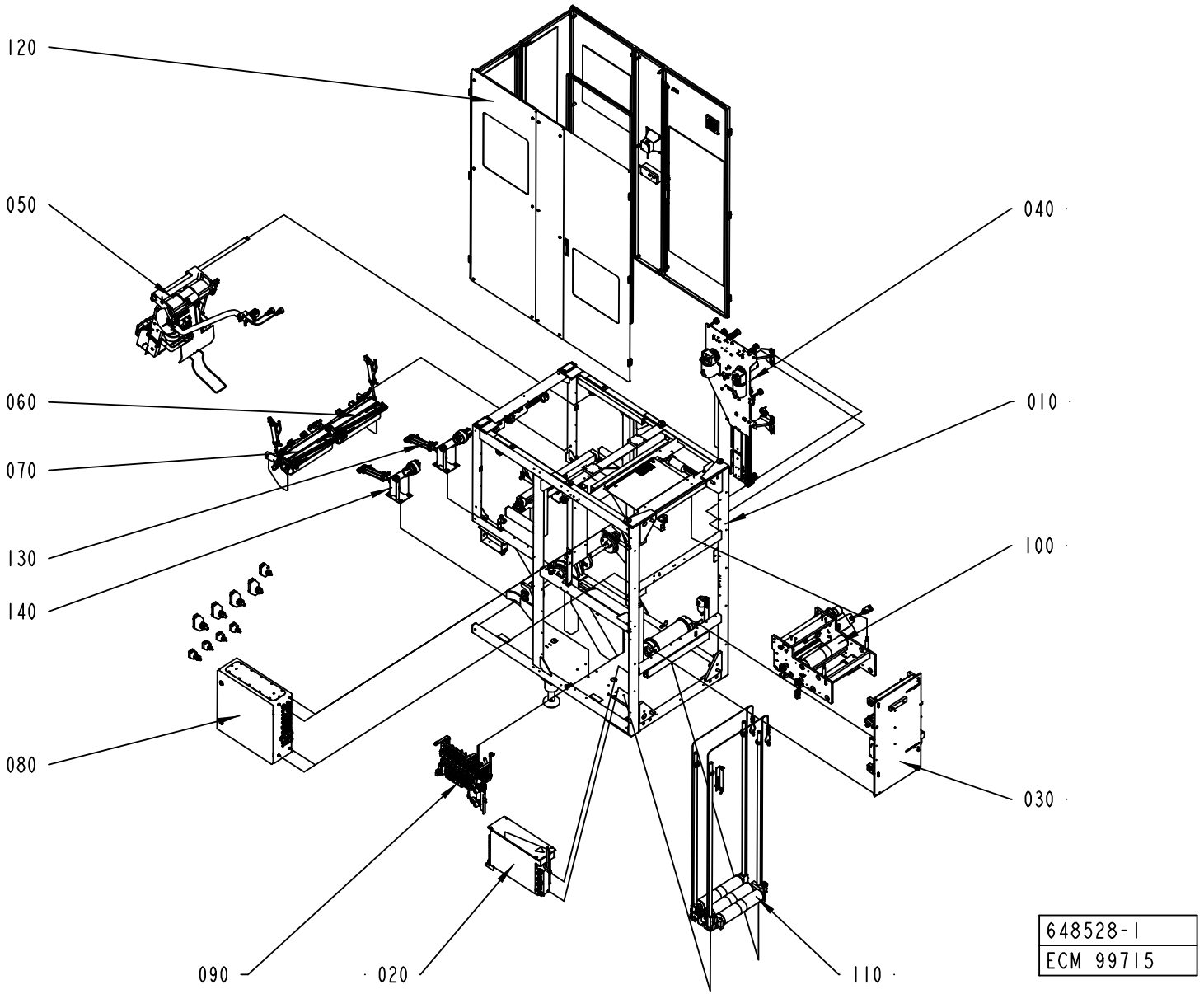
120
050
060
070
130
140
080
090
020
110
040
010
100
030
648528-1
ECM 99715

ECM: 99872 - 20020321
Group number: 648528-0200
Assembly Drawing: 648528-1_1_AA

Issue: 20021022

Pos	Part No	SP	UN	Qty	Description	Page No
Common Parts						
	A1519961-0100	-		1	START UP KIT	**553**
010	A1487560-0100	-		1	MACHINE BODY	**555, 557**
020	A2501222-0100	-		1	GENERATOR CABINET	**577, 579**
030	A2506668-0100	-		1	STRIP APPLICATOR	**581**
040	A1484707-0200	-		1	STRIP MAGAZINE	**601**
050	A1484688-0200	-		1	SPLICING DEVICE	**617**
060	A1487785-0100	-		1	MATERIAL HOLDER LINE 1	**639**
070	A1484699-0100	-		1	MATERIAL HOLDER LINE 2	**647**
080	A1548491-0100	-		1	ELECTRICAL CABINET	**655, 657, 659, 661, 663**
090	A1487801-0200	-		1	VALVE PANEL	**671**
100	A1487808-0200	-		1	BRACKET	**673**
110	A1490831-0200	-		1	MAGAZINE	**681**
120	A1490215-0200	-		1	COVERING PANEL	**685**
130	A2506614-0100	-		1	BOBBIN BRAKE	**709**
140	A2506615-0100	-		1	BOBBIN BRAKE	**711**

Pos	Part No	SP	UN	Qty	Description	Page No

This page is intentionally left blank.

ECM: 104219 - 20020311
Group number: 1519961-0100
Assembly Drawing:

Issue: 20021022

Pos	Part No	SP	UN	Qty	Description	Page No
TBA						
010	1520972-0000	-		1	TPO-BAR	
030	2517066-0000	-		1	DOLLY	

Pos	Part No	SP	UN	Qty	Description	Page No

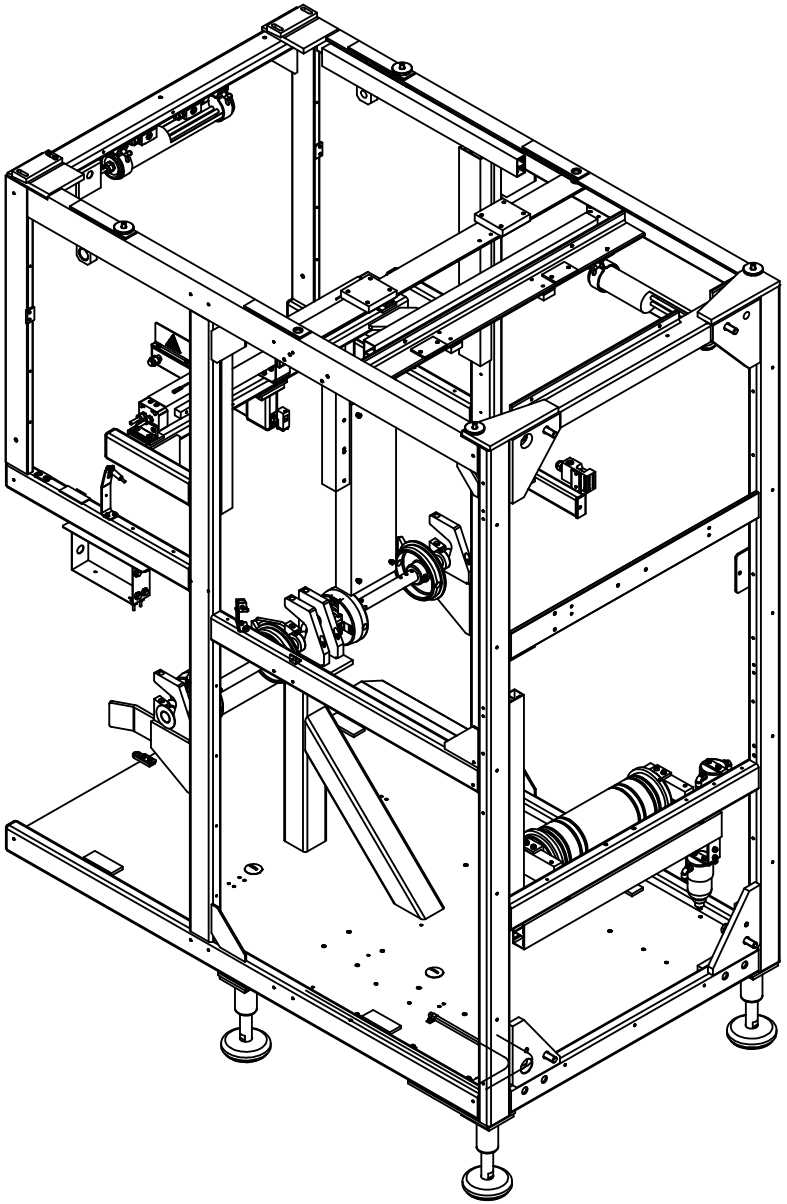

1487560-2
ECM

ECM: 108367 - 20020917
Group number: 1487560-0100
Assembly Drawing: 1487560-2_1_AB

Issue: 20021022

Pos	Part No	SP	UN	Qty	Description	Page No
TBA ASU						
025	A2541891-0100	-		1	FILTER	**559**
030	A1512279-0200	-		1	CABLE DUCT	**561, 563, 565**
035	2510406-0000	-		1	PLATE	
045	A2541083-0100	-		1	BENDING ROLLER	**567**
070	1558487-0000	-		2	SUPPORT	
200	985756-0000	-		2	KEY	
235	1538868-0000	-		6	BRACKET	
350	312105-0366	-		6	SCREW M6S M6X12 A280	
360	312105-0368	-		8	SCREW M6S M6X16 A280	
375	312105-0451	-		4	SCREW M6S ISO 4017 M8X20 A480	
385	312105-0453	-		1	SCREW M6S ISO 4017 M8X25 A480	
390	312105-0506	-		4	SCREW M6S ISO 4014 M10X75 A480	
395	315115-0153	-		12	WASHER PLAIN, TBRB 6,4/12 H=3	
405	90062-0016	-		4	LOCK WASHER SERRAT.EXT.GEAR,8,4/15 H=0,8	
420	312105-0329	-		12	SCREW M6S ISO 4017 M5X16 A480	
500	315105-0153	-		22	WASHER PLAIN, BRB, 6,4/12,H=1,5	
510	315105-0165	-		8	WASHER PLAIN, BRB, 8,4/16,H=1,5	
520	315105-0173	-		4	WASHER PLAIN, BRB, 10,5/22,H=2	
695	312105-0452	-		2	SCREW M6S ISO 4017 M8X22 A480	
780	A1558270-0100	-		2	LEG	**569**
820	312105-0449	-		1	SCREW M6S ISO 4017 M8X16 A480	
Common Parts						
010	A1487544-0100	-		1	SIDE FEEDER	**571**
015	A2541890-0100	-		1	BRACKET	**573**
020	A1499571-0100	-		2	PAPER REEL HOLDER	**575**
050	2538073-0001	-		4	SHIMS	
055	2538073-0002	-		8	SHIMS	
075	1548200-0000	-		1	BRACKET	
080	2553107-0000	-		1	HOLDER	
090	2553108-0000	-		1	HOLDER	
100	1499570-0000	-		1	HOLDER	
115	2538076-0000	-		1	BRACKET	
130	1512420-0000	-		2	PLATE	
140	1517101-0000	-		1	PIPE	
150	1558484-0000	-		1	PROTECTION PLATE	
160	2529551-0000	-		1	PROTECTION PLATE	
170	2553109-0000	-		1	HOLDER	
185	2538075-0000	-		1	BRACKET	
190	1519588-0000	-		1	PROTECTION PLATE	
220	1038865-0000	-		4	SPACER DISC	
250	1116048-0000	-		4	SPACER	
260	1488005-0000	A		4	BEARING BLOCK	
270	1539378-0000	-		1	BRACKET	
280	1539379-0000	-		1	BRACKET	
310	312105-0323	-		5	SCREW M6S ISO 4017 M5X8 A480	
315	352113-0205	-		2	ANCHOR PLATES FOR STRIPS, TYPE TM2S8-C10	
320	312105-0327	-		4	SCREW M6S ISO 4017 M5X12 A480	
335	312105-0291	-		4	SCREW M6S ISO 4017 M4X12 A480	
345	312105-0364	-		4	SCREW M6S ISO 4017 M6X10 A480	
355	312125-0285	-		2	SCREW SLOT.PAN HD. MCS 4X6 A480	
370	312145-0327	-		4	SCREW COUNTERS.SLOT.HD. MFS 5X12 SS	
400	312105-0640	-		4	SCREW M6S ISO 4014 M16X100 A480	
410	312115-0222	-		2	SCREW MC6S M3X8 A280	
425	312115-0329	-		10	SCREW MC6S M5X16 A280	
430	312115-0463	-		4	SCREW MC6S M8X60 A280	
445	312115-0465	-		4	SCREW MC6S M8X70 A280	
450	312155-0366	-		4	SCREW HEX.SOCK.COUNT.MF6S M6X12 A280	
460	312155-0499	-		8	SCREW HEX.SOCK.COUNT.MF6S M10X40 A280	
490	315105-0146	-		19	WASHER PLAIN, BRB, 5,3/10,H=1	
495	315105-0136	-		4	WASHER PLAIN, BRB, 4,3/8,H=0,8	
560	352103-0106	-		4	CABLE GLAND, ST 11, PR18,6/PG11	
570	359705-0005	B		2	WARNING SIGN ISO, MOVING PART	
580	90002-0010	-		2	BLANK-OFF PLUG, PR 37 SKINDICHT-BLK29	
630	90164-0303	-		4	BRACKET SK2202 WALDMANN	
640	90165-0009	-		3	PIPE CLIP FOR TUBE D=12 MM	
660	90232-0333	A		1	REFLECTOR E39-R1	
700	312105-0368	-		2	SCREW M6S M6X16 A280	
770	90458-0736	B		1	VENTING BOX, 9121 9801 90	
790	90347-0175	-		2	MACHINE SHOE BRIK T 125	
800	312923-0150	-		4	RIVET NUT M8, CLAMP. LENGTH 3,0 - 4,5	
810	1549324-0000	-		1	BRACKET	
840	1558798-0000	-		1	BRACKET	
B6209	90044-0139	-		1	KEY SAF.SW. AZ16-02 ZVR K-2254	
B7401	90232-0106	A		1	PH.CELL E3S-CR11-5M	
B7411	90458-0677	A		1	PROXIMITY SWITCH, E2EG-X5MB1-M1	
B7414	90458-0677	A		1	PROXIMITY SWITCH, E2EG-X5MB1-M1	
B7501	90232-0106	A		1	PH.CELL E3S-CR11-5M	
B7801	90044-0139	A		1	KEY SAF.SW. AZ16-02 ZVR K-2254	
B7806	90044-0139	A		1	KEY SAF.SW. AZ16-02 ZVR K-2254	
B7807	90044-0139	A		1	KEY SAF.SW. AZ16-02 ZVR K-2254	
E7702	B90164-0015	A		1	LIGHT FIXTURE, DWDCV111B/230V 50HZ	
	90297-0007	*B*		*1*	*FLUORESCENT TUBE, PL11*	

Machine Type | Group Description | Used-In | Group Number | Page No

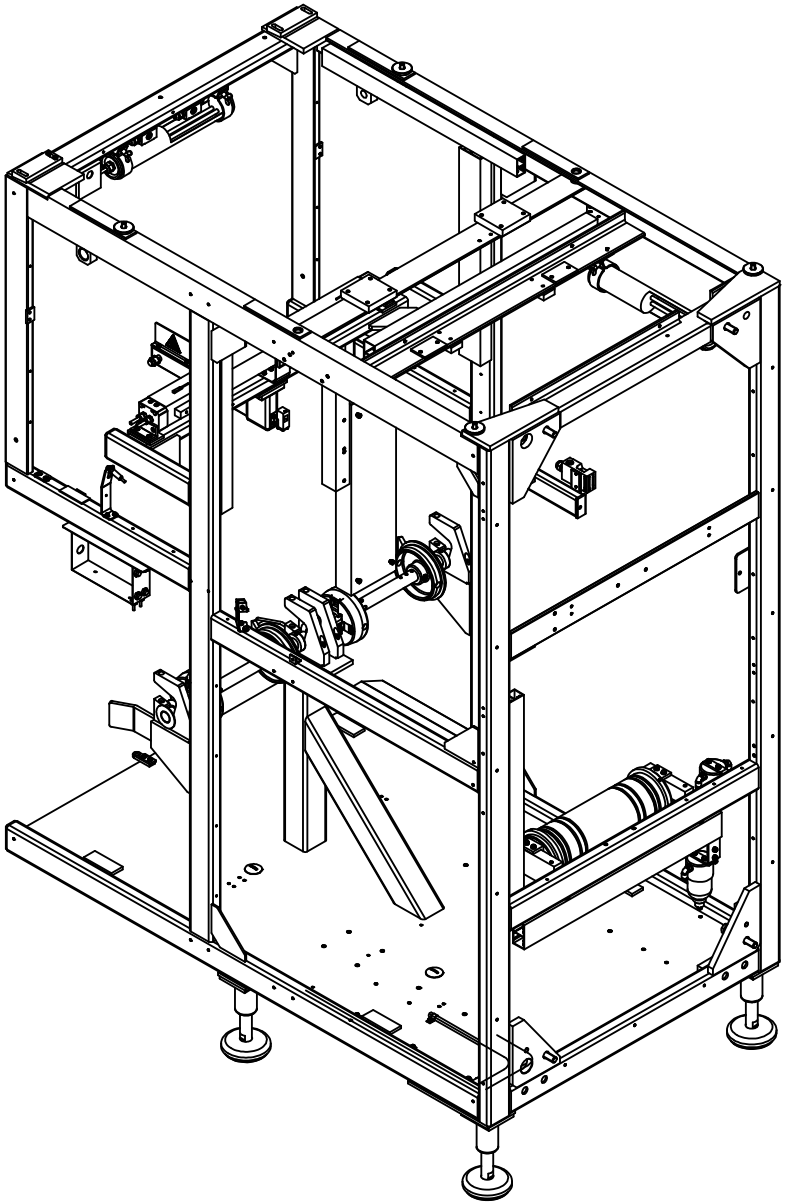

1487560-2
ECM

Pos	Part No	SP	UN	Qty	Description	Page No
Common Parts (Cont'd)						
E7705	B90164-0015	A		1	LIGHT FIXTURE, DWDCV111B/230V 50HZ	
	90297-0007	*B*		*1*	*FLUORESCENT TUBE, PL11*	
H7703	90052-0011	B		1	HORN, YO3/BT 24-50VDC NO.654005	
W7014	351150-0412	-	MM	4000	CABLE OLFLEX 3X1,5 MM2 LIGHT/GREY	
W7024	90458-1076	-		1	L-SHAPED CONNECTOR CABLE 933 235-042	
W7025	90458-1076	-		1	L-SHAPED CONNECTOR CABLE 933 235-042	
W7042	351150-0405	-	MM	5000	CABLE OLFLEX 5X0,75 MM2 LIGHT/GREY	
W7043	351150-0405	-	MM	4000	CABLE OLFLEX 5X0,75 MM2 LIGHT/GREY	
W7044	351150-0405	-	MM	4000	CABLE OLFLEX 5X0,75 MM2 LIGHT/GREY	
W7045	351150-0431	-	MM	4000	CABLE OLFLEX 2X0,75 MM2 LIGHT/GREY	
W7054	351150-0406	-	MM	8000	CABLE OLFLEX 7X0,75 MM2 LIGHT/GREY	
W7055	351150-0412	-	MM	4000	CABLE OLFLEX 3X1,5 MM2 LIGHT/GREY	
W7077	351150-0405	-	MM	5000	CABLE OLFLEX 5X0,75 MM2 LIGHT/GREY	

Pos	Part No	SP	UN	Qty	Description	Page No

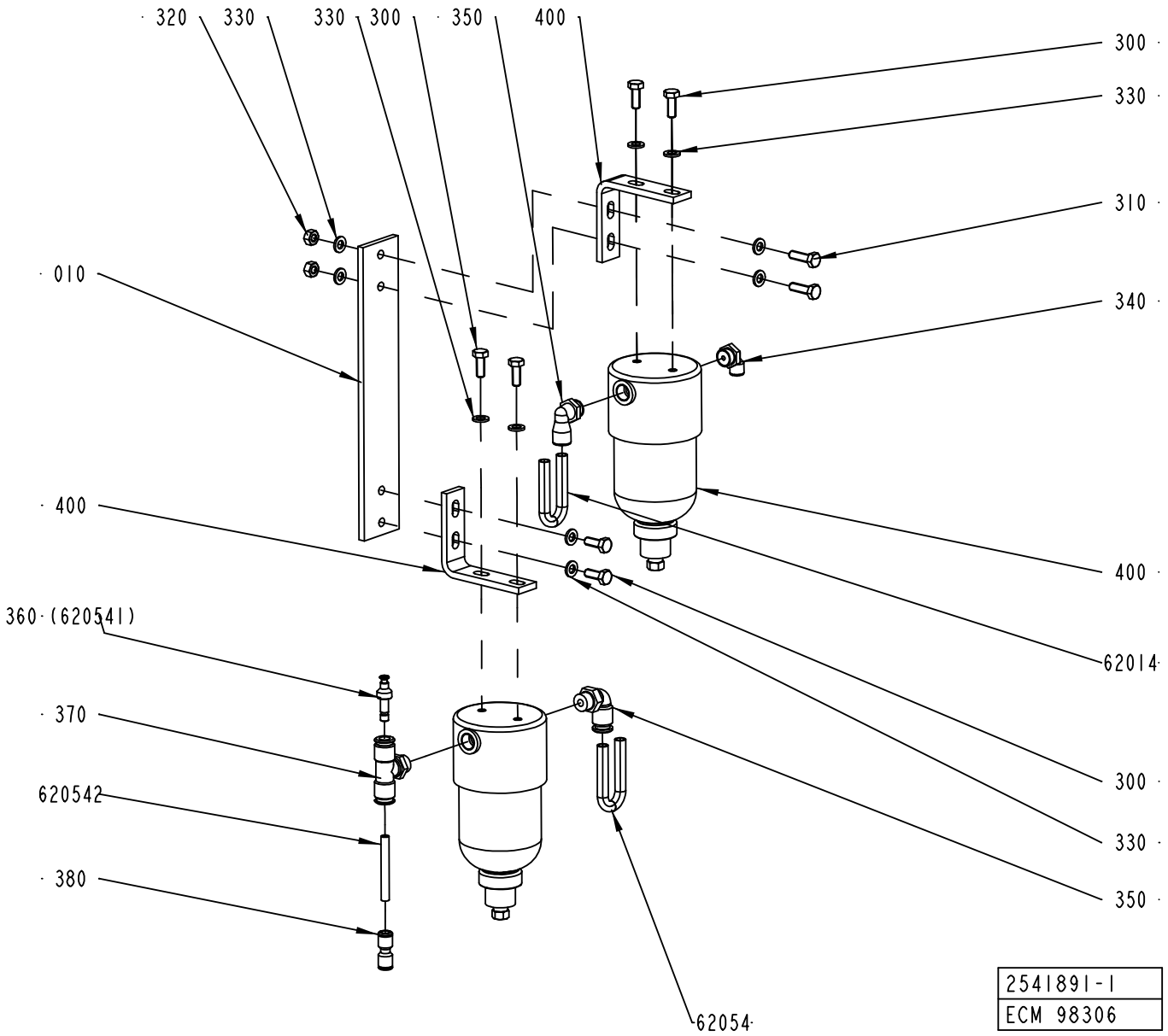
320
330
330
300
350
400
300
330
310
340
010
400
400
62014
360 (620541)
370
620542
380
300
330
350
62054
2541891-1
ECM 98306

ECM: 111558 - 20020917
Group number: 2541891-0100
Assembly Drawing: 2541891-1_1_AA

Issue: 20021022

Pos	Part No	SP	UN	Qty	Description	Page No
Common Parts						
010	2518119-0000	-		1	PLATE	
300	312105-0368	-		4	SCREW M6S M6X16 A280	
310	312105-0370	-		4	SCREW M6S ISO 4017 M6X20 A480	
320	312605-0316	-		2	HEXAGON NUT, M6M M6 A280	
330	315105-0153	-		10	WASHER PLAIN, BRB, 6,4/12,H=1,5	
340	90458-2957	-		1	ELBOW PIPE JOINT, EXT.THREAD, D=6MM-G1/4	
350	90458-2958	-		2	ELBOW PIPE JOINT, EXT.THREAD, D=8MM-G1/4	
360	342716-0202	-		1	REDUCER 4-6	
370	342742-0103	-		1	T-COUPLING,ADJUST,F.PLASTIC TUBE 6-G1/4"	
380	342728-0102	-		1	PIPE COUPLING 6 MM	
400	B90277-0116	-		2	FILTER HOUSING / ART.NO FILTER 58P-S5430	
	90277-0406	*-*		*1*	*CARTRIDGE 100-12-BX*	
62014	90166-0117	-	MM	2000	HOSE 4/6 PVC BLUE	
62054	90166-0013	-	MM	2000	TUBE 8 MM PA BLUE	
620542	90166-0081	-	MM	2000	TUBE 6 MM PA BLUE	

Pos	Part No	SP	UN	Qty	Description	Page No

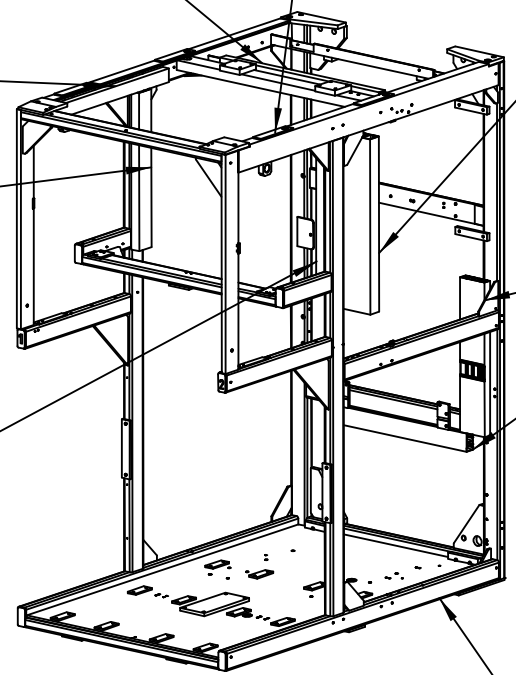

080
W7011
W7019
W7020
W7024
W7028
W7031
W7035
W7042
W7055
W7077
74202
74204
73032
73034

050
W7014
W7025
W7026
W7027
W7029
W7033
W7036
W7043
W7044
W7045
W7054
74154
74152
73154
73152

030
W7010 W7028 W7042 74204
W7011 W7029 W7043 74202
W7014 W7030 W7044 74154
W7020 W7031 W7045 74152
W7023 W7033 W7047 73034
W7024 W7035 W7054 73032
W7025 W7036 W7055 73154
W7026 W7040 W7074 73152
W7027 W7041 W7075
W7077

040
W7024
W7028
W7031
W7035
W7077
73034
73032
74204
74202
74144
74142

060
W7024
W7028
W7029
W7031
W7035
W7077
74204
74202

100
W7046 62034
W7049 62032
W7012 62054
W7017 62014
W7018 MAIN AIR
W7021
W7022
W7038
W7034
W7039
W7050
W7056
W7072
W7073
W7019

020
W7046
W7049
W7017
W7018
W7022
W7050
W7047
W7072
W7073
W7019
62034
62032
62054
62014

060
W7025
W7026
W7027
W7033
W7036

010

INSIDE CABLE CONDUIT:
62054 W7010
62052 W7040
74074 W7041
74104 W7074
74084 W7075

1512279-2
ECM 107090

ECM: 110797 - 20020917
Group number: 1512279-0200
Assembly Drawing: 1512279-2_1_AB

Issue: 20021022

Pos	Part No	SP	UN	Qty	Description	Page No
Common Parts						
010	2529990-0000	-		1	FRAME	
020	1512421-0000	-		1	CABLE DUCT	
030	2524606-0000	-		1	CABLE DUCT	
040	1512423-0000	-		1	CABLE DUCT	
050	2524607-0000	-		1	CABLE DUCT	
060	1512425-0000	-		2	CABLE DUCT	
080	1512426-0000	-		1	CABLE DUCT	
100	2529544-0000	-		1	CABLE DUCT	
110	312105-0364	-		2	SCREW M6S ISO 4017 M6X10 A480	
120	312115-0364	-		16	SCREW HEX.SOCK.HD.MC6S-TT 6X10 A480	
130	312503-0275	-		4	SCREW CROSS RECES.RND.HD.TAPP. B6X6.5	
150	90143-0060	-	MM	1000	EDGE STRIP 9,5X6,3MM BLACK PVC	
160	315125-0153	-		2	WASHER PLAIN ROUND,CHAMF. 6,4/22, H=4	
170	352113-0205	-		25	ANCHOR PLATES FOR STRIPS, TYPE TM2S8-C10	
180	312125-0285	-		25	SCREW SLOT.PAN HD. MCS 4X6 A480	
190	352113-0102	-		25	CLIP-STRIP, BLACK 188X4,8 MM	

Pos	Part No	SP	UN	Qty	Description	Page No

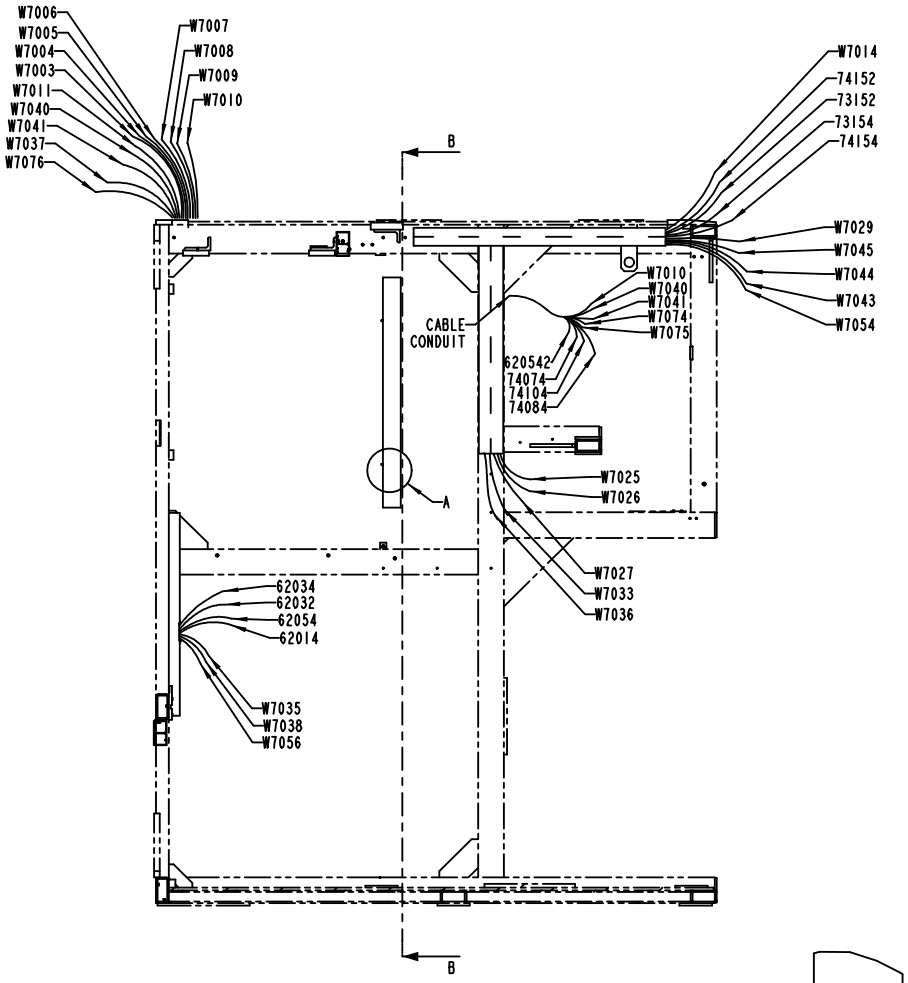

A-A

RIGHT INSIDE

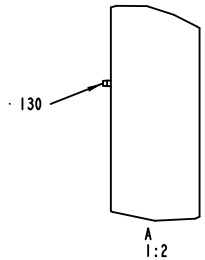

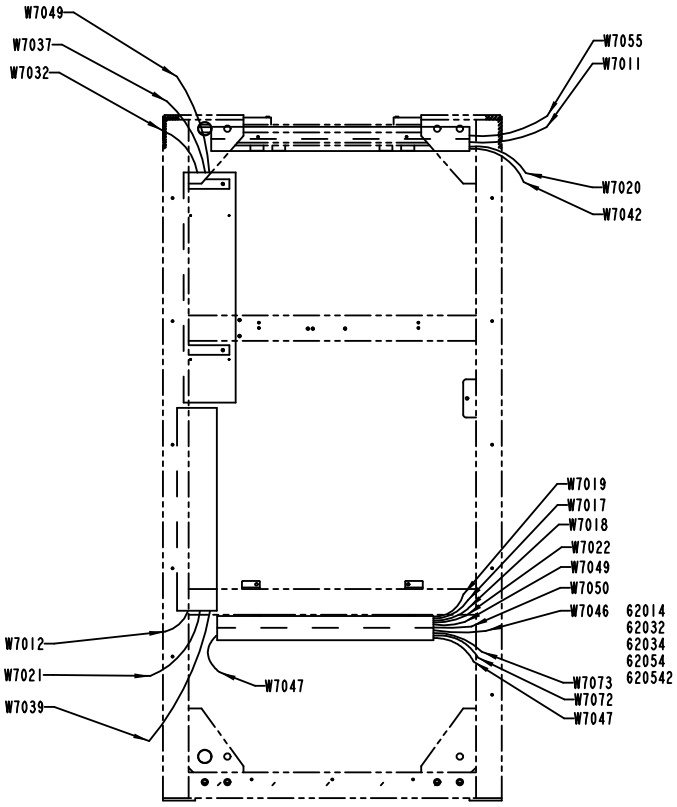

B-B

ECM: 110797 - 20020917
Group number: 1512279-0200
Assembly Drawing: 1512279-2_2_AB

Issue: 20021022

Pos	Part No	SP	UN	Qty	Description	Page No
Common Parts						
010	2529990-0000	-		1	FRAME	
020	1512421-0000	-		1	CABLE DUCT	
030	2524606-0000	-		1	CABLE DUCT	
040	1512423-0000	-		1	CABLE DUCT	
050	2524607-0000	-		1	CABLE DUCT	
060	1512425-0000	-		2	CABLE DUCT	
080	1512426-0000	-		1	CABLE DUCT	
100	2529544-0000	-		1	CABLE DUCT	
110	312105-0364	-		2	SCREW M6S ISO 4017 M6X10 A480	
120	312115-0364	-		16	SCREW HEX.SOCK.HD.MC6S-TT 6X10 A480	
130	312503-0275	-		4	SCREW CROSS RECES.RND.HD.TAPP. B6X6.5	
150	90143-0060	-	MM	1000	EDGE STRIP 9,5X6,3MM BLACK PVC	
160	315125-0153	-		2	WASHER PLAIN ROUND,CHAMF. 6,4/22, H=4	
170	352113-0205	-		25	ANCHOR PLATES FOR STRIPS, TYPE TM2S8-C10	
180	312125-0285	-		25	SCREW SLOT.PAN HD. MCS 4X6 A480	
190	352113-0102	-		25	CLIP-STRIP, BLACK 188X4,8 MM	

Pos	Part No	SP	UN	Qty	Description	Page No

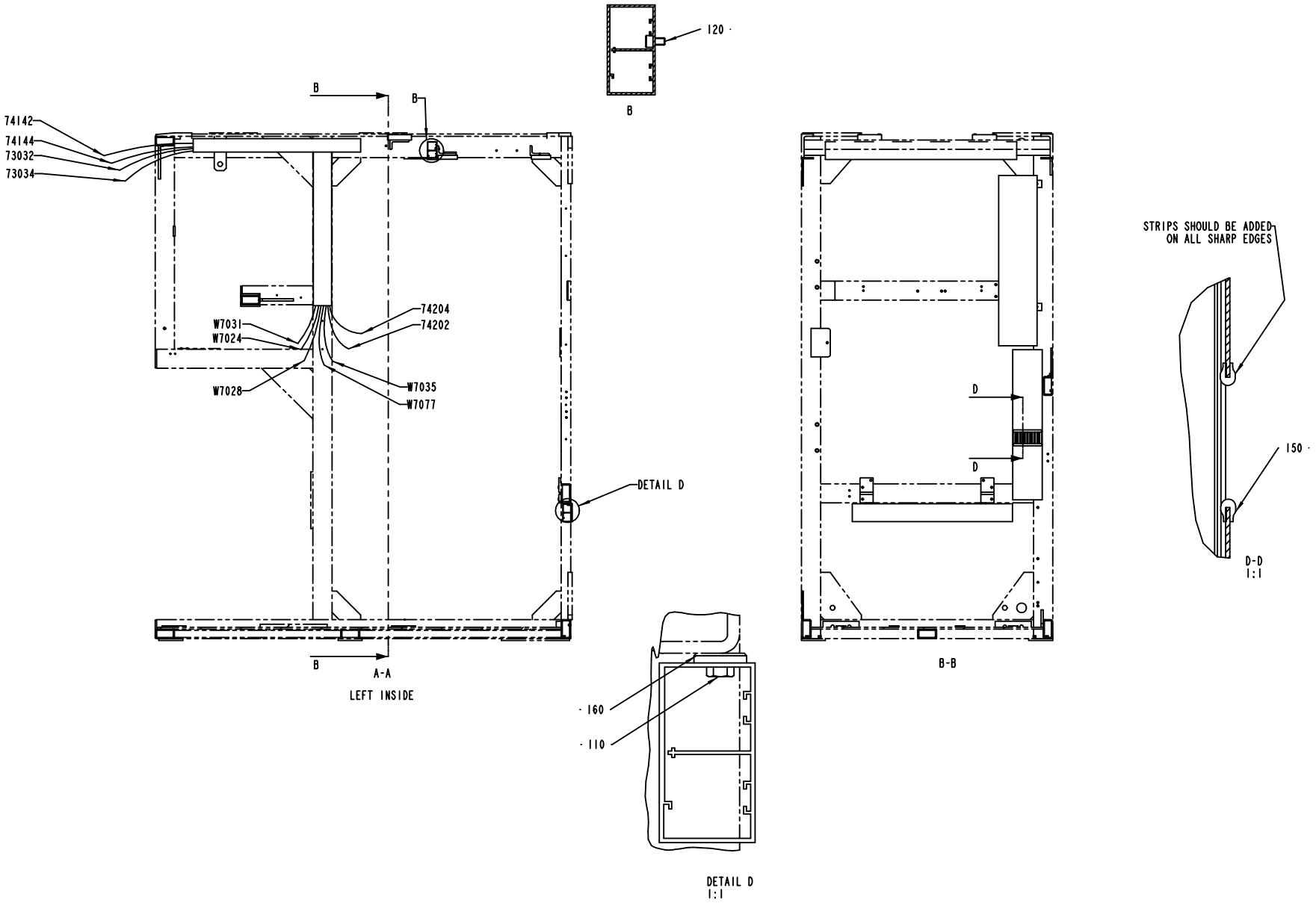
120
B
B
B
74142
74144
73032
73034
74204
74202
W7031
W7024
W7028
W7035
W7077
DETAIL D
B
A-A
LEFT INSIDE
D
D
B-B
STRIPS SHOULD BE ADDED ON ALL SHARP EDGES
150
D-D
1:1
160
110
DETAIL D
1:1

ECM: 110797 - 20020917
Group number: 1512279-0200
Assembly Drawing: 1512279-2_3_AB

Issue: 20021022

Pos	Part No	SP	UN	Qty	Description	Page No
Common Parts						
010	2529990-0000	-		1	FRAME	
020	1512421-0000	-		1	CABLE DUCT	
030	2524606-0000	-		1	CABLE DUCT	
040	1512423-0000	-		1	CABLE DUCT	
050	2524607-0000	-		1	CABLE DUCT	
060	1512425-0000	-		2	CABLE DUCT	
080	1512426-0000	-		1	CABLE DUCT	
100	2529544-0000	-		1	CABLE DUCT	
110	312105-0364	-		2	SCREW M6S ISO 4017 M6X10 A480	
120	312115-0364	-		16	SCREW HEX.SOCK.HD.MC6S-TT 6X10 A480	
130	312503-0275	-		4	SCREW CROSS RECES.RND.HD.TAPP. B6X6.5	
150	90143-0060	-	MM	1000	EDGE STRIP 9,5X6,3MM BLACK PVC	
160	315125-0153	-		2	WASHER PLAIN ROUND,CHAMF. 6,4/22, H=4	
170	352113-0205	-		25	ANCHOR PLATES FOR STRIPS, TYPE TM2S8-C10	
180	312125-0285	-		25	SCREW SLOT.PAN HD. MCS 4X6 A480	
190	352113-0102	-		25	CLIP-STRIP, BLACK 188X4,8 MM	

Pos	Part No	SP	UN	Qty	Description	Page No

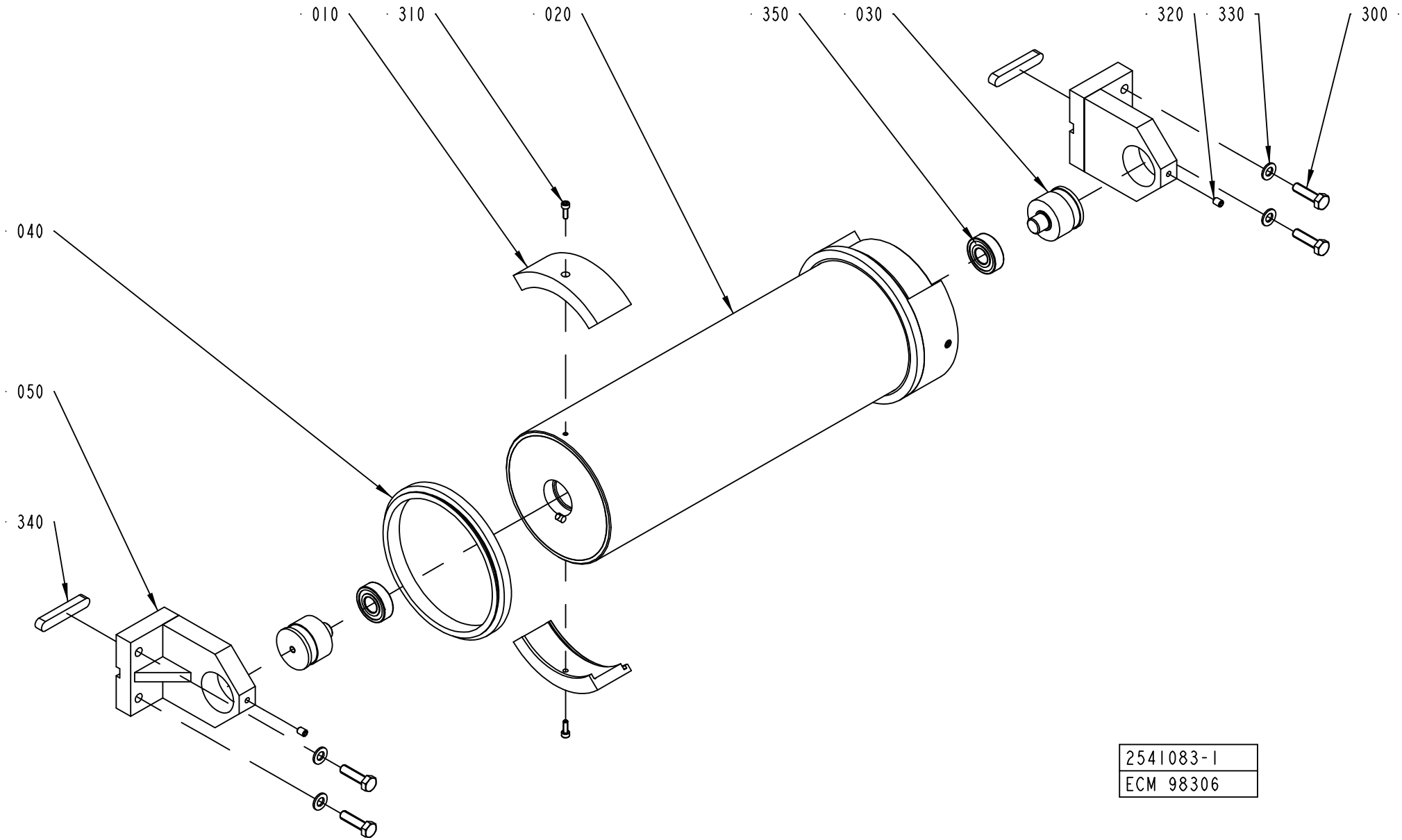
010
310
020
350
030
320
330
300
040
050
340
2541083-1
ECM 98306

Pos	Part No	SP	UN	Qty	Description	Page No
TBA 0200S						
010	2523766-0010	-		4	BRACKET	
TBA 0200B OR TBA 0250B						
010	2523766-0007	-		4	BRACKET	
Common Parts						
020	2523765-0000	-		1	BENDING ROLLER	
030	1499584-0000	-		2	AXLE PIN	
040	2523767-0000	-		2	FLANGE	
050	2506328-0000	-		2	BRACKET	
300	312105-0455	-		4	SCREW M6S ISO 4017 M8X30 A480	
310	312115-0291	-		4	SCREW MC6S M4X12 A280	
320	312318-0362	-		2	SCREW SOCK.SET CUP P MSK6SS M6X8 A4	
330	315105-0165	-		4	WASHER PLAIN, BRB, 8,4/16,H=1,5	
340	315705-0305	-		2	PARALLEL KEY W. ROUND ENDS 10X8X60 MM	
350	321313-0102	-		2	BALL BEARING, 2 SEALS, 15X35X11 MM	

Pos	Part No	SP	UN	Qty	Description	Page No

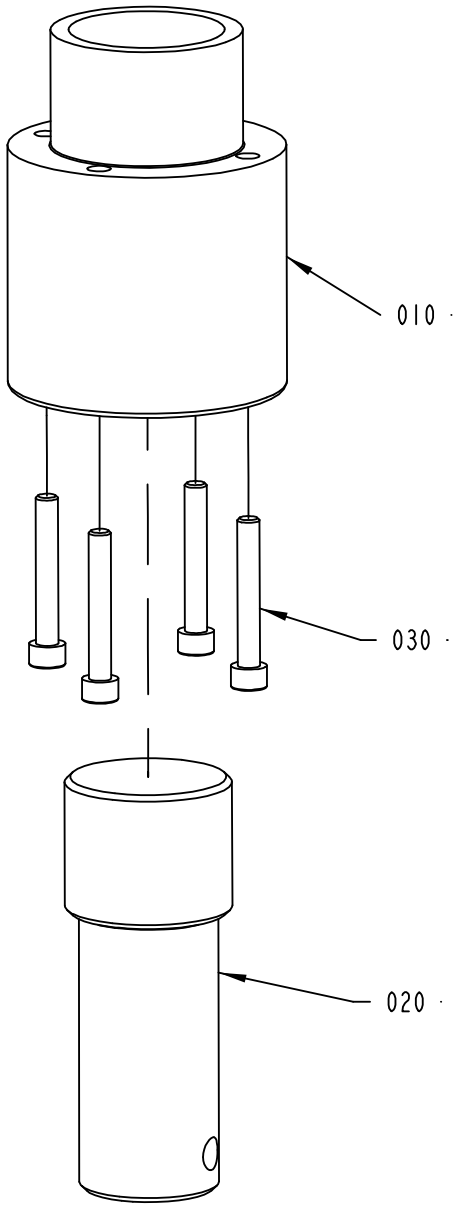

1558270-1
ECM 98306

ECM: 90013 - 20020314
Group number: 1558270-0100
Assembly Drawing: 1558270-1_1_AA

Issue: 20021022

Pos	Part No	SP	UN	Qty	Description	Page No
Common Parts						
010	1558269-0000	-		1	SLEEVE	
020	1558268-0000	-		1	LEG	
030	312115-0462	-		4	SCREW MC6S M8X55 A280	

Pos	Part No	SP	UN	Qty	Description	Page No

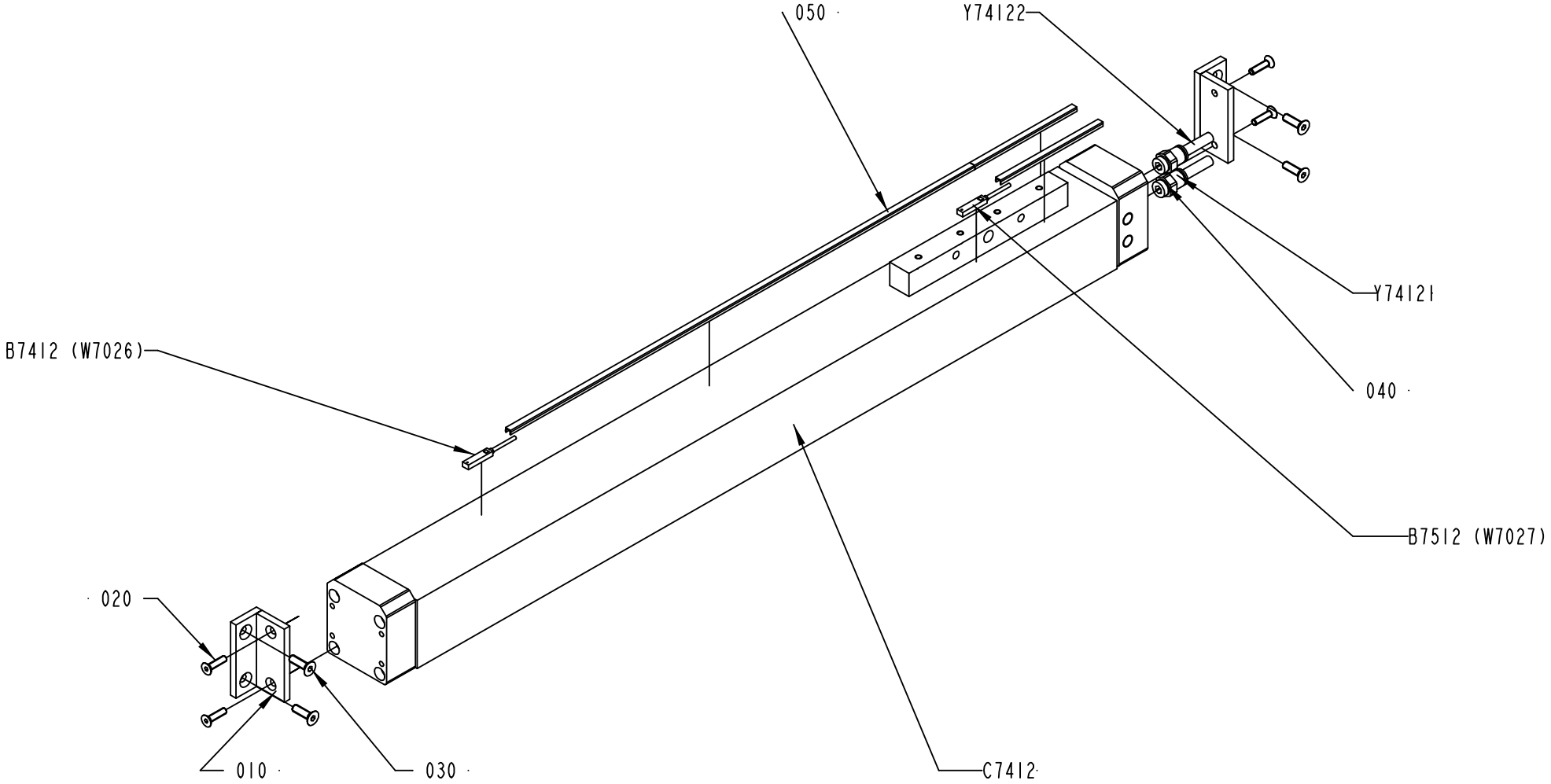

1487544-1
ECN 98306

Pos	Part No	SP	UN	Qty	Description	Page No
Common Parts						
010	1498457-0000	-		2	BRACKET	
020	312155-0331	-		4	SCREW HEX.SOCK.COUNT.MF6S M5X20 A280	
030	312155-0370	-		4	SCREW HEX.SOCK.COUNT.MF6S M6X20 A280	
040	342722-0205	-		2	STRAIGHT COUPLING D=8-G1/4"	
050	90458-0273	-		1	COVER STRIP	
B7412	90044-0165	D		1	SENSOR,SME-8-K5-LED-24	
B7512	90044-0165	D		1	SENSOR,SME-8-K5-LED-24	
C7412	90450-0552	D		1	DOUBLE ACTING,SHUTTLE,CYL 40-520	
Y74121	90166-0194	-	MM	8000	TUBE 8 MM PUR BLUE	
Y74122	90166-0194	-	MM	8000	TUBE 8 MM PUR BLUE	

Pos	Part No	SP	UN	Qty	Description	Page No

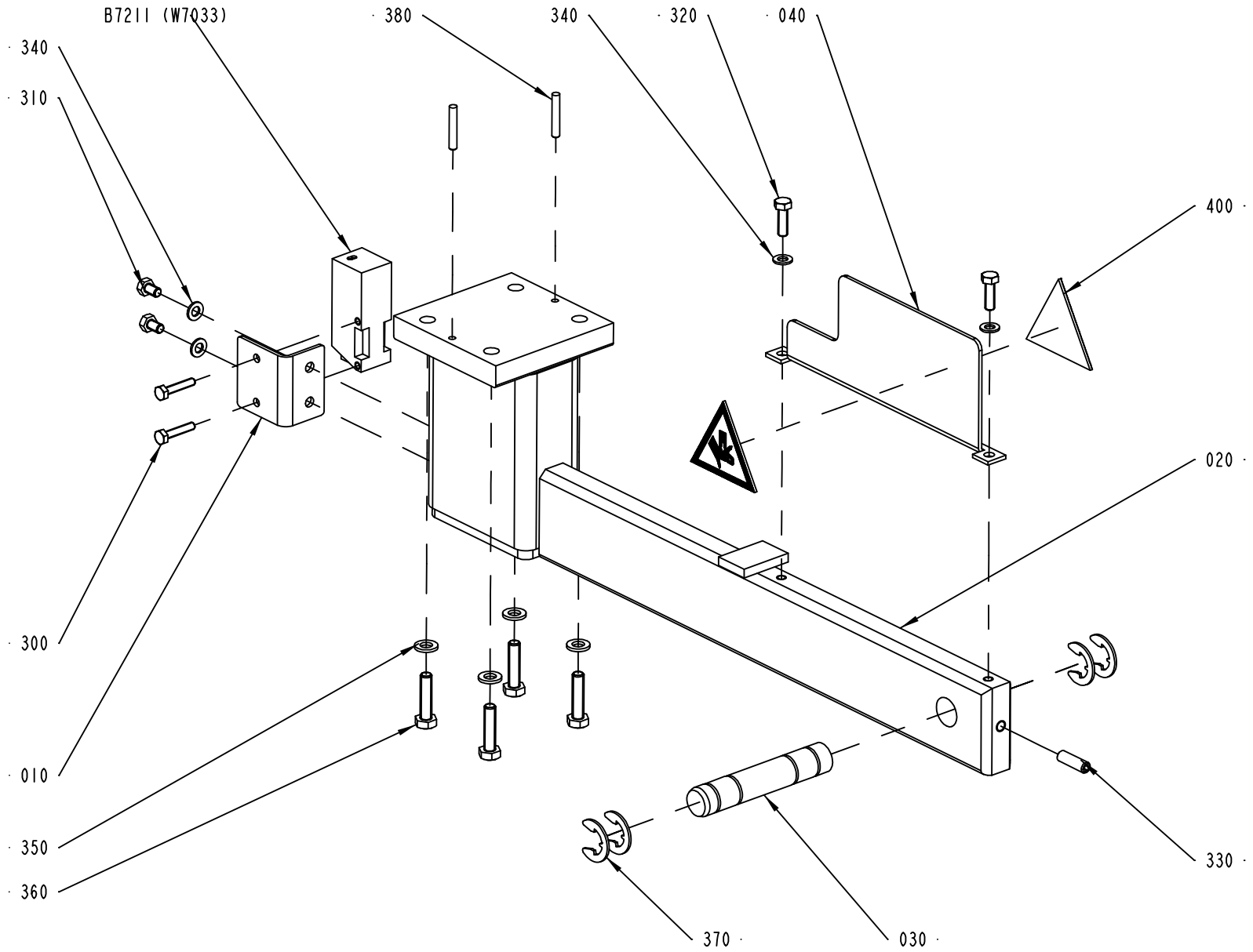

2541890-1
ECM 98306

ECM: 106311 - 20020314
Group number: 2541890-0100
Assembly Drawing: 2541890-1_1_AA

Issue: 20021022

Pos	Part No	SP	UN	Qty	Description	Page No
Common Parts						
010	1490210-0000	-		1	PLATE	
020	1490219-0000	-		1	BRACKET	
030	1499573-0000	-		1	PIN	
040	1512275-0000	-		1	PROTECTION PLATE	
300	312105-0295	-		2	SCREW M6S ISO 4017 M4X20 A480	
310	312105-0323	-		2	SCREW M6S ISO 4017 M5X8 A480	
320	312105-0329	-		2	SCREW M6S ISO 4017 M5X16 A480	
330	312318-0370	-		1	SCREW SOCK.SET CUP P MSK6SS M6X20 A4	
340	315105-0146	-		4	WASHER PLAIN, BRB, 5,3/10,H=1	
350	315105-0153	-		4	WASHER PLAIN, BRB, 6,4/12,H=1,5	
360	312105-0372	-		4	SCREW M6S ISO 4017 M6X25 A480	
370	315755-0112	-		4	LOCKING WASHER 12	
380	311103-0274	-		2	PARALLELL PIN, M6, 4X25 MM	
400	359705-0005	-		2	WARNING SIGN ISO, MOVING PART	
B7211	90232-0129	-		1	PH.CELL E3S-CR61-5M	

Pos	Part No	SP	UN	Qty	Description	Page No

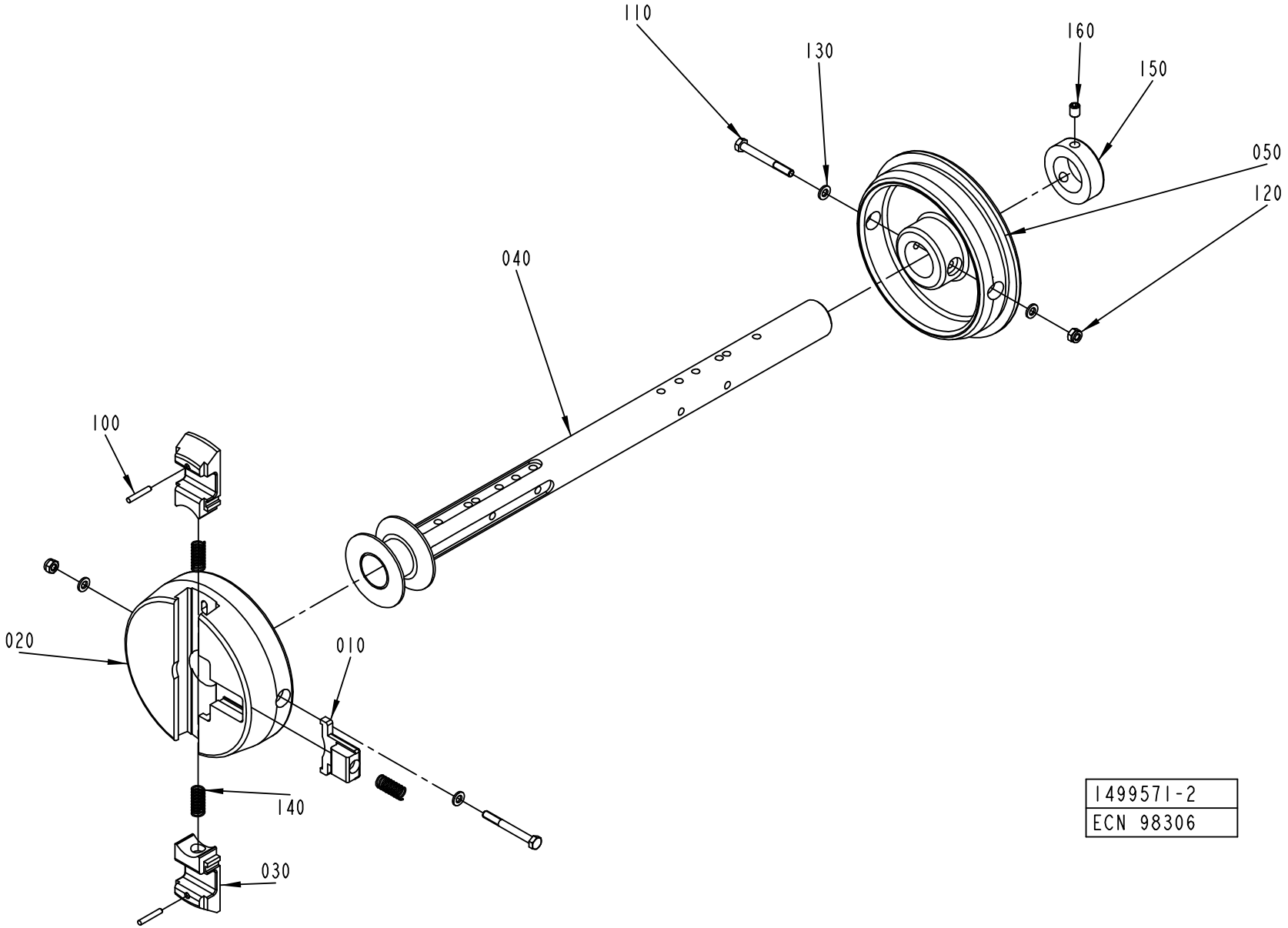
110
130
160
150
050
120
040
100
020
010
140
030
1499571-2
ECN 98306

Pos	Part No	SP	UN	Qty	Description	Page No
TBA/22						
040	1490189-0000	-		1	SHAFT	
150	315742-0123	-		1	COLLAR, 32/52, H=16	
160	312318-0445	-		1	SCREW HEX.SOCK.SET CUP P.MSK6SS8X10 SS	
Common Parts						
010	272728-0000	A		1	BARRIER	
020	1512265-0000	A		1	SLEEVE	
030	575002-0000	A		2	PLUNGER	
050	1512266-0000	A		1	SLEEVE	
100	311103-0274	-		2	PARALLELL PIN, M6, 4X25 MM	
110	312105-0381	-		2	SCREW M6S ISO 4014 M6X55 A480	
120	312812-0316	-		2	HEXAGON NUT, NY-LOCK M6 A480	
130	315105-0153	-		4	WASHER PLAIN, BRB, 6,4/12,H=1,5	
140	90335-0025	A		3	COMP. SPRING 22010, 1X11X26	

Pos	Part No	SP	UN	Qty	Description	Page No

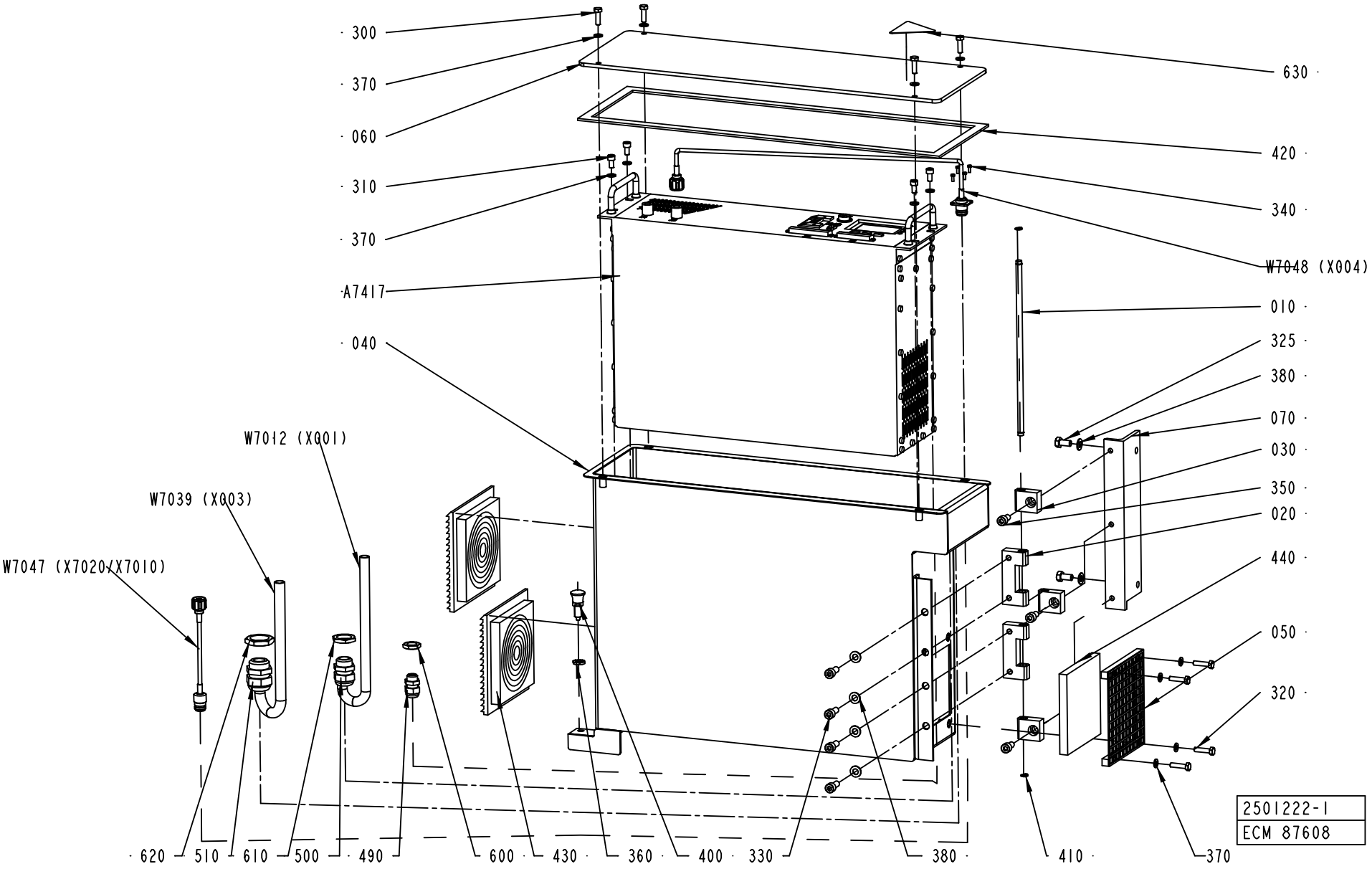
300
370
060
310
370
A7417
040
630
420
340
W7048 (X004)
010
325
380
070
030
350
020
440
050
320
W7012 (X001)
W7039 (X003)
W7047 (X7020/X7010)
620
510
610
500
490
600
430
360
400
330
380
410
370
2501222-1
ECM 87608

ECM: 90872 - 20020319
Group number: 2501222-0100
Assembly Drawing: 2501222-1_1_AA

Issue: 20021022

Pos	Part No	SP	UN	Qty	Description	Page No
Common Parts						
010	1558485-0000	-		1	AXLE PIN	
020	1334189-0000	-		2	BLOCK	
030	1334190-0000	-		3	BLOCK	
040	1548587-0000	-		1	APPLIANCE BOX	
050	1548588-0000	-		1	GRID ELEMENT	
060	1548592-0000	-		1	LID	
070	2510393-0000	-		1	BRACKET	
300	312105-0370	-		4	SCREW M6S ISO 4017 M6X20 A480	
310	312115-0366	-		4	SCREW MC6S M6X12 A280	
320	312105-0372	-		4	SCREW M6S ISO 4017 M6X25 A480	
325	312105-0449	-		2	SCREW M6S ISO 4017 M8X16 A480	
330	312115-0451	-		4	SCREW MC6S M8X20 A280	
340	312115-0222	-		4	SCREW MC6S M3X8 A280	
350	312115-0449	-		3	SCREW MC6S M8X16 A280	
360	90099-0007	-		1	HEXAGON NUT, M10X1, E 63 137 10	
370	315105-0153	-		12	WASHER PLAIN, BRB, 6,4/12,H=1,5	
380	315105-0165	-		6	WASHER PLAIN, BRB, 8,4/16,H=1,5	
400	90051-0087	-		1	LOCK KNOB, NO. GN 617 A5	
410	90141-0015	-		2	RETAIN. RING, 8	
420	90143-0073	-	MM	1600	RUBBER STRIP	
430	90277-0129	-		2	EXHAUST FILTER / SK 3322.200	
440	90458-2395	B		1	FILTER INSERT, SK 3171 100	
490	352103-0101	-		1	CABLE GLAND, ST 9, PR15,2/PG9	
500	352103-0111	-		1	CABLE GLAND, ST 16, PR22,5/PG16	
510	352103-0115	-		1	CABLE GLAND, STR 21, PR28,3/PG21	
600	90099-0104	-		1	NUT, PR 15,2 (PG9)	
610	90099-0110	-		1	NUT, PR 22,5 (PG16)	
620	90099-0119	-		2	NUT, PR 28,3 (PG21)	
630	90194-0016	-		1	SIGN, FLASH, ELECTRIC EQUIPMENT SYMBOL	
A7417	B1499642-0101	A		1	TPIH 2500 HORIZONTAL MOUNTING	
100	*B1487585-0101*	-		*1*	*TPIH 2500, MOTHERBOARD*	
100	*1353053-0000*	-		*1*	*PRINTED CIRCUIT BOARD*	
110	*1499646-0000*	-		*1*	*COOLING BLOCK*	
120	*1511269-0000*	-		*1*	*HEAT SINK*	
130	*1499647-0000*	-		*1*	*HEAT SINK*	
140	*1511270-0000*	-		*1*	*GROUNDING SPRING*	
150	*1511263-0000*	-		*1*	*SHIM*	
160	*1499648-0000*	-		*1*	*TRANSFORMER*	
170	*1499649-0000*	-		*1*	*COIL*	
180	*1499650-0000*	-		*1*	*COIL*	
190	*2500311-0000*	-		*1*	*COIL*	
200	*1499652-0000*	-		*1*	*COIL*	
210	*1499653-0000*	-		*1*	*TRANSFORMER*	
220	*1499655-0000*	-		*1*	*CORE*	
110	*B1487586-0101*	-		*1*	*TPIH 2500, MICROPROCESSOR BOARD*	
100	*1353054-0000*	-		*1*	*PRINTED CIRCUIT BOARD*	
110	*1511271-0000*	-		*1*	*BAR*	
120	*B1487587-0101*	-		*1*	*TPIH 2500, DISPLAY BOARD*	
100	*1353055-0000*	-		*1*	*PRINTED CIRCUIT BOARD*	
140	*1499656-0000*	-		*1*	*CABLE*	
150	*1511272-0000*	-		*1*	*SPACER*	
130	*B1487588-0101*	-		*1*	*TPIH 2500,POWER BOARD*	
100	*1353056-0000*	-		*1*	*PRINTED CIRCUIT BOARD*	
140	*1487589-0000*	-		*1*	*COOLING BLOCK*	
150	*1499657-0000*	-		*1*	*CABLE*	
160	*1499658-0000*	-		*1*	*CABLE*	
170	*1499659-0000*	-		*1*	*CABLE*	
180	*1499667-0000*	-		*1*	*TRANSFORMER*	
190	*1499668-0000*	-		*1*	*COIL*	
200	*1511273-0000*	-		*1*	*SUPPORT*	
210	*1499669-0000*	-		*1*	*SHIM*	
220	*1499670-0000*	-		*1*	*BRACKET*	
300	*1499660-0000*	-		*1*	*PRINTED CIRCUIT BOARD*	
140	*B1487590-0101*	-		*1*	*TPIH 2500, POWER CONTROL BOARD*	
100	*1353057-0000*	-		*1*	*PRINTED CIRCUIT BOARD*	
150	*B1487591-0101*	-		*1*	*TPIH 2500, CAPACITORS BOARD*	
100	*1353058-0000*	-		*1*	*PRINTED CIRCUIT BOARD*	
160	*1511274-0000*	-		*1*	*INSULATING TAPE*	
170	*1487581-0000*	-		*1*	*ANGLE*	
160	*B2500300-0101*	-		*1*	*CIRCUIT BOARD*	
100	*2500301-0000*	-		*1*	*PRINTED CIRCUIT BOARD*	
160	*2500299-0000*	-		*1*	*ANGLE*	
170	*2500303-0000*	-		*1*	*COIL*	
180	*2500304-0000*	-		*1*	*COIL*	
170	*B2500295-0101*	-		*1*	*CIRCUIT BOARD*	
100	*2500296-0000*	-		*1*	*PRINTED CIRCUIT BOARD*	
170	*1499662-0000*	-		*1*	*PRINTED CIRCUIT BOARD*	
180	*1511262-0000*	-		*1*	*SUPPORT*	
190	*2500302-0000*	-		*1*	*TRANSFORMER*	
220	*1487728-0000*	-		*1*	*COVER PLATE*	
230	*1487729-0000*	-		*1*	*PLATE*	
240	*1487580-0000*	-		*1*	*FRONT PLATE*	
250	*1487582-0000*	-		*1*	*PANEL*	

Machine Type | Group Description | Used-In | Group Number | Page No

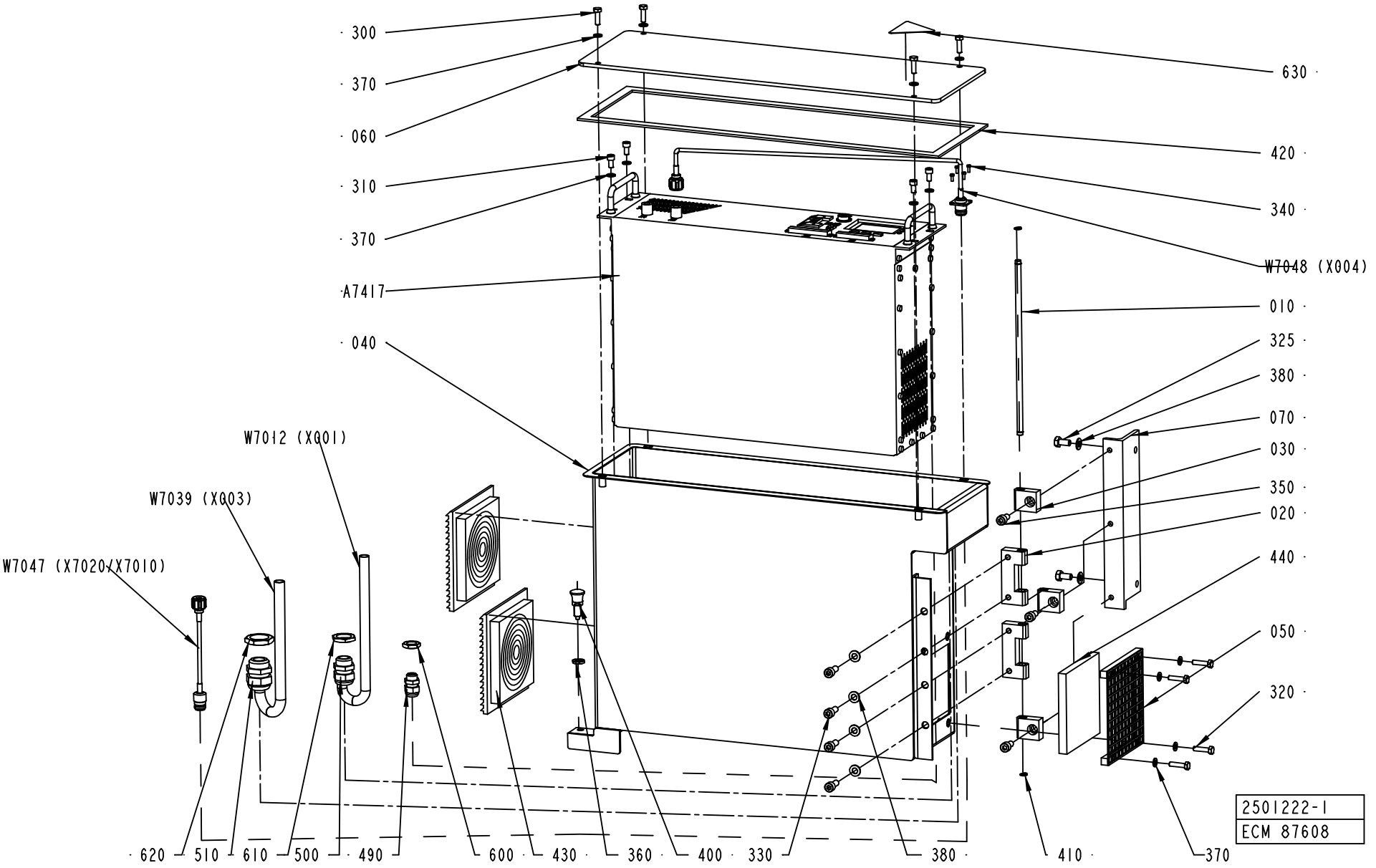
300
370
060
310
370
A7417
040
630
420
340
W7048 (X004)
010
325
380
070
030
350
020
440
050
320
W7012 (XQ01)
W7039 (XQ03)
W7047 (X7020/X7010)
620
510
610
500
490
600
430
360
400
330
380
410
370
2501222-1
ECM 87608

Pos	Part No	SP	UN	Qty	Description	Page No
Common Parts (Cont'd)						
W7012	90220-0105	-	M	3	SCR. CABLE 4X2,5MM2	
W7039	90220-0115	-	M	3	SCR. CABLE 12X0,75MM2	
W7047	2540595-0001	A		1	COAXIAL CABLE	
W7048	2540596-0001	A		1	COAXIAL CABLE	

Pos	Part No	SP	UN	Qty	Description	Page No

STRIP APPLICATOR

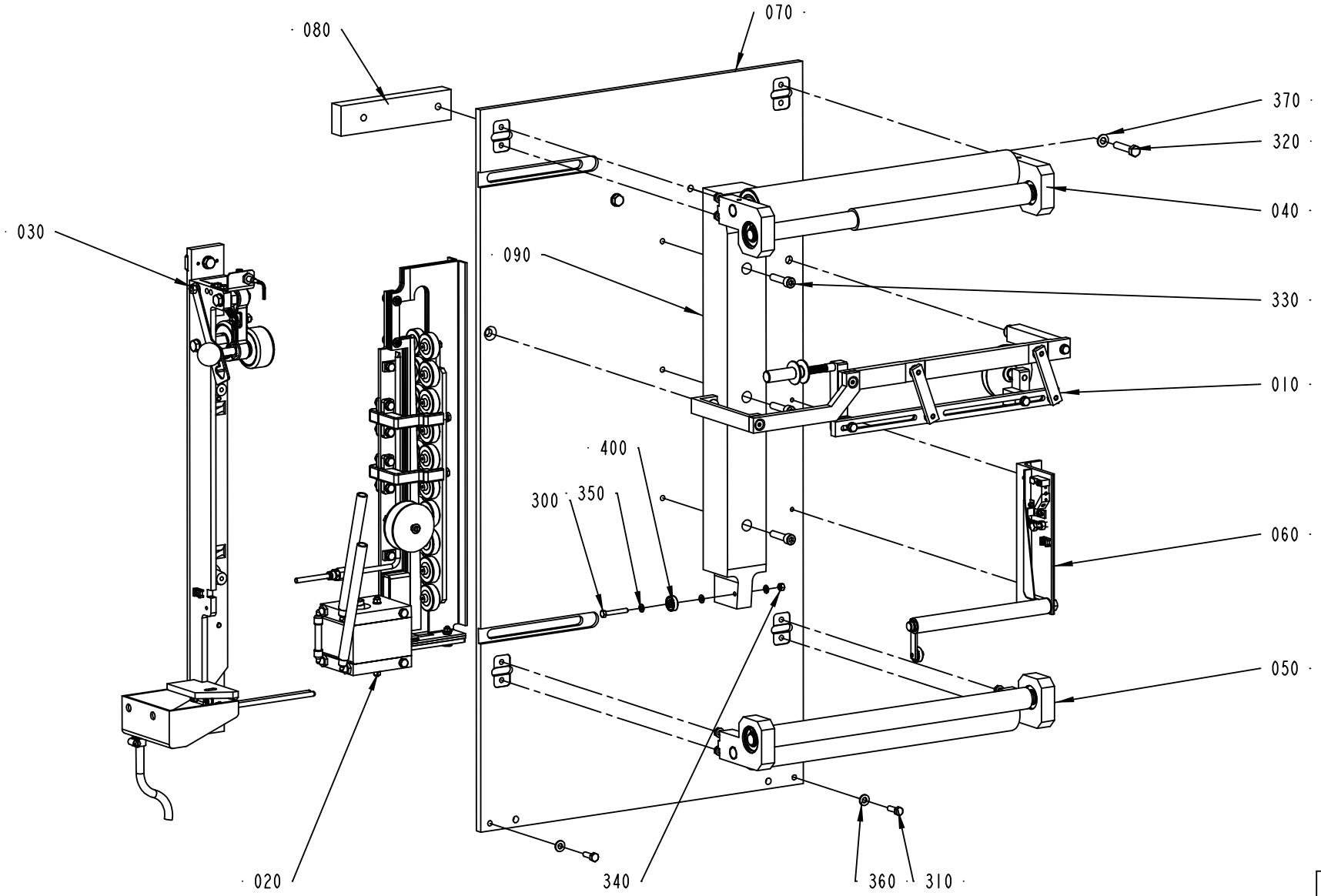

2506668-2
ECM 92719

ECM: 95194 - 20020315
Group number: 2506668-0100
Assembly Drawing: 2506668-2_1_AA

Issue: 20021022

Pos	Part No	SP	UN	Qty	Description	Page No
Common Parts						
010	A2530410-0100	-		1	STRIP GUIDE	**583**
020	A2529569-0100	-		1	INDUCTOR	**585**
030	A2529571-0100	-		1	PRESSURE ROLLER	**593**
040	A2507019-0100	-		1	ROLLER	**595**
050	A2507020-0100	-		1	ROLLER	**597**
060	A2507022-0100	-		1	SPLICE DETECTOR	**599**
070	1498409-0000	-		1	SHEET	
080	2506660-0000	-		1	SPACER	
090	2506664-0000	-		1	STEERING	
300	312105-0337	-		1	SCREW M6S ISO 4014 M5X35 A480	
310	312105-0370	-		2	SCREW M6S ISO 4017 M6X20 A480	
320	312109-0459	-		2	SCREW M6S ISO 4017 M8X40 A480	
330	312115-0457	-		3	SCREW MC6S M8X35 A280	
340	312605-0314	-		1	HEXAGON NUT, M6M M5 A280	
350	315105-0146	-		3	WASHER PLAIN, BRB, 5,3/10,H=1	
360	315105-0156	-		2	WASHER PLAIN, BRB, 6,7/14,H=1,5	
370	315105-0165	-		2	WASHER PLAIN, BRB, 8,4/16,H=1,5	
400	90214-0138	-		1	BALL BEARING, 5X19X6 MM	

Pos	Part No	SP	UN	Qty	Description	Page No

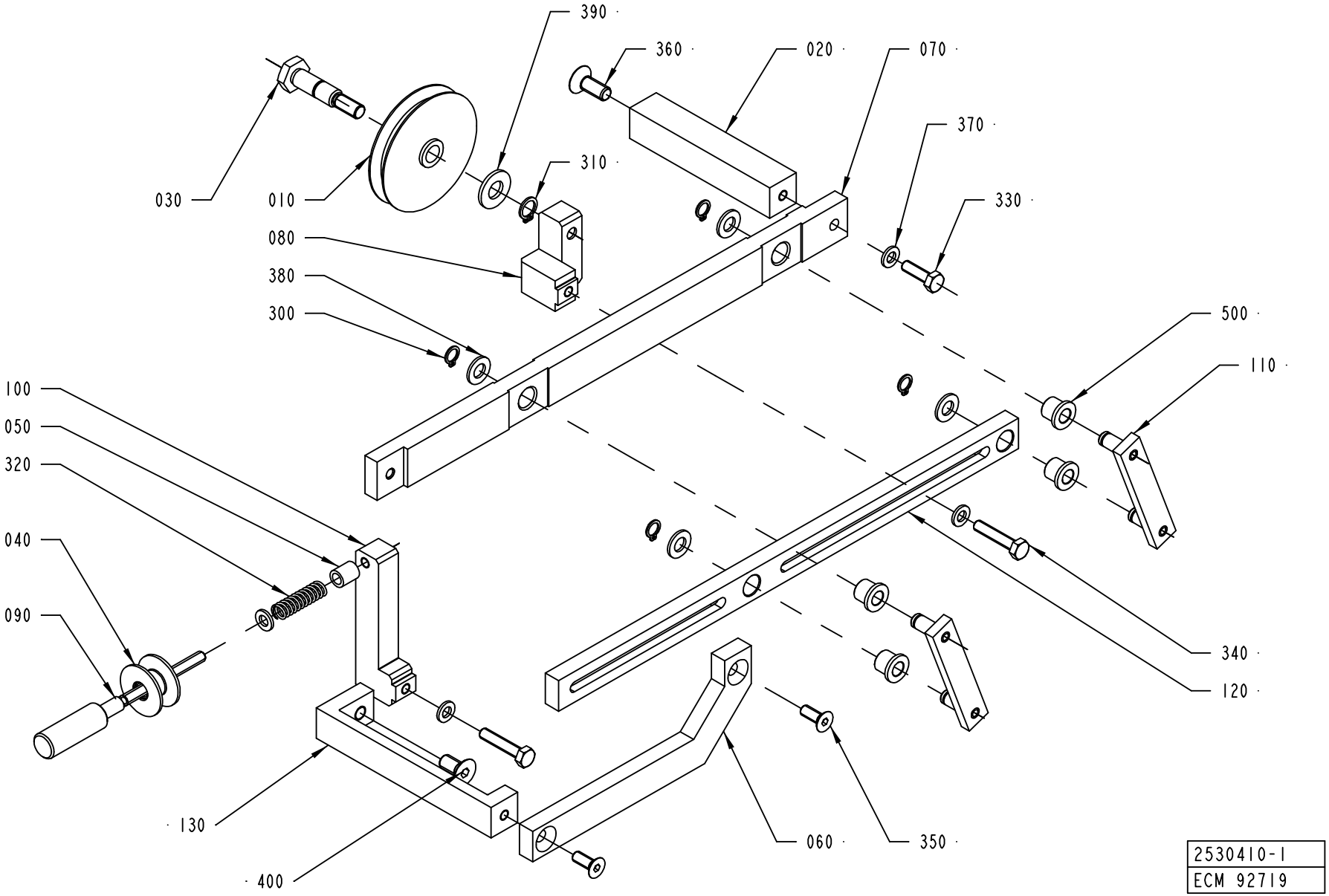
390
360
020
070
370
310
030
010
330
080
380
300
500
110
100
050
320
040
090
340
120
130
060
350
400
2530410-1
ECM 92719

Pos	Part No	SP	UN	Qty	Description	Page No
Common Parts						
010	282635-0000	-		1	GUIDE WHEEL	
020	2504801-0000	-		1	BRACKET	
030	2504807-0000	-		1	AXLE PIN	
040	2504809-0000	-		1	ROLLER	
050	2527326-0000	-		1	SPACER	
060	2530399-0000	-		1	HANGER	
070	2530404-0000	-		1	ROD	
080	2530405-0000	-		1	BRACKET	
090	2530406-0000	-		1	ADJUSTING SCREW	
100	2530407-0000	-		1	BRACKET	
110	2530408-0000	-		2	LEVER	
120	2530409-0000	-		1	ROD	
130	2504808-0000	-		1	BRACKET	
300	90141-0015	-		4	RETAIN. RING, 8	
310	90141-0016	-		1	RETAIN. RING, 10	
320	90335-0027	-		1	COMP. SPRING 22170, 1,25X9,25X33	
330	312105-0370	-		1	SCREW M6S ISO 4017 M6X20 A480	
340	312109-0374	-		2	SCREW M6S ISO 4017 M6X30 A480	
350	312155-0368	-		2	SCREW HEX.SOCK.COUNT.MF6S M6X16 A280	
360	312155-0451	-		1	SCREW HEX.SOCK.COUNT.MF6S M8X20 A280	
370	315105-0153	-		4	WASHER PLAIN, BRB, 6,4/12,H=1,5	
380	315105-0165	-		4	WASHER PLAIN, BRB, 8,4/16,H=1,5	
390	315105-0173	-		1	WASHER PLAIN, BRB, 10,5/22,H=2	
400	312155-0449	-		1	SCREW HEX.SOCK.COUNT.MF6S M8X16 A280	
500	321111-0097	-		4	BEAR.BUSHING WITH FLANGE, 8/12X12 MM	

Pos	Part No	SP	UN	Qty	Description	Page No

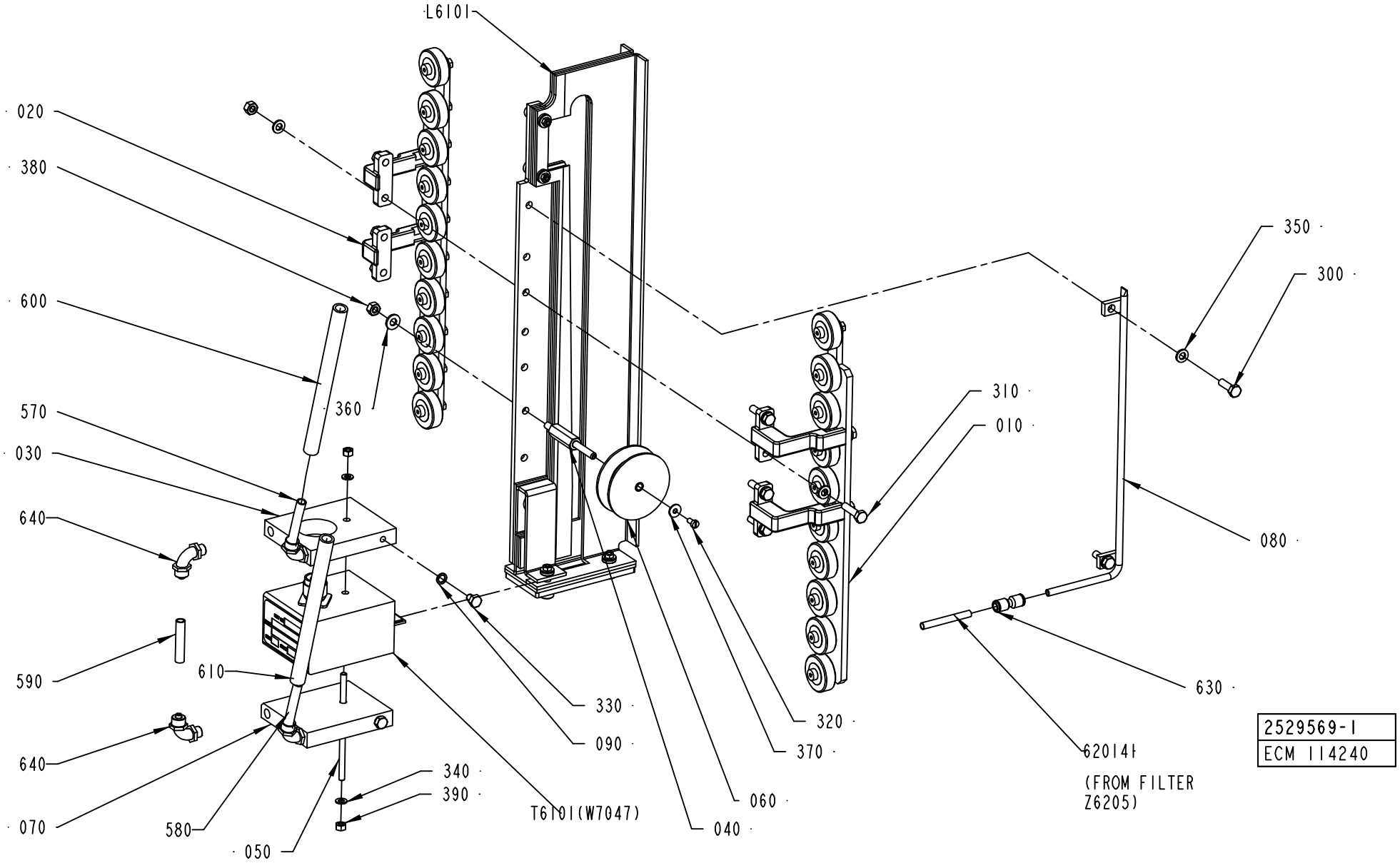
L6101
020
380
600
570
030
640
590
610
640
070
580
050
360
330
090
T6101(W7047)
340
390
040
060
370
320
310
010
350
300
080
630
620141
(FROM FILTER Z6205)
2529569-1
ECM 114240

Pos	Part No	SP	UN	Qty	Description	Page No
Common Parts						
010	A2506496-0100	-		1	PRESSURE ROLLER	**587**
020	A2506497-0100	-		1	PRESSURE ROLLER	**589**
030	1129839-0000	-		1	COOLING PLATE	
040	2510366-0000	-		1	SHAFT	
050	1498430-0000	-		1	ROD	
060	2510365-0000	-		1	ROLLER	
070	1129869-0000	-		1	COOLING PLATE	
080	2529930-0000	-		1	AIR NOZZLE	
090	1140077-0000	-		2	RING	
300	312105-0370	-		2	SCREW M6S ISO 4017 M6X20 A480	
310	312105-0372	-		4	SCREW M6S ISO 4017 M6X25 A480	
320	312125-0287	-		1	SCREW PAN HEAD MCS M4X8 SS	
330	312105-0362	-		2	SCREW M6S ISO 4017 M6X8 A480	
340	315105-0146	-		2	WASHER PLAIN, BRB, 5,3/10,H=1	
350	315105-0153	-		10	WASHER PLAIN, BRB, 6,4/12,H=1,5	
360	315105-0156	-		1	WASHER PLAIN, BRB, 6,7/14,H=1,5	
370	90005-0082	-		1	WASHER PLAIN ROUND 4,3(M4)/12,H=1	
380	312605-0316	-		5	HEXAGON NUT, M6M M6 A280	
390	312605-0314	-		2	HEXAGON NUT, M6M M5 A280	
570	90166-0118	-	MM	1600	TUBE 8 MM PA BLACK	
580	90166-0118	-	MM	1600	TUBE 8 MM PA BLACK	
590	90166-0118	-	MM	70	TUBE 8 MM PA BLACK	
600	90458-2329	-	MM	1600	HOSE, SILICONE, 50 SHORE, 9/13 MM	
610	90458-2329	-	MM	1600	HOSE, SILICONE, 50 SHORE, 9/13 MM	
620141	90166-0193	-	MM	850	TUBE 6 MM PUR BLUE	
630	342728-0102	-		1	PIPE COUPLING 6 MM	
640	342931-0121	-		4	ELBOW 90 COUPL.,EXT.THREAD 8/6-G1/8"	
L 6101	A2509617-0100	-		1	INDUCTOR	**591**
T 6101	67380-0207	-		1	TRANSFORMER	

Pos	Part No	SP	UN	Qty	Description	Page No

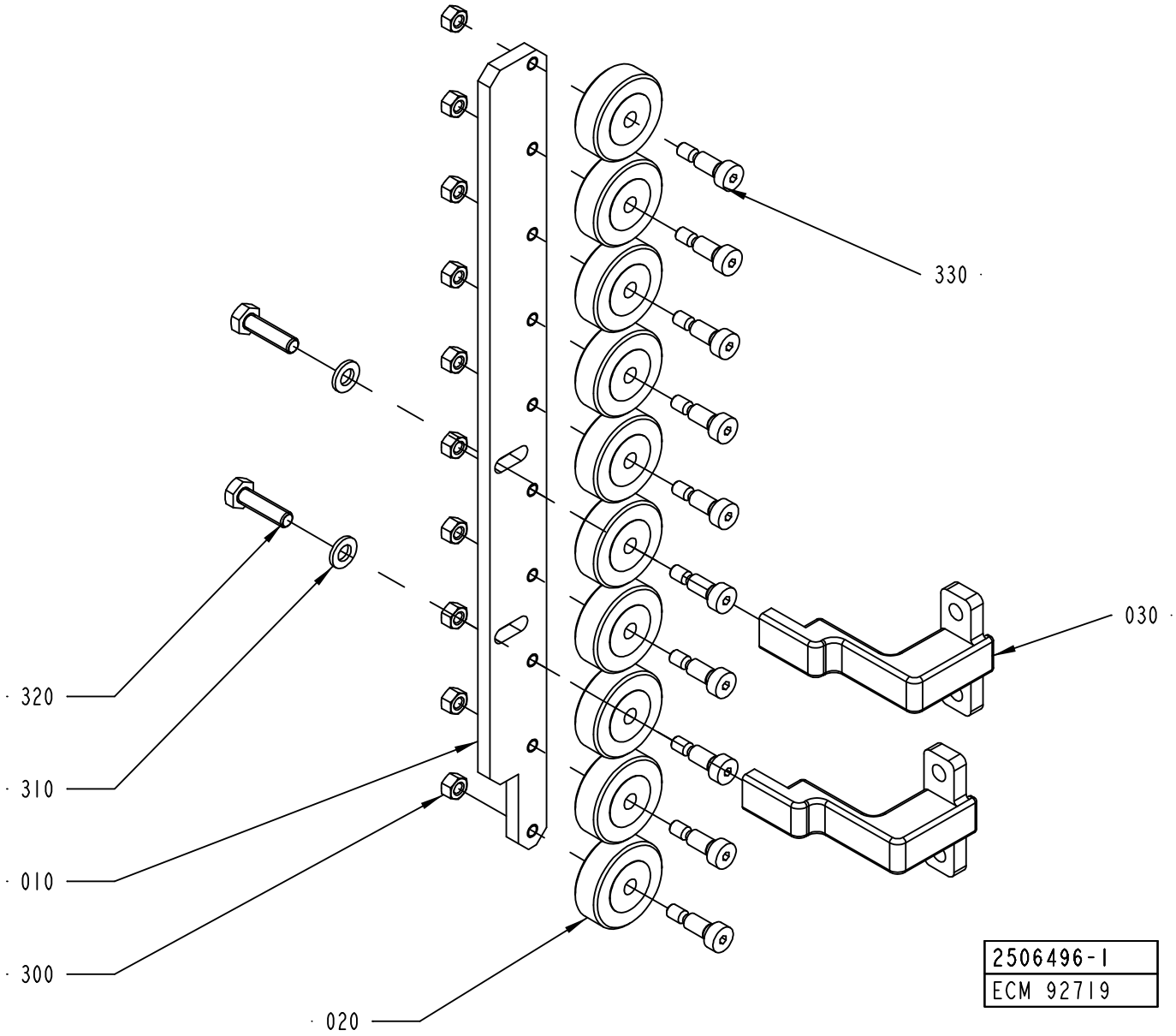
330
030
320
310
010
300
020
2506496-1
ECM 92719

ECM: 101683 - 20020315
Group number: 2506496-0100
Assembly Drawing: 2506496-1_1_AA

Issue: 20021022

Pos	Part No	SP	UN	Qty	Description	Page No
Common Parts						
010	1558914-0000	-		1	ROLLER BRACKET	
020	1558911-0000	-		10	PRESSURE ROLLER	
030	2529573-0000	-		2	BRACKET	
300	312605-0314	-		10	HEXAGON NUT, M6M M5 A280	
310	315105-0153	-		2	WASHER PLAIN, BRB, 6,4/12,H=1,5	
320	312105-0371	-		2	SCREW M6S ISO 4017 M6X22 A480	
330	312180-0366	-		10	SCREW, HEX.SOCK.HEAD SHOULD. M5/6X12	

Pos	Part No	SP	UN	Qty	Description	Page No

Machine Type | Group Description | Used-In | Group Number | Page No

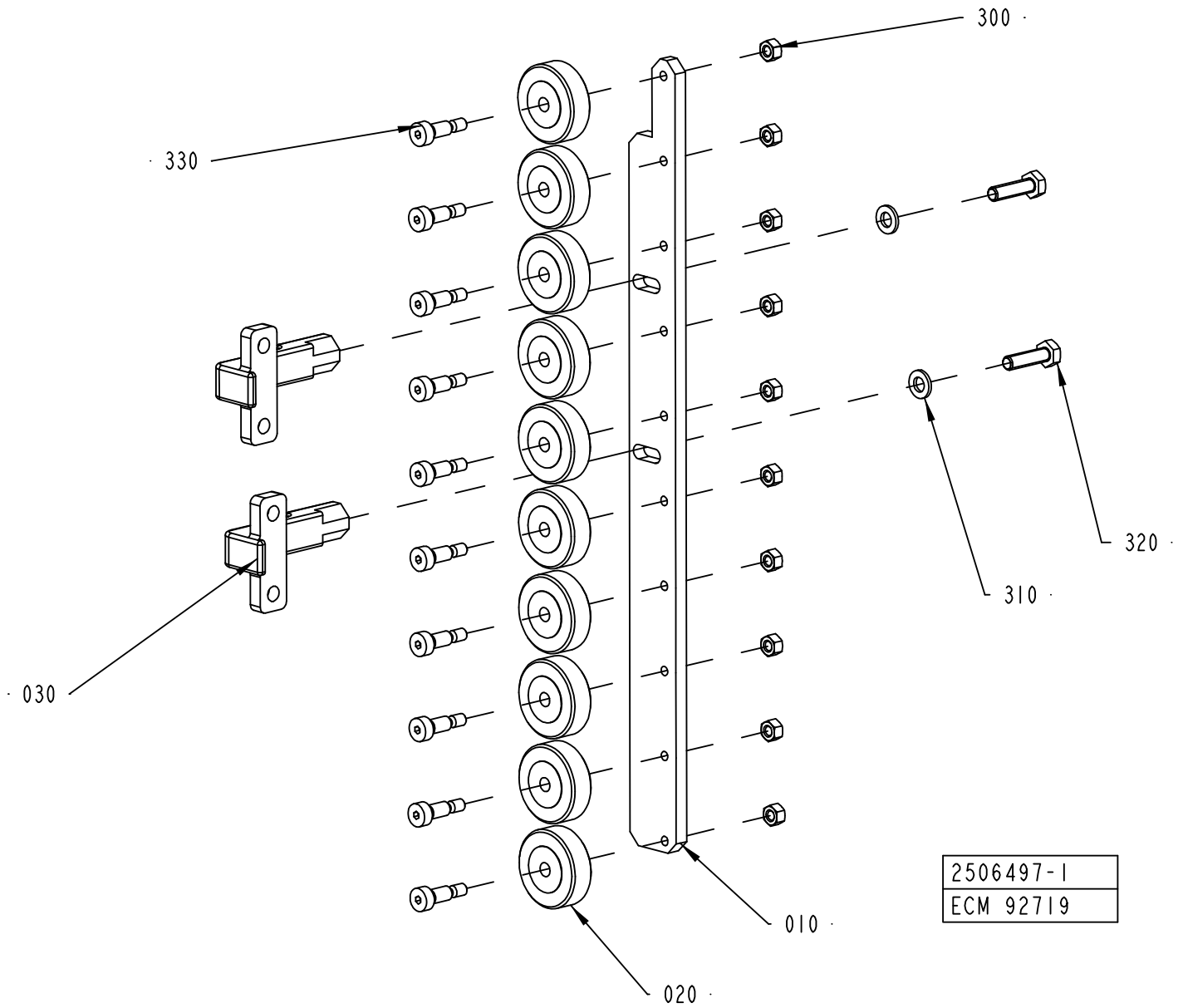
300
330
320
310
030
010
020
2506497-1
ECM 92719

ECM: 101682 - 20020315
Group number: 2506497-0100
Assembly Drawing: 2506497-1_1_AA

Issue: 20021022

Pos	Part No	SP	UN	Qty	Description	Page No
Common Parts						
010	1558914-0000	-		1	ROLLER BRACKET	
020	1558911-0000	-		10	PRESSURE ROLLER	
030	2529572-0000	-		2	BRACKET	
300	312605-0314	-		10	HEXAGON NUT, M6M M5 A280	
310	315105-0153	-		2	WASHER PLAIN, BRB, 6,4/12,H=1,5	
320	312105-0371	-		2	SCREW M6S ISO 4017 M6X22 A480	
330	312180-0366	-		10	SCREW, HEX.SOCK.HEAD SHOULD. M5/6X12	

Pos	Part No	SP	UN	Qty	Description	Page No

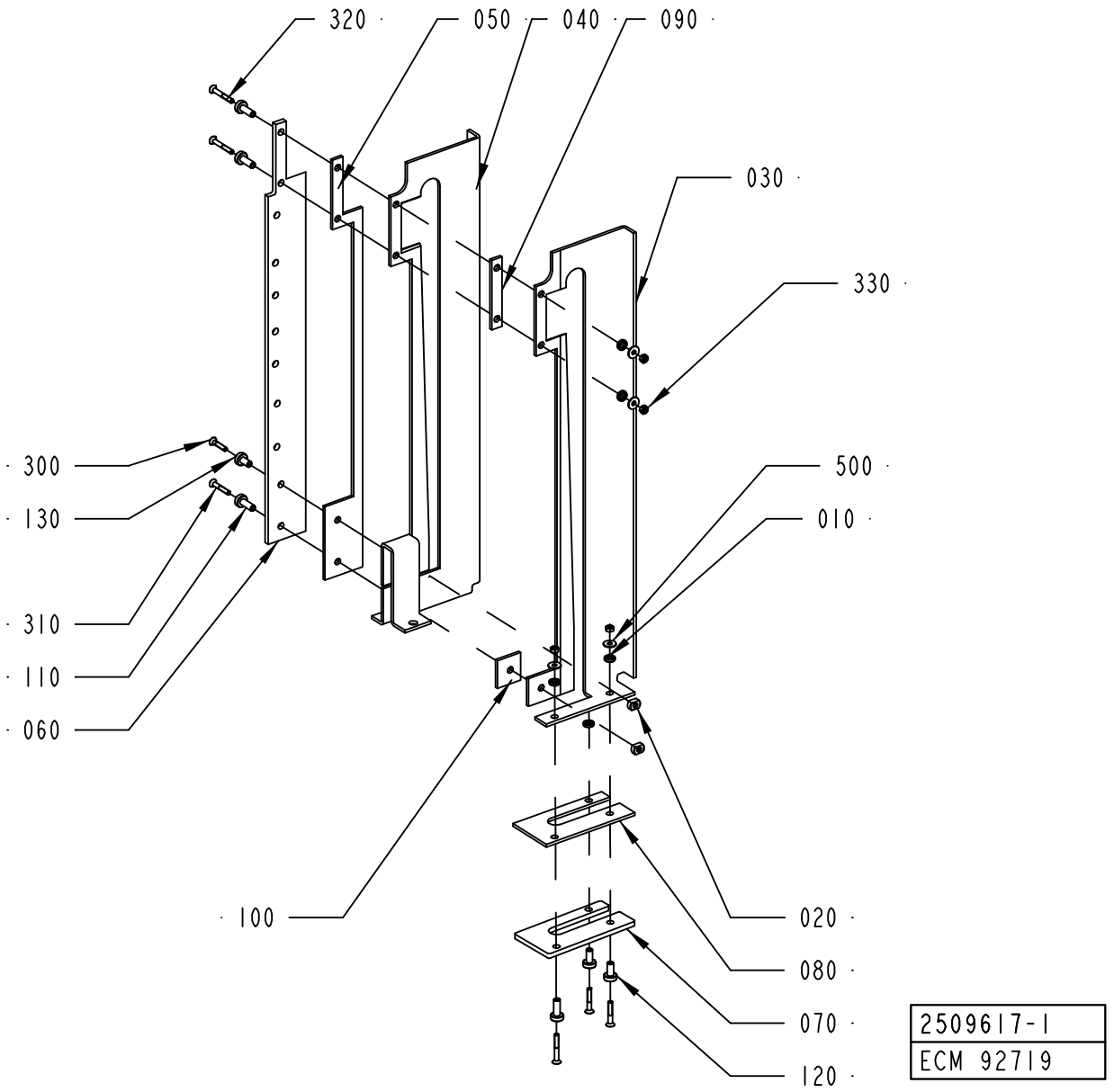
320
050
040
090
030
330
300
130
310
110
060
500
010
100
020
080
070
120
2509617-1
ECM 92719

ECM: 101681 - 20020315
Group number: 2509617-0100
Assembly Drawing: 2509617-1_1_AA

Issue: 20021022

Pos	Part No	SP	UN	Qty	Description	Page No
Common Parts						
010	1558917-0000	-		5	SPACER DISC	
020	1558918-0000	-		2	TIGHTENING NUT	
030	2506498-0000	-		1	SEALING PLATE	
040	2506499-0000	-		1	SEALING PLATE	
050	2506500-0000	-		1	PLATE	
060	2506501-0000	-		1	PLATE	
070	2506502-0000	-		1	PLATE	
080	2506503-0000	-		1	PLATE	
090	2506504-0000	-		1	PLATE	
100	2506505-0000	-		1	PLATE	
110	2509613-0000	-		4	BUSHING	
120	2509614-0000	-		2	BUSHING	
130	2529578-0000	-		1	BUSHING	
300	312155-0295	-		1	SCREW HEX.SOCK.COUNT.MF6S M4X20 A480	
310	312155-0297	-		3	SCREW HEX.SOCK.COUNT.MF6S M4X25 A480	
320	312155-0299	-		3	SCREW HEX.SOCK.COUNT.MF6S M4X30 A480	
330	312605-0312	-		5	HEXAGON NUT, M6M M4 A280	
500	90005-0082	-		5	WASHER PLAIN ROUND 4,3(M4)/12,H=1	

Pos	Part No	SP	UN	Qty	Description	Page No

Machine Type	Group Description	Used-In	Group Number	Page No

PRESSURE ROLLER

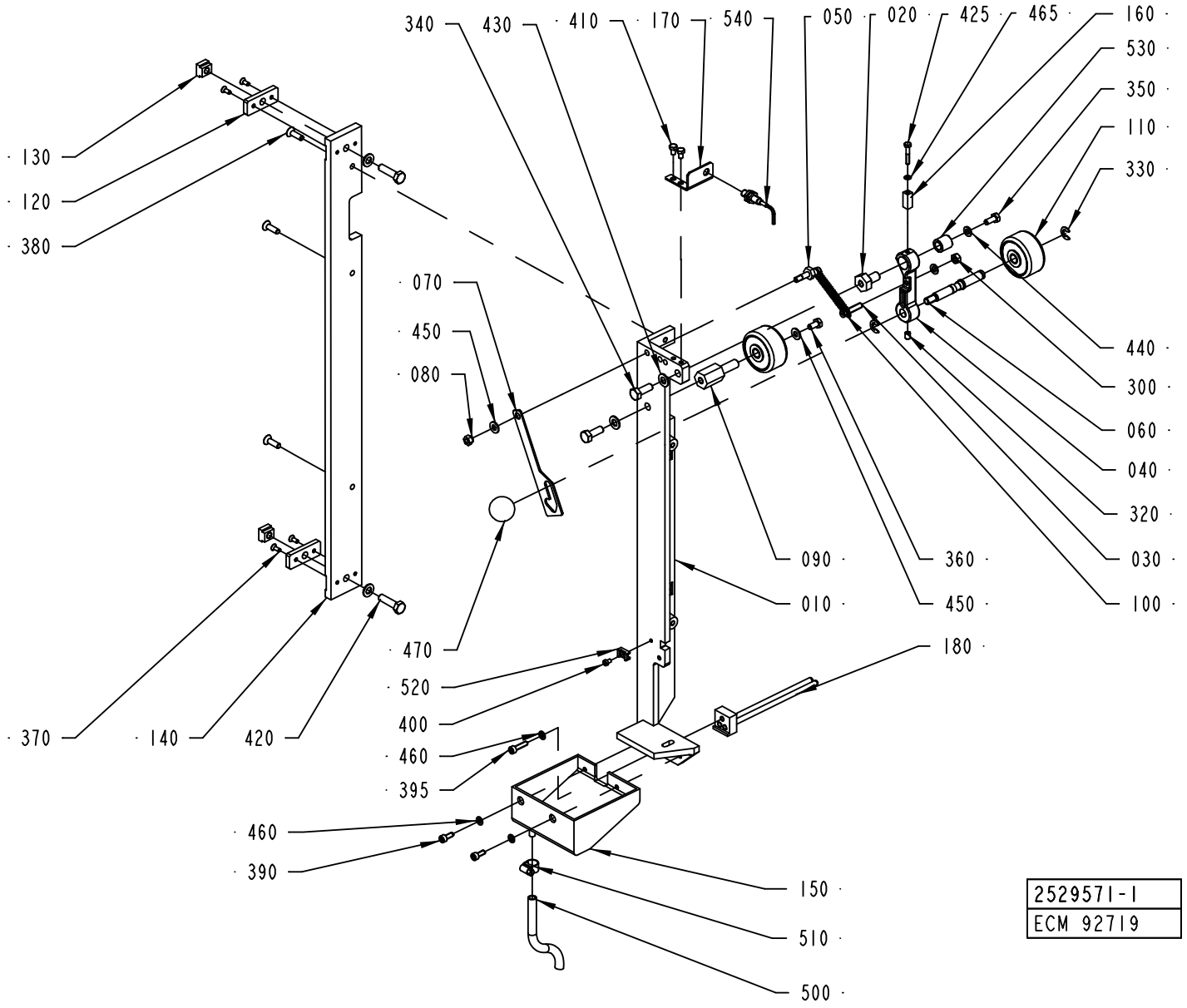

ECM: 100350 - 20020315
Group number: 2529571-0100
Assembly Drawing: 2529571-1_1_AA

Issue: 20021022

Pos	Part No	SP	UN	Qty	Description	Page No
Common Parts						
010	2510359-0000	-		1	FASTENING BRACKET	
020	2510360-0000	-		1	SHAFT	
030	2510362-0000	-		1	SHAFT	
040	2510361-0000	-		1	CONNECTING ROD	
050	2510363-0000	-		1	SHAFT	
060	2510364-0000	-		1	SHAFT	
070	1349432-0000	-		1	CATCH	
080	1349994-0000	-		1	NUT	
090	1035895-0000	-		1	SHAFT	
100	1478303-0000	-		1	TENSION SPRING	
110	B1346988-0000	-		2	ROLL	
010	*90166-0056*	*-*	*MM*	*40*	*SHRINKABLE HOSE*	
020	*321120-0104*	*-*		*2*	*BEARING BUSHING WITHOUT FLANGE,10/12X10*	
120	2506656-0000	-		2	PLATE	
130	2506654-0000	-		2	BLOCK	
140	2506657-0000	-		1	SPACER	
150	2529550-0000	-		1	SUPPORT	
160	2535932-0000	-		1	CAM	
170	2535933-0000	-		1	SUPPORT	
180	1349672-0000	-		1	GUIDE	
300	312605-0316	-		1	HEXAGON NUT, M6M M6 A280	
320	312318-0362	-		1	SCREW SOCK.SET CUP P MSK6SS M6X8 A4	
330	315755-0801	-		2	LOCKING WASHER 8	
340	312105-0452	-		2	SCREW M6S ISO 4017 M8X22 A480	
350	312105-0367	-		1	SCREW M6S M6X14 A280	
360	312105-0366	-		1	SCREW M6S M6X12 A280	
370	312155-0289	-		4	SCREW HEX.SOCK.COUNT.MF6S M4X10 A480	
380	312155-0370	-		3	SCREW HEX.SOCK.COUNT.MF6S M6X20 A280	
390	312115-0327	-		2	SCREW MC6S M5X12 A280	
395	312115-0331	-		1	SCREW MC6S M5X20 A280	
400	312125-0285	-		1	SCREW SLOT.PAN HD. MCS 4X6 A480	
410	312105-0323	-		2	SCREW M6S ISO 4017 M5X8 A480	
420	312105-0455	-		2	SCREW M6S ISO 4017 M8X30 A480	
425	312105-0297	-		1	SCREW M6S ISO 4017 M4X25 A480	
430	315105-0165	-		4	WASHER PLAIN, BRB, 8,4/16,H=1,5	
440	315105-0153	-		2	WASHER PLAIN, BRB, 6,4/12,H=1,5	
450	315105-0156	-		2	WASHER PLAIN, BRB, 6,7/14,H=1,5	
460	315105-0146	-		3	WASHER PLAIN, BRB, 5,3/10,H=1	
465	315105-0136	-		1	WASHER PLAIN, BRB, 4,3/8,H=0,8	
470	318800-0104	-		1	HANDLE,SPHERICAL KNOB,INT.THRE.,D.30-M8	
500	90166-0008	-	MM	3000	HOSE 7/10 PVC TRANSP.	
510	342991-0100	-		1	HOSE CLIP,WORM DRIVE TYPE 10-13	
520	352113-0205	-		1	ANCHOR PLATES FOR STRIPS, TYPE TM2S8-C10	
530	321105-0164	-		1	BUSHING 10F7X16X16	
540	90458-0138	-		1	PROX.SW. E2EG-X1R5B1-5M	

Machine Type | Group Description | Used-In | Group Number | Page No

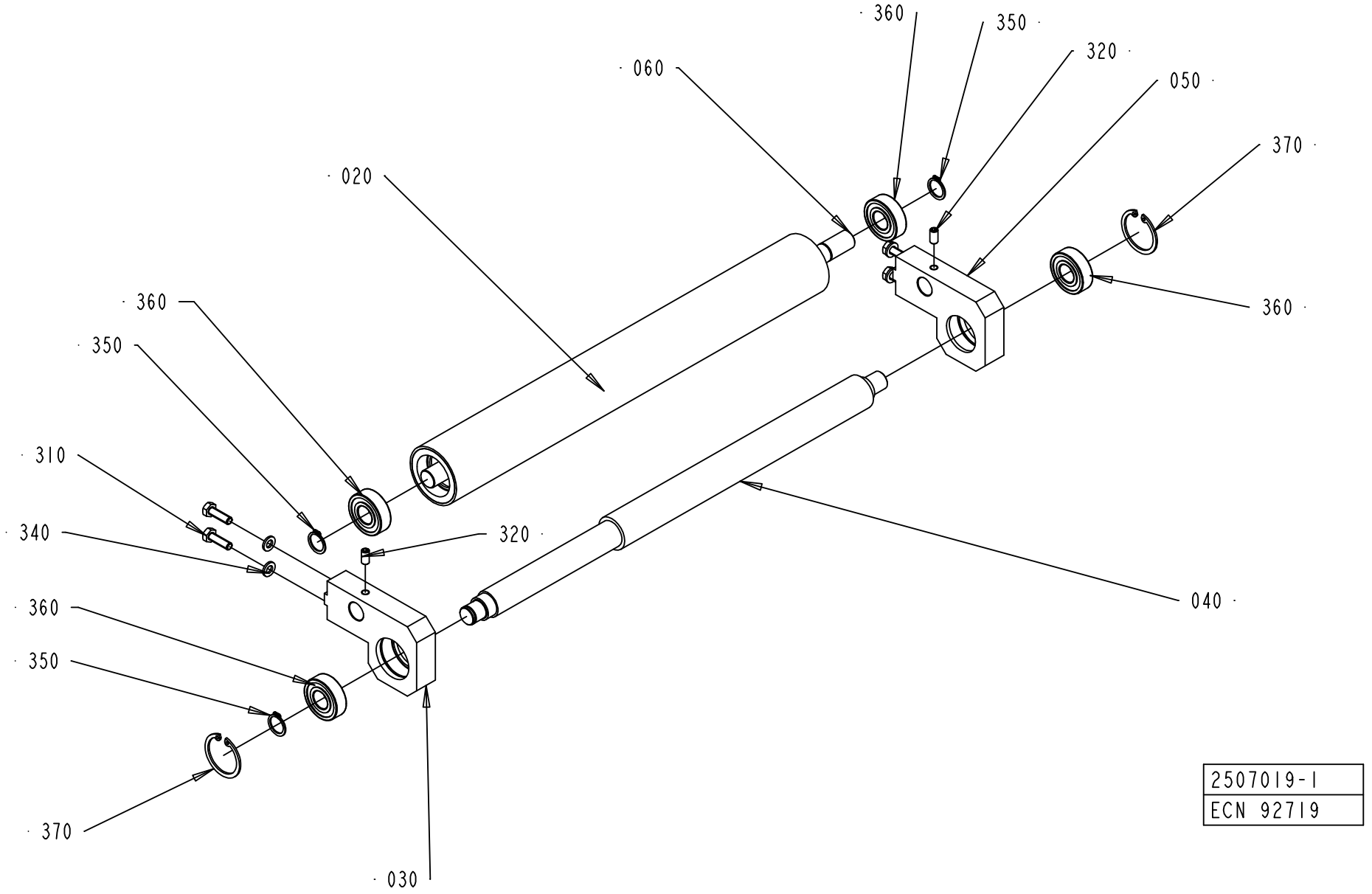
360
350
320
060
050
370
020
360
360
350
310
340
320
040
360
350
370
030
2507019-1
ECN 92719

ECM: 95191 - 20020315
Group number: 2507019-0100
Assembly Drawing: 2507019-1_1_AA

Issue: 20021022

Pos	Part No	SP	UN	Qty	Description	Page No
Common Parts						
020	2506661-0000	-		1	ROLLER	
030	2510404-0000	-		1	SUPPORT	
040	2506663-0000	-		1	SUPPORT	
050	2510405-0000	-		1	SUPPORT	
060	2506666-0000	-		1	AXEL	
310	312105-0370	-		4	SCREW M6S ISO 4017 M6X20 A480	
320	312318-0366	-		2	SCREW SOCK.SET CUP P MSK6SS M6X12 A4	
340	315105-0153	-		4	WASHER PLAIN, BRB, 6,4/12,H=1,5	
350	315751-0112	-		3	RETAIN. RING, 15	
360	321313-0102	-		2	BALL BEARING, 2 SEALS, 15X35X11 MM	
370	315753-0124	-		2	RETAIN. RING, 35	
500	90458-2737	-		2	SPHERICAL BALL BEARING, 15X35X14 MM	

Pos	Part No	SP	UN	Qty	Description	Page No

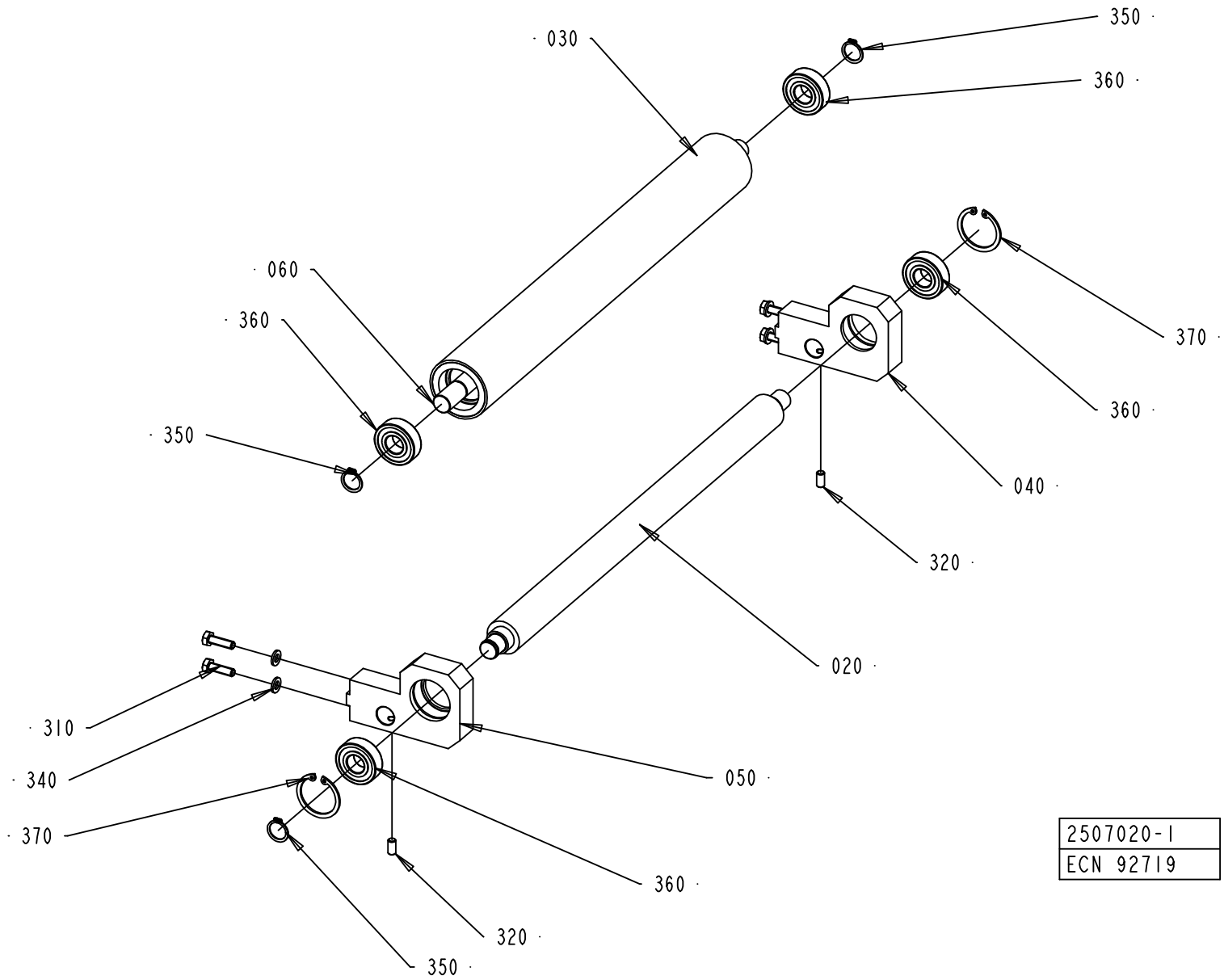
030
350
360
060
360
350
370
360
040
320
020
310
340
370
050
360
320
350
2507020-1
ECN 92719

ECM: 95192 - 20020315
Group number: 2507020-0100
Assembly Drawing: 2507020-1_1_AA

Issue: 20021022

Pos	Part No	SP	UN	Qty	Description	Page No
Common Parts						
020	2506659-0000	-		1	ROLLER	
030	2506661-0000	-		1	ROLLER	
040	2510404-0000	-		1	SUPPORT	
050	2510405-0000	-		1	SUPPORT	
060	2506666-0000	-		1	AXEL	
310	312105-0370	-		4	SCREW M6S ISO 4017 M6X20 A480	
320	312318-0366	-		2	SCREW SOCK.SET CUP P MSK6SS M6X12 A4	
340	315105-0153	-		4	WASHER PLAIN, BRB, 6,4/12,H=1,5	
350	315751-0112	-		3	RETAIN. RING, 15	
360	321313-0102	-		2	BALL BEARING, 2 SEALS, 15X35X11 MM	
370	315753-0124	-		2	RETAIN. RING, 35	
500	90458-2737	-		2	SPHERICAL BALL BEARING, 15X35X14 MM	

Pos	Part No	SP	UN	Qty	Description	Page No

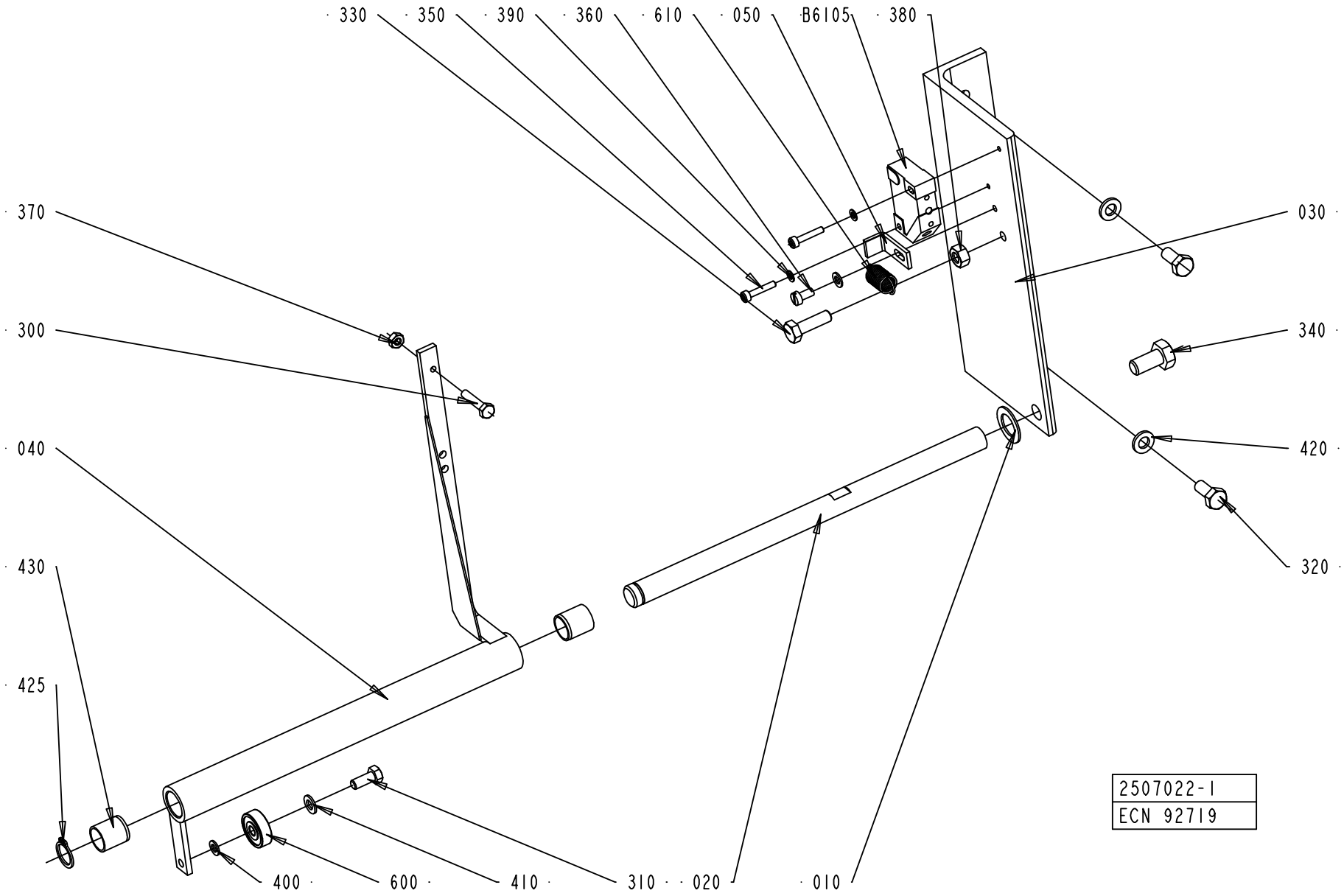
330
350
390
360
610
050
B6105
380
370
300
040
430
425
030
340
420
320
400
600
410
310
020
010
2507022-1
ECN 92719

ECM: 95183 - 20020315
Group number: 2507022-0100
Assembly Drawing: 2507022-1_1_AA

Issue: 20021022

Pos	Part No	SP	UN	Qty	Description	Page No
Common Parts						
010	266737-0000	-		1	WASHER	
020	1498429-0000	-		1	AXLE	
030	2504810-0000	-		1	BRACKET	
040	2504811-0000	-		1	BRACKET	
050	2504812-0000	-		1	BLOCK	
300	312105-0295	-		1	SCREW M6S ISO 4017 M4X20 A480	
310	312105-0327	-		1	SCREW M6S ISO 4017 M5X12 A480	
320	312105-0367	-		2	SCREW M6S M6X14 A280	
330	312105-0370	-		1	SCREW M6S ISO 4017 M6X20 A480	
340	312105-0449	-		1	SCREW M6S ISO 4017 M8X16 A480	
350	312115-0228	-		2	SCREW MC6S M3X16 A280	
360	312125-0287	-		1	SCREW PAN HEAD MCS M4X8 SS	
370	312605-0312	-		1	HEXAGON NUT, M6M M4 A280	
380	312605-0316	-		1	HEXAGON NUT, M6M M6 A280	
390	315105-0124	-		2	WASHER PLAIN, BRB, 3,2/6,H=0,5	
400	315105-0136	-		1	WASHER PLAIN, BRB, 4,3/8,H=0,8	
410	315105-0146	-		2	WASHER PLAIN, BRB, 5,3/10,H=1	
420	315105-0153	-		2	WASHER PLAIN, BRB, 6,4/12,H=1,5	
425	315751-0109	-		1	RETAIN. RING, 12	
430	321141-0183	-		2	BEARING BUSHING WITHOUT FL, 12X14X15 MM	
440	352113-0205	-		1	ANCHOR PLATES FOR STRIPS, TYPE TM2S8-C10	
450	312121-0285	-		1	SCREW SLOT.PAN HD. MCS 4X6 FZB	
600	90214-0138	-		1	BALL BEARING, 5X19X6 MM	
610	90335-0089	-		1	TENSION SPRING 41490, 0,9X10X23	
B6105	90044-0104	-		1	PROX.SWITCH IFM IN 3002	

Pos	Part No	SP	UN	Qty	Description	Page No

Machine Type | Group Description | Used-In | Group Number | Page No

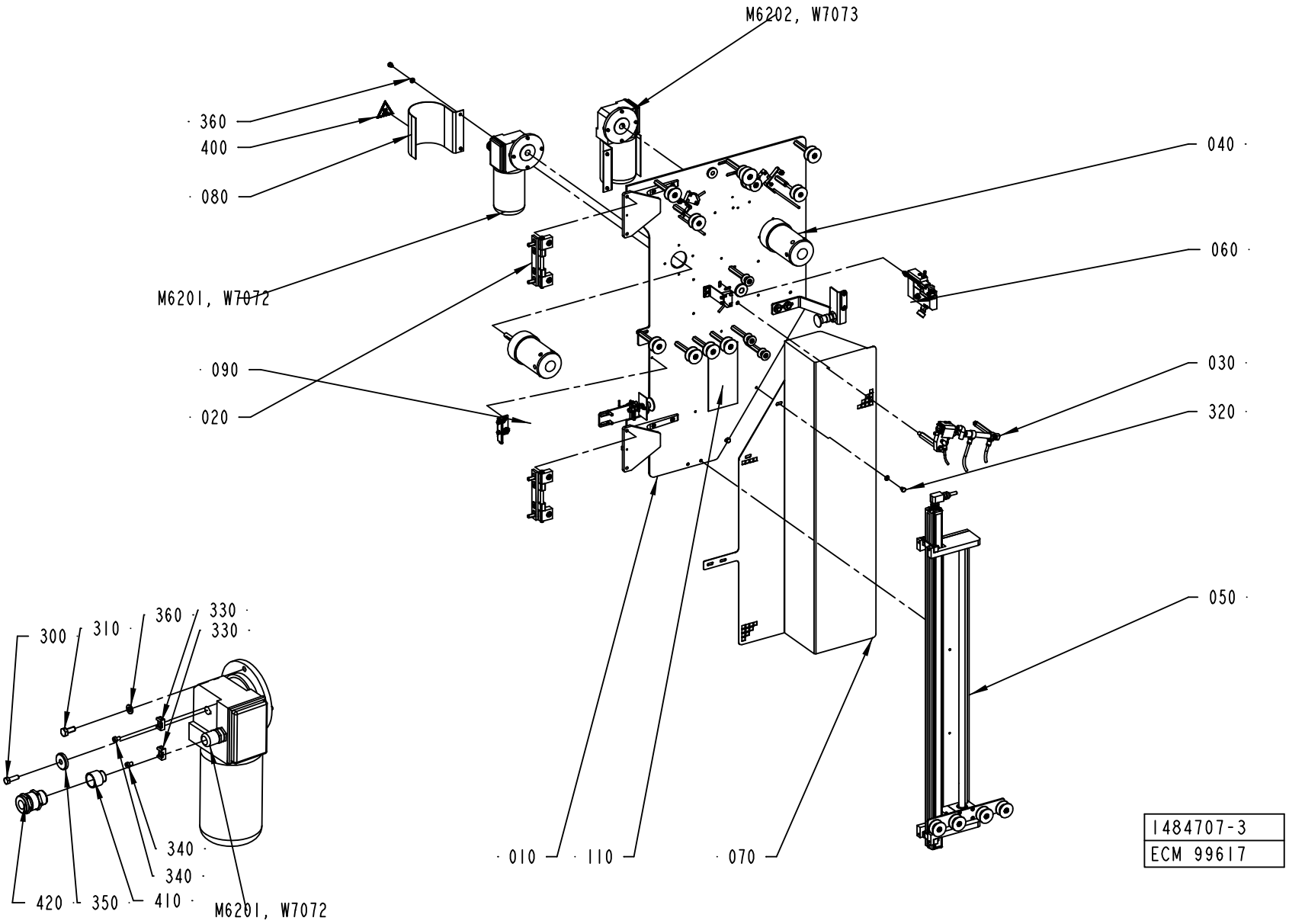
M6202, W7073
360
400
080
M6201, W7072
090
020
040
060
030
320
050
010
110
070
300
310
360
330
330
340
340
420
350
410
M6201, W7072
1484707-3
ECM 99617

ECM: 101546 - 20020314
Group number: 1484707-0200
Assembly Drawing: 1484707-3_1_AA

Issue: 20021022

Pos	Part No	SP	UN	Qty	Description	Page No
Common Parts						
010	A1512428-0200	-		1	MOUNTING SHEET	**603**
020	A1484720-0100	-		2	HINGE	**605**
030	A1490806-0100	-		1	HEATING DEVICE	**607**
040	A1484725-0100	-		2	HUB	**609**
050	A1511585-0200	-		1	STRIP GUIDE	**611**
060	A1524477-0200	-		1	CUTTING TABLE	**613**
070	1517107-0000	-		1	PROTECTION	
080	1498445-0000	-		2	COVER	
090	A2510401-0100	-		1	HOLDER	**615**
110	1538199-0000	-		1	SIGN	
300	312105-0329	-		2	SCREW M6S ISO 4017 M5X16 A480	
310	312105-0367	-		8	SCREW M6S M6X14 A280	
320	312105-0362	-		6	SCREW M6S ISO 4017 M6X8 A480	
330	352113-0205	-		4	ANCHOR PLATES FOR STRIPS, TYPE TM2S8-C10	
340	312125-0285	-		4	SCREW SLOT.PAN HD. MCS 4X6 A480	
350	315125-0153	-		2	WASHER PLAIN ROUND,CHAMF. 6,4/22, H=4	
360	315105-0153	-		14	WASHER PLAIN, BRB, 6,4/12,H=1,5	
400	359705-0007	-		2	WARNING SIGN ISO, HOT SURFACE	
410	90089-0009	-		2	REDUCING SLEEVE, PR15,2/PR18,6	
420	90012-0137	-		2	GLAND, EXTENDED WITH INSERT, PG11	
430	312125-0285	-		4	SCREW SLOT.PAN HD. MCS 4X6 A480	
440	352113-0205	-		4	ANCHOR PLATES FOR STRIPS, TYPE TM2S8-C10	
M6201	90069-0614	A		1	GEARS, WORM MOTOR MC320P2T	
M6202	90457-0921	A		1	WORM GEAR MOTOR MC320P2TB5/D	
W7072	90220-0104	-	M	10	SCR. CABLE 4X1,5MM2	
W7073	90220-0104	-	M	10	SCR. CABLE 4X1,5MM2	

Pos	Part No	SP	UN	Qty	Description	Page No

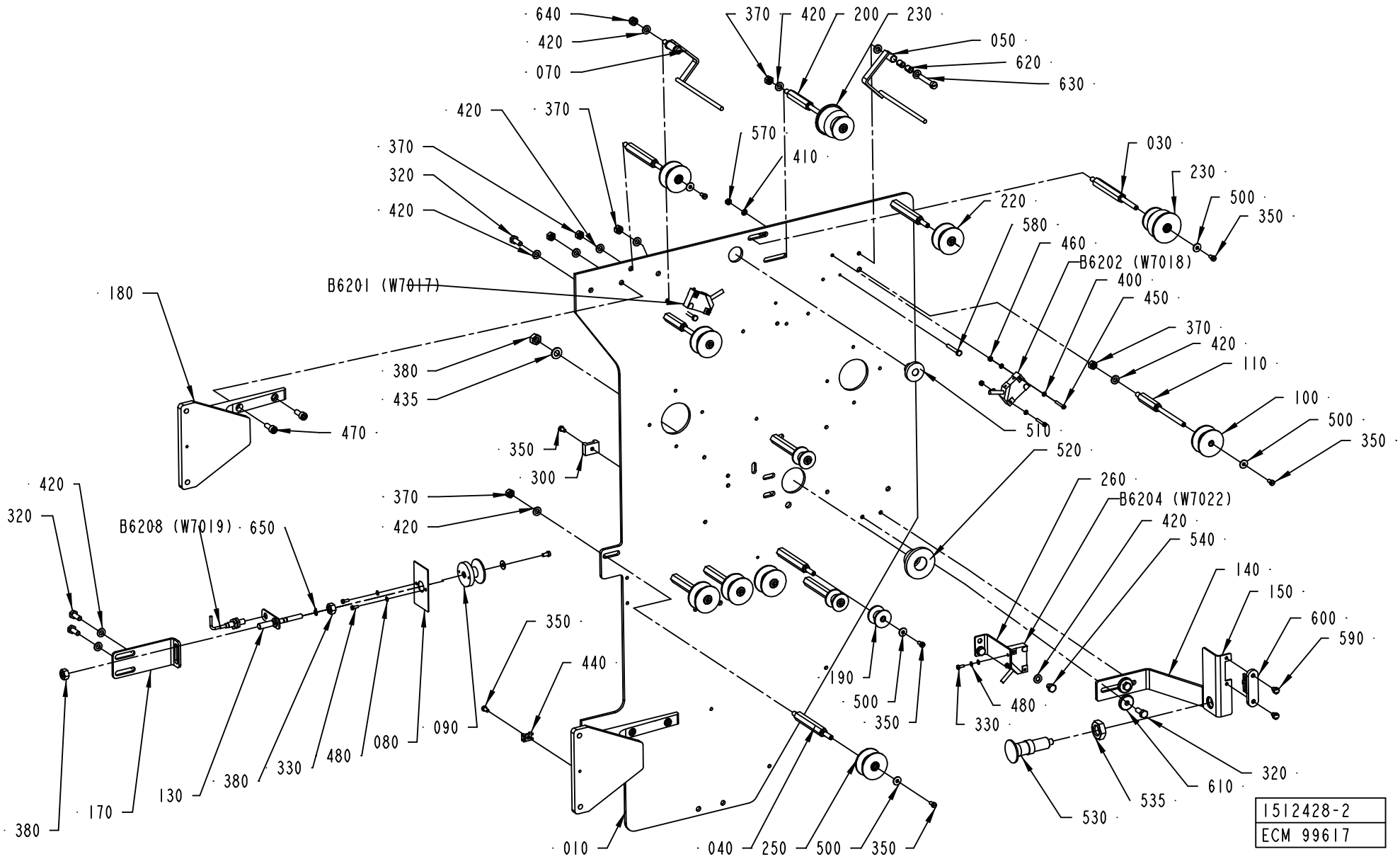
640
420
070
370
420
200
230
050
620
630
420
370
570
410
370
320
420
030
230
500
350
220
580
460
B6202 (W7018)
400
450
370
420
110
100
500
350
510
520
260
B6204 (W7022)
420
540
140
150
600
590
480
330
320
610
535
530
180
B6201 (W7017)
380
435
470
350
300
420
320
B6208 (W7019)
650
370
420
350
440
190
500
350
380
170
130
380
330
480
080
090
010
040
250
500
350
1512428-2
ECM 99617

ECM: 101547 - 20020314
Group number: 1512428-0200
Assembly Drawing: 1512428-2_1_AA

Issue: 20021022

Pos	Part No	SP	UN	Qty	Description	Page No
Common Parts						
010	1484708-0000	-		1	MOUNTING PLATE	
030	590402-0000	-		1	AXLE PIN	
040	536916-0000	-		9	AXLE PIN	
050	1490818-0000	A		1	ARM	
070	1490187-0000	A		1	ROCKER ARM	
080	1349581-0000	-		1	FLAG	
090	B1349986-0000	A		1	ROLLER	
010	*321120-0101*	*C*		*2*	*BEARING BUSHING WITHOUT FLANGE,6/8X6*	
100	583986-0000	A		2	ROLL	
110	544725-0000	-		2	AXLE PIN	
130	1484718-0000	-		1	AXLE PIN	
140	1499569-0000	-		1	BRACKET	
150	1484740-0000	-		1	BRACKET	
170	2525339-0000	-		1	BRACKET	
180	1517087-0000	-		2	HINGE	
190	1548197-0000	A		3	ROLL	
200	1538202-0000	-		1	AXLE PIN	
220	1548195-0000	A		2	ROLL	
230	1548196-0000	A		2	ROLL	
250	1523487-0000	A		4	ROLL	
260	2515289-0000	-		1	BRACKET	
300	352113-0203	-		4	ANCHOR PLATES FOR STRIPS, TYPE TM3S8-M0	
320	312105-0368	-		6	SCREW M6S M6X16 A280	
330	312125-0222	-		4	SCREW PAN HEAD MCS M3X8 SS	
350	312125-0287	-		20	SCREW PAN HEAD MCS M4X8 SS	
370	312605-0316	-		16	HEXAGON NUT, M6M M6 A280	
380	312605-0318	-		3	HEXAGON NUT, M6M M8 A280	
400	315103-0124	-		8	WASHER PLAIN, BRB, 3,2/6,H=0,5 NI PL BR	
410	315105-0136	-		2	WASHER PLAIN, BRB, 4,3/8,H=0,8	
420	315105-0153	-		28	WASHER PLAIN, BRB, 6,4/12,H=1,5	
435	315105-0165	-		1	WASHER PLAIN, BRB, 8,4/16,H=1,5	
440	352113-0205	-		2	ANCHOR PLATES FOR STRIPS, TYPE TM2S8-C10	
450	312125-0230	-		4	SCREW PAN HEAD MCS M3X20 SS	
460	312605-0310	-		4	HEXAGON NUT, M6M M3 A280	
470	312115-0368	-		4	SCREW MC6S M6X16 A280	
480	315105-0124	-		6	WASHER PLAIN, BRB, 3,2/6,H=0,5	
500	90005-0082	-		14	WASHER PLAIN ROUND 4,3(M4)/12,H=1	
510	90015-0021	-		1	LEAD-IN, TET10-14, E-1458023	
520	90015-0024	-		1	LEAD-IN, TET20-26, E-1458035	
530	90051-0088	-		1	ADJUSTMENT SCREW	
535	90099-0131	-		1	NUT HEX. M16X2 SS	
540	312105-0362	-		2	SCREW M6S ISO 4017 M6X8 A480	
570	312605-0312	-		2	HEXAGON NUT, M6M M4 A280	
580	312105-0299	-		2	SCREW M6S ISO 4017 M4X30 A480	
590	1539387-0000	-		2	SCREW	
600	90044-0310	-		1	KEY FOR SAFETY SWITCH, AZ 15/16 B1	
610	315125-0153	-		2	WASHER PLAIN ROUND,CHAMF. 6,4/22, H=4	
620	321141-0064	-		4	BEARING BUSHING WITHOUT FL, 6X8X10 MM	
630	312125-0376	-		2	SCREW PAN HEAD MCS M6X35 SS	
640	312812-0316	-		2	HEXAGON NUT, NY-LOCK M6 A480	
650	315751-0103	-		1	RETAIN. RING, 6	
B6201	90044-0194	A		1	PROX.SW. IN5329/IN3002-BPKG	
B6202	90044-0194	A		1	PROX.SW. IN5329/IN3002-BPKG	
B6204	90044-0194	A		1	PROX.SW. IN5329/IN3002-BPKG	
B6208	90458-0138	A		1	PROX.SW. E2EG-X1R5B1-5M	

Machine Type | Group Description | Used-In | Group Number | Page No

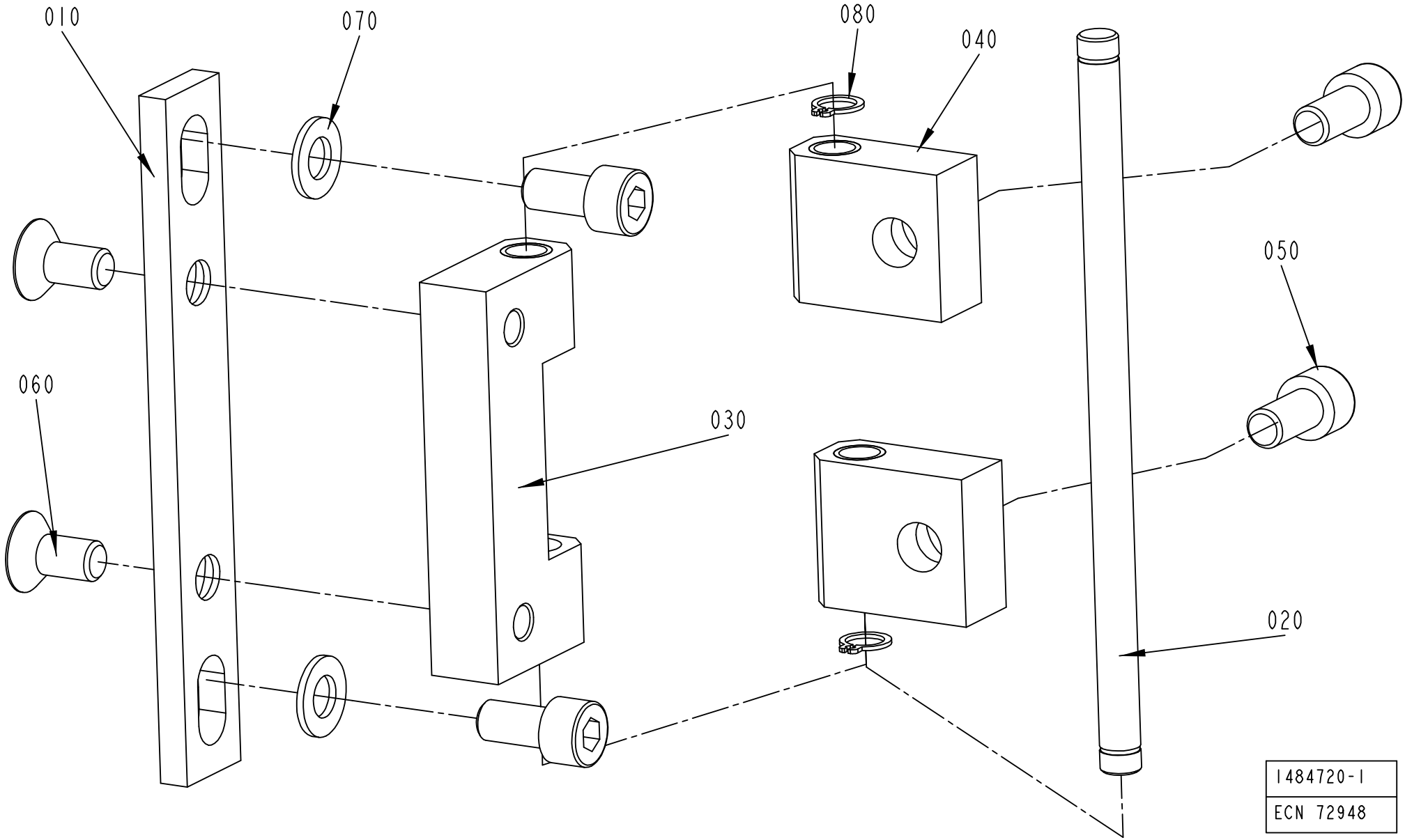
010
070
080
040
050
060
030
020
1484720-1
ECN 72948

ECM: 72948 - 20000404
Group number: 1484720-0100
Assembly Drawing: 1484720-1_1_AA

Issue: 20021022

Pos	Part No	SP	UN	Qty	Description	Page No
Common Parts						
010	1334187-0000	-		1	PLATE	
020	1334188-0000	D		1	AXLE PIN	
030	1334189-0000	D		1	BLOCK	
040	1334190-0000	D		2	BLOCK	
050	312115-0449	-		4	SCREW MC6S M8X16 A280	
060	312155-0449	-		2	SCREW HEX.SOCK.COUNT.MF6S M8X16 A280	
070	315105-0165	-		2	WASHER PLAIN, BRB, 8,4/16,H=1,5	
080	90141-0015	-		2	RETAIN. RING, 8	

Pos	Part No	SP	UN	Qty	Description	Page No

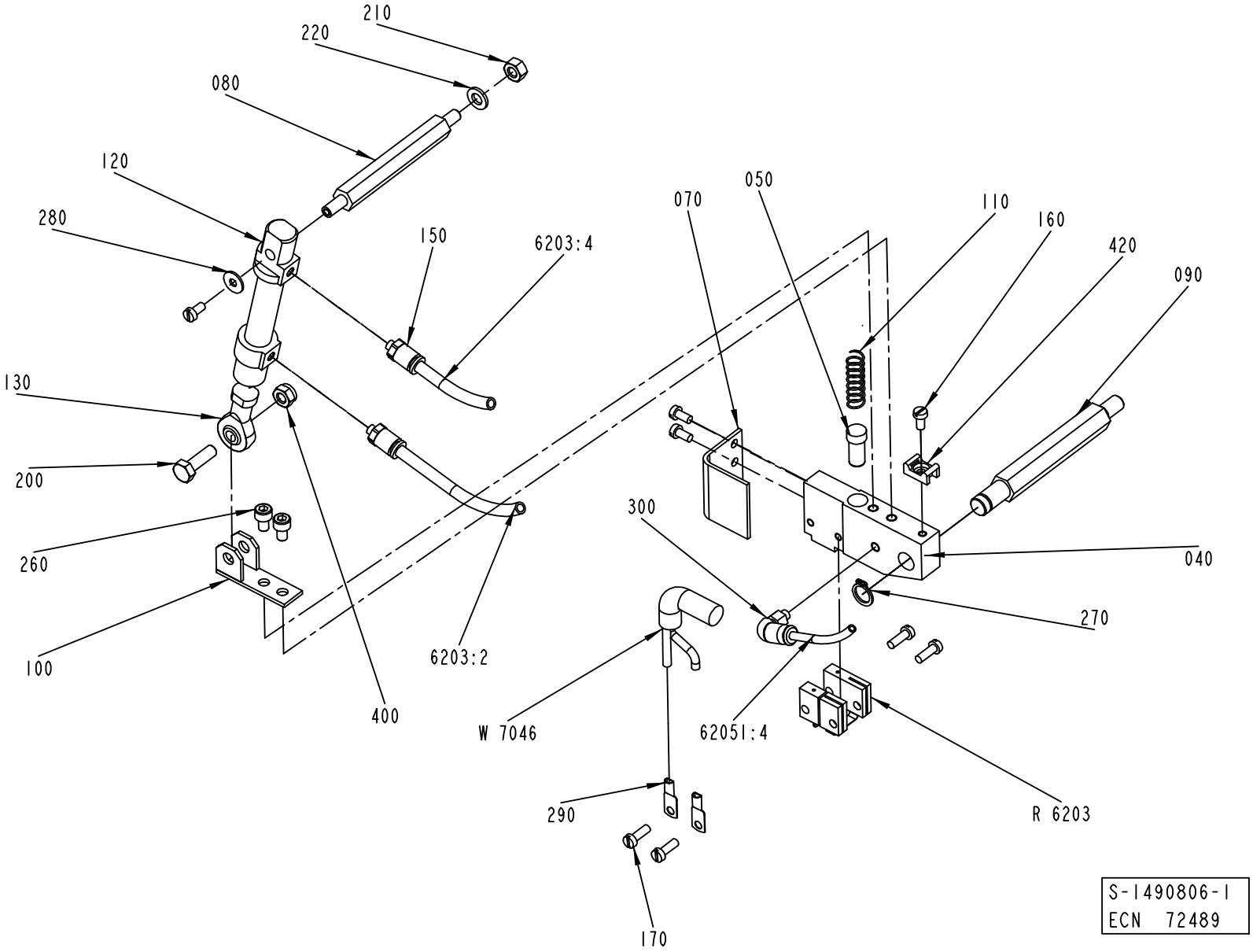
210
220
080
120
280
150
6203:4
070
050
110
160
420
090
130
200
260
100
400
6203:2
300
040
270
W 7046
62051:4
290
R 6203
170
S-1490806-I
ECN 72489

Pos	Part No	SP	UN	Qty	Description	Page No
TBA/22						
R6203	1538473-0000	A		1	SEALING BLOCK	
Common Parts						
040	1490804-0000	A		1	HOLDER	
050	400833-0000	A		1	PLUNGER	
070	1349181-0000	B		1	TOUCH GUARD	
080	1037121-0000	A		1	SHAFT	
090	1037120-0000	A		1	SHAFT	
100	1037124-0000	B		1	HOLDER	
110	400828-0000	A		1	SPRING	
120	90450-0306	A		1	DOUBLE ACTING, MINI-ISO, CYL. 12-25	
130	90239-0491	A		1	ROD END,BALL JOINT EYE,MINI-ISO M6	
150	342722-0197	-		2	STRAIGHT COUPLING	
160	312125-0287	-		4	SCREW PAN HEAD MCS M4X8 SS	
170	312125-0291	-		4	SCREW PAN HEAD MCS M4X12 SS	
200	312105-0370	-		1	SCREW M6S ISO 4017 M6X20 A480	
210	312605-0316	-		1	HEXAGON NUT, M6M M6 A280	
220	315105-0153	-		1	WASHER PLAIN, BRB, 6,4/12,H=1,5	
260	312115-0323	-		2	SCREW MC6S M5X8 A280	
270	90141-0016	-		1	RETAIN. RING, 10	
280	90005-0082	-		1	WASHER PLAIN ROUND 4,3(M4)/12,H=1	
290	353104-0140	-		2	CABLE SHOEYAV 06 M 4*	
300	342732-0099	-		1	ELBOW PIPE JOINT, EXT.THREAD, D=4MM-M5	
400	312812-0316	-		1	HEXAGON NUT, NY-LOCK M6 A480	
420	352113-0205	-		1	ANCHOR PLATES FOR STRIPS, TYPE TM2S8-C10	
6203:2	90166-0193	-	MM	4800	TUBE 6 MM PUR BLUE	
6203:4	90166-0193	-	MM	4800	TUBE 6 MM PUR BLUE	
62051:4	90166-0095	-	MM	500	TUBE 4 MM PA BLUE	
W7046	351120-0126	-	MM	2800	CABLE SIHF 2X4MM2 GREEN/YELLOW	

Pos	Part No	SP	UN	Qty	Description	Page No

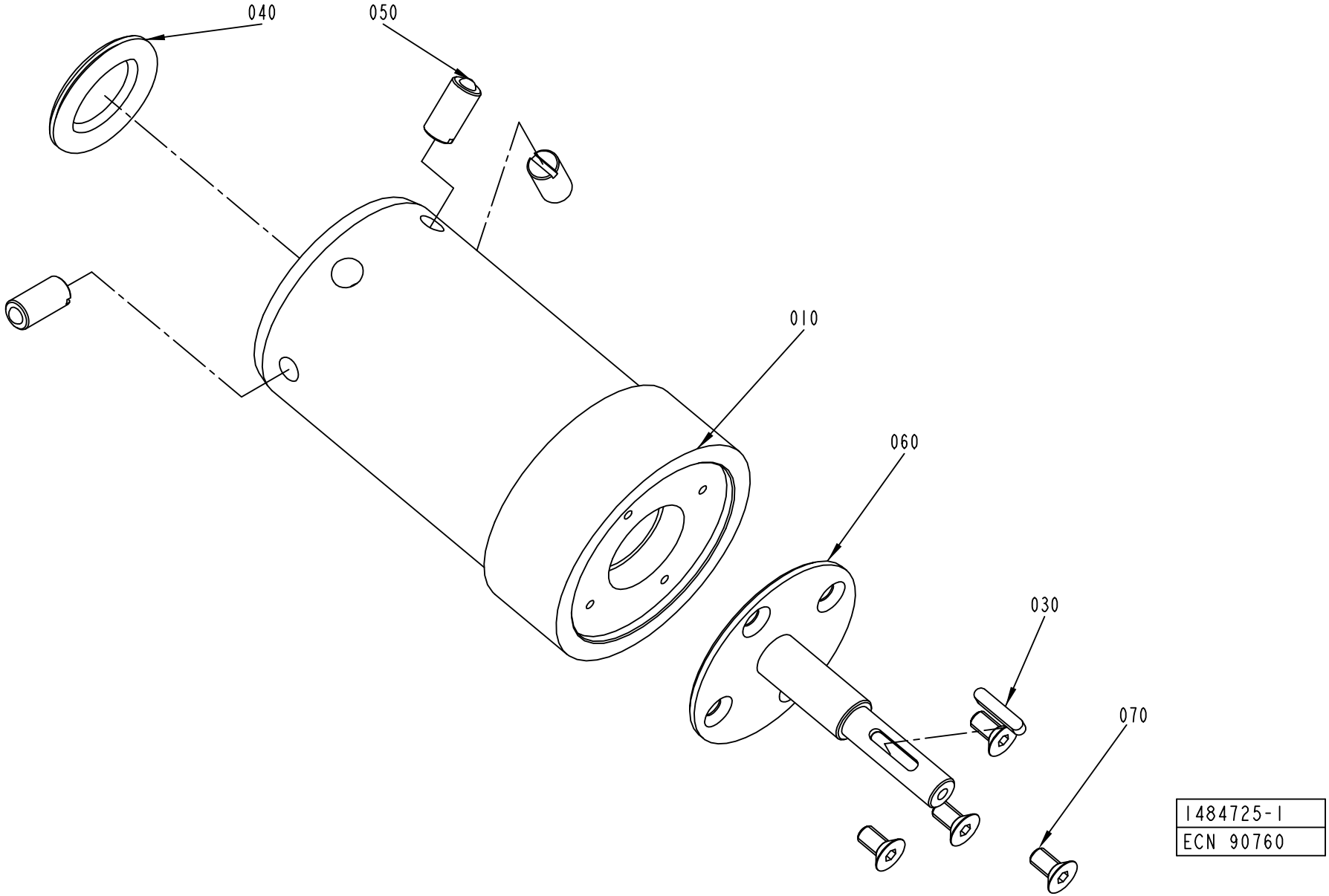
040
050
010
060
030
070
1484725-1
ECN 90760

ECM: 92954 - 20010828
Group number: 1484725-0100
Assembly Drawing: 1484725-1_1_AC

Issue: 20021022

Pos	Part No	SP	UN	Qty	Description	Page No
Common Parts						
010	1484724-0000	-		1	HUB	
030	315701-0170	A		1	PARALLEL KEY W. ROUND ENDS 4X4X20 MM	
040	90261-0049	B		1	PLUG, BLIND, PLASTIC, NO. SR1750	
050	90287-0106	-		3	SCREW SPRINGLOAD. SLOTTED HEAD M10X21	
060	1484726-0000	-		1	SHAFT	
070	312155-0366	-		4	SCREW HEX.SOCK.COUNT.MF6S M6X12 A280	

Pos	Part No	SP	UN	Qty	Description	Page No

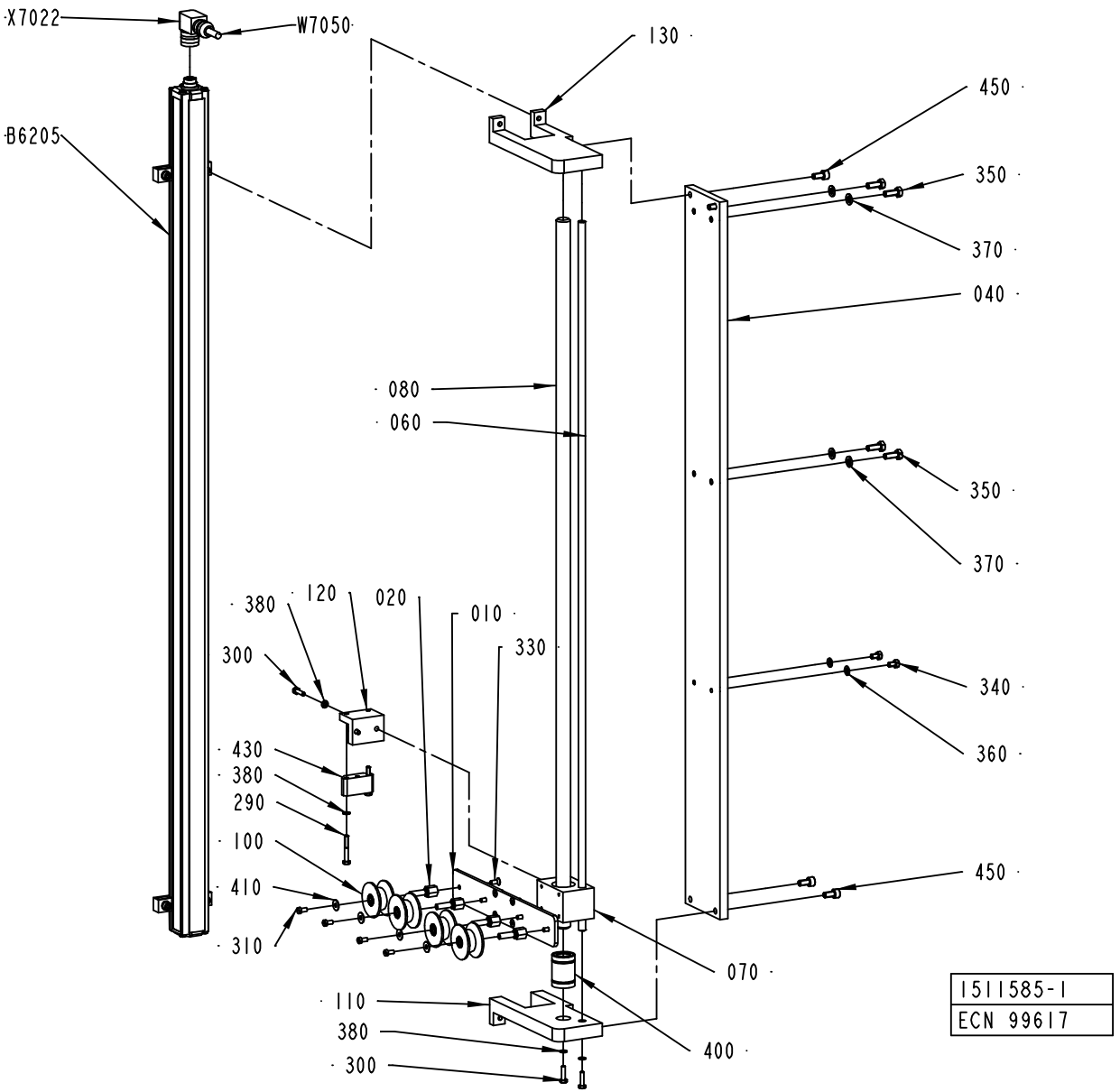
X7022
W7050
B6205
130
450
350
370
040
080
060
350
370
380
120
020
010
330
300
340
360
430
380
290
100
450
410
310
070
110
380
300
400
1511585-1
ECN 99617

ECM: 102162 - 20020314
Group number: 1511585-0200
Assembly Drawing: 1511585-1_1_AA

Issue: 20021022

Pos	Part No	SP	UN	Qty	Description	Page No
Common Parts						
010	1484711-0000	-		1	BRACKET	
020	1484719-0000	A		4	AXLE PIN	
040	1498450-0001	-		1	PLATE	
060	1498451-0001	A		1	SHAFT	
070	1511587-0000	-		1	BUSHING BLOCK	
080	1511586-0001	A		1	BAR	
100	1523487-0000	A		4	ROLL	
110	2501220-0000	-		1	BRACKET	
120	2501221-0000	-		1	BRACKET	
130	2501219-0000	-		1	BRACKET	
290	312105-0299	-		2	SCREW M6S ISO 4017 M4X30 A480	
300	312105-0293	-		4	SCREW M6S ISO 4017 M4X16 A480	
310	312125-0287	-		4	SCREW PAN HEAD MCS M4X8 SS	
330	312155-0289	-		8	SCREW HEX.SOCK.COUNT.MF6S M4X10 A480	
340	312105-0323	-		2	SCREW M6S ISO 4017 M5X8 A480	
350	312105-0368	-		4	SCREW M6S M6X16 A280	
360	315105-0146	-		2	WASHER PLAIN, BRB, 5,3/10,H=1	
370	315105-0153	-		4	WASHER PLAIN, BRB, 6,4/12,H=1,5	
380	315105-0136	-		6	WASHER PLAIN, BRB, 4,3/8,H=0,8	
400	90189-0011	A		1	BALL BUSHING, 16X26X36 MM	
410	90005-0082	-		4	WASHER PLAIN ROUND 4,3(M4)/12,H=1	
430	90458-1592	-		1	FLOATING MAGNET, BTL5-P-3800-2	
450	312115-0366	-		4	SCREW MC6S M6X12 A280	
B6205	90458-1535	A		1	TRANSDUCER, BTL5-A11-M0850-P-S32	
W7050	90220-0092	-	MM	3500	PAIR TWISTED CABLE 3X2X0,25MM2	
X7022	90458-1595	A		1	CONNECTION, BKS-S 33M-00	

Pos	Part No	SP	UN	Qty	Description	Page No

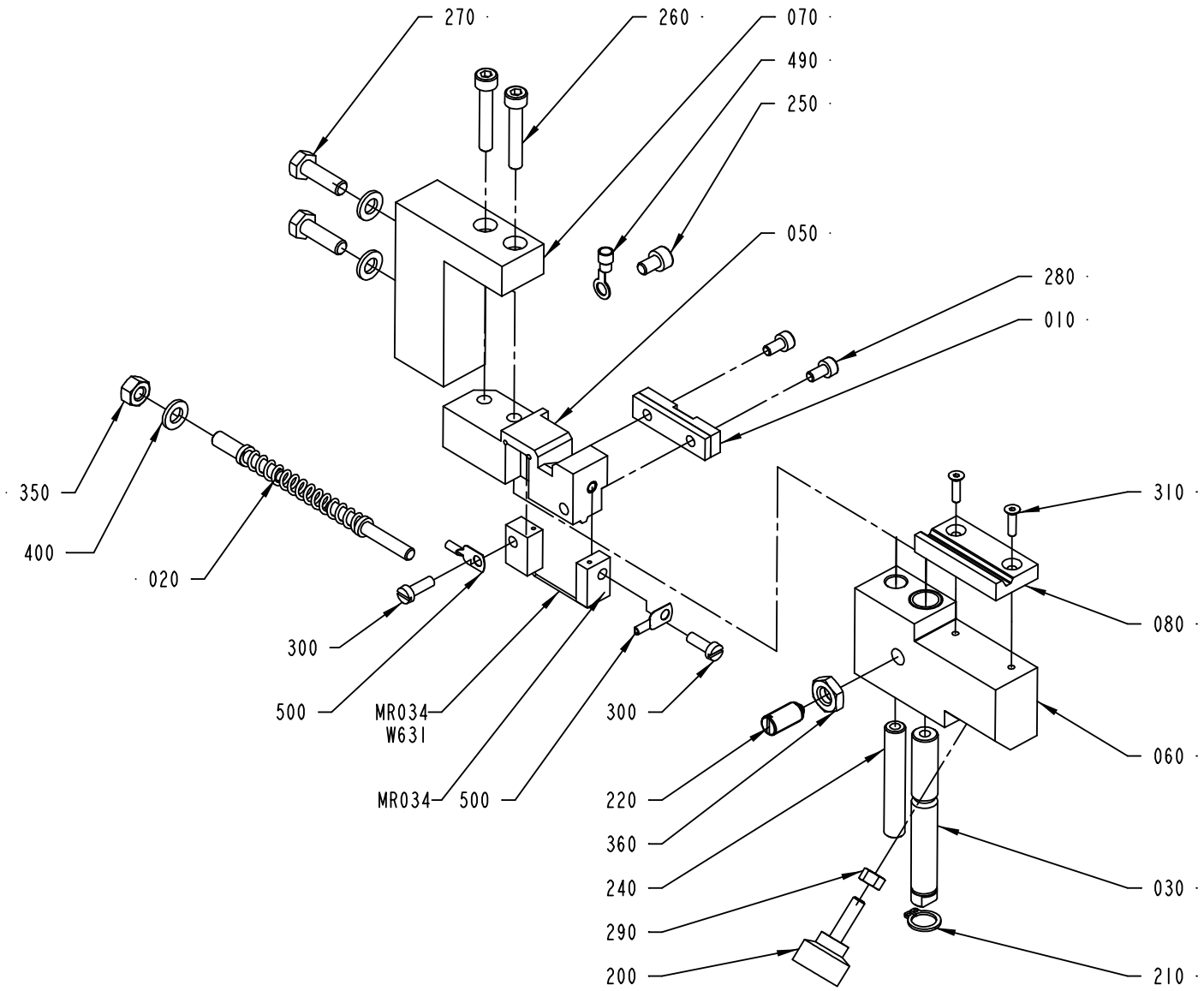

1524477-2
ECM 99617

ECM: 106844 - 20020314
Group number: 1524477-0200
Assembly Drawing: 1524477-2_1_AA

Issue: 20021022

Pos	Part No	SP	UN	Qty	Description	Page No
Common Parts						
010	1349014-0000	-		1	PAD	
020	1349179-0000	-		1	FINGER	
030	1517751-0000	-		1	SHAFT	
050	2523598-0000	A		1	SPLICING TABLE	
060	2523597-0000	-		1	SLIDER	
070	2531493-0000	-		1	BRACKET	
080	2523601-0000	A		1	PAD	
200	90051-0035	-		1	KNOB, EXTERNAL THREAD. NO. 8308-1135	
210	90141-0016	-		1	RETAIN. RING, 10	
220	90287-0112	A		1	SCREW SPRINGLOAD. SLOTTED HEAD M8X16	
240	2523600-0000	-		1	PIN	
250	312115-0323	-		1	SCREW MC6S M5X8 A280	
260	312115-0335	-		2	SCREW MC6S M5X30 A280	
270	312105-0370	-		2	SCREW M6S ISO 4017 M6X20 A480	
280	312115-0287	-		2	SCREW MC6S M4X8 A280	
290	312605-0314	-		1	HEXAGON NUT, M6M M5 A280	
300	312125-0291	-		2	SCREW PAN HEAD MCS M4X12 SS	
310	312155-0226	-		2	SCREW HEX.SOCK.COUNT.MF6S M3X12 A270	
350	312605-0316	-		1	HEXAGON NUT, M6M M6 A280	
360	312625-0318	-		1	NUT HEX. M8 SS	
400	315105-0153	-		3	WASHER PLAIN, BRB, 6,4/12,H=1,5	
490	353101-0132	-		1	CABLE SHOE, RING ø5,3MM	
500	353104-0130	A		2	CABLE SHOEYAV 025 M 4*	
MR034	1524481-0000	A		1	SEALING BLOCK	
W631	351120-0145	-	MM	1000	CABLE SIHF 3X25MM2 GREEN/YELLOW	

Pos	Part No	SP	UN	Qty	Description	Page No

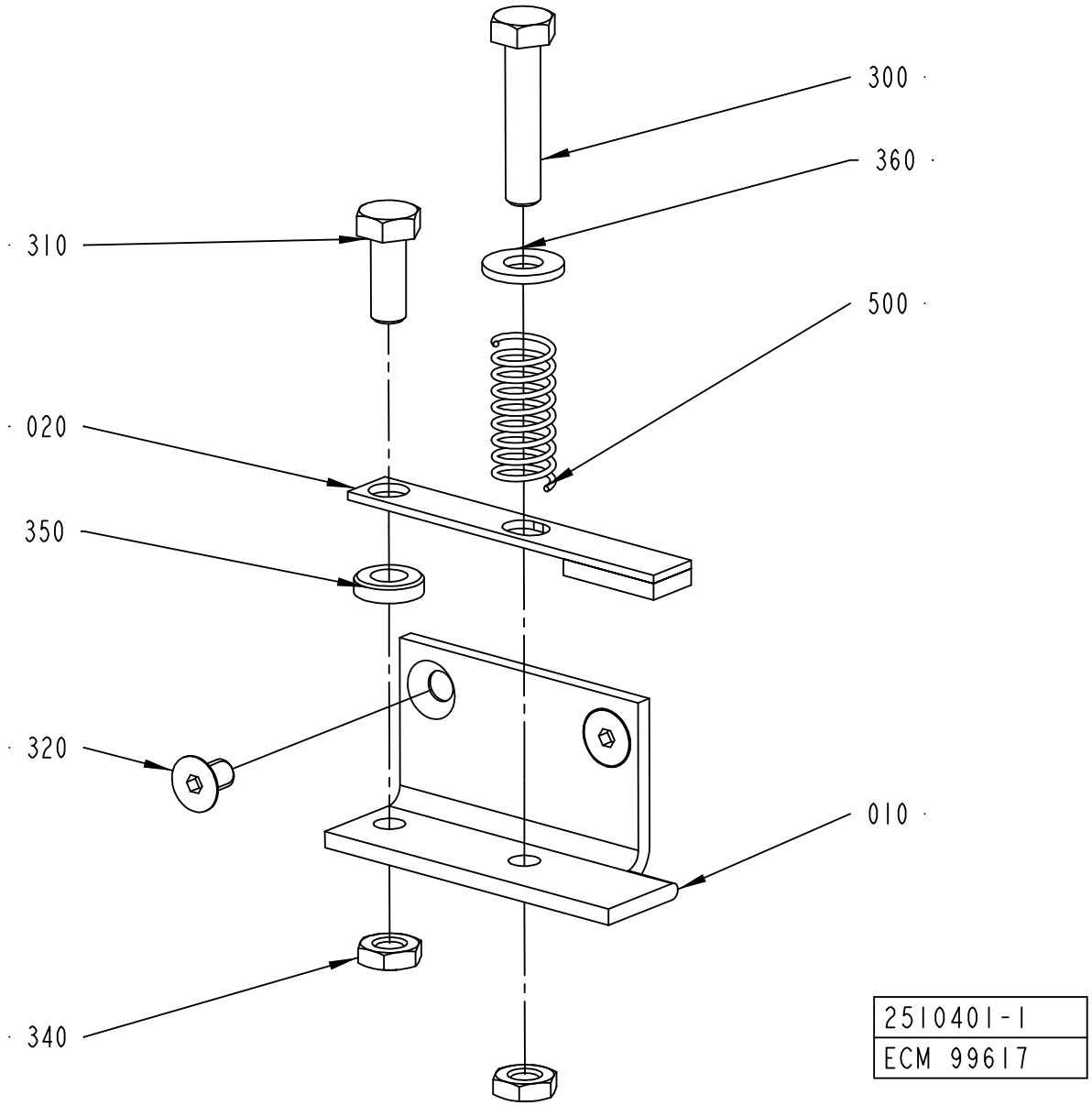
300
360
310
500
020
350
320
010
340
2510401-1
ECM 99617

ECM: 98136 - 20020314
Group number: 2510401-0100
Assembly Drawing: 2510401-1_1_AA

Issue: 20021022

Pos	Part No	SP	UN	Qty	Description	Page No
Common Parts						
010	2510399-0000	-		1	BRACKET	
020	2510400-0000	-		1	HOLDER	
300	312109-0374	-		1	SCREW M6S ISO 4017 M6X30 A480	
310	312105-0368	-		1	SCREW M6S M6X16 A280	
320	312155-0323	-		2	SCREW HEX.SOCK.COUNT.MF6S M5X8 A280	
340	312625-0316	-		2	NUT HEX. M6 SS	
350	315115-0153	-		1	WASHER PLAIN, TBRB 6,4/12 H=3	
360	315105-0156	-		1	WASHER PLAIN, BRB, 6,7/14,H=1,5	
500	90335-0025	-		1	COMP. SPRING 22010, 1X11X26	

Pos	Part No	SP	UN	Qty	Description	Page No

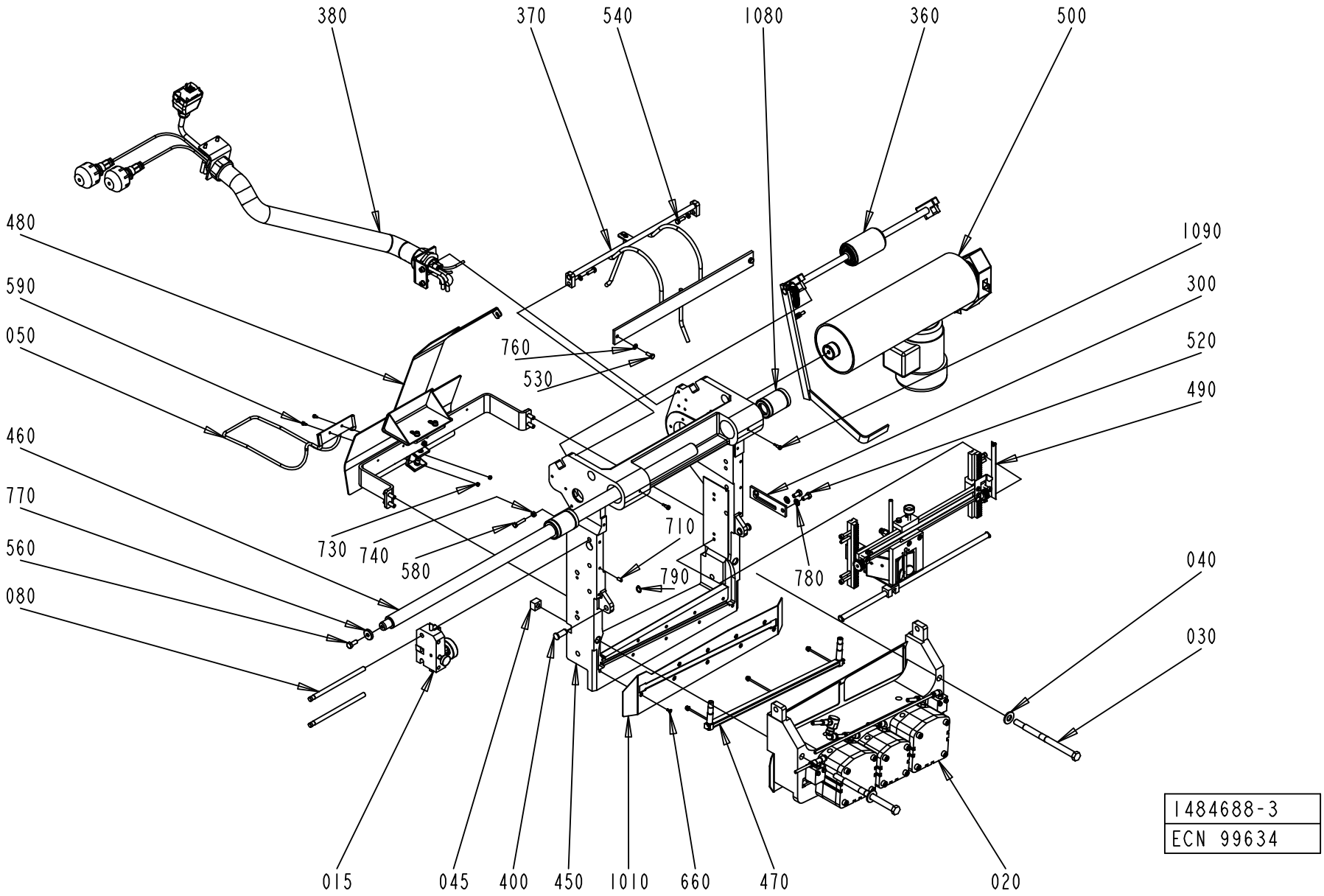
380
370
540
1080
360
500
480
590
050
760
530
1090
300
520
490
460
770
560
080
730
740
580
710
790
780
040
030
015
045
400
450
1010
660
470
020
1484688-3
ECN 99634

ECM: 101652 - 20020313
Group number: 1484688-0200
Assembly Drawing: 1484688-3_1_AA

Issue: 20021022

Pos	Part No	SP	UN	Qty	Description	Page No
Common Parts						
010	A1499578-0200	-		1	CABLE CONDUIT	**619**
015	A1484745-0100	-		1	WEB GUIDE	**621**
020	A1484690-0200	-		1	PRESSURE JAW	**623**
030	1484703-0000	-		2	TIE ROD	
040	1519955-0000	-		2	WASHER	
045	1519956-0000	-		2	WASHER	
050	1538203-0000	-		1	GUIDE RAIL	
060	A2529547-0100	-		1	PAPER GUIDE	**625**
080	1484704-0000	-		4	SHAFT	
1010	1498439-0000	-		1	RULE PLATE	
1080	90189-0005	A		2	BALL BUSHING, 30X47X68 MM	
1090	90287-0313	-		2	CENTERING SCREW	
300	1487517-0000	-		1	CATCH	
360	A2524600-0100	-		1	PRESSURE ROLLER	**627**
370	A1517114-0100	-		1	RAIL	**629**
400	1484781-0000	A		2	PIN	
450	1484689-0000	-		1	BRACKET	
460	1490820-0000	A		1	SHAFT	
470	A1524389-0100	-		1	TPO-BAR	**631**
480	A1524386-0100	-		1	BOW CLAMP	**633**
490	A1524387-0100	-		1	BAR CODE READER	**635**
500	A1524388-0100	-		1	DRIVE UNIT REAR	**637**
520	312105-0449	-		2	SCREW M6S ISO 4017 M8X16 A480	
530	312105-0368	-		2	SCREW M6S M6X16 A280	
540	312105-0370	-		2	SCREW M6S ISO 4017 M6X20 A480	
560	312105-0451	-		1	SCREW M6S ISO 4017 M8X20 A480	
580	312109-0374	-		1	SCREW M6S ISO 4017 M6X30 A480	
590	312105-0287	-		2	SCREW M6S ISO 4017 M4X8 A480	
660	312155-0289	-		9	SCREW HEX.SOCK.COUNT.MF6S M4X10 A480	
710	312318-0366	-		4	SCREW SOCK.SET CUP P MSK6SS M6X12 A4	
730	312605-0312	-		2	HEXAGON NUT, M6M M4 A280	
740	312605-0316	-		1	HEXAGON NUT, M6M M6 A280	
760	315105-0153	-		4	WASHER PLAIN, BRB, 6,4/12,H=1,5	
770	315125-0165	-		1	WASHER PLAIN ROUND,CHAMF. 8,4/26, H=5	
780	315105-0165	-		2	WASHER PLAIN, BRB, 8,4/16,H=1,5	
790	315751-0109	-		2	RETAIN. RING, 12	

Pos	Part No	SP	UN	Qty	Description	Page No

Machine Type | Group Description | Used-In | Group Number | Page No

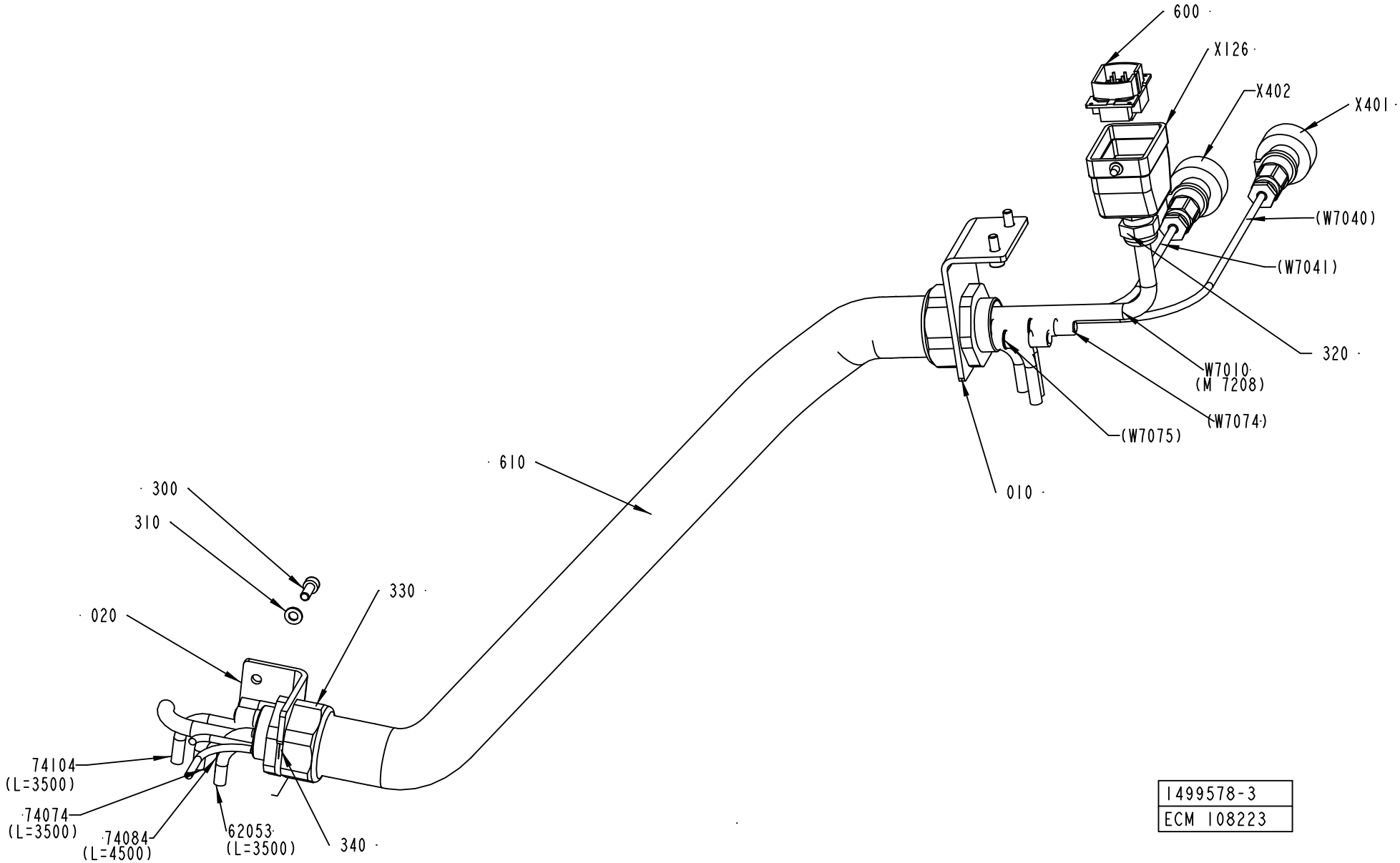

1499578-3
ECM 108223

ECM: 109344 - 20020816
Group number: 1499578-0200
Assembly Drawing: 1499578-3_1_AB

Issue: 20021022

Pos	Part No	SP	UN	Qty	Description	Page No
TBA/22						
X126	90110-0157	-		1	CABLE HOOD 6-POL 70.352.0628.1	
X401	90110-0235	-		1	CABLE CONTACT, PX0739/S	
X402	90110-0235	-		1	CABLE CONTACT, PX0739/S	
Common Parts						
010	1498426-0000	-		1	BRACKET	
020	2551949-0000	-		1	BRACKET	
300	312115-0368	-		4	SCREW MC6S M6X16 A280	
310	315105-0153	-		4	WASHER PLAIN, BRB, 6,4/12,H=1,5	
320	352103-0108	-		1	CABLE GLAND, ST 13,5 , PR20,4/PG13,5	
330	353243-0008	-		2	EXTENDED WITHOUT INSERT, PG29	
340	353249-0054	-		2	INSERT, SINGEL HOLE, EK 156/25	
600	90110-0159	A		1	MALE INSERT 70.310.0640.0	
610	90152-0060	-	MM	850	SPIRAL CONDUIT, 42X35, UL3529	
62053	90166-0194	-	M	3	TUBE 8 MM PUR BLUE	
74084	90166-0193	-	M	4	TUBE 6 MM PUR BLUE	
74104	90166-0194	-	M	3	TUBE 8 MM PUR BLUE	
W7010	90220-0104	-	M	8	SCR. CABLE 4X1,5MM2	

Pos	Part No	SP	UN	Qty	Description	Page No

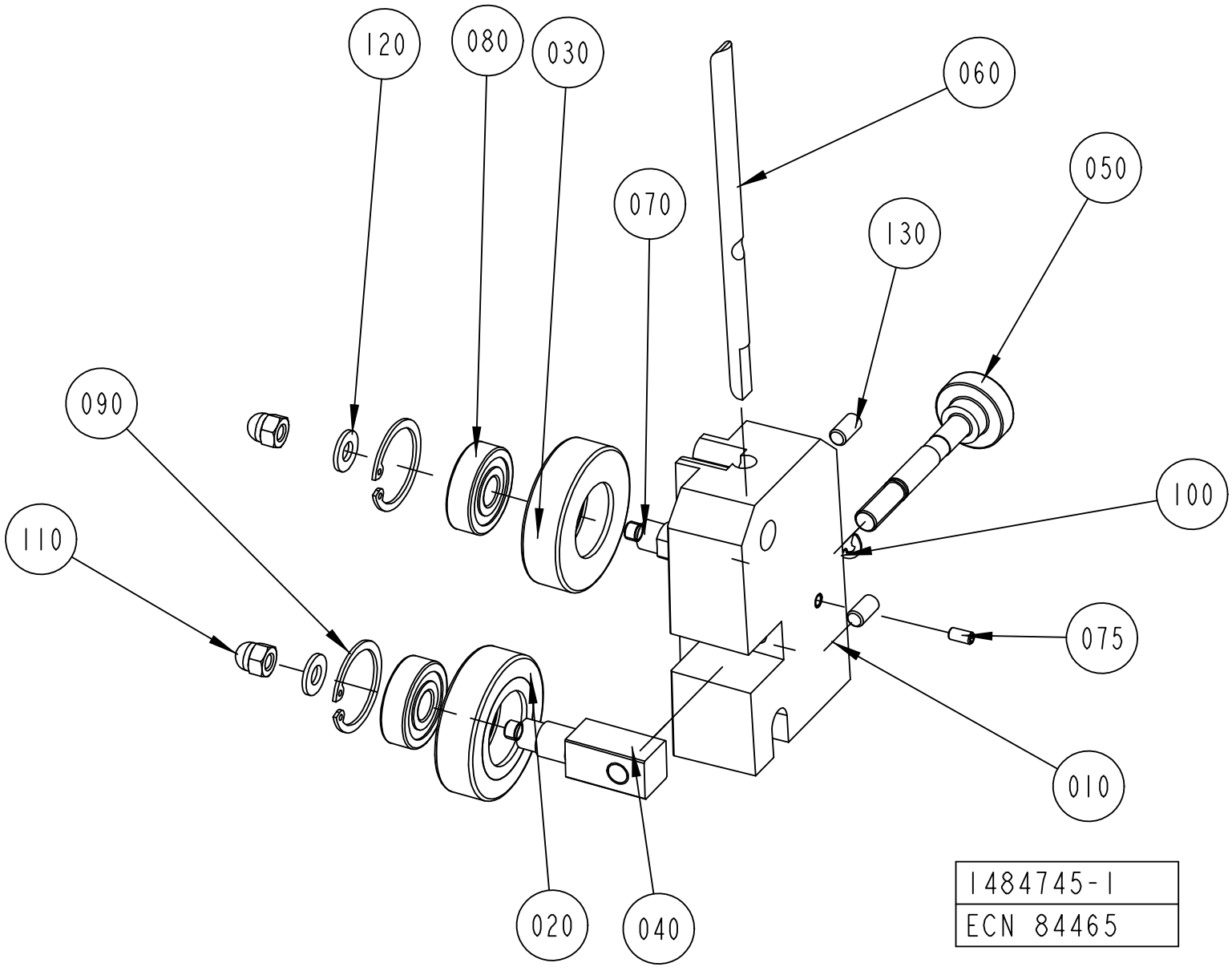
120
080
030
060
050
070
130
090
100
110
075
010
020
040
1484745-1
ECN 84465

ECM: 90447 - 20010924
Group number: 1484745-0100
Assembly Drawing: 1484745-1_1_AC

Issue: 20021022

Pos	Part No	SP	UN	Qty	Description	Page No
Common Parts						
010	1484750-0000	-		1	BRACKET	
020	1036623-0000	A		1	GUIDE ROLLER	
030	1036622-0000	A		1	GUIDE ROLLER	
040	1317711-0000	-		1	SHAFT	
050	1317712-0000	-		1	SHAFT	
060	1512526-0000	-		1	STEERING	
070	583727-0000	-		1	SHAFT	
075	312318-0287	-		1	SCREW SOCK.SET CUP P MSK6SS M4X8 A4	
080	321313-0100	A		2	BALL BEARING, 2 SEALS, 10X30X9 MM	
090	315753-0122	-		2	RETAIN. RING, 30	
100	315755-0108	-		1	LOCKING WASHER 6	
110	312705-0316	-		2	NUT HEX. DOMED CAP MHM-6 M6 A280	
120	315105-0156	-		2	WASHER PLAIN, BRB, 6,7/14,H=1,5	
130	312318-0366	-		2	SCREW SOCK.SET CUP P MSK6SS M6X12 A4	

Pos	Part No	SP	UN	Qty	Description	Page No

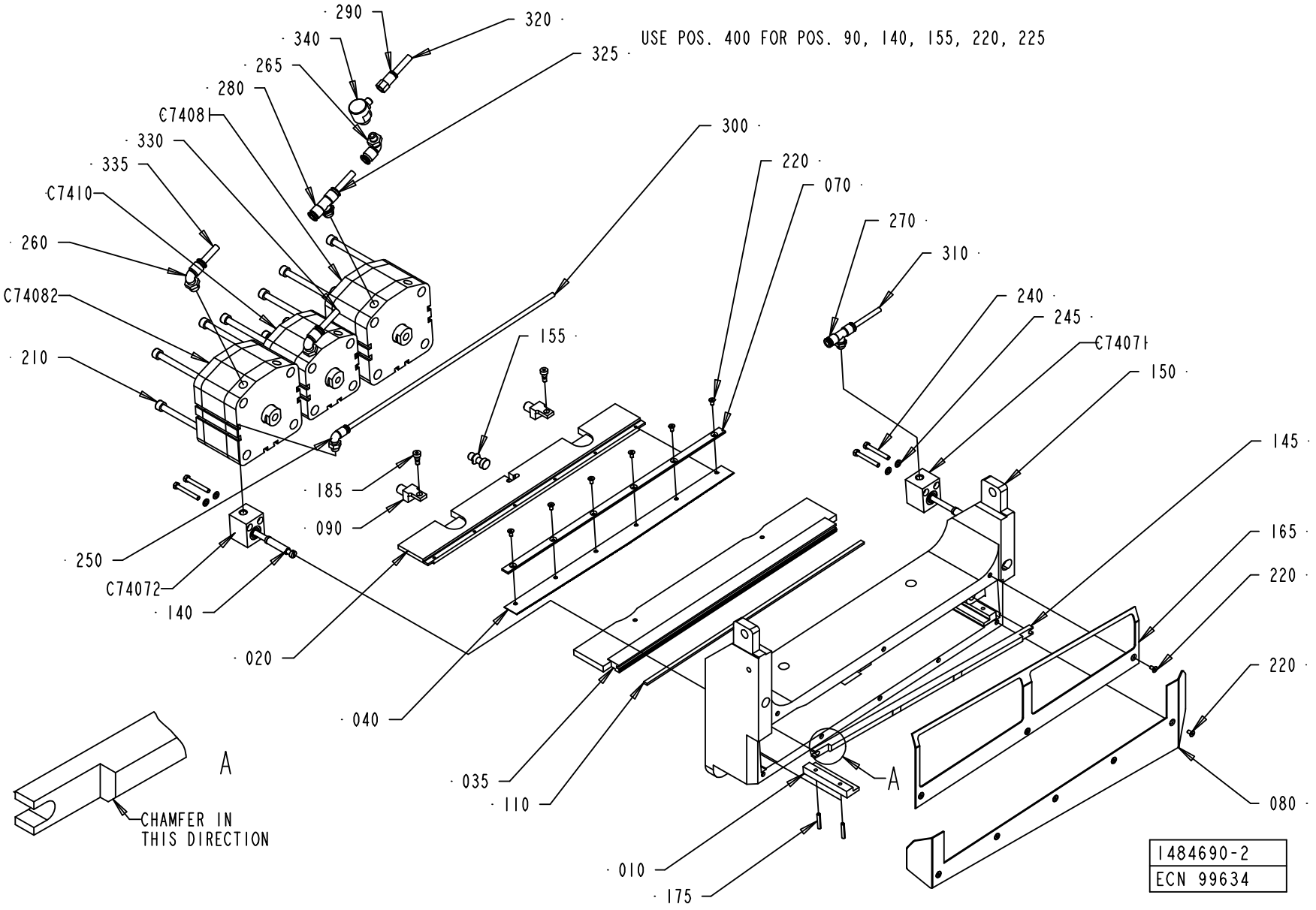
290
320
340
325
265
280
C74081
330
335
C7410
260
C74082
210
250
C74072
140
020
040
035
110
010
175
185
090
155
300
220
070
270
310
240
245
C74071
150
145
165
220
220
080
USE POS. 400 FOR POS. 90, 140, 155, 220, 225
A
A
CHAMFER IN THIS DIRECTION
1484690-2
ECN 99634

Pos	Part No	SP	UN	Qty	Description	Page No
Common Parts						
010	1484692-0000	A		2	SLIDING STRIP	
020	1484693-0000	A		1	KNIFE HOLDER	
035	2506674-0000	A		1	PRESSURE RAIL	
040	1484695-0000	A		1	KNIFE	
070	1519967-0000	-		1	CLAMP	
080	1487525-0000	-		1	RULE PLATE	
090	1548201-0000	A		2	DISTANCE	
110	2517066-0000	A		1	DOLLY	
140	1484696-0000	A		2	COMPRESSION ROD	
145	1487526-0000	-		1	RAIL	
150	1484691-0000	-		1	PRESSURE JAW	
155	1487534-0000	A		1	COUPLING BOLT	
165	1487524-0000	-		1	PLATE	
175	311112-0258	-		4	PIN, STRAIGHT SLOTTED SPRING FRP 4X24	
185	1558801-0000	-		2	SHOULDER SCREW	
210	312115-0467	-		13	SCREW MC6S M8X80 A280	
220	312155-0287	-		14	SCREW HEX.SOCK.COUNT.MF6S M4X8 A270	
240	312105-0339	-		4	SCREW M6S ISO 4014 M5X40 A480	
245	315105-0146	-		4	WASHER PLAIN, BRB, 5,3/10,H=1	
250	342732-0102	-		1	ELBOW PIPE JOINT, EXT.THREAD, D=6MM-G1/8	
260	342732-0104	-		2	ELBOW PIPE JOINT, EXT.THREAD, D=8MM-G1/4	
265	342732-0801	-		1	ELBOW PIPE JOINT, EXT.THREAD, D=8MM-G1/8	
270	342742-0102	-		1	T-COUPLING,ADJUST,F.PLASTIC TUBE 6-G1/8"	
280	342742-0104	-		1	T-COUPLING,ADJUST,F.PLASTIC TUBE 8-G1/4"	
290	342770-0107	-		1	STRAIGHT COUPLING INT, D=8 MM - G1/8	
300	90166-0193	-	MM	410	TUBE 6 MM PUR BLUE	
310	90166-0193	-	MM	3500	TUBE 6 MM PUR BLUE	
320	90166-0194	-	MM	3500	TUBE 8 MM PUR BLUE	
325	90166-0194	-	MM	50	TUBE 8 MM PUR BLUE	
330	90166-0194	-	MM	3500	TUBE 8 MM PUR BLUE	
335	90166-0194	-	MM	220	TUBE 8 MM PUR BLUE	
340	90235-0206	-		1	QUICK EXHAUST VALVE, SEU-1/8	
400	90157-0016	-	ML	1	LOCKING FLUID	
C74071	90450-0207	A		1	CYLINDER	
C74072	90450-0207	A		1	CYLINDER	
C74081	90450-0549	A		1	SINGLE ACTING, SHORT STROKE, CYL 100-15	
C74082	90450-0549	A		1	SINGLE ACTING, SHORT STROKE, CYL 100-15	
C7410	90450-0548	A		1	SINGLE ACTING, SHORT STROKE, CYL 80-25	

Pos	Part No	SP	UN	Qty	Description	Page No

Machine Type | Group Description | Used-In | Group Number | Page No

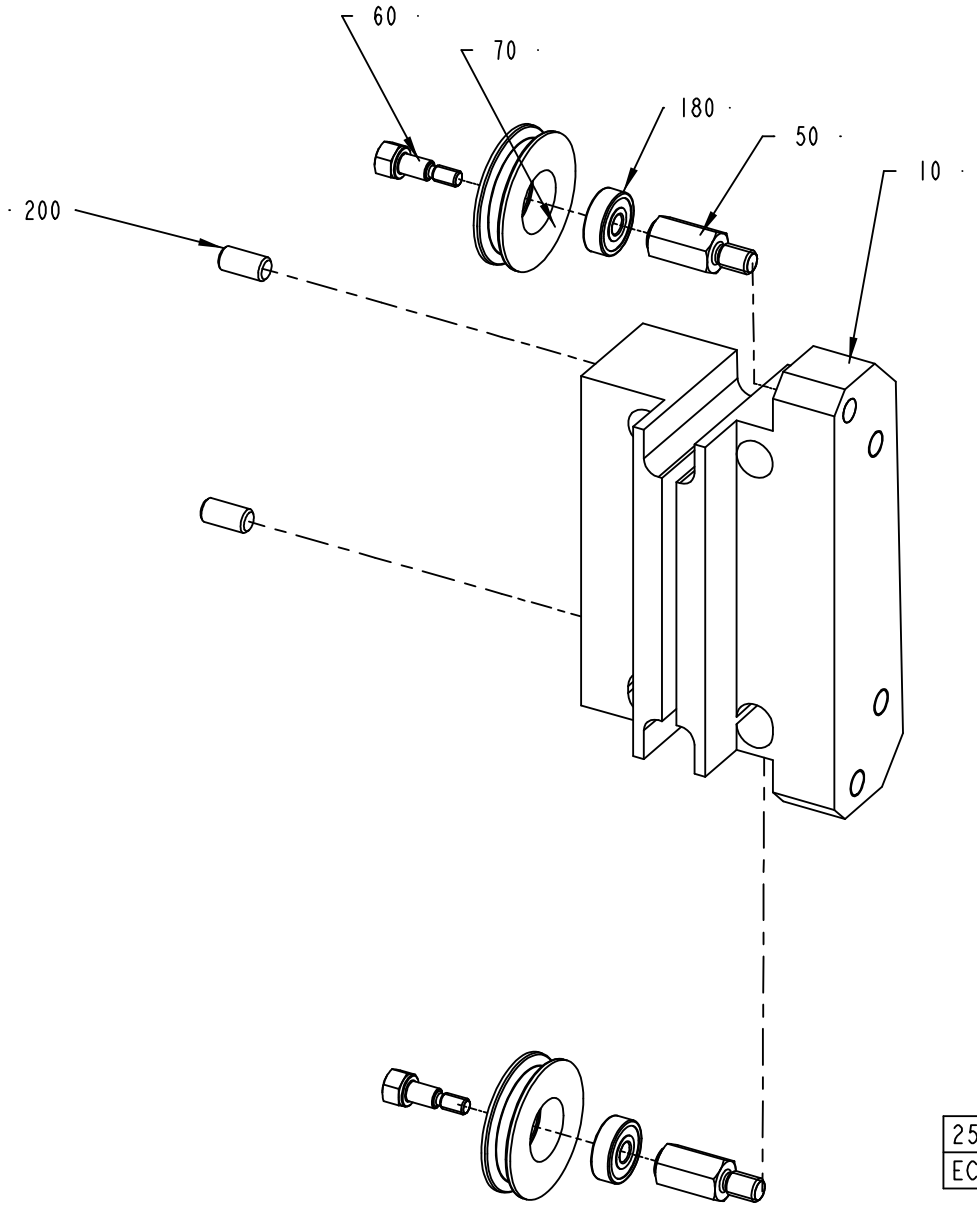
60
70
180
50
10
200
2529547-1
ECM 98954

ECM: 104872 - 20020315
Group number: 2529547-0100
Assembly Drawing: 2529547-1_1_AA

Issue: 20021022

Pos	Part No	SP	UN	Qty	Description	Page No
Common Parts						
010	2529546-0000	-		1	SUPPORT	
050	1558251-0000	-		2	SHAFT	
060	1558252-0000	-		2	SCREW	
070	1558253-0000	-		2	ROLLER	
180	90458-2950	-		2	BALL BEARING, 2 SEALS, 5X16X5 MM	
200	312318-0366	-		2	SCREW SOCK.SET CUP P MSK6SS M6X12 A4	

Pos	Part No	SP	UN	Qty	Description	Page No

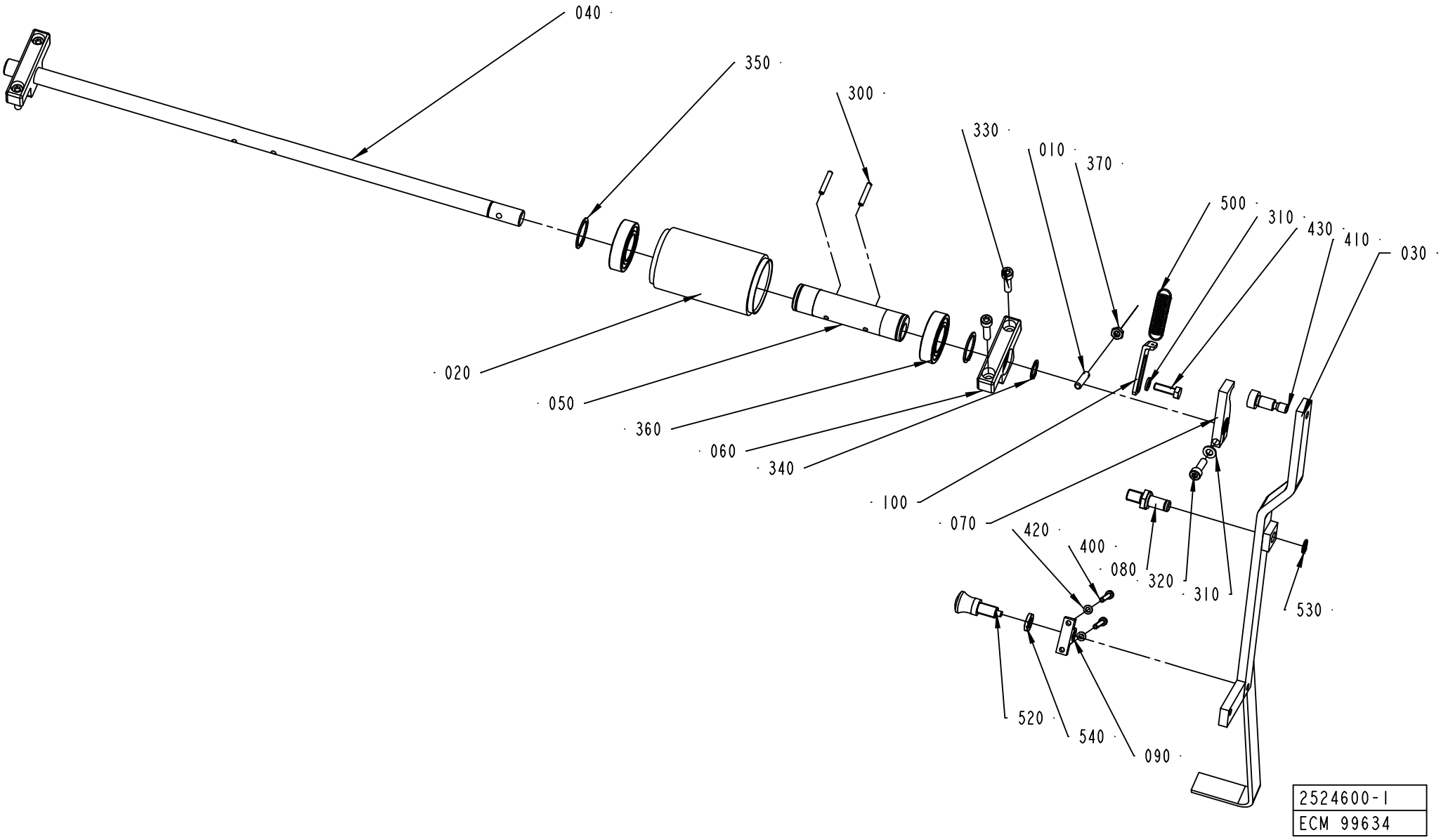
040
350
300
330
010
370
500
310
430
410
030
020
050
360
060
340
100
070
420
400
080
320
310
530
520
540
090
2524600-1
ECM 99634

Pos	Part No	SP	UN	Qty	Description	Page No
TBA/22						
030	2524602-0000	-		1	HANDLE	
070	2524604-0000	-		1	ROCKER ARM	
410	312180-0489	-		1	SCREW, HEX.SOCK.HEAD SHOULD. M8X16	
Common Parts						
010	578684-0000	-		1	SPRING BRACKET	
020	906254-0000	A		1	ROLLER	
040	1487763-0000	A		1	SHAFT	
050	1512267-0000	-		1	ECCENTRIC BUSHING	
060	1519583-0000	-		2	BRACKET	
080	2524601-0000	-		1	AXLE PIN	
090	2524603-0000	-		1	HOLDER	
100	2529549-0000	-		1	PLATE	
300	311112-0258	-		2	PIN, STRAIGHT SLOTTED SPRING FRP 4X24	
310	315105-0153	-		2	WASHER PLAIN, BRB, 6,4/12,H=1,5	
320	312115-0370	-		1	SCREW MC6S M6X20 A280	
330	312115-0372	-		4	SCREW MC6S M6X25 A280	
340	315751-0112	-		2	RETAIN. RING, 15	
350	315751-0119	-		2	RETAIN. RING, 25	
360	321308-0205	A		2	BALL BEARING, 2 SEALS, 25X47X12 MM	
370	312625-0316	-		1	NUT HEX. M6 SS	
400	312115-0297	-		2	SCREW MC6S M4X25 A280	
420	315105-0136	-		2	WASHER PLAIN, BRB, 4,3/8,H=0,8	
430	312105-0370	-		1	SCREW M6S ISO 4017 M6X20 A480	
500	90335-0091	-		1	TENSION SPRING 41890, 1,2X13X48,2	
520	90051-0087	-		1	LOCK KNOB, NO. GN 617 A5	
530	90141-0016	-		1	RETAIN. RING, 10	
540	90099-0007	-		1	HEXAGON NUT, M10X1, E 63 137 10	

Pos	Part No	SP	UN	Qty	Description	Page No

This page is intentionally left blank.

ECM: 99307 - 20011130
Group number: 1517114-0100
Assembly Drawing:

Issue: 20021022

Pos	Part No	SP	UN	Qty	Description	Page No
Common Parts						
020	1517113-0000	-		1	RAIL	
030	311103-0270	-		2	PARALLELL PIN, M6, 4X16 MM	
040	1519578-0000	-		2	MOUNTING BLOCK	
070	312311-0285	-		2	SCREW, SOCK.SET DOGPOINT M4X6	

Pos	Part No	SP	UN	Qty	Description	Page No

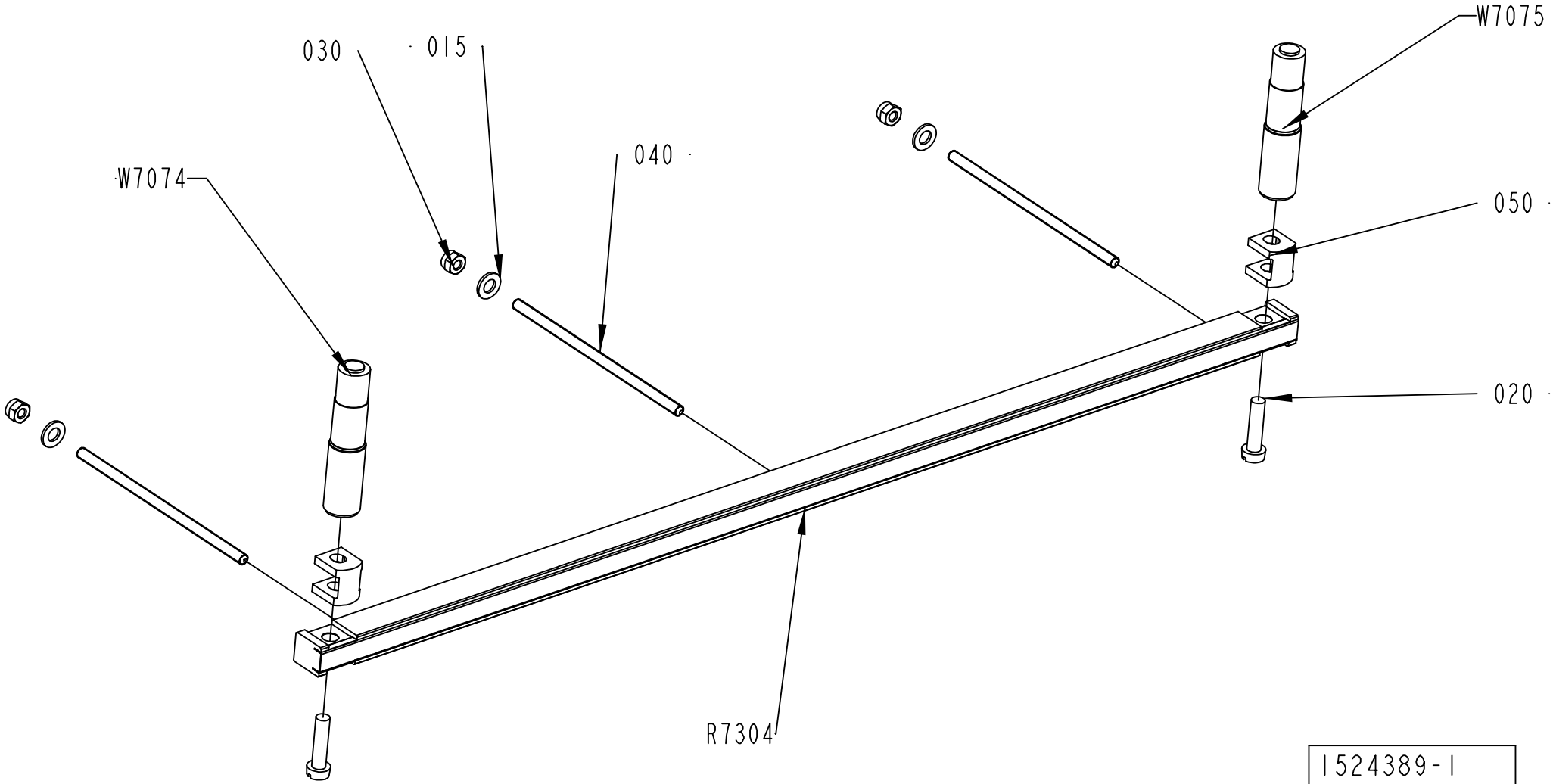

1524389-1
ECM 99634

ECM: 104914 - 20020313
Group number: 1524389-0100
Assembly Drawing: 1524389-1_1_AD

Issue: 20021022

Pos	Part No	SP	UN	Qty	Description	Page No
TBA/22						
R7304	1520972-0000	A		1	TPO-BAR	
W7074	1498433-0000	A		1	CABLE	
W7075	1498433-0000	A		1	CABLE	
Common Parts						
015	315105-0153	-		3	WASHER PLAIN, BRB, 6,4/12,H=1,5	
020	312122-0331	-		2	SCREW SLOT.PAN HD. MCS 5X20 BR NP	
030	312812-0312	-		3	HEXAGON NUT, NY-LOCK M4 A480	
040	1549328-0000	-		3	THREADED ROD	
050	1558797-0000	A		2	WASHER	

Pos	Part No	SP	UN	Qty	Description	Page No

This page is intentionally left blank.

ECM: 105967 - 20020313
Group number: 1524386-0100
Assembly Drawing:

Issue: 20021022

Pos	Part No	SP	UN	Qty	Description	Page No
Common Parts						
010	1490220-0000	-		1	ANGLE BRACKET	
020	1494664-0000	-		1	AXLE LINK	
040	1499566-0000	-		2	WASHER	
050	1512430-0000	A		1	VOLUME SHIM	
060	1519944-0000	-		1	BRACKET	
070	312105-0453	-		4	SCREW M6S ISO 4017 M8X25 A480	
080	312109-0376	-		2	SCREW M6S ISO 4017 M6X35 A480	
085	312105-0366	-		2	SCREW M6S M6X12 A280	
100	312812-0316	-		2	HEXAGON NUT, NY-LOCK M6 A480	
110	315105-0153	-		2	WASHER PLAIN, BRB, 6,4/12,H=1,5	
120	315105-0165	-		4	WASHER PLAIN, BRB, 8,4/16,H=1,5	
130	321120-0098	-		2	BEARING BUSHING WITHOUT FLANG,10/12X8	

Pos	Part No	SP	UN	Qty	Description	Page No

Machine Type | Group Description | Used-In | Group Number | Page No

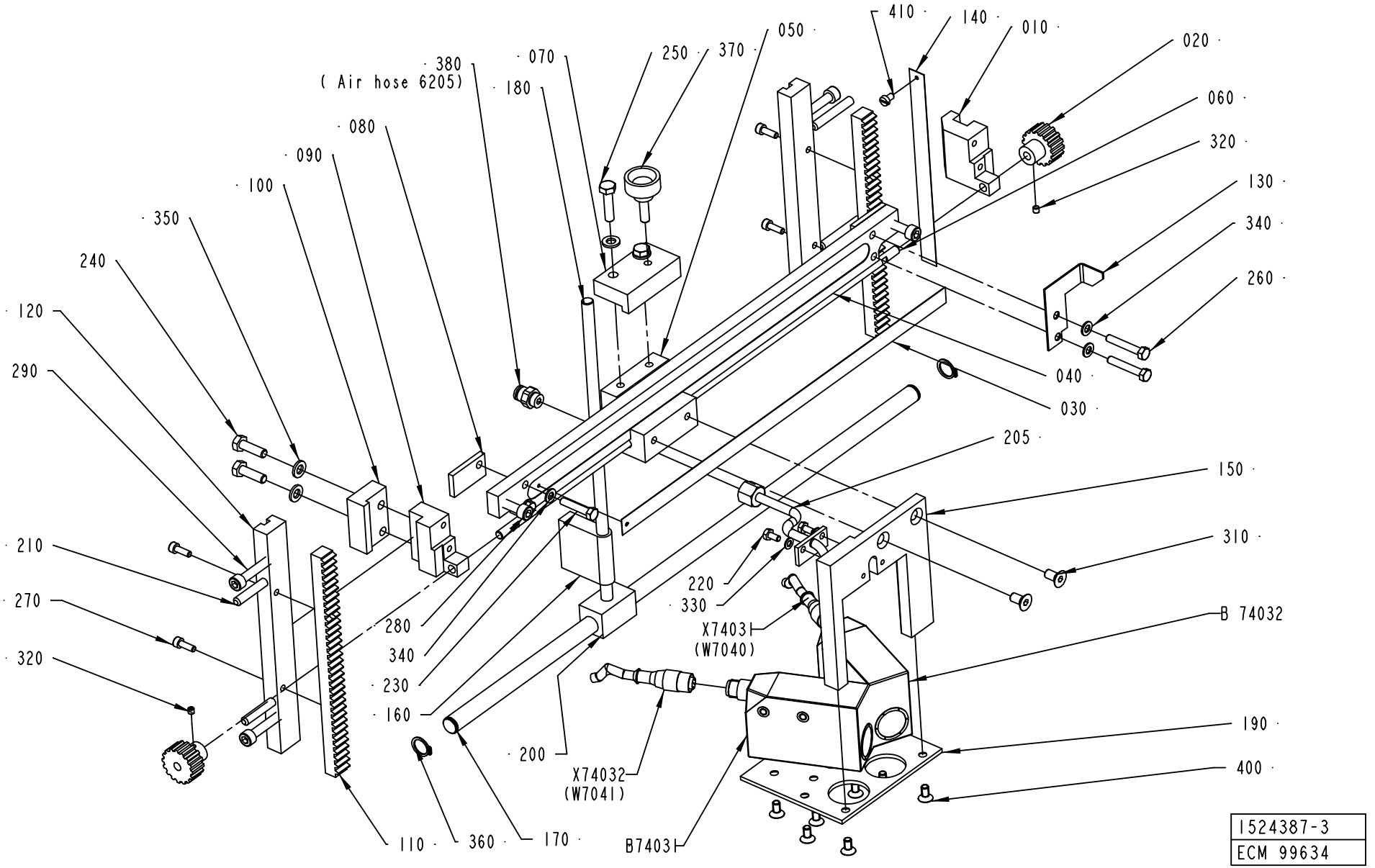
410
140
010
020
050
370
250
070
380
(Air hose 6205)
180
060
320
080
090
100
130
340
350
240
260
120
290
040
030
205
150
310
210
270
320
220
330
X7403
(W7040)
B 74032
280
340
230
160
190
200
X74032
(W7041)
400
110
360
170
B7403
1524387-3
ECM 99634

ECM: 105900 - 20020313
Group number: 1524387-0100
Assembly Drawing: 1524387-3_1_AA

Issue: 20021022

Pos	Part No	SP	UN	Qty	Description	Page No
TBA/22						
160	1487555-0000	-		1	BUSHING	
170	1487556-0000	-		1	BAR	
180	1487557-0000	-		1	BAR	
200	1487559-0000	-		1	SLIDER	
360	315751-0109	-		2	RETAIN. RING, 12	
B74031	90458-0602	-		1	PHOTOCELL,	
B74032	90458-0602	-		1	PHOTOCELL,	
X74031	90458-0603	-		1	CONNECTOR FEMALE 5 PINS	
X74032	90458-0603	-		1	CONNECTOR FEMALE 5 PINS	
Common Parts						
010	1484705-0000	-		1	SLIDER	
020	1484706-0000	A		2	GEAR WHEEL	
030	1484762-0000	-		1	MEASURING TAPE	
040	1484776-0000	-		1	RAIL	
050	1484777-0000	-		1	SLIDER	
060	1484779-0000	-		1	ROD	
070	1484782-0000	-		1	CLAMP BLOCK	
080	1484783-0000	-		2	CLAMPING ELEMENT	
090	1484784-0000	-		1	LOCATING PIECE	
100	1484785-0000	-		1	LOCATING PIECE	
110	1487510-0000	A		2	RACK GEAR	
120	1487511-0000	-		2	BRACKET	
130	1487515-0000	-		1	INDICATION	
140	1487516-0000	-		1	MEASURING TAPE	
150	1487554-0000	-		1	BRACKET	
190	1487558-0000	-		1	FASTENING PLATE	
205	1519580-0000	-		1	GUIDE FINGER	
210	311103-0361	-		4	PARALLELL PIN, M6, 6X40 MM	
220	312105-0287	-		2	SCREW M6S ISO 4017 M4X8 A480	
230	312105-0333	-		2	SCREW M6S ISO 4017 M5X25 A480	
240	312105-0370	-		2	SCREW M6S ISO 4017 M6X20 A480	
250	312105-0372	-		2	SCREW M6S ISO 4017 M6X25 A480	
260	312109-0335	-		2	SCREW M6S ISO 4017 M5X30 A480	
270	312115-0291	-		4	SCREW MC6S M4X12 A280	
280	312115-0370	-		2	SCREW MC6S M6X20 A280	
290	312115-0374	-		4	SCREW MC6S M6X30 A280	
310	312155-0366	-		2	SCREW HEX.SOCK.COUNT.MF6S M6X12 A280	
320	312318-0283	-		2	SCREW SOCK.SET CUP P MSK6SS M4X4 A4	
330	315105-0136	-		2	WASHER PLAIN, BRB, 4,3/8,H=0,8	
340	315105-0146	-		4	WASHER PLAIN, BRB, 5,3/10,H=1	
350	315105-0153	-		4	WASHER PLAIN, BRB, 6,4/12,H=1,5	
370	90051-0083	-		1	KNOB, EXTERNAL THREAD. NO. 8308-1321	
380	342722-0202	-		1	PIPE COUPLING 1/8" D=6MM	
400	312155-0325	-		8	SCREW HEX.SOCK.COUNT.MF6S M5X10 A280	
410	312125-0285	-		1	SCREW SLOT.PAN HD. MCS 4X6 A480	

Machine Type | Group Description | Used-In | Group Number | Page No

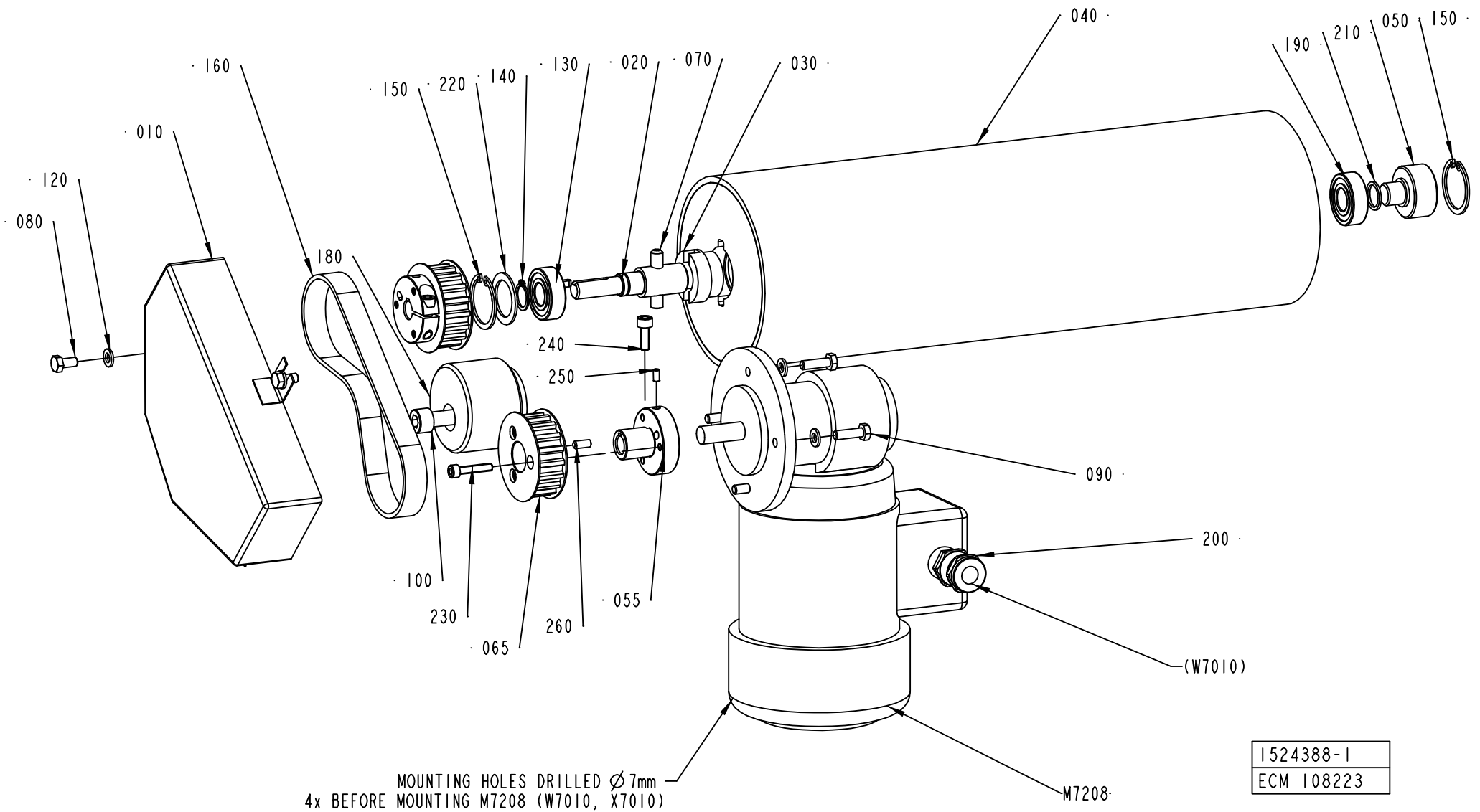
040
190
210
050
150
160
150
220
140
130
020
070
030
010
120
080
180
240
250
090
200
100
230
065
260
055
(W7010)
MOUNTING HOLES DRILLED ∅7mm
4x BEFORE MOUNTING M7208 (W7010, X7010)
M7208
1524388-1
ECM 108223

Pos	Part No	SP	UN	Qty	Description	Page No
TBA/22						
M7208	90069-0600	-		1	GEARS, WORM MOTOR ODM90-60KE5	
Common Parts						
010	1487512-0000	-		1	COVER	
020	1487762-0000	A		1	SHAFT	
030	1487787-0000	-		1	BUSHING	
040	1519584-0000	-		1	BENDING ROLLER	
050	1519597-0000	-		1	AXLE PIN	
055	2540770-0000	-		2	BUSHING	
065	2540769-0000	A		2	TOOTHED PULLEY	
070	311103-0409	-		1	PARALLELL PIN, M6, 8X40 MM	
080	312105-0366	-		3	SCREW M6S M6X12 A280	
090	312105-0370	-		4	SCREW M6S ISO 4017 M6X20 A480	
100	312115-0500	-		1	SCREW MC6S M10X45 A280	
120	315105-0153	-		7	WASHER PLAIN, BRB, 6,4/12,H=1,5	
130	315701-0170	-		1	PARALLEL KEY W. ROUND ENDS 4X4X20 MM	
140	315751-0112	-		1	RETAIN. RING, 15	
150	315753-0124	-		2	RETAIN. RING, 35	
160	90417-0311	-		1	TIMING BELT T10X440X16 POLYURETHANE	
180	90344-0078	A		1	PULLEY	
190	321313-0102	-		2	BALL BEARING, 2 SEALS, 15X35X11 MM	
200	90012-0137	-		1	GLAND, EXTENDED WITH INSERT, PG11	
210	1558989-0000	A		1	SHIMS	
220	1558990-0000	A		1	SHIMS	
230	312115-0333	-		6	SCREW MC6S M5X25 A280	
240	312115-0368	-		2	SCREW MC6S M6X16 A280	
250	312318-0287	-		2	SCREW SOCK.SET CUP P MSK6SS M4X8 A4	
260	311103-0306	-		2	PARALLELL PIN, M6, 5X12 MM	

Pos	Part No	SP	UN	Qty	Description	Page No

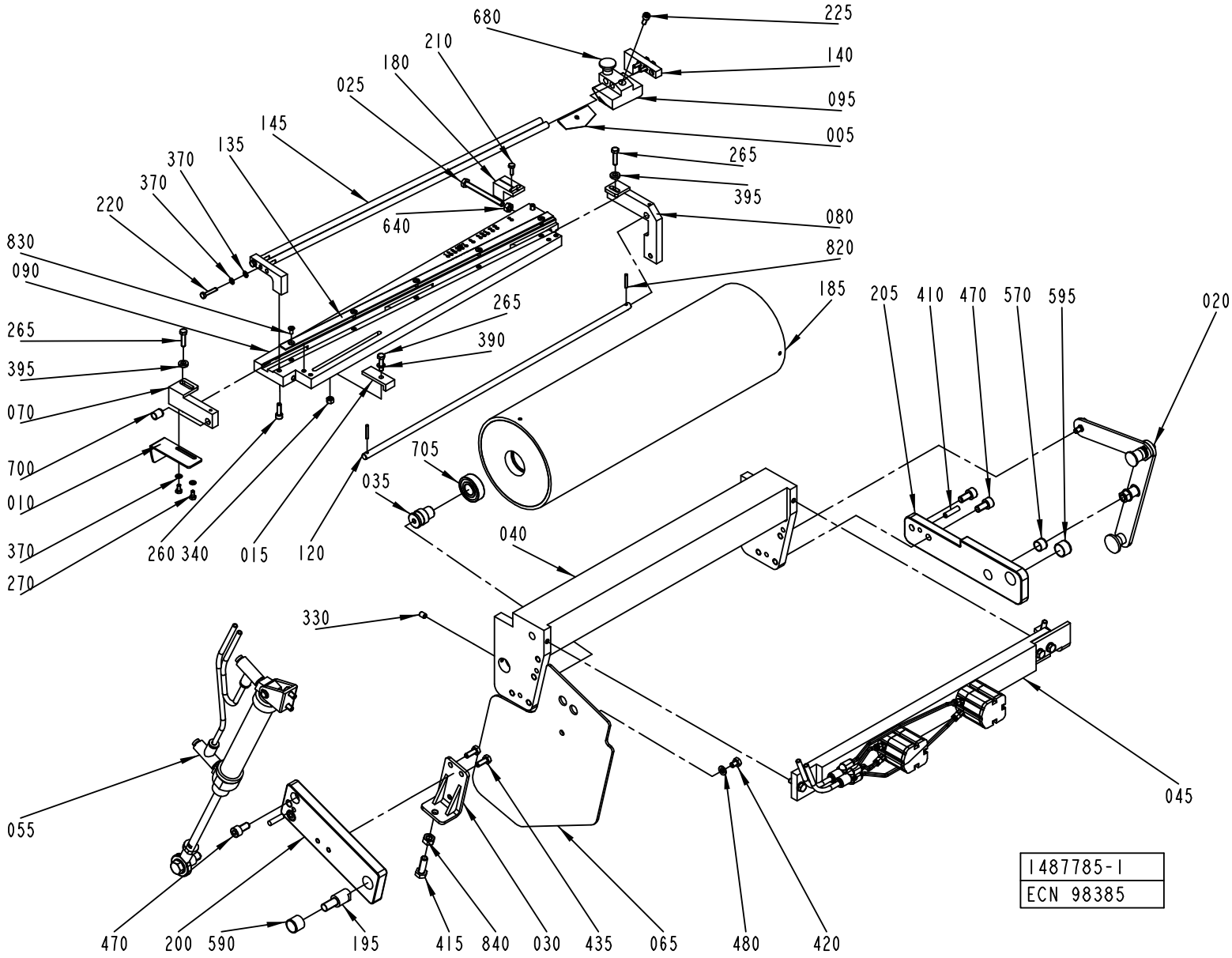
680
225
210
140
180
095
025
005
145
265
135
395
370
080
370
640
220
820
830
090
185
205 410 470 570 595
020
265
390
265
395
070
705
700
035
010
040
370
260 340
015
120
270
330
055
045
470
200 590
195
415 840
030
435
065
480
420
1487785-1
ECN 98385

ECM: 107169 - 20020705
Group number: 1487785-0100
Assembly Drawing: 1487785-1_1_AD

Issue: 20021022

Pos	Part No	SP	UN	Qty	Description	Page No
Common Parts						
005	596678-0000	A		1	KNIFE	
010	2538065-0000	-		1	REFLECTOR	
015	1490821-0000	-		1	ANGLE PIECE	
020	A1524398-0100	-		1	HANDLE	**641**
025	1490832-0000	A		2	SCREW	
030	1490199-0000	-		1	BRACKET	
035	1499582-0000	A		2	AXLE PIN	
040	1487770-0000	-		1	BRACKET	
045	A1524397-0100	-		1	MATERIAL HOLDER	**643**
050	2538071-0000	-		1	ANGLE PIECE	
055	A1524394-0100	-		1	CYLINDER	**645**
065	1512276-0000	-		1	PROTECTION PLATE	
070	1487774-0000	-		1	ROCKER ARM	
080	1487775-0000	-		1	ROCKER ARM	
090	1487776-0000	-		1	CUTTING TABLE	
095	1524746-0000	A		1	KNIFE HOLDER	
120	1487779-0000	-		1	SHAFT	
135	1487518-0000	-		1	RULER	
140	1487781-0000	-		2	BRACKET	
145	1487782-0000	-		2	SHAFT	
185	1499588-0000	A		1	BENDING ROLLER	
195	1511568-0000	B		1	PIN	
200	1511574-0000	-		1	ARM	
205	1511575-0000	-		1	ARM	
210	312105-0291	-		1	SCREW M6S ISO 4017 M4X12 A480	
220	312105-0295	-		4	SCREW M6S ISO 4017 M4X20 A480	
225	312115-0327	-		1	SCREW MC6S M5X12 A280	
260	312115-0329	-		2	SCREW MC6S M5X16 A280	
265	312105-0331	-		3	SCREW M6S ISO 4017 M5X20 A480	
270	312105-0287	-		2	SCREW M6S ISO 4017 M4X8 A480	
330	312318-0362	-		2	SCREW SOCK.SET CUP P MSK6SS M6X8 A4	
340	312605-0314	-		1	HEXAGON NUT, M6M M5 A280	
370	315105-0136	-		11	WASHER PLAIN, BRB, 4,3/8,H=0,8	
390	315105-0146	-		1	WASHER PLAIN, BRB, 5,3/10,H=1	
395	315115-0153	-		2	WASHER PLAIN, TBRB 6,4/12 H=3	
410	311103-0355	-		2	PARALLELL PIN, M6, 6X25 MM	
415	312105-0453	-		1	SCREW M6S ISO 4017 M8X25 A480	
420	312105-0362	-		1	SCREW M6S ISO 4017 M6X8 A480	
435	312105-0368	-		2	SCREW M6S M6X16 A280	
470	312115-0449	-		2	SCREW MC6S M8X16 A280	
480	315105-0153	-		1	WASHER PLAIN, BRB, 6,4/12,H=1,5	
510	312155-0453	-		2	SCREW HEX.SOCK.COUNT.MF6S M8X25 A280	
570	321120-0109	A		1	BEARING BUSHING WITHOUT FLANGE,12/14X10	
590	321120-0125	B		1	BEARING BUSHING WITHOUT FLANGE,16/18X15	
595	321120-0123	B		1	BEARING BUSHING WITHOUT FLANGE,16/18X12	
640	312605-0316	-		2	HEXAGON NUT, M6M M6 A280	
680	318871-0102	-		1	KNOB CIRCULAR, EXT THREAD, NO. 8302-6037	
700	321120-0100	A		2	BEARING BUSHING WITHOUT FLANGE,8/10X12	
705	321313-0102	A		2	BALL BEARING, 2 SEALS, 15X35X11 MM	
820	90258-0031	-		2	PIN, STRAIGHT SLOTTED SPRING FRP 3X20	
830	312145-0287	-		5	SCREW COUNTERS.SLOT.HD. MFS 4X8 SS	
840	312605-0318	-		1	HEXAGON NUT, M6M M8 A280	

Machine Type | Group Description | Used-In | Group Number | Page No

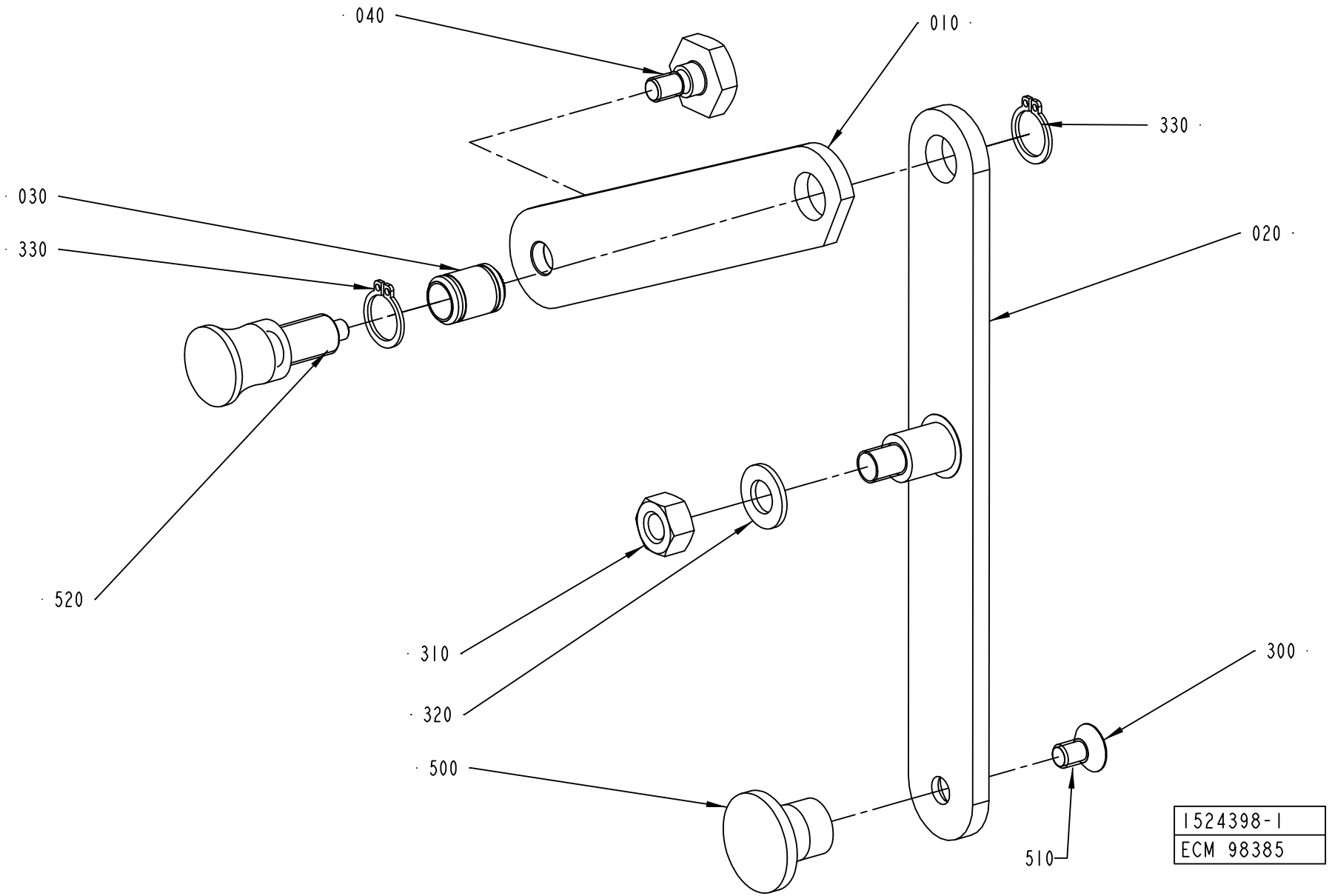
040
010
330
030
330
020
520
310
320
300
500
510
1524398-1
ECM 98385

ECM: 100842 - 20020308
Group number: 1524398-0100
Assembly Drawing: 1524398-1_1_AC

Issue: 20021022

Pos	Part No	SP	UN	Qty	Description	Page No
Common Parts						
010	1490809-0000	-		1	ARM	
020	1490810-0000	-		1	ARM	
030	1490812-0000	B		1	AXLE	
040	1490813-0000	-		1	SCREW	
300	312155-0364	-		1	SCREW HEX.SOCK.COUNT.MF6S M6X10 A280	
310	312605-0318	-		1	HEXAGON NUT, M6M M8 A280	
320	315105-0165	-		1	WASHER PLAIN, BRB, 8,4/16,H=1,5	
330	315751-0109	-		2	RETAIN. RING, 12	
500	90051-0082	-		1	KNOB, CIRCUL, THREADED BUSH, M6 25X21 MM	
510	90157-0016	-		1	LOCKING FLUID	
520	90051-0087	-		1	LOCK KNOB, NO. GN 617 A5	

Pos	Part No	SP	UN	Qty	Description	Page No

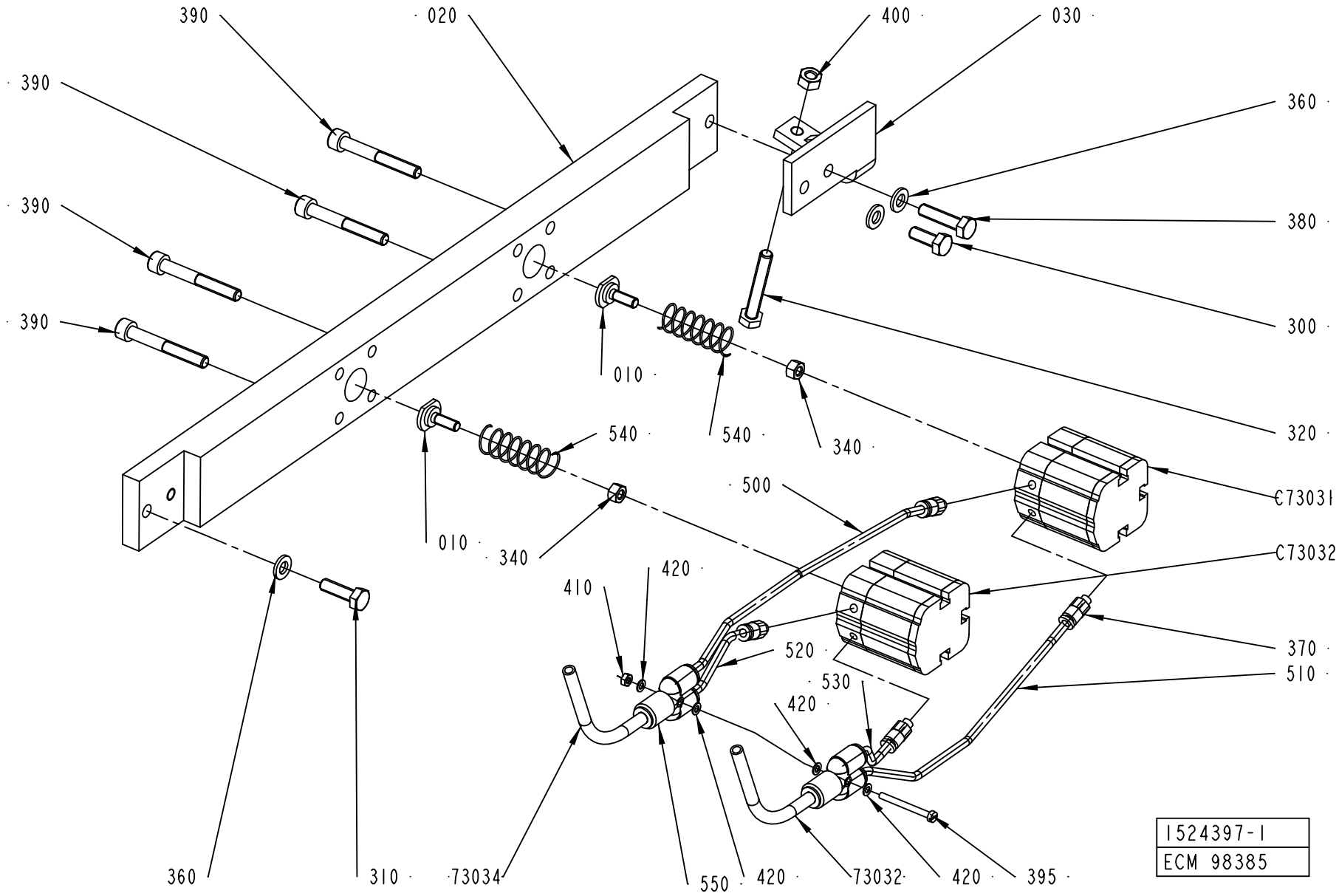
390
020
400
030
390
360
390
380
390
300
010
540
540
340
320
500
C73031
010
340
C73032
420
410
370
520
510
530
420
360
310
73034
550
420
73032
420
395
1524397-1
ECM 98385

ECM: 108467 - 20020705
Group number: 1524397-0100
Assembly Drawing: 1524397-1_1_AB

Issue: 20021022

Pos	Part No	SP	UN	Qty	Description	Page No
TBA/22						
73032	90166-0081	-	MM	6000	TUBE 6 MM PA BLUE	
73034	90116-0081	-	MM	6000	HOSE	
C73031	90450-0551	A		1	DOUBLE ACTING, COMPACT, CYL 20-10	
C73032	90450-0551	A		1	DOUBLE ACTING, COMPACT, CYL 20-10	
Common Parts						
010	1036695-0000	C		2	LOCK STUD	
020	1487773-0000	-		1	CYLINDER BRACKET	
030	1490203-0000	-		1	SPACER	
300	312105-0368	-		1	SCREW M6S M6X16 A280	
310	312105-0370	-		1	SCREW M6S ISO 4017 M6X20 A480	
320	312109-0378	-		1	SCREW M6S ISO 4017 M6X40 A480	
340	312605-0314	-		2	HEXAGON NUT, M6M M5 A280	
360	315105-0153	-		3	WASHER PLAIN, BRB, 6,4/12,H=1,5	
370	342722-0198	-		4	STRAIGHT COUPLING	
380	312105-0372	-		1	SCREW M6S ISO 4017 M6X25 A480	
390	312115-0378	-		4	SCREW MC6S M6X40 A280	
395	312125-0234	-		1	SCREW PAN HEAD MCS M3X30 SS	
400	312605-0316	-		1	HEXAGON NUT, M6M M6 A280	
410	312605-0310	-		1	HEXAGON NUT, M6M M3 A280	
420	315105-0124	-		4	WASHER PLAIN, BRB, 3,2/6,H=0,5	
500	90166-0095	-	MM	300	TUBE 4 MM PA BLUE	
510	90166-0095	-	MM	300	TUBE 4 MM PA BLUE	
520	90166-0095	-	MM	200	TUBE 4 MM PA BLUE	
530	90166-0095	-	MM	200	TUBE 4 MM PA BLUE	
540	90335-0183	A		2	COMP. SPRING 12220, 1,25X13,1X62,5	
550	90055-0154	-		2	HOSE COUPLING	

Pos	Part No	SP	UN	Qty	Description	Page No

Machine Type | Group Description | Used-In | Group Number | Page No

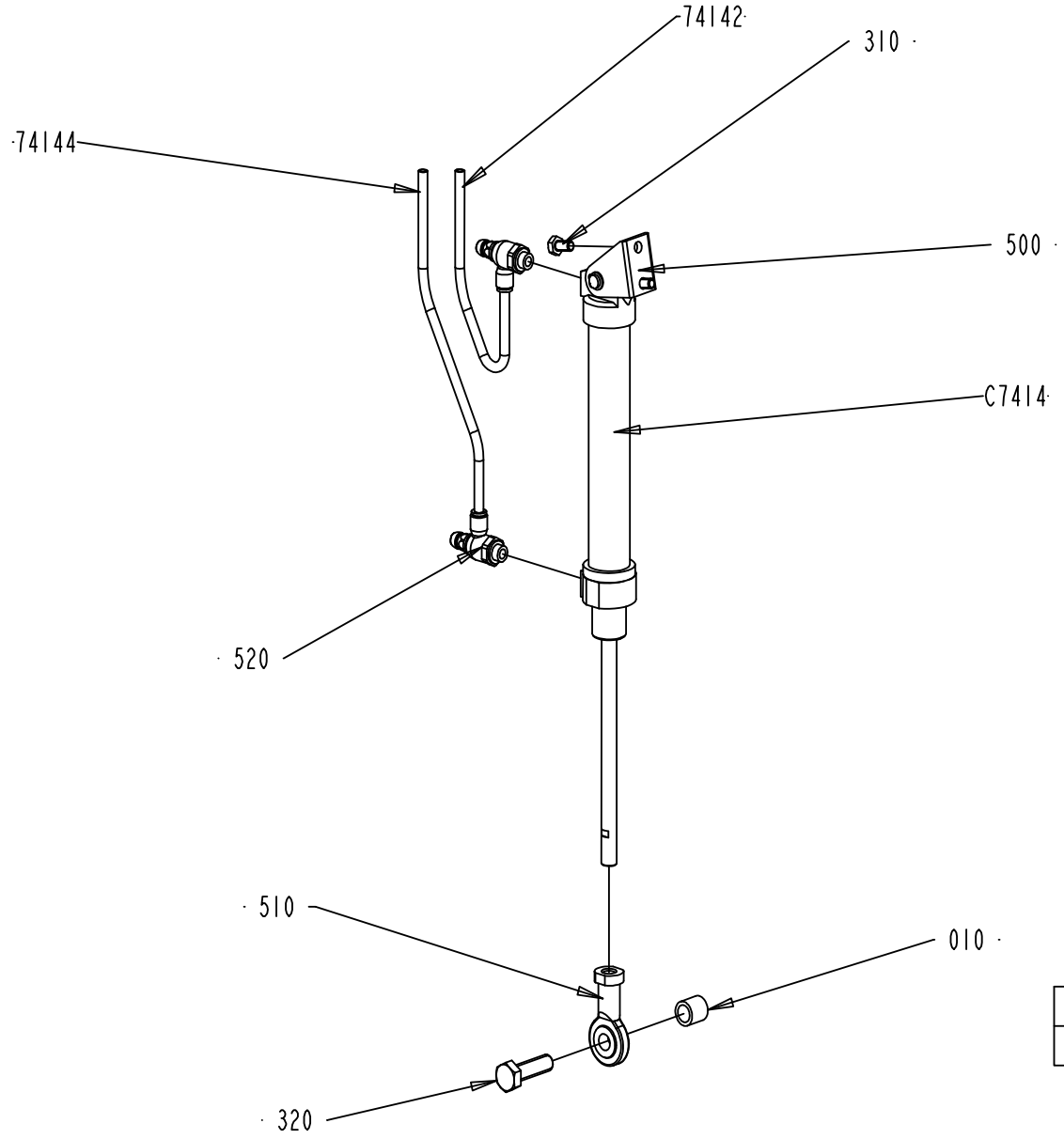
74142
310
74144
500
C7414
520
510
010
320
1524394-1
ECM 106975

ECM: 108470 - 20020705
Group number: 1524394-0100
Assembly Drawing: 1524394-1_1_AD

Issue: 20021022

Pos	Part No	SP	UN	Qty	Description	Page No
TBA/22						
74142	90166-0081	-	MM	6000	TUBE 6 MM PA BLUE	
74144	90166-0081	-	MM	6000	TUBE 6 MM PA BLUE	
C7414	90239-0832	A		1	DOUBLE ACTING, MINI-ISO, CYL. 25-125	
Common Parts						
010	1511569-0000	-		1	SPACER	
310	312105-0366	-		2	SCREW M6S M6X12 A280	
320	312105-0497	-		1	SCREW M6S ISO 4017 M10X35 A480	
500	90239-0487	-		1	REAR,CLEVIS,MINI-ISO 20-25	
510	90239-0405	A		1	ROD END,BALL JOINT EYE,MINI-ISO M10X1,25	
520	90235-0846	A		2	THROTTLE CHECK VALVE G1/8", MANUAL, 6	

Pos	Part No	SP	UN	Qty	Description	Page No

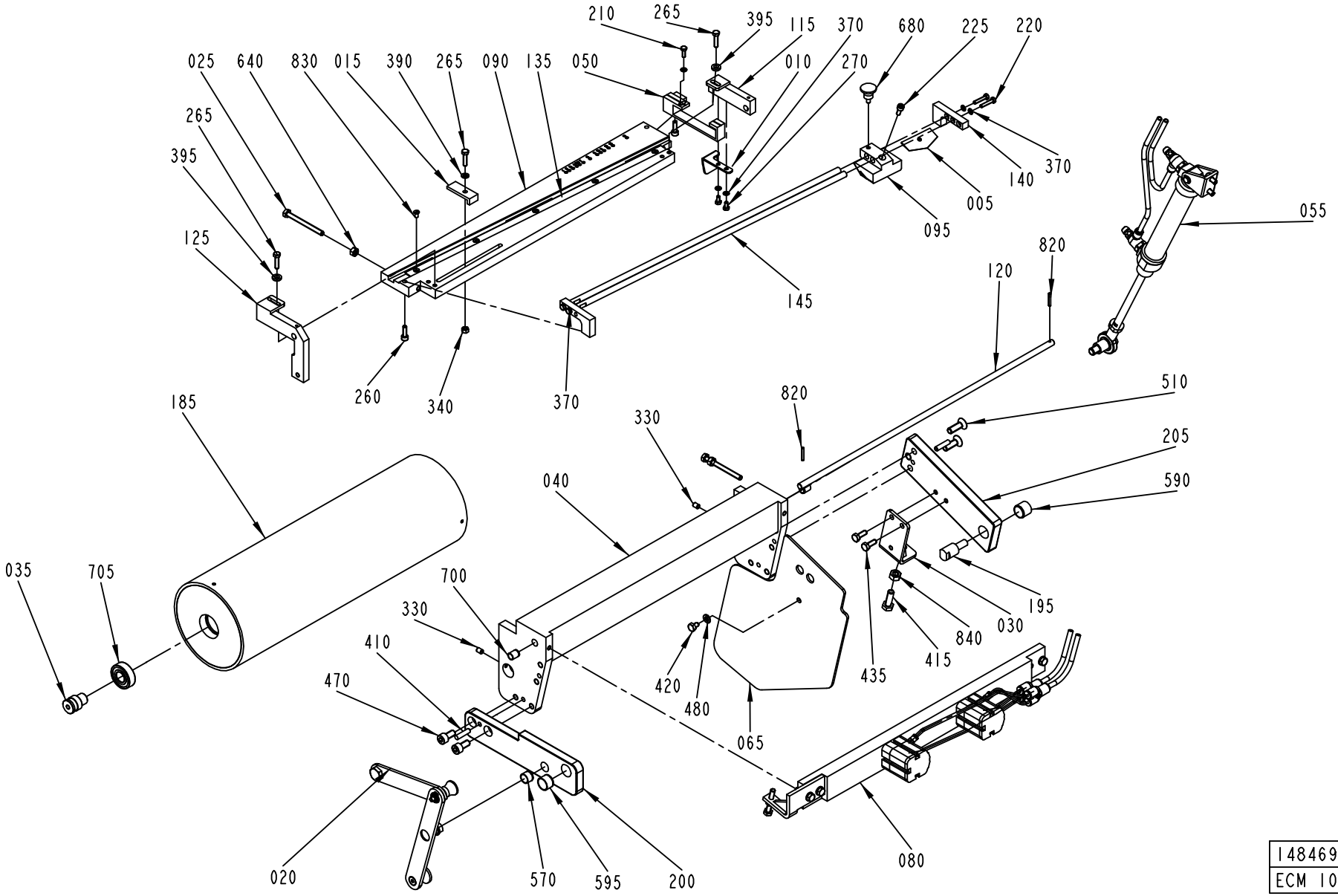

1484699-1
ECM 106975

ECM: 110416 - 20020705
Group number: 1484699-0100
Assembly Drawing: 1484699-1_1_AE

Issue: 20021022

Pos	Part No	SP	UN	Qty	Description	Page No
Common Parts						
005	596678-0000	A		1	KNIFE	
010	2538064-0000	-		1	REFLECTOR	
015	1490821-0000	-		1	ANGLE PIECE	
020	A1519589-0100	-		1	HANDLE	**649**
025	1490832-0000	A		2	SCREW	
030	1490199-0000	-		1	BRACKET	
035	1499582-0000	A		2	AXLE PIN	
040	1487770-0000	-		1	BRACKET	
050	2538071-0000	-		1	ANGLE PIECE	
055	A1487528-0100	-		1	CYLINDER	**651**
065	1512276-0000	-		1	PROTECTION PLATE	
080	A1524729-0100	-		1	MATERIAL HOLDER	**653**
090	1487776-0000	-		1	CUTTING TABLE	
095	1524746-0000	-		1	KNIFE HOLDER	
115	1487772-0000	-		1	ROCKER ARM	
120	1487779-0000	-		1	SHAFT	
125	1487777-0000	-		1	ROCKER ARM	
135	1487518-0000	-		1	RULER	
140	1487781-0000	-		2	BRACKET	
145	1487782-0000	-		2	SHAFT	
185	1499588-0000	A		1	BENDING ROLLER	
195	1511568-0000	-		1	PIN	
200	1499577-0000	-		1	ARM	
205	1511578-0000	-		1	ARM	
210	312105-0291	-		1	SCREW M6S ISO 4017 M4X12 A480	
220	312105-0295	-		4	SCREW M6S ISO 4017 M4X20 A480	
225	312115-0327	-		1	SCREW MC6S M5X12 A280	
260	312115-0329	-		2	SCREW MC6S M5X16 A280	
265	312105-0331	-		3	SCREW M6S ISO 4017 M5X20 A480	
270	312105-0287	-		2	SCREW M6S ISO 4017 M4X8 A480	
330	312318-0362	-		2	SCREW SOCK.SET CUP P MSK6SS M6X8 A4	
340	312605-0314	-		1	HEXAGON NUT, M6M M5 A280	
370	315105-0136	-		7	WASHER PLAIN, BRB, 4,3/8,H=0,8	
390	315105-0146	-		1	WASHER PLAIN, BRB, 5,3/10,H=1	
395	315115-0153	-		2	WASHER PLAIN, TBRB 6,4/12 H=3	
410	311103-0355	-		2	PARALLELL PIN, M6, 6X25 MM	
415	312105-0453	-		1	SCREW M6S ISO 4017 M8X25 A480	
420	312105-0362	-		1	SCREW M6S ISO 4017 M6X8 A480	
435	312105-0368	-		2	SCREW M6S M6X16 A280	
470	312115-0449	-		2	SCREW MC6S M8X16 A280	
480	315105-0153	-		1	WASHER PLAIN, BRB, 6,4/12,H=1,5	
510	312155-0453	-		2	SCREW HEX.SOCK.COUNT.MF6S M8X25 A280	
570	321120-0109	A		1	BEARING BUSHING WITHOUT FLANGE,12/14X10	
590	321120-0125	B		1	BEARING BUSHING WITHOUT FLANGE,16/18X15	
595	321120-0123	B		1	BEARING BUSHING WITHOUT FLANGE,16/18X12	
640	312605-0316	-		2	HEXAGON NUT, M6M M6 A280	
680	318871-0102	-		1	KNOB CIRCULAR, EXT THREAD, NO. 8302-6037	
700	321120-0100	A		2	BEARING BUSHING WITHOUT FLANGE,8/10X12	
705	321313-0102	A		2	BALL BEARING, 2 SEALS, 15X35X11 MM	
820	90258-0031	-		2	PIN, STRAIGHT SLOTTED SPRING FRP 3X20	
830	312145-0287	-		5	SCREW COUNTERS.SLOT.HD. MFS 4X8 SS	
840	312605-0318	-		1	HEXAGON NUT, M6M M8 A280	

Machine Type | Group Description | Used-In | Group Number | Page No

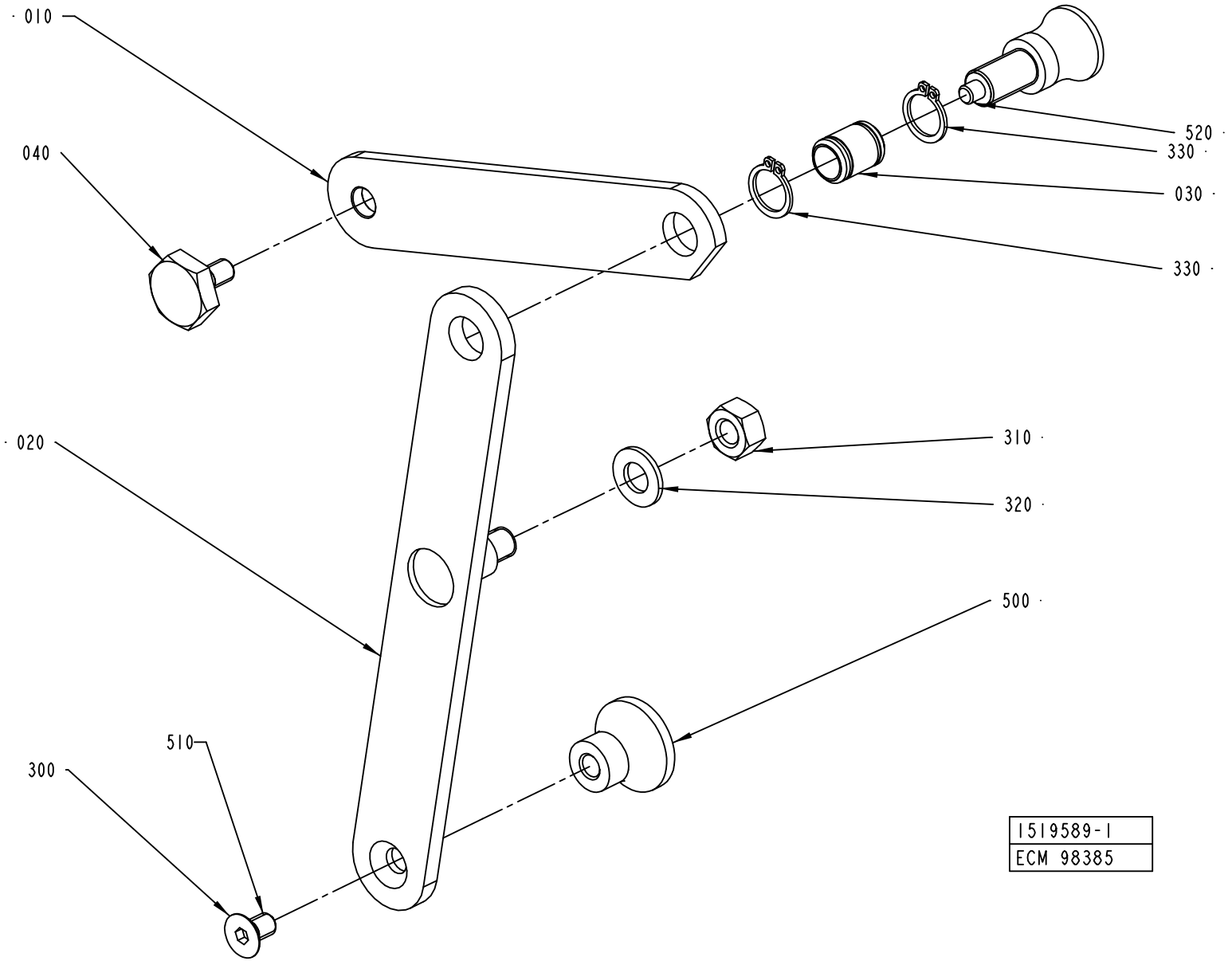
· 010
040
· 020
300
510
520 ·
330 ·
030 ·
330 ·
310 ·
320 ·
500 ·
1519589-1
ECM 98385

ECM: 100843 - 20020308
Group number: 1519589-0100
Assembly Drawing: 1519589-1_1_AC

Issue: 20021022

Pos	Part No	SP	UN	Qty	Description	Page No
Common Parts						
010	1490809-0000	-		1	ARM	
020	1490810-0000	-		1	ARM	
030	1490812-0000	-		1	AXLE	
040	1490813-0000	-		1	SCREW	
300	312155-0364	-		1	SCREW HEX.SOCK.COUNT.MF6S M6X10 A280	
310	312605-0318	-		1	HEXAGON NUT, M6M M8 A280	
320	315105-0165	-		1	WASHER PLAIN, BRB, 8,4/16,H=1,5	
330	315751-0109	-		2	RETAIN. RING, 12	
500	90051-0082	-		1	KNOB, CIRCUL, THREADED BUSH, M6 25X21 MM	
510	90157-0016	-		1	LOCKING FLUID	
520	90051-0087	-		1	LOCK KNOB, NO. GN 617 A5	

Pos	Part No	SP	UN	Qty	Description	Page No

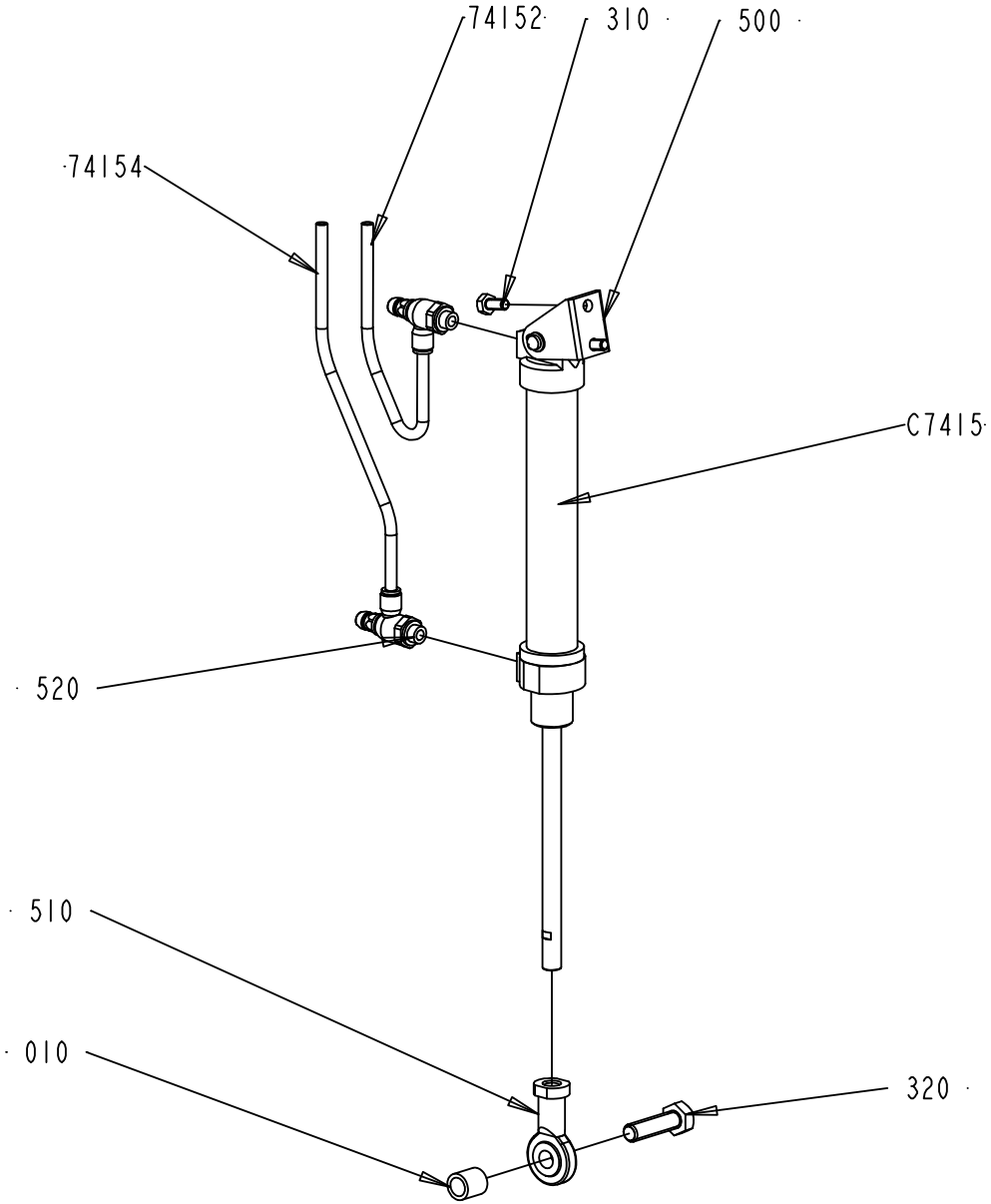

1487528-1
ECM 106975

Pos	Part No	SP	UN	Qty	Description	Page No
TBA/22						
74152	90166-0081	-	MM	6000	TUBE 6 MM PA BLUE	
74154	90166-0081	-	MM	6000	TUBE 6 MM PA BLUE	
C7415	90239-0832	A		1	DOUBLE ACTING, MINI-ISO, CYL. 25-125	
Common Parts						
010	1511569-0000	-		1	SPACER	
310	312105-0366	-		2	SCREW M6S M6X12 A280	
320	312105-0497	-		1	SCREW M6S ISO 4017 M10X35 A480	
500	90239-0487	-		1	REAR,CLEVIS,MINI-ISO 20-25	
510	90239-0405	A		1	ROD END,BALL JOINT EYE,MINI-ISO M10X1,25	
520	90235-0846	A		2	THROTTLE CHECK VALVE G1/8", MANUAL, 6	

Pos	Part No	SP	UN	Qty	Description	Page No

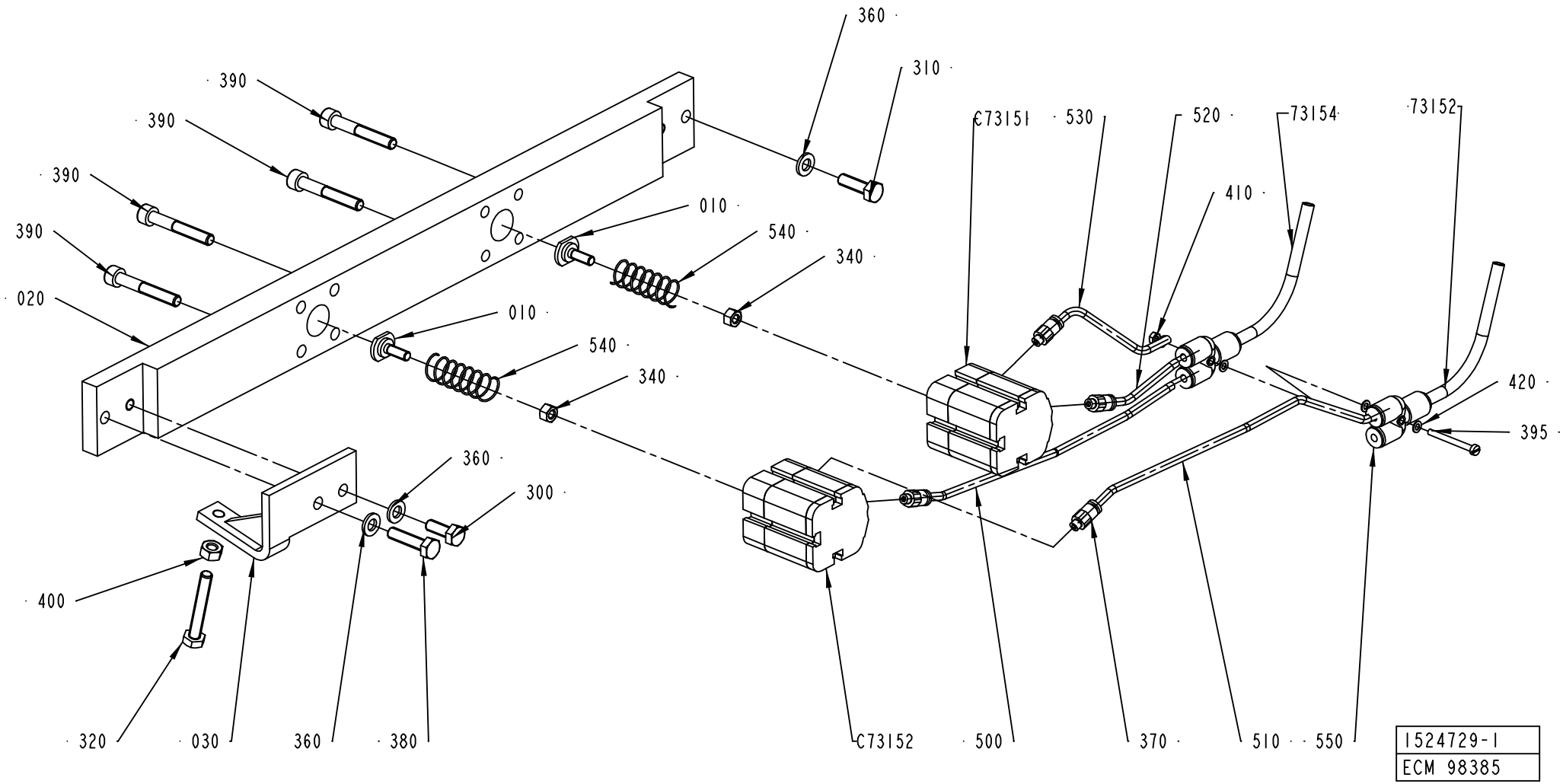
360
310
390
390
390
390
020
010
540
340
010
540
340
C73151
530
520
410
73154
73152
420
395
360
300
400
320
030
360
380
C73152
500
370
510
550
1524729-1
ECM 98385

Pos	Part No	SP	UN	Qty	Description	Page No
TBA/22						
73152	90166-0081	-	MM	4000	TUBE 6 MM PA BLUE	
73154	90166-0081	-	MM	4000	TUBE 6 MM PA BLUE	
C73151	90450-0551	A		1	DOUBLE ACTING, COMPACT, CYL 20-10	
C73152	90450-0551	A		1	DOUBLE ACTING, COMPACT, CYL 20-10	
Common Parts						
010	1036695-0000	-		2	LOCK STUD	
020	1487773-0000	-		1	CYLINDER BRACKET	
030	1511577-0000	-		1	SPACER	
300	312105-0368	-		1	SCREW M6S M6X16 A280	
310	312105-0370	-		1	SCREW M6S ISO 4017 M6X20 A480	
320	312109-0378	-		1	SCREW M6S ISO 4017 M6X40 A480	
340	312605-0314	-		2	HEXAGON NUT, M6M M5 A280	
360	315105-0153	-		3	WASHER PLAIN, BRB, 6,4/12,H=1,5	
370	342722-0198	-		4	STRAIGHT COUPLING	
380	312105-0372	-		1	SCREW M6S ISO 4017 M6X25 A480	
390	312115-0378	-		4	SCREW MC6S M6X40 A280	
395	312125-0234	-		1	SCREW PAN HEAD MCS M3X30 SS	
400	312605-0316	-		1	HEXAGON NUT, M6M M6 A280	
410	312605-0310	-		1	HEXAGON NUT, M6M M3 A280	
420	315105-0124	-		4	WASHER PLAIN, BRB, 3,2/6,H=0,5	
500	90166-0095	-	MM	300	TUBE 4 MM PA BLUE	
510	90166-0095	-	MM	300	TUBE 4 MM PA BLUE	
520	90166-0095	-	MM	200	TUBE 4 MM PA BLUE	
530	90166-0095	-	MM	200	TUBE 4 MM PA BLUE	
540	90335-0183	A		2	COMP. SPRING 12220, 1,25X13,1X62,5	
550	90055-0154	-		2	HOSE COUPLING	

Pos	Part No	SP	UN	Qty	Description	Page No

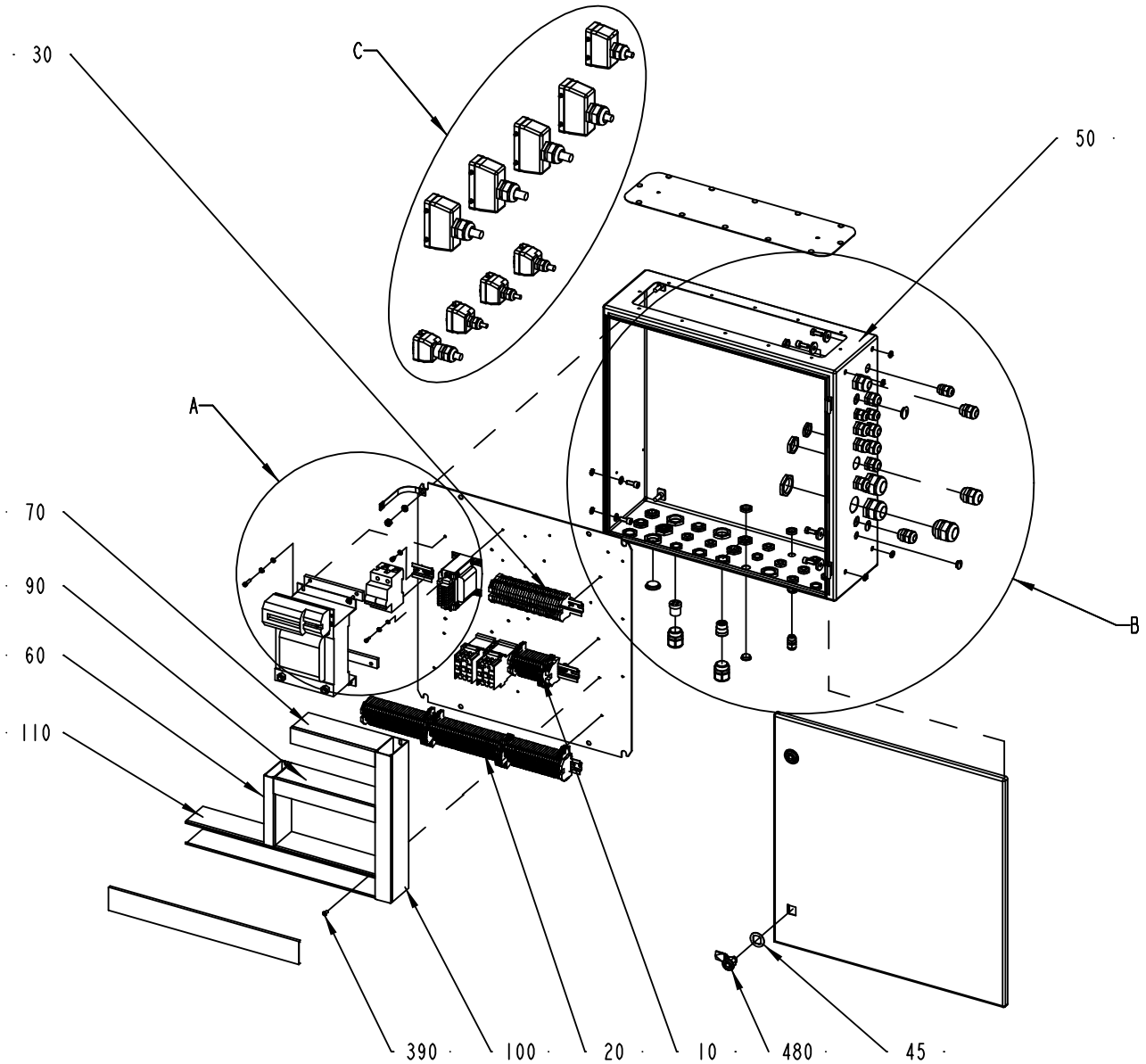

1548491-3
ECM 86126

ECM: 89568 - 20020312
Group number: 1548491-0100
Assembly Drawing: 1548491-3_1_AA

Issue: 20021022

Pos	Part No	SP	UN	Qty	Description	Page No
Common Parts						
010	A1548494-0100	-		1	TERMINAL	**665**
020	A1548496-0100	-		1	TERMINAL	**667**
030	A1548502-0100	-		1	TERMINAL	**669**
040	2503894-0000	-		1	RAIL	
045	2503895-0000	-		2	WASHER	
050	1548492-0000	-		1	ELECTRICAL CABINET	
060	1548495-0000	-		1	CABLE DUCT	
070	1548497-0000	-		1	CABLE DUCT	
080	1548498-0000	-		2	BLOCK	
090	1548499-0000	-		1	CABLE DUCT	
100	1548500-0000	-		1	CABLE DUCT	
110	1548501-0000	-		1	CABLE DUCT	
120	312115-0291	-		4	SCREW MC6S M4X12 A280	
130	312115-0331	-		4	SCREW MC6S M5X20 A280	
135	312105-0451	-		2	SCREW M6S ISO 4017 M8X20 A480	
140	312115-0323	-		2	SCREW MC6S M5X8 A280	
145	312115-0451	-		4	SCREW MC6S M8X20 A280	
150	312605-0318	-		2	HEXAGON NUT, M6M M8 A280	
160	315105-0136	-		4	WASHER PLAIN, BRB, 4,3/8,H=0,8	
165	315105-0146	-		6	WASHER PLAIN, BRB, 5,3/10,H=1	
170	315105-0165	-		2	WASHER PLAIN, BRB, 8,4/16,H=1,5	
175	315125-0165	-		4	WASHER PLAIN ROUND,CHAMF. 8,4/26, H=5	
180	352103-0101	-		2	CABLE GLAND, ST 9, PR15,2/PG9	
190	352103-0106	-		11	CABLE GLAND, ST 11, PR18,6/PG11	
195	352103-0108	-		3	CABLE GLAND, ST 13,5 , PR20,4/PG13,5	
200	352103-0111	-		14	CABLE GLAND, ST 16, PR22,5/PG16	
210	352103-0115	-		3	CABLE GLAND, STR 21, PR28,3/PG21	
215	352103-0116	-		1	CABLE GLAND, ST 21, PR28,3/PG21	
220	352103-0121	-		7	CABLE GLAND, ST 29, PR37,0/PG29	
230	353240-0005	-		3	NORMAL WITHOUT INSERT, PG 21	
240	353249-0051	-		1	INSERT, MULTI HOLE, E154M4X8	
250	90002-0004	-		4	BLANK-OFF PLUG, PR 22,5 SKINDICHT-BLK16	
260	90002-0009	-		4	BLANK-OFF PLUG, PR 18.6 SKINDICHT-BLK11	
270	90002-0012	-		2	BLANK-OFF PLUG, PR 28,3 SKINDICHT-BLK21	
280	90002-0013	-		2	BLANK-OFF PLUG, PR 15,2 SKINDICHT-BLK9	
290	90012-0125	-		2	GLAND FITTING	
310	90062-0016	-		8	LOCK WASHER SERRAT.EXT.GEAR,8,4/15 H=0,8	
315	90062-0021	-		4	LOCKING WASHER A 5,3	
320	90062-0059	-		4	LOCK WASHER SERRAT.EXT.GEAR,4,3/8 H=0,5	
330	90099-0104	-		4	NUT, PR 15,2 (PG9)	
340	90099-0110	-		18	NUT, PR 22,5 (PG16)	
350	90099-0117	-		15	NUT, PR 18,6 (PG11)	
360	90099-0119	-		7	NUT, PR 28,3 (PG21)	
370	90099-0120	-		3	NUT, PR 37 (PG29)	
380	90135-0040	-		1	EARTH WIRE, L=150 MM 16 MM2	
390	90181-0313	-		12	RIVET DUCTAFIX R4	
400	359005-0010	-		7	MARKING LABEL KIT 0 - 9, 04.841.2150.0	
410	359005-0050	-		1	MARKING LABEL KIT X, 04.841.4550.0	
420	90089-0028	-		1	MUFF	
440	90110-0152	-		4	CABLE HOOD 24-POL 70.352.2428.1	
450	90110-0157	-		4	CABLE HOOD 6-POL 70.352.0628.1	
470	90110-0160	-		1	CABLE HOOD 6-16-POL 70.352.1628.1	
480	90237-0206	-		2	LOCK, 1000-U45/U2/17/23/24/991	
F7304	90458-1448	A		1	MAGNETIC FUSE, S292 C100	
T6203	90458-0258	A		1	TRANSFORMER, 220VAC/6-9-12VAC	
T7304	1364474-0000	A		1	TRANSFORMER	
W7003	351150-0420	-	MM	4200	CABLE OLFLEX 7X2,5 MM2 LIGHT/GREY	
W7004	351150-0413	-	MM	3800	CABLE OLFLEX 4X1,5 MM2 LIGHT/GREY	
W7005	351150-0412	-	MM	3700	CABLE OLFLEX 3X1,5 MM2 LIGHT/GREY	
W7006	351150-0425	-	MM	4900	CABLE OLFLEX 25X0,75 MM2 LIGHT/GREY	
W7007	351150-0425	-	MM	4300	CABLE OLFLEX 25X0,75 MM2 LIGHT/GREY	
W7008	351150-0425	-	MM	4100	CABLE OLFLEX 25X0,75 MM2 LIGHT/GREY	
W7009	351150-0424	-	MM	4500	CABLE OLFLEX 18X0,75 MM2 LIGHT/GREY	
W7037	351150-0422	-	MM	4500	CABLE OLFLEX 3X4 MM2 LIGHT/GREY	
W7076	90220-0104	-	MM	4600	SCR. CABLE 4X1,5MM2	
X118	90110-0159	-		1	MALE INSERT 70.310.0640.0	
X128	90110-0159	-		2	MALE INSERT 70.310.0640.0	
X132	90110-0159	-		2	MALE INSERT 70.310.0640.0	
X133	90110-0159	-		2	MALE INSERT 70.310.0640.0	
X225	90110-0150	-		1	MALE INSERT 121110 0000	
X226	90110-0150	-		1	MALE INSERT 121110 0000	
X231	90110-0150	-		1	MALE INSERT 121110 0000	
X504	90110-0156	-		1	MALE INSERT 70.210.0653.0	

Machine Type	Group Description	Used-In	Group Number	Page No

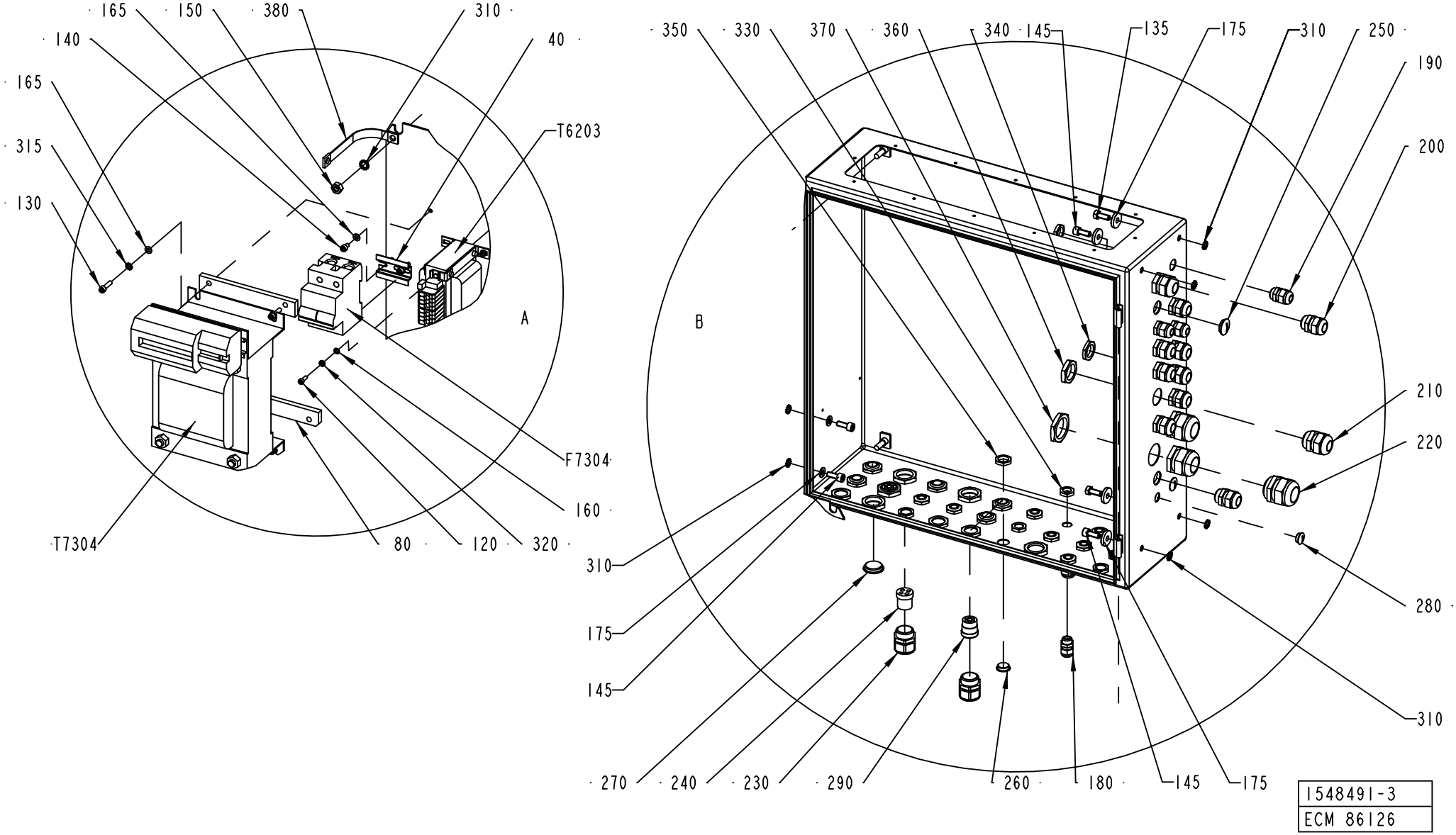
165
150
380
310
140
40
165
T6203
315
130
A
F7304
160
T7304
80
120
320
B
350
330
370
360
340
145
135
175
310
250
190
200
210
220
280
310
310
175
145
270
240
230
290
260
180
145
175
1548491-3
ECM 86126

ECM: 89568 - 20020312
Group number: 1548491-0100
Assembly Drawing: 1548491-3_2_AA

Issue: 20021022

Pos	Part No	SP	UN	Qty	Description	Page No
Common Parts						
010	A1548494-0100	-		1	TERMINAL	**665**
020	A1548496-0100	-		1	TERMINAL	**667**
030	A1548502-0100	-		1	TERMINAL	**669**
040	2503894-0000	-		1	RAIL	
045	2503895-0000	-		2	WASHER	
050	1548492-0000	-		1	ELECTRICAL CABINET	
060	1548495-0000	-		1	CABLE DUCT	
070	1548497-0000	-		1	CABLE DUCT	
080	1548498-0000	-		2	BLOCK	
090	1548499-0000	-		1	CABLE DUCT	
100	1548500-0000	-		1	CABLE DUCT	
110	1548501-0000	-		1	CABLE DUCT	
120	312115-0291	-		4	SCREW MC6S M4X12 A280	
130	312115-0331	-		4	SCREW MC6S M5X20 A280	
135	312105-0451	-		2	SCREW M6S ISO 4017 M8X20 A480	
140	312115-0323	-		2	SCREW MC6S M5X8 A280	
145	312115-0451	-		4	SCREW MC6S M8X20 A280	
150	312605-0318	-		2	HEXAGON NUT, M6M M8 A280	
160	315105-0136	-		4	WASHER PLAIN, BRB, 4,3/8,H=0,8	
165	315105-0146	-		6	WASHER PLAIN, BRB, 5,3/10,H=1	
170	315105-0165	-		2	WASHER PLAIN, BRB, 8,4/16,H=1,5	
175	315125-0165	-		4	WASHER PLAIN ROUND,CHAMF. 8,4/26, H=5	
180	352103-0101	-		2	CABLE GLAND, ST 9, PR15,2/PG9	
190	352103-0106	-		11	CABLE GLAND, ST 11, PR18,6/PG11	
195	352103-0108	-		3	CABLE GLAND, ST 13,5 , PR20,4/PG13,5	
200	352103-0111	-		14	CABLE GLAND, ST 16, PR22,5/PG16	
210	352103-0115	-		3	CABLE GLAND, STR 21, PR28,3/PG21	
215	352103-0116	-		1	CABLE GLAND, ST 21, PR28,3/PG21	
220	352103-0121	-		7	CABLE GLAND, ST 29, PR37,0/PG29	
230	353240-0005	-		3	NORMAL WITHOUT INSERT, PG 21	
240	353249-0051	-		1	INSERT, MULTI HOLE, E154M4X8	
250	90002-0004	-		4	BLANK-OFF PLUG, PR 22,5 SKINDICHT-BLK16	
260	90002-0009	-		4	BLANK-OFF PLUG, PR 18.6 SKINDICHT-BLK11	
270	90002-0012	-		2	BLANK-OFF PLUG, PR 28,3 SKINDICHT-BLK21	
280	90002-0013	-		2	BLANK-OFF PLUG, PR 15,2 SKINDICHT-BLK9	
290	90012-0125	-		2	GLAND FITTING	
310	90062-0016	-		8	LOCK WASHER SERRAT.EXT.GEAR,8,4/15 H=0,8	
315	90062-0021	-		4	LOCKING WASHER A 5,3	
320	90062-0059	-		4	LOCK WASHER SERRAT.EXT.GEAR,4,3/8 H=0,5	
330	90099-0104	-		4	NUT, PR 15,2 (PG9)	
340	90099-0110	-		18	NUT, PR 22,5 (PG16)	
350	90099-0117	-		15	NUT, PR 18,6 (PG11)	
360	90099-0119	-		7	NUT, PR 28,3 (PG21)	
370	90099-0120	-		3	NUT, PR 37 (PG29)	
380	90135-0040	-		1	EARTH WIRE, L=150 MM 16 MM2	
390	90181-0313	-		12	RIVET DUCTAFIX R4	
400	359005-0010	-		7	MARKING LABEL KIT 0 - 9, 04.841.2150.0	
410	359005-0050	-		1	MARKING LABEL KIT X, 04.841.4550.0	
420	90089-0028	-		1	MUFF	
440	90110-0152	-		4	CABLE HOOD 24-POL 70.352.2428.1	
450	90110-0157	-		4	CABLE HOOD 6-POL 70.352.0628.1	
470	90110-0160	-		1	CABLE HOOD 6-16-POL 70.352.1628.1	
480	90237-0206	-		2	LOCK, 1000-U45/U2/17/23/24/991	
F7304	90458-1448	A		1	MAGNETIC FUSE, S292 C100	
T6203	90458-0258	A		1	TRANSFORMER, 220VAC/6-9-12VAC	
T7304	1364474-0000	A		1	TRANSFORMER	
W7003	351150-0420	-	MM	4200	CABLE OLFLEX 7X2,5 MM2 LIGHT/GREY	
W7004	351150-0413	-	MM	3800	CABLE OLFLEX 4X1,5 MM2 LIGHT/GREY	
W7005	351150-0412	-	MM	3700	CABLE OLFLEX 3X1,5 MM2 LIGHT/GREY	
W7006	351150-0425	-	MM	4900	CABLE OLFLEX 25X0,75 MM2 LIGHT/GREY	
W7007	351150-0425	-	MM	4300	CABLE OLFLEX 25X0,75 MM2 LIGHT/GREY	
W7008	351150-0425	-	MM	4100	CABLE OLFLEX 25X0,75 MM2 LIGHT/GREY	
W7009	351150-0424	-	MM	4500	CABLE OLFLEX 18X0,75 MM2 LIGHT/GREY	
W7037	351150-0422	-	MM	4500	CABLE OLFLEX 3X4 MM2 LIGHT/GREY	
W7076	90220-0104	-	MM	4600	SCR. CABLE 4X1,5MM2	
X118	90110-0159	-		1	MALE INSERT 70.310.0640.0	
X128	90110-0159	-		2	MALE INSERT 70.310.0640.0	
X132	90110-0159	-		2	MALE INSERT 70.310.0640.0	
X133	90110-0159	-		2	MALE INSERT 70.310.0640.0	
X225	90110-0150	-		1	MALE INSERT 121110 0000	
X226	90110-0150	-		1	MALE INSERT 121110 0000	
X231	90110-0150	-		1	MALE INSERT 121110 0000	
X504	90110-0156	-		1	MALE INSERT 70.210.0653.0	

Machine Type	Group Description	Used-In	Group Number	Page No

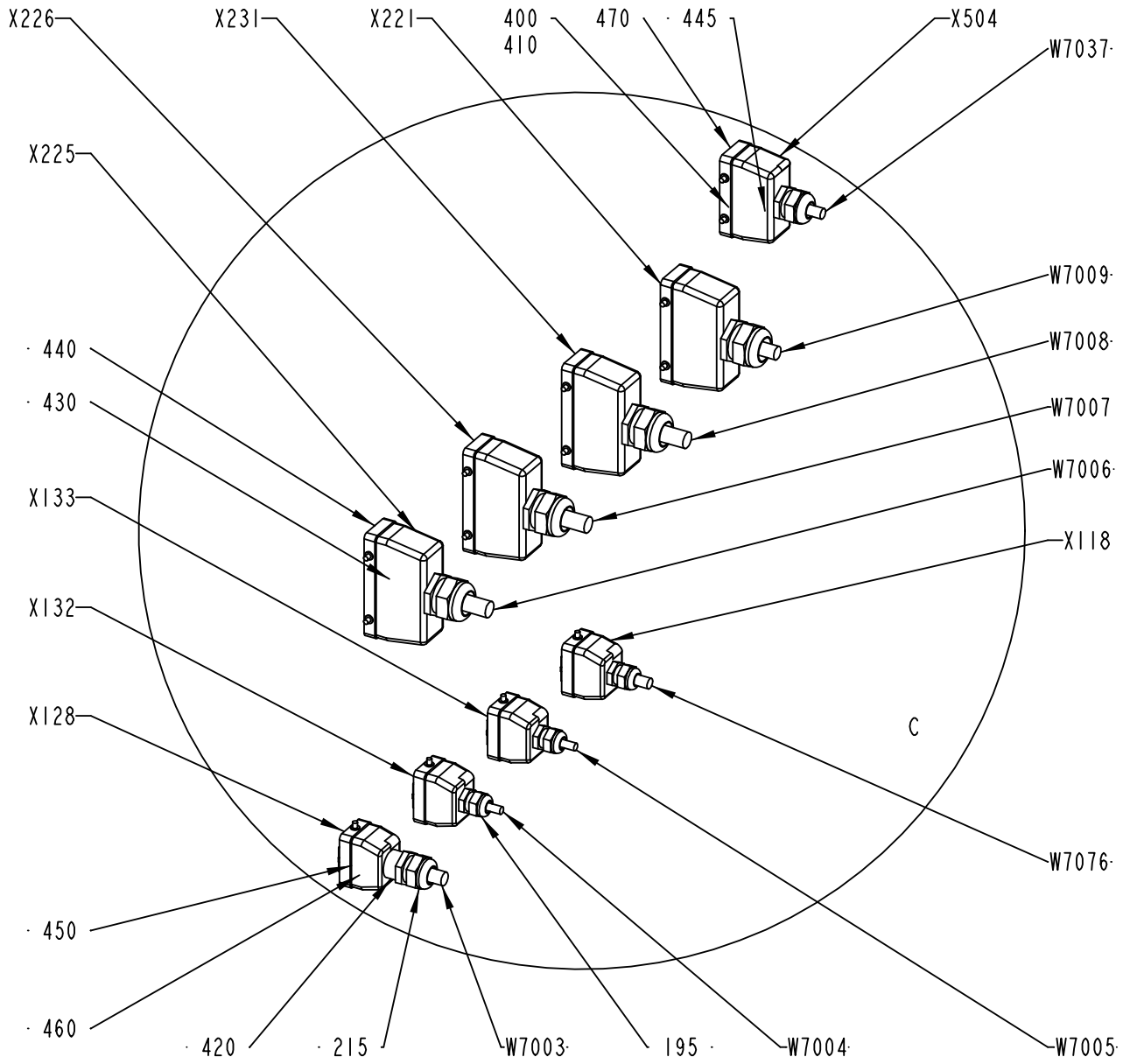

1548491-3
ECM 86126

ECM: 89568 - 20020312
Group number: 1548491-0100
Assembly Drawing: 1548491-3_3_AA

Issue: 20021022

Pos	Part No	SP	UN	Qty	Description	Page No
Common Parts						
010	A1548494-0100	-		1	TERMINAL	**665**
020	A1548496-0100	-		1	TERMINAL	**667**
030	A1548502-0100	-		1	TERMINAL	**669**
040	2503894-0000	-		1	RAIL	
045	2503895-0000	-		2	WASHER	
050	1548492-0000	-		1	ELECTRICAL CABINET	
060	1548495-0000	-		1	CABLE DUCT	
070	1548497-0000	-		1	CABLE DUCT	
080	1548498-0000	-		2	BLOCK	
090	1548499-0000	-		1	CABLE DUCT	
100	1548500-0000	-		1	CABLE DUCT	
110	1548501-0000	-		1	CABLE DUCT	
120	312115-0291	-		4	SCREW MC6S M4X12 A280	
130	312115-0331	-		4	SCREW MC6S M5X20 A280	
135	312105-0451	-		2	SCREW M6S ISO 4017 M8X20 A480	
140	312115-0323	-		2	SCREW MC6S M5X8 A280	
145	312115-0451	-		4	SCREW MC6S M8X20 A280	
150	312605-0318	-		2	HEXAGON NUT, M6M M8 A280	
160	315105-0136	-		4	WASHER PLAIN, BRB, 4,3/8,H=0,8	
165	315105-0146	-		6	WASHER PLAIN, BRB, 5,3/10,H=1	
170	315105-0165	-		2	WASHER PLAIN, BRB, 8,4/16,H=1,5	
175	315125-0165	-		4	WASHER PLAIN ROUND,CHAMF. 8,4/26, H=5	
180	352103-0101	-		2	CABLE GLAND, ST 9, PR15,2/PG9	
190	352103-0106	-		11	CABLE GLAND, ST 11, PR18,6/PG11	
195	352103-0108	-		3	CABLE GLAND, ST 13,5 , PR20,4/PG13,5	
200	352103-0111	-		14	CABLE GLAND, ST 16, PR22,5/PG16	
210	352103-0115	-		3	CABLE GLAND, STR 21, PR28,3/PG21	
215	352103-0116	-		1	CABLE GLAND, ST 21, PR28,3/PG21	
220	352103-0121	-		7	CABLE GLAND, ST 29, PR37,0/PG29	
230	353240-0005	-		3	NORMAL WITHOUT INSERT, PG 21	
240	353249-0051	-		1	INSERT, MULTI HOLE, E154M4X8	
250	90002-0004	-		4	BLANK-OFF PLUG, PR 22,5 SKINDICHT-BLK16	
260	90002-0009	-		4	BLANK-OFF PLUG, PR 18.6 SKINDICHT-BLK11	
270	90002-0012	-		2	BLANK-OFF PLUG, PR 28,3 SKINDICHT-BLK21	
280	90002-0013	-		2	BLANK-OFF PLUG, PR 15,2 SKINDICHT-BLK9	
290	90012-0125	-		2	GLAND FITTING	
310	90062-0016	-		8	LOCK WASHER SERRAT.EXT.GEAR,8,4/15 H=0,8	
315	90062-0021	-		4	LOCKING WASHER A 5,3	
320	90062-0059	-		4	LOCK WASHER SERRAT.EXT.GEAR,4,3/8 H=0,5	
330	90099-0104	-		4	NUT, PR 15,2 (PG9)	
340	90099-0110	-		18	NUT, PR 22,5 (PG16)	
350	90099-0117	-		15	NUT, PR 18,6 (PG11)	
360	90099-0119	-		7	NUT, PR 28,3 (PG21)	
370	90099-0120	-		3	NUT, PR 37 (PG29)	
380	90135-0040	-		1	EARTH WIRE, L=150 MM 16 MM2	
390	90181-0313	-		12	RIVET DUCTAFIX R4	
400	359005-0010	-		7	MARKING LABEL KIT 0 - 9, 04.841.2150.0	
410	359005-0050	-		1	MARKING LABEL KIT X, 04.841.4550.0	
420	90089-0028	-		1	MUFF	
440	90110-0152	-		4	CABLE HOOD 24-POL 70.352.2428.1	
450	90110-0157	-		4	CABLE HOOD 6-POL 70.352.0628.1	
470	90110-0160	-		1	CABLE HOOD 6-16-POL 70.352.1628.1	
480	90237-0206	-		2	LOCK, 1000-U45/U2/17/23/24/991	
F7304	90458-1448	A		1	MAGNETIC FUSE, S292 C100	
T6203	90458-0258	A		1	TRANSFORMER, 220VAC/6-9-12VAC	
T7304	1364474-0000	A		1	TRANSFORMER	
W7003	351150-0420	-	MM	4200	CABLE OLFLEX 7X2,5 MM2 LIGHT/GREY	
W7004	351150-0413	-	MM	3800	CABLE OLFLEX 4X1,5 MM2 LIGHT/GREY	
W7005	351150-0412	-	MM	3700	CABLE OLFLEX 3X1,5 MM2 LIGHT/GREY	
W7006	351150-0425	-	MM	4900	CABLE OLFLEX 25X0,75 MM2 LIGHT/GREY	
W7007	351150-0425	-	MM	4300	CABLE OLFLEX 25X0,75 MM2 LIGHT/GREY	
W7008	351150-0425	-	MM	4100	CABLE OLFLEX 25X0,75 MM2 LIGHT/GREY	
W7009	351150-0424	-	MM	4500	CABLE OLFLEX 18X0,75 MM2 LIGHT/GREY	
W7037	351150-0422	-	MM	4500	CABLE OLFLEX 3X4 MM2 LIGHT/GREY	
W7076	90220-0104	-	MM	4600	SCR. CABLE 4X1,5MM2	
X118	90110-0159	-		1	MALE INSERT 70.310.0640.0	
X128	90110-0159	-		2	MALE INSERT 70.310.0640.0	
X132	90110-0159	-		2	MALE INSERT 70.310.0640.0	
X133	90110-0159	-		2	MALE INSERT 70.310.0640.0	
X225	90110-0150	-		1	MALE INSERT 121110 0000	
X226	90110-0150	-		1	MALE INSERT 121110 0000	
X231	90110-0150	-		1	MALE INSERT 121110 0000	
X504	90110-0156	-		1	MALE INSERT 70.210.0653.0	

Machine Type	Group Description	Used-In	Group Number	Page No

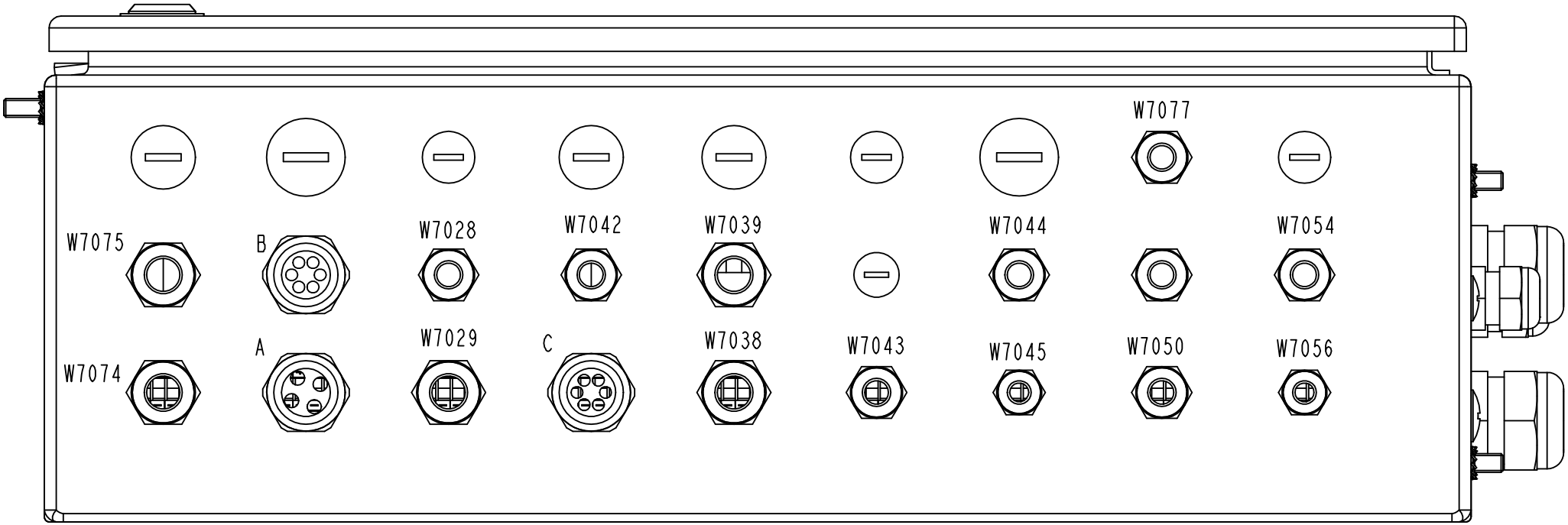

A*	B*	C*
W7016	W7020	W7015
W7017	W7023	W7019
W7018	W7024	W7030
W7022	W7025	W7033
	W7026	W7035
	W7027	W7036

1548491-3
ECM 86126

ECM: 89568 - 20020312
Group number: 1548491-0100
Assembly Drawing: 1548491-3_4_AA

Issue: 20021022

Pos	Part No	SP	UN	Qty	Description	Page No
Common Parts						
010	A1548494-0100	-		1	TERMINAL	**665**
020	A1548496-0100	-		1	TERMINAL	**667**
030	A1548502-0100	-		1	TERMINAL	**669**
040	2503894-0000	-		1	RAIL	
045	2503895-0000	-		2	WASHER	
050	1548492-0000	-		1	ELECTRICAL CABINET	
060	1548495-0000	-		1	CABLE DUCT	
070	1548497-0000	-		1	CABLE DUCT	
080	1548498-0000	-		2	BLOCK	
090	1548499-0000	-		1	CABLE DUCT	
100	1548500-0000	-		1	CABLE DUCT	
110	1548501-0000	-		1	CABLE DUCT	
120	312115-0291	-		4	SCREW MC6S M4X12 A280	
130	312115-0331	-		4	SCREW MC6S M5X20 A280	
135	312105-0451	-		2	SCREW M6S ISO 4017 M8X20 A480	
140	312115-0323	-		2	SCREW MC6S M5X8 A280	
145	312115-0451	-		4	SCREW MC6S M8X20 A280	
150	312605-0318	-		2	HEXAGON NUT, M6M M8 A280	
160	315105-0136	-		4	WASHER PLAIN, BRB, 4,3/8,H=0,8	
165	315105-0146	-		6	WASHER PLAIN, BRB, 5,3/10,H=1	
170	315105-0165	-		2	WASHER PLAIN, BRB, 8,4/16,H=1,5	
175	315125-0165	-		4	WASHER PLAIN ROUND,CHAMF. 8,4/26, H=5	
180	352103-0101	-		2	CABLE GLAND, ST 9, PR15,2/PG9	
190	352103-0106	-		11	CABLE GLAND, ST 11, PR18,6/PG11	
195	352103-0108	-		3	CABLE GLAND, ST 13,5 , PR20,4/PG13,5	
200	352103-0111	-		14	CABLE GLAND, ST 16, PR22,5/PG16	
210	352103-0115	-		3	CABLE GLAND, STR 21, PR28,3/PG21	
215	352103-0116	-		1	CABLE GLAND, ST 21, PR28,3/PG21	
220	352103-0121	-		7	CABLE GLAND, ST 29, PR37,0/PG29	
230	353240-0005	-		3	NORMAL WITHOUT INSERT, PG 21	
240	353249-0051	-		1	INSERT, MULTI HOLE, E154M4X8	
250	90002-0004	-		4	BLANK-OFF PLUG, PR 22,5 SKINDICHT-BLK16	
260	90002-0009	-		4	BLANK-OFF PLUG, PR 18.6 SKINDICHT-BLK11	
270	90002-0012	-		2	BLANK-OFF PLUG, PR 28,3 SKINDICHT-BLK21	
280	90002-0013	-		2	BLANK-OFF PLUG, PR 15,2 SKINDICHT-BLK9	
290	90012-0125	-		2	GLAND FITTING	
310	90062-0016	-		8	LOCK WASHER SERRAT.EXT.GEAR,8,4/15 H=0,8	
315	90062-0021	-		4	LOCKING WASHER A 5,3	
320	90062-0059	-		4	LOCK WASHER SERRAT.EXT.GEAR,4,3/8 H=0,5	
330	90099-0104	-		4	NUT, PR 15,2 (PG9)	
340	90099-0110	-		18	NUT, PR 22,5 (PG16)	
350	90099-0117	-		15	NUT, PR 18,6 (PG11)	
360	90099-0119	-		7	NUT, PR 28,3 (PG21)	
370	90099-0120	-		3	NUT, PR 37 (PG29)	
380	90135-0040	-		1	EARTH WIRE, L=150 MM 16 MM2	
390	90181-0313	-		12	RIVET DUCTAFIX R4	
400	359005-0010	-		7	MARKING LABEL KIT 0 - 9, 04.841.2150.0	
410	359005-0050	-		1	MARKING LABEL KIT X, 04.841.4550.0	
420	90089-0028	-		1	MUFF	
440	90110-0152	-		4	CABLE HOOD 24-POL 70.352.2428.1	
450	90110-0157	-		4	CABLE HOOD 6-POL 70.352.0628.1	
470	90110-0160	-		1	CABLE HOOD 6-16-POL 70.352.1628.1	
480	90237-0206	-		2	LOCK, 1000-U45/U2/17/23/24/991	
F7304	90458-1448	A		1	MAGNETIC FUSE, S292 C100	
T6203	90458-0258	A		1	TRANSFORMER, 220VAC/6-9-12VAC	
T7304	1364474-0000	A		1	TRANSFORMER	
W7003	351150-0420	-	MM	4200	CABLE OLFLEX 7X2,5 MM2 LIGHT/GREY	
W7004	351150-0413	-	MM	3800	CABLE OLFLEX 4X1,5 MM2 LIGHT/GREY	
W7005	351150-0412	-	MM	3700	CABLE OLFLEX 3X1,5 MM2 LIGHT/GREY	
W7006	351150-0425	-	MM	4900	CABLE OLFLEX 25X0,75 MM2 LIGHT/GREY	
W7007	351150-0425	-	MM	4300	CABLE OLFLEX 25X0,75 MM2 LIGHT/GREY	
W7008	351150-0425	-	MM	4100	CABLE OLFLEX 25X0,75 MM2 LIGHT/GREY	
W7009	351150-0424	-	MM	4500	CABLE OLFLEX 18X0,75 MM2 LIGHT/GREY	
W7037	351150-0422	-	MM	4500	CABLE OLFLEX 3X4 MM2 LIGHT/GREY	
W7076	90220-0104	-	MM	4600	SCR. CABLE 4X1,5MM2	
X118	90110-0159	-		1	MALE INSERT 70.310.0640.0	
X128	90110-0159	-		2	MALE INSERT 70.310.0640.0	
X132	90110-0159	-		2	MALE INSERT 70.310.0640.0	
X133	90110-0159	-		2	MALE INSERT 70.310.0640.0	
X225	90110-0150	-		1	MALE INSERT 121110 0000	
X226	90110-0150	-		1	MALE INSERT 121110 0000	
X231	90110-0150	-		1	MALE INSERT 121110 0000	
X504	90110-0156	-		1	MALE INSERT 70.210.0653.0	

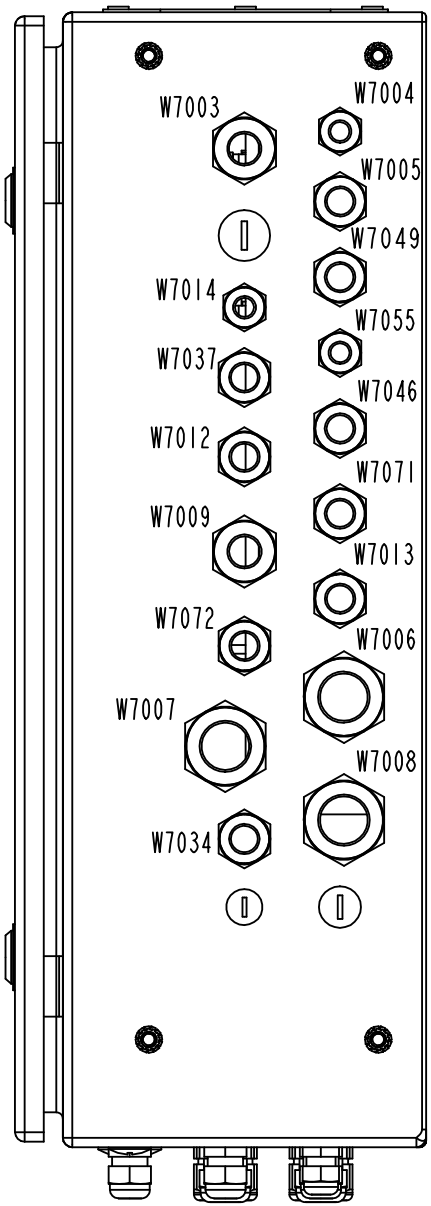

1548491-3
ECM 86126

ECM: 89568 - 20020312
Group number: 1548491-0100
Assembly Drawing: 1548491-3_5_AA

Issue: 20021022

Pos	Part No	SP	UN	Qty	Description	Page No
Common Parts						
010	A1548494-0100	-		1	TERMINAL	**665**
020	A1548496-0100	-		1	TERMINAL	**667**
030	A1548502-0100	-		1	TERMINAL	**669**
040	2503894-0000	-		1	RAIL	
045	2503895-0000	-		2	WASHER	
050	1548492-0000	-		1	ELECTRICAL CABINET	
060	1548495-0000	-		1	CABLE DUCT	
070	1548497-0000	-		1	CABLE DUCT	
080	1548498-0000	-		2	BLOCK	
090	1548499-0000	-		1	CABLE DUCT	
100	1548500-0000	-		1	CABLE DUCT	
110	1548501-0000	-		1	CABLE DUCT	
120	312115-0291	-		4	SCREW MC6S M4X12 A280	
130	312115-0331	-		4	SCREW MC6S M5X20 A280	
135	312105-0451	-		2	SCREW M6S ISO 4017 M8X20 A480	
140	312115-0323	-		2	SCREW MC6S M5X8 A280	
145	312115-0451	-		4	SCREW MC6S M8X20 A280	
150	312605-0318	-		2	HEXAGON NUT, M6M M8 A280	
160	315105-0136	-		4	WASHER PLAIN, BRB, 4,3/8,H=0,8	
165	315105-0146	-		6	WASHER PLAIN, BRB, 5,3/10,H=1	
170	315105-0165	-		2	WASHER PLAIN, BRB, 8,4/16,H=1,5	
175	315125-0165	-		4	WASHER PLAIN ROUND,CHAMF. 8,4/26, H=5	
180	352103-0101	-		2	CABLE GLAND, ST 9, PR15,2/PG9	
190	352103-0106	-		11	CABLE GLAND, ST 11, PR18,6/PG11	
195	352103-0108	-		3	CABLE GLAND, ST 13,5 , PR20,4/PG13,5	
200	352103-0111	-		14	CABLE GLAND, ST 16, PR22,5/PG16	
210	352103-0115	-		3	CABLE GLAND, STR 21, PR28,3/PG21	
215	352103-0116	-		1	CABLE GLAND, ST 21, PR28,3/PG21	
220	352103-0121	-		7	CABLE GLAND, ST 29, PR37,0/PG29	
230	353240-0005	-		3	NORMAL WITHOUT INSERT, PG 21	
240	353249-0051	-		1	INSERT, MULTI HOLE, E154M4X8	
250	90002-0004	-		4	BLANK-OFF PLUG, PR 22,5 SKINDICHT-BLK16	
260	90002-0009	-		4	BLANK-OFF PLUG, PR 18.6 SKINDICHT-BLK11	
270	90002-0012	-		2	BLANK-OFF PLUG, PR 28,3 SKINDICHT-BLK21	
280	90002-0013	-		2	BLANK-OFF PLUG, PR 15,2 SKINDICHT-BLK9	
290	90012-0125	-		2	GLAND FITTING	
310	90062-0016	-		8	LOCK WASHER SERRAT.EXT.GEAR,8,4/15 H=0,8	
315	90062-0021	-		4	LOCKING WASHER A 5,3	
320	90062-0059	-		4	LOCK WASHER SERRAT.EXT.GEAR,4,3/8 H=0,5	
330	90099-0104	-		4	NUT, PR 15,2 (PG9)	
340	90099-0110	-		18	NUT, PR 22,5 (PG16)	
350	90099-0117	-		15	NUT, PR 18,6 (PG11)	
360	90099-0119	-		7	NUT, PR 28,3 (PG21)	
370	90099-0120	-		3	NUT, PR 37 (PG29)	
380	90135-0040	-		1	EARTH WIRE, L=150 MM 16 MM2	
390	90181-0313	-		12	RIVET DUCTAFIX R4	
400	359005-0010	-		7	MARKING LABEL KIT 0 - 9, 04.841.2150.0	
410	359005-0050	-		1	MARKING LABEL KIT X, 04.841.4550.0	
420	90089-0028	-		1	MUFF	
440	90110-0152	-		4	CABLE HOOD 24-POL 70.352.2428.1	
450	90110-0157	-		4	CABLE HOOD 6-POL 70.352.0628.1	
470	90110-0160	-		1	CABLE HOOD 6-16-POL 70.352.1628.1	
480	90237-0206	-		2	LOCK, 1000-U45/U2/17/23/24/991	
F7304	90458-1448	A		1	MAGNETIC FUSE, S292 C100	
T6203	90458-0258	A		1	TRANSFORMER, 220VAC/6-9-12VAC	
T7304	1364474-0000	A		1	TRANSFORMER	
W7003	351150-0420	-	MM	4200	CABLE OLFLEX 7X2,5 MM2 LIGHT/GREY	
W7004	351150-0413	-	MM	3800	CABLE OLFLEX 4X1,5 MM2 LIGHT/GREY	
W7005	351150-0412	-	MM	3700	CABLE OLFLEX 3X1,5 MM2 LIGHT/GREY	
W7006	351150-0425	-	MM	4900	CABLE OLFLEX 25X0,75 MM2 LIGHT/GREY	
W7007	351150-0425	-	MM	4300	CABLE OLFLEX 25X0,75 MM2 LIGHT/GREY	
W7008	351150-0425	-	MM	4100	CABLE OLFLEX 25X0,75 MM2 LIGHT/GREY	
W7009	351150-0424	-	MM	4500	CABLE OLFLEX 18X0,75 MM2 LIGHT/GREY	
W7037	351150-0422	-	MM	4500	CABLE OLFLEX 3X4 MM2 LIGHT/GREY	
W7076	90220-0104	-	MM	4600	SCR. CABLE 4X1,5MM2	
X118	90110-0159	-		1	MALE INSERT 70.310.0640.0	
X128	90110-0159	-		2	MALE INSERT 70.310.0640.0	
X132	90110-0159	-		2	MALE INSERT 70.310.0640.0	
X133	90110-0159	-		2	MALE INSERT 70.310.0640.0	
X225	90110-0150	-		1	MALE INSERT 121110 0000	
X226	90110-0150	-		1	MALE INSERT 121110 0000	
X231	90110-0150	-		1	MALE INSERT 121110 0000	
X504	90110-0156	-		1	MALE INSERT 70.210.0653.0	

Machine Type	Group Description	Used-In	Group Number	Page No

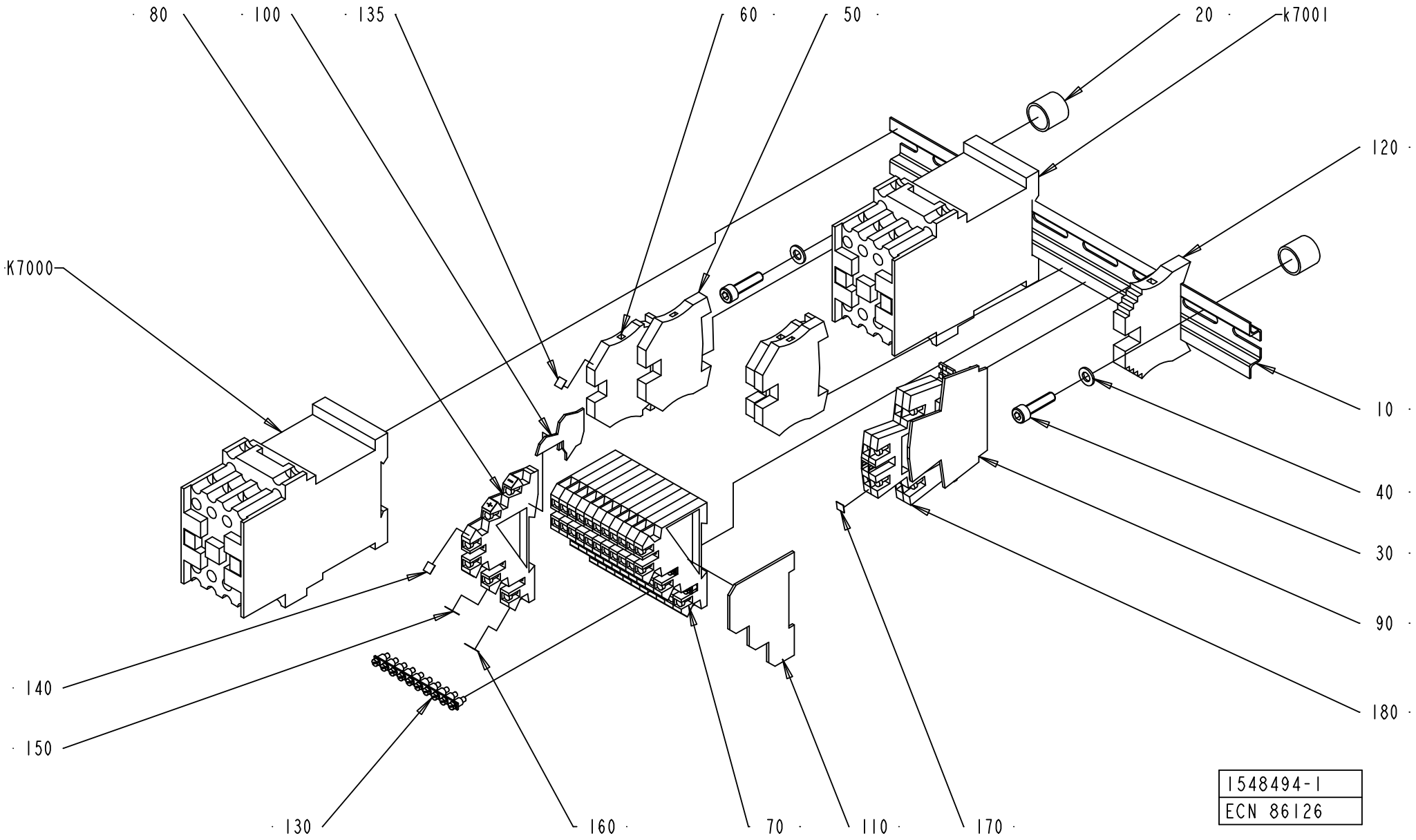
80
100
135
60
50
20
k7001
120
K7000
10
40
30
90
140
150
180
130
160
70
110
170
1548494-1
ECN 86126

Pos	Part No	SP	UN	Qty	Description	Page No
Common Parts						
010	1548493-0000	-		1	RAIL	
020	495118-0014	-		2	DISTANCE PIPE L=14 MM	
030	312115-0331	-		2	SCREW MC6S M5X20 A280	
040	315105-0146	-		2	WASHER PLAIN, BRB, 5,3/10,H=1	
050	353024-0205	-		2	EARTH TERMINAL, 1010.1	
060	353021-0213	-		2	FEED THROUGH TERMINAL, 10201.0	
070	353021-0301	-		11	TERMINALS,TRIPLE-LEVEL, DLI 2,5/35 PA	
080	353021-0302	-		1	TERMINALS,TRIPLE-LEVEL, DLD 2,5/35 PA	
090	353032-0009	-		1	END PLATE, WAP 16/35	
100	353032-0013	-		1	END PLATE, 13818.6	
110	353032-0301	-		1	END PLATE WAP	
120	353031-0203	-		1	END SUPPORT, WEW 35/2	
130	353034-0404	-		3	BRIDGE CONNECTOR Q10, 13131.0	
135	359011-0807	-		2	MARKING PLATES 5-FW 1-50	
140	359011-0810	-		2	MARKING PLATES 5-FW 151-200	
150	359011-0817	-		1	SYMBOL 5-GW (+) 50PC	
160	359011-0818	-		1	SYMBOL 5-GW (-) 50PC	
170	359011-0819	-		1	MARKING PLATES 5-GW (EARTH)	
180	90458-1136	-		2	TERMINAL BLOCK, 103630	
K7000	90075-0127	-		1	CONTACTOR, 4KW 24VDC	
K7001	90075-0127	-		1	CONTACTOR, 4KW 24VDC	

Pos	Part No	SP	UN	Qty	Description	Page No

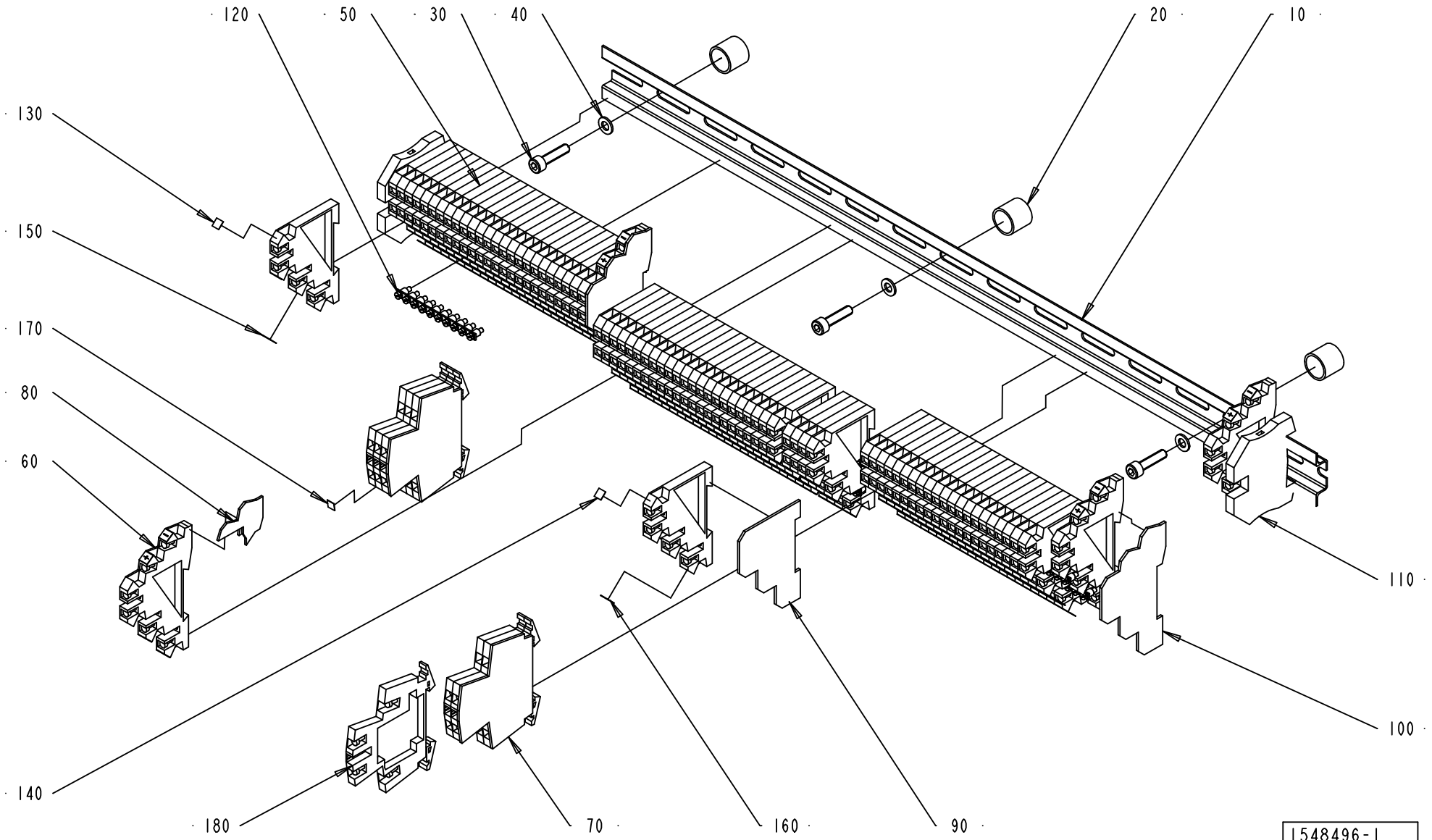
120
50
30
40
20
10
130
150
170
80
60
110
100
140
180
70
160
90
1548496-1
ECN 86126

Pos	Part No	SP	UN	Qty	Description	Page No
Common Parts						
010	2503654-0000	-		1	RAIL	
020	495118-0014	-		3	DISTANCE PIPE L=14 MM	
030	312115-0331	-		3	SCREW MC6S M5X20 A280	
040	315105-0146	-		3	WASHER PLAIN, BRB, 5,3/10,H=1	
050	353021-0301	-		74	TERMINALS,TRIPLE-LEVEL, DLI 2,5/35 PA	
060	353021-0302	-		4	TERMINALS,TRIPLE-LEVEL, DLD 2,5/35 PA	
070	353032-0009	-		2	END PLATE, WAP 16/35	
080	353032-0013	-		1	END PLATE, 13818.6	
090	353032-0301	-		1	END PLATE WAP	
100	353032-0302	-		2	END PLATE WAP	
110	353024-0205	-		2	EARTH TERMINAL, 1010.1	
120	353034-0404	-		17	BRIDGE CONNECTOR Q10, 13131.0	
130	359011-0809	-		2	MARKING PLATES 5-FW 101-150	
140	359011-0810	-		2	MARKING PLATES 5-FW 151-200	
150	359011-0817	-		2	SYMBOL 5-GW (+) 50PC	
160	359011-0818	-		2	SYMBOL 5-GW (-) 50PC	
170	359011-0819	-		1	MARKING PLATES 5-GW (EARTH)	
180	90458-1136	-		6	TERMINAL BLOCK, 103630	

Pos	Part No	SP	UN	Qty	Description	Page No

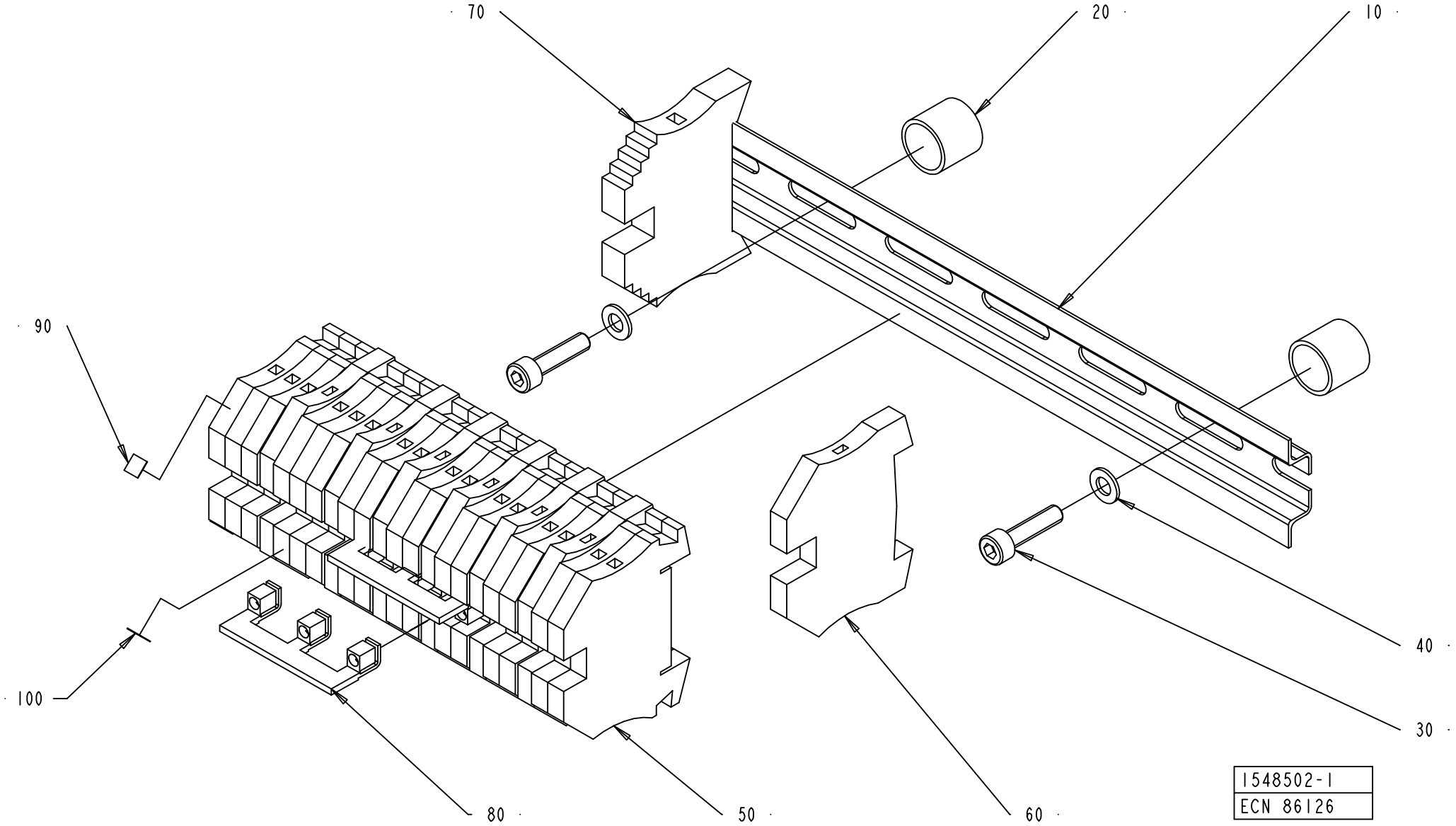
70
20
10
90
100
80
50
60
40
30
1548502-1
ECN 86126

ECM: 89462 - 20020312
Group number: 1548502-0100
Assembly Drawing: 1548502-1_1_AA

Issue: 20021022

Pos	Part No	SP	UN	Qty	Description	Page No
Common Parts						
010	2503653-0000	-		1	RAIL	
020	495118-0014	-		2	DISTANCE PIPE L=14 MM	
030	312115-0331	-		2	SCREW MC6S M5X20 A280	
040	315105-0146	-		2	WASHER PLAIN, BRB, 5,3/10,H=1	
050	353021-0213	-		20	FEED THROUGH TERMINAL, 10201.0	
060	353024-0205	-		9	EARTH TERMINAL, 1010.1	
070	353031-0203	-		1	END SUPPORT, WEW 35/2	
080	353034-0031	-		3	BRIDGE CONNECTOR, WQV 4/10, 10520.6	
090	359011-0807	-		2	MARKING PLATES 5-FW 1-50	
100	359011-0819	-		1	MARKING PLATES 5-GW (EARTH)	

Pos	Part No	SP	UN	Qty	Description	Page No

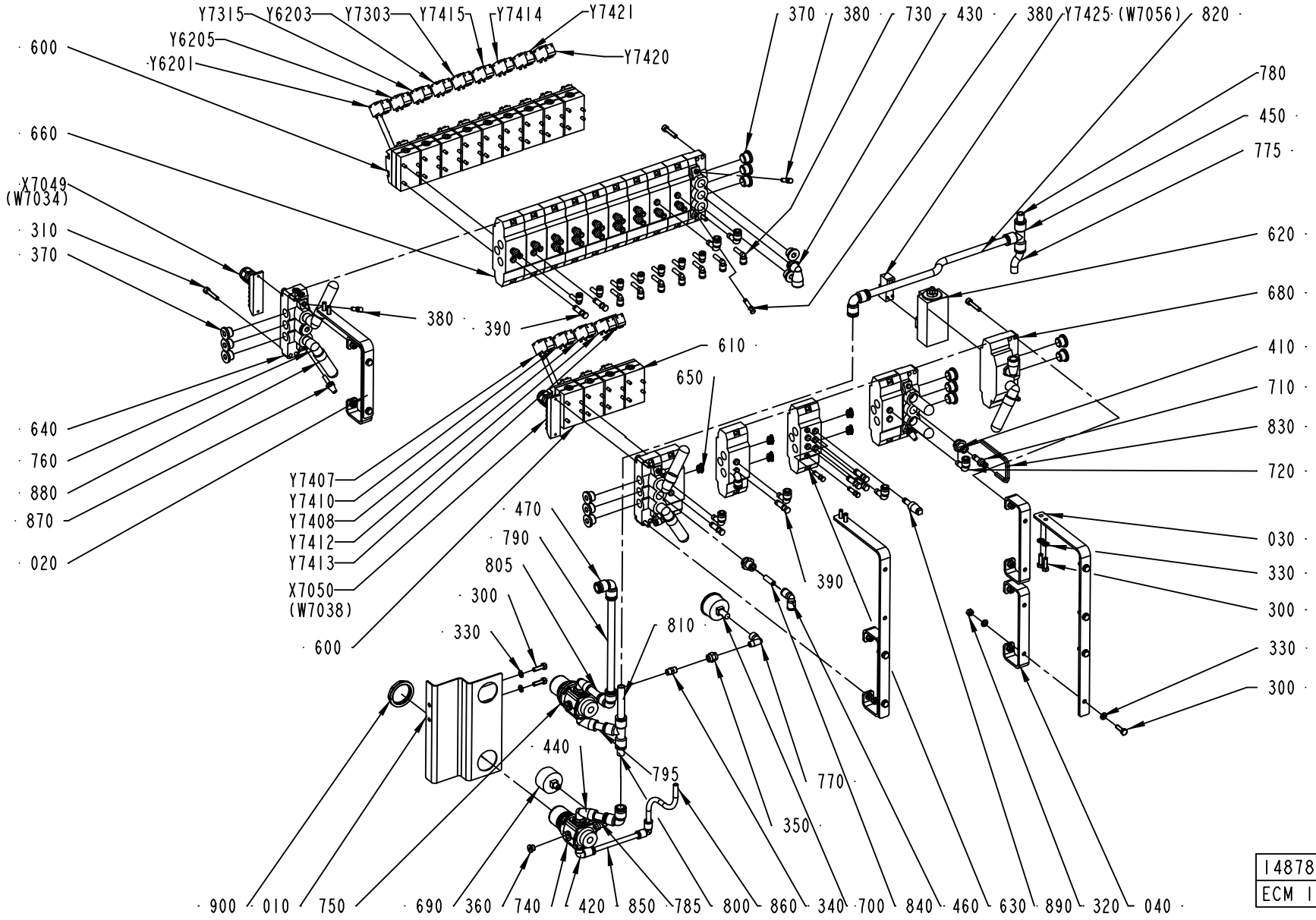

1487801-3
ECM 102278

ECM: 97890 - 20020311
Group number: 1487801-0200
Assembly Drawing: 1487801-3_1_AA

Issue: 20021022

Pos	Part No	SP	UN	Qty	Description	Page No
Common Parts						
010	2529540-0000	-		1	BRACKET	
020	2529541-0000	-		1	BRACKET	
030	2529542-0000	-		2	BRACKET	
040	2529654-0000	-		4	BRACKET	
100	2528968-0000	-		1	PNEUMATIC DIAGRAM	
300	312105-0370	-		16	SCREW M6S ISO 4017 M6X20 A480	
310	312115-0374	-		8	SCREW MC6S M6X30 A280	
320	312602-0316	-		16	HEXAGON NUT, M6M M6 BR NI.PL.	
330	315103-0153	-		32	WASHER PLAIN, BRB, 6,4/12,H=1,5 NIPL BR	
340	342700-0109	-		2	NIPPLES,HEXAGON,EXT.G-THREAD G1/8"-G1/8"	
350	342707-0109	-		2	SLEEVE, INT. THREAD, NO. 2543-1/8	
360	342713-0209	-		2	PLUG, EXT THREAD HEX SOCKET 8638-00-180	
370	342713-0211	-		17	PLUG, EXT THREAD HEX SOCKET 8638-00-380	
380	342715-0102	-		6	BLIND PLUG 6 MM	
390	342715-0103	-		7	BLIND PLUG 8 MM	
410	342722-0206	-		2	STRAIGHT COUPLING D=8-G3/8"	
420	342732-0105	-		1	ELBOW PIPE D8-R3/8"	
430	90458-2960	-		4	ELBOW PIPE JOINT, EXT.THREAD,D=12MM-G3/8	
440	90458-2959	-		1	ELBOW PIPE JOINT, EXT.THREAD,D=12MM-G1/4	
450	342748-0109	-		2	T-CONNECTION 12MM	
460	342735-0103	-		2	ELBOW PIPE JOINT	
470	342735-0109	-		4	ELBOW PIPE JOINT	
600	90042-0215	A		12	VALVE BODY 5/2 UNISTABLE	
610	90042-0221	A		1	VALVE BODY 5/2 BISTABLE	
620	90042-0265	-		1	HIGH SPEED VENTING VALVE 583-590-000-1	
630	90042-0520	-		1	BASE PLATE ISO SIZE 1	
640	90042-0522	A		4	PORTED END PIECE ISO SIZE 1	
650	90042-0528	A		5	BLANKING KIT SEALS ISO SIZE 1	
660	90042-0532	-		12	BASE PLATE ISO SIZE 1	
680	90042-0545	-		1	SUB-BASE SOFT START ISO 1 AND VDMA 01	
690	90043-0021	A		1	PRESSURE GAUGE WIEGAND 0-1 BAR 1/8"	
700	90043-0065	A		1	PRESSURE GAUGE, 2048 D=40 MM	
710	342716-0203	-		15	REDUCER 6-8	
720	90055-0172	-		7	ELBOW PIPE JOINT	
730	90055-0217	-		15	ELBOW PIPE JOINT	
740	90113-0152	A		1	REGULATOR 4 BAR	
750	90113-0153	A		1	REGULATOR 10 BAR	
760	90140-0020	-		5	ELBOW, 90, INT/EXT. THREAD, NO. 2020-3/8	
770	90140-0021	-		2	ELBOW, 90 INT/EXT, 20201/8-1/8	
775	90166-0068	-	MM	40	TUBE 12 MM PA BLUE	
780	90166-0068	-	MM	60	TUBE 12 MM PA BLUE	
785	90166-0068	-	MM	60	TUBE 12 MM PA BLUE	
790	90166-0068	-	MM	1300	TUBE 12 MM PA BLUE	
795	90166-0068	-	MM	60	TUBE 12 MM PA BLUE	
800	90166-0068	-	MM	40	TUBE 12 MM PA BLUE	
805	90166-0068	-	MM	70	TUBE 12 MM PA BLUE	
810	90166-0068	-	MM	80	TUBE 12 MM PA BLUE	
820	90166-0068	-	MM	290	TUBE 12 MM PA BLUE	
830	90166-0117	-	MM	150	HOSE 4/6 PVC BLUE	
840	90166-0194	-	MM	40	TUBE 8 MM PUR BLUE	
850	90166-0194	-	MM	150	TUBE 8 MM PUR BLUE	
860	90166-0194	-	MM	100	TUBE 8 MM PUR BLUE	
870	90328-0017	B		2	SILENCER, D=6 MM	
880	90328-0024	B		7	SILENCER G3/8	
890	90328-0038	-		1	SILENCER, D=8 MM	
900	90457-0078	-		2	PANEL NUT	
X7049	90042-0535	-		1	TERMINAL BOARD 19 CORDS	
X7050	90042-0535	-		1	TERMINAL BOARD 19 CORDS	
Y6201	90042-0538	A		1	PILOT VALVE L=500MM	
Y6203	90042-0538	A		1	PILOT VALVE L=500MM	
Y6205	90042-0538	A		1	PILOT VALVE L=500MM	
Y7303	90042-0538	A		1	PILOT VALVE L=500MM	
Y7315	90042-0538	A		1	PILOT VALVE L=500MM	
Y7407	90042-0538	A		1	PILOT VALVE L=500MM	
Y7408	90042-0538	A		1	PILOT VALVE L=500MM	
Y7410	90042-0538	A		1	PILOT VALVE L=500MM	
Y7412	90042-0538	A		1	PILOT VALVE L=500MM	
Y7413	90042-0538	A		1	PILOT VALVE L=500MM	
Y7414	90042-0538	A		1	PILOT VALVE L=500MM	
Y7415	90042-0538	A		1	PILOT VALVE L=500MM	
Y7420	90042-0538	A		1	PILOT VALVE L=500MM	
Y7421	90042-0538	A		1	PILOT VALVE L=500MM	
Y7425	90042-0585	A		1	PILOT VALVE L=5M	

Machine Type	Group Description	Used-In	Group Number	Page No

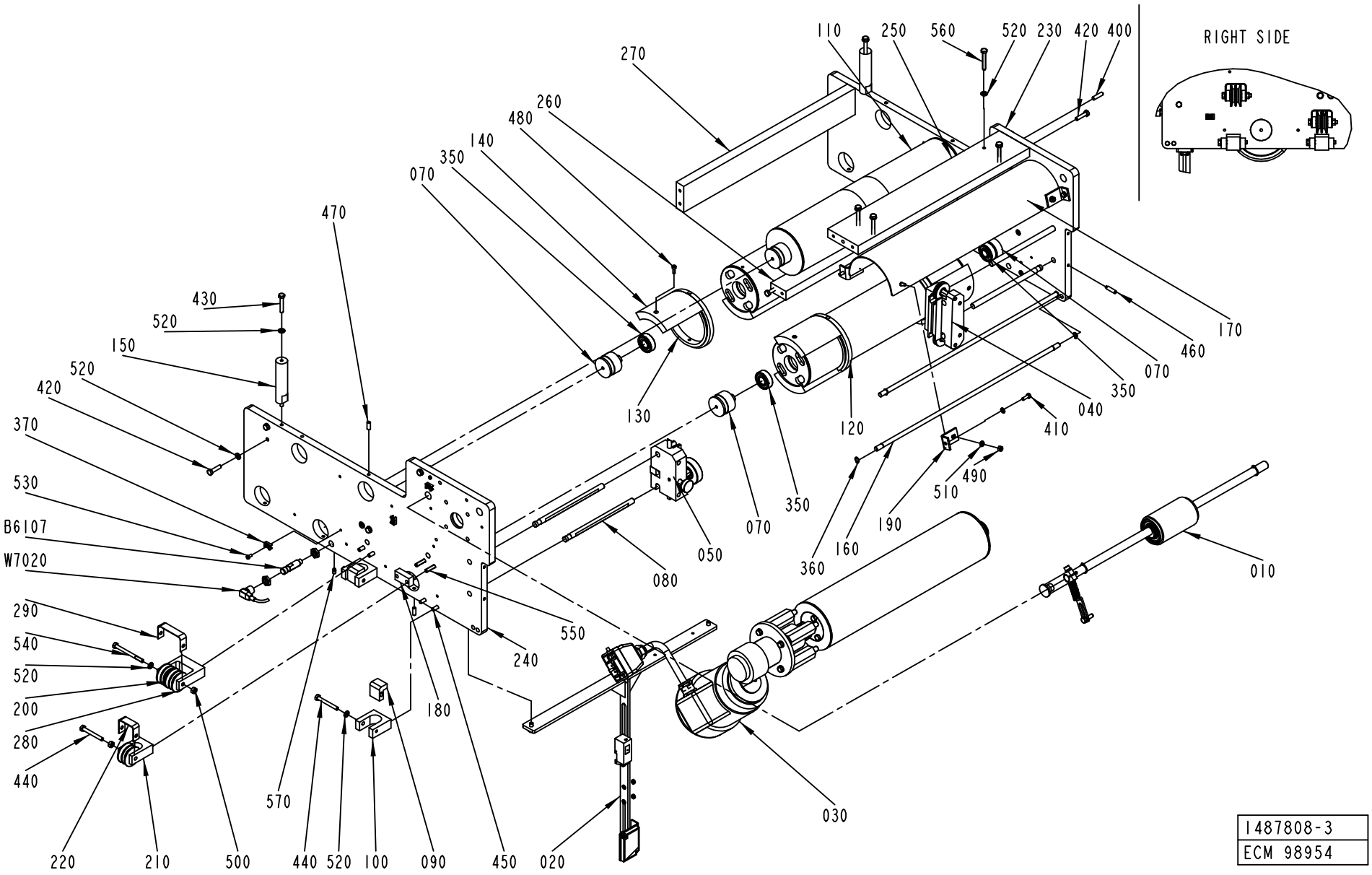

1487808-3
ECM 98954

ECM: 104814 - 20020315
Group number: 1487808-0200
Assembly Drawing: 1487808-3_1_AA

Issue: 20021022

Pos	Part No	SP	UN	Qty	Description	Page No
TBA 0200S						
140	2508205-0010	-		8	BRACKET	
TBA 0200B OR TBA 0250B						
140	2508205-0007	-		8	BRACKET	
Common Parts						
010	A1512429-0100	-		1	PRESSURE ROLLER	**675**
020	A1524731-0100	-		1	BRACKET	**677**
030	A1524732-0200	-		1	DRIVE UNIT	**679**
040	A2529547-0100	-		1	PAPER GUIDE	**625**
050	A1484745-0100	-		1	WEB GUIDE	**621**
070	1499584-0000	-		6	AXLE PIN	
080	1484704-0000	-		4	SHAFT	
090	1484728-0000	-		4	BRACKET	
100	1484738-0000	-		4	BRACKET	
110	1484766-0000	-		1	DANCE ROLLER	
120	2508206-0000	-		2	BENDING ROLLER	
130	2508204-0000	-		4	FLANGE	
150	1487802-0000	-		2	SPACER	
160	1490791-0000	-		2	GUIDE PIN	
170	2515422-0000	-		1	GUIDE PLATE	
180	1519960-0000	-		1	SPACER	
190	1490819-0000	-		4	BRACKET	
200	1519581-0000	-		5	ROLLER BAR	
210	1519586-0000	-		3	BRACKET	
220	1519592-0000	-		4	BOW	
230	1490814-0000	-		1	PLATE	
240	1490815-0000	-		1	PLATE	
250	1487795-0000	-		1	PLATE	
260	1487796-0000	-		1	PLATE	
270	1487800-0000	-		1	PLATE	
280	1538192-0000	-		1	BRACKET	
290	1539396-0000	-		1	BOW CLAMP	
350	321313-0102	-		6	BALL BEARING, 2 SEALS, 15X35X11 MM	
360	90141-0015	-		4	RETAIN. RING, 8	
370	352113-0205	-		6	ANCHOR PLATES FOR STRIPS, TYPE TM2S8-C10	
400	311103-0355	-		2	PARALLELL PIN, M6, 6X25 MM	
410	312105-0328	-		4	SCREW M6S ISO 4017 M5X14 A480	
420	312105-0372	-		11	SCREW M6S ISO 4017 M6X25 A480	
430	312105-0376	-		2	SCREW M6S ISO 4014 M6X35 A480	
440	312105-0380	-		8	SCREW M6S ISO 4014 M6X50 A480	
450	312115-0370	-		14	SCREW MC6S M6X20 A280	
460	312311-0372	-		4	SCREW, SOCK.SET DOGPOINT M6X25	
470	312318-0368	-		5	SCREW SOCK.SET CUP P MSK6SS M6X16 A4	
480	312115-0291	-		8	SCREW MC6S M4X12 A280	
490	312605-0314	-		4	HEXAGON NUT, M6M M5 A280	
500	312605-0316	-		5	HEXAGON NUT, M6M M6 A280	
510	315105-0146	-		8	WASHER PLAIN, BRB, 5,3/10,H=1	
520	315105-0153	-		25	WASHER PLAIN, BRB, 6,4/12,H=1,5	
530	312125-0287	-		6	SCREW PAN HEAD MCS M4X8 SS	
540	312105-0384	-		1	SCREW M6S ISO 4014 M6X70 A480	
550	312115-0374	-		2	SCREW MC6S M6X30 A280	
560	312109-0378	-		4	SCREW M6S ISO 4017 M6X40 A480	
570	90287-0154	-		1	SCREW, SOCK.SET DOGPOINT M6X10	
B6107	90458-0677	-		1	PROXIMITY SWITCH, E2EG-X5MB1-M1	
W7020	90458-1076	-		1	L-SHAPED CONNECTOR CABLE 933 235-042	

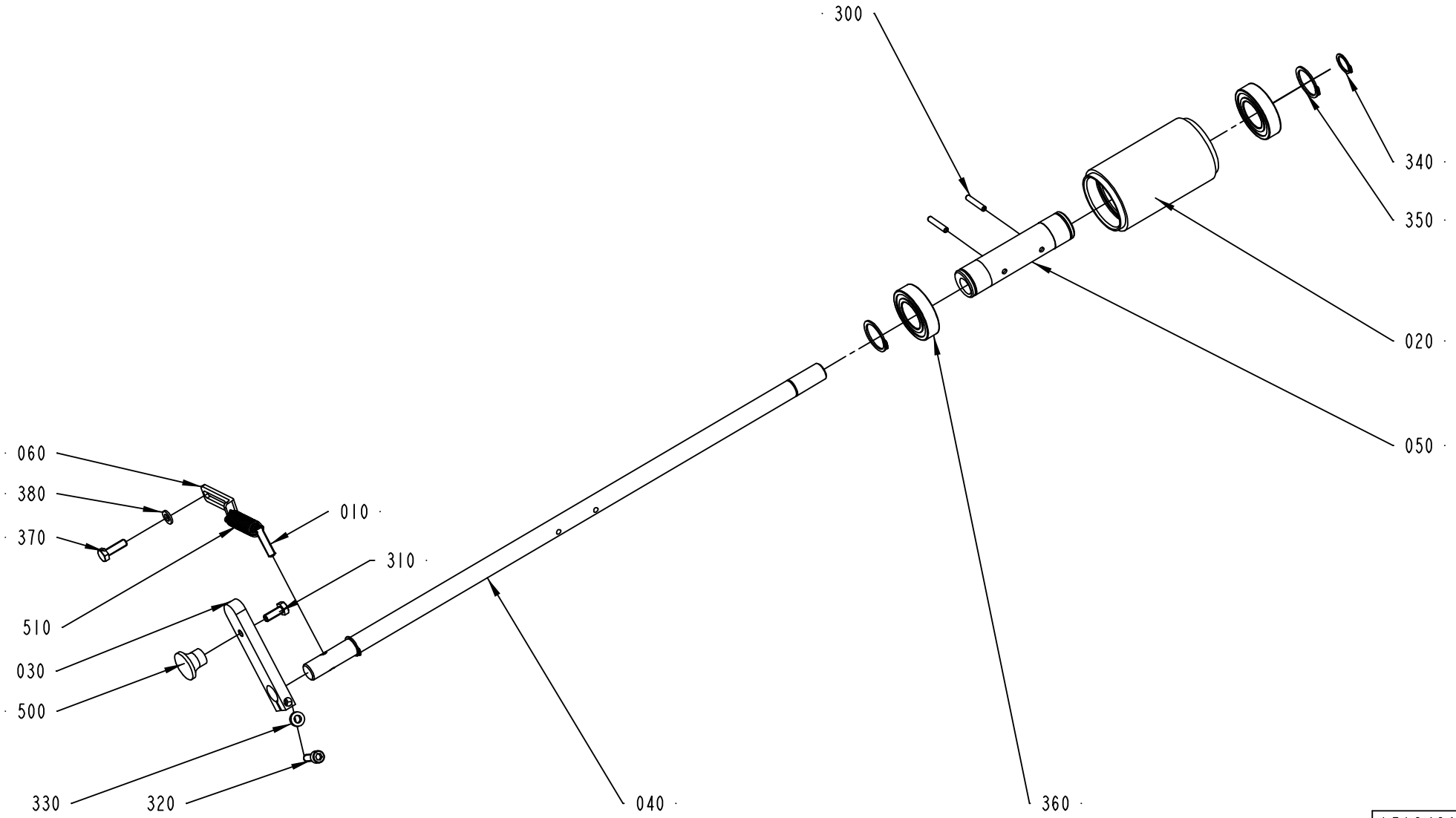

1512429-1
ECM 98954

ECM: 103859 - 20020315
Group number: 1512429-0100
Assembly Drawing: 1512429-1_1_AB

Issue: 20021022

Pos	Part No	SP	UN	Qty	Description	Page No
Common Parts						
010	578684-0000	-		1	SPRING BRACKET	
020	906254-0000	A		1	ROLLER	
030	1147485-0000	-		1	ROCKER ARM	
040	1487521-0000	B		1	SHAFT	
050	1512267-0000	B		1	ECCENTRIC BUSHING	
060	2529549-0000	-		1	PLATE	
300	311112-0258	-		2	PIN, STRAIGHT SLOTTED SPRING FRP 4X24	
310	312105-0368	-		1	SCREW M6S M6X16 A280	
320	312115-0370	-		1	SCREW MC6S M6X20 A280	
330	315115-0153	-		1	WASHER PLAIN, TBRB 6,4/12 H=3	
340	315751-0112	-		2	RETAIN. RING, 15	
350	315751-0119	-		2	RETAIN. RING, 25	
360	321308-0205	A		2	BALL BEARING, 2 SEALS, 25X47X12 MM	
370	312105-0370	-		1	SCREW M6S ISO 4017 M6X20 A480	
380	315105-0153	-		1	WASHER PLAIN, BRB, 6,4/12,H=1,5	
500	90051-0082	-		1	KNOB, CIRCUL, THREADED BUSH, M6 25X21 MM	
510	90335-0091	-		1	TENSION SPRING 41890, 1,2X13X48,2	

Pos	Part No	SP	UN	Qty	Description	Page No

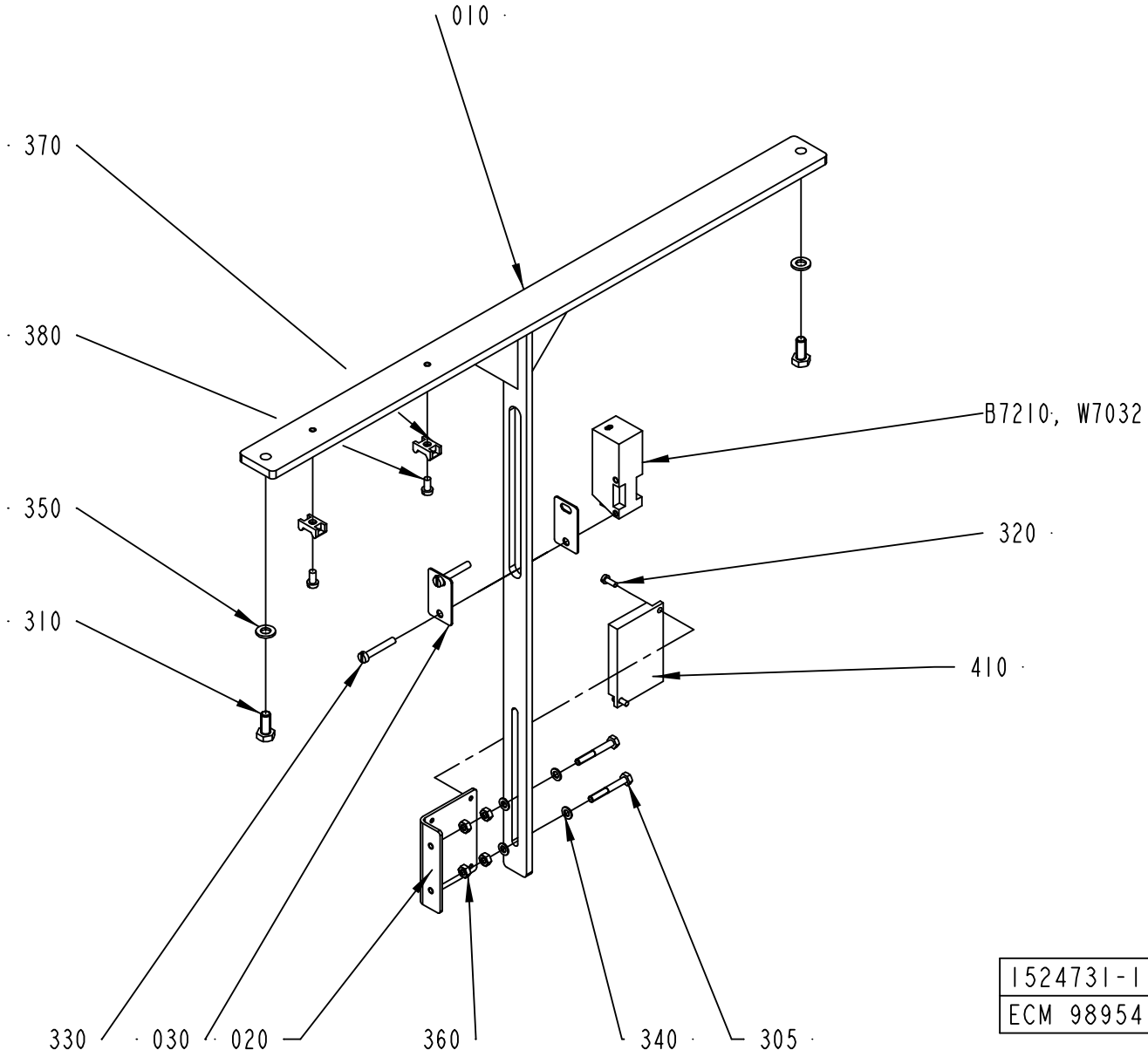

1524731-1
ECM 98954

ECM: 103860 - 20020315
Group number: 1524731-0100
Assembly Drawing: 1524731-1_1_AB

Issue: 20021022

Pos	Part No	SP	UN	Qty	Description	Page No
Common Parts						
010	1512269-0000	-		1	BRACKET	
020	1487784-0000	-		1	BRACKET	
030	1517105-0000	-		2	PLATE	
305	312105-0299	-		2	SCREW M6S ISO 4017 M4X30 A480	
310	312105-0367	-		2	SCREW M6S M6X14 A280	
320	312125-0222	-		2	SCREW PAN HEAD MCS M3X8 SS	
330	312125-0297	-		2	SCREW PAN HEAD MCS M4X25 SS	
340	315105-0136	-		4	WASHER PLAIN, BRB, 4,3/8,H=0,8	
350	315105-0153	-		2	WASHER PLAIN, BRB, 6,4/12,H=1,5	
360	312605-0312	-		4	HEXAGON NUT, M6M M4 A280	
370	352113-0205	-		2	ANCHOR PLATES FOR STRIPS, TYPE TM2S8-C10	
380	312125-0287	-		2	SCREW PAN HEAD MCS M4X8 SS	
410	90232-0333	B		1	REFLECTOR E39-R1	
B7210	90232-0129	A		1	PH.CELL E3S-CR61-5M	

Pos	Part No	SP	UN	Qty	Description	Page No

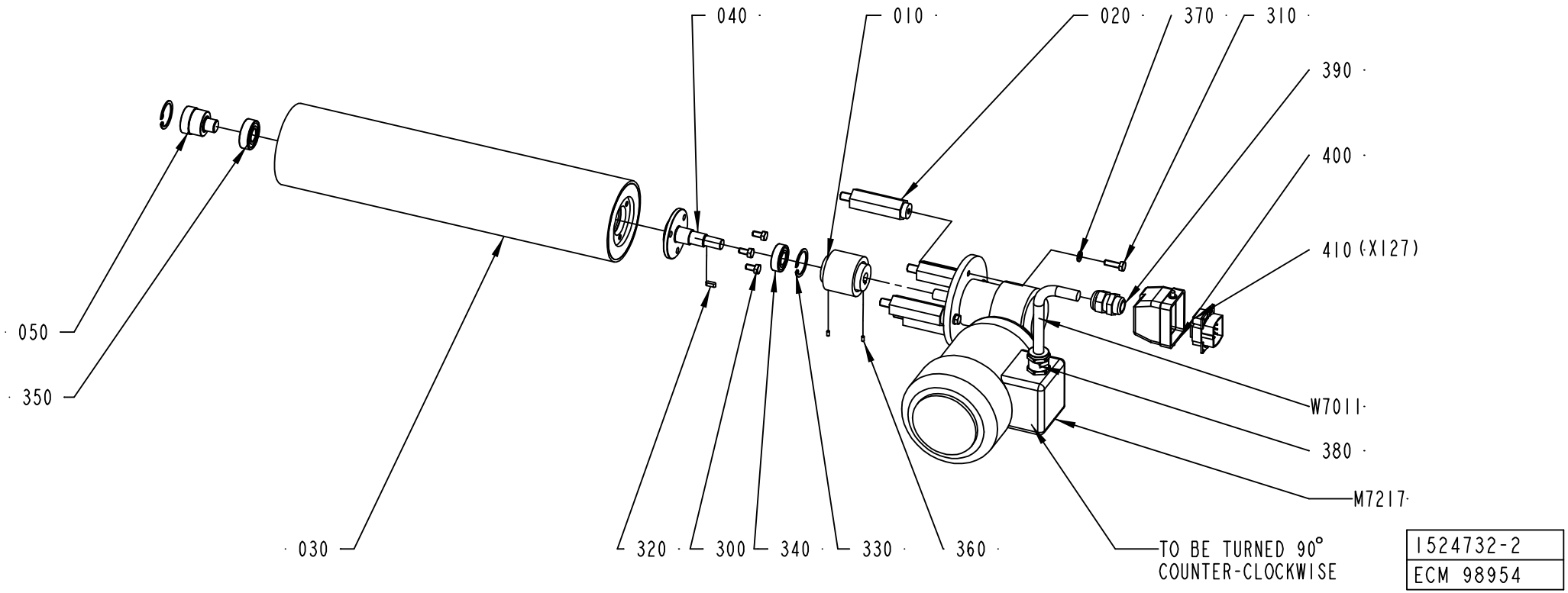
040
010
020
370
310
390
400
410 (X127)
050
350
W7011
380
M7217
030
320
300
340
330
360
TO BE TURNED 90°
COUNTER-CLOCKWISE
1524732-2
ECM 98954

ECM: 103861 - 20020315
Group number: 1524732-0200
Assembly Drawing: 1524732-2_1_AA

Issue: 20021022

Pos	Part No	SP	UN	Qty	Description	Page No
Common Parts						
010	979847-0000	A		1	SHAFT COUPLING	
020	1487788-0000	-		4	SPACER	
030	2523497-0000	A		1	BENDING ROLLER	
040	2523499-0000	-		1	SHAFT	
050	2523500-0000	-		1	AXLE PIN	
300	312105-0366	-		3	SCREW M6S M6X12 A280	
310	312105-0370	-		4	SCREW M6S ISO 4017 M6X20 A480	
320	315701-0166	-		1	PARALLEL KEY W. ROUND ENDS 4X4X12 MM	
330	315753-0123	-		2	RETAINING RING FOR HOLE, 32X1,2 MM	
340	321308-0202	A		1	BALL BEARING, 2 SEALS, 15X32X9 MM	
350	321313-0102	A		1	BALL BEARING, 2 SEALS, 15X35X11 MM	
360	312318-0220	-		2	SCREW SOCK.SET CUP P MSK6SS M3X6 A4	
370	315105-0153	-		4	WASHER PLAIN, BRB, 6,4/12,H=1,5	
380	90012-0137	-		1	GLAND, EXTENDED WITH INSERT, PG11	
390	352103-0108	-		1	CABLE GLAND, ST 13,5 , PR20,4/PG13,5	
400	90110-0157	-		1	CABLE HOOD 6-POL 70.352.0628.1	
410	90110-0159	-		1	MALE INSERT 70.310.0640.0	
M7217	90069-0600	A		1	GEARS, WORM MOTOR ODM90-60KE5	
W7011	90220-0104	-	MM	8500	SCR. CABLE 4X1,5MM2	

Pos	Part No	SP	UN	Qty	Description	Page No

Machine Type | Group Description | Used-In | Group Number | Page No

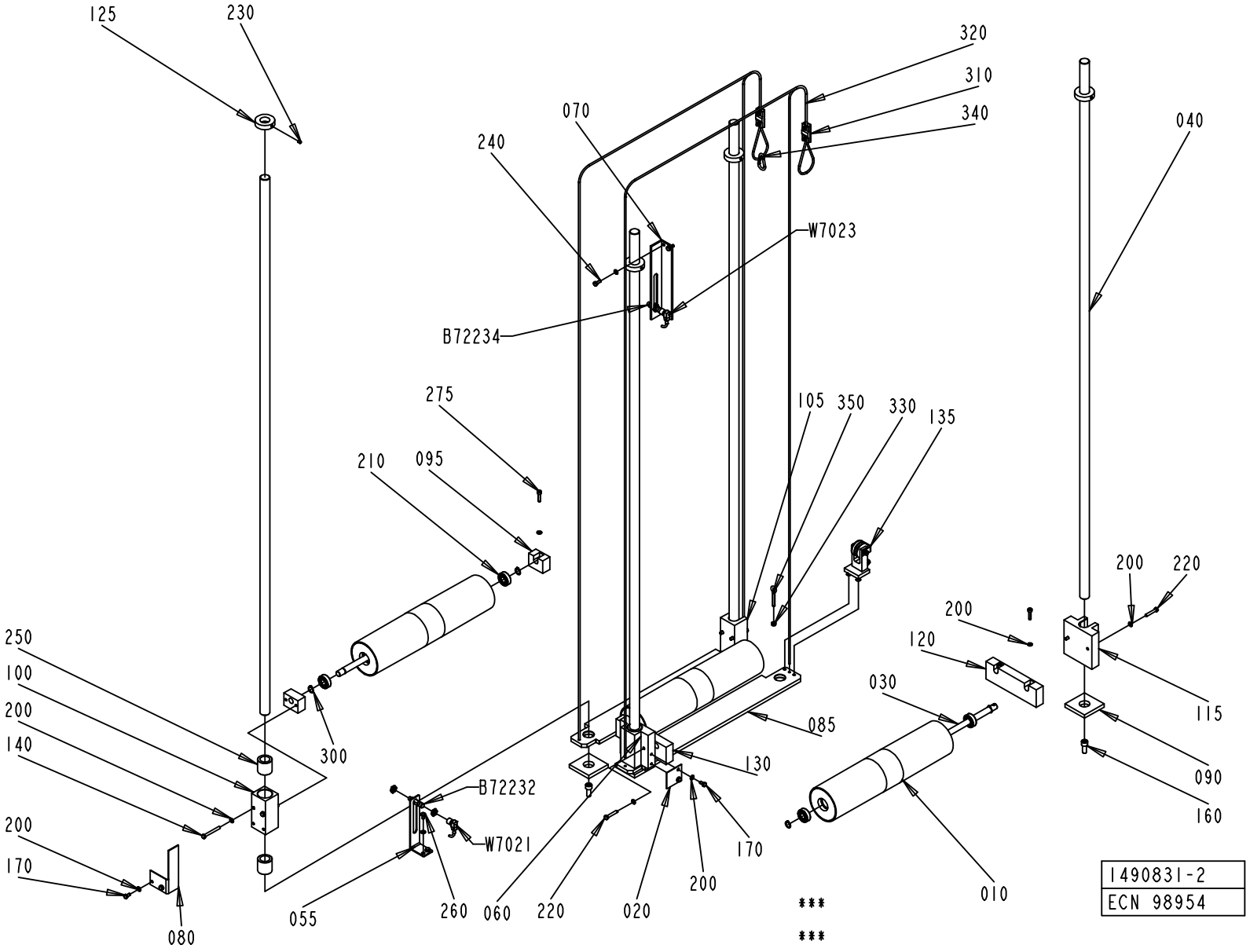
125
230
320
310
340
070
240
040
W7023
B72234
275
105
350
330
135
210
095
200
220
200
120
250
100
200
140
300
030
085
115
130
090
B72232
160
W7021
200
170
170
010
055
260
060
220
020
200
***
***
080
1490831-2
ECN 98954

Pos	Part No	SP	UN	Qty	Description	Page No
Common Parts						
010	1484766-0000	A		3	DANCE ROLLER	
020	1484778-0000	-		1	PLATE	
030	1487519-0000	A		3	SHAFT	
040	1487530-0001	A		4	GUIDE ROD	
055	1484761-0000	-		1	ANGLE BRACKET	
060	1487536-0000	A		1	GUIDE BRACKET	
070	1487550-0000	-		1	ANGLE BRACKET	
080	1487551-0000	-		1	PLATE	
085	1519942-0000	-		2	PLATE	
090	1487765-0000	-		4	SPACER	
095	1511579-0000	-		1	BRACKET	
100	1484752-0000	A		1	SLIDER	
105	1484760-0000	A		1	SLIDER	
110	2529561-0000	-		2	PLATE	
115	1511564-0000	A		1	GUIDE BRACKET	
120	2523719-0000	-		1	BRACKET	
125	1487769-0000	-		4	SPACER	
130	2523720-0000	-		1	BRACKET	
135	A1548210-0100	-		1	LOCKING DEVICE	**683**
140	312105-0381	-		4	SCREW M6S ISO 4014 M6X55 A480	
160	312115-0493	-		4	SCREW MC6S M10X25 A280	
170	312105-0366	-		4	SCREW M6S M6X12 A280	
200	315105-0153	-		19	WASHER PLAIN, BRB, 6,4/12,H=1,5	
210	321313-0102	A		6	BALL BEARING, 2 SEALS, 15X35X11 MM	
220	312105-0376	-		4	SCREW M6S ISO 4014 M6X35 A480	
230	312316-0362	-		4	SCREW HEX.SOCK.SET CUP P.MSK6SS6X8 FZB	
240	312105-0368	-		2	SCREW M6S M6X16 A280	
250	90189-0025	A		4	BALL BUSHING, 25X37X37 MM	
260	312105-0364	-		2	SCREW M6S ISO 4017 M6X10 A480	
275	312115-0372	-		3	SCREW MC6S M6X25 A280	
280	312115-0451	-		4	SCREW MC6S M8X20 A280	
300	315751-0112	-		6	RETAIN. RING, 15	
310	90211-0002	-		2	WIRE LOCK, 5 MM	
320	90319-0013	-	M	2	ROPE 4MM BLUE 3700N	
330	312605-0316	-		1	HEXAGON NUT, M6M M6 A280	
340	1558265-0000	-		2	SNAP HOOK	
350	1558266-0000	-		1	LIFTING EYEBOLT	
360	353249-0054	-		2	INSERT, SINGEL HOLE, EK 156/25	
B72232	90458-0677	A		1	PROXIMITY SWITCH, E2EG-X5MB1-M1	
B72234	90458-0677	A		1	PROXIMITY SWITCH, E2EG-X5MB1-M1	
W7021	90458-1076	A		1	L-SHAPED CONNECTOR CABLE 933 235-042	
W7023	90458-1076	A		1	L-SHAPED CONNECTOR CABLE 933 235-042	

Machine Type | Group Description | Used-In | Group Number | Page No

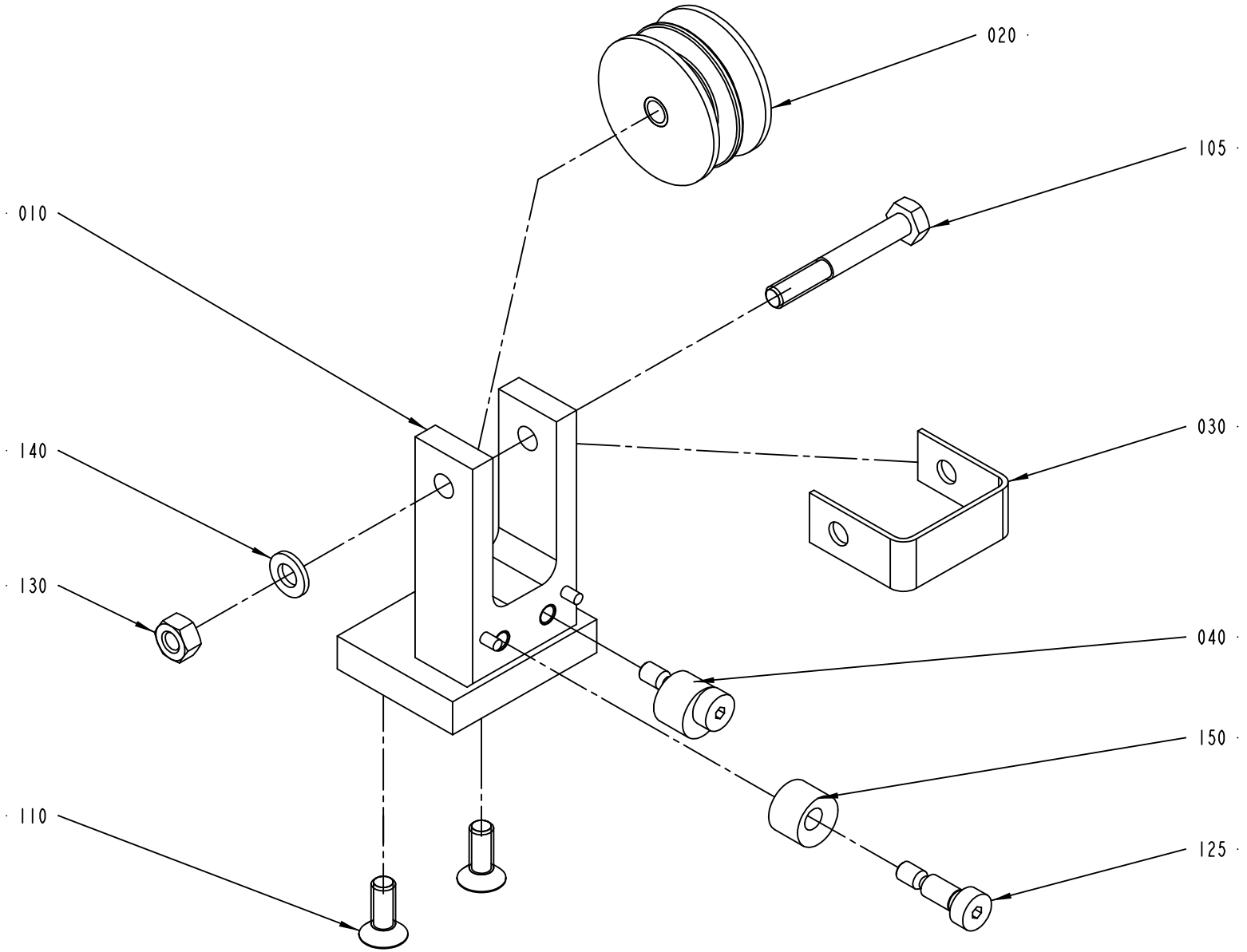

1548210-1
ECN 91848

ECM: 97251 - 20010831
Group number: 1548210-0100
Assembly Drawing: 1548210-1_1_AB

Issue: 20021022

Pos	Part No	SP	UN	Qty	Description	Page No
Common Parts						
010	1539394-0000	-		1	BRACKET	
020	1519581-0000	A		1	ROLLER BAR	
030	1519592-0000	-		1	BOW	
040	1539397-0000	-		1	ROLLER	
105	312105-0379	-		1	SCREW M6S ISO 4014 M6X45 A480	
110	312155-0368	-		2	SCREW HEX.SOCK.COUNT.MF6S M6X16 A280	
125	312180-0366	-		2	SCREW, HEX.SOCK.HEAD SHOULD. M5/6X12	
130	312605-0316	-		1	HEXAGON NUT, M6M M6 A280	
140	315105-0153	-		1	WASHER PLAIN, BRB, 6,4/12,H=1,5	
150	1549332-0000	-		1	ROLLER	

Pos	Part No	SP	UN	Qty	Description	Page No

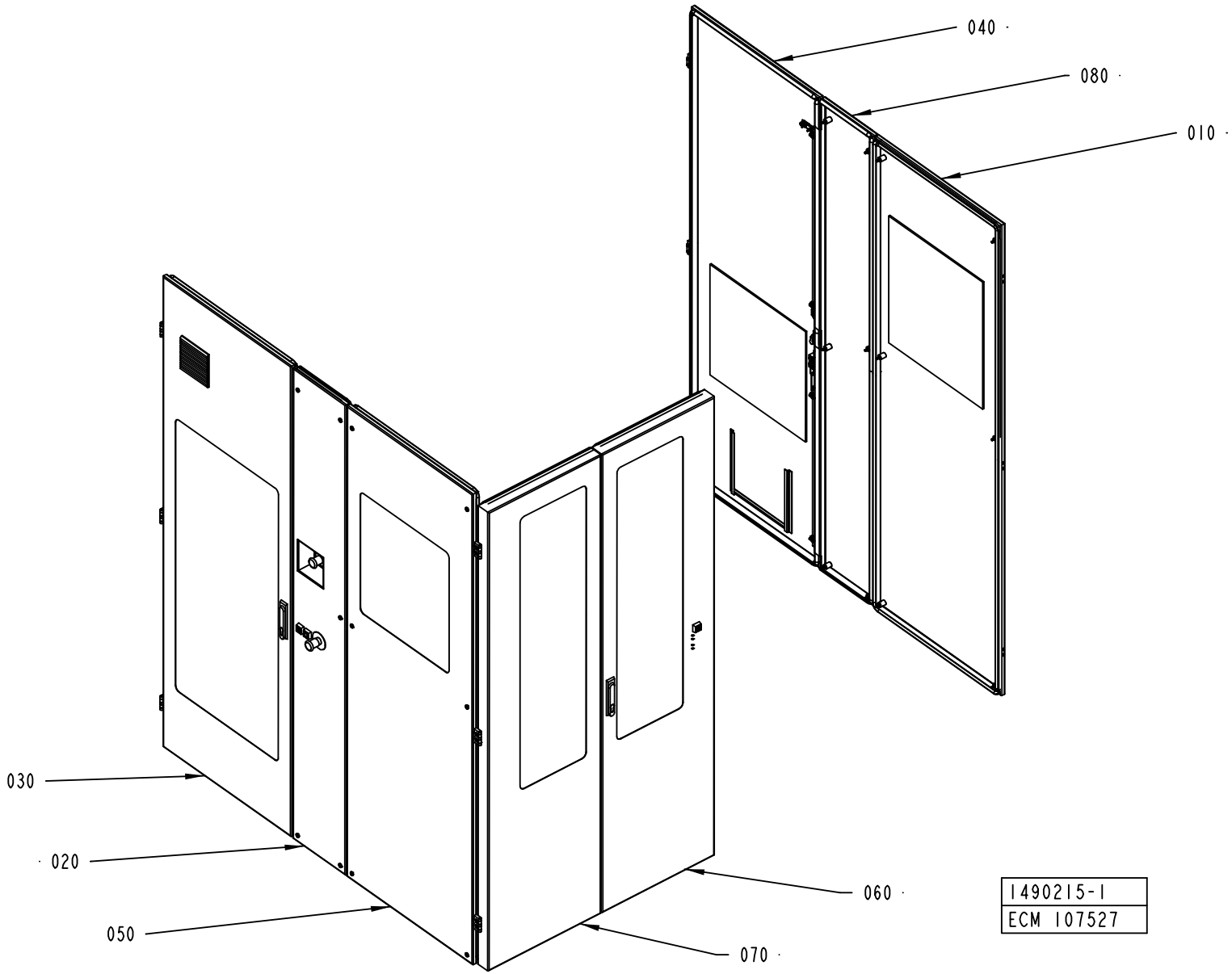
040
080
010
030
020
050
060
070
1490215-1
ECM 107527

ECM: 111555 - 20020709
Group number: 1490215-0200
Assembly Drawing: 1490215-1_1_AB

Issue: 20021022

Pos	Part No	SP	UN	Qty	Description	Page No
Common Parts						
010	A1499564-0100	-		1	COVER	**687**
020	A1490190-0200	-		1	HATCH	**689**
030	A1490191-0100	-		1	DOOR	**695**
040	A1558988-0100	-		1	DOOR	**697**
050	A1490193-0100	-		1	COVER	**699**
060	A1498453-0200	-		1	DOOR	**701**
070	A1498454-0100	-		1	DOOR	**705**
080	A1490188-0100	-		1	COVER	**707**

Pos	Part No	SP	UN	Qty	Description	Page No

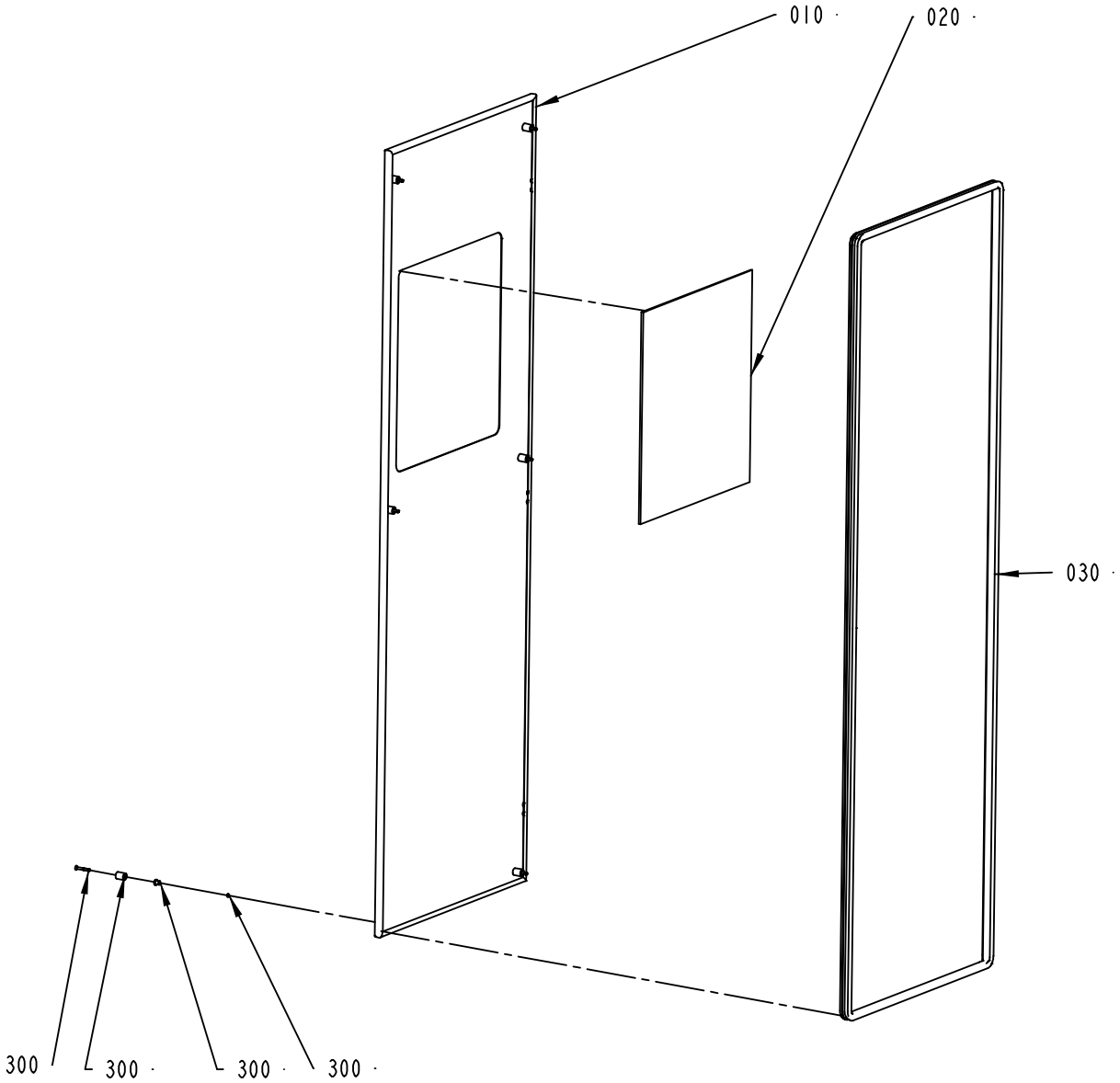

1499564-1
ECN 80701

ECM: 85308 - 20010306
Group number: 1499564-0100
Assembly Drawing: 1499564-1_1_AB

Issue: 20021022

Pos	Part No	SP	UN	Qty	Description	Page No
Common Parts						
010	1487995-0000	-		1	HATCH	
020	1498459-0003	-		1	GLASS PANE	
030	1498461-0002	-		1	SEALING STRIP	
300	90226-0458	-		6	MOUNTING SCREW	

Pos	Part No	SP	UN	Qty	Description	Page No

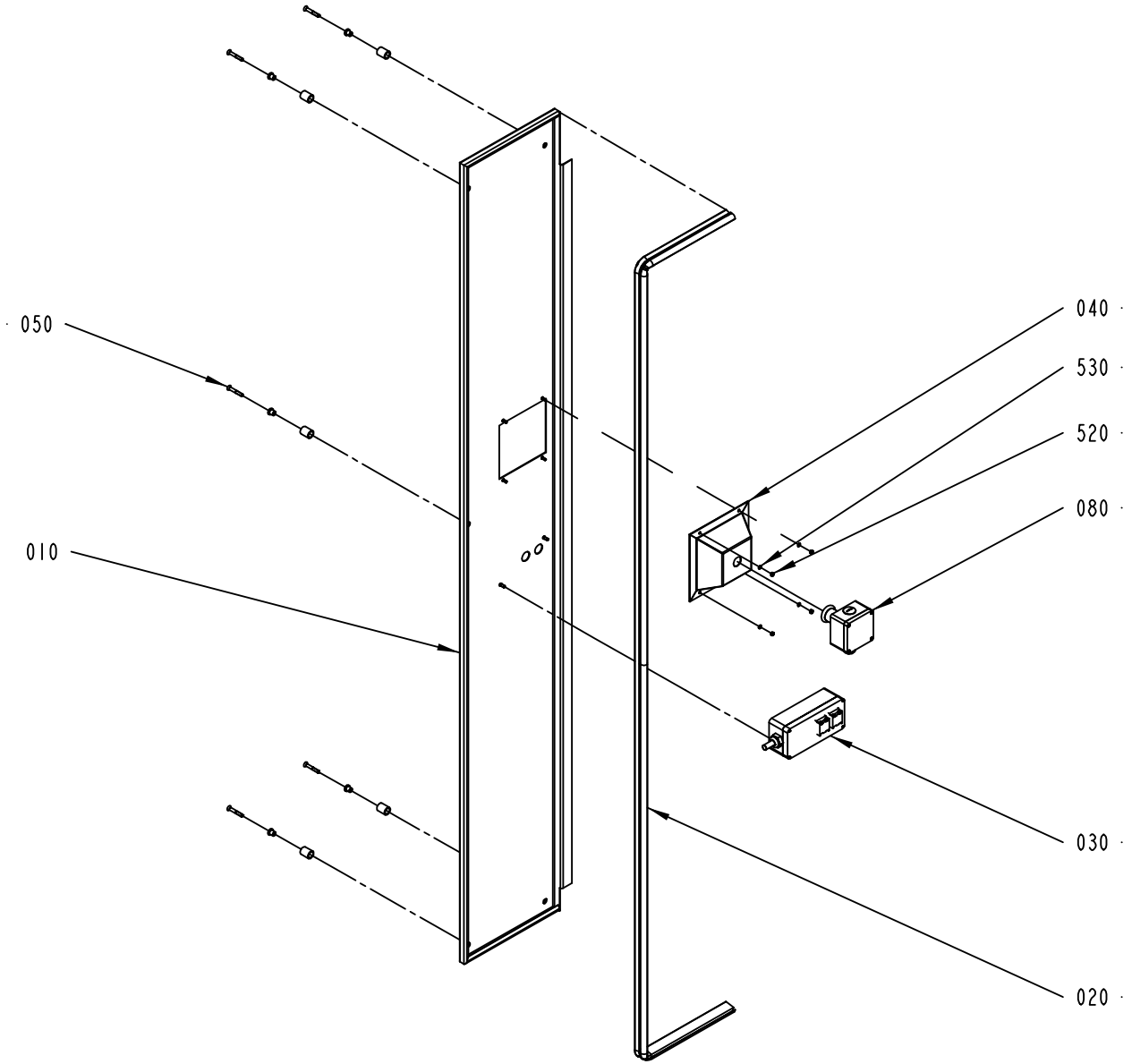

1490190-5
ECM 94495

ECM: 98407 - 20020311
Group number: 1490190-0200
Assembly Drawing: 1490190-5_1_AA

Issue: 20021022

Pos	Part No	SP	UN	Qty	Description	Page No
Common Parts						
010	2532535-0000	-		1	HATCH	
020	1512414-0000	-		1	SEALING STRIP	
030	A1512413-0100	-		1	CONTROL PANEL	**691**
040	1484363-0000	-		1	COVER	
050	90226-0458	-		5	MOUNTING SCREW	
080	A2508187-0100	-		1	EMERGENCY STOP	**693**
520	312605-0312	-		4	HEXAGON NUT, M6M M4 A280	
530	315105-0136	-		4	WASHER PLAIN, BRB, 4,3/8,H=0,8	

Pos	Part No	SP	UN	Qty	Description	Page No

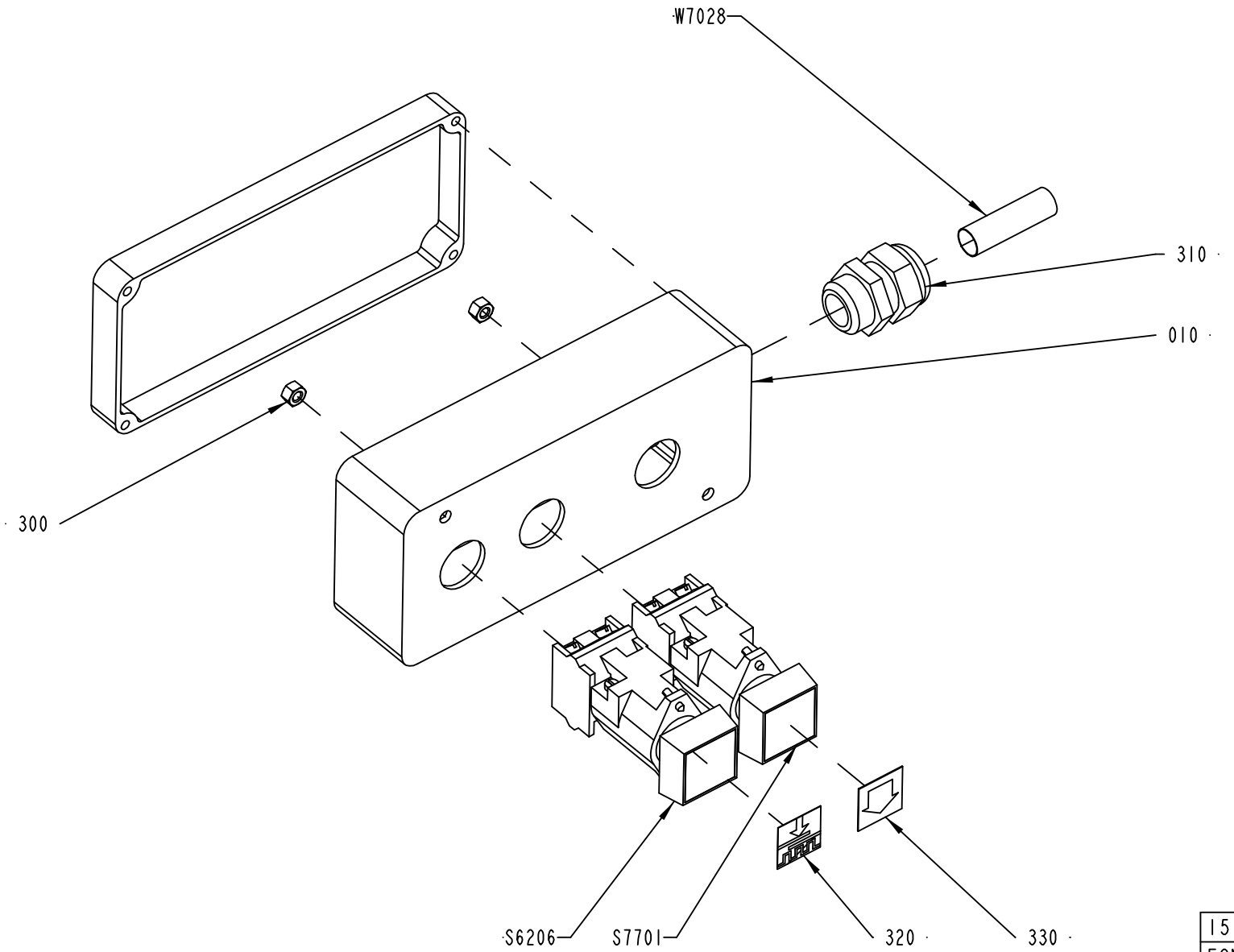

1512413-3
ECM 107527

Pos	Part No	SP	UN	Qty	Description	Page No
TBA/22						
010	1512280-0000	-		1	PUSH BUTTON BOX	
330	359301-0005	-		1	SIGN "DOWN"	
Common Parts						
300	312605-0314	-		2	HEXAGON NUT, M6M M5 A280	
310	352103-0111	-		1	CABLE GLAND, ST 16, PR22,5/PG16	
320	359301-0101	-		1	SIGN	
S6206	B90064-0082	A		1	PUSH BUTTON, WHITE	
	90036-0057	*B*		*1*	*LIGHT BULB, BA9S 28V*	
S7701	90064-0084	A		1	PUSH BUTTON, YELLOW	
W7028	351150-0407	-	MM	500	CABLE OLFLEX 12X0,75 MM2 LIGHT/GREY	

Pos	Part No	SP	UN	Qty	Description	Page No

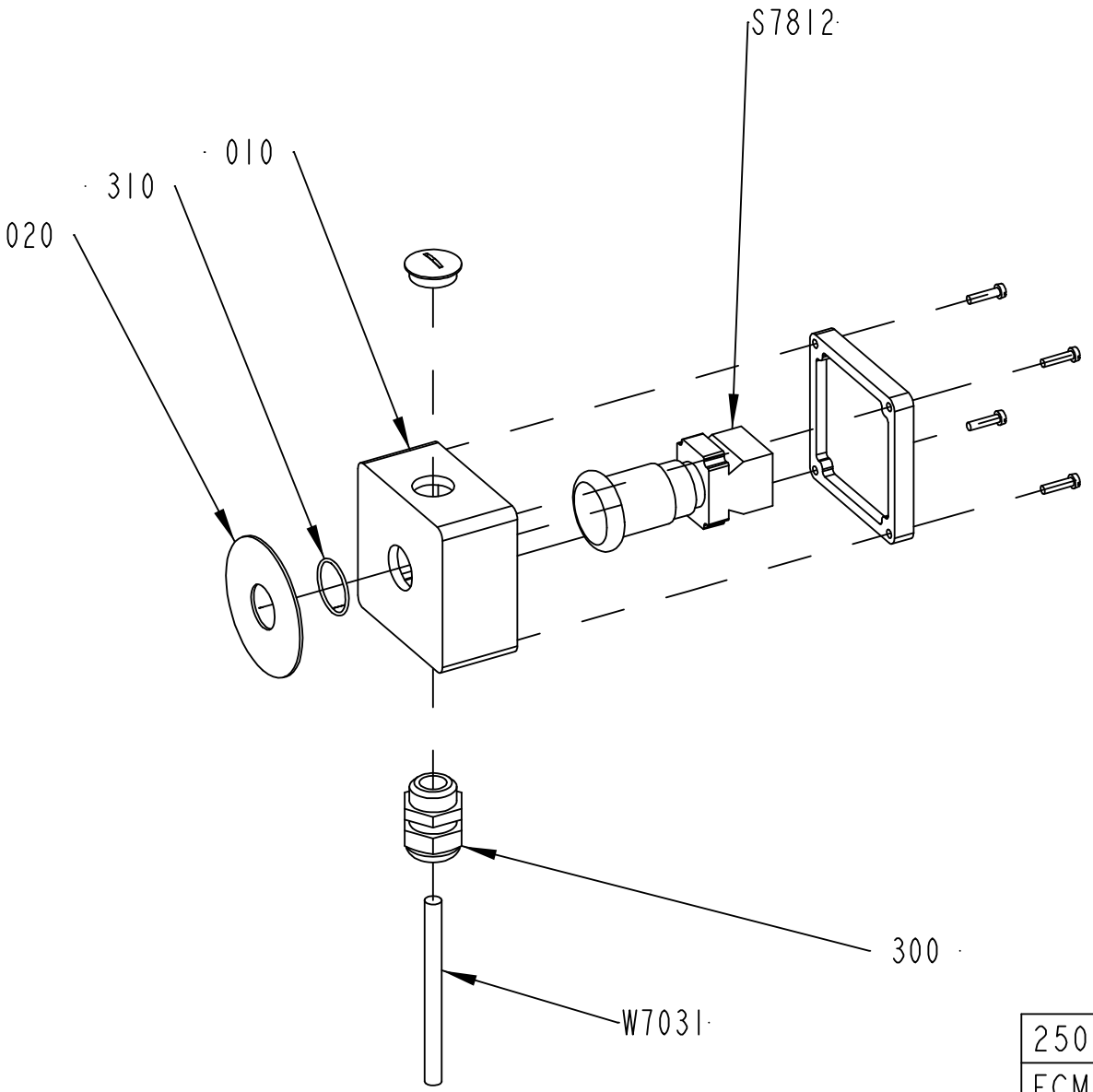

2508187-2
ECM 94495

ECM: 104877 - 20020311
Group number: 2508187-0100
Assembly Drawing: 2508187-2_1_AA

Issue: 20021022

Pos	Part No	SP	UN	Qty	Description	Page No
Common Parts						
010	1037130-0000	-		1	CONNECTION BOX	
020	486826-0001	-		1	SIGN "EMERGENCY STOP"	
300	352103-0110	-		1	CABLE GLAND, STR 16, PR22,5/PG16	
310	315202-0119	-		1	O-RING 25,1X1,6 MM	
S7812	90064-0124	-		1	SWITCH, EM. STOP, ZB2-BS844+ZB2-BZ1045	
W7031	351150-0405	-	MM	4000	CABLE OLFLEX 5X0,75 MM2 LIGHT/GREY	

Pos	Part No	SP	UN	Qty	Description	Page No

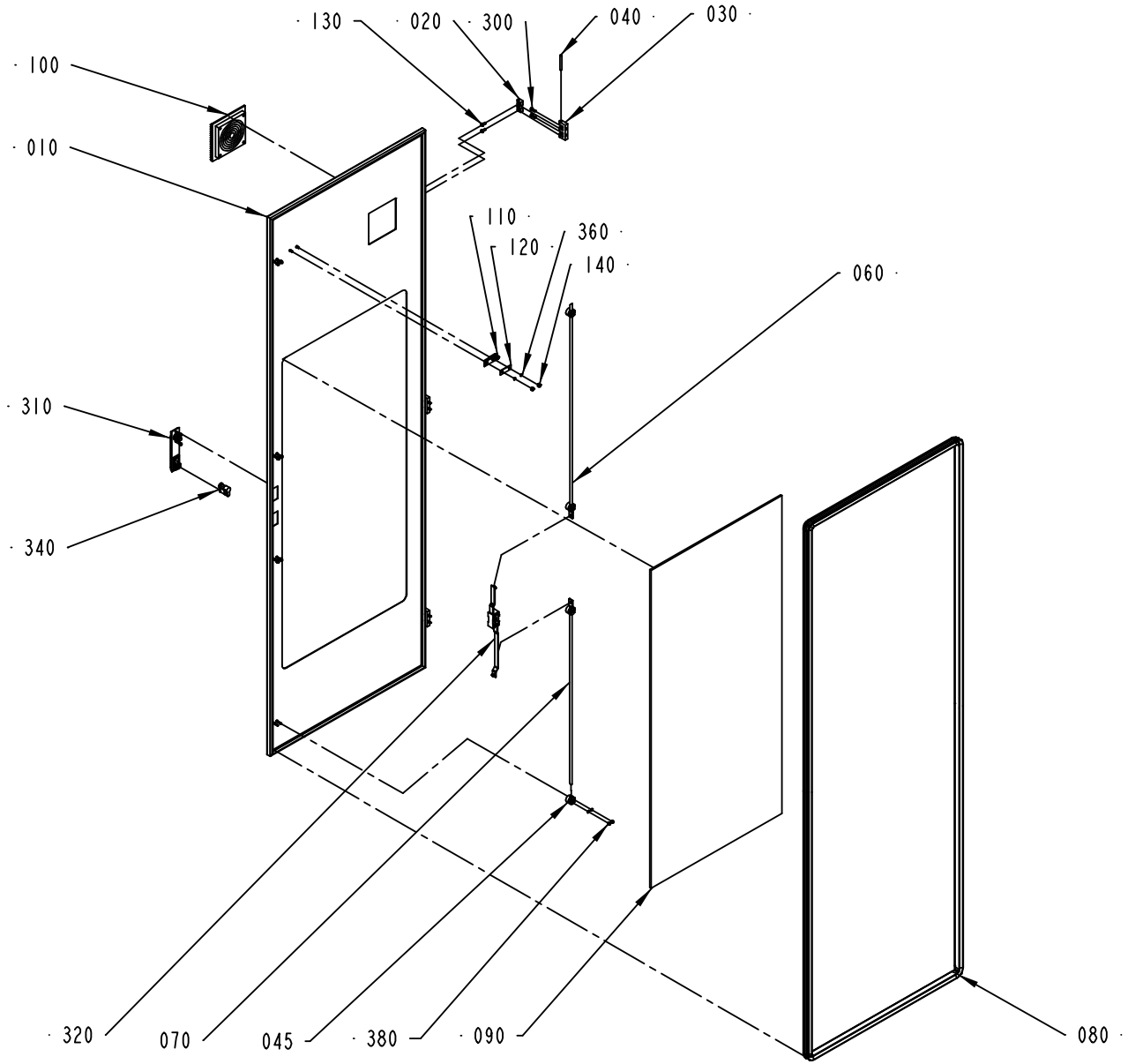

1490191-2
ECM 107527

Pos	Part No	SP	UN	Qty	Description	Page No
Common Parts						
010	1488000-0000	-		1	DOOR	
020	1129770-0000	-		6	BLOCKING PIECE	
030	1035792-0000	-		3	E-HINGE	
040	988685-0000	-		3	PIN	
045	2550333-0000	-		4	GUIDE LUG	
060	1499562-0003	-		1	LOCKING ARM	
070	1499562-0004	-		1	LOCKING ARM	
080	1498461-0005	-		1	SEALING STRIP	
090	1498459-0002	-		1	GLASS PANE	
100	1490226-0000	A		1	FILTER	
110	975917-0000	-		1	KEY FOR SAFETY SWITCH 90044-103	
120	1036563-0000	-		1	WASHER	
130	1129767-0000	-		6	SCREW	
140	1539391-0000	-		2	ROUND NUT	
300	312115-0327	-		6	SCREW MC6S M5X12 A280	
310	90237-0175	-		1	TURNING HANDLE	
320	90237-0153	-		1	LOCK HOUSING, 1121-U26-0B	
340	90237-0128	-		1	LOCK CYLINDER, 1109-U3	
360	315105-0136	-		10	WASHER PLAIN, BRB, 4,3/8,H=0,8	
380	312705-0312	-		8	NUT HEX. DOMED CAP MHM-6 M4 A280	

Pos	Part No	SP	UN	Qty	Description	Page No

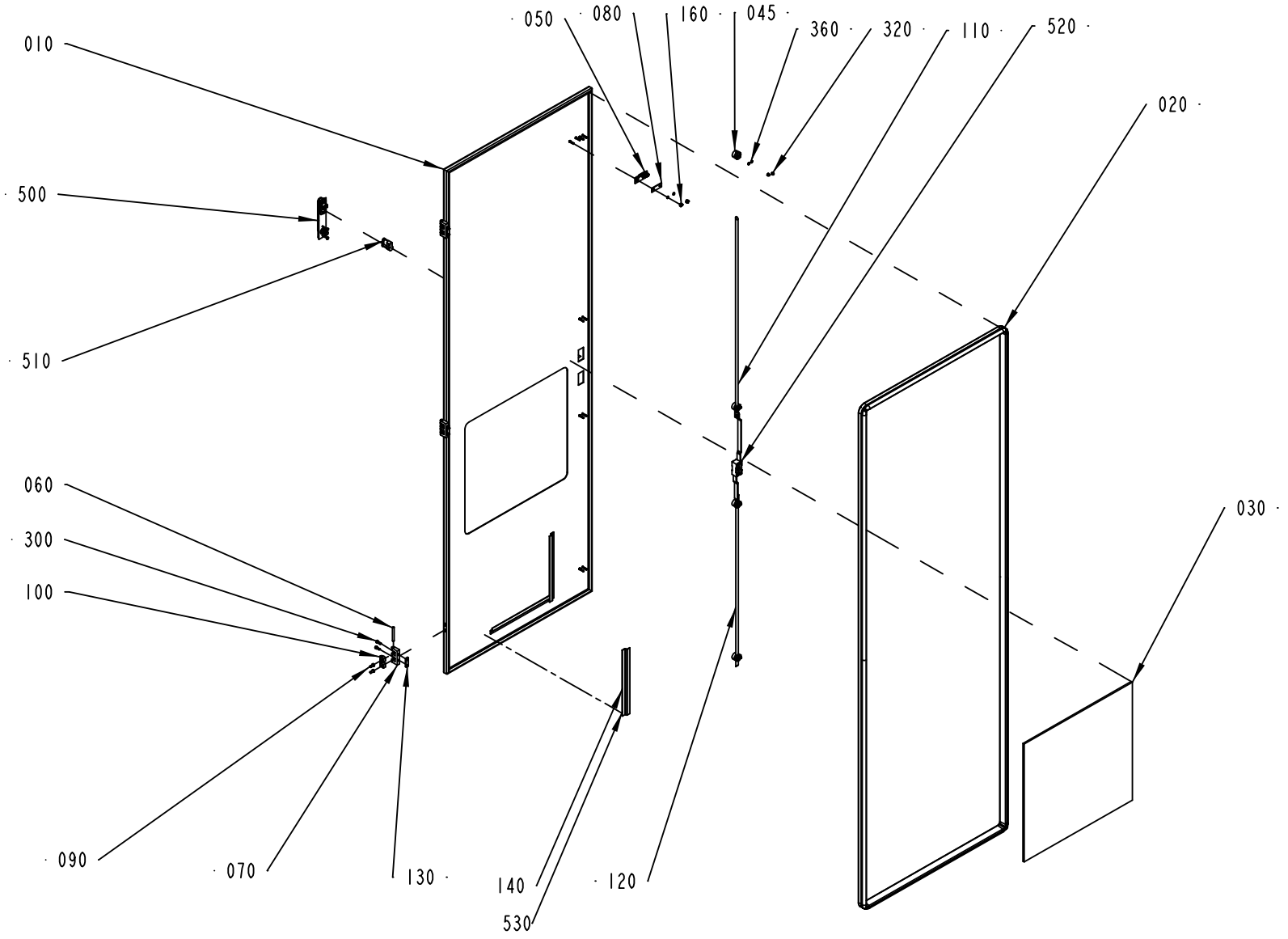

1558988-1
ECM 107527

ECM: 110694 - 20020709
Group number: 1558988-0100
Assembly Drawing: 1558988-1_1_AB

Issue: 20021022

Pos	Part No	SP	UN	Qty	Description	Page No
Common Parts						
010	1558983-0000	-		1	DOOR	
020	1498461-0005	-		1	SEALING STRIP	
030	1498459-0004	-		1	GLASS PANE	
045	2550333-0000	-		4	GUIDE LUG	
050	975917-0000	-		1	KEY FOR SAFETY SWITCH 90044-103	
060	988685-0000	-		3	PIN	
070	1035792-0000	-		3	E-HINGE	
080	1036563-0000	-		1	WASHER	
090	1129767-0000	-		6	SCREW	
100	1129770-0000	-		6	BLOCKING PIECE	
110	1499562-0003	-		1	LOCKING ARM	
120	1499562-0004	-		1	LOCKING ARM	
130	1147253-0000	-		3	NUT	
140	988690-0000	-		3	RIM	
160	1539391-0000	-		2	ROUND NUT	
300	312115-0327	-		6	SCREW MC6S M5X12 A280	
320	312705-0312	-		8	NUT HEX. DOMED CAP MHM-6 M4 A280	
360	315105-0136	-		10	WASHER PLAIN, BRB, 4,3/8,H=0,8	
500	90237-0175	-		1	TURNING HANDLE	
510	90237-0128	-		1	LOCK CYLINDER, 1109-U3	
520	90237-0153	-		1	LOCK HOUSING, 1121-U26-0B	
530	90144-0072	-	MM	840	TAPE SCOTCH VHBS 4945 W=12,7MM	

Pos	Part No	SP	UN	Qty	Description	Page No

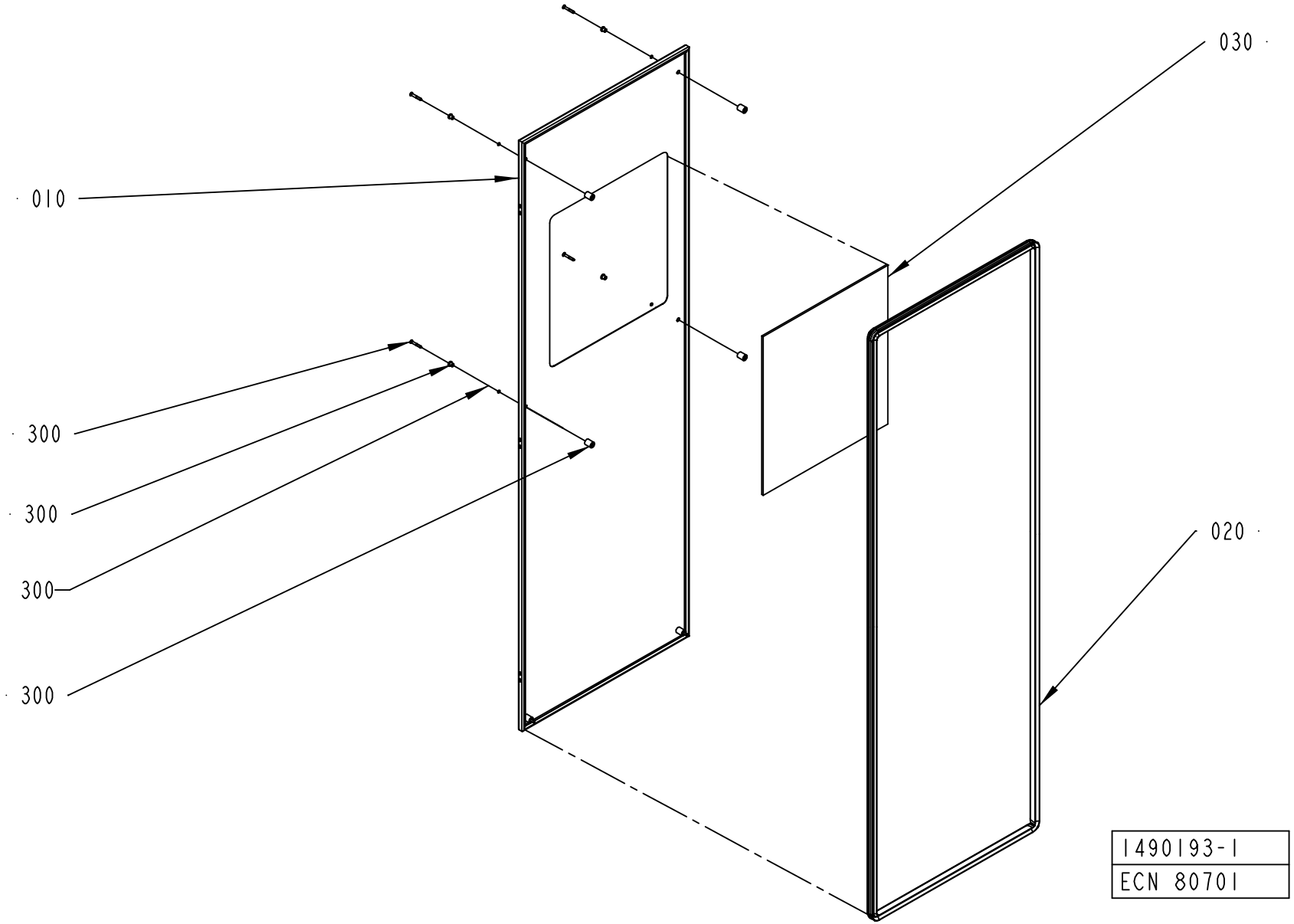
030
010
300
300
300
300
020
1490193-1
ECN 80701

ECM: 85414 - 20010306
Group number: 1490193-0100
Assembly Drawing: 1490193-1_1_AB

Issue: 20021022

Pos	Part No	SP	UN	Qty	Description	Page No
Common Parts						
010	1498460-0000	-		1	HATCH	
020	1498461-0002	-		1	SEALING STRIP	
030	1498459-0003	-		1	GLASS PANE	
300	90226-0458	-		6	MOUNTING SCREW	

Pos	Part No	SP	UN	Qty	Description	Page No

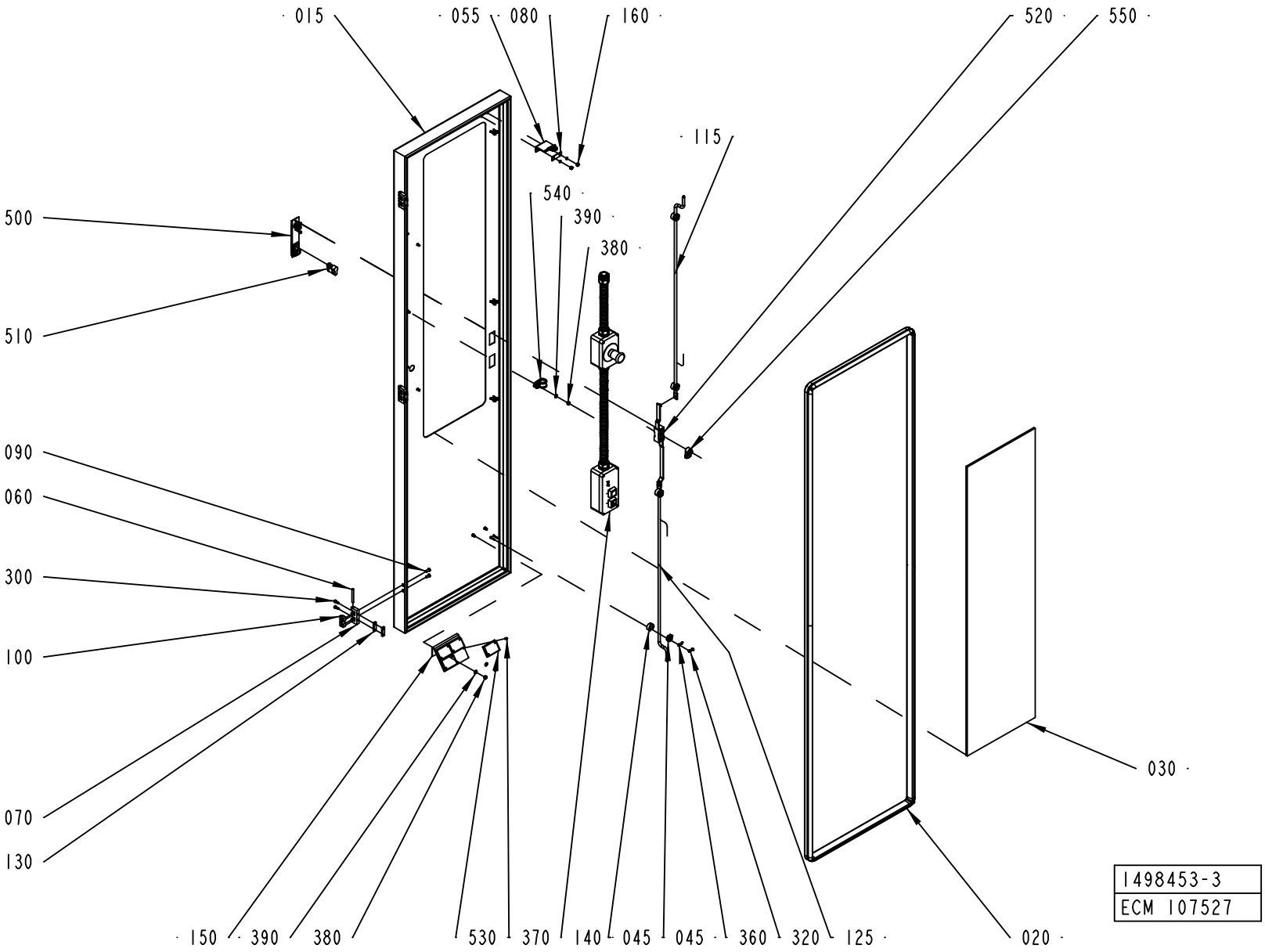
015
055
080
160
520
550
115
540
390
380
500
510
090
060
300
100
070
130
030
150
390
380
530
370
140
045
045
360
320
125
020
1498453-3
ECM 107527

Pos	Part No	SP	UN	Qty	Description	Page No
Common Parts						
015	2547666-0000	-		1	DOOR	
020	1498461-0001	-		1	SEALING STRIP	
030	1498459-0001	-		1	GLASS PANE	
045	2550333-0000	-		4	GUIDE LUG	
055	2553072-0000	-		1	KEY FOR SAFETY SWITCH	
060	988685-0000	-		3	PIN	
070	1035792-0000	-		3	E-HINGE	
080	1036563-0000	-		1	WASHER	
090	1129767-0000	-		6	SCREW	
100	1129770-0000	-		6	BLOCKING PIECE	
115	2550269-0001	-		1	LOCKING ARM	
125	2550269-0002	-		1	LOCKING ARM	
130	1147253-0000	-		3	NUT	
140	A1517088-0200	-		1	CONTROL PANEL	**703**
150	1538204-0000	-		1	BRACKET	
160	1539391-0000	-		2	ROUND NUT	
300	312115-0327	-		6	SCREW MC6S M5X12 A280	
320	312705-0312	-		8	NUT HEX. DOMED CAP MHM-6 M4 A280	
360	315105-0136	-		10	WASHER PLAIN, BRB, 4,3/8,H=0,8	
370	312125-0222	-		8	SCREW PAN HEAD MCS M3X8 SS	
380	312605-0316	-		3	HEXAGON NUT, M6M M6 A280	
390	315105-0153	-		3	WASHER PLAIN, BRB, 6,4/12,H=1,5	
500	90237-0175	-		1	TURNING HANDLE	
510	90237-0128	-		1	LOCK CYLINDER, 1109-U3	
520	90237-0153	-		1	LOCK HOUSING, 1121-U26-0B	
530	90232-0333	-		4	REFLECTOR E39-R1	
540	90165-0159	-		1	PIPE CLAMP, RSGU 1 25/20-W4, D=25 MM	
550	90237-0165	-		1	LATCH	

Pos	Part No	SP	UN	Qty	Description	Page No

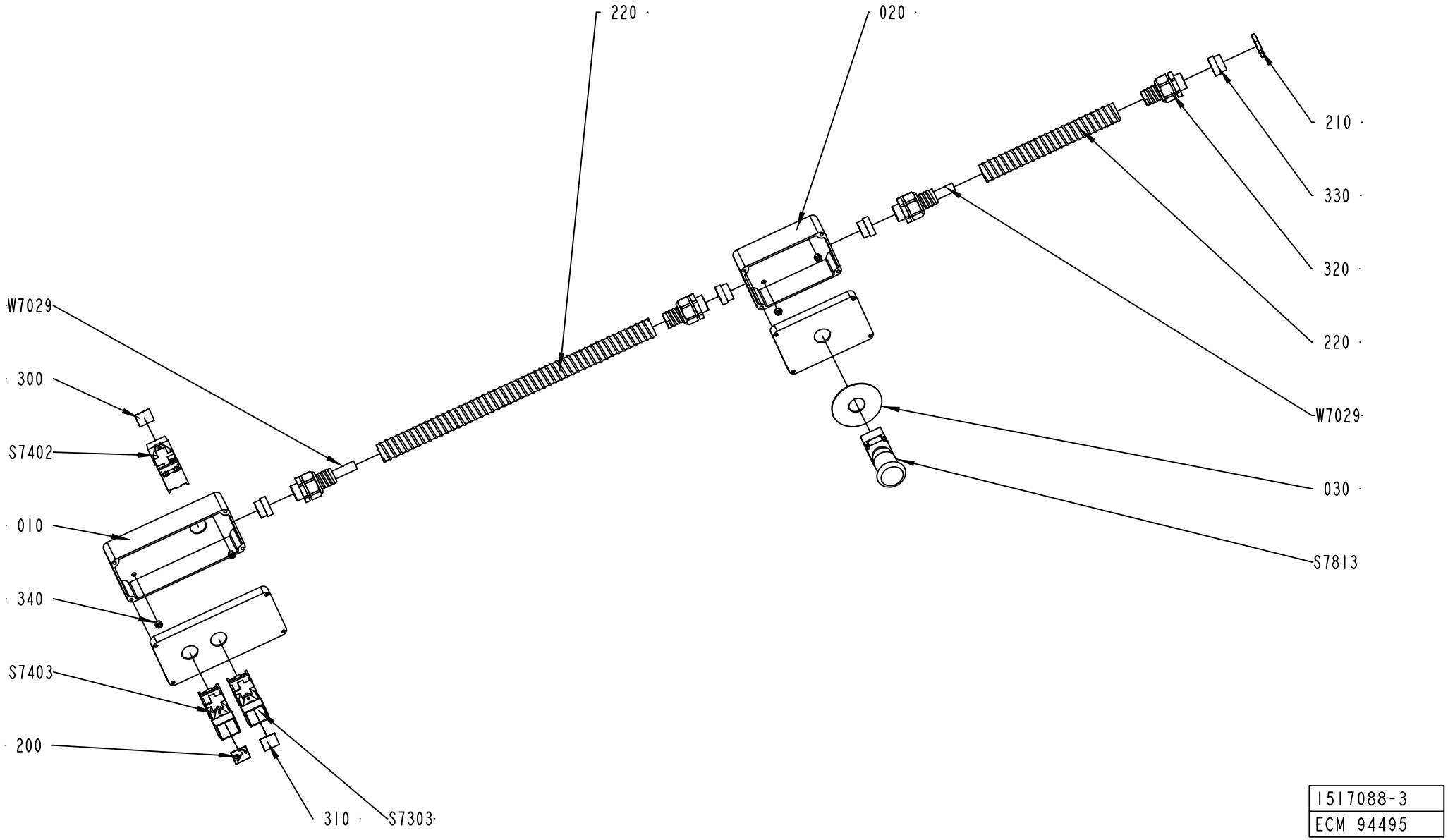

1517088-3
ECM 94495

Pos	Part No	SP	UN	Qty	Description	Page No
Common Parts						
010	2523482-0000	-		1	PUSH BUTTON BOX	
020	2523483-0000	-		1	PUSH BUTTON BOX	
030	486826-0001	-		1	SIGN "EMERGENCY STOP"	
200	90457-0920	-		1	BUTTON SIGN, ROTATION OF MATERIAL HOLDER	
210	90099-0110	-		1	NUT, PR 22,5 (PG16)	
220	90152-0051	-	MM	1500	SPIRAL CONDUIT, 25X18, UL 1816	
300	359301-0100	-		1	SIGN "SPLICING"	
310	359301-0488	-		1	BUTTON SIGN, MATERIAL LOCKING	
320	353243-0005	-		4	EXTENDED WITHOUT INSERT, PG16	
330	353249-0014	-		4	INSERT, SINGEL HOLE, EK 154/16	
340	312605-0314	-		4	HEXAGON NUT, M6M M5 A280	
S7303	B90064-0082	A		1	PUSH BUTTON, WHITE	
	90036-0057	*B*		*1*	*LIGHT BULB, BA9S 28V*	
S7402	B90064-0082	A		1	PUSH BUTTON, WHITE	
	90036-0057	*B*		*1*	*LIGHT BULB, BA9S 28V*	
S7403	B90064-0082	A		1	PUSH BUTTON, WHITE	
	90036-0057	*B*		*1*	*LIGHT BULB, BA9S 28V*	
S7813	90064-0124	A		1	SWITCH, EM. STOP, ZB2-BS844+ZB2-BZ1045	
W7029	351150-0407	-	MM	4000	CABLE OLFLEX 12X0,75 MM2 LIGHT/GREY	

Pos	Part No	SP	UN	Qty	Description	Page No

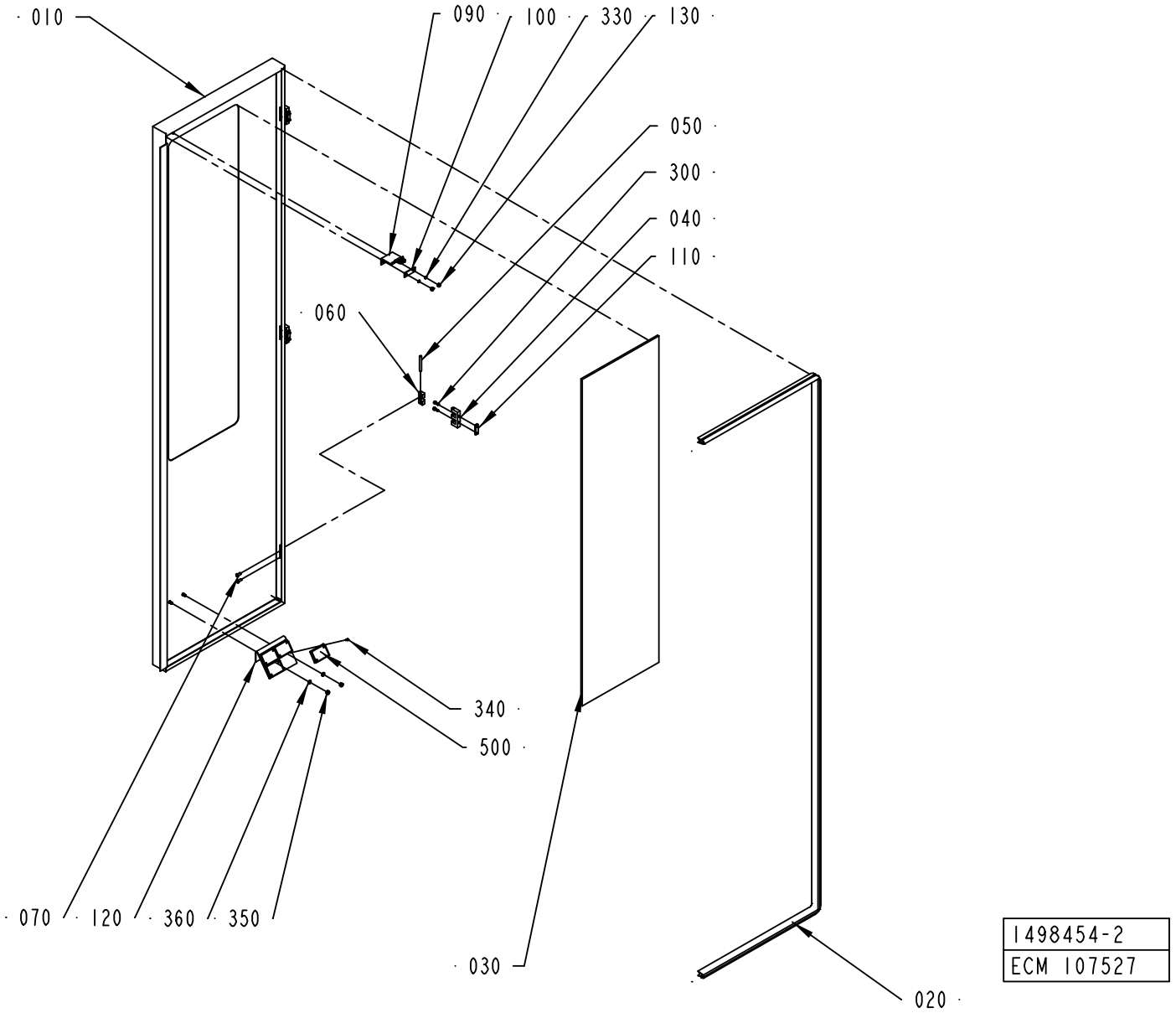
010
090
100
330
130
050
300
040
110
060
340
500
070
120
360
350
030
020
1498454-2
ECM 107527

ECM: 110691 - 20020709
Group number: 1498454-0100
Assembly Drawing: 1498454-2_1_AA

Issue: 20021022

Pos	Part No	SP	UN	Qty	Description	Page No
TBA/22						
010	2547667-0000	-		1	DOOR	
090	2553072-0000	-		1	KEY FOR SAFETY SWITCH	
Common Parts						
020	1499579-0000	-		1	SEALING STRIP	
030	1498459-0001	-		1	GLASS PANE	
040	1035792-0000	-		3	E-HINGE	
050	988685-0000	-		3	PIN	
060	1129770-0000	-		6	BLOCKING PIECE	
070	1129767-0000	-		6	SCREW	
100	1036563-0000	-		1	WASHER	
110	1147253-0000	-		3	NUT	
120	1538204-0000	-		1	BRACKET	
130	1539391-0000	-		2	ROUND NUT	
300	312115-0327	-		6	SCREW MC6S M5X12 A280	
330	315105-0136	-		2	WASHER PLAIN, BRB, 4,3/8,H=0,8	
340	312125-0222	-		8	SCREW PAN HEAD MCS M3X8 SS	
350	312605-0316	-		2	HEXAGON NUT, M6M M6 A280	
360	315105-0153	-		2	WASHER PLAIN, BRB, 6,4/12,H=1,5	
500	90232-0333	B		4	REFLECTOR E39-R1	

Pos	Part No	SP	UN	Qty	Description	Page No

Machine Type | Group Description | Used-In | Group Number | Page No

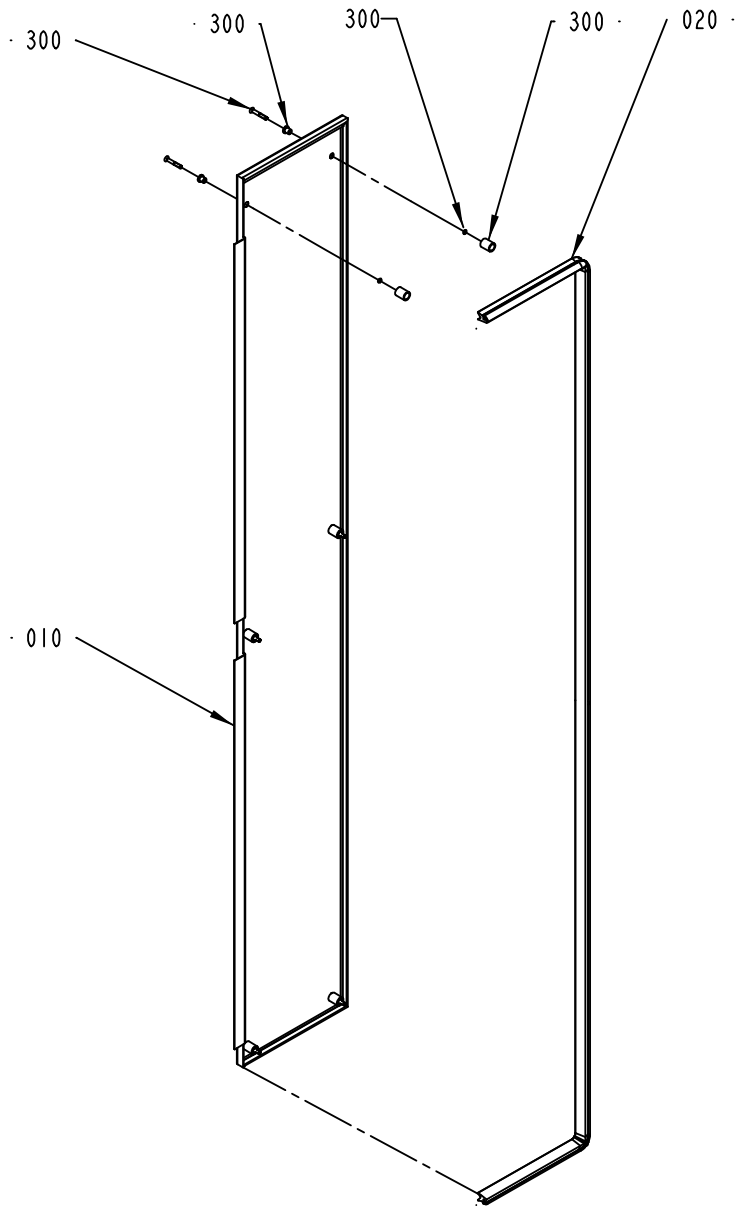

1490188-1
ECN 80701

ECM: 85420 - 20010306
Group number: 1490188-0100
Assembly Drawing: 1490188-1_1_AB

Issue: 20021022

Pos	Part No	SP	UN	Qty	Description	Page No
Common Parts						
010	1499568-0000	-		1	HATCH	
020	1512278-0000	-		1	SEALING STRIP	
300	90226-0458	-		6	MOUNTING SCREW	

Pos	Part No	SP	UN	Qty	Description	Page No

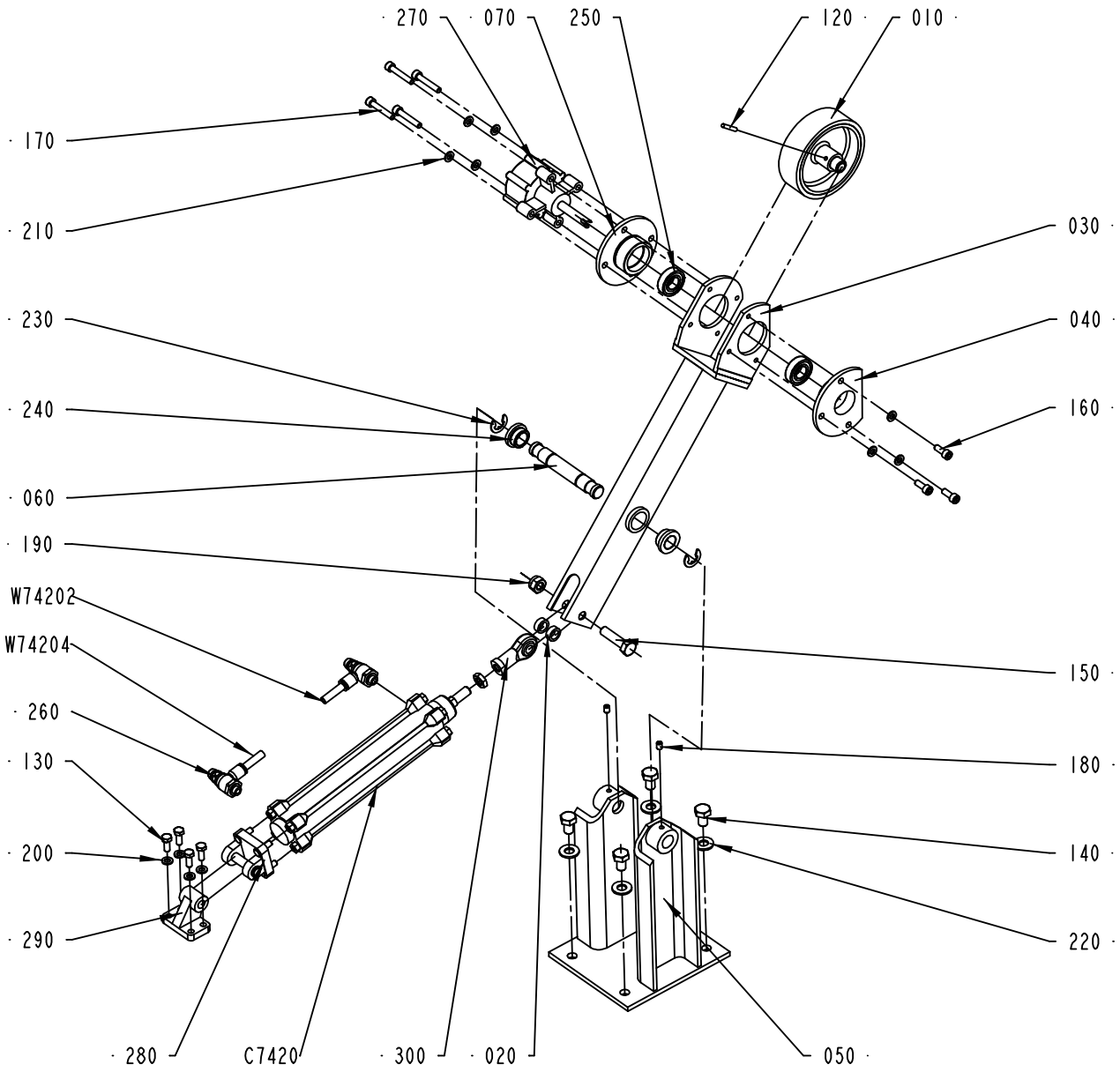
270
070
250
120
010
170
210
030
230
040
240
160
060
190
W74202
W74204
150
260
180
130
140
200
220
290
280
C7420
300
020
050
2506614-1
ECM 95164

ECM: 95170 - 20020315
Group number: 2506614-0100
Assembly Drawing: 2506614-1_1_AA

Issue: 20021022

Pos	Part No	SP	UN	Qty	Description	Page No
Common Parts						
010	1523483-0000	-		1	ROLLER	
020	1523486-0000	-		2	SPACER	
030	2506647-0000	-		1	LEVER	
040	2506649-0000	-		1	BEARING FLANGE	
050	2506650-0000	-		1	FRAME	
060	2506652-0000	-		1	AXLE PIN	
070	2507103-0000	-		1	BEARING FLANGE	
120	311103-0274	-		1	PARALLELL PIN, M6, 4X25 MM	
130	312105-0370	-		4	SCREW M6S ISO 4017 M6X20 A480	
140	312105-0491	-		4	SCREW M6S ISO 4017 M10X20 A480	
150	312105-0499	-		1	SCREW M6S ISO 4014 M10X40 A480	
160	312115-0366	-		3	SCREW MC6S M6X12 A280	
170	312115-0376	-		4	SCREW MC6S M6X35 A280	
180	312318-0362	-		2	SCREW SOCK.SET CUP P MSK6SS M6X8 A4	
190	312812-0320	-		1	HEXAGON NUT, NY-LOCK M10 A480	
200	315103-0153	-		4	WASHER PLAIN, BRB, 6,4/12,H=1,5 NIPL BR	
210	315105-0153	-		7	WASHER PLAIN, BRB, 6,4/12,H=1,5	
220	315105-0173	-		4	WASHER PLAIN, BRB, 10,5/22,H=2	
230	315755-0112	-		2	LOCKING WASHER 12	
240	321101-0202	-		2	FLANGE BUS 16F7X12	
250	321308-0202	-		2	BALL BEARING, 2 SEALS, 15X32X9 MM	
260	90235-0848	-		2	THROTTLE CHECK VALVE, G1/8", MANUAL,8	
270	90347-0054	-		1	DAMPER	
280	90450-0654	-		1	BRACKET,REAR,EYE WITH AXLE 32	
290	90450-0655	-		1	BRACKET,REAR,CLEVIS FLANGE WITH FOOT 32	
300	90450-0723	-		1	ROD END,BALL JOINT EYE M10X1,25	
C7420	90458-1971	-		1	DOUBLE ACTING, PROFILE,CYL 32-140	
W74202	90166-0194	-	MM	2000	TUBE 8 MM PUR BLUE	
W74204	90166-0194	-	MM	2000	TUBE 8 MM PUR BLUE	

Pos	Part No	SP	UN	Qty	Description	Page No

Machine Type | Group Description | Used-In | Group Number | Page No

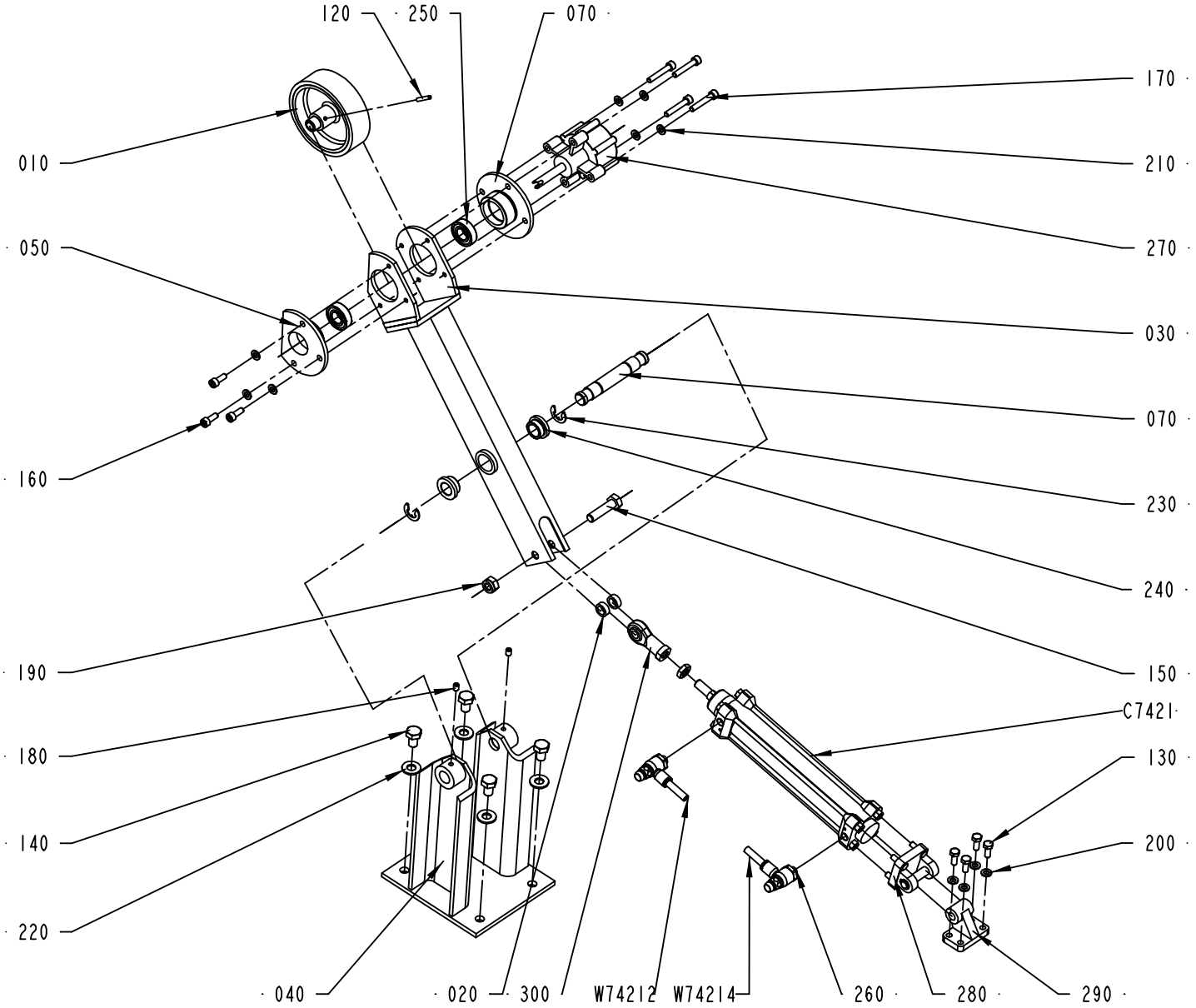

2506615-1
ECM 95164

ECM: 95171 - 20020315
Group number: 2506615-0100
Assembly Drawing: 2506615-1_1_AA

Issue: 20021022

Pos	Part No	SP	UN	Qty	Description	Page No
Common Parts						
010	1523483-0000	-		1	ROLLER	
020	1523486-0000	-		2	SPACER	
030	2506648-0000	-		1	LEVER	
040	2506650-0000	-		1	FRAME	
050	2506651-0000	-		1	BEARING FLANGE	
060	2506652-0000	-		1	AXLE PIN	
070	2507103-0000	-		1	BEARING FLANGE	
120	311103-0274	-		1	PARALLELL PIN, M6, 4X25 MM	
130	312105-0370	-		4	SCREW M6S ISO 4017 M6X20 A480	
140	312105-0491	-		4	SCREW M6S ISO 4017 M10X20 A480	
150	312105-0499	-		1	SCREW M6S ISO 4014 M10X40 A480	
160	312115-0366	-		3	SCREW MC6S M6X12 A280	
170	312115-0376	-		4	SCREW MC6S M6X35 A280	
180	312318-0362	-		2	SCREW SOCK.SET CUP P MSK6SS M6X8 A4	
190	312812-0320	-		1	HEXAGON NUT, NY-LOCK M10 A480	
200	315103-0153	-		4	WASHER PLAIN, BRB, 6,4/12,H=1,5 NIPL BR	
210	315105-0153	-		7	WASHER PLAIN, BRB, 6,4/12,H=1,5	
220	315105-0173	-		4	WASHER PLAIN, BRB, 10,5/22,H=2	
230	315755-0112	-		2	LOCKING WASHER 12	
240	321101-0202	-		2	FLANGE BUS 16F7X12	
250	321308-0202	-		2	BALL BEARING, 2 SEALS, 15X32X9 MM	
260	90235-0848	-		2	THROTTLE CHECK VALVE, G1/8", MANUAL,8	
270	90347-0054	-		1	DAMPER	
280	90450-0654	-		1	BRACKET,REAR,EYE WITH AXLE 32	
290	90450-0655	-		1	BRACKET,REAR,CLEVIS FLANGE WITH FOOT 32	
300	90450-0723	-		1	ROD END,BALL JOINT EYE M10X1,25	
C7421	90458-1971	-		1	DOUBLE ACTING, PROFILE,CYL 32-140	
W74212	90166-0194	-	MM	2000	TUBE 8 MM PUR BLUE	
W74214	90166-0194	-	MM	2000	TUBE 8 MM PUR BLUE	

Pos	Part No	SP	UN	Qty	Description	Page No

Tetra Pak

SPC
Spare Parts Catalogue

This page is intentionally left blank.

Pos	Part No	SP	UN	Qty	Description	Page No
Common Parts						
	A531345-0200	-		1	PERSONAL PROTECT. EQ H2O2	**717**
	A1519819-0200	-		1	START-UP KIT	**719**
	A1498691-0200	-		1	TOOLS AND TEMPLATES	**733**
	A2552551-0100	-		1	TPOP DATA COLLECTION	**749**
	A2555087-0100	-		1	SUPPORT	**751**
	A2555088-0100	-		1	SUPPORT	
	598878-0000	-		1	MACHINE SIGN 2 ADR. EEA	
	90220-0091	-	M	200	PAIR TWISTED CABLE 2X2X0,25MM2	
	90459-0246	-	KG	25	GREASE, KLüBERSYNTH UH1 14-1600	
	311521-0142	-		4	BLANK RIVET 3,2X6	
	351150-0407	-	M	50	CABLE OLFLEX 12X0,75 MM2 LIGHT/GREY	

Pos	Part No	SP	UN	Qty	Description	Page No

This page is intentionally left blank.

ECM: 72190 - 19990628
Group number: 531345-0200
Assembly Drawing:

Issue: 20021022

Pos	Part No	SP	UN	Qty	Description	Page No
Common Parts						
	90303-0013	-		1	APRON	
	90303-0012	-		1	PROTECTIVE GLOVES	
	90303-0011	-		1	PROTECTIVE GOGGLES	

Pos	Part No	SP	UN	Qty	Description	Page No

This page is intentionally left blank.

ECM: 99253 - 20020715
Group number: 1519819-0200
Assembly Drawing:

Issue: 20021022

Pos	Part No	SP	UN	Qty	Description	Page No
Common Parts						
010	A2524610-0100	-		1	SUPERSTRUCTURE	**721**
020	A2524611-0100	-		1	JAW SYSTEM	**723**
030	A2524612-0100	-		1	FINAL FOLDER	**725**
040	A2524613-0100	-		1	AUTOMATIC SPLICING UNIT	**727**
050	A2524614-0100	-		1	ELECTRICAL CABINET	**729**
060	A2524615-0100	-		1	MACHINE BODY	**731**

Pos	Part No	SP	UN	Qty	Description	Page No

This page is intentionally left blank.

Pos	Part No	SP	UN	Qty	Description	Page No
TBA 0200B FLOATER OR TBA 0250B FLOATER						
010	295376-0000	-		1	SHAFT	
020	257330-0000	-		2	PRESSURE ROLLER	
170	90459-0328	-		2	O-RING 20,29X2,62 MM	
180	1487378-0000	-		1	LOCKING PIN	
TBA 0200B LEVELPROBE OR TBA 0250B LEVELPROBE						
010	1334051-0000	-		1	SHAFT	
020	257330-0000	-		2	PRESSURE ROLLER	
030	1347511-0000	-		1	FITTING	
040	1349913-0000	-		1	BUSHING	
050	1348639-0000	-		1	SEALING GASKET	
060	1348555-0000	-		1	SEALING RING	
TBA 0200S						
010	255977-0000	-		1	SHAFT	
020	272479-0000	-		2	PRESSURE ROLLER	
030	1347511-0000	-		1	FITTING	
040	1349913-0000	-		1	BUSHING	
050	1348639-0000	-		1	SEALING GASKET	
060	1348555-0000	-		1	SEALING RING	
Common Parts						
070	925998-0000	-		2	DIAPHRAGM	
080	1348475-0000	-		2	GASKET	
090	342850-0304	-		2	GASKET 35,4X49,1X5,2 MM 1"1/2 FDA	
100	90217-0347	-		2	GASKET 32X22,6X3,6 MM	
110	90217-0348	-		4	GASKET 35,4X46,8X4 MM	
120	90217-0307	-		4	GASKET 35,8X50,5X5,5 MM	
130	315204-0214	-		1	O-RING 17,3X2,4 MM	
140	B90206-0070	-		1	HEATING ELEMENT 6000W 380/220V	
	90269-0308	*-*		*1*	*GASKET 59X68X3 MM*	
	90206-0326	*-*		*1*	*JUNCTION BOX FOR 90206-56*	
	90269-0308	*-*		*1*	*GASKET 59X68X3 MM*	
150	315229-0105	-		5	GASKETS, 48,5X55,5X3,7 MM 2" FDA	
160	315229-0104	-		2	GASKETS, 35,8X42,8X3,7 MM 1"1/2 FD	
190	1538794-0000	-		2	O-RING	
200	1348474-0000	-		2	GASKET	

Pos	Part No	SP	UN	Qty	Description	Page No

Machine Type | Group Description | Used-In | Group Number | Page No

This page is intentionally left blank.

Pos	Part No	SP	UN	Qty	Description	Page No
TBA 0200B						
050	1533002-0000	-		2	INDUCTOR	
080	1498609-0000	-		40	VOLUME SHIM	
090	1539924-0000	-		4	VOLUME FLAP	
TBA 0200S						
050	1533000-0000	-		2	INDUCTOR	
080	272991-0000	-		40	VOLUME SHIM	
090	1539993-0000	-		4	VOLUME FLAP	
TBA 0250B						
050	1533002-0000	-		2	INDUCTOR	
080	1348257-0000	-		40	VOLUME SHIM	
090	1539992-0000	-		4	VOLUME FLAP	
Common Parts						
010	1539348-0000	-		8	HOLDER	
020	1538148-0000	-		8	SPRING	
030	1538149-0000	-		8	SPRING	
040	1520564-0000	-		60	DOLLY	
060	1517289-0000	-		10	KNIFE	
100	2523607-0000	-		4	CARBON BRUSH	
110	32544-0000	-		10	INSULATION NUT	

Pos	Part No	SP	UN	Qty	Description	Page No

Machine Type | Group Description | Used-In | Group Number | Page No

This page is intentionally left blank.

Pos	Part No	SP	UN	Qty	Description	Page No
TBA 0200B						
020	2508263-0000	-		1	NOZZLE	
030	2508265-0000	-		1	NOZZLE	
040	1519203-0000	-		1	BELT	
TBA 0200S						
010	B1532490-0000	-		1	BELT	
	1532489-0000	*-*		*8*	*PUSHER*	
	1499012-0000	*-*		*1*	*BELT*	
	1532489-0000	*-*		*8*	*PUSHER*	
010	1523100-0000	-		1	BELT	
020	1548041-0000	-		1	NOZZLE	
030	1548040-0000	-		1	NOZZLE	
040	1499919-0000	-		1	BELT	
TBA 0250B						
010	1523101-0000	-		1	BELT	
020	2508263-0000	-		1	NOZZLE	
030	2508265-0000	-		1	NOZZLE	
040	1519203-0000	-		1	BELT	
Common Parts						
050	90206-0132	-		1	HOT AIR ELEMENT	

Pos	Part No	SP	UN	Qty	Description	Page No

This page is intentionally left blank.

ECM: 106050 - 20020715
Group number: 2524613-0100
Assembly Drawing:

Issue: 20021022

Pos	Part No	SP	UN	Qty	Description	Page No
Common Parts						
010	90458-0672	-		1	PROXIMITY SENSOR E2E2-X5MB1-5M	
020	B1346988-0000	-		2	ROLL	
010	*90166-0056*	-	*MM*	*40*	*SHRINKABLE HOSE*	
020	*321120-0104*	-		*2*	*BEARING BUSHING WITHOUT FLANGE,10/12X10*	

Pos	Part No	SP	UN	Qty	Description	Page No

This page is intentionally left blank.

Pos	Part No	SP	UN	Qty	Description	Page No
Common Parts						
010	90233-0029	-		3	TUBE FUSE, 25A	
020	90233-0028	-		7	TUBE FUSE, 10A	

Pos	Part No	SP	UN	Qty	Description	Page No

This page is intentionally left blank.

ECM: 106052 - 20020715
Group number: 2524615-0100
Assembly Drawing:

Issue: 20021022

Pos	Part No	SP	UN	Qty	Description	Page No
Common Parts						
010	315229-0104	-		2	GASKETS, 35,8X42,8X3,7 MM 1"1/2 FD	

Pos	Part No	SP	UN	Qty	Description	Page No

This page is intentionally left blank.

ECM: 116564 - 20021015
Group number: 1498691-0200
Assembly Drawing:

Issue: 20021022

Pos	Part No	SP	UN	Qty	Description	Page No
Common Parts						
010	A1498692-0200	-		1	TOOLS AND TEMPLATE,JAW SYSTEM	**735**
020	A1498693-0100	-		1	TOOLS AND TEMPLATES, FINAL FOLDER	**739**
030	A1498694-0100	-		1	TOOLS AND TEMPLATES, FILLING TUBE	**741**

Pos	Part No	SP	UN	Qty	Description	Page No

This page is intentionally left blank.

ECM: 99252 - 20020715
Group number: 1498692-0200
Assembly Drawing:

Issue: 20021022

Pos	Part No	SP	UN	Qty	Description	Page No
Common Parts						
010	A1487215-0100	-		1	TOOL	**737**
020	1512559-0000	-		1	SPRAY GUN	

Machine Type	Group Description	Used-In	Group Number	Page No

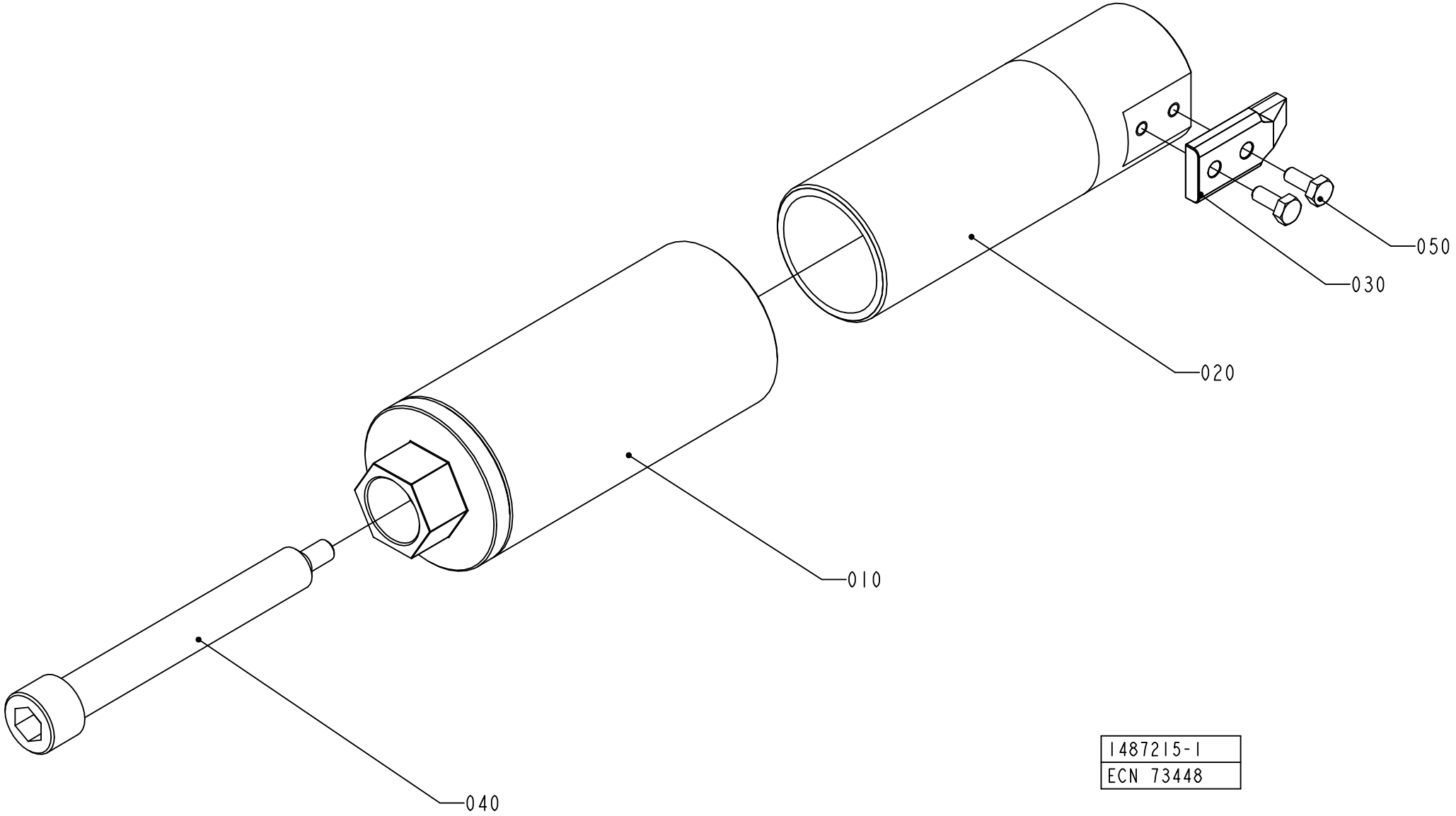
050
030
020
010
040
1487215-1
ECN 73448

ECM: 73448 - 20000302
Group number: 1487215-0100
Assembly Drawing: 1487215-1_1_AA

Issue: 20021022

Pos	Part No	SP	UN	Qty	Description	Page No
Common Parts						
010	B1519725-0000	-		1	SHAFT	
010	*1487211-0000*	*-*		*1*	*SHAFT*	
020	*1487210-0000*	*-*		*1*	*PLUG*	
020	1487213-0000	-		1	SHAFT	
030	1499186-0000	-		1	HOLDER	
030	1499129-0000	-		1	HOLDER	
040	1487214-0000	-		1	SCREW	
050	312105-0289	-		2	SCREW M6S ISO 4017 M4X10 A480	

Pos	Part No	SP	UN	Qty	Description	Page No

This page is intentionally left blank.

Pos	Part No	SP	UN	Qty	Description	Page No
TBA 0200B						
010	2508395-0000	-		1	TEMPLATE	
TBA 0200S						
010	2501225-0000	-		1	TEMPLATE	
TBA 0250B						
010	2508396-0000	-		1	TEMPLATE	
Common Parts						
020	1350716-0000	-		1	SHAFT	

Pos	Part No	SP	UN	Qty	Description	Page No

This page is intentionally left blank.

Pos	Part No	SP	UN	Qty	Description	Page No
TBA 0200B OR TBA 0250B						
030	1498687-0000	-		1	ADJUSTMENT BRACKET	
TBA 0200S						
030	2500588-0000	-		1	ADJUSTMENT BRACKET	
Common Parts						
010	A1498674-0100	-		1	TOOLS	**743, 745**
020	A1498676-0100	-		1	TOOLS	**747**

Pos	Part No	SP	UN	Qty	Description	Page No

Machine Type	Group Description	Used-In	Group Number	Page No

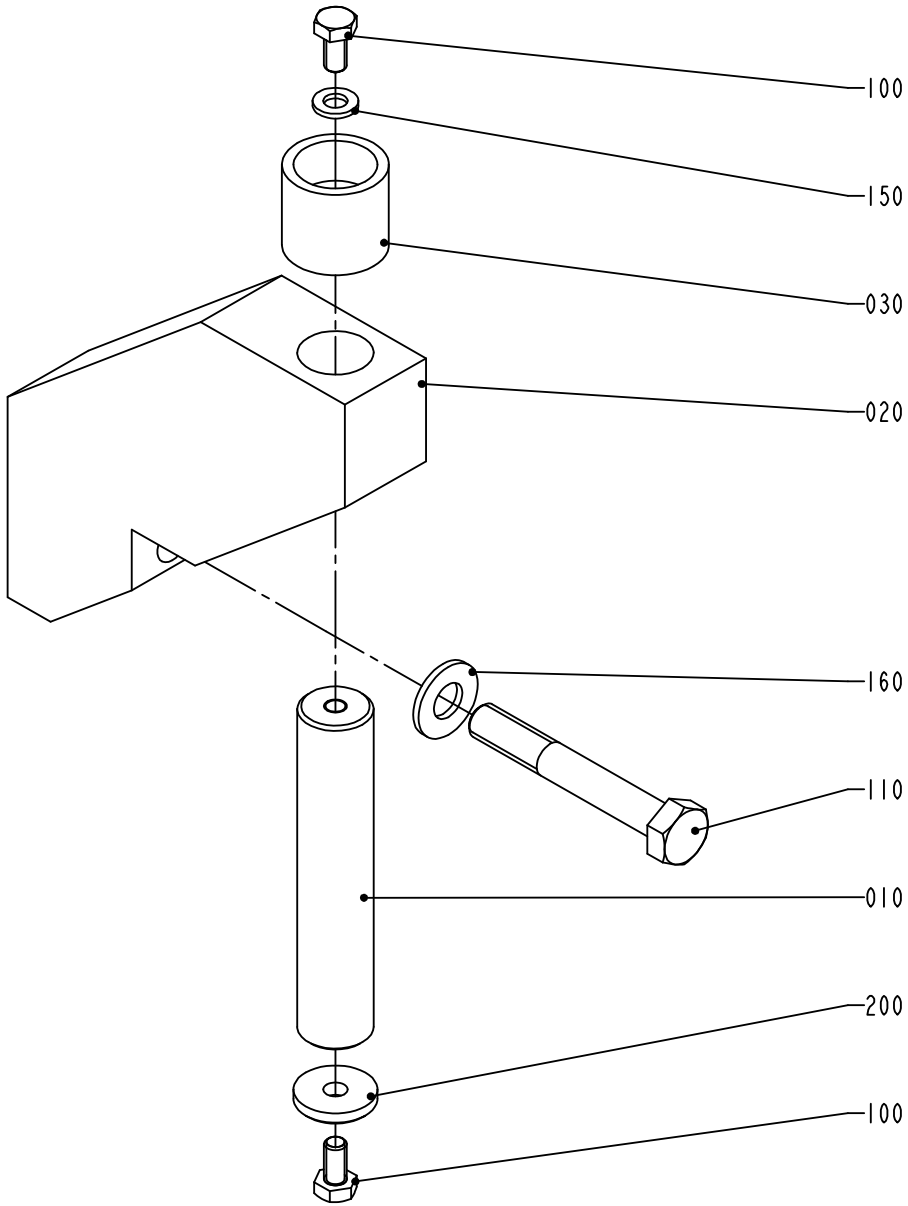

S-1498674-1
ECN 73448

ECM: 106775 - 20020715
Group number: 1498674-0100
Assembly Drawing: 1498674-1_1_AA

Issue: 20021022

Pos	Part No	SP	UN	Qty	Description	Page No
FLOATER						
010	1548238-0000	-		1	SHAFT	
020	2525542-0000	-		1	SUPPORT	
030	1548240-0000	-		1	BUSHING	
LEVELPROBE						
010	1487482-0000	-		1	SHAFT	
020	1487483-0000	-		1	SUPPORT	
030	1498675-0000	-		1	BUSHING	
Common Parts						
100	312105-0366	-		2	SCREW M6S M6X12 A280	
110	312105-0505	-		1	SCREW M6S ISO 4014 M10X70 A480	
150	315105-0153	-		1	WASHER PLAIN, BRB, 6,4/12,H=1,5	
160	315105-0173	-		1	WASHER PLAIN, BRB, 10,5/22,H=2	
200	315125-0153	-		1	WASHER PLAIN ROUND,CHAMF. 6,4/22, H=4	

Pos	Part No	SP	UN	Qty	Description	Page No

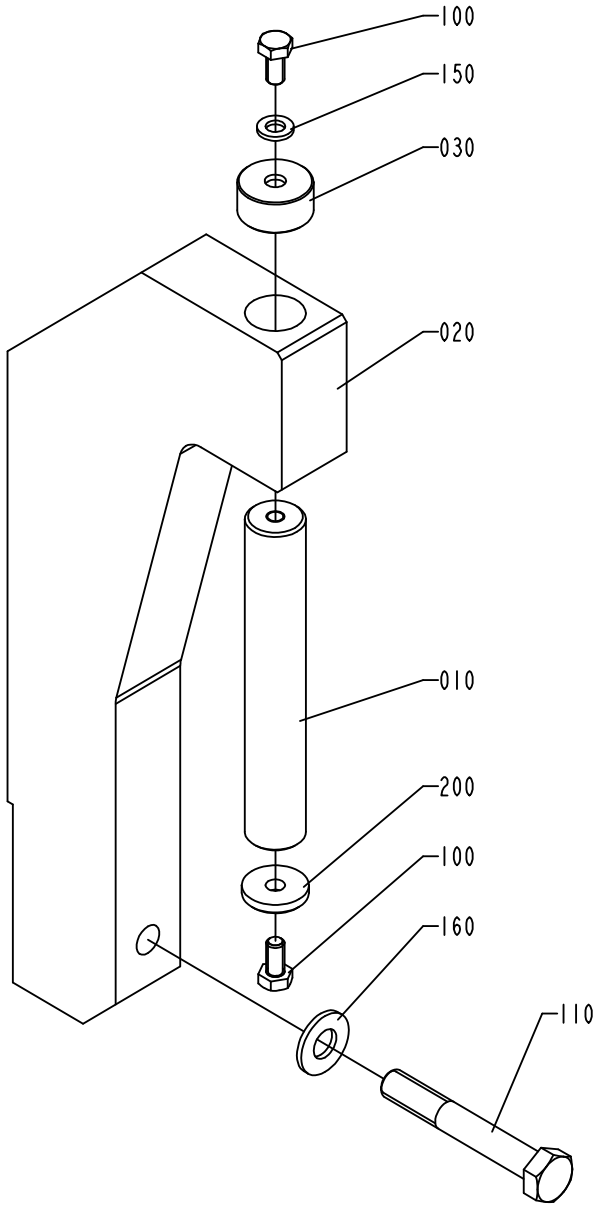

1498674-2
ECM 99258

ECM: 106775 - 20020715
Group number: 1498674-0100
Assembly Drawing: 1498674-2_1_AA

Issue: 20021022

Pos	Part No	SP	UN	Qty	Description	Page No
FLOATER						
010	1548238-0000	-		1	SHAFT	
020	2525542-0000	-		1	SUPPORT	
030	1548240-0000	-		1	BUSHING	
LEVELPROBE						
010	1487482-0000	-		1	SHAFT	
020	1487483-0000	-		1	SUPPORT	
030	1498675-0000	-		1	BUSHING	
Common Parts						
100	312105-0366	-		2	SCREW M6S M6X12 A280	
110	312105-0505	-		1	SCREW M6S ISO 4014 M10X70 A480	
150	315105-0153	-		1	WASHER PLAIN, BRB, 6,4/12,H=1,5	
160	315105-0173	-		1	WASHER PLAIN, BRB, 10,5/22,H=2	
200	315125-0153	-		1	WASHER PLAIN ROUND,CHAMF. 6,4/22, H=4	

Pos	Part No	SP	UN	Qty	Description	Page No

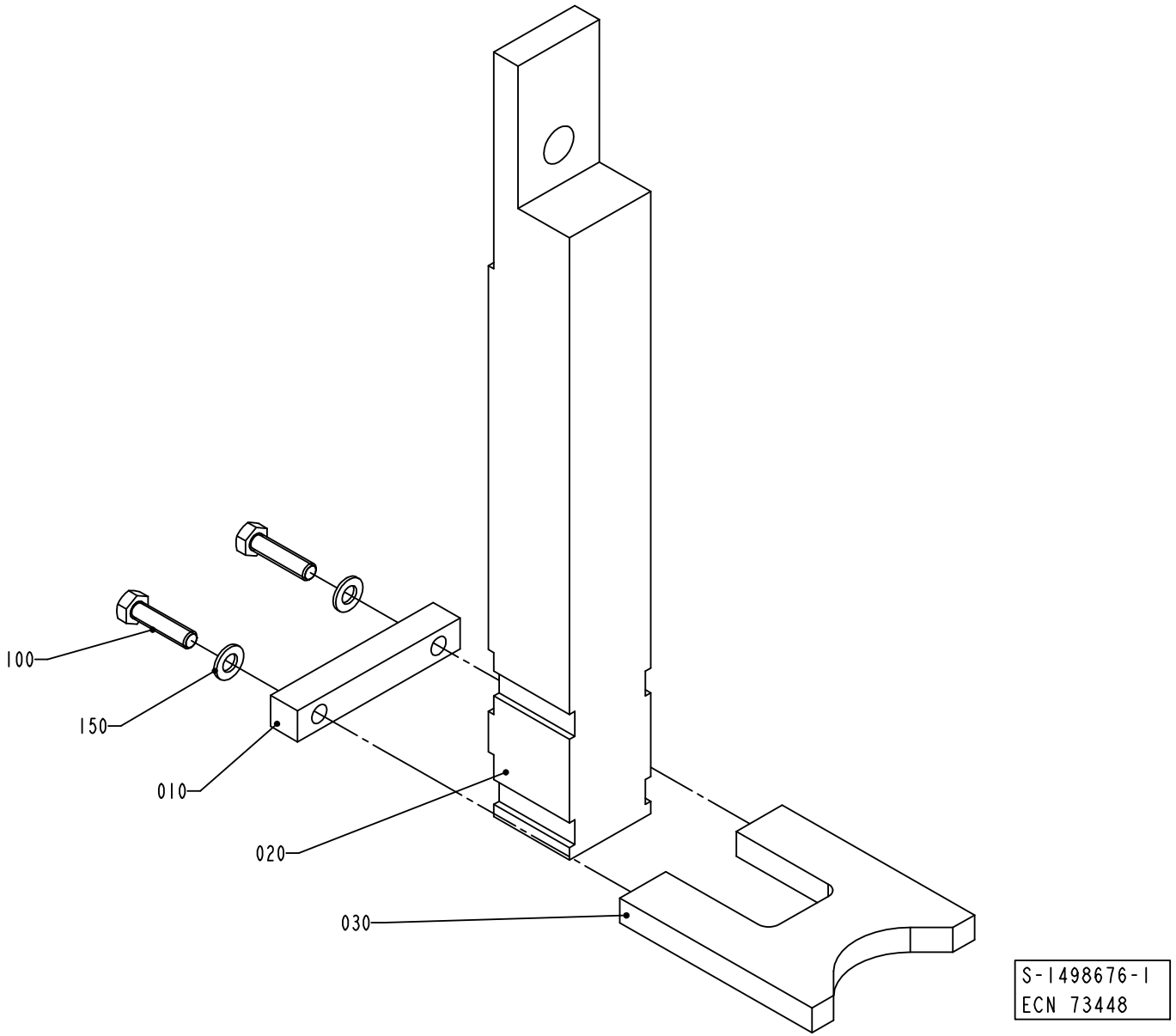
100
150
010
020
030
S-1498676-1
ECN 73448

ECM: 73448 - 20000302
Group number: 1498676-0100
Assembly Drawing: 1498676-1_1_AA

Issue: 20021022

Pos	Part No	SP	UN	Qty	Description	Page No
Common Parts						
010	1487494-0000	-		1	BAR	
020	1498677-0000	-		1	BAR	
030	1499407-0000	-		1	FORK	
100	312105-0331	-		2	SCREW M6S ISO 4017 M5X20 A480	
150	315105-0146	-		2	WASHER PLAIN, BRB, 5,3/10,H=1	

Pos	Part No	SP	UN	Qty	Description	Page No

This page is intentionally left blank.

ECM: 110434 - 20020715
Group number: 2552551-0100
Assembly Drawing:

Issue: 20021022

Pos	Part No	SP	UN	Qty	Description	Page No
Common Parts						
010	90453-0001	-		1	MODEM MA-12	
020	90041-0068	-		1	DATACABLE MODEM PC	
030	90220-0091	-	M	200	PAIR TWISTED CABLE 2X2X0,25MM2	
040	B1190007-0302	-		1	PLMS RECEIVE	
0020	*2503244-0000*	-		*1*	*DOCUMENTATION DISKETTE*	
0030	*1369438-0000*	-		*1*	*LABELS, DISKETTE*	
0040	*2503242-0000*	-		*1*	*SHORT FORM INSTRUCTION*	
0050	*2503243-0000*	-		*1*	*MASTER DISKETTE*	
050	82197-0103	-		1	UM DOCUMENT SERIAL COMUNICATION ONLY EN	
060	B1254471-0401	-		1	PLMS OFF-LINE	
0010	*B47937-0401*	-		*1*	*PLMS OFF-LINE PROGRAM*	
0020	*2503248-0000*	-		*1*	*DOCUMENTATION DISKETTE*	
0030	*2503249-0000*	-		*1*	*LABEL DISKETTE*	
0040	*2503246-0000*	-		*1*	*SHORT FORM INSTRUCTION*	
0050	*2503247-0000*	-		*1*	*MASTER DISKETTE*	
0020	*82351-0104*	-		*1*	*USER MANUAL PLMS OFF-LINE*	

Pos	Part No	SP	UN	Qty	Description	Page No

Machine Type | Group Description | Used-In | Group Number | Page No

This page is intentionally left blank.

ECM: 112424 - 20020715
Group number: 2555087-0100
Assembly Drawing:

Issue: 20021022

Pos	Part No	SP	UN	Qty	Description	Page No
Common Parts						
	1558942-0000	-		1	BRACKET	
	315105-0173	-		2	WASHER PLAIN, BRB, 10,5/22,H=2	
	312105-0502	-		2	SCREW M6S ISO 4014 M10X55 A480	

Pos	Part No	SP	UN	Qty	Description	Page No

Tetra Pak

SPC
Spare Parts Catalogue

Part No	Description	Page No
2033-0007	WASHER	23, 25, 31, 33, 35, 37
2033-0011	WASHER	23, 25, 27, 31, 33, 35, 37
12242-0001	GASKET 32X25X5,5	137
12242-0003	GASKET 48X38X5,5	21
29876-0000	COVER	143
30298-0000	INSULATION	143
32544-0000	INSULATION NUT	369, 371, 377, 379, 723
38535-0001	LOCKING FINGER	91
42063-0100	LEVEL DETECTOR	87
42067-0100	SENSOR BOARD	89
42068-0100	CONVERTER BOARD	89
67379-0248	TRANSFORMER	361
67379-0407	TRANSFORMER	45
67380-0207	TRANSFORMER	585
67388-0102	RACK FRONTMOUNTED 84TE	517, 519
68262-0101	BACKPLANE FRONT RACK 8TE	517, 519
68450-0101	STEPPER MOTOR DRIVER	517, 519
68917-0100	ANGLE INDICATOR	333
82197-0103	UM DOCUMENT SERIAL COMUNICATION ONLY EN	749
90001-0033	WALL SOCKET OUTLET	513, 515
90002-0004	BLANK-OFF PLUG, PR 22,5 SKINDICHT-BLK16	151, 153, 473, 655, 657, 659, 661, 663
90002-0009	BLANK-OFF PLUG, PR 18.6 SKINDICHT-BLK11	95, 151, 153, 201, 203, 205, 215, 217, 297, 655, 657, 659, 661, 663
90002-0010	BLANK-OFF PLUG, PR 37 SKINDICHT-BLK29	555, 557
90002-0012	BLANK-OFF PLUG, PR 28,3 SKINDICHT-BLK21	215, 655, 657, 659, 661, 663
90002-0013	BLANK-OFF PLUG, PR 15,2 SKINDICHT-BLK9	151, 153, 201, 203, 205, 213, 215, 341, 433, 473, 655, 657, 659, 661, 663
90002-0016	BLANK-OFF PLUG PR 20.4 SKINDICHT-BLK13,5	203, 205
90005-0077	WASHER PL.RND.NYL.8,4/7, H=2	233, 505
90005-0082	WASHER PLAIN ROUND 4,3(M4)/12,H=1	365, 367, 369, 371, 373, 375, 377, 379, 381, 383, 585, 591, 603, 607, 611
90005-0094	GASKET C 19438-EPR	409, 411
90005-0114	WASHER PLAIN ROUND 5,3(M5)/15, H=1	303, 305, 315, 317
90005-0116	WASHER PLAIN ROUND 8,4(M8)/24, H=2	179
90005-0143	SPACER 3,3/7, H=3	89
90007-0128	CIRCUIT BREAKER, 1P 6 A K	541, 543
90007-0129	CIRCUIT BREAKER, 1P 10 A K	535, 541, 543
90007-0133	CIRCUIT BREAKER, 1P 25 A K	541
90007-0138	CIRCUIT BREAKER, 2P 10 A K	535
90007-0146	CIRCUIT BREAKER, 3P 6 A K	543
90007-0147	CIRCUIT BREAKER, 3P 10 A K	535
90012-0071	GLAND FITTING	19
90012-0117	GLAND, EXTENDED WITH INSERT, PG11	219, 221
90012-0119	GLAND, EXTENDED WITH INSERT, PG9	87
90012-0125	GLAND FITTING	655, 657, 659, 661, 663
90012-0126	NORMAL WITHOUT INSERT, PG29	143
90012-0131	NORMAL WITHOUT INSERT, PG21	169
90012-0137	GLAND, EXTENDED WITH INSERT, PG11	41, 601, 637, 679
90012-0138	GLAND, EXTENDED WITH INSERT, PG13,5	151, 153
90015-0020	LEAD-IN, TET5-7, E-1458016	99, 223, 225, 415
90015-0021	LEAD-IN, TET10-14, E-1458023	223, 225, 603
90015-0022	LEAD-IN, TET14-20, E-1458029	223, 225
90015-0023	LEAD-IN, TET7-10, E-1458019	217, 223, 225, 243
90015-0024	LEAD-IN, TET20-26, E-1458035	223, 225, 603
90015-0025	LEAD-IN, TET26-35, E-1458041	421
90015-0027	RUBBER BUSHING DI=6MM	353, 355
90015-0037	RUBBER BUSHING	429
90016-0024	DISC SPRING, CONICAL 20X8,2X0,8 MM	369, 371, 377, 379
90017-0015	HANDLE, NO. 14.4012.02.308	505
90017-0016	HANDLE, NO. 14.4012.02.120	197, 233
90017-0017	HANDLE, NO. 547-128	513, 515
90024-0036	FILTERED TERMINAL BLOCK	421
90024-0039	INPUT FILTER, 50 A	535
90024-0047	EMI SUPPRESSION FERRITE	529, 531, 533
90024-0060	POWER LINE FILTER, 80 A 250/440 VAC	421
90030-0058	CONN. T-PIPE T-12	97
90030-0062	CONN. STR. GE 6-1/4-18 NPTF	137
90030-0066	CONN. BULKHEAD SV 6-L/SY	353, 355
90030-0071	CONN. ELBOW WA 8-R1/4	453
90030-0075	PIPE CONNECTION G-6	167, 191, 193
90030-0076	CONN. T-PIPE T-6	191, 193
90030-0096	CONN. ELBOW W-12	97
90030-0106	CONN. PIPE G-12	163
90030-0136	ADJUSTABLE ELBOW CONNECTION,EXT 12-G3/8	97, 163
90030-0171	ADJUSTABLE ELBOW CONNECTION,EXT 6-G1/8	191, 193, 337
90030-0180	CONN. STR. GE 12-1/2-14 NPTF	97
90030-0184	CONN. STR. GA-6-G1/8	65, 135, 191, 193, 203, 205, 331, 337, 353, 355
90030-0185	CONN. STR. GA-8-G1/4	97, 443, 445
90030-0187	CONN. STR. GA-12-G3/8	97, 163
90030-0188	CONN. STR. GA-15-G1/2	97, 141
90030-0200	CONN. ELBOW, 6-M10X1, EXT.THREAD	337
90030-0208	CONN. STR. GE 6-1/8-27 NPTF	397, 399
90030-0212	NIPPLES, REDUSING, INT. THR. NO. 2521	113
90030-0336	CONN. STRAIGHT, 316L-12M-BVCO-3	101

Part No	Description	Page No
90030-0338	NUT, PIPE & CONNECTORS, SS-8-BVCO-4	101
90030-0465	STRAIGHT CONNECTION, MAD DN 15	439
90030-0599	CONN. CROSS, 12	163
90031-0031	ENHANCED GENIUS COMMUNICATION MODULE	529, 531, 533
90031-0051	BASEPLATE, 10-SLOT	529, 531, 533
90031-0053	BASEPLATE,10-SLOT	529, 531, 533
90031-0057	PLC, DIGITAL INPUT MODULE	529, 531, 533
90031-0058	PLC, DIGITAL INPUT MODULE	529, 531, 533
90031-0059	PLC, DIGITAL OUTPUT MODULE	529, 531, 533
90031-0060	PLC,ANALOG INPUT MODULE 16 PT/VOLTAGE	529, 531, 533
90031-0061	PLC,ANALOG INPUT MODULE 16 PT/CURRENT	529, 531, 533
90031-0062	PLC, ANALOG OUTPUT MODULE 8PT/CURR/VOLT	529, 531, 533
90031-0065	PLC,TEMPERATUR CONTROL,INPUT MODULE 8 PT	529, 531, 533
90031-0068	PLC, POWER SUPPLY	529, 531, 533
90031-0075	CPU363, SERIAL COMMUNICATION	529, 531, 533
90031-0305	I/O EXPANSION CABLE	529, 531, 533
90036-0068	BULB 6.5W 24V	267
90041-0068	DATACABLE MODEM PC	749
90041-0078	REMOTE COMMUNIKATION LINK BOARD,E000014B	237
90041-0079	ADAPTER BACKLIGHT, 50000007	237
90041-0082	CABLE, DISPLAY POWER, 2223-0022-018	237
90041-0093	DISPLAY, TOSHIBA 12,1"	237
90041-0095	FRAME 12" , 12I1-V2.0	233
90041-0099	IR TOUCH PCB, 12.1" , IRT 12I1-V2.1	237
90041-0103	DATA CABLE DISPLAY, E000018B	237
90041-0104	CHASSIS FOR TOUCH, 12,1" , M0089A39	237
90042-0172	SOLENOID VALVE 4023/1005/1032 24VDC	141
90042-0203	SOLENOID VALVE BURKERT	65
90042-0206	SOLENOID VALVE 444-111-000-1	283
90042-0215	VALVE BODY 5/2 UNISTABLE	187, 189, 243, 339, 479, 671
90042-0221	VALVE BODY 5/2 BISTABLE	671
90042-0230	VALVE BODY 5/3 OPEN CENTRE	187
90042-0248	SOLENOID VALVE OFFICIENE DI ENSINO	249
90042-0249	SOLENOID VALVE OFFICINE DI ENSINO	475
90042-0254	SOLENOID VALVE, R1 1/2	437
90042-0265	HIGH SPEED VENTING VALVE 583-590-000-1	671
90042-0398	CONTACT 3 POLE+EARTH	283
90042-0487	COIL 24 VDC MECMAN	283
90042-0519	BLANK PLATE ISO SIZE 1	479
90042-0520	BASE PLATE ISO SIZE 1	187, 243, 339, 671
90042-0522	PORTED END PIECE ISO SIZE 1	187, 189, 243, 339, 479, 671
90042-0526	PROTECTIVE SLEEVE MECMAN	479
90042-0528	BLANKING KIT SEALS ISO SIZE 1	187, 243, 479, 671
90042-0532	BASE PLATE ISO SIZE 1	187, 189, 243, 479, 671
90042-0535	TERMINAL BOARD 19 CORDS	187, 189, 243, 339, 479, 671
90042-0538	PILOT VALVE L=500MM	187, 189, 243, 339, 479, 671
90042-0545	SUB-BASE SOFT START ISO 1 AND VDMA 01	671
90042-0583	CABLE MECMAN 440-827 000-1	481
90042-0585	PILOT VALVE L=5M	481, 671
90043-0002	PRESSURE GAUGE, 2040 D=63 MM	163
90043-0006	PRESSURE GAUGE, 2041 D=63 MM	475
90043-0021	PRESSURE GAUGE WIEGAND 0-1 BAR 1/8"	283, 671
90043-0043	PRESSURE GAUGE WIEGAND 0-10 BAR 1/8"	439
90043-0065	PRESSURE GAUGE, 2048 D=40 MM	479, 671
90043-0082	PRESSURE GAUGE, 2740, D=63 MM	97
90043-0095	PRESSURE GAUGE, 2740, D=63 MM, GLYC.	135
90043-0100	PRESSURE GAUGE, 2948 D=63 MM	427
90043-0107	PRESSURE GAUGE	481
90044-0084	LIMIT SW. 14 CE1-4	83, 93, 165
90044-0104	PROX.SWITCH IFM IN 3002	99, 179, 599
90044-0139	KEY SAF.SW. AZ16-02 ZVR K-2254	51, 53, 61, 67, 197, 313, 555, 557
90044-0145	PROX.SW. 922 AAIY-A9P-050-LZ876	115
90044-0165	SENSOR,SME-8-K5-LED-24	571
90044-0191	PROX.SW. E2EG-X2B1	55
90044-0193	SENSOR, 32-31 0310	139
90044-0194	PROX.SW. IN5329/IN3002-BPKG	391, 603
90044-0310	KEY FOR SAFETY SWITCH, AZ 15/16 B1	51, 53, 61, 67, 197, 603
90045-0087	MOTOR 3GAA 071002-CSA M2AA 71B	289
90045-0164	SERVO MOTOR EP 075-112-44T3B	323
90045-0189	STEP MOTOR E22NSLT-LNN-NS-02	23, 25, 329
90045-0197	SERVO MOTOR EP 165-090-66T3B	331
90045-0397	POWER SUPPLY 80 A	529, 531, 533
90051-0026	KNOB, CIRKUL, THREADED BUSH, M5 17X14 MM	185
90051-0035	KNOB, EXTERNAL THREAD. NO. 8308-1135	613
90051-0045	STELLAR KNOB, NO. 8323-2575	29
90051-0082	KNOB, CIRCUL, THREADED BUSH, M6 25X21 MM	641, 649, 675
90051-0083	KNOB, EXTERNAL THREAD. NO. 8308-1321	635
90051-0087	LOCK KNOB, NO. GN 617 A5	577, 579, 627, 641, 649
90051-0088	ADJUSTMENT SCREW	603
90051-0106	COCK HANDLE, NO. H6	471
90051-0112	LOCK KNOB, NO. GN 617 NIK5	243
90051-0127	HANDLE, NO. .601/90+X-M10-INOX	347, 401
90052-0011	HORN, YO3/BT 24-50VDC NO.654005	555, 557
90053-0029	COUNTER, F524.800FA3C 24VDC	513, 515

Part No	Description	Page No
90053-0031	HOUR COUNTER, B 609.10 10-50VDC	513, 515
90055-0051	HOSE NIPPLE, EXT.THR. R3/8X13 MM	279
90055-0097	STRAIGHT COUPLING	141, 249, 483
90055-0100	Y-CONNECTION, 6-6	249, 325, 327
90055-0116	REDUCER 6-14	239, 241, 249
90055-0118	ELBOW PIPE JOINT -8MM	185, 187, 403
90055-0132	HOSE NIPPLE, EXT.THR. R1/4X7,8 MM	453
90055-0147	HOSE,Y-CONNECTION,PARALLEL,FPT, 12X12MM	185
90055-0154	HOSE COUPLING	363, 643, 653
90055-0166	HOSE NIPPLE, EXT.THR. R11/2X38 MM	437
90055-0172	ELBOW PIPE JOINT	671
90055-0173	ELBOW WITH TAILPIECE 8/6 MM	187, 189, 243
90055-0189	HOSE,NIPPLE,REDUCER,TUBE, 6/8M	243
90055-0204	ELBOW WITH TAILPIECE 8/8 MM LONG	243, 339
90055-0217	ELBOW PIPE JOINT	243, 671
90056-0163	WORM GEAR BS 71-F-TT	349, 351
90056-0164	WORM GEAR BS 71-F-TT	349, 351, 397, 399
90056-0170	WORM GEAR BS 40 AL-TT ENV RH	391
90056-0171	WORM GEAR BS71 F ENV RH	409, 411
90061-0027	ANGLE ENCODER 670900035	349, 351
90062-0015	LOCK WASHER SERRAT.EXT.GEAR,6,4/11 H=0,7	421, 495, 497, 501, 503, 513, 515
90062-0016	LOCK WASHER SERRAT.EXT.GEAR,8,4/15 H=0,8	555, 557, 655, 657, 659, 661, 663
90062-0021	LOCKING WASHER A 5,3	529, 531, 533, 655, 657, 659, 661, 663
90062-0022	LOCKING WASHER D=6,4/11	513, 515, 523, 529, 531, 533
90062-0029	WASHER LOCK 5,1X 8,6, T= 1,5 DIN 7980	425
90062-0059	LOCK WASHER SERRAT.EXT.GEAR,4,3/8 H=0,5	655, 657, 659, 661, 663
90062-0060	LOCK WASHER SERRAT.EXT.GEAR,5,3/10 H=0,6	517, 519
90064-0082	PUSH BUTTON, WHITE	233, 691, 703
90064-0084	PUSH BUTTON, YELLOW	233, 691
90064-0085	PUSH BUTTON, RED	203, 205
90064-0093	PUSH BUTTON, GREEN	233
90064-0098	PUSH BUTTON, CLEAR	233
90064-0124	SWITCH, EM. STOP, ZB2-BS844+ZB2-BZ1045	19, 203, 205, 233, 305, 503, 693, 703
90066-0021	PUSH BUTTON BOX XAP-M1501	19
90069-0257	GEARS, WORM MOTOR WKM/DM90-60WE2A	297
90069-0600	GEARS, WORM MOTOR ODM90-60KE5	637, 679
90069-0608	GEARS, WORM MOTOR ODM120-60KE3	41
90069-0614	GEARS, WORM MOTOR MC320P2T	601
90074-0025	CLIPS, CABLE CLIPS DI=8 MM	481
90075-0127	CONTACTOR, 4KW 24VDC	541, 543, 665
90075-0128	CONTACTOR, 7,5KW 24VDC	535, 541, 543
90075-0313	AUXILIARY CONTACT K&M 22 DILM.2NO;2NC	535, 541, 543
90077-0079	FEED THROUGH TERMINAL, 02943.6	235, 521
90077-0307	END PLATE	521
90077-0308	END PLATE, 10-00038286-1	521
90077-0328	RAIL TS15/5	235, 521
90082-0013	OVERVOLTAGE PROTECTOR	421
90083-0055	BEARING ROLLER, 2 SEALS, 15X35X19 MM	353, 355, 365, 367, 369, 371, 373, 375, 377, 379, 381, 383
90087-0010	PLUG, EXT. THREAD, HEX. SOCKET NR. M10-	353, 355
90087-0036	PLUG	479
90089-0009	REDUCING SLEEVE, PR15,2/PR18,6	601
90089-0015	REDUCING SLEEVE, PR37M/PR28,3F	151, 153
90089-0017	REDUCING SLEEVE, PR18,6/PR22,5	297
90089-0021	REDUCTION SLEEVE,PLASTIC GREY	19
90089-0028	MUFF	655, 657, 659, 661, 663
90089-0029	ENLARGING SLEEVE	151, 153, 219, 221
90091-0143	RADIAL SEAL 47X62X6 MM	47
90091-0237	ROD SEAL, GLIDORING 20X27,5X3 MM	103, 105, 107
90091-0238	WEAR RING 20X22X10 MM	103, 105, 107
90091-0263	RADIAL SEAL 24X47X7 MM DUST LIP	405
90091-0266	SEAL RING 10,4X16,3X2,5 MM	101
90091-0296	RADIAL SEAL 40X52X7 MM DUST LIP	349, 351
90091-0297	RADIAL SEAL 35X47X7 MM DUST LIP	41
90091-0298	RADIAL SEAL 45X65X8 MM DUST LIP	349, 351
90091-0303	RADIAL SEAL 20X35X7 MM DUST LIP	55
90091-0305	RADIAL SEAL 40X55X7 MM DUST LIP	409, 411
90091-0320	RADIAL SEAL 20X30X7 MM DUST LIP	41
90091-0322	RADIAL SEAL 25X42X7 MM DUST LIP	23, 25, 397, 399
90091-0335	PISTON SEAL,GLIDORING 62,5X70X3 MM	105
90091-0336	PISTON SEAL, GLIDORING 79X90X4 MM	103, 107
90091-0357	VARISEAL ROTO 15X23X4 MM	43
90091-0406	RADIAL SEAL 25X40X7 MM DUST LIP	397, 399
90091-0412	SEAL RING	289
90091-0430	RADIAL SEAL 15X35X7 MM DUST LIP	359
90091-0431	RADIAL SEAL 8X22X7 MM	359
90091-0436	RADIAL SEAL 20X40X7 MM DUST LIP	391
90091-0437	RADIAL SEAL 17X40X7 MM DUST LIP	391
90091-0438	RADIAL SEAL 25X52X10 MM DUST LIP	391
90091-0439	RADIAL SEAL 35X62X7 MM DUST LIP	397, 399
90091-0441	RADIAL SEAL 50X72X8 MM DUST LIP	397, 399
90091-0449	VARILIP 40X52X7 MM	331
90095-0070	OVERLOAD PROTECTION, PKZM 0,4 A	541
90095-0072	OVERLOAD PROTECTION, PKZM 1,0 A	541

Part No	Description	Page No
90095-0073	OVERLOAD PROTECTION, PKZM 1,6 A	541
90095-0074	OVERLOAD PROTECTION, PKZM 2,5 A	541
90095-0077	OVERLOAD PROTECTION, PKZM 6-10 A	541
90095-0078	OVERLOAD PROTECTION, PKZM0-16	541
90095-0080	OVERLOAD PROTECTION, PKZM 25 A	541
90099-0003	NUT	161
90099-0004	NUT	219, 221
90099-0007	HEXAGON NUT, M10X1, E 63 137 10	577, 579, 627
90099-0051	NUT HEX. M10X1,25, FE FZB	133, 139
90099-0085	NUT	421
90099-0096	NUT	421, 489, 491, 493
90099-0103	NUT, PR 47 (PG36)	363, 415
90099-0104	NUT, PR 15,2 (PG9)	29, 65, 69, 71, 99, 113, 123, 135, 137, 139, 143, 151, 153, 165, 169, 171, 179, 391, 413, 415, 577, 579, 655, 657, 659, 661, 663
90099-0110	NUT, PR 22,5 (PG16)	131, 151, 153, 333, 427, 489, 491, 493, 547, 577, 579, 655, 657, 659, 661, 663, 703
90099-0117	NUT, PR 18,6 (PG11)	119, 121, 125, 127, 149, 151, 153, 169, 185, 421, 655, 657, 659, 661, 663
90099-0118	NUT, PR 20,4 (PG13,5)	151, 153, 489, 491, 493
90099-0119	NUT, PR 28,3 (PG21)	151, 153, 489, 491, 493, 577, 579, 655, 657, 659, 661, 663
90099-0120	NUT, PR 37 (PG29)	99, 403, 415, 655, 657, 659, 661, 663
90099-0131	NUT HEX. M16X2 SS	47, 409, 411, 603
90110-0028	CONTACT UNIT 4-POLE	513, 515
90110-0095	CONNECTOR 3 POLE + EARTH	475
90110-0125	ELECTRIC PLUG	363
90110-0126	COAXIAL CONNECTOR, GE 15021 C10BN	363
90110-0142	PLUG DA15P064TX	529, 531, 533
90110-0145	COVER 8630-5169014-15-01	529, 531, 533
90110-0150	MALE INSERT 121110 0000	151, 153, 219, 221, 341, 363, 415, 473, 655, 657, 659, 661, 663
90110-0151	FEMALE INSERT 24-POL 121130 0000	219, 221
90110-0152	CABLE HOOD 24-POL 70.352.2428.1	151, 153, 219, 221, 341, 655, 657, 659, 661, 663
90110-0153	CHASSIS HOUSING 24-P CHI 24, 121240 0000	489, 491, 493
90110-0156	MALE INSERT 70.210.0653.0	151, 153, 219, 221, 443, 445, 655, 657, 659, 661, 663
90110-0157	CABLE HOOD 6-POL 70.352.0628.1	151, 153, 219, 221, 341, 619, 655, 657, 659, 661, 663, 679
90110-0159	MALE INSERT 70.310.0640.0	151, 153, 219, 221, 341, 425, 429, 433, 619, 655, 657, 659, 661, 663, 679
90110-0160	CABLE HOOD 6-16-POL 70.352.1628.1	151, 153, 219, 221, 655, 657, 659, 661, 663
90110-0161	FEMALE INSERT 70 105 0653 0	489, 491, 493
90110-0163	FEMALE INSERT 70 300 0640 0	219, 221
90110-0164	FEMALE INSERT 70 105 2453 3	489, 491, 493
90110-0165	FEMALE INSERT 70.005.0653.0	489, 491, 493
90110-0166	CHASSIS HOUSING 310144-33	489, 491, 493
90110-0167	CHASSIS HOUSING 310133-33	489, 491, 493
90110-0208	CABLE CONTACT	219, 221, 529, 531, 533
90110-0209	CONTACT PIN, RC20M13K	219, 221, 489, 491, 493, 529, 531, 533
90110-0221	CHASSIS HOUSING 310162-33	219, 221
90110-0222	SOCKET FEMALE, MS 3102 E 16S-1S	91
90110-0223	CONTACT MALE, MS 3106 E 16S-1P	203, 205
90110-0224	CHASSIS HOUSING 310166-33	219, 221
90110-0225	CHASSIS HOUSING 310168-33	219, 221
90110-0226	CABLE HOOD 6-POL 70.350.0628.0	425, 429, 433
90110-0227	CABLE HOOD 6-16-POL 71.350.1628.0	443, 445
90110-0228	CABLE HOOD 24-POL 71.350.2428.0	363, 415, 473
90110-0235	CABLE CONTACT, PX0739/S	325, 327, 619
90110-0236	CHASSIS CONTACT PX0767/S	219, 221, 489, 491, 493
90110-0247	FEMALE INSERT 70.200.0653.0	219, 221
90110-0380	CONTACT PIN	219, 221, 489, 491, 493
90110-0381	COVER	489, 491, 493
90110-0385	HOLDER	151, 153
90110-0504	CABLE CONTACT	219, 221
90110-0505	CHASSIES CONTACT	489, 491, 493
90110-0506	CHASSIES CONTACT	489, 491, 493
90110-0507	CHASSIES CONTACT	489, 491, 493
90110-0508	CABLE CONTACT	529, 531, 533
90110-0513	CHASSIS CONTACT	219, 221
90111-0120	SWITCH, 2 POS.704.510 .0A+704.901.5/A	233
90111-0122	KEY SWITCH, 2 NO CONTACTS	513, 515
90111-0124	KEY SWITCH, 1NO,1NC CONTACT	513, 515
90111-0173	MAIN SW.NZM64-100/ZM64-100-760+AS4-NZM64	421
90113-0056	REGULATOR	283
90113-0072	PRESSURE REGULATOR	481
90113-0095	PRESSURE REGULATOR	185, 243
90113-0096	PRESSURE REGULATOR	185, 243
90113-0097	PRESSURE REGULATOR	185, 243
90113-0098	PRESSURE REGULATOR	439
90113-0152	REGULATOR 4 BAR	671
90113-0153	REGULATOR 10 BAR	671
90113-0374	SLOW STARTING VALVE	481
90113-0375	PRESSURE DISTRIBUTION	481
90113-0377	SHUT-OFF VALVE	481
90113-0423	HIGH SPEED VENTING VALVE	481
90113-0470	MANIFOLD REGULATOR 10 BAR	479
90115-0020	ROD END, ID=8 MM, M8X1,25	385
90115-0173	ROD END, ID=6 MM, M6X1	297
90116-0081	HOSE	643

Part No	Description	Page No
90119-0056	RELAY, AUXILIARY MK3P5-S 24VDC	523
90119-0063	OPTO-RELAY, DC/DC AMMS-10-1/30VDC	201, 213
90119-0067	SOLID-STATE RELAY, H12WD4850	537, 539
90119-0084	EXPANSION RELAY, JSR1T-500MS	523
90121-0114	RESISTANCE FIXED, 0,22 KOHM, 25 W	535
90121-0115	RESISTANCE FIXED, 0,047 KOHM, 200 W	535
90121-0120	RESISTANCE FIXED, 0,25 KOHM, 0,125 W	513, 515
90129-0006	BASE, S3-B	523
90132-0021	HOSE CLIP 6-10MM	283
90132-0030	HOLDER MV 87177 KS 580T	135, 141
90135-0026	EARTH TERMINAL, 3802.6	235, 521
90135-0035	EARTH WIRE, L=250 MM 16 MM2	495, 497, 501, 503, 513, 515
90135-0039	SHIELD CLIP KLBU 4-13.5	513, 515, 529, 531, 533
90135-0040	EARTH WIRE, L=150 MM 16 MM2	655, 657, 659, 661, 663
90140-0012	ELBOW, 90 INT/EXT, 2020-1/2-1/2	223, 225
90140-0018	T-PIPE, INT. THREAD, 2003-1/4	427
90140-0020	ELBOW, 90, INT/EXT. THREAD, NO. 2020-3/8	671
90140-0021	ELBOW, 90 INT/EXT, 20201/8-1/8	671
90140-0023	T-PIPE, INT. THREAD, NO. 2070-3/8-3/8	425
90141-0015	RETAIN. RING, 8	149, 577, 579, 583, 605, 673
90141-0016	RETAIN. RING, 10	17, 583, 607, 613, 627
90141-0017	RETAIN. RING, 17	391
90141-0020	RETAIN. RING, 42	323, 397, 399, 405
90141-0022	SNAP RING B 16	133, 139
90143-0020	STRIP	287
90143-0057	STRIP EMKA 1011-05 21X11MM	197, 233, 421, 489, 491, 493
90143-0059	SEAL STRIP 4610069	191, 193, 223, 225
90143-0060	EDGE STRIP 9,5X6,3MM BLACK PVC	197, 421, 465, 513, 515, 561, 563, 565
90143-0073	RUBBER STRIP	577, 579
90143-0098	RUBBER STRIP, CLAMPING, NO. 1038-02	361
90144-0007	TAPE	437, 439, 441, 447
90144-0072	TAPE SCOTCH VHBS 4945 W=12,7MM	697
90144-0073	TREBOFLON-TAPE W=13MM	135, 137, 141, 161, 163
90144-0074	SHIELDING SEAL STRIP EMC, 3,17X3,17 MM	237
90144-0075	SHIELDING SEAL STRIP EMC, 1,02X3,18 MM	233
90152-0016	HOSE	245
90152-0017	HOSE	253
90152-0050	SPIRAL CONDUIT, 20X13, UL 1313	85, 151, 153, 169, 203, 205
90152-0051	SPIRAL CONDUIT, 25X18, UL 1816	151, 153, 169, 703
90152-0059	SPIRAL CONDUIT, 18X12, UL 1211	203, 205, 391, 413
90152-0060	SPIRAL CONDUIT, 42X35, UL3529	363, 403, 415, 619
90152-0070	METAL HOSE, 32,5X26, UL 2621	151, 153
90153-0016	ADHESIVE TUBE 100G RHODORSIL CAF 3	119, 121, 331
90153-0020	ADHESIVE BOSTIK 1782 125ML	143
90153-0023	ADHESIVE	29, 51, 53, 61, 67, 73, 171, 287
90153-0049	ADHESIVE	303, 305, 315, 317
90155-0008	HANGER CHAIN, 18	123
90157-0016	LOCKING FLUID	395, 405, 475, 623, 641, 649
90157-0021	LOCKING FLUID	275
90157-0034	SEALING COMPOUND LOCTITE 572 50 ML	165, 169
90157-0035	LOCKING FLUID 641	365, 367, 369, 371, 373, 375, 377, 379, 381, 383
90157-0037	SEALING COMPOUND	135, 141, 161, 163
90157-0041	SEALING COMPOUND	197, 303, 305, 309, 315, 317, 497
90157-0044	SEALING COMPOUND	91
90163-0041	HOSE NIPPLE, EXT.THR. 3/8-12 MM	425
90163-0046	SLEEVE LP-004-0-WR 0510-21-1 BRASS	337
90163-0052	HOSE NIPPLE, EXT.THR. 1/4-12 MM	141
90163-0057	NIPPLE 1/8" BRASS	191, 193
90163-0062	QUICK COUPLING, (F) 5053-1/8	191, 193, 337
90164-0015	LIGHT FIXTURE, DWDCV111B/230V 50HZ	555, 557
90164-0018	LIGHT FIXTURE, FK 130	489, 491, 493
90164-0303	BRACKET SK2202 WALDMANN	555, 557
90165-0009	PIPE CLIP FOR TUBE D=12 MM	555, 557
90165-0019	TOOL CLIP, 81/3, OPEN, 20 - 30 MM	243
90165-0039	PIPE CLAMP, RSGU 1.15/12, D=15 MM	141
90165-0076	T-CLIP T8 FOR TUBE D=8 - 9 MM	353, 355
90165-0147	HOSE CLIP	21, 83, 93, 249, 257, 259, 261, 449
90165-0159	PIPE CLAMP, RSGU 1 25/20-W4, D=25 MM	489, 491, 493, 701
90166-0008	HOSE 7/10 PVC TRANSP.	233, 453, 593
90166-0013	TUBE 8 MM PA BLUE	185, 191, 193, 239, 241, 243, 245, 325, 327, 339, 415, 483, 559
90166-0068	TUBE 12 MM PA BLUE	191, 193, 479, 671
90166-0081	TUBE 6 MM PA BLUE	185, 191, 193, 239, 241, 283, 339, 559, 643, 645, 651, 653
90166-0087	HOSE 15/23 REINF.PVC TRANSP.	161, 285
90166-0089	HOSE 4/6.2 PE BLUE	385
90166-0095	TUBE 4 MM PA BLUE	479, 607, 643, 653
90166-0101	HOSE, SILICONE, 60 SHORE, 6/10 MM	283
90166-0117	HOSE 4/6 PVC BLUE	559, 671
90166-0118	TUBE 8 MM PA BLACK	45, 251, 361, 363, 397, 399, 401, 415, 425, 427, 431, 585
90166-0119	HOSE PUR 4/6 BLACK	391
90166-0121	HOSE	141, 223, 225, 257, 423, 425, 427, 439, 451
90166-0132	TUBE 6 MM PA,TRANSP.	249, 297, 325, 327, 363
90166-0135	TUBE 10 MM PA BLACK	253
90166-0138	HOSE	279
90166-0151	HOSE	223, 225, 279

Part No	Description	Page No
90166-0153	TUBE 12 MM PA BLACK	185
90166-0158	HOSE	285
90166-0161	HOSE	283
90166-0176	RUBBER HOSE	203, 205
90166-0193	TUBE 6 MM PUR BLUE	585, 607, 619, 623
90166-0194	TUBE 8 MM PUR BLUE	479, 571, 619, 623, 671, 709, 711
90166-0195	TUBE 12 MM PA BLUE	239, 241, 339
90166-0196	TUBE 14 MM PA BLUE	239, 241, 249, 481, 483
90166-0199	RUBBER HOSE	131
90166-0232	SHRINKABLE HOSE	421
90166-0233	HOSE	21, 83, 93, 249, 257, 259, 261, 449
90166-0236	HOSE, 38/51 REINFORCED RUBBER	437
90166-0260	HOSE	249
90166-0266	TUBE, 6 MM PA BLACK	363
90181-0038	CABLE DUCT, 40X40MM	489, 491, 493
90181-0040	CABLE DUCT, 80X40MM	529, 531, 533
90181-0045	CABLE DUCT, 40X60MM	489, 491, 493, 517, 519
90181-0046	CABLE DUCT, 60X60MM	489, 491, 493
90181-0048	CABLE DUCT, 100X60MM	535
90181-0052	CABLE DUCT, 25X80MM	513, 515, 529, 531, 533
90181-0054	CABLE DUCT, 60X80MM	523, 529, 531, 533
90181-0055	CABLE DUCT, 80X80MM	523, 535
90181-0056	CABLE DUCT, 100X80MM	523, 535
90181-0057	CABLE DUCT, 120X80MM	529, 531, 533
90181-0313	RIVET DUCTAFIX R4	517, 519, 523, 529, 531, 533, 535, 655, 657, 659, 661, 663
90182-0005	CLIP STRIP 79X2,3MM REPL.BY 352113-101	233
90187-0029	BALL VALVE G1/2, NPBR	475
90187-0045	BALL VALVE G1/4 CR PL	427, 429
90187-0059	BALL VALVE FOR HYDR.PER. G1/2 3MM HOLE	279, 285
90187-0062	BALL VALVE G1/2, NPBR	163
90187-0082	BALL VALVE G1/2	97
90187-0105	PURGING VALVE, G3/8 FOR WATER	169, 429
90187-0110	DIAPHRAGM VALVE DN15, N.C. WELD CONN.	97
90187-0112	COCK VALVE, G1/4, 4-WAY, VITON	97
90187-0133	SAFETY VALVE, 10 BARS, R1/2, R1/2	439
90187-0147	BALL VALVE G11/2	437
90187-0148	BALL VALVE G1	449
90187-0158	THROTTLE BALL VALVE G1/4, R1/4	169, 223, 225, 331, 409, 411
90189-0005	BALL BUSHING, 30X47X68 MM	617
90189-0011	BALL BUSHING, 16X26X36 MM	611
90189-0025	BALL BUSHING, 25X37X37 MM	681
90194-0016	SIGN, FLASH, ELECTRIC EQUIPMENT SYMBOL	215, 233, 433, 471, 473, 497, 499, 503, 505
		577, 579
90194-0075	WARNING SIGN ISO, HOT SURFACE	143, 169
90194-0133	SIGN "DELIVERED DESIGN"	233
90194-0152	SIGN, EARTH	495, 497, 501, 503, 513, 515
90195-0028	TERM.BLOCK 6-POLE STEATIT	143
90195-0029	CONN. LINK NO324 FOR -28	143
90201-0450	PLUG	331
90206-0070	HEATING ELEMENT 6000W 380/220V	165, 169, 721
90206-0132	HOT AIR ELEMENT	403, 725
90206-0326	JUNCTION BOX FOR 90206-56	165, 169
90207-0363	GASKET	101
90207-0365	GASKET	101
90211-0002	WIRE LOCK, 5 MM	681
90214-0036	BALL BEARING, 10X22X6 MM	63, 325, 327
90214-0096	BALL BEARING, 2 SEALS, 25X52X15 MM	391
90214-0138	BALL BEARING, 5X19X6 MM	179, 581, 599
90214-0165	BALL BEARING, 2 SEALS, 25X47X12 MM	397, 399
90214-0189	BALL BEARING, 2 SEALS, 17X40X12 MM	391
90214-0225	BALL BEARING SOLID OIL 20X42X12 MM	41, 397, 399, 405
90214-0232	BALL BEARING, 2 SEALS, 20X47X14 MM	409, 411
90214-0236	BALL BEARING, 2 SEALS, 40X80X18 MM	349, 351, 409, 411
90214-0303	SEALING RING, 18,6X35X2 MM	17
90217-0206	UNION NUT, 1 1/2 APV, 07-01-376/17	123
90217-0307	GASKET 35,8X50,5X5,5 MM	83, 93, 721
90217-0347	GASKET 32X22,6X3,6 MM	113, 721
90217-0348	GASKET 35,4X46,8X4 MM	113, 123, 721
90220-0034	THERMOCOUPLE CABLE K/ 2X0,5MM2	151, 153, 169, 219, 221, 415, 427
90220-0084	MOTOR CABLE 4X2,5+2(2X0.75)+SHIELD	219, 221, 529, 531, 533
90220-0085	CABLES, MULTI-CONDUCTOR SCREENED	87
90220-0091	PAIR TWISTED CABLE 2X2X0,25MM2	219, 221, 715, 749
90220-0092	PAIR TWISTED CABLE 3X2X0,25MM2	151, 153, 203, 205, 611
90220-0095	SCR. CABLE 3X0,75MM2	421
90220-0104	SCR. CABLE 4X1,5MM2	151, 153, 601, 619, 655, 657, 659, 661, 663, 679
90220-0105	SCR. CABLE 4X2,5MM2	219, 221, 577, 579
90220-0107	SCR. CABLE 5X0,75MM2	203, 205, 219, 221
90220-0115	SCR. CABLE 12X0,75MM2	577, 579
90220-0116	MOTOR CABLE 4X1,0+2(2X0,5)+SHIELD	219, 221, 529, 531, 533
90220-0131	PAIR TWISTED CABLE 3X2X0,25MM2	219, 221, 529, 531, 533
90220-0162	SCR. CABLE 10X0,25MM2	203, 205
90220-0302	CLAMP FOR SCR.CABLE, 16MM, 55-016-89	237, 513, 515
90220-0303	CLAMP FOR SCR.CABLE, 10MM, 55-016-22	421
90220-0304	CLAMP FOR SCR.CABLE, 24MM,	237, 513, 515

Part No	Description	Page No
90220-0305	CLAMP FOR SCR.CABLE, 16MM,	421
90224-0308	CONN. BANJO, ART. NO. 2023-1/8-1/8	191, 193
90224-0349	BULKHEAD LEAD-IN	191, 193
90226-0458	MOUNTING SCREW	197, 199, 301, 309, 459, 465, 469, 499, 505, 687, 689, 699, 707
90230-0025	NON-RETURN VALVE, 12MM, L=85	97
90230-0027	NON-RETURN VALVE QJ 8355-1/4"	409, 411
90230-0028	NON-RETURN VALVE H 151 R 3/8"	427
90230-0041	OVERPRESSURE VALVE SS-4 CPA2-RTDG-3	429
90230-0042	NON-RETURN VALVE 1/2"	257, 439, 447
90230-0044	NON-RETURN VALVE 1"	257, 441
90232-0103	PH.CELL E3S-CT61-L-5M	413
90232-0104	PH.CELL E3S-CT61-D-5M	413
90232-0106	PH.CELL E3S-CR11-5M	555, 557
90232-0129	PH.CELL E3S-CR61-5M	573, 677
90232-0333	REFLECTOR E39-R1	555, 557, 677, 701, 705
90233-0027	TUBE FUSE, 16A	543
90233-0028	TUBE FUSE, 10A	541, 543, 729
90233-0029	TUBE FUSE, 25A	543, 729
90233-0303	FUSE HOLDER, ST10	541, 543
90235-0151	NON-RETURN VALVE	249, 447
90235-0206	QUICK EXHAUST VALVE, SEU-1/8	623
90235-0261	VALVE	97
90235-0274	THROTTLE CHECK VALVES,G1/8"	191, 193
90235-0282	THROTTLE CHECK VALVES,G1/8	191, 193
90235-0288	VALVE	99
90235-0290	THROTTLE CHECK VALVES M5	297
90235-0846	THROTTLE CHECK VALVE G1/8", MANUAL, 6	645, 651
90235-0848	THROTTLE CHECK VALVE, G1/8", MANUAL,8	709, 711
90236-0045	SUPPORT	391
90237-0126	TURNING HANDLE "REPBY 90237-175"	463, 467
90237-0128	LOCK CYLINDER, 1109-U3	197, 303, 305, 315, 317, 463, 467, 497, 695, 697, 701
90237-0151	GUIDE, 1001-U11	197, 495, 497, 501, 503
90237-0152	GUIDE, 1001-U12	197, 495, 497, 501, 503
90237-0153	LOCK HOUSING, 1121-U26-0C	197, 303, 305, 315, 317, 463, 467, 495, 497, 501, 503, 695, 697, 701
90237-0154	LOCK HOUSING, 1121-U60-0C	197
90237-0155	LOCK ADAPTER, 1121-U40	197, 495, 497, 501, 503
90237-0156	LOCK BOLT, 1000-16	197, 495, 497, 501, 503
90237-0157	LOCK BOLT, 1000-230	233, 471, 513, 515
90237-0160	ESCUTCHEON WITH SQUARE, 1121-U23/U13	495, 501, 503
90237-0165	LATCH	197, 303, 701
90237-0168	ROUND BAR WITH END WHEEL, 1049-U5	495, 497, 501, 503
90237-0169	LOCK ADAPTER, 1000-U49	197, 495, 497, 501, 503
90237-0175	TURNING HANDLE	197, 315, 317, 695, 697, 701
90237-0176	TURNING HANDLE	197, 303, 305, 497
90237-0206	LOCK, 1000-U45/U2/17/23/24/991	655, 657, 659, 661, 663
90237-0319	LOCK HOUSING, 1000-U134	233, 471, 513, 515
90237-0320	LOCK HOUSING, 1000-U136	233, 471, 513, 515
90237-0322	LOCK GASKET, 1000-U137	471
90237-0323	LOCK O-RINGT, 1000-24	471
90237-0324	KEY, 1104-02 FOR SQUARE 8 MM	495, 501, 503
90239-0405	ROD END,BALL JOINT EYE,MINI-ISO M10X1,25	645, 651
90239-0487	REAR,CLEVIS,MINI-ISO 20-25	21, 645, 651
90239-0489	ROD END,CLEVIS WITH AXLE M6	43, 69, 71
90239-0490	ROD END,CLEVIS WITH AXLE M8	21
90239-0491	ROD END,BALL JOINT EYE,MINI-ISO M6	607
90239-0516	ROD END,CLEVIS WITH AXLE M10X1,25	17
90239-0532	ROD END,CLEVIS WITH AXLE M8	149
90239-0579	SENSOR,BRACKET,FOR CYL 16	69, 71
90239-0582	SENSOR,BRACKET,FOR CYL 32	17
90239-0816	DOUBLE ACTING, MINI-ISO, CYL.16-25	69, 71
90239-0817	DOUBLE ACTING, MINI-ISO, CYL.16-50	43
90239-0822	DOUBLE ACTING, MINI-ISO, CYL.20-50	149, 385
90239-0832	DOUBLE ACTING, MINI-ISO, CYL. 25-125	645, 651
90239-0837	DOUBLE ACTING, MINI-ISO, CYL. 32-100	17
90239-0842	DOUBLE ACTING, MINI-ISO, CYL.16-50	297
90239-0847	DOUBLE ACTING, MINI-ISO, CYL.20-50	21
90240-0146	FLANGE BUSHING,15X21X20 MM	165
90240-0172	FLANGE BUSHING,8X12X10 MM NFB	23, 25, 27, 31, 33, 35, 37
90240-0260	FLANGE BUSHING, 8X10X9 MM	365, 367, 369, 371, 373, 375, 377, 379, 381, 383
90240-0261	FLANGE BUSHING, 12X14X9 MM	17, 365, 367, 369, 371, 373, 375, 377, 379, 381, 383
90240-0263	FLANGE BUSHING, 15X17X12 MM	17, 43
90240-0264	FLANGE BUSHING, 15X17X17 MM	23, 25, 47
90240-0265	FLANGE BUSHING, 20X23X21 MM	357, 401
90240-0287	BUSHING, 10X12X10 MM	177
90240-0302	BUSHING	69, 71
90240-0321	BUSHING	23, 25
90240-0322	BUSHING	23, 25
90240-0325	FLANGE BUSHING, 16X18X12 MM	357
90240-0332	BUSHING	409, 411
90242-0264	O-RING 16,1X1,6 MM	165
90242-0265	O-RING 32,2X3 MM	165
90243-0061	AIR GUN, CEJN SERIE 204 ED: 90459-0173	245
90243-0112	FLOW METER	249
90243-0214	CONDUCTIVITY METER	513, 515

Part No	Description	Page No
90243-0245	MEASURING INSTRUMENT	439
90243-0321	CONDUCTIVITY SENSOR, TP5EL. 00343-10803	125, 127
90243-0430	FLOW METER, MAG 1100 FOOD PFA	125, 127
90245-0043	TRANSFORMER, Z-8782	91
90248-0047	HINGE, 1150-U50	233
90252-0047	TIMING BELT AT5 450X16 MM	323
90258-0031	PIN, STRAIGHT SLOTTED SPRING FRP 3X20	29, 639, 647
90259-0313	AUX. CONTACT K&M NHI21-PKZM0	541
90261-0011	PLUG, BLIND, PLASTIC GPN300F233	353, 355
90261-0033	PLUG, BLIND, PLASTIC GPN300F182	269, 271
90261-0038	HOOD GPN 1000/893	413
90261-0049	PLUG, BLIND, PLASTIC, NO. SR1750	609
90261-0069	PLUG, BLIND, PLASTIC, NO. 055-0615	451
90261-0071	PLUG, BLIND, PLASTIC, NO. GPN500B58	353, 355, 359
90266-0154	PIPE	409, 411
90267-0027	CONVEYOR WHEEL, 12T	297
90269-0308	GASKET 59X68X3 MM	165, 169
90270-0017	COMPRESSOR NASH/ELMO 112 MB/4-2083	131
90270-0349	CONSTANT FLOW VALVE, 1/2"X1/2" 2GPM	141
90274-0042	PRESSURE GUARD, 200 KPA	475
90274-0045	PRESSURE GUARD, 14 KPA	135
90274-0056	PRESSURE SWITCH, 100 - 1200 KPA	429
90274-0074	PRESSURE GUARD, 530 KPA	481
90274-0082	FLOW SWITCH, 2 - 3 L/MIN	437
90274-0088	PRESSURE GUARD, 1,5 KPA	203, 205
90274-0096	LEVEL PROBE, Z8778/1	91
90274-0099	IP-TRANSDUCER	113
90274-0108	DUAL PRESSURE GUARD, -20 - 2800 KPA	425
90277-0039	FILTER TYP LF -1/4-S-5M-B	283
90277-0045	FILTER / 9900-05-BK	185, 243
90277-0046	FILTER / 9933-05-101	185, 243
90277-0116	FILTER HOUSING / ART.NO FILTER 58P-S5430	559
90277-0129	EXHAUST FILTER / SK 3322.200	577, 579
90286-0013	GREASE NIPPLE STRAIGHT M6	325, 327, 353, 355, 365, 367, 369, 371, 373, 375, 377, 379, 381, 383
90287-0073	SCREW MC6S M5X70 129	481
90287-0106	SCREW SPRINGLOAD. SLOTTED HEAD M10X21	609
90287-0112	SCREW SPRINGLOAD. SLOTTED HEAD M8X16	93, 325, 327, 613
90287-0124	SCREW PAN HEAD MSCS M4X12 NYLON	489, 491, 493
90287-0130	SCREW HEX.SOCK.SET FLATPT. MP6SS M20X30	227
90287-0154	SCREW, SOCK.SET DOGPOINT M6X10	673
90287-0157	SCREW M6SF FLAT HEAD M6X10 88	523, 529, 531, 533, 535
90287-0313	CENTERING SCREW	617
90287-0349	SCREW	171
90296-0068	GREASE UNIWAY LI 62 CARTRIDGE 400 GR.	391, 409, 411
90296-0070	GREASE	325, 327, 353, 355, 359, 365, 367, 369, 371, 373, 375, 377, 379, 381, 383
90296-0091	LUBRICATION GREASE	41, 69, 71, 91
90297-0011	FLUORESCENT TUBE, TDL 30W/840	489, 491, 493
90303-0011	PROTECTIVE GOGGLES	717
90303-0012	PROTECTIVE GLOVES	717
90303-0013	APRON	717
90304-0020	LIQUID CONTAINER	163, 431
90304-0307	ATTACHMENT PIPE	163
90314-0044	SIGNAL CONVERTER	203, 205
90316-0022	SPACER NUT DSNF M3060X20	237
90316-0023	SPACER NUT DSM M3055X8	237
90316-0029	SPACER NUT, M3X16	237
90316-0030	ELASTIC SCREW, 15060002	237
90319-0013	ROPE 4MM BLUE 3700N	681
90321-0100	PUMP PBK 16/A 220/380V 50 HZ 3 PH.	161
90321-0116	PUMP GRUNDFOSS CHI 2-60	429
90321-0117	PUMP LOWARA SV8-14 F75T	443, 445
90321-0120	PUMP SV8-09 F756T, 380V60HZ	443, 445
90321-0127	CENTRIFUGAL PUMP LOWARA	161
90321-0134	CIRC. PUMP TMB 40/2 230V50HZ	169
90321-0135	CIRC. PUMP TMB 40/2 230V60HZ	169
90321-0396	FILTER	453
90326-0012	PROTECTIVE COVER, T31A4618	29, 97, 137, 143, 165, 169, 219, 221, 427
90326-0020	PLUG, FEMALE YELLOW CR-AL	29, 97, 137, 143, 165, 169, 219, 221, 427, 489, 491, 493
90326-0022	PLUG, MALE YELLOW CR-AL	151, 153, 219, 221, 403, 415, 427
90326-0038	THERMOCOUPLE, CR-AL	165
90326-0051	THERMOCOUPLE, 12826-33	137, 143
90326-0053	THERMOCOUPLE, 12826-35	165, 489, 491, 493
90326-0057	THERMOCOUPLE, CR-AL	169, 427
90326-0077	CONTACT	403
90326-0089	THERMOCOUPLE, 5110-089-000	97
90326-0306	GLAND FITTING 9041-45-KS-KR.1/8" D=4,5MM	165
90326-0316	THERMO CONTACT PANEL	489, 491, 493
90328-0007	SILENCER	481
90328-0017	SILENCER, D=6 MM	187, 189, 243, 339, 479, 671
90328-0024	SILENCER G3/8	187, 189, 243, 339, 479, 671
90328-0026	SILENCER G1/4	115
90328-0038	SILENCER, D=8 MM	671
90330-0004	NIPPLES,HEXAGON,EXT.R-THREAD R3/4"-R3/4"	427

Part No	Description	Page No
90330-0012	SLEEVE, REDUCTION, INT, R-2021/4X1/8	135
90330-0014	ELBOW, 90 INT. THREAD, R-222R1	441
90330-0021	NIPPLES, EXT. THREAD. R-207R1/2	141, 285, 439
90330-0025	BUSHING, INT/EXT. THR. R1/4-RP1/8	337
90330-0026	PLUG, EXT. G-THREAD, G1/4	223, 225
90330-0032	NIPPLES, EXT. THREAD. ISO 7/1 R1/8-R1/8	337
90330-0036	BUSHING, INT/EXT. THR. RP1/8-RP1/2	439
90330-0043	NIPPLES, EXT. THREAD. R-207R1/4	169, 337, 427, 429, 447
90330-0045	NIPPLES, EXT. THREAD. R-209 KR11/2- KR1	441
90330-0048	BUSHING, INT/EXT. THR. R1/2-RP3/8	163
90330-0049	T-PIPE, INT. THREAD, R-221R1/2	141, 439, 481
90330-0054	SLEEVE, INT. THREAD, NO. R-201R1/2	285
90330-0056	NIPPLES, EXT. THREAD. R-207 KR11/2	437
90330-0057	ELBOW, 90 INT. THREAD, R-222R11/2	437
90330-0066	PLUG, EXT. G-THREAD, G1/8	397, 399
90330-0080	NIPPLES, EXT. THREAD. R3/4-R1/2	427, 429, 439
90330-0083	NIPPLES, EXT. THREAD. R3/8-R1/4	427
90332-0020	RECORDER HONEYWELL	513, 515
90335-0012	SPRING	175
90335-0025	COMP. SPRING 22010, 1X11X26	575, 615
90335-0027	COMP. SPRING 22170, 1,25X9,25X33	583
90335-0089	TENSION SPRING 41490, 0,9X10X23	179, 599
90335-0091	TENSION SPRING 41890, 1,2X13X48,2	627, 675
90335-0183	COMP. SPRING 12220, 1,25X13,1X62,5	643, 653
90335-0253	SPRING	365, 367, 373, 375, 381, 383
90337-0315	FILTERINSERT / MCS 4463	97
90342-0022	BELLOWS	133
90342-0024	RUBBER BELLOWS, 100X100 MM	275
90344-0078	PULLEY	637
90347-0004	VIBRATION DAMPER D=30 TH=M8 H=17 H2=21MM	161, 173
90347-0007	VIBRATION DAMPER	229
90347-0009	FLOOR PLATE, NO 1256730	271, 273
90347-0029	DAMPER	227
90347-0034	VIBRATION DAMPER	197
90347-0039	DAMPER	67
90347-0054	DAMPER	175, 709, 711
90347-0127	DAMPER	197
90347-0144	VIBRATION DAMPER, NO. RA 40EM-A	131
90347-0163	GAS-DAMPER	495, 497, 501, 503, 513, 515
90347-0175	MACHINE SHOE BRIK T 125	555, 557
90347-0183	GAS SPRING NO. A1 A1N-52-060-205/800N	401
90355-0195	TORQUE RIGID COUPLING, 18X18 MM	359
90355-0369	COVER PLUG, 22X19X7 MM	359
90360-0020	STEAM TRAP / MK36/51 3/8"	97
90360-0305	FLOAT, ART NO 10739920	135
90411-0005	INSULATOR	143
90411-0020	INSULATING TUBE	249
90415-0032	FILTER / 3-02-00-1 1/2"	437
90415-0060	DEIONIZER FILTER, 190035	427
90415-0065	FILTER	427
90417-0311	TIMING BELT T10X440X16 POLYURETHANE	637
90419-0012	LIGHT ELEMENT, RED	267
90419-0013	LIGHT ELEMENT, BLUE	267
90419-0014	LIGHT ELEMENT, YELLOW	267
90419-0017	BASE	267
90419-0307	GASKET	267
90419-0310	GASKET	267
90424-0054	SPRAY NOZZLE 120 DEG	141
90424-0066	ROT.SPRAY NOZZLE, D26984-R3/8-PVDF 4.5	257, 259
90424-0071	ROT.SPRAY NOZZLE, D40140-R3/8-PVDF 4.5	257
90426-0003	HAND SHOWER	253
90430-0070	FREQ.CONV. 6SE3213-6CA40	529, 531, 533
90430-0326	FILTER 6SE3290-0BA87-0FB2	529, 531, 533
90450-0207	CYLINDER	623
90450-0306	DOUBLE ACTING, MINI-ISO, CYL. 12-25	607
90450-0509	CYLINDER	47
90450-0548	SINGLE ACTING, SHORT STROKE, CYL 80-25	623
90450-0549	SINGLE ACTING, SHORT STROKE, CYL 100-15	623
90450-0551	DOUBLE ACTING, COMPACT, CYL 20-10	643, 653
90450-0552	DOUBLE ACTING,SHUTTLE,CYL 40-520	571
90450-0654	BRACKET,REAR,EYE WITH AXLE 32	709, 711
90450-0655	BRACKET,REAR,CLEVIS FLANGE WITH FOOT 32	709, 711
90450-0723	ROD END,BALL JOINT EYE M10X1,25	709, 711
90450-0816	SENSOR, BRACKET,SERIES 2700/2702	139
90453-0001	MODEM MA-12	749
90453-0002	MODEM MD-12 DC	513, 515
90456-0001	INTOUCH OEM 2000 V.5.6B/6.0B HW KEY	513, 515
90457-0047	SENSOR,2750-1-5111-1 INCL. ADAPTER, PNP	17, 69, 71
90457-0078	PANEL NUT	479, 671
90457-0090	FLEXIBLE COUPLING, 10X10 MM	297
90457-0092	SAFETY RELAY RT9-24VDC	523
90457-0149	LIGHT FIXTURE, DWDV 118D/230V 50 HZ	217
90457-0192	WASHER PLAIN ROUND, 6,5/18, H=1,5	513, 515, 547
90457-0920	BUTTON SIGN, ROTATION OF MATERIAL HOLDER	703

Part No	Description	Page No
90457-0921	WORM GEAR MOTOR MC320P2TB5/D	601
90458-0031	CONNECTOR KIT 9032 010 353	529, 531, 533
90458-0032	CONNECTOR KIT 9-032-010-496	529, 531, 533
90458-0033	CONNECTOR KIT 9-032-010-851	529, 531, 533
90458-0048	RETAINING RING FOR HOLE, 62X2 MM	397, 399
90458-0060	FLANGE BUSHING, 12X14X15 MM	365, 367, 373, 375, 381, 383
90458-0061	TUBE, 4 MM PA BLACK	363
90458-0068	BALL BEARING, STAINLESS 35X62X14 MM	397, 399
90458-0072	SCREW, HEX.SOCK.BUTTON HEAD M6X12	271
90458-0138	PROX.SW. E2EG-X1R5B1-5M	593, 603
90458-0181	RETAINING RING FOR HOLE, 80X2,5 MM	349, 351
90458-0200	PEROX. SAFETY VALVE, NO. 527-430 1/2X3/4	163
90458-0201	FLUID AUT. FEEDER, ALINOX 1/2 46.04.00	163
90458-0258	TRANSFORMER, 220VAC/6-9-12VAC	655, 657, 659, 661, 663
90458-0270	VENTING DEVICETCDF 1/8G ELESA 58669	349, 351, 397, 399
90458-0273	COVER STRIP	571
90458-0274	DISC FOR COUPLING, HUCO 236.50T	357
90458-0289	PLUG,GPN 340-SW-5 MM	353, 355, 365, 367, 369, 371, 373, 375, 377, 379
90458-0341	THERMOCOUPLE, 5130050-001	29
90458-0353	BUSHING, 8X10X8 MM	365, 367, 369, 371, 373, 375, 377, 379, 381, 383
90458-0396	SERVO DRIVE DMC2 50720	529, 531, 533
90458-0399	SERVO DRIVE DMC2 51540	529, 531, 533
90458-0548	PARALLEL KEY W. ROUND ENDS 5X5X16 MM	357
90458-0601	PHOTOCELL, SICK PHOTOCELL 1	325, 327
90458-0602	PHOTOCELL,	635
90458-0603	CONNECTOR FEMALE 5 PINS	635
90458-0672	PROXIMITY SENSOR E2E2-X5MB1-5M	29, 149, 347, 357, 363, 489, 491, 493, 727
90458-0675	PROXIMITY SENSOR, E2EG-X5MB1-5M	43
90458-0676	PROXIMITY SWITCH,E2EG-X5B1-6M	123
90458-0677	PROXIMITY SWITCH, E2EG-X5MB1-M1	555, 557, 673, 681
90458-0685	COUPLING DISC 25/57 COD.236.57-F25	349, 351
90458-0724	STABILIZED POWER SUPPLY, SITOP 40A 24VDC	489, 491, 493
90458-0736	VENTING BOX, 9121 9801 90	555, 557
90458-0751	BUSHING,INT./EXT.G-THREAD G3/4"-G1/2"	163
90458-0921	FILTER SP 122-200	475
90458-1076	L-SHAPED CONNECTOR CABLE 933 235-042	555, 557, 673, 681
90458-1136	TERMINAL BLOCK, 103630	665, 667
90458-1159	PH.CELL WS4-2D135	349, 351, 385
90458-1160	PH.CELL WE4-2P135	349, 351, 385
90458-1382	PLUG, M5X3.5 SMC - MS-5P	397, 399
90458-1385	TIMING BELT T5X620X16 POLYURETHANE	397, 399
90458-1386	TIMING BELT T5X660X16 POLYURETHANE	397, 399
90458-1387	RADIAL SEAL 38X62X7 MM DUST LIP	397, 399
90458-1404	BEAR.BUSH. WITH FLANGE, 12/16X16 MM	395
90458-1448	MAGNETIC FUSE, S292 C100	655, 657, 659, 661, 663
90458-1477	CONNECTOR 6-1/8 NPT, EXT. TAPERED	293
90458-1478	BALL VALVE SS-43T6MM-SH-10147	293
90458-1535	TRANSDUCER, BTL5-A11-M0850-P-S32	611
90458-1592	FLOATING MAGNET, BTL5-P-3800-2	611
90458-1595	CONNECTION, BKS-S 33M-00	611
90458-1704	BALL BEARING, 15X35X11 MM	17, 39, 43, 49, 55, 57
90458-1792	FREE-WHEEL COUPLING, 14X14 MM	55
90458-1849	CONN. STR., 6-R1/8, EXT. THREAD	191, 193
90458-1888	GEARS, BEVEL Z10-CY-1.25-ILT-1-N	409, 411
90458-1971	DOUBLE ACTING, PROFILE,CYL 32-140	709, 711
90458-1977	REFRACTOMETER SET DA15FC15A DFTP A	293
90458-2290	ROTARY ACTUATOR DSM-16-270-P	55
90458-2329	HOSE, SILICONE, 50 SHORE, 9/13 MM	585
90458-2395	FILTER INSERT, SK 3171 100	577, 579
90458-2518	TIMING BELT T5X690X16 POLYURETHANE	397, 399
90458-2580	LEVEL CONTROL RELAY RM4-LA32MW	523
90458-2602	BULKHEAD CONNECTOR, 12 MM	223, 225
90458-2737	SPHERICAL BALL BEARING, 15X35X14 MM	595, 597
90458-2845	SCREW,HEXAGON HEAD M6S ISO 4017 M10X45	265, 269
90458-2850	HOSE CLIP , 51 MM	437
90458-2890	CONNECTOR, 21N-50N12N133NE	151, 153, 363
90458-2892	CONNECTOR, 11 N-50-3-31/133 NE	151, 153, 363
90458-2893	SLEEVE, 78 Z-0-3-4	151, 153, 363
90458-2894	PAIR TWISTED CABLE 1X2X0,2MM2	509, 517, 519
90458-2895	COAXIAL CABLE RG 400/U BROWN	151, 153, 363
90458-2950	BALL BEARING, 2 SEALS, 5X16X5 MM	625
90458-2956	ELBOW PIPE JOINT, EXT.THREAD, D=6MM-G1/8	97, 113, 133, 149, 325, 327
90458-2957	ELBOW PIPE JOINT, EXT.THREAD, D=6MM-G1/4	113, 185, 249, 409, 411, 559
90458-2958	ELBOW PIPE JOINT, EXT.THREAD, D=8MM-G1/4	185, 403, 559
90458-2959	ELBOW PIPE JOINT, EXT.THREAD,D=12MM-G1/4	113, 671
90458-2960	ELBOW PIPE JOINT, EXT.THREAD,D=12MM-G3/8	187, 189, 339, 671
90458-2964	ELBOW PIPE JOINT, EXT.THREAD, D=8MM-G1/8	449
90459-0001	PUMP UNIT, FIXED STROKE 888211	337
90459-0002	PUMP PISTON, 888042	337
90459-0003	PRESSURE RELIEF VALVE, 888036	337
90459-0004	FILTER , 1113230	337
90459-0005	SOLENOID VALVE, 44487	337
90459-0006	VALVE PLATE, 44451	337
90459-0007	NON-RETURN VALVE, 519335	337

Part No	Description	Page No
90459-0008	GAUGE, 3292116	337
90459-0009	LUBRICANT DISTRIBUTOR, 16LRX.25VCP-C	337
90459-0010	LUBRICANT DISTRIBUTOR, 25LR.25V.50VCP-C	337
90459-0182	INTERFACE CONNECTOR FOR TMCC2	517, 519
90459-0184	INTERFACE CONNECTOR FOR TPIH 2500 GENER.	509
90459-0246	GREASE, KLüBERSYNTH UH1 14-1600	715
90459-0250	HOSE , SILICONE, 53,8/62 MM	223, 225
90459-0252	PROXIMITY SWITCH	83, 93
90459-0253	CONNECTOR W. CABLE S12-3FVW-050	83, 93
90459-0328	O-RING 20,29X2,62 MM	81, 721
90459-0363	COOLING UNIT, KB40A0721.01	547
90459-1004	ROUND BAR W. END WHEEL, 1049-U18-L820	197
90459-1250	RESISTANCE FIXED, 120 OHM, 0,5 W 1%	517, 519
209183-0000 ..	RING	123
230551-0000 ..	GASKET	131
243989-0000 ..	TENSION SPRING	361
247355-0000 ..	LOCK WASHER	15
247358-0000 ..	SHIFTER HANDLE	15
255977-0000 ..	SHAFT	91, 721
255978-0000 ..	FORK	91
257050-0000 ..	SHAFT	27
257330-0000 ..	PRESSURE ROLLER	81, 91, 721
263311-0000 ..	WASHER	45
266737-0000 ..	WASHER	179, 599
269859-0000 ..	BRACKET	131
271860-0000 ..	CLAMP BLOCK	51, 53, 61, 67
272479-0000 ..	PRESSURE ROLLER	91, 721
272728-0000 ..	BARRIER	575
272990-0000 ..	VOLUME BULGE	365, 367, 369, 371, 373, 375, 377, 379, 381, 383
272991-0000 ..	VOLUME SHIM	365, 367, 369, 371, 373, 375, 377, 379, 381, 383, 723
273429-0000 ..	WASHER	137, 143
273450-0000 ..	SIGN	185
273452-0000 ..	SIGN	185
273455-0000 ..	LABEL (COLD WATER)	475
273458-0000 ..	LABEL (AIR)	481
273953-0000 ..	SEAL	59
273961-0000 ..	SEAL	29
273977-0000 ..	NUT	291
273978-0000 ..	LEVEL GLASS	291
273980-0000 ..	SPRING	291
273981-0000 ..	GASKET	283
273996-0000 ..	NUT	291
282635-0000 ..	GUIDE WHEEL	583
295376-0000 ..	SHAFT	81, 721
295377-0001 ..	HOOD	81, 91
311103-0235 ..	PARALLELL PIN, CP, M6, 3X14 MM	361
311103-0268 ..	PARALLELL PIN, M6, 4X12 MM	365, 367, 369, 371, 373, 375, 377, 379, 381, 383
311103-0270 ..	PARALLELL PIN, M6, 4X16 MM	629
311103-0272 ..	PARALLELL PIN, M6, 4X20 MM	325, 327, 409, 411
311103-0274 ..	PARALLELL PIN, M6, 4X25 MM	573, 575, 709, 711
311103-0306 ..	PARALLELL PIN, M6, 5X12 MM	409, 411, 637
311103-0308 ..	PARALLELL PIN, M6, 5X16 MM	405
311103-0310 ..	PARALLELL PIN, M6, 5X20 MM	409, 411
311103-0318 ..	PARALLELL PIN, M6, 5X40 MM	17
311103-0351 ..	PARALLELL PIN, M6, 6X16 MM	59, 349, 351, 397, 399
311103-0353 ..	PARALLELL PIN, M6, 6X20 MM	325, 327
311103-0355 ..	PARALLELL PIN, M6, 6X25 MM	23, 25, 639, 647, 673
311103-0357 ..	PARALLELL PIN, M6, 6X30 MM	349, 351
311103-0358 ..	PIN,STRIGHT M6 6X32 RFR	359
311103-0361 ..	PARALLELL PIN, M6, 6X40 MM	635
311103-0399 ..	PARALLELL PIN, CP, M6, 8X16 MM	223, 225
311103-0401 ..	PARALLELL PIN, M6, 8X20 MM	165, 325, 327
311103-0403 ..	PARALLELL PIN, M6, 8X25 MM	397, 399, 415
311103-0405 ..	PARALLELL PIN, M6, 8X30 MM	83
311103-0409 ..	PARALLELL PIN, M6, 8X40 MM	637
311103-0413 ..	PARALLELL PIN, M6, 8X50 MM	51, 53, 61, 67
311103-0454 ..	PARALLELL PIN, M6, 10X20 MM	349, 351
311103-0466 ..	PARALLELL PIN, M6, 10X50 MM	353, 355
311111-0209 ..	PIN, STRAIGHT SLOTTED SPRING FRP 3X18	87
311112-0258 ..	PIN, STRAIGHT SLOTTED SPRING FRP 4X24	623, 627, 675
311112-0262 ..	PIN, STRAIGHT SLOTTED SPRING FRP 4X32	15
311112-0308 ..	PIN, STRAIGHT SLOTTED SPRING FRP 5X20	369, 371, 377, 379
311520-0329 ..	RIVET, BLANK 2,4X8	243, 471, 513, 515
311521-0142 ..	BLANK RIVET 3,2X6	97, 715
311521-0146 ..	BLANK RIVET 3,2X12	509
312101-0344 ..	SCREW M6S M5X65 FZB	403
312101-0364 ..	SCREW M6S M6X10 FZB	535
312101-0366 ..	SCREW M6S M6X12 FZB	513, 515
312101-0630 ..	SCREW M6S M16X50 FZB	271
312104-0461 ..	SCREW M6S M8X50H FZB	173, 273
312105-0287 ..	SCREW M6S ISO 4017 M4X8 A480	97, 99, 115, 135, 137, 143, 365, 367, 369, 371, 373, 375, 377, 379, 381, 383, 401, 489, 491, 493, 617, 635, 639, 647
312105-0289 ..	SCREW M6S ISO 4017 M4X10 A480	249, 403, 737
312105-0291 ..	SCREW M6S ISO 4017 M4X12 A480	97, 413, 555, 557, 639, 647

Part No	Description	Page No
312105-0293 ..	SCREW M6S ISO 4017 M4X16 A480	69, 71, 611
312105-0295 ..	SCREW M6S ISO 4017 M4X20 A480	179, 369, 371, 377, 379, 573, 599, 639, 647
312105-0297 ..	SCREW M6S ISO 4017 M4X25 A480	403, 593
312105-0299 ..	SCREW M6S ISO 4017 M4X30 A480	97, 603, 611, 677
312105-0323 ..	SCREW M6S ISO 4017 M5X8 A480	97, 113, 555, 557, 573, 593, 611
312105-0325 ..	SCREW M6S ISO 4017 M5X10 A480	15
312105-0327 ..	SCREW M6S ISO 4017 M5X12 A480	29, 185, 323, 361, 365, 367, 369, 371, 373, 375, 377, 379 381, 383, 409, 411, 413, 427, 555, 557, 599
312105-0328 ..	SCREW M6S ISO 4017 M5X14 A480	385, 547, 673
312105-0329 ..	SCREW M6S ISO 4017 M5X16 A480	23, 25, 29, 97, 191, 193, 325, 327, 555, 557, 573, 601
312105-0331 ..	SCREW M6S ISO 4017 M5X20 A480	639, 647, 747
312105-0332 ..	SCREW M6S ISO 4017 M5X22 A480	149
312105-0333 ..	SCREW M6S ISO 4017 M5X25 A480	97, 179, 275, 323, 635
312105-0335 ..	SCREW M6S ISO 4014 M5X30 A480	55
312105-0337 ..	SCREW M6S ISO 4014 M5X35 A480	45, 581
312105-0339 ..	SCREW M6S ISO 4014 M5X40 A480	623
312105-0362 ..	SCREW M6S ISO 4017 M6X8 A480	131, 171, 197, 233, 297, 585, 601, 603, 639, 647
312105-0364 ..	SCREW M6S ISO 4017 M6X10 A480	17, 45, 69, 71, 97, 151, 153, 325, 327, 489, 491, 493, 513 515, 555, 557, 561, 563, 565, 681
312105-0366 ..	SCREW M6S M6X12 A280	27, 63, 69, 71, 115, 123, 131, 143, 167, 175, 177, 185, 191, 193, 199 201, 213, 217, 219, 221, 223, 225, 243, 269, 283, 293, 295, 297, 325, 327, 333, 337, 349, 351, 353 355, 357, 359, 365, 367, 369, 371, 373, 375, 377, 379, 381, 383, 397, 399, 409, 411, 415, 427, 431 555, 557, 593, 633, 637, 645, 651, 679, 681, 743, 745
312105-0367 ..	SCREW M6S M6X14 A280	51, 53, 61, 67, 151, 153, 219, 221, 363, 401, 405, 593, 599, 601, 677
312105-0368 ..	SCREW M6S M6X16 A280	29, 45, 59, 65, 85, 131, 163, 165, 167, 185, 191, 193, 217, 243, 249 257, 297, 365, 367, 373, 375, 381, 383, 385, 391, 397, 399, 403, 405, 409, 411, 413, 421, 451, 453 457, 461, 473, 479, 481, 555, 557, 559, 603, 611, 615, 617, 639, 643, 647, 653, 675, 681
312105-0370 ..	SCREW M6S ISO 4017 M6X20 A480	17, 21, 29, 39, 41, 43, 49, 55, 57, 69, 71, 83, 93, 115, 151 153, 175, 177, 179, 191, 193, 257, 289, 297, 359, 385, 397, 399, 403, 409, 411, 413, 475, 559, 577 579, 581, 583, 585, 595, 597, 599, 607, 613, 617, 627, 635, 637, 643, 653, 671, 675, 679, 709, 711
312105-0371 ..	SCREW M6S ISO 4017 M6X22 A480	23, 25, 31, 33, 45, 165, 349, 351, 587, 589
312105-0372 ..	SCREW M6S ISO 4017 M6X25 A480	17, 27, 35, 37, 41, 43, 47, 69, 71, 83, 93, 165, 167, 177 197, 199, 203, 205, 289, 325, 327, 361, 385, 397, 399, 409, 411, 413, 573, 577, 579, 585, 635, 643 653, 673
312105-0374 ..	SCREW M6S ISO 4014 M6X30 A480	45, 397, 399
312105-0376 ..	SCREW M6S ISO 4014 M6X35 A480	401, 421, 479, 673, 681
312105-0378 ..	SCREW M6S ISO 4014 M6X40 A480	97, 283
312105-0379 ..	SCREW M6S ISO 4014 M6X45 A480	397, 399, 403, 431, 683
312105-0380 ..	SCREW M6S ISO 4014 M6X50 A480	349, 351, 673
312105-0381 ..	SCREW M6S ISO 4014 M6X55 A480	135, 141, 163, 177, 575, 681
312105-0383 ..	SCREW M6S ISO 4014 M6X65 A480	171
312105-0384 ..	SCREW M6S ISO 4014 M6X70 A480	359, 673
312105-0386 ..	SCREW M6S ISO 4014 M6X80 A480	97, 359
312105-0388 ..	SCREW M6S ISO 4014 M6X90 A480	409, 411
312105-0447 ..	SCREW M6S ISO 4017 M8X12 A480	69, 71, 149, 169, 233, 271, 285, 413, 505
312105-0449 ..	SCREW M6S ISO 4017 M8X16 A480	67, 83, 131, 133, 139, 165, 197, 259, 273, 279, 281, 293 297, 311, 401, 405, 409, 411, 451, 555, 557, 577, 579, 599, 617
312105-0451 ..	SCREW M6S ISO 4017 M8X20 A480	29, 43, 51, 53, 61, 67, 69, 71, 75, 95, 131, 143, 165, 167 169, 171, 173, 179, 257, 259, 261, 273, 281, 285, 289, 323, 325, 327, 337, 401, 431, 451, 453, 555 557, 617, 655, 657, 659, 661, 663
312105-0452 ..	SCREW M6S ISO 4017 M8X22 A480	17, 45, 555, 557, 593
312105-0453 ..	SCREW M6S ISO 4017 M8X25 A480	21, 29, 83, 93, 99, 133, 135, 137, 139, 141, 143, 145, 147 161, 167, 171, 279, 281, 297, 325, 327, 331, 337, 349, 351, 361, 385, 391, 397, 399, 401, 409, 411 429, 443, 445, 555, 557, 633, 639, 647
312105-0455 ..	SCREW M6S ISO 4017 M8X30 A480	15, 43, 47, 97, 137, 165, 169, 171, 257, 259, 347, 349, 351 353, 355, 357, 397, 399, 401, 409, 411, 567, 593
312105-0457 ..	SCREW M6S ISO 4014 M8X35 A480	85, 353, 355, 397, 399
312105-0459 ..	SCREW M6S ISO 4014 M8X40 A480	415
312105-0460 ..	SCREW M6S ISO 4014 M8X45 A480	331, 361
312105-0461 ..	SCREW M6S ISO 4014 M8X50 A480	369, 371, 377, 379, 401
312105-0462 ..	SCREW M6S ISO 4014 M8X55 A480	169, 171, 353, 355, 357
312105-0463 ..	SCREW M6S ISO 4014 M8X60 A480	331
312105-0465 ..	SCREW M6S ISO 4014 M8X70 A480	353, 355
312105-0466 ..	SCREW M6S ISO 4014 M8X75 A480	287, 353, 355, 357, 359
312105-0467 ..	SCREW M6S ISO 4014 M8X80 A480	353, 355, 357
312105-0471 ..	SCREW M6S ISO 4014 M8X100 A480	197, 357, 361, 391
312105-0477 ..	SCREW M6S ISO 4014 M8X130 A480	409, 411
312105-0491 ..	SCREW M6S ISO 4017 M10X20 A480	131, 269, 331, 415, 455, 709, 711
312105-0493 ..	SCREW M6S ISO 4017 M10X25 A480	31, 33, 45, 47, 131, 349, 351, 391, 397, 399, 413
312105-0495 ..	SCREW M6S ISO 4017 M10X30 A480	23, 25, 35, 37, 47, 63, 131, 143, 175, 271, 273, 349, 351 405, 451
312105-0497 ..	SCREW M6S ISO 4017 M10X35 A480	29, 119, 121, 645, 651
312105-0499 ..	SCREW M6S ISO 4014 M10X40 A480	397, 399, 443, 445, 709, 711
312105-0500 ..	SCREW M6S ISO 4014 M10X45 A480	331, 353, 355
312105-0502 ..	SCREW M6S ISO 4014 M10X55 A480	751
312105-0503 ..	SCREW M6S ISO 4014 M10X60 A480	397, 399
312105-0505 ..	SCREW M6S ISO 4014 M10X70 A480	269, 743, 745
312105-0506 ..	SCREW M6S ISO 4014 M10X75 A480	555, 557
312105-0513 ..	SCREW M6S ISO 4014 M10X110 A480	171
312105-0532 ..	SCREW M6S ISO 4017 M12X20 A480	353, 355
312105-0534 ..	SCREW M6S ISO 4017 M12X25 A480	489, 491, 493
312105-0536 ..	SCREW M6S ISO 4017 M12X30 A480	171, 271, 349, 351
312105-0538 ..	SCREW M6S ISO 4017 M12X35 A480	349, 351, 489, 491, 493
312105-0540 ..	SCREW M6S ISO 4017 M12X40 A480	349, 351

Part No	Description	Page No
312105-0542 ..	SCREW M6S ISO 4014 M12X50 A480	353, 355, 385, 443, 445
312105-0548 ..	SCREW M6S ISO 4014 M12X80 A480	171, 385
312105-0552 ..	SCREW M6S ISO 4014 M12X100 A480	385
312105-0622 ..	SCREW M6S ISO 4017 M16X25 A480	271
312105-0640 ..	SCREW M6S ISO 4014 M16X100 A480	555, 557
312109-0335 ..	SCREW M6S ISO 4017 M5X30 A480	51, 53, 61, 67, 635
312109-0374 ..	SCREW M6S ISO 4017 M6X30 A480	27, 65, 279, 365, 367, 369, 371, 373, 375, 377, 379, 381, 383, 409, 411, 583, 615, 617
312109-0376 ..	SCREW M6S ISO 4017 M6X35 A480	45, 185, 243, 339, 357, 369, 371, 377, 379, 385, 633
312109-0378 ..	SCREW M6S ISO 4017 M6X40 A480	45, 269, 643, 653, 673
312109-0380 ..	SCREW M6S ISO 4017 M6X50 A480	289, 297
312109-0457 ..	SCREW M6S ISO 4017 M8X35 A480	119, 121, 149, 325, 327, 353, 355, 391, 405, 451
312109-0459 ..	SCREW M6S ISO 4017 M8X40 A480	357, 409, 411, 581
312109-0544 ..	SCREW M6S ISO 4017 M12X60 A480	279
312111-0370 ..	SCREW HEX.SOCK.HD.MC6S-TT 6X20 88 FZB	535
312115-0222 ..	SCREW MC6S M3X8 A280	555, 557, 577, 579
312115-0226 ..	SCREW MC6S M3X12 A280	55
312115-0228 ..	SCREW MC6S M3X16 A280	179, 391, 599
312115-0285 ..	SCREW HEX.SOCK.HD.MC6S-TTS 4X6 A480	537, 539
312115-0287 ..	SCREW MC6S M4X8 A280	23, 25, 115, 513, 515, 529, 531, 533, 613
312115-0289 ..	SCREW HEX.SOCK.HD.MC6S-TT 4X10 A480	489, 491, 493, 537, 539
312115-0291 ..	SCREW MC6S M4X12 A280	107, 489, 491, 493, 509, 529, 531, 533, 567, 635, 655, 657, 659, 661, 663, 673
312115-0293 ..	SCREW MC6S M4X16 A280	135
312115-0297 ..	SCREW MC6S M4X25 A280	627
312115-0299 ..	SCREW MC6S M4X30 A280	489, 491, 493
312115-0323 ..	SCREW MC6S M5X8 A280	305, 489, 491, 493, 523, 525, 527, 529, 531, 533, 607, 613, 655, 657, 659, 661, 663
312115-0325 ..	SCREW HEX.SOCK.HD.MC6S-TT 5X10 A480	359, 489, 491, 493, 513, 515, 517, 519
312115-0327 ..	SCREW MC6S M5X12 A280	23, 25, 185, 197, 243, 273, 303, 305, 315, 317, 451, 453, 463, 467, 471, 593, 639, 647, 695, 697, 701, 705
312115-0329 ..	SCREW MC6S M5X16 A280	23, 25, 165, 265, 269, 365, 367, 369, 371, 373, 375, 377, 379, 381, 383, 489, 491, 493, 495, 497, 501, 503, 555, 557, 639, 647
312115-0331 ..	SCREW MC6S M5X20 A280	83, 93, 535, 593, 655, 657, 659, 661, 663, 665, 667, 669
312115-0333 ..	SCREW MC6S M5X25 A280	19, 357, 637
312115-0335 ..	SCREW MC6S M5X30 A280	613
312115-0337 ..	SCREW MC6S M5X35 A280	97
312115-0339 ..	SCREW MC6S M5X40 A280	329, 529, 531, 533
312115-0340 ..	SCREW MC6S M5X45 A280	337
312115-0364 ..	SCREW HEX.SOCK.HD.MC6S-TT 6X10 A480	289, 433, 473, 523, 537, 539, 561, 563, 565
312115-0366 ..	SCREW MC6S M6X12 A280	83, 93, 165, 297, 329, 349, 351, 353, 355, 359, 391, 495, 497, 501, 503, 509, 577, 579, 611, 709, 711
312115-0368 ..	SCREW MC6S M6X16 A280	289, 385, 423, 425, 513, 515, 603, 619, 637
312115-0370 ..	SCREW MC6S M6X20 A280	365, 367, 369, 371, 373, 375, 377, 379, 381, 383, 413, 473, 545, 627, 635, 673, 675
312115-0372 ..	SCREW MC6S M6X25 A280	201, 213, 215, 257, 323, 337, 341, 349, 351, 627, 681
312115-0374 ..	SCREW MC6S M6X30 A280	175, 203, 205, 433, 635, 671, 673
312115-0376 ..	SCREW MC6S M6X35 A280	337, 357, 709, 711
312115-0378 ..	SCREW MC6S M6X40 A280	643, 653
312115-0382 ..	SCREW MC6S M6X60 A280	325, 327
312115-0449 ..	SCREW MC6S M8X16 A280	409, 411, 577, 579, 605, 639, 647
312115-0451 ..	SCREW MC6S M8X20 A280	577, 579, 655, 657, 659, 661, 663, 681
312115-0453 ..	SCREW MC6S M8X25 A280	409, 411, 447
312115-0455 ..	SCREW MC6S M8X30 A280	409, 411
312115-0457 ..	SCREW MC6S M8X35 A280	581
312115-0459 ..	SCREW MC6S M8X40 A280	353, 355
312115-0462 ..	SCREW MC6S M8X55 A280	569
312115-0463 ..	SCREW MC6S M8X60 A280	555, 557
312115-0465 ..	SCREW MC6S M8X70 A280	555, 557
312115-0467 ..	SCREW MC6S M8X80 A280	401, 623
312115-0493 ..	SCREW MC6S M10X25 A280	681
312115-0495 ..	SCREW MC6S M10X30 A280	331
312115-0497 ..	SCREW MC6S M10X35 A280	181
312115-0499 ..	SCREW MC6S M10X40 A280	275
312115-0500 ..	SCREW MC6S M10X45 A280	637
312115-0501 ..	SCREW MC6S M10X50 A280	223, 225
312115-0630 ..	SCREW MC6S M16X50 A280	181, 265, 269
312115-0634 ..	SCREW MC6S M16X70 A280	269
312121-0222 ..	SCREW SLOT.PAN HD. MCS 3X8 FZB	535
312121-0285 ..	SCREW SLOT.PAN HD. MCS 4X6 FZB	521, 599
312121-0323 ..	SCREW SLOT.PAN HD. MCS 5X8 FZB	529, 531, 533, 535
312121-0325 ..	SCREW SLOT.PAN HD. MCS 5X10 FZB	517, 519
312121-0327 ..	SCREW SLOT.PAN HD. MCS 5X12 FZB	497
312121-0364 ..	SCREW SLOT.PAN HD. MCS 6X10 FZB	213
312121-0366 ..	SCREW SLOT.PAN HD. MCS 6X12 FZB	523, 529, 531, 533
312122-0287 ..	SCREW PAN HEAD MCS M4X8 NL. PL.	529, 531, 533
312122-0331 ..	SCREW SLOT.PAN HD. MCS 5X20 BR NP	631
312125-0220 ..	SCREW SLOT.PAN HD. MCS 3X6 A480	237, 243, 427
312125-0222 ..	SCREW PAN HEAD MCS M3X8 SS	91, 203, 205, 489, 491, 493, 603, 677, 701, 705
312125-0224 ..	SCREW SLOT.PAN HD. MCS 3X10 A480	385
312125-0226 ..	SCREW PAN HEAD MCS M3X12 SS	219, 221, 361
312125-0228 ..	SCREW PAN HEAD MCS M3X16 A480	89
312125-0230 ..	SCREW PAN HEAD MCS M3X20 SS	21, 99, 219, 221, 603
312125-0232 ..	SCREW PAN HEAD MCS M3X25 SS	349, 351

Part No	Description	Page No
312125-0234 ..	SCREW PAN HEAD MCS M3X30 SS	643, 653
312125-0285 ..	SCREW SLOT.PAN HD. MCS 4X6 A480	65, 91, 119, 121, 135, 279, 297, 361, 555, 557, 561, 563, 565, 593, 601, 635
312125-0287 ..	SCREW PAN HEAD MCS M4X8 SS	99, 175, 219, 221, 421, 451, 481, 585, 599, 603, 607, 611, 673, 677
312125-0289 ..	SCREW SLOT.PAN HD. MCS 4X10 A480	423, 489, 491, 493
312125-0291 ..	SCREW PAN HEAD MCS M4X12 SS	333, 607, 613
312125-0293 ..	SCREW PAN HEAD MCS M4X16 SS	267
312125-0297 ..	SCREW PAN HEAD MCS M4X25 SS	677
312125-0299 ..	SCREW PAN HEAD MCS M4X30 SS	237
312125-0323 ..	SCREW PAN HEAD MCS M5X8 SS	103, 105, 107, 141, 143, 353, 355, 453
312125-0325 ..	SCREW SLOT.PAN HD. MCS 5X10 A480	203, 205
312125-0327 ..	SCREW PAN HEAD MCS M5X12 SS	223, 225, 497, 507
312125-0329 ..	SCREW PAN HEAD MCS M5X16 SS	197
312125-0331 ..	SCREW PAN HEAD MCS M5X20 SS	143, 313
312125-0341 ..	SCREW SLOT.PAN HD. MCS 5X50 A480	283
312125-0364 ..	SCREW SLOT.PAN HD. MCS 6X10 A480	203, 205, 215, 341
312125-0366 ..	SCREW PAN HEAD MCS M6X12 SS	171, 201, 257, 269
312125-0370 ..	SCREW PAN HEAD MCS M6X20 SS	283
312125-0376 ..	SCREW PAN HEAD MCS M6X35 SS	603
312125-0378 ..	SCREW PAN HEAD MCS M6X40 SS	513, 515
312132-0284 ..	SCREW SLOT. PAN HEAD MSCS M4X5	165
312132-0287 ..	SCREW SLOT. PAN HEAD MSCS M4X8	513, 515
312132-0289 ..	SCREW SLOT. PAN HEAD MSCS M4X10	425
312132-0323 ..	SCREW SLOT. PAN HEAD MSCS M5X8	349, 351
312141-0287 ..	SCREW COUNTERS.SLOT.HD. MFS 4X8 FZB	489, 491, 493
312145-0224 ..	SCREW COUNTERS.SLOT.HD. MFS 3X10 SS	365, 367, 373, 375, 381, 383
312145-0287 ..	SCREW COUNTERS.SLOT.HD. MFS 4X8 SS	91, 365, 367, 369, 371, 373, 375, 377, 379, 381, 383, 639, 647
312145-0327 ..	SCREW COUNTERS.SLOT.HD. MFS 5X12 SS	555, 557
312155-0226 ..	SCREW HEX.SOCK.COUNT.MF6S M3X12 A270	613
312155-0287 ..	SCREW HEX.SOCK.COUNT.MF6S M4X8 A270	623
312155-0289 ..	SCREW HEX.SOCK.COUNT.MF6S M4X10 A480	593, 611, 617
312155-0291 ..	SCREW HEX.SOCK.COUNT.MF6S M4X12 A480	349, 351, 391
312155-0295 ..	SCREW HEX.SOCK.COUNT.MF6S M4X20 A480	97, 353, 355, 591
312155-0297 ..	SCREW HEX.SOCK.COUNT.MF6S M4X25 A480	591
312155-0299 ..	SCREW HEX.SOCK.COUNT.MF6S M4X30 A480	591
312155-0323 ..	SCREW HEX.SOCK.COUNT.MF6S M5X8 A280	615
312155-0325 ..	SCREW HEX.SOCK.COUNT.MF6S M5X10 A280	635
312155-0327 ..	SCREW HEX.SOCK.COUNT.MF6S M5X12 A280	197, 363
312155-0329 ..	SCREW HEX.SOCK.COUNT.MF6S M5X16 A280	47, 51, 53, 61, 67, 197, 359, 361
312155-0331 ..	SCREW HEX.SOCK.COUNT.MF6S M5X20 A280	571
312155-0364 ..	SCREW HEX.SOCK.COUNT.MF6S M6X10 A280	641, 649
312155-0366 ..	SCREW HEX.SOCK.COUNT.MF6S M6X12 A280	265, 269, 297, 357, 391, 405, 555, 557, 609, 635
312155-0368 ..	SCREW HEX.SOCK.COUNT.MF6S M6X16 A280	583, 683
312155-0370 ..	SCREW HEX.SOCK.COUNT.MF6S M6X20 A280	171, 271, 409, 411, 571, 593
312155-0372 ..	SCREW HEX.SOCK.COUNT.MF6S M6X25 A280	361
312155-0449 ..	SCREW HEX.SOCK.COUNT.MF6S M8X16 A280	391, 583, 605
312155-0451 ..	SCREW HEX.SOCK.COUNT.MF6S M8X20 A280	583
312155-0453 ..	SCREW HEX.SOCK.COUNT.MF6S M8X25 A280	229, 639, 647
312155-0495 ..	SCREW HEX.SOCK.COUNT.MF6S M10X30 A280	269
312155-0499 ..	SCREW HEX.SOCK.COUNT.MF6S M10X40 A280	555, 557
312180-0366 ..	SCREW, HEX.SOCK.HEAD SHOULD. M5/6X12	587, 589, 683
312180-0489 ..	SCREW, HEX.SOCK.HEAD SHOULD. M8X16	627
312180-0534 ..	SCREW, HEX.SOCK.HEAD SHOULD. M10/12X25	171
312311-0285 ..	SCREW, SOCK.SET DOGPOINT M4X6	629
312311-0327 ..	SCREW, SOCK.SET DOGPOINT M5X12	275
312311-0372 ..	SCREW, SOCK.SET DOGPOINT M6X25	673
312311-0374 ..	SCREW, SOCK.SET DOGPOINT M6X30	83, 93
312311-0624 ..	SCREW HEX.SOCK.SET DOG P.MT6SS 16X30 FZB	227
312316-0362 ..	SCREW HEX.SOCK.SET CUP P.MSK6SS6X8 FZB	681
312318-0220 ..	SCREW SOCK.SET CUP P MSK6SS M3X6 A4	679
312318-0283 ..	SCREW SOCK.SET CUP P MSK6SS M4X4 A4	635
312318-0285 ..	SCREW SOCK.SET CUP P MSK6SS M4X6 A4	349, 351
312318-0287 ..	SCREW SOCK.SET CUP P MSK6SS M4X8 A4	621, 637
312318-0321 ..	SCREW HEX.SOCK.SET CUP P.MSK6SS 5X6 SS	359
312318-0323 ..	SCREW SOCK.SET CUP P MSK6SS M5X8 A4	41
312318-0327 ..	SCREW SOCK.SET CUP P MSK6SS M5X12 A4	23, 25
312318-0360 ..	SCREW HEX.SOCK.SET CUP P.MSK6SS6X6 SS	55
312318-0362 ..	SCREW SOCK.SET CUP P MSK6SS M6X8 A4	15, 567, 593, 639, 647, 709, 711
312318-0364 ..	SCREW HEX.SOCK.SET CUP P.MSK6SS6X10 SS	229
312318-0366 ..	SCREW SOCK.SET CUP P MSK6SS M6X12 A4	177, 595, 597, 617, 621, 625
312318-0368 ..	SCREW SOCK.SET CUP P MSK6SS M6X16 A4	673
312318-0370 ..	SCREW SOCK.SET CUP P MSK6SS M6X20 A4	573
312318-0443 ..	SCREW SOCK.SET CUP P MSK6SS M8X8 A4	347
312318-0445 ..	SCREW HEX.SOCK.SET CUP P.MSK6SS8X10 SS	575
312318-0447 ..	SCREW SOCK.SET CUP P MSK6SS M8X12 A4	353, 355, 361
312318-0453 ..	SCREW SOCK.SET CUP P MSK6SS M8X25 A4	181, 265, 269, 271
312502-0120 ..	DRIVE SCREW ROUND HEAD KDS 0X5	185, 243, 305, 475, 479, 481
312503-0275 ..	SCREW CROSS RECES.RND.HD.TAPP. B6X6.5	561, 563, 565
312601-0312 ..	NUT M6M 4-8 FZB	421
312601-0316 ..	NUT M6M 6-8 FZB	513, 515
312602-0316 ..	HEXAGON NUT, M6M M6 BR NI.PL.	671
312605-0310 ..	HEXAGON NUT, M6M M3 A280	27, 99, 237, 421, 513, 515, 603, 643, 653

Part No	Description	Page No
312605-0312 ..	HEXAGON NUT, M6M M4 A280	65, 135, 165, 179, 237, 279, 489, 491, 493, 591, 599, 603, 617, 677, 689
312605-0314 ..	HEXAGON NUT, M6M M5 A280	45, 51, 53, 61, 65, 67, 133, 139, 141, 151, 153, 223, 225, 283, 413, 479, 511, 581, 585, 587, 589, 613, 639, 643, 647, 653, 673, 691, 703
312605-0316 ..	HEXAGON NUT, M6M M6 A280	17, 21, 29, 39, 41, 43, 45, 49, 55, 57, 69, 71, 83, 93, 97, 131, 151, 153, 165, 167, 179, 185, 191, 193, 199, 217, 219, 221, 229, 233, 243, 257, 265, 283, 285, 289, 297, 305, 309, 325, 327, 339, 409, 411, 421, 431, 453, 479, 489, 491, 493, 495, 497, 501, 503, 513, 515, 559, 585, 593, 599, 603, 607, 613, 617, 639, 643, 647, 653, 673, 681, 683, 701, 705
312605-0318 ..	HEXAGON NUT, M6M M8 A280	15, 21, 29, 41, 63, 75, 83, 85, 93, 95, 119, 121, 133, 135, 137, 139, 141, 143, 145, 147, 149, 161, 165, 167, 169, 171, 173, 197, 257, 259, 273, 281, 287, 297, 311, 325, 327, 385, 443, 445, 447, 451, 603, 639, 641, 647, 649, 655, 657, 659, 661, 663
312605-0320 ..	HEXAGON NUT, M6M M10 A280	119, 121, 143, 175, 401, 455
312605-0322 ..	HEXAGON NUT, M6M M12 A280	279, 325, 327
312605-0324 ..	HEXAGON NUT, M6M M16 A280	227, 271, 273
312605-0326 ..	HEXAGON NUT, M6M M20 A280	391
312625-0316 ..	NUT HEX. M6 SS	615, 627
312625-0318 ..	NUT HEX. M8 SS	93, 173, 613
312625-0320 ..	NUT HEX. M10 SS	23, 25, 347
312705-0312 ..	NUT HEX. DOMED CAP MHM-6 M4 A280	303, 305, 315, 317, 463, 467, 695, 697, 701
312705-0314 ..	NUT HEX. DOMED CAP MHM-6 M5 A280	151, 153
312705-0316 ..	NUT HEX. DOMED CAP MHM-6 M6 A280	23, 25, 27, 31, 33, 35, 37, 177, 295, 309, 621
312705-0320 ..	NUT HEX. DOMED CAP MHM-6 M10 A280	45, 47
312805-0100 ..	NUT ROUND WITH SLOTS M10X0,75 FE	359
312810-0316 ..	HEXAGON NUT, NY-LOCK M6 FZB	489, 491, 493
312812-0310 ..	HEXAGON NUT, NY-LOCK M3 A480	89, 361
312812-0312 ..	HEXAGON NUT, NY-LOCK M4 A480	303, 315, 317, 631
312812-0314 ..	HEXAGON NUT, NY-LOCK M5 A480	313
312812-0316 ..	HEXAGON NUT, NY-LOCK M6 A480	29, 163, 185, 197, 397, 399, 401, 409, 411, 489, 491, 493, 513, 515, 575, 603, 607, 633
312812-0318 ..	HEXAGON NUT, NY-LOCK M8 A480	265, 269, 495, 501
312812-0320 ..	HEXAGON NUT, NY-LOCK M10 A480	275, 709, 711
312923-0150 ..	RIVET NUT M8, CLAMP. LENGTH 3,0 - 4,5	555, 557
315101-0136 ..	WASHER PLAIN, BRB, 4,3/8 H=0,8	421, 521, 537, 539
315101-0146 ..	WASHER PLAIN, BRB, 5,3/10 H=1	511, 517, 519, 525, 527, 535
315101-0153 ..	WASHER PLAIN, BRB, 6,4/12 H=1,5	513, 515, 535, 537, 539, 545
315101-0165 ..	WASHER PLAIN, BRB, 8,4/16 H=1,5	173
315103-0124 ..	WASHER PLAIN, BRB, 3,2/6,H=0,5 NI PL BR	603
315103-0153 ..	WASHER PLAIN, BRB, 6,4/12,H=1,5 NIPL BR	523, 671, 709, 711
315105-0124 ..	WASHER PLAIN, BRB, 3,2/6,H=0,5	21, 89, 99, 179, 219, 221, 237, 349, 351, 385, 391, 421, 489, 491, 493, 513, 515, 599, 603, 643, 653
315105-0136 ..	WASHER PLAIN, BRB, 4,3/8,H=0,8	65, 97, 99, 115, 135, 165, 237, 249, 267, 279, 303, 305, 315, 317, 401, 403, 481, 489, 491, 493, 509, 513, 515, 529, 531, 533, 555, 557, 593, 599, 603, 611, 627, 635, 639, 647, 655, 657, 659, 661, 663, 677, 689, 695, 697, 701, 705
315105-0146 ..	WASHER PLAIN, BRB, 5,3/10,H=1	15, 29, 45, 51, 53, 61, 65, 67, 97, 141, 143, 151, 153, 179, 185, 197, 203, 205, 265, 269, 273, 313, 323, 325, 327, 329, 361, 365, 367, 369, 371, 373, 375, 377, 379, 381, 383, 385, 403, 413, 451, 463, 467, 471, 479, 489, 491, 493, 497, 507, 513, 515, 523, 529, 531, 533, 555, 557, 573, 581, 585, 593, 599, 611, 623, 635, 639, 647, 655, 657, 659, 661, 663, 665, 667, 669, 673, 747
315105-0153 ..	WASHER PLAIN, BRB, 6,4/12,H=1,5	21, 27, 45, 63, 65, 69, 71, 85, 97, 115, 123, 175, 177, 185, 191, 193, 197, 199, 201, 217, 219, 221, 249, 257, 269, 271, 283, 289, 293, 295, 297, 305, 309, 323, 325, 327, 337, 349, 351, 357, 359, 361, 363, 365, 367, 369, 371, 373, 375, 377, 379, 381, 383, 385, 397, 399, 401, 403, 405, 409, 411, 413, 415, 421, 427, 431, 451, 453, 457, 473, 479, 489, 491, 493, 495, 497, 501, 503, 509, 513, 515, 523, 555, 557, 559, 573, 575, 577, 579, 583, 585, 587, 589, 593, 595, 597, 599, 601, 603, 607, 611, 613, 617, 619, 627, 631, 633, 635, 637, 639, 643, 647, 653, 673, 675, 677, 679, 681, 683, 701, 705, 709, 711, 743, 745
315105-0156 ..	WASHER PLAIN, BRB, 6,7/14,H=1,5	177, 397, 399, 581, 585, 593, 615, 621
315105-0165 ..	WASHER PLAIN, BRB, 8,4/16,H=1,5	29, 41, 45, 63, 85, 143, 165, 169, 171, 197, 259, 269, 271, 273, 279, 289, 293, 297, 311, 323, 325, 327, 331, 347, 349, 351, 353, 355, 357, 359, 361, 385, 391, 397, 399, 401, 405, 409, 411, 413, 415, 429, 451, 453, 555, 557, 567, 577, 579, 581, 583, 593, 603, 605, 617, 633, 641, 649, 655, 657, 659, 661, 663
315105-0171 ..	WASHER PLAIN, BRB, 10/18,H=2	87, 405, 415
315105-0173 ..	WASHER PLAIN, BRB, 10,5/22,H=2	17, 45, 119, 121, 175, 265, 269, 271, 273, 331, 353, 355, 391, 397, 399, 413, 443, 445, 451, 455, 555, 557, 583, 709, 711, 743, 745, 751
315105-0178 ..	WASHER PLAIN, BRB, 13/24,H=2	171, 271, 279, 283, 349, 351, 353, 355, 489, 491, 493
315105-0179 ..	WASHER PLAIN, BRB, 13,5/24,H=2	385
315105-0186 ..	WASHER PLAIN, BRB, 17/30,H=3	271, 391
315105-0191 ..	WASHER PLAIN, BRB, 20/36 H=3	391, 413
315105-0195 ..	WASHER PLAIN ROUND 23/40, H=3	397, 399
315111-0186 ..	WASHER PLAIN, TBRB 17/30 H=6	265, 269, 271
315115-0153 ..	WASHER PLAIN, TBRB 6,4/12 H=3	191, 193, 425, 555, 557, 615, 639, 647, 675
315115-0165 ..	WASHER PLAIN, TBRB 8,4/16 H=3	15, 165, 171, 297
315115-0173 ..	WASHER PLAIN, TBRB 10,5/22 H=4	29, 171, 181, 275
315125-0153 ..	WASHER PLAIN ROUND,CHAMF. 6,4/22, H=4	59, 83, 93, 151, 153, 167, 171, 175, 257, 265, 289, 295, 357, 397, 399, 401, 413, 457, 461, 475, 561, 563, 565, 601, 603, 743, 745
315125-0165 ..	WASHER PLAIN ROUND,CHAMF. 8,4/26, H=5	47, 99, 133, 139, 279, 337, 349, 351, 391, 397, 399, 405, 431, 617, 655, 657, 659, 661, 663
315202-0119 ..	O-RING 25,1X1,6 MM	145, 147, 305, 693
315202-0120 ..	O-RING 27,1X1,6 MM	87
315202-0204 ..	O-RING 5,3X2,4 MM	21
315202-0213 ..	O-RING 15,3X2,4 MM	409, 411
315202-0220 ..	O-RING 32,2X3 MM	405
315202-0221 ..	O-RING 34,2X3 MM	55
315202-0223 ..	O-RING 39,2X3 MM	359
315202-0301 ..	O-RING 49,5X3 MM	405

Part No	Description	Page No
315202-0303 ..	O-RING 59,5X3 MM	55
315202-0304 ..	O-RING 64,5X3 MM	105, 405
315202-0308 ..	O-RING 84,5X3 MM	21, 103, 107
315202-0312 ..	O-RING 104,5X3 MM	275
315202-0335 ..	O-RING 239,3X5,7 MM	59
315202-0803 ..	O-RING 44,17X1,78 MM	401
315204-0103 ..	O-RING 5,1X1,6 MM	283
315204-0109 ..	O-RING 11,1X1,6 MM	15
315204-0119 ..	O-RING 25,1X1,6 MM	91
315204-0207 ..	O-RING 8,3X2,4 MM	453
315204-0208 ..	O-RING 9,3X2,4 MM	69, 71
315204-0213 ..	O-RING 15,2X2,4 MM	135
315204-0214 ..	O-RING 17,3X2,4 MM	91, 721
315204-0215 ..	O-RING 19,2X3 MM	103, 105, 107
315204-0221 ..	O-RING 34,2X3 MM	15
315204-0301 ..	O-RING 49,5X3 MM	105
315204-0303 ..	O-RING 59,5X3 MM	349, 351
315204-0306 ..	O-RING 74,5X3 MM	397, 399
315204-0317 ..	O-RING 129,5X3 MM	135, 141
315204-0319 ..	O-RING 139,5X3 MM	349, 351
315205-0508 ..	O-RING 9,19X2,62 MM	361
315220-0167 ..	V-RINGS 27X35X10,5 MM V-30S	325, 327
315220-0198 ..	V-RINGS 45X55X13 MM V-50S	81, 91, 297
315221-0147 ..	RADIAL SEAL 20X47X7 MM	323, 329
315221-0156 ..	RADIAL SEAL 25X35X7 MM	401
315221-0175 ..	RADIAL SEAL 35X47X7 MM	409, 411
315229-0101 ..	GASKETS, 10,4X17,4X3,7 MM 1/2" FDA	167
315229-0102 ..	GASKETS, 16,8X23,8X3,7 MM 3/4" FDA	83, 93, 425, 427
315229-0103 ..	GASKETS, 23,1X30,1X3,7 MM 1" FDA	21, 161, 167, 169, 257, 259, 261, 281, 443, 445, 449
315229-0104 ..	GASKETS, 35,8X42,8X3,7 MM 1"1/2 FD	83, 93, 169, 281, 721, 731
315229-0105 ..	GASKETS, 48,5X55,5X3,7 MM 2" FDA	167, 281, 285, 721
315229-0106 ..	GASKETS, 61,2X68,2X3,7 MM 2"1/2 FD	93
315229-0107 ..	GASKETS, 73,9X80,9X3,7 MM 2"1/2 FD	83, 93, 281
315229-0203 ..	GASKET 34,8X42,8X3,7 MM 1"1/2	135, 145, 147
315229-0204 ..	GASKET 34,8X42,8X3,7 MM 1"1/2	141, 149
315229-0205 ..	GASKET 47,5X55,5X3,7 MM 2"	133, 139, 141, 149
315229-0206 ..	GASKET 60,2X68,2X3,7 MM 2"1/2	133, 137, 139, 143
315233-0101 ..	WASHER PL.RND.NYL.5,2/8,H=1	103, 105, 107
315233-0109 ..	WASHER PL.RND.NYL.10,3/14,H=1	475
315233-0110 ..	WASHER PL.RND.NYL.13,3/17,H=1	481
315233-0111 ..	WASHER PL.RND.NYL.17/22,H=1	475
315233-0113 ..	WASHER PL.RND.NYL.21,4/27,H=1,2	257, 475, 481
315234-0109 ..	WASHER,PL.RND.CU.10,3/13,5 H=1,0	165
315234-0113 ..	WASHER PL.RND.CU.21,3//26 H=1,5	131
315237-0109 ..	WASHER,PL.RND.AL.10/14,H=1,5	161, 191, 193
315237-0110 ..	WASHER,PL.RND.AL.13,5/18,H=1,5	165, 223, 225
315401-0153 ..	WASHER FBH6,1FZB	547
315402-0136 ..	LOCK WASHER FBB 4,1	107, 509
315402-0146 ..	LOCK WASHER FBB 5,1	511
315402-0156 ..	LOCK WASHER FBB 6,5	509
315402-0173 ..	LOCK WASHER FBB 10,2	275
315410-0100 ..	LOCK WASHER MB 0 D=10 H=1	359
315701-0166 ..	PARALLEL KEY W. ROUND ENDS 4X4X12 MM	679
315701-0168 ..	PARALLEL KEY W. ROUND ENDS 4X4X16 MM	41, 359
315701-0170 ..	PARALLEL KEY W. ROUND ENDS 4X4X20 MM	609, 637
315701-0197 ..	PARALLEL KEY W. ROUND ENDS 5X5X12 MM	323
315701-0199 ..	PARALLEL KEY W. ROUND ENDS 5X5X16 MM	323, 397, 399
315705-0196 ..	PARALLEL KEY W. ROUND ENDS 5X5X10 MM	289
315705-0201 ..	PARALLEL KEY W. ROUND ENDS 5X5X20 MM	17
315705-0202 ..	PARALLEL KEY W. ROUND ENDS 5X5X25 MM	397, 399
315705-0230 ..	PARALLEL KEY W. ROUND ENDS 6X6X16 MM	329, 359
315705-0232 ..	PARALLEL KEY W. ROUND ENDS 6X6X20 MM	43
315705-0236 ..	PARALLEL KEY W. ROUND ENDS 6X6X30 MM	391
315705-0238 ..	PARALLEL KEY W. ROUND ENDS 6X6X36 MM	397, 399
315705-0240 ..	PARALLEL KEY W. ROUND ENDS 6X6X45 MM	391
315705-0263 ..	PARALLEL KEY W. ROUND ENDS 8X7X20 MM	349, 351
315705-0265 ..	PARALLEL KEY W. ROUND ENDS 8X7X25 MM	397, 399
315705-0267 ..	PARALLEL KEY W. ROUND ENDS 8X7X30 MM	297
315705-0269 ..	PARALLEL KEY W. ROUND ENDS 8X7X35 MM	409, 411
315705-0271 ..	PARALLEL KEY W. ROUND ENDS 8X7X45 MM	409, 411
315705-0301 ..	PARALLEL KEY W. ROUND ENDS 10X8X40 MM	409, 411
315705-0305 ..	PARALLEL KEY W. ROUND ENDS 10X8X60 MM	567
315705-0307 ..	PARALLEL KEY W. ROUND ENDS 10X8X70 MM	349, 351, 397, 399
315705-0330 ..	PARALLEL KEY W. ROUND ENDS 12X8X32 MM	397, 399
315742-0122 ..	COLLAR, 30/55, H=15	297
315742-0123 ..	COLLAR, 32/52, H=16	575
315751-0103 ..	RETAIN. RING, 6	43, 69, 71, 297, 315, 317, 603
315751-0109 ..	RETAIN. RING, 12	179, 369, 371, 377, 379, 599, 617, 635, 641, 649
315751-0112 ..	RETAIN. RING, 15	175, 331, 353, 355, 365, 367, 369, 371, 373, 375, 377, 379, 381, 383, 595, 597, 627, 637, 675, 681
315751-0113 ..	RETAIN. RING, 16	357
315751-0116 ..	RETAIN. RING, 20	323, 329, 397, 399, 405
315751-0119 ..	RETAIN. RING, 25	391, 397, 399, 401, 627, 675
315751-0127 ..	RETAIN. RING, 40	349, 351

Part No	Description	Page No
315753-0117 ..	RETAIN. RING, 22	359
315753-0122 ..	RETAIN. RING, 30	177, 621
315753-0123 ..	RETAINING RING FOR HOLE, 32X1,2 MM	359, 679
315753-0124 ..	RETAIN. RING, 35	39, 43, 55, 57, 595, 597, 637
315753-0130 ..	RETAINING RING FOR HOLE, 47X1,75 MM	329, 397, 399
315753-0132 ..	RETAINING RING FOR HOLE, 52X2 MM	391
315754-0113 ..	LOCKING WAE 15	103, 105, 107
315755-0105 ..	LOCKING WASHER 3,2	75
315755-0106 ..	LOCKING WASHER 4	197, 365, 367, 373, 375, 381, 383
315755-0108 ..	LOCKING WASHER 6	621
315755-0112 ..	LOCKING WASHER 12	353, 355, 573, 709, 711
315755-0113 ..	LOCKING WASHER 15	325, 327
315755-0801 ..	LOCKING WASHER 8	229, 325, 327, 593
316810-0106 ..	PIPE CLIP FOR TUBE D=8 MM	401, 453
318800-0104 ..	HANDLE,SPHERICAL KNOB,INT.THRE.,D.30-M8	593
318860-0106 ..	KNOB, ADJUST.HI.EXT.THREAD, NO 8324-3674	275
318871-0102 ..	KNOB CIRCULAR, EXT THREAD, NO. 8302-6037	639, 647
321101-0202 ..	FLANGE BUS 16F7X12	709, 711
321101-0273 ..	FLANGE BUS 30F7X30	331
321105-0164 ..	BUSHING 10F7X16X16	593
321111-0097 ..	BEAR.BUSHING WITH FLANGE, 8/12X12 MM	385, 583
321111-0188 ..	FLANGE BUSHING, 14X20X20 MM	385
321120-0098 ..	BEARING BUSHING WITHOUT FLANG,10/12X8	633
321120-0100 ..	BEARING BUSHING WITHOUT FLANGE,8/10X12	639, 647
321120-0104 ..	BEARING BUSHING WITHOUT FLANGE,10/12X10	21
321120-0109 ..	BEARING BUSHING WITHOUT FLANGE,12/14X10	639, 647
321120-0111 ..	BEARING BUSHING WITHOUT FLANGE,12/14X15	179
321120-0123 ..	BEARING BUSHING WITHOUT FLANGE,16/18X12	639, 647
321120-0125 ..	BEARING BUSHING WITHOUT FLANGE,16/18X15	639, 647
321136-0183 ..	BUSHING, 12X14X15 MM	325, 327
321136-0260 ..	BUSHING, 20X23X20 MM	325, 327
321141-0064 ..	BEARING BUSHING WITHOUT FL, 6X8X10 MM	603
321141-0183 ..	BEARING BUSHING WITHOUT FL, 12X14X15 MM	599
321153-0296 ..	FLANGE BUSHING, 25X28X21,5 MM	401
321156-0145 ..	FLANGE BUSHING, 10X12X15 MM	409, 411
321156-0270 ..	FLANGE BUSHING, 20X23X30 MM	325, 327
321156-0420 ..	FLANGE BUSHING, 40X44X40 MM	325, 327
321302-0298 ..	BALL BEARING, 2 SEALS, 8X22X7 MM	359
321308-0202 ..	BALL BEARING, 2 SEALS, 15X32X9 MM	679, 709, 711
321308-0204 ..	BALL BEARING, 2 SEALS, 20X42X12 MM	323
321308-0205 ..	BALL BEARING, 2 SEALS, 25X47X12 MM	627, 675
321313-0100 ..	BALL BEARING, 2 SEALS, 10X30X9 MM	177, 621
321313-0101 ..	BALL BEARING, 2 SEALS, 12X32X10 MM	359
321313-0102 ..	BALL BEARING, 2 SEALS, 15X35X11 MM	175, 229, 567, 595, 597, 637, 639, 647, 673, 679, 681
321313-0104 ..	BALL BEARING, 2 SEALS, 20X47X14 MM	329
321330-0108 ..	ANG. BALL BEAR, 40X80X30,2 MM	397, 399
342203-0120 ..	NIPPLES, EXT. THREAD, HEXAGON,ÿNO. 209	441
342206-0109 ..	BUSHING, TAPERED, INT/EXT. THRÿNO. R211	135
342245-0102 ..	T-PIPE, INT. THREAD, R1/4XKR1/4	283
342700-0109 ..	NIPPLES,HEXAGON,EXT.G-THREAD G1/8"-G1/8"	671
342700-0113 ..	NIPPLES,HEXAGON,EXT.G-THREAD G1/2"-G1/2"	163, 481
342700-0205 ..	NIPPLES,HEXAGON,EXT.G-THREAD G1/2"-G1/4"	481
342701-0201 ..	BUSHING,INT./EXT.G-THREAD G1/4"-G1/8"	283
342701-0202 ..	BUSHING,INT./EXT.G-THREAD G3/8"-G1/8"	425, 475
342701-0203 ..	BUSHING, INT/EXT. G-THREAD NO. 3/8-1/4	163
342701-0205 ..	BUSHING,INT./EXT.G-THREAD G1/2"-G1/4"	253
342701-0206 ..	BUSHING,INT./EXT.G-THREAD G1/2"-G3/8"	425
342701-0209 ..	BUSHING,INT./EXT.G-THREAD G3/4"-G3/8"	163
342706-0130 ..	ACCESSORIES, INSERT SLEEVE 6 MM	191, 193, 363
342707-0109 ..	SLEEVE, INT. THREAD, NO. 2543-1/8	671
342713-0209 ..	PLUG, EXT THREAD HEX SOCKET 8638-00-180	161, 165, 337, 361, 671
342713-0210 ..	PLUG, EXT THREAD HEX SOCKET 8638-00-140	185, 243, 337
342713-0211 ..	PLUG, EXT THREAD HEX SOCKET 8638-00-380	163, 187, 189, 243, 339, 479, 671
342713-0213 ..	PLUG, EXT THREAD HEX SOCKET 8638-00-120	131
342715-0100 ..	BLIND PLUG 4 MM	187
342715-0102 ..	BLIND PLUG 6 MM	187, 189, 243, 339, 479, 671
342715-0103 ..	BLIND PLUG 8 MM	187, 189, 243, 339, 479, 671
342716-0202 ..	REDUCER 4-6	559
342716-0203 ..	REDUCER 6-8	243, 339, 671
342716-0209 ..	REDUCER 8-12	223, 225, 239, 241
342716-0210 ..	REDUCER 6-12	339
342716-0211 ..	REDUCER 12-14	239, 241
342720-0103 ..	CONN. STR. GA-8-G1/8	325, 327
342720-0114 ..	CONN. STR. GA-15-G1/2	475
342722-0197 ..	STRAIGHT COUPLING	43, 55, 69, 71, 607
342722-0198 ..	STRAIGHT COUPLING	361, 643, 653
342722-0202 ..	PIPE COUPLING 1/8" D=6MM	99, 139, 337, 385, 391, 635
342722-0203 ..	STRAIGHT COUPLING	83, 93, 185, 249, 281, 283, 331
342722-0204 ..	PIPE COUPLING	331
342722-0205 ..	STRAIGHT COUPLING D=8-G1/4"	331, 447, 571
342722-0206 ..	STRAIGHT COUPLING D=8-G3/8"	427, 479, 671
342722-0209 ..	STRAIGHT COUPLING D=12-G1/4"	185
342724-0102 ..	CONN. STR. PIPE GI 6-G1/8	191, 193
342725-0102 ..	CONN. STR. PIPE GI-6-G1/8	337

Part No	Description	Page No
342725-0103 ..	CONN. STR. PIPE GI-8-G1/4	97
342725-0114 ..	CONN. STR. PIPE GI-15-G1/2	249
342728-0102 ..	PIPE COUPLING 6 MM	559, 585
342732-0099 ..	ELBOW PIPE JOINT, EXT.THREAD, D=4MM-M5	607
342732-0100 ..	ELBOW PIPE JOINT, EXT.THREAD, D=4MM-G1/8	479
342732-0102 ..	ELBOW PIPE JOINT, EXT.THREAD, D=6MM-G1/8	17, 21, 99, 283, 623
342732-0103 ..	ELBOW PIPE JOINT, EXT.THREAD, D=6MM-G1/4	283
342732-0104 ..	ELBOW PIPE JOINT, EXT.THREAD, D=8MM-G1/4	243, 479, 481, 623
342732-0105 ..	ELBOW PIPE D8-R3/8"	187, 671
342732-0109 ..	ELBOW PIPE JOINT, EXT.THREAD, D=1MM-G1/4	243, 479
342732-0110 ..	ELBOW PIPE JOINT, EXT.THREAD,D=12MM-G3/8	243, 479
342732-0161 ..	ELBOW PIPE JOINT,EXT.THREAD,D=14 MM-G1/2	481
342732-0801 ..	ELBOW PIPE JOINT, EXT.THREAD, D=8MM-G1/8	623
342733-0114 ..	CONN. ELBOW WI-15-G1/2	141
342735-0103 ..	ELBOW PIPE JOINT	671
342735-0109 ..	ELBOW PIPE JOINT	239, 241, 671
342735-0110 ..	ELBOW PIPE	239, 241, 249
342737-0221 ..	CONN. ELBOW W-15 LRFR	141, 161
342738-0221 ..	ADJUSTABLE ELBOW CONNECTION,EXT 15-G1/2	135
342742-0102 ..	T-COUPLING,ADJUST,F.PLASTIC TUBE 6-G1/8"	623
342742-0103 ..	T-COUPLING,ADJUST,F.PLASTIC TUBE 6-G1/4"	559
342742-0104 ..	T-COUPLING,ADJUST,F.PLASTIC TUBE 8-G1/4"	623
342748-0102 ..	T-CONNECTION 6MM	191, 193, 239, 241, 249
342748-0109 ..	T-CONNECTION 12MM	185, 239, 241, 339, 479, 671
342748-0110 ..	T-CONNECTION 14MM	239, 241, 249, 481
342751-0215 ..	CONN. L-PIPE, EXT. LE-12-R3/8	163
342759-0102 ..	CONN. L-PIPE ADJ.,EVL,EXT,T-6-G1/8	191, 193
342767-0100 ..	CONN. BULKHEAD G1/8	203, 205
342767-0104 ..	CONN. BULKHEAD G1/4	223, 225, 245, 253
342768-0102 ..	BULKHEAD CONNECTOR, 6 MM	223, 225, 249, 363
342768-0103 ..	BULKHEAD CONNECTOR, 8 MM	185
342770-0101 ..	STRAIGHT COUPLING INT, D=4 MM - G1/8	479
342770-0107 ..	STRAIGHT COUPLING INT, D=8 MM - G1/8	623
342772-0122 ..	ELBOW FITTING, 8 - G1/4	243
342797-0121 ..	CONN. BANJO, RINGPIECE 6-1/8	65, 191, 193
342797-0122 ..	CONN. BANJO, RINGPIECE 6-1/4	135, 191, 193
342840-0103 ..	CLAMPING PIECE	83, 93, 113, 117, 123, 125, 127, 137, 259
342840-0105 ..	CLAMPING PIECE	99, 135, 141
342840-0107 ..	CLAMPING PIECE	223, 225
342840-0108 ..	CLAMP, 101,6 MM 3-A PCS+PMCS	135
342844-0303 ..	PIPE ELBOW 90 DEGR. D=25,4 MM PCS 3-A	285
342850-0103 ..	GASKET 22,7X49,1X5,2 MM 1" FDA	259
342850-0107 ..	GASKET, FDA, 3-A, 3	223, 225
342850-0304 ..	GASKET 35,4X49,1X5,2 MM 1"1/2 FDA	113, 117, 123, 125, 127, 137, 721
342850-0305 ..	GASKET 47,8X62,6X5,2 MM 2" FDA	99
342850-0405 ..	GASKET 47,8X62,6X5,2 MM 2" FDA	135, 141
342850-0408 ..	GASKET 97X117,7X5,2 MM 4" FDA	135
342901-0101 ..	HOSE NIPPLE, EXT.THR. R1/8-7 MM	283
342901-0105 ..	HOSE NIPPLE, EXT.THR. R1/2-12 MM	141, 223, 225, 257, 439, 475
342920-0122 ..	STRAIGHT COUPLING,EXT.THREADED 8/6-R1/4"	245
342920-0123 ..	STRAIGHT COUPLING,EXT.THREADED 8/6-R3/8"	427
342920-0132 ..	STRAIGHT COUPL.,EXT.THREADED 10/8-R1/4"	253
342921-0113 ..	STRAIGHT COUPLING,EXT.THREADED 6/4-G1/8"	203, 205
342921-0121 ..	STRAIGHT COUPLING,EXT.THREADED 8/6-G1/8"	361
342921-0122 ..	STRAIGHT COUPLING,EXT.THREADED 8/6-G1/4"	223, 225, 331, 397, 399, 401
342922-0122 ..	STRAIG.COUPL.,ADJUST.,EXT.THRE.8/6-R1/4"	427, 429
342923-0121 ..	STRAIGHT COUPL.,INT.THREADED 8/6-G1/8"	191, 193
342930-0133 ..	ELBOW 90 COUPL.,EXT.THREAD 10/8-R3/8"	475
342931-0121 ..	ELBOW 90 COUPL.,EXT.THREAD 8/6-G1/8"	45, 361, 425, 585
342931-0122 ..	ELBOW 90 COUPL.,EXT.THREAD 8/6-G1/4"	397, 399, 409, 411, 427
342933-0122 ..	ELBOW 90 COUPL.,INT.THREAD 8/6-G1/4"	427
342940-0122 ..	T-COUPLING,EXT.THREAD 8/6-R1/4"	431
342980-0112 ..	BANJO-CONNECTION,RING 6/4-M6	297
342980-0303 ..	BANJO-HOLLOW BOLT COUPL,EXT.THR.01-G1/8"	65, 191, 193
342980-0304 ..	BANJO-HOLLOW BOLT COUPL,EXT.THR.01-G1/4"	135, 191, 193
342980-0314 ..	BANJO-HOLLOW BOLT COUPL,EXT.THR.02-G1/4"	135, 331
342981-0114 ..	BANJO CONNEC,RING,FOR PLAST.TUBE 6-G1/4"	331
342991-0100 ..	HOSE CLIP,WORM DRIVE TYPE 10-13	439, 453, 593
342991-0101 ..	HOSE CLIP,WORM DRIVE TYPE (13)-16	141, 223, 225, 279, 283, 423, 425, 427
342991-0102 ..	HOSE CLIP,WORM DRIVE TYPE (16)-19	257, 451
342991-0103 ..	HOSE CLIP,WORM DRIVE TYPE (19)-23	161, 285
342991-0104 ..	HOSE CLIP,WORM DRIVE TYPE (23)-27	249, 279
342991-0105 ..	HOSE CLIP,WORM DRIVE TYPE (27)-30	223, 225
342991-0106 ..	HOSE CLIP,WORM DRIVE TYPE (30)-36	285
342991-0109 ..	HOSE CLIP,WORM DRIVE TYPE (48)-50	133
342991-0110 ..	HOSE CLIP,WORM DRIVE TYPE (54)-63	223, 225, 279, 285
342991-0111 ..	HOSE CLIP,WORM DRIVE TYPE (63)-73	131
342991-0114 ..	HOSE CLIP,WORM DRIVE TYPE (93)-110	275
346800-0110 ..	SILENCER FILTER R1/4"	113
351120-0126 ..	CABLE SIHF 2X4MM2 GREEN/YELLOW	607
351120-0145 ..	CABLE SIHF 3X25MM2 GREEN/YELLOW	613
351120-0164 ..	CABLE SIHF 4X1,5MM2 GREEN/YELLOW	169
351120-0165 ..	CABLE SIHF 4X25MM2 GREEN/YELLOW	151, 153
351120-0168 ..	CABLE SIHF 4X10MM2 GREEN/YELLOW	151, 153

Part No	Description	Page No
351150-0122 ..	CABLE " REPL.BY 351150-431"	429
351150-0166 ..	CABLE OLFLEX 4X4 MM2 LIGHT/GREY	219, 221, 443, 445
351150-0403 ..	CABLE OLFLEX 3X0,75 MM2 LIGHT/GREY	151, 153, 201, 203, 205, 249, 283, 341, 437, 475
351150-0404 ..	CABLE OLFLEX 4X0,75 MM2 LIGHT/GREY	203, 205
351150-0405 ..	CABLE OLFLEX 5X0,75 MM2 LIGHT/GREY	151, 153, 203, 205, 219, 221, 305, 313, 555, 557, 693
351150-0406 ..	CABLE OLFLEX 7X0,75 MM2 LIGHT/GREY	219, 221, 433, 555, 557
351150-0407 ..	CABLE OLFLEX 12X0,75 MM2 LIGHT/GREY	203, 205, 219, 221, 691, 703, 715
351150-0412 ..	CABLE OLFLEX 3X1,5 MM2 LIGHT/GREY	151, 153, 169, 217, 219, 221, 341, 555, 557, 655, 657, 659, 661, 663
351150-0413 ..	CABLE OLFLEX 4X1,5 MM2 LIGHT/GREY	655, 657, 659, 661, 663
351150-0418 ..	CABLE OLFLEX 4X2,5 MM2 LIGHT/GREY	151, 153, 219, 221, 289, 297, 425, 429
351150-0419 ..	CABLE OLFLEX 5X2,5 MM2 LIGHT/GREY	219, 221, 415
351150-0420 ..	CABLE OLFLEX 7X2,5 MM2 LIGHT/GREY	655, 657, 659, 661, 663
351150-0422 ..	CABLE OLFLEX 3X4 MM2 LIGHT/GREY	655, 657, 659, 661, 663
351150-0424 ..	CABLE OLFLEX 18X0,75 MM2 LIGHT/GREY	655, 657, 659, 661, 663
351150-0425 ..	CABLE OLFLEX 25X0,75 MM2 LIGHT/GREY	201, 203, 205, 219, 221, 341, 473, 655, 657, 659, 661, 663
351150-0426 ..	CABLE OLFLEX 5X25 MM2 LIGHT/GREY	219, 221
351150-0431 ..	CABLE OLFLEX 2X0,75 MM2 LIGHT/GREY	425, 427, 555, 557
351160-0102 ..	CABLE AWM 1X0,75 MM2 DARKBLUE	203, 205
351172-0102 ..	CABLE AWM 1X 0,75 MM2 DARK-BLUE	473
351173-0110 ..	CABLE AWM 1X25 MM2 LIGHT-BLUE	421
351175-0109 ..	CABLE AWM 1X16 MM2 YELLOW-GREEN	421
351179-0110 ..	CABLE AWM 1X25 MM2 BLACK	421
352103-0100 ..	CABLE GLAND, STR 9, PR15,2/PG9	151, 153, 203, 205, 473
352103-0101 ..	CABLE GLAND, ST 9, PR15,2/PG9	99, 113, 123, 135, 141, 151, 153, 165, 201, 203, 205, 213, 215, 341, 433, 437, 473, 475, 481, 577, 579, 655, 657, 659, 661, 663
352103-0106 ..	CABLE GLAND, ST 11, PR18,6/PG11	87, 151, 153, 197, 203, 205, 213, 215, 217, 313, 341, 421, 555, 557, 655, 657, 659, 661, 663
352103-0108 ..	CABLE GLAND, ST 13,5 , PR20,4/PG13,5	151, 153, 213, 219, 221, 341, 425, 429, 433, 489, 491, 493, 619, 655, 657, 659, 661, 663, 679
352103-0110 ..	CABLE GLAND, STR 16, PR22,5/PG16	151, 153, 289, 305, 429, 433, 473, 547, 693
352103-0111 ..	CABLE GLAND, ST 16, PR22,5/PG16	131, 151, 153, 161, 201, 203, 205, 219, 221, 297, 333, 443, 445, 489, 491, 493, 577, 579, 655, 657, 659, 661, 663, 691
352103-0115 ..	CABLE GLAND, STR 21, PR28,3/PG21	219, 221, 233, 341, 443, 445, 577, 579, 655, 657, 659, 661, 663
352103-0116 ..	CABLE GLAND, ST 21, PR28,3/PG21	151, 153, 201, 203, 205, 213, 215, 219, 221, 341, 473, 489, 491, 493, 655, 657, 659, 661, 663
352103-0120 ..	CABLE GLAND, STR 29, PR37,0/PG29	151, 153, 341, 473
352103-0121 ..	CABLE GLAND, ST 29, PR37,0/PG29	151, 153, 219, 221, 655, 657, 659, 661, 663
352103-0123 ..	CABLE GLAND, ST 42, PR54,0/PG42	421, 489, 491, 493
352113-0102 ..	CLIP-STRIP, BLACK 188X4,8 MM	561, 563, 565
352113-0203 ..	ANCHOR PLATES FOR STRIPS, TYPE TM3S8-M0	297, 423, 489, 491, 493, 603
352113-0204 ..	ANCHOR PLATES FOR STRIPS, TYPE TM3S25-M7	171, 223, 225, 257, 269, 349, 351, 353, 355, 523
352113-0205 ..	ANCHOR PLATES FOR STRIPS, TYPE TM2S8-C10	175, 451, 513, 515, 555, 557, 561, 563, 565, 593, 599, 601, 603, 607, 673, 677
352113-0206 ..	ANCHOR PLATES FOR STRIPS, TYPE ABM100-AT	233
353021-0120 ..	FEED THROUGH TERMINAL, 10215.8	215
353021-0122 ..	TERMINAL DISCONNECTBLE, WTR 2,5 D	525
353021-0212 ..	FEED THROUGH TERMINAL, 10200.0	511, 535, 545
353021-0213 ..	FEED THROUGH TERMINAL, 10201.0	213, 215, 341, 511, 665, 669
353021-0214 ..	FEED THROUGH TERMINAL, 10202.0	541, 543
353021-0216 ..	FEED THROUGH TERMINAL, 10200.8	203, 205, 433, 473, 525, 527
353021-0219 ..	FEED THROUGH TERMINAL, 10205.0	507
353021-0223 ..	FEED THROUGH TERMINAL, 10202.8	527
353021-0226 ..	BY-PASS TERMINAL WDU 35	507
353021-0301 ..	TERMINALS,TRIPLE-LEVEL, DLI 2,5/35 PA	665, 667
353021-0302 ..	TERMINALS,TRIPLE-LEVEL, DLD 2,5/35 PA	201, 203, 205, 213, 341, 665, 667
353022-0002 ..	NEUTRAL TERMINAL, 10107.8	545
353024-0204 ..	EARTH TERMINAL WPE 2,5	213, 215, 341, 473, 535, 545
353024-0205 ..	EARTH TERMINAL, 1010.1	201, 203, 205, 213, 215, 341, 433, 473, 511, 665, 667, 669
353024-0206 ..	EARTH TERMINAL, 1010.2	545
353024-0209 ..	EARTH TERMINAL, 1010.5	421, 507, 545
353031-0201 ..	END BRACKET EW35	473
353031-0203 ..	END SUPPORT, WEW 35/2	213, 215, 433, 507, 511, 513, 515, 525, 527, 535, 541, 543, 545, 665, 669
353032-0004 ..	END PLATE WAP 2,5-10 BEIGE	511, 545
353032-0005 ..	END PLATE WAP 2,5-10 BLUE	525
353032-0009 ..	END PLATE, WAP 16/35	665, 667
353032-0010 ..	END PLATE WAP	215
353032-0013 ..	END PLATE, 13818.6	665, 667
353032-0301 ..	END PLATE WAP	665, 667
353032-0302 ..	END PLATE WAP	201, 203, 205, 213, 667
353033-0104 ..	END PLATE, 10502.8	545
353033-0106 ..	PARTITITION, 10501.8	203, 205
353034-0030 ..	BRIDGE CONNECTOR WQV 2,5/10, 10544.6	215, 433, 473, 525, 527, 545
353034-0031 ..	BRIDGE CONNECTOR, WQV 4/10, 10520.6	215, 669
353034-0039 ..	BRIDGE CONN. WQV 4/4	215
353034-0402 ..	BRIDGE CONNECTOR Q3, 13126.0	213
353034-0404 ..	BRIDGE CONNECTOR Q10, 13131.0	201, 203, 205, 213, 665, 667
353041-0001 ..	RAIL 10X3MM SSCH	545
353041-0106 ..	HOLDER ZB35 K 5026.8	545
353042-0003 ..	RAIL TS35/15/1,5	489, 491, 493
353042-0004 ..	RAIL TS 35/7,5	511, 513, 515, 523

Part No	Description	Page No
353042-0005 ..	RAIL TS 35/7.5	421, 507, 525, 527, 535, 545
353042-0010 ..	BUSBAR HÅLLARE	541, 543
353042-0012 ..	ADJUSTMENTPLATTA	541, 543
353042-0013 ..	PROTECTIVE CASING	541, 543
353042-0014 ..	BUSBAR ADA ADAPTER	541, 543
353042-0015 ..	BUSBAR ADAPTER	541, 543
353042-0016 ..	CONNECTIONSADAPTER	541, 543
353042-0019 ..	SIDE GUARD	541, 543
353101-0132 ..	CABLE SHOE, RING ø5,3MM	613
353104-0130 ..	CABLE SHOEYAV 025 M 4*	613
353104-0140 ..	CABLE SHOEYAV 06 M 4*	607
353104-0168 ..	CABLE SHO YAV 16 M6*	421
353105-0200 ..	PIN CABLE SKO A4630SR	421
353240-0002 ..	NORMAL WITHOUT INSERT, PG 11	403
353240-0004 ..	NORMAL WITHOUT INSERT, PG 16	151, 153
353240-0005 ..	NORMAL WITHOUT INSERT, PG 21	655, 657, 659, 661, 663
353240-0006 ..	NORMAL WITHOUT INSERT, PG 29	99, 151, 153, 219, 221
353240-0007 ..	NORMAL WITHOUT INSERT, PG 36	363
353241-0003 ..	EXTENDED WITHOUT INSERT, PG 21	363, 415
353242-0004 ..	NORMAL WITHOUT INSERT, PG36	363, 415
353243-0001 ..	EXTENDED WITHOUT INSERT, PG9	29, 65, 69, 71, 137, 139, 143, 151, 153, 165, 169, 171, 179, 203, 205, 391, 413, 415
353243-0002 ..	EXTENDED WITHOUT INSERT, PG11	65, 119, 121, 149, 151, 153, 203, 205
353243-0003 ..	EXTENDED WITHOUT INSERT, PG11	51, 53, 61, 67, 85, 125, 127, 151, 153, 169, 185, 203, 205
353243-0004 ..	EXTENDED WITHOUT INSERT, PG13,5	151, 153
353243-0005 ..	EXTENDED WITHOUT INSERT, PG16	703
353243-0007 ..	EXTENDED WITHOUT INSERT, PG21	151, 153, 165
353243-0008 ..	EXTENDED WITHOUT INSERT, PG29	403, 415, 619
353244-0002 ..	EXTENDED WITHOUT INSERT, HIGH TEMP, PG13	125, 127
353245-0004 ..	GLAND, EXTENDED WITH INSERT, PG16/PR 22,	219, 221
353245-0005 ..	GLAND, EXTENDED WITH INSERT, PG16/PR 22,	219, 221
353249-0008 ..	INSERT, SINGEL HOLE, EK 152/7	29, 69, 71, 137, 143, 151, 153, 165, 169, 171, 179, 203, 205, 413, 415
353249-0009 ..	INSERT, SINGEL HOLE, EK 152/9	65, 119, 121, 151, 153, 203, 205, 391
353249-0011 ..	INSERT, SINGEL HOLE, EK 153/11	51, 53, 61, 67, 85, 125, 127, 151, 153, 169, 185, 203, 205
353249-0013 ..	INSERT, SINGEL HOLE, EK 154/13	151, 153, 165, 169
353249-0014 ..	INSERT, SINGEL HOLE, EK 154/16	703
353249-0018 ..	INSERT, SINGEL HOLE, HI.TEMP, EK152I9	125, 127
353249-0028 ..	INSERT, MULTI HOLE, E153M2X8	151, 153
353249-0036 ..	INSERT, MULTI HOLE, EK152 M 2X4	139, 149, 151, 153
353249-0041 ..	INSERT, SOLID, E151G	403
353249-0051 ..	INSERT, MULTI HOLE, E154M4X8	655, 657, 659, 661, 663
353249-0054 ..	INSERT, SINGEL HOLE, EK 156/25	619, 681
353249-0060 ..	INSERT, MULTI HOLE, E155M2X13	151, 153, 219, 221
353249-0061 ..	INSERT, SINGEL HOLE, EK 155/20	151, 153
353249-0079 ..	INSERT, MULTI HOLE, E155M8X5,5	99
359000-0024 ..	MARKING CO2/4 "-"	239, 241, 243
359000-0025 ..	MARKING CO3/6 "-"	239, 241
359000-0400 ..	MARKING CO2/4"0"	239, 241, 243, 251, 297
359000-0401 ..	MARKING COLLAR 2/4 "1" YELLOW	239, 241, 243, 251, 297
359000-0402 ..	MARKING COLLAR 2/4 "2" YELLOW	239, 241, 243, 251, 297
359000-0403 ..	MARKING COLLAR PA2/4 "3" YELLOW	239, 241, 243, 251
359000-0404 ..	MARKING COLLAR PA2/4 "4" YELLOW	239, 241, 243, 251, 297
359000-0405 ..	MARKING CO2/4"5"	239, 241, 243, 251, 297
359000-0406 ..	MARKING COLLAR PA2/4 "6" YELLOW	239, 241, 243
359000-0408 ..	MARKING COLLAR PA2/4 "8" YELLOW	251
359000-0409 ..	MARKING COLLAR PA2/4 "9" YELLOW	251
359000-0500 ..	MARKING COLLAR 3/6 "0" YELLOW	239, 241, 249
359000-0501 ..	MARKING COLLAR 3/6 "1" YELLOW	239, 241
359000-0502 ..	MARKING CO3/6"2"	239, 241
359000-0503 ..	MARKING CO3/6"3"	239, 241
359000-0765 ..	MARKING CO2/4"P"	239, 241
359000-0800 ..	MARKING CO3/6"A"	239, 241
359000-0815 ..	MARKING CO3/6"P"	239, 241, 249
359000-0818 ..	MARKING CO3/6"S"	239, 241
359000-0820 ..	MARKING CO3/6"U"	239, 241
359005-0010 ..	MARKING LABEL KIT 0 - 9, 04.841.2150.0	151, 153, 425, 429, 433, 443, 445, 473, 655, 657, 659, 661, 663
359005-0050 ..	MARKING LABEL KIT X, 04.841.4550.0	151, 153, 425, 429, 433, 443, 445, 473, 655, 657, 659, 661, 663
359011-0807 ..	MARKING PLATES 5-FW 1-50	507, 521, 525, 545, 665, 669
359011-0808 ..	MARKING PLATES 5-FW 51-100	545
359011-0809 ..	MARKING PLATES 5-FW 101-150	215, 433, 473, 525, 527, 545, 667
359011-0810 ..	MARKING PLATES 5-FW 151-200	203, 205, 215, 527, 665, 667
359011-0817 ..	SYMBOL 5-GW (+) 50PC	665, 667
359011-0818 ..	SYMBOL 5-GW (-) 50PC	665, 667
359011-0819 ..	MARKING PLATES 5-GW (EARTH)	213, 215, 235, 521, 665, 667, 669
359011-0821 ..	SET OF SIGNS 6-FW 1-50	213, 215, 235, 545
359011-0823 ..	SET OF SIGNS 6-FW 101-150	201, 203, 205, 213, 545
359011-0824 ..	SET OF SIGNS 6-FW 151-200	203, 205, 213
359011-0832 ..	SET OF SIGNS 6-GW (+)	201, 203, 205, 213
359011-0833 ..	SET OF SIGNS 6-GW (-)	201, 203, 205, 213
359011-0834 ..	SET OF SIGNS 6-GW(EARTH)	201, 203, 205, 213, 215
359240-0100 ..	SIGN HOLDER FOR 359240-0001	243, 471, 509, 513, 515, 523

Part No	Description	Page No
359241-0122 ..	SIGN, CIP OF STEAM BARRIER SPACE	513, 515
359241-0131 ..	SIGN, TEMP. LS HEATER	509
359241-0133 ..	SIGN, SERVICE SWITCH	513, 515
359241-0135 ..	SIGN, TRANSVERSAL SEALING	509
359241-0201 ..	SIGN "HOUR GLASS"	513, 515
359241-0431 ..	SIGN "MAIN SWITCH"	471
359241-0482 ..	SIGN "PACKAGE COUNTER"	513, 515
359243-0917 ..	SIGN"400V, 50HZ, 100A"	471
359243-0918 ..	SIGN"400V, 60HZ, 100A"	471
359301-0001 ..	SIGN "UP"	233
359301-0005 ..	SIGN "DOWN"	233, 691
359301-0050 ..	SIGN "DROP CHUTE"	233
359301-0090 ..	SIGN "INCHING"	233
359301-0091 ..	SIGN "INCHING FFU"	233
359301-0100 ..	SIGN "SPLICING"	703
359301-0101 ..	SIGN	691
359301-0110 ..	SIGN "SHORT STOP"	203, 205, 233
359301-0130 ..	SIGN "LAMPTEST"	233
359301-0170 ..	SIGN "MANUAL FLUSHING FFU"	233
359301-0488 ..	BUTTON SIGN, MATERIAL LOCKING	703
359301-0519 ..	SIGN "TPOP RESET"	233
359705-0003 ..	WARNING SIGN ISO, DANGEROUS CHEMICALS	83, 93
359705-0004 ..	WARNING SIGN ISO, DANGEROUS CHEMICALS	165, 279
359705-0005 ..	WARNING SIGN ISO, MOVING PART	555, 557, 573
359705-0007 ..	WARNING SIGN ISO, HOT SURFACE	83, 93, 97, 141, 401, 601
359705-0015 ..	WARNING SIGN ISO, RISK OF ELECTRIC SHOCK	165, 169, 201, 203, 205, 213, 341, 403, 495, 501
359710-0001 ..	WARNING SIGN ISO, HOT SURFACE	349, 351
400828-0000 ..	SPRING	607
400833-0000 ..	PLUNGER	607
440650-0000 ..	WASHER	107
440655-0000 ..	RING	103
440659-0000 ..	CYLINDRICAL PIN	107
440660-0000 ..	COMPRESSION SPRING	107
440661-0000 ..	COMPRESSION SPRING	107
440662-0000 ..	COMPRESSION SPRING	105
440663-0000 ..	COMPRESSION SPRING	103, 107
441737-0000 ..	WASHER	51, 53, 61, 67
441739-0000 ..	WASHER	51, 53, 61, 67
441871-0000 ..	PENDULUM SUSPENSION	133, 139
442237-0000 ..	NUT	145, 147
449939-0001 ..	HEATING ELEMENT 15KW	143
450833-0000 ..	FILTER	65
451423-0000 ..	CIRCUIT BOARD	333
451430-0000 ..	CONNECTION HOUS.(MINOR)	143
456123-0000 ..	SUPPORT	143
456139-0000 ..	LOCK PLATE	23, 25
457696-0001 ..	JOINT PIECE	413
466074-0002 ..	SLIDER	413
476087-0000 ..	LID	29
476185-0000 ..	VALVE CONE	105
476243-0000 ..	BOTTOM PLATE	413
476975-0000 ..	WHEEL	409, 411
476978-0000 ..	SHAFT	413
476979-0000 ..	WASHER	413
479234-0000 ..	WASHER	135
479261-0000 ..	NIPPLE	141, 475
484701-0000 ..	SHUTTER	409, 411, 413
486826-0001 ..	SIGN "EMERGENCY STOP"	19, 203, 205, 305, 503, 693, 703
490901-0000 ..	SEAL	59
490998-0000 ..	THROTTLE SCREW	145, 147
491230-0000 ..	GRUB SCREW	365, 367, 369, 371, 373, 375, 377, 379, 381, 383
491305-0000 ..	CONN.DIAGRAM AIR SUPERH.	143
491880-0000 ..	FASTENING PLATE	325, 327
491929-0000 ..	IMPELLER WHEEL	289
495118-0014 ..	DISTANCE PIPE L=14 MM	665, 667, 669
495377-0000 ..	BUSH	513, 515
495495-0000 ..	COOLING ELEMENT SSR	537, 539
497748-0000 ..	PIN	109, 111
526767-0000 ..	SCREW	413
527898-0100 ..	CONTAINER H2O2	277
527912-0000 ..	NON-RETURN VALVE	283
530551-0000 ..	WASHER	283
530587-0000 ..	WASHER	105
530588-0000 ..	SEAL RING	105
530589-0000 ..	SEAL RING	103, 107, 133, 139
530590-0000 ..	VALVE CONE	103, 107, 133, 139
530591-0000 ..	HOLDER	107
530592-0000 ..	SEAL RING HOLDER	103
530595-0000 ..	SEAL RING HOLDER	103
530597-0000 ..	WASHER	107
530598-0000 ..	WASHER	107
530599-0000 ..	RING	107, 133, 139
531191-0000 ..	BUSHING	15
531345-0200 ..	PERSONAL PROTECT. EQ H2O2	715

Part No	Description	Page No
531503-0000 ..	SLIDE RAIL	409, 411
531616-0000 ..	HOLDER	309
531731-0000 ..	GASKET	143
532117-0000 ..	CLAMP RING	109
532118-0000 ..	CLAMP RING	111
532349-0000 ..	PLAIN BEARING	133, 139
532655-0000 ..	CAUTION SIGN	291
533169-0000 ..	DIAPHRAGM	103
534310-0001 ..	NOZZLE	409, 411
536916-0000 ..	AXLE PIN	603
539212-0000 ..	GASKET	101
540306-0001 ..	COMPONENTS WITHOUT TP-NO	335
540307-0000 ..	PRINTED CIRCUIT BOARD	335
541163-0200 ..	CLAMP RING	101
541164-0200 ..	CLAMP RING	101
541165-0000 ..	WASHER	109, 111
541166-0000 ..	WASHER	103
541177-0000 ..	BENDING ROLLER	165
544725-0000 ..	AXLE PIN	603
544894-0000 ..	SPRING	81, 91
546929-0000 ..	FILTER	135, 141
549267-0000 ..	LID	65
553607-0000 ..	SLEEVE	103, 105, 107
554141-0000 ..	FILTER	65
554142-0000 ..	FILTER HOUSING	65
554162-0000 ..	SCREW	109, 111
554585-0000 ..	STUD SCREW	65
555458-0000 ..	SEALING WASHER	107
556133-0000 ..	SEALING WASHER	105
556702-0000 ..	AP-VALVE-BODY (51-38)	101
559810-0101 ..	TMCC2 CONTROLLER	517, 519
560931-0000 ..	BRACKET	65, 135
560932-0000 ..	INTERMEDIATE PART	65
561427-0000 ..	CONTAINER	291
561650-0102 ..	CURVE WHEEL	413
563285-0000 ..	BLIND PLUG	283
565250-0000 ..	WASHER	291
565251-0000 ..	VALVE	291
566171-0000 ..	CUP SPRING	287
566194-0000 ..	WEIGHT	287
566195-0000 ..	LID	287
566196-0100 ..	LID WITH WEIGHT	285
567018-0000 ..	STEAM HOUSE	101
567070-0011 ..	ELECTRODE	165
567070-0013 ..	ELECTRODE	65
567070-0019 ..	ELECTRODE	65
568583-0000 ..	FORK	81
575002-0000 ..	PLUNGER	575
575034-0000 ..	ROUND NUT	51, 53, 61, 67
575203-0100 ..	HAND CRANK	345
575235-0300 ..	CONTROL PANEL	487
575236-0300 ..	CONTROL PANEL	487
575237-0300 ..	POWER SIDE	487
576434-0100 ..	AP-VALVE 51-38	99
576436-0100 ..	A-CYLINDER	101
576437-0100 ..	C-CYLINDER	101
576438-0100 ..	B-CYLINDER	101
576439-0000 ..	CYLINDER HOUSING	103, 107
576440-0000 ..	END SECTION	103, 107
576441-0000 ..	PISTON	103, 107
576442-0000 ..	PISTON ROD	107
576443-0000 ..	CYLINDER HOUSING	105
576444-0000 ..	END SECTION	105
576445-0000 ..	PISTON	105
576446-0000 ..	PISTON ROD	103
576447-0000 ..	PISTON ROD	105
576448-0000 ..	SPACER	103
576449-0000 ..	SPACER	103
576450-0000 ..	SPACER	107
576451-0000 ..	SPACER	105
577102-0400 ..	ASEPTIC CHAMBER	11
577103-0300 ..	FILLING SYSTEM	11
577104-0300 ..	STERILE AIR SYSTEM	11
577111-0400 ..	CONVEYOR	389
577112-0400 ..	FINAL FOLDER	389
577113-0300 ..	DISCHARGE DEVICE	389
577114-0300 ..	WASTE CONVEYOR	209
577115-0300 ..	FRAME	389
577117-0300 ..	ELECTRICAL SUPPLY	209
577118-0500 ..	MACHINE BODY	209
577119-0400 ..	PNEUMATIC SYSTEM	209
577120-0400 ..	DOORS AND COVERS	209
577121-0400 ..	PIPE WORK	209
577122-0300 ..	EXTERNAL CLEANING SYSTEM	209

Part No	Description	Page No
578640-0000 ..	CLAMPING RING	181
578684-0000 ..	SPRING BRACKET	627, 675
583727-0000 ..	SHAFT	621
583986-0000 ..	ROLL	603
590402-0000 ..	AXLE PIN	603
591341-0000 ..	PIN	223, 225
596678-0000 ..	KNIFE	639, 647
598878-0000 ..	MACHINE SIGN 2 ADR. EEA	715
736514-0000 ..	SHOCK ABSORBER	87, 115
751009-0000 ..	INSULATION	143
751284-0000 ..	ROLL	31, 33
751395-0000 ..	FLANGE	289
751457-0000 ..	CANTILEVER	325, 327
751485-0000 ..	SCREW	181
751491-0000 ..	ROLL	23, 25
751492-0000 ..	ROLL	23, 25
751493-0000 ..	ROLL	23, 25
751499-0000 ..	ROLL	35, 37
751500-0000 ..	ROLL	35, 37
751604-0000 ..	SPRING	91
752126-0000 ..	FORMING ROLLER	23, 25
752127-0000 ..	FORMING ROLLER	23, 25
752128-0000 ..	FORMING ROLLER	23, 25
752129-0000 ..	FORMING ROLLER	31, 33
752130-0000 ..	FORMING ROLLER	31, 33
752132-0000 ..	FORMING ROLLER	35, 37
752134-0000 ..	FORMING ROLLER	35, 37
752156-0000 ..	FLANGE BUSHING	23, 25
752186-0002 ..	SHAFT	23, 25
752186-0003 ..	SHAFT	31, 33, 35, 37
752186-0004 ..	SHAFT	31, 33
752186-0005 ..	SHAFT	23, 25, 35, 37
752186-0006 ..	SHAFT	23, 25, 27, 35, 37
752186-0007 ..	SHAFT	35, 37
752186-0008 ..	SHAFT	23, 25
752186-0009 ..	SHAFT	23, 25
752186-0010 ..	SHAFT	31, 33
752186-0016 ..	SHAFT	27
752186-0017 ..	SHAFT	31, 33
906254-0000 ..	ROLLER	627, 675
925877-0000 ..	SUPPORT	87
925998-0000 ..	DIAPHRAGM	115, 721
925999-0000 ..	PROTECTION PIPE	87
926820-0000 ..	PLUG	87
926906-0000 ..	SPACER	115
926907-0000 ..	SCREW	115
926909-0000 ..	COMPRESSION SPRING	115
926934-0000 ..	SUPPORT	115
927044-0000 ..	SPACER	115
927194-0000 ..	BODY	115
927203-0000 ..	COVER	115
927420-0001 ..	O-RING 5.1X1.6 SILICON	65
927421-0002 ..	O-RING 12.3X2.4 SILICON	65
927421-0003 ..	O-RING 13.3X2.4 SILICON	167
927421-0004 ..	O-RING 15.3X2.4 SILICON	65, 165
927422-0001 ..	O-RING 19.2X3 SILICON	65
927422-0003 ..	O.RING 24.2X3 SILICON	291
927422-0005 ..	O-RING 36.2X3 SILICON	289
927422-0006 ..	O-RING 42.2X3 SILICON	289
927422-0007 ..	O-RING 44.2X3 SILICON	65
927422-0009 ..	O-RING 54.5X3 SILICON	65
927422-0016 ..	O-RING 79.5X3 SILICON	279
970215-0000 ..	STOP BLOCK	497, 513, 515
971346-0000 ..	GUIDE PIN	513, 515
975917-0000 ..	KEY FOR SAFETY SWITCH 90044-103	695, 697
978603-0000 ..	SIGN	243
978735-0000 ..	FASTENING PLATE	325, 327
978999-0000 ..	VALVE	281
979326-0000 ..	FLOAT	81
979434-0000 ..	FERRULE	115
979500-0003 ..	ELECTRODE	135
979847-0000 ..	SHAFT COUPLING	679
985328-0000 ..	CONNECTION	265, 269, 271
985756-0000 ..	KEY	555, 557
985842-0000 ..	BRACKET	489, 491, 493
985851-0000 ..	BRACKET	497
988666-0000 ..	GASKET	495, 497, 501, 503
988685-0000 ..	PIN	185, 197, 243, 303, 463, 467, 471, 495, 497, 501, 503, 695, 697, 701, 705
988690-0000 ..	RIM	697
996388-0400 ..	PEROXIDE PUMP	277
996451-0100 ..	CRANK	13
996475-0200 ..	COMPRESSOR UNIT	129
1010822-0000 .	RAILING	181, 269, 271
1010947-0000 .	GASKET	403

Part No	Description	Page No
1020146-0000	.LOCKING BLOCK REPL BY 1020290-101	413
1020635-0001	.HOLDER	413
1020637-0000	.HOLDER	413
1035008-0400	.BATH	159
1035076-0100	.LEG	223, 225
1035259-0200	.INTERMEDIATE PART	77, 79
1035382-0100	.EMERGENCY STOP	13
1035654-0000	.CONNECTION	181
1035792-0000	.E-HINGE	185, 197, 243, 303, 463, 467, 471, 495, 497, 501, 503, 695, 697, 701, 705
1035794-0000	.BLOCKING PIECE	463, 467, 471
1035882-0000	.BENDING ROLLER	229
1035895-0000	.SHAFT	593
1035897-0000	.SHAFT	179
1035898-0000	.BRACKET	179
1035942-0000	.HEATING PIPE	143
1036119-0000	.LEG	227
1036120-0000	.SLEEVE	227
1036174-0000	.BEARING COVER	43
1036178-0000	.SHAFT	43, 69, 71
1036187-0000	.T-PIPE	133
1036188-0000	.SHAFT	133, 139
1036189-0000	.SPINDLE GUIDE	133, 139
1036191-0000	.SEAL HOLDER	133, 139
1036194-0000	.T-PIPE	133, 139
1036227-0000	.BRACKET	451, 453, 479
1036241-0000	.WASHER	171, 265, 269, 271
1036293-0000	.HOLDER	137, 139
1036294-0000	.GASKET	149
1036304-0001	.LOCKING ARM	463, 467
1036304-0006	.LOCKING ARM	303, 305
1036304-0007	.LOCKING ARM	305
1036304-0013	.LOCKING ARM	303
1036304-0014	.LOCKING ARM	467
1036304-0018	.LOCKING ARM	315, 317
1036314-0000	.BOTTOM PANEL	131
1036315-0000	.FRONT PLATE	131
1036318-0000	.PIPE	131
1036319-0000	.BRACKET	131
1036328-0000	.LID	43
1036329-0000	.PIN	197
1036372-0000	.PIPE	143
1036373-0000	.HOLDER	29, 143
1036465-0000	.LID	29
1036475-0000	.PIN	29
1036478-0000	.GASKET	29
1036496-0000	.WHEEL	49
1036516-0000	.CANTILEVER	229
1036553-0000	.WHEEL	165
1036563-0000	.WASHER	303, 315, 317, 695, 697, 701, 705
1036587-0000	.PIPE	133
1036610-0000	.BRACKET	179
1036622-0000	.GUIDE ROLLER	177, 621
1036623-0000	.GUIDE ROLLER	177, 621
1036695-0000	.LOCK STUD	643, 653
1036753-0000	.UPPER SECTION	135
1036755-0000	.PUMP HOUSING	289
1036777-0000	.GASKET	119, 121
1036778-0000	.GASKET	119, 121
1036782-0000	.HOLDER	119, 121
1036794-0000	.PIPE	441
1036810-0000	.HOLDER	135
1036811-0000	.CLAMP	135, 141
1036826-0000	.PIPE	439
1036827-0000	.PIPE	439, 447
1036828-0000	.TANK	443, 445
1036832-0000	.WHEEL	15
1036833-0000	.SCREW	15
1036841-0000	.SHAFT	15
1036868-0000	.CHAIN	15
1036910-0000	.UPPER SECTION	141
1036911-0000	.CONTAINER	141
1036939-0000	.SIDE PIECE	173
1036940-0000	.SIDE PIECE	173
1036963-0000	.HOOK HOLDER	173
1036965-0000	.HOOK HOLDER	173
1036977-0000	.HOLDER	501
1037011-0000	.PIPE	141
1037012-0000	.AXLE PIN	229
1037041-0000	.HOLDER	141
1037044-0000	.RAILING	181
1037048-0000	.PLATE	51, 53, 61, 67
1037080-0000	.GLASS PANE	67
1037081-0000	.GASKET	67
1037089-0000	.SPACER	67

Part No	Description	Page No
1037093-0000	.SENSOR BRACKET	99
1037102-0000	.SPACER PIPE	279
1037120-0000	.SHAFT	607
1037121-0000	.SHAFT	607
1037124-0000	.HOLDER	607
1037129-0000	.LID	145, 147
1037130-0000	.CONNECTION BOX	305, 693
1037184-0000	.SPACER SCREW	421
1037199-0000	.BRACKET	69, 71
1037267-0000	.PIPE	145, 147
1037268-0000	.LID	145, 147
1037314-0000	.PIPE CONNECTION	161
1037391-0000	.CANTILEVER	273
1037423-0000	.SEAT RING	21
1037424-0000	.SEAT RING	21
1037425-0000	.LEVER	21
1037443-0000	.GASKET	257, 259
1037456-0000	.BRACKET	29
1037461-0000	.CONDUCTIVITY PIPE	125, 127
1037502-0000	.COVERING PLATE	199
1037508-0000	.COVERING PLATE	199
1037528-0000	.COVERING PLATE	199
1037531-0000	.SPACER PLATE	421
1037552-0000	.SPACER	199
1037562-0000	.SHAFT	297
1037565-0000	.BEARING UNIT	297
1037571-0000	.GUIDE BUSHING	269
1037572-0000	.COVER PLATE	489, 491, 493
1037573-0000	.GASKET	489, 491, 493
1037574-0000	.COVER PLATE	489, 491, 493
1037575-0000	.GASKET	489, 491, 493
1037576-0000	.GASKET	489, 491, 493
1037583-0000	.HOLDER	475
1037673-0000	.SLEEVE	219, 221
1037761-0000	.PIN	223, 225
1037762-0000	.PIN	223, 225
1038249-0000	.BUSHING	69, 71
1038275-0012	.SPACER	535
1038334-0000	.PIPE	125, 127
1038358-0000	.PIPE	203, 205
1038408-0000	.COVERING PLATE	489, 491, 493
1038409-0000	.WASHER	21
1038428-0000	.LOCK PLATE	31, 33
1038464-0000	.SPROCKET	15
1038518-0000	.BRACKET	489, 491, 493
1038519-0000	.GASKET	489, 491, 493
1038628-0000	.PUMP	453
1038634-0000	.DRAINING	135
1038659-0000	.STRAIGHT PIPE UNION	141
1038688-0000	.HOLDER	167
1038714-0000	.CABLE	523, 529, 531, 533
1038820-0000	.COVER PLATE	489, 491, 493
1038850-0000	.ANGLE BRACKET	171
1038857-0000	.FLANGE	165
1038858-0000	.FLANGE	165
1038860-0000	.BRACKET	165
1038861-0000	.BRACKET	165
1038865-0000	.SPACER DISC	555, 557
1038866-0000	.INTERMEDIARY SECTION	135
1038876-0000	.COVERING PLATE	219, 221, 489, 491, 493
1038879-0000	.PIPE	167
1038905-0000	.VALVE	83, 93
1038964-0000	.INTERMEDIATE PART	117
1038965-0000	.HOLDER	117
1040777-0000	.CARRIER	15
1040796-0000	.PIPE	289
1040797-0000	.SHAFT	289
1040807-0000	.LID	285
1040808-0000	.GASKET	285
1040840-0000	.FLANGE	279
1040841-0000	.FLANGE	279
1040852-0000	.SEALING RING	279
1040853-0000	.SEALING RING	279
1040856-0000	.SPACER	171
1040859-0000	.COVER	131
1040874-0000	.COVER	131
1040875-0000	.COVER	131
1040876-0000	.COVER	131
1040877-0000	.PLATE	131
1040878-0000	.PLATE	131
1040970-0000	.BRACKET	65, 165, 169
1041046-0000	.FLOW METER	427
1041215-0000	.BLOCKING PIECE	353, 355
1041216-0000	.SHAFT	331

Part No	Description	Page No
1041549-0000	.WASHER	357
1041597-0000	.PLATE	275
1041598-0000	.FITTING BOLT	275
1041603-0000	.BRACKET	229
1041606-0000	.SHAFT	229
1041609-0000	.NUT	233
1041688-0000	.FITTING BOLT	43
1041905-0000	.DOOR	497
1041920-0000	.DOOR	503
1041921-0000	.HOLDER	481
1041925-0000	.PIPE	437
1041926-0000	.PIPE	437
1041932-0000	.PIPE	475
1041933-0000	.PIPE	475
1041934-0000	.PIPE	447
1041937-0000	.SIGN	185
1041938-0000	.SIGN	479
1041939-0000	.DOOR	499
1041943-0000	.CONNECTION BOX	433
1041944-0000	.BRACKET	427
1041946-0000	.PIPE	443, 445
1041948-0000	.DOOR	505
1041949-0000	.CHECKER PLATE	265
1041959-0000	.PIVOT BRACKET	427
1041963-0000	.WASTE BOX	451
1041967-0000	.COVERING PANEL	461
1041970-0000	.DOOR	467
1041972-0000	.DOOR	471
1041977-0000	.DOOR	501
1041978-0000	.HINGE FLANGE	51, 53, 61, 67
1041979-0000	.HINGE FLANGE	51, 53, 61, 67
1041980-0000	.SPACER	289
1041984-0000	.ATTACHMENT PIPE	427
1082973-0000	.STEERING	347
1082974-0000	.CRANK	347
1086625-0000	.SLIDE RAIL	413
1086626-0000	.SLIDE RAIL	413
1095597-0100	.TERMINAL	233
1095606-0200	.MACHINE BODY	419
1095607-0200	.COVERING PANEL	419
1095608-0100	.WATER PANEL	419
1095609-0200	.PNEUMATIC UNIT	477
1095610-0300	.MAIN SWITCH	419
1095611-0300	.VALVE PANEL	477
1095612-0300	.COOLING WATER SYSTEM	419
1095627-0300	.FOAM CLEANING UNIT	419
1095630-0200	.CONNECTION BOX	419
1095634-0100	.DOOR	489, 491, 493
1095637-0100	.DOOR	489, 491, 493
1095672-0100	.PIPE	435
1095673-0100	.SIDE	435
1095675-0100	.PIPE	435
1095676-0100	.PUMP	435
1095677-0100	.BRANCHING PIPE	435
1095678-0300	.BALL VALVE	435
1095681-0100	.SPRAY GUN	247
1095682-0100	.AIR JET GUN	239, 241
1095705-0300	.FLOW METER	423
1095706-0300	.COOLING WATER PUMP	423
1095709-0200	.CONNECTION BOX	423
1095710-0300	.COMPRESSOR UNIT	423
1095714-0300	.SUPPLY SYSTEM	419
1095716-0100	.PIPE WORK-AIR	477
1095778-0100	.PLINTH	489, 491, 493
1095790-0200	.COVERING PLATE	13
1095803-0100	.BENDING ROLLER	223, 225
1095853-0300	.CLEANING PIPE	255
1095861-0100	.LIGHT FIXTURE	211
1095862-0100	.LADDER	171
1095863-0100	.PIVOT ARM	209
1095876-0100	.CABLE DUCT	209
1095882-0200	.FRAME SECTION	451
1095883-0200	.GABLE PLATE	457
1095886-0200	.COVERING PANEL	457
1095888-0200	.HATCH	457
1095889-0100	.DOOR	457
1095890-0200	.HATCH	457
1095891-0200	.DOOR	457
1095954-0300	.COOLING SYSTEM	487
1103300-0000	.NON-SKID	223, 225
1103391-0000	.PIPE	161
1116048-0000	.SPACER	269, 555, 557
1116536-0000	.BRACKET	513, 515
1129004-0000	.SIGN LANGUAGEINDEPENDENT	427

Part No	Description	Page No
1129042-0000	.KEY	303, 315, 317
1129047-0000	.GLASS PANE	497
1129066-0000	.RETURN PIPE	429
1129101-0000	.BRACKET	163
1129141-0000	.MACHINE BODY	423
1129150-0000	.PNEUMATIC DIAGRAM	481
1129155-0000	.COVERING PLATE	489, 491, 493
1129156-0000	.COVERING PLATE	489, 491, 493
1129157-0000	.PROFILE	489, 491, 493
1129159-0000	.BRACKET	489, 491, 493
1129182-0000	.BRACKET	473
1129194-0000	.FRAME	197
1129195-0000	.OPENING	197
1129196-0000	.FRAME	197
1129197-0000	.OPENING	197
1129199-0000	.DOOR	197
1129202-0000	.CONNECTION BOX	473
1129209-0000	.MOUNTING RAIL	473
1129210-0000	.MOUNTING RAIL	433
1129247-0000	.FRAME	297
1129248-0001	.GUARD PLATE	297
1129253-0000	.FASTENING PLATE	297
1129274-0000	.GUIDE LUG	303, 305, 315, 317, 463, 467
1129275-0000	.BOX FOR DIAGRAM	305
1129298-0000	.SHAFT COUPLING	41
1129318-0000	.BRACKET	489, 491, 493
1129321-0000	.SHUTTER	115
1129322-0000	.BRACKET	489, 491, 493
1129324-0000	.WASHER	303
1129325-0000	.SEALING FLANGE	303
1129328-0000	.ATTACHMENT	283
1129338-0000	.BRACKET	539
1129341-0000	.PROTECTION	535
1129342-0000	.PROTECTION	537
1129343-0000	.PROTECTION	539
1129378-0000	.BRACKET	257
1129379-0000	.PIPE	257
1129383-0000	.PIPE	257
1129387-0000	.CONNECTION TABLE	451
1129402-0000	.SPACER SCREW	421
1129432-0000	.LID	453
1129441-0001	.ELECTRODE	279
1129441-0002	.ELECTRODE	279
1129441-0003	.ELECTRODE	279
1129441-0004	.ELECTRODE	279
1129443-0000	.CABLE DUCT	295
1129444-0000	.LID	295
1129456-0000	.EXTERNAL CLEANING DIAGRAM	435
1129475-0000	.HOLDER	203, 205
1129478-0000	.GASKET	489, 491, 493
1129480-0000	.CABLE DUCT	203, 205
1129481-0000	.COVERING PLATE	489, 491, 493
1129493-0000	.PIPE BRACKET	275
1129494-0000	.BLOCKING PIECE	275
1129504-0000	.MOUNTING RAIL	215
1129549-0000	.SHEET	489, 491, 493
1129550-0000	.GASKET	219, 221, 489, 491, 493
1129570-0000	.LDS, LVDS TERMINAL 1	237
1129594-0000	.BRACKET	297
1129600-0000	.BRAID	219, 221
1129633-0000	.RING	275
1129637-0000	.COVER PLATE	171
1129638-0000	.WASHER	171
1129641-0000	.SILICON RUBBER PROFILE	171
1129642-0000	.CANTILEVER	517, 519
1129643-0000	.STAIR	173
1129644-0000	.BRACKET	173
1129710-0000	.CANTILEVER	219, 221
1129741-0000	.RAILING	181
1129767-0000	.SCREW	197, 303, 305, 315, 317, 695, 697, 701, 705
1129770-0000	.BLOCKING PIECE	185, 197, 243, 303, 305, 315, 317, 495, 497, 501, 503, 695, 697, 701, 705
1129801-0000	.PIPE	99
1129837-0000	.BALL	21
1129839-0000	.COOLING PLATE	585
1129855-0000	.HOUSE	21
1129869-0000	.COOLING PLATE	585
1129871-0000	.SPINDLE	21
1129925-0000	.BUSBAR	541, 543
1129973-0000	.COVERING PANEL	489, 491, 493
1129998-0000	.PNEUMATIC DIAGRAM	307
1140053-0000	.SPACER	529, 531, 533
1140077-0000	.RING	585
1140129-0000	.HOLDER	217
1140208-0000	.BRACKET	297

Part No	Description	Page No
1140233-0000	.WASHER	365, 367, 373, 375, 381, 383
1140287-0000	.CAM	353, 355
1140288-0000	.CAM	353, 355
1140312-0000	.SHAFT	365, 367, 369, 371, 373, 375, 377, 379, 381, 383
1140313-0000	.SHAFT	365, 367, 369, 371, 373, 375, 377, 379, 381, 383
1140437-0000	.BUSHING	359, 369, 371, 377, 379
1140479-0000	.ROLLER	365, 367, 369, 371, 373, 375, 377, 379, 381, 383
1140485-0000	.SPRING	369, 371, 377, 379
1140488-0000	.SHAFT	369, 371, 377, 379
1140492-0000	.PIN	369, 371, 377, 379
1140515-0000	.SCREW	45
1140519-0000	.PROTECTION	489, 491, 493
1140523-0000	.PROTECTION PLATE	489, 491, 493
1140527-0000	.PROTECTION PLATE	489, 491, 493
1140529-0000	.PROTECTION PLATE	489, 491, 493
1140555-0000	.BRACKET	503
1140603-0000	.COMPRESSOR UNIT	425
1140641-0000	.ARM	297
1140645-0000	.BRACKET	163
1140670-0000	.BRACKET	443, 445
1140716-0000	.PIN	361
1140717-0000	.PIN	361
1140751-0000	.RING	349, 351
1140767-0000	.WHEEL	349, 351
1140769-0000	.DOOR STOPPER	489, 491, 493
1140837-0000	.PULLEY	323
1140839-0000	.PULLEY	323
1140844-0000	.CURVE	357
1140845-0000	.ROLLER	357
1140846-0000	.ECCENTRIC SHAFT	357
1140851-0000	.WASHER	323
1140856-0000	.PROTECTION	353, 355
1140865-0000	.ROLL	331
1140866-0000	.BRACKET	331
1140872-0000	.BRACKET	353, 355
1147253-0000	.NUT	697, 701, 705
1147485-0000	.ROCKER ARM	675
1190007-0302	.PLMS RECEIVE	749
1195161-0300	.MOVABLE FORMING RING	13
1195162-0100	.LOWER FORMING RING	13
1195163-0300	.PILLAR	13
1195164-0200	.UPPER FORMING RING	13
1195165-0200	.FORMING RING	13
1195166-0200	.PAPER GUIDE	13
1195173-0300	.PENDULUM ROLLER	13
1195174-0300	.LONGITUDINAL SEALING	13
1195175-0200	.SHORT STOP	13
1195180-0100	.BENDING ROLLER	13
1195181-0100	.DOOR	13
1195182-0100	.DOOR	13
1195191-0000	.MOVABLE FORMING RING	23, 25
1195208-0000	.LINK	365, 367, 369, 371, 373, 375, 377, 379, 381, 383
1195209-0200	.BENDING ROLLER	13
1195214-0100	.SEAL	13
1195266-0000	.BRACKET	297
1195269-0100	.DOOR	13
1195270-0000	.FRAME	51
1195271-0000	.GLASS PANE	51
1195272-0000	.GASKET	51
1195273-0000	.FRAME	53
1195274-0000	.GLASS PANE	53
1195275-0000	.GASKET	53
1195276-0000	.FRAME	61
1195277-0000	.GLASS PANE	61
1195278-0000	.GASKET	61
1195284-0300	.PIPE-LINE	129
1195285-0300	.PRE-HEATING VALVE	129
1195293-0000	.SHAFT	365, 367, 373, 375, 381, 383
1195294-0000	.SLEEVE	365, 367, 373, 375, 381, 383
1195305-0000	.SHAFT	369, 371, 377, 379
1195317-0000	.SEALING RING	365, 367, 373, 375, 381, 383
1195319-0000	.FITTING BOLT	27
1195322-0000	.BRACKET	29
1195460-0000	.BRACKET	165
1195466-0000	.PIPE	257, 259, 261, 449
1254025-0000	.STRIP	265
1254027-0000	.CORNER STRIP	265
1254028-0000	.FASTENING PLATE	265
1254030-0000	.CHECKER PLATE	265
1254091-0000	.PROTECTION	535
1254118-0000	.CHECKER PLATE	265
1254471-0401	.PLMS OFF-LINE	749
1254494-0000	.SPACER	275
1255293-0000	.CROSS BAR	451

Part No	Description	Page No
1255294-0000	.FRAME SECTION	455
1255295-0000	.MACHINE BODY	451
1255493-0000	.PIPE	257
1255504-0000	.PIPE	21
1255551-0000	.SEAL CLOTH	167
1255557-0000	.GASKET	289
1255558-0000	.EXTENSION PIPE	289
1255559-0000	.PEROXIDE TANK	279
1255633-0000	.HATCH	465
1255635-0000	.HATCH	469
1255636-0000	.COVERING PANEL	457
1255637-0000	.COVER	457
1255638-0000	.COVERING PANEL	457
1255670-0000	.GABLE PLATE	461
1255671-0000	.GABLE PLATE	459
1255839-0000	.SHAFT	165
1255866-0000	.PROTECTION	421
1255924-0000	.LABEL	97
1255970-0000	.WASHER	47
1255975-0000	.SEAL HOLDER	59
1255976-0000	.SEAL HOLDER	59
1255979-0300	.SCRUBBER	129
1255980-0200	.PRODUCT VALVE GROUP	77, 79
1255984-0300	.CLEANING PIPE	77, 79
1255986-0000	.VALVE BRACKET	99
1255987-0000	.COVER	99
1260050-0000	.SHAFT	359
1260051-0000	.HOUSING	359
1260052-0000	.FRAME	415
1260061-0000	.HOUSING	409, 411
1260064-0000	.DRUM	409, 411
1260065-0000	.BRACKET	409, 411
1260066-0000	.WASHER	409, 411, 413
1260067-0000	.CARRIER	409, 411
1260068-0000	.SHAFT	409, 411
1260070-0000	.SHAFT	409, 411
1260097-0300	.CLEANING PIPEWORK UPPER	255
1260098-0300	.CLEANING PIPEWORK	255
1260101-0000	.PIPE	257
1260120-0100	.VOLUME ADJUSTER	321
1260128-0000	.SHAFT	391
1260129-0000	.PULLEY	391
1260139-0000	.BOLT	391
1260142-0200	.CURVE WHEEL	407
1260148-0000	.ECCENTRIC SHAFT	359
1260149-0000	.WORM SCREW	359
1260151-0000	.BRACKET	359
1260152-0000	.WORM WHEEL	359
1260153-0000	.SPACER	359
1260154-0000	.WORM SCREW	359
1260167-0000	.WASHER	391
1260168-0000	.BELT	391
1260169-0000	.WORM WHEEL	359
1260170-0000	.SHAFT	359
1260171-0000	.SHAFT	329
1260172-0000	.BUSHING	329
1260174-0000	.BOLT	391
1260177-0000	.COVER	359
1260185-0000	.PIPE	259
1260187-0000	.SPACER	329
1260248-0000	.CLAMP	427
1260303-0000	.WASHER	199
1260749-0000	.HOLDER	363
1260750-0000	.HINGE	331
1260751-0000	.HINGE	353, 355
1260752-0000	.SHAFT	353, 355
1260753-0000	.PIN	331
1260773-0000	.SPACER	45
1260863-0000	.PLATE	323
1260865-0000	.SPACER	323
1260950-0000	.CURVE	357
1279075-0000	.SEALING STRIP	317
1279076-0000	.SEALING STRIP	315
1279088-0000	.LOCKING PLATE	31, 33
1279089-0000	.LOCKING PLATE	31, 33
1279091-0000	.LOCKING PLATE	23, 25
1279456-0000	.LABEL	97
1279603-0000	.SHAFT	175
1279802-0200	.FRAME	11
1279803-0200	.BENDING ROLLER	171
1279809-0300	.CABINET	487
1282028-0000	.BRACKET	497
1282029-0000	.BRACKET	497
1282030-0000	.FRAME	497

Part No	Description	Page No
1282031-0200	.DOOR	489, 491, 493
1282034-0200	.DOOR	489, 491, 493
1282036-0200	.DOOR	489, 491, 493
1282037-0200	.DOOR	489, 491, 493
1282350-0000	.FRAME	501
1282796-0000	.WASHER	401
1282876-0000	.PIPE	281
1282879-0000	.CONNECTING PIPE	281
1282889-0000	.PIPE	167
1282891-0000	.PIPE	279
1282892-0000	.TANK	285
1282893-0000	.PIPE	285
1282894-0100	.PEROXIDE TANK	277
1282895-0200	.PEROXIDE PIPE	277
1282896-0100	.TANK	277
1282898-0000	.HOSE	285
1282899-0000	.HOSE	279
1282901-0000	.PIPE	281
1282902-0000	.HEAT EXCHANGER	161
1282903-0000	.FLANGE	279
1282904-0000	.LID	279
1282905-0000	.CLAMP	289
1282906-0000	.NIPPLE	279
1282995-0000	.SCREW	353, 355
1285109-0000	.NUT	513, 515
1285329-0000	.PIPE	83, 93
1285400-0300	.COVERING PANEL	11
1285403-0000	.COVERING	197
1285426-0000	.PIPE	281
1285521-0000	.FRAME	503
1285523-0000	.CONNECTION BOX	489, 491, 493
1285524-0300	.RACK	513, 515
1285525-0000	.BRACKET	517, 519
1285528-0300	.FUSE BOARD 2	535
1285530-0100	.DISTRIBUTION TERMINAL	523
1285532-0100	.DISTRIBUTION TERMINAL	523
1285535-0000	.MOUNTING PLATE	529, 531, 533
1285537-0300	.RELAY UNIT 2	535
1285538-0100	.PLINTH	535
1285539-0300	.FUSE BOARD 1	535
1285844-0000	.LOCKING ARM	315
1285845-0000	.BRACKET	315, 317
1285846-0000	.LINK	315, 317
1285847-0000	.SHAFT	315, 317
1285848-0000	.SHAFT	315, 317
1296109-0000	.BRACKET	27
1296110-0000	.SUPPORT	27
1296111-0000	.HOLDER	45
1296112-0000	.BRACKET	45
1296113-0000	.INDUCTOR	45
1296114-0000	.BRACKET	45
1296219-0000	.SEALING STRIP	309
1296754-0000	.SHAFT	23, 25
1296755-0000	.SHAFT	23, 25
1296756-0000	.SHAFT	47
1296757-0000	.SHAFT	47
1296758-0000	.ROLL	23, 25
1296759-0000	.ROLL	47
1296760-0000	.NUT	23, 25, 47
1296764-0000	.RAIL	47
1296847-0300	.CONNECTION BOX	11
1296996-0000	.SCREW	45
1296997-0000	.WASHER	45
1317102-0100	.HYDROGEN PEROXIDE	209
1317103-0100	.PUMP	277
1317104-0000	.BRACKETS, FASTENING PLATES, - BRACKETS	283
1317105-0000	.BRACKET	283
1317226-0000	.WEIGHT	283
1317252-0000	.CABLE SERIAL	513, 515
1317268-0100	.COVERS	299
1317271-0000	.DOOR	303
1317272-0000	.DOOR	303
1317273-0200	.DOOR	299
1317274-0000	.SEALING STRIP	303
1317275-0000	.SEALING STRIP	303
1317386-0000	.DOOR	305
1317387-0000	.DOOR	305
1317388-0100	.DOORS	299
1317389-0000	.COVER	305
1317390-0000	.COVER	305
1317391-0000	.SEALING STRIP	305
1317392-0000	.COVER	305
1317438-0000	.FORK	91
1317447-0000	.PIPE	259

Part No	Description	Page No
1317450-0000	.BRACKET	259
1317451-0000	.BRACKET	259
1317453-0000	.BRACKET	257
1317486-0000	.BRACKET	257
1317711-0000	.SHAFT	621
1317712-0000	.SHAFT	621
1317784-0000	.BRACKET	283
1317793-0000	.BASE	267
1317794-0000	.BASE	267
1317983-0100	.ALARM BEACON	265, 269
1317997-0000	.SHAFT	17
1317998-0000	.BRACKET	17
1317999-0000	.BLOCK	17
1334000-0000	.STOP	17
1334001-0000	.BRACKET	17
1334003-0000	.FLANGE	17
1334004-0000	.ARM	17
1334005-0000	.LINK	17
1334006-0000	.SHAFT	17
1334008-0200	.CALENDER ROLLER	13
1334051-0000	.SHAFT	91, 721
1334056-0000	.COMPRESSION GLAND	91
1334187-0000	.PLATE	605
1334188-0000	.AXLE PIN	605
1334189-0000	.BLOCK	577, 579, 605
1334190-0000	.BLOCK	577, 579, 605
1334506-0200	.HEATING UNIT	159
1334507-0000	.TUBE	169
1334510-0000	.PIPE	167
1334511-0000	.PIPE	167
1334512-0000	.PIPE	167
1334513-0000	.PIPE	167
1334514-0000	.PIPE	167
1334516-0000	.PIPE	169
1334793-0000	.WASHER	349, 351
1334810-0200	.PIPE WORK	247
1334812-0100	.COOLING HOSES	247
1334989-0100	.LEVEL PROBE	85
1346314-0200	.COMPONENT DOOR	487
1346353-0000	.LOCK PIN	93
1346468-0000	.DOOR	495
1346523-0000	.CHUTE	297
1346524-0000	.HATCH	297
1346525-0000	.COVER	297
1346526-0000	.PIPE	297
1346527-0000	.CLAMP	297
1346528-0000	.RUBBER	297
1346541-0000	.CONVEYOR CHAIN	297
1346557-0000	.GASKET	165
1346558-0000	.COVER	165
1346565-0000	.VALVE	281
1346568-0000	.HEAT EXCHANGER	169
1346571-0000	.BATH	165
1346574-0000	.PROTECTION	169
1346613-0200	.VALVE PANEL	239, 241
1346656-0000	.ROD	133, 139
1346657-0000	.CYLINDER BRACKET	133, 139
1346658-0000	.BRACKET	133, 139
1346659-0000	.SCREW	133, 139
1346665-0000	.PIPE	257
1346677-0000	.CYLINDER	133, 139
1346756-0000	.COVER	301
1346757-0000	.GASKET	301
1346758-0000	.COVER	301
1346759-0000	.GASKET	301
1346819-0000	.COVER	309
1346822-0000	.SHAFT	297
1346823-0200	.FRONT COVER	299
1346957-0000	.TUNNEL	311
1346958-0000	.PLATE	311
1346959-0100	.LID	309
1346988-0000	.ROLL	593, 727
1347069-0100	.SAFETY SWITCH	299
1347073-0000	.PULLEY	401
1347077-0000	.BRUSH	391
1347090-0000	.CHUTE	413
1347113-0000	.PIPE	133
1347116-0000	.PIPE	137
1347124-0000	.PIPE	163
1347126-0000	.PIPE	161
1347129-0000	.PIPE	141
1347130-0000	.PIPE	163
1347131-0000	.PIPE	163
1347134-0000	.PIPE	137

Part No	Description	Page No
1347135-0000	.PIPE	135
1347136-0000	.PIPE	135
1347140-0200	.CABLE TRENCH	11
1347141-0100	.VALVE HEAT EXCHANGER	129
1347142-0200	.SEPARATOR	129
1347171-0200	.HYDROGEN PEROXIDE	11
1347172-0200	.PEROXIDE PIPE	159
1347174-0200	.WATER CIRCULATION	159
1347191-0200	.CONNECTION BOX	11
1347192-0000	.LID	151, 153
1347193-0000	.LID	151, 153
1347195-0000	.LID	151, 153
1347223-0000	.PIPE	149
1347245-0000	.HEAT EXCHANGER	143
1347246-0100	.AIR SUPER-HEATER	129
1347484-0000	.SPACER	41
1347485-0100	.DRIVEN CALENDER ROLLER	13
1347493-0100	.DOOR	13
1347494-0000	.FRAME	67
1347499-0000	.BEARING BUSHING	17
1347500-0000	.SHAFT	17
1347511-0000	.FITTING	91, 721
1347513-0000	.SHEET	29
1347521-0000	.ROLLER	63, 325, 327
1347522-0000	.NOZZLE	325, 327
1347547-0200	.PNEUMATIC SYSTEM	11
1347548-0300	.VALVE PANEL	183
1347549-0300	.VALVE RAMP	185
1347550-0300	.VALVE RAMP	185
1347551-0200	.HOSE INSTALLATION	183
1347556-0000	.ECCENTRIC	23, 25
1347557-0000	.MOVABLE FORMING RING	23, 25
1347558-0000	.SUPPORT	23, 25
1347559-0000	.SHAFT	23, 25
1347585-0000	.DIAGRAM	307
1347601-0000	.DIVIDED FORMING RING	35, 37
1347615-0100	.COVERING PANEL	11
1347616-0000	.COVERING PLATE	199
1347617-0000	.COVERING PLATE	199
1347638-0000	.PIPE	223, 225
1347639-0100	.RAILING	171
1347640-0000	.RAILING	181
1347641-0000	.RAILING	181
1347671-0000	.GASKET	165
1347673-0000	.BRACKET	537
1347695-0000	.FRAME	171
1347696-0000	.FRAME	171
1347697-0000	.FRAME	171
1347704-0000	.THERMOCOUPLE	279
1347766-0000	.SIGN	305
1347767-0000	.SIGN	305
1347867-0000	.CHECKER PLATE	171
1347868-0000	.CHECKER PLATE	171
1347869-0000	.BRACKET	171
1347870-0000	.BRACKET	171
1347872-0000	.LID	151, 153
1347873-0000	.CABLE DUCT	151, 153
1347874-0000	.LID	151, 153
1347875-0100	.BALL	13
1347877-0000	.HOLDER	201
1347878-0000	.RAIL	213
1347880-0000	.INSERT	151, 153
1347881-0000	.LOCK PLATE	35, 37
1347900-0000	.SPACER	413
1347902-0000	.SUPPORT	413
1347905-0000	.HOLDER	413
1347907-0000	.HOLDER	413
1347910-0000	.SHAFT	409, 411
1347938-0000	.PENDULUM ARM	43
1347940-0000	.SHAFT	43
1347941-0000	.LID	43
1348063-0000	.LEVER	43
1348067-0000	.CABLE	529, 531, 533
1348090-0100	.CABLE HARNESS	211
1348099-0000	.PIPE	93
1348197-0000	.HOLDER	243
1348232-0000	.FRAME	305
1348241-0000	.HOSE CLAMP	409, 411
1348242-0000	.SPROCKET	409, 411
1348243-0000	.SPACER	409, 411
1348244-0000	.BRACKET	409, 411
1348256-0000	.VOLUME BULGE	365, 367, 369, 371, 373, 375, 377, 379, 381, 383
1348257-0000	.VOLUME SHIM	365, 367, 369, 371, 373, 375, 377, 379, 381, 383, 723
1348287-0000	.GUIDE	359

Part No	Description	Page No
1348474-0000	.GASKET	83, 93, 721
1348475-0000	.GASKET	83, 93, 721
1348496-0100	.CONNECTION BOX	211
1348497-0100	.CONNECTION BOX	211
1348498-0000	.HOLDER	213
1348499-0000	.CONNECTION BOX	215
1348500-0000	.CONNECTION BOX	213
1348510-0000	.PLATE	363, 415
1348529-0000	.STRAINER	281
1348530-0000	.LID	281
1348555-0000	.SEALING RING	91, 721
1348622-0000	.O-RING	29
1348639-0000	.SEALING GASKET	91, 721
1348657-0000	.HOUSING	363
1348703-0000	.COVER	349, 351
1348704-0000	.BEARING HOUSING	349, 351
1348707-0100	.DISPLAY UNIT 12"	231
1348708-0000	.COVER PLATE	237
1348709-0000	.COVER PLATE	237
1348744-0000	.CAM	409, 411
1348746-0000	.GUIDE	409, 411
1348750-0000	.BRACKET	413
1348751-0200	.OUTFEED UNIT	407
1348752-0000	.BOX	415
1348846-0000	.ROD	495, 497, 501, 503
1348938-0000	.LOCK PLATE	35, 37
1348940-0000	.PIPE	191, 193
1348941-0000	.PIPE	21
1349014-0000	.PAD	613
1349179-0000	.FINGER	613
1349181-0000	.TOUCH GUARD	607
1349360-0000	.LINK	365, 367, 369, 371, 373, 375, 377, 379, 381, 383
1349367-0000	.BRACKET	353, 355
1349375-0000	.CURVE	357
1349377-0000	.CURVE	357
1349379-0000	.CURVE	357
1349380-0000	.CURVE	357
1349381-0000	.ECCENTRIC SHAFT	357
1349386-0000	.SHAFT	359
1349387-0000	.SHAFT	359
1349397-0000	.SHIM	47
1349398-0000	.NUT	133, 139
1349399-0000	.WASHER	369, 371, 377, 379
1349432-0000	.CATCH	593
1349464-0300	.CONNECTION BOX	321
1349465-0000	.CONNECTION BOX	333
1349505-0000	.FRAME	169
1349581-0000	.FLAG	603
1349608-0000	.HOLDER	169
1349672-0000	.GUIDE	593
1349762-0000	.SHAFT	149
1349772-0100	.TPOP PANEL 12"	209
1349773-0000	.PANEL	233
1349774-0100	.PANEL UNIT 12"	231
1349777-0000	.DOOR	233
1349778-0000	.FOIL	233
1349864-0000	.BRACKET	421
1349872-0000	.MOUNTING PLATE	203, 205
1349913-0000	.BUSHING	91, 721
1349915-0000	.SHAFT	47
1349986-0000	.ROLLER	603
1349994-0000	.NUT	593
1350289-0000	.ROLL	35, 37
1350704-0000	.BRACKET	489, 491, 493
1350705-0000	.PIPE	161
1350708-0000	.LOCKING ARM	315, 317
1350716-0000	.SHAFT	739
1350718-0000	.CURVE	357
1350902-0000	.GLASS PANE	331
1350904-0000	.ROLL	31, 33
1350905-0000	.LOCKING PLATE	31, 33
1350906-0000	.LOCKING PLATE	31, 33
1350907-0000	.UPPER FORMING RING	31, 33
1350916-0000	.PROTECTION	529, 531, 533
1361560-0000	.PLATE	425
1363288-0301	.FLEXBOX TETRA BRIK	513, 515
1363297-0000	.CABLE LVDS 10M	219, 221
1364474-0000	.TRANSFORMER	655, 657, 659, 661, 663
1387381-0000	.CALENDER ROLLER	41
1478005-0000	.LOCKING ARM	317
1478048-0000	.SLEEVE	289
1478170-0000	.CONTAINER	65
1478171-0000	.BUSHING	289
1478182-0000	.SPACER	23, 25

Part No	Description	Page No
1478191-0000	.WHEEL	349, 351
1478236-0000	.COVERING	197
1478267-0000	.ROLL	27
1478303-0000	.TENSION SPRING	593
1478570-0000	.AXLE PIN	23, 25
1478616-0000	.HEATING PIPE	403
1478617-0000	.HEATING PIPE	403
1478618-0000	.SHIM	405
1478619-0000	.CAP	403
1478620-0000	.BRACKET	403
1478621-0000	.CLAMP	403
1478623-0000	.SPACER	403
1478625-0000	.COVER HOUSING	403
1478626-0000	.GASKET	403
1478627-0000	.SPACER	403
1478629-0000	.CAP	403
1478630-0100	.HEATING CHAMBER	393
1478631-0000	.SUPPORT	391
1478634-0000	.SUPPORT	413
1478635-0000	.PLATE	405
1478636-0000	.PLATE	405
1478637-0000	.SHAFT	405
1478638-0000	.PULLEY	405
1478639-0000	.FLANGE	405
1478640-0000	.SPACER	405
1478765-0100	.PRESSURE REGULATOR	129
1478766-0000	.PIPE	145, 147
1478813-0000	.SPACER	115
1478814-0000	.SENSOR	115
1478943-0100	.CHEMICALS UNIT	451
1478959-0000	.ARM	369, 371, 377, 379
1484081-0000	.BRACKET	431
1484170-0000	.EARTH BAR	529, 531, 533
1484235-0000	.SWING FRAME	513, 515
1484277-0100	.PLINTH	517, 519
1484285-0000	.SCREW	119, 121
1484363-0000	.COVER	689
1484425-0000	.PIPE	191, 193
1484428-0000	.PLASTIC PLUG	165
1484466-0000	.MOUNTING PLATE	535
1484467-0000	.MOUNTING PLATE	535
1484470-0000	.CABLE	139
1484479-0000	.SUPPORT	357
1484480-0000	.ADJUSTER	357
1484511-0000	.WATER DIAGRAM	307, 453
1484514-0000	.HOUSING	41
1484515-0000	.LID	91
1484516-0000	.GASKET	91
1484688-0200	.SPLICING DEVICE	551
1484689-0000	.BRACKET	617
1484690-0200	.PRESSURE JAW	617
1484691-0000	.PRESSURE JAW	623
1484692-0000	.SLIDING STRIP	623
1484693-0000	.KNIFE HOLDER	623
1484695-0000	.KNIFE	623
1484696-0000	.COMPRESSION ROD	623
1484699-0100	.MATERIAL HOLDER LINE 2	551
1484703-0000	.TIE ROD	617
1484704-0000	.SHAFT	617, 673
1484705-0000	.SLIDER	635
1484706-0000	.GEAR WHEEL	635
1484707-0200	.STRIP MAGAZINE	551
1484708-0000	.MOUNTING PLATE	603
1484711-0000	.BRACKET	611
1484718-0000	.AXLE PIN	603
1484719-0000	.AXLE PIN	611
1484720-0100	.HINGE	601
1484724-0000	.HUB	609
1484725-0100	.HUB	601
1484726-0000	.SHAFT	609
1484728-0000	.BRACKET	673
1484738-0000	.BRACKET	673
1484740-0000	.BRACKET	603
1484745-0100	.WEB GUIDE	617, 673
1484750-0000	.BRACKET	621
1484752-0000	.SLIDER	681
1484760-0000	.SLIDER	681
1484761-0000	.ANGLE BRACKET	681
1484762-0000	.MEASURING TAPE	635
1484766-0000	.DANCE ROLLER	673, 681
1484776-0000	.RAIL	635
1484777-0000	.SLIDER	635
1484778-0000	.PLATE	681
1484779-0000	.ROD	635

Part No	Description	Page No
1484781-0000	.PIN	617
1484782-0000	.CLAMP BLOCK	635
1484783-0000	.CLAMPING ELEMENT	635
1484784-0000	.LOCATING PIECE	635
1484785-0000	.LOCATING PIECE	635
1484823-0000	.PLATE	15
1484859-0000	.ROLLER	27
1484860-0000	.LOCK PLATE	27
1484861-0000	.LOCK PLATE	27
1484862-0000	.FORMING RING	27
1484863-0000	.FORMING RING	27
1484885-0000	.SPLASH PLATE	453
1484887-0000	.PLATE	453
1484888-0000	.PIPE	453
1484889-0100	.DOOR	461
1484890-0000	.DOOR	463
1484891-0000	.LOCKING ARM	463
1484892-0000	.PNEUMATIC DIAGRAM	307, 479
1484893-0000	.EXTERNAL CLEANING DIAGRAM	307
1487023-0000	.PIPE	449
1487037-0000	.FLANGE	93
1487048-0000	.FRAME	415
1487051-0000	.SPACER	405
1487052-0000	.FLANGE	405
1487053-0000	.ROLLER	405
1487054-0000	.SHAFT	405
1487055-0000	.SLIDER	405
1487075-0000	.GASKET	403
1487076-0000	.GASKET	403
1487099-0000	.COVER	323
1487114-0000	.BLOCK	65
1487126-0000	.SIGN	243
1487127-0000	.SPACER SCREW	323
1487164-0000	.PLATE	47
1487165-0000	.SCREW	47
1487166-0000	.SCREW	47
1487167-0000	.AXLE PIN	47
1487168-0000	.PLATE	47
1487198-0000	.PIPE	83, 93
1487200-0000	.CLAMP	97
1487204-0000	.CANTILEVER	325, 327
1487205-0000	.SPRING	353, 355
1487209-0000	.ROLLER	63, 325, 327
1487213-0000	.SHAFT	737
1487214-0000	.SCREW	737
1487215-0100	.TOOL	735
1487219-0000	.CURVE	353, 355
1487249-0000	.WASHER	361
1487263-0000	.BRACKET	149
1487332-0000	.SHAFT	361
1487373-0000	.WASHER	361
1487378-0000	.LOCKING PIN	81, 721
1487429-0000	.SHAFT	349, 351
1487482-0000	.SHAFT	743, 745
1487483-0000	.SUPPORT	743, 745
1487494-0000	.BAR	747
1487510-0000	.RACK GEAR	635
1487511-0000	.BRACKET	635
1487512-0000	.COVER	637
1487515-0000	.INDICATION	635
1487516-0000	.MEASURING TAPE	635
1487517-0000	.CATCH	617
1487518-0000	.RULER	639, 647
1487519-0000	.SHAFT	681
1487521-0000	.SHAFT	675
1487524-0000	.PLATE	623
1487525-0000	.RULE PLATE	623
1487526-0000	.RAIL	623
1487528-0100	.CYLINDER	647
1487530-0001	.GUIDE ROD	681
1487534-0000	.COUPLING BOLT	623
1487536-0000	.GUIDE BRACKET	681
1487544-0100	.SIDE FEEDER	555, 557
1487550-0000	.ANGLE BRACKET	681
1487551-0000	.PLATE	681
1487554-0000	.BRACKET	635
1487555-0000	.BUSHING	635
1487556-0000	.BAR	635
1487557-0000	.BAR	635
1487558-0000	.FASTENING PLATE	635
1487559-0000	.SLIDER	635
1487560-0100	.MACHINE BODY	551
1487599-0000	.FOLDING FLAP	369, 371, 377, 379
1487600-0000	.FOLDING FLAP	369, 371, 377, 379

Part No	Description	Page No
1487687-0000	.LOCK PLATE	23, 25
1487689-0000	.LOCK PLATE	23, 25
1487700-0000	.SHAFT	23, 25
1487762-0000	.SHAFT	637
1487763-0000	.SHAFT	627
1487765-0000	.SPACER	681
1487769-0000	.SPACER	681
1487770-0000	.BRACKET	639, 647
1487772-0000	.ROCKER ARM	647
1487773-0000	.CYLINDER BRACKET	643, 653
1487774-0000	.ROCKER ARM	639
1487775-0000	.ROCKER ARM	639
1487776-0000	.CUTTING TABLE	639, 647
1487777-0000	.ROCKER ARM	647
1487779-0000	.SHAFT	639, 647
1487781-0000	.BRACKET	639, 647
1487782-0000	.SHAFT	639, 647
1487784-0000	.BRACKET	677
1487785-0100	.MATERIAL HOLDER LINE 1	551
1487787-0000	.BUSHING	637
1487788-0000	.SPACER	679
1487795-0000	.PLATE	673
1487796-0000	.PLATE	673
1487800-0000	.PLATE	673
1487801-0200	.VALVE PANEL	551
1487802-0000	.SPACER	673
1487808-0200	.BRACKET	551
1487830-0000	.MOVABLE FORMING RING	23, 25
1487837-0000	.CLAMP	97
1487838-0000	.CLAMP	97
1487839-0000	.CLAMP	97
1487840-0000	.CLAMP	97
1487848-0000	.PIPE	163
1487874-0000	.SHIM	405
1487881-0000	.SUPPORT	405
1487898-0000	.PLUG	353, 355
1487995-0000	.HATCH	687
1488000-0000	.DOOR	695
1488005-0000	.BEARING BLOCK	555, 557
1490187-0000	.ROCKER ARM	603
1490188-0100	.COVER	685
1490189-0000	.SHAFT	575
1490190-0200	.HATCH	685
1490191-0100	.DOOR	685
1490193-0100	.COVER	685
1490199-0000	.BRACKET	639, 647
1490203-0000	.SPACER	643
1490210-0000	.PLATE	573
1490215-0200	.COVERING PANEL	551
1490219-0000	.BRACKET	573
1490220-0000	.ANGLE BRACKET	633
1490226-0000	.FILTER	695
1490265-0100	.WATER CIRCULATION	159
1490279-0000	.SCREW	73
1490405-0000	.ROLLER	39, 57
1490406-0000	.WASHER	39, 43, 55, 57
1490407-0000	.WASHER	39, 43, 49, 55, 57
1490408-0000	.SHAFT	39, 55
1490409-0000	.ROLLER	43
1490410-0000	.SHAFT	43
1490411-0000	.ROLLER	49
1490412-0000	.SHAFT	49
1490413-0000	.SHAFT	49
1490415-0000	.SHAFT	57
1490742-0000	.EARTH BAR	529, 531, 533
1490791-0000	.GUIDE PIN	673
1490804-0000	.HOLDER	607
1490806-0100	.HEATING DEVICE	601
1490809-0000	.ARM	641, 649
1490810-0000	.ARM	641, 649
1490812-0000	.AXLE	641, 649
1490813-0000	.SCREW	641, 649
1490814-0000	.PLATE	673
1490815-0000	.PLATE	673
1490818-0000	.ARM	603
1490819-0000	.BRACKET	673
1490820-0000	.SHAFT	617
1490821-0000	.ANGLE PIECE	639, 647
1490831-0200	.MAGAZINE	551
1490832-0000	.SCREW	639, 647
1490886-0000	.SHAFT	55
1490887-0000	.WASHER	55
1490893-0000	.BRACKET	171
1490902-0000	.BRACKET	29

Part No	Description	Page No
1494664-0000	.AXLE LINK	633
1498078-0000	.PLATE	397, 399
1498278-0000	.CAM	353, 355
1498279-0000	.SHAFT	353, 355
1498409-0000	.SHEET	581
1498426-0000	.BRACKET	619
1498429-0000	.AXLE	599
1498430-0000	.ROD	585
1498433-0000	.CABLE	631
1498439-0000	.RULE PLATE	617
1498445-0000	.COVER	601
1498450-0001	.PLATE	611
1498451-0001	.SHAFT	611
1498453-0200	.DOOR	685
1498454-0100	.DOOR	685
1498457-0000	.BRACKET	571
1498459-0001	.GLASS PANE	701, 705
1498459-0002	.GLASS PANE	695
1498459-0003	.GLASS PANE	687, 699
1498459-0004	.GLASS PANE	697
1498460-0000	.HATCH	699
1498461-0001	.SEALING STRIP	701
1498461-0002	.SEALING STRIP	687, 699
1498461-0005	.SEALING STRIP	695, 697
1498479-0000	.GUIDE	369, 371, 377, 379
1498502-0000	.BRACKET	223, 225
1498524-0000	.PIPE	141
1498526-0000	.REGULATOR BODY	115
1498527-0000	.MOUNTING PLATE	119, 121
1498551-0000	.PULLEY	391
1498552-0000	.FLANGE	391
1498553-0000	.BELT	391
1498554-0000	.PULLEY	391
1498608-0000	.VOLUME BULGE	365, 367, 369, 371, 373, 375, 377, 379, 381, 383
1498609-0000	.VOLUME SHIM	365, 367, 369, 371, 373, 375, 377, 379, 381, 383, 723
1498614-0000	.SENSOR	47
1498615-0000	.BUSHING	47
1498616-0000	.BUSHING	47
1498624-0100	.WEB GUIDE	175
1498644-0000	.CALENDER ROLLER	17
1498646-0000	.BEARING COVER	17
1498647-0000	.BEARING COVER	17
1498667-0100	.FASTENING PLATE	77, 79
1498668-0200	.FILLING PIPE	77, 79
1498669-0100	.REGULATING VALVE	113
1498670-0000	.LID	29
1498671-0000	.PAPER GUIDE	29
1498673-0200	.CLEANING SLEEVE	77, 79
1498674-0100	.TOOLS	741
1498675-0000	.BUSHING	743, 745
1498676-0100	.TOOLS	741
1498677-0000	.BAR	747
1498687-0000	.ADJUSTMENT BRACKET	741
1498691-0200	.TOOLS AND TEMPLATES	715
1498692-0200	.TOOLS AND TEMPLATE,JAW SYSTEM	733
1498693-0100	.TOOLS AND TEMPLATES, FINAL FOLDER	733
1498694-0100	.TOOLS AND TEMPLATES, FILLING TUBE	733
1498697-0000	.FILLING PIPE	91
1498698-0000	.PIPE	113
1498699-0000	.PIPE	113
1498700-0200	.FLOW REGULATOR	77, 79
1498953-0000	.FRAME	415
1498969-0000	.SPACER	403
1498973-0000	.BRACKET	409, 411
1498980-0000	.INSERT	403, 415
1498997-0000	.CARRIER	409, 411
1499007-0000	.SUPPORT	405
1499008-0000	.SHAFT	405
1499009-0000	.ROLLER	405
1499010-0000	.SLIDER	405
1499011-0000	.SPACER	405
1499013-0000	.SUPPORT	405
1499016-0000	.PULLEY	405
1499024-0000	.BAR	177
1499025-0000	.ROLLER	177
1499026-0000	.SHAFT	177
1499027-0000	.BRACKET	177
1499089-0000	.INSERT	415
1499125-0000	.SEAL	93
1499126-0000	.SEAL	93
1499127-0000	.FLANGE	83, 93
1499129-0000	.HOLDER	737
1499186-0000	.HOLDER	737
1499387-0000	.PLATE	349, 351

Part No	Description	Page No
1499391-0000	.WASHER	349, 351
1499397-0000	.CAM	365, 367, 373, 375, 381, 383
1499407-0000	.FORK	747
1499562-0003	.LOCKING ARM	695, 697
1499562-0004	.LOCKING ARM	695, 697
1499564-0100	.COVER	685
1499566-0000	.WASHER	633
1499568-0000	.HATCH	707
1499569-0000	.BRACKET	603
1499570-0000	.HOLDER	555, 557
1499571-0100	.PAPER REEL HOLDER	555, 557
1499573-0000	.PIN	573
1499577-0000	.ARM	647
1499578-0200	.CABLE CONDUIT	617
1499579-0000	.SEALING STRIP	705
1499582-0000	.AXLE PIN	639, 647
1499584-0000	.AXLE PIN	567, 673
1499588-0000	.BENDING ROLLER	639, 647
1499602-0000	.CAM	353, 355
1499603-0000	.CAM	353, 355
1499604-0000	.CAM	353, 355
1499634-0000	.INTERNAL PIPE	137
1499642-0101	.TPIH 2500 HORIZONTAL MOUNTING	509, 577, 579
1499686-0000	.SHAFT	405
1499687-0000	.ROLLER	405
1499688-0000	.SLIDER	405
1499689-0000	.SPACER	405
1499690-0200	.SQUEEZER	393
1499776-0000	.WATER DIAGRAM	475
1499786-0000	.BRACKET	443, 445
1499908-0000	.PULLEY	391
1499909-0000	.FLANGE	391
1499915-0000	.FLANGE BUSHING	357
1499919-0000	.BELT	405, 725
1499935-0000	.SLIDER	405
1511000-0000	.PLATE	177
1511001-0000	.SHAFT	177
1511002-0000	.HOLDER	177
1511003-0000	.WEIGHT	177
1511242-0000	.WASHER	357
1511256-0000	.SHAFT	349, 351
1511257-0000	.SHAFT	349, 351
1511258-0000	.WHEEL	349, 351
1511305-0000	.LINK	365, 367, 369, 371, 373, 375, 377, 379, 381, 383
1511396-0000	.CAM	353, 355
1511397-0000	.CAM	353, 355
1511398-0000	.ARM	369, 371, 377, 379
1511399-0000	.FOLDING FLAP	369, 371, 377, 379
1511400-0000	.FOLDING FLAP	369, 371, 377, 379
1511503-0000	.PIPE	137
1511521-0000	.LABEL	243
1511522-0000	.LABEL	243
1511525-0000	.LABEL	243
1511526-0000	.LABEL	243
1511564-0000	.GUIDE BRACKET	681
1511568-0000	.PIN	639, 647
1511569-0000	.SPACER	645, 651
1511574-0000	.ARM	639
1511575-0000	.ARM	639
1511577-0000	.SPACER	653
1511578-0000	.ARM	647
1511579-0000	.BRACKET	681
1511585-0200	.STRIP GUIDE	601
1511586-0001	.BAR	611
1511587-0000	.BUSHING BLOCK	611
1511600-0000	.SPACER	115
1511651-0000	.SUPPORT	413
1511652-0000	.PLATE	405
1511673-0000	.BRACKET	333
1512265-0000	.SLEEVE	575
1512266-0000	.SLEEVE	575
1512267-0000	.ECCENTRIC BUSHING	627, 675
1512269-0000	.BRACKET	677
1512275-0000	.PROTECTION PLATE	573
1512276-0000	.PROTECTION PLATE	639, 647
1512278-0000	.SEALING STRIP	707
1512279-0200	.CABLE DUCT	555, 557
1512280-0000	.PUSH BUTTON BOX	691
1512299-0000	.SPRAY NOZZLE DOME	137
1512300-0000	.SPRAY NOZZLE NUT	137
1512301-0000	.SPACER	137
1512302-0000	.SPRAY NOZZLE GASKET	137
1512319-0000	.SPRAY NOZZLE BODY	137
1512321-0000	.PLATE	243

Part No	Description	Page No
1512322-0000	.COPPER BRAID	529, 531, 533
1512346-0000	.CURVE	357
1512365-0000	.BRACKET	353, 355
1512366-0000	.CURVE	357
1512367-0000	.CURVE	357
1512368-0000	.ECCENTRIC SHAFT	357
1512376-0000	.PNEUMATIC DIAGRAM	243, 307
1512398-0100	.DIAGRAM	305
1512405-0000	.NUT	137
1512409-0000	.SPRAY NOZZLE INJECTOR	137
1512410-0000	.SPRAY NOZZLE PLUG	137
1512413-0100	.CONTROL PANEL	689
1512414-0000	.SEALING STRIP	689
1512420-0000	.PLATE	555, 557
1512421-0000	.CABLE DUCT	561, 563, 565
1512423-0000	.CABLE DUCT	561, 563, 565
1512425-0000	.CABLE DUCT	561, 563, 565
1512426-0000	.CABLE DUCT	561, 563, 565
1512428-0200	.MOUNTING SHEET	601
1512429-0100	.PRESSURE ROLLER	673
1512430-0000	.VOLUME SHIM	633
1512463-0000	.THERMOCOUPLE	403
1512526-0000	.STEERING	621
1512559-0000	.SPRAY GUN	735
1512584-0000	.DRIVE SHAFT	297
1512590-0000	.RUBBER BUSHING	365, 367, 373, 375, 381, 383
1512598-0000	.GUIDE	359
1512599-0000	.VOLUME CAM	359
1512600-0000	.PIPE	353, 355
1512601-0000	.PIPE	353, 355
1512604-0000	.SHAFT	365, 367, 369, 371, 373, 375, 377, 379, 381, 383
1512605-0000	.BRACKET	365, 367, 369, 371, 373, 375, 377, 379, 381, 383
1512613-0000	.HUB	349, 351
1512626-0000	.FOLDING FLAP	369, 371, 377, 379
1512627-0000	.FOLDING FLAP	369, 371, 377, 379
1512644-0000	.ROUND NUT	303
1512649-0000	.SHAFT	323
1512650-0000	.BEARING HOUSING	323
1512651-0000	.CURVE	357
1512652-0000	.SHAFT	359
1512653-0000	.SHAFT	359
1512658-0000	.NOZZLE	325, 327
1512823-0000	.NUT	397, 399
1512835-0000	.EXTERNAL PIPE	137
1512836-0000	.LID	137
1517055-0000	.MOTOR COVER	297
1517087-0000	.HINGE	603
1517088-0200	.CONTROL PANEL	701
1517101-0000	.PIPE	555, 557
1517105-0000	.PLATE	677
1517107-0000	.PROTECTION	601
1517113-0000	.RAIL	629
1517114-0100	.RAIL	617
1517277-0000	.SPACER	325, 327
1517278-0000	.SPACER	325, 327
1517289-0000	.KNIFE	365, 367, 373, 375, 381, 383, 723
1517290-0000	.HOLDER	365, 367, 373, 375, 381, 383
1517291-0000	.SHAFT	365, 367, 373, 375, 381, 383
1517295-0000	.SHEET	479
1517316-0000	.ROLL	35, 37
1517318-0000	.MOVABLE FORMING RING	23, 25
1517319-0000	.FORMING RING	35, 37
1517483-0000	.NET	137
1517707-0000	.BRACKET	169
1517714-0000	.SPROCKET	397, 399
1517715-0100	.STATION CHAIN	393
1517717-0000	.SHAFT	395
1517718-0000	.SCREW	395
1517719-0000	.SLIDER	395
1517720-0000	.FRAME	397, 399
1517721-0000	.FLANGE	397, 399
1517722-0000	.FLANGE	397, 399
1517723-0000	.SPACER	397, 399
1517724-0000	.SPACER	397, 399
1517727-0000	.FLANGE	397, 399
1517731-0000	.PIN	401
1517732-0000	.SPACER	397, 399
1517733-0000	.GUIDE	397, 399
1517734-0000	.GUIDE	397, 399
1517735-0100	.CHAIN SUPPORT	393
1517736-0000	.GUIDE	397, 399
1517737-0000	.GUIDE	397, 399
1517738-0000	.GUIDE	397, 399
1517740-0100	.SWING FRAME	393

Part No	Description	Page No
1517751-0000	.SHAFT	613
1517968-0000	.SLIDER	405
1519178-0000	.SPACER	325, 327
1519184-0000	.FLANGE	69, 71
1519185-0000	.FLANGE	69, 71
1519186-0000	.SHAFT	69, 71
1519187-0000	.SPACER	69, 71
1519188-0000	.ARM	69, 71
1519189-0000	.LEVER	69, 71
1519190-0000	.LID	69, 71
1519203-0000	.BELT	405, 725
1519303-0000	.GASKET	29
1519304-0000	.TUNNEL	29
1519428-0000	.GUIDE	401
1519429-0000	.GUIDE	401
1519430-0000	.SWING FRAME	401
1519432-0000	.BRACKET	401
1519433-0000	.SLIDER	401
1519434-0000	.GUIDE	401
1519435-0000	.PLATE	401
1519438-0000	.SPACER	401
1519442-0000	.TOUCH GUARD	401
1519443-0000	.PLATE	397, 399
1519444-0000	.PLATE	397, 399
1519450-0000	.SPACER	401
1519486-0000	.FILTER HOUSE	65
1519491-0000	.LOCK PLATE	35, 37
1519492-0000	.LOCK PLATE	35, 37
1519496-0000	.BRACKET	27
1519501-0000	.FILLING PIPE	91
1519502-0000	.SEAL HOLDER	59
1519503-0000	.SEAL HOLDER	59
1519510-0000	.AXLE PIN	23, 25
1519521-0000	.SPACER	171
1519578-0000	.MOUNTING BLOCK	629
1519580-0000	.GUIDE FINGER	635
1519581-0000	.ROLLER BAR	673, 683
1519583-0000	.BRACKET	627
1519584-0000	.BENDING ROLLER	637
1519586-0000	.BRACKET	673
1519588-0000	.PROTECTION PLATE	555, 557
1519589-0100	.HANDLE	647
1519592-0000	.BOW	673, 683
1519597-0000	.AXLE PIN	637
1519725-0000	.SHAFT	737
1519811-0000	.SHAFT	365, 367, 369, 371, 373, 375, 377, 379, 381, 383
1519813-0000	.SHAFT	357
1519814-0000	.ECCENTRIC SHAFT	357
1519819-0200	.START-UP KIT	715
1519942-0000	.PLATE	681
1519944-0000	.BRACKET	633
1519955-0000	.WASHER	617
1519956-0000	.WASHER	617
1519960-0000	.SPACER	673
1519961-0100	.START UP KIT	551
1519967-0000	.CLAMP	623
1519975-0100	.LEVEL CONTROL DEVICE	77, 79
1520564-0000	.DOLLY	365, 367, 373, 375, 381, 383, 723
1520726-0000	.BUSBAR	45
1520972-0000	.TPO-BAR	553, 631
1523100-0000	.BELT	405, 725
1523101-0000	.BELT	405, 725
1523368-0000	.VOLUME CAM	359
1523483-0000	.ROLLER	709, 711
1523486-0000	.SPACER	709, 711
1523487-0000	.ROLL	603, 611
1523777-0100	.STAIR CASE	263
1523780-0000	.SHAFT	265, 269
1523781-0000	.CHECKER PLATE	265
1523782-0000	.CHECKER PLATE	265
1523783-0000	.TOE PLATE	265
1523784-0000	.TOE PLATE	265
1523793-0000	.TOE PLATE	269
1523980-0000	.MOUNTING BLOCK	365, 367, 373, 375, 381, 383
1523981-0000	.GUIDE	369, 371, 377, 379
1524167-0000	.CORNER STRIP	269, 271
1524168-0000	.CORNER STRIP	269
1524171-0000	.FRAME	271
1524172-0000	.CHECKER PLATE	271
1524173-0000	.CHECKER PLATE	271
1524174-0000	.HOOK	271
1524175-0000	.LEG	271
1524176-0000	.CLAMP	271
1524177-0000	.TOE PLATE	271

Part No	Description	Page No
1524178-0000	.TOE PLATE	271
1524179-0000	.TOE PLATE	271
1524181-0000	.PIN	271
1524182-0000	.RAILING	271
1524185-0000	.EXTENSION PIECE	271, 273
1524186-0000	.PROFILE	273
1524187-0000	.PROFILE	273
1524188-0000	.STAIR	273
1524190-0000	.BRACKET	273
1524191-0000	.RIM	273
1524192-0000	.RAILING	273
1524193-0000	.RAILING	273
1524260-0000	.SHAFT	353, 355
1524267-0000	.HOLDER	353, 355
1524386-0100	.BOW CLAMP	617
1524387-0100	.BAR CODE READER	617
1524388-0100	.DRIVE UNIT REAR	617
1524389-0100	.TPO-BAR	617
1524394-0100	.CYLINDER	639
1524397-0100	.MATERIAL HOLDER	639
1524398-0100	.HANDLE	639
1524431-0000	.HUB	409, 411
1524438-0000	.HUB	349, 351
1524442-0000	.SUPPORT	349, 351, 513, 515
1524474-0000	.PIPE	97
1524477-0200	.CUTTING TABLE	601
1524481-0000	.SEALING BLOCK	613
1524517-0000	.SUPPORT	405
1524518-0000	.SHAFT	397, 399
1524519-0000	.PLATE	397, 399
1524520-0000	.PIN	397, 399, 401
1524521-0000	.FLANGE	401
1524525-0000	.SHAFT	397, 399
1524526-0000	.FLANGE	397, 399
1524528-0000	.BRACKET	401
1524529-0000	.WASHER	397, 399
1524531-0000	.TOP SECTION	401
1524532-0000	.SPACER	397, 399
1524539-0000	.PROTECTION	401
1524729-0100	.MATERIAL HOLDER	647
1524731-0100	.BRACKET	673
1524732-0200	.DRIVE UNIT	673
1524746-0000	.KNIFE HOLDER	639, 647
1524752-0000	.BRACKET	353, 355
1524763-0000	.PIPE	353, 355
1524764-0000	.PIPE	353, 355
1524845-0100	.BACK PLATFORM	263
1524847-0000	.PLATFORM	269
1524848-0000	.PLATFORM	269
1524850-0000	.CHECKER PLATE	269
1524851-0000	.CHECKER PLATE	269
1524854-0000	.BEAM	269
1524855-0000	.TOE PLATE	269
1524856-0000	.TOE PLATE	269
1524857-0000	.TOE PLATE	269
1524859-0000	.RAILING	269
1524860-0000	.RAILING	269
1524861-0000	.RAILING	269
1524864-0000	.RAILING	271
1524866-0100	.FRONT PLATFORM	263
1524867-0000	.PLATFORM	265
1524868-0000	.PLATFORM	265
1524869-0000	.TOE PLATE	265
1524870-0000	.RAILING	265
1524871-0100	.PLATFORM	209
1532490-0000	.BELT	405, 725
1532492-0000	.COOLING PLATE	361
1532493-0000	.COOLING PLATE	361
1532495-0000	.SCREW	361
1532496-0000	.COVER	361
1532938-0000	.GUIDE	349, 351
1532946-0000	.FLAG	381, 383
1532947-0000	.BRACKET	349, 351
1532949-0000	.FLAG	381, 383
1532952-0000	.SHAFT	349, 351
1532960-0000	.PLATE	349, 351
1532961-0000	.BRACKET	349, 351
1533000-0000	.INDUCTOR	369, 371, 377, 379, 723
1533002-0000	.INDUCTOR	369, 371, 377, 379, 723
1533428-0000	.BUSBAR	361
1535036-0000	.PLATE	269
1535038-0000	.CHECKER PLATE	269
1535042-0000	.WASHER	269
1535043-0000	.PLATFORM	269

Part No	Description	Page No
1538011-0000	.FLANGE	175
1538012-0000	.ROLLER	175
1538013-0000	.BRACKET	175
1538014-0000	.ROLLER	175
1538015-0000	.SHAFT	175
1538016-0000	.SHAFT	175
1538017-0000	.SPACER	175
1538040-0000	.PLATE	175
1538041-0000	.PLATE	179
1538048-0000	.PIPE	169
1538049-0000	.PIPE	169
1538130-0000	.SHAFT	349, 351
1538133-0000	.SLEEVE	347
1538134-0000	.BRACKET	365, 367, 369, 371, 373, 375, 377, 379, 381, 383
1538135-0000	.SHAFT	365, 367, 369, 371, 373, 375, 377, 379, 381, 383
1538138-0000	.SPACER	325, 327
1538139-0000	.HOLDER	325, 327
1538141-0000	.DAMPER	365, 367, 369, 371, 373, 375, 377, 379, 381, 383
1538148-0000	.SPRING	365, 367, 369, 371, 373, 375, 377, 379, 381, 383, 723
1538149-0000	.SPRING	365, 367, 369, 371, 373, 375, 377, 379, 381, 383, 723
1538192-0000	.BRACKET	673
1538199-0000	.SIGN	601
1538202-0000	.AXLE PIN	603
1538203-0000	.GUIDE RAIL	617
1538204-0000	.BRACKET	701, 705
1538302-0000	.HUB	357
1538306-0000	.ROLLER	409, 411
1538473-0000	.SEALING BLOCK	607
1538494-0000	.LID	75
1538521-0000	.BUSHING	365, 367, 369, 371, 373, 375, 377, 379, 381, 383
1538567-0000	.CARTON STATION	395
1538568-0000	.GUIDE	397, 399
1538569-0000	.GUIDE	397, 399
1538570-0000	.FRAME	397, 399
1538571-0000	.SWING FRAME	401
1538572-0000	.GUIDE	401
1538573-0000	.SLIDER	401
1538574-0000	.BRACKET	401
1538575-0000	.GUIDE	401
1538576-0000	.GUIDE	401
1538577-0000	.PLATE	401
1538578-0000	.PULLEY	401
1538579-0000	.TOP SECTION	401
1538787-0000	.SUPPORT	83, 93
1538794-0000	.O-RING	83, 93, 721
1538800-0000	.PIPE	191, 193
1538809-0100	.SPLICE DETECTOR	175
1538826-0000	.PIPE	191, 193
1538827-0000	.PIPE	191, 193
1538828-0000	.PIPE	191, 193
1538829-0000	.PIPE	191, 193
1538830-0000	.PIPE	191, 193
1538831-0000	.PIPE	191, 193
1538846-0000	.SEAL	83
1538847-0000	.CABLE DUCT	151, 153
1538868-0000	.BRACKET	303, 305, 315, 317, 555, 557
1538870-0100	.PLATFORM	263
1538889-0000	.EARTH BAR	529, 531, 533
1538960-0000	.PIPE	259
1538961-0000	.PIPE	261
1538962-0000	.PIPE	257
1539174-0000	.BUSHING	45
1539175-0000	.PLATE	45
1539348-0000	.HOLDER	365, 367, 369, 371, 373, 375, 377, 379, 381, 383, 723
1539354-0000	.COOLING PLATE	45
1539355-0000	.COOLING PLATE	45
1539376-0000	.PULLEY	357
1539378-0000	.BRACKET	555, 557
1539379-0000	.BRACKET	555, 557
1539387-0000	.SCREW	603
1539391-0000	.ROUND NUT	695, 697, 701, 705
1539394-0000	.BRACKET	683
1539396-0000	.BOW CLAMP	673
1539397-0000	.ROLLER	683
1539579-0000	.FORMING RING	27
1539580-0000	.FORMING RING	27
1539924-0000	.VOLUME FLAP	365, 367, 369, 371, 373, 375, 377, 379, 381, 383, 723
1539992-0000	.VOLUME FLAP	365, 367, 369, 371, 373, 375, 377, 379, 381, 383, 723
1539993-0000	.VOLUME FLAP	365, 367, 369, 371, 373, 375, 377, 379, 381, 383, 723
1548001-0000	.SIGN	185
1548011-0000	.GUIDE	397, 399
1548012-0000	.GUIDE	397, 399
1548013-0000	.PIPE	397, 399
1548015-0000	.SWING FRAME	401

Part No	Description	Page No
1548016-0000	.GUIDE	401
1548017-0000	.GUIDE	401
1548018-0000	.TOP SECTION	401
1548019-0000	.FRAME	397, 399
1548020-0000	.CARTON STATION	395
1548021-0000	.SHAFT	397, 399
1548022-0000	.SHAFT	397, 399
1548040-0000	.NOZZLE	403, 725
1548041-0000	.NOZZLE	403, 725
1548044-0000	.SCREW	409, 411
1548186-0000	.WASHER	397, 399, 409, 411
1548195-0000	.ROLL	603
1548196-0000	.ROLL	603
1548197-0000	.ROLL	603
1548200-0000	.BRACKET	555, 557
1548201-0000	.DISTANCE	623
1548210-0100	.LOCKING DEVICE	681
1548211-0000	.RAILING	269
1548215-0000	.SHAFT	365, 367, 369, 371, 373, 375, 377, 379, 381, 383
1548238-0000	.SHAFT	743, 745
1548240-0000	.BUSHING	743, 745
1548241-0005	.WASHER	149
1548245-0000	.PIPE	191, 193
1548249-0000	.PIPE	149
1548253-0000	.PLATE	197
1548432-0000	.SPACER	397, 399
1548433-0000	.ROUND NUT	397, 399
1548491-0100	.ELECTRICAL CABINET	551
1548492-0000	.ELECTRICAL CABINET	655, 657, 659, 661, 663
1548493-0000	.RAIL	665
1548494-0100	.TERMINAL	655, 657, 659, 661, 663
1548495-0000	.CABLE DUCT	655, 657, 659, 661, 663
1548496-0100	.TERMINAL	655, 657, 659, 661, 663
1548497-0000	.CABLE DUCT	655, 657, 659, 661, 663
1548498-0000	.BLOCK	655, 657, 659, 661, 663
1548499-0000	.CABLE DUCT	655, 657, 659, 661, 663
1548500-0000	.CABLE DUCT	655, 657, 659, 661, 663
1548501-0000	.CABLE DUCT	655, 657, 659, 661, 663
1548502-0100	.TERMINAL	655, 657, 659, 661, 663
1548539-0000	.CANTILEVER	249
1548587-0000	.APPLIANCE BOX	577, 579
1548588-0000	.GRID ELEMENT	577, 579
1548592-0000	.LID	577, 579
1548598-0000	.FORMING RING	31, 33
1548760-0000	.SPACER ROD	133, 139
1548766-0000	.SHAFT	365, 367, 369, 371, 373, 375, 377, 379, 381, 383
1548767-0000	.SHAFT	357
1548769-0000	.PULLEY	357
1548789-0000	.MOTOR PLATE	297
1548796-0000	.ROLLER	27
1548798-0000	.TIMING BELT	357
1548810-0000	.PIVOT PIN	359
1548813-0000	.LINK ARM	361
1548817-0000	.WASHER	365, 367, 369, 371, 373, 375, 377, 379, 381, 383
1548818-0000	.BRACKET	361
1548854-0000	.CAM	391
1548861-0000	.MOUNTING PLATE	119, 121
1549122-0000	.FLANGE BEARING	369, 371, 377, 379
1549123-0000	.PIVOT PIN	369, 371, 377, 379
1549124-0000	.FRAME	223, 225
1549324-0000	.BRACKET	555, 557
1549328-0000	.THREADED ROD	631
1549332-0000	.ROLLER	683
1549412-0000	.SCREW	365, 367, 373, 375, 381, 383
1549601-0000	.WASHER	365, 367, 373, 375, 381, 383
1549865-0000	.SPACER	413
1549969-0000	.SLIDE PLATE	409, 411
1549970-0000	.SLIDER	409, 411
1549971-0000	.FASTENING PLATE	409, 411
1549972-0000	.FOOT	409, 411
1558062-0000	.PRESSURE RAIL	365, 367, 373, 375, 381, 383
1558162-0000	.ROLLER	27
1558186-0000	.ROLLER	27
1558251-0000	.SHAFT	625
1558252-0000	.SCREW	625
1558253-0000	.ROLLER	625
1558265-0000	.SNAP HOOK	681
1558266-0000	.LIFTING EYEBOLT	681
1558268-0000	.LEG	569
1558269-0000	.SLEEVE	569
1558270-0100	.LEG	555, 557
1558418-0000	.SHAFT	75
1558484-0000	.PROTECTION PLATE	555, 557
1558485-0000	.AXLE PIN	577, 579

Part No	Description	Page No
1558487-0000	.SUPPORT	555, 557
1558771-0000	.FLANGE	135
1558795-0000	.RAILING	269
1558797-0000	.WASHER	631
1558798-0000	.BRACKET	555, 557
1558801-0000	.SHOULDER SCREW	623
1558911-0000	.PRESSURE ROLLER	587, 589
1558914-0000	.ROLLER BRACKET	587, 589
1558917-0000	.SPACER DISC	591
1558918-0000	.TIGHTENING NUT	591
1558942-0000	.BRACKET	751
1558946-0000	.PLUG	273
1558947-0000	.STRIP	269
1558983-0000	.DOOR	697
1558988-0100	.DOOR	685
1558989-0000	.SHIMS	637
1558990-0000	.SHIMS	637
2500015-0000	.PIPE	93
2500016-0000	.PIPE	83, 93
2500017-0000	.PIPE	83, 93
2500329-0000	.INSERT	363
2500363-0000	.INSERT	363
2500366-0000	.PLATE	331
2500369-0000	.SHAFT	331
2500375-0000	.ARM	369, 371, 377, 379
2500376-0000	.ARM	369, 371, 377, 379
2500377-0000	.LINK ARM	369, 371, 377, 379
2500423-0000	.PIPE	191, 193
2500424-0000	.PIPE	191, 193
2500425-0000	.PIPE	191, 193
2500426-0000	.PIPE	191, 193
2500427-0000	.PIPE	191, 193
2500428-0000	.PIPE	191, 193
2500432-0000	.PIPE	191, 193
2500433-0000	.PIPE	191, 193
2500434-0000	.PIPE	191, 193
2500435-0000	.BRACKET	191, 193
2500436-0000	.PLATE	191, 193
2500437-0000	.BRACKET	191, 193
2500588-0000	.ADJUSTMENT BRACKET	741
2501219-0000	.BRACKET	611
2501220-0000	.BRACKET	611
2501221-0000	.BRACKET	611
2501222-0100	.GENERATOR CABINET	551
2501223-0000	.RAIL	409, 411
2501225-0000	.TEMPLATE	739
2501231-0000	.BRUSH	397, 399
2501378-0000	.PIPE	293
2501513-0000	.PIPE	191, 193
2501515-0000	.PIPE	137
2501516-0000	.CONTAINER	137
2501518-0000	.PIPE	137
2501519-0000	.PIPE	137
2501520-0000	.PIPE	163
2501521-0000	.PIPE	163
2501522-0000	.PIPE	167
2501523-0000	.PIPE	167
2501524-0000	.PIPE	167
2501527-0000	.CLAMP	83
2502402-0000	.PLATE	353, 355
2502403-0000	.PLATE	353, 355
2502404-0000	.PLATE	353, 355
2502405-0000	.PLATE	353, 355
2502406-0000	.PROTECTION	353, 355
2502408-0000	.SHAFT	365, 367, 373, 375, 381, 383
2502413-0000	.SPRING	365, 367, 373, 375, 381, 383
2502415-0000	.PIPE	353, 355
2502969-0000	.FLANGE	405
2503209-0000	.GASKET	219, 221
2503573-0000	.GUIDE	413
2503653-0000	.RAIL	669
2503654-0000	.RAIL	667
2503894-0000	.RAIL	655, 657, 659, 661, 663
2503895-0000	.WASHER	655, 657, 659, 661, 663
2504426-0000	.SHAFT	325, 327
2504427-0000	.ROUND NUT	325, 327
2504428-0000	.SUPPORT	325, 327
2504429-0000	.GUIDE HOLDER	325, 327
2504430-0000	.GUIDE ROD	325, 327
2504431-0000	.SHAFT	325, 327
2504433-0000	.BEARING HOUSING	325, 327
2504434-0000	.KNOB	325, 327
2504640-0000	.GEAR WHEEL	349, 351
2504641-0000	.GEAR WHEEL	349, 351

Part No	Description	Page No
2504711-0000	.SUPPORT	397, 399
2504712-0000	.PLATE	397, 399
2504722-0000	.PLATE	391
2504723-0000	.HOLDER	391
2504724-0000	.SHAFT	391
2504725-0000	.SUPPORT	391
2504726-0000	.PLATE	409, 411
2504727-0000	.GEAR	397, 399
2504801-0000	.BRACKET	583
2504807-0000	.AXLE PIN	583
2504808-0000	.BRACKET	583
2504809-0000	.ROLLER	583
2504810-0000	.BRACKET	599
2504811-0000	.BRACKET	599
2504812-0000	.BLOCK	599
2505518-0200	.SOFTWARE	513, 515
2506263-0000	.WASHER	325, 327
2506264-0000	.GASKET	325, 327
2506317-0000	.SHAFT	325, 327
2506328-0000	.BRACKET	567
2506496-0100	.PRESSURE ROLLER	585
2506497-0100	.PRESSURE ROLLER	585
2506498-0000	.SEALING PLATE	591
2506499-0000	.SEALING PLATE	591
2506500-0000	.PLATE	591
2506501-0000	.PLATE	591
2506502-0000	.PLATE	591
2506503-0000	.PLATE	591
2506504-0000	.PLATE	591
2506505-0000	.PLATE	591
2506614-0100	.BOBBIN BRAKE	551
2506615-0100	.BOBBIN BRAKE	551
2506647-0000	.LEVER	709
2506648-0000	.LEVER	711
2506649-0000	.BEARING FLANGE	709
2506650-0000	.FRAME	709, 711
2506651-0000	.BEARING FLANGE	711
2506652-0000	.AXLE PIN	709, 711
2506654-0000	.BLOCK	593
2506656-0000	.PLATE	593
2506657-0000	.SPACER	593
2506659-0000	.ROLLER	597
2506660-0000	.SPACER	581
2506661-0000	.ROLLER	595, 597
2506663-0000	.SUPPORT	595
2506664-0000	.STEERING	581
2506666-0000	.AXEL	595, 597
2506668-0100	.STRIP APPLICATOR	551
2506674-0000	.PRESSURE RAIL	623
2506686-0000	.SHAFT	409, 411
2506689-0000	.PLATE	385
2506690-0000	.PLATE	385
2506691-0000	.PLATE	385
2506692-0000	.SHAFT	385
2506693-0000	.PLATE	385
2506694-0000	.SPACER	385
2506695-0000	.SPACER	385
2506696-0000	.SUPPORT	385
2506697-0000	.PLATE	385
2506698-0000	.PLATE	385
2506699-0000	.SHAFT	385
2506700-0000	.PLATE	385
2506701-0000	.PLATE	385
2506702-0000	.SCREW	385
2506703-0000	.LOCK COMPONENT	385
2506704-0000	.PLATE	385
2506705-0000	.PIN	385
2506706-0000	.FRAME	391
2506707-0000	.FRAME	391
2506711-0000	.GUIDE	409, 411
2506713-0000	.PIN	385
2506714-0000	.WASHER	391
2506828-0000	.PIPE	135
2506829-0000	.FRAME	495
2506832-0000	.PLUG	83
2506837-0000	.FILLING PIPE	81
2506839-0000	.COLUMN	29
2506840-0000	.FLANGE	55
2506841-0000	.ROLLER	55
2506842-0100	.BENDING ROLLER	13
2506843-0000	.CLEANING SLEEVE	83
2506844-0000	.PLATE	185
2506845-0000	.DIAGRAM	185
2506846-0000	.PIPE	141

Part No	Description	Page No
2507019-0100	.ROLLER	581
2507020-0100	.ROLLER	581
2507022-0100	.SPLICE DETECTOR	581
2507103-0000	.BEARING FLANGE	709, 711
2508187-0100	.EMERGENCY STOP	689
2508204-0000	.FLANGE	673
2508205-0007	.BRACKET	673
2508205-0010	.BRACKET	673
2508206-0000	.BENDING ROLLER	673
2508263-0000	.NOZZLE	403, 725
2508265-0000	.NOZZLE	403, 725
2508395-0000	.TEMPLATE	739
2508396-0000	.TEMPLATE	739
2508408-0000	.PIPE	353, 355
2508420-0000	.PIPE	353, 355
2508421-0000	.PIPE	353, 355
2509551-0000	.LINK ARM	369, 371, 377, 379
2509613-0000	.BUSHING	591
2509614-0000	.BUSHING	591
2509617-0100	.INDUCTOR	585
2510243-0000	.GEAR WHEEL	325, 327
2510359-0000	.FASTENING BRACKET	593
2510360-0000	.SHAFT	593
2510361-0000	.CONNECTING ROD	593
2510362-0000	.SHAFT	593
2510363-0000	.SHAFT	593
2510364-0000	.SHAFT	593
2510365-0000	.ROLLER	585
2510366-0000	.SHAFT	585
2510393-0000	.BRACKET	577, 579
2510399-0000	.BRACKET	615
2510400-0000	.HOLDER	615
2510401-0100	.HOLDER	601
2510404-0000	.SUPPORT	595, 597
2510405-0000	.SUPPORT	595, 597
2510406-0000	.PLATE	555, 557
2510416-0000	.TUBE	397, 399
2510417-0000	.TUBE	397, 399
2510418-0000	.TUBE	397, 399
2510419-0000	.TUBE	397, 399
2510909-0001	.DMC PROGRAMME	529, 531, 533
2510917-0001	.DMC PROGRAMME	529, 531, 533
2511239-0000	.PLATE	353, 355
2511242-0000	.PROTECTION	369, 371, 377, 379
2511243-0000	.PLATE	331
2511245-0000	.PROTECTION	353, 355
2511246-0000	.BUSHING	369, 371, 377, 379
2511247-0100	.DESIGN CORRECTION DEVICE	321
2511248-0100	.PLATE	321
2511249-0100	.PHOTOCELL UNIT	321
2511250-0100	.PRESSURE JAW	345
2511251-0100	.PRESSURE JAW	345
2511252-0100	.PRESSURE JAW	345
2511253-0100	.SEALING JAW	345
2511254-0100	.SEALING JAW	345
2511255-0100	.FRAME	345
2511256-0100	.DRIVE UNIT	345
2511257-0100	.DESIGN CORRECTION	345
2511258-0100	.VOLUME ADJUSTER	345
2511260-0100	.CABLE HARNESS	345
2511261-0000	.LINK	365, 367, 373, 375, 381, 383
2511262-0000	.LINK	369, 371, 377, 379
2511263-0000	.WASHER	369, 371, 377, 379
2511352-0000	.FRAME	391
2511353-0000	.FRAME	391
2511354-0000	.PLATE	385
2511360-0000	.PLATE	385
2511410-0000	.TOUCH GUARD	97
2511417-0000	.PIPE	191, 193
2511418-0000	.BRACKET	97
2511419-0000	.DISTRIBUTOR BLOCK	97
2511420-0000	.DISTRIBUTOR BLOCK	97
2511421-0000	.PIPE	97
2511422-0000	.PIPE	97
2511423-0000	.PIPE	97
2511424-0000	.PIPE	97
2511426-0000	.PIPE	97
2511665-0000	.BRACKET	85
2511666-0000	.HOLDER	85
2511667-0000	.COVER PLATE	489, 491, 493
2512991-0000	.PULLEY	397, 399
2512992-0000	.PULLEY	397, 399
2514077-0100	.EXPANSION VESSEL	423
2514083-0000	.REDUCTION NIPPLE	431

Part No	Description	Page No
2514087-0000	.PLATE	431
2514114-0000	.PLATE	385
2514115-0000	.PLATE	385
2514117-0000	.SHAFT	385
2514119-0000	.SPACER	385
2514121-0000	.SPACER	385
2514122-0000	.PLATE	385
2514123-0000	.FRAME	391
2514124-0000	.FRAME	391
2514125-0000	.GUIDE	385
2514126-0000	.GUIDE	385
2514127-0000	.SUPPORT	385
2514128-0000	.GUIDE	409, 411
2514131-0000	.BRACKET	401
2514132-0000	.PIN	401
2514133-0000	.BRACKET	409, 411
2514134-0000	.GUIDE	413
2514136-0000	.CHUTE	413
2514139-0000	.SUPPORT	409, 411
2514140-0000	.GUIDE	409, 411
2514258-0000	.TUBE HOLDER	397, 399
2514281-0000	.COUNTER	55
2514285-0000	.PLATE	29
2515213-0100	.SPRAY SYSTEM	13
2515238-0000	.SPACER	179
2515289-0000	.BRACKET	603
2515422-0000	.GUIDE PLATE	673
2517065-0000	.ROLLER	55
2517066-0000	.DOLLY	553, 623
2517171-0000	.CABLE	361
2517363-0000	.PIPE	191, 193
2517364-0000	.CONNECTION BOX	201
2517365-0000	.RAIL	201
2517368-0000	.STRAIGHT CONNECTION	97
2517369-0000	.CONNECTION	97
2517370-0000	.CLAMP	97
2517371-0000	.CLAMP	97
2517372-0100	.LID	13
2517373-0000	.FLANGE	75
2517375-0000	.COVER	97
2517376-0000	.RAIL	203, 205
2518119-0000	.PLATE	559
2519471-0000	.PIPE	191, 193
2519472-0000	.BRACKET	113
2519554-0000	.PIPE	281
2519555-0000	.PIPE	281
2519556-0000	.BRACKET	293
2519574-0100	.HYDROGEN PEROXIDE CONCENTRATION METER	277
2520189-0000	.SUPPORT	349, 351
2520190-0000	.GUIDE	349, 351
2520191-0000	.SUPPORT	349, 351
2520199-0000	.GEAR	397, 399
2520225-0000	.TUBE	397, 399
2520226-0000	.TUBE	397, 399
2520227-0000	.TUBE	397, 399
2520228-0000	.TUBE	397, 399
2520475-0000	.PIPE	191, 193
2520476-0000	.PIPE	191, 193
2520562-0000	.PIPE	191, 193
2520563-0000	.PIPE	191, 193
2521069-0000	.GUIDE	385
2521070-0000	.GUIDE	385
2522094-0100	.ELECTRICAL CONNECTION	345
2522125-0000	.CLAMP	191, 193
2522126-0000	.CLAMP	191, 193
2522148-0000	.PIPE	449
2522150-0000	.PLATE	73
2522151-0000	.GASKET	73
2522161-0100	.LID	13
2522184-0000	.PIPE	449
2522188-0000	.GASKET	45
2522189-0000	.PLATE	45
2522190-0000	.PLATE	45
2522195-0000	.CONNECTION	97
2522261-0000	.PLATE	45
2523319-0000	.PLATE	331
2523482-0000	.PUSH BUTTON BOX	703
2523483-0000	.PUSH BUTTON BOX	703
2523494-0000	.PLATE	331
2523497-0000	.BENDING ROLLER	679
2523499-0000	.SHAFT	679
2523500-0000	.AXLE PIN	679
2523581-0000	.CARRIER	409, 411
2523597-0000	.SLIDER	613

Part No	Description	Page No
2523598-0000	.SPLICING TABLE	613
2523600-0000	.PIN	613
2523601-0000	.PAD	613
2523606-0000	.CARBON BRUSH HOLDER	369, 371, 377, 379
2523607-0000	.CARBON BRUSH	369, 371, 377, 379, 723
2523608-0000	.BUSBAR	369, 371, 377, 379
2523609-0000	.VOLUME CAM	359
2523610-0000	.PLATE	353, 355
2523611-0000	.PLATE	353, 355
2523612-0000	.PLATE	353, 355
2523613-0000	.PLATE	353, 355
2523614-0000	.PLATE	353, 355
2523615-0000	.PLATE	353, 355
2523616-0000	.PLATE	353, 355
2523617-0000	.PLATE	353, 355
2523618-0000	.PROTECTION	353, 355
2523621-0000	.PLATE	353, 355
2523622-0000	.PIPE	353, 355
2523642-0000	.PIPE	97
2523644-0100	.STEAM SYSTEM	77, 79
2523645-0000	.FILTER	97
2523647-0000	.PIPE	83
2523648-0000	.PIPE	83
2523658-0000	.SUPPORT	349, 351
2523660-0000	.RAIL	203, 205
2523661-0000	.CONNECTION BOX	203, 205
2523663-0000	.PIPE	97
2523664-0100	.BUTTERFLY VALVE	129
2523665-0000	.ARM	149
2523666-0000	.BRACKET	45
2523670-0200	.FILLING PIPE	77, 79
2523679-0000	.CONNECTION	409, 411
2523693-0000	.INTERMEDIARY SHAFT	397, 399
2523694-0000	.INTERMEDIARY SHAFT	397, 399
2523695-0000	.INTERMEDIARY SHAFT	391
2523696-0000	.INTERMEDIARY SHAFT	409, 411
2523719-0000	.BRACKET	681
2523720-0000	.BRACKET	681
2523723-0000	.BRACKET	45
2523724-0000	.PLATE	45
2523765-0000	.BENDING ROLLER	567
2523766-0007	.BRACKET	567
2523766-0010	.BRACKET	567
2523767-0000	.FLANGE	567
2524337-0200	.RELAY UNIT 1	535
2524349-0000	.CONNECTING PIPE	123
2524351-0000	.PIPE SUPPORT	123
2524363-0000	.HANGER	451
2524403-0000	.PIPE	191, 193
2524404-0000	.PIPE	191, 193
2524453-0000	.CABLE DUCT	151, 153
2524454-0000	.CABLE DUCT	151, 153
2524506-0000	.LINK	365, 367, 373, 375, 381, 383
2524515-0000	.CABINET	421
2524600-0100	.PRESSURE ROLLER	617
2524601-0000	.AXLE PIN	627
2524602-0000	.HANDLE	627
2524603-0000	.HOLDER	627
2524604-0000	.ROCKER ARM	627
2524606-0000	.CABLE DUCT	561, 563, 565
2524607-0000	.CABLE DUCT	561, 563, 565
2524610-0100	.SUPERSTRUCTURE	719
2524611-0100	.JAW SYSTEM	719
2524612-0100	.FINAL FOLDER	719
2524613-0100	.AUTOMATIC SPLICING UNIT	719
2524614-0100	.ELECTRICAL CABINET	719
2524615-0100	.MACHINE BODY	719
2524617-0000	.LINK	369, 371, 377, 379
2525282-0000	.LINK	369, 371, 377, 379
2525338-0000	.PLUG	123
2525339-0000	.BRACKET	603
2525518-0100	.CLEANING PIPE	77, 79
2525531-0000	.PIPE	97
2525532-0000	.STEAM PIPE	97
2525533-0000	.STEAM PIPE	97
2525537-0000	.LOCKING RING	81
2525539-0000	.BRACKET	63
2525540-0000	.SHAFT	63
2525541-0100	.TUBE SUPPORT	13
2525542-0000	.SUPPORT	743, 745
2525660-0000	.SHAFT	323
2525661-0000	.SHAFT	323
2525673-0000	.LINK	365, 367, 373, 375, 381, 383
2525675-0000	.INTERMEDIARY SHAFT	391

Part No	Description	Page No
2525676-0000	.INTERMEDIARY SHAFT	397, 399
2525677-0000	.INTERMEDIARY SHAFT	409, 411
2525678-0000	.CURVE	357
2526930-0000	.CONTACT RAIL	361
2526931-0000	.BRACKET	361
2526932-0000	.SPACER	361
2527133-0000	.GUIDE ROD	325, 327
2527141-0000	.BRACKET	361
2527290-0000	.PLATE	361
2527326-0000	.SPACER	583
2527401-0000	.DISTRIBUTOR BLOCK	331
2527477-0000	.BRACKET	45
2527726-0000	.CONTACT RAIL	361
2527727-0000	.BRACKET	361
2527728-0000	.SPACER	361
2527729-0000	.PLATE	361
2527740-0000	.CLEANING PIPE	83, 93
2527741-0000	.CLEANING PIPE	83, 93
2528454-0000	.SHAFT	409, 411
2528968-0000	.PNEUMATIC DIAGRAM	671
2529030-0000	.PLATE	219, 221
2529039-0100	.VALVE PANEL	337
2529495-0000	.CONTACT RAIL	361
2529496-0000	.BRACKET	361
2529540-0000	.BRACKET	671
2529541-0000	.BRACKET	671
2529542-0000	.BRACKET	671
2529544-0000	.CABLE DUCT	561, 563, 565
2529546-0000	.SUPPORT	625
2529547-0100	.PAPER GUIDE	617, 673
2529549-0000	.PLATE	627, 675
2529550-0000	.SUPPORT	593
2529551-0000	.PROTECTION PLATE	555, 557
2529561-0000	.PLATE	681
2529569-0100	.INDUCTOR	581
2529571-0100	.PRESSURE ROLLER	581
2529572-0000	.BRACKET	589
2529573-0000	.BRACKET	587
2529578-0000	.BUSHING	591
2529654-0000	.BRACKET	671
2529677-0000	.SPACER	361
2529735-0000	.BRACKET	361
2529930-0000	.AIR NOZZLE	585
2529990-0000	.FRAME	561, 563, 565
2530121-0000	.CARTON STATION	395
2530399-0000	.HANGER	583
2530404-0000	.ROD	583
2530405-0000	.BRACKET	583
2530406-0000	.ADJUSTING SCREW	583
2530407-0000	.BRACKET	583
2530408-0000	.LEVER	583
2530409-0000	.ROD	583
2530410-0100	.STRIP GUIDE	581
2531245-0000	.HOSE NIPPLE	425, 427
2531269-0000	.DOOR	197
2531270-0000	.DOOR	197
2531271-0000	.COVERING	197
2531272-0000	.TOP COVER	197
2531273-0000	.BRACKET	29
2531409-0100	.ELECTRIC EQUIPMENT	337
2531410-0000	.CONNECTION BOX	341
2531417-0000	.RAIL	341
2531423-0000	.NUT	425, 427
2531428-0000	.CLEANING PIPE	93
2531429-0000	.CONTAINER	93
2531430-0000	.CLEANING PIPE	93
2531434-0000	.BRACKET	149
2531435-0000	.PLUG	149
2531493-0000	.BRACKET	613
2531500-0000	.PIPE	293
2531501-0000	.PIPE	293
2531502-0000	.SPACER	197
2531643-0100	.GREASE LUBRICATION SYST	321
2531644-0000	.FRAME	337
2531645-0000	.BLOCK	337
2531646-0000	.DISTRIBUTOR BLOCK	337
2531649-0000	.PIPE	337
2531650-0000	.PIPE	337
2531651-0000	.PIPE	337
2531652-0000	.PIPE	337
2531710-0000	.TUBE	397, 399
2531711-0000	.TUBE	397, 399
2531712-0000	.TUBE	397, 399
2531713-0000	.TUBE	397, 399

Part No	Description	Page No
2532535-0000	.HATCH	689
2532574-0000	.COVER	425
2532806-0000	.ATTACHMENT PIPE	429
2532808-0000	.HOLDER	413
2533624-0000	.GLASS PANE	315
2533625-0000	.GLASS PANE	309
2533626-0000	.GLASS PANE	303
2533724-0000	.GLASS PANE	317
2533725-0100	.DOOR	299
2533726-0100	.DOOR	299
2535648-0000	.PIPE	337
2535650-0000	.PIPE	337
2535651-0000	.PIPE	337
2535652-0000	.PIPE	337
2535653-0000	.PIPE	337
2535654-0000	.PIPE	337
2535655-0000	.BRACKET	337
2535656-0000	.PIPE	337
2535657-0000	.PIPE	337
2535658-0000	.PIPE	337
2535659-0000	.PIPE	337
2535745-0000	.INSERT	415
2535932-0000	.CAM	593
2535933-0000	.SUPPORT	593
2537835-0000	.PLUG	83
2538064-0000	.REFLECTOR	647
2538065-0000	.REFLECTOR	639
2538071-0000	.ANGLE PIECE	639, 647
2538073-0001	.SHIMS	555, 557
2538073-0002	.SHIMS	555, 557
2538075-0000	.BRACKET	555, 557
2538076-0000	.BRACKET	555, 557
2539463-0000	.BRACKET	29
2539502-0000	.WELDED CABINET	489, 491, 493
2540595-0001	.COAXIAL CABLE	577, 579
2540596-0001	.COAXIAL CABLE	577, 579
2540769-0000	.TOOTHED PULLEY	637
2540770-0000	.BUSHING	637
2540801-0000	.PLUG	135
2540802-0100	.CLEANING SLEEVE	77, 79
2540803-0000	.CLEANING SLEEVE	93
2540804-0000	.BRACKET	63
2540806-0000	.GASKET	45
2541083-0100	.BENDING ROLLER	555, 557
2541122-0100	.DISTRIBUTION TERMINAL	489, 491, 493
2541129-0000	.DOOR	317
2541130-0000	.DOOR	315
2541711-0000	.PNEUMATIC DIAGRAM	337
2541890-0100	.BRACKET	555, 557
2541891-0100	.FILTER	555, 557
2542330-0000	.SUPPORT	509
2542343-0000	.BRACKET	249
2543215-0000	.HYDRAULIC DIAGRAM	337
2543220-0000	.PROFILE	489, 491, 493
2543221-0100	.IH EQUIPMENT	489, 491, 493
2543222-0000	.PROTECTION	523
2543342-0000	.MOUNTING PLATE	523
2544302-0000	.FRAME	513, 515
2545016-0000	.SUPPORT	93
2545250-0000	.COVER PLATE	517, 519
2546189-0000	.GUIDE	413
2546203-0000	.HOLDER	413
2546211-0000	.COVER	97
2546212-0000	.COVER	97
2546213-0000	.COVER	97
2546214-0000	.COVER	97
2546215-0000	.COVER	97
2546227-0000	.HOLDER	413
2546322-0000	.ARCH	413
2546451-0000	.GLASS PANE	197
2547013-0000	.CAP	197
2547061-0000	.HOLDER	475
2547143-0000	.INSERT	415
2547146-0000	.PLATE	489, 491, 493
2547150-0100	.PLUG	77, 79
2547666-0000	.DOOR	701
2547667-0000	.DOOR	705
2550269-0001	.LOCKING ARM	701
2550269-0002	.LOCKING ARM	701
2550315-0000	.INDUCTOR	45
2550333-0000	.GUIDE LUG	695, 697, 701
2551115-0000	.PIPE	117
2551949-0000	.BRACKET	619
2552246-0000	.CATCH HANDLE	185

Part No	Description	Page No
2552317-0001	.TMCC PROGRAMME	517, 519
2552321-0001	.TMCC PROGRAMME	517, 519
2552329-0001	.TMCC PROGRAMME	517, 519
2552533-0000	.PIPE	337
2552534-0000	.PIPE	337
2552535-0000	.PIPE	337
2552551-0100	.TPOP DATA COLLECTION	715
2552791-0000	.PIPE	337
2552792-0000	.PIPE	337
2553072-0000	.KEY FOR SAFETY SWITCH	701, 705
2553107-0000	.HOLDER	555, 557
2553108-0000	.HOLDER	555, 557
2553109-0000	.HOLDER	555, 557
2553140-0001	.DMC PROGRAMME	529, 531, 533
2555087-0100	.SUPPORT	715
2555088-0100	.SUPPORT	715
2555684-0000	.PROFILE	489, 491, 493
2556248-0000	.STOPPER	405
2558133-0000	.PRESSURE REGULATOR	97
2558134-0000	.PRESSURE REGULATOR	97
2558848-0000	.SCREW	83, 93
2558853-0100	.WASTE BOX	345
2558854-0000	.FILLING PIPE	91
2558855-0000	.FILLING PIPE	91
2564030-0000	.INTERMEDIARY SHAFT	391
2564953-0000	.GRUB SCREW	395
2569800-0000	.FILLING PIPE	81
2569801-0000	.FILLING PIPE	81
2569802-0000	.CLEANING PIPE	93
2569803-0000	.CLEANING PIPE	93
2569805-0000	.CLEANING PIPE	83
2569806-0000	.CLEANING PIPE	83

Part No	Description	Page No

Tetra Pak

SPC
Spare Parts Catalogue

Pos	Part No	Description	Page No
A			
A101	90031-0058	PLC, DIGITAL INPUT MODULE	529, 531, 533
A102	90031-0059	PLC, DIGITAL OUTPUT MODULE	529, 531, 533
A103	90031-0065	PLC,TEMPERATUR CONTROL,INPUT MODULE 8 PT	529, 531, 533
A104	90031-0065	PLC,TEMPERATUR CONTROL,INPUT MODULE 8 PT	529, 531, 533
A105	90031-0061	PLC,ANALOG INPUT MODULE 16 PT/CURRENT	529, 531, 533
A106	90031-0060	PLC,ANALOG INPUT MODULE 16 PT/VOLTAGE	529, 531, 533
A107	90031-0062	PLC, ANALOG OUTPUT MODULE 8PT/CURR/VOLT	529, 531, 533
A108	90031-0062	PLC, ANALOG OUTPUT MODULE 8PT/CURR/VOLT	529, 531, 533
A109	90031-0031	ENHANCED GENIUS COMMUNICATION MODULE	529, 531, 533
A110	90031-0057	PLC, DIGITAL INPUT MODULE	529, 531, 533
A111	90031-0057	PLC, DIGITAL INPUT MODULE	529, 531, 533
A112	90031-0057	PLC, DIGITAL INPUT MODULE	529, 531, 533
A113	90031-0057	PLC, DIGITAL INPUT MODULE	529, 531, 533
A114	90031-0057	PLC, DIGITAL INPUT MODULE	529, 531, 533
A115	90031-0057	PLC, DIGITAL INPUT MODULE	529, 531, 533
A116	90031-0057	PLC, DIGITAL INPUT MODULE	529, 531, 533
A117	90031-0057	PLC, DIGITAL INPUT MODULE	529, 531, 533
A118	90031-0057	PLC, DIGITAL INPUT MODULE	529, 531, 533
A119	90031-0057	PLC, DIGITAL INPUT MODULE	529, 531, 533
A120	90031-0057	PLC, DIGITAL INPUT MODULE	529, 531, 533
A121	90031-0057	PLC, DIGITAL INPUT MODULE	529, 531, 533
A122	90031-0057	PLC, DIGITAL INPUT MODULE	529, 531, 533
A123	90031-0057	PLC, DIGITAL INPUT MODULE	529, 531, 533
A124	90031-0057	PLC, DIGITAL INPUT MODULE	529, 531, 533
A125	90031-0057	PLC, DIGITAL INPUT MODULE	529, 531, 533
A126	90031-0059	PLC, DIGITAL OUTPUT MODULE	529, 531, 533
A127	90031-0059	PLC, DIGITAL OUTPUT MODULE	529, 531, 533
A128	90031-0059	PLC, DIGITAL OUTPUT MODULE	529, 531, 533
A129	90031-0059	PLC, DIGITAL OUTPUT MODULE	529, 531, 533
A130	90031-0059	PLC, DIGITAL OUTPUT MODULE	529, 531, 533
A131	90031-0059	PLC, DIGITAL OUTPUT MODULE	529, 531, 533
A132	90031-0059	PLC, DIGITAL OUTPUT MODULE	529, 531, 533
A133	90031-0059	PLC, DIGITAL OUTPUT MODULE	529, 531, 533
A134	90031-0059	PLC, DIGITAL OUTPUT MODULE	529, 531, 533
A135	90031-0059	PLC, DIGITAL OUTPUT MODULE	529, 531, 533
A136	90031-0059	PLC, DIGITAL OUTPUT MODULE	529, 531, 533
A137	90031-0059	PLC, DIGITAL OUTPUT MODULE	529, 531, 533
A138	90031-0059	PLC, DIGITAL OUTPUT MODULE	529, 531, 533
A139	90031-0059	PLC, DIGITAL OUTPUT MODULE	529, 531, 533
A140	90031-0057	PLC, DIGITAL INPUT MODULE	529, 531, 533
A141	90031-0057	PLC, DIGITAL INPUT MODULE	529, 531, 533
A142	90031-0057	PLC, DIGITAL INPUT MODULE	529, 531, 533
A145	90031-0059	PLC, DIGITAL OUTPUT MODULE	529, 531, 533
A146	90031-0059	PLC, DIGITAL OUTPUT MODULE	529, 531, 533
A147	90031-0059	PLC, DIGITAL OUTPUT MODULE	529, 531, 533
A160	90031-0051	BASEPLATE, 10-SLOT	529, 531, 533
A161	90031-0053	BASEPLATE,10-SLOT	529, 531, 533
A162	90031-0053	BASEPLATE,10-SLOT	529, 531, 533
A163	90031-0053	BASEPLATE,10-SLOT	529, 531, 533
A164	90031-0053	BASEPLATE,10-SLOT	529, 531, 533
A300	90458-2580	LEVEL CONTROL RELAY RM4-LA32MW	523
A301	90458-2580	LEVEL CONTROL RELAY RM4-LA32MW	523
A302	90458-2580	LEVEL CONTROL RELAY RM4-LA32MW	523
A303	90458-2580	LEVEL CONTROL RELAY RM4-LA32MW	523
A304	90458-2580	LEVEL CONTROL RELAY RM4-LA32MW	523
A305	90458-2580	LEVEL CONTROL RELAY RM4-LA32MW	523
A306	90458-2580	LEVEL CONTROL RELAY RM4-LA32MW	523
A307	90458-2580	LEVEL CONTROL RELAY RM4-LA32MW	523
A308	90458-2580	LEVEL CONTROL RELAY RM4-LA32MW	523
A400	67388-0102	RACK FRONTMOUNTED 84TE	517, 519
A410	90430-0070	FREQ.CONV. 6SE3213-6CA40	529, 531, 533
A411	90430-0070	FREQ.CONV. 6SE3213-6CA40	529, 531, 533
A412	90430-0070	FREQ.CONV. 6SE3213-6CA40	529, 531, 533
A413	90430-0070	FREQ.CONV. 6SE3213-6CA40	529, 531, 533
A414	90243-0214	CONDUCTIVITY METER	513, 515
A415	90430-0070	FREQ.CONV. 6SE3213-6CA40	529, 531, 533
A418	559810-0101	TMCC2 CONTROLLER	517, 519
A418:1	68262-0101	BACKPLANE FRONT RACK 8TE	517, 519
A418:2	2552317-0001	TMCC PROGRAMME	517, 519
A419	559810-0101	TMCC2 CONTROLLER	517, 519
A419:1	68262-0101	BACKPLANE FRONT RACK 8TE	517, 519
A419:2	2552321-0001	TMCC PROGRAMME	517, 519
A420	559810-0101	TMCC2 CONTROLLER	517, 519
A420:1	68262-0101	BACKPLANE FRONT RACK 8TE	517, 519
A420:2	2552329-0001	TMCC PROGRAMME	517, 519
A421	559810-0101	TMCC2 CONTROLLER	517, 519
A421:1	68262-0101	BACKPLANE FRONT RACK 8TE	517, 519
A422	559810-0101	TMCC2 CONTROLLER	517, 519
A422:1	68262-0101	BACKPLANE FRONT RACK 8TE	517, 519
A424	68450-0101	STEPPER MOTOR DRIVER	517, 519
A424:1	68262-0101	BACKPLANE FRONT RACK 8TE	517, 519
A425	68450-0101	STEPPER MOTOR DRIVER	517, 519

Pos	Part No	Description	Page No
A			
A425:1	68262-0101	BACKPLANE FRONT RACK 8TE	517, 519
A450	90453-0002	MODEM MD-12 DC	513, 515
A451	1363288-0301	FLEXBOX TETRA BRIK	513, 515
A451:1	90456-0001	INTOUCH OEM 2000 V.5.6B/6.0B HW KEY	513, 515
A451:2	2505518-0200	SOFTWARE	513, 515
A500	90458-0724	STABILIZED POWER SUPPLY, SITOP 40A 24VDC	489, 491, 493
A501	1499642-0101	TPIH 2500 HORIZONTAL MOUNTING	509
A501:4	359241-0131	SIGN, TEMP. LS HEATER	509
A502	1499642-0101	TPIH 2500 HORIZONTAL MOUNTING	509
A502:4	359241-0135	SIGN, TRANSVERSAL SEALING	509
A504:1	68262-0101	BACKPLANE FRONT RACK 8TE	517, 519
A505	90045-0397	POWER SUPPLY 80 A	529, 531, 533
A505:1	90458-0033	CONNECTOR KIT 9-032-010-851	529, 531, 533
A506	90458-0399	SERVO DRIVE DMC2 51540	529, 531, 533
A506:1	90458-0032	CONNECTOR KIT 9-032-010-496	529, 531, 533
A506:2	90110-0142	PLUG DA15P064TX	529, 531, 533
A506:3	90110-0145	COVER 8630-5169014-15-01	529, 531, 533
A506:4	2510917-0001	DMC PROGRAMME	529, 531, 533
A507	90458-0399	SERVO DRIVE DMC2 51540	529, 531, 533
A507:1	90458-0032	CONNECTOR KIT 9-032-010-496	529, 531, 533
A507:2	90110-0142	PLUG DA15P064TX	529, 531, 533
A507:3	90110-0145	COVER 8630-5169014-15-01	529, 531, 533
A507:4	2510909-0001	DMC PROGRAMME	529, 531, 533
A508	90458-0396	SERVO DRIVE DMC2 50720	529, 531, 533
A508:1	90458-0031	CONNECTOR KIT 9032 010 353	529, 531, 533
A508:2	90110-0142	PLUG DA15P064TX	529, 531, 533
A508:3	90110-0145	COVER 8630-5169014-15-01	529, 531, 533
A508:4	2553140-0001	DMC PROGRAMME	529, 531, 533
A600	90457-0092	SAFETY RELAY RT9-24VDC	523
A601	90457-0092	SAFETY RELAY RT9-24VDC	523
A602	90457-0092	SAFETY RELAY RT9-24VDC	523
A603	90119-0084	EXPANSION RELAY, JSR1T-500MS	523
A605	90457-0092	SAFETY RELAY RT9-24VDC	523
A1304	90314-0044	SIGNAL CONVERTER	203, 205
A7417	1499642-0101	TPIH 2500 HORIZONTAL MOUNTING	577, 579
B			
B001	90326-0053	THERMOCOUPLE, 12826-35	489, 491, 493
B002	90458-0672	PROXIMITY SENSOR E2E2-X5MB1-5M	489, 491, 493
B003	90458-0672	PROXIMITY SENSOR E2E2-X5MB1-5M	489, 491, 493
B004	90458-0672	PROXIMITY SENSOR E2E2-X5MB1-5M	489, 491, 493
B005	90458-0672	PROXIMITY SENSOR E2E2-X5MB1-5M	489, 491, 493
B1102	90274-0045	PRESSURE GUARD, 14 KPA	135
B1103	90274-0088	PRESSURE GUARD, 1,5 KPA	203, 205
B1104	979500-0003	ELECTRODE	135
B1105	90326-0051	THERMOCOUPLE, 12826-33	143
B1106	90326-0051	THERMOCOUPLE, 12826-33	137
B1109	90458-0341	THERMOCOUPLE, 5130050-001	29
B1111	90044-0193	SENSOR, 32-31 0310	139
B1112	90044-0193	SENSOR, 32-31 0310	139
B1113	90458-0675	PROXIMITY SENSOR, E2EG-X5MB1-5M	43
B1201	567070-0011	ELECTRODE	165
B1208	90326-0038	THERMOCOUPLE, CR-AL	165
B1209	90326-0057	THERMOCOUPLE, CR-AL	169
B1220	567070-0011	ELECTRODE	165
B1222	90326-0053	THERMOCOUPLE, 12826-35	165
B1224	90044-0084	LIMIT SW. 14 CE1-4	165
B1225	90044-0084	LIMIT SW. 14 CE1-4	165
B1230:1	567070-0013	ELECTRODE	65
B1230:2	567070-0019	ELECTRODE	65
B1241	90458-0672	PROXIMITY SENSOR E2E2-X5MB1-5M	149
B1242	90458-0672	PROXIMITY SENSOR E2E2-X5MB1-5M	149
B1301	90044-0104	PROX.SWITCH IFM IN 3002	99
B1302	90044-0104	PROX.SWITCH IFM IN 3002	99
B1303	90044-0104	PROX.SWITCH IFM IN 3002	99
B1304	90274-0096	LEVEL PROBE, Z8778/1	91
B1306	90458-0676	PROXIMITY SWITCH,E2EG-X5B1-6M	123
B1307	90458-0676	PROXIMITY SWITCH,E2EG-X5B1-6M	123
B1310	90326-0089	THERMOCOUPLE, 5110-089-000	97
B1314	1334989-0100	LEVEL PROBE	85
B1315	90243-0321	CONDUCTIVITY SENSOR, TP5EL. 00343-10803	125, 127
B1316	90243-0430	FLOW METER, MAG 1100 FOOD PFA	125, 127
B1321	90044-0145	PROX.SW. 922 AAIY-A9P-050-LZ876	115
B1322	1478814-0000	SENSOR	115
B1330	90459-0252	PROXIMITY SWITCH	83, 93
B1350	90458-0672	PROXIMITY SENSOR E2E2-X5MB1-5M	29
B1403	90044-0104	PROX.SWITCH IFM IN 3002	179
B1405	90044-0191	PROX.SW. E2EG-X2B1	55
B1502	90457-0047	SENSOR,2750-1-5111-1 INCL. ADAPTER, PNP	17
B1504	90044-0139	KEY SAF.SW. AZ16-02 ZVR K-2254	67
B1505	90044-0139	KEY SAF.SW. AZ16-02 ZVR K-2254	51
B1506	90044-0139	KEY SAF.SW. AZ16-02 ZVR K-2254	53
B1507	90044-0139	KEY SAF.SW. AZ16-02 ZVR K-2254	61

Pos	Part No	Description	Page No
B			
B 2102	90274-0042	PRESSURE GUARD, 200 KPA	475
B2115	1498614-0000	SENSOR	47
B2116	1498614-0000	SENSOR	47
B2201	90274-0074	PRESSURE GUARD, 530 KPA	481
B 2501	90274-0056	PRESSURE SWITCH, 100 - 1200 KPA	429
B 2510	90326-0057	THERMOCOUPLE, CR-AL	427
B 2520	90326-0020	PLUG, FEMALE YELLOW CR-AL	427
B2540	90274-0108	DUAL PRESSURE GUARD, -20 - 2800 KPA	425
B2810	90044-0139	KEY SAF.SW. AZ16-02 ZVR K-2254	313
B2811	90044-0139	KEY SAF.SW. AZ16-02 ZVR K-2254	313
B2812	90044-0139	KEY SAF.SW. AZ16-02 ZVR K-2254	313
B2830	90044-0139	KEY SAF.SW. AZ16-02 ZVR K-2254	313
B2831	90044-0139	KEY SAF.SW. AZ16-02 ZVR K-2254	313
B2832	90044-0139	KEY SAF.SW. AZ16-02 ZVR K-2254	313
B3102	90274-0082	FLOW SWITCH, 2 - 3 L/MIN	437
B3105	90243-0245	MEASURING INSTRUMENT	439
B 4001	68917-0100	ANGLE INDICATOR	333
B4102	90458-0672	PROXIMITY SENSOR E2E2-X5MB1-5M	347
B4103	90061-0027	ANGLE ENCODER 670900035	349, 351
B4200	90458-0672	PROXIMITY SENSOR E2E2-X5MB1-5M	363
B4202	90458-0672	PROXIMITY SENSOR E2E2-X5MB1-5M	357
B5103	90044-0194	PROX.SW. IN5329/IN3002-BPKG	391
B5307	1512463-0000	THERMOCOUPLE	403
B5308	1512463-0000	THERMOCOUPLE	403
B5309	1512463-0000	THERMOCOUPLE	403
B5310	1512463-0000	THERMOCOUPLE	403
B6105	90044-0104	PROX.SWITCH IFM IN 3002	599
B6107	90458-0677	PROXIMITY SWITCH, E2EG-X5MB1-M1	673
B6201	90044-0194	PROX.SW. IN5329/IN3002-BPKG	603
B6202	90044-0194	PROX.SW. IN5329/IN3002-BPKG	603
B6204	90044-0194	PROX.SW. IN5329/IN3002-BPKG	603
B6205	90458-1535	TRANSDUCER, BTL5-A11-M0850-P-S32	611
B6208	90458-0138	PROX.SW. E2EG-X1R5B1-5M	603
B6209	90044-0139	KEY SAF.SW. AZ16-02 ZVR K-2254	555, 557
B7210	90232-0129	PH.CELL E3S-CR61-5M	677
B7211	90232-0129	PH.CELL E3S-CR61-5M	573
B7401	90232-0106	PH.CELL E3S-CR11-5M	555, 557
B7411	90458-0677	PROXIMITY SWITCH, E2EG-X5MB1-M1	555, 557
B7412	90044-0165	SENSOR,SME-8-K5-LED-24	571
B7414	90458-0677	PROXIMITY SWITCH, E2EG-X5MB1-M1	555, 557
B7501	90232-0106	PH.CELL E3S-CR11-5M	555, 557
B7512	90044-0165	SENSOR,SME-8-K5-LED-24	571
B7801	90044-0139	KEY SAF.SW. AZ16-02 ZVR K-2254	555, 557
B7806	90044-0139	KEY SAF.SW. AZ16-02 ZVR K-2254	555, 557
B7807	90044-0139	KEY SAF.SW. AZ16-02 ZVR K-2254	555, 557
B43011	90458-0601	PHOTOCELL, SICK PHOTOCELL 1	325, 327
B43012	90458-0601	PHOTOCELL, SICK PHOTOCELL 1	325, 327
B54051	90458-1159	PH.CELL WS4-2D135	349, 351, 385
B54052	90458-1160	PH.CELL WE4-2P135	349, 351, 385
B54101	90232-0103	PH.CELL E3S-CT61-L-5M	413
B54102	90232-0104	PH.CELL E3S-CT61-D-5M	413
B54123	90232-0104	PH.CELL E3S-CT61-D-5M	413
B54124	90232-0103	PH.CELL E3S-CT61-L-5M	413
B72232	90458-0677	PROXIMITY SWITCH, E2EG-X5MB1-M1	681
B72234	90458-0677	PROXIMITY SWITCH, E2EG-X5MB1-M1	681
B74031	90458-0602	PHOTOCELL,	635
B74032	90458-0602	PHOTOCELL,	635
C			
C1314	90274-0099	IP-TRANSDUCER	113
C7410	90450-0548	SINGLE ACTING, SHORT STROKE, CYL 80-25	623
C7412	90450-0552	DOUBLE ACTING,SHUTTLE,CYL 40-520	571
C7414	90239-0832	DOUBLE ACTING, MINI-ISO, CYL. 25-125	645
C7415	90239-0832	DOUBLE ACTING, MINI-ISO, CYL. 25-125	651
C7420	90458-1971	DOUBLE ACTING, PROFILE,CYL 32-140	709
C7421	90458-1971	DOUBLE ACTING, PROFILE,CYL 32-140	711
C73031	90450-0551	DOUBLE ACTING, COMPACT, CYL 20-10	643
C73032	90450-0551	DOUBLE ACTING, COMPACT, CYL 20-10	643
C73151	90450-0551	DOUBLE ACTING, COMPACT, CYL 20-10	653
C73152	90450-0551	DOUBLE ACTING, COMPACT, CYL 20-10	653
C74071	90450-0207	CYLINDER	623
C74072	90450-0207	CYLINDER	623
C74081	90450-0549	SINGLE ACTING, SHORT STROKE, CYL 100-15	623
C74082	90450-0549	SINGLE ACTING, SHORT STROKE, CYL 100-15	623
D			
D100	90031-0075	CPU363, SERIAL COMMUNICATION	529, 531, 533
E			
E001	90164-0018	LIGHT FIXTURE, FK 130	489, 491, 493
E001:1	90297-0011	FLUORESCENT TUBE, TDL 30W/840	489, 491, 493
E002	90164-0018	LIGHT FIXTURE, FK 130	489, 491, 493
E002:1	90297-0011	FLUORESCENT TUBE, TDL 30W/840	489, 491, 493
E 2001	90457-0149	LIGHT FIXTURE, DWDV 118D/230V 50 HZ	217
E 2002	90457-0149	LIGHT FIXTURE, DWDV 118D/230V 50 HZ	217

Pos	Part No	Description	Page No
E			
E7702	90164-0015	LIGHT FIXTURE, DWDCV111B/230V 50HZ	555, 557
E7705	90164-0015	LIGHT FIXTURE, DWDCV111B/230V 50HZ	555, 557
F			
F002	90007-0128	CIRCUIT BREAKER, 1P 6 A K	543
F003	90007-0129	CIRCUIT BREAKER, 1P 10 A K	543
F004	90007-0129	CIRCUIT BREAKER, 1P 10 A K	543
F005	90007-0129	CIRCUIT BREAKER, 1P 10 A K	543
F006	90007-0129	CIRCUIT BREAKER, 1P 10 A K	543
F007	90007-0129	CIRCUIT BREAKER, 1P 10 A K	543
F008	90007-0128	CIRCUIT BREAKER, 1P 6 A K	543
F010	42063-0100	LEVEL DETECTOR	87
F010	90007-0133	CIRCUIT BREAKER, 1P 25 A K	541
F011	90007-0129	CIRCUIT BREAKER, 1P 10 A K	541
F012	90233-0028	TUBE FUSE, 10A	541
F014	90233-0028	TUBE FUSE, 10A	541
F015	90007-0128	CIRCUIT BREAKER, 1P 6 A K	541
F016	90007-0128	CIRCUIT BREAKER, 1P 6 A K	543
F020	90007-0138	CIRCUIT BREAKER, 2P 10 A K	535
F022	90007-0147	CIRCUIT BREAKER, 3P 10 A K	535
F028	90007-0146	CIRCUIT BREAKER, 3P 6 A K	543
F101	90233-0029	TUBE FUSE, 25A	543
F102	90233-0029	TUBE FUSE, 25A	543
F103	90233-0029	TUBE FUSE, 25A	543
F104	90233-0028	TUBE FUSE, 10A	543
F105	90233-0028	TUBE FUSE, 10A	543
F106	90233-0027	TUBE FUSE, 16A	543
F107	90233-0027	TUBE FUSE, 16A	543
F108	90233-0027	TUBE FUSE, 16A	543
F112	90233-0028	TUBE FUSE, 10A	543
F122	90007-0129	CIRCUIT BREAKER, 1P 10 A K	535
F7304	90458-1448	MAGNETIC FUSE, S292 C100	655, 657, 659, 661, 663
G			
G100	90031-0068	PLC, POWER SUPPLY	529, 531, 533
G101	90031-0068	PLC, POWER SUPPLY	529, 531, 533
G102	90031-0068	PLC, POWER SUPPLY	529, 531, 533
G103	90031-0068	PLC, POWER SUPPLY	529, 531, 533
G104	90031-0068	PLC, POWER SUPPLY	529, 531, 533
H			
H2801	1317983-0100	ALARM BEACON	265
H2802	1317983-0100	ALARM BEACON	269
H7703	90052-0011	HORN, YO3/BT 24-50VDC NO.654005	555, 557

Pos	Part No	Description	Page No
K			
K001	90075-0127	CONTACTOR, 4KW 24VDC	541
K001:1	90075-0313	AUXILIARY CONTACT K&M 22 DILM.2NO;2NC	541
K002	90075-0127	CONTACTOR, 4KW 24VDC	541
K002:1	90075-0313	AUXILIARY CONTACT K&M 22 DILM.2NO;2NC	541
K003	90075-0128	CONTACTOR, 7,5KW 24VDC	541
K003:1	90075-0313	AUXILIARY CONTACT K&M 22 DILM.2NO;2NC	541
K004	90075-0128	CONTACTOR, 7,5KW 24VDC	535
K004:1	90075-0313	AUXILIARY CONTACT K&M 22 DILM.2NO;2NC	535
K005	90075-0127	CONTACTOR, 4KW 24VDC	541
K006	90075-0128	CONTACTOR, 7,5KW 24VDC	535
K006:1	90075-0313	AUXILIARY CONTACT K&M 22 DILM.2NO;2NC	535
K007	90075-0127	CONTACTOR, 4KW 24VDC	543
K007:1	90075-0313	AUXILIARY CONTACT K&M 22 DILM.2NO;2NC	543
K008	90075-0127	CONTACTOR, 4KW 24VDC	543
K008:1	90075-0313	AUXILIARY CONTACT K&M 22 DILM.2NO;2NC	543
K009	90075-0127	CONTACTOR, 4KW 24VDC	541
K009:1	90075-0313	AUXILIARY CONTACT K&M 22 DILM.2NO;2NC	541
K010	90075-0127	CONTACTOR, 4KW 24VDC	543
K010:1	90075-0313	AUXILIARY CONTACT K&M 22 DILM.2NO;2NC	543
K011	90075-0127	CONTACTOR, 4KW 24VDC	541
K011:1	90075-0313	AUXILIARY CONTACT K&M 22 DILM.2NO;2NC	541
K012	90075-0128	CONTACTOR, 7,5KW 24VDC	541
K013	90075-0128	CONTACTOR, 7,5KW 24VDC	541
K014	90075-0128	CONTACTOR, 7,5KW 24VDC	541
K015	90075-0128	CONTACTOR, 7,5KW 24VDC	541
K016	90075-0127	CONTACTOR, 4KW 24VDC	541
K016:1	90075-0313	AUXILIARY CONTACT K&M 22 DILM.2NO;2NC	541
K020	90075-0128	CONTACTOR, 7,5KW 24VDC	541
K020:1	90075-0313	AUXILIARY CONTACT K&M 22 DILM.2NO;2NC	541
K022	90075-0127	CONTACTOR, 4KW 24VDC	541
K023	90075-0127	CONTACTOR, 4KW 24VDC	541
K024	90075-0128	CONTACTOR, 7,5KW 24VDC	541
K024:1	90075-0313	AUXILIARY CONTACT K&M 22 DILM.2NO;2NC	541
K025	90075-0128	CONTACTOR, 7,5KW 24VDC	541
K026	90075-0127	CONTACTOR, 4KW 24VDC	543
K027	90075-0127	CONTACTOR, 4KW 24VDC	543
K028	90075-0128	CONTACTOR, 7,5KW 24VDC	543
K029	90075-0127	CONTACTOR, 4KW 24VDC	543
K030	90075-0127	CONTACTOR, 4KW 24VDC	543
K031	90075-0127	CONTACTOR, 4KW 24VDC	543
K032	90075-0127	CONTACTOR, 4KW 24VDC	543

Pos	Part No	Description	Page No
K			
K033	90075-0127	CONTACTOR, 4KW 24VDC	543
K036	90075-0127	CONTACTOR, 4KW 24VDC	543
K036:1	90075-0313	AUXILIARY CONTACT K&M 22 DILM.2NO;2NC	543
K100	90119-0056	RELAY, AUXILIARY MK3P5-S 24VDC	523
K101	90119-0056	RELAY, AUXILIARY MK3P5-S 24VDC	523
K102	90119-0056	RELAY, AUXILIARY MK3P5-S 24VDC	523
K104	90119-0056	RELAY, AUXILIARY MK3P5-S 24VDC	523
K105	90119-0056	RELAY, AUXILIARY MK3P5-S 24VDC	523
K107	90119-0056	RELAY, AUXILIARY MK3P5-S 24VDC	523
K108	90119-0056	RELAY, AUXILIARY MK3P5-S 24VDC	523
K110	90119-0056	RELAY, AUXILIARY MK3P5-S 24VDC	523
K111	90119-0056	RELAY, AUXILIARY MK3P5-S 24VDC	523
K112	90119-0056	RELAY, AUXILIARY MK3P5-S 24VDC	523
K113	90119-0056	RELAY, AUXILIARY MK3P5-S 24VDC	523
K114	90119-0056	RELAY, AUXILIARY MK3P5-S 24VDC	523
K115	90119-0056	RELAY, AUXILIARY MK3P5-S 24VDC	523
K116	90119-0056	RELAY, AUXILIARY MK3P5-S 24VDC	523
K118	90119-0056	RELAY, AUXILIARY MK3P5-S 24VDC	523
K120	90119-0056	RELAY, AUXILIARY MK3P5-S 24VDC	523
K121	90119-0056	RELAY, AUXILIARY MK3P5-S 24VDC	523
K126	90119-0056	RELAY, AUXILIARY MK3P5-S 24VDC	523
K140	90119-0056	RELAY, AUXILIARY MK3P5-S 24VDC	523
K200	90119-0067	SOLID-STATE RELAY, H12WD4850	537
K201	90119-0067	SOLID-STATE RELAY, H12WD4850	537
K202	90119-0067	SOLID-STATE RELAY, H12WD4850	537
K203	90119-0067	SOLID-STATE RELAY, H12WD4850	537
K204	90119-0067	SOLID-STATE RELAY, H12WD4850	537
K205	90119-0067	SOLID-STATE RELAY, H12WD4850	537
K206	90119-0067	SOLID-STATE RELAY, H12WD4850	537
K207	90119-0067	SOLID-STATE RELAY, H12WD4850	537
K208	90119-0067	SOLID-STATE RELAY, H12WD4850	539
K209	90119-0067	SOLID-STATE RELAY, H12WD4850	539
K210	90119-0067	SOLID-STATE RELAY, H12WD4850	539
K211	90119-0067	SOLID-STATE RELAY, H12WD4850	539
K213	90119-0067	SOLID-STATE RELAY, H12WD4850	539
K7000	90075-0127	CONTACTOR, 4KW 24VDC	665
K7001	90075-0127	CONTACTOR, 4KW 24VDC	665
L			
L1402	1296113-0000	INDUCTOR	45
L1402	2550315-0000	INDUCTOR	45
L 6101	2509617-0100	INDUCTOR	585
M			
MR034	1524481-0000	SEALING BLOCK	613
M1101	90270-0017	COMPRESSOR NASH/ELMO 112 MB/4-2083	131
M1122	90459-0001	PUMP UNIT, FIXED STROKE 888211	337
M1205	90321-0100	PUMP PBK 16/A 220/380V 50 HZ 3 PH.	161
M1205	90321-0127	CENTRIFUGAL PUMP LOWARA	161
M1206	90321-0134	CIRC. PUMP TMB 40/2 230V50HZ	169
M1206	90321-0135	CIRC. PUMP TMB 40/2 230V60HZ	169
M 1213	90045-0087	MOTOR 3GAA 071002-CSA M2AA 71B	289
M1501	90069-0608	GEARS, WORM MOTOR ODM120-60KE3	41
M1503	90045-0189	STEP MOTOR E22NSLT-LNN-NS-02	329
M1504	90045-0189	STEP MOTOR E22NSLT-LNN-NS-02	23, 25
M 2501	90321-0116	PUMP GRUNDFOSS CHI 2-60	429
M3102	90321-0117	PUMP LOWARA SV8-14 F75T	443, 445
M3102	90321-0120	PUMP SV8-09 F756T, 380V60HZ	443, 445
M4105	90045-0197	SERVO MOTOR EP 165-090-66T3B	331
M4302	90045-0164	SERVO MOTOR EP 075-112-44T3B	323
M4304	90045-0197	SERVO MOTOR EP 165-090-66T3B	331
M5503	90069-0257	GEARS, WORM MOTOR WKM/DM90-60WE2A	297
M6201	90069-0614	GEARS, WORM MOTOR MC320P2T	601
M6202	90457-0921	WORM GEAR MOTOR MC320P2TB5/D	601
M7208	90069-0600	GEARS, WORM MOTOR ODM90-60KE5	637
M7217	90069-0600	GEARS, WORM MOTOR ODM90-60KE5	679
O			
O2530	90304-0020	LIQUID CONTAINER	431
P			
P-03214	90166-0081	TUBE 6 MM PA BLUE	339
P1-07	90166-0013	TUBE 8 MM PA BLUE	239, 241
P1-01	90166-0195	TUBE 12 MM PA BLUE	239
P1-02	90166-0195	TUBE 12 MM PA BLUE	239
P1-03	90166-0195	TUBE 12 MM PA BLUE	239
P1-04	90166-0195	TUBE 12 MM PA BLUE	239
P1-05	90166-0195	TUBE 12 MM PA BLUE	239
P1-06	90166-0195	TUBE 12 MM PA BLUE	239
P1-01	90166-0195	TUBE 12 MM PA BLUE	241
P1-02	90166-0195	TUBE 12 MM PA BLUE	241
P1-03	90166-0195	TUBE 12 MM PA BLUE	241
P1-04	90166-0195	TUBE 12 MM PA BLUE	241
P1-05	90166-0195	TUBE 12 MM PA BLUE	241
P1-06	90166-0195	TUBE 12 MM PA BLUE	241
P1-032	90166-0195	TUBE 12 MM PA BLUE	339
P1-0321	90166-0195	TUBE 12 MM PA BLUE	339

Pos	Part No	Description	Page No
P			
P1	90166-0196	TUBE 14 MM PA BLUE	239, 241
P2	90166-0013	TUBE 8 MM PA BLUE	191, 193
P2-14	90166-0081	TUBE 6 MM PA BLUE	239, 241
P2-02	90166-0195	TUBE 12 MM PA BLUE	239, 241
P2	90166-0196	TUBE 14 MM PA BLUE	239
P2-01	90166-0196	TUBE 14 MM PA BLUE	239
P2	90166-0196	TUBE 14 MM PA BLUE	241
P2-01	90166-0196	TUBE 14 MM PA BLUE	241
P002	90332-0020	RECORDER HONEYWELL	513, 515
P003	90332-0020	RECORDER HONEYWELL	513, 515
P100	90053-0031	HOUR COUNTER, B 609.10 10-50VDC	513, 515
P100:1	359241-0201	SIGN "HOUR GLASS"	513, 515
P101	90053-0029	COUNTER, F524.800FA3C 24VDC	513, 515
P101:1	359241-0482	SIGN "PACKAGE COUNTER"	513, 515
Q			
Q001	90095-0072	OVERLOAD PROTECTION, PKZM 1,0 A	541
Q001:1	90259-0313	AUX. CONTACT K&M NHI21-PKZM0	541
Q002	90095-0073	OVERLOAD PROTECTION, PKZM 1,6 A	541
Q002:1	90259-0313	AUX. CONTACT K&M NHI21-PKZM0	541
Q003	90095-0078	OVERLOAD PROTECTION, PKZM0-16	541
Q003:1	90259-0313	AUX. CONTACT K&M NHI21-PKZM0	541
Q009	90095-0070	OVERLOAD PROTECTION, PKZM 0,4 A	541
Q009:1	90259-0313	AUX. CONTACT K&M NHI21-PKZM0	541
Q011	90095-0074	OVERLOAD PROTECTION, PKZM 2,5 A	541
Q011:1	90259-0313	AUX. CONTACT K&M NHI21-PKZM0	541
Q016	90095-0073	OVERLOAD PROTECTION, PKZM 1,6 A	541
Q016:1	90259-0313	AUX. CONTACT K&M NHI21-PKZM0	541
Q020	90095-0077	OVERLOAD PROTECTION, PKZM 6-10 A	541
Q020:1	90259-0313	AUX. CONTACT K&M NHI21-PKZM0	541
Q022	90095-0074	OVERLOAD PROTECTION, PKZM 2,5 A	541
Q022:1	90259-0313	AUX. CONTACT K&M NHI21-PKZM0	541
Q023	90095-0074	OVERLOAD PROTECTION, PKZM 2,5 A	541
Q023:1	90259-0313	AUX. CONTACT K&M NHI21-PKZM0	541
Q024	90095-0080	OVERLOAD PROTECTION, PKZM 25 A	541
Q024:1	90259-0313	AUX. CONTACT K&M NHI21-PKZM0	541
Q100	90111-0173	MAIN SW.NZM64-100/ZM64-100-760+AS4-NZM64	421
R			
R001	90121-0114	RESISTANCE FIXED, 0,22 KOHM, 25 W	535
R002	90121-0114	RESISTANCE FIXED, 0,22 KOHM, 25 W	535
R003	90121-0114	RESISTANCE FIXED, 0,22 KOHM, 25 W	535
R421	90459-1250	RESISTANCE FIXED, 120 OHM, 0,5 W 1%	517, 519
R505	90121-0115	RESISTANCE FIXED, 0,047 KOHM, 200 W	535
R807	90121-0120	RESISTANCE FIXED, 0,25 KOHM, 0,125 W	513, 515
R808	90121-0120	RESISTANCE FIXED, 0,25 KOHM, 0,125 W	513, 515
R809	90121-0120	RESISTANCE FIXED, 0,25 KOHM, 0,125 W	513, 515
R1105	449939-0001	HEATING ELEMENT 15KW	143
R1206	90206-0070	HEATING ELEMENT 6000W 380/220V	165
R1207	90206-0070	HEATING ELEMENT 6000W 380/220V	165
R1208	90206-0070	HEATING ELEMENT 6000W 380/220V	169
R1209	90206-0070	HEATING ELEMENT 6000W 380/220V	169
R5307	90206-0132	HOT AIR ELEMENT	403
R5308	90206-0132	HOT AIR ELEMENT	403
R5309	90206-0132	HOT AIR ELEMENT	403
R5310	90206-0132	HOT AIR ELEMENT	403
R6203	1538473-0000	SEALING BLOCK	607
R7304	1520972-0000	TPO-BAR	631
S			
S001	90064-0124	SWITCH, EM. STOP, ZB2-BS844+ZB2-BZ1045	503
S003	90111-0122	KEY SWITCH, 2 NO CONTACTS	513, 515
S003:1	359241-0133	SIGN, SERVICE SWITCH	513, 515
S004	90111-0124	KEY SWITCH, 1NO,1NC CONTACT	513, 515
S004:1	359241-0122	SIGN, CIP OF STEAM BARRIER SPACE	513, 515
S005	90064-0124	SWITCH, EM. STOP, ZB2-BS844+ZB2-BZ1045	503
S900	90064-0124	SWITCH, EM. STOP, ZB2-BS844+ZB2-BZ1045	233
S901	90064-0082	PUSH BUTTON, WHITE	233
S901:1	359301-0519	SIGN "TPOP RESET"	233
S902	90064-0082	PUSH BUTTON, WHITE	233
S902:1	359301-0130	SIGN "LAMPTEST"	233
S903	90111-0120	SWITCH, 2 POS.704.510 .0A+704.901.5/A	233
S904	90064-0082	PUSH BUTTON, WHITE	233
S904:1	359301-0170	SIGN "MANUAL FLUSHING FFU"	233
S905	90064-0098	PUSH BUTTON, CLEAR	233
S905:1	359301-0091	SIGN "INCHING FFU"	233
S906	90064-0082	PUSH BUTTON, WHITE	233
S906:1	359301-0050	SIGN "DROP CHUTE"	233
S907	90064-0098	PUSH BUTTON, CLEAR	233
S907:1	359301-0090	SIGN "INCHING"	233
S908	90064-0084	PUSH BUTTON, YELLOW	233
S908:1	359301-0110	SIGN "SHORT STOP"	233
S911	90064-0093	PUSH BUTTON, GREEN	233
S911:1	359301-0001	SIGN "UP"	233
S912	90064-0082	PUSH BUTTON, WHITE	233

Pos	Part No	Description	Page No
S			
S912:1	359301-0005	SIGN "DOWN"	233
S1003	90064-0085	PUSH BUTTON, RED	203, 205
S1802	90064-0124	SWITCH, EM. STOP, ZB2-BS844+ZB2-BZ1045	203, 205
S2803	90064-0124	SWITCH, EM. STOP, ZB2-BS844+ZB2-BZ1045	305
S2804	90064-0124	SWITCH, EM. STOP, ZB2-BS844+ZB2-BZ1045	305
S6206	90064-0082	PUSH BUTTON, WHITE	691
S7303	90064-0082	PUSH BUTTON, WHITE	703
S7402	90064-0082	PUSH BUTTON, WHITE	703
S7403	90064-0082	PUSH BUTTON, WHITE	703
S7701	90064-0084	PUSH BUTTON, YELLOW	691
S7812	90064-0124	SWITCH, EM. STOP, ZB2-BS844+ZB2-BZ1045	693
S7813	90064-0124	SWITCH, EM. STOP, ZB2-BS844+ZB2-BZ1045	703
S7814	90044-0084	LIMIT SW. 14 CE1-4	83, 93
T			
T1231	90113-0095	PRESSURE REGULATOR	185
T1304	90245-0043	TRANSFORMER, Z-8782	91
T1326	90113-0097	PRESSURE REGULATOR	185
T1402	67379-0407	TRANSFORMER	45
T1501	90113-0096	PRESSURE REGULATOR	185
T1502	90113-0095	PRESSURE REGULATOR	185
T 6101	67380-0207	TRANSFORMER	585
T6203	90458-0258	TRANSFORMER, 220VAC/6-9-12VAC	655, 657, 659, 661, 663
T7304	1364474-0000	TRANSFORMER	655, 657, 659, 661, 663
V			
V017	353021-0122	TERMINAL DISCONNECTBLE, WTR 2,5 D	525
V018	353021-0122	TERMINAL DISCONNECTBLE, WTR 2,5 D	525
W			
W0001	351150-0426	CABLE OLFLEX 5X25 MM2 LIGHT/GREY	219, 221
W100	90031-0305	I/O EXPANSION CABLE	529, 531, 533
W101	90031-0305	I/O EXPANSION CABLE	529, 531, 533
W102	90031-0305	I/O EXPANSION CABLE	529, 531, 533
W103	90031-0305	I/O EXPANSION CABLE	529, 531, 533
W173	1512322-0000	COPPER BRAID	529, 531, 533
W174	1512322-0000	COPPER BRAID	529, 531, 533
W175	1512322-0000	COPPER BRAID	529, 531, 533
W176	1512322-0000	COPPER BRAID	529, 531, 533
W177	1512322-0000	COPPER BRAID	529, 531, 533
W178	1512322-0000	COPPER BRAID	529, 531, 533
W400	1348067-0000	CABLE	529, 531, 533
W421	90458-2894	PAIR TWISTED CABLE 1X2X0,2MM2	517, 519
W422	90458-2894	PAIR TWISTED CABLE 1X2X0,2MM2	517, 519
W423	90458-2894	PAIR TWISTED CABLE 1X2X0,2MM2	509
W450	1524442-0000	SUPPORT	513, 515
W451	1317252-0000	CABLE SERIAL	513, 515
W501	90458-2895	COAXIAL CABLE RG 400/U BROWN	151, 153
W503	90458-2895	COAXIAL CABLE RG 400/U BROWN	363
W504	90458-2895	COAXIAL CABLE RG 400/U BROWN	363
W549	90220-0084	MOTOR CABLE 4X2,5+2(2X0.75)+SHIELD	529, 531, 533
W550	90220-0084	MOTOR CABLE 4X2,5+2(2X0.75)+SHIELD	529, 531, 533
W551	90220-0084	MOTOR CABLE 4X2,5+2(2X0.75)+SHIELD	529, 531, 533
W552	90220-0084	MOTOR CABLE 4X2,5+2(2X0.75)+SHIELD	529, 531, 533
W553	90220-0116	MOTOR CABLE 4X1,0+2(2X0,5)+SHIELD	529, 531, 533
W554	90220-0131	PAIR TWISTED CABLE 3X2X0,25MM2	529, 531, 533
W555	90220-0131	PAIR TWISTED CABLE 3X2X0,25MM2	529, 531, 533
W556	90220-0131	PAIR TWISTED CABLE 3X2X0,25MM2	529, 531, 533
W631	351120-0145	CABLE SIHF 3X25MM2 GREEN/YELLOW	613
W1001	351150-0425	CABLE OLFLEX 25X0,75 MM2 LIGHT/GREY	201
W1002	351150-0425	CABLE OLFLEX 25X0,75 MM2 LIGHT/GREY	201
W1003	351150-0425	CABLE OLFLEX 25X0,75 MM2 LIGHT/GREY	203, 205
W1004	351150-0425	CABLE OLFLEX 25X0,75 MM2 LIGHT/GREY	203, 205
W1005	351150-0425	CABLE OLFLEX 25X0,75 MM2 LIGHT/GREY	201
W1006	351150-0407	CABLE OLFLEX 12X0,75 MM2 LIGHT/GREY	203, 205
W1007	351150-0425	CABLE OLFLEX 25X0,75 MM2 LIGHT/GREY	203, 205
W1011	351150-0405	CABLE OLFLEX 5X0,75 MM2 LIGHT/GREY	203, 205
W1015	351150-0403	CABLE OLFLEX 3X0,75 MM2 LIGHT/GREY	201
W1018	351150-0403	CABLE OLFLEX 3X0,75 MM2 LIGHT/GREY	201
W1019	351150-0403	CABLE OLFLEX 3X0,75 MM2 LIGHT/GREY	201
W1024	351150-0405	CABLE OLFLEX 5X0,75 MM2 LIGHT/GREY	203, 205
W1027	351150-0403	CABLE OLFLEX 3X0,75 MM2 LIGHT/GREY	203, 205
W1028	351150-0403	CABLE OLFLEX 3X0,75 MM2 LIGHT/GREY	203, 205
W1029	351150-0404	CABLE OLFLEX 4X0,75 MM2 LIGHT/GREY	203, 205
W1030	351150-0403	CABLE OLFLEX 3X0,75 MM2 LIGHT/GREY	203, 205
W1031	351150-0403	CABLE OLFLEX 3X0,75 MM2 LIGHT/GREY	203, 205
W1044	351150-0405	CABLE OLFLEX 5X0,75 MM2 LIGHT/GREY	203, 205
W1045	351150-0405	CABLE OLFLEX 5X0,75 MM2 LIGHT/GREY	203, 205
W1046	351150-0405	CABLE OLFLEX 5X0,75 MM2 LIGHT/GREY	203, 205
W1048	351150-0405	CABLE OLFLEX 5X0,75 MM2 LIGHT/GREY	203, 205
W1049	351150-0403	CABLE OLFLEX 3X0,75 MM2 LIGHT/GREY	151, 153
W1051	90220-0092	PAIR TWISTED CABLE 3X2X0,25MM2	151, 153
W1052	351150-0404	CABLE OLFLEX 4X0,75 MM2 LIGHT/GREY	203, 205
W1053	90220-0092	PAIR TWISTED CABLE 3X2X0,25MM2	203, 205
W1058	351150-0403	CABLE OLFLEX 3X0,75 MM2 LIGHT/GREY	203, 205

Pos	Part No	Description	Page No
W			
W1065	...351150-0403	CABLE OLFLEX 3X0,75 MM2 LIGHT/GREY	203, 205
W1068	...351150-0405	CABLE OLFLEX 5X0,75 MM2 LIGHT/GREY	151, 153
W1084	...90220-0107	SCR. CABLE 5X0,75MM2	203, 205
W1122	...351150-0412	CABLE OLFLEX 3X1,5 MM2 LIGHT/GREY	341
W1206	...351150-0425	CABLE OLFLEX 25X0,75 MM2 LIGHT/GREY	341
W1207	...351150-0407	CABLE OLFLEX 12X0,75 MM2 LIGHT/GREY	219, 221
W1208	...351150-0407	CABLE OLFLEX 12X0,75 MM2 LIGHT/GREY	219, 221
W1300	...90220-0034	THERMOCOUPLE CABLE K/ 2X0,5MM2	151, 153
W1301	...90220-0034	THERMOCOUPLE CABLE K/ 2X0,5MM2	151, 153
W1302	...90220-0034	THERMOCOUPLE CABLE K/ 2X0,5MM2	151, 153
W1303	...90220-0034	THERMOCOUPLE CABLE K/ 2X0,5MM2	169
W1304	...90220-0034	THERMOCOUPLE CABLE K/ 2X0,5MM2	219, 221
W1305	...90220-0034	THERMOCOUPLE CABLE K/ 2X0,5MM2	151, 153
W1306	...90220-0034	THERMOCOUPLE CABLE K/ 2X0,5MM2	151, 153
W1307	...90220-0034	THERMOCOUPLE CABLE K/ 2X0,5MM2	151, 153
W1330	...90459-0253	CONNECTOR W. CABLE S12-3FVW-050	83, 93
W1402	...1520726-0000 ..	BUSBAR	45
W1500	...351150-0418	CABLE OLFLEX 4X2,5 MM2 LIGHT/GREY	151, 153
W1501	...351120-0168	CABLE SIHF 4X10MM2 GREEN/YELLOW	151, 153
W1502	...351120-0165	CABLE SIHF 4X25MM2 GREEN/YELLOW	151, 153
W1503	...351120-0165	CABLE SIHF 4X25MM2 GREEN/YELLOW	151, 153
W2001	...351150-0418	CABLE OLFLEX 4X2,5 MM2 LIGHT/GREY	151, 153
W2002	...351150-0418	CABLE OLFLEX 4X2,5 MM2 LIGHT/GREY	219, 221
W 2002	..351150-0418	CABLE OLFLEX 4X2,5 MM2 LIGHT/GREY	289
W2003	...351150-0166	CABLE OLFLEX 4X4 MM2 LIGHT/GREY	219, 221
W2004	...90220-0107	SCR. CABLE 5X0,75MM2	219, 221
W2005	...351150-0412	CABLE OLFLEX 3X1,5 MM2 LIGHT/GREY	219, 221
W2007	...351150-0418	CABLE OLFLEX 4X2,5 MM2 LIGHT/GREY	219, 221
W2008	...351150-0418	CABLE OLFLEX 4X2,5 MM2 LIGHT/GREY	219, 221
W2014	...351150-0418	CABLE OLFLEX 4X2,5 MM2 LIGHT/GREY	219, 221, 297
W2015	...90220-0105	SCR. CABLE 4X2,5MM2	219, 221
W2017	...351150-0419	CABLE OLFLEX 5X2,5 MM2 LIGHT/GREY	415
W2018	...351150-0419	CABLE OLFLEX 5X2,5 MM2 LIGHT/GREY	415
W2021	...90220-0034	THERMOCOUPLE CABLE K/ 2X0,5MM2	415
W2022	...90220-0034	THERMOCOUPLE CABLE K/ 2X0,5MM2	415
W2023	...90220-0034	THERMOCOUPLE CABLE K/ 2X0,5MM2	415
W2024	...90220-0034	THERMOCOUPLE CABLE K/ 2X0,5MM2	415
W2027	...90220-0095	SCR. CABLE 3X0,75MM2	421
W2028	...90220-0162	SCR. CABLE 10X0,25MM2	203, 205
W2029	...90220-0104	SCR. CABLE 4X1,5MM2	151, 153
W2031	...351150-0412	CABLE OLFLEX 3X1,5 MM2 LIGHT/GREY	151, 153
W2040	...351150-0412	CABLE OLFLEX 3X1,5 MM2 LIGHT/GREY	169
W2041	...351120-0164	CABLE SIHF 4X1,5MM2 GREEN/YELLOW	169
W2042	...351120-0164	CABLE SIHF 4X1,5MM2 GREEN/YELLOW	169
W2050	...351150-0425	CABLE OLFLEX 25X0,75 MM2 LIGHT/GREY	219, 221
W2054	...351150-0425	CABLE OLFLEX 25X0,75 MM2 LIGHT/GREY	219, 221
W2055	...90220-0034	THERMOCOUPLE CABLE K/ 2X0,5MM2	219, 221
W2056	...351150-0425	CABLE OLFLEX 25X0,75 MM2 LIGHT/GREY	219, 221
W2057	...351150-0425	CABLE OLFLEX 25X0,75 MM2 LIGHT/GREY	219, 221
W2062	...351150-0425	CABLE OLFLEX 25X0,75 MM2 LIGHT/GREY	219, 221
W2064	...90220-0091	PAIR TWISTED CABLE 2X2X0,25MM2	219, 221
W2066	...351150-0425	CABLE OLFLEX 25X0,75 MM2 LIGHT/GREY	219, 221
W2067	...351150-0425	CABLE OLFLEX 25X0,75 MM2 LIGHT/GREY	219, 221
W2068	...1363297-0000 ..	CABLE LVDS 10M	219, 221
W2201	...90042-0583	CABLE MECMAN 440-827 000-1	481
W 2211	..351150-0412	CABLE OLFLEX 3X1,5 MM2 LIGHT/GREY	217
W 2213	..351150-0418	CABLE OLFLEX 4X2,5 MM2 LIGHT/GREY	429
W 2214	..351150-0418	CABLE OLFLEX 4X2,5 MM2 LIGHT/GREY	425
W 2220	..351150-0403	CABLE OLFLEX 3X0,75 MM2 LIGHT/GREY	475
W2222	...351150-0403	CABLE OLFLEX 3X0,75 MM2 LIGHT/GREY	437
W2224	...351150-0405	CABLE OLFLEX 5X0,75 MM2 LIGHT/GREY	313
W2225	...351150-0405	CABLE OLFLEX 5X0,75 MM2 LIGHT/GREY	313
W2226	...351150-0405	CABLE OLFLEX 5X0,75 MM2 LIGHT/GREY	313
W2228	...351150-0405	CABLE OLFLEX 5X0,75 MM2 LIGHT/GREY	313
W2229	...351150-0405	CABLE OLFLEX 5X0,75 MM2 LIGHT/GREY	313
W2230	...351150-0405	CABLE OLFLEX 5X0,75 MM2 LIGHT/GREY	313
W2232	...351150-0406	CABLE OLFLEX 7X0,75 MM2 LIGHT/GREY	219, 221
W2233	...351150-0406	CABLE OLFLEX 7X0,75 MM2 LIGHT/GREY	219, 221
W2235	...351150-0403	CABLE OLFLEX 3X0,75 MM2 LIGHT/GREY	249
W 2242	..90220-0034	THERMOCOUPLE CABLE K/ 2X0,5MM2	427
W 2243	..351150-0403	CABLE OLFLEX 3X0,75 MM2 LIGHT/GREY	475
W 2244	..351150-0412	CABLE OLFLEX 3X1,5 MM2 LIGHT/GREY	217
W2250	...351150-0406	CABLE OLFLEX 7X0,75 MM2 LIGHT/GREY	433
W 2251	..351150-0122	CABLE " REPL.BY 351150-431"	429
W2252	...351150-0431	CABLE OLFLEX 2X0,75 MM2 LIGHT/GREY	425
W 2253	..351150-0431	CABLE OLFLEX 2X0,75 MM2 LIGHT/GREY	427
W2254	...351150-0405	CABLE OLFLEX 5X0,75 MM2 LIGHT/GREY	305
W2255	...351150-0405	CABLE OLFLEX 5X0,75 MM2 LIGHT/GREY	305
W2256	...351150-0166	CABLE OLFLEX 4X4 MM2 LIGHT/GREY	443, 445
W2258	...351150-0425	CABLE OLFLEX 25X0,75 MM2 LIGHT/GREY	473
W4000	...90220-0084	MOTOR CABLE 4X2,5+2(2X0.75)+SHIELD	219, 221
W4001	...90220-0116	MOTOR CABLE 4X1,0+2(2X0,5)+SHIELD	219, 221

Pos	Part No	Description	Page No
W			
W4002	90220-0084	MOTOR CABLE 4X2,5+2(2X0.75)+SHIELD	219, 221
W4003	351150-0407	CABLE OLFLEX 12X0,75 MM2 LIGHT/GREY	219, 221
W4004	351150-0425	CABLE OLFLEX 25X0,75 MM2 LIGHT/GREY	219, 221
W4005	351150-0419	CABLE OLFLEX 5X2,5 MM2 LIGHT/GREY	219, 221
W4006	351150-0419	CABLE OLFLEX 5X2,5 MM2 LIGHT/GREY	219, 221
W4010	90220-0131	PAIR TWISTED CABLE 3X2X0,25MM2	219, 221
W4011	90220-0131	PAIR TWISTED CABLE 3X2X0,25MM2	219, 221
W4012	90220-0034	THERMOCOUPLE CABLE K/ 2X0,5MM2	219, 221
W4013	90220-0034	THERMOCOUPLE CABLE K/ 2X0,5MM2	219, 221
W4014	90220-0034	THERMOCOUPLE CABLE K/ 2X0,5MM2	219, 221
W4015	90220-0034	THERMOCOUPLE CABLE K/ 2X0,5MM2	219, 221
W4016	90220-0107	SCR. CABLE 5X0,75MM2	219, 221
W4017	90220-0107	SCR. CABLE 5X0,75MM2	219, 221
W4018	351150-0407	CABLE OLFLEX 12X0,75 MM2 LIGHT/GREY	219, 221
W4021	351150-0407	CABLE OLFLEX 12X0,75 MM2 LIGHT/GREY	219, 221
W4022	351150-0403	CABLE OLFLEX 3X0,75 MM2 LIGHT/GREY	283
W4054	351150-0405	CABLE OLFLEX 5X0,75 MM2 LIGHT/GREY	219, 221
W4081	90220-0131	PAIR TWISTED CABLE 3X2X0,25MM2	219, 221
W4122	351150-0403	CABLE OLFLEX 3X0,75 MM2 LIGHT/GREY	341
W4123	351150-0403	CABLE OLFLEX 3X0,75 MM2 LIGHT/GREY	341
W4124	351150-0403	CABLE OLFLEX 3X0,75 MM2 LIGHT/GREY	341
W4125	351150-0403	CABLE OLFLEX 3X0,75 MM2 LIGHT/GREY	341
W4141	351150-0403	CABLE OLFLEX 3X0,75 MM2 LIGHT/GREY	341
W4240	351150-0403	CABLE OLFLEX 3X0,75 MM2 LIGHT/GREY	249
W7003	351150-0420	CABLE OLFLEX 7X2,5 MM2 LIGHT/GREY	655, 657, 659, 661, 663
W7004	351150-0413	CABLE OLFLEX 4X1,5 MM2 LIGHT/GREY	655, 657, 659, 661, 663
W7005	351150-0412	CABLE OLFLEX 3X1,5 MM2 LIGHT/GREY	655, 657, 659, 661, 663
W7006	351150-0425	CABLE OLFLEX 25X0,75 MM2 LIGHT/GREY	655, 657, 659, 661, 663
W7007	351150-0425	CABLE OLFLEX 25X0,75 MM2 LIGHT/GREY	655, 657, 659, 661, 663
W7008	351150-0425	CABLE OLFLEX 25X0,75 MM2 LIGHT/GREY	655, 657, 659, 661, 663
W7009	351150-0424	CABLE OLFLEX 18X0,75 MM2 LIGHT/GREY	655, 657, 659, 661, 663
W7010	90220-0104	SCR. CABLE 4X1,5MM2	619
W7011	90220-0104	SCR. CABLE 4X1,5MM2	679
W7012	90220-0105	SCR. CABLE 4X2,5MM2	577, 579
W7014	351150-0412	CABLE OLFLEX 3X1,5 MM2 LIGHT/GREY	555, 557
W7020	90458-1076	L-SHAPED CONNECTOR CABLE 933 235-042	673
W7021	90458-1076	L-SHAPED CONNECTOR CABLE 933 235-042	681
W7023	90458-1076	L-SHAPED CONNECTOR CABLE 933 235-042	681
W7024	90458-1076	L-SHAPED CONNECTOR CABLE 933 235-042	555, 557
W7025	90458-1076	L-SHAPED CONNECTOR CABLE 933 235-042	555, 557
W7028	351150-0407	CABLE OLFLEX 12X0,75 MM2 LIGHT/GREY	691
W7029	351150-0407	CABLE OLFLEX 12X0,75 MM2 LIGHT/GREY	703
W7031	351150-0405	CABLE OLFLEX 5X0,75 MM2 LIGHT/GREY	693
W7037	351150-0422	CABLE OLFLEX 3X4 MM2 LIGHT/GREY	655, 657, 659, 661, 663
W7039	90220-0115	SCR. CABLE 12X0,75MM2	577, 579
W7042	351150-0405	CABLE OLFLEX 5X0,75 MM2 LIGHT/GREY	555, 557
W7043	351150-0405	CABLE OLFLEX 5X0,75 MM2 LIGHT/GREY	555, 557
W7044	351150-0405	CABLE OLFLEX 5X0,75 MM2 LIGHT/GREY	555, 557
W7045	351150-0431	CABLE OLFLEX 2X0,75 MM2 LIGHT/GREY	555, 557
W7046	351120-0126	CABLE SIHF 2X4MM2 GREEN/YELLOW	607
W7047	2540595-0001	COAXIAL CABLE	577, 579
W7048	2540596-0001	COAXIAL CABLE	577, 579
W7050	90220-0092	PAIR TWISTED CABLE 3X2X0,25MM2	611
W7054	351150-0406	CABLE OLFLEX 7X0,75 MM2 LIGHT/GREY	555, 557
W7055	351150-0412	CABLE OLFLEX 3X1,5 MM2 LIGHT/GREY	555, 557
W7072	90220-0104	SCR. CABLE 4X1,5MM2	601
W7073	90220-0104	SCR. CABLE 4X1,5MM2	601
W7074	1498433-0000	CABLE	631
W7075	1498433-0000	CABLE	631
W7076	90220-0104	SCR. CABLE 4X1,5MM2	655, 657, 659, 661, 663
W7077	351150-0405	CABLE OLFLEX 5X0,75 MM2 LIGHT/GREY	555, 557
W74202	90166-0194	TUBE 8 MM PUR BLUE	709
W74204	90166-0194	TUBE 8 MM PUR BLUE	709
W74212	90166-0194	TUBE 8 MM PUR BLUE	711
W74214	90166-0194	TUBE 8 MM PUR BLUE	711
X			
X011	90001-0033	WALL SOCKET OUTLET	513, 515
X020:1	353024-0204	EARTH TERMINAL WPE 2,5	535
X020:2	353021-0212	FEED THROUGH TERMINAL, 10200.0	535
X020:3	353021-0212	FEED THROUGH TERMINAL, 10200.0	535
X020:4	353021-0212	FEED THROUGH TERMINAL, 10200.0	535
X020:5	353021-0212	FEED THROUGH TERMINAL, 10200.0	535
X022:1	353024-0204	EARTH TERMINAL WPE 2,5	535
X022:2	353021-0212	FEED THROUGH TERMINAL, 10200.0	535
X022:3	353021-0212	FEED THROUGH TERMINAL, 10200.0	535
X022:4	353021-0212	FEED THROUGH TERMINAL, 10200.0	535
X022:5	353021-0212	FEED THROUGH TERMINAL, 10200.0	535
X022:6	353031-0203	END SUPPORT, WEW 35/2	535
X025	90326-0020	PLUG, FEMALE YELLOW CR-AL	489, 491, 493
X101	90110-0159	MALE INSERT 70.310.0640.0	219, 221
X101	90110-0161	FEMALE INSERT 70 105 0653 0	489, 491, 493
X102	90110-0159	MALE INSERT 70.310.0640.0	219, 221

Pos	Part No	Description	Page No
X			
X102	90110-0161	FEMALE INSERT 70 105 0653 0	489, 491, 493
X103	90110-0159	MALE INSERT 70.310.0640.0	219, 221
X103	90110-0161	FEMALE INSERT 70 105 0653 0	489, 491, 493
X105	90110-0159	MALE INSERT 70.310.0640.0	151, 153
X105	90110-0161	FEMALE INSERT 70 105 0653 0	489, 491, 493
X107	90110-0159	MALE INSERT 70.310.0640.0	219, 221
X107	90110-0161	FEMALE INSERT 70 105 0653 0	489, 491, 493
X108	90110-0159	MALE INSERT 70.310.0640.0	219, 221
X108	90110-0161	FEMALE INSERT 70 105 0653 0	489, 491, 493
X110	90110-0159	MALE INSERT 70.310.0640.0	151, 153
X110	90110-0161	FEMALE INSERT 70 105 0653 0	489, 491, 493
X111	90110-0159	MALE INSERT 70.310.0640.0	219, 221
X111	90110-0161	FEMALE INSERT 70 105 0653 0	489, 491, 493
X112	90110-0159	MALE INSERT 70.310.0640.0	219, 221
X112	90110-0161	FEMALE INSERT 70 105 0653 0	489, 491, 493
X113	90110-0159	MALE INSERT 70.310.0640.0	219, 221
X113	90110-0161	FEMALE INSERT 70 105 0653 0	489, 491, 493
X115	90110-0159	MALE INSERT 70.310.0640.0	219, 221
X115	90110-0161	FEMALE INSERT 70 105 0653 0	489, 491, 493
X116	90110-0159	MALE INSERT 70.310.0640.0	219, 221
X116	90110-0161	FEMALE INSERT 70 105 0653 0	489, 491, 493
X117	90110-0159	MALE INSERT 70.310.0640.0	219, 221
X117	90110-0161	FEMALE INSERT 70 105 0653 0	489, 491, 493
X118	90110-0159	MALE INSERT 70.310.0640.0	655, 657, 659, 661, 663
X118	90110-0161	FEMALE INSERT 70 105 0653 0	489, 491, 493
X119	90110-0159	MALE INSERT 70.310.0640.0	151, 153
X119	90110-0161	FEMALE INSERT 70 105 0653 0	489, 491, 493
X122	90110-0159	MALE INSERT 70.310.0640.0	341
X122	90110-0161	FEMALE INSERT 70 105 0653 0	489, 491, 493
X125	90110-0159	MALE INSERT 70.310.0640.0	219, 221
X125	90110-0161	FEMALE INSERT 70 105 0653 0	489, 491, 493
X126	90110-0157	CABLE HOOD 6-POL 70.352.0628.1	619
X126	90110-0161	FEMALE INSERT 70 105 0653 0	489, 491, 493
X127	90110-0161	FEMALE INSERT 70 105 0653 0	489, 491, 493
X128	90110-0159	MALE INSERT 70.310.0640.0	655, 657, 659, 661, 663
X128	90110-0161	FEMALE INSERT 70 105 0653 0	489, 491, 493
X129	90110-0159	MALE INSERT 70.310.0640.0	151, 153
X129	90110-0161	FEMALE INSERT 70 105 0653 0	489, 491, 493
X130	90110-0159	MALE INSERT 70.310.0640.0	151, 153
X130	90110-0161	FEMALE INSERT 70 105 0653 0	489, 491, 493
X131	90110-0159	MALE INSERT 70.310.0640.0	151, 153
X131	90110-0161	FEMALE INSERT 70 105 0653 0	489, 491, 493
X132	90110-0159	MALE INSERT 70.310.0640.0	655, 657, 659, 661, 663
X132	90110-0161	FEMALE INSERT 70 105 0653 0	489, 491, 493
X133	90110-0159	MALE INSERT 70.310.0640.0	655, 657, 659, 661, 663
X133	90110-0161	FEMALE INSERT 70 105 0653 0	489, 491, 493
X134	90110-0161	FEMALE INSERT 70 105 0653 0	489, 491, 493
X135	90110-0159	MALE INSERT 70.310.0640.0	151, 153
X135	90110-0161	FEMALE INSERT 70 105 0653 0	489, 491, 493
X136	90110-0159	MALE INSERT 70.310.0640.0	151, 153
X136	90110-0161	FEMALE INSERT 70 105 0653 0	489, 491, 493
X137	90110-0159	MALE INSERT 70.310.0640.0	151, 153
X137	90110-0161	FEMALE INSERT 70 105 0653 0	489, 491, 493
X138	90110-0159	MALE INSERT 70.310.0640.0	151, 153
X138	90110-0161	FEMALE INSERT 70 105 0653 0	489, 491, 493
X140	90458-2890	CONNECTOR, 21N-50N12N133NE	151, 153
X203	90110-0164	FEMALE INSERT 70 105 2453 3	489, 491, 493
X206	90110-0150	MALE INSERT 121110 0000	341
X206	90110-0164	FEMALE INSERT 70 105 2453 3	489, 491, 493
X207	90110-0164	FEMALE INSERT 70 105 2453 3	489, 491, 493
X207:1	90110-0150	MALE INSERT 121110 0000	219, 221
X208	90110-0381	COVER	489, 491, 493
X209	90110-0381	COVER	489, 491, 493
X212	90110-0150	MALE INSERT 121110 0000	151, 153
X212	90110-0164	FEMALE INSERT 70 105 2453 3	489, 491, 493
X213	90110-0150	MALE INSERT 121110 0000	219, 221
X213	90110-0164	FEMALE INSERT 70 105 2453 3	489, 491, 493
X214	90110-0150	MALE INSERT 121110 0000	219, 221
X214	90110-0164	FEMALE INSERT 70 105 2453 3	489, 491, 493
X215	90110-0150	MALE INSERT 121110 0000	219, 221
X215	90110-0164	FEMALE INSERT 70 105 2453 3	489, 491, 493
X216	90110-0150	MALE INSERT 121110 0000	219, 221
X216	90110-0164	FEMALE INSERT 70 105 2453 3	489, 491, 493
X217	90110-0150	MALE INSERT 121110 0000	151, 153
X217	90110-0164	FEMALE INSERT 70 105 2453 3	489, 491, 493
X218	90110-0150	MALE INSERT 121110 0000	151, 153
X218	90110-0164	FEMALE INSERT 70 105 2453 3	489, 491, 493
X219	90110-0150	MALE INSERT 121110 0000	219, 221
X219	90110-0164	FEMALE INSERT 70 105 2453 3	489, 491, 493
X220	90110-0150	MALE INSERT 121110 0000	219, 221
X220	90110-0164	FEMALE INSERT 70 105 2453 3	489, 491, 493
X221	90110-0164	FEMALE INSERT 70 105 2453 3	489, 491, 493

Pos	Part No	Description	Page No
X			
X222	90110-0150	MALE INSERT 121110 0000	219, 221
X222	90110-0164	FEMALE INSERT 70 105 2453 3	489, 491, 493
X223	90110-0150	MALE INSERT 121110 0000	151, 153
X223	90110-0164	FEMALE INSERT 70 105 2453 3	489, 491, 493
X224	90110-0150	MALE INSERT 121110 0000	151, 153
X224	90110-0164	FEMALE INSERT 70 105 2453 3	489, 491, 493
X225	90110-0150	MALE INSERT 121110 0000	655, 657, 659, 661, 663
X225	90110-0164	FEMALE INSERT 70 105 2453 3	489, 491, 493
X226	90110-0150	MALE INSERT 121110 0000	655, 657, 659, 661, 663
X226	90110-0164	FEMALE INSERT 70 105 2453 3	489, 491, 493
X227	90110-0150	MALE INSERT 121110 0000	151, 153
X227	90110-0164	FEMALE INSERT 70 105 2453 3	489, 491, 493
X228	90110-0164	FEMALE INSERT 70 105 2453 3	489, 491, 493
X229	90110-0150	MALE INSERT 121110 0000	151, 153
X229	90110-0164	FEMALE INSERT 70 105 2453 3	489, 491, 493
X230	90110-0150	MALE INSERT 121110 0000	151, 153
X230	90110-0164	FEMALE INSERT 70 105 2453 3	489, 491, 493
X231	90110-0150	MALE INSERT 121110 0000	655, 657, 659, 661, 663
X231	90110-0164	FEMALE INSERT 70 105 2453 3	489, 491, 493
X232	90110-0150	MALE INSERT 121110 0000	151, 153
X232	90110-0164	FEMALE INSERT 70 105 2453 3	489, 491, 493
X233	90110-0164	FEMALE INSERT 70 105 2453 3	489, 491, 493
X234	90110-0150	MALE INSERT 121110 0000	219, 221
X234	90110-0164	FEMALE INSERT 70 105 2453 3	489, 491, 493
X300	90326-0316	THERMO CONTACT PANEL	489, 491, 493
X301	90326-0022	PLUG, MALE YELLOW CR-AL	219, 221
X302	90326-0022	PLUG, MALE YELLOW CR-AL	219, 221
X303	90326-0022	PLUG, MALE YELLOW CR-AL	219, 221
X304	90326-0022	PLUG, MALE YELLOW CR-AL	219, 221
X305	90326-0022	PLUG, MALE YELLOW CR-AL	219, 221
X306	90326-0022	PLUG, MALE YELLOW CR-AL	151, 153
X307	90326-0022	PLUG, MALE YELLOW CR-AL	151, 153
X308	90326-0022	PLUG, MALE YELLOW CR-AL	151, 153
X309	90326-0022	PLUG, MALE YELLOW CR-AL	219, 221
X310	90326-0022	PLUG, MALE YELLOW CR-AL	151, 153
X311	90326-0022	PLUG, MALE YELLOW CR-AL	151, 153
X313	90326-0022	PLUG, MALE YELLOW CR-AL	151, 153
X315	90326-0022	PLUG, MALE YELLOW CR-AL	151, 153
X351	90110-0507	CHASSIES CONTACT	489, 491, 493
X351	90110-0508	CABLE CONTACT	529, 531, 533
X351:1	90110-0209	CONTACT PIN, RC20M13K	529, 531, 533
X351:1	90110-0380	CONTACT PIN	489, 491, 493
X352	90110-0504	CABLE CONTACT	219, 221
X352	90110-0505	CHASSIES CONTACT	489, 491, 493
X352:1	90110-0209	CONTACT PIN, RC20M13K	489, 491, 493
X353	90110-0507	CHASSIES CONTACT	489, 491, 493
X353	90110-0508	CABLE CONTACT	529, 531, 533
X353:1	90110-0209	CONTACT PIN, RC20M13K	529, 531, 533
X353:1	90110-0380	CONTACT PIN	489, 491, 493
X354	90110-0504	CABLE CONTACT	219, 221
X354	90110-0505	CHASSIES CONTACT	489, 491, 493
X354:1	90110-0209	CONTACT PIN, RC20M13K	489, 491, 493
X355	90110-0208	CABLE CONTACT	529, 531, 533
X355	90110-0506	CHASSIES CONTACT	489, 491, 493
X355:1	90110-0209	CONTACT PIN, RC20M13K	529, 531, 533
X355:1	90110-0380	CONTACT PIN	489, 491, 493
X356	90110-0504	CABLE CONTACT	219, 221
X356	90110-0505	CHASSIES CONTACT	489, 491, 493
X356:1	90110-0209	CONTACT PIN, RC20M13K	489, 491, 493
X401	90110-0235	CABLE CONTACT, PX0739/S	619
X401	90110-0236	CHASSIS CONTACT PX0767/S	489, 491, 493
X402	90110-0235	CABLE CONTACT, PX0739/S	619
X402	90110-0236	CHASSIS CONTACT PX0767/S	489, 491, 493
X421	90459-0182	INTERFACE CONNECTOR FOR TMCC2	517, 519
X422	90459-0182	INTERFACE CONNECTOR FOR TMCC2	517, 519
X423	90459-0184	INTERFACE CONNECTOR FOR TPIH 2500 GENER.	509
X424	90459-0184	INTERFACE CONNECTOR FOR TPIH 2500 GENER.	509
X451	90110-0028	CONTACT UNIT 4-POLE	513, 515
X501	90110-0156	MALE INSERT 70.210.0653.0	151, 153
X501	90110-0165	FEMALE INSERT 70.005.0653.0	489, 491, 493
X503	90110-0156	MALE INSERT 70.210.0653.0	219, 221
X503	90110-0165	FEMALE INSERT 70.005.0653.0	489, 491, 493
X504	90110-0156	MALE INSERT 70.210.0653.0	655, 657, 659, 661, 663
X511	90458-2892	CONNECTOR, 11 N-50-3-31/133 NE	151, 153
X513	90458-2892	CONNECTOR, 11 N-50-3-31/133 NE	363
X514	90458-2892	CONNECTOR, 11 N-50-3-31/133 NE	363
X600	2541122-0100	DISTRIBUTION TERMINAL	489, 491, 493
X901	1095597-0100	TERMINAL	233
X1001	1347191-0200	CONNECTION BOX	11
X1003	1296847-0300	CONNECTION BOX	11
X1053	90110-0223	CONTACT MALE, MS 3106 E 16S-1P	203, 205
X1250	90042-0535	TERMINAL BOARD 19 CORDS	189

Pos	Part No	Description	Page No
X			
X1251	90042-0535	TERMINAL BOARD 19 CORDS	187
X1252	90042-0535	TERMINAL BOARD 19 CORDS	187
X1253	90042-0535	TERMINAL BOARD 19 CORDS	189
X1300	90326-0020	PLUG, FEMALE YELLOW CR-AL	143
X1301	90326-0020	PLUG, FEMALE YELLOW CR-AL	137
X1302	90326-0020	PLUG, FEMALE YELLOW CR-AL	29
X1304	90326-0020	PLUG, FEMALE YELLOW CR-AL	219, 221
X1307	90326-0020	PLUG, FEMALE YELLOW CR-AL	97
X2038	90326-0020	PLUG, FEMALE YELLOW CR-AL	219, 221
X 2038	90326-0022	PLUG, MALE YELLOW CR-AL	427
X2051	90042-0535	TERMINAL BOARD 19 CORDS	479
X2062	90110-0163	FEMALE INSERT 70 300 0640 0	219, 221
X2241	90110-0163	FEMALE INSERT 70 300 0640 0	219, 221
X2242	90110-0163	FEMALE INSERT 70 300 0640 0	219, 221
X2243	90110-0247	FEMALE INSERT 70.200.0653.0	219, 221
X2244	90110-0151	FEMALE INSERT 24-POL 121130 0000	219, 221
X 4001	451423-0000	CIRCUIT BOARD	333
X4002	90110-0151	FEMALE INSERT 24-POL 121130 0000	219, 221
X4002	90110-0228	CABLE HOOD 24-POL 71.350.2428.0	363
X4003	90110-0151	FEMALE INSERT 24-POL 121130 0000	219, 221
X4003	90110-0228	CABLE HOOD 24-POL 71.350.2428.0	415
X4004	90110-0151	FEMALE INSERT 24-POL 121130 0000	219, 221
X4004	90110-0228	CABLE HOOD 24-POL 71.350.2428.0	415
X4005:2	90110-0151	FEMALE INSERT 24-POL 121130 0000	219, 221
X4006:2	90110-0151	FEMALE INSERT 24-POL 121130 0000	219, 221
X4010	90326-0020	PLUG, FEMALE YELLOW CR-AL	219, 221
X4010	90326-0022	PLUG, MALE YELLOW CR-AL	415
X4011	90326-0020	PLUG, FEMALE YELLOW CR-AL	219, 221
X4011	90326-0022	PLUG, MALE YELLOW CR-AL	415
X4012	90326-0020	PLUG, FEMALE YELLOW CR-AL	219, 221
X4012	90326-0022	PLUG, MALE YELLOW CR-AL	415
X4013	90326-0020	PLUG, FEMALE YELLOW CR-AL	219, 221
X4013	90326-0022	PLUG, MALE YELLOW CR-AL	415
X4050	90110-0208	CABLE CONTACT	219, 221
X4051	90110-0208	CABLE CONTACT	219, 221
X4054	90110-0236	CHASSIS CONTACT PX0767/S	219, 221
X4055	90110-0236	CHASSIS CONTACT PX0767/S	219, 221
X4056	90110-0208	CABLE CONTACT	219, 221
X4058	90042-0535	TERMINAL BOARD 19 CORDS	243
X4059	90042-0535	TERMINAL BOARD 19 CORDS	243
X4071	90458-2890	CONNECTOR, 21N-50N12N133NE	363
X4072	90110-0125	ELECTRIC PLUG	363
X4073	90110-0126	COAXIAL CONNECTOR, GE 15021 C10BN	363
X4073	90458-2890	CONNECTOR, 21N-50N12N133NE	363
X4121	90042-0535	TERMINAL BOARD 19 CORDS	339
X5006-1	90326-0022	PLUG, MALE YELLOW CR-AL	403
X5006-2	90326-0077	CONTACT	403
X5007-1	90326-0022	PLUG, MALE YELLOW CR-AL	403
X5007-2	90326-0077	CONTACT	403
X5008-1	90326-0022	PLUG, MALE YELLOW CR-AL	403
X5008-2	90326-0077	CONTACT	403
X5009-1	90326-0022	PLUG, MALE YELLOW CR-AL	403
X5009-2	90326-0077	CONTACT	403
X7022	90458-1595	CONNECTION, BKS-S 33M-00	611
X7049	90042-0535	TERMINAL BOARD 19 CORDS	671
X7050	90042-0535	TERMINAL BOARD 19 CORDS	671
X74031	90458-0603	CONNECTOR FEMALE 5 PINS	635
X74032	90458-0603	CONNECTOR FEMALE 5 PINS	635
Y			
Y1104	90042-0172	SOLENOID VALVE 4023/1005/1032 24VDC	141
Y1105	90042-0172	SOLENOID VALVE 4023/1005/1032 24VDC	141
Y1107	90042-0538	PILOT VALVE L=500MM	187
Y1108	90042-0538	PILOT VALVE L=500MM	189
Y1111	90042-0538	PILOT VALVE L=500MM	189
Y1210	90042-0206	SOLENOID VALVE 444-111-000-1	283
Y1220	90042-0538	PILOT VALVE L=500MM	243
Y1221	90042-0538	PILOT VALVE L=500MM	243
Y1230	90042-0203	SOLENOID VALVE BURKERT	65
Y1241	90042-0538	PILOT VALVE L=500MM	189
Y1280	90042-0538	PILOT VALVE L=500MM	189
Y1281	90042-0538	PILOT VALVE L=500MM	189
Y1301	90042-0538	PILOT VALVE L=500MM	187
Y1303	90042-0538	PILOT VALVE L=500MM	189
Y2104	90042-0538	PILOT VALVE L=500MM	243
Y2106	90042-0248	SOLENOID VALVE OFFICIENE DI ENSINO	249
Y 2108	90042-0249	SOLENOID VALVE OFFICINE DI ENSINO	475
Y2201	90042-0585	PILOT VALVE L=5M	481
Y3101	90042-0254	SOLENOID VALVE, R1 1/2	437
Y3103	90042-0538	PILOT VALVE L=500MM	479
Y3105	90042-0538	PILOT VALVE L=500MM	479
Y3109	90042-0538	PILOT VALVE L=500MM	479
Y3111	90042-0538	PILOT VALVE L=500MM	479

Pos	Part No	Description	Page No
Y			
Y3112	90042-0538	PILOT VALVE L=500MM	479
Y4260	90042-0538	PILOT VALVE L=500MM	339
Y4261	90042-0538	PILOT VALVE L=500MM	339
Y4262	90042-0538	PILOT VALVE L=500MM	339
Y4263	90459-0005	SOLENOID VALVE, 44487	337
Y6201	90042-0538	PILOT VALVE L=500MM	671
Y6203	90042-0538	PILOT VALVE L=500MM	671
Y6205	90042-0538	PILOT VALVE L=500MM	671
Y7303	90042-0538	PILOT VALVE L=500MM	671
Y7315	90042-0538	PILOT VALVE L=500MM	671
Y7407	90042-0538	PILOT VALVE L=500MM	671
Y7408	90042-0538	PILOT VALVE L=500MM	671
Y7410	90042-0538	PILOT VALVE L=500MM	671
Y7412	90042-0538	PILOT VALVE L=500MM	671
Y7413	90042-0538	PILOT VALVE L=500MM	671
Y7414	90042-0538	PILOT VALVE L=500MM	671
Y7415	90042-0538	PILOT VALVE L=500MM	671
Y7420	90042-0538	PILOT VALVE L=500MM	671
Y7421	90042-0538	PILOT VALVE L=500MM	671
Y7425	90042-0585	PILOT VALVE L=5M	671
Y74121	90166-0194	TUBE 8 MM PUR BLUE	571
Y74122	90166-0194	TUBE 8 MM PUR BLUE	571
Z			
Z001	90024-0060	POWER LINE FILTER, 80 A 250/440 VAC	421
Z002	90082-0013	OVERVOLTAGE PROTECTOR	421
Z003	90024-0039	INPUT FILTER, 50 A	535
Z004	90024-0036	FILTERED TERMINAL BLOCK	421
Z18	90024-0047	EMI SUPPRESSION FERRITE	529, 531, 533
Z19	90024-0047	EMI SUPPRESSION FERRITE	531, 533
Z20	90024-0047	EMI SUPPRESSION FERRITE	531, 533
Z21	90024-0047	EMI SUPPRESSION FERRITE	531, 533
Z22	90024-0047	EMI SUPPRESSION FERRITE	531, 533
Z23	90024-0047	EMI SUPPRESSION FERRITE	531, 533
Z24	90024-0047	EMI SUPPRESSION FERRITE	531, 533
Z25	90024-0047	EMI SUPPRESSION FERRITE	531, 533
Z26	90024-0047	EMI SUPPRESSION FERRITE	531, 533
Z27	90024-0047	EMI SUPPRESSION FERRITE	531, 533
Z410	90430-0326	FILTER 6SE3290-0BA87-0FB2	529, 531, 533

Pos	Part No	Description	Page No	Pos	Part No	Description	Page No

Machine Type	Group Description	Page No

Tetra Pak

SPC binder labels. 40 mm Full width *Note! This page is generated* **automatically.**
using the **variable definitions** *made in the* **front page** *file!!*

TBA/22 050V
648571-0500
Issue: 2002-11 Doc No: SPC-81765-0106

TBA/22 050V
648571-0500
Issue: 2002-11 Doc No: SPC-81765-0106

TBA/22 050V
648571-0500
Issue: 2002-11 Doc No: SPC-81765-0106

TBA/22 050V
648571-0500
Issue: 2002-11 Doc No: SPC-81765-0106

TBA/22 050V
648571-0500
Issue: 2002-11 Doc No: SPC-81765-0106

TBA/22 050V
648571-0500
Issue: 2002-11 Doc No: SPC-81765-0106

TBA/22 050V
648571-0500
Issue: 2002-11 Doc No: SPC-81765-0106

TBA/22 050V
648571-0500
Issue: 2002-11 Doc No: SPC-81765-0106

TBA/22 050V
648571-0500
Issue: 2002-11 Doc No: SPC-81765-0106

TBA/22 050V
648571-0500
Issue: 2002-11 Doc No: SPC-81765-0106

TBA/22 050V
648571-0500
Issue: 2002-11 Doc No: SPC-81765-0106