SPC

Spare Parts Catalogue

TBA/22 050V

648571-0500

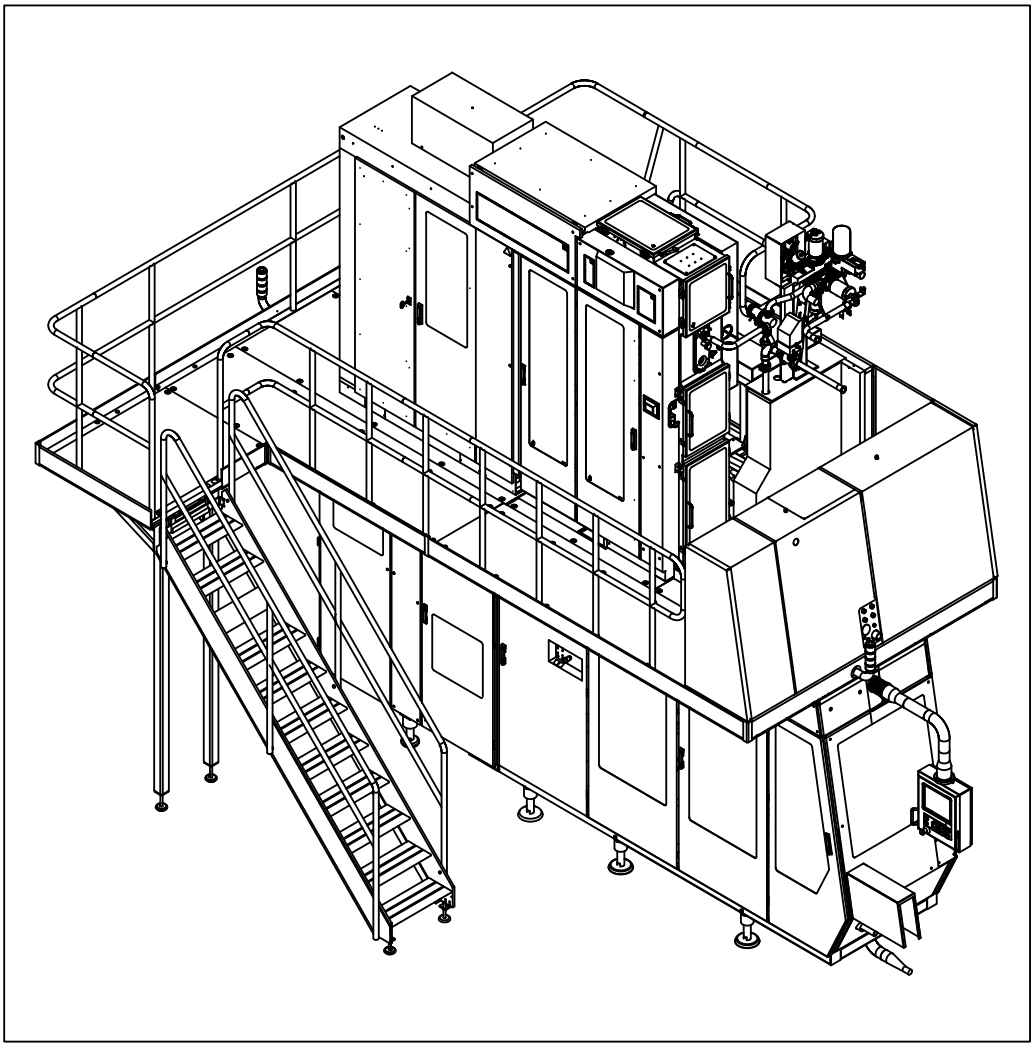

Tetra Pak

Doc. No: SPC-81765-0154

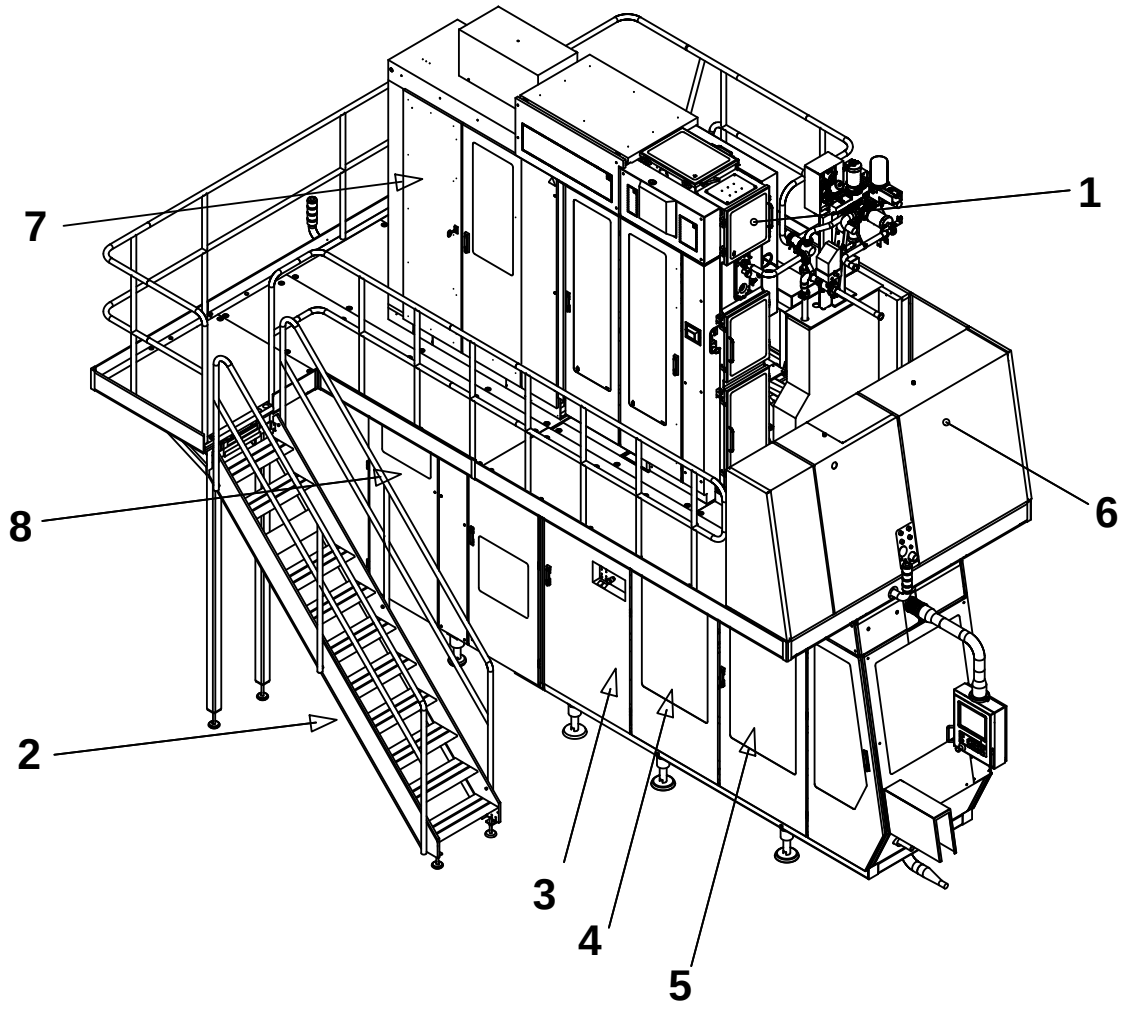

The position numbers in the illustration correspond with the chapter numbers listed on the next page.

Copyright © 2009 Tetra Pak Group

All rights reserved. No part of this document may be reproduced or copied in any form or by any means without written permission from Tetra Pak Packaging Solutions .

Tetra Pak and all Tetra Pak products are trademarks belonging to the Tetra Pak Group.

The content of this manual is in accordance with the design and construction of the machine or equipment at the time of publishing. Tetra Pak reserves the right to introduce design modifications without prior notice.

This document was produced by:

Tetra Pak Packaging Solutions
Via Delfini 1
411 00 Modena
ITALY

Additional copies can be ordered from Tetra Pak. When ordering additional copies, always provide the document number.

Doc. No. SPC-81765-0154

Issue 2009-03

This document is valid from:

21203/00430

Series No/Machine No Sign.

SPC

Spare Parts Catalogue

TBA/22 050V
648571-0500

BINDER 1

i Introduction

1 Superstructure

2 Machine Body

3 Drive

4 Jaw System

5 Final Folder

6 Service Unit

7 Electrical Cabinet

BINDER 2

8 Automatic Splicing Unit

9 Electric Equipment

10 Conveyor Section

11 Regular Accessories

12 Optional Accessories

ii Part Number Index

iii Ref. Des. Parts Index

Machine or equipment configurations that this catalogue is valid for are described on the next page.

Doc. No: SPC-81765-0154

Issue 2009-03

Tetra Pak

Tetra Pak Packaging Solutions

Valid for:

Name	Drawing Specification and Development Step	Additional Information
TBA/22 050V	648571-0500	-

Update Log for Doc. No. SPC-81765-0154

This table shows all changes made to this catalogue, including installed rebuilding kits, added or removed pages.

Date	Installed Kit	Added Pages (Doc. No.)	Removed Pages	Signature

Date	Installed Kit	Added Pages (Doc. No.)	Removed Pages	Signature

i Introduction

en About the Introduction Chapter
This chapter contains basic information about this catalogue and related Tetra Pak equipment.

bg За уводната глава
Тази глава съдържа основна информация за този каталог и приложимото Tetra Pak оборудване.

cs O kapitole Úvod
Tato kapitola obsahuje základní informace o této příručce a souvisejícím zařízení Tetra Pak.

da Om indledningen
Kapitlet indeholder grundlæggende oplysninger om dette katalog og tilhørende Tetra Pak-udstyr.

de Über das Einleitungskapitel
Diese Kapitel enthält grundlegende Informationen über diesen Katalog und die zugehörige Tetra Pak-Ausrüstung

el Σχετικά με το Κεφάλαιο 'Εισαγωγή'
Αυτό το κεφάλαιο περιέχει βασικές πληροφορίες για τον παρόντα κατάλογο και τον σχετικό εξοπλισμό της Tetra Pak.

es Acerca del capítulo Introducción
Este capítulo contiene información básica sobre este catálogo y el equipo Tetra Pak relacionado.

et Sissejuhatava peatüki kohta
See peatükk sisaldab teavet käesoleva kataloogi ja sellega seonduva Tetra Paki seadme kohta.

fi Tietoja Johdanto-luvusta
Tässä luvussa on perustietoja tästä luettelosta ja Tetra Pak -laitteesta.

fr À propos du chapitre Introduction
Ce chapitre contient les informations de base à propos de ce catalogue et de l'équipement Tetra Pak concerné.

hu A Bevezetés fejezetről
Ez a fejezet alapvető információkat tartalmaz a katalógusról és a hozzá tartozó Tetra Pak berendezésről.

is Um inngangskaflann
Þessi kafli inniheldur grundvallarupplýsingar um þennan vörulista og tengdan Tetra Pak búnað.

it Informazioni sul capitolo Introduzione
Questo capitolo contiene informazioni generali sul presente catalogo e sulla relativa macchina Tetra Pak.

lt Apie įvadinį skyrių
Šiame skyriuje pateikta pagrindinė informacija apie šį katalogą ir su juo susijusią "Tetra Pak" įrangą.

lv Par Ievada nodaļu
Šī nodaļa ietver galveno informāciju par šo katalogu un saistītajām Tetra Pak iekārtām.

nl Over de inleiding
Dit hoofdstuk bevat basisinformatie omtrent deze catalogus en aanverwante Tetra Pak-installatie.

no Om kapitlet Introduksjon
Dette kapitlet inneholder grunnleggende informasjon om denne katalogen og relatert Tetra Pak-utstyr.

pl Informacje na temat rozdziału wprowadzającego
Rozdział wprowadzający zawiera podstawowe informacje dotyczące niniejszego katalogu i związanej z nim maszyny Tetra Pak.

pt Acerca do Capítulo de Introdução
Este capítulo contém informações básicas sobre este catálogo e os equipamentos relacionados da Tetra Pak.

ro Despre capitolul introductiv
Acest capitol conține informații de bază despre acest catalog și despre echipamentul Tetra Pak corelat.

sk O kapitole Úvod
Táto kapitola obsahuje základné informácie o tomto návode a informácie súvisiace so zariadením Tetra Pak.

sl O uvodnem poglavju
To poglavje vsebuje osnovne informacije o tem katalogu in opremi Tetra Pak.

sv Om inledningskapitlet
Det här kapitlet innehåller grundläggande information om katalogen och Tetra Pak-utrustningen.

Introduction

Illustrations . . . . . i - 5
English Text . . . . . i - 7

Увод

Илюстрации . . . . . i - 5
Текст на български език . . . . . i -11

Úvod

Obrázky . . . . . i -5
Český text . . . . . i - 15

Indledning

Illustrationer . . . . . i - 5
Dansk tekst . . . . . i - 19

Einleitung

Abbildungen . . . . . i - 5
Deutscher Text . . . . . i - 23

Εισαγωγή

Εικόνες . . . . . i - 5
Ελληνικό Κείμενο . . . . . i - 27

Introducción

Ilustraciones . . . . . i - 5
Texto en español . . . . . i - 31

Sissejuhatus

Joonised . . . . . i - 5
Eestikeelne tekst . . . . . i - 35

Johdanto

Kuvat . . . . . i - 5
Suomenkielinen teksti . . . . . i - 39

Introduction

Illustrations . . . . . i - 5
Texte français . . . . . i - 43

Bevezetés

Ábrák . . . . . i - 5
Magyar szöveg . . . . . i - 47

Inngangur

Skýringarmyndir . . . . . i - 5
Íslenskur texti . . . . . i - 51

Introduzione

Figure . . . . . i - 5
Testo in italiano . . . . . i - 55

Įvadas

Paveikslėliai . . . . . i - 5
Lietuviškas tekstas . . . . . i - 59

Ievads

Ilustrācijas . . . . . i - 5
Teksts latviešu valodā . . . . . i - 63

Inleiding

Afbeeldingen . . . . . i - 5
Nederlands tekst . . . . . i - 67

Introduksjon

Illustrasjoner . . . . . i - 5
Norsk tekst . . . . . i - 71

Wprowadzenie

Rysunki . . . . . i - 5
Tekst polski . . . . . i - 75

Introdução

Ilustrações . . . . . i - 5
Texto em português . . . . . i - 79

Introducere

Ilustrații . . . . . i - 5
Text în limba română . . . . . i - 83

Úvod

Ilustrácie . . . . . i – 5
Slovenský text . . . . . i - 87

Uvod

Slike . . . . . i - 5
Slovensko besedilo . . . . . i - 91

Inledning

Bilder . . . . . i - 5
Svensk text . . . . . i - 95

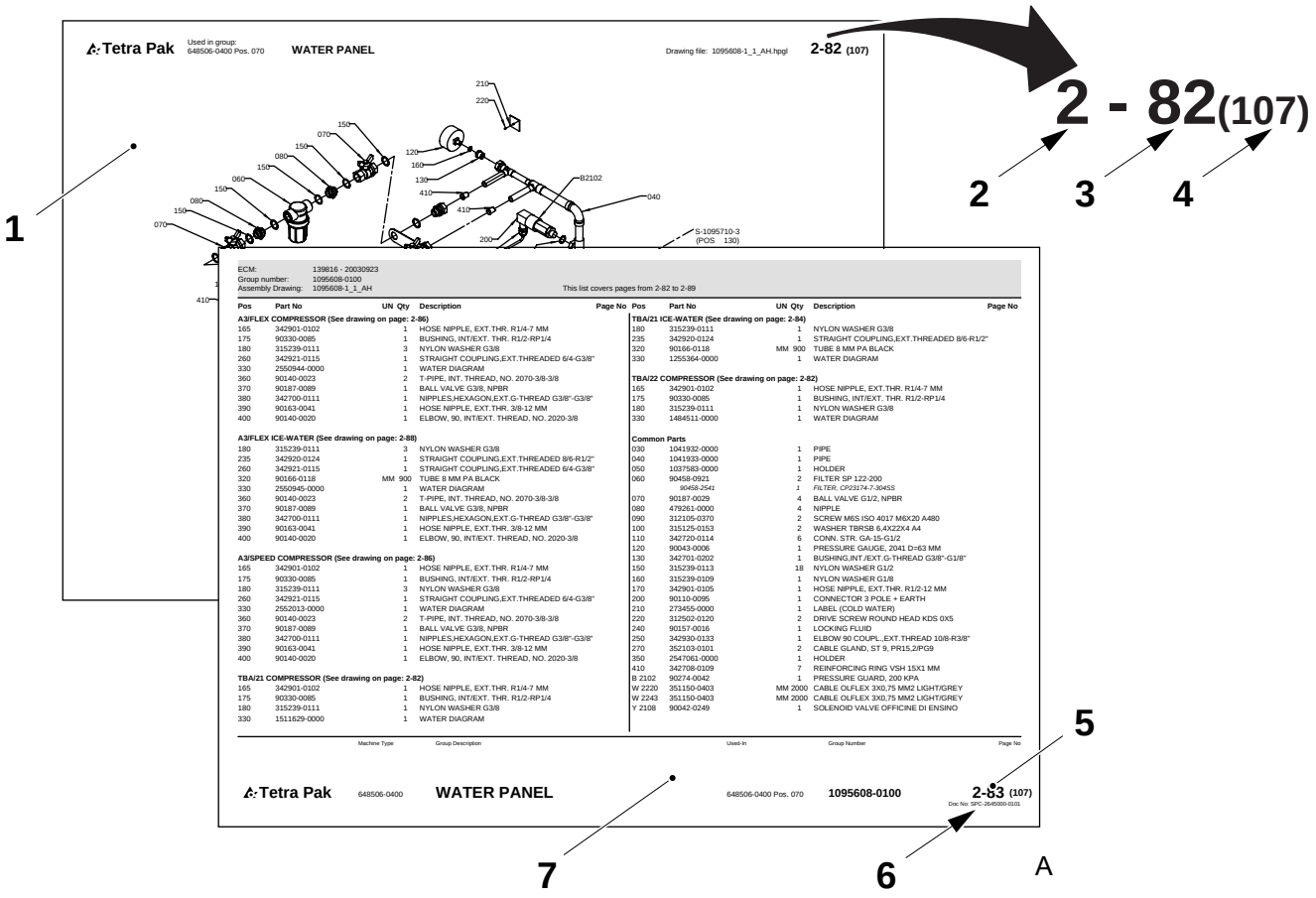
Tetra Pak
Used in group: 648506-0400 Pos. 070
WATER PANEL
Drawing file: 1095608-1_1_AH.hpgl
2-82 (107)
2 - 82(107)
1
2
3
4
5
6
7
A
ECM: 139816 - 20030923
Group number: 1095608-0100
Assembly Drawing: 1095608-1_1_AH
This list covers pages from 2-82 to 2-89
Tetra Pak
648506-0400
WATER PANEL
648506-0400 Pos. 070
1095608-0100
2-83 (107)

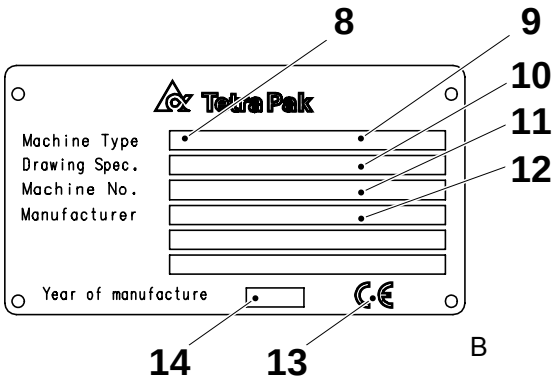
8
9
10
11
12
Tetra Pak
Machine Type
Drawing Spec.
Machine No.
Manufacturer
Year of manufacture
14
13
B

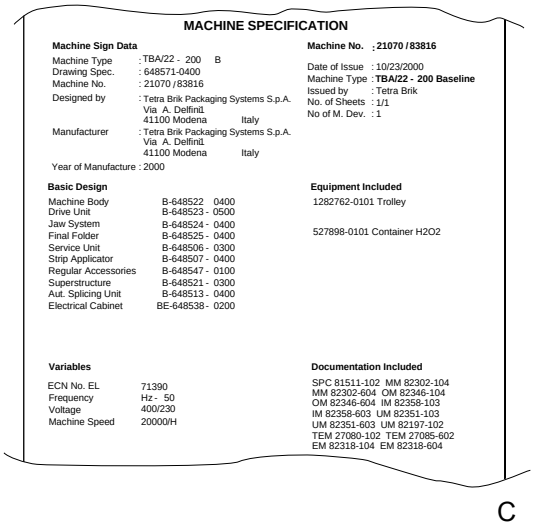
MACHINE SPECIFICATION
Machine Sign Data
Machine Type : TBA/22 - 200 B
Drawing Spec. : 648571-0400
Machine No. : 21070 / 83816
Designed by : Tetra Brik Packaging Systems S.p.A. Via A. Delfini1 41100 Modena Italy
Manufacturer : Tetra Brik Packaging Systems S.p.A. Via A. Delfini1 41100 Modena Italy
Year of Manufacture : 2000
Machine No. ; 21070 / 83816
Date of Issue : 10/23/2000
Machine Type : TBA/22 - 200 Baseline
Issued by : Tetra Brik
No. of Sheets : 1/1
No of M. Dev. : 1
Basic Design
Machine Body B-648522 0400
Drive Unit B-648523 - 0500
Jaw System B-648524 - 0400
Final Folder B-648525 - 0400
Service Unit B-648506 - 0300
Strip Applicator B-648507 - 0400
Regular Accessories B-648547 - 0100
Superstructure B-648521 - 0300
Aut. Splicing Unit B-648513 - 0400
Electrical Cabinet BE-648538 - 0200
Equipment Included
1282762-0101 Trolley
527898-0101 Container H2O2
Variables
ECN No. EL 71390
Frequency Hz - 50
Voltage 400/230
Machine Speed 20000/H
Documentation Included
SPC 81511-102 MM 82302-104
MM 82302-604 OM 82346-104
OM 82346-604 IM 82358-103
IM 82358-603 UM 82351-103
UM 82351-603 UM 82197-102
TEM 27080-102 TEM 27085-602
EM 82318-104 EM 82318-604
C

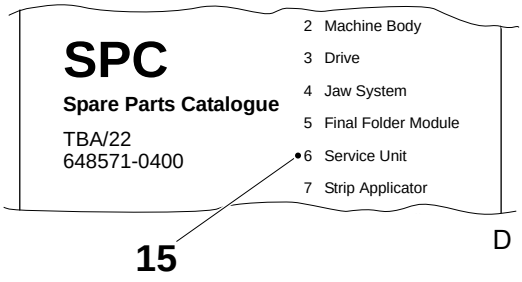
SPC
Spare Parts Catalogue
TBA/22
648571-0400
2 Machine Body
3 Drive
4 Jaw System
5 Final Folder Module
6 Service Unit
7 Strip Applicator
15
D

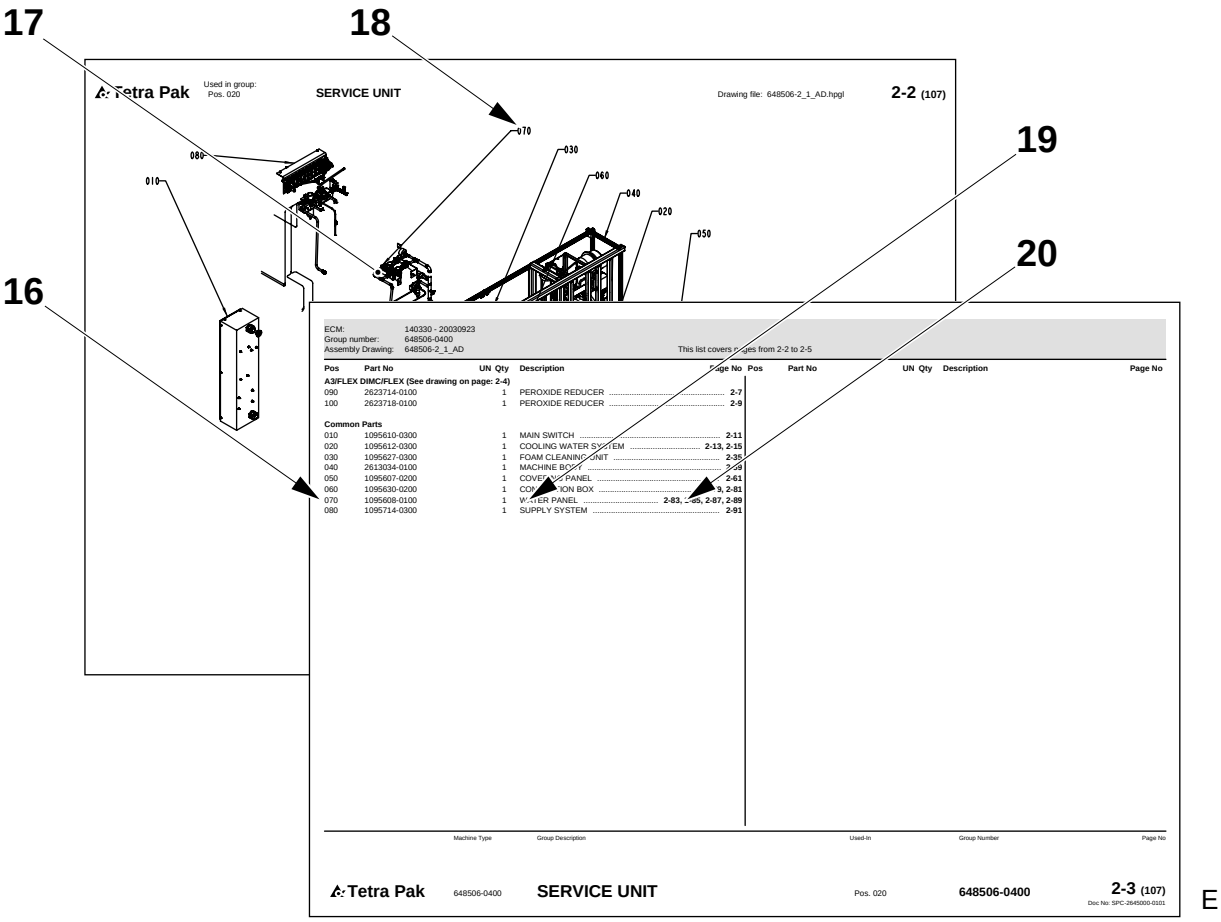
17
18
19
20
16
Tetra Pak
Used in group:
Pos. 020
SERVICE UNIT
Drawing file: 648506-2_1_AD.hpgl
2-2 (107)
070
030
080
060
010
040
020
050
ECM: 140330 - 20030923
Group number: 648506-0400
Assembly Drawing: 648506-2_1_AD
This list covers pages from 2-2 to 2-5
Pos Part No UN Qty Description Page No
A3/FLEX DIMC/FLEX (See drawing on page: 2-4)
090 2623714-0100 1 PEROXIDE REDUCER 2-7
100 2623718-0100 1 PEROXIDE REDUCER 2-9
Common Parts
010 1095610-0300 1 MAIN SWITCH 2-11
020 1095612-0300 1 COOLING WATER SYSTEM 2-13, 2-15
030 1095627-0300 1 FOAM CLEANING UNIT 2-35
040 2613034-0100 1 MACHINE BODY 2-39
050 1095607-0200 1 COVERING PANEL 2-61
060 1095630-0200 1 CONNECTION BOX 2-79, 2-81
070 1095608-0100 1 WATER PANEL 2-83, 2-85, 2-87, 2-89
080 1095714-0300 1 SUPPLY SYSTEM 2-91
Pos Part No UN Qty Description Page No
Machine Type Group Description Used-In Group Number Page No
Tetra Pak 648506-0400 SERVICE UNIT Pos. 020 648506-0400 2-3 (107)
Doc No: SPC-2645000-0101
E

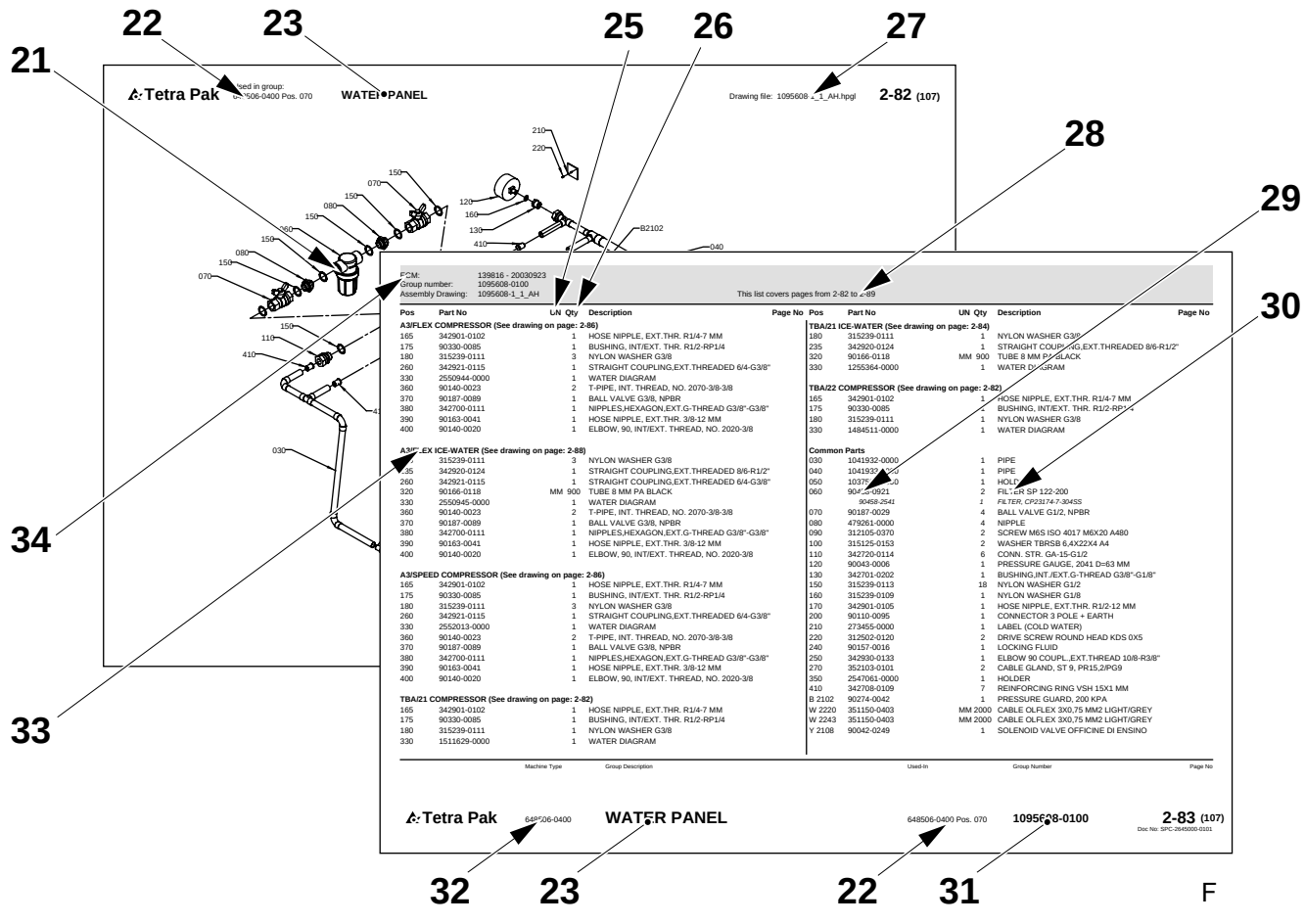
22
23
25
26
27
21
28
29
30
34
33
Tetra Pak
Used in group:
Pos. 070
WATER PANEL
Drawing file: 1095608-1_1_AH.hpgl
2-82 (107)
210
220
150
070
080
150
150
080
150
070
120
160
130
410
B2102
040
030
110
410
ECM: 139816 - 20030923
Group number: 1095608-0100
Assembly Drawing: 1095608-1_1_AH
This list covers pages from 2-82 to 2-89
Pos Part No UN Qty Description Page No
A3/FLEX COMPRESSOR (See drawing on page: 2-86)
165 342901-0102 1 HOSE NIPPLE, EXT.THR. R1/4-7 MM
175 90330-0085 1 BUSHING, INT/EXT. THR. R1/2-RP1/4
180 315239-0111 3 NYLON WASHER G3/8
260 342921-0115 1 STRAIGHT COUPLING,EXT.THREADED 6/4-G3/8"
330 2550944-0000 1 WATER DIAGRAM
360 90140-0023 2 T-PIPE, INT. THREAD, NO. 2070-3/8-3/8
370 90187-0089 1 BALL VALVE G3/8, NPBR
380 342700-0111 1 NIPPLES,HEXAGON,EXT.G-THREAD G3/8"-G3/8"
390 90163-0041 1 HOSE NIPPLE, EXT.THR. 3/8-12 MM
400 90140-0020 1 ELBOW, 90, INT/EXT. THREAD, NO. 2020-3/8
A3/FLEX ICE-WATER (See drawing on page: 2-88)
235 315239-0111 3 NYLON WASHER G3/8
235 342920-0124 1 STRAIGHT COUPLING,EXT.THREADED 8/6-R1/2"
260 342921-0115 1 STRAIGHT COUPLING,EXT.THREADED 6/4-G3/8"
320 90166-0118 MM 900 TUBE 8 MM PA BLACK
330 2550945-0000 1 WATER DIAGRAM
360 90140-0023 2 T-PIPE, INT. THREAD, NO. 2070-3/8-3/8
370 90187-0089 1 BALL VALVE G3/8, NPBR
380 342700-0111 1 NIPPLES,HEXAGON,EXT.G-THREAD G3/8"-G3/8"
390 90163-0041 1 HOSE NIPPLE, EXT.THR. 3/8-12 MM
400 90140-0020 1 ELBOW, 90, INT/EXT. THREAD, NO. 2020-3/8
A3/SPEED COMPRESSOR (See drawing on page: 2-86)
165 342901-0102 1 HOSE NIPPLE, EXT.THR. R1/4-7 MM
175 90330-0085 1 BUSHING, INT/EXT. THR. R1/2-RP1/4
180 315239-0111 3 NYLON WASHER G3/8
260 342921-0115 1 STRAIGHT COUPLING,EXT.THREADED 6/4-G3/8"
330 2552013-0000 1 WATER DIAGRAM
360 90140-0023 2 T-PIPE, INT. THREAD, NO. 2070-3/8-3/8
370 90187-0089 1 BALL VALVE G3/8, NPBR
380 342700-0111 1 NIPPLES,HEXAGON,EXT.G-THREAD G3/8"-G3/8"
390 90163-0041 1 HOSE NIPPLE, EXT.THR. 3/8-12 MM
400 90140-0020 1 ELBOW, 90, INT/EXT. THREAD, NO. 2020-3/8
TBA/21 COMPRESSOR (See drawing on page: 2-82)
165 342901-0102 1 HOSE NIPPLE, EXT.THR. R1/4-7 MM
175 90330-0085 1 BUSHING, INT/EXT. THR. R1/2-RP1/4
180 315239-0111 1 NYLON WASHER G3/8
330 1511629-0000 1 WATER DIAGRAM
TBA/21 ICE-WATER (See drawing on page: 2-84)
180 315239-0111 1 NYLON WASHER G3/8
235 342920-0124 1 STRAIGHT COUPLING,EXT.THREADED 8/6-R1/2"
320 90166-0118 MM 900 TUBE 8 MM PA BLACK
330 1255364-0000 1 WATER DIAGRAM
TBA/22 COMPRESSOR (See drawing on page: 2-82)
165 342901-0102 1 HOSE NIPPLE, EXT.THR. R1/4-7 MM
175 90330-0085 1 BUSHING, INT/EXT. THR. R1/2-RP1/4
180 315239-0111 1 NYLON WASHER G3/8
330 1484511-0000 1 WATER DIAGRAM
Common Parts
030 1041932-0000 1 PIPE
040 1041933-0000 1 PIPE
050 1037[illegible]-0000 1 HOLDER
060 90458-0921 2 FILTER SP 122-200
90458-2541 FILTER, CP23174-7-304SS
070 90187-0029 4 BALL VALVE G1/2, NPBR
080 479261-0000 4 NIPPLE
090 312105-0370 2 SCREW M6S ISO 4017 M6X20 A480
100 315125-0153 2 WASHER TBRSB 6,4X22X4 A4
110 342720-0114 6 CONN. STR. GA-15-G1/2
120 90043-0006 1 PRESSURE GAUGE, 2041 D=63 MM
130 342701-0202 1 BUSHING,INT./EXT.G-THREAD G3/8"-G1/8"
150 315239-0113 18 NYLON WASHER G1/2
160 315239-0109 1 NYLON WASHER G1/8
170 342901-0105 1 HOSE NIPPLE, EXT.THR. R1/2-12 MM
200 90110-0095 1 CONNECTOR 3 POLE + EARTH
210 273455-0000 1 LABEL (COLD WATER)
220 312502-0120 2 DRIVE SCREW ROUND HEAD KDS 0X5
240 90157-0016 1 LOCKING FLUID
250 342930-0133 1 ELBOW 90 COUPL.,EXT.THREAD 10/8-R3/8"
270 352103-0101 2 CABLE GLAND, ST 9, PR15,2/PG9
350 2547061-0000 1 HOLDER
410 342708-0109 7 REINFORCING RING VSH 15X1 MM
B 2102 90274-0042 1 PRESSURE GUARD, 200 KPA
W 2220 351150-0403 MM 2000 CABLE OLFLEX 3X0,75 MM2 LIGHT/GREY
W 2243 351150-0403 MM 2000 CABLE OLFLEX 3X0,75 MM2 LIGHT/GREY
Y 2108 90042-0249 1 SOLENOID VALVE OFFICINE DI ENSINO
Pos Part No UN Qty Description Page No
Machine Type Group Description Used-In Group Number Page No
Tetra Pak 648506-0400 WATER PANEL 648506-0400 Pos. 070 1095608-0100 2-83 (107)
Doc No: SPC-2645000-0101
32 23 22 31
F

Introduction

Manual Information

Tetra Pak recommends reading all delivered manuals carefully. Make sure that the delivered manuals are available to personnel who operate or maintain the equipment.

It is important to keep this catalogue for the lifetime of the equipment and to pass the catalogue on to any subsequent holder or user.

Tetra Pak will not be held responsible for any damage to the equipment caused by not following the instructions given in the manuals that accompany this equipment.

Delivered Manuals

Manuals delivered with this equipment may include

- CM
  The Conversion Manual provides technicians with information on converting the equipment between different production modes.
- EM
  The Electrical Manual provides technicians with information about the equipment's electrical system.
- IM
  The Installation Manual provides technicians with information required to safely install the equipment.
- MM
  The Maintenance Manual provides technicians with information on maintaining the equipment.
- OM
  The Operation Manual manual provides the operator with information on handling and operating the equipment before, during, and after production.
- SPC
  The Spare Parts Catalogue provides the information necessary to order spare parts from Tetra Pak
- TeM
  The Technical Manual
  - provides technicians with information required to safely install the equipment
  - provides technicians with information on maintaining the equipment
  - provides technicians with information about the machine's/ equipment's electrical system
  - provides the information necessary to order spare parts from Tetra Pak.

Page Layout

Refer to the illustration (A) on page i-5: The main pages in a Spare Parts Catalogue consist of an illustration page (1) and a corresponding list page (7). The page number (5) is shown in the header of an illustration page and in the footer of a list page. The document number (6) is shown in the footer of a list page.

Page Numbering

Refer to the illustration (A) on page i-5: A page number (5) has three parts:

- chapter number (2)
- consecutive page number within the chapter (3)
- total number of pages in the chapter (4)

Machine Introduction

Manufacturer

For the manufacturer's name and address, see the second page of this catalogue.

Service

To order spare parts for this machine, or to report problems associated with operating this machine, contact the nearest Tetra Pak office.

Contact the Liaison with other inquiries, comments, or suggestions for improvement regarding the equipment and its documentation.

Identification

CE Classification

This equipment complies with the basic health and safety regulations of the European Economic Area (EEA).

Machine Plate

The illustration (B) on page i-5 shows an example of a machine plate. An illustration of the valid machine plate and its location on the equipment is shown in the Introduction chapter of the manuals delivered with this equipment. The machine plate contains the data listed below, needed when contacting Tetra Pak concerning this specific equipment.

- Machine type (8)
- Volume (9)
- Drawing specifications (10)
- Machine serial number (11)
- Manufacturer (12)
- CE mark (13)
- Year of manufacture (14)

The illustration (C) on page i-5 shows an example of a machine specification. Make sure that the equipment data listed in the front pages of this manual corresponds to the machine plate data and the machine specification.

How to Use This Spare Parts Catalogue

Locate a Spare Part Number

a) Refer to the illustration (D) on page i-5: Go to the chapter number (15) indicated beside the main group that contains the part you want to locate.

Items b) and c) refer to the illustration (E) on page i-6.

b) On the main group illustration, look for the machine subgroup (17) that contains the part or subgroup you are looking for. Note the position number (18) and go to the list page that follows the illustration.

c) Look for the position number/reference designation (16) or the subgroup name (19). Go to the corresponding page number (20) listed in the right-hand column. Tetra Pak has chosen to always use the function oriented structure for reference designation. The prefix indicating function oriented structure (=) is not shown in the reference designation.

Items d) and e) refer to the illustration (F) on page i-6.

d) Locate the part (21) that you are looking for on the subgroup illustration and note the part's position number.

e) The part number (29) and part description (30) are listed beside the position number on the list page.

Information Listed in a Spare Parts Catalogue

The list below refers to the illustration (F) on page i-6. A Spare Parts Catalogue contains the following information about groups, subgroups, and spare parts for the equipment:

- Group structure reference (22). Indicates the next higher group in the equipment list structure.
- Group name (23)
- Unit of measure (25)
- Quantity (26)
- Assembly drawing number (27)
- List page range (28). Included if there are multiple pages in the group illustration or list.
- Part or subgroup number (29)
- Subgroup name or part description (30)
- Group number (31)
- Equipment number (32)
- Group information heading (33). Indicates if the section below the heading is for a specific machine variant or if it is a list of common parts. If a list has more than one variant and each variant has its own assembly drawing, a page reference to the variant's assembly drawing is shown.
- Internal information (34)

Увод

Информация за ръководството

Tetra Pak Ви препоръчва да прочетете внимателно всички доставени ръководства. Проверете дали доставените ръководства са достъпни за служителите, които поддържат или работят с оборудването.

Важно е да запазите този каталог през целия живот на оборудването и да го предадете на трети лица, които ще използват или съхраняват оборудването.

Tetra Pak не може да бъде държана под отговорност за щети върху оборудването, причинени от неспазване на даденте инструкции в ръководствата, които съпровождат оборудването.

Доставени ръководства

Ръководствата, доставени с това оборудване, могат да включват

- CM
  Ръководството за приспособяване осигурява на техническите лица информация за приспособяването на оборудване към различни производствени режими.
- EM
  Електрическото ръководство осигурява на техническите лица информация за електрическата система на оборудването.
- IM
  Ръководството за инсталиране предоставя на техническите лица информацията, която е необходима за безопасно инсталиране на оборудването.
- MM
  Ръководството за поддръжка предоставя на техническите лица информация относно поддържането на оборудването.
- OM
  Ръководството за операции предоставя на операторите информация за това, как да боравят и функционират с оборудването преди, по време на и след производство.
- SPC
  Каталогът с резервни части предоставя необходимата информация за поръчка на резервни части от Tetra Pak
- TeM
  Техническото ръководство
  - предоставя на техническите лица необходимата информация за безопасно инсталиране на оборудването
  - предоставя на техническите лица информация за поддръжка на оборудването
  - предоставя на техническите лица информация за електрическата система на машината/оборудването
  - предоставя необходимата информация за поръчка на резервни части от Tetra Pak.

Формат на страниците

Разгледайте илюстрация (A) на страница i-5: Главните страници в Каталога с резервни части се състоят от страница с илюстрация (1) и прилежаща страница със списък (7). Номерът на страницата (5) е посочен в горната част на страницата с илюстрация и в долната част на страницата със списъка. Номерът на документа (6) е показан в долната част на страницата със списъка.

Номериране на страници

Разгледайте илюстрация (A) на страница i-5: Един номер на страница (5) има три части:

- номер на глава (2)
- последователен номер на страница в една глава (3)
- общ брой страници в главата (4)

Машини Увод

Производител

Вижте втората страница на този каталог, за да проверите името и адреса на производителя.

Обслужване

За да поръчате резервни части за тази машина или да докладвате за проблеми, свързани с работата с тази машина, се свържете с най-близкия офис на Tetra Pak.

Свържете се с отдела за контакти с клиенти за други запитвания, коментари и предложения за подобрение по отношение на оборудването и прилежащата му документация.

Идентификация

Класификация на ЦЕ

Това оборудване отговаря на основните наредби, свързани с опазване на здравето и безопасността на Европейската Икономическа Общност (ЕИО).

Табелка на машина

Илюстрация (B) на страница i-5 показва пример с табелка на машина. В уводната глава на ръководствата, доставени с това оборудване, е показана илюстрация с валидната табелка на машината и нейното положение върху оборудването. Табелката на машината съдържа посочените по-долу данни, които Ви трябват, когато се свързвате с Tetra Pak относно това специфично оборудване.

- Тип машина (8)
- Обем (9)
- Спесификации за чертане (10)
- Сериен номер на машината (11)
- Производител (12)
- CE печат (13)
- Година на производство (14)

Илюстрация (C) на страница i-5 показва пример със спесификация за машина. Проверете дали данните за оборудването, изброени на предните страници в това ръководство отговарят на данните от табелката на машината и на спесификацията на машината.

Как да използвате този Каталог за резервни части

Намерете Номер на резервна част

a) Разгледайте илюстрация (D) на страница i-5: Отидете в глава номер (15) посочена до главната група, която съдържа частта, която искате да намерите.

Артикули b) и c) се отнасят до илюстрация (E) на страница i-6.

b) На главната обща илюстрация вижте подгрупата на машината (17), която съдържа частта или подгрупата, която търсите. Намерете номера на позицията (18) и отворете на страницата със списъка, която е след илюстрацията.

c) Намерете номера на позицията/референцията (16) или името на подгрупата (19). Отворете съответстващия номер на страница (20) в дясната колона. Tetra Pak е избрала да използва винаги функционално-ориентирана структура при обозначаване на референциите. Префиксът, който показва функционално-ориентирана структура (=) не е посочен в обозначаването на референциите.

Артикули d) и e) се отнасят до илюстрация (F) на страница i-6.

d) Намерете частта (21), която търсите в илюстрацията на подгрупата и запомнете номера на частта.

e) Номерът на частта (29) и описанието на частта (30) са изброени до номера на позицията на страницата със списъка.

Изброена информация в Каталога с резервни части

По-долу посоченият списък се отнася до илюстрация (F) на страница i-6. Каталогът с резервни части съдържа следната информация за групи, подгрупи и резервни части за оборудването:

- Референция за структурата (22). Показва следващата по-голяма група в структурата със списъка на оборудването.
- Име на група (23)
- Единица мярка (25)
- Количество (26)
- Номер за монтажен чертеж (27)
- Обхват на страницата със списък (28). Включен, ако има няколко страници в илюстрацията на групата или списъка.
- Номер на част или подгрупа (29)
- Име на подгрупа или описание на част (30)
- Номер на група (31)
- Номер на оборудване (32)
- Референция за информацията за групата (33). Показва дали частта под заглавието е за специфична версия на машината или е списък с общи части. Ако един списък има повече от един вариант и всеки вариант има собствен монтажен чертеж, се показва референцията на страницата към монтажния чертеж на варианта.
- Вътрешна информация (34)

Úvod

Informace o manuálu

Tetra Pak doporučuje, abyste si pozorně přečetli všechny dodané příručky. Přesvědčte se, že dodané manuály jsou k dispozici personálu, který obsluhuje nebo provádí údržbu zařízení.

Je důležité ponechat si tuto příručku po celou dobu životnosti zařízení a předat ho jakémukoliv následujícímu vlastníkovi nebo uživateli.

Tetra Pak nebude odpovídat za žádné škody zařízení, způsobené nedodržováním pokynů uvedených v této příručce.

Dodané příručky

Příručky dodané s tímto zařízením mohou obsahovat

- CM
  Konverzní manuál (CM) poskytuje technikům informace o konverzi zařízení mezi různými výrobními režimy.
- EM
  Elektrický manuál (EM) poskytuje technikům informace o elektrickém systému tohoto zařízení.
- IM
  Instalační manuál (IM) poskytuje technikům informace potřebné k bezpečné instalaci zařízení.
- MM
  Údržbový manuál (MM) poskytuje technikům informace o údržbě tohoto zařízení.
- OM
  Provozní manuál (OM) poskytuje operátorovi informace o manipulaci s tímto zařízením a provozu před, během a po výrobě.
- SPC
  Katalog náhradních dílů (SPC) poskytuje informace potřebné pro objednávání náhradních dílů od společnosti Tetra Pak
- TeM
  Technický manuál
  - poskytuje technikům informace potřebné k bezpečné instalaci tohoto zařízení
  - poskytuje technikům informace o údržbě tohoto zařízení
  - poskytuje technikům informace o elektrickém systému tohoto zařízení
  - poskytuje informace potřebné pro objednávání náhradních dílů od společnosti Tetra Pak

Rozvržení stránky

Viz obrázek (A) na straně i-5: Hlavní strany Katalogu náhradních dílů obsahují stranu s obrázky (1) a odpovídající stranu seznamu (7). Číslo strany (5) je uvedeno v záhlaví strany s obrázky a v zápatí strany seznamu. Číslo dokumentu (6) je uvedeno v zápatí strany seznamu.

Číslování stran

Viz obrázek (A) na straně i-5: Číslo strany (5) sestává ze tří částí:

- číslo kapitoly (2)
- pořadové číslo strany (3) v kapitole
- celkový počet stránek (4) v kapitole

Úvod ke stroji

Výrobce

Název a adresa výrobce je uvedena na druhé straně tohoto katalogu.

Servis

Chcete-li objednat náhradní díly nebo ohlásit problémy související s provozem tohoto stroje, kontaktujte nejbližší kancelář Tetra Pak.

S dalšími dotazy, připomínkami nebo náměty na vylepšení ohledně zařízení a této dokumentace se obracejte na kontaktní osobu.

Identifikace

Klasifikace CE

Toto zařízení splňuje základní zdravotní a bezpečnostní předpisy Evropského hospodářského prostoru (EEA).

Štítek na stroji

Obrázek (B) na straně i-5 znázorňuje příklad štítku na stroji. Obrázek platného štítku na stroji a jeho umístění na zařízení je uveden v příručkách dodaných s tímto strojem v kapitole Úvod. Na štítku jsou uvedeny údaje potřebné při kontaktování společnosti Tetra Pak, týkající se tohoto specifického zařízení.

- Typ stroje (8)
- Objem (9)
- Výkresové specifikace (10)
- Výrobní číslo stroje (11)
- Výrobce (12)
- Označení CE (13)
- Rok výroby (14)

Obrázek (C) na straně i-5 zobrazuje příklad specifikace stroje. Přesvědčte se, že údaje o zařízení uvedená v seznamu na předních stranách tohoto manuálu odpovídají údajům štítku na stroji a specifikaci stroje.

Jak používat tento Katalog náhradních dílů

Vyhledejte číslo náhradního dílu

a) Viz obrázek (D) na straně i-5: Přejděte na číslo kapitoly (15) uvedené vedle hlavní skupiny, která obsahuje hledaný díl.

Položky b) a c) odkazují na obrázek (E) na straně i-6.

b) Na vyobrazení hlavní skupiny vyhledejte strojní podskupinu (17), která obsahuje hledaný díl nebo podskupinu. Poznamenejte si číslo pozice (18) a přejděte na stranu seznamu vyplývající z obrázku.

c) Vyhledejte číslo pozice/označení odkazu (16) nebo název podskupiny (19). Přejděte na odpovídající číslo strany (20) v seznamu v pravém sloupci. Tetra Pak zvolil pro označování odkazu používat vždy uspořádání orientované na funkci. Prefix indikující uspořádání orientované na funkci (=) není uveden v označení odkazu.

Položky d) a e) odkazují na obrázek (F) na straně i-6.

d) Vyhledejte díl (21), který hledáte na vyobrazení podskupiny a poznamenejte si číslo pozice dílu.

e) Číslo dílu (29) a popis dílu (30) jsou uvedeny v seznamu vedle čísla pozice na straně seznamu.

Informace uvedené v seznamu v Katalogu náhradních dílů

Níže uvedený seznam odkazuje na obrázek (F) na straně i-6. Katalog náhradních dílů obsahuje následující informace o skupinách, podskupinách a náhradních dílech pro toto zařízení:

- Odkaz na uspořádání skupiny (22). Indikuje další vyšší skupinu v uspořádání seznamu zařízení.
- Název skupiny (23)
- Měrná jednotka (25)
- Množství (26)
- Číslo montážního výkresu (27)
- Rozsah stran seznamu (28). Včetně toho, zda existuje více stran v obrázku skupiny nebo seznamu.
- Díl nebo číslo podskupiny (29)
- Název podskupiny nebo popis dílu (30)
- Číslo skupiny (31)
- Číslo zařízení (32)
- Záhlaví informace o skupině (33). Indikuje, že oddíl pod záhlavím je pro specifickou variantu stroje nebo jde-li o seznam běžných dílů. Jestliže seznam obsahuje více než jednu variantu a každá varianta má svůj vlastní montážní výkres, pak je uveden odkaz na stranu montážního výkresu této varianty.
- Interní informace (34)

Indledning

Oplysninger om manualen

Tetra Pak anbefaler, at alle leverede manualer læses omhyggeligt. Sørg for, at de udleverede manualer er til rådighed for personale, som arbejder med eller vedligeholder udstyret.

Det er vigtigt at opbevare dette katalog hele udstyrets levetid og give kataloget videre til eventuelt kommende ejere eller brugere.

Tetra Pak kan ikke holdes ansvarlig for eventuel beskadigelse af udstyr, der opstår, fordi instruktionerne i manualerne til dette udstyr ikke følges.

Udleverede manualer

De manualer, der leveres sammen med dette udstyr, kan omfatte

- CM
  Denne konverteringsmanual forsyner teknikere med oplysninger om konvertering af udstyret mellem forskellige produktionstilstande.
- EM
  Denne elektriske manual forsyner teknikere med informationer om udstyrets elektriske system.
- IM
  Denne installationsmanual forsyner teknikere med nødvendig information i forbindelse med sikker installation af udstyret.
- MM
  Denne vedligeholdelsesmanual forsyner teknikere med information om vedligeholdelse af udstyret.
- OM
  Denne betjeningsmanual giver operatøren oplysninger om betjening af udstyret før, under og efter produktion.
- SPC
  Denne reservedelskatalog indeholder oplysninger, der er nødvendig for at bestille reservedele fra Tetra Pak
- TeM
  Den tekniske manual
  – forsyner teknikere med information, der er nødvendig for en sikker installation af udstyret.
  – forsyner teknikere med information om vedligeholdelse af udstyret.
  – forsyner teknikere med information om maskinens/udstyrets elektriske system.
  – indeholder de informationer, der er nødvendige for at kunne bestille reservedele fra Tetra Pak.

Sidelayout

Se illustration (A) på side i-5: Hovedsiderne i et reservedelskatalog består af en illustrationsside (1) og en tilsvarende listeside (7). Sidenummeret (5) vises i sidehovedet på en illlustrationsside og i sidefoden på en listeside. Dokumentnummeret (6) vises i sidefoden på en listeside.

Sidenummerering

Se illustrationen (A) på side i-5: Et sidenummer (5) har tre dele:

- kapitelnummer (2)
- fortløbende sidenummer i kapitlet (3)
- samlet sideantal i kapitlet (4)

Præsentation af maskinen

Producent

Producentens navn og adresse findes på side to i dette katalog.

Service

Kontakt nærmeste Tetra Pak-kontor for at bestille reservedele eller rapportere problemer i forbindelse med betjening af denne maskine.

Henvendelse til vores kontaktperson med andre forespørgsler, kommentarer eller forslag til forbedring angående udstyr og dokumentation.

Identificering

CE-klassificering

Dette udstyr lever op til de grundlæggende regulativer for sundhed og sikkerhed indenfor den Europæiske Økonomiske Samarbejdsområde (EØS).

Maskinskilt

Illustrationen (B) på side i-5 viser et eksempel på et maskinskilt.
En illustration af et gyldigt maskinskilt og dets placering på udstyret er vist i indledningskapitlet i de manualer, der leveres med dette udstyr. Maskinskiltet indeholder nedennævnte data. Disse er nødvendige ved kontakt med Tetra Pak vedrørende dette specifikke udstyr.

- Maskintype (8)
- Volumen (9)
- Tegningsspecifikationer (10)
- Maskinens serienummer (11)
- Producent (12)
- CE-mærke (13)
- Produktionsår (14)

Illustrationen (C) på side i-5 viser et eksempel på en maskinspecifikation. Kontroller, at de udstyrsdata, der er anført på de første sider i denne manual, svarer til maskinskiltsdataene og maskinspecifikationen.

Sådan bruges dette reservedelskatalog.

Find et reservedelsnummer

a) Se illustrationen (D) på side i-5: Gå til kapitelnummeret (15), der er angivet ved siden af hovedgruppen, der indeholder den del, der ønskes fundet.

Punkterne b) og c) refererer til illustrationen (E) på side i-6.

b) I hovedgruppeillustrationen skal man se efter maskinundergruppen (17), som indeholder den del eller undergruppe, der søges. Bemærk placeringsnummeret (18), og gå til listesiden, som følger illustrationen.

c) Se efter placeringsnummeret/henvisningsbetegnelse (16) eller undergruppens navn (19). Gå til det tilsvarende sidenummer (20) angivet i den højre kolonne. Tetra Pak har valgt altid at anvende den funktionsorienterede struktur til henvisningsbetegnelse. Præfikset angiver funktionsorienteret struktur (=) ikke vist i henvisningsbetegnelsen.

Punkterne d) og e) refererer til illustrationen (F) på side i-6.

d) Find den del (21), du søger i undergruppeillustrationen, og notér delens placeringsnummer.

e) Reservedelsnummeret (29) og -beskrivelsen (30) er angivet ved siden af placeringsnummeret på listesiden.

Informationer der er angivet i et reservedelskatalog

Listen nedenfor refererer til illustrationen (F) på side i-6. Et reservedelskatalog indeholder følgende informationer om grupper, undergrupper og reservedele til udstyret:

- Gruppestrukturreference (22). Angiver næste overordnede gruppe i udstyrslistestrukturen.
- Gruppenavn (23)
- Måleenhed (25)
- Antal (26)
- Samletegningsnummer (27)
- Listens sideområde (28). Er angivet, hvis gruppeillustrationen eller -listen inkluderer mange sider.
- Del- eller undergruppenummer (29)
- Undergruppens navn eller delsbeskrivelse (30)
- Gruppenummer (31)
- Udstyrsnummer (32)
- Overskrift for gruppeinformation (33). Angiver, om afsnittet under overskriften er for en specifik maskinvariant, eller om det er en liste over fælles dele. Hvis en liste har mere end én variant, og hver variant har sin egen samletegning, vises en sidereference til variantens samletegning.
- Intern information (34)

Einleitung

Informationen über das Handbuch

Tetra Pak empfiehlt, alle mitgelieferten Handbücher sorgfältig durchzulesen. Stellen Sie sicher, dass die Handbücher dem Personal, das die Ausrüstung betreibt oder wartet, zur Verfügung steht.

Es ist wichtig, dass Sie diesen Katalog für die gesamte Lebensdauer der Ausrüstung vorliegen haben und einem etwaigen Nachbesitzer oder -betreiber übergeben.

Tetra Pak haftet nicht für Schäden an der Ausrüstung, die aufgrund von Nichtbeachtung der Anweisungen aus den Handbüchern, die mit diesem Gerät geliefert werden, entstehen.

Gelieferte Handbücher

Die Handbücher, die mit dieser Ausrüstung geliefert wird, können Folgendes beinhalten

- CM
  Das Umbauhandbuch gibt den Technikern Informationen über den Umbau der Ausrüstung zwischen verschiedenen Produktionsweisen.
- EM
  Das Elektrohandbuch gibt den Technikern Informationen zum Elektrosystem der Ausrüstung.
- IM
  Das Installationshandbuch gibt den Technikern Informationen für die sichere Installation der Ausrüstung.
- MM
  Das Wartungshandbuch gibt den Technikern Informationen für die Wartung der Ausrüstung.
- OM
  Das Betriebshandbuch gibt dem Bediener Informationen über die Bedienung und den Betrieb der Ausrüstung vor, während und nach der Produktion.
- SPC
  Der Ersatzteilkatalog liefert die Informationen, die für die Bestellung von Ersatzteilen bei Tetra Pak erforderlich sind.
- TeM
  Das technische Handbuch
  - gibt den Technikern Informationen für die sichere Installation der Ausrüstung
  - gibt den Technikern Informationen für die Wartung der Ausrüstung
  - gibt den Techniker Informationen zum Elektrosystem der Ausrüstung/der Maschine
  - liefert die Informationen, die für die Bestellung von Ersatzteilen bei Tetra Pak erforderlich sind.

Seitenlayout

Bezugnahme auf Abbildung (A) auf Seite i-5: Die Hauptseiten in einem Ersatzteilkatalog bestehen aus einer Abbildungsseite (1) und einer entsprechenden Listenseite (7). Die Seitennummer (5) wird in der Kopfzeile einer Abbildungsseite und in der Fußzeile einer Listenseite aufgeführt. Die Dokumentennummer (6) wird in der Fußzeile einer Listenseite aufgeführt.

Seitennummerierung

Bezugnahme auf Abbildung (A) auf Seite i-5: Eine Seitennummer (5) besteht aus drei Teilen:

- Kapitelnummer (2)
- Fortlaufende Seitennummer innerhalb des Kapitels (3)
- Gesamtzahl der Seiten im Kapitel (4)

Einführung zur Maschine

Hersteller

Bitte entnehmen Sie den Namen und die Adresse des Herstellers der zweiten Seite dieses Katalogs.

Service

Zur Bestellung von Ersatzteilen für diese Maschine oder um Probleme im Zusammenhang mit dem Betrieb dieser Maschine zu melden, wenden Sie sich bitte an das nächstgelegene Büro von Tetra Pak.

Wenden Sie sich bei anderen Anfragen, Kommentaren oder Verbesserungsvorschlägen mit Bezug auf die Ausrüstung und seine Dokumentation an die Verbindungsstelle.

Identifizierung

CE-Klassifizierung

Diese Ausrüstung erfüllt die wesentlichen Anforderungen des Europäischen Wirtschaftsraum (EWR) für Gesundheitsschutz und die Sicherheit.

Maschinenschild

Die Abbildung (B) auf Seite i-5 zeigt ein Beispiel eines Maschinenschilds. Die Abbildung eines gültigen Maschinenschildes und seine Position auf der Ausrüstung wird im Einleitungskapitel der mit dieser Ausrüstung gelieferten Handbücher gezeigt. Das Maschinenschild enthält die Daten, die erforderlich sind, wenn Sie sich bezüglich dieser speziallen Ausrüstung an Tetra Pak wenden.

- Maschinentyp (8)
- Volumen (9)
- Zeichnungsspezifikationen (10)
- Seriennummer der Maschine (11)
- Hersteller (12)
- CE-Zeichen (13)
- Baujahr (14)

Die Abbildung (C) auf Seite i-5 zeigt ein Beispiel einer Maschinenspezifikation. Stellen Sie sicher, dass die Ausrüstungsdaten, die in den vorderen Seiten dieses Handbuchs aufgelistet sind, mit den Maschinenschilddaten und der Maschinenspezifikation übereinstimmen.

Benutzung dieses Ersatzteilkatalogs

Finden einer Ersatzteilnummer

a) Bezugnahme auf Abbildung (D) auf Seite i-5: Weiter zur Kapitel nummer (15), die neben der Hauptgruppe angegeben ist, die das entsprechende Teil enthält.

Die Positionen b) und c) beziehen sich auf die Abbildung (E) auf Seite i-6.

b) Suchen Sie auf der Hauptgruppenillustration nach der Maschinen-Untergruppe (17), die das gesuchte Teil oder die Untergruppe enthält. Notieren Sie die Positionsnummer (18) und gehen Sie dann zur Listenseite, die der Abbildung folgt.

c) Suchen Sie nach der Positionsnummer/Referenzbezeichnung (16) oder dem Namen der Untergruppe (19). Gehen Sie zur entsprechenden Seitennummer (20), die in der rechten Spalte aufgelistet ist. Tetra Pak hat sich dazu entschieden, stets eine funktionsorientierte Struktur für die Referenzbezeichnung zu verwenden. Die vorangestellte Kennzeichnung, welche die funktionsorientierte Struktur angibt (=), wird in der Referenzbezeichnung nicht angezeigt.

Die Positionen d) und e) beziehen sich auf die Abbildung (F) auf Seite i-6.

d) Finden Sie das gesuchte Teil (21) auf der Abbildung der Untergruppe und notieren Sie die Positionsnummer des Teils.

e) Die Teilenummer (29) und die Teilebeschreibung (30) werden neben der Positionsnummer auf der Listenseite aufgelistet.

In einem Ersatzteilkatalog aufgelistete Informationen

Die folgende Liste bezieht sich auf die Abbildung (F) auf Seite i-6. Ein Ersatzteilkatalog enthält folgende Informationen über Gruppen, Untergruppen und Ersatzteile für die Ausrüstung:

- Gruppenstrukturreferenz (22). Sie gibt die nächst höhere Gruppe in der Ausrüstungslistenstruktur an.
- Gruppenname (23)
- Maßeinheit (25)
- Menge (26)
- Nummer der Zusammenbauzeichnung (27)
- Listenseitenbereich (28). Enthalten, wenn es mehrere Seiten in der Gruppenabbildung oder Liste gibt.
- Teile- oder Untergruppennummer (29)
- Untergruppenname oder Teilebeschreibung (30)
- Gruppennummer (31)
- Ausrüstungsnummer (32)
- Gruppeninformationsüberschrift (33). Gibt an, ob sich der Abschnitt unter der Überschrift auf eine spezifische Maschinenvariante bezieht oder ob es sich um eine Liste der allgemeinen Teile handelt. Wenn eine Liste mehr als eine Variante hat und jede Variante über eine eigene Zusammenbauzeichnung verfügt, wird eine Seitenreferenz zur Zusammenbauzeichnung angezeigt.
- Interne Informationen (34)

Εισαγωγή

Πληροφορίες για το Εγχειρίδιο

Η Tetra Pak σάς συνιστά να διαβάζετε προσεκτικά όλα τα παρεχόμενα εγχειρίδια. Εξασφαλίζετε ότι όλα τα παρεχόμενα εγχειρίδια διατίθενται στο προσωπικό που χειρίζεται ή συντηρεί τον εξοπλισμό.

Είναι σημαντικό να διατηρείτε αυτό τον κατάλογο καθ' όλη τη διάρκεια ζωής του εξοπλισμού καθώς και να παραδίδετε τον κατάλογο στον τυχόν επόμενο ιδιοκτήτη ή χρήστη του εξοπλισμού.

Η Tetra Pak δεν πρόκειται να αναλάβει καμία ευθύνη για οποιαδήποτε ζημιά που μπορεί να προκληθεί στον εξοπλισμό εξαιτίας της μη τήρησης των οδηγιών οι οποίες παρέχονται στα εγχειρίδια που συνοδεύουν αυτό τον εξοπλισμό.

Παρεχόμενα Εγχειρίδια

Στα εγχειρίδια που παρέχονται μαζί μ' αυτό τον εξοπλισμό, μπορεί να περιλαμβάνονται τα εξής:

- CM
  Αυτό το Εγχειρίδιο Μετατροπής παρέχει στους τεχνικούς πληροφορίες για τη μετατροπή του εξοπλισμού μεταξύ των διάφορων λειτουργιών παραγωγής.
- EM
  Αυτό το Ηλεκτρικό Εγχειρίδιο παρέχει στους τεχνικούς πληροφορίες για το ηλεκτρικό σύστημα του εξοπλισμού.
- IM
  Αυτό το Εγχειρίδιο Εγκατάστασης παρέχει στους τεχνικούς τις απαιτούμενες πληροφορίες για την ασφαλή εγκατάσταση του εξοπλισμού.
- MM
  Αυτό το Εγχειρίδιο Συντήρησης παρέχει στους τεχνικούς πληροφορίες για τη συντήρηση του εξοπλισμού.
- OM
  Αυτό το Εγχειρίδιο Χειρισμού παρέχει στο χειριστή πληροφορίες για το χειρισμό και τη λειτουργία του εξοπλισμού πριν, κατά τη διάρκεια και μετά την παραγωγή.
- SPC
  Αυτός ο Κατάλογος Ανταλλακτικών παρέχει τις απαραίτητες πληροφορίες για την παραγγελία ανταλλακτικών από την Tetra Pak.
- TeM
  Το Τεχνικό Εγχειρίδιο
  - παρέχει στους τεχνικούς τις απαιτούμενες πληροφορίες για την ασφαλή εγκατάσταση του εξοπλισμού
  - παρέχει στους τεχνικούς πληροφορίες για τη συντήρηση του εξοπλισμού
  - παρέχει στους τεχνικούς πληροφορίες για το ηλεκτρικό σύστημα του εξοπλισμού/μηχανής
  - παρέχει τις απαραίτητες πληροφορίες για την παραγγελία ανταλλακτικών από την Tetra Pak.

Διάταξη Σελίδων

Ανατρέξτε στην εικόν (A) της σελίδας i-5: Οι κύριες σελίδες ενός Καταλόγου Ανταλλακτικών αποτελούνται από μία εικονογραφημένη σελίδα (1) και από μία αντίστοιχη σελίδα λίστας (7). Ο αριθμός σελίδας (5) εμφανίζεται στην κεφαλίδα μιας εικονογραφημένης σελίδας και στο υποσέλιδο μιας σελίδας λίστας. Ο αριθμός εγγράφου (6) εμφανίζεται στο υποσέλιδο μιας σελίδας λίστας.

Αρίθμηση Σελίδων

Ανατρέξτε στην εικόνα (A) της σελίδας i-5: Ένας αριθμός σελίδας (5) αποτελείται από τα εξής τρία μέρη:

- αριθμός κεφαλαίου (2)
- αύξων αριθμός σελίδας του κεφαλαίου (3)
- συνολικός αριθμός σελίδων του κεφαλαίου (4)

Παρουσίαση Μηχανής

Κατασκευαστής

Για το όνομα και τη διεύθυνση του κατασκευαστή, ανατρέξτε στη δεύτερη σελίδα αυτού του καταλόγου.

Τεχνική Εξυπηρέτηση

Για να παραγγείλετε ανταλλακτικά για τη συγκεκριμένη μηχανή ή για να αναφέρετε προβλήματα που σχετίζονται με τη λειτουργία αυτής της μηχανής, επικοινωνήστε με το πλησιέστερο γραφείο της Tetra Pak.

Εάν έχετε άλλου είδους ερωτήσεις, σχόλια ή προτάσεις βελτίωσης σχετικά με τον εξοπλισμό και την έγγραφη τεκμηρίωσή του, επικοινωνήστε με το Τμήμα Σχέσεων.

Στοιχεία Ταυτότητας

Σήμανση CE

Αυτός ο εξοπλισμός συμμορφώνεται με τους βασικούς κανονισμούς υγείας και ασφάλειας του Ευρωπαϊκού Οικονομικού Χώρου (ΕΟΧ).

Πινακίδα Αναγνώρισης Μηχανής

Η εικόνα (B) της σελίδας i-5 δείχνει ένα παράδειγμα μιας πινακίδας αναγνώρισης μηχανής.
Μια εικόνα που δείχνει την ενδεδειγμένη μορφή και θέση της πινακίδας αναγνώρισης μηχανής στον εξοπλισμό, παρουσιάζεται στο κεφάλαιο 'Εισαγωγή' των εγχειριδίων που παρέχονται μ' αυτόν τον εξοπλισμό.
Η πινακίδα αναγνώρισης μηχανής αναγράφει τα δεδομένα που παρατίθενται στη συνέχεια, τα οποία είναι απαραίτητα όταν επικοινωνείτε με την Tetra Pak για θέματα που αφορούν αυτό το συγκεκριμένο εξοπλισμό.

- Τύπος μηχανής (8)
- Χωρητικότητα (9)
- Στοιχεία σχεδίου (10)
- Αριθμός σειράς μηχανής (11)
- Κατασκευαστής (12)
- Σήμανση CE (13)
- Έτος κατασκευής (14)

Η εικόνα (Γ) της σελίδας i-5 δείχνει ένα παράδειγμα τεχνικών χαρακτηριστικών μηχανής. Βεβαιωθείτε ότι τα δεδομένα εξοπλισμού που παρατίθενται στις πρώτες σελίδες αυτού του εγχειριδίου συμφωνούν με τα δεδομένα της πινακίδας αναγνώρισης μηχανής και των τεχνικών χαρακτηριστικών μηχανής.

Πώς Χρησιμοποιείται Αυτός ο Κατάλογος Ανταλλακτικών

Εύρεση ενός Αριθμού Ανταλλακτικού

a) Ανατρέξτε στην εικόνα (Δ) της σελίδας i-5: Πηγαίνετε στον αριθμό κεφαλαίου (15) που υποδεικνύεται δίπλα από την κύρια ομάδα της μηχανής η οποία περιλαμβάνει το εξάρτημα που θέλετε να βρείτε.

Τα βήματα b) και c) αναφέρονται στην εικόνα (Ε) της σελίδας i-6.

b) Στην εικόνα της κύριας ομάδας μηχανής, αναζητήστε την υποομάδα μηχανής (17) η οποία περιλαμβάνει το εξάρτημα ή την υποομάδα που αναζητάτε. Σημειώστε τον αριθμό θέσης (18) και πηγαίνετε στη σελίδα λίστας που ακολουθεί την εικόνα.

c) Αναζητήστε τον αριθμό θέσης/ονομασία αναφοράς (16) ή το όνομα υποομάδας (19). Πηγαίνετε στον αντίστοιχο αριθμό σελίδας (20) που αναγράφεται στη δεξιά στήλη. Η Tetra Pak έχει επιλέξει να χρησιμοποιεί πάντα δομή ονομασίας αναφοράς με βάση τη λειτουργία. Το πρόθεμα που υποδεικνύει τη δομή με βάση τη λειτουργία (=) δε φαίνεται στο διάγραμμα αναφοράς.

Τα βήματα d) και e) αναφέρονται στην εικόνα (ΣΤ) της σελίδας i-6.

d) Βρείτε το εξάρτημα (21) που αναζητάτε στην εικόνα υποομάδας μηχανής και σημειώστε τον αριθμό θέσης του εξαρτήματος.

e) Ο αριθμός του εξαρτήματος (29) και η περιγραφή του εξαρτήματος (30) παρατίθενται δίπλα στον αριθμό θέσης στη σελίδα λίστας.

Πληροφορίες που Περιέχονται σε έναν Κατάλογο Ανταλλακτικών

Η λίστα που ακολουθεί αναφέρεται στην εικόνα (F) της σελίδας i-6. Ένας Κατάλογος Ανταλλακτικών περιέχει τις παρακάτω πληροφορίες σχετικά με τις ομάδες, τις υποομάδες και τα ανταλλακτικά του εξοπλισμού:

- Αναφορά δομής ομάδας (22). Υποδηλώνει την επόμενη μεγαλύτερη ομάδα στη δομή λίστας του εξοπλισμού.
- Όνομα ομάδας (23)
- Μονάδα μέτρησης (25)
- Ποσότητα (26)
- Αριθμός σχεδίου συγκροτήματος (27)
- Περιοχή σελίδων λίστας (28). Περιλαμβάνεται εφόσον η εικόνα ή η λίστα μιας ομάδας εκτίθεται σε περισσότερες από μία σελίδες.
- Αριθμός εξαρτήματος ή υποομάδας (29)
- Αριθμός υποομάδας ή περιγραφή εξαρτήματος (30)
- Αριθμός ομάδας (31)
- Αριθμός εξοπλισμού (32)
- Επικεφαλίδα πληροφοριών ομάδας (33). Υποδεικνύει εάν η ενότητα κάτω από την επικεφαλίδα αφορά μια συγκεκριμένη παραλλαγή μηχανής ή αποτελεί μια λίστα κοινών εξαρτημάτων. Σε περίπτωση που μια λίστα περιέχει περισσότερες από μία παραλλαγές και κάθε παραλλαγή έχει ξεχωριστό σχέδιο συγκροτήματος, εμφανίζεται μια παραπομπή προς τη σελίδα όπου βρίσκεται το σχέδιο συγκροτήματος της παραλλαγής.
- Εσωτερικές πληροφορίες (34)

Introducción

Información sobre el manual

Tetra Pak recomienda leer atentamente todos los manuales suministrados. Asegúrese de que los manuales están disponibles para el personal que opera o mantiene el equipo.

Es importante conservar este catálogo durante la vida útil del equipo, así como facilitárselo a cualquier propietario o usuario posterior.

Tetra Pak no se responsabilizará de daños en el equipo por no seguir las instrucciones proporcionadas en los manuales que acompañan este equipo.

Manuales entregados

Los manuales entregados con este equipo pueden incluir:

- CM
  El Manual de conversión proporciona a los técnicos información sobre cómo convertir el equipo a diferentes modos de producción.
- EM
  El Manual eléctrico proporciona a los técnicos información sobre el sistema eléctrico del equipo.
- IM
  El Manual de instalación proporciona a los técnicos la información necesaria para instalar el equipo de manera segura.
- MM
  El Manual de mantenimiento proporciona a los técnicos información sobre el mantenimiento del equipo.
- OM
  El Manual de funcionamiento proporciona al operador información sobre el manejo y el funcionamiento del equipo antes, durante y después de la producción.
- SPC
  El Catálogo de recambios proporciona la información necesaria para pedir las piezas de recambio a Tetra Pak.
- TeM
  El Manual técnico
  - proporciona a los técnicos la información necesaria para instalar de manera segura el equipo
  - proporciona a los técnicos información sobre el mantenimiento del equipo
  - proporciona a los técnicos información sobre el sistema eléctrico de la máquina/equipo
  - proporciona la información necesaria para pedir las piezas de recambio a Tetra Pak.

Organización de las páginas

Consultar la ilustración (A) en la página i-5: Las páginas principales en un Catálogo de recambios se componen de una página de ilustración (1) y una página de lista correspondiente (7). El número de la página (5) se muestra en el encabezado de una página de ilustración y en el pie de página de una página de lista. El número del documento (6) se muestra en el pie de página de una página de lista.

Numeración de las páginas

Consulte la ilustración (A) en la página i-5: Un número de página (5) consta de tres partes:

- número de capítulo (2)
- número de página consecutivo dentro del capítulo (3)
- número total de páginas del capítulo (4)

Introducción a la máquina

Fabricante

Para obtener el nombre y la dirección del fabricante, véase la segunda página de este catálogo.

Servicio

Para pedir recambios para esta máquina o informar de problemas asociados con el funcionamiento de la misma, póngase en contacto con la oficina de Tetra Pak más cercana.

Póngase en contacto con el representante para otras consultas, comentarios o consejos sobre mejoras referidos al equipo y su documentación.

Identificación

Clasificación de la CE

Este equipo cumple con la normativa básica sobre salud y seguridad del Espacio Económico Europeo (EEE).

Placa de máquina

La ilustración (B) en la página i-5 muestra un ejemplo de una placa de máquina.
En el capítulo Introducción de los manuales entregados con este equipo, se muestra una ilustración de la placa de máquina válida y su ubicación en el equipo. La placa de máquina contiene los datos que se enumeran a continuación, requeridos al ponerse en contacto con Tetra Pak en relación con este equipo específico.

- Tipo de máquina (8)
- Volumen (9)
- Especificaciones de plano (10)
- Número de serie de la máquina (11)
- Fabricante (12)
- Marca de la CE (13)
- Año de fabricación (14)

La ilustración (C) en la página i-5 muestra un ejemplo de especificación de la máquina. Asegúrese de que los datos de equipo que se enumeran en las páginas de la cubierta de este manual corresponden a los datos de la placa y las especificaciones de la máquina.

Cómo utilizar este Catálogo de recambios

Localizar un número de recambio

a) Consulte la ilustración (D) en la página i-5: Vaya al número de capítulo (15) indicado junto al grupo principal que contiene la pieza que desea localizar.

Los puntos b) y c) hacen referencia a la ilustración (E) en la página i-6.

b) En la ilustración del grupo principal, busque el subgrupo de la máquina (17) que contiene la pieza o el subgrupo que busca. Anote el número de posición (18) y vaya a la página de lista que sigue a la ilustración.

c) Busque el número de posición/denominación de referencia (16) o el nombre del subgrupo (19). Vaya al número de página correspondiente (20) que aparece en la columna de la derecha. Tetra Pak ha elegido utilizar siempre la estructura orientada a la función para la denominación de referencia. El prefijo que indica la estructura orientada a la función (=) no aparece en la denominación de referencia.

Los puntos d) y e) hacen referencia a la ilustración (F) en la página i-6.

d) Localice la pieza (21) que busca en la ilustración del subgrupo y anote el número de posición de la pieza.

e) El número de pieza (29) y la descripción de la misma (30) aparecen junto al número de posición en la página de lista.

Información que contiene un Catálogo de recambios

La lista que aparece a continuación hace referencia a la ilustración (F) en la página i-6. Un Catálogo de recambios contiene la siguiente información sobre grupos, subgrupos y recambios para el equipo:

- Referencia de estructura de grupo (22). Indica el siguiente grupo más alto en la estructura de lista del equipo.
- Nombre del grupo (23)
- Unidad de medida (25)
- Cantidad (26)
- Número de dibujo del conjunto (27)
- Intervalo de página de lista (28). Incluido si hay varias páginas en la ilustración o lista de grupo.
- Número de pieza o subgrupo (29)
- Nombre de subgrupo o descripción de pieza (30)
- Número de grupo (31)
- Número de equipo (32)
- Encabezado de información de grupo (33). Indica si la sección que aparece debajo del encabezado corresponde a una variante específica de la máquina o si es una lista de piezas comunes. Si la lista tiene más de una variante y cada variante tiene su propio dibujo de conjunto, se muestra una referencia de página al dibujo de conjunto de la variante.
- Información interna (34)

Sissejuhatus

Juhendi teave

Tetra Pak soovitab kõik juhendid hoolikalt läbi lugeda. Kontrollige, et juhendid oleksid seadmetega töötavatele ja neid hooldavatele isikutele kättesaadavad.

Kataloog tuleb seadme kasutusaja vältel alles hoida ning järgmisele omanikule või kasutajale edasi anda.

Tetra Pak ei vastuta seadme vigastuste eest, mis on tekkinud seadmega kaasnevate juhendite mittejärgimise tõttu.

Kaasaolevad juhendid

Seadmega kaasasolevad juhendid võivad sisaldada järgmist:

- CM
  Ümberseadistusjuhend annab tehnikutele teavet seadme ümber seadistamise kohta eri tootmisrežiimide korral.
- EM
  Elektrijuhend annab tehnikutele informatsiooni seadme elektrisüsteemi kohta.
- IM
  Paigaldusjuhend annab tehnikutele vajalikku teavet seadme ohutu paigaldamise kohta.
- MM
  Hooldusjuhend annab tehnikutele teavet seadme hoolduse kohta.
- OM
  Kasutusjuhend annab operaatorile teavet seadme käsitsemise ja kasutamise kohta enne tootmist, selle ajal ja pärast seda.
- SPC
  Varuosade kataloog annab vajalikku teavet Tetra Pakilt varuosade tellimiseks
- TeM
  Tehniline juhend
  - annab tehnikutele vajalikku teavet seadme ohutuks paigaldamiseks
  - annab tehnikutele teavet seadme hooldamise kohta
  - annab tehnikutele teavet masina/seadme elektrisüsteemi kohta
  - annab vajalikku teavet Tetra Pakilt varuosade tellimiseks.

Lehekülje kujundus

Vt joonist (A) lk i-5: Varuosade kataloogi põhilehtedeks on jooniste lehekülg (1) ja vastav loeteluleht (7). Lehekülje number (5) on toodud joonistelehe päises ja loetelulehe jaluses. Dokumendi number (6) on toodud loetelulehe jaluses.

Lehekülje nummerdus

Vt joonist (A) lk i-5: Lehekülje number (5) koosneb kolmest osast:

- peatüki number (2)
- järgneva lehekülje number (3) peatükis
- lehekülgede koguarv peatükis (4)

Sissejuhatus masina kohta

Tootja

Tootja nimi ja aadress on toodud kataloogi teisel lehel.

Teenindus

Masina varuosade tellimiseks või masina kasutamisega seonduvate probleemide teatamiseks võtke ühendust lähima Tetra Pak kontoriga.

Seadme ja dokumendiga seonduvate küsimuste, kommentaaride ja parandusettepanekute puhul võtke ühendust ettevõtte esindajaga.

Identifikatsioon

CE klassifikatsioon

Seade on kooskõlas Euroopa Majanduspiirkonna (EEA) tervishoiu- ja ohutusnõuetega.

Masina andmeplaat

Joonisel (B) leheküljel i-5 on kujutatud masina andmeplaati. Masina andmeplaadi joonis ja selle asukoht seadmel on toodud seadmega kaasasoleva juhendi sissejuhatavas peatükis. Masina andmeplaadil on toodud allpool loetletud andmed, mida vajate antud konkreetse seadmega seoses Tetra Paki poole pöördudes.

- Masina tüüp (8)
- Maht (9)
- Joonisspetsifikatsioonid (10)
- Masina seerianumber (11)
- Tootja (12)
- CE tähis (13)
- Tootmisaasta (14)

Joonisel (C) leheküljel i-5 on kujutatud näide masina spetsifikatsioonist. Veenduge, et juhendi esimestel lehekülgedel toodud andmed seadme kohta vastavad masina andmesildil olevatele andmetele ja masina spetsifikatsioonile.

Kuidas varuosade kataloogi kasutada

Leidke varuosa number

a) Vt joonist (D) lk i-5: Leidke peatükk, mille number (15) on toodud selle põhirühma juures, mis sisaldab otsitavat varuosa.

Punktid b) ja c) viitavad joonisele (E) lk i-6.

b) Põhirühma joonisel leidke masina alamrühm (17), mis sisaldab otsitavat osa või alamrühma. Leidke positsiooninumber (18) ja avage joonisele järgnev loeteluleht.

c) Leidke positsiooninumber/viite tähis (16) või alamgrupi nimetus (19). Avage parempoolses veerus loetletud vastav lehekülje number (20). Tetra Pak on valinud viite tähise puhul alatiseks kasutamiseks funktsioonile suunatud struktuuri. Funktsioonile suunatud struktuuri prefiks (=) pole viite tähises näidatud.

Punktid d) ja e) viitavad jooniselerefer (F) lk i-6.

d) Leidke otsitav osa (21) alamrühma joonisel ja seejärel osa positsioonnumber.

e) Osa number (29) ja osa kirjeldus (30) on toodud loetelulehel positsioonnumbri kõrval.

Varuosade kataloogis toodud teave

Allpool toodud loetelui viitab joonisele (F) lk i-6. Varuosade kataloog sisaldab järgmist teavet seadme rühmade, alamrühmade ja varuosade kohta:

- Rühmastruktuuri viide (22). Märgib seadme loetelu struktuuris järgmist kõrgemat rühma.
- Rühma nimetus (23)
- Mõõtühik (25)
- Kogus (26)
- Koostejoonise number (27)
- Loetelu lehekülgede vahemik (28). Kaasatud kui rühma joonised või loetelu on toodud mitmel lehel.
- Osa või alamrühma number (29)
- Alamrühma nimetus või osa kirjeldus (30)
- Rühma number (31)
- Seadme number (32)
- Rühma teabe pealkiri (33). Näitab, kas pealkirja all toodud jaotis on konkreetse masinavariandi kohta või on tegemist tavaliste varuosade loeteluga. Kui loetelus on toodud rohkem kui üks variant ja iga variandi jaoks on oma koostejoonis, esitatakse viide selle variandi koostejoonise leheküljele.
- Siseteave (34)

Johdanto

Tietoja käsikirjasta

Tetra Pak suosittelee kaikkien toimitettavien oppaiden lukemista huolellisesti. Varmista, että toimitetut oppaat ovat laitetta käyttävän tai huoltavan henkilökunnan saatavilla.

Tämä luettelo on säilytettävä laitteen käyttöiän ajan ja toimitettava edelleen mahdolliselle seuraavalle omistajalle tai käyttäjälle.

Tetra Pak ei vastaa laitevaurioista, jotka aiheutuvat laitteen mukana tulevissa oppaissa annettujen ohjeiden noudattamatta jättämisestä.

Toimitettavat ohjeet

Tämän laitteen mukana toimitettaviin ohjeisiin kuuluvat:

- CM
  Muunnoskirjassa on teknikoille tarkoitettuja ohjeita laitteiston muuttamisesta eri tuotantotiloihin.
- EM
  Sähkökirjassa on teknikoille tarkoitettuja tietoja laitteen sähköjärjestelmästä.
- IM
  Asennuskäsikirjassa on teknikoille tarkoitettuja tietoja, jotka tarvitaan laitteen turvallista asentamista varten.
- MM
  Huoltokäsikirjassa on teknikoille tarkoitettuja tietoja tämän laitteen huoltamisesta.
- OM
  Käyttäjän käsikirjassa on käyttäjälle tarkoitettuja tietoja laitteen käsittelystä ja käyttämisestä ennen tuotantoa, tuotannon aikana ja sen jälkeen.
- SPC
  Varaosaluettelossa on tietoja, joita tarvitaan varaosien tilaamiseen Tetra Pakilta.
- TeM
  Tekninen käsikirja
  - sisältää teknikoille tarkoitettuja tietoja, joita tarvitaan laitteen turvallista asentamista varten
  - sisältää teknikoille tarkoitettuja tietoja laitteen huoltamisesta
  - sisältää teknikoille tarkoitettuja tietoja koneen/laitteen sähköjärjestelmästä
  - sisältää tietoja, joita tarvitaan varaosien tilaamiseen Tetra Pakilta.

Sivujen asettelu

Katso kuva (A) sivulla i-5: Varaosaluettelon pääsivut koostuvat kuvasivusta (1) ja sitä vastaavasta luettelosivusta (7). Sivunumero (5) näytetään kuvasivun ylätunnisteessa ja luettelosivun alatunnisteessa. Asiakirjan numero (6) näytetään luettelosivun alatunnisteessa.

Sivunumerointi

Katso kuva (A) sivulla i-5: Sivunumerossa (5) on kolme osaa:

- luvun numero (2)
- perättäinen sivunumero (3) luvun sisällä
- luvun kokonaissivumäärä (4).

Koneen esittely

Valmistaja

Valmistajan nimi ja osoite on ilmoitettu tämän luettelon toisella sivulla.

Huolto

Jos haluat tilata tähän koneeseen varaosia tai jos tämän koneen käytössä ilmenee ongelmia, jotka haluat raportoida, ota yhteyttä lähimpään Tetra Pakin toimistoon.

Jos sinulla on muuta kysyttävää, huomautettavaa tai ehdotuksia ja sen asiakirjoja koskevista parannuksista, ota yhteys yhteyshenkilöön.

Tunnistetiedot

CE-luokitus

Tämä laite vastaa Euroopan talousalueen (ETA) terveyttä ja turvallisuutta koskevia perusvaatimuksia.

Koneen tyyppikilpi

Kuvassa (B) sivulla i-5 on esimerkki koneen tyyppikilvestä. Voimassa olevan tyyppikilven kuva ja sen sijainti koneessa käy ilmi laitteiston mukana tulleiden ohjeiden Johdanto-luvusta. Tyyppikilvessä on tarvitsemasi Tetra Pakin voimassa olevat yhteystiedot, kun on kyseessä tämä nimenomainen laite.

- Konetyyppi (8)
- Tilavuus (9)
- Piirustuserittely (10)
- Koneen sarjanumero (11)
- Valmistaja (12)
- CE-merkki (13)
- Valmistusvuosi (14)

Kuvassa (C) sivulla i-5 on esimerkki koneen erittelystä. Varmista, että tämän ohjeen etusivuilla ilmoitetut laitetiedot vastaavat tyyppikilven ja kone-erittelyn tietoja.

Tämän varaosaluettelon käyttäminen

Etsi varaosan numero

a) Katso kuva (D) sivulla i-5: Siirry lukuun (15), joka on ilmoitettu etsittävän osan pääryhmän vieressä.

Kohdat b) ja c) viittaavat kuvaan (E) sivulla i-6.

b) Etsi pääryhmän kuvasta koneen alaryhmä (17), joka sisältää etsimäsi osan tai alaryhmän. Merkitse muistiin paikkanumero (18) ja siirry luettelosivulle, joka seuraa kuvaa.

c) Etsi paikkanumero (16) tai alaryhmän nimi (19). Siirry vastaavalle sivunumerolle (20), joka on ilmoitettu oikeassa sarakkeessa. Tetra Pak on päättänyt aina noudattaa toimintoperusteista rakennetta viitemerkinnöissä. Viitemerkinnässä ei esitetä toimintoperusteisen rakenteen osoittavaa etuliitettä (=).

Kohdat d) ja e) viittaavat kuvaan (F) sivulla i-6.

d) Hae etsittävä osa (21) alaryhmän kuvasta ja merkitse osan paikkanumero muistiin.

e) Osanumero (29) ja osan kuvaus (30) on annettu paikkanumeron vieressä luettelosivulla.

Varaosaluettelossa olevat tiedot

Alla oleva luettelo viittaa kuvaan (F) sivulla i-6. Varaosaluettelo sisältää seuraavat tiedot ryhmistä, alaryhmistä ja laitteen varaosista:

- Ryhmärakenneviite (22). Osoittaa seuraavaksi ylemmän ryhmän laiteluettelorakenteessa.
- Ryhmän nimi (23)
- Mittayksikkö (25)
- Määrä (26)
- Kokoonpanopiirustuksen numero (27)
- Luettelon sivualue (28). Tämä on mukana, jos ryhmäkuvassa tai luettelossa on useita sivuja.
- Osan tai alaryhmän numero (29)
- Alaryhmän nimi tai osan kuvaus (30)
- Ryhmän numero (31)
- Laitteen numero (32)
- Ryhmätietojen otsikko (33). Osoittaa, koskeeko alla oleva osio tiettyä koneversiota vai onko kyseessä yhteisten osien luettelo. Jos luettelolla on useampi kuin yksi versio ja kullakin versiolla on oma kokoonpanopiirustuksensa, näytetään version kokoonpanopiirustuksen sivuviittaus.
- Sisäiset tiedot (34)

Introduction

Informations sur ce manuel

Tetra Pak recommande de lire attentivement tous les manuels remis. S'assurer que ceux-ci sont accessibles au personnel d'exploitation et de maintenance de l'équipement.

Il est important de conserver ce catalogue pendant la durée de vie de l'équipement et de le transmettre à tout détenteur ou à tout utilisateur ultérieur de l'équipement.

Tetra Pak ne pourra être tenu responsable d'aucun dommage causé à l'équipement suite au non respect des instructions fournies dans les manuels remis avec cet équipement.

Manuels remis

Les manuels remis avec cet équipement peuvent comprendre

- CM
  Le Manuel de Conversion contient les informations destinées aux techniciens pour la conversion de l'équipement en vue des différents modes de production.
- EM
  Le Manuel Electrique fournit aux techniciens des informations sur le système électrique de l'équipement.
- IM
  Le Manuel d'Installation fournit les informations nécessaires aux techniciens pour installer l'équipement en toute sécurité.
- MM
  Le Manuel d'Entretien contient les informations nécessaires aux techniciens pour la maintenance de l'équipement.
- OM
  Le Manuel d'Utilisation fournit à l'opérateur les informations nécessaires à la manutention et à l'exploitation de l'équipement, avant, pendant et après la production.
- SPC
  Le Catalogue des Pièces de Rechange contient les informations permettant de commander des pièces de rechange auprès de Tetra Pak
- TeM
  Le Manuel Technique
  - contient les informations nécessaires aux techniciens pour installer l'équipement en toute sécurité.
  - contient les informations nécessaires aux techniciens pour la maintenance de l'équipement.
  - fournit aux techniciens des informations sur le système électrique de la machine/de l'équipement.
  - fournit les informations permettant de commander des pièces de rechange auprès de Tetra Pak.

Mise en page

Reportez-vous au schéma (A) page i-5 : Dans un catalogue de Pièces de Rechange, les pages principales sont les pages de schémas (1) et les pages de listes correspondantes (7). Le numéro de page (5) est indiqué en en-tête sur une page de schéma et en bas de page sur une page de liste. Le numéro de document (6) est indiqué au bas d'une page de liste.

Numérotation des pages

Reportez-vous au schéma (A) page i-5 : Un numéro de page (5) se compose de trois éléments :

- numéro du chapitre (2)
- numéro de page séquentiel à l'intérieur du chapitre (3)
- nombre total de pages du chapitre (4)

Présentation de la machine

Fabricant

Les nom et adresse du fabricant sont donnés en deuxième page de ce catalogue.

Assistance technique

Pour commander des pièces de rechange pour cette machine ou signaler un problème lié à son fonctionnement, contactez l'agence Tetra Pak la plus proche.

Contactez le responsable de liaison pour tout autre renseignement, commentaire ou suggestion d'amélioration relatifs à l'équipement et à sa documentation.

Identification

Certification CE

Cet équipement est conforme aux réglementations essentielles en matière d'hygiène et de sécurité de l'Espace économique européen (EEE).

Plaque signalétique de la machine

Le schéma (B) de la page i-5 reproduit un exemple de plaque signalétique de la machine.
Le chapitre Introduction des manuels remis avec cet équipement comprend une reproduction de la plaque signalétique valide de la machine et indique son emplacement sur l'équipement. La plaque comporte les caractéristiques indiquées ci-dessous, nécessaires pour prendre contact avec Tetra Pak à propos de cet équipement spécifique.

- Type de la machine (8)
- Volume (9)
- Caractéristiques schéma (10)
- Numéro de série de la machine (11)
- Fabricant (12)
- Marquage CE (13)
- Année de fabrication (14)

Le schéma (C) de la page i-5 reproduit un exemple de plaque signalétique de la machine. Assurez-vous que les données relatives à l'équipement qui se trouvent au début de ce manuel correspondent bien aux données figurant sur la plaque signalétique de la machine et à ses spécifications.

Comment utiliser ce Catalogue des Pièces de Rechange

Trouver un numéro de pièce de rechange

a) Reportez-vous au schéma (D) page i-5 : Allez au numéro de chapitre (15) indiqué à côté du groupe principal contenant la pièce que vous recherchez.

Les éléments b) et c) se rapportent au schéma (E) de la page i-6.

b) Sur le schéma du groupe principal, recherchez le sous-groupe de la machine (17) contenant la pièce ou le sous-groupe que vous recherchez. Notez le numéro de position (18) et reportez-vous à la page de liste suivant le schéma.

c) Recherchez le numéro de position/la désignation de référence (16) ou le nom du sous-groupe (19). Allez au numéro de page correspondant (20) figurant dans la liste de la colonne de droite. Tetra Pak a pris le parti de toujours utiliser la structure de la fonction pour la désignation de la référence. Le préfixe indiquant la structure de la fonction (=) ne figure pas dans la désignation de la référence.

Les éléments d) et e) se rapportent au schéma (F) de la page i-6.

d) Repérez la pièce (21) que vous recherchez dans le schéma du sous-groupe et notez le numéro de position de la pièce.

e) Le numéro de la pièce (29) et sa description (30) figurent à côté du numéro de position sur la page de liste.

Informations données dans un Catalogue de Pièces de Rechange

La liste ci-dessous se rapporte au schéma (F) de la page i-6. Un Catalogue de Pièces de Rechange contient les informations suivantes concernant les groupes, sous-groupes et pièces de rechange de l'équipement :

- Référence de structure de groupe (22). Indique le groupe immédiatement supérieur dans la structure de liste de l'équipement.
- Nom du groupe (23)
- Unité de mesure (25)
- Quantité (26)
- Numéro de plan de montage (27)
- Groupe de pages de liste (28). Indiqué si la liste ou l'illustration du groupe comporte plusieurs pages.
- Numéro de pièce ou de sous-groupe (29)
- Nom du sous-groupe ou description de la pièce (30)
- Numéro de groupe (31)
- Numéro de l'équipement (32)
- Titre information du groupe (33) Indique si la section en-dessous du titre est destinée à une variante spécifique de la machine ou s'il s'agit d'une liste de pièces communes. Si une liste comprend plus d'une variante et que chaque variante a son propre plan de montage, une référence de page est donnée pour le plan de montage de la variante.
- Information interne (34)

Bevezetés

Kézikönyvre vonatkozó információk

A Tetra Pak javasolja, hogy az összes kapott kézikönyvet gondosan olvassa el. Gondoskodjon róla, hogy a kézikönyvek a berendezést üzemeltető és karbantartó személyzet számára elérhetők legyenek.

Fontos, hogy megőrizzék ezt a katalógust a berendezés élettartama alatt, és átadják a következő tulajdonosoknak és felhasználóknak.

A Tetra Pak nem vállal felelősséget a berendezés semmilyen megrongálódása esetén, ha nem követték a berendezéshez tartozó kézikönyvekben leírt utasításokat.

Szállított kézikönyvek

A berendezéssel szállított kézikönyvek az alábbiak lehetnek

- CM
  Az Átállási kézikönyv a műszaki szakemberek számára a berendezés különböző gyártási módjai közötti átállásra vonatkozó információkat tartalmaz.
- EM
  A Villamossági kézikönyv a berendezés elektronikai rendszerére vonatkozó információkat szolgáltat a műszaki szakemberek részére.
- IM
  Az Üzembe helyezési kézikönyv a berendezés biztonságos üzembe helyezésére vonatkozó információkat biztosít a technikai szakemberek részére.
- MM
  A Karbantartási kézikönyv a berendezés karbantartására vonatkozó információkat biztosít a technikai szakemberek részére.
- OM
  Az Üzemeltetési kézikönyv az üzemeltető személyzetnek szolgáltat a berendezés kezelésére és üzemeltetésére, a feldolgozás előtti, közbeni és utáni teendőkre vonatkozó információkat.
- SPC
  A Tartalékalkatrész-katalógus információt biztosít a pótalkatrészek Tetra Pak-tól történő megrendeléséhez.
- TeM
  A Technikai kézikönyv
  – a berendezés biztonságos üzembe helyezésére vonatkozó információkat biztosít a technikai szakemberek részére.
  – a berendezés karbantartására vonatkozó információkat biztosít a technikai szakemberek részére.
  – a gép/berendezés elektromos rendszerére vonatkotó információkat szolgáltat a technikai szakemberek számára.
  – információkat biztosít a pótalkatrészek Tetra Pak-tól történő megrendeléséhez.

Oldalelrendezés

Tekintse meg az i-5 oldalon lévő (A) ábrát: A Tartalékalkatrész-katalógus főoldalai egy rajzoldalból (1) és egy hozzá tartozó listaoldalból (7) állnak. Az oldalszám (5) a rajzoldal fejlécében és a listaoldal láblécében látható. A dokumentum száma (6) a listaoldal láblécében jelenik meg.

Oldalszámozás

Tekintse meg az i-5 oldalon lévő (A) ábrát: Az oldalszám (5) három részből áll:

- fejezetszám (2)
- folyamatos oldalszám (3) a fejezeten belül
- összes oldalszám (4) a fejezeten belül.

Bevezetés

Gyártó

A gyártó neve és címe a katalógus második oldalán található.

Szerviz

A gép valamely pótalkatrészének megrendelése vagy a berendezés működésével kapcsolatos zavarok bejelentése végett forduljon a legközelebbi Tetra Pak képviselethez.

Bármilyen más, a berendezésre illetve a dokumentációra vonatkozó kérdéseivel, megjegyzéseivel vagy javaslataival forduljon területi képviselőjéhez.

Azonosítás

CE besorolás

Ez a berendezés megfelel az Európai Gazdasági Régió (EEA) alapvető egészségügyi és biztonsági előírásainak.

Gépcímke

A(z) i-5 oldalon található (B) ábra a gépcímke egy példáját mutatja be. Egy érvényes gépcímkét és megfelelő elhelyezését ábrázoló rajz látható a berendezéssel szállított kézikönyv Bevezetés fejezetében. A gépcímke azokat az alább felsorolt adatokat tartalmazza, amelyek a Tetra Pak-kal történő, a berendezésre vonatkozó kommunikációhoz szükségesek.

- Géptípus (8)
- Térfogat (9)
- Tervrajzok (10)
- A gép sorozatszáma (11)
- Gyártó (12)
- CE jelzés (13)
- Gyártási év (14)

A(z) i-5 oldalon található (C) ábra a gép műszaki specifikációjának egy példáját mutatja be. Győződjön meg róla, hogy a kézikönyv első lapjain közölt berendezésadatok megegyeznek a gép adattábláján és a gép műszaki leírásában megjelenő információkkal.

A Tartalékalkatrész-katalógus használata

A tartalékalkatrész számának kikeresése

a) Tekintse meg a(z) i-5 oldalon lévő (D) ábrát: Lapozzon a keresett alkatrészt tartalmazó főcsoport mellett feltüntetett (15) számú fejezetre.

A b) és c) elemek az i-6 oldalon található ábrára vonatkoznak.

b) A főcsoport-ábrán keresse meg azt az alcsoportot (17), amelyik a keresett alkatrészt vagy alcsoportot tartalmazza. Jegyezze meg a pozíciószámot (18), majd lapozzon az ábrát követő listaoldalra.

c) Keresse meg a lejegyzett pozíciószámot/hivatkozási megjelölést (16) vagy a keresett alcsoport nevét (19). Lapozzon a jobb oldali oszlopban feltüntetett számú (20) oldalra. A Tetra Pak a hivatkozási jelöléseket mindig funkció-orientált struktúra alapján végzi el. Az előtaggal jelölt funkció-orientált struktúra (=) nem jelenik meg a hivatkozási jelölésben.

A d) és e) elemek az i-6 oldalon található (F) ábrára vonatkoznak.

d) Az alcsoport ábrán keresse meg a kívánt alkatrészt (21), és jegyezze meg az alkatrész pozíciószámát.

e) Az alkatrész száma (29) és leírása (30) a listaoldalon, a pozíciószám mellett látható.

A Tartalékalkatrész-katalógusban megtalálható információk

Az alábbi lista az i-6 oldalon található (F) ábrára vonatkozik.
A Tartalékalkatrész-katalógus a következő, csoportokra, alcsoportokra és pótalkatrészekre vonatkozó adatokat tartalmazza:

- Csoportstruktúra-hivatkozás (22). A berendezés listás struktúrájában közvetlenül az aktuális csoport fölött álló csoportot jelöli.
- Csoportnév (23)
- Mértékegység (25)
- Mennyiség (26)
- Összeszerelési rajzszám (27)
- Lista oldaltartománya (28). Abban az esetben jelenik meg, ha a csoport ábrája vagy listája többoldalas.
- Alkatrész vagy alcsoport száma (29)
- Alcsoport neve vagy alkatrész leírása (30)
- Csoportszám (31)
- Berendezésszám (32)
- Csoportinformáció fejléce (33). Azt mutatja, hogy a fejléc után következő rész egy speciális gépváltozatra vonatkozik vagy az általános pótalkatrészek listája. Ha a listának több változata van, és mindegyikhez saját összeszerelési rajz tartozik, az illető összeszerelési rajz oldalhivatkozása is megjelenik.
- Belső információ (34)

Inngangur

Upplýsingar um handbók

Tetra Pak mælir með því að allar handbækur sem afhentar eru séu lesnar vandlega. Gætið þess að afhentar handbækur séu tiltækar fyrir starfsfólk sem vinnur við eða viðheldur tækjabúnaðinum.

Það er mikilvægt að halda upp á þennan vörulista allan líftíma tækjabúnaðarins og að láta síðari eiganda eða notanda hafa vörulistann.

Ekki er hægt að gera Tetra Pak ábyrgt fyrir neinum skemmdum sem verða á tækjabúnaðinum vegna þess að ekki er farið eftir leiðbeiningunum í þeim handbókum sem fylgja tækjabúnaðinum.

Afhentar handbækur

Handbækur sem afhentar eru með þessum tækjabúnaði geta verið

- CM
  Breytingahandbók, sem veitir tæknimönnum upplýsingar um breytingar á tækjabúnaðinum milli mismunandi framleiðsluhama.
- EM
  Rafmagnshandbók, sem veitir tæknimönnum upplýsingar um rafkerfi tækjabúnaðarins.
- IM
  Uppsetningarhandbók, sem veitir tæknimönnum nauðsynlegar upplýsingar til að setja tækjabúnaðinn upp á öruggan hátt.
- MM
  Viðhaldshandbók, sem eitir tæknimönnum upplýsingar um viðhald tækjabúnaðarins.
- OM
  Notkunarhandbók, sem veitir stjórnandanum upplýsingar um meðhöndlun og notkun tækjabúnaðarins, fyrir, eftir og meðan á framleiðslu stendur.
- SPC
  Varahlutavörulisti, sem veitir nauðsynlegar upplýsingar til pöntunar varahluta frá Tetra Pak.
- TeM
  Tæknihandbók
  - sem veitir tæknimönnum nauðsynlegar upplýsingar til að setja tækjabúnaðinn upp á öruggan hátt
  - sem veitir tæknimönnum upplýsingar um viðhald tækjabúnaðarins
  - sem veitir tæknimönnum upplýsingar um rafkerfi vélarinnar/ tækjabúnaðarins
  - sem veitir nauðsynlegar upplýsingar til pöntunar varahluta frá Tetra Pak.

Umbrot

Sjá skýringarmynd (A) á síðu i-5: Aðalsíðurnar í Varahlutavörulistanum samanstanda af skýringarsíðu (1) og samsvarandi listasíðu (7). Síðunúmerið (5) er sýnt í haus síðunnar með skýringarmyndinni og í fæti listasíðunnar. Skjalnúmerið (6) er sýnt í fæti listasíðunnar.

Númerun síðu

Sjá skýringarmynd (A) á síðu i-5: Síðunúmer (5) er í þremur hlutum:

- kaflanúmer (2)
- samfellt síðunúmer innan kaflans (3)
- heildarfjölda blaðsíðna í kaflanum (4)

Kynning á vél

Framleiðandi

Fyrir nafn og heimilisfang framleiðanda, sjá síðu tvö í þessum vörulista.

Þjónusta

Til að panta varahluti fyrir þessa vél, eða til að tilkynna vandamál sem tengjast notkun þessarar vélar, skal hafa samband við næstu Tetra Pak skrifstofu.

Hafðu samband við Samskiptatengsl með aðrar fyrirspurnir, athugasemdir eða uppástungur varðandi tækjabúnaðinn og fylgiskjöl hans.

Kennsl

CE flokkun

Þessi tækjabúnaður er í samræmi við grundvallar heilbrigðis- og öryggisreglugerðir á Evrópska efnahags svæðinu (EES).

Nafnplata

Skýringarmynd (B) á síðu i-5 sýnir dæmi um nafnplötu.
Skýringarmynd af gildri nafnplötu og staðsetningu hennar á tækjabúnaðinum er sýnd í Inngangskafla handbókanna sem afhentar eru með þessum tækjabúnaði. Á nafnplötunni eru upplýsingarnar sem taldar eru upp hér að neðan, sem þörf er á þegar haft er samband við Tetra Pak varðandi þennan tiltekna tækjabúnað.

- Vélartegund (8)
- Fjöldi (9)
- Teikniupplýsingar (10)
- Raðnúmer vélar (11)
- Framleiðandi (12)
- CE merki (13)
- Framleiðsluár (14)

Skýringarmynd (C) á síðu i-5 sýnir dæmi um tæknilýsingu vélar. Gættu þess að upplýsingar um tækjabúnað sem talinn er upp á fremstu síðum þessarar handbóka samsvari upplýsingum á nafnplötu og tæknilýsingu vélar.

Hvernig nota á þennan Varahlutavörulista

Finndu varahlutarnúmer

a) Sjá skýringarmynd (D) á síðu i-5: Farðu í kaflanúmerið (15) sem gefið er til kynna við hlið aðalflokksins sem inniheldur hlutinn sem þú vilt finna.

Atriði b) og c) vísa til skýringarmyndar (E) á síðu i-6:

b) Á skýringarmynd aðalflokksins skaltu leita að undirflokki (17) vélarinnar, sem inniheldur hlutinn eða undirflokkinn sem þú ert að leita að. Taktu eftir stöðunúmerinu (18) og farðu á listasíðuna sem fylgir skýringarmyndinni.

c) Leitaðu að stöðunúmeri/tilvísunartitli (16) eða heiti undirflokksins (19). Farðu á samsvarandi síðunúmer (20) sem sýnt er í hægri dálkinum. Tetra Pak hefur kosið að nota alltaf sérhæfða skipan fyrir tilvísunartitla. Forskeytið sem gefur til kynna sérhæfða skipan (=) er ekki sýnt í tilvísunartitlinum.

Atriði d) og e) vísa til skýringarmyndar (F) á síðu i-6:

d) Finndu hlutinn (21) sem þú ert að leita að á undirflokksskýringarmyndinni og taktu eftir stöðunúmeri hlutarins.

e) Hlutarnúmerið (29) og lýsing hlutar (30) eru skráð hjá stöðunúmerinu á listasíðunni.

Upplýsingar skráðar í Varahlutavörulista

Listinn að neðan vísar til skýringarmyndar (F) á síðu i-6: Varahlutavörulisti inniheldur eftirfarandi upplýsingar um flokka, undirflokka og varahluti fyrir tækjabúnaðinn:

- Tilvísun flokkaskipunar (22). Gefur til kynna næsta flokk fyrir ofan í listaskipan tækjabúnaðarins.
- Heiti flokks (23)
- Mælieining (25)
- Magn (26)
- Númer samsetningarteikningar (27)
- Röð listasíðu (28). Fylgir með ef það eru margar blaðsíður í skýringarmynd eða lista flokksins.
- Númer hlutar eða undirflokks (29)
- Heiti undirflokks eða lýsing hlutar (30)
- Númer flokks (31)
- Númer tækjabúnaðar (32)
- Fyrirsögn flokkaskipunar (33). Gefur til kynna ef kaflinn fyrir neðan fyrirsögnina er fyrir sérstakt afbrigði vélar eða ef hann er listi yfir algenga hluti. Ef listi er með meira en eitt afbrigði og hvert afbrigði á sína eigin samsetningarteikningu, er sýnd blaðsíðutilvísun til samsetningarteikningar afbrigðisins.
- Innri upplýsingar (34)

Introduzione

Informazioni sul manuale

Tetra Pak consiglia di leggere con attenzione tutti i manuali forniti in dotazione. Assicurarsi che tutti i manuali in dotazione siano disponibili per il personale addetto al funzionamento o alla manutenzione della macchina.

È importante conservare il presente catalogo per tutta la durata della macchina e consegnarlo al successivo proprietario o utilizzatore.

Tetra Pak non sarà da ritenersi responsabile per eventuali danni alla macchina causati dal mancato rispetto delle istruzioni fornite nei manuali che accompagnano questa macchina.

Manuali in dotazione

I manuali consegnati con la presente macchina possono comprendere:

- CM (Manuale di conversione)
  Questo manuale fornisce ai tecnici le informazioni necessarie per la conversione della macchina da una modalità di produzione a un'altra.
- EM (Manuale elettrico)
  Questo manuale fornisce ai tecnici informazioni sull'impianto elettrico della macchina.
- IM (Manuale d'installazione)
  Questo manuale fornisce ai tecnici le informazioni necessarie per installare in sicurezza la macchina.
- MM (Manuale di manutenzione)
  Questo manuale fornisce ai tecnici le informazioni sulla manutenzione della macchina.
- OM (Manuale operativo)
  Questo manuale fornisce all'operatore le informazioni sull'utilizzo e il funzionamento della macchina prima, durante e dopo la produzione.
- SPC (Catalogo dei pezzi di ricambio)
  Questo catalogo fornisce le informazioni necessarie per ordinare i pezzi di ricambio a Tetra Pak.
- TeM (Manuale tecnico)
  Questo manuale:
  - fornisce ai tecnici le informazioni necessarie per installare in sicurezza la macchina
  - fornisce ai tecnici le informazioni sulla manutenzione della macchina
  - fornisce ai tecnici informazioni sull'impianto elettrico della macchina
  - fornisce le informazioni necessarie per ordinare i pezzi di ricambio a Tetra Pak.

Schema delle pagine

Consultare la figura (A) a pagina i-5: Le pagine principali di un Catalogo dei pezzi di ricambio sono costituite da una pagina con la figura (1) e una pagina elenco corrispondente (7). Il numero di pagina (5) è indicato nell'intestazione delle pagine con le figure e nel piè di pagina delle pagine elenco. Il codice del documento (6) è indicato nel piè di pagina delle pagine elenco.

Numerazione delle pagine

Consultare la figura (A) a pagina i-5: Il numero di pagina (5) è suddiviso in tre parti:

- numero del capitolo (2)
- numero progressivo di pagina all'interno del capitolo (3)
- numero totale di pagine nel capitolo (4)

Introduzione alla macchina

Fabbricante

Il nome e l'indirizzo del fabbricante sono riportati sulla seconda pagina del presente catalogo.

Assistenza

Per ordinare i pezzi di ricambio per questa macchina oppure per riferire problemi associati al funzionamento della macchina, contattare l'ufficio Tetra Pak più vicino.

Per tutte le altre richieste, commenti o suggerimenti per eventuali miglioramenti da apportare alla macchina e alla relativa documentazione, contattare il responsabile di collegamento.

Identificazione

Classificazione CE

Questa macchina è conforme alle principali norme sanitarie e di sicurezza dell'Area Economica Europea (EEA).

Targhetta della macchina

La figura (B) a pagina i-5 mostra un esempio di targhetta della macchina. Il capitolo Introduzione di tutti i manuali consegnati con la presente macchina contiene invece la figura della targhetta della macchina valida e la sua posizione sulla macchina. La targhetta riporta i dati elencati qui sotto, che sono necessari per contattare Tetra Pak in relazione a questa macchina specifica.

- Tipo di macchina (8)
- Volume (9)
- Specifiche disegno (10)
- Numero di matricola della macchina (11)
- Fabbricante (12)
- Marchio CE (13)
- Anno di fabbricazione (14)

La figura (C) a pagina i-5 mostra un esempio delle specifiche di una macchina. Verificare che i dati relativi alla macchina elencati nelle pagine iniziali del presente manuale corrispondano ai dati riportati sulla targhetta della macchina e nelle specifiche della macchina.

Come usare questo Catalogo dei pezzi di ricambio

Individuare il numero del pezzo di ricambio

a) Consultare la figura (D) a pagina i-5: andare al numero del capitolo (15) indicato accanto al gruppo principale che contiene il pezzo che si desidera individuare.

I punti b) e c) fanno riferimento alla figura (E) a pagina i-6.

b) Nella figura del gruppo principale, identificare il sottogruppo della macchina (17) che contiene il pezzo o il sottogruppo cercato. Annotare il numero di posizione (18) e andare alla pagina elenco che segue la figura.

c) Identificare il numero di posizione/l'indicazione di riferimento (16) o il nome del sottogruppo (19). Andare al numero di pagina corrispondente (20) indicato nella colonna di destra. Per le indicazioni di riferimento, Tetra Pak ha scelto di usare sempre la struttura "function-oriented". Il prefisso che indica la struttura "function-oriented" (=) non è mostrato nell'indicazione di riferimento.

I punti d) e e) fanno riferimento alla figura (F) a pagina i-6.

d) Individuare il pezzo (21) cercato sulla figura del sottogruppo e annotare il numero di posizione del pezzo.

e) Il numero del pezzo (29) e la descrizione del pezzo (30) sono indicati accanto al numero di posizione sulla pagina elenco.

Informazioni contenute nel Catalogo dei pezzi di ricambio

L'elenco seguente fa riferimento alla figura (F) a pagina i-6. Il Catalogo dei pezzi di ricambio contiene le seguenti informazioni sui gruppi, i sottogruppi e i pezzi di ricambio della macchina:

- Riferimento struttura gruppo (22). Indica il gruppo superiore successivo nella struttura elenco della macchina.
- Nome gruppo (23)
- Unità di misura (25)
- Quantità (26)
- Numero disegno di assemblaggio (27)
- Intervallo delle pagine elenco (28). Questa informazione è presente se la figura o l'elenco relativi al gruppo occupano più di una pagina del manuale.
- Numero pezzo o sottogruppo (29)
- Nome sottogruppo o descrizione pezzo (30)
- Numero gruppo (31)
- Numero macchina (32)
- Intestazione informazioni gruppo (33). Indica se la sezione che segue l'intestazione si riferisce a una variante di macchina specifica oppure se si tratta di un elenco di parti comuni. Se un elenco contiene più di una variante ed esiste un disegno di assemblaggio specifico per ogni variante, viene fornito il riferimento alla pagina in cui è mostrato il disegno di assemblaggio relativo alla variante.
- Informazioni interne (34)

Įvadas

Informacija apie instrukciją

"Tetra Pak" rekomenduoja atidžiai perskaityti visas pateiktas instrukcijas. Pasirūpinkite, kad instrukcijos būtų prieinamos darbuotojams, kurie eksploatuoja arba prižiūri įrangą.

Svarbu šį katalogą išsaugoti visą įrangos tarnavimo laiką ir perduoti jį kitam įrangos savininkui arba naudotojui.

"Tetra Pak" neprisiima atsakomybės už įrangos sugadinimą, jei nesilaikoma nurodymų, pateiktų prie šios įrangos pridedamuose kataloguose.

Pateikiamos instrukcijos

Su šia įranga pateikiamose instrukcijose gali būti

- CM
  Transformacijos instrukcija, suteikianti technikams informaciją apie įrangos transformavimą skirtingiems gamybos režimams.
- EM
  Elektrinės dalies instrukcija, suteikianti technikams informaciją apie įrangos elektros sistemą.
- IM
  Įrengimo instrukcija, suteikianti technikams informaciją, reikalingą norint saugiai sumontuoti įrangą.
- MM
  Techninės priežiūros instrukcija, suteikianti technikams informaciją apie įrangos priežiūrą.
- OM
  Eksploatavimo instrukcijos paskirtis yra suteikti informaciją operatoriui, kaip naudoti ir valdyti įrangą prieš gamybos procesą, jo metu ir po jo.
- SPC
  Atsarginių dalių katalogas, kuriame yra informacija, reikalinga atsarginėms dalims iš "Tetra Pak" užsakyti
- TeM
  Techninė instrukcija
  – suteikia technikams informaciją, reikalingą saugiai sumontuoti įrangą
  – suteikia technikams informaciją apie įrangos priežiūrą
  – suteikia technikams informaciją apie įrangos elektros sistemą
  – suteikia informaciją, reikalingą užsakyti iš "Tetra Pak" atsargines dalis

Puslapių išdėstymas

Žr. paveikslėlį (A) puslapyje i-5. Pagrindiniai atsarginių dalių katalogo puslapiai sudaryti iš paveikslėlio puslapio (1) ir atitinkamo sąrašo puslapio (7). Puslapio numeris (5) nurodomas paveikslėlio puslapio viršuje ir sąrašo puslapio apačioje. Dokumento numeris (6) nurodomas sąrašo puslapio apačioje.

Puslapių numeravimas

Žr. iliustraciją (A) puslapyje i-5. Puslapio numerį (5) sudaro trys dalys:

- skyriaus numeris (2)
- puslapio eilės numeris (3) skyriuje
- bendras puslapių skaičius (4) skyriuje

Įrenginio pristatymas

Gamintojas

Gamintojo pavadinimas ir adresas pateikti antrajame šio katalogo puslapyje.

Aptarnavimas

Jei reikia šiai įrangai užsakyti atsarginių dalių arba pranešti apie jos eksploatavimo nesklandumus, kreipkitės į artimiausią "Tetra Pak" biurą.

Su kitais klausimais, pastabomis ar įrangos ir jos dokumentacijos tobulinimo pasiūlymais kreipkitės į savo kontaktinį asmenį.

Identifikavimas

CE klasifikacija

Šis įrenginys atitinka esminius Europos ekonominės erdvės (EEE) sveikatos ir saugumo reikalavimus.

Vardinė plokštelė

Puslapyje i-5 pateiktame paveikslėlyje (B) parodytas įrangos vardinės plokštelės pavyzdys.
Atitinkamos įrangos vardinė plokštelė ir jos vieta ant įrangos parodoma su šia įranga pateikiamų instrukcijų įvade. Įrangos vardinėje plokštelėje pateikiami žemiau nurodyti duomenys, kurie reikalingi kreipiantis į "Tetra Pak" dėl konkretaus įrenginio.

- Mašinos tipas (8)
- Tomas (9)
- Brėžinių specifikacijos (10)
- Įrangos serijos numeris (11)
- Gamintojas (12)
- CE ženklas (13)
- Pagaminimo metai (14)

Paveikslėlyje (C) puslapyje i-5 parodytas įrangos specifikacijos pavyzdys. Patikrinkite, ar šios instrukcijos pirmuosiuose puslapiuose nurodyti duomenys atitinka duomenis vardinėje plokštelėje ir įrangos specifikaciją.

Kaip naudotis atsarginių dalių katalogu

Atsarginės dalies numerio suradimas

a) Žr. iliustraciją (D) puslapyje i-5. Atsiverskite skyrių (15), nurodytą šalia pagrindinio mazgo, kuriame yra jūsų ieškoma dalis.

Punktai b) ir c) atitinka paveikslėlį (E) puslapyje i-6.

b) Pagrindinio mazgo paveikslėlyje suraskite smulkesnį įrangos mazgą (17), kuriame yra jūsų ieškoma dalis arba mazgas. Pasižiūrėkite pozicijos numerį (18) ir suraskite jį toliau pateiktame sąraše.

c) Suraskite pozicijos numerį/pavadinimą (16) arba smulkesnio mazgo pavadinimą (19). Atsiverskite dešiniajame stulpelyje nurodytą puslapį (20). "Tetra Pak" nusprendė pavadinimuose visada naudoti paskirtį atitinkančią struktūrą. Pavadinimuose nepateikiamas paskirtį atitinkančios struktūros prefiksas (=).

Punktai d) ir e) atitinka paveikslėlį (F) puslapyje i-6.

d) Suraskite ieškomą dalį (21) smulkesnio mazgo paveikslėlyje ir pasižiūrėkite dalies pozicijos numerį.

e) Dalies numeris (29) ir dalies aprašymas (30) sąrašo puslapyje nurodyti šalia pozicijos numerio.

Atsarginių dalių kataloge pateikiama informacija

Žemiau pateiktas sąrašas atitinka paveikslėlį (F) puslapyje i-6. Atsarginių dalių kataloge apie įrangos mazgus, smulkesnius mazgus ir atsargines dalis pateikiama tokia informacija:

- Struktūrinė mazgo nuoroda (22). Nurodo stambesnį mazgą įrangos sąrašo struktūroje.
- Mazgo pavadinimas (23)
- Matavimo vienetai (25)
- Kiekis (26)
- Surinkimo brėžinio numeris (27)
- Sąrašo puslapių intervalas (28) Pateikiamas, jei mazgo paveikslėlis arba sąrašas užima kelis puslapius.
- Dalies arba smulkesnio mazgo numeris (29)
- Smulkesnio mazgo arba dalies aprašymas (30)
- Mazgo numeris (31)
- Įrangos numeris (32)
- Informacijos apie mazgą puslapio antraštė (33). Nurodo, ar po antrašte pateikta informacija yra specifinio įrangos varianto, ar tai paprastų dalių sąrašas. Jei yra daugiau kaip vienas sąrašo variantas ir kiekvienam variantui yra atskiras surinkimo brėžinys, nurodomas puslapis, kuriame pateiktas konkretaus varianto surinkimo brėžinys.
- Vidinė informacija (34)

Ievads

Informācija par rokasgrāmatu

Tetra Pak iesaka rūpīgi izlasīt visas piegādātās rokasgrāmatas. Jānodrošina, lai piegādātas rokasgrāmatas būtu pieejamas personālam, kas apkalpo iekārtas vai veic to apkopi.

Šo katalogu ir nepieciešams saglabāt visu laiku, kamēr iekārtas tiek izmantotas, un nodot katalogu nākamajam īpašniekam vai lietotājam.

Tetra Pak neatbild par jebkuriem iekārtas bojājumiem, kuri rodas līdz ar iekārtu piegādāto instrukciju neievērošanas rezultātā.

Piegādātas rokasgrāmatas

Līdz ar iekārtu var tikt piegādātas šādas rokasgrāmatas

- CM
  Pārslēgšanas rokasgrāmata sniedz tehniķiem informāciju par iekārtas pārslēgšanu dažādos atšķirīgos ražošanas režīmos.
- EM
  Elektriskās instalācijas rokasgrāmata sniedz tehniķiem informāciju par iekārtas elektriskās instalācijas sistēmu.
- IM
  Uzstādīšanas rokasgrāmata sniedz tehniķiem informāciju, kas nepieciešama drošai iekārtas uzstādīšanai.
- MM
  Apkopes rokasgrāmata sniedz tehniķiem informāciju par iekārtas apkopi.
- OM
  Ekspluatācijas rokasgrāmata sniedz apkalpojošajam personālam informāciju par iekārtas apkalpošanu un ekspluatēšanu pirms darba sākuma, darba laikā un pēc darba beigām.
- SPC
  Rezerves daļu katalogs sniedz informāciju, kas nepieciešama, lai pasūtītu rezerves daļas no Tetra Pak
- TeM
  Tehniskā rokasgrāmata
  - sniedz tehniķiem informāciju, kas nepieciešama drošai iekārtas uzstādīšanai
  - sniedz tehniķiem informāciju par iekārtas apkopi
  - sniedz tehniķiem informāciju par mašīnas/iekārtas elektrisko instalāciju
  - sniedz informāciju, kas nepieciešama, lai pasūtītu rezerves daļas no Tetra Pak.

Lappuses izkārtojums

Skatīt ilustrāciju (A) i-5 lappusē: Galvenās lappuses Rezerves daļu katalogā sastāv no ilustrāciju lapas (1) un atbilstīgās saraksta lapas (7). Lappuses numurs (5) ir norādīts ilustrāciju lapas galvenē un saraksta lapas kājenē. Dokumenta numurs (6) ir norādīts saraksta lapas kājenē.

Lappušu numerācija

Skatīt ilustrāciju (A) lappusē i-5: Lappuses numurs (5) sastāv no trim daļām:

- nodaļas numura (2)
- secīga lappuses numura nodaļas ietvaros (3)
- kopējā lappušu skaita nodaļā (3)

Iepazīstināšana ar iekārtu

Ražotājs

Ražotāja nosaukumu un adresi skatīt šī kataloga otrajā lappusē.

Serviss

Lai pasūtītu rezerves daļas šai mašīnai vai lai ziņotu par problēmām saistībā ar šīs mašīnas ekspluatāciju, sazinieties ar tuvāko Tetra Pak pārstāvniecību.

Ja Jums ir citi jautājumi, piezīmes vai ieteikumi par iekārtas un tās dokumentācijas uzlabošanu, tad lūdzam sazināties ar Sakaru biroju.

Identifikācija

EK klasifikācija

Šī iekārta atbilst galvenajām Eiropas Ekonomiskās Zonas (EEA) regulām, kuras attiecas uz veselību un drošību.

Mašīnas tipa plāksnīte

Ilustrācijā (B) i-5 lappusē ir redzams mašīnas tipa plāksnītes paraugs. Aktuālās mašīnas tipa plāksnīte un tās atrašanās vieta uz iekārtas ir parādīta līdz ar šo iekārtu piegādāto rokasgrāmatu Ievada nodaļā. Mašīnas tipa plāksnīte ietver turpmāk uzskaitīto informāciju, kura ir nepieciešama, sazinoties ar Tetra Pak par šo konkrēto iekārtu.

- Mašīnas tips (8)
- Daudzums (9)
- Rasējuma specifikācijas (10)
- Mašīnas sērijas numurs (11)
- Ražotājs (12)
- CE apzīmējums (13)
- Izgatavošanas gads (14)

Ilustrācijā (C) lappusē i-5 ir parādīts mašīnas specifikācijas paraugs. Pārliecinieties, ka šīs rokasgrāmatas titullapās minētā informācija par iekārtu atbilst tai, kas norādīta uz mašīnas tipa plāksnītes un mašīnas specifikācijā.

Rezerves daļu kataloga lietošana

Vajadzīgās rezerves daļas numura atrašana

a) Skatiet ilustrāciju (D) lappusē i-5: Atrodiet nodaļas numuru (15), kas norādīts līdzās galvenajai grupai, kurā ietilpst Jūsu meklētā rezerves daļa.

Pozīcijas b) un c) skatiet ilustrāciju (E) lappusē i-6.

b) Galvenās grupas ilustrācijā atrodiet mašīnas apakšgrupu (17), kurā ietilpst Jūsu meklētā detaļa vai apakšgrupa. Atzīmējiet pozīcijas numuru (18) un pievērsieties saraksta lappusei, kura seko šai ilustrācijai.

c) Sameklējiet atbilstīgo pozīcijas numuru (16) vai apakšgrupas nosaukumu (19). Pievērsieties atbilstīgajam lappuses numuram (20), kas norādīts ailē pa labi. Tetra Pak norādes apzīmēšanai ir izvēlējies vienmēr izmantot uz funkciju orientētu struktūru. Priedēklis, kas norāda uz funkciju orientētu struktūru (=), norādes apzīmējumā nav parādīts.

Pozīcijas d) un e) skatiet ilustrāciju (F) lappusē i-6.

d) Atrodiet vajadzīgo rezerves daļu (21) apakšgrupas ilustrācijā un atzīmējiet šīs detaļas pozīcijas numuru.

e) Šīs detaļas numurs (29) un apraksts (30) atrodas saraksta lapā līdzās pozīcijas numuram.

Rezerves daļu katalogā sniegtā informācija

Šis saraksts attiecas uz ilustrāciju (F) lappusē i-6. Rezerves daļu katalogs satur šādu informāciju par grupām, apakšgrupām un iekārtas rezerves daļām:

- Grupas struktūras norāde (22). Norāda nākamo augstāko grupu iekārtas saraksta struktūrā.
- Grupas nosaukums (23)
- Mērvienība (25)
- Skaits (26)
- Montāžas rasējuma numurs (27)
- Saraksta lappuses zona (28). Tiek izmantota tad, ja grupas ilustrācija vai saraksts ir uz vairākām lappusēm.
- Daļas vai apakšgrupas numurs (29)
- Apakšgrupas nosaukums vai daļas apraksts (30)
- Grupas numurs (31)
- Iekārtas numurs (32)
- Grupas informācijas iedaļas apzīmējums (33). Norāda, vai iedaļa zem šī apzīmējuma attiecas uz noteiktu mašīnas variantu, vai arī tas ir kopējo rezerves daļu saraksts. Ja sarakstam ir vairāk nekā viens variants un katram variantam ir savs montāžas rasējums, tad tiek dota atsauce uz lappusi, kur atrodams katra varianta montāžas rasējums.
- Iekšējā informācija (34)

Inleiding

Informatiehandboek

Tetra Pak adviseert alle meegeleverde handboeken zorgvuldig te lezen. Controleer of het bedienende of onderhoudspersoneel van de machine de beschikking heeft over de meegeleverde handboeken

Het is belangrijk deze catalogus tijdens de levensduur van de machine te bewaren en de catalogus door te geven aan iedere volgende eigenaar of gebruiker.

Tetra Pak stelt zich niet aansprakelijk voor eventuele schade aan de installatie als gevolg van het niet naleven van de instructies die in de meegeleverde handboeken worden gegeven.

Meegeleverde handboeken

De bij deze installatie meegeleverde handboeken omvatten

- CM
  Het conversiehandboek geeft technici informatie met betrekking tot de ombouw van de installatie tussen verschillende productiemodi.
- EM
  Het elektriciteitshandboek informeerttechnici omtrent het elektrischesysteem van de installatie.
- IM
  Het installatiehandboek informeert technici hoe men de installatie op veilige wijze installeert.
- MM
  Het onderhoudshandboek geeft technici informatie over het onderhoud van de installatie.
- OM
  Het bedieningshandboek informeert de operator betreffende het omgaan met en het bedienen van de installatie voor, tijdens en na de productie.
- SPC
  De reserveonderdelencatalogus geeft de nodige informatie omtrent het bestellen van reserveonderdelen bij Tetra Pak
- TeM
  Het technische handboek
  - informeert technici hoe men de installatie op veilige wijze installeert
  - informeert technici omtrent het onderhoud van de installatie
  - informeert technici omtrent het elektrische systeem van de machine/ installatie
  - informeert over welke informatie men nodig heeft om reserveonderdelen bij Tetra Pak te bestellen.

Pagina layout

Zie afbeelding (A) op pagina i-5: De belangrijkste bladzijden van een reserveonderdelencatalogus bestaan uit een bladzijde met afbeeldingen (1) en een bladzijde met een corresponderende lijst (7). Het bladzijde-nummer (5) is te vinden in de kop van een bladzijde met een afbeelding en in de voetnoot van een lijstbladzijde. Het documentennummer (6) is te vinden in de voetnoot van een lijstbladzijde.

Bladzijdenummering

Zie afbeelding (A) op pagina: i-5: Een bladzijdenummer (5) bestaat uit drie delen:

- hoofdstuknummer (2)
- opeenvolgend bladzijdenummer in het hoofdstuk (3)
- totaal aantal bladzijden in het hoofdstuk (4)

Introductie van de machine

Fabrikant

Zie de tweede bladzijde van deze catalogus voor naam en adres van de fabrikant.

Service

Neem voor het bestellen van reserveonderdelen voor deze machine, of om bedieningsproblemen met betrekking tot deze machine te melden, contact op met de dichtstbijzijnde Tetra Pak vestiging.

Neem contact op met de contactpersoon voor verdere informatie, opmerkingen of suggesties ter verbetering van de installatie en de bijbehorende documentatie.

Identificatie

CE-classificatie

Deze installatie voldoet aan de basisvoorschriften voor gezondheid en veiligheid voor het Europese Economische Gebied (EEG).

Machineplaatje

Afbeelding (B) op bladzijde i-5 toont een voorbeeld van een machineplaatje. Een afbeelding van het geldige machineplaatje en de plaatsing ervan worden getoond in de Inleiding van de handboeken, die bij deze installatie worden meegeleverd. Het machineplaatje bevat onderstaande gegevens, die men nodig heeft wanneer men omtrent de desbetreffende installatie contact opneemt met Tetra Pak.

- Machinetype (8)
- Volume (9)
- Specificatietekeningen (10)
- Serienummer van de machine (11)
- Fabrikant (12)
- CE-markering (13)
- Jaar van fabrikage (14)

Afbeelding (C) op pagina i-5 toont een voorbeeld van een machinespecificatie. Controleer of de gegevens betreffende de installatie op de eerste bladzijden van dit handboek overeenkomen met de gegevens op het machineplaatje en de machinespecificatie.

Gebruik van de reserveonderdelencatalogus

Vinden van het bestelnummer van een reserveonderdeel

a) Zie afbeelding (D) op pagina i-5: Ga naar het hoofdstuknummer (15) dat wordt aangeven naast de hoofdgroep waarin zich het door u gezochte onderdeel bevindt.

Items b) en c) verwijzen naar afbeelding (E) op pagina i-6.

b) Op de afbeelding van de hoofdgroep zoekt u de machinesubgroep (17), die het gezochte onderdeel of de gezochte subgroep bevat. Noteer het positienummer (18) en ga naar de lijstbladzijde die op de afbeelding volgt.

c) Zoek naar het positienummer/de referentie (16) of de subgroep-naam (19). Ga naar de corresponderende bladzijde (20) die in de rechterkolom staat vermeld. Tetra Pak heeft voor de benoeming van de referenties gekozen voor de functiegeoriënteerde structuur. De prefixaanduidende functiegeoriënteerde structuur (=) wordt niet in de referentie getoond.

Items d) en e) verwijzen naar afbeelding (F) op pagina i-6.

d) Zoek het gewenste deel (21) op de subgroepafbeelding en noteer het positienummer van het onderdeel.

e) Het bestelnummer (29) en de omschrijving (30) van het onderdeel staan naast het positienummer op de lijstbladzijde.

Informatie die in een reserveonderdelencatalogus wordt gegeven

De onderstaande lijst verwijst naar afbeelding (F) op bladzijde i-6. Een reserveonderdelencatalogus bevat de volgende informatie over groepen, subgroepen en reserveronderdelen voor de installatie:

- Referentie groepstructuur (22). Geeft de volgende hogere groep in de lijststructuur van de installatie aan.
- Groepsnaam (23)
- Meeteenheid (25)
- Hoeveelheid (26)
- Nummer montagetekening (27)
- Lijst bladzijdenreeks (28). Wordt vermeld wanneer er meerdere bladzijden in de groepsafbeelding of -lijst voorkomen.
- Deel- of subgroepnummer (29)
- Subgroepnaam of onderdeelbeschrijving (30)
- Groepsnummer (31)
- Machinenummer (32)
- Titel groepsinformatie (33). Geeft aan of het gedeelte onder de titel voor een specifieke machinesoort is of dat het een lijst met gebruikelijke onderdelen is. Indien een lijst meer dan één type bevat en ieder type zijn eigen montagetekening heeft, wordt een bladzijdereferentie getoond voor de montagetekening van het type.
- Interne informatie (34)

Introduksjon

Informasjon om manualen

Tetra Pak anbefaler at du leser nøye gjennom alle leverte manualer. Sørg for at manualene er tilgjengelige for alle som betjener eller vedlikeholder utstyret.

Det er viktig at du tar vare på denne katalogen under hele levetiden til utstyret og at du gir den videre til eventuelle nye eiere eller brukere.

Tetra Pak vil ikke være ansvarlig for skader på utstyret som oppstår fordi brukeren ikke følger instruksjonene i manualene som følger med utstyret.

Leverte manualer

Manualene som leveres med dette utstyret, kan inkludere

- CM
  Konverteringsmanualen gir teknikere informasjon om hvordan de konverterer utstyret mellom ulike produksjonsmodi.
- EM
  Den elektriske manualen gir teknikere informasjon om utstyrets elektriske system.
- IM
  Installasjonsmanualen gir teknikere informasjon som kreves for å kunne installere utstyret på en sikker måte.
- MM
  Vedlikeholdsmanualen gir teknikere informasjon om vedlikehold av utstyret.
- OM
  Driftsmanualen gir operatøren informasjon om hvordan han håndterer og bruker utstyret før, under og etter produksjon.
- SPC
  Reservedelskatalogen inneholder informasjon som du trenger for å bestille reservedeler fra Tetra Pak
- TeM
  Den tekniske manualen
  – gir teknikere informasjon om sikker installasjon av utstyret
  – gir teknikere informasjon om vedlikehold av utstyret
  – gir teknikere informasjon om maskinens/utstyrets elektriske system
  – inneholder informasjon som du trenger for å bestille reservedeler fra Tetra Pak.

Sideoppsett

Se illustrasjonen (A) på side i-5: Hovedsidene i reservedelskatalogen består av en illustrasjonsside (1) og en korresponderende listeside (7). Sidenummeret (5) vises i topteksten på illustrasjonssiden og i bunnteksten på listesiden. Dokumentnummeret (6) vises i bunnteksten på listesiden.

Sidenummerering

Se illustrasjonen (A) på side i-5: Et sidenummer (5) består av tre deler:

- kapittelnummer (2)
- etterfølgende sidenummer i kapitlet (3)
- det totale antall sider i kapitlet (4)

Introduksjon av maskinen

Produsent

Hvis du ønsker produsentens navn og adresse, kan du se side to i denne katalogen.

Service

Når du skal bestille reservedeler til denne maskinen eller rapportere problemer forbundet med driften av denne maskinen, må du kontakte ditt nærmeste Tetra Pak-kontor.

Når det gjelder andre forespørsler, kommentarer eller forslag til forbedringer av utstyret og dets dokumentasjon, kan du ta kontakt med din kontaktperson.

Identifisering

CE-klassifisering

Dette utstyret er i overensstemmelse med de grunnleggende helse- og sikkerhetsforskriftene i Det europeiske økonomiske samarbeidsområdet (EØS).

Maskinplate

Illustrasjonen (B) på side i-5 viser et eksempel på en maskinplate.
En illustrasjon av en gyldig maskinplate og hvor denne er plassert på utstyret, er vist i introduksjonskapitlet i manualene som følger med dette utstyret. Maskinplaten inneholder nedenstående data, som du trenger når du skal kontakte Tetra Pak angående dette bestemte utstyret.

- Maskintype (8)
- Volum (9)
- Tegningsspesifikasjoner (10)
- Maskin-serienummer (11)
- Produsent (12)
- CE-merke (13)
- Produksjonsår (14)

Illustrasjonen (C) på side i-5 viser et eksempel på en maskinspesifikasjon. Sørg for at utstyrsdataene som står oppført foran i denne manualen, samsvarer med dataene på maskinplaten og maskinspesifikasjonen.

Hvordan bruke denne reservedelskatalogen

Finn et reservedelsnummer

a) Se illustrasjonen (D) på side i-5: Gå til kapittelnummeret (15) som er angitt ved siden av hovedgruppen som inneholder delen du vil finne.

Punkt b) og c) viser til illustrasjonen (E) på side i-6.

b) På hovedgruppeillustrasjonen ser du etter maskinundergruppen (17) som inneholder delen eller undergruppen du ser etter. Merk deg posisjonsnummeret (18), og gå til listesiden som kommer etter illustrasjonen.

c) Se etter posisjonsnummeret/referansebetegnelsen (16) eller undergruppenavnet (19). Gå til det korresponderende sidenummeret (20) som står oppført i høyre kolonne. Tetra Pak har valgt å alltid bruke den funksjonsorienterte inndelingen for referansebetegnelse. Prefiksen som angir funksjonsorientert inndeling (=), er ikke vist i referansebetegnelsen.

Punkt d) og e) viser til illustrasjonen (F) på side i-6.

d) Finn delen (21) du ser etter på undergruppeillustrasjonen, og merk deg delens posisjonsnummer.

e) Delenummeret (29) og delebeskrivelsen (30) finner du ved siden av posisjonsnummeret på listesiden.

Informasjon i en reservedelskatalog

Listen nedenfor viser til illustrasjonen (F) på side i-6. En reservedelskatalog inneholder følgende informasjon om grupper, undergrupper og reservedeler for utstyret:

- Gruppeinndelingsreferanse (22). Angir den neste gruppen opp i inndelingen av utstyrslisten.
- Gruppenavn (23)
- Målenhet (25)
- Antall (26)
- Tegningsnummer (27)
- Listesideområde (28). Inkludert hvis det er flere sider i gruppe-illustrasjonen eller listen.
- Dele- eller undergruppenummer (29)
- Undergruppenavn eller delebeskrivelse (30)
- Gruppenummer (31)
- Utstyrsnummer (32)
- Gruppeinformasjonsoverskrift (33). Angir om avsnittet under overskriften er for en bestemt maskinvariant eller om det er en liste over vanlige deler. Hvis en liste har flere varianter og hver variant har sin egen sammenstillingstegning, vises det en sidereferanse til variantens sammenstillingstegning.
- Intern informasjon (34)

Wprowadzenie

Informacje na temat instrukcji

Firma Tetra Pak zaleca dokładne przeczytanie wszystkich dostarczonych instrukcji. Należy upewnić się, że dostarczone instrukcje są dostępne dla personelu, który obsługuje lub konserwuje maszynę.

Należy przechowywać ten katalog przez cały okres użytkowania maszyny i przekazać go kolejnemu właścicielowi lub użytkownikowi.

Firma Tetra Pak nie będzie ponosić odpowiedzialności za jakiekolwiek uszkodzenia maszyny spowodowane niestosowaniem się do zaleceń zawartych w instrukcjach dostarczonych z maszyną.

Dostarczone instrukcje

W skład dokumentacji dostarczonej z maszyną wchodzą:

- Instrukcja konwersji (CM)
  W tej instrukcji zawarte są informacje dotyczące dostosowania maszyny do różnych trybów produkcji.
- Instrukcja dotycząca wyposażenia elektrycznego (EM)
  W tej instrukcji zawarte są informacje dotyczące układu elektrycznego maszyny.
- Instrukcja instalacji (IM)
  W tej instrukcji zawarte są informacje niezbędne do bezpiecznego zainstalowania maszyny.
- Instrukcja konserwacji (MM)
  W tej instrukcji zawarte są informacje dotyczące konserwacji maszyny.
- Instrukcja obsługi (OM)
  W tej instrukcji zawarte są informacje dotyczące obsługi maszyny przed rozpoczęciem produkcji, w jej trakcie oraz po jej zakończeniu.
- Katalog części zamiennych (SPC)
  W katalogu zawarte są informacje dotyczące zamawiania części zamiennych w firmie Tetra Pak.
- Instrukcja techniczna (TeM)
  Instrukcja techniczna zawiera informacje:
  - dotyczące bezpiecznego instalowania maszyny,
  - dotyczące konserwacji maszyny,
  - dotyczące układu elektrycznego maszyny,
  - dotyczące zamawiania części zamiennych w firmie Tetra Pak.

Układ strony

Patrz rysunek (A) na stronie i-5: Główne strony w Katalogu części zamiennych składają się ze strony zawierającej rysunek (1) i odpowiadającej jej strony zawierającej listę (7). Numer strony (5) znajduje się w nagłówku strony zawierającej rysunek i w stopce strony zawierającej listę. Numer dokumentu (6) znajduje się w stopce strony zawierającej listę.

Numeracja stron

Patrz rysunek (A) na stronie i-5: Numer strony (5) składa się z trzech części:

- numeru rozdziału (2),
- kolejnego numeru strony w rozdziale (3),
- całkowitej liczby stron w rozdziale (4).

Ogólne informacje o maszynie

Producent

Nazwę i adres producenta można znaleźć na drugiej stronie niniejszego katalogu.

Serwis

Aby zamówić części zapasowe do tej maszyny lub zgłosić problemy związane z jej pracą, należy skontaktować się z najbliższym biurem Tetra Pak.

Można kontaktować się także w przypadku innych zapytań, uwag lub sugestii dotyczących udoskonalenia urządzenia i dokumentacji.

Identyfikacja

Klasyfikacja CE

Maszyna spełnia podstawowe wymogi z zakresu bezpieczeństwa i ochrony zdrowia obowiązujące w Europejskiej Strefie Ekonomicznej (EEA).

Tabliczka znamionowa

Na rysunku (B), znajdującym się na stronie i-5, pokazano przykładową tabliczkę znamionową.
Rysunek prawidłowej tabliczki znamionowej oraz jej umiejscowienie na maszynie pokazano w rozdziale Wprowadzenie zawartym w instrukcjach dostarczonych z maszyną. Tabliczka znamionowa zawiera następujące dane potrzebne w przypadku kontaktowania się z firmą Tetra Pak w sprawie dotyczącej danej maszyny:

- typ maszyny (8),
- objętość (9),
- specyfikacje rysunkowe (10),
- numer seryjny maszyny (11),
- nazwę producenta (12),
- oznaczenie CE (13),
- rok produkcji (14).

Na rysunku (C) zamieszczonym na stronie i-5 pokazano przykład specyfikacji maszyny. Należy sprawdzić, czy dane dotyczące maszyny przedstawione na pierwszej stronie tej instrukcji odpowiadają danym zawartym na tabliczce znamionowej maszyny oraz specyfikacji maszyny.

Jak korzystać z niniejszego Katalogu części zamiennych

Należy odnaleźć numer części zamiennej

a) Zapoznaj się z rysunkiem (D) na stronie i-5: przejdź do numeru rozdziału (15) pokazanego obok głównej grupy zawierającej część, którą chcesz odszukać.

Punkty b) i c) odnoszą się do rysunku (E) na stronie i-6.

b) Na rysunku grupy głównej odszukaj podgrupę maszyny (17), która zawiera odpowiednią część lub podgrupę, której szukasz. Zanotuj numer pozycji (18) i przejdź do strony z listą odpowiadającą rysunkowi.

c) Odszukaj numer pozycji/oznaczenie odnośnika (16) lub nazwę podgrupy (19). Przejdź do odpowiedniego numeru strony (20) podanego w kolumnie umieszczonej po prawej stronie. Firma Tetra Pak w przypadku oznaczenia odnośnika korzysta ze struktury ukierunkowanej na funkcję. Przedrostek wskazujący strukturę ukierunkowaną na funkcję (=) nie jest pokazany w oznaczeniu odnośnika.

Punkty d) i e) odnoszą się do rysunku (F) na stronie i-6.

d) Na rysunku podgrupyodszukaj odpowiednią część (21) i zanotuj numer pozycji części.

e) Numer części (29) oraz jej opis (30) podano na stronie zawierającej listę obok numeru pozycji.

Informacje zawarte w Katalogu części zamiennych

Poniższa lista odnosi się do rysunku (F), znajdującego się na stronie i-6. Katalog części zamiennych zawiera następujące informacje o grupach, podgrupach oraz częściach zamiennych maszyny:

- Odnośnik struktury grup (22). Wskazuje następną wyższą grupę zawartą w strukturze listy maszyny.
- Nazwa grupy (23).
- Jednostka miary (25).
- Liczba (26).
- Numer rysunku złożeniowego (27).
- Zakres stron zawierających listę (28). Podany w przypadku występowania wielu stron zawierających rysunek grupy lub listę.
- Numer części lub podgrupy (29).
- Nazwa podgrupy lub opis części (30).
- Numer grupy (31).
- Numer maszyny (32).
- Nagłówek informacyjny grupy (33). Wskazuje, czy sekcja umieszczona pod nagłówkiem dotyczy określonego wariantu maszyny, czy też jest to lista wspólna dla wszystkich wariantów. Jeśli lista występuje w wielu wariantach i dla każdego z nich dostępny jest osobny rysunek złożeniowy, podany jest odnośnik strony do rysunku złożeniowego dla danego wariantu.
- Informacje wewnętrzne (34).

Introdução

Informações sobre o Manual

A Tetra Pak recomenda que leia atentamente todos os manuais incluídos. Certifique-se de que os manuais incluídos estão disponíveis para o pessoal que utiliza ou faz a manutenção do equipamento.

É importante que mantenha este catálogo durante toda a vida útil do equipamento, devendo ainda ser fornecido a quaisquer proprietários e operadores subsequentes do mesmo.

A Tetra Pak não será responsável por quaisquer danos no equipamento provocados pelo não seguimento das instruções fornecidas nos manuais que acompanham este equipamento.

Manuais Fornecidos

Os manuais fornecidos com este equipamento podem incluir

- CM
  O Manual de Conversão (Conversion Manual) fornece aos técnicos informações sobre a conversão do equipamento entre modos de produção diferentes.
- EM
  O Manual Eléctrico (Electrical Manual) fornece aos técnicos informações sobre o sistema eléctrico do equipamento.
- IM
  O Manual de Instalação (Installation Manual) fornece aos técnicos as informações necessárias à instalação do equipamento em segurança.
- MM
  O Manual de Manutenção (Maintenance Manual) fornece aos técnicos informações sobre como realizar a manutenção do equipamento.
- OM
  O Manual de Funcionamento (Operation Manual) fornece ao operador informações sobre o manuseamento e funcionamento do equipamento antes, durante e após a produção.
- SPC
  O Spare Parts Catalogue (Catálogo das Peças Sobressalentes) fornece as informações necessárias para encomendar peças sobressalentes à Tetra Pak
- TeM
  O Manual Técnico (Technical Manual)
  - fornece aos técnicos as informações necessárias à instalação do equipamento em segurança
  - fornece aos técnicos informações sobre a manutenção do equipamento
  - fornece aos técnicos informações sobre o sistema eléctrico da máquina/equipamento
  - fornece as informações necessárias para encomendar peças sobressalentes à Tetra Pak.

Desenho da Página

Consulte a ilustração (A) na página i-5: As páginas principais num Catálogo de Peças Sobressalentes são constituídas por uma página de ilustração (1) e uma página de lista correspondente (7). O número de página (5) é apresentado no cabeçalho de uma página de ilustração e no rodapé de uma página de lista. O número do documento (6) é apresentado no rodapé de uma página de lista.

Numeração das Páginas

Consulte a ilustração (A) na página i-5: Um número de página (5) tem três partes:

- número do capítulo (2)
- número das páginas consecutivas dentro do capítulo (3)
- número de páginas total no capítulo (4)

Introdução da Máquina

Fabricante

Quanto ao nome e endereço do fabricante, consulte a segunda página deste catálogo.

Manutenção

Para encomendar peças sobressalentes para esta máquina ou para apresentar relatórios de problemas associados com o funcionamento desta máquina, contacte os escritórios mais próximos da Tetra Pak.

Contacte a Ligação com outras questões, comentários ou sugestões para melhoria referentes ao equipamento e à sua documentação.

Identificação

Classificação da CE

Este equipamento está em conformidade com as regulamentações básicas da saúde e segurança da Área Económica Europeia (AEE).

Chapa de Identificação da Máquina

A ilustração (B) na página i-5 mostra um exemplo de uma chapa de identificação da máquina.
No capítulo Introdução dos manuais entregues com este equipamento é apresentada uma ilustração da chapa de identificação válida da máquina e a sua localização no equipamento. A chapa de identificação da máquina contém os dados listados em baixo, necessários quando contactar a Tetra Pak em relação a este equipamento específico.

- Tipo de máquina (8)
- Volume (9)
- Especificações do desenho (10)
- Número de série da máquina (11)
- Fabricante (12)
- Marca da CE (13)
- Ano de fabricação (14)

A ilustração (C) na página i-5 mostra um exemplo de uma especificação da máquina. Certifique-se de que os dados do equipamento listados nas primeiras páginas deste manual correspondem aos dados indicados na chapa de identificação da máquina e às especificações da máquina.

Como utilizar este Catálogo de Peças Sobressalentes

Localize o Número da Peça Sobressalente

a) Consulte a ilustração (D) na página i-5: Vá para o número do capítulo (15) indicado no grupo principal que contém a peça que pretende localizar.

Os itens b) e c) referem-se à ilustração (E) na página i-6:

b) Na ilustração do grupo principal, procure o subgrupo da máquina (17) que contém a peça ou o subgrupo que procura. Tome nota do número de posição (18) e vá para a página de lista a seguir à ilustração.

c) Procure o número de posição/designação de referência (16) ou o nome do subgrupo (19). Vá para o número de página correspondente (20) indicado na coluna do lado direito. A Tetra Pak preferiu utilizar sempre a estrutura orientada para a função como designação de referência. O prefixo que inicia a estrutura orientada para a função (=) não está indicada na designação de referência.

Os itens d) e e) referem-se à ilustração (F) na página i-6:

d) Localize a peça (21) que procura na ilustração do subgrupo e tome nota do número de posição da peça.

e) O número de peça (29) e a descrição da peça (30) são apresentados ao lado do número da posição na página de lista.

Informações listadas num Catálogo de Peças Sobressalentes

A lista em baixo refere-se à ilustração (F) na página i-6: Um Catálogo de Peças Sobressalentes contém as seguintes informações sobre grupos, subgrupos e peças sobressalentes para o equipamento:

- Referência da estrutura do grupo (22). Indica o grupo mais elevado seguinte na estrutura da lista do equipamento.
- Nome do grupo (23)
- Unidade de medida (25)
- Quantidade (26)
- Número de série do conjunto (27)
- Intervalo de páginas da lista (28). Incluído se existirem várias páginas na ilustração ou na lista do grupo.
- Número de peça ou subgrupo (29)
- Nome do subgrupo ou descrição da peça (30)
- Número do grupo (31)
- Número do equipamento (32)
- Cabeçalho das informações do grupo (33). Indica se a secção em baixo do cabeçalho é de uma variante específica da máquina ou se é uma lista de peças comuns. Se uma lista tiver mais de uma variante e cada variante tiver o seu próprio desenho de conjunto, é apresentada uma referência de página ao desenho do conjunto da variante.
- Informações internas (34)

Introducere

Informații despre manual

Tetra Pak recomandă citirea cu atenție a tuturor manualelor livrate. Asigurați-vă că manualele livrate sunt puse la îndemâna personalului care exploatează sau întreține echipamentul.

Este important să păstrați acest catalog pe întreaga durată de viață a echipamentului și să transmiteți catalogul deținătorilor sau utilizatorilor ulteriori.

Tetra Pak nu va fi răspunzător pentru niciun defect al echipamentului cauzat prin nerespectarea instrucțiunilor date în manualele care însoțesc acest echipament.

Manuale livrate

Manualele livrate cu acest echipament pot include

- CM
  Manualul de conversie furnizează tehnicienilor informații despre conversia echipamentului între diferite moduri de producție.
- EM
  Manualul electric furnizează tehnicienilor informații despre sistemul electric al echipamentului.
- IM
  Manualul de instalare furnizează tehnicienilor informații necesare pentru instalarea în siguranță a echipamentului.
- MM
  Manualul de întreținere furnizează tehnicienilor informații cu privire la întreținerea echipamentului.
- OM
  Manualul de exploatare pune la dispoziție operatorilor informații despre manevrarea și exploatarea echipamentului înainte, în timpul și după producție.
- SPC
  Catalogul pieselor de schimb furnizează informații necesare pentru comandarea pieselor de schimb de la Tetra Pak.
- TeM
  Manualul tehnic
  – furnizează tehnicienilor informații necesare pentru instalarea în siguranță a echipamentului
  – furnizează tehnicienilor informații necesare cu privire la întreținerea echipamentului
  – furnizează tehnicienilor informații despre sistemul electric al mașinii/echipamentului
  – furnizează informații necesare pentru comandarea pieselor de schimb de la Tetra Pak.

Configurația paginilor

Examinați ilustrația (A) de pe pagina i-5: Paginile principale dintr-un catalog de piese de schimb constau dintr-o pagină de ilustrare (1) și o pagină de liste corespunzătoare (7). Numărul paginii (5) apare în antetul unei pagini de ilustrare și în subsolul unei pagini de liste. Numărul documentului (6) apare în subsolul unei pagini de liste.

Numerotarea paginilor

Examinați ilustrația (A) de la pagina i-5: Un număr de pagină (5) are trei părți:

- numărul capitolului (2)
- numărul paginii consecutive din cadrul capitolului (3)
- număr total de pagini din capitol (4)

Prezentare introductivă a mașinii

Producător

Pentru numele și adresa producătorului, consultați pagina a doua a acestui catalog.

Service

Pentru comandarea pieselor de schimb pentru această mașină sau pentru a raporta problemele asociate cu exploatarea acestei mașini, contactați cel mai apropiat birou Tetra Pak.

Contactați Liaison cu privire la alte întrebări, comentarii sau sugestii legate de îmbunătățirea echipamentului și a documentației acestuia.

Identificare

Clasificare CE

Acest echipament este fabricat în conformitate cu reglementările de bază cu privire la sănătate și siguranță din Zona economică europeană (EEA).

Plăcuța mașinii

Ilustrația (B) de la pagina i-5 arată un exemplu al unei plăcuțe de mașină. O ilustrație a plăcuței valide a mașinii și a poziției acesteia pe echipament este arătată în capitolul introductiv al manualelor livrate împreună cu acest echipament. Plăcuța mașinii conține datele listate mai jos, necesare în cazul în care contactați Tetra Pak în legătură cu acest echipament specific.

- Tip mașină (8)
- Volum (9)
- Specificații de desen (10)
- Număr de serie al mașinii (11)
- Producător (12)
- Marcaj CE (13)
- Anul fabricației (14)

Ilustrația (C) de la pagina i-5 arată un exemplu al unei specificații de mașină. Asigurați-vă că datele specifice echipamentului, listate în paginile din față ale acestui manual, corespund cu datele de pe plăcuța mașinii și cu specificațiile mașinii.

Cum se utilizează acest catalog de piese de schimb

Localizarea unui număr de piesă de schimb

a) Examinați ilustrația (D) de la pagina i-5: Treceți la numărul de capitol (15) indicat lângă grupa principală care conține piesa pe care doriți să o localizați.

Articolele b) și c) se referă la ilustrația (E) de la pagina i-6.

b) Pe ilustrația grupei principale, căutați subgrupa aferentă mașinii (17) care conține piesa sau subgrupa pe care o căutați. Notați numărul poziției (18) și treceți la pagina de liste care urmează după ilustrație.

c) Căutați numărul poziției/marcarea de referință (16) sau numele subgrupei (19). Treceți la numărul de pagină corespunzător (20) listat în coloana din partea dreaptă. Tetra Pak a optat ca întotdeauna să utilizeze structura orientată pe funcție pentru marcarea de referință. Prefixul care indică structura orientată pe funcție (=) nu este arătat în marcarea de referință.

Articolele d) și e) se referă la ilustrația (F) de la pagina i-6.

d) Localizați piesa (21) pe care o căutați pe ilustrația subgrupei și notați numărul de poziție al piesei.

e) Numărul piesei (29) și descrierea piesei (30) sunt listate lângă numărul de poziție de pe pagina de liste.

Informațiile listate într-un catalog de piese de schimb

Lista de mai jos se referă la ilustrația (F) de la pagina i-6. Un catalog de piese de schimb conține următoarele informații despre grupe, subgrupe și piese de schimb pentru echipament:

- Referința despre structura grupelor (22). Indică următoarea grupă superioară din structura de liste a echipamentului.
- Numele grupei (23)
- Unitatea de măsură (25)
- Cantitatea (26)
- Numărul de desen de ansamblu (27)
- Intervalul de pagini de liste (28). Inclus dacă există mai multe pagini în ilustrația sau lista grupei.
- Numărul piesei sau al subgrupei (29)
- Numele subgrupei sau descrierea piesei (30)
- Numărul grupei (31)
- Numărul echipamentului (32)
- Antet cu informații despre grupă (33). Indică dacă secțiunea de sub antet se referă la o anumită variantă de mașină sau este o listă de piese comune. Dacă o listă are mai multe variante și fiecare variantă are propriul său desen de ansamblu, este arătată o referință de pagină pentru desenul de ansamblu al variantei.
- Informații interne (34)

Úvod

Informácie o návode

Spoločnosť Tetra Pak odporúča, starostlivo si prečítať všetky dodané návody. Dbajte, aby pracovníci, obsluhujúci zariadenie alebo zabezpečujúci jeho údržbu, mali vždy dodané návody k dispozícii.

Je dôležité, aby bol tento katalóg k dispozícii počas celého času životnosti zariadenia, a aby sa katalóg dostal aj k jeho prípadnému ďalšiemu držiteľovi alebo používateľovi.

Spoločnosť Tetra Pak nepreberá zodpovednosť za akékoľvek poškodenie zariadenia spôsobené nedodržaním pokynov uvedených v návodoch dodávaných s týmto zariadením.

Dodané návody

S týmto zariadením vám mohli byť dodané nasledujúce návody:

- CM
  Návod na prestavovanie poskytuje technikom informácie o prestavovaní zariadenia do rôznych výrobných režimov.
- EM
  Elektrotechnický návod poskytujetechnikom informácie o elektrickom systéme zariadenia.
- IM
  Návod na inštaláciu poskytuje technikom informácie potrebné na bezpečnú inštaláciu zariadenia.
- MM
  Návod na údržbu poskytujetechnikom informácie o údržbe zariadenia.
- OM
  Návod na obsluhu poskytuje obsluhe informácie o zaobchádzaní a obsluhe zariadenia pred, počas a po prevádzke.
- SPC
  Katalóg náhradných dielcov poskytuje informácie potrebné na objednávanie náhradných dielcov od spoločnosti Tetra Pak
- TeM
  Technický návod
  - poskytuje technikom informácie potrebné na bezpečnú inštaláciu zariadenia
  - poskytuje technikom informácie o údržbe zariadenia
  - poskytuje technikom informácie o elektrickom systéme stroja/ zariadenia
  - poskytuje informácie potrebné na objednávanie náhradných dielcov od spoločnosti Tetra Pak.

Rozloženie strany

Pozri ilustráciu (A) na strane i-5: Hlavné strany Katalógu náhradných dielcov obsahujú stránku s ilustráciami (1) a príslušnú stranu so zoznamom (7). Číslo strany (5) sa uvádza v záhlaví na strane s ilustráciami a v päte strany so zoznamom. Číslo dokumentu (6) sa uvádza v päte strany so zoznamom.

Číslovanie strán

Pozri ilustráciu (A) na strane i-5: Číslo strany (5) má tri časti:

- číslo kapitoly (2)
- poradové číslo strany v rámci kapitoly (3)
- celkový počet strán v kapitole (4)

Základné informácie o stroji

Výrobca

Meno a adresa výrobcu sa uvádza na druhej strane tohto katalógu.

Servis

Pri objednávaní náhradných dielcov pre tento stroj alebo na nahlasovanie problémov súvisiacich s prevádzkou tohto stroja sa obráťte na najbližšie zastúpenie spoločnosti Tetra Pak.

S ostatnými otázkami, pripomienkami a podnetmi na vylepšenie stroja alebo zariadenia a jeho dokumentácie sa obracajte na kontaktnú osobu.

Identifikácia

Klasifikácia CE

Toto zariadenie spĺňa základné predpisy o ochrane zdravia a bezpečnosti Európskeho hospodárskeho priestoru (EEA).

Typový štítok stroja

Na ilustrácii (B) na strane i-5 uvádzame príklad typového štítku. Ilustrácia platného typového štítku stroja a jeho umiestnenia na zariadení sa uvádza v kapitole Úvod v návodoch, dodaných s týmto zariadením. Typový štítok obsahuje dolu údaje uvedené, potrebné pri kontaktoch so spoločnosťou Tetra Pak ohľadom tohto špecifického zariadenia.

- Typ stroja (8)
- Objem (9)
- Údaje o výkrese (10)
- Výrobné číslo stroja (11)
- Výrobca (12)
- Značka CE (13)
- Rok výroby (14)

Ilustrácia (C) na strane i-5 zobrazuje príklad špecifikácie stroja. Presvedčite sa, že údaje zariadenia uvedené na predných stranách tohto návodu zodpovedajú údajom na typovom štítku a v špecifikácii stroja.

Ako sa tento Katalóg náhradných dielcov používa

Vyhľadanie čísla náhradného dielca

a) Pozri ilustráciu (D) na strane i-5: Prejdite na číslo kapitoly (15) uvedené vedľa hlavnej skupiny obsahujúcej dielec, ktorý chcete vyhľadať.

Položky b) a c) odkazujú na ilustráciu (E) na strane i-6.

b) Na ilustrácii hlavnej skupiny hľadajte podskupinu stroja (17), ktorý obsahuje dielec alebo podskupinu, ktorú hľadáte. Poznamenajte si číslo položky (18) a prejdite stranu so zoznamom nasledujúcu po ilustrácii.

c) Vyhľadajte číslo položky/referenčné označenie (16) alebo názov podskupiny (19). Prejdite na príslušné číslo strany (20) uvedené v zozname v pravom stĺpci. Spoločnosť Tetra Pak sa rozhodla vždy používať funkčne zameranú štruktúru na referenčné označovanie. Predčíslie udávajúce funkčne orientovanú štruktúra (=) sa v referenčnom označení nezobrazuje.

Položky d) a e) odkazujú na ilustráciu (F) na strane i-6.

d) Nájdite dielec (21), ktorý hľadáte, na ilustrácii podskupiny a poznamenajte si číslo položky daného dielca.

e) Číslo dielca (29) a popis dielca (30) sa uvádza vedľa čísla položky na stránke so zoznamom.

Informácie uvádzané v Katalógu náhradných dielcov

Dolu uvedený zoznam odkazuje na ilustráciu (F) na strane i-6. Katalóg náhradných dielcov obsahuje nasledujúce informácia o skupinách, podskupinách a náhradných dielcov zariadenia:

- Referenčná štruktúrna skupina (22). Označuje najbližšiu vyššiu skupinu v štruktúre zoznamu zariadenia.
- Názobv skupiny (23)
- Jednotka merania (25)
- Množstvo (26)
- Číslo výkresu celkovej zostavy (27)
- Rozsah strán zoznamu (28). Uvádza sa, ak má ilustrácia alebo zoznam skupiny viac strán.
- Číslo dielca alebo podskupiny (29)
- Názov podskupiny alebo popis dielca (30)
- Číslo skupiny (31)
- Číslo zariadenia (32)
- Záhlavie informácií o skupine (33). Uvádza, či je časť nasledujúca pod záhlavím určená pre špecifický variant stroja, alebo či ide o zoznam spoločných dielcov. Ak má zoznam viac ako jeden variant a každý z variantov má vlastný výkres celkovej zostavy, uvádza sa odkaz na stranu s výkresom zostavy daného variantu.
- Interné informácie (34)

Uvod

Informacije o priročnikih

Tetra Pak priporoča, da natančno preberete vse priložene priročnike. Osebje, ki upravlja in vzdržuje opremo mora imeti dostop do priloženih priročnikov.

Katalog hranite v celotnem času uporabe opreme. V primeru, ko opremo pridobi drug imetnik ali uporabnik, mu obenem izročite tudi katalog.

Podjetje Tetra Pak ne prevzema odgovornosti za poškodbe na opremi, ki nastanejo zaradi neupoštevanja navodil iz priročnikov, ki so priloženi opremi.

Priloženi priročniki

Priročniki, ki so priloženi tej opremi, lahko vključujejo

- Priročnik za zamenjavo (CM)
  V tem priročniku so podatki, ki tehnikom omogočajo izvesti zamenjavo opreme med različnimi načini proizvodnje.
- Elektrotehnični priročnik (EM)
  Priročnik vsebuje podatke za tehnike o električnem sistemu opreme.
- Priročnik za montažo (IM)
  Priročnik vsebuje podatke, ki jih tehniki potrebujejo za varno montažo opreme.
- Priročnik za vzdrževanje (MM)
  Priročnik vsebuje podatke za tehnike o vzdrževanju opreme.
- Priročnik za obratovanje (OM)
  Priročnik je namenjen informiranju za pravilno rokovanje in upravljanje s strojem pred, med in po proizvodnem postopku.
- Katalog nadomestnih delov (SPC)
  Katalog vsebuje potrebne podatke za naročilo nadomestnih delov pri podjetju Tetra Pak.
- Tehnični priročnik (TeM)
  Priročnik
  - vsebuje podatke, ki jih tehniki potrebujejo za varno montažo opreme;
  - vsebuje podatke za tehnike o vzdrževanju opreme;
  - vsebuje podatke za tehnike o električnem sistemu stroja/opreme;
  - vsebuje potrebne podatke za naročilo nadomestnih delov pri podjetju Tetra Pak.

Postavitev strani

Poglejte sliko (A) na strani i-5: Glavne strani v Katalogu nadomestnih delov sestavljata stran s sliko (1) in ustrezna stran s seznamom (7). Številka strani (5) je prikazana na vrhu strani s sliko in na dnu strani s seznamom. Številka dokumenta (6) je prikazana na dnu strani s seznamom.

Številčenje strani

Oglejte si sliko (A) na strani i-5: Številka strani (5) ima tri dele:

- številko poglavja (2);
- zaporedno številko strani v poglavju (3);
- število vseh strani v poglavju (4).

Predstavitev stroja

Proizvajalec

Ime in naslov proizvajalca najdete na drugi strani kataloga.

Servisiranje

Za naročanje nadomestnih delov za stroj ter za sporočanje motenj pri delovanju stroja se obrnite na najbližjo servisno službo podjetja Tetra Pak.

V primeru drugih zahtev, komentarjev, predlogov za izboljšavo opreme ali dokumentacije se obrnite na odgovorno osebo.

Identifikacijska oznaka

CE-klasifikacija

Oprema je izdelana v skladu z osnovnimi zdravstvenimi in varnostnimi predpisi Evropskega gospodarskega prostora (EGS).

Napisna ploščica

Slika (B) na strani i-5 prikazuje primer napisne ploščice.
Sliko veljavne napisne ploščice in njeno mesto na opremi najdete v uvodnem poglavju priloženih priročnikov. Ploščica vsebuje spodaj navedene podatke, ki jih potrebujete, ko se v zvezi z določeno opremo obrnete na podjetje Tetra Pak:

- tip stroja (8);
- prostornino (9);
- specifikacije risbe (10);
- serijsko številko stroja (11);
- proizvajalca (12);
- oznako CE (13);
- leto izdelave (14).

Slika (C) na strani i-5 prikazuje primer specifikacije stroja. Podatki o opremi, navedeni na prvih straneh tega priročnika, se morajo ujemati s podatki o stroju, navedenimi na napisni ploščici in v specifikacijah.

Uporaba Kataloga nadomestnih delov

Iskanje številke nadomestnega dela

a) Oglejte si sliko (D) na strani i-5: Poiščite številko poglavja (15), navedeno poleg glavne skupine, ki vsebuje iskani del.

Točki b) in c) se nanašata na sliko (E) na strani i-6.

b) Na sliki glavne skupine poiščite podskupino stroja (17), ki vsebuje iskani del ali podskupino. Zapomnite si pozicijsko številko (18) in poiščite stran s seznamom, ki pripada sliki.

c) Poiščite pozicijsko številko/referenčno oznako (16) ali ime podskupine (19). Pojdite na stran (20), navedeno v desnem stolpcu. Tetra Pak za referenčno označevanje vedno uporablja funkcijsko strukturo. Predpona, ki označuje funkcijsko strukturo (=), ni prikazana v referenčni oznaki.

Točki d) in e) se nanašata na sliko (F) na strani i-6.

d) Na sliki podskupine poiščite del (21), ki ga iščete, in si zapomnite njegovo pozicijsko številko.

e) Številka (29) in opis dela (30) sta navedena poleg pozicijske številke na strani s seznamom.

Informacije v Katalogu nadomestnih delov

Spodnji seznam se nanaša na sliko (F) na strani i-6. Katalog nadomestnih delov vsebuje naslednje informacije o skupinah, podskupinah in nadomestnih delih za opremo:

- referenco strukture skupine (22); Označuje naslednjo višjo skupino v strukturi seznamov opreme.
- ime skupine (23);
- mersko enoto (25);
- količino (26);
- številko sestavne risbe (27);
- število strani seznama (28); Če je slika ali seznam skupine sestavljen iz več strani.
- številko dela ali podskupine (29);
- ime podskupine ali opis dela (30);
- številko skupine (31);
- številko opreme (32);
- naslov z informacijami o skupini (33). Označuje, ali je razdelek pod naslovom namenjen specifični izvedbi stroja ali gre za seznam skupnih delov. Če ima seznam več izvedb in če ima vsaka od njih svojo sestavno risbo, je ob vsaki izvedbi navedena referenčna stran s sestavno risbo.
- interne informacije (34).

Inledning

Information om manualen

Tetra Pak rekommenderar att alla manualer läses noggrant. Se till att manualerna är tillgängliga för personalen som använder eller underhåller utrustningen.

Det är viktigt att denna katalog behålls under utrustningens livslängd, och att den överlämnas till varje efterföljande innehavare eller användare av utrustningen.

Tetra Pak tar inte ansvar för någon skada på utrustningen som orsakats av att instruktionerna i medföljande manualer inte har följts.

Medföljande manualer

Följande manualer kan levereras tillsammans med utrustningen:

- CM
  Konverteringsmanualen (CM) innehåller information för tekniker om hur man konverterar utrustningen mellan olika produktionslägen.
- EM
  Den elektriska manualen (EM) innehåller information för tekniker om utrustningens elektriska system.
- IM
  Installationsmanualen (IM) innehåller information för tekniker om hur utrustningen installeras på ett säkert sätt.
- MM
  Underhållsmanualen (MM) innehåller information för tekniker om hur utrustningen underhålls.
- OM
  Driftsmanualen (OM) innehåller information för operatören om hur utrustningen ska hanteras före, under och efter produktion.
- SPC
  Reservdelskatalogen (SPC) innehåller den information som behövs för att beställa reservdelar från Tetra Pak.
- TeM
  Den tekniska manualen (TeM)
  - innehåller information för tekniker om hur utrustningen installeras på ett säkert sätt.
  - innehåller information för tekniker om hur utrustningen underhålls.
  - innehåller information för tekniker om maskinens/utrustningens elektriska system.
  - innehåller den information som behövs för att beställa reservdelar från Tetra Pak.

Sidlayout

Se bild (A) på sidan i-5: Huvudsidorna i reservdelskatalogen består av en bildsida (1) och en motsvarande listsida (7). Sidnumret (5) visas i sidhuvudet på bildsidan och i sidfoten på listsidan. Dokumentnumret (6) visas i sidfoten på listsidan.

Sidnumrering

Se bild (A) på sidan i-5: Ett sidnummer (5) består av tre delar:

- kapitlets nummer (2)
- löpande sidnummer inom kapitlet (3)
- totalt sidantal i kapitlet (4)

Introduktion till maskinen

Tillverkare

Tillverkarens namn och adress finns på sidan 2 i katalogen.

Service

För att beställa reservdelar till denna maskin eller för att rapportera problem som uppstått i samband med driften kontaktar du närmaste Tetra Pak-kontor.

Om du har andra frågor, kommentarer eller förslag till förbättringar av utrustningen och dokumentationen vänder du dig till din kontaktperson på Tetra Pak.

Identifiering

CE-märkning

Denna utrustning överensstämmer med den grundläggande hälso- och säkerhetslagstiftningen inom Europeiska ekonomiska samarbetsområdet (EES).

Maskinskylt

Bild (B) på sidan i-5 visar ett exempel på en maskinskylt.
En bild på giltig maskinskylt och dess placering på utrustningen visas i inledningskapitlet som medföljer utrustningen. Skylten innehåller de uppgifter som listas nedan och som behövs vid kontakt med Tetra Pak angående utrustningen.

- Maskintyp (8)
- Volym (9)
- Ritningsspecifikationer (10)
- Maskinnummer (11)
- Tillverkare (12)
- CE-märkning (13)
- Tillverkningsår (14)

Bild (C) på sidan i-5 visar ett exempel på en maskinspecifikation. Kontrollera att informationen om utrustningen som listas på de första sidorna i manualen motsvarar informationen på maskinskylten och i maskinspecifikationen.

Använda reservdelskatalogen

Hitta ett reservdelsnummer

a) Se bild (D) på sidan i-5: Gå till kapitelnumret (15) som står vid sidan om huvudgruppen som innehåller den del du vill hitta.

Punkt b) och c) hänvisar till bild (E) på sidan i-6.

b) På huvudgruppsbilden letar du efter den maskinundergrupp (17) som innehåller delen eller undergruppen du letar efter. Notera positionsnumret (18) och gå till listsidan som anges efter bilden.

c) Leta efter positionsnumret/referensbeteckningen (16) eller undergruppsnamnet (19). Gå till motsvarande sidnummer (20) som listas i den högra kolumnen. Tetra Pak har valt allt alltid använda en funktionsorienterad struktur för referensbeteckningarna. Prefixet för funktionsorienterad struktur (=) visas inte i referensbeteckningen.

Punkt d) och e) hänvisar till bild (F) på sidan i-6.

d) Leta reda på delen (21) i undergruppsbilden och notera delens positionsnummer.

e) Reservdelsnumret (29) och reservdelsbeskrivningen (30) står bredvid positionsnumret på listsidan.

Information i reservdelskatalogen

Listan nedan hänvisar till bild (F) på sidan i-6. Reservdelskatalogen innehåller följande information om grupper, undergrupper och reservdelar för utrustningen:

- Gruppstrukturreferens (22). Anger nästa högre grupp i utrustningslistans struktur.
- Gruppnamn (23)
- Måttenhet (25)
- Kvantitet (26)
- Monteringsritningsnummer (27)
- Listsideintervall (28). Anges om det finns flera sidor i gruppbilden eller grupplistan.
- Reservdels- eller undergruppsnummer (29)
- Undergruppsnamn eller reservdelsbeskrivning (30)
- Gruppnummer (31)
- Utrustningsnummer (32)
- Gruppinformationsrubrik (33). Anger om avsnittet under rubriken gäller en viss maskinvariant eller om det är en lista över allmänna delar. Om en lista har fler än en variant och varje variant har sin egen monteringsritning visas en sidhänvisning till variantens monteringsritning.
- Intern information (34)

SPC
Spare Parts Catalogue

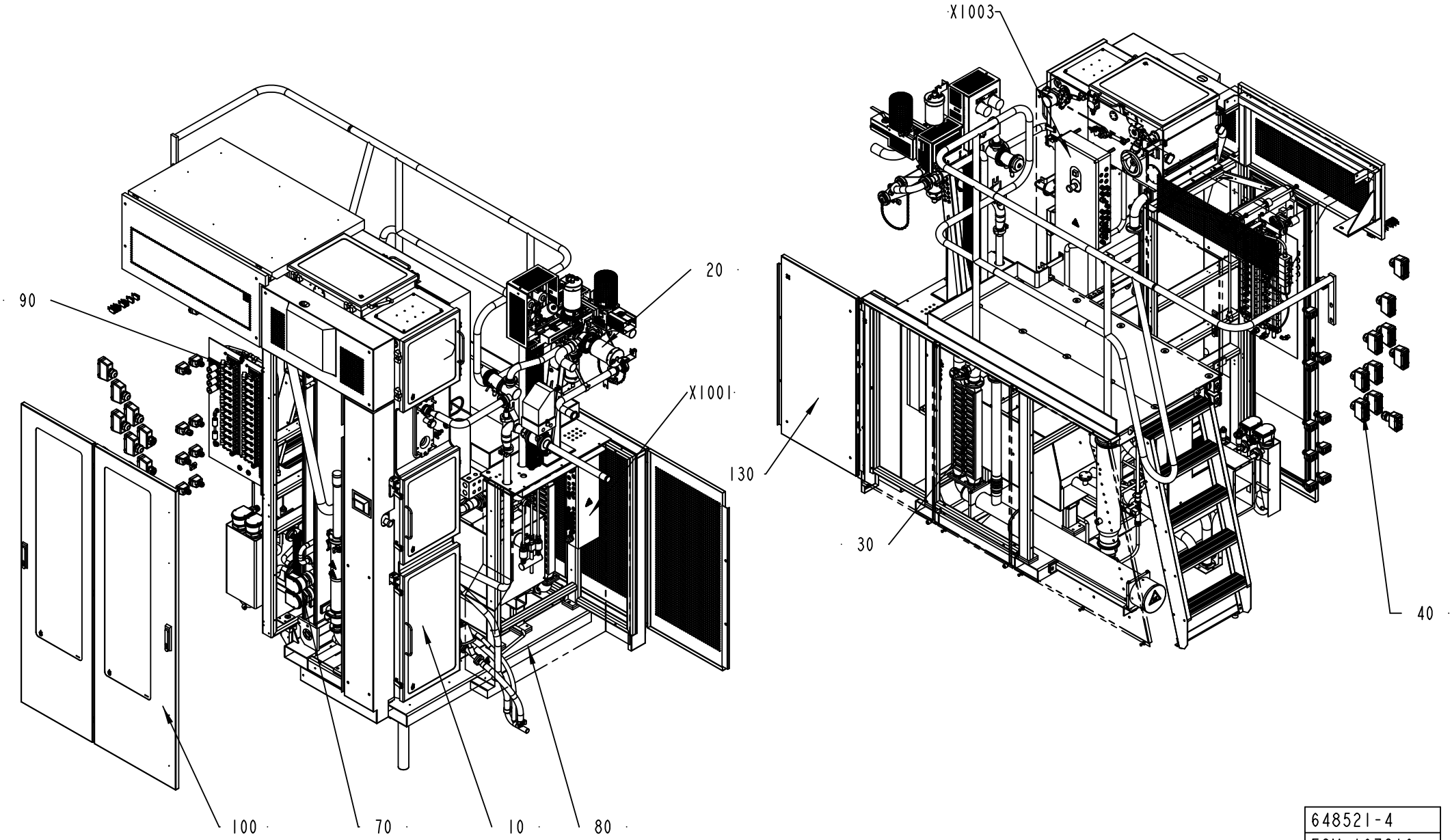

648521-4
ECM 107819

ECM: 315330 - 20070628
Group number: 648521-0400
Assembly Drawing: 648521-4_1_AB

This list covers pages from 1-2 to 1-5

Pos	Part No	UN	Qty	Description	Page No
-					
010	577102-0400		1	ASEPTIC CHAMBER	**1-7**
020	577103-0300		1	FILLING SYSTEM	**1-75, 1-77, 1-79, 1-81**
030	577104-0300		1	STERILE AIR SYSTEM	**1-137**
040	1347140-0200		1	CABLE TRENCH	**1-161, 1-163, 1-165, 1-167, 1-169, 1-171, 1-173, 1-175**
070	1347171-0200		1	HYDROGEN PEROXIDE	**1-177**
080	1279802-0200		1	FRAME	**1-189**
090	1347547-0200		1	PNEUMATIC SYSTEM	**1-201, 1-203**
100	1285400-0350		1	COVERING PANEL	**1-231**
130	1347615-0100		1	COVERING PANEL	**1-233**
X1001	1347191-0200		1	CONNECTION BOX	**1-235**
X1003	1296847-0300		1	CONNECTION BOX	**1-237, 1-239, 1-241, 1-243, 1-245, 1-247, 1-249**
					1-251

Pos	Part No	UN	Qty	Description	Page No

Machine Type | Group Description | Used-In | Group Number | Page No

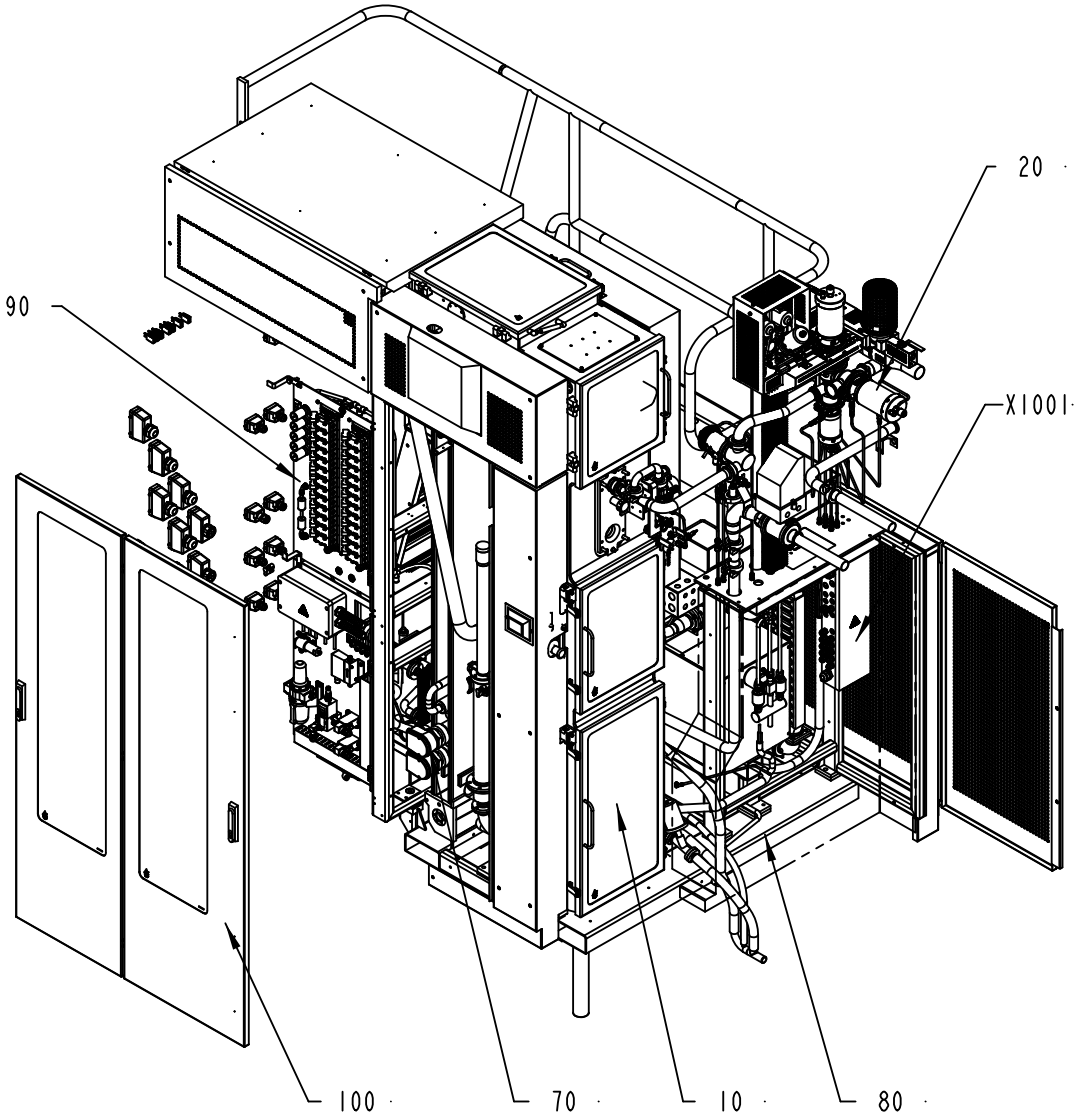

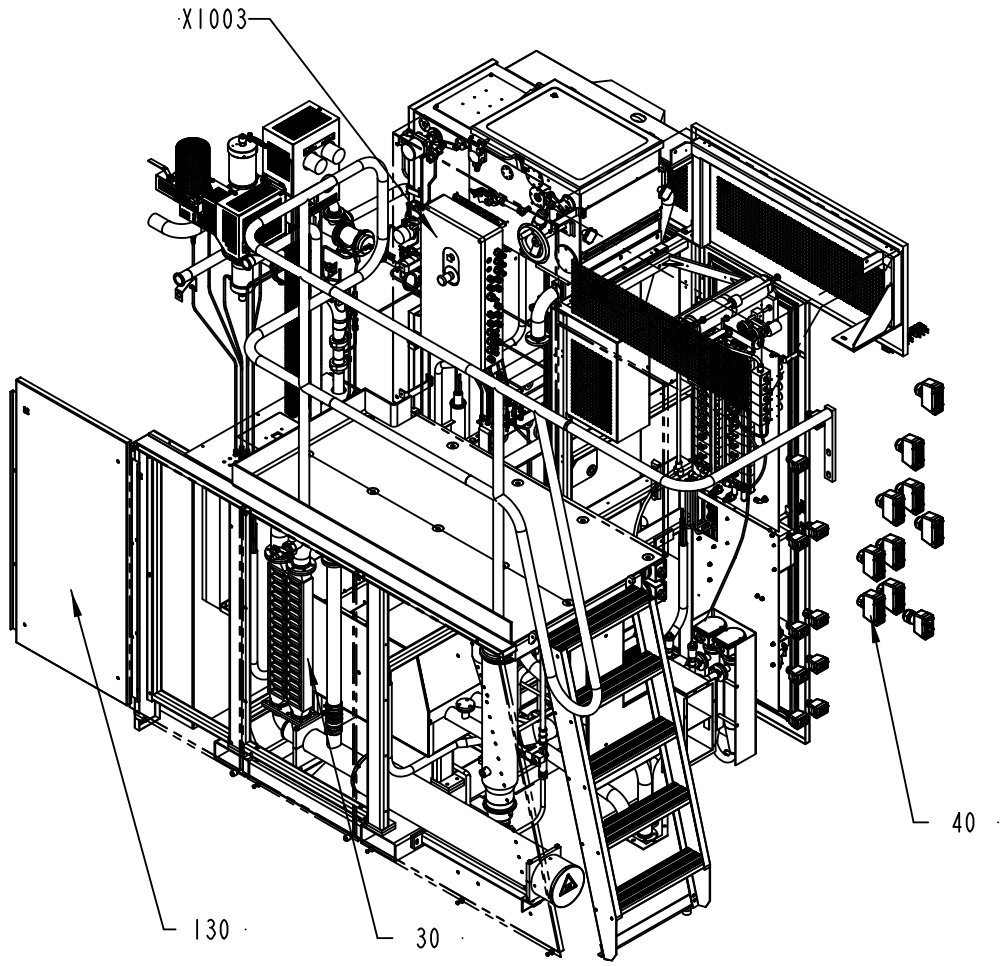

648521-5
ECM 134026

ECM: 315330 - 20070628
Group number: 648521-0400
Assembly Drawing: 648521-5_1_AA

This list covers pages from 1-2 to 1-5

Pos	Part No	UN	Qty	Description	Page No
-					
010	577102-0400		1	ASEPTIC CHAMBER	**1-7**
020	577103-0300		1	FILLING SYSTEM	**1-75, 1-77, 1-79, 1-81**
030	577104-0300		1	STERILE AIR SYSTEM	**1-137**
040	1347140-0200		1	CABLE TRENCH	**1-161, 1-163, 1-165, 1-167, 1-169, 1-171, 1-173, 1-175**
070	1347171-0200		1	HYDROGEN PEROXIDE	**1-177**
080	1279802-0200		1	FRAME	**1-189**
090	1347547-0200		1	PNEUMATIC SYSTEM	**1-201, 1-203**
100	1285400-0350		1	COVERING PANEL	**1-231**
130	1347615-0100		1	COVERING PANEL	**1-233**
X1001	1347191-0200		1	CONNECTION BOX	**1-235**
X1003	1296847-0300		1	CONNECTION BOX	**1-237, 1-239, 1-241, 1-243, 1-245, 1-247, 1-249**
					1-251

Pos	Part No	UN	Qty	Description	Page No

ASEPTIC CHAMBER

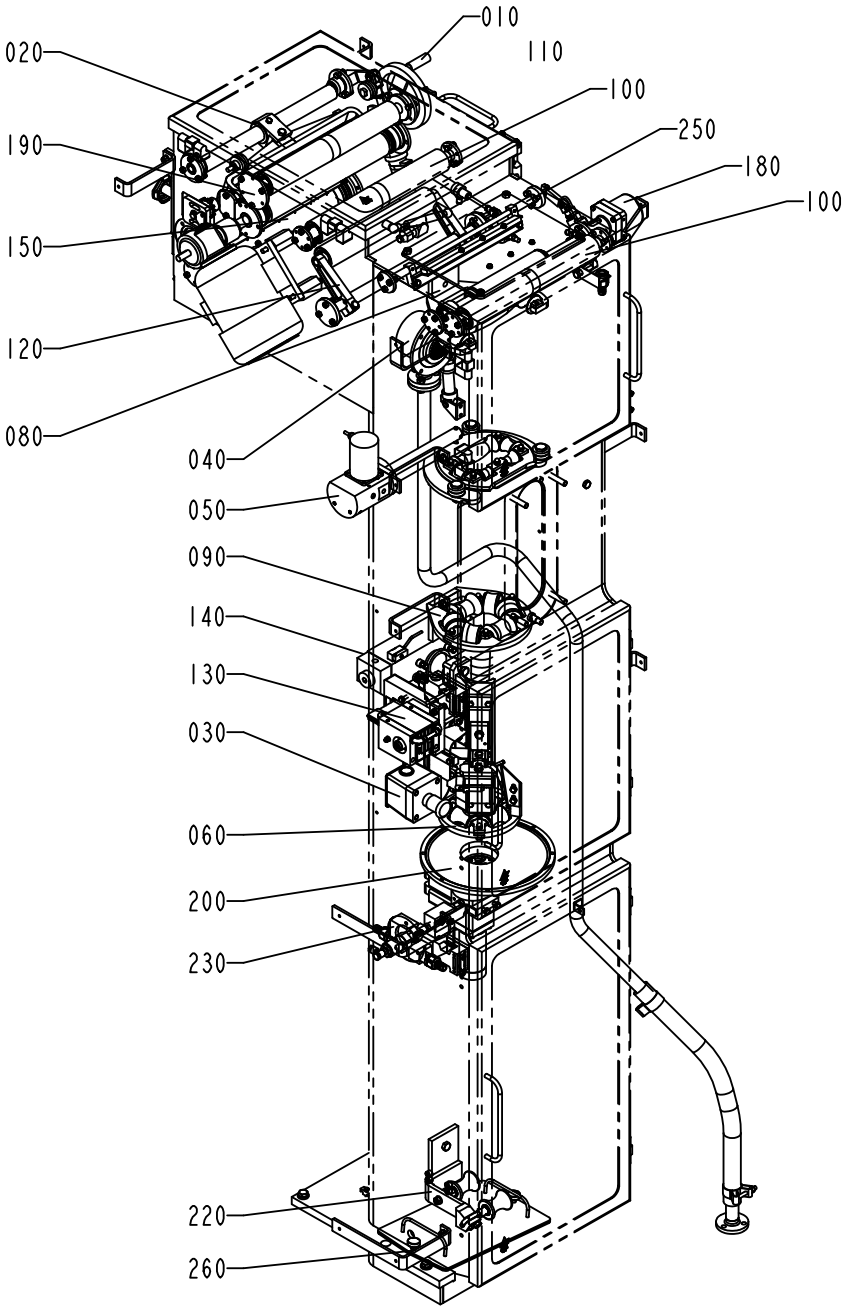

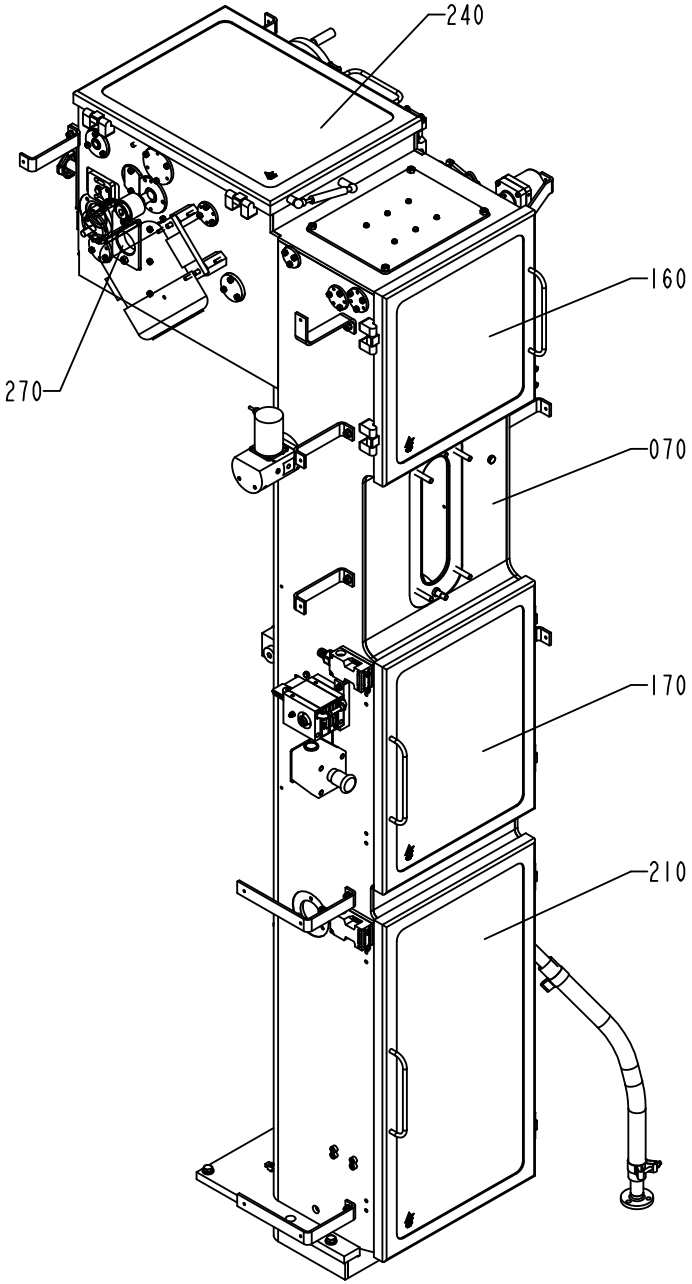

577102-4
218222

ECM: 315331 - 20070628
Group number: 577102-0400
Assembly Drawing: 577102-4_1_AF

Pos	Part No	UN	Qty	Description	Page No
-					
010	996451-0100		1	CRANK	**1-9**
020	1334008-0300		1	CALENDER ROLLER	**1-11**
030	1035382-0100		1	EMERGENCY STOP	**1-13**
040	1347875-0100		1	BALL	**1-15**
050	1195161-0300		1	MOVABLE FORMING RING	**1-17, 1-19**
060	1195162-0200		1	LOWER FORMING RING	**1-21, 1-23**
070	1195163-0300		1	PILLAR	**1-25**
080	1195164-0200		1	UPPER FORMING RING	**1-27, 1-29**
090	1195165-0300		1	FORMING RING	**1-31**
100	1195166-0200		2	PAPER GUIDE	**1-33**
110	1347485-0100		1	DRIVEN CALENDER ROLLER	**1-35**
120	1195173-0300		1	PENDULUM ROLLER	**1-37**
130	1195174-0400		1	LONGITUDINAL SEALING	**1-39**
140	1195175-0200		1	SHORT STOP	**1-43**
150	1195180-0100		1	BENDING ROLLER	**1-45**
160	1195181-0150		1	DOOR	**1-47**
170	1195182-0150		1	DOOR	**1-49**
180	2506842-0100		1	BENDING ROLLER	**1-51**
190	1195209-0200		1	BENDING ROLLER	**1-53**
200	1195214-0100		1	SEAL	**1-55**
210	1195269-0150		1	DOOR	**1-57**
220	2525541-0200		1	TUBE SUPPORT	**1-59**
230	2515213-0200		1	SPRAY SYSTEM	**1-61, 1-63**
240	1347493-0150		1	DOOR	**1-65**
250	1095790-0200		1	COVERING PLATE	**1-67, 1-69**
260	2522161-0100		1	LID	**1-71**
270	2517372-0100		1	LID	**1-73**

Pos	Part No	UN	Qty	Description	Page No

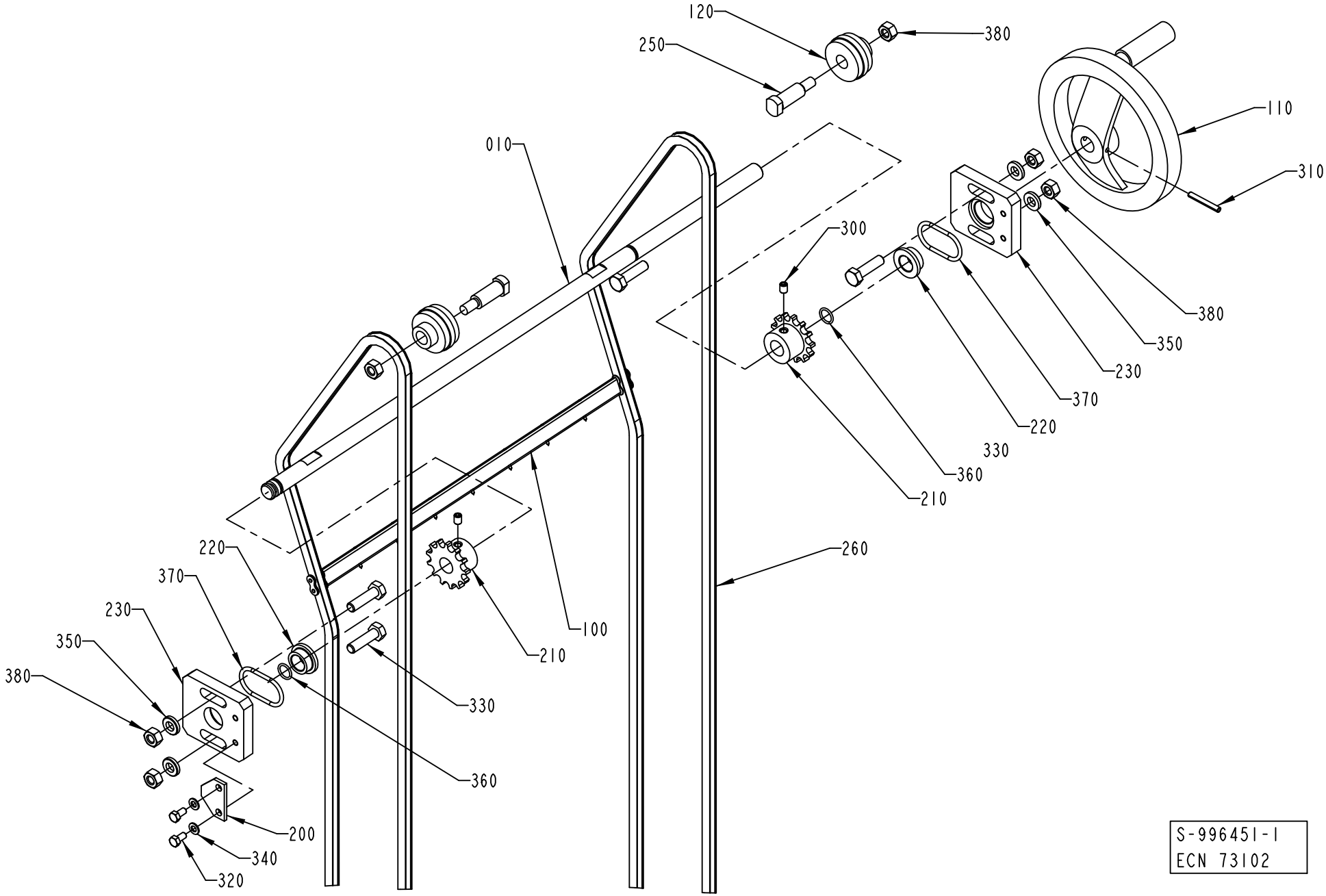

S-996451-I
ECN 73102

ECM: 259400 - 20060419
Group number: 996451-0100
Assembly Drawing: 996451-1_1_AB

Pos	Part No	UN	Qty	Description	Page No
-					
010	1036841-0000		1	SHAFT	
100	1040777-0000		1	CARRIER	
110	247358-0000		1	SHIFTER HANDLE	
120	1036832-0000		2	WHEEL	
200	247355-0000		1	LOCK WASHER	
210	1038464-0000		2	SPROCKET	
220	531191-0000		2	BUSHING	
230	1484823-0000		2	PLATE	
250	1036833-0000		2	SCREW	
260	1036868-0000		2	CHAIN	
300	312318-0362		2	SCREW ISO4029 M6X8 A4	
310	311112-0262		1	SPRING PIN, ISO 8752 4X32-C	
320	312105-0325		2	SCREW M6S ISO 4017 M5X10 A480	
330	312105-0455		4	SCREW M6S ISO 4017 M8X30 A480	
340	315105-0146		2	WASHER BRB 5,3X10 RFR	
350	315115-0165		4	WASHER PLAIN, TBRB 8,4/16 H=3	
360	315204-0109		2	O-RING 11,1X1,6 MM	
370	315204-0221		2	O-RING 34,2X3 MM	
380	312605-0318		6	HEXAGON NUT, M6M M8 A280	

Pos	Part No	UN	Qty	Description	Page No

CALENDER ROLLER

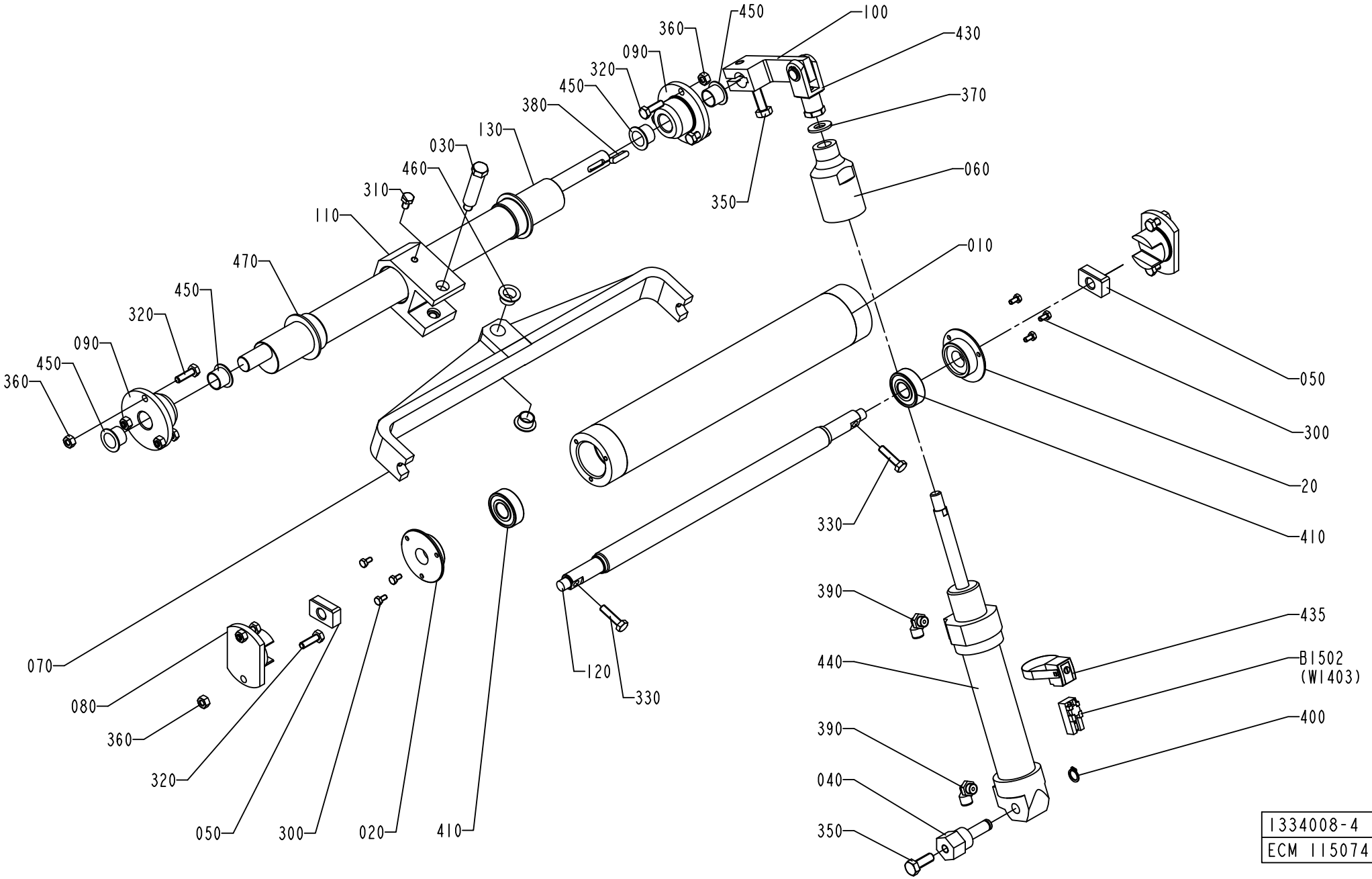

ECM: 315448 - 20071112
Group number: 1334008-0300
Assembly Drawing: 1334008-4_1_AA

Pos	Part No	UN	Qty	Description	Page No
-					
010	2610633-0000		1	ROLLER	
020	2610634-0000		2	PLUG	
030	1498629-0000		1	SHAFT	
040	1317998-0000		1	BRACKET	
050	1317999-0000		2	BLOCK	
060	1334000-0000		1	STOP	
070	2610631-0000		1	BRACKET	
080	1347499-0000		2	BEARING BUSHING	
090	1334003-0000		2	FLANGE	
100	1334004-0000		1	ARM	
110	2558136-0000		1	LINK	
120	1334006-0000		1	SHAFT	
130	1347500-0000		1	SHAFT	
300	312105-0287		6	SCREW M6S ISO 4017 M4X8 A470	
310	312105-0364		1	SCREW M6S ISO 4017 M6X10 A480	
320	312105-0370		10	SCREW M6S ISO 4017 M6X20 A480	
330	312105-0372		2	SCREW M6S ISO 4017 M6X25 A480	
350	312105-0452		2	SCREW M6S ISO 4017 M8X22 A480	
360	312605-0316		10	HEXAGON NUT, M6M M6 A280	
370	315105-0173		1	WASHER BRB 10,5X22 RFR	
380	315705-0201		1	PARALLEL KEY W. ROUND ENDS 5X5X20 MM	
390	90458-2956		2	ELBOW PIPE JOINT, EXT.THREAD, D=6MM-G1/8	
400	90141-0016		1	RETAINING RING FOR SHAFT DIN 471 10 SS	
410	90458-1704		2	BALL BEARING, 15X35X11 MM	
430	90239-0516		1	ROD END, CLEVIS WITH AXLE M10X1,25	
435	90239-0582		1	SENSOR,BRACKET,FOR CYL 32	
440	90239-0837		1	DOUBLE ACTING, MINI-ISO, CYL. 32-100	
450	90240-0263		4	FLANGE BUSHING, 15X17X12 MM	
460	90240-0261		2	FLANGE BUSHING, 12X14X9 MM	
470	90459-1450		2	FLANGE BUSHING, 32X36X15 MM	
B1502	90457-0047		1	SENSOR 2750-1-5111-1 W.ADAPTER PNP	

Pos	Part No	UN	Qty	Description	Page No

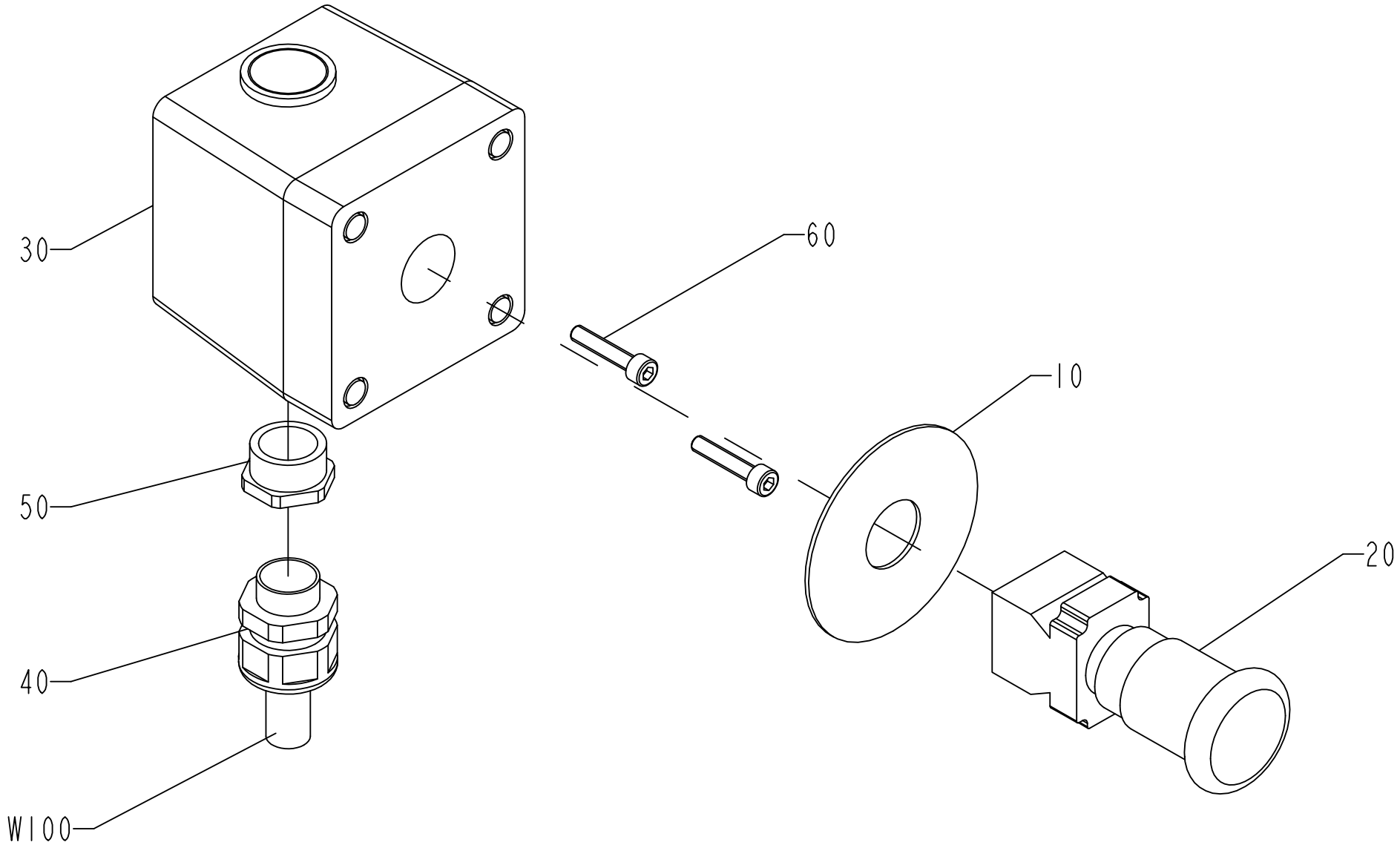

1035382-1
ECN 130094

ECM: 259403 - 20060419
Group number: 1035382-0100
Assembly Drawing: 1035382-1_1_AC

Pos	Part No	UN	Qty	Description	Page No
-					
010	486826-0001		1	SIGN "EMERGENCY STOP"	
020	90064-0124		1	SWITCH, EM. STOP, ZB2-BS844+ZB2-BZ1045	
030	90066-0021		1	PUSH BUTTON BOX XAP-M1501	
040	90012-0071		1	GLAND FITTING	
050	90089-0021		1	REDUCTION SLEEVE,PLASTIC GREY	
060	312115-0333		2	SCREW ISO4762 M5X25 A4 80	

Pos	Part No	UN	Qty	Description	Page No

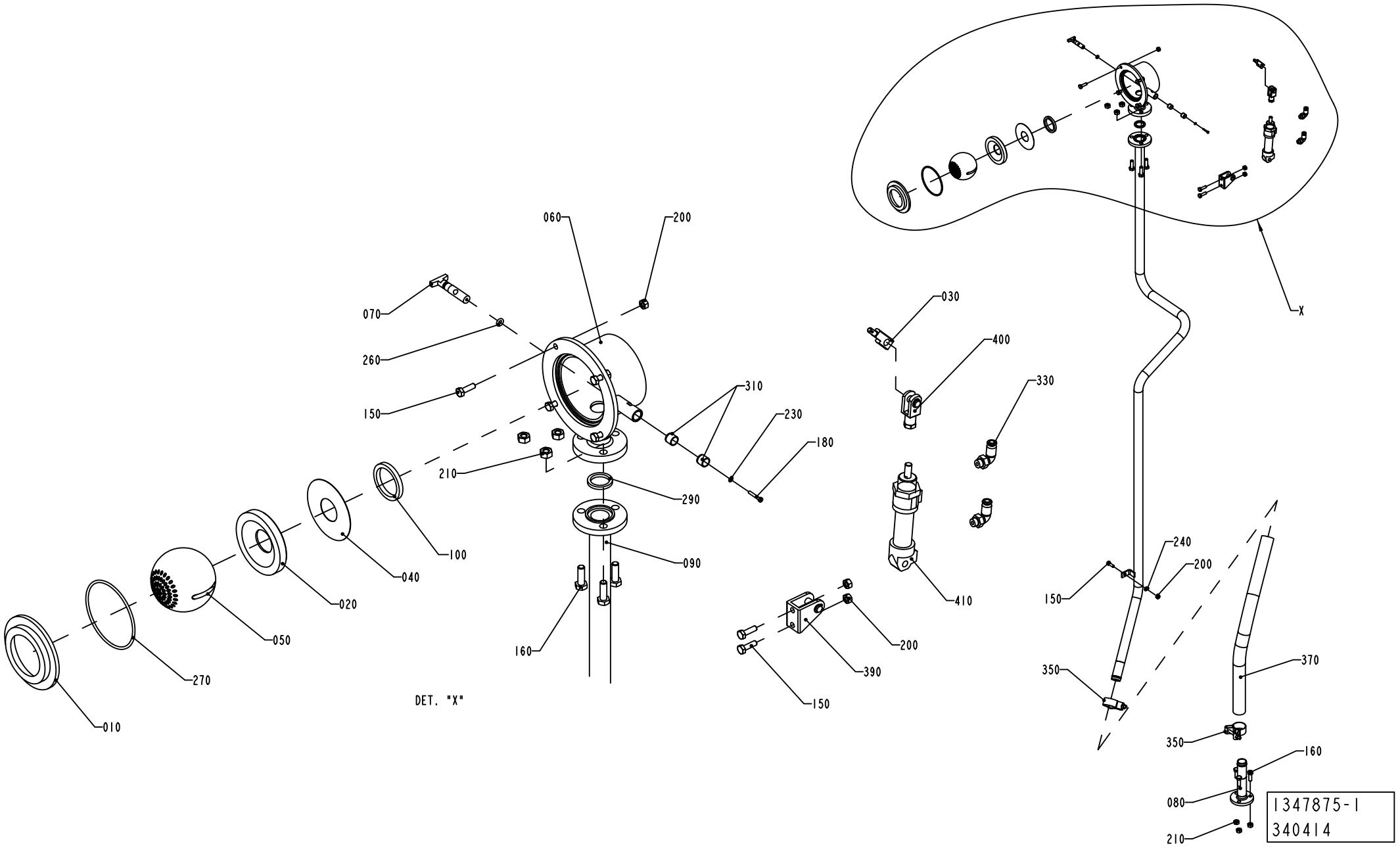
060
200
070
260
150
310
230
180
210
290
100
090
040
020
050
270
010
160
DET. "X"
030
400
330
410
X
240
200
150
370
350
200
390
150
350
160
080
210
1347875-1
340414

ECM: 341016 - 20080404
Group number: 1347875-0100
Assembly Drawing: 1347875-1_1_AC

Pos	Part No	UN	Qty	Description	Page No
-					
010	1037423-0000		1	SEAT RING	
020	1037424-0000		1	SEAT RING	
030	1037425-0000		1	LEVER	
040	1038409-0000		1	WASHER	
050	1129837-0000		1	BALL	
060	1129855-0000		1	HOUSE	
070	1129871-0000		1	SPINDLE	
080	1255504-0000		1	PIPE	
090	1348941-0000		1	PIPE	
100	12242-0003		1	GASKET 48X38X5,5	
150	312105-0370		7	SCREW M6S ISO 4017 M6X20 A480	
160	312105-0453		6	SCREW M6S ISO 4017 M8X25 A480	
180	312125-0230		1	SCREW ISO 1207 M3X20 A4	
200	312605-0316		7	HEXAGON NUT, M6M M6 A280	
210	312605-0318		6	HEXAGON NUT, M6M M8 A280	
230	315105-0124		1	WASHER BRB 3,2X6 RFR	
240	315105-0153		1	WASHER BRB 6,4X12 RFR	
260	315202-0204		1	O-RING 5,3X2,4 MM	
270	315202-0308		1	O-RING 84,5X3 MM	
290	315229-0103		1	GASKETS, 23,1X30,1X3,7 MM 1" FDA	
310	321120-0104		2	BEARING BUSH W/O FLANGE, 10X12X10 MM	
330	342732-0102		2	ELBOW PIPE JOINT, EXT.THREAD, D=6MM-G1/8	
350	90459-2366		2	HOSE CLIP, (32)-35	
370	90166-0233	MM	600	HOSE	
390	90239-0487		1	REAR, CLEVIS, MINI-ISO 20-25	
400	90239-0490		1	ROD END, CLEVIS WITH AXLE M8X1,25	
410	90239-0847		1	DOUBLE ACTING, MINI-ISO, CYL.20-50	

Pos	Part No	UN	Qty	Description	Page No

Machine Type | Group Description | Used-In | Group Number | Page No

MOVABLE FORMING RING

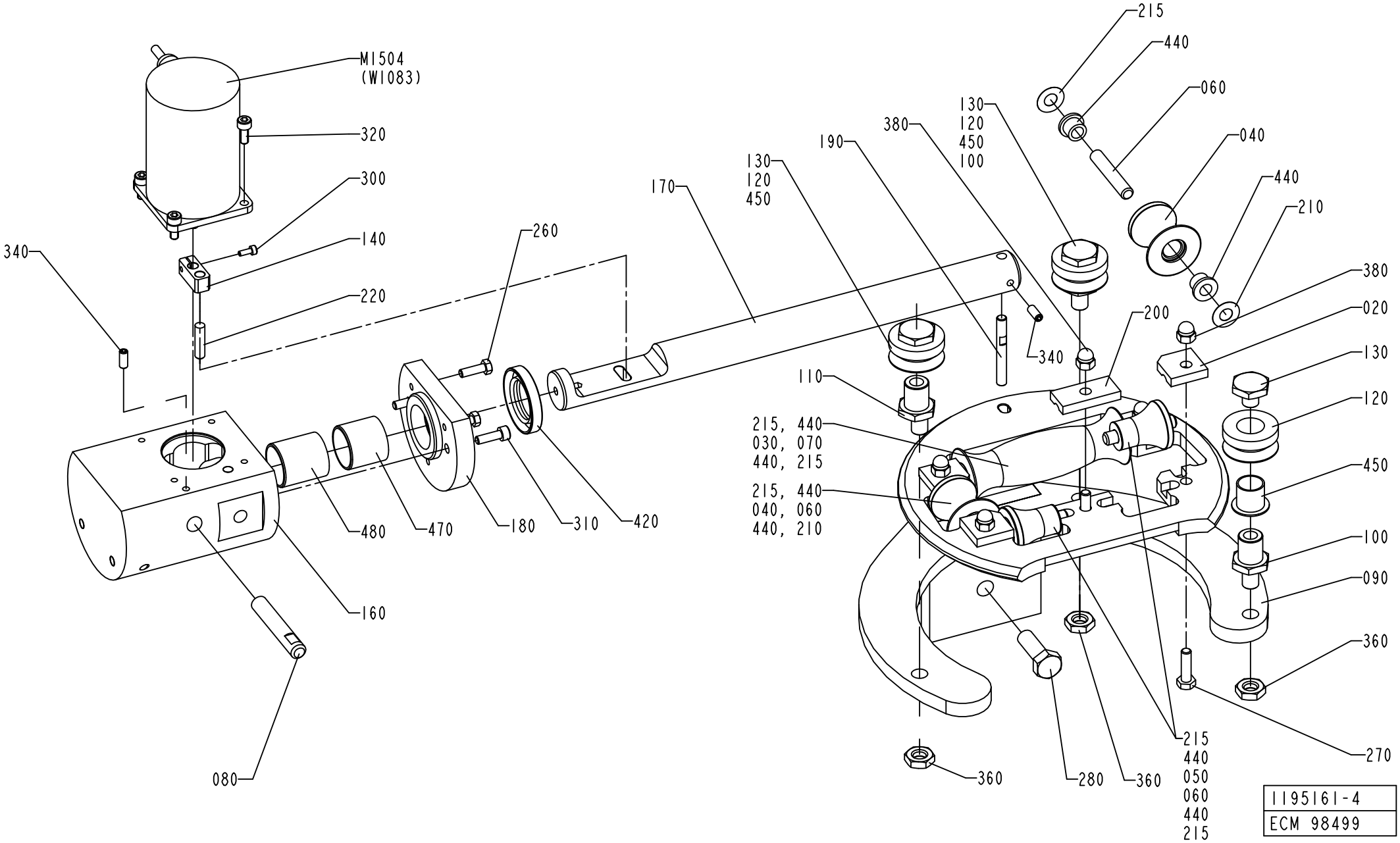

ECM: 315437 - 20071112
Group number: 1195161-0300
Assembly Drawing: 1195161-4_1_AA

This list covers pages from 1-16 to 1-19

Pos	Part No	UN	Qty	Description	Page No
TBA 0200B, TBA 0250B, TBA 0300S (See drawing on page: 1-16)					
020	456139-0000		4	LOCK PLATE	
030	751491-0000		1	ROLL	
040	751492-0000		2	ROLL	
050	751493-0000		2	ROLL	
060	752186-0005		4	SHAFT	
070	752186-0009		1	SHAFT	
090	1195191-0000		1	MOVABLE FORMING RING	
150	1347557-0000		1	MOVABLE FORMING RING	
170	1347559-0000		1	SHAFT	
200	1487687-0000		1	LOCK PLATE	
210	2033-0007		2	WASHER	
215	2033-0011		8	WASHER	
440	90240-0172		10	FLANGE BUSHING, 8X12X10 MM	
TBA 0200M, TBA 0250S (See drawing on page: 1-18)					
010	752156-0000		4	FLANGE BUSHING	
020	1279091-0000		4	LOCKING PLATE	
030	574479-0000		1	ROLL	
040	574480-0000		2	ROLL	
050	574481-0000		2	ROLL	
055	752186-0002		2	SHAFT	
060	752186-0006		2	SHAFT	
070	752186-0008		1	SHAFT	
090	1487830-0000		1	MOVABLE FORMING RING	
150	1487688-0000		1	MOVABLE FORMING RING	
170	1487700-0000		1	SHAFT	
200	1487689-0000		1	LOCK PLATE	
215	2033-0011		10	WASHER	
440	90240-0172		6	FLANGE BUSHING, 8X12X10 MM	
TBA 0200S (See drawing on page: 1-18)					
010	752156-0000		4	FLANGE BUSHING	
020	1279091-0000		4	LOCKING PLATE	
030	752126-0000		1	FORMING ROLLER	
040	752127-0000		2	FORMING ROLLER	
050	752128-0000		2	FORMING ROLLER	
055	752186-0002		2	SHAFT	
060	752186-0006		2	SHAFT	
070	752186-0008		1	SHAFT	
090	1487830-0000		1	MOVABLE FORMING RING	
150	1517318-0000		1	MOVABLE FORMING RING	
170	1487700-0000		1	SHAFT	
200	1487689-0000		1	LOCK PLATE	
215	2033-0011		10	WASHER	
440	90240-0172		6	FLANGE BUSHING, 8X12X10 MM	
Common Parts					
080	1519510-0000		1	AXLE PIN	
100	1296754-0000		2	SHAFT	
110	1296755-0000		1	SHAFT	
120	1296758-0000		3	ROLL	
130	1296760-0000		3	NUT	
140	1347556-0000		1	ECCENTRIC	
160	1347558-0000		1	SUPPORT	
180	1478182-0000		1	SPACER	
190	1478570-0000		1	AXLE PIN	
220	311103-0355		1	PARALLEL PIN ISO 2338 6M6X25 A1	
260	312105-0329		3	SCREW M6S ISO 4017 M5X16 A480	
270	312105-0371		5	SCREW M6S ISO 4017 M6X22 A480	
280	312105-0495		1	SCREW M6S ISO 4017 M10X30 A480	
300	312115-0287		1	SCREW ISO4762 M4X8 A4 80	
310	312115-0329		2	SCREW ISO4762 M5X16 A4 80	
320	312115-0327		4	SCREW ISO4762 M5X12 A4 80	
340	312318-0327		2	SCREW ISO4029 M5X12 A4	
360	312625-0320		3	HEXAGON THIN NUT, EN 24035 ML6M M10 A4	
380	312705-0316		5	NUT HEX. DOMED CAP MHM-6 M6 A280	
420	90091-0322		1	RADIAL SEAL 25X42X7 MM DUST LIP	
450	90240-0264		3	FLANGE BUSHING, 15X17X17 MM	
470	90240-0321		1	BUSHING, 25X28X25 MM	
480	90240-0322		1	BUSHING, 25X28X30 MM	
M1504	90045-0189		1	STEP MOTOR E22NSLT-LNN-NS-02	

Machine Type	Group Description	Used-In	Group Number	Page No

MOVABLE FORMING RING

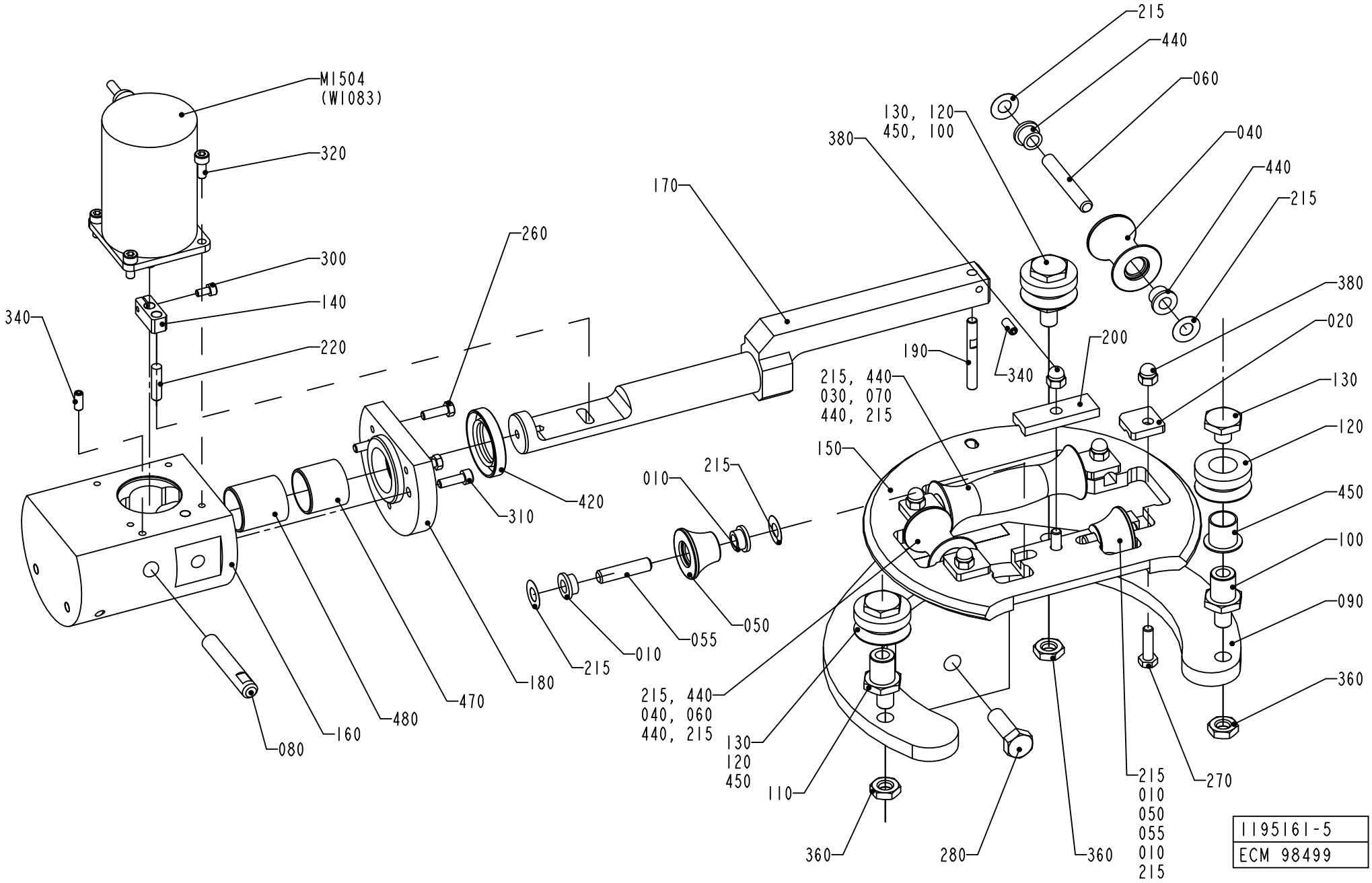

ECM: 315437 - 20071112
Group number: 1195161-0300
Assembly Drawing: 1195161-5_1_AA

This list covers pages from 1-16 to 1-19

Pos	Part No	UN	Qty	Description	Page No
TBA 0200B, TBA 0250B, TBA 0300S (See drawing on page: 1-16)					
020	456139-0000		4	LOCK PLATE	
030	751491-0000		1	ROLL	
040	751492-0000		2	ROLL	
050	751493-0000		2	ROLL	
060	752186-0005		4	SHAFT	
070	752186-0009		1	SHAFT	
090	1195191-0000		1	MOVABLE FORMING RING	
150	1347557-0000		1	MOVABLE FORMING RING	
170	1347559-0000		1	SHAFT	
200	1487687-0000		1	LOCK PLATE	
210	2033-0007		2	WASHER	
215	2033-0011		8	WASHER	
440	90240-0172		10	FLANGE BUSHING, 8X12X10 MM	
TBA 0200M, TBA 0250S (See drawing on page: 1-18)					
010	752156-0000		4	FLANGE BUSHING	
020	1279091-0000		4	LOCKING PLATE	
030	574479-0000		1	ROLL	
040	574480-0000		2	ROLL	
050	574481-0000		2	ROLL	
055	752186-0002		2	SHAFT	
060	752186-0006		2	SHAFT	
070	752186-0008		1	SHAFT	
090	1487830-0000		1	MOVABLE FORMING RING	
150	1487688-0000		1	MOVABLE FORMING RING	
170	1487700-0000		1	SHAFT	
200	1487689-0000		1	LOCK PLATE	
215	2033-0011		10	WASHER	
440	90240-0172		6	FLANGE BUSHING, 8X12X10 MM	
TBA 0200S (See drawing on page: 1-18)					
010	752156-0000		4	FLANGE BUSHING	
020	1279091-0000		4	LOCKING PLATE	
030	752126-0000		1	FORMING ROLLER	
040	752127-0000		2	FORMING ROLLER	
050	752128-0000		2	FORMING ROLLER	
055	752186-0002		2	SHAFT	
060	752186-0006		2	SHAFT	
070	752186-0008		1	SHAFT	
090	1487830-0000		1	MOVABLE FORMING RING	
150	1517318-0000		1	MOVABLE FORMING RING	
170	1487700-0000		1	SHAFT	
200	1487689-0000		1	LOCK PLATE	
215	2033-0011		10	WASHER	
440	90240-0172		6	FLANGE BUSHING, 8X12X10 MM	
Common Parts					
080	1519510-0000		1	AXLE PIN	
100	1296754-0000		2	SHAFT	
110	1296755-0000		1	SHAFT	
120	1296758-0000		3	ROLL	
130	1296760-0000		3	NUT	
140	1347556-0000		1	ECCENTRIC	
160	1347558-0000		1	SUPPORT	
180	1478182-0000		1	SPACER	
190	1478570-0000		1	AXLE PIN	
220	311103-0355		1	PARALLEL PIN ISO 2338 6M6X25 A1	
260	312105-0329		3	SCREW M6S ISO 4017 M5X16 A480	
270	312105-0371		5	SCREW M6S ISO 4017 M6X22 A480	
280	312105-0495		1	SCREW M6S ISO 4017 M10X30 A480	
300	312115-0287		1	SCREW ISO4762 M4X8 A4 80	
310	312115-0329		2	SCREW ISO4762 M5X16 A4 80	
320	312115-0327		4	SCREW ISO4762 M5X12 A4 80	
340	312318-0327		2	SCREW ISO4029 M5X12 A4	
360	312625-0320		3	HEXAGON THIN NUT, EN 24035 ML6M M10 A4	
380	312705-0316		5	NUT HEX. DOMED CAP MHM-6 M6 A280	
420	90091-0322		1	RADIAL SEAL 25X42X7 MM DUST LIP	
450	90240-0264		3	FLANGE BUSHING, 15X17X17 MM	
470	90240-0321		1	BUSHING, 25X28X25 MM	
480	90240-0322		1	BUSHING, 25X28X30 MM	
M1504	90045-0189		1	STEP MOTOR E22NSLT-LNN-NS-02	

Machine Type	Group Description	Used-In	Group Number	Page No

LOWER FORMING RING

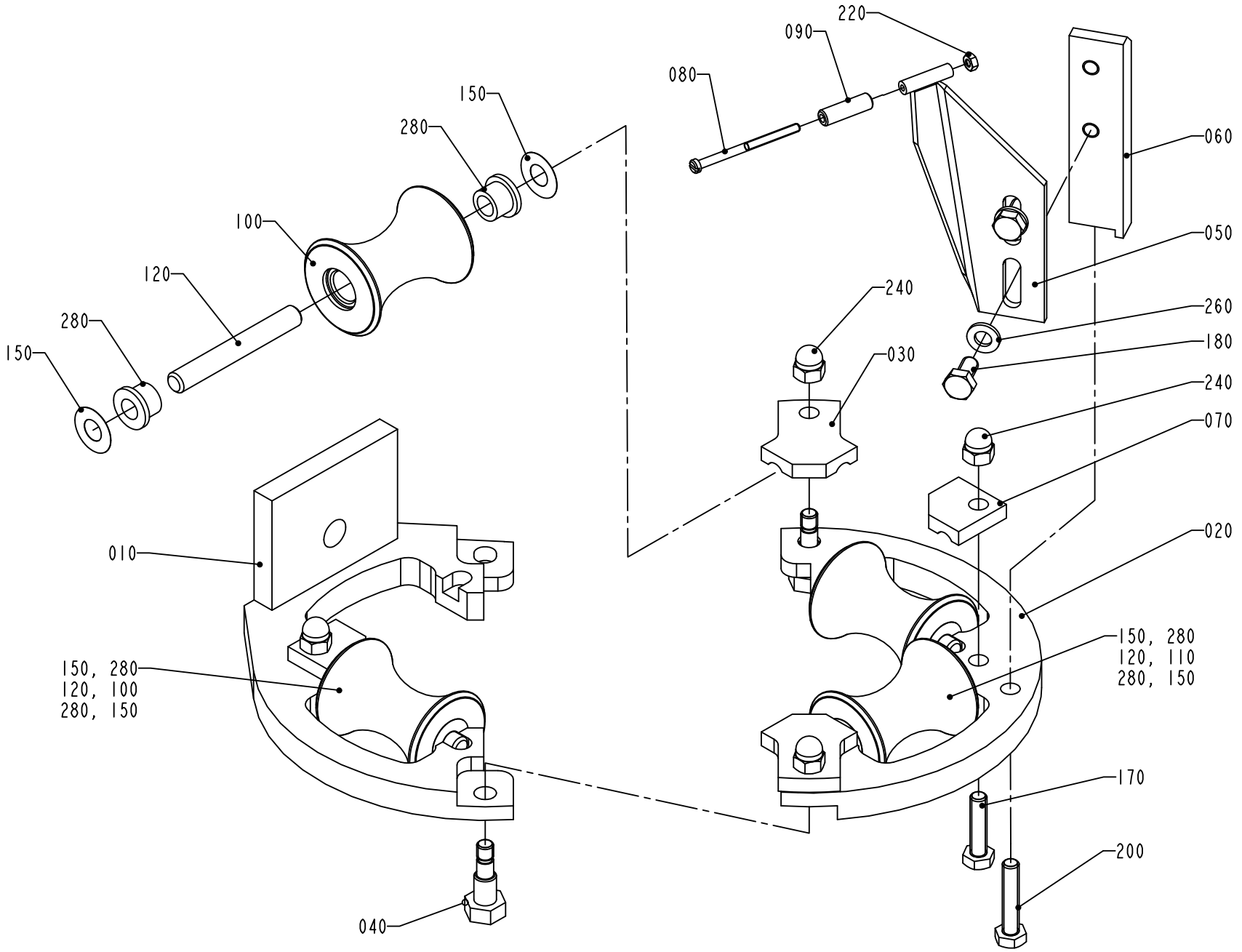

1195162-4
ECM 126249

ECM: 998034 - 20071112
Group number: 1195162-0200
Assembly Drawing: 1195162-4_1_AA

This list covers pages from 1-20 to 1-23

Pos	Part No	UN	Qty	Description	Page No
TBA 0200B, TBA 0250B (See drawing on page: 1-20)					
010	1484862-0000		1	FORMING RING	
020	1484863-0000		1	FORMING RING	
060	2618700-0000		1	SUPPORT	
090	1478267-0000		1	ROLL	
100	1484859-0000		3	ROLLER	
110	2611156-0000		1	ROLLER	
120	752186-0016		4	SHAFT	
150	2033-0011		8	WASHER	
240	312705-0316		4	NUT HEX. DOMED CAP MHM-6 M6 A280	
280	90240-0172		8	FLANGE BUSHING, 8X12X10 MM	
TBA 0200M, TBA 0250S (See drawing on page: 1-20)					
010	1484862-0000		1	FORMING RING	
020	1484863-0000		1	FORMING RING	
060	2618702-0000		1	SUPPORT	
090	1478267-0000		1	ROLL	
100	2523655-0000		3	ROLLER	
110	2523649-0000		1	COUNTER ROLLER	
120	752186-0016		4	SHAFT	
150	2033-0011		8	WASHER	
230	312705-0314		4	NUT HEX. DOMED CAP MHM-6 M5 A280	
240	312705-0316		4	NUT HEX. DOMED CAP MHM-6 M6 A280	
280	90240-0172		8	FLANGE BUSHING, 8X12X10 MM	
TBA 0200S (See drawing on page: 1-20)					
010	1539580-0000		1	FORMING RING	
020	1539579-0000		1	FORMING RING	
060	2611162-0000		1	SUPPORT	
090	1478267-0000		1	ROLL	
100	1558186-0000		3	ROLLER	
110	1558162-0000		1	ROLLER	
120	752186-0006		4	SHAFT	
240	312705-0316		4	NUT HEX. DOMED CAP MHM-6 M6 A280	
280	90240-0172		8	FLANGE BUSHING, 8X12X10 MM	
TBA 0300S (See drawing on page: 1-22)					
010	1484862-0000		1	FORMING RING	
020	1484863-0000		1	FORMING RING	
020	2833234-0000		1	FORMING RING	
060	2618700-0000		1	SUPPORT	
090	2833235-0000		1	1ROLLER	
100	1484859-0000		2	ROLLER	
105	2841374-0000		1	ROLLER	
110	2841372-0000		1	ROLLER	
120	752186-0016		4	SHAFT	
125	752186-0004		1	SHAFT	
130	2845033-0000		1	BRACKET	
140	2845412-0000		1	ROLLER	
150	2033-0011		10	WASHER	
160	2715649-0008		2	SPACER	
165	2715650-0010		2	SCREW	
190	312318-0283		1	SCREW ISO4029 M4X4 A4	
240	312705-0316		6	NUT HEX. DOMED CAP MHM-6 M6 A280	
280	90240-0172		10	FLANGE BUSHING, 8X12X10 MM	
Common Parts					
030	1484860-0000		2	LOCK PLATE	
040	1195319-0000		2	FITTING BOLT	
050	1296109-0000		1	BRACKET	
070	1484861-0000		2	LOCK PLATE	
080	257050-0000		1	SHAFT	
170	312105-0372		2	SCREW M6S ISO 4017 M6X25 A480	
180	312105-0366		2	SCREW M6S ISO 4017 M6X12 A480	
200	312109-0374		1	SCREW M6S ISO 4017 M6X30 A480	
220	312605-0310		1	HEXAGON NUT, M6M M3 A280	
260	315105-0153		2	WASHER BRB 6,4X12 RFR	

Machine Type | Group Description | Used-In | Group Number | Page No

LOWER FORMING RING

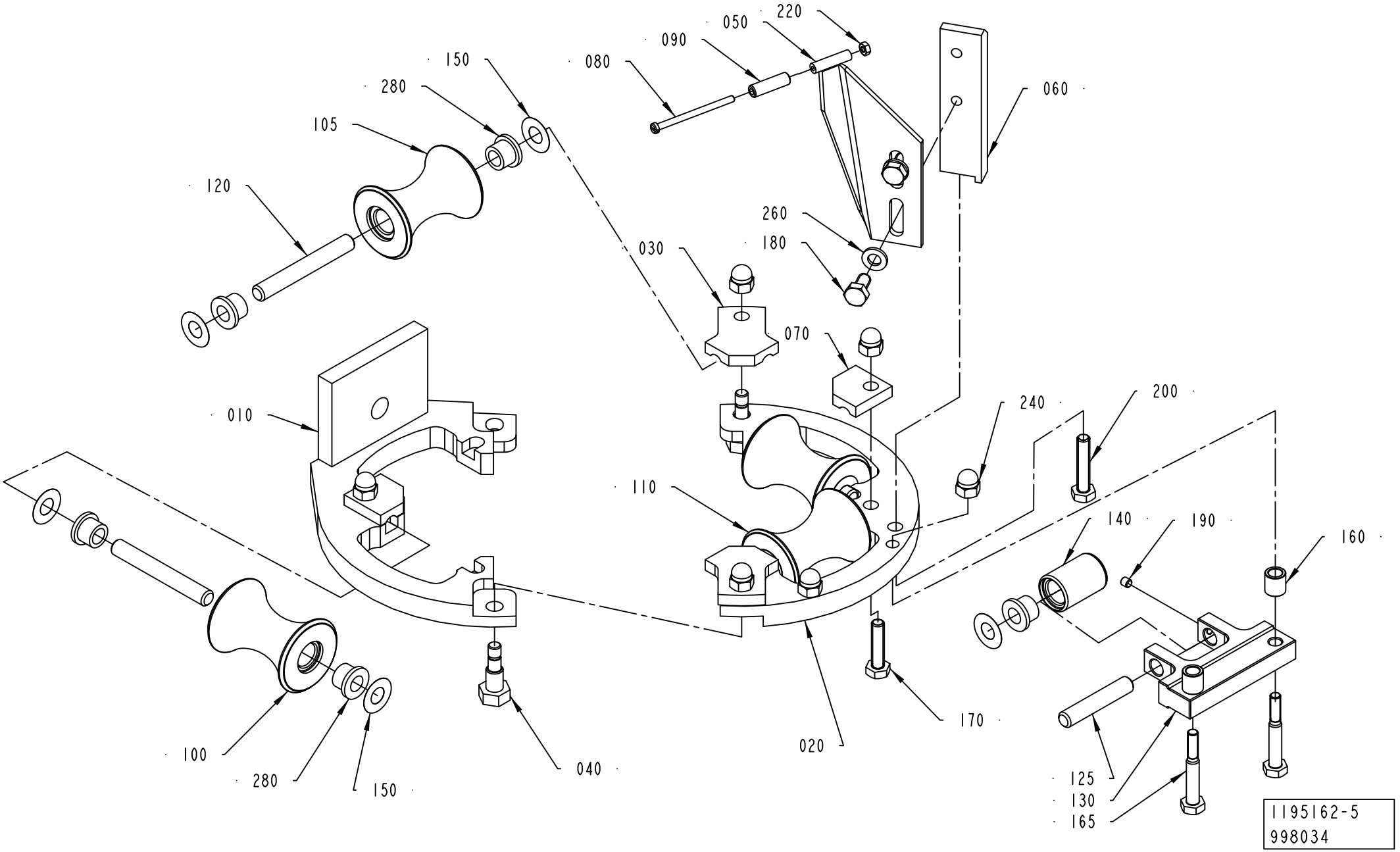

ECM: 998034 - 20071112
Group number: 1195162-0200
Assembly Drawing: 1195162-5_1_AA

This list covers pages from 1-20 to 1-23

Pos	Part No	UN	Qty	Description	Page No
TBA 0200B, TBA 0250B (See drawing on page: 1-20)					
010	1484862-0000		1	FORMING RING	
020	1484863-0000		1	FORMING RING	
060	2618700-0000		1	SUPPORT	
090	1478267-0000		1	ROLL	
100	1484859-0000		3	ROLLER	
110	2611156-0000		1	ROLLER	
120	752186-0016		4	SHAFT	
150	2033-0011		8	WASHER	
240	312705-0316		4	NUT HEX. DOMED CAP MHM-6 M6 A280	
280	90240-0172		8	FLANGE BUSHING, 8X12X10 MM	
TBA 0200M, TBA 0250S (See drawing on page: 1-20)					
010	1484862-0000		1	FORMING RING	
020	1484863-0000		1	FORMING RING	
060	2618702-0000		1	SUPPORT	
090	1478267-0000		1	ROLL	
100	2523655-0000		3	ROLLER	
110	2523649-0000		1	COUNTER ROLLER	
120	752186-0016		4	SHAFT	
150	2033-0011		8	WASHER	
230	312705-0314		4	NUT HEX. DOMED CAP MHM-6 M5 A280	
240	312705-0316		4	NUT HEX. DOMED CAP MHM-6 M6 A280	
280	90240-0172		8	FLANGE BUSHING, 8X12X10 MM	
TBA 0200S (See drawing on page: 1-20)					
010	1539580-0000		1	FORMING RING	
020	1539579-0000		1	FORMING RING	
060	2611162-0000		1	SUPPORT	
090	1478267-0000		1	ROLL	
100	1558186-0000		3	ROLLER	
110	1558162-0000		1	ROLLER	
120	752186-0006		4	SHAFT	
240	312705-0316		4	NUT HEX. DOMED CAP MHM-6 M6 A280	
280	90240-0172		8	FLANGE BUSHING, 8X12X10 MM	
TBA 0300S (See drawing on page: 1-22)					
010	1484862-0000		1	FORMING RING	
020	1484863-0000		1	FORMING RING	
020	2833234-0000		1	FORMING RING	
060	2618700-0000		1	SUPPORT	
090	2833235-0000		1	1ROLLER	
100	1484859-0000		2	ROLLER	
105	2841374-0000		1	ROLLER	
110	2841372-0000		1	ROLLER	
120	752186-0016		4	SHAFT	
125	752186-0004		1	SHAFT	
130	2845033-0000		1	BRACKET	
140	2845412-0000		1	ROLLER	
150	2033-0011		10	WASHER	
160	2715649-0008		2	SPACER	
165	2715650-0010		2	SCREW	
190	312318-0283		1	SCREW ISO4029 M4X4 A4	
240	312705-0316		6	NUT HEX. DOMED CAP MHM-6 M6 A280	
280	90240-0172		10	FLANGE BUSHING, 8X12X10 MM	
Common Parts					
030	1484860-0000		2	LOCK PLATE	
040	1195319-0000		2	FITTING BOLT	
050	1296109-0000		1	BRACKET	
070	1484861-0000		2	LOCK PLATE	
080	257050-0000		1	SHAFT	
170	312105-0372		2	SCREW M6S ISO 4017 M6X25 A480	
180	312105-0366		2	SCREW M6S ISO 4017 M6X12 A480	
200	312109-0374		1	SCREW M6S ISO 4017 M6X30 A480	
220	312605-0310		1	HEXAGON NUT, M6M M3 A280	
260	315105-0153		2	WASHER BRB 6,4X12 RFR	

Machine Type | Group Description | Used-In | Group Number | Page No

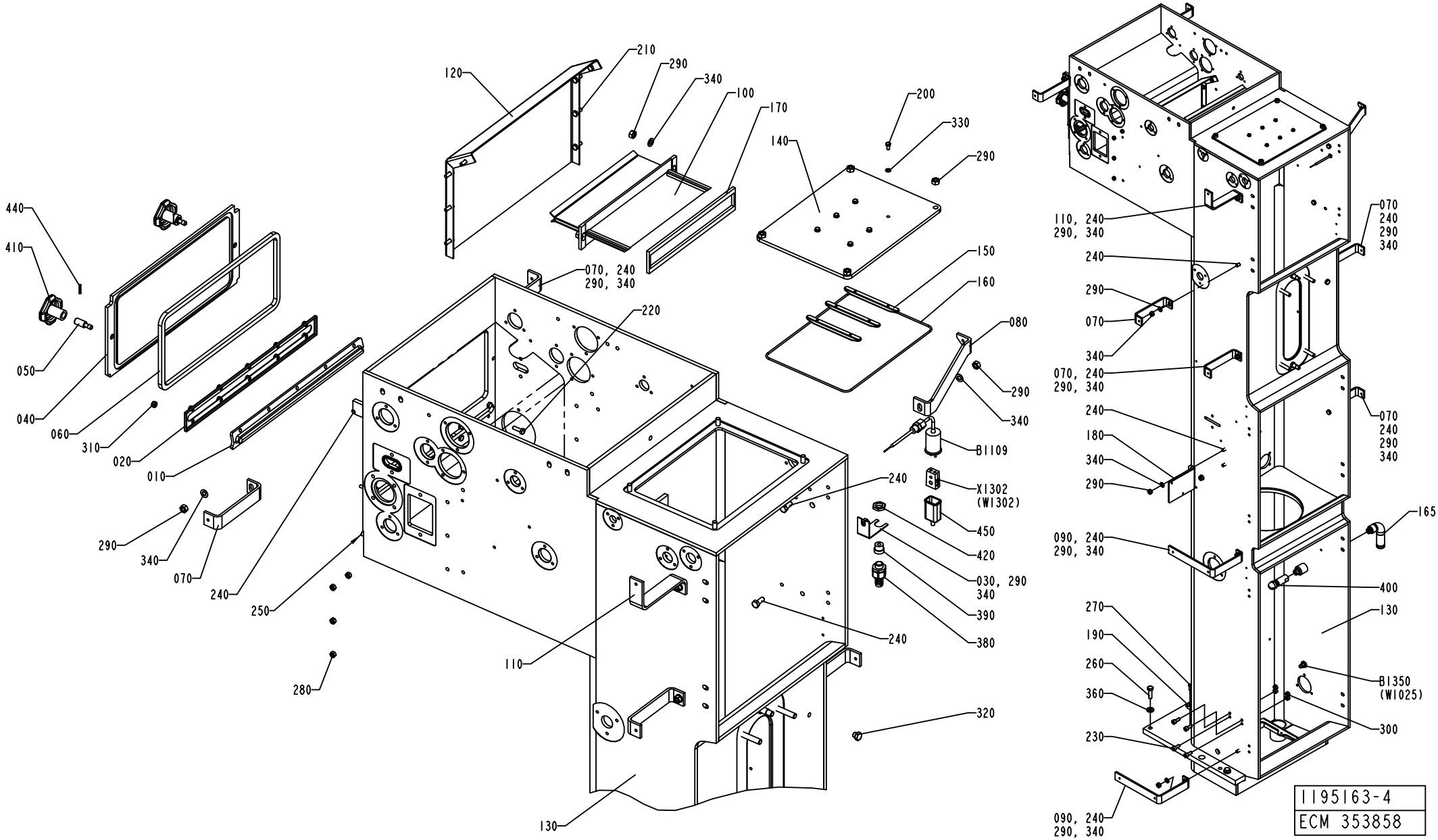
120
210
290
340
100
170
200
330
290
140
150
160
070, 240
290, 340
220
080
290
340
B1109
X1302
(W1302)
450
420
030, 290
340
390
380
240
320
130
110
280
250
240
440
410
050
040
060
310
020
010
290
340
070
240
110, 240
290, 340
070
240
290
340
240
290
070
340
070, 240
290, 340
240
180
340
290
070
240
290
340
165
090, 240
290, 340
400
130
270
190
260
360
230
B1350
(W1025)
300
090, 240
290, 340
1195163-4
ECM 353858

ECM: 368149 - 20090101
Group number: 1195163-0300
Assembly Drawing: 1195163-4_1_AF

Pos	Part No	UN	Qty	Description	Page No
FLOATER NOHI					
320	90330-0066		1	PLUG, EXT. G-THREAD, G1/8	
LEVELPROBE HI					
230	312115-0451		4	SCREW ISO4762 M8X20 A4 80	
300	312605-0318		4	HEXAGON NUT, M6M M8 A280	
LEVELPROBE NOHI					
230	312115-0451		4	SCREW ISO4762 M8X20 A4 80	
300	312605-0318		4	HEXAGON NUT, M6M M8 A280	
320	90330-0066		1	PLUG, EXT. G-THREAD, G1/8	
Common Parts					
010	273961-0000		1	SEAL	
020	476087-0000		1	LID	
030	1036373-0000		1	HOLDER	
040	1036465-0000		1	LID	
050	1036475-0000		2	PIN	
060	1036478-0000		1	GASKET	
070	1037456-0000		6	BRACKET	
080	2514285-0000		1	PLATE	
090	2531273-0000		2	BRACKET	
100	1519304-0000		1	TUNNEL	
110	1195322-0000		1	BRACKET	
120	1347513-0000		1	SHEET	
130	2506839-0000		1	COLUMN	
140	1498670-0000		1	LID	
150	1498671-0000		3	PAPER GUIDE	
160	1348622-0000		1	O-RING	
165	1129383-0000		1	PIPE	
170	1519303-0000		1	GASKET	
180	1490902-0000		1	BRACKET	
190	2539463-0000		2	BRACKET	
200	312105-0325		6	SCREW M6S ISO 4017 M5X10 A480	
210	312105-0368		8	SCREW M6S ISO 4017 M6X16 A480	
220	312105-0370		10	SCREW M6S ISO 4017 M6X20 A480	
240	312105-0451		13	SCREW M6S ISO 4017 M8X20 A480	
250	312105-0453		3	SCREW M6S ISO 4017 M8X25 A480	
260	312105-0497		4	SCREW M6S ISO 4017 M10X35 A480	
270	312105-0329		2	SCREW M6S ISO 4017 M5X16 A480	
280	312605-0316		8	HEXAGON NUT, M6M M6 A280	
290	312605-0318		19	HEXAGON NUT, M6M M8 A280	
310	312812-0316		10	HEXAGON NUT, NY-LOCK M6 A480	
330	315105-0146		6	WASHER BRB 5,3X10 RFR	
340	315105-0165		15	WASHER BRB 8,4X16 RFR	
360	315115-0173		4	WASHER PLAIN, TBRB 10,5/22 H=4	
380	353243-0001		1	HOSE GLAND W/O INSERT PG9 EXTENDED	
390	353249-0008		1	INSERT, SINGLE HOLE, EK 152/7	
400	90459-2735		1	ROT.SPRAY NOZZLE, 5MC.049.17.AF.00.02	
410	90051-0045		2	STELLAR KNOB, NO. 8323-257	
420	90099-0104		1	NUT, PR 15,2 (PG9)	
430	90153-0023		1	ADHESIVE, SILICON 251470 TUB 90CC(UN1993	
440	90258-0031		2	PIN, STRAIGHT SLOTTED SPRING FRP 3X20	
450	90326-0012		1	PROTECTIVE COVER, T31A4618	
B1109	90458-0341		1	THERMOCOUPLE, 5130050-001	
B1350	90458-0672		1	PROX.SENSOR E2E2-X5MB1-5M	
X1302	90326-0020		1	PLUG, FEMALE YELLOW CR-AL	

Machine Type	Group Description	Used-In	Group Number	Page No

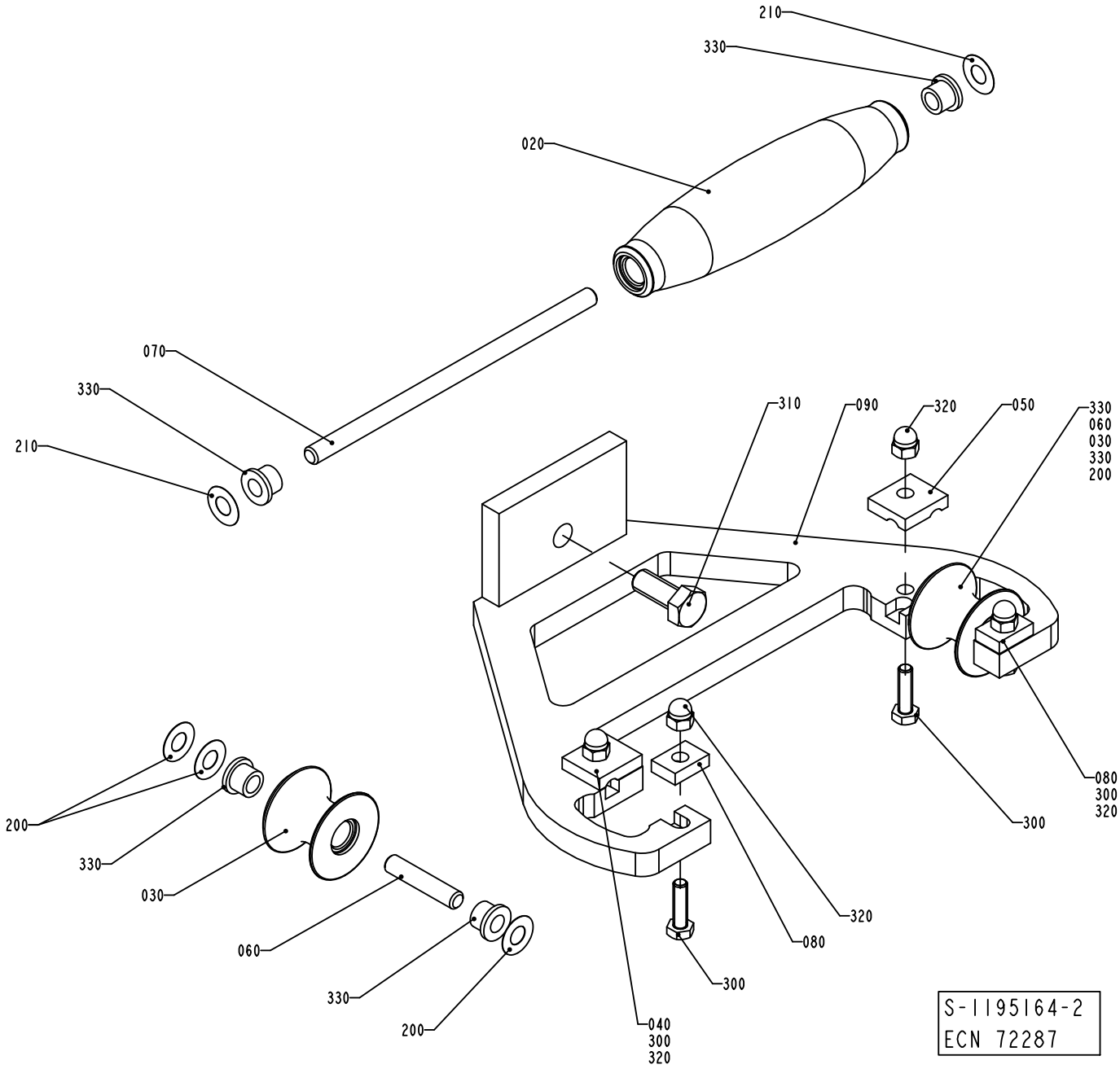
210
330
020
070
330
210
310
090
320
050
330
060
030
330
200
080
300
320
320
080
300
040
300
320
200
330
030
060
330
200
S-1195164-2
ECN 72287

ECM: 315439 - 20071112
Group number: 1195164-0200
Assembly Drawing: 1195164-2_1_AB

This list covers pages from 1-26 to 1-29

Pos	Part No	UN	Qty	Description	Page No
TBA 0200B, TBA 0250B, TBA 0300S (See drawing on page: 1-26)					
020	1350904-0000		1	ROLL	
030	751284-0000		2	ROLL	
040	1350905-0000		1	LOCKING PLATE	
050	1350906-0000		1	LOCKING PLATE	
060	752186-0003		2	SHAFT	
070	752186-0017		1	SHAFT	
090	1350907-0000		1	UPPER FORMING RING	
200	2033-0007		6	WASHER	
210	2033-0011		2	WASHER	
TBA 0200M, TBA 0250S (See drawing on page: 1-28)					
020	574417-0000		1	ROLL	
030	574418-0000		2	ROLL	
040	1279089-0000		1	LOCKING PLATE	
050	1279088-0000		1	LOCKING PLATE	
060	752186-0012		2	SHAFT	
070	752186-0010		1	SHAFT	
090	1484234-0000		1	FORMING RING	
200	2033-0007		2	WASHER	
210	2033-0011		4	WASHER	
TBA 0200S (See drawing on page: 1-28)					
020	752129-0000		1	FORMING ROLLER	
030	752130-0000		2	FORMING ROLLER	
040	1279089-0000		1	LOCKING PLATE	
050	1279088-0000		1	LOCKING PLATE	
060	752186-0004		2	SHAFT	
070	752186-0010		1	SHAFT	
090	1548598-0000		1	FORMING RING	
200	2033-0007		2	WASHER	
210	2033-0011		4	WASHER	
Common Parts					
080	1038428-0000		2	LOCK PLATE	
300	312105-0371		4	SCREW M6S ISO 4017 M6X22 A480	
310	312105-0493		1	SCREW M6S ISO 4017 M10X25 A480	
320	312705-0316		4	NUT HEX. DOMED CAP MHM-6 M6 A280	
330	90240-0172		6	FLANGE BUSHING, 8X12X10 MM	

Pos	Part No	UN	Qty	Description	Page No

UPPER FORMING RING

Drawing file: 1195164-3_1_AA.hpgl

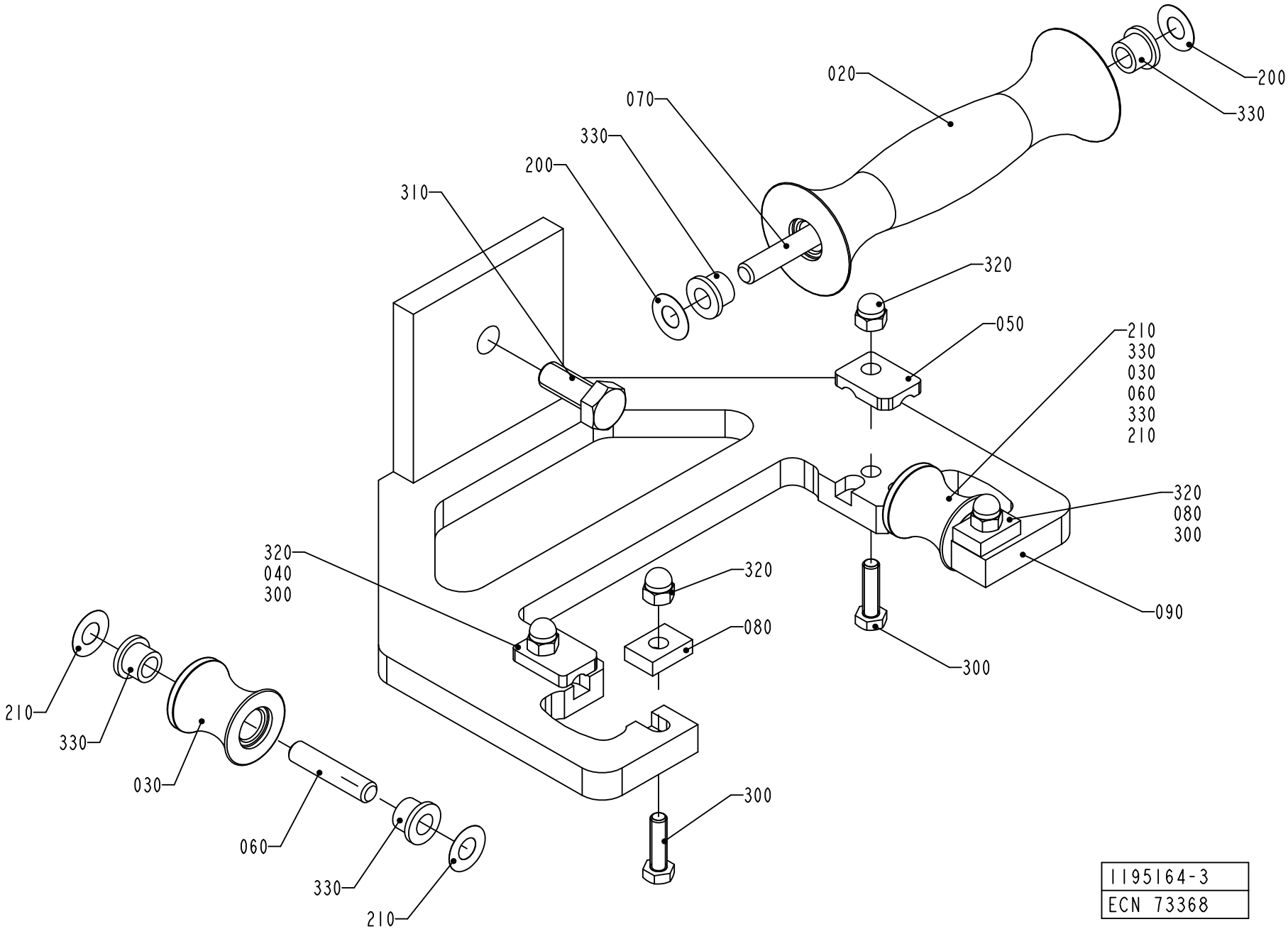

1195164-3
ECN 73368

ECM: 315439 - 20071112
Group number: 1195164-0200
Assembly Drawing: 1195164-3_1_AA

This list covers pages from 1-26 to 1-29

Pos	Part No	UN	Qty	Description	Page No
TBA 0200B, TBA 0250B, TBA 0300S (See drawing on page: 1-26)					
020	1350904-0000		1	ROLL	
030	751284-0000		2	ROLL	
040	1350905-0000		1	LOCKING PLATE	
050	1350906-0000		1	LOCKING PLATE	
060	752186-0003		2	SHAFT	
070	752186-0017		1	SHAFT	
090	1350907-0000		1	UPPER FORMING RING	
200	2033-0007		6	WASHER	
210	2033-0011		2	WASHER	
TBA 0200M, TBA 0250S (See drawing on page: 1-28)					
020	574417-0000		1	ROLL	
030	574418-0000		2	ROLL	
040	1279089-0000		1	LOCKING PLATE	
050	1279088-0000		1	LOCKING PLATE	
060	752186-0012		2	SHAFT	
070	752186-0010		1	SHAFT	
090	1484234-0000		1	FORMING RING	
200	2033-0007		2	WASHER	
210	2033-0011		4	WASHER	
TBA 0200S (See drawing on page: 1-28)					
020	752129-0000		1	FORMING ROLLER	
030	752130-0000		2	FORMING ROLLER	
040	1279089-0000		1	LOCKING PLATE	
050	1279088-0000		1	LOCKING PLATE	
060	752186-0004		2	SHAFT	
070	752186-0010		1	SHAFT	
090	1548598-0000		1	FORMING RING	
200	2033-0007		2	WASHER	
210	2033-0011		4	WASHER	
Common Parts					
080	1038428-0000		2	LOCK PLATE	
300	312105-0371		4	SCREW M6S ISO 4017 M6X22 A480	
310	312105-0493		1	SCREW M6S ISO 4017 M10X25 A480	
320	312705-0316		4	NUT HEX. DOMED CAP MHM-6 M6 A280	
330	90240-0172		6	FLANGE BUSHING, 8X12X10 MM	

Pos	Part No	UN	Qty	Description	Page No

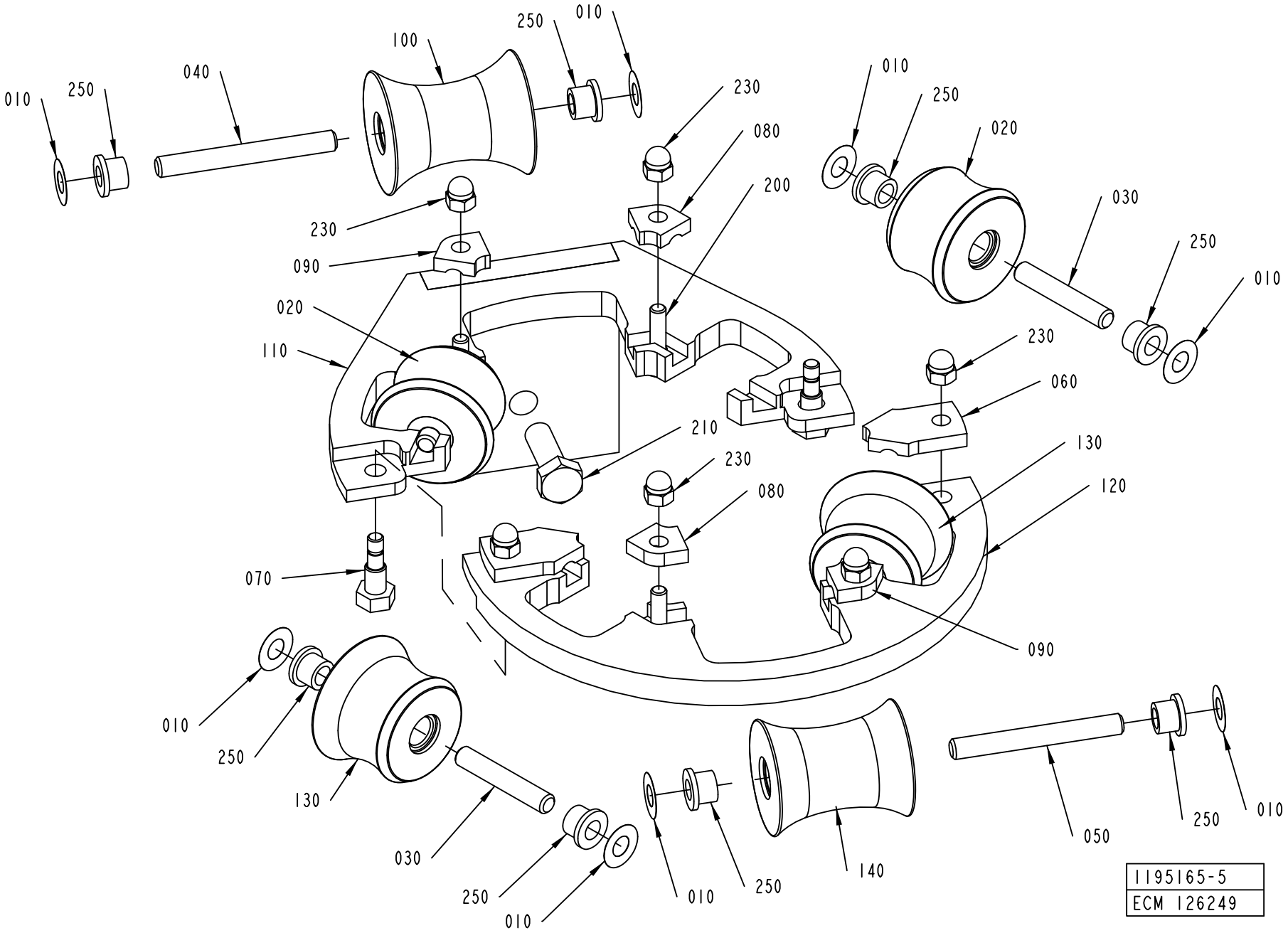
010
250
040
100
250
010
230
080
200
230
090
020
110
010
250
020
030
250
010
230
060
210
230
080
130
120
070
090
010
250
130
030
250
010
010
250
140
050
250
010
1195165-5
ECM 126249

ECM: 315440 - 20071112
Group number: 1195165-0300
Assembly Drawing: 1195165-5_1_AA

Pos	Part No	UN	Qty	Description	Page No
TBA 0200B, TBA 0250B, TBA 0300S					
020	751499-0000		2	ROLL	
030	752186-0005		4	SHAFT	
040	752186-0007		1	SHAFT	
050	752186-0014		1	SHAFT	
080	1348938-0000		2	,LOCK PLATE	
090	1348938-0000		2	,LOCK PLATE	
100	1350289-0000		1	ROLL	
110	2618701-0000		1	FORMING RING	
120	2618703-0000		1	FORMING RING	
130	2618704-0000		2	ROLLER	
140	2618705-0000		1	ROLLER	
TBA 0200M, TBA 0250S					
020	574397-0000		2	ROLL	
030	752186-0004		4	SHAFT	
040	752186-0006		1	SHAFT	
050	752186-0006		1	SHAFT	
080	1348938-0000		2	,LOCK PLATE	
090	1348938-0000		2	,LOCK PLATE	
100	1487691-0000		1	ROLL	
110	2618706-0000		1	FORMING RING	
120	2618707-0000		1	FORMING RING	
130	2618708-0000		2	ROLLER	
140	2632629-0000		1	ROLLER	
TBA 0200S					
020	752132-0000		2	FORMING ROLLER	
030	752186-0003		4	SHAFT	
040	752186-0006		1	SHAFT	
050	752186-0006		1	SHAFT	
080	1519491-0000		2	LOCK PLATE	
090	1519492-0000		2	LOCK PLATE	
100	1517316-0000		1	ROLL	
110	2611168-0000		1	FORMING RING	
120	2611169-0000		1	FORMING RING	
130	2611166-0000		2	ROLLER	
140	2611167-0000		1	ROLLER	
Common Parts					
010	2033-0011		12	WASHER	
060	1195318-0000		2	PLATE	
070	1195319-0000		2	FITTING BOLT	
200	312105-0372		4	SCREW M6S ISO 4017 M6X25 A480	
210	312105-0495		1	SCREW M6S ISO 4017 M10X30 A480	
230	312705-0316		6	NUT HEX. DOMED CAP MHM-6 M6 A280	
250	90240-0172		12	FLANGE BUSHING, 8X12X10 MM	

Machine Type | Group Description | Used-In | Group Number | Page No

PAPER GUIDE

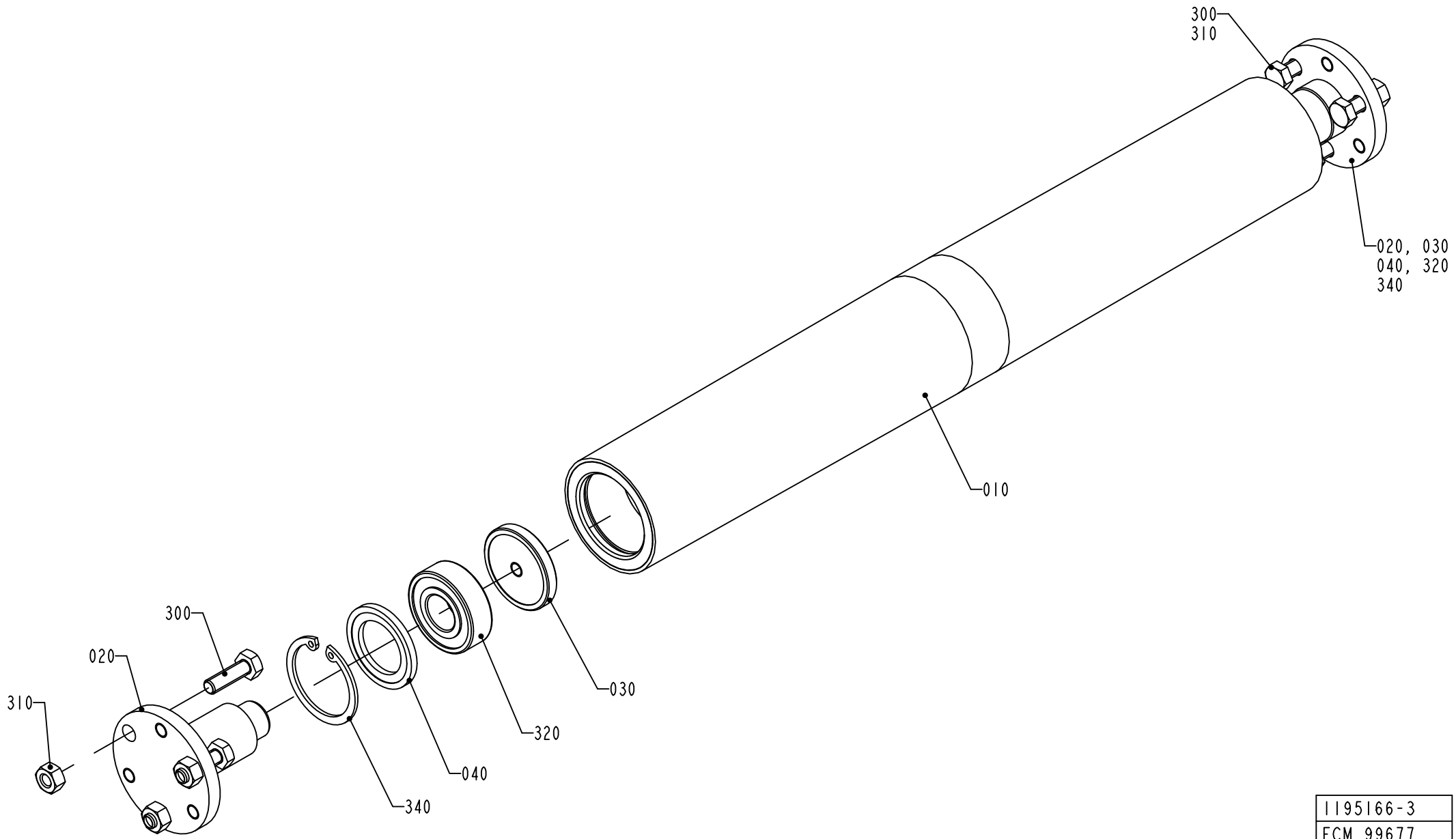

1195166-3
ECM 99677

ECM: 315441 - 20071112
Group number: 1195166-0200
Assembly Drawing: 1195166-3_1_AB

Pos	Part No	UN	Qty	Description	Page No
-					
010	1490405-0000		1	ROLLER	
020	1490408-0000		2	SHAFT	
030	1490407-0000		2	WASHER	
040	1490406-0000		2	WASHER	
300	312105-0370		6	SCREW M6S ISO 4017 M6X20 A480	
310	312605-0316		6	HEXAGON NUT, M6M M6 A280	
320	90458-1704		2	BALL BEARING, 15X35X11 MM	
340	315753-0124		2	RETAINING RING FOR BORE DIN 472 35 A2	

Pos	Part No	UN	Qty	Description	Page No

DRIVEN CALENDER ROLLER

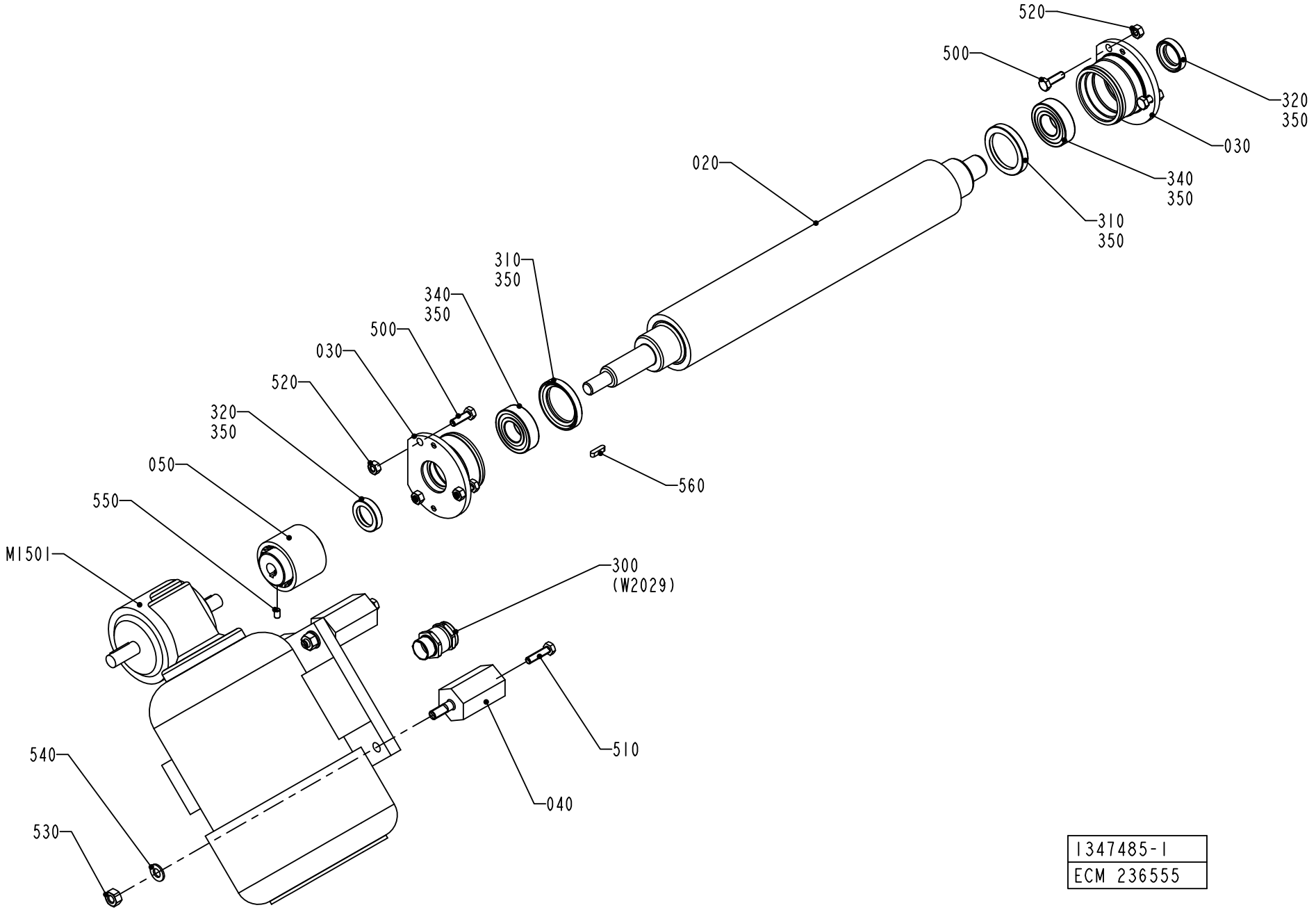

1347485-1
ECM 236555

ECM: 315449 - 20071112
Group number: 1347485-0100
Assembly Drawing: 1347485-1_1_AD

Pos	Part No	UN	Qty	Description	Page No
-					
020	2781160-0000		1	CALENDER ROLLER	
030	1484514-0000		2	HOUSING	
040	1347484-0000		4	SPACER	
050	1129298-0000		1	SHAFT COUPLING	
300	90012-0137		1	GLAND, EXTENDED WITH INSERT, PG11	
310	90091-0297		2	RADIAL SEAL 35X47X7 MM DUST LIP	
320	90091-0320		2	RADIAL SEAL 20X30X7 MM DUST LIP	
340	90214-0225		2	BALL BEARING SOLID OIL 20X42X12 MM	
350	90296-0091		1	LUBRICATION GREASE	
500	312105-0370		6	SCREW M6S ISO 4017 M6X20 A480	
510	312105-0372		4	SCREW M6S ISO 4017 M6X25 A480	
520	312605-0316		6	HEXAGON NUT, M6M M6 A280	
530	312605-0318		4	HEXAGON NUT, M6M M8 A280	
540	315105-0165		4	WASHER BRB 8,4X16 RFR	
550	312318-0323		2	SCREW ISO4029 M5X8 A4	
560	315701-0168		1	PARALLEL KEY W. ROUND ENDS 4X4X16 MM	
M1501	90069-0608		1	GEARS, WORM MOTOR ODM120-60KE3	

Pos	Part No	UN	Qty	Description	Page No

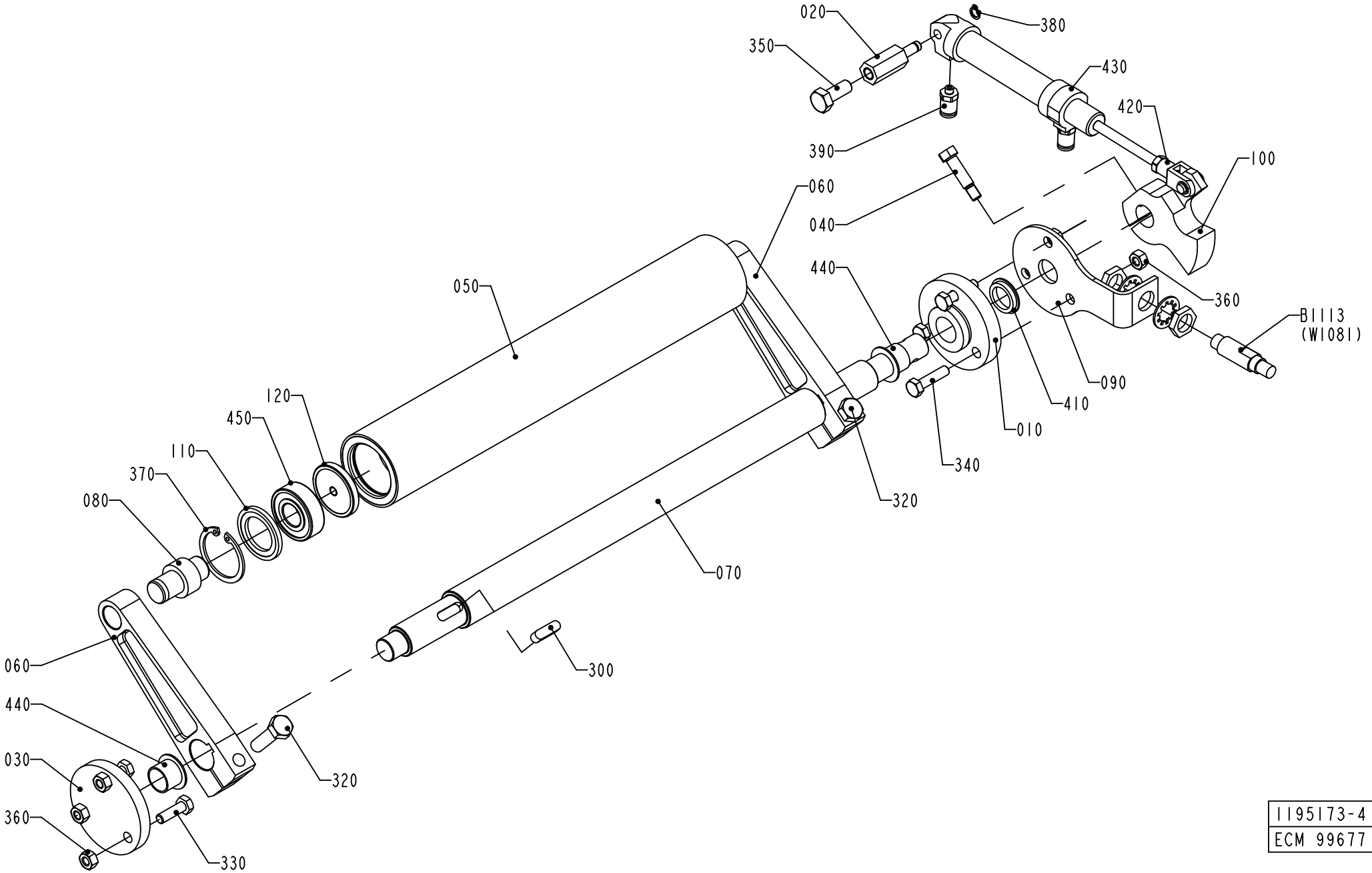

1195173-4
ECM 99677

ECM: 315442 - 20071112
Group number: 1195173-0300
Assembly Drawing: 1195173-4_1_AB

Pos	Part No	UN	Qty	Description	Page No
-					
010	1036174-0000		1	BEARING COVER	
020	1036178-0000		1	SHAFT	
030	1036328-0000		1	LID	
040	1041688-0000		1	FITTING BOLT	
050	1490409-0000		1	ROLLER	
060	1347938-0000		2	PENDULUM ARM	
070	1347940-0000		1	SHAFT	
080	1490410-0000		2	SHAFT	
090	1347941-0000		1	LID	
100	1348063-0000		1	LEVER	
110	1490406-0000		2	WASHER	
120	1490407-0000		2	WASHER	
300	315705-0232		2	PARALLEL KEY W. ROUND ENDS 6X6X20 MM	
320	312105-0455		2	SCREW M6S ISO 4017 M8X30 A480	
330	312105-0370		3	SCREW M6S ISO 4017 M6X20 A480	
340	312105-0372		3	SCREW M6S ISO 4017 M6X25 A480	
350	312105-0451		1	SCREW M6S ISO 4017 M8X20 A480	
360	312605-0316		6	HEXAGON NUT, M6M M6 A280	
370	315753-0124		2	RETAINING RING FOR BORE DIN 472 35 A2	
380	315751-0103		1	RETAINING RING FOR SHAFT DIN 471 6 SS	
390	342722-0197		2	STRAIGHT COUPLING	
410	90091-0357		1	VARISEAL ROTO 15X23X4 MM	
420	90239-0489		1	ROD END, CLEVIS WITH AXLE M6X1,25	
430	90239-0817		1	DOUBLE ACTING, MINI-ISO, CYL.16-50	
440	90240-0263		2	FLANGE BUSHING, 15X17X12 MM	
450	90458-1704		2	BALL BEARING, 15X35X11 MM	
B1113	90458-0675		1	PROX.SENSOR, E2EG-X5MB1-5M	

Pos	Part No	UN	Qty	Description	Page No

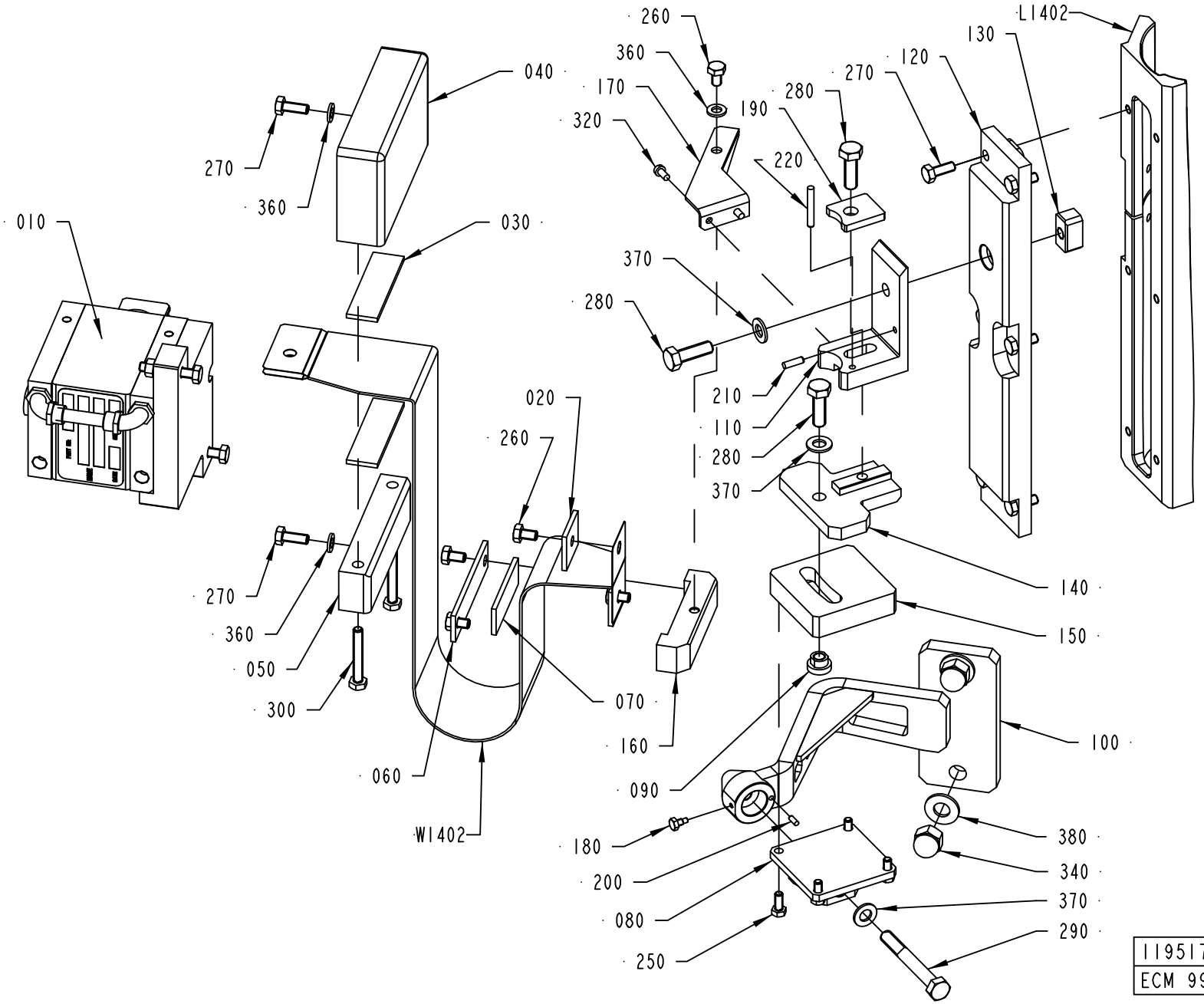
260
360
170
320
040
270
360
010
030
190
280
270
120
130
L1402
220
370
280
210
110
280
370
020
260
140
150
270
360
050
300
070
160
060
W1402
100
090
180
200
080
250
380
340
370
290
1195174-5
ECM 998034

ECM: 998577 - 20070102
Group number: 1195174-0400
Assembly Drawing: 1195174-5_1_AC

Pos	Part No	UN	Qty	Description	Page No
TBA 0200B					
110	2607090-0000		1	BRACKET	
L1402	2606897-0000		1	INDUCTOR	
TBA 0200M					
110	2611155-0000		1	BRACKET	
L1402	2705811-0000		1	INDUCTOR	
TBA 0200S					
110	2611155-0000		1	BRACKET	
L1402	2611161-0000		1	INDUCTOR	
TBA 0250B					
110	2607090-0000		1	BRACKET	
L1402	2606897-0000		1	INDUCTOR	
TBA 0250S					
110	2611155-0000		1	BRACKET	
L1402	2705811-0000		1	INDUCTOR	
TBA 0300S					
110	2607090-0000		1	BRACKET	
L1402	2606897-0000		1	INDUCTOR	
Common Parts					
010	2597526-0100		1	IH EQUIPMENT	**1-41**
020	1296997-0000		2	WASHER	
030	2522188-0000		2	GASKET	
040	2522189-0000		1	PLATE	
050	2522190-0000		1	PLATE	
060	2523724-0000		1	PLATE	
070	2540806-0000		1	GASKET	
080	2570671-0000		1	BRACKET	
090	2570674-0000		1	PIN	
100	2570676-0000		1	HOLDER	
120	2863177-0000		1	INSULATING PLATE	
130	2607092-0000		1	BLOCK	
140	2607093-0000		1	PLATE	
150	2607094-0000		1	PLATE	
160	2607095-0000		1	BRACKET	
170	2607096-0000		1	BRACKET	
180	2632631-0000		1	SCREW	
190	2715619-0000		1	WASHER	
200	311103-0232		1	PARALLEL PIN ISO 2338 3M6X8 A1	
210	311103-0269		1	PARALLEL PIN ISO 2338 4M6X14 A1	
220	311103-0276		1	PARALLEL PIN ISO 2338 4M6X30 A1	
250	312105-0327		4	SCREW M6S ISO 4017 M5X12 A480	
260	312105-0364		5	SCREW M6S ISO 4017 M6X10 A480	
270	312105-0368		8	SCREW M6S ISO 4017 M6X16 A480	
280	312105-0453		3	SCREW M6S ISO 4017 M8X25 A480	
290	312105-0464		1	SCREW M6S ISO 4014 M8X65 A480	
300	312109-0378		2	SCREW M6S ISO 4017 M6X40 A480	
320	312125-0287		2	SCREW ISO 1207 M4X8 A4	
340	312705-0320		2	NUT HEX. DOMED CAP MHM-6 M10 A280	
360	315105-0153		3	WASHER BRB 6,4X12 RFR	
370	315105-0165		3	WASHER BRB 8,4X16 RFR	
380	315105-0173		2	WASHER BRB 10,5X22 RFR	
W1402	2863176-0000		1	BUSBAR	

Machine Type Group Description Used-In Group Number Page No

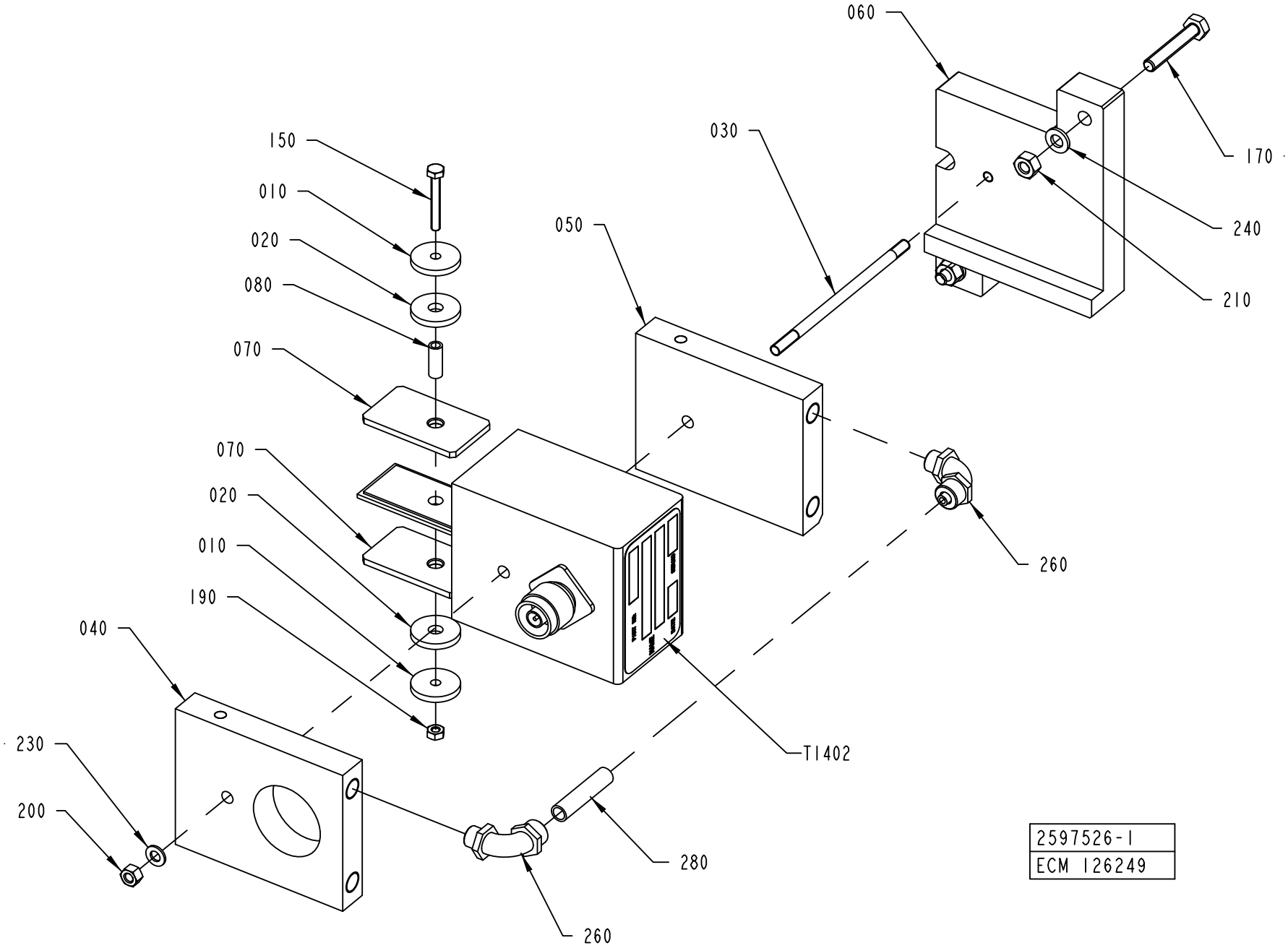
060
030
170
240
210
150
010
020
080
070
050
070
020
010
190
040
260
T1402
230
200
280
260
2597526-1
ECM 126249

ECM: 998574 - 20070101
Group number: 2597526-0100
Assembly Drawing: 2597526-1_1_AA

Pos	Part No	UN	Qty	Description	Page No
TBA 0200B					
T1402	67379-0416		1	TRANSFORMER	
TBA 0200M					
T1402	67379-0408		1	TRANSFORMER	
TBA 0200S					
T1402	67379-0415		1	TRANSFORMER	
TBA 0250B					
T1402	67379-0408		1	TRANSFORMER	
TBA 0250S					
T1402	67379-0408		1	TRANSFORMER	
TBA 0300S					
T1402	67379-0408		1	TRANSFORMER	
Common Parts					
010	583859-0000		2	WASHER	
020	583860-0000		2	WASHER	
030	1140515-0000		1	SCREW	
040	1539354-0000		1	COOLING PLATE	
050	1539355-0000		1	COOLING PLATE	
060	2522261-0000		1	PLATE	
070	2607100-0000		2	PLATE	
080	2607101-0000		1	INSULATOR	
150	312105-0299		1	SCREW M6S ISO 4017 M4X30 A470	
170	312109-0376		2	SCREW M6S ISO 4017 M6X35 A480	
190	312605-0312		1	HEXAGON NUT, M6M M4 A280	
200	312605-0314		1	HEXAGON NUT, M6M M5 A280	
210	312605-0316		2	HEXAGON NUT, M6M M6 A280	
230	315105-0146		1	WASHER BRB 5,3X10 RFR	
240	315105-0153		2	WASHER BRB 6,4X12 RFR	
260	342931-0121		2	ELBOW 90 COUPL.,EXT.THREAD 8/6-G1/8"	
280	90166-0118	MM	36	TUBE 8 MM PA BLACK	

Pos	Part No	UN	Qty	Description	Page No

SHORT STOP

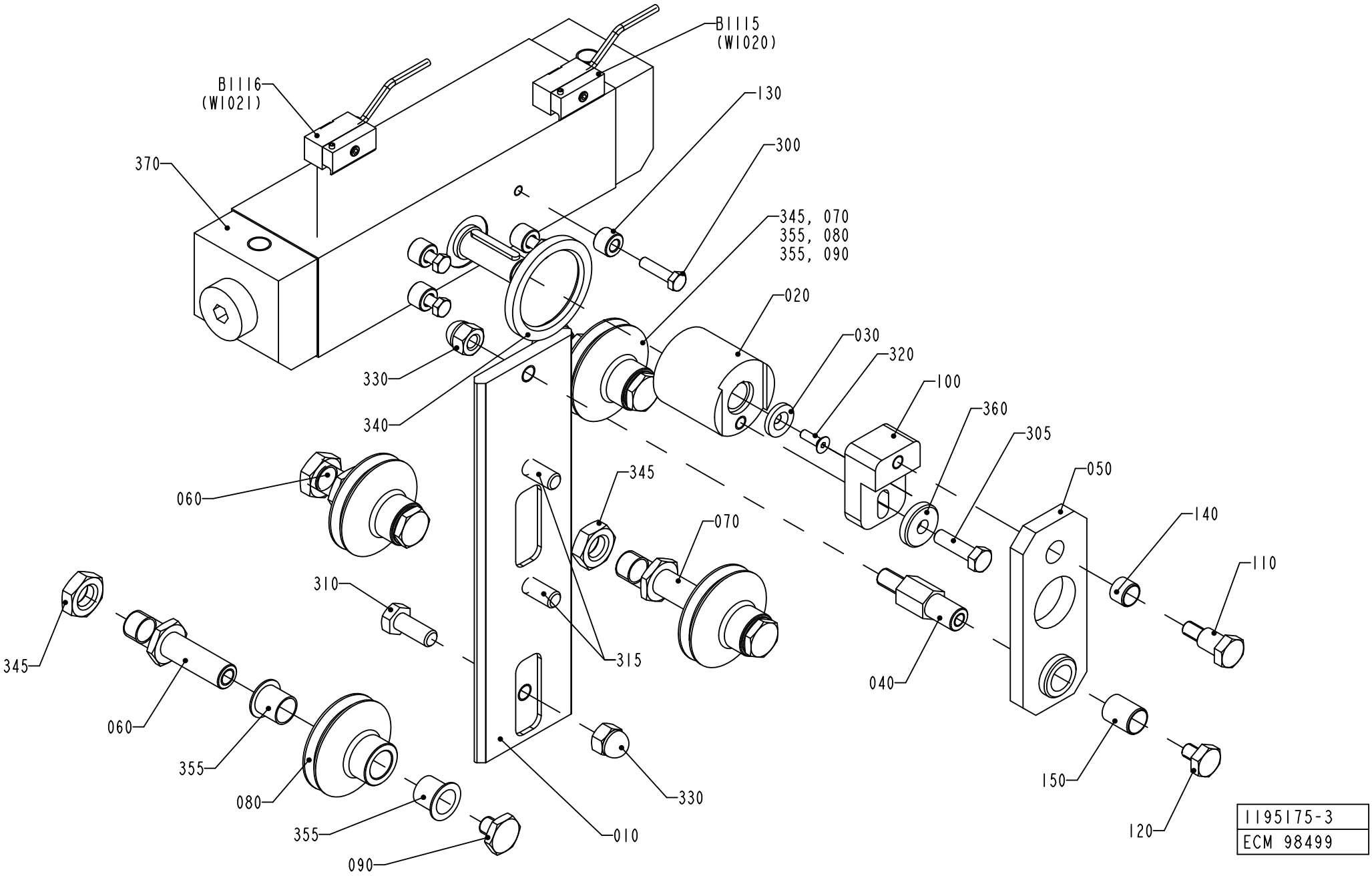
B1115
(W1020)
B1116
(W1021)
130
300
370
345, 070
355, 080
355, 090
020
030
320
100
360
305
050
140
110
330
340
060
345
070
310
315
040
345
060
355
080
355
090
010
330
150
120
1195175-3
ECM 98499

ECM: 259572 - 20060419
Group number: 1195175-0200
Assembly Drawing: 1195175-3_1_AA

Pos	Part No	UN	Qty	Description	Page No
-					
010	1296764-0000		1	CARRIL	
020	1349915-0000		1	SHAFT	
030	1255970-0000		1	WASHER	
040	1487167-0000		1	AXLE PIN	
050	1487168-0000		1	PLATE	
060	1296756-0000		2	EIXO	
070	1296757-0000		2	EIXO	
080	1296759-0000		4	ROLO	
090	1296760-0000		4	NUT	
100	1487164-0000		1	PLATE	
110	1487165-0000		1	SCREW	
120	1487166-0000		1	SCREW	
130	1349397-0000		4	SHIM	
140	1498615-0000		1	CASQUILHO	
150	1498616-0000		1	BUSHING	
300	312105-0372		4	SCREW M6S ISO 4017 M6X25 A480	
305	312105-0455		1	SCREW M6S ISO 4017 M8X30 A480	
310	312105-0493		1	SCREW M6S ISO 4017 M10X25 A480	
315	312105-0495		2	SCREW M6S ISO 4017 M10X30 A480	
320	312155-0329		1	SCREW DIN 7991 MF6S M5X16 A4 70	
330	312705-0320		2	NUT HEX. DOMED CAP MHM-6 M10 A280	
340	90091-0143		1	RADIAL SEAL 47X62X6 MM	
345	90099-0131		4	NUT HEX. M16X2 SS	
355	90240-0264		8	FLANGE BUSHING, 15X17X17 MM	
360	315125-0165		1	WASHER TBRSB 8,4X26X5 A4	
370	90450-0509		1	CYLINDER	
B2115	1498614-0000		1	SENSOR	
B2116	1498614-0000		1	SENSOR	

Pos	Part No	UN	Qty	Description	Page No

BENDING ROLLER

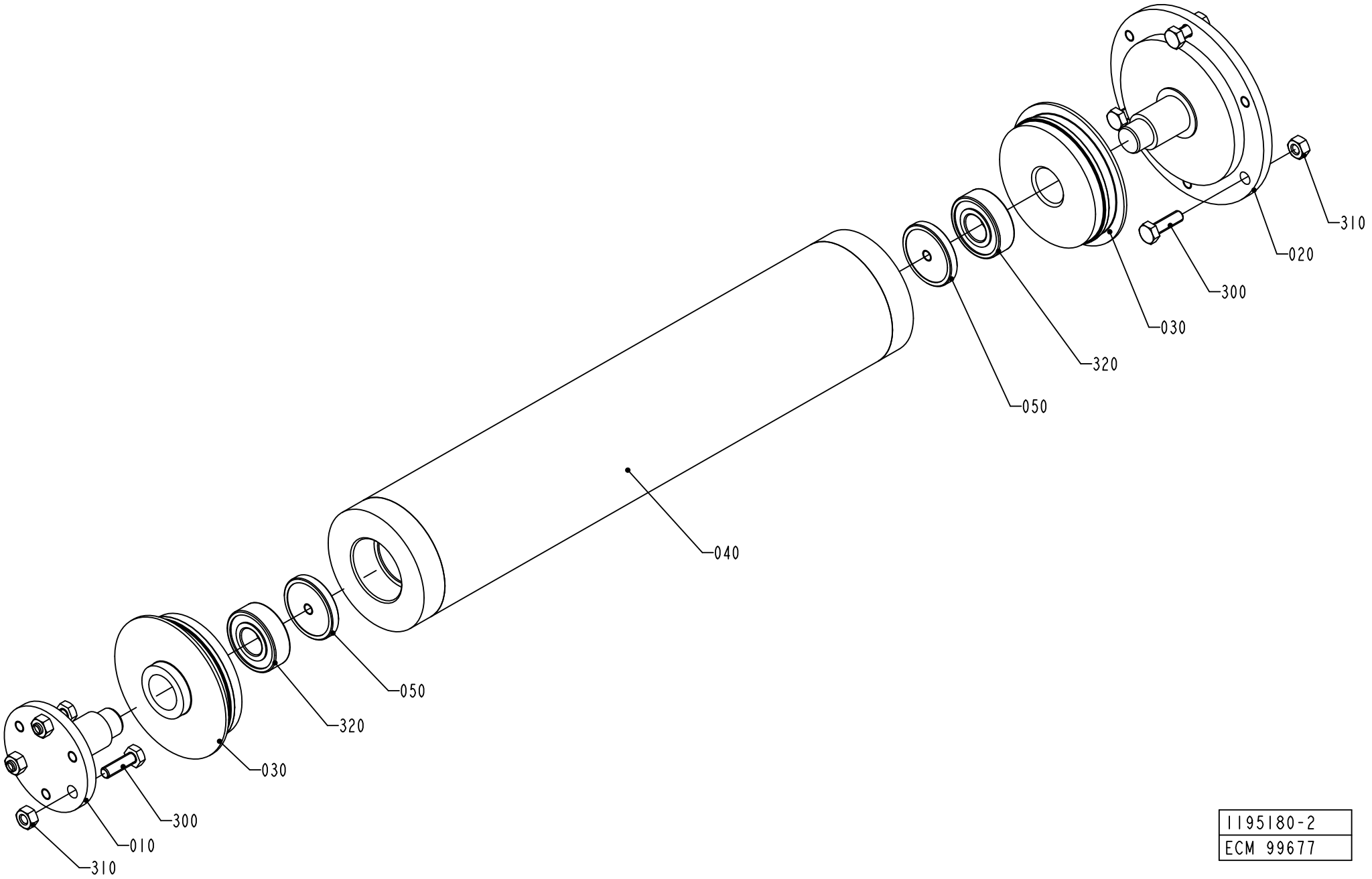

1195180-2
ECM 99677

ECM: 315443 - 20071112
Group number: 1195180-0100
Assembly Drawing: 1195180-2_1_AB

Pos	Part No	UN	Qty	Description	Page No
-					
010	1490413-0000		1	SHAFT	
020	1490412-0000		1	SHAFT	
030	1036496-0000		2	WHEEL	
040	1490411-0000		1	ROLLER	
050	1490407-0000		2	WASHER	
300	312105-0370		6	SCREW M6S ISO 4017 M6X20 A480	
310	312605-0316		6	HEXAGON NUT, M6M M6 A280	
320	90458-1704		2	BALL BEARING, 15X35X11 MM	

Pos	Part No	UN	Qty	Description	Page No

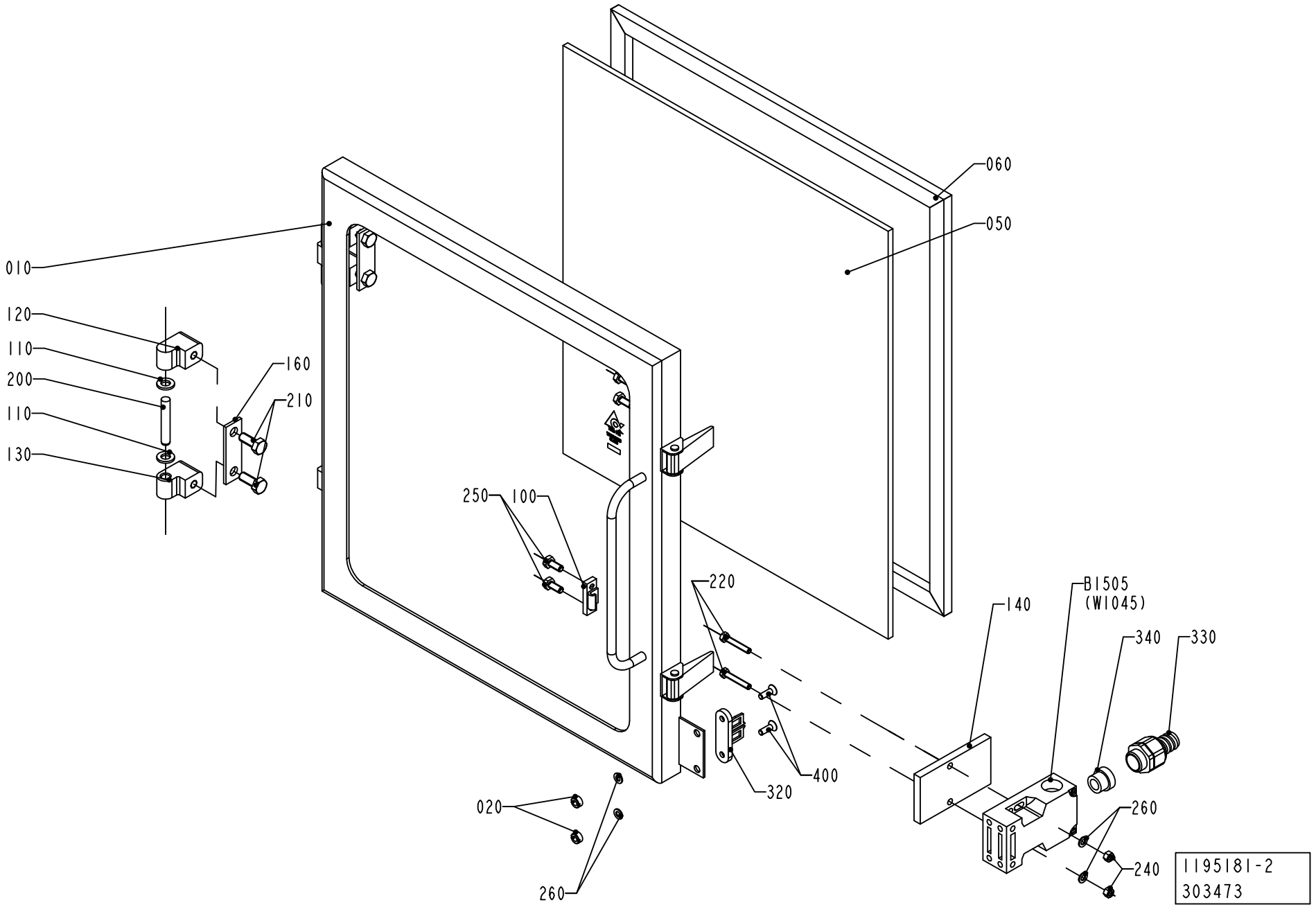
010
120
110
200
110
130
160
210
060
050
250
100
220
140
B1505
(W1045)
340
330
400
320
020
260
260
240
1195181-2
303473

ECM: 304223 - 20070417
Group number: 1195181-0150
Assembly Drawing: 1195181-2_1_AA

Pos	Part No	UN	Qty	Description	Page No
-					
010	1195270-0000		1	FRAME	
020	575034-0000		2	ROUND NUT	
050	2874760-0000		1	GLASS PANE	
060	1195272-0000		1	GASKET	
100	271860-0000		2	CLAMP BLOCK	
110	441739-0000		4	WASHER	
120	1041979-0000		2	HINGE FLANGE	
130	1041978-0000		2	HINGE FLANGE	
140	1037048-0000		1	PLATE	
160	441737-0000		2	WASHER	
200	311103-0413		2	PARALLEL PIN ISO 2338 8M6X50 A1	
210	312105-0451		4	SCREW M6S ISO 4017 M8X20 A480	
220	312109-0335		2	SCREW M6S ISO 4017 M5X30 A480	
240	312605-0314		2	HEXAGON NUT, M6M M5 A280	
250	312105-0367		4	SCREW M6S ISO 4017 M6X14 A480	
260	315105-0146		4	WASHER BRB 5,3X10 RFR	
320	90044-0310		1	KEY FOR SAFETY SWITCH AZ 15/16 B1	
330	90458-0429		1	HOSE GLAND W/O INSERT M20 EXTENDED	
340	353249-0011		1	INSERT, SINGLE HOLE, EK 153/11	
400	312155-0329		2	SCREW DIN 7991 MF6S M5X16 A4 70	
420	90153-0023		1	ADHESIVE, SILICON 251470 TUB 90CC(UN1993	
B1505	90459-0472		1	KEY SAF.SW. AZ 16 02ZVRK-M20-2152-2254	

Pos	Part No	UN	Qty	Description	Page No

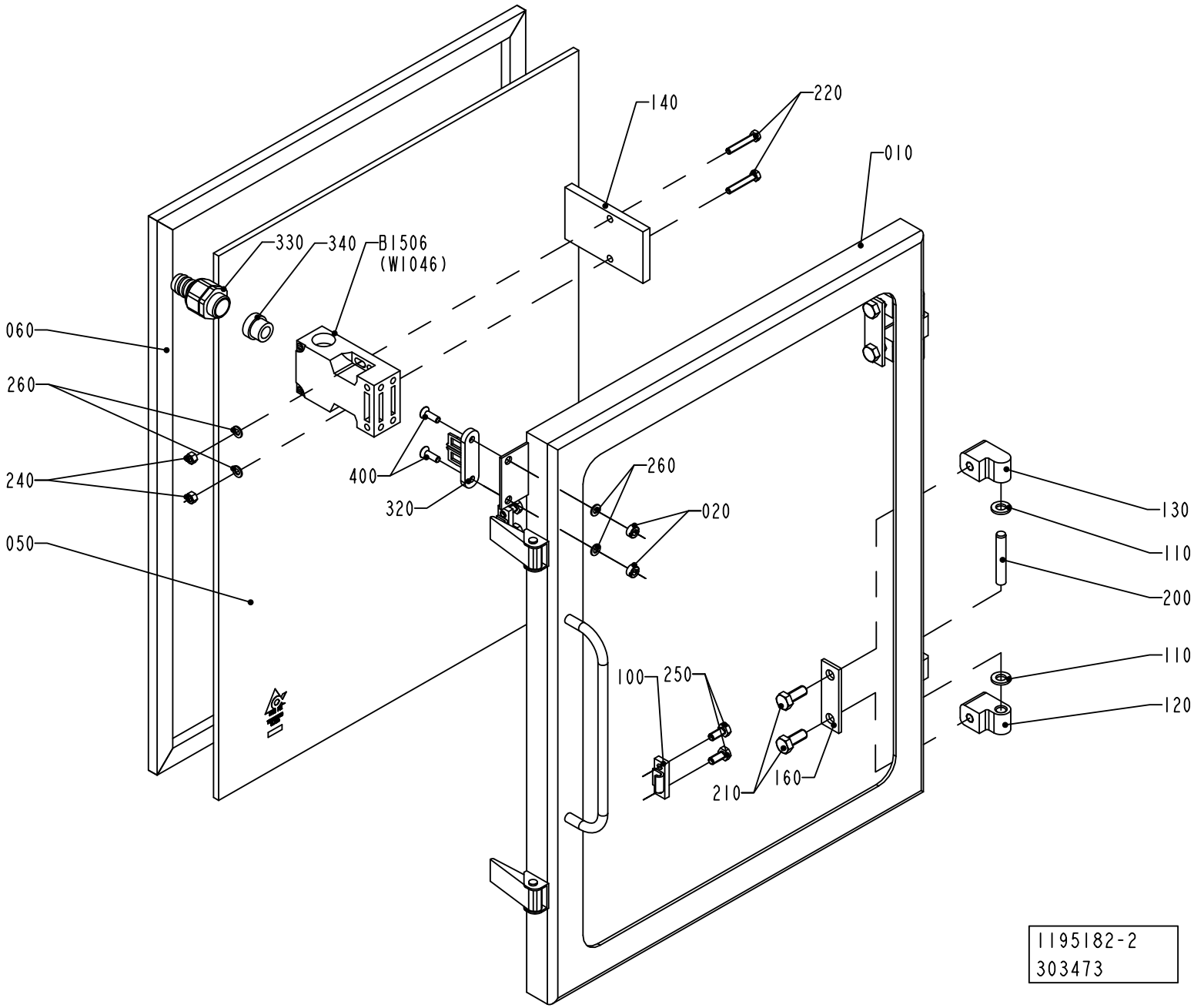
140
220
010
330
340
B1506
(W1046)
060
260
240
050
400
320
260
020
130
110
200
110
120
100
250
210
160
1195182-2
303473

ECM: 304221 - 20070417
Group number: 1195182-0150
Assembly Drawing: 1195182-2_1_AA

Pos	Part No	UN	Qty	Description	Page No
-					
010	1195273-0000		1	FRAME	
020	575034-0000		2	ROUND NUT	
050	2874757-0000		1	GLASS PANE	
060	1195275-0000		1	GASKET	
100	271860-0000		2	CLAMP BLOCK	
110	441739-0000		4	WASHER	
120	1041979-0000		2	HINGE FLANGE	
130	1041978-0000		2	HINGE FLANGE	
140	1037048-0000		1	PLATE	
160	441737-0000		2	WASHER	
200	311103-0413		2	PARALLEL PIN ISO 2338 8M6X50 A1	
210	312105-0451		4	SCREW M6S ISO 4017 M8X20 A480	
220	312109-0335		2	SCREW M6S ISO 4017 M5X30 A480	
240	312605-0314		2	HEXAGON NUT, M6M M5 A280	
250	312105-0367		4	SCREW M6S ISO 4017 M6X14 A480	
260	315105-0146		4	WASHER BRB 5,3X10 RFR	
320	90044-0310		1	KEY FOR SAFETY SWITCH AZ 15/16 B1	
330	90458-0429		1	HOSE GLAND W/O INSERT M20 EXTENDED	
340	353249-0011		1	INSERT, SINGLE HOLE, EK 153/11	
400	312155-0329		2	SCREW DIN 7991 MF6S M5X16 A4 70	
420	90153-0023		1	ADHESIVE, SILICON 251470 TUB 90CC(UN1993	
B1506	90459-0472		1	KEY SAF.SW. AZ 16 02ZVRK-M20-2152-2254	

Pos	Part No	UN	Qty	Description	Page No

BENDING ROLLER

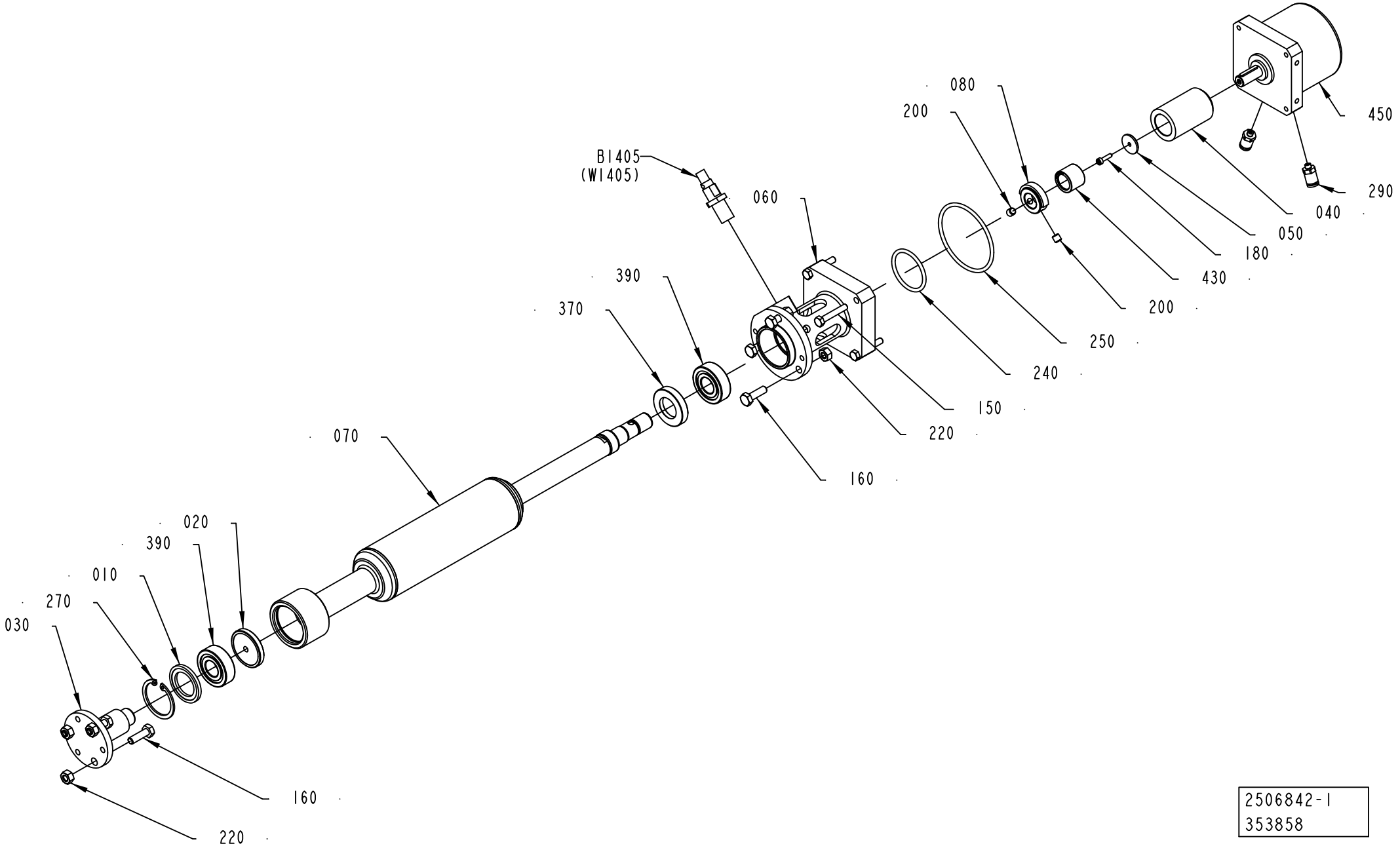

2506842-1
353858

ECM: 364793 - 20090101
Group number: 2506842-0100
Assembly Drawing: 2506842-1_1_AC

Pos	Part No	UN	Qty	Description	Page No
TBA 0200B, TBA 0250B, TBA 0300S					
070	2517065-0000		1	ROLLER	
TBA 0200M, TBA 0250S					
070	2517064-0000		1	ROLLER	
TBA 0200S					
070	2506841-0000		1	ROLLER	
Common Parts					
010	1490406-0000		1	WASHER	
020	1490407-0000		1	WASHER	
030	1490408-0000		1	SHAFT	
040	1490886-0000		1	SHAFT	
050	1490887-0000		1	WASHER	
060	2506840-0000		1	FLANGE	
080	2514281-0000		1	COUNTER	
150	312105-0335		4	SCREW M6S ISO 4014 M5X30 A480	
160	312105-0370		6	SCREW M6S ISO 4017 M6X20 A480	
180	312115-0226		1	SCREW ISO4762 M3X12 A4 80	
200	312318-0360		2	SCREW ISO4029 M6X6 A4	
220	312605-0316		6	HEXAGON NUT, M6M M6 A280	
240	315202-0221		1	O-RING 34,2X3 MM	
250	315202-0303		1	O-RING 59,5X3 MM	
270	315753-0124		1	RETAINING RING FOR BORE DIN 472 35 A2	
290	342722-0197		2	STRAIGHT COUPLING	
370	90091-0303		1	RADIAL SEAL 20X35X7 MM DUST LIP	
390	90458-1704		2	BALL BEARING, 15X35X11 MM	
430	90458-1792		1	FREE-WHEEL COUPLING, 14X14 MM	
450	90458-2290		1	ROTARY ACTUATOR DSM-16-270-P	
B1405	90044-0191		1	PROX.SWITCH E2EG-X2B1	

Pos	Part No	UN	Qty	Description	Page No

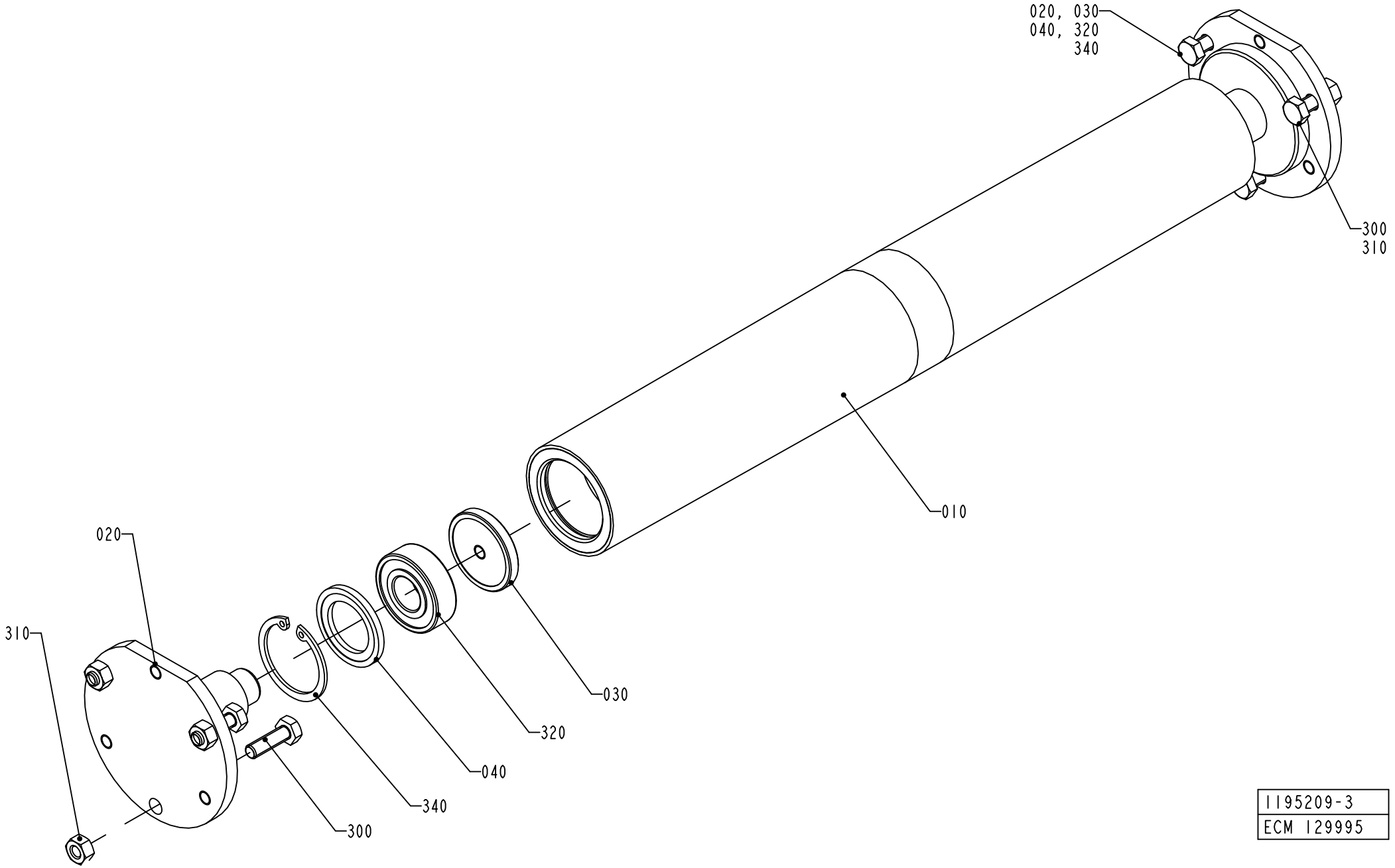

1195209-3
ECM 129995

ECM: 315444 - 20071112
Group number: 1195209-0200
Assembly Drawing: 1195209-3_1_AC

Pos	Part No	UN	Qty	Description	Page No
-					
010	1490405-0000		1	ROLLER	
020	1490415-0000		2	SHAFT	
030	1490407-0000		2	WASHER	
040	1490406-0000		2	WASHER	
300	312105-0370		6	SCREW M6S ISO 4017 M6X20 A480	
310	312605-0316		6	HEXAGON NUT, M6M M6 A280	
320	90458-1704		2	BALL BEARING, 15X35X11 MM	
340	315753-0124		2	RETAINING RING FOR BORE DIN 472 35 A2	

Pos	Part No	UN	Qty	Description	Page No

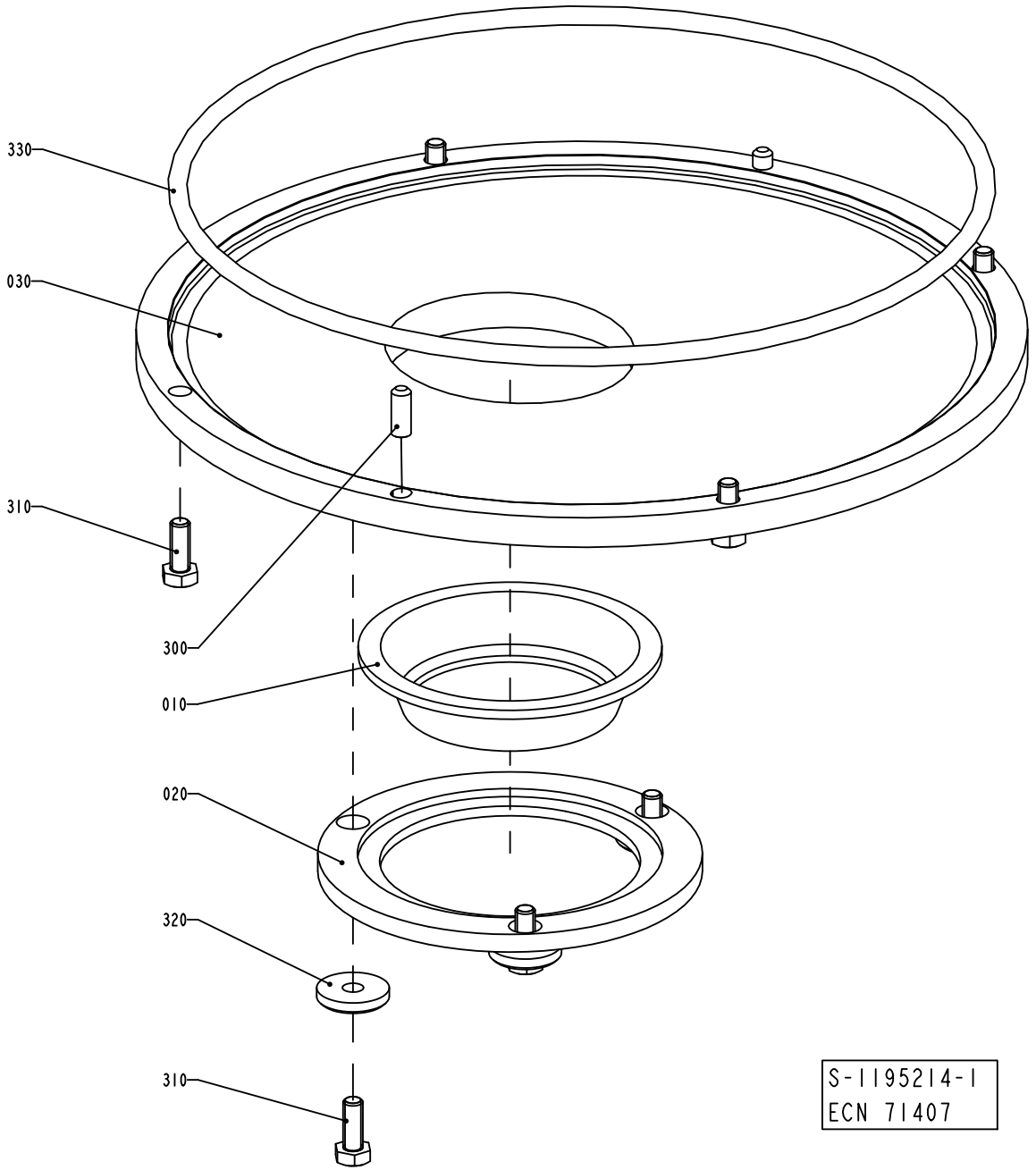
330
030
310
300
010
020
320
310
S-1195214-1
ECN 71407

ECM: 315445 - 20071112
Group number: 1195214-0100
Assembly Drawing: 1195214-1_1_AA

Pos	Part No	UN	Qty	Description	Page No
TBA 0200B, TBA 0250B, TBA 0300S					
010	273953-0000		1	SEAL	
020	1255975-0000		1	SEAL HOLDER	
030	1255976-0000		1	SEAL HOLDER	
TBA 0200M, TBA 0250S					
010	574336-0000		1	SEAL	
020	1487694-0000		1	SEAL HOLDER	
030	1487693-0000		1	SEAL HOLDER	
TBA 0200S					
010	490901-0000		1	SEAL	
020	1519503-0000		1	SEAL HOLDER	
030	1519502-0000		1	SEAL HOLDER	
Common Parts					
300	311103-0351		2	PARALLEL PIN ISO 2338 6M6X16 A1	
310	312105-0368		7	SCREW M6S ISO 4017 M6X16 A480	
320	315125-0153		3	WASHER TBRSB 6,4X22X4 A4	
330	315202-0335		1	O-RING 239,3X5,7 MM	

Pos	Part No	UN	Qty	Description	Page No

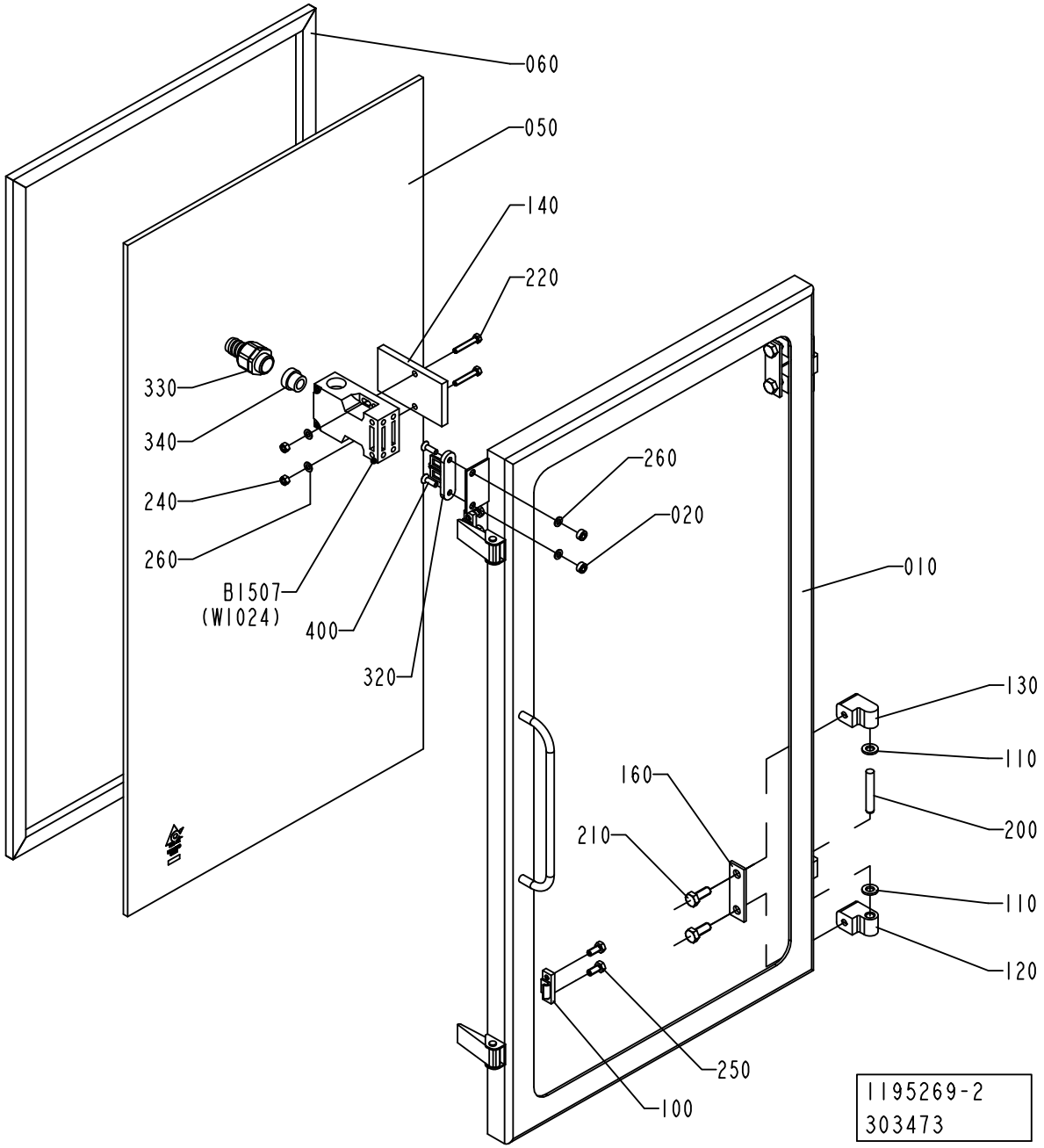
060
050
140
220
330
340
240
260
B1507
(W1024)
400
320
260
020
010
130
110
160
200
210
110
120
250
100
1195269-2
303473

ECM: 304222 - 20070417
Group number: 1195269-0150
Assembly Drawing: 1195269-2_1_AA

Pos	Part No	UN	Qty	Description	Page No
-					
010	1195276-0000		1	FRAME	
020	575034-0000		2	ROUND NUT	
050	2874758-0000		1	GLASS PANE	
060	1195278-0000		1	GASKET	
100	271860-0000		2	CLAMP BLOCK	
110	441739-0000		4	WASHER	
120	1041979-0000		2	HINGE FLANGE	
130	1041978-0000		2	HINGE FLANGE	
140	1037048-0000		1	PLATE	
160	441737-0000		2	WASHER	
200	311103-0413		2	PARALLEL PIN ISO 2338 8M6X50 A1	
210	312105-0451		4	SCREW M6S ISO 4017 M8X20 A480	
220	312109-0335		2	SCREW M6S ISO 4017 M5X30 A480	
240	312605-0314		2	HEXAGON NUT, M6M M5 A280	
250	312105-0367		4	SCREW M6S ISO 4017 M6X14 A480	
260	315105-0146		4	WASHER BRB 5,3X10 RFR	
320	90044-0310		1	KEY FOR SAFETY SWITCH AZ 15/16 B1	
330	90458-0429		1	HOSE GLAND W/O INSERT M20 EXTENDED	
340	353249-0011		1	INSERT, SINGLE HOLE, EK 153/11	
400	312155-0329		2	SCREW DIN 7991 MF6S M5X16 A4 70	
420	90153-0023		1	ADHESIVE, SILICON 251470 TUB 90CC(UN1993	
B1507	90459-0472		1	KEY SAF.SW. AZ 16 02ZVRK-M20-2152-2254	

Pos	Part No	UN	Qty	Description	Page No

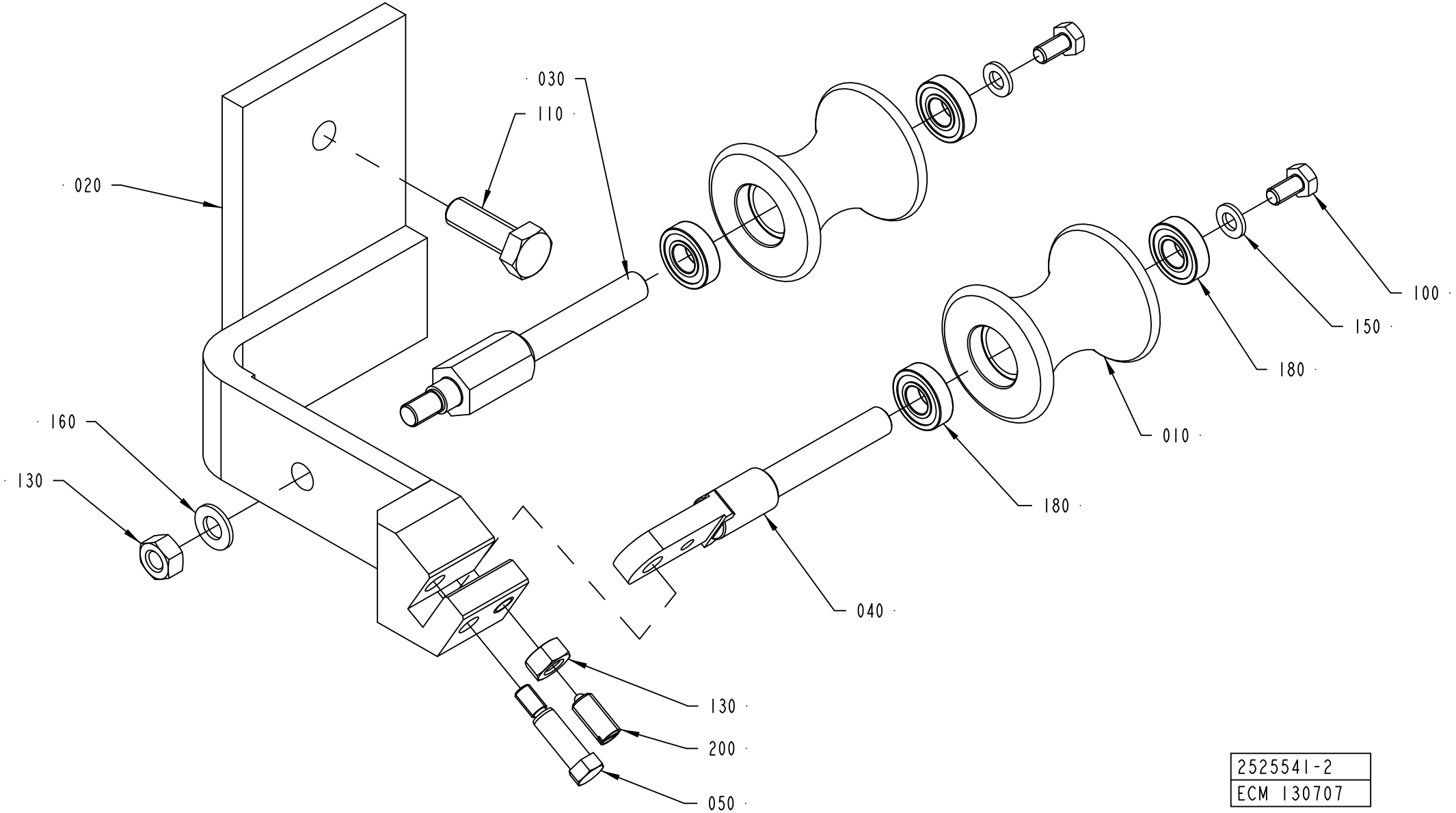

2525541-2
ECM 130707

ECM: 224805 - 20050831
Group number: 2525541-0200
Assembly Drawing: 2525541-2_1_AA

Pos	Part No	UN	Qty	Description	Page No
TBA 0200B, TBA 0250B, TBA 0300S					
010	1347521-0000		2	ROLLER	
020	2603496-0000		1	BRACKET	
TBA 0200M, TBA 0250S					
010	1484793-0000		2	ROLLER	
020	2603497-0000		1	BRACKET	
TBA 0200S					
010	1487209-0000		2	ROLLER	
020	2603495-0000		1	BRACKET	
Common Parts					
030	2525540-0000		1	SHAFT	
040	2603493-0000		1	SHAFT	
050	2603494-0000		1	SCREW	
100	312105-0366		2	SCREW M6S ISO 4017 M6X12 A480	
110	312105-0495		1	SCREW M6S ISO 4017 M10X30 A480	
130	312605-0318		2	HEXAGON NUT, M6M M8 A280	
150	315105-0153		2	WASHER BRB 6,4X12 RFR	
160	315105-0165		1	WASHER BRB 8,4X16 RFR	
180	90214-0036		4	BALL BEARING, 10X22X6 MM	
200	90287-0334		1	SCREW SPRINGLOAD. SLOTTED HEAD M8X16	

Pos	Part No	UN	Qty	Description	Page No

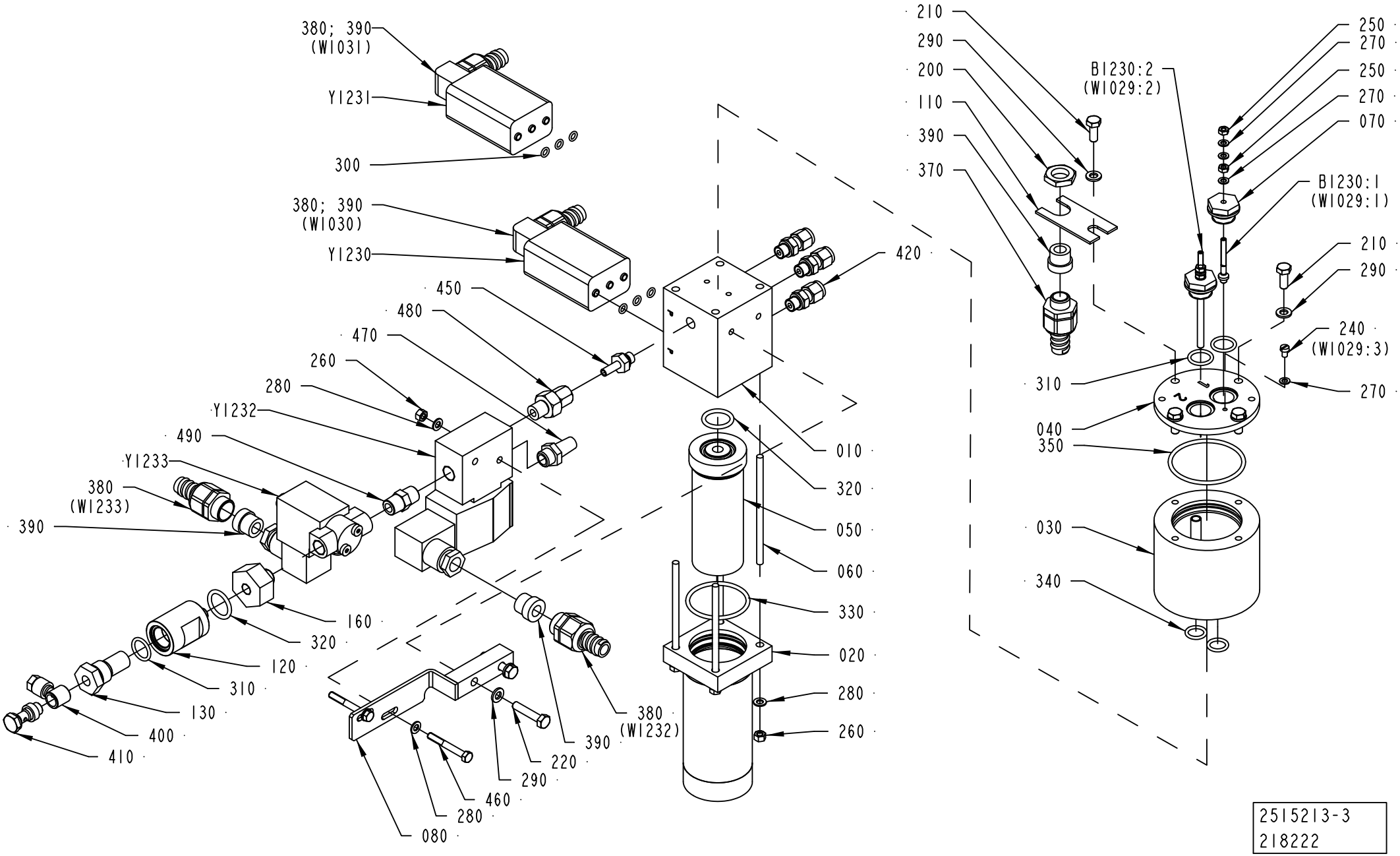
380; 390
(WI031)
Y1231
300
380; 390
(WI030)
Y1230
450
480
470
260
280
Y1232
490
Y1233
380
(WI233)
390
160
320
120
310
130
400
410
080
280
460
290
220
390
380
(WI232)
420
010
320
050
060
330
020
280
260
210
290
200
110
390
370
BI230:2
(WI029:2)
250
270
250
270
070
BI230:1
(WI029:1)
210
290
240
(WI029:3)
270
310
040
350
030
340
2515213-3
218222

ECM: 237813 - 20061101
Group number: 2515213-0200
Assembly Drawing: 2515213-3_1_AA

This list covers pages from 1-60 to 1-63

Pos	Part No	UN	Qty	Description	Page No
HI (See drawing on page: 1-62)					
010	2535468-0000		1	DISTRIBUTOR BLOCK	
060	1140221-0000		4	STUD	
090	2553167-0000		1	LID	
100	2562310-0000		1	BRACKET	
120	1519486-0000		2	FILTER HOUSING	
130	450833-0000		2	FILTER	
140	2514217-0000		1	PIPE	
150	2672974-0000		2	BUSHING	
200	90099-0104		2	NUT, PR 15,2 (PG9)	
230	312105-0333		4	SCREW M6S ISO 4017 M5X25 A480	
250	312605-0312		8	HEXAGON NUT, M6M M4 A280	
270	315105-0136		11	WASHER BRB 4,3X8 RFR	
280	315105-0146		12	WASHER BRB 5,3X10 RFR	
300	927420-0001		12	O-RING 5.1X1.6 SILICONE	
310	927421-0004		4	O-RING 15.3X2.4 SILICONE	
320	927422-0001		3	O-RING 19.2X3 SILICONE	
360	927422-0006		1	O-RING 42.2X3 SILICONE	
370	353243-0001		2	HOSE GLAND W/O INSERT PG9 EXTENDED	
380	353243-0002		6	HOSE GLAND W/O INSERT PG11 EXTENDED	
390	353249-0009		8	INSERT, SINGLE HOLE, EK 152/9	
400	342797-0121		2	CONN. BANJO, RINGPIECE 6-1/8	
410	342980-0303		2	BANJO-HOLLOW BOLT COUPL,EXT.THR.01-G1/8	
420	90459-1424		5	CONN. STR., 6-G1/8, EXT. THREAD	
430	90030-0571		1	CONN. T-PIPE 6	
440	90152-0059	M	14	SPIRAL CONDUIT, 18X12, UL 1211	
B9113:1	2672972-0000		1	ELECTRODE	
B9113:2	2672973-0000		1	ELECTRODE	
W9112	351150-0403	M	4	CABLE OLFLEX 3X0,75 MM2 LIGHT/GREY	
W9113	351150-0404	M	4	CABLE OLFLEX 4X0,75 MM2 LIGHT/GREY	
W9114	351150-0403	M	4	CABLE OLFLEX 3X0,75 MM2 LIGHT/GREY	
Y9112	90042-0203		1	SOLENOID VALVE BüRKERT	
Y9114	90042-0203		1	SOLENOID VALVE BüRKERT	
NOHI (See drawing on page: 1-60)					
010	1487114-0000		1	BLOCK	
060	554585-0000		4	STUD SCREW	
120	1519486-0000		1	FILTER HOUSING	
130	450833-0000		1	FILTER	
200	90099-0104		1	NUT, PR 15,2 (PG9)	
250	312605-0312		4	HEXAGON NUT, M6M M4 A280	
270	315105-0136		7	WASHER BRB 4,3X8 RFR	
280	315105-0146		8	WASHER BRB 5,3X10 RFR	
300	927420-0001		6	O-RING 5.1X1.6 SILICONE	
310	927421-0004		3	O-RING 15.3X2.4 SILICONE	
320	927422-0001		2	O-RING 19.2X3 SILICONE	
370	353243-0001		1	HOSE GLAND W/O INSERT PG9 EXTENDED	
380	353243-0002		4	HOSE GLAND W/O INSERT PG11 EXTENDED	
390	353249-0009		5	INSERT, SINGLE HOLE, EK 152/9	
400	342797-0121		1	CONN. BANJO, RINGPIECE 6-1/8	
410	342980-0303		1	BANJO-HOLLOW BOLT COUPL,EXT.THR.01-G1/8	
420	90459-1424		3	CONN. STR., 6-G1/8, EXT. THREAD	
Y1230	90042-0203		1	SOLENOID VALVE BüRKERT	
Y1231	90042-0203		1	SOLENOID VALVE BüRKERT	
Common Parts					
020	554142-0000		1	FILTER HOUSING	
030	1478170-0000		1	CONTAINER	
040	549267-0000		1	LID	
050	554141-0000		1	FILTER	
070	2578486-0000		2	BRACKET	
080	2792115-0000		1	SUPPORT	
110	1040970-0000		1	BRACKET	
160	2763969-0000		1	REDUCER	
210	312105-0368		4	SCREW M6S ISO 4017 M6X16 A480	
220	312109-0374		2	SCREW M6S ISO 4017 M6X30 A480	
240	312125-0285		1	SCREW ISO 1207 M4X6 A4	
260	312605-0314		6	HEXAGON NUT, M6M M5 A280	
290	315105-0153		6	WASHER BRB 6,4X12 RFR	
330	927422-0007		1	O-RING 44.2X3 SILICONE	
340	927421-0002		2	O-RING 12.3X2.4 SILICONE	
350	927422-0009		1	O-RING 54.5X3 SILICONE	
450	90458-1786		1	ADAPTER, SS-6-MTA-1-2RS	
460	312105-0339		2	SCREW M6S ISO 4014 M5X40 A480	
470	346800-0110		1	SILENCER FILTER R1/4"	
480	90030-0202		1	CONN. STR., 6-G1/4, EXT. THREAD	
490	90330-0043		1	NIPPLES, EXT. THREAD. R-207R1/4	
B1230:1	2559045-0004		1	ELECTRODE	
B1230:2	2559045-0003		1	ELECTRODE	
Y1232	90459-6975		1	SOLENOID VALVE G1/4, 2401186082702400	
Y1233	90459-6977		1	SOLENOID VALVE G1/4, V04B286N-B423A	

Machine Type	Group Description	Used-In	Group Number	Page No

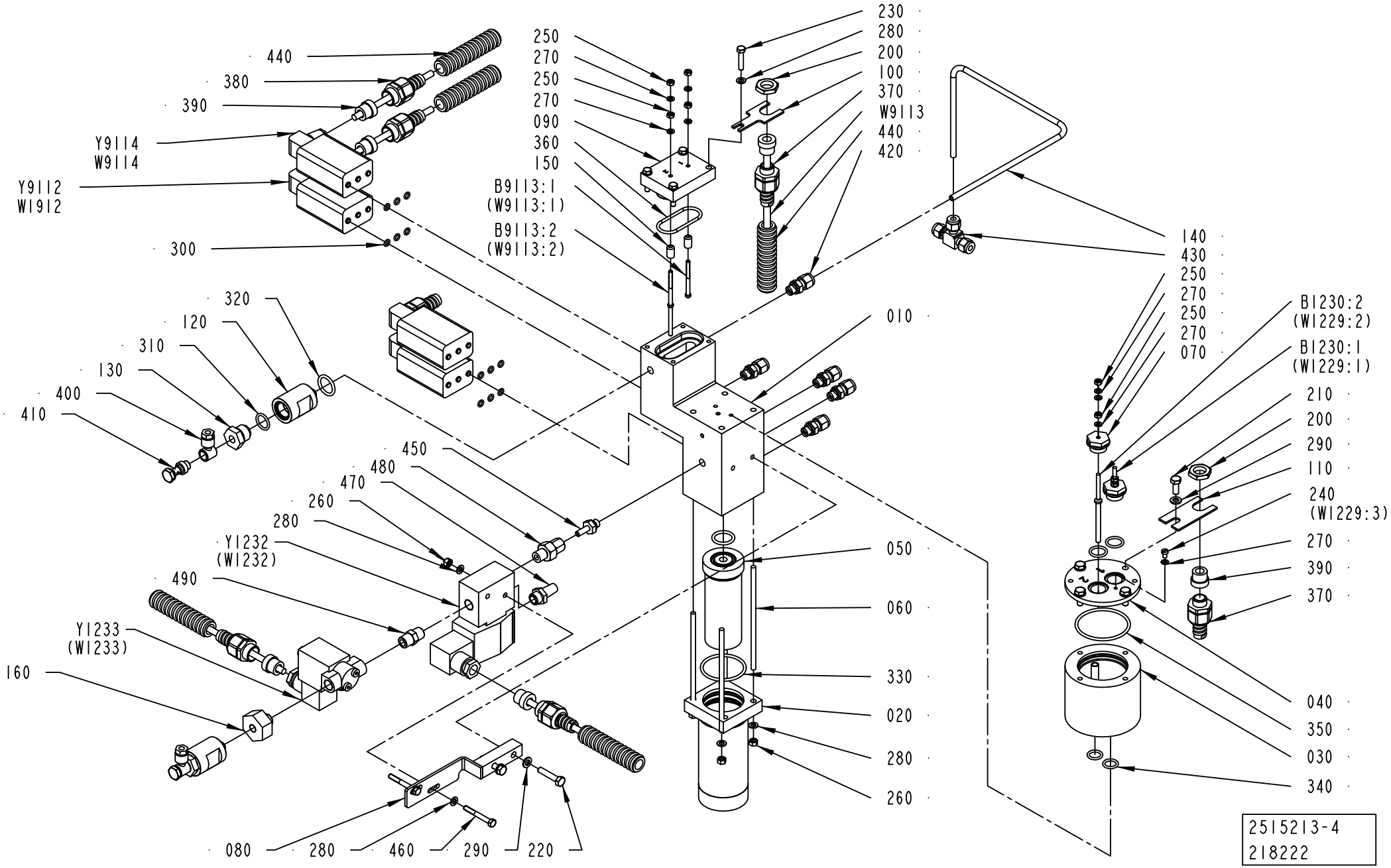
440
380
390
Y9114
W9114
Y9112
W1912
300
250
270
250
270
090
360
150
B9113:1
(W9113:1)
B9113:2
(W9113:2)
230
280
200
100
370
W9113
440
420
140
430
250
270
250
270
070
B1230:2
(W1229:2)
B1230:1
(W1229:1)
210
200
290
110
240
(W1229:3)
270
390
370
040
350
030
340
010
050
060
330
020
280
260
320
120
310
130
400
410
450
480
470
260
280
Y1232
(W1232)
490
Y1233
(W1233)
160
080
280
460
290
220
2515213-4
218222

ECM: 237813 - 20061101
Group number: 2515213-0200
Assembly Drawing: 2515213-4_1_AA

This list covers pages from 1-60 to 1-63

Pos	Part No	UN	Qty	Description	Page No
HI (See drawing on page: 1-62)					
010	2535468-0000		1	DISTRIBUTOR BLOCK	
060	1140221-0000		4	STUD	
090	2553167-0000		1	LID	
100	2562310-0000		1	BRACKET	
120	1519486-0000		2	FILTER HOUSING	
130	450833-0000		2	FILTER	
140	2514217-0000		1	PIPE	
150	2672974-0000		2	BUSHING	
200	90099-0104		2	NUT, PR 15,2 (PG9)	
230	312105-0333		4	SCREW M6S ISO 4017 M5X25 A480	
250	312605-0312		8	HEXAGON NUT, M6M M4 A280	
270	315105-0136		11	WASHER BRB 4,3X8 RFR	
280	315105-0146		12	WASHER BRB 5,3X10 RFR	
300	927420-0001		12	O-RING 5.1X1.6 SILICONE	
310	927421-0004		4	O-RING 15.3X2.4 SILICONE	
320	927422-0001		3	O-RING 19.2X3 SILICONE	
360	927422-0006		1	O-RING 42.2X3 SILICONE	
370	353243-0001		2	HOSE GLAND W/O INSERT PG9 EXTENDED	
380	353243-0002		6	HOSE GLAND W/O INSERT PG11 EXTENDED	
390	353249-0009		8	INSERT, SINGLE HOLE, EK 152/9	
400	342797-0121		2	CONN. BANJO, RINGPIECE 6-1/8	
410	342980-0303		2	BANJO-HOLLOW BOLT COUPL,EXT.THR.01-G1/8	
420	90459-1424		5	CONN. STR., 6-G1/8, EXT. THREAD	
430	90030-0571		1	CONN. T-PIPE 6	
440	90152-0059	M	14	SPIRAL CONDUIT, 18X12, UL 1211	
B9113:1	2672972-0000		1	ELECTRODE	
B9113:2	2672973-0000		1	ELECTRODE	
W9112	351150-0403	M	4	CABLE OLFLEX 3X0,75 MM2 LIGHT/GREY	
W9113	351150-0404	M	4	CABLE OLFLEX 4X0,75 MM2 LIGHT/GREY	
W9114	351150-0403	M	4	CABLE OLFLEX 3X0,75 MM2 LIGHT/GREY	
Y9112	90042-0203		1	SOLENOID VALVE BüRKERT	
Y9114	90042-0203		1	SOLENOID VALVE BüRKERT	
NOHI (See drawing on page: 1-60)					
010	1487114-0000		1	BLOCK	
060	554585-0000		4	STUD SCREW	
120	1519486-0000		1	FILTER HOUSING	
130	450833-0000		1	FILTER	
200	90099-0104		1	NUT, PR 15,2 (PG9)	
250	312605-0312		4	HEXAGON NUT, M6M M4 A280	
270	315105-0136		7	WASHER BRB 4,3X8 RFR	
280	315105-0146		8	WASHER BRB 5,3X10 RFR	
300	927420-0001		6	O-RING 5.1X1.6 SILICONE	
310	927421-0004		3	O-RING 15.3X2.4 SILICONE	
320	927422-0001		2	O-RING 19.2X3 SILICONE	
370	353243-0001		1	HOSE GLAND W/O INSERT PG9 EXTENDED	
380	353243-0002		4	HOSE GLAND W/O INSERT PG11 EXTENDED	
390	353249-0009		5	INSERT, SINGLE HOLE, EK 152/9	
400	342797-0121		1	CONN. BANJO, RINGPIECE 6-1/8	
410	342980-0303		1	BANJO-HOLLOW BOLT COUPL,EXT.THR.01-G1/8	
420	90459-1424		3	CONN. STR., 6-G1/8, EXT. THREAD	
Y1230	90042-0203		1	SOLENOID VALVE BüRKERT	
Y1231	90042-0203		1	SOLENOID VALVE BüRKERT	
Common Parts					
020	554142-0000		1	FILTER HOUSING	
030	1478170-0000		1	CONTAINER	
040	549267-0000		1	LID	
050	554141-0000		1	FILTER	
070	2578486-0000		2	BRACKET	
080	2792115-0000		1	SUPPORT	
110	1040970-0000		1	BRACKET	
160	2763969-0000		1	REDUCER	
210	312105-0368		4	SCREW M6S ISO 4017 M6X16 A480	
220	312109-0374		2	SCREW M6S ISO 4017 M6X30 A480	
240	312125-0285		1	SCREW ISO 1207 M4X6 A4	
260	312605-0314		6	HEXAGON NUT, M6M M5 A280	
290	315105-0153		6	WASHER BRB 6,4X12 RFR	
330	927422-0007		1	O-RING 44.2X3 SILICONE	
340	927421-0002		2	O-RING 12.3X2.4 SILICONE	
350	927422-0009		1	O-RING 54.5X3 SILICONE	
450	90458-1786		1	ADAPTER, SS-6-MTA-1-2RS	
460	312105-0339		2	SCREW M6S ISO 4014 M5X40 A480	
470	346800-0110		1	SILENCER FILTER R1/4"	
480	90030-0202		1	CONN. STR., 6-G1/4, EXT. THREAD	
490	90330-0043		1	NIPPLES, EXT. THREAD. R-207R1/4	
B1230:1	2559045-0004		1	ELECTRODE	
B1230:2	2559045-0003		1	ELECTRODE	
Y1232	90459-6975		1	SOLENOID VALVE G1/4, 2401186082702400	
Y1233	90459-6977		1	SOLENOID VALVE G1/4, V04B286N-B423A	

Machine Type | Group Description | Used-In | Group Number | Page No

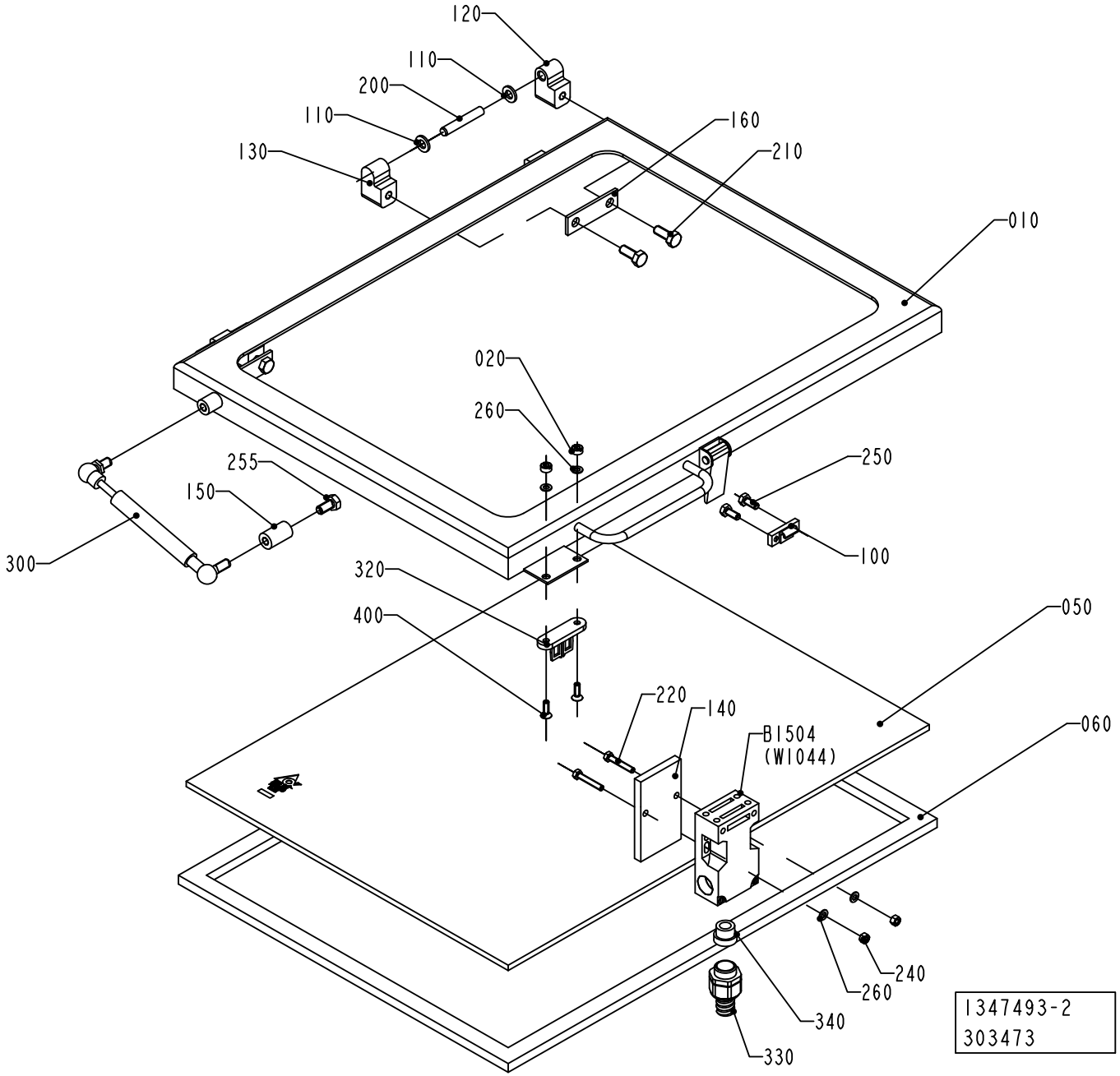
120
110
200
110
130
160
210
010
020
260
255
150
250
300
100
320
400
050
220
140
B1504
(W1044)
060
240
260
340
330
1347493-2
303473

ECM: 304224 - 20070417
Group number: 1347493-0150
Assembly Drawing: 1347493-2_1_AA

Pos	Part No	UN	Qty	Description	Page No
-					
010	1347494-0000		1	FRAME	
020	575034-0000		2	ROUND NUT	
050	2874759-0000		1	GLASS PANE	
060	1037081-0000		1	GASKET	
100	271860-0000		1	CLAMP BLOCK	
110	441739-0000		4	WASHER	
120	1041979-0000		2	HINGE FLANGE	
130	1041978-0000		2	HINGE FLANGE	
140	1037048-0000		1	PLATE	
150	1037089-0000		1	SPACER	
160	441737-0000		2	WASHER	
200	311103-0413		2	PARALLEL PIN ISO 2338 8M6X50 A1	
210	312105-0451		4	SCREW M6S ISO 4017 M8X20 A480	
220	312109-0335		2	SCREW M6S ISO 4017 M5X30 A480	
240	312605-0314		2	HEXAGON NUT, M6M M5 A280	
250	312105-0367		2	SCREW M6S ISO 4017 M6X14 A480	
255	312105-0449		1	SCREW M6S ISO 4017 M8X16 A480	
260	315105-0146		4	WASHER BRB 5,3X10 RFR	
300	90347-0039		1	DAMPER	
320	90044-0310		1	KEY FOR SAFETY SWITCH AZ 15/16 B1	
330	90458-0429		1	HOSE GLAND W/O INSERT M20 EXTENDED	
340	353249-0011		1	INSERT, SINGLE HOLE, EK 153/11	
400	312155-0329		2	SCREW DIN 7991 MF6S M5X16 A4 70	
420	90153-0023		1	ADHESIVE, SILICON 251470 TUB 90CC(UN1993	
B1504	90459-0472		1	KEY SAF.SW. AZ 16 02ZVRK-M20-2152-2254	

Pos	Part No	UN	Qty	Description	Page No

Machine Type | Group Description | Used-In | Group Number | Page No

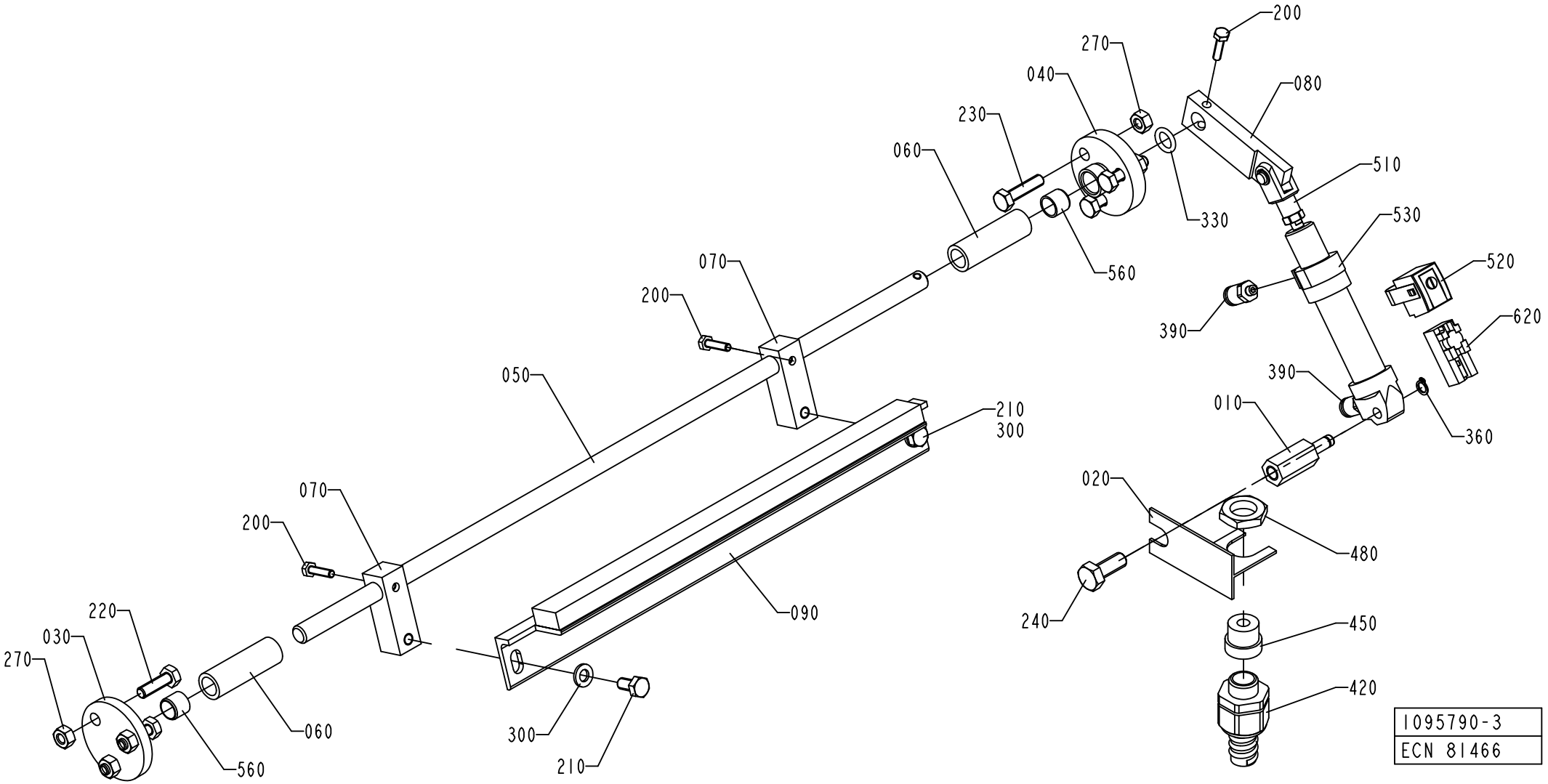
200
270
040
080
230
060
510
330
530
560
070
520
200
390
620
050
390
210
300
010
360
070
020
200
480
090
240
450
220
030
270
420
060
300
560
210
1095790-3
ECN 81466

ECM: 259404 - 20060419
Group number: 1095790-0200
Assembly Drawing: 1095790-3_1_AA

This list covers pages from 1-66 to 1-69

Pos	Part No	UN	Qty	Description	Page No
FULLYEQUIP (See drawing on page: 1-66)					
010	1036178-0000		1	SHAFT	
020	1037199-0000		1	BRACKET	
030	1519184-0000		1	FLANGE	
040	1519185-0000		1	FLANGE	
050	1519186-0000		1	SHAFT	
060	1519187-0000		2	SPACER	
070	1519188-0000		2	ARM	
080	1519189-0000		1	LEVER	
090	1519190-0000		1	LID	
200	312105-0293		3	SCREW M6S ISO 4017 M4X16 A470	
210	312105-0366		2	SCREW M6S ISO 4017 M6X12 A480	
220	312105-0370		3	SCREW M6S ISO 4017 M6X20 A480	
230	312105-0372		3	SCREW M6S ISO 4017 M6X25 A480	
240	312105-0451		1	SCREW M6S ISO 4017 M8X20 A480	
300	315105-0153		2	WASHER BRB 6,4X12 RFR	
330	315204-0208		1	O-RING 9,3X2,4 MM	
360	315751-0103		1	RETAINING RING FOR SHAFT DIN 471 6 SS	
390	342722-0197		2	STRAIGHT COUPLING	
420	353243-0001		1	HOSE GLAND W/O INSERT PG9 EXTENDED	
450	353249-0008		1	INSERT, SINGLE HOLE, EK 152/7	
480	90099-0104		1	NUT, PR 15,2 (PG9)	
510	90239-0489		1	ROD END, CLEVIS WITH AXLE M6X1,25	
520	90239-0579		1	SENSOR,BRACKET,FOR CYL 16	
530	90239-0816		1	DOUBLE ACTING, MINI-ISO, CYL.16-25	
560	90240-0302		2	BUSHING, 10X12X10 MM	
590	90296-0091		1	LUBRICATION GREASE	
620	90457-0047		1	SENSOR 2750-1-5111-1 W.ADAPTER PNP	
HIGH HYGIEN., STD (See drawing on page: 1-68)					
100	1038249-0000		2	BUSHING	
190	312105-0364		2	SCREW M6S ISO 4017 M6X10 A480	
220	312105-0370		6	SCREW M6S ISO 4017 M6X20 A480	
250	312105-0447		1	SCREW M6S ISO 4017 M8X12 A480	
Common Parts					
270	312605-0316		6	HEXAGON NUT, M6M M6 A280	

Pos	Part No	UN	Qty	Description	Page No

COVERING PLATE

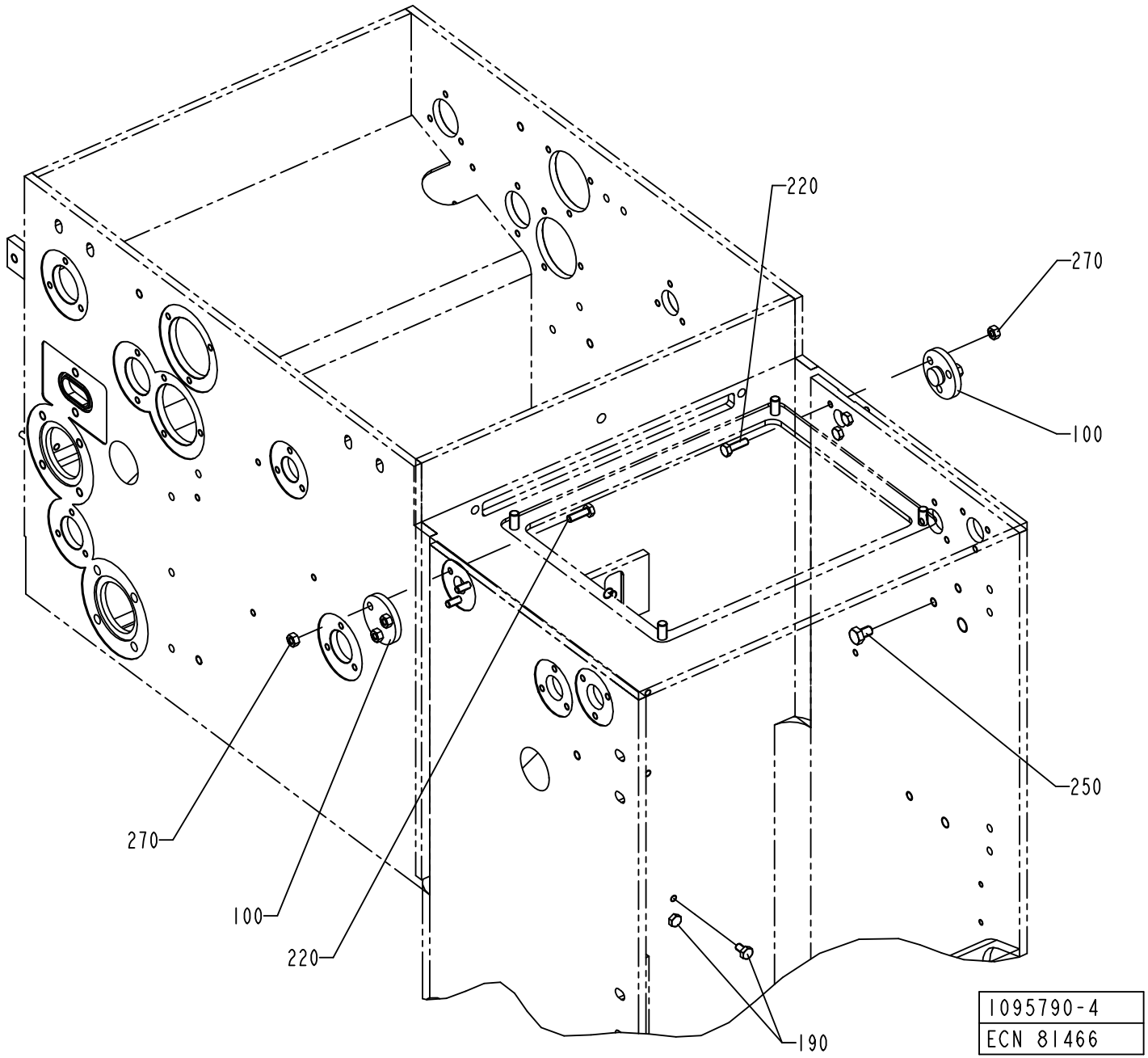

ECM: 259404 - 20060419
Group number: 1095790-0200
Assembly Drawing: 1095790-4_1_AA

This list covers pages from 1-66 to 1-69

Pos	Part No	UN	Qty	Description	Page No
FULLYEQUIP (See drawing on page: 1-66)					
010	1036178-0000		1	SHAFT	
020	1037199-0000		1	BRACKET	
030	1519184-0000		1	FLANGE	
040	1519185-0000		1	FLANGE	
050	1519186-0000		1	SHAFT	
060	1519187-0000		2	SPACER	
070	1519188-0000		2	ARM	
080	1519189-0000		1	LEVER	
090	1519190-0000		1	LID	
200	312105-0293		3	SCREW M6S ISO 4017 M4X16 A470	
210	312105-0366		2	SCREW M6S ISO 4017 M6X12 A480	
220	312105-0370		3	SCREW M6S ISO 4017 M6X20 A480	
230	312105-0372		3	SCREW M6S ISO 4017 M6X25 A480	
240	312105-0451		1	SCREW M6S ISO 4017 M8X20 A480	
300	315105-0153		2	WASHER BRB 6,4X12 RFR	
330	315204-0208		1	O-RING 9,3X2,4 MM	
360	315751-0103		1	RETAINING RING FOR SHAFT DIN 471 6 SS	
390	342722-0197		2	STRAIGHT COUPLING	
420	353243-0001		1	HOSE GLAND W/O INSERT PG9 EXTENDED	
450	353249-0008		1	INSERT, SINGLE HOLE, EK 152/7	
480	90099-0104		1	NUT, PR 15,2 (PG9)	
510	90239-0489		1	ROD END, CLEVIS WITH AXLE M6X1,25	
520	90239-0579		1	SENSOR,BRACKET,FOR CYL 16	
530	90239-0816		1	DOUBLE ACTING, MINI-ISO, CYL.16-25	
560	90240-0302		2	BUSHING, 10X12X10 MM	
590	90296-0091		1	LUBRICATION GREASE	
620	90457-0047		1	SENSOR 2750-1-5111-1 W.ADAPTER PNP	
HIGH HYGIEN., STD (See drawing on page: 1-68)					
100	1038249-0000		2	BUSHING	
190	312105-0364		2	SCREW M6S ISO 4017 M6X10 A480	
220	312105-0370		6	SCREW M6S ISO 4017 M6X20 A480	
250	312105-0447		1	SCREW M6S ISO 4017 M8X12 A480	
Common Parts					
270	312605-0316		6	HEXAGON NUT, M6M M6 A280	

Pos	Part No	UN	Qty	Description	Page No

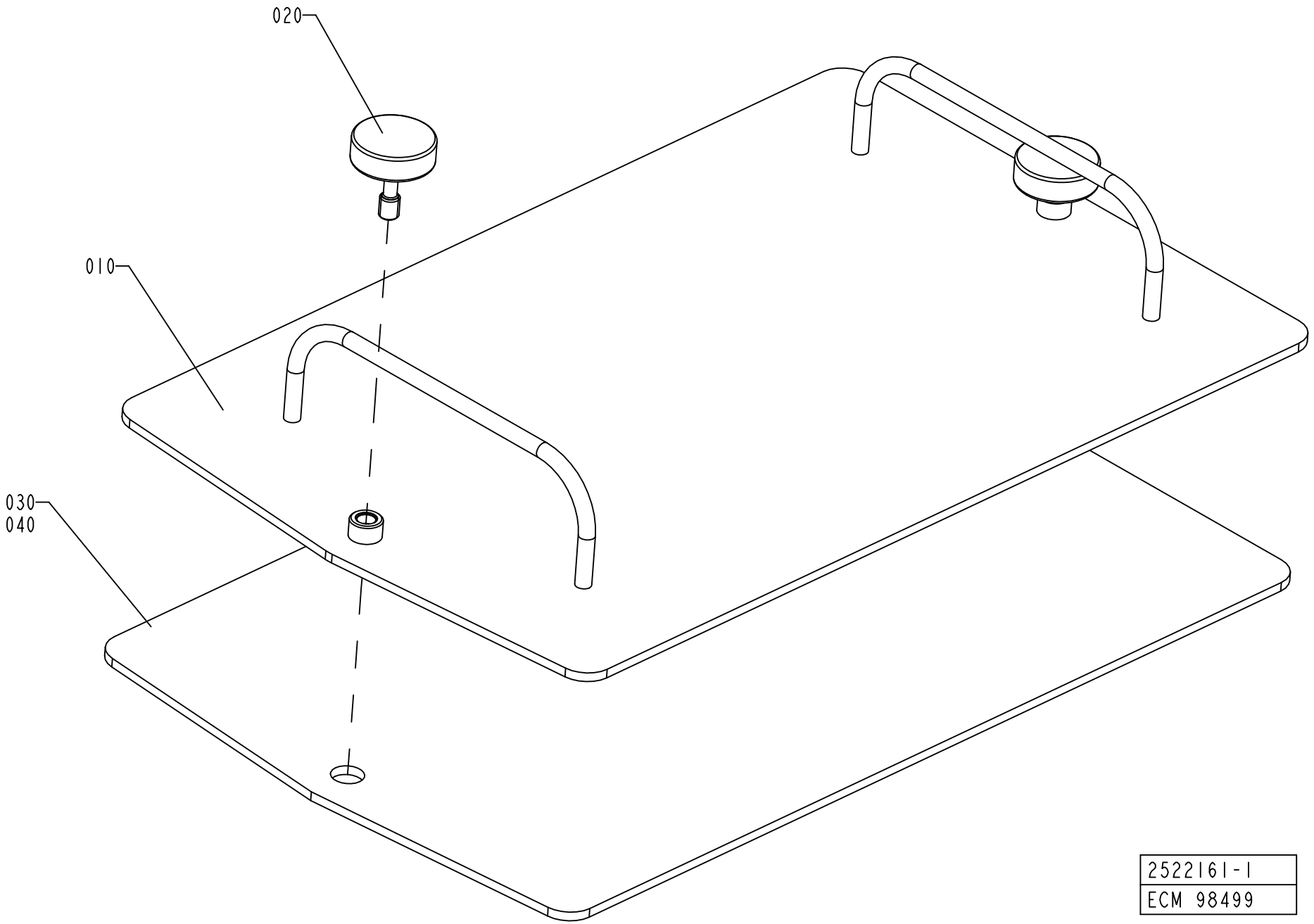
020
010
030
040
2522161-1
ECM 98499

ECM: 262195 - 20060404
Group number: 2522161-0100
Assembly Drawing: 2522161-1_1_AA

Pos	Part No	UN	Qty	Description	Page No
-					
010	2522150-0000		1	PLATE	
020	1490279-0000		2	SCREW	
030	2522151-0000		1	GASKET	
040	90153-0023		1	ADHESIVE, SILICON 251470 TUB 90CC(UN1993	

Pos	Part No	UN	Qty	Description	Page No

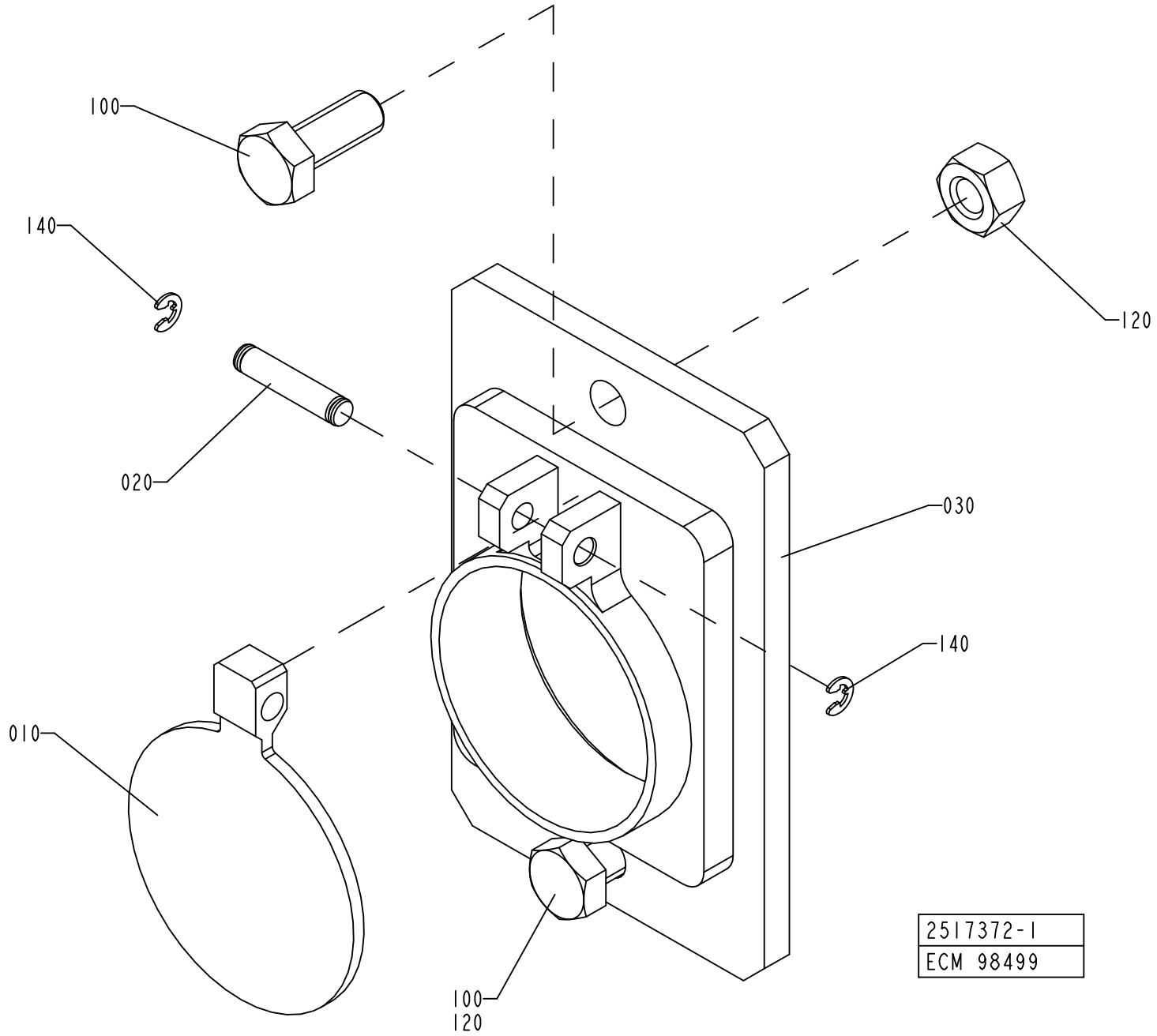
100
140
020
120
030
140
010
100
120
2517372-1
ECM 98499

ECM: 262194 - 20060404
Group number: 2517372-0100
Assembly Drawing: 2517372-1_1_AA

Pos	Part No	UN	Qty	Description	Page No
-					
010	1538494-0000		1	LID	
020	1558418-0000		1	SHAFT	
030	2517373-0000		1	FLANGE	
100	312105-0451		2	SCREW M6S ISO 4017 M8X20 A480	
120	312605-0318		2	HEXAGON NUT, M6M M8 A280	
140	315755-0105		2	RETAINING RING SHAFT DIN 6799 3,2 A2	

Pos	Part No	UN	Qty	Description	Page No

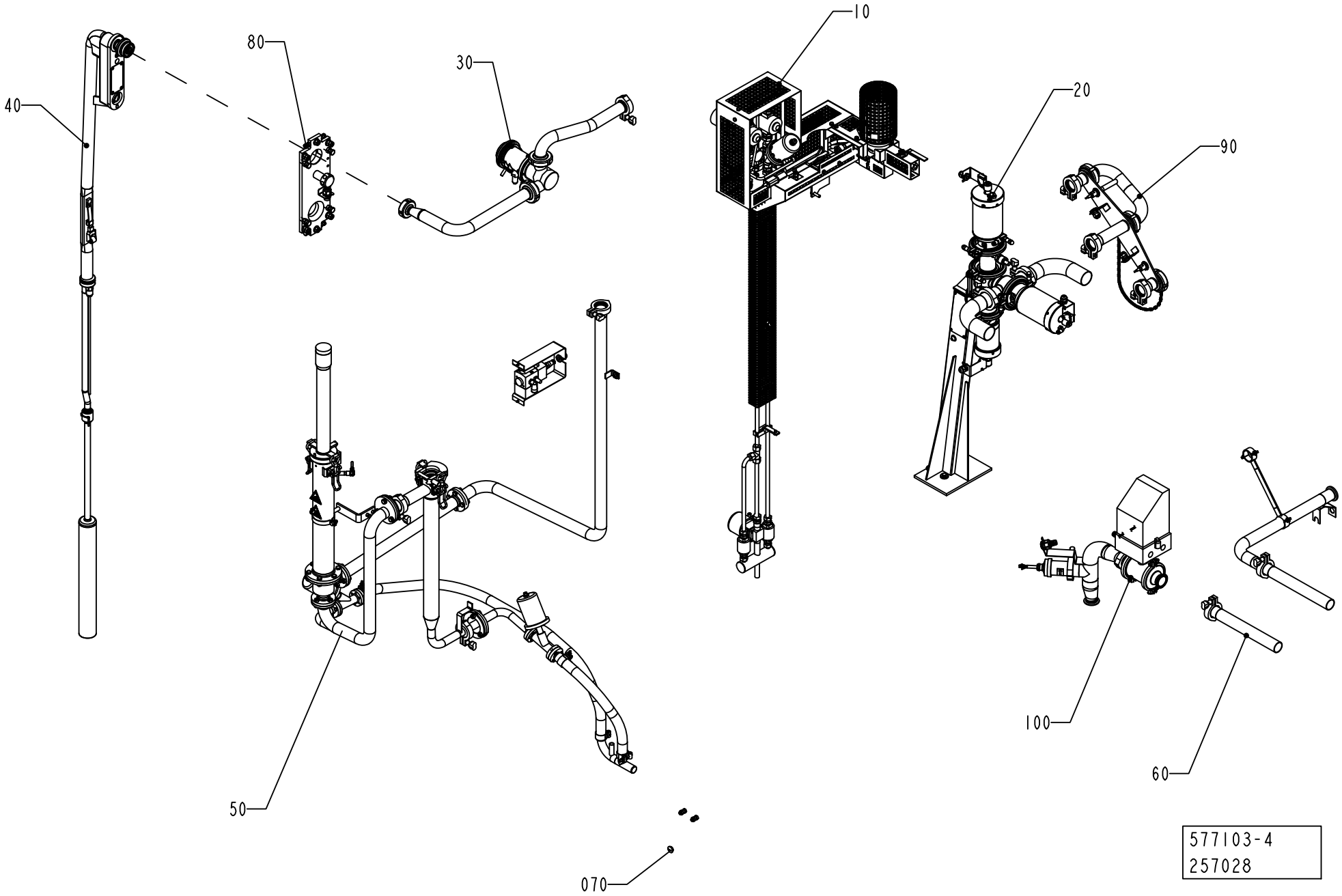
10
20
30
40
50
60
70
80
90
100
577103-4
257028

ECM: 327600 - 20080101
Group number: 577103-0300
Assembly Drawing: 577103-4_1_AC

This list covers pages from 1-74 to 1-81

Pos	Part No	UN	Qty	Description	Page No
FLOATER HI (See drawing on page: 1-80)					
040	2523670-0400		1	FILLING PIPE	**1-83, 1-85**
050	2540802-0100		1	CLEANING SLEEVE	**1-87, 1-89**
070	1519975-0200		1	LEVEL CONTROL DEVICE	**1-91**
110	2629317-0200		1	INJECTION SYSTEM	**1-93**
FLOATER NOHI (See drawing on page: 1-76)					
040	2523670-0400		1	FILLING PIPE	**1-83, 1-85**
050	2540802-0100		1	CLEANING SLEEVE	**1-87, 1-89**
070	1519975-0200		1	LEVEL CONTROL DEVICE	**1-91**
LEVELPROBE HI (See drawing on page: 1-78)					
040	1498668-0300		1	FILLING PIPE	**1-95**
050	1498673-0200		1	CLEANING SLEEVE	**1-97, 1-99**
070	2547150-0100		1	PLUG	**1-101**
110	2629317-0200		1	INJECTION SYSTEM	**1-93**
LEVELPROBE NOHI (See drawing on page: 1-74)					
040	1498668-0300		1	FILLING PIPE	**1-95**
050	1498673-0200		1	CLEANING SLEEVE	**1-97, 1-99**
070	2547150-0100		1	PLUG	**1-101**
Common Parts					
010	2523644-0100		1	STEAM SYSTEM	**1-103**
020	1255980-0200		1	PRODUCT VALVE GROUP	**1-105**
030	1498700-0200		1	FLOW REGULATOR	**1-119, 1-121**
060	1255984-0300		1	CLEANING PIPE	**1-125**
080	1498667-0100		1	FASTENING PLATE	**1-127, 1-129**
090	2525518-0100		1	CLEANING PIPE	**1-131**
100	1035259-0300		1	INTERMEDIATE PART	**1-133, 1-135**

Pos	Part No	UN	Qty	Description	Page No

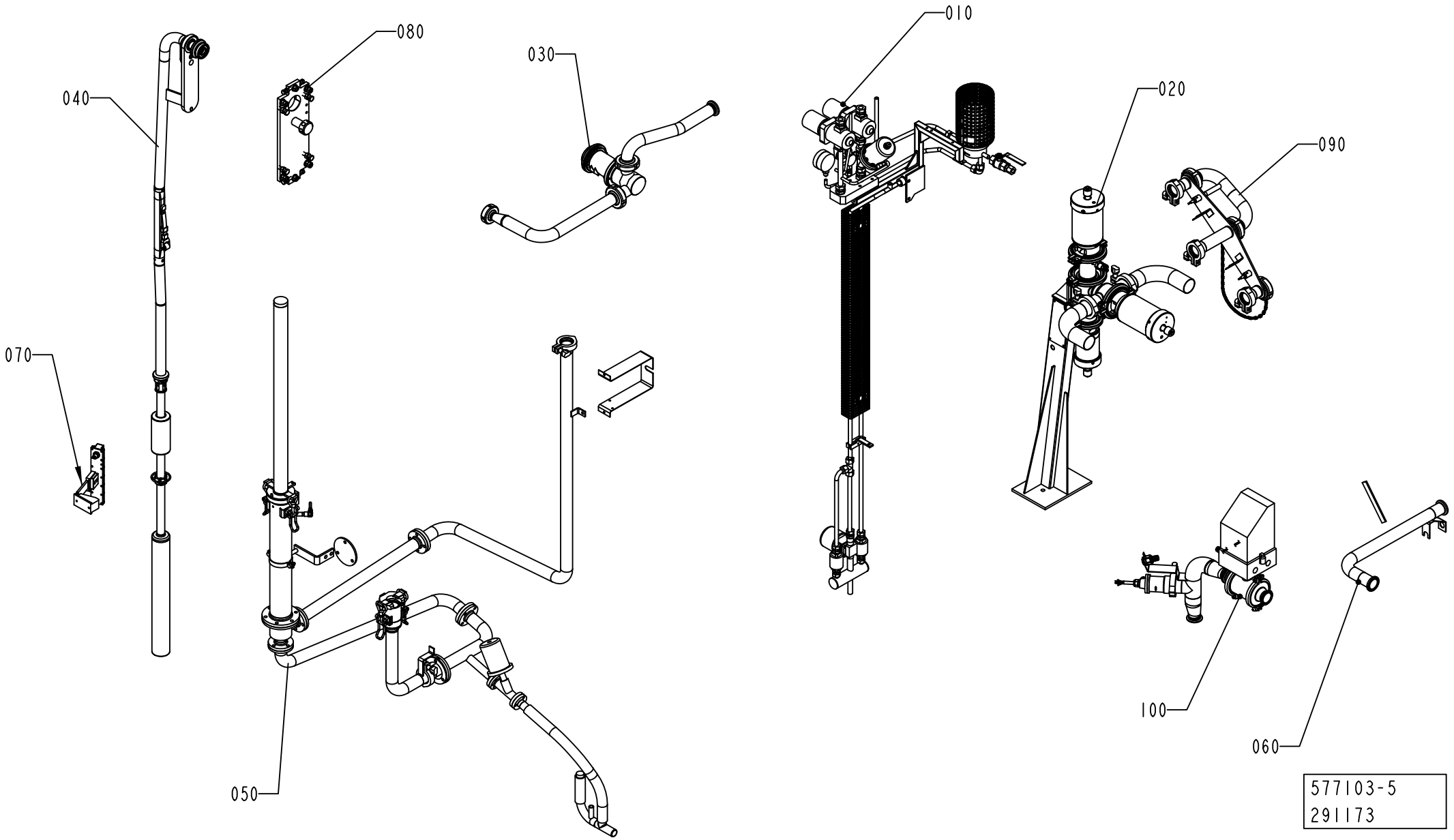
010
020
030
040
050
060
070
080
090
100
577103-5
291173

ECM: 327600 - 20080101
Group number: 577103-0300
Assembly Drawing: 577103-5_1_AC

This list covers pages from 1-74 to 1-81

Pos	Part No	UN	Qty	Description	Page No
FLOATER HI (See drawing on page: 1-80)					
040	2523670-0400		1	FILLING PIPE	**1-83, 1-85**
050	2540802-0100		1	CLEANING SLEEVE	**1-87, 1-89**
070	1519975-0200		1	LEVEL CONTROL DEVICE	**1-91**
110	2629317-0200		1	INJECTION SYSTEM	**1-93**
FLOATER NOHI (See drawing on page: 1-76)					
040	2523670-0400		1	FILLING PIPE	**1-83, 1-85**
050	2540802-0100		1	CLEANING SLEEVE	**1-87, 1-89**
070	1519975-0200		1	LEVEL CONTROL DEVICE	**1-91**
LEVELPROBE HI (See drawing on page: 1-78)					
040	1498668-0300		1	FILLING PIPE	**1-95**
050	1498673-0200		1	CLEANING SLEEVE	**1-97, 1-99**
070	2547150-0100		1	PLUG	**1-101**
110	2629317-0200		1	INJECTION SYSTEM	**1-93**
LEVELPROBE NOHI (See drawing on page: 1-74)					
040	1498668-0300		1	FILLING PIPE	**1-95**
050	1498673-0200		1	CLEANING SLEEVE	**1-97, 1-99**
070	2547150-0100		1	PLUG	**1-101**
Common Parts					
010	2523644-0100		1	STEAM SYSTEM	**1-103**
020	1255980-0200		1	PRODUCT VALVE GROUP	**1-105**
030	1498700-0200		1	FLOW REGULATOR	**1-119, 1-121**
060	1255984-0300		1	CLEANING PIPE	**1-125**
080	1498667-0100		1	FASTENING PLATE	**1-127, 1-129**
090	2525518-0100		1	CLEANING PIPE	**1-131**
100	1035259-0300		1	INTERMEDIATE PART	**1-133, 1-135**

Pos	Part No	UN	Qty	Description	Page No

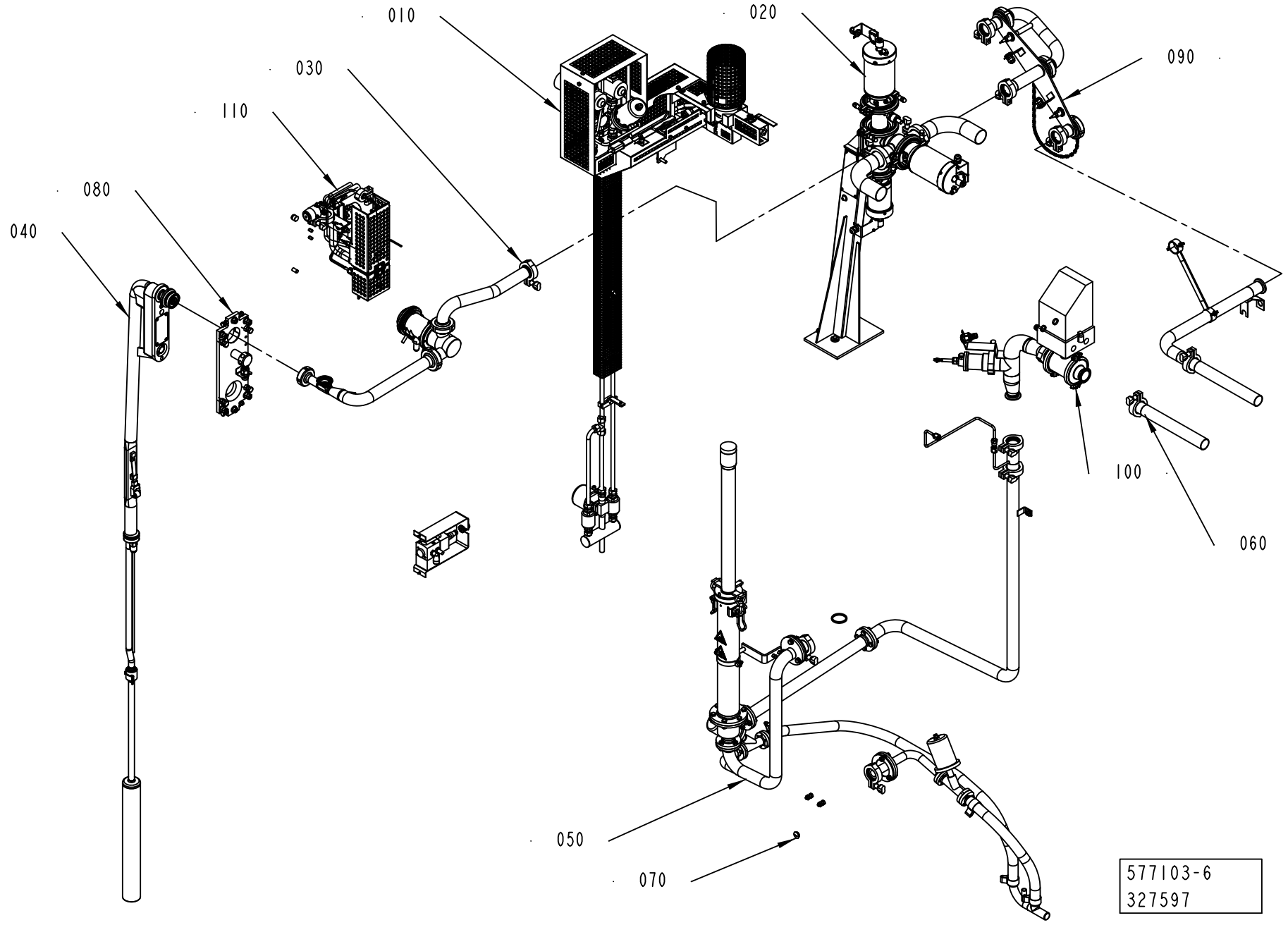
010
020
030
090
110
080
040
100
060
050
070
577103-6
327597

ECM: 327600 - 20080101
Group number: 577103-0300
Assembly Drawing: 577103-6_1_AC

This list covers pages from 1-74 to 1-81

Pos	Part No	UN	Qty	Description	Page No
FLOATER HI (See drawing on page: 1-80)					
040	2523670-0400		1	FILLING PIPE	**1-83, 1-85**
050	2540802-0100		1	CLEANING SLEEVE	**1-87, 1-89**
070	1519975-0200		1	LEVEL CONTROL DEVICE	**1-91**
110	2629317-0200		1	INJECTION SYSTEM	**1-93**
FLOATER NOHI (See drawing on page: 1-76)					
040	2523670-0400		1	FILLING PIPE	**1-83, 1-85**
050	2540802-0100		1	CLEANING SLEEVE	**1-87, 1-89**
070	1519975-0200		1	LEVEL CONTROL DEVICE	**1-91**
LEVELPROBE HI (See drawing on page: 1-78)					
040	1498668-0300		1	FILLING PIPE	**1-95**
050	1498673-0200		1	CLEANING SLEEVE	**1-97, 1-99**
070	2547150-0100		1	PLUG	**1-101**
110	2629317-0200		1	INJECTION SYSTEM	**1-93**
LEVELPROBE NOHI (See drawing on page: 1-74)					
040	1498668-0300		1	FILLING PIPE	**1-95**
050	1498673-0200		1	CLEANING SLEEVE	**1-97, 1-99**
070	2547150-0100		1	PLUG	**1-101**
Common Parts					
010	2523644-0100		1	STEAM SYSTEM	**1-103**
020	1255980-0200		1	PRODUCT VALVE GROUP	**1-105**
030	1498700-0200		1	FLOW REGULATOR	**1-119, 1-121**
060	1255984-0300		1	CLEANING PIPE	**1-125**
080	1498667-0100		1	FASTENING PLATE	**1-127, 1-129**
090	2525518-0100		1	CLEANING PIPE	**1-131**
100	1035259-0300		1	INTERMEDIATE PART	**1-133, 1-135**

Pos	Part No	UN	Qty	Description	Page No

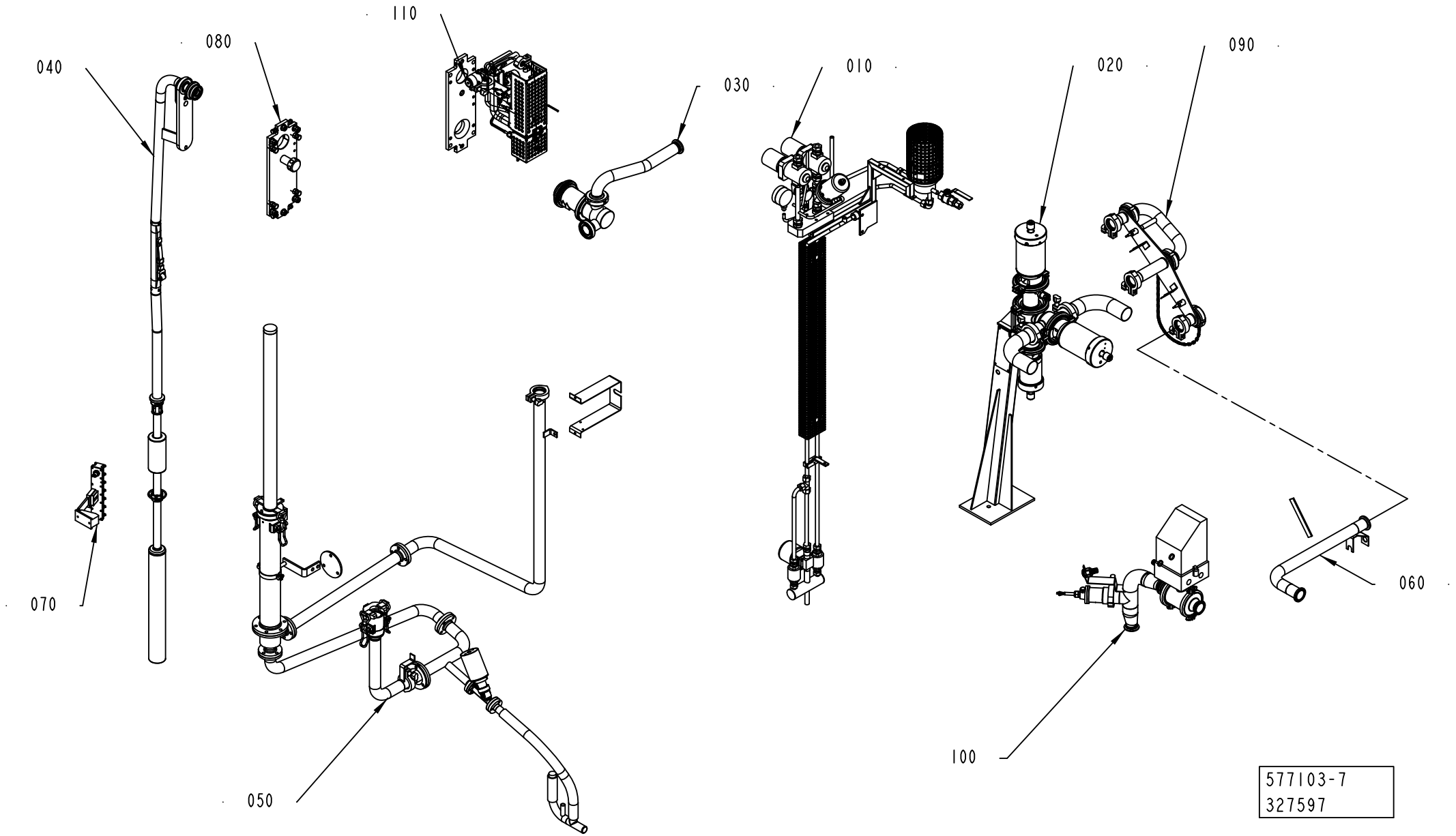
110
080
040
030
010
020
090
070
050
060
100
577103-7
327597

Pos	Part No	UN	Qty	Description	Page No
FLOATER HI (See drawing on page: 1-80)					
040	2523670-0400		1	FILLING PIPE	**1-83, 1-85**
050	2540802-0100		1	CLEANING SLEEVE	**1-87, 1-89**
070	1519975-0200		1	LEVEL CONTROL DEVICE	**1-91**
110	2629317-0200		1	INJECTION SYSTEM	**1-93**
FLOATER NOHI (See drawing on page: 1-76)					
040	2523670-0400		1	FILLING PIPE	**1-83, 1-85**
050	2540802-0100		1	CLEANING SLEEVE	**1-87, 1-89**
070	1519975-0200		1	LEVEL CONTROL DEVICE	**1-91**
LEVELPROBE HI (See drawing on page: 1-78)					
040	1498668-0300		1	FILLING PIPE	**1-95**
050	1498673-0200		1	CLEANING SLEEVE	**1-97, 1-99**
070	2547150-0100		1	PLUG	**1-101**
110	2629317-0200		1	INJECTION SYSTEM	**1-93**
LEVELPROBE NOHI (See drawing on page: 1-74)					
040	1498668-0300		1	FILLING PIPE	**1-95**
050	1498673-0200		1	CLEANING SLEEVE	**1-97, 1-99**
070	2547150-0100		1	PLUG	**1-101**
Common Parts					
010	2523644-0100		1	STEAM SYSTEM	**1-103**
020	1255980-0200		1	PRODUCT VALVE GROUP	**1-105**
030	1498700-0200		1	FLOW REGULATOR	**1-119, 1-121**
060	1255984-0300		1	CLEANING PIPE	**1-125**
080	1498667-0100		1	FASTENING PLATE	**1-127, 1-129**
090	2525518-0100		1	CLEANING PIPE	**1-131**
100	1035259-0300		1	INTERMEDIATE PART	**1-133, 1-135**

Pos	Part No	UN	Qty	Description	Page No

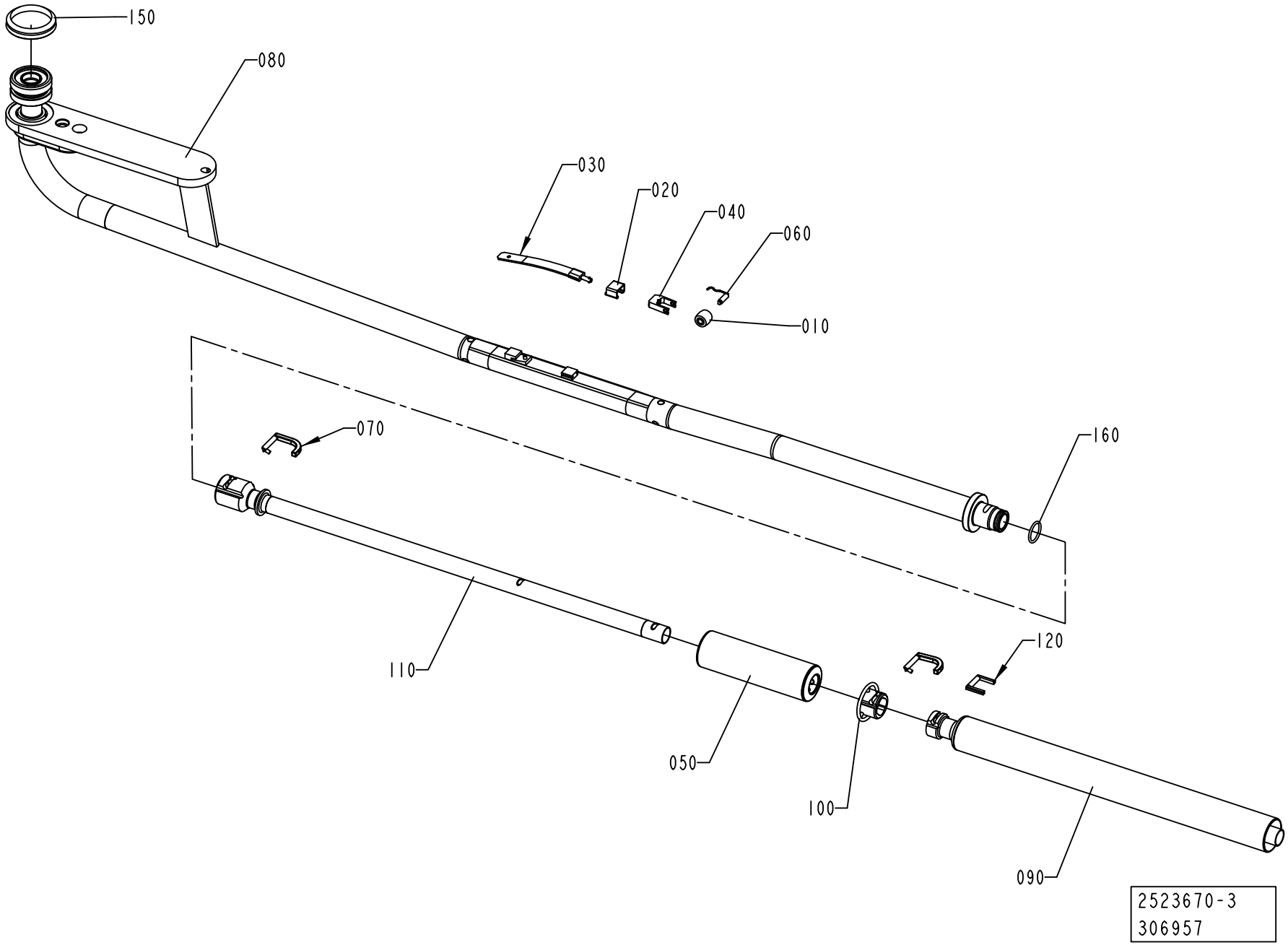
150
080
030
020
040
060
010
070
160
110
120
050
100
090
2523670-3
306957

ECM: 363599 - 20090101
Group number: 2523670-0400
Assembly Drawing: 2523670-3_1_AD

This list covers pages from 1-82 to 1-85

Pos	Part No	UN	Qty	Description	Page No
TBA 0200B (See drawing on page: 1-84)					
010	2607089-0000		1	PRESSURE ROLLER	
020	295377-0001		1	HOOD	
030	2894222-0000		1	SPRING	
040	568583-0000		1	FORK	
050	2685290-0000		1	FLOAT	
060	2529417-0000		1	SHAFT	
070	2809845-0000		1	STOP PIN	
080	2736698-0000		1	FILLING PIPE	
090	2736706-0000		1	LOWER FILLING TUBE	
100	2525537-0000		1	LOCK RING	
120	2736701-0000		1	STOP PIN	
160	315207-0514		1	O-RING 18,72X2,62 MM	
TBA 0200M (See drawing on page: 1-84)					
010	272479-0000		1	PRESSURE ROLLER (10PCS)	
020	295377-0001		1	HOOD	
030	2826392-0000		1	SPRING	
040	255978-0000		1	FORK	
050	2754798-0000		1	FLOAT	
060	255977-0000		1	SHAFT	
070	2809845-0000		1	STOP PIN	
080	2736698-0000		1	FILLING PIPE	
090	2852113-0000		1	LOWER FILLING TUBE	
100	2555091-0000		1	LOCK RING	
120	2736701-0000		1	STOP PIN	
160	315207-0514		1	O-RING 18,72X2,62 MM	
TBA 0200S (See drawing on page: 1-82)					
010	272479-0000		1	PRESSURE ROLLER (10PCS)	
020	295377-0001		1	HOOD	
030	2826392-0000		1	SPRING	
040	255978-0000		1	FORK	
050	2551116-0000		1	FLOAT	
060	255977-0000		1	SHAFT	
070	2809845-0000		2	STOP PIN	
080	2555083-0000		1	FILLING PIPE	
090	2685325-0000		1	FILLING PIPE	
100	2552980-0000		1	LOCK RING	
110	2685326-0000		1	FILLING PIPE	
120	2715554-0000		1	PIN	
160	315207-0719		1	O-RING 23,47X2,62 MM	
TBA 0250B (See drawing on page: 1-84)					
010	2607089-0000		1	PRESSURE ROLLER	
020	295377-0001		1	HOOD	
030	2894222-0000		1	SPRING	
040	568583-0000		1	FORK	
050	2685290-0000		1	FLOAT	
060	2529417-0000		1	SHAFT	
070	2809845-0000		1	STOP PIN	
080	2736698-0000		1	FILLING PIPE	
090	2736699-0000		1	LOWER FILLING TUBE	
100	2525537-0000		1	LOCK RING	
120	2736701-0000		1	STOP PIN	
160	315207-0514		1	O-RING 18,72X2,62 MM	
TBA 0250S (See drawing on page: 1-84)					
010	272479-0000		1	PRESSURE ROLLER (10PCS)	
020	295377-0001		1	HOOD	
030	2826392-0000		1	SPRING	
040	255978-0000		1	FORK	
050	2754798-0000		1	FLOAT	
060	255977-0000		1	SHAFT	
070	2809845-0000		1	STOP PIN	
080	2736698-0000		1	FILLING PIPE	
090	2852114-0000		1	LOWER FILLING TUBE	
100	2555091-0000		1	LOCK RING	
120	2736701-0000		1	STOP PIN	
160	315207-0514		1	O-RING 18,72X2,62 MM	
TBA 0300S (See drawing on page: 1-84)					
010	2607089-0000		2	PRESSURE ROLLER	
020	2845298-0000		1	HOOD	
030	2909522-0000		1	SPRING	
040	2845035-0000		1	FORK	
050	2798497-0000		1	FLOAT	
060	499011-0000		2	SHAFT	
070	2809845-0000		1	STOP PIN	
080	2931191-0000		1	FILLING PIPE	
090	2804486-0000		1	FILLING PIPE	
100	2525537-0000		1	LOCK RING	
120	2736701-0000		1	STOP PIN	
130	2845034-0000		1	BRACKET	
140	2634972-0000		1	SHAFT	
160	315207-0514		1	O-RING 18,72X2,62 MM	
170	24928-0000		4	LOCKING RUBBER	
Common Parts					
150	315220-0198		1	V-RINGS 45X55X13 MM V-50S	

Machine Type	Group Description	Used-In	Group Number	Page No

FILLING PIPE

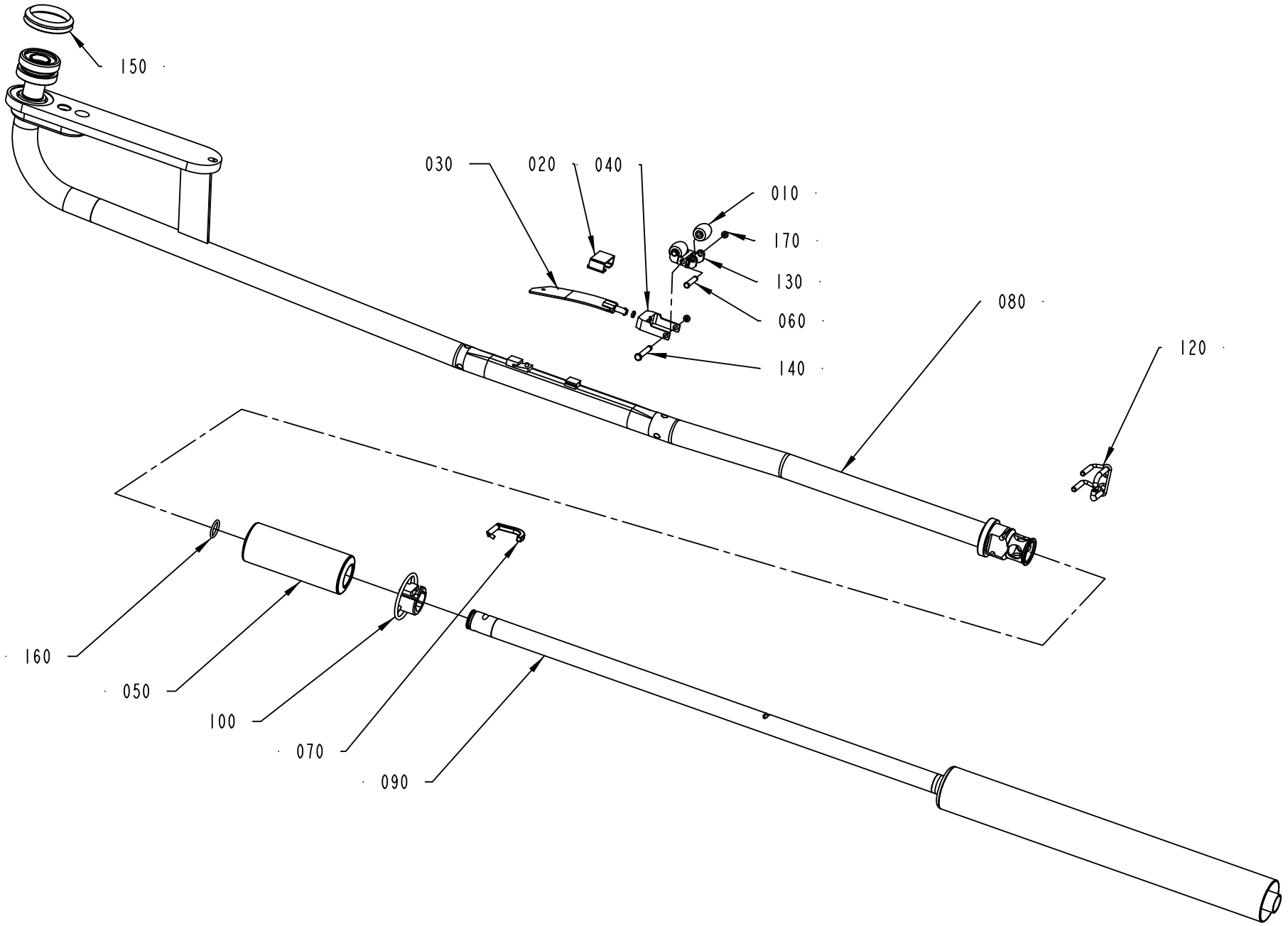

2523670-5
327597

ECM: 363599 - 20090101
Group number: 2523670-0400
Assembly Drawing: 2523670-5_1_AD

This list covers pages from 1-82 to 1-85

Pos	Part No	UN	Qty	Description	Page No
TBA 0200B (See drawing on page: 1-84)					
010	2607089-0000		1	PRESSURE ROLLER	
020	295377-0001		1	HOOD	
030	2894222-0000		1	SPRING	
040	568583-0000		1	FORK	
050	2685290-0000		1	FLOAT	
060	2529417-0000		1	SHAFT	
070	2809845-0000		1	STOP PIN	
080	2736698-0000		1	FILLING PIPE	
090	2736706-0000		1	LOWER FILLING TUBE	
100	2525537-0000		1	LOCK RING	
120	2736701-0000		1	STOP PIN	
160	315207-0514		1	O-RING 18,72X2,62 MM	
TBA 0200M (See drawing on page: 1-84)					
010	272479-0000		1	PRESSURE ROLLER (10PCS)	
020	295377-0001		1	HOOD	
030	2826392-0000		1	SPRING	
040	255978-0000		1	FORK	
050	2754798-0000		1	FLOAT	
060	255977-0000		1	SHAFT	
070	2809845-0000		1	STOP PIN	
080	2736698-0000		1	FILLING PIPE	
090	2852113-0000		1	LOWER FILLING TUBE	
100	2555091-0000		1	LOCK RING	
120	2736701-0000		1	STOP PIN	
160	315207-0514		1	O-RING 18,72X2,62 MM	
TBA 0200S (See drawing on page: 1-82)					
010	272479-0000		1	PRESSURE ROLLER (10PCS)	
020	295377-0001		1	HOOD	
030	2826392-0000		1	SPRING	
040	255978-0000		1	FORK	
050	2551116-0000		1	FLOAT	
060	255977-0000		1	SHAFT	
070	2809845-0000		2	STOP PIN	
080	2555083-0000		1	FILLING PIPE	
090	2685325-0000		1	FILLING PIPE	
100	2552980-0000		1	LOCK RING	
110	2685326-0000		1	FILLING PIPE	
120	2715554-0000		1	PIN	
160	315207-0719		1	O-RING 23,47X2,62 MM	
TBA 0250B (See drawing on page: 1-84)					
010	2607089-0000		1	PRESSURE ROLLER	
020	295377-0001		1	HOOD	
030	2894222-0000		1	SPRING	
040	568583-0000		1	FORK	
050	2685290-0000		1	FLOAT	
060	2529417-0000		1	SHAFT	
070	2809845-0000		1	STOP PIN	
080	2736698-0000		1	FILLING PIPE	
090	2736699-0000		1	LOWER FILLING TUBE	
100	2525537-0000		1	LOCK RING	
120	2736701-0000		1	STOP PIN	
160	315207-0514		1	O-RING 18,72X2,62 MM	
TBA 0250S (See drawing on page: 1-84)					
010	272479-0000		1	PRESSURE ROLLER (10PCS)	
020	295377-0001		1	HOOD	
030	2826392-0000		1	SPRING	
040	255978-0000		1	FORK	
050	2754798-0000		1	FLOAT	
060	255977-0000		1	SHAFT	
070	2809845-0000		1	STOP PIN	
080	2736698-0000		1	FILLING PIPE	
090	2852114-0000		1	LOWER FILLING TUBE	
100	2555091-0000		1	LOCK RING	
120	2736701-0000		1	STOP PIN	
160	315207-0514		1	O-RING 18,72X2,62 MM	
TBA 0300S (See drawing on page: 1-84)					
010	2607089-0000		2	PRESSURE ROLLER	
020	2845298-0000		1	HOOD	
030	2909522-0000		1	SPRING	
040	2845035-0000		1	FORK	
050	2798497-0000		1	FLOAT	
060	499011-0000		2	SHAFT	
070	2809845-0000		1	STOP PIN	
080	2931191-0000		1	FILLING PIPE	
090	2804486-0000		1	FILLING PIPE	
100	2525537-0000		1	LOCK RING	
120	2736701-0000		1	STOP PIN	
130	2845034-0000		1	BRACKET	
140	2634972-0000		1	SHAFT	
160	315207-0514		1	O-RING 18,72X2,62 MM	
170	24928-0000		4	LOCKING RUBBER	
Common Parts					
150	315220-0198		1	V-RINGS 45X55X13 MM V-50S	

Machine Type	Group Description	Used-In	Group Number	Page No

CLEANING SLEEVE

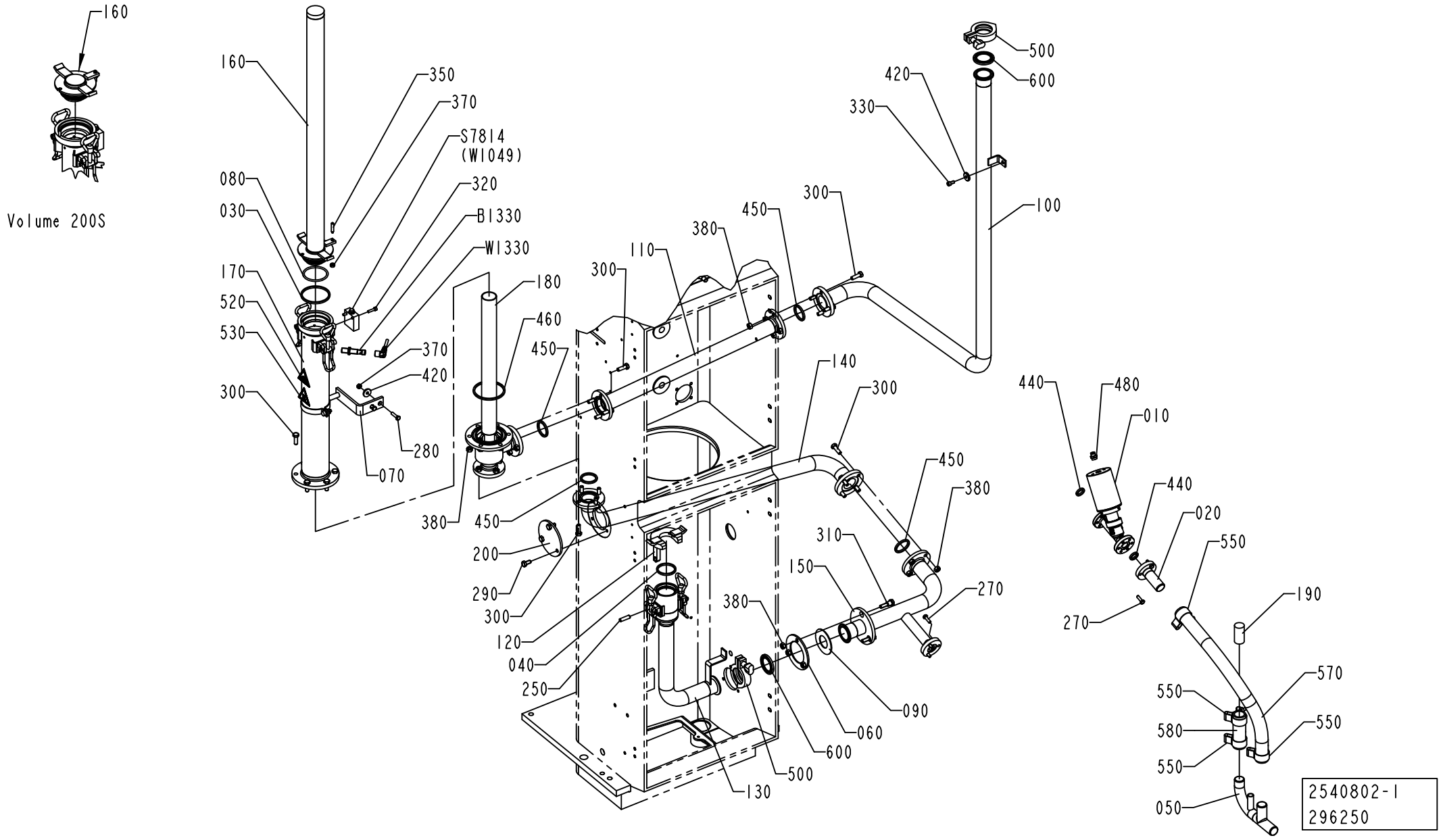

ECM: 296252 - 20070701
Group number: 2540802-0100
Assembly Drawing: 2540802-1_1_AE

This list covers pages from 1-86 to 1-89

Pos	Part No	UN	Qty	Description	Page No
TBA 0200B HI (See drawing on page: 1-88)					
070	1538787-0000		1	SUPPORT	
100	2551062-0000		1	PIPE	
160	2569805-0000		1	CLEANING PIPE	
170	2527740-0000		1	CLEANING PIPE	
180	2527741-0000		1	CLEANING PIPE	
210	979256-0000		1	CLEANING PIPE	
220	2514213-0000		1	PIPE	
460	315229-0107		1	GASKETS, 73,9X80,9X3,7 MM 2"1/2 FD	
500	342840-0103		3	CLAMPING PIECE	
600	90217-0307		3	GASKET 35,8X50,5X5,5 MM	
TBA 0200B NOHI (See drawing on page: 1-86)					
070	1538787-0000		1	SUPPORT	
100	2500016-0000		1	PIPE	
160	2569805-0000		1	CLEANING PIPE	
170	2527740-0000		1	CLEANING PIPE	
180	2527741-0000		1	CLEANING PIPE	
460	315229-0107		1	GASKETS, 73,9X80,9X3,7 MM 2"1/2 FD	
500	342840-0103		2	CLAMPING PIECE	
600	90217-0307		2	GASKET 35,8X50,5X5,5 MM	
TBA 0200M HI (See drawing on page: 1-88)					
070	2545016-0000		1	SUPPORT	
	2545431-0000		*1*	*SUPPORT*	
	2545430-0000		*1*	*CLAMP*	
	312115-0368		*2*	*SCREW ISO4762 M6X16 A4 80*	
100	2551062-0000		1	PIPE	
160	2558849-0000		1	CLEANING PIPE	
170	2547153-0000		1	CONTAINER	
180	2547154-0000		1	CLEANING PIPE	
210	979256-0000		1	CLEANING PIPE	
220	2514213-0000		1	PIPE	
460	315229-0106		1	GASKETS, 61,2X68,2X3,7 MM 2"1/2 FD	
500	342840-0103		3	CLAMPING PIECE	
600	90217-0307		3	GASKET 35,8X50,5X5,5 MM	
TBA 0200M NOHI (See drawing on page: 1-86)					
070	2545016-0000		1	SUPPORT	
	2545431-0000		*1*	*SUPPORT*	
	2545430-0000		*1*	*CLAMP*	
	312115-0368		*2*	*SCREW ISO4762 M6X16 A4 80*	
100	2500016-0000		1	PIPE	
160	2558849-0000		1	CLEANING PIPE	
170	2547153-0000		1	CONTAINER	
180	2547154-0000		1	CLEANING PIPE	
460	315229-0106		1	GASKETS, 61,2X68,2X3,7 MM 2"1/2 FD	
500	342840-0103		2	CLAMPING PIECE	
600	90217-0307		2	GASKET 35,8X50,5X5,5 MM	
TBA 0200S HI (See drawing on page: 1-88)					
070	2545016-0000		1	SUPPORT	
	2545431-0000		*1*	*SUPPORT*	
	2545430-0000		*1*	*CLAMP*	
	312115-0368		*2*	*SCREW ISO4762 M6X16 A4 80*	
100	2551062-0000		1	PIPE	
160	2597527-0000		1	PLUG	
170	2531429-0000		1	CONTAINER	
180	2531430-0000		1	CLEANING PIPE	
210	979256-0000		1	CLEANING PIPE	
220	2514213-0000		1	PIPE	
460	315229-0106		1	GASKETS, 61,2X68,2X3,7 MM 2"1/2 FD	
500	342840-0103		3	CLAMPING PIECE	
600	90217-0307		3	GASKET 35,8X50,5X5,5 MM	
TBA 0200S NOHI (See drawing on page: 1-86)					
070	2545016-0000		1	SUPPORT	
	2545431-0000		*1*	*SUPPORT*	
	2545430-0000		*1*	*CLAMP*	
	312115-0368		*2*	*SCREW ISO4762 M6X16 A4 80*	
100	2500016-0000		1	PIPE	
160	2597527-0000		1	PLUG	
170	2531429-0000		1	CONTAINER	
180	2531430-0000		1	CLEANING PIPE	
460	315229-0106		1	GASKETS, 61,2X68,2X3,7 MM 2"1/2 FD	
500	342840-0103		2	CLAMPING PIECE	
600	90217-0307		2	GASKET 35,8X50,5X5,5 MM	
TBA 0250B HI, TBA 0300S HI (See drawing on page: 1-88)					
070	1538787-0000		1	SUPPORT	
100	2551062-0000		1	PIPE	
160	2569806-0000		1	CLEANING PIPE	
170	2527740-0000		1	CLEANING PIPE	
180	2527741-0000		1	CLEANING PIPE	
210	979256-0000		1	CLEANING PIPE	
220	2514213-0000		1	PIPE	
460	315229-0107		1	GASKETS, 73,9X80,9X3,7 MM 2"1/2 FD	
500	342840-0103		3	CLAMPING PIECE	
600	90217-0307		3	GASKET 35,8X50,5X5,5 MM	
TBA 0250B NOHI, TBA 0300S NOHI (See drawing on page: 1-86)					

CLEANING SLEEVE

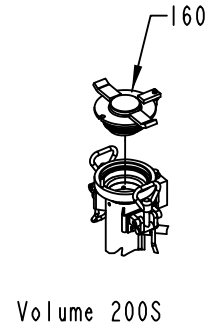

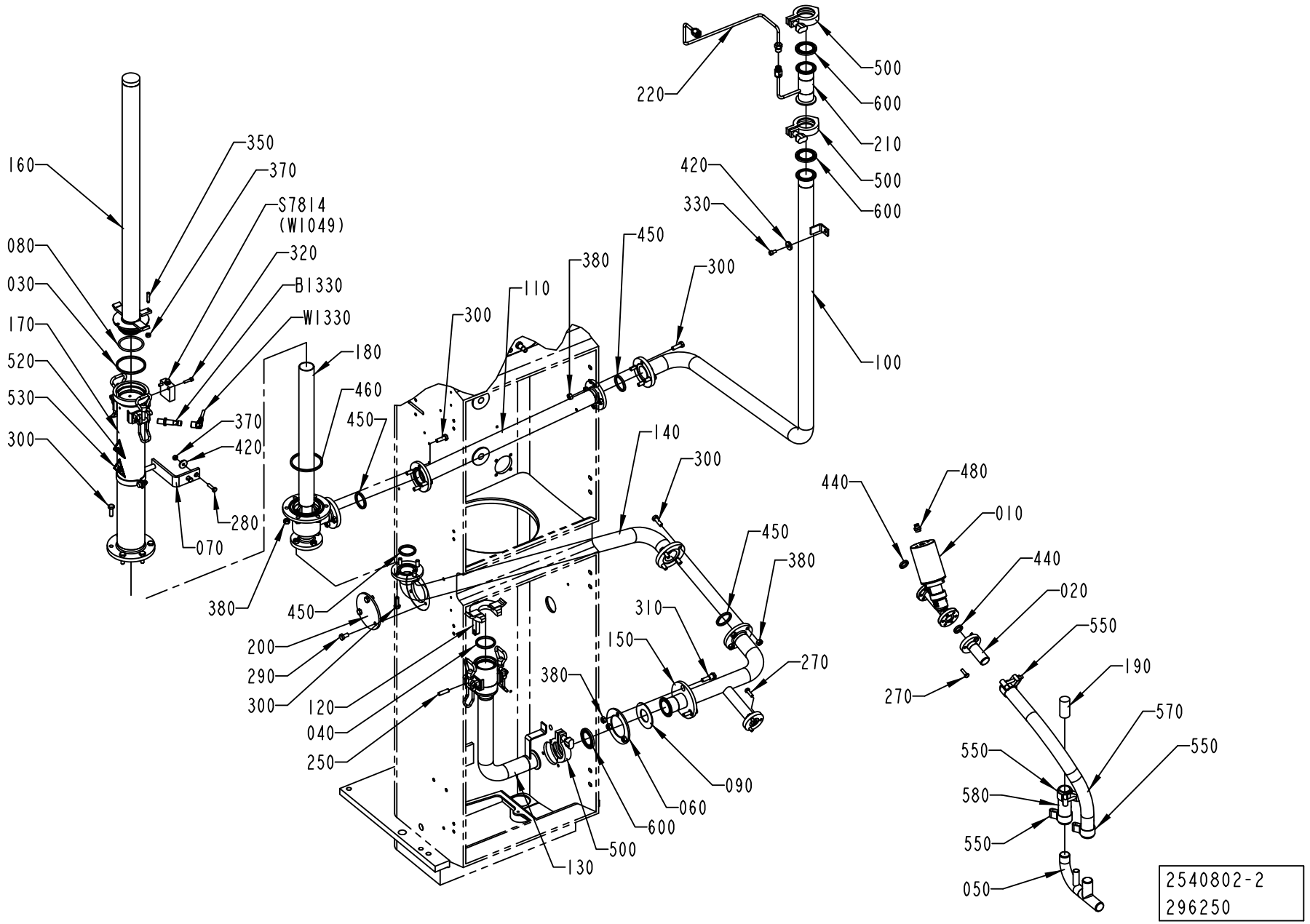

ECM: 296252 - 20070701
Group number: 2540802-0100
Assembly Drawing: 2540802-2_1_AC

This list covers pages from 1-86 to 1-89

Pos	Part No	UN	Qty	Description	Page No
TBA 0250B NOHI, TBA 0300S NOHI (Cont'd) (See drawing on page: 1-86)					
070	1538787-0000		1	SUPPORT	
100	2500016-0000		1	PIPE	
160	2569806-0000		1	CLEANING PIPE	
170	2527740-0000		1	CLEANING PIPE	
180	2527741-0000		1	CLEANING PIPE	
460	315229-0107		1	GASKETS, 73,9X80,9X3,7 MM 2"1/2 FD	
500	342840-0103		2	CLAMPING PIECE	
600	90217-0307		2	GASKET 35,8X50,5X5,5 MM	
TBA 0250S HI (See drawing on page: 1-88)					
070	2545016-0000		1	SUPPORT	
	2545431-0000		*1*	*SUPPORT*	
	2545430-0000		*1*	*CLAMP*	
	312115-0368		*2*	*SCREW ISO4762 M6X16 A4 80*	
100	2551062-0000		1	PIPE	
160	2555094-0000		1	CLEANING PIPE	
170	2547153-0000		1	CONTAINER	
180	2547154-0000		1	CLEANING PIPE	
210	979256-0000		1	CLEANING PIPE	
220	2514213-0000		1	PIPE	
460	315229-0106		1	GASKETS, 61,2X68,2X3,7 MM 2"1/2 FD	
500	342840-0103		3	CLAMPING PIECE	
600	90217-0307		3	GASKET 35,8X50,5X5,5 MM	
TBA 0250S NOHI (See drawing on page: 1-86)					
070	2545016-0000		1	SUPPORT	
	2545431-0000		*1*	*SUPPORT*	
	2545430-0000		*1*	*CLAMP*	
	312115-0368		*2*	*SCREW ISO4762 M6X16 A4 80*	
100	2500016-0000		1	PIPE	
160	2555094-0000		1	CLEANING PIPE	
170	2547153-0000		1	CONTAINER	
180	2547154-0000		1	CLEANING PIPE	
460	315229-0106		1	GASKETS, 61,2X68,2X3,7 MM 2"1/2 FD	
500	342840-0103		2	CLAMPING PIECE	
600	90217-0307		2	GASKET 35,8X50,5X5,5 MM	
Common Parts					
010	90459-6982		1	ANGLE SEAT VALVE W. FLANGES, N.O. D=16	
020	1285329-0000		1	PIPE	
030	1348474-0000		1	GASKET	
040	1348475-0000		1	GASKET	
050	1487198-0000		1	PIPE	
060	1499127-0000		1	FLANGE	
080	1538794-0000		1	O-RING	
090	1538846-0000		1	SEAL	
110	2500017-0000		1	PIPE	
120	2501527-0000		1	CLAMP	
130	2506843-0000		1	CLEANING SLEEVE	
140	2523647-0000		1	PIPE	
150	2523648-0000		1	PIPE	
190	2537835-0000		1	PLUG	
200	2506832-0000		1	PLUG	
250	311103-0405		1	PARALLEL PIN ISO 2338 8M6X30 A1	
270	312105-0370		6	SCREW M6S ISO 4017 M6X20 A480	
280	312105-0372		2	SCREW M6S ISO 4017 M6X25 A480	
290	312105-0449		3	SCREW M6S ISO 4017 M8X16 A480	
300	312105-0453		22	SCREW M6S ISO 4017 M8X25 A480	
310	2558848-0000		3	SCREW	
320	312115-0331		2	SCREW ISO4762 M5X20 A4 80	
330	312115-0366		1	SCREW ISO4762 M6X12 A4 80	
350	312311-0374		1	SCREW ISO4028 M6X30 FZB	
370	312605-0316		3	HEXAGON NUT, M6M M6 A280	
380	312605-0318		25	HEXAGON NUT, M6M M8 A280	
420	315125-0153		3	WASHER TBRSB 6,4X22X4 A4	
440	315229-0102		2	GASKETS, 16,8X23,8X3,7 MM 3/4" FDA	
450	315229-0104		4	GASKETS, 35,8X42,8X3,7 MM 1"1/2 FD	
480	342722-0203		1	STRAIGHT COUPLING	
520	359705-0003		1	WARNING SIGN ISO, DANGEROUS CHEMICALS	
530	359705-0007		1	WARNING SIGN ISO, HOT SURFACE	
550	90459-2366		4	HOSE CLIP, (32)-35	
570	90166-0233	MM	500	HOSE	
580	90166-0233	MM	100	HOSE	
B1330	90459-0252		1	PROX.SWITCH IX 0208	
S7814	90044-0084		1	LIMIT SW. 14 CE1-4	
W1330	90459-0253		1	SENSOR CABLE S12-3FVW-050	

Machine Type | Group Description | Used-In | Group Number | Page No

LEVEL CONTROL DEVICE

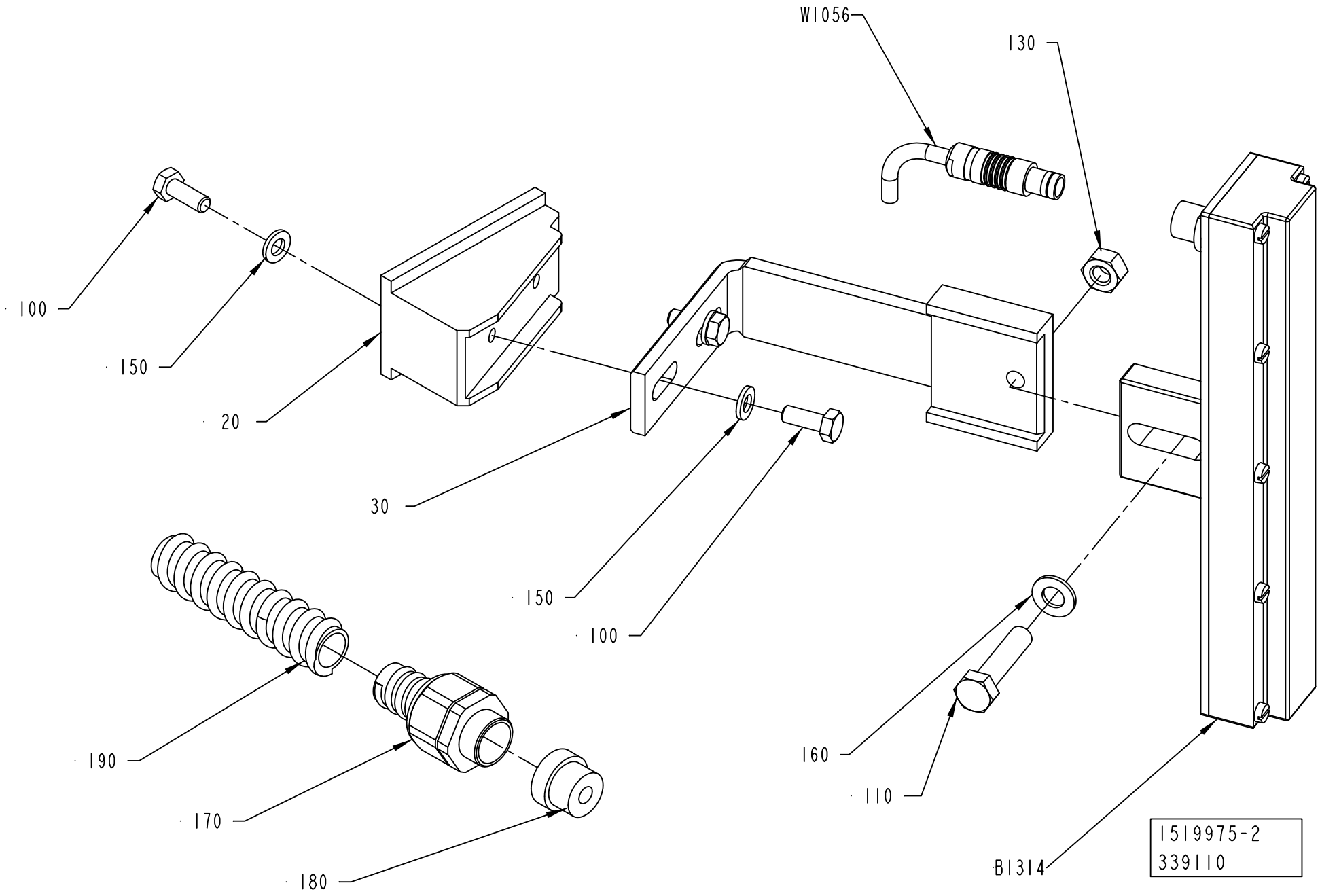

ECM: 369309 - 20090101
Group number: 1519975-0200
Assembly Drawing: 1519975-2_1_AB

Pos	Part No	UN	Qty	Description	Page No
-					
020	2511665-0000		1	BRACKET	
030	2511666-0000		1	HOLDER	
100	312105-0368		4	SCREW M6S ISO 4017 M6X16 A480	
110	312105-0457		1	SCREW M6S ISO 4014 M8X35 A480	
130	312605-0318		1	HEXAGON NUT, M6M M8 A280	
150	315105-0153		4	WASHER BRB 6,4X12 RFR	
160	315105-0165		1	WASHER BRB 8,4X16 RFR	
170	353243-0003		1	HOSE GLAND W/O INSERT PG11 EXTENDED	
180	353249-0085		1	INSERT, SINGLE HOLE, HI.TEMP, EK153I7	
190	90152-0050	M	1	SPIRAL CONDUIT, 20X13, UL 1313	
B1314	2968260-0000		1	LEVEL PROBE	
W1056	90459-4705		1	LOCKING PLUG, S 103 A 053-130+ AND 90220	
	90459-4707		*1*	*RECEPTACLE, MOD.DBEE 103 A 053-130*	

Pos	Part No	UN	Qty	Description	Page No

INJECTION SYSTEM

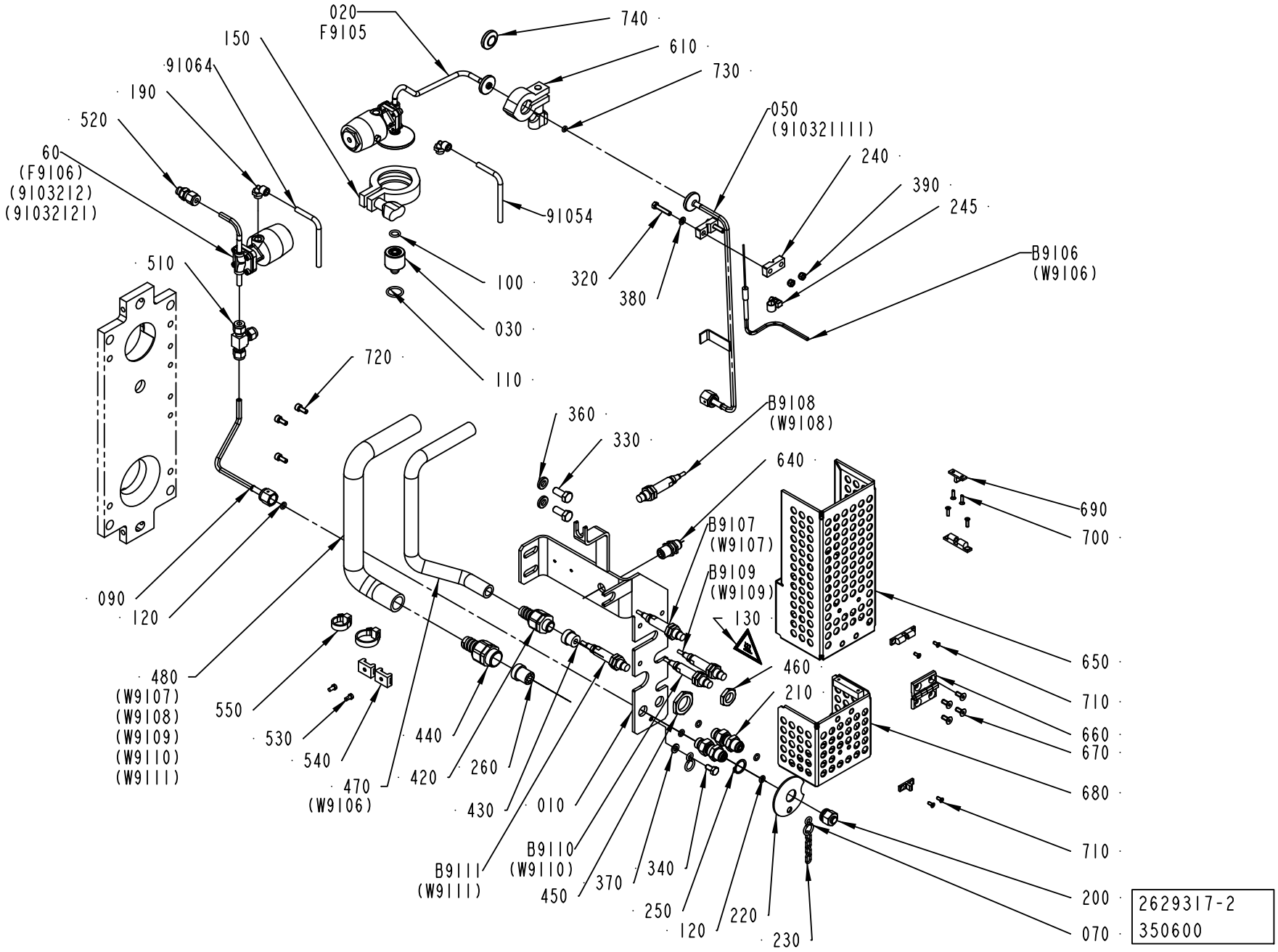

2629317-2
350600

ECM: 361967 - 20081001
Group number: 2629317-0200
Assembly Drawing: 2629317-2_1_AB

Pos	Part No	UN	Qty	Description	Page No
-					
010	2886651-0000		1	BRACKET	
020	2838968-0000		1	VALVE BODY	
030	1523154-0006		1	SPRAY NOZZLE	
030	2514316-0000		1	NOZZLE	
030	1523154-0003		1	SPRAY NOZZLE	
030	1523154-0004		1	SPRAY NOZZLE	
030	1523154-0005		1	SPRAY NOZZLE	
050	2826255-0000		1	PIPE	
060	2696111-0000		1	VALVE BODY	
	90600-0500		*1*	*DIAPHRAGM VALVE, 650.004.D.0.34.5A.1.U30*	
	90600-0493		*1*	*DIAPHRAGM 3A, 600-008-M5A*	
	90600-0491		*1*	*ACTUATOR, 9650-0089-Z-I-OTI*	
070	209183-0000		2	RING	
090	2886652-0000		1	PIPE	
100	315204-0208		1	O-RING 9,3X2,4 MM	
110	315204-0214		1	O-RING 17,3X2,4 MM	
120	315205-0505		5	O-RING 6,07X1,78 MM	
130	359705-0007		1	WARNING SIGN ISO, HOT SURFACE	
150	342840-0103		1	CLAMPING PIECE	
190	90458-2956		2	ELBOW PIPE JOINT, EXT.THREAD, D=6MM-G1/8	
200	978380-0000		1	BLIND PLUG	
210	90030-0549		2	CONN. STRAIGHT, BULKHEAD, SS-4-VCO-61	
220	978381-0000		1	WASHER 56X2MM	
230	90155-0008	MM	200	HANGER CHAIN, 18	
240	2939863-0000		2	CLAMP	
245	90132-0021		1	HOSE CLIP 6-10MM	
250	90141-0017		1	RETAINING RING FOR SHAFT DIN 471 17 SS	
260	353249-0026		1	INSERT, MULTI HOLE, E153M6X4	
320	312105-0333		2	SCREW M6S ISO 4017 M5X25 A480	
330	312105-0451		2	SCREW M6S ISO 4017 M8X20 A480	
340	312105-0366		1	SCREW M6S ISO 4017 M6X12 A480	
360	315115-0165		2	WASHER PLAIN, TBRB 8,4/16 H=3	
370	315105-0153		1	WASHER BRB 6,4X12 RFR	
380	315105-0146		2	WASHER BRB 5,3X10 RFR	
390	312812-0314		2	HEXAGON NUT, NY-LOCK M5 A480	
420	353243-0001		1	HOSE GLAND W/O INSERT PG9 EXTENDED	
430	353249-0008		1	INSERT, SINGLE HOLE, EK 152/7	
440	353242-0002		1	HOSE GLAND W/O INSERT PG16 NORMAL	
450	90099-0110		1	NUT, PR 22,5 (PG16)	
460	90099-0104		1	NUT, PR 15,2 (PG9)	
470	90152-0059	M	2	SPIRAL CONDUIT, 18X12, UL 1211	
480	90152-0051	M	1	SPIRAL CONDUIT, 25X18, UL 1816	
510	90030-0571		1	CONN. T-PIPE 6	
520	90459-1424		1	CONN. STR., 6-G1/8, EXT. THREAD	
530	312125-0287		2	SCREW ISO 1207 M4X8 A4	
540	352113-0203		2	ANCHOR PLATES FOR STRIPS, TYPE TM3S8-M0	
550	352113-0103		2	CABLE TIE, BLACK 290X7,6 MM	
610	342840-0101		1	CLAMP, 12,7 AND 19,1 MM 3-A PCS+PMCS	
640	342768-0102		1	BULKHEAD CONNECTOR, 6 MM	
650	2886653-0000		1	COVER	
660	90459-0075		1	HINGE, 1056-U30	
670	312155-0327		4	SCREW DIN 7991 MF6S M5X12 A4 70	
680	2886655-0000		1	COVER	
690	90600-0276		2	SNAP-IN BALL LOCK, 43X14,5 MM	
700	312155-0226		4	SCREW DIN 7991 MF6S M3X12 A4 70	
710	90287-0295		4	SCREW HEX.SOCK.COUNT.MF6S M3X8 A280	
720	312115-0327		3	SCREW ISO4762 M5X12 A4 80	
730	90600-0495		1	O-RING 4X2 MM	
740	2802425-0000		1	PLUG	
91054	90166-0193	M	8	TUBE 6 MM PUR BLUE	
91064	90166-0193	M	8	TUBE 6 MM PUR BLUE	
B9106	90326-0060		1	THERMOCOUPLE, CR-AL	
B9107	90600-0463		1	INDUCTIVE SWITCH,E2A-M12LN05-WP-B1-TP 5M	
B9108	90600-0463		1	INDUCTIVE SWITCH,E2A-M12LN05-WP-B1-TP 5M	
B9109	90600-0463		1	INDUCTIVE SWITCH,E2A-M12LN05-WP-B1-TP 5M	
B9110	90600-0463		1	INDUCTIVE SWITCH,E2A-M12LN05-WP-B1-TP 5M	
B9111	90600-0463		1	INDUCTIVE SWITCH,E2A-M12LN05-WP-B1-TP 5M	

Machine Type	Group Description	Used-In	Group Number	Page No

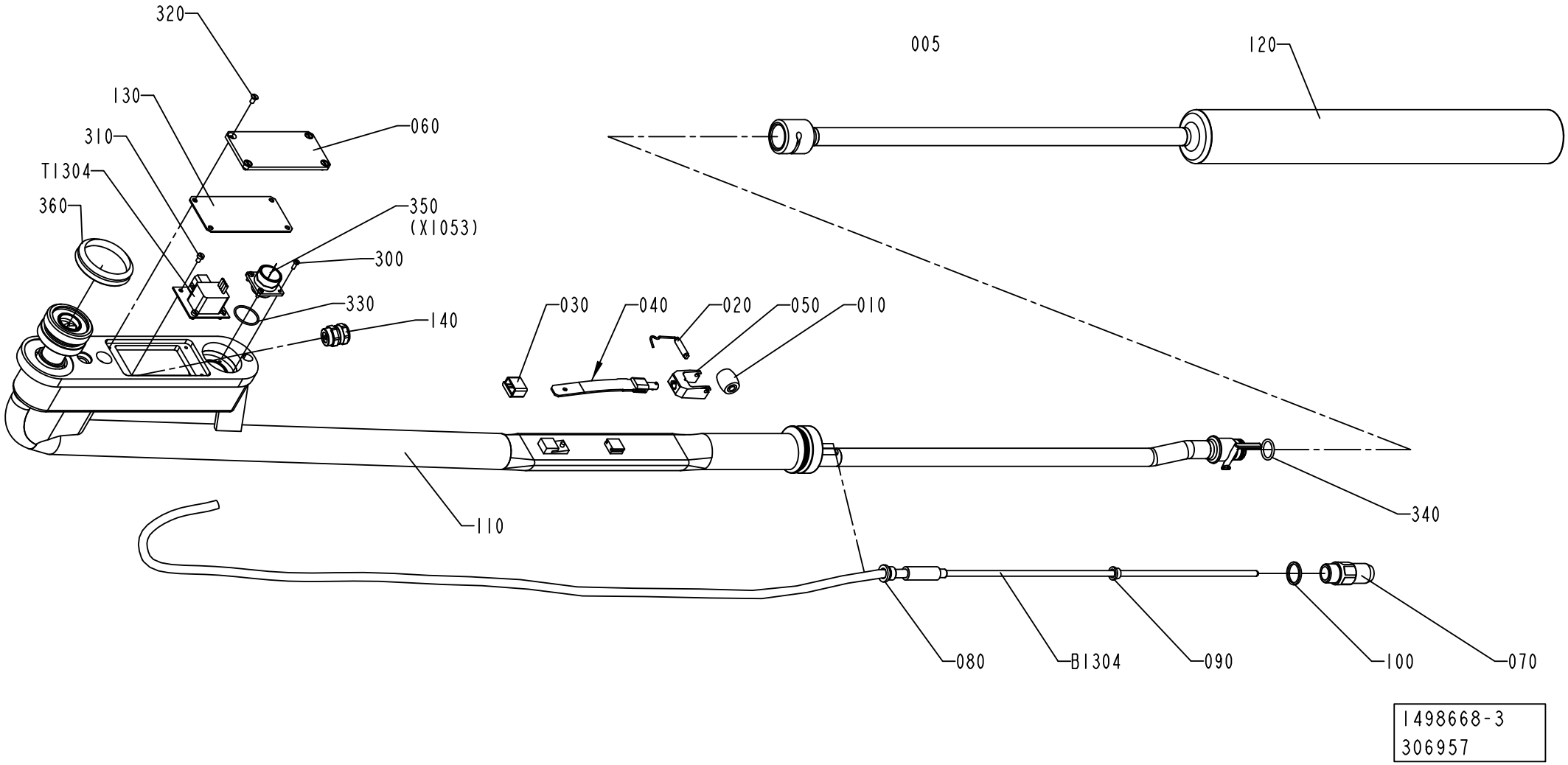
320
130
310
T1304
360
060
350
(X1053)
300
330
140
005
120
030
040
020
050
010
110
340
080
B1304
090
100
070
1498668-3
306957

ECM: 310376 - 20071001
Group number: 1498668-0300
Assembly Drawing: 1498668-3_1_AC

Pos	Part No	UN	Qty	Description	Page No
TBA 0200B					
010	2607089-0000		1	PRESSURE ROLLER	
020	2529418-0000		1	SHAFT	
040	2894222-0000		1	SPRING	
050	1317438-0000		1	FORK	
120	2685322-0000		1	FILLING PIPE	
TBA 0200M					
010	272479-0000		1	PRESSURE ROLLER (10PCS)	
020	255977-0000		1	SHAFT	
040	2894385-0000		1	SPRING	
050	1484550-0000		1	FORK	
120	2685319-0000		1	FILLING PIPE	
TBA 0200S					
010	272479-0000		1	PRESSURE ROLLER (10PCS)	
020	255977-0000		1	SHAFT	
040	2894385-0000		1	SPRING	
050	255978-0000		1	FORK	
120	2685324-0000		1	FILLING PIPE	
TBA 0250B					
010	2607089-0000		1	PRESSURE ROLLER	
020	2529418-0000		1	SHAFT	
040	2894222-0000		1	SPRING	
050	1317438-0000		1	FORK	
120	2685320-0000		1	FILLING PIPE	
TBA 0250S					
010	272479-0000		1	PRESSURE ROLLER (10PCS)	
020	255977-0000		1	SHAFT	
040	2894385-0000		1	SPRING	
050	1484550-0000		1	FORK	
120	2685323-0000		1	FILLING PIPE	
Common Parts					
005	2715555-0000		1	PIN	
030	295377-0001		1	HOOD	
060	1484515-0000		1	LID	
070	1347511-0000		1	FITTING	
080	1349913-0000		1	BUSHING	
090	1348639-0000		1	SEALING GASKET	
100	1348555-0000		1	SEALING RING	
110	1498697-0000		1	FILLING PIPE	
130	1484516-0000		1	GASKET	
140	1334056-0000		1	COMPRESSION GLAND	
300	312125-0222		4	SCREW ISO 1207 M3X8 A4	
310	312125-0285		4	SCREW ISO 1207 M4X6 A4	
320	312145-0287		4	SCREW ISO 2009 MFS M4X8 A4	
330	315204-0119		1	O-RING 25,1X1,6 MM	
340	315204-0214		1	O-RING 17,3X2,4 MM	
350	90110-0222		1	SOCKET FEMALE, MS 3102 E 16S-1S	
360	315220-0198		1	V-RINGS 45X55X13 MM V-50S	
400	90296-0091		1	LUBRICATION GREASE	
410	90157-0044		1	SEALING COMPOUND, PROD. RTV 102Q WHITE	
B1304	90274-0096		1	LEVEL PROBE, Z8778/1	
T1304	90245-0043		1	TRANSFORMER, Z-8782	

Machine Type | Group Description | Used-In | Group Number | Page No

CLEANING SLEEVE

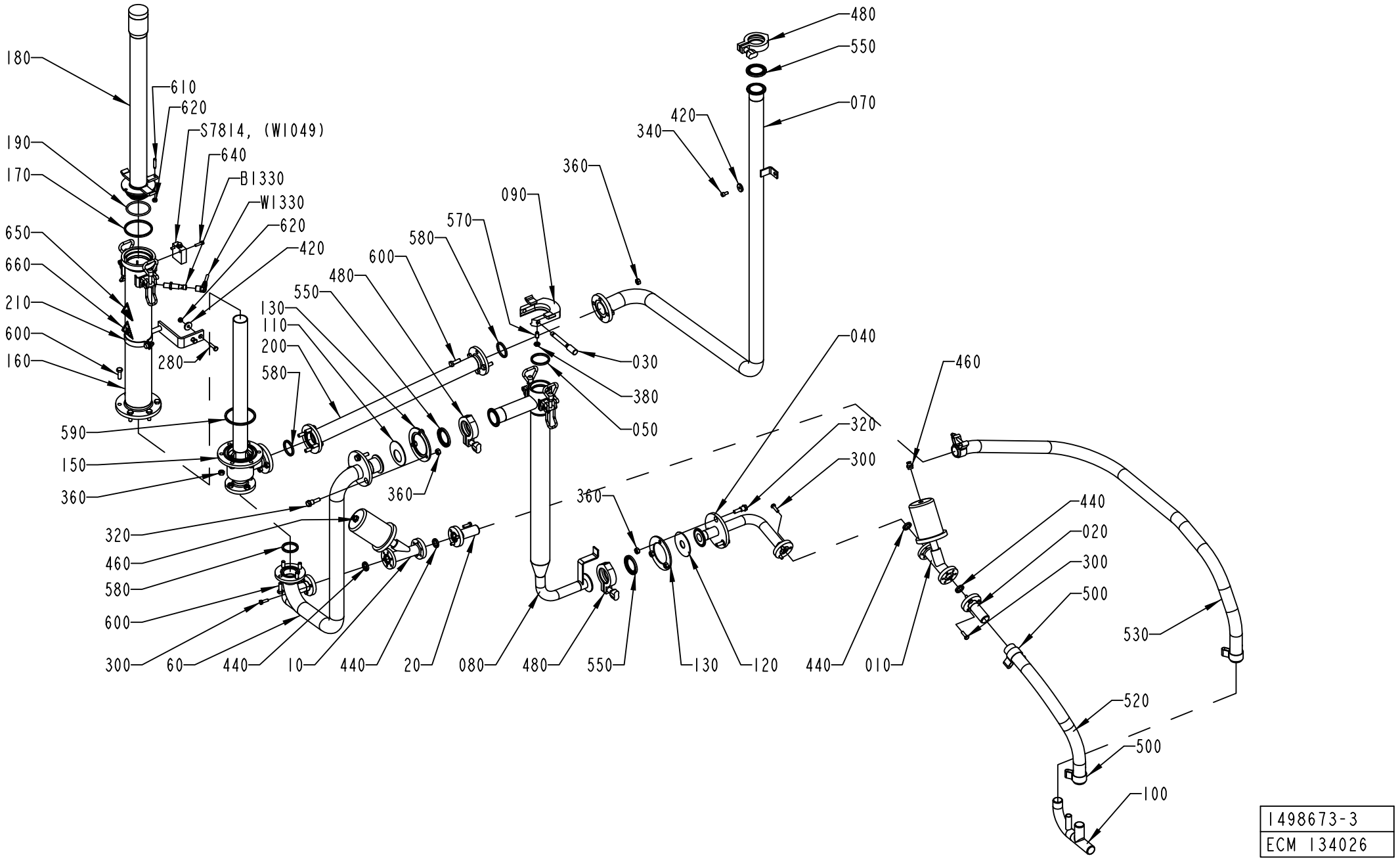

1498673-3
ECM 134026

Pos	Part No	UN	Qty	Description	Page No
TBA 0200B HI (See drawing on page: 1-98)					
070	2551062-0000		1	PIPE	
140	979256-0000		1	CLEANING PIPE	
150	2527741-0000		1	CLEANING PIPE	
160	2527740-0000		1	CLEANING PIPE	
180	2569802-0000		1	CLEANING PIPE	
210	1538787-0000		1	SUPPORT	
220	2514213-0000		1	PIPE	
480	342840-0103		4	CLAMPING PIECE	
550	90217-0307		4	GASKET 35,8X50,5X5,5 MM	
590	315229-0107		1	GASKETS, 73,9X80,9X3,7 MM 2"1/2 FD	
TBA 0200B NOHI (See drawing on page: 1-96)					
070	2500016-0000		1	PIPE	
150	2527741-0000		1	CLEANING PIPE	
160	2527740-0000		1	CLEANING PIPE	
180	2569802-0000		1	CLEANING PIPE	
210	1538787-0000		1	SUPPORT	
480	342840-0103		3	CLAMPING PIECE	
550	90217-0307		3	GASKET 35,8X50,5X5,5 MM	
590	315229-0107		1	GASKETS, 73,9X80,9X3,7 MM 2"1/2 FD	
TBA 0200M HI (See drawing on page: 1-98)					
070	2551062-0000		1	PIPE	
140	979256-0000		1	CLEANING PIPE	
150	2547154-0000		1	CLEANING PIPE	
160	2547153-0000		1	CONTAINER	
180	2569804-0000		1	CLEANING PIPE	
210	2545016-0000		1	SUPPORT	
	2545431-0000		*1*	*SUPPORT*	
	2545430-0000		*1*	*CLAMP*	
	312115-0368		*2*	*SCREW ISO4762 M6X16 A4 80*	
220	2514213-0000		1	PIPE	
480	342840-0103		4	CLAMPING PIECE	
550	90217-0307		4	GASKET 35,8X50,5X5,5 MM	
590	315229-0106		1	GASKETS, 61,2X68,2X3,7 MM 2"1/2 FD	
TBA 0200M NOHI (See drawing on page: 1-96)					
070	2500016-0000		1	PIPE	
150	2547154-0000		1	CLEANING PIPE	
160	2547153-0000		1	CONTAINER	
180	2569804-0000		1	CLEANING PIPE	
210	2545016-0000		1	SUPPORT	
	2545431-0000		*1*	*SUPPORT*	
	2545430-0000		*1*	*CLAMP*	
	312115-0368		*2*	*SCREW ISO4762 M6X16 A4 80*	
480	342840-0103		3	CLAMPING PIECE	
550	90217-0307		3	GASKET 35,8X50,5X5,5 MM	
590	315229-0106		1	GASKETS, 61,2X68,2X3,7 MM 2"1/2 FD	
TBA 0200S HI (See drawing on page: 1-98)					
070	2551062-0000		1	PIPE	
140	979256-0000		1	CLEANING PIPE	
150	2531430-0000		1	CLEANING PIPE	
160	2531429-0000		1	CONTAINER	
180	2531428-0000		1	CLEANING PIPE	
210	2545016-0000		1	SUPPORT	
	2545431-0000		*1*	*SUPPORT*	
	2545430-0000		*1*	*CLAMP*	
	312115-0368		*2*	*SCREW ISO4762 M6X16 A4 80*	
220	2514213-0000		1	PIPE	
480	342840-0103		4	CLAMPING PIECE	
550	90217-0307		4	GASKET 35,8X50,5X5,5 MM	
590	315229-0106		1	GASKETS, 61,2X68,2X3,7 MM 2"1/2 FD	
TBA 0200S NOHI (See drawing on page: 1-96)					
070	2500016-0000		1	PIPE	
150	2531430-0000		1	CLEANING PIPE	
160	2531429-0000		1	CONTAINER	
180	2531428-0000		1	CLEANING PIPE	
210	2545016-0000		1	SUPPORT	
	2545431-0000		*1*	*SUPPORT*	
	2545430-0000		*1*	*CLAMP*	
	312115-0368		*2*	*SCREW ISO4762 M6X16 A4 80*	
480	342840-0103		3	CLAMPING PIECE	
550	90217-0307		3	GASKET 35,8X50,5X5,5 MM	
590	315229-0106		1	GASKETS, 61,2X68,2X3,7 MM 2"1/2 FD	
TBA 0250B HI (See drawing on page: 1-98)					
070	2551062-0000		1	PIPE	
140	979256-0000		1	CLEANING PIPE	
150	2527741-0000		1	CLEANING PIPE	
160	2527740-0000		1	CLEANING PIPE	
180	2569803-0000		1	CLEANING PIPE	
210	1538787-0000		1	SUPPORT	
220	2514213-0000		1	PIPE	
480	342840-0103		4	CLAMPING PIECE	
550	90217-0307		4	GASKET 35,8X50,5X5,5 MM	
590	315229-0107		1	GASKETS, 73,9X80,9X3,7 MM 2"1/2 FD	
TBA 0250B NOHI (See drawing on page: 1-96)					

CLEANING SLEEVE

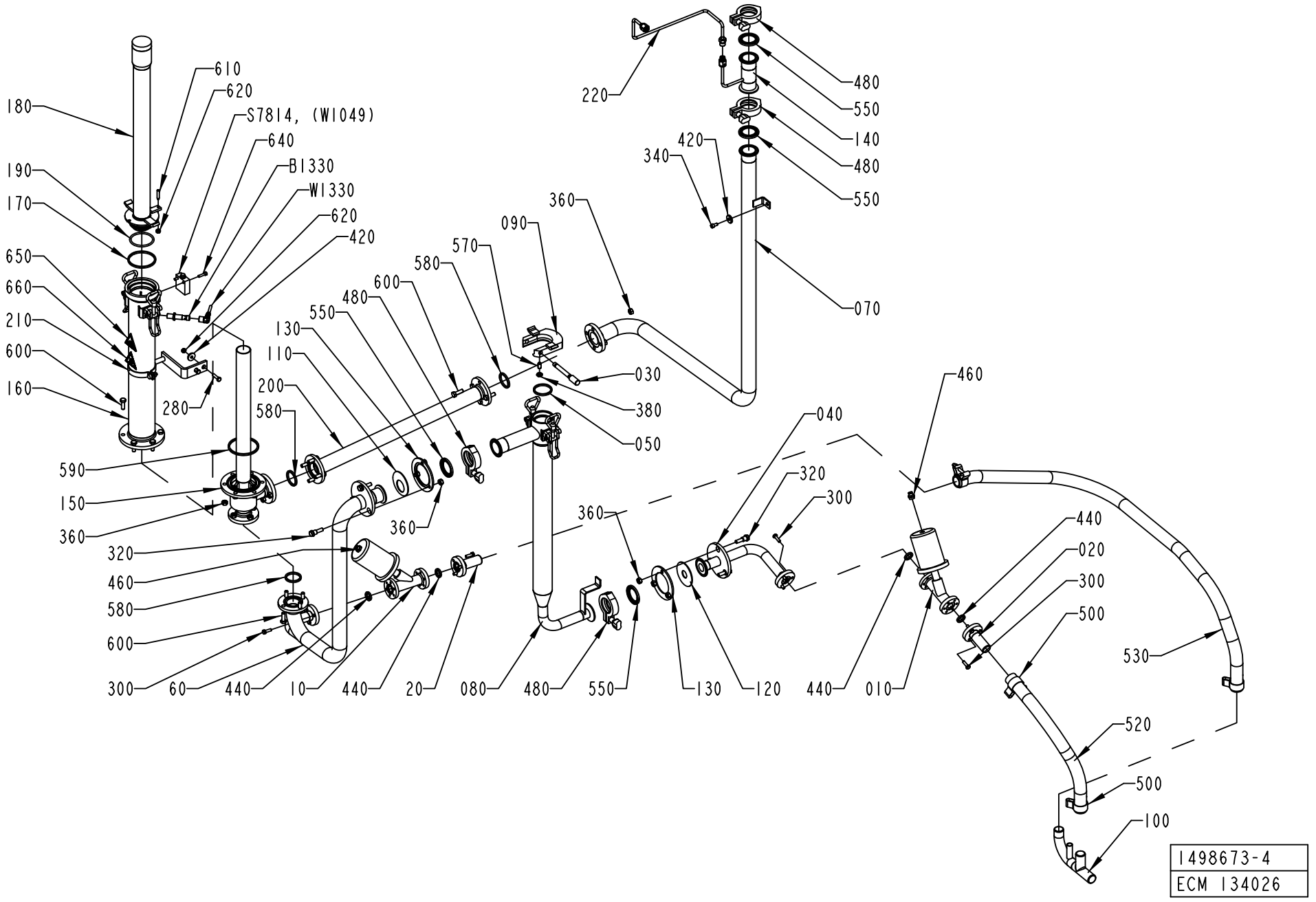

ECM: 262187 - 20060404
Group number: 1498673-0200
Assembly Drawing: 1498673-4_1_AA

This list covers pages from 1-96 to 1-99

Pos	Part No	UN	Qty	Description	Page No
TBA 0250B NOHI (Cont'd) (See drawing on page: 1-96)					
070	2500016-0000		1	PIPE	
150	2527741-0000		1	CLEANING PIPE	
160	2527740-0000		1	CLEANING PIPE	
180	2569803-0000		1	CLEANING PIPE	
210	1538787-0000		1	SUPPORT	
480	342840-0103		3	CLAMPING PIECE	
550	90217-0307		3	GASKET 35,8X50,5X5,5 MM	
590	315229-0107		1	GASKETS, 73,9X80,9X3,7 MM 2"1/2 FD	
TBA 0250S HI (See drawing on page: 1-98)					
070	2551062-0000		1	PIPE	
140	979256-0000		1	CLEANING PIPE	
150	2547154-0000		1	CLEANING PIPE	
160	2547153-0000		1	CONTAINER	
180	2547155-0000		1	CLEANING PIPE	
210	2545016-0000		1	SUPPORT	
	2545431-0000		*1*	*SUPPORT*	
	2545430-0000		*1*	*CLAMP*	
	312115-0368		*2*	*SCREW ISO4762 M6X16 A4 80*	
220	2514213-0000		1	PIPE	
480	342840-0103		4	CLAMPING PIECE	
550	90217-0307		4	GASKET 35,8X50,5X5,5 MM	
590	315229-0106		1	GASKETS, 61,2X68,2X3,7 MM 2"1/2 FD	
TBA 0250S NOHI (See drawing on page: 1-96)					
070	2500016-0000		1	PIPE	
150	2547154-0000		1	CLEANING PIPE	
160	2547153-0000		1	CONTAINER	
180	2547155-0000		1	CLEANING PIPE	
210	2545016-0000		1	SUPPORT	
	2545431-0000		*1*	*SUPPORT*	
	2545430-0000		*1*	*CLAMP*	
	312115-0368		*2*	*SCREW ISO4762 M6X16 A4 80*	
480	342840-0103		3	CLAMPING PIECE	
550	90217-0307		3	GASKET 35,8X50,5X5,5 MM	
590	315229-0106		1	GASKETS, 61,2X68,2X3,7 MM 2"1/2 FD	
Common Parts					
010	1038905-0000		2	VALVE	
020	1285329-0000		2	PIPE	
030	1346353-0000		1	LOCK PIN	
040	1348099-0000		1	PIPE	
050	1348475-0000		1	GASKET	
060	2500015-0000		1	PIPE	
080	2540803-0000		1	CLEANING SLEEVE	
090	1487037-0000		1	FLANGE	
100	1487198-0000		1	PIPE	
110	1499125-0000		1	SEAL	
120	1499126-0000		1	SEAL	
130	1499127-0000		2	FLANGE	
170	1348474-0000		1	GASKET	
190	1538794-0000		1	O-RING	
200	2500017-0000		1	PIPE	
280	312105-0372		2	SCREW M6S ISO 4017 M6X25 A480	
300	312105-0370		12	SCREW M6S ISO 4017 M6X20 A480	
320	2558848-0000		6	SCREW	
340	312115-0366		1	SCREW ISO4762 M6X12 A4 80	
360	312605-0318		24	HEXAGON NUT, M6M M8 A280	
380	312625-0318		1	HEXAGON THIN NUT, EN 24035 ML6M M8 A4	
420	315125-0153		3	WASHER TBRSB 6,4X22X4 A4	
440	315229-0102		4	GASKETS, 16,8X23,8X3,7 MM 3/4" FDA	
460	342722-0203		2	STRAIGHT COUPLING	
500	90459-2366		4	HOSE CLIP, (32)-35	
520	90166-0233	MM	500	HOSE	
530	90166-0233	MM	1500	HOSE	
570	90287-0112		1	SCREW SPRINGLOAD. SLOTTED HEAD M8X16	
580	315229-0104		3	GASKETS, 35,8X42,8X3,7 MM 1"1/2 FD	
600	312105-0453		18	SCREW M6S ISO 4017 M8X25 A480	
610	312311-0374		1	SCREW ISO4028 M6X30 FZB	
620	312605-0316		3	HEXAGON NUT, M6M M6 A280	
640	312115-0331		2	SCREW ISO4762 M5X20 A4 80	
650	359705-0003		1	WARNING SIGN ISO, DANGEROUS CHEMICALS	
660	359705-0007		1	WARNING SIGN ISO, HOT SURFACE	
B1330	90459-0252		1	PROX.SWITCH IX 0208	
S7814	90044-0084		1	LIMIT SW. 14 CE1-4	
W1330	90459-0253		1	SENSOR CABLE S12-3FVW-050	

Machine Type	Group Description	Used-In	Group Number	Page No

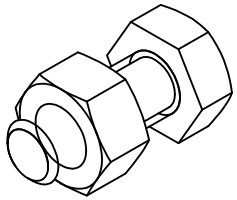

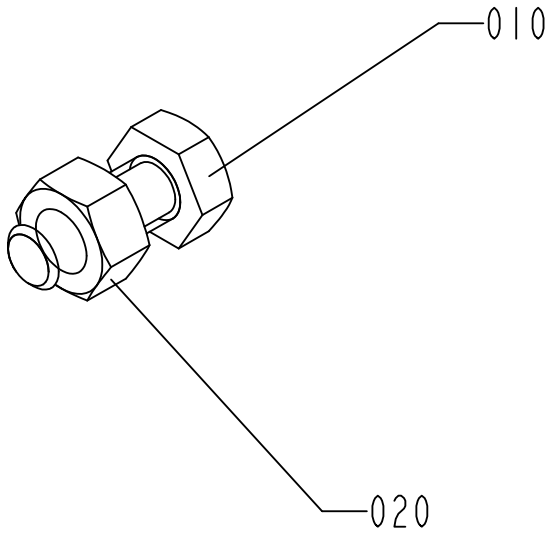

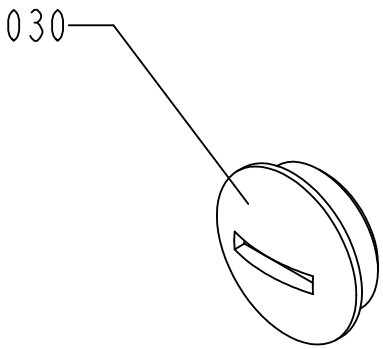

2547150-1
ECM 107819

ECM: 262307 - 20060404
Group number: 2547150-0100
Assembly Drawing: 2547150-1_1_AA

Pos	Part No	UN	Qty	Description	Page No
-					
010	312105-0451		2	SCREW M6S ISO 4017 M8X20 A480	
020	312605-0318		2	HEXAGON NUT, M6M M8 A280	
030	90002-0009		1	BLANK-OFF PLUG, PR 18.6 SKINDICHT-BLK11	

Pos	Part No	UN	Qty	Description	Page No

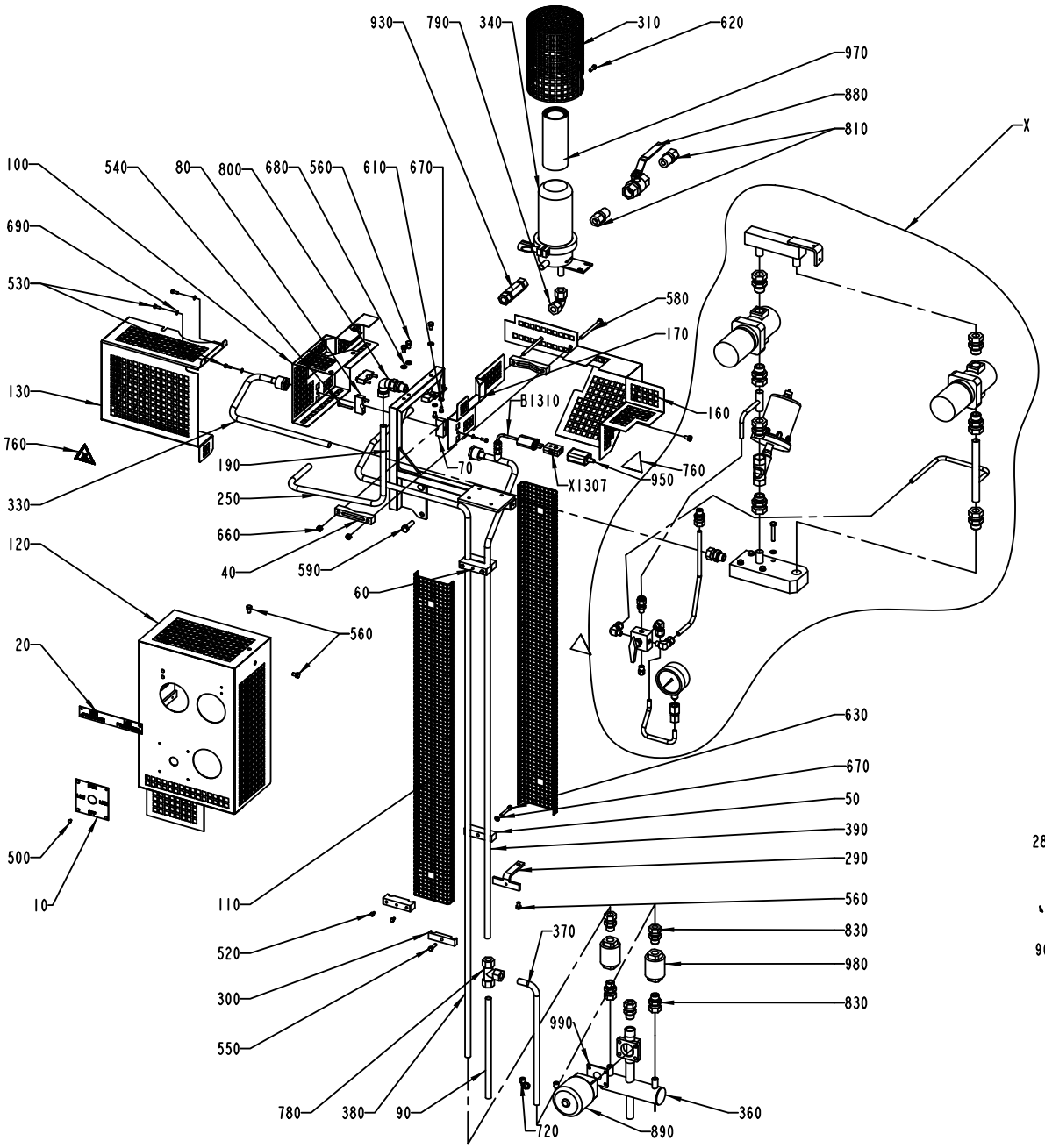

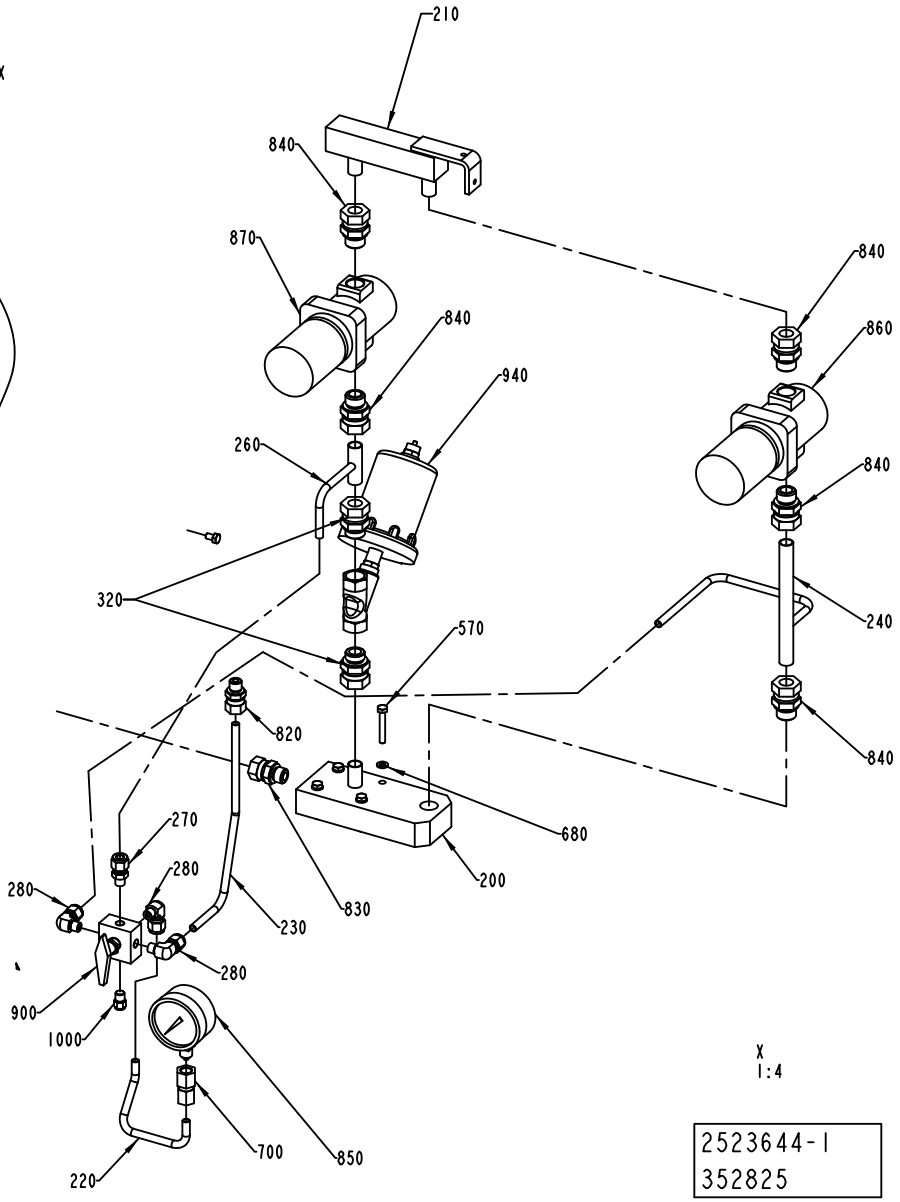

2523644-1
352825

ECM: 363770 - 20081001
Group number: 2523644-0100
Assembly Drawing: 2523644-1_1_AE

Pos	Part No	UN	Qty	Description	Page No
-					
010	2982548-0000		1	LABEL	
020	1279456-0000		1	LABEL	
040	1487200-0000		2	CLAMP	
050	1487837-0000		2	CLAMP	
060	1487838-0000		2	CLAMP	
070	1487839-0000		2	CLAMP	
080	1487840-0000		2	CLAMP	
090	1524474-0000		1	PIPE	
100	2546215-0000		1	COVER	
1000	90600-5463		1	PLUG, SS-2-P	
110	2511410-0000		2	TOUCH GUARD	
120	2982547-0000		1	COVER	
130	2546212-0000		1	COVER	
160	2546213-0000		1	COVER	
170	2546214-0000		1	COVER	
190	2511418-0000		1	BRACKET	
200	2511419-0000		1	DISTRIBUTOR BLOCK	
210	2511420-0000		1	DISTRIBUTOR BLOCK	
220	2982524-0000		1	PIPE	
230	2982525-0000		1	PIPE	
240	2982526-0000		1	PIPE	
250	2511424-0000		1	PIPE	
260	2982527-0000		1	PIPE	
270	90600-5462		1	CONN. STR 8-1/8 NPT, EXT TAPERED	
280	90600-5461		3	CONN. ELBOW, 8-1/8 NPT, EXT.THREAD	
290	2517370-0000		1	CLAMP	
300	2517371-0000		1	CLAMP	
310	2517375-0000		1	COVER	
320	2522195-0000		2	CONNECTION	
330	2523642-0000		1	PIPE	
340	2523645-0000		1	FILTER	
360	2523663-0000		1	PIPE	
370	2525531-0000		1	PIPE	
380	2525532-0000		1	STEAM PIPE	
390	2525533-0000		1	STEAM PIPE	
500	311521-0142		8	RIVET, BLANK 3,2X6	
520	312105-0287		8	SCREW M6S ISO 4017 M4X8 A470	
530	312105-0291		6	SCREW M6S ISO 4017 M4X12 A470	
540	312105-0299		4	SCREW M6S ISO 4017 M4X30 A470	
550	312105-0333		1	SCREW M6S ISO 4017 M5X25 A480	
560	312105-0364		7	SCREW M6S ISO 4017 M6X10 A480	
570	312105-0378		4	SCREW M6S ISO 4014 M6X40 A480	
580	312105-0386		2	SCREW M6S ISO 4014 M6X80 A480	
590	312105-0455		2	SCREW M6S ISO 4017 M8X30 A480	
610	312105-0323		2	SCREW M6S ISO 4017 M5X8 A480	
620	312105-0329		1	SCREW M6S ISO 4017 M5X16 A480	
630	312115-0337		2	SCREW ISO4762 M5X35 A4 80	
660	312605-0316		2	HEXAGON NUT, M6M M6 A280	
670	315105-0146		4	WASHER BRB 5,3X10 RFR	
680	315105-0153		7	WASHER BRB 6,4X12 RFR	
690	315105-0136		2	WASHER BRB 4,3X8 RFR	
700	342725-0103		1	CONN. STR. PIPE GAI08LR G1/4	
720	90458-2956		2	ELBOW PIPE JOINT, EXT.THREAD, D=6MM-G1/8	
760	359705-0007		3	WARNING SIGN ISO, HOT SURFACE	
780	90030-0058		1	CONN. T-PIPE T-12	
790	90030-0096		1	CONN. ELBOW W12L71	
800	90030-0136		1	ADJUSTABLE ELBOW CONNECTION,EXT 12-G3/8	
810	90030-0180		2	CONN. STR. GE12L1/2NPT71	
820	90030-0185		1	CONN. STR. GE08LRED71	
830	90030-0187		6	CONN. STR. GA-12-G3/8	
840	90030-0188		5	CONN. STR. GA-15-G1/2	
850	90043-0082		1	PRESSURE GAUGE, 2740, D=63 MM	
860	2558133-0000		1	PRESSURE REGULATOR	
870	2558134-0000		1	PRESSURE REGULATOR	
880	90187-0082		1	BALL VALVE RP1/2	
890	90187-0110		1	DIAPHRAGM VALVE DN15, NC WELD CONN.	
900	90600-5341		1	BALL VALVE, 2F-MB6X5PFA-SSP	
930	90230-0025		1	NON-RETURN VALVE, 12MM, L=85	
940	90235-0261		1	ANGLE SEAT VALVE G1/2, N.C. DN13	
950	90326-0012		1	PROTECTIVE COVER, T31A4618	
970	90337-0315		1	FILTER INSERT / MCS 4463	
	90458-2549		*1*	*O-RING 72,69X2,62 MM*	
980	90360-0020		2	STEAM TRAP / MK36/51 3/8 INCH	
	90360-0309		*1*	*STRAINER, FOR STEAM TRAP 90360-20*	
	90360-0310		*1*	*CAPSULE, FOR STEAM TRAP 90360-20*	
990	90459-5901		1	DIAPHRAGM, 425 EPM SIZE 15	
B1310	90326-0089		1	THERMOCOUPLE, 5110-089-000	
X1307	90326-0020		1	PLUG, FEMALE YELLOW CR-AL	

Machine Type | Group Description | Used-In | Group Number | Page No

PRODUCT VALVE GROUP

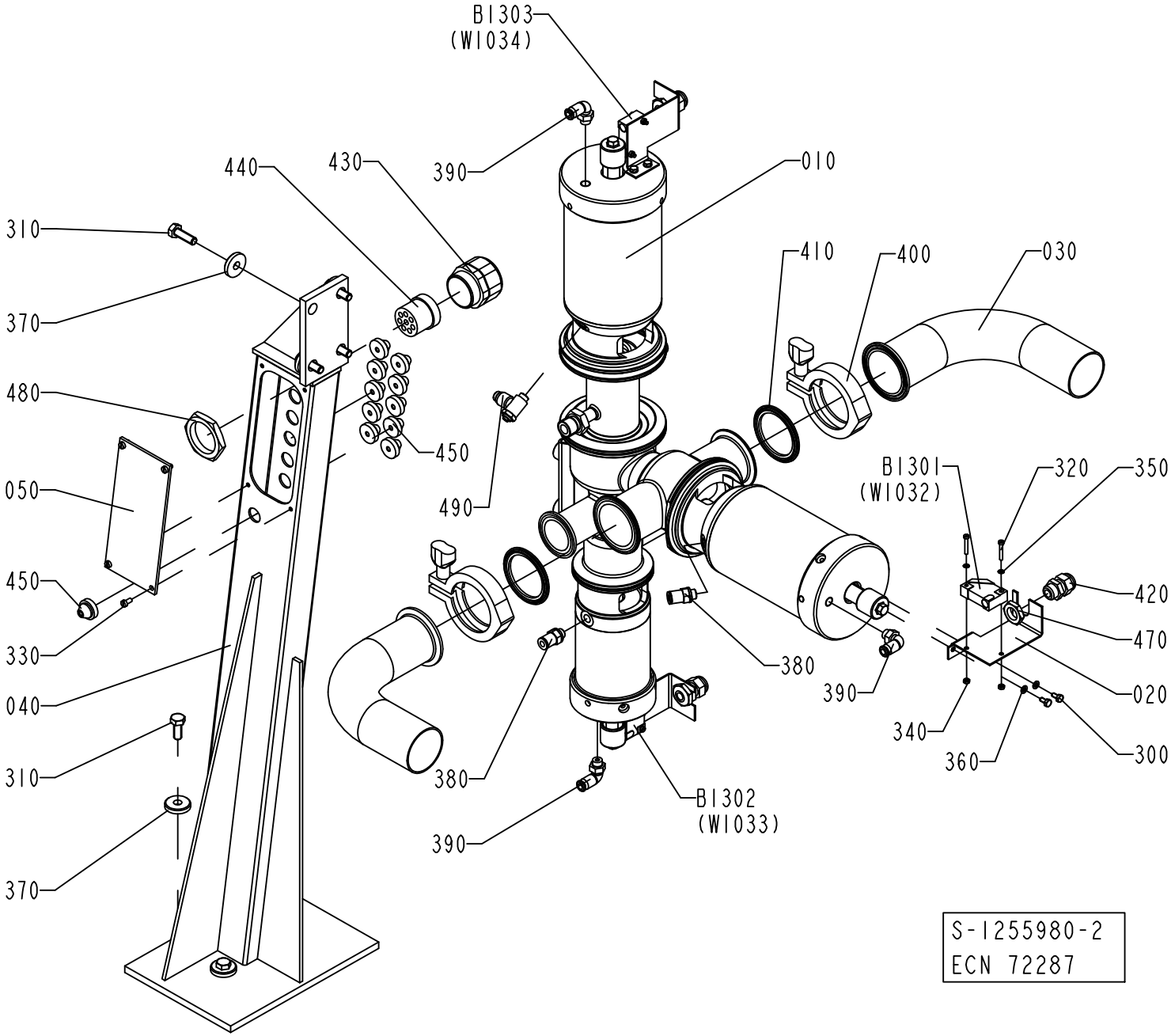

ECM: 315446 - 20071112
Group number: 1255980-0200
Assembly Drawing: 1255980-2_1_AB

Pos	Part No	UN	Qty	Description	Page No
TBA 0200M, TBA 0200B, TBA 0200S, TBA 0250S, TBA 0250B, TBA 0300S					
010	576434-0100		1	AP-VALVE 51-38	**1-107**
030	1129801-0000		2	PIPE	
400	342840-0105		2	CLAMPING PIECE	
410	342850-0305		2	GASKET 47,8X62,6X5,2 MM 2" FDA	
Common Parts					
020	1037093-0000		3	SENSOR BRACKET	
040	1255986-0000		1	VALVE BRACKET	
050	1255987-0000		1	COVER	
300	312105-0287		6	SCREW M6S ISO 4017 M4X8 A470	
310	312105-0453		8	SCREW M6S ISO 4017 M8X25 A480	
320	312125-0230		6	SCREW ISO 1207 M3X20 A4	
330	312125-0287		4	SCREW ISO 1207 M4X8 A4	
340	312605-0310		6	HEXAGON NUT, M6M M3 A280	
350	315105-0124		6	WASHER BRB 3,2X6 RFR	
360	315105-0136		6	WASHER BRB 4,3X8 RFR	
370	315125-0165		8	WASHER TBRSB 8,4X26X5 A4	
380	342722-0202		2	PIPE COUPLING 1/8" D=6MM	
390	342732-0102		3	ELBOW PIPE JOINT, EXT.THREAD, D=6MM-G1/8	
420	352103-0101		3	CABLE GLAND, ST 9, PR15,2/PG9	
430	353240-0006		1	GLAND W/O INSERT PG29 NORMAL	
440	353249-0079		1	INSERT, MULTI HOLE, E155M8X5,5	
450	90015-0020		11	LEAD-IN, TET5-7, E-1458016	
470	90099-0104		3	NUT, PR 15,2 (PG9)	
480	90099-0120		1	NUT, PR 37 (PG29)	
490	90235-0288		1	THROTTLE CHECK VALVE G1/8" MANUAL, 6	
B1301	90044-0104		1	PROX.SWITCH IN-3002-BPKG REPBY 90044-194	
B1302	90044-0104		1	PROX.SWITCH IN-3002-BPKG REPBY 90044-194	
B1303	90044-0104		1	PROX.SWITCH IN-3002-BPKG REPBY 90044-194	

Pos	Part No	UN	Qty	Description	Page No

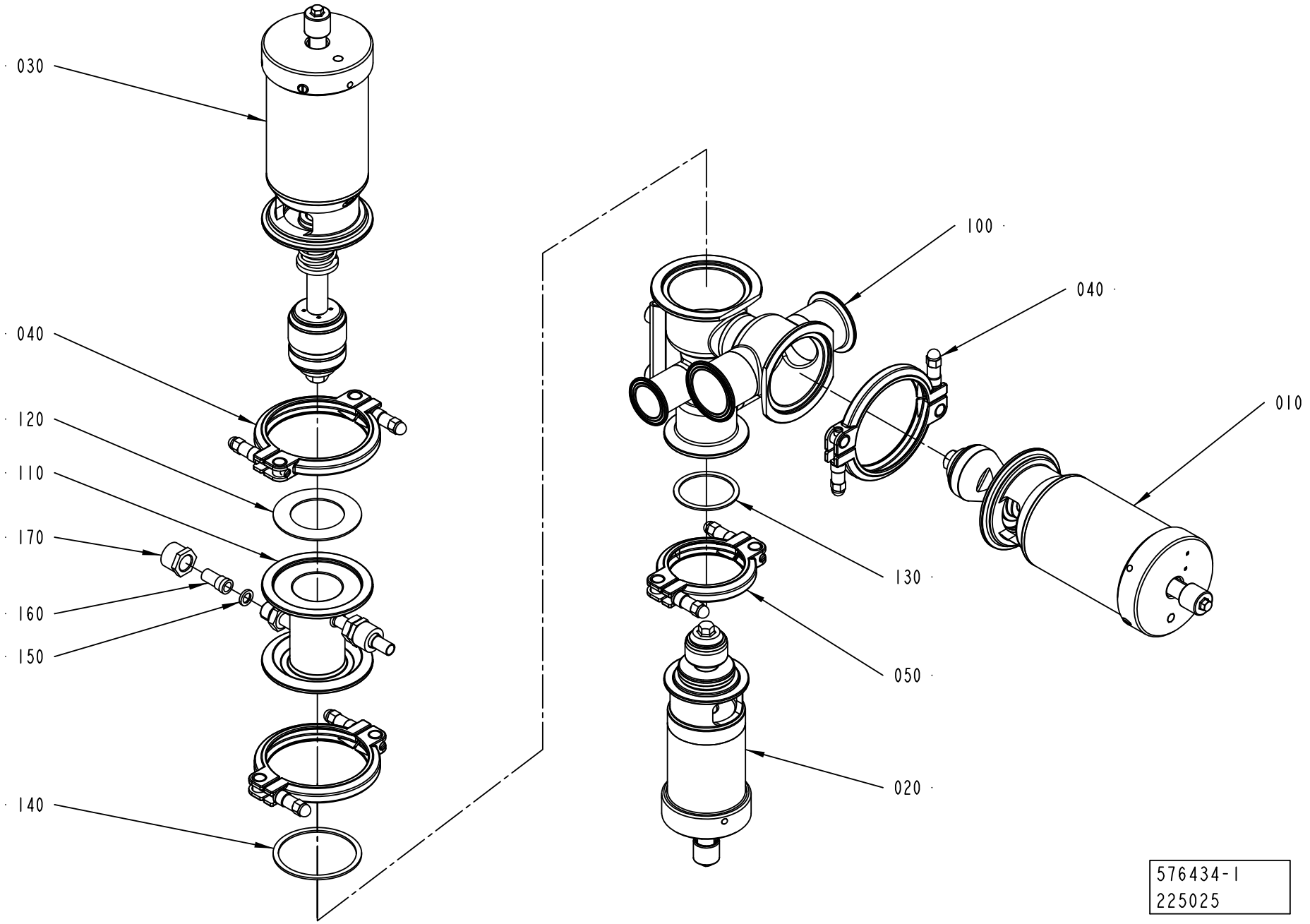
030
040
120
110
170
160
150
140
100
040
010
130
050
020
576434-1
225025

ECM: 259395 - 20060419
Group number: 576434-0100
Assembly Drawing: 576434-1_1_AC

Pos	Part No	UN	Qty	Description	Page No
-					
010	576436-0100		1	A-CYLINDER	**1-109**
020	576438-0100		1	B-CYLINDER	**1-111**
030	576437-0100		1	C-CYLINDER	**1-113**
040	541163-0200		3	CLAMP RING	**1-115**
050	541164-0200		1	CLAMP RING	**1-117**
100	556702-0000		1	AP-VALVE-BODY (51-38)	
110	567018-0000		1	STEAM HOUSE	
120	539212-0000		1	GASKET	
130	90207-0365		1	GASKET 53X63X1,8 MM 2,5" FDA 3-A	
140	90207-0363		1	GASKET 75X85X1,8 MM 3" FDA 3-A	
150	90091-0266		2	SEAL RING 10,4X16,3X2,5 MM	
160	90030-0336		2	CONN. STRAIGHT, 316L-12M-BVCO-3	
170	90030-0338		2	NUT, PIPE & CONNECTORS, SS-8-BVCO-4	

Pos	Part No	UN	Qty	Description	Page No

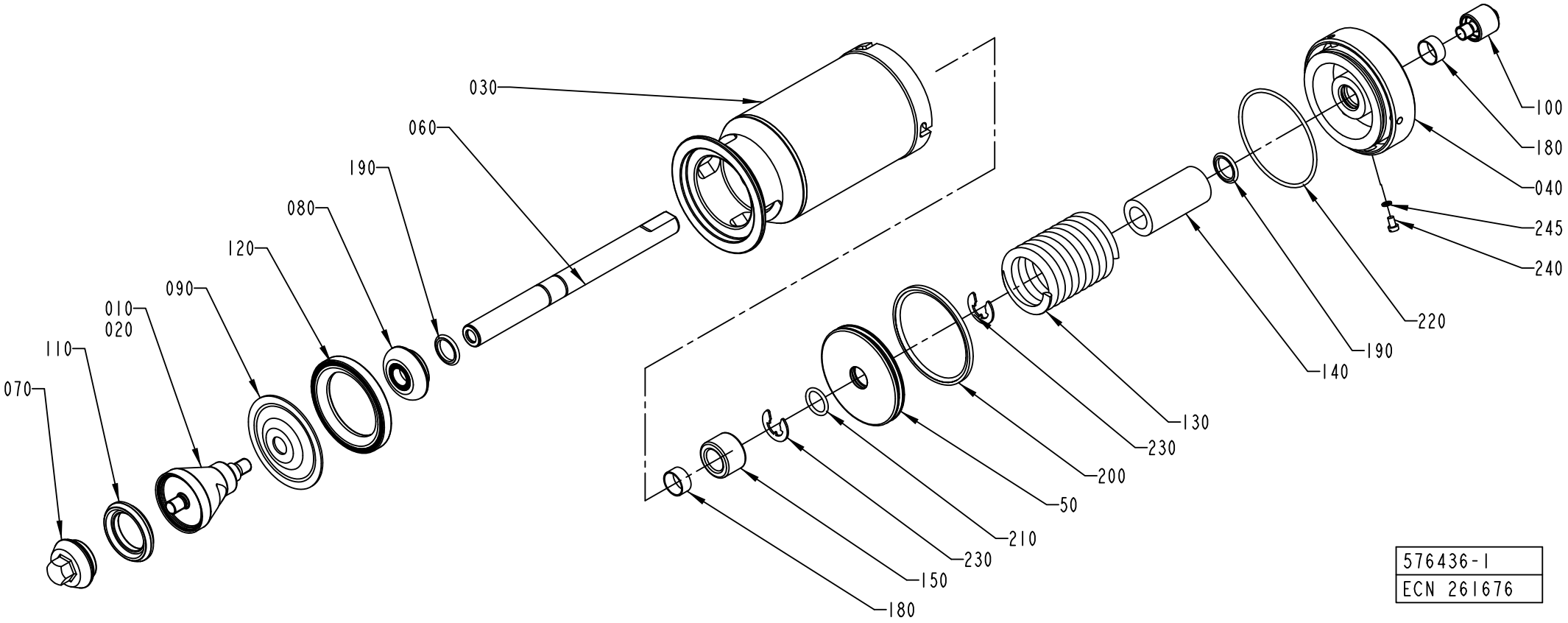
030
060
190
080
120
090
010
020
110
070
100
180
040
245
240
220
190
140
130
230
200
50
210
230
150
180
576436-1
ECN 261676

ECM: 343604 - 20080402
Group number: 576436-0100
Assembly Drawing: 576436-1_1_AC

Pos	Part No	UN	Qty	Description	Page No
2"					
010	2833037-0000		1	SEAL RING	
3"					
010	530595-0000		1	SEAL RING HOLDER	
HVA					
070	2898203-0000		1	VALVE CONE	
NOHVA					
070	2826442-0000		1	VALVE CONE	
Common Parts					
030	576439-0000		1	CYLINDER HOUSING	
040	576440-0000		1	END SECTION	
050	576441-0000		1	PISTON	
060	576446-0000		1	PISTON ROD	
080	541166-0000		1	WASHER	
090	533169-0000		1	DIAPHRAGM	
100	553607-0000		1	SLEEVE	
110	2826441-0000		1	SEAL RING	
120	440655-0000		1	RING	
130	440663-0000		1	COMPRESSION SPRING	
140	576448-0000		1	SPACER	
150	576449-0000		1	SPACER	
180	90091-0238		2	WEAR RING 20X22X10 MM	
190	90091-0237		2	ROD SEAL, GLIDORING 20X27,5X3 MM	
200	90091-0336		1	PISTON SEAL GLIDE RING 79X90X4 MM	
210	315204-0215		1	O-RING 19,2X3 MM	
220	315202-0308		1	O-RING 84,5X3 MM	
230	315754-0113		2	LOCKING WAE 15	
240	312125-0323		1	SCREW ISO 1207 M5X8 A4	
245	315233-0101		1	WASHER CAPTIVE SEALING M5(NEW315239-101)	

Pos	Part No	UN	Qty	Description	Page No

B-CYLINDER

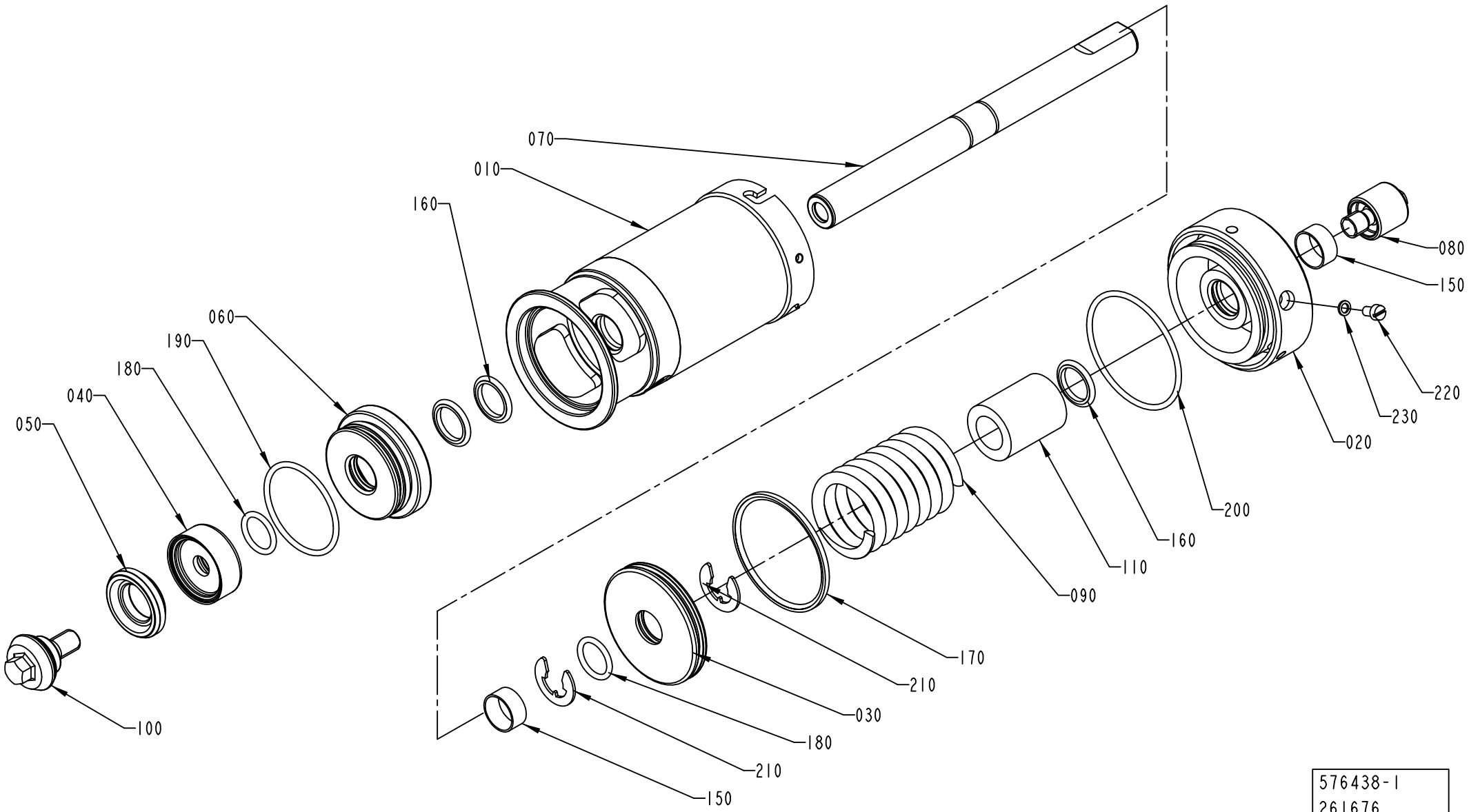

576438-1
261676

ECM: 274697 - 20070101
Group number: 576438-0100
Assembly Drawing: 576438-1_1_AC

Pos	Part No	UN	Qty	Description	Page No
-					
010	576443-0000		1	CYLINDER HOUSING	
020	576444-0000		1	END SECTION	
030	576445-0000		1	PISTON	
040	530587-0000		1	WASHER	
050	2826440-0000		1	SEAL RING	
060	556133-0000		1	SEALING WASHER	
070	576447-0000		1	PISTON ROD	
080	553607-0000		1	SLEEVE	
090	440662-0000		1	COMPRESSION SPRING	
100	2826439-0000		1	VALVE CONE	
110	576451-0000		1	SPACER	
150	90091-0238		2	WEAR RING 20X22X10 MM	
160	90091-0237		3	ROD SEAL, GLIDORING 20X27,5X3 MM	
170	90091-0335		1	PISTON SEAL GLIDE RING 62,5X70X3 MM	
180	315204-0215		2	O-RING 19,2X3 MM	
190	315204-0301		1	O-RING 49,5X3 MM	
200	315202-0304		1	O-RING 64,5X3 MM	
210	315754-0113		2	LOCKING WAE 15	
220	312125-0323		1	SCREW ISO 1207 M5X8 A4	
230	315233-0101		1	WASHER CAPTIVE SEALING M5(NEW315239-101)	

Pos	Part No	UN	Qty	Description	Page No

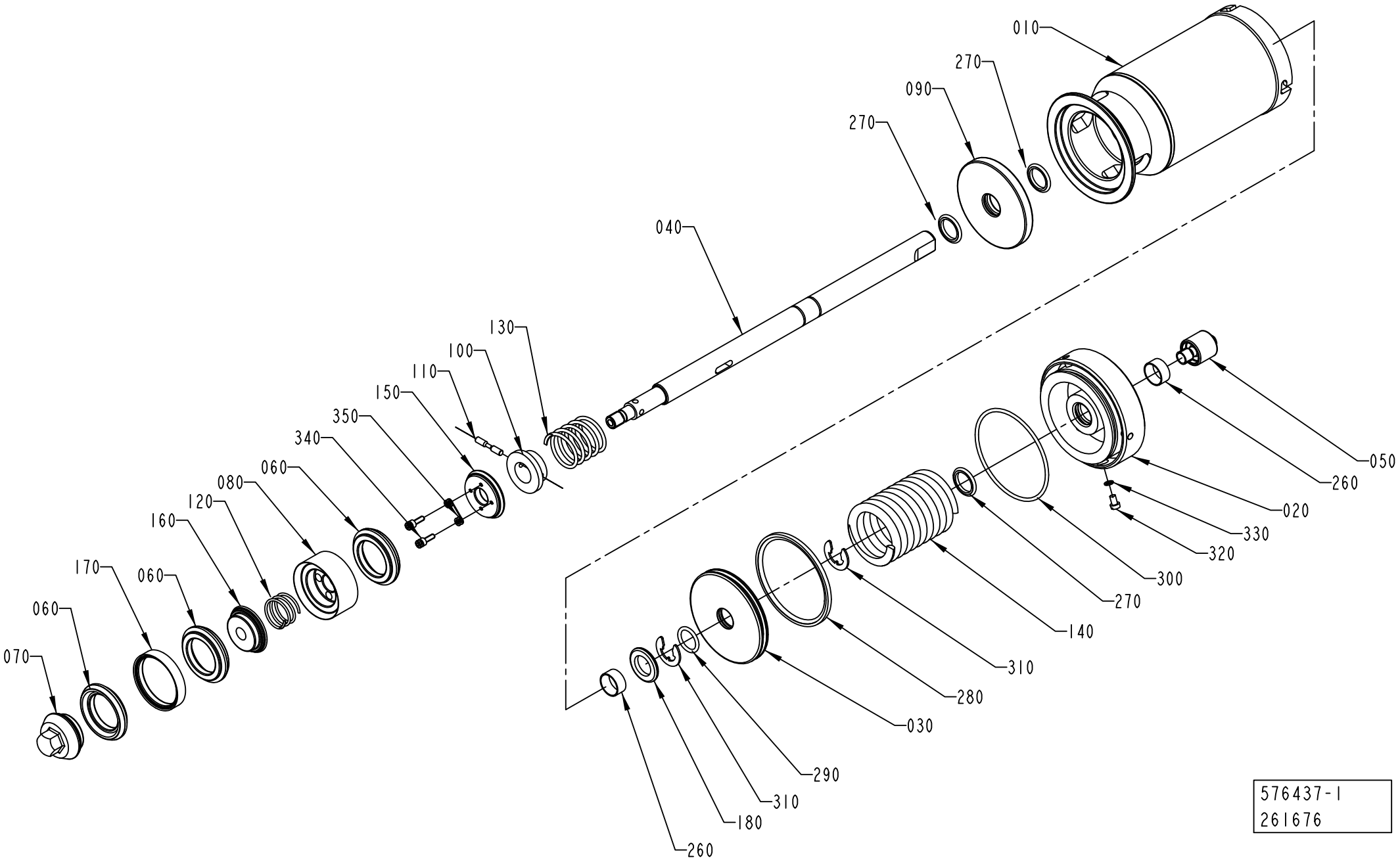
010
270
090
270
040
130
100
110
150
350
340
060
080
120
160
170
060
060
070
050
260
020
330
320
300
270
140
310
280
030
290
310
180
260
576437-1
261676

ECM: 274695 - 20070101
Group number: 576437-0100
Assembly Drawing: 576437-1_1_AC

Pos	Part No	UN	Qty	Description	Page No
-					
010	576439-0000		1	CYLINDER HOUSING	
020	576440-0000		1	END SECTION	
030	576441-0000		1	PISTON	
040	576442-0000		1	PISTON ROD	
050	553607-0000		1	SLEEVE	
060	2826441-0000		3	SEAL RING	
070	2826442-0000		1	VALVE CONE	
080	530591-0000		1	HOLDER	
090	555458-0000		1	SEALING WASHER	
100	440650-0000		1	WASHER	
110	440659-0000		1	CYLINDRICAL PIN	
120	440660-0000		1	COMPRESSION SPRING	
130	440661-0000		1	COMPRESSION SPRING	
140	440663-0000		1	COMPRESSION SPRING	
150	530597-0000		1	WASHER	
160	530598-0000		1	WASHER	
170	530599-0000		2	RING	
180	576450-0000		1	SPACER	
260	90091-0238		2	WEAR RING 20X22X10 MM	
270	90091-0237		3	ROD SEAL, GLIDORING 20X27,5X3 MM	
280	90091-0336		1	PISTON SEAL GLIDE RING 79X90X4 MM	
290	315204-0215		1	O-RING 19,2X3 MM	
300	315202-0308		1	O-RING 84,5X3 MM	
310	315754-0113		2	LOCKING WAE 15	
320	312125-0323		1	SCREW ISO 1207 M5X8 A4	
330	315233-0101		1	WASHER CAPTIVE SEALING M5(NEW315239-101)	
340	312115-0291		4	SCREW ISO4762 M4X12 A4 80	
350	315402-0136		4	LOCK WASHER FBB 4,1	

Pos	Part No	UN	Qty	Description	Page No

CLAMP RING

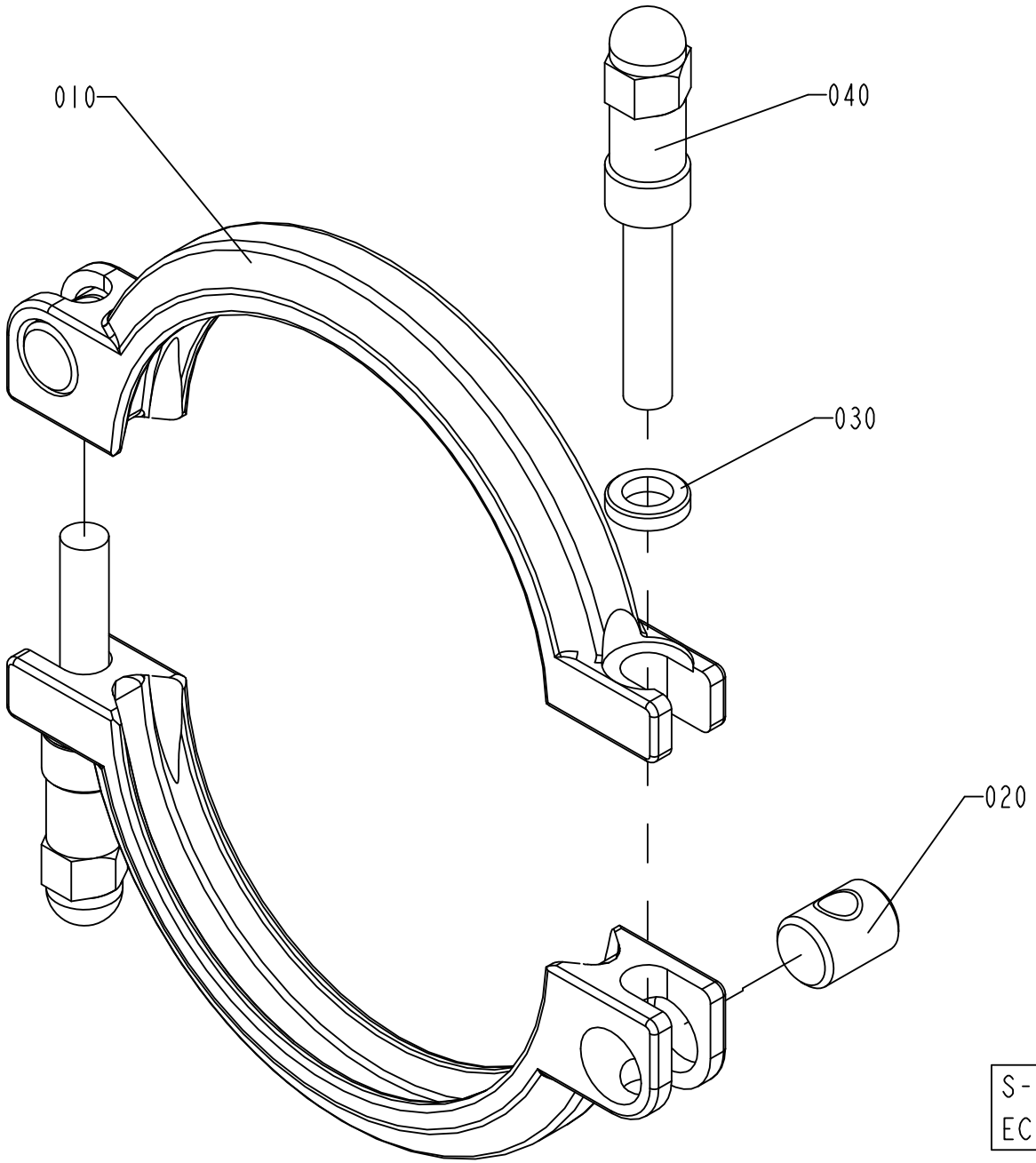

ECM: 343597 - 20080402
Group number: 541163-0200
Assembly Drawing: 541163-2_1_AB

Pos	Part No	UN	Qty	Description	Page No
-					
010	532117-0000		2	CLAMP RING	
020	497748-0000		2	PIN	
030	541165-0000		2	WASHER	
040	554162-0000		2	SCREW	

Pos	Part No	UN	Qty	Description	Page No

CLAMP RING

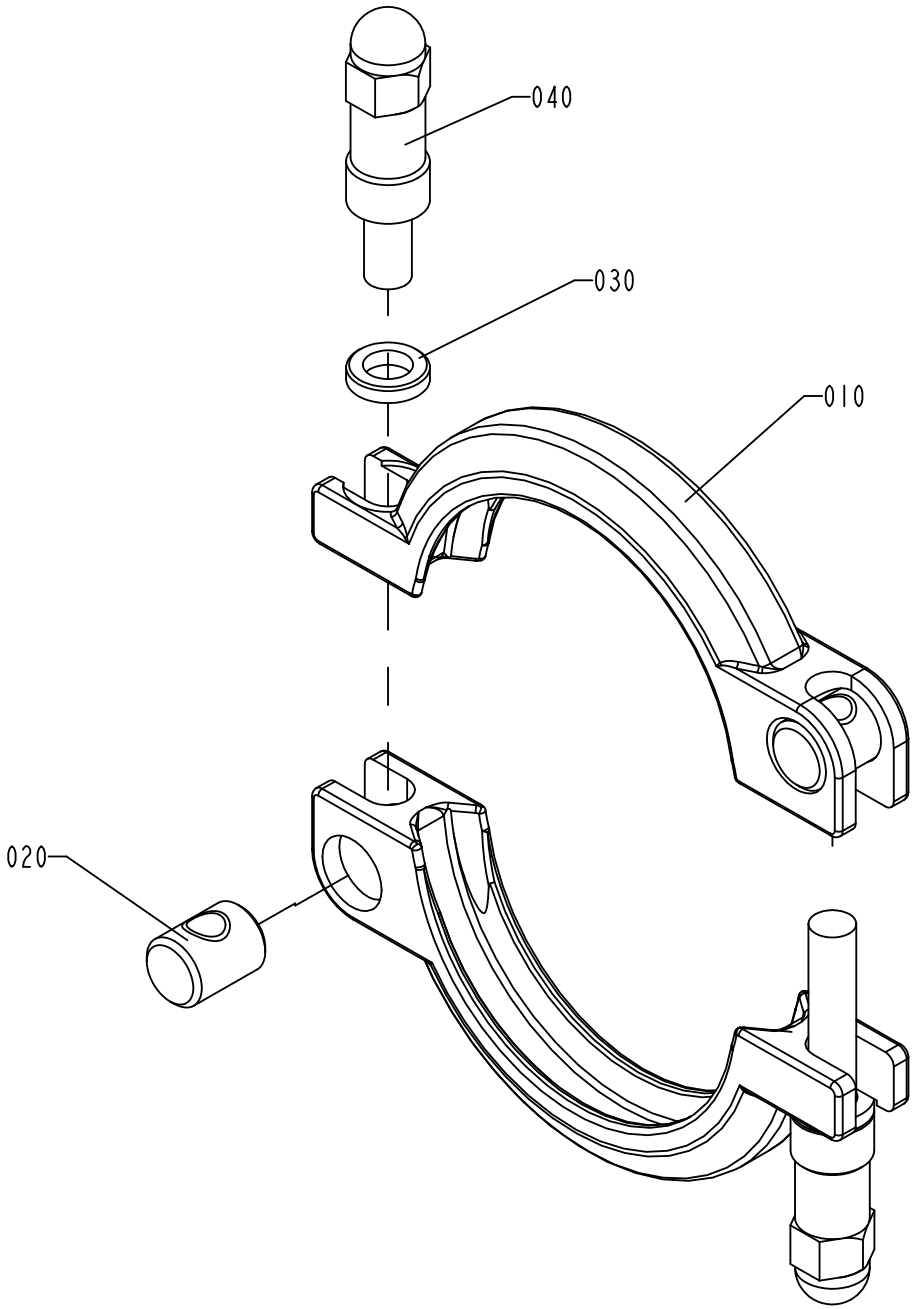

ECM: 343598 - 20080402
Group number: 541164-0200
Assembly Drawing: 541164-2_1_AB

Pos	Part No	UN	Qty	Description	Page No
-					
010	532118-0000		2	CLAMP RING	
020	497748-0000		2	PIN	
030	541165-0000		2	WASHER	
040	554162-0000		2	SCREW	

Pos	Part No	UN	Qty	Description	Page No

FLOW REGULATOR

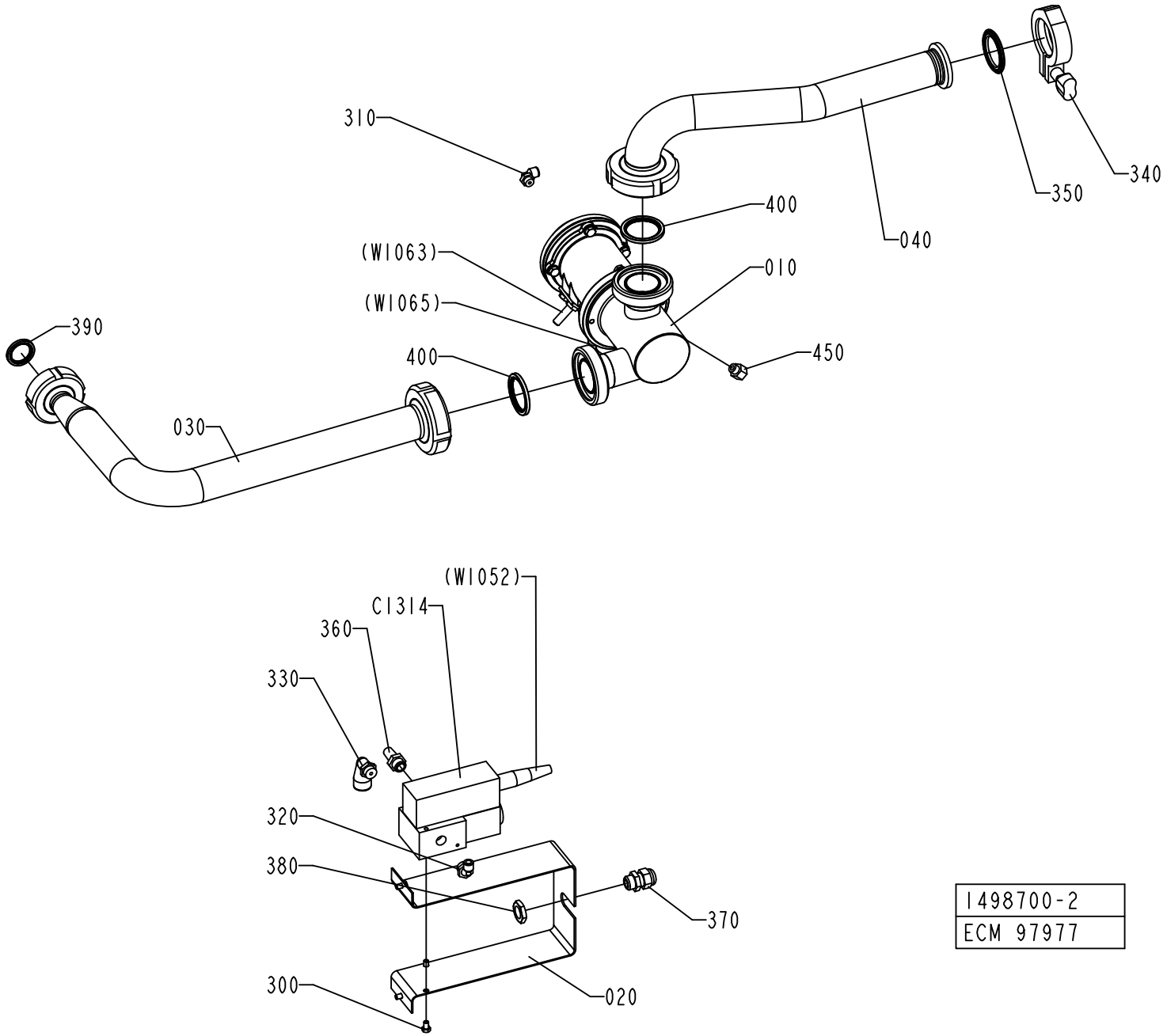

1498700-2
ECM 97977

ECM: 165041 - 20061101
Group number: 1498700-0200
Assembly Drawing: 1498700-2_1_AA

This list covers pages from 1-118 to 1-121

Pos	Part No	UN	Qty	Description	Page No
HI (See drawing on page: 1-120)					
030	2512806-0000		1	PIPE	
NOHI (See drawing on page: 1-118)					
030	1498699-0000		1	PIPE	
Common Parts					
010	1498669-0200		1	REGULATING VALVE	**1-123**
020	2519472-0000		1	BRACKET	
040	1498698-0000		1	PIPE	
300	312105-0323		4	SCREW M6S ISO 4017 M5X8 A480	
310	90458-2956		1	ELBOW PIPE JOINT, EXT.THREAD, D=6MM-G1/8	
320	90458-2957		1	ELBOW PIPE JOINT, EXT.THREAD, D=6MM-G1/4	
330	90458-2959		1	ELBOW PIPE JOINT, EXT.THREAD,D=12MM-G1/4	
340	342840-0103		1	CLAMPING PIECE	
350	342850-0304		1	GASKET 35,4X49,1X5,2 1"1/2 FDA	
360	346800-0110		1	SILENCER FILTER R1/4"	
370	352103-0101		1	CABLE GLAND, ST 9, PR15,2/PG9	
380	90099-0104		1	NUT, PR 15,2 (PG9)	
390	90217-0347		1	GASKET 32X22,6X3,6 MM	
400	90217-0348		2	GASKET 35,4X46,8X4 MM	
450	90030-0212		1	NIPPLES, REDUSING, INT. THR. NO. 2521	
C1314	90274-0099		1	IP-TRANSDUCER	

Pos	Part No	UN	Qty	Description	Page No

FLOW REGULATOR

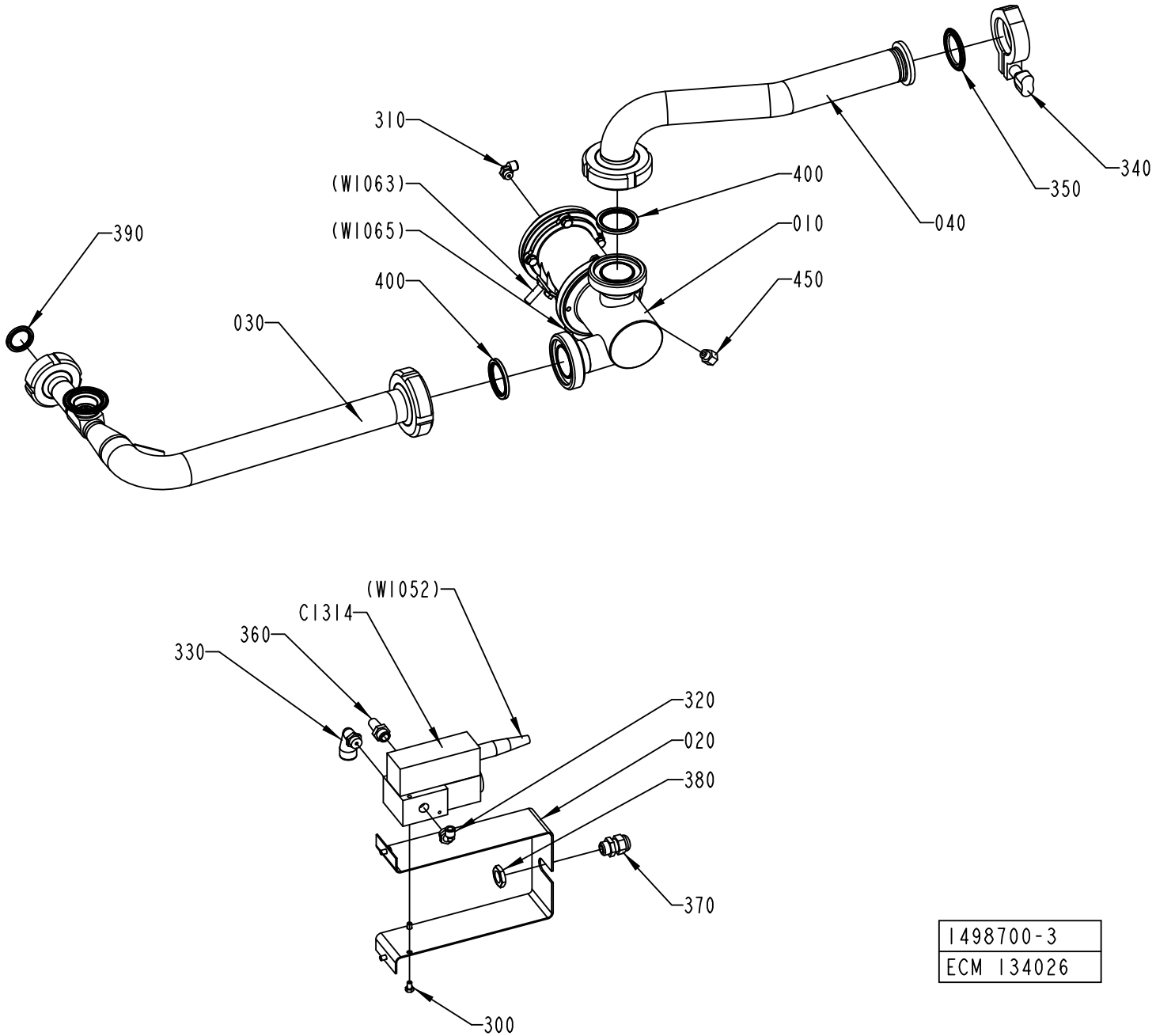

1498700-3
ECM 134026

ECM: 165041 - 20061101
Group number: 1498700-0200
Assembly Drawing: 1498700-3_1_AA

This list covers pages from 1-118 to 1-121

Pos	Part No	UN	Qty	Description	Page No
HI (See drawing on page: 1-120)					
030	2512806-0000		1	PIPE	
NOHI (See drawing on page: 1-118)					
030	1498699-0000		1	PIPE	
Common Parts					
010	1498669-0200		1	REGULATING VALVE	**1-123**
020	2519472-0000		1	BRACKET	
040	1498698-0000		1	PIPE	
300	312105-0323		4	SCREW M6S ISO 4017 M5X8 A480	
310	90458-2956		1	ELBOW PIPE JOINT, EXT.THREAD, D=6MM-G1/8	
320	90458-2957		1	ELBOW PIPE JOINT, EXT.THREAD, D=6MM-G1/4	
330	90458-2959		1	ELBOW PIPE JOINT, EXT.THREAD,D=12MM-G1/4	
340	342840-0103		1	CLAMPING PIECE	
350	342850-0304		1	GASKET 35,4X49,1X5,2 1"1/2 FDA	
360	346800-0110		1	SILENCER FILTER R1/4"	
370	352103-0101		1	CABLE GLAND, ST 9, PR15,2/PG9	
380	90099-0104		1	NUT, PR 15,2 (PG9)	
390	90217-0347		1	GASKET 32X22,6X3,6 MM	
400	90217-0348		2	GASKET 35,4X46,8X4 MM	
450	90030-0212		1	NIPPLES, REDUSING, INT. THR. NO. 2521	
C1314	90274-0099		1	IP-TRANSDUCER	

Pos	Part No	UN	Qty	Description	Page No

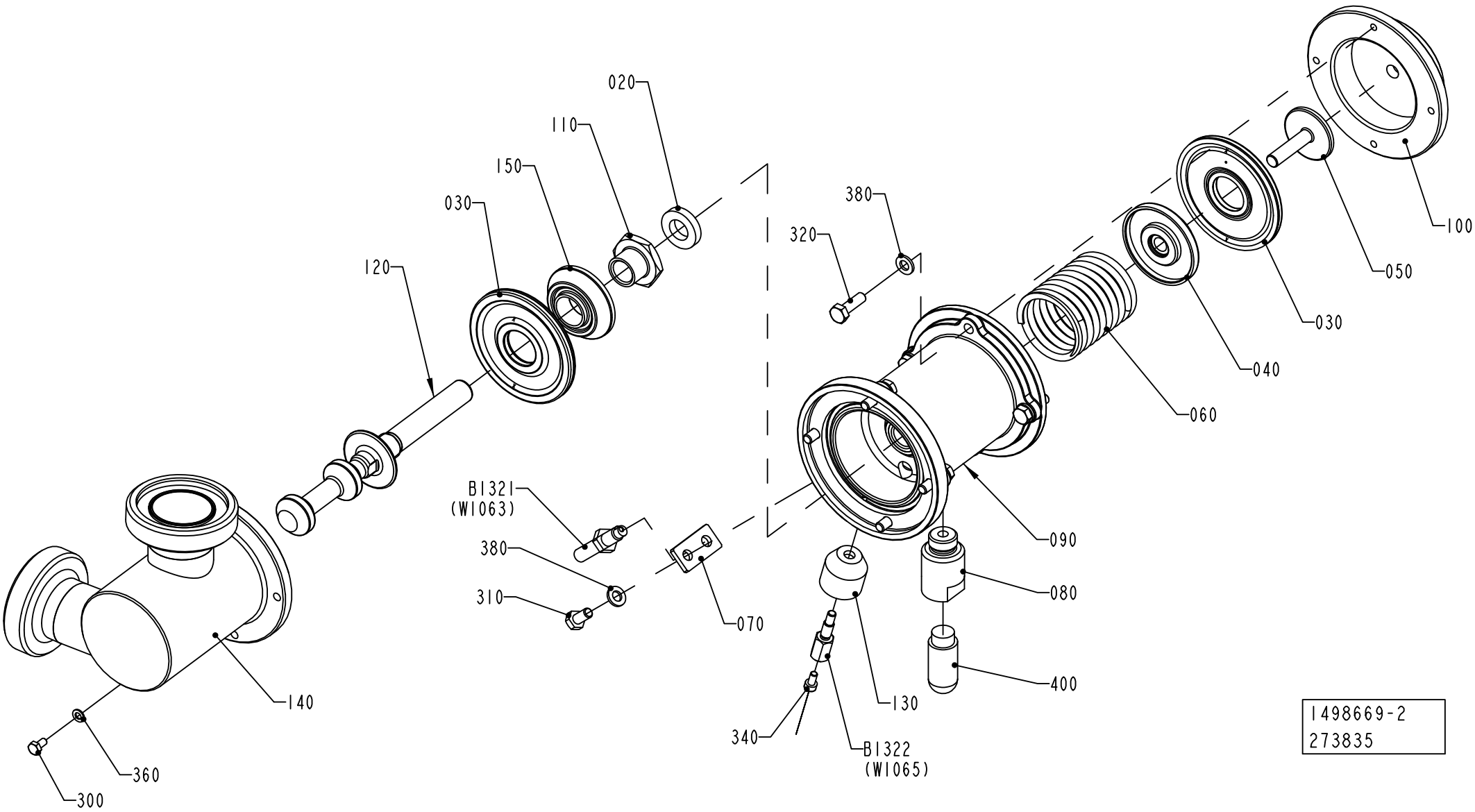
020
110
150
030
120
380
320
100
050
030
040
060
B1321
(W1063)
380
310
070
090
080
400
130
340
B1322
(W1065)
140
360
300
1498669-2
273835

ECM: 273837 - 20061101
Group number: 1498669-0200
Assembly Drawing: 1498669-2_1_AA

Pos	Part No	UN	Qty	Description	Page No
-					
020	736514-0000		1	SHOCK ABSORBER	
030	925998-0000		2	DIAPHRAGM	
040	926906-0000		1	SPACER	
050	926907-0000		1	SCREW	
060	926909-0000		1	COMPRESSION SPRING	
070	926934-0000		1	SUPPORT	
080	927044-0000		1	SPACER	
090	2790433-0000		1	BODY	
100	927203-0000		1	COVER	
110	979434-0000		1	FERRULE	
120	2790431-0000		1	SHUTTER	
130	1478813-0000		1	SPACER	
140	1498526-0000		1	REGULATOR BODY	
150	1511600-0000		1	SPACER	
300	312105-0287		1	SCREW M6S ISO 4017 M4X8 A470	
310	312105-0366		1	SCREW M6S ISO 4017 M6X12 A480	
320	312105-0370		8	SCREW M6S ISO 4017 M6X20 A480	
340	312115-0287		1	SCREW ISO4762 M4X8 A4 80	
360	315105-0136		1	WASHER BRB 4,3X8 RFR	
380	315105-0153		9	WASHER BRB 6,4X12 RFR	
400	90328-0026		1	SILENCER G1/4"	
B1321	90044-0145		1	PROX.SWITCH 922	
B1322	1478814-0000		1	SENSOR	

Pos	Part No	UN	Qty	Description	Page No

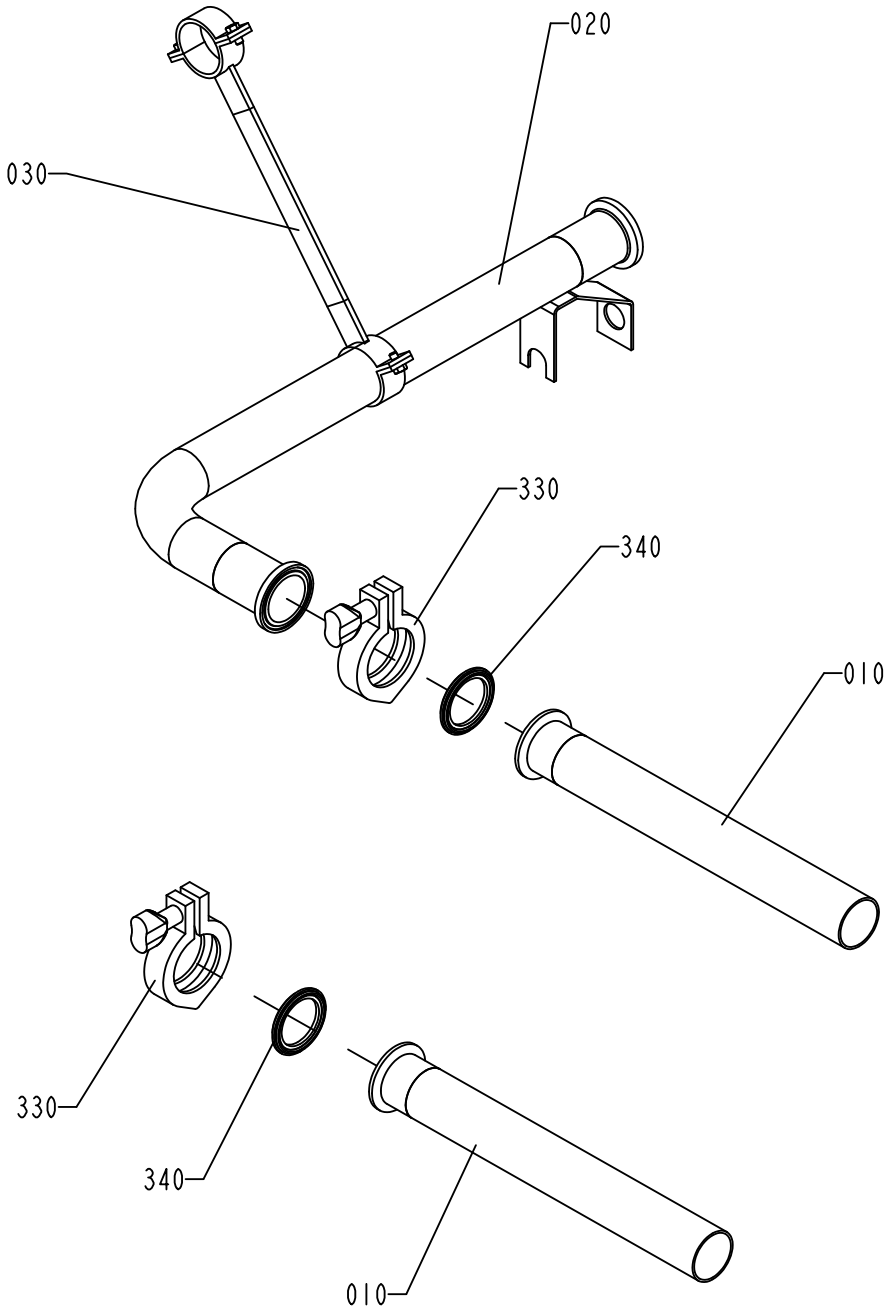

1255984-3
ECM 102299

ECM: 259652 - 20060404
Group number: 1255984-0300
Assembly Drawing: 1255984-3_1_AB

Pos	Part No	UN	Qty	Description	Page No
-					
010	2551115-0000		2	PIPE	
020	1038964-0000		1	INTERMEDIATE PART	
030	1038965-0000		1	HOLDER	
330	342840-0103		2	CLAMPING PIECE	
340	342850-0304		2	GASKET 35,4X49,1X5,2 1"1/2 FDA	

Pos	Part No	UN	Qty	Description	Page No

FASTENING PLATE

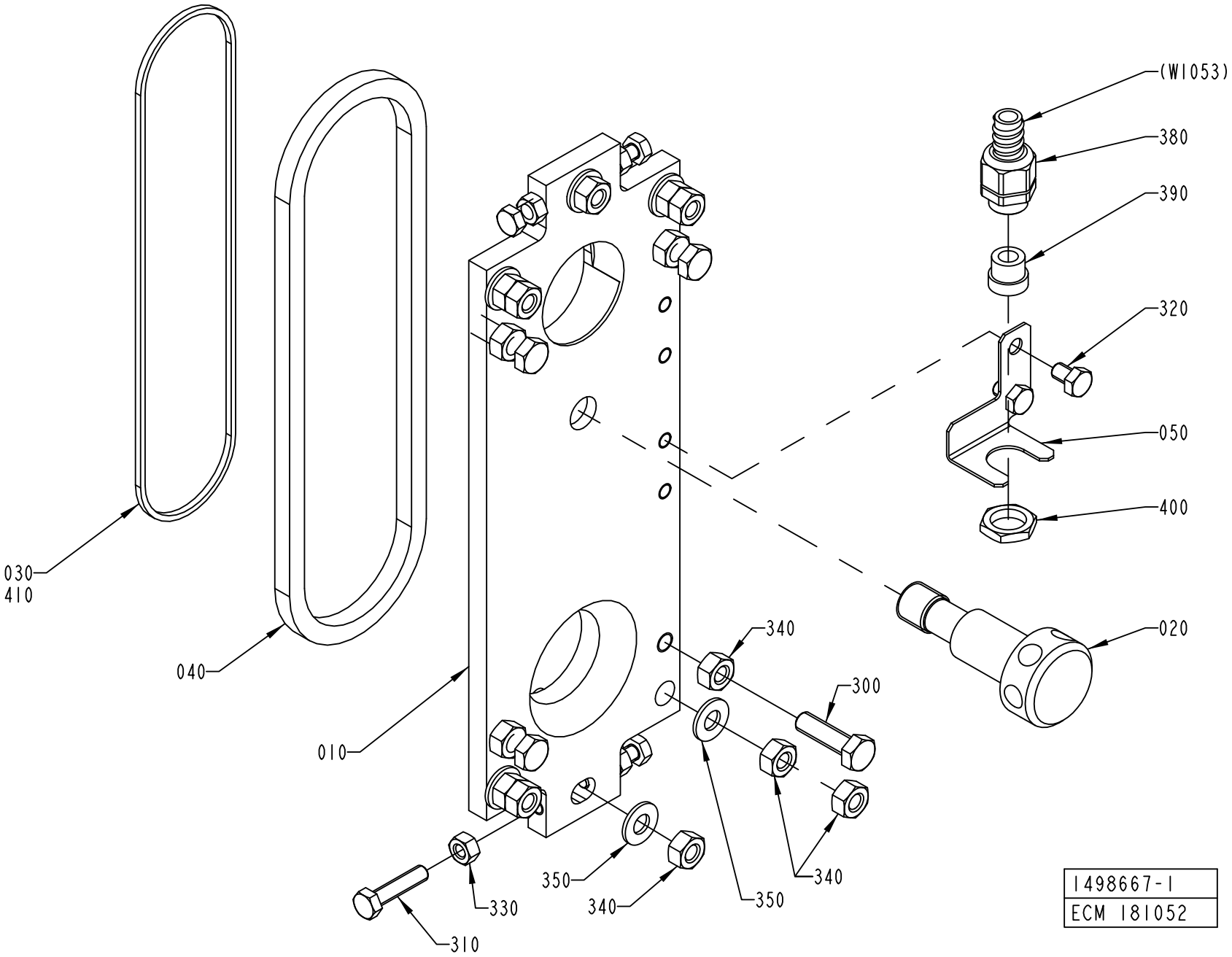

1498667-1
ECM 181052

ECM: 261776 - 20060404
Group number: 1498667-0100
Assembly Drawing: 1498667-1_1_AC

This list covers pages from 1-126 to 1-129

Pos	Part No	UN	Qty	Description	Page No
FLOATER (See drawing on page: 1-128)					
010	1548861-0000		1	MOUNTING PLATE	
LEVELPROBE (See drawing on page: 1-126)					
010	1498527-0000		1	MOUNTING PLATE	
050	2657867-0000		1	HOLDER	
320	312105-0447		2	SCREW M6S ISO 4017 M8X12 A480	
380	353243-0002		1	HOSE GLAND W/O INSERT PG11 EXTENDED	
390	353249-0009		1	INSERT, SINGLE HOLE, EK 152/9	
400	90099-0117		1	NUT, PR 18,6 (PG11)	
Common Parts					
020	1484285-0000		1	SCREW	
030	1036777-0000		1	GASKET	
040	1036778-0000		1	GASKET	
300	312105-0497		4	SCREW M6S ISO 4017 M10X35 A480	
310	312109-0457		4	SCREW M6S ISO 4017 M8X35 A480	
330	312605-0318		4	HEXAGON NUT, M6M M8 A280	
340	312605-0320		14	HEXAGON NUT, M6M M10 A280	
350	315105-0173		6	WASHER BRB 10,5X22 RFR	
410	90153-0016	L	1	ADHESIVE,TUBE 100G RHODORSIL CAF 3	

Pos	Part No	UN	Qty	Description	Page No

FASTENING PLATE

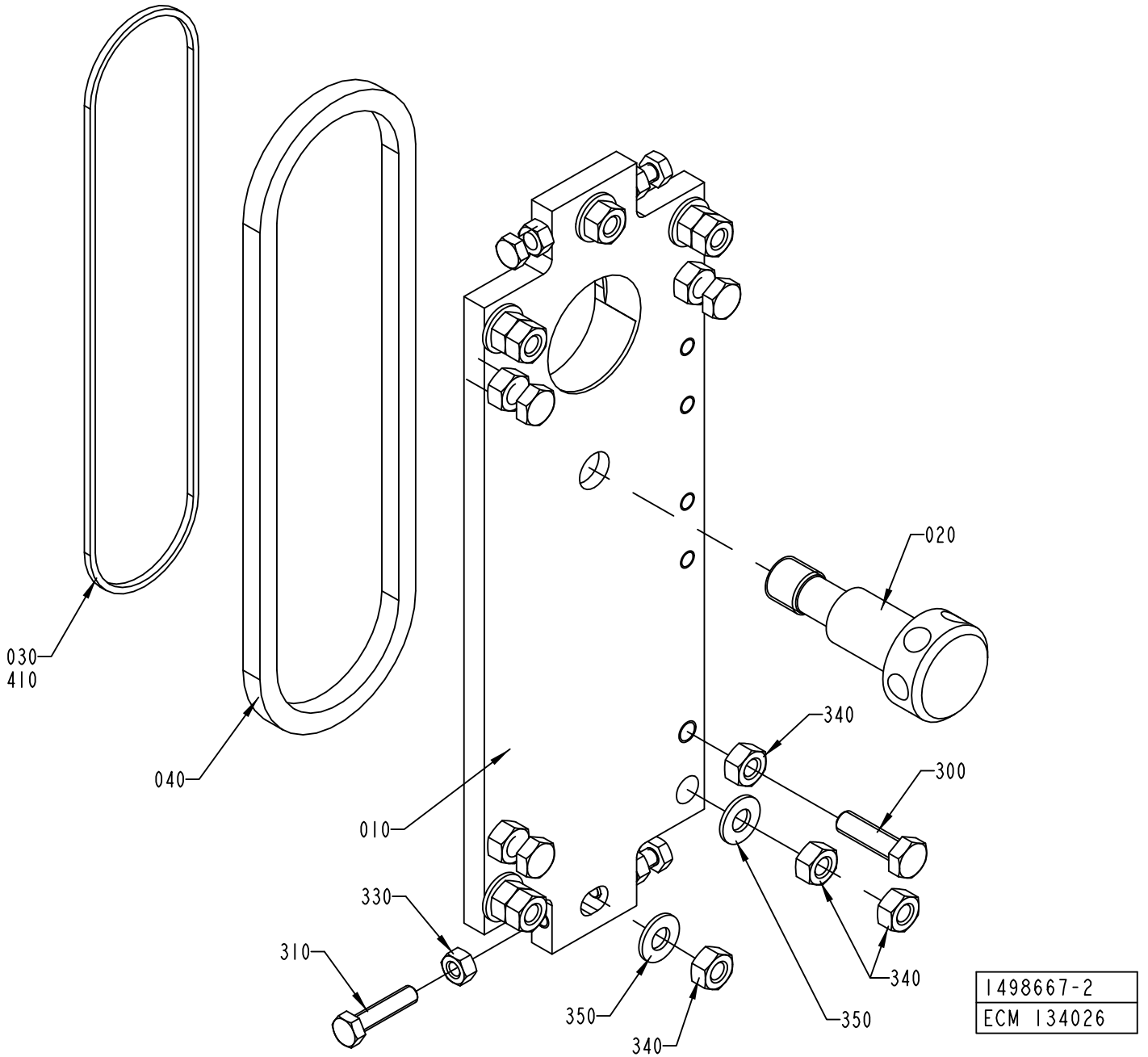

ECM: 261776 - 20060404
Group number: 1498667-0100
Assembly Drawing: 1498667-2_1_AB

This list covers pages from 1-126 to 1-129

Pos	Part No	UN	Qty	Description	Page No
FLOATER (See drawing on page: 1-128)					
010	1548861-0000		1	MOUNTING PLATE	
LEVELPROBE (See drawing on page: 1-126)					
010	1498527-0000		1	MOUNTING PLATE	
050	2657867-0000		1	HOLDER	
320	312105-0447		2	SCREW M6S ISO 4017 M8X12 A480	
380	353243-0002		1	HOSE GLAND W/O INSERT PG11 EXTENDED	
390	353249-0009		1	INSERT, SINGLE HOLE, EK 152/9	
400	90099-0117		1	NUT, PR 18,6 (PG11)	
Common Parts					
020	1484285-0000		1	SCREW	
030	1036777-0000		1	GASKET	
040	1036778-0000		1	GASKET	
300	312105-0497		4	SCREW M6S ISO 4017 M10X35 A480	
310	312109-0457		4	SCREW M6S ISO 4017 M8X35 A480	
330	312605-0318		4	HEXAGON NUT, M6M M8 A280	
340	312605-0320		14	HEXAGON NUT, M6M M10 A280	
350	315105-0173		6	WASHER BRB 10,5X22 RFR	
410	90153-0016	L	1	ADHESIVE,TUBE 100G RHODORSIL CAF 3	

Pos	Part No	UN	Qty	Description	Page No

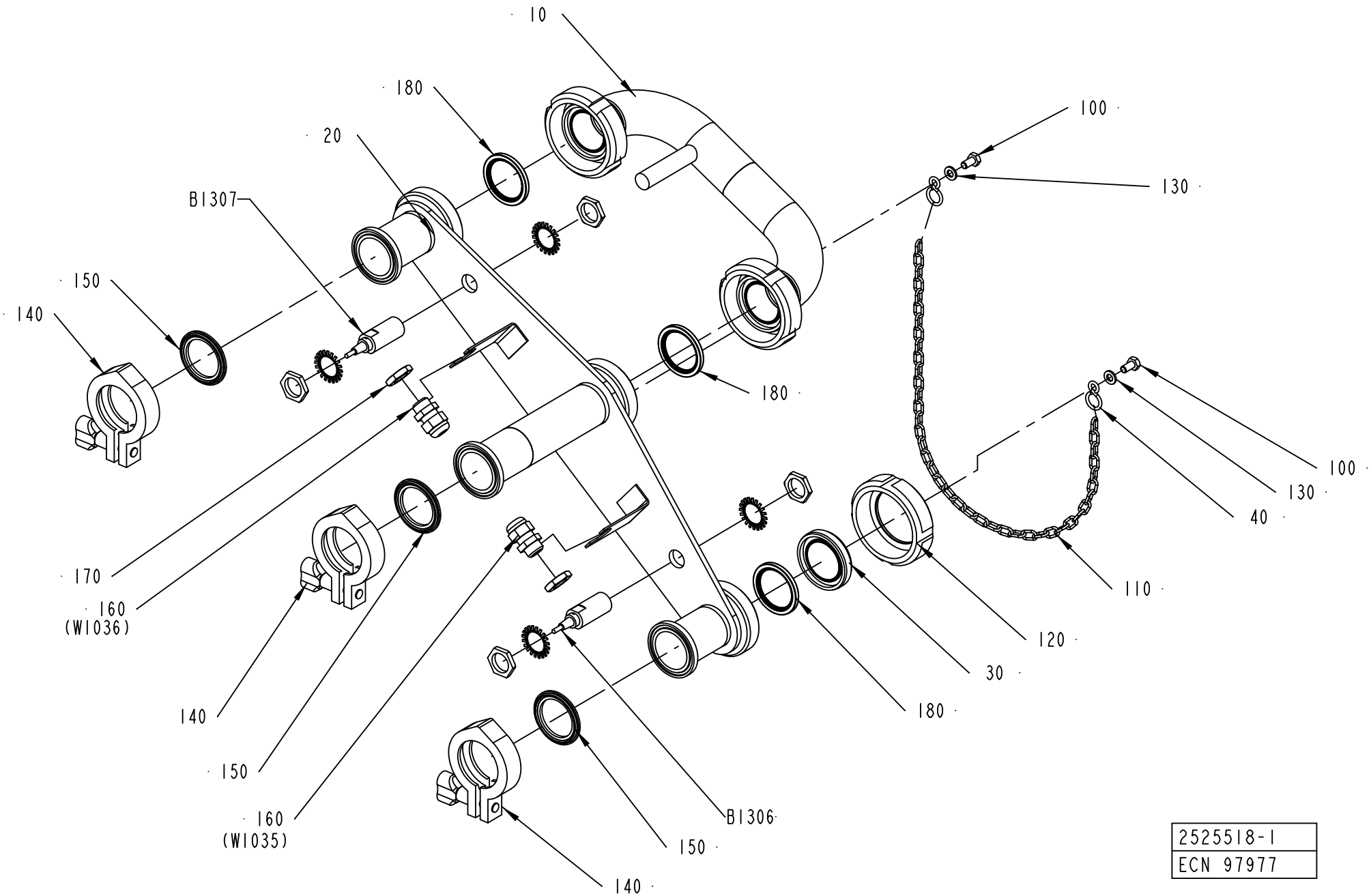

2525518-1
ECN 97977

ECM: 262303 - 20060404
Group number: 2525518-0100
Assembly Drawing: 2525518-1_1_AA

Pos	Part No	UN	Qty	Description	Page No
-					
010	2524349-0000		1	CONNECTING PIPE	
020	2524351-0000		1	PIPE SUPPORT	
030	2525338-0000		1	PLUG	
040	209183-0000		2	RING	
100	312105-0366		2	SCREW M6S ISO 4017 M6X12 A480	
110	90155-0008	MM	500	HANGER CHAIN, 18	
120	90217-0206		1	UNION NUT, 1 1/2 APV, 07-01-376/17	
130	315105-0153		2	WASHER BRB 6,4X12 RFR	
140	342840-0103		3	CLAMPING PIECE	
150	342850-0304		3	GASKET 35,4X49,1X5,2 1"1/2 FDA	
160	352103-0101		2	CABLE GLAND, ST 9, PR15,2/PG9	
170	90099-0104		2	NUT, PR 15,2 (PG9)	
180	90217-0348		3	GASKET 35,4X46,8X4 MM	
B1306	90458-0676		1	PROX.SWITCH E2EG-X5B1-6M ED 90600-0467	
B1307	90458-0676		1	PROX.SWITCH E2EG-X5B1-6M ED 90600-0467	

Pos	Part No	UN	Qty	Description	Page No

INTERMEDIATE PART

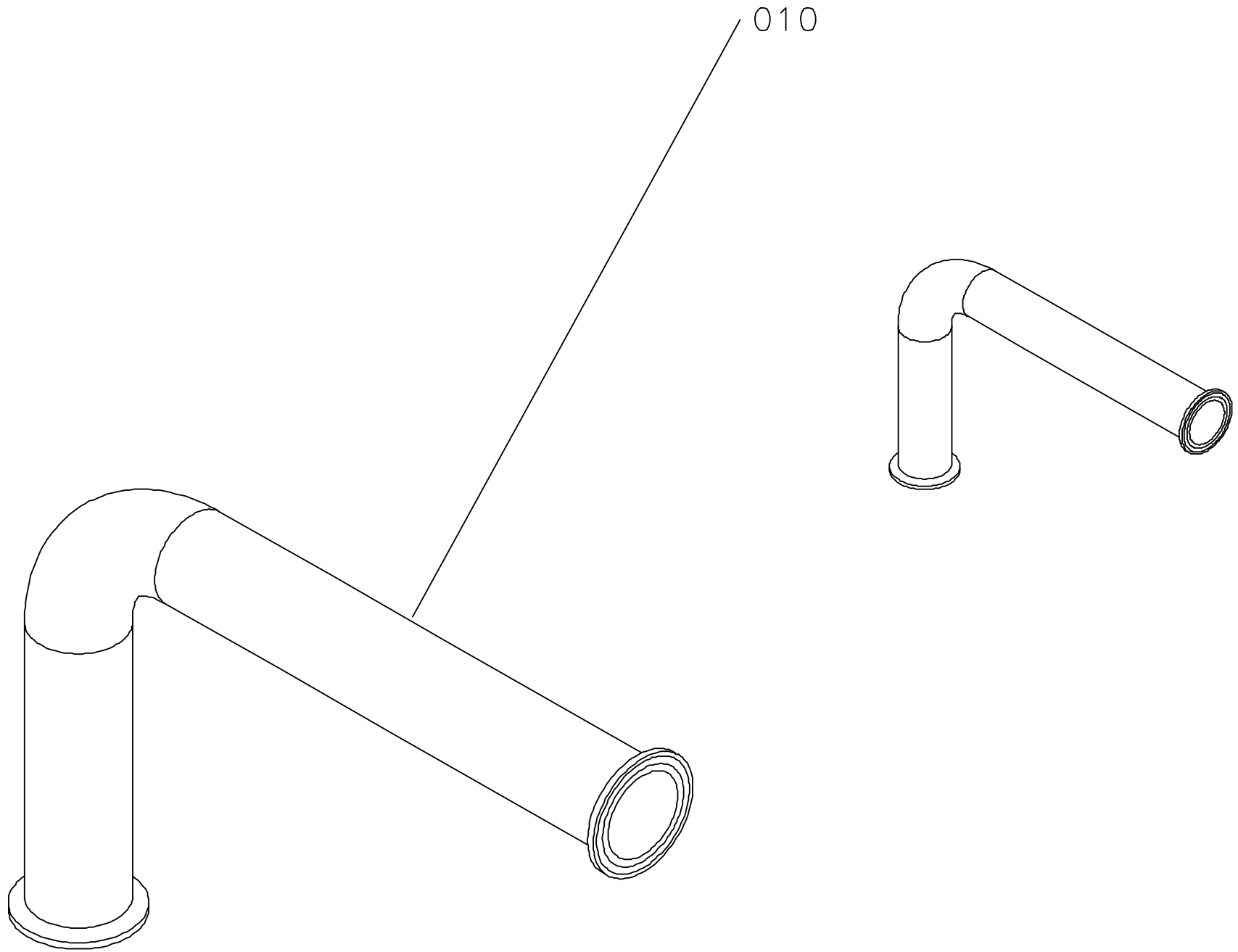

ECM: 330244 - 20080102
Group number: 1035259-0300
Assembly Drawing: 1035259-1_1_AA

This list covers pages from 1-132 to 1-135

Pos	Part No	UN	Qty	Description	Page No
CIPSUPERV (See drawing on page: 1-134)					
020	2818547-0000		1	PIPE	
300	342840-0103		1	CLAMPING PIECE	
310	342850-0304		1	GASKET 35,4X49,1X5,2 1"1/2 FDA	
320	342840-0105		1	CLAMPING PIECE	
330	342850-0305		1	GASKET 47,8X62,6X5,2 MM 2" FDA	
600	353243-0003		1	HOSE GLAND W/O INSERT PG11 EXTENDED	
605	353249-0011		1	INSERT, SINGLE HOLE, EK 153/11	
610	353244-0002		2	HOSE GLAND W/O INSERT PG13,5 EXTENDED	
620	90099-0117		1	NUT, PR 18,6 (PG11)	
650	353249-0018		2	INSERT, SINGLE HOLE, HI.TEMP, EK152I9	
B1315	90600-3924		1	CONDUCTIVITY SENSOR CLS 54-ACS1022	
B1316	90243-0430		1	FLOW METER, MAG 1100 FOOD PFA	
	90458-1617		*1*	*GASKET, DN40 FOR MAG 1100 FOOD*	
NOCIPSUPERV (See drawing on page: 1-132)					
010	1038334-0000		1	PIPE	

Pos	Part No	UN	Qty	Description	Page No

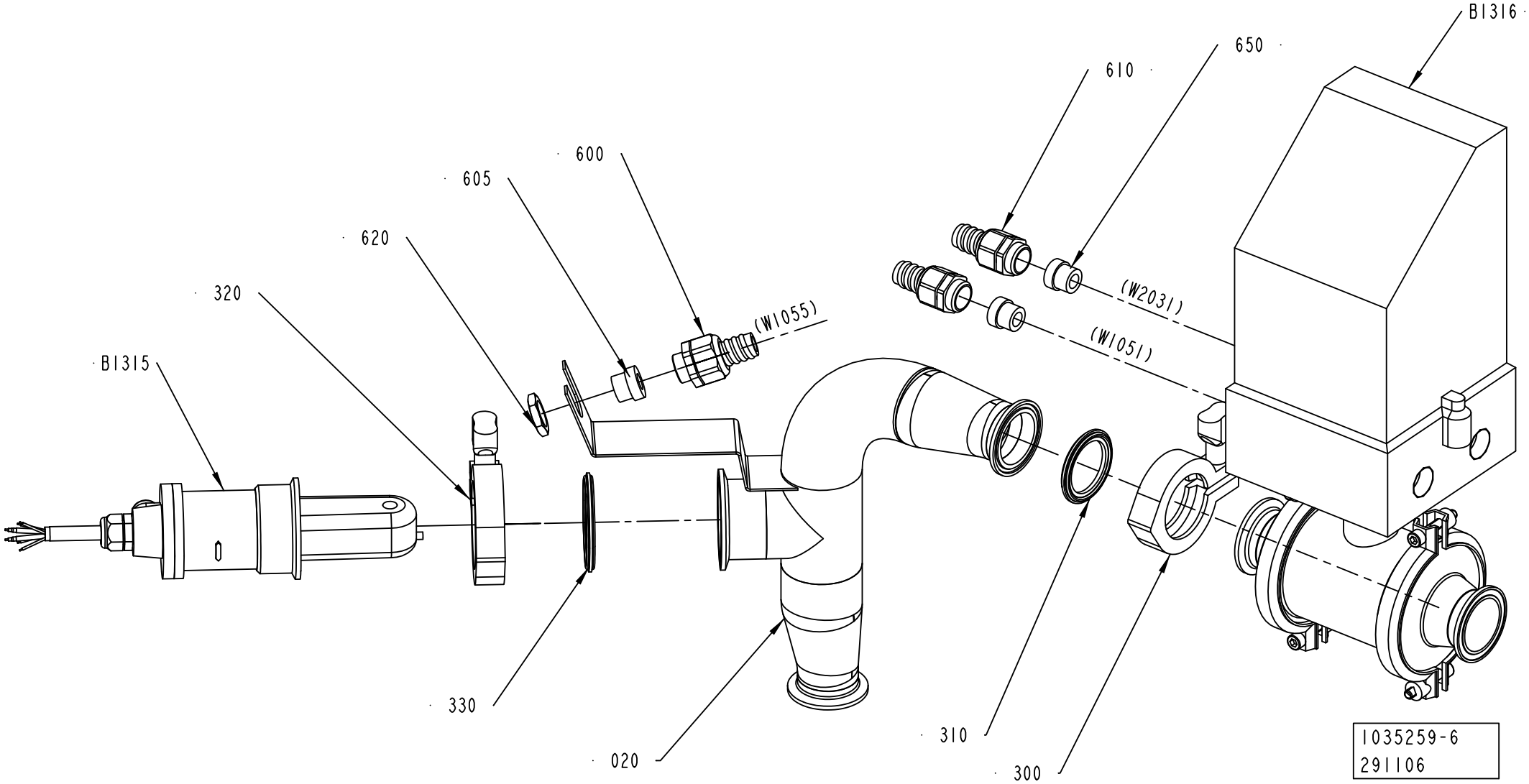
B1316
650
610
600
605
620
320
B1315
(W1055)
(W2031)
(W1051)
330
020
310
300
1035259-6
291106

ECM: 330244 - 20080102
Group number: 1035259-0300
Assembly Drawing: 1035259-6_1_AB

This list covers pages from 1-132 to 1-135

Pos	Part No	UN	Qty	Description	Page No
CIPSUPERV (See drawing on page: 1-134)					
020	2818547-0000		1	PIPE	
300	342840-0103		1	CLAMPING PIECE	
310	342850-0304		1	GASKET 35,4X49,1X5,2 1"1/2 FDA	
320	342840-0105		1	CLAMPING PIECE	
330	342850-0305		1	GASKET 47,8X62,6X5,2 MM 2" FDA	
600	353243-0003		1	HOSE GLAND W/O INSERT PG11 EXTENDED	
605	353249-0011		1	INSERT, SINGLE HOLE, EK 153/11	
610	353244-0002		2	HOSE GLAND W/O INSERT PG13,5 EXTENDED	
620	90099-0117		1	NUT, PR 18,6 (PG11)	
650	353249-0018		2	INSERT, SINGLE HOLE, HI.TEMP, EK152I9	
B1315	90600-3924		1	CONDUCTIVITY SENSOR CLS 54-ACS1022	
B1316	90243-0430		1	FLOW METER, MAG 1100 FOOD PFA	
	90458-1617		*1*	*GASKET, DN40 FOR MAG 1100 FOOD*	
NOCIPSUPERV (See drawing on page: 1-132)					
010	1038334-0000		1	PIPE	

Pos	Part No	UN	Qty	Description	Page No

STERILE AIR SYSTEM

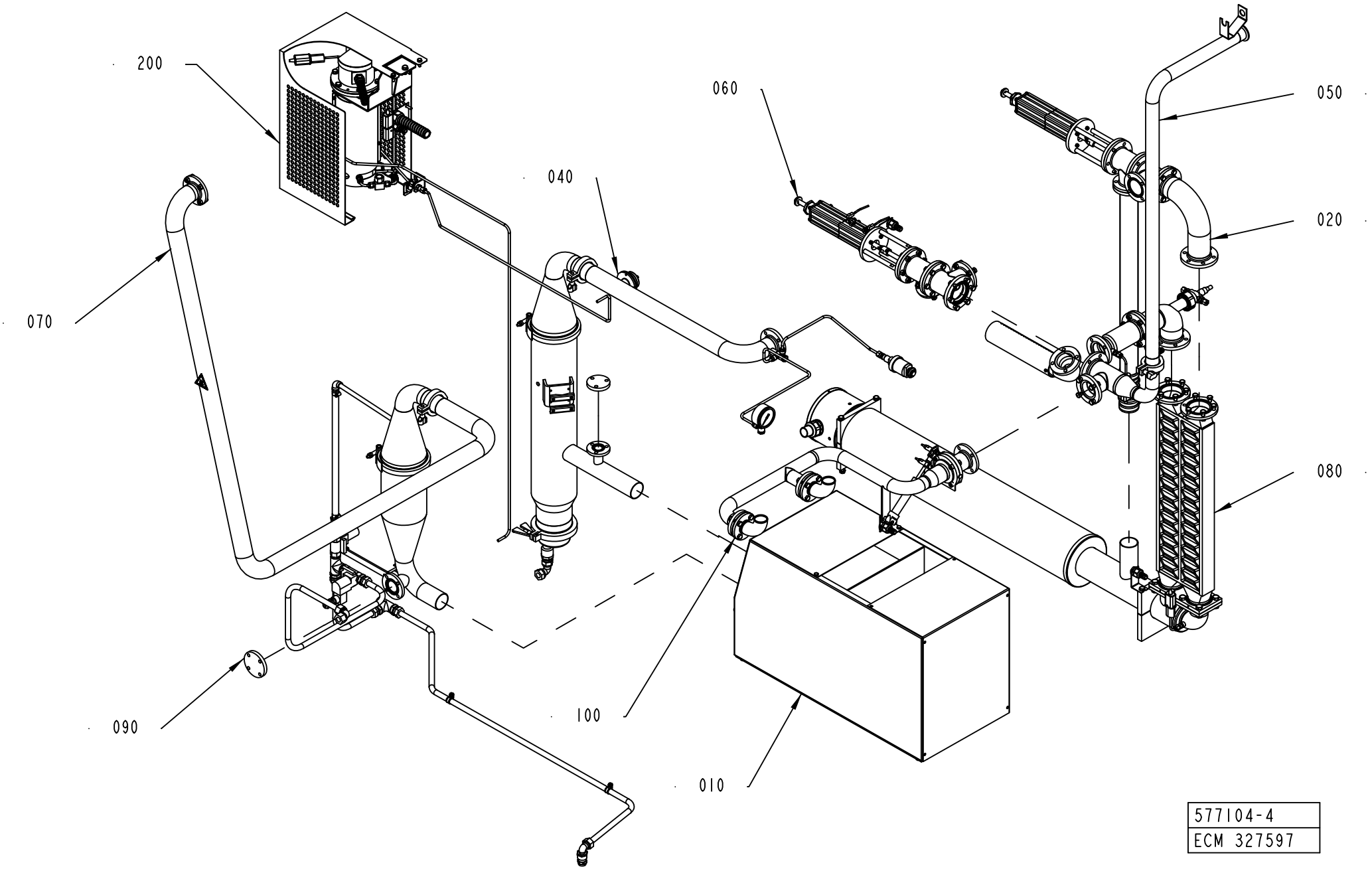

ECM: 327605 - 20080101
Group number: 577104-0300
Assembly Drawing: 577104-4_1_AC

Pos	Part No	UN	Qty	Description	Page No
HI					
200	2579744-0200		1	HEATER	**1-139**
Common Parts					
010	996475-0200		1	COMPRESSOR UNIT	**1-141**
020	1347141-0100		1	VALVE HEAT EXCHANGER	**1-143**
040	1347142-0200		1	SEPARATOR	**1-145**
050	1195284-0300		1	PIPE-LINE	**1-147**
060	1195285-0300		1	PRE-HEATING VALVE	**1-149**
070	1255979-0300		1	SCRUBBER	**1-151**
080	1347246-0100		1	AIR SUPER-HEATER	**1-153**
090	1478765-0100		1	PRESSURE REGULATOR	**1-155, 1-157**
100	2523664-0100		1	BUTTERFLY VALVE	**1-159**

Pos	Part No	UN	Qty	Description	Page No

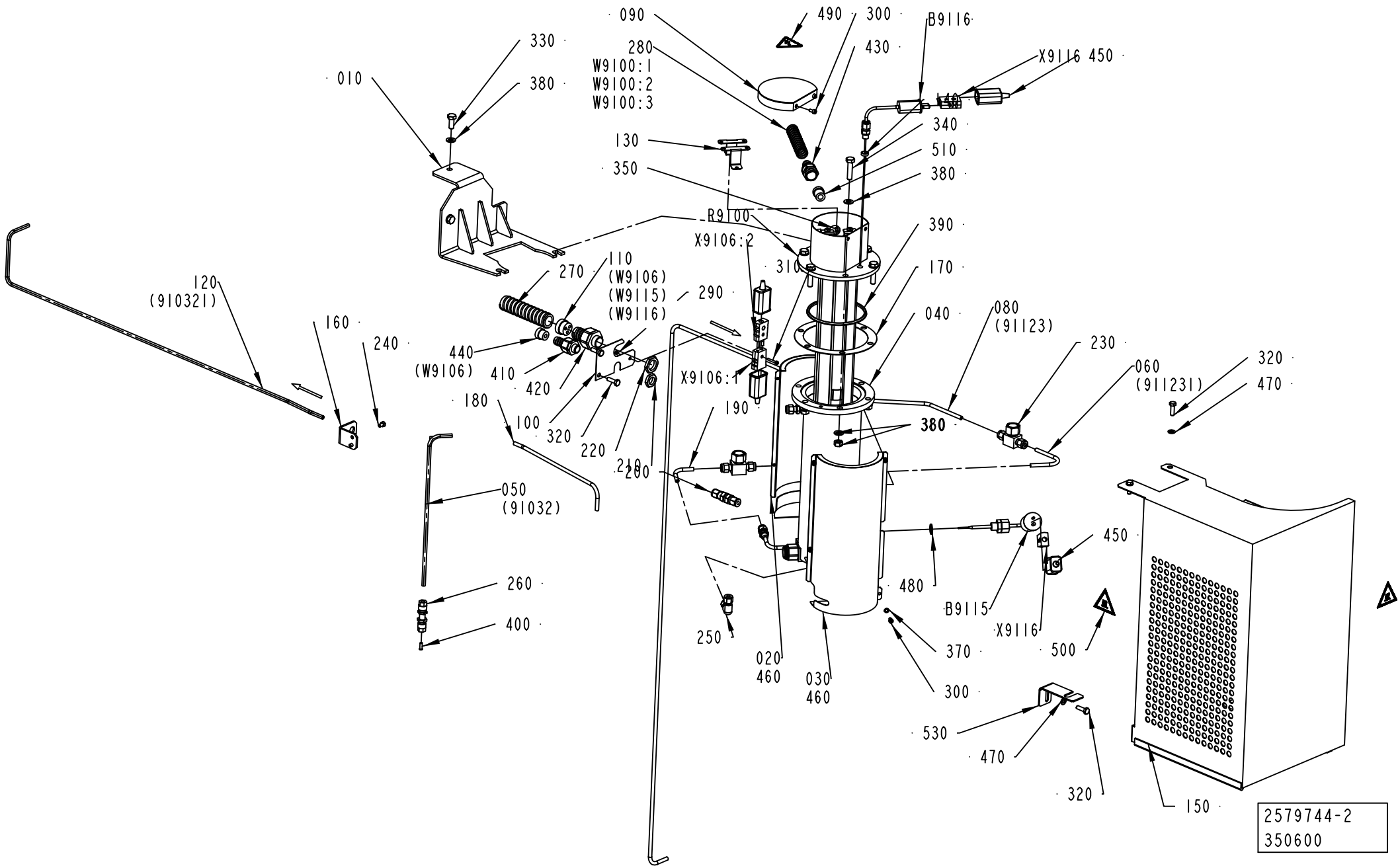
090
490
300
B9116
330
280
W9100:1
W9100:2
W9100:3
430
X9116 450
010
380
340
130
510
350
380
R9100
X9106:2
390
310
170
270
110
(W9106)
(W9115)
(W9116)
290
040
080
(91123)
120
(910321)
160
240
230
060
(911231)
320
470
440
(W9106)
410
420
X9106:1
180
190
380
100
320
220
210
200
050
(91032)
450
480
260
400
B9115
X9116
500
250
020
460
030
460
370
300
530
470
320
150
2579744-2
350600

ECM: 358941 - 20081001
Group number: 2579744-0200
Assembly Drawing: 2579744-2_1_AB

Pos	Part No	UN	Qty	Description	Page No
-					
010	2685379-0000		1	SUPPORT	
020	2685340-0000		1	COVER	
030	2685341-0000		1	COVER	
040	2685314-0000		1	COIL	
U70V4242	*90277-0407*		*1*	*FILTER ELEMENT 60µ, SS-4F-K4-60*	
050	2886660-0000		1	PIPE	
060	2685381-0000		1	PIPE	
080	2685376-0000		1	PIPE	
090	2562315-0000		1	PLUG	
100	2579743-0000		1	SUPPORT	
110	2579745-0000		1	INSERT	
120	2886656-0000		1	PIPE	
130	2598084-0000		2	PLATE	
140	2598085-0000		1	SPACER	
150	2685383-0000		1	COVER	
160	2685384-0000		1	BRACKET	
170	2685339-0000		1	GASKET	
180	2685377-0000		1	PIPE	
190	2736707-0000		2	PIPE	
200	90459-4512		1	CONN. BULKHEAD. SS-6MO-61	
210	90099-0104		1	NUT, PR 15,2 (PG9)	
220	90099-0118		1	NUT, PR 20,4 (PG13,5)	
230	90230-0064		2	CHECK VALVE, 6 MM HIGH TEMP.	
240	312105-0323		2	SCREW M6S ISO 4017 M5X8 A480	
250	90459-4511		1	CONN. ELBOW, 6	
260	90224-0349		1	CONN. BULKHEAD. 1250-6	
270	90152-0051	M	4	SPIRAL CONDUIT, 25X18, UL 1816	
280	90152-0050	M	4	SPIRAL CONDUIT, 20X13, UL 1313	
290	312605-0310		1	HEXAGON NUT, M6M M3 A280	
300	312115-0287		6	SCREW ISO4762 M4X8 A4 80	
310	312115-0230		1	SCREW ISO4762 M3X20 A4 80	
320	312105-0370		5	SCREW M6S ISO 4017 M6X20 A480	
330	312105-0451		2	SCREW M6S ISO 4017 M8X20 A480	
340	312109-0457		6	SCREW M6S ISO 4017 M8X35 A480	
350	312607-0312		1	HEXAGON NUT, EN 24032 M6M M4 A480	
360	312605-0318		6	HEXAGON NUT, M6M M8 A280	
370	315105-0136		4	WASHER BRB 4,3X8 RFR	
380	315105-0165		14	WASHER BRB 8,4X16 RFR	
390	315229-0208		1	GASKET 97,4X105,4X3,7 MM 4"	
400	342706-0130		1	ACCESSORIES, INSERT SLEEVE 6 MM	
410	353243-0001		1	HOSE GLAND W/O INSERT PG9 EXTENDED	
420	353243-0004		1	HOSE GLAND W/O INSERT PG13,5 EXTENDED	
430	90600-0975		1	HOSE GLAND W/O INSERT PG13,5 EXTENDED	
440	353249-0008		1	INSERT, SINGLE HOLE, EK 152/7	
450	90326-0012		4	PROTECTIVE COVER, T31A4618	
460	90411-0001	MM	1000	INSULATING MAT	
470	315105-0153		3	WASHER BRB 6,4X12 RFR	
480	315234-0110		1	WASHER,PL.RND.CU.13,5/18 H=1,5	
490	90600-1738		1	WARNING SIGN ISO, ELECTRIC SHOCK	
500	359705-0007		2	WARNING SIGN ISO, HOT SURFACE	
510	90600-0976		1	INSERT, SINGLE HOLE, HI.TEMP, EK153I9	
530	2886659-0000		1	BRACKET	
B9115	90326-0053		1	THERMOCOUPLE, 12826-35	
B9116	90459-2122		1	THERMOCOUPLE, EN-5130060-0001	
R9100	2685342-0000		1	HEATING ELEMENT	
W9100:1	90459-3165	M	7	CABLE OLFLON PTFE 1X4,72 MM² BLACK	
W9100:2	90459-3165	M	7	CABLE OLFLON PTFE 1X4,72 MM² BLACK	
W9100:3	90459-3154	M	7	CABLE OLFLONPTFE 1X4,72 MM² YELLOW-GREEN	
X9106:1	90326-0020		1	PLUG, FEMALE YELLOW CR-AL	
X9106:2	90326-0022		1	PLUG, MALE YELLOW CR-AL	
X9115	90326-0020		1	PLUG, FEMALE YELLOW CR-AL	
X9116	90326-0020		1	PLUG, FEMALE YELLOW CR-AL	

Machine Type	Group Description	Used-In	Group Number	Page No

COMPRESSOR UNIT

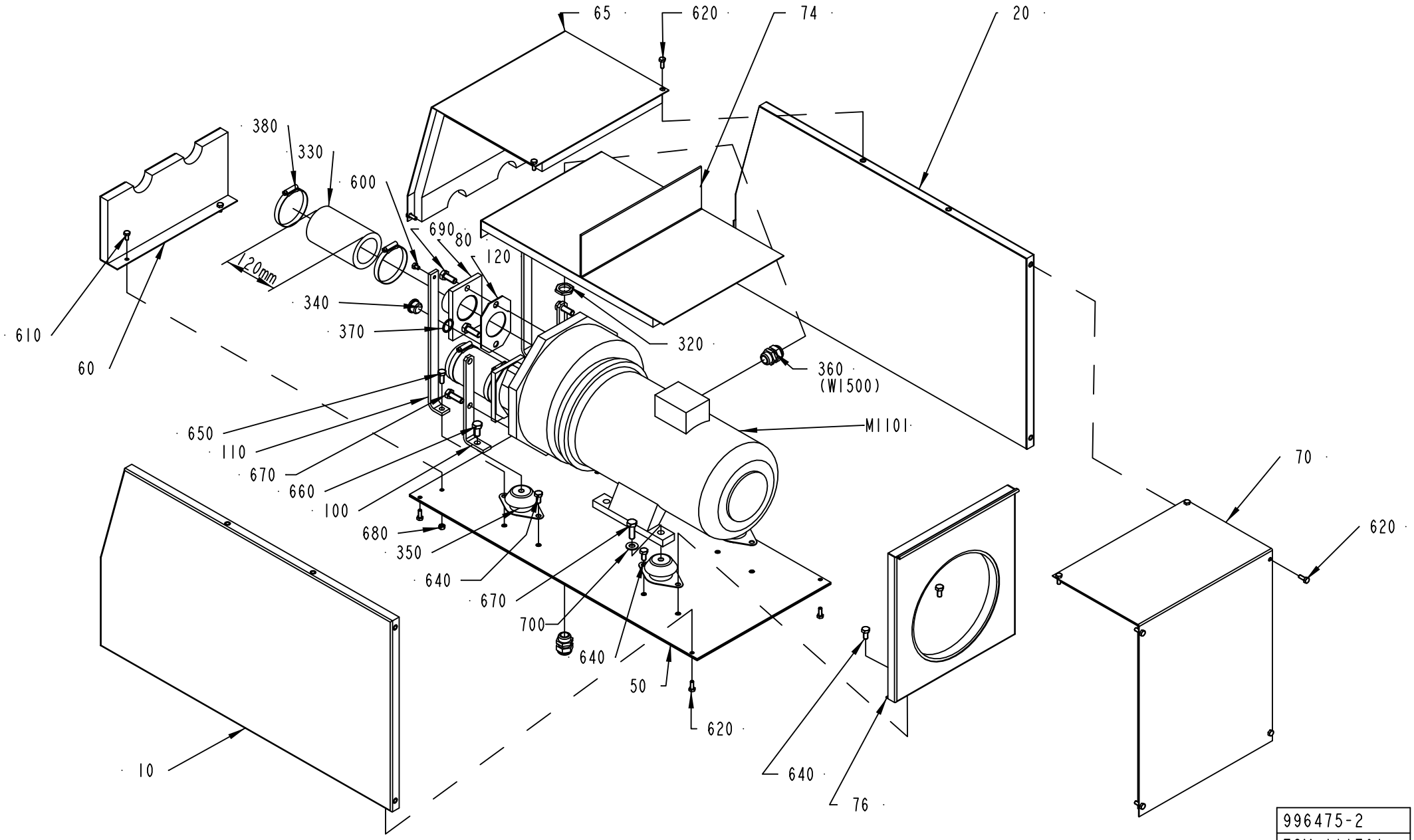

996475-2
ECM 111701

ECM: 259401 - 20060419
Group number: 996475-0200
Assembly Drawing: 996475-2_1_AD

Pos	Part No	UN	Qty	Description	Page No
-					
010	1040859-0000		1	COVER	
020	1040874-0000		1	COVER	
050	1036314-0000		1	BOTTOM PANEL	
060	1036315-0000		1	FRONT PLATE	
065	1040875-0000		1	COVER	
070	1040876-0000		1	COVER	
074	1040877-0000		1	PLATE	
076	1040878-0000		1	PLATE	
080	1036318-0000		2	PIPE	
100	269859-0000		2	BRACKET	
110	1036319-0000		2	BRACKET	
120	230551-0000		2	GASKET	
320	90099-0110		1	NUT, PR 22,5 (PG16)	
330	90166-0199	MM	240	RUBBER HOSE	
340	342713-0213		1	PLUG, EXT THREAD HEX SOCKET 8638-00-120	
350	90347-0144		4	VIBRATION DAMPER, NO. RA 40EM-A	
360	352103-0111		2	CABLE GLAND, ST 16, PR22,5/PG16	
370	315234-0113		1	WASHER PL.RND.CU.21,3//26 H=1,5	
380	342991-0111		4	HOSE CLIP,WORM DRIVE TYPE (63)-73	
600	312105-0362		2	SCREW M6S ISO 4017 M6X8 A480	
610	312105-0366		2	SCREW M6S ISO 4017 M6X12 A480	
620	312105-0368		14	SCREW M6S ISO 4017 M6X16 A480	
640	312105-0449		6	SCREW M6S ISO 4017 M8X16 A480	
650	312105-0451		2	SCREW M6S ISO 4017 M8X20 A480	
660	312105-0491		2	SCREW M6S ISO 4017 M10X20 A480	
670	312105-0495		6	SCREW M6S ISO 4017 M10X30 A480	
680	312605-0316		2	HEXAGON NUT, M6M M6 A280	
690	312105-0493		4	SCREW M6S ISO 4017 M10X25 A480	
700	315105-0173		2	WASHER BRB 10,5X22 RFR	
M1101	90270-0017		1	COMPRESSOR NASH/ELMO 112 MB/4-2083	

Pos	Part No	UN	Qty	Description	Page No

VALVE HEAT EXCHANGER

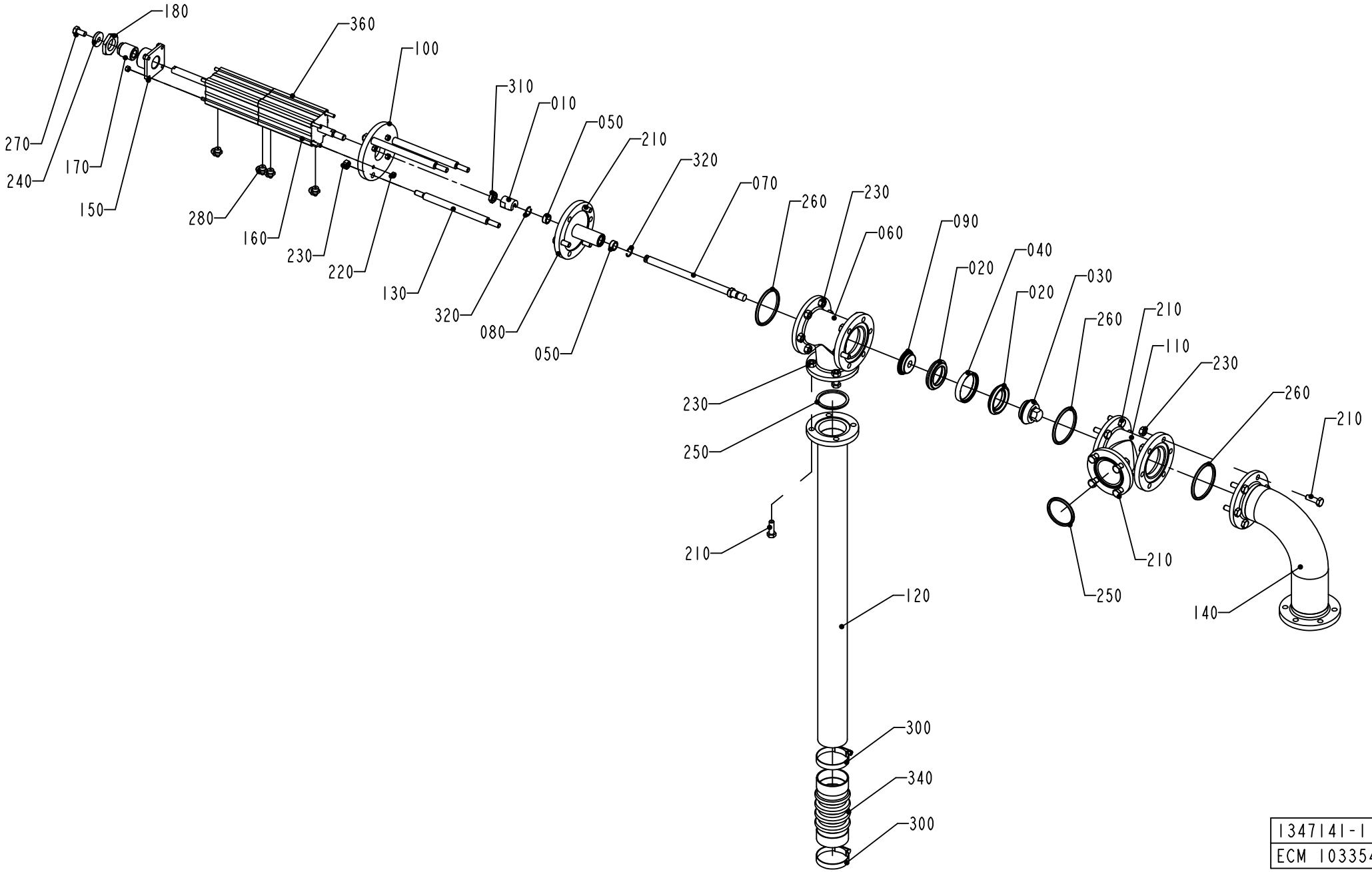

1347141-1
ECM 103354

ECM: 261762 - 20060404
Group number: 1347141-0100
Assembly Drawing: 1347141-1_1_AD

Pos	Part No	UN	Qty	Description	Page No
-					
010	441871-0000		1	PENDULUM SUSPENSION	
020	530589-0000		2	SEAL RING	
030	530590-0000		1	VALVE CONE	
040	530599-0000		1	RING	
050	532349-0000		2	PLAIN BEARING	
060	1036187-0000		1	T-PIPE	
070	1036188-0000		1	SHAFT	
080	1036189-0000		1	SPINDEL GUIDE	
090	1036191-0000		1	SEAL HOLDER	
100	1346657-0000		1	CYLINDER BRACKET	
110	1036194-0000		1	T-PIPE	
120	1036587-0000		1	PIPE	
130	1548760-0000		3	SPACER ROD	
140	1347113-0000		1	PIPE	
150	1346658-0000		1	BRACKET	
160	1346656-0000		4	ROD	
170	1346659-0000		1	SCREW	
180	1349398-0000		1	NUT	
210	312105-0453		23	SCREW M6S ISO 4017 M8X25 A480	
220	312605-0314		8	HEXAGON NUT, M6M M5 A280	
230	312605-0318		29	HEXAGON NUT, M6M M8 A280	
240	315125-0165		1	WASHER TBRSB 8,4X26X5 A4	
250	315229-0205		2	GASKET 47,5X55,5X3,7 MM 2 INCH	
260	315229-0206		3	GASKET 60,2X68,2X3,7 MM 2"1/2	
270	312105-0449		1	SCREW M6S ISO 4017 M8X16 A480	
280	90458-2956		4	ELBOW PIPE JOINT, EXT.THREAD, D=6MM-G1/8	
300	342991-0109		2	HOSE CLIP,WORM DRIVE TYPE (48)-50	
310	90099-0051		1	NUT HEX. M10X1,25, FE FZB	
320	90141-0022		2	SNAP RING B 16	
340	90342-0022		1	BELLOWS	
360	1346677-0000		1	CYLINDER	

Pos	Part No	UN	Qty	Description	Page No

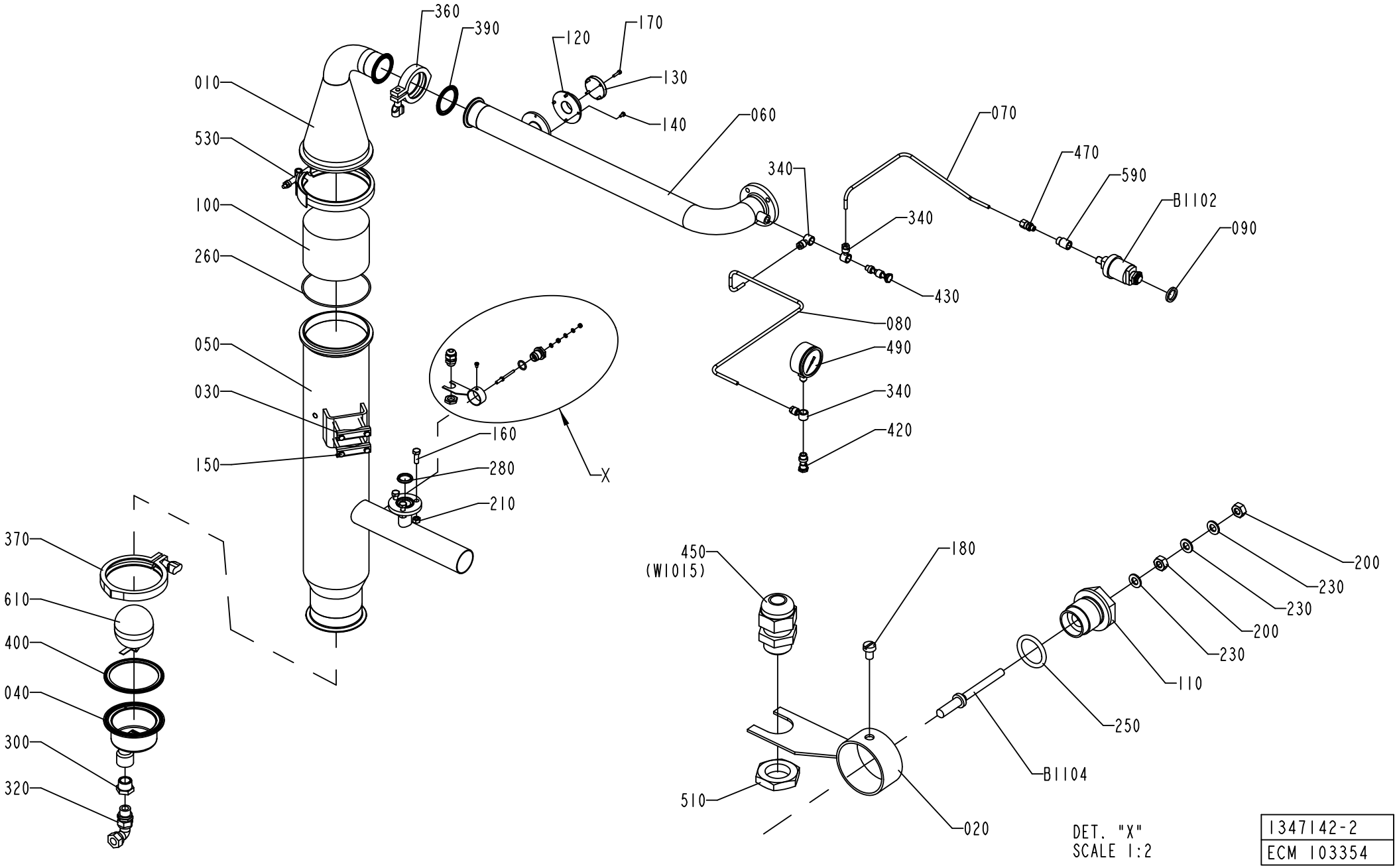

1347142-2
ECM 103354

ECM: 261763 - 20060404
Group number: 1347142-0200
Assembly Drawing: 1347142-2_1_AA

Pos	Part No	UN	Qty	Description	Page No
-					
010	1036753-0000		1	UPPER SECTION	
020	1036810-0000		1	HOLDER	
030	1036811-0000		2	CLAMP	
040	1038634-0000		1	DRAINING	
050	1038866-0000		1	INTERMEDIARY SECTION	
060	2506828-0000		1	PIPE	
070	1347135-0000		1	PIPE	
080	1347136-0000		1	PIPE	
090	479234-0000		1	WASHER	
100	546929-0000		1	FILTER	
110	560931-0000		1	BRACKET	
120	1558771-0000		1	FLANGE	
130	2540801-0000		1	PLUG	
140	312105-0287		4	SCREW M6S ISO 4017 M4X8 A470	
150	312105-0381		4	SCREW M6S ISO 4014 M6X55 A480	
160	312105-0453		3	SCREW M6S ISO 4017 M8X25 A480	
170	312115-0293		4	SCREW ISO4762 M4X16 A4 80	
180	312125-0285		1	SCREW ISO 1207 M4X6 A4	
200	312605-0312		2	HEXAGON NUT, M6M M4 A280	
210	312605-0318		3	HEXAGON NUT, M6M M8 A280	
230	315105-0136		3	WASHER BRB 4,3X8 RFR	
250	315204-0213		1	O-RING 15,2X2,4 MM	
260	315204-0317		1	O-RING 129,5X3 MM	
280	315229-0203		1	GASKET 22,1X30,1X3,7 MM 1"	
300	342206-0109		1	BUSHING, TAPERED, INT/EXT. THR NO. R211	
320	342738-0221		1	ADJUSTABLE ELBOW CONNECTION,EXT 15-G1/2	
340	342797-0122		3	CONN. BANJO, RINGPIECE 6-1/4	
360	342840-0105		1	CLAMPING PIECE	
370	342840-0108		1	CLAMP, 101,6 MM 3-A PCS+PMCS	
390	342850-0405		1	GASKET 47,8X62,6X5,2 MM 2" FDA	
400	342850-0408		1	GASKET 97X117,7X5,2 MM 4" FDA	
420	342980-0304		1	BANJO-HOLLOW BOLT COUPL,EXT.THR.01-G1/4	
430	342980-0314		1	BANJO-HOLLOW BOLT COUPL,EXT.THR.02-G1/4	
450	352103-0101		1	CABLE GLAND, ST 9, PR15,2/PG9	
470	90030-0184		1	CONN. STR. GE06LRED71	
490	90043-0095		1	PRESSURE GAUGE, 2740, D=63 MM, GLYC.	
510	90099-0104		1	NUT, PR 15,2 (PG9)	
530	90132-0030		1	SUPORTE MV 87177 KS 580T	
540	90144-0073		1	TREBOFLON-TAPE W=13MM	
590	90330-0012		1	SLEEVE, REDUCTION, INT, R-2021/4X1/8	
610	90360-0305		1	FLOAT, ART NO 10739920	
620	90157-0037		1	THREAD SEALANT LOCTITE 542	
B1102	90274-0045		1	PRESSURE GUARD, 14 KPA	
B1104	979500-0003		1	ELECTRODE	

Machine Type Group Description Used-In Group Number Page No

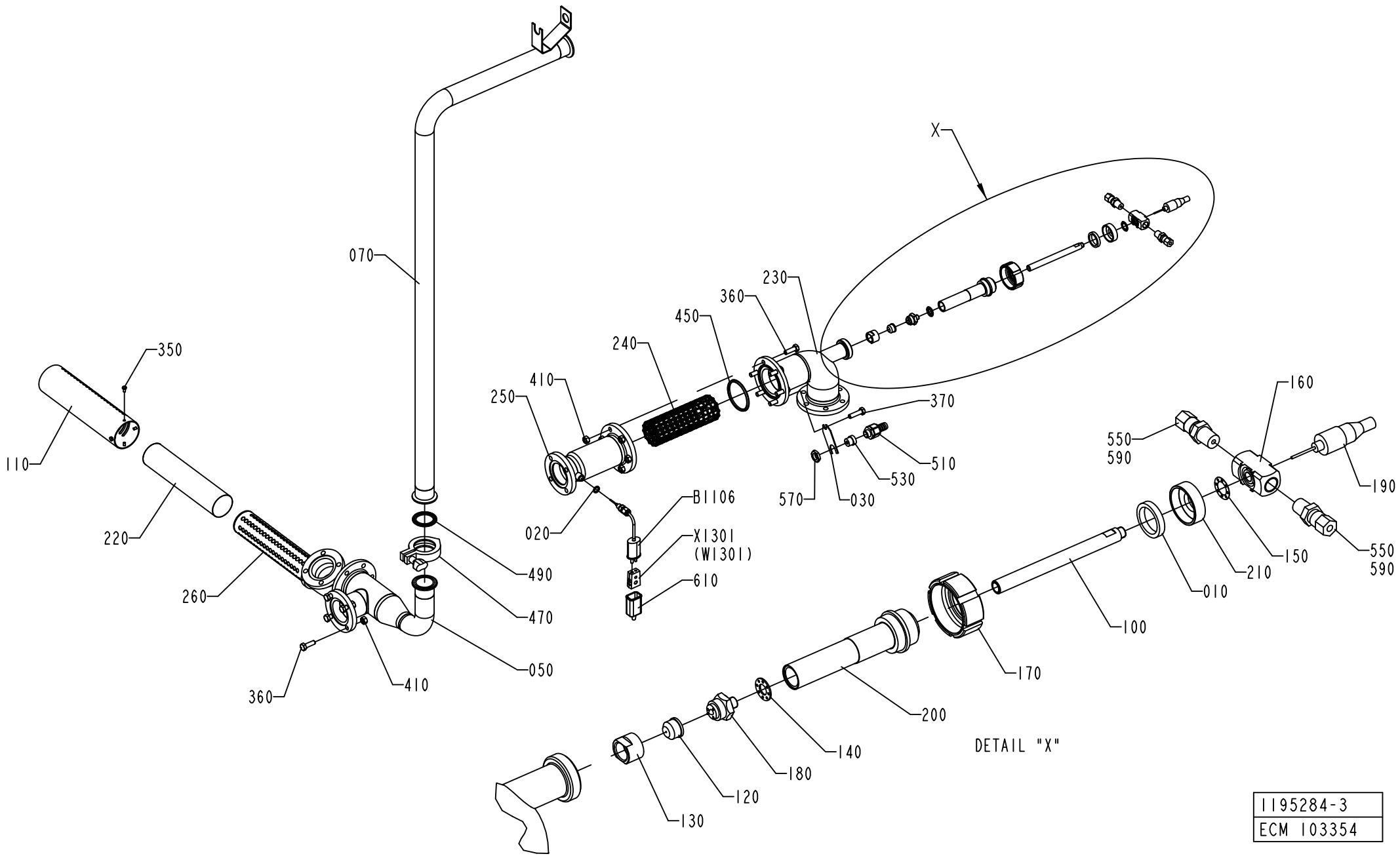

1195284-3
ECM 103354

ECM: 259648 - 20060404
Group number: 1195284-0300
Assembly Drawing: 1195284-3_1_AA

Pos	Part No	UN	Qty	Description	Page No
-					
010	12242-0001		1	GASKET 32X25X5,5	
020	273429-0000		1	WASHER	
030	1036293-0000		1	HOLDER	
050	1347116-0000		1	PIPE	
070	1347134-0000		1	PIPE	
100	1499634-0000		1	INTERNAL PIPE	
110	1511503-0000		1	PIPE	
120	1512299-0000		1	SPRAY NOZZLE DOME	
130	1512300-0000		1	SPRAY NOZZLE NUT	
140	1512301-0000		1	SPACER	
150	1512302-0000		1	SPRAY NOZZLE GASKET	
160	1512319-0000		1	SPRAY NOZZLE BODY	
170	1512405-0000		1	NUT	
180	1512409-0000		1	SPRAY NOZZLE INJECTOR	
190	1512410-0000		1	SPRAY NOZZLE PLUG	
200	1512835-0000		1	EXTERNAL PIPE	
210	1512836-0000		1	LID	
220	1517483-0000		1	NET	
230	2501515-0000		1	PIPE	
240	2501516-0000		1	CONTAINER	
250	2501518-0000		1	PIPE	
260	2501519-0000		1	PIPE	
350	312105-0287		4	SCREW M6S ISO 4017 M4X8 A470	
360	312105-0453		10	SCREW M6S ISO 4017 M8X25 A480	
370	312105-0455		1	SCREW M6S ISO 4017 M8X30 A480	
410	312605-0318		10	HEXAGON NUT, M6M M8 A280	
450	315229-0206		1	GASKET 60,2X68,2X3,7 MM 2"1/2	
470	342840-0103		1	CLAMPING PIECE	
490	342850-0304		1	GASKET 35,4X49,1X5,2 1"1/2 FDA	
510	353243-0001		1	HOSE GLAND W/O INSERT PG9 EXTENDED	
530	353249-0008		1	INSERT, SINGLE HOLE, EK 152/7	
550	90030-0062		2	CONN. STR. GE 6-1/4-18 NPTF	
570	90099-0104		1	NUT, PR 15,2 (PG9)	
590	90144-0073		1	TREBOFLON-TAPE W=13MM	
610	90326-0012		1	PROTECTIVE COVER, T31A4618	
B1106	90326-0051		1	THERMOCOUPLE, 12826-33	
X1301	90326-0020		1	PLUG, FEMALE YELLOW CR-AL	

Pos	Part No	UN	Qty	Description	Page No

Machine Type | Group Description | Used-In | Group Number | Page No

PRE-HEATING VALVE

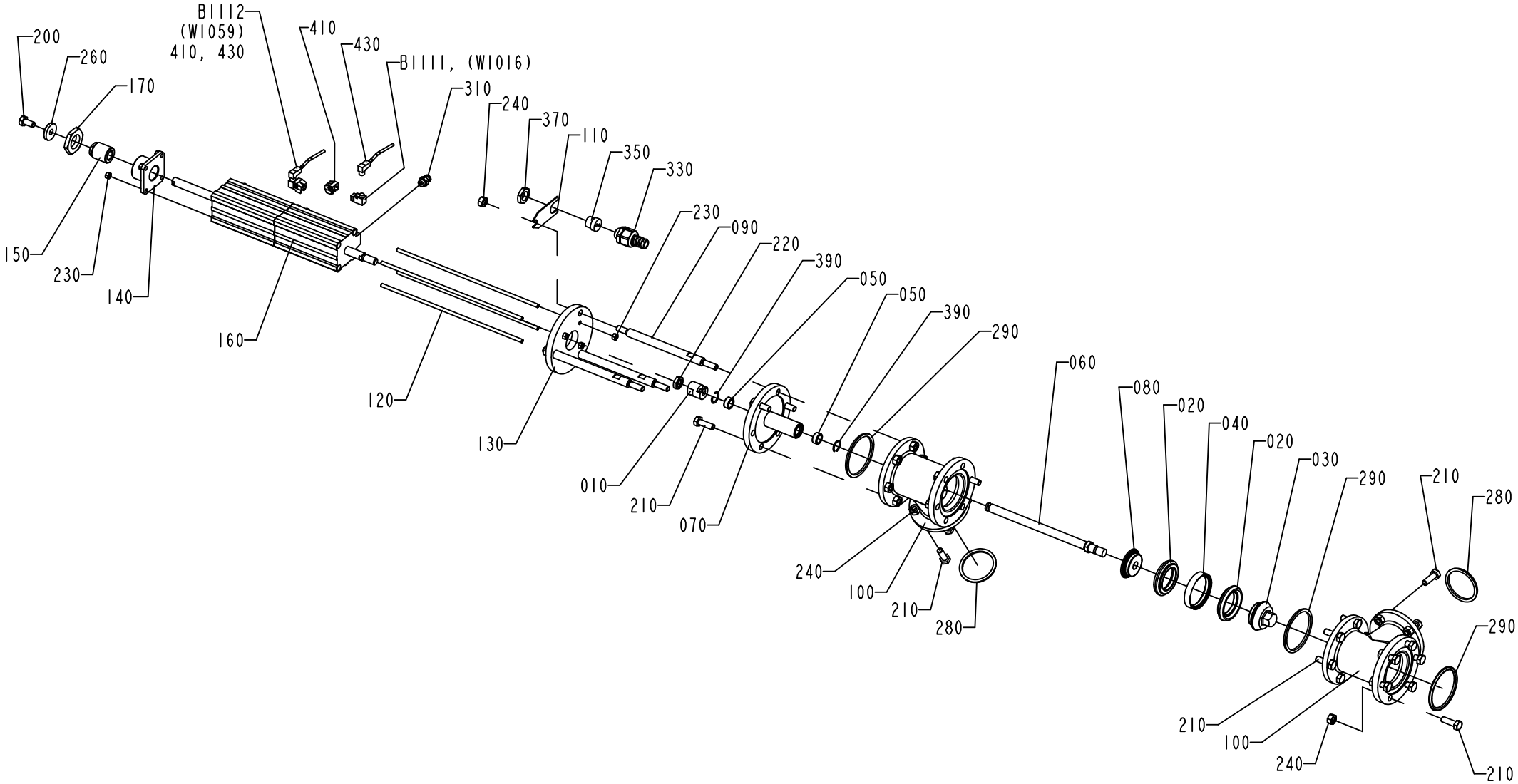

1195285-3
ECM 103354

ECM: 259649 - 20060404
Group number: 1195285-0300
Assembly Drawing: 1195285-3_1_AA

Pos	Part No	UN	Qty	Description	Page No
-					
010	441871-0000		1	PENDULUM SUSPENSION	
020	530589-0000		2	SEAL RING	
030	530590-0000		1	VALVE CONE	
040	530599-0000		1	RING	
050	532349-0000		2	PLAIN BEARING	
060	1036188-0000		1	SHAFT	
070	1036189-0000		1	SPINDEL GUIDE	
080	1036191-0000		1	SEAL HOLDER	
090	1548760-0000		3	SPACER ROD	
100	1036194-0000		2	T-PIPE	
110	1036293-0000		1	HOLDER	
120	1346656-0000		4	ROD	
130	1346657-0000		1	CYLINDER BRACKET	
140	1346658-0000		1	BRACKET	
150	1346659-0000		1	SCREW	
160	1346677-0000		1	CYLINDER	
170	1349398-0000		1	NUT	
200	312105-0449		1	SCREW M6S ISO 4017 M8X16 A480	
210	312105-0453		23	SCREW M6S ISO 4017 M8X25 A480	
220	90099-0051		1	NUT HEX. M10X1,25, FE FZB	
230	312605-0314		8	HEXAGON NUT, M6M M5 A280	
240	312605-0318		29	HEXAGON NUT, M6M M8 A280	
260	315125-0165		1	WASHER TBRSB 8,4X26X5 A4	
280	315229-0205		2	GASKET 47,5X55,5X3,7 MM 2 INCH	
290	315229-0206		3	GASKET 60,2X68,2X3,7 MM 2"1/2	
310	342722-0202		4	PIPE COUPLING 1/8" D=6MM	
330	353243-0001		1	HOSE GLAND W/O INSERT PG9 EXTENDED	
350	353249-0036		1	INSERT, MULTI HOLE, EK152 M 2X4	
370	90099-0104		1	NUT, PR 15,2 (PG9)	
390	90141-0022		2	SNAP RING B 16	
410	90450-0816		2	SENSOR, BRACKET,SERIES 2700/2702	
430	1484470-0000		2	CABLE	
B1111	90044-0193		1	SENSOR, 322-31-0310	
B1112	90044-0193		1	SENSOR, 322-31-0310	

Pos	Part No	UN	Qty	Description	Page No

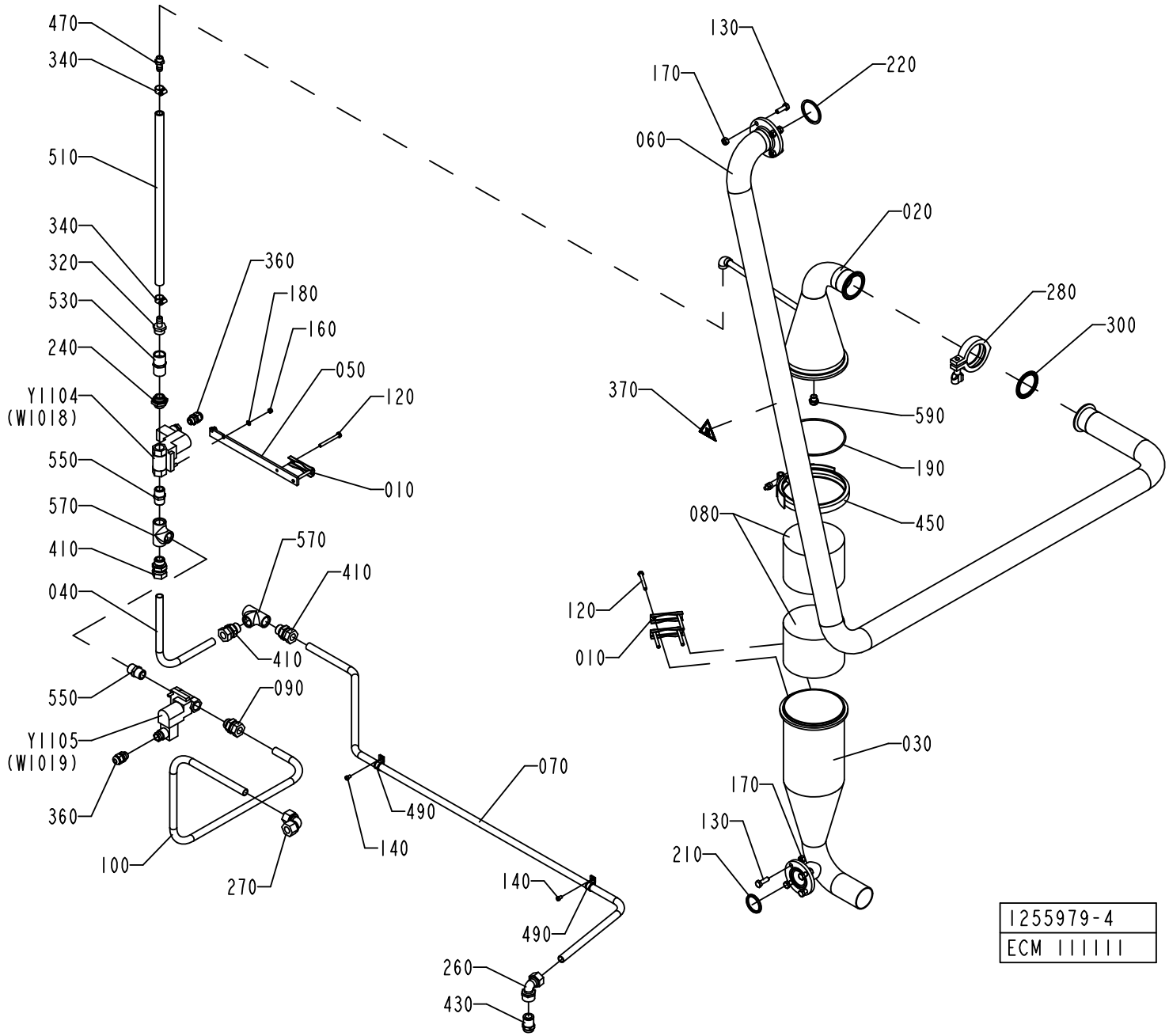
470
340
510
340
320
530
240
Y1104
(W1018)
550
570
410
040
550
Y1105
(W1019)
360
100
270
360
180
160
050
120
010
570
410
410
090
490
140
070
140
490
260
430
130
170
220
060
020
280
300
370
590
190
450
080
120
010
030
170
130
210
1255979-4
ECM 111111

ECM: 259650 - 20060404
Group number: 1255979-0300
Assembly Drawing: 1255979-4_1_AB

Pos	Part No	UN	Qty	Description	Page No
-					
010	1036811-0000		3	CLAMP	
020	1036910-0000		1	UPPER SECTION	
030	1036911-0000		1	CONTAINER	
040	1037011-0000		1	PIPE	
050	1037041-0000		1	HOLDER	
060	2506846-0000		1	PIPE	
070	1347129-0000		1	PIPE	
080	546929-0000		2	FILTER	
090	1038659-0000		1	STRAIGHT PIPE UNION	
100	1498524-0000		1	PIPE	
120	312105-0381		6	SCREW M6S ISO 4014 M6X55 A480	
130	312105-0453		8	SCREW M6S ISO 4017 M8X25 A480	
140	312125-0323		2	SCREW ISO 1207 M5X8 A4	
160	312605-0314		2	HEXAGON NUT, M6M M5 A280	
170	312605-0318		8	HEXAGON NUT, M6M M8 A280	
180	315105-0146		2	WASHER BRB 5,3X10 RFR	
190	315204-0317		1	O-RING 129,5X3 MM	
210	315229-0204		1	GASKET 34,8X42,8X3,7 MM 1"1/2	
220	315229-0205		1	GASKET 47,5X55,5X3,7 MM 2 INCH	
240	479261-0000		1	NIPPLE	
260	342733-0114		1	CONN. ELBOW WI-15-G1/2	
270	342737-0221		1	CONN. ELBOW W-15 LRFR	
280	342840-0105		1	CLAMPING PIECE	
300	342850-0405		1	GASKET 47,8X62,6X5,2 MM 2" FDA	
320	342901-0105		1	HOSE NIPPLE, EXT.THR. R1/2-12 MM	
340	342991-0101		2	HOSE CLIP,WORM DRIVE TYPE (13)-16	
360	352103-0101		2	CABLE GLAND, ST 9, PR15,2/PG9	
370	359705-0007		1	WARNING SIGN ISO, HOT SURFACE	
410	90030-0188		3	CONN. STR. GA-15-G1/2	
430	90055-0097		1	STRAIGHT COUPLING	
450	90132-0030		1	SUPORTE MV 87177 KS 580T	
470	90163-0052		1	HOSE NIPPLE, EXT.THR. 1/4-12 MM	
490	90165-0039		2	PIPE CLAMP D=15 MM, GSK15/12	
510	90166-0121	MM	450	HOSE	
530	90270-0349		1	CONSTANT FLOW VALVE, 1/2"X1/2" 2GPM	
550	90330-0021		2	NIPPLES, EXT. THREAD. R-207R1/2	
570	90330-0049		2	T-PIPE, INT. THREAD, R-221R1/2	
590	90424-0054		1	SPRAY NOZZLE 120 DEG	
610	90144-0073		1	TREBOFLON-TAPE W=13MM	
620	90157-0037		1	THREAD SEALANT LOCTITE 542	
Y1104	90042-0172		1	SOLENOID VALVE 4023/1005/1032 24VDC	
	90042-0467		*1*	*COIL 24VDC GSR*	
Y1105	90042-0172		1	SOLENOID VALVE 4023/1005/1032 24VDC	
	90042-0467		*1*	*COIL 24VDC GSR*	

Machine Type	Group Description	Used-In	Group Number	Page No

AIR SUPER-HEATER

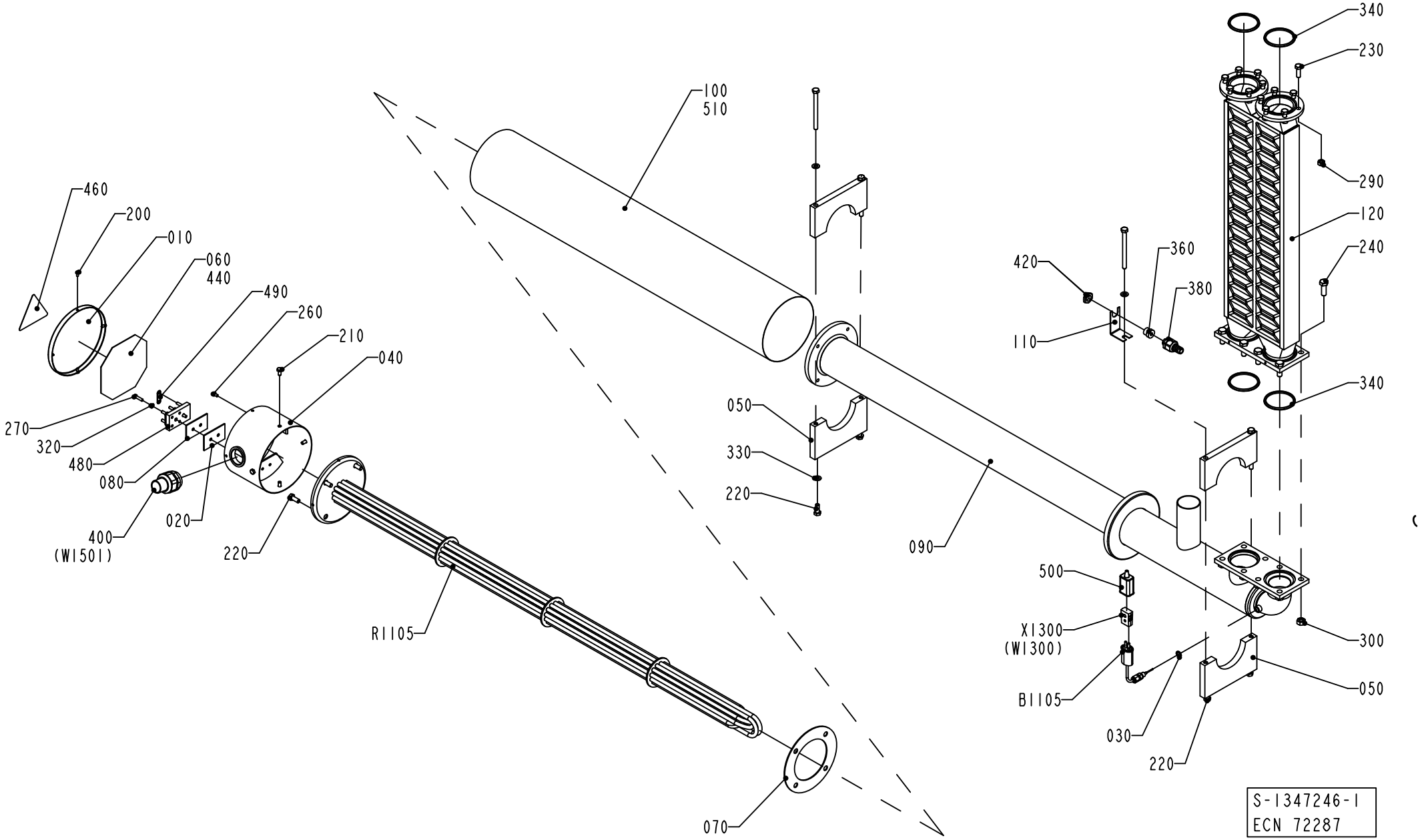

ECM: 261767 - 20060404
Group number: 1347246-0100
Assembly Drawing: 1347246-1_1_AB

Pos	Part No	UN	Qty	Description	Page No
-					
010	29876-0000		1	COVER	
020	30298-0000		1	INSULATION	
030	273429-0000		1	WASHER	
040	451430-0000		1	CONNECTION HOUS.(MINOR)	
050	456123-0000		2	SUPPORT	
	312105-0471		*2*	*SCREW M6S ISO 4014 M8X100 A480*	
	315105-0165		*2*	*WASHER BRB 8,4X16 RFR*	
060	491305-0000		1	CONN.DIAGRAM AIR SUPERH.	
070	531731-0000		1	GASKET	
080	751009-0000		1	INSULATION	
090	1035942-0000		1	HEATING PIPE	
100	1036372-0000		1	PIPE	
110	1036373-0000		1	HOLDER	
120	1347245-0000		1	HEAT EXCHANGER	
200	312105-0287		4	SCREW M6S ISO 4017 M4X8 A470	
210	312105-0366		4	SCREW M6S ISO 4017 M6X12 A480	
220	312105-0451		8	SCREW M6S ISO 4017 M8X20 A480	
230	312105-0453		12	SCREW M6S ISO 4017 M8X25 A480	
240	312105-0495		8	SCREW M6S ISO 4017 M10X30 A480	
260	312125-0323		1	SCREW ISO 1207 M5X8 A4	
270	312125-0331		2	SCREW ISO 1207 M5X20 A4	
290	312605-0318		12	HEXAGON NUT, M6M M8 A280	
300	312605-0320		8	HEXAGON NUT, M6M M10 A280	
320	315105-0146		2	WASHER BRB 5,3X10 RFR	
330	315105-0165		2	WASHER BRB 8,4X16 RFR	
340	315229-0206		4	GASKET 60,2X68,2X3,7 MM 2"1/2	
360	353243-0001		1	HOSE GLAND W/O INSERT PG9 EXTENDED	
380	353249-0008		1	INSERT, SINGLE HOLE, EK 152/7	
400	90012-0126		1	HOSE GLAND W/O INSERT PG29 NORMAL	
420	90099-0104		1	NUT, PR 15,2 (PG9)	
440	90153-0020	L	1	ADHESIVE, BOSTIK 1782 125ML	
460	90194-0075		1	WARNING SIGN ISO, HOT SURFACE	
480	90195-0028		1	TERMINAL BLOCK, 6440	
490	90195-0029		3	CONN. LINK NO324 FOR -28	
500	90326-0012		1	PROTECTIVE COVER, T31A4618	
510	90411-0005	MM	900	INSULATION 1200MM SERIE 21 89/154X30	
B1105	90326-0051		1	THERMOCOUPLE, 12826-33	
R1105	449939-0001		1	HEATING ELEMENT 15KW	
	449938-0001		*2*	*HEATING PIPE*	
	449938-0002		*2*	*HEATING PIPE*	
	449938-0003		*2*	*HEATING PIPE*	
X1300	90326-0020		1	PLUG, FEMALE YELLOW CR-AL	

Machine Type | Group Description | Used-In | Group Number | Page No

PRESSURE REGULATOR

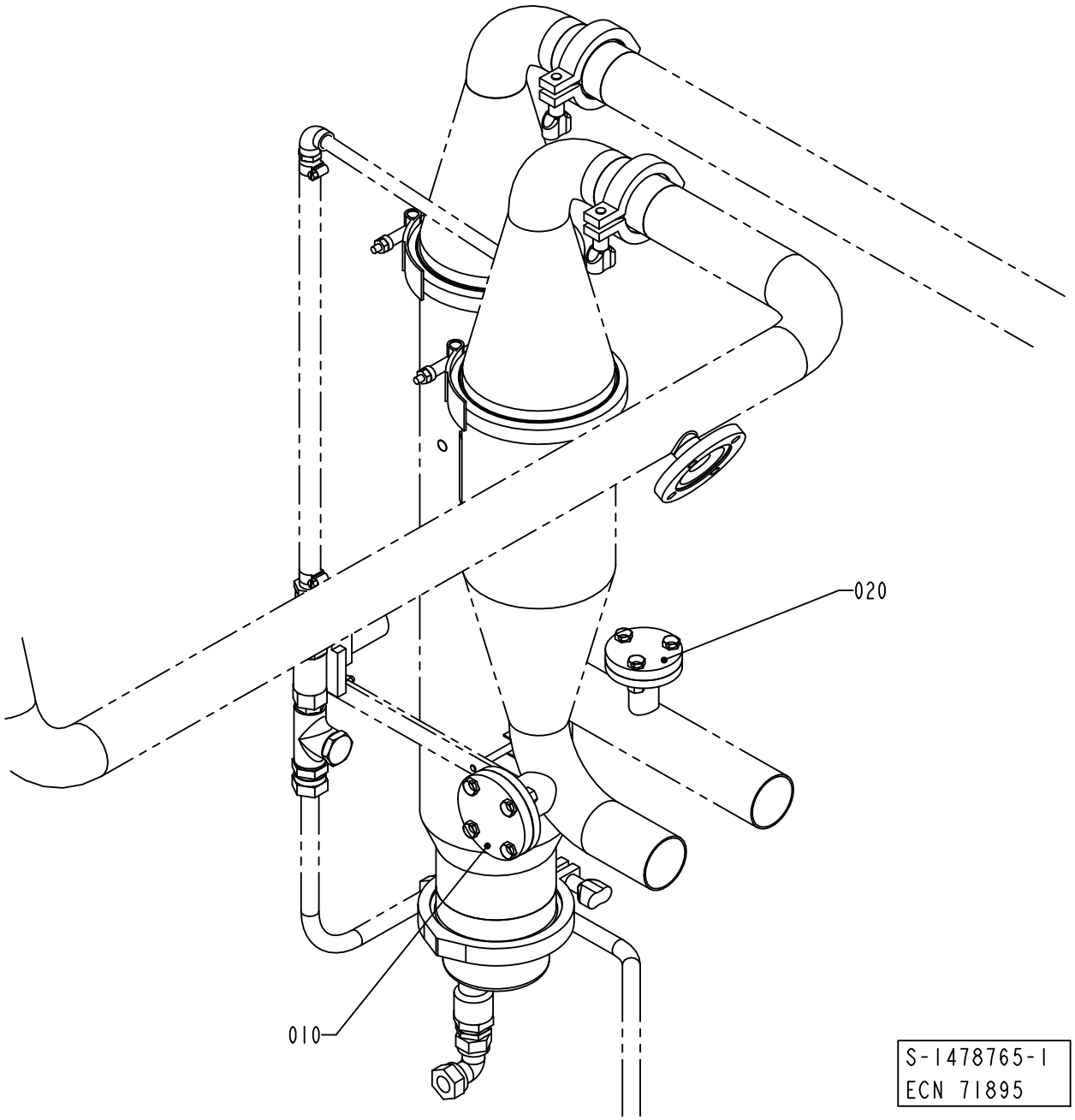

ECM: 261773 - 20060404
Group number: 1478765-0100
Assembly Drawing: 1478765-1_1_AA

This list covers pages from 1-154 to 1-157

Pos	Part No	UN	Qty	Description	Page No
50HZ (See drawing on page: 1-154)					
010	1037268-0000		1	LID	
020	1037129-0000		1	LID	
60HZ (See drawing on page: 1-156)					
050	1478766-0000		1	PIPE	
060	1037267-0000		1	PIPE	
070	442237-0000		1	NUT	
080	490998-0000		1	THROTTLE SCREW	
600	312105-0453		3	SCREW M6S ISO 4017 M8X25 A480	
610	312605-0318		3	HEXAGON NUT, M6M M8 A280	
620	315202-0119		1	O-RING 25,1X1,6 MM	
630	315229-0203		1	GASKET 22,1X30,1X3,7 MM 1"	

Pos	Part No	UN	Qty	Description	Page No

PRESSURE REGULATOR

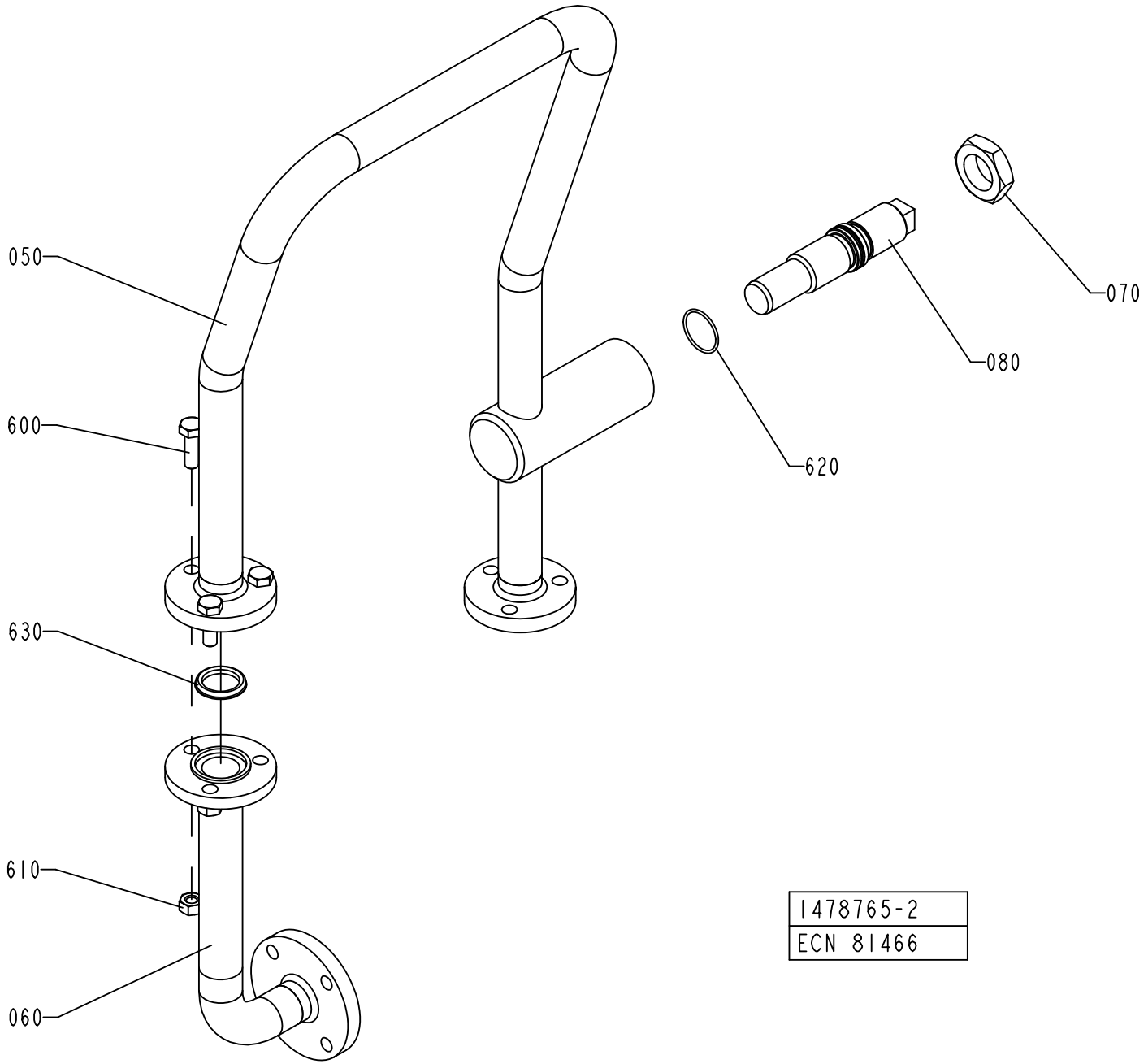

ECM: 261773 - 20060404
Group number: 1478765-0100
Assembly Drawing: 1478765-2_1_AB

This list covers pages from 1-154 to 1-157

Pos	Part No	UN	Qty	Description	Page No
50HZ (See drawing on page: 1-154)					
010	1037268-0000		1	LID	
020	1037129-0000		1	LID	
60HZ (See drawing on page: 1-156)					
050	1478766-0000		1	PIPE	
060	1037267-0000		1	PIPE	
070	442237-0000		1	NUT	
080	490998-0000		1	THROTTLE SCREW	
600	312105-0453		3	SCREW M6S ISO 4017 M8X25 A480	
610	312605-0318		3	HEXAGON NUT, M6M M8 A280	
620	315202-0119		1	O-RING 25,1X1,6 MM	
630	315229-0203		1	GASKET 22,1X30,1X3,7 MM 1"	

Pos	Part No	UN	Qty	Description	Page No

BUTTERFLY VALVE

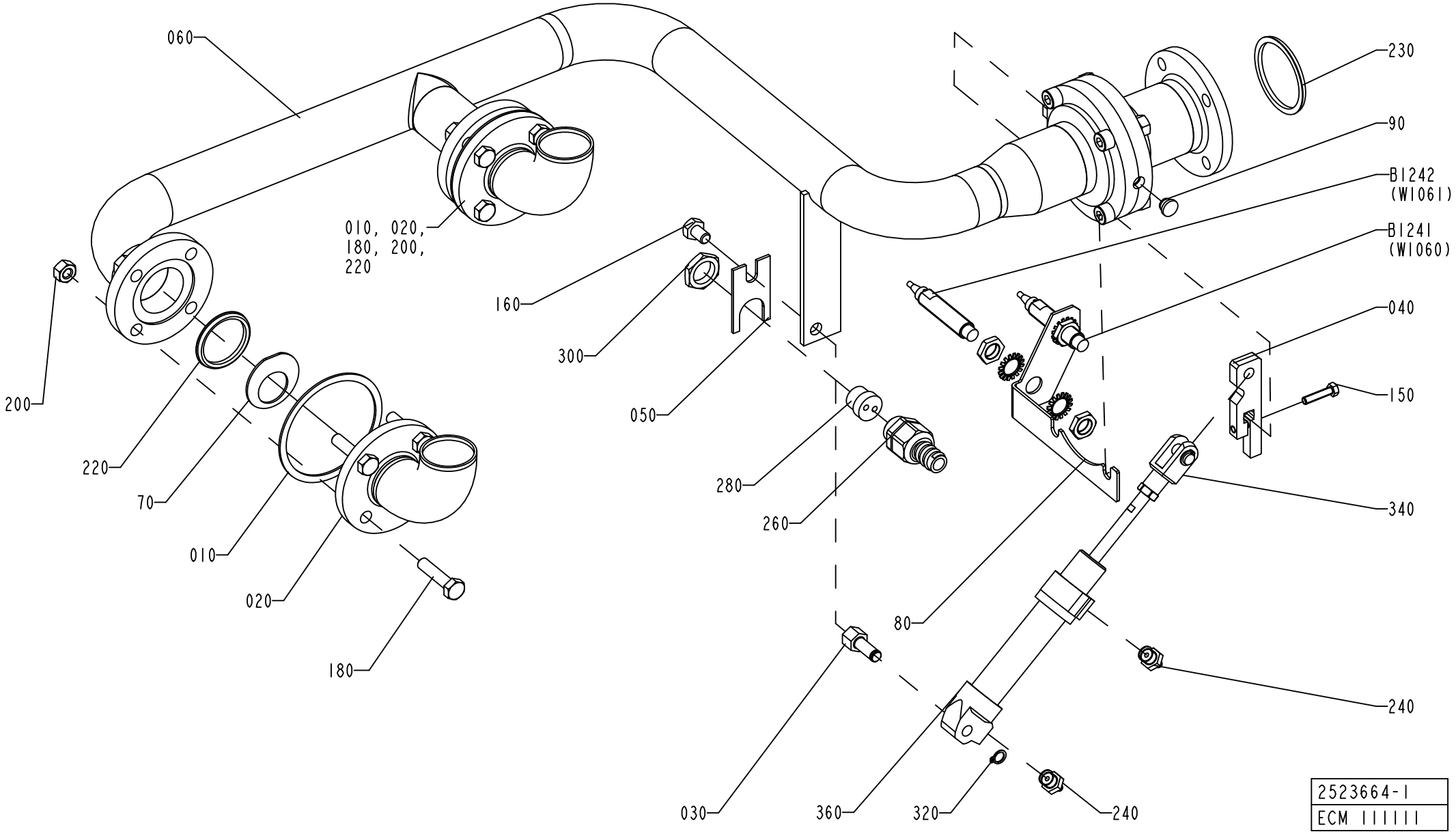

ECM: 262301 - 20060404
Group number: 2523664-0100
Assembly Drawing: 2523664-1_1_AB

Pos	Part No	UN	Qty	Description	Page No
-					
010	1036294-0000		2	GASKET	
020	1347223-0000		2	PIPE	
030	1349762-0000		1	SHAFT	
040	2523665-0000		1	ARM	
050	1487263-0000		1	BRACKET	
060	1548249-0000		1	PIPE	
	90240-0302		*2*	*BUSHING, 10X12X10 MM*	
	1487261-0000		*2*	*SEAL RING*	
070	1548241-0005		2	WASHER	
080	2531434-0000		1	BRACKET	
090	2531435-0000		1	PLUG	
150	312105-0332		1	SCREW M6S ISO 4017 M5X22 A470	
160	312105-0447		1	SCREW M6S ISO 4017 M8X12 A480	
180	312109-0457		8	SCREW M6S ISO 4017 M8X35 A480	
200	312605-0318		8	HEXAGON NUT, M6M M8 A280	
220	315229-0204		2	GASKET 34,8X42,8X3,7 MM 1"1/2	
230	315229-0205		1	GASKET 47,5X55,5X3,7 MM 2 INCH	
240	90458-2956		2	ELBOW PIPE JOINT, EXT.THREAD, D=6MM-G1/8	
260	353243-0002		1	HOSE GLAND W/O INSERT PG11 EXTENDED	
280	353249-0036		1	INSERT, MULTI HOLE, EK152 M 2X4	
300	90099-0117		1	NUT, PR 18,6 (PG11)	
320	90141-0015		1	RETAINING RING FOR SHAFT DIN 471 8 SS	
340	90239-0532		1	ROD END, CLEVIS WITH AXLE M8X1,25	
360	90239-0822		1	DOUBLE ACTING, MINI-ISO, CYL.20-50	
B1241	90458-0672		1	PROX.SENSOR E2E2-X5MB1-5M	
B1242	90458-0672		1	PROX.SENSOR E2E2-X5MB1-5M	

Pos	Part No	UN	Qty	Description	Page No

CABLE TRENCH

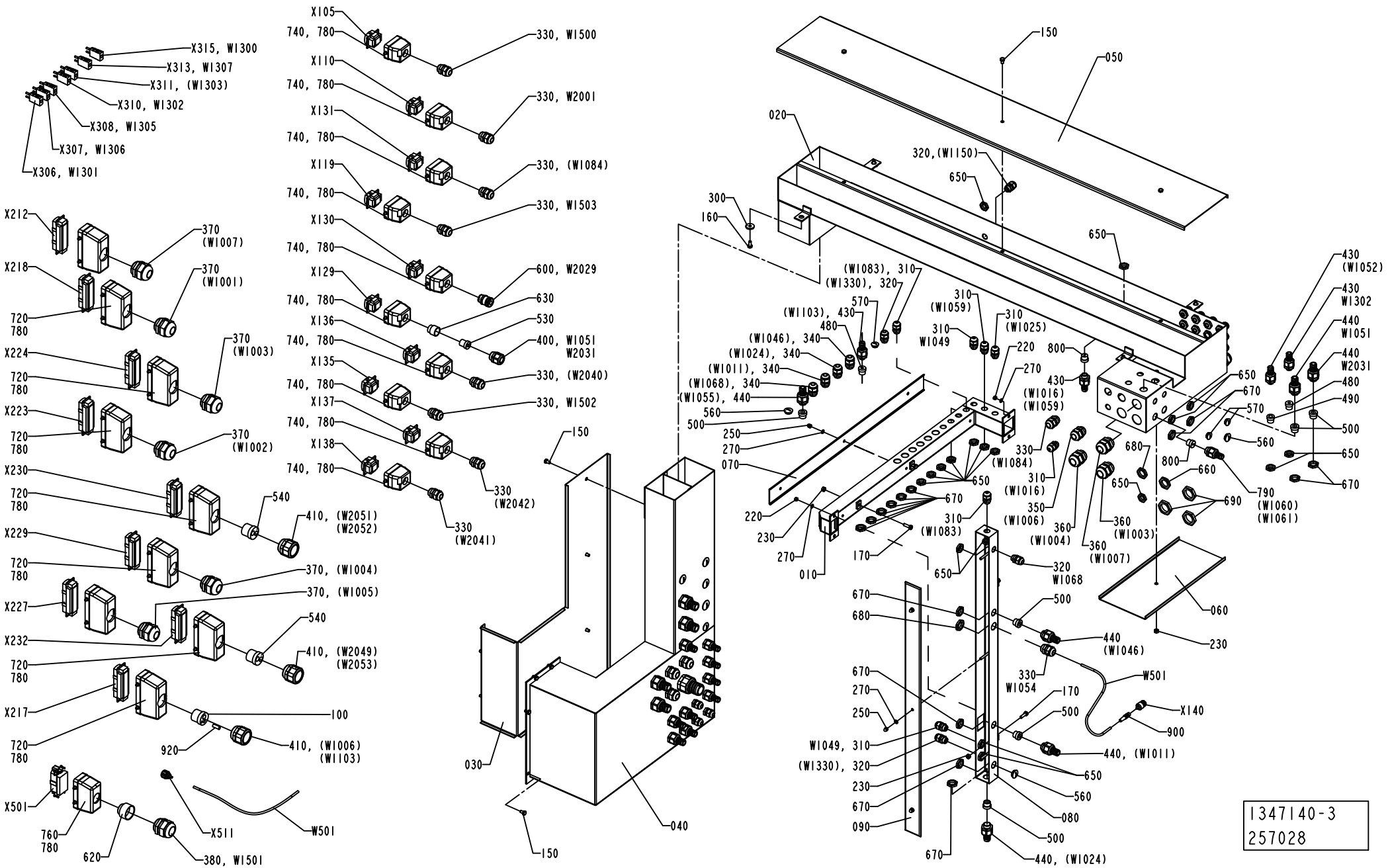

ECM: 327607 - 20080101
Group number: 1347140-0200
Assembly Drawing: 1347140-3_1_AF

This list covers pages from 1-160 to 1-175

Pos	Part No	UN	Qty	Description	Page No
FLOATER HI (See drawing on pages: 1-172, 1-174)					
110	2562308-0000		1	INSERT	
120	2579745-0000		1	INSERT	
130	2598086-0000		1	INSERT	
340	352103-0106		5	CABLE GLAND, ST 11, PR18,6/PG11	
410	353240-0006		4	GLAND W/O INSERT PG29 NORMAL	
440	353243-0003		12	HOSE GLAND W/O INSERT PG11 EXTENDED	
450	353240-0004		7	GLAND W/O INSERT PG16 NORMAL	
460	353243-0007		2	HOSE GLAND W/O INSERT PG21 EXTENDED	
470	353249-0014		1	INSERT, SINGLE HOLE, EK 154/16	
500	353249-0011		12	INSERT, SINGLE HOLE, EK 153/11	
560	90002-0009		2	BLANK-OFF PLUG, PR 18.6 SKINDICHT-BLK11	
610	353249-0071		1	INSERT, SINGLE HOLE, E155/18	
660	90099-0110		4	NUT, PR 22,5 (PG16)	
720	90110-0152		10	CABLE HOOD 24-POL 70.352.2428.1	
760	90110-0160		2	CABLE HOOD 6-16-POL 70.352.1628.1	
780	90110-0385		22	MARKING HOLDER, 4.242.3853.0	
810	359005-0050		4	MARKING LABEL KIT X, 04.841.4550.0	
820	359005-0010		25	MARKING LABEL KIT 0 - 9, 04.841.2150.0	
870	90152-0070	M	14	METAL HOSE, 32,5X26, UL 2621	
930	90600-0975		1	HOSE GLAND W/O INSERT PG13,5 EXTENDED	
940	90600-0976		1	INSERT, SINGLE HOLE, HI.TEMP, EK153I9	
W9106	90220-0034	M	7	THERMOCABLE TEX/SITW-20F-KX 2X0,5MM2	
W9115	90220-0034	M	7	THERMOCABLE TEX/SITW-20F-KX 2X0,5MM2	
W9116	90220-0034	M	7	THERMOCABLE TEX/SITW-20F-KX 2X0,5MM2	
X210	90110-0150		1	MALE INSERT 121110 0000	
X317	90326-0022		1	PLUG, MALE YELLOW CR-AL	
X318	90326-0022		1	PLUG, MALE YELLOW CR-AL	
X319	90326-0022		1	PLUG, MALE YELLOW CR-AL	
X502	90110-0156		1	MALE INSERT 70.210.0653.0	
FLOATER NOHI (See drawing on pages: 1-164, 1-166)					
340	352103-0106		5	CABLE GLAND, ST 11, PR18,6/PG11	
410	353240-0006		3	GLAND W/O INSERT PG29 NORMAL	
440	353243-0003		12	HOSE GLAND W/O INSERT PG11 EXTENDED	
450	353243-0004		4	HOSE GLAND W/O INSERT PG13,5 EXTENDED	
460	353243-0007		1	HOSE GLAND W/O INSERT PG21 EXTENDED	
500	353249-0011		12	INSERT, SINGLE HOLE, EK 153/11	
550	90002-0004		1	BLANK-OFF PLUG, PR 22,5 SKINDICHT-BLK16	
560	90002-0009		2	BLANK-OFF PLUG, PR 18.6 SKINDICHT-BLK11	
660	90099-0110		5	NUT, PR 22,5 (PG16)	
720	90110-0152		9	CABLE HOOD 24-POL 70.352.2428.1	
760	90110-0160		1	CABLE HOOD 6-16-POL 70.352.1628.1	
780	90110-0385		20	MARKING HOLDER, 4.242.3853.0	
810	359005-0050		2	MARKING LABEL KIT X, 04.841.4550.0	
820	359005-0010		20	MARKING LABEL KIT 0 - 9, 04.841.2150.0	
870	90152-0070	MM	1000	METAL HOSE, 32,5X26, UL 2621	
910	90002-0016		3	BLANK-OFF PLUG PR 20.4 SKINDICHT-BLK13,5	
LEVELPROBE HI (See drawing on pages: 1-168, 1-170)					
110	2562308-0000		1	INSERT	
120	2579745-0000		1	INSERT	
130	2598086-0000		1	INSERT	
340	352103-0106		4	CABLE GLAND, ST 11, PR18,6/PG11	
410	353240-0006		4	GLAND W/O INSERT PG29 NORMAL	
440	353243-0003		11	HOSE GLAND W/O INSERT PG11 EXTENDED	
450	353240-0004		7	GLAND W/O INSERT PG16 NORMAL	
460	353243-0007		2	HOSE GLAND W/O INSERT PG21 EXTENDED	
470	353249-0014		1	INSERT, SINGLE HOLE, EK 154/16	
500	353249-0011		11	INSERT, SINGLE HOLE, EK 153/11	
560	90002-0009		4	BLANK-OFF PLUG, PR 18.6 SKINDICHT-BLK11	
610	353249-0071		1	INSERT, SINGLE HOLE, E155/18	
660	90099-0110		4	NUT, PR 22,5 (PG16)	
720	90110-0152		10	CABLE HOOD 24-POL 70.352.2428.1	
760	90110-0160		2	CABLE HOOD 6-16-POL 70.352.1628.1	
780	90110-0385		22	MARKING HOLDER, 4.242.3853.0	
810	359005-0050		4	MARKING LABEL KIT X, 04.841.4550.0	
820	359005-0010		25	MARKING LABEL KIT 0 - 9, 04.841.2150.0	
870	90152-0070	M	14	METAL HOSE, 32,5X26, UL 2621	
930	90600-0975		1	HOSE GLAND W/O INSERT PG13,5 EXTENDED	
940	90600-0976		1	INSERT, SINGLE HOLE, HI.TEMP, EK153I9	
W9106	90220-0034	M	7	THERMOCABLE TEX/SITW-20F-KX 2X0,5MM2	
W9115	90220-0034	M	7	THERMOCABLE TEX/SITW-20F-KX 2X0,5MM2	
W9116	90220-0034	M	7	THERMOCABLE TEX/SITW-20F-KX 2X0,5MM2	
X210	90110-0150		1	MALE INSERT 121110 0000	
X317	90326-0022		1	PLUG, MALE YELLOW CR-AL	
X318	90326-0022		1	PLUG, MALE YELLOW CR-AL	
X319	90326-0022		1	PLUG, MALE YELLOW CR-AL	
X502	90110-0156		1	MALE INSERT 70.210.0653.0	
LEVELPROBE NOHI (See drawing on pages: 1-160, 1-162)					
340	352103-0106		4	CABLE GLAND, ST 11, PR18,6/PG11	
410	353240-0006		3	GLAND W/O INSERT PG29 NORMAL	
440	353243-0003		11	HOSE GLAND W/O INSERT PG11 EXTENDED	
450	353243-0004		4	HOSE GLAND W/O INSERT PG13,5 EXTENDED	
460	353243-0007		1	HOSE GLAND W/O INSERT PG21 EXTENDED	
500	353249-0011		11	INSERT, SINGLE HOLE, EK 153/11	

Machine Type | Group Description | Used-In | Group Number | Page No

CABLE TRENCH

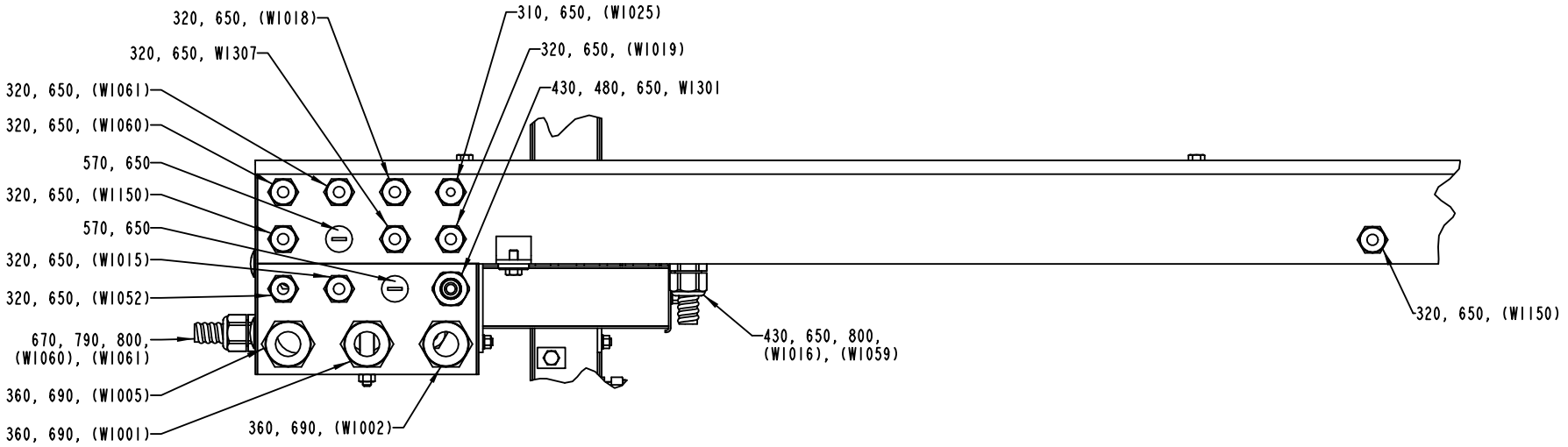

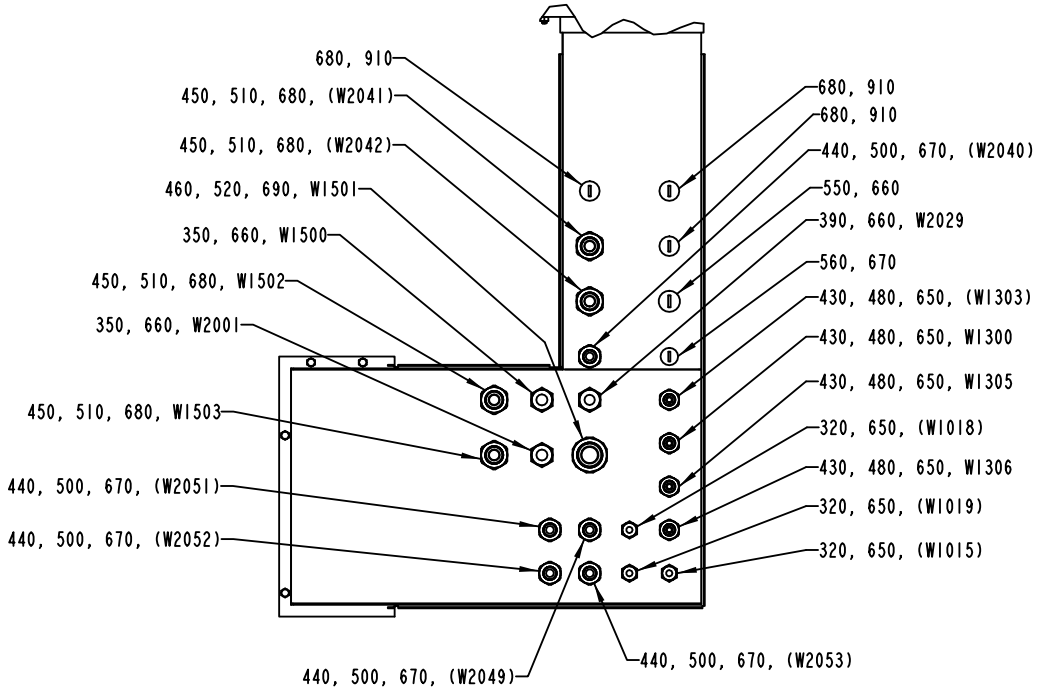

1347140-3
257028

ECM: 327607 - 20080101
Group number: 1347140-0200
Assembly Drawing: 1347140-3_2_AF

This list covers pages from 1-160 to 1-175

Pos	Part No	UN	Qty	Description	Page No
LEVELPROBE NOHI (Cont'd) (See drawing on pages: 1-160, 1-162)					
550	90002-0004		1	BLANK-OFF PLUG, PR 22,5 SKINDICHT-BLK16	
560	90002-0009		4	BLANK-OFF PLUG, PR 18.6 SKINDICHT-BLK11	
660	90099-0110		5	NUT, PR 22,5 (PG16)	
720	90110-0152		9	CABLE HOOD 24-POL 70.352.2428.1	
760	90110-0160		1	CABLE HOOD 6-16-POL 70.352.1628.1	
780	90110-0385		20	MARKING HOLDER, 4.242.3853.0	
810	359005-0050		2	MARKING LABEL KIT X, 04.841.4550.0	
820	359005-0010		20	MARKING LABEL KIT 0 - 9, 04.841.2150.0	
870	90152-0070	MM	1000	METAL HOSE, 32,5X26, UL 2621	
910	90002-0016		3	BLANK-OFF PLUG PR 20.4 SKINDICHT-BLK13,5	
Common Parts					
010	2524453-0000		1	CABLE DUCT	
020	2524454-0000		1	CABLE DUCT	
030	1347195-0000		1	LID	
040	1538847-0000		1	CABLE DUCT	
050	1347193-0000		1	LID	
060	1347192-0000		1	LID	
070	1347872-0000		1	LID	
080	1347873-0000		1	CABLE DUCT	
090	1347874-0000		1	LID	
100	90459-7079		1	INSERT, MULTI HOLE, E155G1X5,5/1X7,5/1X1	
150	312105-0364		12	SCREW M6S ISO 4017 M6X10 A480	
160	312105-0367		4	SCREW M6S ISO 4017 M6X14 A480	
170	312105-0370		4	SCREW M6S ISO 4017 M6X20 A480	
220	312605-0314		4	HEXAGON NUT, M6M M5 A280	
230	312605-0316		5	HEXAGON NUT, M6M M6 A280	
250	312705-0314		6	NUT HEX. DOMED CAP MHM-6 M5 A280	
270	315105-0146		10	WASHER BRB 5,3X10 RFR	
300	315125-0153		4	WASHER TBRSB 6,4X22X4 A4	
310	352103-0100		8	CABLE GLAND, STR 9, PR15,2/PG9	
320	352103-0101		15	CABLE GLAND, ST 9, PR15,2/PG9	
330	352103-0108		10	CABLE GLAND, ST 13,5 , PR20,4/PG13,5	
350	352103-0111		3	CABLE GLAND, ST 16, PR22,5/PG16	
360	352103-0116		6	CABLE GLAND, ST 21, PR28,3/PG21	
370	352103-0120		6	CABLE GLAND, STR 29, PR37,0/PG29	
380	352103-0121		1	CABLE GLAND, ST 29, PR37,0/PG29	
390	352103-0110		1	CABLE GLAND, STR 16, PR22,5/PG16	
400	353240-0004		1	GLAND W/O INSERT PG16 NORMAL	
430	353243-0001		9	HOSE GLAND W/O INSERT PG9 EXTENDED	
480	353249-0008		7	INSERT, SINGLE HOLE, EK 152/7	
490	353249-0009		1	INSERT, SINGLE HOLE, EK 152/9	
510	353249-0013		4	INSERT, SINGLE HOLE, EK 154/13	
520	353249-0061		1	INSERT, SINGLE HOLE, EK 155/20	
530	353249-0028		1	INSERT, MULTI HOLE, E153M2X8	
540	353249-0060		2	INSERT, MULTI HOLE, E155M2X13	
570	90002-0013		5	BLANK-OFF PLUG, PR 15,2 SKINDICHT-BLK9	
600	90012-0138		1	GLAND, EXTENDED WITH INSERT, PG13,5	
620	90089-0015		1	REDUCING SLEEVE, PR37M/PR28,3F	
630	90089-0029		1	ENLARGING SLEEVE	
650	90099-0104		36	NUT, PR 15,2 (PG9)	
670	90099-0117		21	NUT, PR 18,6 (PG11)	
680	90099-0118		9	NUT, PR 20,4 (PG13,5)	
690	90099-0119		7	NUT, PR 28,3 (PG21)	
740	90110-0157		10	CABLE HOOD 6-POL 70.352.0628.1	
790	353243-0002		1	HOSE GLAND W/O INSERT PG11 EXTENDED	
800	353249-0036		2	INSERT, MULTI HOLE, EK152 M 2X4	
850	90152-0051	MM	3200	SPIRAL CONDUIT, 25X18, UL 1816	
880	90152-0050	M	17.5	SPIRAL CONDUIT, 20X13, UL 1313	
900	90458-2893		1	SLEEVE, 78 Z-0-3-4	
920	353249-0307		1	SEALING PIN, 7,5X20	
W1049	351150-0403	M	4	CABLE OLFLEX 3X0,75 MM2 LIGHT/GREY	
W1051	90220-0092	MM	6000	PAIR TWISTED CABLE 3X2X0,25MM2	
W1068	351150-0405	M	4	CABLE OLFLEX 5X0,75 MM2 LIGHT/GREY	
W1300	90220-0034	MM	5700	THERMOCABLE TEX/SITW-20F-KX 2X0,5MM2	
W1301	90220-0034	MM	6300	THERMOCABLE TEX/SITW-20F-KX 2X0,5MM2	
W1302	90220-0034	MM	6700	THERMOCABLE TEX/SITW-20F-KX 2X0,5MM2	
W1305	90220-0034	MM	5400	THERMOCABLE TEX/SITW-20F-KX 2X0,5MM2	
W1306	90220-0034	MM	5300	THERMOCABLE TEX/SITW-20F-KX 2X0,5MM2	
W1307	90220-0034	MM	7000	THERMOCABLE TEX/SITW-20F-KX 2X0,5MM2	
W1500	351150-0418	MM	5100	CABLE OLFLEX 4X2,5 MM2 LIGHT/GREY	
W1501	351120-0168	MM	4000	CABLE SIHF 4X10MM2 GREEN/YELLOW	
W1502	351120-0165	MM	4500	CABLE SIHF 4X2,5MM2 GREEN/YELLOW	
W1503	351120-0165	MM	4500	CABLE SIHF 4X2,5MM2 GREEN/YELLOW	
W2001	351150-0418	MM	4300	CABLE OLFLEX 4X2,5 MM2 LIGHT/GREY	
W2029	90220-0104	MM	6500	SCR. CABLE 4X1,5MM2	
W2031	351150-0412	MM	6000	CABLE OLFLEX 3X1,5 MM2 LIGHT/GREY	
W501	90458-2895	M	10	COAXIAL CABLE RG 400/U BROWN	
X105	90110-0159		1	MALE INSERT 70.310.0640.0	
X110	90110-0159		1	MALE INSERT 70.310.0640.0	
X119	90110-0159		1	MALE INSERT 70.310.0640.0	
X129	90110-0159		1	MALE INSERT 70.310.0640.0	
X130	90110-0159		1	MALE INSERT 70.310.0640.0	
X131	90110-0159		1	MALE INSERT 70.310.0640.0	

Machine Type | Group Description | Used-In | Group Number | Page No

CABLE TRENCH

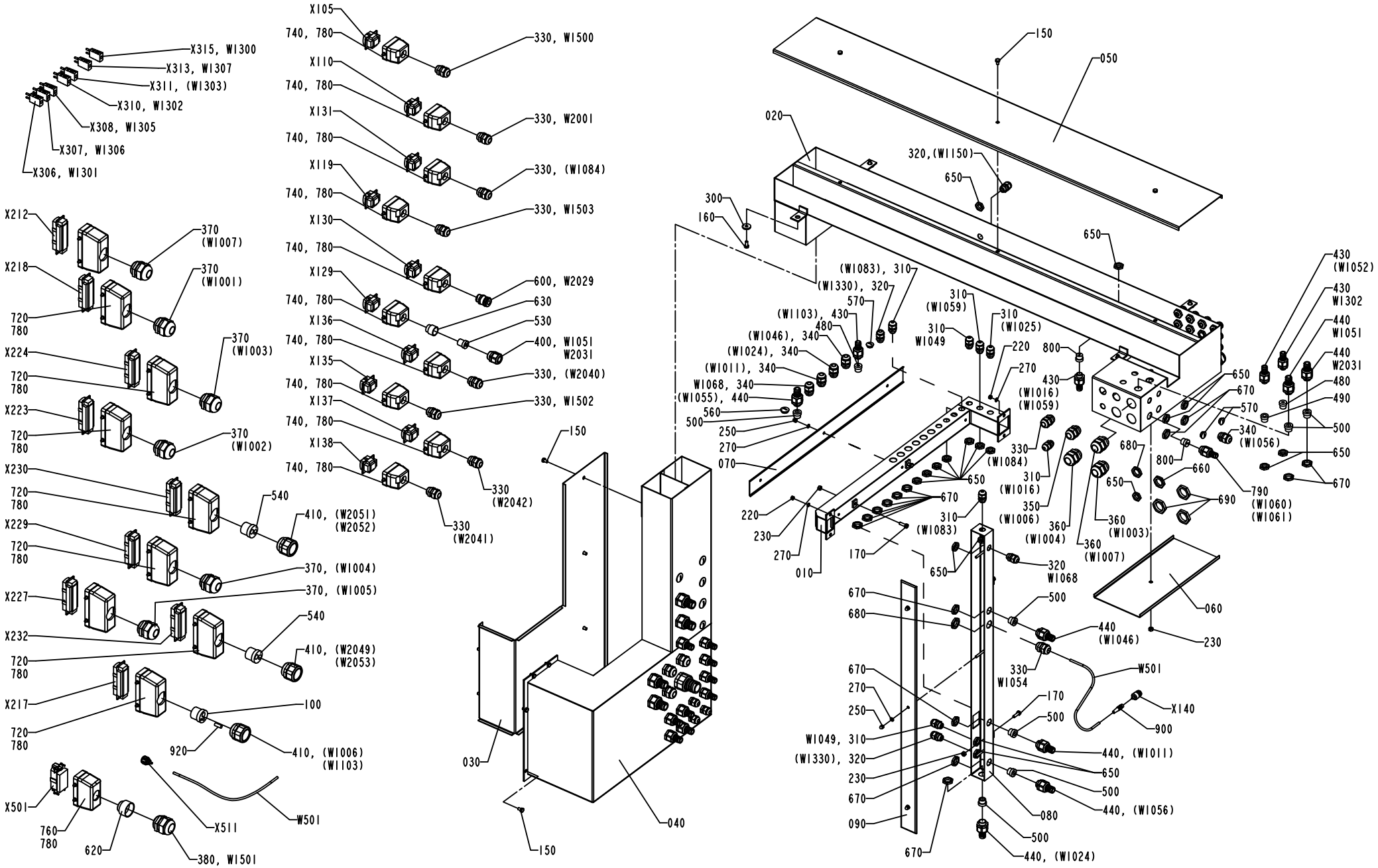

Pos	Part No	UN	Qty	Description	Page No
Common Parts (Cont'd)					
X135	90110-0159		1	MALE INSERT 70.310.0640.0	
X136	90110-0159		1	MALE INSERT 70.310.0640.0	
X137	90110-0159		1	MALE INSERT 70.310.0640.0	
X138	90110-0159		1	MALE INSERT 70.310.0640.0	
X140	90458-2890		1	CONNECTOR, 21N-50N12N133NE	
X212	90110-0150		1	MALE INSERT 121110 0000	
X217	90110-0150		1	MALE INSERT 121110 0000	
X218	90110-0150		1	MALE INSERT 121110 0000	
X223	90110-0150		1	MALE INSERT 121110 0000	
X224	90110-0150		1	MALE INSERT 121110 0000	
X227	90110-0150		1	MALE INSERT 121110 0000	
X229	90110-0150		1	MALE INSERT 121110 0000	
X230	90110-0150		1	MALE INSERT 121110 0000	
X232	90110-0150		1	MALE INSERT 121110 0000	
X306	90326-0022		1	PLUG, MALE YELLOW CR-AL	
X307	90326-0022		1	PLUG, MALE YELLOW CR-AL	
X308	90326-0022		1	PLUG, MALE YELLOW CR-AL	
X310	90326-0022		1	PLUG, MALE YELLOW CR-AL	
X311	90326-0022		1	PLUG, MALE YELLOW CR-AL	
X313	90326-0022		1	PLUG, MALE YELLOW CR-AL	
X315	90326-0022		1	PLUG, MALE YELLOW CR-AL	
X501	90110-0156		1	MALE INSERT 70.210.0653.0	
X511	90458-2892		1	CONNECTOR, 11 N-50-3-31/133 NE	

Pos	Part No	UN	Qty	Description	Page No

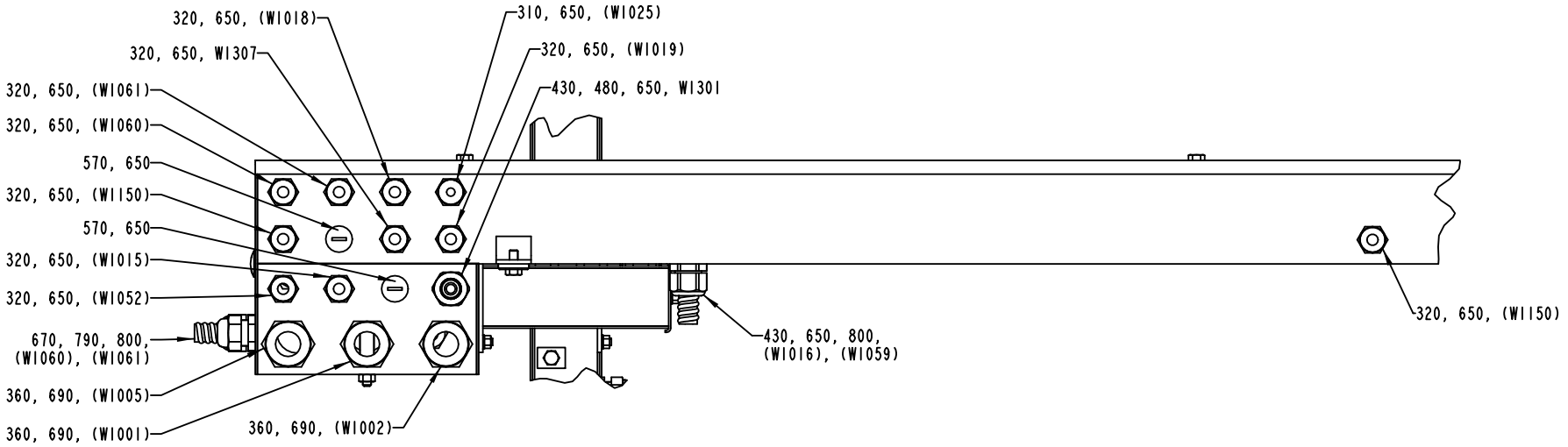

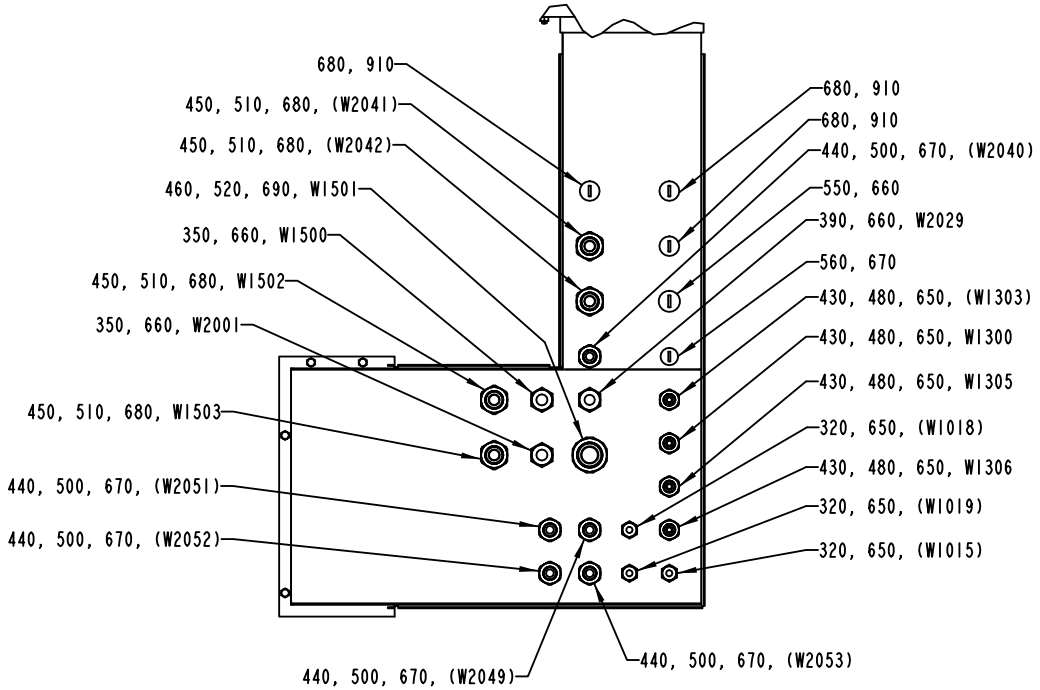

1347140-4
257028

ECM: 327607 - 20080101
Group number: 1347140-0200
Assembly Drawing: 1347140-4_2_AE

This list covers pages from 1-160 to 1-175

Pos	Part No	UN	Qty	Description	Page No
SEE PREVIOUS LISTS PAGES: 1-161, 1-163, 1-165.					

Pos	Part No	UN	Qty	Description	Page No

CABLE TRENCH

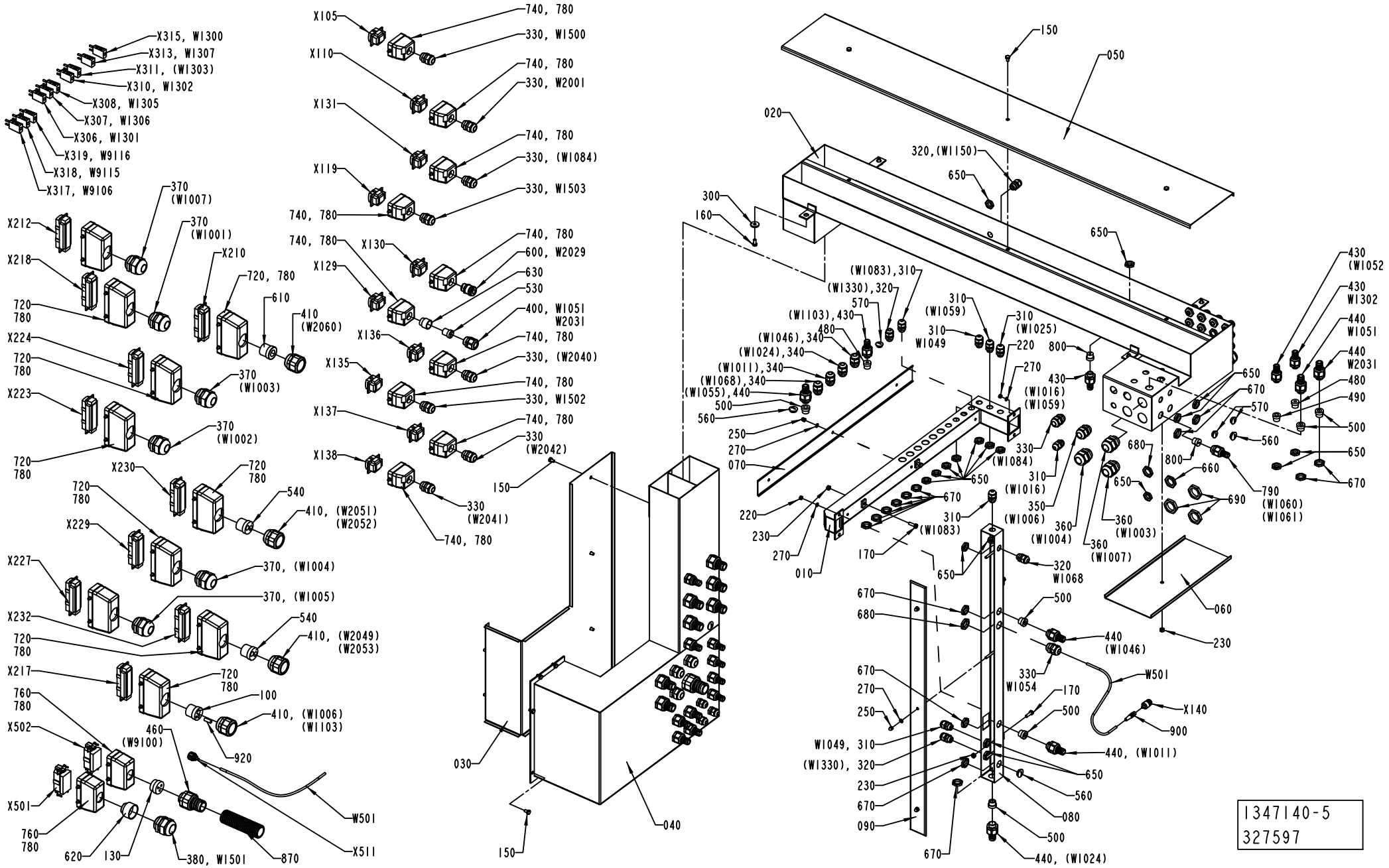

ECM: 327607 - 20080101
Group number: 1347140-0200
Assembly Drawing: 1347140-5_1_AD

This list covers pages from 1-160 to 1-175

Pos	Part No	UN	Qty	Description	Page No
SEE PREVIOUS LISTS PAGES: 1-161, 1-163, 1-165.					

Pos	Part No	UN	Qty	Description	Page No

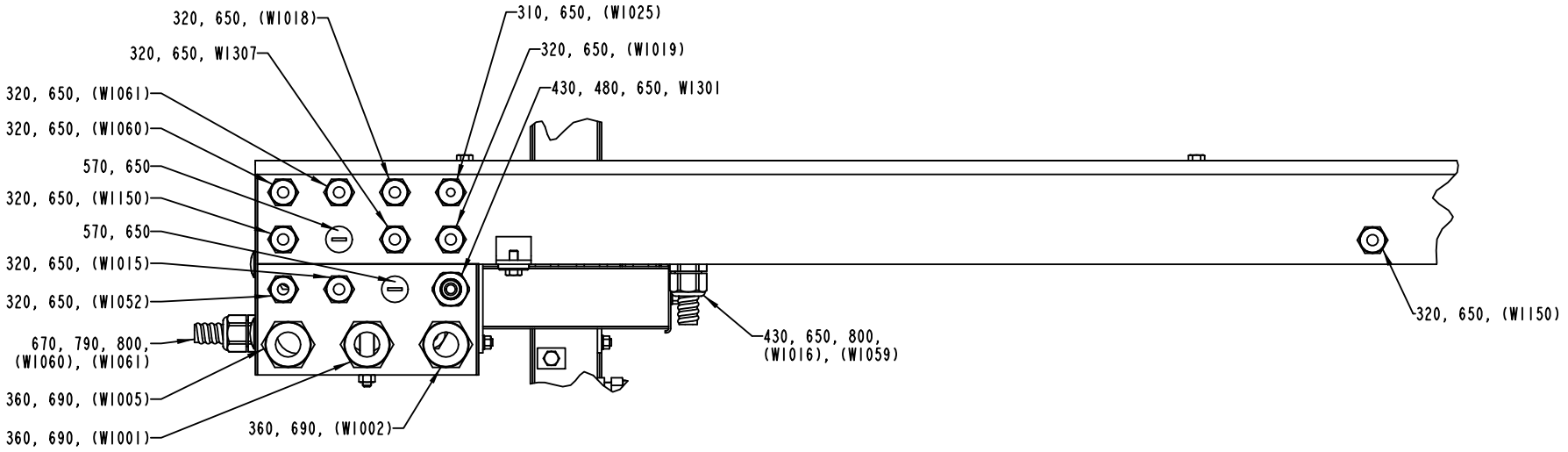

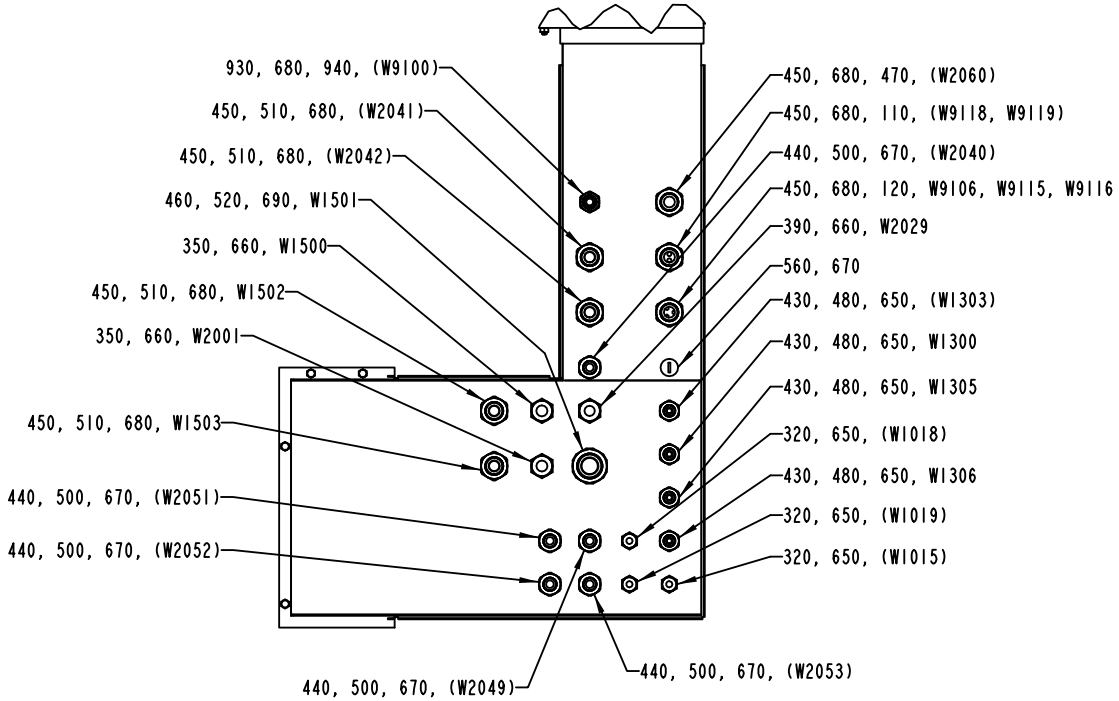

1347140-5
327597

Pos	Part No	UN	Qty	Description	Page No

SEE PREVIOUS LISTS PAGES: 1-161, 1-163, 1-165.

Pos	Part No	UN	Qty	Description	Page No

CABLE TRENCH

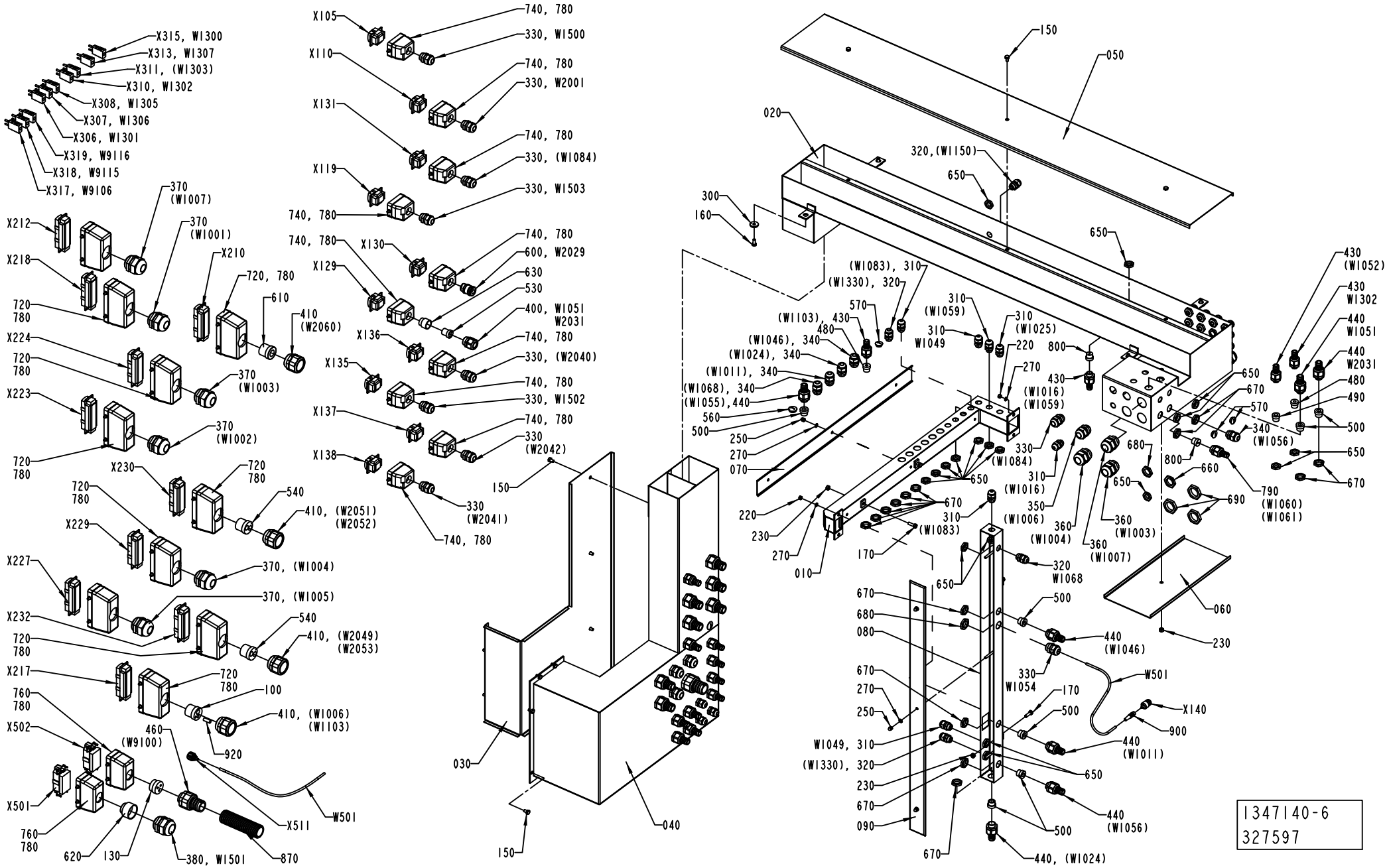

1347140-6
327597

ECM: 327607 - 20080101
Group number: 1347140-0200
Assembly Drawing: 1347140-6_1_AD

This list covers pages from 1-160 to 1-175

Pos	Part No	UN	Qty	Description	Page No
SEE PREVIOUS LISTS PAGES: 1-161, 1-163, 1-165.					

Pos	Part No	UN	Qty	Description	Page No

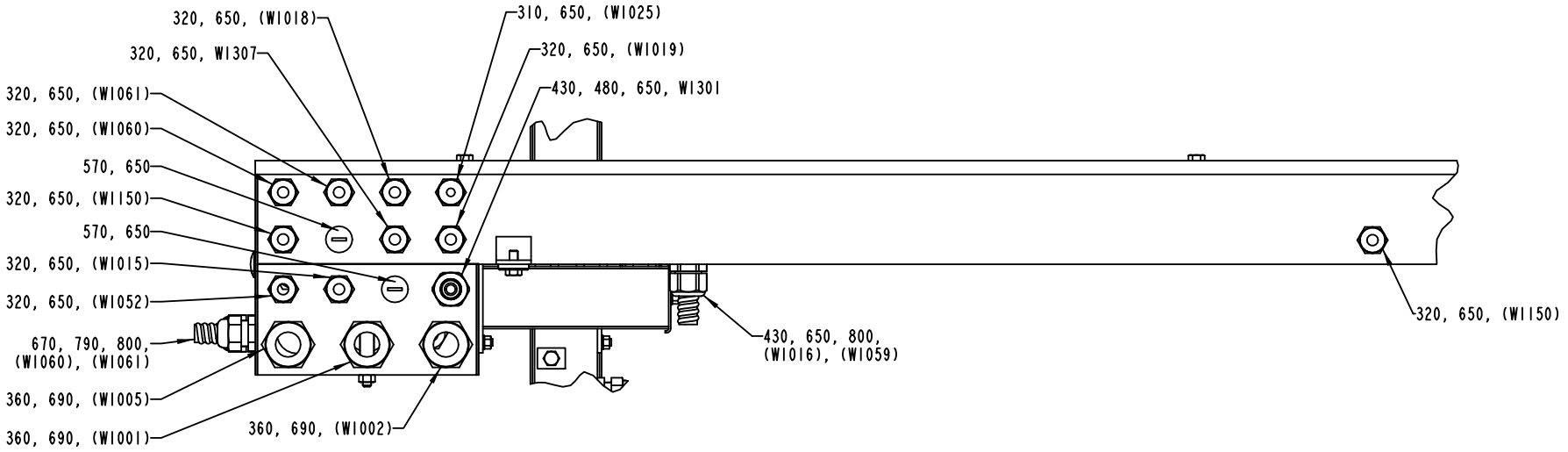
320, 650, (W1018)
320, 650, W1307
320, 650, (W1061)
320, 650, (W1060)
570, 650
320, 650, (W1150)
570, 650
320, 650, (W1015)
320, 650, (W1052)
670, 790, 800, (W1060), (W1061)
360, 690, (W1005)
360, 690, (W1001)
360, 690, (W1002)
310, 650, (W1025)
320, 650, (W1019)
430, 480, 650, W1301
430, 650, 800, (W1016), (W1059)
320, 650, (W1150)

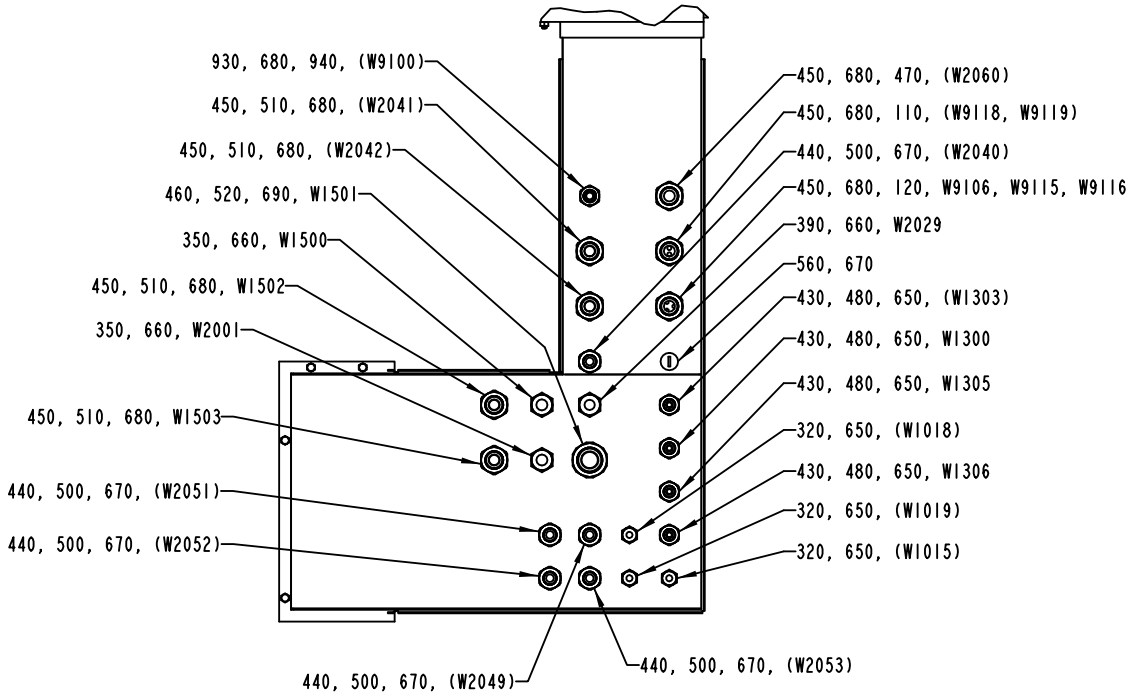
930, 680, 940, (W9100)
450, 510, 680, (W2041)
450, 510, 680, (W2042)
460, 520, 690, W1501
350, 660, W1500
450, 510, 680, W1502
350, 660, W2001
450, 510, 680, W1503
440, 500, 670, (W2051)
440, 500, 670, (W2052)
440, 500, 670, (W2049)
440, 500, 670, (W2053)
450, 680, 470, (W2060)
450, 680, 110, (W9118, W9119)
440, 500, 670, (W2040)
450, 680, 120, W9106, W9115, W9116
390, 660, W2029
560, 670
430, 480, 650, (W1303)
430, 480, 650, W1300
430, 480, 650, W1305
320, 650, (W1018)
430, 480, 650, W1306
320, 650, (W1019)
320, 650, (W1015)

Pos	Part No	UN	Qty	Description	Page No
SEE PREVIOUS LISTS PAGES: 1-161, 1-163, 1-165.					

Pos	Part No	UN	Qty	Description	Page No

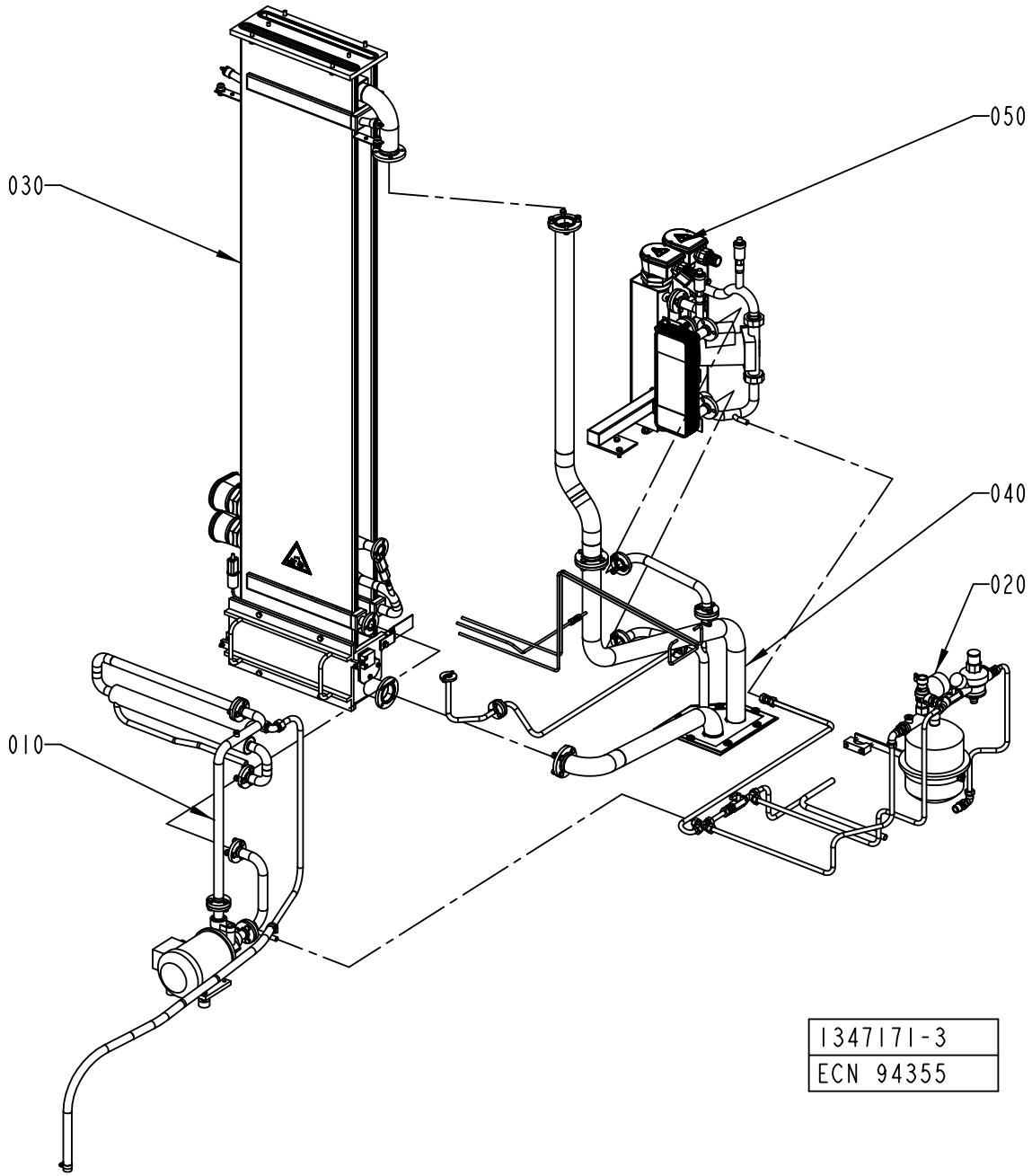
050
030
040
020
010
1347171-3
ECN 94355

ECM: 94389 - 20010923
Group number: 1347171-0200
Assembly Drawing: 1347171-3_1_AA

Pos	Part No	UN	Qty	Description	Page No
-					
010	1490265-0100		1	WATER CIRCULATION	**1-179**
020	1347174-0200		1	WATER CIRCULATION	**1-181**
030	1035008-0400		1	BATH	**1-183**
040	1347172-0200		1	PEROXIDE PIPE	**1-185**
050	1334506-0200		1	HEATING UNIT	**1-187**

Pos	Part No	UN	Qty	Description	Page No

WATER CIRCULATION

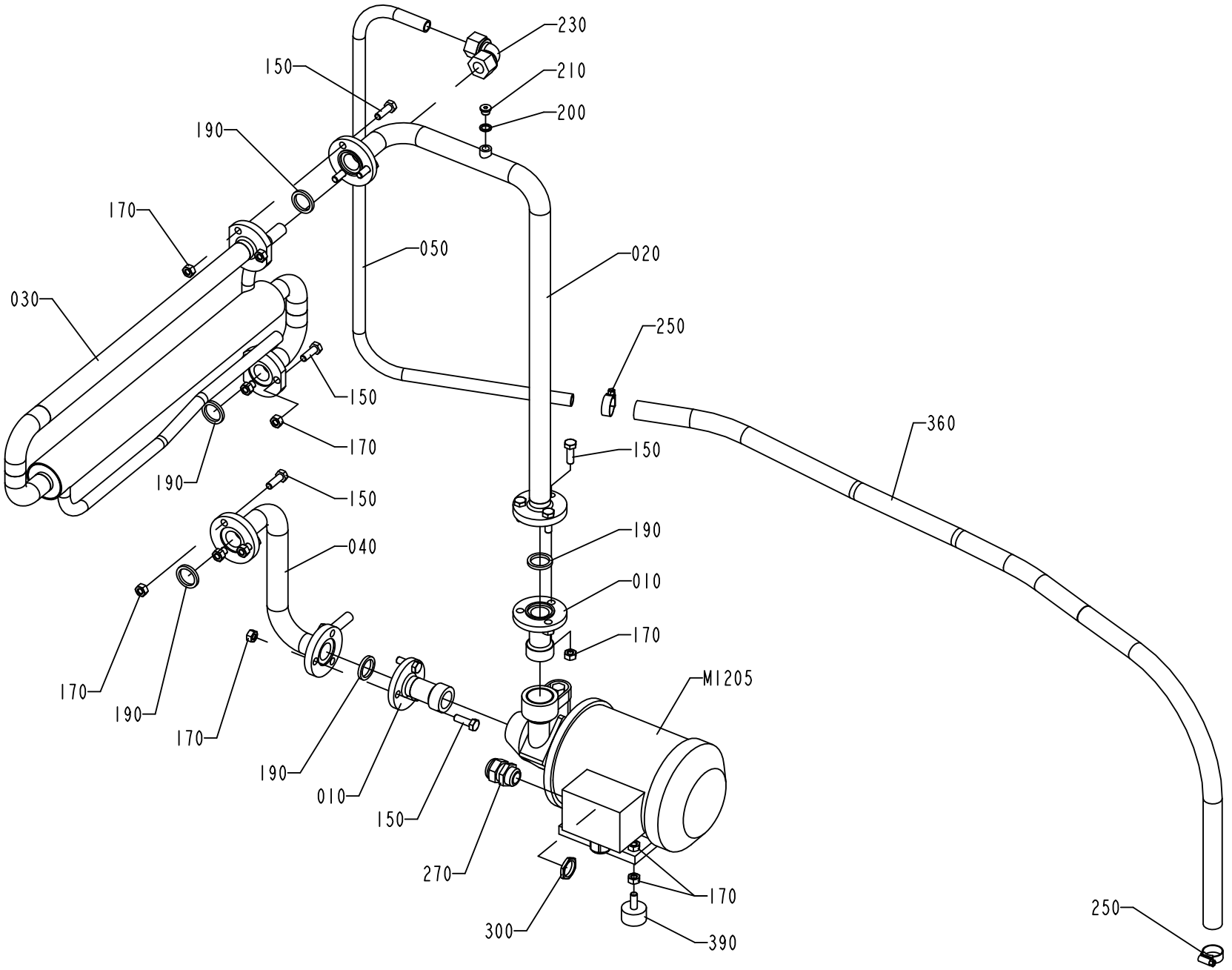

1490265-1
ECN 73029

ECM: 261774 - 20060404
Group number: 1490265-0100
Assembly Drawing: 1490265-1_1_AA

Pos	Part No	UN	Qty	Description	Page No
50HZ					
M1205	90321-0100		1	PUMP PBK 16/A 220/380V 50 HZ 3 PH.	
	90321-0567		*1*	*IMPELLER*	
	90321-0568		*1*	*SEAL*	
	90321-0569		*1*	*O-RING*	
60HZ					
M1205	90321-0127		1	CENTRIFUGAL PUMP LOWARA	
	90459-0044		*1*	*IMPELLER WHEEL, 260720310 FOR 90321-0127*	
	90321-0569		*1*	*O-RING*	
	90321-0568		*1*	*SEAL*	
Common Parts					
010	1037314-0000		2	PIPE CONNECTION	
020	1103391-0000		1	PIPE	
030	1282902-0000		1	HEAT EXCHANGER	
040	1347126-0000		1	PIPE	
050	1350705-0000		1	PIPE	
150	312105-0453		15	SCREW M6S ISO 4017 M8X25 A480	
170	312605-0318		19	HEXAGON NUT, M6M M8 A280	
190	315229-0103		5	GASKETS, 23,1X30,1X3,7 MM 1" FDA	
200	315237-0109		1	WASHER,PL.RND.AL.10/14,H=1,5	
210	342713-0209		1	PLUG (QUANT.MINIMA= 10PC).	
230	342737-0221		1	CONN. ELBOW W-15 LRFR	
250	342991-0103		2	HOSE CLIP,WORM DRIVE TYPE (19)-23	
270	352103-0111		1	CABLE GLAND, ST 16, PR22,5/PG16	
300	90099-0003		1	NUT PR 22,5	
320	90144-0073	MM	1	TREBOFLON-TAPE W=13MM	
330	90157-0037		1	THREAD SEALANT LOCTITE 542	
360	90166-0087	MM	1200	HOSE 15/23 REINF.PVC TRANSP.	
390	90347-0004		2	VIBRATION DAMPER D=30 TH=M8 H=17 H2=21MM	

Pos	Part No	UN	Qty	Description	Page No

Machine Type | Group Description | Used-In | Group Number | Page No

WATER CIRCULATION

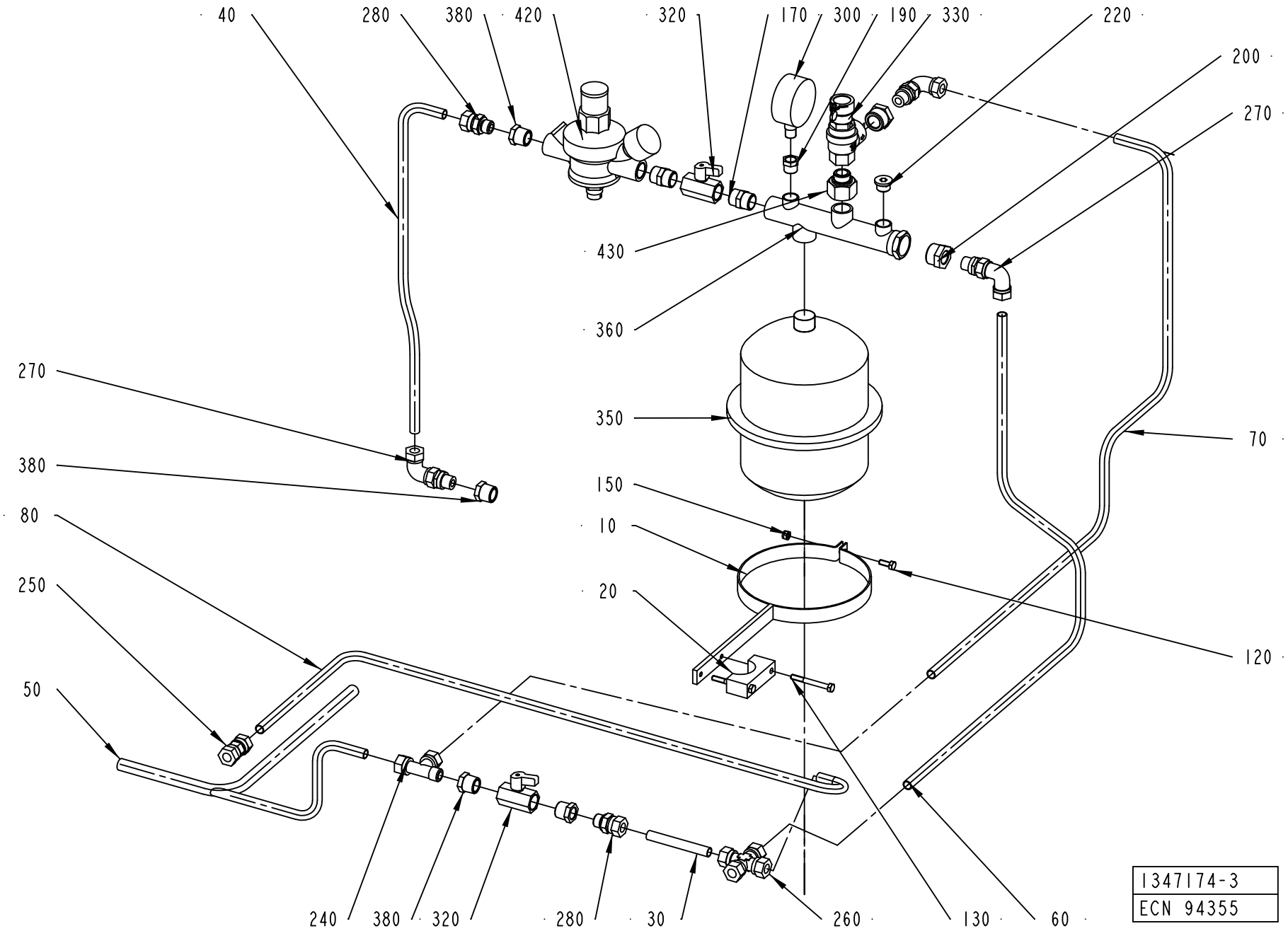

ECM: 261765 - 20060404
Group number: 1347174-0200
Assembly Drawing: 1347174-3_1_AA

Pos	Part No	UN	Qty	Description	Page No
-					
010	1129101-0000		1	BRACKET	
020	1140645-0000		1	BRACKET	
030	1347124-0000		1	PIPE	
040	2501520-0000		1	PIPE	
050	1347130-0000		1	PIPE	
060	1347131-0000		1	PIPE	
070	2501521-0000		1	PIPE	
080	1487848-0000		1	PIPE	
120	312105-0368		1	SCREW M6S ISO 4017 M6X16 A480	
130	312105-0381		2	SCREW M6S ISO 4014 M6X55 A480	
150	312812-0316		1	HEXAGON NUT, NY-LOCK M6 A480	
170	342700-0113		2	NIPPLES,HEXAGON,EXT.G-THREAD G1/2"-G1/2"	
190	342701-0203		1	BUSHING, INT/EXT. G-THREAD NO. 3/8-1/4	
200	342701-0209		2	BUSHING,INT./EXT.G-THREAD G3/4"-G3/8"	
220	342713-0211		1	PLUG, EXT THREAD HEX SOCKET 8638-00-380	
240	342751-0215		1	CONN. L-PIPE, EXT. LE-12-R3/8	
250	90030-0106		1	CONN. PIPE G-12	
260	90030-0599		1	CONN. CROSS, 12	
270	90030-0136		3	ADJUSTABLE ELBOW CONNECTION,EXT 12-G3/8	
280	90030-0187		2	CONN. STR. GA-12-G3/8	
300	90043-0002		1	PRESSURE GAUGE, 2040 D=63 MM	
320	90187-0062		2	BALL VALVE G1/2, NPBR	
330	90458-0200		1	PEROX. SAFETY VALVE, NO. 527-430 1/2X3/4	
350	90304-0020		1	RECIPIENTE	
360	90304-0307		1	ATTACHMENT PIPE	
380	90330-0048		4	BUSHING, INT/EXT. THR. R1/2-RP3/8	
400	90144-0073	MM	1	TREBOFLON-TAPE W=13MM	
410	90157-0037		1	THREAD SEALANT LOCTITE 542	
420	90458-0201		1	FLUID AUT. FEEDER, ALINOX 1/2 46.04.00	
430	90458-0751		1	BUSHING,INT./EXT.G-THREAD G3/4"-G1/2"	

Pos	Part No	UN	Qty	Description	Page No

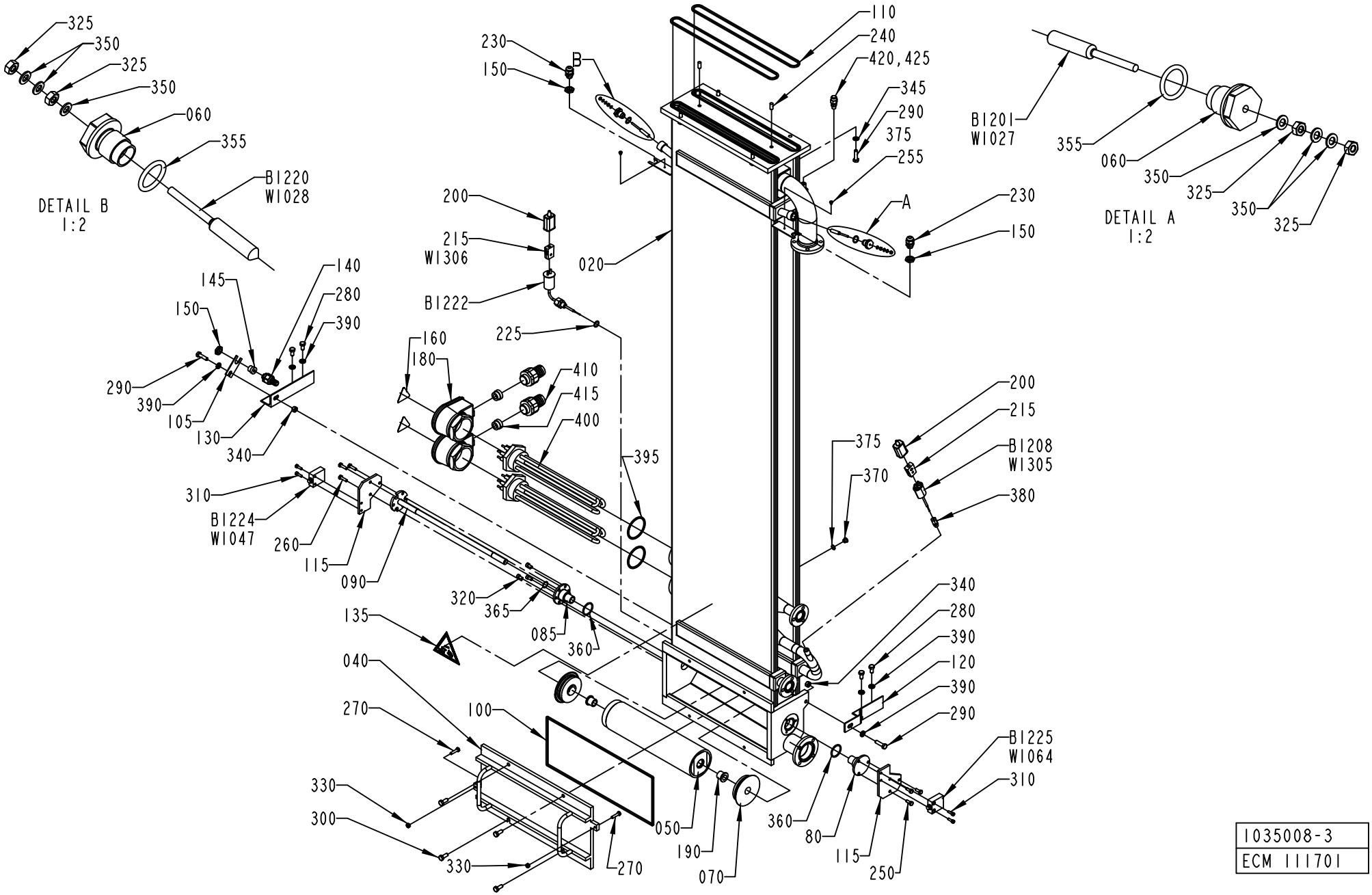
325
350
325
350
060
355
B1220
W1028
DETAIL B
1:2
110
240
420,425
345
290
375
255
230
150
B
A
B1201
W1027
355
060
350
325
350
325
DETAIL A
1:2
200
215
W1306
B1222
225
020
230
150
140
280
390
145
150
290
390
105
130
340
160
180
410
415
400
395
200
215
B1208
W1305
380
375
370
310
B1224
W1047
260
115
090
320
365
085
360
135
340
280
390
120
390
290
040
270
100
330
300
330
270
050
190
070
360
80
115
250
B1225
W1064
310
1035008-3
ECM 111701

ECM: 315436 - 20071112
Group number: 1035008-0400
Assembly Drawing: 1035008-3_1_AD

Pos	Part No	UN	Qty	Description	Page No
-					
020	1346571-0000		1	BATH	
040	1346558-0000		1	COVER	
050	541177-0000		1	BENDING ROLLER	
060	1484428-0000		2	PLASTIC PLUG	
070	1036553-0000		2	WHEEL	
080	1038857-0000		1	FLANGE	
085	1038858-0000		1	FLANGE	
090	1255839-0000		1	SHAFT	
100	1347671-0000		1	GASKET	
105	1040970-0000		1	BRACKET	
110	1346557-0000		2	GASKET	
115	1195460-0000		2	BRACKET	
120	1038860-0000		1	BRACKET	
130	1038861-0000		1	BRACKET	
135	359705-0004		1	WARNING SIGN ISO, DANGEROUS CHEMICALS	
140	353243-0001		1	HOSE GLAND W/O INSERT PG9 EXTENDED	
145	353249-0008		1	INSERT, SINGLE HOLE, EK 152/7	
150	90099-0104		3	NUT, PR 15,2 (PG9)	
160	359705-0015		2	WARNING SIGN ISO, RISK OF ELECTRIC SHOCK	
180	90206-0326		2	CONNECTION BOX K2 FOR 90206-56 AND -70	
190	90240-0146		2	FLANGE BUSHING, 15X21X20 MM	
200	90326-0012		2	PROTECTIVE COVER, T31A4618	
215	90326-0020		2	PLUG, FEMALE YELLOW CR-AL	
225	315237-0110		1	WASHER,PL.RND.AL.13,5/18,H=1,5	
230	352103-0101		2	CABLE GLAND, ST 9, PR15,2/PG9	
240	311103-0401		2	PARALLEL PIN ISO 2338 8M6X20 A1	
250	312105-0368		3	SCREW M6S ISO 4017 M6X16 A480	
255	312132-0284		2	SLOTTED HEAD, PAN SCREW, MSCS M4X5	
260	312105-0371		3	SCREW M6S ISO 4017 M6X22 A480	
270	312105-0372		2	SCREW M6S ISO 4017 M6X25 A480	
280	312105-0449		4	SCREW M6S ISO 4017 M8X16 A480	
290	312105-0455		6	SCREW M6S ISO 4017 M8X30 A480	
300	312105-0451		4	SCREW M6S ISO 4017 M8X20 A480	
310	312115-0329		4	SCREW ISO4762 M5X16 A4 80	
320	312115-0366		3	SCREW ISO4762 M6X12 A4 80	
325	312605-0312		4	HEXAGON NUT, M6M M4 A280	
330	312605-0316		2	HEXAGON NUT, M6M M6 A280	
340	312605-0318		2	HEXAGON NUT, M6M M8 A280	
345	315105-0165		4	WASHER BRB 8,4X16 RFR	
350	315105-0136		6	WASHER BRB 4,3X8 RFR	
355	927421-0004		2	O-RING 15.3X2.4 SILICONE	
360	90242-0265		2	O-RING 32,2X3 MM	
365	90242-0264		1	O-RING 16,1X1,6 MM	
370	342713-0209		1	PLUG (QUANT.MINIMA= 10PC).	
375	315234-0109		1	WASHER,PL.RND.CU.10,3/13,5 H=1,0	
380	90326-0306		1	GLAND FITTING 9041-45-KS-KR.1/8" D=4,5MM	
390	315115-0165		6	WASHER PLAIN, TBRB 8,4/16 H=3	
395	90269-0308		2	GASKET 59X68X3 MM	
400	90157-0034			THREAD SEALANT LOCTITE 572 50 ML	
410	353243-0007		2	HOSE GLAND W/O INSERT PG21 EXTENDED	
415	353249-0013		2	INSERT, SINGLE HOLE, EK 154/13	
420	90459-1736		1	PURGE VALVE, 2RM-PG4L-SS	
425	90144-0007	M	0.2	TAPE	
B1201	567070-0011		1	ELECTRODE	
B1208	90326-0038		1	THERMOCOUPLE, CR-AL	
B1220	567070-0011		1	ELECTRODE	
B1222	90326-0053		1	THERMOCOUPLE, 12826-35	
B1224	90044-0084		1	LIMIT SW. 14 CE1-4	
B1225	90044-0084		1	LIMIT SW. 14 CE1-4	
R1206	90206-0070		1	HEATING ELEMENT 6000W 380/220V	
	90206-0326		*1*	*CONNECTION BOX K2 FOR 90206-56 AND -70*	
	90269-0308		*1*	*GASKET 59X68X3 MM*	
R1207	90206-0070		1	HEATING ELEMENT 6000W 380/220V	
	90206-0326		*1*	*CONNECTION BOX K2 FOR 90206-56 AND -70*	
	90269-0308		*1*	*GASKET 59X68X3 MM*	

Machine Type	Group Description	Used-In	Group Number	Page No

PEROXIDE PIPE

Drawing file: 1347172-2_1_AA.hpgl

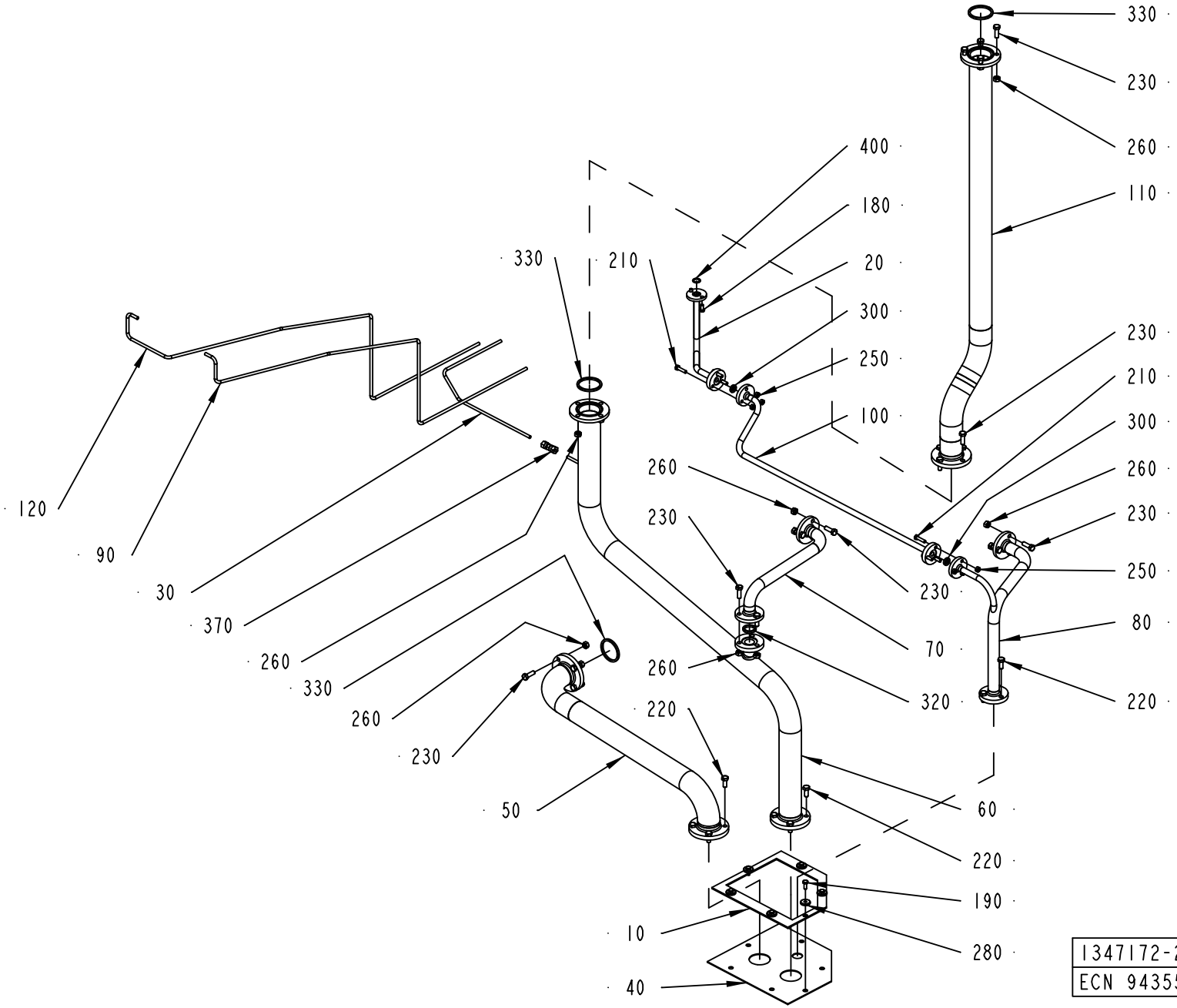

ECM: 261764 - 20060404
Group number: 1347172-0200
Assembly Drawing: 1347172-2_1_AA

Pos	Part No	UN	Qty	Description	Page No
-					
010	1038688-0000		1	HOLDER	
020	1038879-0000		1	PIPE	
030	2501524-0000		1	PIPE	
040	1255551-0000		1	SEAL CLOTH	
050	1282889-0000		1	PIPE	
060	1334510-0000		1	PIPE	
070	1334511-0000		1	PIPE	
080	1334512-0000		1	PIPE	
090	2501522-0000		1	PIPE	
100	1334513-0000		1	PIPE	
110	1334514-0000		1	PIPE	
120	2501523-0000		1	PIPE	
180	312105-0366		2	SCREW M6S ISO 4017 M6X12 A480	
190	312105-0368		6	SCREW M6S ISO 4017 M6X16 A480	
210	312105-0372		6	SCREW M6S ISO 4017 M6X25 A480	
220	312105-0451		11	SCREW M6S ISO 4017 M8X20 A480	
230	312105-0453		21	SCREW M6S ISO 4017 M8X25 A480	
250	312605-0316		6	HEXAGON NUT, M6M M6 A280	
260	312605-0318		21	HEXAGON NUT, M6M M8 A280	
280	315125-0153		6	WASHER TBRSB 6,4X22X4 A4	
300	315229-0101		2	GASKETS, 10,4X17,4X3,7 MM 1/2" FDA	
320	315229-0103		1	GASKETS, 23,1X30,1X3,7 MM 1" FDA	
330	315229-0105		3	GASKETS, 48,5X55,5X3,7 MM 2" FDA	
370	90030-0075		1	UNION FITTING 6MM, G06L71	
400	927421-0003		1	O-RING 13.3X2.4 SILICONE	

Pos	Part No	UN	Qty	Description	Page No

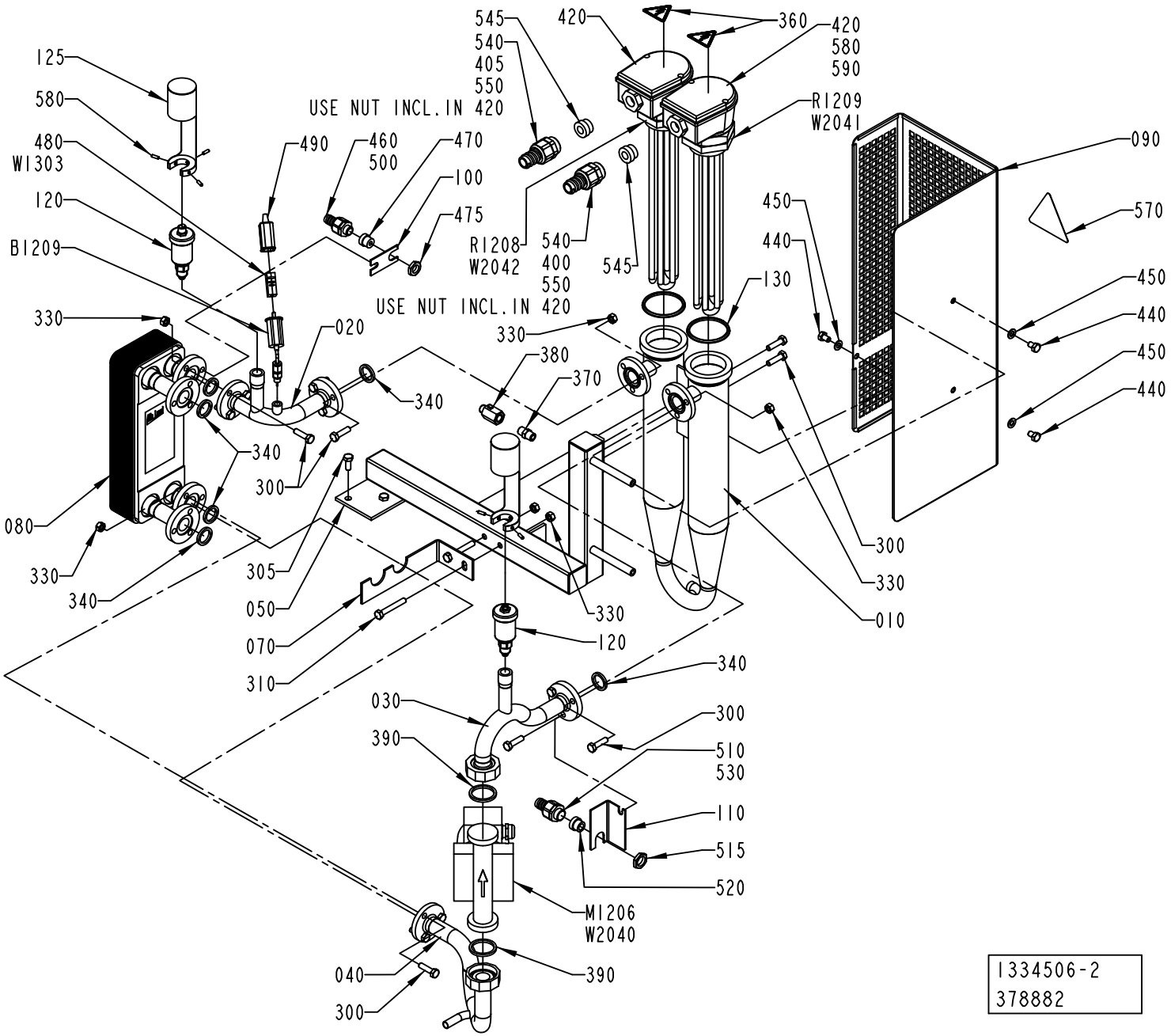
545
540
405
550
420
360
420
580
590
R1209
W2041
USE NUT INCL.IN 420
125
580
480
W1303
120
B1209
490
460
500
470
100
475
R1208
W2042
540
400
550
545
090
570
450
440
130
450
440
450
440
330
020
340
330
380
370
340
300
080
330
340
305
050
070
310
330
300
330
010
120
340
030
390
300
510
530
110
515
520
M1206
W2040
040
300
390
1334506-2
378882

ECM: 379262 - 20090101
Group number: 1334506-0200
Assembly Drawing: 1334506-2_1_AI

Pos	Part No	UN	Qty	Description	Page No
50HZ					
M1206	90321-0134		1	CIRC. PUMP TCB25-6LV.230 HZ 50	
60HZ					
M1206	90321-0135		1	CIRC. PUMP 230V60HZ	
Common Parts					
010	1334507-0000		1	TUBE	
020	1538048-0000		1	PIPE	
030	1538049-0000		1	PIPE	
040	1334516-0000		1	PIPE	
050	1349505-0000		1	FRAME	
070	1349608-0000		1	HOLDER	
080	1346568-0000		1	HEAT EXCHANGER	
090	2966771-0000		1	PROTECTION	
100	1040970-0000		1	BRACKET	
110	1517707-0000		1	BRACKET	
120	90600-6015		2	VENTING VALVE, 12003 (+ 11163)	
	90600-6021		*1*	*O-RING 17X2 MM*	
	315202-0721		*1*	*O-RING 26,64X2,62 MM*	
125	2898459-0000		2	PROTECTION	
130	315229-0206		2	GASKET 60,2X68,2X3,7 MM 2"1/2	
300	312105-0455		14	SCREW M6S ISO 4017 M8X30 A480	
305	312105-0451		2	SCREW M6S ISO 4017 M8X20 A480	
310	312105-0462		2	SCREW M6S ISO 4014 M8X55 A480	
330	312605-0318		14	HEXAGON NUT, M6M M8 A280	
340	315229-0103		6	GASKETS, 23,1X30,1X3,7 MM 1" FDA	
360	359705-0015		2	WARNING SIGN ISO, RISK OF ELECTRIC SHOCK	
370	90330-0043		1	NIPPLES, EXT. THREAD. R-207R1/4	
380	90600-0775		1	BALL VALVE G1/4, 406F-1/4"	
390	315229-0104		2	GASKETS, 35,8X42,8X3,7 MM 1"1/2 FD	
400	90152-0051	MM	1800	SPIRAL CONDUIT, 25X18, UL 1816	
405	90152-0051	MM	1800	SPIRAL CONDUIT, 25X18, UL 1816	
420	90206-0326		2	CONNECTION BOX K2 FOR 90206-56 AND -70	
440	312105-0447		3	SCREW M6S ISO 4017 M8X12 A480	
450	315105-0165		3	WASHER BRB 8,4X16 RFR	
460	353243-0001		1	HOSE GLAND W/O INSERT PG9 EXTENDED	
470	353249-0008		1	INSERT, SINGLE HOLE, EK 152/7	
475	90099-0104		1	NUT, PR 15,2 (PG9)	
480	90326-0020		1	PLUG, FEMALE YELLOW CR-AL	
490	90326-0012		1	PROTECTIVE COVER, T31A4618	
500	90152-0050	MM	1500	SPIRAL CONDUIT, 20X13, UL 1313	
510	353243-0003		1	HOSE GLAND W/O INSERT PG11 EXTENDED	
515	90099-0117		1	NUT, PR 18,6 (PG11)	
520	353249-0011		1	INSERT, SINGLE HOLE, EK 153/11	
530	90152-0050	MM	1750	SPIRAL CONDUIT, 20X13, UL 1313	
540	90012-0131		2	HOSE GLAND W/O INSERT PG21 NORMAL	
545	353249-0013		2	INSERT, SINGLE HOLE, EK 154/13	
550	90157-0034			THREAD SEALANT LOCTITE 572 50 ML	
570	90194-0075		1	WARNING SIGN ISO, HOT SURFACE	
580	312318-0291		6	SCREW ISO4029 M4X12 A4	
B1209	90326-0057		1	THERMOCOUPLE, CR-AL	
R1208	90206-0070		1	HEATING ELEMENT 6000W 380/220V	
	90206-0326		*1*	*CONNECTION BOX K2 FOR 90206-56 AND -70*	
	90269-0308		*1*	*GASKET 59X68X3 MM*	
R1209	90206-0070		1	HEATING ELEMENT 6000W 380/220V	
	90206-0326		*1*	*CONNECTION BOX K2 FOR 90206-56 AND -70*	
	90269-0308		*1*	*GASKET 59X68X3 MM*	
W1303	90220-0034	M	5	THERMOCABLE TEX/SITW-20F-KX 2X0,5MM2	
W2040	351150-0412	M	4	CABLE OLFLEX 3X1,5 MM2 LIGHT/GREY	
W2041	351120-0164	M	4	CABLE SIHF 4X1,5MM2 GREEN/YELLOW	
W2042	351120-0164	M	4	CABLE SIHF 4X1,5MM2 GREEN/YELLOW	

Machine Type | Group Description | Used-In | Group Number | Page No

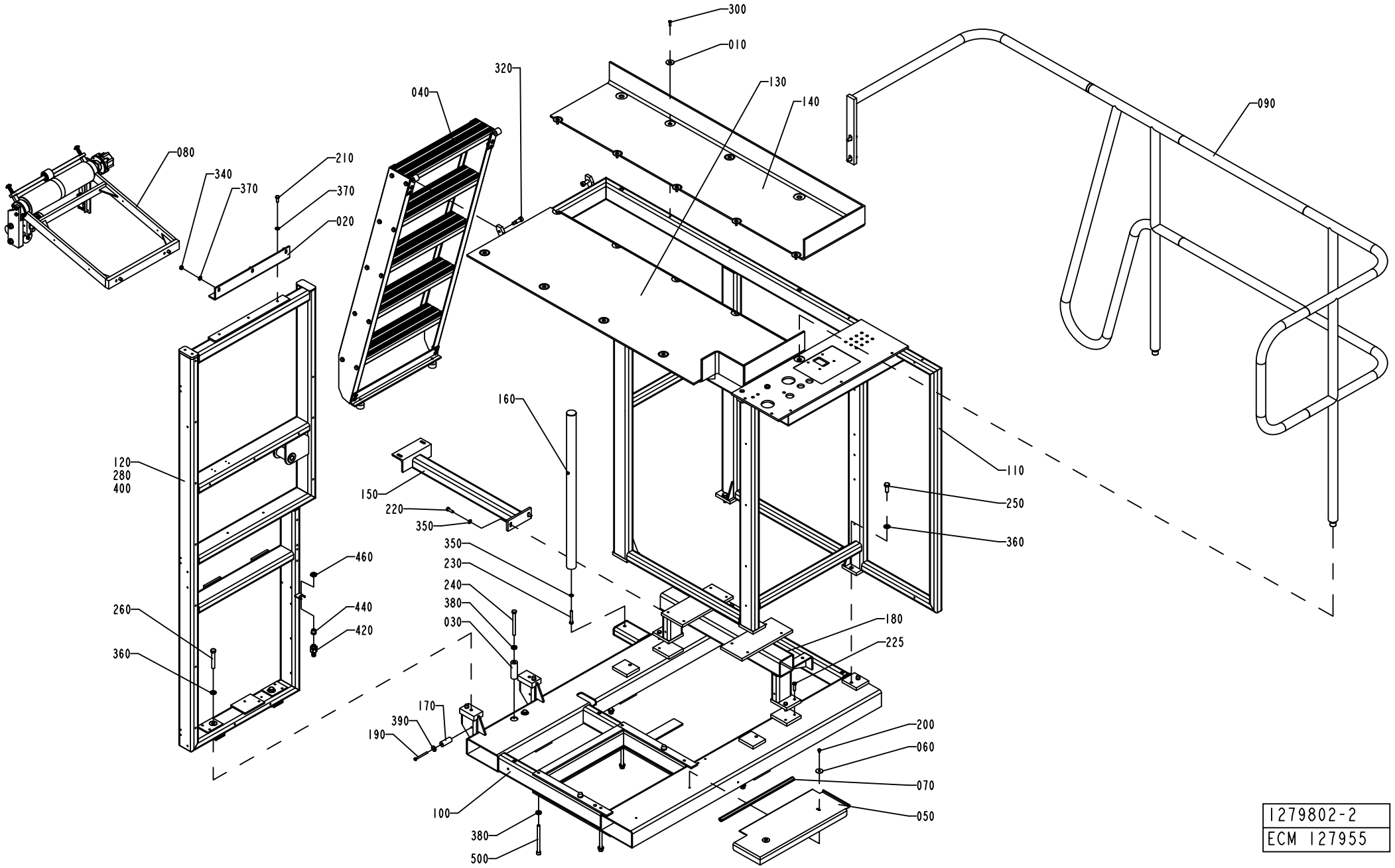
300
010
320
040
130
140
090
080
340
370
210
370
020
120
280
400
160
110
150
220
350
250
360
350
230
240
380
030
460
440
420
260
360
180
225
170
390
190
200
060
070
100
050
380
500
1279802-2
ECM 127955

ECM: 259653 - 20060404
Group number: 1279802-0200
Assembly Drawing: 1279802-2_1_AE

Pos	Part No	UN	Qty	Description	Page No
-					
010	1036241-0000		13	WASHER	
020	1038850-0000		1	ANGLE BRACKET	
030	1040856-0000		2	SPACER	
040	1095862-0100		1	LADDER	**1-191**
050	1129637-0000		1	COVER PLATE	
060	1129638-0000		2	WASHER	
070	1129641-0000		1	SILICON RUBBER PROFILE	
080	1279803-0200		1	BENDING ROLLER	**1-193**
090	1347639-0100		1	RAILING	**1-199**
100	1347695-0000		1	FRAME	
110	1347696-0000		1	FRAME	
120	1347697-0000		1	FRAME	
130	1347867-0000		1	CHECKER PLATE	
140	1347868-0000		1	CHECKER PLATE	
150	1347869-0000		1	BRACKET	
160	1347870-0000		1	BRACKET	
170	1519521-0000		1	SPACER	
180	1490893-0000		1	BRACKET	
190	312105-0383		1	SCREW M6S ISO 4014 M6X65 A480	
200	312105-0362		2	SCREW M6S ISO 4017 M6X8 A480	
210	312105-0451		3	SCREW M6S ISO 4017 M8X20 A480	
220	312105-0453		2	SCREW M6S ISO 4017 M8X25 A480	
225	312105-0455		4	SCREW M6S ISO 4017 M8X30 A480	
230	312105-0462		1	SCREW M6S ISO 4014 M8X55 A480	
240	312105-0513		2	SCREW M6S ISO 4014 M10X110 A480	
250	312105-0536		4	SCREW M6S ISO 4017 M12X30 A480	
260	312105-0548		2	SCREW M6S ISO 4014 M12X80 A480	
280	312125-0366		37	SCREW ISO 1207 M6X12 A4	
300	312155-0370		13	SCREW DIN 7991 MF6S M6X20 A4 70	
320	312180-0534		2	SCREW ISO7379 H12X25	
340	312605-0318		3	HEXAGON NUT, M6M M8 A280	
350	315105-0165		3	WASHER BRB 8,4X16 RFR	
360	315105-0178		6	WASHER BRB 13X24 RFR	
370	315115-0165		6	WASHER PLAIN, TBRB 8,4/16 H=3	
380	315115-0173		8	WASHER PLAIN, TBRB 10,5/22 H=4	
390	315125-0153		1	WASHER TBRSB 6,4X22X4 A4	
400	352113-0204		37	ANCHOR PLATES FOR STRIPS, TYPE TM3S25-M	
420	353243-0001		1	HOSE GLAND W/O INSERT PG9 EXTENDED	
440	353249-0008		1	INSERT, SINGLE HOLE, EK 152/7	
460	90099-0104		1	NUT, PR 15,2 (PG9)	
480	90153-0023		1	ADHESIVE, SILICON 251470 TUB 90CC(UN1993	
500	90287-0349		6	SCREW	

Machine Type	Group Description	Used-In	Group Number	Page No

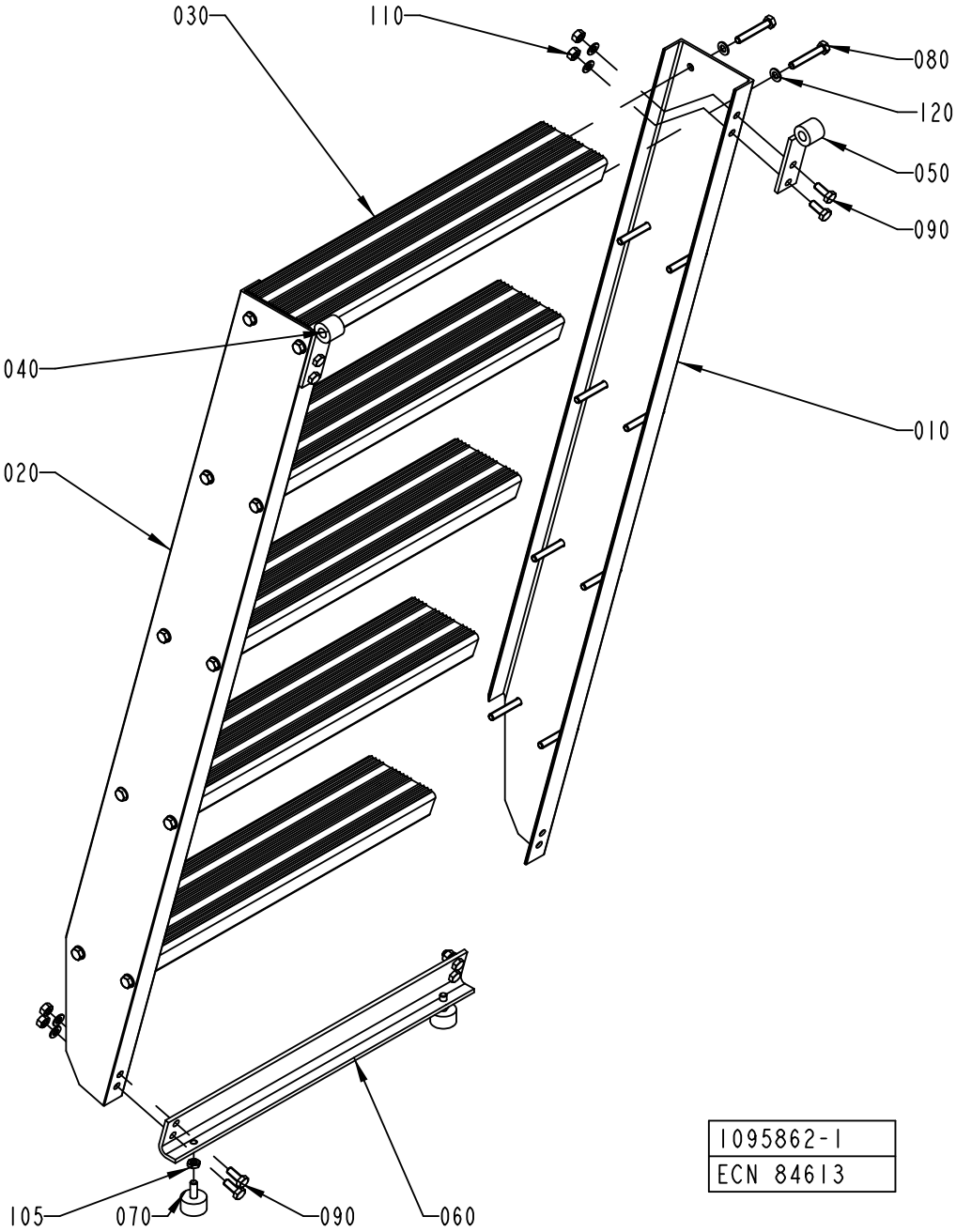
030
110
080
120
050
090
040
010
020
105
070
090
060
1095862-1
ECN 84613

ECM: 358935 - 20081001
Group number: 1095862-0100
Assembly Drawing: 1095862-1_1_AB

Pos	Part No	UN	Qty	Description	Page No
-					
010	1036939-0000		1	SIDE PIECE	
020	1036940-0000		1	SIDE PIECE	
030	1129643-0000		5	STAIR	
040	1036963-0000		1	HOOK HOLDER	
050	1036965-0000		1	HOOK HOLDER	
060	1129644-0000		2	BRACKET	
070	90347-0004		2	VIBRATION DAMPER D=30 TH=M8 H=17 H2=21MM	
080	312104-0461		20	SCREW M6S M8X50H FZB	
090	312105-0451		8	SCREW M6S ISO 4017 M8X20 A480	
105	312625-0318		2	HEXAGON THIN NUT, EN 24035 ML6M M8 A4	
110	312605-0318		8	HEXAGON NUT, M6M M8 A280	
120	315101-0165		28	WASHER PLAIN, BRB, 8,4/16 H=1,5	

Pos	Part No	UN	Qty	Description	Page No

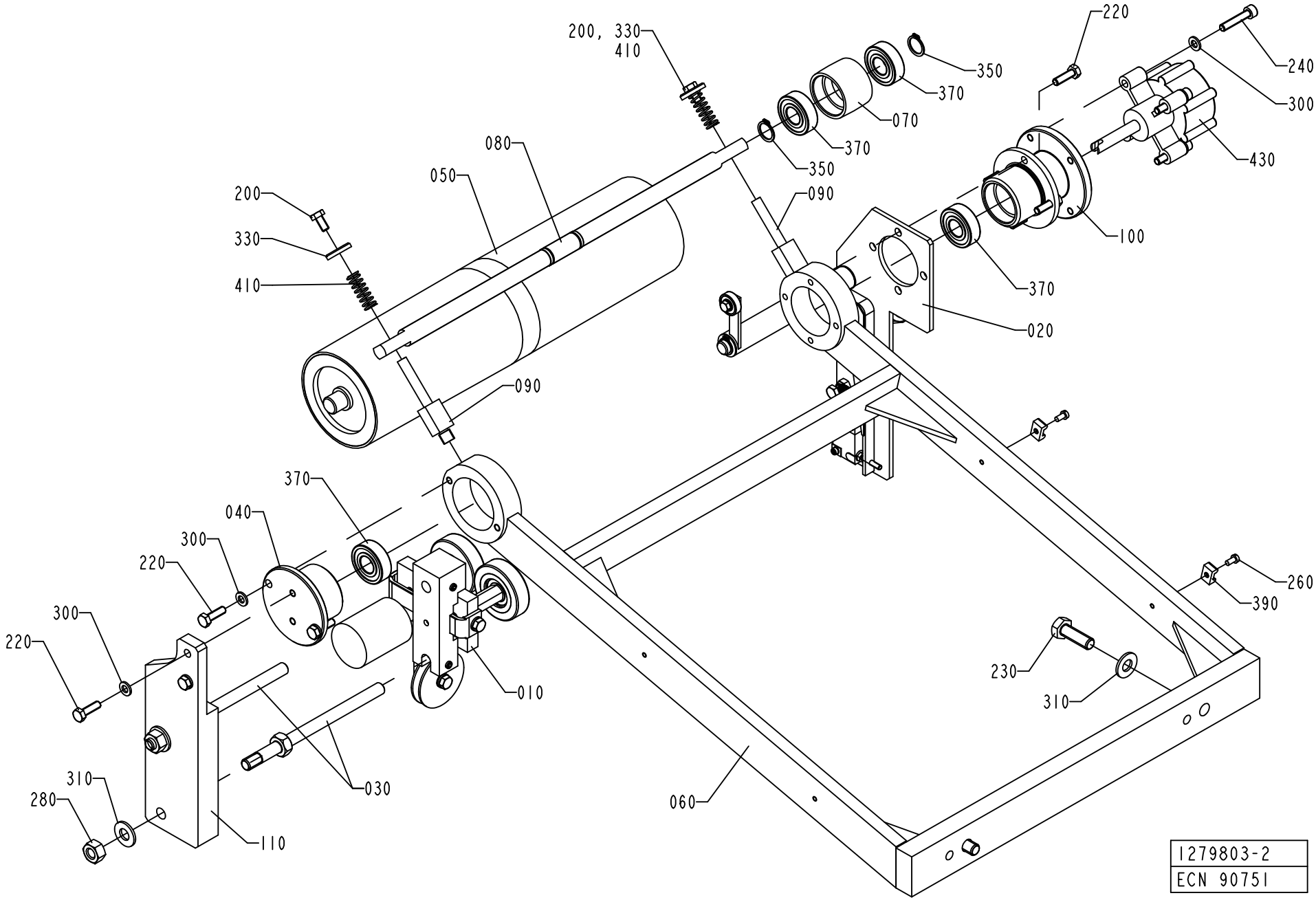
200, 330
410
350
370
070
220
240
300
080
050
090
430
200
330
410
100
370
020
090
370
040
300
220
260
390
300
220
230
310
010
310
280
030
060
110
1279803-2
ECN 90751

ECM: 315447 - 20071112
Group number: 1279803-0200
Assembly Drawing: 1279803-2_1_AB

Pos	Part No	UN	Qty	Description	Page No
-					
010	1498624-0100		1	WEB GUIDE	**1-195**
020	1538809-0100		1	SPLICE DETECTOR	**1-197**
030	1279603-0000		2	SHAFT	
040	1538011-0000		1	FLANGE	
050	1538012-0000		1	ROLLER	
060	1538013-0000		1	BRACKET	
070	1538014-0000		1	ROLLER	
080	1538015-0000		1	SHAFT	
090	1538016-0000		2	SHAFT	
100	1538017-0000		1	SPACER	
110	1538040-0000		1	PLATE	
200	312105-0366		2	SCREW M6S ISO 4017 M6X12 A480	
220	312105-0370		8	SCREW M6S ISO 4017 M6X20 A480	
230	312105-0495		2	SCREW M6S ISO 4017 M10X30 A480	
240	312115-0374		4	SCREW ISO4762 M6X30 A4 80	
260	312125-0287		2	SCREW ISO 1207 M4X8 A4	
280	312605-0320		2	HEXAGON NUT, M6M M10 A280	
300	315105-0153		8	WASHER BRB 6,4X12 RFR	
310	315105-0173		4	WASHER BRB 10,5X22 RFR	
330	315125-0153		2	WASHER TBRSB 6,4X22X4 A4	
350	315751-0112		2	RETAINING RING FOR SHAFT DIN 471 15 SS	
370	321313-0102		4	BALL BEARING, 15X35X11 MM	
390	352113-0205		2	ANCHOR PLATES FOR STRIPS, TYPE TM2S8-C10	
410	90335-0012		2	SPRING	
430	90347-0054		1	ROTARY DASHPOT, S-CRD-P277	

Pos	Part No	UN	Qty	Description	Page No

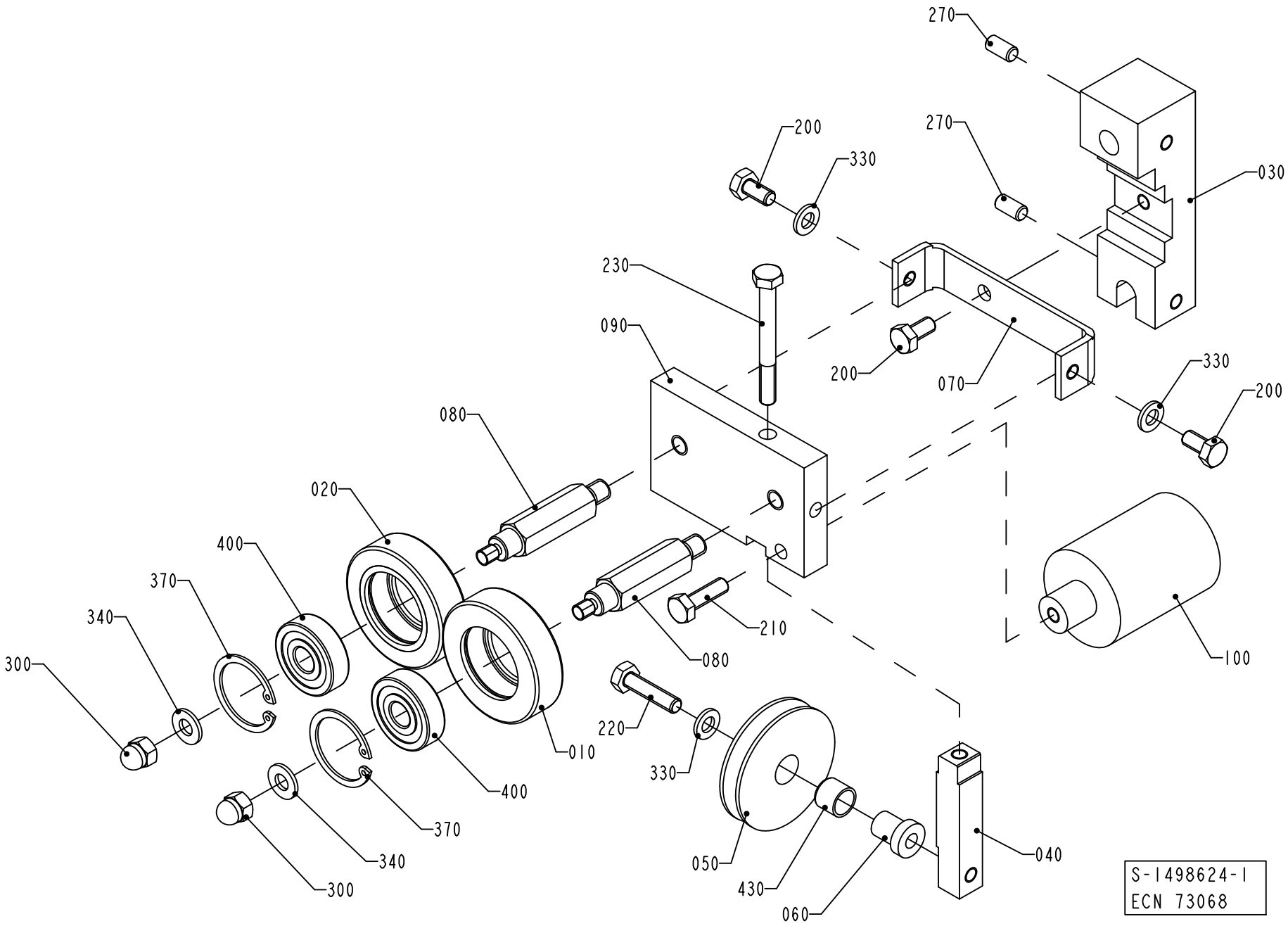
270
270
200
330
030
230
090
200
070
330
200
080
020
400
370
340
300
210
080
100
220
330
010
400
370
340
300
050
430
060
040
S-1498624-1
ECN 73068

ECM: 315450 - 20071112
Group number: 1498624-0100
Assembly Drawing: 1498624-1_1_AA

Pos	Part No	UN	Qty	Description	Page No
-					
010	1036622-0000		1	GUIDE ROLLER	
020	1036623-0000		1	GUIDE ROLLER	
030	1511002-0000		1	HOLDER	
040	1499024-0000		1	BAR	
050	1499025-0000		1	ROLLER	
060	1499026-0000		1	SHAFT	
070	1499027-0000		1	BRACKET	
080	1511001-0000		2	SHAFT	
090	1511000-0000		1	PLATE	
100	1511003-0000		1	WEIGHT	
200	312105-0366		3	SCREW M6S ISO 4017 M6X12 A480	
210	312105-0370		1	SCREW M6S ISO 4017 M6X20 A480	
220	312105-0372		1	SCREW M6S ISO 4017 M6X25 A480	
230	312105-0381		1	SCREW M6S ISO 4014 M6X55 A480	
270	312318-0366		2	SCREW ISO4029 M6X12 A4	
300	312705-0316		2	NUT HEX. DOMED CAP MHM-6 M6 A280	
330	315105-0153		3	WASHER BRB 6,4X12 RFR	
340	315105-0156		2	WASHER BRB 6,7X14 RFR	
370	315753-0122		2	RETAINING RING FOR BORE DIN 472 30 A2	
400	321313-0100		2	BALL BEARING, 10X30X9 MM	
430	90240-0287		1	BUSHING, 10X12X10 MM	

Pos	Part No	UN	Qty	Description	Page No

SPLICE DETECTOR

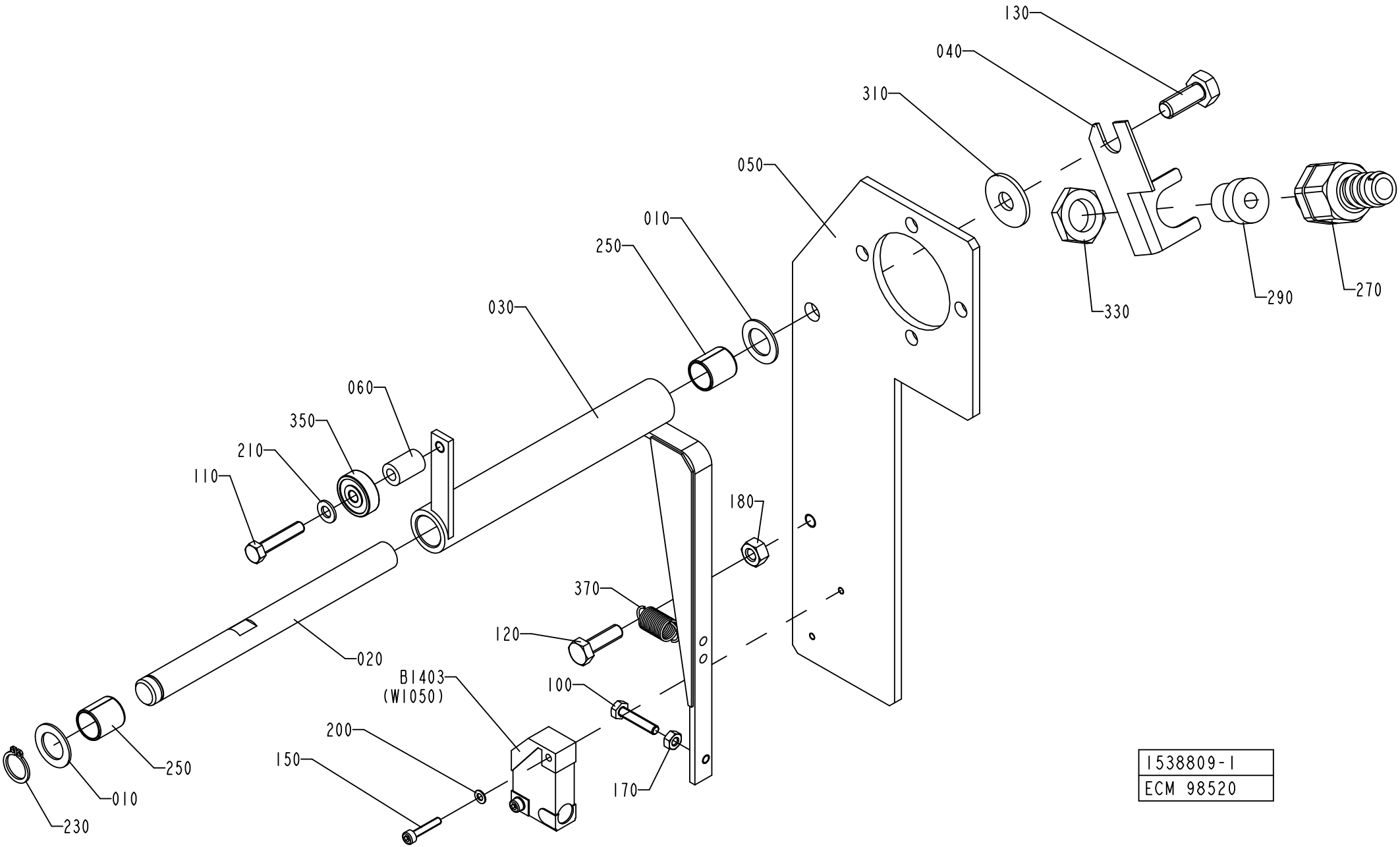

ECM: 262189 - 20060404
Group number: 1538809-0100
Assembly Drawing: 1538809-1_1_AC

Pos	Part No	UN	Qty	Description	Page No
-					
010	266737-0000		2	WASHER	
020	1035897-0000		1	SHAFT	
030	1035898-0000		1	BRACKET	
040	1036610-0000		1	BRACKET	
050	1538041-0000		1	PLATE	
060	2515238-0000		1	SPACER	
100	312105-0295		1	SCREW M6S ISO 4017 M4X20 A470	
110	312105-0333		1	SCREW M6S ISO 4017 M5X25 A480	
120	312105-0370		1	SCREW M6S ISO 4017 M6X20 A480	
130	312105-0451		1	SCREW M6S ISO 4017 M8X20 A480	
150	312115-0228		2	SCREW ISO4762 M3X16 A4 80	
170	312605-0312		1	HEXAGON NUT, M6M M4 A280	
180	312605-0316		1	HEXAGON NUT, M6M M6 A280	
200	315105-0124		2	WASHER BRB 3,2X6 RFR	
210	315105-0146		1	WASHER BRB 5,3X10 RFR	
230	315751-0109		1	RETAINING RING FOR SHAFT DIN 471 12 SS	
250	321120-0111		2	BEARING BUSH W/O FLANGE, 12X14X15 MM	
270	353243-0001		1	HOSE GLAND W/O INSERT PG9 EXTENDED	
290	353249-0008		1	INSERT, SINGLE HOLE, EK 152/7	
310	90005-0116		1	WASHER PLAIN ROUND 8,4(M8)/24, H=2	
330	90099-0104		1	NUT, PR 15,2 (PG9)	
350	90214-0138		1	BALL BEARING, 5X19X6 MM	
370	90335-0089		1	TENSION SPRING 41490, 0,9X10X23	
B1403	90044-0104		1	PROX.SWITCH IN-3002-BPKG REPBY 90044-194	

Pos	Part No	UN	Qty	Description	Page No

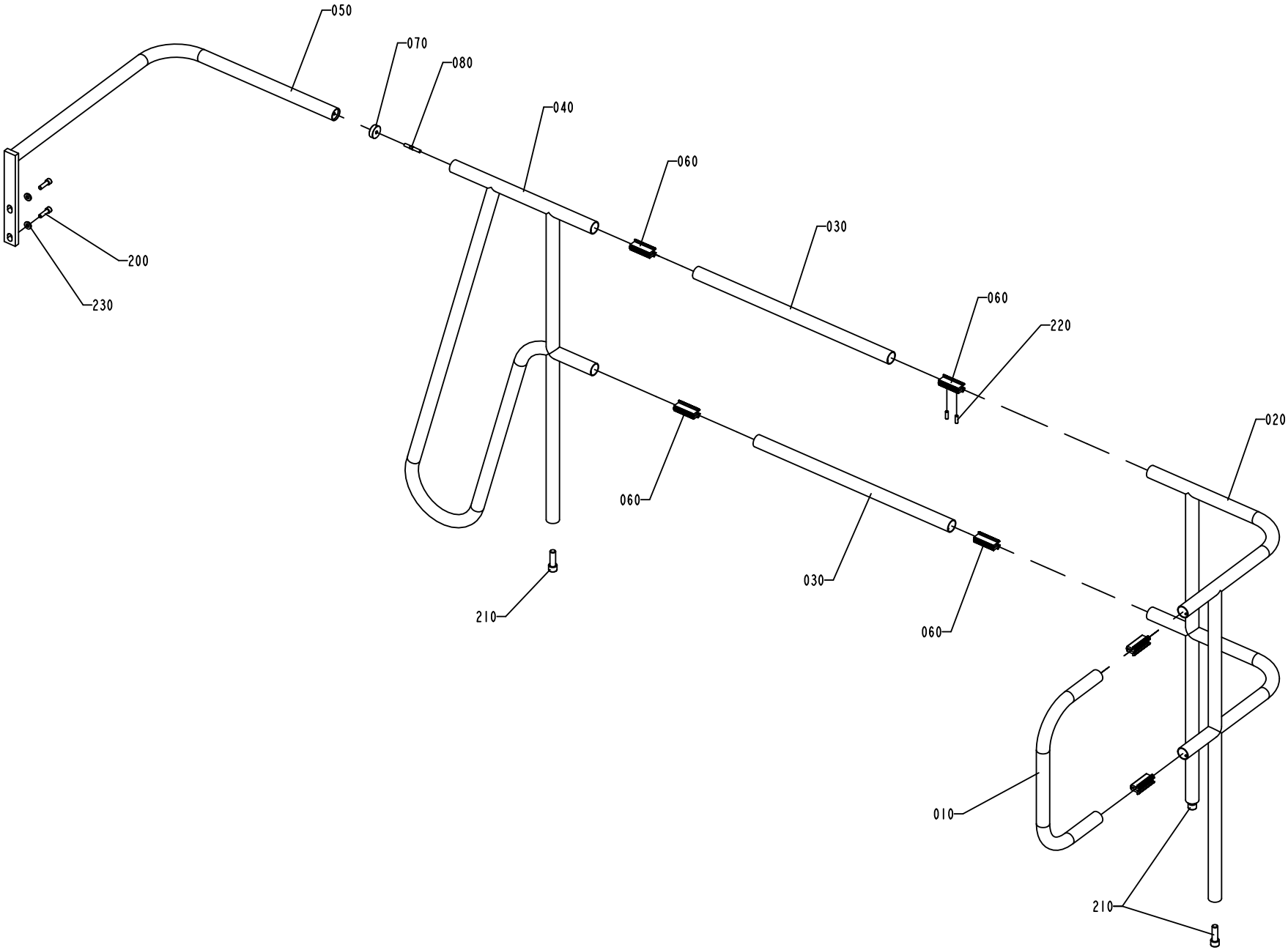

1347639-1
ECN 81466

ECM: 264651 - 20060512
Group number: 1347639-0100
Assembly Drawing: 1347639-1_1_AB

Pos	Part No	UN	Qty	Description	Page No
TBA 0200M, TBA 0200B, TBA 0200S, TBA 0250S, TBA 0250B, TBA 0300S					
050	1347640-0000		1	RAILING	
Common Parts					
010	1347641-0000		1	RAILING	
020	1010822-0000		1	RAILING	
030	1037044-0000		2	RAILING	
040	1129741-0000		1	RAILING	
060	1035654-0000		6	CONNECTION	
070	578640-0000		1	CLAMPING RING	
080	751485-0000		1	SCREW	
200	312115-0497		2	SCREW ISO4762 M10X35 A4 80	
210	312115-0630		3	SCREW ISO4762 M16X50 A4 80	
220	312318-0453		12	SCREW ISO4029 M8X25 A4	
230	315115-0173		2	WASHER PLAIN, TBRB 10,5/22 H=4	

Pos	Part No	UN	Qty	Description	Page No

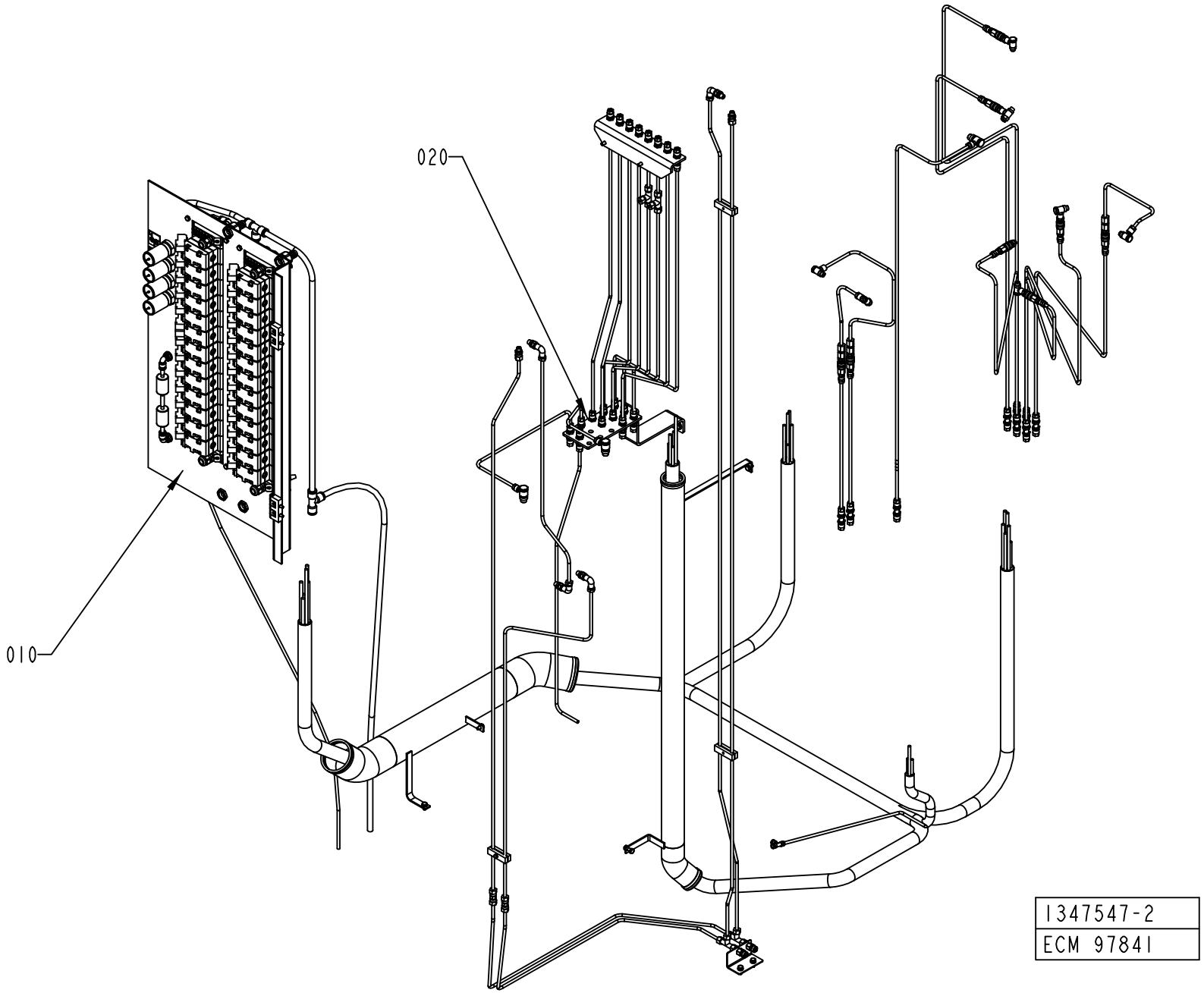
020
010
1347547-2
ECM 97841

ECM: 327606 - 20080101
Group number: 1347547-0200
Assembly Drawing: 1347547-2_1_AA

This list covers pages from 1-200 to 1-203

Pos	Part No	UN	Qty	Description	Page No
HI (See drawing on page: 1-202)					
030	2514216-0200		1	PNEUMATIC PANEL	**1-205**
Common Parts					
010	1347548-0400		1	VALVE PANEL	**1-209, 1-211**
020	1347551-0200		1	HOSE INSTALLATION	**1-219, 1-221, 1-223, 1-225, 1-227, 1-229**

Pos	Part No	UN	Qty	Description	Page No

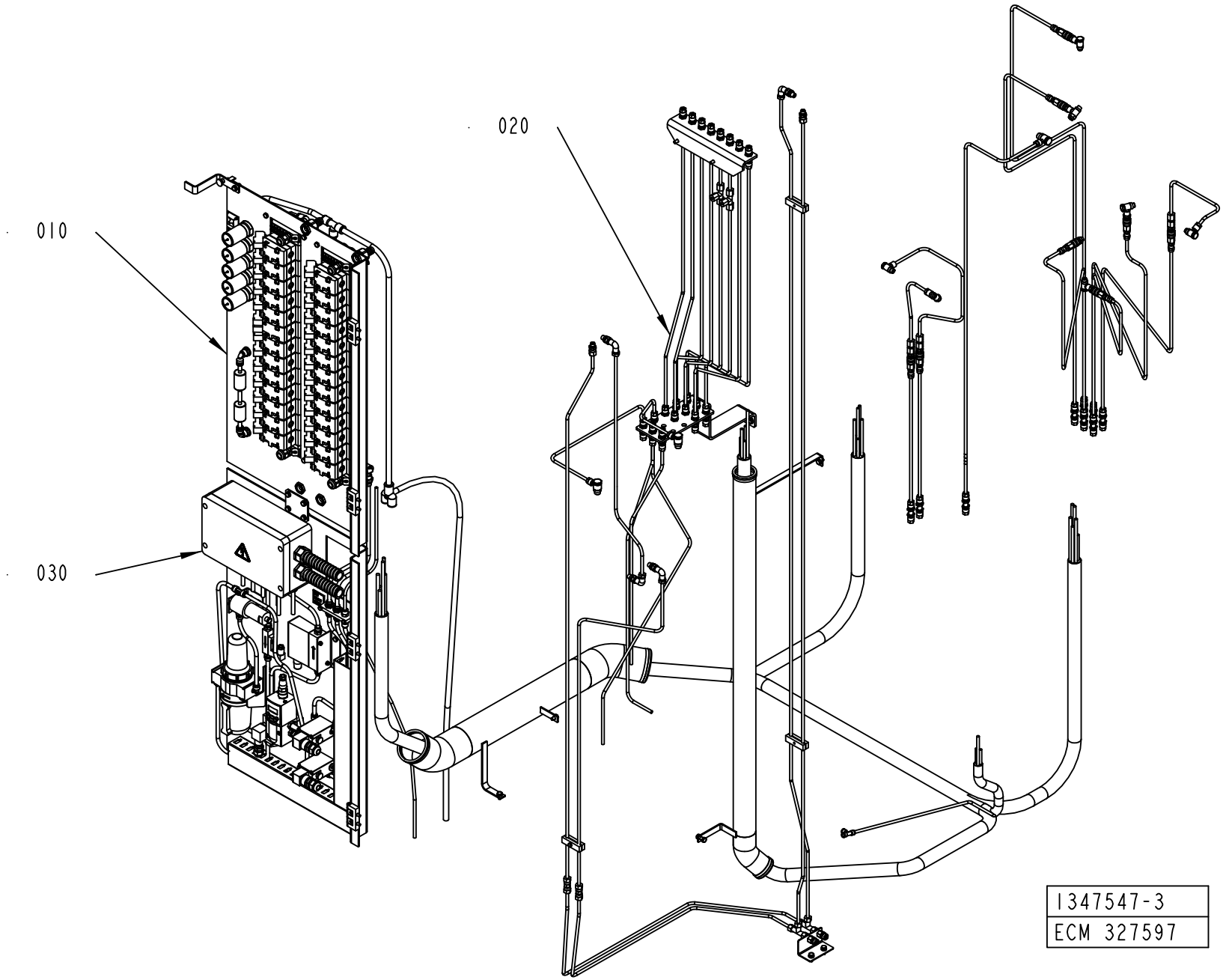
010
020
030
1347547-3
ECM 327597

ECM: 327606 - 20080101
Group number: 1347547-0200
Assembly Drawing: 1347547-3_1_AB

This list covers pages from 1-200 to 1-203

Pos	Part No	UN	Qty	Description	Page No
HI (See drawing on page: 1-202)					
030	2514216-0200		1	PNEUMATIC PANEL	**1-205**
Common Parts					
010	1347548-0400		1	VALVE PANEL	**1-209, 1-211**
020	1347551-0200		1	HOSE INSTALLATION	**1-219, 1-221, 1-223, 1-225, 1-227, 1-229**

Pos	Part No	UN	Qty	Description	Page No

PNEUMATIC PANEL

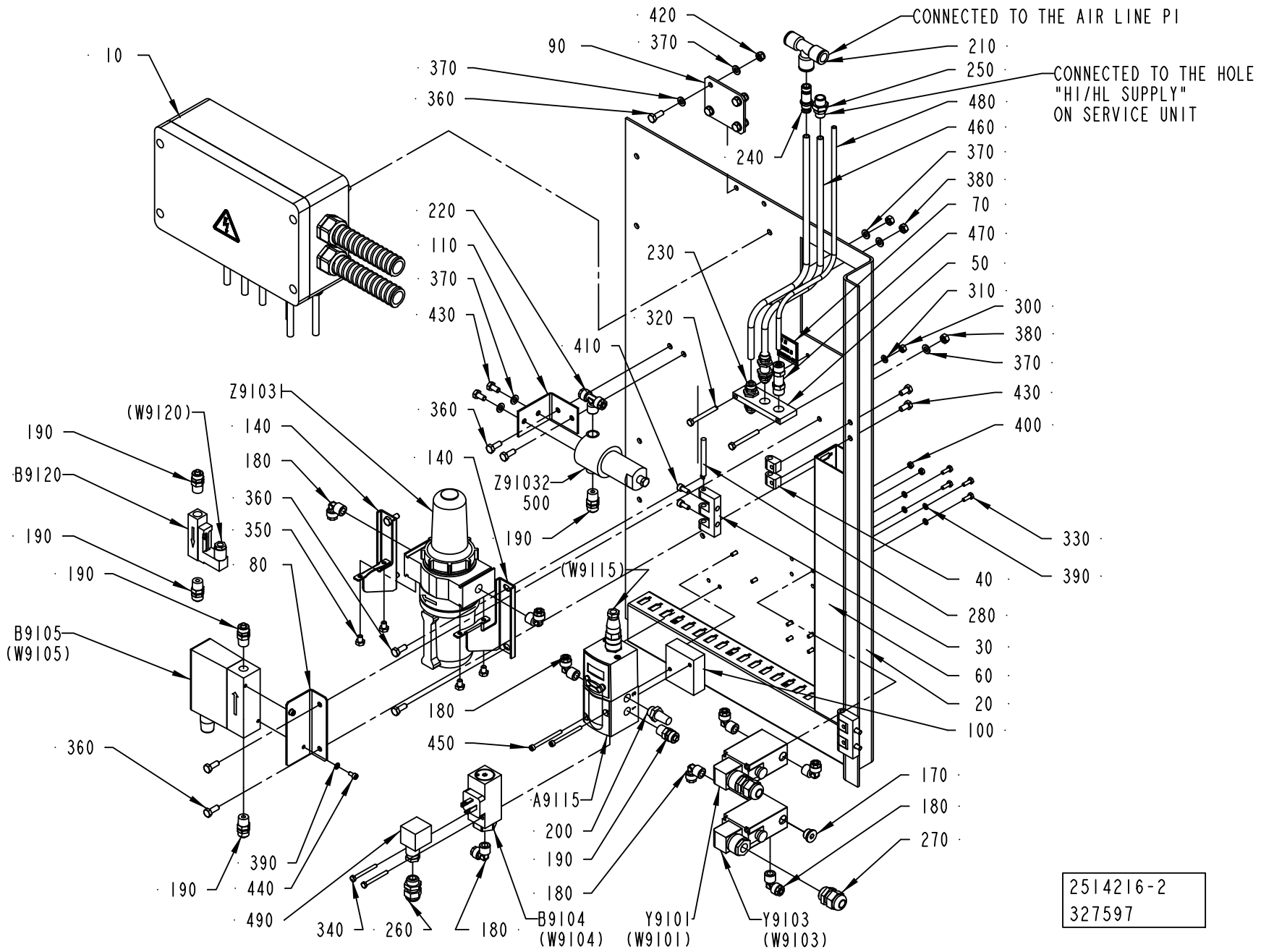

ECM: 327603 - 20080101
Group number: 2514216-0200
Assembly Drawing: 2514216-2_1_AA

Pos	Part No	UN	Qty	Description	Page No
-					
010	2514449-0200		1	CONNECTION BOX	**1-207**
020	2551067-0000		1	PLATE	
030	1035792-0000		2	E-HINGE	
040	1129770-0000		4	BLOCKING PIECE	
050	1254481-0000		1	HOLDER	
060	1347691-0000		2	CABLE DUCT	
070	1347703-0000		1	SIGN BOARD	
080	2551068-0000		1	BRACKET	
090	2657862-0000		1	PLATE	
100	2511330-0000		1	SPACER	
110	2607080-0000		1	PLATE	
140	90236-0041		1	BRACKET, 74504-50	
170	342713-0210		1	PLUG, EXT THREAD HEX SOCKET	
180	342930-0122		9	ELBOW 90 COUPL.,EXT.THREAD 8/6-R1/4"	
190	342920-0122		6	STRAIGHT COUPLING,EXT.THREADED 8/6-R1/4"	
200	346800-0110		1	SILENCER FILTER R1/4"	
210	342748-0109		1	T-CONNECTION 12MM	
220	342940-0122		1	T-COUPLING,EXT.THREAD 8/6-R1/4"	
230	342960-0122		2	BULKHEAD COUPLING 8/6	
240	342716-0209		1	REDUCER 8-12	
250	342921-0122		1	STRAIGHT COUPLING,EXT.THREADED 8/6-G1/4"	
260	352103-0101		1	CABLE GLAND, ST 9, PR15,2/PG9	
270	352103-0106		2	CABLE GLAND, ST 11, PR18,6/PG11	
280	988685-0000		2	PIN	
300	312605-0314		2	HEXAGON NUT, M6M M5 A280	
310	315105-0146		2	WASHER BRB 5,3X10 RFR	
320	312105-0340		2	SCREW M6S ISO 4014 M5X45 A480	
330	312105-0291		10	SCREW M6S ISO 4017 M4X12 A470	
340	312105-0303		2	SCREW M6S ISO 4017 M4X40 A470	
350	312105-0362		6	SCREW M6S ISO 4017 M6X8 A480	
360	312105-0368		12	SCREW M6S ISO 4017 M6X16 A480	
370	315105-0153		18	WASHER BRB 6,4X12 RFR	
380	312605-0316		8	HEXAGON NUT, M6M M6 A280	
390	315105-0136		12	WASHER BRB 4,3X8 RFR	
400	312605-0312		4	HEXAGON NUT, M6M M4 A280	
410	312115-0327		4	SCREW ISO4762 M5X12 A4 80	
420	312812-0316		4	HEXAGON NUT, NY-LOCK M6 A480	
430	312105-0366		4	SCREW M6S ISO 4017 M6X12 A480	
440	312115-0287		2	SCREW ISO4762 M4X8 A4 80	
450	312115-0305		2	SCREW ISO4762 M4X50 A4 80	
460	90166-0013	M	3	TUBE 8 MM PA BLUE	
470	342960-0121		1	BULKHEAD COUPLING 8/6-6/4	
480	90166-0193	M	2	TUBE 6 MM PUR BLUE	
490	90110-0095		1	CONNECTOR 3 POLE + EARTH	
500	90277-0324		1	FILTER CARTRIDGE 050-11-A	
A9115	90459-1420		1	PROPORTIONAL VALVE 0 - 10V/0-6 BAR	
	90458-1262		*1*	*CONNECTOR 131028001 FOR PROP. VALVE*	
B9104	90458-2241		1	PRESSURE SWITCH 0,5-10 BAR ADJUSTABLE	
B9105	90458-2619		1	FLOW METER, D-6230-HGB-BB-AV-99-0-N2	
B9120	90459-6215		1	FLOW SWITCH BFS-10-N-G1/4-MS-NO-ST	
Y9101	90042-0171		1	SOLENOID VALVE BURKERT	
	90042-0466		*1*	*DIAPHRAGM 330.95.2 VITON*	
Y9103	90042-0171		1	SOLENOID VALVE BURKERT	
	90042-0466		*1*	*DIAPHRAGM 330.95.2 VITON*	
Z91031	90277-0104		1	FILTER F64B-2GN-ARO	
	90113-0457		*1*	*FILTER ELEMENTS*	
	90113-0458		*1*	*FILTER ELEMENTS, 5350-99*	
Z91032	90277-0323		1	FILTER HOUSING / ART.NO 95S6-1/4 S 5430	

Machine Type	Group Description	Used-In	Group Number	Page No

CONNECTION BOX

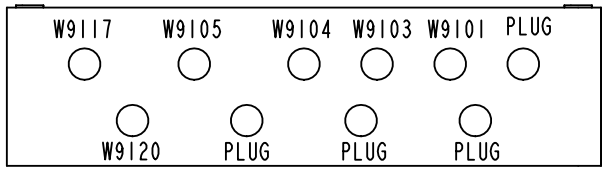

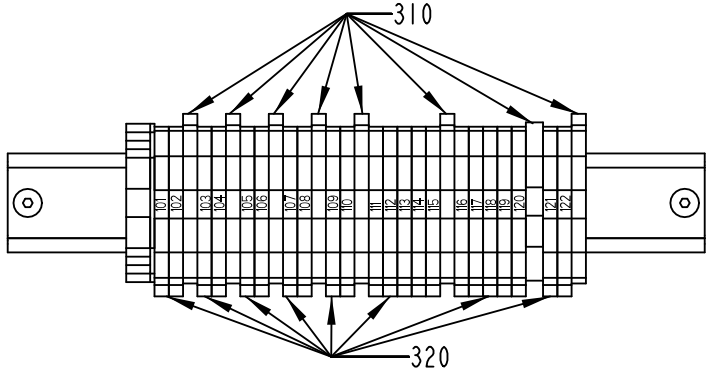

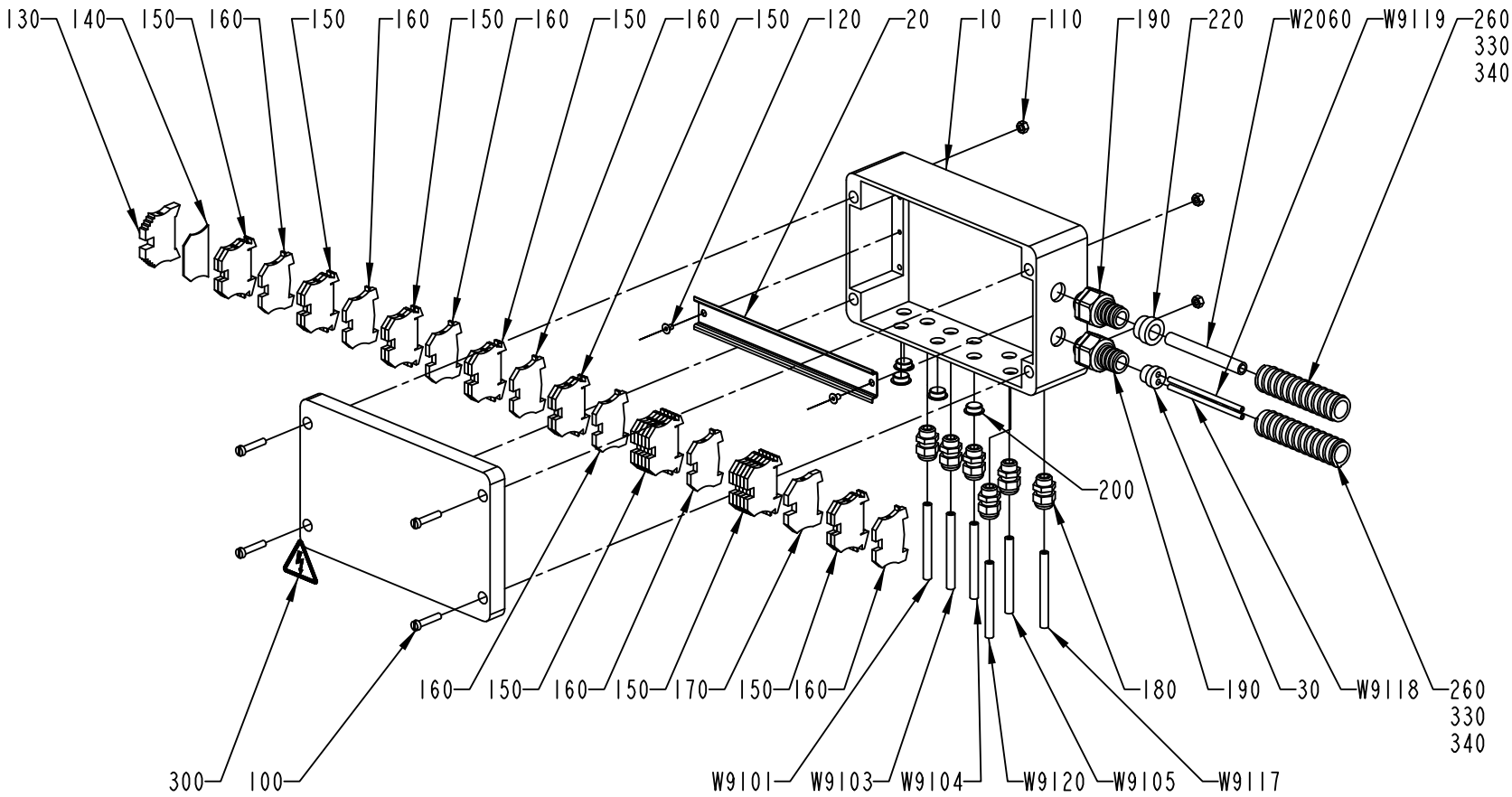

2514449-2
327597

ECM: 327604 - 20080101
Group number: 2514449-0200
Assembly Drawing: 2514449-2_1_AA

Pos	Part No	UN	Qty	Description	Page No
-					
010	2535472-0000		1	CONNECTION BOX	
020	2504625-0000		1	RAIL	
030	2562308-0000		1	INSERT	
100	312125-0374		4	SCREW ISO 1207 M6X30 A4	
110	312605-0316		4	HEXAGON NUT, M6M M6 A280	
120	312155-0323		2	SCREW DIN 7991 MF6S M5X8 A4 70	
130	353031-0203		1	END SUPPORT, WEW 35/2	
140	353032-0005		1	END PLATE WAP 2,5-10 BLUE	
150	353021-0216		22	FEED THROUGH TERMINAL, 10200.8	
160	353024-0204		7	EARTH TERMINAL WPE 2,5	
170	353024-0205		1	EARTH TERMINAL, 1010.1	
180	352103-0101		6	CABLE GLAND, ST 9, PR15,2/PG9	
190	353243-0004		2	HOSE GLAND W/O INSERT PG13,5 EXTENDED	
200	90002-0013		5	BLANK-OFF PLUG, PR 15,2 SKINDICHT-BLK9	
220	353249-0014		1	INSERT, SINGLE HOLE, EK 154/16	
260	90152-0051	M	7	SPIRAL CONDUIT, 25X18, UL 1816	
300	359705-0015		1	WARNING SIGN ISO, RISK OF ELECTRIC SHOCK	
310	359011-0819		3	MARKING PLATES 5-GW (EARTH)	
320	359011-0809		4	MARKING PLATES 5-FW 101-150	
330	359005-0050		1	MARKING LABEL KIT X, 04.841.4550.0	
340	359005-0010		1	MARKING LABEL KIT 0 - 9, 04.841.2150.0	
W2060	351150-0407	M	7	CABLE OLFLEX 12X0,75 MM2 LIGHT/GREY	
W9101	351150-0403	M	2	CABLE OLFLEX 3X0,75 MM2 LIGHT/GREY	
W9103	351150-0403	M	2	CABLE OLFLEX 3X0,75 MM2 LIGHT/GREY	
W9104	351150-0403	M	2	CABLE OLFLEX 3X0,75 MM2 LIGHT/GREY	
W9105	90220-0072	M	2	SCR. CABLE 4X0,34MM2	
W9117	90220-0072	M	2	SCR. CABLE 4X0,34MM2	
W9118	90220-0183	M	10	SCR. CABLE 2X0,34MM2	
W9119	90220-0183	M	10	SCR. CABLE 2X0,34MM2	
W9120	351150-0403	MM	500	CABLE OLFLEX 3X0,75 MM2 LIGHT/GREY	

Pos	Part No	UN	Qty	Description	Page No

VALVE PANEL

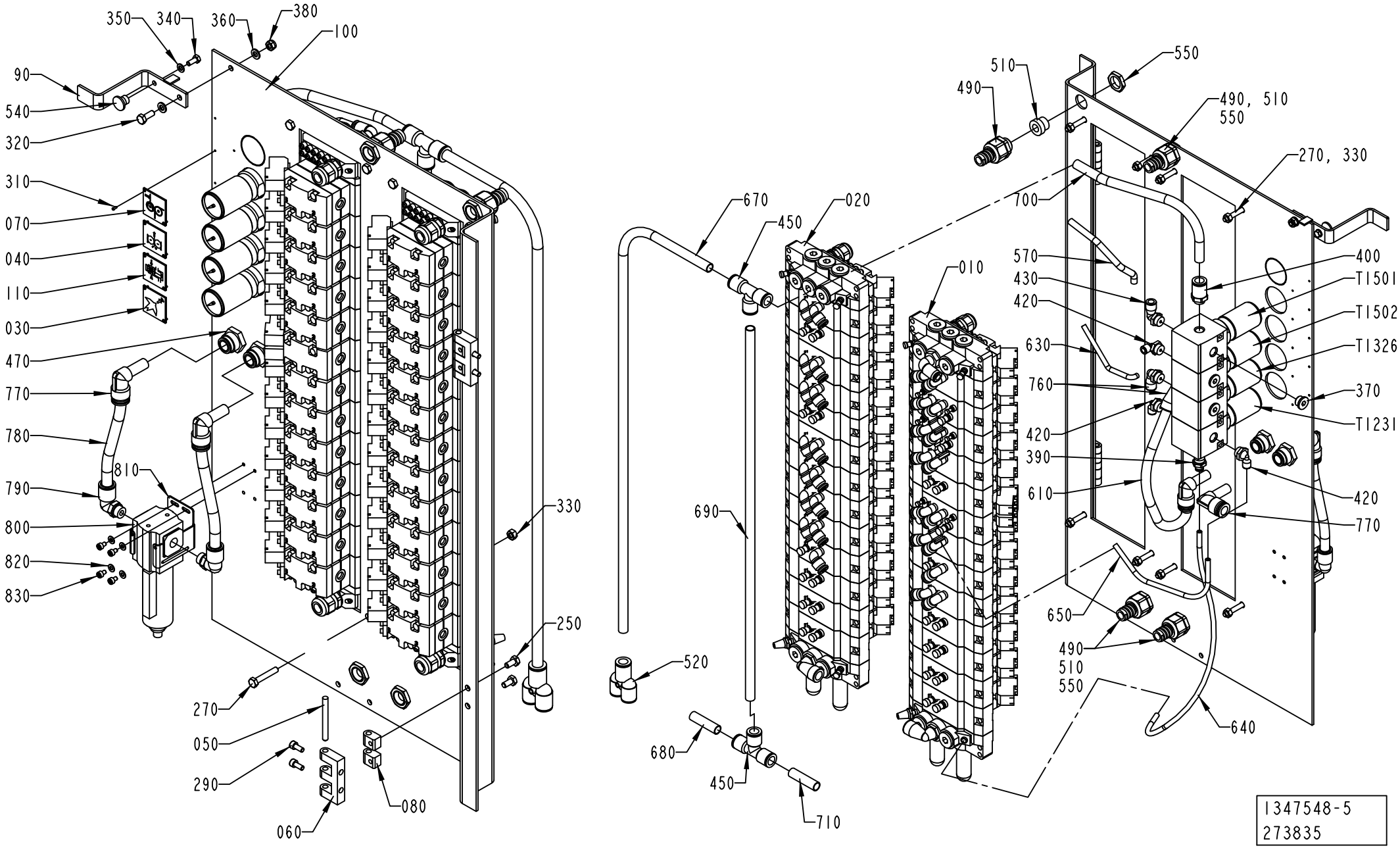
350
340
360
380
100
90
540
320
310
070
040
110
030
470
770
780
810
790
800
820
830
330
250
270
050
290
060
080
550
510
490
490, 510
550
270, 330
700
670
450
020
010
570
430
420
630
760
420
390
610
400
T1501
T1502
T1326
370
T1231
420
770
650
490
510
550
640
690
520
680
450
710
1347548-5
273835

ECM: 327602 - 20080101
Group number: 1347548-0400
Assembly Drawing: 1347548-5_1_AA

This list covers pages from 1-208 to 1-211

Pos	Part No	UN	Qty	Description	Page No
HI (See drawing on page: 1-210)					
000	2629320-0000		1	PNEUMATIC DIAGRAM	
120	2640822-0000		1	SIGN	
310	312502-0120		10	DRIVE SCREW ROUND HEAD KDS 0X5	
370	342713-0210		4	PLUG, EXT THREAD HEX SOCKET	
420	90458-2957		4	ELBOW PIPE JOINT, EXT.THREAD, D=6MM-G1/4	
T9114	90113-0095		1	PRESSURE REGULATOR	
NOHI (See drawing on page: 1-208)					
000	2506845-0000		1	DIAGRAM	
310	312502-0120		8	DRIVE SCREW ROUND HEAD KDS 0X5	
370	342713-0210		3	PLUG, EXT THREAD HEX SOCKET	
420	90458-2957		3	ELBOW PIPE JOINT, EXT.THREAD, D=6MM-G1/4	
Common Parts					
010	1347549-0300		1	VALVE RAMP	**1-213, 1-215**
020	1347550-0300		1	VALVE RAMP	**1-217**
030	273450-0000		1	SIGN, AIR SPRAY	
040	273452-0000		1	SIGN, ROLLING MACHINE FOR FABRICS	
050	988685-0000		2	PIN	
060	1035792-0000		2	E-HINGE	
070	1041937-0000		1	SIGN	
080	1129770-0000		4	BLOCKING PIECE	
090	2552246-0000		1	CATCH HANDLE	
100	2846213-0000		1	PLATE	
110	1548001-0000		1	SIGN	
250	312105-0366		4	SCREW M6S ISO 4017 M6X12 A480	
270	312109-0376		8	SCREW M6S ISO 4017 M6X35 A480	
290	312115-0327		4	SCREW ISO4762 M5X12 A4 80	
320	312105-0368		1	SCREW M6S ISO 4017 M6X16 A480	
330	312605-0316		8	HEXAGON NUT, M6M M6 A280	
340	312105-0327		1	SCREW M6S ISO 4017 M5X12 A480	
350	315101-0146		1	WASHER PLAIN, BRB, 5,3/10 H=1	
360	315105-0153		2	WASHER BRB 6,4X12 RFR	
380	312812-0316		1	HEXAGON NUT, NY-LOCK M6 A480	
390	342722-0203		1	STRAIGHT COUPLING	
400	342722-0209		1	STRAIGHT COUPLING D=12-G1/4"	
430	90458-2958		2	ELBOW PIPE JOINT, EXT.THREAD, D=8MM-G1/4	
450	342748-0109		2	T-CONNECTION 12MM	
470	350010-0005		2	PUSH-IN BULKHEAD FITTING QSS-F-12	
490	353243-0003		4	HOSE GLAND W/O INSERT PG11 EXTENDED	
510	353249-0011		4	INSERT, SINGLE HOLE, EK 153/11	
520	90055-0147		1	Y-FITTING QSY-12	
540	90051-0026		1	KNOB, CIRKUL, THREADED BUSH, M5 17X14 MM	
550	90099-0117		4	NUT, PR 18,6 (PG11)	
570	90166-0013	MM	150	TUBE 8 MM PA BLUE	
610	90166-0013	MM	300	TUBE 8 MM PA BLUE	
630	90166-0081	MM	250	TUBE 6 MM PA BLUE	
640	90166-0081	MM	450	TUBE 6 MM PA BLUE	
650	90166-0081	MM	300	TUBE 6 MM PA BLUE	
670	90166-0153	MM	1000	TUBE 12 MM PA BLACK	
680	90166-0153	MM	40	TUBE 12 MM PA BLACK	
690	90166-0153	MM	600	TUBE 12 MM PA BLACK	
700	90166-0153	MM	250	TUBE 12 MM PA BLACK	
710	90166-0153	MM	40	TUBE 12 MM PA BLACK	
760	90458-2959		1	ELBOW PIPE JOINT, EXT.THREAD,D=12MM-G1/4	
770	90459-1825		4	ELBOW WITH TAILPIECE 12/12 MM	
780	90166-0068	MM	400	TUBE 12 MM PA BLUE	
790	350002-0011		2	PUSH-IN L-FITTING QSL-F-G1/4-12	
800	90113-0472		1	FILTER 0,01 MICRON, F72C-2GD-AEO	
	90113-0471		*1*	*FILTER ELEMENT COALESCING, F72C-5925-09*	
810	90459-7110		1	BRACKET, 4224-50	
820	315106-0136		4	WASHER ISO 7089-4-200 HV A4	
830	312115-0285		4	SCREW ISO4762 M4X6 A4 80	
T1231	90113-0095		1	PRESSURE REGULATOR	
T1326	90113-0097		1	PRESSURE REGULATOR	
T1501	90113-0096		1	PRESSURE REGULATOR	
T1502	90113-0095		1	PRESSURE REGULATOR	

Machine Type	Group Description	Used-In	Group Number	Page No

VALVE PANEL

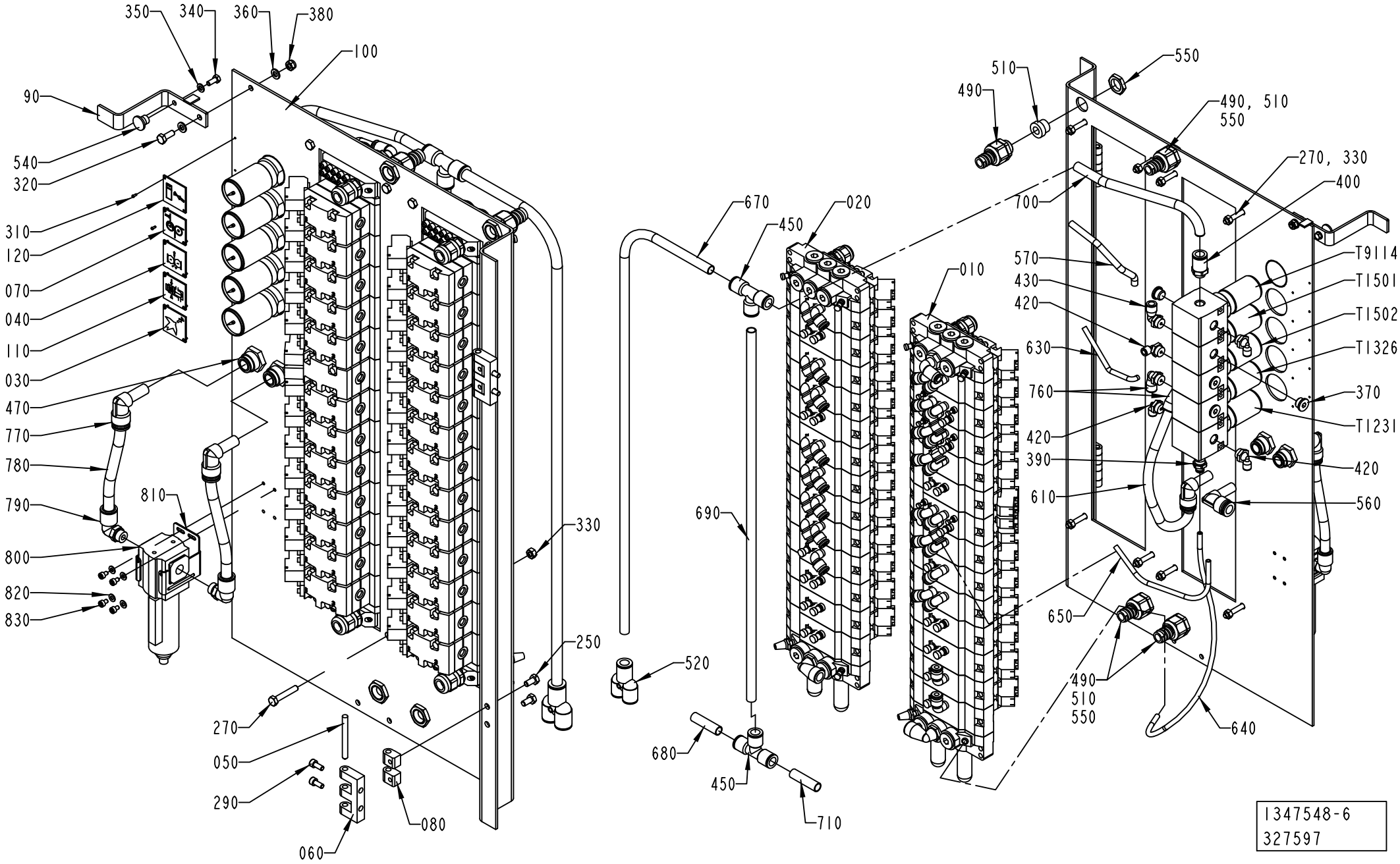
350
340
360
380
100
90
540
320
310
120
070
040
110
030
470
770
780
790
800
820
830
810
330
250
270
050
290
060
080
550
510
490
490, 510
550
270, 330
400
700
670
450
020
010
570
430
420
630
760
420
390
610
T9114
T1501
T1502
T1326
370
T1231
420
560
690
520
680
450
710
650
490
510
550
640
1347548-6
327597

ECM: 327602 - 20080101
Group number: 1347548-0400
Assembly Drawing: 1347548-6_1_AB

This list covers pages from 1-208 to 1-211

Pos	Part No	UN	Qty	Description	Page No
HI (See drawing on page: 1-210)					
000	2629320-0000		1	PNEUMATIC DIAGRAM	
120	2640822-0000		1	SIGN	
310	312502-0120		10	DRIVE SCREW ROUND HEAD KDS 0X5	
370	342713-0210		4	PLUG, EXT THREAD HEX SOCKET	
420	90458-2957		4	ELBOW PIPE JOINT, EXT.THREAD, D=6MM-G1/4	
T9114	90113-0095		1	PRESSURE REGULATOR	
NOHI (See drawing on page: 1-208)					
000	2506845-0000		1	DIAGRAM	
310	312502-0120		8	DRIVE SCREW ROUND HEAD KDS 0X5	
370	342713-0210		3	PLUG, EXT THREAD HEX SOCKET	
420	90458-2957		3	ELBOW PIPE JOINT, EXT.THREAD, D=6MM-G1/4	
Common Parts					
010	1347549-0300		1	VALVE RAMP	**1-213, 1-215**
020	1347550-0300		1	VALVE RAMP	**1-217**
030	273450-0000		1	SIGN, AIR SPRAY	
040	273452-0000		1	SIGN, ROLLING MACHINE FOR FABRICS	
050	988685-0000		2	PIN	
060	1035792-0000		2	E-HINGE	
070	1041937-0000		1	SIGN	
080	1129770-0000		4	BLOCKING PIECE	
090	2552246-0000		1	CATCH HANDLE	
100	2846213-0000		1	PLATE	
110	1548001-0000		1	SIGN	
250	312105-0366		4	SCREW M6S ISO 4017 M6X12 A480	
270	312109-0376		8	SCREW M6S ISO 4017 M6X35 A480	
290	312115-0327		4	SCREW ISO4762 M5X12 A4 80	
320	312105-0368		1	SCREW M6S ISO 4017 M6X16 A480	
330	312605-0316		8	HEXAGON NUT, M6M M6 A280	
340	312105-0327		1	SCREW M6S ISO 4017 M5X12 A480	
350	315101-0146		1	WASHER PLAIN, BRB, 5,3/10 H=1	
360	315105-0153		2	WASHER BRB 6,4X12 RFR	
380	312812-0316		1	HEXAGON NUT, NY-LOCK M6 A480	
390	342722-0203		1	STRAIGHT COUPLING	
400	342722-0209		1	STRAIGHT COUPLING D=12-G1/4"	
430	90458-2958		2	ELBOW PIPE JOINT, EXT.THREAD, D=8MM-G1/4	
450	342748-0109		2	T-CONNECTION 12MM	
470	350010-0005		2	PUSH-IN BULKHEAD FITTING QSS-F-12	
490	353243-0003		4	HOSE GLAND W/O INSERT PG11 EXTENDED	
510	353249-0011		4	INSERT, SINGLE HOLE, EK 153/11	
520	90055-0147		1	Y-FITTING QSY-12	
540	90051-0026		1	KNOB, CIRKUL, THREADED BUSH, M5 17X14 MM	
550	90099-0117		4	NUT, PR 18,6 (PG11)	
570	90166-0013	MM	150	TUBE 8 MM PA BLUE	
610	90166-0013	MM	300	TUBE 8 MM PA BLUE	
630	90166-0081	MM	250	TUBE 6 MM PA BLUE	
640	90166-0081	MM	450	TUBE 6 MM PA BLUE	
650	90166-0081	MM	300	TUBE 6 MM PA BLUE	
670	90166-0153	MM	1000	TUBE 12 MM PA BLACK	
680	90166-0153	MM	40	TUBE 12 MM PA BLACK	
690	90166-0153	MM	600	TUBE 12 MM PA BLACK	
700	90166-0153	MM	250	TUBE 12 MM PA BLACK	
710	90166-0153	MM	40	TUBE 12 MM PA BLACK	
760	90458-2959		1	ELBOW PIPE JOINT, EXT.THREAD,D=12MM-G1/4	
770	90459-1825		4	ELBOW WITH TAILPIECE 12/12 MM	
780	90166-0068	MM	400	TUBE 12 MM PA BLUE	
790	350002-0011		2	PUSH-IN L-FITTING QSL-F-G1/4-12	
800	90113-0472		1	FILTER 0,01 MICRON, F72C-2GD-AEO	
	90113-0471		*1*	*FILTER ELEMENT COALESCING, F72C-5925-09*	
810	90459-7110		1	BRACKET, 4224-50	
820	315106-0136		4	WASHER ISO 7089-4-200 HV A4	
830	312115-0285		4	SCREW ISO4762 M4X6 A4 80	
T1231	90113-0095		1	PRESSURE REGULATOR	
T1326	90113-0097		1	PRESSURE REGULATOR	
T1501	90113-0096		1	PRESSURE REGULATOR	
T1502	90113-0095		1	PRESSURE REGULATOR	

Machine Type	Group Description	Used-In	Group Number	Page No

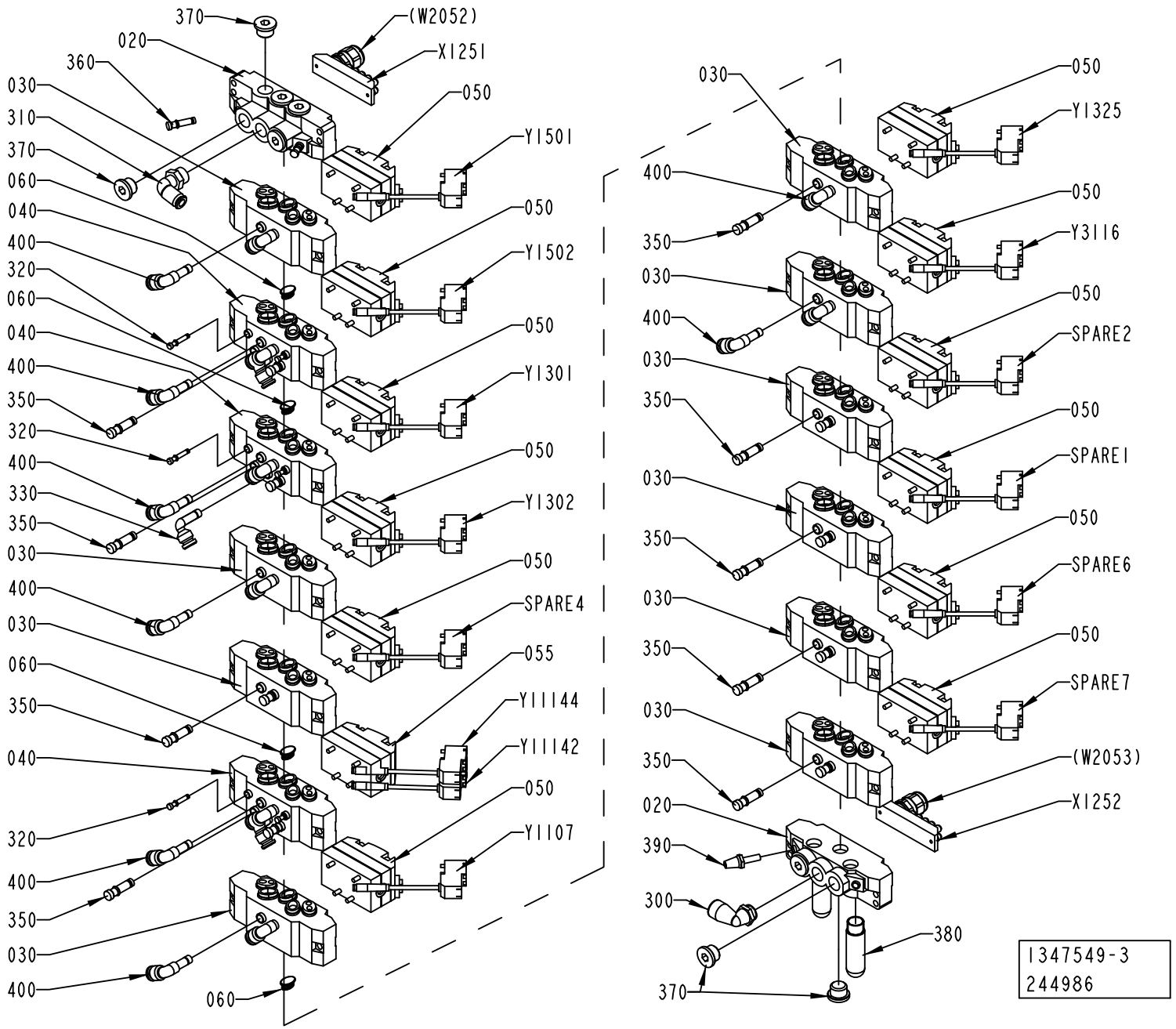
370
020
360
030
310
370
060
040
400
320
060
040
400
350
320
400
330
350
030
400
030
060
350
040
320
400
350
030
400
060
(W2052)
X1251
050
Y1501
050
Y1502
050
Y1301
050
Y1302
050
SPARE4
055
Y1144
Y1142
050
Y1107
030
050
Y1325
400
050
Y3116
030
400
050
SPARE2
030
350
050
SPARE1
030
350
050
SPARE6
030
350
050
SPARE7
030
350
(W2053)
X1252
020
390
300
380
370
1347549-3
244986

ECM: 274549 - 20060728
Group number: 1347549-0300
Assembly Drawing: 1347549-3_1_AB

This list covers pages from 1-212 to 1-215

Pos	Part No	UN	Qty	Description	Page No
HI (See drawing on page: 1-214)					
350	342715-0103		15	BLIND PLUG 8 MM	
400	90055-0173		19	ELBOW WITH TAILPIECE 8/6 MM	
Y9105	90042-0538		1	PILOT VALVE L=500MM	
Y9106	90042-0538		1	PILOT VALVE L=500MM	
NOHI (See drawing on page: 1-212)					
350	342715-0103		17	BLIND PLUG 8 MM	
400	90055-0173		17	ELBOW WITH TAILPIECE 8/6 MM	
SPARE6	90042-0538		1	PILOT VALVE L=500MM	
SPARE7	90042-0538		1	PILOT VALVE L=500MM	
Common Parts					
020	90042-0522		2	PORTED END PIECE ISO SIZE 1	
030	90042-0532		10	BASE PLATE ISO SIZE 1	
040	90042-0520		3	BASE PLATE ISO SIZE 1	
050	90042-0215		12	VALVE BODY 5/2 UNISTABLE	
055	90042-0230		1	VALVE BODY 5/3 OPEN CENTRE	
060	90042-0528		4	BLANKING KIT SEALS ISO SIZE 1	
300	90458-2960		1	ELBOW PIPE JOINT, EXT.THREAD,D=12MM-G3/8	
310	342732-0105		1	ELBOW PIPE JOINT ,EXT.THREAD,D=8 MM R3/8	
320	342715-0100		6	BLIND PLUG 4 MM	
330	90055-0118		1	ELBOW WITH TAILPIECE 8/8 MM	
360	342715-0102		2	BLIND PLUG 6 MM	
370	342713-0211		8	PLUG, EXT THREAD HEX SOCKET 8638-00-380	
380	90328-0024		2	SILENCER G3/8"	
390	90328-0017		1	SILENCER, D=6 MM	
SPARE1	90042-0538		1	PILOT VALVE L=500MM	
SPARE2	90042-0538		1	PILOT VALVE L=500MM	
SPARE4	90042-0538		1	PILOT VALVE L=500MM	
X1251	90042-0535		1	TERMINAL BOARD 19 CORDS	
X1252	90042-0535		1	TERMINAL BOARD 19 CORDS	
Y1107	90042-0538		1	PILOT VALVE L=500MM	
Y11142	90042-0538		1	PILOT VALVE L=500MM	
Y11144	90042-0538		1	PILOT VALVE L=500MM	
Y1301	90042-0538		1	PILOT VALVE L=500MM	
Y1302	90042-0538		1	PILOT VALVE L=500MM	
Y1325	90042-0538		1	PILOT VALVE L=500MM	
Y1501	90042-0538		1	PILOT VALVE L=500MM	
Y1502	90042-0538		1	PILOT VALVE L=500MM	
Y3116	90042-0538		1	PILOT VALVE L=500MM	

Pos	Part No	UN	Qty	Description	Page No

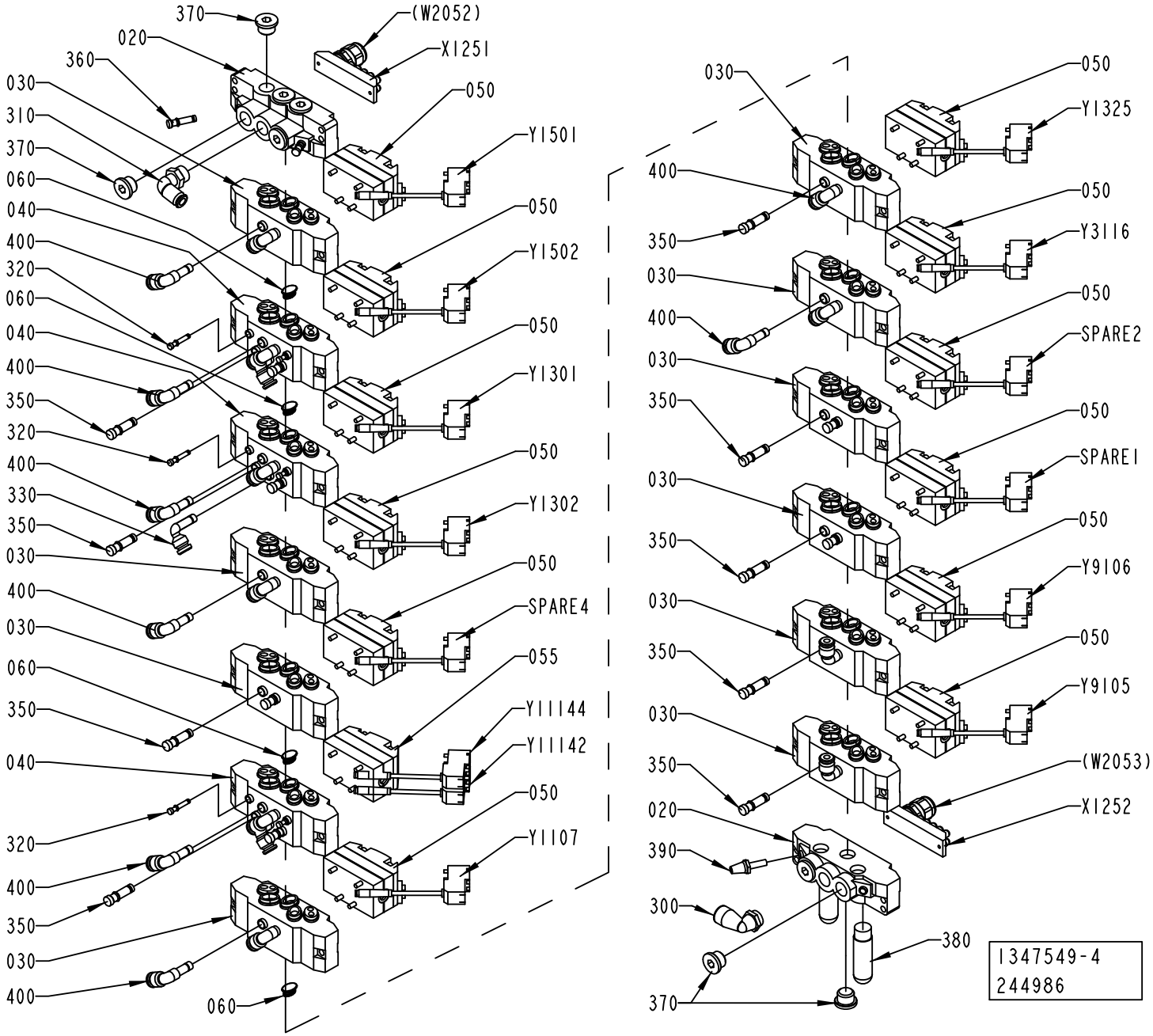
370
020
360
030
310
370
060
040
400
320
060
040
400
350
320
400
330
350
030
400
030
060
350
040
320
400
350
030
400
060
(W2052)
X1251
050
Y1501
050
Y1502
050
Y1301
050
Y1302
050
SPARE4
055
Y1144
Y1142
050
Y1107
030
400
350
050
Y1325
400
050
Y3116
030
400
050
SPARE2
030
350
050
SPARE1
030
350
050
Y9106
030
350
050
Y9105
030
350
(W2053)
X1252
020
390
300
380
370
1347549-4
244986

ECM: 274549 - 20060728
Group number: 1347549-0300
Assembly Drawing: 1347549-4_1_AB

This list covers pages from 1-212 to 1-215

Pos	Part No	UN	Qty	Description	Page No
HI (See drawing on page: 1-214)					
350	342715-0103		15	BLIND PLUG 8 MM	
400	90055-0173		19	ELBOW WITH TAILPIECE 8/6 MM	
Y9105	90042-0538		1	PILOT VALVE L=500MM	
Y9106	90042-0538		1	PILOT VALVE L=500MM	
NOHI (See drawing on page: 1-212)					
350	342715-0103		17	BLIND PLUG 8 MM	
400	90055-0173		17	ELBOW WITH TAILPIECE 8/6 MM	
SPARE6	90042-0538		1	PILOT VALVE L=500MM	
SPARE7	90042-0538		1	PILOT VALVE L=500MM	
Common Parts					
020	90042-0522		2	PORTED END PIECE ISO SIZE 1	
030	90042-0532		10	BASE PLATE ISO SIZE 1	
040	90042-0520		3	BASE PLATE ISO SIZE 1	
050	90042-0215		12	VALVE BODY 5/2 UNISTABLE	
055	90042-0230		1	VALVE BODY 5/3 OPEN CENTRE	
060	90042-0528		4	BLANKING KIT SEALS ISO SIZE 1	
300	90458-2960		1	ELBOW PIPE JOINT, EXT.THREAD,D=12MM-G3/8	
310	342732-0105		1	ELBOW PIPE JOINT ,EXT.THREAD,D=8 MM R3/8	
320	342715-0100		6	BLIND PLUG 4 MM	
330	90055-0118		1	ELBOW WITH TAILPIECE 8/8 MM	
360	342715-0102		2	BLIND PLUG 6 MM	
370	342713-0211		8	PLUG, EXT THREAD HEX SOCKET 8638-00-380	
380	90328-0024		2	SILENCER G3/8"	
390	90328-0017		1	SILENCER, D=6 MM	
SPARE1	90042-0538		1	PILOT VALVE L=500MM	
SPARE2	90042-0538		1	PILOT VALVE L=500MM	
SPARE4	90042-0538		1	PILOT VALVE L=500MM	
X1251	90042-0535		1	TERMINAL BOARD 19 CORDS	
X1252	90042-0535		1	TERMINAL BOARD 19 CORDS	
Y1107	90042-0538		1	PILOT VALVE L=500MM	
Y11142	90042-0538		1	PILOT VALVE L=500MM	
Y11144	90042-0538		1	PILOT VALVE L=500MM	
Y1301	90042-0538		1	PILOT VALVE L=500MM	
Y1302	90042-0538		1	PILOT VALVE L=500MM	
Y1325	90042-0538		1	PILOT VALVE L=500MM	
Y1501	90042-0538		1	PILOT VALVE L=500MM	
Y1502	90042-0538		1	PILOT VALVE L=500MM	
Y3116	90042-0538		1	PILOT VALVE L=500MM	

Pos	Part No	UN	Qty	Description	Page No

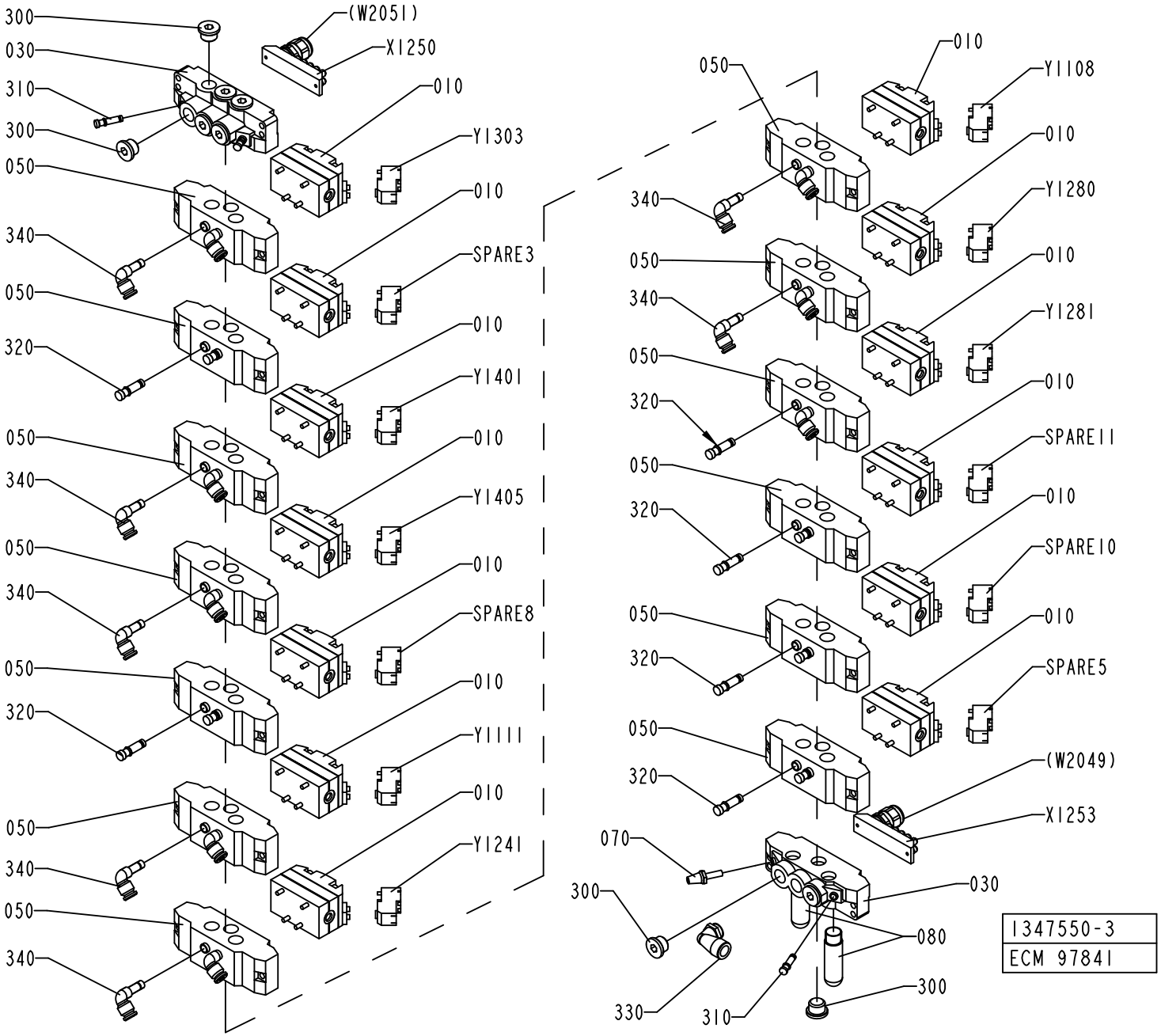
300
030
310
300
050
340
050
320
050
340
050
340
050
320
050
340
050
340
(W2051)
X1250
010
Y1303
010
SPARE3
010
Y1401
010
Y1405
010
SPARE8
010
Y1111
010
Y1241
050
Y1108
010
340
050
340
050
320
050
320
050
320
050
320
070
300
330
310
010
010
Y1280
010
Y1281
010
SPARE11
010
SPARE10
010
SPARE5
(W2049)
X1253
030
080
300
1347550-3
ECM 97841

ECM: 224801 - 20050831
Group number: 1347550-0300
Assembly Drawing: 1347550-3_1_AA

Pos	Part No	UN	Qty	Description	Page No
-					
010	90042-0215		13	VALVE BODY 5/2 UNISTABLE	
030	90042-0522		2	PORTED END PIECE ISO SIZE 1	
050	90042-0532		13	BASE PLATE ISO SIZE 1	
070	90328-0017		1	SILENCER, D=6 MM	
080	90328-0024		2	SILENCER G3/8"	
300	342713-0211		9	PLUG, EXT THREAD HEX SOCKET 8638-00-380	
310	342715-0102		3	BLIND PLUG 6 MM	
320	342715-0103		11	BLIND PLUG 8 MM	
330	90458-2960		1	ELBOW PIPE JOINT, EXT.THREAD,D=12MM-G3/8	
340	90055-0173		15	ELBOW WITH TAILPIECE 8/6 MM	
SPARE 8	90042-0538		1	PILOT VALVE L=500MM	
SPARE10	90042-0538		1	PILOT VALVE L=500MM	
SPARE11	90042-0538		1	PILOT VALVE L=500MM	
SPARE3	90042-0538		1	PILOT VALVE L=500MM	
SPARE5	90042-0538		1	PILOT VALVE L=500MM	
X1250	90042-0535		1	TERMINAL BOARD 19 CORDS	
X1253	90042-0535		1	TERMINAL BOARD 19 CORDS	
Y1108	90042-0538		1	PILOT VALVE L=500MM	
Y1111	90042-0538		1	PILOT VALVE L=500MM	
Y1241	90042-0538		1	PILOT VALVE L=500MM	
Y1280	90042-0538		1	PILOT VALVE L=500MM	
Y1281	90042-0538		1	PILOT VALVE L=500MM	
Y1303	90042-0538		1	PILOT VALVE L=500MM	
Y1401	90042-0538		1	PILOT VALVE L=500MM	
Y1405	90042-0538		1	PILOT VALVE L=500MM	

Pos	Part No	UN	Qty	Description	Page No

HOSE INSTALLATION

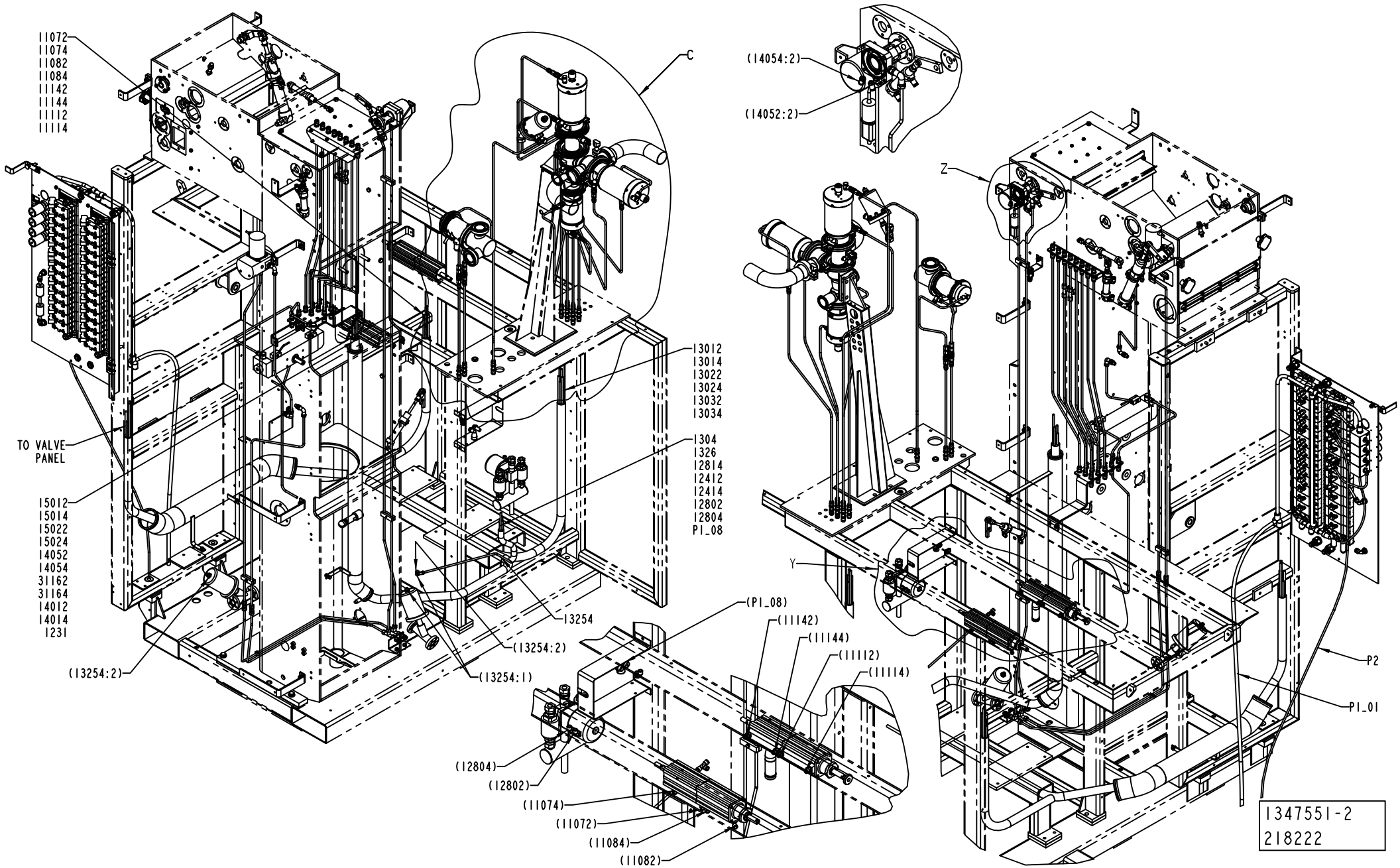

ECM: 237812 - 20061101
Group number: 1347551-0200
Assembly Drawing: 1347551-2_1_AC

This list covers pages from 1-218 to 1-229

Pos	Part No	UN	Qty	Description	Page No
HI (See drawing on pages: 1-224, 1-226, 1-228)					
120	2588389-0000		1	PIPE	
590	342706-0130		29	ACCESSORIES, INSERT SLEEVE 6 MM	
850	90224-0349		29	CONN. BULKHEAD. 1250-6	
9114	90166-0199	M	5	RUBBER HOSE	
NOHI (See drawing on pages: 1-218, 1-220, 1-222)					
590	342706-0130		28	ACCESSORIES, INSERT SLEEVE 6 MM	
850	90224-0349		28	CONN. BULKHEAD. 1250-6	
Common Parts					
010	1348940-0000		1	PIPE	
020	1484425-0000		2	PIPE	
030	1538800-0000		1	PIPE	
040	1538826-0000		1	PIPE	
050	1538827-0000		1	PIPE	
060	1538828-0000		1	PIPE	
070	1538829-0000		1	PIPE	
080	1538830-0000		1	PIPE	
090	1538831-0000		1	PIPE	
100	1548245-0000		2	PIPE	
110	2792303-0000		1	PIPE	
11072	90166-0081	MM	3900	TUBE 6 MM PA BLUE	
11074	90166-0081	MM	3900	TUBE 6 MM PA BLUE	
11082	90166-0081	MM	3900	TUBE 6 MM PA BLUE	
11084	90166-0081	MM	3900	TUBE 6 MM PA BLUE	
11112	90166-0081	MM	3900	TUBE 6 MM PA BLUE	
11114	90166-0081	MM	3900	TUBE 6 MM PA BLUE	
11142	90166-0081	MM	3900	TUBE 6 MM PA BLUE	
11144	90166-0081	MM	3900	TUBE 6 MM PA BLUE	
120	2500424-0000		2	PIPE	
1231	90166-0081	MM	5900	TUBE 6 MM PA BLUE	
12412	90166-0081	MM	5500	TUBE 6 MM PA BLUE	
12414	90166-0081	MM	5500	TUBE 6 MM PA BLUE	
12802	90166-0081	MM	5900	TUBE 6 MM PA BLUE	
12804	90166-0081	MM	5900	TUBE 6 MM PA BLUE	
12814	90166-0081	MM	5900	TUBE 6 MM PA BLUE	
130	2500425-0000		2	PIPE	
13012	90166-0081	MM	5000	TUBE 6 MM PA BLUE	
13014	90166-0081	MM	5100	TUBE 6 MM PA BLUE	
13022	90166-0081	MM	5300	TUBE 6 MM PA BLUE	
13024	90166-0081	MM	5100	TUBE 6 MM PA BLUE	
13032	90166-0081	MM	4900	TUBE 6 MM PA BLUE	
13034	90166-0081	MM	4900	TUBE 6 MM PA BLUE	
1304	90166-0081	MM	500	TUBE 6 MM PA BLUE	
13254	90166-0081	MM	4400	TUBE 6 MM PA BLUE	
13254:1	90166-0081	MM	250	TUBE 6 MM PA BLUE	
13254:2	90166-0081	MM	1000	TUBE 6 MM PA BLUE	
1326	90166-0081	MM	4800	TUBE 6 MM PA BLUE	
140	2500426-0000		1	PIPE	
14012	90166-0081	MM	5900	TUBE 6 MM PA BLUE	
14014	90166-0081	MM	5900	TUBE 6 MM PA BLUE	
14052	90166-0081	MM	6000	TUBE 6 MM PA BLUE	
14052:2	90166-0081	MM	650	TUBE 6 MM PA BLUE	
14054	90166-0081	MM	6000	TUBE 6 MM PA BLUE	
14054:2	90166-0081	MM	650	TUBE 6 MM PA BLUE	
150	2500427-0000		1	PIPE	
15012	90166-0081	MM	5800	TUBE 6 MM PA BLUE	
15012:2	90166-0081	MM	600	TUBE 6 MM PA BLUE	
15014	90166-0081	MM	6000	TUBE 6 MM PA BLUE	
15014:2	90166-0081	MM	300	TUBE 6 MM PA BLUE	
15022	90166-0081	MM	5900	TUBE 6 MM PA BLUE	
15022:2	90166-0081	MM	400	TUBE 6 MM PA BLUE	
15024	90166-0081	MM	6100	TUBE 6 MM PA BLUE	
15024:2	90166-0081	MM	450	TUBE 6 MM PA BLUE	
160	2500428-0000		2	PIPE	
170	2500432-0000		1	PIPE	
180	2500433-0000		1	PIPE	
190	2500434-0000		1	PIPE	
200	2500435-0000		1	BRACKET	
210	2500436-0000		1	PLATE	
220	2500437-0000		1	BRACKET	
230	2501513-0000		1	PIPE	
240	2517363-0000		1	PIPE	
250	2519471-0000		1	PIPE	
260	2520475-0000		1	PIPE	
270	2520476-0000		1	PIPE	
280	2520562-0000		1	PIPE	
290	2520563-0000		1	PIPE	
300	2522125-0000		3	CLAMP	
310	2522126-0000		3	CLAMP	
31162	90166-0081	MM	6000	TUBE 6 MM PA BLUE	
31162:1	90166-0081	MM	400	TUBE 6 MM PA BLUE	
31162:2	90166-0081	MM	600	TUBE 6 MM PA BLUE	
31164	90166-0081	MM	6000	TUBE 6 MM PA BLUE	
31164:1	90166-0081	MM	400	TUBE 6 MM PA BLUE	

Machine Type | Group Description | Used-In | Group Number | Page No

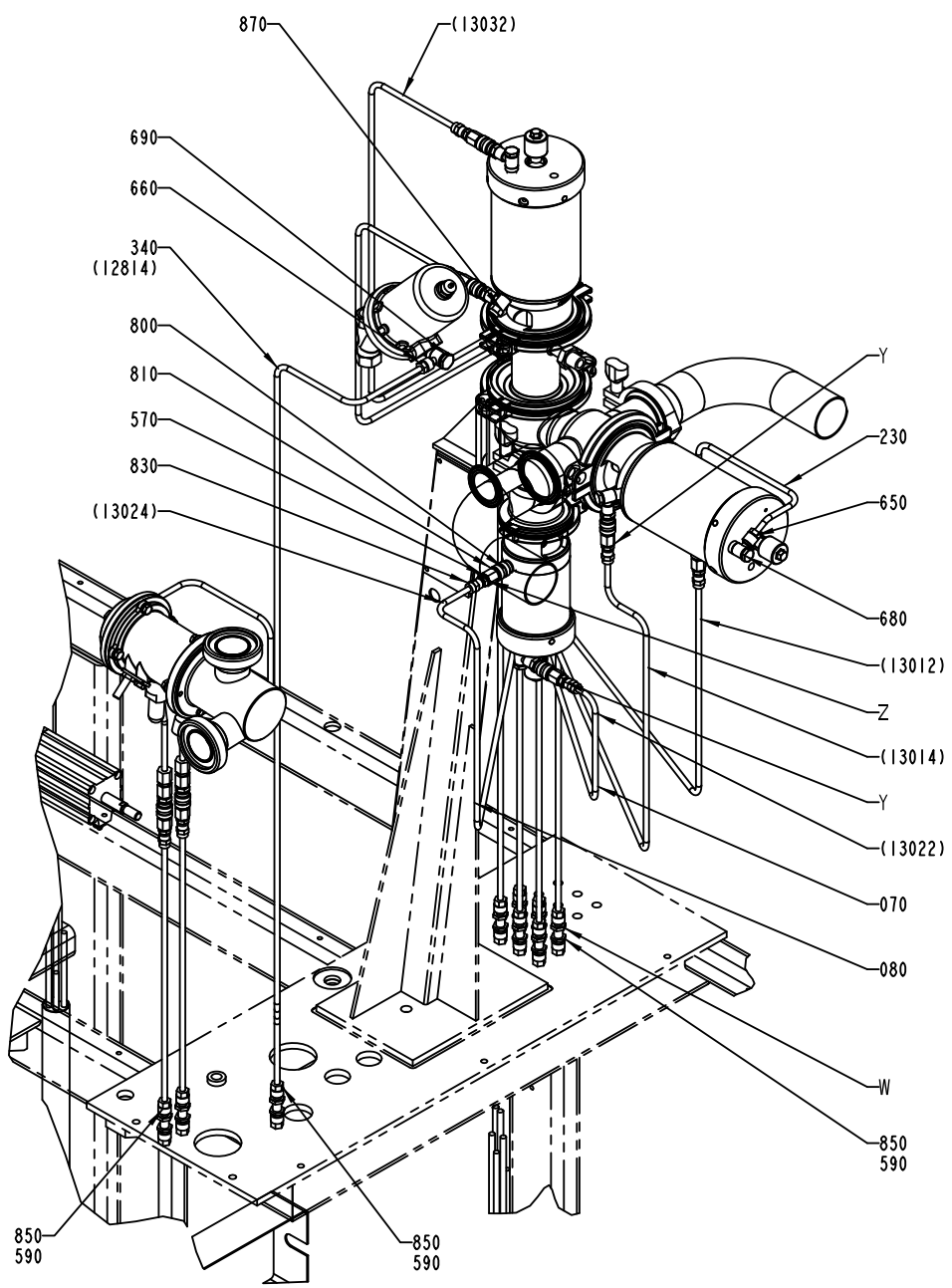
870
(13032)
690
660
340
(12814)
800
810
570
830
(13024)
Y
230
650
680
(13012)
Z
(13014)
Y
(13022)
070
080
W
850
590
850
590
850
590

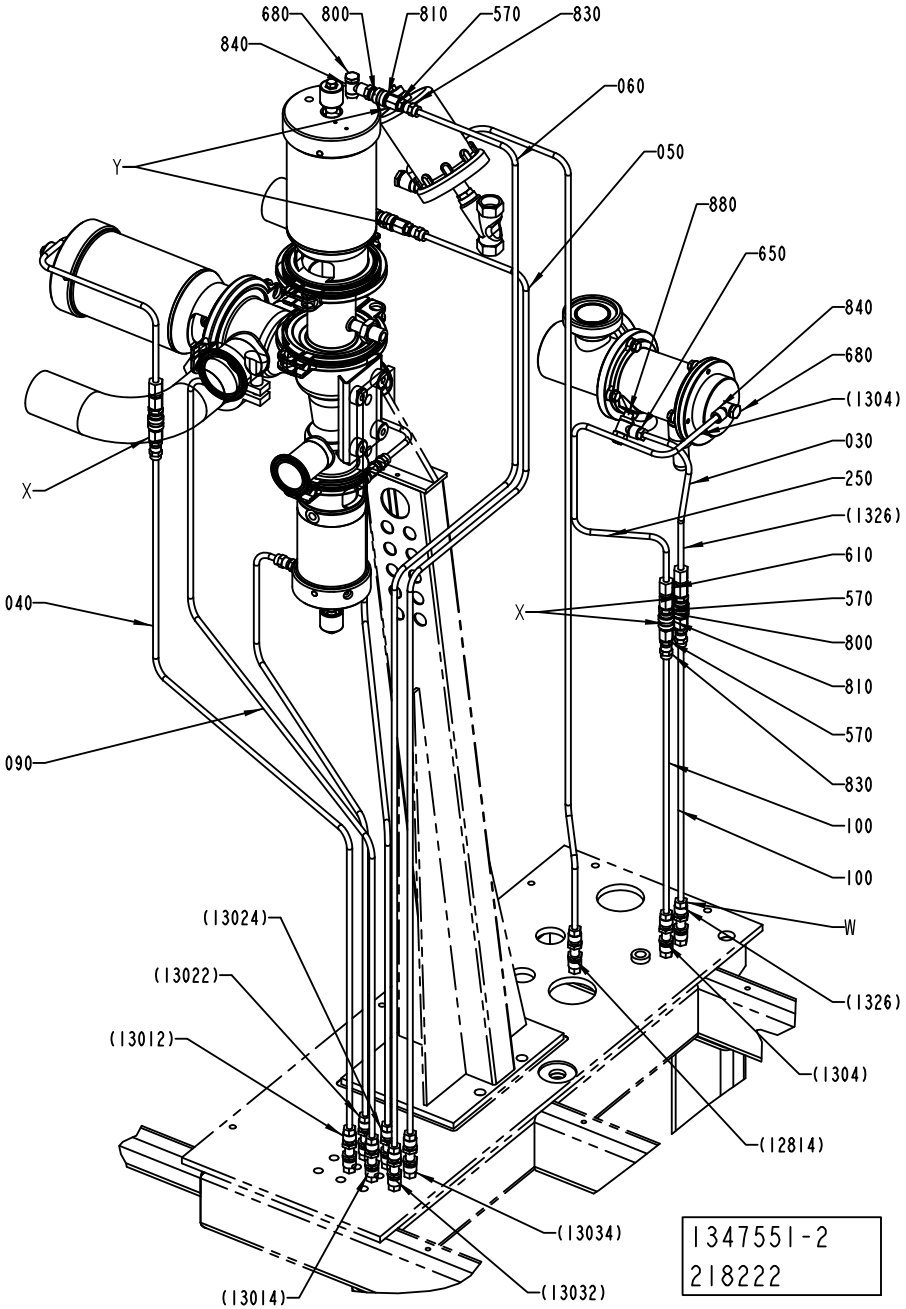
680
800
810
570
830
840
060
Y
050
880
650
840
680
(1304)
030
250
(1326)
610
570
800
810
570
830
100
100
W
(1326)
(1304)
(12814)
X
X
040
090
(13024)
(13022)
(13012)
(13034)
(13032)
(13014)
1347551-2
218222

ECM: 237812 - 20061101
Group number: 1347551-0200
Assembly Drawing: 1347551-2_2_AC

This list covers pages from 1-218 to 1-229

Pos	Part No	UN	Qty	Description	Page No
Common Parts (Cont'd)					
31164:2	90166-0081	MM	600	TUBE 6 MM PA BLUE	
320	2524403-0000		1	PIPE	
330	2524404-0000		1	PIPE	
340	2511417-0000		1	PIPE	
450	312105-0329		3	SCREW M6S ISO 4017 M5X16 A480	
470	312105-0366		5	SCREW M6S ISO 4017 M6X12 A480	
480	312105-0368		4	SCREW M6S ISO 4017 M6X16 A480	
490	312105-0370		1	SCREW M6S ISO 4017 M6X20 A480	
510	312605-0316		1	HEXAGON NUT, M6M M6 A280	
530	315105-0153		8	WASHER BRB 6,4X12 RFR	
550	315115-0153		2	WASHER PLAIN, TBRB 6,4/12 H=3	
570	315237-0109		11	WASHER,PL.RND.AL.10/14,H=1,5	
610	342724-0102		3	CONN. STR. PIPE GI 6-G1/8	
630	342759-0102		2	CONN. L-PIPE ADJ.,EVL,EXT,T-6-G1/8	
650	342797-0121		2	CONN. BANJO, RINGPIECE 6-1/8	
660	342797-0122		3	CONN. BANJO, RINGPIECE 6-1/4	
670	342923-0121		2	STRAIGHT COUPL.,INT.THREADED 8/6-G1/8"	
680	342980-0303		5	BANJO-HOLLOW BOLT COUPL,EXT.THR.01-G1/8	
690	342980-0304		3	BANJO-HOLLOW BOLT COUPL,EXT.THR.01-G1/4	
710	90030-0075		2	UNION FITTING 6MM, G06L71	
720	90030-0076		2	CONN. T-PIPE T-6	
730	90030-0171		4	ADJUSTABLE ELBOW CONNECTION, EVW06LR71	
740	90030-0184		2	CONN. STR. GE06LRED71	
780	90143-0059	MM	700	SELF GRIPPING GASKET, 4610069	
800	90163-0057		8	QUICK COUPLING, (M) 5150-1/8	
810	90163-0062		8	QUICK COUPLING, (F) 5053-1/8	
830	90458-1849		8	CONN. STR., 6-R1/8, EXT. THREAD	
840	90224-0308		5	CONN. BANJO, ART. NO. 2023-1/8-1/8	
870	90235-0274		1	THROTTLE CHECK VALVE, G1/8", SCU-604-1/8	
880	90235-0282		1	THROTTLE CHECK VALVE, G1/8", SCO-604-1/8	
890	342748-0102		1	T-CONNECTION 6MM	
P1_01	90166-0068	MM	2000	TUBE 12 MM PA BLUE	
P1_08	90166-0068	MM	3800	TUBE 12 MM PA BLUE	
P2	90166-0013	MM	2000	TUBE 8 MM PA BLUE	

Pos	Part No	UN	Qty	Description	Page No

Machine Type | Group Description | Used-In | Group Number | Page No

HOSE INSTALLATION

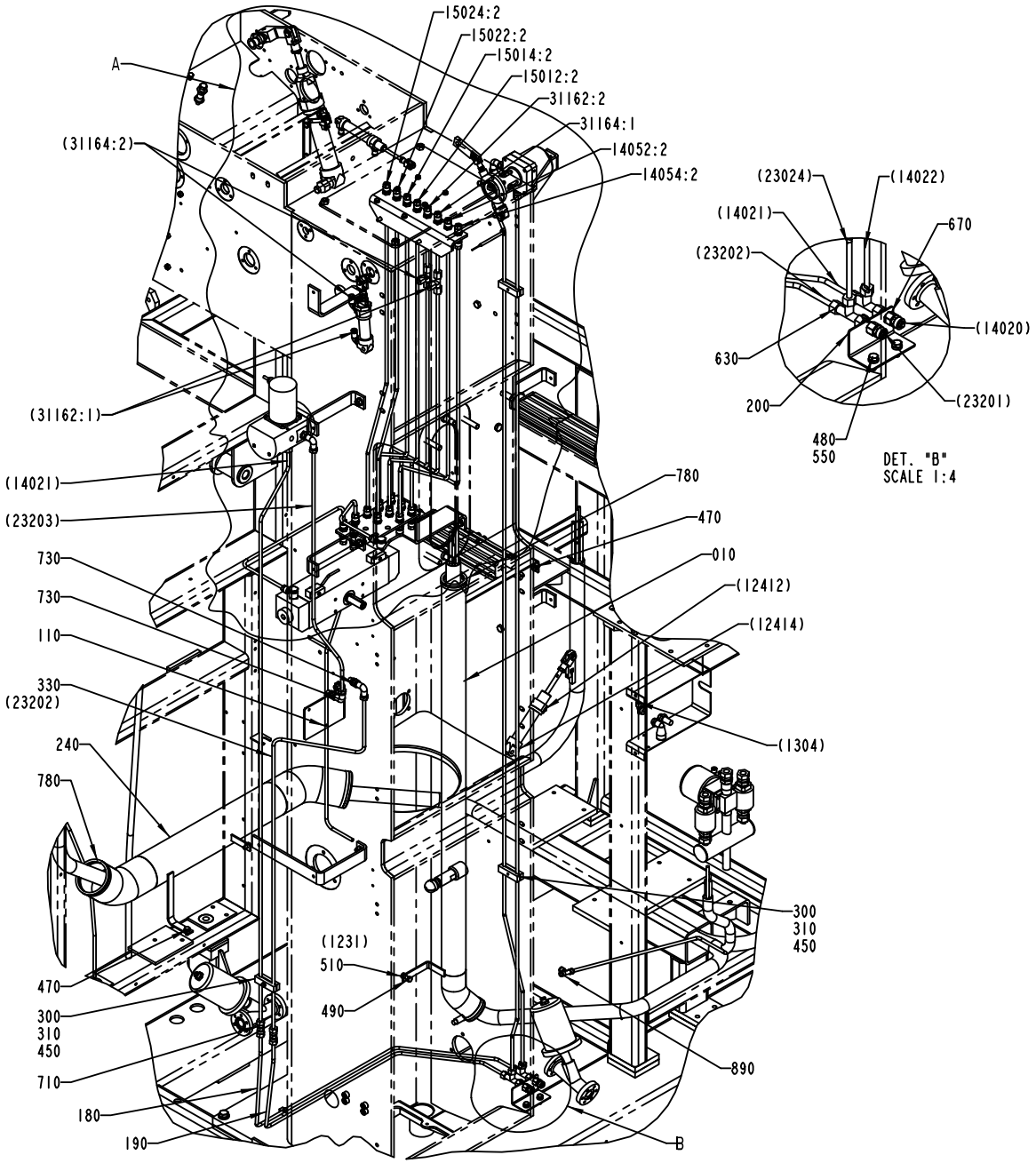

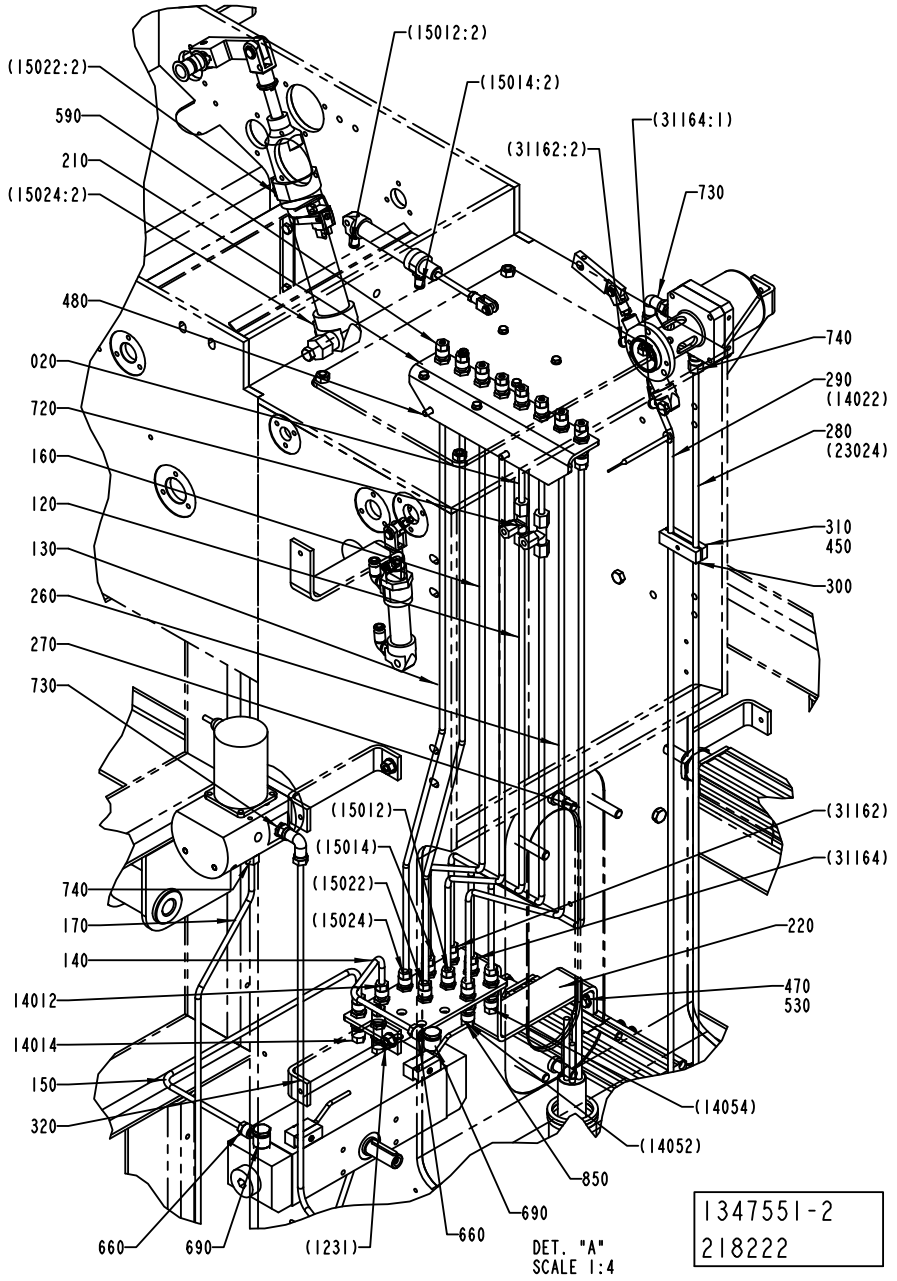

ECM: 237812 - 20061101
Group number: 1347551-0200
Assembly Drawing: 1347551-2_3_AC

This list covers pages from 1-218 to 1-229

Pos	Part No	UN	Qty	Description	Page No
SEE PREVIOUS LISTS PAGES: 1-219, 1-221.					

Pos	Part No	UN	Qty	Description	Page No

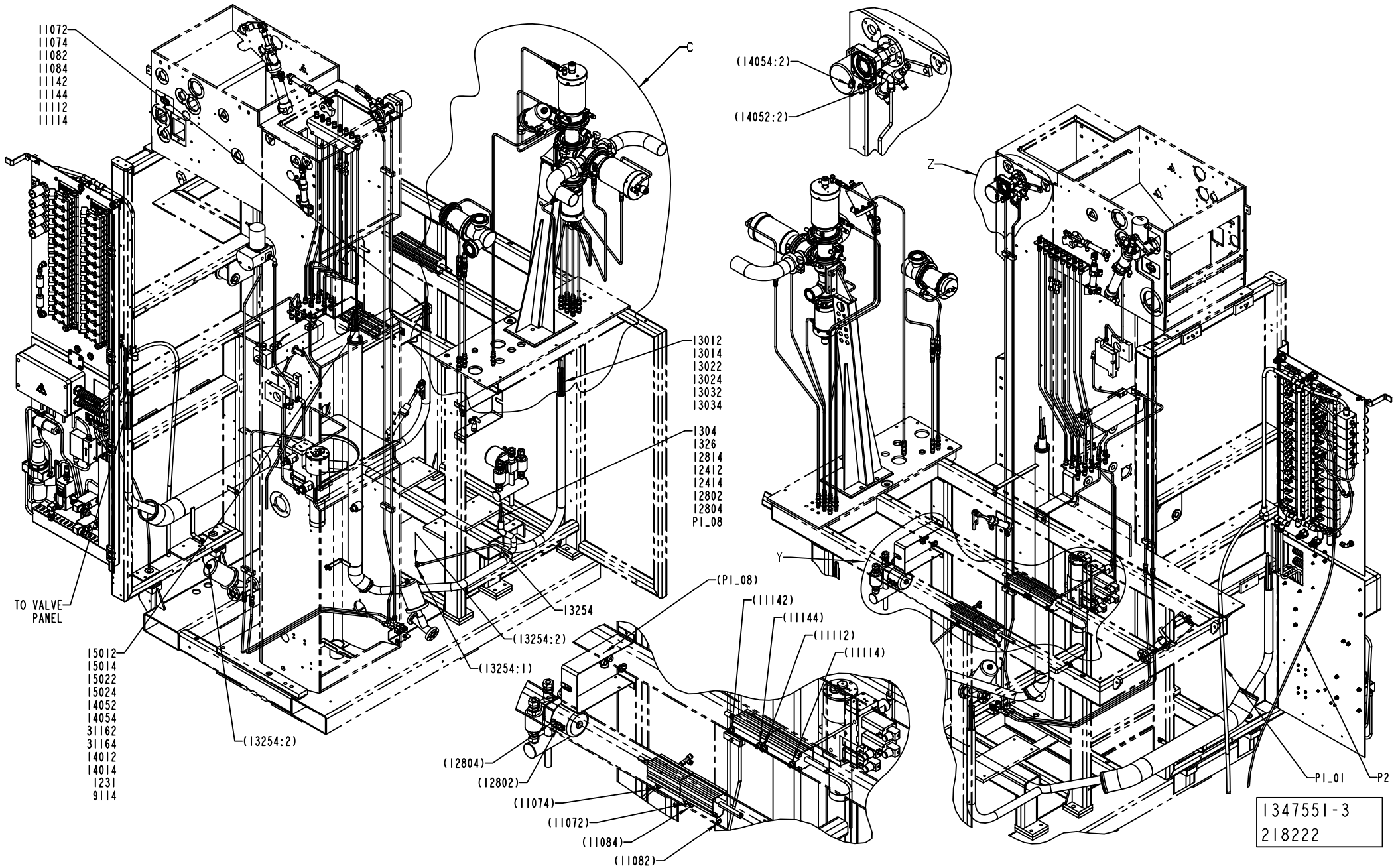
11072
11074
11082
11084
11142
11144
11112
11114
C
13012
13014
13022
13024
13032
13034
1304
1326
12814
12412
12414
12802
12804
P1_08
TO VALVE PANEL
15012
15014
15022
15024
14052
14054
31162
31164
14012
14014
1231
9114
(13254:2)
13254
(13254:2)
(13254:1)
(P1_08)
(11142)
(11144)
(11112)
(11114)
(12804)
(12802)
(11074)
(11072)
(11084)
(11082)
(14054:2)
(14052:2)
Z
Y
P1_01
P2
1347551-3
218222

ECM: 237812 - 20061101
Group number: 1347551-0200
Assembly Drawing: 1347551-3_1_AB

This list covers pages from 1-218 to 1-229

Pos	Part No	UN	Qty	Description	Page No
SEE PREVIOUS LISTS PAGES: 1-219, 1-221.					

Pos	Part No	UN	Qty	Description	Page No

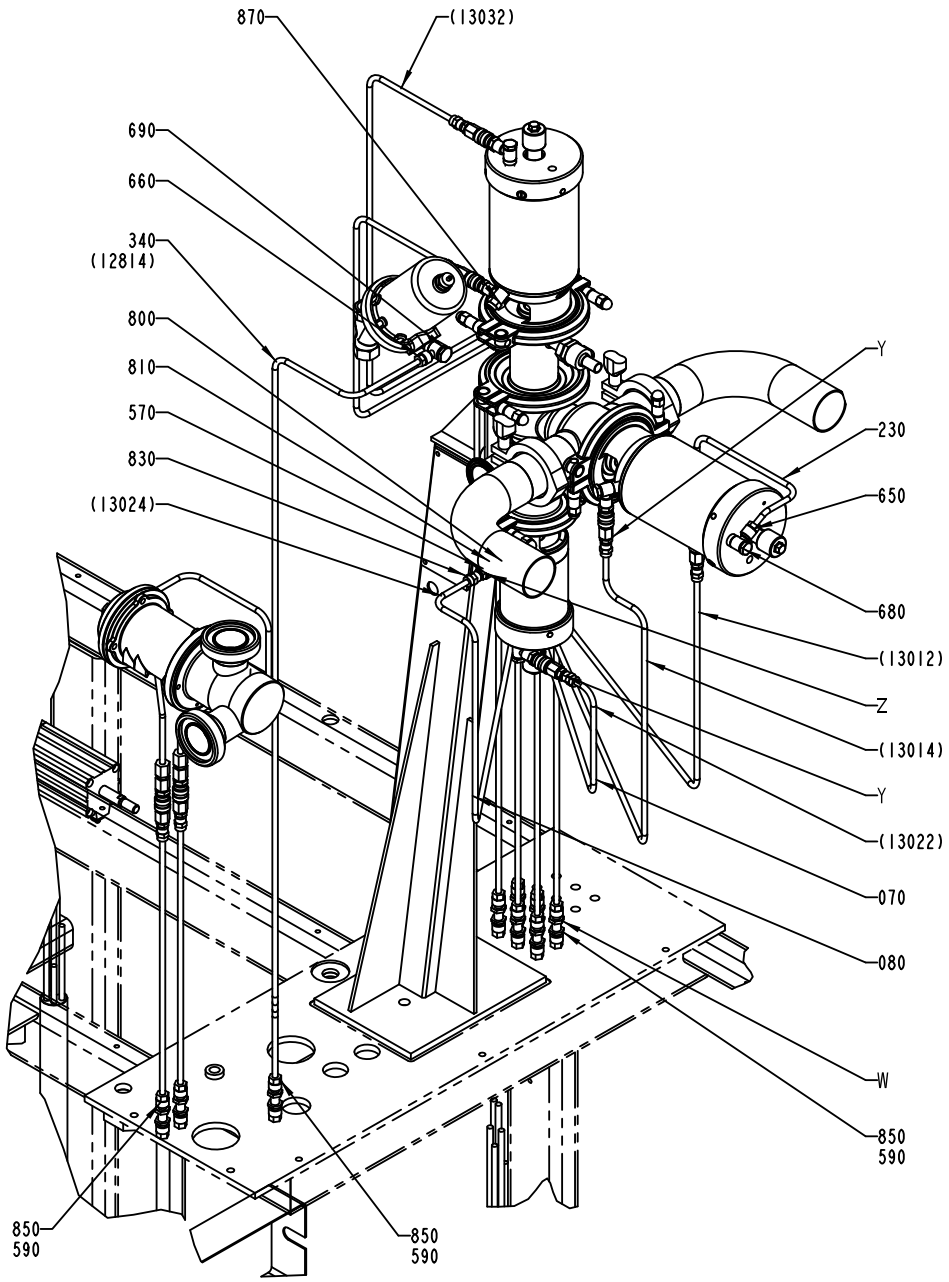
870
(13032)
690
660
340
(12814)
800
810
570
830
(13024)
Y
230
650
680
(13012)
Z
(13014)
Y
(13022)
070
080
W
850
590
850
590
850
590

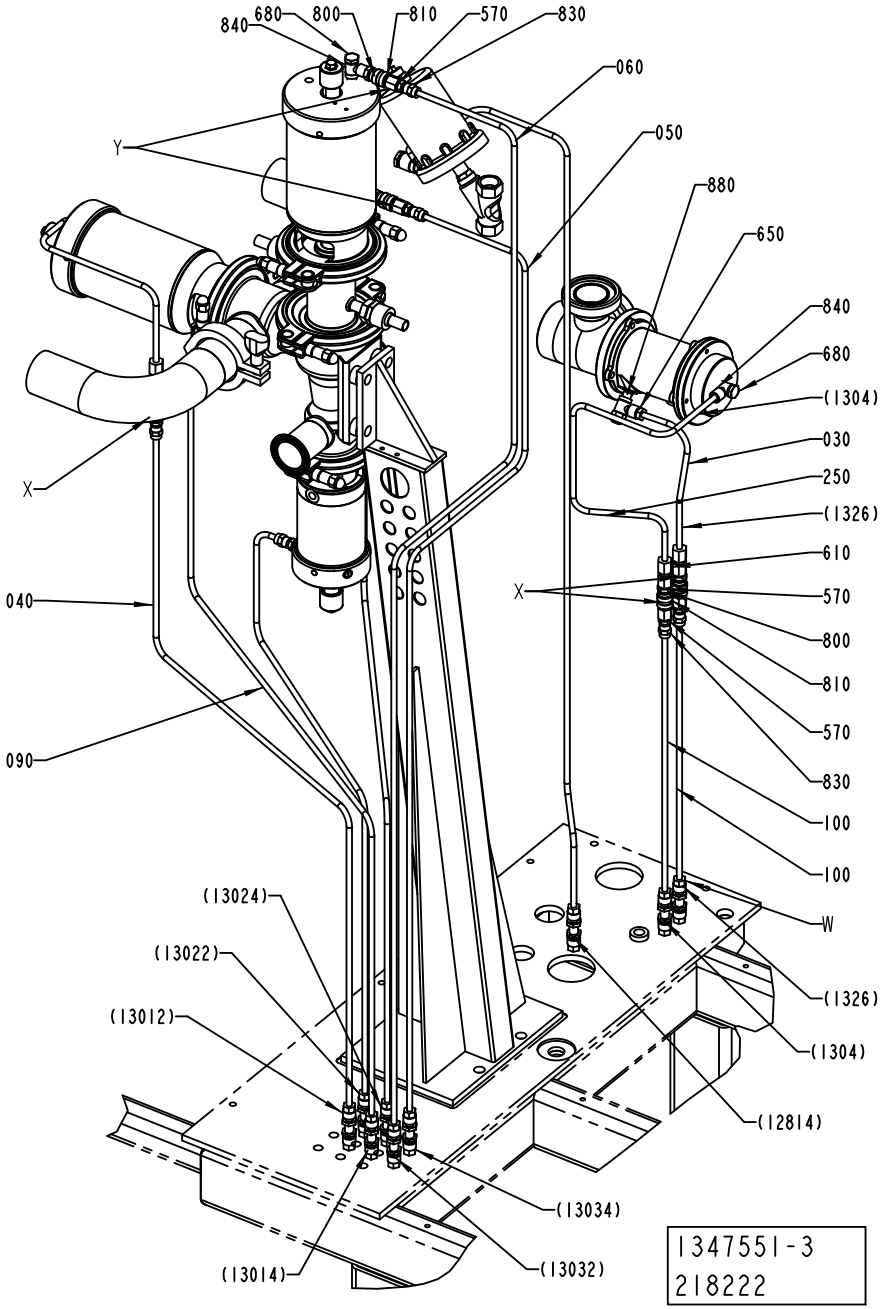
840
680
800
810
570
830
060
Y
050
880
650
840
680
(1304)
030
250
(1326)
610
570
800
810
570
830
100
100
W
X
040
090
(13024)
(13022)
(13012)
(1326)
(1304)
(12814)
(13034)
(13014)
(13032)
1347551-3
218222

ECM: 237812 - 20061101
Group number: 1347551-0200
Assembly Drawing: 1347551-3_2_AB

This list covers pages from 1-218 to 1-229

Pos	Part No	UN	Qty	Description	Page No
SEE PREVIOUS LISTS PAGES: 1-219, 1-221.					

Pos	Part No	UN	Qty	Description	Page No

HOSE INSTALLATION

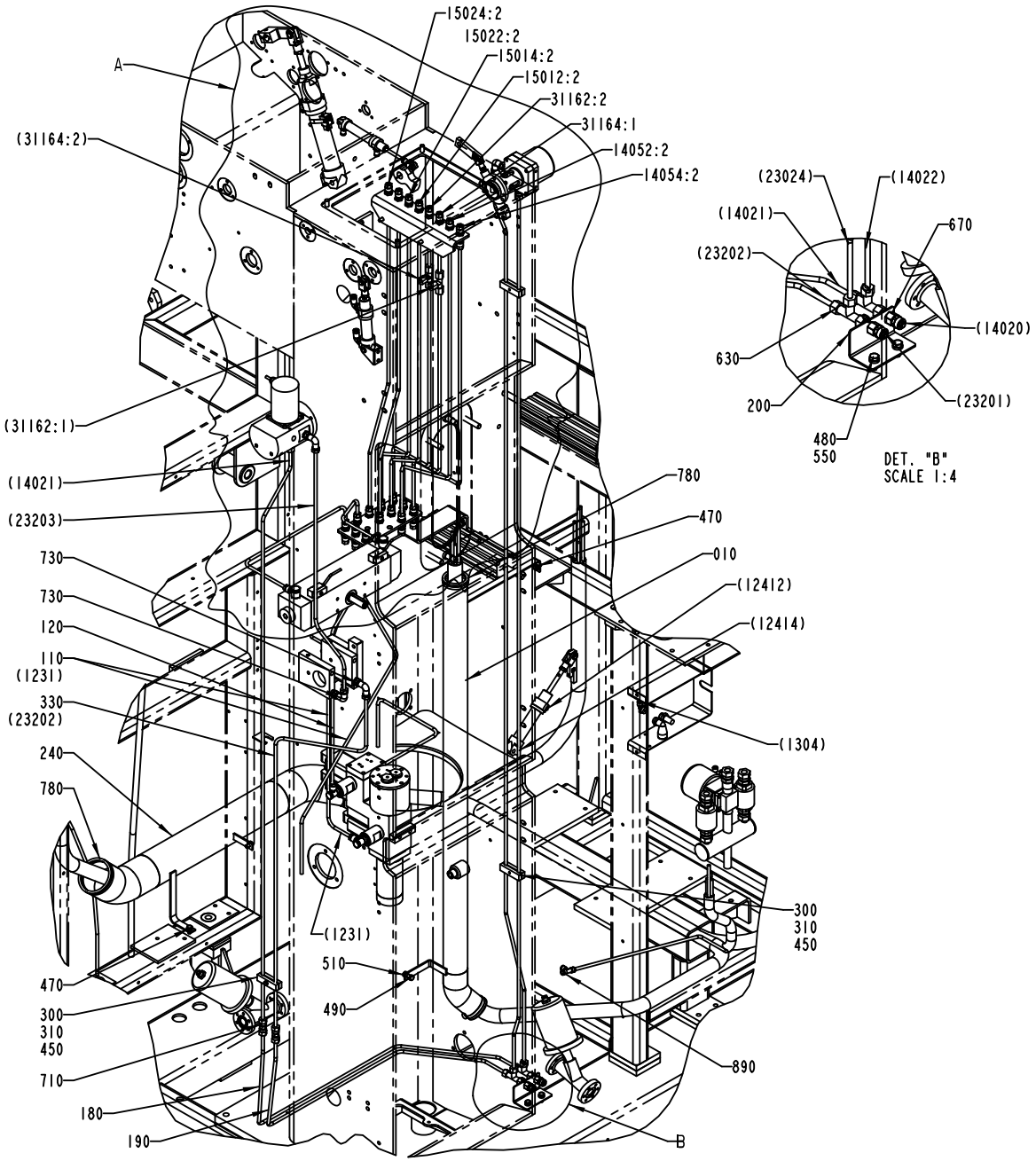

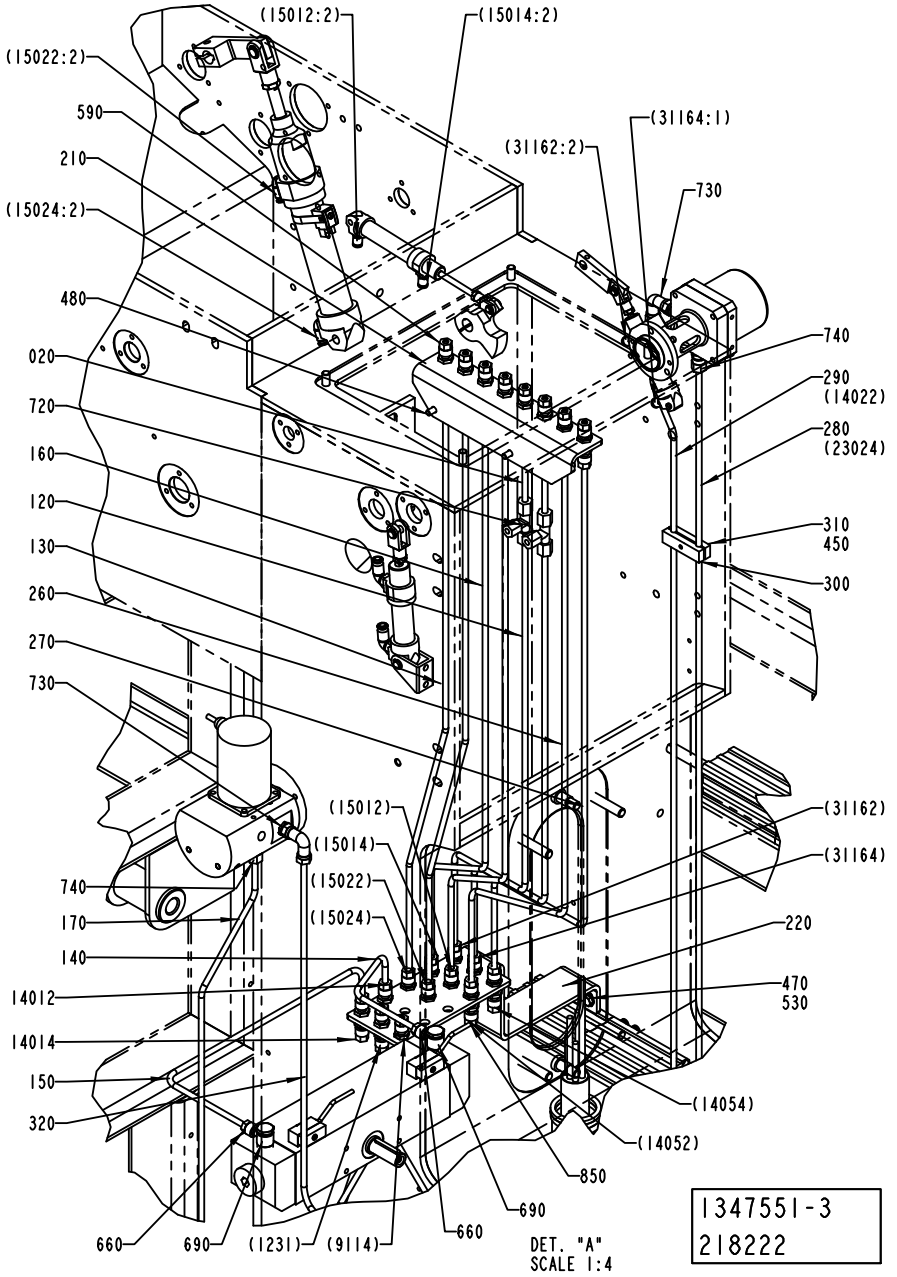

ECM: 237812 - 20061101
Group number: 1347551-0200
Assembly Drawing: 1347551-3_3_AB

This list covers pages from 1-218 to 1-229

Pos	Part No	UN	Qty	Description	Page No
SEE PREVIOUS LISTS PAGES: 1-219, 1-221.					

Pos	Part No	UN	Qty	Description	Page No

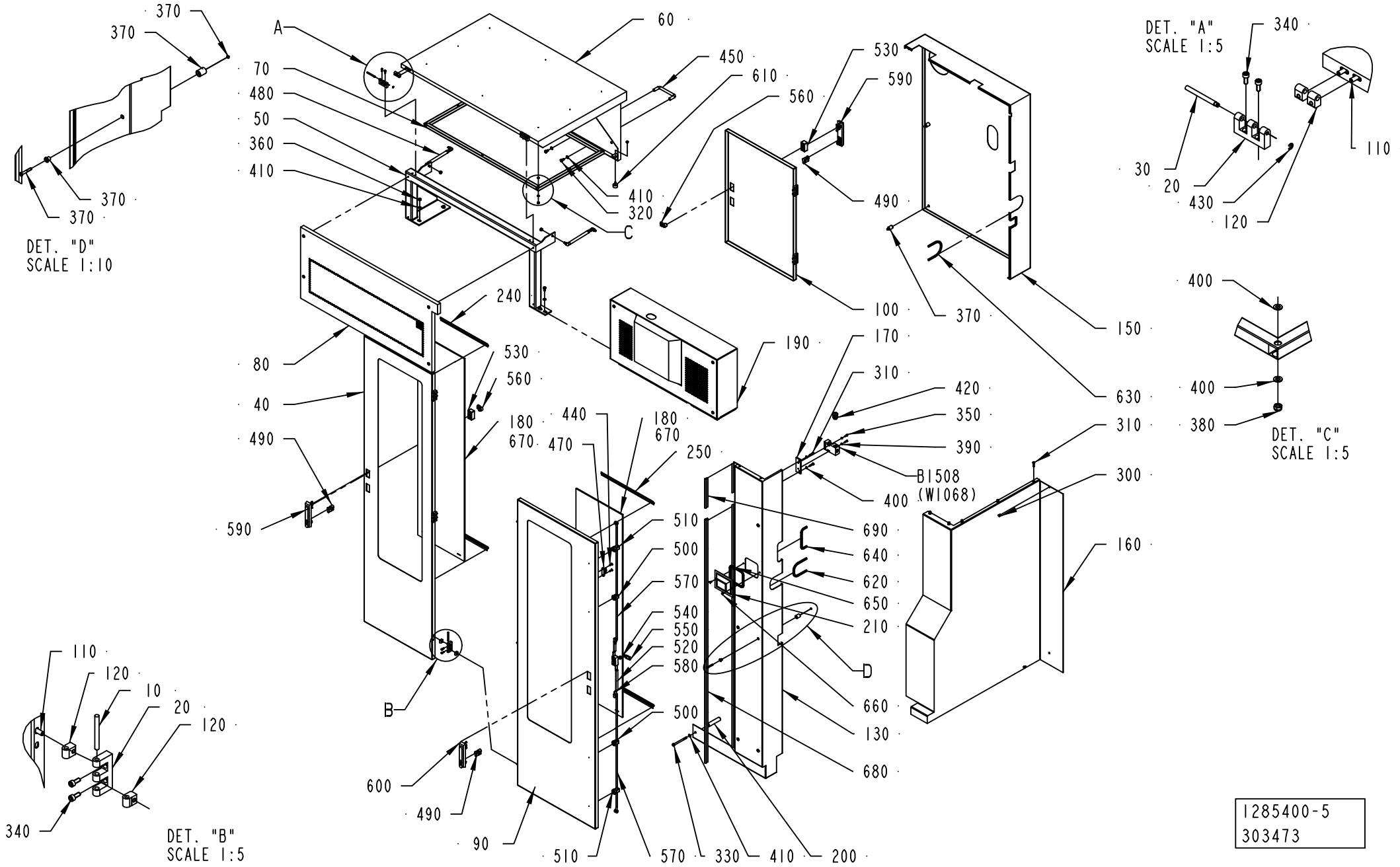

1285400-5
303473

ECM: 304242 - 20070417
Group number: 1285400-0350
Assembly Drawing: 1285400-5_1_AA

Pos	Part No	UN	Qty	Description	Page No
-					
010	988685-0000		5	PIN	
020	1035792-0000		7	E-HINGE	
030	1036329-0000		2	PIN	
040	2531269-0000		1	DOOR	
050	1129194-0000		1	FRAME	
060	1129195-0000		1	OPENING	
070	1129196-0000		1	FRAME	
080	1129197-0000		1	OPENING	
090	2531270-0000		1	DOOR	
100	1129199-0000		1	DOOR	
110	1129767-0000		14	SCREW	
120	1129770-0000		14	BLOCKING PIECE	
130	2531271-0000		1	COVERING	
150	1285403-0000		1	COVERING	
160	1478236-0000		1	COVERING	
170	1548253-0000		1	PLATE	
180	2874764-0000		2	GLASS PANE	
190	2531272-0000		1	TOP COVER	
200	2531502-0000		1	SPACER	
210	2547013-0000		1	CAP	
220	2594227-0000		1	PLATE	
230	2594228-0000		1	PLATE	
240	2594229-0000		1	PLATE	
250	2594230-0000		1	PLATE	
300	312105-0362		2	SCREW M6S ISO 4017 M6X8 A480	
310	312105-0372		7	SCREW M6S ISO 4017 M6X25 A480	
320	312105-0449		4	SCREW M6S ISO 4017 M8X16 A480	
330	312105-0471		1	SCREW M6S ISO 4014 M8X100 A480	
340	312115-0327		14	SCREW ISO4762 M5X12 A4 80	
350	312125-0329		2	SCREW ISO 1207 M5X16 A4	
360	312605-0318		4	HEXAGON NUT, M6M M8 A280	
370	90226-0458		18	MOUNTING SCREW	
380	312812-0316		10	HEXAGON NUT, NY-LOCK M6 A480	
390	315105-0146		2	WASHER BRB 5,3X10 RFR	
400	315105-0153		18	WASHER BRB 6,4X12 RFR	
410	315105-0165		7	WASHER BRB 8,4X16 RFR	
420	90458-0315		1	CABLE GLAND, M20X1,5, NO.5311 1120	
430	315755-0106		2	RETAINING RING SHAFT DIN 6799 4 A2	
440	312155-0329		2	SCREW DIN 7991 MF6S M5X16 A4 70	
450	90017-0016		1	HANDLE, NO. 14.4012.02.120	
470	90044-0310		1	KEY FOR SAFETY SWITCH AZ 15/16 B1	
480	90347-0127		2	DAMPER	
490	90237-0128		3	LOCK CYLINDER, 1109-SU125	
500	90237-0151		2	GUIDE, 1001-U11	
510	90237-0152		2	GUIDE, 1001-U12	
520	90237-0153		1	LOCK HOUSING, 1121-U26-0B	
530	90237-0154		2	LOCK HOUSING, 1121-U60-0C	
540	90237-0214		1	LOCK ADAPTER, 1121-U40	
550	90237-0156		1	LOCK BOLT, 1000-16	
560	90237-0165		2	LATCH	
570	90459-1004		2	ROUND BAR W. END WHEEL, 1049-U18-L820	
580	90237-0169		2	LOCK ADAPTER, 1000-U49	
590	90237-0175		2	TURNING HANDLE, 1125-U185-0A	
600	90237-0176		1	TURNING HANDLE, 1125-U190-A	
610	90347-0034		2	VIBRATION DAMPER	
620	90143-0060	MM	250	EDGE STRIP 9,5X6,3MM BLACK PVC	
630	90143-0060	MM	310	EDGE STRIP 9,5X6,3MM BLACK PVC	
640	90143-0060	MM	195	EDGE STRIP 9,5X6,3MM BLACK PVC	
650	90143-0060	MM	380	EDGE STRIP 9,5X6,3MM BLACK PVC	
660	312155-0327		2	SCREW DIN 7991 MF6S M5X12 A4 70	
670	90157-0041		1	SEALING COMPOUND, RHODORSEAL 5651	
680	90143-0057	MM	1690	STRIP EMKA 1011-05 21X11MM	
690	90143-0057	MM	200	STRIP EMKA 1011-05 21X11MM	
B1508	90459-0472		1	KEY SAF.SW. AZ 16 02ZVRK-M20-2152-2254	

Machine Type Group Description Used-In Group Number Page No

COVERING PANEL

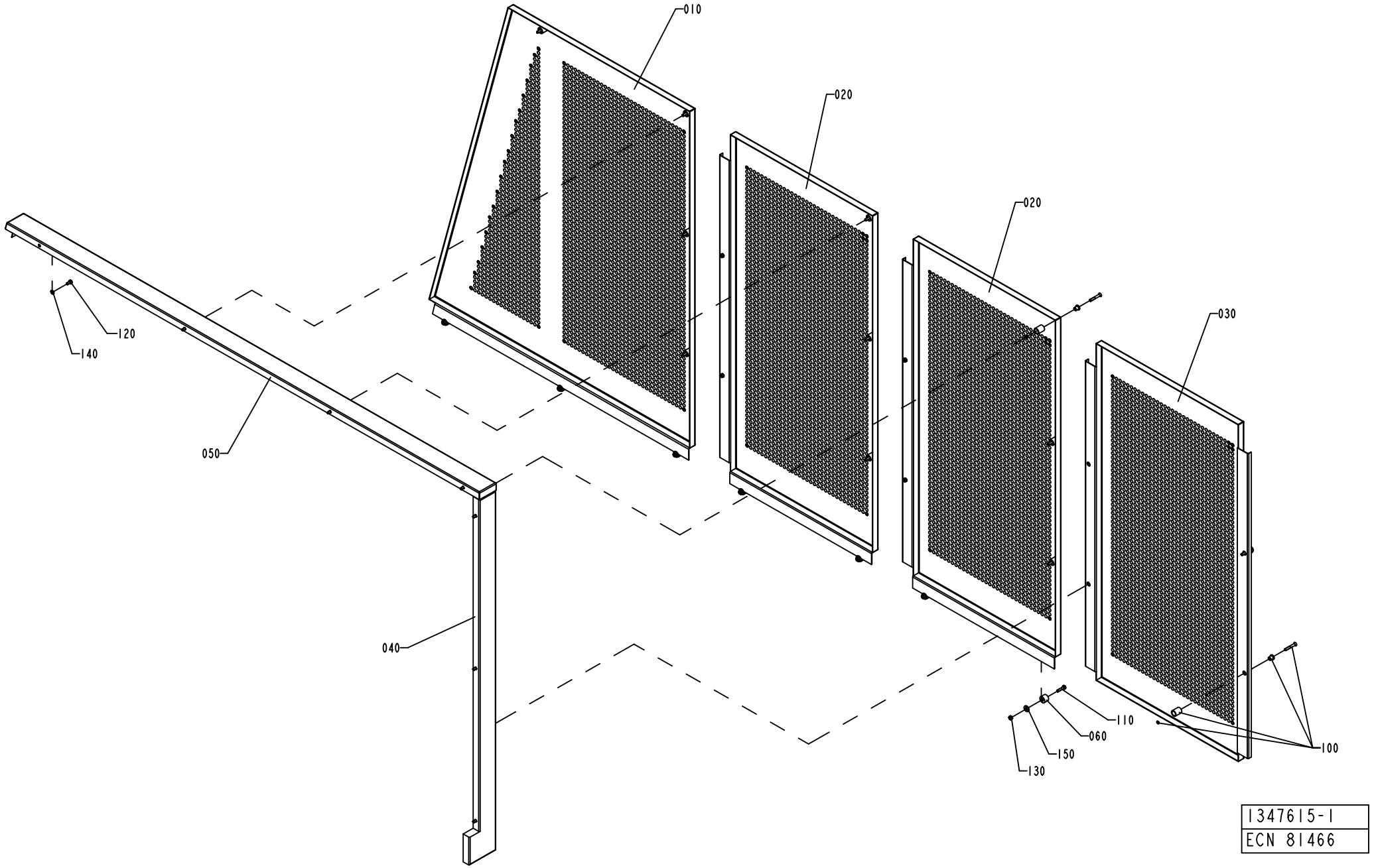

1347615-1
ECN 81466

ECM: 81479 - 20001012
Group number: 1347615-0100
Assembly Drawing: 1347615-1_1_AB

Pos	Part No	UN	Qty	Description	Page No
-					
010	1037502-0000		1	COVERING PLATE	
020	1037508-0000		2	COVERING PLATE	
030	1037528-0000		1	COVERING PLATE	
040	1347616-0000		1	COVERING PLATE	
050	1347617-0000		1	COVERING PLATE	
060	1037552-0000		7	SPACER	
100	90226-0458		12	MOUNTING SCREW	
110	312105-0372		7	SCREW M6S ISO 4017 M6X25 A480	
120	312105-0366		7	SCREW M6S ISO 4017 M6X12 A480	
130	312605-0316		7	HEXAGON NUT, M6M M6 A280	
140	315105-0153		7	WASHER BRB 6,4X12 RFR	
150	1260303-0000		7	WASHER	

Pos	Part No	UN	Qty	Description	Page No

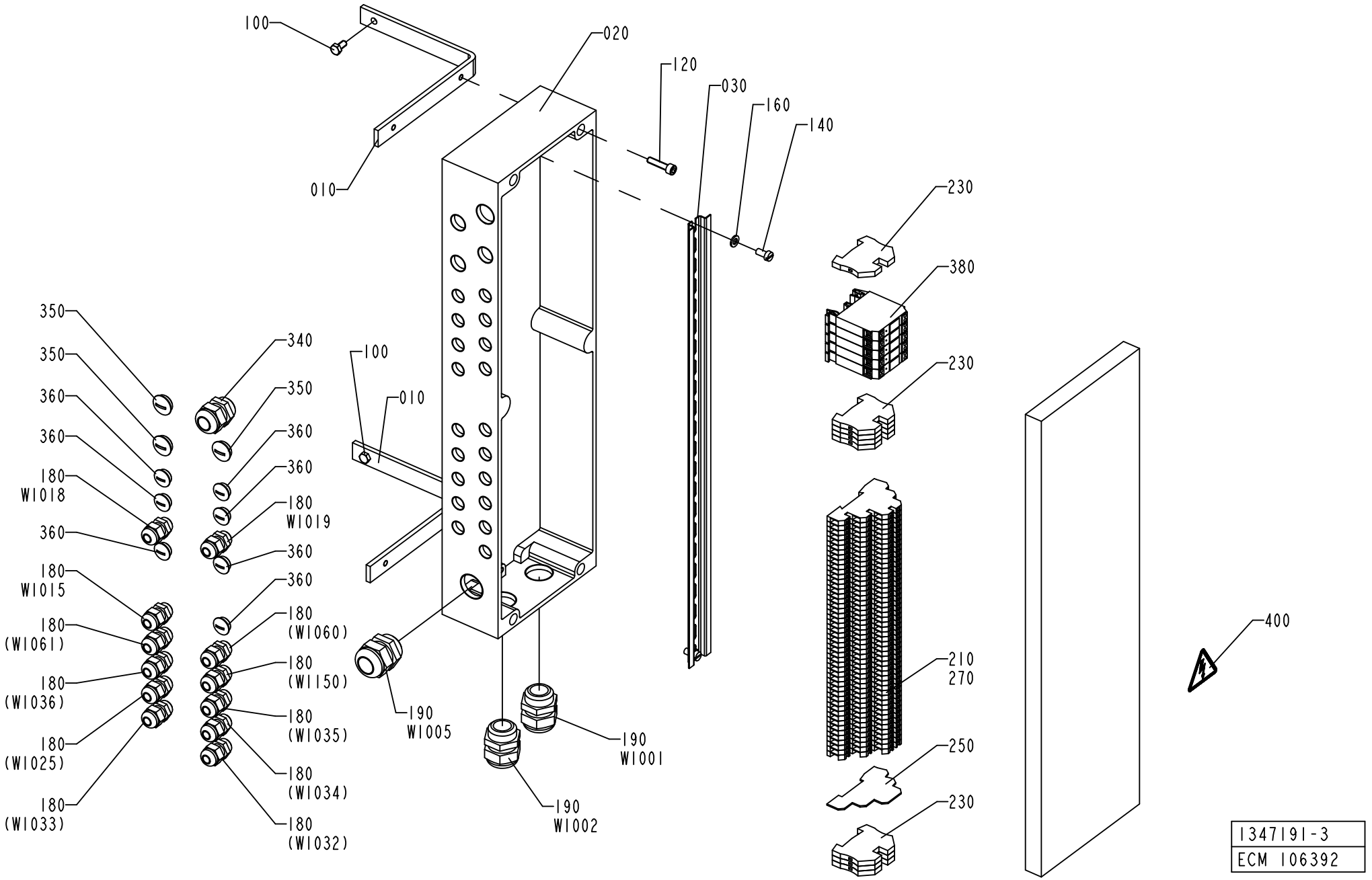
100
020
120
030
160
140
010
230
380
230
350
350
360
360
180
W1018
360
180
W1015
180
(W1061)
180
(W1036)
180
(W1025)
180
(W1033)
340
350
360
360
180
W1019
360
360
180
(W1060)
180
(W1150)
180
(W1035)
180
(W1034)
180
(W1032)
100
010
190
W1005
190
W1001
190
W1002
210
270
250
230
400
1347191-3
ECM 106392

ECM: 261766 - 20060404
Group number: 1347191-0200
Assembly Drawing: 1347191-3_1_AB

Pos	Part No	UN	Qty	Description	Page No
-					
010	1347877-0000		2	HOLDER	
020	2517364-0000		1	CONNECTION BOX	
030	2517365-0000		1	RAIL	
100	312105-0366		2	SCREW M6S ISO 4017 M6X12 A480	
120	312115-0372		4	SCREW ISO4762 M6X25 A4 80	
140	312125-0366		2	SCREW ISO 1207 M6X12 A4	
160	315105-0153		2	WASHER BRB 6,4X12 RFR	
180	352103-0101		12	CABLE GLAND, ST 9, PR15,2/PG9	
190	352103-0116		3	CABLE GLAND, ST 21, PR28,3/PG21	
210	353021-0302		49	TERMINALS,TRIPLE-LEVEL, DLD 2,5/35 PA	
230	353024-0205		8	EARTH TERMINAL, 1010.1	
250	353032-0302		1	END PLATE, AP DLD2,5 DB	
270	353034-0404		10	BRIDGE CONNECTOR Q10, 13131.0	
290	359011-0823		2	SET OF SIGNS 6-FW 101-150	
300	359011-0832		2	SET OF SIGNS 6-GW (+)	
310	359011-0833		2	SET OF SIGNS 6-GW (-)	
320	359011-0834		1	SET OF SIGNS 6-GW(EARTH)	
340	352103-0111		1	CABLE GLAND, ST 16, PR22,5/PG16	
350	90002-0009		3	BLANK-OFF PLUG, PR 18.6 SKINDICHT-BLK11	
360	90002-0013		7	BLANK-OFF PLUG, PR 15,2 SKINDICHT-BLK9	
380	90119-0063		5	OPTO-RELAY, DC/DC AMMS-10-1/30VDC	
400	359705-0015		1	WARNING SIGN ISO, RISK OF ELECTRIC SHOCK	
W1001	351150-0425	MM	6000	CABLE OLFLEX 25X0,75 MM2 LIGHT/GREY	
W1002	351150-0425	MM	6000	CABLE OLFLEX 25X0,75 MM2 LIGHT/GREY	
W1005	351150-0425	MM	6000	CABLE OLFLEX 25X0,75 MM2 LIGHT/GREY	
W1015	351150-0403	MM	3600	CABLE OLFLEX 3X0,75 MM2 LIGHT/GREY	
W1018	351150-0403	MM	3400	CABLE OLFLEX 3X0,75 MM2 LIGHT/GREY	
W1019	351150-0403	MM	3400	CABLE OLFLEX 3X0,75 MM2 LIGHT/GREY	

Pos	Part No	UN	Qty	Description	Page No

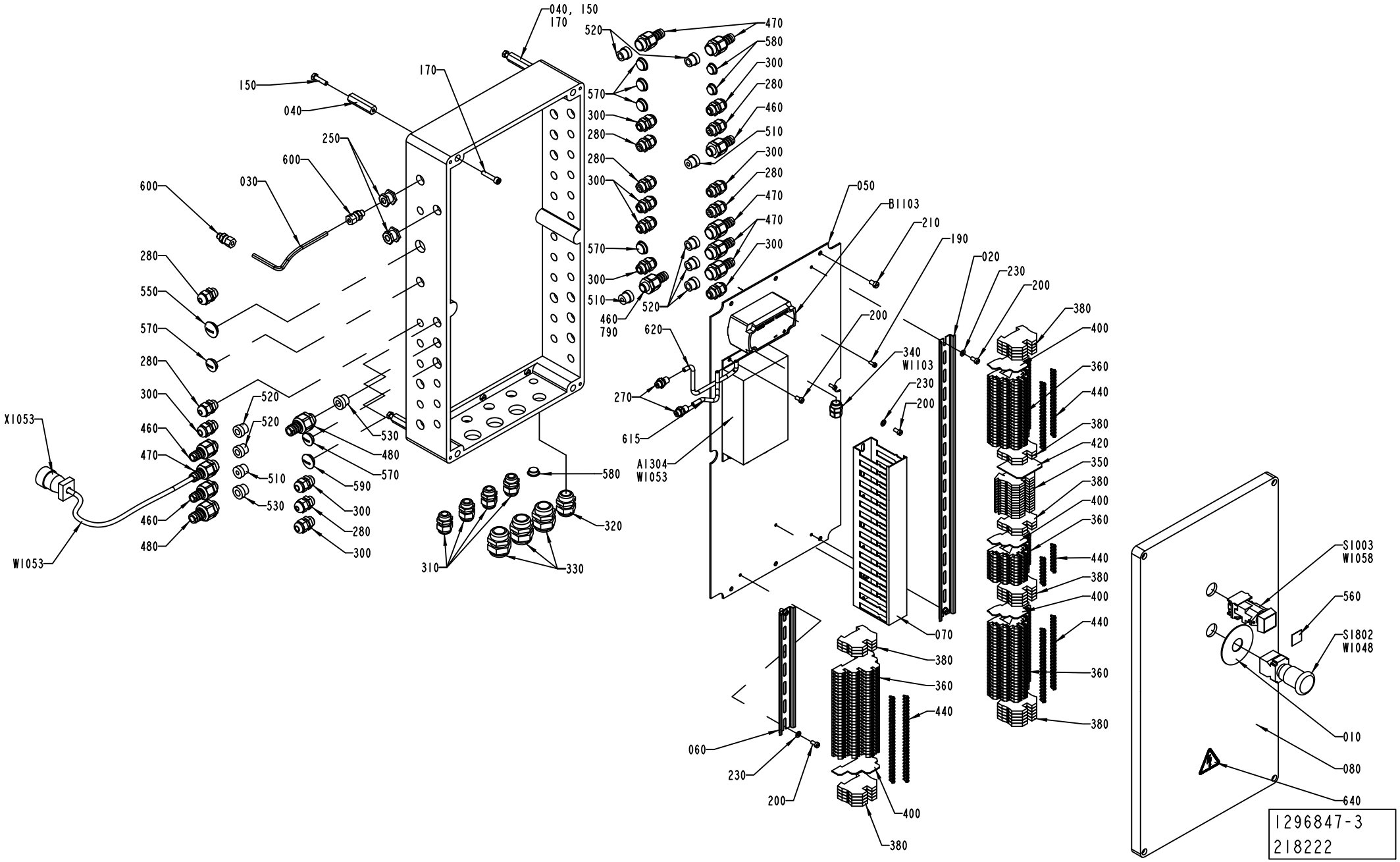
040, 150
170
520
470
580
300
280
460
510
300
280
470
470
300
570
300
280
280
300
570
300
510
460
790
520
150
040
170
250
600
030
600
280
550
570
280
300
460
470
460
480
520
520
510
530
530
480
570
590
300
280
300
X1053
W1053
310
330
320
580
050
B1103
210
190
020
230
200
380
400
360
440
380
420
350
380
400
360
440
380
400
440
360
380
200
620
270
615
A1304
W1053
340
W1103
230
200
070
380
360
440
060
230
200
400
380
S1003
W1058
560
S1802
W1048
010
080
640
1296847-3
218222

ECM: 273681 - 20061101
Group number: 1296847-0300
Assembly Drawing: 1296847-3_1_AF

This list covers pages from 1-236 to 1-251

Pos	Part No	UN	Qty	Description	Page No
FLOATER HI (See drawing on pages: 1-248, 1-250)					
200	312125-0325		6	SCREW ISO 1207 M5X10 A4	
310	352103-0106		5	CABLE GLAND, ST 11, PR18,6/PG11	
470	353243-0002		8	HOSE GLAND W/O INSERT PG11 EXTENDED	
490	353243-0005		1	HOSE GLAND W/O INSERT PG16 EXTENDED	
520	353249-0009		9	INSERT, SINGLE HOLE, EK 152/9	
540	353249-0026		1	INSERT, MULTI HOLE, E153M6X4	
570	90002-0009		3	BLANK-OFF PLUG, PR 18.6 SKINDICHT-BLK11	
FLOATER NOHI (See drawing on pages: 1-240, 1-242)					
200	312125-0325		6	SCREW ISO 1207 M5X10 A4	
310	352103-0106		5	CABLE GLAND, ST 11, PR18,6/PG11	
470	353243-0002		5	HOSE GLAND W/O INSERT PG11 EXTENDED	
520	353249-0009		6	INSERT, SINGLE HOLE, EK 152/9	
550	90002-0004		1	BLANK-OFF PLUG, PR 22,5 SKINDICHT-BLK16	
570	90002-0009		6	BLANK-OFF PLUG, PR 18.6 SKINDICHT-BLK11	
LEVELPROBE HI (See drawing on pages: 1-244, 1-246)					
200	312125-0325		10	SCREW ISO 1207 M5X10 A4	
310	352103-0106		4	CABLE GLAND, ST 11, PR18,6/PG11	
470	353243-0002		9	HOSE GLAND W/O INSERT PG11 EXTENDED	
490	353243-0005		1	HOSE GLAND W/O INSERT PG16 EXTENDED	
520	353249-0009		10	INSERT, SINGLE HOLE, EK 152/9	
540	353249-0026		1	INSERT, MULTI HOLE, E153M6X4	
570	90002-0009		3	BLANK-OFF PLUG, PR 18.6 SKINDICHT-BLK11	
A1304	90314-0044		1	SIGNAL CONVERTER	
W1053	90220-0092	MM	1100	PAIR TWISTED CABLE 3X2X0,25MM2	
X1053	90110-0223		1	CONTACT MALE, MS 3106 E 16S-1P	
LEVELPROBE NOHI (See drawing on pages: 1-236, 1-238)					
200	312125-0325		10	SCREW ISO 1207 M5X10 A4	
310	352103-0106		4	CABLE GLAND, ST 11, PR18,6/PG11	
470	353243-0002		6	HOSE GLAND W/O INSERT PG11 EXTENDED	
520	353249-0009		7	INSERT, SINGLE HOLE, EK 152/9	
550	90002-0004		1	BLANK-OFF PLUG, PR 22,5 SKINDICHT-BLK16	
570	90002-0009		6	BLANK-OFF PLUG, PR 18.6 SKINDICHT-BLK11	
A1304	90314-0044		1	SIGNAL CONVERTER	
W1053	90220-0092	MM	1100	PAIR TWISTED CABLE 3X2X0,25MM2	
X1053	90110-0223		1	CONTACT MALE, MS 3106 E 16S-1P	
Common Parts					
010	486826-0001		1	SIGN "EMERGENCY STOP"	
020	2517376-0000		1	RAIL	
030	1038358-0000		1	PIPE	
040	1129475-0000		3	HOLDER	
050	2794054-0000		1	MOUNTING PLATE	
060	2523660-0000		1	RAIL	
070	1129480-0000		1	CABLE DUCT	
080	2523661-0000		1	CONNECTION BOX	
150	312105-0372		3	SCREW M6S ISO 4017 M6X25 A480	
170	312115-0374		3	SCREW ISO4762 M6X30 A4 80	
190	312125-0289		2	SCREW ISO 1207 M4X10 A4	
210	312125-0364		6	SCREW ISO 1207 M6X10 A4	
230	315105-0146		6	WASHER BRB 5,3X10 RFR	
250	342767-0100		2	CONN. BULKHEAD G1/8	
270	342921-0113		2	STRAIGHT COUPLING,EXT.THREADED 6/4-G1/8"	
280	352103-0100		7	CABLE GLAND, STR 9, PR15,2/PG9	
300	352103-0101		10	CABLE GLAND, ST 9, PR15,2/PG9	
320	352103-0111		1	CABLE GLAND, ST 16, PR22,5/PG16	
330	352103-0116		3	CABLE GLAND, ST 21, PR28,3/PG21	
340	90459-7081		1	GLAND, EXTENDED, M16X1,5	
350	353021-0216		13	FEED THROUGH TERMINAL, 10200.8	
360	353021-0302		83	TERMINALS,TRIPLE-LEVEL, DLD 2,5/35 PA	
380	353024-0205		24	EARTH TERMINAL, 1010.1	
400	353032-0302		4	END PLATE, AP DLD2,5 DB	
420	353033-0106		1	PARTITITION, 10501.8	
440	353034-0404		18	BRIDGE CONNECTOR Q10, 13131.0	
460	353243-0001		4	HOSE GLAND W/O INSERT PG9 EXTENDED	
480	353243-0003		2	HOSE GLAND W/O INSERT PG11 EXTENDED	
510	353249-0008		3	INSERT, SINGLE HOLE, EK 152/7	
530	353249-0011		2	INSERT, SINGLE HOLE, EK 153/11	
560	359301-0110		1	BUTTON SIGN, SHORT STOP	
580	90002-0013		3	BLANK-OFF PLUG, PR 15,2 SKINDICHT-BLK9	
590	90002-0016		1	BLANK-OFF PLUG PR 20.4 SKINDICHT-BLK13,5	
600	90030-0184		2	CONN. STR. GE06LRED71	
615	90166-0176	MM	140	RUBBER HOSE	
620	90166-0176	MM	160	RUBBER HOSE	
640	359705-0015		1	WARNING SIGN ISO, RISK OF ELECTRIC SHOCK	
660	359011-0810		2	MARKING PLATES 5-FW 151-200	
670	359011-0823		2	SET OF SIGNS 6-FW 101-150	
680	359011-0824		2	SET OF SIGNS 6-FW 151-200	
690	359011-0832		4	SET OF SIGNS 6-GW (+)	
700	359011-0833		4	SET OF SIGNS 6-GW (-)	
710	359011-0834		1	SET OF SIGNS 6-GW(EARTH)	
760	351160-0102	MM	3500	WIRE AWM 1X0,75 MM2 DARKBLUE	
770	90152-0050	MM	8400	SPIRAL CONDUIT, 20X13, UL 1313	
780	90152-0059	MM	350	SPIRAL CONDUIT, 18X12, UL 1211	
790	90152-0058	MM	1200	SPIRAL CONDUIT, 15X9, UL 0909	

Machine Type | Group Description | Used-In | Group Number | Page No

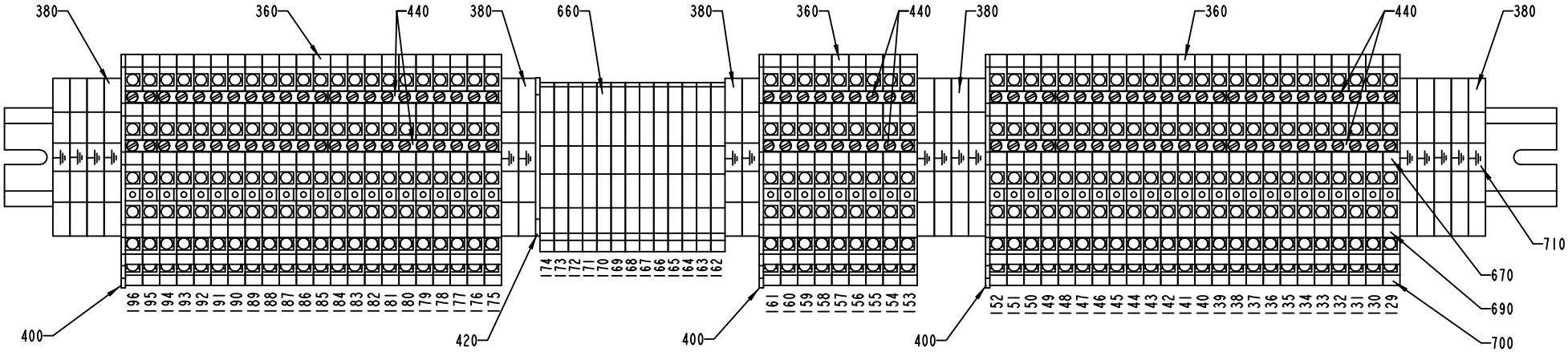

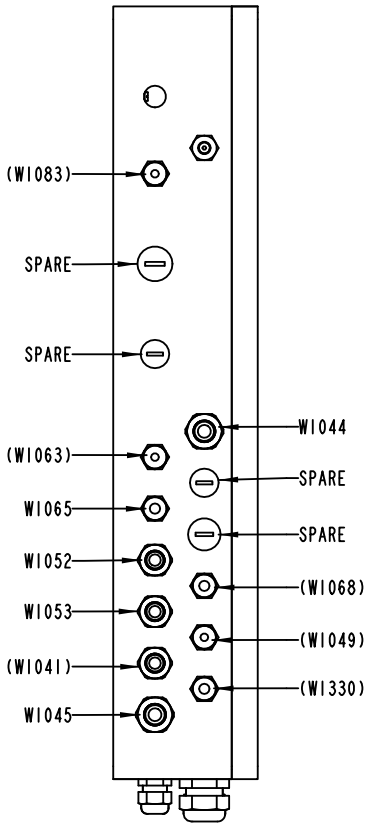

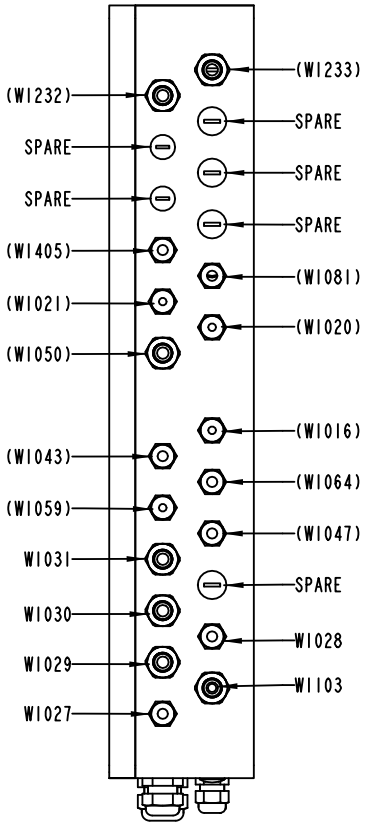

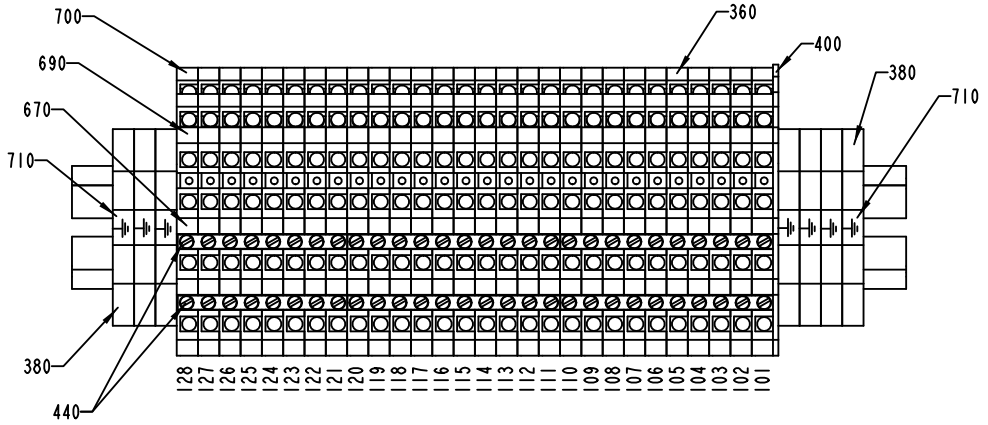

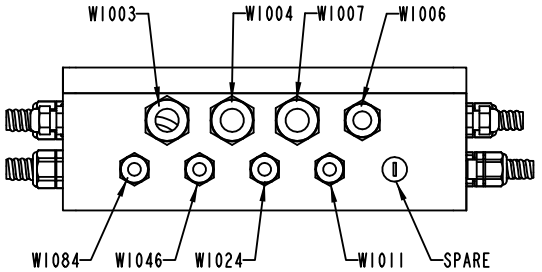

1296847-3
218222

Pos	Part No	UN	Qty	Description	Page No
Common Parts (Cont'd)					
B1103	90459-4810		1	PRESS TRANSD (DIFF) 0 - 2000PA, 2681-20C	
S1003	90064-0085		1	PUSH BUTTON, RED	
S1802	90064-0124		1	SWITCH, EM. STOP, ZB2-BS844+ZB2-BZ1045	
W1003	351150-0425	MM	6000	CABLE OLFLEX 25X0,75 MM2 LIGHT/GREY	
W1004	351150-0425	MM	5800	CABLE OLFLEX 25X0,75 MM2 LIGHT/GREY	
W1006	351150-0407	MM	5800	CABLE OLFLEX 12X0,75 MM2 LIGHT/GREY	
W1007	351150-0425	MM	5800	CABLE OLFLEX 25X0,75 MM2 LIGHT/GREY	
W1011	351150-0405	MM	3000	CABLE OLFLEX 5X0,75 MM2 LIGHT/GREY	
W1024	351150-0405	MM	3000	CABLE OLFLEX 5X0,75 MM2 LIGHT/GREY	
W1027	351150-0403	MM	2000	CABLE OLFLEX 3X0,75 MM2 LIGHT/GREY	
W1028	351150-0403	MM	3000	CABLE OLFLEX 3X0,75 MM2 LIGHT/GREY	
W1029	351150-0404	MM	3000	CABLE OLFLEX 4X0,75 MM2 LIGHT/GREY	
W1030	351150-0403	MM	3000	CABLE OLFLEX 3X0,75 MM2 LIGHT/GREY	
W1031	351150-0403	MM	3000	CABLE OLFLEX 3X0,75 MM2 LIGHT/GREY	
W1044	351150-0405	MM	2500	CABLE OLFLEX 5X0,75 MM2 LIGHT/GREY	
W1045	351150-0405	MM	2000	CABLE OLFLEX 5X0,75 MM2 LIGHT/GREY	
W1046	351150-0405	MM	3000	CABLE OLFLEX 5X0,75 MM2 LIGHT/GREY	
W1048	351150-0405	MM	1000	CABLE OLFLEX 5X0,75 MM2 LIGHT/GREY	
W1052	351150-0404	MM	3000	CABLE OLFLEX 4X0,75 MM2 LIGHT/GREY	
W1058	351150-0403	MM	1000	CABLE OLFLEX 3X0,75 MM2 LIGHT/GREY	
W1065	351150-0403	MM	2500	CABLE OLFLEX 3X0,75 MM2 LIGHT/GREY	
W1084	90220-0107	MM	6500	SCR. CABLE 5X0,75MM2	
W1103	90220-0183	M	11	SCR. CABLE 2X0,34MM2	
W1232	351150-0403	MM	3000	CABLE OLFLEX 3X0,75 MM2 LIGHT/GREY	
W1233	351150-0403	MM	3000	CABLE OLFLEX 3X0,75 MM2 LIGHT/GREY	

Pos	Part No	UN	Qty	Description	Page No

CONNECTION BOX

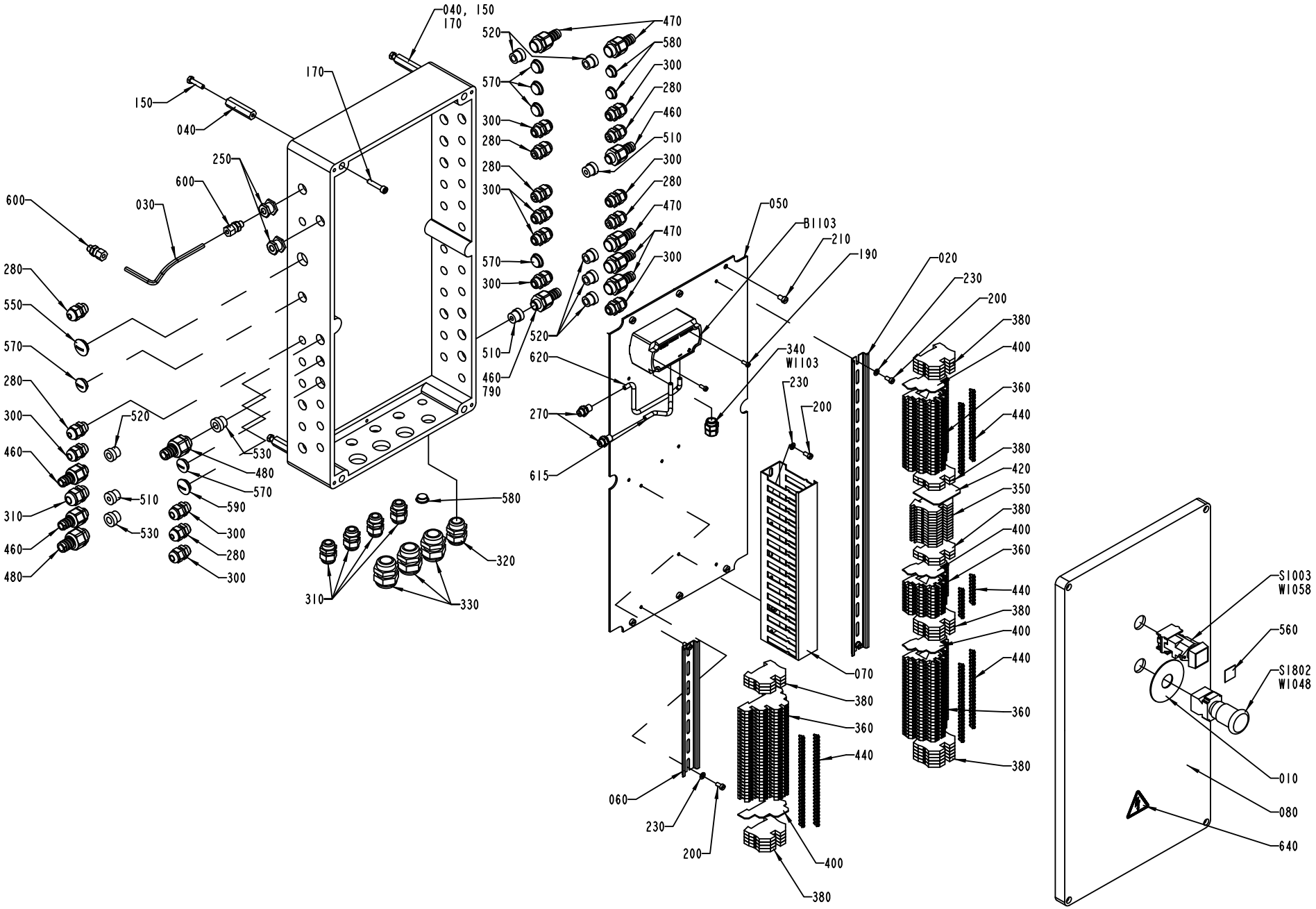

Pos	Part No	UN	Qty	Description	Page No

SEE PREVIOUS LISTS PAGES: 1-237, 1-239.

Pos	Part No	UN	Qty	Description	Page No

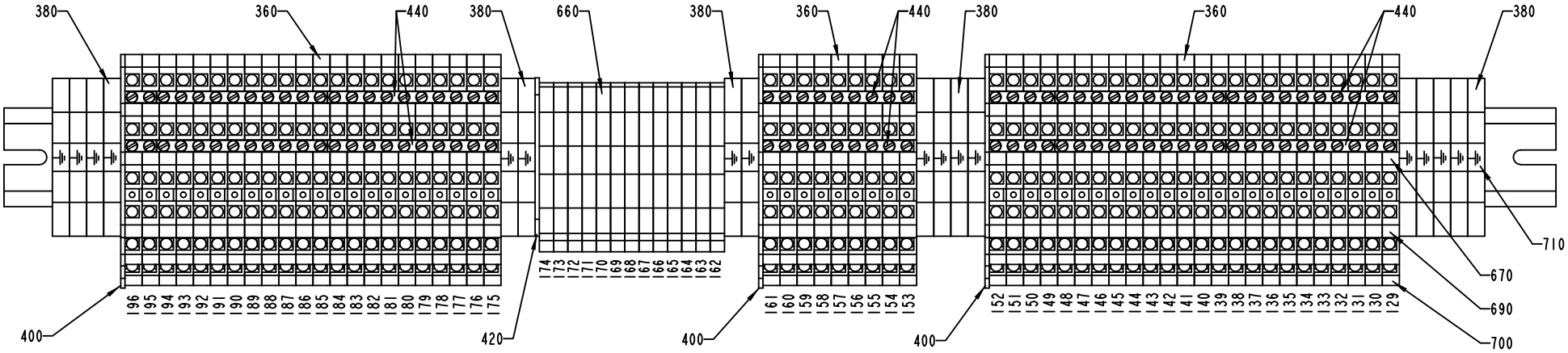

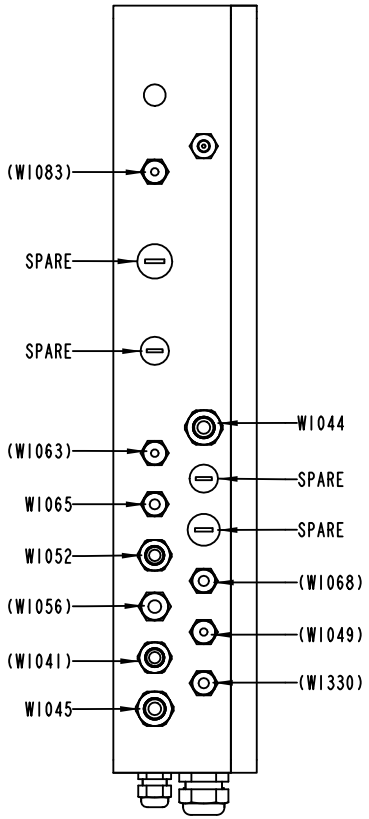

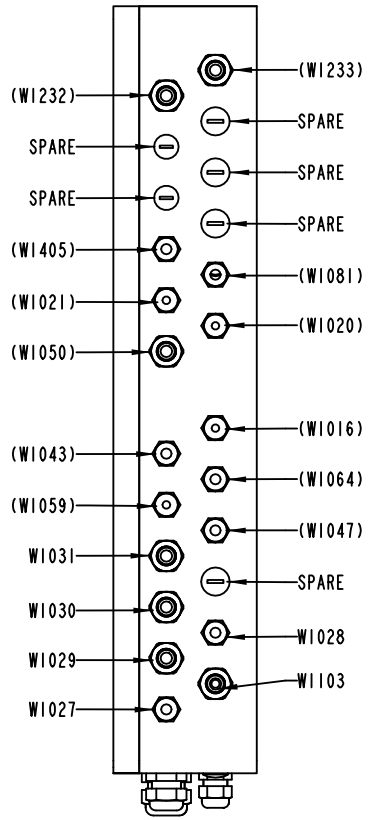

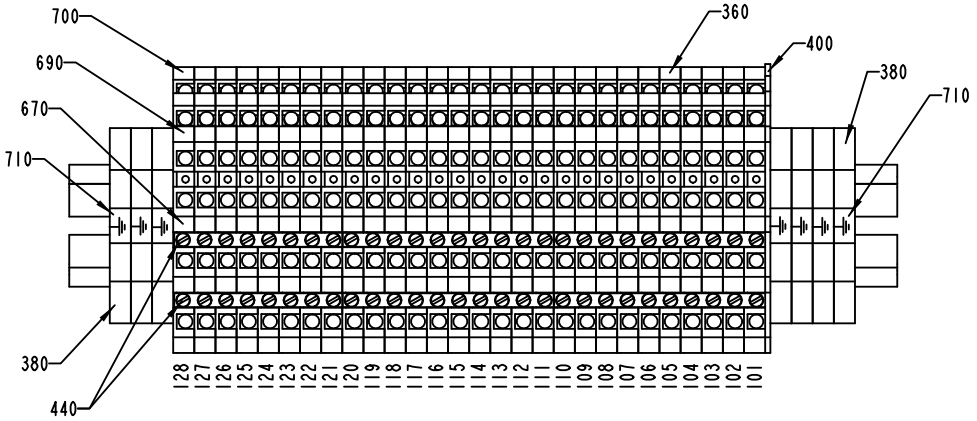

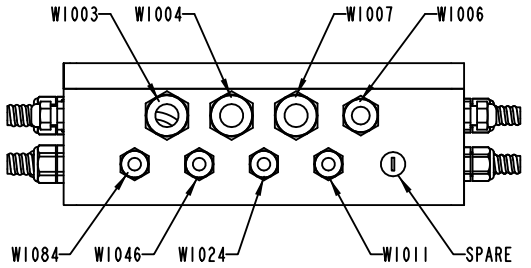

1296847-4
218222

Pos	Part No	UN	Qty	Description	Page No
SEE PREVIOUS LISTS PAGES: 1-237, 1-239.					

Pos	Part No	UN	Qty	Description	Page No

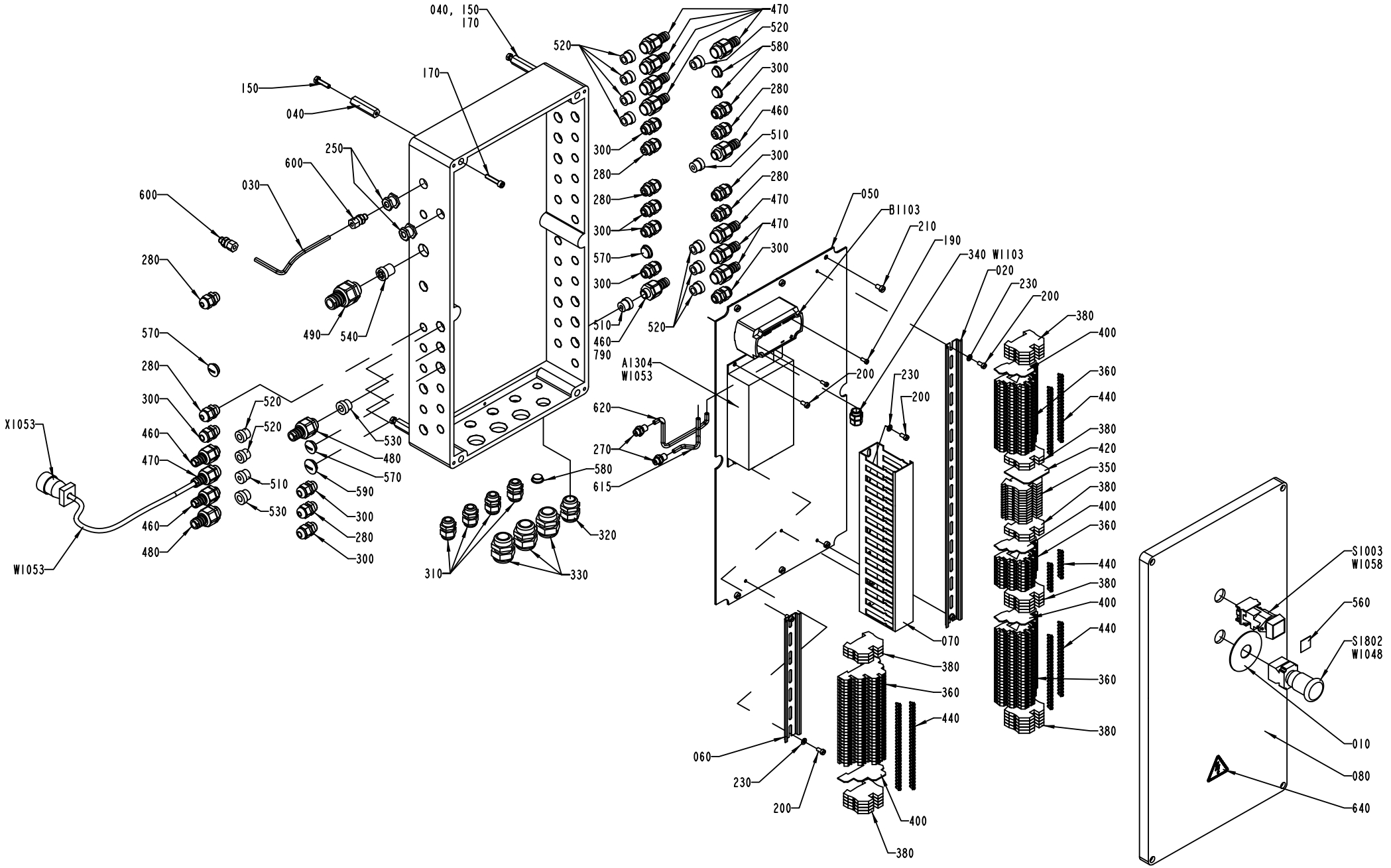
040, 150
170
520
470
520
580
300
280
460
510
300
280
470
470
300
150
040
170
250
600
030
600
280
570
280
300
460
470
460
480
X1053
W1053
490
540
300
280
280
300
570
300
510
460
790
520
520
530
480
570
590
300
280
300
510
530
310
320
330
620
270
580
615
A1304
W1053
050
B1103
210
190
340 W1103
020
230
200
380
400
360
440
380
420
350
380
400
360
440
380
400
440
360
380
200
230
200
070
380
360
440
060
230
200
400
380
S1003
W1058
560
S1802
W1048
010
080
640

Pos	Part No	UN	Qty	Description	Page No

SEE PREVIOUS LISTS PAGES: 1-237, 1-239.

Pos	Part No	UN	Qty	Description	Page No

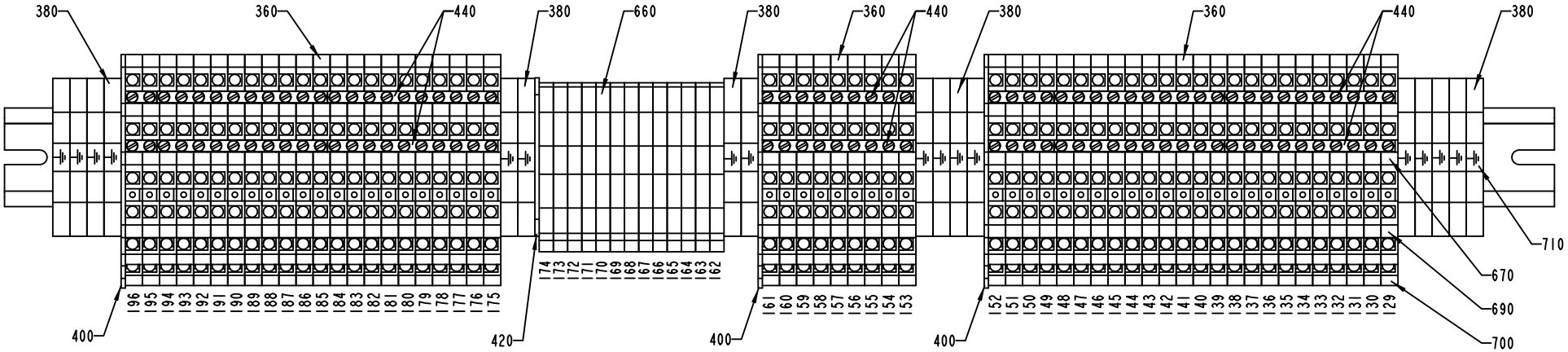

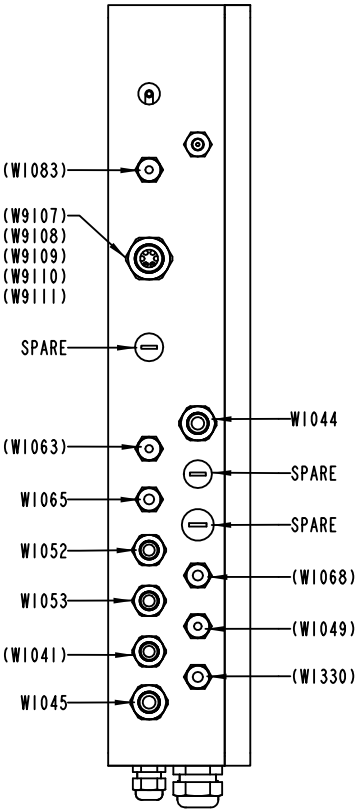

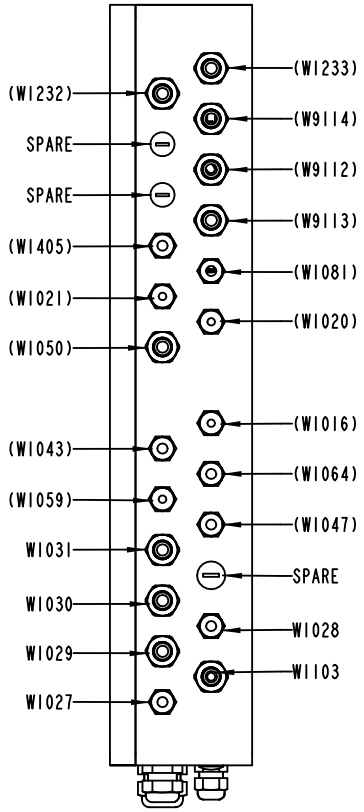

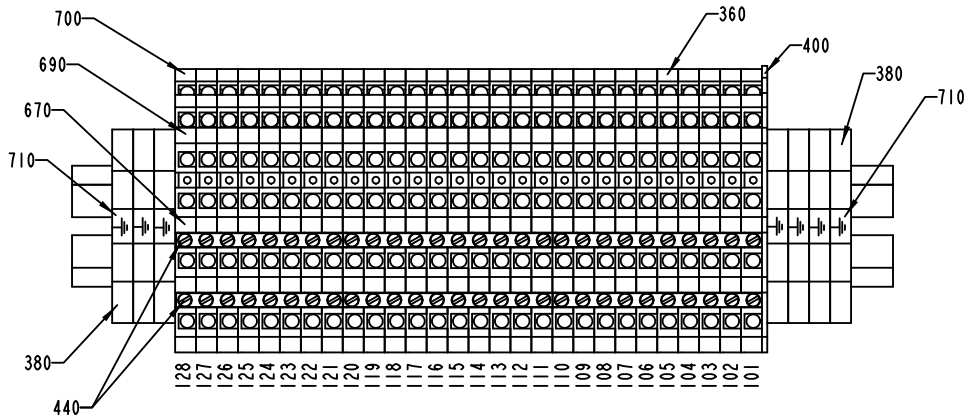

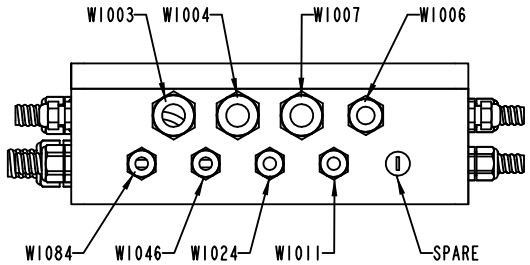

1296847-5
218222

Pos	Part No	UN	Qty	Description	Page No
SEE PREVIOUS LISTS PAGES: 1-237, 1-239.					

Pos	Part No	UN	Qty	Description	Page No

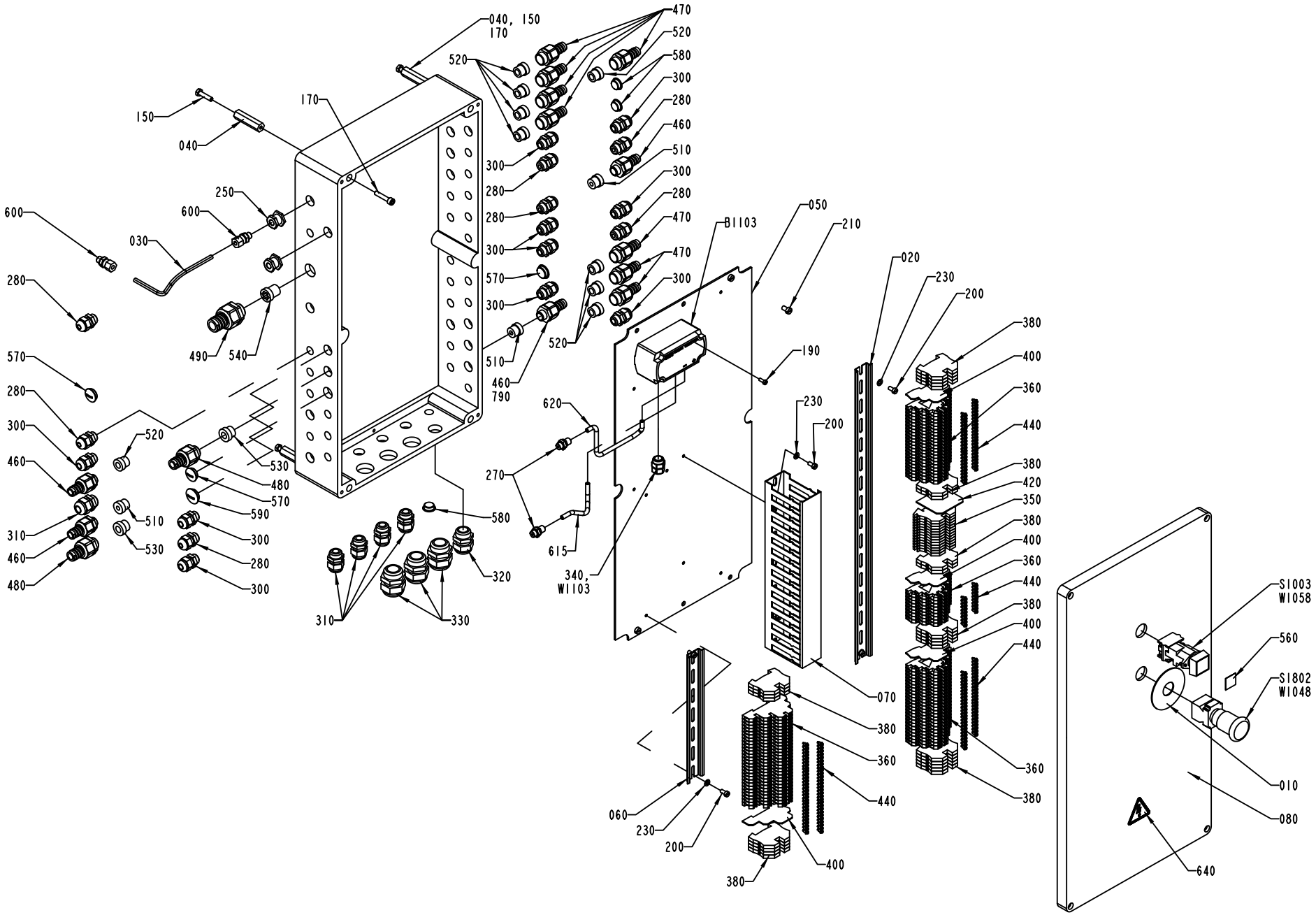
040, 150
170
520
150
040
170
300
280
280
300
570
300
510
460
790
520
470
520
580
300
280
460
510
300
280
470
470
300
600
280
570
280
300
460
310
460
480
250
600
030
490
540
520
530
480
570
590
510
530
300
280
300
580
320
310
330
620
270
615
340,
W1103
B1103
050
210
190
020
230
200
380
400
360
440
380
420
350
380
400
360
440
380
400
440
360
380
070
380
360
440
060
230
200
380
400
S1003
W1058
560
S1802
W1048
010
080
640

Pos	Part No	UN	Qty	Description	Page No

SEE PREVIOUS LISTS PAGES: 1-237, 1-239.

Pos	Part No	UN	Qty	Description	Page No

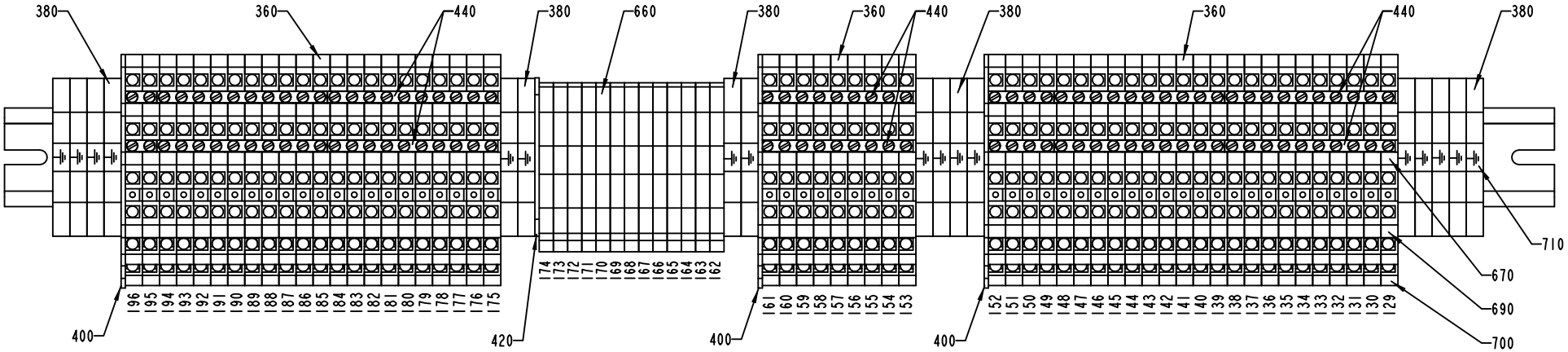

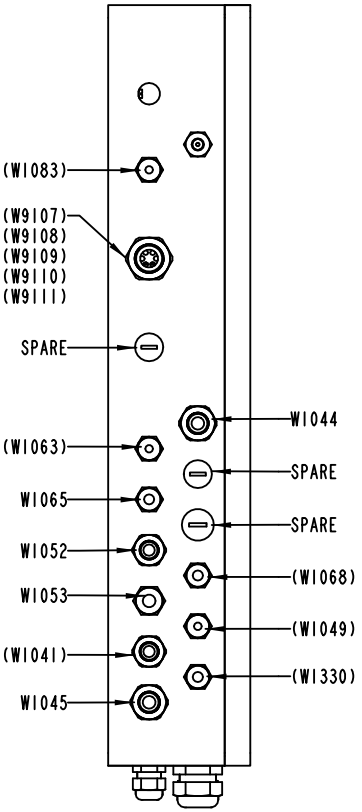

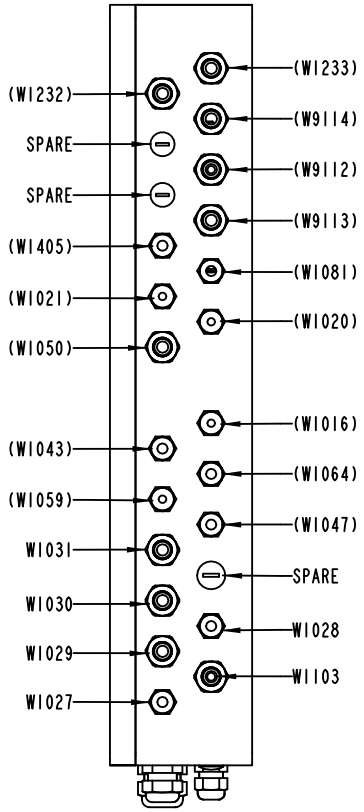

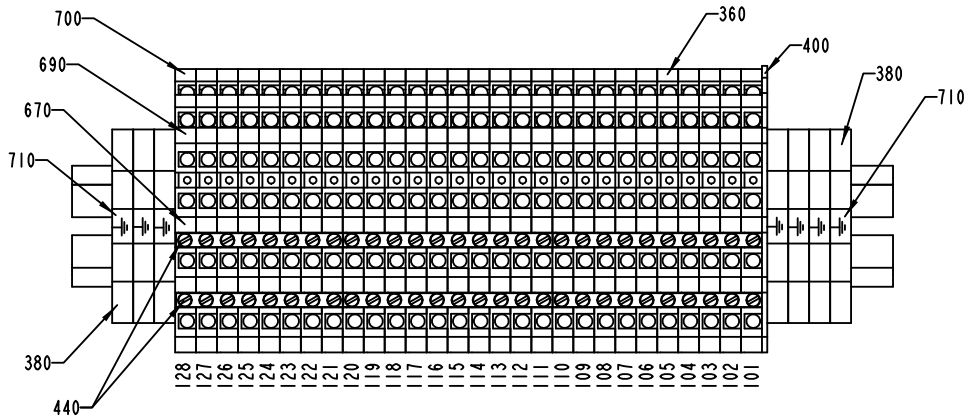

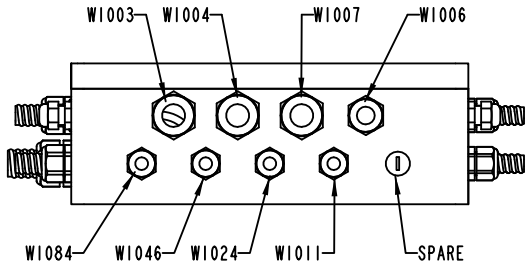

1296847-6
218222

ECM: 273681 - 20061101
Group number: 1296847-0300
Assembly Drawing: 1296847-6_2_AD

This list covers pages from 1-236 to 1-251

Pos	Part No	UN	Qty	Description	Page No
SEE PREVIOUS LISTS PAGES: 1-237, 1-239.					

Pos	Part No	UN	Qty	Description	Page No

Tetra Pak

SPC
Spare Parts Catalogue

MACHINE BODY

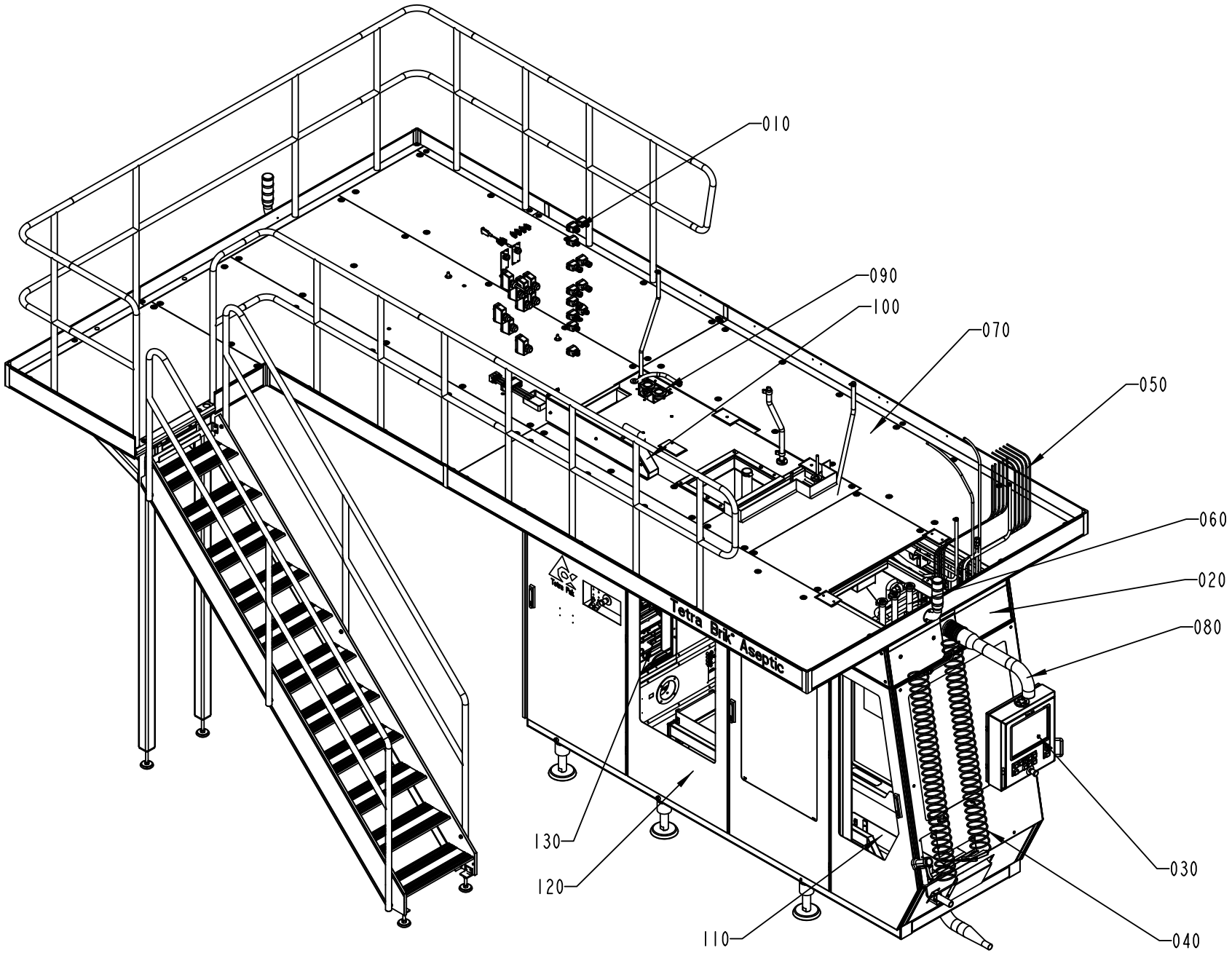

648522-6
265826

ECM: 306259 - 20070401
Group number: 648522-0600
Assembly Drawing: 648522-6_1_AG

Pos	Part No	UN	Qty	Description	Page No
-					
010	577117-0400		1	ELECTRICAL SYSTEM	**2-5**
020	577118-0600		1	MACHINE BODY	**2-19, 2-21, 2-23**
030	2518146-0100		1	TPOP PANEL 15"	**2-29**
040	577119-0400		1	PNEUMATIC SYSTEM	**2-35, 2-37**
050	577121-0400		1	PIPE WORK	**2-45**
060	577122-0300		1	EXTERNAL CLEANING SYSTEM	**2-53**
070	1524871-0100		1	PLATFORM	**2-61, 2-63**
080	1095863-0200		1	PIVOT ARM	**2-79**
090	1317102-0100		1	HYDROGEN PEROXIDE	**2-83**
100	2558850-0100		1	CABLE DUCT	**2-101**
110	577114-0300		1	WASTE CONVEYOR	**2-103**
120	577120-0400		1	DOORS AND COVERS	**2-105**
130	2598203-0200		1	PUMP UNIT	**2-123**

Pos	Part No	UN	Qty	Description	Page No

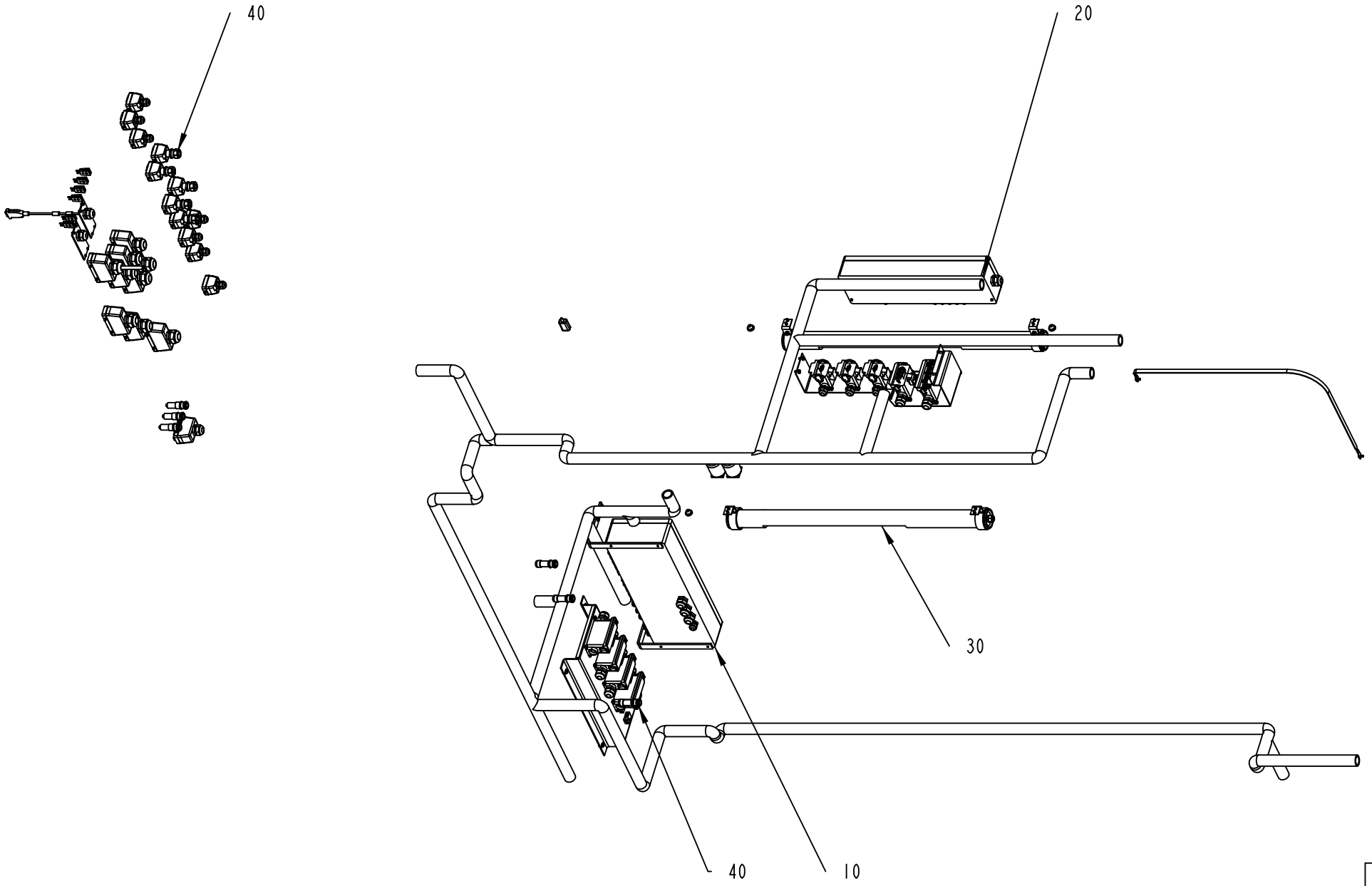

577117-5
ECM 144463

ECM: 147449 - 20031204
Group number: 577117-0400
Assembly Drawing: 577117-5_1_AA

Pos	Part No	UN	Qty	Description	Page No
-					
010	1348496-0100		1	CONNECTION BOX	**2-7**
020	1348497-0100		1	CONNECTION BOX	**2-9**
030	1095861-0100		1	LIGHT FIXTURE	**2-11**
040	1348090-0200		1	CABLE HARNESS	**2-13, 2-15, 2-17**

Pos	Part No	UN	Qty	Description	Page No

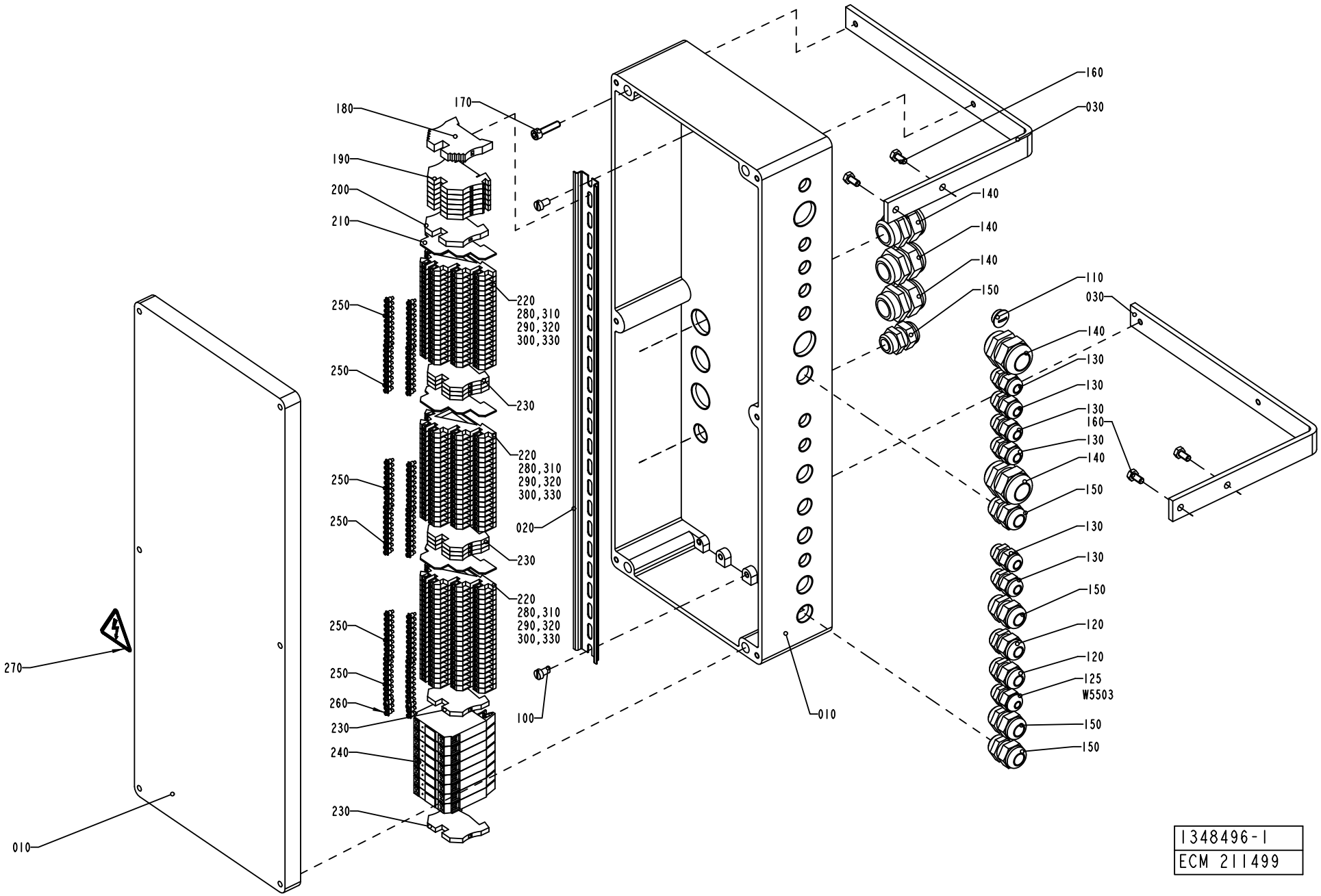
160
030
180
170
190
200
210
140
140
140
150
110
030
140
130
130
130
160
130
140
150
130
130
150
120
120
125
W5503
150
150
250
250
220
280,310
290,320
300,330
230
250
250
220
280,310
290,320
300,330
020
230
250
250
220
280,310
290,320
300,330
260
230
240
230
270
010
100
010
1348496-1
ECM 211499

ECM: 256702 - 20060313
Group number: 1348496-0100
Assembly Drawing: 1348496-1_1_AE

Pos	Part No	UN	Qty	Description	Page No
-					
010	1348500-0000		1	CONNECTION BOX	
020	1347878-0000		1	RAIL	
030	1348498-0000		2	HOLDER	
100	312121-0364		2	SCREW ISO 1207 M6X10 4.8-5.8 Z.PL.	
110	90002-0013		1	BLANK-OFF PLUG, PR 15,2 SKINDICHT-BLK9	
120	352103-0106		2	CABLE GLAND, ST 11, PR18,6/PG11	
125	352103-0100		1	CABLE GLAND, STR 9, PR15,2/PG9	
130	352103-0101		6	CABLE GLAND, ST 9, PR15,2/PG9	
140	352103-0116		5	CABLE GLAND, ST 21, PR28,3/PG21	
150	352103-0108		5	CABLE GLAND, ST 13,5 , PR20,4/PG13,5	
160	312105-0366		4	SCREW M6S ISO 4017 M6X12 A480	
170	312115-0372		4	SCREW ISO4762 M6X25 A4 80	
180	353031-0203		1	END SUPPORT, WEW 35/2	
190	353021-0213		6	FEED THROUGH TERMINAL, 10201.0	
200	353024-0205		1	EARTH TERMINAL, 1010.1	
210	353032-0302		3	END PLATE, AP DLD2,5 DB	
220	353021-0302		59	TERMINALS,TRIPLE-LEVEL, DLD 2,5/35 PA	
230	353024-0204		8	EARTH TERMINAL WPE 2,5	
240	90119-0063		8	OPTO-RELAY, DC/DC AMMS-10-1/30VDC	
250	353034-0404		12	BRIDGE CONNECTOR Q10, 13131.0	
260	353034-0402		2	BRIDGE CONNECTOR Q3, 13126.0	
270	359705-0015		1	WARNING SIGN ISO, RISK OF ELECTRIC SHOCK	
280	359011-0823		2	SET OF SIGNS 6-FW 101-150	
290	359011-0819		1	MARKING PLATES 5-GW (EARTH)	
300	359011-0834		1	SET OF SIGNS 6-GW(EARTH)	
310	359011-0832		3	SET OF SIGNS 6-GW (+)	
320	359011-0833		3	SET OF SIGNS 6-GW (-)	
330	359011-0824		2	SET OF SIGNS 6-FW 151-200	
340	359011-0821		2	SET OF SIGNS 6-FW 1-50	
W5503	351150-0403	M	3	CABLE OLFLEX 3X0,75 MM2 LIGHT/GREY	

Pos	Part No	UN	Qty	Description	Page No

Machine Type | Group Description | Used-In | Group Number | Page No

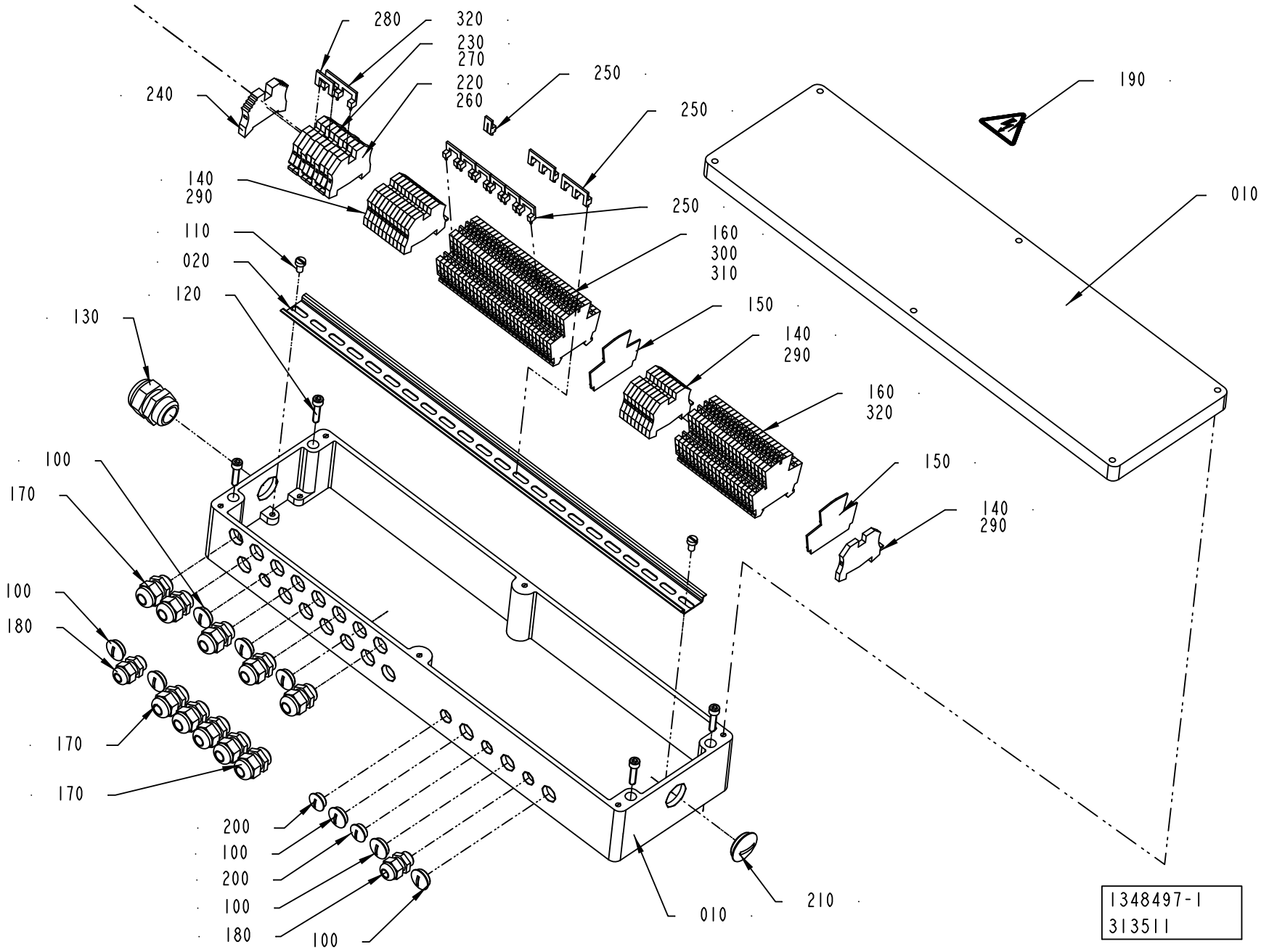
280
320
230
270
220
260
240
250
250
250
190
010
140
290
110
020
120
130
160
300
310
150
140
290
160
320
150
140
290
100
170
100
180
170
170
200
100
200
100
180
100
010
210
1348497-1
313511

ECM: 339957 - 20080402
Group number: 1348497-0100
Assembly Drawing: 1348497-1_1_AD

Pos	Part No	UN	Qty	Description	Page No
-					
010	1348499-0000		1	CONNECTION BOX	
020	1129504-0000		1	MOUNTING RAIL	
100	90002-0009		8	BLANK-OFF PLUG, PR 18.6 SKINDICHT-BLK11	
110	312125-0364		2	SCREW ISO 1207 M6X10 A4	
120	312115-0372		4	SCREW ISO4762 M6X25 A4 80	
130	352103-0116		1	CABLE GLAND, ST 21, PR28,3/PG21	
140	353024-0204		20	EARTH TERMINAL WPE 2,5	
150	353032-0010		2	END PLATE WAP	
160	353021-0120		52	FEED THROUGH TERMINAL, 10215.8	
170	352103-0106		10	CABLE GLAND, ST 11, PR18,6/PG11	
180	352103-0101		1	CABLE GLAND, ST 9, PR15,2/PG9	
190	90194-0016		1	WARNING SIGN, RISK OF ELECTRIC SHOCK	
200	90002-0013		3	BLANK-OFF PLUG, PR 15,2 SKINDICHT-BLK9	
210	90002-0012		1	BLANK-OFF PLUG, PR 28,3 SKINDICHT-BLK21	
220	353024-0205		3	EARTH TERMINAL, 1010.1	
230	353021-0213		6	FEED THROUGH TERMINAL, 10201.0	
240	353031-0203		1	END SUPPORT, WEW 35/2	
250	353034-0030		10	BRIDGE CONNECTOR WQV 2,5/10, 10544.6	
260	359011-0821		2	SET OF SIGNS 6-FW 1-50	
270	359011-0834		1	SET OF SIGNS 6-GW(EARTH)	
280	353034-0039		1	BRIDGE CONNECTOR WQV 4/4, 10546.6	
290	359011-0819		1	MARKING PLATES 5-GW (EARTH)	
300	359011-0809		2	MARKING PLATES 5-FW 101-150	
310	359011-0810		2	MARKING PLATES 5-FW 151-200	
320	353034-0031		1	BRIDGE CONNECTOR, WQV 4/10, 10520.6	
330	359011-0821		2	SET OF SIGNS 6-FW 1-50	

Pos	Part No	UN	Qty	Description	Page No

Machine Type	Group Description	Used-In	Group Number	Page No

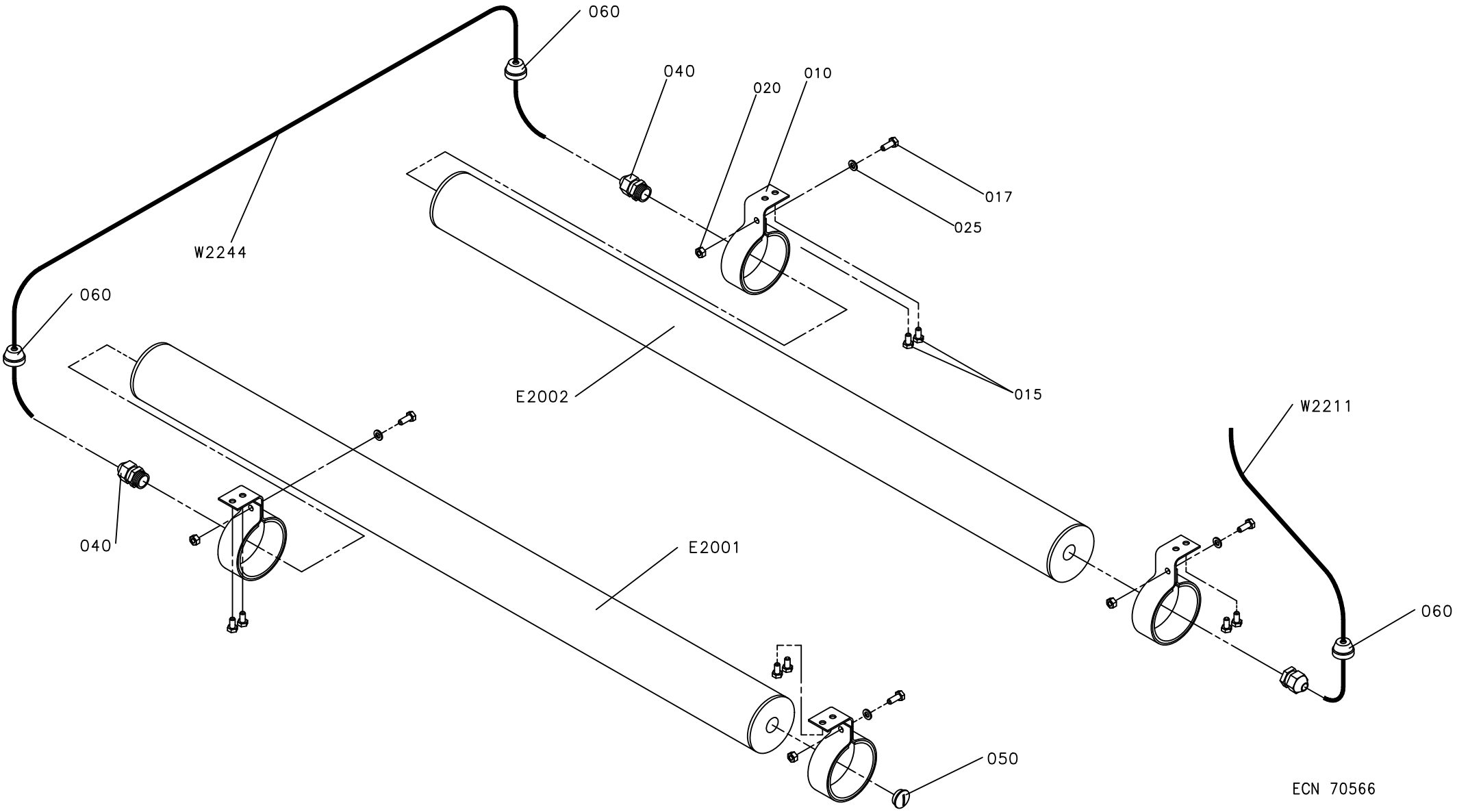
060
040
020
010
017
025
W2244
060
E2002
015
W2211
040
E2001
060
050
ECN 70566

ECM: 223712 - 20060313
Group number: 1095861-0100
Assembly Drawing: 1095861-1_1_AB

Pos	Part No	UN	Qty	Description	Page No
-					
010	1140129-0000		4	HOLDER	
015	312105-0366		8	SCREW M6S ISO 4017 M6X12 A480	
017	312105-0368		4	SCREW M6S ISO 4017 M6X16 A480	
020	312605-0316		4	HEXAGON NUT, M6M M6 A280	
025	315105-0153		4	WASHER BRB 6,4X12 RFR	
040	352103-0106		3	CABLE GLAND, ST 11, PR18,6/PG11	
050	90002-0009		1	BLANK-OFF PLUG, PR 18.6 SKINDICHT-BLK11	
060	90015-0023		3	LEAD-IN, TET7-10, E-1458019	
E 2001	90457-0149		1	LIGHT FIXTURE, RL 70V-118D/230V 50 HZ	
	90297-0002		*1*	*FLUORESCENT TUBE, TLD 18/33*	
	90164-0303		*1*	*LIGHT FIXTURE, BRACKET 70MM*	
	90164-0302		*1*	*LIGHT FIXTURE, BRACKET 70MM*	
E 2002	90457-0149		1	LIGHT FIXTURE, RL 70V-118D/230V 50 HZ	
	90297-0002		*1*	*FLUORESCENT TUBE, TLD 18/33*	
	90164-0303		*1*	*LIGHT FIXTURE, BRACKET 70MM*	
	90164-0302		*1*	*LIGHT FIXTURE, BRACKET 70MM*	
W 2211	351150-0412	MM	1800	CABLE OLFLEX 3X1,5 MM2 LIGHT/GREY	
W 2244	351150-0412	MM	2000	CABLE OLFLEX 3X1,5 MM2 LIGHT/GREY	

Pos	Part No	UN	Qty	Description	Page No

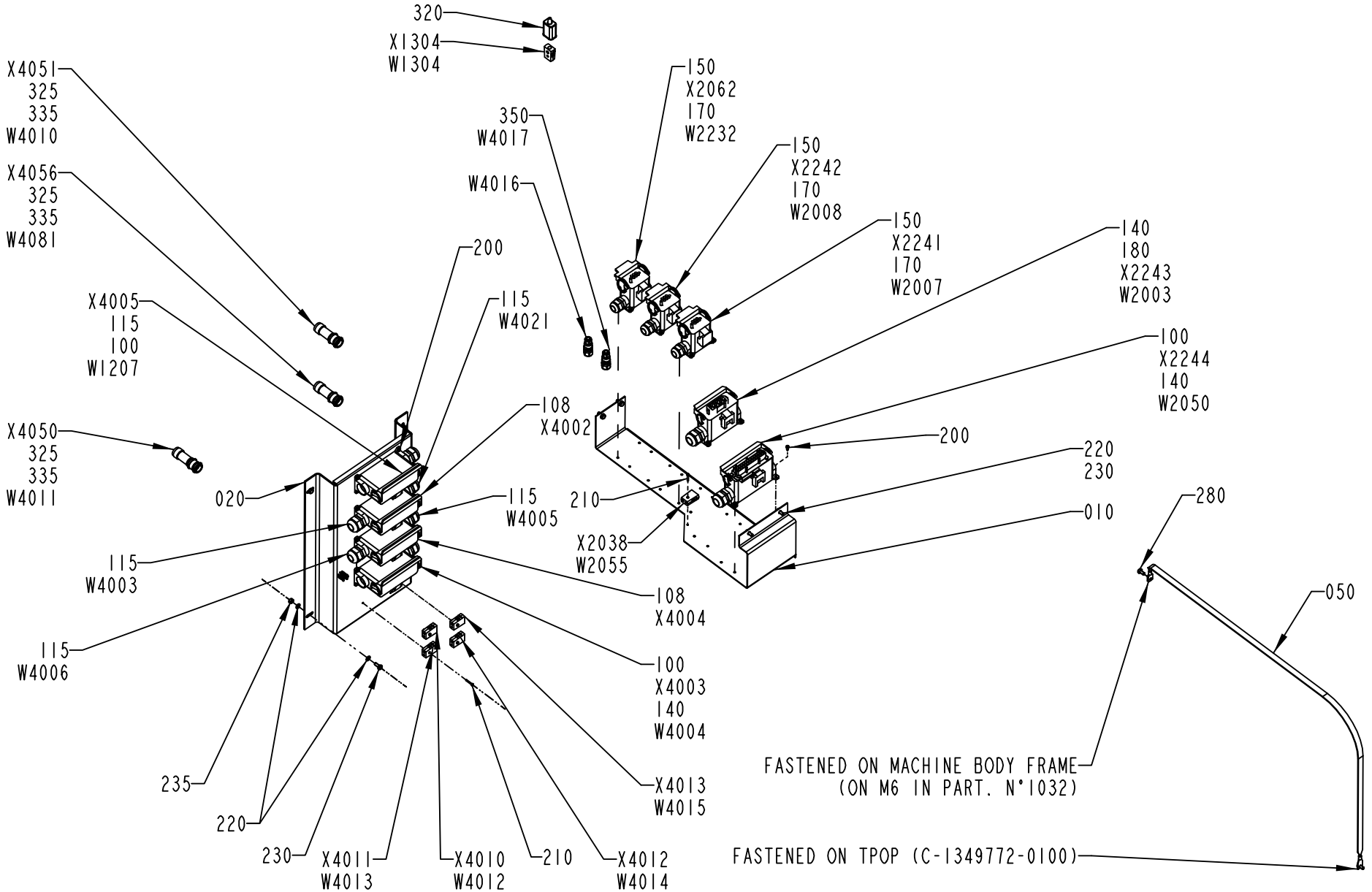
320
X1304
W1304
X4051
325
335
W4010
X4056
325
335
W4081
X4005
115
100
W1207
X4050
325
335
W4011
350
W4017
W4016
150
X2062
170
W2232
150
X2242
170
W2008
150
X2241
170
W2007
140
180
X2243
W2003
100
X2244
140
W2050
200
115
W4021
108
X4002
200
220
230
210
010
X2038
W2055
020
115
W4005
115
W4003
115
W4006
108
X4004
100
X4003
140
W4004
X4013
W4015
235
220
230
X4011
W4013
X4010
W4012
210
X4012
W4014
280
050
FASTENED ON MACHINE BODY FRAME
(ON M6 IN PART. N°1032)
FASTENED ON TPOP (C-1349772-0100)
1348090-3
310957

ECM: 334776 - 20080102
Group number: 1348090-0200
Assembly Drawing: 1348090-3_1_AD

This list covers pages from 2-12 to 2-17

Pos	Part No	UN	Qty	Description	Page No
-					
010	1129710-0000		1	CANTILEVER	
020	2598528-0000		1	PLATE	
030	90110-0152		9	CABLE HOOD 24-POL 70.352.2428.1	
040	352103-0121		8	CABLE GLAND, ST 29, PR37,0/PG29	
050	1129600-0000		1	BRAID	
060	90110-0157		12	CABLE HOOD 6-POL 70.352.0628.1	
070	352103-0108		7	CABLE GLAND, ST 13,5 , PR20,4/PG13,5	
075	353245-0004		3	GLAND, EXTENDED WITH INSERT, PG16/PR 22,	
080	1038876-0000		2	COVERING PLATE	
085	1129550-0000		2	GASKET	
095	353245-0005		2	GLAND, EXTENDED WITH INSERT, PG16/PR 22,	
100	90110-0225		3	CHASSIS HOUSING 310168-33	
105	90089-0029		5	ENLARGING SLEEVE	
108	90110-0513		2	CHASSIS HOUSING, CHP 24L S2	
115	352103-0115		7	CABLE GLAND, STR 21, PR28,3/PG21	
120	90099-0004		2	NUT	
140	352103-0116		4	CABLE GLAND, ST 21, PR28,3/PG21	
150	90110-0221		3	CHASSIS HOUSING 310162-33	
170	352103-0111		3	CABLE GLAND, ST 16, PR22,5/PG16	
180	90110-0224		1	CHASSIS HOUSING 310166-33	
200	312125-0287		44	SCREW ISO 1207 M4X8 A4	
210	312125-0230		5	SCREW ISO 1207 M3X20 A4	
220	315105-0153		12	WASHER BRB 6,4X12 RFR	
230	312105-0367		8	SCREW M6S ISO 4017 M6X14 A480	
235	312605-0316		4	HEXAGON NUT, M6M M6 A280	
240	90110-0160		1	CABLE HOOD 6-16-POL 70.352.1628.1	
280	312105-0366		2	SCREW M6S ISO 4017 M6X12 A480	
325	90012-0117		3	GLAND, EXTENDED WITH INSERT, PG11	
335	90110-0209		21	CONTACT PIN, RC20M13K	
337	352103-0120		1	CABLE GLAND, STR 29, PR37,0/PG29	
340	90110-0209		21	CONTACT PIN, RC20M13K	
350	90459-6568		2	CONNECTOR M12 5-POLES FEMALE, RKCN5/7	
360	90110-0145		3	COVER D-SUB 15, 8655MH1511LF	
W0001	351150-0426	M	6	CABLE OLFLEX 5X25 MM2 LIGHT/GREY	
W1207	351150-0407	M	8	CABLE OLFLEX 12X0,75 MM2 LIGHT/GREY	
W1304	90220-0034	M	5.5	THERMOCABLE TEX/SITW-20F-KX 2X0,5MM2	
W2002	351150-0418	M	5	CABLE OLFLEX 4X2,5 MM2 LIGHT/GREY	
W2003	351150-0166	M	4	CABLE OLFLEX 4X4 MM2 LIGHT/GREY	
W2004	90220-0107	M	5	SCR. CABLE 5X0,75MM2	
W2005	351150-0412	M	7	CABLE OLFLEX 3X1,5 MM2 LIGHT/GREY	
W2007	351150-0418	M	6	CABLE OLFLEX 4X2,5 MM2 LIGHT/GREY	
W2008	351150-0418	M	6	CABLE OLFLEX 4X2,5 MM2 LIGHT/GREY	
W2014	351150-0418	M	9	CABLE OLFLEX 4X2,5 MM2 LIGHT/GREY	
W2050	351150-0425	M	4.5	CABLE OLFLEX 25X0,75 MM2 LIGHT/GREY	
W2054	351150-0425	M	7	CABLE OLFLEX 25X0,75 MM2 LIGHT/GREY	
W2055	90220-0034	M	6	THERMOCABLE TEX/SITW-20F-KX 2X0,5MM2	
W2056	351150-0425	M	5	CABLE OLFLEX 25X0,75 MM2 LIGHT/GREY	
W2057	351150-0425	M	5.5	CABLE OLFLEX 25X0,75 MM2 LIGHT/GREY	
W2062	351150-0425	M	5.5	CABLE OLFLEX 25X0,75 MM2 LIGHT/GREY	
W2064	90220-0091	MM	6500	PAIR TWISTED CABLE 2X2X0,25MM2	
W2066	90458-2557	M	8	CABLE OLFLEX 25X1 MM2	
W2067	90458-2557	M	8	CABLE OLFLEX 25X1 MM2	
W2068	1363297-0000		1	CABLE LVDS 10M	
W2232	351150-0406	M	3	CABLE OLFLEX 7X0,75 MM2 LIGHT/GREY	
W2233	351150-0406	M	3	CABLE OLFLEX 7X0,75 MM2 LIGHT/GREY	
W4000	90220-0084	M	6	MOTOR CABLE 4X2,5+2(2X0.75)+SHIELD	
W4001	90220-0116	M	5	MOTOR CABLE 4X1,0+2(2X0,5)+SHIELD	
W4002	90220-0084	M	5	MOTOR CABLE 4X2,5+2(2X0.75)+SHIELD	
W4003	351150-0407	M	3	CABLE OLFLEX 12X0,75 MM2 LIGHT/GREY	
W4004	351150-0425	M	3	CABLE OLFLEX 25X0,75 MM2 LIGHT/GREY	
W4005	351150-0419	M	7	CABLE OLFLEX 5X2,5 MM2 LIGHT/GREY	
W4006	351150-0419	M	7	CABLE OLFLEX 5X2,5 MM2 LIGHT/GREY	
W4010	90220-0131	M	5.5	PAIR TWISTED CABLE 3X2X0,25MM2	
W4011	90220-0131	M	5.5	PAIR TWISTED CABLE 3X2X0,25MM2	
W4012	90220-0034	M	7	THERMOCABLE TEX/SITW-20F-KX 2X0,5MM2	
W4013	90220-0034	M	7	THERMOCABLE TEX/SITW-20F-KX 2X0,5MM2	
W4014	90220-0034	M	7	THERMOCABLE TEX/SITW-20F-KX 2X0,5MM2	
W4015	90220-0034	M	7	THERMOCABLE TEX/SITW-20F-KX 2X0,5MM2	
W4016	90220-0165	M	6	SCR. CABLE 5X0,34MM2	
W4017	90220-0165	M	6	SCR. CABLE 5X0,34MM2	
W4018	351150-0407	MM	4500	CABLE OLFLEX 12X0,75 MM2 LIGHT/GREY	
W4021	351150-0407	MM	3500	CABLE OLFLEX 12X0,75 MM2 LIGHT/GREY	
W4054	351150-0405	M	3	CABLE OLFLEX 5X0,75 MM2 LIGHT/GREY	
W4081	90220-0131	M	5.5	PAIR TWISTED CABLE 3X2X0,25MM2	
W4502	90220-0091	M	8	PAIR TWISTED CABLE 2X2X0,25MM2	
W6001	90220-0105	M	16	SCR. CABLE 4X2,5MM2	
X101	90110-0159		1	MALE INSERT 70.310.0640.0	
X102	90110-0159		1	MALE INSERT 70.310.0640.0	
X103	90110-0159		1	MALE INSERT 70.310.0640.0	
X107	90110-0159		1	MALE INSERT 70.310.0640.0	
X108	90110-0159		1	MALE INSERT 70.310.0640.0	
X111	90110-0159		1	MALE INSERT 70.310.0640.0	
X112	90110-0159		1	MALE INSERT 70.310.0640.0	

Machine Type | Group Description | Used-In | Group Number | Page No

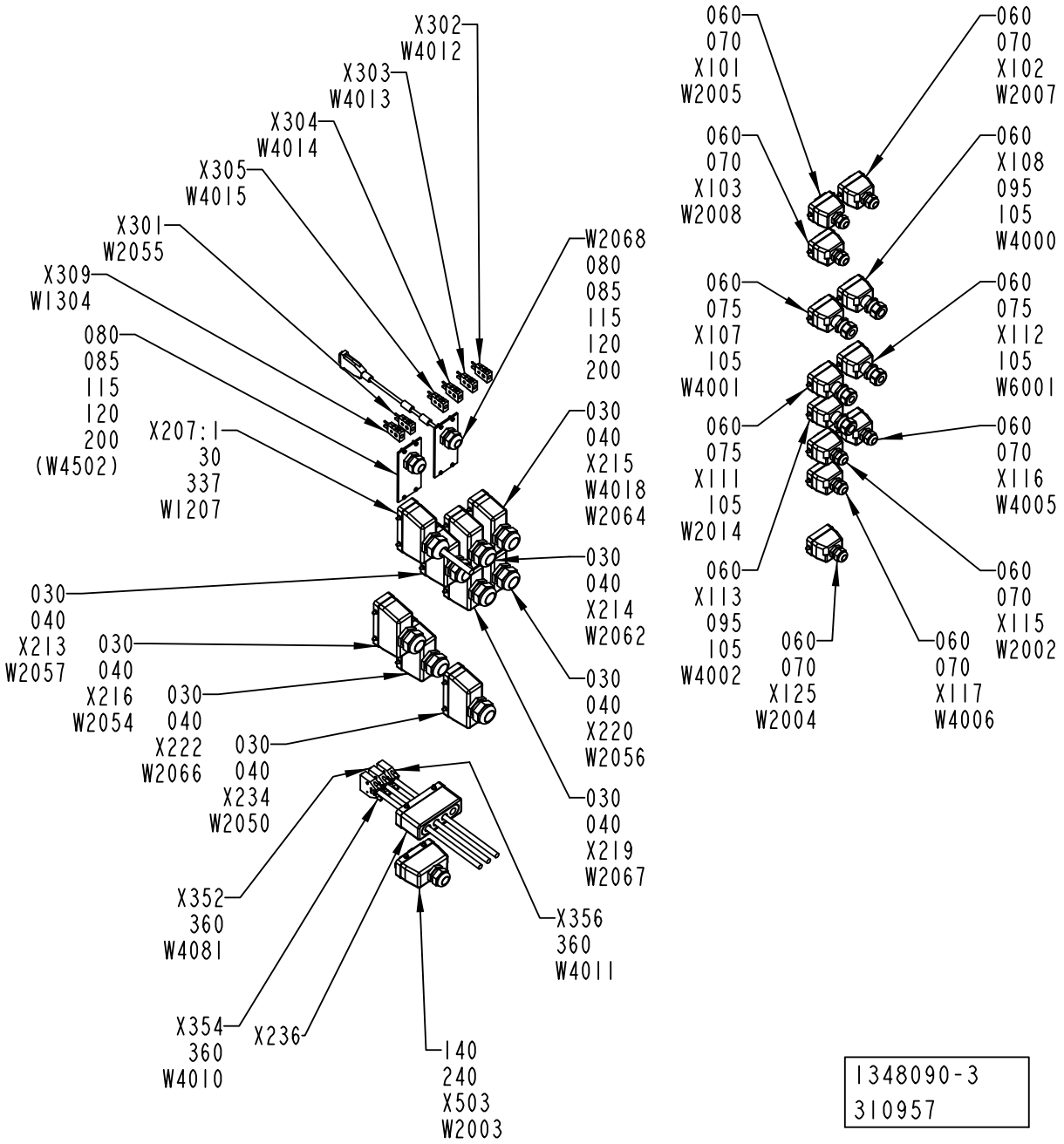
X302
W4012
X303
W4013
X304
W4014
X305
W4015
X301
W2055
X309
W1304
080
085
115
120
200
(W4502)
X207:1
30
337
W1207
W2068
080
085
115
120
200
030
040
X215
W4018
W2064
030
040
X214
W2062
030
040
X220
W2056
030
040
X219
W2067
030
040
X213
W2057
030
040
X216
W2054
030
040
X222
W2066
030
040
X234
W2050
X352
360
W4081
X354
360
W4010
X236
X356
360
W4011
140
240
X503
W2003
060
070
X101
W2005
060
070
X102
W2007
060
070
X103
W2008
060
X108
095
105
W4000
060
075
X107
105
W4001
060
075
X112
105
W6001
060
075
X111
105
W2014
060
070
X116
W4005
060
X113
095
105
W4002
060
070
X115
W2002
060
070
X125
W2004
060
070
X117
W4006
1348090-3
310957

Pos	Part No	UN	Qty	Description	Page No
- (Cont'd)					
X113	90110-0159		1	MALE INSERT 70.310.0640.0	
X115	90110-0159		1	MALE INSERT 70.310.0640.0	
X116	90110-0159		1	MALE INSERT 70.310.0640.0	
X117	90110-0159		1	MALE INSERT 70.310.0640.0	
X125	90110-0159		1	MALE INSERT 70.310.0640.0	
X1304	90326-0020		1	PLUG, FEMALE YELLOW CR-AL	
X2038	90326-0020		1	PLUG, FEMALE YELLOW CR-AL	
X2062	90110-0163		1	FEMALE INSERT 70 300 0640 0	
X207:1	90110-0150		1	MALE INSERT 121110 0000	
X213	90110-0150		1	MALE INSERT 121110 0000	
X214	90110-0150		1	MALE INSERT 121110 0000	
X215	90110-0150		1	MALE INSERT 121110 0000	
X216	90110-0150		1	MALE INSERT 121110 0000	
X219	90110-0150		1	MALE INSERT 121110 0000	
X220	90110-0150		1	MALE INSERT 121110 0000	
X222	90110-0150		1	MALE INSERT 121110 0000	
X2241	90110-0163		1	FEMALE INSERT 70 300 0640 0	
X2242	90110-0163		1	FEMALE INSERT 70 300 0640 0	
X2243	90110-0247		1	FEMALE INSERT 70.200.0653.0	
X2244	90110-0151		1	FEMALE INSERT 24-POL 121130 0000	
X234	90110-0150		1	MALE INSERT 121110 0000	
X236	90110-0381		1	COVER, 310601-33 CYR24.4	
X301	90326-0022		1	PLUG, MALE YELLOW CR-AL	
X302	90326-0022		1	PLUG, MALE YELLOW CR-AL	
X303	90326-0022		1	PLUG, MALE YELLOW CR-AL	
X304	90326-0022		1	PLUG, MALE YELLOW CR-AL	
X305	90326-0022		1	PLUG, MALE YELLOW CR-AL	
X309	90326-0022		1	PLUG, MALE YELLOW CR-AL	
X352	90110-0142		1	PLUG D-SUB 15 MALE, DE15P064TXLF	
X354	90110-0142		1	PLUG D-SUB 15 MALE, DE15P064TXLF	
X356	90110-0142		1	PLUG D-SUB 15 MALE, DE15P064TXLF	
X4002	90110-0151		1	FEMALE INSERT 24-POL 121130 0000	
X4003	90110-0151		1	FEMALE INSERT 24-POL 121130 0000	
X4004	90110-0151		1	FEMALE INSERT 24-POL 121130 0000	
X4005	90110-0151		1	FEMALE INSERT 24-POL 121130 0000	
X4010	90326-0020		1	PLUG, FEMALE YELLOW CR-AL	
X4011	90326-0020		1	PLUG, FEMALE YELLOW CR-AL	
X4012	90326-0020		1	PLUG, FEMALE YELLOW CR-AL	
X4013	90326-0020		1	PLUG, FEMALE YELLOW CR-AL	
X4050	90110-0208		1	CABLE CONTACT	
X4051	90110-0208		1	CABLE CONTACT	
X4054	90110-0236		1	CHASSIS CONTACT PX0767/S	
X4055	90110-0236		1	CHASSIS CONTACT PX0767/S	
X4056	90110-0208		1	CABLE CONTACT	
X503	90110-0156		1	MALE INSERT 70.210.0653.0	

Machine Type | Group Description | Used-In | Group Number | Page No

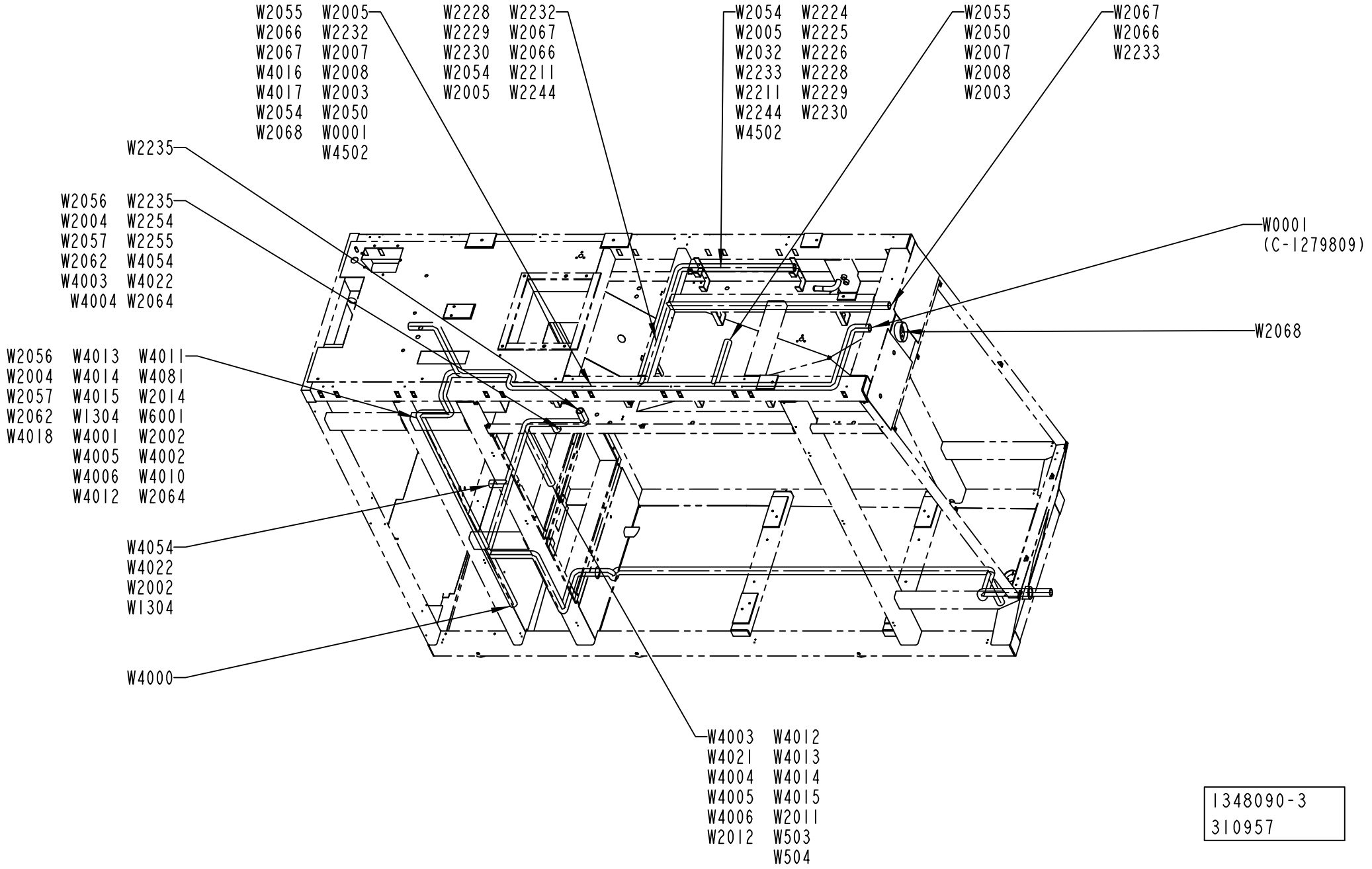

1348090-3
310957

ECM: 334776 - 20080102
Group number: 1348090-0200
Assembly Drawing: 1348090-3_3_AD

This list covers pages from 2-12 to 2-17

Pos	Part No	UN	Qty	Description	Page No
SEE PREVIOUS LISTS PAGES: 2-13, 2-15.					

Pos	Part No	UN	Qty	Description	Page No

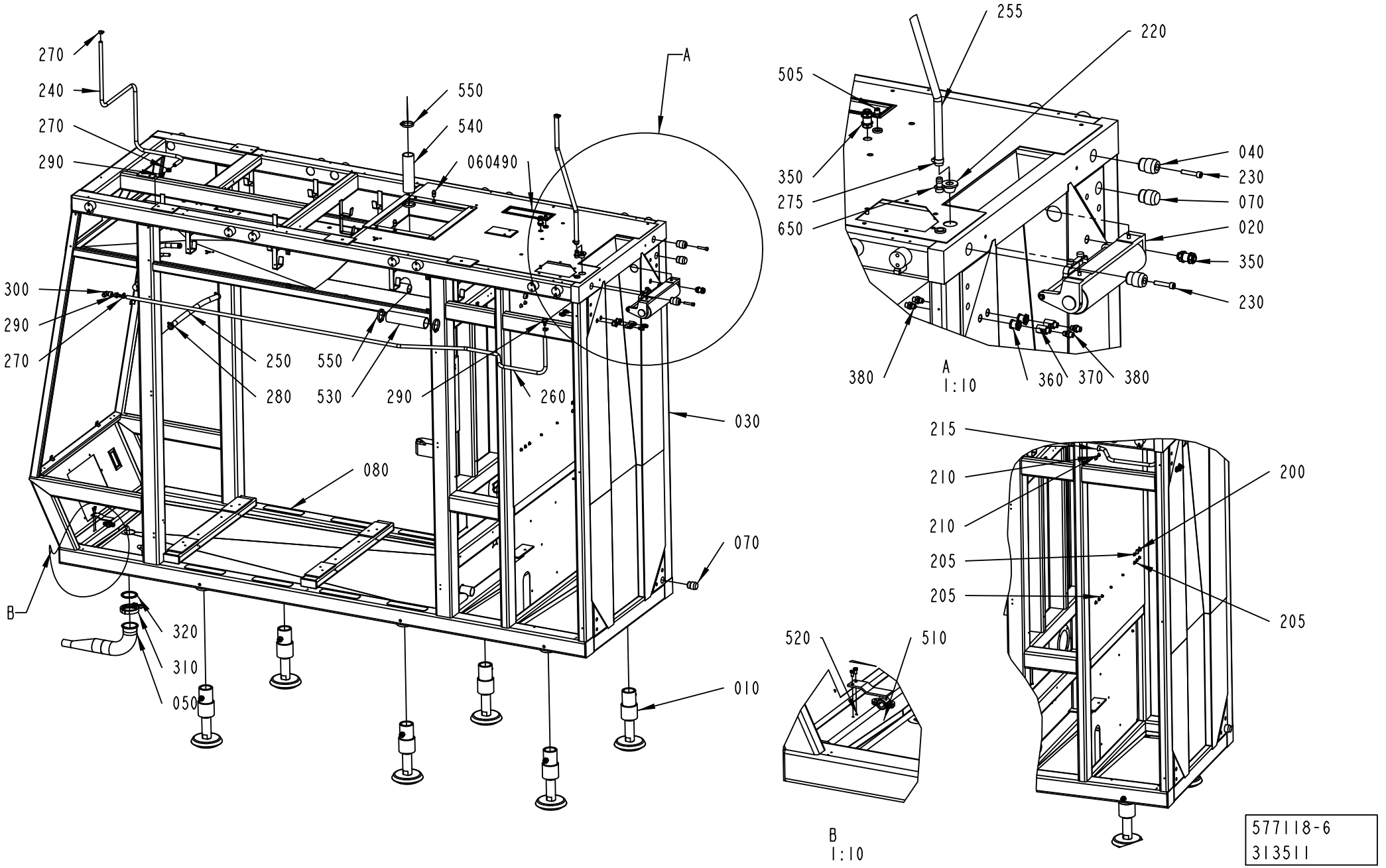
270
240
270
290
550
540
060490
A
300
290
270
250
280
550
530
290
260
030
080
070
010
B
320
310
050
255
220
505
350
275
650
040
230
070
020
350
230
380
360
370
380
A
1:10
215
210
210
205
205
200
205
520
510
B
1:10
577118-6
313511

ECM: 339956 - 20080402
Group number: 577118-0600
Assembly Drawing: 577118-6_1_AH

This list covers pages from 2-18 to 2-23

Pos	Part No	UN	Qty	Description	Page No
-					
010	1035076-0100		6	LEG	2-25
020	1095803-0100		1	BENDING ROLLER	2-27
030	2598530-0000		1	FRAME	
040	591341-0000		2	PIN	
050	1347638-0000		1	PIPE	
060	1037761-0000		2	PIN	
070	1037762-0000		2	PIN	
080	1103300-0000		8	NON-SKID	
090	2527401-0000		1	DISTRIBUTOR BLOCK	
100	1350902-0000		1	GLASS PANE	
200	90015-0021		3	LEAD-IN, TET10-14, E-1458023	
205	90015-0020		7	LEAD-IN, TET5-7, E-1458016	
210	90015-0023		2	LEAD-IN, TET7-10, E-1458019	
215	90015-0022		1	LEAD-IN, TET14-20, E-1458029	
220	90015-0024		1	LEAD-IN, TET20-26, E-1458035	
230	312115-0501		2	SCREW ISO4762 M10X50 A4 80	
240	90166-0121	MM	1600	HOSE	
250	90166-0151	MM	400	HOSE	
255	90166-0129	MM	2900	HOSE 16/22 REINFORCED PVC	
260	90166-0121	MM	2800	HOSE	
270	342991-0101		4	HOSE CLIP,WORM DRIVE TYPE (13)-16	
275	342991-0103		2	HOSE CLIP,WORM DRIVE TYPE (19)-23	
280	342991-0105		2	HOSE CLIP,WORM DRIVE TYPE (27)-30	
290	342901-0105		3	HOSE NIPPLE, EXT.THR. R1/2-12 MM	
300	90140-0012		1	ELBOW, 90 INT/EXT, 2020-1/2-1/2	
310	342840-0107		1	CLAMPING PIECE	
320	342850-0107		1	GASKET, FDA, 3-A, 3	
330	342768-0102		13	BULKHEAD CONNECTOR, 6 MM	
340	90330-0026		2	PLUG, EXT. G-THREAD, G1/4	
350	90458-2602		2	BULKHEAD CONNECTOR, 12 MM	
360	342767-0104		2	CONN. BULKHEAD G1/4	
370	90600-0775		8	BALL VALVE G1/4, 406F-1/4"	
380	342921-0122		16	STRAIGHT COUPLING,EXT.THREADED 8/6-G1/4"	
400	352113-0204		20	ANCHOR PLATES FOR STRIPS, TYPE TM3S25-M	
410	315237-0110		2	WASHER,PL.RND.AL.13,5/18,H=1,5	
420	90030-0184		4	CONN. STR. GE06LRED71	
430	342722-0210		1	STRAIGHT COUPLING, D=12 MM - G3/8"	
440	312605-0314		3	HEXAGON NUT, M6M M5 A280	
450	312125-0327		20	SCREW ISO 1207 M5X12 A4	
490	90143-0097	MM	1300	SELF GRIPPING GASKET, 1011-24	
500	311103-0401		4	PARALLEL PIN ISO 2338 8M6X20 A1	
505	342722-0206		1	STRAIGHT COUPLING D=8-G3/8"	
510	1498502-0000		1	BRACKET	
520	312105-0366		2	SCREW M6S ISO 4017 M6X12 A480	
530	90459-0250	MM	220	HOSE , SILICONE, 53,8/62 MM	
540	90459-0250	MM	250	HOSE , SILICONE, 53,8/62 MM	
550	342991-0110		4	HOSE CLIP,WORM DRIVE TYPE (54)-63	
560	342768-0103		6	BULKHEAD CONNECTOR, 8 MM	
570	342980-0314		1	BANJO-HOLLOW BOLT COUPL,EXT.THR.02-G1/4	
580	342981-0114		2	BANJO CONNEC,RING,FOR PLAST.TUBE 6-G1/4"	
600	90055-0217		3	ELBOW PIPE JOINT	
610	312105-0372		4	SCREW M6S ISO 4017 M6X25 A480	
620	315105-0156		4	WASHER BRB 6,7X14 RFR	
630	90459-0843		6	CONN. BANJO, 6-G1/8	
640	90153-0016		1	ADHESIVE,TUBE 100G RHODORSIL CAF 3	
650	90163-0039		1	HOSE NIPPLE EXT.THR. R1/2 2601-17 MM	
660	312309-0536		2	SCREW ISO4026 M12X30 A4	
670	1260753-0000		1	PIN	
680	342921-0114		1	STRAIGHT COUPLING,EXT.THREADED 6/4-G1/4"	
690	312105-0532		2	SCREW M6S ISO 4017 M12X20 A480	
700	312607-0322		2	HEXAGON NUT, EN 24032 M6M M12 A480	
710	315105-0146		2	WASHER BRB 5,3X10 RFR	
720	90181-0190		2	CABLE DUCT, WALL BRACKET, B4 MINI	
730	90181-0180		1	CABLE TRAY	
740	312105-0327		2	SCREW M6S ISO 4017 M5X12 A480	

Machine Type	Group Description	Used-In	Group Number	Page No

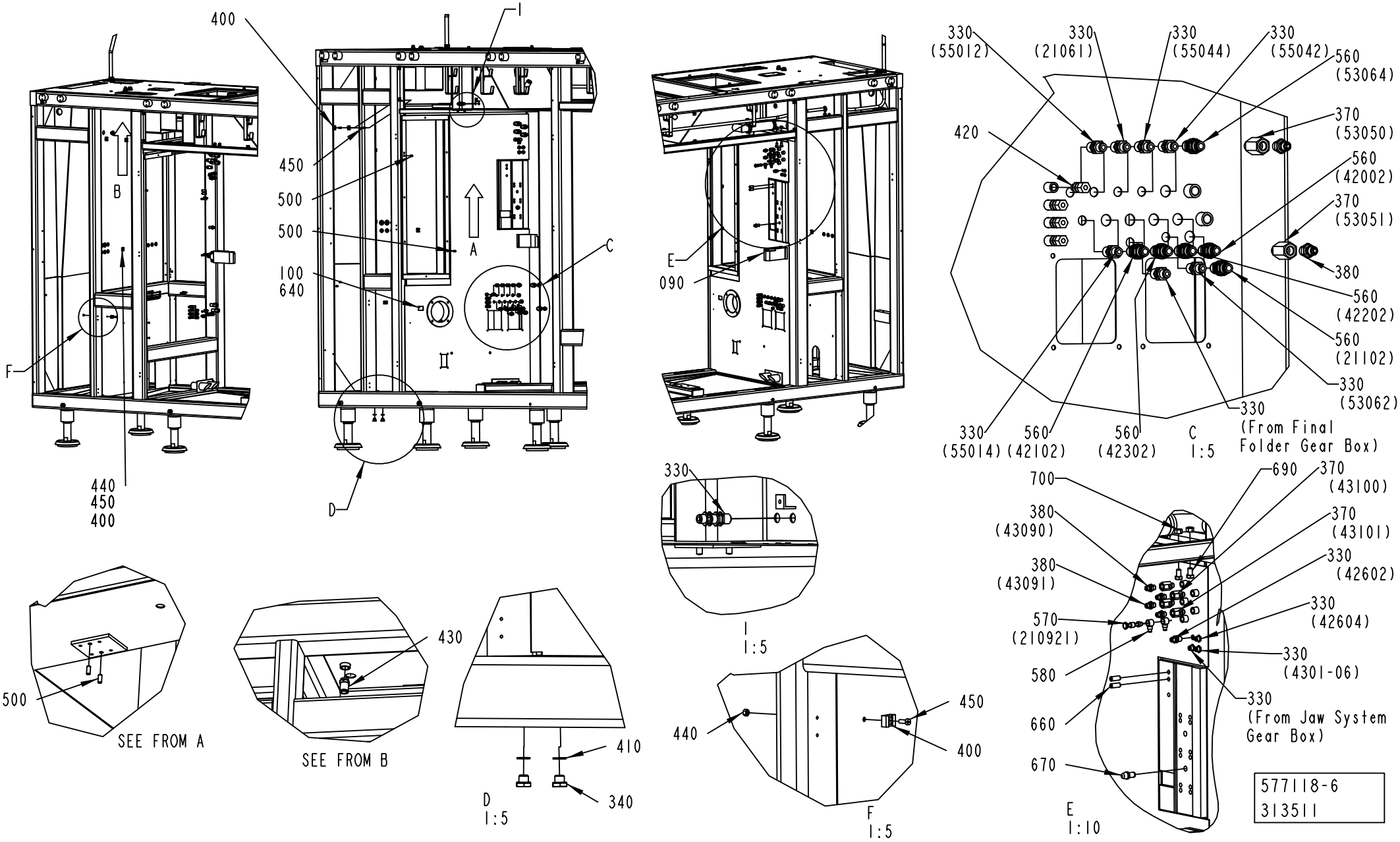
400
I
450
500
500
100
640
A
B
C
D
E
090
F
II
440
450
400
330
(55012)
330
(21061)
330
(55044)
330
(55042)
560
(53064)
420
370
(53050)
560
(42002)
370
(53051)
380
560
(42202)
560
(21102)
330
(53062)
330
(55014)
560
(42102)
560
(42302)
C
1:5
330
(From Final
Folder Gear Box)
330
I
1:5
700
690
370
(43100)
380
(43090)
370
(43101)
380
(43091)
330
(42602)
570
(210921)
330
(42604)
580
330
(4301-06)
660
330
(From Jaw System
Gear Box)
670
E
1:10
500
SEE FROM A
430
SEE FROM B
410
340
D
1:5
440
450
400
F
1:5
577118-6
313511

ECM: 339956 - 20080402
Group number: 577118-0600
Assembly Drawing: 577118-6_2_AH

This list covers pages from 2-18 to 2-23

Pos	Part No	UN	Qty	Description	Page No
-					
010	1035076-0100		6	LEG	**2-25**
020	1095803-0100		1	BENDING ROLLER	**2-27**
030	2598530-0000		1	FRAME	
040	591341-0000		2	PIN	
050	1347638-0000		1	PIPE	
060	1037761-0000		2	PIN	
070	1037762-0000		2	PIN	
080	1103300-0000		8	NON-SKID	
090	2527401-0000		1	DISTRIBUTOR BLOCK	
100	1350902-0000		1	GLASS PANE	
200	90015-0021		3	LEAD-IN, TET10-14, E-1458023	
205	90015-0020		7	LEAD-IN, TET5-7, E-1458016	
210	90015-0023		2	LEAD-IN, TET7-10, E-1458019	
215	90015-0022		1	LEAD-IN, TET14-20, E-1458029	
220	90015-0024		1	LEAD-IN, TET20-26, E-1458035	
230	312115-0501		2	SCREW ISO4762 M10X50 A4 80	
240	90166-0121	MM	1600	HOSE	
250	90166-0151	MM	400	HOSE	
255	90166-0129	MM	2900	HOSE 16/22 REINFORCED PVC	
260	90166-0121	MM	2800	HOSE	
270	342991-0101		4	HOSE CLIP,WORM DRIVE TYPE (13)-16	
275	342991-0103		2	HOSE CLIP,WORM DRIVE TYPE (19)-23	
280	342991-0105		2	HOSE CLIP,WORM DRIVE TYPE (27)-30	
290	342901-0105		3	HOSE NIPPLE, EXT.THR. R1/2-12 MM	
300	90140-0012		1	ELBOW, 90 INT/EXT, 2020-1/2-1/2	
310	342840-0107		1	CLAMPING PIECE	
320	342850-0107		1	GASKET, FDA, 3-A, 3	
330	342768-0102		13	BULKHEAD CONNECTOR, 6 MM	
340	90330-0026		2	PLUG, EXT. G-THREAD, G1/4	
350	90458-2602		2	BULKHEAD CONNECTOR, 12 MM	
360	342767-0104		2	CONN. BULKHEAD G1/4	
370	90600-0775		8	BALL VALVE G1/4, 406F-1/4"	
380	342921-0122		16	STRAIGHT COUPLING,EXT.THREADED 8/6-G1/4"	
400	352113-0204		20	ANCHOR PLATES FOR STRIPS, TYPE TM3S25-M	
410	315237-0110		2	WASHER,PL.RND.AL.13,5/18,H=1,5	
420	90030-0184		4	CONN. STR. GE06LRED71	
430	342722-0210		1	STRAIGHT COUPLING, D=12 MM - G3/8"	
440	312605-0314		3	HEXAGON NUT, M6M M5 A280	
450	312125-0327		20	SCREW ISO 1207 M5X12 A4	
490	90143-0097	MM	1300	SELF GRIPPING GASKET, 1011-24	
500	311103-0401		4	PARALLEL PIN ISO 2338 8M6X20 A1	
505	342722-0206		1	STRAIGHT COUPLING D=8-G3/8"	
510	1498502-0000		1	BRACKET	
520	312105-0366		2	SCREW M6S ISO 4017 M6X12 A480	
530	90459-0250	MM	220	HOSE , SILICONE, 53,8/62 MM	
540	90459-0250	MM	250	HOSE , SILICONE, 53,8/62 MM	
550	342991-0110		4	HOSE CLIP,WORM DRIVE TYPE (54)-63	
560	342768-0103		6	BULKHEAD CONNECTOR, 8 MM	
570	342980-0314		1	BANJO-HOLLOW BOLT COUPL,EXT.THR.02-G1/4	
580	342981-0114		2	BANJO CONNEC,RING,FOR PLAST.TUBE 6-G1/4"	
600	90055-0217		3	ELBOW PIPE JOINT	
610	312105-0372		4	SCREW M6S ISO 4017 M6X25 A480	
620	315105-0156		4	WASHER BRB 6,7X14 RFR	
630	90459-0843		6	CONN. BANJO, 6-G1/8	
640	90153-0016		1	ADHESIVE,TUBE 100G RHODORSIL CAF 3	
650	90163-0039		1	HOSE NIPPLE EXT.THR. R1/2 2601-17 MM	
660	312309-0536		2	SCREW ISO4026 M12X30 A4	
670	1260753-0000		1	PIN	
680	342921-0114		1	STRAIGHT COUPLING,EXT.THREADED 6/4-G1/4"	
690	312105-0532		2	SCREW M6S ISO 4017 M12X20 A480	
700	312607-0322		2	HEXAGON NUT, EN 24032 M6M M12 A480	
710	315105-0146		2	WASHER BRB 5,3X10 RFR	
720	90181-0190		2	CABLE DUCT, WALL BRACKET, B4 MINI	
730	90181-0180		1	CABLE TRAY	
740	312105-0327		2	SCREW M6S ISO 4017 M5X12 A480	

Machine Type	Group Description	Used-In	Group Number	Page No

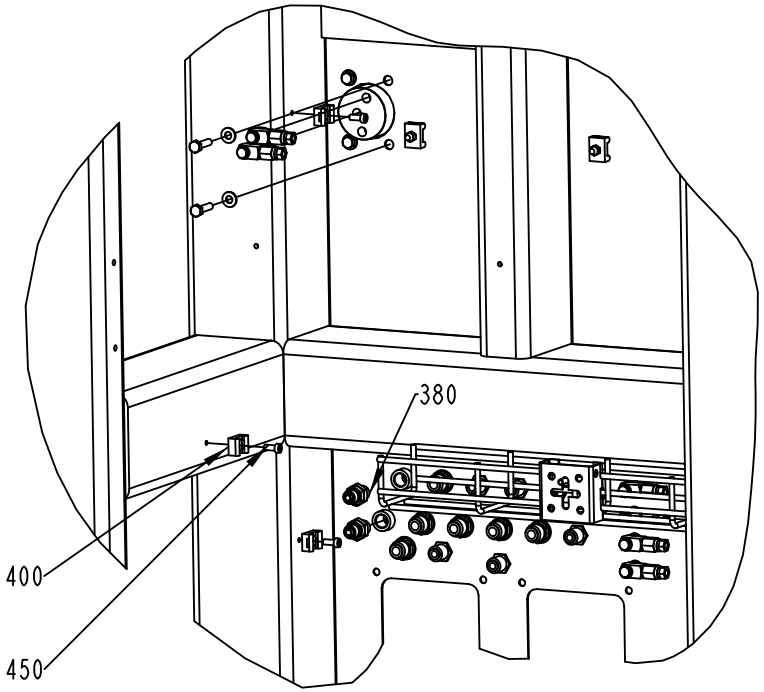

H
1:5

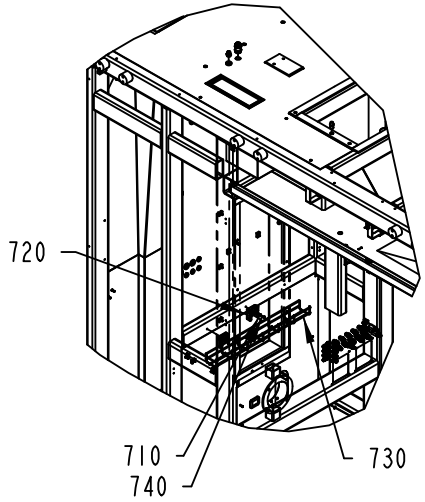

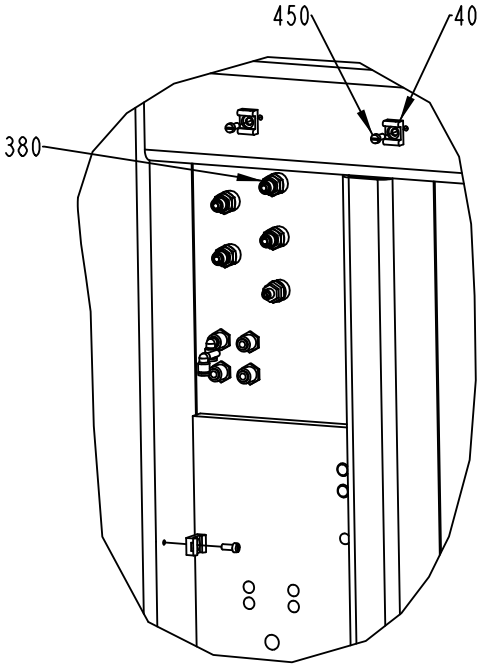

G
1:5

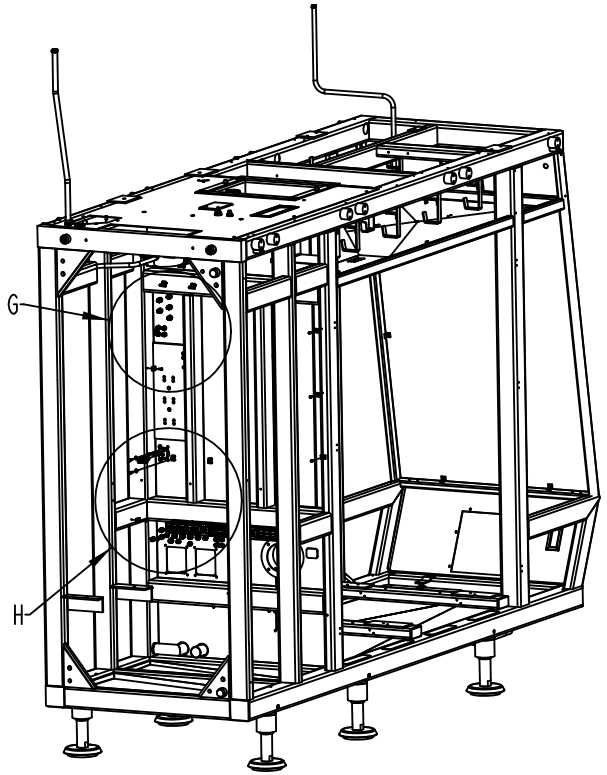

577118-6
313511

ECM: 339956 - 20080402
Group number: 577118-0600
Assembly Drawing: 577118-6_3_AH

This list covers pages from 2-18 to 2-23

Pos	Part No	UN	Qty	Description	Page No
-					
010	1035076-0100		6	LEG	2-25
020	1095803-0100		1	BENDING ROLLER	2-27
030	2598530-0000		1	FRAME	
040	591341-0000		2	PIN	
050	1347638-0000		1	PIPE	
060	1037761-0000		2	PIN	
070	1037762-0000		2	PIN	
080	1103300-0000		8	NON-SKID	
090	2527401-0000		1	DISTRIBUTOR BLOCK	
100	1350902-0000		1	GLASS PANE	
200	90015-0021		3	LEAD-IN, TET10-14, E-1458023	
205	90015-0020		7	LEAD-IN, TET5-7, E-1458016	
210	90015-0023		2	LEAD-IN, TET7-10, E-1458019	
215	90015-0022		1	LEAD-IN, TET14-20, E-1458029	
220	90015-0024		1	LEAD-IN, TET20-26, E-1458035	
230	312115-0501		2	SCREW ISO4762 M10X50 A4 80	
240	90166-0121	MM	1600	HOSE	
250	90166-0151	MM	400	HOSE	
255	90166-0129	MM	2900	HOSE 16/22 REINFORCED PVC	
260	90166-0121	MM	2800	HOSE	
270	342991-0101		4	HOSE CLIP,WORM DRIVE TYPE (13)-16	
275	342991-0103		2	HOSE CLIP,WORM DRIVE TYPE (19)-23	
280	342991-0105		2	HOSE CLIP,WORM DRIVE TYPE (27)-30	
290	342901-0105		3	HOSE NIPPLE, EXT.THR. R1/2-12 MM	
300	90140-0012		1	ELBOW, 90 INT/EXT, 2020-1/2-1/2	
310	342840-0107		1	CLAMPING PIECE	
320	342850-0107		1	GASKET, FDA, 3-A, 3	
330	342768-0102		13	BULKHEAD CONNECTOR, 6 MM	
340	90330-0026		2	PLUG, EXT. G-THREAD, G1/4	
350	90458-2602		2	BULKHEAD CONNECTOR, 12 MM	
360	342767-0104		2	CONN. BULKHEAD G1/4	
370	90600-0775		8	BALL VALVE G1/4, 406F-1/4"	
380	342921-0122		16	STRAIGHT COUPLING,EXT.THREADED 8/6-G1/4"	
400	352113-0204		20	ANCHOR PLATES FOR STRIPS, TYPE TM3S25-M	
410	315237-0110		2	WASHER,PL.RND.AL.13,5/18,H=1,5	
420	90030-0184		4	CONN. STR. GE06LRED71	
430	342722-0210		1	STRAIGHT COUPLING, D=12 MM - G3/8"	
440	312605-0314		3	HEXAGON NUT, M6M M5 A280	
450	312125-0327		20	SCREW ISO 1207 M5X12 A4	
490	90143-0097	MM	1300	SELF GRIPPING GASKET, 1011-24	
500	311103-0401		4	PARALLEL PIN ISO 2338 8M6X20 A1	
505	342722-0206		1	STRAIGHT COUPLING D=8-G3/8"	
510	1498502-0000		1	BRACKET	
520	312105-0366		2	SCREW M6S ISO 4017 M6X12 A480	
530	90459-0250	MM	220	HOSE , SILICONE, 53,8/62 MM	
540	90459-0250	MM	250	HOSE , SILICONE, 53,8/62 MM	
550	342991-0110		4	HOSE CLIP,WORM DRIVE TYPE (54)-63	
560	342768-0103		6	BULKHEAD CONNECTOR, 8 MM	
570	342980-0314		1	BANJO-HOLLOW BOLT COUPL,EXT.THR.02-G1/4	
580	342981-0114		2	BANJO CONNEC,RING,FOR PLAST.TUBE 6-G1/4"	
600	90055-0217		3	ELBOW PIPE JOINT	
610	312105-0372		4	SCREW M6S ISO 4017 M6X25 A480	
620	315105-0156		4	WASHER BRB 6,7X14 RFR	
630	90459-0843		6	CONN. BANJO, 6-G1/8	
640	90153-0016		1	ADHESIVE,TUBE 100G RHODORSIL CAF 3	
650	90163-0039		1	HOSE NIPPLE EXT.THR. R1/2 2601-17 MM	
660	312309-0536		2	SCREW ISO4026 M12X30 A4	
670	1260753-0000		1	PIN	
680	342921-0114		1	STRAIGHT COUPLING,EXT.THREADED 6/4-G1/4"	
690	312105-0532		2	SCREW M6S ISO 4017 M12X20 A480	
700	312607-0322		2	HEXAGON NUT, EN 24032 M6M M12 A480	
710	315105-0146		2	WASHER BRB 5,3X10 RFR	
720	90181-0190		2	CABLE DUCT, WALL BRACKET, B4 MINI	
730	90181-0180		1	CABLE TRAY	
740	312105-0327		2	SCREW M6S ISO 4017 M5X12 A480	

Machine Type	Group Description	Used-In	Group Number	Page No

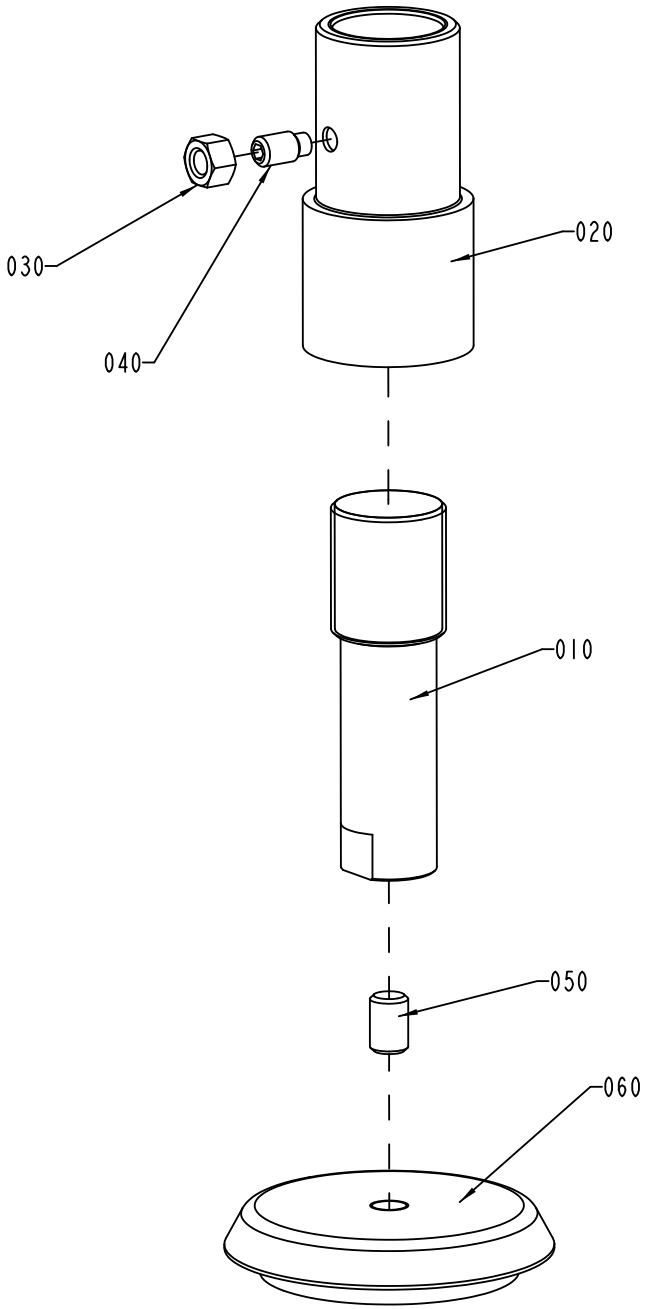

S-1035076-1
ECN 71019

ECM: 71870 - 19981029
Group number: 1035076-0100
Assembly Drawing: 1035076-1_1_AB

Pos	Part No	UN	Qty	Description	Page No
-					
010	1036119-0000		1	LEG	
020	1036120-0000		1	SLEEVE	
030	312605-0324		1	HEXAGON NUT, M6M M16 A280	
040	312311-0624		1	SCREW ISO4028 M16X30 FZB	
050	90347-0029		1	DAMPER	
060	90287-0130		1	SCREW HEX.SOCK.SET FLATPT. MP6SS M20X30	

Pos	Part No	UN	Qty	Description	Page No

BENDING ROLLER

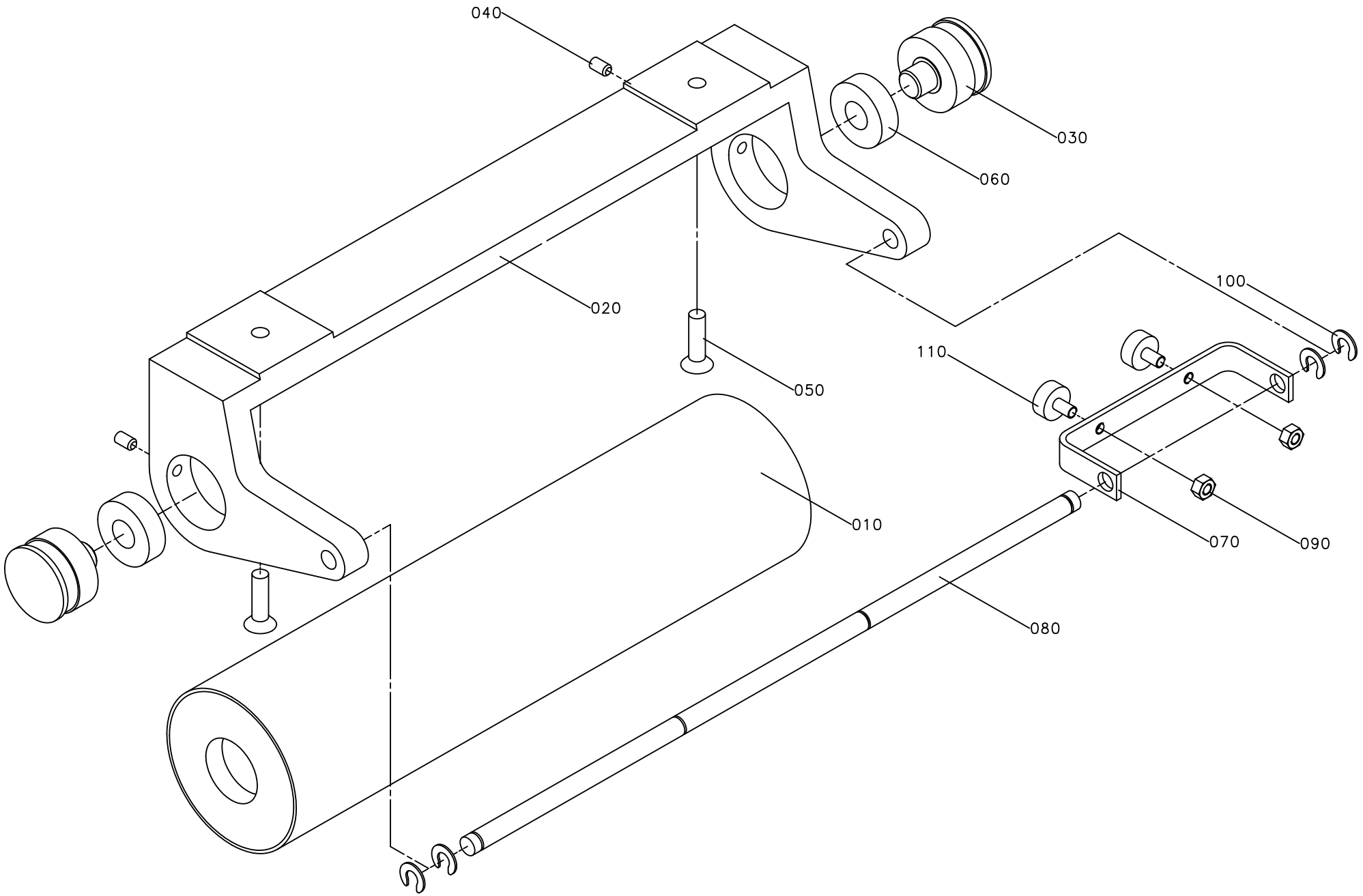

ECM: 222289 - 20060313
Group number: 1095803-0100
Assembly Drawing: 1095803-1_1_AA

Pos	Part No	UN	Qty	Description	Page No
-					
010	1035882-0000		1	BENDING ROLLER	
020	1036516-0000		1	CANTILEVER	
030	1037012-0000		2	AXLE PIN	
040	312318-0364		2	SCREW ISO4029 M6X10 A4	
050	312155-0453		2	SCREW DIN 7991 MF6S M8X25 A4 70	
060	321313-0102		2	BALL BEARING, 15X35X11 MM	
070	1041603-0000		1	BRACKET	
080	1041606-0000		1	SHAFT	
090	312605-0316		2	HEXAGON NUT, M6M M6 A280	
100	315755-0801		4	RETAINING RING SHAFT DIN 6799 8 A2	
110	90347-0007		2	VIBRATION DAMPER	

Pos	Part No	UN	Qty	Description	Page No

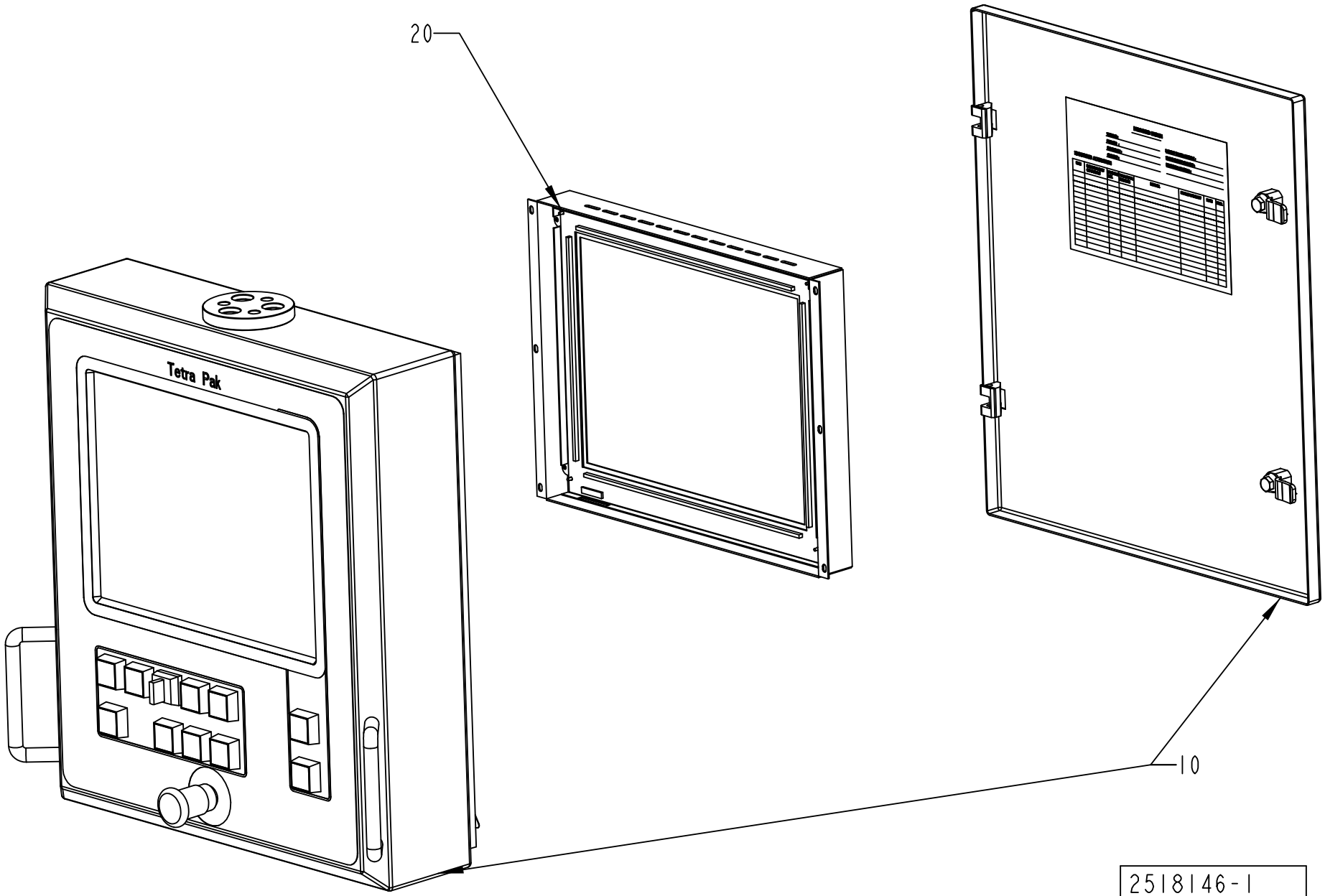
20
Tetra Pak
10
2518146-1
ECM 100818

ECM: 272531 - 20080403
Group number: 2518146-0100
Assembly Drawing: 2518146-1_1_AA

Pos	Part No	UN	Qty	Description	Page No
TBA/22-0500					
0010	2518147-0108		1	PANEL UNIT 15"	**2-31**
Common Parts					
0020	90459-0287		1	DISPLAY UNIT 15", 02567-000	

Pos	Part No	UN	Qty	Description	Page No

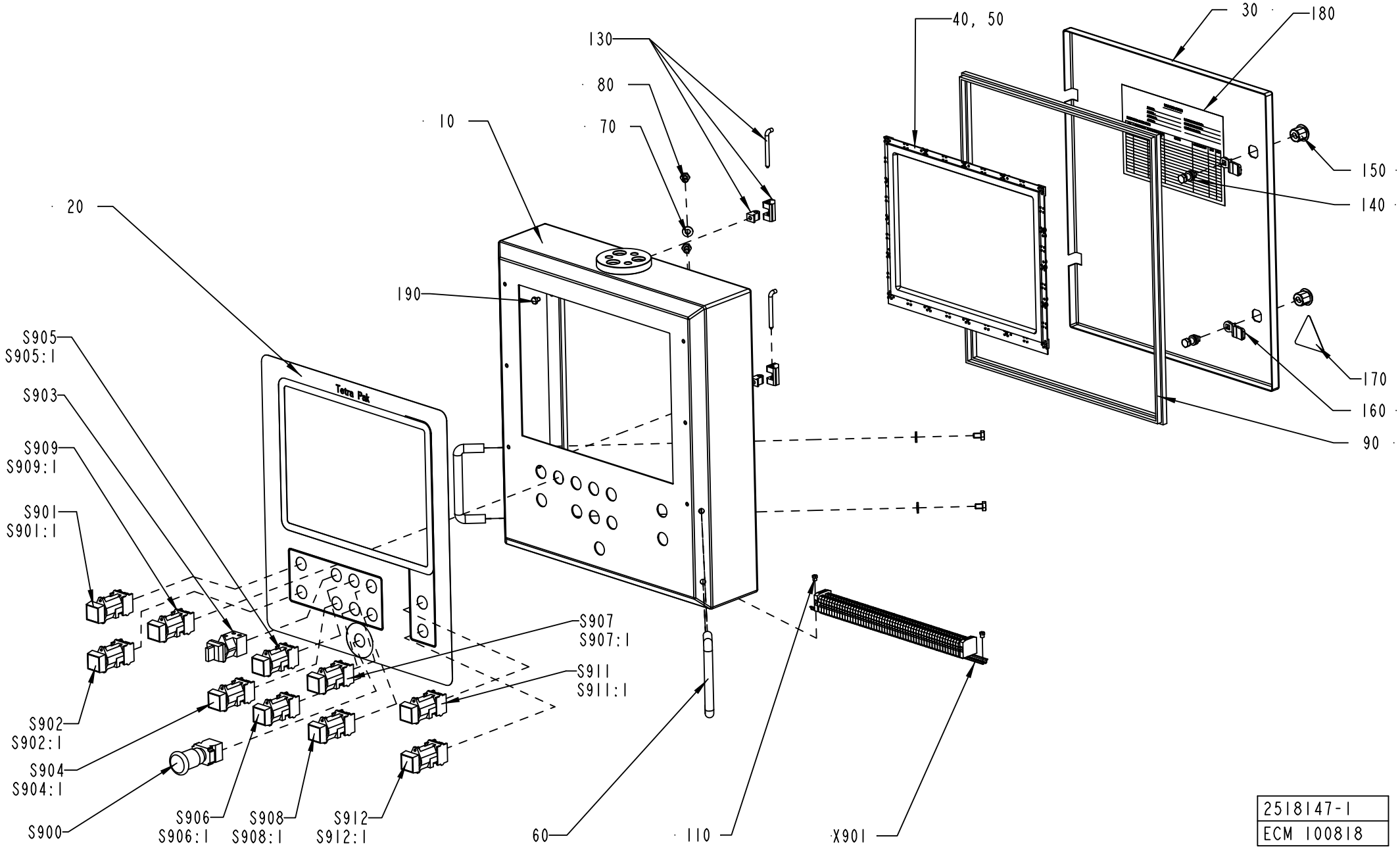
40, 50
30
180
130
80
10
70
150
140
20
190
170
160
90
S905
S905:1
S903
S909
S909:1
S901
S901:1
S907
S907:1
S911
S911:1
S902
S902:1
S904
S904:1
S900
S906
S906:1
S908
S908:1
S912
S912:1
60
110
X901
2518147-1
ECM 100818

ECM: 100818 -
Group number: 2518147-0108
Assembly Drawing: 2518147-1_1_AA

Pos	Part No	UN	Qty	Description	Page No
TBA/22-0500					
S903	90111-0120		1	SWITCH, 2 POS.704.510 .0A+704.901.5/A	
S904	90064-0082		1	PUSH BUTTON, WHITE	
	90036-0057		*1*	*LIGHT BULB, BA9S 28V*	
S904:1	359301-0170		1	BUTTON SIGN, SPOOLING OF FINAL FOLDER	
S905	90064-0098		1	PUSH BUTTON, CLEAR	
S905:1	359301-0091		1	BUTTON SIGN, INCHING FINAL FOLDER	
Common Parts					
010	2518148-0000		1	PANEL	
020	2518149-0000		1	FOIL	
030	2518157-0000		1	DOOR	
040	90459-0288		1	SLIM LINE TOUCH BEZEL 15", 1511	
050	90153-0060		1	ADHESIVE, 3M DP-190 B/A	
060	90017-0016		2	HANDLE, NO. 14.4012.02.120	
070	90005-0077		4	WASHER PL.RND.NYL.8,4/7, H=2	
080	312105-0447		4	SCREW M6S ISO 4017 M8X12 A480	
090	90143-0057	MM	1800	STRIP EMKA 1011-05 21X11MM	
110	1041609-0000		2	NUT	
120	312605-0316		1	HEXAGON NUT, M6M M6 A280	
130	90248-0047		2	HINGE, 1150-U50	
140	90237-0320		2	LOCK HOUSING, 1000-U136	
150	90237-0319		2	LOCK HOUSING, 1000-U134	
160	90237-0157		2	LOCK BOLT, 1000-230	
170	359705-0015		1	WARNING SIGN ISO, RISK OF ELECTRIC SHOCK	
190	90194-0133		1	SIGN "DELIVERED DESIGN"	
220	312105-0362		2	SCREW M6S ISO 4017 M6X8 A480	
S900	90458-1651		1	EMERGENCY STOP, ZB4-BS-844 ZB4-BZ-104	
S901	90064-0082		1	PUSH BUTTON, WHITE	
	90036-0057		*1*	*LIGHT BULB, BA9S 28V*	
S901:1	359301-0519		1	SIGN "TPOP RESET"	
S902	90064-0082		1	PUSH BUTTON, WHITE	
	90036-0057		*1*	*LIGHT BULB, BA9S 28V*	
S902:1	359301-0130		1	BUTTON SIGN, LAMP TEST	
S906	90064-0082		1	PUSH BUTTON, WHITE	
	90036-0057		*1*	*LIGHT BULB, BA9S 28V*	
S906:1	359301-0050		1	BUTTON SIGN, DROP CHUTE BRIK	
S907	90064-0098		1	PUSH BUTTON, CLEAR	
S907:1	359301-0090		1	BUTTON SIGN, INCHING	
S908	90064-0084		1	PUSH BUTTON, YELLOW	
S908:1	359301-0110		1	BUTTON SIGN, SHORT STOP	
S909	90064-0086		1	PUSH BUTTON, WHITE	
	90036-0057		*1*	*LIGHT BULB, BA9S 28V*	
S909:1	359301-0160		1	BUTTON SIGN, DRAINAGE OF PRODUCT TUBE	
S911	90064-0093		1	PUSH BUTTON, GREEN	
	90036-0057		*1*	*LIGHT BULB, BA9S 28V*	
S911:1	359301-0001		1	BUTTON SIGN, UP	
S912	90064-0082		1	PUSH BUTTON, WHITE	
	90036-0057		*1*	*LIGHT BULB, BA9S 28V*	
S912:1	359301-0005		1	BUTTON SIGN, DOWN	
X901	1095597-0100		1	TERMINAL	**2-33**

Machine Type	Group Description	Used-In	Group Number	Page No

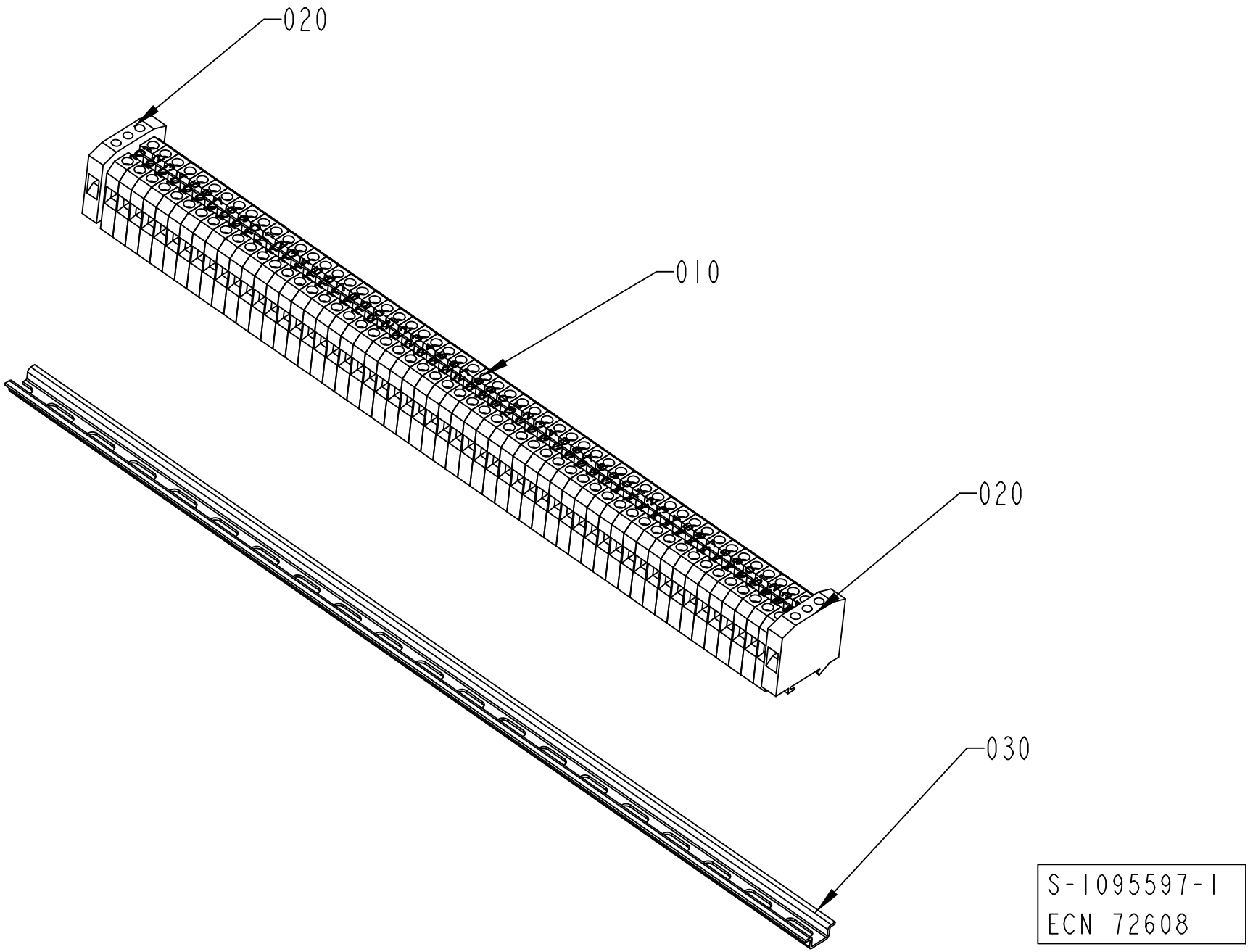
020
010
020
030
S-1095597-1
ECN 72608

ECM: 189931 - 20041104
Group number: 1095597-0100
Assembly Drawing: 1095597-1_1_AB

Pos	Part No	UN	Qty	Description	Page No
-					
010	90077-0079		56	FEED THROUGH TERMINAL, 02943.6	
020	90135-0026		2	EARTH TERMINAL, 3802.6	
030	90077-0328	MM	390	RAIL TS15/5	
040	359011-0821		2	SET OF SIGNS 6-FW 1-50	
050	359011-0819		1	MARKING PLATES 5-GW (EARTH)	

Pos	Part No	UN	Qty	Description	Page No

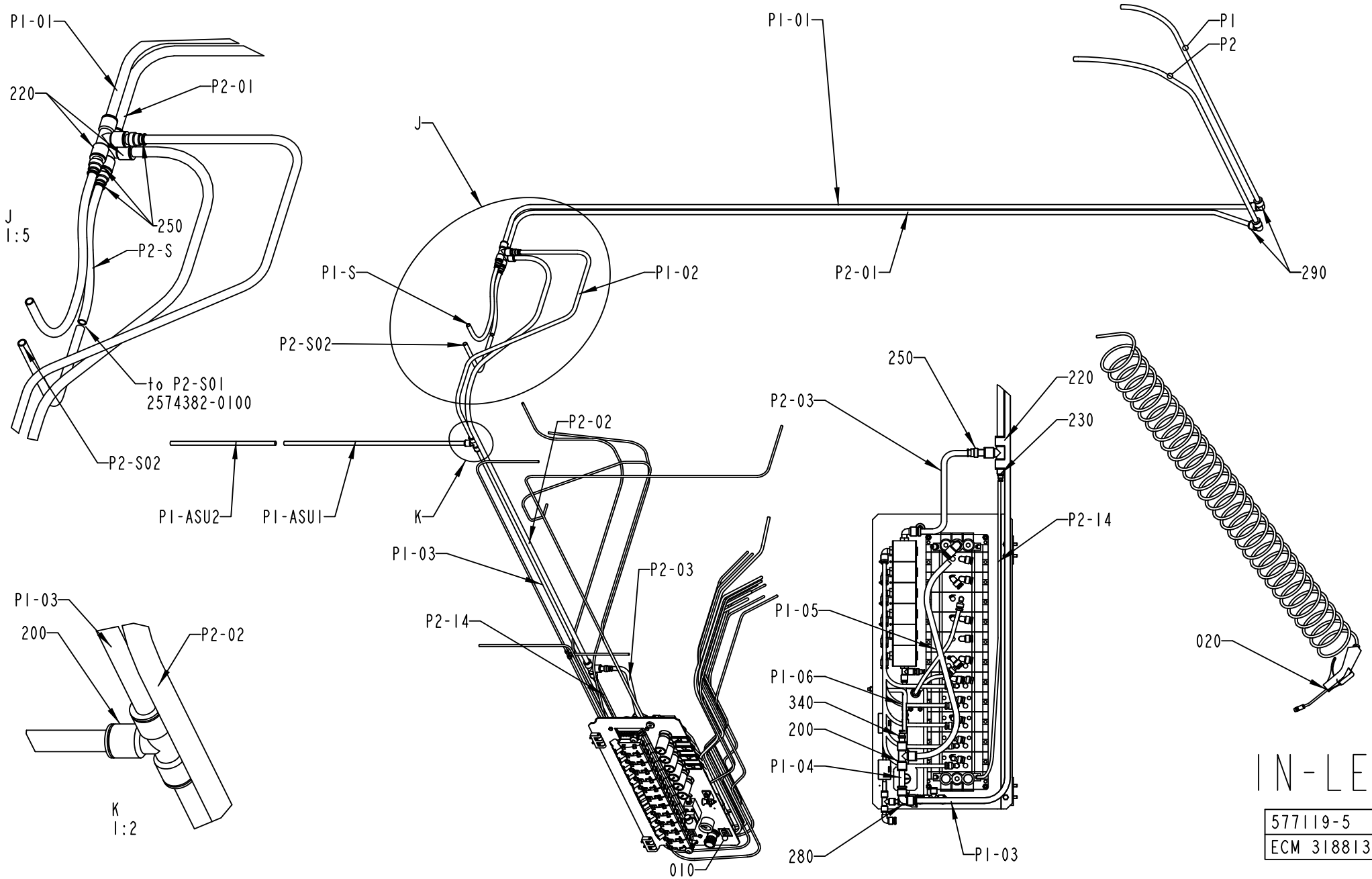
P1-01
220
P2-01
J
1:5
250
P2-S
to P2-S01
2574382-0100
P2-S02
P1-ASU2
P1-ASU1
J
P1-S
P1-02
P2-S02
P2-02
K
P1-03
P2-14
P2-03
010
P1-03
200
P2-02
K
1:2
P1-01
P2-01
P1
P2
290
250
220
230
P2-03
P2-14
P1-05
P1-06
340
200
P1-04
280
P1-03
020
IN-LET
577119-5
ECM 318813

ECM: 321076 - 20080101
Group number: 577119-0400
Assembly Drawing: 577119-5_1_AI

This list covers pages from 2-34 to 2-37

Pos	Part No	UN	Qty	Description	Page No
-					
010	1346613-0300		1	VALVE PANEL	**2-39, 2-41**
020	1095682-0100		1	AIR JET GUN	**2-43**
1210-01	90166-0081	MM	1200	TUBE 6 MM PA BLUE	
12204	90166-0081	MM	2800	TUBE 6 MM PA BLUE	
12214	90166-0081	MM	2800	TUBE 6 MM PA BLUE	
200	342748-0109		2	T-CONNECTION 12MM	
21044	90166-0081	MM	460	TUBE 6 MM PA BLUE	
210441	90166-0081	MM	200	TUBE 6 MM PA BLUE	
210442	90166-0081	MM	1500	TUBE 6 MM PA BLUE	
220	342748-0110		3	T-CONNECTION 14MM	
230	90055-0116		1	REDUCER 6-14	
240	342748-0102		1	T-CONNECTION 6MM	
250	342716-0211		4	REDUCER 12-14	
280	342735-0109		1	ELBOW PIPE JOINT	
290	342735-0110		2	ELBOW PIPE	
340	342716-0209		1	REDUCER 8-12	
350	359000-0400		40	WIRE MARKING, YELLOW, PA2/4"0"	
360	359000-0401		32	WIRE MARKING, YELLOW, PA2/4"1"	
370	359000-0402		42	WIRE MARKING, YELLOW, PA2/4"2"	
380	359000-0403		7	WIRE MARKING, YELLOW, PA2/4"3"	
390	359000-0404		43	WIRE MARKING, YELLOW, PA2/4"4"	
400	359000-0405		18	WIRE MARKING, YELLOW, PA2/4"5"	
410	359000-0406		3	WIRE MARKING, YELLOW, PA2/4"6"	
420	359000-0765		4	WIRE MARKING, YELLOW, PA2/4"P"	
42002	90166-0013	MM	2100	TUBE 8 MM PA BLUE	
42102	90166-0013	MM	2100	TUBE 8 MM PA BLUE	
42202	90166-0013	MM	2100	TUBE 8 MM PA BLUE	
42302	90166-0013	MM	2100	TUBE 8 MM PA BLUE	
430	359000-0024		7	WIRE MARKING, YELLOW, PA2/4"-"	
4301-04	90166-0081	MM	3500	TUBE 6 MM PA BLUE	
4301-06	90166-0081	MM	2000	TUBE 6 MM PA BLUE	
440	359000-0501		16	WIRE MARKING, YELLOW, PA3/6"1"	
450	359000-0502		13	WIRE MARKING, YELLOW, PA3/6"2"	
460	359000-0503		2	WIRE MARKING, YELLOW, PA3/6"3"	
470	359000-0815		21	WIRE MARKING, YELLOW, PA3/6"P"	
480	359000-0800		3	WIRE MARKING, YELLOW, PA3/6"A"	
490	359000-0818		7	WIRE MARKING, YELLOW, PA3/6"S"	
500	359000-0820		3	WIRE MARKING, YELLOW, PA3/6"U"	
510	359000-0025		17	WIRE MARKING, YELLOW, PA3/6"-"	
520	359000-0500		10	WIRE MARKING, YELLOW, PA3/6"0"	
53062	90166-0081	MM	2000	TUBE 6 MM PA BLUE	
53064	90166-0013	MM	1800	TUBE 8 MM PA BLUE	
55012	90166-0081	MM	2000	TUBE 6 MM PA BLUE	
55014	90166-0081	MM	2000	TUBE 6 MM PA BLUE	
55042	90166-0081	MM	1800	TUBE 6 MM PA BLUE	
55044	90166-0081	MM	1800	TUBE 6 MM PA BLUE	
P1	90166-0196	MM	1100	TUBE 14MM PA BLUE	
P1-01	90166-0196	MM	2600	TUBE 14MM PA BLUE	
P1-02	90166-0195	MM	1130	TUBE 12 MM PA BLUE	
P1-03	90166-0195	MM	2140	TUBE 12 MM PA BLUE	
P1-04	90166-0195	MM	100	TUBE 12 MM PA BLUE	
P1-05	90166-0195	MM	500	TUBE 12 MM PA BLUE	
P1-06	90166-0013	MM	140	TUBE 8 MM PA BLUE	
P1-ASU1	90166-0195	MM	550	TUBE 12 MM PA BLUE	
P1-ASU2	90166-0195	MM	1500	TUBE 12 MM PA BLUE	
P1-S	90166-0195	MM	450	TUBE 12 MM PA BLUE	
P2	90166-0196	MM	1250	TUBE 14MM PA BLUE	
P2-01	90166-0196	MM	2600	TUBE 14MM PA BLUE	
P2-02	90166-0196	MM	2000	TUBE 14MM PA BLUE	
P2-03	90166-0195	MM	250	TUBE 12 MM PA BLUE	
P2-14	90166-0081	MM	700	TUBE 6 MM PA BLUE	
P2-S	90166-0195	MM	200	TUBE 12 MM PA BLUE	
P2-S02	90166-0195	MM	300	TUBE 12 MM PA BLUE	

Machine Type | Group Description | Used-In | Group Number | Page No

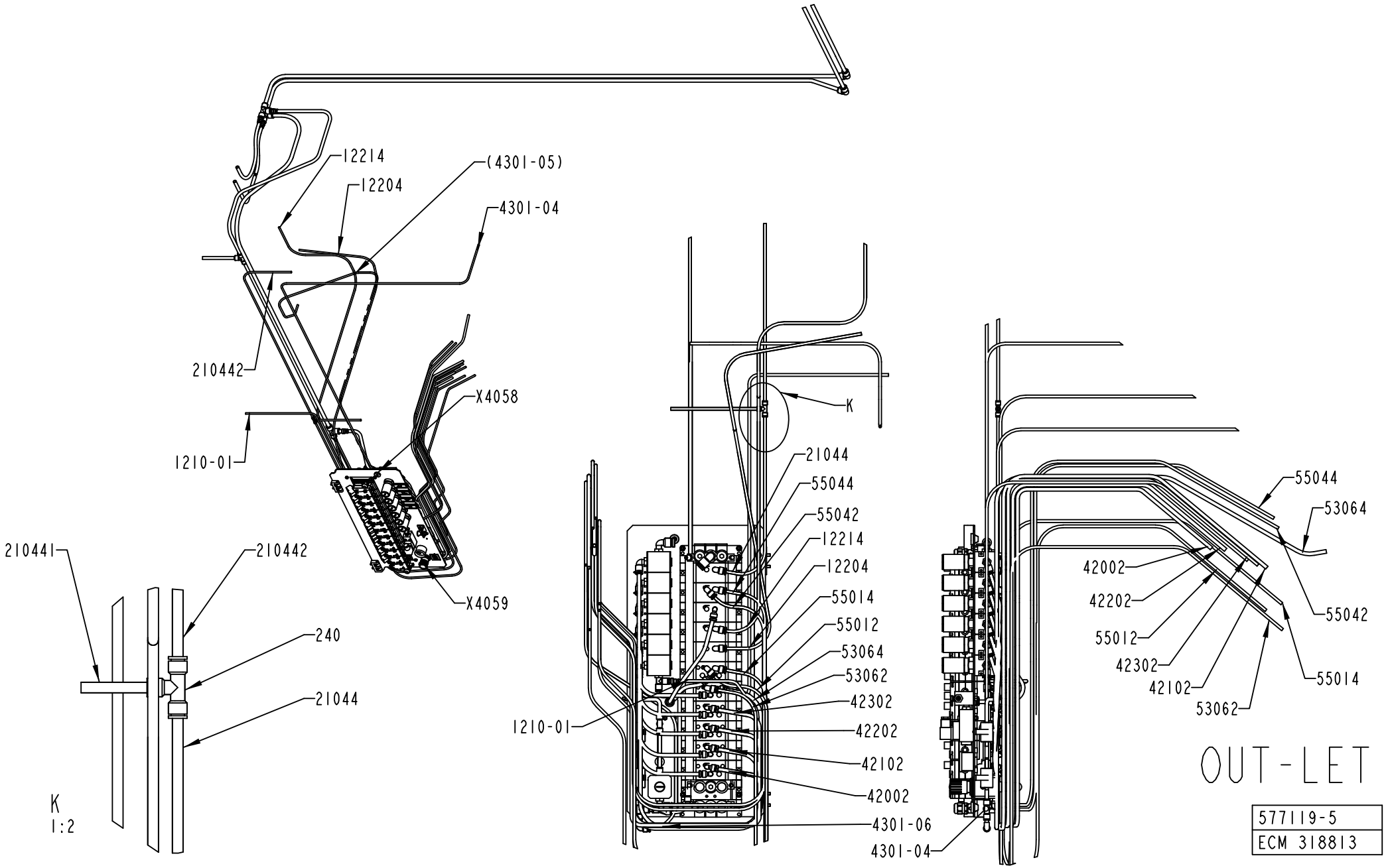
12214
(4301-05)
12204
4301-04
210442
X4058
1210-01
X4059
210441
210442
240
21044
K
1:2
K
21044
55044
55042
12214
12204
55014
55012
53064
53062
42302
42202
42102
42002
1210-01
4301-06
4301-04
55044
53064
42002
42202
55042
55012
42302
55014
42102
53062
OUT-LET
577119-5
ECM 318813

ECM: 321076 - 20080101
Group number: 577119-0400
Assembly Drawing: 577119-5_2_AI

This list covers pages from 2-34 to 2-37

Pos	Part No	UN	Qty	Description	Page No
-					
010	1346613-0300		1	VALVE PANEL	2-39, 2-41
020	1095682-0100		1	AIR JET GUN	2-43
1210-01	90166-0081	MM	1200	TUBE 6 MM PA BLUE	
12204	90166-0081	MM	2800	TUBE 6 MM PA BLUE	
12214	90166-0081	MM	2800	TUBE 6 MM PA BLUE	
200	342748-0109		2	T-CONNECTION 12MM	
21044	90166-0081	MM	460	TUBE 6 MM PA BLUE	
210441	90166-0081	MM	200	TUBE 6 MM PA BLUE	
210442	90166-0081	MM	1500	TUBE 6 MM PA BLUE	
220	342748-0110		3	T-CONNECTION 14MM	
230	90055-0116		1	REDUCER 6-14	
240	342748-0102		1	T-CONNECTION 6MM	
250	342716-0211		4	REDUCER 12-14	
280	342735-0109		1	ELBOW PIPE JOINT	
290	342735-0110		2	ELBOW PIPE	
340	342716-0209		1	REDUCER 8-12	
350	359000-0400		40	WIRE MARKING, YELLOW, PA2/4"0"	
360	359000-0401		32	WIRE MARKING, YELLOW, PA2/4"1"	
370	359000-0402		42	WIRE MARKING, YELLOW, PA2/4"2"	
380	359000-0403		7	WIRE MARKING, YELLOW, PA2/4"3"	
390	359000-0404		43	WIRE MARKING, YELLOW, PA2/4"4"	
400	359000-0405		18	WIRE MARKING, YELLOW, PA2/4"5"	
410	359000-0406		3	WIRE MARKING, YELLOW, PA2/4"6"	
420	359000-0765		4	WIRE MARKING, YELLOW, PA2/4"P"	
42002	90166-0013	MM	2100	TUBE 8 MM PA BLUE	
42102	90166-0013	MM	2100	TUBE 8 MM PA BLUE	
42202	90166-0013	MM	2100	TUBE 8 MM PA BLUE	
42302	90166-0013	MM	2100	TUBE 8 MM PA BLUE	
430	359000-0024		7	WIRE MARKING, YELLOW, PA2/4"-"	
4301-04	90166-0081	MM	3500	TUBE 6 MM PA BLUE	
4301-06	90166-0081	MM	2000	TUBE 6 MM PA BLUE	
440	359000-0501		16	WIRE MARKING, YELLOW, PA3/6"1"	
450	359000-0502		13	WIRE MARKING, YELLOW, PA3/6"2"	
460	359000-0503		2	WIRE MARKING, YELLOW, PA3/6"3"	
470	359000-0815		21	WIRE MARKING, YELLOW, PA3/6"P"	
480	359000-0800		3	WIRE MARKING, YELLOW, PA3/6"A"	
490	359000-0818		7	WIRE MARKING, YELLOW, PA3/6"S"	
500	359000-0820		3	WIRE MARKING, YELLOW, PA3/6"U"	
510	359000-0025		17	WIRE MARKING, YELLOW, PA3/6"-"	
520	359000-0500		10	WIRE MARKING, YELLOW, PA3/6"0"	
53062	90166-0081	MM	2000	TUBE 6 MM PA BLUE	
53064	90166-0013	MM	1800	TUBE 8 MM PA BLUE	
55012	90166-0081	MM	2000	TUBE 6 MM PA BLUE	
55014	90166-0081	MM	2000	TUBE 6 MM PA BLUE	
55042	90166-0081	MM	1800	TUBE 6 MM PA BLUE	
55044	90166-0081	MM	1800	TUBE 6 MM PA BLUE	
P1	90166-0196	MM	1100	TUBE 14MM PA BLUE	
P1-01	90166-0196	MM	2600	TUBE 14MM PA BLUE	
P1-02	90166-0195	MM	1130	TUBE 12 MM PA BLUE	
P1-03	90166-0195	MM	2140	TUBE 12 MM PA BLUE	
P1-04	90166-0195	MM	100	TUBE 12 MM PA BLUE	
P1-05	90166-0195	MM	500	TUBE 12 MM PA BLUE	
P1-06	90166-0013	MM	140	TUBE 8 MM PA BLUE	
P1-ASU1	90166-0195	MM	550	TUBE 12 MM PA BLUE	
P1-ASU2	90166-0195	MM	1500	TUBE 12 MM PA BLUE	
P1-S	90166-0195	MM	450	TUBE 12 MM PA BLUE	
P2	90166-0196	MM	1250	TUBE 14MM PA BLUE	
P2-01	90166-0196	MM	2600	TUBE 14MM PA BLUE	
P2-02	90166-0196	MM	2000	TUBE 14MM PA BLUE	
P2-03	90166-0195	MM	250	TUBE 12 MM PA BLUE	
P2-14	90166-0081	MM	700	TUBE 6 MM PA BLUE	
P2-S	90166-0195	MM	200	TUBE 12 MM PA BLUE	
P2-S02	90166-0195	MM	300	TUBE 12 MM PA BLUE	

Machine Type | Group Description | Used-In | Group Number | Page No

X4058	X4059
1)	1) Y4200
2) Y2104	2) Y4210
3)	3) Y4220
4) Y5504	4) Y4230
5)	5) Y5501
6)	6) Y5502
7) Y5307	7) Y5503
8) Y1220	
9) Y1221	
10)Y5306	

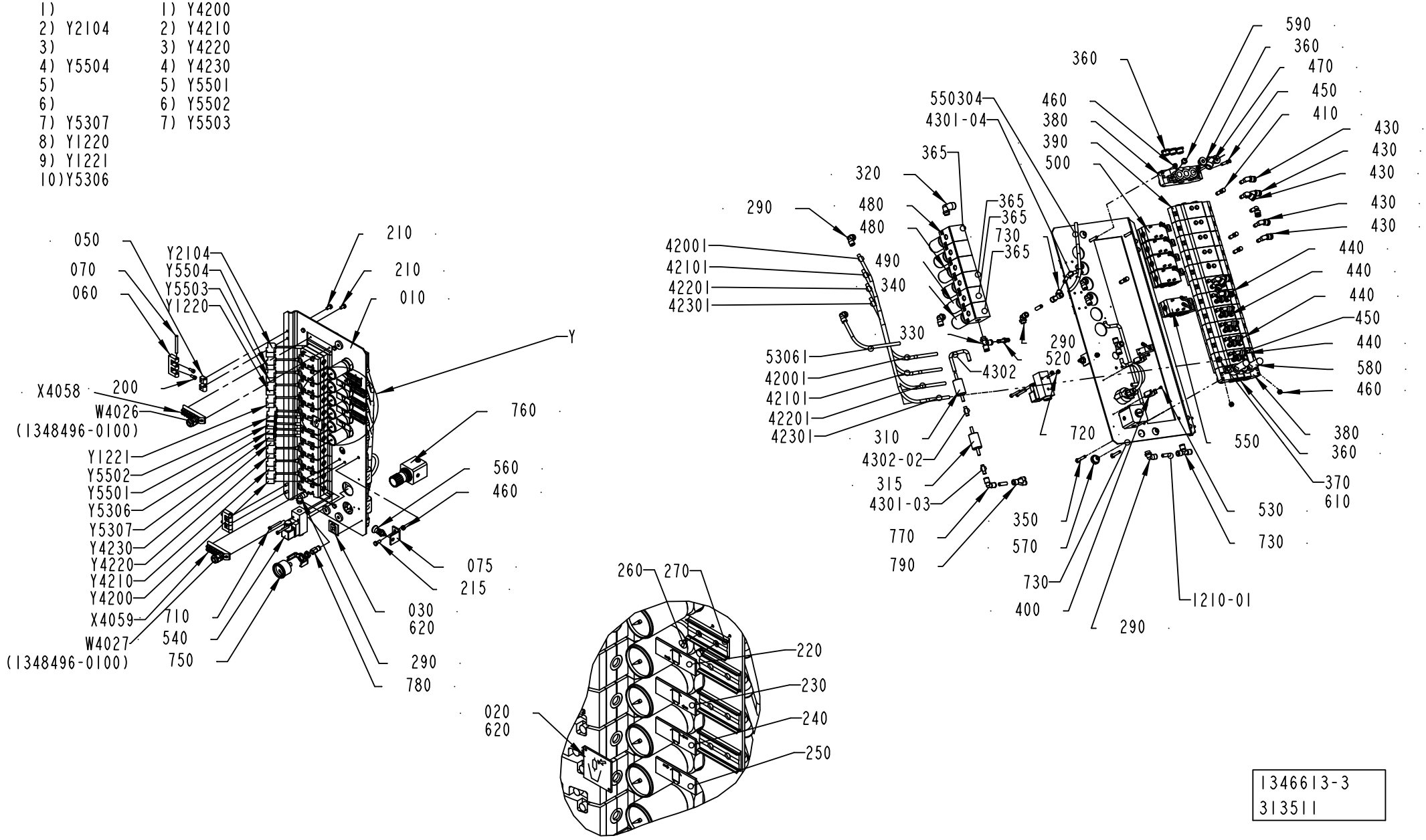

1346613-3
313511

ECM: 340094 - 20080402
Group number: 1346613-0300
Assembly Drawing: 1346613-3_1_AG

This list covers pages from 2-38 to 2-41

Pos	Part No	UN	Qty	Description	Page No
-					
005	2908571-0000		1	PNEUMATIC DIAGRAM	
010	2721805-0000		1	PLATE	
020	2594544-0000		1	SIGN	
030	978603-0000		1	SIGN	
050	1129770-0000		4	BLOCKING PIECE	
060	1035792-0000		2	E-HINGE	
070	988685-0000		2	PIN	
075	1348197-0000		1	HOLDER	
200	312115-0327		4	SCREW ISO4762 M5X12 A4 80	
210	312105-0366		4	SCREW M6S ISO 4017 M6X12 A480	
215	312105-0368		1	SCREW M6S ISO 4017 M6X16 A480	
220	1511522-0000		1	LABEL	
230	1511521-0000		1	LABEL	
240	1511525-0000		1	LABEL	
250	1511526-0000		1	LABEL	
260	311520-0329		8	RIVET, BLANK 2,4X8	
270	359240-0100		4	SIGN HOLDER FOR 359240-0001	
290	90458-2958		9	ELBOW PIPE JOINT, EXT.THREAD, D=8MM-G1/4	
310	90277-0045		1	FILTER / 9900-05-BK	
315	90277-0046		1	FILTER / 9933-05-101	
320	90459-2959		1	COOLER, AIR14616.30.CU.10.AL.06.10.0150.	
330	342772-0122		1	ELBOW FITTING, 8 - G1/4	
340	90113-0097		1	PRESSURE REGULATOR	
350	312109-0376		4	SCREW M6S ISO 4017 M6X35 A480	
360	342713-0211		9	PLUG, EXT THREAD HEX SOCKET 8638-00-380	
365	342713-0210		7	PLUG, EXT THREAD HEX SOCKET	
370	90042-0520		6	BASE PLATE ISO SIZE 1	
380	90042-0522		2	PORTED END PIECE ISO SIZE 1	
390	90042-0532		5	BASE PLATE ISO SIZE 1	
400	90165-0019		2	TOOL CLIP, 81/3, OPEN, 20 - 30 MM	
410	342715-0103		20	BLIND PLUG 8 MM	
42001	90166-0013	MM	600	TUBE 8 MM PA BLUE	
42101	90166-0013	MM	600	TUBE 8 MM PA BLUE	
42201	90166-0013	MM	600	TUBE 8 MM PA BLUE	
42301	90166-0013	MM	600	TUBE 8 MM PA BLUE	
430	90055-0173		8	ELBOW WITH TAILPIECE 8/6 MM	
4301-01	90166-0013	MM	70	TUBE 8 MM PA BLUE	
4301-02	90166-0013	MM	50	TUBE 8 MM PA BLUE	
4301-03	90166-0013	MM	50	TUBE 8 MM PA BLUE	
4301-04	90166-0013	MM	300	TUBE 8 MM PA BLUE	
4301-05	90166-0013	MM	600	TUBE 8 MM PA BLUE	
440	90055-0204		12	ELBOW WITH TAILPIECE 8/8 MM LONG	
450	342715-0102		14	BLIND PLUG 6 MM	
460	312605-0316		5	HEXAGON NUT, M6M M6 A280	
470	90459-2960		1	FILTER, SOLBERG FS-18P-126	
	90459-3249		*1*	*FILTER ELEMENT 18P*	
480	90113-0096		4	PRESSURE REGULATOR	
490	90113-0095		1	PRESSURE REGULATOR	
500	90042-0215		9	VALVE BODY 5/2 UNISTABLE	
520	342716-0203		1	REDUCER 6-8	
530	312125-0220		2	SCREW ISO 1207 M3X6 A4	
53061	90166-0013	MM	450	TUBE 8 MM PA BLUE	
540	90274-0103		1	PRESSURE GUARD PEV-1/4-B (10773	
550	90042-0230		2	VALVE BODY 5/3 OPEN CENTRE	
55034	90166-0013	MM	600	TUBE 8 MM PA BLUE	
560	90051-0112		1	LOCK KNOB, NO. GN 617 NIK5	
570	90015-0023		3	LEAD-IN, TET7-10, E-1458019	
580	90328-0024		2	SILENCER G3/8"	
590	90328-0017		1	SILENCER, D=6 MM	
610	90042-0528		6	BLANKING KIT SEALS ISO SIZE 1	
620	312502-0120		4	DRIVE SCREW ROUND HEAD KDS 0X5	
630	359000-0400		27	WIRE MARKING, YELLOW, PA2/4"0"	
640	359000-0401		18	WIRE MARKING, YELLOW, PA2/4"1"	
650	359000-0402		12	WIRE MARKING, YELLOW, PA2/4"2"	
660	359000-0403		14	WIRE MARKING, YELLOW, PA2/4"3"	
670	359000-0404		15	WIRE MARKING, YELLOW, PA2/4"4"	
680	359000-0405		7	WIRE MARKING, YELLOW, PA2/4"5"	
690	359000-0406		2	WIRE MARKING, YELLOW, PA2/4"6"	
700	359000-0024		6	WIRE MARKING, YELLOW, PA2/4"-"	
710	312125-0339		2	SCREW ISO 1207 M5X40 A4	
720	312607-0314		2	HEXAGON NUT, EN 24032 M6M M5 A480	
730	342748-0103		3	T-CONNECTION 8MM	
750	90043-0090		1	PRESSURE GAUGE, 2048 D=40 MM	
760	90600-3050		1	REGULATOR, SA-235942A	
770	350004-0003		1	PUSH-IN L-FITTING QSL-F-8	
780	342770-0107		1	STRAIGHT COUPLING INT, D=8 MM - G1/8	
790	90055-0227		1	Y-CONNECTION, 6-8	
X4058	90042-0535		1	TERMINAL BOARD 19 CORDS	
X4059	90042-0535		1	TERMINAL BOARD 19 CORDS	
Y1220	90042-0538		1	PILOT VALVE L=500MM	
Y1221	90042-0538		1	PILOT VALVE L=500MM	
Y2104	90042-0538		1	PILOT VALVE L=500MM	
Y4200	90042-0538		1	PILOT VALVE L=500MM	

Machine Type | Group Description | Used-In | Group Number | Page No

X4058	X4059
1)	1) Y4200
2) Y2104	2) Y4210
3)	3) Y4220
4) Y5504	4) Y4230
5)	5) Y5501
6)	6) Y5502
7) Y5307	7) Y5503
8) Y1220	
9) Y1221	
10)Y5306	

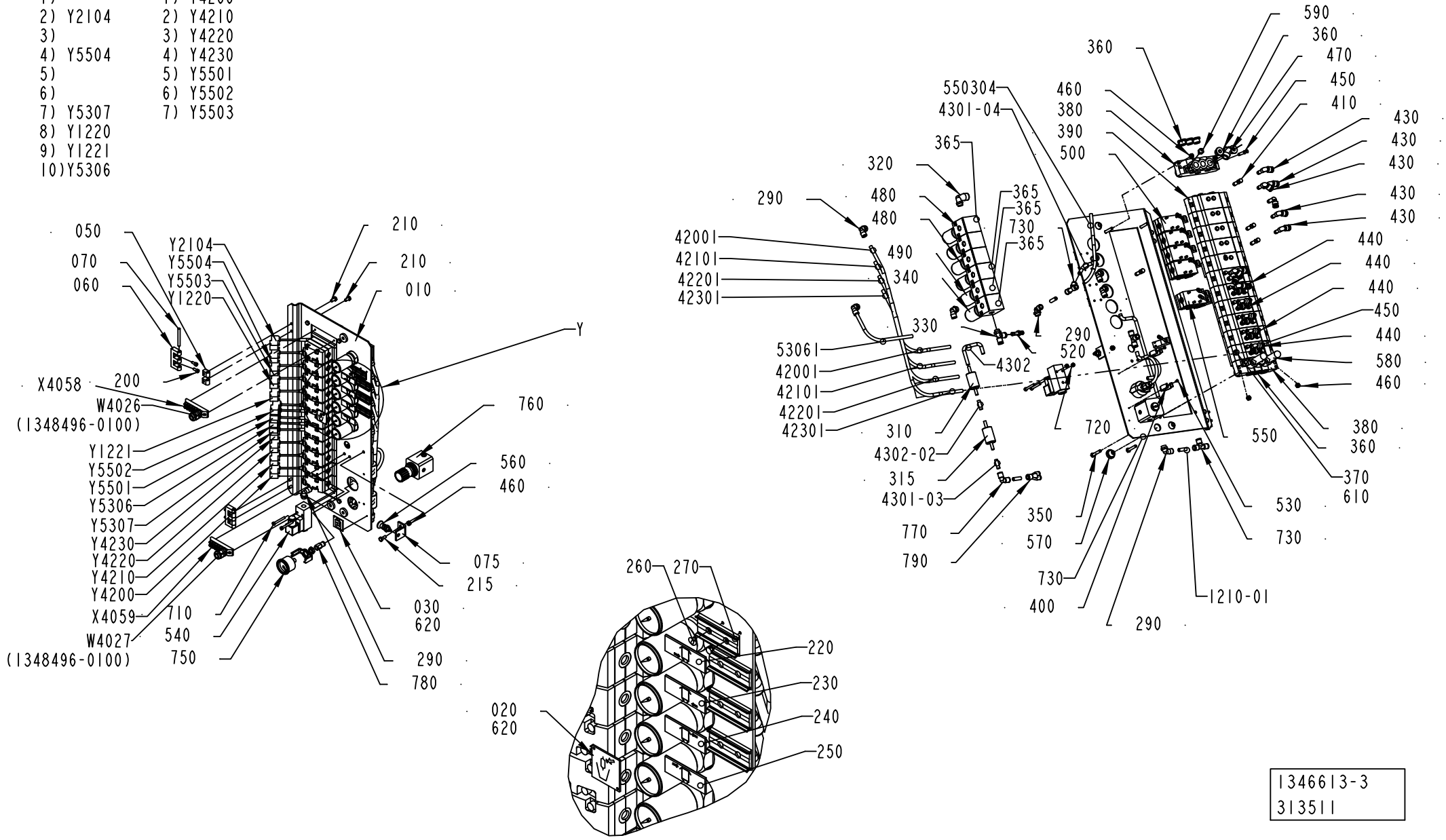

1346613-3
313511

Pos	Part No	UN	Qty	Description	Page No
- (Cont'd)					
Y4210	90042-0538		1	PILOT VALVE L=500MM	
Y4220	90042-0538		1	PILOT VALVE L=500MM	
Y4230	90042-0538		1	PILOT VALVE L=500MM	
Y5306	90042-0538		1	PILOT VALVE L=500MM	
Y5307	90042-0538		1	PILOT VALVE L=500MM	
Y5501	90042-0538		1	PILOT VALVE L=500MM	
Y5502	90042-0538		1	PILOT VALVE L=500MM	
Y5503	90042-0538		1	PILOT VALVE L=500MM	
Y5504	90042-0538		1	PILOT VALVE L=500MM	

Pos	Part No	UN	Qty	Description	Page No

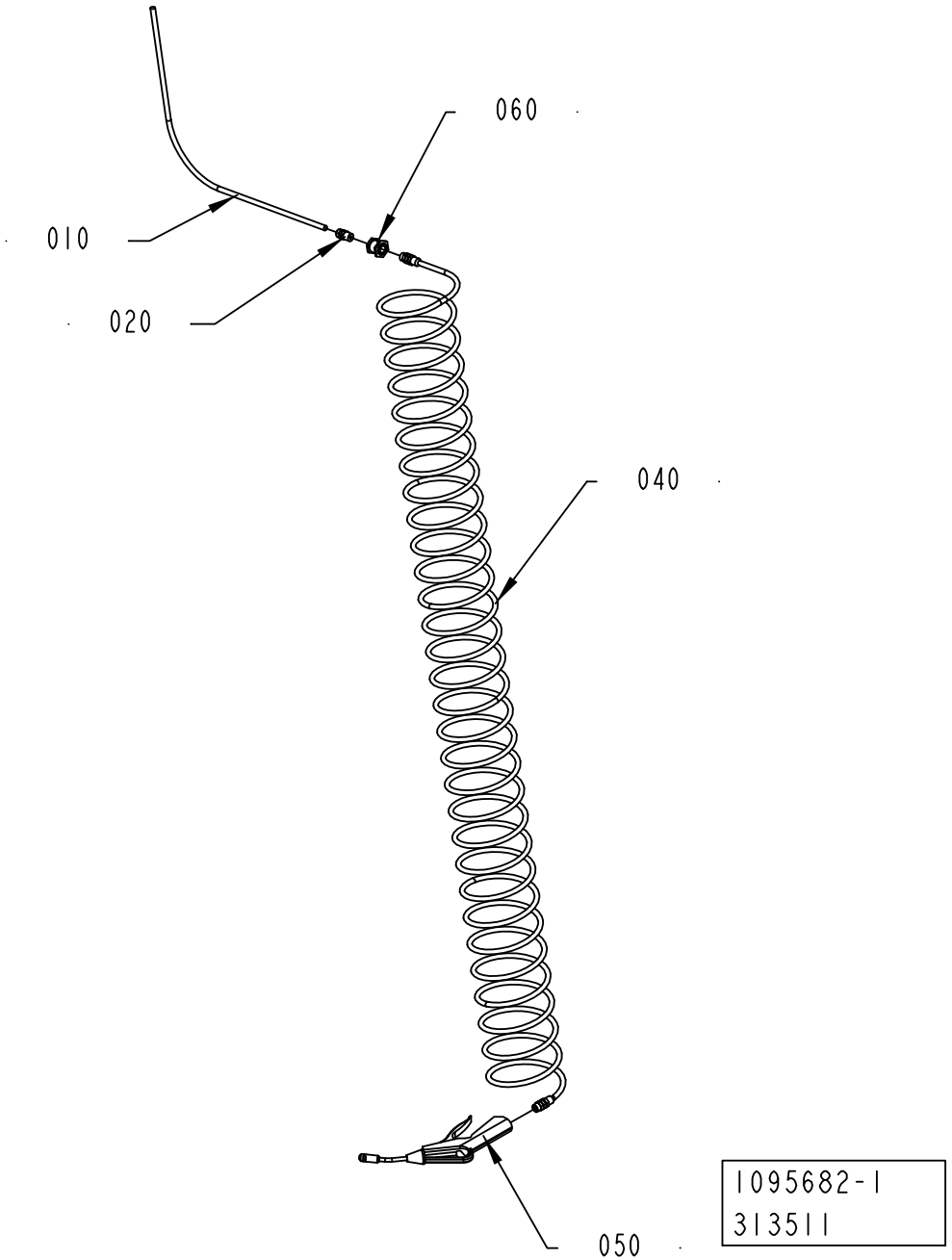
060
010
020
040
050
1095682-1
313511

ECM: 339755 - 20080402
Group number: 1095682-0100
Assembly Drawing: 1095682-1_1_AB

Pos	Part No	UN	Qty	Description	Page No
-					
010	90166-0013	MM	1800	TUBE 8 MM PA BLUE	
020	342920-0122		1	STRAIGHT COUPLING,EXT.THREADED 8/6-R1/4"	
030	342767-0104		1	CONN. BULKHEAD G1/4	
040	90152-0016		1	HOSE (SPIRAL)	
050	90459-0173		1	AIR GUN ASSEMBLY, CEJN SERIE 208	

Pos	Part No	UN	Qty	Description	Page No

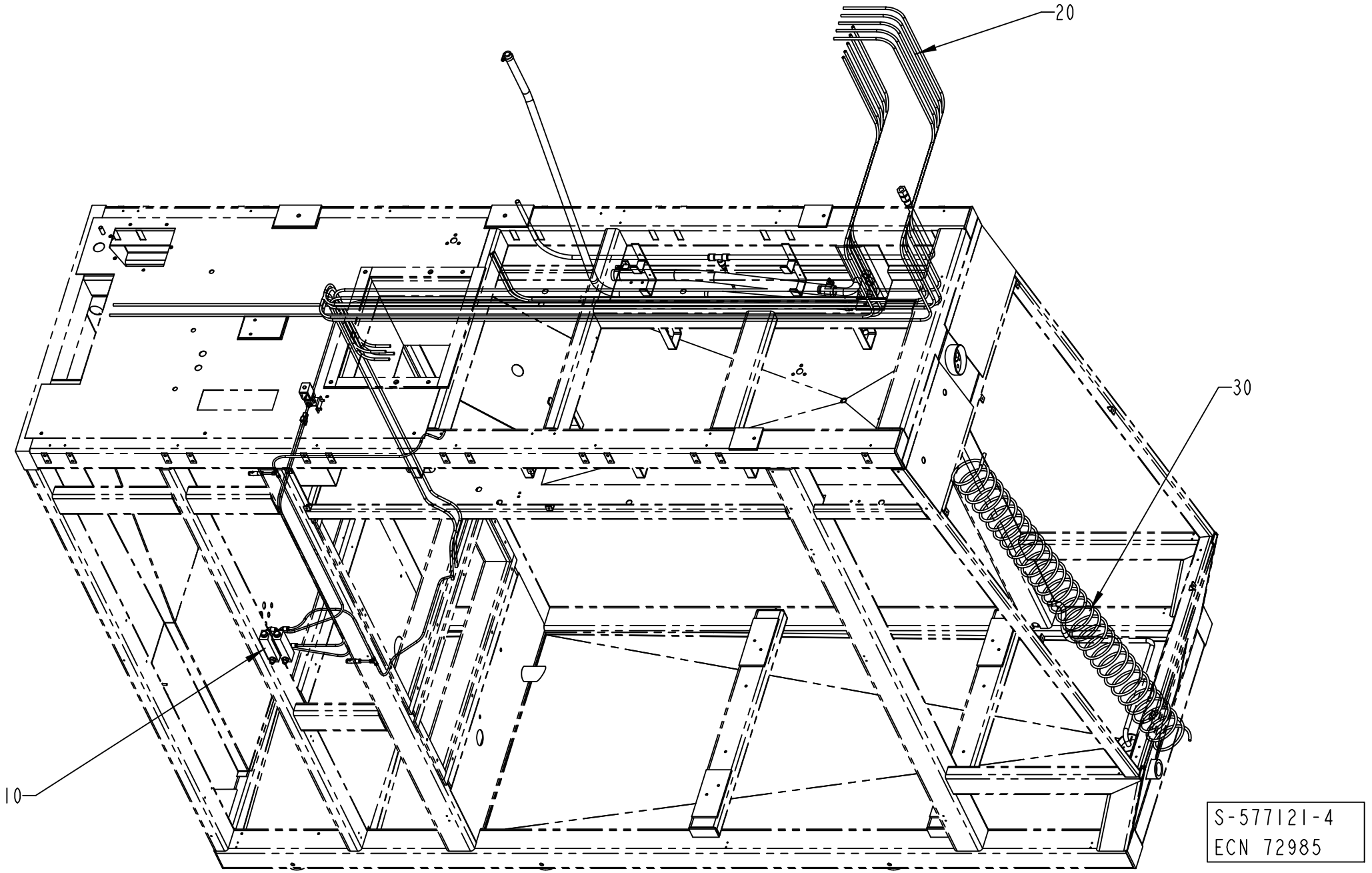
20
30
10
S-577121-4
ECN 72985

ECM: 72985 - 20000201
Group number: 577121-0400
Assembly Drawing: 577121-4_1_AA

Pos	Part No	UN	Qty	Description	Page No
-					
010	1334810-0200		1	PIPE WORK	**2-47**
020	1334812-0100		1	COOLING HOSES	**2-49**
030	1095681-0100		1	SPRAY GUN	**2-51**

Pos	Part No	UN	Qty	Description	Page No

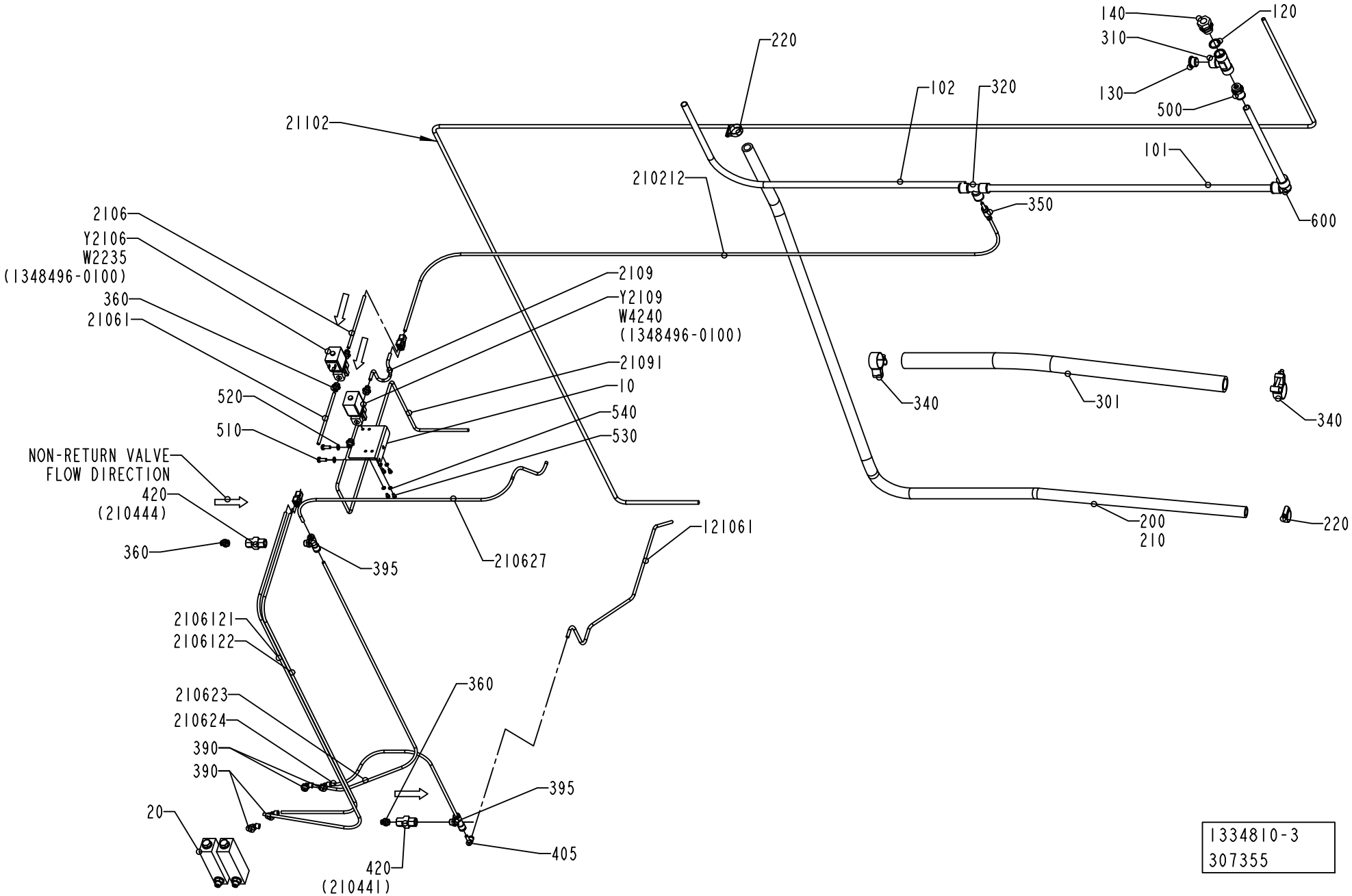
140
120
310
130
500
220
102
320
21102
101
210212
350
600
2106
Y2106
W2235
(1348496-0100)
360
21061
2109
Y2109
W4240
(1348496-0100)
21091
10
540
530
520
510
340
301
340
NON-RETURN VALVE
FLOW DIRECTION
420
(210444)
360
395
210627
121061
200
210
220
2106121
2106122
210623
210624
390
390
360
395
20
420
(210441)
405
1334810-3
307355

ECM: 307358 - 20070701
Group number: 1334810-0200
Assembly Drawing: 1334810-3_1_AH

Pos	Part No	UN	Qty	Description	Page No
-					
010	1548539-0000		1	CANTILEVER	
020	90243-0112		2	FLOW METER	
101	90166-0196	MM	1650	TUBE 14MM PA BLUE	
102	90166-0196	MM	1000	TUBE 14MM PA BLUE	
120	315239-0113		1	NYLON WASHER G1/2, 1/2RRP	
121061	90166-0132	MM	2100	TUBE 6 MM PA,TRANSP.	
130	342713-0213		1	PLUG, EXT THREAD HEX SOCKET 8638-00-120	
140	342720-0114		1	CONN. STR. GA-15-G1/2	
200	90166-0260	MM	2000	HOSE	
210	90411-0020	MM	2000	INSULATING TUBE	
210212	90166-0132	MM	1500	TUBE 6 MM PA,TRANSP.	
2106	90166-0132	MM	150	TUBE 6 MM PA,TRANSP.	
21061	90166-0132	MM	75	TUBE 6 MM PA,TRANSP.	
2106121	90166-0132	MM	1450	TUBE 6 MM PA,TRANSP.	
2106122	90166-0132	MM	1450	TUBE 6 MM PA,TRANSP.	
210623	90166-0132	MM	1050	TUBE 6 MM PA,TRANSP.	
210624	90166-0132	MM	1100	TUBE 6 MM PA,TRANSP.	
210627	90166-0132	MM	1000	TUBE 6 MM PA,TRANSP.	
2109	90166-0132	MM	200	TUBE 6 MM PA,TRANSP.	
21091	90166-0132	MM	1450	TUBE 6 MM PA,TRANSP.	
21102	90166-0133	MM	4500	TUBE 8 MM PA,TRANSP.	
220	342991-0104		2	HOSE CLIP,WORM DRIVE TYPE (23)-27	
301	90166-0233	MM	1000	HOSE	
310	90140-0010		1	T-PIPE, INT. THREAD, 20031/2	
320	342748-0110		1	T-CONNECTION 14MM	
340	90459-2366		2	HOSE CLIP, (32)-35	
350	90055-0116		1	REDUCER 6-14	
360	342722-0203		6	STRAIGHT COUPLING	
380	90055-0100		2	Y-CONNECTION, 6-6	
390	90458-2957		4	ELBOW PIPE JOINT, EXT.THREAD, D=6MM-G1/4	
395	342742-0103		2	T-COUPLING,ADJUST,F.PLASTIC TUBE 6-G1/4"	
405	90055-0217		1	ELBOW PIPE JOINT	
420	90235-0151		2	NON-RETURN VALVE, 534 098 110 0	
500	90055-0097		1	STRAIGHT COUPLING	
510	312105-0368		2	SCREW M6S ISO 4017 M6X16 A480	
520	315105-0153		2	WASHER BRB 6,4X12 RFR	
530	312105-0287		4	SCREW M6S ISO 4017 M4X8 A470	
540	315105-0136		4	WASHER BRB 4,3X8 RFR	
550	359000-0815		4	WIRE MARKING, YELLOW, PA3/6"P"	
560	359000-0500		4	WIRE MARKING, YELLOW, PA3/6"0"	
600	342735-0110		1	ELBOW PIPE	
W2235	351150-0403	MM	3000	CABLE OLFLEX 3X0,75 MM2 LIGHT/GREY	
W4240	351150-0403	MM	3000	CABLE OLFLEX 3X0,75 MM2 LIGHT/GREY	
Y2106	90042-0248		1	SOLENOID VALVE OFFICIENE DI ENSINO	
Y2109	90042-0248		1	SOLENOID VALVE OFFICIENE DI ENSINO	

Machine Type | Group Description | Used-In | Group Number | Page No

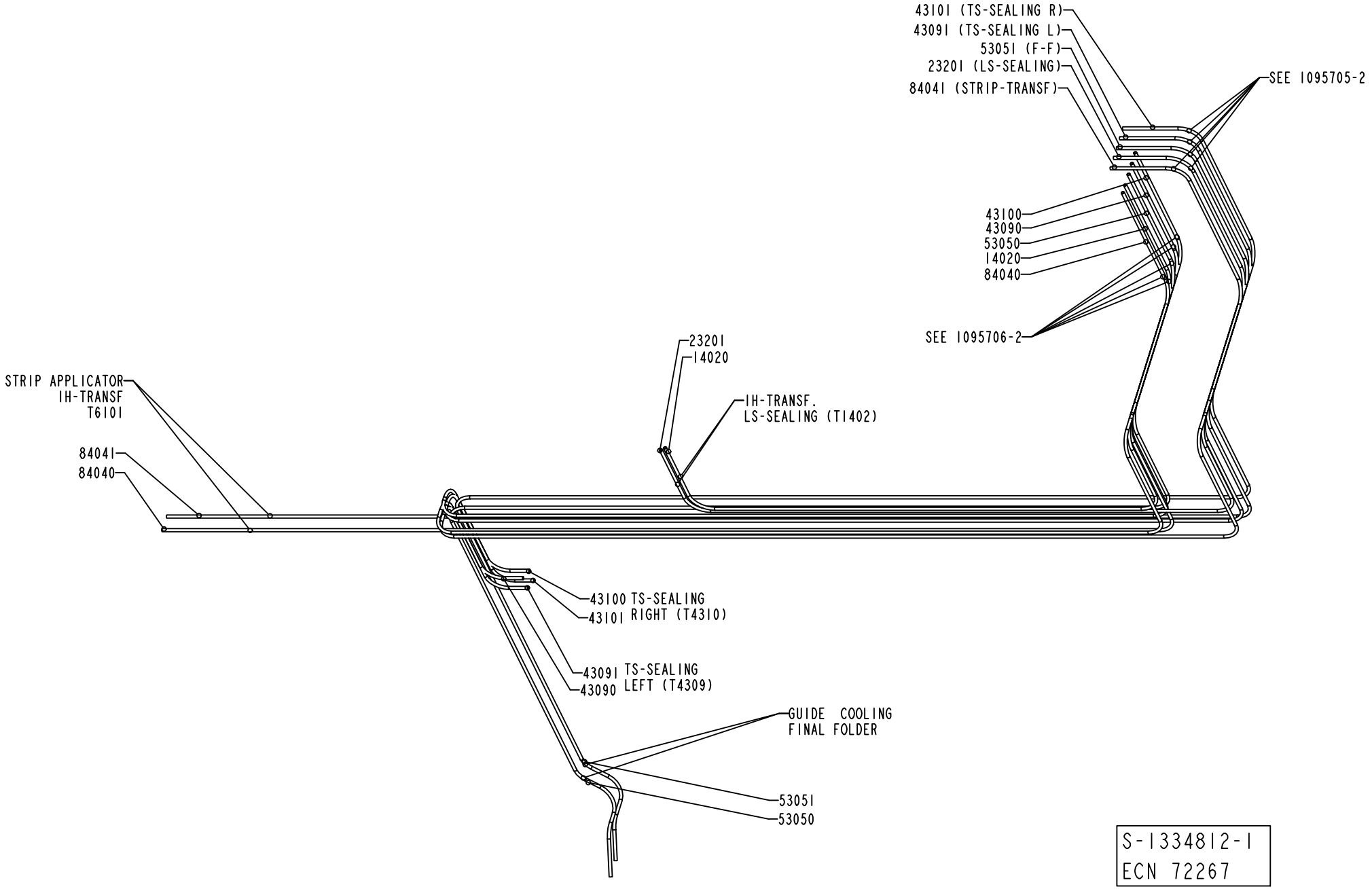

S-1334812-1
ECN 72267

ECM: 72985 - 20000201
Group number: 1334812-0100
Assembly Drawing: 1334812-1_1_AB

Pos	Part No	UN	Qty	Description	Page No
-					
100	359000-0400		30	WIRE MARKING, YELLOW, PA2/4"0"	
110	359000-0401		16	WIRE MARKING, YELLOW, PA2/4"1"	
120	359000-0402		6	WIRE MARKING, YELLOW, PA2/4"2"	
130	359000-0403		14	WIRE MARKING, YELLOW, PA2/4"3"	
140	359000-0404		18	WIRE MARKING, YELLOW, PA2/4"4"	
14020	90166-0118	MM	2800	TUBE 8 MM PA BLACK	
150	359000-0405		8	WIRE MARKING, YELLOW, PA2/4"5"	
160	359000-0408		4	WIRE MARKING, YELLOW, PA2/4"8"	
170	359000-0409		4	WIRE MARKING, YELLOW, PA2/4"9"	
23201	90166-0118	MM	3500	TUBE 8 MM PA BLACK	
43090	90166-0118	MM	4000	TUBE 8 MM PA BLACK	
43091	90166-0118	MM	4550	TUBE 8 MM PA BLACK	
43100	90166-0118	MM	4000	TUBE 8 MM PA BLACK	
43101	90166-0118	MM	4500	TUBE 8 MM PA BLACK	
53050	90166-0118	MM	5200	TUBE 8 MM PA BLACK	
53051	90166-0118	MM	5400	TUBE 8 MM PA BLACK	
84040	90166-0118	MM	4200	TUBE 8 MM PA BLACK	
84041	90166-0118	MM	4600	TUBE 8 MM PA BLACK	

Pos	Part No	UN	Qty	Description	Page No

SPRAY GUN

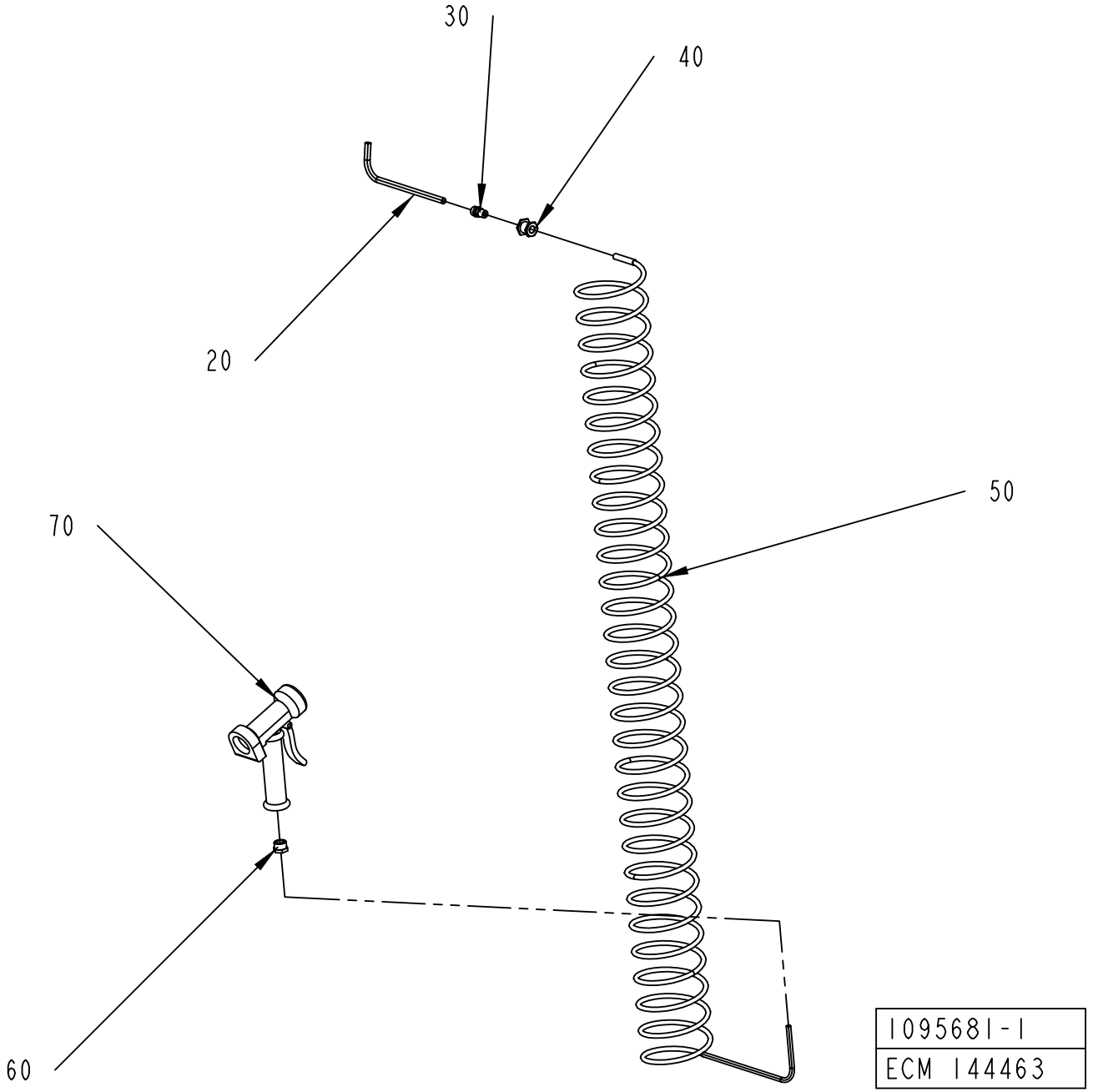

ECM: 189878 - 20041104
Group number: 1095681-0100
Assembly Drawing: 1095681-1_1_AB

Pos	Part No	UN	Qty	Description	Page No
-					
020	90166-0141	MM	1600	TUBE 10 MM PA,TRANSP. MIN.50M	
030	342920-0132		1	STRAIGHT COUPL.,EXT.THREADED 10/8-R1/4"	
040	342767-0104		1	CONN. BULKHEAD G1/4	
050	90152-0017		1	HOSE (SPIRAL)	
060	342701-0205		1	BUSHING,INT./EXT.G-THREAD G1/2"-G1/4"	
070	90426-0003		1	HAND SHOWER	

Pos	Part No	UN	Qty	Description	Page No

EXTERNAL CLEANING SYSTEM

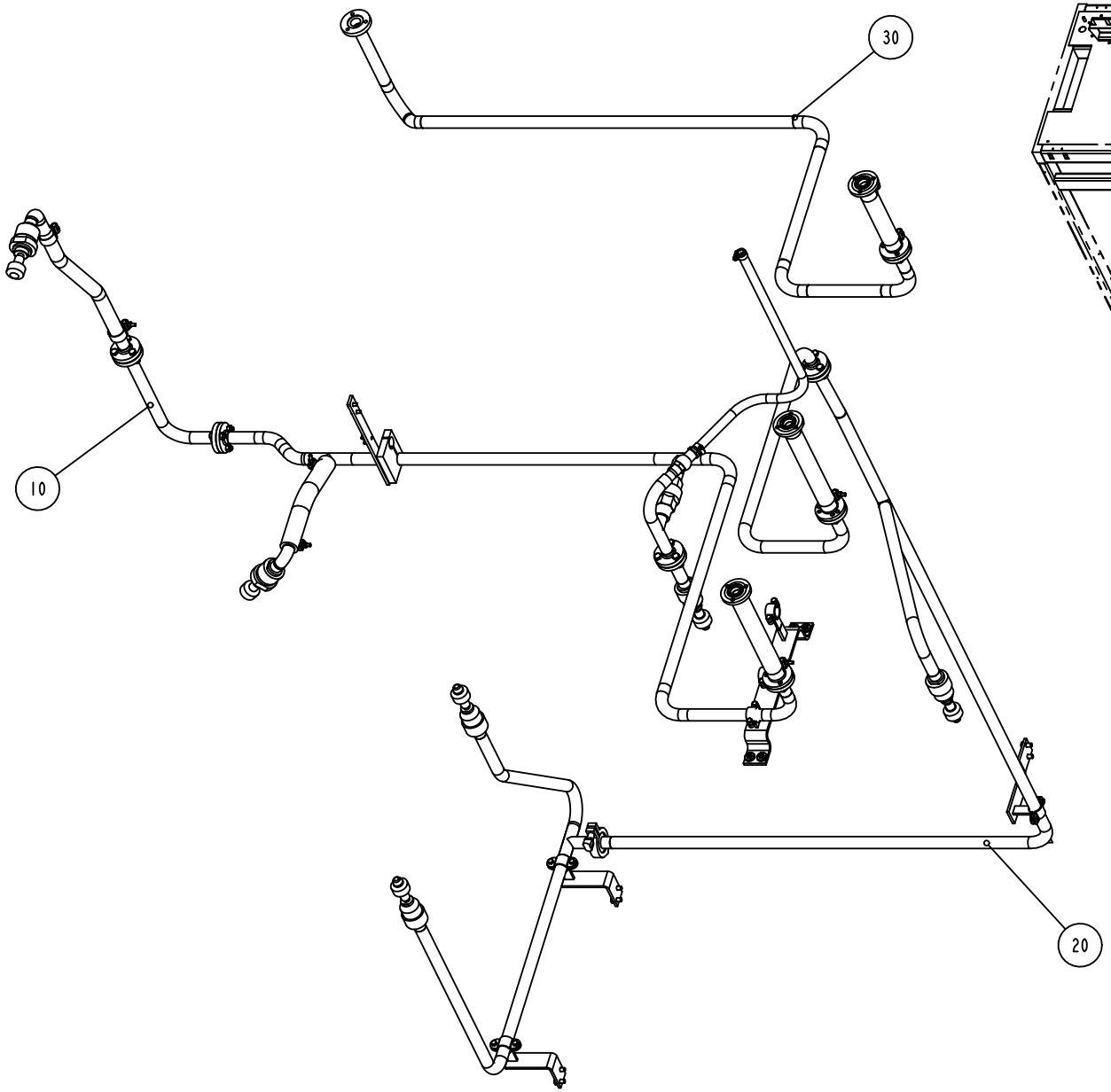

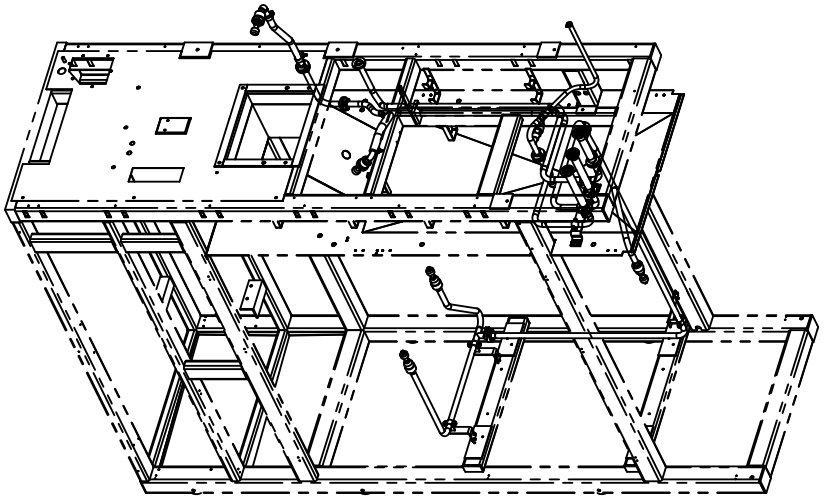

577122-3
ECN 84210

ECM: 84808 - 20000913
Group number: 577122-0300
Assembly Drawing: 577122-3_1_AB

Pos	Part No	UN	Qty	Description	Page No
-					
010	1260097-0300		1	CLEANING PIPEWORK UPPER	**2-55**
020	1260098-0300		1	CLEANING PIPEWORK	**2-57**
030	1095853-0300		1	CLEANING PIPE	**2-59**

Pos	Part No	UN	Qty	Description	Page No

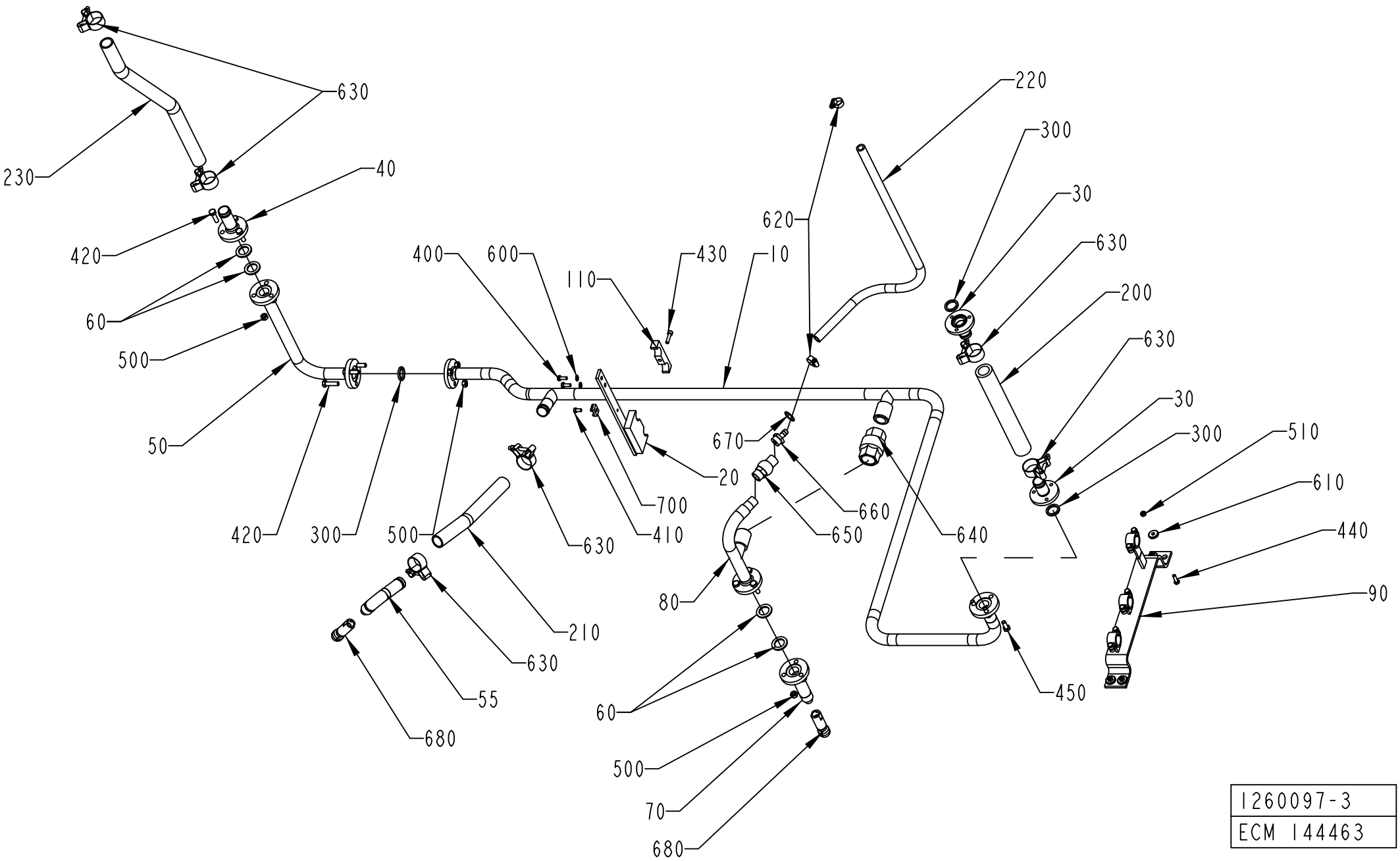

1260097-3
ECM 144463

ECM: 233900 - 20060313
Group number: 1260097-0300
Assembly Drawing: 1260097-3_1_AG

Pos	Part No	UN	Qty	Description	Page No
-					
010	1538962-0000		1	PIPE	
020	1317453-0000		1	BRACKET	
030	1195466-0000		2	PIPE	
040	1346665-0000		1	PIPE	
050	1260101-0000		1	PIPE	
055	1129383-0000		1	PIPE	
060	1037443-0000		4	GASKET	
070	1129379-0000		1	PIPE	
080	1255493-0000		1	PIPE	
090	1129378-0000		1	BRACKET	
110	1317486-0000		1	BRACKET	
200	90166-0233	MM	340	HOSE	
210	90166-0233	MM	300	HOSE	
220	90166-0121	MM	1000	HOSE	
230	90166-0233	MM	630	HOSE	
300	315229-0103		2	GASKETS, 23,1X30,1X3,7 MM 1" FDA	
400	312105-0368		2	SCREW M6S ISO 4017 M6X16 A480	
410	312125-0366		1	SCREW ISO 1207 M6X12 A4	
420	312105-0455		6	SCREW M6S ISO 4017 M8X30 A480	
430	312115-0372		1	SCREW ISO4762 M6X25 A4 80	
440	312105-0370		4	SCREW M6S ISO 4017 M6X20 A480	
450	312105-0451		3	SCREW M6S ISO 4017 M8X20 A480	
500	312605-0318		9	HEXAGON NUT, M6M M8 A280	
510	312605-0316		4	HEXAGON NUT, M6M M6 A280	
600	315105-0153		2	WASHER BRB 6,4X12 RFR	
610	315125-0153		4	WASHER TBRSB 6,4X22X4 A4	
620	342991-0102		2	HOSE CLIP,WORM DRIVE TYPE (16)-19	
630	90459-2366		6	HOSE CLIP, (32)-35	
640	90230-0044		1	NON-RETURN VALVE 1"	
	90230-0308		*1*	*GASKET KIT*	
650	90230-0042		1	NON-RETURN VALVE 1/2"	
660	342901-0105		1	HOSE NIPPLE, EXT.THR. R1/2-12 MM	
670	315233-0113		1	WASHER CAPTIVE SEALING G1/2	
680	90459-2735		2	ROT.SPRAY NOZZLE, 5MC.049.17.AF.00.02	
700	352113-0204		1	ANCHOR PLATES FOR STRIPS, TYPE TM3S25-M	

Pos	Part No	UN	Qty	Description	Page No

Machine Type | Group Description | Used-In | Group Number | Page No

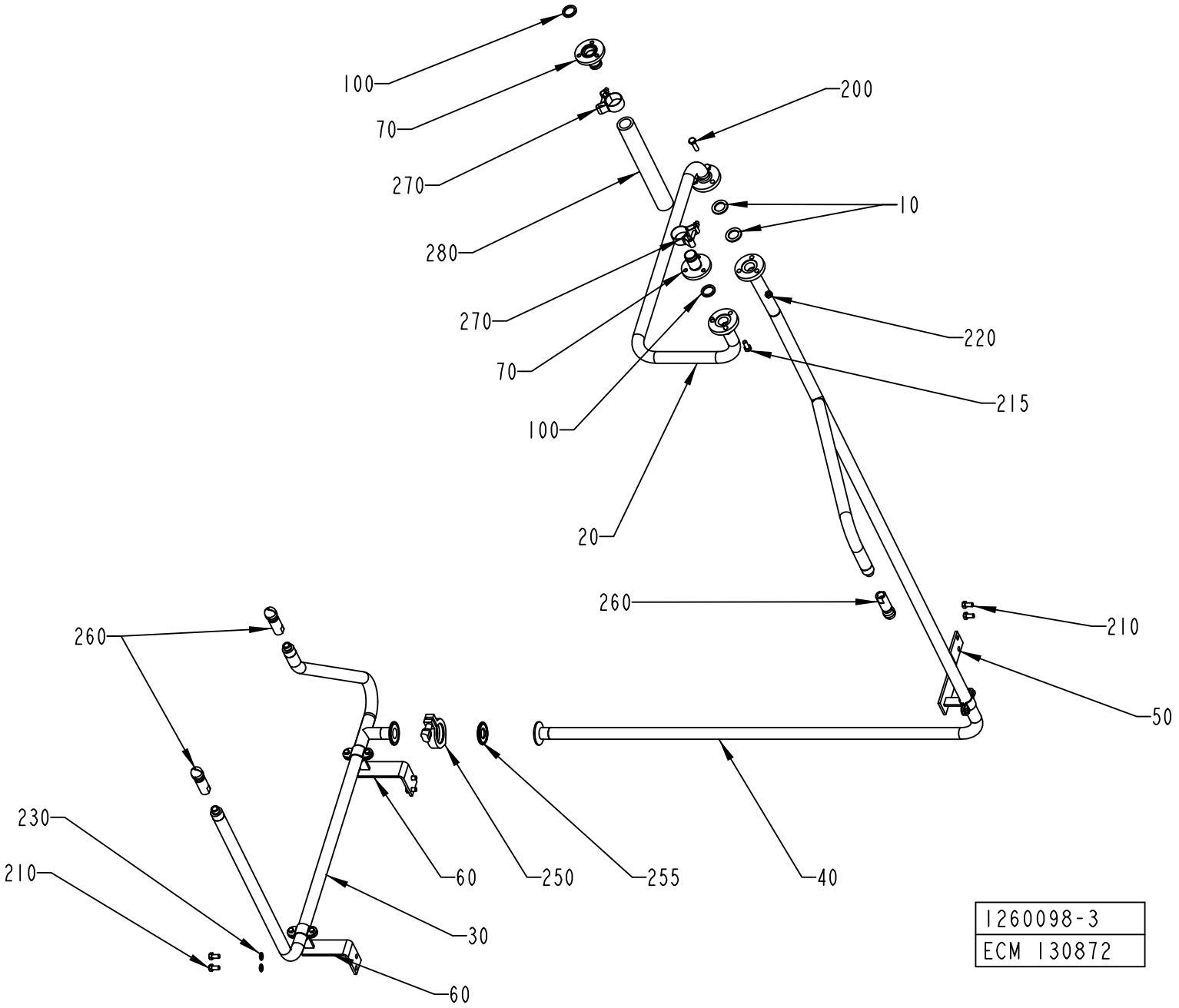
100
70
270
280
270
70
100
20
200
10
220
215
260
260
210
50
230
210
60
250
255
40
30
60
1260098-3
ECM 130872

ECM: 233901 - 20060313
Group number: 1260098-0300
Assembly Drawing: 1260098-3_1_AC

Pos	Part No	UN	Qty	Description	Page No
-					
010	1037443-0000		2	GASKET	
020	1538960-0000		1	PIPE	
030	1260185-0000		1	PIPE	
040	1317447-0000		1	PIPE	
050	1317451-0000		1	BRACKET	
060	1317450-0000		2	BRACKET	
070	1195466-0000		2	PIPE	
100	315229-0103		1	GASKETS, 23,1X30,1X3,7 MM 1" FDA	
200	312105-0455		3	SCREW M6S ISO 4017 M8X30 A480	
210	312105-0449		6	SCREW M6S ISO 4017 M8X16 A480	
215	312105-0451		3	SCREW M6S ISO 4017 M8X20 A480	
220	312605-0318		3	HEXAGON NUT, M6M M8 A280	
230	315105-0165		4	WASHER BRB 8,4X16 RFR	
250	342840-0103		1	CLAMPING PIECE	
255	342850-0103		1	GASKET 22,7X49,1X5,2 MM 1" FDA	
260	90459-2735		3	ROT.SPRAY NOZZLE, 5MC.049.17.AF.00.02	
270	90459-2366		2	HOSE CLIP, (32)-35	
280	90166-0233	MM	340	HOSE	

Pos	Part No	UN	Qty	Description	Page No

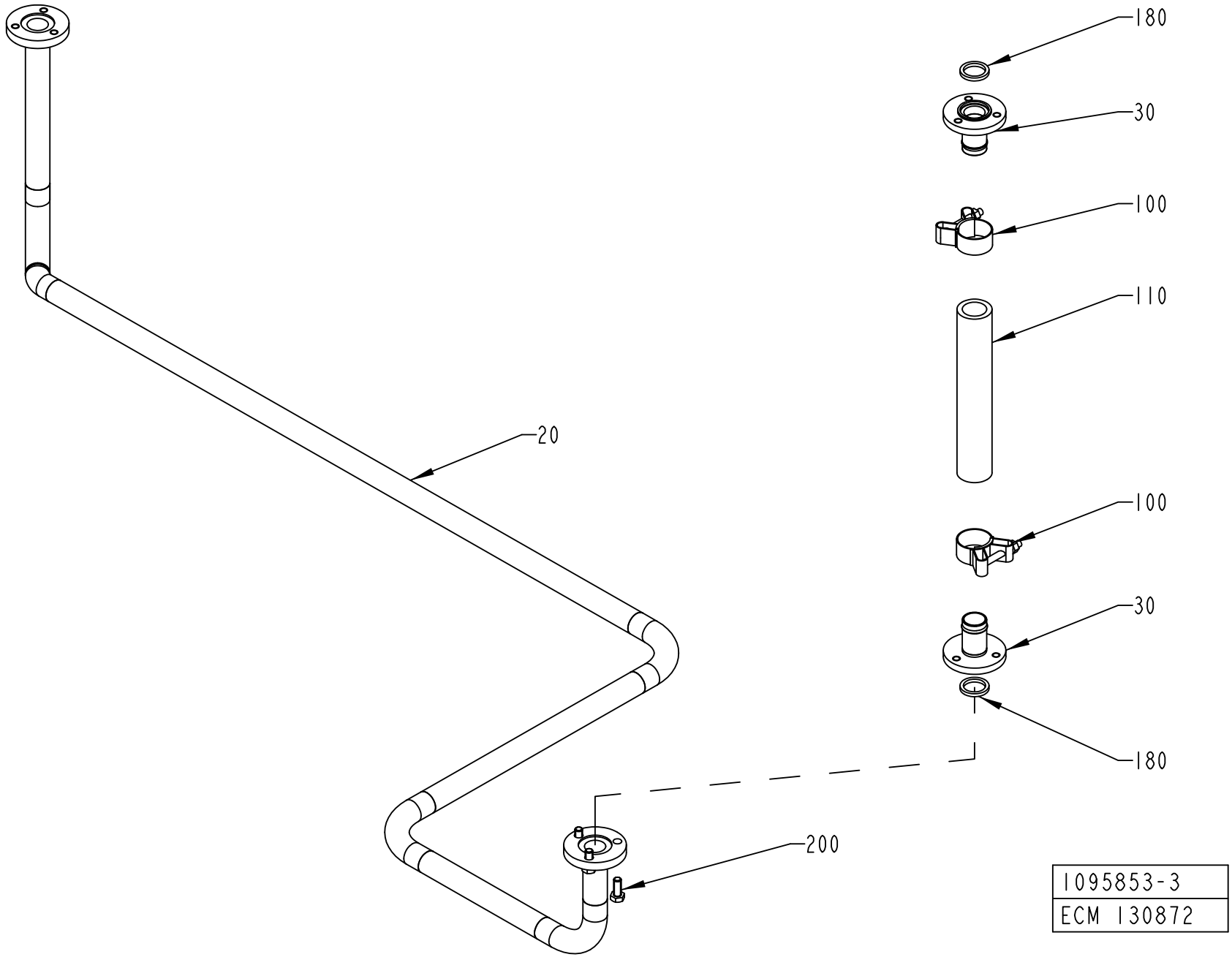
180
30
100
110
100
30
180
20
200
1095853-3
ECM 130872

ECM: 223711 - 20060313
Group number: 1095853-0300
Assembly Drawing: 1095853-3_1_AB

Pos	Part No	UN	Qty	Description	Page No
-					
020	1538961-0000		1	PIPE	
030	1195466-0000		2	PIPE	
100	90459-2366		2	HOSE CLIP, (32)-35	
110	90166-0233	MM	300	HOSE	
180	315229-0103		2	GASKETS, 23,1X30,1X3,7 MM 1" FDA	
200	312105-0451		3	SCREW M6S ISO 4017 M8X20 A480	

Pos	Part No	UN	Qty	Description	Page No

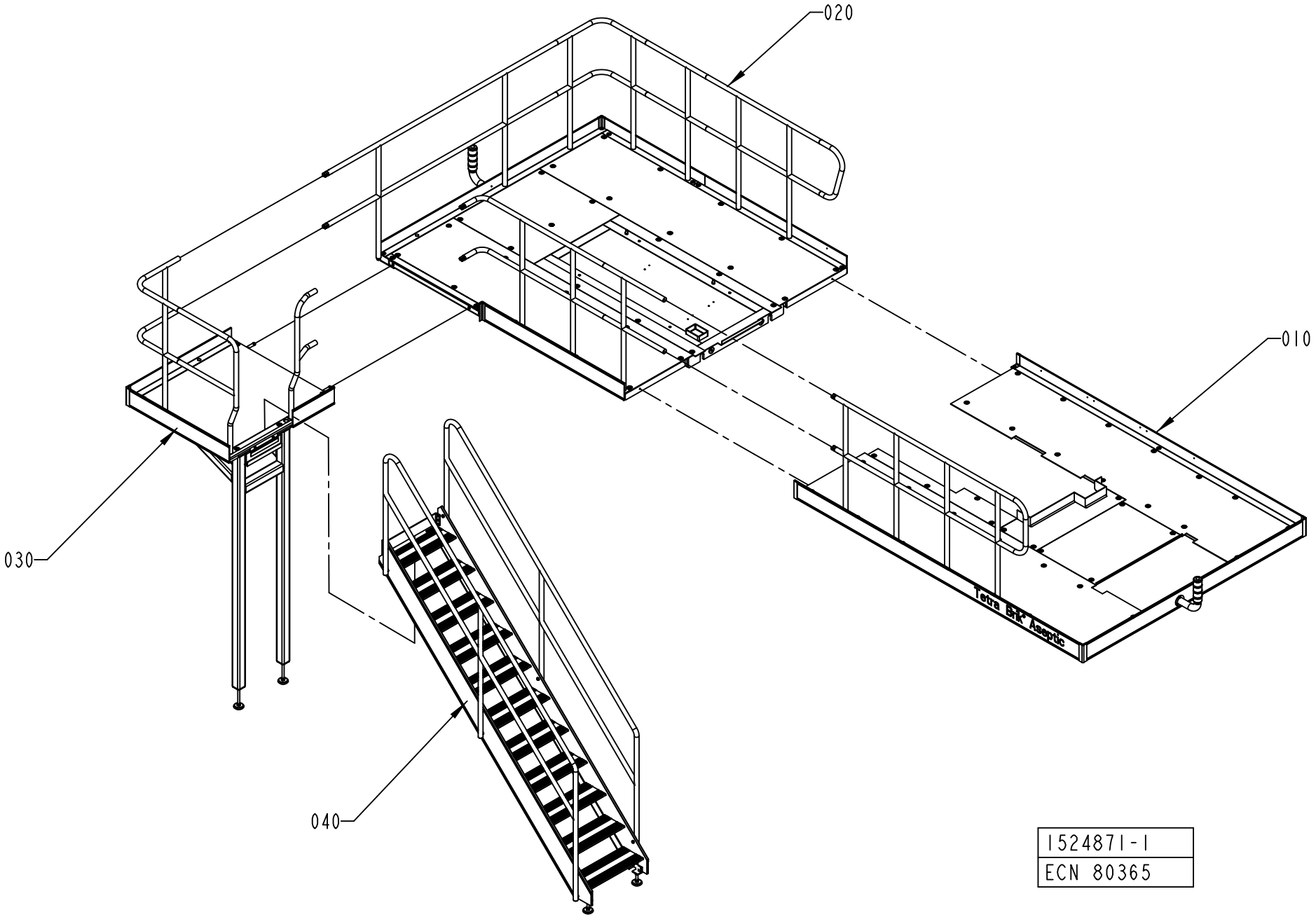

1524871-1
ECN 80365

ECM: 140256 - 20031002
Group number: 1524871-0100
Assembly Drawing: 1524871-1_1_AA

This list covers pages from 2-60 to 2-63

Pos	Part No	UN	Qty	Description	Page No
-					
010	1524866-0100		1	FRONT PLATFORM	**2-65**
020	1524845-0100		1	BACK PLATFORM	**2-69, 2-71**
030	1538870-0100		1	PLATFORM	**2-73, 2-75**
040	1523777-0100		1	STAIR CASE	**2-77**

Pos	Part No	UN	Qty	Description	Page No

Machine Type | Group Description | Used-In | Group Number | Page No

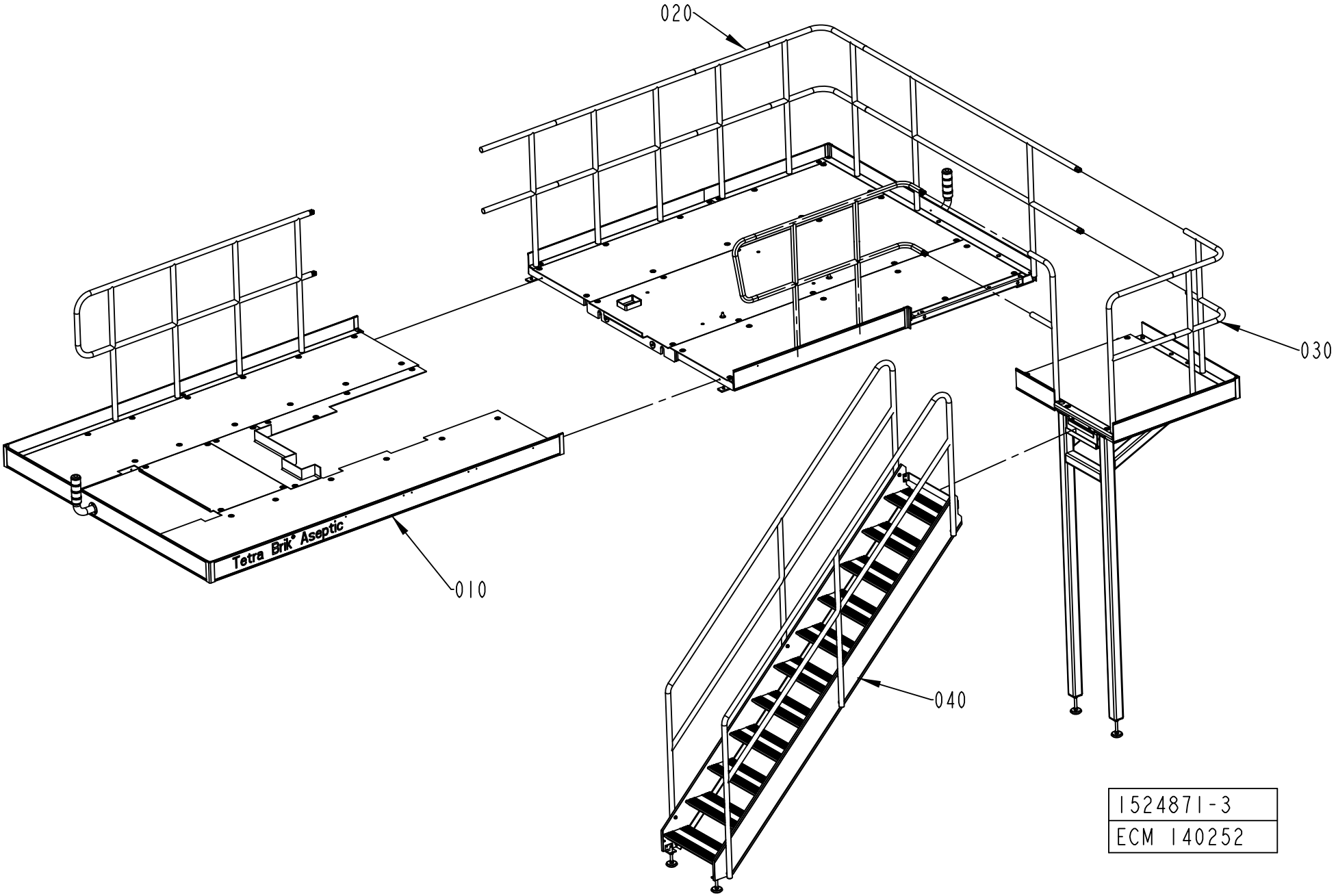
020
030
Tetra Brik® Aseptic
010
040
1524871-3
ECM 140252

ECM: 140256 - 20031002
Group number: 1524871-0100
Assembly Drawing: 1524871-3_1_AA

This list covers pages from 2-60 to 2-63

Pos	Part No	UN	Qty	Description	Page No
-					
010	1524866-0100		1	FRONT PLATFORM	**2-65**
020	1524845-0100		1	BACK PLATFORM	**2-69, 2-71**
030	1538870-0100		1	PLATFORM	**2-73, 2-75**
040	1523777-0100		1	STAIR CASE	**2-77**

Pos	Part No	UN	Qty	Description	Page No

Machine Type | Group Description | Used-In | Group Number | Page No

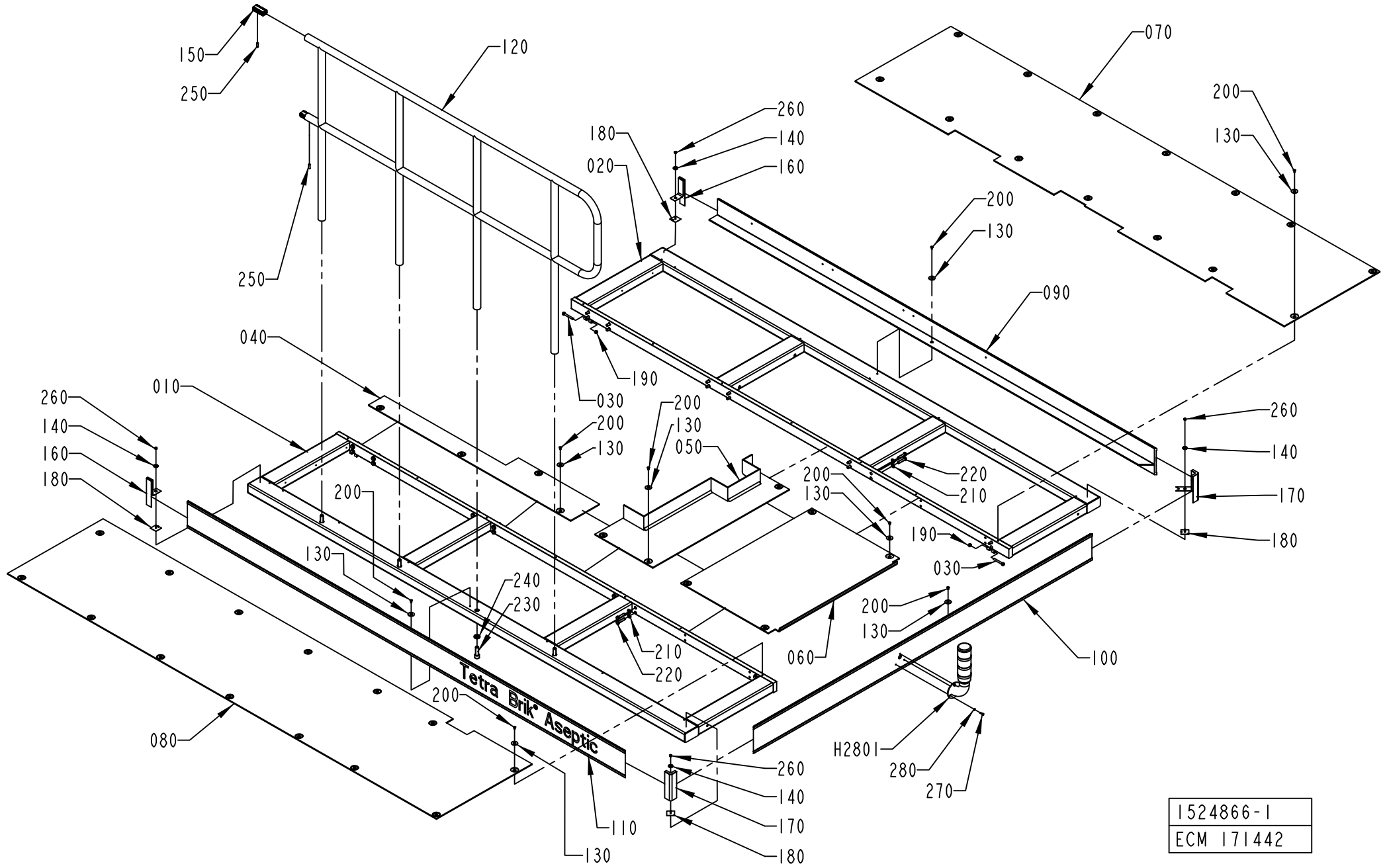
150
250
120
250
040
010
260
140
160
180
200
130
180
020
260
140
160
030
190
200
130
050
070
200
130
090
200
130
220
210
190
030
260
140
170
180
200
130
240
230
210
220
200
130
060
100
080
200
Tetra Brik Aseptic
110
130
260
140
170
180
H2801
280
270
1524866-1
ECM 171442

ECM: 171446 - 20040322
Group number: 1524866-0100
Assembly Drawing: 1524866-1_1_AD

Pos	Part No	UN	Qty	Description	Page No
-					
010	1524867-0000		1	PLATFORM	
020	1524868-0000		1	PLATFORM	
030	1523780-0000		4	SHAFT	
040	1254118-0000		1	CHECKER PLATE	
050	1041949-0000		1	CHECKER PLATE	
060	1254030-0000		1	CHECKER PLATE	
070	1523781-0000		1	CHECKER PLATE	
080	1523782-0000		1	CHECKER PLATE	
090	1523783-0000		1	TOE PLATE	
100	1523784-0000		1	TOE PLATE	
110	1524869-0000		1	TOE PLATE	
120	1524870-0000		1	RAILING	
130	1036241-0000		42	WASHER	
140	315125-0153		4	WASHER TBRSB 6,4X22X4 A4	
150	985328-0000		2	CONNECTION	
160	1254025-0000		2	STRIP	
170	1254027-0000		2	CORNER STRIP	
180	1254028-0000		4	FASTENING PLATE	
190	312812-0318		4	HEXAGON NUT, NY-LOCK M8 A480	
200	312155-0366		42	SCREW DIN 7991 MF6S M6X12 A4 70	
210	315105-0173		28	WASHER BRB 10,5X22 RFR	
220	90458-2845		28	SCREW,HEXAGON HEAD M6S ISO 4017 M10X45	
230	312115-0630		4	SCREW ISO4762 M16X50 A4 80	
240	315111-0186		4	WASHER PLAIN, TBRB 17/30 H=6	
250	312318-0453		4	SCREW ISO4029 M8X25 A4	
260	312605-0316		4	HEXAGON NUT, M6M M6 A280	
270	312115-0329		3	SCREW ISO4762 M5X16 A4 80	
280	315105-0146		3	WASHER BRB 5,3X10 RFR	
H2801	2540716-0100		1	SIGNAL LAMP	**2-67**

Pos	Part No	UN	Qty	Description	Page No

Machine Type | Group Description | Used-In | Group Number | Page No

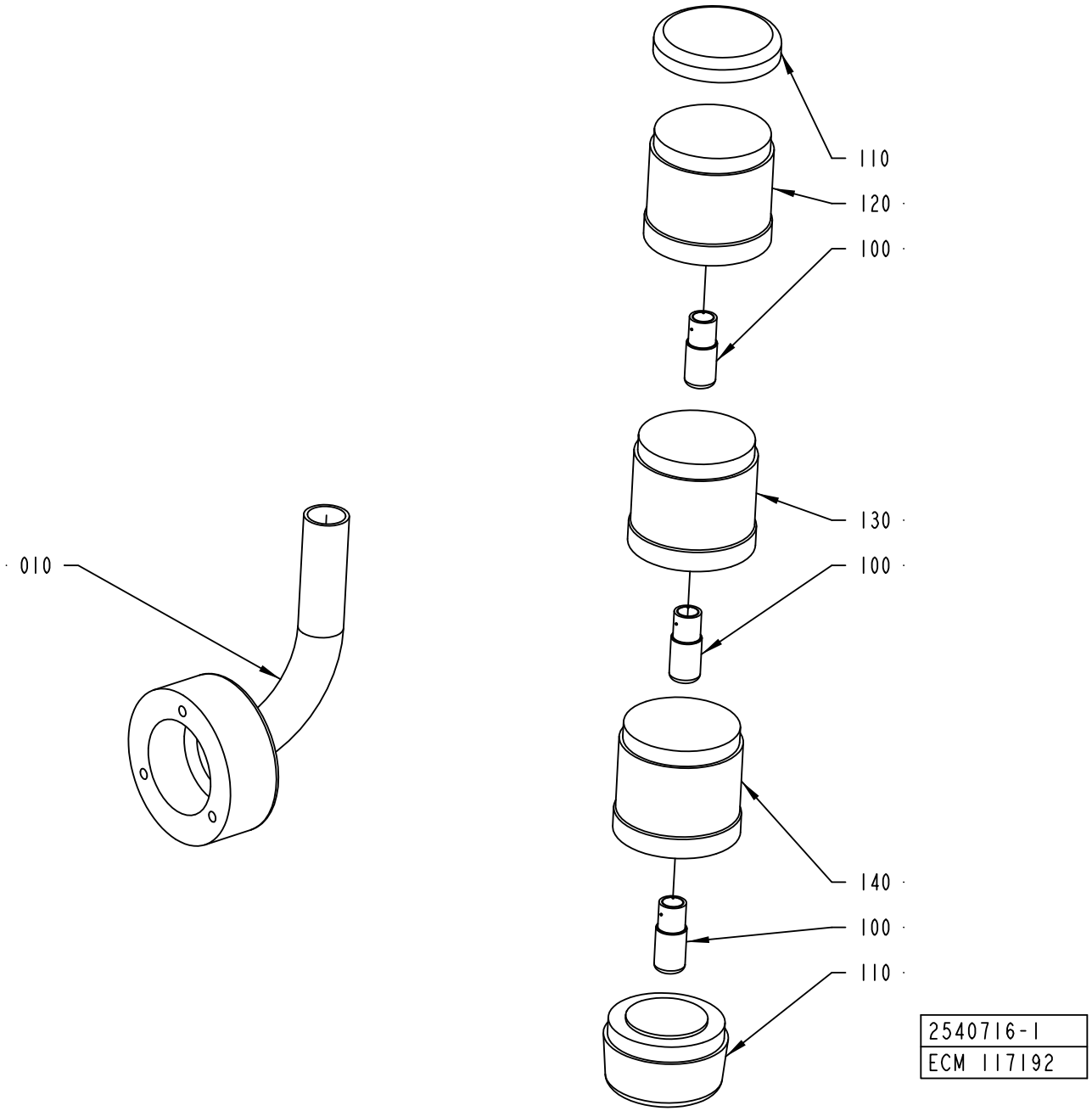
010
110
120
100
130
100
140
100
110
2540716-1
ECM 117192

ECM: 189868 - 20041104
Group number: 2540716-0100
Assembly Drawing: 2540716-1_1_AA

Pos	Part No	UN	Qty	Description	Page No
-					
010	2540767-0000		1	PIPE	
100	90036-0068		3	BULB 6.5W 24V	
110	90458-0292		1	BASE, KT70-1001	
120	90458-0293		1	LIGHT ELEMENT, RED, KL70-401R	
130	90458-0294		1	LIGHT ELEMENT, YELLOW, KL70-401Y	
140	90458-0295		1	LIGHT ELEMENT, BLUE, KL70-401L	

Pos	Part No	UN	Qty	Description	Page No

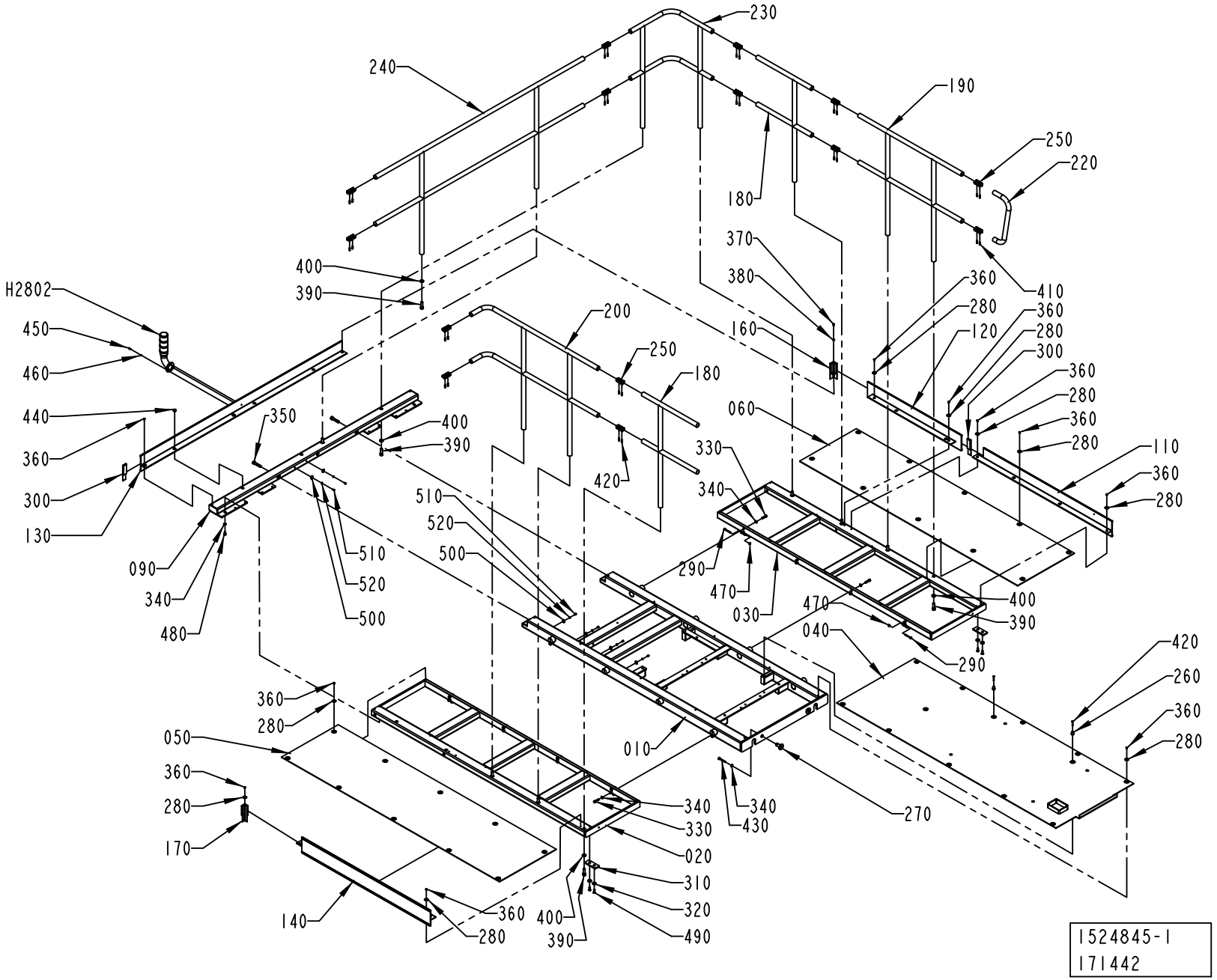
230
240
190
250
220
180
370
380
410
360
280
120
300
400
390
200
160
H2802
450
460
440
360
300
130
350
250
180
060
110
420
330
340
510
520
500
090
340
480
290
470
030
040
260
010
050
170
140
270
430
020
310
320
490
1524845-1
171442

ECM: 171445 - 20040322
Group number: 1524845-0100
Assembly Drawing: 1524845-1_1_AD

This list covers pages from 2-68 to 2-71

Pos	Part No	UN	Qty	Description	Page No
LEFTSTAIR (See drawing on page: 2-68)					
120	1524856-0000		1	TOE PLATE	
200	1524861-0000		1	RAILING	
RIGHTSTAIR (See drawing on page: 2-70)					
120	1524858-0000		1	TOE PLATE	
200	1524862-0000		1	RAILING	
Common Parts					
010	1535043-0000		1	PLATFORM	
020	1524847-0000		1	PLATFORM	
030	1524848-0000		1	PLATFORM	
040	1535038-0000		1	CHECKER PLATE	
050	1524850-0000		1	CHECKER PLATE	
060	1524851-0000		1	CHECKER PLATE	
090	1524854-0000		1	BEAM	
110	1524855-0000		1	TOE PLATE	
130	1523793-0000		1	TOE PLATE	
140	1524857-0000		1	TOE PLATE	
160	1524167-0000		1	CORNER STRIP	
170	1524168-0000		1	CORNER STRIP	
180	1524859-0000		2	RAILING	
190	1524860-0000		1	RAILING	
220	1558795-0000		1	RAILING	
230	1010822-0000		1	RAILING	
240	1548211-0000		1	RAILING	
250	985328-0000		14	CONNECTION	
260	1037571-0000		2	GUIDE BUSHING	
270	1116048-0000		2	SPACER	
280	1036241-0000		38	WASHER	
290	1523780-0000		4	SHAFT	
300	1558947-0000		2	STRIP	
310	1535036-0000		2	PLATE	
320	1535042-0000		4	WASHER	
330	90458-2845		16	SCREW,HEXAGON HEAD M6S ISO 4017 M10X45	
340	315105-0173		20	WASHER BRB 10,5X22 RFR	
350	312115-0634		2	SCREW ISO4762 M16X70 A4 80	
360	312155-0366		38	SCREW DIN 7991 MF6S M6X12 A4 70	
370	312105-0366		1	SCREW M6S ISO 4017 M6X12 A480	
380	315105-0165		1	WASHER BRB 8,4X16 RFR	
390	312115-0630		10	SCREW ISO4762 M16X50 A4 80	
400	315111-0186		10	WASHER PLAIN, TBRB 17/30 H=6	
410	312318-0453		28	SCREW ISO4029 M8X25 A4	
420	312109-0378		2	SCREW M6S ISO 4017 M6X40 A480	
430	312105-0505		2	SCREW M6S ISO 4014 M10X70 A480	
440	90261-0033		3	PLUG, BLIND, PLASTIC GPN300F182	
450	312115-0329		3	SCREW ISO4762 M5X16 A4 80	
460	315105-0146		3	WASHER BRB 5,3X10 RFR	
470	312812-0318		4	HEXAGON NUT, NY-LOCK M8 A480	
480	312105-0491		2	SCREW M6S ISO 4017 M10X20 A480	
490	312155-0495		4	SCREW DIN 7991 MF6S M10X30 A4 70	
500	352113-0204		6	ANCHOR PLATES FOR STRIPS, TYPE TM3S25-M	
510	312125-0366		6	SCREW ISO 1207 M6X12 A4	
520	315105-0153		6	WASHER BRB 6,4X12 RFR	
H2802	2540716-0100		1	SIGNAL LAMP	**2-67**

Machine Type | Group Description | Used-In | Group Number | Page No

BACK PLATFORM

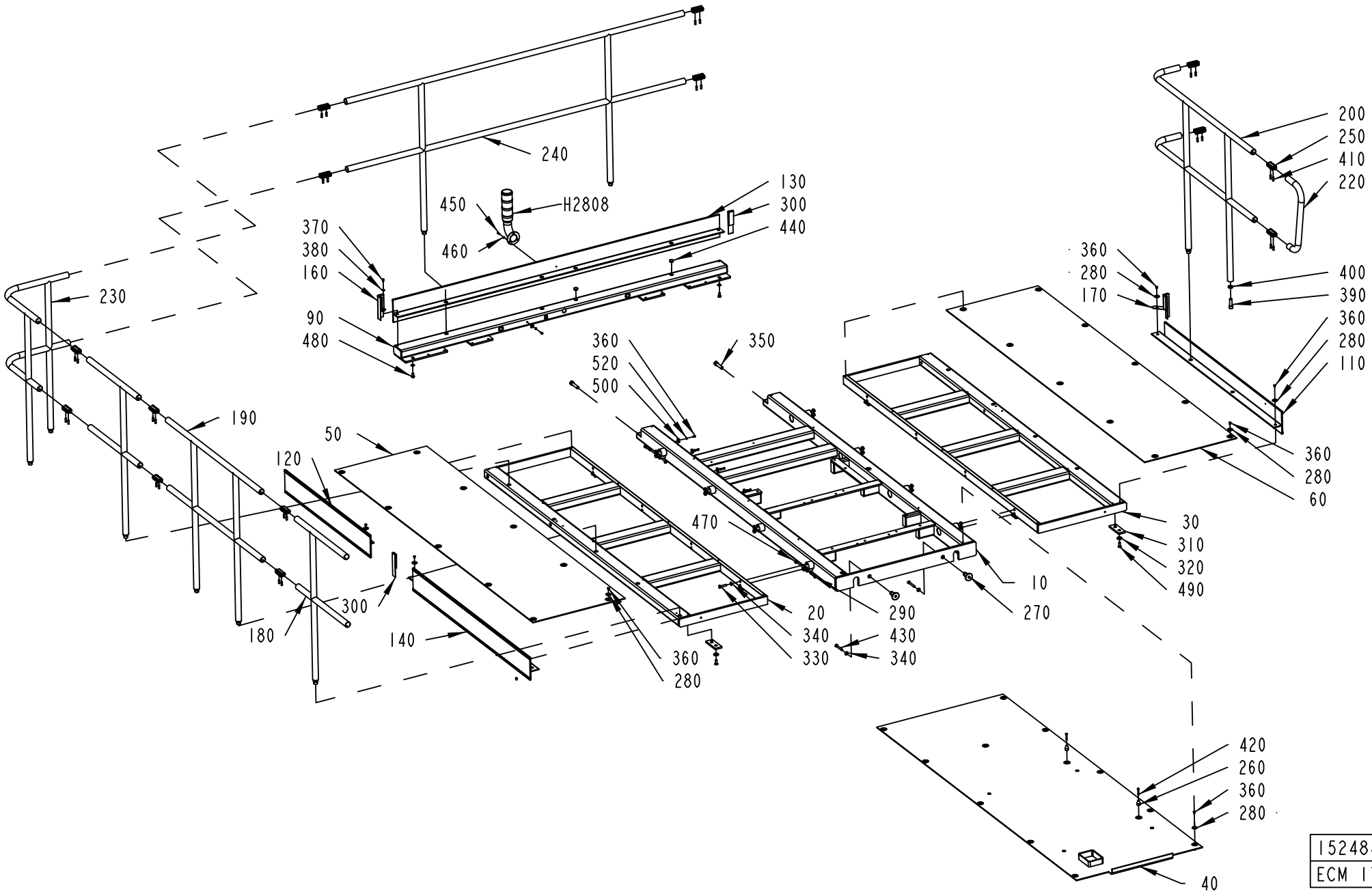

1524845-3
ECM 171442

ECM: 171445 - 20040322
Group number: 1524845-0100
Assembly Drawing: 1524845-3_1_AB

This list covers pages from 2-68 to 2-71

Pos	Part No	UN	Qty	Description	Page No
LEFTSTAIR (See drawing on page: 2-68)					
120	1524856-0000		1	TOE PLATE	
200	1524861-0000		1	RAILING	
RIGHTSTAIR (See drawing on page: 2-70)					
120	1524858-0000		1	TOE PLATE	
200	1524862-0000		1	RAILING	
Common Parts					
010	1535043-0000		1	PLATFORM	
020	1524847-0000		1	PLATFORM	
030	1524848-0000		1	PLATFORM	
040	1535038-0000		1	CHECKER PLATE	
050	1524850-0000		1	CHECKER PLATE	
060	1524851-0000		1	CHECKER PLATE	
090	1524854-0000		1	BEAM	
110	1524855-0000		1	TOE PLATE	
130	1523793-0000		1	TOE PLATE	
140	1524857-0000		1	TOE PLATE	
160	1524167-0000		1	CORNER STRIP	
170	1524168-0000		1	CORNER STRIP	
180	1524859-0000		2	RAILING	
190	1524860-0000		1	RAILING	
220	1558795-0000		1	RAILING	
230	1010822-0000		1	RAILING	
240	1548211-0000		1	RAILING	
250	985328-0000		14	CONNECTION	
260	1037571-0000		2	GUIDE BUSHING	
270	1116048-0000		2	SPACER	
280	1036241-0000		38	WASHER	
290	1523780-0000		4	SHAFT	
300	1558947-0000		2	STRIP	
310	1535036-0000		2	PLATE	
320	1535042-0000		4	WASHER	
330	90458-2845		16	SCREW,HEXAGON HEAD M6S ISO 4017 M10X45	
340	315105-0173		20	WASHER BRB 10,5X22 RFR	
350	312115-0634		2	SCREW ISO4762 M16X70 A4 80	
360	312155-0366		38	SCREW DIN 7991 MF6S M6X12 A4 70	
370	312105-0366		1	SCREW M6S ISO 4017 M6X12 A480	
380	315105-0165		1	WASHER BRB 8,4X16 RFR	
390	312115-0630		10	SCREW ISO4762 M16X50 A4 80	
400	315111-0186		10	WASHER PLAIN, TBRB 17/30 H=6	
410	312318-0453		28	SCREW ISO4029 M8X25 A4	
420	312109-0378		2	SCREW M6S ISO 4017 M6X40 A480	
430	312105-0505		2	SCREW M6S ISO 4014 M10X70 A480	
440	90261-0033		3	PLUG, BLIND, PLASTIC GPN300F182	
450	312115-0329		3	SCREW ISO4762 M5X16 A4 80	
460	315105-0146		3	WASHER BRB 5,3X10 RFR	
470	312812-0318		4	HEXAGON NUT, NY-LOCK M8 A480	
480	312105-0491		2	SCREW M6S ISO 4017 M10X20 A480	
490	312155-0495		4	SCREW DIN 7991 MF6S M10X30 A4 70	
500	352113-0204		6	ANCHOR PLATES FOR STRIPS, TYPE TM3S25-M	
510	312125-0366		6	SCREW ISO 1207 M6X12 A4	
520	315105-0153		6	WASHER BRB 6,4X12 RFR	
H2802	2540716-0100		1	SIGNAL LAMP	**2-67**

Machine Type	Group Description	Used-In	Group Number	Page No

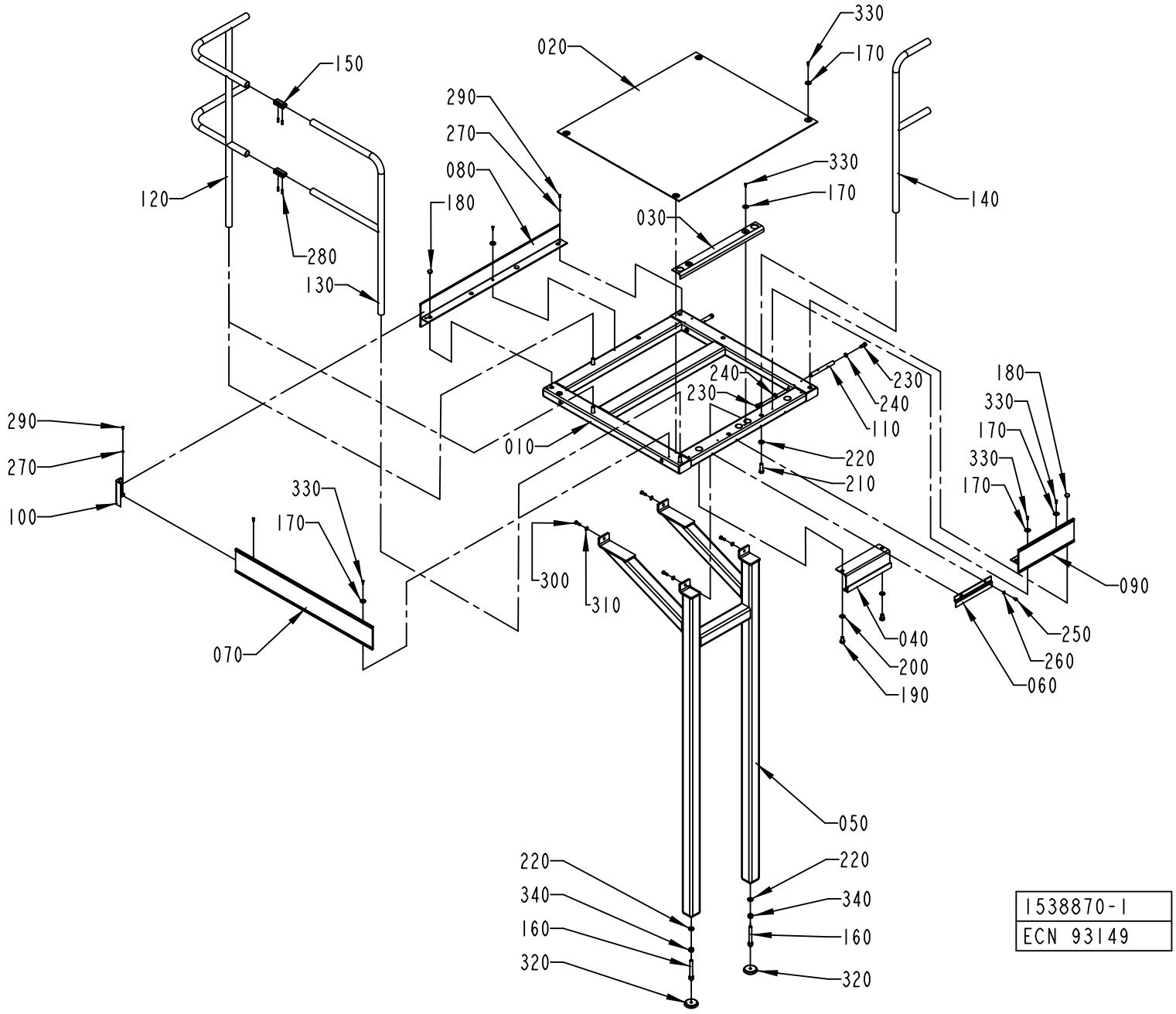
330
170
020
150
290
270
080
180
120
280
130
330
170
140
030
240
230
230
240
110
180
330
170
330
170
290
270
100
010
220
210
330
170
300
310
090
040
200
190
250
260
060
070
050
220
340
160
320
220
340
160
320
1538870-1
ECN 93149

Pos	Part No	UN	Qty	Description	Page No
LEFTSTAIR (See drawing on page: 2-72)					
070	1524177-0000		1	TOE PLATE	
RIGHTSTAIR (See drawing on page: 2-74)					
070	1524180-0000		1	TOE PLATE	
Common Parts					
010	1524171-0000		1	FRAME	
020	1524172-0000		1	CHECKER PLATE	
030	1524173-0000		1	CHECKER PLATE	
040	1524174-0000		1	HOOK	
050	1524175-0000		1	LEG	
060	1524176-0000		1	CLAMP	
080	1524178-0000		1	TOE PLATE	
090	1524179-0000		1	TOE PLATE	
100	1524167-0000		1	CORNER STRIP	
110	1524181-0000		2	PIN	
120	1010822-0000		1	RAILING	
130	1524182-0000		1	RAILING	
140	1524864-0000		1	RAILING	
150	985328-0000		2	CONNECTION	
160	1524185-0000		2	EXTENSION PIECE	
170	1036241-0000		11	WASHER	
180	90261-0033		3	PLUG, BLIND, PLASTIC GPN300F182	
190	312105-0622		2	SCREW M6S ISO 4017 M16X25 A480	
200	315105-0186		2	WASHER BRB 17X30 RFR	
210	312101-0630		4	SCREW M6S M16X50 FZB	
220	315111-0186		6	WASHER PLAIN, TBRB 17/30 H=6	
230	312105-0536		4	SCREW M6S ISO 4017 M12X30 A480	
240	315105-0178		4	WASHER BRB 13X24 RFR	
250	312105-0447		2	SCREW M6S ISO 4017 M8X12 A480	
260	315105-0165		2	WASHER BRB 8,4X16 RFR	
270	315105-0153		2	WASHER BRB 6,4X12 RFR	
280	312318-0453		4	SCREW ISO4029 M8X25 A4	
290	90458-0072		2	SCREW ISO 7380 S M6X12 A2	
300	312105-0495		4	SCREW M6S ISO 4017 M10X30 A480	
310	315105-0173		4	WASHER BRB 10,5X22 RFR	
320	90347-0009		2	FLOOR PLATE, NO 1256730	
330	312155-0370		11	SCREW DIN 7991 MF6S M6X20 A4 70	
340	312605-0324		2	HEXAGON NUT, M6M M16 A280	

Pos	Part No	UN	Qty	Description	Page No

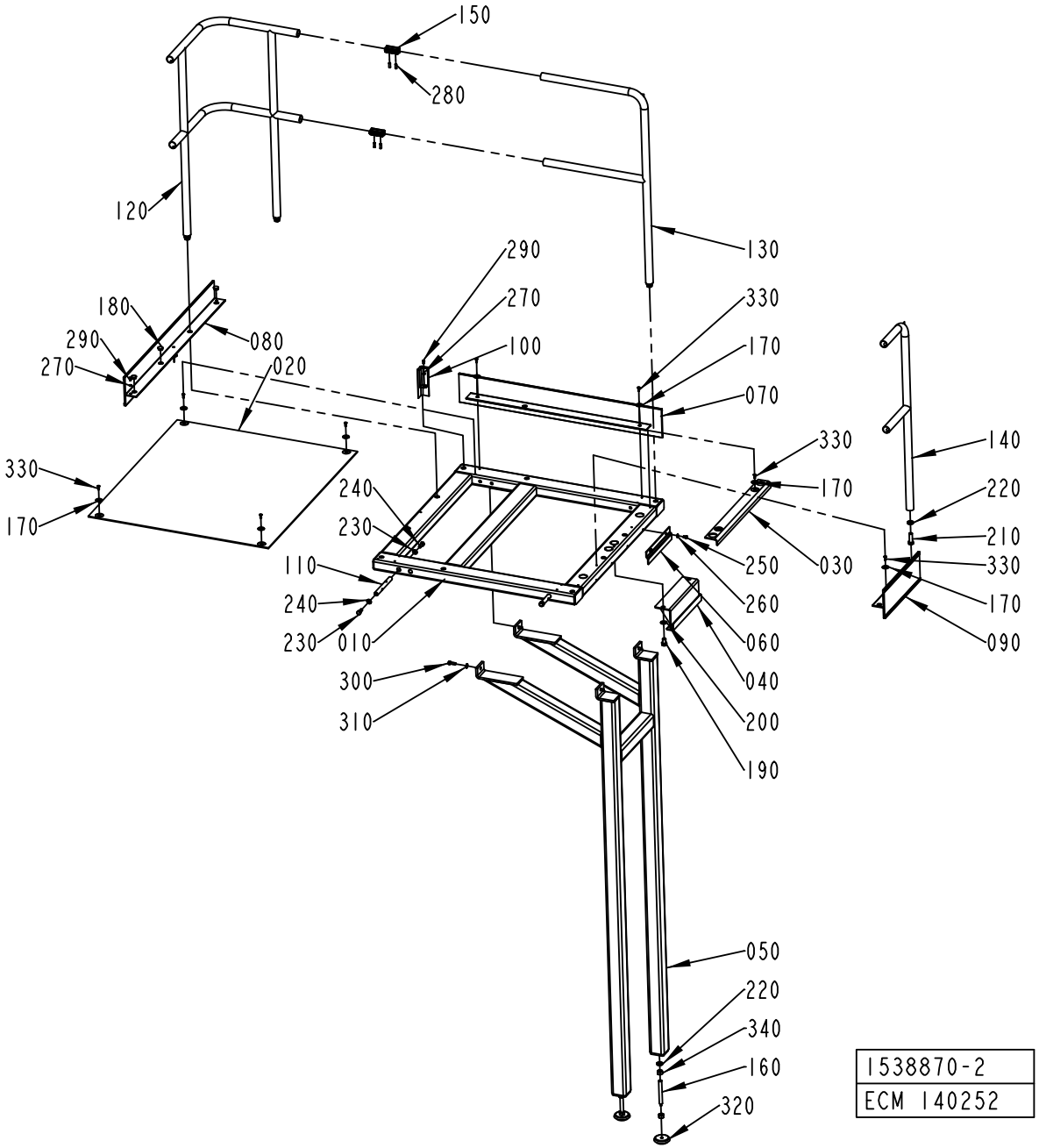
150
280
120
130
290
270
100
180
290
270
080
020
330
170
330
170
070
330
170
140
220
210
330
170
090
240
230
110
240
230
010
250
260
060
040
200
190
030
300
310
050
220
340
160
320
1538870-2
ECM 140252

Pos	Part No	UN	Qty	Description	Page No
LEFTSTAIR (See drawing on page: 2-72)					
070	1524177-0000		1	TOE PLATE	
RIGHTSTAIR (See drawing on page: 2-74)					
070	1524180-0000		1	TOE PLATE	
Common Parts					
010	1524171-0000		1	FRAME	
020	1524172-0000		1	CHECKER PLATE	
030	1524173-0000		1	CHECKER PLATE	
040	1524174-0000		1	HOOK	
050	1524175-0000		1	LEG	
060	1524176-0000		1	CLAMP	
080	1524178-0000		1	TOE PLATE	
090	1524179-0000		1	TOE PLATE	
100	1524167-0000		1	CORNER STRIP	
110	1524181-0000		2	PIN	
120	1010822-0000		1	RAILING	
130	1524182-0000		1	RAILING	
140	1524864-0000		1	RAILING	
150	985328-0000		2	CONNECTION	
160	1524185-0000		2	EXTENSION PIECE	
170	1036241-0000		11	WASHER	
180	90261-0033		3	PLUG, BLIND, PLASTIC GPN300F182	
190	312105-0622		2	SCREW M6S ISO 4017 M16X25 A480	
200	315105-0186		2	WASHER BRB 17X30 RFR	
210	312101-0630		4	SCREW M6S M16X50 FZB	
220	315111-0186		6	WASHER PLAIN, TBRB 17/30 H=6	
230	312105-0536		4	SCREW M6S ISO 4017 M12X30 A480	
240	315105-0178		4	WASHER BRB 13X24 RFR	
250	312105-0447		2	SCREW M6S ISO 4017 M8X12 A480	
260	315105-0165		2	WASHER BRB 8,4X16 RFR	
270	315105-0153		2	WASHER BRB 6,4X12 RFR	
280	312318-0453		4	SCREW ISO4029 M8X25 A4	
290	90458-0072		2	SCREW ISO 7380 S M6X12 A2	
300	312105-0495		4	SCREW M6S ISO 4017 M10X30 A480	
310	315105-0173		4	WASHER BRB 10,5X22 RFR	
320	90347-0009		2	FLOOR PLATE, NO 1256730	
330	312155-0370		11	SCREW DIN 7991 MF6S M6X20 A4 70	
340	312605-0324		2	HEXAGON NUT, M6M M16 A280	

Pos	Part No	UN	Qty	Description	Page No

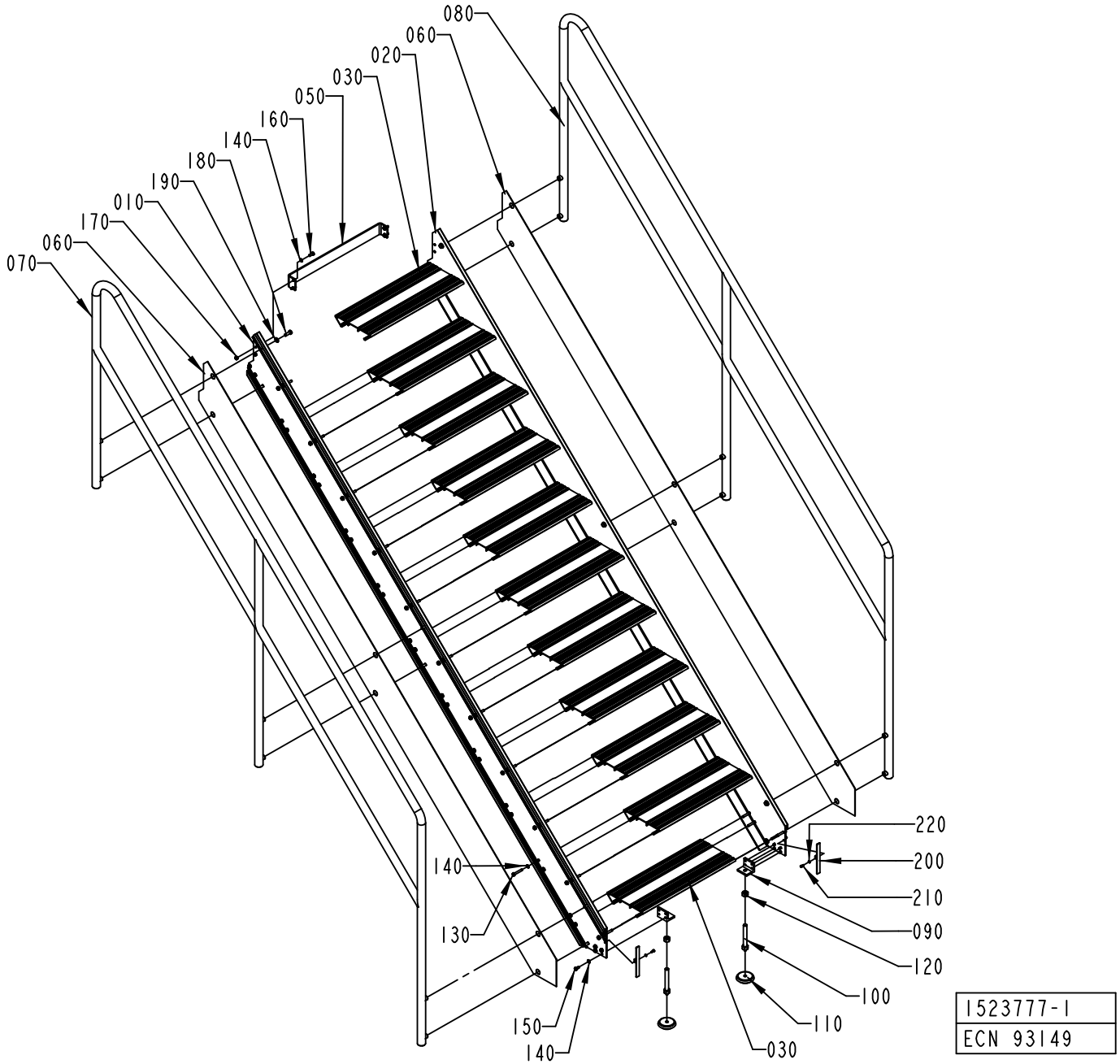
080
060
020
030
050
160
140
180
190
010
170
060
070
140
130
150
140
030
220
200
210
090
120
100
110
1523777-1
ECN 93149

ECM: 189875 - 20041104
Group number: 1523777-0100
Assembly Drawing: 1523777-1_1_AB

Pos	Part No	UN	Qty	Description	Page No
-					
010	1524186-0000		1	PROFILE	
020	1524187-0000		1	PROFILE	
030	1524188-0000		10	STAIR	
050	1524190-0000		1	BRACKET	
060	1524191-0000		2	RIM	
070	1524192-0000		1	RAILING	
080	1524193-0000		1	RAILING	
090	1037391-0000		2	CANTILEVER	
100	1524185-0000		2	EXTENSION PIECE	
110	90347-0009		2	FLOOR PLATE, NO 1256730	
120	312605-0324		2	HEXAGON NUT, M6M M16 A280	
130	312104-0461		88	SCREW M6S M8X50H FZB	
140	315105-0165		94	WASHER BRB 8,4X16 RFR	
150	312105-0449		8	SCREW M6S ISO 4017 M8X16 A480	
160	312105-0451		6	SCREW M6S ISO 4017 M8X20 A480	
170	312605-0318		4	HEXAGON NUT, M6M M8 A280	
180	312105-0495		12	SCREW M6S ISO 4017 M10X30 A480	
190	315105-0173		12	WASHER BRB 10,5X22 RFR	
200	1558946-0000		2	PLUG	
210	312115-0327		2	SCREW ISO4762 M5X12 A4 80	
220	315105-0146		2	WASHER BRB 5,3X10 RFR	

Pos	Part No	UN	Qty	Description	Page No

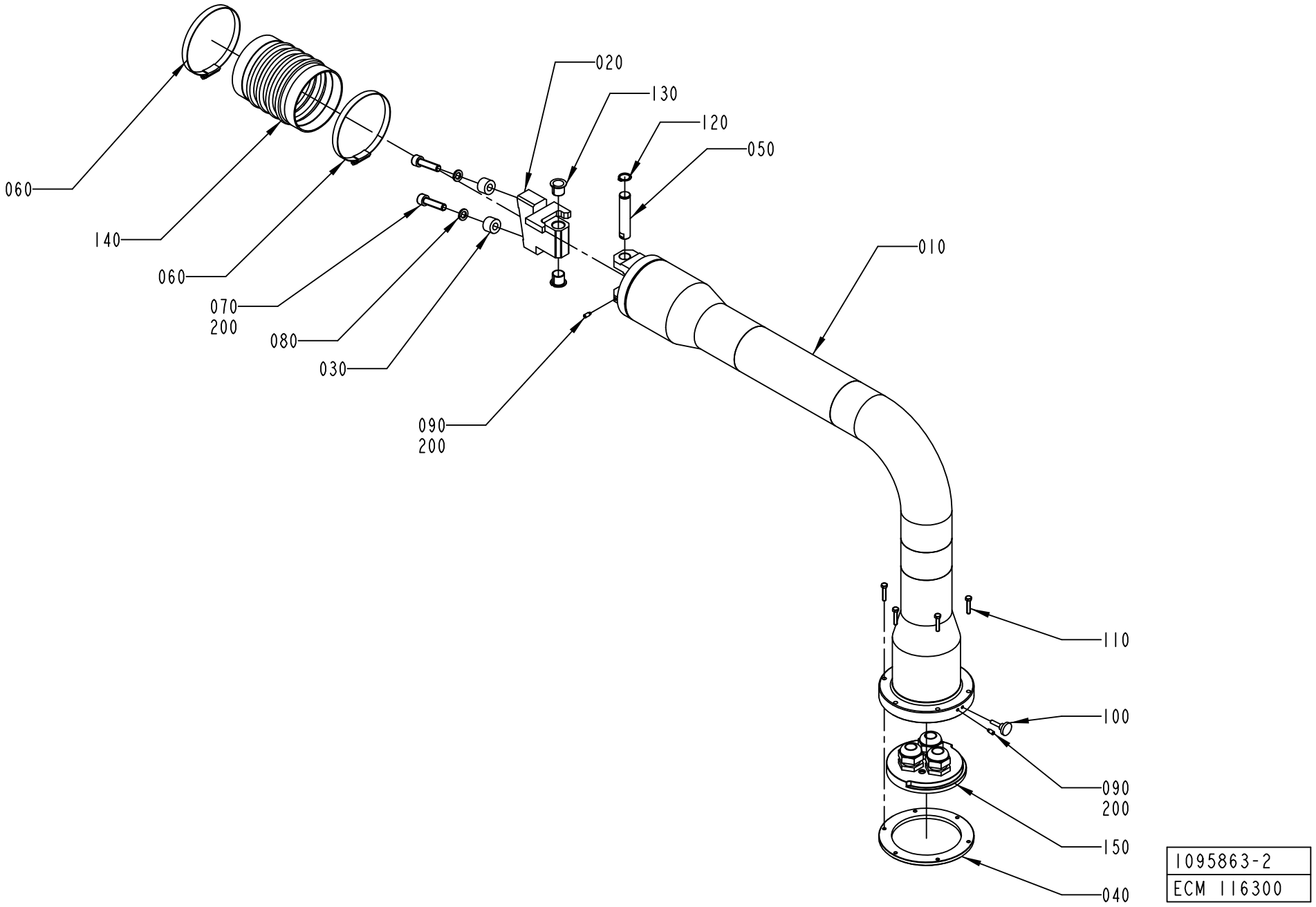
020
130
120
050
060
140
060
070
200
080
030
090
200
010
110
100
090
200
150
040
1095863-2
ECM 116300

ECM: 189861 - 20041104
Group number: 1095863-0200
Assembly Drawing: 1095863-2_1_AA

Pos	Part No	UN	Qty	Description	Page No
-					
010	1558974-0000		1	PIPE BRACKET	
020	1558975-0000		1	BLOCKING PIECE	
030	1254494-0000		1	SPACER	
040	1558949-0000		1	PLATE	
050	1558945-0000		1	PIVOT PIN	
060	342991-0114		2	HOSE CLIP,WORM DRIVE TYPE (93)-110	
070	312115-0499		2	SCREW ISO4762 M10X40 A4 80	
080	315402-0173		2	LOCK WASHER FBB 10,2	
090	312311-0327		2	SCREW ISO4028 M5X12 FZB	
100	318860-0106		1	KNOB, ADJUST.HI.EXT.THREAD, NO 8324-3674	
110	312105-0333		6	SCREW M6S ISO 4017 M5X25 A480	
120	315751-0113		1	RETAINING RING FOR SHAFT DIN 471 16 SS	
130	321161-0221		2	FLANGE BUSHING, 16X18X17 MM	
140	90342-0024		1	RUBBER BELLOWS, 100X100 MM	
150	2570616-0100		1	FASTENING PLATE	**2-81**
200	90157-0021	KG	1	LOCKING FLUID LOCTITE 270	

Pos	Part No	UN	Qty	Description	Page No

Machine Type | Group Description | Used-In | Group Number | Page No

FASTENING PLATE

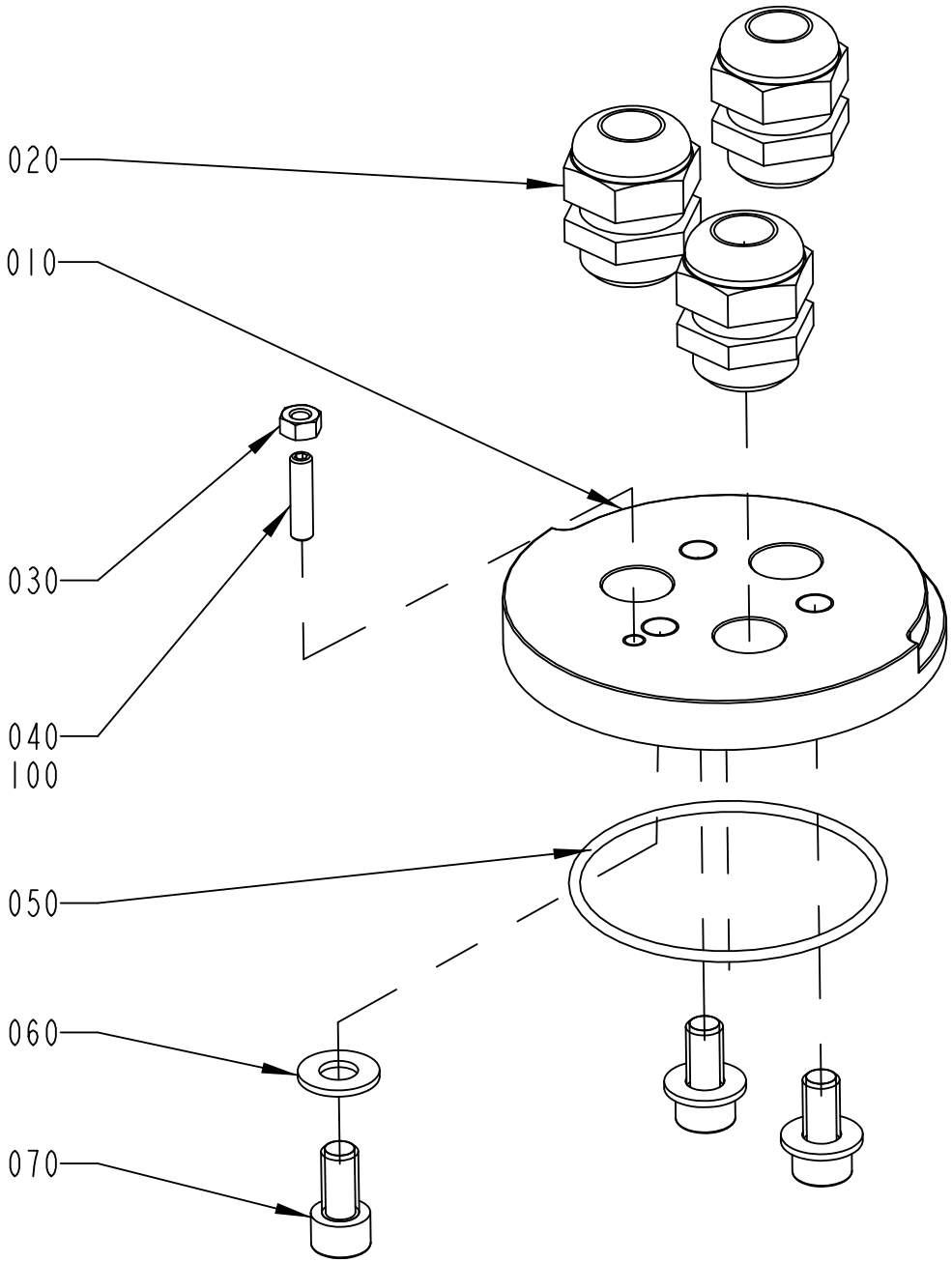

2570616-1
ECM 116300

ECM: 224853 - 20050831
Group number: 2570616-0100
Assembly Drawing: 2570616-1_1_AA

Pos	Part No	UN	Qty	Description	Page No
-					
010	1558948-0000		1	PLATE	
020	352103-0115		3	CABLE GLAND, STR 21, PR28,3/PG21	
030	312605-0316		1	HEXAGON NUT, M6M M6 A280	
040	312318-0372		1	SCREW ISO4029 M6X25 A4	
050	315202-0307		1	O-RING 79,5X3 MM	
060	315105-0173		3	WASHER BRB 10,5X22 RFR	
070	312115-0491		3	SCREW ISO4762 M10X20 A4 80	
100	90157-0021		1	LOCKING FLUID LOCTITE 270	

Pos	Part No	UN	Qty	Description	Page No

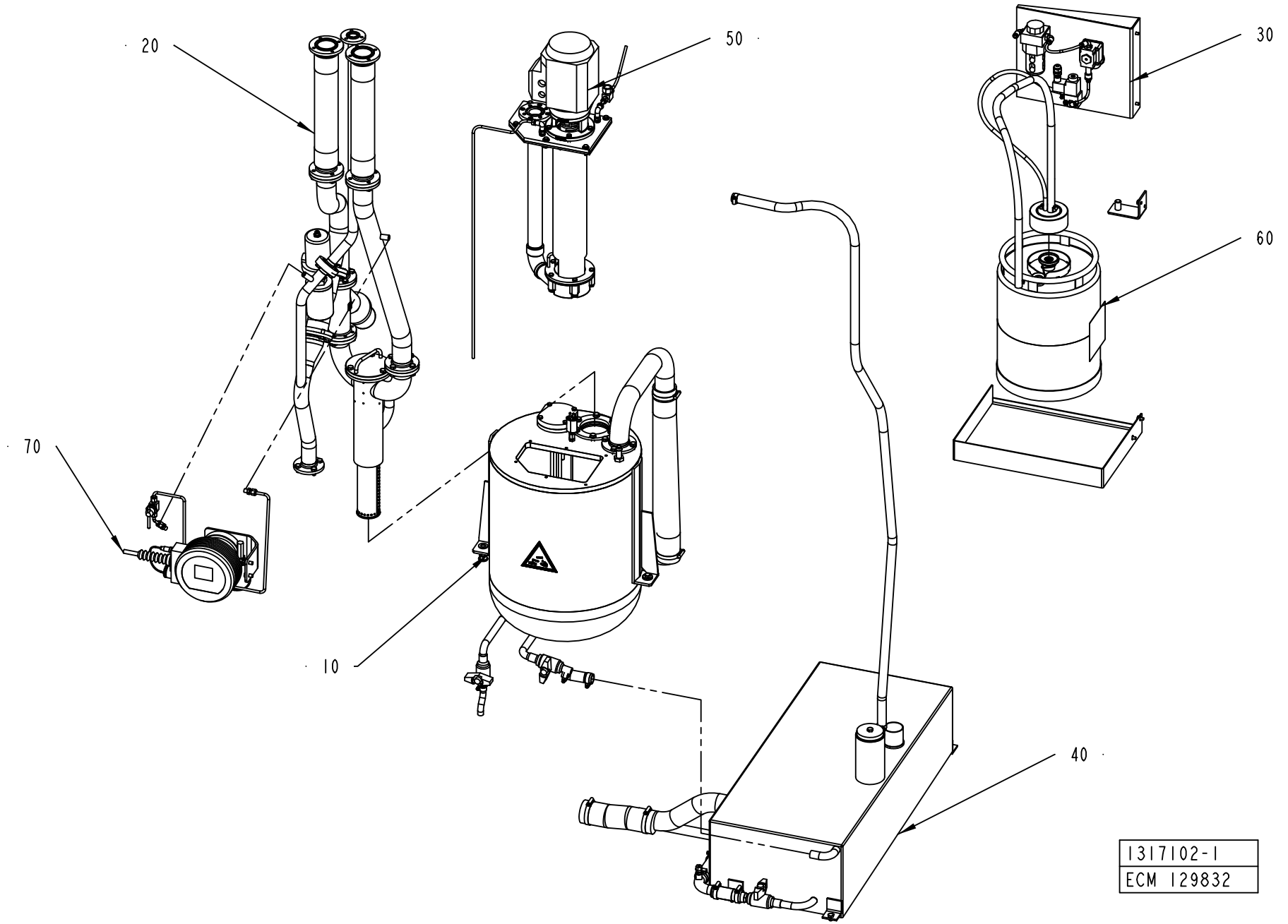
20
50
30
60
70
10
40
1317102-1
ECM 129832

ECM: 334726 - 20080101
Group number: 1317102-0100
Assembly Drawing: 1317102-1_1_AC

Pos	Part No	UN	Qty	Description	Page No
-					
010	1282894-0100		1	PEROXIDE TANK	**2-85**
020	1282895-0200		1	PEROXIDE PIPE	**2-87**
030	1317103-0100		1	PUMP	**2-89**
040	1282896-0100		1	TANK	**2-91**
050	2734100-0100		1	PEROXIDE PUMP	**2-95**
060	527898-0100		1	MKS CONTAINER H2O2	**2-97, 12-7**
070	2519574-0100		1	HYDROGEN PEROXIDE CONCENTRATION METER	**2-99**

Pos	Part No	UN	Qty	Description	Page No

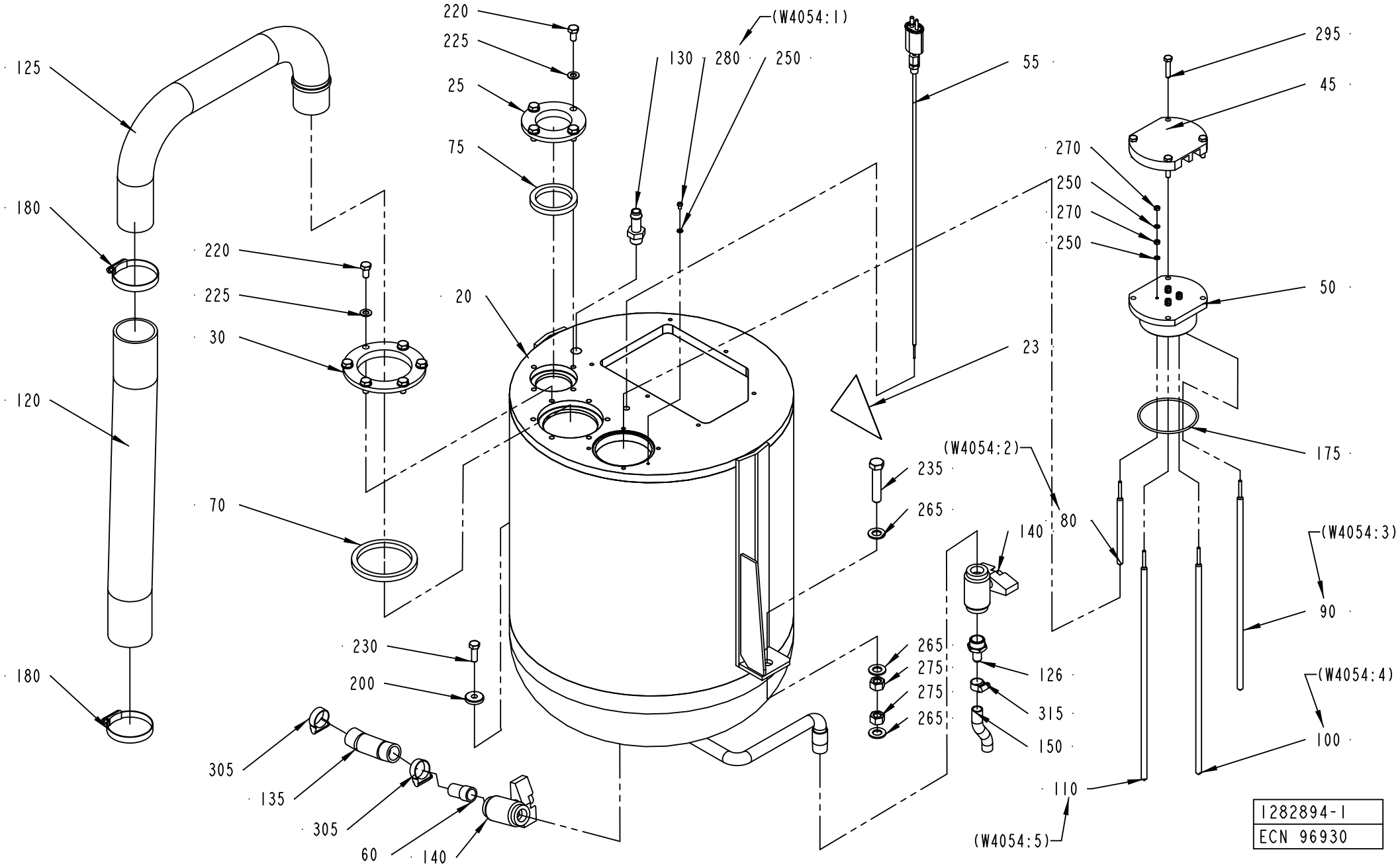
125
180
120
180
220
225
30
70
220
225
25
75
20
(W4054:1)
130
280
250
55
295
45
270
250
270
250
50
23
175
(W4054:2)
235
265
140
80
(W4054:3)
90
230
200
265
275
275
265
126
315
150
(W4054:4)
100
110
(W4054:5)
305
135
305
60
140
1282894-1
ECN 96930

ECM: 323427 - 20080101
Group number: 1282894-0100
Assembly Drawing: 1282894-1_1_AD

Pos	Part No	UN	Qty	Description	Page No
TBA/22					
045	1282903-0000		1	FLANGE	
050	1282904-0000		1	LID	
080	1129441-0001		1	ELECTRODE	
090	1129441-0002		1	ELECTRODE	
100	1129441-0003		1	ELECTRODE	
110	1129441-0004		1	ELECTRODE	
250	315105-0136		9	WASHER BRB 4,3X8 RFR	
270	312605-0312		8	HEXAGON NUT, M6M M4 A280	
Common Parts					
020	1255559-0000		1	PEROXIDE TANK	
023	359705-0004		1	WARNING SIGN ISO, DANGEROUS CHEMICALS	
025	1040840-0000		1	FLANGE	
030	1040841-0000		1	FLANGE	
055	1347704-0000		1	THERMOCOUPLE	
	90326-0306		*1*	*GLAND FITTING 9041-45-KS-KR.1/8" D=4,5MM*	
	1040890-0000		*1*	*THERMOCOUPLE*	
060	1037102-0000		1	SPACER PIPE	
070	1040852-0000		1	SEALING RING	
075	1040853-0000		1	SEALING RING	
120	1282899-0000		1	HOSE	
125	1282891-0000		1	PIPE	
126	1282906-0000		1	NIPPLE	
130	90055-0051		1	HOSE NIPPLE, EXT.THR. R3/8X13 MM	
135	90166-0151	MM	140	HOSE	
140	90187-0059		2	BALL VALVE FOR HYDR.PER. G1/2 3MM HOLE	
150	90166-0138	MM	85	HOSE	
175	927422-0016		1	O-RING 79.5X3 SILICONE	
180	342991-0110		2	HOSE CLIP,WORM DRIVE TYPE (54)-63	
200	315125-0165		1	WASHER TBRSB 8,4X26X5 A4	
220	312105-0449		10	SCREW M6S ISO 4017 M8X16 A480	
225	315105-0165		10	WASHER BRB 8,4X16 RFR	
230	312105-0453		1	SCREW M6S ISO 4017 M8X25 A480	
235	312109-0544		1	SCREW M6S ISO 4017 M12X60 A480	
265	315105-0178		3	WASHER BRB 13X24 RFR	
275	312605-0322		2	HEXAGON NUT, M6M M12 A280	
280	312125-0285		1	SCREW ISO 1207 M4X6 A4	
295	312109-0374		4	SCREW M6S ISO 4017 M6X30 A480	
305	342991-0104		2	HOSE CLIP,WORM DRIVE TYPE (23)-27	
315	342991-0101		1	HOSE CLIP,WORM DRIVE TYPE (13)-16	

Pos	Part No	UN	Qty	Description	Page No

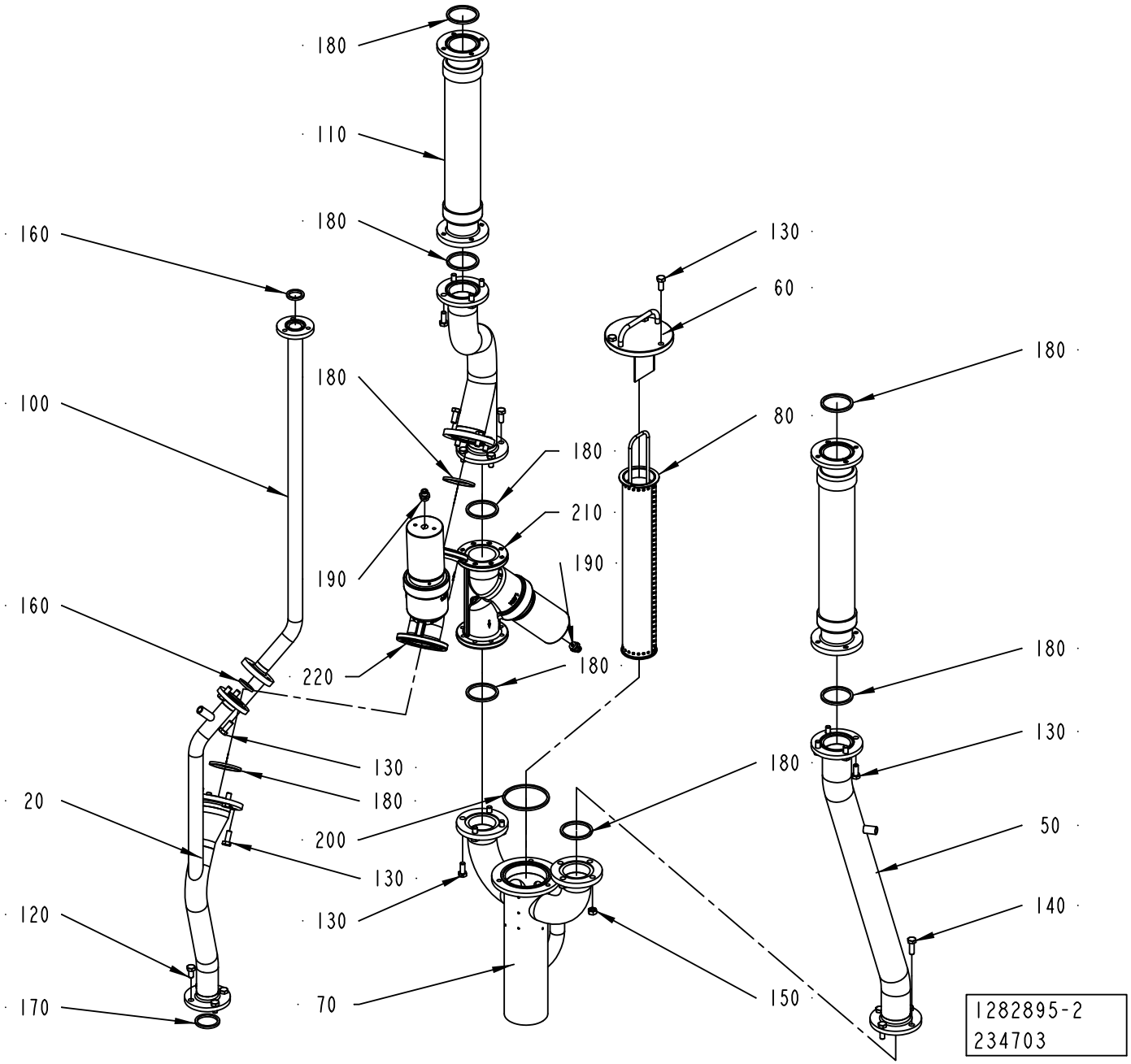
180
110
180
160
180
100
190
160
220
130
180
20
200
130
120
130
170
70
130
60
180
80
180
210
190
180
180
130
180
50
140
150
1282895-2
234703

ECM: 340454 - 20080403
Group number: 1282895-0200
Assembly Drawing: 1282895-2_1_AD

Pos	Part No	UN	Qty	Description	Page No
-					
020	2519554-0000		1	PIPE	
040	1282876-0000		1	PIPE	
050	2519555-0000		1	PIPE	
060	1348530-0000		1	LID	
070	1282879-0000		1	CONNECTING PIPE	
080	1348529-0000		1	STRAINER	
100	1282901-0000		1	PIPE	
110	2598689-0000		2	HOSE	
120	312105-0449		4	SCREW M6S ISO 4017 M8X16 A480	
130	312105-0451		30	SCREW M6S ISO 4017 M8X20 A480	
140	312105-0453		4	SCREW M6S ISO 4017 M8X25 A480	
150	312605-0318		4	HEXAGON NUT, M6M M8 A280	
160	315229-0103		2	GASKETS, 23,1X30,1X3,7 MM 1" FDA	
170	315229-0104		1	GASKETS, 35,8X42,8X3,7 MM 1"1/2 FD	
180	315229-0105		9	GASKETS, 48,5X55,5X3,7 MM 2" FDA	
190	342722-0203		2	STRAIGHT COUPLING	
200	315229-0107		1	GASKETS, 73,9X80,9X3,7 MM 2"1/2 FD	
210	90459-5177		1	ANGLE SEAT VALVE W. FLANGES, N.O.8498668	
220	90459-5178		1	ANGLE SEAT VALVE W. FLANGES, N.O.8498669	

Pos	Part No	UN	Qty	Description	Page No

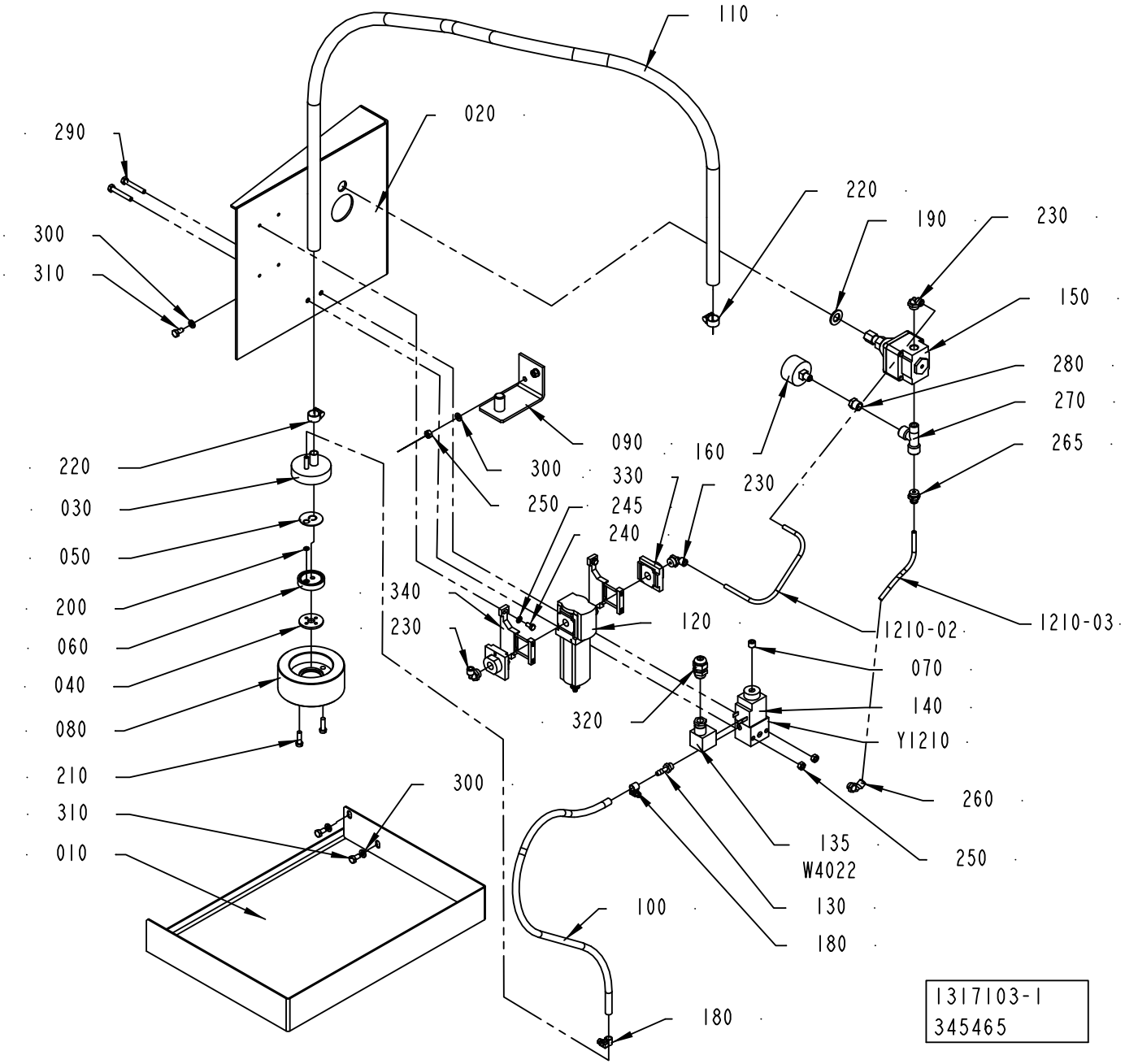
110
020
290
300
310
220
190
230
150
280
270
265
160
230
090
300
330
250
245
240
340
230
120
1210-02
1210-03
070
140
Y1210
320
260
250
135
W4022
130
180
100
180
220
030
050
200
060
040
080
210
310
010
300
1317103-1
345465

ECM: 350738 - 20080701
Group number: 1317103-0100
Assembly Drawing: 1317103-1_1_AC

Pos	Part No	UN	Qty	Description	Page No
-					
010	1317104-0000		1	BRACKETS, FASTENING PLATES, - BRACKETS	
020	1317105-0000		1	BRACKET	
030	1129328-0000		1	ATTACHMENT	
040	273981-0000		1	GASKET	
050	527912-0000		1	NON-RETURN VALVE	
060	530551-0000		1	WASHER	
070	563285-0000		1	BLIND PLUG	
080	1317226-0000		1	WEIGHT	
090	1317784-0000		1	BRACKET	
100	90166-0101	MM	680	HOSE, SILICONE, 60 SHORE, 6/10 MM	
110	90166-0161	MM	1500	HOSE	
120	90459-2338		1	FILTER, MS4-LF-1/4-CRV	
	90459-3818		*1*	*FILTER CARTRIDGE, MS4-LFP-C*	
1210-02	90166-0081	MM	210	TUBE 6 MM PA BLUE	
1210-03	90166-0081	MM	150	TUBE 6 MM PA BLUE	
130	342901-0101		1	HOSE NIPPLE, EXT.THR. R1/8-7 MM	
135	90110-0095		1	CONNECTOR 3 POLE + EARTH	
140	90042-0487		1	COIL 24 VDC/15W, 04983 197 18	
150	90113-0056		1	REGULATOR, 11-818-998	
160	90043-0021		1	PRESSURE GAUGE 0-1 BAR 1/8" D=40	
180	90132-0021		2	HOSE CLIP 6-10MM	
190	315105-0178		1	WASHER BRB 13X24 RFR	
200	315204-0103		1	O-RING 5,1X1,6 MM	
210	312125-0370		2	SCREW ISO 1207 M6X20 A4	
220	342991-0101		2	HOSE CLIP,WORM DRIVE TYPE (13)-16	
230	90458-2957		3	ELBOW PIPE JOINT, EXT.THREAD, D=6MM-G1/4	
240	312105-0325		4	SCREW M6S ISO 4017 M5X10 A480	
245	315105-0146		4	WASHER BRB 5,3X10 RFR	
250	312605-0316		4	HEXAGON NUT, M6M M6 A280	
260	90458-2956		1	ELBOW PIPE JOINT, EXT.THREAD, D=6MM-G1/8	
265	342722-0203		1	STRAIGHT COUPLING	
270	342245-0102		1	T-PIPE, INT. THREAD, R1/4XKR1/4	
280	342701-0201		1	BUSHING,INT./EXT.G-THREAD G1/4"-G1/8"	
290	312105-0378		2	SCREW M6S ISO 4014 M6X40 A480	
300	315105-0153		6	WASHER BRB 6,4X12 RFR	
310	312105-0366		4	SCREW M6S ISO 4017 M6X12 A480	
320	352103-0101		1	CABLE GLAND, ST 9, PR15,2/PG9	
330	90459-2246		1	END PLATE, MS4-AGB	
340	90459-2247		2	BRACKET, MS4-WP	
W4022	351150-0403	MM	2500	CABLE OLFLEX 3X0,75 MM2 LIGHT/GREY	
Y1210	90042-0206		1	SOLENOID VALVE G1/8, 444-111-000-1	

Pos	Part No	UN	Qty	Description	Page No

Machine Type | Group Description | Used-In | Group Number | Page No

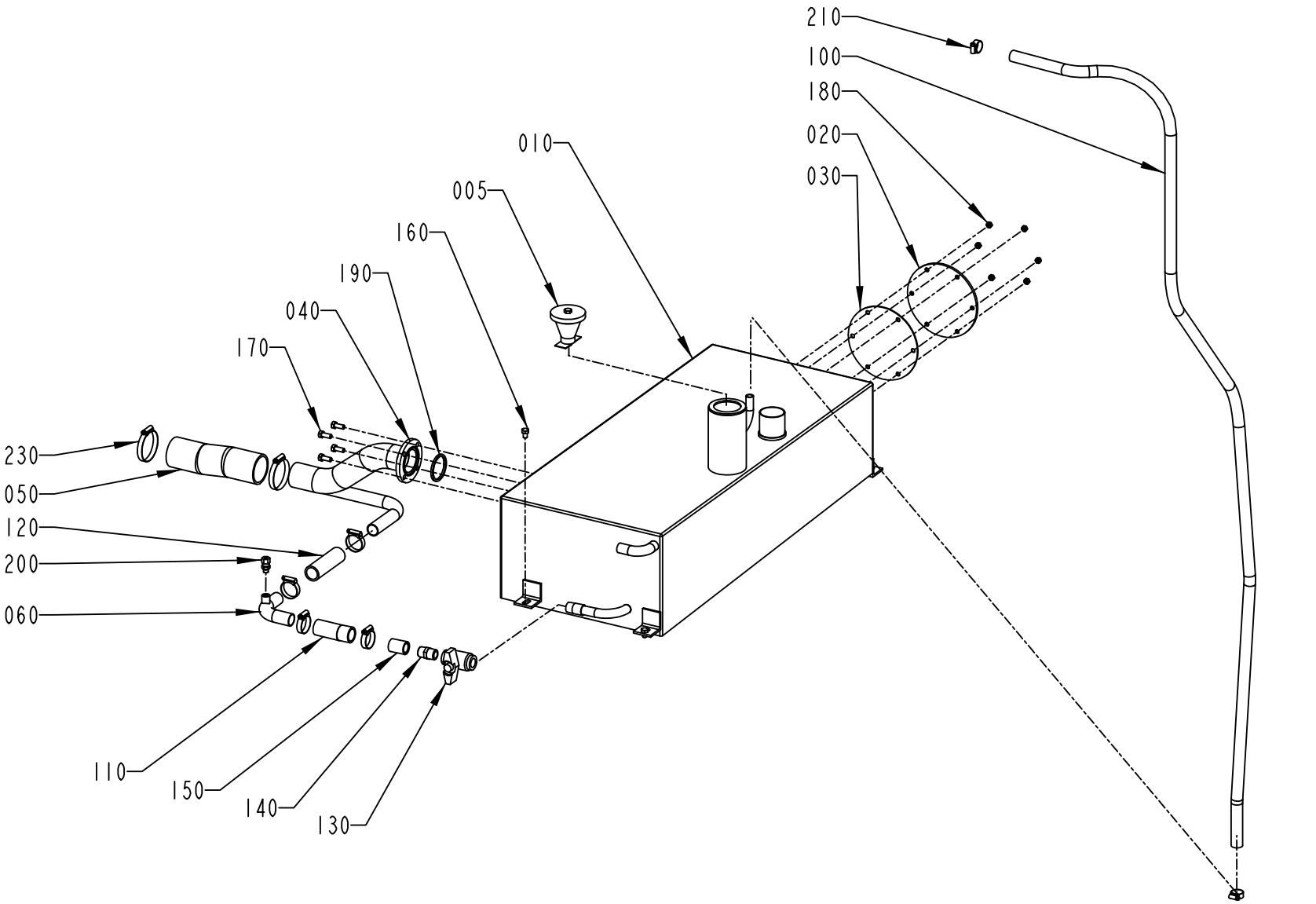

1282896-1
ECM 121676

ECM: 224842 - 20050831
Group number: 1282896-0100
Assembly Drawing: 1282896-1_1_AB

Pos	Part No	UN	Qty	Description	Page No
-					
005	566196-0100		1	LID WITH WEIGHT	**2-93**
010	1282892-0000		1	TANK	
020	1040807-0000		1	LID	
030	1040808-0000		1	GASKET	
040	1282893-0000		1	PIPE	
050	1282898-0000		1	HOSE	
060	2574421-0000		1	PIPE	
100	90166-0087	MM	2500	HOSE 15/23 REINF.PVC TRANSP.	
110	90166-0158	MM	85	HOSE	
120	90166-0158	MM	105	HOSE	
130	90187-0059		1	BALL VALVE FOR HYDR.PER. G1/2 3MM HOLE	
140	90330-0021		1	NIPPLES, EXT. THREAD. R-207R1/2	
150	90330-0054		1	SLEEVE, INT. THREAD, NO. R-201R1/2	
160	312105-0447		4	SCREW M6S ISO 4017 M8X12 A480	
170	312105-0451		4	SCREW M6S ISO 4017 M8X20 A480	
180	312605-0316		6	HEXAGON NUT, M6M M6 A280	
190	315229-0105		1	GASKETS, 48,5X55,5X3,7 MM 2" FDA	
200	90030-0184		1	CONN. STR. GE06LRED71	
210	342991-0103		2	HOSE CLIP,WORM DRIVE TYPE (19)-23	
220	342991-0106		4	HOSE CLIP,WORM DRIVE TYPE (30)-36	
230	342991-0110		2	HOSE CLIP,WORM DRIVE TYPE (54)-63	

Pos	Part No	UN	Qty	Description	Page No

Machine Type | Group Description | Used-In | Group Number | Page No

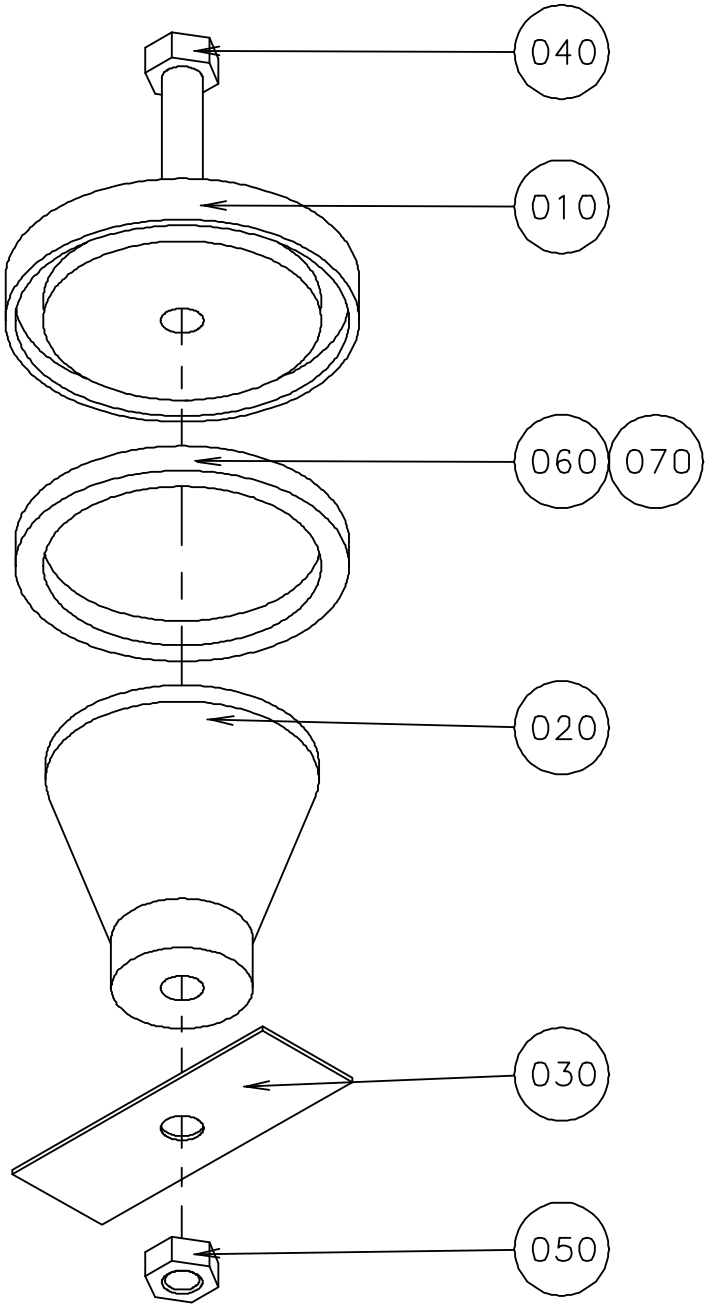

S-566196-1
ECN 70662

ECM: 189748 - 20041104
Group number: 566196-0100
Assembly Drawing: 566196-1_1_AA

Pos	Part No	UN	Qty	Description	Page No
-					
010	566195-0000		1	LID	
020	566194-0000		1	WEIGHT	
030	566171-0000		1	CUP SPRING	
040	312105-0466		1	SCREW M6S ISO 4014 M8X75 A480	
050	312605-0318		1	HEXAGON NUT, M6M M8 A280	
060	90143-0020	MM	190	STRIP	
070	90153-0023		1	ADHESIVE, SILICON 251470 TUB 90CC(UN1993	

Pos	Part No	UN	Qty	Description	Page No

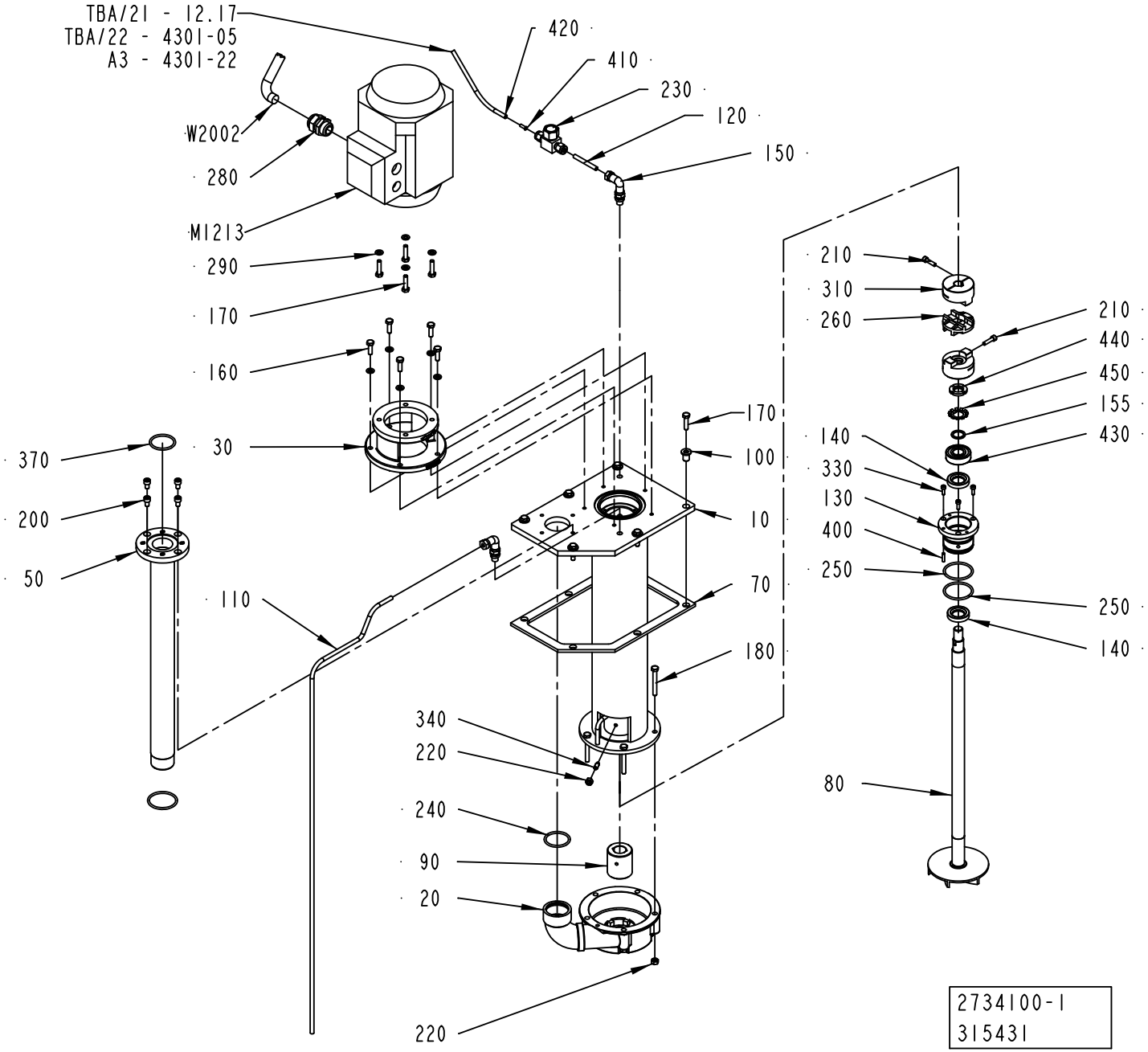
TBA/21 - 12.17
TBA/22 - 4301-05
A3 - 4301-22
420
410
230
120
150
W2002
280
M1213
290
170
160
30
370
200
50
110
170
100
10
70
180
340
220
240
90
20
220
210
310
260
210
440
450
155
430
140
330
130
400
250
250
140
80
2734100-1
315431

ECM: 340560 - 20080403
Group number: 2734100-0100
Assembly Drawing: 2734100-1_1_AA

Pos	Part No	UN	Qty	Description	Page No
-					
010	2734101-0000		1	EXTENSION PIPE	
020	2529412-0000		1	PUMP HOUSING	
030	751395-0000		1	FLANGE	
050	1040796-0000		1	PIPE	
070	1255557-0000		1	GASKET	
080	2931192-0000		1	IMPELLER WHEEL	
090	2734102-0000		1	BUSHING	
100	2564342-0000		6	SPACER	
110	2564561-0000		1	PIPE	
120	2564978-0000		1	PIPE	
130	2734104-0000		1	BUSHING	
140	90091-0412		2	SEAL RING	
150	90030-0171		2	ADJUSTABLE ELBOW CONNECTION, EVW06LR71	
155	2744234-0000		1	SPACER	
160	312105-0370		5	SCREW M6S ISO 4017 M6X20 A480	
170	312105-0372		10	SCREW M6S ISO 4017 M6X25 A480	
180	312109-0380		5	SCREW M6S ISO 4017 M6X50 A480	
200	312115-0364		4	SCREW ISO4762 M6X10 A4 80	
210	312115-0331		2	SCREW ISO4762 M5X20 A4 80	
220	312605-0316		7	HEXAGON NUT, M6M M6 A280	
230	90230-0064		1	CHECK VALVE, 6 MM HIGH TEMP.	
240	927422-0005		1	O-RING 36.2X3 SILICONE	
250	927422-0006		3	O-RING 42.2X3 SILICONE	
260	90458-0274		1	DISC FOR COUPLING, HUCO 236.50T	
280	352103-0110		1	CABLE GLAND, STR 16, PR22,5/PG16	
290	315105-0153		9	WASHER BRB 6,4X12 RFR	
310	90459-1536		2	FLEXIBLE COUPLING DISC, 14 MM	
330	312115-0291		3	SCREW ISO4762 M4X12 A4 80	
340	90287-0159		2	SCREW, SOCK.SET DOGPOINT M6X16	
370	315204-0222		1	O-RING 36,2X3 MM	
400	311103-0270		1	PARALLEL PIN ISO 2338 4M6X16 A1	
410	342706-0130		1	ACCESSORIES, INSERT SLEEVE 6 MM	
420	90166-0132	M	1	TUBE 6 MM PA,TRANSP.	
430	321313-0103		1	BALL BEARING, 17X40X12MM	
440	312805-0103		1	NUT ROUND WITH SLOTS M17X1 FE	
450	315410-0103		1	LOCK WASHER MB 3 D=17 H=1	
M1213	90458-2466		1	MOTOR 3GVA071002-CSC-M2VA71B2	
W2002	351150-0418	M	1	CABLE OLFLEX 4X2,5 MM2 LIGHT/GREY	

Pos	Part No	UN	Qty	Description	Page No

Machine Type	Group Description	Used-In	Group Number	Page No

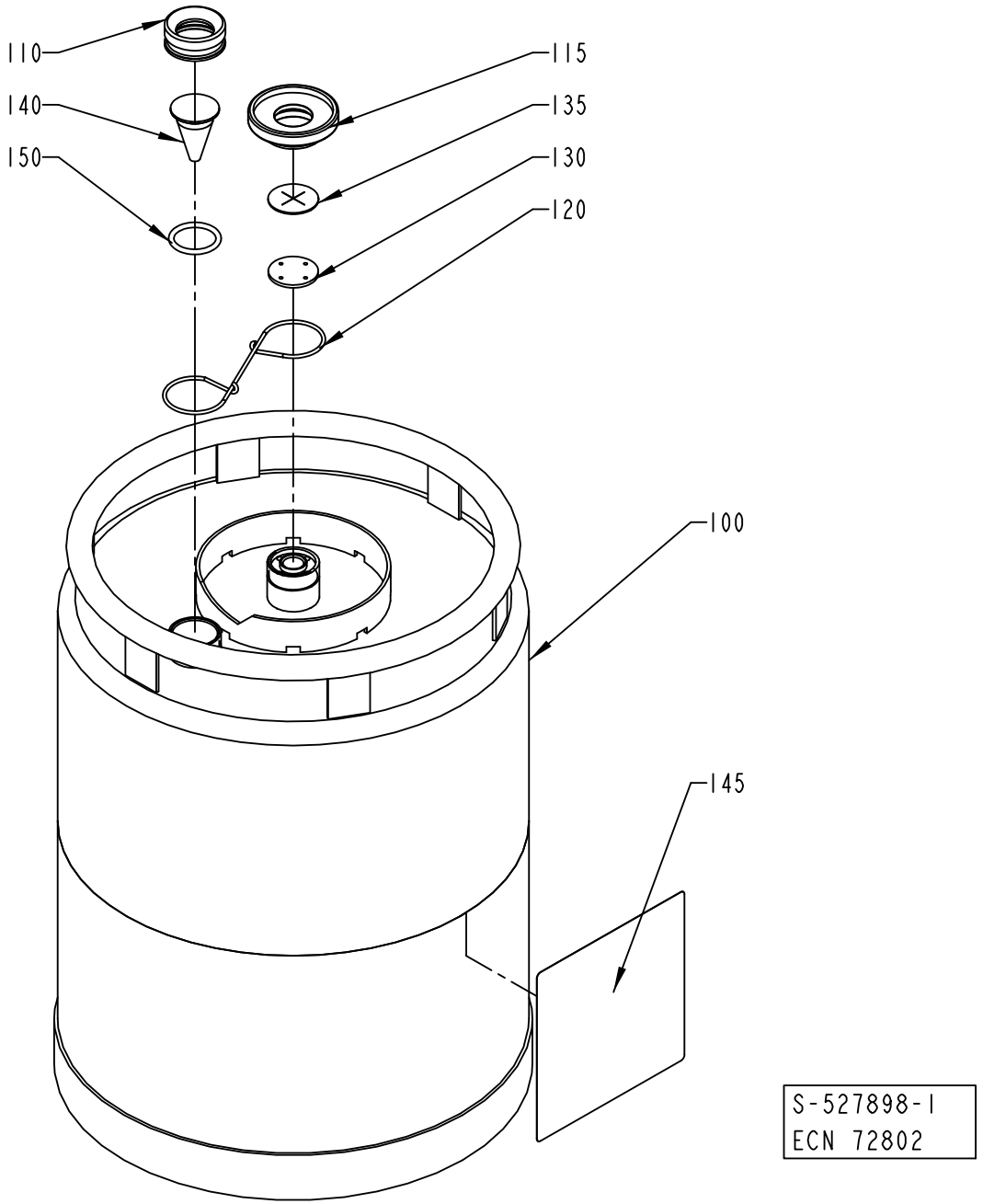
110
140
150
115
135
130
120
100
145
S-527898-I
ECN 72802

ECM: 224840 - 20050831
Group number: 527898-0100
Assembly Drawing: 527898-1_1_AB

Pos	Part No	UN	Qty	Description	Page No
-					
100	561427-0000		1	CONTAINER	
110	273977-0000		1	NUT	
115	273996-0000		1	NUT	
120	273980-0000		1	SPRING	
130	565250-0000		1	WASHER	
135	565251-0000		1	VALVE	
140	273978-0000		1	LEVEL GLAS	
145	532655-0000		1	CAUTION SIGN	
150	927422-0003		1	O.RING 24.2X3 SILICONE	

Pos	Part No	UN	Qty	Description	Page No

HYDROGEN PEROXIDE CONCENTRATION METER

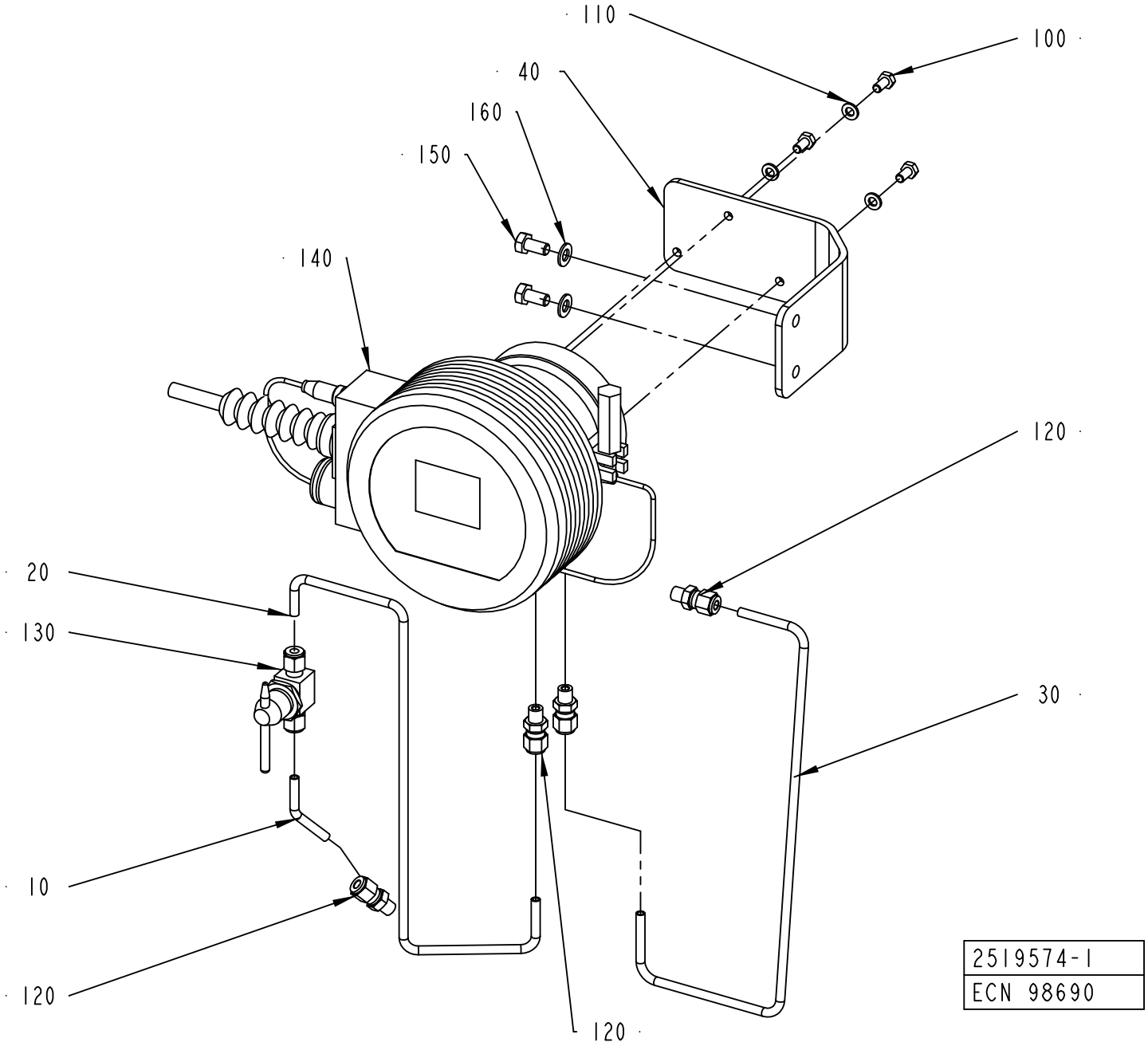

ECM: 224852 - 20050831
Group number: 2519574-0100
Assembly Drawing: 2519574-1_1_AA

Pos	Part No	UN	Qty	Description	Page No
-					
010	2501378-0000		1	PIPE	
020	2531500-0000		1	PIPE	
030	2531501-0000		1	PIPE	
040	2519556-0000		1	BRACKET	
100	312105-0366		3	SCREW M6S ISO 4017 M6X12 A480	
110	315105-0153		3	WASHER BRB 6,4X12 RFR	
120	90458-1477		4	CONNECTOR 6-1/8 NPT, EXT. TAPERED	
130	90458-1478		1	BALL VALVE SS-43T6MM-SH-10147	
140	90458-1977		1	REFRACTOMETER SET DA15FC15A DFTP A	
	90458-2269		*1*	*DEFLECTOR A0808137*	
	90458-1980		*1*	*REFRACTOMETER DA16FC16B*	
	90458-1979		*1*	*BELLOWS A0710020*	
	90458-1976		*1*	*CABLE A0804273*	
	90458-1950		*1*	*PROBE A0803021 IPT100 1/8" GAS TRIC-B*	
	90458-1943		*1*	*O-RING A0701145 53,65X2,62 MM*	
	90458-1941		*1*	*O-RING A0701180 10,82X1,78 MM*	
	90458-1940		*1*	*CLAMP A0515170 3" AISI 304*	
	90458-1893		*1*	*CARTRIDGE A0111004*	
	90458-1892		*1*	*GASKET A0539066 80,5X90,5X2 MM*	
150	312105-0449		2	SCREW M6S ISO 4017 M8X16 A480	
160	315105-0165		2	WASHER BRB 8,4X16 RFR	

Pos	Part No	UN	Qty	Description	Page No

Machine Type | Group Description | Used-In | Group Number | Page No

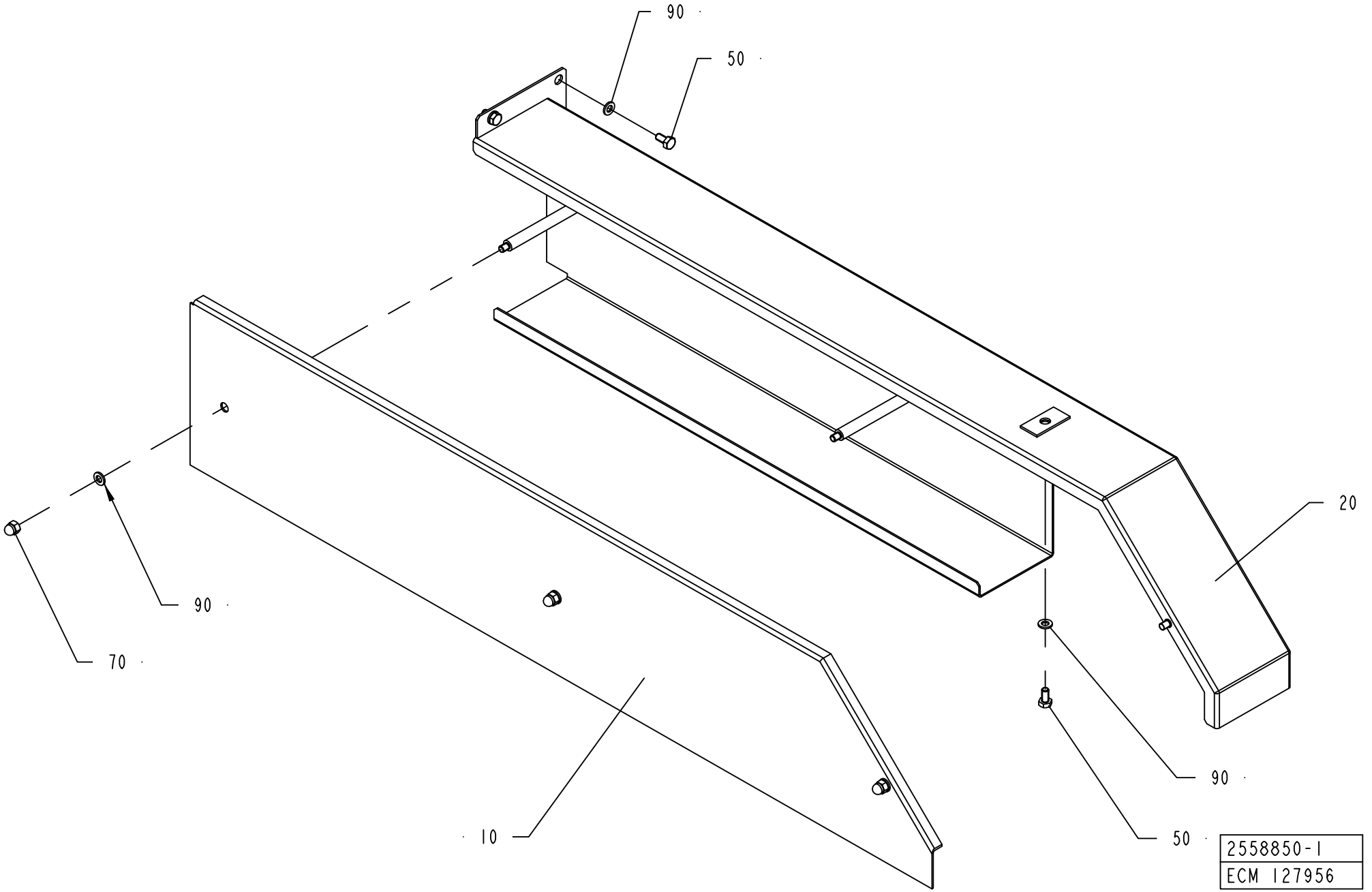
90
50
20
90
70
90
10
50
2558850-1
ECM 127956

ECM: 127958 - 20030630
Group number: 2558850-0100
Assembly Drawing: 2558850-1_1_AA

Pos	Part No	UN	Qty	Description	Page No
-					
010	1129444-0000		1	LID	
020	2558851-0000		1	CABLE DUCT	
050	312105-0366		5	SCREW M6S ISO 4017 M6X12 A480	
070	312705-0316		3	NUT HEX. DOMED CAP MHM-6 M6 A280	
090	315105-0153		8	WASHER BRB 6,4X12 RFR	

Pos	Part No	UN	Qty	Description	Page No

WASTE CONVEYOR

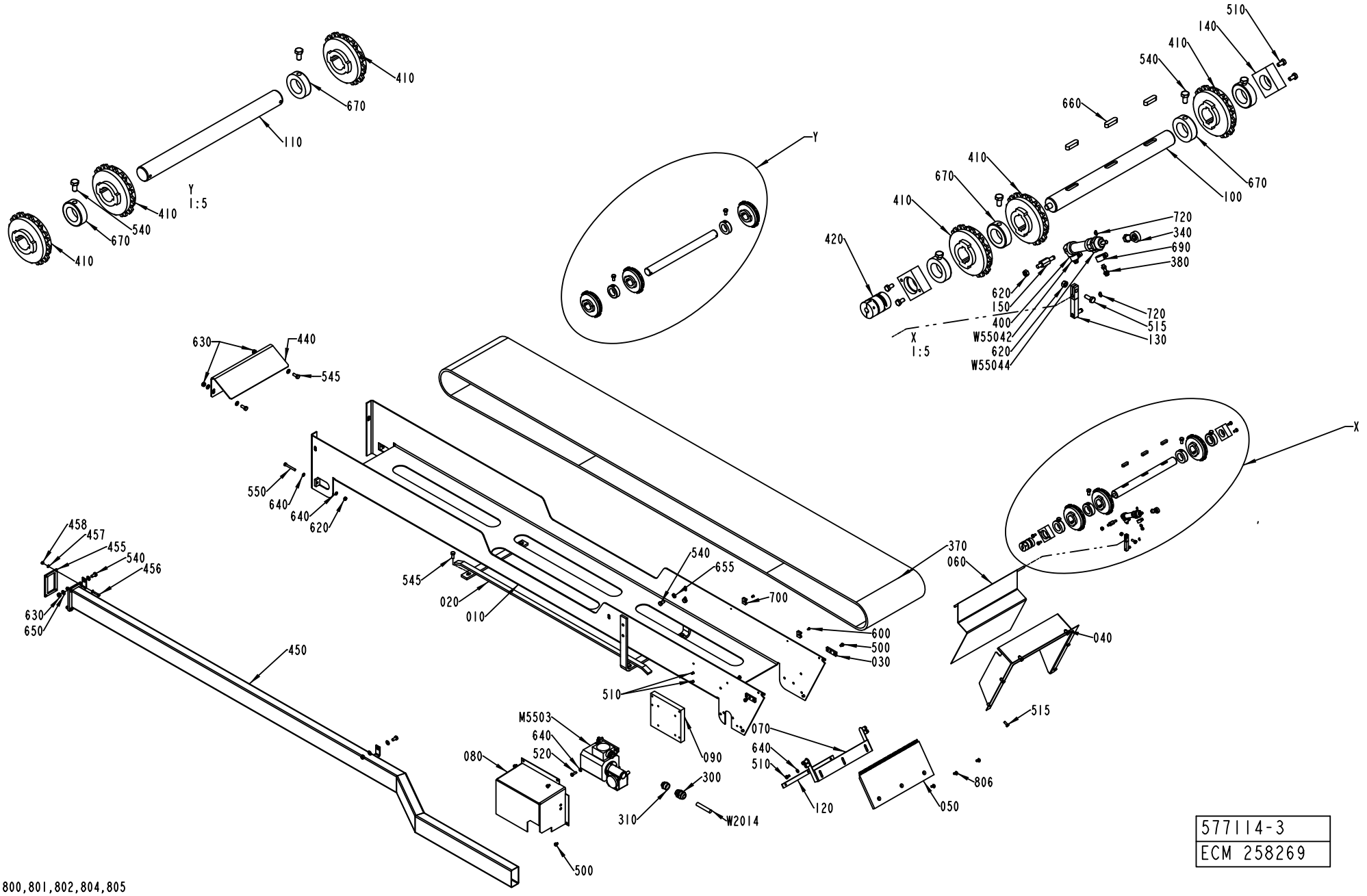

577114-3
ECM 258269

800,801,802,804,805

ECM: 258269 - 20060701
Group number: 577114-0300
Assembly Drawing: 577114-3_1_AE

Pos	Part No	UN	Qty	Description	Page No
-					
010	1346523-0000		1	CHUTE	
020	1195266-0000		1	BRACKET	
030	1140208-0000		2	BRACKET	
040	1129247-0000		1	FRAME	
050	1129248-0001		1	GUARD PLATE	
060	1346524-0000		1	HATCH	
070	1129594-0000		1	BRACKET	
080	1517055-0000		1	MOTOR COVER	
090	1548789-0000		1	MOTOR PLATE	
100	1512584-0000		1	DRIVE SHAFT	
110	1037562-0000		1	SHAFT	
120	1129253-0000		1	FASTENING PLATE	
130	1140641-0000		1	ARM	
140	1037565-0000		2	BEARING UNIT	
150	1346822-0000		1	SHAFT	
300	352103-0111		1	CABLE GLAND, ST 16, PR22,5/PG16	
310	90089-0017		1	REDUCING SLEEVE, PR18,6/PR22,5	
340	90115-0173		1	ROD END, ID=6 MM, M6X1	
370	1346541-0000		1	CONVEYOR CHAIN	
380	90235-0290		2	THROTTLE CHECK VALVE M5	
400	90239-0842		1	DOUBLE ACTING, MINI-ISO, CYL.16-50	
410	90267-0027		6	CONVEYOR WHEEL, 12T	
420	90457-0090		1	FLEXIBLE COUPLING, 10X10 MM	
440	1346525-0000		1	COVER	
450	2623797-0000		1	PIPE	
455	2639555-0000		1	GASKET	
456	312105-0332		4	SCREW M6S ISO 4017 M5X22 A470	
457	315105-0146		8	WASHER BRB 5,3X10 RFR	
458	312605-0314		4	HEXAGON NUT, M6M M5 A280	
500	312105-0362		5	SCREW M6S ISO 4017 M6X8 A480	
510	312105-0366		12	SCREW M6S ISO 4017 M6X12 A480	
515	312105-0368		7	SCREW M6S ISO 4017 M6X16 A480	
520	312105-0370		4	SCREW M6S ISO 4017 M6X20 A480	
540	312105-0449		10	SCREW M6S ISO 4017 M8X16 A480	
545	312105-0451		6	SCREW M6S ISO 4017 M8X20 A480	
550	312109-0380		2	SCREW M6S ISO 4017 M6X50 A480	
55042	90166-0132	MM	3000	TUBE 6 MM PA,TRANSP.	
55044	90166-0132	MM	3000	TUBE 6 MM PA,TRANSP.	
600	312125-0285		2	SCREW ISO 1207 M4X6 A4	
620	312605-0316		4	HEXAGON NUT, M6M M6 A280	
630	312605-0318		4	HEXAGON NUT, M6M M8 A280	
640	315105-0153		10	WASHER BRB 6,4X12 RFR	
650	315105-0165		8	WASHER BRB 8,4X16 RFR	
655	315115-0165		4	WASHER PLAIN, TBRB 8,4/16 H=3	
660	315705-0267		3	PARALLEL KEY W. ROUND ENDS 8X7X30 MM	
670	315742-0122		6	RETAINING RING 30 SMS 199	
680	315220-0198		2	V-RINGS 45X55X13 MM V-50S	
690	342980-0112		2	BANJO-CONNECTION,RING 6/4-M6	
700	352113-0203		2	ANCHOR PLATES FOR STRIPS, TYPE TM3S8-M0	
720	315751-0103		2	RETAINING RING FOR SHAFT DIN 471 6 SS	
800	359000-0400		6	WIRE MARKING, YELLOW, PA2/4"0"	
801	359000-0401		2	WIRE MARKING, YELLOW, PA2/4"1"	
802	359000-0402		4	WIRE MARKING, YELLOW, PA2/4"2"	
804	359000-0404		8	WIRE MARKING, YELLOW, PA2/4"4"	
805	359000-0405		8	WIRE MARKING, YELLOW, PA2/4"5"	
806	312155-0368		3	SCREW DIN 7991 MF6S M6X16 A4 70	
M5503	90459-4147		1	GEARS, WORM MOTOR IGK 80-40 VE31-D-L-2-S	
W2014	351150-0418	M	3	CABLE OLFLEX 4X2,5 MM2 LIGHT/GREY	

Machine Type	Group Description	Used-In	Group Number	Page No

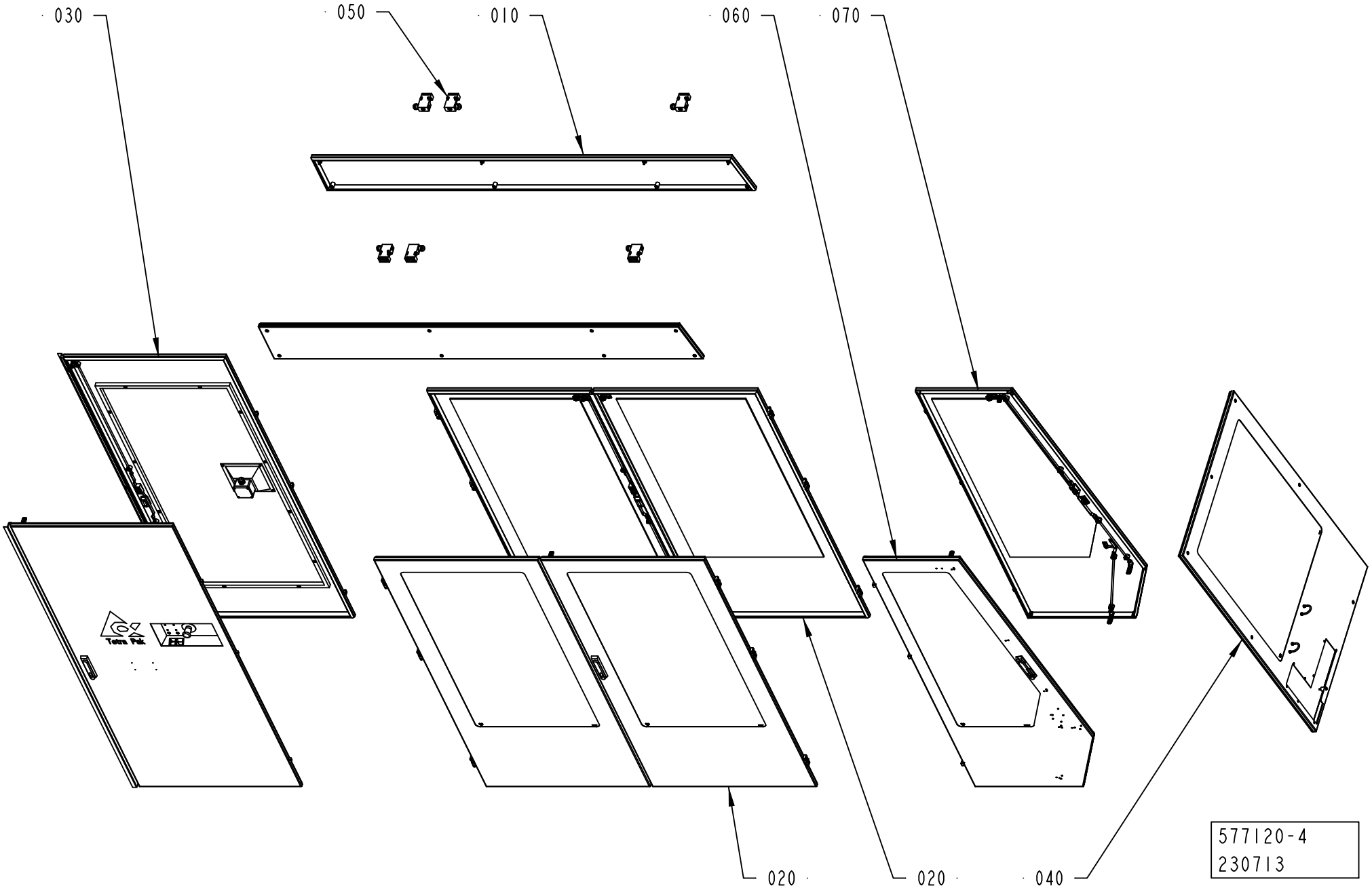
030
050
010
060
070
020
020
040
577120-4
230713

ECM: 230713 - 20060101
Group number: 577120-0400
Assembly Drawing: 577120-4_1_AB

Pos	Part No	UN	Qty	Description	Page No
-					
010	1317268-0100		1	COVERS	**2-107**
020	1317273-0200		2	DOOR	**2-109**
030	1317388-0100		1	DOORS	**2-111**
040	1346823-0200		1	FRONT COVER	**2-115**
050	1347069-0100		1	SAFETY SWITCH	**2-117**
060	2533725-0100		1	DOOR	**2-119**
070	2533726-0100		1	DOOR	**2-121**

Pos	Part No	UN	Qty	Description	Page No

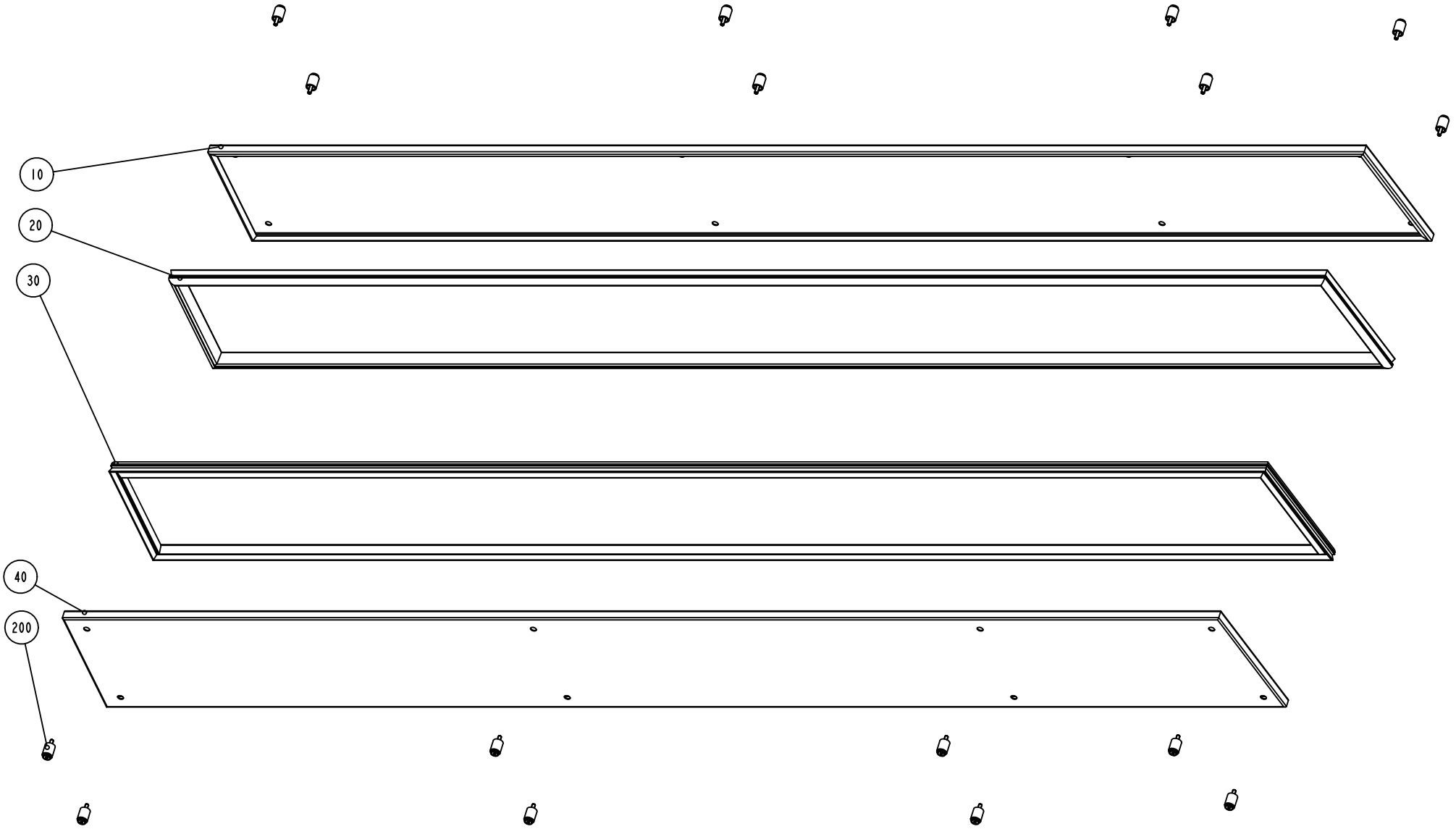

S-1317268-1
ECN 71879

ECM: 71879 - 19981005
Group number: 1317268-0100
Assembly Drawing: 1317268-1_1_AA

Pos	Part No	UN	Qty	Description	Page No
-					
010	1346758-0000		1	COVER	
020	1346759-0000		1	GASKET	
030	1346757-0000		1	GASKET	
040	1346756-0000		1	COVER	
200	90226-0458		16	MOUNTING SCREW	

Pos	Part No	UN	Qty	Description	Page No

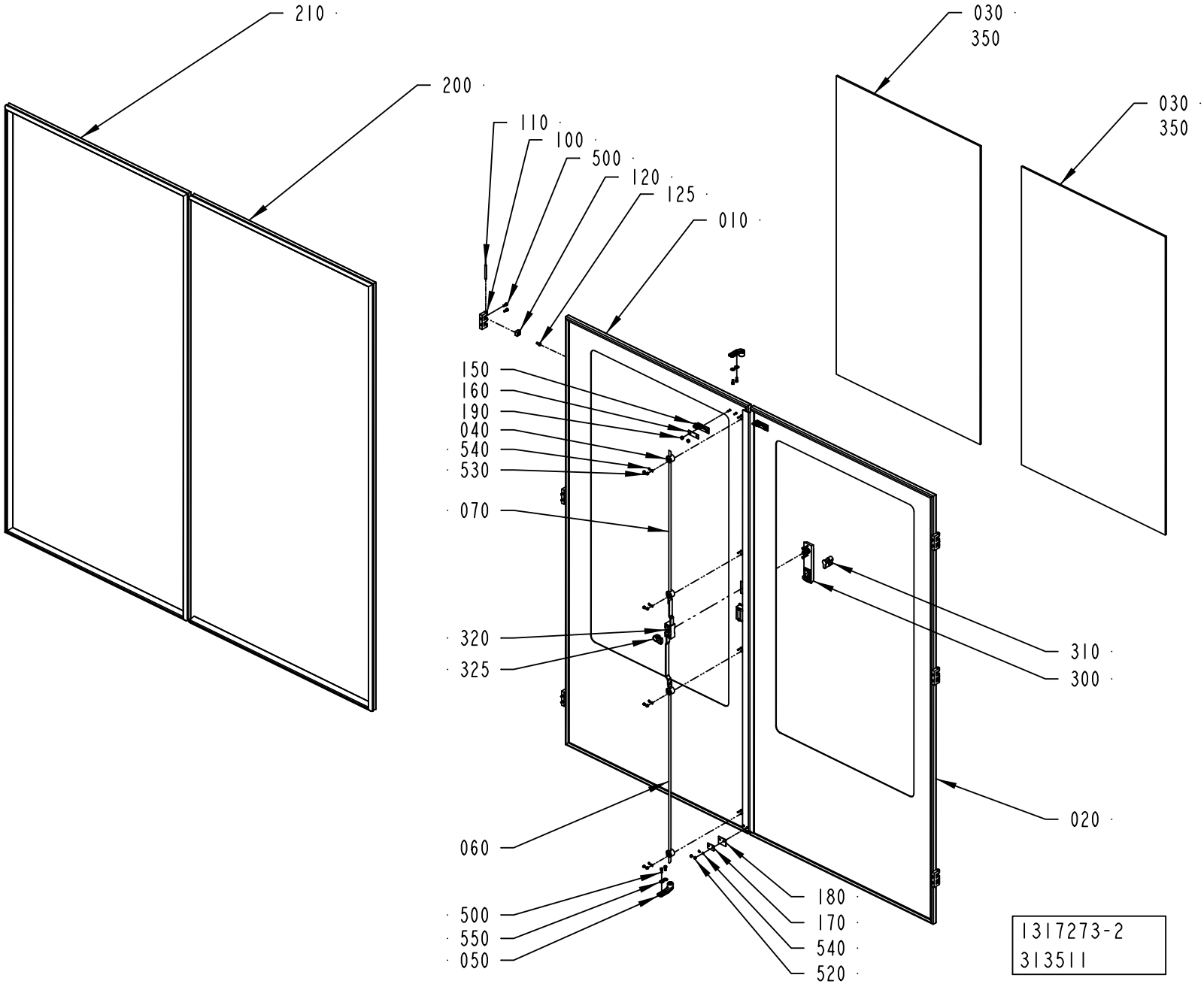
210
200
030
350
030
350
110
100
500
120
125
010
150
160
190
040
540
530
070
320
325
310
300
020
060
500
550
050
180
170
540
520
1317273-2
313511

ECM: 340090 - 20080402
Group number: 1317273-0200
Assembly Drawing: 1317273-2_1_AB

Pos	Part No	UN	Qty	Description	Page No
-					
010	1317271-0000		1	DOOR	
020	1317272-0000		1	DOOR	
030	2533626-0000		2	GLASS PANE	
040	1129274-0000		4	GUIDE LUG	
050	1538868-0000		2	BRACKET	
060	1036304-0006		1	LOCKING ARM	
070	1036304-0013		1	LOCKING ARM	
100	1035792-0000		6	E-HINGE	
110	988685-0000		6	PIN	
120	1129770-0000		6	BLOCKING PIECE	
125	1129767-0000		6	SCREW	
150	1129042-0000		2	KEY	
160	1036563-0000		2	WASHER	
170	1129324-0000		1	WASHER	
180	1129325-0000		1	SEALING FLANGE	
190	1512644-0000		4	ROUND NUT	
200	1317274-0000		1	SEALING STRIP	
210	1317275-0000		1	SEALING STRIP	
300	90237-0176		1	TURNING HANDLE, 1125-U190-A	
310	90237-0128		1	LOCK CYLINDER, 1109-SU125	
320	90237-0153		1	LOCK HOUSING, 1121-U26-0B	
325	90237-0165		1	LATCH	
350	90157-0041		1	SEALING COMPOUND, RHODORSEAL 5651	
500	312115-0327		16	SCREW ISO4762 M5X12 A4 80	
520	312812-0312		2	HEXAGON NUT, NY-LOCK M4 A480	
530	312705-0312		8	NUT HEX. DOMED CAP MHM-6 M4 A280	
540	315105-0136		10	WASHER BRB 4,3X8 RFR	
550	90005-0114		4	WASHER PLAIN ROUND 5,3(M5)/15, H=1	

Pos	Part No	UN	Qty	Description	Page No

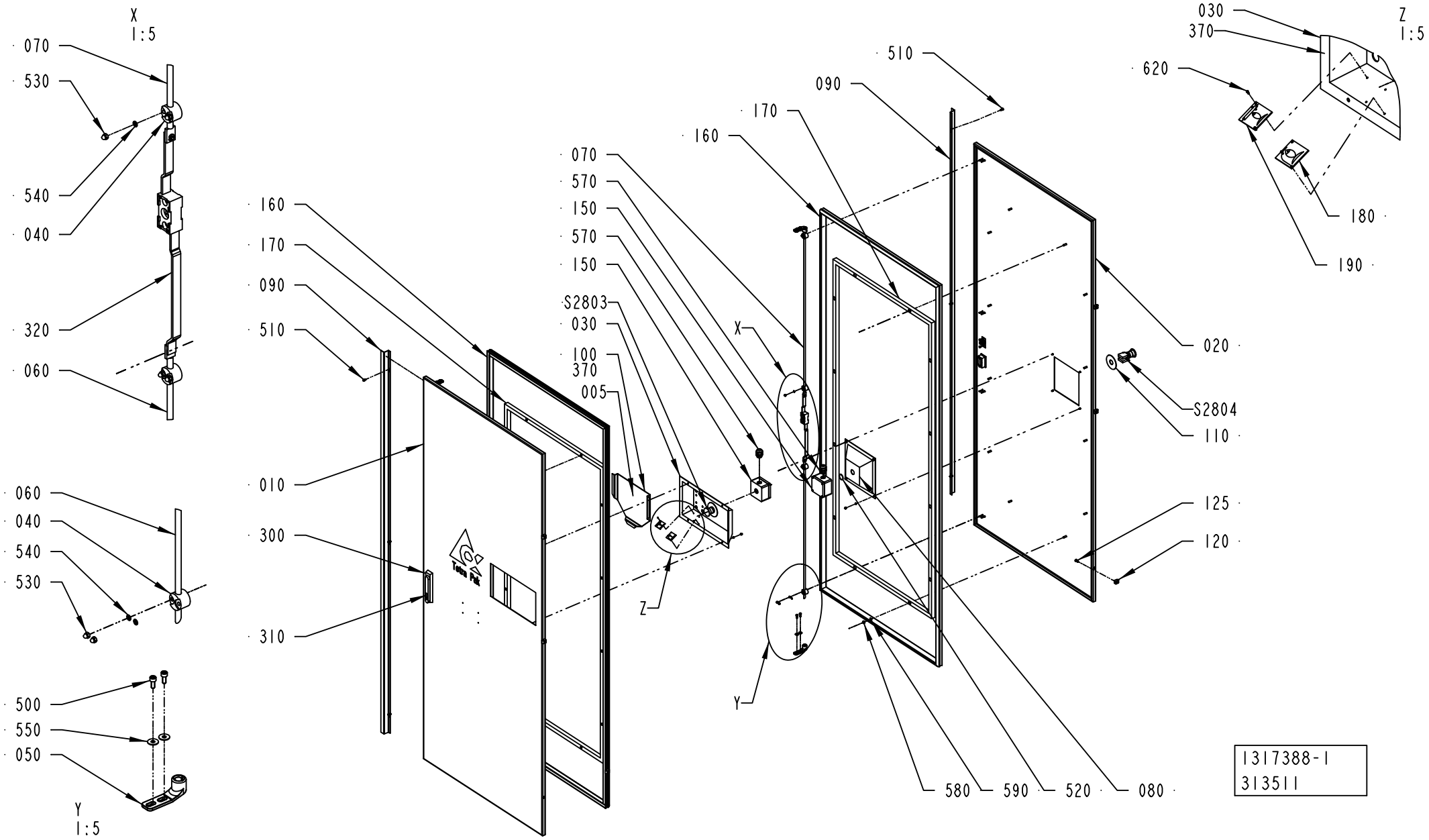
X
1:5
070
530
540
040
320
060
060
040
540
530
500
550
050
Y
1:5
160
170
090
510
010
300
310
070
570
150
570
150
S2803
030
100
370
005
Z
X
510
090
170
160
Y
030
370
620
180
190
Z
1:5
020
S2804
110
125
120
580
590
520
080
1317388-1
313511

ECM: 340091 - 20080402
Group number: 1317388-0100
Assembly Drawing: 1317388-1_1_AE

Pos	Part No	UN	Qty	Description	Page No
-					
005	1512398-0100		1	DIAGRAM	**2-113**
010	1317386-0000		1	DOOR	
020	1317387-0000		1	DOOR	
030	1317389-0000		1	COVER	
040	1129274-0000		8	GUIDE LUG	
050	1538868-0000		4	BRACKET	
060	1036304-0006		2	LOCKING ARM	
070	1036304-0007		2	LOCKING ARM	
080	1317390-0000		1	COVER	
090	1317392-0000		2	COVER	
100	1129275-0000		1	BOX FOR DIAGRAM	
110	486826-0001		2	SIGN "EMERGENCY STOP"	
120	1129770-0000		6	BLOCKING PIECE	
125	1129767-0000		6	SCREW	
150	1037130-0000		2	CONNECTION BOX	
160	1317391-0000		2	SEALING STRIP	
170	1348232-0000		2	FRAME	
180	1347766-0000		1	SIGN	
190	1347767-0000		1	SIGN	
300	90237-0176		2	TURNING HANDLE, 1125-U190-A	
310	90237-0128		2	LOCK CYLINDER, 1109-SU125	
320	90237-0153		2	LOCK HOUSING, 1121-U26-0B	
370	90157-0041		1	SEALING COMPOUND, RHODORSEAL 5651	
500	312115-0327		8	SCREW ISO4762 M5X12 A4 80	
510	312115-0323		6	SCREW ISO4762 M5X8 A4 80	
520	315202-0119		2	O-RING 25,1X1,6 MM	
530	312705-0312		24	NUT HEX. DOMED CAP MHM-6 M4 A280	
540	315105-0136		24	WASHER BRB 4,3X8 RFR	
550	90005-0114		8	WASHER PLAIN ROUND 5,3(M5)/15, H=1	
570	352103-0110		2	CABLE GLAND, STR 16, PR22,5/PG16	
580	312605-0316		24	HEXAGON NUT, M6M M6 A280	
590	315105-0153		24	WASHER BRB 6,4X12 RFR	
620	312502-0120		4	DRIVE SCREW ROUND HEAD KDS 0X5	
S2803	90458-1651		1	EMERGENCY STOP, ZB4-BS-844 ZB4-BZ-104	
S2804	90458-1651		1	EMERGENCY STOP, ZB4-BS-844 ZB4-BZ-104	
W2254	351150-0405	MM	2000	CABLE OLFLEX 5X0,75 MM2 LIGHT/GREY	
W2255	351150-0405	MM	3000	CABLE OLFLEX 5X0,75 MM2 LIGHT/GREY	

Pos	Part No	UN	Qty	Description	Page No

Machine Type | Group Description | Used-In | Group Number | Page No

This page is intentionally left blank.

ECM: 244252 - 20060102
Group number: 1512398-0100
Assembly Drawing:

Pos	Part No	UN	Qty	Description	Page No
-					
010	2736144-0000		1	PNEUMATIC DIAGRAM	
020	1484892-0000		1	PNEUMATIC DIAGRAM	
030	2506845-0000		1	DIAGRAM	
040	1484511-0000		1	WATER DIAGRAM	
050	1484893-0000		1	EXTERNAL CLEANING DIAGRAM	
060	2528968-0000		1	PNEUMATIC DIAGRAM	
070	2582671-0000		1	HYDRAULIC DIAGRAM	
080	2570379-0000		1	PNEUMATIC DIAGRAM	
090	2582672-0000		1	PNEUMATIC DIAGRAM	
100	2801653-0000		1	WATER DIAGRAM	

Pos	Part No	UN	Qty	Description	Page No

FRONT COVER

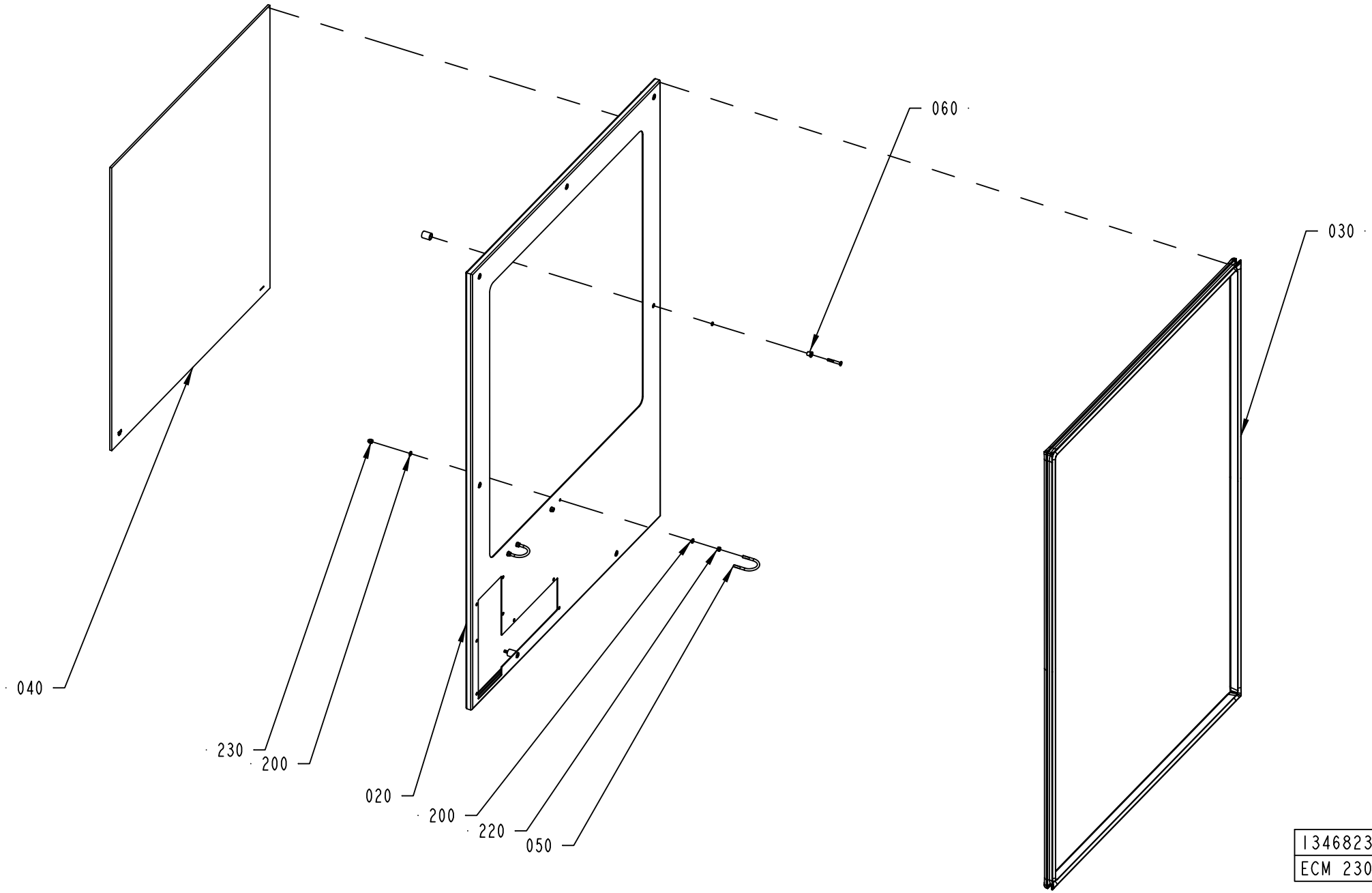

1346823-2
ECM 230713

ECM: 230713 - 20060101
Group number: 1346823-0200
Assembly Drawing: 1346823-2_1_AC

Pos	Part No	UN	Qty	Description	Page No
-					
020	2774479-0000		1	COVER	
030	1296219-0000		1	SEALING STRIP	
040	2533625-0000		1	GLASS PANE	
050	531616-0000		2	HOLDER	
060	90226-0458		7	MOUNTING SCREW	
070	90157-0041		1	SEALING COMPOUND, RHODORSEAL 5651	
200	315105-0153		8	WASHER BRB 6,4X12 RFR	
220	312605-0316		4	HEXAGON NUT, M6M M6 A280	
230	312705-0316		4	NUT HEX. DOMED CAP MHM-6 M6 A280	

Pos	Part No	UN	Qty	Description	Page No

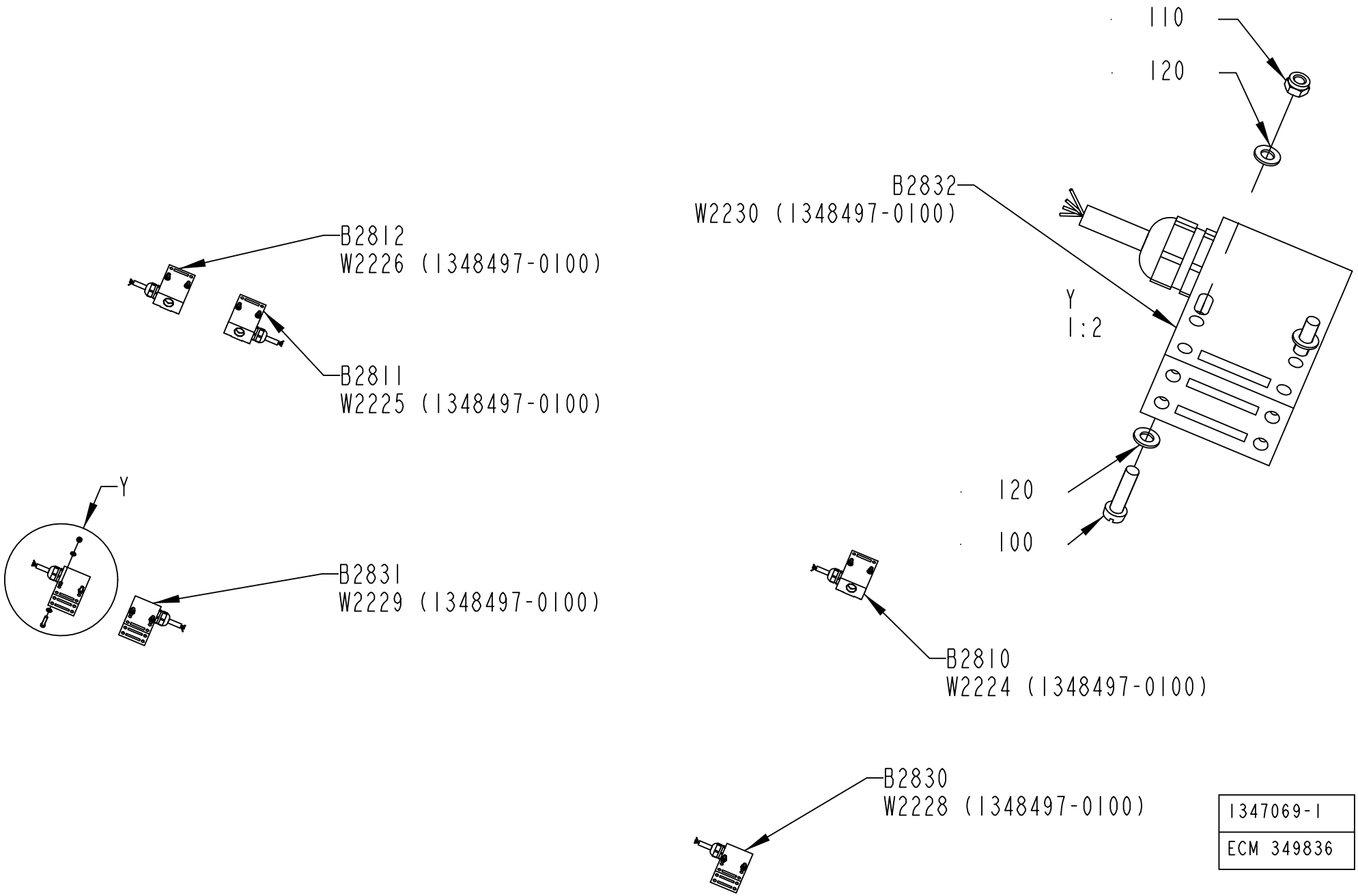

1347069-1
ECM 349836

ECM: 364671 - 20081002
Group number: 1347069-0100
Assembly Drawing: 1347069-1_1_AD

Pos	Part No	UN	Qty	Description	Page No
-					
100	312125-0331		12	SCREW ISO 1207 M5X20 A4	
110	312812-0314		12	HEXAGON NUT, NY-LOCK M5 A480	
120	315105-0146		24	WASHER BRB 5,3X10 RFR	
B2810	90600-5010		1	SAFETY SWITCH, AZ 16-02 ZVRK-STR-2612-2	
B2811	90600-5009		1	SAFETY SWITCH, AZ 16-02 ZVRK-STL-2612-1	
B2812	90600-5010		1	SAFETY SWITCH, AZ 16-02 ZVRK-STR-2612-2	
B2830	90600-5009		1	SAFETY SWITCH, AZ 16-02 ZVRK-STL-2612-1	
B2831	90600-5010		1	SAFETY SWITCH, AZ 16-02 ZVRK-STR-2612-2	
B2832	90600-5009		1	SAFETY SWITCH, AZ 16-02 ZVRK-STL-2612-1	

Pos	Part No	UN	Qty	Description	Page No

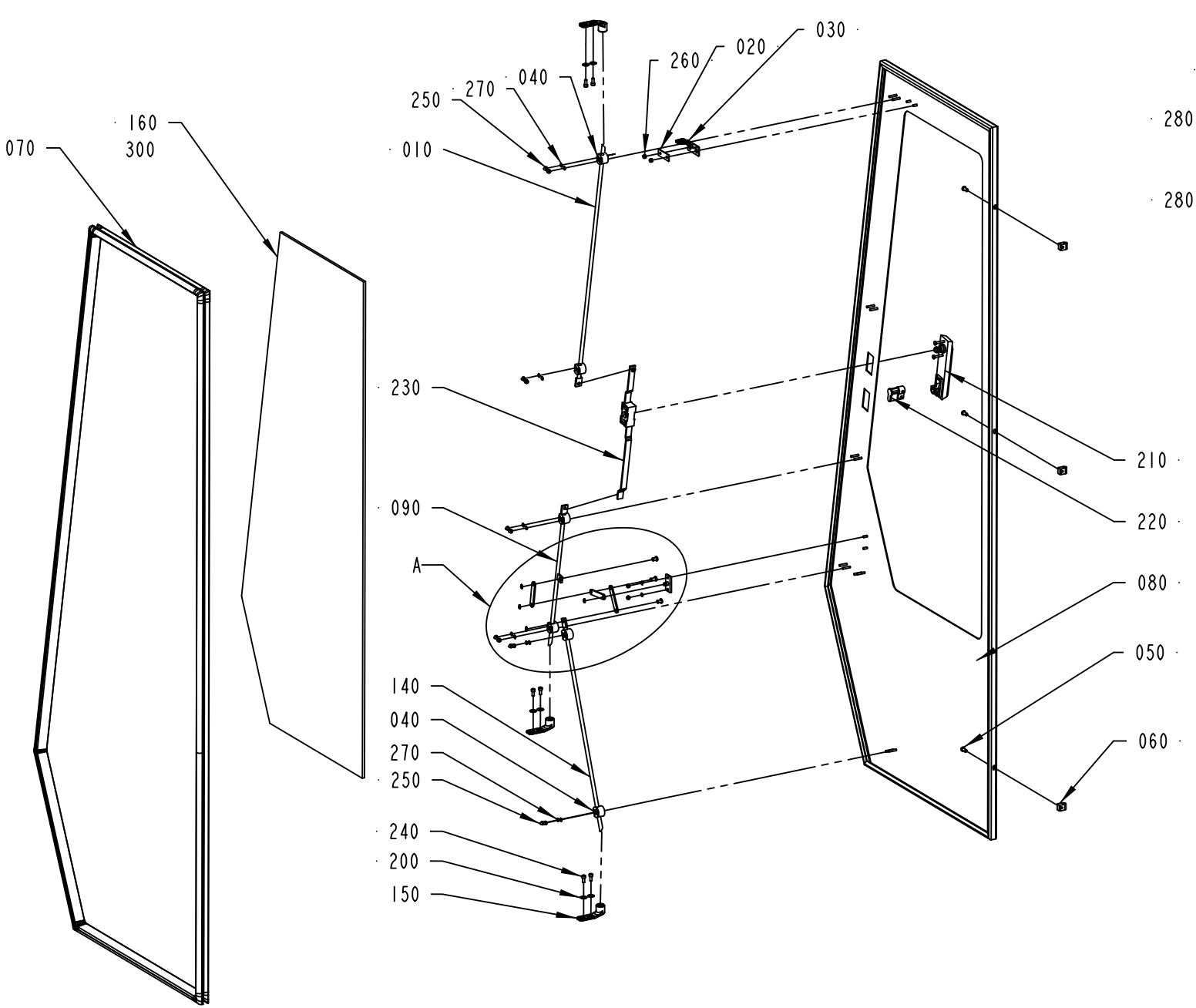

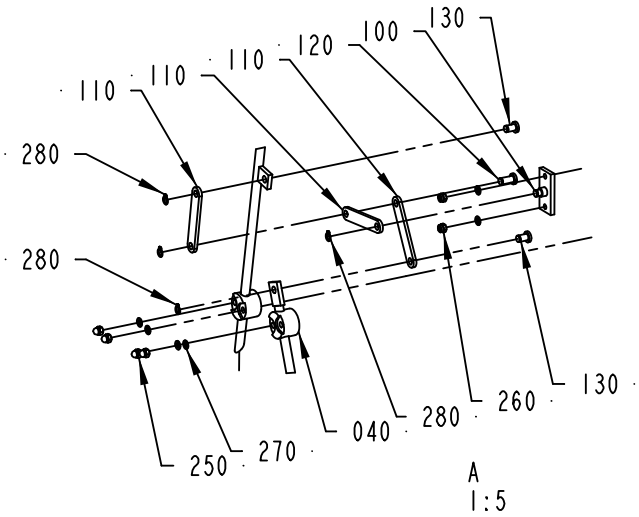

2533725-1
313511

ECM: 340092 - 20080402
Group number: 2533725-0100
Assembly Drawing: 2533725-1_1_AB

Pos	Part No	UN	Qty	Description	Page No
-					
010	1036304-0018		1	LOCKING ARM	
020	1036563-0000		1	WASHER	
030	1129042-0000		1	KEY	
040	1129274-0000		6	GUIDE LUG	
050	1129767-0000		3	SCREW	
060	1129770-0000		3	BLOCKING PIECE	
070	1279076-0000		1	SEALING STRIP	
080	2541130-0000		1	DOOR	
090	1285844-0000		1	LOCKING ARM	
100	1285845-0000		1	BRACKET	
110	1285846-0000		3	LINK	
120	1285847-0000		1	SHAFT	
130	1285848-0000		2	SHAFT	
140	1350708-0000		1	LOCKING ARM	
150	1538868-0000		3	BRACKET	
160	2533624-0000		1	GLASS PANE	
200	90005-0114		6	WASHER PLAIN ROUND 5,3(M5)/15, H=1	
210	90237-0175		1	TURNING HANDLE, 1125-U185-0A	
220	90237-0128		1	LOCK CYLINDER, 1109-SU125	
230	90237-0153		1	LOCK HOUSING, 1121-U26-0B	
240	312115-0327		6	SCREW ISO4762 M5X12 A4 80	
250	312705-0312		12	NUT HEX. DOMED CAP MHM-6 M4 A280	
260	312812-0312		4	HEXAGON NUT, NY-LOCK M4 A480	
270	315105-0136		14	WASHER BRB 4,3X8 RFR	
280	315751-0103		4	RETAINING RING FOR SHAFT DIN 471 6 SS	
300	90157-0041		1	SEALING COMPOUND, RHODORSEAL 5651	

Pos	Part No	UN	Qty	Description	Page No

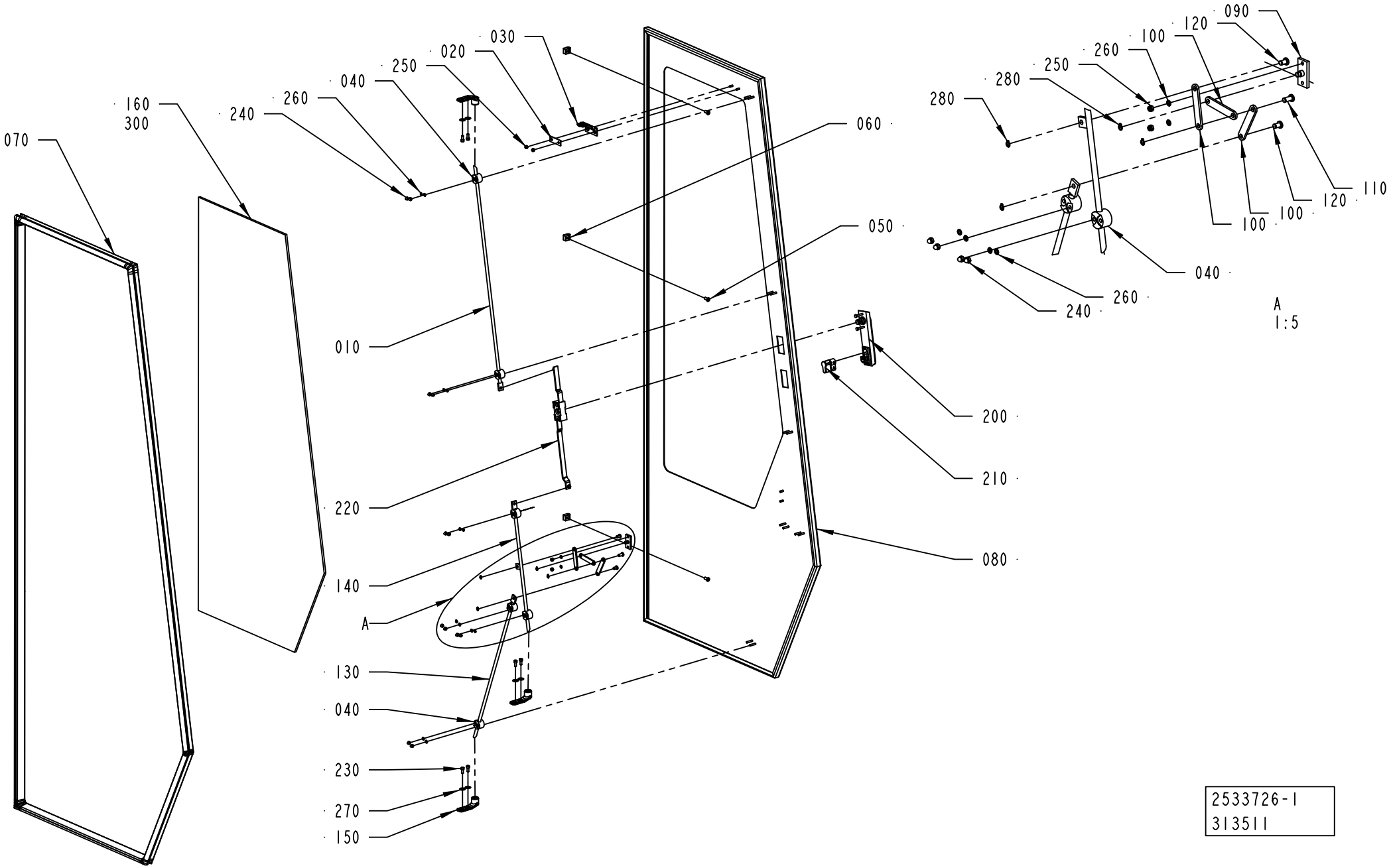

2533726-1
313511

ECM: 340093 - 20080402
Group number: 2533726-0100
Assembly Drawing: 2533726-1_1_AB

Pos	Part No	UN	Qty	Description	Page No
-					
010	1036304-0018		1	LOCKING ARM	
020	1036563-0000		1	WASHER	
030	1129042-0000		1	KEY	
040	1129274-0000		6	GUIDE LUG	
050	1129767-0000		3	SCREW	
060	1129770-0000		3	BLOCKING PIECE	
070	1279075-0000		1	SEALING STRIP	
080	2541129-0000		1	DOOR	
090	1285845-0000		1	BRACKET	
100	1285846-0000		3	LINK	
110	1285847-0000		1	SHAFT	
120	1285848-0000		2	SHAFT	
130	1350708-0000		1	LOCKING ARM	
140	1478005-0000		1	LOCKING ARM	
150	1538868-0000		3	BRACKET	
160	2533724-0000		1	GLASS PANE	
200	90237-0175		1	TURNING HANDLE, 1125-U185-0A	
210	90237-0128		1	LOCK CYLINDER, 1109-SU125	
220	90237-0153		1	LOCK HOUSING, 1121-U26-0B	
230	312115-0327		6	SCREW ISO4762 M5X12 A4 80	
240	312705-0312		12	NUT HEX. DOMED CAP MHM-6 M4 A280	
250	312812-0312		4	HEXAGON NUT, NY-LOCK M4 A480	
260	315105-0136		14	WASHER BRB 4,3X8 RFR	
270	90005-0114		6	WASHER PLAIN ROUND 5,3(M5)/15, H=1	
280	315751-0103		4	RETAINING RING FOR SHAFT DIN 471 6 SS	
300	90157-0041		1	SEALING COMPOUND, RHODORSEAL 5651	

Pos	Part No	UN	Qty	Description	Page No

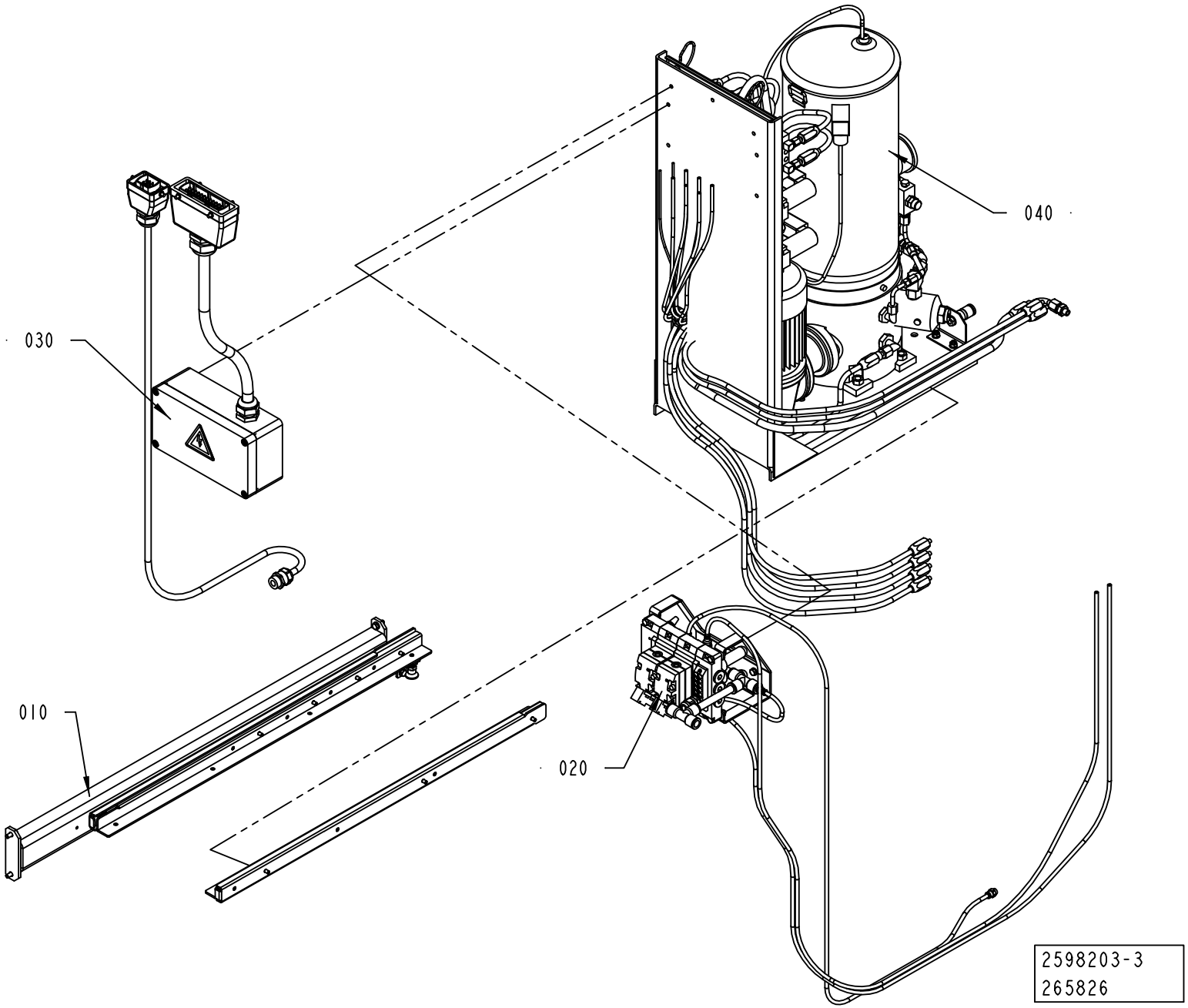
040
030
010
020
2598203-3
265826

ECM: 306257 - 20070401
Group number: 2598203-0200
Assembly Drawing: 2598203-3_1_AA

Pos	Part No	UN	Qty	Description	Page No
-					
010	2566204-0300		1	SUPPORT	**2-125**
020	2574382-0100		1	VALVE PANEL	**2-127**
030	2574383-0100		1	ELECTRIC EQUIPMENT	**2-129**
040	2605199-0100		1	PUMP UNIT	**2-131**

Pos	Part No	UN	Qty	Description	Page No

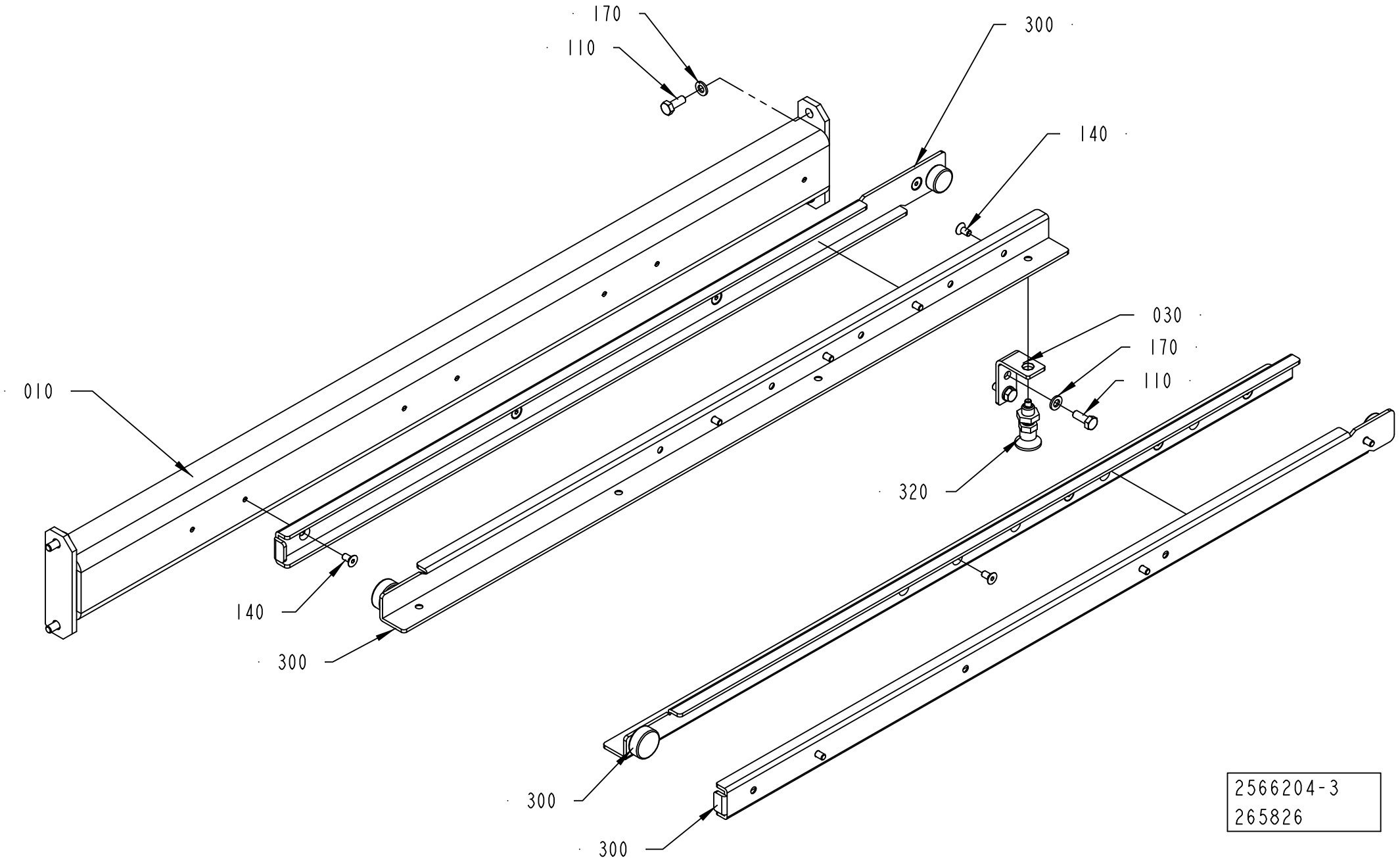

2566204-3
265826

ECM: 306256 - 20070401
Group number: 2566204-0300
Assembly Drawing: 2566204-3_1_AA

Pos	Part No	UN	Qty	Description	Page No
-					
010	2891537-0000		1	SUPPORT	
030	2891538-0000		1	BRACKET	
110	312105-0368		6	SCREW M6S ISO 4017 M6X16 A480	
140	312155-0325		15	SCREW DIN 7991 MF6S M5X10 A4 70	
170	315105-0153		6	WASHER BRB 6,4X12 RFR	
300	2819097-0000		1	GUIDE	
320	90051-0112		1	LOCK KNOB, NO. GN 617 NIK5	

Pos	Part No	UN	Qty	Description	Page No

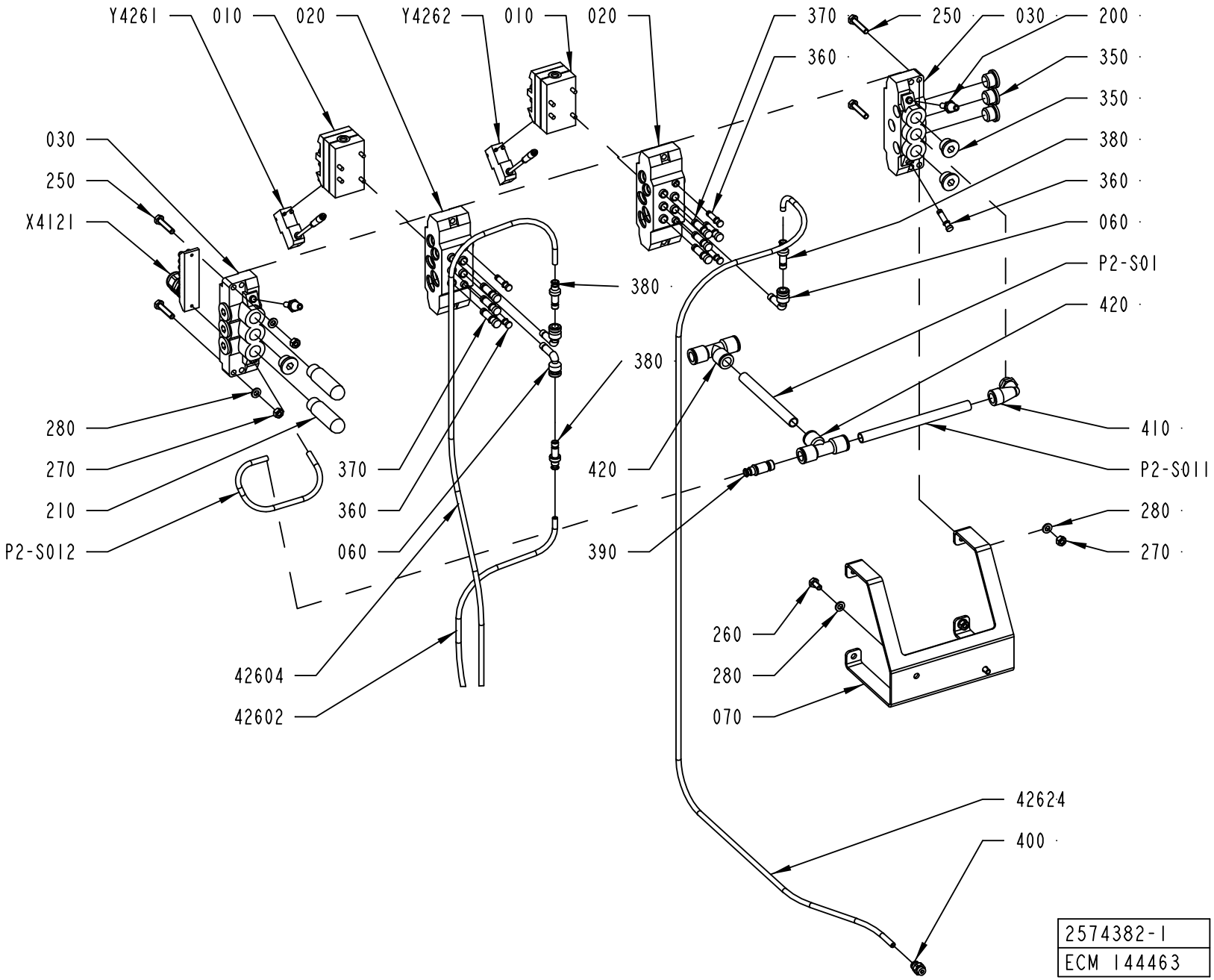
Y4261
010
020
Y4262
010
020
370
360
250
030
200
350
350
380
360
060
P2-S01
420
030
250
X4121
380
380
420
390
280
270
210
P2-S012
370
360
060
410
P2-S011
280
270
260
280
070
42604
42602
42624
400
2574382-1
ECM 144463

ECM: 190220 - 20041104
Group number: 2574382-0100
Assembly Drawing: 2574382-1_1_AB

Pos	Part No	UN	Qty	Description	Page No
-					
010	90042-0215		2	VALVE BODY 5/2 UNISTABLE	
020	90042-0520		2	BASE PLATE ISO SIZE 1	
030	90042-0522		2	PORTED END PIECE ISO SIZE 1	
060	90055-0204		3	ELBOW WITH TAILPIECE 8/8 MM LONG	
070	2603957-0000		1	SUPPORT	
200	90328-0017		2	SILENCER, D=6 MM	
210	90328-0024		2	SILENCER G3/8"	
250	312109-0374		4	SCREW M6S ISO 4017 M6X30 A480	
260	312105-0366		2	SCREW M6S ISO 4017 M6X12 A480	
270	312605-0316		4	HEXAGON NUT, M6M M6 A280	
280	315105-0153		6	WASHER BRB 6,4X12 RFR	
350	342713-0211		9	PLUG, EXT THREAD HEX SOCKET 8638-00-380	
360	342715-0102		5	BLIND PLUG 6 MM	
370	342715-0103		7	BLIND PLUG 8 MM	
380	342716-0203		3	REDUCER 6-8	
390	342716-0210		1	REDUCER 6-12	
400	342722-0202		1	PIPE COUPLING 1/8" D=6MM	
410	90458-2960		1	ELBOW PIPE JOINT, EXT.THREAD,D=12MM-G3/8	
420	342748-0109		2	T-CONNECTION 12MM	
42602	90166-0081	MM	1300	TUBE 6 MM PA BLUE	
42604	90166-0081	MM	1300	TUBE 6 MM PA BLUE	
42624	90166-0081	MM	1150	TUBE 6 MM PA BLUE	
P2-S01	90166-0195	MM	900	TUBE 12 MM PA BLUE	
P2-S011	90166-0195	MM	140	TUBE 12 MM PA BLUE	
P2-S012	90166-0081	MM	400	TUBE 6 MM PA BLUE	
X4121	90042-0535		1	TERMINAL BOARD 19 CORDS	
Y4261	90042-0538		1	PILOT VALVE L=500MM	
Y4262	90042-0538		1	PILOT VALVE L=500MM	

Pos	Part No	UN	Qty	Description	Page No

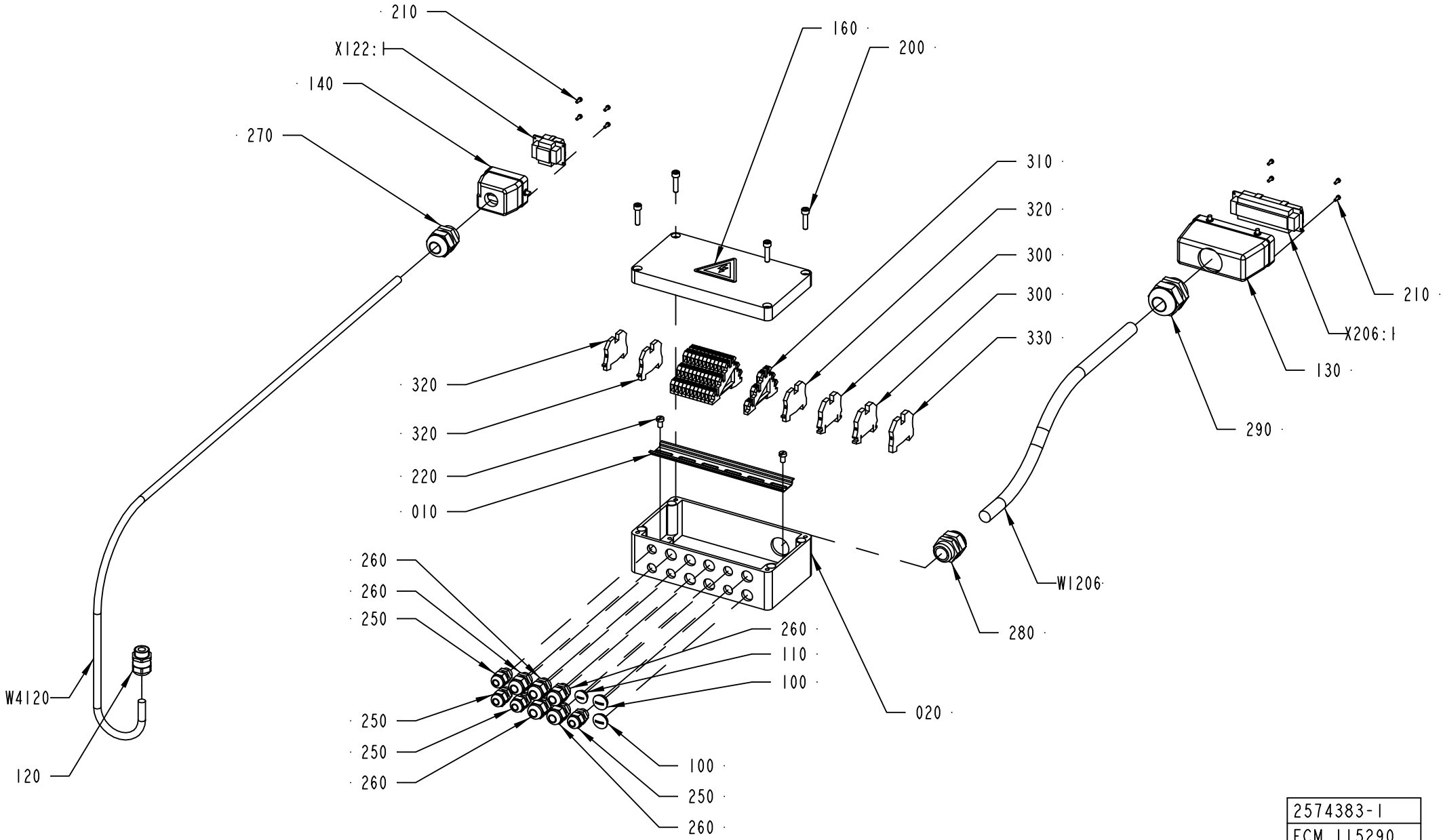

2574383-1
ECM 115290

ECM: 224854 - 20050831
Group number: 2574383-0100
Assembly Drawing: 2574383-1_1_AA

Pos	Part No	UN	Qty	Description	Page No
-					
010	2531417-0000		1	RAIL	
020	2594415-0000		1	CONNECTION BOX	
100	90002-0009		2	BLANK-OFF PLUG, PR 18.6 SKINDICHT-BLK11	
110	90002-0013		1	BLANK-OFF PLUG, PR 15,2 SKINDICHT-BLK9	
120	90458-0307		1	CABLE GLAND, M20X1,5, NO.5311 1020	
130	90110-0152		1	CABLE HOOD 24-POL 70.352.2428.1	
140	90110-0157		1	CABLE HOOD 6-POL 70.352.0628.1	
160	359705-0015		1	WARNING SIGN ISO, RISK OF ELECTRIC SHOCK	
200	312115-0372		8	SCREW ISO4762 M6X25 A4 80	
210	312125-0222		8	SCREW ISO 1207 M3X8 A4	
220	312125-0364		2	SCREW ISO 1207 M6X10 A4	
250	352103-0101		4	CABLE GLAND, ST 9, PR15,2/PG9	
260	352103-0106		5	CABLE GLAND, ST 11, PR18,6/PG11	
270	352103-0115		1	CABLE GLAND, STR 21, PR28,3/PG21	
280	352103-0116		1	CABLE GLAND, ST 21, PR28,3/PG21	
290	352103-0120		1	CABLE GLAND, STR 29, PR37,0/PG29	
300	353021-0213		2	FEED THROUGH TERMINAL, 10201.0	
310	353021-0302		12	TERMINALS,TRIPLE-LEVEL, DLD 2,5/35 PA	
320	353024-0204		3	EARTH TERMINAL WPE 2,5	
330	353024-0205		1	EARTH TERMINAL, 1010.1	
W1206	351150-0425	MM	8000	CABLE OLFLEX 25X0,75 MM2 LIGHT/GREY	
W4120	351150-0418	MM	9000	CABLE OLFLEX 4X2,5 MM2 LIGHT/GREY	
X122:1	90110-0159		1	MALE INSERT 70.310.0640.0	
X206:1	90110-0150		1	MALE INSERT 121110 0000	

Pos	Part No	UN	Qty	Description	Page No

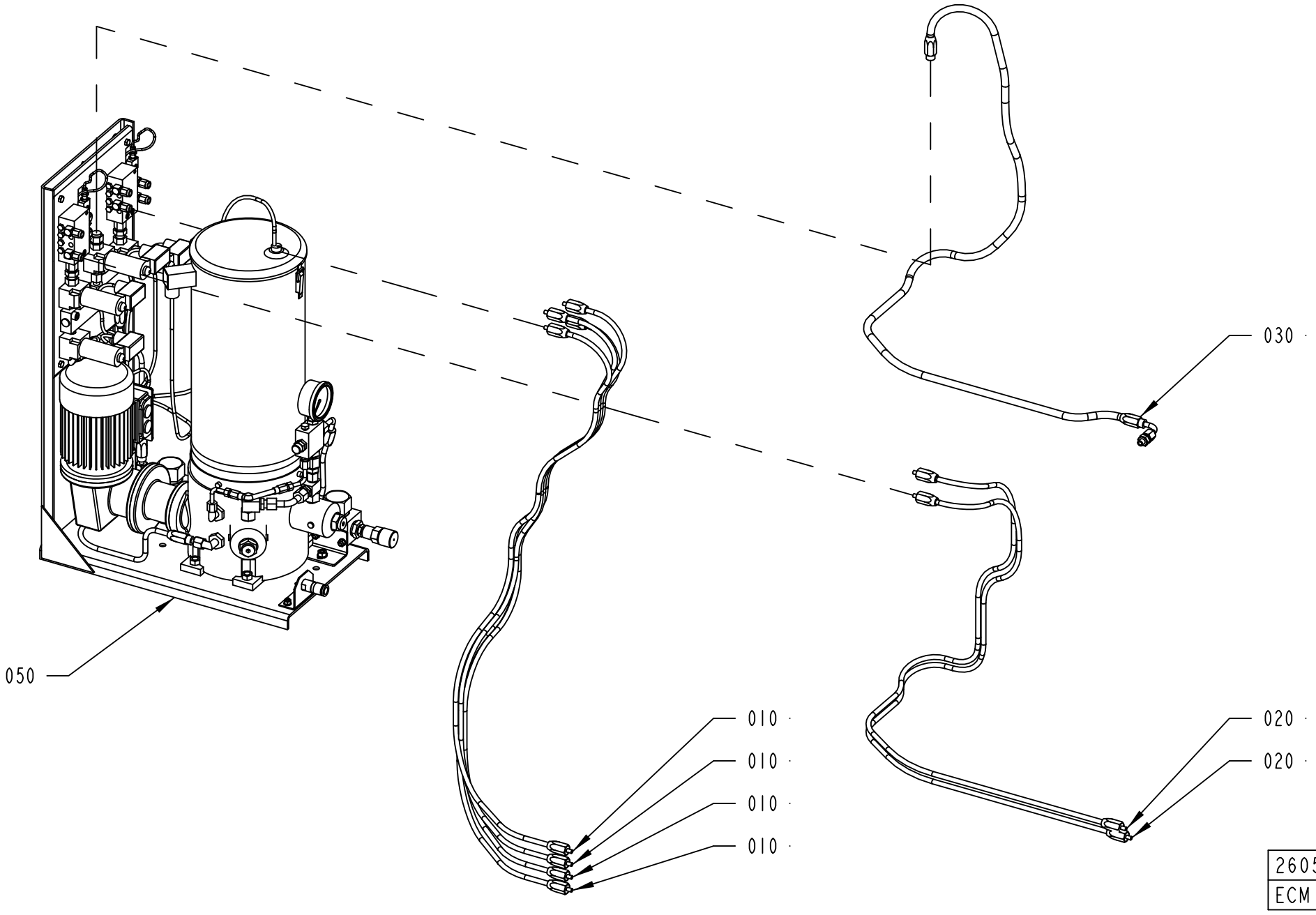
030
050
010
010
010
010
020
020
2605199-1
ECM 115290

ECM: 325780 - 20080101
Group number: 2605199-0100
Assembly Drawing: 2605199-1_1_AA

Pos	Part No	UN	Qty	Description	Page No
TBA/22					
010	90459-2341		4	HOSE ASSEMBLY, EL 03600101	
Common Parts					
020	90459-2342		2	HOSE ASSEMBLY, EL 03600102	
030	90459-2343		1	HOSE ASSEMBLY, EL 03600103	
050	90459-1795		1	LUBRICATION PUMP UNIT 10KG, BK 03173001	
10	*90459-2068*		*2*	*GREASE FILTER 100µM, EL 03530304*	
100	*90600-3730*		*1*	*GREASE DISPENCER, BK06011505*	
20	*90459-2147*		*2*	*PUMP PISTON, COD 2152 99 06 50 103*	
30	*90459-2150*		*1*	*DISTRIBUTION BLOCK, BK 06011304*	
40	*90459-2152*		*3*	*SOLENOID VALVE, COD. GR2-0-A24*	
50	*90459-2177*		*1*	*GEARED MOTOR, SK 15 40 VF-63 L/4*	
60	*90459-2186*		*2*	*CAPACITIVE SENSOR, KCN-T18PU/007-K1.5V*	
70	*90459-2626*		*2*	*PROX.SWITCH KIB-M08PS/1.5-KL6*	
80	*315202-0713*		*2*	*O-RING 29,87X1,78 MM*	
90	*90600-1224*		*1*	*DIRECTIONAL SEATED VALVE, GS2-0-A24*	

Pos	Part No	UN	Qty	Description	Page No

Tetra Pak

SPC
Spare Parts Catalogue

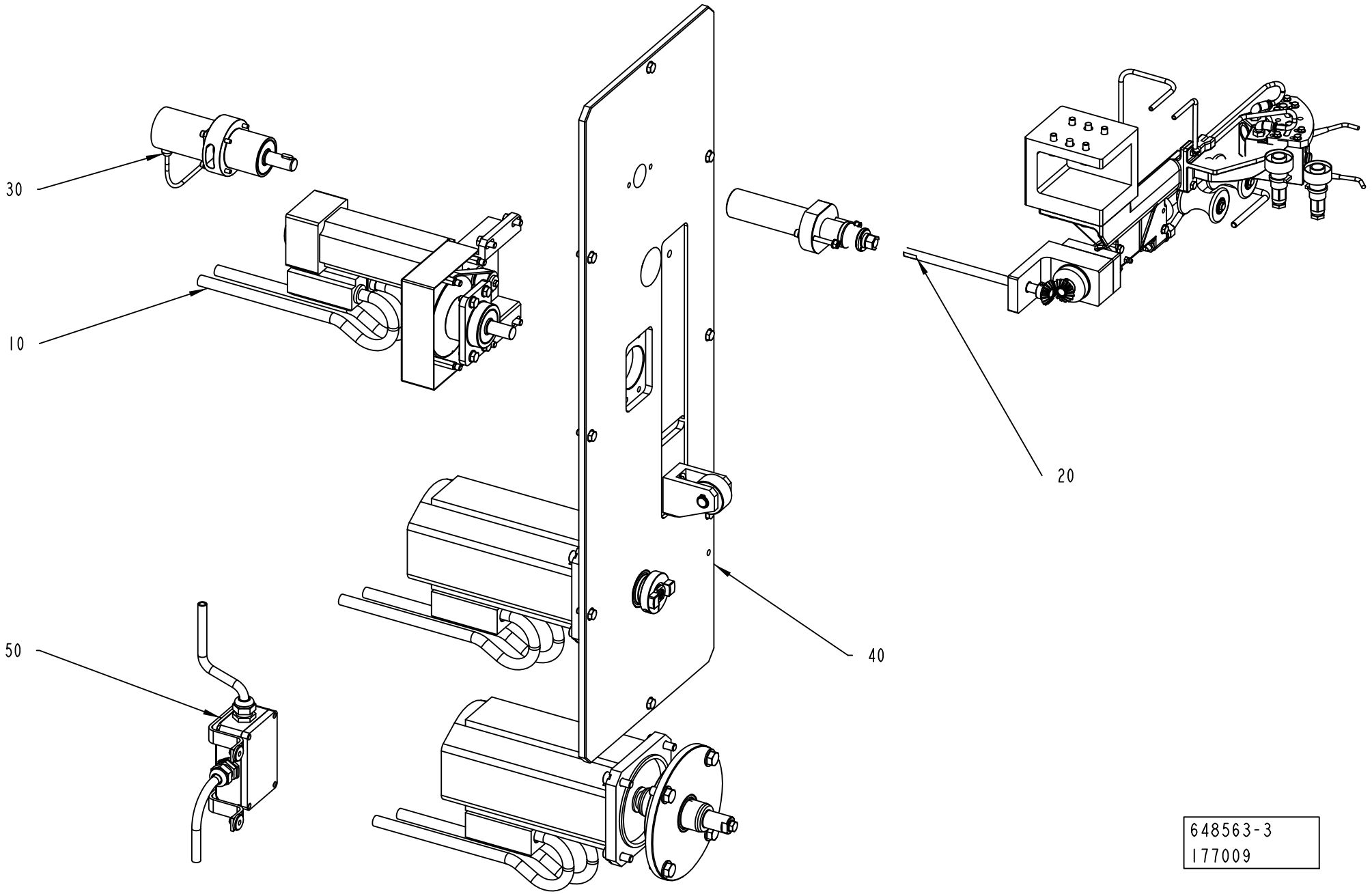

648563-3
177009

ECM: 276013 - 20070101
Group number: 648563-0200
Assembly Drawing: 648563-3_1_AA

Pos	Part No	UN	Qty	Description	Page No
-					
010	2511247-0100		1	DESIGN CORRECTION DEVICE	**3-5**
020	2511249-0100		1	PHOTOCELL UNIT	**3-7, 3-9**
030	1260120-0100		1	VOLUME ADJUSTER	**3-11**
040	2511248-0400		1	PLATE	**3-13, 3-15**
050	1349464-0300		1	CONNECTION BOX	**3-17**

Pos	Part No	UN	Qty	Description	Page No

DESIGN CORRECTION DEVICE

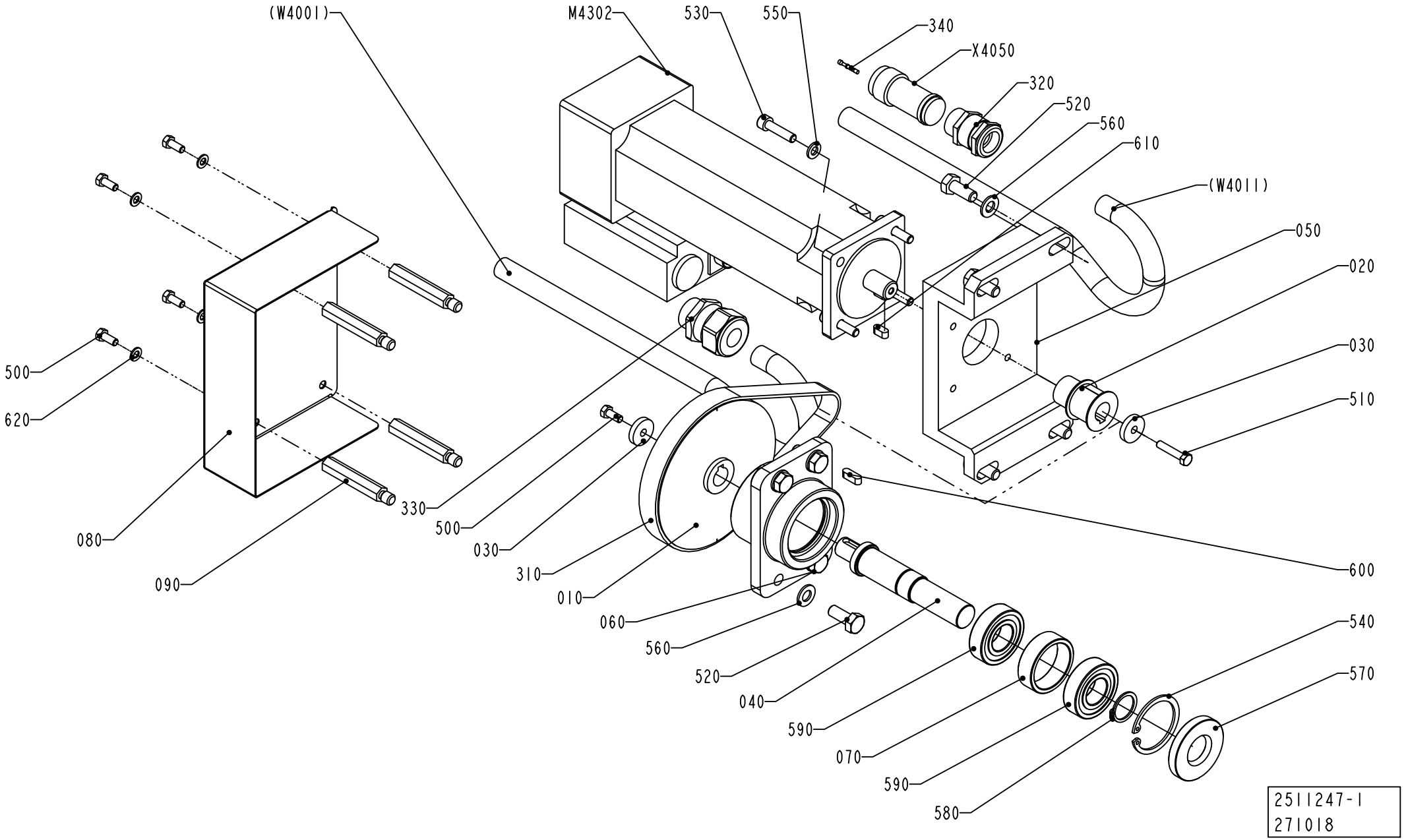

ECM: 276011 - 20070101
Group number: 2511247-0100
Assembly Drawing: 2511247-1_1_AB

Pos	Part No	UN	Qty	Description	Page No
TBA 0200B (See drawing on page: 3-4)					
040	2525660-0000		1	SHAFT	
X4050	90110-0208		1	CABLE CONTACT	
TBA 0200M, TBA 0250B (See drawing on page: 3-4)					
040	2525661-0000		1	SHAFT	
X4050	90110-0208		1	CABLE CONTACT	
TBA 0200S, TBA 0250S, TBA 0300S (See drawing on page: 3-4)					
040	1512649-0000		1	SHAFT	
X4050	90110-0208		1	CABLE CONTACT	
Common Parts					
010	1140839-0000		1	PULLEY	
020	1140837-0000		1	PULLEY	
030	1140851-0000		2	WASHER	
050	1260863-0000		1	PLATE	
060	1512650-0000		1	BEARING HOUSING	
070	1260865-0000		1	SPACER	
080	1487099-0000		1	COVER	
090	1487127-0000		4	SPACER SCREW	
310	90252-0047		1	TIMING BELT AT5 450X16 MM	
320	90012-0117		1	GLAND, EXTENDED WITH INSERT, PG11	
330	353245-0004		1	GLAND, EXTENDED WITH INSERT, PG16/PR 22,	
340	90110-0209		7	CONTACT PIN, RC20M13K	
500	312105-0327		5	SCREW M6S ISO 4017 M5X12 A480	
510	312105-0333		1	SCREW M6S ISO 4017 M5X25 A480	
520	312105-0451		8	SCREW M6S ISO 4017 M8X20 A480	
530	312115-0372		4	SCREW ISO4762 M6X25 A4 80	
540	90141-0020		1	RETAINING RING FOR BORE DIN 472 42 A2	
550	315105-0153		4	WASHER BRB 6,4X12 RFR	
560	315105-0165		8	WASHER BRB 8,4X16 RFR	
570	315221-0147		1	RADIAL SEAL 20X47X7 MM	
580	315751-0116		1	RETAINING RING FOR SHAFT DIN 471 20 SS	
590	321308-0204		2	BALL BEARING, 20X42X12 MM	
600	315701-0199		1	PARALLEL KEY W. ROUND ENDS 5X5X16 MM	
610	315701-0197		1	PARALLEL KEY W. ROUND ENDS 5X5X12 MM	
620	315105-0146		4	WASHER BRB 5,3X10 RFR	
M4302	90045-0164		1	SERVO MOTOR EP 075-112-44T3B	

Pos	Part No	UN	Qty	Description	Page No

Machine Type | Group Description | Used-In | Group Number | Page No

PHOTOCELL UNIT

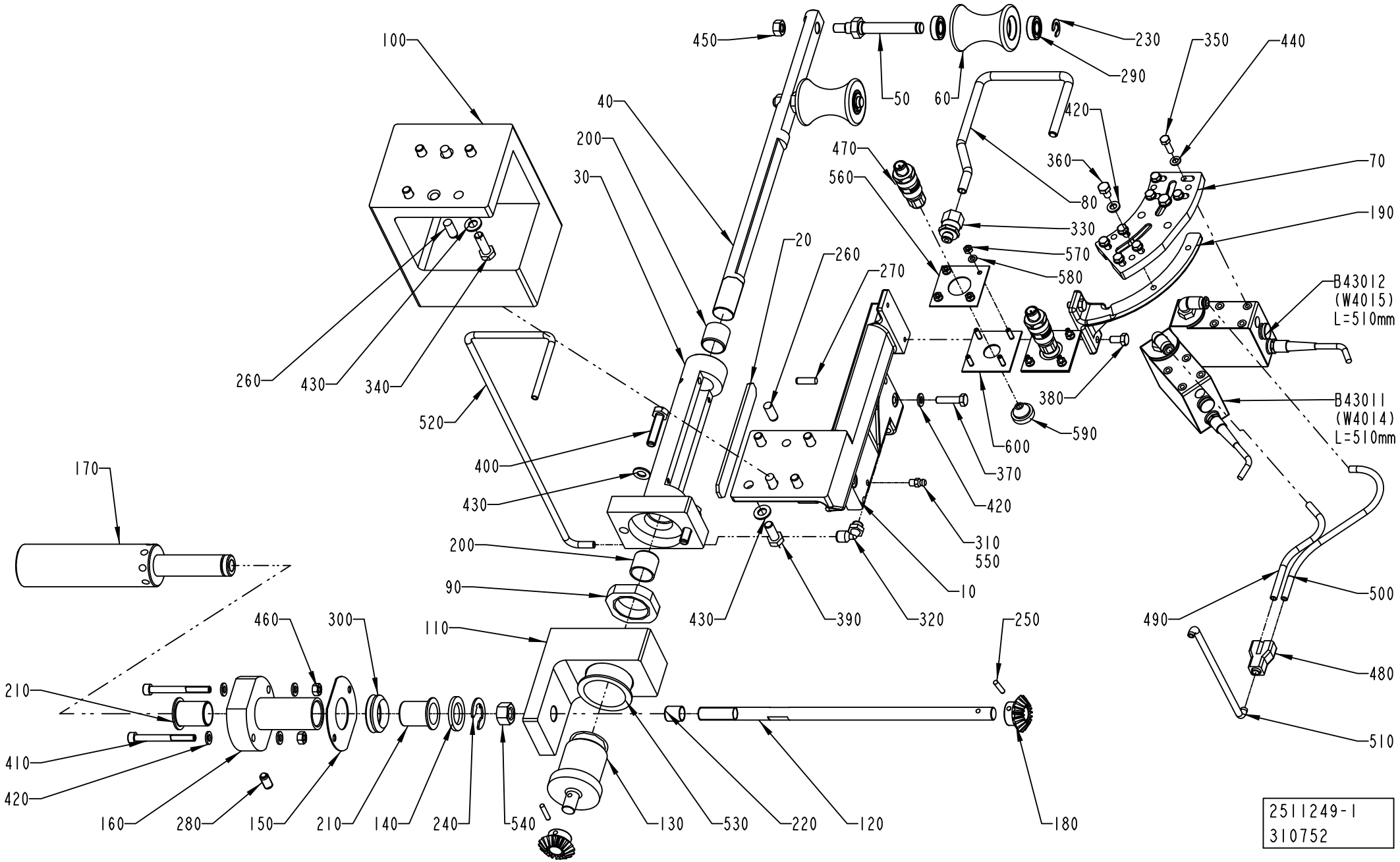

ECM: 314105 - 20071001
Group number: 2511249-0100
Assembly Drawing: 2511249-1_1_AD

This list covers pages from 3-6 to 3-9

Pos	Part No	UN	Qty	Description	Page No
TBA 0200B					
040	2504430-0000		1	GUIDE ROD	
060	1347521-0000		2	ROLLER	
070	978735-0000		1	FASTENING PLATE	
080	1347522-0000		1	NOZZLE	
100	1517278-0000		1	SPACER	
190	751457-0000		1	CANTILEVER	
340	312105-0453		4	SCREW M6S ISO 4017 M8X25 A480	
390	312105-0451		4	SCREW M6S ISO 4017 M8X20 A480	
430	315105-0165		10	WASHER BRB 8,4X16 RFR	
490	90166-0013	MM	200	TUBE 8 MM PA BLUE	
500	90166-0013	MM	150	TUBE 8 MM PA BLUE	
510	90166-0013	MM	350	TUBE 8 MM PA BLUE	
520	90166-0132	MM	520	TUBE 6 MM PA,TRANSP.	
TBA 0200M					
040	2531955-0000		1	GUIDE ROD	
060	1484793-0000		2	ROLLER	
070	491880-0000		1	FASTENING PLATE	
080	1487203-0000		1	NOZZLE	
100	1517277-0000		1	SPACER	
190	1487204-0000		1	CANTILEVER	
340	312105-0453		4	SCREW M6S ISO 4017 M8X25 A480	
390	312105-0451		4	SCREW M6S ISO 4017 M8X20 A480	
430	315105-0165		10	WASHER BRB 8,4X16 RFR	
490	90166-0013	MM	250	TUBE 8 MM PA BLUE	
500	90166-0013	MM	220	TUBE 8 MM PA BLUE	
510	90166-0013	MM	230	TUBE 8 MM PA BLUE	
520	90166-0132	MM	500	TUBE 6 MM PA,TRANSP.	
TBA 0200S					
040	2527133-0000		1	GUIDE ROD	
060	1487209-0000		2	ROLLER	
070	491880-0000		1	FASTENING PLATE	
080	1512658-0000		1	NOZZLE	
100	1519178-0000		1	SPACER	
190	1487204-0000		1	CANTILEVER	
340	312105-0453		4	SCREW M6S ISO 4017 M8X25 A480	
390	312105-0451		4	SCREW M6S ISO 4017 M8X20 A480	
430	315105-0165		10	WASHER BRB 8,4X16 RFR	
490	90166-0013	MM	200	TUBE 8 MM PA BLUE	
500	90166-0013	MM	150	TUBE 8 MM PA BLUE	
510	90166-0013	MM	280	TUBE 8 MM PA BLUE	
520	90166-0132	MM	450	TUBE 6 MM PA,TRANSP.	

Pos	Part No	UN	Qty	Description	Page No
TBA 0250B					
040	2504430-0000		1	GUIDE ROD	
060	1347521-0000		2	ROLLER	
070	978735-0000		1	FASTENING PLATE	
080	1347522-0000		1	NOZZLE	
100	1517277-0000		1	SPACER	
190	751457-0000		1	CANTILEVER	
340	312105-0453		4	SCREW M6S ISO 4017 M8X25 A480	
390	312105-0451		4	SCREW M6S ISO 4017 M8X20 A480	
430	315105-0165		10	WASHER BRB 8,4X16 RFR	
490	90166-0013	MM	200	TUBE 8 MM PA BLUE	
500	90166-0013	MM	150	TUBE 8 MM PA BLUE	
510	90166-0013	MM	280	TUBE 8 MM PA BLUE	
520	90166-0132	MM	450	TUBE 6 MM PA,TRANSP.	
TBA 0250S					
040	2531955-0000		1	GUIDE ROD	
060	1484793-0000		2	ROLLER	
070	491880-0000		1	FASTENING PLATE	
080	1487203-0000		1	NOZZLE	
100	2500364-0000		1	SPACER	
190	1487204-0000		1	CANTILEVER	
390	312105-0464		4	SCREW M6S ISO 4014 M8X65 A480	
430	315105-0165		6	WASHER BRB 8,4X16 RFR	
490	90166-0013	MM	250	TUBE 8 MM PA BLUE	
500	90166-0013	MM	220	TUBE 8 MM PA BLUE	
510	90166-0013	MM	130	TUBE 8 MM PA BLUE	
520	90166-0132	MM	390	TUBE 6 MM PA,TRANSP.	
TBA 0300S					
040	2504430-0000		1	GUIDE ROD	
060	1347521-0000		2	ROLLER	
070	978735-0000		1	FASTENING PLATE	
080	1347522-0000		1	NOZZLE	
100	1519178-0000		1	SPACER	
190	751457-0000		1	CANTILEVER	
340	312105-0453		4	SCREW M6S ISO 4017 M8X25 A480	
390	312105-0451		4	SCREW M6S ISO 4017 M8X20 A480	
430	315105-0165		10	WASHER BRB 8,4X16 RFR	
490	90166-0013	MM	130	TUBE 8 MM PA BLUE	
500	90166-0013	MM	205	TUBE 8 MM PA BLUE	
510	90166-0013	MM	170	TUBE 8 MM PA BLUE	
520	90166-0132	MM	450	TUBE 6 MM PA,TRANSP.	
Common Parts					

Machine Type	Group Description	Used-In	Group Number	Page No

PHOTOCELL UNIT

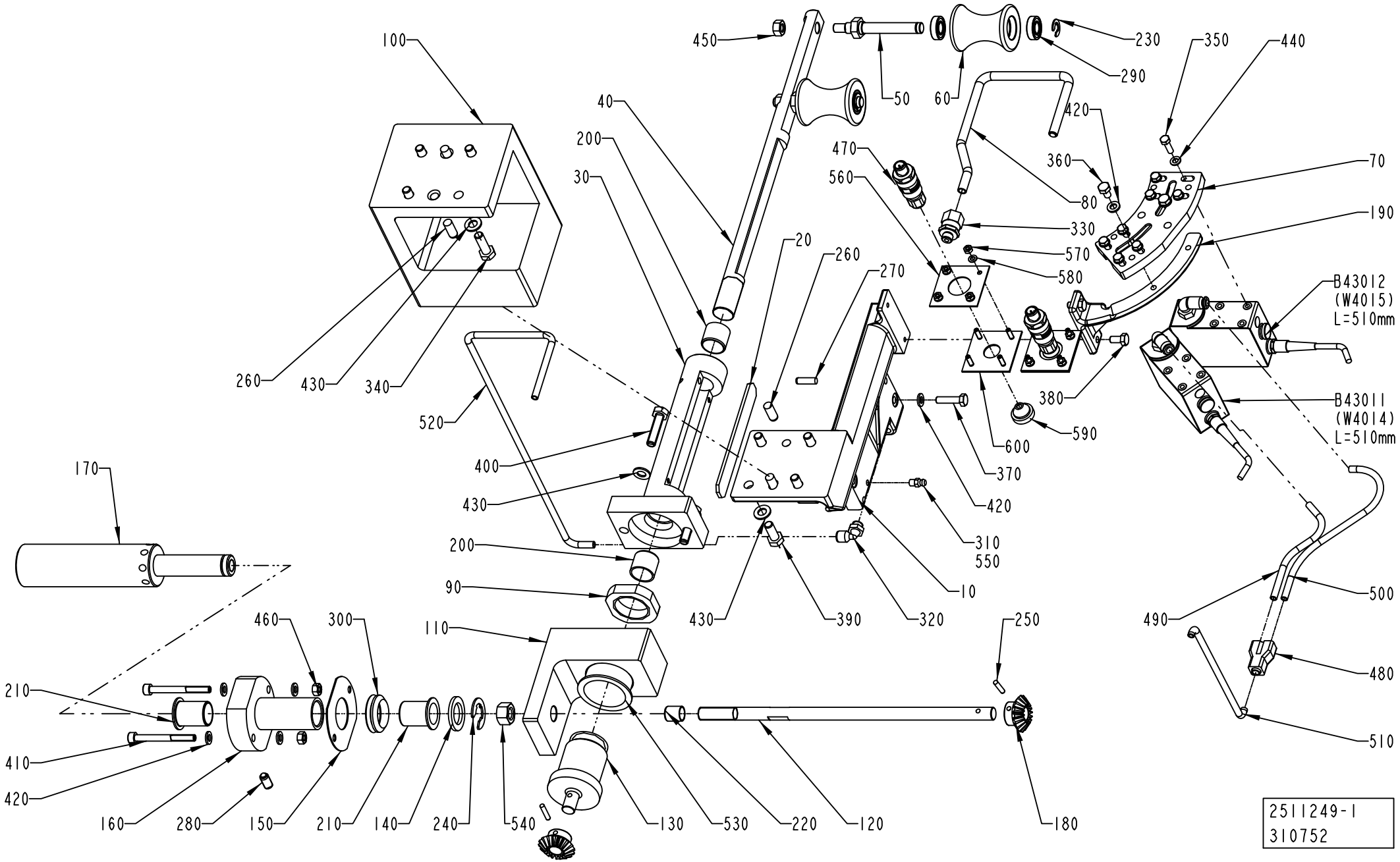

ECM: 314105 - 20071001
Group number: 2511249-0100
Assembly Drawing: 2511249-1_1_AD

This list covers pages from 3-6 to 3-9

Pos	Part No	UN	Qty	Description	Page No
Common Parts (Cont'd)					
010	1538139-0000		1	HOLDER	
020	1538138-0000		1	.SPACER	
030	2504429-0000		1	GUIDE HOLDER	
050	2506317-0000		2	SHAFT	
090	2504427-0000		1	ROUND NUT	
110	2504428-0000		1	SUPPORT	
120	2504431-0000		1	SHAFT	
130	2504426-0000		1	SHAFT	
140	2506263-0000		1	WASHER	
150	2506264-0000		1	GASKET	
160	2504433-0000		1	BEARING HOUSING	
170	2504434-0000		1	KNOB	
180	2510243-0000		2	GEAR WHEEL	
200	321136-0260		2	BUSHING, 20X23X20 MM	
210	321156-0270		2	FLANGE BUSHING, 20X23X30 MM	
220	321136-0183		1	BUSHING, 12X14X15 MM	
230	315755-0801		2	RETAINING RING SHAFT DIN 6799 8 A2	
240	315755-0113		1	RETAINING RING SHAFT DIN 6799 15 A2	
250	311103-0272		2	PARALLEL PIN ISO 2338 4M6X20 A1	
260	311103-0401		4	PARALLEL PIN ISO 2338 8M6X20 A1	
270	311103-0353		2	PARALLEL PIN ISO 2338 6M6X20 A1	
280	90287-0112		1	SCREW SPRINGLOAD. SLOTTED HEAD M8X16	
290	90214-0036		4	BALL BEARING, 10X22X6 MM	
300	315220-0167		1	V-RINGS 27X35X10,5 MM V-30S	
310	90286-0013		1	GREASE NIPPLE STRAIGHT, H1 M6X1 2346	
320	90458-2956		1	ELBOW PIPE JOINT, EXT.THREAD, D=6MM-G1/8	
330	342720-0103		1	CONN. STR. GA-8-G1/8	
350	312105-0329		8	SCREW M6S ISO 4017 M5X16 A480	
360	312105-0364		2	SCREW M6S ISO 4017 M6X10 A480	
370	312105-0372		2	SCREW M6S ISO 4017 M6X25 A480	
380	312105-0366		2	SCREW M6S ISO 4017 M6X12 A480	
400	312109-0457		2	SCREW M6S ISO 4017 M8X35 A480	
410	312115-0382		2	SCREW ISO4762 M6X60 A4 80	
420	315105-0153		8	WASHER BRB 6,4X12 RFR	
440	315105-0146		8	WASHER BRB 5,3X10 RFR	
450	312605-0318		2	HEXAGON NUT, M6M M8 A280	
460	312605-0316		2	HEXAGON NUT, M6M M6 A280	
470	90459-6570		2	CONNECTOR M12 5-POLES MALE, RSCN5/7	
480	90055-0100		1	Y-CONNECTION, 6-6	
530	321156-0420		1	FLANGE BUSHING, 40X44X40 MM	
540	312605-0322		1	HEXAGON NUT, M6M M12 A280	
550	90296-0070		1	SHELL ALVANIA GREASE EP 1	
560	2727703-0000		2	GASKET	
570	312605-0312		8	HEXAGON NUT, M6M M4 A280	
580	315105-0136		8	WASHER BRB 4,3X8 RFR	
590	90015-0020		2	LEAD-IN, TET5-7, E-1458016	
600	2878583-0000		2	PLATE	
B43011	90458-0601		1	CONTRAST SCANNER, KT15W-P2110S01	
	342732-0102		*1*	*ELBOW PIPE JOINT, EXT.THREAD, D=6MM-G1/8*	
B43012	90458-0601		1	CONTRAST SCANNER, KT15W-P2110S01	
	342732-0102		*1*	*ELBOW PIPE JOINT, EXT.THREAD, D=6MM-G1/8*	

Machine Type | Group Description | Used-In | Group Number | Page No

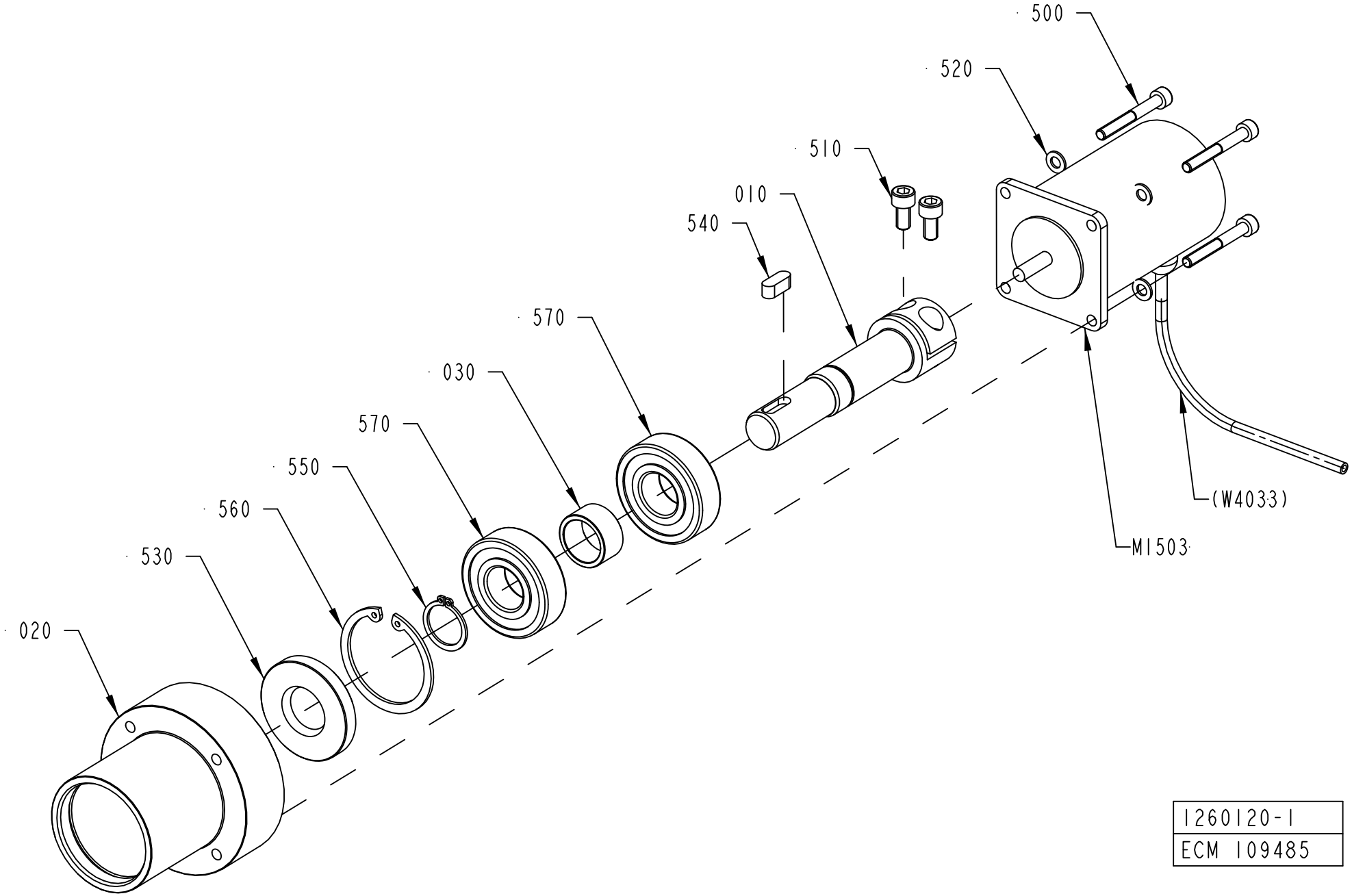

1260120-1
ECM 109485

ECM: 276012 - 20070101
Group number: 1260120-0100
Assembly Drawing: 1260120-1_1_AB

Pos	Part No	UN	Qty	Description	Page No
TBA 0200M, TBA 0200B, TBA 0200S, TBA 0250S, TBA 0250B, TBA 0300S					
010	1260171-0000		1	SHAFT	
540	315705-0230		1	PARALLEL KEY W. ROUND ENDS 6X6X16 MM	
M1503	90045-0189		1	STEP MOTOR E22NSLT-LNN-NS-02	
Common Parts					
020	1260172-0000		1	BUSHING	
030	1260187-0000		1	SPACER	
500	312115-0339		4	SCREW ISO4762 M5X40 A4 80	
510	312115-0366		2	SCREW ISO4762 M6X12 A4 80	
520	315105-0146		4	WASHER BRB 5,3X10 RFR	
530	315221-0147		1	RADIAL SEAL 20X47X7 MM	
550	315751-0116		1	RETAINING RING FOR SHAFT DIN 471 20 SS	
560	315753-0130		1	RETAINING RING FOR BORE DIN 472 47 A2	
570	321313-0104		2	BALL BEARING, 20X47X14 MM	

Pos	Part No	UN	Qty	Description	Page No

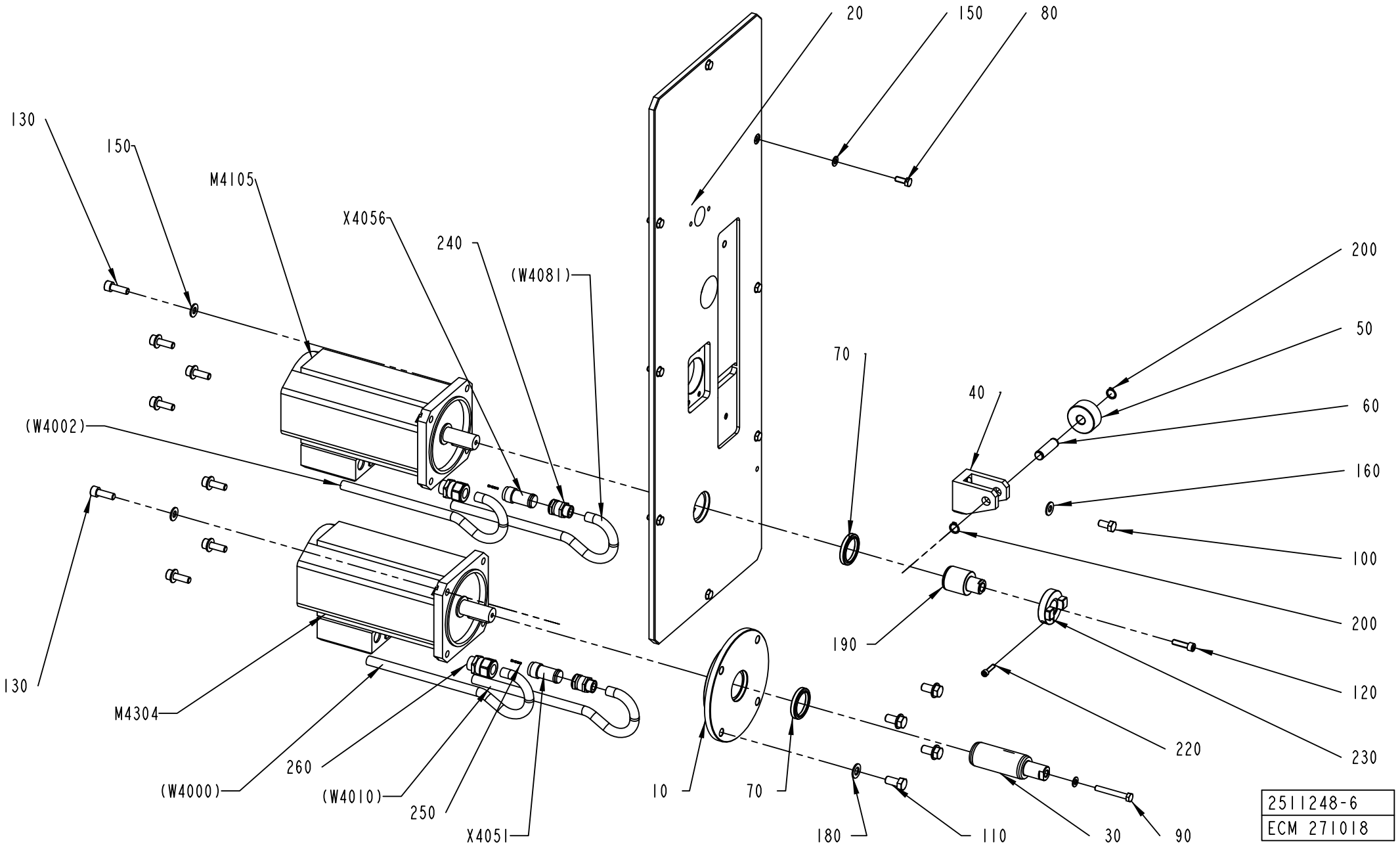
20
150
80
130
150
M4105
X4056
240
(W4081)
200
50
70
40
60
(W4002)
160
100
200
190
130
120
M4304
220
230
260
(W4000)
(W4010)
250
X4051
10
70
180
110
30
90
2511248-6
ECM 271018

ECM: 276010 - 20070101
Group number: 2511248-0400
Assembly Drawing: 2511248-6_1_AB

This list covers pages from 3-12 to 3-15

Pos	Part No	UN	Qty	Description	Page No
TBA 0200B (See drawing on page: 3-12)					
020	2651251-0000		1	PLATE	
130	312115-0495		8	SCREW ISO4762 M10X30 A4 80	
190	2694094-0000		1	SHAFT	
TBA 0200M, TBA 0250B (See drawing on page: 3-14)					
020	2651252-0000		1	PLATE	
025	2694081-0000		1	MOTOR BRACKET	
130	312115-0495		8	SCREW ISO4762 M10X30 A4 80	
190	2694027-0000		1	SHAFT	
TBA 0200S, TBA 0300S (See drawing on page: 3-14)					
020	2598529-0000		1	PLATE	
025	2694080-0000		1	MOTOR BRACKET	
130	312115-0495		4	SCREW ISO4762 M10X30 A4 80	
140	312115-0501		4	SCREW ISO4762 M10X50 A4 80	
190	2694094-0000		1	SHAFT	
TBA 0250S (See drawing on page: 3-14)					
020	2651253-0000		1	PLATE	
025	2694080-0000		1	MOTOR BRACKET	
130	312115-0495		4	SCREW ISO4762 M10X30 A4 80	
140	312115-0501		4	SCREW ISO4762 M10X50 A4 80	
190	2694027-0000		1	SHAFT	
Common Parts					
010	2639390-0000		1	CUP	
030	2598532-0000		1	SHAFT	
040	1140866-0000		1	BRACKET	
050	1140865-0000		1	ROLL	
060	1041216-0000		1	SHAFT	
070	90091-0449		2	VARILIP 40X52X7 MM	
080	312105-0451		8	SCREW M6S ISO 4017 M8X20 A480	
090	312105-0471		1	SCREW M6S ISO 4014 M8X100 A480	
100	312105-0491		1	SCREW M6S ISO 4017 M10X20 A480	
110	312105-0534		4	SCREW M6S ISO 4017 M12X25 A480	
120	312115-0455		1	SCREW ISO4762 M8X30 A4 80	
150	315105-0165		9	WASHER BRB 8,4X16 RFR	
160	315105-0173		9	WASHER BRB 10,5X22 RFR	
180	315105-0178		4	WASHER BRB 13X24 RFR	
200	315751-0112		2	RETAINING RING FOR SHAFT DIN 471 15 SS	
220	312115-0372		1	SCREW ISO4762 M6X25 A4 80	
230	2694026-0000		1	HUB	
240	90012-0117		2	GLAND, EXTENDED WITH INSERT, PG11	
250	90110-0209		14	CONTACT PIN, RC20M13K	
260	353245-0005		1	GLAND, EXTENDED WITH INSERT, PG16/PR 22,	
M4105	90045-0197		1	SERVO MOTOR EP 165-090-66T3B	
M4304	90045-0197		1	SERVO MOTOR EP 165-090-66T3B	
X4051	90110-0208		1	CABLE CONTACT	
X4056	90110-0208		1	CABLE CONTACT	

Machine Type | Group Description | Used-In | Group Number | Page No

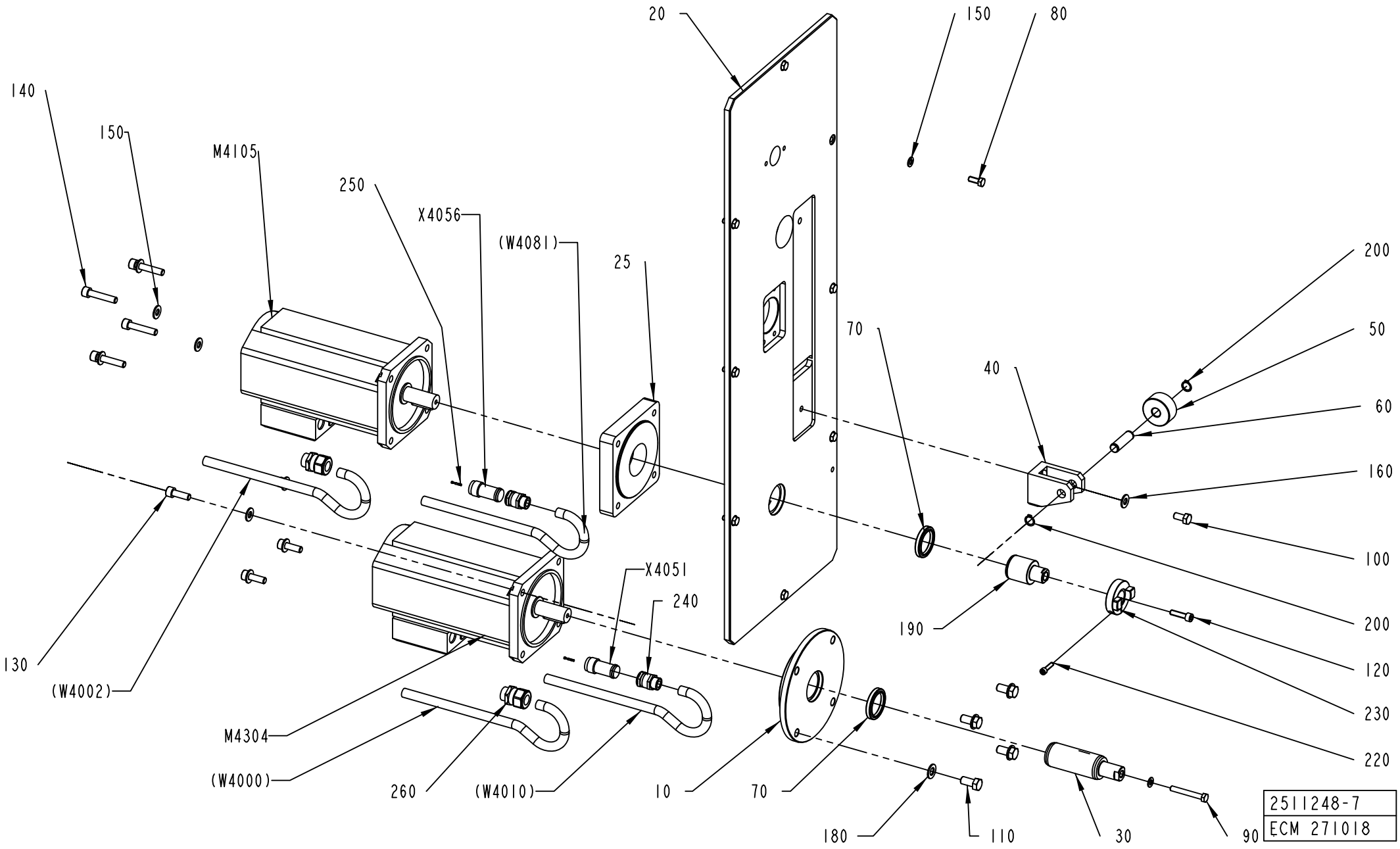
20
150
80
140
150
M4105
250
X4056
(W4081)
25
200
50
70
40
60
160
100
X4051
240
190
200
120
130
230
(W4002)
220
M4304
(W4000)
260
(W4010)
10
70
180
110
30
90
2511248-7
ECM 271018

Pos	Part No	UN	Qty	Description	Page No
TBA 0200B (See drawing on page: 3-12)					
020	2651251-0000		1	PLATE	
130	312115-0495		8	SCREW ISO4762 M10X30 A4 80	
190	2694094-0000		1	SHAFT	
TBA 0200M, TBA 0250B (See drawing on page: 3-14)					
020	2651252-0000		1	PLATE	
025	2694081-0000		1	MOTOR BRACKET	
130	312115-0495		8	SCREW ISO4762 M10X30 A4 80	
190	2694027-0000		1	SHAFT	
TBA 0200S, TBA 0300S (See drawing on page: 3-14)					
020	2598529-0000		1	PLATE	
025	2694080-0000		1	MOTOR BRACKET	
130	312115-0495		4	SCREW ISO4762 M10X30 A4 80	
140	312115-0501		4	SCREW ISO4762 M10X50 A4 80	
190	2694094-0000		1	SHAFT	
TBA 0250S (See drawing on page: 3-14)					
020	2651253-0000		1	PLATE	
025	2694080-0000		1	MOTOR BRACKET	
130	312115-0495		4	SCREW ISO4762 M10X30 A4 80	
140	312115-0501		4	SCREW ISO4762 M10X50 A4 80	
190	2694027-0000		1	SHAFT	
Common Parts					
010	2639390-0000		1	CUP	
030	2598532-0000		1	SHAFT	
040	1140866-0000		1	BRACKET	
050	1140865-0000		1	ROLL	
060	1041216-0000		1	SHAFT	
070	90091-0449		2	VARILIP 40X52X7 MM	
080	312105-0451		8	SCREW M6S ISO 4017 M8X20 A480	
090	312105-0471		1	SCREW M6S ISO 4014 M8X100 A480	
100	312105-0491		1	SCREW M6S ISO 4017 M10X20 A480	
110	312105-0534		4	SCREW M6S ISO 4017 M12X25 A480	
120	312115-0455		1	SCREW ISO4762 M8X30 A4 80	
150	315105-0165		9	WASHER BRB 8,4X16 RFR	
160	315105-0173		9	WASHER BRB 10,5X22 RFR	
180	315105-0178		4	WASHER BRB 13X24 RFR	
200	315751-0112		2	RETAINING RING FOR SHAFT DIN 471 15 SS	
220	312115-0372		1	SCREW ISO4762 M6X25 A4 80	
230	2694026-0000		1	HUB	
240	90012-0117		2	GLAND, EXTENDED WITH INSERT, PG11	
250	90110-0209		14	CONTACT PIN, RC20M13K	
260	353245-0005		1	GLAND, EXTENDED WITH INSERT, PG16/PR 22,	
M4105	90045-0197		1	SERVO MOTOR EP 165-090-66T3B	
M4304	90045-0197		1	SERVO MOTOR EP 165-090-66T3B	
X4051	90110-0208		1	CABLE CONTACT	
X4056	90110-0208		1	CABLE CONTACT	

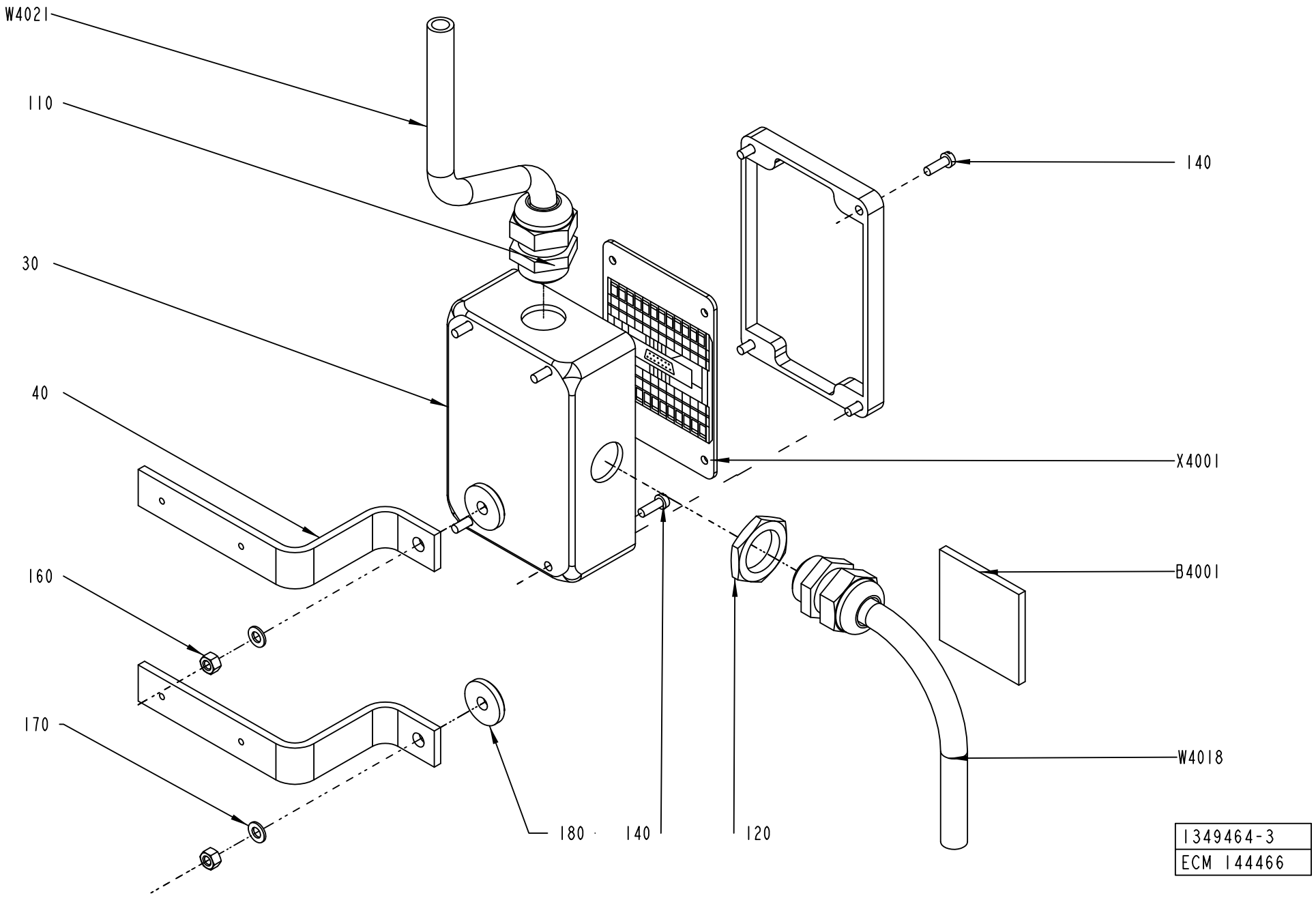
W4021
110
30
40
160
170
180
140
120
140
X4001
B4001
W4018
1349464-3
ECM 144466

ECM: 224768 - 20050831
Group number: 1349464-0300
Assembly Drawing: 1349464-3_1_AB

Pos	Part No	UN	Qty	Description	Page No
-					
030	1349465-0000		1	CONNECTION BOX	
040	1511673-0000		2	BRACKET	
110	352103-0111		2	CABLE GLAND, ST 16, PR22,5/PG16	
120	90099-0110		1	NUT, PR 22,5 (PG16)	
140	312125-0291		8	SCREW ISO 1207 M4X12 A4	
160	312605-0314		2	HEXAGON NUT, M6M M5 A280	
170	315105-0146		2	WASHER BRB 5,3X10 RFR	
180	315125-0153		2	WASHER TBRSB 6,4X22X4 A4	
B 4001	68917-0100		1	ANGLE INDICATOR	**3-19**
X 4001	451423-0000		1	CIRCUIT BOARD	

Pos	Part No	UN	Qty	Description	Page No

This page is intentionally left blank.

ECM: 224771 - 20050831
Group number: 68917-0100
Assembly Drawing:

Pos	Part No	UN	Qty	Description	Page No
-					
010	540306-0001		1	COMPONENTS WITHOUT TP-NO	
020	540307-0000		1	PRINTED CIRCUIT BOARD	

Pos	Part No	UN	Qty	Description	Page No

Tetra Pak

SPC
Spare Parts Catalogue

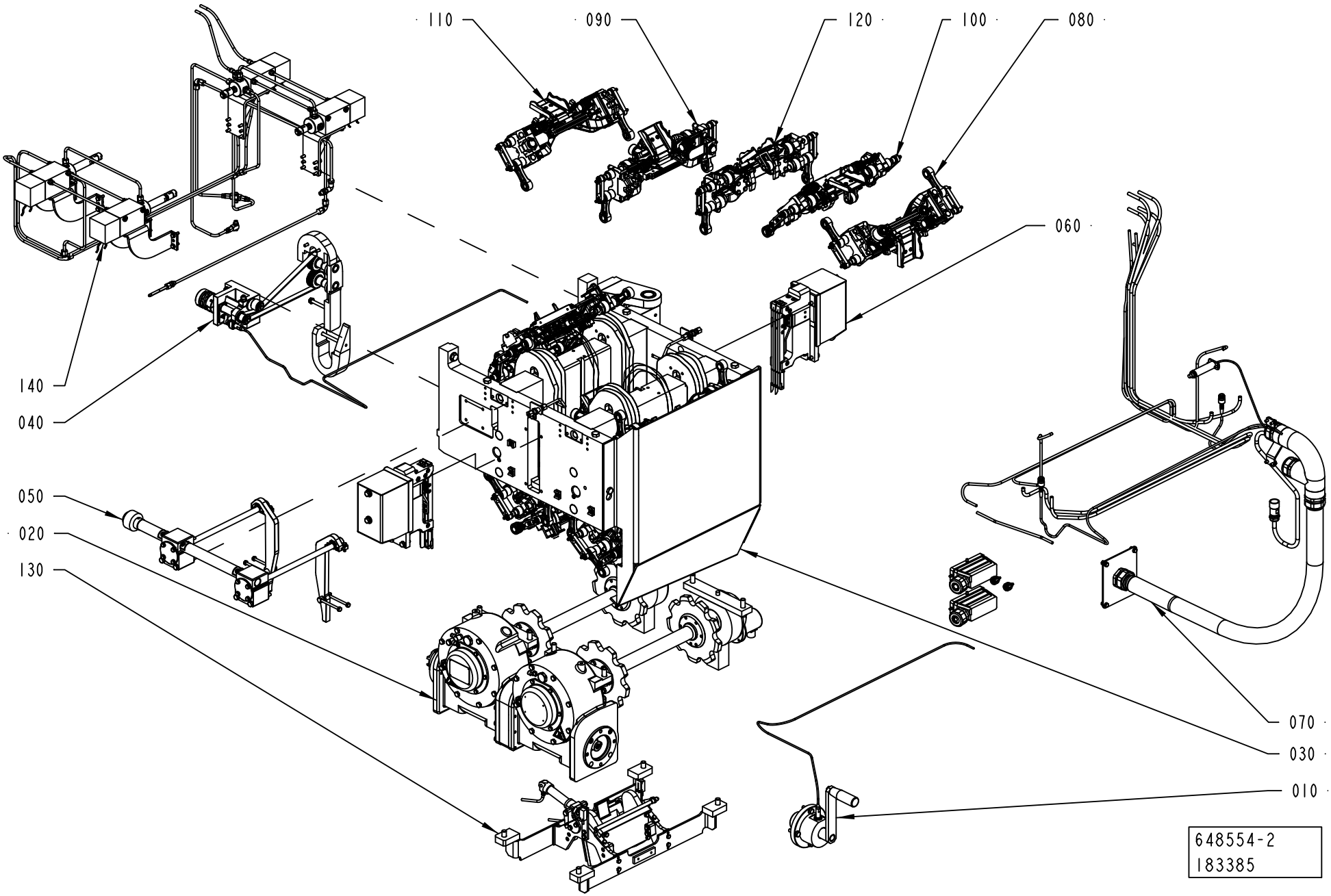
110
090
120
100
080
060
140
040
050
020
130
070
030
010
648554-2
183385

ECM: 276091 - 20070101
Group number: 648554-0100
Assembly Drawing: 648554-2_1_AB

Pos	Part No	UN	Qty	Description	Page No
-					
010	2598215-0100		1	HAND CRANK	**4-5**
020	2511256-0300		1	DRIVE	**4-7, 4-9**
030	2511255-0100		1	FRAME	**4-11, 4-13**
040	2511257-0100		1	DESIGN CORRECTION	**4-15, 4-17**
050	2511258-0100		1	VOLUME ADJUSTER	**4-19**
060	2522094-0200		2	ELECTRICAL CONNECTION	**4-21**
070	2511260-0400		1	CABLE HARNESS	**4-23**
080	2529792-0300		4	PRESSURE JAW	**4-25, 4-27**
090	2529794-0300		5	SEALING JAW	**4-29, 4-31, 4-33**
100	2529793-0300		5	PRESSURE JAW	**4-35, 4-37**
110	2529795-0300		5	SEALING JAW	**4-39, 4-41, 4-43**
120	2529791-0300		1	PRESSURE JAW	**4-45, 4-47, 4-49**
130	2558853-0200		1	WASTE BOX	**4-51**
140	2564899-0100		1	LUBRICATION UNIT	**4-53, 4-55, 4-57**

Pos	Part No	UN	Qty	Description	Page No

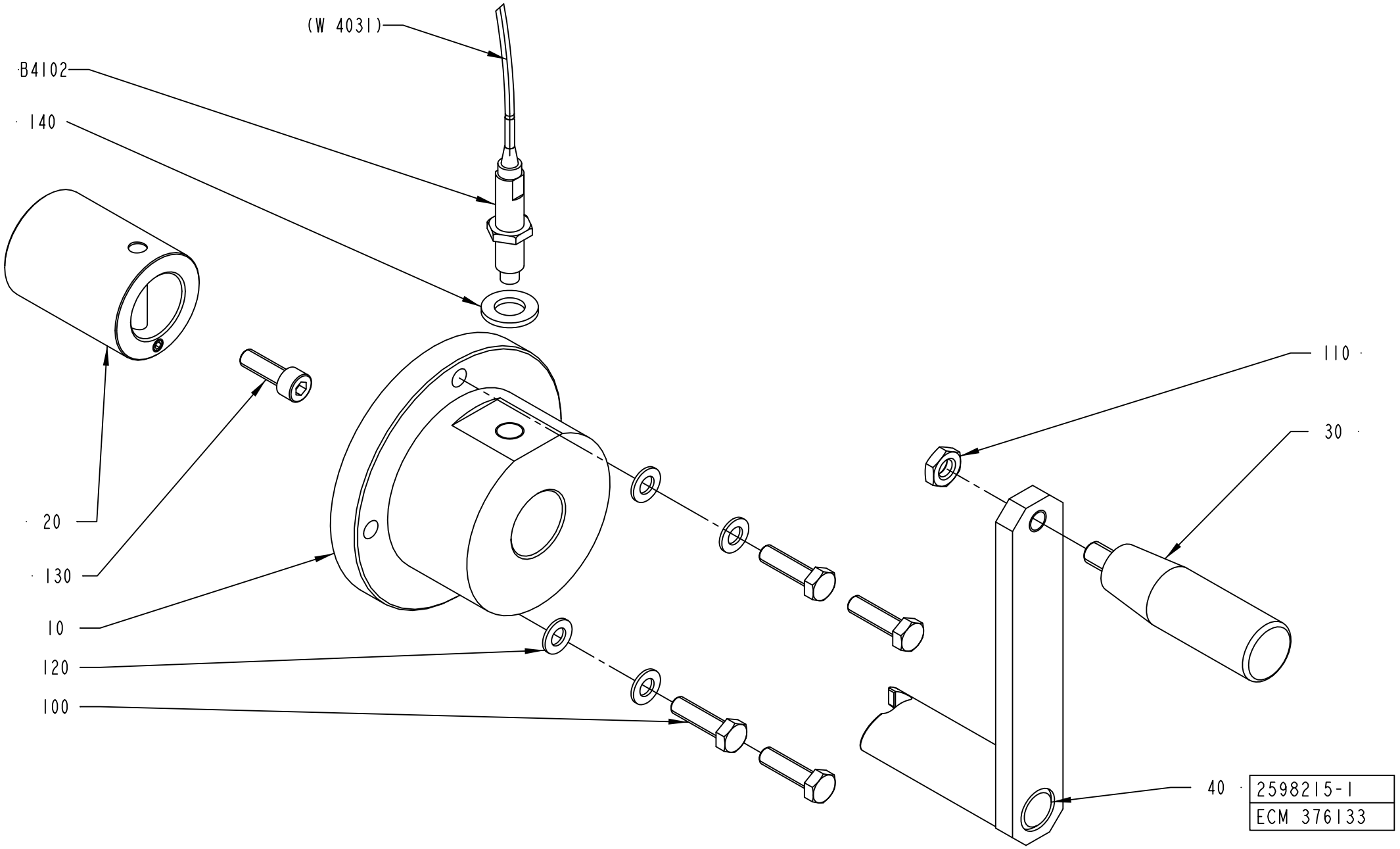
(W 4031)
B4102
140
20
130
10
120
100
110
30
40
2598215-1
ECM 376133

ECM: 376818 - 20090101
Group number: 2598215-0100
Assembly Drawing: 2598215-1_1_AC

Pos	Part No	UN	Qty	Description	Page No
-					
010	2531474-0000		1	STEERING	
020	2531489-0000		1	SLEEVE	
	312318-0362		*1*	*SCREW ISO4029 M6X8 A4*	
	311102-0413		*1*	*PARALLEL PIN ISO 2338 8M6X50 ST*	
030	90051-0127		1	HANDLE, NO. .601/90+X-M10-INOX	
040	2783524-0000		1	CRANK	
100	312105-0455		4	SCREW M6S ISO 4017 M8X30 A480	
110	312625-0320		1	HEXAGON THIN NUT, EN 24035 ML6M M10 A4	
120	315105-0165		4	WASHER BRB 8,4X16 RFR	
130	312115-0453		1	SCREW ISO4762 M8X25 A4 80	
140	315106-0178		1	WASHER ISO 7089-12-200 HV A4	
B4102	90600-0463		1	INDUCTIVE SWITCH,E2A-M12LN05-WP-B1-TP 5M	

Pos	Part No	UN	Qty	Description	Page No

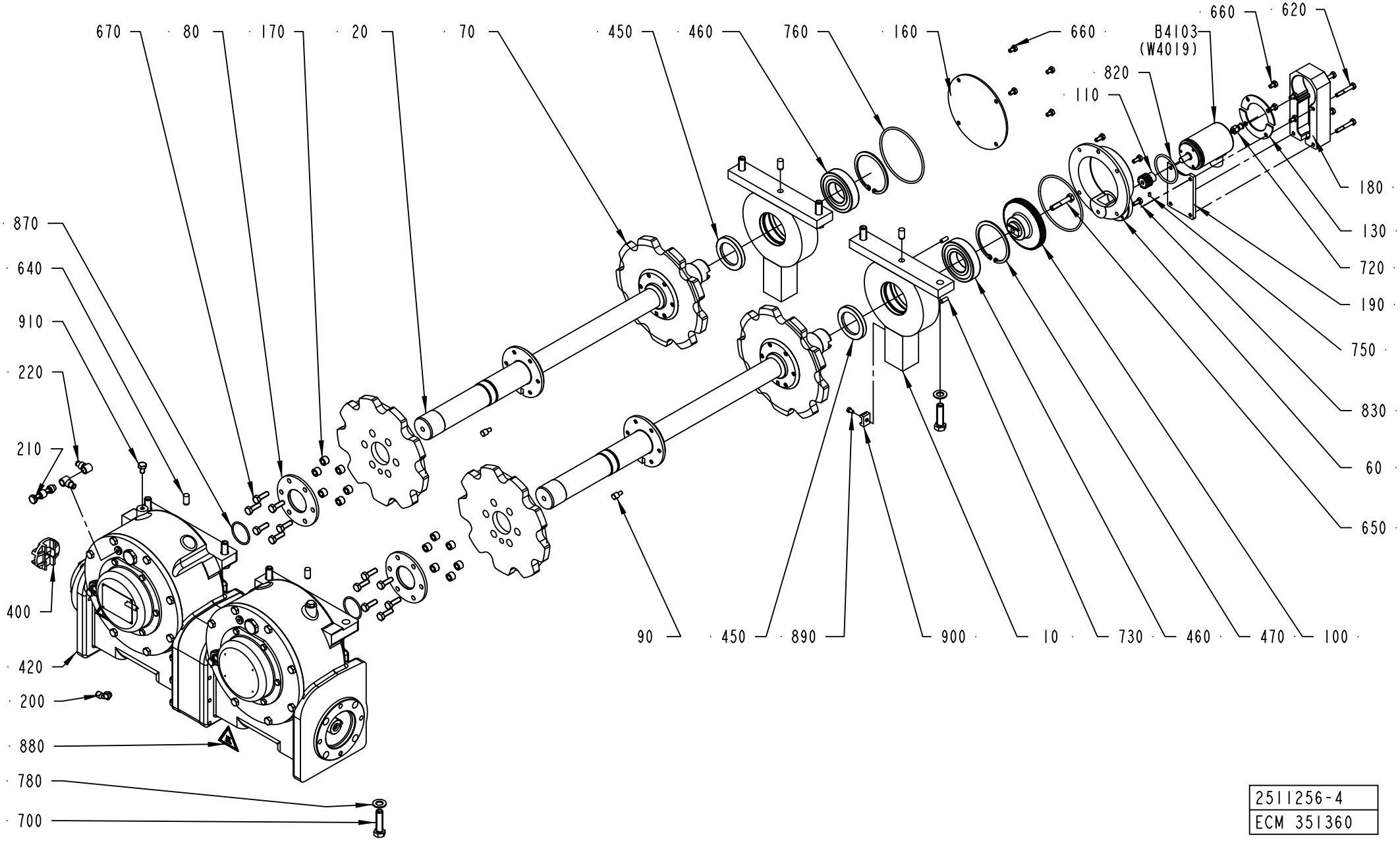

2511256-4
ECM 351360

ECM: 351521 - 20080701
Group number: 2511256-0300
Assembly Drawing: 2511256-4_1_AD

This list covers pages from 4-6 to 4-9

Pos	Part No	UN	Qty	Description	Page No
TBA 0200B (See drawing on page: 4-8)					
070	2644108-0000		4	WHEEL	
420	90459-4812		1	WORM GEAR 10.756.247	
	90600-0333		*1*	*RADIAL SEAL 50X65X8 MM DUST LIP*	
	90600-4264		*1*	*FLEXIBLE COUPLING, 24X24 MM*	
	90600-4275		*3*	*SEAL RING, GP 30-62-7 FKM*	
	90600-4276		*4*	*\EAL RING, GP 60-90-8 FKM*	
700	312105-0541		4	SCREW M6S ISO 4014 M12X45 A480	
850	312105-0538		4	SCREW M6S ISO 4017 M12X35 A480	
TBA 0200M (See drawing on page: 4-6)					
070	2644109-0000		4	WHEEL	
420	90459-4811		1	WORM GEAR 10.756.248	
	90600-4276		*4*	*\EAL RING, GP 60-90-8 FKM*	
	90600-4275		*3*	*SEAL RING, GP 30-62-7 FKM*	
	90600-4264		*1*	*FLEXIBLE COUPLING, 24X24 MM*	
	90600-0333		*1*	*RADIAL SEAL 50X65X8 MM DUST LIP*	
700	312105-0541		8	SCREW M6S ISO 4014 M12X45 A480	
TBA 0200S, TBA 0300S (See drawing on page: 4-6)					
070	2644110-0000		4	WHEEL	
420	90459-4813		1	WORM GEAR 10.756.249	
	90600-0333		*1*	*RADIAL SEAL 50X65X8 MM DUST LIP*	
700	312105-0541		8	SCREW M6S ISO 4014 M12X45 A480	
TBA 0250B (See drawing on page: 4-6)					
070	2644109-0000		4	WHEEL	
420	90459-4811		1	WORM GEAR 10.756.248	
	90600-4276		*4*	*\EAL RING, GP 60-90-8 FKM*	
	90600-4275		*3*	*SEAL RING, GP 30-62-7 FKM*	
	90600-4264		*1*	*FLEXIBLE COUPLING, 24X24 MM*	
	90600-0333		*1*	*RADIAL SEAL 50X65X8 MM DUST LIP*	
700	312105-0541		8	SCREW M6S ISO 4014 M12X45 A480	
TBA 0250S (See drawing on page: 4-6)					
070	2644111-0000		4	WHEEL	
420	90459-4814		1	WORM GEAR 10.756.250	
	90600-4276		*4*	*\EAL RING, GP 60-90-8 FKM*	
	90600-4275		*3*	*SEAL RING, GP 30-62-7 FKM*	
	90600-4272		*1*	*FLEXIBLE COUPLING, 24X24 MM*	
	90600-0333		*1*	*RADIAL SEAL 50X65X8 MM DUST LIP*	
700	312105-0541		8	SCREW M6S ISO 4014 M12X45 A480	
Common Parts					
010	2605704-0000		2	PLATE	
020	2605705-0000		2	SHAFT	
060	2605706-0000		1	BRACKET	
080	2641243-0000		4	FLANGE	
090	2641241-0000		4	PIN	
100	2605707-0000		1	GEAR WHEEL	
110	2504641-0000		1	GEAR WHEEL	
130	2605709-0000		2	DISC	
160	2605710-0000		1	DISC	
170	2633447-0000		24	BUSHING	
180	2807061-0000		1	COVER	
190	2807062-0000		1	PLATE	
200	90458-2956		1	ELBOW PIPE JOINT, EXT.THREAD, D=6MM-G1/8	
210	342980-0313		1	BANJO-HOLLOW BOLT COUPL,EXT.THR.02-G1/8	
220	342981-0113		2	BANJO CONNEC,RING,FOR PLAST.TUBE 6-G1/8"	
400	90458-0685		1	COUPLING DISC 25/57 COD.236.57-F25	
450	90091-0298		2	RADIAL SEAL 45X65X8 MM DUST LIP	
460	90214-0236		2	BALL BEARING, 40X80X18 MM	
470	90458-0181		2	RETAINING RING FOR BORE DIN 472 80 A2	
620	312105-0378		4	SCREW M6S ISO 4014 M6X40 A480	
630	311103-0357		8	PARALLEL PIN ISO 2338 6M6X30 A1	
640	311103-0454		4	PARALLEL PIN ISO 2338 10M6X20 A1	
650	312105-0460		1	SCREW M6S ISO 4014 M8X45 A480	
660	312105-0364		8	SCREW M6S ISO 4017 M6X10 A480	
670	312105-0453		24	SCREW M6S ISO 4017 M8X25 A480	
720	90600-1032		1	PUSH-IN FITTING CRQS-M5-6	
730	311103-0351		2	PARALLEL PIN ISO 2338 6M6X16 A1	
750	312318-0285		1	SCREW ISO4029 M4X6 A4	
760	315202-0621		2	O-RING 104,37X3,53 MM	
780	315105-0178		8	WASHER BRB 13X24 RFR	
820	315202-0604		1	O-RING 50,39X3,53 MM	
830	312105-0367		4	SCREW M6S ISO 4017 M6X14 A480	
870	315205-0729		2	O-RING 39,34X2,62 MM	
880	359705-0007		1	WARNING SIGN ISO, HOT SURFACE	
890	312125-0323		1	SCREW ISO 1207 M5X8 A4	
900	352113-0204		1	ANCHOR PLATES FOR STRIPS, TYPE TM3S25-M	
910	312105-0447		2	SCREW M6S ISO 4017 M8X12 A480	
B4103	90459-1844		1	ANGLE ENCODER, BAY1G.24P1024/405884	

Machine Type | Group Description | Used-In | Group Number | Page No

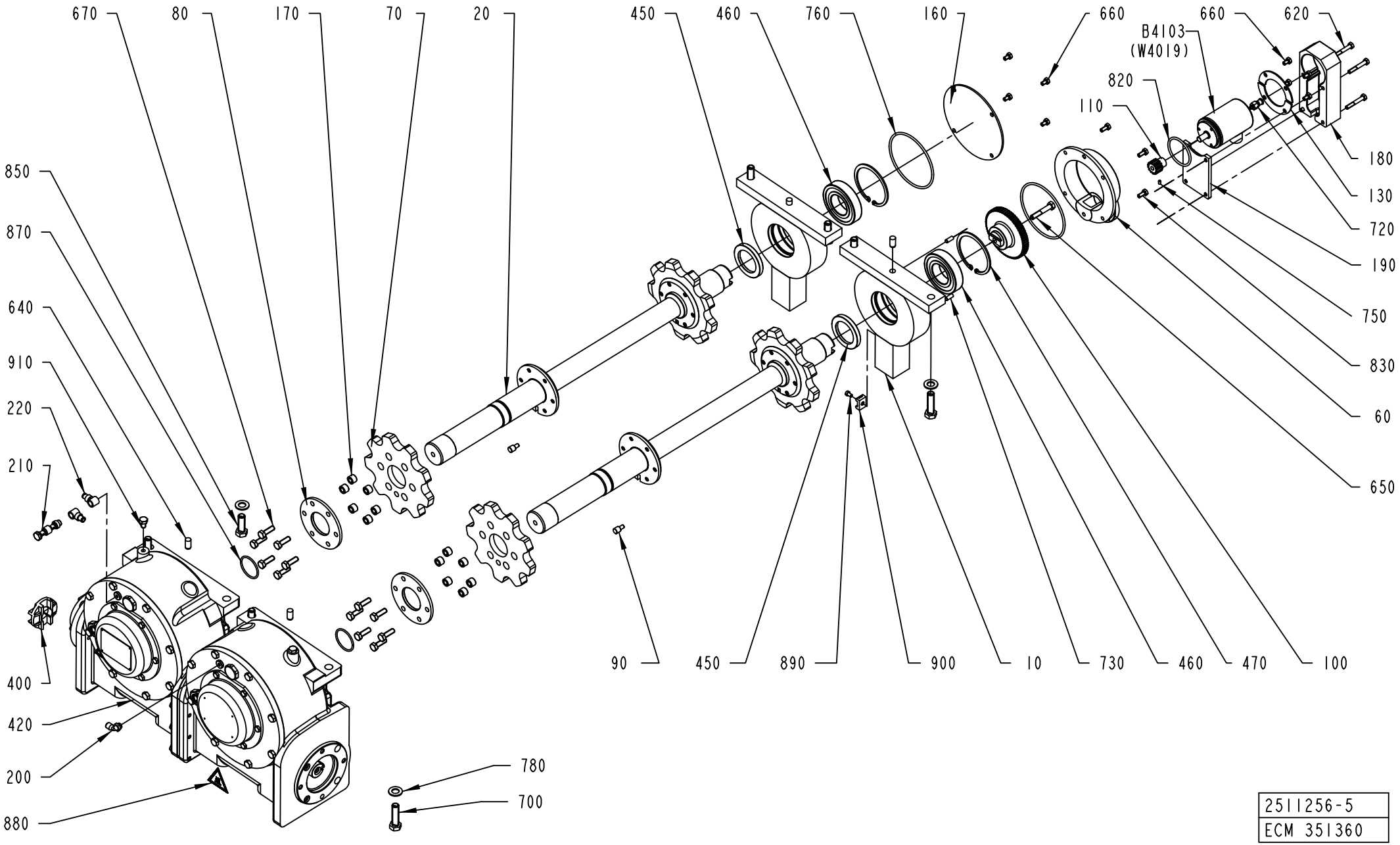

2511256-5
ECM 351360

ECM: 351521 - 20080701
Group number: 2511256-0300
Assembly Drawing: 2511256-5_1_AD

This list covers pages from 4-6 to 4-9

Pos	Part No	UN	Qty	Description	Page No
TBA 0200B (See drawing on page: 4-8)					
070	2644108-0000		4	WHEEL	
420	90459-4812		1	WORM GEAR 10.756.247	
	90600-0333		*1*	*RADIAL SEAL 50X65X8 MM DUST LIP*	
	90600-4264		*1*	*FLEXIBLE COUPLING, 24X24 MM*	
	90600-4275		*3*	*SEAL RING, GP 30-62-7 FKM*	
	90600-4276		*4*	*\EAL RING, GP 60-90-8 FKM*	
700	312105-0541		4	SCREW M6S ISO 4014 M12X45 A480	
850	312105-0538		4	SCREW M6S ISO 4017 M12X35 A480	
TBA 0200M (See drawing on page: 4-6)					
070	2644109-0000		4	WHEEL	
420	90459-4811		1	WORM GEAR 10.756.248	
	90600-4276		*4*	*\EAL RING, GP 60-90-8 FKM*	
	90600-4275		*3*	*SEAL RING, GP 30-62-7 FKM*	
	90600-4264		*1*	*FLEXIBLE COUPLING, 24X24 MM*	
	90600-0333		*1*	*RADIAL SEAL 50X65X8 MM DUST LIP*	
700	312105-0541		8	SCREW M6S ISO 4014 M12X45 A480	
TBA 0200S, TBA 0300S (See drawing on page: 4-6)					
070	2644110-0000		4	WHEEL	
420	90459-4813		1	WORM GEAR 10.756.249	
	90600-0333		*1*	*RADIAL SEAL 50X65X8 MM DUST LIP*	
700	312105-0541		8	SCREW M6S ISO 4014 M12X45 A480	
TBA 0250B (See drawing on page: 4-6)					
070	2644109-0000		4	WHEEL	
420	90459-4811		1	WORM GEAR 10.756.248	
	90600-4276		*4*	*\EAL RING, GP 60-90-8 FKM*	
	90600-4275		*3*	*SEAL RING, GP 30-62-7 FKM*	
	90600-4264		*1*	*FLEXIBLE COUPLING, 24X24 MM*	
	90600-0333		*1*	*RADIAL SEAL 50X65X8 MM DUST LIP*	
700	312105-0541		8	SCREW M6S ISO 4014 M12X45 A480	
TBA 0250S (See drawing on page: 4-6)					
070	2644111-0000		4	WHEEL	
420	90459-4814		1	WORM GEAR 10.756.250	
	90600-4276		*4*	*\EAL RING, GP 60-90-8 FKM*	
	90600-4275		*3*	*SEAL RING, GP 30-62-7 FKM*	
	90600-4272		*1*	*FLEXIBLE COUPLING, 24X24 MM*	
	90600-0333		*1*	*RADIAL SEAL 50X65X8 MM DUST LIP*	
700	312105-0541		8	SCREW M6S ISO 4014 M12X45 A480	
Common Parts					
010	2605704-0000		2	PLATE	
020	2605705-0000		2	SHAFT	
060	2605706-0000		1	BRACKET	
080	2641243-0000		4	FLANGE	
090	2641241-0000		4	PIN	
100	2605707-0000		1	GEAR WHEEL	
110	2504641-0000		1	GEAR WHEEL	
130	2605709-0000		2	DISC	
160	2605710-0000		1	DISC	
170	2633447-0000		24	BUSHING	
180	2807061-0000		1	COVER	
190	2807062-0000		1	PLATE	
200	90458-2956		1	ELBOW PIPE JOINT, EXT.THREAD, D=6MM-G1/8	
210	342980-0313		1	BANJO-HOLLOW BOLT COUPL,EXT.THR.02-G1/8	
220	342981-0113		2	BANJO CONNEC,RING,FOR PLAST.TUBE 6-G1/8"	
400	90458-0685		1	COUPLING DISC 25/57 COD.236.57-F25	
450	90091-0298		2	RADIAL SEAL 45X65X8 MM DUST LIP	
460	90214-0236		2	BALL BEARING, 40X80X18 MM	
470	90458-0181		2	RETAINING RING FOR BORE DIN 472 80 A2	
620	312105-0378		4	SCREW M6S ISO 4014 M6X40 A480	
630	311103-0357		8	PARALLEL PIN ISO 2338 6M6X30 A1	
640	311103-0454		4	PARALLEL PIN ISO 2338 10M6X20 A1	
650	312105-0460		1	SCREW M6S ISO 4014 M8X45 A480	
660	312105-0364		8	SCREW M6S ISO 4017 M6X10 A480	
670	312105-0453		24	SCREW M6S ISO 4017 M8X25 A480	
720	90600-1032		1	PUSH-IN FITTING CRQS-M5-6	
730	311103-0351		2	PARALLEL PIN ISO 2338 6M6X16 A1	
750	312318-0285		1	SCREW ISO4029 M4X6 A4	
760	315202-0621		2	O-RING 104,37X3,53 MM	
780	315105-0178		8	WASHER BRB 13X24 RFR	
820	315202-0604		1	O-RING 50,39X3,53 MM	
830	312105-0367		4	SCREW M6S ISO 4017 M6X14 A480	
870	315205-0729		2	O-RING 39,34X2,62 MM	
880	359705-0007		1	WARNING SIGN ISO, HOT SURFACE	
890	312125-0323		1	SCREW ISO 1207 M5X8 A4	
900	352113-0204		1	ANCHOR PLATES FOR STRIPS, TYPE TM3S25-M	
910	312105-0447		2	SCREW M6S ISO 4017 M8X12 A480	
B4103	90459-1844		1	ANGLE ENCODER, BAY1G.24P1024/405884	

Machine Type | Group Description | Used-In | Group Number | Page No

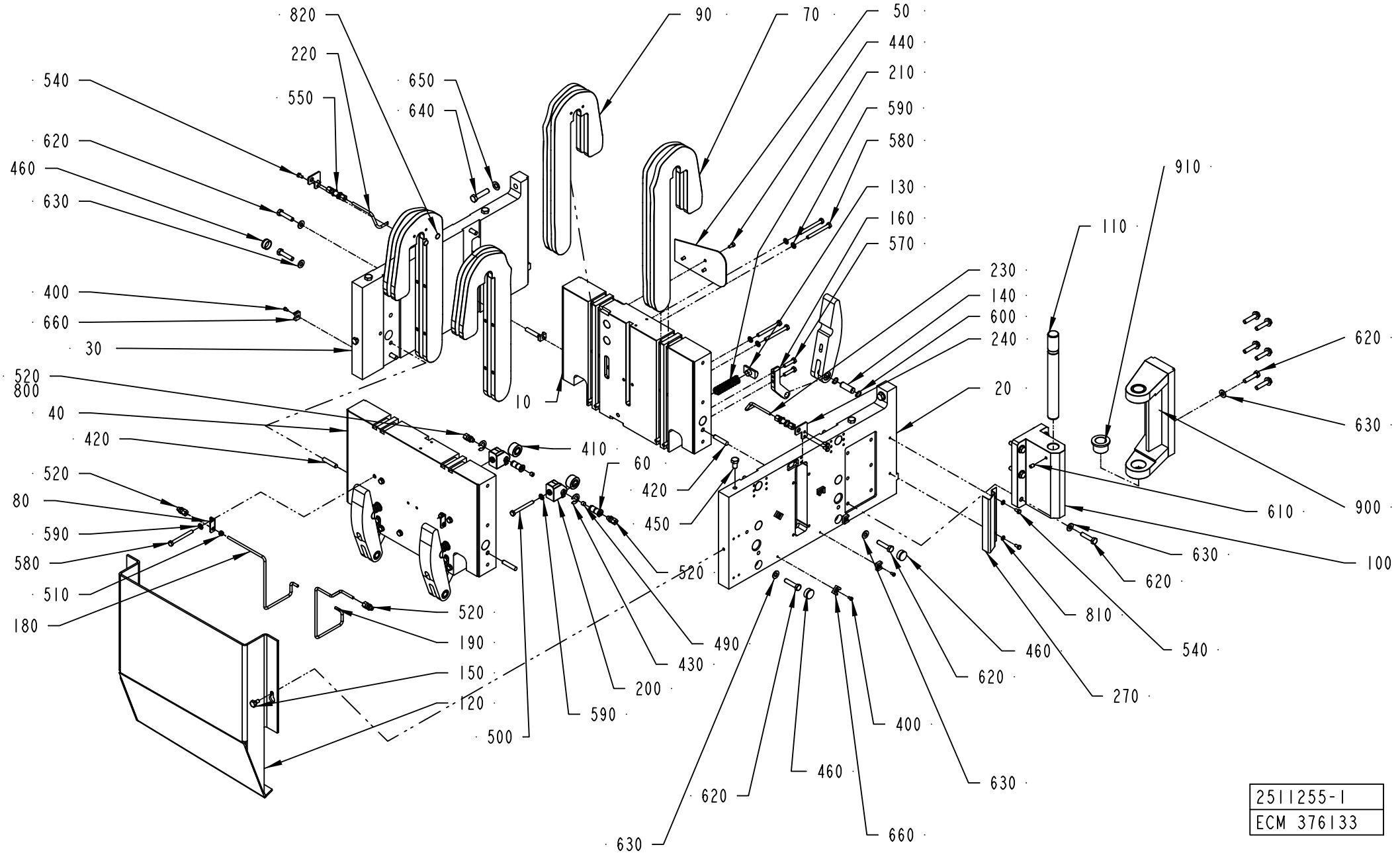

2511255-1
ECM 376133

ECM: 376135 - 20090101
Group number: 2511255-0100
Assembly Drawing: 2511255-1_1_AH

This list covers pages from 4-10 to 4-13

Pos	Part No	UN	Qty	Description	Page No
TBA 0200B (See drawing on page: 4-12)					
010	2523614-0000		1	PLATE	
020	2523617-0000		1	PLATE	
030	2523616-0000		1	PLATE	
040	2523615-0000		1	PLATE	
070	1511397-0000		4	CAM	
090	1511396-0000		4	CAM	
120	2523618-0000		1	PROTECTION	
160	1349367-0000		4	BRACKET	
170	1487219-0000		4	CURVE	
180	1512600-0000		1	PIPE	
190	1512601-0000		1	PIPE	
220	2523622-0000		1	PIPE	
240	2704281-0000		1	PLATE	
250	2704282-0000		1	PLATE	
460	90458-2419		9	PLUG GPN 300 V 233	
500	312109-0457		2	SCREW M6S ISO 4017 M8X35 A480	
560	312115-0459		2	SCREW ISO4762 M8X40 A4 80	
570	312105-0455		8	SCREW M6S ISO 4017 M8X30 A480	
580	312105-0465		14	SCREW M6S ISO 4014 M8X70 A480	
590	315105-0165		18	WASHER BRB 8,4X16 RFR	
620	312105-0500		23	SCREW M6S ISO 4014 M10X45 A480	
630	315105-0173		23	WASHER BRB 10,5X22 RFR	
TBA 0200M (See drawing on page: 4-10)					
010	2523610-0000		1	PLATE	
020	2523613-0000		1	PLATE	
030	2523612-0000		1	PLATE	
040	2523611-0000		1	PLATE	
070	2792625-0000		4	CAM	
090	2792626-0000		4	CAM	
120	2511245-0000		1	PROTECTION	
160	1140872-0000		4	BRACKET	
170	1498278-0000		4	CAM	
180	1524763-0000		1	PIPE	
190	1524764-0000		1	PIPE	
220	2508420-0000		1	PIPE	
240	2704281-0000		2	PLATE	
460	90458-2419		10	PLUG GPN 300 V 233	
500	312105-0462		2	SCREW M6S ISO 4014 M8X55 A480	
580	312105-0467		16	SCREW M6S ISO 4014 M8X80 A480	
590	315105-0165		10	WASHER BRB 8,4X16 RFR	
620	312105-0500		24	SCREW M6S ISO 4014 M10X45 A480	
630	315105-0173		24	WASHER BRB 10,5X22 RFR	
TBA 0200S (See drawing on page: 4-10)					
010	2502402-0000		1	PLATE	
020	2502404-0000		1	PLATE	
030	2502405-0000		1	PLATE	
040	2502403-0000		1	PLATE	
070	1499604-0000		4	CAM	
090	1499603-0000		4	CAM	
120	2502406-0000		1	PROTECTION	
160	1512365-0000		4	BRACKET	
170	1499602-0000		4	CAM	
180	2502415-0000		1	PIPE	
190	2508408-0000		1	PIPE	
220	2508420-0000		1	PIPE	
240	2704281-0000		2	PLATE	
460	90458-2419		10	PLUG GPN 300 V 233	
500	312105-0466		2	SCREW M6S ISO 4014 M8X75 A480	
570	312105-0457		8	SCREW M6S ISO 4014 M8X35 A480	
580	312105-0467		16	SCREW M6S ISO 4014 M8X80 A480	
590	315105-0165		18	WASHER BRB 8,4X16 RFR	
620	312105-0500		24	SCREW M6S ISO 4014 M10X45 A480	
630	315105-0173		24	WASHER BRB 10,5X22 RFR	
TBA 0250B (See drawing on page: 4-10)					
010	2523610-0000		1	PLATE	
020	2523613-0000		1	PLATE	
030	2523612-0000		1	PLATE	
040	2523611-0000		1	PLATE	
070	1140287-0000		4	CAM	
090	1140288-0000		4	CAM	
120	2511245-0000		1	PROTECTION	
160	1140872-0000		4	BRACKET	
170	1498278-0000		4	CAM	
180	1524763-0000		1	PIPE	
190	1524764-0000		1	PIPE	
220	2508420-0000		1	PIPE	
240	2704281-0000		2	PLATE	
460	90458-2419		10	PLUG GPN 300 V 233	
500	312105-0462		2	SCREW M6S ISO 4014 M8X55 A480	
580	312105-0467		16	SCREW M6S ISO 4014 M8X80 A480	
590	315105-0165		10	WASHER BRB 8,4X16 RFR	
620	312105-0500		24	SCREW M6S ISO 4014 M10X45 A480	
630	315105-0173		24	WASHER BRB 10,5X22 RFR	

Machine Type | Group Description | Used-In | Group Number | Page No

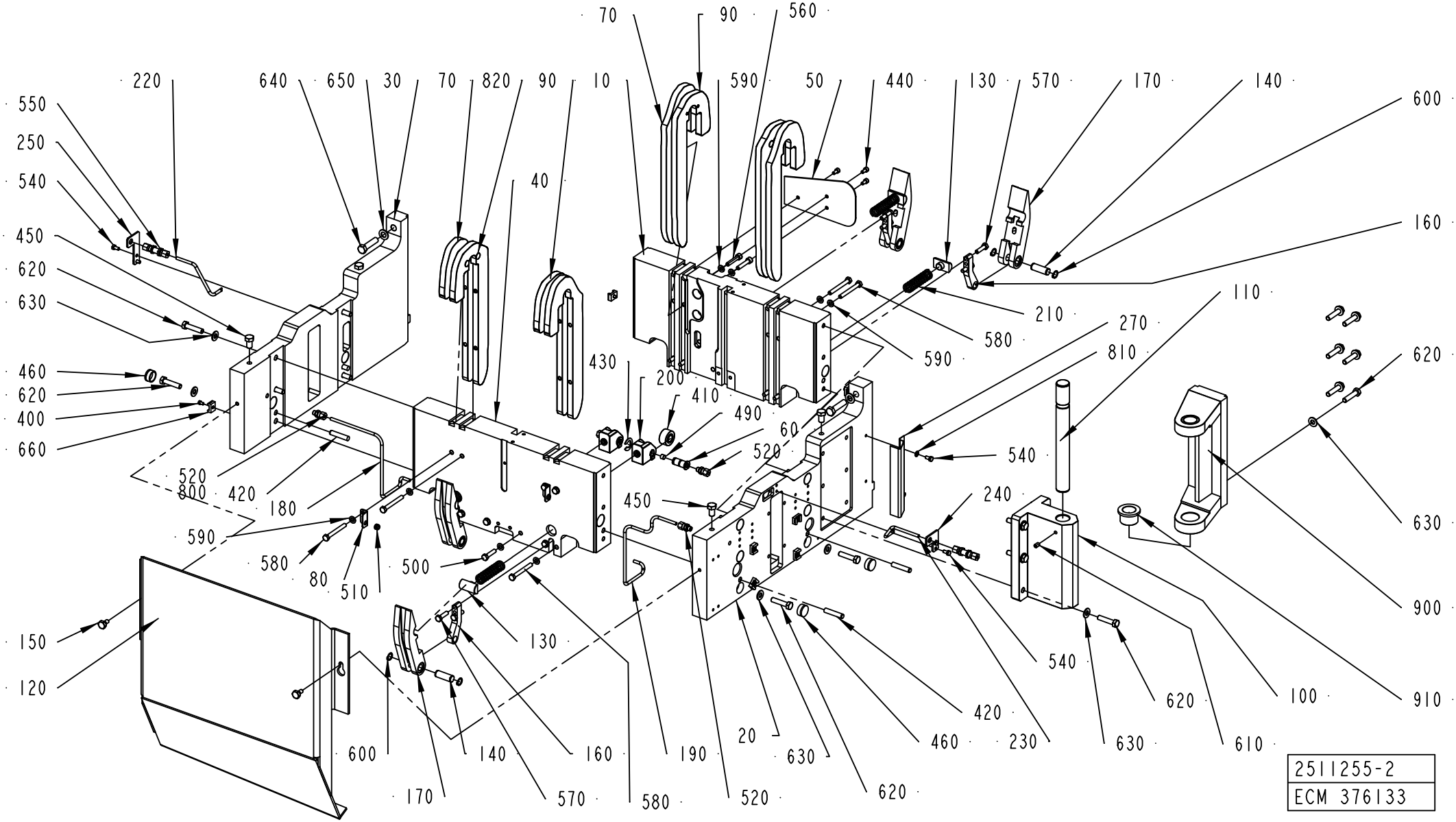
70
90
560
220
640
650
30
70
820
90
10
590
50
440
130
570
170
140
600
550
250
540
450
620
630
40
160
110
210
270
580
590
810
620
460
620
400
660
430
200
410
490
60
520
540
520
800
420
180
240
450
590
580
80
510
500
630
150
120
130
540
420
620
100
910
600
170
140
160
190
20
630
460
230
630
610
570
580
520
620
2511255-2
ECM 376133

ECM: 376135 - 20090101
Group number: 2511255-0100
Assembly Drawing: 2511255-2_1_AF

This list covers pages from 4-10 to 4-13

Pos	Part No	UN	Qty	Description	Page No
TBA 0250S (Cont'd) (See drawing on page: 4-10)					
010	1498587-0000		1	PLATE	
020	1498589-0000		1	PLATE	
030	1498590-0000		1	PLATE	
040	1498588-0000		1	PLATE	
070	1498578-0000		4	CURVE	
090	1498579-0000		4	CURVE	
120	1498591-0000		1	PROTECTION	
160	1498592-0000		4	BRACKET	
170	1498593-0000		4	CURVE	
180	1512616-0000		1	PIPE	
190	1512617-0000		1	PIPE	
220	2508420-0000		1	PIPE	
240	2704281-0000		2	PLATE	
460	90458-2419		10	PLUG GPN 300 V 233	
500	312105-0466		2	SCREW M6S ISO 4014 M8X75 A480	
570	312105-0457		8	SCREW M6S ISO 4014 M8X35 A480	
580	312105-0467		16	SCREW M6S ISO 4014 M8X80 A480	
590	315105-0165		18	WASHER BRB 8,4X16 RFR	
620	312105-0500		24	SCREW M6S ISO 4014 M10X45 A480	
630	315105-0173		24	WASHER BRB 10,5X22 RFR	
TBA 0300S					
010	2502402-0000		1	PLATE	
020	2502404-0000		1	PLATE	
030	2502405-0000		1	PLATE	
040	2502403-0000		1	PLATE	
070	2500370-0000		4	CURVE	
090	2500371-0000		4	CURVE	
120	2502406-0000		1	PROTECTION	
160	1512365-0000		4	BRACKET	
170	1499602-0000		4	CAM	
180	2502415-0000		1	PIPE	
190	2508408-0000		1	PIPE	
220	2508420-0000		1	PIPE	
240	2704281-0000		2	PLATE	
460	90458-2419		10	PLUG GPN 300 V 233	
500	312105-0466		2	SCREW M6S ISO 4014 M8X75 A480	
570	312105-0457		8	SCREW M6S ISO 4014 M8X35 A480	
580	312105-0467		16	SCREW M6S ISO 4014 M8X80 A480	
590	315105-0165		18	WASHER BRB 8,4X16 RFR	
620	312105-0500		24	SCREW M6S ISO 4014 M10X45 A480	
630	315105-0173		24	WASHER BRB 10,5X22 RFR	

Pos	Part No	UN	Qty	Description	Page No
Common Parts					
050	1140856-0000		1	PROTECTION	
060	1524260-0000		2	SHAFT	
080	1524752-0000		2	BRACKET	
100	1260751-0000		1	HINGE	
110	1260752-0000		1	SHAFT	
130	1041215-0000		4	BLOCKING PIECE	
140	1498279-0000		4	SHAFT	
150	1282995-0000		2	SCREW	
200	1524267-0000		2	HOLDER	
210	90600-5905		4	COMP. SPRING D23060, 2,5X22,5X81,5	
230	2508421-0000		1	PIPE	
270	2569972-0000		1	CABLE PROTECTION	
400	312125-0323		9	SCREW ISO 1207 M5X8 A4	
410	90083-0055		2	ROLLER BEARING, 15X35X19 MM	
420	311103-0466		4	PARALLEL PIN ISO 2338 10M6X50 A1	
430	315755-0112		2	RETAINING RING SHAFT DIN 6799 12 A2	
440	312115-0366		3	SCREW ISO4762 M6X12 A4 80	
450	312105-0532		4	SCREW M6S ISO 4017 M12X20 A480	
490	90087-0010		2	PLUG, EXT. THREAD, HEX. SOCKET NR. M10-	
510	90015-0027		2	RUBBER BUSHING DI=6MM	
520	90030-0184		4	CONN. STR. GE06LRED71	
540	312105-0366		6	SCREW M6S ISO 4017 M6X12 A480	
550	90030-0066		2	CONN. BULKHEAD SV 6-L/SY	
600	315751-0112		8	RETAINING RING FOR SHAFT DIN 471 15 SS	
610	312318-0447		1	SCREW ISO4029 M8X12 A4	
640	312105-0542		2	SCREW M6S ISO 4014 M12X50 A480	
650	315105-0178		2	WASHER BRB 13X24 RFR	
660	352113-0204		9	ANCHOR PLATES FOR STRIPS, TYPE TM3S25-M	
800	90459-0246	KG	1	GREASE, KLüBERSYNTH UH1, ONLY IN BOM	
	90459-7413		*1*	*GREASE, KLüBERSYNTH UH1 14-1600, 1 KG*	
	90459-7414		*1*	*GREASE, KLüBERSYNTH UH1 14-1600, 25 KG*	
810	315105-0153		2	WASHER BRB 6,4X12 RFR	
820	90458-0289		12	PLUG,GPN 340-SW-5 MM	
900	2598533-0000		1	HINGE	
910	321101-0273		2	FLANGE BUSHING, 30X40X30 MM	

Machine Type | Group Description | Used-In | Group Number | Page No

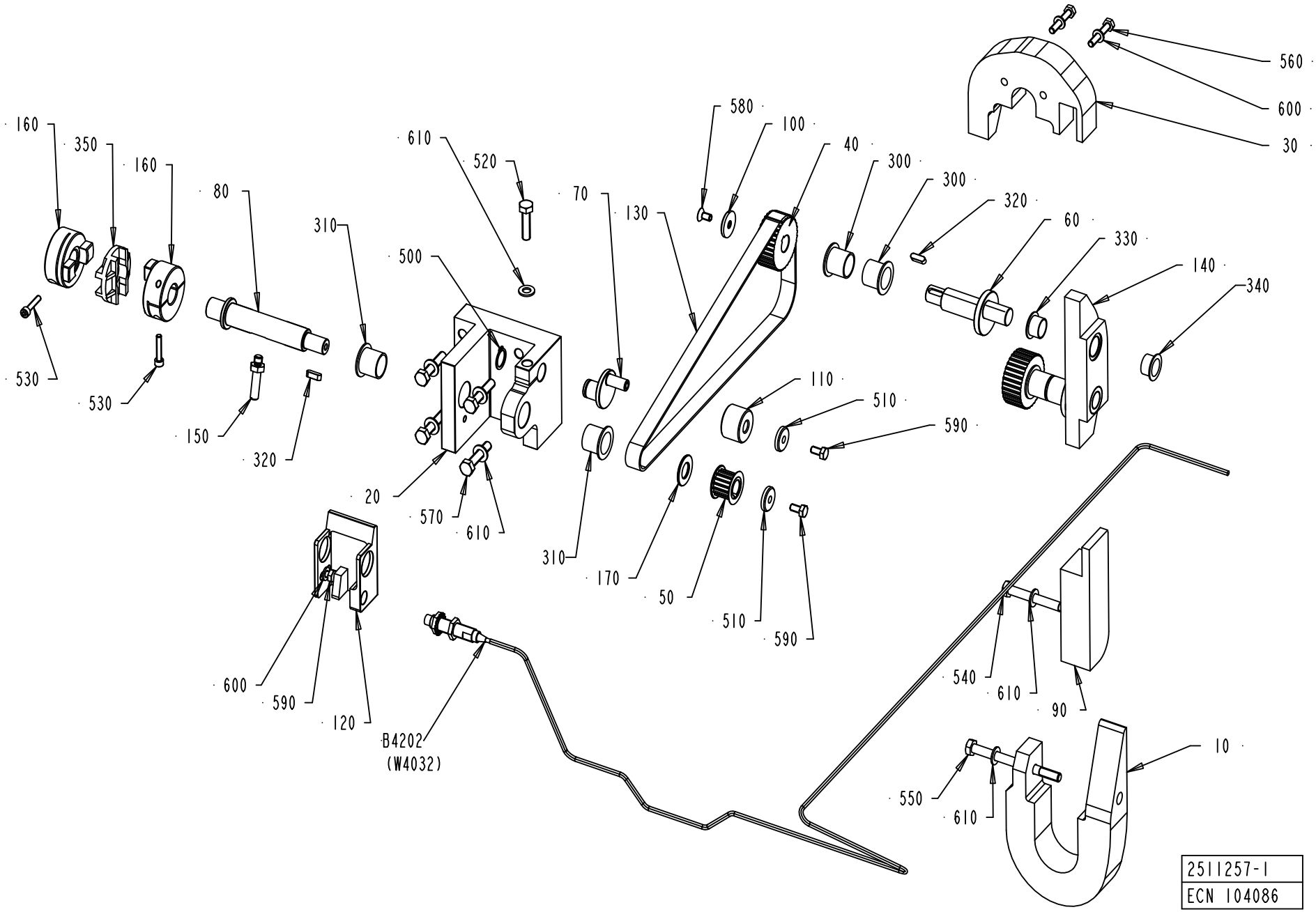
160
350
160
530
530
80
150
320
310
610
520
500
20
570
610
580
100
40
70
130
310
170
50
510
590
300
300
320
60
330
140
340
110
510
590
560
600
30
600
590
120
B4202
(W4032)
540
610
90
550
610
10
2511257-1
ECN 104086

ECM: 315540 - 20071112
Group number: 2511257-0100
Assembly Drawing: 2511257-1_1_AB

This list covers pages from 4-14 to 4-17

Pos	Part No	UN	Qty	Description	Page No
TBA 0200B					
010	1349377-0000		1	CURVE	
030	1349380-0000		1	CURVE	
060	1349381-0000		2	ECCENTRIC SHAFT	
090	1349379-0000		1	CURVE	
140	1349375-0000		1	CURVE	
300	90459-1186		4	FLANGE BUSHING, 20X23X11 MM	
330	90240-0325		2	FLANGE BUSHING, 16X18X12 MM	
540	312105-0462		1	SCREW M6S ISO 4014 M8X55 A480	
550	312105-0466		1	SCREW M6S ISO 4014 M8X75 A480	
560	312115-0376		2	SCREW ISO4762 M6X35 A4 80	
TBA 0200M					
010	1484336-0000		1	CURVE	
030	1484337-0000		1	CURVE	
060	1548768-0000		2	ECCENTRIC SHAFT	
090	2525678-0000		1	CURVE	
140	1484826-0000		1	CURVE	
300	90240-0265		4	FLANGE BUSHING, 20X23X21 MM	
330	321155-0221		2	FLANGE BUSHING, 16X18X17 MM	
540	312105-0467		1	SCREW M6S ISO 4014 M8X80 A480	
550	312105-0471		1	SCREW M6S ISO 4014 M8X100 A480	
560	312109-0376		2	SCREW M6S ISO 4017 M6X35 A480	
TBA 0200S					
010	1512346-0000		1	CURVE	
030	1512651-0000		1	CURVE	
060	1512368-0000		2	ECCENTRIC SHAFT	
090	1512367-0000		1	CURVE	
140	1512366-0000		1	CURVE	
300	90240-0265		4	FLANGE BUSHING, 20X23X21 MM	
330	90240-0325		2	FLANGE BUSHING, 16X18X12 MM	
340	90240-0325		2	FLANGE BUSHING, 16X18X12 MM	
540	312105-0467		1	SCREW M6S ISO 4014 M8X80 A480	
550	312105-0471		1	SCREW M6S ISO 4014 M8X100 A480	
560	312109-0376		2	SCREW M6S ISO 4017 M6X35 A480	
TBA 0250B					
010	1140844-0000		1	CURVE	
030	1260950-0000		1	CURVE	
060	1140846-0000		2	ECCENTRIC SHAFT	
090	2525678-0000		1	CURVE	
140	1350718-0000		1	CURVE	
300	90240-0265		4	FLANGE BUSHING, 20X23X21 MM	
330	90240-0325		2	FLANGE BUSHING, 16X18X12 MM	
540	312105-0467		1	SCREW M6S ISO 4014 M8X80 A480	
550	312105-0471		1	SCREW M6S ISO 4014 M8X100 A480	
560	312109-0376		2	SCREW M6S ISO 4017 M6X35 A480	
TBA 0250S					
010	1548808-0000		1	CURVE	
030	1548804-0000		1	CURVE	
060	1548806-0000		2	ECCENTRIC SHAFT	
090	1548807-0000		1	CURVE	
140	1548805-0000		1	CURVE	
300	90240-0265		4	FLANGE BUSHING, 20X23X21 MM	
330	321155-0221		2	FLANGE BUSHING, 16X18X17 MM	
540	312105-0467		1	SCREW M6S ISO 4014 M8X80 A480	
550	312105-0475		1	SCREW M6S ISO 4014 M8X120 A480	
560	312109-0376		2	SCREW M6S ISO 4017 M6X35 A480	
TBA 0300S					
010	2502410-0000		1	CURVE	
030	2502412-0000		1	CURVE	
060	2502414-0000		2	ECCENTRIC SHAFT	
090	2502409-0000		1	CURVE	
140	2502411-0000		1	CURVE	
300	90240-0265		4	FLANGE BUSHING, 20X23X21 MM	
330	321155-0221		2	FLANGE BUSHING, 16X18X17 MM	
540	312105-0467		1	SCREW M6S ISO 4014 M8X80 A480	
550	312105-0475		1	SCREW M6S ISO 4014 M8X120 A480	
560	312109-0376		2	SCREW M6S ISO 4017 M6X35 A480	
Common Parts					
020	1484479-0000		1	SUPPORT	
040	1539376-0000		2	PULLEY	
050	1548769-0000		1	PULLEY	
070	1519814-0000		1	ECCENTRIC SHAFT	
080	1548767-0000		1	SHAFT	
100	1041549-0000		2	0,012WASHER	
110	1140845-0000		1	ROLLER	
120	1484480-0000		1	ADJUSTER	
130	1548798-0000		1	TIMING BELT	
150	1519813-0000		1	SHAFT	
160	1538302-0000		2	HUB	
170	1511242-0000		1	WASHER	
310	90240-0265		2	FLANGE BUSHING, 20X23X21 MM	
320	90458-0548		3	PARALLEL KEY W. ROUND ENDS 5X5X16 MM	
350	90458-0274		1	DISC FOR COUPLING, HUCO 236.50T	
500	315751-0113		1	RETAINING RING FOR SHAFT DIN 471 16 SS	

Machine Type | Group Description | Used-In | Group Number | Page No

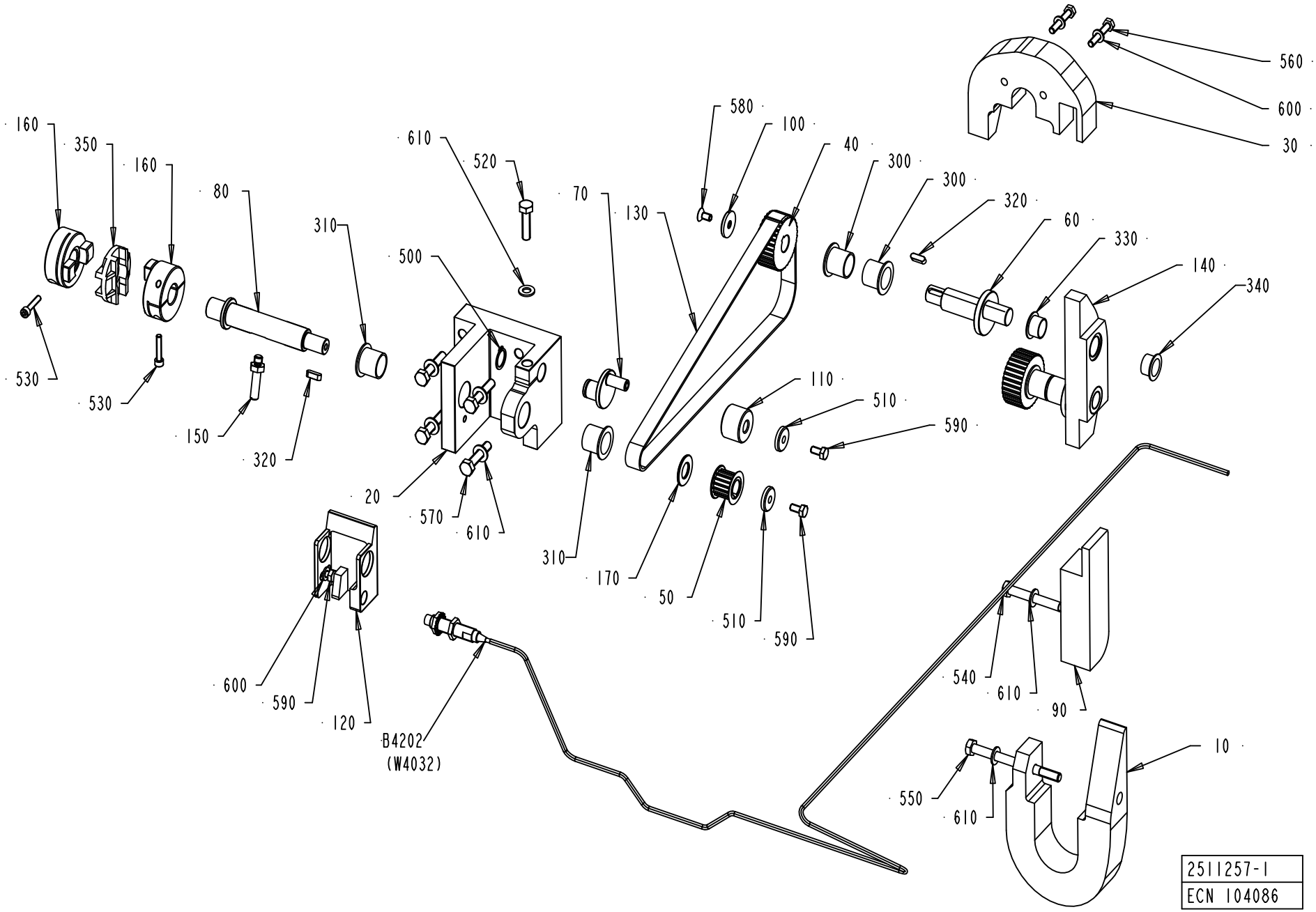
160
350
160
530
530
80
150
320
310
610
520
500
20
570
610
580
100
40
70
130
310
170
50
510
590
300
300
320
60
330
140
340
110
510
590
560
600
30
600
590
120
B4202
(W4032)
540
610
90
550
610
10
2511257-1
ECN 104086

Pos	Part No	UN	Qty	Description	Page No
Common Parts (Cont'd)					
510	315125-0153		2	WASHER TBRSB 6,4X22X4 A4	
520	312105-0455		1	SCREW M6S ISO 4017 M8X30 A480	
530	312115-0333		2	SCREW ISO4762 M5X25 A4 80	
570	312109-0459		4	SCREW M6S ISO 4017 M8X40 A480	
580	312155-0366		2	SCREW DIN 7991 MF6S M6X12 A4 70	
590	312105-0366		3	SCREW M6S ISO 4017 M6X12 A480	
600	315105-0153		3	WASHER BRB 6,4X12 RFR	
610	315105-0165		7	WASHER BRB 8,4X16 RFR	
B4202	90600-0459		1	INDUCTIVE SWITCH, E2A-M12KN05-WP-B1 5M	

Pos	Part No	UN	Qty	Description	Page No

VOLUME ADJUSTER

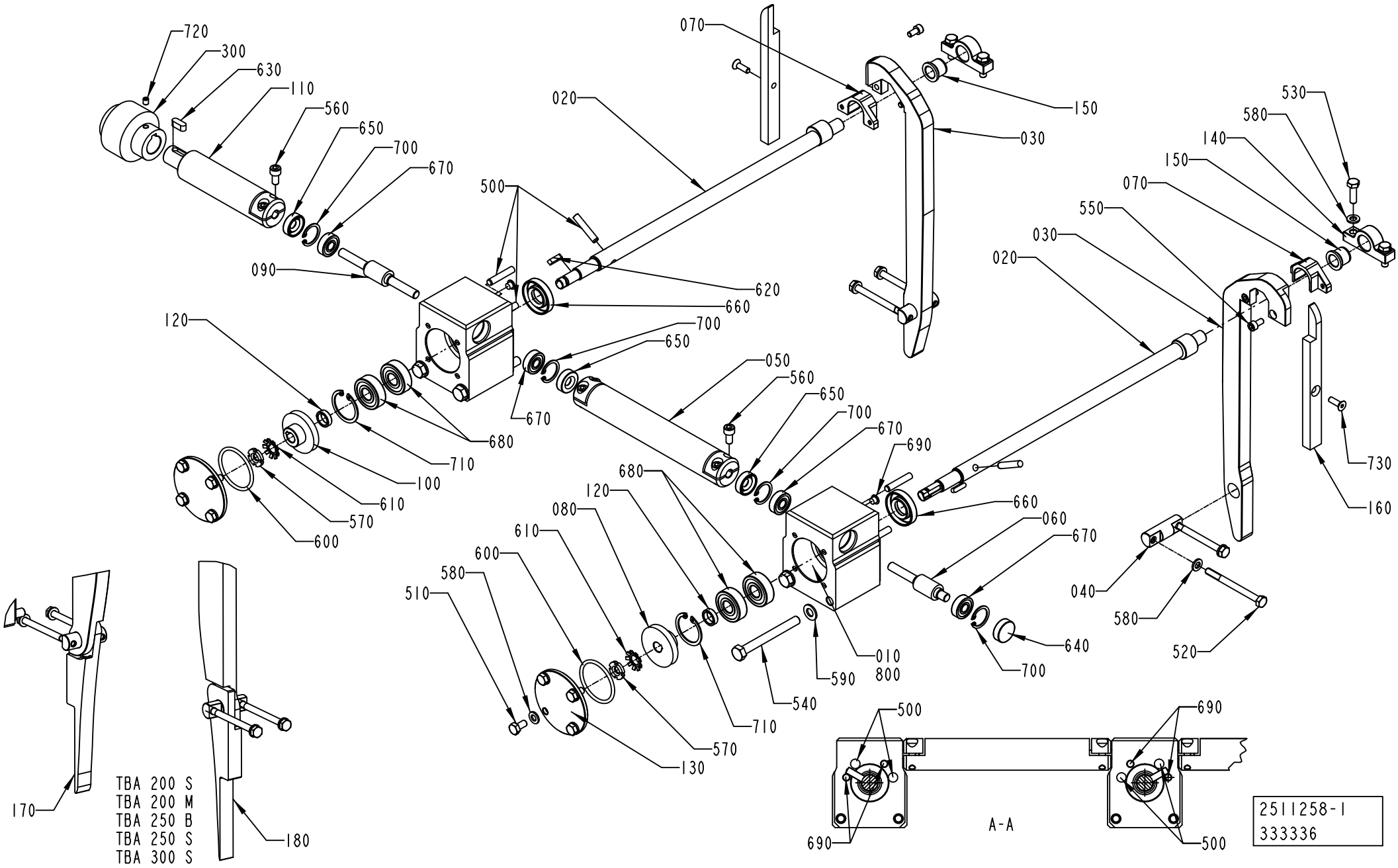

ECM: 333616 - 20080401
Group number: 2511258-0100
Assembly Drawing: 2511258-1_1_AD

Pos	Part No	UN	Qty	Description	Page No
TBA 0200B					
030	1512599-0000		2	VOLUME CAM	
050	1349386-0000		1	SHAFT	
110	1349387-0000		1	SHAFT	
160	1512598-0000		2	GUIDE	
520	312105-0384		4	SCREW M6S ISO 4014 M6X70 A480	
730	312155-0329		2	SCREW DIN 7991 MF6S M5X16 A4 70	
TBA 0200M					
030	2915911-0000		2	VOLUME CAM	
050	1260050-0000		1	SHAFT	
110	1260170-0000		1	SHAFT	
170	2915912-0000		1	CAM	
180	2915913-0000		1	CAM	
520	312105-0386		4	SCREW M6S ISO 4014 M6X80 A480	
TBA 0200S					
030	2845579-0000		2	CAM	
050	1512652-0000		1	SHAFT	
110	1512653-0000		1	SHAFT	
170	2832779-0000		1	CAM	
180	2847904-0000		1	CAM	
520	312105-0386		4	SCREW M6S ISO 4014 M6X80 A480	
TBA 0250B					
030	2909143-0000		2	VOLUME CAM	
050	1260050-0000		1	SHAFT	
110	1260170-0000		1	SHAFT	
170	2912004-0000		1	CAM	
180	2909144-0000		1	CAM	
520	312105-0386		4	SCREW M6S ISO 4014 M6X80 A480	
TBA 0250S					
030	2925286-0000		2	VOLUME CAM	
050	1498601-0000		1	SHAFT	
110	1498602-0000		1	SHAFT	
170	2925287-0000		1	CAM	
180	2925288-0000		1	CAM	
520	312105-0386		4	SCREW M6S ISO 4014 M6X80 A480	
TBA 0300S					
030	2930905-0000		2	VOLUME CAM	
050	1512652-0000		1	SHAFT	
110	1512653-0000		1	SHAFT	
170	2930906-0000		1	CAM	
180	2930907-0000		1	CAM	
520	312105-0386		4	SCREW M6S ISO 4014 M6X80 A480	

Pos	Part No	UN	Qty	Description	Page No
Common Parts					
010	1260051-0000		2	HOUSING	
020	1260148-0000		2	ECCENTRIC SHAFT	
040	1548810-0000		2	PIVOT PIN	
060	1260149-0000		1	WORM SCREW	
070	1348287-0000		2	GUIDE	
080	1260152-0000		1	WORM WHEEL	
090	1260154-0000		1	WORM SCREW	
100	1260169-0000		1	WORM WHEEL	
120	1260153-0000		2	SPACER	
130	1260177-0000		2	COVER	
140	1260151-0000		2	BRACKET	
150	1140437-0000		2	BUSHING	
300	2582019-0000		1	SHAFT COUPLING	
500	311103-0358		6	PARALLEL PIN ISO 2338 6M6X32 A1	
510	312105-0366		8	SCREW M6S ISO 4017 M6X12 A480	
530	312105-0370		4	SCREW M6S ISO 4017 M6X20 A480	
540	312105-0466		4	SCREW M6S ISO 4014 M8X75 A480	
550	312115-0325		4	SCREW ISO4762 M5X10 A4 80	
560	312115-0366		6	SCREW ISO4762 M6X12 A4 80	
570	312805-0100		2	NUT ROUND WITH SLOTS M10X0,75 FE	
580	315105-0153		16	WASHER BRB 6,4X12 RFR	
590	315105-0165		4	WASHER BRB 8,4X16 RFR	
600	315202-0223		2	O-RING 39,2X3 MM	
610	315410-0100		2	LOCK WASHER MB 0 D=10 H=1	
620	315701-0168		2	PARALLEL KEY W. ROUND ENDS 4X4X16 MM	
630	315705-0230		1	PARALLEL KEY W. ROUND ENDS 6X6X16 MM	
640	90355-0369		1	COVER PLUG, 22X19X7 MM	
650	90091-0431		3	RADIAL SEAL 8X22X7 MM	
660	90091-0430		2	RADIAL SEAL 15X35X7 MM DUST LIP	
670	321302-0298		4	BALL BEARING, 8X22X7 MM	
680	321313-0101		4	BALL BEARING, 12X32X10 MM	
690	90261-0071		4	PLUG, BLIND, PLASTIC, NO. GPN500B58	
700	315753-0117		4	RETAINING RING FOR BORE DIN 472 22 A2	
710	315753-0123		2	RETAINING RING FOR BORE DIN 472 32 A2	
720	312318-0321		2	SCREW ISO4029 M5X6 A4	
800	90296-0070		1	SHELL ALVANIA GREASE EP 1	

Machine Type | Group Description | Used-In | Group Number | Page No

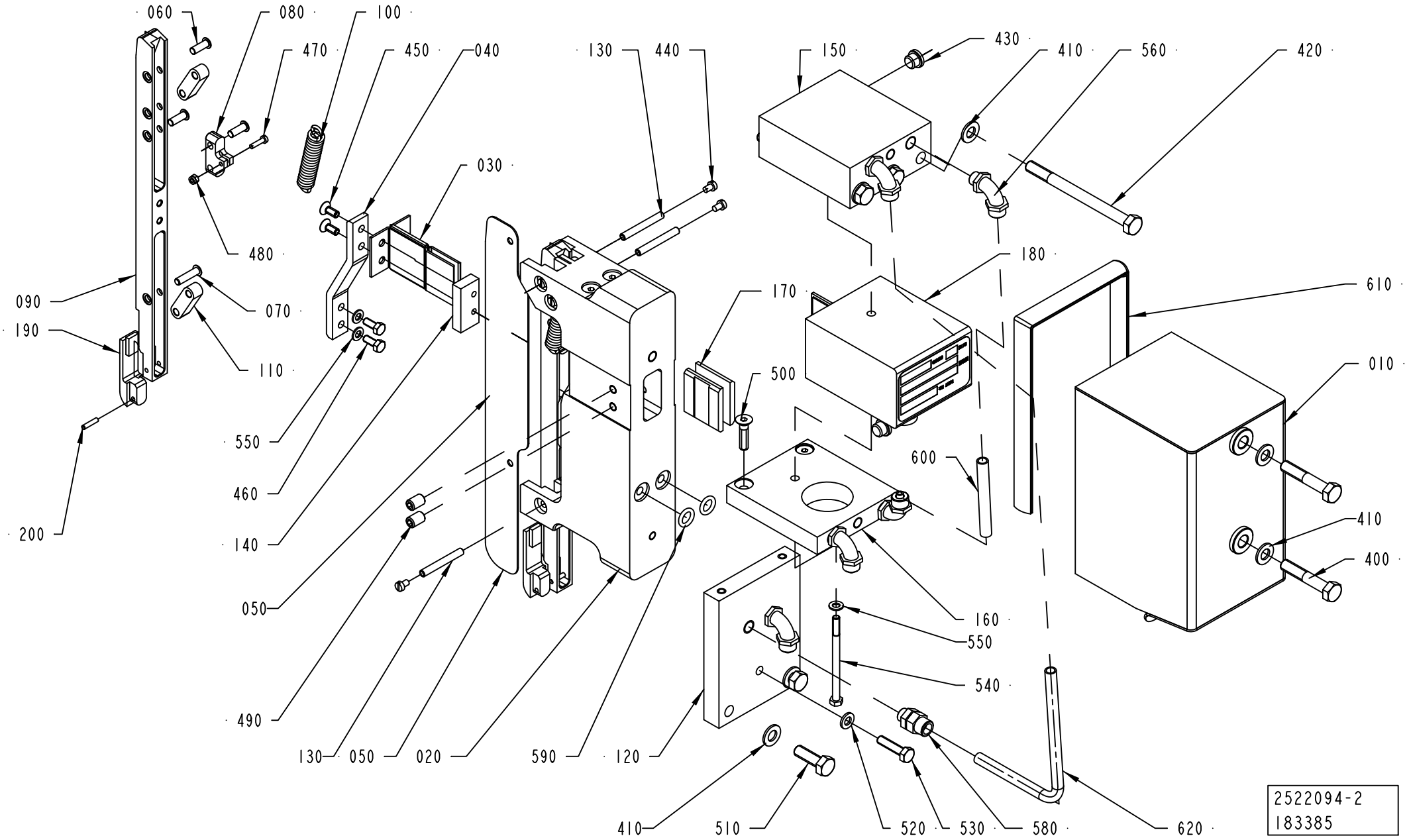
060
080
100
470
450
040
130
440
150
430
410
560
420
030
480
180
610
090
190
070
110
170
500
010
550
460
140
600
410
400
200
050
160
550
540
490
130
050
020
590
120
410
510
520
530
580
620
2522094-2
183385

ECM: 315541 - 20071112
Group number: 2522094-0200
Assembly Drawing: 2522094-2_1_AA

Pos	Part No	UN	Qty	Description	Page No
TBA 0200B					
020	2526931-0000		1	BRACKET	
050	2526932-0000		1	SPACER	
090	2652083-0000		2	CONTACT RAIL	
120	2527290-0000		1	PLATE	
180	67379-0106		1	TRANSFORMER	
190	2529735-0000		2	BRACKET	
TBA 0200M					
020	2527727-0000		1	BRACKET	
050	2527728-0000		1	SPACER	
090	2665229-0000		2	CONTACT RAIL	
120	2527729-0000		1	PLATE	
180	67379-0249		1	TRANSFORMER	
190	2527141-0000		2	BRACKET	
TBA 0200S					
020	2529496-0000		1	BRACKET	
050	2529677-0000		1	SPACER	
090	2665270-0000		2	CONTACT RAIL	
120	2527729-0000		1	PLATE	
180	67379-0248		1	TRANSFORMER	
190	2527141-0000		2	BRACKET	
TBA 0250B					
050	2527728-0000		1	SPACER	
090	2665229-0000		2	CONTACT RAIL	
120	2527729-0000		1	PLATE	
180	67379-0106		1	TRANSFORMER	
190	2527141-0000		2	BRACKET	
TBA 0250S					
020	2544899-0000		1	BRACKET	
050	2544900-0000		1	SPACER	
090	2665207-0000		2	CONTACT RAIL	
120	2527729-0000		1	PLATE	
180	67379-0248		1	TRANSFORMER	
190	2527141-0000		2	BRACKET	
TBA 0300S					
020	2529496-0000		1	BRACKET	
050	2529677-0000		1	SPACER	
090	2665270-0000		2	CONTACT RAIL	
120	2527729-0000		1	PLATE	
180	67379-0106		1	TRANSFORMER	
190	2527141-0000		2	BRACKET	
Common Parts					
010	1532496-0000		1	COVER	
030	1533428-0000		1	BUSBAR	
040	2517171-0000		2	CABLE	
060	1140716-0000		6	PIN	
070	1140717-0000		2	PIN	
080	1548818-0000		2	BRACKET	
100	243989-0000		2	TENSION SPRING	
110	1548813-0000		4	LINK ARM	
130	1487332-0000		3	SHAFT	
140	1487373-0000		2	WASHER	
150	1532492-0000		1	COOLING PLATE	
160	1532493-0000		1	COOLING PLATE	
170	1487249-0000		2	WASHER	
200	311103-0235		2	PARALLEL PIN ISO 2338 3M6X14 A1	
400	312105-0460		2	SCREW M6S ISO 4014 M8X45 A480	
410	315105-0165		6	WASHER BRB 8,4X16 RFR	
420	312105-0471		3	SCREW M6S ISO 4014 M8X100 A480	
430	342713-0209		2	PLUG (QUANT.MINIMA= 10PC).	
440	312125-0285		6	SCREW ISO 1207 M4X6 A4	
450	312155-0327		4	SCREW DIN 7991 MF6S M5X12 A4 70	
460	312105-0327		4	SCREW M6S ISO 4017 M5X12 A480	
470	312125-0226		2	SCREW ISO 1207 M3X12 A4	
480	312812-0310		2	HEXAGON NUT, NY-LOCK M3 A480	
490	312318-0366		4	SCREW ISO4029 M6X12 A4	
500	312155-0372		2	SCREW DIN 7991 MF6S M6X25 A4 70	
510	312105-0453		2	SCREW M6S ISO 4017 M8X25 A480	
520	315105-0153		1	WASHER BRB 6,4X12 RFR	
530	312105-0372		1	SCREW M6S ISO 4017 M6X25 A480	
540	1532495-0000		1	SCREW	
550	315105-0146		4	WASHER BRB 5,3X10 RFR	
560	342931-0121		5	ELBOW 90 COUPL.,EXT.THREAD 8/6-G1/8"	
580	342921-0121		1	STRAIGHT CPLNG,EXT.THREADED 8/6-G1/8INCH	
590	315205-0508		2	O-RING 9,19X2,62 MM	
600	90166-0118	MM	80	TUBE 8 MM PA BLACK	
610	90143-0098	MM	395	RUBBER STRIP, CLAMPING, NO. 1038-02	

Machine Type | Group Description | Used-In | Group Number | Page No

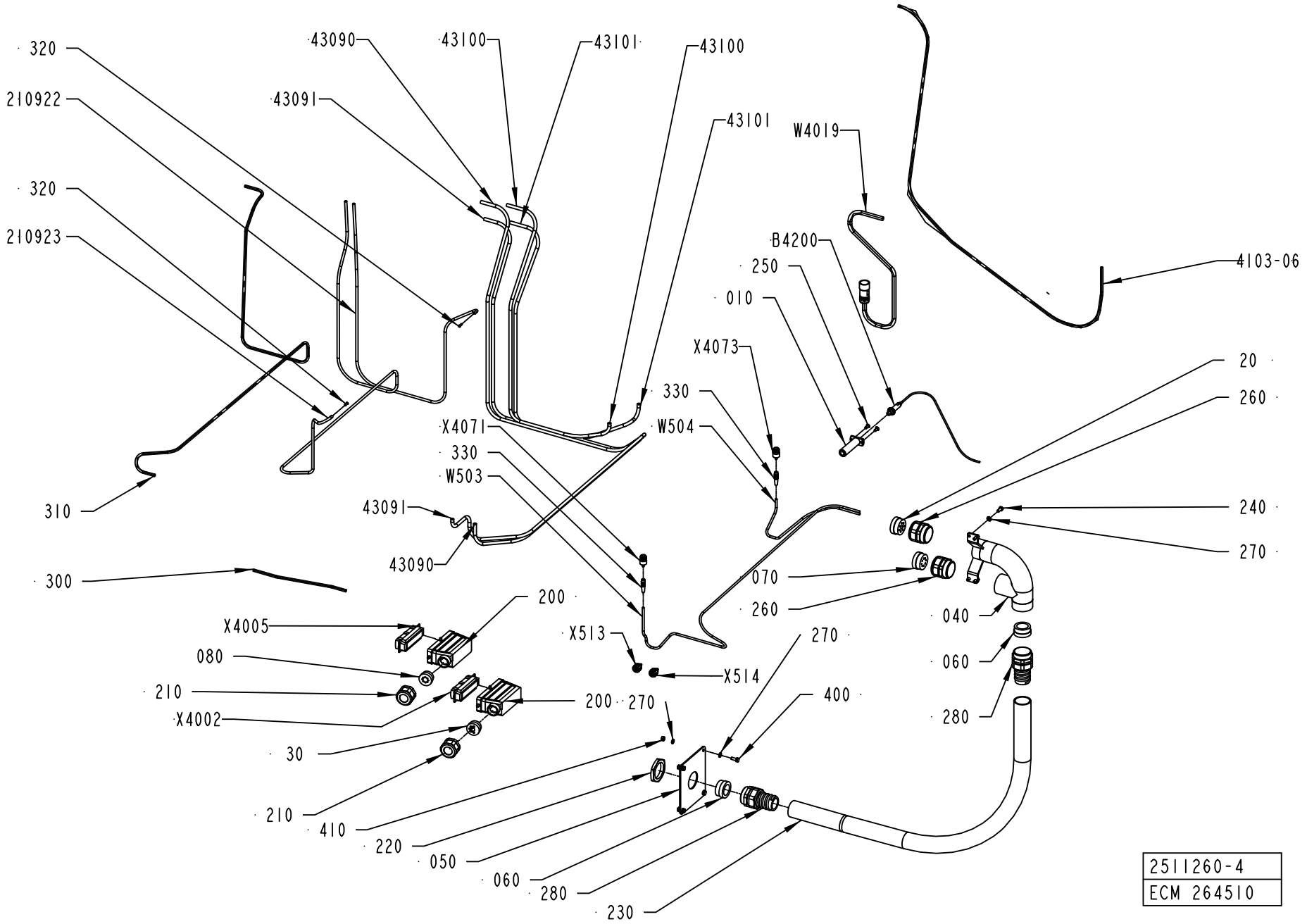
320
210922
320
210923
310
300
43090
43100
43101
43100
43091
43101
W4019
B4200
250
010
4103-06
X4073
20
260
330
W504
X4071
330
W503
43091
43090
240
270
070
260
040
060
280
200
X4005
080
210
X4002
30
210
410
220
050
060
280
230
X513
X514
270
200
270
400
2511260-4
ECM 264510

ECM: 276027 - 20070101
Group number: 2511260-0400
Assembly Drawing: 2511260-4_1_AB

Pos	Part No	UN	Qty	Description	Page No	Pos	Part No	UN	Qty	Description	Page No
-											
010	1260749-0000		1	HOLDER							
020	2694079-0000		1	INSERT							
030	2695311-0000		1	INSERT							
040	2527413-0000		1	HOUSING							
050	1348510-0000		1	PLATE							
060	2531413-0000		2	INSERT							
070	2594979-0000		1	INSERT							
080	2595005-0000		1	INSERT							
200	90110-0228		2	CABLE HOOD 24-POL 71.350.2428.0							
210	353241-0003		2	GLAND W/O INSERT PG21 EXTENDED							
210922	90166-0266	MM	1800	TUBE 6 MM PA BLACK							
210923	90166-0266	MM	2500	TUBE 6 MM PA BLACK							
220	90099-0103		1	NUT, PR 47 (PG36)							
230	90152-0060	MM	1100	SPIRAL CONDUIT, 42X35, UL3529							
240	312105-0367		4	SCREW M6S ISO 4017 M6X14 A480							
250	312155-0327		2	SCREW DIN 7991 MF6S M5X12 A4 70							
260	353240-0007		2	GLAND W/O INSERT PG36 NORMAL							
270	315105-0153		12	WASHER BRB 6,4X12 RFR							
280	353242-0004		2	HOSE GLAND W/O INSERT PG36 NORMAL							
300	90166-0081	MM	300	TUBE 6 MM PA BLUE							
310	90166-0081	MM	1850	TUBE 6 MM PA BLUE							
320	342706-0130		2	ACCESSORIES, INSERT SLEEVE 6 MM							
330	90458-2893		2	SLEEVE, 78 Z-0-3-4							
400	312105-0368		4	SCREW M6S ISO 4017 M6X16 A480							
410	312605-0316		4	HEXAGON NUT, M6M M6 A280							
4301-06	90166-0081	MM	1500	TUBE 6 MM PA BLUE							
43090	90166-0118	MM	2500	TUBE 8 MM PA BLACK							
43091	90166-0118	MM	2500	TUBE 8 MM PA BLACK							
43100	90166-0118	MM	1400	TUBE 8 MM PA BLACK							
43101	90166-0118	MM	1400	TUBE 8 MM PA BLACK							
B4200	90600-0463		1	INDUCTIVE SWITCH,E2A-M12LN05-WP-B1-TP 5M							
W4019	90459-2193		1	CABLE, BAUMER Z169.005							
W503	90458-2895	M	12	COAXIAL CABLE RG 400/U BROWN							
W504	90458-2895	M	12	COAXIAL CABLE RG 400/U BROWN							
X4002	90110-0150		1	MALE INSERT 121110 0000							
X4005	90110-0150		1	MALE INSERT 121110 0000							
X4071	90458-2890		1	CONNECTOR, 21N-50N12N133NE							
X4073	90458-2890		1	CONNECTOR, 21N-50N12N133NE							
X513	90458-2892		1	CONNECTOR, 11 N-50-3-31/133 NE							
X514	90458-2892		1	CONNECTOR, 11 N-50-3-31/133 NE							

PRESSURE JAW

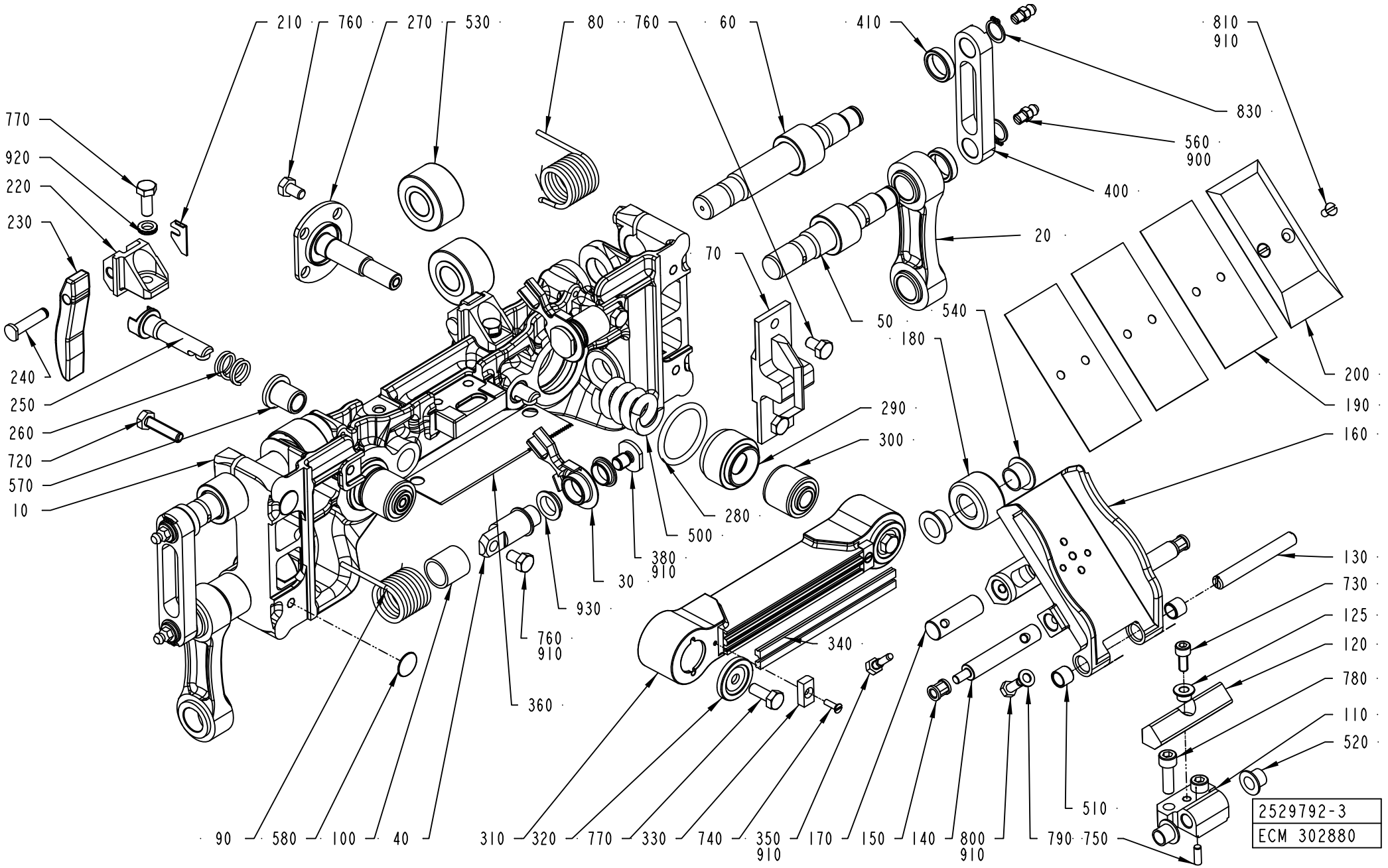

ECM: 315543 - 20071112
Group number: 2529792-0300
Assembly Drawing: 2529792-3_1_AG

This list covers pages from 4-24 to 4-27

Pos	Part No	UN	Qty	Description	Page No
TBA 0200B					
010	2695417-0000		1	PRESSURE JAW	
020	2611128-0000		2	LINK	
	2611910-0000		*1*	*LINK*	
	1195204-0000		*2*	*BUSHING*	
110	1512605-0000		1	BRACKET	
130	1512604-0000		1	SHAFT	
160	2611446-0000		1	VOLUME FLAP	
	2638064-0000		*1*	*VOLUME FLAP*	
	2611445-0000		*1*	*BRACKET*	
	315105-0146		*1*	*WASHER BRB 5,3X10 RFR*	
	312105-0327		*1*	*SCREW M6S ISO 4017 M5X12 A480*	
	311103-0268		*2*	*PARALLEL PIN ISO 2338 4M6X12 A1*	
	90157-0016		*1*	*LOCKING FLUID LOCTITE 242 50 ML*	
190	1498609-0000		3	VOLUME SHIM	
200	1498608-0000		1	VOLUME BULGE	
400	2681388-0000		2	LINK	
TBA 0200M					
010	2695418-0000		1	PRESSURE JAW	
020	2611417-0000		2	LINK	
	1195204-0000		*2*	*BUSHING*	
	2611416-0000		*1*	*LINK*	
110	1512607-0000		1	BRACKET	
130	1512608-0000		1	SHAFT	
160	2611447-0000		1	VOLUME FLAP	
	2638065-0000		*1*	*VOLUME FLAP*	
	2611445-0000		*1*	*BRACKET*	
	315105-0146		*1*	*WASHER BRB 5,3X10 RFR*	
	312105-0327		*1*	*SCREW M6S ISO 4017 M5X12 A480*	
	311103-0268		*2*	*PARALLEL PIN ISO 2338 4M6X12 A1*	
	90157-0016		*1*	*LOCKING FLUID LOCTITE 242 50 ML*	
190	1498604-0000		3	VOLUME SHIM	
200	1498603-0000		1	VOLUME BULGE	
400	2691641-0000		2	LINK	
TBA 0200S					
010	2695422-0000		1	PRESSURE JAW	
020	2633465-0000		2	LINK	
	1195204-0000		*2*	*BUSHING*	
	2633464-0000		*1*	*LINK*	
110	1538134-0000		1	BRACKET	
130	1538135-0000		1	SHAFT	
160	2611448-0000		1	VOLUME FLAP	
	2638066-0000		*1*	*VOLUME FLAP*	
	2611445-0000		*1*	*BRACKET*	
	315105-0146		*1*	*WASHER BRB 5,3X10 RFR*	
	312105-0327		*1*	*SCREW M6S ISO 4017 M5X12 A480*	
	311103-0268		*2*	*PARALLEL PIN ISO 2338 4M6X12 A1*	
	90157-0016		*1*	*LOCKING FLUID LOCTITE 242 50 ML*	
190	272991-0000		3	VOLUME SHIM	
200	272990-0000		1	VOLUME BULGE	
400	2693207-0000		2	LINK	
TBA 0250B					
010	2695416-0000		1	PRESSURE JAW	
020	2611417-0000		2	LINK	
	1195204-0000		*2*	*BUSHING*	
	2611416-0000		*1*	*LINK*	
110	1512605-0000		1	BRACKET	
130	1512604-0000		1	SHAFT	
160	2611449-0000		1	VOLUME FLAP	
	2638067-0000		*1*	*VOLUME FLAP*	
	2611445-0000		*1*	*BRACKET*	
	315105-0146		*1*	*WASHER BRB 5,3X10 RFR*	
	312105-0327		*1*	*SCREW M6S ISO 4017 M5X12 A480*	
	311103-0268		*2*	*PARALLEL PIN ISO 2338 4M6X12 A1*	
	90157-0016		*1*	*LOCKING FLUID LOCTITE 242 50 ML*	
190	1348257-0000		4	VOLUME SHIM	
200	1348256-0000		1	VOLUME BULGE	
400	2691641-0000		2	LINK	
TBA 0250S					
010	2695423-0000		1	PRESSURE JAW	
020	2611398-0000		2	LINK	
	1195204-0000		*2*	*BUSHING*	
	2611394-0000		*1*	*LINK*	
110	1512607-0000		1	BRACKET	
130	1512608-0000		1	SHAFT	
160	2611450-0000		1	VOLUME FLAG	
	2638068-0000		*1*	*VOLUME FLAP*	
	2611445-0000		*1*	*BRACKET*	
	315105-0146		*1*	*WASHER BRB 5,3X10 RFR*	
	312105-0327		*1*	*SCREW M6S ISO 4017 M5X12 A480*	
	311103-0268		*2*	*PARALLEL PIN ISO 2338 4M6X12 A1*	
	90157-0016		*1*	*LOCKING FLUID LOCTITE 242 50 ML*	
190	574366-0000		3	VOLUME SHIM	
200	574367-0000		1	VOLUME BULGE	

Machine Type | Group Description | Used-In | Group Number | Page No

PRESSURE JAW

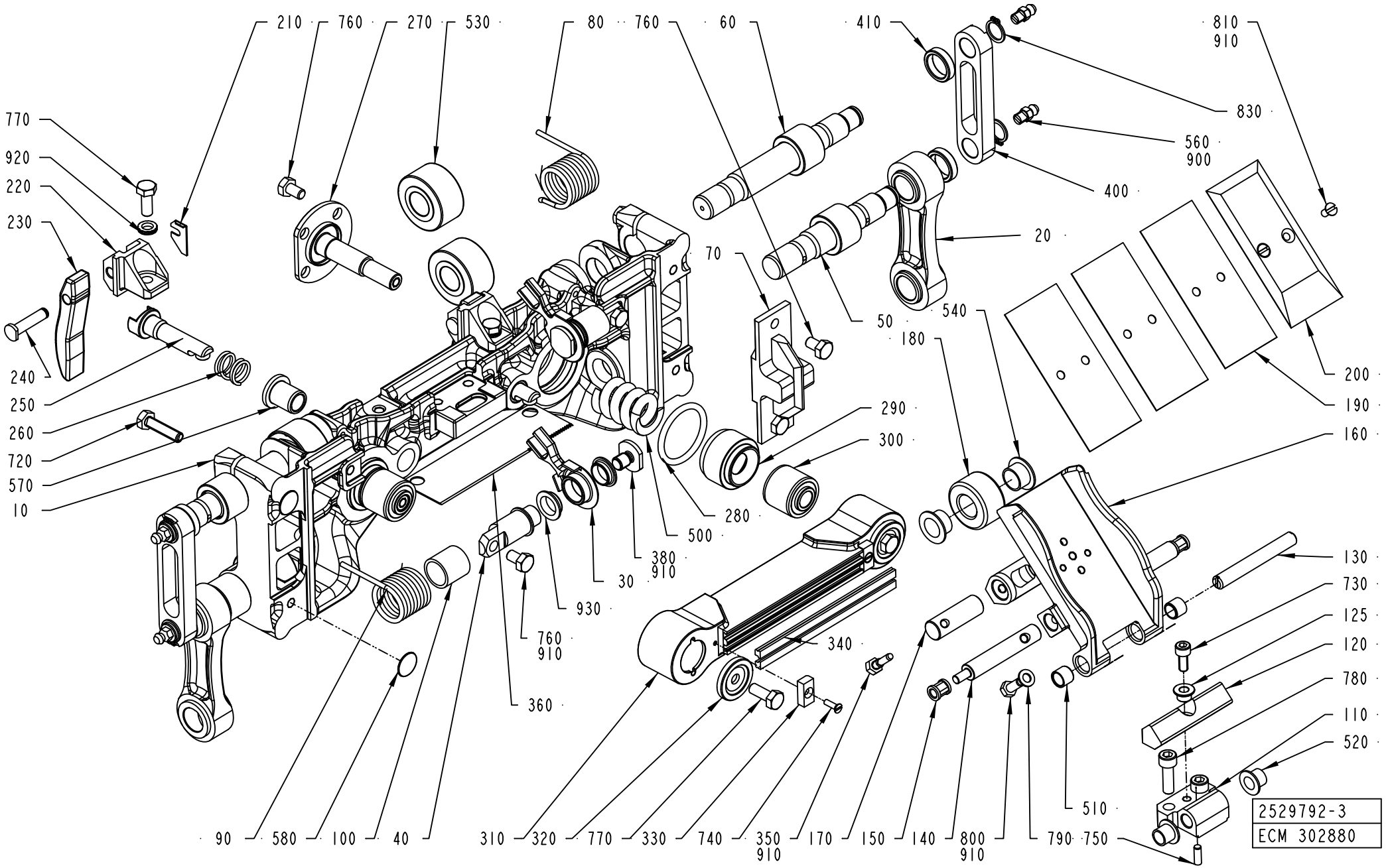

ECM: 315543 - 20071112
Group number: 2529792-0300
Assembly Drawing: 2529792-3_1_AG

This list covers pages from 4-24 to 4-27

Pos	Part No	UN	Qty	Description	Page No
TBA 0250S (Cont'd)					
400	2693208-0000		2	LINK	
TBA 0300S					
010	2797397-0000		1	PRESSURE JAW	
020	2633465-0000		2	LINK	
	1195204-0000		*2*	*BUSHING*	
	2633464-0000		*1*	*LINK*	
110	1512605-0000		1	BRACKET	
130	1512604-0000		1	SHAFT	
160	2797887-0000		1	VOLUME FLAP	
	90157-0016		*1*	*LOCKING FLUID LOCTITE 242 50 ML*	
	311103-0268		*2*	*PARALLEL PIN ISO 2338 4M6X12 A1*	
	312105-0327		*1*	*SCREW M6S ISO 4017 M5X12 A480*	
	315105-0146		*1*	*WASHER BRB 5,3X10 RFR*	
	2611445-0000		*1*	*BRACKET*	
	2797526-0000		*1*	*VOLUME FLAP*	
190	272986-0005		3	VOLUME SHIM	
200	752739-0000		1	VOLUME BULGE	
400	2693207-0000		2	LINK	
Common Parts					
030	2812441-0000		2	LEVER	
040	2812438-0000		2	SHAFT	
050	2694884-0000		2	SHAFT	
060	2694885-0000		2	SHAFT	
070	1523980-0000		1	MOUNTING BLOCK	
080	2812451-0000		1	SPRING	
090	2812440-0000		1	SPRING	
100	2812439-0000		2	BUSHING	
120	2834201-0000		1	DAMPER	
125	2835130-0000		1	SPACER	
140	2812443-0000		2	SHAFT	
150	2812444-0000		2	BUSHING	
170	1548766-0000		1	SHAFT	
180	1140479-0000		1	ROLLER	
210	2691667-0000		2	PLATE	
220	2858820-0000		2	HOLDER	
230	2844227-0000		2	CAM	
240	1517291-0000		2	SHAFT	
250	2693209-0000		2	SHAFT	
260	2693210-0000		2	SPRING	
270	2588014-0000		2	SHAFT	
280	315206-0523		2	O-RING 31,34X3,53 MM	
290	2588015-0000		2	SLEEVE	
300	1512590-0000		2	RUBBER BUSHING	
310	1558062-0000		1	PRESSURE RAIL	
320	1549601-0000		2	WASHER	
330	1140233-0000		2	WASHER	
340	1520564-0003		2	DOLLY	
350	491230-0000		1	GRUB SCREW(LI - CHINE)	
360	1517289-0000		1	KNIFE	
380	2812442-0000		2	WASHER	
410	2691417-0000		4	SPACER	
500	2690208-0000		2	SPRING	
510	90458-0353		2	BUSHING, 8X10X8 MM	
520	90240-0260		2	FLANGE BUSHING, 8X10X9 MM	
530	90083-0055		4	ROLLER BEARING, 15X35X19 MM	
540	90240-0261		2	FLANGE BUSHING, 12X14X9 MM	
560	90286-0013		4	GREASE NIPPLE STRAIGHT, H1 M6X1 2346	
570	2691818-0000		2	BUSHING	
580	90458-0289		2	PLUG,GPN 340-SW-5 MM	
720	312105-0372		4	SCREW M6S ISO 4017 M6X25 A480	
730	312115-0327		1	SCREW ISO4762 M5X12 A4 80	
740	312145-0224		2	SCREW ISO 2009 MFS M3X10 A4	
750	311103-0268		1	PARALLEL PIN ISO 2338 4M6X12 A1	
760	312105-0364		12	SCREW M6S ISO 4017 M6X10 A480	
770	312105-0368		4	SCREW M6S ISO 4017 M6X16 A480	
780	312115-0370		2	SCREW ISO4762 M6X20 A4 80	
790	315105-0146		2	WASHER BRB 5,3X10 RFR	
800	312105-0327		2	SCREW M6S ISO 4017 M5X12 A480	
810	312145-0287		2	SCREW ISO 2009 MFS M4X8 A4	
830	315751-0109		4	RETAINING RING FOR SHAFT DIN 471 12 SS	
900	90459-0246	KG	1	GREASE, KLüBERSYNTH UH1, ONLY IN BOM	
	90459-7413		*1*	*GREASE, KLüBERSYNTH UH1 14-1600, 1 KG*	
	90459-7414		*1*	*GREASE, KLüBERSYNTH UH1 14-1600, 25 KG*	
910	90157-0021		1	LOCKING FLUID LOCTITE 270	
920	90062-0061		2	LOCK WASHER NORD-LOCK,6,5/10,8, T=2,2	
930	90600-0590		4	FLANGE BUSHING, 12X14X4,5 MM	

Machine Type | Group Description | Used-In | Group Number | Page No

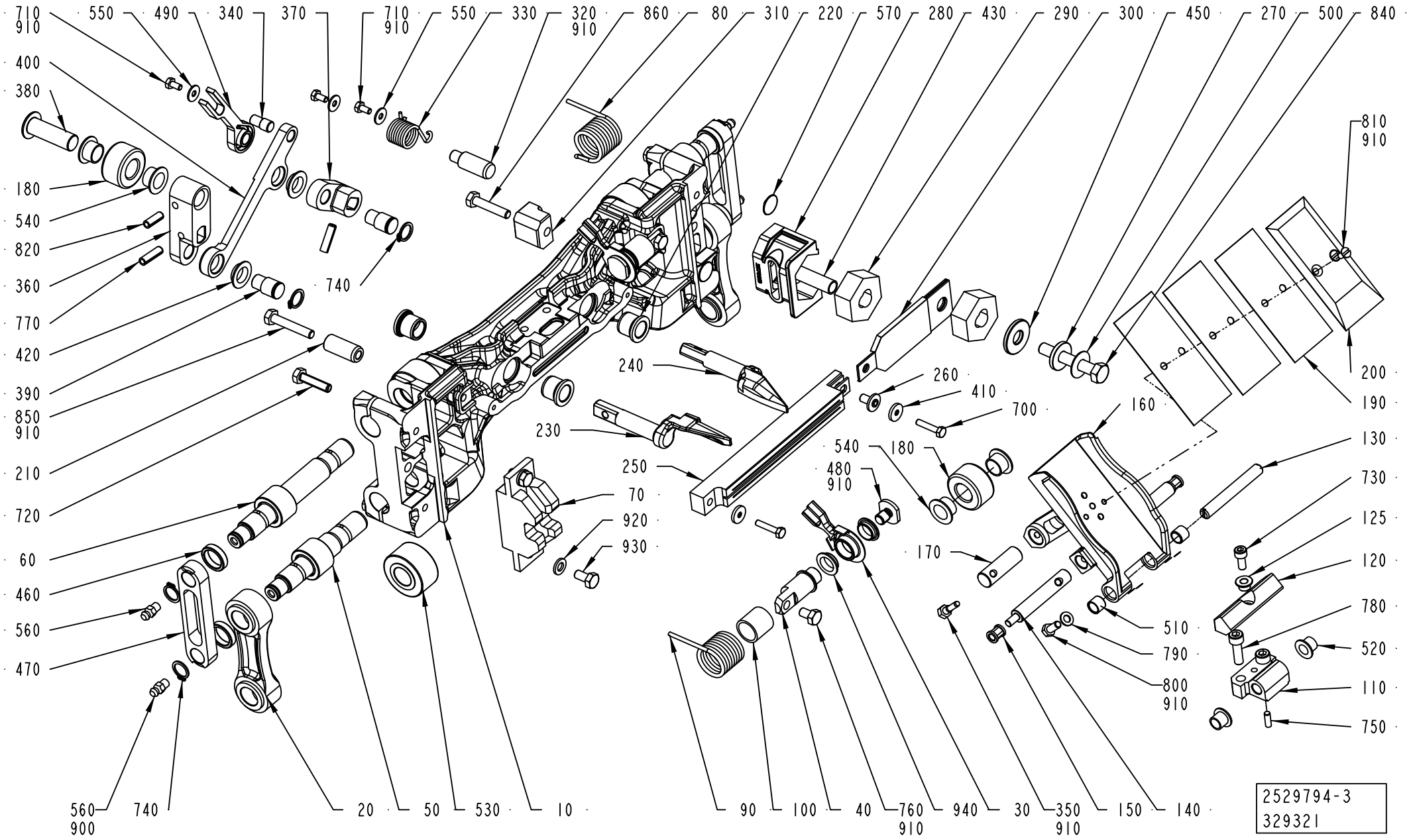
710
910
550
490
340
370
710
910
550
330
320
910
860
80
310
220
570
280
430
290
300
450
270
500
840
400
380
180
540
820
360
770
420
390
850
910
210
720
60
460
560
470
740
810
910
200
190
130
730
125
120
780
520
110
750
160
260
410
700
240
230
250
70
920
930
540
180
480
910
170
510
790
800
910
560
900
740
20
50
530
10
90
100
40
760
910
940
30
350
910
150
140
2529794-3
329321

ECM: 336848 - 20071217
Group number: 2529794-0300
Assembly Drawing: 2529794-3_1_AD

This list covers pages from 4-28 to 4-33

Pos	Part No	UN	Qty	Description	Page No
TBA 0200B					
010	2695420-0000		1	SEALING JAW	
020	2611128-0000		2	LINK	
	2611910-0000		*1*	*LINK*	
	1195204-0000		*2*	*BUSHING*	
110	1512605-0000		1	BRACKET	
130	1512604-0000		1	SHAFT	
160	2611446-0000		1	VOLUME FLAP	
	2638064-0000		*1*	*VOLUME FLAP*	
	2611445-0000		*1*	*BRACKET*	
	315105-0146		*1*	*WASHER BRB 5,3X10 RFR*	
	312105-0327		*1*	*SCREW M6S ISO 4017 M5X12 A480*	
	311103-0268		*2*	*PARALLEL PIN ISO 2338 4M6X12 A1*	
	90157-0016		*1*	*LOCKING FLUID LOCTITE 242 50 ML*	
190	1498609-0000		3	VOLUME SHIM	
200	1498608-0000		1	VOLUME BULGE	
230	2778709-0000		1	FOLDING FLAP	
240	2778710-0000		1	FOLDING FLAP	
250	1533002-0000		1	INDUCTOR	
360	2629312-0000		1	ARM	
370	2500376-0000		1	ARM	
400	2500377-0000		1	LINK ARM	
470	2681388-0000		2	LINK	
490	2812447-0000		1	LEVER	
TBA 0200M					
010	2695421-0000		1	SEALING JAW	
020	2611417-0000		2	LINK	
	1195204-0000		*2*	*BUSHING*	
	2611416-0000		*1*	*LINK*	
110	1512607-0000		1	BRACKET	
130	1512608-0000		1	SHAFT	
160	2611447-0000		1	VOLUME FLAP	
	2638065-0000		*1*	*VOLUME FLAP*	
	2611445-0000		*1*	*BRACKET*	
	315105-0146		*1*	*WASHER BRB 5,3X10 RFR*	
	312105-0327		*1*	*SCREW M6S ISO 4017 M5X12 A480*	
	311103-0268		*2*	*PARALLEL PIN ISO 2338 4M6X12 A1*	
	90157-0016		*1*	*LOCKING FLUID LOCTITE 242 50 ML*	
190	1498604-0000		3	VOLUME SHIM	
200	1498603-0000		1	VOLUME BULGE	
210	2511246-0000		1	BUSHING	
230	2778715-0000		1	FOLDING FLAP	
240	2778716-0000		1	FOLDING FLAP	
250	1520166-0000		1	INDUCTOR	
360	2629310-0000		1	ARM	
370	1478959-0000		1	ARM	
400	1478960-0000		1	LINK ARM	
470	2691641-0000		2	LINK	
490	2844198-0000		1	LEVER	
850	312109-0376		1	SCREW M6S ISO 4017 M6X35 A480	
TBA 0200S					
010	2695424-0000		1	SEALING JAW	
020	2633465-0000		2	LINK	
	1195204-0000		*2*	*BUSHING*	
	2633464-0000		*1*	*LINK*	
110	1538134-0000		1	BRACKET	
130	1538135-0000		1	SHAFT	
160	2611448-0000		1	VOLUME FLAP	
	2638066-0000		*1*	*VOLUME FLAP*	
	2611445-0000		*1*	*BRACKET*	
	315105-0146		*1*	*WASHER BRB 5,3X10 RFR*	
	312105-0327		*1*	*SCREW M6S ISO 4017 M5X12 A480*	
	311103-0268		*2*	*PARALLEL PIN ISO 2338 4M6X12 A1*	
	90157-0016		*1*	*LOCKING FLUID LOCTITE 242 50 ML*	
190	272991-0000		3	VOLUME SHIM	
200	272990-0000		1	VOLUME BULGE	
210	2511246-0000		1	BUSHING	
230	2778714-0000		1	FOLDING FLAP	
240	2778713-0000		1	FOLDING FLAP	
250	1533000-0000		1	INDUCTOR	
360	2629311-0000		1	ARM	
370	1478959-0000		1	ARM	
400	2509551-0000		1	LINK ARM	
470	2693207-0000		2	LINK	
490	2844198-0000		1	LEVER	
850	312109-0376		1	SCREW M6S ISO 4017 M6X35 A480	
TBA 0250B					
010	2695419-0000		1	SEALING JAW	
020	2611417-0000		2	LINK	
	1195204-0000		*2*	*BUSHING*	
	2611416-0000		*1*	*LINK*	
110	1512605-0000		1	BRACKET	
130	1512604-0000		1	SHAFT	
160	2611449-0000		1	VOLUME FLAP	

Machine Type | Group Description | Used-In | Group Number | Page No

SEALING JAW

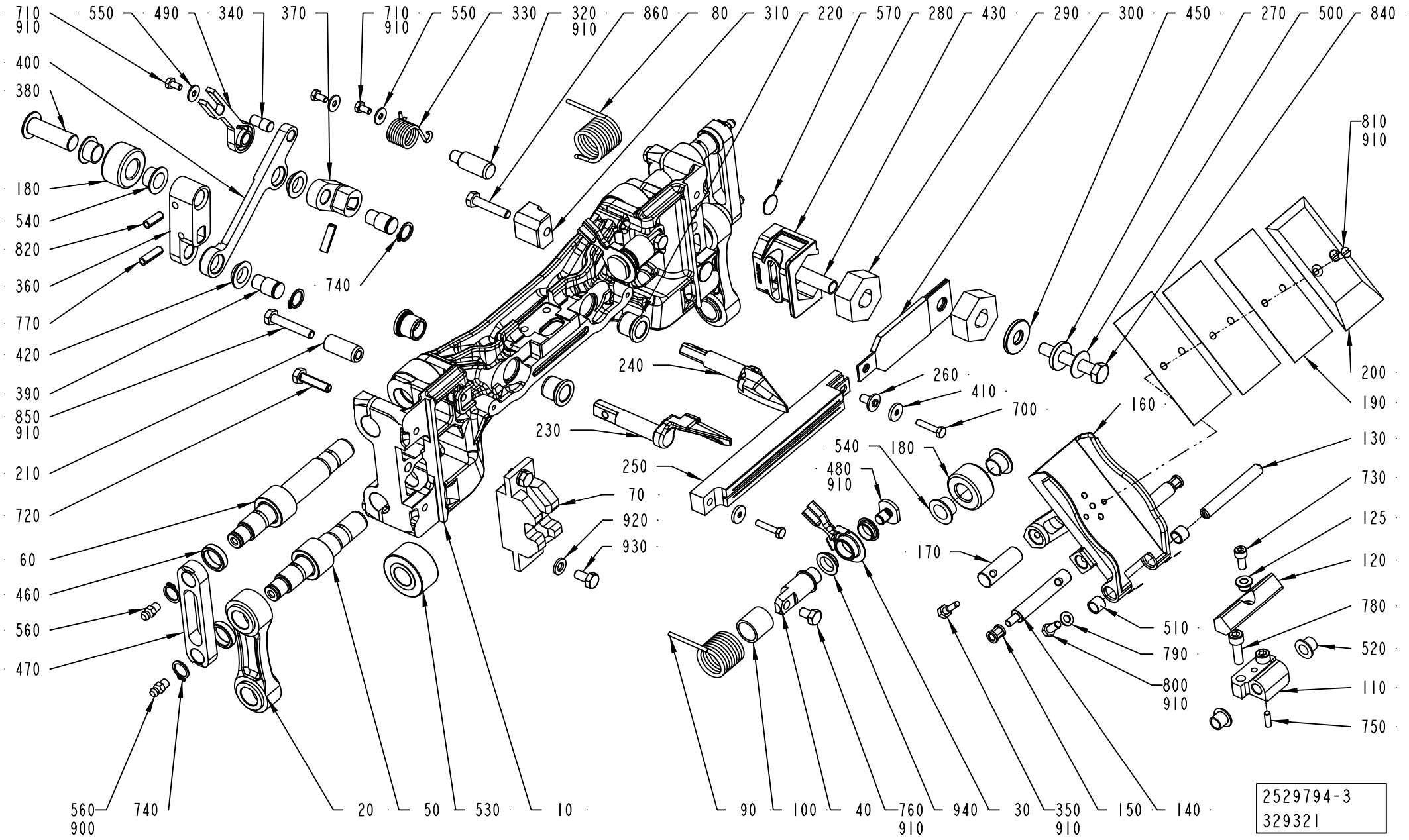
710
910
550
490
340
370
710
910
550
330
320
910
860
80
310
220
570
280
430
290
300
450
270
500
840
400
380
180
540
820
360
770
420
390
850
910
210
720
60
460
560
470
740
810
910
200
190
160
130
730
125
120
780
520
110
750
240
230
250
70
920
930
260
410
700
540
180
480
910
170
510
790
800
910
560
900
740
20
50
530
10
90
100
40
760
910
940
30
350
910
150
140
2529794-3
329321

ECM: 336848 - 20071217
Group number: 2529794-0300
Assembly Drawing: 2529794-3_1_AD

This list covers pages from 4-28 to 4-33

Pos	Part No	UN	Qty	Description	Page No
TBA 0250B (Cont'd)					
190	1348257-0000		4	VOLUME SHIM	
200	1348256-0000		1	VOLUME BULGE	
230	2778711-0000		1	FOLDING FLAP	
240	2778712-0000		1	FOLDING FLAP	
250	1533002-0000		1	INDUCTOR	
360	2629312-0000		1	ARM	
370	2500376-0000		1	ARM	
400	2500377-0000		1	LINK ARM	
470	2691641-0000		2	LINK	
490	2812447-0000		1	LEVER	
TBA 0250S					
010	2695425-0000		1	SEALING JAW	
020	2611398-0000		2	LINK	
	1195204-0000		*2*	*BUSHING*	
	2611394-0000		*1*	*LINK*	
110	1512607-0000		1	BRACKET	
130	1512608-0000		1	SHAFT	
160	2611450-0000		1	VOLUME FLAG	
	2638068-0000		*1*	*VOLUME FLAP*	
	2611445-0000		*1*	*BRACKET*	
	315105-0146		*1*	*WASHER BRB 5,3X10 RFR*	
	312105-0327		*1*	*SCREW M6S ISO 4017 M5X12 A480*	
	311103-0268		*2*	*PARALLEL PIN ISO 2338 4M6X12 A1*	
	90157-0016		*1*	*LOCKING FLUID LOCTITE 242 50 ML*	
190	574366-0000		3	VOLUME SHIM	
200	574367-0000		1	VOLUME BULGE	
210	2511246-0000		1	BUSHING	
230	2778715-0000		1	FOLDING FLAP	
240	2778716-0000		1	FOLDING FLAP	
250	1520166-0000		1	INDUCTOR	
360	2629310-0000		1	ARM	
370	1478959-0000		1	ARM	
400	1478960-0000		1	LINK ARM	
470	2693208-0000		2	LINK	
490	2844198-0000		1	LEVER	
850	312109-0376		1	SCREW M6S ISO 4017 M6X35 A480	
TBA 0300S					
010	2798051-0000		1	SEALING JAW	
020	2633465-0000		2	LINK	
	1195204-0000		*2*	*BUSHING*	
	2633464-0000		*1*	*LINK*	
110	1512605-0000		1	BRACKET	
130	1512604-0000		1	SHAFT	
160	2797887-0000		1	VOLUME FLAP	
	90157-0016		*1*	*LOCKING FLUID LOCTITE 242 50 ML*	
	311103-0268		*2*	*PARALLEL PIN ISO 2338 4M6X12 A1*	
	312105-0327		*1*	*SCREW M6S ISO 4017 M5X12 A480*	
	315105-0146		*1*	*WASHER BRB 5,3X10 RFR*	
	2611445-0000		*1*	*BRACKET*	
	2797526-0000		*1*	*VOLUME FLAP*	
190	272986-0005		3	VOLUME SHIM	
200	752739-0000		1	VOLUME BULGE	
230	2778711-0000		1	FOLDING FLAP	
240	2778712-0000		1	FOLDING FLAP	
250	1533002-0000		1	INDUCTOR	
360	2629312-0000		1	ARM	
370	2500376-0000		1	ARM	
400	2500377-0000		1	LINK ARM	
470	2693207-0000		2	LINK	
490	2812447-0000		1	LEVER	
Common Parts					
030	2812441-0000		2	LEVER	
040	2812438-0000		2	SHAFT	
050	2694884-0000		2	SHAFT	
060	2694885-0000		2	SHAFT	
070	1523981-0000		1	GUIDE	
080	2812451-0000		1	SPRING	
090	2812440-0000		1	SPRING	
100	2812439-0000		2	BUSHING	
120	2834201-0000		1	DAMPER	
140	2812443-0000		2	SHAFT	
150	2812444-0000		3	BUSHING	
170	1548766-0000		1	SHAFT	
180	1140479-0000		2	ROLLER	
220	1140437-0000		4	BUSHING	
260	32544-0000		1	INSULATION NUT	
270	2511263-0000		1	WASHER	
280	2579810-0000		1	CARBON BRUSH HOLDER	
290	2545308-0000		2	CARBON BRUSH	
300	2644425-0000		1	BUSBAR	
310	1498479-0000		1	GUIDE	
320	2812445-0000		1	PIN	
330	2812446-0000		1	SPRING	

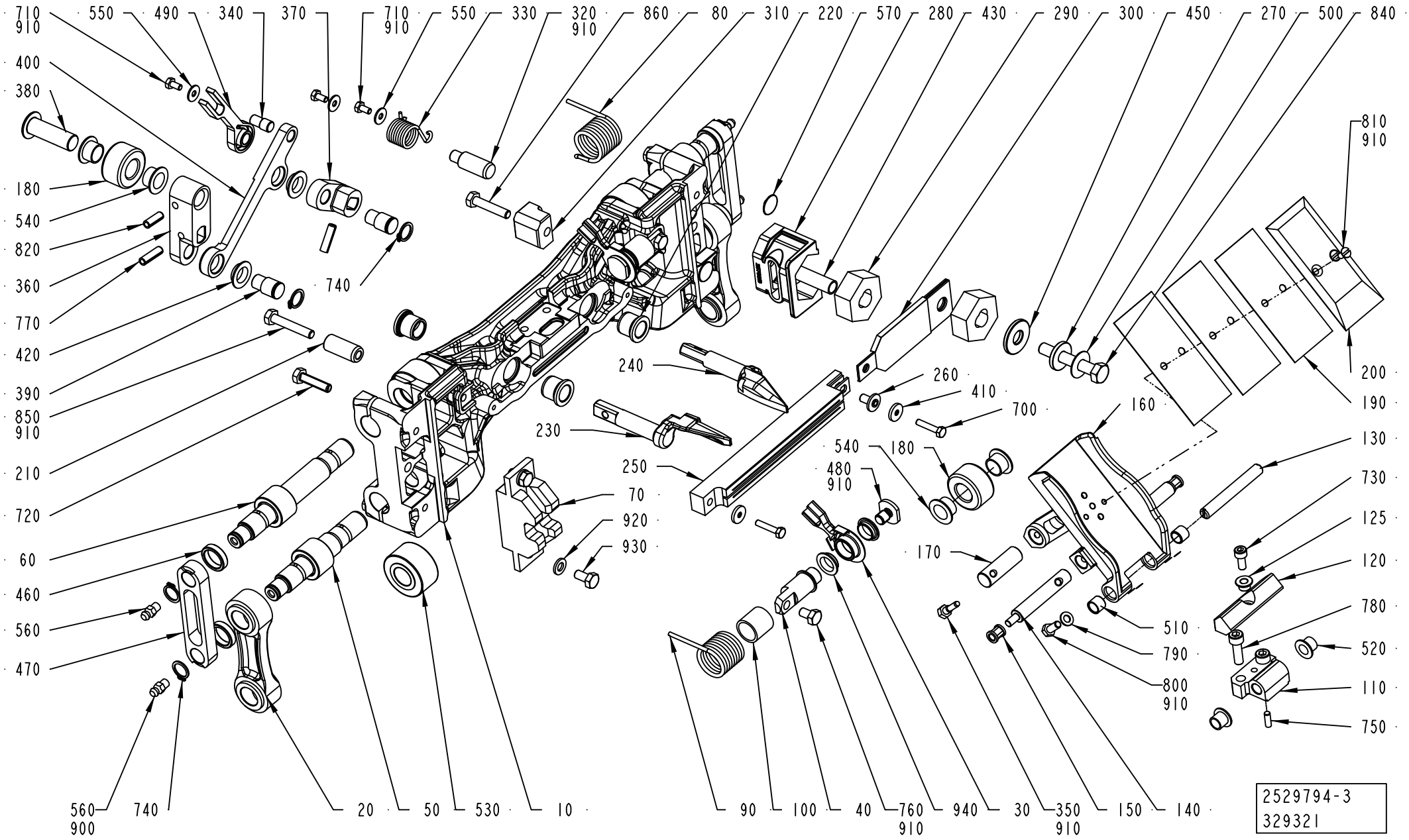
710
910
550
490
340
370
710
910
550
330
320
910
860
80
310
220
570
280
430
290
300
450
270
500
840
400
380
180
540
820
360
770
420
390
850
910
210
720
60
460
560
470
740
810
910
200
190
160
130
730
125
120
780
520
110
750
240
230
250
70
920
930
260
410
700
540
180
480
910
170
510
790
800
910
560
900
740
20
50
530
10
90
100
40
760
910
940
30
350
910
150
140
2529794-3
329321

ECM: 336848 - 20071217
Group number: 2529794-0300
Assembly Drawing: 2529794-3_1_AD

This list covers pages from 4-28 to 4-33

Pos	Part No	UN	Qty	Description	Page No
Common Parts (Cont'd)					
340	1549123-0000		1	PIVOT PIN	
350	491230-0000		1	GRUB SCREW(LI - CHINE)	
380	2629313-0000		1	SHAFT	
390	1140488-0000		2	SHAFT	
410	1349399-0000		2	WASHER	
420	1549122-0000		4	FLANGE BEARING	
430	2511242-0000		1	PROTECTION	
450	2579811-0000		1	WASHER	
460	2691417-0000		4	SPACER	
480	2812442-0000		2	WASHER	
500	90016-0024		1	DISC SPRING, CONICAL 20X8,2X0,8 MM	
510	90458-0353		2	BUSHING, 8X10X8 MM	
520	90240-0260		2	FLANGE BUSHING, 8X10X9 MM	
530	90083-0055		4	ROLLER BEARING, 15X35X19 MM	
540	90240-0261		4	FLANGE BUSHING, 12X14X9 MM	
550	90005-0082		3	WASHER PLAIN ROUND 4,3(M4)/12,H=1	
560	90286-0013		4	GREASE NIPPLE STRAIGHT, H1 M6X1 2346	
570	90458-0289		2	PLUG,GPN 340-SW-5 MM	
700	312105-0295		2	SCREW M6S ISO 4017 M4X20 A470	
710	312105-0287		3	SCREW M6S ISO 4017 M4X8 A470	
720	312105-0372		4	SCREW M6S ISO 4017 M6X25 A480	
730	312115-0327		1	SCREW ISO4762 M5X12 A4 80	
740	315751-0109		6	RETAINING RING FOR SHAFT DIN 471 12 SS	
750	311103-0268		1	PARALLEL PIN ISO 2338 4M6X12 A1	
760	312105-0364		2	SCREW M6S ISO 4017 M6X10 A480	
770	311112-0308		2	SPRING PIN, ISO 8752 5X20-C	
780	312115-0370		2	SCREW ISO4762 M6X20 A4 80	
790	315105-0146		2	WASHER BRB 5,3X10 RFR	
800	312105-0327		2	SCREW M6S ISO 4017 M5X12 A480	
810	312145-0287		2	SCREW ISO 2009 MFS M4X8 A4	
820	311112-0306		1	SPRING PIN, ISO 8752 5X16-C	
840	312105-0461		1	SCREW M6S ISO 4014 M8X50 A480	
860	312109-0374		1	SCREW M6S ISO 4017 M6X30 A480	
900	90459-0246	KG	1	GREASE, KLüBERSYNTH UH1, ONLY IN BOM	
	90459-7413		*1*	*GREASE, KLüBERSYNTH UH1 14-1600, 1 KG*	
	90459-7414		*1*	*GREASE, KLüBERSYNTH UH1 14-1600, 25 KG*	
910	90157-0021		1	LOCKING FLUID LOCTITE 270	
920	315105-0153		2	WASHER BRB 6,4X12 RFR	
930	312105-0366		2	SCREW M6S ISO 4017 M6X12 A480	
940	90600-0590		4	FLANGE BUSHING, 12X14X4,5 MM	

Pos	Part No	UN	Qty	Description	Page No

Machine Type | Group Description | Used-In | Group Number | Page No

PRESSURE JAW

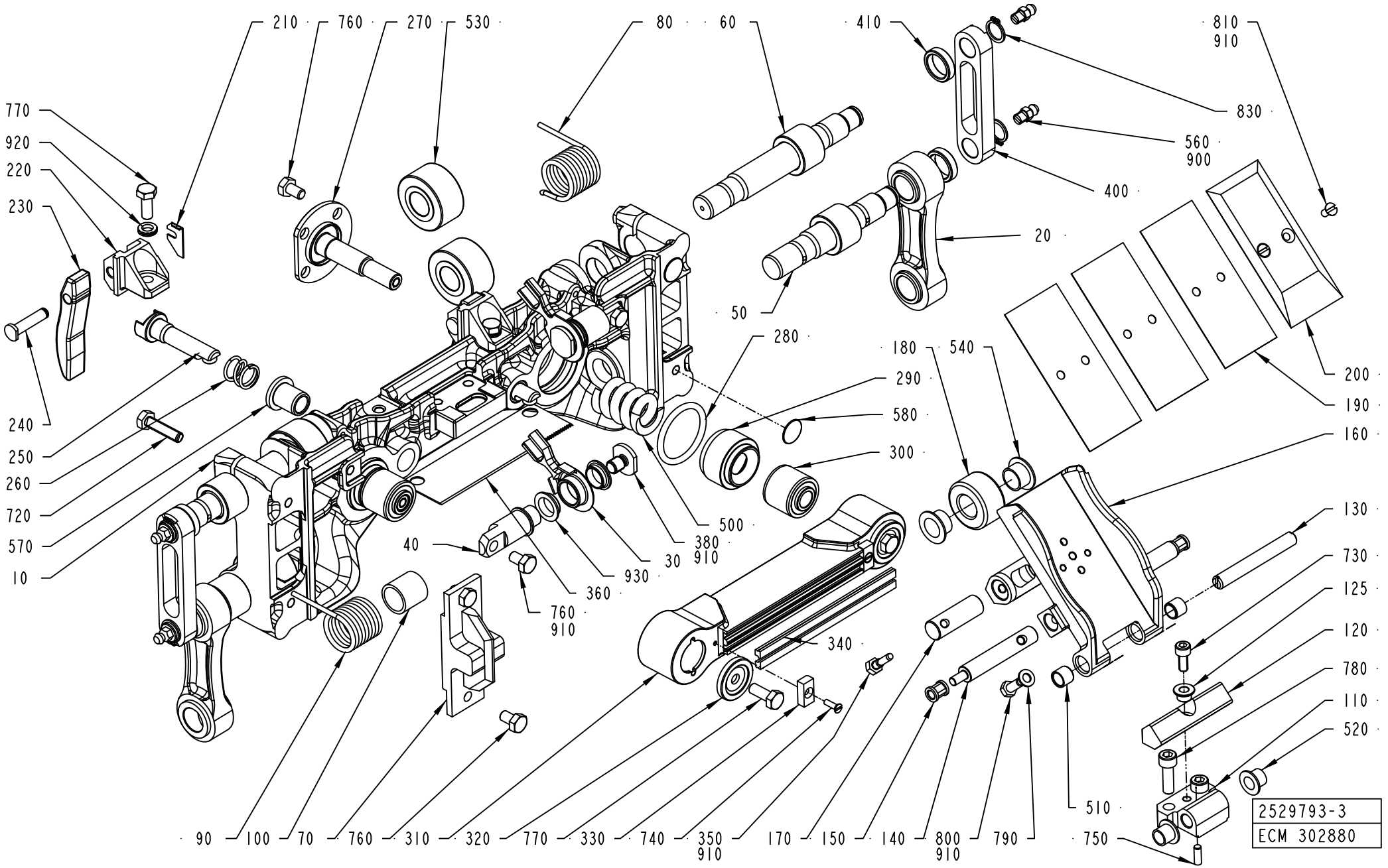

ECM: 315544 - 20071112
Group number: 2529793-0300
Assembly Drawing: 2529793-3_1_AG

This list covers pages from 4-34 to 4-37

Pos	Part No	UN	Qty	Description	Page No
TBA 0200B					
010	2695417-0000		1	PRESSURE JAW	
020	2611128-0000		2	LINK	
	2611910-0000		*1*	*LINK*	
	1195204-0000		*2*	*BUSHING*	
110	1512605-0000		1	BRACKET	
130	1512604-0000		1	SHAFT	
160	2611446-0000		1	VOLUME FLAP	
	2638064-0000		*1*	*VOLUME FLAP*	
	2611445-0000		*1*	*BRACKET*	
	315105-0146		*1*	*WASHER BRB 5,3X10 RFR*	
	312105-0327		*1*	*SCREW M6S ISO 4017 M5X12 A480*	
	311103-0268		*2*	*PARALLEL PIN ISO 2338 4M6X12 A1*	
	90157-0016		*1*	*LOCKING FLUID LOCTITE 242 50 ML*	
190	1498609-0000		3	VOLUME SHIM	
200	1498608-0000		1	VOLUME BULGE	
400	2681388-0000		2	LINK	
TBA 0200M					
010	2695418-0000		1	PRESSURE JAW	
020	2611417-0000		2	LINK	
	1195204-0000		*2*	*BUSHING*	
	2611416-0000		*1*	*LINK*	
110	1512607-0000		1	BRACKET	
130	1512608-0000		1	SHAFT	
160	2611447-0000		1	VOLUME FLAP	
	2638065-0000		*1*	*VOLUME FLAP*	
	2611445-0000		*1*	*BRACKET*	
	315105-0146		*1*	*WASHER BRB 5,3X10 RFR*	
	312105-0327		*1*	*SCREW M6S ISO 4017 M5X12 A480*	
	311103-0268		*2*	*PARALLEL PIN ISO 2338 4M6X12 A1*	
	90157-0016		*1*	*LOCKING FLUID LOCTITE 242 50 ML*	
190	1498604-0000		3	VOLUME SHIM	
200	1498603-0000		1	VOLUME BULGE	
400	2691641-0000		2	LINK	
TBA 0200S					
010	2695422-0000		1	PRESSURE JAW	
020	2633465-0000		2	LINK	
	1195204-0000		*2*	*BUSHING*	
	2633464-0000		*1*	*LINK*	
110	1538134-0000		1	BRACKET	
130	1538135-0000		1	SHAFT	
160	2611448-0000		1	VOLUME FLAP	
	2638066-0000		*1*	*VOLUME FLAP*	
	2611445-0000		*1*	*BRACKET*	
	315105-0146		*1*	*WASHER BRB 5,3X10 RFR*	
	312105-0327		*1*	*SCREW M6S ISO 4017 M5X12 A480*	
	311103-0268		*2*	*PARALLEL PIN ISO 2338 4M6X12 A1*	
	90157-0016		*1*	*LOCKING FLUID LOCTITE 242 50 ML*	
190	272991-0000		3	VOLUME SHIM	
200	272990-0000		1	VOLUME BULGE	
400	2693207-0000		2	LINK	
TBA 0250B					
010	2695416-0000		1	PRESSURE JAW	
020	2611417-0000		2	LINK	
	1195204-0000		*2*	*BUSHING*	
	2611416-0000		*1*	*LINK*	
110	1512605-0000		1	BRACKET	
130	1512604-0000		1	SHAFT	
160	2611449-0000		1	VOLUME FLAP	
	2638067-0000		*1*	*VOLUME FLAP*	
	2611445-0000		*1*	*BRACKET*	
	315105-0146		*1*	*WASHER BRB 5,3X10 RFR*	
	312105-0327		*1*	*SCREW M6S ISO 4017 M5X12 A480*	
	311103-0268		*2*	*PARALLEL PIN ISO 2338 4M6X12 A1*	
	90157-0016		*1*	*LOCKING FLUID LOCTITE 242 50 ML*	
190	1348257-0000		4	VOLUME SHIM	
200	1348256-0000		1	VOLUME BULGE	
400	2691641-0000		2	LINK	
TBA 0250S					
010	2695423-0000		1	PRESSURE JAW	
020	2611398-0000		2	LINK	
	1195204-0000		*2*	*BUSHING*	
	2611394-0000		*1*	*LINK*	
110	1512607-0000		1	BRACKET	
130	1512608-0000		1	SHAFT	
160	2611450-0000		1	VOLUME FLAG	
	2638068-0000		*1*	*VOLUME FLAP*	
	2611445-0000		*1*	*BRACKET*	
	315105-0146		*1*	*WASHER BRB 5,3X10 RFR*	
	312105-0327		*1*	*SCREW M6S ISO 4017 M5X12 A480*	
	311103-0268		*2*	*PARALLEL PIN ISO 2338 4M6X12 A1*	
	90157-0016		*1*	*LOCKING FLUID LOCTITE 242 50 ML*	
190	574366-0000		3	VOLUME SHIM	
200	574367-0000		1	VOLUME BULGE	

Machine Type | Group Description | Used-In | Group Number | Page No

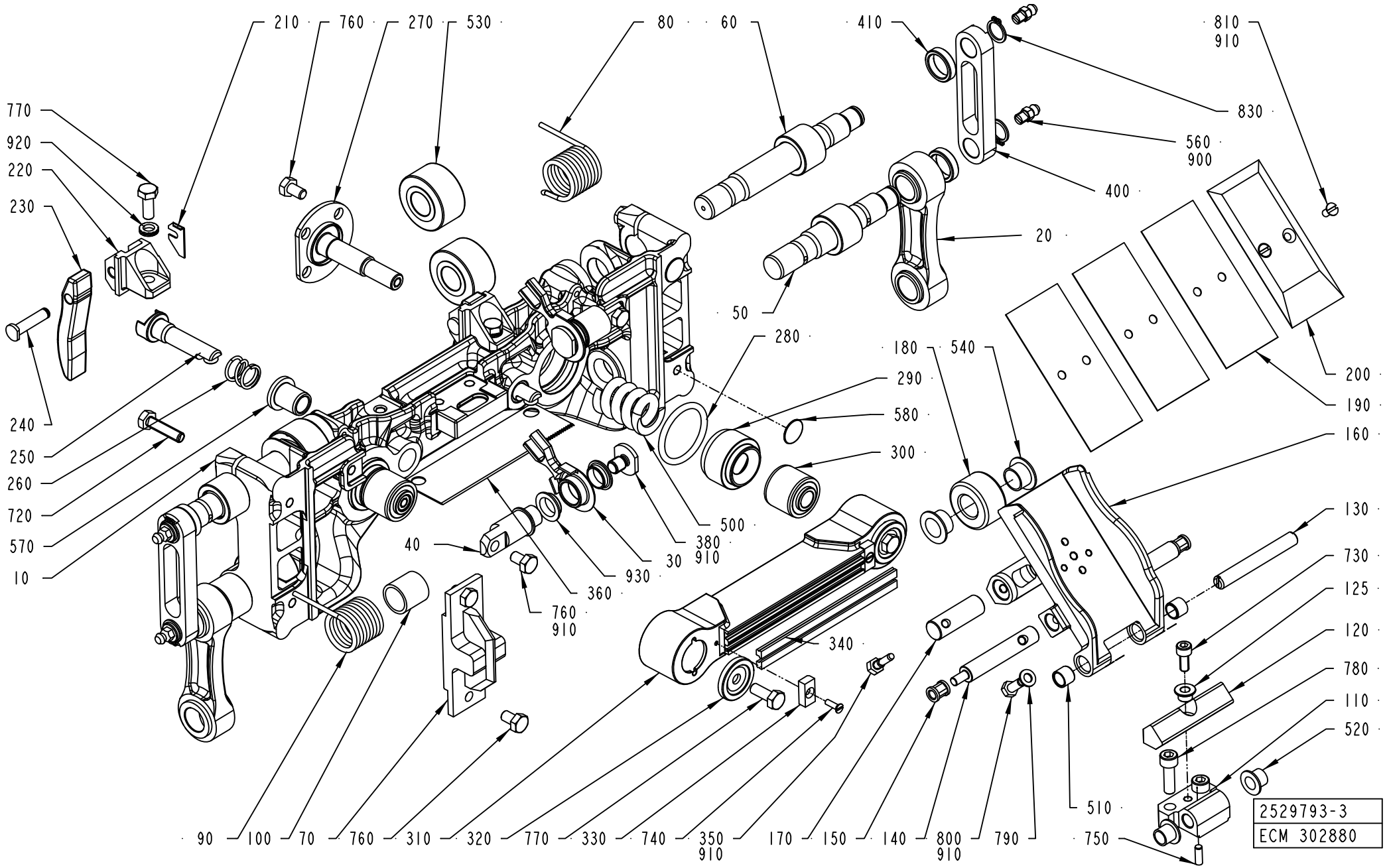
210
760
270
530
80
60
410
810
910
770
920
220
230
830
560
900
400
20
50
280
180
540
290
580
300
200
190
160
240
250
260
720
570
10
500
380
910
30
930
360
760
910
40
340
130
730
125
120
780
110
520
510
750
90
100
70
760
310
320
770
330
740
350
910
170
150
140
800
910
790
2529793-3
ECM 302880

ECM: 315544 - 20071112
Group number: 2529793-0300
Assembly Drawing: 2529793-3_1_AG

This list covers pages from 4-34 to 4-37

Pos	Part No	UN	Qty	Description	Page No
TBA 0250S (Cont'd)					
400	2693208-0000		2	LINK	
TBA 0300S					
010	2797397-0000		1	PRESSURE JAW	
020	2633465-0000		2	LINK	
	1195204-0000		*2*	*BUSHING*	
	2633464-0000		*1*	*LINK*	
110	1512605-0000		1	BRACKET	
130	1512604-0000		1	SHAFT	
160	2797887-0000		1	VOLUME FLAP	
	90157-0016		*1*	*LOCKING FLUID LOCTITE 242 50 ML*	
	311103-0268		*2*	*PARALLEL PIN ISO 2338 4M6X12 A1*	
	312105-0327		*1*	*SCREW M6S ISO 4017 M5X12 A480*	
	315105-0146		*1*	*WASHER BRB 5,3X10 RFR*	
	2611445-0000		*1*	*BRACKET*	
	2797526-0000		*1*	*VOLUME FLAP*	
190	272986-0005		3	VOLUME SHIM	
200	752739-0000		1	VOLUME BULGE	
400	2693207-0000		2	LINK	
Common Parts					
030	2812441-0000		2	LEVER	
040	2812438-0000		2	SHAFT	
050	2694884-0000		2	SHAFT	
060	2694885-0000		2	SHAFT	
070	1523980-0000		1	MOUNTING BLOCK	
080	2812451-0000		1	SPRING	
090	2812440-0000		1	SPRING	
100	2812439-0000		2	BUSHING	
120	2834201-0000		1	DAMPER	
125	2835130-0000		1	SPACER	
140	2812443-0000		2	SHAFT	
150	2812444-0000		2	BUSHING	
170	1548766-0000		1	SHAFT	
180	1140479-0000		1	ROLLER	
210	2691667-0000		2	PLATE	
220	2858820-0000		2	HOLDER	
230	2844227-0000		2	CAM	
240	1517291-0000		2	SHAFT	
250	2693209-0000		2	SHAFT	
260	2693210-0000		2	SPRING	
270	2588014-0000		2	SHAFT	
280	315206-0523		2	O-RING 31,34X3,53 MM	
290	2588015-0000		2	SLEEVE	
300	1512590-0000		2	RUBBER BUSHING	
310	1558062-0000		1	PRESSURE RAIL	
320	1549601-0000		2	WASHER	
330	1140233-0000		2	WASHER	
340	1520564-0003		2	DOLLY	
350	491230-0000		1	GRUB SCREW(LI - CHINE)	
360	1517289-0000		1	KNIFE	
380	2812442-0000		2	WASHER	
410	2691417-0000		4	SPACER	
500	2690208-0000		2	SPRING	
510	90458-0353		2	BUSHING, 8X10X8 MM	
520	90240-0260		2	FLANGE BUSHING, 8X10X9 MM	
530	90083-0055		4	ROLLER BEARING, 15X35X19 MM	
540	90240-0261		2	FLANGE BUSHING, 12X14X9 MM	
560	90286-0013		4	GREASE NIPPLE STRAIGHT, H1 M6X1 2346	
570	2691818-0000		2	BUSHING	
580	90458-0289		2	PLUG,GPN 340-SW-5 MM	
720	312105-0372		4	SCREW M6S ISO 4017 M6X25 A480	
730	312115-0327		1	SCREW ISO4762 M5X12 A4 80	
740	312145-0224		2	SCREW ISO 2009 MFS M3X10 A4	
750	311103-0268		1	PARALLEL PIN ISO 2338 4M6X12 A1	
760	312105-0364		12	SCREW M6S ISO 4017 M6X10 A480	
770	312105-0368		4	SCREW M6S ISO 4017 M6X16 A480	
780	312115-0370		2	SCREW ISO4762 M6X20 A4 80	
790	315105-0146		2	WASHER BRB 5,3X10 RFR	
800	312105-0327		2	SCREW M6S ISO 4017 M5X12 A480	
810	312145-0287		2	SCREW ISO 2009 MFS M4X8 A4	
830	315751-0109		4	RETAINING RING FOR SHAFT DIN 471 12 SS	
900	90459-0246	KG	1	GREASE, KLüBERSYNTH UH1, ONLY IN BOM	
	90459-7413		*1*	*GREASE, KLüBERSYNTH UH1 14-1600, 1 KG*	
	90459-7414		*1*	*GREASE, KLüBERSYNTH UH1 14-1600, 25 KG*	
910	90157-0021		1	LOCKING FLUID LOCTITE 270	
920	90062-0061		2	LOCK WASHER NORD-LOCK,6,5/10,8, T=2,2	
930	90600-0590		4	FLANGE BUSHING, 12X14X4,5 MM	

Machine Type | Group Description | Used-In | Group Number | Page No

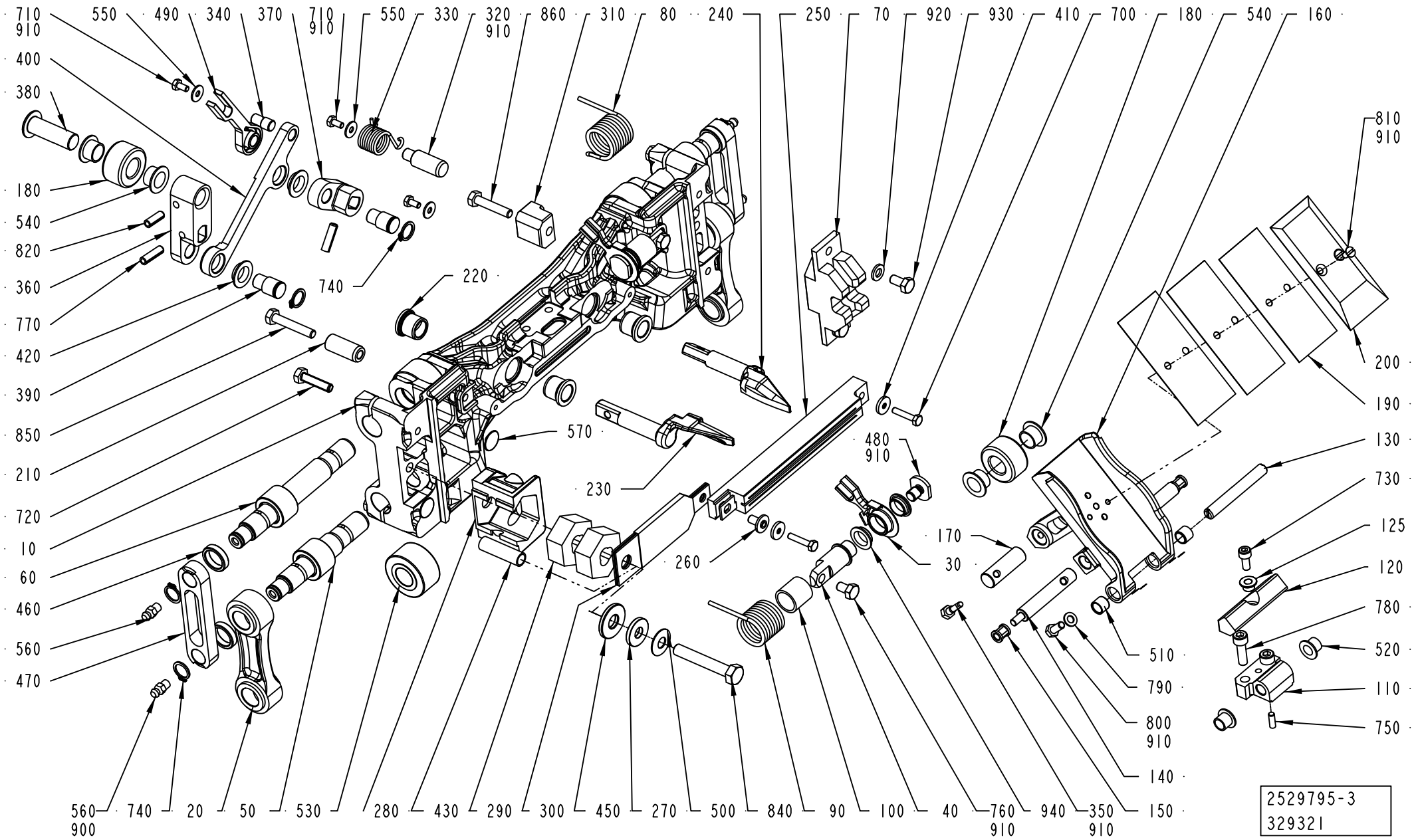
710
910
550
490
340
370
710
910
550
330
320
910
860
310
80
240
250
70
920
930
410
700
180
540
160
400
380
180
540
820
360
770
420
390
850
210
720
10
60
460
560
470
740
220
570
230
260
480
910
170
30
810
910
200
190
130
730
125
120
780
520
110
750
510
790
800
910
140
150
350
910
760
910
940
100
40
90
840
500
270
450
300
290
430
280
530
50
20
740
560
900
2529795-3
329321

ECM: 336849 - 20071217
Group number: 2529795-0300
Assembly Drawing: 2529795-3_1_AD

This list covers pages from 4-38 to 4-43

Pos	Part No	UN	Qty	Description	Page No
TBA 0200B					
010	2695420-0000		1	SEALING JAW	
020	2611128-0000		2	LINK	
	2611910-0000		*1*	*LINK*	
	1195204-0000		*2*	*BUSHING*	
110	1512605-0000		1	BRACKET	
130	1512604-0000		1	SHAFT	
160	2611446-0000		1	VOLUME FLAP	
	2638064-0000		*1*	*VOLUME FLAP*	
	2611445-0000		*1*	*BRACKET*	
	315105-0146		*1*	*WASHER BRB 5,3X10 RFR*	
	312105-0327		*1*	*SCREW M6S ISO 4017 M5X12 A480*	
	311103-0268		*2*	*PARALLEL PIN ISO 2338 4M6X12 A1*	
	90157-0016		*1*	*LOCKING FLUID LOCTITE 242 50 ML*	
190	1498609-0000		3	VOLUME SHIM	
200	1498608-0000		1	VOLUME BULGE	
230	2778709-0000		1	FOLDING FLAP	
240	2778710-0000		1	FOLDING FLAP	
250	1533002-0000		1	INDUCTOR	
360	2629312-0000		1	ARM	
370	2500376-0000		1	ARM	
400	2500377-0000		1	LINK ARM	
470	2681388-0000		2	LINK	
490	2812447-0000		1	LEVER	
TBA 0200M					
010	2695421-0000		1	SEALING JAW	
020	2611417-0000		2	LINK	
	1195204-0000		*2*	*BUSHING*	
	2611416-0000		*1*	*LINK*	
110	1512607-0000		1	BRACKET	
130	1512608-0000		1	SHAFT	
160	2611447-0000		1	VOLUME FLAP	
	2638065-0000		*1*	*VOLUME FLAP*	
	2611445-0000		*1*	*BRACKET*	
	315105-0146		*1*	*WASHER BRB 5,3X10 RFR*	
	312105-0327		*1*	*SCREW M6S ISO 4017 M5X12 A480*	
	311103-0268		*2*	*PARALLEL PIN ISO 2338 4M6X12 A1*	
	90157-0016		*1*	*LOCKING FLUID LOCTITE 242 50 ML*	
190	1498604-0000		3	VOLUME SHIM	
200	1498603-0000		1	VOLUME BULGE	
210	2511246-0000		1	BUSHING	
230	2778715-0000		1	FOLDING FLAP	
240	2778716-0000		1	FOLDING FLAP	
250	1520166-0000		1	INDUCTOR	
360	2629310-0000		1	ARM	
370	1478959-0000		1	ARM	
400	1478960-0000		1	LINK ARM	
470	2691641-0000		2	LINK	
490	2844198-0000		1	LEVER	
850	312109-0376		1	SCREW M6S ISO 4017 M6X35 A480	
TBA 0200S					
010	2695424-0000		1	SEALING JAW	
020	2633465-0000		2	LINK	
	1195204-0000		*2*	*BUSHING*	
	2633464-0000		*1*	*LINK*	
110	1538134-0000		1	BRACKET	
130	1538135-0000		1	SHAFT	
160	2611448-0000		1	VOLUME FLAP	
	2638066-0000		*1*	*VOLUME FLAP*	
	2611445-0000		*1*	*BRACKET*	
	315105-0146		*1*	*WASHER BRB 5,3X10 RFR*	
	312105-0327		*1*	*SCREW M6S ISO 4017 M5X12 A480*	
	311103-0268		*2*	*PARALLEL PIN ISO 2338 4M6X12 A1*	
	90157-0016		*1*	*LOCKING FLUID LOCTITE 242 50 ML*	
190	272991-0000		3	VOLUME SHIM	
200	272990-0000		1	VOLUME BULGE	
210	2511246-0000		1	BUSHING	
230	2778714-0000		1	FOLDING FLAP	
240	2778713-0000		1	FOLDING FLAP	
250	1533000-0000		1	INDUCTOR	
360	2629311-0000		1	ARM	
370	1478959-0000		1	ARM	
400	2509551-0000		1	LINK ARM	
470	2693207-0000		2	LINK	
490	2844198-0000		1	LEVER	
850	312109-0376		1	SCREW M6S ISO 4017 M6X35 A480	
TBA 0250B					
010	2695419-0000		1	SEALING JAW	
020	2611417-0000		2	LINK	
	1195204-0000		*2*	*BUSHING*	
	2611416-0000		*1*	*LINK*	
110	1512605-0000		1	BRACKET	
130	1512604-0000		1	SHAFT	
160	2611449-0000		1	VOLUME FLAP	

Machine Type | Group Description | Used-In | Group Number | Page No

SEALING JAW

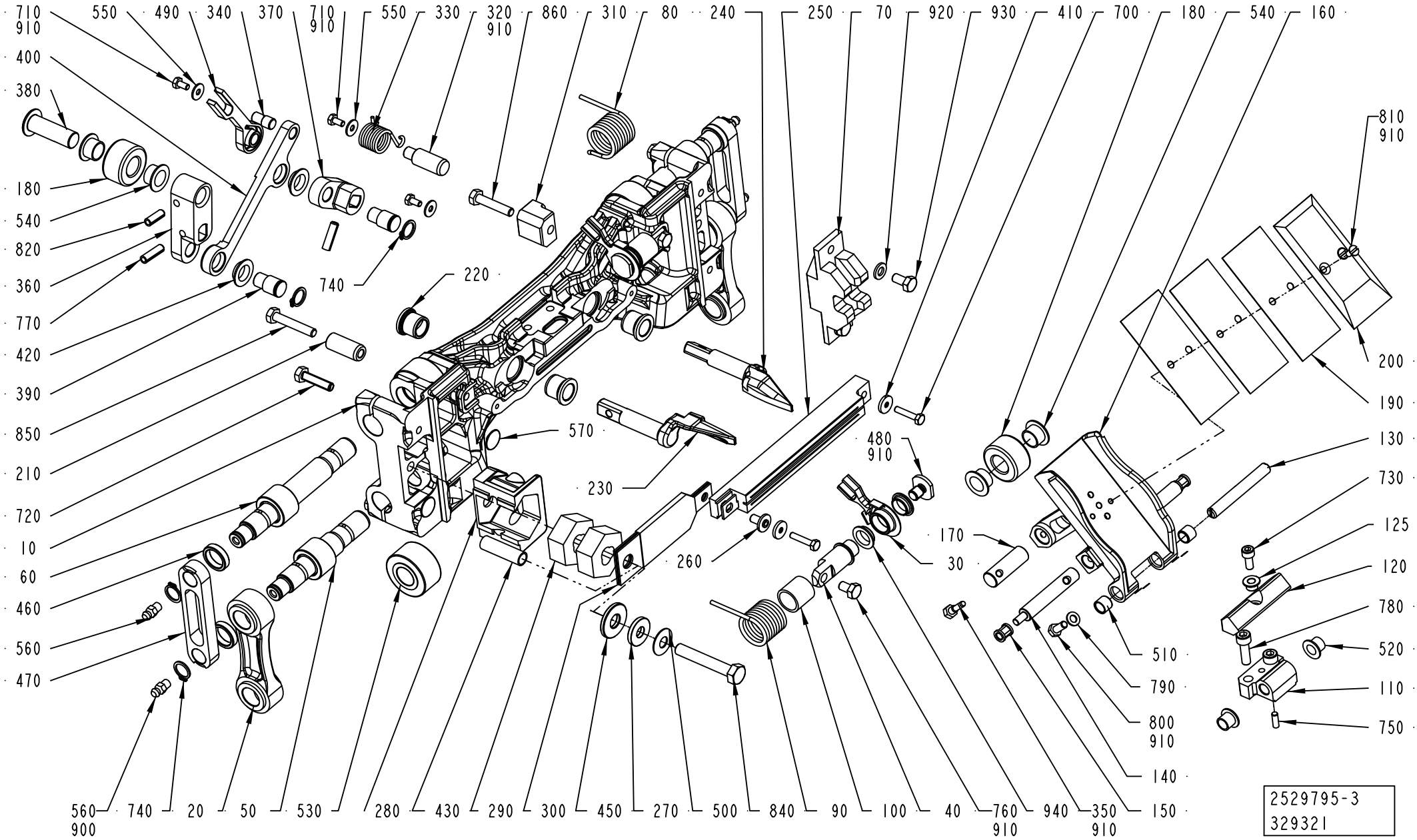
710
910
550
490
340
370
710
910
550
330
320
910
860
310
80
240
250
70
920
930
410
700
180
540
160
400
380
180
540
820
360
770
420
390
850
210
720
10
60
460
560
470
740
220
570
230
260
480
910
170
30
810
910
200
190
130
730
125
120
780
520
110
750
510
790
800
910
140
150
350
910
760
910
940
100
40
90
840
500
270
450
300
290
430
280
530
50
20
740
560
900
2529795-3
329321

ECM: 336849 - 20071217
Group number: 2529795-0300
Assembly Drawing: 2529795-3_1_AD

This list covers pages from 4-38 to 4-43

Pos	Part No	UN	Qty	Description	Page No
TBA 0250B (Cont'd)					
190	1348257-0000		4	VOLUME SHIM	
200	1348256-0000		1	VOLUME BULGE	
230	2778711-0000		1	FOLDING FLAP	
240	2778712-0000		1	FOLDING FLAP	
250	1533002-0000		1	INDUCTOR	
360	2629312-0000		1	ARM	
370	2500376-0000		1	ARM	
400	2500377-0000		1	LINK ARM	
470	2691641-0000		2	LINK	
490	2812447-0000		1	LEVER	
TBA 0250S					
010	2695425-0000		1	SEALING JAW	
020	2611398-0000		2	LINK	
	1195204-0000		*2*	*BUSHING*	
	2611394-0000		*1*	*LINK*	
110	1512607-0000		1	BRACKET	
130	1512608-0000		1	SHAFT	
160	2611450-0000		1	VOLUME FLAG	
	2638068-0000		*1*	*VOLUME FLAP*	
	2611445-0000		*1*	*BRACKET*	
	315105-0146		*1*	*WASHER BRB 5,3X10 RFR*	
	312105-0327		*1*	*SCREW M6S ISO 4017 M5X12 A480*	
	311103-0268		*2*	*PARALLEL PIN ISO 2338 4M6X12 A1*	
	90157-0016		*1*	*LOCKING FLUID LOCTITE 242 50 ML*	
190	574366-0000		3	VOLUME SHIM	
200	574367-0000		1	VOLUME BULGE	
210	2511246-0000		1	BUSHING	
230	2778715-0000		1	FOLDING FLAP	
240	2778716-0000		1	FOLDING FLAP	
250	1520166-0000		1	INDUCTOR	
360	2629310-0000		1	ARM	
370	1478959-0000		1	ARM	
400	1478960-0000		1	LINK ARM	
470	2693208-0000		2	LINK	
490	2844198-0000		1	LEVER	
850	312109-0376		1	SCREW M6S ISO 4017 M6X35 A480	
TBA 0300S					
010	2798051-0000		1	SEALING JAW	
020	2633465-0000		2	LINK	
	1195204-0000		*2*	*BUSHING*	
	2633464-0000		*1*	*LINK*	
110	1512605-0000		1	BRACKET	
130	1512604-0000		1	SHAFT	
160	2797887-0000		1	VOLUME FLAP	
	90157-0016		*1*	*LOCKING FLUID LOCTITE 242 50 ML*	
	311103-0268		*2*	*PARALLEL PIN ISO 2338 4M6X12 A1*	
	312105-0327		*1*	*SCREW M6S ISO 4017 M5X12 A480*	
	315105-0146		*1*	*WASHER BRB 5,3X10 RFR*	
	2611445-0000		*1*	*BRACKET*	
	2797526-0000		*1*	*VOLUME FLAP*	
190	272986-0005		3	VOLUME SHIM	
200	752739-0000		1	VOLUME BULGE	
230	2778711-0000		1	FOLDING FLAP	
240	2778712-0000		1	FOLDING FLAP	
250	1533002-0000		1	INDUCTOR	
360	2629312-0000		1	ARM	
370	2500376-0000		1	ARM	
400	2500377-0000		1	LINK ARM	
470	2693207-0000		2	LINK	
490	2812447-0000		1	LEVER	
Common Parts					
030	2812441-0000		2	LEVER	
040	2812438-0000		2	SHAFT	
050	2694884-0000		2	SHAFT	
060	2694885-0000		2	SHAFT	
070	1523981-0000		1	GUIDE	
080	2812451-0000		1	SPRING	
090	2812440-0000		1	SPRING	
100	2812439-0000		2	BUSHING	
120	2834201-0000		1	DAMPER	
125	2835130-0000		1	SPACER	
140	2812443-0000		2	SHAFT	
150	2812444-0000		3	BUSHING	
170	1548766-0000		1	SHAFT	
180	1140479-0000		2	ROLLER	
220	1140437-0000		4	BUSHING	
260	32544-0000		1	INSULATION NUT	
270	2511263-0000		1	WASHER	
280	2579810-0000		1	CARBON BRUSH HOLDER	
290	2545308-0000		2	CARBON BRUSH	
300	2644425-0000		1	BUSBAR	
310	1498479-0000		1	GUIDE	
320	2812445-0000		1	PIN	

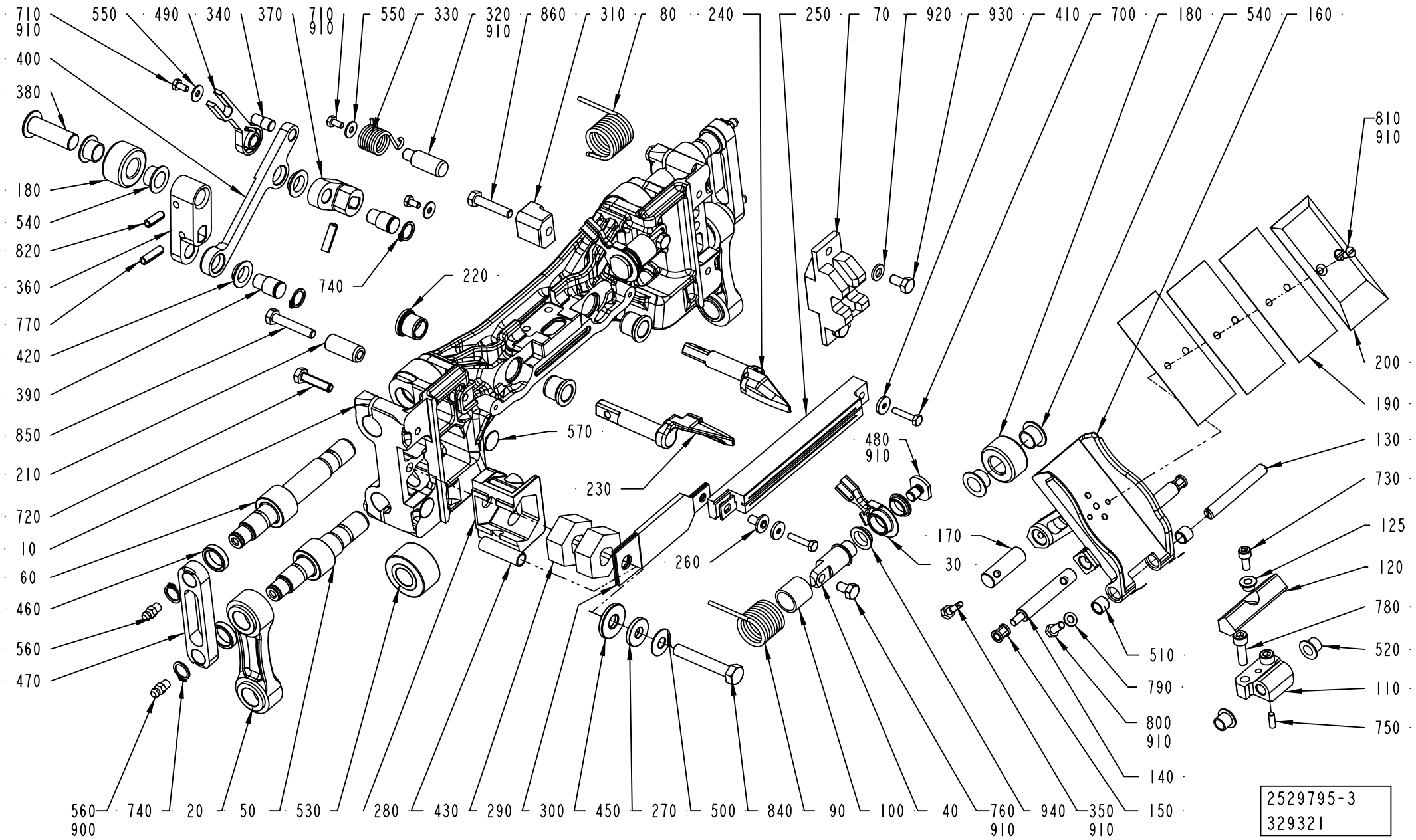
710
910
550
490
340
370
710
910
550
330
320
910
860
310
80
240
250
70
920
930
410
700
180
540
160
400
380
180
540
820
360
770
420
390
850
210
720
10
60
460
560
470
740
220
570
230
260
480
910
170
30
810
910
200
190
130
730
125
120
780
520
110
750
510
790
800
910
140
150
350
910
760
910
940
40
100
90
840
500
270
450
300
290
430
280
530
50
20
740
560
900
2529795-3
329321

ECM: 336849 - 20071217
Group number: 2529795-0300
Assembly Drawing: 2529795-3_1_AD

This list covers pages from 4-38 to 4-43

Pos	Part No	UN	Qty	Description	Page No
Common Parts (Cont'd)					
330	2812446-0000		1	SPRING	
340	1549123-0000		1	PIVOT PIN	
350	491230-0000		1	GRUB SCREW(LI - CHINE)	
380	2629313-0000		1	SHAFT	
390	1140488-0000		2	SHAFT	
410	1349399-0000		2	WASHER	
420	1549122-0000		4	FLANGE BEARING	
430	2511242-0000		1	PROTECTION	
450	2579811-0000		1	WASHER	
460	2691417-0000		4	SPACER	
480	2812442-0000		2	WASHER	
500	90016-0024		1	DISC SPRING, CONICAL 20X8,2X0,8 MM	
510	90458-0353		2	BUSHING, 8X10X8 MM	
520	90240-0260		2	FLANGE BUSHING, 8X10X9 MM	
530	90083-0055		4	ROLLER BEARING, 15X35X19 MM	
540	90240-0261		4	FLANGE BUSHING, 12X14X9 MM	
550	90005-0082		3	WASHER PLAIN ROUND 4,3(M4)/12,H=1	
560	90286-0013		4	GREASE NIPPLE STRAIGHT, H1 M6X1 2346	
570	90458-0289		2	PLUG,GPN 340-SW-5 MM	
700	312105-0295		2	SCREW M6S ISO 4017 M4X20 A470	
710	312105-0287		3	SCREW M6S ISO 4017 M4X8 A470	
720	312105-0372		4	SCREW M6S ISO 4017 M6X25 A480	
730	312115-0327		1	SCREW ISO4762 M5X12 A4 80	
740	315751-0109		6	RETAINING RING FOR SHAFT DIN 471 12 SS	
750	311103-0268		1	PARALLEL PIN ISO 2338 4M6X12 A1	
760	312105-0364		2	SCREW M6S ISO 4017 M6X10 A480	
770	311102-0308		2	PARALLEL PIN ISO 2338 5M6X16 ST	
780	312115-0370		2	SCREW ISO4762 M6X20 A4 80	
790	315105-0146		2	WASHER BRB 5,3X10 RFR	
800	312105-0327		2	SCREW M6S ISO 4017 M5X12 A480	
810	312145-0287		2	SCREW ISO 2009 MFS M4X8 A4	
820	311112-0306		1	SPRING PIN, ISO 8752 5X16-C	
840	312105-0461		1	SCREW M6S ISO 4014 M8X50 A480	
860	312109-0374		1	SCREW M6S ISO 4017 M6X30 A480	
900	90459-0246	KG	1	GREASE, KLüBERSYNTH UH1, ONLY IN BOM	
	90459-7413		*1*	*GREASE, KLüBERSYNTH UH1 14-1600, 1 KG*	
	90459-7414		*1*	*GREASE, KLüBERSYNTH UH1 14-1600, 25 KG*	
910	90157-0021		1	LOCKING FLUID LOCTITE 270	
920	315105-0153		2	WASHER BRB 6,4X12 RFR	
930	312105-0366		2	SCREW M6S ISO 4017 M6X12 A480	
940	90600-0590		4	FLANGE BUSHING, 12X14X4,5 MM	

Pos	Part No	UN	Qty	Description	Page No

Machine Type | Group Description | Used-In | Group Number | Page No

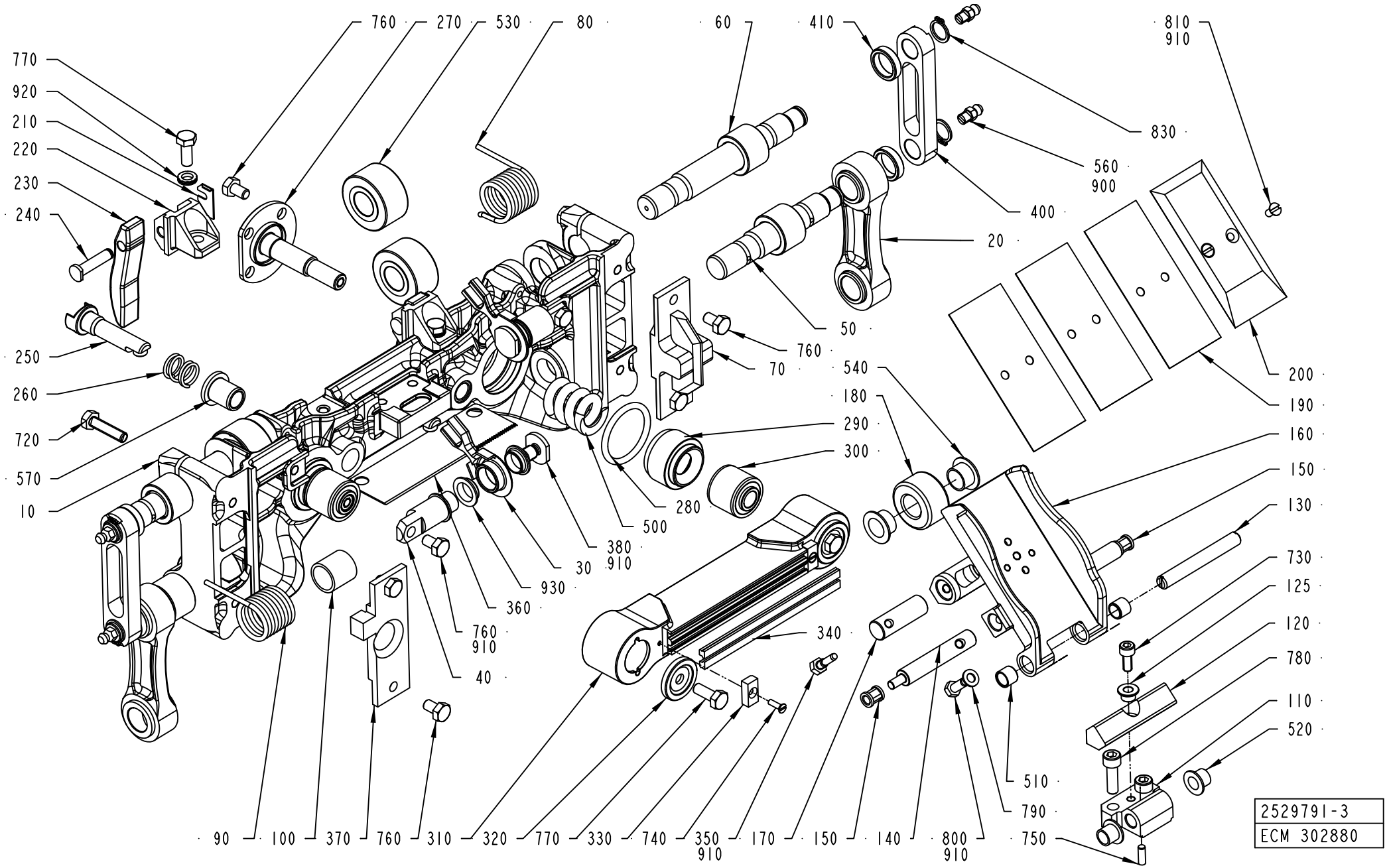
760
270
530
80
60
410
810
910
770
920
210
220
230
240
830
560
900
400
20
50
760
70
540
180
290
300
200
190
160
150
130
730
125
120
780
110
520
510
790
750
250
260
720
570
10
280
500
380
910
30
930
360
760
910
40
340
90
100
370
760
310
320
770
330
740
350
910
170
150
140
800
910
2529791-3
ECM 302880

ECM: 315542 - 20071112
Group number: 2529791-0300
Assembly Drawing: 2529791-3_1_AG

This list covers pages from 4-44 to 4-49

Pos	Part No	UN	Qty	Description	Page No
TBA 0200B					
010	2695417-0000		1	PRESSURE JAW	
020	2611128-0000		2	LINK	
	2611910-0000		*1*	*LINK*	
	1195204-0000		*2*	*BUSHING*	
110	1512605-0000		1	BRACKET	
130	1512604-0000		1	SHAFT	
160	2611446-0000		1	VOLUME FLAP	
	2638064-0000		*1*	*VOLUME FLAP*	
	2611445-0000		*1*	*BRACKET*	
	315105-0146		*1*	*WASHER BRB 5,3X10 RFR*	
	312105-0327		*1*	*SCREW M6S ISO 4017 M5X12 A480*	
	311103-0268		*2*	*PARALLEL PIN ISO 2338 4M6X12 A1*	
	90157-0016		*1*	*LOCKING FLUID LOCTITE 242 50 ML*	
190	1498609-0000		3	VOLUME SHIM	
200	1498608-0000		1	VOLUME BULGE	
370	1532949-0000		1	FLAG	
400	2681388-0000		2	LINK	
TBA 0200M					
010	2695418-0000		1	PRESSURE JAW	
020	2611417-0000		2	LINK	
	1195204-0000		*2*	*BUSHING*	
	2611416-0000		*1*	*LINK*	
110	1512607-0000		1	BRACKET	
130	1512608-0000		1	SHAFT	
160	2611447-0000		1	VOLUME FLAP	
	2638065-0000		*1*	*VOLUME FLAP*	
	2611445-0000		*1*	*BRACKET*	
	315105-0146		*1*	*WASHER BRB 5,3X10 RFR*	
	312105-0327		*1*	*SCREW M6S ISO 4017 M5X12 A480*	
	311103-0268		*2*	*PARALLEL PIN ISO 2338 4M6X12 A1*	
	90157-0016		*1*	*LOCKING FLUID LOCTITE 242 50 ML*	
190	1498604-0000		3	VOLUME SHIM	
200	1498603-0000		1	VOLUME BULGE	
370	1532946-0000		1	FLAG	
400	2691641-0000		2	LINK	
TBA 0200S					
010	2695422-0000		1	PRESSURE JAW	
020	2633465-0000		2	LINK	
	1195204-0000		*2*	*BUSHING*	
	2633464-0000		*1*	*LINK*	
110	1538134-0000		1	BRACKET	
130	1538135-0000		1	SHAFT	
160	2611448-0000		1	VOLUME FLAP	
	2638066-0000		*1*	*VOLUME FLAP*	
	2611445-0000		*1*	*BRACKET*	
	315105-0146		*1*	*WASHER BRB 5,3X10 RFR*	
	312105-0327		*1*	*SCREW M6S ISO 4017 M5X12 A480*	
	311103-0268		*2*	*PARALLEL PIN ISO 2338 4M6X12 A1*	
	90157-0016		*1*	*LOCKING FLUID LOCTITE 242 50 ML*	
190	272991-0000		3	VOLUME SHIM	
200	272990-0000		1	VOLUME BULGE	
370	1532946-0000		1	FLAG	
400	2693207-0000		2	LINK	
TBA 0250B					
010	2695416-0000		1	PRESSURE JAW	
020	2611417-0000		2	LINK	
	1195204-0000		*2*	*BUSHING*	
	2611416-0000		*1*	*LINK*	
110	1512605-0000		1	BRACKET	
130	1512604-0000		1	SHAFT	
160	2611449-0000		1	VOLUME FLAP	
	2638067-0000		*1*	*VOLUME FLAP*	
	2611445-0000		*1*	*BRACKET*	
	315105-0146		*1*	*WASHER BRB 5,3X10 RFR*	
	312105-0327		*1*	*SCREW M6S ISO 4017 M5X12 A480*	
	311103-0268		*2*	*PARALLEL PIN ISO 2338 4M6X12 A1*	
	90157-0016		*1*	*LOCKING FLUID LOCTITE 242 50 ML*	
190	1348257-0000		4	VOLUME SHIM	
200	1348256-0000		1	VOLUME BULGE	
370	1532946-0000		1	FLAG	
400	2691641-0000		2	LINK	
TBA 0250S					
010	2695423-0000		1	PRESSURE JAW	
020	2611398-0000		2	LINK	
	1195204-0000		*2*	*BUSHING*	
	2611394-0000		*1*	*LINK*	
110	1512607-0000		1	BRACKET	
130	1512608-0000		1	SHAFT	
160	2611450-0000		1	VOLUME FLAG	
	2638068-0000		*1*	*VOLUME FLAP*	
	2611445-0000		*1*	*BRACKET*	
	315105-0146		*1*	*WASHER BRB 5,3X10 RFR*	
	312105-0327		*1*	*SCREW M6S ISO 4017 M5X12 A480*	

Machine Type | Group Description | Used-In | Group Number | Page No

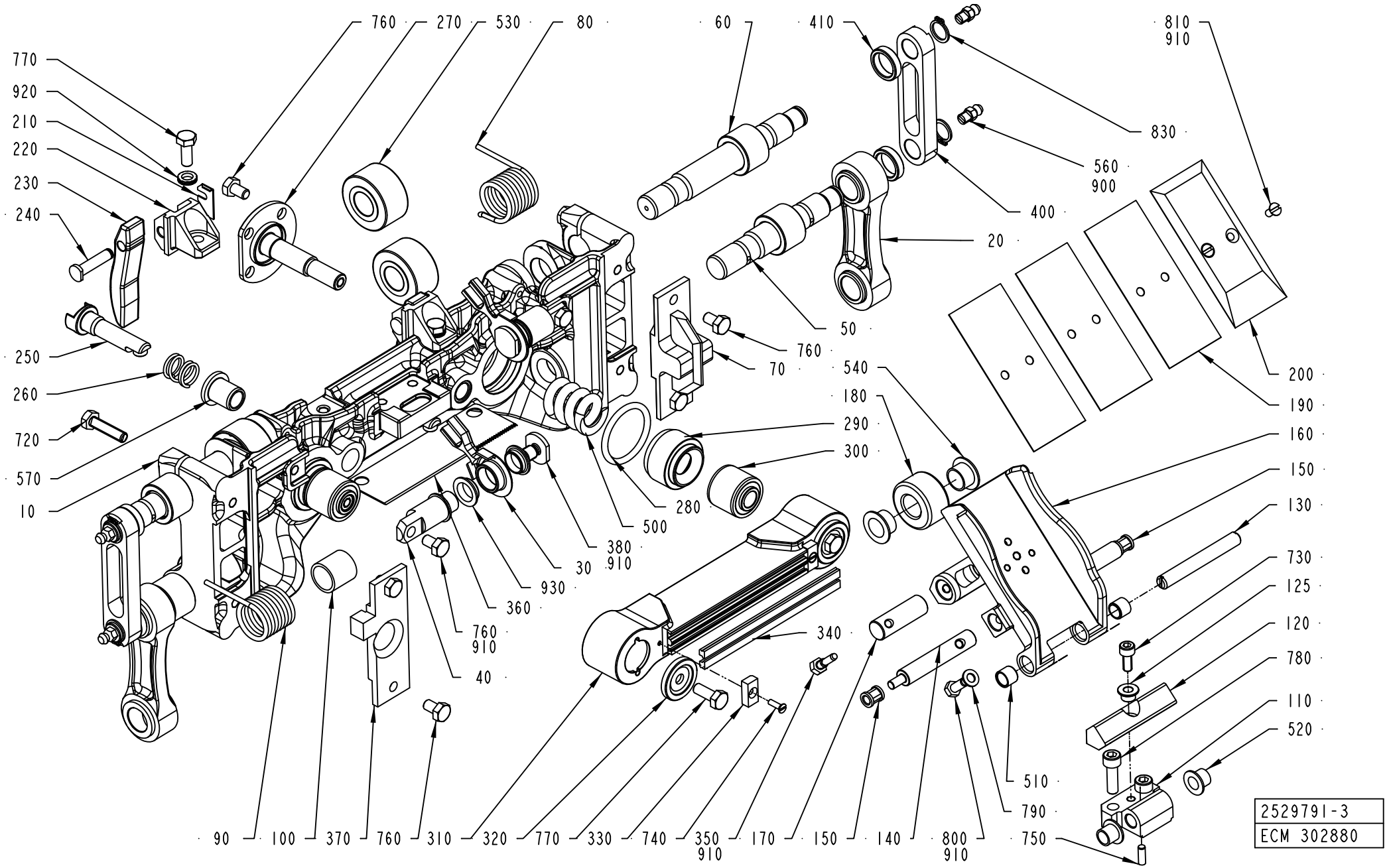

2529791-3
ECM 302880

ECM: 315542 - 20071112
Group number: 2529791-0300
Assembly Drawing: 2529791-3_1_AG

This list covers pages from 4-44 to 4-49

Pos	Part No	UN	Qty	Description	Page No
TBA 0250S (Cont'd)					
190	574366-0000		3	VOLUME SHIM	
200	574367-0000		1	VOLUME BULGE	
370	1532946-0000		1	FLAG	
400	2693208-0000		2	LINK	
TBA 0300S					
010	2797397-0000		1	PRESSURE JAW	
020	2633465-0000		2	LINK	
	1195204-0000		*2*	*BUSHING*	
	2633464-0000		*1*	*LINK*	
110	1512605-0000		1	BRACKET	
130	1512604-0000		1	SHAFT	
160	2797887-0000		1	VOLUME FLAP	
	90157-0016		*1*	*LOCKING FLUID LOCTITE 242 50 ML*	
	311103-0268		*2*	*PARALLEL PIN ISO 2338 4M6X12 A1*	
	312105-0327		*1*	*SCREW M6S ISO 4017 M5X12 A480*	
	315105-0146		*1*	*WASHER BRB 5,3X10 RFR*	
	2611445-0000		*1*	*BRACKET*	
	2797526-0000		*1*	*VOLUME FLAP*	
190	272986-0005		3	VOLUME SHIM	
200	752739-0000		1	VOLUME BULGE	
370	1532946-0000		1	FLAG	
400	2693207-0000		2	LINK	
Common Parts					
030	2812441-0000		2	LEVER	
040	2812438-0000		2	SHAFT	
050	2694884-0000		2	SHAFT	
060	2694885-0000		2	SHAFT	
070	1523980-0000		1	MOUNTING BLOCK	
080	2812451-0000		1	SPRING	
090	2812440-0000		1	SPRING	
100	2812439-0000		2	BUSHING	
120	2834201-0000		1	DAMPER	
125	2835130-0000		1	SPACER	
140	2812443-0000		2	SHAFT	
150	2812444-0000		2	BUSHING	
170	1548766-0000		1	SHAFT	
180	1140479-0000		1	ROLLER	
210	2691667-0000		2	PLATE	
220	2858820-0000		2	HOLDER	
230	2844227-0000		2	CAM	
240	1517291-0000		2	SHAFT	
250	2693209-0000		2	SHAFT	
260	2693210-0000		2	SPRING	
270	2588014-0000		2	SHAFT	
280	315206-0523		2	O-RING 31,34X3,53 MM	
290	2588015-0000		2	SLEEVE	
300	1512590-0000		2	RUBBER BUSHING	
310	1558062-0000		1	PRESSURE RAIL	
320	1549601-0000		2	WASHER	
330	1140233-0000		2	WASHER	
340	1520564-0003		2	DOLLY	
350	491230-0000		1	GRUB SCREW(LI - CHINE)	
360	1517289-0000		1	KNIFE	
380	2812442-0000		2	WASHER	
410	2691417-0000		4	SPACER	
500	2690208-0000		2	SPRING	
510	90458-0353		2	BUSHING, 8X10X8 MM	
520	90240-0260		2	FLANGE BUSHING, 8X10X9 MM	
530	90083-0055		4	ROLLER BEARING, 15X35X19 MM	
540	90240-0261		2	FLANGE BUSHING, 12X14X9 MM	
560	90286-0013		4	GREASE NIPPLE STRAIGHT, H1 M6X1 2346	
570	2691818-0000		2	BUSHING	
720	312105-0372		4	SCREW M6S ISO 4017 M6X25 A480	
730	312115-0327		1	SCREW ISO4762 M5X12 A4 80	
740	312145-0224		2	SCREW ISO 2009 MFS M3X10 A4	
750	311103-0268		1	PARALLEL PIN ISO 2338 4M6X12 A1	
760	312105-0364		14	SCREW M6S ISO 4017 M6X10 A480	
770	312105-0368		4	SCREW M6S ISO 4017 M6X16 A480	
780	312115-0370		2	SCREW ISO4762 M6X20 A4 80	
790	315105-0146		3	WASHER BRB 5,3X10 RFR	
800	312105-0327		2	SCREW M6S ISO 4017 M5X12 A480	
810	312145-0287		2	SCREW ISO 2009 MFS M4X8 A4	
830	315751-0109		4	RETAINING RING FOR SHAFT DIN 471 12 SS	
900	90459-0246	KG	1	GREASE, KLüBERSYNTH UH1, ONLY IN BOM	
	90459-7413		*1*	*GREASE, KLüBERSYNTH UH1 14-1600, 1 KG*	
	90459-7414		*1*	*GREASE, KLüBERSYNTH UH1 14-1600, 25 KG*	
910	90157-0021		1	LOCKING FLUID LOCTITE 270	
920	90062-0061		2	LOCK WASHER NORD-LOCK,6,5/10,8, T=2,2	
930	90600-0590		4	FLANGE BUSHING, 12X14X4,5 MM	

Machine Type | Group Description | Used-In | Group Number | Page No

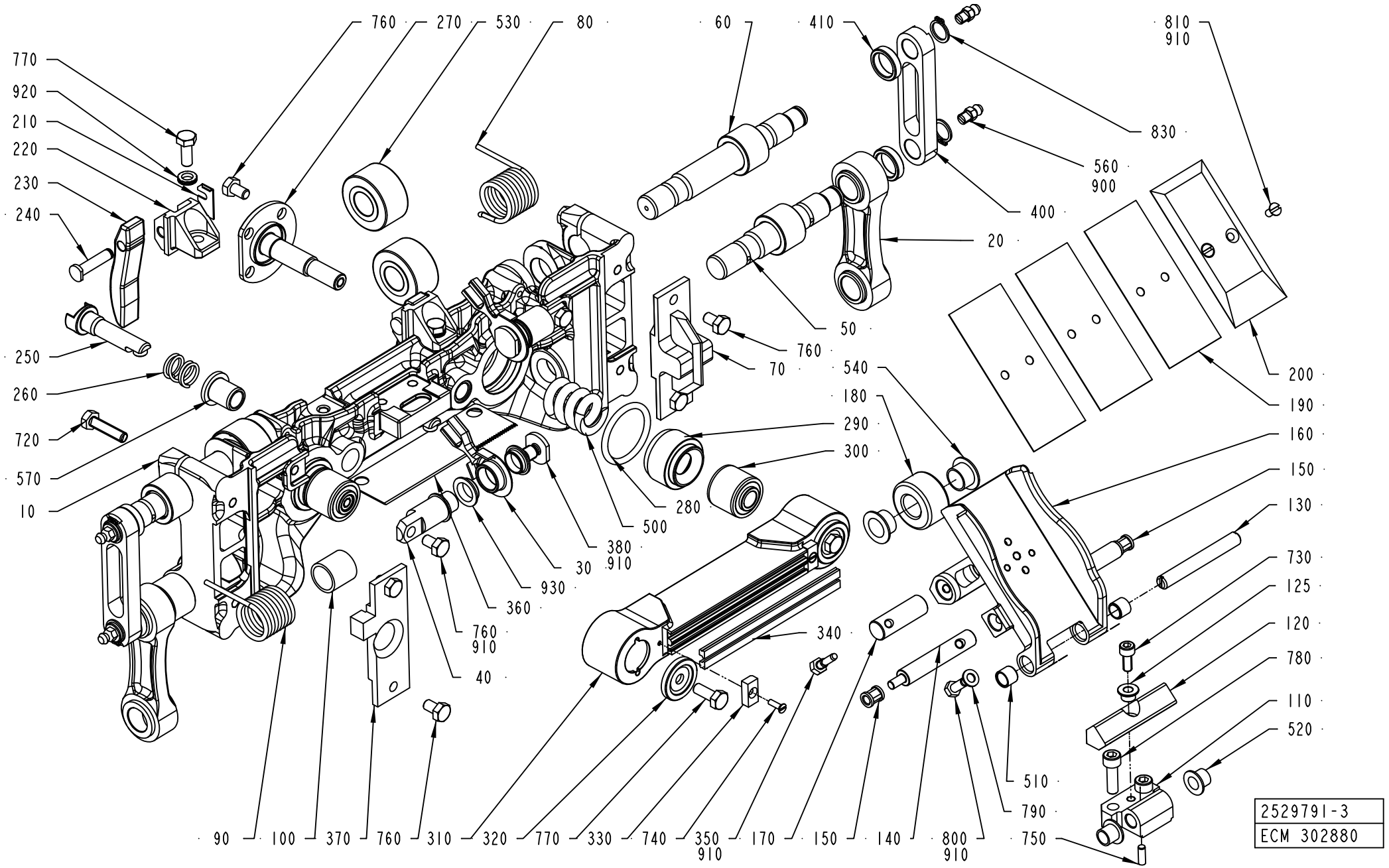
760
270
530
80
60
410
810
910
770
920
210
220
230
240
830
560
900
400
20
50
760
70
540
180
290
300
200
190
160
150
130
730
125
120
780
110
520
510
790
750
250
260
720
570
10
280
500
380
910
30
930
360
760
910
40
340
90
100
370
760
310
320
770
330
740
350
910
170
150
140
800
910
2529791-3
ECM 302880

Pos	Part No	UN	Qty	Description	Page No
Common Parts (Cont'd)					
910	90157-0021		1	LOCKING FLUID LOCTITE 270	
920	90062-0061		2	LOCK WASHER NORD-LOCK,6,5/10,8, T=2,2	
930	90600-0590		4	FLANGE BUSHING, 12X14X4,5 MM	

Pos	Part No	UN	Qty	Description	Page No

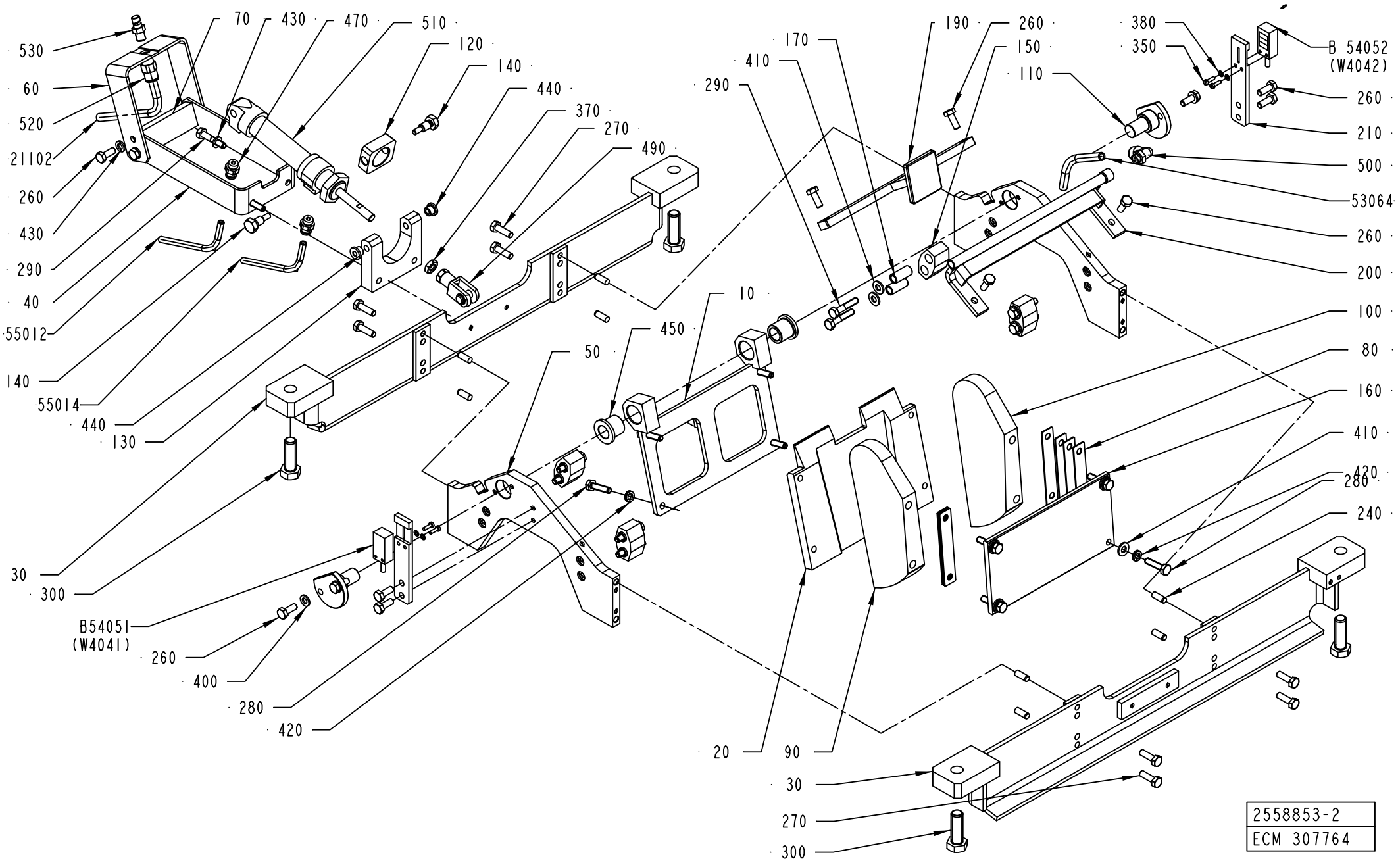
530
60
520
21102
260
430
290
40
55012
140
55014
440
130
70
430
470
510
120
140
440
370
270
490
30
300
B54051
(W4041)
260
400
280
420
50
450
10
20
90
30
270
300
190
260
150
110
170
410
290
380
350
B 54052
(W4042)
260
210
500
53064
260
200
100
80
160
410
420
280
240
2558853-2
ECM 307764

ECM: 307766 - 20070701
Group number: 2558853-0200
Assembly Drawing: 2558853-2_1_AC

Pos	Part No	UN	Qty	Description	Page No
TBA 0200B					
010	2609885-0001		1	PLATE	
020	2609886-0001		1	PLATE	
030	2609887-0000		2	PLATE	
160	2609891-0001		1	PLATE	
TBA 0200M					
010	2609885-0002		1	PLATE	
020	2609886-0002		1	PLATE	
030	2609888-0000		2	PLATE	
160	2609891-0002		1	PLATE	
TBA 0200S					
010	2609885-0003		1	PLATE	
020	2609886-0003		1	PLATE	
030	2609889-0000		2	PLATE	
160	2609891-0003		1	PLATE	
TBA 0250B					
010	2609885-0001		1	PLATE	
020	2609886-0001		1	PLATE	
030	2609888-0000		2	PLATE	
160	2609891-0001		1	PLATE	
TBA 0250S					
010	2609885-0002		1	PLATE	
020	2609886-0002		1	PLATE	
030	2609890-0000		2	PLATE	
160	2609891-0002		1	PLATE	
TBA 0300S					
010	2609885-0001		1	PLATE	
020	2609886-0001		1	PLATE	
030	2609889-0000		2	PLATE	
160	2609891-0001		1	PLATE	
Common Parts					
040	2890625-0000		1	SUPPORT	
050	2609894-0000		2	PLATE	
060	2890626-0000		1	SUPPORT	
070	2890627-0000		1	BAR	
080	2841624-0000		8	SHIM	
090	2841622-0000		1	PLATE	
100	2841623-0000		1	PLATE	
110	2641392-0000		2	PIN	
120	2641395-0000		1	PLATE	
130	2641393-0000		1	PLATE	
140	2641394-0000		2	SCREW	
150	2609895-0000		4	LOCK COMPONENT	
170	2609896-0000		8	SPACER	
190	2609892-0000		1	GUIDE	
200	2609893-0000		1	AIR GUIDE	
210	2514127-0000		2	SUPPORT	
21102	90166-0133	MM	200	TUBE 8 MM PA,TRANSP.	
240	311103-0351		8	PARALLEL PIN ISO 2338 6M6X16 A1	
260	312105-0368		16	SCREW M6S ISO 4017 M6X16 A480	
270	312105-0370		8	SCREW M6S ISO 4017 M6X20 A480	
280	312105-0372		8	SCREW M6S ISO 4017 M6X25 A480	
290	312105-0374		10	SCREW M6S ISO 4014 M6X30 A480	
300	312105-0538		4	SCREW M6S ISO 4017 M12X35 A480	
350	312125-0224		4	SCREW ISO 1207 M3X10 A4	
370	312605-0318		1	HEXAGON NUT, M6M M8 A280	
380	315105-0124		4	WASHER BRB 3,2X6 RFR	
400	315105-0153		8	WASHER BRB 6,4X12 RFR	
410	315105-0156		8	WASHER BRB 6,7X14 RFR	
420	90062-0061		8	LOCK WASHER NORD-LOCK,6,5/10,8, T=2,2	
430	315402-0156		6	LOCK WASHER FBB 6,5	
440	321111-0049		2	FLANGE BUSHING, 5X9X8 MM	
450	321111-0188		2	FLANGE BUSHING, 14X20X20 MM	
470	342722-0202		2	PIPE COUPLING 1/8" D=6MM	
490	90239-0532		1	ROD END, CLEVIS WITH AXLE M8X1,25	
500	90458-2964		1	ELBOW PIPE JOINT, EXT.THREAD, D=8MM-G1/8	
510	90239-0822		1	DOUBLE ACTING, MINI-ISO, CYL.20-50	
520	350008-0005		1	PUSH-IN FITTING QSF-F-G1/8-8	
530	90600-2896		1	SPRAY NOZZLE 125 DEG B1/8 K - SS ,75	
53064	315400-0004	MM	1500	TUBE PUN-H-8X1,25-BL	
55012	90166-0089	MM	1500	TUBE, 6,2 MM PE BLUE	
55014	90166-0089	MM	1500	TUBE, 6,2 MM PE BLUE	
B54051	90458-1159		1	PH.CELL WS4-2D135	
B54052	90458-1160		1	PH.CELL WE4-2P135	

Machine Type | Group Description | Used-In | Group Number | Page No

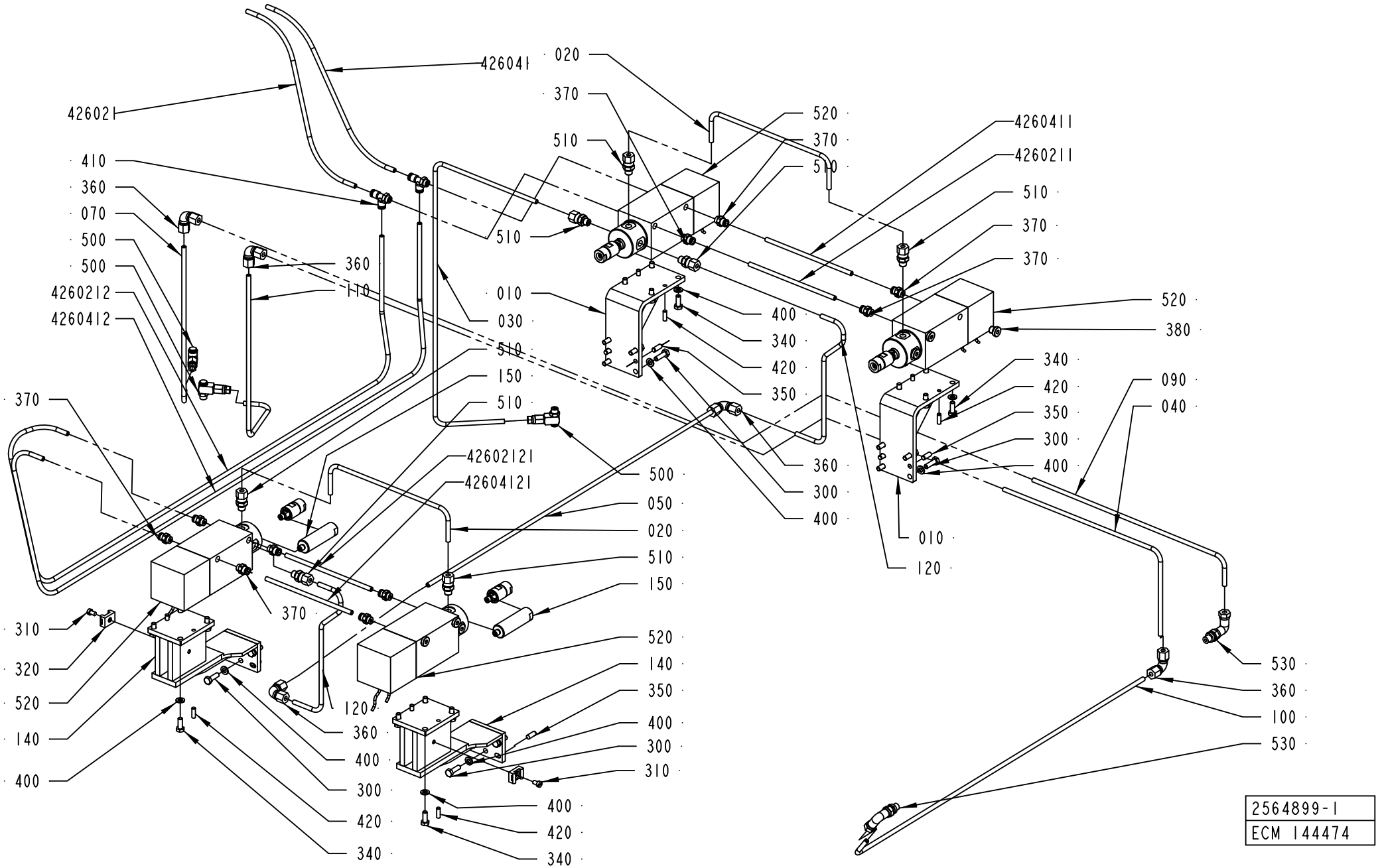
426041
020
370
426021
520
4260411
510
370
510
4260211
410
360
070
500
500
4260212
4260412
510
510
360
110
010
030
510
150
510
370
42602121
42604121
500
050
020
510
150
520
140
350
400
300
310
400
420
340
370
310
320
520
140
400
360
400
300
420
340
120
400
340
420
350
360
300
400
010
120
520
380
340
420
350
300
400
090
040
530
360
100
530
2564899-1
ECM 144474

ECM: 276019 - 20070101
Group number: 2564899-0100
Assembly Drawing: 2564899-1_1_AB

This list covers pages from 4-52 to 4-57

Pos	Part No	UN	Qty	Description	Page No
TBA 0200B (See drawing on page: 4-52)					
010	2565291-0000		2	BRACKET	
020	2535665-0000		2	PIPE	
030	2565550-0000		1	PIPE	
040	2565552-0000		1	PIPE	
050	2541983-0000		1	PIPE	
070	2579707-0000		1	PIPE	
090	2565549-0000		1	PIPE	
100	2565551-0000		1	PIPE	
110	2565553-0000		1	PIPE	
120	2653662-0000		2	PIPE	
140	2564898-0000		2	BRACKET	
150	2564589-0000		2	EXTENSION PIPE	
310	312125-0323		2	SCREW ISO 1207 M5X8 A4	
320	352113-0204		2	ANCHOR PLATES FOR STRIPS, TYPE TM3S25-M	
400	315105-0153		30	WASHER BRB 6,4X12 RFR	
426021	90166-0081	MM	300	TUBE 6 MM PA BLUE	
4260211	90166-0081	MM	160	TUBE 6 MM PA BLUE	
4260212	90166-0081	MM	1400	TUBE 6 MM PA BLUE	
42602121	90166-0081	MM	160	TUBE 6 MM PA BLUE	
426041	90166-0081	MM	300	TUBE 6 MM PA BLUE	
4260411	90166-0081	MM	160	TUBE 6 MM PA BLUE	
4260412	90166-0081	MM	1400	TUBE 6 MM PA BLUE	
42604121	90166-0081	MM	160	TUBE 6 MM PA BLUE	
510	90030-0184		7	CONN. STR. GE06LRED71	
530	90030-0171		2	ADJUSTABLE ELBOW CONNECTION, EVW06LR71	
TBA 0200M (See drawing on page: 4-54)					
010	2580000-0000		1	BRACKET	
015	2580102-0000		1	BRACKET	
020	2580103-0000		2	PIPE	
030	2529626-0000		1	PIPE	
040	2578773-0000		1	PIPE	
050	2578782-0000		1	PIPE	
070	2544919-0000		1	PIPE	
080	2544918-0000		1	PIPE	
090	2578772-0000		1	PIPE	
100	2544916-0000		1	PIPE	
110	2529022-0000		1	PIPE	
120	2544913-0000		1	PIPE	
130	2580104-0000		1	BRACKET	
140	2580001-0000		1	BRACKET	
150	2564589-0000		2	EXTENSION PIPE	
400	315105-0153		32	WASHER BRB 6,4X12 RFR	
426021	90166-0081	MM	200	TUBE 6 MM PA BLUE	
4260211	90166-0081	MM	240	TUBE 6 MM PA BLUE	
4260212	90166-0081	MM	1800	TUBE 6 MM PA BLUE	
42602121	90166-0081	MM	240	TUBE 6 MM PA BLUE	
426041	90166-0081	MM	200	TUBE 6 MM PA BLUE	
4260411	90166-0081	MM	240	TUBE 6 MM PA BLUE	
4260412	90166-0081	MM	1800	TUBE 6 MM PA BLUE	
42604121	90166-0081	MM	240	TUBE 6 MM PA BLUE	
510	90030-0184		8	CONN. STR. GE06LRED71	
530	90030-0171		1	ADJUSTABLE ELBOW CONNECTION, EVW06LR71	
TBA 0200S (See drawing on page: 4-56)					
010	2642679-0000		1	BRACKET	
015	2575105-0000		1	BRACKET	
020	2579829-0000		2	PIPE	
030	2579901-0000		1	PIPE	
040	2579910-0000		1	PIPE	
050	2544926-0000		1	PIPE	
070	2579909-0000		1	PIPE	
080	2579921-0000		1	PIPE	
090	2579908-0000		1	PIPE	
100	2579985-0000		1	PIPE	
110	2579906-0000		1	PIPE	
120	2581995-0000		1	PIPE	
130	2578482-0000		1	BRACKET	
140	2578483-0000		1	BRACKET	
400	315105-0153		32	WASHER BRB 6,4X12 RFR	
426021	90166-0081	MM	200	TUBE 6 MM PA BLUE	
4260211	90166-0081	MM	240	TUBE 6 MM PA BLUE	
4260212	90166-0081	MM	1800	TUBE 6 MM PA BLUE	
42602121	90166-0081	MM	240	TUBE 6 MM PA BLUE	
426041	90166-0081	MM	200	TUBE 6 MM PA BLUE	
4260411	90166-0081	MM	240	TUBE 6 MM PA BLUE	
4260412	90166-0081	MM	1800	TUBE 6 MM PA BLUE	
42604121	90166-0081	MM	240	TUBE 6 MM PA BLUE	
510	90030-0184		8	CONN. STR. GE06LRED71	
530	90030-0171		1	ADJUSTABLE ELBOW CONNECTION, EVW06LR71	
TBA 0250B (See drawing on page: 4-54)					
010	2579689-0000		1	BRACKET	
015	2579689-0000		1	BRACKET	
020	2544915-0000		2	PIPE	
030	2529626-0000		1	PIPE	

Machine Type | Group Description | Used-In | Group Number | Page No

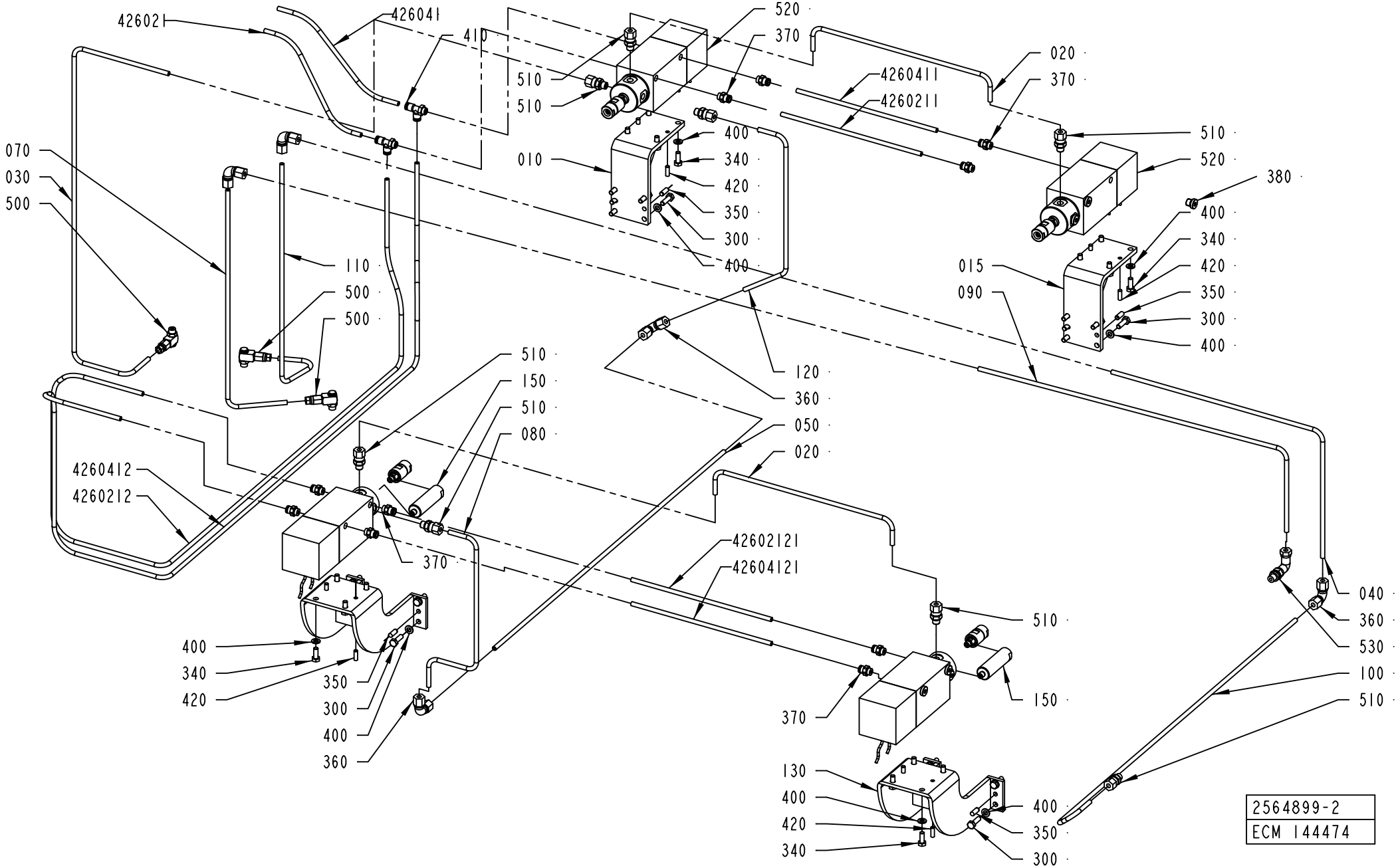
42602
426041
410
510
510
520
370
4260411
4260211
020
370
510
520
380
400
340
420
350
300
400
010
070
030
500
110
500
500
015
090
120
360
050
020
510
150
510
080
4260412
4260212
370
42602121
42604121
400
340
420
350
300
400
360
510
150
370
130
400
420
340
400
350
300
040
360
530
100
510
2564899-2
ECM 144474

ECM: 276019 - 20070101
Group number: 2564899-0100
Assembly Drawing: 2564899-2_1_AB

This list covers pages from 4-52 to 4-57

Pos	Part No	UN	Qty	Description	Page No
TBA 0250B (Cont'd) (See drawing on page: 4-54)					
040	2578773-0000		1	PIPE	
050	2578782-0000		1	PIPE	
070	2544919-0000		1	PIPE	
080	2544918-0000		1	PIPE	
090	2578772-0000		1	PIPE	
100	2544916-0000		1	PIPE	
110	2529022-0000		1	PIPE	
120	2544913-0000		1	PIPE	
130	2574072-0000		1	BRACKET	
140	2574072-0000		1	BRACKET	
150	2564589-0000		2	EXTENSION PIPE	
400	315105-0153		32	WASHER BRB 6,4X12 RFR	
426021	90166-0081	MM	200	TUBE 6 MM PA BLUE	
4260211	90166-0081	MM	250	TUBE 6 MM PA BLUE	
4260212	90166-0081	MM	1800	TUBE 6 MM PA BLUE	
42602121	90166-0081	MM	250	TUBE 6 MM PA BLUE	
426041	90166-0081	MM	200	TUBE 6 MM PA BLUE	
4260411	90166-0081	MM	250	TUBE 6 MM PA BLUE	
4260412	90166-0081	MM	1800	TUBE 6 MM PA BLUE	
42604121	90166-0081	MM	250	TUBE 6 MM PA BLUE	
510	90030-0184		8	CONN. STR. GE06LRED71	
530	90030-0171		1	ADJUSTABLE ELBOW CONNECTION, EVW06LR71	
TBA 0250S (See drawing on page: 4-56)					
010	2529042-0000		1	BRACKET	
015	2529042-0000		1	BRACKET	
020	2529043-0000		2	PIPE	
030	2651254-0000		1	PIPE	
040	2566415-0000		1	PIPE	
050	2544926-0000		1	PIPE	
070	2651255-0000		1	PIPE	
080	2575521-0000		1	PIPE	
090	2575522-0000		1	PIPE	
100	2545262-0000		1	PIPE	
110	2651256-0000		1	PIPE	
120	2575629-0000		1	PIPE	
130	2608195-0000		1	BRACKET	
140	2575419-0000		1	BRACKET	
400	315105-0153		32	WASHER BRB 6,4X12 RFR	
426021	90166-0081	MM	200	TUBE 6 MM PA BLUE	
4260211	90166-0081	MM	260	TUBE 6 MM PA BLUE	
4260212	90166-0081	MM	1800	TUBE 6 MM PA BLUE	
42602121	90166-0081	MM	260	TUBE 6 MM PA BLUE	
426041	90166-0081	MM	200	TUBE 6 MM PA BLUE	
4260411	90166-0081	MM	260	TUBE 6 MM PA BLUE	
4260412	90166-0081	MM	1800	TUBE 6 MM PA BLUE	
42604121	90166-0081	MM	260	TUBE 6 MM PA BLUE	
510	90030-0184		8	CONN. STR. GE06LRED71	
530	90030-0171		1	ADJUSTABLE ELBOW CONNECTION, EVW06LR71	
TBA 0300S (See drawing on page: 4-56)					
010	2642679-0000		1	BRACKET	
015	2575105-0000		1	BRACKET	
020	2579829-0000		2	PIPE	
030	2579901-0000		1	PIPE	
040	2579910-0000		1	PIPE	
050	2544926-0000		1	PIPE	
070	2579909-0000		1	PIPE	
080	2579921-0000		1	PIPE	
090	2579908-0000		1	PIPE	
100	2579985-0000		1	PIPE	
110	2579906-0000		1	PIPE	
120	2581995-0000		1	PIPE	
130	2578482-0000		1	BRACKET	
140	2578483-0000		1	BRACKET	
160	2803808-0000		4	SHIM	
400	315105-0153		32	WASHER BRB 6,4X12 RFR	
426021	90166-0081	MM	200	TUBE 6 MM PA BLUE	
4260211	90166-0081	MM	240	TUBE 6 MM PA BLUE	
4260212	90166-0081	MM	1800	TUBE 6 MM PA BLUE	
42602121	90166-0081	MM	240	TUBE 6 MM PA BLUE	
426041	90166-0081	MM	200	TUBE 6 MM PA BLUE	
4260411	90166-0081	MM	240	TUBE 6 MM PA BLUE	
4260412	90166-0081	MM	1800	TUBE 6 MM PA BLUE	
42604121	90166-0081	MM	240	TUBE 6 MM PA BLUE	
510	90030-0184		8	CONN. STR. GE06LRED71	
530	90030-0171		1	ADJUSTABLE ELBOW CONNECTION, EVW06LR71	
Common Parts					
300	312105-0370		16	SCREW M6S ISO 4017 M6X20 A480	
340	312105-0368		16	SCREW M6S ISO 4017 M6X16 A480	
350	311103-0351		8	PARALLEL PIN ISO 2338 6M6X16 A1	
360	342737-0204		5	CONN. ELBOW W-6 LRFR	
370	342722-0202		10	PIPE COUPLING 1/8" D=6MM	
380	90201-0450		13	PLUG	
410	342772-0113		2	ELBOW FITTING, 6 - G1/8	

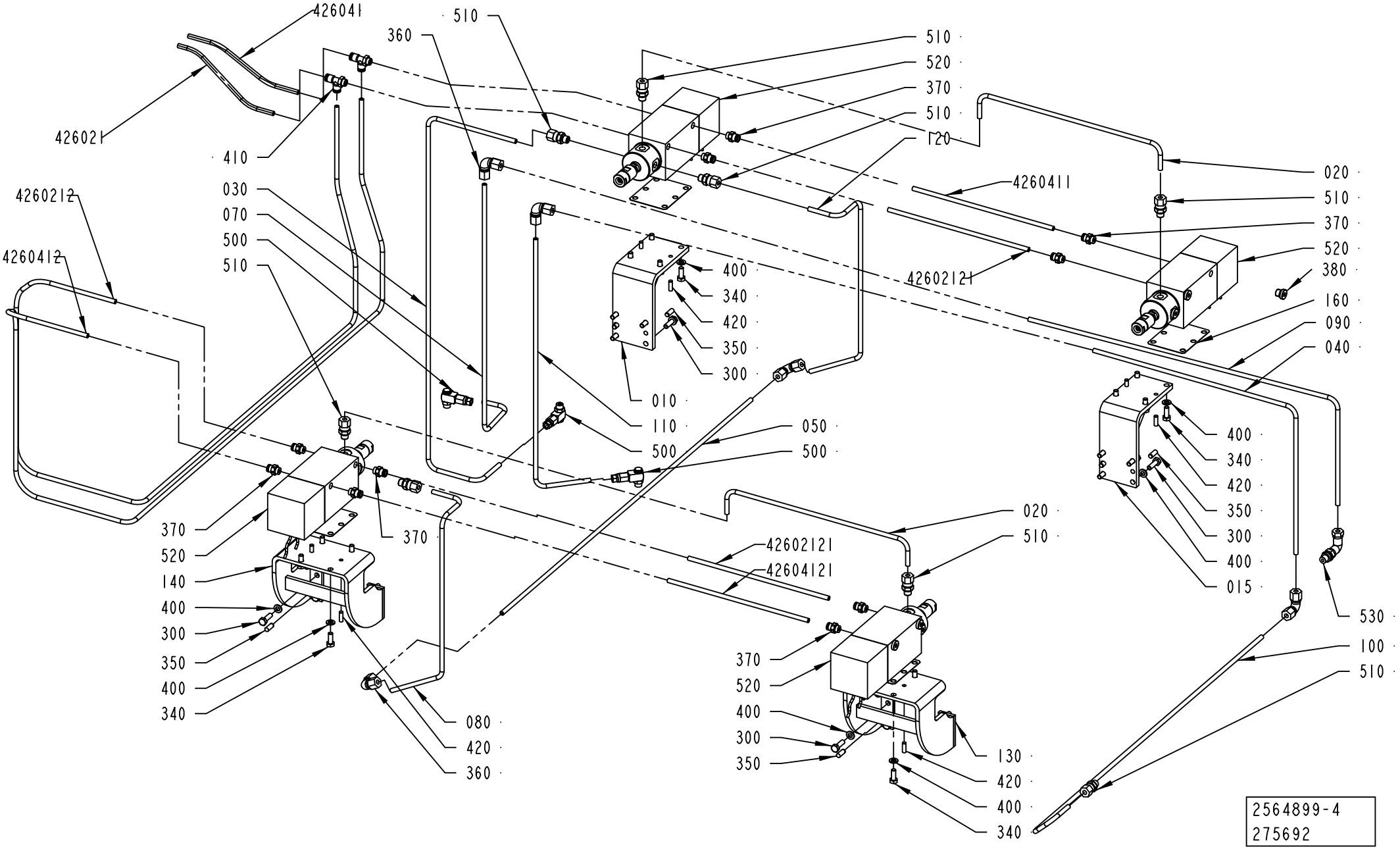
426041
426021
360
510
410
4260212
4260412
030
070
500
510
400
340
420
350
300
010
110
500
050
500
4260411
42602121
020
510
370
520
380
160
090
040
400
340
420
350
300
400
015
530
100
510
370
520
140
400
300
350
400
340
370
080
420
360
42602121
42604121
020
510
370
520
400
300
350
130
420
400
340
2564899-4
275692

Pos	Part No	UN	Qty	Description	Page No
Common Parts (Cont'd)					
420	311103-0308		8	PARALLEL PIN ISO 2338 5M6X16 A1	
500	90459-0843		3	CONN. BANJO, 6-G1/8	
520	90459-1255		4	PUMP CYLINDER, 4415 000 00	
10	*90459-1471*		*1*	*LUBRICATION HEAD, 4415 051 00*	
20	*90459-2626*		*2*	*PROX.SWITCH KIB-M08PS/1.5-KL6*	

Pos	Part No	UN	Qty	Description	Page No

Tetra Pak

SPC
Spare Parts Catalogue

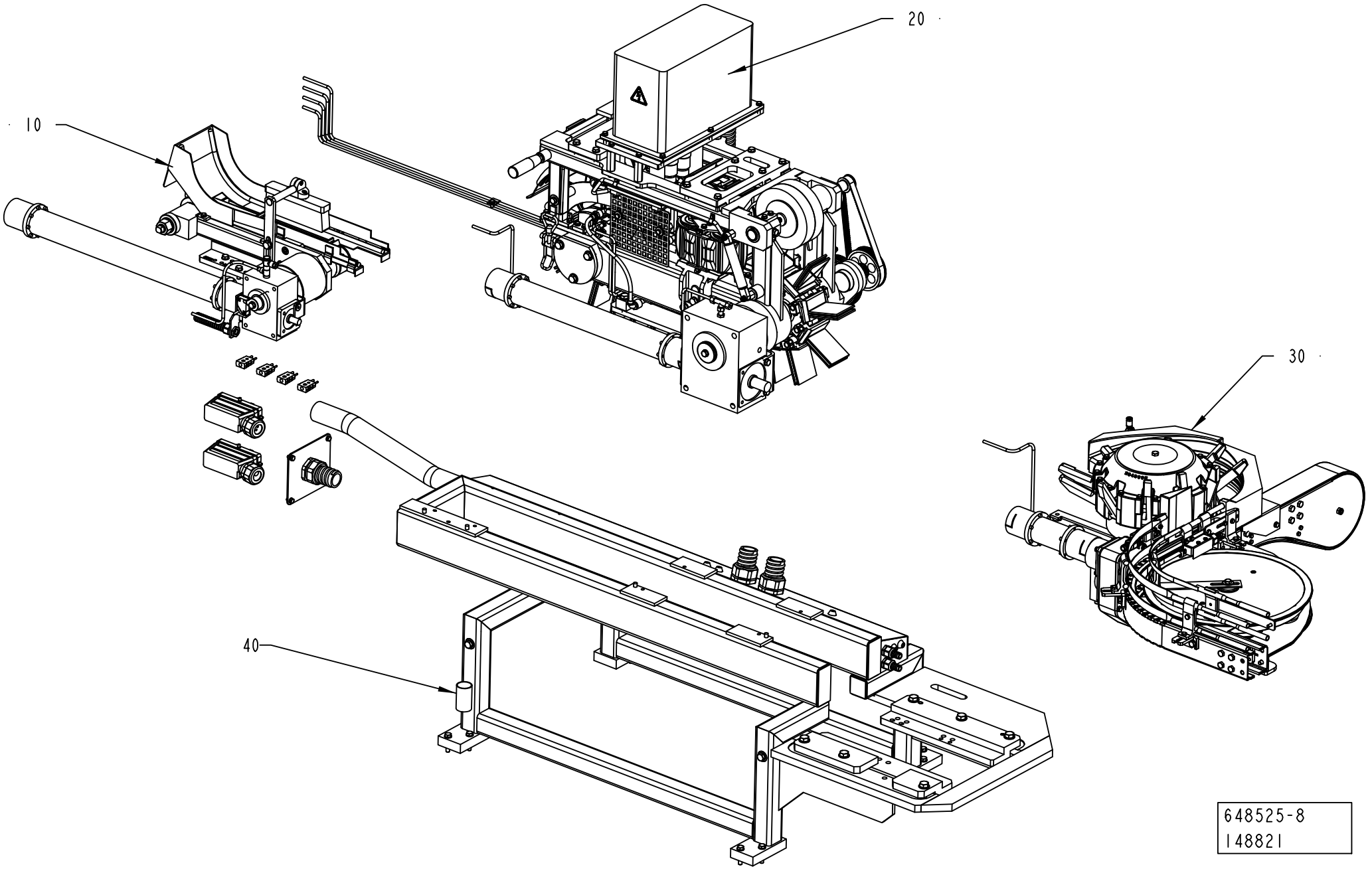
10
20
30
40
648525-8
148821

ECM: 998629 - 20070102
Group number: 648525-0500
Assembly Drawing: 648525-8_1_AA

Pos	Part No	UN	Qty	Description	Page No
-					
010	577111-0500		1	CONVEYOR	**5-5, 5-7**
020	577112-0500		1	FINAL FOLDER	**5-9**
030	577113-0400		1	DISCHARGE DEVICE	**5-31**
040	577115-0400		1	FRAME	**5-63**

Pos	Part No	UN	Qty	Description	Page No

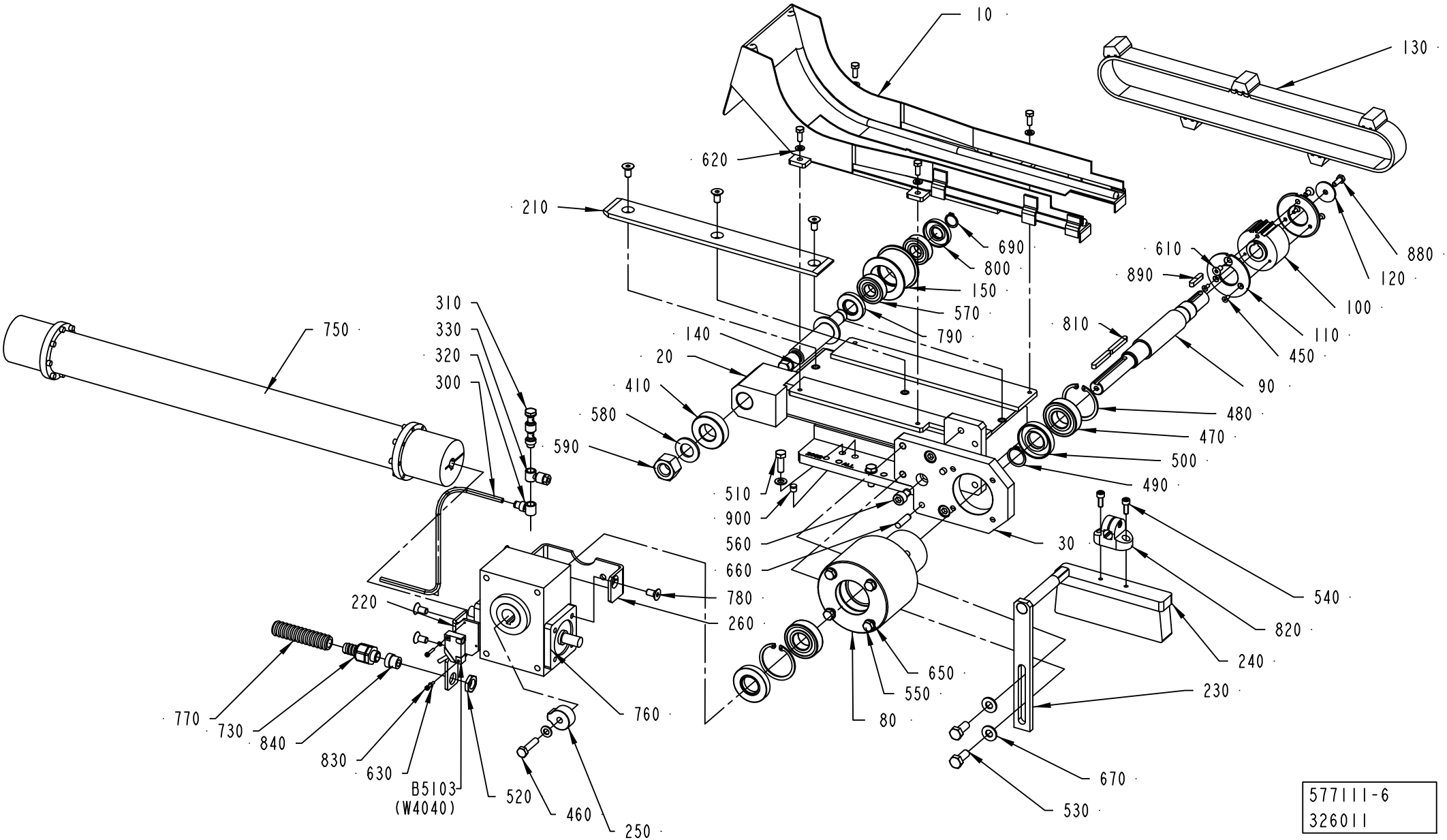
10
130
620
210
690
800
150
570
790
610
890
880
120
100
110
450
810
90
480
470
500
490
310
330
320
300
750
140
20
410
580
590
510
900
560
660
780
260
30
540
820
240
230
650
550
80
220
770
730
840
830
630
B5103
(W4040)
520
460
250
760
670
530
577111-6
326011

ECM: 377691 - 20090101
Group number: 577111-0500
Assembly Drawing: 577111-6_1_AC

This list covers pages from 5-4 to 5-7

Pos	Part No	UN	Qty	Description	Page No
TBA 0200B (See drawing on page: 5-4)					
010	2640507-0000		1	CHUTE	
030	2758700-0000		1	PLATE	
100	1499908-0000		1	PULLEY	
110	1499909-0000		2	FLANGE	
130	90600-1407		1	TIMING BELT AT10 1000X32 MM SECA-V 32	
150	1260129-0000		1	PULLEY	
210	2616153-0000		1	GUIDE	
620	315105-0153		4	WASHER BRB 6,4X12 RFR	
750	2564030-0000		1	INTERMEDIARY SHAFT	
	90600-5383		*1*	*HUB, ZA/60/24H7/XX*	
	Remark : Hole Ø 24 mm.				
	90600-5382		*1*	*HUB, ZA/60/14H7 KEYWAY/XX*	
	Remark : Hole Ø 14 mm.				
880	312105-0368		5	SCREW M6S ISO 4017 M6X16 A480	
TBA 0200M (See drawing on page: 5-6)					
010	2918132-0000		1	CHUTE	
030	2758700-0000		1	PLATE	
040	2918312-0000		1	GUIDE	
050	2918313-0000		1	GUIDE	
100	1499908-0000		1	PULLEY	
110	1499909-0000		2	FLANGE	
130	90600-1407		1	TIMING BELT AT10 1000X32 MM SECA-V 32	
150	1260129-0000		1	PULLEY	
210	2616153-0000		1	GUIDE	
2106121	90166-0119	MM	1500	HOSE PUR 4/6 BLACK	
620	315105-0153		8	WASHER BRB 6,4X12 RFR	
750	2523695-0000		1	INTERMEDIARY SHAFT	
	90600-5382		*1*	*HUB, ZA/60/14H7 KEYWAY/XX*	
	Remark : Hole Ø 14 mm.				
	90600-5383		*1*	*HUB, ZA/60/24H7/XX*	
	Remark : Hole Ø 24 mm.				
880	312105-0368		9	SCREW M6S ISO 4017 M6X16 A480	
910	342722-0202		1	PIPE COUPLING 1/8" D=6MM	
920	342946-0112		1	T-COUPLING,UNION 6/4	
TBA 0200S (See drawing on page: 5-4)					
010	2649684-0000		1	CHUTE	
030	2640504-0000		1	PLATE	
100	1498551-0000		1	PULLEY	
110	1498552-0000		2	FLANGE	
130	90600-1412		1	TIMING BELT AT10 1150X32 MM SECA-V 32	
150	1498554-0000		1	PULLEY	
210	2732816-0000		1	GUIDE	
620	315105-0153		4	WASHER BRB 6,4X12 RFR	
750	2525675-0000		1	INTERMEDIARY SHAFT	
	90600-5383		*1*	*HUB, ZA/60/24H7/XX*	
	Remark : Hole Ø 24 mm.				
	90600-5382		*1*	*HUB, ZA/60/14H7 KEYWAY/XX*	
	Remark : Hole Ø 14 mm.				
880	312105-0368		5	SCREW M6S ISO 4017 M6X16 A480	
TBA 0250B (See drawing on page: 5-4)					
010	2649685-0000		1	CHUTE	
030	2758700-0000		1	PLATE	
100	1499908-0000		1	PULLEY	
110	1499909-0000		2	FLANGE	
130	90600-1407		1	TIMING BELT AT10 1000X32 MM SECA-V 32	
150	1260129-0000		1	PULLEY	
210	2616153-0000		1	GUIDE	
620	315105-0153		4	WASHER BRB 6,4X12 RFR	
750	2523695-0000		1	INTERMEDIARY SHAFT	
	90600-5382		*1*	*HUB, ZA/60/14H7 KEYWAY/XX*	
	Remark : Hole Ø 14 mm.				
	90600-5383		*1*	*HUB, ZA/60/24H7/XX*	
	Remark : Hole Ø 24 mm.				
880	312105-0368		5	SCREW M6S ISO 4017 M6X16 A480	
TBA 0250S (See drawing on page: 5-4)					
010	2649686-0000		1	CHUTE	
030	2640504-0000		1	PLATE	
100	1498551-0000		1	PULLEY	
110	1498552-0000		2	FLANGE	
130	90600-1412		1	TIMING BELT AT10 1150X32 MM SECA-V 32	
150	1498554-0000		1	PULLEY	
210	2732816-0000		1	GUIDE	
620	315105-0153		4	WASHER BRB 6,4X12 RFR	
750	2525675-0000		1	INTERMEDIARY SHAFT	
	90600-5383		*1*	*HUB, ZA/60/24H7/XX*	
	Remark : Hole Ø 24 mm.				
	90600-5382		*1*	*HUB, ZA/60/14H7 KEYWAY/XX*	
	Remark : Hole Ø 14 mm.				
880	312105-0368		5	SCREW M6S ISO 4017 M6X16 A480	
TBA 0300S (See drawing on page: 5-4)					
010	2649687-0000		1	CHUTE	
030	2640504-0000		1	PLATE	
100	1498551-0000		1	PULLEY	

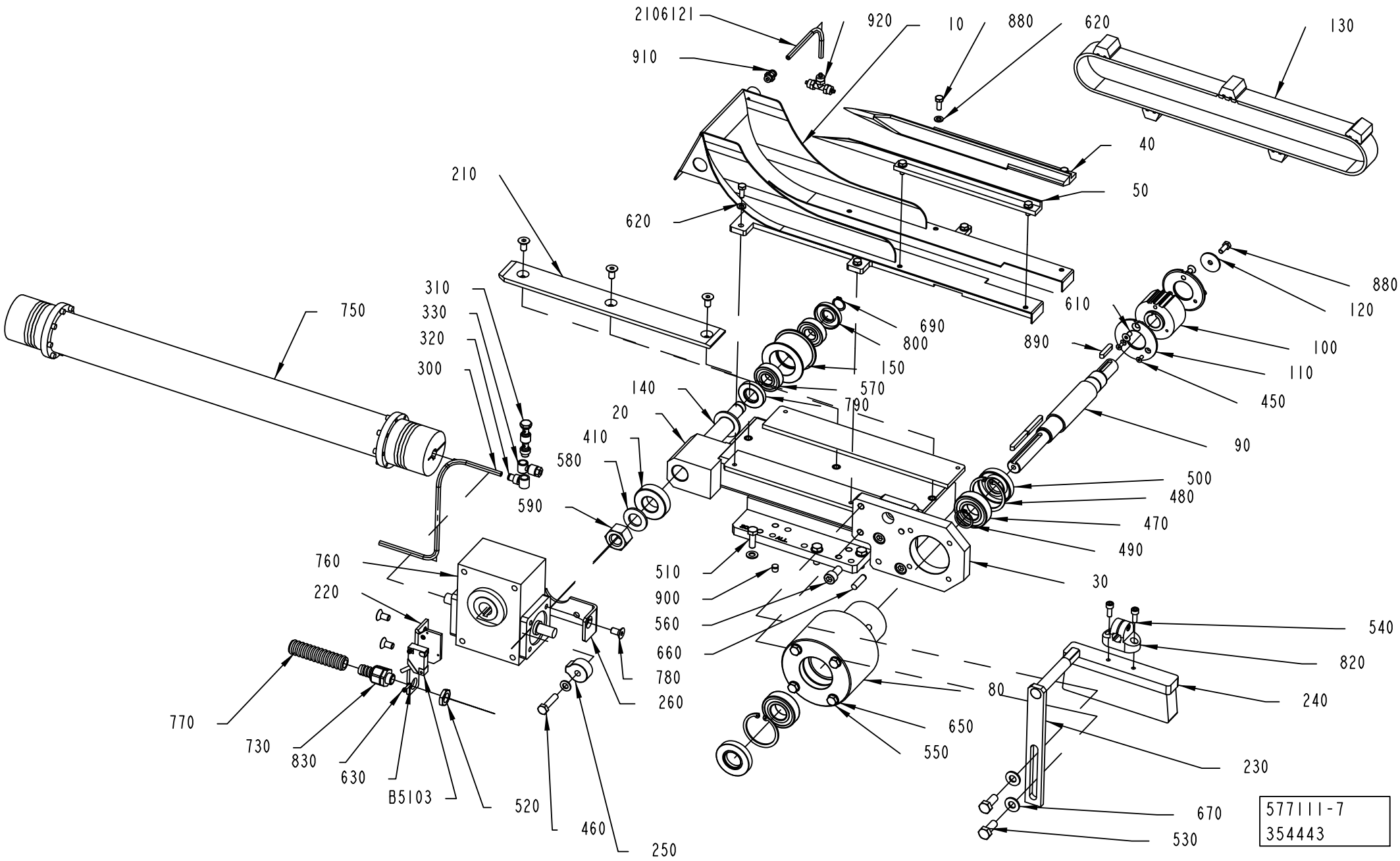
2106121
910
920
10
880
620
130
40
50
620
210
750
310
330
320
300
690
800
150
570
790
610
890
880
120
100
110
450
90
140
20
410
580
590
500
480
470
490
30
760
220
510
900
560
660
780
260
540
820
240
80
650
550
230
770
730
830
630
B5103
520
460
250
670
530
577111-7
354443

ECM: 377691 - 20090101
Group number: 577111-0500
Assembly Drawing: 577111-7_1_AA

This list covers pages from 5-4 to 5-7

Pos	Part No	UN	Qty	Description	Page No
TBA 0300S (Cont'd) (See drawing on page: 5-4)					
110	1498552-0000		2	FLANGE	
130	90600-1412		1	TIMING BELT AT10 1150X32 MM SECA-V 32	
150	1498554-0000		1	PULLEY	
210	2732816-0000		1	GUIDE	
620	315105-0153		4	WASHER BRB 6,4X12 RFR	
750	2525675-0000		1	INTERMEDIARY SHAFT	
	90600-5383		*1*	*HUB, ZA/60/24H7/XX*	
	Remark : Hole Ø 24 mm.				
	90600-5382		*1*	*HUB, ZA/60/14H7 KEYWAY/XX*	
	Remark : Hole Ø 14 mm.				
880	312105-0368		5	SCREW M6S ISO 4017 M6X16 A480	
Common Parts					
020	2616156-0000		1	FRAME	
080	2616158-0000		1	FRAME	
090	2806294-0000		1	SHAFT	
1140	90296-0068		1	SHELL ALVANIA GREASE EP 2	
120	1260167-0000		1	WASHER	
140	1260128-0000		1	SHAFT	
220	2504725-0000		1	SUPPORT	
230	1478631-0000		1	SUPPORT	
240	1347077-0000		1	BRUSH	
250	1548854-0000		1	CAM	
260	2616157-0000		1	BRACKET	
300	90166-0081	MM	2600	TUBE 6 MM PA BLUE	
310	342980-0313		1	BANJO-HOLLOW BOLT COUPL,EXT.THR.02-G1/8	
320	342981-0113		1	BANJO CONNEC,RING,FOR PLAST.TUBE 6-G1/8"	
330	342797-0121		1	CONN. BANJO, RINGPIECE 6-1/8	
410	2506714-0000		1	WASHER	
450	312155-0289		4	SCREW DIN 7991 MF6S M4X10 A4 70	
460	312109-0457		1	SCREW M6S ISO 4017 M8X35 A480	
470	90214-0096		2	BALL BEARING, 25X52X15 MM	
480	315753-0132		2	RETAINING RING FOR BORE DIN 472 52 A2	
490	315751-0119		1	RETAINING RING FOR SHAFT DIN 471 25 SS	
500	90091-0438		2	RADIAL SEAL 25X52X10 MM DUST LIP	
510	312105-0453		4	SCREW M6S ISO 4017 M8X25 A480	
520	90099-0104		1	NUT, PR 15,2 (PG9)	
530	312105-0493		2	SCREW M6S ISO 4017 M10X25 A480	
540	312115-0368		2	SCREW ISO4762 M6X16 A4 80	
550	312105-0471		4	SCREW M6S ISO 4014 M8X100 A480	
560	312115-0491		3	SCREW ISO4762 M10X20 A4 80	
570	90214-0189		2	BALL BEARING, 17X40X12 MM	
580	315105-0191		1	WASHER BRB 20X36 RFR	
590	312605-0326		1	HEXAGON NUT, M6M M20 A280	
610	312155-0366		2	SCREW DIN 7991 MF6S M6X12 A4 70	
630	315105-0124		2	WASHER BRB 3,2X6 RFR	
650	315105-0165		8	WASHER BRB 8,4X16 RFR	
660	311103-0405		2	PARALLEL PIN ISO 2338 8M6X30 A1	
670	315105-0173		2	WASHER BRB 10,5X22 RFR	
690	90141-0017		1	RETAINING RING FOR SHAFT DIN 471 17 SS	
730	353243-0001		1	HOSE GLAND W/O INSERT PG9 EXTENDED	
760	90056-0170		1	WORM GEAR BS 40 AL-TT ENV RH	
770	90152-0059	MM	600	SPIRAL CONDUIT, 18X12, UL 1211	
780	312155-0449		7	SCREW DIN 7991 MF6S M8X16 A4 70	
790	90091-0436		1	RADIAL SEAL 20X40X7 MM DUST LIP	
800	90091-0437		1	RADIAL SEAL 17X40X7 MM DUST LIP	
810	315705-0240		2	PARALLEL KEY W. ROUND ENDS 6X6X45 MM	
820	90236-0045		1	SUPPORT	
830	312115-0228		2	SCREW ISO4762 M3X16 A4 80	
840	353249-0009		1	INSERT, SINGLE HOLE, EK 152/9	
890	315705-0236		1	PARALLEL KEY W. ROUND ENDS 6X6X30 MM	
900	90261-0017		6	PLUG, BLIND, PLASTIC GPN300V3	
B5103	90044-0194		1	PROX.SW. IN5329/IN3002-BPKG(EX90044-104)	

Machine Type	Group Description	Used-In	Group Number	Page No

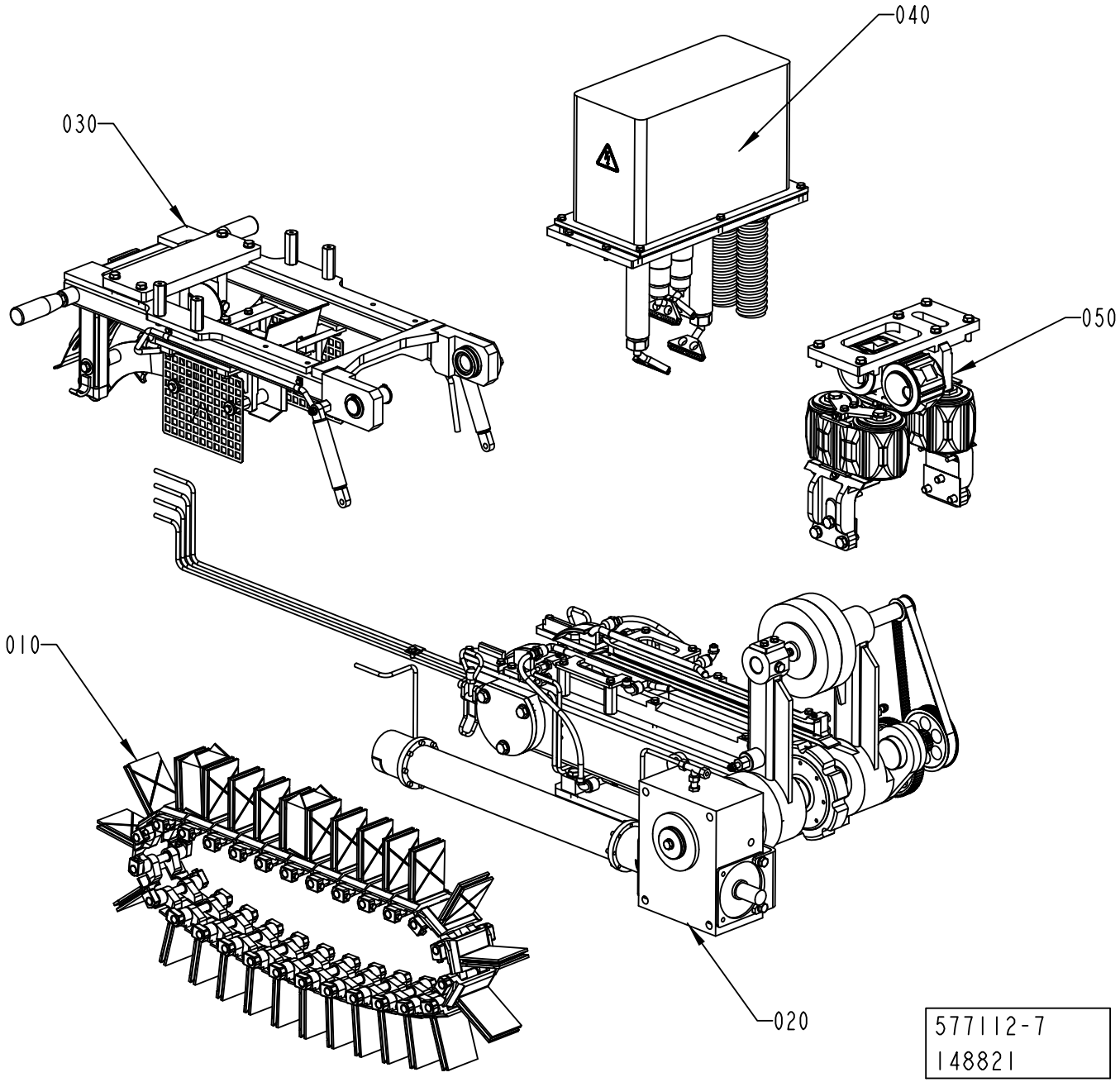
040
030
050
010
020
577112-7
148821

ECM: 998627 - 20070102
Group number: 577112-0500
Assembly Drawing: 577112-7_1_AA

Pos	Part No	UN	Qty	Description	Page No
-					
010	1517715-0100		1	STATION CHAIN	**5-11**
020	1517735-0300		1	CHAIN SUPPORT	**5-13, 5-15, 5-17**
030	1517740-0200		1	SWING FRAME	**5-19, 5-21**
040	1478630-0200		1	HEATING CHAMBER	**5-23, 5-25**
050	1499690-0300		1	SQUEEZER	**5-27, 5-29**

Pos	Part No	UN	Qty	Description	Page No

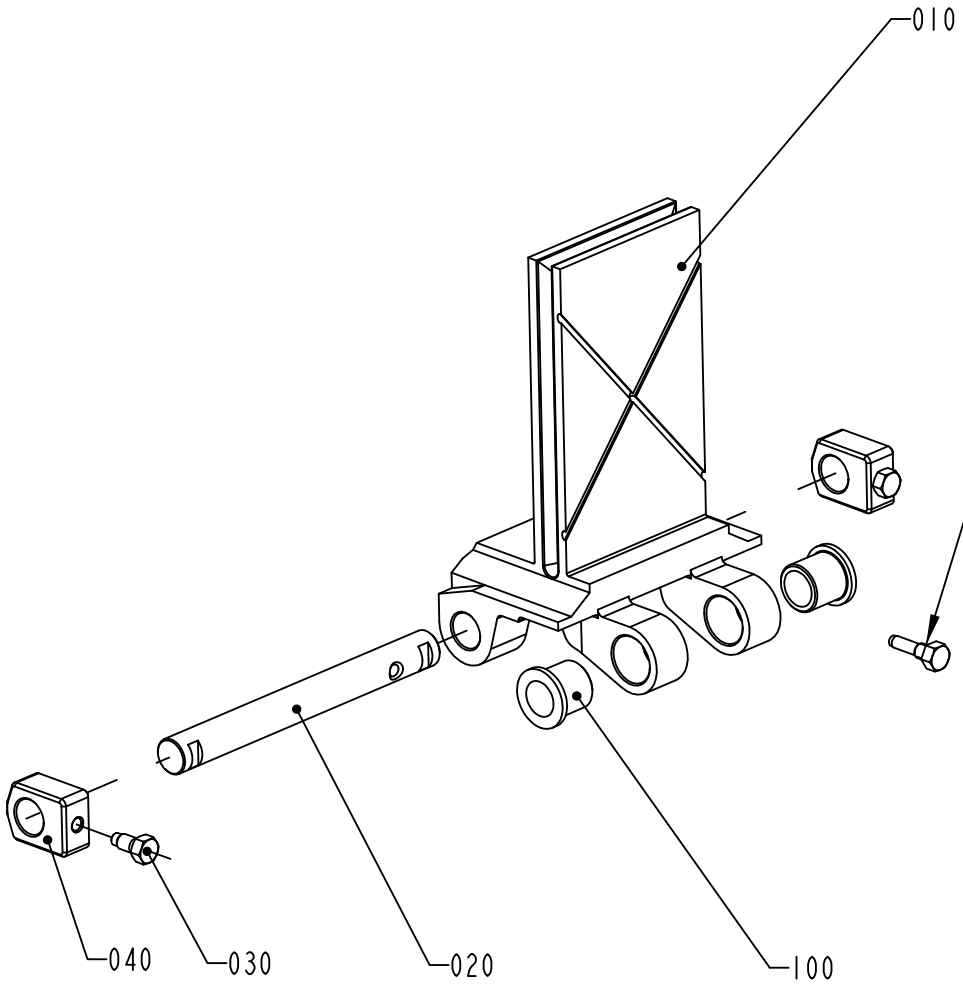

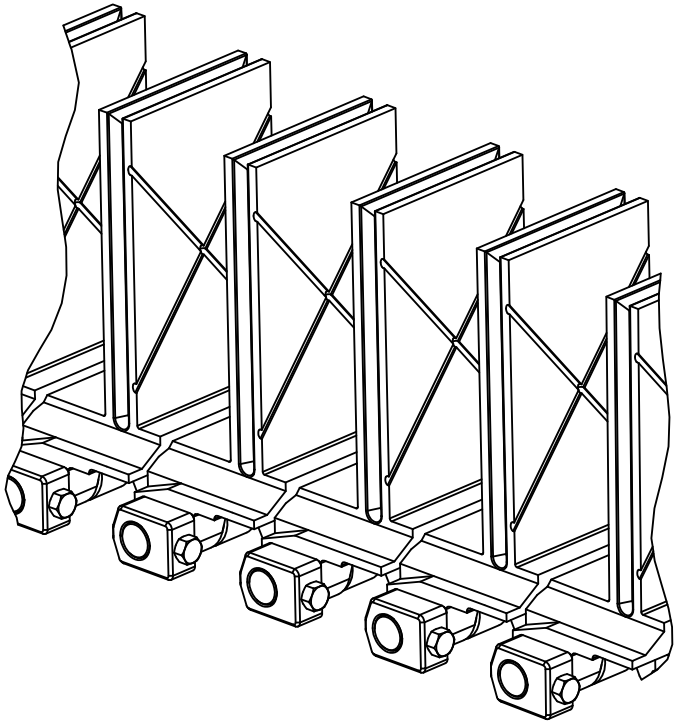

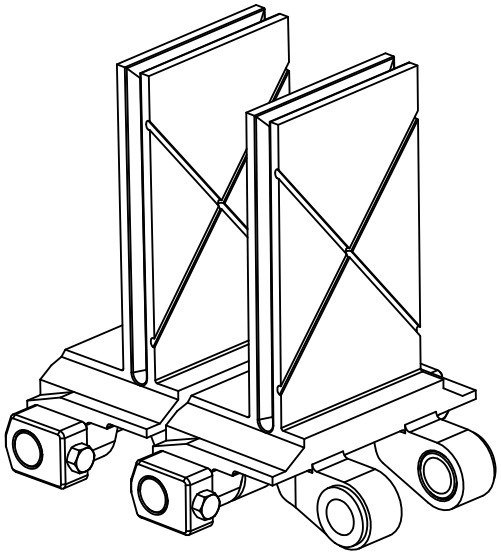

1517715-1
ECM 288751

ECM: 288817 - 20070401
Group number: 1517715-0100
Assembly Drawing: 1517715-1_1_AC

Pos	Part No	UN	Qty	Description	Page No
TBA 0200B					
010	1548020-0000		27	CARTON STATION	
TBA 0200M					
010	1548036-0000		27	CARTON STATION	
TBA 0200S					
010	1538567-0000		27	CARTON STATION	
TBA 0250B					
010	2530121-0000		27	CARTON STATION	
TBA 0250S					
010	1548024-0000		27	CARTON STATION	
TBA 0300S					
010	2504730-0000		27	CARTON STATION	
Common Parts					
	90157-0016		1	LOCKING FLUID LOCTITE 242 50 ML	
020	1517717-0000		27	SHAFT	
030	1517718-0000		54	SCREW	
040	2868080-0000		54	SLIDER - SEE PN. 1517719-0000 FOR STOCK	
050	2564953-0000		27	GRUB SCREW	
100	90458-1404		54	FLANGE BUSHING, 12X16X16 MM	

Pos	Part No	UN	Qty	Description	Page No

CHAIN SUPPORT

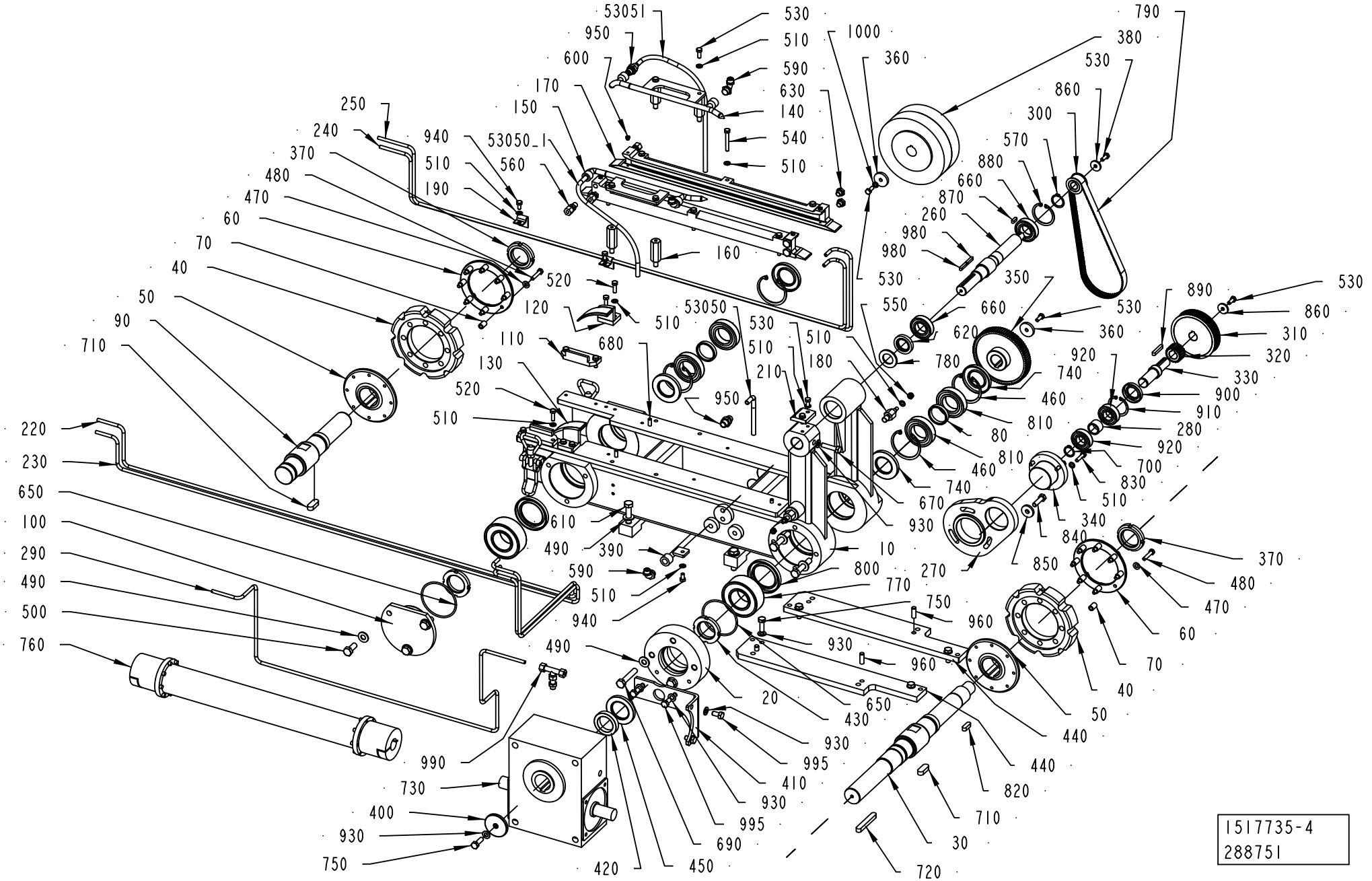

ECM: 363743 - 20081002
Group number: 1517735-0300
Assembly Drawing: 1517735-4_1_AC

This list covers pages from 5-12 to 5-17

Pos	Part No	UN	Qty	Description	Page No
TBA 0200B					
010	1548019-0000		1	FRAME	
120	1517736-0000		1	GUIDE	
130	1517737-0000		1	GUIDE	
140	1517733-0000		1	GUIDE	
150	1517734-0000		1	GUIDE	
220	2531713-0000		1	TUBE	
230	2531712-0000		1	TUBE	
240	2531710-0000		1	TUBE	
250	2531711-0000		1	TUBE	
290	2697052-0000		1	PIPE	
440	2616160-0000		2	PLATE	
760	90600-5393		1	INTERMEDIARY SHAFT, ZA/60/583/24H7/14H7	
	90600-5382		*1*	*HUB, ZA/60/14H7 KEYWAY/XX*	
	Remark : Hole Ø 14 mm.				
	90600-5383		*1*	*HUB, ZA/60/24H7/XX*	
	Remark : Hole Ø 24 mm.				
790	90458-1385		1	TIMING BELT T5X620X16 POLYURETHANE	
TBA 0200M					
010	1548039-0000		1	FRAME	
120	1548012-0000		1	GUIDE	
130	1548011-0000		1	GUIDE	
140	1548025-0000		1	GUIDE	
150	1548026-0000		1	GUIDE	
220	2510419-0000		1	TUBE	
230	2510418-0000		1	TUBE	
240	2510416-0000		1	TUBE	
250	2510417-0000		1	TUBE	
290	2697053-0000		1	PIPE	
440	2649694-0000		2	SUPPORT	
760	90600-5394		1	INTERMEDIARY SHAFT, ZA/60/607/24H7/14H7	
	90600-5383		*1*	*HUB, ZA/60/24H7/XX*	
	Remark : Hole Ø 24 mm.				
	90600-5382		*1*	*HUB, ZA/60/14H7 KEYWAY/XX*	
	Remark : Hole Ø 14 mm.				
790	90458-1386		1	TIMING BELT T5X660X16 POLYURETHANE	
TBA 0200S					
010	1538570-0000		1	FRAME	
120	1548012-0000		1	GUIDE	
130	1548011-0000		1	GUIDE	
140	2846472-0000		1	GUIDE	
150	2846471-0000		1	GUIDE	
220	2520228-0000		1	TUBE	
230	2520227-0000		1	TUBE	
240	2520225-0000		1	TUBE	
250	2520226-0000		1	TUBE	
290	2697054-0000		1	PIPE	
440	2616164-0000		2	SUPPORT	
760	90600-5395		1	INTERMEDIARY SHAFT, ZA/60/624/24H7/14H7K	
	90600-5382		*1*	*HUB, ZA/60/14H7 KEYWAY/XX*	
	Remark : Hole Ø 14 mm.				
	90600-5383		*1*	*HUB, ZA/60/24H7/XX*	
	Remark : Hole Ø 24 mm.				
790	90458-2518		1	TIMING BELT T5X690X16 POLYURETHANE	
TBA 0250B					
010	1517720-0000		1	FRAME	
120	1517736-0000		1	GUIDE	
130	1517737-0000		1	GUIDE	
140	1517733-0000		1	GUIDE	
150	1517734-0000		1	GUIDE	
220	2510419-0000		1	TUBE	
230	2510418-0000		1	TUBE	
240	2510416-0000		1	TUBE	
250	2510417-0000		1	TUBE	
290	2697053-0000		1	PIPE	
440	2649694-0000		2	SUPPORT	
760	90600-5394		1	INTERMEDIARY SHAFT, ZA/60/607/24H7/14H7	
	90600-5383		*1*	*HUB, ZA/60/24H7/XX*	
	Remark : Hole Ø 24 mm.				
	90600-5382		*1*	*HUB, ZA/60/14H7 KEYWAY/XX*	
	Remark : Hole Ø 14 mm.				
790	90458-1386		1	TIMING BELT T5X660X16 POLYURETHANE	
TBA 0250S					
010	1548033-0000		1	FRAME	
120	1548012-0000		1	GUIDE	
130	1548011-0000		1	GUIDE	
140	1548025-0000		1	GUIDE	
150	1548026-0000		1	GUIDE	
220	2529130-0000		1	PIPE	
230	2529129-0000		1	PIPE	
240	2529127-0000		1	PIPE	
250	2529128-0000		1	PIPE	
290	2697055-0000		1	PIPE	
440	2616164-0000		2	SUPPORT	

Machine Type | Group Description | Used-In | Group Number | Page No

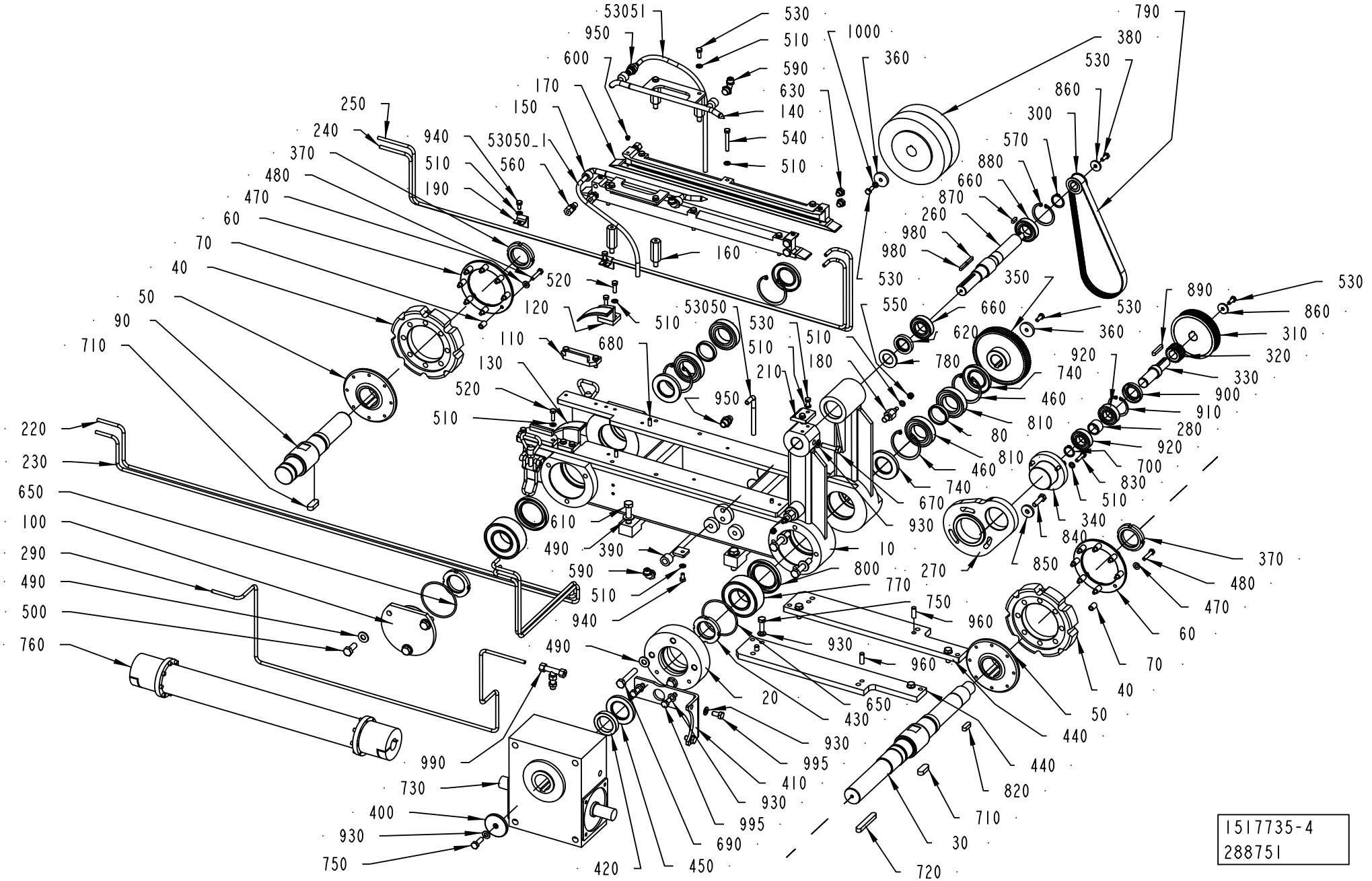

1517735-4
288751

ECM: 363743 - 20081002
Group number: 1517735-0300
Assembly Drawing: 1517735-4_1_AC

This list covers pages from 5-12 to 5-17

Pos	Part No	UN	Qty	Description	Page No
TBA 0250S (Cont'd)					
760	90600-5392		1	INTERMEDIARY SHAFT, ZA/60/636/24H7/14H7	
	90600-5382		*1*	*HUB, ZA/60/14H7 KEYWAY/XX*	
	Remark : Hole Ø 14 mm.				
	90600-5383		*1*	*HUB, ZA/60/24H7/XX*	
	Remark : Hole Ø 24 mm.				
790	90458-2518		1	TIMING BELT T5X690X16 POLYURETHANE	
TBA 0300S					
	2529131-0000		1	FRAME	
120	1548012-0000		1	GUIDE	
130	1548011-0000		1	GUIDE	
140	1517733-0000		1	GUIDE	
150	1517734-0000		1	GUIDE	
220	2520228-0000		1	TUBE	
230	2520227-0000		1	TUBE	
240	2520225-0000		1	TUBE	
250	2520226-0000		1	TUBE	
290	2697054-0000		1	PIPE	
440	2616164-0000		2	SUPPORT	
760	90600-5395		1	INTERMEDIARY SHAFT, ZA/60/624/24H7/14H7K	
	90600-5382		*1*	*HUB, ZA/60/14H7 KEYWAY/XX*	
	Remark : Hole Ø 14 mm.				
	90600-5383		*1*	*HUB, ZA/60/24H7/XX*	
	Remark : Hole Ø 24 mm.				
790	90458-2518		1	TIMING BELT T5X690X16 POLYURETHANE	
Common Parts					
020	2623628-0000		1	SUPPORT	
030	1548021-0000		1	SHAFT	
040	1517714-0000		2	SPROCKET	
050	1517721-0000		2	FLANGE	
060	1517722-0000		2	FLANGE	
070	1517723-0000		16	SPACER	
080	1517724-0000		2	SPACER	
090	1548022-0000		1	SHAFT	
100	1517727-0000		1	FLANGE	
1000	90062-0061		1	LOCK WASHER NORD-LOCK,6,5/10,8, T=2,2	
110	1498078-0000		2	PLATE	
160	1517732-0000		4	SPACER	
170	2868081-0000		2	GUIDE	
180	1524520-0000		2	PIN	
190	2514258-0000		2	TUBE HOLDER	
210	1519443-0000		1	PLATE	
260	1524518-0000		1	SHAFT	
270	1524519-0000		1	PLATE	
280	1524532-0000		1	SPACER	
300	2512991-0000		1	PULLEY	
310	2512992-0000		1	PULLEY	
320	2504727-0000		1	GEAR	
330	1524525-0000		1	SHAFT	
340	1524526-0000		1	FLANGE	
350	2520199-0000		1	GEAR	
360	1524529-0000		2	WASHER	
370	1512823-0000		2	NUT	
380	2501231-0000		2	BRUSH	
390	1548013-0000		1	PIPE	
400	1548186-0000		1	WASHER	
410	2719688-0000		1	PLATE	
420	1548432-0000		1	SPACER	
430	1548433-0000		2	ROUND NUT	
450	90458-1387		1	RADIAL SEAL 38X62X7 MM DUST LIP	
460	90458-0048		4	RETAINING RING FOR HOLE, 62X2 MM	
470	315105-0156		16	WASHER BRB 6,7X14 RFR	
480	312105-0374		16	SCREW M6S ISO 4014 M6X30 A480	
490	315105-0173		11	WASHER BRB 10,5X22 RFR	
500	312105-0493		3	SCREW M6S ISO 4017 M10X25 A480	
510	315105-0153		29	WASHER BRB 6,4X12 RFR	
520	312105-0370		8	SCREW M6S ISO 4017 M6X20 A480	
530	312105-0368		10	SCREW M6S ISO 4017 M6X16 A480	
53050	90166-0118	MM	2000	TUBE 8 MM PA BLACK	
53050_1	90166-0118	MM	1000	TUBE 8 MM PA BLACK	
53051	90166-0118	MM	2000	TUBE 8 MM PA BLACK	
540	312105-0379		6	SCREW M6S ISO 4014 M6X45 A480	
550	312812-0316		2	HEXAGON NUT, NY-LOCK M6 A480	
560	90030-0184		4	CONN. STR. GE06LRED71	
570	315751-0119		1	RETAINING RING FOR SHAFT DIN 471 25 SS	
590	342931-0122		4	ELBOW 90 COUPL.,EXT.THREAD 8/6-G1/4"	
600	90458-1382		4	PLUG, M5X3.5 SMC - MS-5P	
610	312105-0499		4	SCREW M6S ISO 4014 M10X40 A480	
620	90091-0406		1	RADIAL SEAL 25X40X7 MM DUST LIP	
630	90330-0066		4	PLUG, EXT. G-THREAD, G1/8	
650	315204-0306		2	O-RING 74,5X3 MM	
660	90214-0165		2	BALL BEARING, 25X47X12 MM	
670	312105-0457		1	SCREW M6S ISO 4014 M8X35 A480	
680	311103-0351		4	PARALLEL PIN ISO 2338 6M6X16 A1	

CHAIN SUPPORT

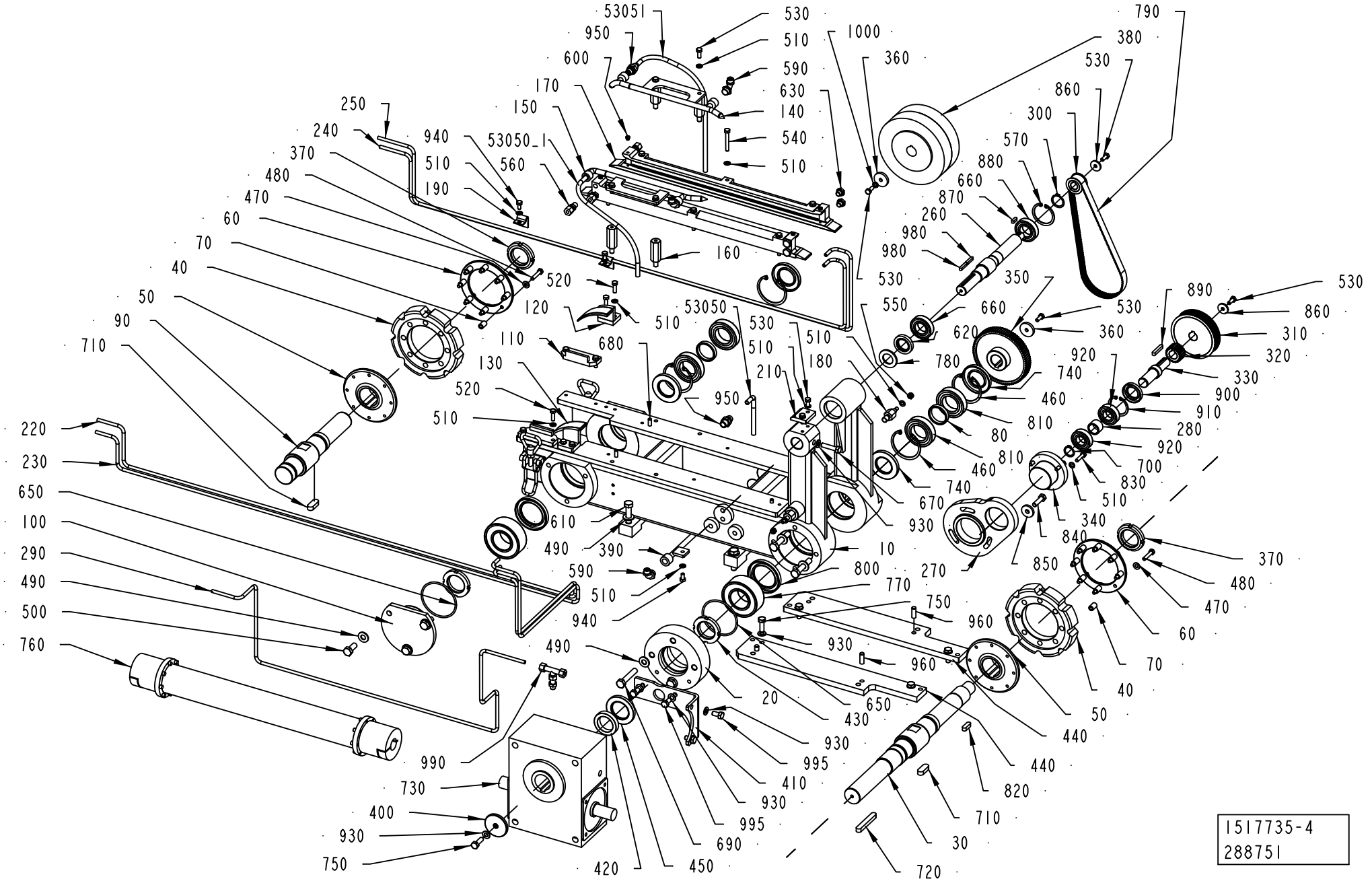

Pos	Part No	UN	Qty	Description	Page No
Common Parts (Cont'd)					
690	312105-0502		4	SCREW M6S ISO 4014 M10X55 A480	
700	315751-0116		1	RETAINING RING FOR SHAFT DIN 471 20 SS	
710	315705-0330		2	PARALLEL KEY W. ROUND ENDS 12X8X32 MM	
720	315705-0307		1	PARALLEL KEY W. ROUND ENDS 10X8X70 MM	
730	90056-0164		1	WORM GEAR BS 71-F-TT	
740	90091-0439		4	RADIAL SEAL 35X62X7 MM DUST LIP	
750	312105-0453		5	SCREW M6S ISO 4017 M8X25 A480	
770	321330-0108		2	ANG. BALL BEAR, 40X80X30,2 MM	
780	315105-0195		1	WASHER BRB 23X40 RFR	
800	90091-0441		2	RADIAL SEAL 50X72X8 MM DUST LIP	
810	90458-0068		4	BALL BEARING, STAINLESS 35X62X14 MM	
820	315705-0265		1	PARALLEL KEY W. ROUND ENDS 8X7X25 MM	
830	312105-0370		3	SCREW M6S ISO 4017 M6X20 A480	
840	312105-0455		3	SCREW M6S ISO 4017 M8X30 A480	
850	315125-0165		3	WASHER TBRSB 8,4X26X5 A4	
860	315125-0153		2	WASHER TBRSB 6,4X22X4 A4	
870	315701-0199		1	PARALLEL KEY W. ROUND ENDS 5X5X16 MM	
880	315753-0130		1	RETAINING RING FOR BORE DIN 472 47 A2	
890	315705-0238		1	PARALLEL KEY W. ROUND ENDS 6X6X36 MM	
900	90091-0322		1	RADIAL SEAL 25X42X7 MM DUST LIP	
910	90141-0020		1	RETAINING RING FOR BORE DIN 472 42 A2	
920	90214-0225		2	BALL BEARING SOLID OIL 20X42X12 MM	
930	315105-0165		10	WASHER BRB 8,4X16 RFR	
940	312105-0366		4	SCREW M6S ISO 4017 M6X12 A480	
950	342921-0122		2	STRAIGHT COUPLING,EXT.THREADED 8/6-G1/4"	
960	311103-0401		3	PARALLEL PIN ISO 2338 8M6X20 A1	
980	315705-0202		2	PARALLEL KEY W ROUND ENDS 5X5X25MM	
990	342755-0102		1	CONN. T-PIPE ADJ. , EVT06LROMD	
995	312105-0449		4	SCREW M6S ISO 4017 M8X16 A480	

Pos	Part No	UN	Qty	Description	Page No

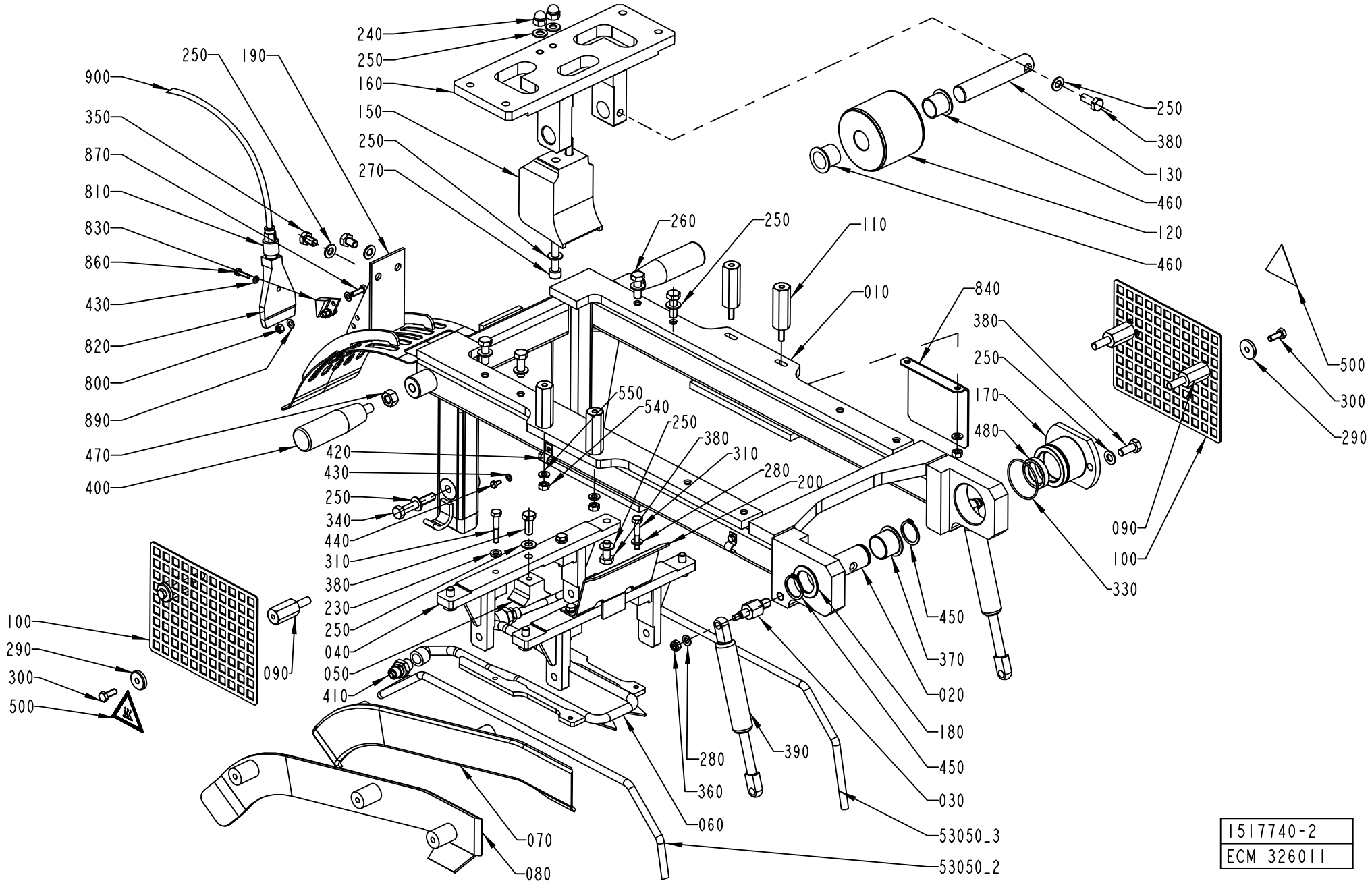
240
250
160
150
250
270
250
190
900
350
870
810
830
860
430
820
800
890
470
400
260
250
110
010
250
380
460
120
460
840
380
250
170
480
330
090
100
500
300
290
420
430
250
340
440
310
380
230
250
040
050
410
550
540
250
380
310
280
200
100
290
300
500
090
280
360
070
080
060
390
450
370
020
180
450
030
53050_3
53050_2
1517740-2
ECM 326011

ECM: 326016 - 20080102
Group number: 1517740-0200
Assembly Drawing: 1517740-2_1_AC

This list covers pages from 5-18 to 5-21

Pos	Part No	UN	Qty	Description	Page No
TBA 0200B					
010	2623625-0000		1	SWING FRAME	
050	1519435-0000		1	PLATE	
060	1519434-0000		1	GUIDE	
070	1548016-0000		1	GUIDE	
080	1548017-0000		1	GUIDE	
120	1347073-0000		1	PULLEY	
150	2623627-0000		1	SLIDER	
190	1548018-0000		1	TOP SECTION	
TBA 0200M					
010	2623630-0000		1	SWING FRAME	
050	1548030-0000		1	PLATE	
060	1548031-0000		1	GUIDE	
070	1548038-0000		1	GUIDE	
080	1548037-0000		1	GUIDE	
120	1548032-0000		1	PULLEY	
150	1548027-0000		1	SLIDER	
190	2827786-0000		1	TOP SECTION	
TBA 0200S					
010	2623631-0000		1	SWING FRAME	
050	1538577-0000		1	PLATE	
060	2792619-0000		1	GUIDE	
070	1538576-0000		1	GUIDE	
080	1538575-0000		1	GUIDE	
120	2779653-0000		1	PULLEY	
150	2892563-0000		1	SLIDER	
190	2827787-0000		1	TOP SECTION	
TBA 0250B					
010	2623630-0000		1	SWING FRAME	
050	1519435-0000		1	PLATE	
060	1519434-0000		1	GUIDE	
070	1519429-0000		1	GUIDE	
080	1519428-0000		1	GUIDE	
120	1347073-0000		1	PULLEY	
150	2623627-0000		1	SLIDER	
190	2827786-0000		1	TOP SECTION	
TBA 0250S					
010	2623632-0000		1	SWING FRAME	
050	1548030-0000		1	PLATE	
060	1548031-0000		1	GUIDE	
070	1548029-0000		1	GUIDE	
080	1548028-0000		1	GUIDE	
120	1548032-0000		1	PULLEY	
150	1548027-0000		1	SLIDER	
190	1548035-0000		1	TOP SECTION	
TBA 0300S					
010	2623631-0000		1	SWING FRAME	
050	1538577-0000		1	PLATE	
060	1519434-0000		1	GUIDE	
070	2527351-0000		1	GUIDE	
080	2527350-0000		1	GUIDE	
120	1538578-0000		1	PULLEY	
150	2623627-0000		1	SLIDER	
190	2827787-0000		1	TOP SECTION	
Common Parts					
020	1517731-0000		1	PIN	
030	1524520-0000		2	PIN	
040	1524528-0000		2	BRACKET	
090	1519450-0000		4	SPACER	
100	1519442-0000		2	TOUCH GUARD	
110	2616154-0000		4	SPACER	
130	2514132-0000		1	PIN	
160	2616159-0000		1	BRACKET	
170	1524521-0000		1	FLANGE	
180	1282796-0000		1	WASHER	
200	1524539-0000		1	PROTECTION	
230	315115-0153		2	WASHER PLAIN, TBRB 6,4/12 H=3	
240	312705-0318		2	NUT HEX. DOMED CAP MHM-6 M8 A280	
250	315105-0165		20	WASHER BRB 8,4X16 RFR	
260	312105-0453		4	SCREW M6S ISO 4017 M8X25 A480	
270	90287-0335		2	SCREW MC6S M8X90 A280	
280	315105-0153		4	WASHER BRB 6,4X12 RFR	
290	315125-0153		4	WASHER TBRSB 6,4X22X4 A4	
300	312105-0368		4	SCREW M6S ISO 4017 M6X16 A480	
310	312105-0376		4	SCREW M6S ISO 4014 M6X35 A480	
330	315202-0803		1	O-RING 44,17X1,78 MM	
340	312105-0461		2	SCREW M6S ISO 4014 M8X50 A480	
350	312105-0447		2	SCREW M6S ISO 4017 M8X12 A480	
360	312812-0316		2	HEXAGON NUT, NY-LOCK M6 A480	
370	321153-0296		1	FLANGE BUSHING, 25X28X21,5 MM	
380	312105-0451		8	SCREW M6S ISO 4017 M8X20 A480	
390	90459-2851		2	GAS SPRING A1 A1N-52-060-205/900N	
400	90051-0127		2	HANDLE, NO. .601/90+X-M10-INOX	
410	342921-0122		2	STRAIGHT COUPLING,EXT.THREADED 8/6-G1/4"	

Machine Type | Group Description | Used-In | Group Number | Page No

SWING FRAME

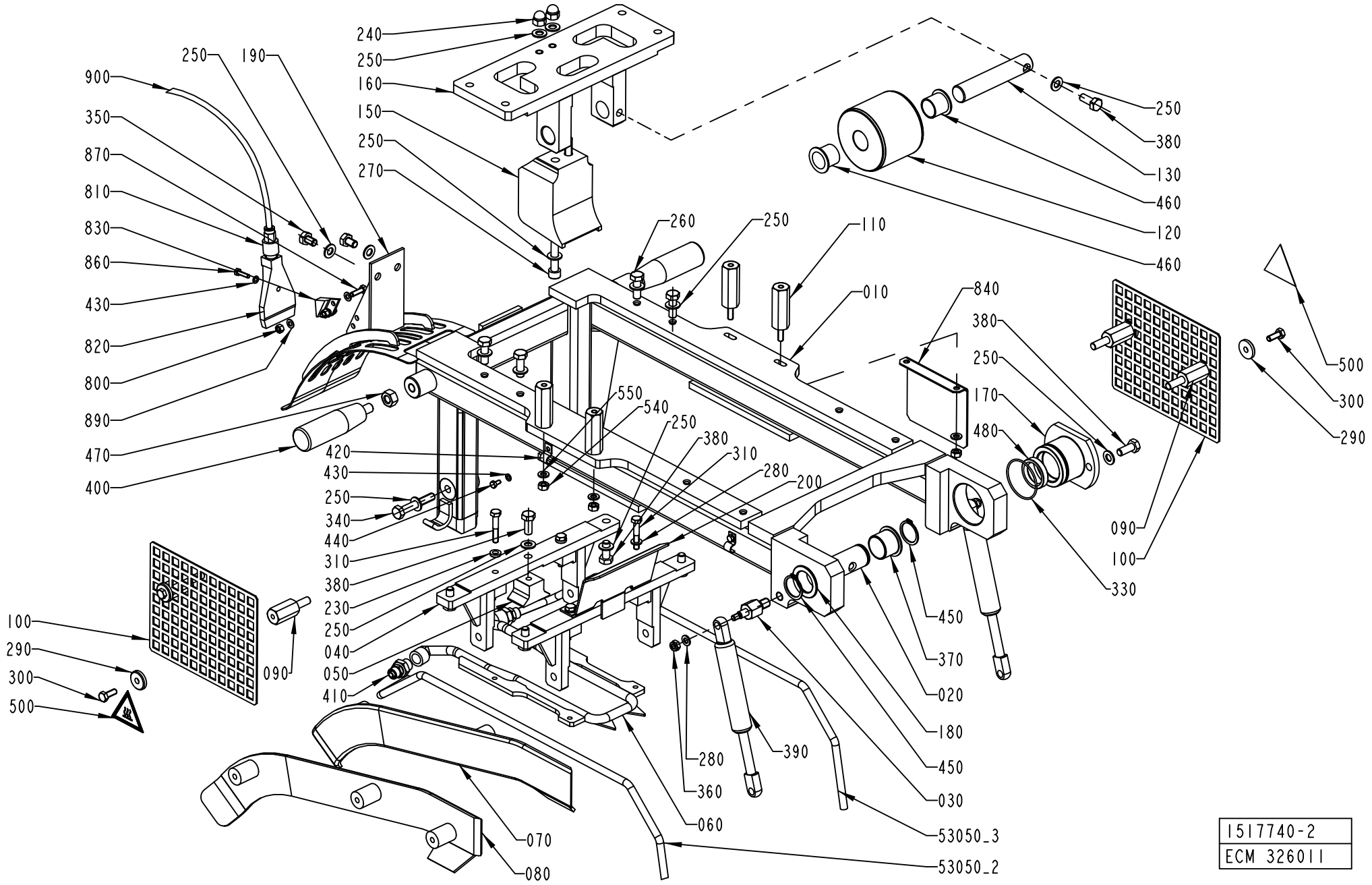

1517740-2
ECM 326011

ECM: 326016 - 20080102
Group number: 1517740-0200
Assembly Drawing: 1517740-2_1_AC

This list covers pages from 5-18 to 5-21

Pos	Part No	UN	Qty	Description	Page No
Common Parts (Cont'd)					
420	316810-0106		4	PIPE CLIP FOR TUBE D=8 MM	
430	315105-0136		5	WASHER BRB 4,3X8 RFR	
440	312105-0287		4	SCREW M6S ISO 4017 M4X8 A470	
450	315751-0119		2	RETAINING RING FOR SHAFT DIN 471 25 SS	
460	90240-0265		2	FLANGE BUSHING, 20X23X21 MM	
470	312605-0320		2	HEXAGON NUT, M6M M10 A280	
480	315221-0156		1	RADIAL SEAL 25X35X7 MM	
500	359705-0007		2	WARNING SIGN ISO, HOT SURFACE	
53050_2	90166-0118	MM	1000	TUBE 8 MM PA BLACK	
53050_3	90166-0118	MM	1000	TUBE 8 MM PA BLACK	
540	312605-0316		4	HEXAGON NUT, M6M M6 A280	
550	315105-0153		4	WASHER BRB 6,4X12 RFR	
800	312605-0314		2	HEXAGON NUT, M6M M5 A280	
810	350008-0004		1	PUSH-IN FITTING QSF-F-G1/4-6	
820	90424-0089		1	AIR NOZZLE, BSPT1/4, AAB727-1/4-15	
830	2827790-0000		1	TOUCH GUARD	
840	2794928-0000		1	PLATE	
860	312105-0293		1	SCREW M6S ISO 4017 M4X16 A470	
870	312105-0329		2	SCREW M6S ISO 4017 M5X16 A480	
890	315105-0146		4	WASHER BRB 5,3X10 RFR	
900	90166-0081	M	5	TUBE 6 MM PA BLUE	

Pos	Part No	UN	Qty	Description	Page No

HEATING CHAMBER

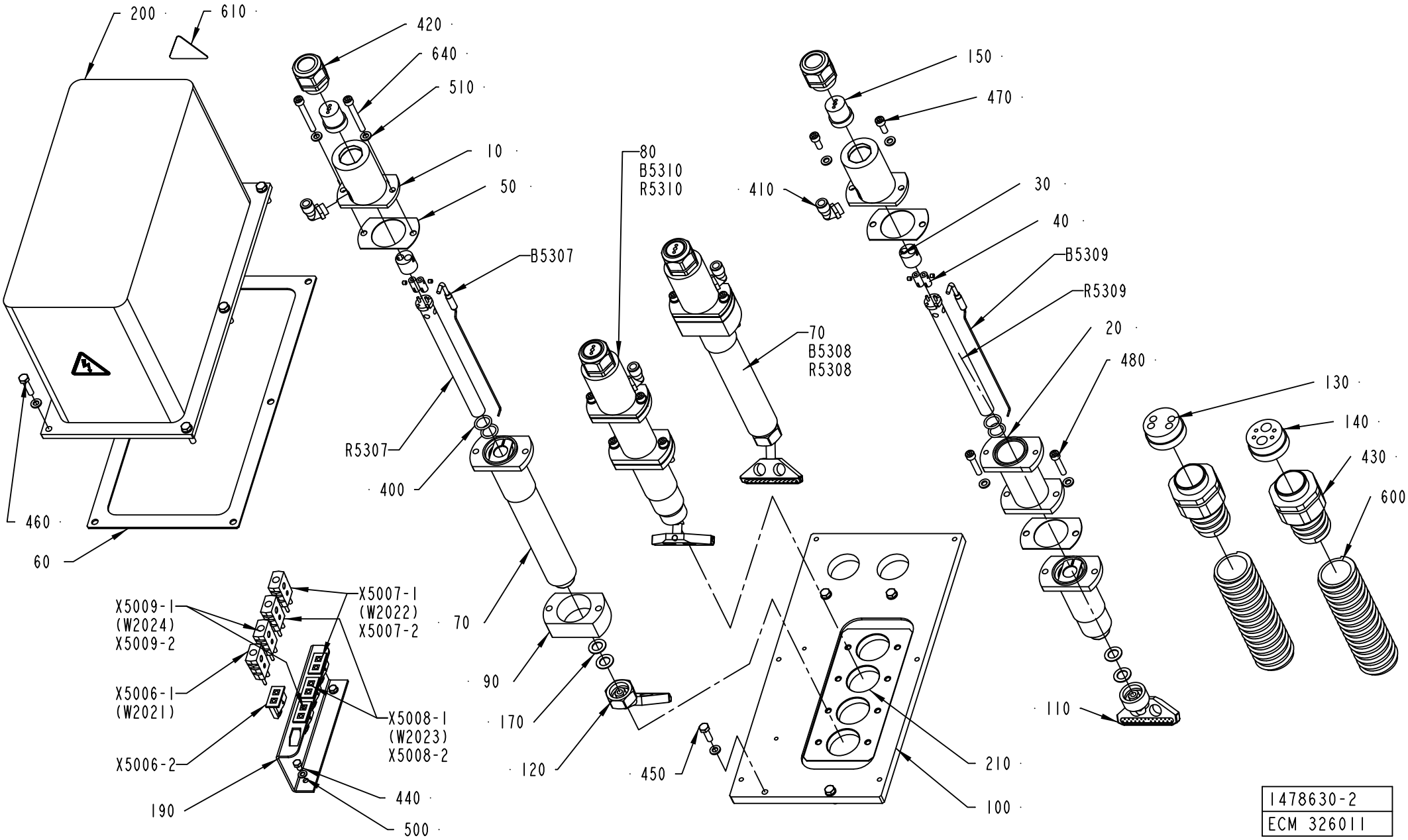

1478630-2
ECM 326011

ECM: 326014 - 20080102
Group number: 1478630-0200
Assembly Drawing: 1478630-2_1_AC

This list covers pages from 5-22 to 5-25

Pos	Part No	UN	Qty	Description	Page No
TBA 0200B					
090	2616147-0003		2	SPACER	
110	2508265-0000		2	NOZZLE	
120	2508263-0000		2	NOZZLE	
640	312115-0384		4	SCREW ISO4762 M6X70 A4 80	
TBA 0200M					
090	2616147-0002		2	SPACER	
110	2633497-0000		2	ITOZZLE	
120	2633496-0000		2	NOZZLE	
640	312115-0380		4	SCREW ISO4762 M6X50 A4 80	
TBA 0200S					
090	2616147-0001		2	SPACER	
110	2632764-0000		2	NOZZLE	
120	2632763-0000		2	NOZZLE	
640	312115-0378		4	SCREW ISO4762 M6X40 A4 80	
TBA 0250B					
090	2616147-0002		2	SPACER	
110	2508265-0000		2	NOZZLE	
120	2508263-0000		2	NOZZLE	
640	312115-0380		4	SCREW ISO4762 M6X50 A4 80	
TBA 0250S					
110	2633497-0000		2	ITOZZLE	
120	2633496-0000		2	NOZZLE	
640	312115-0374		4	SCREW ISO4762 M6X30 A4 80	
TBA 0300S					
090	2616147-0001		2	SPACER	
110	2508265-0000		2	NOZZLE	
120	2508263-0000		2	NOZZLE	
640	312115-0378		4	SCREW ISO4762 M6X40 A4 80	
Common Parts					
010	2659861-0000		4	CAP	
020	2500504-0000		2	SPACER	
030	2500505-0000		4	CLAMP	
040	2500506-0000		8	AXLE PIN	
050	2500507-0000		6	GASKET	
060	2501839-0000		1	GASKET	
070	2616155-0002		2	HEATING PIPE	
080	2616155-0001		2	HEATING PIPE	
100	2616149-0000		1	PLATE	
130	2501843-0000		1	INSERT	
140	2501844-0000		1	INSERT	
150	2649691-0000		4	INSERT	
170	1010947-0000		10	GASKET	
190	1558406-0000		1	HOLDER	
200	2501838-0000		1	COVER HOUSING	
210	2501840-0000		1	GASKET	
400	315202-0213		8	O-RING 15,3X2,4 MM	
410	90458-2958		4	ELBOW PIPE JOINT, EXT.THREAD, D=8MM-G1/4	
420	353240-0005		4	GLAND W/O INSERT PG21 NORMAL	
430	353243-0008		2	HOSE GLAND W/O INSERT PG29 EXTENDED	
440	312105-0323		2	SCREW M6S ISO 4017 M5X8 A480	
450	312105-0370		4	SCREW M6S ISO 4017 M6X20 A480	
460	312105-0372		6	SCREW M6S ISO 4017 M6X25 A480	
470	312115-0368		4	SCREW ISO4762 M6X16 A4 80	
480	312115-0374		4	SCREW ISO4762 M6X30 A4 80	
500	315105-0146		2	WASHER BRB 5,3X10 RFR	
510	315105-0153		22	WASHER BRB 6,4X12 RFR	
520	312318-0283		8	SCREW ISO4029 M4X4 A4	
600	90152-0060	M	2	SPIRAL CONDUIT, 42X35, UL3529	
610	359705-0015		2	WARNING SIGN ISO, RISK OF ELECTRIC SHOCK	
B5307	2616150-0000		1	THERMOCOUPLE	
B5308	2616150-0000		1	THERMOCOUPLE	
B5309	2616150-0000		1	THERMOCOUPLE	
B5310	2616150-0000		1	THERMOCOUPLE	
R5307	90206-0132		1	HOT AIR ELEMENT	
R5308	90206-0132		1	HOT AIR ELEMENT	
R5309	90206-0132		1	HOT AIR ELEMENT	
R5310	90206-0132		1	HOT AIR ELEMENT	
X5006-1	90326-0022		1	PLUG, MALE YELLOW CR-AL	
X5006-2	90326-0077		1	CONTACT	
X5007-1	90326-0022		1	PLUG, MALE YELLOW CR-AL	
X5007-2	90326-0077		1	CONTACT	
X5008-1	90326-0022		1	PLUG, MALE YELLOW CR-AL	
X5008-2	90326-0077		1	CONTACT	
X5009-1	90326-0022		1	PLUG, MALE YELLOW CR-AL	
X5009-2	90326-0077		1	CONTACT	

Machine Type | Group Description | Used-In | Group Number | Page No

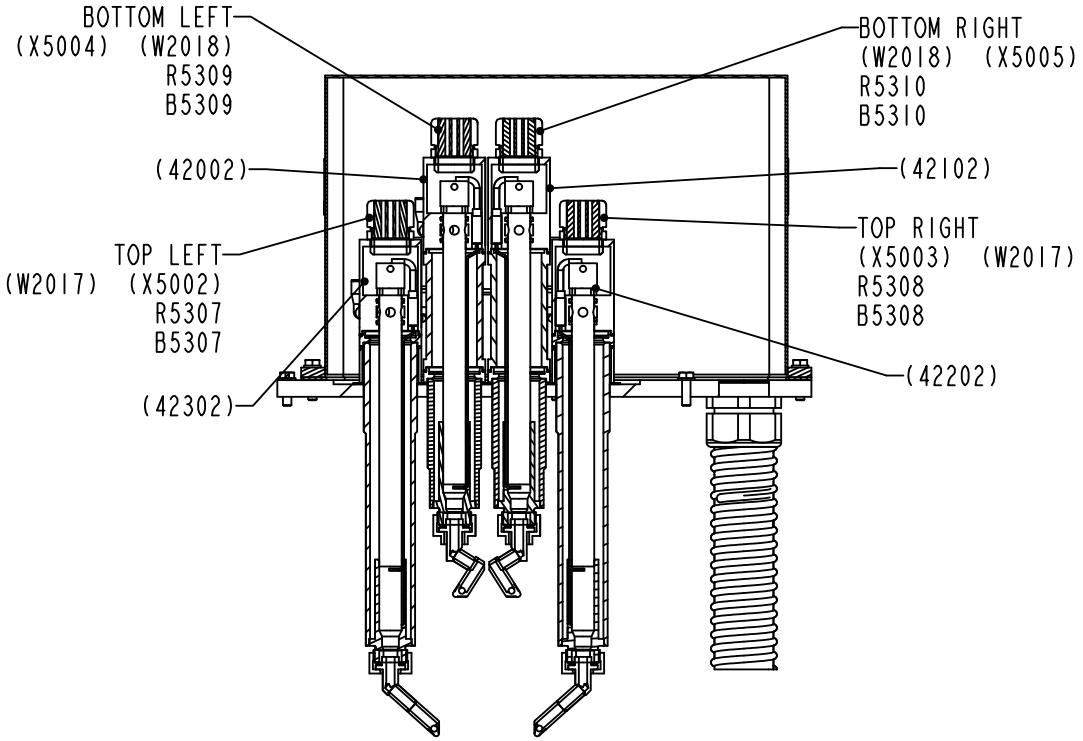

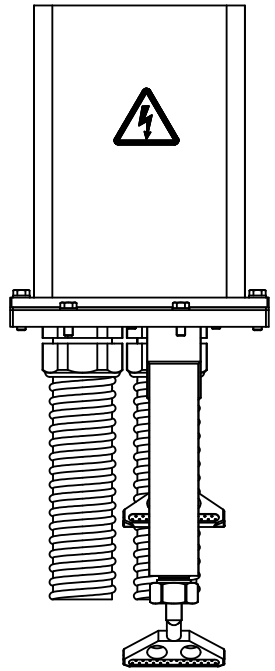

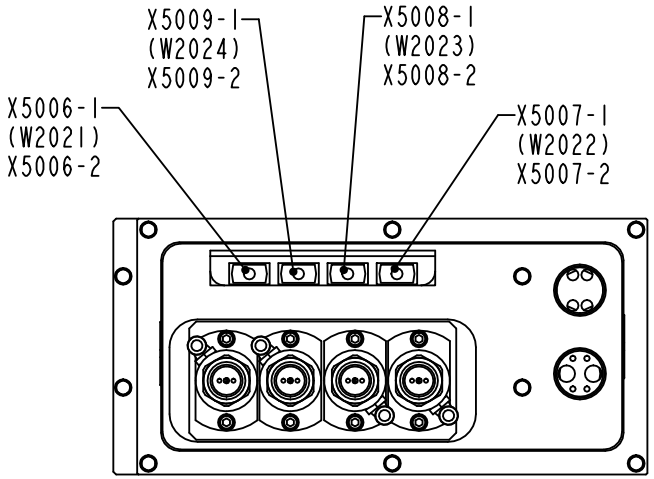

1478630-2
ECM 326011

ECM: 326014 - 20080102
Group number: 1478630-0200
Assembly Drawing: 1478630-2_2_AC

This list covers pages from 5-22 to 5-25

Pos	Part No	UN	Qty	Description	Page No
TBA 0200B					
090	2616147-0003		2	SPACER	
110	2508265-0000		2	NOZZLE	
120	2508263-0000		2	NOZZLE	
640	312115-0384		4	SCREW ISO4762 M6X70 A4 80	
TBA 0200M					
090	2616147-0002		2	SPACER	
110	2633497-0000		2	ITOZZLE	
120	2633496-0000		2	NOZZLE	
640	312115-0380		4	SCREW ISO4762 M6X50 A4 80	
TBA 0200S					
090	2616147-0001		2	SPACER	
110	2632764-0000		2	NOZZLE	
120	2632763-0000		2	NOZZLE	
640	312115-0378		4	SCREW ISO4762 M6X40 A4 80	
TBA 0250B					
090	2616147-0002		2	SPACER	
110	2508265-0000		2	NOZZLE	
120	2508263-0000		2	NOZZLE	
640	312115-0380		4	SCREW ISO4762 M6X50 A4 80	
TBA 0250S					
110	2633497-0000		2	ITOZZLE	
120	2633496-0000		2	NOZZLE	
640	312115-0374		4	SCREW ISO4762 M6X30 A4 80	
TBA 0300S					
090	2616147-0001		2	SPACER	
110	2508265-0000		2	NOZZLE	
120	2508263-0000		2	NOZZLE	
640	312115-0378		4	SCREW ISO4762 M6X40 A4 80	
Common Parts					
010	2659861-0000		4	CAP	
020	2500504-0000		2	SPACER	
030	2500505-0000		4	CLAMP	
040	2500506-0000		8	AXLE PIN	
050	2500507-0000		6	GASKET	
060	2501839-0000		1	GASKET	
070	2616155-0002		2	HEATING PIPE	
080	2616155-0001		2	HEATING PIPE	
100	2616149-0000		1	PLATE	
130	2501843-0000		1	INSERT	
140	2501844-0000		1	INSERT	
150	2649691-0000		4	INSERT	
170	1010947-0000		10	GASKET	
190	1558406-0000		1	HOLDER	
200	2501838-0000		1	COVER HOUSING	
210	2501840-0000		1	GASKET	
400	315202-0213		8	O-RING 15,3X2,4 MM	
410	90458-2958		4	ELBOW PIPE JOINT, EXT.THREAD, D=8MM-G1/4	
420	353240-0005		4	GLAND W/O INSERT PG21 NORMAL	
430	353243-0008		2	HOSE GLAND W/O INSERT PG29 EXTENDED	
440	312105-0323		2	SCREW M6S ISO 4017 M5X8 A480	
450	312105-0370		4	SCREW M6S ISO 4017 M6X20 A480	
460	312105-0372		6	SCREW M6S ISO 4017 M6X25 A480	
470	312115-0368		4	SCREW ISO4762 M6X16 A4 80	
480	312115-0374		4	SCREW ISO4762 M6X30 A4 80	
500	315105-0146		2	WASHER BRB 5,3X10 RFR	
510	315105-0153		22	WASHER BRB 6,4X12 RFR	
520	312318-0283		8	SCREW ISO4029 M4X4 A4	
600	90152-0060	M	2	SPIRAL CONDUIT, 42X35, UL3529	
610	359705-0015		2	WARNING SIGN ISO, RISK OF ELECTRIC SHOCK	
B5307	2616150-0000		1	THERMOCOUPLE	
B5308	2616150-0000		1	THERMOCOUPLE	
B5309	2616150-0000		1	THERMOCOUPLE	
B5310	2616150-0000		1	THERMOCOUPLE	
R5307	90206-0132		1	HOT AIR ELEMENT	
R5308	90206-0132		1	HOT AIR ELEMENT	
R5309	90206-0132		1	HOT AIR ELEMENT	
R5310	90206-0132		1	HOT AIR ELEMENT	
X5006-1	90326-0022		1	PLUG, MALE YELLOW CR-AL	
X5006-2	90326-0077		1	CONTACT	
X5007-1	90326-0022		1	PLUG, MALE YELLOW CR-AL	
X5007-2	90326-0077		1	CONTACT	
X5008-1	90326-0022		1	PLUG, MALE YELLOW CR-AL	
X5008-2	90326-0077		1	CONTACT	
X5009-1	90326-0022		1	PLUG, MALE YELLOW CR-AL	
X5009-2	90326-0077		1	CONTACT	

Machine Type | Group Description | Used-In | Group Number | Page No

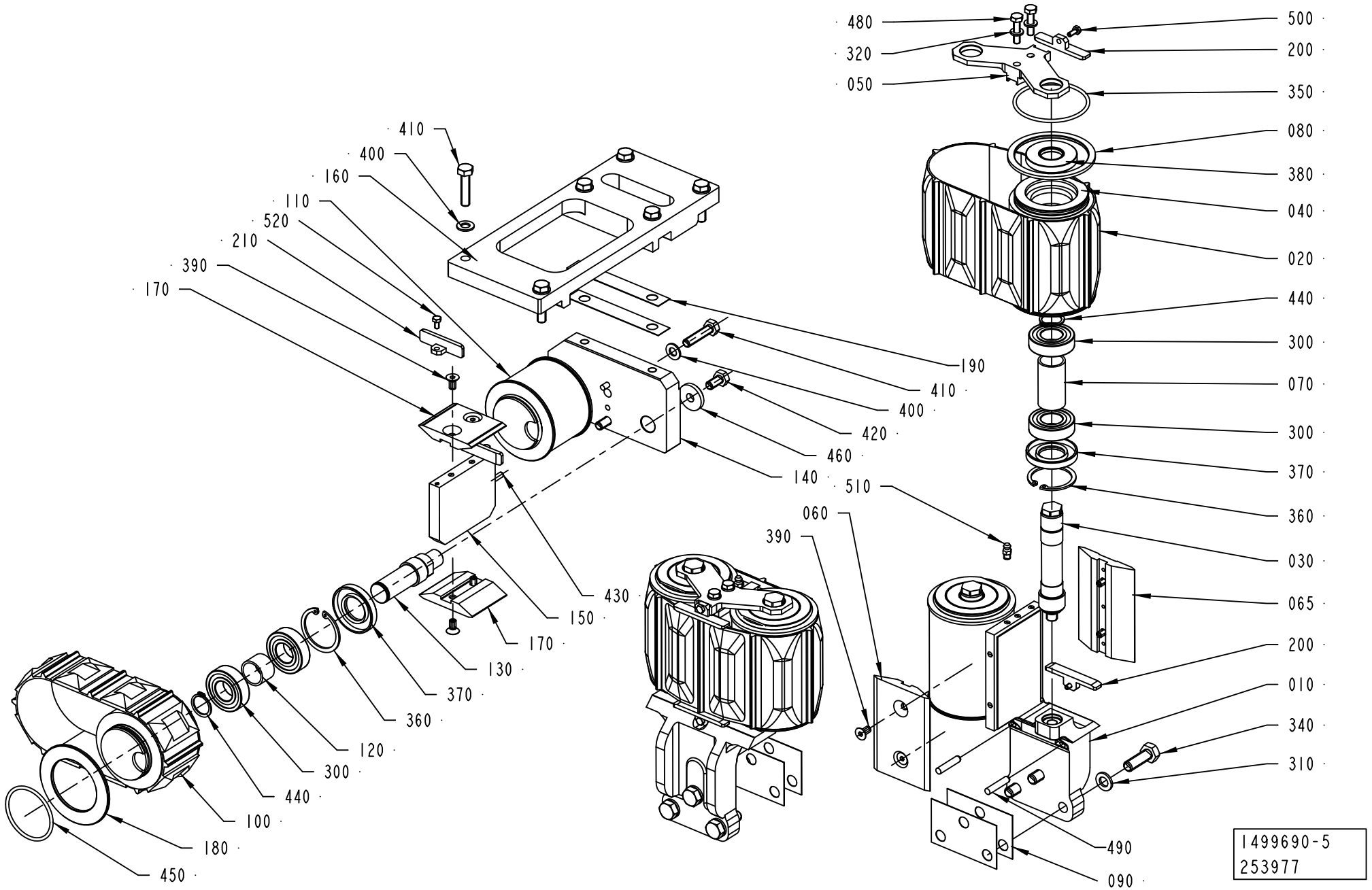
480
320
050
500
200
350
080
380
040
020
440
300
070
300
370
360
030
065
200
010
340
310
410
400
160
110
520
210
390
170
190
410
400
420
460
140
510
060
390
430
150
170
130
370
360
120
300
440
100
180
450
490
090
1499690-5
253977

ECM: 358723 - 20081001
Group number: 1499690-0300
Assembly Drawing: 1499690-5_1_AB

This list covers pages from 5-26 to 5-29

Pos	Part No	UN	Qty	Description	Page No
TBA 0200B					
010	2666550-0000		2	SUPPORT	
020	1523100-0000		2	BELT	
030	2665719-0000		4	SHAFT	
040	2665658-0000		4	ROLLER	
060	1499688-0000		2	SLIDER	
065	2708125-0000		2	SLIDER	
070	1499689-0000		4	SPACER	
100	1519203-0000		1	BELT	
110	1478638-0000		2	PULLEY	
150	2792666-0000		1	PLATE	
170	1499935-0000		2	SLIDER	
190	1487874-0000		2	SHIM	
TBA 0200M					
010	2665852-0000		2	SUPPORT	
020	1523101-0000		2	BELT	
030	2666553-0000		4	SHAFT	
040	2666556-0000		4	ROLLER	
060	1487055-0000		2	SLIDER	
065	2707530-0000		2	SLIDER	
070	1487051-0000		4	SPACER	
100	2947460-0000		1	BELT	
110	2730020-0000		2	PULLEY	
150	2730017-0000		1	PLATE	
170	2730018-0000		2	SLIDER	
190	1487874-0000		2	SHIM	
TBA 0200S					
010	2666551-0000		2	SUPPORT	
020	2525662-0000		2	BELT	
030	2666554-0000		4	SHAFT	
040	2666557-0000		4	ROLLER	
060	1499010-0000		2	SLIDER	
065	2726983-0000		2	SLIDER	
070	1499011-0000		4	SPACER	
100	1499919-0000		1	BELT	
110	1499016-0000		2	PULLEY	
150	2792446-0000		1	PLATE	
170	1517968-0000		2	SLIDER	
TBA 0250B					
010	2665852-0000		2	SUPPORT	
020	1523101-0000		2	BELT	
030	2666553-0000		4	SHAFT	
040	2666556-0000		4	ROLLER	
060	1487055-0000		2	SLIDER	
065	2707530-0000		2	SLIDER	
070	1487051-0000		4	SPACER	
100	1519203-0000		1	BELT	
110	1478638-0000		2	PULLEY	
150	2792666-0000		1	PLATE	
170	1499935-0000		2	SLIDER	
190	1487874-0000		2	SHIM	
TBA 0250S					
010	2666552-0000		2	SUPPORT	
020	2852433-0000		2	BELT	
030	2666555-0000		4	SHAFT	
040	2666558-0000		4	ROLLER	
060	1499004-0000		2	SLIDER	
065	2726984-0000		2	SLIDER	
070	1499005-0000		4	SPACER	
100	2947460-0000		1	BELT	
110	2730020-0000		2	PULLEY	
150	2730017-0000		1	PLATE	
170	2730018-0000		2	SLIDER	
190	1487874-0000		2	SHIM	
TBA 0300S					
010	2666551-0000		2	SUPPORT	
020	2525662-0000		2	BELT	
030	2666554-0000		4	SHAFT	
040	2666557-0000		4	ROLLER	
060	1499010-0000		2	SLIDER	
065	2726983-0000		2	SLIDER	
070	1499011-0000		4	SPACER	
100	1519203-0000		1	BELT	
110	1478638-0000		2	PULLEY	
150	2792666-0000		1	PLATE	
170	1499935-0000		2	SLIDER	
190	1487874-0000		2	SHIM	
Common Parts					
050	2665191-0000		2	PLATE	
080	2502969-0000		4	FLANGE	
090	1478618-0000		6	SHIM	
120	1478640-0000		2	SPACER	
130	1478637-0000		2	SHAFT	
140	1478636-0000		1	PLATE	

Machine Type | Group Description | Used-In | Group Number | Page No

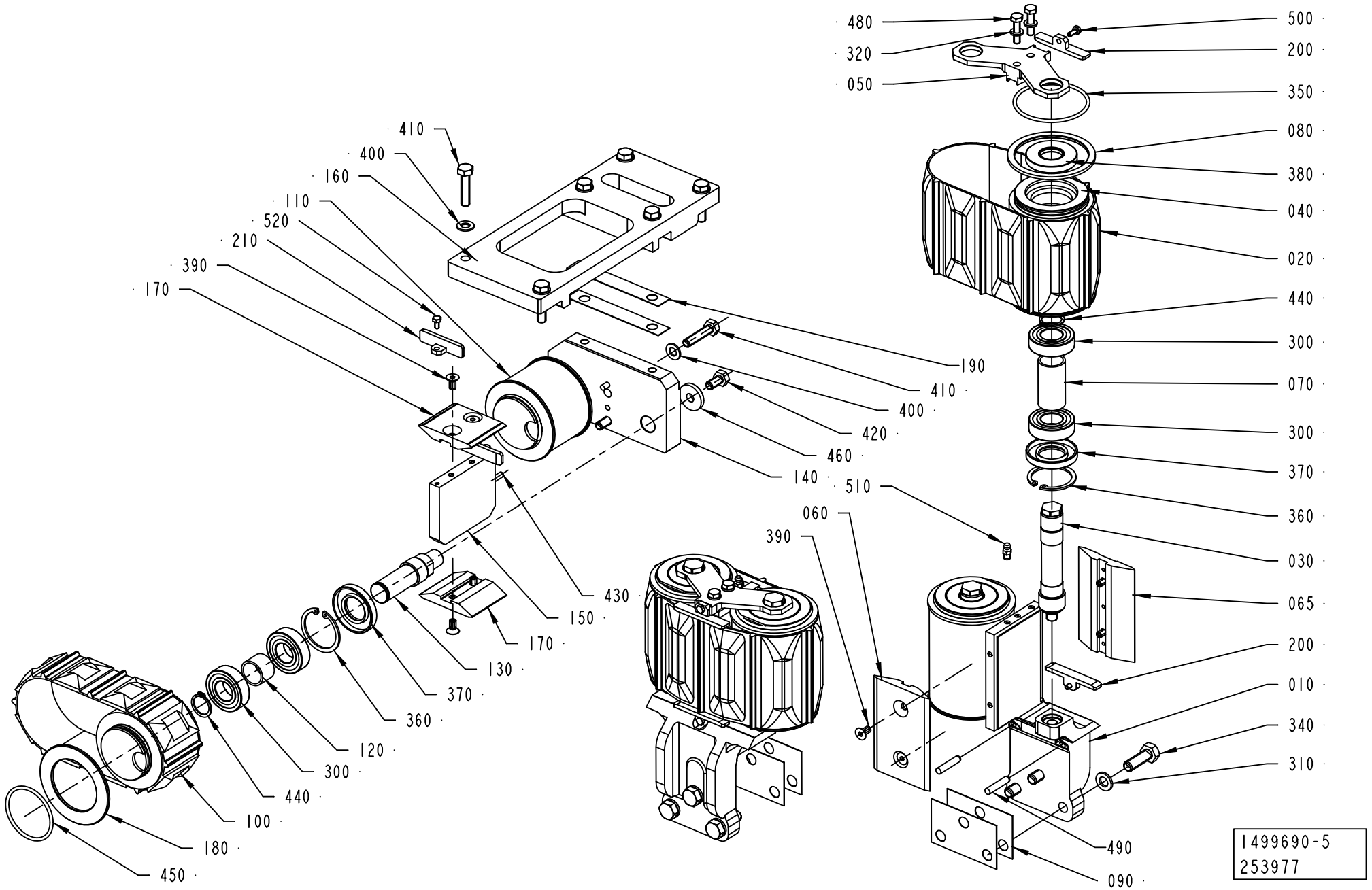
480
320
050
500
200
350
080
380
040
020
440
300
070
300
370
360
030
065
200
010
340
310
490
090
410
400
160
110
520
210
390
170
190
410
400
420
460
140
510
060
390
430
150
170
130
370
360
120
300
440
100
180
450
1499690-5
253977

Pos	Part No	UN	Qty	Description	Page No
Common Parts (Cont'd)					
160	1524517-0000		1	SUPPORT	
180	1478639-0000		2	FLANGE	
200	2706654-0000		4	STOPPER	
210	2792440-0000		2	SUPPORT	
300	90214-0225		12	BALL BEARING SOLID OIL 20X42X12 MM	
310	315105-0171		6	WASHER BRB 10X18 RFR	
320	315105-0153		4	WASHER BRB 6,4X12 RFR	
340	312105-0495		6	SCREW M6S ISO 4017 M10X30 A480	
350	315202-0304		4	O-RING 64,5X3 MM	
360	90141-0020		6	RETAINING RING FOR BORE DIN 472 42 A2	
370	90091-0263		6	RADIAL SEAL 24X47X7 MM DUST LIP	
380	90458-0137		4	RADIAL SEAL 20X47X7 MM DUST LIP	
390	312155-0366		12	SCREW DIN 7991 MF6S M6X12 A4 70	
400	315105-0165		8	WASHER BRB 8,4X16 RFR	
410	312109-0457		8	SCREW M6S ISO 4017 M8X35 A480	
420	312105-0449		2	SCREW M6S ISO 4017 M8X16 A480	
430	311103-0308		2	PARALLEL PIN ISO 2338 5M6X16 A1	
440	315751-0116		6	RETAINING RING FOR SHAFT DIN 471 20 SS	
450	315202-0301		2	O-RING 49,5X3 MM	
460	315125-0165		2	WASHER TBRSB 8,4X26X5 A4	
470	90157-0016		1	LOCKING FLUID LOCTITE 242 50 ML	
480	312105-0372		4	SCREW M6S ISO 4017 M6X25 A480	
490	311103-0357		4	PARALLEL PIN ISO 2338 6M6X30 A1	
500	312105-0289		4	SCREW M6S H4X10 A4 70 ISO4017/DIN933	
510	90286-0013		2	GREASE NIPPLE STRAIGHT, H1 M6X1 2346	
520	312105-0287		2	SCREW M6S ISO 4017 M4X8 A470	

Pos	Part No	UN	Qty	Description	Page No

DISCHARGE DEVICE

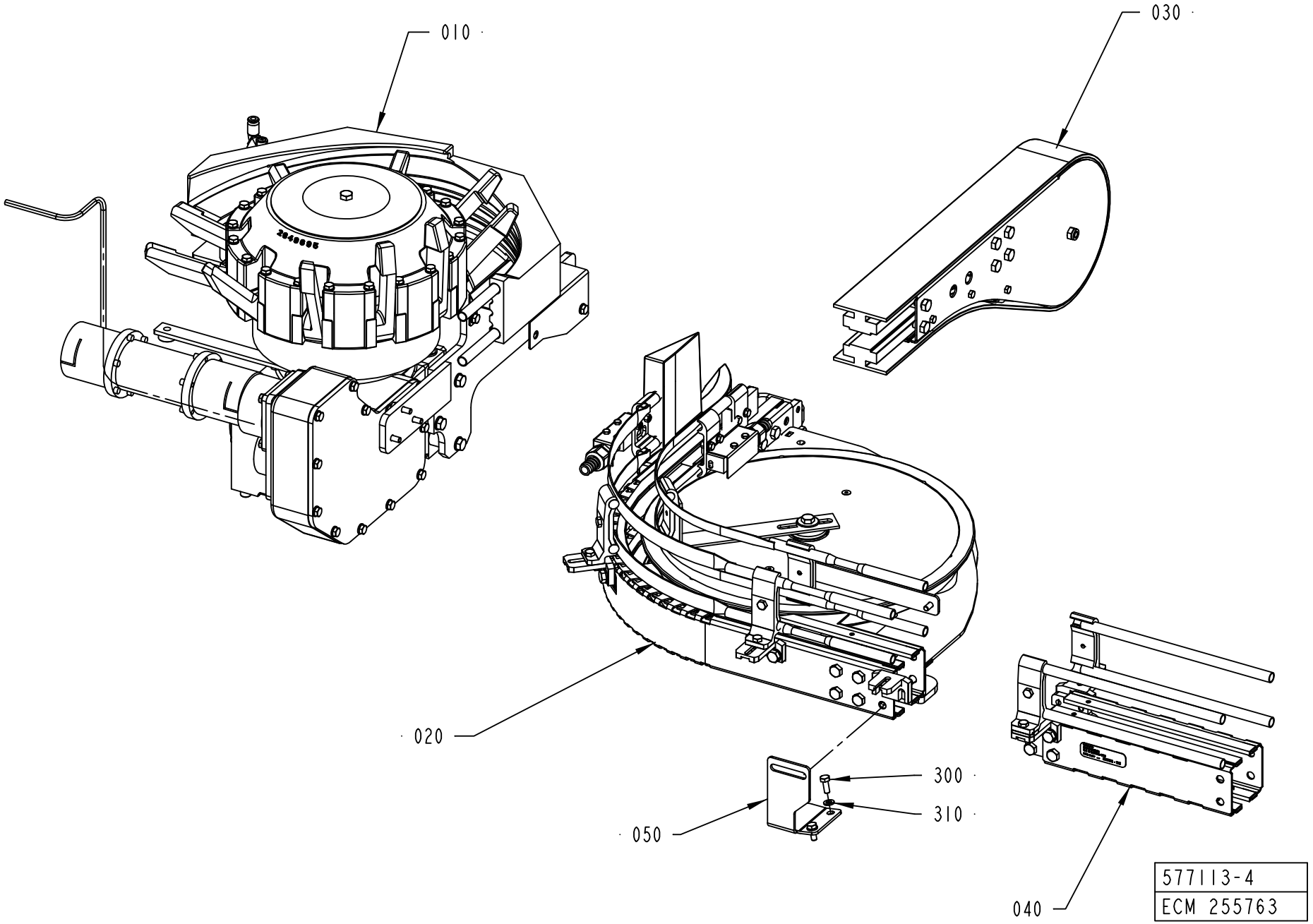

ECM: 377692 - 20090101
Group number: 577113-0400
Assembly Drawing: 577113-4_1_AB

Pos	Part No	UN	Qty	Description	Page No
TBA 0200B					
040	2763600-0101		1	STRAIGHT CONVEYOR L=250MM.	**5-33**
050	2814266-0000		1	SUPPORT	
TBA 0200M					
040	2763600-0101		1	STRAIGHT CONVEYOR L=250MM.	**5-33**
050	2814266-0000		1	SUPPORT	
TBA 0200S					
050	2814267-0000		1	SUPPORT	
TBA 0250B					
040	2763600-0101		1	STRAIGHT CONVEYOR L=250MM.	**5-33**
050	2814266-0000		1	SUPPORT	
TBA 0250S					
050	2814267-0000		1	SUPPORT	
TBA 0300S					
050	2814267-0000		1	SUPPORT	
Common Parts					
010	1348751-0400		1	OUTFEED UNIT L1	**5-43, 5-45, 5-47**
020	2774491-0100		1	CURVE WHEEL	**5-49**
030	2687780-0100		1	END UNIT	**5-59**
300	312105-0368		2	SCREW M6S ISO 4017 M6X16 A480	
310	315105-0153		2	WASHER BRB 6,4X12 RFR	

Pos	Part No	UN	Qty	Description	Page No

Machine Type | Group Description | Used-In | Group Number | Page No

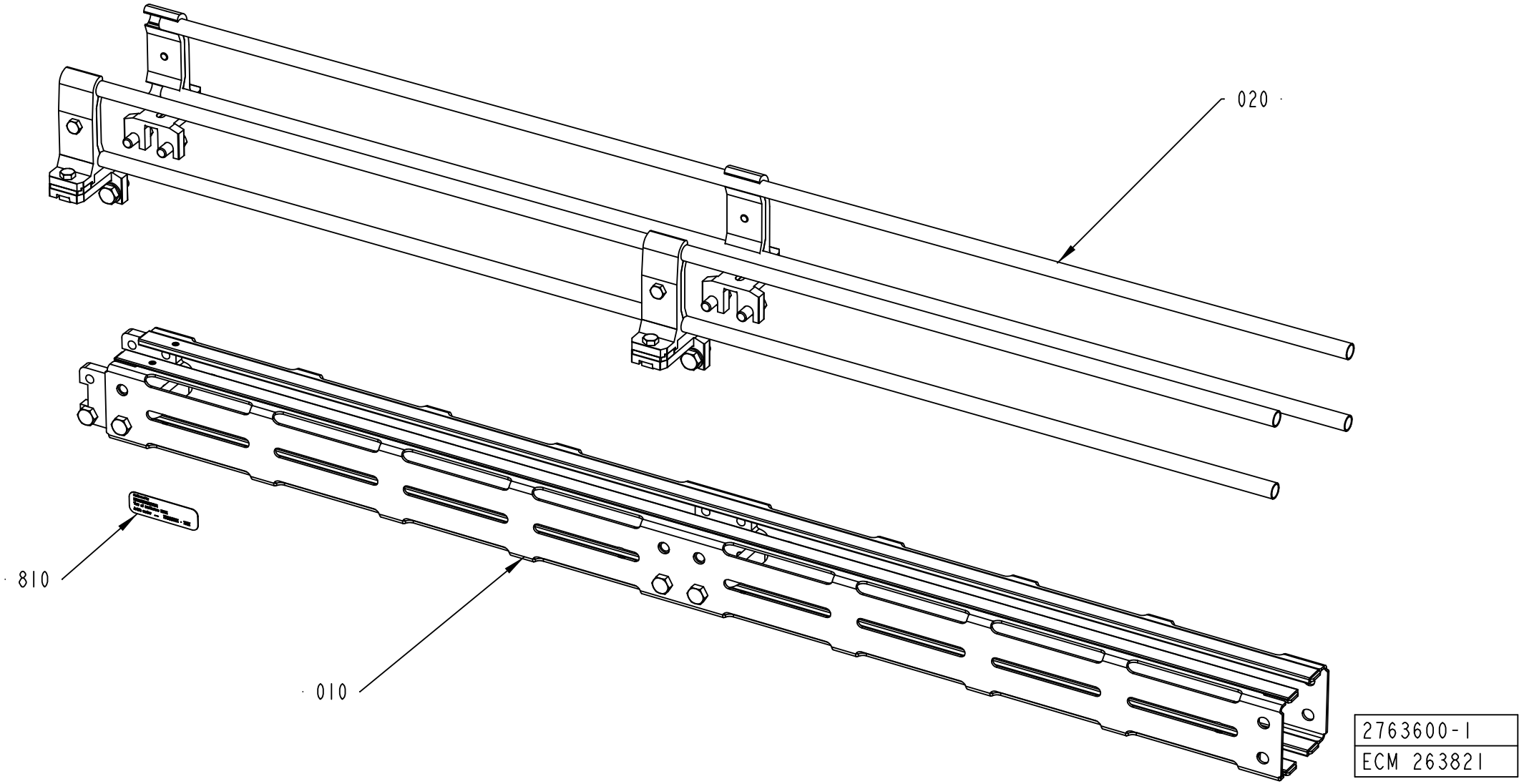
020
810
010
2763600-1
ECM 263821

ECM: 263821 -
Group number: 2763600-0101
Assembly Drawing: 2763600-1_1_AA

Pos	Part No	UN	Qty	Description	Page No
L 0250					
010	2763616-0101		1	CONVEYOR BODY	**5-35**
020	2561274-0101		1	RAILING	**5-37**
820	2590253-0100		1	PACKING DESCRIPTION	**5-41**
Common Parts					
810	1086870-0000		1	SIGN	

Pos	Part No	UN	Qty	Description	Page No

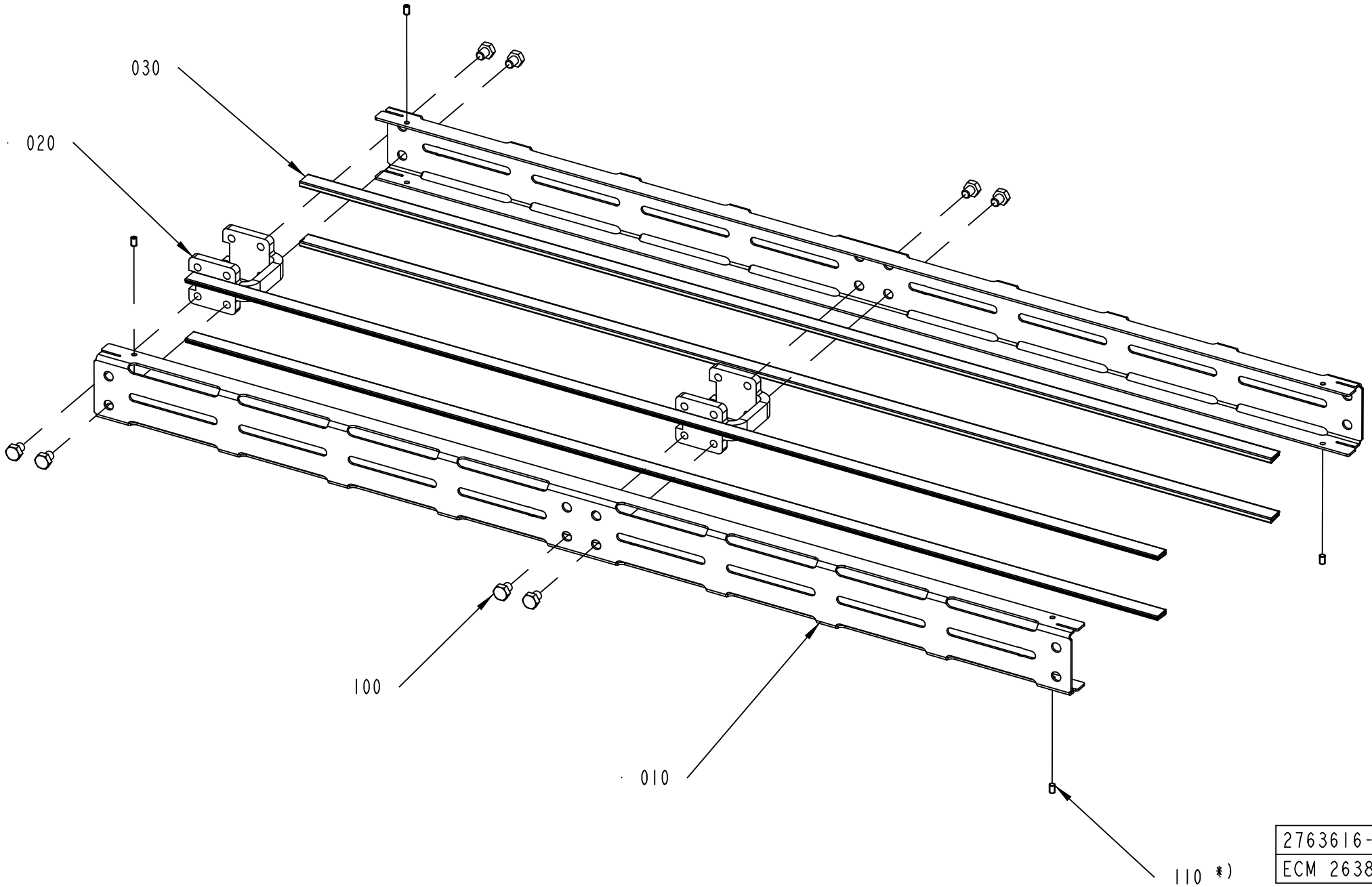

2763616-1
ECM 263821

ECM: 263821 -
Group number: 2763616-0101
Assembly Drawing: 2763616-1_1_AA

Pos	Part No	UN	Qty	Description	Page No
L 0250					
010	2763617-0001		2	SIDE PLATE	
020	2561206-0000		1	SPACER	
030	1550595-2460		4	SLIDING STRIP	
100	90459-4735		4	SCREW M6S ISO 4017 M8X10 A480	
L 0500					
020	2561206-0000		1	SPACER	
100	90459-4735		4	SCREW M6S ISO 4017 M8X10 A480	
Common Parts					
110	90459-7293		6	SET SCREW DIN 551M5X8 PA66	

Pos	Part No	UN	Qty	Description	Page No

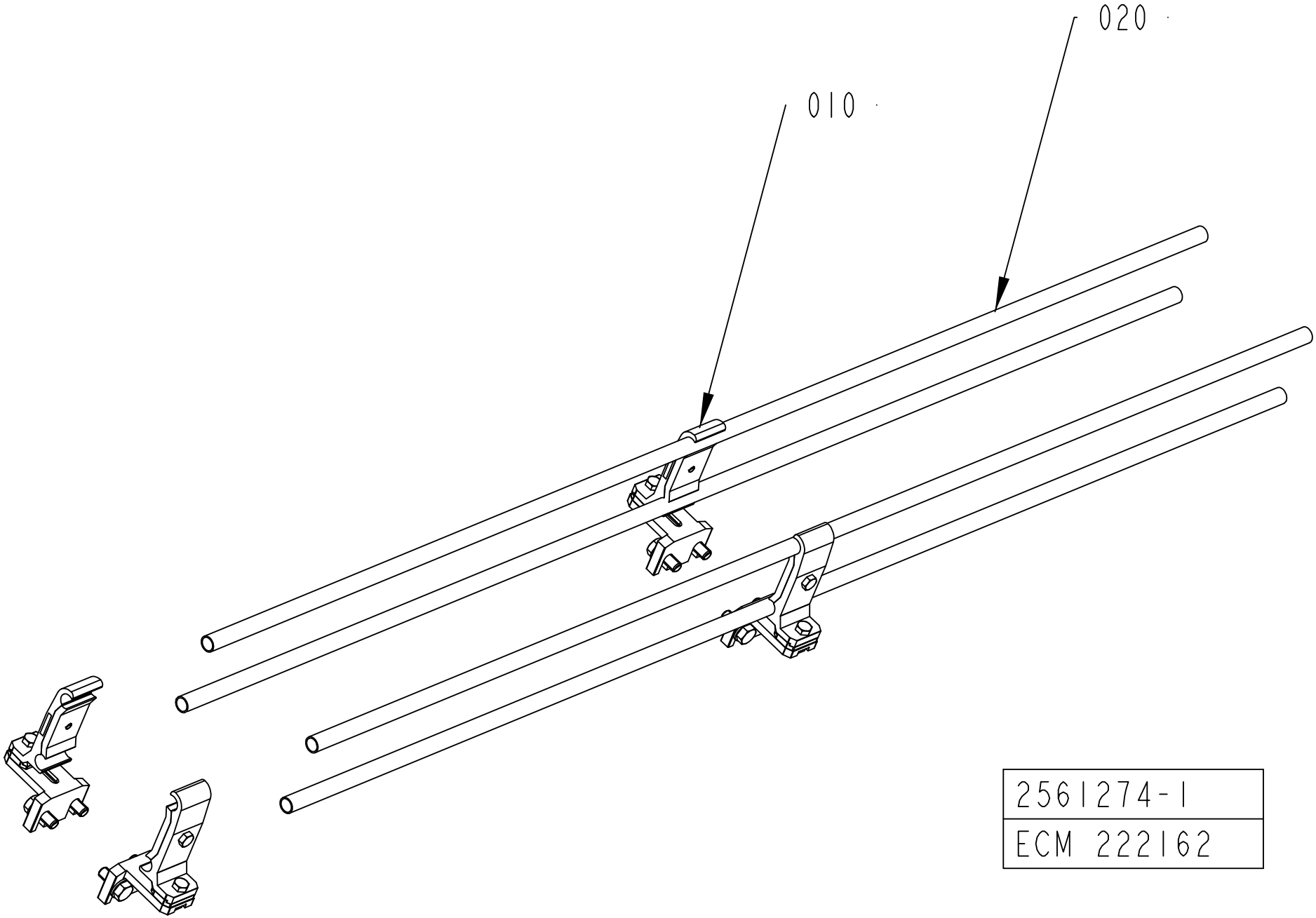
020
010
2561274-1
ECM 222162

ECM: 222162 -
Group number: 2561274-0101
Assembly Drawing: 2561274-1_1_AB

Pos	Part No	UN	Qty	Description	Page No
L 0250					
010	1550743-0200		2	RAIL HOLDER	**5-39, 10-11**
020	476221-0009		4	PIPE	
L 0500					
010	1550743-0200		2	RAIL HOLDER	**5-39, 10-11**

Pos	Part No	UN	Qty	Description	Page No

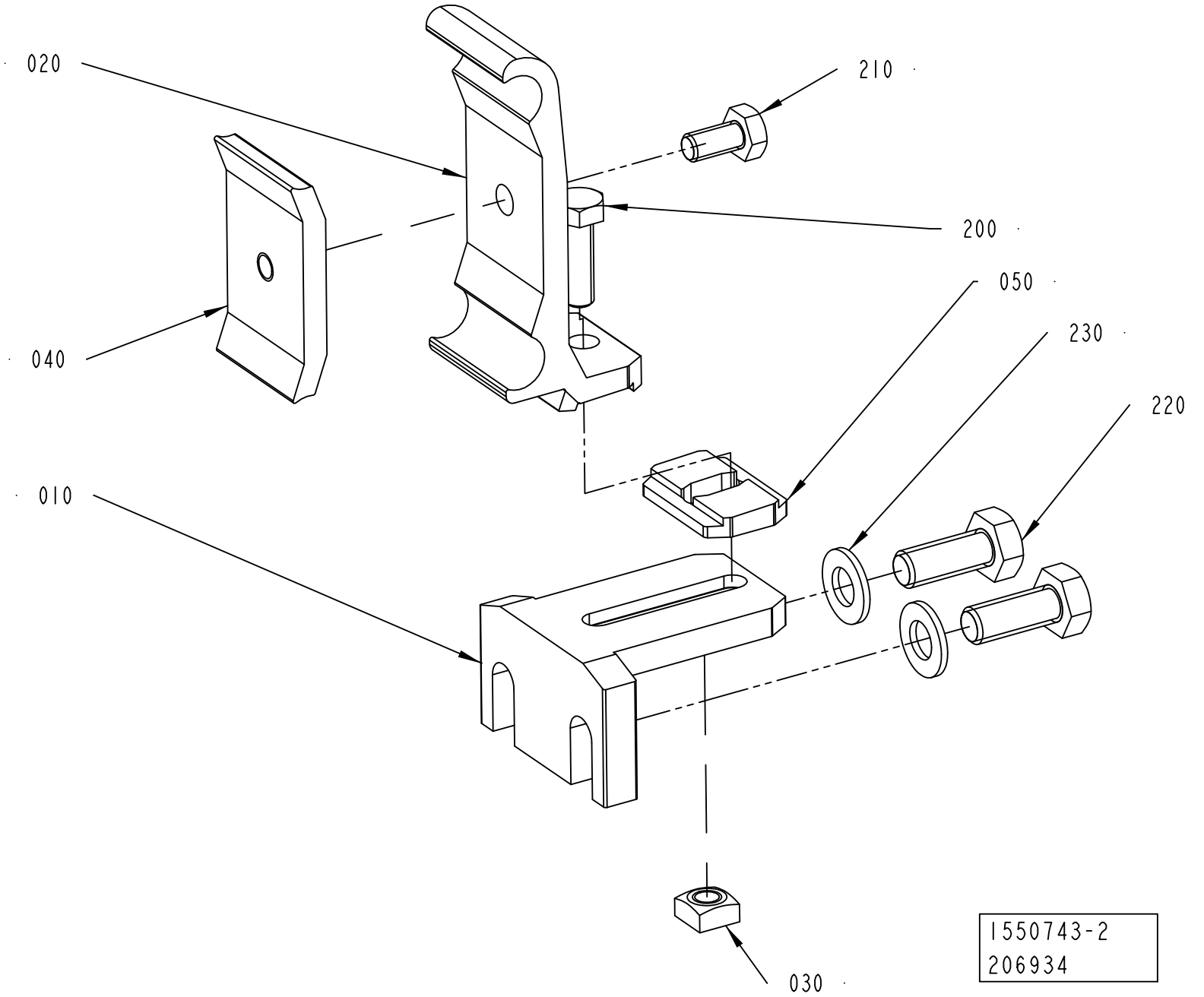
020
210
200
040
050
230
220
010
030
1550743-2
206934

ECM: 206965 - 20050602
Group number: 1550743-0200
Assembly Drawing: 1550743-2_1_AA

Pos	Part No	UN	Qty	Description	Page No
-					
010	1550772-0000		1	HOLDER	
020	2699437-0000		1	RAIL HOLDER	
030	1359565-0000		1	NUT	
040	1366727-0000		1	CLAMP	
050	2699436-0000		1	SPACER	
200	312105-0370		1	SCREW M6S ISO 4017 M6X20 A480	
210	312105-0366		1	SCREW M6S ISO 4017 M6X12 A480	
220	312105-0451		2	SCREW M6S ISO 4017 M8X20 A480	
230	315105-0165		2	WASHER BRB 8,4X16 RFR	

Pos	Part No	UN	Qty	Description	Page No

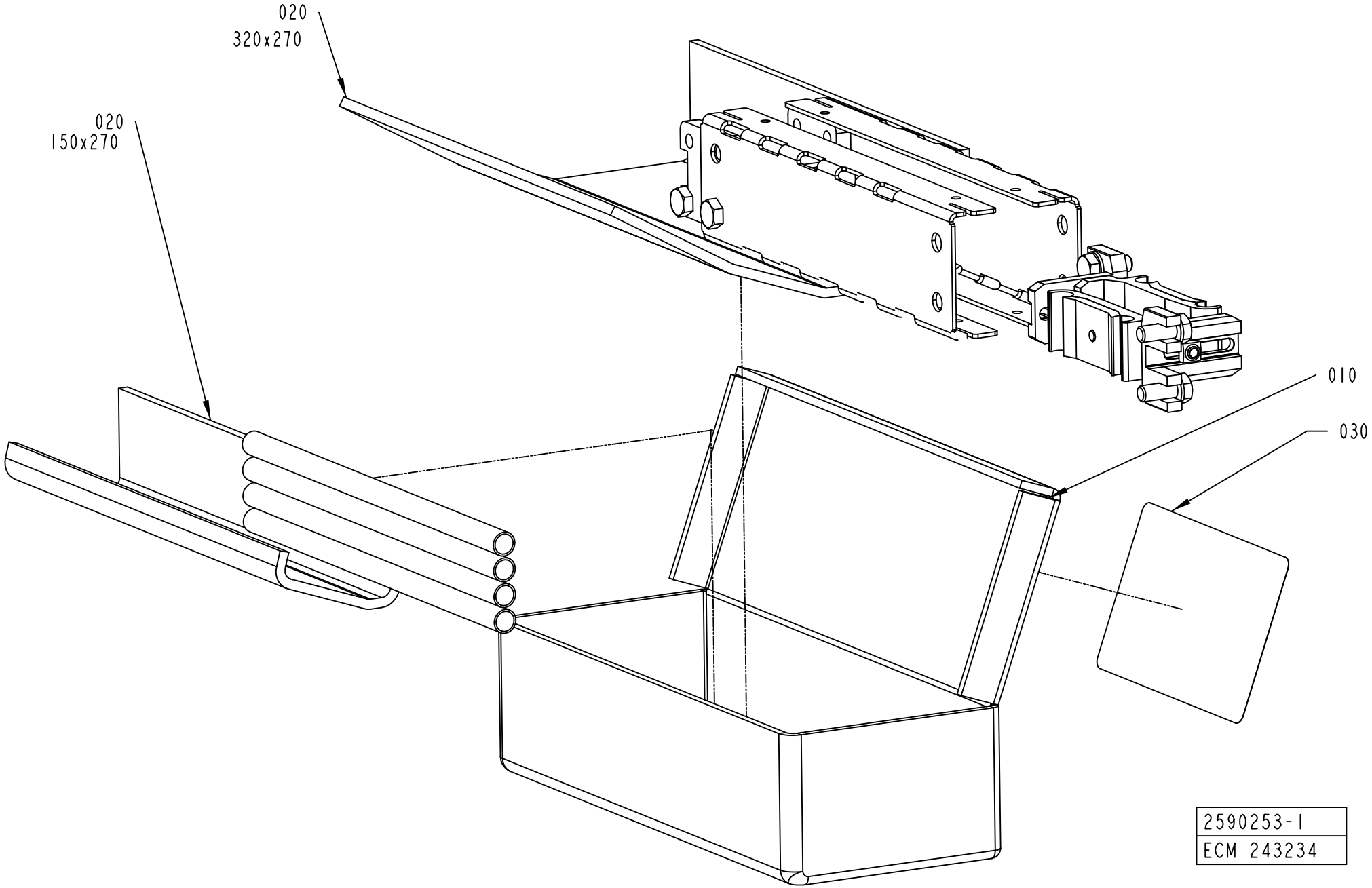
020
320x270
020
150x270
010
030
2590253-1
ECM 243234

ECM: 262008 - 20060710
Group number: 2590253-0100
Assembly Drawing: 2590253-1_1_AC

Pos	Part No	UN	Qty	Description	Page No
-					
010	2590254-0000		1	CORRUGATED CARDBOARD BOX	
020	90003-0474		1	PACKING	
030	1086871-0000		1	LABEL TAPE	
100	90003-0019		1	BAG	

Pos	Part No	UN	Qty	Description	Page No

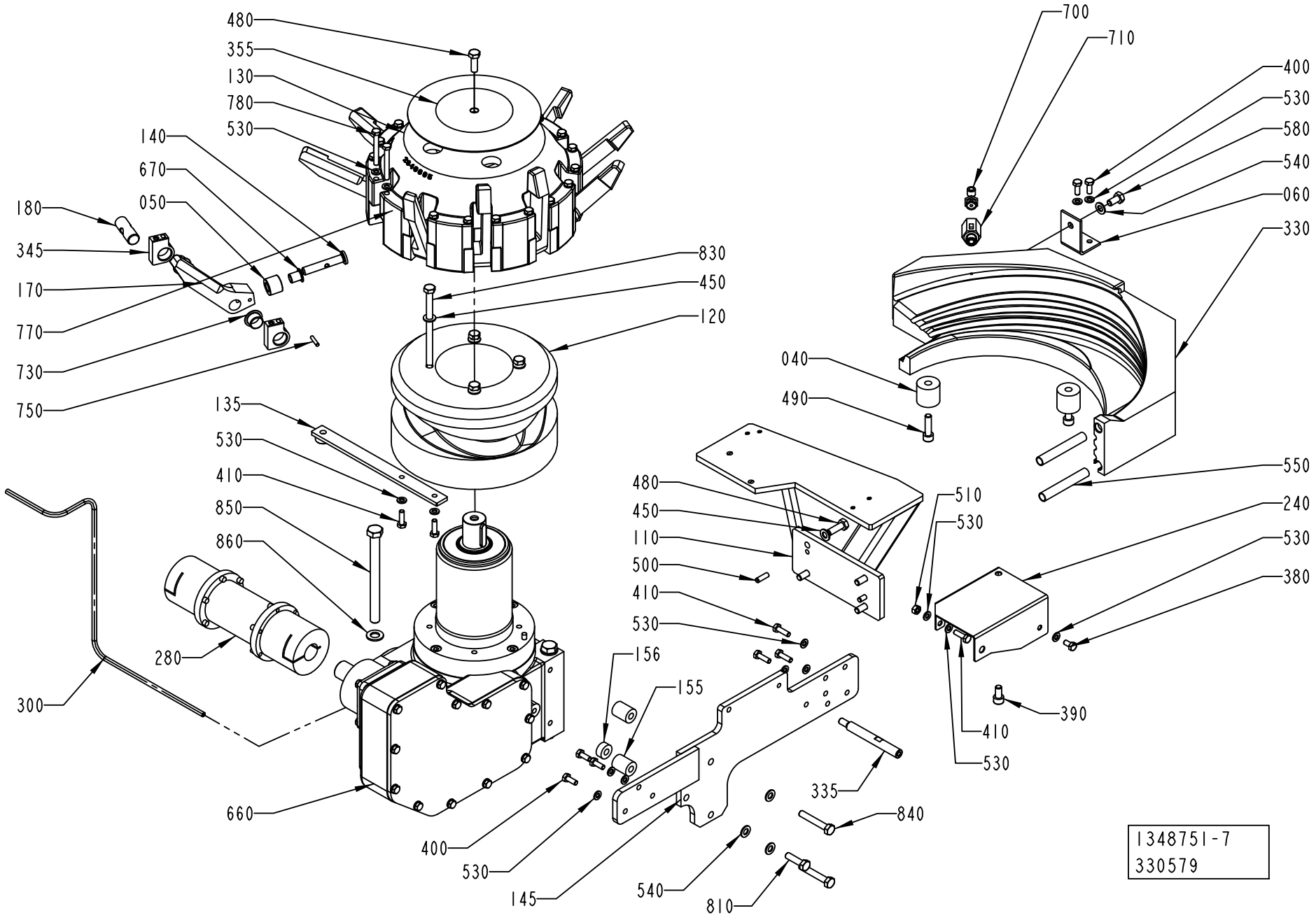
480
355
130
780
530
140
670
050
180
345
170
770
730
750
830
450
120
135
530
410
850
860
280
300
660
400
530
145
700
710
400
530
580
540
060
330
040
490
550
480
450
110
500
410
530
510
530
240
530
380
156
155
390
410
530
335
840
540
810
1348751-7
330579

ECM: 330582 - 20080401
Group number: 1348751-0400
Assembly Drawing: 1348751-7_1_AC

This list covers pages from 5-42 to 5-47

Pos	Part No	UN	Qty	Description	Page No
TBA 0200B (See drawing on page: 5-42)					
040	1549972-0000		2	FOOT	
060	1549971-0000		1	FASTENING PLATE	
135	2818515-0000		1	SUPPORT	
170	2523581-0000		10	CARRIER	
240	2818553-0000		1	SLIDE PLATE	
280	2744963-0000		1	INTERMEDIARY SHAFT	
	90600-5383		*2*	*HUB, ZA/60/24H7/XX*	
	Remark : Hole Ø 24 mm.				
300	2778802-0000		1	PIPE	
330	1549970-0000		1	SLIDER	
380	312105-0366		1	SCREW M6S ISO 4017 M6X12 A480	
390	312115-0449		1	SCREW ISO4762 M8X16 A4 80	
400	312105-0368		5	SCREW M6S ISO 4017 M6X16 A480	
490	312115-0455		2	SCREW ISO4762 M8X30 A4 80	
510	312605-0316		1	HEXAGON NUT, M6M M6 A280	
530	315105-0153		33	WASHER BRB 6,4X12 RFR	
540	315105-0165		12	WASHER BRB 8,4X16 RFR	
550	90266-0154	MM	200	PIPE	
580	312105-0449		1	SCREW M6S ISO 4017 M8X16 A480	
700	90458-2957		1	ELBOW PIPE JOINT, EXT.THREAD, D=6MM-G1/4	
710	90600-0775		1	BALL VALVE G1/4, 406F-1/4"	
810	312105-0455		1	SCREW M6S ISO 4017 M8X30 A480	
TBA 0200M (See drawing on page: 5-42)					
040	1549972-0000		2	FOOT	
060	1549971-0000		1	FASTENING PLATE	
135	2818549-0000		1	SUPPORT	
170	2917260-0000		10	CARRIER	
240	2818553-0000		1	SLIDE PLATE	
280	2755380-0000		1	INTERMEDIARY SHAFT	
	90600-5383		*2*	*HUB, ZA/60/24H7/XX*	
	Remark : Hole Ø 24 mm.				
300	2778801-0000		1	PIPE	
330	2916157-0000		1	SLIDER	
380	312105-0366		1	SCREW M6S ISO 4017 M6X12 A480	
390	312115-0449		1	SCREW ISO4762 M8X16 A4 80	
400	312105-0368		5	SCREW M6S ISO 4017 M6X16 A480	
490	312115-0455		2	SCREW ISO4762 M8X30 A4 80	
510	312605-0316		1	HEXAGON NUT, M6M M6 A280	
530	315105-0153		33	WASHER BRB 6,4X12 RFR	
540	315105-0165		12	WASHER BRB 8,4X16 RFR	
550	90266-0154	MM	200	PIPE	
580	312105-0449		1	SCREW M6S ISO 4017 M8X16 A480	
700	90458-2957		1	ELBOW PIPE JOINT, EXT.THREAD, D=6MM-G1/4	
710	90600-0775		1	BALL VALVE G1/4, 406F-1/4"	
810	312105-0455		1	SCREW M6S ISO 4017 M8X30 A480	
TBA 0200S (See drawing on page: 5-44)					
135	2818515-0000		1	SUPPORT	
170	1498997-0000		10	CARRIER	
200	2818552-0000		1	GUIDE	
220	1498973-0000		1	BRACKET	
230	2514140-0000		1	GUIDE	
250	2501223-0000		1	RAIL	
260	2514139-0000		1	SUPPORT	
270	484701-0000		3	SHUTTER	
280	2758699-0000		1	INTERMEDIARY SHAFT	
	90600-5383		*2*	*HUB, ZA/60/24H7/XX*	
	Remark : Hole Ø 24 mm.				
300	2778803-0000		1	PIPE	
380	312105-0366		3	SCREW M6S ISO 4017 M6X12 A480	
400	312105-0368		6	SCREW M6S ISO 4017 M6X16 A480	
460	534310-0001		1	NOZZLE	
470	90230-0027		1	NON-RETURN VALVE QJ 8355-1/4"	
	90230-0300		*1*	*STRAINER*	
	90230-0301		*1*	*DIAPHRAGM*	
510	312812-0316		1	HEXAGON NUT, NY-LOCK M6 A480	
530	315105-0153		35	WASHER BRB 6,4X12 RFR	
540	315105-0165		13	WASHER BRB 8,4X16 RFR	
690	342931-0122		1	ELBOW 90 COUPL.,EXT.THREAD 8/6-G1/4"	
720	90005-0094		1	GASKET C 19438-EPR	
810	312105-0455		3	SCREW M6S ISO 4017 M8X30 A480	
TBA 0250B (See drawing on page: 5-44)					
135	2723038-0000		1	SUPPORT	
170	1260067-0000		10	CARRIER	
200	2818550-0000		1	GUIDE	
220	2514133-0000		1	BRACKET	
250	2501223-0000		1	RAIL	
260	2514139-0000		1	SUPPORT	
270	484701-0000		3	SHUTTER	
280	2755380-0000		1	INTERMEDIARY SHAFT	
	90600-5383		*2*	*HUB, ZA/60/24H7/XX*	
	Remark : Hole Ø 24 mm.				
300	2778801-0000		1	PIPE	
380	312105-0366		3	SCREW M6S ISO 4017 M6X12 A480	

Machine Type | Group Description | Used-In | Group Number | Page No

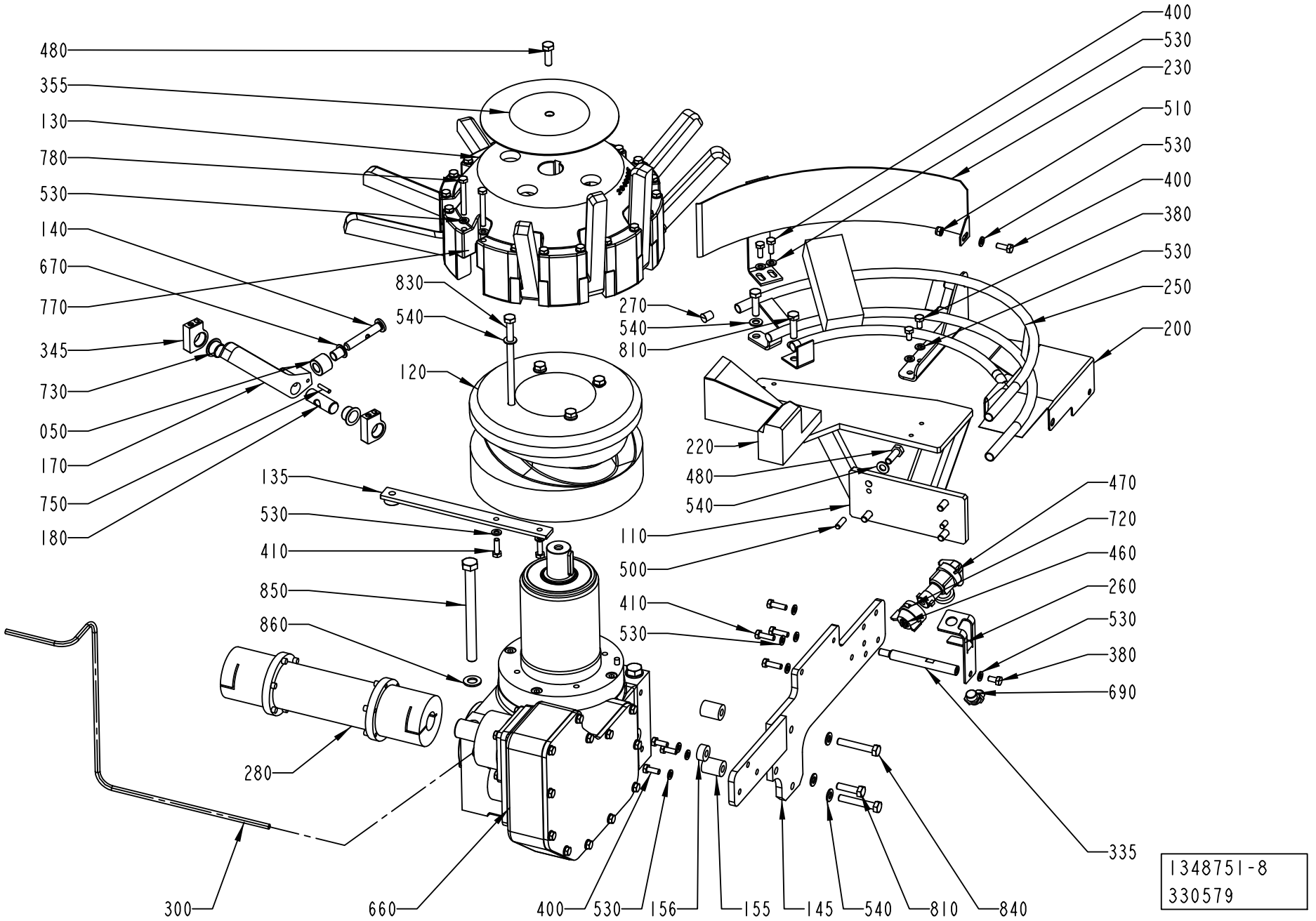
480
355
130
780
530
140
670
770
345
730
050
170
750
180
830
540
120
135
530
410
850
860
280
300
660
400
530
156
155
145
540
810
840
335
270
540
810
400
530
230
510
530
400
380
530
250
200
220
480
540
110
500
410
530
470
720
460
260
530
380
690
1348751-8
330579

Pos	Part No	UN	Qty	Description	Page No
TBA 0250B (Cont'd) (See drawing on page: 5-44)					
400	312105-0368		6	SCREW M6S ISO 4017 M6X16 A480	
460	534310-0001		1	NOZZLE	
470	90230-0027		1	NON-RETURN VALVE QJ 8355-1/4"	
	90230-0300		*1*	*STRAINER*	
	90230-0301		*1*	*DIAPHRAGM*	
510	312812-0316		1	HEXAGON NUT, NY-LOCK M6 A480	
530	315105-0153		35	WASHER BRB 6,4X12 RFR	
540	315105-0165		13	WASHER BRB 8,4X16 RFR	
690	342931-0122		1	ELBOW 90 COUPL.,EXT.THREAD 8/6-G1/4"	
720	90005-0094		1	GASKET C 19438-EPR	
810	312105-0455		3	SCREW M6S ISO 4017 M8X30 A480	
TBA 0250S (See drawing on page: 5-44)					
135	2818549-0000		1	SUPPORT	
170	1498101-0000		10	CARRIER	
200	2818550-0000		1	GUIDE	
220	2504736-0000		1	SLIDER	
230	1498977-0000		1	GUIDE	
250	2501223-0000		1	RAIL	
260	2514139-0000		1	SUPPORT	
270	484701-0000		3	SHUTTER	
280	2758698-0000		1	INTERMEDIARY SHAFT	
	90600-5383		*2*	*HUB, ZA/60/24H7/XX*	
	Remark : Hole Ø 24 mm.				
300	2778804-0000		1	PIPE	
380	312105-0366		3	SCREW M6S ISO 4017 M6X12 A480	
400	312105-0368		6	SCREW M6S ISO 4017 M6X16 A480	
460	534310-0001		1	NOZZLE	
470	90230-0027		1	NON-RETURN VALVE QJ 8355-1/4"	
	90230-0300		*1*	*STRAINER*	
	90230-0301		*1*	*DIAPHRAGM*	
510	312812-0316		1	HEXAGON NUT, NY-LOCK M6 A480	
530	315105-0153		35	WASHER BRB 6,4X12 RFR	
540	315105-0165		13	WASHER BRB 8,4X16 RFR	
690	342931-0122		1	ELBOW 90 COUPL.,EXT.THREAD 8/6-G1/4"	
720	90005-0094		1	GASKET C 19438-EPR	
810	312105-0455		3	SCREW M6S ISO 4017 M8X30 A480	
TBA 0300S (See drawing on page: 5-44)					
135	2723038-0000		1	SUPPORT	
170	1260067-0000		10	CARRIER	
200	2818552-0000		1	GUIDE	
220	2504735-0000		1	BRACKET	
230	2514140-0000		1	GUIDE	
250	2501223-0000		1	RAIL	
260	2514139-0000		1	SUPPORT	
270	484701-0000		3	SHUTTER	
280	2758699-0000		1	INTERMEDIARY SHAFT	
	90600-5383		*2*	*HUB, ZA/60/24H7/XX*	
	Remark : Hole Ø 24 mm.				
300	2778803-0000		1	PIPE	
380	312105-0366		3	SCREW M6S ISO 4017 M6X12 A480	
400	312105-0368		6	SCREW M6S ISO 4017 M6X16 A480	
460	534310-0001		1	NOZZLE	
470	90230-0027		1	NON-RETURN VALVE QJ 8355-1/4"	
	90230-0300		*1*	*STRAINER*	
	90230-0301		*1*	*DIAPHRAGM*	
510	312812-0316		1	HEXAGON NUT, NY-LOCK M6 A480	
530	315105-0153		35	WASHER BRB 6,4X12 RFR	
540	315105-0165		13	WASHER BRB 8,4X16 RFR	
690	342931-0122		1	ELBOW 90 COUPL.,EXT.THREAD 8/6-G1/4"	
720	90005-0094		1	GASKET C 19438-EPR	
810	312105-0455		3	SCREW M6S ISO 4017 M8X30 A480	
Common Parts					
050	1538306-0000		10	ROLLER	
110	2755376-0000		1	SUPPORT	
120	2640510-0000		1	CAM	
130	2649695-0000		1	DRUM	
140	1260068-0000		10	SHAFT	
145	2649692-0000		1	PLATE	
155	2771120-0000		2	SPACER	
156	2771119-0000		1	SPACER	
180	1260070-0000		10	SHAFT	
335	2687778-0000		1	SHAFT	
345	2781168-0000		20	BRACKET	
355	1478558-0000		1	WASHER	
410	312105-0370		6	SCREW M6S ISO 4017 M6X20 A480	
480	312105-0453		5	SCREW M6S ISO 4017 M8X25 A480	
500	311103-0353		2	PARALLEL PIN ISO 2338 6M6X20 A1	
660	90459-4109		1	WORM GEAR 10.756.261	
670	321156-0145		10	FLANGE BUSHING, 10X12X15 MM	
730	90240-0332		20	FLANGE BUSHING, 16X18X12 MM	
750	311103-0272		10	PARALLEL PIN ISO 2338 4M6X20 A1	
770	311103-0308		20	PARALLEL PIN ISO 2338 5M6X16 A1	
780	312105-0380		20	SCREW M6S ISO 4014 M6X50 A480	

See previous drawings pages: 5-42, 5-44.

Pos	Part No	UN	Qty	Description	Page No
Common Parts (Cont'd)					
820	90296-0068		1	SHELL ALVANIA GREASE EP 2	
830	312115-0478		4	SCREW ISO4762 M8X140 A4 80	
840	312105-0461		2	SCREW M6S ISO 4014 M8X50 A480	
850	312101-0559		4	SCREW M6S M12X140 FZB	
860	315101-0176		4	WASHER PLAIN, BRB, 12/22 H=2	

Pos	Part No	UN	Qty	Description	Page No

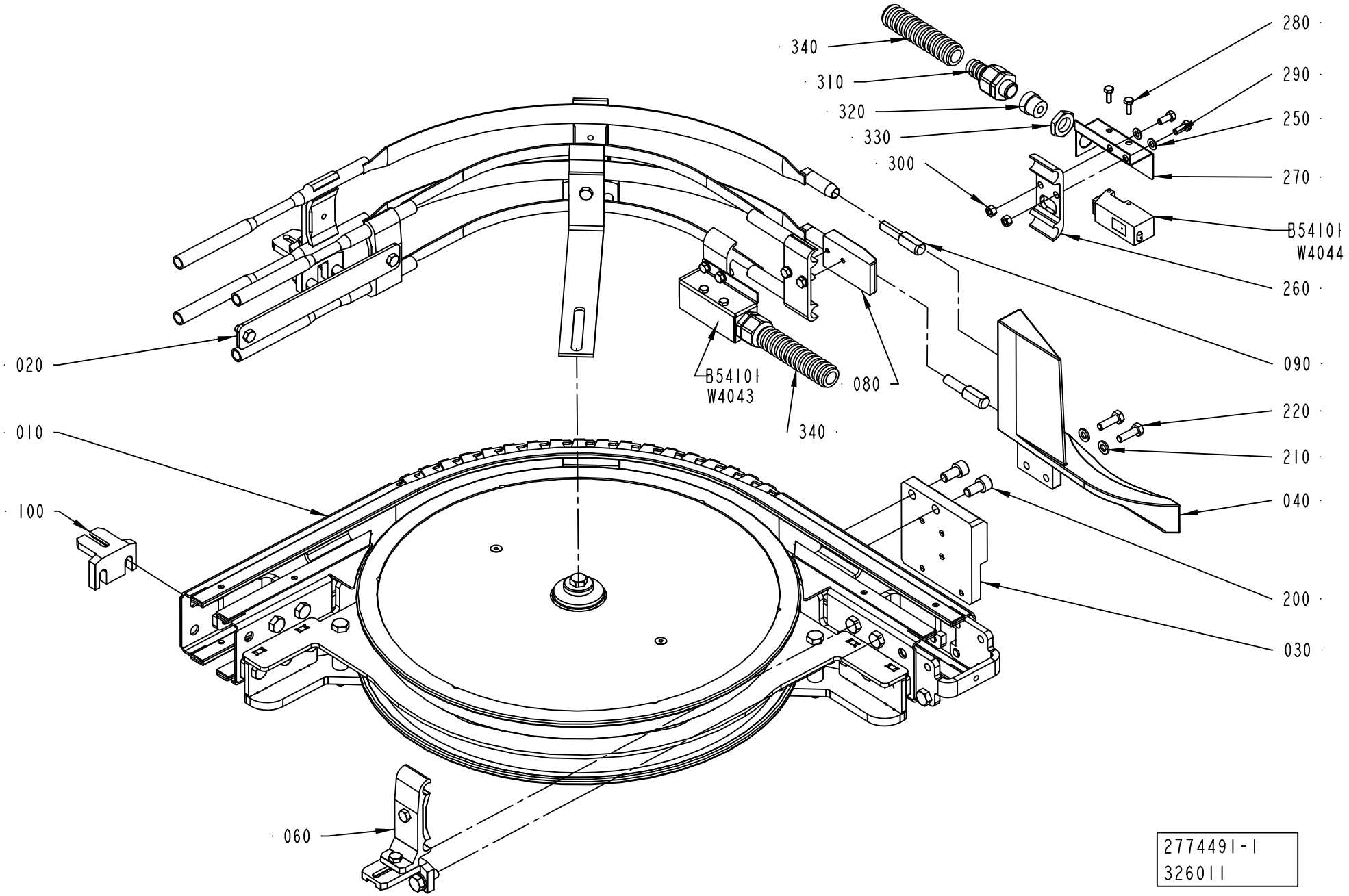
340
310
320
330
300
280
290
250
270
B54101
W4044
260
020
010
100
B54101
W4043
080
340
090
220
210
040
200
030
060
2774491-1
326011

ECM: 326017 - 20080102
Group number: 2774491-0100
Assembly Drawing: 2774491-1_1_AC

Pos	Part No	UN	Qty	Description	Page No
TBA 0200B					
080	1347090-0000		1	CHUTE	
TBA 0200M, TBA 0250S, TBA 0250B, TBA 0300S					
060	1550743-0100		1	RAIL HOLDER	**5-51**
080	1347090-0000		1	CHUTE	
TBA 0200S					
060	1550743-0100		1	RAIL HOLDER	**5-51**
080	2514136-0000		1	CHUTE	
Common Parts					
010	1550698-0200		1	WHEEL CURVE 90 DEGREES	**5-53, 10-89**
020	2695962-0100		1	RAILING KIT	**5-55**
030	2774477-0000		1	SUPPORT	
040	2616152-0000		1	GUIDE	
090	2778796-0000		2	PIN	
100	2784685-0000		1	HOLDER	
200	312115-0449		2	SCREW ISO4762 M8X16 A4 80	
210	315105-0153		2	WASHER BRB 6,4X12 RFR	
220	312105-0370		2	SCREW M6S ISO 4017 M6X20 A480	
240	312105-0327		2	SCREW M6S ISO 4017 M5X12 A480	
250	315105-0146		6	WASHER BRB 5,3X10 RFR	
260	1517188-0000		2	BRACKET	
270	2781201-0000		2	HOLDER	
280	312105-0291		4	SCREW M6S ISO 4017 M4X12 A470	
290	312105-0327		4	SCREW M6S ISO 4017 M5X12 A480	
300	312605-0314		4	HEXAGON NUT, M6M M5 A280	
310	353243-0001		2	HOSE GLAND W/O INSERT PG9 EXTENDED	
320	353249-0008		2	INSERT, SINGLE HOLE, EK 152/7	
330	90099-0104		2	NUT, PR 15,2 (PG9)	
340	90152-0059	M	1.8	SPIRAL CONDUIT, 18X12, UL 1211	
B54101	90232-0103		1	PH.CELL E3S-CT61-L-5M	
B54102	90232-0104		1	PH.CELL E3S-CT61-D-5M	

Pos	Part No	UN	Qty	Description	Page No

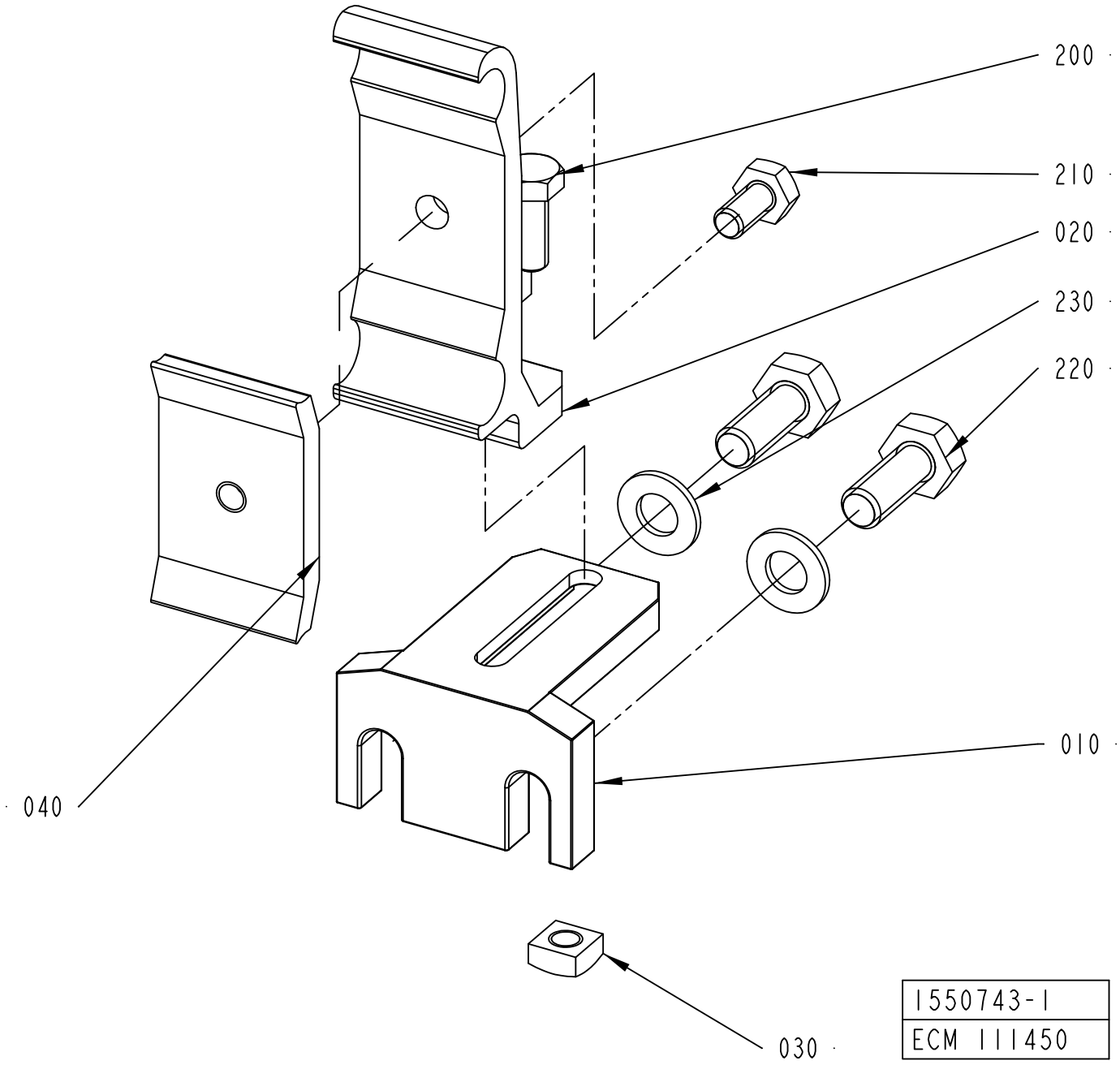
200
210
020
230
220
010
040
030
1550743-1
ECM 111450

ECM: 129860 - 20031113
Group number: 1550743-0100
Assembly Drawing: 1550743-1_1_AB

Pos	Part No	UN	Qty	Description	Page No
-					
010	1550772-0000		1	HOLDER	
020	1550773-0000		1	RAIL HOLDER	
030	1359565-0000		1	NUT	
040	1366727-0000		1	CLAMP	
200	312105-0368		1	SCREW M6S ISO 4017 M6X16 A480	
210	312105-0366		1	SCREW M6S ISO 4017 M6X12 A480	
220	312105-0451		2	SCREW M6S ISO 4017 M8X20 A480	
230	315105-0165		2	WASHER BRB 8,4X16 RFR	

Pos	Part No	UN	Qty	Description	Page No

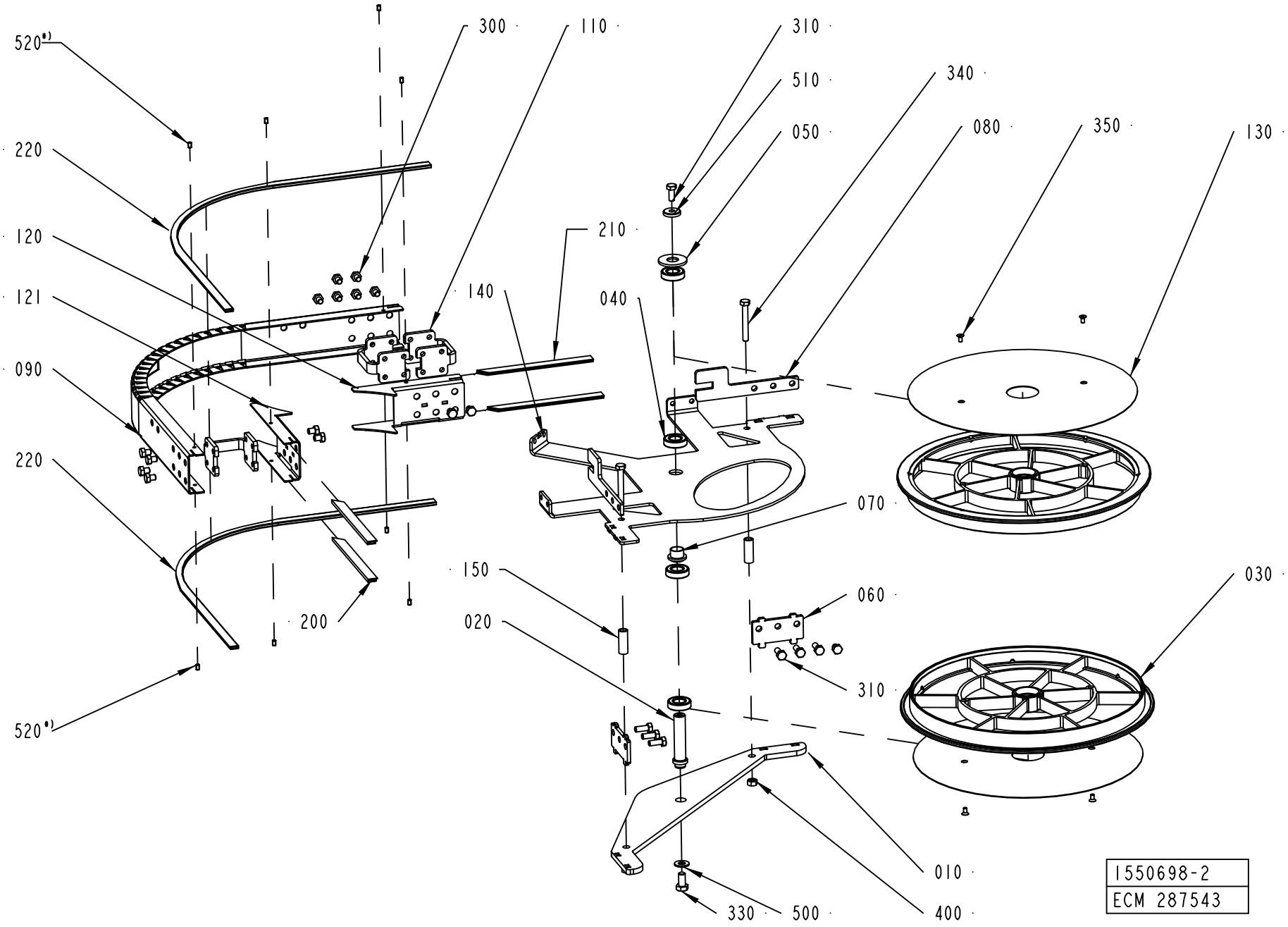
520*)
220
120
121
090
220
520*)
300
110
310
510
050
340
080
350
130
210
140
040
070
150
020
200
060
310
030
010
400
330
500
1550698-2
ECM 287543

ECM: 306224 - 20070817
Group number: 1550698-0200
Assembly Drawing: 1550698-2_1_AF

Pos	Part No	UN	Qty	Description	Page No
-					
010	1550667-0000		1	BOTTOM PANEL	
020	1550689-0000		1	SHAFT	
030	2656655-0000		2	WHEEL	
040	1550348-0002		4	BEARING	
040	1550348-0001		4	BEARING	
050	1550693-0000		1	WASHER	
060	2561257-0000		2	SPACER	
070	1550690-0000		1	SLEEVE	
080	2561603-0000		2	SPACER	
090	1550669-0000		1	SIDE PLATE	
110	2561206-0000		3	SPACER	
120	1550687-0001		1	SIDE PLATE	
121	1550687-0002		1	SIDE PLATE	
130	2561232-0000		2	COVER	
140	1550668-0000		1	BRACKET	
150	1550626-0005		2	SPACER	
200	1550595-1801		2	SLIDING STRIP	
210	1550595-1802		2	SLIDING STRIP	
220	2699584-0830		2	SLIDING STRIP	
300	90459-4735		15	SCREW M6S ISO 4017 M8X10 A480	
310	312105-0451		7	SCREW M6S ISO 4017 M8X20 A480	
330	312105-0491		1	SCREW M6S ISO 4017 M10X20 A480	
340	312105-0463		2	SCREW M6S ISO 4014 M8X60 A480	
350	312155-0325		4	SCREW DIN 7991 MF6S M5X10 A4 70	
400	312605-0318		2	HEXAGON NUT, M6M M8 A280	
500	315105-0173		1	WASHER BRB 10,5X20 RFR	
510	315125-0165		1	WASHER TBRSB 8,4X26X5 A4	
520	90459-7293		8	SET SCREW DIN 551M5X8 PA66	

Pos	Part No	UN	Qty	Description	Page No

Machine Type | Group Description | Used-In | Group Number | Page No

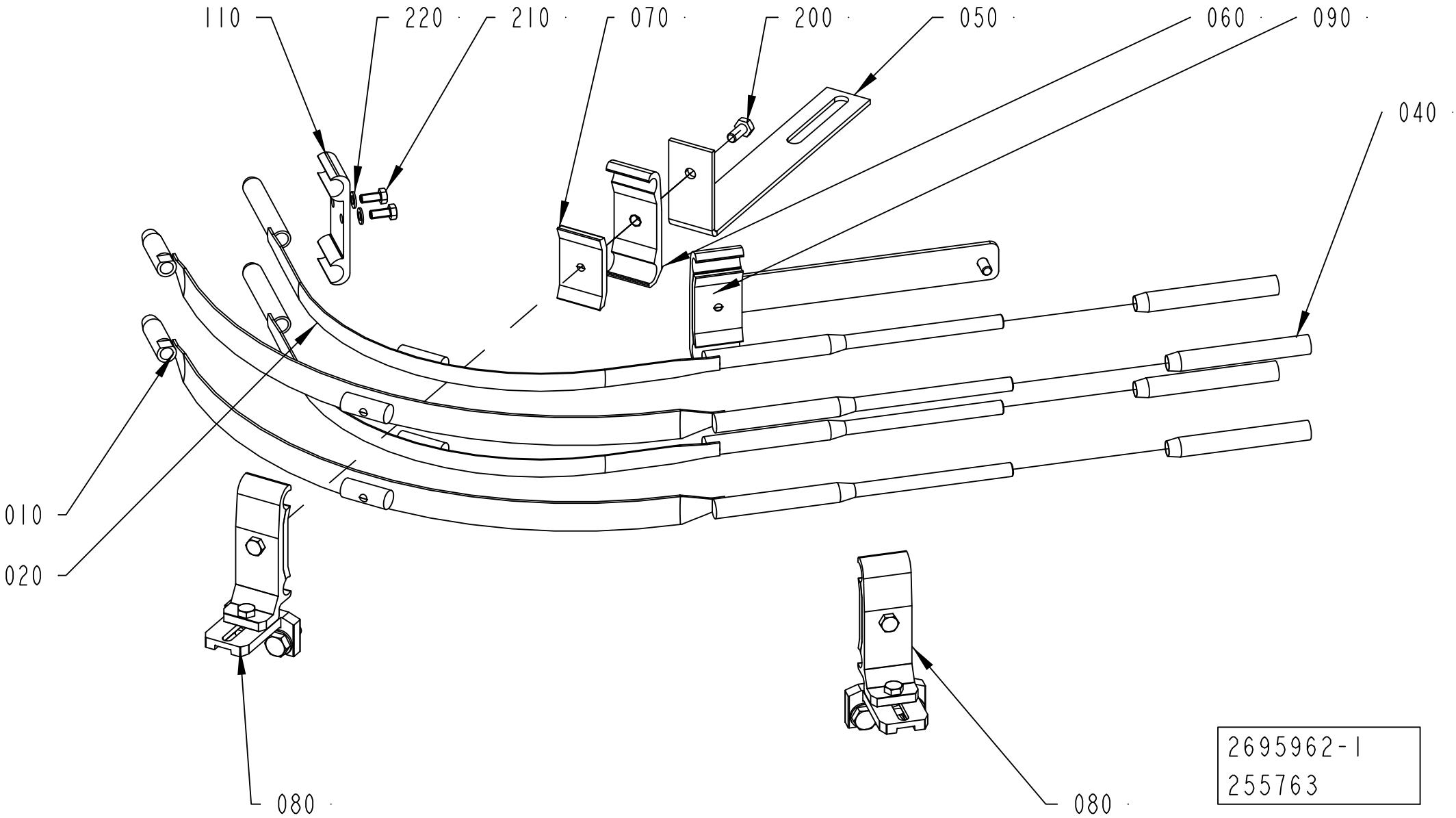
110
220
210
070
200
050
060
090
040
010
020
080
080
2695962-1
255763

ECM: 259164 - 20060701
Group number: 2695962-0100
Assembly Drawing: 2695962-1_1_AB

Pos	Part No	UN	Qty	Description	Page No
-					
010	2695963-0000		2	ARCH	
020	2696485-0000		2	ARCH	
040	1550665-0000		4	PIPE	
050	1550666-0000		1	HOLDER	
060	1366750-0000		1	HOLDER	
070	1366727-0000		1	CLAMP	
080	1550743-0100		2	RAIL HOLDER	**5-51**
090	2561602-0100		1	RAIL HOLDER KIT	**5-57, 10-85**
100	1020637-0000		1	HOLDER	
200	312105-0368		1	SCREW M6S ISO 4017 M6X16 A480	
210	312105-0327		2	SCREW M6S ISO 4017 M5X12 A480	
220	315105-0146		2	WASHER BRB 5,3X10 RFR	

Pos	Part No	UN	Qty	Description	Page No

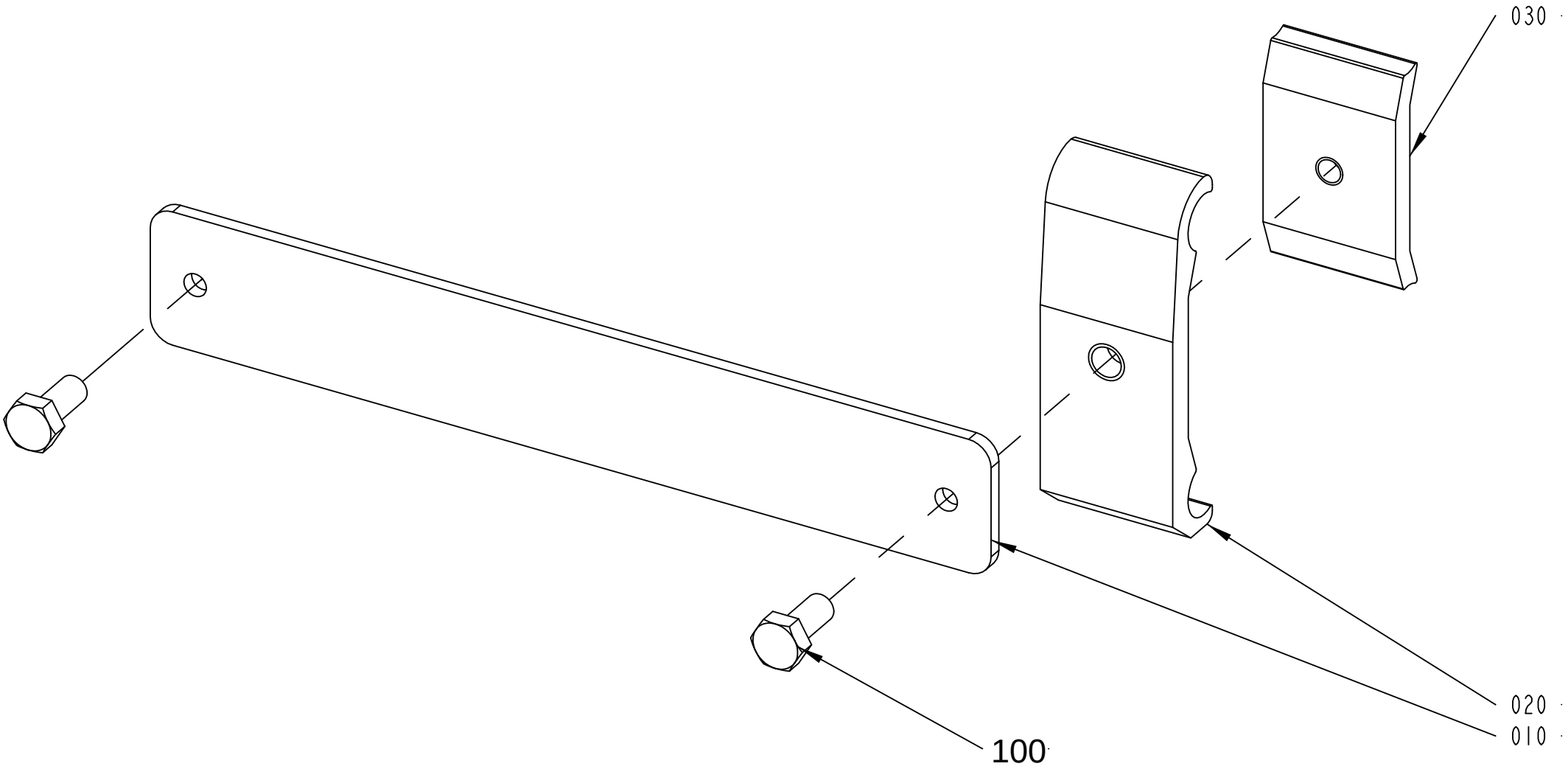

2561602-1
ECM 153837

ECM: 255321 - 20060302
Group number: 2561602-0100
Assembly Drawing: 2561602-1_1_AB

Pos	Part No	UN	Qty	Description	Page No
-					
010	2561596-0000		1	RAIL HOLDER KIT	
020	1366750-0000		1	HOLDER	
030	1366727-0000		1	CLAMP	
100	312105-0367		2	SCREW M6S ISO 4017 M6X14 A480	

Pos	Part No	UN	Qty	Description	Page No

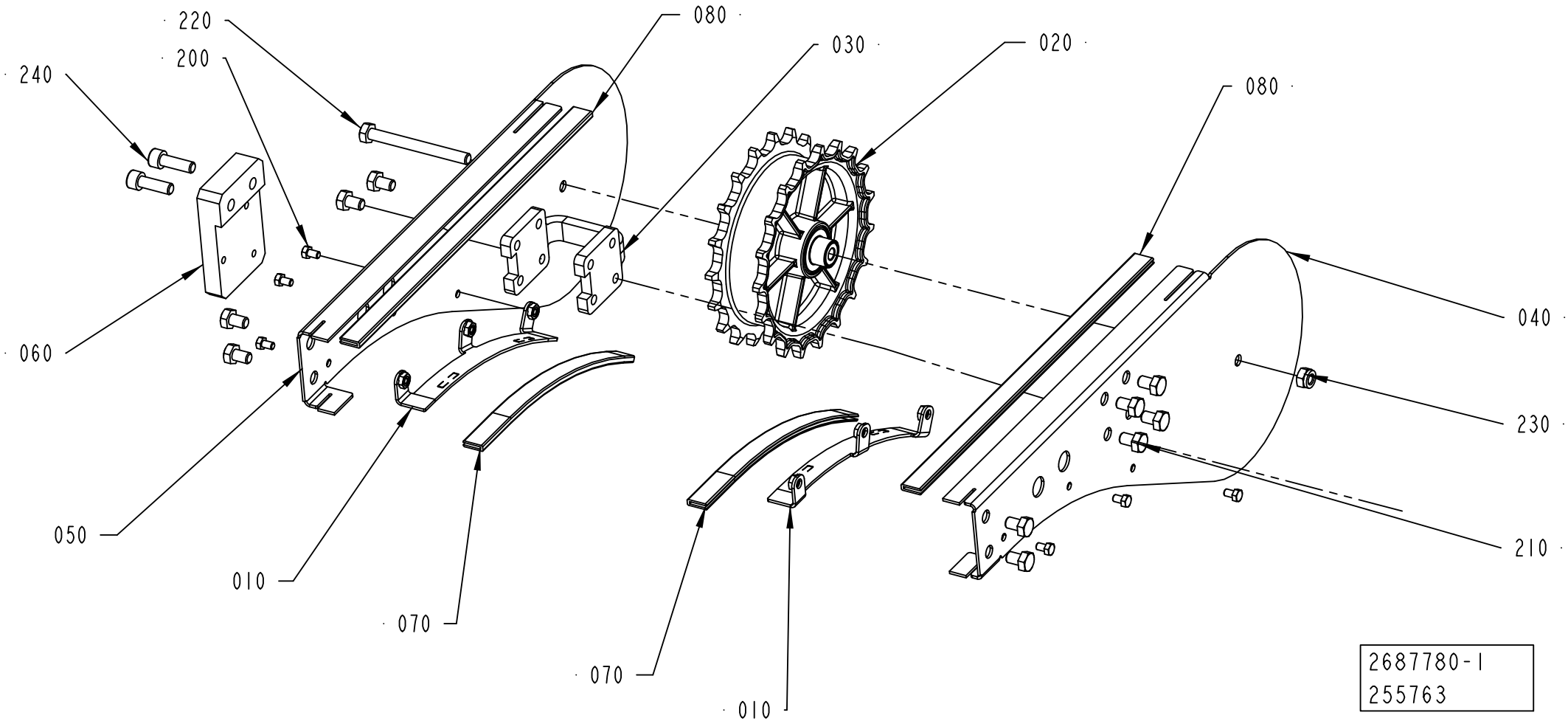
220
200
240
080
030
020
080
060
040
230
050
210
010
070
070
010
2687780-1
255763

ECM: 259168 - 20060701
Group number: 2687780-0100
Assembly Drawing: 2687780-1_1_AB

Pos	Part No	UN	Qty	Description	Page No
-					
010	2687772-0000		2	SIDE PLATE	
020	2561244-0200		1	DRIVE WHEEL	**5-61, 10-15**
030	2561206-0000		1	SPACER	
040	2687773-0000		1	SIDE PLATE	
050	2687774-0000		1	SIDE PLATE	
060	2687776-0000		1	SUPPORT	
070	2589960-2120		2	SLIDING STRIP	
080	2589960-3220		2	SLIDING STRIP	
200	312105-0323		8	SCREW M6S ISO 4017 M5X8 A480	
210	312105-0447		10	SCREW M6S ISO 4017 M8X12 A480	
220	312105-0467		1	SCREW M6S ISO 4014 M8X80 A480	
230	312812-0318		1	HEXAGON NUT, NY-LOCK M8 A480	
240	312115-0453		2	SCREW ISO4762 M8X25 A4 80	

Pos	Part No	UN	Qty	Description	Page No

Machine Type | Group Description | Used-In | Group Number | Page No

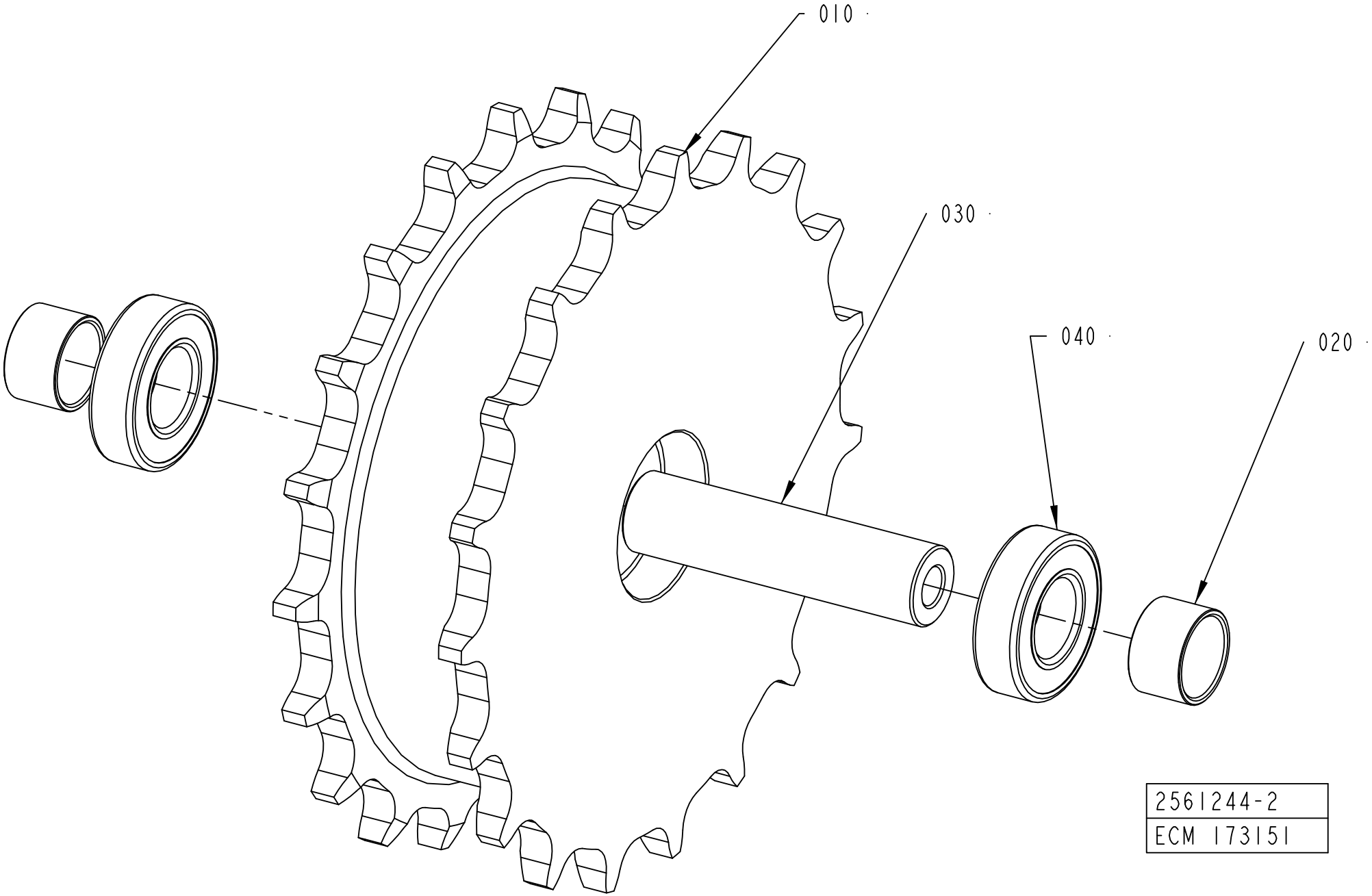
010
030
040
020
2561244-2
ECM 173151

ECM: 306227 - 20070817
Group number: 2561244-0200
Assembly Drawing: 2561244-2_1_AA

Pos	Part No	UN	Qty	Description	Page No
-					
010	2656672-0000		1	SPROCKET	
020	2656673-0000		2	SPACER	
030	2561267-0000		1	SHAFT	
040	1550348-0002		2	BEARING	
040	1550348-0001		2	BEARING	

Pos	Part No	UN	Qty	Description	Page No

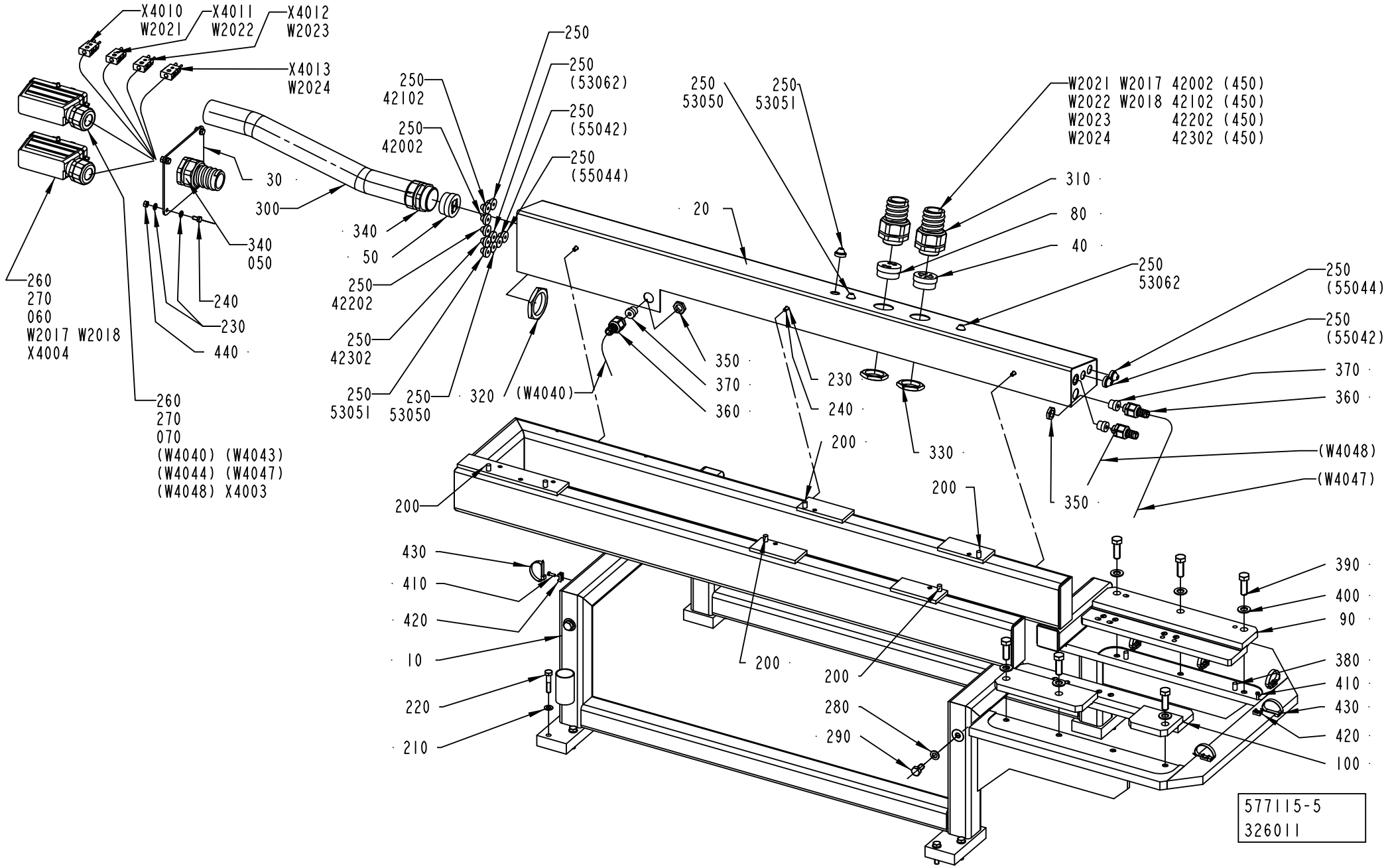
X4010
W2021
X4011
W2022
X4012
W2023
X4013
W2024
30
300
340
050
240
230
440
260
270
060
W2017 W2018
X4004
260
270
070
(W4040) (W4043)
(W4044) (W4047)
(W4048) X4003
250
42102
250
42002
250
42202
250
42302
250
53051
250
53050
250
(53062)
250
(55042)
250
(55044)
340
50
320
(W4040)
250
53050
250
53051
20
W2021 W2017 42002 (450)
W2022 W2018 42102 (450)
W2023 42202 (450)
W2024 42302 (450)
310
80
40
250
53062
250
(55044)
250
(55042)
370
360
(W4048)
(W4047)
350
350
370
360
230
240
200
330
200
200
200
200
200
200
280
290
430
410
420
10
220
210
390
400
90
380
410
430
420
100
577115-5
326011

ECM: 326019 - 20080102
Group number: 577115-0400
Assembly Drawing: 577115-5_1_AE

Pos	Part No	UN	Qty	Description	Page No
TBA 0200M, TBA 0200B, TBA 0250B					
090	2640505-0000		1	SUPPORT	
100	2640506-0000		1	SUPPORT	
TBA 0200S, TBA 0250S, TBA 0300S					
090	2640502-0000		1	SUPPORT	
100	2640503-0000		1	SUPPORT	
Common Parts					
010	2640501-0000		1	FRAME	
020	2640509-0000		1	BOX	
030	1348510-0000		1	PLATE	
040	2501844-0000		1	INSERT	
050	2547143-0000		2	INSERT	
060	1499089-0000		1	INSERT	
070	2535745-0000		1	INSERT	
080	2501843-0000		1	INSERT	
200	311103-1403		6	PARALLEL PIN ISO 2338 8M6X24 A1	
210	315105-0165		8	WASHER BRB 8,4X16 RFR	
220	312105-0459		8	SCREW M6S ISO 4014 M8X40 A480	
230	315105-0153		11	WASHER BRB 6,4X12 RFR	
240	312105-0366		7	SCREW M6S ISO 4017 M6X12 A480	
250	90015-0020		15	LEAD-IN, TET5-7, E-1458016	
260	90110-0150		2	MALE INSERT 121110 0000	
270	353241-0003		2	GLAND W/O INSERT PG21 EXTENDED	
280	315105-0171		4	WASHER BRB 10X18 RFR	
290	312105-0491		4	SCREW M6S ISO 4017 M10X20 A480	
300	90152-0060	MM	550	SPIRAL CONDUIT, 42X35, UL3529	
310	353243-0008		2	HOSE GLAND W/O INSERT PG29 EXTENDED	
320	90099-0103		2	NUT, PR 47 (PG36)	
330	90099-0120		2	NUT, PR 37 (PG29)	
340	353242-0004		2	HOSE GLAND W/O INSERT PG36 NORMAL	
350	90099-0104		3	NUT, PR 15,2 (PG9)	
360	353243-0001		3	HOSE GLAND W/O INSERT PG9 EXTENDED	
370	353249-0008		3	INSERT, SINGLE HOLE, EK 152/7	
380	311103-0405		2	PARALLEL PIN ISO 2338 8M6X30 A1	
390	312105-0538		6	SCREW M6S ISO 4017 M12X35 A480	
400	315105-0178		6	WASHER BRB 13X24 RFR	
410	312125-0291		7	SCREW ISO 1207 M4X12 A4	
420	352113-0205		7	ANCHOR PLATES FOR STRIPS, TYPE TM2S8-C10	
42002	90166-0013	MM	3500	TUBE 8 MM PA BLUE	
42102	90166-0013	MM	3500	TUBE 8 MM PA BLUE	
42202	90166-0013	MM	3500	TUBE 8 MM PA BLUE	
42302	90166-0013	MM	3500	TUBE 8 MM PA BLUE	
430	352113-0102		7	CABLE TIE, BLACK 188X4,8 MM	
440	312605-0316		4	HEXAGON NUT, M6M M6 A280	
450	342735-0103		4	ELBOW PIPE JOINT	
53050	90166-0118	MM	4500	TUBE 8 MM PA BLACK	
53051	90166-0118	MM	4500	TUBE 8 MM PA BLACK	
55042	90166-0089	MM	4500	TUBE, 6,2 MM PE BLUE	
55044	90166-0089	MM	4500	TUBE, 6,2 MM PE BLUE	
W2017	351150-0419	MM	4000	CABLE OLFLEX 5X2,5 MM2 LIGHT/GREY	
W2018	351150-0419	MM	4000	CABLE OLFLEX 5X2,5 MM2 LIGHT/GREY	
W2021	90220-0034	MM	4000	THERMOCABLE TEX/SITW-20F-KX 2X0,5MM2	
W2022	90220-0034	MM	4000	THERMOCABLE TEX/SITW-20F-KX 2X0,5MM2	
W2023	90220-0034	MM	4000	THERMOCABLE TEX/SITW-20F-KX 2X0,5MM2	
W2024	90220-0034	MM	4000	THERMOCABLE TEX/SITW-20F-KX 2X0,5MM2	
X4003	90110-0228		1	CABLE HOOD 24-POL 71.350.2428.0	
X4004	90110-0228		1	CABLE HOOD 24-POL 71.350.2428.0	
X4010	90326-0022		1	PLUG, MALE YELLOW CR-AL	
X4011	90326-0022		1	PLUG, MALE YELLOW CR-AL	
X4012	90326-0022		1	PLUG, MALE YELLOW CR-AL	
X4013	90326-0022		1	PLUG, MALE YELLOW CR-AL	

Machine Type | Group Description | Used-In | Group Number | Page No

Tetra Pak

SPC
Spare Parts Catalogue

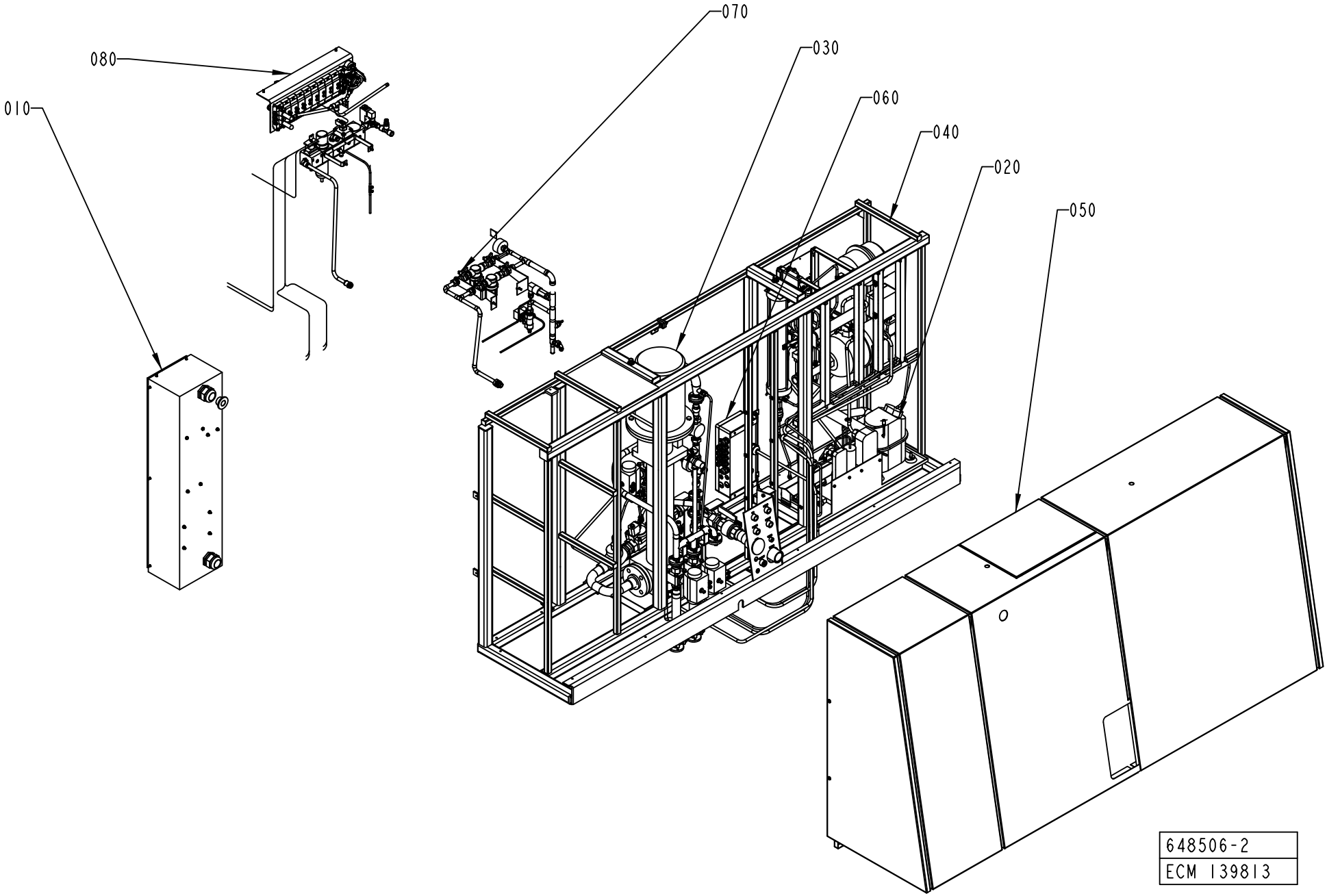
070
030
060
040
020
050
080
010
648506-2
ECM 139813

ECM: 268357 - 20060703
Group number: 648506-0400
Assembly Drawing: 648506-2_1_AD

Pos	Part No	UN	Qty	Description	Page No
-					
010	1095610-0300		1	MAIN SWITCH	**6-5**
020	1095612-0300		1	COOLING WATER SYSTEM	**6-7, 6-9**
030	1095627-0300		1	FOAM CLEANING UNIT	**6-27**
040	2613034-0100		1	MACHINE BODY	**6-43**
050	1095607-0200		1	COVERING PANEL	**6-47**
060	1095630-0200		1	CONNECTION BOX	**6-63**
070	1095608-0100		1	WATER PANEL	**6-65, 6-67**
080	1095714-0300		1	SUPPLY SYSTEM	**6-69**

Pos	Part No	UN	Qty	Description	Page No

MAIN SWITCH

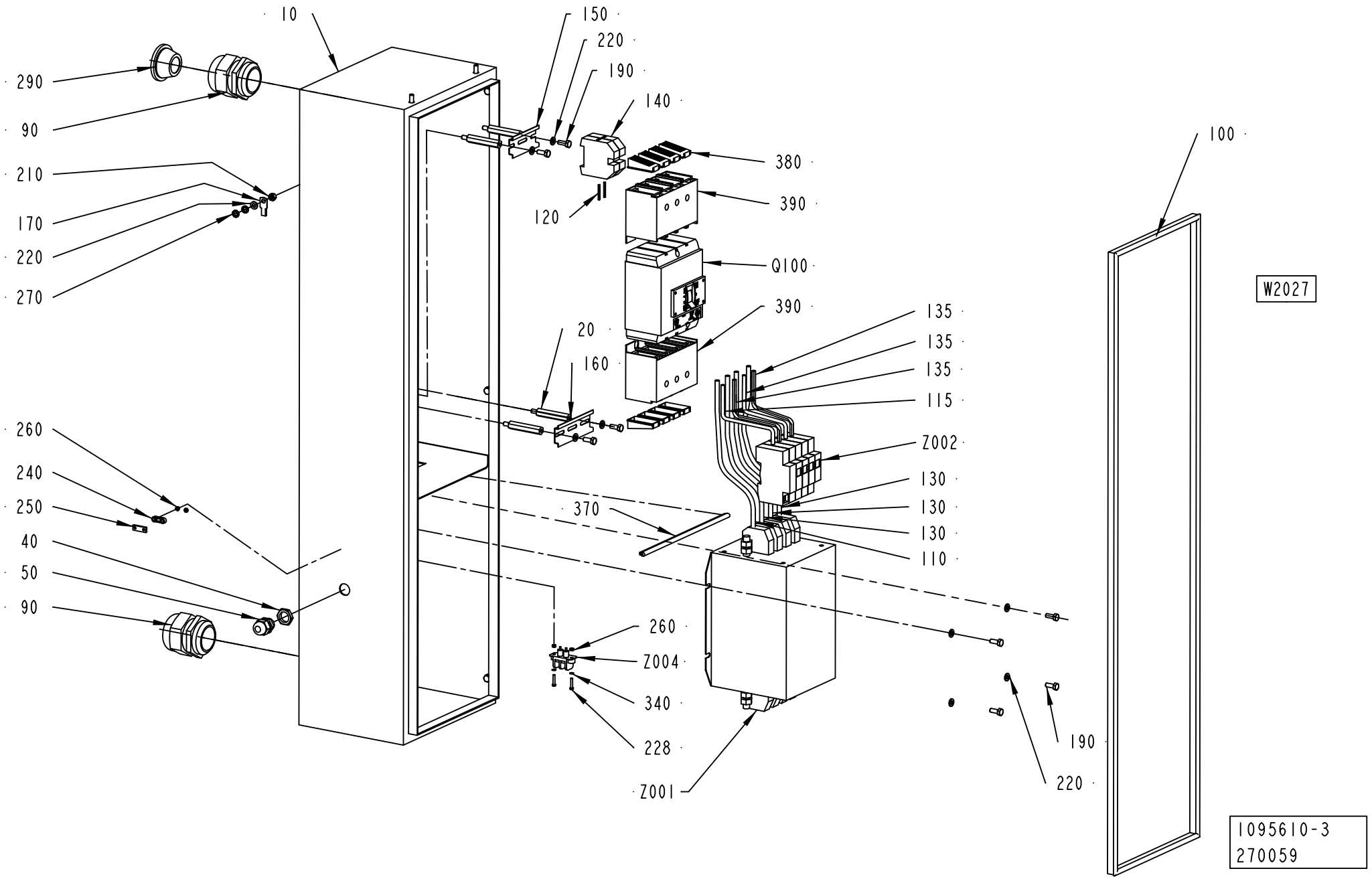
10
150
220
190
140
290
90
210
170
220
270
380
390
120
Q100
390
20
160
100
W2027
135
135
135
115
Z002
130
130
130
110
260
240
250
40
50
90
370
260
Z004
340
228
Z001
190
220
1095610-3
270059

ECM: 271182 - 20060807
Group number: 1095610-0300
Assembly Drawing: 1095610-3_1_AD

Pos	Part No	UN	Qty	Description	Page No
-					
010	2842999-0000		1	CABINET	
020	1037184-0000		4	SPACER SCREW	
040	90099-0117		1	NUT, PR 18,6 (PG11)	
050	352103-0106		1	CABLE GLAND, ST 11, PR18,6/PG11	
060	90099-0085		1	NUT	
070	90099-0096		1	NUT	
090	352103-0123		2	CABLE GLAND, ST 42, PR54,0/PG42	
100	90143-0057	MM	2600	STRIP EMKA 1011-05 21X11MM	
110	351161-0110	MM	2400	WIRE AWM 1X25 MM2 LIGHTBLUE	
115	351161-0111	MM	240	WIRE AWM 1X35 MM2 LIGHTBLUE	
120	351162-0109	MM	850	WIRE AWM 1X16 MM2 YELLOW-GREEN	
130	351164-0111	MM	6000	WIRE AWM 1X35 MM2 BLACK	
135	351164-0111	MM	600	WIRE AWM 1X35 MM2 BLACK	
140	353024-0209		2	EARTH TERMINAL, 1010.5	
150	353042-0005	MM	75	RAIL TS 35/7.5	
160	353042-0005	MM	100	RAIL TS 35/7.5	
170	353104-0168		1	CABLE SHOE, RING UNINS., YAV 16 M 6	
180	353105-0200		9	PIN CABLE SHOE A4630SR	
190	312105-0368		13	SCREW M6S ISO 4017 M6X16 A480	
210	312605-0316		1	HEXAGON NUT, M6M M6 A280	
220	315105-0153		16	WASHER BRB 6,4X12 RFR	
230	90143-0060	MM	600	EDGE STRIP 9,5X6,3MM BLACK PVC	
240	90220-0303		1	CLAMP FOR SCR.CABLE, 10MM, 55-016-22	
250	90220-0305		1	CLAMP FOR SCR.CABLE, 16MM,	
260	312605-0310		2	HEXAGON NUT, M6M M3 A280	
270	90062-0015		2	LOCK WASHER SERRAT.EXT.GEAR,6,4/11 H=0,7	
280	90166-0232	MM	500	SHRINKABLE HOSE	
290	90015-0025		1	LEAD-IN, TET26-35, E-1458041	
300	1129402-0000		4	SPACER SCREW	
340	315105-0124		4	WASHER BRB 3,2X6 RFR	
370	90143-0060	MM	250	EDGE STRIP 9,5X6,3MM BLACK PVC	
W2027	90220-0095	MM	3000	SCR. CABLE 3X0,75MM2	
Z001	90024-0060		1	POWER LINE FILTER, 80 A 250/440 VAC	
Z002	90082-0013		1	OVER VOLT. PROTECT. PU 4C-R 230 VAC	
	90082-0301		*3*	*OVER VOLT. PROTECT. PU 0 C 833951*	
Z004	90024-0036		1	FILTERED TERMINAL BLOCK, 52-160-002	

Pos	Part No	UN	Qty	Description	Page No

Machine Type | Group Description | Used-In | Group Number | Page No

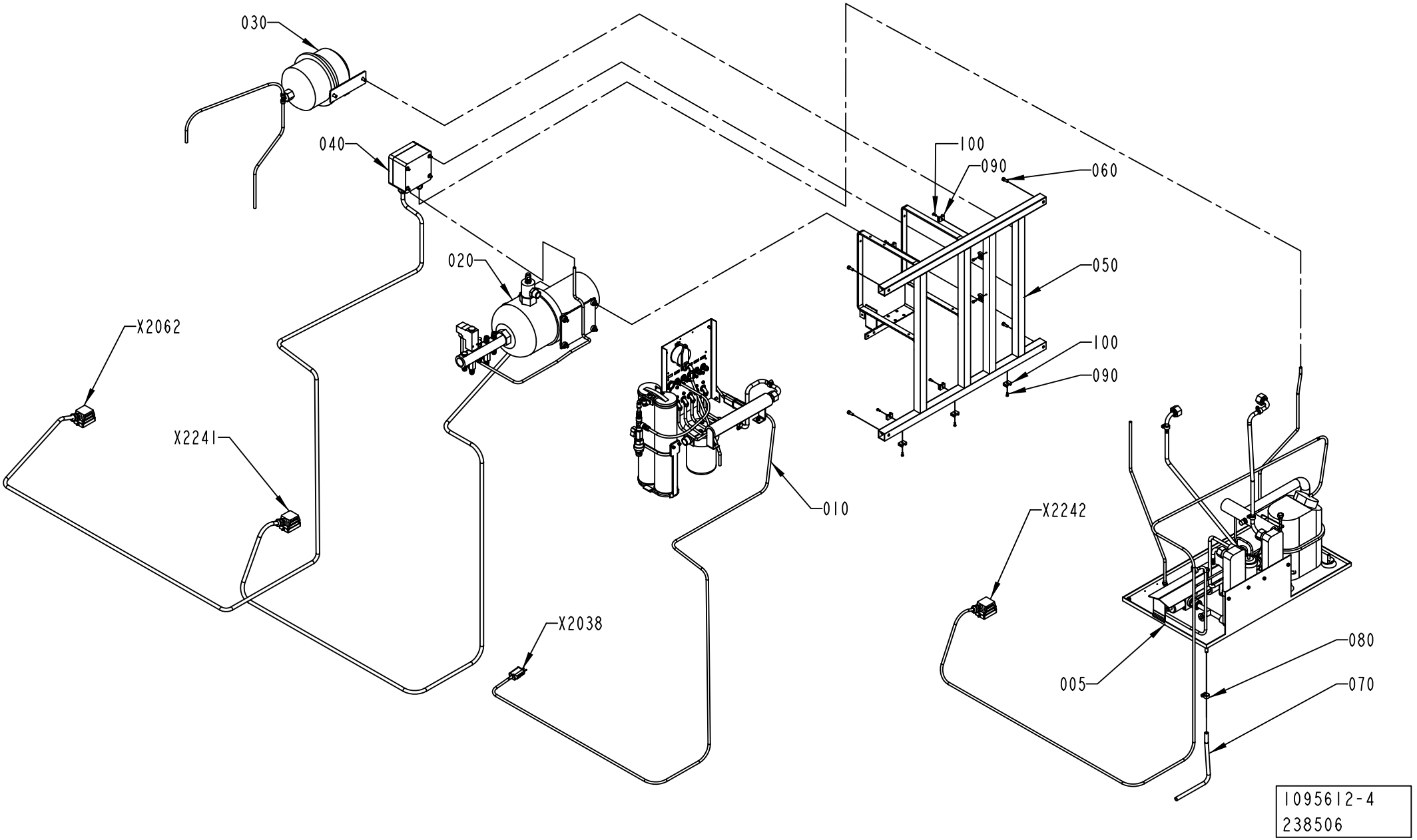
030
040
020
X2062
X2241
010
X2038
100
090
060
050
100
090
X2242
005
080
070
1095612-4
238506

ECM: 256723 - 20060313
Group number: 1095612-0300
Assembly Drawing: 1095612-4_1_AD

This list covers pages from 6-6 to 6-9

Pos	Part No	UN	Qty	Description	Page No
TBA/22 COMPRESSOR (See drawing on page: 6-6)					
005	1095710-0300		1	COMPRESSOR UNIT	**6-11**
010	1095705-0300		1	FLOW METER	**6-13**
TBA/22 ICE-WATER (See drawing on page: 6-8)					
007	1260547-0100		1	ICE WATER UNIT	**6-17**
010	1095705-0300		1	FLOW METER	**6-13**
Common Parts					
020	1095706-0300		1	COOLING WATER PUMP	**6-21**
030	2514077-0100		1	EXPANSION VESSEL	**6-23**
040	1095709-0200		1	CONNECTION BOX	**6-25**
050	1129141-0000		1	MACHINE BODY	
060	312115-0368		4	SCREW ISO4762 M6X16 A4 80	
070	90166-0121	MM	1000	HOSE	
080	342991-0101		1	HOSE CLIP,WORM DRIVE TYPE (13)-16	
090	352113-0203		9	ANCHOR PLATES FOR STRIPS, TYPE TM3S8-M0	
100	312125-0289		9	SCREW ISO 1207 M4X10 A4	

Pos	Part No	UN	Qty	Description	Page No

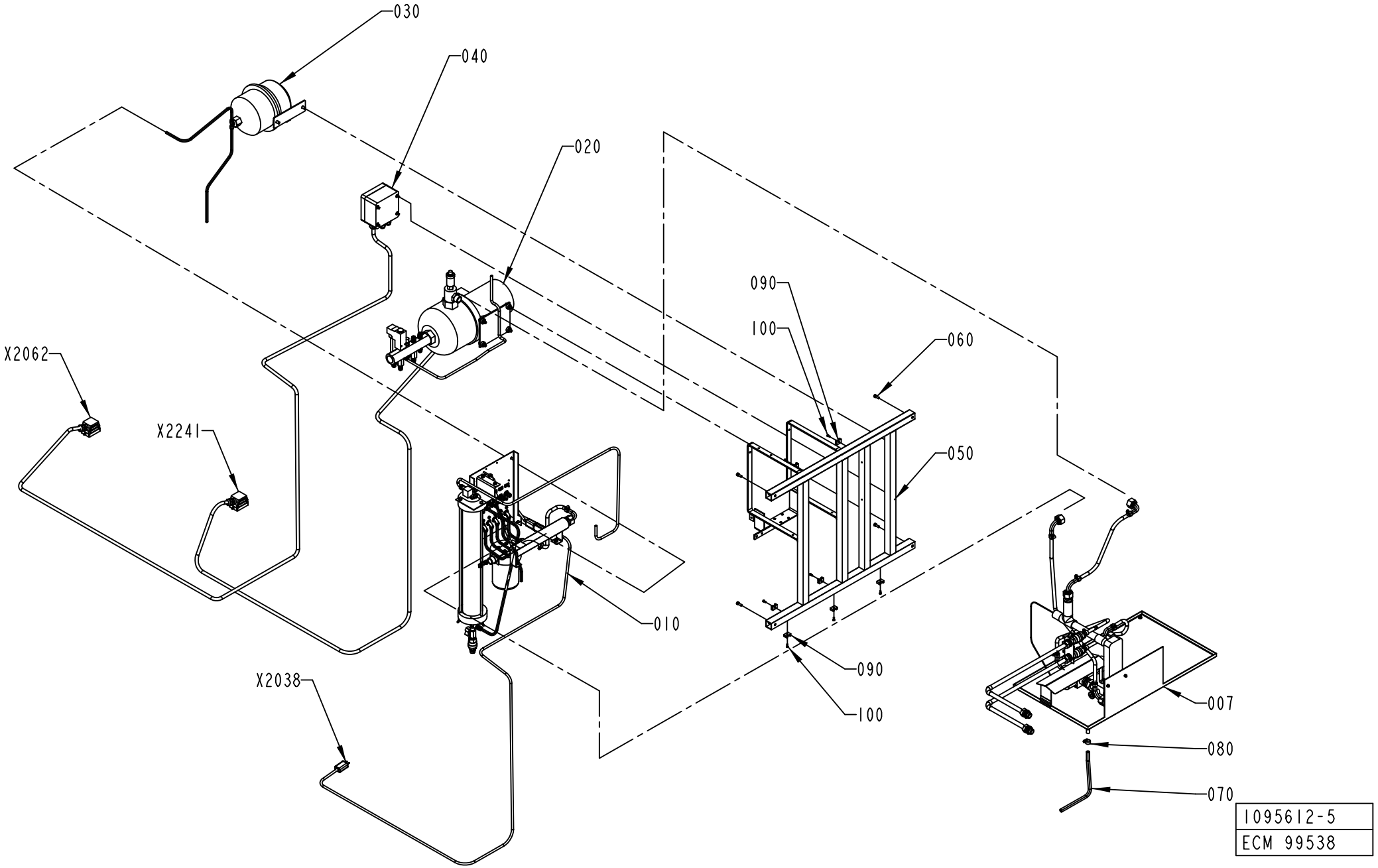
030
040
020
090
100
060
X2062
X2241
050
010
090
100
X2038
007
080
070
1095612-5
ECM 99538

ECM: 256723 - 20060313
Group number: 1095612-0300
Assembly Drawing: 1095612-5_1_AC

This list covers pages from 6-6 to 6-9

Pos	Part No	UN	Qty	Description	Page No
TBA/22 COMPRESSOR (See drawing on page: 6-6)					
005	1095710-0300		1	COMPRESSOR UNIT	**6-11**
010	1095705-0300		1	FLOW METER	**6-13**
TBA/22 ICE-WATER (See drawing on page: 6-8)					
007	1260547-0100		1	ICE WATER UNIT	**6-17**
010	1095705-0300		1	FLOW METER	**6-13**
Common Parts					
020	1095706-0300		1	COOLING WATER PUMP	**6-21**
030	2514077-0100		1	EXPANSION VESSEL	**6-23**
040	1095709-0200		1	CONNECTION BOX	**6-25**
050	1129141-0000		1	MACHINE BODY	
060	312115-0368		4	SCREW ISO4762 M6X16 A4 80	
070	90166-0121	MM	1000	HOSE	
080	342991-0101		1	HOSE CLIP,WORM DRIVE TYPE (13)-16	
090	352113-0203		9	ANCHOR PLATES FOR STRIPS, TYPE TM3S8-M0	
100	312125-0289		9	SCREW ISO 1207 M4X10 A4	

Pos	Part No	UN	Qty	Description	Page No

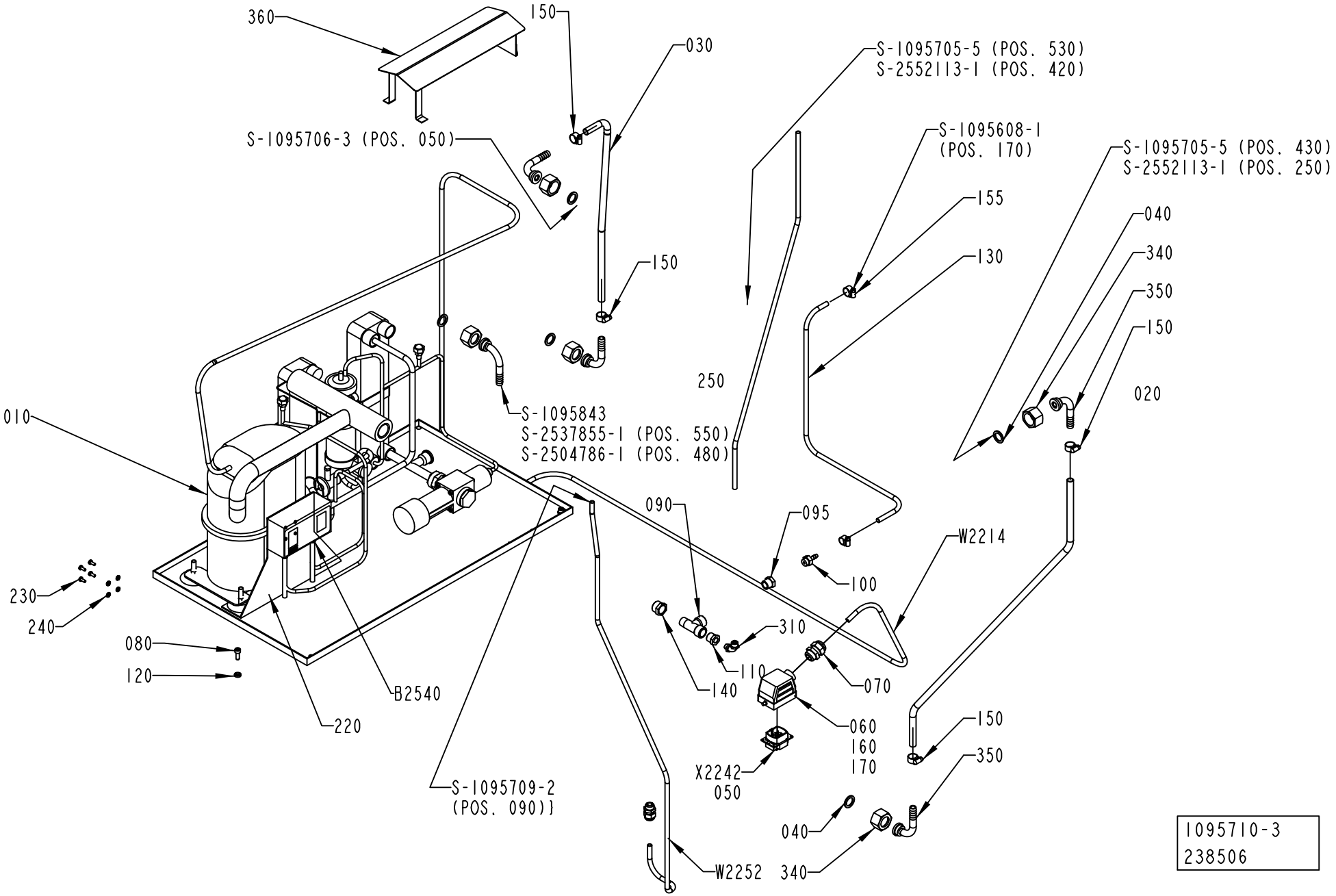
360
150
030
S-1095705-5 (POS. 530)
S-2552113-1 (POS. 420)
S-1095706-3 (POS. 050)
S-1095608-1
(POS. 170)
S-1095705-5 (POS. 430)
S-2552113-1 (POS. 250)
155
040
340
350
150
130
150
250
020
010
S-1095843
S-2537855-1 (POS. 550)
S-2504786-1 (POS. 480)
090
095
W2214
100
230
240
310
080
110
070
120
140
B2540
060
160
170
150
220
X2242
050
350
S-1095709-2
(POS. 090)]
040
W2252
340
1095710-3
238506

ECM: 254525 - 20060221
Group number: 1095710-0300
Assembly Drawing: 1095710-3_1_AF

Pos	Part No	UN	Qty	Description	Page No
TBA/22					
010	1140603-0000		1	COMPRESSOR UNIT	
	342713-0213		*1*	*PLUG, EXT THREAD HEX SOCKET 8638-00-120*	
	90459-6809		*1*	*EXP. VALVE TUB ORIF 5 R134A, 068U2004*	
	90459-6804		*1*	*CONDENSER, B8/14 CONNECTION 2/22U + 2/1/*	
	90459-6802		*1*	*COMPRESSOR, TAJ4511Y*	
	90459-6800		*1*	*CAPACITY REGULATOR, KVP 12*	
	90459-6799		*1*	*THERMOST. VALVE,WVFX 15 3.5-16 BAR 1/2"*	
	90459-6798		*1*	*DRYING FILTER, DMC 2032S*	
	90422-0037		*1*	*HEAT EXCHANGER*	
	90274-0123		*1*	*PRESSURE SWITCH, KP 1560-1254*	
W 2214	351150-0418	MM	3500	CABLE OLFLEX 4X2,5 MM2 LIGHT/GREY	
Common Parts					
020	90166-0121	MM	930	HOSE	
030	90166-0121	MM	840	HOSE	
040	90459-3339		5	GASKET NBR/PTFE 17X24X2 MM 3/4"	
050	90110-0159		1	MALE INSERT 70.310.0640.0	
060	90110-0226		1	CABLE HOOD 6-POL 70.350.0628.0	
070	352103-0108		1	CABLE GLAND, ST 13,5 , PR20,4/PG13,5	
080	312115-0368		2	SCREW ISO4762 M6X16 A4 80	
090	90140-0023		1	T-PIPE, INT. THREAD, NO. 2070-3/8-3/8	
095	90330-0042		1	BUSHING, INT/EXT. THR. R3/8-RP1/4	
100	342901-0102		1	HOSE NIPPLE, EXT.THR. R1/4-7 MM	
110	342701-0202		1	BUSHING,INT./EXT.G-THREAD G3/8"-G1/8"	
120	315115-0153		2	WASHER PLAIN, TBRB 6,4/12 H=3	
130	90166-0045	MM	705	HOSE PVC TRANSP. 6/12	
140	342701-0206		1	BUSHING,INT./EXT.G-THREAD G1/2"-G3/8"	
150	342991-0101		4	HOSE CLIP,WORM DRIVE TYPE (13)-16	
155	342991-0100		2	HOSE CLIP,WORM DRIVE TYPE 10-13	
160	359005-0050		1	MARKING LABEL KIT X, 04.841.4550.0	
170	359005-0010		1	MARKING LABEL KIT 0 - 9, 04.841.2150.0	
220	1361560-0000		1	PLATE	
230	312132-0289		4	SLOTTED HEAD, PAN SCREW, MSCS M4X10	
240	90062-0029		4	LOCK WASHER 5,1X 8,6, T= 1,5 DIN 7980	
250	90166-0118	MM	500	TUBE 8 MM PA BLACK	
310	342931-0121		1	ELBOW 90 COUPL.,EXT.THREAD 8/6-G1/8"	
340	2531423-0000		5	NUT	
350	2531245-0000		5	HOSE NIPPLE	
360	2532574-0000		1	COVER	
B2540	90274-0108		1	DUAL PRESSURE GUARD, -20 - 2800 KPA	
W2252	351150-0431	MM	1000	CABLE OLFLEX 2X0,75 MM2 LIGHT/GREY	

Machine Type	Group Description	Used-In	Group Number	Page No

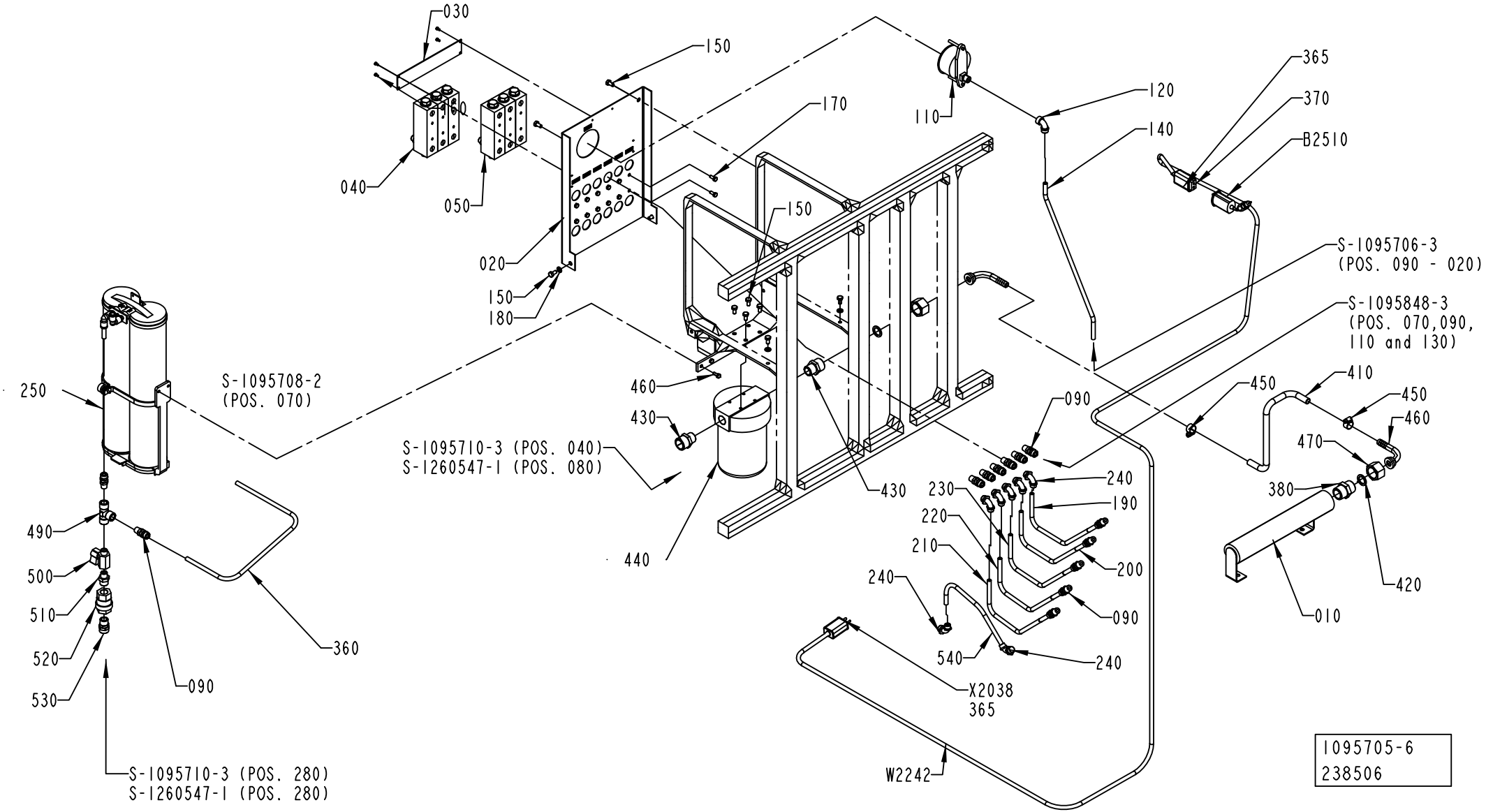
030
150
170
110
120
140
365
370
B2510
040
050
020
150
180
150
S-1095706-3
(POS. 090 - 020)
S-1095848-3
(POS. 070,090,
110 and 130)
250
S-1095708-2
(POS. 070)
460
430
S-1095710-3 (POS. 040)
S-1260547-1 (POS. 080)
440
090
450
410
450
460
470
380
420
010
240
230
190
220
210
200
240
090
540
240
490
500
510
520
530
090
360
S-1095710-3 (POS. 280)
S-1260547-1 (POS. 280)
X2038
365
W2242
1095705-6
238506

ECM: 247178 - 20060220
Group number: 1095705-0300
Assembly Drawing: 1095705-6_1_AC

Pos	Part No	UN	Qty	Description	Page No
TBA/22					
020	2579861-0002		1	PIVOT BRACKET	
030	1484886-0000		1	SIGN LANGUAGEINDEPENDENT	
050	1041046-0000		3	FLOW METER	
090	342922-0122		13	STRAIG.COUPL.,ADJUST.,EXT.THRE.8/6-R1/4"	
170	312105-0327		14	SCREW M6S ISO 4017 M5X12 A480	
240	342931-0122		8	ELBOW 90 COUPL.,EXT.THREAD 8/6-G1/4"	
540	90166-0118	MM	700	TUBE 8 MM PA BLACK	
Common Parts					
010	1041984-0000		1	ATTACHMENT PIPE	
040	1041046-0000		3	FLOW METER	
110	90043-0100		1	PRESSURE GAUGE, 2948 D=63 MM	
120	342933-0122		1	ELBOW 90 COUPL.,INT.THREAD 8/6-G1/4	
140	90166-0118	MM	490	TUBE 8 MM PA BLACK	
150	312105-0366		10	SCREW M6S ISO 4017 M6X12 A480	
160	312125-0220		4	SCREW ISO 1207 M3X6 A4	
180	315105-0153		4	WASHER BRB 6,4X12 RFR	
190	90166-0118	MM	255	TUBE 8 MM PA BLACK	
200	90166-0118	MM	255	TUBE 8 MM PA BLACK	
210	90166-0118	MM	255	TUBE 8 MM PA BLACK	
220	90166-0118	MM	255	TUBE 8 MM PA BLACK	
230	90166-0118	MM	255	TUBE 8 MM PA BLACK	
250	2792119-0100		1	FILTER	**6-15**
270	90099-0110		1	NUT, PR 22,5 (PG16)	
320	342722-0206		1	STRAIGHT COUPLING D=8-G3/8"	
360	90166-0118	MM	800	TUBE 8 MM PA BLACK	
365	90326-0012		2	PROTECTIVE COVER, T31A4618	
370	90326-0020		1	PLUG, FEMALE YELLOW CR-AL	
380	90330-0004		1	NIPPLES,HEXAGON,EXT.R-THREAD R3/4"-R3/4"	
410	90166-0121	MM	400	HOSE	
420	90459-3339		2	GASKET NBR/PTFE 17X24X2 MM 3/4"	
430	90358-0091		2	REDUCING NIPPLE	
440	90415-0065		1	FILTER	
010	*90415-0357*		*1*	*FILTER INSERT*	
450	342991-0101		2	HOSE CLIP,WORM DRIVE TYPE (13)-16	
460	2531245-0000		2	HOSE NIPPLE	
470	2531423-0000		2	NUT	
490	90140-0018		1	T-PIPE, INT. THREAD, 2003-1/4	
500	90187-0045		1	BALL VALVE G1/4 CR PL	
510	90330-0083		1	NIPPLES, EXT. THREAD. R3/8-R1/4	
520	90230-0028		1	NON-RETURN VALVE H 151 R 3/8"	
530	342920-0123		1	STRAIGHT COUPLING,EXT.THREADED 8/6-R3/8"	

Pos	Part No	UN	Qty	Description	Page No
B 2510	90326-0057		1	THERMOCOUPLE, CR-AL	
B 2520	90326-0020		1	PLUG, FEMALE YELLOW CR-AL	
W 2242	90220-0034	MM	3000	THERMOCABLE TEX/SITW-20F-KX 2X0,5MM2	
X 2038	90326-0022		1	PLUG, MALE YELLOW CR-AL	

Machine Type	Group Description	Used-In	Group Number	Page No

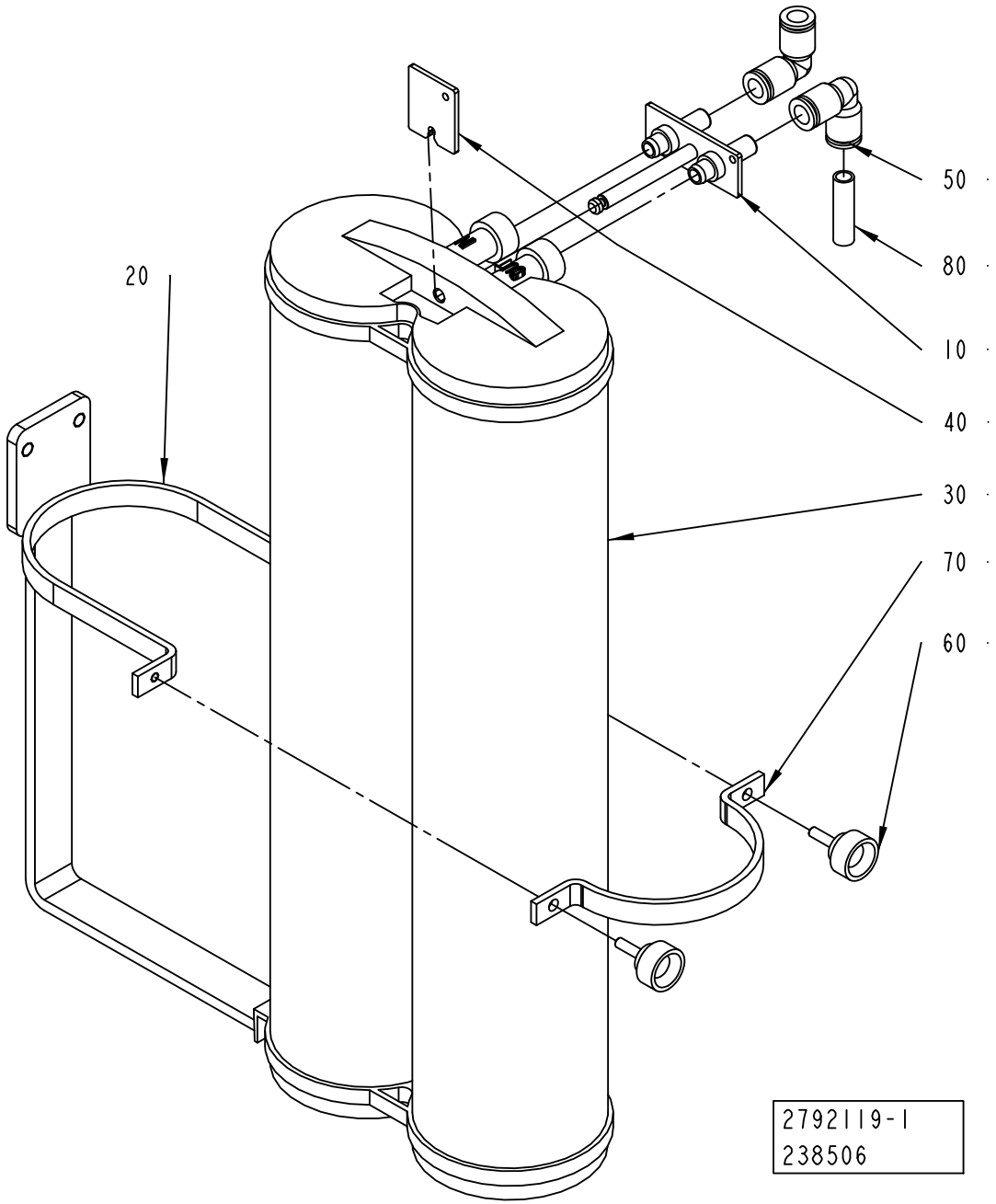
50
80
10
40
30
70
60
20
2792119-1
238506

ECM: 272753 - 20060711
Group number: 2792119-0100
Assembly Drawing: 2792119-1_1_AA

Pos	Part No	UN	Qty	Description	Page No
-					
010	2793908-0000		1	CONNECTOR	
020	2792118-0000		1	SUPPORT	
030	90459-7084		1	FILTER, CPDI000M1	
040	2793907-0000		1	FASTENING PLATE	
050	342735-0103		2	ELBOW PIPE JOINT	
060	318856-0101		2	KNOB, EXTERNAL THREAD. NO. 8308-1011	
070	2792120-0000		1	SUPPORT	
080	90166-0118	MM	200	TUBE 8 MM PA BLACK	

Pos	Part No	UN	Qty	Description	Page No

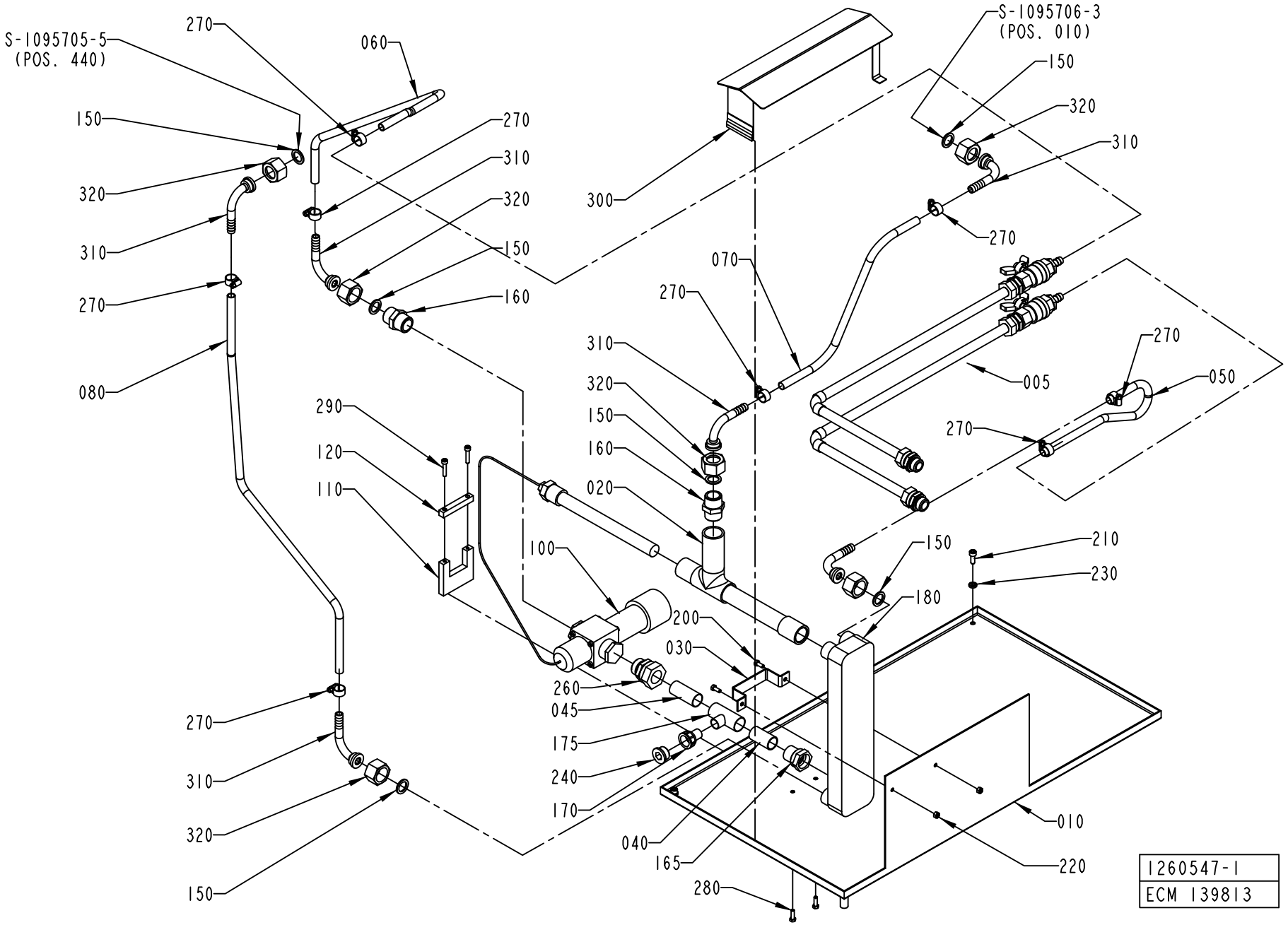
S-1095705-5
(POS. 440)
270
060
150
320
310
270
080
270
310
320
150
160
300
S-1095706-3
(POS. 010)
150
320
310
270
070
270
005
270
050
270
310
320
150
160
020
290
120
110
100
150
210
230
180
200
030
260
045
175
240
170
040
165
280
270
310
320
150
010
220
1260547-1
ECM 139813

ECM: 189412 - 20041104
Group number: 1260547-0100
Assembly Drawing: 1260547-1_1_AG

Pos	Part No	UN	Qty	Description	Page No
-					
005	1095715-0100		1	ICE WATER	**6-19**
010	1255365-0000		1	MOUNTING PLATE	
020	1511680-0000		1	TUBE	
030	1260247-0000		1	CLIP	
040	1260327-0000		1	TUBE	
045	1285363-0000		1	TUBE	
050	90166-0121	MM	400	HOSE	
060	90166-0121	MM	550	HOSE	
070	90166-0121	MM	600	HOSE	
080	90166-0121	MM	850	HOSE	
100	90187-0130		1	TEMP. CONTR. VALVE, R3/4 0-30øC	
110	1511615-0000		1	BRACKET	
120	1511616-0000		1	BRACKET	
150	90459-3339		6	GASKET NBR/PTFE 17X24X2 MM 3/4"	
160	90330-0004		2	NIPPLES,HEXAGON,EXT.R-THREAD R3/4"-R3/4"	
165	90418-0045		1	ADAPTER, INT. CONN. NO. 7272CU/22-G3/4	
170	90418-0057		1	ADAPTER, EXT. CONN. NO. 7276CU / 15-G1/2	
175	90418-0062		1	T-PIPE, REDUCTION, INT, NO. 7130-22X15X2	
180	90422-0037		1	HEAT EXCHANGER	
200	312105-0327		2	SCREW M6S ISO 4017 M5X12 A480	
210	312105-0368		2	SCREW M6S ISO 4017 M6X16 A480	
220	312605-0314		2	HEXAGON NUT, M6M M5 A280	
230	315115-0153		2	WASHER PLAIN, TBRB 6,4/12 H=3	
240	342713-0213		1	PLUG, EXT THREAD HEX SOCKET 8638-00-120	
260	342720-0119		1	CONN. STR., GA-22-G3/4	
270	342991-0101		8	HOSE CLIP,WORM DRIVE TYPE (13)-16	
280	312105-0329		2	SCREW M6S ISO 4017 M5X16 A480	
290	312115-0333		2	SCREW ISO4762 M5X25 A4 80	
300	2532574-0000		1	COVER	
310	2531245-0000		6	HOSE NIPPLE	
320	2531423-0000		6	NUT	

Pos	Part No	UN	Qty	Description	Page No

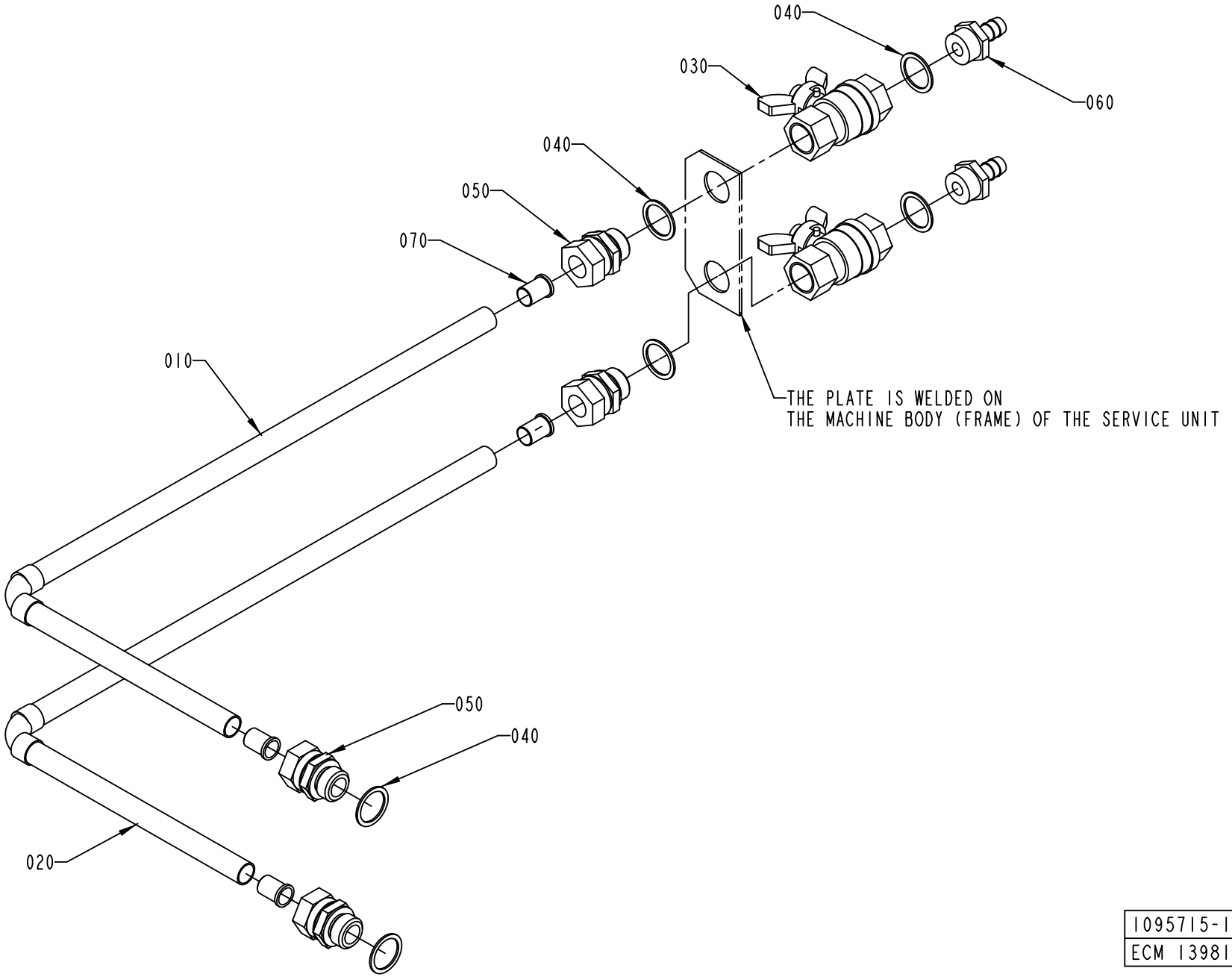

1095715-1
ECM 139813

ECM: 224833 - 20050831
Group number: 1095715-0100
Assembly Drawing: 1095715-1_1_AD

Pos	Part No	UN	Qty	Description	Page No
-					
010	1041930-0000		1	PIPE	
020	1041931-0000		1	PIPE	
030	90187-0029		2	BALL VALVE G1/2, NPBR	
040	315233-0113		6	WASHER CAPTIVE SEALING G1/2	
050	342720-0114		4	CONN. STR. GA-15-G1/2	
060	342901-0105		2	HOSE NIPPLE, EXT.THR. R1/2-12 MM	
070	342708-0109		4	REINFORCING RING VSH 15X1 MM	

Pos	Part No	UN	Qty	Description	Page No

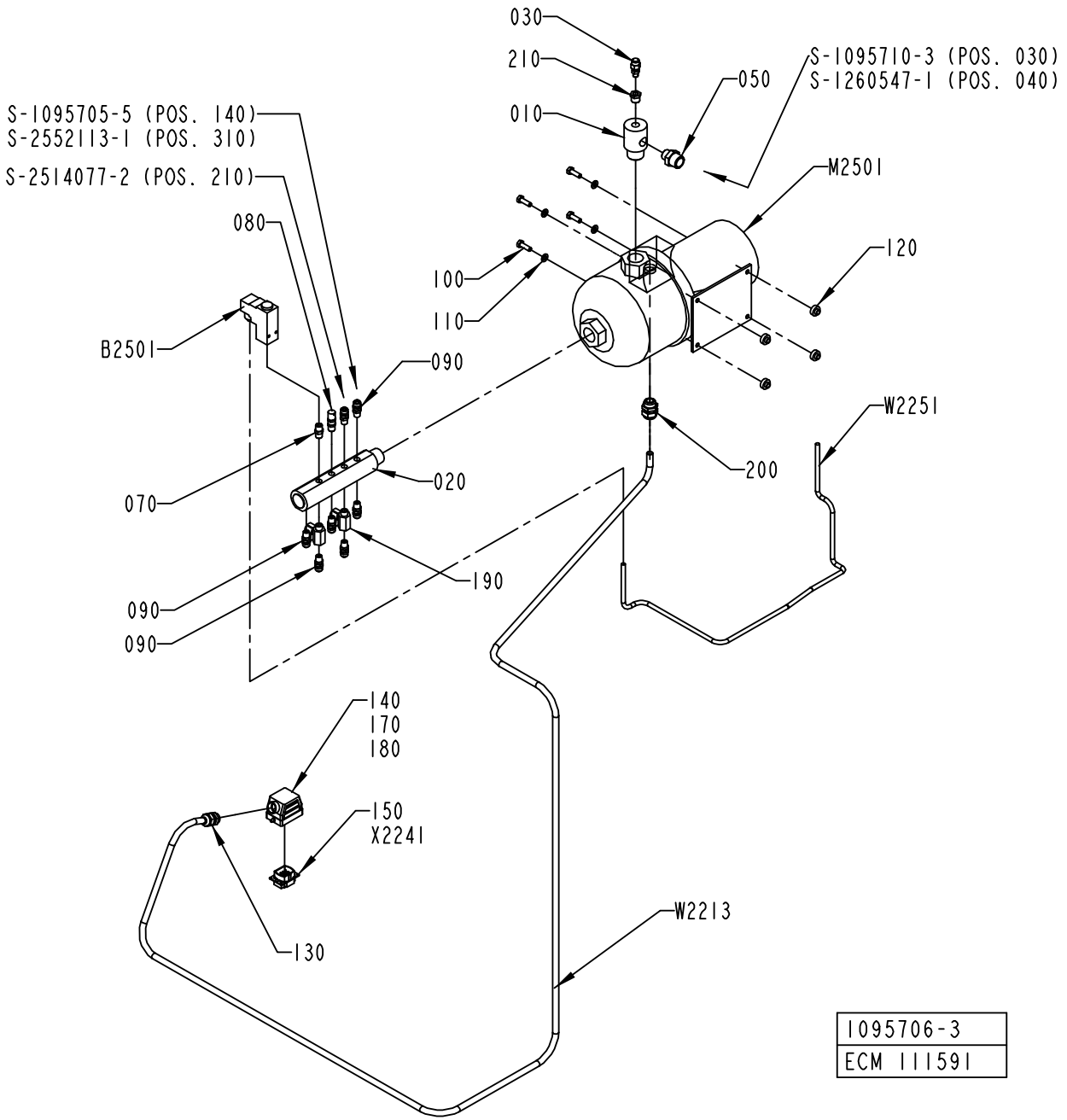
030
210
010
050
S-1095710-3 (POS. 030)
S-1260547-1 (POS. 040)
S-1095705-5 (POS. 140)
S-2552113-1 (POS. 310)
S-2514077-2 (POS. 210)
080
M2501
120
100
110
B2501
090
W2251
200
020
070
190
090
090
140
170
180
150
X2241
130
W2213
1095706-3
ECM 111591

ECM: 224832 - 20050831
Group number: 1095706-0300
Assembly Drawing: 1095706-3_1_AD

Pos	Part No	UN	Qty	Description	Page No
TBA/22					
090	342922-0122		7	STRAIG.COUPL.,ADJUST.,EXT.THRE.8/6-R1/4"	
190	90187-0045		2	BALL VALVE G1/4 CR PL	
220	90330-0026		1	PLUG, EXT. G-THREAD, G1/4	
W 2213	351150-0418	MM	3000	CABLE OLFLEX 4X2,5 MM2 LIGHT/GREY	
Common Parts					
010	2532806-0000		1	ATTACHMENT PIPE	
020	1129066-0000		1	RETURN PIPE	
030	90459-1736		1	PURGE VALVE, 2RM-PG4L-SS	
050	90330-0080		1	NIPPLES, EXT. THREAD. R3/4-R1/2	
070	90330-0043		1	NIPPLES, EXT. THREAD. R-207R1/4	
080	90230-0041		1	OVERPRESSURE VALVE SS-4 CPA2-RTDG-3	
100	312105-0453		4	SCREW M6S ISO 4017 M8X25 A480	
110	315105-0165		4	WASHER BRB 8,4X16 RFR	
120	90015-0037		4	RUBBER BUSHING	
130	352103-0108		1	CABLE GLAND, ST 13,5 , PR20,4/PG13,5	
140	90110-0226		1	CABLE HOOD 6-POL 70.350.0628.0	
150	90110-0159		1	MALE INSERT 70.310.0640.0	
170	359005-0050		1	MARKING LABEL KIT X, 04.841.4550.0	
180	359005-0010		1	MARKING LABEL KIT 0 - 9, 04.841.2150.0	
200	352103-0110		1	CABLE GLAND, STR 16, PR22,5/PG16	
210	342701-0202		1	BUSHING,INT./EXT.G-THREAD G3/8"-G1/8"	
B 2501	90274-0056		1	PRESS. SW. 1 - 12 BAR, PEV-1/4-B-SA22358	
M 2501	90321-0116		1	PUMP GRUNDFOS CHI 2-60	
	90321-0618		*1*	*SEAL KIT FOR REPAIR OF PUMP*	
W 2251	351150-0431	MM	1000	CABLE OLFLEX 2X0,75 MM2 LIGHT/GREY	

Pos	Part No	UN	Qty	Description	Page No

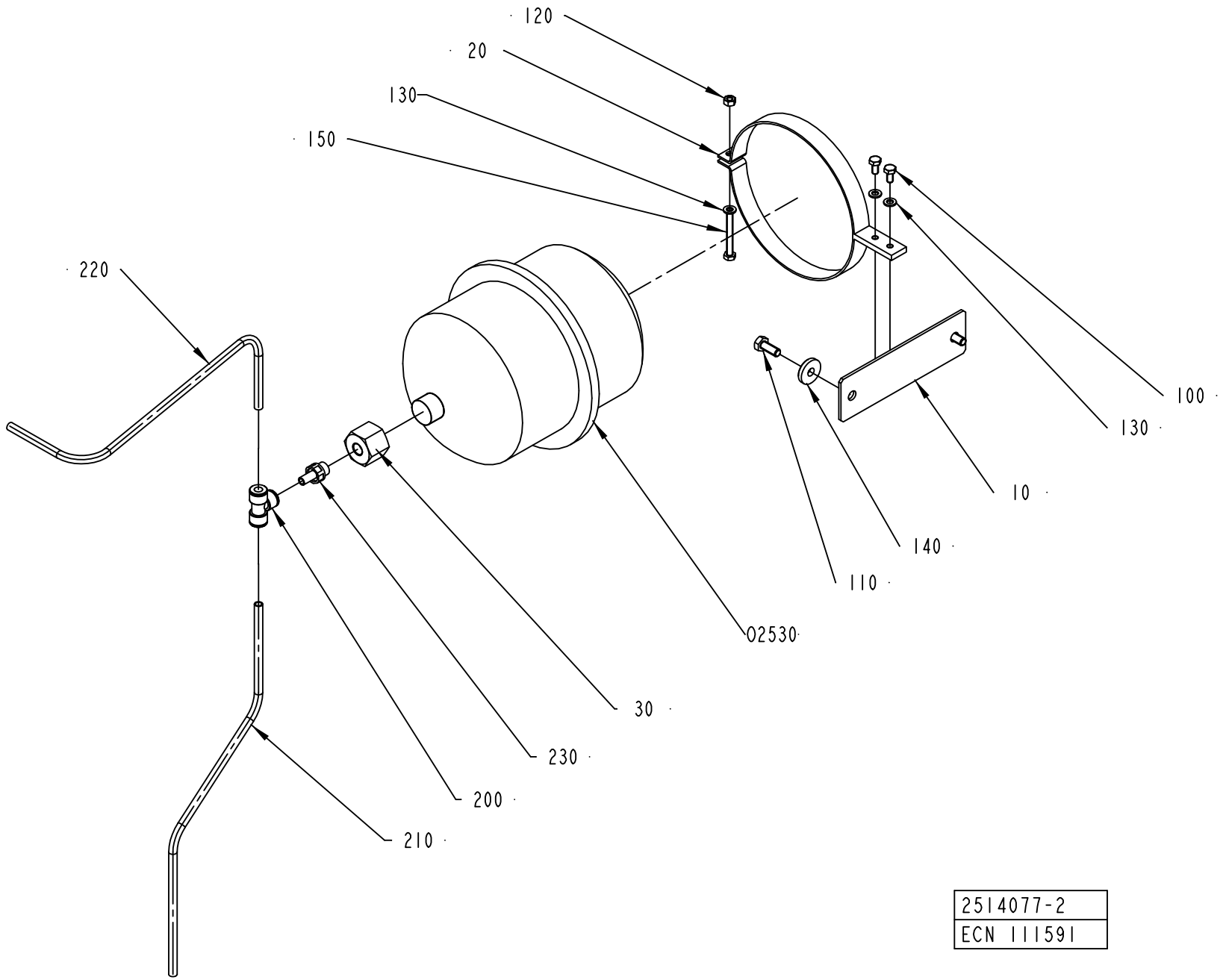
120
20
130
150
220
100
130
10
140
110
02530
30
230
200
210
2514077-2
ECN 111591

ECM: 189417 - 20041104
Group number: 2514077-0100
Assembly Drawing: 2514077-2_1_AA

Pos	Part No	UN	Qty	Description	Page No
TBA/22					
200	342940-0122		1	T-COUPLING,EXT.THREAD 8/6-R1/4"	
Common Parts					
010	2514087-0000		1	PLATE	
020	1484081-0000		1	BRACKET	
030	2514083-0000		1	REDUCTION NIPPLE	
100	312105-0366		2	SCREW M6S ISO 4017 M6X12 A480	
110	312105-0451		2	SCREW M6S ISO 4017 M8X20 A480	
120	312605-0316		1	HEXAGON NUT, M6M M6 A280	
130	315105-0153		3	WASHER BRB 6,4X12 RFR	
140	315125-0165		2	WASHER TBRSB 8,4X26X5 A4	
150	312109-0380		1	SCREW M6S ISO 4017 M6X50 A480	
210	90166-0118	MM	450	TUBE 8 MM PA BLACK	
220	90166-0118	MM	500	TUBE 8 MM PA BLACK	
O2530	90304-0020		1	RECIPIENTE	

Pos	Part No	UN	Qty	Description	Page No

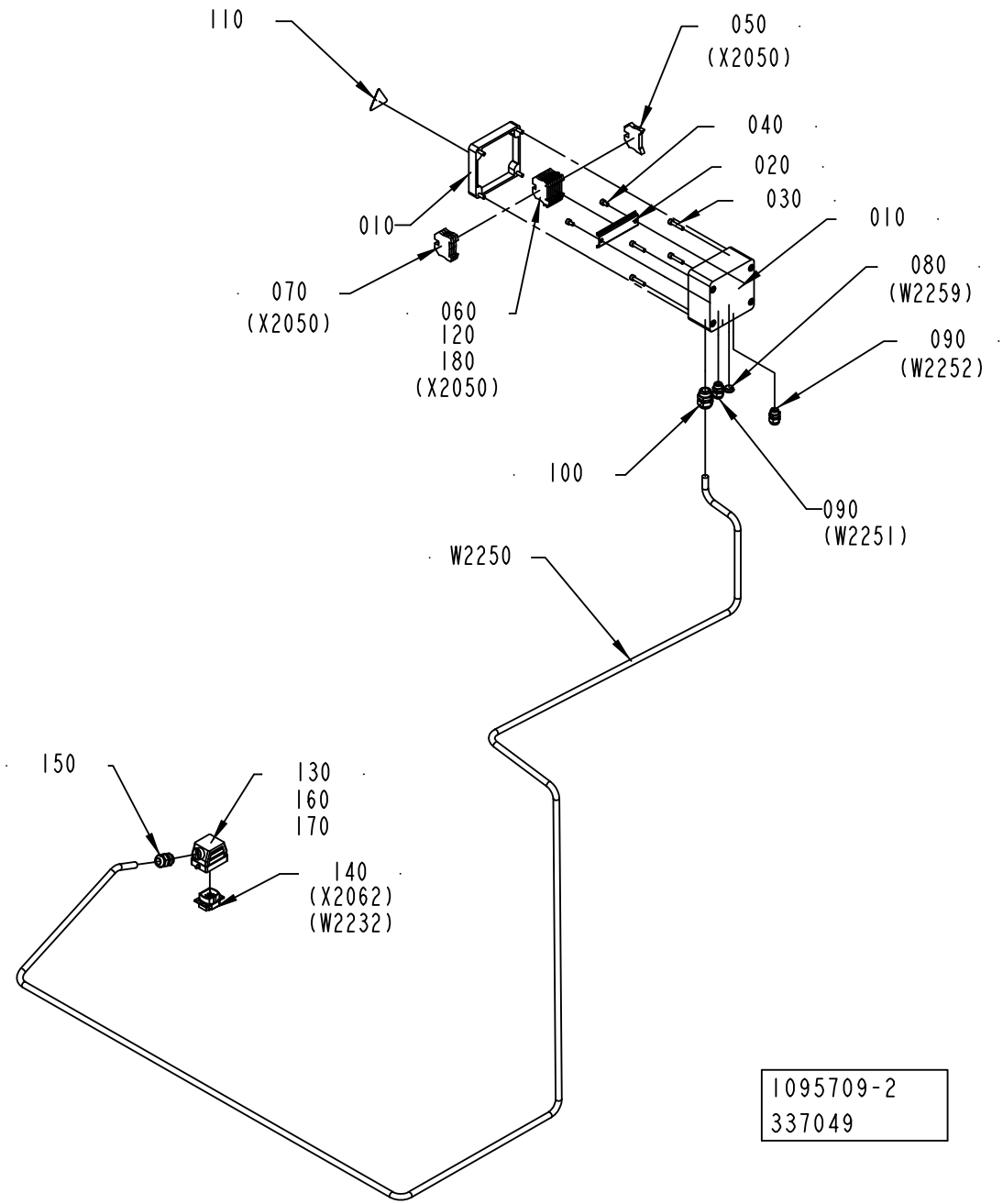
110
050
(X2050)
040
020
030
010
010
080
(W2259)
070
(X2050)
060
120
180
(X2050)
090
(W2252)
100
090
(W2251)
W2250
150
130
160
170
140
(X2062)
(W2232)
1095709-2
337049

ECM: 340134 - 20080124
Group number: 1095709-0200
Assembly Drawing: 1095709-2_1_AD

Pos	Part No	UN	Qty	Description	Page No
TBA/22					
W2250	351150-0406	MM	3500	CABLE OLFLEX 7X0,75 MM2 LIGHT/GREY	
Common Parts					
010	1041943-0000		1	CONNECTION BOX	
020	1129210-0000		1	MOUNTING RAIL	
030	312115-0374		4	SCREW ISO4762 M6X30 A4 80	
040	312115-0364		2	SCREW ISO4762 M6X10 A4 80	
050	353031-0203		1	END SUPPORT, WEW 35/2	
060	353021-0216		8	FEED THROUGH TERMINAL, 10200.8	
070	353024-0205		3	EARTH TERMINAL, 1010.1	
080	90002-0013		2	BLANK-OFF PLUG, PR 15,2 SKINDICHT-BLK9	
090	352103-0101		2	CABLE GLAND, ST 9, PR15,2/PG9	
100	352103-0110		1	CABLE GLAND, STR 16, PR22,5/PG16	
110	359705-0015		1	WARNING SIGN ISO, RISK OF ELECTRIC SHOCK	
120	359011-0809		1	MARKING PLATES 5-FW 101-150	
130	90110-0226		1	CABLE HOOD 6-POL 70.350.0628.0	
140	90110-0159		1	MALE INSERT 70.310.0640.0	
150	352103-0108		1	CABLE GLAND, ST 13,5 , PR20,4/PG13,5	
160	359005-0050		1	MARKING LABEL KIT X, 04.841.4550.0	
170	359005-0010		1	MARKING LABEL KIT 0 - 9, 04.841.2150.0	
180	353034-0030		1	BRIDGE CONNECTOR WQV 2,5/10, 10544.6	

Pos	Part No	UN	Qty	Description	Page No

FOAM CLEANING UNIT

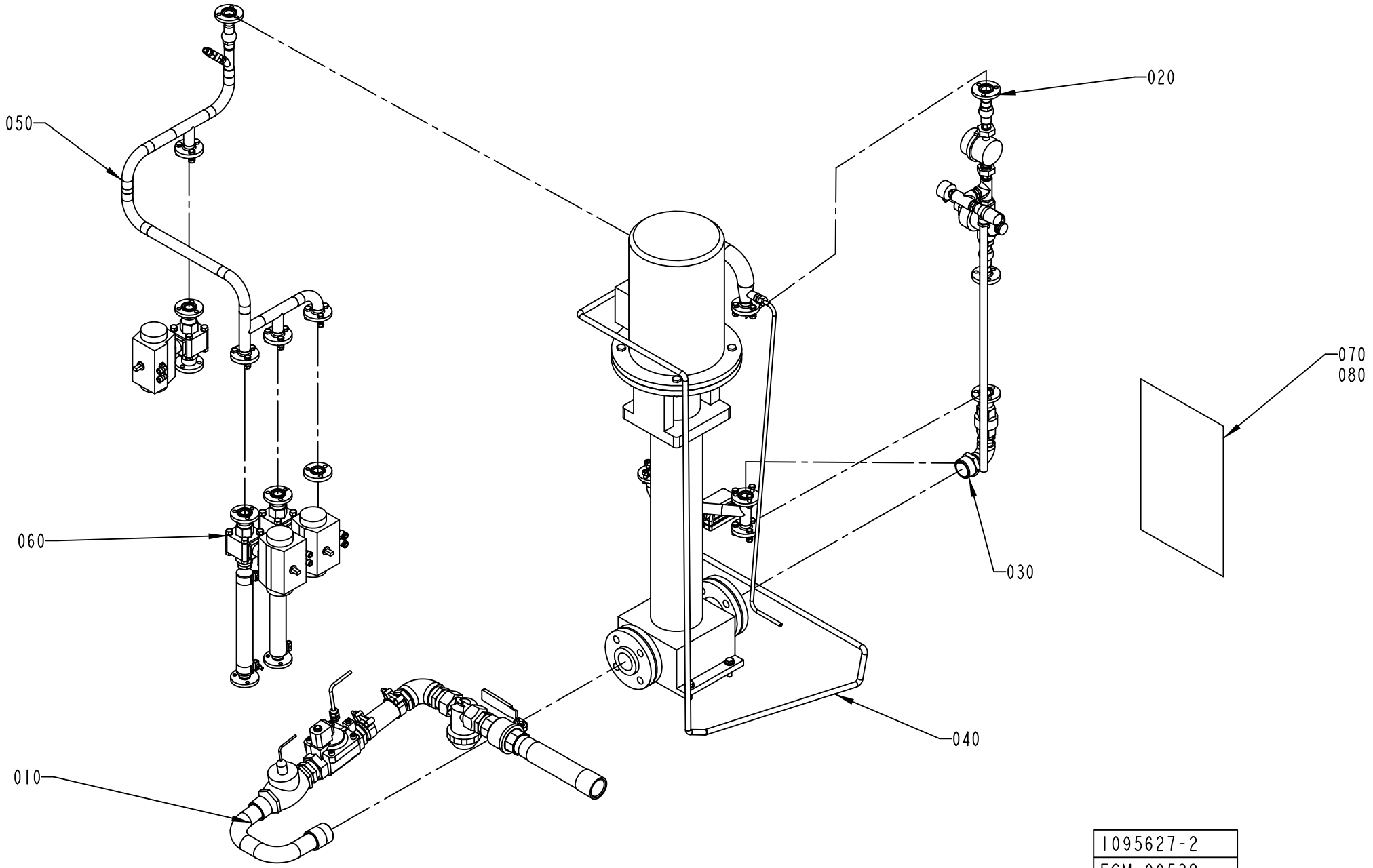

ECM: 139558 - 20030711
Group number: 1095627-0300
Assembly Drawing: 1095627-2_1_AB

Pos	Part No	UN	Qty	Description	Page No
TBA/22 50HZ					
080	1484893-0000		1	EXTERNAL CLEANING DIAGRAM	
TBA/22 60HZ					
080	1484893-0000		1	EXTERNAL CLEANING DIAGRAM	
Common Parts					
010	1095672-0100		1	PIPE	**6-29**
020	1095673-0100		1	SIDE	**6-31**
030	1095675-0100		1	PIPE	**6-33**
040	1095676-0100		1	PUMP	**6-35, 6-37**
050	1095677-0100		1	BRANCHING PIPE	**6-39**
060	1095678-0300		1	BALL VALVE	**6-41**

Pos	Part No	UN	Qty	Description	Page No

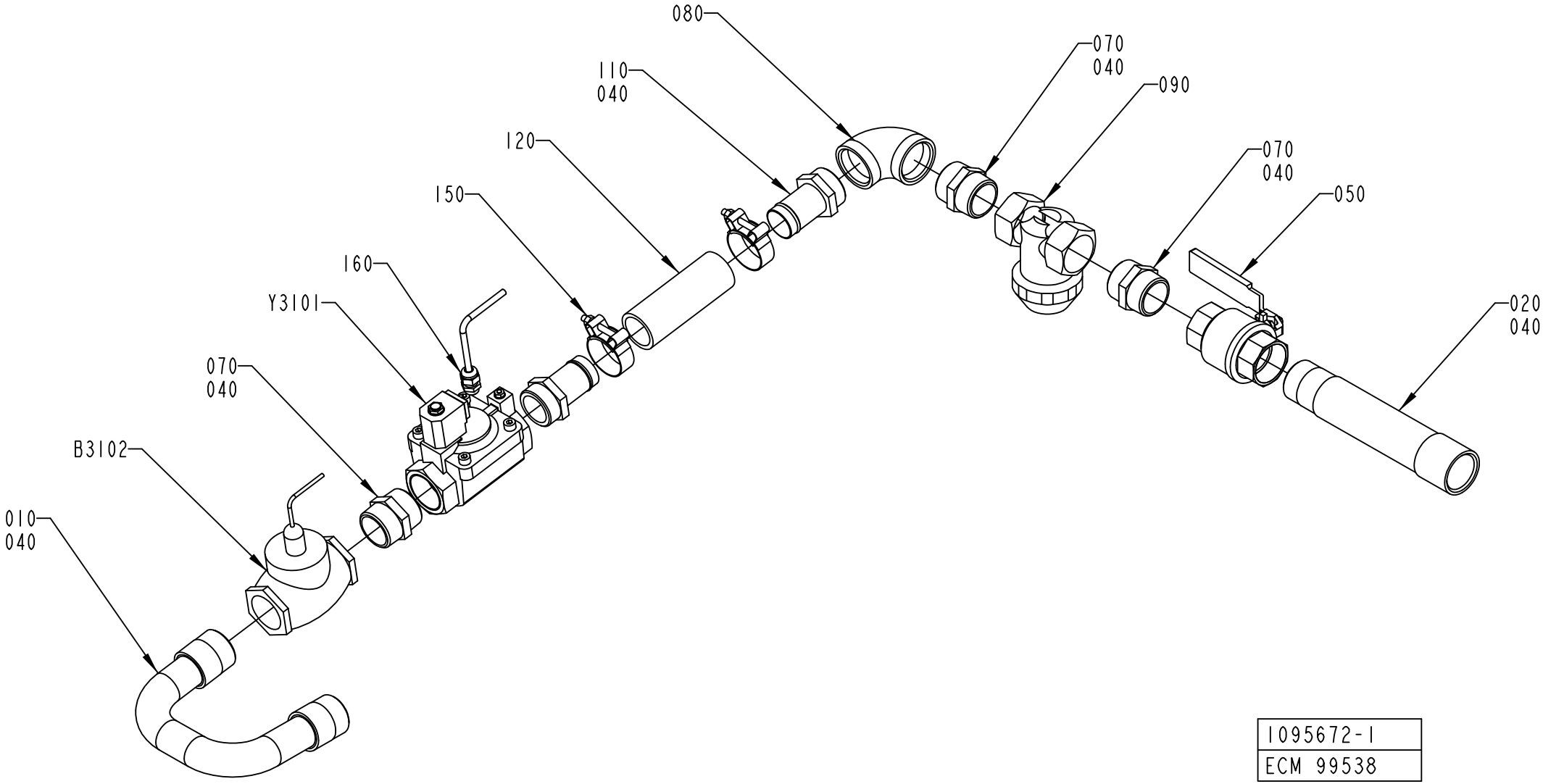

1095672-1
ECM 99538

ECM: 224829 - 20050831
Group number: 1095672-0100
Assembly Drawing: 1095672-1_1_AD

Pos	Part No	UN	Qty	Description	Page No
-					
010	1041925-0000		1	PIPE	
020	1041926-0000		1	PIPE	
040	90144-0007	MM	1	TAPE	
050	90187-0147		1	BALL VALVE G11/2	
070	90330-0056		3	NIPPLES, EXT. THREAD. R-207 KR11/2	
080	90330-0057		1	ELBOW, 90 INT. THREAD, R-222R11/2	
090	90415-0032		1	FILTER / 3-02-00-1 1/2"	
	90415-0328		*1*	*FILTER INSERT*	
110	90055-0166		2	HOSE NIPPLE, EXT.THR. R11/2X38 MM	
120	90166-0236	MM	150	HOSE, 38/51 REINFORCED RUBBER	
150	90458-2850		2	HOSE CLIP , 51 MM	
160	352103-0101		1	CABLE GLAND, ST 9, PR15,2/PG9	
B3102	90274-0082		1	FLOW SWITCH, 2 - 3 L/MIN	
	90274-0322		*1*	*SPARE PART KIT*	
W2222	351150-0403	M	2	CABLE OLFLEX 3X0,75 MM2 LIGHT/GREY	
Y3101	90042-0254		1	SOLENOID DIAPHRAGM VALVE, R1 1/2	
	90042-0557		*1*	*COIL V24DC-N3*	
	90458-2575		*1*	*DIAPHRAGM, R450466/B FOR 90042-0254*	

Pos	Part No	UN	Qty	Description	Page No

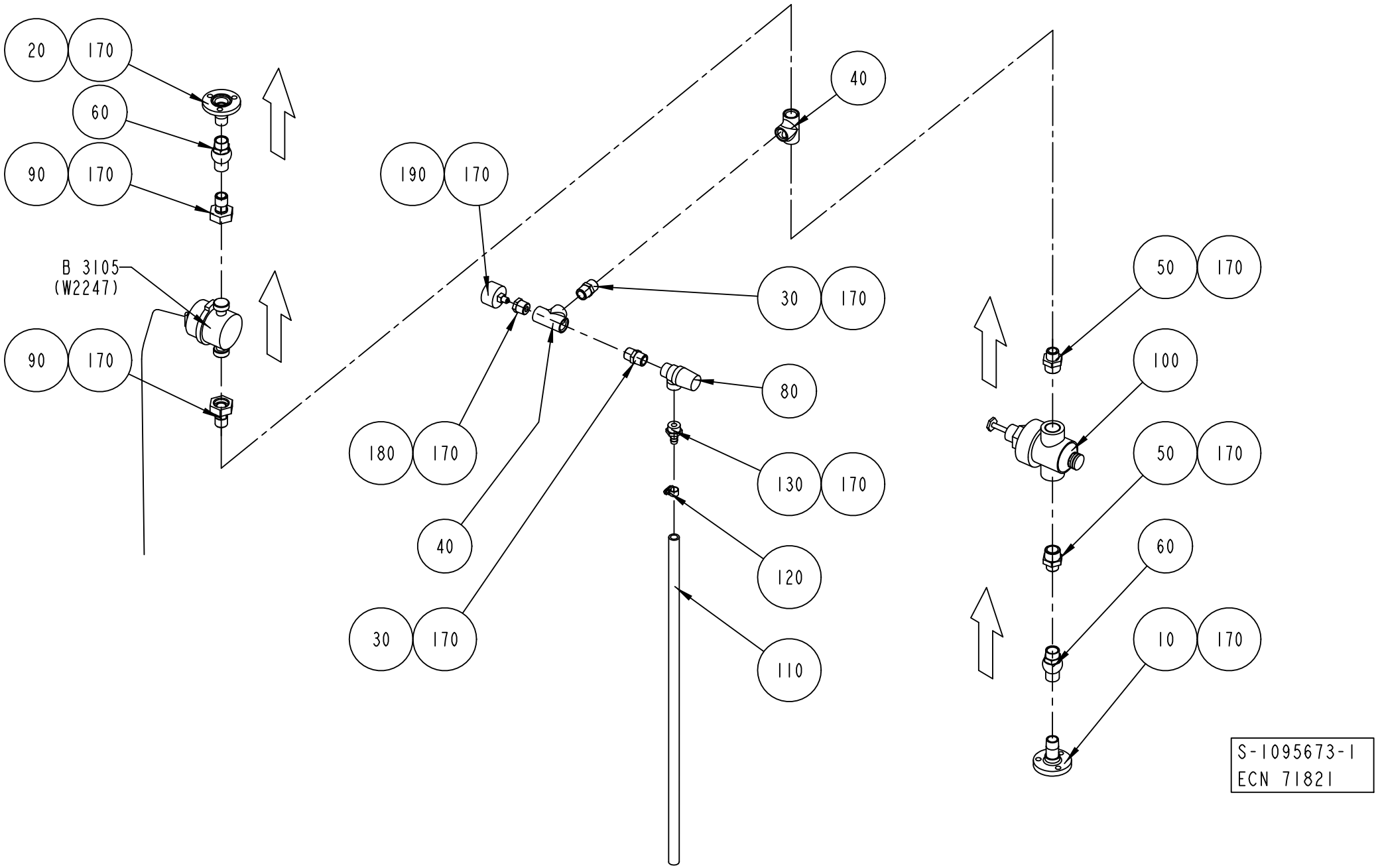
20
170
60
90
170
B 3105
(W2247)
90
170
190
170
40
30
170
80
180
170
130
170
40
120
30
170
110
50
170
100
50
170
60
10
170
S-1095673-1
ECN 71821

ECM: 224830 - 20050831
Group number: 1095673-0100
Assembly Drawing: 1095673-1_1_AD

Pos	Part No	UN	Qty	Description	Page No
-					
010	1036826-0000		1	PIPE	
020	1036827-0000		1	PIPE	
030	90330-0021		2	NIPPLES, EXT. THREAD. R-207R1/2	
040	90330-0049		2	T-PIPE, INT. THREAD, R-221R1/2	
050	90330-0080		2	NIPPLES, EXT. THREAD. R3/4-R1/2	
060	90230-0042		2	NON-RETURN VALVE 1/2"	
080	90187-0133		1	SAFETY VALVE, 10 BARS, R1/2, R1/2	
090	90030-0465		2	STRAIGHT CONNECTION, MAD DN 15	
	90005-0156		*1*	*WASHER PLAIN ROUND 16/24, H=1,5*	
100	90113-0098		1	PRESSURE REGULATOR	
110	90166-0121	MM	700	HOSE	
120	342991-0100		1	HOSE CLIP,WORM DRIVE TYPE 10-13	
130	342901-0105		1	HOSE NIPPLE, EXT.THR. R1/2-12 MM	
170	90144-0007	MM	1	TAPE	
180	90330-0036		1	BUSHING, INT/EXT. THR. RP1/8-RP1/2	
190	90043-0043		1	PRESSURE GAUGE 0-10 BAR 1/8"	
B3105	90243-0245		1	MEASURING INSTRUMENT	

Pos	Part No	UN	Qty	Description	Page No

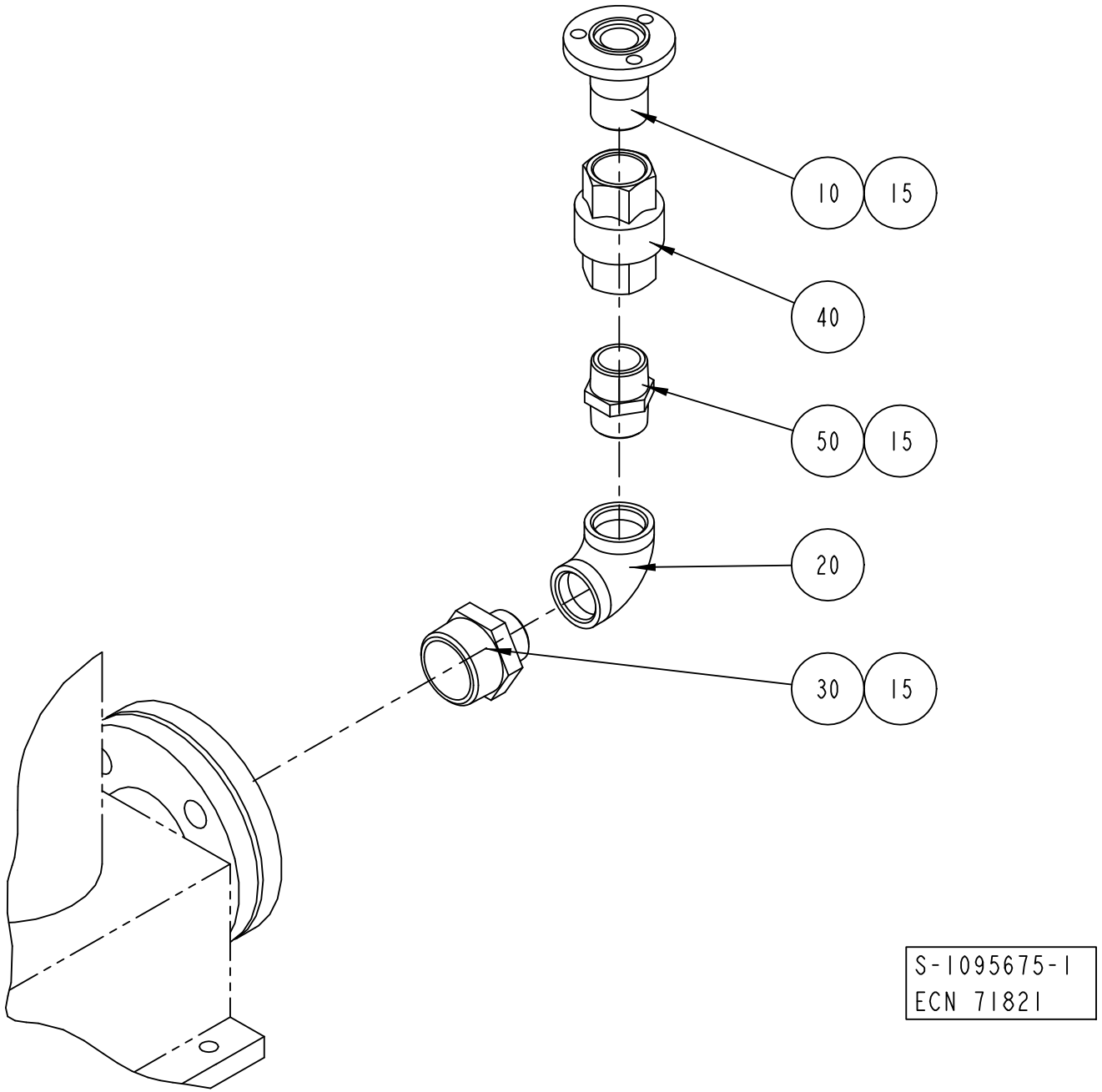
10
15
40
50
15
20
30
15
S-1095675-1
ECN 71821

ECM: 189421 - 20041104
Group number: 1095675-0100
Assembly Drawing: 1095675-1_1_AB

Pos	Part No	UN	Qty	Description	Page No
-					
010	1036794-0000		1	PIPE	
015	90144-0007	MM	1	TAPE	
020	90330-0014		1	ELBOW, 90 INT. THREAD, R-222R1	
030	90330-0045		1	NIPPLES, EXT. THREAD. R-209 KR11/2- KR1	
040	90230-0044		1	NON-RETURN VALVE 1"	
	90230-0308		*1*	*GASKET KIT*	
050	342203-0120		1	NIPPLES, EXT. THREAD, HEXAGON,ÿNO. 209	

Pos	Part No	UN	Qty	Description	Page No

Machine Type | Group Description | Used-In | Group Number | Page No

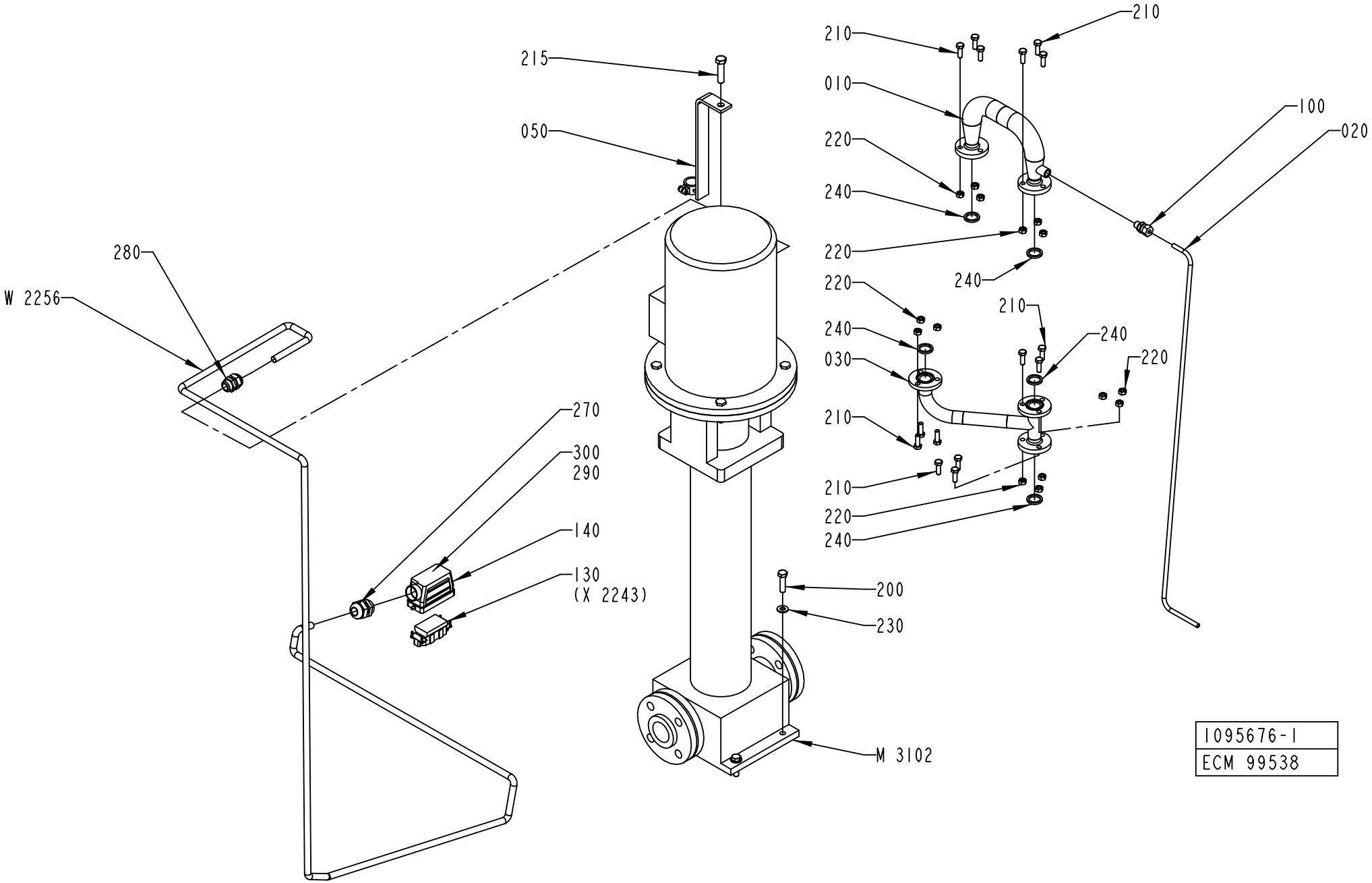
210
210
215
010
050
220
240
100
020
280
220
W 2256
240
220
210
240
240
030
220
210
270
300
290
210
220
240
140
130
(X 2243)
200
230
M 3102
1095676-1
ECM 99538

ECM: 189422 - 20041104
Group number: 1095676-0100
Assembly Drawing: 1095676-1_1_AC

This list covers pages from 6-34 to 6-37

Pos	Part No	UN	Qty	Description	Page No
TBA/22 50HZ (See drawing on page: 6-34)					
050	1140670-0000		1	BRACKET	
M3102	90321-0117		1	PUMP LOWARA SV8-14 F75T	
	90321-0593		*1*	*SEAL*	
W2256	351150-0166	MM	3300	CABLE OLFLEX 4X4 MM2 LIGHT/GREY	
TBA/22 60HZ (See drawing on page: 6-36)					
050	1499786-0000		1	BRACKET	
M3102	90321-0120		1	PUMP SV8-09 F756T, 380V60HZ	
	90321-0593		*1*	*SEAL*	
W2256	351150-0166	MM	3300	CABLE OLFLEX 4X4 MM2 LIGHT/GREY	
Common Parts					
010	1036828-0000		1	TANK	
030	1041946-0000		1	PIPE	
100	90030-0185		1	CONN. STR. GE08LRED71	
130	90110-0156		1	MALE INSERT 70.210.0653.0	
140	90110-0227		1	CABLE HOOD 6-16-POL 71.350.1628.0	
200	312105-0499		4	SCREW M6S ISO 4014 M10X40 A480	
210	312105-0453		15	SCREW M6S ISO 4017 M8X25 A480	
215	312105-0542		1	SCREW M6S ISO 4014 M12X50 A480	
220	312605-0318		15	HEXAGON NUT, M6M M8 A280	
230	315105-0173		4	WASHER BRB 10,5X22 RFR	
240	315229-0103		5	GASKETS, 23,1X30,1X3,7 MM 1" FDA	
270	352103-0115		1	CABLE GLAND, STR 21, PR28,3/PG21	
280	352103-0111		1	CABLE GLAND, ST 16, PR22,5/PG16	
290	359005-0010		2	MARKING LABEL KIT 0 - 9, 04.841.2150.0	
300	359005-0050		1	MARKING LABEL KIT X, 04.841.4550.0	

Pos	Part No	UN	Qty	Description	Page No

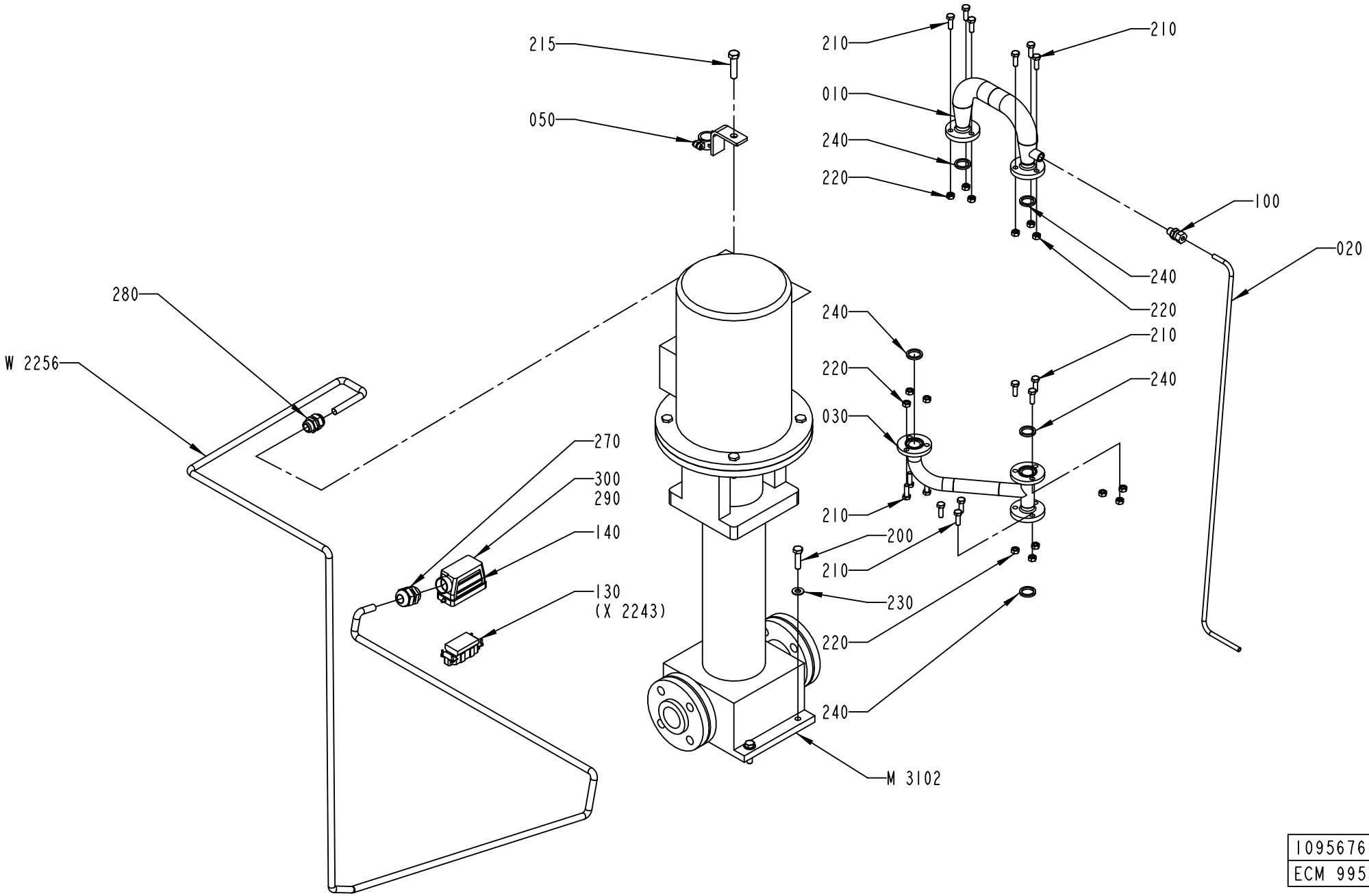

1095676-2
ECM 99538

ECM: 189422 - 20041104
Group number: 1095676-0100
Assembly Drawing: 1095676-2_1_AA

This list covers pages from 6-34 to 6-37

Pos	Part No	UN	Qty	Description	Page No
TBA/22 50HZ (See drawing on page: 6-34)					
050	1140670-0000		1	BRACKET	
M3102	90321-0117		1	PUMP LOWARA SV8-14 F75T	
	90321-0593		*1*	*SEAL*	
W2256	351150-0166	MM	3300	CABLE OLFLEX 4X4 MM2 LIGHT/GREY	
TBA/22 60HZ (See drawing on page: 6-36)					
050	1499786-0000		1	BRACKET	
M3102	90321-0120		1	PUMP SV8-09 F756T, 380V60HZ	
	90321-0593		*1*	*SEAL*	
W2256	351150-0166	MM	3300	CABLE OLFLEX 4X4 MM2 LIGHT/GREY	
Common Parts					
010	1036828-0000		1	TANK	
030	1041946-0000		1	PIPE	
100	90030-0185		1	CONN. STR. GE08LRED71	
130	90110-0156		1	MALE INSERT 70.210.0653.0	
140	90110-0227		1	CABLE HOOD 6-16-POL 71.350.1628.0	
200	312105-0499		4	SCREW M6S ISO 4014 M10X40 A480	
210	312105-0453		15	SCREW M6S ISO 4017 M8X25 A480	
215	312105-0542		1	SCREW M6S ISO 4014 M12X50 A480	
220	312605-0318		15	HEXAGON NUT, M6M M8 A280	
230	315105-0173		4	WASHER BRB 10,5X22 RFR	
240	315229-0103		5	GASKETS, 23,1X30,1X3,7 MM 1" FDA	
270	352103-0115		1	CABLE GLAND, STR 21, PR28,3/PG21	
280	352103-0111		1	CABLE GLAND, ST 16, PR22,5/PG16	
290	359005-0010		2	MARKING LABEL KIT 0 - 9, 04.841.2150.0	
300	359005-0050		1	MARKING LABEL KIT X, 04.841.4550.0	

Pos	Part No	UN	Qty	Description	Page No

Machine Type | Group Description | Used-In | Group Number | Page No

BRANCHING PIPE

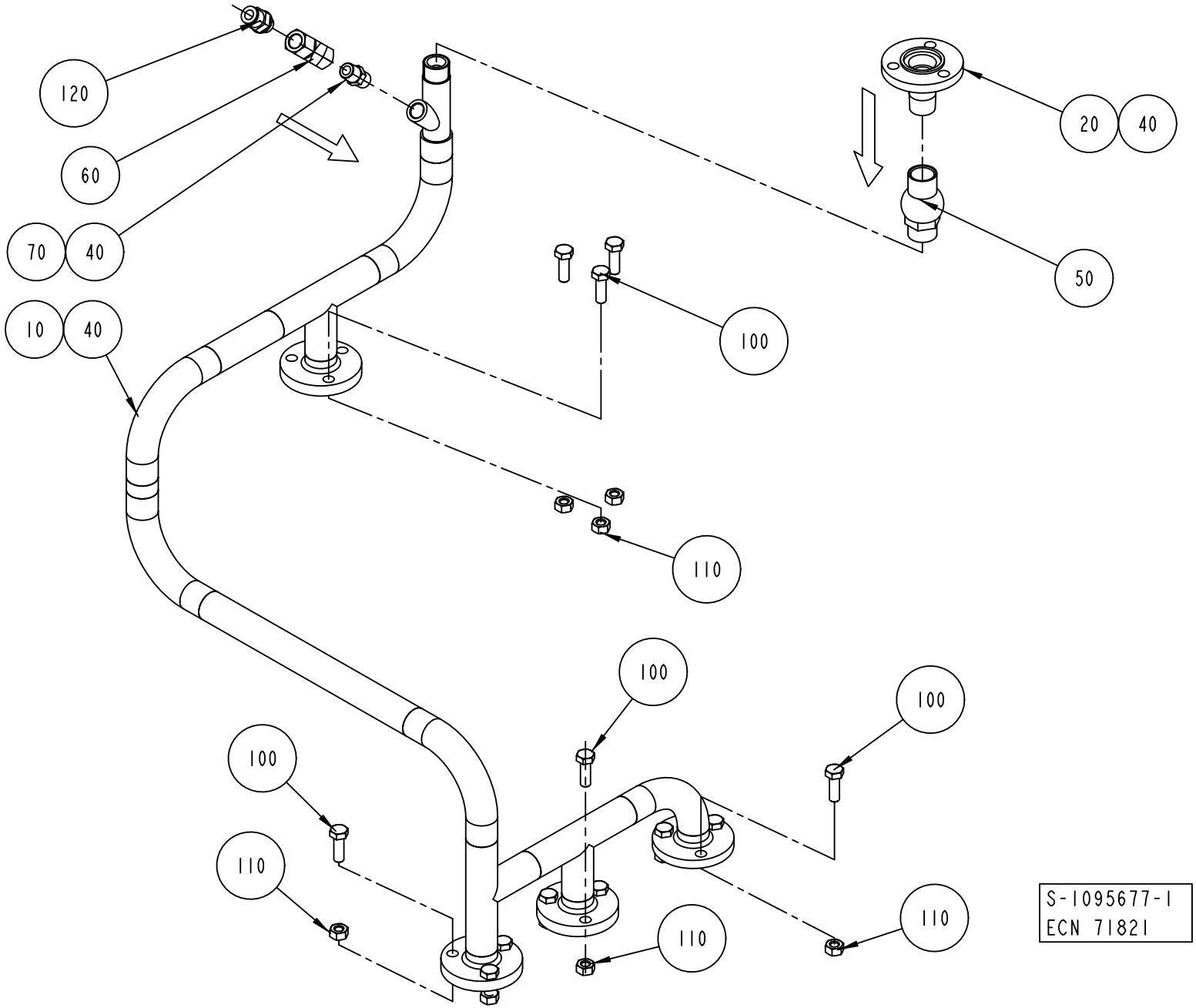

ECM: 224831 - 20050831
Group number: 1095677-0100
Assembly Drawing: 1095677-1_1_AB

Pos	Part No	UN	Qty	Description	Page No
-					
010	1041934-0000		1	PIPE	
020	1036827-0000		1	PIPE	
040	90144-0007	MM	1	TAPE	
050	90230-0042		1	NON-RETURN VALVE 1/2"	
060	90235-0151		1	NON-RETURN VALVE, 534 098 110 0	
070	90330-0043		1	NIPPLES, EXT. THREAD. R-207R1/4	
100	312115-0453		12	SCREW ISO4762 M8X25 A4 80	
110	312605-0318		12	HEXAGON NUT, M6M M8 A280	
120	342722-0205		1	STRAIGHT COUPLING D=8-G1/4"	

Pos	Part No	UN	Qty	Description	Page No

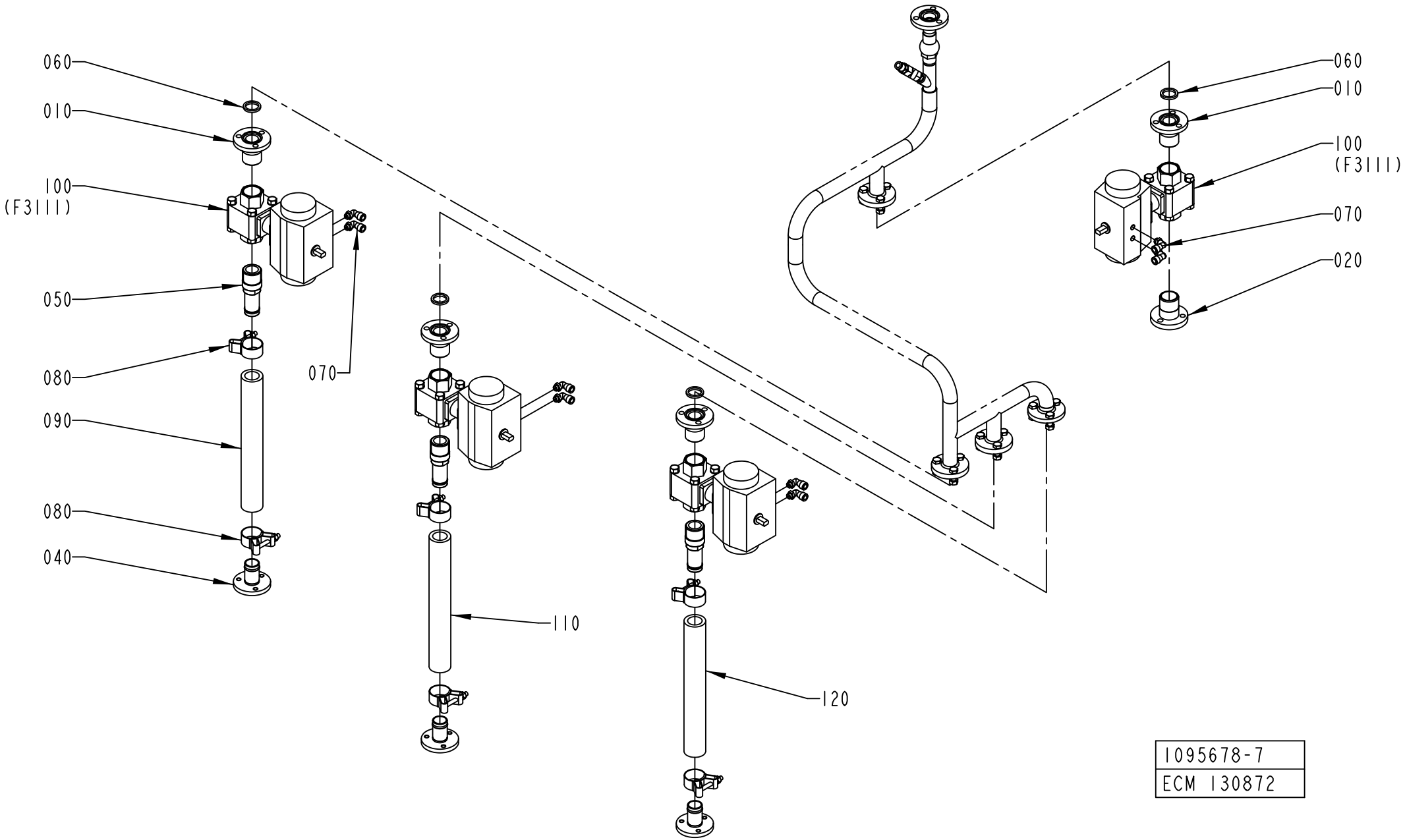

1095678-7
ECM 130872

ECM: 189424 - 20041104
Group number: 1095678-0300
Assembly Drawing: 1095678-7_1_AB

Pos	Part No	UN	Qty	Description	Page No
TBA/22					
010	2522148-0000		4	PIPE	
020	2522184-0000		2	PIPE	
040	1195466-0000		3	PIPE	
050	1487023-0000		3	PIPE	
070	90458-2964		8	ELBOW PIPE JOINT, EXT.THREAD, D=8MM-G1/8	
080	90459-2366		6	HOSE CLIP, (32)-35	
100	90187-0148		4	BALL VALVE G1	
	90187-0319		*1*	*GASKET UNIT*	
120	90166-0233	MM	300	HOSE	
Common Parts					
060	315229-0103		4	GASKETS, 23,1X30,1X3,7 MM 1" FDA	
090	90166-0233	MM	300	HOSE	
110	90166-0233	MM	300	HOSE	

Pos	Part No	UN	Qty	Description	Page No

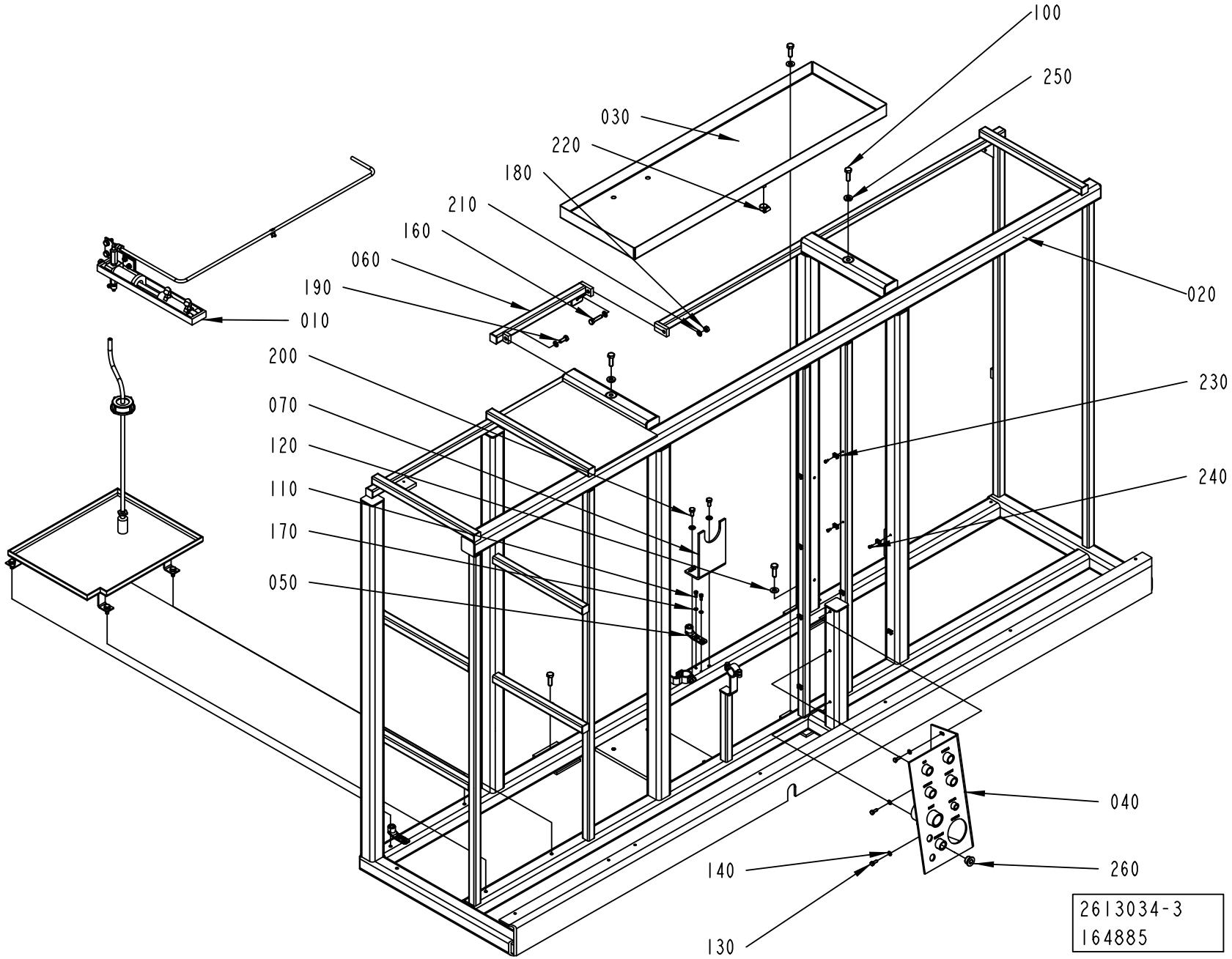
100
250
030
220
180
210
160
060
190
010
020
200
230
070
120
240
110
170
050
040
140
260
130
2613034-3
164885

ECM: 189425 - 20041104
Group number: 2613034-0100
Assembly Drawing: 2613034-3_1_AA

Pos	Part No	UN	Qty	Description	Page No
TBA/22					
010	2650720-0100		1	CHEMICALS	**6-45**
Common Parts					
020	2613033-0000		1	MACHINE BODY	
030	1041963-0000		1	WASTE BOX	
040	1129387-0000		1	CONNECTION TABLE	
050	1538868-0000		3	BRACKET	
060	1255293-0000		1	CROSS BAR	
070	2524363-0000		1	HANGER	
100	312105-0495		5	SCREW M6S ISO 4017 M10X30 A480	
110	312115-0327		6	SCREW ISO4762 M5X12 A4 80	
120	315105-0173		3	WASHER BRB 10,5X22 RFR	
130	312105-0368		3	SCREW M6S ISO 4017 M6X16 A480	
140	315105-0153		3	WASHER BRB 6,4X12 RFR	
150	90261-0069		1	PLUG, BLIND, PLASTIC, NO. 055-0615	
160	312109-0457		1	SCREW M6S ISO 4017 M8X35 A480	
170	315105-0146		6	WASHER BRB 5,3X10 RFR	
180	312605-0318		1	HEXAGON NUT, M6M M8 A280	
190	312105-0451		1	SCREW M6S ISO 4017 M8X20 A480	
200	312105-0449		2	SCREW M6S ISO 4017 M8X16 A480	
210	315105-0165		5	WASHER BRB 8,4X16 RFR	
220	342991-0102		1	HOSE CLIP,WORM DRIVE TYPE (16)-19	
230	352113-0205		15	ANCHOR PLATES FOR STRIPS, TYPE TM2S8-C10	
240	312125-0287		15	SCREW ISO 1207 M4X8 A4	
250	315115-0173		2	WASHER PLAIN, TBRB 10,5/22 H=4	
260	342713-0213		1	PLUG, EXT THREAD HEX SOCKET 8638-00-120	

Pos	Part No	UN	Qty	Description	Page No

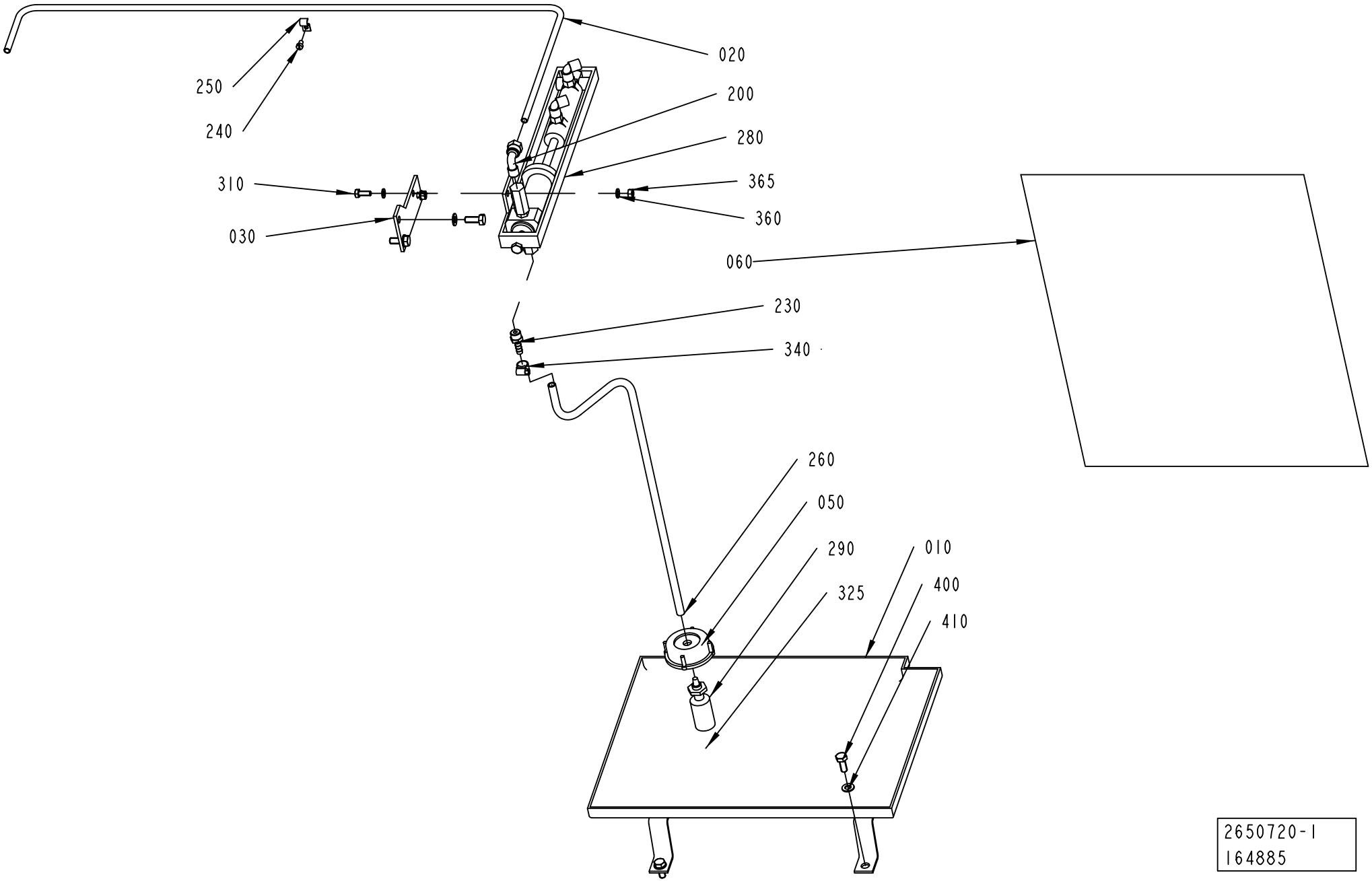
020
250
240
200
280
310
365
360
030
060
230
340
260
050
290
010
400
325
410
2650720-1
164885

ECM: 211667 - 20060313
Group number: 2650720-0100
Assembly Drawing: 2650720-1_1_AA

Pos	Part No	UN	Qty	Description	Page No
-					
010	2650719-0000		1	SPLASH PLATE	
020	1484888-0000		1	PIPE	
030	1484887-0000		1	PLATE	
050	1129432-0000		1	LID	
060	1484511-0000		1	WATER DIAGRAM	
200	90030-0071		1	CONN. ELBOW WE08LR71	
230	90055-0132		1	HOSE NIPPLE, EXT.THR. R1/4X7,8 MM	
240	312125-0323		1	SCREW ISO 1207 M5X8 A4	
250	316810-0106		1	PIPE CLIP FOR TUBE D=8 MM	
260	90166-0008	MM	750	HOSE 7/10 PVC TRANSP.	
280	1038628-0000		1	PUMP	
290	90415-0052		1	FILTER ART NO 12565 C-340-6E FOTVENTI EP	
310	312105-0368		2	SCREW M6S ISO 4017 M6X16 A480	
325	315204-0207		1	O-RING 8,3X2,4 MM	
340	342991-0100		1	HOSE CLIP,WORM DRIVE TYPE 10-13	
360	315105-0153		4	WASHER BRB 6,4X12 RFR	
365	312605-0316		2	HEXAGON NUT, M6M M6 A280	
400	312105-0451		7	SCREW M6S ISO 4017 M8X20 A480	
410	315105-0165		7	WASHER BRB 8,4X16 RFR	

Pos	Part No	UN	Qty	Description	Page No

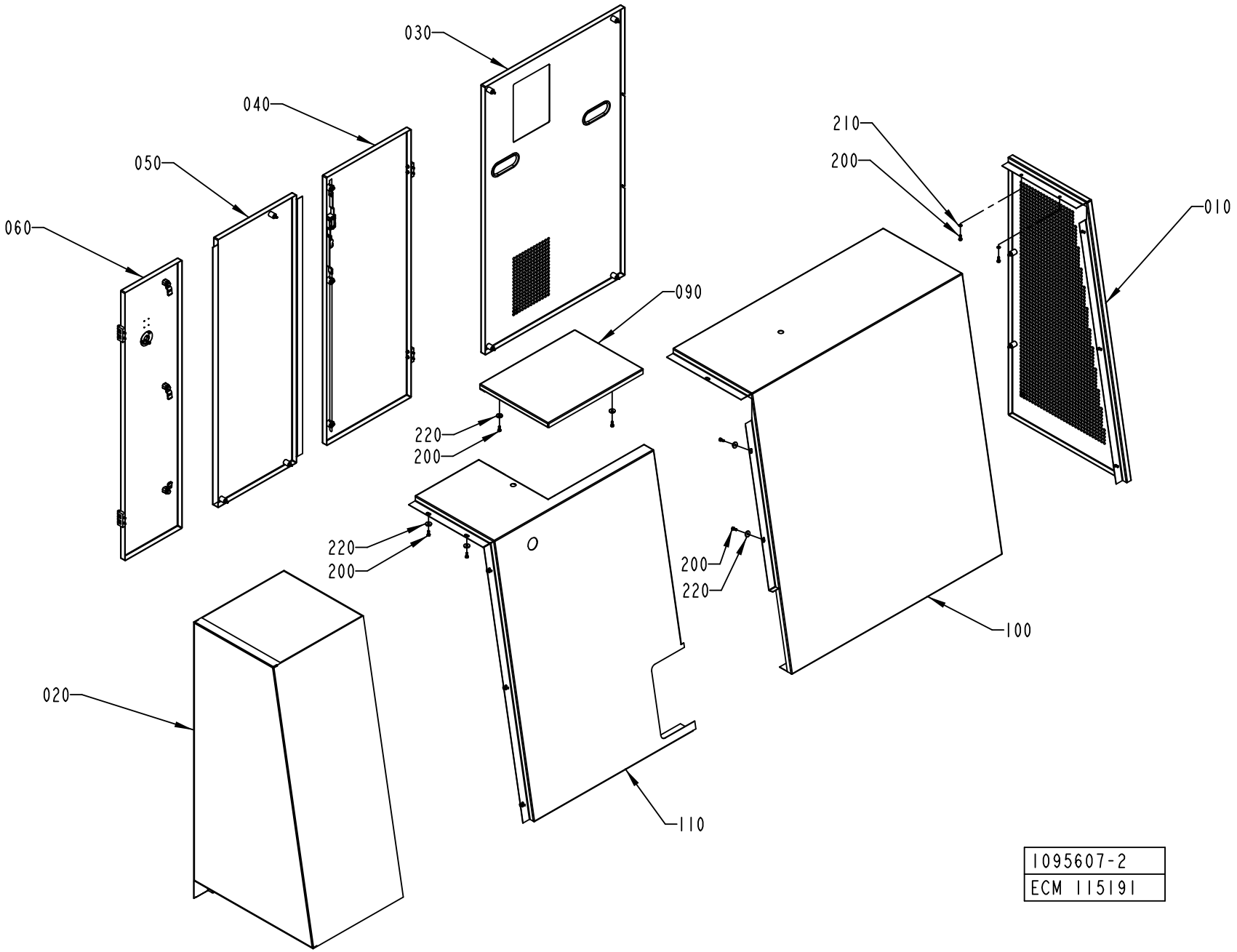
030
040
050
060
210
200
010
090
220
200
220
200
200
220
100
020
110
1095607-2
ECM 115191

ECM: 189432 - 20041104
Group number: 1095607-0200
Assembly Drawing: 1095607-2_1_AC

Pos	Part No	UN	Qty	Description	Page No
-					
010	1095883-0200		1	GABLE PLATE	**6-49**
020	1095886-0200		1	COVERING PANEL	**6-51**
030	1095888-0200		1	HATCH	**6-55**
040	1095889-0100		1	DOOR	**6-57**
050	1095890-0200		1	HATCH	**6-59**
060	1095891-0200		1	DOOR	**6-61**
090	1255637-0000		1	COVER	
100	1255636-0000		1	COVERING PANEL	
110	1255638-0000		1	COVERING PANEL	
200	312105-0368		19	SCREW M6S ISO 4017 M6X16 A480	
210	315105-0153		5	WASHER BRB 6,4X12 RFR	
220	315125-0153		14	WASHER TBRSB 6,4X22X4 A4	

Pos	Part No	UN	Qty	Description	Page No

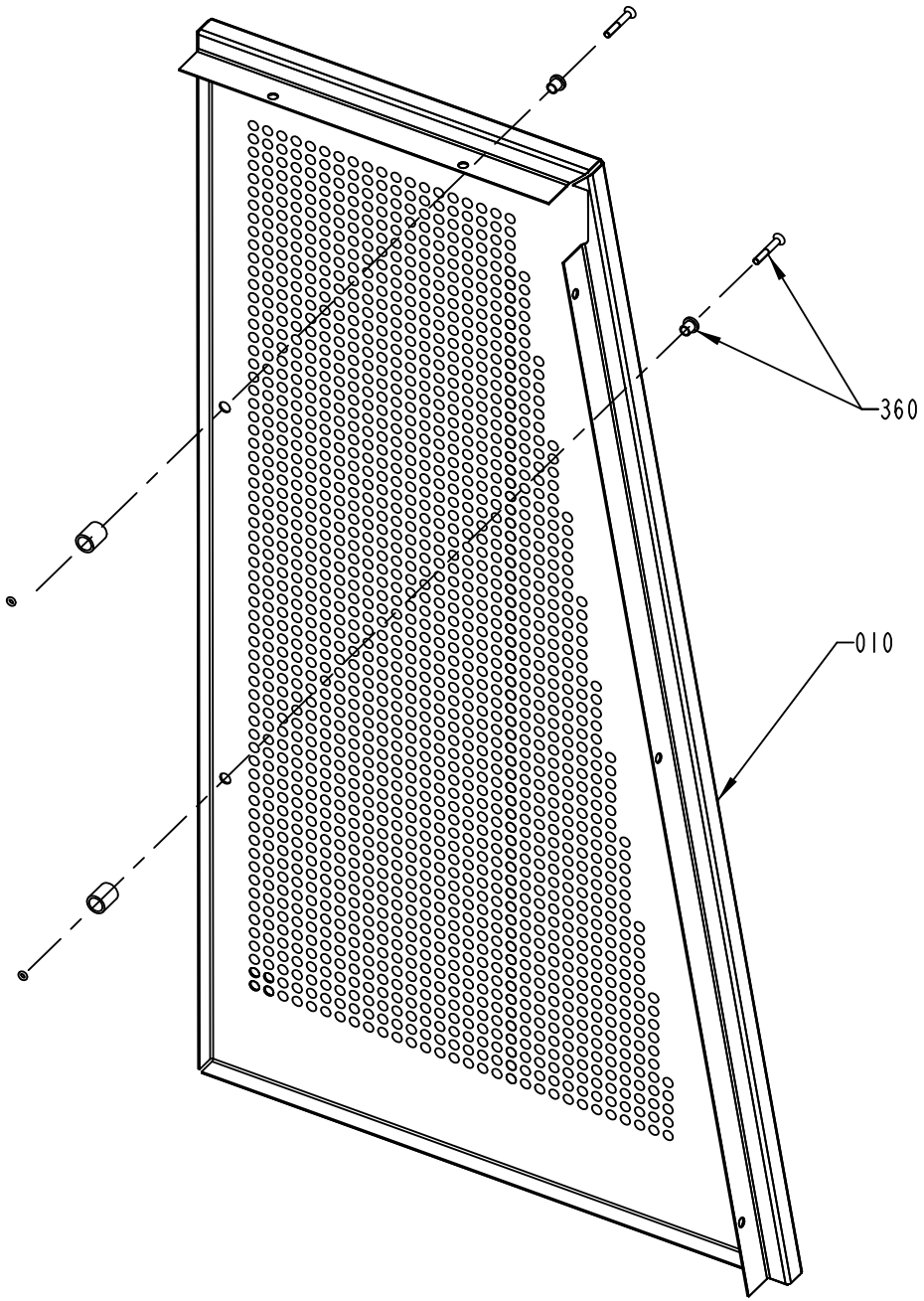
360
010

ECM: 189435 - 20041104
Group number: 1095883-0200
Assembly Drawing: 1095883-2_1_AA

Pos	Part No	UN	Qty	Description	Page No
-					
010	1255671-0000		1	GABLE PLATE	
360	90226-0458		2	MOUNTING SCREW	

Pos	Part No	UN	Qty	Description	Page No

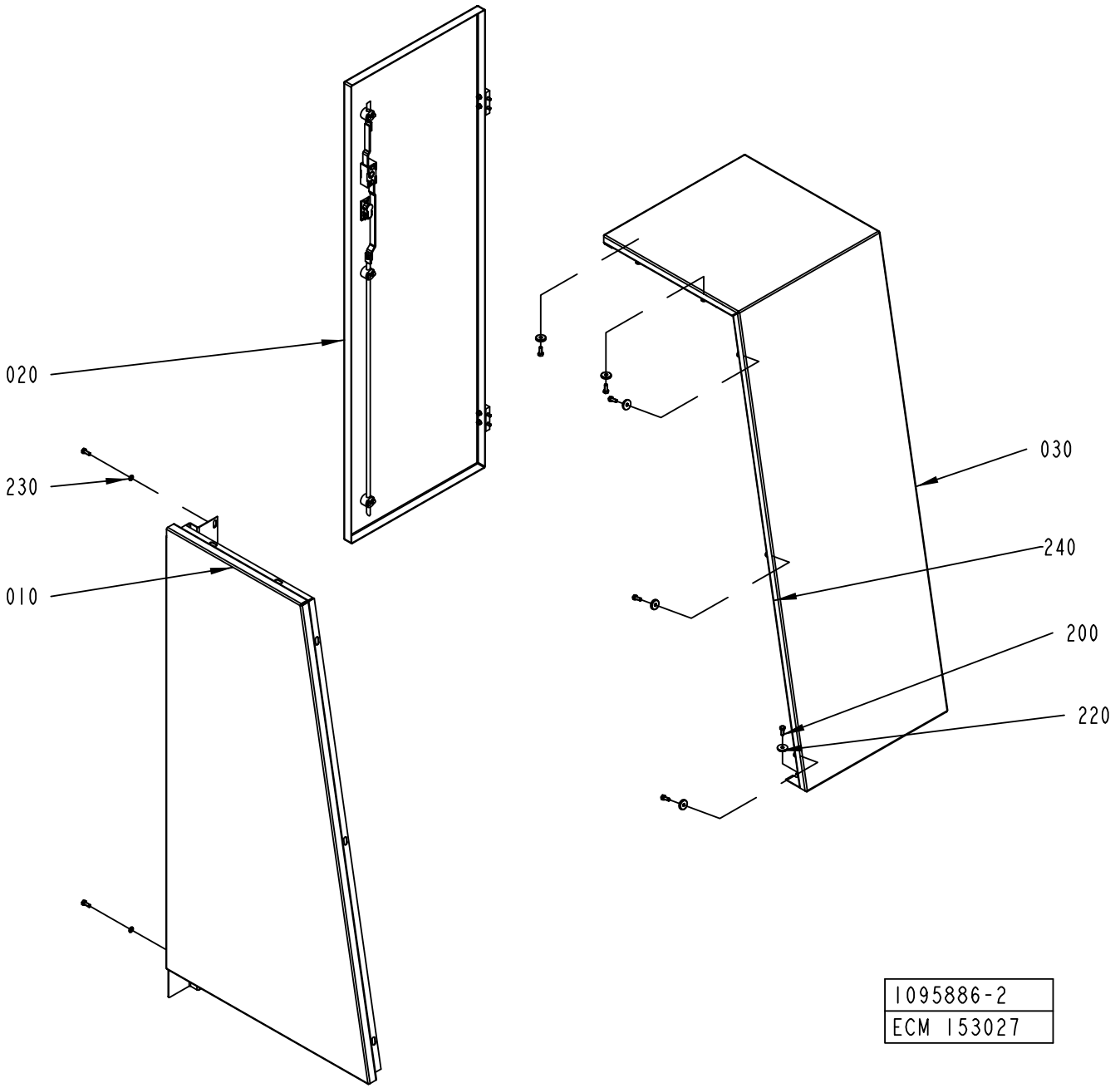
020
230
010
030
240
200
220
1095886-2
ECM 153027

ECM: 189436 - 20041104
Group number: 1095886-0200
Assembly Drawing: 1095886-2_1_AF

Pos	Part No	UN	Qty	Description	Page No
-					
010	2665129-0000		1	GABLE PLATE	
020	1484889-0100		1	DOOR	**6-53**
030	1041967-0000		1	COVERING PANEL	
200	312105-0368		7	SCREW M6S ISO 4017 M6X16 A480	
220	315125-0153		7	WASHER TBRSB 6,4X22X4 A4	
230	315105-0153		2	WASHER BRB 6,4X12 RFR	
240	90143-0060	MM	1120	EDGE STRIP 9,5X6,3MM BLACK PVC	

Pos	Part No	UN	Qty	Description	Page No

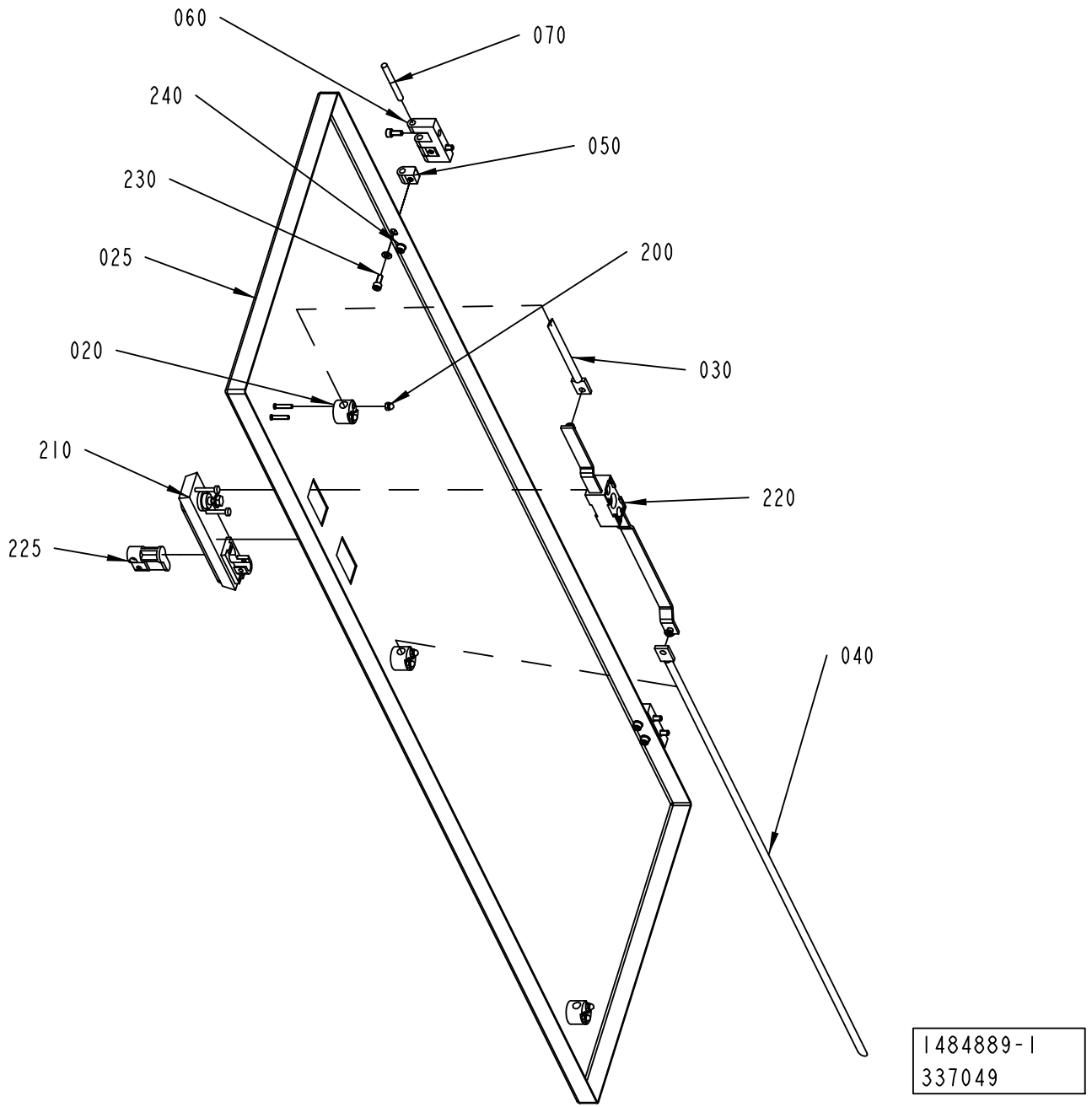
060
070
240
050
230
025
200
020
030
210
220
225
040
1484889-1
337049

ECM: 340137 - 20080124
Group number: 1484889-0100
Assembly Drawing: 1484889-1_1_AC

Pos	Part No	UN	Qty	Description	Page No
-					
020	1129274-0000		3	GUIDE LUG	
025	1484890-0000		1	DOOR	
030	2665132-0000		1	LOCKING ARM	
040	2665131-0000		1	LOCKING ARM	
050	1035794-0000		4	BLOCKING PIECE	
060	1035792-0000		2	E-HINGE	
070	988685-0000		2	PIN	
200	312705-0312		6	NUT HEX. DOMED CAP MHM-6 M4 A280	
210	90237-0175		1	TURNING HANDLE, 1125-U185-0A	
220	90237-0153		1	LOCK HOUSING, 1121-U26-0B	
225	90237-0128		1	LOCK CYLINDER, 1109-SU125	
230	312115-0327		8	SCREW ISO4762 M5X12 A4 80	
240	315105-0146		4	WASHER BRB 5,3X10 RFR	

Pos	Part No	UN	Qty	Description	Page No

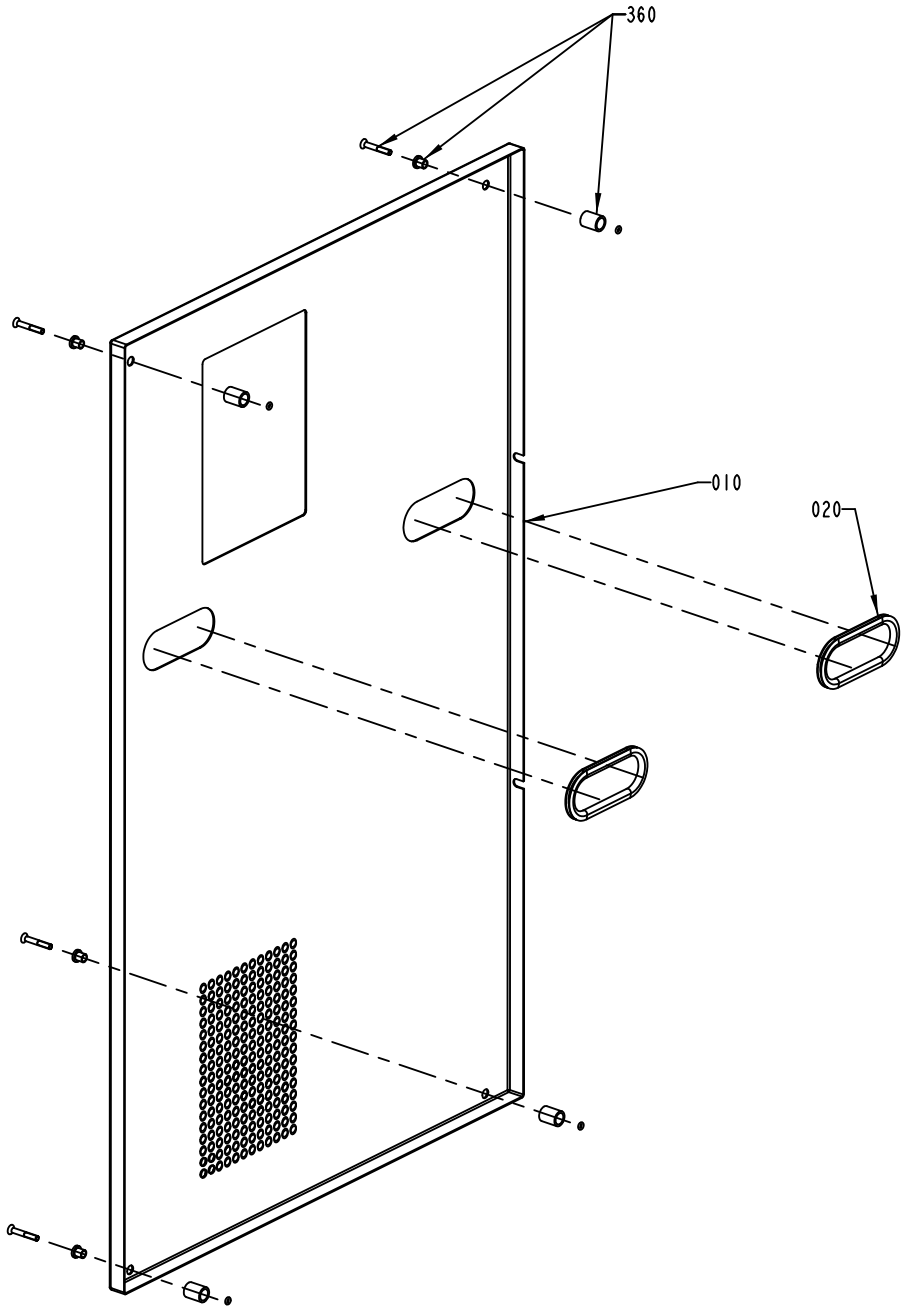
360
010
020

ECM: 189438 - 20041104
Group number: 1095888-0200
Assembly Drawing: 1095888-2_1_AB

Pos	Part No	UN	Qty	Description	Page No
-					
010	1255633-0000		1	HATCH	
020	90143-0060	M	1	EDGE STRIP 9,5X6,3MM BLACK PVC	
360	90226-0458		4	MOUNTING SCREW	

Pos	Part No	UN	Qty	Description	Page No

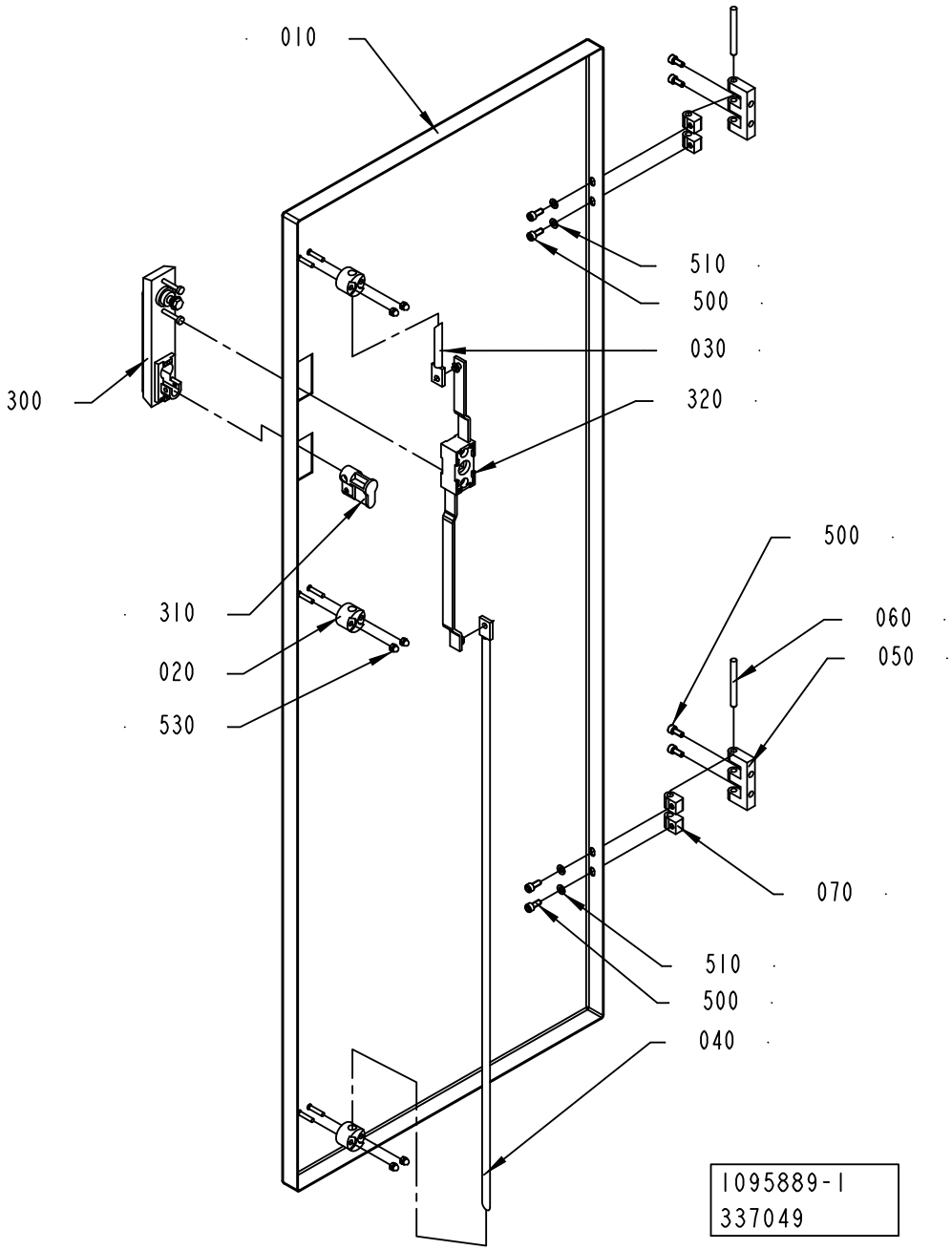
010
510
500
030
320
300
500
060
050
310
020
530
070
510
500
040
1095889-1
337049

ECM: 340138 - 20080124
Group number: 1095889-0100
Assembly Drawing: 1095889-1_1_AC

Pos	Part No	UN	Qty	Description	Page No
-					
010	1041970-0000		1	DOOR	
020	1129274-0000		1	GUIDE LUG	
030	1036304-0001		1	LOCKING ARM	
040	1036304-0014		1	LOCKING ARM	
050	1035792-0000		2	E-HINGE	
060	988685-0000		2	PIN	
070	1035794-0000		4	BLOCKING PIECE	
300	90237-0175		1	TURNING HANDLE, 1125-U185-0A	
310	90237-0128		1	LOCK CYLINDER, 1109-SU125	
320	90237-0153		1	LOCK HOUSING, 1121-U26-0B	
500	312115-0327		8	SCREW ISO4762 M5X12 A4 80	
510	315105-0146		4	WASHER BRB 5,3X10 RFR	
530	312705-0312		6	NUT HEX. DOMED CAP MHM-6 M4 A280	

Pos	Part No	UN	Qty	Description	Page No

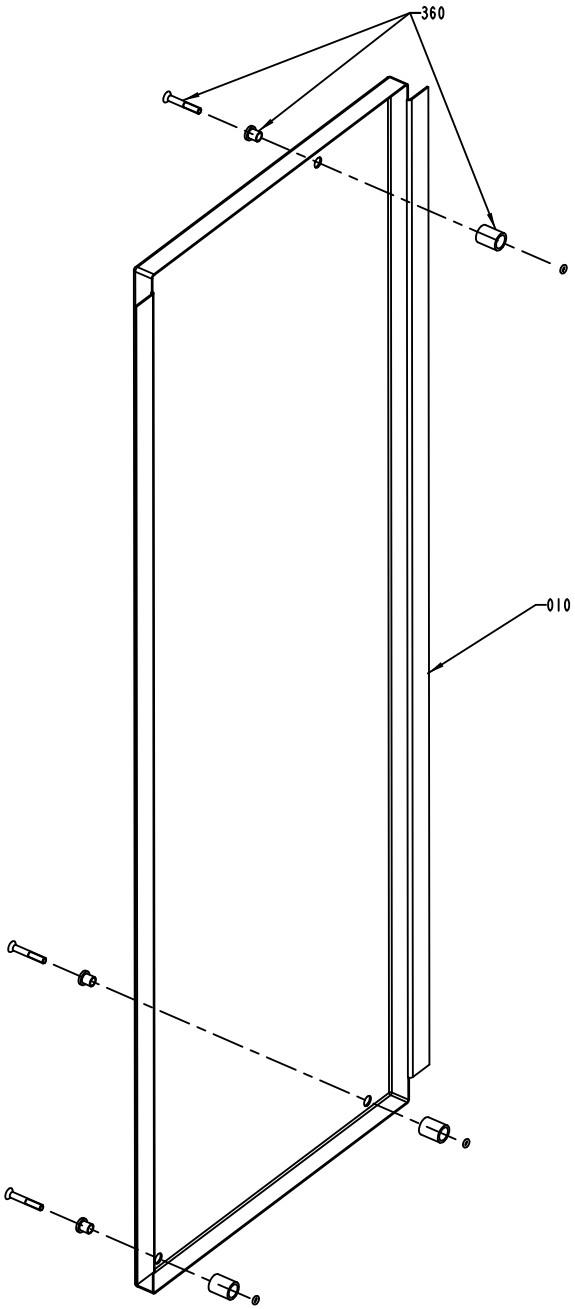
360
010

ECM: 189439 - 20041104
Group number: 1095890-0200
Assembly Drawing: 1095890-2_1_AA

Pos	Part No	UN	Qty	Description	Page No
-					
010	1255635-0000		1	HATCH	
360	90226-0458		3	MOUNTING SCREW	

Pos	Part No	UN	Qty	Description	Page No

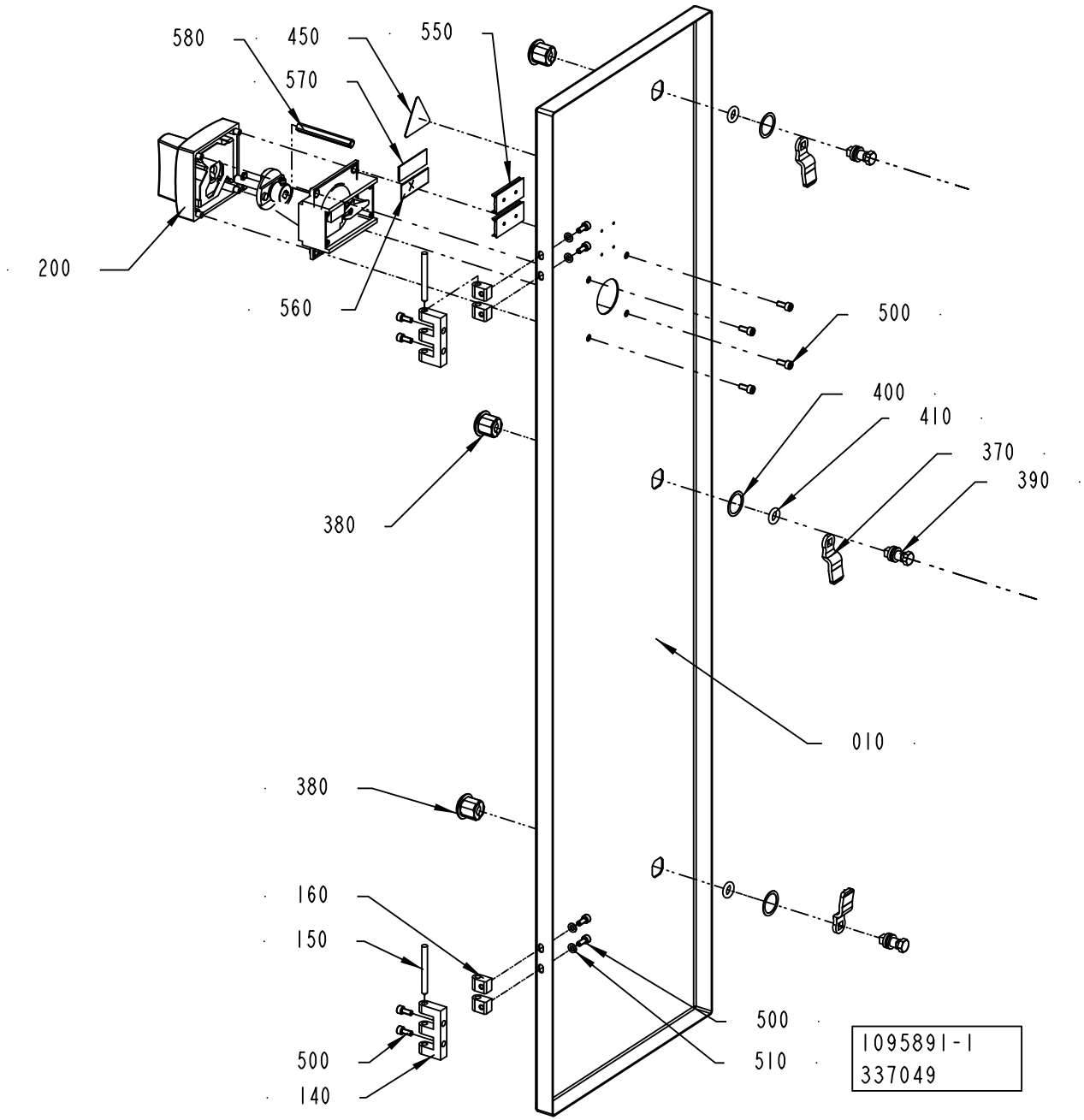
580
450
550
570
200
560
500
400
410
370
390
380
010
380
160
150
500
140
500
510
1095891-1
337049

ECM: 340135 - 20080124
Group number: 1095891-0200
Assembly Drawing: 1095891-1_1_AD

Pos	Part No	UN	Qty	Description	Page No
50HZ					
570	359243-0917		1	SIGN"400V, 50HZ, 100A"	
60HZ					
570	359243-0918		1	SIGN"400V, 60HZ, 100A"	
Common Parts					
010	2843000-0000		1	DOOR	
140	1035792-0000		2	E-HINGE	
150	988685-0000		2	PIN	
160	1035794-0000		4	BLOCKING PIECE	
200	90459-6620		1	HANDLE, NZM1-XTVDV	
370	90237-0157		3	LOCK BOLT, 1000-230	
380	90237-0319		3	LOCK HOUSING, 1000-U134	
390	90237-0320		3	LOCK HOUSING, 1000-U136	
400	90237-0322		3	LOCK GASKET, 1000-U137	
410	90237-0323		3	LOCK O-RING, 1000-24	
450	359705-0015		1	WARNING SIGN ISO, RISK OF ELECTRIC SHOCK	
490	311520-0329		4	RIVET, BLANK 2,4X8	
500	312115-0327		8	SCREW ISO4762 M5X12 A4 80	
510	315105-0146		4	WASHER BRB 5,3X10 RFR	
550	359240-0100		2	SIGN HOLDER FOR 359240-0001	
560	359241-0431		1	SIGN: " MAIN SWITCH"	
580	2774348-0000		1	EXTENSION SHAFT	

Pos	Part No	UN	Qty	Description	Page No

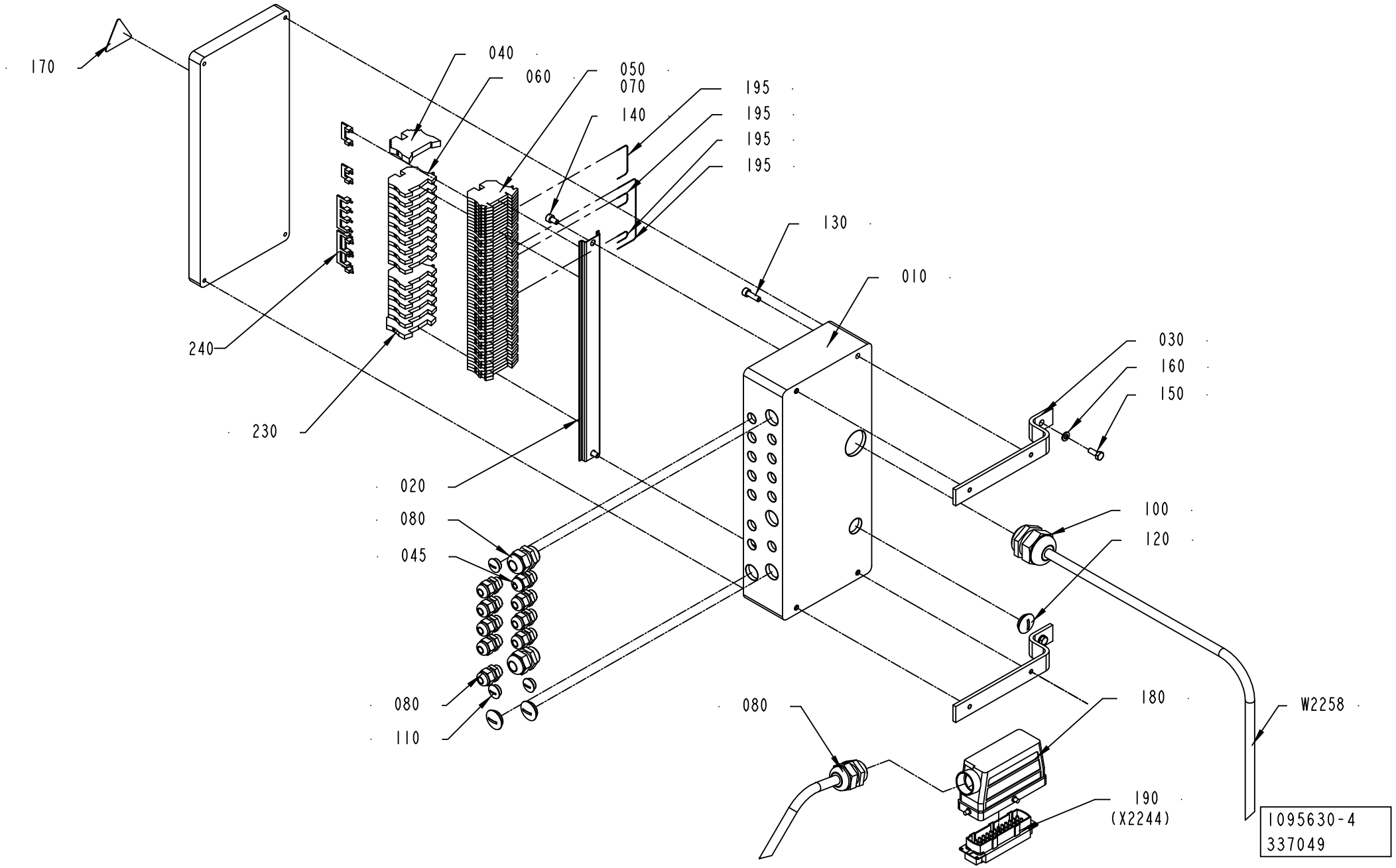
170
040
060
050
070
140
195
195
195
195
130
010
240
230
020
080
045
080
110
080
030
160
150
100
120
180
190
(X2244)
W2258
1095630-4
337049

ECM: 340136 - 20080124
Group number: 1095630-0200
Assembly Drawing: 1095630-4_1_AB

Pos	Part No	UN	Qty	Description	Page No
TBA/22					
080	352103-0101		8	CABLE GLAND, ST 9, PR15,2/PG9	
110	90002-0013		3	BLANK-OFF PLUG, PR 15,2 SKINDICHT-BLK9	
W2258	351150-0425	MM	2300	CABLE OLFLEX 25X0,75 MM2 LIGHT/GREY	
Common Parts					
010	1129202-0000		1	CONNECTION BOX	
020	1129209-0000		1	MOUNTING RAIL	
030	1129182-0000		2	BRACKET	
040	353031-0203		1	END SUPPORT, WEW 35/2	
045	352103-0100		1	CABLE GLAND, STR 9, PR15,2/PG9	
050	353021-0216		40	FEED THROUGH TERMINAL, 10200.8	
060	353024-0204		14	EARTH TERMINAL WPE 2,5	
070	359011-0809		2	MARKING PLATES 5-FW 101-150	
090	352103-0110		2	CABLE GLAND, STR 16, PR22,5/PG16	
100	352103-0120		1	CABLE GLAND, STR 29, PR37,0/PG29	
120	90002-0004		3	BLANK-OFF PLUG, PR 22,5 SKINDICHT-BLK16	
130	312115-0370		4	SCREW ISO4762 M6X20 A4 80	
140	312115-0364		2	SCREW ISO4762 M6X10 A4 80	
150	312105-0368		2	SCREW M6S ISO 4017 M6X16 A480	
160	315105-0153		2	WASHER BRB 6,4X12 RFR	
170	359705-0015		1	WARNING SIGN ISO, RISK OF ELECTRIC SHOCK	
180	90110-0228		1	CABLE HOOD 24-POL 71.350.2428.0	
190	90110-0150		1	MALE INSERT 121110 0000	
195	351160-0102	M	1	WIRE AWM 1X0,75 MM2 DARKBLUE	
200	352103-0116		1	CABLE GLAND, ST 21, PR28,3/PG21	
210	359005-0050		1	MARKING LABEL KIT X, 04.841.4550.0	
220	359005-0010		1	MARKING LABEL KIT 0 - 9, 04.841.2150.0	
230	353024-0205		1	EARTH TERMINAL, 1010.1	
240	353034-0030		4	BRIDGE CONNECTOR WQV 2,5/10, 10544.6	

Pos	Part No	UN	Qty	Description	Page No

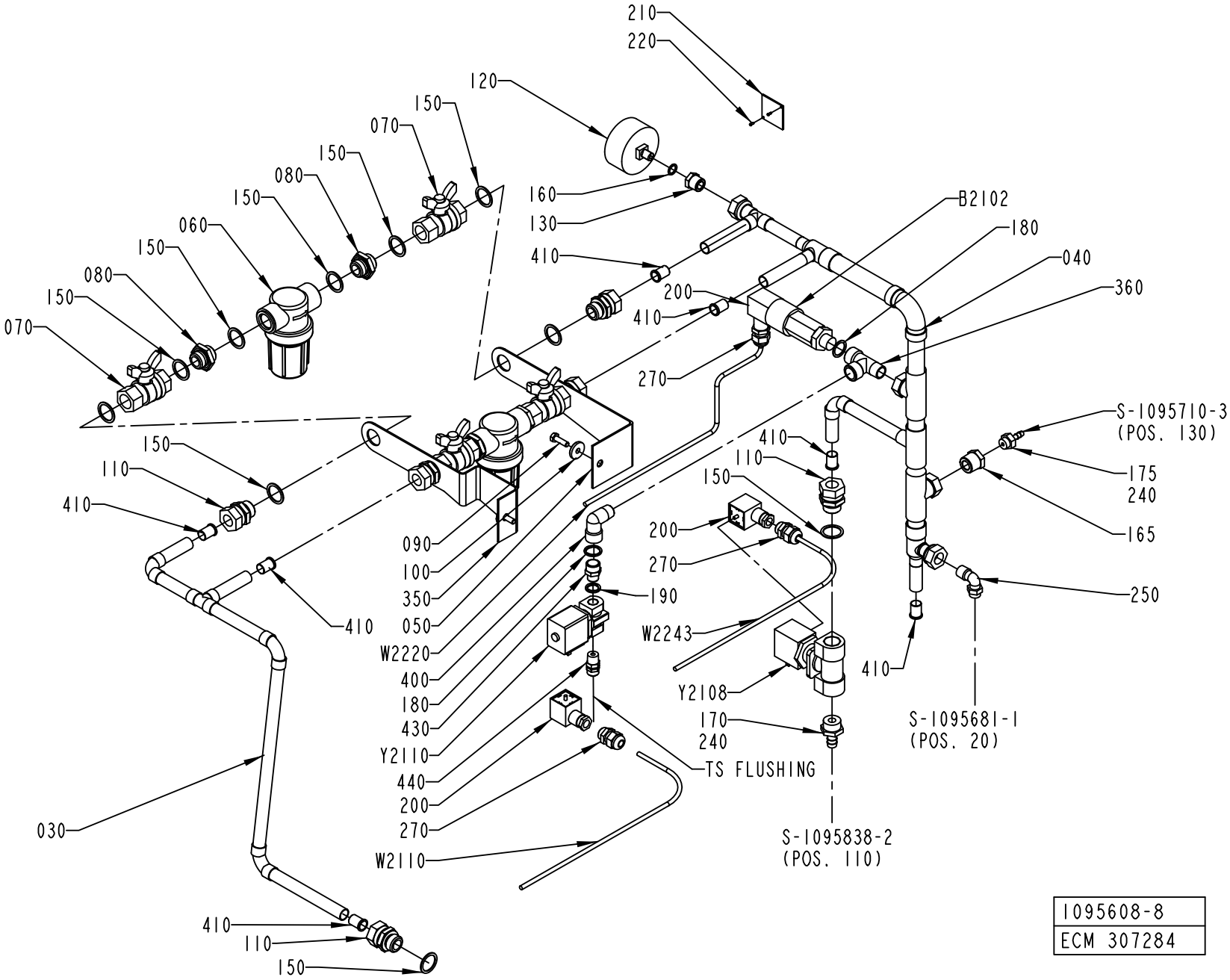

1095608-8
ECM 307284

ECM: 307286 - 20070702
Group number: 1095608-0100
Assembly Drawing: 1095608-8_1_AA

This list covers pages from 6-64 to 6-67

Pos	Part No	UN	Qty	Description	Page No
TBA/22 COMPRESSOR (See drawing on page: 6-64)					
165	342901-0102		1	HOSE NIPPLE, EXT.THR. R1/4-7 MM	
175	90330-0085		1	BUSHING, INT/EXT. THR. R1/2-RP1/4	
180	315239-0111		2	NYLON WASHER G3/8, 3/8RRP	
190	315239-0110		1	NYLON WASHER G1/4, 1/4RRP	
200	90110-0095		2	CONNECTOR 3 POLE + EARTH	
270	352103-0101		3	CABLE GLAND, ST 9, PR15,2/PG9	
330	1484511-0000		1	WATER DIAGRAM	
360	90140-0023		1	T-PIPE, INT. THREAD, NO. 2070-3/8-3/8	
400	90140-0020		1	ELBOW, 90, INT/EXT. THREAD, NO. 2020-3/8	
430	342700-0203		1	NIPPLES,HEXAGON,EXT.G-THREAD G3/8"-G1/4"	
440	342920-0122		1	STRAIGHT COUPLING,EXT.THREADED 8/6-R1/4"	
W2110	351150-0403	MM	1000	CABLE OLFLEX 3X0,75 MM2 LIGHT/GREY	
Y2110	90042-0248		1	SOLENOID VALVE OFFICIENE DI ENSINO	
TBA/22 ICE-WATER (See drawing on page: 6-66)					
180	315239-0111		2	NYLON WASHER G3/8, 3/8RRP	
190	315239-0110		1	NYLON WASHER G1/4, 1/4RRP	
200	90110-0095		2	CONNECTOR 3 POLE + EARTH	
235	342920-0124		1	STRAIGHT COUPLING,EXT.THREADED 8/6-R1/2"	
270	352103-0101		3	CABLE GLAND, ST 9, PR15,2/PG9	
320	90166-0118	MM	900	TUBE 8 MM PA BLACK	
330	2801653-0000		1	WATER DIAGRAM	
360	90140-0023		1	T-PIPE, INT. THREAD, NO. 2070-3/8-3/8	
400	90140-0020		1	ELBOW, 90, INT/EXT. THREAD, NO. 2020-3/8	
430	342700-0203		1	NIPPLES,HEXAGON,EXT.G-THREAD G3/8"-G1/4"	
440	342920-0122		1	STRAIGHT COUPLING,EXT.THREADED 8/6-R1/4"	
W2110	351150-0403	MM	1000	CABLE OLFLEX 3X0,75 MM2 LIGHT/GREY	
Y2110	90042-0248		1	SOLENOID VALVE OFFICIENE DI ENSINO	
Common Parts					
030	1041932-0000		1	PIPE	
040	1041933-0000		1	PIPE	
050	1037583-0000		1	HOLDER	
060	90458-0921		2	FILTER SP 122-200	
	90458-2541		*1*	*FILTER, CP23174-7-304SS*	
070	90187-0029		4	BALL VALVE G1/2, NPBR	
080	479261-0000		4	NIPPLE	
090	312105-0370		2	SCREW M6S ISO 4017 M6X20 A480	
100	315125-0153		2	WASHER TBRSB 6,4X22X4 A4	
110	342720-0114		6	CONN. STR. GA-15-G1/2	
120	90043-0006		1	PRESSURE GAUGE, 2041 D=63 MM	
130	342701-0202		1	BUSHING,INT./EXT.G-THREAD G3/8"-G1/8"	
150	315239-0113		18	NYLON WASHER G1/2, 1/2RRP	
160	315239-0109		1	NYLON WASHER G1/8, 1/8RRP	
170	342901-0105		1	HOSE NIPPLE, EXT.THR. R1/2-12 MM	
210	273455-0000		1	SIGN, COLD WATER	
220	312502-0120		2	DRIVE SCREW ROUND HEAD KDS 0X5	
240	90157-0016		1	LOCKING FLUID LOCTITE 242 50 ML	
250	342930-0133		1	ELBOW 90 COUPL.,EXT.THREADED 10/8-R3/8"	
350	2547061-0000		1	HOLDER	
410	342708-0109		7	REINFORCING RING VSH 15X1 MM	
B 2102	90274-0042		1	PRESSURE GUARD, 200 KPA	
W 2220	351150-0403	MM	2000	CABLE OLFLEX 3X0,75 MM2 LIGHT/GREY	
W 2243	351150-0403	MM	2000	CABLE OLFLEX 3X0,75 MM2 LIGHT/GREY	
Y 2108	90042-0249		1	SOLENOID VALVE OFFICINE DI ENSINO	

Machine Type | Group Description | Used-In | Group Number | Page No

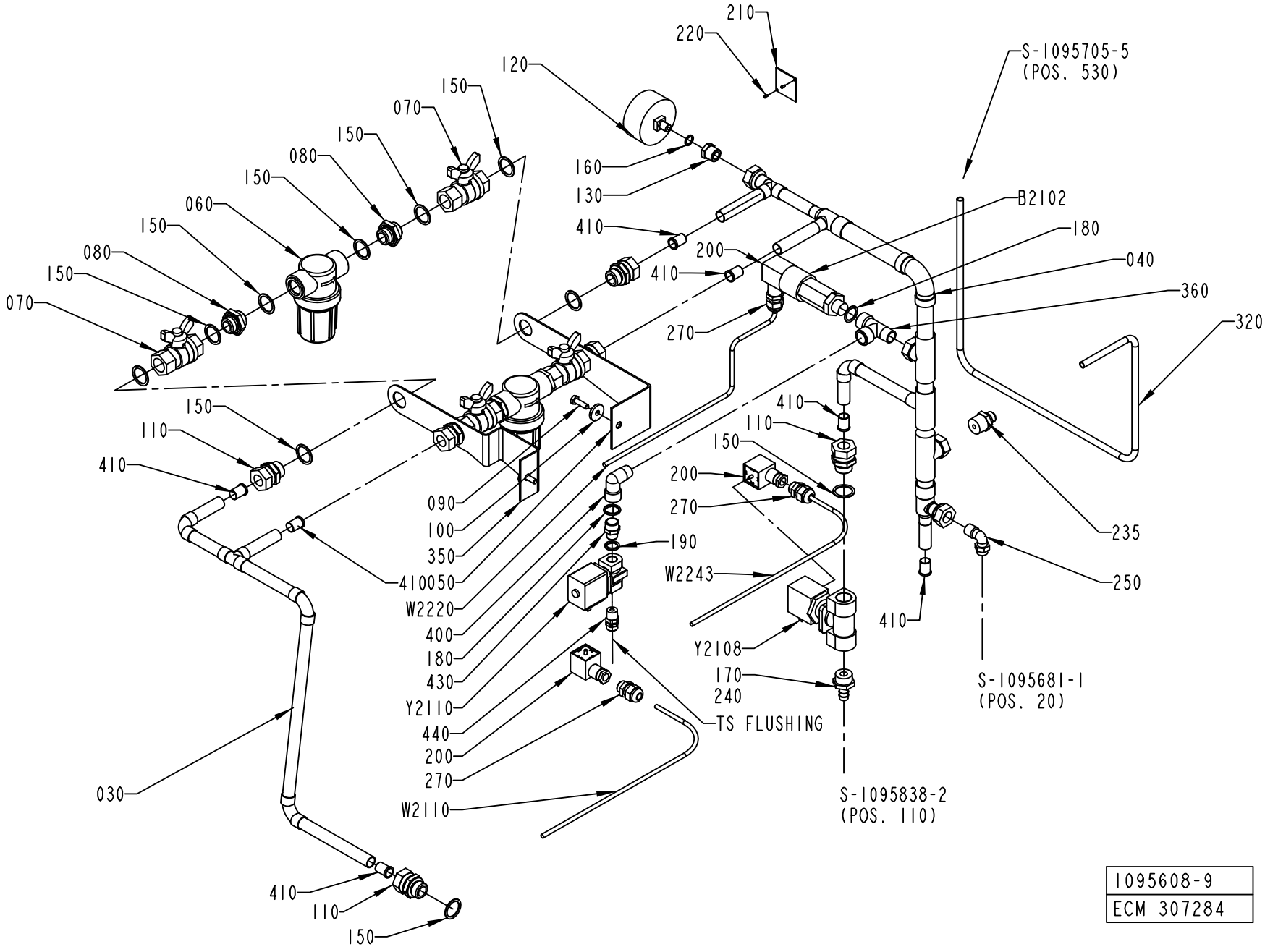

1095608-9
ECM 307284

ECM: 307286 - 20070702
Group number: 1095608-0100
Assembly Drawing: 1095608-9_1_AA

This list covers pages from 6-64 to 6-67

Pos	Part No	UN	Qty	Description	Page No
TBA/22 COMPRESSOR (See drawing on page: 6-64)					
165	342901-0102		1	HOSE NIPPLE, EXT.THR. R1/4-7 MM	
175	90330-0085		1	BUSHING, INT/EXT. THR. R1/2-RP1/4	
180	315239-0111		2	NYLON WASHER G3/8, 3/8RRP	
190	315239-0110		1	NYLON WASHER G1/4, 1/4RRP	
200	90110-0095		2	CONNECTOR 3 POLE + EARTH	
270	352103-0101		3	CABLE GLAND, ST 9, PR15,2/PG9	
330	1484511-0000		1	WATER DIAGRAM	
360	90140-0023		1	T-PIPE, INT. THREAD, NO. 2070-3/8-3/8	
400	90140-0020		1	ELBOW, 90, INT/EXT. THREAD, NO. 2020-3/8	
430	342700-0203		1	NIPPLES,HEXAGON,EXT.G-THREAD G3/8"-G1/4"	
440	342920-0122		1	STRAIGHT COUPLING,EXT.THREADED 8/6-R1/4"	
W2110	351150-0403	MM	1000	CABLE OLFLEX 3X0,75 MM2 LIGHT/GREY	
Y2110	90042-0248		1	SOLENOID VALVE OFFICIENE DI ENSINO	
TBA/22 ICE-WATER (See drawing on page: 6-66)					
180	315239-0111		2	NYLON WASHER G3/8, 3/8RRP	
190	315239-0110		1	NYLON WASHER G1/4, 1/4RRP	
200	90110-0095		2	CONNECTOR 3 POLE + EARTH	
235	342920-0124		1	STRAIGHT COUPLING,EXT.THREADED 8/6-R1/2"	
270	352103-0101		3	CABLE GLAND, ST 9, PR15,2/PG9	
320	90166-0118	MM	900	TUBE 8 MM PA BLACK	
330	2801653-0000		1	WATER DIAGRAM	
360	90140-0023		1	T-PIPE, INT. THREAD, NO. 2070-3/8-3/8	
400	90140-0020		1	ELBOW, 90, INT/EXT. THREAD, NO. 2020-3/8	
430	342700-0203		1	NIPPLES,HEXAGON,EXT.G-THREAD G3/8"-G1/4"	
440	342920-0122		1	STRAIGHT COUPLING,EXT.THREADED 8/6-R1/4"	
W2110	351150-0403	MM	1000	CABLE OLFLEX 3X0,75 MM2 LIGHT/GREY	
Y2110	90042-0248		1	SOLENOID VALVE OFFICIENE DI ENSINO	
Common Parts					
030	1041932-0000		1	PIPE	
040	1041933-0000		1	PIPE	
050	1037583-0000		1	HOLDER	
060	90458-0921		2	FILTER SP 122-200	
	90458-2541		*1*	*FILTER, CP23174-7-304SS*	
070	90187-0029		4	BALL VALVE G1/2, NPBR	
080	479261-0000		4	NIPPLE	
090	312105-0370		2	SCREW M6S ISO 4017 M6X20 A480	
100	315125-0153		2	WASHER TBRSB 6,4X22X4 A4	
110	342720-0114		6	CONN. STR. GA-15-G1/2	
120	90043-0006		1	PRESSURE GAUGE, 2041 D=63 MM	
130	342701-0202		1	BUSHING,INT./EXT.G-THREAD G3/8"-G1/8"	
150	315239-0113		18	NYLON WASHER G1/2, 1/2RRP	
160	315239-0109		1	NYLON WASHER G1/8, 1/8RRP	
170	342901-0105		1	HOSE NIPPLE, EXT.THR. R1/2-12 MM	
210	273455-0000		1	SIGN, COLD WATER	
220	312502-0120		2	DRIVE SCREW ROUND HEAD KDS 0X5	
240	90157-0016		1	LOCKING FLUID LOCTITE 242 50 ML	
250	342930-0133		1	ELBOW 90 COUPL.,EXT.THREADED 10/8-R3/8"	
350	2547061-0000		1	HOLDER	
410	342708-0109		7	REINFORCING RING VSH 15X1 MM	
B 2102	90274-0042		1	PRESSURE GUARD, 200 KPA	
W 2220	351150-0403	MM	2000	CABLE OLFLEX 3X0,75 MM2 LIGHT/GREY	
W 2243	351150-0403	MM	2000	CABLE OLFLEX 3X0,75 MM2 LIGHT/GREY	
Y 2108	90042-0249		1	SOLENOID VALVE OFFICINE DI ENSINO	

Machine Type | Group Description | Used-In | Group Number | Page No

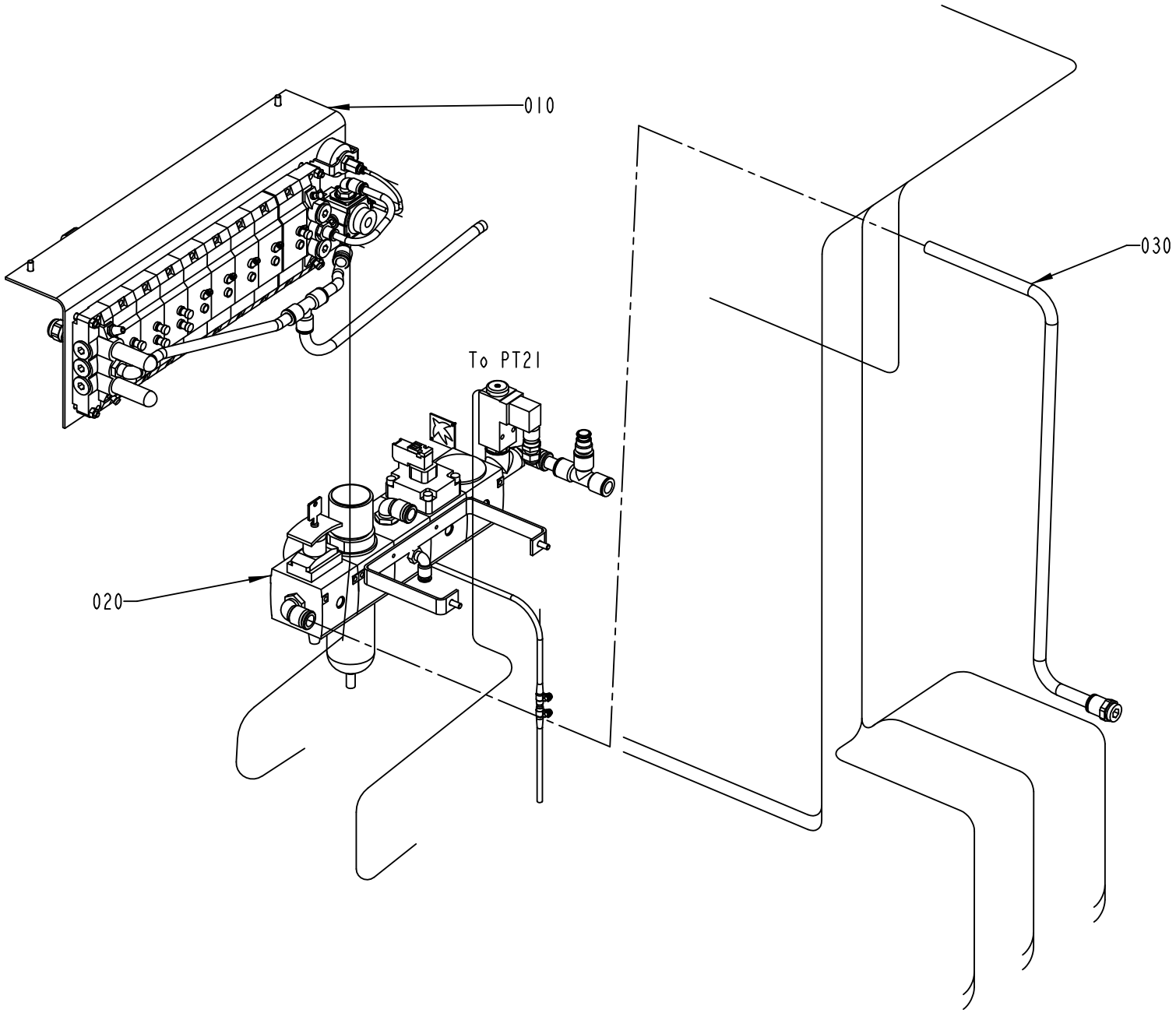

1095714-2
ECM 115191

ECM: 139561 - 20030711
Group number: 1095714-0300
Assembly Drawing: 1095714-2_1_AD

Pos	Part No	UN	Qty	Description	Page No
-					
010	1095611-0300		1	VALVE PANEL	**6-71**
020	1095609-0200		1	PNEUMATIC UNIT	**6-73**
030	1095716-0100		1	PIPE WORK-AIR	**6-75**

Pos	Part No	UN	Qty	Description	Page No

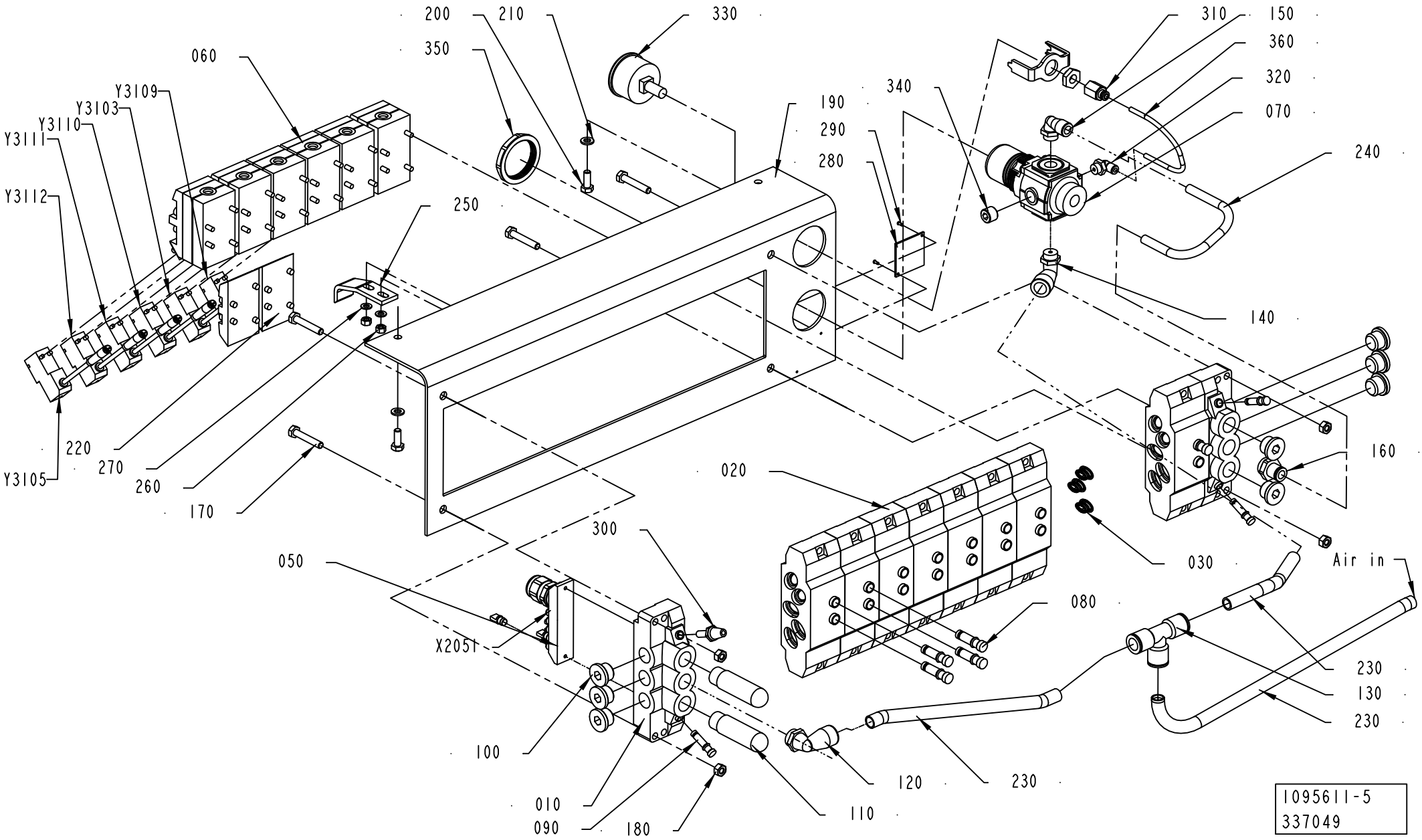
200
210
330
350
060
Y3109
Y3103
Y3110
Y3111
Y3112
Y3105
220
270
260
170
250
310
150
360
320
070
340
190
290
280
240
140
160
020
030
Air in
080
230
130
230
300
050
X2051
100
010
090
180
120
230
110
1095611-5
337049

ECM: 339612 - 20080124
Group number: 1095611-0300
Assembly Drawing: 1095611-5_1_AB

Pos	Part No	UN	Qty	Description	Page No
TBA/22					
005	1484892-0000		1	PNEUMATIC DIAGRAM	
060	90042-0215		6	VALVE BODY 5/2 UNISTABLE	
080	342715-0103		7	BLIND PLUG 8 MM	
220	90042-0519		2	BLANK PLATE ISO SIZE 1	
250	1036227-0000		1	BRACKET	
Y3105	90042-0538		1	PILOT VALVE L=500MM	
Y3110	90042-0538		1	PILOT VALVE L=500MM	
Common Parts					
010	90042-0522		2	PORTED END PIECE ISO SIZE 1	
020	90042-0532		8	BASE PLATE ISO SIZE 1	
030	90042-0528		1	BLANKING KIT SEALS ISO SIZE 1	
050	90042-0550		5	PROTECTION PLUG FOR UNUSED CONNECTION	
070	90113-0470		1	MANIFOLD REGULATOR 10 BAR	
090	342715-0102		3	BLIND PLUG 6 MM	
100	342713-0211		8	PLUG, EXT THREAD HEX SOCKET 8638-00-380	
110	90328-0024		2	SILENCER G3/8"	
120	90458-2960		1	ELBOW PIPE JOINT, EXT.THREAD,D=12MM-G3/8	
130	342748-0109		1	T-CONNECTION 12MM	
140	90459-2959		1	COOLER, AIR14616.30.CU.10.AL.06.10.0150.	
150	90458-2958		1	ELBOW PIPE JOINT, EXT.THREAD, D=8MM-G1/4	
160	342722-0206		1	STRAIGHT COUPLING D=8-G3/8"	
170	312105-0376		4	SCREW M6S ISO 4014 M6X35 A480	
180	312605-0316		4	HEXAGON NUT, M6M M6 A280	
190	1517295-0000		1	SHEET	
200	312105-0368		2	SCREW M6S ISO 4017 M6X16 A480	
210	315105-0153		2	WASHER BRB 6,4X12 RFR	
230	90166-0068	MM	1000	TUBE 12 MM PA BLUE	
240	315400-0004	MM	400	TUBE PUN-H-8X1,25-BL	
260	312605-0314		2	HEXAGON NUT, M6M M5 A280	
270	315105-0146		2	WASHER BRB 5,3X10 RFR	
280	1041938-0000		1	SIGN	
290	312502-0120		2	DRIVE SCREW ROUND HEAD KDS 0X5	
300	90328-0017		1	SILENCER, D=6 MM	
310	342770-0101		1	STRAIGHT COUPLING INT, D=4 MM - G1/8	
320	90458-2955		1	ELBOW PIPE JOINT, EXT.THREAD,	
330	90043-0065		1	MKC NEW FILL PUMP VACUUM PRESSURE GAUGE	
340	90087-0036		1	PLUG, KR 1/4	
350	90457-0078		1	PANEL NUT	
360	90166-0095	MM	200	TUBE 4 MM PA BLUE (50M)	
X2051	90042-0535		1	TERMINAL BOARD 19 CORDS	
Y3103	90042-0538		1	PILOT VALVE L=500MM	
Y3109	90042-0538		1	PILOT VALVE L=500MM	
Y3111	90042-0538		1	PILOT VALVE L=500MM	
Y3112	90042-0538		1	PILOT VALVE L=500MM	

Machine Type Group Description Used-In Group Number Page No

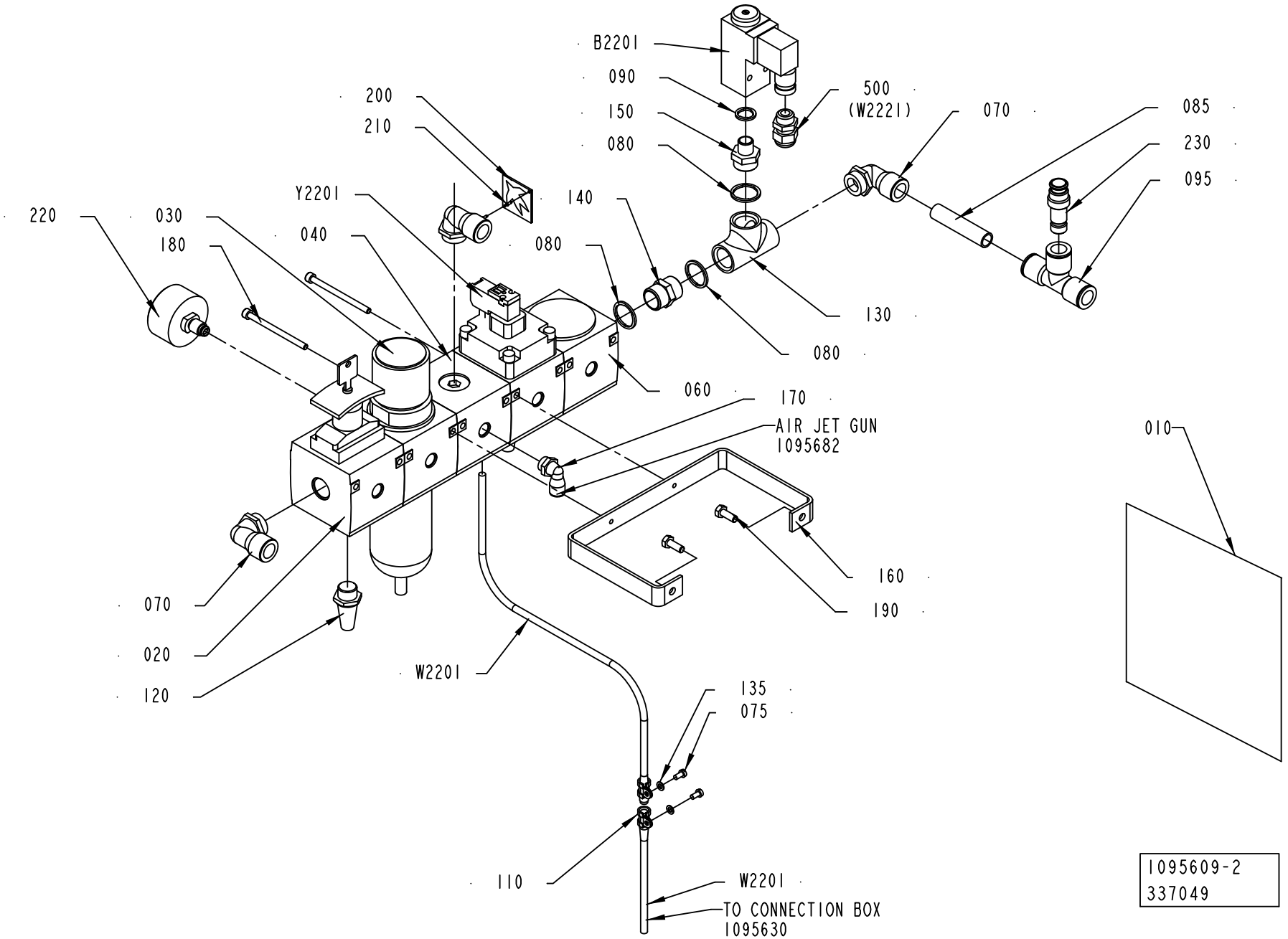
B2201
090
150
080
500
(W2221)
070
085
230
095
200
210
Y2201
140
220
030
180
040
080
130
080
060
170
AIR JET GUN
1095682
010
160
190
070
020
120
W2201
135
075
110
W2201
TO CONNECTION BOX
1095630
1095609-2
337049

ECM: 339611 - 20080124
Group number: 1095609-0200
Assembly Drawing: 1095609-2_1_AG

Pos	Part No	UN	Qty	Description	Page No
TBA/22					
010	1129150-0000		1	PNEUMATIC DIAGRAM	
Common Parts					
020	90113-0377		1	SHUT OFF VALVE G1/2, 915-331053	
030	90113-0072		1	FILTER REGULATOR 40µ, 915-331242	
	90113-0387		*1*	*FILTER ELEMENT 40UM FOR 90113-0094*	
	90113-0459		*1*	*O-RING*	
040	90113-0375		1	PRESSURE DISTRIBUTION	
050	90113-0423		1	HIGH SPEED VENTING VALVE G1/2, R40403053	
060	90113-0374		1	SLOW STARTING VALVE	
070	90458-2965		3	ELBOW PIPE JOINT, EXT.THREAD,D=14MM-G1/2	
075	312125-0287		2	SCREW ISO 1207 M4X8 A4	
080	315239-0113		3	NYLON WASHER G1/2, 1/2RRP	
085	90166-0196	MM	70	TUBE 14MM PA BLUE	
090	315239-0110		1	NYLON WASHER G1/4, 1/4RRP	
095	342748-0110		1	T-CONNECTION 14MM	
110	90165-0065		2	PIPE CLAMP D=8 MM, GSK08/12	
120	90328-0007		1	SILENCER, 338/125 B140-00-380	
130	90330-0049		1	T-PIPE, INT. THREAD, R-221R1/2	
135	315105-0136		2	WASHER BRB 4,3X8 RFR	
140	342700-0113		1	NIPPLES,HEXAGON,EXT.G-THREAD G1/2"-G1/2"	
150	342700-0205		1	NIPPLES,HEXAGON,EXT.G-THREAD G1/2"-G1/4"	
160	1041921-0000		1	HOLDER	
170	90458-2958		1	ELBOW PIPE JOINT, EXT.THREAD, D=8MM-G1/4	
180	90287-0073		2	SCREW MC6S M5X70 129	
190	312105-0368		2	SCREW M6S ISO 4017 M6X16 A480	
200	273458-0000		1	SIGN, AIR	
210	312502-0120		2	DRIVE SCREW ROUND HEAD KDS 0X5	
220	90459-0307		1	PRESSURE GAUGE, 162838 MA-50-10-1/4-EN	
230	342716-0211		1	REDUCER 12-14	
500	352103-0101		1	CABLE GLAND, ST 9, PR15,2/PG9	
B2201	90274-0074		1	PRESS. SW. 5,3 BAR, PEV-1/4-B-SA22357	
W2201	90042-0583		1	CABLE MECMAN 440-827 000-1	
Y2201	90042-0585		1	PILOT VALVE L=5M	

Pos	Part No	UN	Qty	Description	Page No

PIPE WORK-AIR

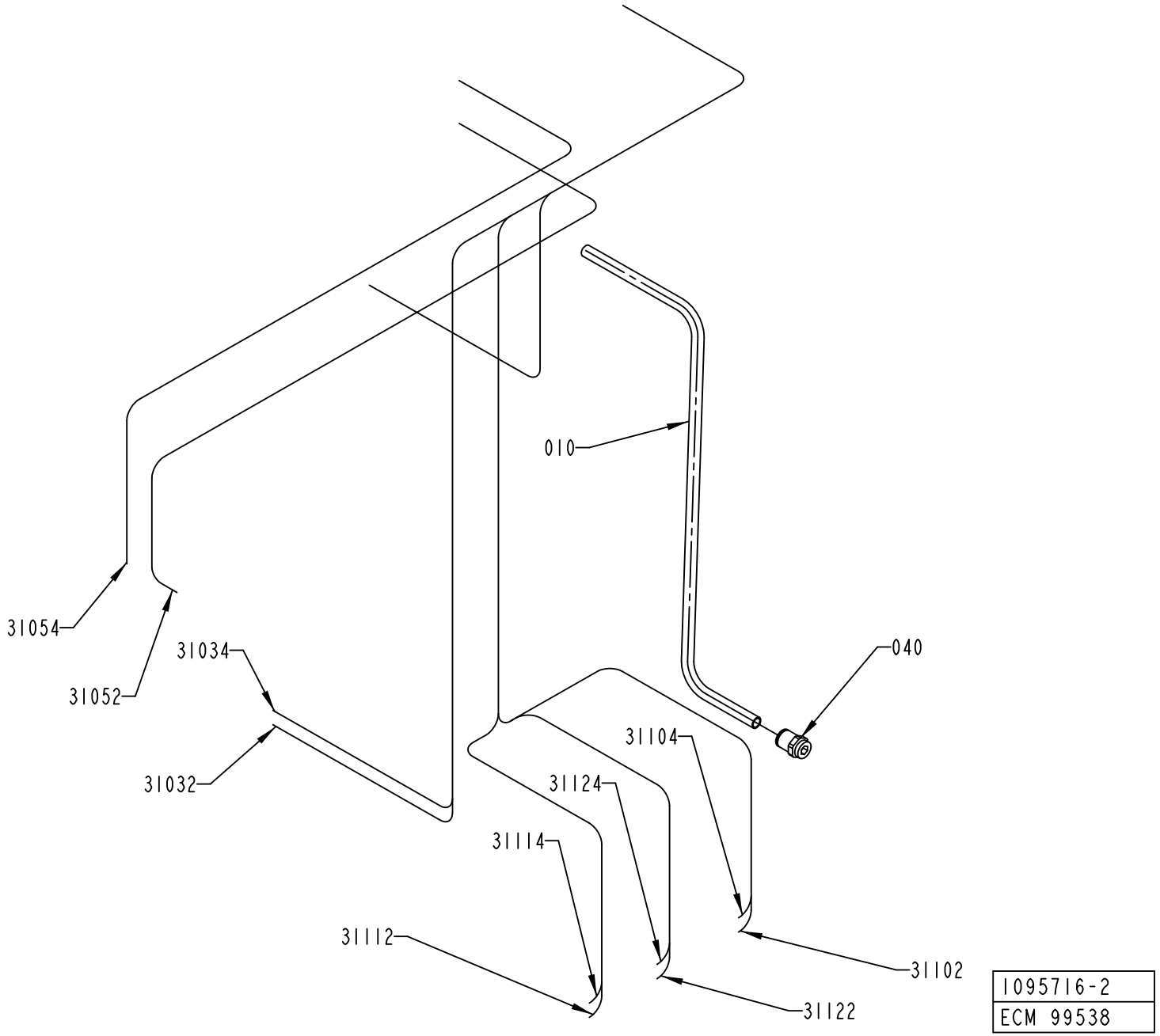

ECM: 189444 - 20041104
Group number: 1095716-0100
Assembly Drawing: 1095716-2_1_AB

Pos	Part No	UN	Qty	Description	Page No
TBA/22					
010	90166-0196	MM	770	TUBE 14MM PA BLUE	
040	90055-0097		1	STRAIGHT COUPLING	
31052	90166-0013	MM	1700	TUBE 8 MM PA BLUE	
31054	90166-0013	MM	1700	TUBE 8 MM PA BLUE	
31102	90166-0013	MM	1500	TUBE 8 MM PA BLUE	
31104	90166-0013	MM	1500	TUBE 8 MM PA BLUE	
Common Parts					
31032	90166-0013	MM	1400	TUBE 8 MM PA BLUE	
31034	90166-0013	MM	1400	TUBE 8 MM PA BLUE	
31094	90166-0013	MM	1400	TUBE 8 MM PA BLUE	
31112	90166-0013	MM	1500	TUBE 8 MM PA BLUE	
31114	90166-0013	MM	1500	TUBE 8 MM PA BLUE	
31122	90166-0013	MM	1500	TUBE 8 MM PA BLUE	
31124	90166-0013	MM	1500	TUBE 8 MM PA BLUE	

Pos	Part No	UN	Qty	Description	Page No

Tetra Pak

SPC
Spare Parts Catalogue

This page is intentionally left blank.

ECM: 306885 - 20070701
Group number: 648539-0250
Assembly Drawing:

Pos	Part No	UN	Qty	Description	Page No
TBA/22					
070	1317248-0200		1	TPOP DATA COLLECTION	**7-5**
Common Parts					
	2635131-0150		1	CABLE SET	**7-7**
010	1532902-0250		1	CABINET	**7-9**
020	1532908-0250		1	CONTROL BOARD LEFT	**7-35, 7-37, 7-39**
030	1548123-0150		1	CONTROL BOARD RIGHT	**7-45, 7-47**
040	1548127-0250		1	POWER SUPPLY UNIT	**7-51**
050	1548136-0150		1	DOOR	**7-87, 7-89**
060	2550125-0100		1	COOLING UNIT	**7-101**

Pos	Part No	UN	Qty	Description	Page No

This page is intentionally left blank.

ECM: 185840 - 20041108
Group number: 1317248-0200
Assembly Drawing:

Pos	Part No	UN	Qty	Description	Page No
-					
010	90453-0001		1	MODEM MA-12	
020	90041-0068		1	DATACABLE MODEM PC	
030	90220-0091	M	200	PAIR TWISTED CABLE 2X2X0,25MM2	
040	1190007-0402		1	PLMS RECEIVE	
050	82197-0104		1	USER MANUAL	
060	47937-0410		1	PLMS OFF-LINE PROGRAM	
070	82351-0106		1	USER MANUAL PLMS OFF-LINE	
080	1369439-0301		1	PLMS ON-LINE PROGRAM	

Pos	Part No	UN	Qty	Description	Page No

This page is intentionally left blank.

ECM: 295341 - 20061227
Group number: 2635131-0150
Assembly Drawing:

Pos	Part No	UN	Qty	Description	Page No
-					
	351164-0111	M	15	WIRE AWM 1X35 MM2 BLACK	

Pos	Part No	UN	Qty	Description	Page No

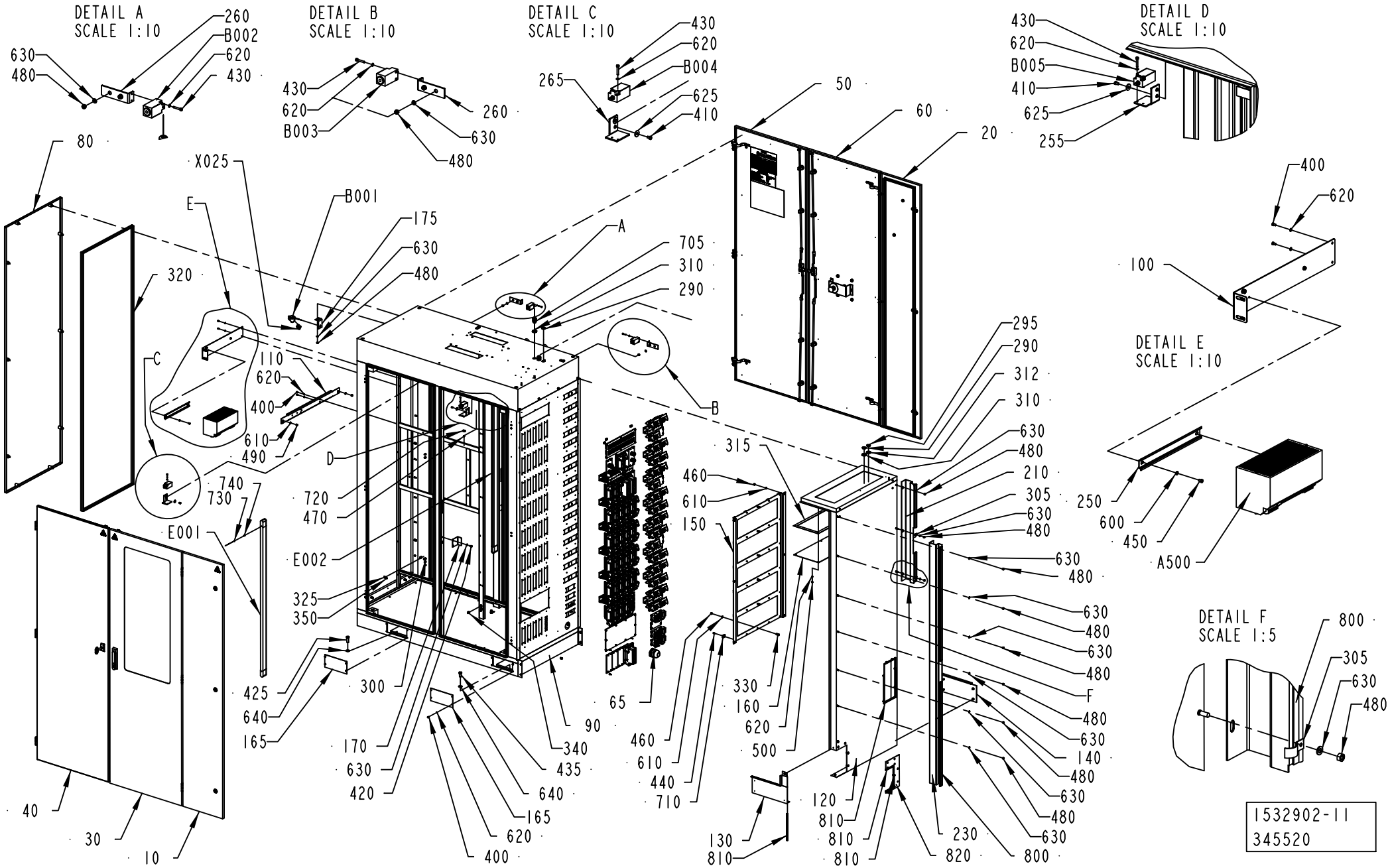
DETAIL A
SCALE 1:10
260
B002
620
630
480
430
DETAIL B
SCALE 1:10
430
620
B003
260
630
480
DETAIL C
SCALE 1:10
430
620
B004
265
625
410
DETAIL D
SCALE 1:10
430
620
B005
410
625
255
DETAIL E
SCALE 1:10
250
600
450
A500
DETAIL F
SCALE 1:5
800
305
630
480
50
60
20
400
620
100
80
X025
E
B001
175
630
480
320
A
705
310
290
C
110
620
400
610
490
B
D
720
470
E002
325
350
425
640
165
300
170
630
420
340
435
640
165
620
400
90
65
315
460
610
150
330
160
620
500
460
610
440
710
295
290
312
310
630
480
210
305
630
480
630
480
630
480
630
480
F
480
630
140
480
630
480
630
120
810
810
810
230
820
800
740
730
E001
40
30
10
1532902-11
345520

ECM: 345527 - 20080701
Group number: 1532902-0250
Assembly Drawing: 1532902-11_1_AB

Pos	Part No	UN	Qty	Description	Page No
TBA/22					
090	2844055-0001		1	WELDED CABINET	
120	2765462-0001		1	COVERING PANEL	
210	2897668-0000		1	PROFILE	
230	2889861-0000		1	PROFILE	
290	90002-0004		2	BLANK-OFF PLUG, PR 22,5 SKINDICHT-BLK16	
295	90002-0016		1	BLANK-OFF PLUG PR 20.4 SKINDICHT-BLK13,5	
300	90062-0015		9	LOCK WASHER SERRAT.EXT.GEAR,6,4/11 H=0,7	
310	90099-0110		2	NUT, PR 22,5 (PG16)	
705	352103-0108		2	CABLE GLAND, ST 13,5 , PR20,4/PG13,5	
720	352113-0205		6	ANCHOR PLATES FOR STRIPS, TYPE TM2S8-C10	
800	90143-0059	MM	2550	SELF GRIPPING GASKET, 4610069	
810	90143-0060	MM	2000	EDGE STRIP 9,5X6,3MM BLACK PVC	
A500	90459-2938		1	POWER SUPPLY, 6EP1437-3BA00	
Common Parts					
010	2789109-0100		1	DOOR	**7-11**
020	2789107-0100		1	DOOR	**7-13**
030	1532920-0100		1	DOOR	**7-15**
040	1532923-0100		1	DOOR	**7-17**
050	1532932-0250		1	DOOR	**7-19**
060	1532935-0100		1	DOOR	**7-21**
065	2563166-0250		1	CONNECTOR	**7-23, 7-25, 7-27, 7-29, 7-31**
080	1532904-0100		1	DOOR	**7-33**
100	1532927-0000		1	FASTENING PLATE	
110	2530287-0000		1	PLATE	
130	1532928-0000		1	COVERING PLATE	
140	1532929-0000		1	COVERING PLATE	
150	1532911-0000		1	FASTENING PLATE	
160	1532909-0000		1	PLATE	
165	1038408-0000		4	COVERING PLATE	
170	1140769-0000		1	DOOR STOPPER	
175	1129318-0000		1	BRACKET	
250	2530286-0000		1	RAIL	
255	2606215-0000		1	BRACKET	
260	2608106-0000		2	BRACKET	
265	2608107-0000		1	BRACKET	
300	90062-0015		11	LOCK WASHER SERRAT.EXT.GEAR,6,4/11 H=0,7	
305	90074-0011		2	CABLE CLIPS, D=14 MM	
312	90099-0118		1	NUT, PR 20,4 (PG13,5)	
315	1532926-0000		1	GASKET	
320	90143-0057	M	36	STRIP EMKA 1011-05 21X11MM	
330	90287-0137		6	SPACER BOLT DSSM60100	
340	90287-0157		2	SCREW M6SF FLAT HEAD M6X10 88	
400	312105-0287		20	SCREW M6S ISO 4017 M4X8 A470	
410	312105-0323		4	SCREW M6S ISO 4017 M5X8 A480	
420	312105-0364		2	SCREW M6S ISO 4017 M6X10 A480	
425	312105-0538		2	SCREW M6S ISO 4017 M12X35 A480	
430	312111-0297		8	SCREW HEX.SOCK.HD.MC6S-TT 4X25 88 FZB	
435	312105-0534		2	SCREW M6S ISO 4017 M12X25 A480	
440	312121-0289		24	SCREW ISO 1207 M4X10 4.8-5.8 Z.PL.	
450	312121-0323		2	SCREW ISO 1207 M5X8 4.8-5.8 Z.PL.	
460	312601-0316		12	HEXAGON NUT, DIN 934 M6 8 FZB	
470	312605-0312		9	HEXAGON NUT, M6M M4 A280	
480	312605-0316		37	HEXAGON NUT, M6M M6 A280	
490	312810-0316		6	HEXAGON NUT, NY-LOCK M6 FZB	
500	312812-0312		6	HEXAGON NUT, NY-LOCK M4 A480	
600	315101-0146		2	WASHER PLAIN, BRB, 5,3/10 H=1	
610	315101-0153		18	WASHER PLAIN, BRB, 6,4/12 H=1,5	
620	315105-0136		34	WASHER BRB 4,3X8 RFR	
625	90005-0060		4	WASHER PLAIN, RBS 6,4/M6)/18,H=1,5	
630	315105-0153		39	WASHER BRB 6,4X12 RFR	
640	315105-0178		4	WASHER BRB 13X24 RFR	
710	352113-0203		27	ANCHOR PLATES FOR STRIPS, TYPE TM3S8-M0	
730	315105-0124		4	WASHER BRB 3,2X6 RFR	
740	312115-0222		4	SCREW ISO4762 M3X8 A4 80	
810	90143-0060	MM	1550	EDGE STRIP 9,5X6,3MM BLACK PVC	
820	2889859-0000		1	COVER PLATE	
B001	90326-0053		1	THERMOCOUPLE, 12826-35	
B002	90044-0192		1	LIMIT SW. SZ2586.000	
B003	90044-0192		1	LIMIT SW. SZ2586.000	
B004	90044-0192		1	LIMIT SW. SZ2586.000	
B005	90044-0192		1	LIMIT SW. SZ2586.000	
E001	90600-4050		1	LIGHT FIXTURE, TCH128 1XTL5-28W/830 HF	
	90600-4240		*1*	*FLUORESC. TUBE,MASTER TL5 HE 28W/830 SLV*	
E002	90600-4050		1	LIGHT FIXTURE, TCH128 1XTL5-28W/830 HF	
	90600-4240		*1*	*FLUORESC. TUBE,MASTER TL5 HE 28W/830 SLV*	
X025	90326-0020		1	PLUG, FEMALE YELLOW CR-AL	

Machine Type Group Description Used-In Group Number Page No

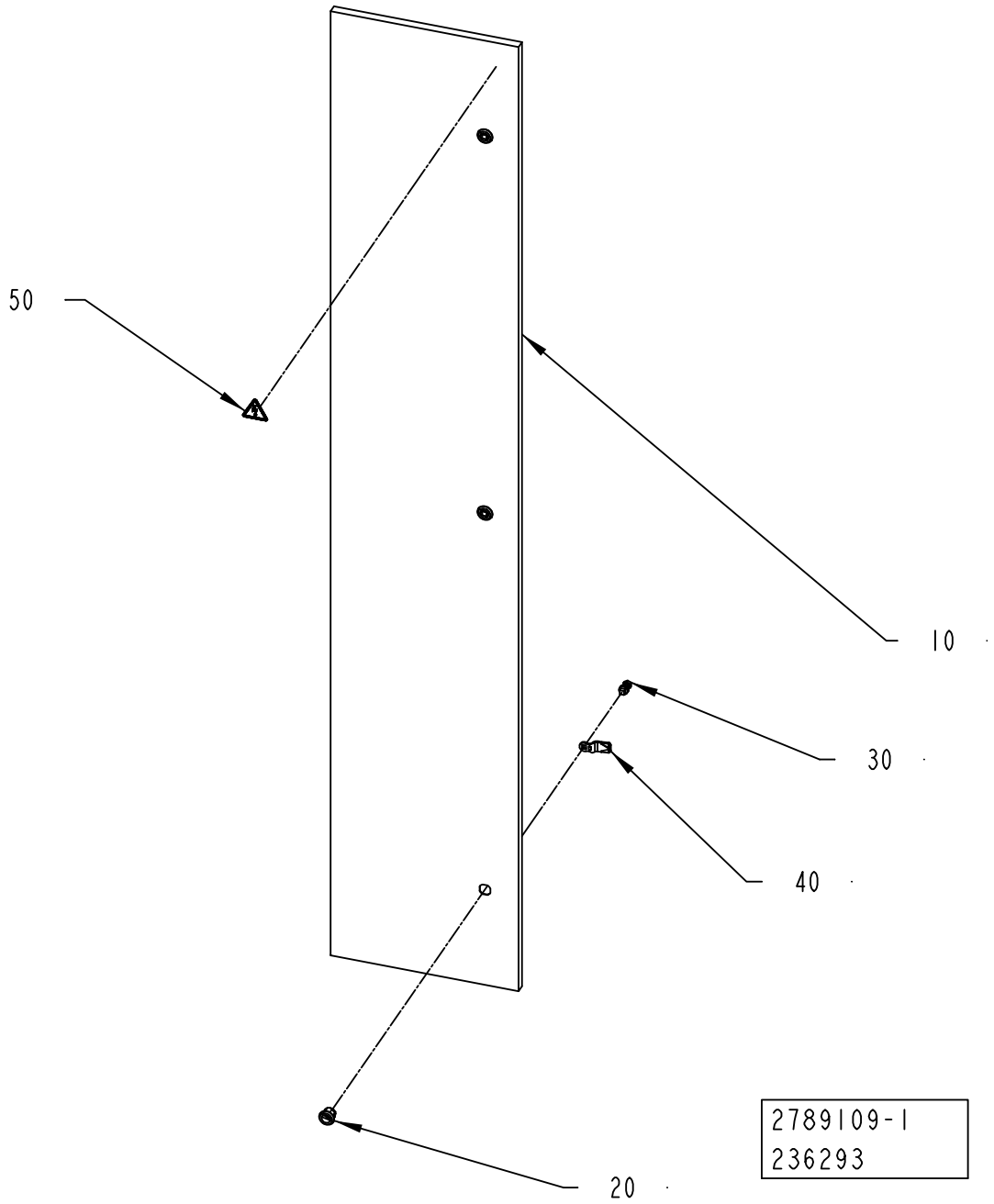
50
10
30
40
20
2789109-1
236293

ECM: 236483 - 20060101
Group number: 2789109-0100
Assembly Drawing: 2789109-1_1_AA

Pos	Part No	UN	Qty	Description	Page No
-					
010	2789110-0000		1	DOOR	
020	90237-0319		3	LOCK HOUSING, 1000-U134	
030	90237-0320		3	LOCK HOUSING, 1000-U136	
040	90237-0157		3	LOCK BOLT, 1000-230	
050	359705-0015		1	WARNING SIGN ISO, RISK OF ELECTRIC SHOCK	

Pos	Part No	UN	Qty	Description	Page No

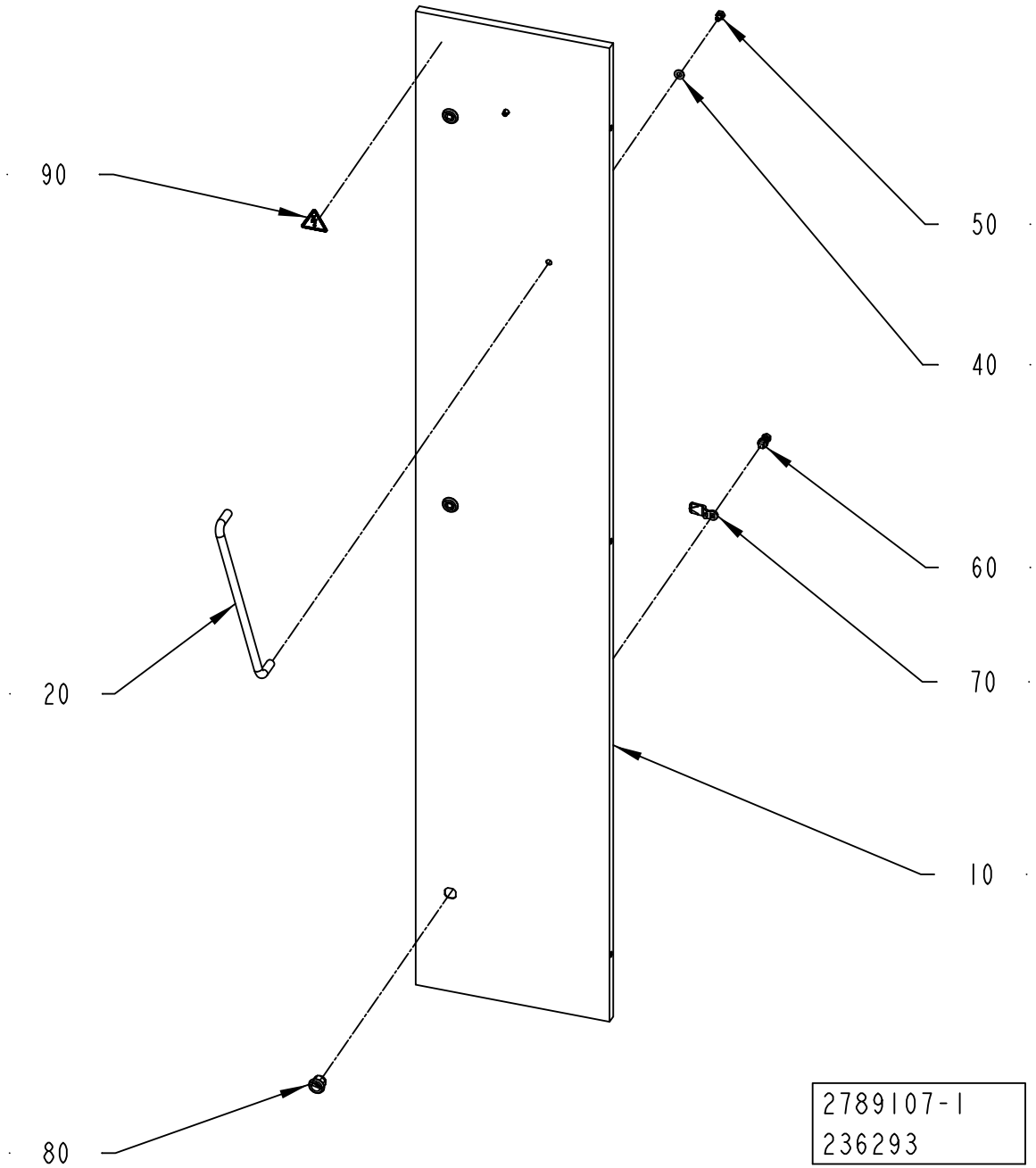
90
20
80
50
40
60
70
10
2789107-1
236293

ECM: 236293 - 20060101
Group number: 2789107-0100
Assembly Drawing: 2789107-1_1_AA

Pos	Part No	UN	Qty	Description	Page No
-					
010	2789108-0000		1	DOOR	
020	90017-0015		1	HANDLE, NO. 14.4012.02.308	
040	90005-0077		2	WASHER PL.RND.NYL.8,4/7, H=2	
050	312105-0447		2	SCREW M6S ISO 4017 M8X12 A480	
060	90237-0320		3	LOCK HOUSING, 1000-U136	
070	90237-0157		3	LOCK BOLT, 1000-230	
080	90237-0319		3	LOCK HOUSING, 1000-U134	
090	359705-0015		1	WARNING SIGN ISO, RISK OF ELECTRIC SHOCK	

Pos	Part No	UN	Qty	Description	Page No

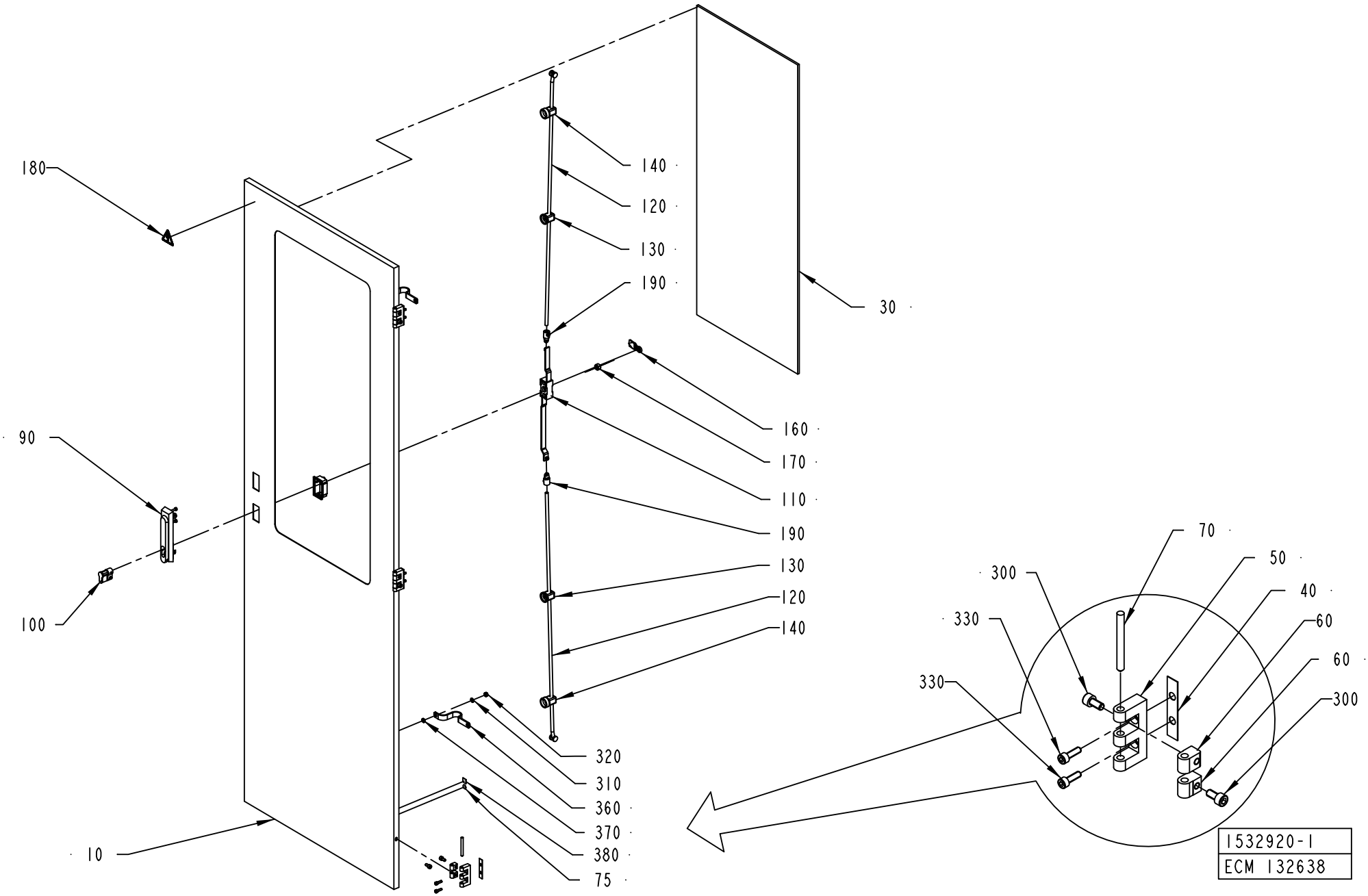
180
140
120
130
190
30
90
160
170
110
190
130
120
140
100
320
310
360
370
380
75
10
70
50
300
40
330
60
330
60
300
1532920-1
ECM 132638

ECM: 315259 - 20080215
Group number: 1532920-0100
Assembly Drawing: 1532920-1_1_AB

Pos	Part No	UN	Qty	Description	Page No
-					
010	1532921-0000		1	DOOR	
030	2530288-0000		1	GLASS PANE	
040	988666-0000		3	GASKET	
050	1035792-0000		3	E-HINGE	
060	1129770-0000		6	BLOCKING PIECE	
070	988685-0000		3	PIN	
075	2608177-0000		2	SIGN	
090	90237-0176		1	TURNING HANDLE, 1125-U190-A	
100	90237-0128		1	LOCK CYLINDER, 1109-SU125	
110	90237-0153		1	LOCK HOUSING, 1121-U26-0B	
120	90237-0168		2	ROUND BAR WITH END WHEEL, 1049-U5	
130	90237-0151		2	GUIDE, 1001-U11	
140	90237-0152		2	GUIDE, 1001-U12	
160	90237-0156		1	LOCK BOLT, 1000-16	
170	90237-0155		1	LOCK ADAPTER, 1121-U40	
180	359705-0015		1	WARNING SIGN ISO, RISK OF ELECTRIC SHOCK	
190	90237-0169		2	LOCK ADAPTER, 1000-U49	
300	312115-0366		6	SCREW ISO4762 M6X12 A4 80	
310	315105-0153		2	WASHER BRB 6,4X12 RFR	
320	312605-0316		2	HEXAGON NUT, M6M M6 A280	
330	312115-0329		6	SCREW ISO4762 M5X16 A4 80	
360	90135-0035		2	EARTH WIRE, L=250 MM 16 MM2	
370	90062-0015		2	LOCK WASHER SERRAT.EXT.GEAR,6,4/11 H=0,7	
380	90194-0152		2	SIGN, EARTH	

Pos	Part No	UN	Qty	Description	Page No

Machine Type | Group Description | Used-In | Group Number | Page No

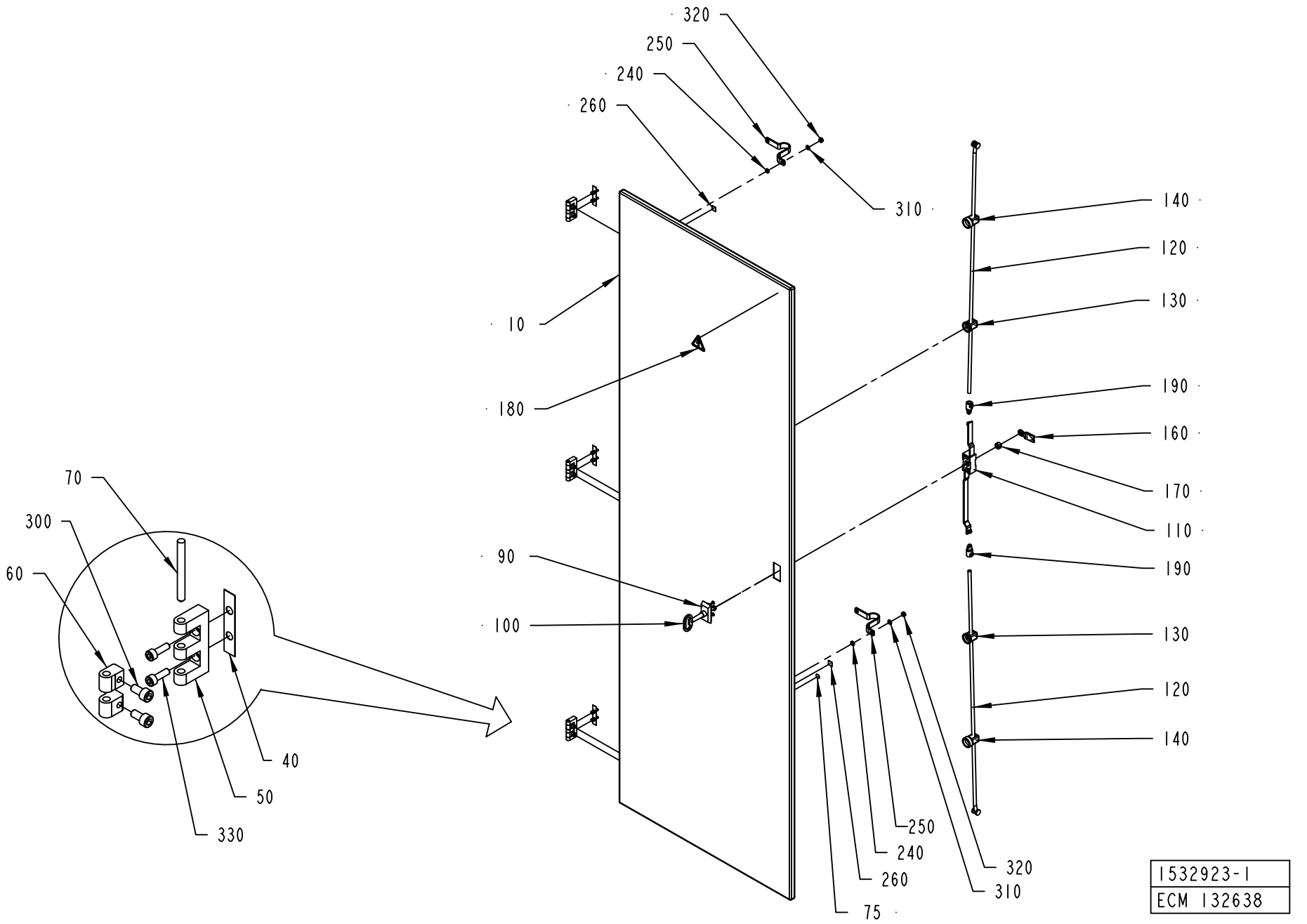
320
250
240
260
310
140
120
130
10
180
190
160
170
110
190
90
100
130
120
140
70
300
60
40
50
330
250
240
260
320
310
75
1532923-1
ECM 132638

ECM: 315260 - 20080215
Group number: 1532923-0100
Assembly Drawing: 1532923-1_1_AB

Pos	Part No	UN	Qty	Description	Page No
-					
010	1532924-0000		1	DOOR	
040	988666-0000		3	GASKET	
050	1035792-0000		3	E-HINGE	
060	1129770-0000		6	BLOCKING PIECE	
070	988685-0000		1	PIN	
075	2608177-0000		2	SIGN	
090	90237-0160		1	ESCUTCHEON WITH SQUARE, 1121-U23/U13	
100	90237-0324		1	KEY, 1104-02 FOR SQUARE 8 MM	
110	90237-0153		1	LOCK HOUSING, 1121-U26-0B	
120	90237-0168		2	ROUND BAR WITH END WHEEL, 1049-U5	
130	90237-0151		2	GUIDE, 1001-U11	
140	90237-0152		2	GUIDE, 1001-U12	
160	90237-0156		1	LOCK BOLT, 1000-16	
170	90237-0155		1	LOCK ADAPTER, 1121-U40	
180	359705-0015		1	WARNING SIGN ISO, RISK OF ELECTRIC SHOCK	
190	90237-0169		2	LOCK ADAPTER, 1000-U49	
240	90062-0015		2	LOCK WASHER SERRAT.EXT.GEAR,6,4/11 H=0,7	
250	90135-0035		2	EARTH WIRE, L=250 MM 16 MM2	
260	90194-0152		2	SIGN, EARTH	
300	312115-0366		6	SCREW ISO4762 M6X12 A4 80	
310	315105-0153		2	WASHER BRB 6,4X12 RFR	
320	312605-0316		2	HEXAGON NUT, M6M M6 A280	
330	312115-0329		6	SCREW ISO4762 M5X16 A4 80	

Pos	Part No	UN	Qty	Description	Page No

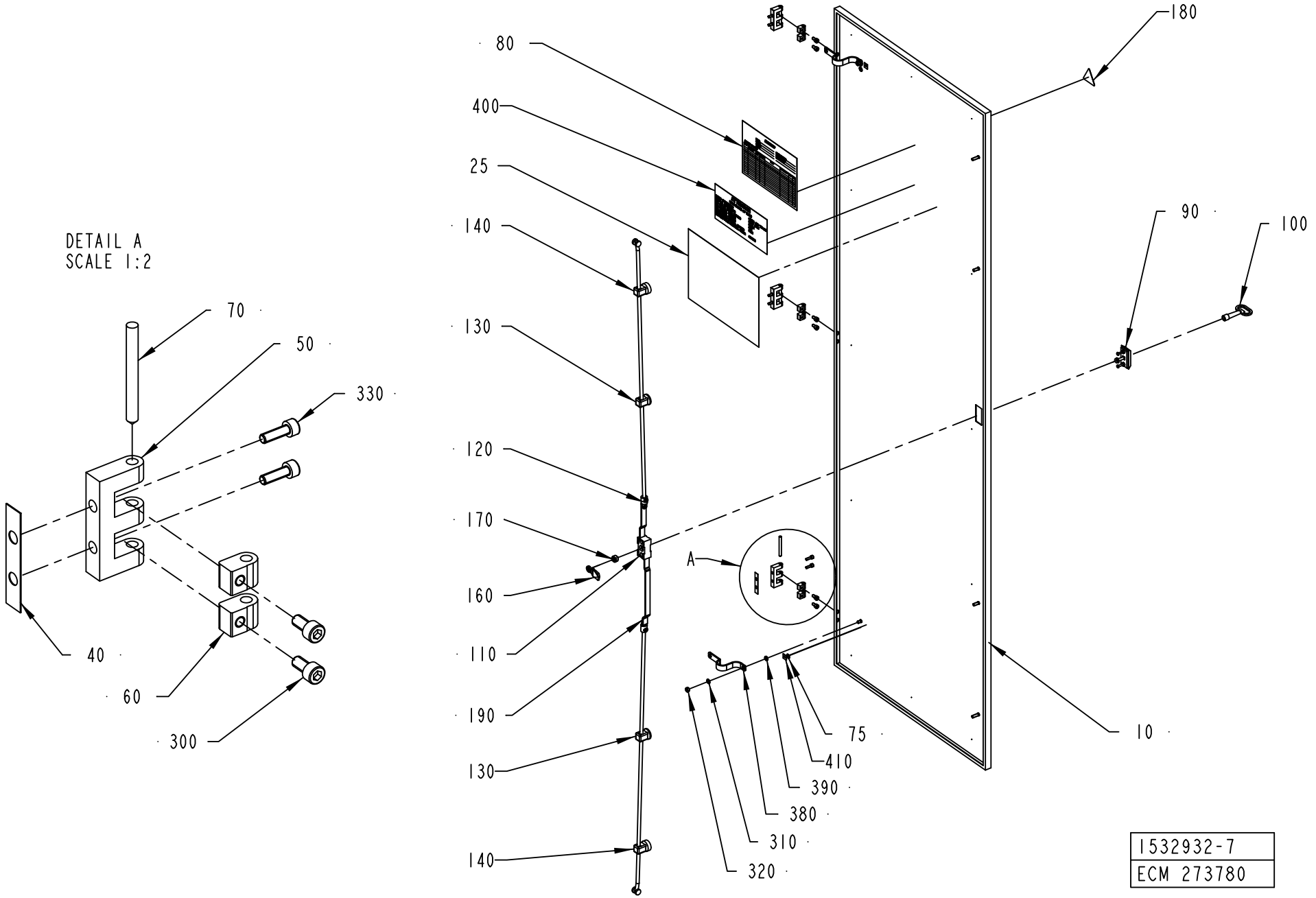
DETAIL A
SCALE 1:2
70
50
330
40
60
300
80
400
25
140
130
120
170
160
110
190
130
140
180
90
100
A
75
410
390
380
310
320
10
1532932-7
ECM 273780

ECM: 306636 - 20070701
Group number: 1532932-0250
Assembly Drawing: 1532932-7_1_AA

Pos	Part No	UN	Qty	Description	Page No
TBA/22					
025	2897671-0000		1	FUSE PANEL LABEL	
Common Parts					
010	1532933-0000		1	DOOR	
040	988666-0000		3	GASKET	
050	1035792-0000		3	E-HINGE	
060	1129770-0000		6	BLOCKING PIECE	
070	988685-0000		3	PIN	
075	2608177-0000		2	SIGN	
080	90194-0133		1	SIGN "DELIVERED DESIGN"	
090	90237-0160		1	ESCUTCHEON WITH SQUARE, 1121-U23/U13	
100	90237-0324		1	KEY, 1104-02 FOR SQUARE 8 MM	
110	90237-0153		1	LOCK HOUSING, 1121-U26-0B	
120	90237-0168		2	ROUND BAR WITH END WHEEL, 1049-U5	
130	90237-0151		2	GUIDE, 1001-U11	
140	90237-0152		2	GUIDE, 1001-U12	
160	90237-0156		1	LOCK BOLT, 1000-16	
170	90237-0155		1	LOCK ADAPTER, 1121-U40	
180	359705-0015		1	WARNING SIGN ISO, RISK OF ELECTRIC SHOCK	
190	90237-0169		2	LOCK ADAPTER, 1000-U49	
300	312115-0366		6	SCREW ISO4762 M6X12 A4 80	
310	315105-0153		2	WASHER BRB 6,4X12 RFR	
320	312605-0316		2	HEXAGON NUT, M6M M6 A280	
330	312115-0329		6	SCREW ISO4762 M5X16 A4 80	
380	90135-0035		2	EARTH WIRE, L=250 MM 16 MM2	
390	90062-0015		2	LOCK WASHER SERRAT.EXT.GEAR,6,4/11 H=0,7	
400	90194-0080		1	SIGN, IDENTIFICATION OF WIRING	
410	90194-0152		2	SIGN, EARTH	

Pos	Part No	UN	Qty	Description	Page No

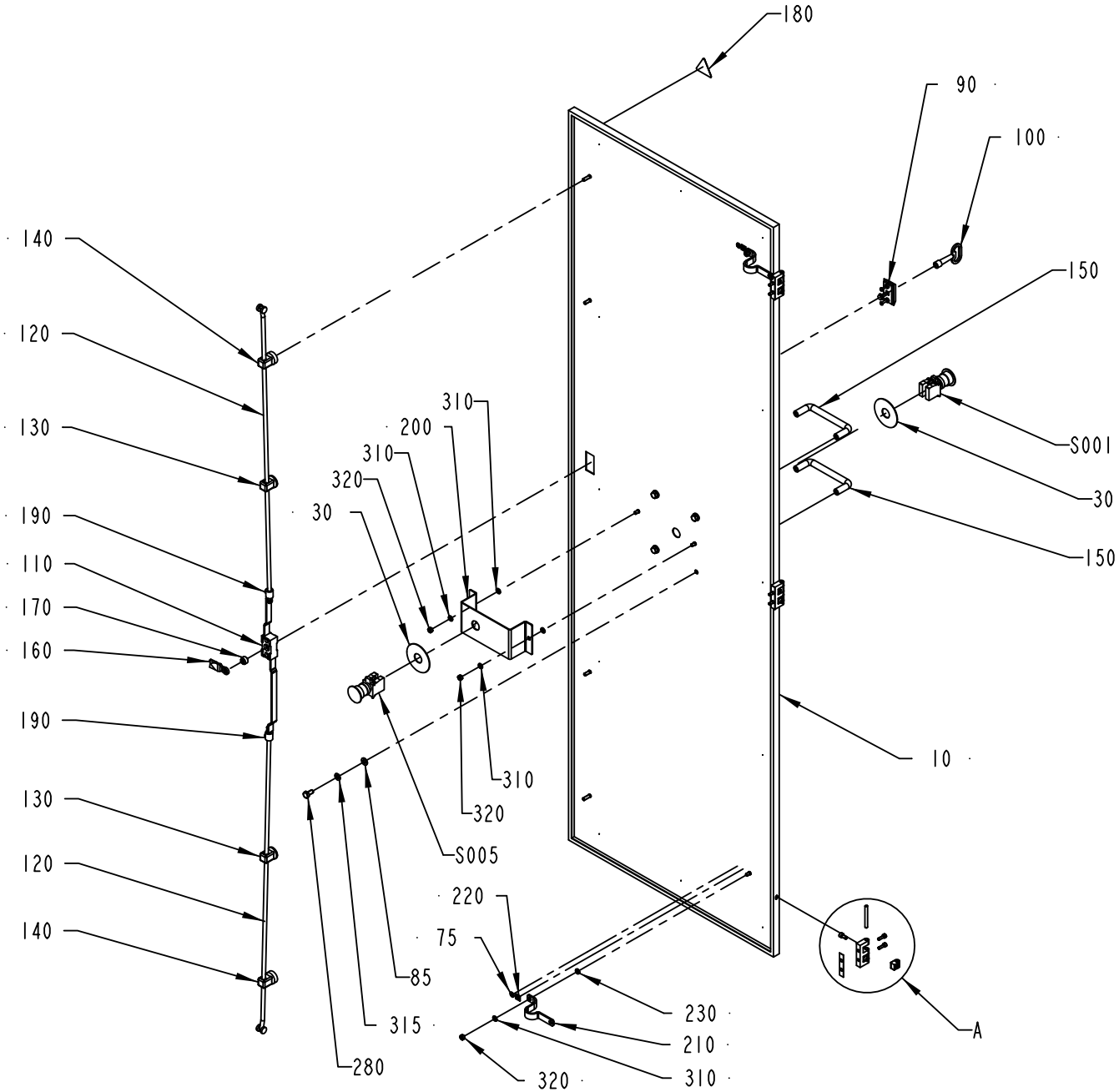

DETAIL A
SCALE 1:2

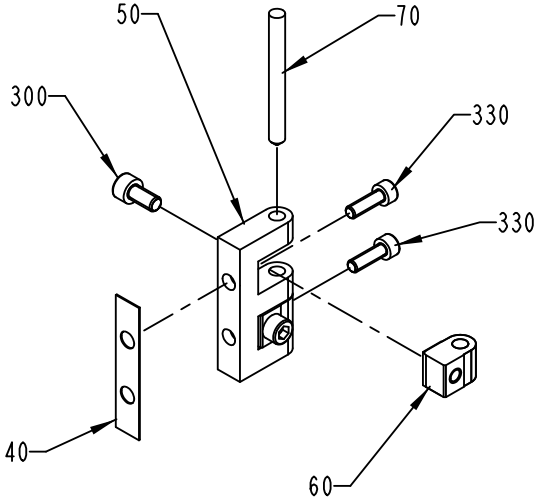

1532935-1
ECM 132638

ECM: 315261 - 20080215
Group number: 1532935-0100
Assembly Drawing: 1532935-1_1_AB

Pos	Part No	UN	Qty	Description	Page No
-					
010	1532936-0000		1	DOOR	
030	486826-0001		2	SIGN "EMERGENCY STOP"	
040	988666-0000		3	GASKET	
050	1035792-0000		3	E-HINGE	
060	1129770-0000		6	BLOCKING PIECE	
070	988685-0000		3	PIN	
075	2608177-0000		2	SIGN	
085	90005-0077		4	WASHER PL.RND.NYL.8,4/7, H=2	
090	90237-0160		1	ESCUTCHEON WITH SQUARE, 1121-U23/U13	
100	90237-0324		1	KEY, 1104-02 FOR SQUARE 8 MM	
110	90237-0153		1	LOCK HOUSING, 1121-U26-0B	
120	90237-0168		2	ROUND BAR WITH END WHEEL, 1049-U5	
130	90237-0151		2	GUIDE, 1001-U11	
140	90237-0152		2	GUIDE, 1001-U12	
150	90017-0016		2	HANDLE, NO. 14.4012.02.120	
160	90237-0156		1	LOCK BOLT, 1000-16	
170	90237-0155		1	LOCK ADAPTER, 1121-U40	
180	359705-0015		1	WARNING SIGN ISO, RISK OF ELECTRIC SHOCK	
190	90237-0169		2	LOCK ADAPTER, 1000-U49	
200	1038699-0000		1	BRACKET	
210	90135-0035		2	EARTH WIRE, L=250 MM 16 MM2	
220	90194-0152		2	SIGN, EARTH	
230	90062-0015		2	LOCK WASHER SERRAT.EXT.GEAR,6,4/11 H=0,7	
280	312105-0449		4	SCREW M6S ISO 4017 M8X16 A480	
300	312115-0366		6	SCREW ISO4762 M6X12 A4 80	
310	315105-0153		6	WASHER BRB 6,4X12 RFR	
315	315105-0165		4	WASHER BRB 8,4X16 RFR	
320	312605-0316		4	HEXAGON NUT, M6M M6 A280	
330	312115-0329		6	SCREW ISO4762 M5X16 A4 80	
S001	90458-1651		1	EMERGENCY STOP, ZB4-BS-844 ZB4-BZ-104	
S005	90458-1651		1	EMERGENCY STOP, ZB4-BS-844 ZB4-BZ-104	

Pos	Part No	UN	Qty	Description	Page No

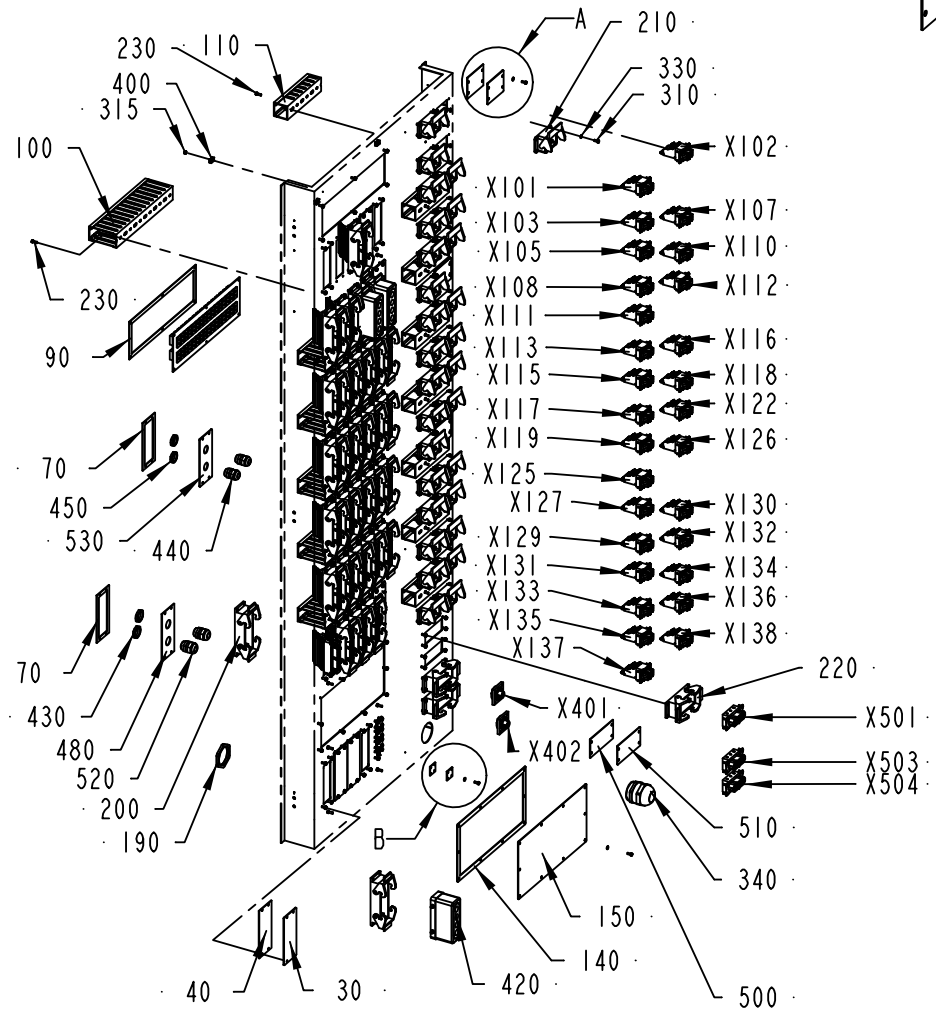

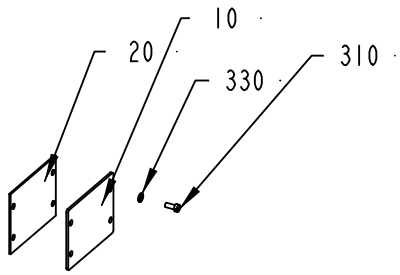

DETAIL A
SCALE 1:5

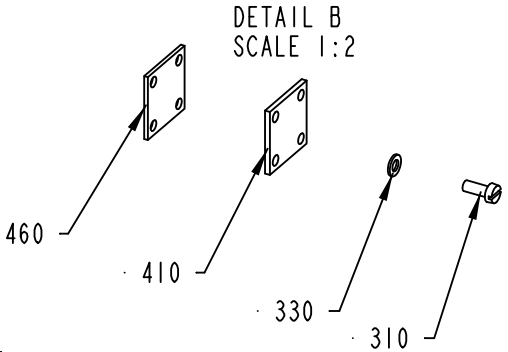

DETAIL B
SCALE 1:2

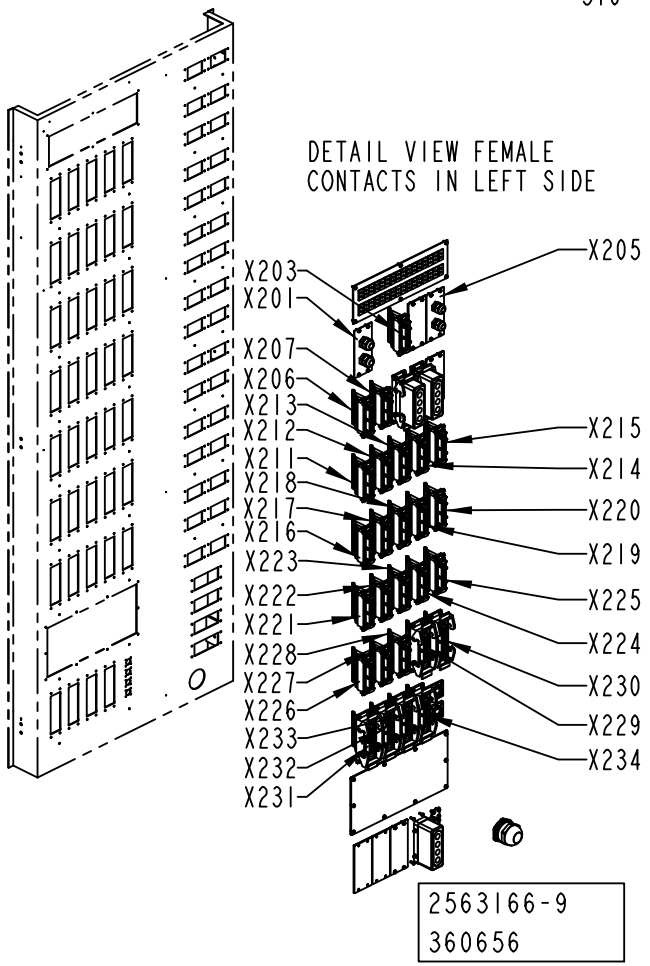

ECM: 360661 - 20081001
Group number: 2563166-0250
Assembly Drawing: 2563166-9_1_AC

This list covers pages from 7-22 to 7-31

Pos	Part No	UN	Qty	Description	Page No
TBA/22 HI NO PACKTRACE PRINT (See drawing on page: 7-24)					
010	1037572-0000		3	COVER PLATE	
020	1037573-0000		3	GASKET	
030	1037574-0000		4	COVER PLATE	
040	1037575-0000		4	GASKET	
060	1129549-0000		1	SHEET	
100	2551988-0000		6	CABLE DUCT	
140	2841498-0000		1	GASKET	
150	2889860-0000		1	COVER PLATE	
200	90459-6639		30	HOUSING 24B BULKHEAD, 09 30 024 0301	
210	90110-0123		29	HOUSING, 09 30 006 0301	
220	90459-6638		4	HOUSING 16B BULKHEAD, 09 30 016 0301	
300	312125-0222		8	SCREW ISO 1207 M3X8 A4	
310	312125-0289		328	SCREW ISO 1207 M4X10 A4	
330	315105-0136		330	WASHER BRB 4,3X8 RFR	
420	90110-0381		3	COVER, 310601-33 CYR24.4	
430	90099-0110		2	NUT, PR 22,5 (PG16)	
440	352103-0108		2	CABLE GLAND, ST 13,5 , PR20,4/PG13,5	
450	90099-0118		2	NUT, PR 20,4 (PG13,5)	
460	2889865-0000		4	GASKET	
480	2511667-0000		1	COVER PLATE	
520	352103-0111		2	CABLE GLAND, ST 16, PR22,5/PG16	
530	1038820-0000		1	COVER PLATE	
W120	90220-0183	MM	2900	SCR. CABLE 2X0,34MM2	
W121	90220-0183	MM	2950	SCR. CABLE 2X0,34MM2	
W122	90220-0183	MM	3800	SCR. CABLE 2X0,34MM2	
W123	90220-0183	MM	3200	SCR. CABLE 2X0,34MM2	
W124	90220-0183	MM	3200	SCR. CABLE 2X0,34MM2	
W125	90220-0183	MM	3300	SCR. CABLE 2X0,34MM2	
W1256	90220-0183	MM	3200	SCR. CABLE 2X0,34MM2	
W126	90220-0183	MM	3150	SCR. CABLE 2X0,34MM2	
W127	90220-0183	MM	3150	SCR. CABLE 2X0,34MM2	
W128	90220-0183	MM	2900	SCR. CABLE 2X0,34MM2	
W129	90220-0183	MM	3900	SCR. CABLE 2X0,34MM2	
W130	90220-0183	MM	2700	SCR. CABLE 2X0,34MM2	
W131	90220-0183	MM	3900	SCR. CABLE 2X0,34MM2	
W132	90220-0183	MM	3900	SCR. CABLE 2X0,34MM2	
W133	90220-0183	MM	3900	SCR. CABLE 2X0,34MM2	
W134	90220-0183	MM	3200	SCR. CABLE 2X0,34MM2	
W136	90220-0183	MM	3900	SCR. CABLE 2X0,34MM2	
W137	90220-0091	MM	1500	PAIR TWISTED CABLE 2X2X0,25MM2	
W138	90220-0183	MM	2500	SCR. CABLE 2X0,34MM2	
W190	90220-0183	MM	3500	SCR. CABLE 2X0,34MM2	
W191	90220-0183	MM	3300	SCR. CABLE 2X0,34MM2	
W192	90220-0183	MM	2300	SCR. CABLE 2X0,34MM2	
W201	90220-0104	MM	1050	SCR. CABLE 4X1,5MM2	
W202	90220-0104	MM	2100	SCR. CABLE 4X1,5MM2	
W203	90220-0104	MM	1200	SCR. CABLE 4X1,5MM2	
W204	90220-0104	MM	1050	SCR. CABLE 4X1,5MM2	
W205	90220-0104	MM	1500	SCR. CABLE 4X1,5MM2	
W424	90220-0107	MM	2700	SCR. CABLE 5X0,75MM2	
W425	90220-0107	MM	2900	SCR. CABLE 5X0,75MM2	
W440	90220-0107	MM	2500	SCR. CABLE 5X0,75MM2	
W441	90220-0107	MM	2500	SCR. CABLE 5X0,75MM2	
W549	90220-0084	MM	1500	MOTOR CABLE 4X2,5+2(2X0.75)+SHIELD	
W550	90220-0084	MM	2300	MOTOR CABLE 4X2,5+2(2X0.75)+SHIELD	
W551	90220-0084	MM	1500	MOTOR CABLE 4X2,5+2(2X0.75)+SHIELD	
W552	90220-0084	MM	2800	MOTOR CABLE 4X2,5+2(2X0.75)+SHIELD	
W553	90220-0116	MM	1700	MOTOR CABLE 4X1,0+2(2X0,5)+SHIELD	
X108	90459-6624		1	FEMALE INSERT HAN E AV, 09 33 006 4735	
X110	90459-6624		1	FEMALE INSERT HAN E AV, 09 33 006 4735	
X113	90459-6624		1	FEMALE INSERT HAN E AV, 09 33 006 4735	
X118	90459-6624		1	FEMALE INSERT HAN E AV, 09 33 006 4735	
X119	90459-6624		1	FEMALE INSERT HAN E AV, 09 33 006 4735	
X122	90459-6624		1	FEMALE INSERT HAN E AV, 09 33 006 4735	
X125	90459-6624		1	FEMALE INSERT HAN E AV, 09 33 006 4735	
X129	90459-6624		1	FEMALE INSERT HAN E AV, 09 33 006 4735	
X131	90459-6624		1	FEMALE INSERT HAN E AV, 09 33 006 4735	
X135	90459-6624		1	FEMALE INSERT HAN E AV, 09 33 006 4735	
X138	90459-6624		1	FEMALE INSERT HAN E AV, 09 33 006 4735	
X210	90459-6627		1	FEMALE INSERT HAN E AV, 09 33 024 4735	
X229	90459-6627		1	FEMALE INSERT HAN E AV, 09 33 024 4735	
X230	90459-6627		1	FEMALE INSERT HAN E AV, 09 33 024 4735	
X231	90459-6627		1	FEMALE INSERT HAN E AV, 09 33 024 4735	
X232	90459-6627		1	FEMALE INSERT HAN E AV, 09 33 024 4735	
X233	90459-6627		1	FEMALE INSERT HAN E AV, 09 33 024 4735	
X234	90459-6627		1	FEMALE INSERT HAN E AV, 09 33 024 4735	
X501	90110-0055		1	FEMALE INSERT HAN 6 HSB 09 31 006 2701	
X502	90110-0055		1	FEMALE INSERT HAN 6 HSB 09 31 006 2701	
TBA/22 HI PACKTRACE DOM (See drawing on page: 7-26)					
010	1037572-0000		3	COVER PLATE	
020	1037573-0000		3	GASKET	
030	1037574-0000		3	COVER PLATE	
040	1037575-0000		3	GASKET	

Machine Type | Group Description | Used-In | Group Number | Page No

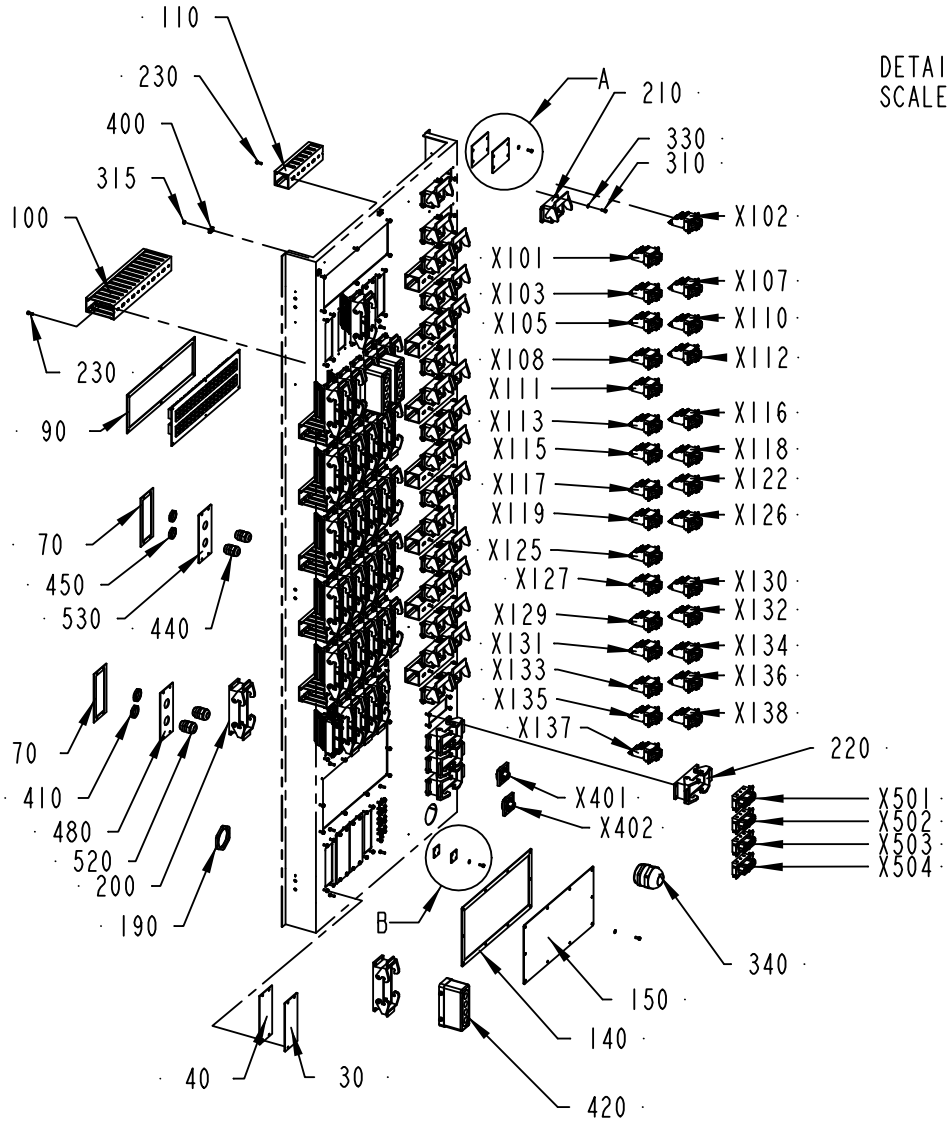

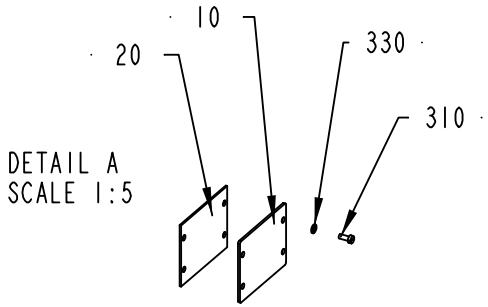

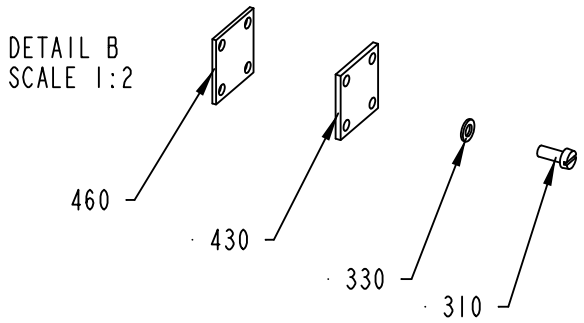

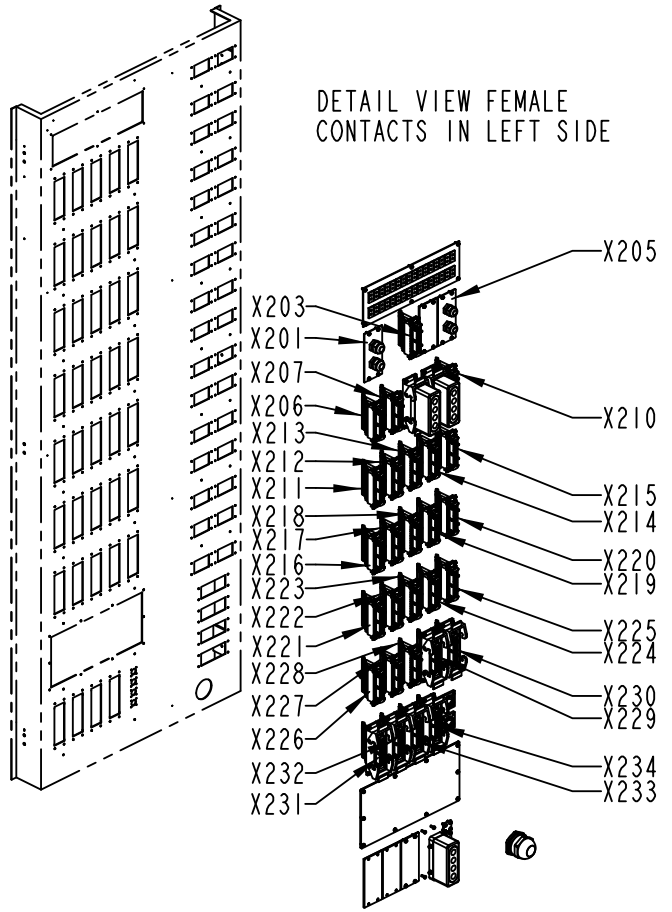

2563166-10
360656

ECM: 360661 - 20081001
Group number: 2563166-0250
Assembly Drawing: 2563166-10_1_AB

This list covers pages from 7-22 to 7-31

Pos	Part No	UN	Qty	Description	Page No
TBA/22 HI PACKTRACE DOM (Cont'd) (See drawing on page: 7-26)					
060	1129549-0000		1	SHEET	
100	2551988-0000		6	CABLE DUCT	
140	2841498-0000		1	GASKET	
150	2889860-0000		1	COVER PLATE	
200	90459-6639		31	HOUSING 24B BULKHEAD, 09 30 024 0301	
210	90110-0123		29	HOUSING, 09 30 006 0301	
220	90459-6638		4	HOUSING 16B BULKHEAD, 09 30 016 0301	
300	312125-0222		8	SCREW ISO 1207 M3X8 A4	
310	312125-0289		328	SCREW ISO 1207 M4X10 A4	
330	315105-0136		330	WASHER BRB 4,3X8 RFR	
420	90110-0381		4	COVER, 310601-33 CYR24.4	
430	90099-0110		2	NUT, PR 22,5 (PG16)	
440	352103-0108		2	CABLE GLAND, ST 13,5 , PR20,4/PG13,5	
450	90099-0118		2	NUT, PR 20,4 (PG13,5)	
460	2889865-0000		4	GASKET	
480	2511667-0000		1	COVER PLATE	
520	352103-0111		2	CABLE GLAND, ST 16, PR22,5/PG16	
530	1038820-0000		1	COVER PLATE	
W120	90220-0183	MM	2900	SCR. CABLE 2X0,34MM2	
W121	90220-0183	MM	2950	SCR. CABLE 2X0,34MM2	
W122	90220-0183	MM	3800	SCR. CABLE 2X0,34MM2	
W123	90220-0183	MM	3200	SCR. CABLE 2X0,34MM2	
W124	90220-0183	MM	3200	SCR. CABLE 2X0,34MM2	
W125	90220-0183	MM	3300	SCR. CABLE 2X0,34MM2	
W1256	90220-0183	MM	3200	SCR. CABLE 2X0,34MM2	
W126	90220-0183	MM	3150	SCR. CABLE 2X0,34MM2	
W127	90220-0183	MM	3150	SCR. CABLE 2X0,34MM2	
W128	90220-0183	MM	2900	SCR. CABLE 2X0,34MM2	
W129	90220-0183	MM	3900	SCR. CABLE 2X0,34MM2	
W130	90220-0183	MM	2700	SCR. CABLE 2X0,34MM2	
W131	90220-0183	MM	3900	SCR. CABLE 2X0,34MM2	
W132	90220-0183	MM	3900	SCR. CABLE 2X0,34MM2	
W133	90220-0183	MM	3900	SCR. CABLE 2X0,34MM2	
W134	90220-0183	MM	3200	SCR. CABLE 2X0,34MM2	
W136	90220-0183	MM	3900	SCR. CABLE 2X0,34MM2	
W137	90220-0091	MM	1500	PAIR TWISTED CABLE 2X2X0,25MM2	
W138	90220-0183	MM	2500	SCR. CABLE 2X0,34MM2	
W190	90220-0183	MM	3500	SCR. CABLE 2X0,34MM2	
W191	90220-0183	MM	3300	SCR. CABLE 2X0,34MM2	
W192	90220-0183	MM	2300	SCR. CABLE 2X0,34MM2	
W201	90220-0104	MM	1050	SCR. CABLE 4X1,5MM2	
W202	90220-0104	MM	2100	SCR. CABLE 4X1,5MM2	
W203	90220-0104	MM	1200	SCR. CABLE 4X1,5MM2	
W204	90220-0104	MM	1050	SCR. CABLE 4X1,5MM2	
W205	90220-0104	MM	1500	SCR. CABLE 4X1,5MM2	
W424	90220-0107	MM	2700	SCR. CABLE 5X0,75MM2	
W425	90220-0107	MM	2900	SCR. CABLE 5X0,75MM2	
W440	90220-0107	MM	2500	SCR. CABLE 5X0,75MM2	
W441	90220-0107	MM	2500	SCR. CABLE 5X0,75MM2	
W549	90220-0084	MM	1500	MOTOR CABLE 4X2,5+2(2X0.75)+SHIELD	
W550	90220-0084	MM	2300	MOTOR CABLE 4X2,5+2(2X0.75)+SHIELD	
W551	90220-0084	MM	1500	MOTOR CABLE 4X2,5+2(2X0.75)+SHIELD	
W552	90220-0084	MM	2800	MOTOR CABLE 4X2,5+2(2X0.75)+SHIELD	
W553	90220-0116	MM	1700	MOTOR CABLE 4X1,0+2(2X0,5)+SHIELD	
X108	90459-6624		1	FEMALE INSERT HAN E AV, 09 33 006 4735	
X110	90459-6624		1	FEMALE INSERT HAN E AV, 09 33 006 4735	
X113	90459-6624		1	FEMALE INSERT HAN E AV, 09 33 006 4735	
X118	90459-6624		1	FEMALE INSERT HAN E AV, 09 33 006 4735	
X119	90459-6624		1	FEMALE INSERT HAN E AV, 09 33 006 4735	
X122	90459-6624		1	FEMALE INSERT HAN E AV, 09 33 006 4735	
X125	90459-6624		1	FEMALE INSERT HAN E AV, 09 33 006 4735	
X129	90459-6624		1	FEMALE INSERT HAN E AV, 09 33 006 4735	
X131	90459-6624		1	FEMALE INSERT HAN E AV, 09 33 006 4735	
X135	90459-6624		1	FEMALE INSERT HAN E AV, 09 33 006 4735	
X138	90459-6624		1	FEMALE INSERT HAN E AV, 09 33 006 4735	
X210	90459-6627		1	FEMALE INSERT HAN E AV, 09 33 024 4735	
X229	90459-6627		1	FEMALE INSERT HAN E AV, 09 33 024 4735	
X230	90459-6627		1	FEMALE INSERT HAN E AV, 09 33 024 4735	
X231	90459-6627		1	FEMALE INSERT HAN E AV, 09 33 024 4735	
X232	90459-6627		1	FEMALE INSERT HAN E AV, 09 33 024 4735	
X233	90459-6627		1	FEMALE INSERT HAN E AV, 09 33 024 4735	
X234	90459-6627		1	FEMALE INSERT HAN E AV, 09 33 024 4735	
X501	90110-0055		1	FEMALE INSERT HAN 6 HSB 09 31 006 2701	
X502	90110-0055		1	FEMALE INSERT HAN 6 HSB 09 31 006 2701	
TBA/22 NOHI NO PACKTRACE PRINT (See drawing on page: 7-22)					
010	1037572-0000		3	COVER PLATE	
020	1037573-0000		3	GASKET	
030	1037574-0000		5	COVER PLATE	
040	1037575-0000		5	GASKET	
060	1129549-0000		1	SHEET	
100	2551988-0000		6	CABLE DUCT	
140	2841498-0000		1	GASKET	
150	2889860-0000		1	COVER PLATE	

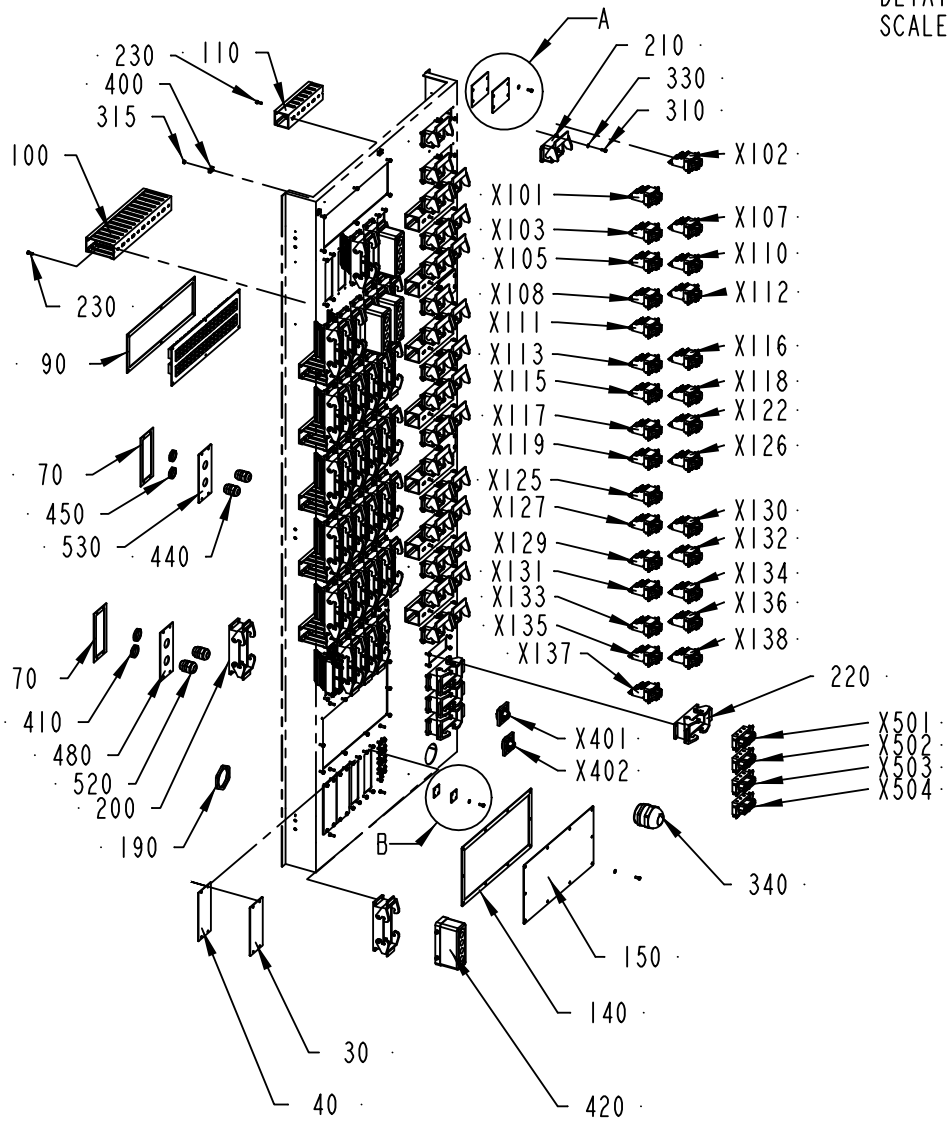

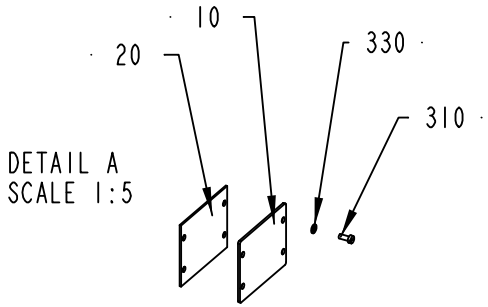

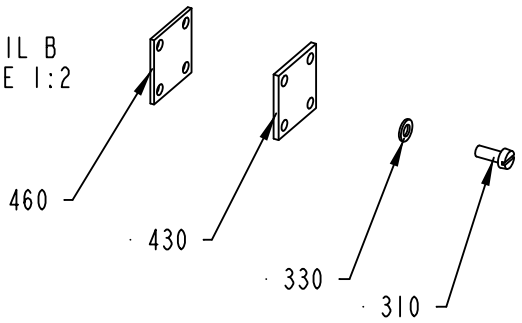

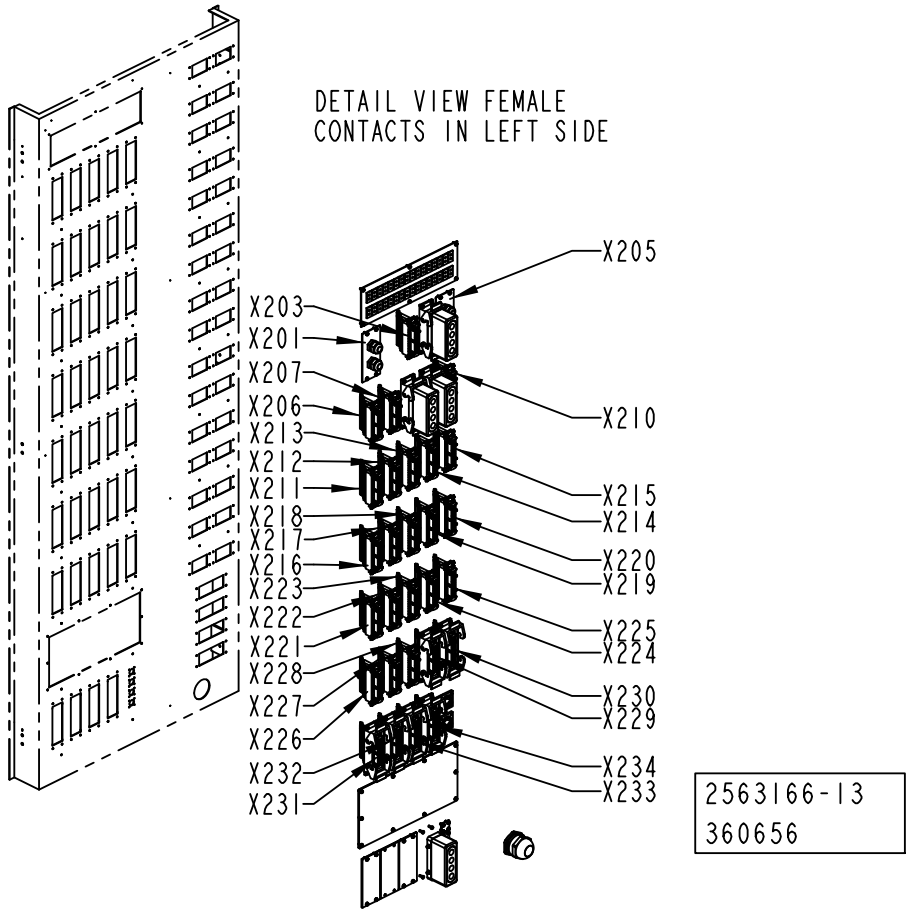

2563166-13
360656

ECM: 360661 - 20081001
Group number: 2563166-0250
Assembly Drawing: 2563166-13_1_AA

This list covers pages from 7-22 to 7-31

Pos	Part No	UN	Qty	Description	Page No
TBA/22 NOHI NO PACKTRACE PRINT (Cont'd) (See drawing on page: 7-22)					
200	90459-6639		31	HOUSING 24B BULKHEAD, 09 30 024 0301	
210	90110-0123		29	HOUSING, 09 30 006 0301	
220	90459-6638		3	HOUSING 16B BULKHEAD, 09 30 016 0301	
300	312125-0222		8	SCREW ISO 1207 M3X8 A4	
310	312125-0289		328	SCREW ISO 1207 M4X10 A4	
330	315105-0136		330	WASHER BRB 4,3X8 RFR	
420	90110-0381		3	COVER, 310601-33 CYR24.4	
430	90099-0110		2	NUT, PR 22,5 (PG16)	
440	352103-0108		2	CABLE GLAND, ST 13,5 , PR20,4/PG13,5	
450	90099-0118		2	NUT, PR 20,4 (PG13,5)	
460	2889865-0000		4	GASKET	
480	2511667-0000		1	COVER PLATE	
500	1129478-0000		1	GASKET	
510	1129481-0000		1	COVERING PLATE	
520	352103-0111		2	CABLE GLAND, ST 16, PR22,5/PG16	
530	1038820-0000		1	COVER PLATE	
W120	90220-0183	MM	2900	SCR. CABLE 2X0,34MM2	
W121	90220-0183	MM	2950	SCR. CABLE 2X0,34MM2	
W122	90220-0183	MM	3800	SCR. CABLE 2X0,34MM2	
W123	90220-0183	MM	3200	SCR. CABLE 2X0,34MM2	
W124	90220-0183	MM	3200	SCR. CABLE 2X0,34MM2	
W125	90220-0183	MM	3300	SCR. CABLE 2X0,34MM2	
W1256	90220-0183	MM	3200	SCR. CABLE 2X0,34MM2	
W126	90220-0183	MM	3150	SCR. CABLE 2X0,34MM2	
W127	90220-0183	MM	3150	SCR. CABLE 2X0,34MM2	
W128	90220-0183	MM	2900	SCR. CABLE 2X0,34MM2	
W129	90220-0183	MM	3900	SCR. CABLE 2X0,34MM2	
W130	90220-0183	MM	2700	SCR. CABLE 2X0,34MM2	
W131	90220-0183	MM	3900	SCR. CABLE 2X0,34MM2	
W132	90220-0183	MM	3900	SCR. CABLE 2X0,34MM2	
W133	90220-0183	MM	3900	SCR. CABLE 2X0,34MM2	
W134	90220-0183	MM	3200	SCR. CABLE 2X0,34MM2	
W136	90220-0183	MM	3900	SCR. CABLE 2X0,34MM2	
W137	90220-0091	MM	1500	PAIR TWISTED CABLE 2X2X0,25MM2	
W138	90220-0183	MM	2500	SCR. CABLE 2X0,34MM2	
W190	90220-0183	MM	3500	SCR. CABLE 2X0,34MM2	
W191	90220-0183	MM	3300	SCR. CABLE 2X0,34MM2	
W192	90220-0183	MM	2300	SCR. CABLE 2X0,34MM2	
W201	90220-0104	MM	1050	SCR. CABLE 4X1,5MM2	
W202	90220-0104	MM	2100	SCR. CABLE 4X1,5MM2	
W203	90220-0104	MM	1200	SCR. CABLE 4X1,5MM2	
W204	90220-0104	MM	1050	SCR. CABLE 4X1,5MM2	
W205	90220-0104	MM	1500	SCR. CABLE 4X1,5MM2	
W424	90220-0107	MM	2700	SCR. CABLE 5X0,75MM2	
W425	90220-0107	MM	2900	SCR. CABLE 5X0,75MM2	
W440	90220-0107	MM	2500	SCR. CABLE 5X0,75MM2	
W441	90220-0107	MM	2500	SCR. CABLE 5X0,75MM2	
W549	90220-0084	MM	1500	MOTOR CABLE 4X2,5+2(2X0.75)+SHIELD	
W550	90220-0084	MM	2300	MOTOR CABLE 4X2,5+2(2X0.75)+SHIELD	
W551	90220-0084	MM	1500	MOTOR CABLE 4X2,5+2(2X0.75)+SHIELD	
W552	90220-0084	MM	2800	MOTOR CABLE 4X2,5+2(2X0.75)+SHIELD	
W553	90220-0116	MM	1700	MOTOR CABLE 4X1,0+2(2X0,5)+SHIELD	
X108	90459-6624		1	FEMALE INSERT HAN E AV, 09 33 006 4735	
X110	90459-6624		1	FEMALE INSERT HAN E AV, 09 33 006 4735	
X113	90459-6624		1	FEMALE INSERT HAN E AV, 09 33 006 4735	
X118	90459-6624		1	FEMALE INSERT HAN E AV, 09 33 006 4735	
X119	90459-6624		1	FEMALE INSERT HAN E AV, 09 33 006 4735	
X122	90459-6624		1	FEMALE INSERT HAN E AV, 09 33 006 4735	
X125	90459-6624		1	FEMALE INSERT HAN E AV, 09 33 006 4735	
X129	90459-6624		1	FEMALE INSERT HAN E AV, 09 33 006 4735	
X131	90459-6624		1	FEMALE INSERT HAN E AV, 09 33 006 4735	
X135	90459-6624		1	FEMALE INSERT HAN E AV, 09 33 006 4735	
X138	90459-6624		1	FEMALE INSERT HAN E AV, 09 33 006 4735	
X229	90459-6627		1	FEMALE INSERT HAN E AV, 09 33 024 4735	
X230	90459-6627		1	FEMALE INSERT HAN E AV, 09 33 024 4735	
X231	90459-6627		1	FEMALE INSERT HAN E AV, 09 33 024 4735	
X232	90459-6627		1	FEMALE INSERT HAN E AV, 09 33 024 4735	
X233	90459-6627		1	FEMALE INSERT HAN E AV, 09 33 024 4735	
X234	90459-6627		1	FEMALE INSERT HAN E AV, 09 33 024 4735	
X501	90110-0055		1	FEMALE INSERT HAN 6 HSB 09 31 006 2701	
TBA/22 NOHI PACKTRACE DOM (See drawing on page: 7-28)					
010	1037572-0000		3	COVER PLATE	
020	1037573-0000		3	GASKET	
030	1037574-0000		4	COVER PLATE	
040	1037575-0000		4	GASKET	
060	1129549-0000		1	SHEET	
100	2551988-0000		6	CABLE DUCT	
140	2841498-0000		1	GASKET	
150	2889860-0000		1	COVER PLATE	
200	90459-6639		32	HOUSING 24B BULKHEAD, 09 30 024 0301	
210	90110-0123		29	HOUSING, 09 30 006 0301	
220	90459-6638		3	HOUSING 16B BULKHEAD, 09 30 016 0301	
300	312125-0222		8	SCREW ISO 1207 M3X8 A4	

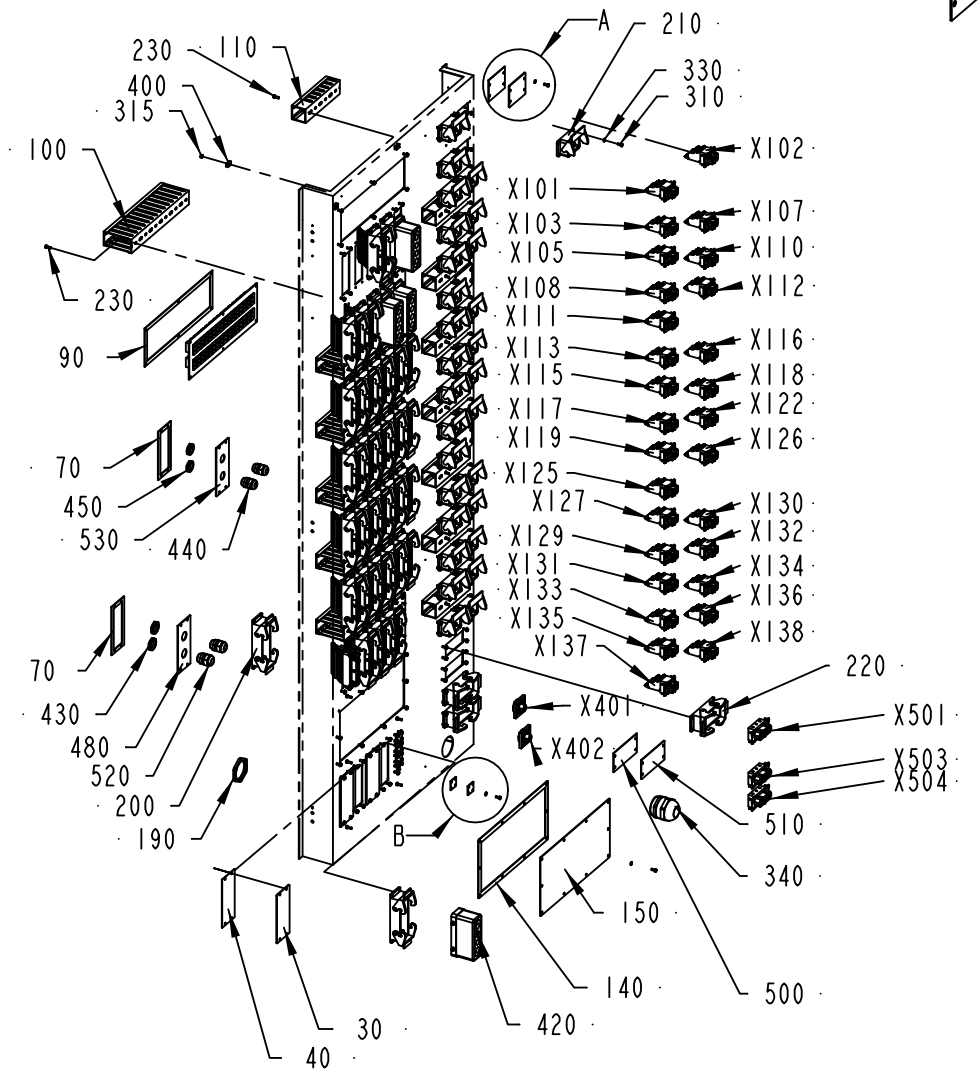

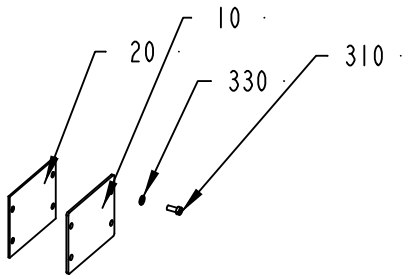

DETAIL A
SCALE 1:5

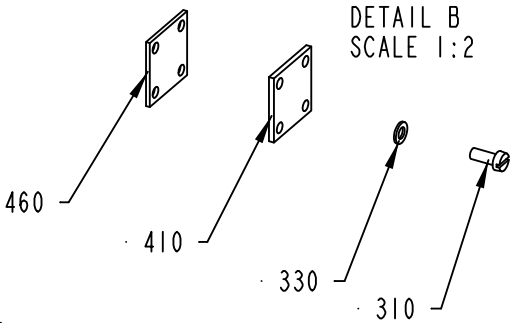

DETAIL B
SCALE 1:2

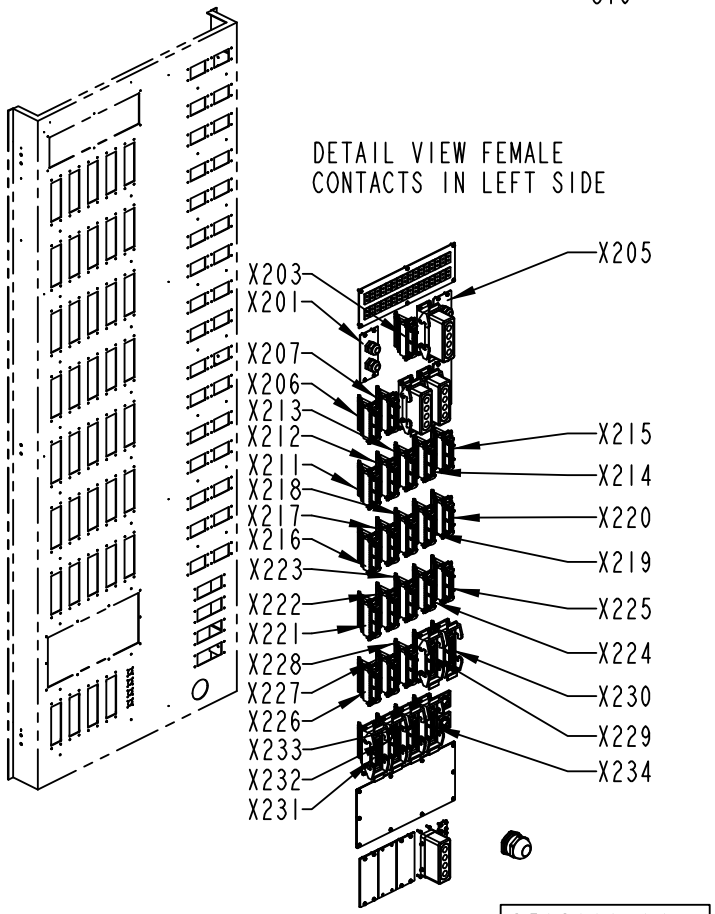

2563166-14
360656

ECM: 360661 - 20081001
Group number: 2563166-0250
Assembly Drawing: 2563166-14_1_AA

This list covers pages from 7-22 to 7-31

Pos	Part No	UN	Qty	Description	Page No
TBA/22 NOHI PACKTRACE DOM (Cont'd) (See drawing on page: 7-28)					
310	312125-0289		328	SCREW ISO 1207 M4X10 A4	
330	315105-0136		330	WASHER BRB 4,3X8 RFR	
420	90110-0381		4	COVER, 310601-33 CYR24.4	
430	90099-0110		2	NUT, PR 22,5 (PG16)	
440	352103-0108		2	CABLE GLAND, ST 13,5 , PR20,4/PG13,5	
450	90099-0118		2	NUT, PR 20,4 (PG13,5)	
460	2889865-0000		4	GASKET	
480	2511667-0000		1	COVER PLATE	
500	1129478-0000		1	GASKET	
510	1129481-0000		1	COVERING PLATE	
520	352103-0111		2	CABLE GLAND, ST 16, PR22,5/PG16	
530	1038820-0000		1	COVER PLATE	
W120	90220-0183	MM	2900	SCR. CABLE 2X0,34MM2	
W121	90220-0183	MM	2950	SCR. CABLE 2X0,34MM2	
W122	90220-0183	MM	3800	SCR. CABLE 2X0,34MM2	
W123	90220-0183	MM	3200	SCR. CABLE 2X0,34MM2	
W124	90220-0183	MM	3200	SCR. CABLE 2X0,34MM2	
W125	90220-0183	MM	3300	SCR. CABLE 2X0,34MM2	
W1256	90220-0183	MM	3200	SCR. CABLE 2X0,34MM2	
W126	90220-0183	MM	3150	SCR. CABLE 2X0,34MM2	
W127	90220-0183	MM	3150	SCR. CABLE 2X0,34MM2	
W128	90220-0183	MM	2900	SCR. CABLE 2X0,34MM2	
W129	90220-0183	MM	3900	SCR. CABLE 2X0,34MM2	
W130	90220-0183	MM	2700	SCR. CABLE 2X0,34MM2	
W131	90220-0183	MM	3900	SCR. CABLE 2X0,34MM2	
W132	90220-0183	MM	3900	SCR. CABLE 2X0,34MM2	
W133	90220-0183	MM	3900	SCR. CABLE 2X0,34MM2	
W134	90220-0183	MM	3200	SCR. CABLE 2X0,34MM2	
W136	90220-0183	MM	3900	SCR. CABLE 2X0,34MM2	
W137	90220-0091	MM	1500	PAIR TWISTED CABLE 2X2X0,25MM2	
W138	90220-0183	MM	2500	SCR. CABLE 2X0,34MM2	
W190	90220-0183	MM	3500	SCR. CABLE 2X0,34MM2	
W191	90220-0183	MM	3300	SCR. CABLE 2X0,34MM2	
W192	90220-0183	MM	2300	SCR. CABLE 2X0,34MM2	
W201	90220-0104	MM	1050	SCR. CABLE 4X1,5MM2	
W202	90220-0104	MM	2100	SCR. CABLE 4X1,5MM2	
W203	90220-0104	MM	1200	SCR. CABLE 4X1,5MM2	
W204	90220-0104	MM	1050	SCR. CABLE 4X1,5MM2	
W205	90220-0104	MM	1500	SCR. CABLE 4X1,5MM2	
W424	90220-0107	MM	2700	SCR. CABLE 5X0,75MM2	
W425	90220-0107	MM	2900	SCR. CABLE 5X0,75MM2	
W440	90220-0107	MM	2500	SCR. CABLE 5X0,75MM2	
W441	90220-0107	MM	2500	SCR. CABLE 5X0,75MM2	
W549	90220-0084	MM	1500	MOTOR CABLE 4X2,5+2(2X0.75)+SHIELD	
W550	90220-0084	MM	2300	MOTOR CABLE 4X2,5+2(2X0.75)+SHIELD	
W551	90220-0084	MM	1500	MOTOR CABLE 4X2,5+2(2X0.75)+SHIELD	
W552	90220-0084	MM	2800	MOTOR CABLE 4X2,5+2(2X0.75)+SHIELD	
W553	90220-0116	MM	1700	MOTOR CABLE 4X1,0+2(2X0,5)+SHIELD	
X108	90459-6624		1	FEMALE INSERT HAN E AV, 09 33 006 4735	
X110	90459-6624		1	FEMALE INSERT HAN E AV, 09 33 006 4735	
X113	90459-6624		1	FEMALE INSERT HAN E AV, 09 33 006 4735	
X118	90459-6624		1	FEMALE INSERT HAN E AV, 09 33 006 4735	
X119	90459-6624		1	FEMALE INSERT HAN E AV, 09 33 006 4735	
X122	90459-6624		1	FEMALE INSERT HAN E AV, 09 33 006 4735	
X125	90459-6624		1	FEMALE INSERT HAN E AV, 09 33 006 4735	
X129	90459-6624		1	FEMALE INSERT HAN E AV, 09 33 006 4735	
X131	90459-6624		1	FEMALE INSERT HAN E AV, 09 33 006 4735	
X135	90459-6624		1	FEMALE INSERT HAN E AV, 09 33 006 4735	
X138	90459-6624		1	FEMALE INSERT HAN E AV, 09 33 006 4735	
X229	90459-6627		1	FEMALE INSERT HAN E AV, 09 33 024 4735	
X230	90459-6627		1	FEMALE INSERT HAN E AV, 09 33 024 4735	
X231	90459-6627		1	FEMALE INSERT HAN E AV, 09 33 024 4735	
X232	90459-6627		1	FEMALE INSERT HAN E AV, 09 33 024 4735	
X233	90459-6627		1	FEMALE INSERT HAN E AV, 09 33 024 4735	
X234	90459-6627		1	FEMALE INSERT HAN E AV, 09 33 024 4735	
X501	90110-0055		1	FEMALE INSERT HAN 6 HSB 09 31 006 2701	
Common Parts					
070	1129550-0000		3	GASKET	
090	2539532-0000		1	GASKET	
110	2551989-0000		8	CABLE DUCT	
190	353250-0050		1	GLAND, LOCK NUT M50X1,5	
230	90287-0124		34	SCREW PAN HEAD MSCS M4X12 NYLON	
315	312605-0312		4	HEXAGON NUT, M6M M4 A280	
340	90458-0311		1	CABLE GLAND, M50X1,5, NO.5311 1060	
400	352113-0205		4	ANCHOR PLATES FOR STRIPS, TYPE TM2S8-C10	
X101	90459-6624		1	FEMALE INSERT HAN E AV, 09 33 006 4735	
X102	90459-6624		1	FEMALE INSERT HAN E AV, 09 33 006 4735	
X103	90459-6624		1	FEMALE INSERT HAN E AV, 09 33 006 4735	
X107	90459-6624		1	FEMALE INSERT HAN E AV, 09 33 006 4735	
X111	90459-6624		1	FEMALE INSERT HAN E AV, 09 33 006 4735	
X112	90459-6624		1	FEMALE INSERT HAN E AV, 09 33 006 4735	
X115	90459-6624		1	FEMALE INSERT HAN E AV, 09 33 006 4735	
X116	90459-6624		1	FEMALE INSERT HAN E AV, 09 33 006 4735	

Machine Type | Group Description | Used-In | Group Number | Page No

See previous drawings pages: 7-22, 7-24, 7-26, 7-28.

Pos	Part No	UN	Qty	Description	Page No
Common Parts (Cont'd)					
X117	90459-6624		1	FEMALE INSERT HAN E AV, 09 33 006 4735	
X126	90459-6624		1	FEMALE INSERT HAN E AV, 09 33 006 4735	
X127	90459-6624		1	FEMALE INSERT HAN E AV, 09 33 006 4735	
X130	90459-6624		1	FEMALE INSERT HAN E AV, 09 33 006 4735	
X132	90459-6624		1	FEMALE INSERT HAN E AV, 09 33 006 4735	
X133	90459-6624		1	FEMALE INSERT HAN E AV, 09 33 006 4735	
X134	90459-6624		1	FEMALE INSERT HAN E AV, 09 33 006 4735	
X136	90459-6624		1	FEMALE INSERT HAN E AV, 09 33 006 4735	
X137	90459-6624		1	FEMALE INSERT HAN E AV, 09 33 006 4735	
X203	90459-6627		1	FEMALE INSERT HAN E AV, 09 33 024 4735	
X206	90459-6627		1	FEMALE INSERT HAN E AV, 09 33 024 4735	
X207	90459-6627		1	FEMALE INSERT HAN E AV, 09 33 024 4735	
X211	90459-6627		1	FEMALE INSERT HAN E AV, 09 33 024 4735	
X212	90459-6627		1	FEMALE INSERT HAN E AV, 09 33 024 4735	
X213	90459-6627		1	FEMALE INSERT HAN E AV, 09 33 024 4735	
X214	90459-6627		1	FEMALE INSERT HAN E AV, 09 33 024 4735	
X215	90459-6627		1	FEMALE INSERT HAN E AV, 09 33 024 4735	
X216	90459-6627		1	FEMALE INSERT HAN E AV, 09 33 024 4735	
X217	90459-6627		1	FEMALE INSERT HAN E AV, 09 33 024 4735	
X218	90459-6627		1	FEMALE INSERT HAN E AV, 09 33 024 4735	
X219	90459-6627		1	FEMALE INSERT HAN E AV, 09 33 024 4735	
X220	90459-6627		1	FEMALE INSERT HAN E AV, 09 33 024 4735	
X221	90459-6627		1	FEMALE INSERT HAN E AV, 09 33 024 4735	
X222	90459-6627		1	FEMALE INSERT HAN E AV, 09 33 024 4735	
X223	90459-6627		1	FEMALE INSERT HAN E AV, 09 33 024 4735	
X224	90459-6627		1	FEMALE INSERT HAN E AV, 09 33 024 4735	
X225	90459-6627		1	FEMALE INSERT HAN E AV, 09 33 024 4735	
X226	90459-6627		1	FEMALE INSERT HAN E AV, 09 33 024 4735	
X227	90459-6627		1	FEMALE INSERT HAN E AV, 09 33 024 4735	
X228	90459-6627		1	FEMALE INSERT HAN E AV, 09 33 024 4735	
X300	90459-0835		1	THERMO CONTACT PANEL, 16 CONTACTS 2 ROWS	
X401	90110-0236		1	CHASSIS CONTACT PX0767/S	
X402	90110-0236		1	CHASSIS CONTACT PX0767/S	
X503	90110-0055		1	FEMALE INSERT HAN 6 HSB 09 31 006 2701	
X504	90110-0055		1	FEMALE INSERT HAN 6 HSB 09 31 006 2701	

Pos	Part No	UN	Qty	Description	Page No

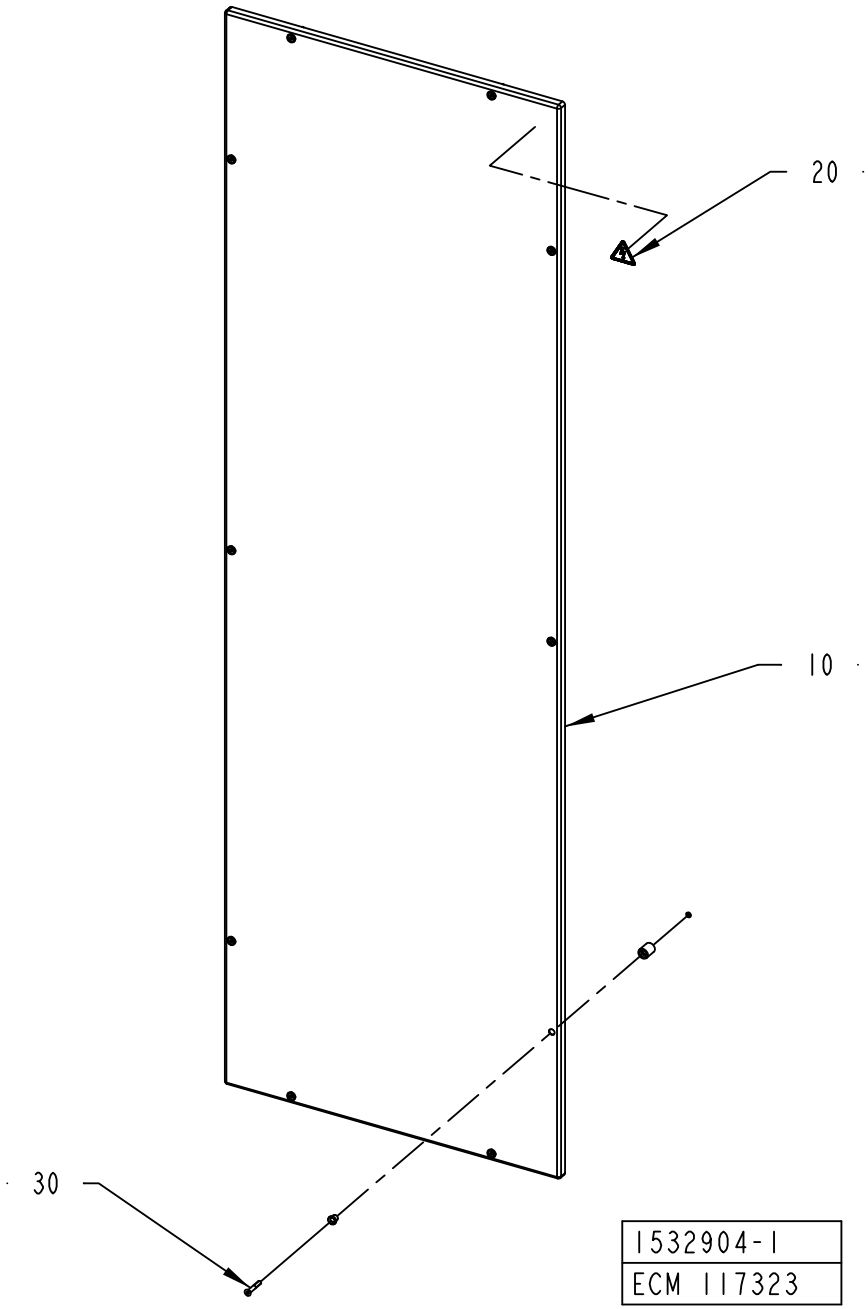
20
10
30
1532904-1
ECM 117323

ECM: 315255 - 20080404
Group number: 1532904-0100
Assembly Drawing: 1532904-1_1_AA

Pos	Part No	UN	Qty	Description	Page No
-					
010	1532905-0000		1	PLATE	
020	359705-0015		1	WARNING SIGN ISO, RISK OF ELECTRIC SHOCK	
030	90226-0458		10	MOUNTING SCREW	

Pos	Part No	UN	Qty	Description	Page No

CONTROL BOARD LEFT

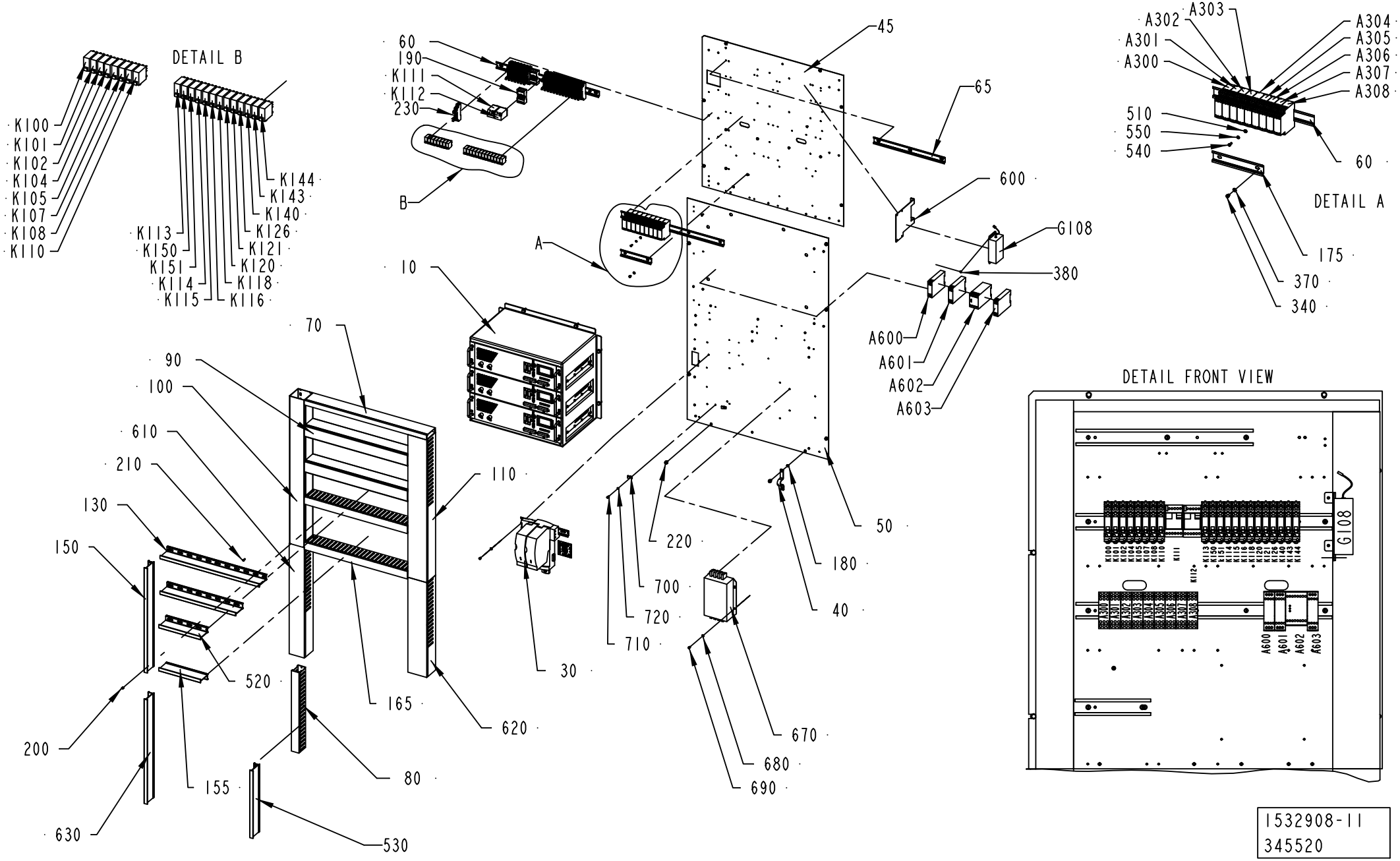

ECM: 345531 - 20080701
Group number: 1532908-0250
Assembly Drawing: 1532908-11_1_AB

This list covers pages from 7-34 to 7-39

Pos	Part No	UN	Qty	Description	Page No
TBA/22					
190	90129-0006		2	BASE, S3-B	
A601	90457-0092		1	SAFETY RELAY RT9-24VDC	
TBA/22 HI (See drawing on page: 7-36)					
010	2533651-0100		1	IH EQUIPMENT	**7-41**
030	2885012-0100		1	MOTOR DRIVE CONTROL	**7-43**
040	90135-0035		1	EARTH WIRE, L=250 MM 16 MM2	
045	2844056-0000		1	MOUNTING PLATE	
050	2844057-0000		1	MOUNTING PLATE	
065	2829262-0000		1	RAIL	
070	2841125-0000		1	CABLE DUCT	
080	2918736-0000		1	CABLE DUCT	
080	2895702-0000		1	CABLE DUCT	
100	2892585-0000		1	CABLE DUCT	
110	2841130-0000		1	CABLE DUCT	
130	2927008-0000		2	DIVIDER	
150	2895703-0000		1	DIVIDER	
175	2841497-0000		1	RAIL	
180	90062-0022		1	LOCK WASHER D=6,4/11	
190	90129-0006		2	BASE, S3-B	
200	90181-0064		15	LOCK ZP1 FOR CHANNEL T1	
210	90287-0124		49	SCREW PAN HEAD MSCS M4X12 NYLON	
230	90129-0018		21	BASE OMRON P2RF-08-E	
340	312121-0321		13	SCREW ISO 1207 M5X6 4.8-5.8 Z.PL.	
370	315101-0146		13	WASHER PLAIN, BRB, 5,3/10 H=1	
510	90062-0059		1	LOCK WASKER SERRAT.EXT.GEAR,4,3/8 H=0,5	
520	2918735-0000		1	DIVIDER	
530	2927007-0000		1	DIVIDER	
540	312121-0289		1	SCREW ISO 1207 M4X10 4.8-5.8 Z.PL.	
550	315101-0136		1	WASHER BRB, 4,3/8 H=0,8	
600	2826649-0000		1	BRACKET	
610	2894090-0000		1	CABLE DUCT	
620	2894091-0000		1	CABLE DUCT	
630	2895704-0000		1	DIVIDER	
670	90024-0039		1	FILTER 50 A, FN 351-50/33	
680	315105-0146		4	WASHER BRB 5,3X10 RFR	
690	312125-0323		4	SCREW ISO 1207 M5X8 A4	
700	90165-0007		2	PIPE CLIP FOR TUBE D=8 MM	
710	312115-0289		2	SCREW ISO4762 M4X10 A4 80	
720	315105-0136		2	WASHER BRB 4,3X8 RFR	
A300	90458-2580		1	LEVEL CONTROL RELAY RM4-LA32M	
A302	90458-2580		1	LEVEL CONTROL RELAY RM4-LA32M	
A305	90458-2580		1	LEVEL CONTROL RELAY RM4-LA32M	
A306	90458-2580		1	LEVEL CONTROL RELAY RM4-LA32M	
A307	90458-2580		1	LEVEL CONTROL RELAY RM4-LA32M	
A309	90458-2580		1	LEVEL CONTROL RELAY RM4-LA32M	
A600	90457-0092		1	SAFETY RELAY RT9-24VDC	
A601	90457-0092		1	SAFETY RELAY RT9-24VDC	
A602	90119-0089		1	SAFETY RELAY, JSBT4 24VDC	
A603	90457-0092		1	SAFETY RELAY RT9-24VDC	
K100	90119-0108		1	RELAY OMRON G2R-2-SNI-24DC	
	90129-0018		*1*	*BASE OMRON P2RF-08-E*	
K101	90119-0108		1	RELAY OMRON G2R-2-SNI-24DC	
	90129-0018		*1*	*BASE OMRON P2RF-08-E*	
K102	90119-0108		1	RELAY OMRON G2R-2-SNI-24DC	
	90129-0018		*1*	*BASE OMRON P2RF-08-E*	
K104	90119-0108		1	RELAY OMRON G2R-2-SNI-24DC	
	90129-0018		*1*	*BASE OMRON P2RF-08-E*	
K105	90119-0108		1	RELAY OMRON G2R-2-SNI-24DC	
	90129-0018		*1*	*BASE OMRON P2RF-08-E*	
K107	90119-0108		1	RELAY OMRON G2R-2-SNI-24DC	
	90129-0018		*1*	*BASE OMRON P2RF-08-E*	
K110	90119-0108		1	RELAY OMRON G2R-2-SNI-24DC	
	90129-0018		*1*	*BASE OMRON P2RF-08-E*	
K111	90119-0108		1	RELAY OMRON G2R-2-SNI-24DC	
	90129-0018		*1*	*BASE OMRON P2RF-08-E*	
K112	90119-0056		1	RELAY, AUXILIARY MK3P5-S 24VDC	
K113	90119-0108		1	RELAY OMRON G2R-2-SNI-24DC	
	90129-0018		*1*	*BASE OMRON P2RF-08-E*	
K114	90119-0108		1	RELAY OMRON G2R-2-SNI-24DC	
	90129-0018		*1*	*BASE OMRON P2RF-08-E*	
K115	90119-0108		1	RELAY OMRON G2R-2-SNI-24DC	
	90129-0018		*1*	*BASE OMRON P2RF-08-E*	
K116	90119-0108		1	RELAY OMRON G2R-2-SNI-24DC	
	90129-0018		*1*	*BASE OMRON P2RF-08-E*	
K118	90119-0108		1	RELAY OMRON G2R-2-SNI-24DC	
	90129-0018		*1*	*BASE OMRON P2RF-08-E*	
K120	90119-0108		1	RELAY OMRON G2R-2-SNI-24DC	
	90129-0018		*1*	*BASE OMRON P2RF-08-E*	
K121	90119-0108		1	RELAY OMRON G2R-2-SNI-24DC	
	90129-0018		*1*	*BASE OMRON P2RF-08-E*	
K140	90119-0108		1	RELAY OMRON G2R-2-SNI-24DC	
	90129-0018		*1*	*BASE OMRON P2RF-08-E*	
K144	90119-0108		1	RELAY OMRON G2R-2-SNI-24DC	

CONTROL BOARD LEFT

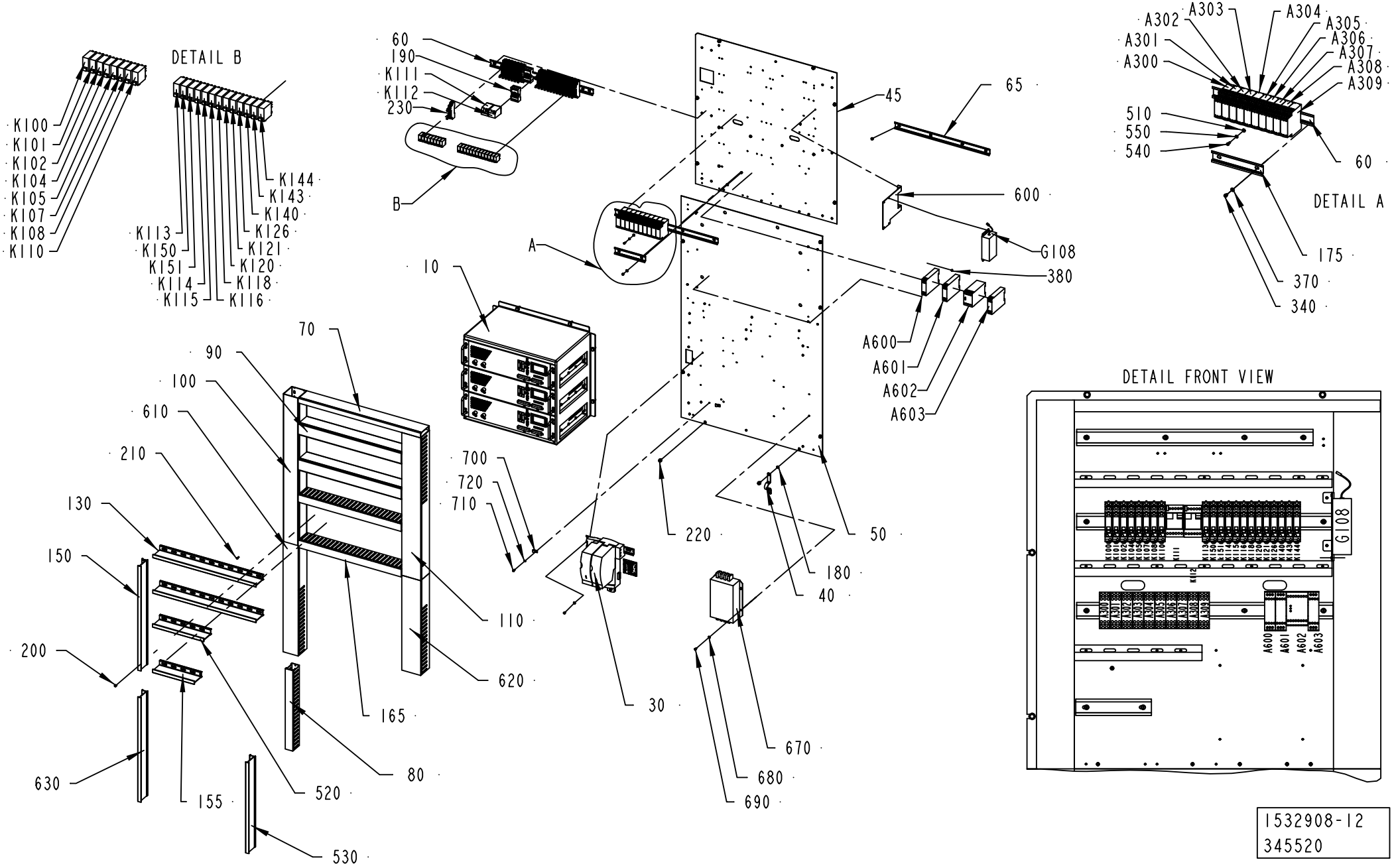

1532908-12
345520

Pos	Part No	UN	Qty	Description	Page No
TBA/22 HI (Cont'd) (See drawing on page: 7-36)					
K150	90119-0108		1	RELAY OMRON G2R-2-SNI-24DC	
	90129-0018		*1*	*BASE OMRON P2RF-08-E*	
K151	90119-0108		1	RELAY OMRON G2R-2-SNI-24DC	
	90129-0018		*1*	*BASE OMRON P2RF-08-E*	
TBA/22 NOHI (See drawing on page: 7-34)					
010	2533651-0100		1	IH EQUIPMENT	**7-41**
030	2885012-0100		1	MOTOR DRIVE CONTROL	**7-43**
040	90135-0035		1	EARTH WIRE, L=250 MM 16 MM2	
045	2844056-0000		1	MOUNTING PLATE	
050	2844057-0000		1	MOUNTING PLATE	
065	2829262-0000		1	RAIL	
070	2841125-0000		1	CABLE DUCT	
080	2918736-0000		1	CABLE DUCT	
080	2895702-0000		1	CABLE DUCT	
100	2892585-0000		1	CABLE DUCT	
110	2841130-0000		1	CABLE DUCT	
130	2927008-0000		2	DIVIDER	
150	2895703-0000		1	DIVIDER	
175	2841497-0000		1	RAIL	
180	90062-0022		1	LOCK WASHER D=6,4/11	
190	90129-0006		2	BASE, S3-B	
200	90181-0064		15	LOCK ZP1 FOR CHANNEL T1	
210	90287-0124		49	SCREW PAN HEAD MSCS M4X12 NYLON	
230	90129-0018		21	BASE OMRON P2RF-08-E	
340	312121-0321		13	SCREW ISO 1207 M5X6 4.8-5.8 Z.PL.	
370	315101-0146		13	WASHER PLAIN, BRB, 5,3/10 H=1	
510	90062-0059		1	LOCK WASKER SERRAT.EXT.GEAR,4,3/8 H=0,5	
520	2918735-0000		1	DIVIDER	
530	2927007-0000		1	DIVIDER	
540	312121-0289		1	SCREW ISO 1207 M4X10 4.8-5.8 Z.PL.	
550	315101-0136		1	WASHER BRB, 4,3/8 H=0,8	
600	2826649-0000		1	BRACKET	
610	2894090-0000		1	CABLE DUCT	
620	2894091-0000		1	CABLE DUCT	
630	2895704-0000		1	DIVIDER	
670	90024-0039		1	FILTER 50 A, FN 351-50/33	
680	315105-0146		4	WASHER BRB 5,3X10 RFR	
690	312125-0323		4	SCREW ISO 1207 M5X8 A4	
700	90165-0007		2	PIPE CLIP FOR TUBE D=8 MM	
710	312115-0289		2	SCREW ISO4762 M4X10 A4 80	
720	315105-0136		2	WASHER BRB 4,3X8 RFR	
A300	90458-2580		1	LEVEL CONTROL RELAY RM4-LA32M	
A302	90458-2580		1	LEVEL CONTROL RELAY RM4-LA32M	
A305	90458-2580		1	LEVEL CONTROL RELAY RM4-LA32M	
A306	90458-2580		1	LEVEL CONTROL RELAY RM4-LA32M	
A307	90458-2580		1	LEVEL CONTROL RELAY RM4-LA32M	
A600	90457-0092		1	SAFETY RELAY RT9-24VDC	
A602	90119-0089		1	SAFETY RELAY, JSBT4 24VDC	
A603	90457-0092		1	SAFETY RELAY RT9-24VDC	
K100	90119-0108		1	RELAY OMRON G2R-2-SNI-24DC	
	90129-0018		*1*	*BASE OMRON P2RF-08-E*	
K101	90119-0108		1	RELAY OMRON G2R-2-SNI-24DC	
	90129-0018		*1*	*BASE OMRON P2RF-08-E*	
K102	90119-0108		1	RELAY OMRON G2R-2-SNI-24DC	
	90129-0018		*1*	*BASE OMRON P2RF-08-E*	
K104	90119-0108		1	RELAY OMRON G2R-2-SNI-24DC	
	90129-0018		*1*	*BASE OMRON P2RF-08-E*	
K105	90119-0108		1	RELAY OMRON G2R-2-SNI-24DC	
	90129-0018		*1*	*BASE OMRON P2RF-08-E*	
K107	90119-0108		1	RELAY OMRON G2R-2-SNI-24DC	
	90129-0018		*1*	*BASE OMRON P2RF-08-E*	
K110	90119-0108		1	RELAY OMRON G2R-2-SNI-24DC	
	90129-0018		*1*	*BASE OMRON P2RF-08-E*	
K111	90119-0108		1	RELAY OMRON G2R-2-SNI-24DC	
	90129-0018		*1*	*BASE OMRON P2RF-08-E*	
K112	90119-0056		1	RELAY, AUXILIARY MK3P5-S 24VDC	
K113	90119-0108		1	RELAY OMRON G2R-2-SNI-24DC	
	90129-0018		*1*	*BASE OMRON P2RF-08-E*	
K114	90119-0108		1	RELAY OMRON G2R-2-SNI-24DC	
	90129-0018		*1*	*BASE OMRON P2RF-08-E*	
K115	90119-0108		1	RELAY OMRON G2R-2-SNI-24DC	
	90129-0018		*1*	*BASE OMRON P2RF-08-E*	
K116	90119-0108		1	RELAY OMRON G2R-2-SNI-24DC	
	90129-0018		*1*	*BASE OMRON P2RF-08-E*	
K118	90119-0108		1	RELAY OMRON G2R-2-SNI-24DC	
	90129-0018		*1*	*BASE OMRON P2RF-08-E*	
K120	90119-0108		1	RELAY OMRON G2R-2-SNI-24DC	
	90129-0018		*1*	*BASE OMRON P2RF-08-E*	
K121	90119-0108		1	RELAY OMRON G2R-2-SNI-24DC	
	90129-0018		*1*	*BASE OMRON P2RF-08-E*	
K140	90119-0108		1	RELAY OMRON G2R-2-SNI-24DC	
	90129-0018		*1*	*BASE OMRON P2RF-08-E*	
K144	90119-0108		1	RELAY OMRON G2R-2-SNI-24DC	

See previous drawings pages: 7-34, 7-36.

Pos	Part No	UN	Qty	Description	Page No
TBA/22 NOHI (Cont'd) (See drawing on page: 7-34)					
K150	90119-0108		1	RELAY OMRON G2R-2-SNI-24DC	
	90129-0018		*1*	*BASE OMRON P2RF-08-E*	
K151	90119-0108		1	RELAY OMRON G2R-2-SNI-24DC	
	90129-0018		*1*	*BASE OMRON P2RF-08-E*	
Common Parts					
060	2550126-0000		2	RAIL	
090	2550129-0000		2	CABLE DUCT	
155	2557591-0000		2	DIVIDER	
165	2675519-0000		2	CABLE DUCT	
220	90287-0157		13	SCREW M6SF FLAT HEAD M6X10 88	
380	312145-0285		4	SCREW ISO 2009 MFS M4X6 A4	
A301	90458-2580		1	LEVEL CONTROL RELAY RM4-LA32M	
A303	90458-2580		1	LEVEL CONTROL RELAY RM4-LA32M	
A304	90458-2580		1	LEVEL CONTROL RELAY RM4-LA32M	
A308	90458-2580		1	LEVEL CONTROL RELAY RM4-LA32M	
A604	90457-0092		1	SAFETY RELAY RT9-24VDC	
G108	90459-7198		1	AUXILIARY BATTERY MODULE, IC693ACC302	
K108	90119-0108		1	RELAY OMRON G2R-2-SNI-24DC	
	90129-0018		*1*	*BASE OMRON P2RF-08-E*	
K125	90119-0056		1	RELAY, AUXILIARY MK3P5-S 24VDC	
K126	90119-0108		1	RELAY OMRON G2R-2-SNI-24DC	
	90129-0018		*1*	*BASE OMRON P2RF-08-E*	
K132	90119-0056		1	RELAY, AUXILIARY MK3P5-S 24VDC	
K133	90119-0108		1	RELAY OMRON G2R-2-SNI-24DC	
	90129-0018		*1*	*BASE OMRON P2RF-08-E*	
K143	90119-0108		1	RELAY OMRON G2R-2-SNI-24DC	
	90129-0018		*1*	*BASE OMRON P2RF-08-E*	

Pos	Part No	UN	Qty	Description	Page No

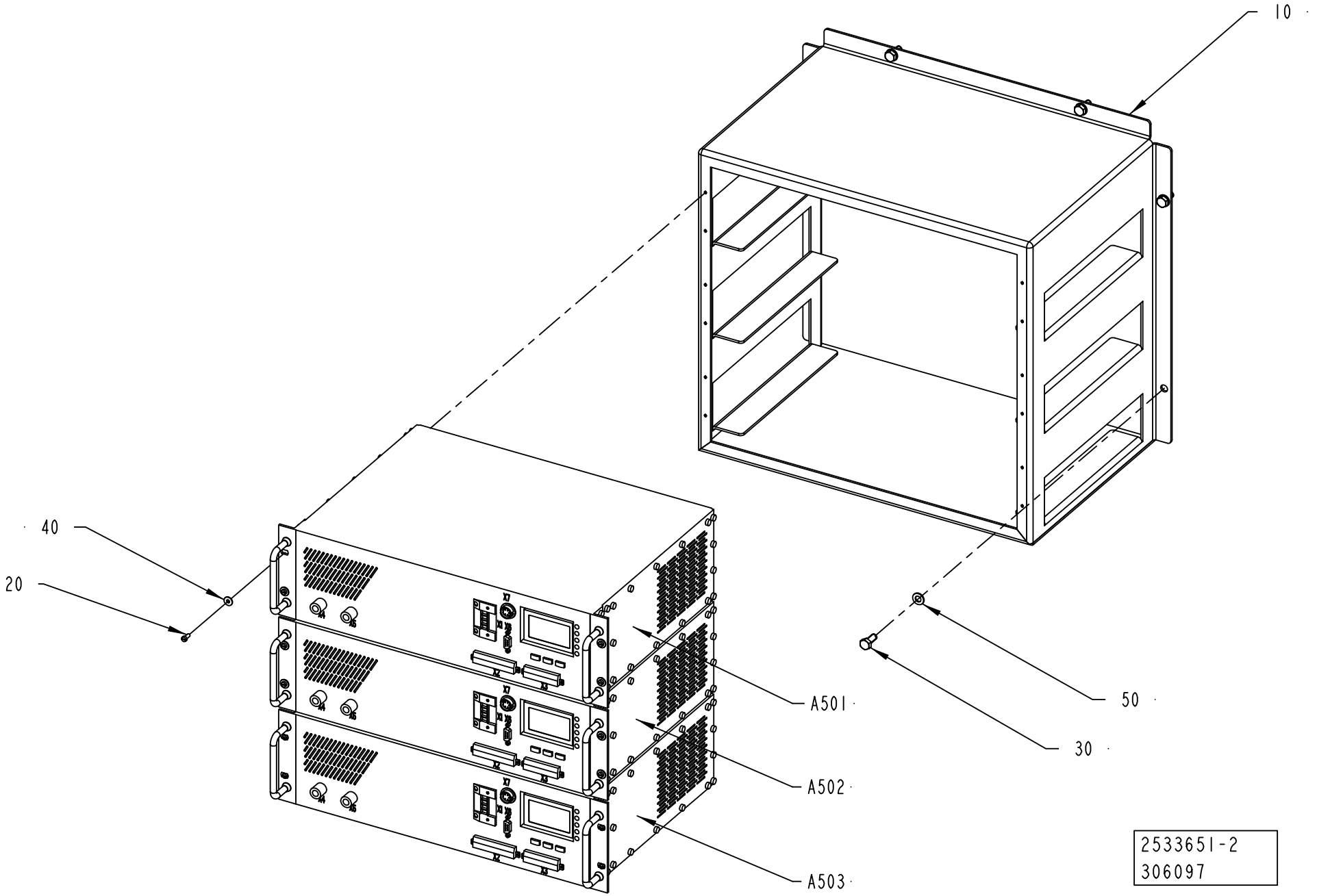
10
40
20
A501
A502
A503
50
30
2533651-2
306097

ECM: 335588 - 20080401
Group number: 2533651-0100
Assembly Drawing: 2533651-2_1_AA

Pos	Part No	UN	Qty	Description	Page No
TBA/22					
A503	1499642-0201		1	TPIH GENERATOR	
Common Parts					
010	1532912-0000		1	FRAME	
020	312125-0289		12	SCREW ISO 1207 M4X10 A4	
030	312105-0451		6	SCREW M6S ISO 4017 M8X20 A480	
040	90005-0082		12	WASHER PLAIN ROUND 4,3(M4)/12,H=1	
050	315105-0165		6	WASHER BRB 8,4X16 RFR	
A501	1499642-0201		1	TPIH GENERATOR	
A502	1499642-0201		1	TPIH GENERATOR	

Pos	Part No	UN	Qty	Description	Page No

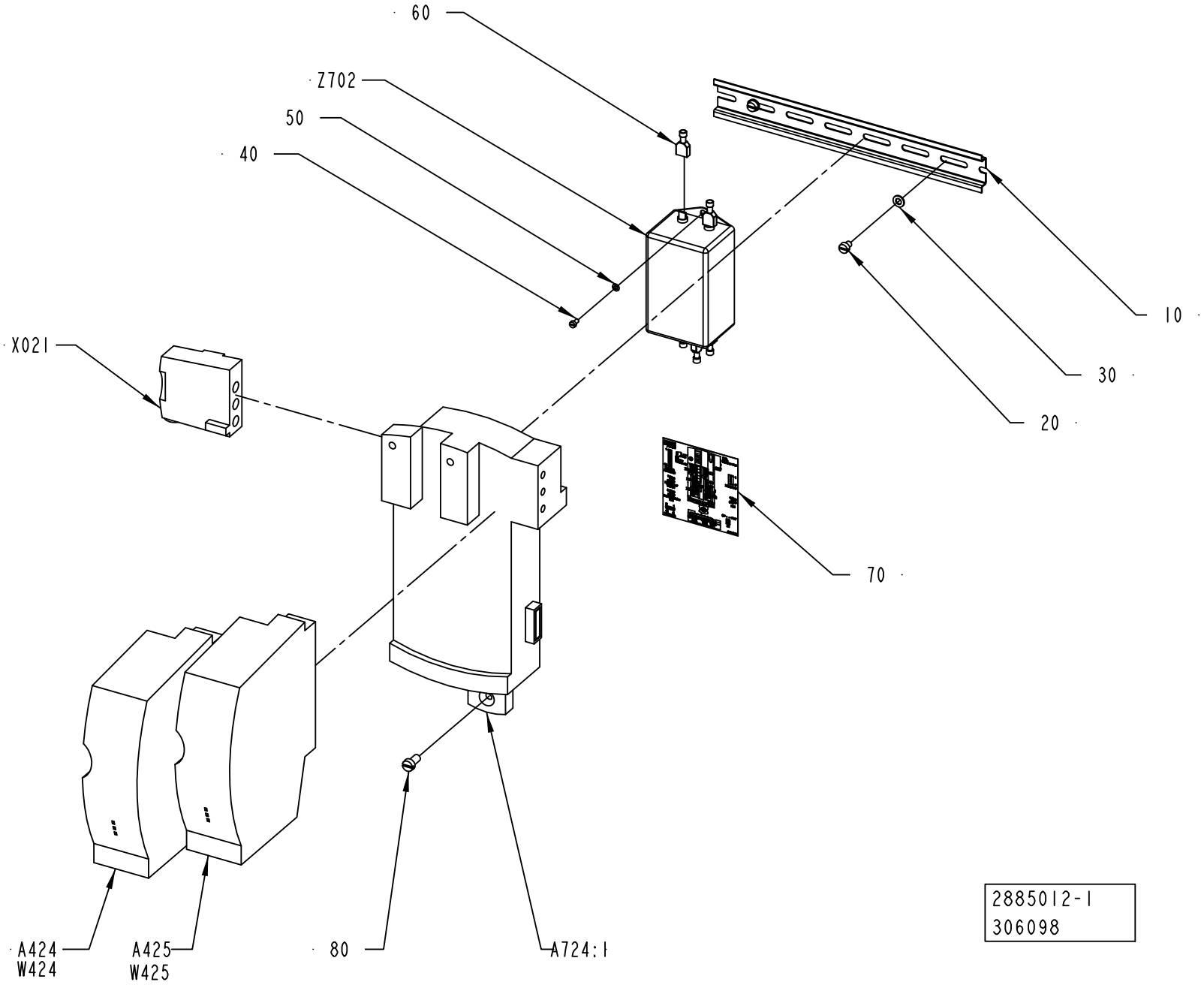
60
Z702
50
40
X021
10
30
20
70
A424
W424
A425
W425
80
A724:1
2885012-1
306098

ECM: 306298 - 20070701
Group number: 2885012-0100
Assembly Drawing: 2885012-1_1_AA

Pos	Part No	UN	Qty	Description	Page No
-					
10	353042-0004	MM	250	RAIL TS 35/7,5	
20	312121-0321		2	SCREW ISO 1207 M5X6 4.8-5.8 Z.PL.	
30	315101-0146		2	WASHER PLAIN, BRB, 5,3/10 H=1	
40	312121-0220		2	SCREW ISO 1207 M3X4 4.8-5.8 Z.PL.	
50	315101-0124		2	WASHER PLAIN, BRB, 3,2/6 H=0,5	
60	90459-3747		5	FLAT PIN SOCKET, 6,3X0,8	
70	90458-1856		1	ADHESIVE LABEL, CONNECTION DIAGRAM	
80	312122-0366		1	SCREW ISO 1207 M6X12 NI PL BRASS	
A424	90458-0522		1	STEP MOTOR DRIVE L25	
A425	90458-0522		1	STEP MOTOR DRIVE L25	
A724:1	90458-1300		1	2 AXIS DOCKING STATION D2/PLC	
	90458-1856		*1*	*ADHESIVE LABEL, CONNECTION DIAGRAM*	
X021	90458-1279		1	PLUG CONNECTOR DP1	
Z702	90459-3698		1	FILTER, 6 A, 250 VAC, FN2070M-6/06	

Pos	Part No	UN	Qty	Description	Page No

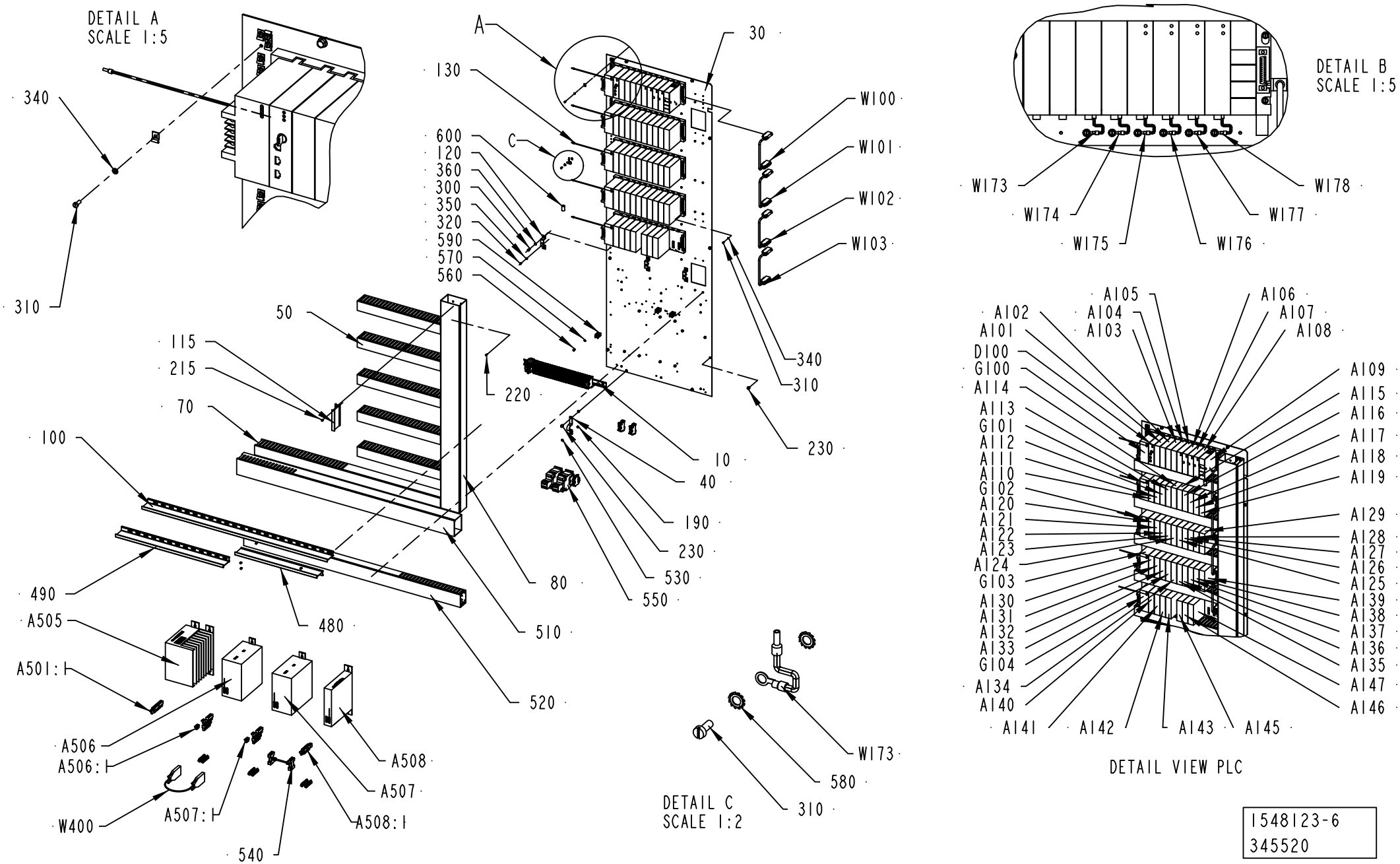

1548123-6
345520

ECM: 345530 - 20080701
Group number: 1548123-0150
Assembly Drawing: 1548123-6_1_AD

This list covers pages from 7-44 to 7-47

Pos	Part No	UN	Qty	Description	Page No
TBA/22					
010	2885026-0100		1	PLINTH	**7-49**
030	2841128-0000		1	MOUNTING PLATE	
040	90135-0035		1	EARTH WIRE, L=250 MM 16 MM2	
070	2841131-0000		1	CABLE DUCT	
080	2850659-0000		1	CABLE DUCT	
100	2850660-0000		1	DIVIDER	
120	90458-1447		3	MOUNTING RAIL SUPPORT TST 128660	
190	90062-0022		2	LOCK WASHER D=6,4/11	
210	90165-0003		25	PIPE CLIP FOR TUBE D=4 MM	
215	90181-0064		14	LOCK ZP1 FOR CHANNEL T1	
220	90287-0124		39	SCREW PAN HEAD MSCS M4X12 NYLON	
310	312121-0289		51	SCREW ISO 1207 M4X10 4.8-5.8 Z.PL.	
340	315101-0136		45	WASHER BRB, 4,3/8 H=0,8	
360	315101-0153		6	WASHER PLAIN, BRB, 6,4/12 H=1,5	
510	2894087-0000		1	CABLE DUCT	
520	2897672-0000		1	CABLE DUCT	
520	2894088-0000		1	CABLE DUCT	
530	315105-0153		1	WASHER BRB 6,4X12 RFR	
540	2889862-0000		1	CONNECTOR	
A101	90031-0058		1	PLC, DIGITAL INPUT MODULE	
A102	90031-0059		1	PLC, DIGITAL OUTPUT MODULE	
A103	90031-0065		1	PLC,TEMPERATUR CONTROL,INPUT MODULE 8 PT	
A104	90031-0065		1	PLC,TEMPERATUR CONTROL,INPUT MODULE 8 PT	
A105	90031-0061		1	PLC,ANALOG INPUT MODULE 16 PT/CURRENT	
A106	90031-0060		1	PLC,ANALOG INPUT MODULE 16 PT/VOLTAGE	
A107	90031-0062		1	PLC, ANALOG OUTPUT MODULE 8PT/CURR/VOLT	
A108	90031-0062		1	PLC, ANALOG OUTPUT MODULE 8PT/CURR/VOLT	
A109	90031-0031		1	ENHANCED GENIUS COMMUNICATION MODULE	
A112	90031-0057		1	PLC, DIGITAL INPUT MODULE	
A113	90031-0057		1	PLC, DIGITAL INPUT MODULE	
A135	90031-0059		1	PLC, DIGITAL OUTPUT MODULE	
A140	90031-0057		1	PLC, DIGITAL INPUT MODULE	
A141	90031-0057		1	PLC, DIGITAL INPUT MODULE	
A142	90031-0057		1	PLC, DIGITAL INPUT MODULE	
A143	90031-0057		1	PLC, DIGITAL INPUT MODULE	
A505	90045-0397		1	POWER SUPPLY 80A	
A505:1	90458-0033		1	CONNECTOR KIT 9-032-010-851	
A506	90458-0399		1	SERVO DRIVE DMC2 51540	
A506:1	90458-0032		1	CONNECTOR KIT 9-032-010-496	
A507	90458-0399		1	SERVO DRIVE DMC2 51540	
A507:1	90458-0032		1	CONNECTOR KIT 9-032-010-496	
A508	90458-0396		1	SERVO DRIVE DMC2 50720	
A508:1	90458-0031		1	CONNECTOR KIT 9032 010 353	
W173	1512322-0000		1	COPPER BRAID	
W174	1512322-0000		1	COPPER BRAID	
W175	1512322-0000		1	COPPER BRAID	
W176	1512322-0000		1	COPPER BRAID	
W177	1512322-0000		1	COPPER BRAID	
W178	1512322-0000		1	COPPER BRAID	
W400	1512322-0000		1	COPPER BRAID	
TBA/22 HI, TBA/22 NOHI					
480	2918738-0000		1	DIVIDER	
490	2918737-0000		1	DIVIDER	
Common Parts					
050	2557587-0000		5	CABLE DUCT	
115	2675522-0000		1	DIVIDER	
230	90287-0157		11	SCREW M6SF FLAT HEAD M6X10 88	
300	312111-0366		6	SCREW HEX.SOCK.HD.MC6S-TT 6X12 88 FZB	
320	312121-0321		3	SCREW ISO 1207 M5X6 4.8-5.8 Z.PL.	
350	315101-0146		3	WASHER PLAIN, BRB, 5,3/10 H=1	
A110	90031-0057		1	PLC, DIGITAL INPUT MODULE	
A111	90031-0057		1	PLC, DIGITAL INPUT MODULE	
A114	90031-0057		1	PLC, DIGITAL INPUT MODULE	
A115	90031-0057		1	PLC, DIGITAL INPUT MODULE	
A116	90031-0057		1	PLC, DIGITAL INPUT MODULE	
A117	90031-0057		1	PLC, DIGITAL INPUT MODULE	
A118	90031-0057		1	PLC, DIGITAL INPUT MODULE	
A119	90031-0057		1	PLC, DIGITAL INPUT MODULE	
A120	90031-0057		1	PLC, DIGITAL INPUT MODULE	
A121	90031-0057		1	PLC, DIGITAL INPUT MODULE	
A122	90031-0057		1	PLC, DIGITAL INPUT MODULE	
A123	90031-0057		1	PLC, DIGITAL INPUT MODULE	
A124	90031-0057		1	PLC, DIGITAL INPUT MODULE	
A125	90031-0057		1	PLC, DIGITAL INPUT MODULE	
A126	90031-0057		1	PLC, DIGITAL INPUT MODULE	
A127	90031-0057		1	PLC, DIGITAL INPUT MODULE	
A128	90031-0057		1	PLC, DIGITAL INPUT MODULE	
A129	90031-0057		1	PLC, DIGITAL INPUT MODULE	
A130	90031-0059		1	PLC, DIGITAL OUTPUT MODULE	
A131	90031-0059		1	PLC, DIGITAL OUTPUT MODULE	
A132	90031-0059		1	PLC, DIGITAL OUTPUT MODULE	
A133	90031-0059		1	PLC, DIGITAL OUTPUT MODULE	
A134	90031-0059		1	PLC, DIGITAL OUTPUT MODULE	

Machine Type | Group Description | Used-In | Group Number | Page No

CONTROL BOARD RIGHT

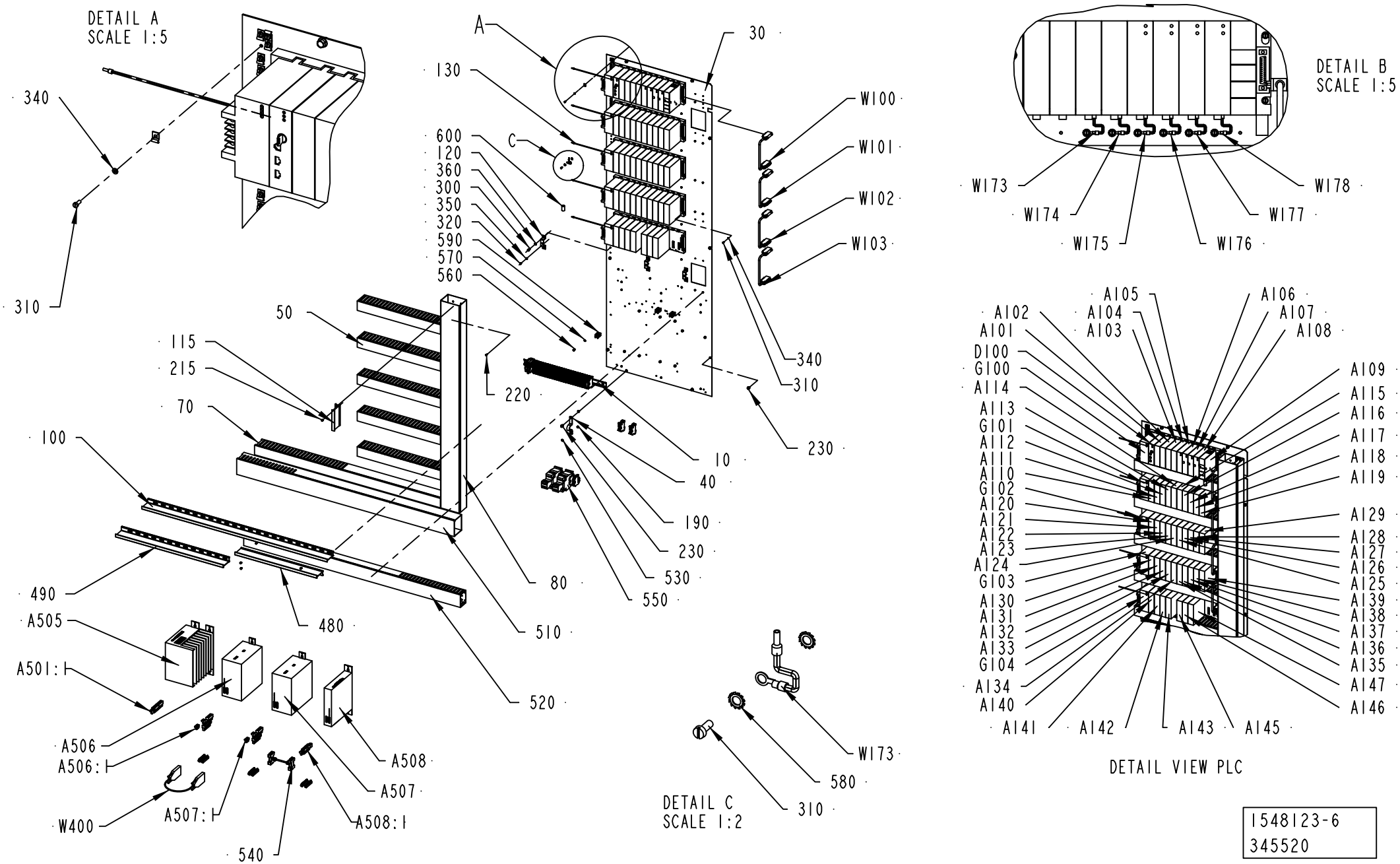

1548123-6
345520

Pos	Part No	UN	Qty	Description	Page No
Common Parts (Cont'd)					
A136	90031-0059		1	PLC, DIGITAL OUTPUT MODULE	
A137	90031-0059		1	PLC, DIGITAL OUTPUT MODULE	
A138	90031-0059		1	PLC, DIGITAL OUTPUT MODULE	
A139	90031-0059		1	PLC, DIGITAL OUTPUT MODULE	
A145	90031-0059		1	PLC, DIGITAL OUTPUT MODULE	
A146	90031-0059		1	PLC, DIGITAL OUTPUT MODULE	
A147	90031-0059		1	PLC, DIGITAL OUTPUT MODULE	
A160	90031-0051		1	BASEPLATE, 10-SLOT	
A161	90031-0053		1	BASEPLATE,10-SLOT	
	90031-0302		*1*	*I/O BUS TERMINATION PLUG*	
A162	90031-0053		1	BASEPLATE,10-SLOT	
	90031-0302		*1*	*I/O BUS TERMINATION PLUG*	
A163	90031-0053		1	BASEPLATE,10-SLOT	
	90031-0302		*1*	*I/O BUS TERMINATION PLUG*	
A164	90031-0053		1	BASEPLATE,10-SLOT	
	90031-0302		*1*	*I/O BUS TERMINATION PLUG*	
D100	90600-1223		1	CPU374, ETHERNET COMMUNICATION	
G100	90031-0068		1	PLC, POWER SUPPLY	
	90031-0301		*1*	*SPARE BATTERY CPU,PCM,2PCS*	
	352551-0134		*1*	*FINE-WIRE FUSE 2 A SLOW,5X20MM*	
G101	90031-0068		1	PLC, POWER SUPPLY	
	90031-0301		*1*	*SPARE BATTERY CPU,PCM,2PCS*	
	352551-0134		*1*	*FINE-WIRE FUSE 2 A SLOW,5X20MM*	
G102	90031-0068		1	PLC, POWER SUPPLY	
	90031-0301		*1*	*SPARE BATTERY CPU,PCM,2PCS*	
	352551-0134		*1*	*FINE-WIRE FUSE 2 A SLOW,5X20MM*	
G103	90031-0068		1	PLC, POWER SUPPLY	
	90031-0301		*1*	*SPARE BATTERY CPU,PCM,2PCS*	
	352551-0134		*1*	*FINE-WIRE FUSE 2 A SLOW,5X20MM*	
G104	90031-0068		1	PLC, POWER SUPPLY	
	90031-0301		*1*	*SPARE BATTERY CPU,PCM,2PCS*	
	352551-0134		*1*	*FINE-WIRE FUSE 2 A SLOW,5X20MM*	
W100	90031-0305		1	I/O EXPANSION CABLE	
W101	90031-0305		1	I/O EXPANSION CABLE	
W102	90031-0305		1	I/O EXPANSION CABLE	
W103	90031-0305		1	I/O EXPANSION CABLE	

Pos	Part No	UN	Qty	Description	Page No

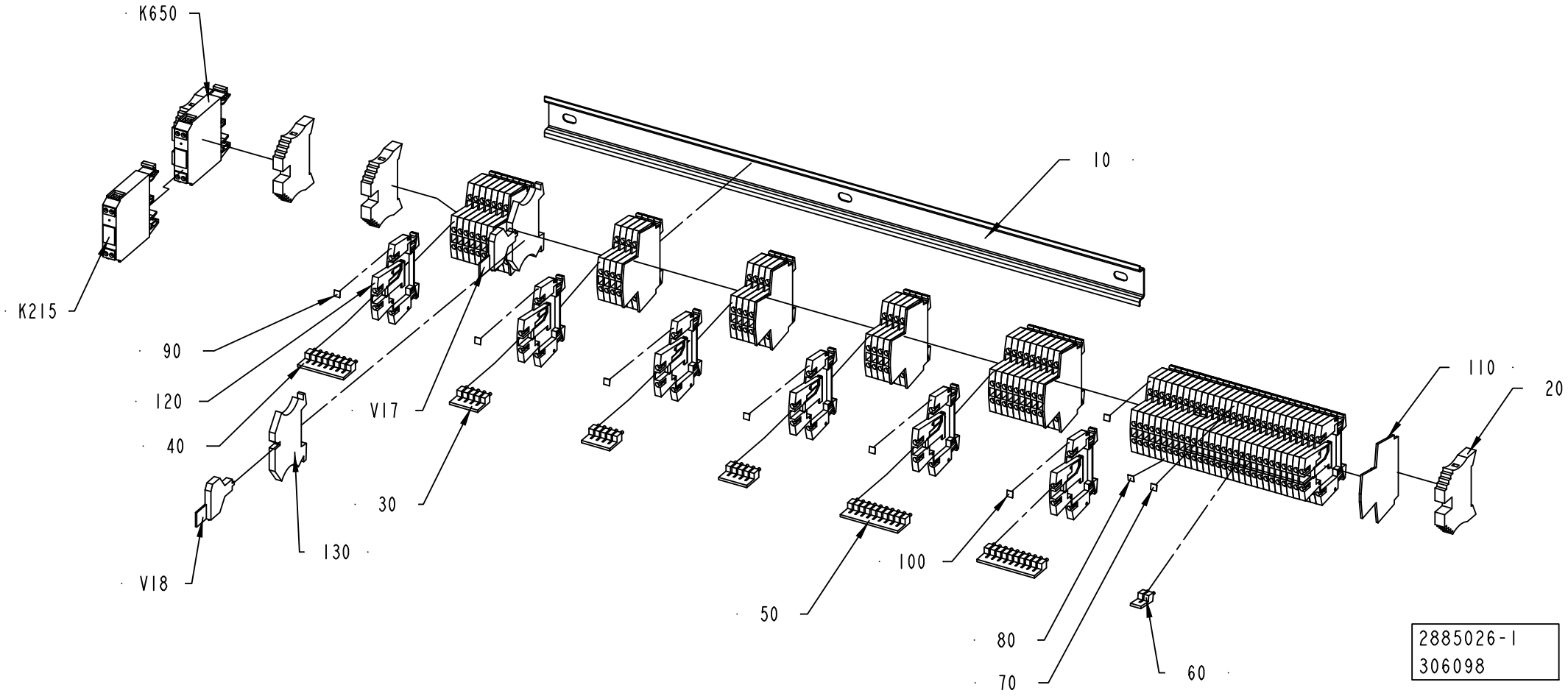
K650
K215
10
90
120
40
V17
30
130
V18
50
100
80
70
60
110
20
2885026-1
306098

ECM: 306286 - 20070701
Group number: 2885026-0100
Assembly Drawing: 2885026-1_1_AA

Pos	Part No	UN	Qty	Description	Page No
-					
10	2557594-0000		1	RAIL	
100	359011-0808		1	MARKING PLATES 5-FW 51-100	
110	353032-0009		6	END PLATE, WAP FOR WDK	
120	90457-0049		63	TERMINAL BLOCK WDK 2.5V, 102230	
130	90600-2134		2	TERMINAL DISCONNECATBLE, WTR 2,5/O.TNHE	
20	353031-0203		4	END SUPPORT, WEW 35/2	
30	353034-0030		3	BRIDGE CONNECTOR WQV 2,5/10, 10544.6	
40	353034-0030		1	BRIDGE CONNECTOR WQV 2,5/10, 10544.6	
50	353034-0030		4	BRIDGE CONNECTOR WQV 2,5/10, 10544.6	
60	353034-0030		2	BRIDGE CONNECTOR WQV 2,5/10, 10544.6	
70	359011-0810		1	MARKING PLATES 5-FW 151-200	
80	359011-0811		1	MARKING PLATES 5-FW 201-2	
90	359011-0809		6	MARKING PLATES 5-FW 101-150	
K125	90119-0063		1	OPTO-RELAY, DC/DC AMMS-10-1/30VDC	
K650	90119-0063		1	OPTO-RELAY, DC/DC AMMS-10-1/30VDC	
V17	90600-2135		1	MODULE CONNECTOR 250V, BEST/D 1878560000	
V18	90600-2135		1	MODULE CONNECTOR 250V, BEST/D 1878560000	

Pos	Part No	UN	Qty	Description	Page No

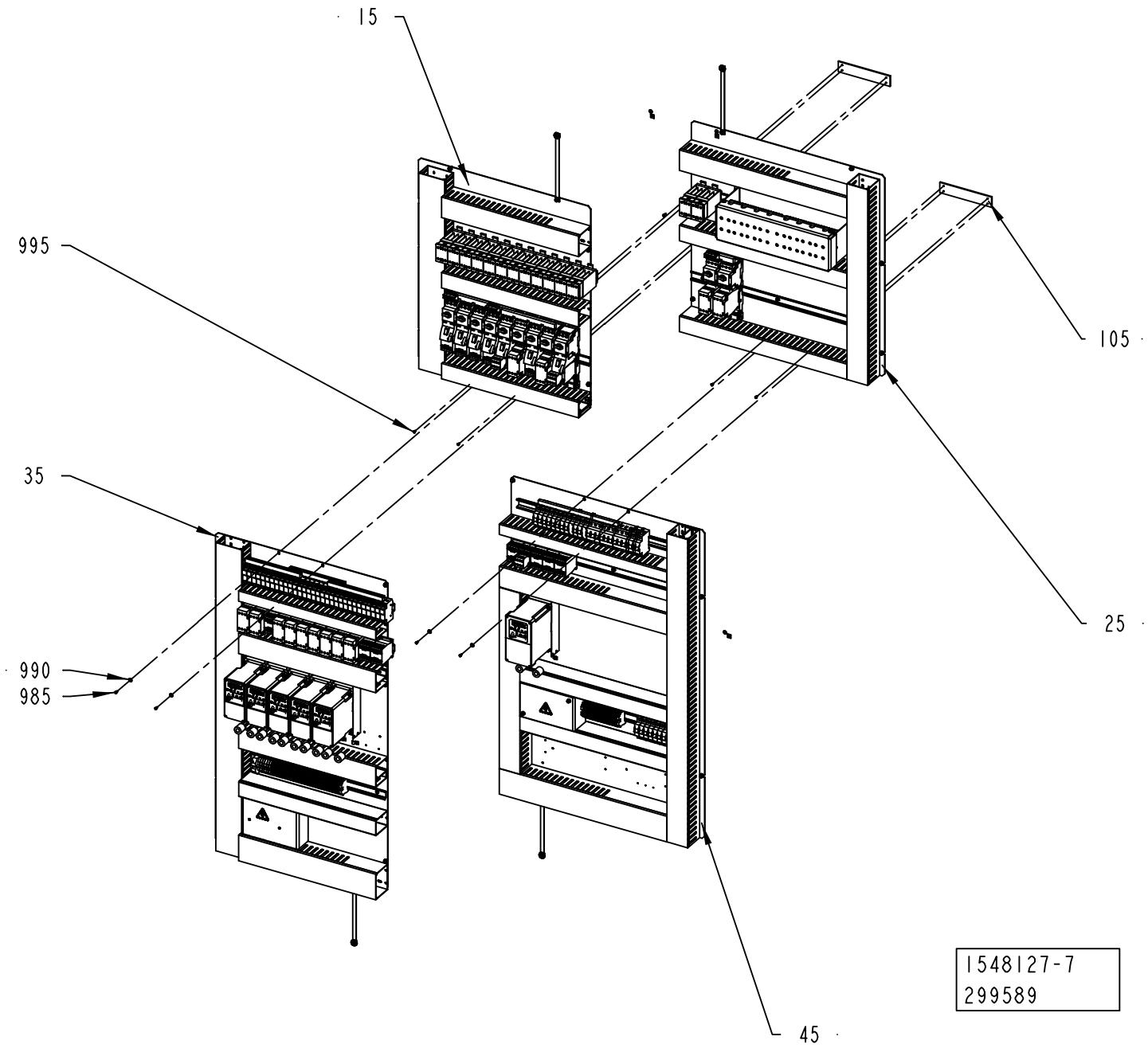
15
995
105
35
25
990
985
45
1548127-7
299589

ECM: 335453 - 20080401
Group number: 1548127-0250
Assembly Drawing: 1548127-7_1_AB

Pos	Part No	UN	Qty	Description	Page No
TBA/22					
015	2876491-0100		1	COMPONENT PLATES	**7-53**
025	2876492-0100		1	COMPONENT PLATES	**7-59**
035	2876493-0100		1	COMPONENT PLATES	**7-67**
045	2876494-0100		1	COMPONENT PLATES	**7-79**
105	2885010-0000		2	PLATE	
985	312125-0287		4	SCREW ISO 1207 M4X8 A4	
990	90005-0082		4	WASHER PLAIN ROUND 4,3(M4)/12,H=1	
995	312155-0291		4	SCREW DIN 7991 MF6S M4X12 A4 70	

Pos	Part No	UN	Qty	Description	Page No

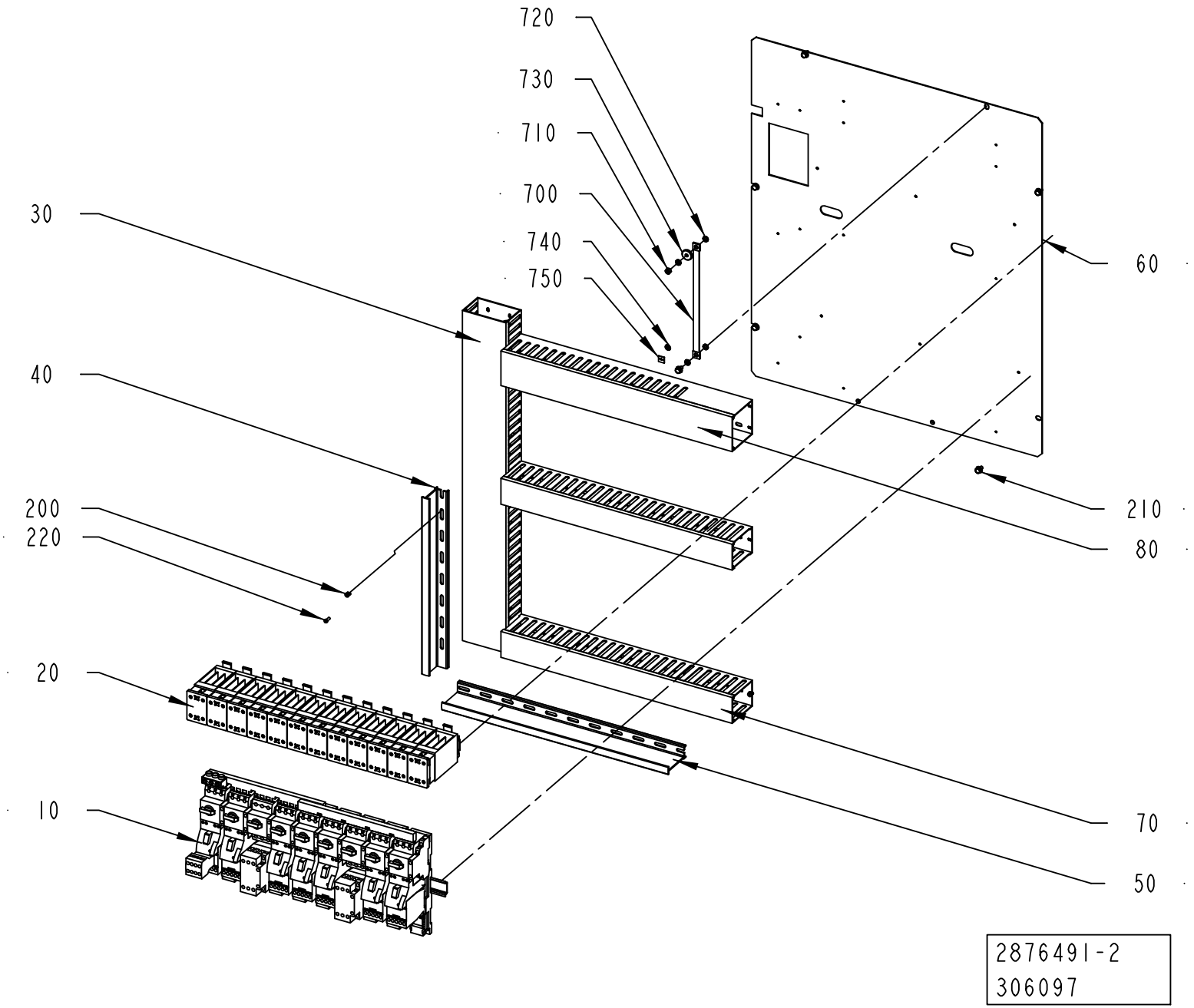
720
730
710
700
740
750
30
40
200
220
20
10
60
210
80
70
50
2876491-2
306097

ECM: 340645 - 20080215
Group number: 2876491-0100
Assembly Drawing: 2876491-2_1_AA

Pos	Part No	UN	Qty	Description	Page No
TBA/22					
10	2885014-0100		1	FUSE BOARD 1	**7-55**
20	2885013-0100		1	RELAY UNIT 1	**7-57**
Common Parts					
200	90181-0064		4	LOCK ZP1 FOR CHANNEL T1	
210	90287-0157		6	SCREW M6SF FLAT HEAD M6X10 88	
220	90287-0124		14	SCREW PAN HEAD MSCS M4X12 NYLON	
30	2892577-0000		1	CABLE DUCT	
40	2892592-0000		1	DIVIDER	
50	2889864-0000		1	DIVIDER	
60	2892576-0000		1	MOUNTING PLATE	
70	2892573-0000		2	CABLE DUCT 60X80MM	
700	90135-0035		1	EARTH WIRE, L=250 MM 16 MM2	
710	312601-0316		1	HEXAGON NUT, DIN 934 M6 8 FZB	
720	90062-0015		4	LOCK WASHER SERRAT.EXT.GEAR,6,4/11 H=0,7	
730	315125-0153		1	WASHER TBRSB 6,4X22X4 A4	
740	2608177-0000		1	SIGN	
750	90194-0152		1	SIGN, EARTH	
80	2892574-0000		1	CABLE DUCT 80X80MM	

Pos	Part No	UN	Qty	Description	Page No

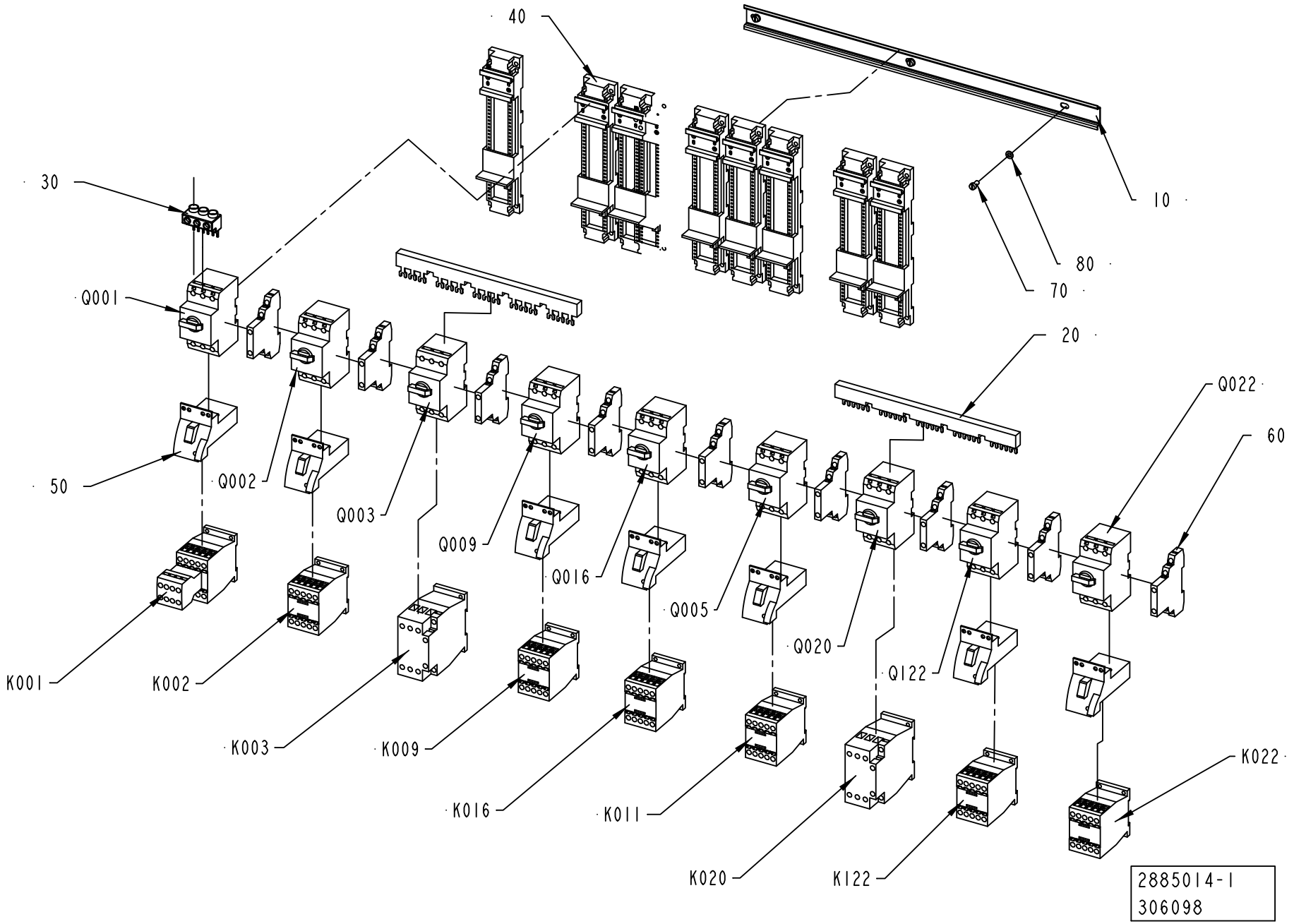
40
10
30
80
70
Q001
20
Q022
60
50
Q002
Q003
Q009
Q016
Q005
Q020
Q122
K001
K002
K003
K009
K016
K011
K020
K122
K022
2885014-1
306098

ECM: 306296 - 20070701
Group number: 2885014-0100
Assembly Drawing: 2885014-1_1_AA

Pos	Part No	UN	Qty	Description	Page No
-					
10	2892599-0000		1	RAIL	
20	90259-0311		2	3 POLE BUSBAR, K&M B3.1/5	
30	90458-0577		1	CONNECTION TERMINAL BK 25/3-PKZ 0	
40	90459-6851		9	BASE UNIT, PKZM0-XDM32	
50	90459-6850		7	CONNECTION, PKZM0-XDM12	
60	90259-0313		9	AUX. CONTACT K&M NHI21-PKZM0	
70	312125-0325		3	SCREW ISO 1207 M5X10 A4	
80	315102-0146		3	SPARE PART	
K001	90459-5316		1	CONTACTOR 4KW 24VDC, DILM9-32	
K002	90459-5440		1	CONTACTOR 4KW 24VDC, DILM9-01	
K003	90459-5441		1	CONTACTOR 7,5KW 24VDC, DILM17-01	
K005	90459-5440		1	CONTACTOR 4KW 24VDC, DILM9-01	
K011	90459-5308		1	CONTACTOR 4KW 24VDC, DILM9-10	
K016	90459-5308		1	CONTACTOR 4KW 24VDC, DILM9-10	
K020	90459-5441		1	CONTACTOR 7,5KW 24VDC, DILM17-01	
K022	90459-5440		1	CONTACTOR 4KW 24VDC, DILM9-01	
K122	90459-5440		1	CONTACTOR 4KW 24VDC, DILM9-01	
Q001	90459-5323		1	OVERLOAD PROTECTION, PKZM0-1	
Q002	90459-5324		1	OVERLOAD PROTECTION, PKZM0-1,6	
Q003	90459-5330		1	OVERLOAD PROTECTION, PKZM0-16	
Q005	90459-5326		1	OVERLOAD PROTECTION, PKZM0-4	
Q009	90459-5321		1	OVERLOAD PROTECTION, PKZM0-0,4	
Q016	90459-5324		1	OVERLOAD PROTECTION, PKZM0-1,6	
Q020	90459-5328		1	OVERLOAD PROTECTION, PKZM0-10	
Q022	90459-5325		1	OVERLOAD PROTECTION, PKZM0-2,5	
Q122	90459-5323		1	OVERLOAD PROTECTION, PKZM0-1	

Pos	Part No	UN	Qty	Description	Page No

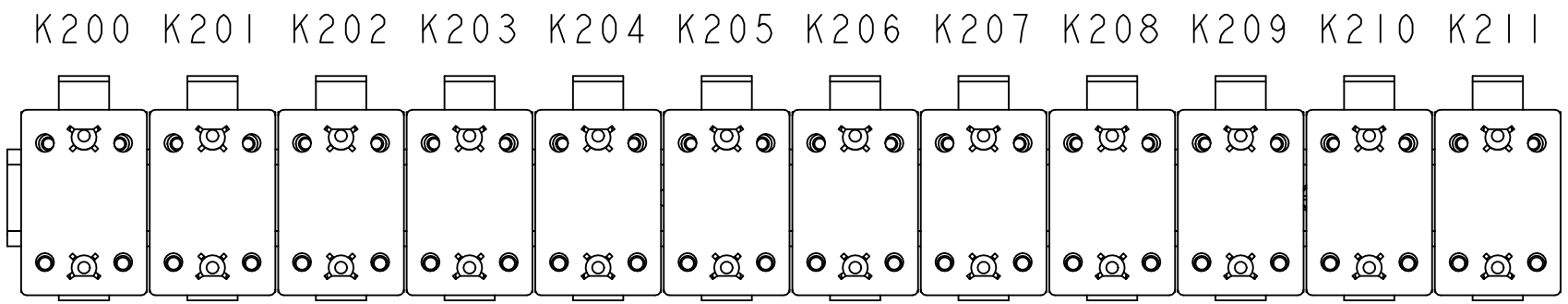

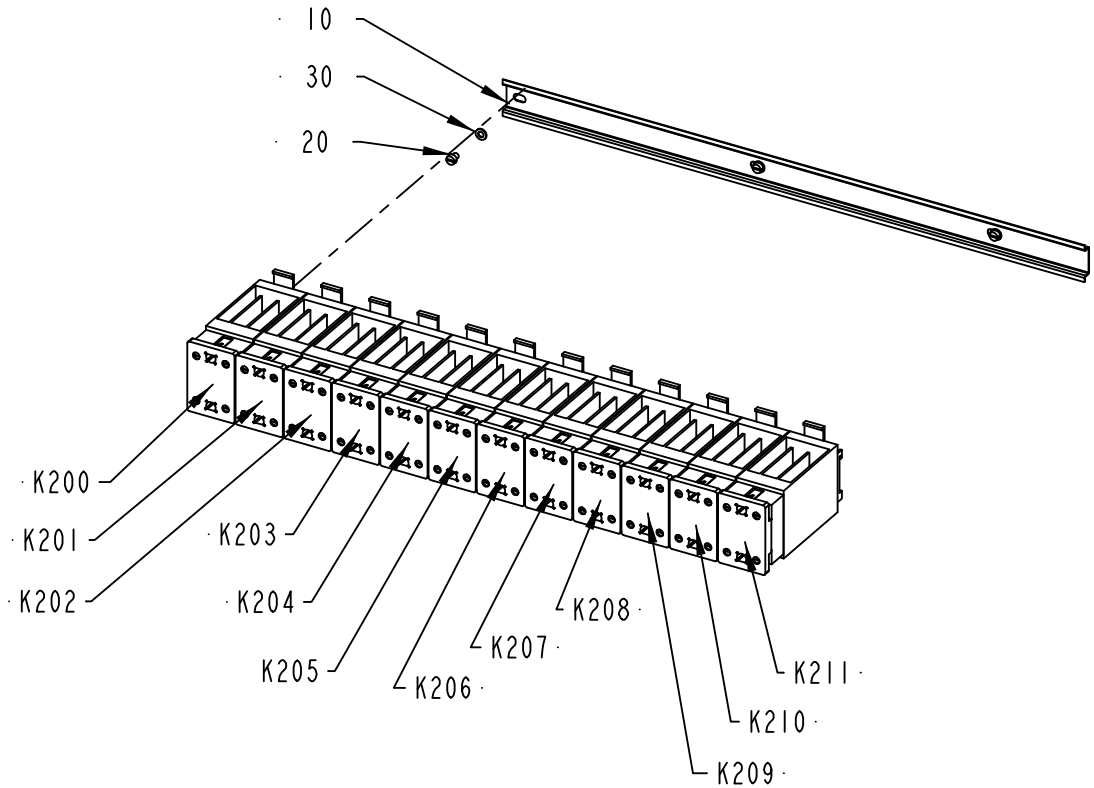

2885013-1
ECM 306098

ECM: 306297 - 20070701
Group number: 2885013-0100
Assembly Drawing: 2885013-1_1_AA

Pos	Part No	UN	Qty	Description	Page No
-					
10	2892602-0000		1	RAIL	
20	312121-0321		3	SCREW ISO 1207 M5X6 4.8-5.8 Z.PL.	
30	315101-0146		3	WASHER PLAIN, BRB, 5,3/10 H=1	
K200	90119-0082		2	SSR 90119-67 + HEAT SINK	
K201	90119-0082		2	SSR 90119-67 + HEAT SINK	
K202	90119-0082		5	SSR 90119-67 + HEAT SINK	
K203	90119-0082		1	SSR 90119-67 + HEAT SINK	
K204	90119-0082		1	SSR 90119-67 + HEAT SINK	
K205	90119-0082		1	SSR 90119-67 + HEAT SINK	
K206	90119-0082		1	SSR 90119-67 + HEAT SINK	
K207	90119-0082		1	SSR 90119-67 + HEAT SINK	
K208	90119-0082		1	SSR 90119-67 + HEAT SINK	
K209	90119-0082		1	SSR 90119-67 + HEAT SINK	
K210	90119-0082		1	SSR 90119-67 + HEAT SINK	
K211	90119-0082		1	SSR 90119-67 + HEAT SINK	

Pos	Part No	UN	Qty	Description	Page No

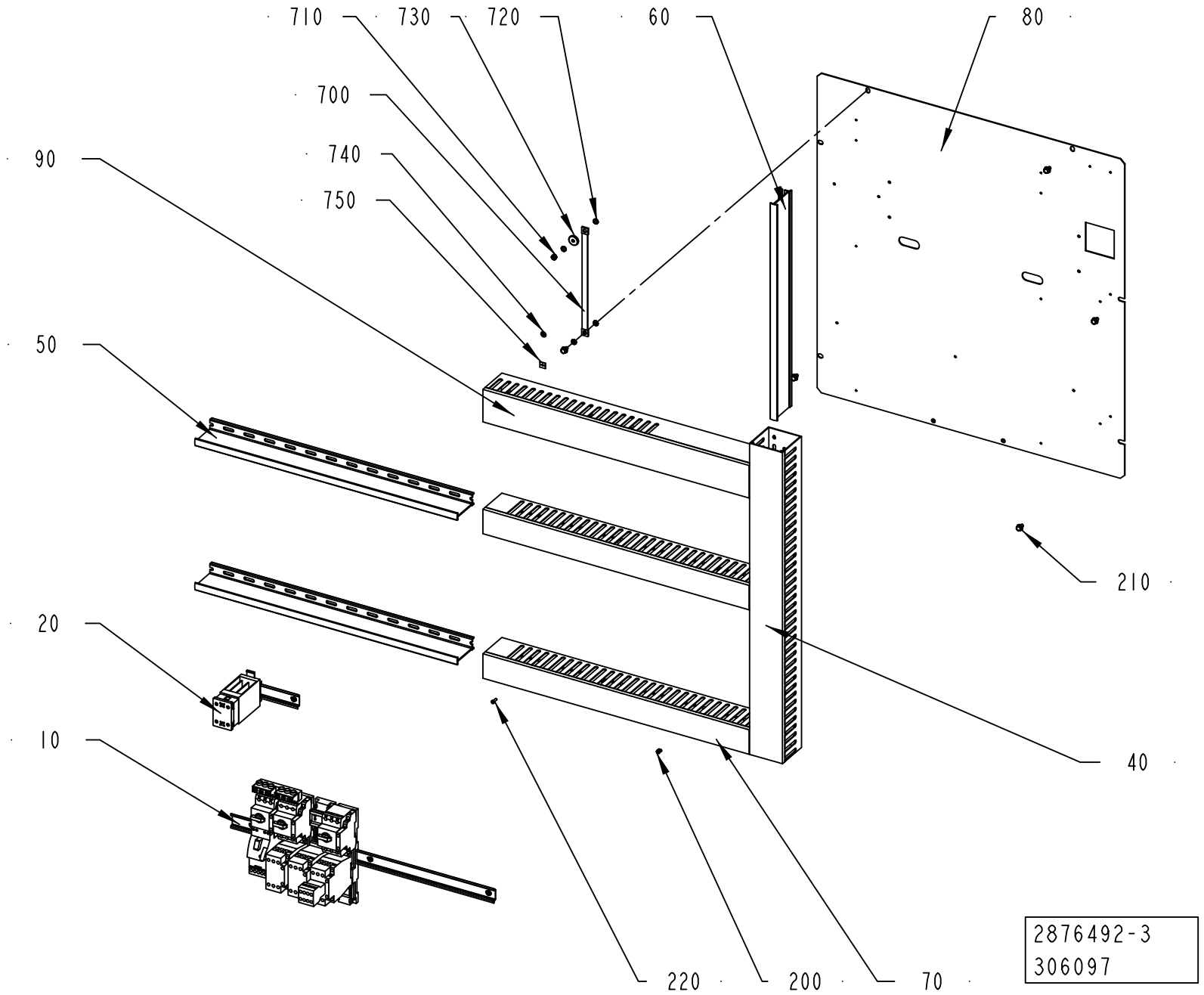
710
730
720
60
80
700
740
750
90
50
210
20
10
40
220
200
70
2876492-3
306097

ECM: 340646 - 20080215
Group number: 2876492-0100
Assembly Drawing: 2876492-3_1_AA

Pos	Part No	UN	Qty	Description	Page No
TBA/22					
10	2885016-0100		1	FUSE BOARD 1	**7-61**
20	2885015-0100		1	RELAY UNIT 1	**7-63, 7-65**
Common Parts					
200	90181-0064		7	LOCK ZP1 FOR CHANNEL T1	
210	90287-0157		6	SCREW M6SF FLAT HEAD M6X10 88	
220	90287-0124		14	SCREW PAN HEAD MSCS M4X12 NYLON	
40	2892583-0000		1	CABLE DUCT	
50	2892593-0000		2	DIVIDER	
60	2889868-0000		1	DIVIDER	
70	2889869-0000		2	CABLE DUCT 60X80MM	
700	90135-0035		1	EARTH WIRE, L=250 MM 16 MM2	
710	312601-0316		1	HEXAGON NUT, DIN 934 M6 8 FZB	
720	90062-0015		4	LOCK WASHER SERRAT.EXT.GEAR,6,4/11 H=0,7	
730	315125-0153		1	WASHER TBRSB 6,4X22X4 A4	
740	2608177-0000		1	SIGN	
750	90194-0152		1	SIGN, EARTH	
80	2892575-0000		1	MOUNTING PLATE	
90	2889870-0000		1	CABLE DUCT 80X80MM	

Pos	Part No	UN	Qty	Description	Page No

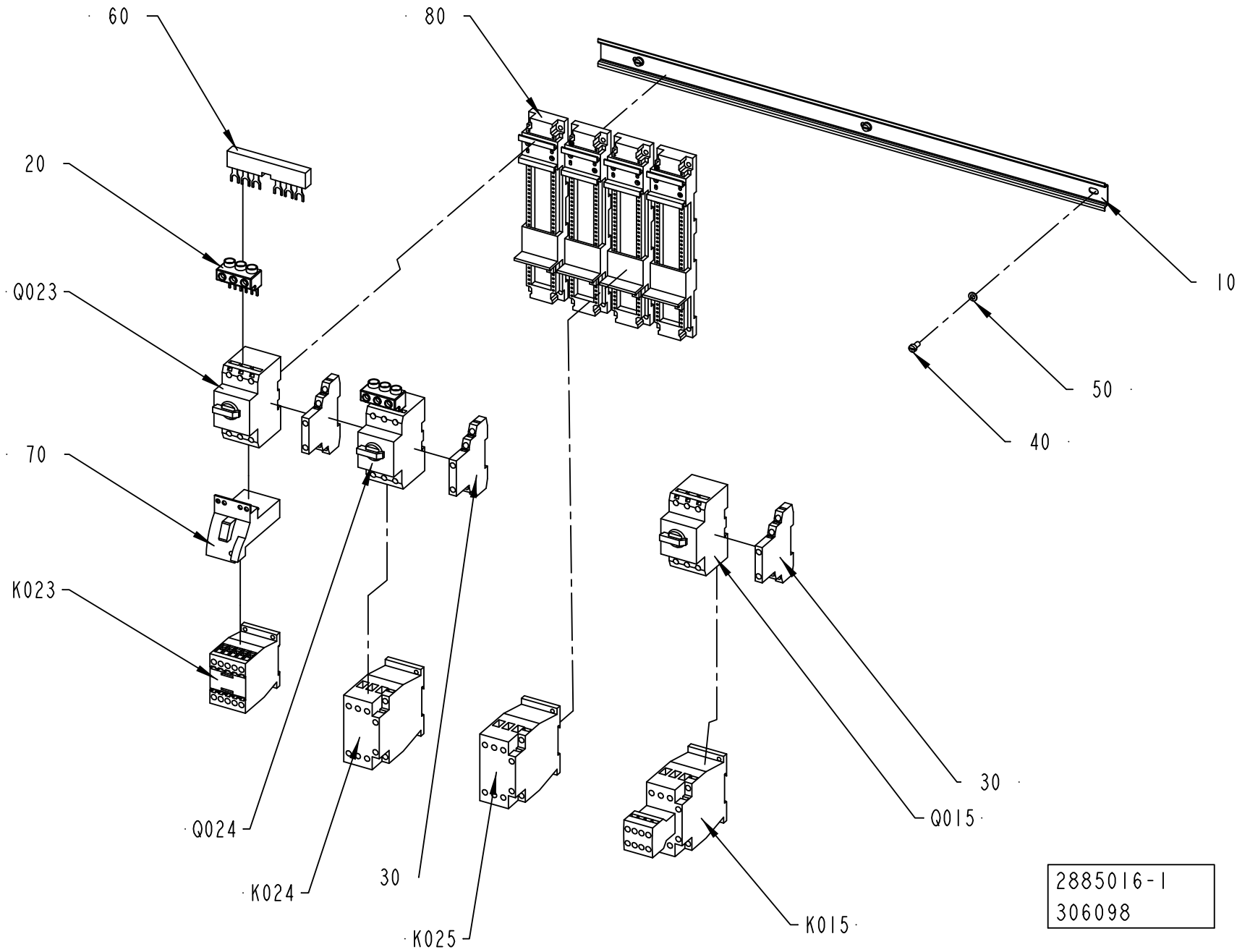
60
80
20
Q023
10
50
40
70
K023
Q024
K024
30
K025
30
Q015
K015
2885016-1
306098

ECM: 306294 - 20070701
Group number: 2885016-0100
Assembly Drawing: 2885016-1_1_AA

Pos	Part No	UN	Qty	Description	Page No
-					
10	2892596-0000		1	RAIL	
20	90458-0577		2	CONNECTION TERMINAL BK 25/3-PKZ 0	
30	90259-0313		3	AUX. CONTACT K&M NHI21-PKZM0	
40	312125-0325		3	SCREW ISO 1207 M5X10 A4	
50	315105-0146		3	WASHER BRB 5,3X10 RFR	
60	90600-1203		1	BUS BAR 3-POLE+AUX. CONT., B3.1/2-PKZ0	
70	90459-6850		1	CONNECTION, PKZM0-XDM12	
80	90459-6851		4	BASE UNIT, PKZM0-XDM32	
K015	90459-5317		1	CONTACTOR 7,5KW 24VDC, DILM17-32	
K023	90459-5440		1	CONTACTOR 4KW 24VDC, DILM9-01	
K024	90459-5441		1	CONTACTOR 7,5KW 24VDC, DILM17-01	
K025	90459-5441		1	CONTACTOR 7,5KW 24VDC, DILM17-01	
Q015	90459-5323		1	OVERLOAD PROTECTION, PKZM0-1	
Q023	90459-5325		1	OVERLOAD PROTECTION, PKZM0-2,5	
Q024	90459-5332		1	OVERLOAD PROTECTION, PKZM0-25	

Pos	Part No	UN	Qty	Description	Page No

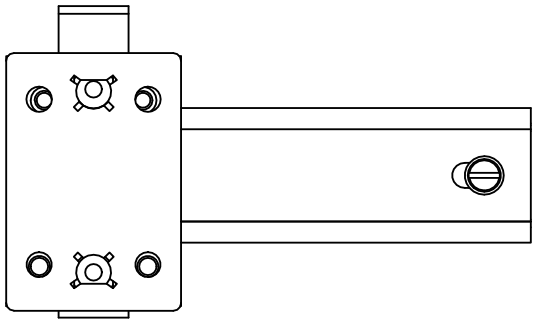

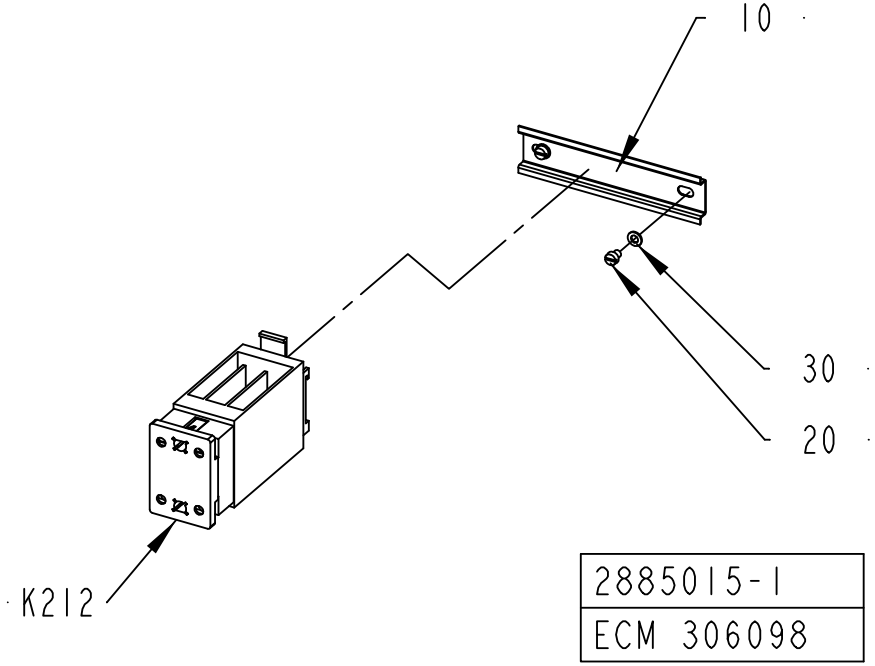

2885015-1
ECM 306098

ECM: 306295 - 20070701
Group number: 2885015-0100
Assembly Drawing: 2885015-1_1_AA

This list covers pages from 7-62 to 7-65

Pos	Part No	UN	Qty	Description	Page No
HI (See drawing on page: 7-64)					
K911	90119-0082		1	SSR 90119-67 + HEAT SINK	
Common Parts					
10	2892595-0000		1	RAIL	
20	312121-0321		2	SCREW ISO 1207 M5X6 4.8-5.8 Z.PL.	
30	315101-0146		2	WASHER PLAIN, BRB, 5,3/10 H=1	
K212	90119-0082		1	SSR 90119-67 + HEAT SINK	

Pos	Part No	UN	Qty	Description	Page No

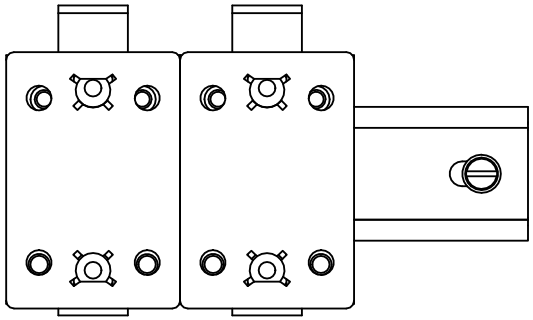
K212 K911

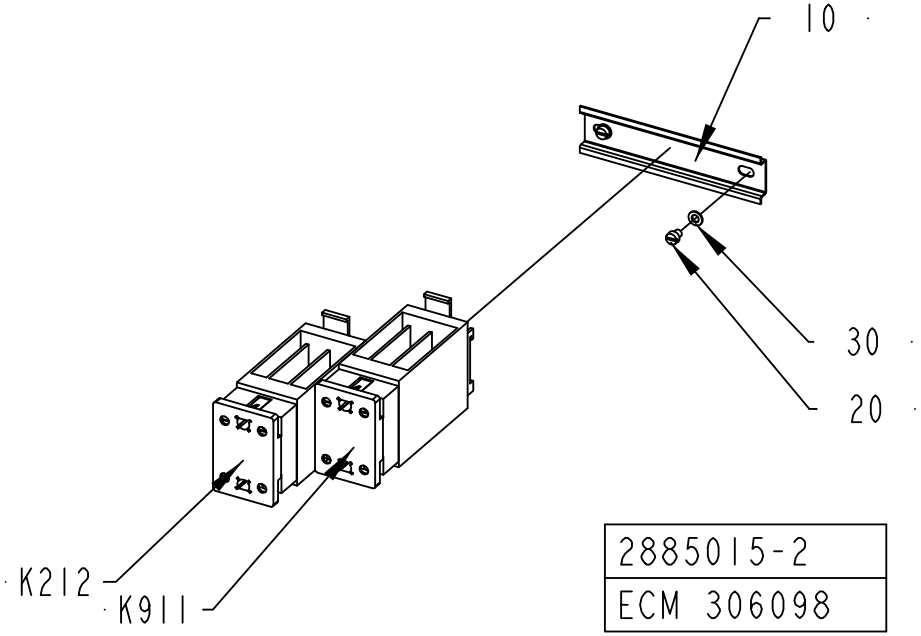
10
30
20
K212
K911
2885015-2
ECM 306098

ECM: 306295 - 20070701
Group number: 2885015-0100
Assembly Drawing: 2885015-2_1_AA

This list covers pages from 7-62 to 7-65

Pos	Part No	UN	Qty	Description	Page No
HI (See drawing on page: 7-64)					
K911	90119-0082		1	SSR 90119-67 + HEAT SINK	
Common Parts					
10	2892595-0000		1	RAIL	
20	312121-0321		2	SCREW ISO 1207 M5X6 4.8-5.8 Z.PL.	
30	315101-0146		2	WASHER PLAIN, BRB, 5,3/10 H=1	
K212	90119-0082		1	SSR 90119-67 + HEAT SINK	

Pos	Part No	UN	Qty	Description	Page No

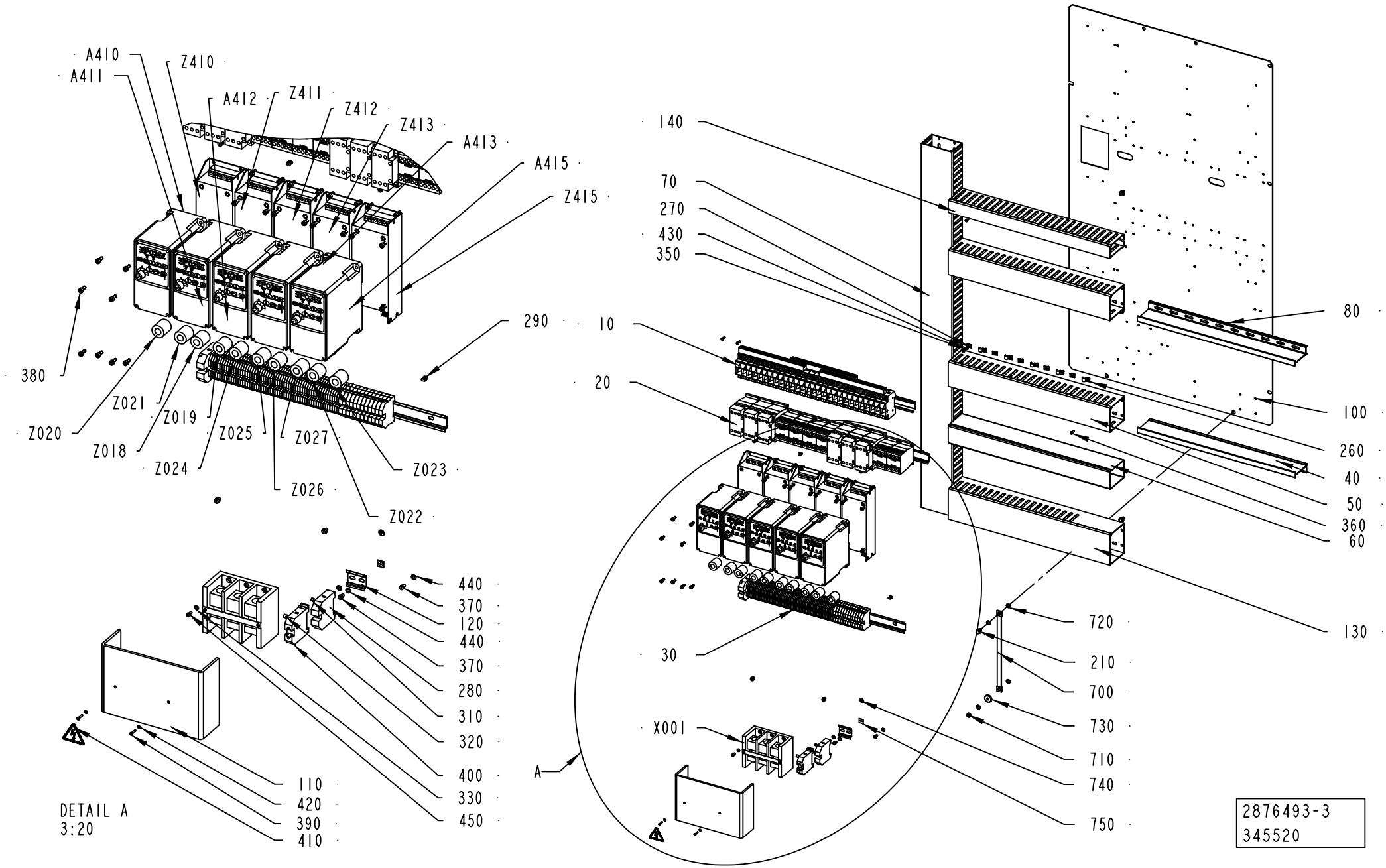
A410
A411
Z410
A412
Z411
Z412
Z413
A413
A415
Z415
290
380
Z021
Z020
Z019
Z018
Z025
Z024
Z027
Z026
Z023
Z022
140
70
270
430
350
10
20
30
X001
A
80
100
260
40
50
360
60
130
720
210
700
730
710
740
750
440
370
120
440
370
280
310
320
400
330
450
110
420
390
410
DETAIL A
3:20
2876493-3
345520

ECM: 360972 - 20081001
Group number: 2876493-0100
Assembly Drawing: 2876493-3_1_AC

Pos	Part No	UN	Qty	Description	Page No
TBA/22					
10	2885017-0100		1	FUSE BOARD 2	**7-69, 7-71**
20	2885018-0100		1	FUSE BOARD 3	**7-73, 7-75**
30	2885019-0100		1	PLINTH	**7-77**
40	2918738-0000		1	DIVIDER	
A410	90459-3450		1	VARIABLE FREQUENCY DRIVE 22A-A4P5N104	
A411	90459-3449		1	VARIABLE FREQUENCY DRIVE 22A-A2P3N104	
A412	90459-3449		1	VARIABLE FREQUENCY DRIVE 22A-A2P3N104	
A413	90459-3449		1	VARIABLE FREQUENCY DRIVE 22A-A2P3N104	
A415	90459-3450		1	VARIABLE FREQUENCY DRIVE 22A-A4P5N104	
Z018	90458-1140		1	FERRITE, RI-26-28-13	
Z019	90458-1140		1	FERRITE, RI-26-28-13	
Z020	90458-1140		1	FERRITE, RI-26-28-13	
Z021	90458-1140		1	FERRITE, RI-26-28-13	
Z022	90458-1140		1	FERRITE, RI-26-28-13	
Z023	90458-1140		1	FERRITE, RI-26-28-13	
Z024	90458-1140		1	FERRITE, RI-26-28-13	
Z025	90458-1140		1	FERRITE, RI-26-28-13	
Z026	90458-1140		1	FERRITE, RI-26-28-13	
Z027	90458-1140		1	FERRITE, RI-26-28-13	
Z410	90459-3460		1	FOOTPRINT FILTER 22-RF010-AL	
Z411	90459-3460		1	FOOTPRINT FILTER 22-RF010-AL	
Z412	90459-3460		1	FOOTPRINT FILTER 22-RF010-AL	
Z413	90459-3460		1	FOOTPRINT FILTER 22-RF010-AL	
Z415	90459-3460		1	FOOTPRINT FILTER 22-RF010-AL	
Common Parts					
100	2876480-0000		1	MOUNTING PLATE	
110	2844054-0000		1	PROTECTION	
120	2789106-0000		1	RAIL	
130	2889872-0000		1	CABLE DUCT 100X80MM	
140	2889873-0000		1	CABLE DUCT 40X80MM	
210	90287-0157		1	SCREW M6SF FLAT HEAD M6X10 88	
260	90165-0007		5	PIPE CLIP FOR TUBE D=8 MM	
270	90165-0022		5	PIPE CLIP, FOR TUBE D=2,5 MM, B-3570	
280	353024-0209		1	EARTH TERMINAL, 1010.5	
290	90181-0064		6	LOCK ZP1 FOR CHANNEL T1	
310	359011-0819		1	MARKING PLATES 5-GW (EARTH)	
320	359011-0821		1	SET OF SIGNS 6-FW 1-50	
330	315105-0136		6	WASHER BRB 4,3X8 RFR	
340	90287-0157		6	SCREW M6SF FLAT HEAD M6X10 88	
350	312121-0289		10	SCREW ISO 1207 M4X10 4.8-5.8 Z.PL.	
360	90287-0124		26	SCREW PAN HEAD MSCS M4X12 NYLON	
370	312121-0323		5	SCREW ISO 1207 M5X8 4.8-5.8 Z.PL.	
380	312115-0327		40	SCREW ISO4762 M5X12 A4 80	
390	312503-0229		2	TAPPING SCREW ISO 7049-ST2,9X16-C-Z	
400	353021-0226		1	BY-PASS TERMINAL WDU 35	
410	359705-0015		1	WARNING SIGN ISO, RISK OF ELECTRIC SHOCK	
420	315105-0124		2	WASHER BRB 3,2X6 RFR	
430	315101-0136		10	WASHER BRB, 4,3/8 H=0,8	
440	315101-0146		5	WASHER PLAIN, BRB, 5,3/10 H=1	
450	312125-0289		6	SCREW ISO 1207 M4X10 A4	
50	2892582-0000		2	CABLE DUCT	
60	2892581-0000		1	CABLE DUCT	
70	2876495-0000		1	CABLE DUCT	
700	90135-0035		1	EARTH WIRE, L=250 MM 16 MM2	
710	312601-0316		1	HEXAGON NUT, DIN 934 M6 8 FZB	
720	90062-0015		4	LOCK WASHER SERRAT.EXT.GEAR,6,4/11 H=0,7	
730	315125-0153		1	WASHER TBRSB 6,4X22X4 A4	
740	2608177-0000		1	SIGN	
750	90194-0152		1	SIGN, EARTH	
80	2889871-0000		2	DIVIDER	
X001	90459-0959		1	DISTRIBUTOR BLOCK 1492-PD3163	

Machine Type | Group Description | Used-In | Group Number | Page No

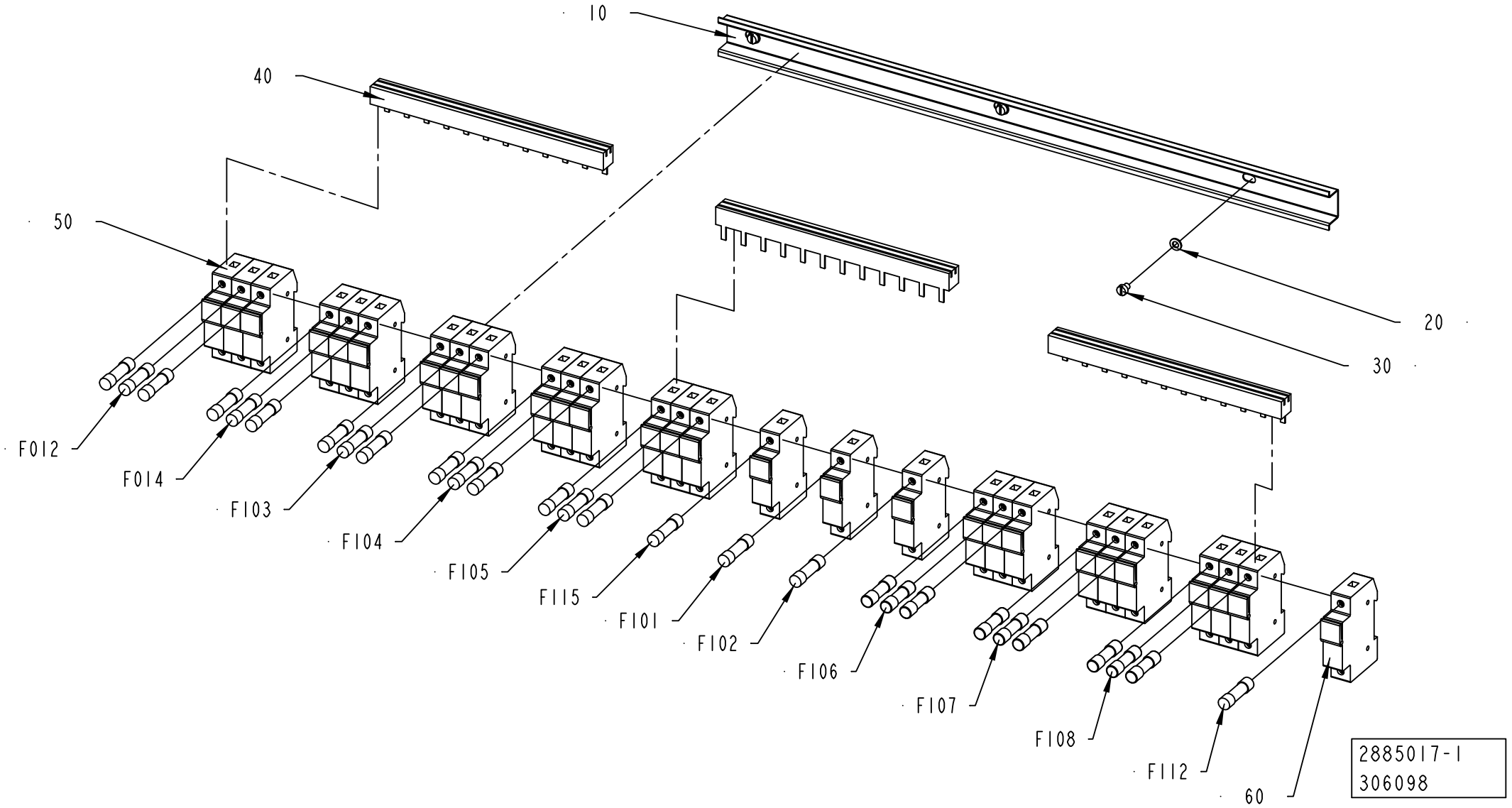
10
40
50
20
30
F012
F014
F103
F104
F105
F115
F101
F102
F106
F107
F108
F112
60
2885017-1
306098

ECM: 360663 - 20081001
Group number: 2885017-0100
Assembly Drawing: 2885017-1_1_AA

This list covers pages from 7-68 to 7-71

Pos	Part No	UN	Qty	Description	Page No
HI (See drawing on page: 7-68)					
60	90600-4648		4	FUSE HOLDER CYLINDRICAL FUSE, CMS101SP	
NOHI (See drawing on page: 7-70)					
60	90600-4648		5	FUSE HOLDER CYLINDRICAL FUSE, CMS101SP	
F910	90233-0027		1	TUBE FUSE 16A, A070GRB16T13 J330012	
	90233-0305		*1*	*INDICATOR*	
Common Parts					
10	2892600-0000		1	RAIL	
20	315101-0146		3	WASHER PLAIN, BRB, 5,3/10 H=1	
30	312121-0321		3	SCREW ISO 1207 M5X6 4.8-5.8 Z.PL.	
40	90459-6857		3	BUSBAR, 3-P 12 100A	
50	90600-4650		8	FUSE HOLDER CYLINDRICAL FUSE, CMS103SP	
F012	90233-0028		3	TUBE FUSE 10A, A070GRB10T13 G330010	
F014	90233-0028		3	TUBE FUSE 10A, A070GRB10T13 G330010	
F101	90233-0029		1	TUBE FUSE 25A, A070GRB25T13 L330014	
F102	90233-0029		1	TUBE FUSE 25A, A070GRB25T13 L330014	
F103	90233-0029		3	TUBE FUSE 25A, A070GRB25T13 L330014	
F104	90233-0028		3	TUBE FUSE 10A, A070GRB10T13 G330010	
F105	90233-0028		3	TUBE FUSE 10A, A070GRB10T13 G330010	
F106	90459-1254		3	TUBE FUSE, 4A 500V	
F107	90459-1254		3	TUBE FUSE, 4A 500V	
F108	90459-1254		3	TUBE FUSE, 4A 500V	
F112	90233-0034		1	TUBE FUSE, 1 A	
F115	90233-0062		1	TUBE FUSE, 4A 600V	

Pos	Part No	UN	Qty	Description	Page No

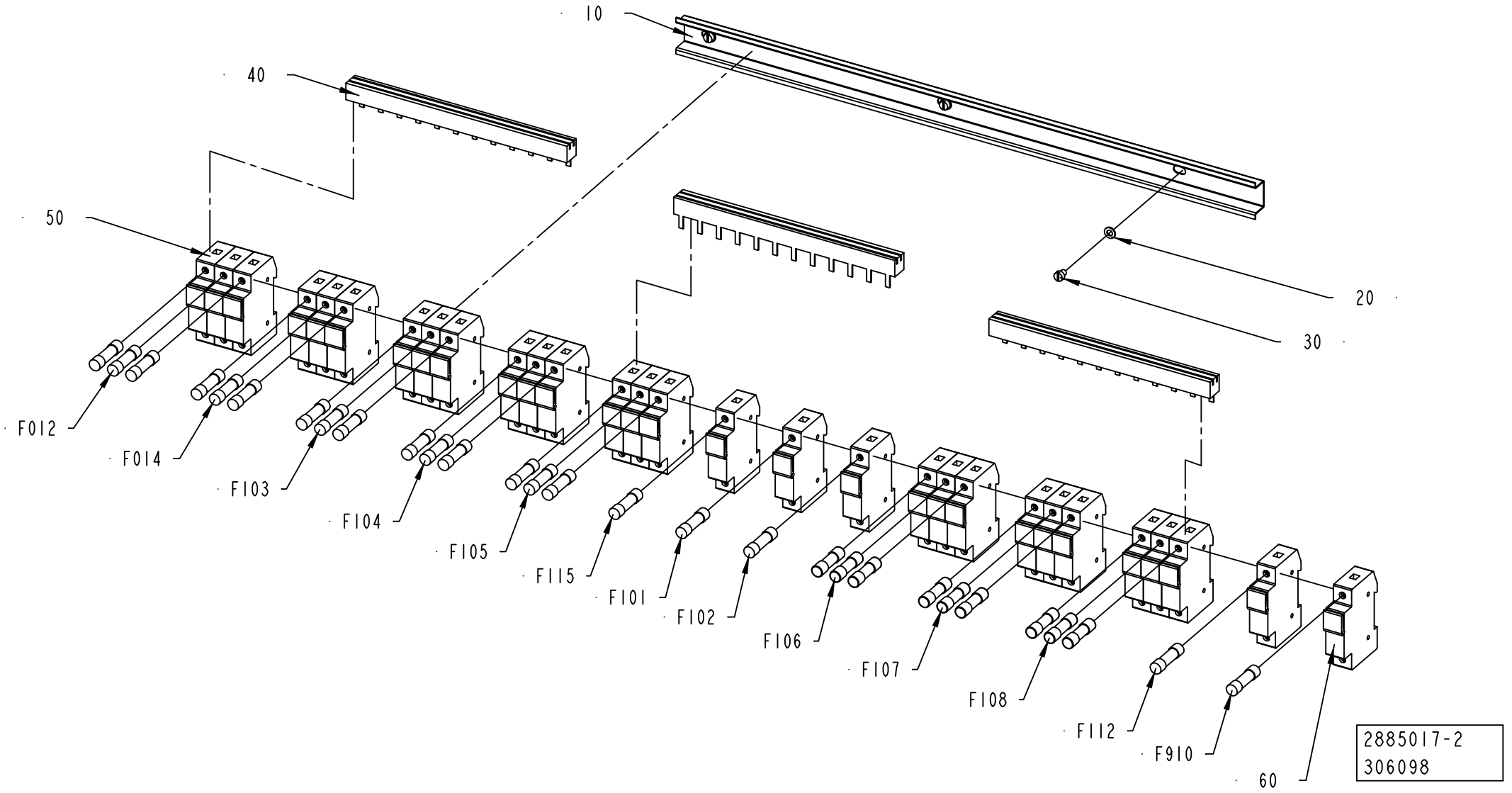
10
40
50
20
30
F012
F014
F103
F104
F105
F115
F101
F102
F106
F107
F108
F112
F910
60
2885017-2
306098

ECM: 360663 - 20081001
Group number: 2885017-0100
Assembly Drawing: 2885017-2_1_AA

This list covers pages from 7-68 to 7-71

Pos	Part No	UN	Qty	Description	Page No
HI (See drawing on page: 7-68)					
60	90600-4648		4	FUSE HOLDER CYLINDRICAL FUSE, CMS101SP	
NOHI (See drawing on page: 7-70)					
60	90600-4648		5	FUSE HOLDER CYLINDRICAL FUSE, CMS101SP	
F910	90233-0027		1	TUBE FUSE 16A, A070GRB16T13 J330012	
	90233-0305		*1*	*INDICATOR*	
Common Parts					
10	2892600-0000		1	RAIL	
20	315101-0146		3	WASHER PLAIN, BRB, 5,3/10 H=1	
30	312121-0321		3	SCREW ISO 1207 M5X6 4.8-5.8 Z.PL.	
40	90459-6857		3	BUSBAR, 3-P 12 100A	
50	90600-4650		8	FUSE HOLDER CYLINDRICAL FUSE, CMS103SP	
F012	90233-0028		3	TUBE FUSE 10A, A070GRB10T13 G330010	
F014	90233-0028		3	TUBE FUSE 10A, A070GRB10T13 G330010	
F101	90233-0029		1	TUBE FUSE 25A, A070GRB25T13 L330014	
F102	90233-0029		1	TUBE FUSE 25A, A070GRB25T13 L330014	
F103	90233-0029		3	TUBE FUSE 25A, A070GRB25T13 L330014	
F104	90233-0028		3	TUBE FUSE 10A, A070GRB10T13 G330010	
F105	90233-0028		3	TUBE FUSE 10A, A070GRB10T13 G330010	
F106	90459-1254		3	TUBE FUSE, 4A 500V	
F107	90459-1254		3	TUBE FUSE, 4A 500V	
F108	90459-1254		3	TUBE FUSE, 4A 500V	
F112	90233-0034		1	TUBE FUSE, 1 A	
F115	90233-0062		1	TUBE FUSE, 4A 600V	

Pos	Part No	UN	Qty	Description	Page No

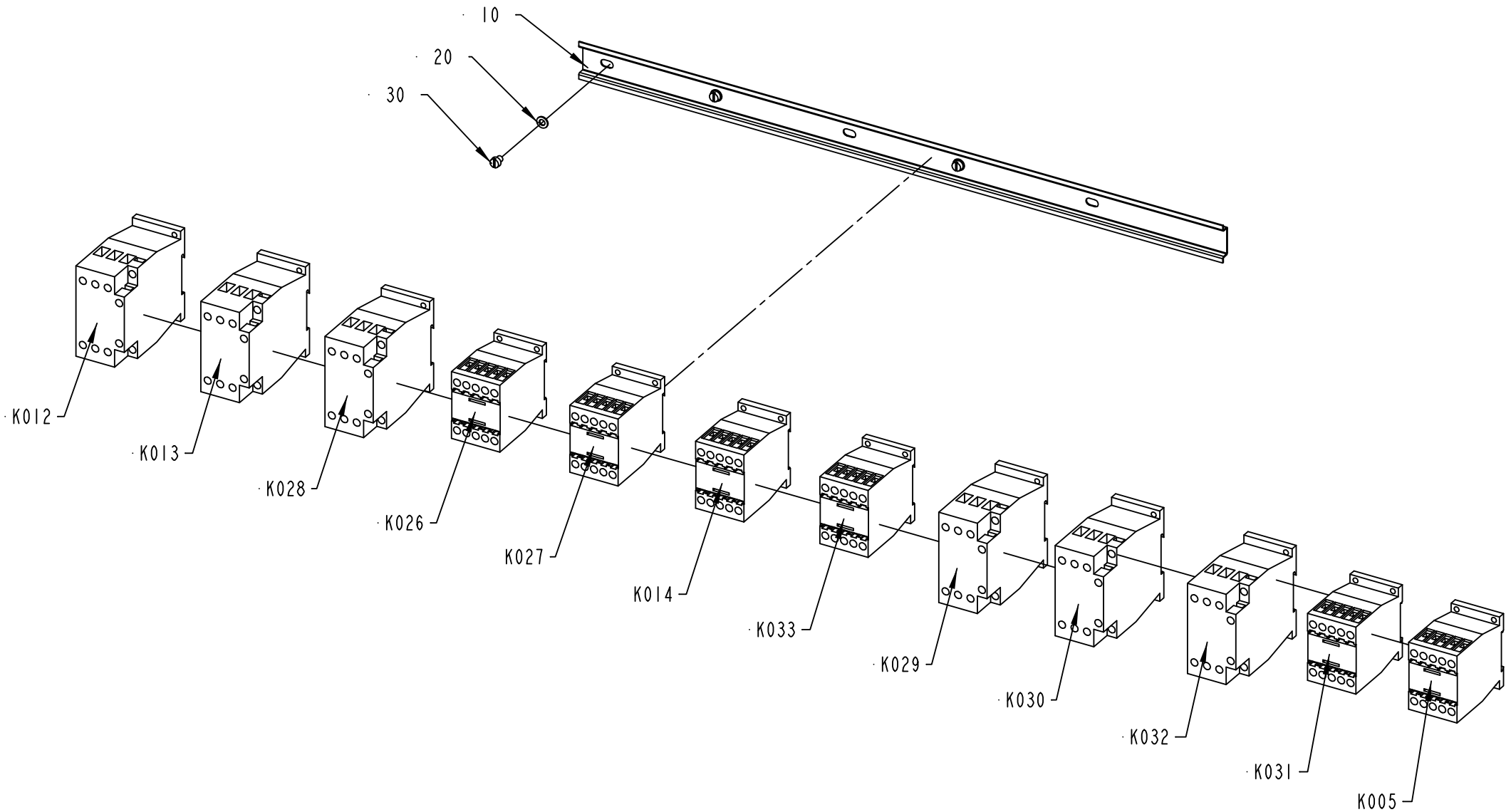
10
20
30
K012
K013
K028
K026
K027
K014
K033
K029
K030
K032
K031
K005
2885018-1
306098

ECM: 306292 - 20070701
Group number: 2885018-0100
Assembly Drawing: 2885018-1_1_AA

This list covers pages from 7-72 to 7-75

Pos	Part No	UN	Qty	Description	Page No
HI (See drawing on page: 7-74)					
K910	90459-5441		1	CONTACTOR 7,5KW 24VDC, DILM17-01	
Common Parts					
10	2897669-0000		1	RAIL	
20	315101-0146		3	WASHER PLAIN, BRB, 5,3/10 H=1	
30	312121-0321		3	SCREW ISO 1207 M5X6 4.8-5.8 Z.PL.	
K005	90459-5440		1	CONTACTOR 4KW 24VDC, DILM9-01	
K012	90459-5441		1	CONTACTOR 7,5KW 24VDC, DILM17-01	
K013	90459-5441		1	CONTACTOR 7,5KW 24VDC, DILM17-01	
K014	90459-5440		1	CONTACTOR 4KW 24VDC, DILM9-01	
K026	90459-5440		1	CONTACTOR 4KW 24VDC, DILM9-01	
K027	90459-5440		1	CONTACTOR 4KW 24VDC, DILM9-01	
K028	90459-5441		1	CONTACTOR 7,5KW 24VDC, DILM17-01	
K029	90459-5441		1	CONTACTOR 7,5KW 24VDC, DILM17-01	
K030	90459-5441		1	CONTACTOR 7,5KW 24VDC, DILM17-01	
K031	90459-5440		1	CONTACTOR 4KW 24VDC, DILM9-01	
K032	90459-5441		1	CONTACTOR 7,5KW 24VDC, DILM17-01	
K033	90459-5440		1	CONTACTOR 4KW 24VDC, DILM9-01	

Pos	Part No	UN	Qty	Description	Page No

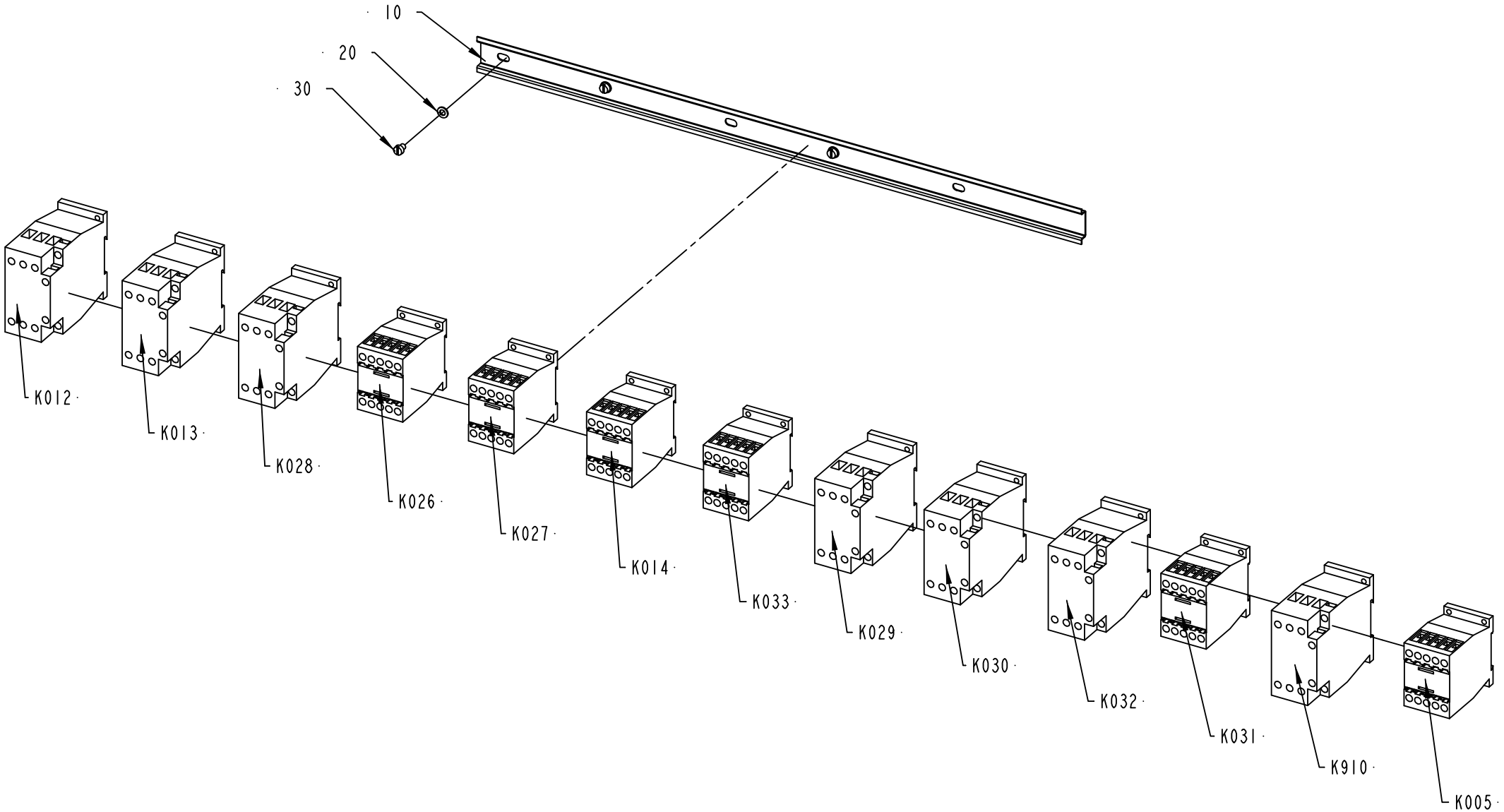

2885018-2
306098

ECM: 306292 - 20070701
Group number: 2885018-0100
Assembly Drawing: 2885018-2_1_AA

This list covers pages from 7-72 to 7-75

Pos	Part No	UN	Qty	Description	Page No
HI (See drawing on page: 7-74)					
K910	90459-5441		1	CONTACTOR 7,5KW 24VDC, DILM17-01	
Common Parts					
10	2897669-0000		1	RAIL	
20	315101-0146		3	WASHER PLAIN, BRB, 5,3/10 H=1	
30	312121-0321		3	SCREW ISO 1207 M5X6 4.8-5.8 Z.PL.	
K005	90459-5440		1	CONTACTOR 4KW 24VDC, DILM9-01	
K012	90459-5441		1	CONTACTOR 7,5KW 24VDC, DILM17-01	
K013	90459-5441		1	CONTACTOR 7,5KW 24VDC, DILM17-01	
K014	90459-5440		1	CONTACTOR 4KW 24VDC, DILM9-01	
K026	90459-5440		1	CONTACTOR 4KW 24VDC, DILM9-01	
K027	90459-5440		1	CONTACTOR 4KW 24VDC, DILM9-01	
K028	90459-5441		1	CONTACTOR 7,5KW 24VDC, DILM17-01	
K029	90459-5441		1	CONTACTOR 7,5KW 24VDC, DILM17-01	
K030	90459-5441		1	CONTACTOR 7,5KW 24VDC, DILM17-01	
K031	90459-5440		1	CONTACTOR 4KW 24VDC, DILM9-01	
K032	90459-5441		1	CONTACTOR 7,5KW 24VDC, DILM17-01	
K033	90459-5440		1	CONTACTOR 4KW 24VDC, DILM9-01	

Pos	Part No	UN	Qty	Description	Page No

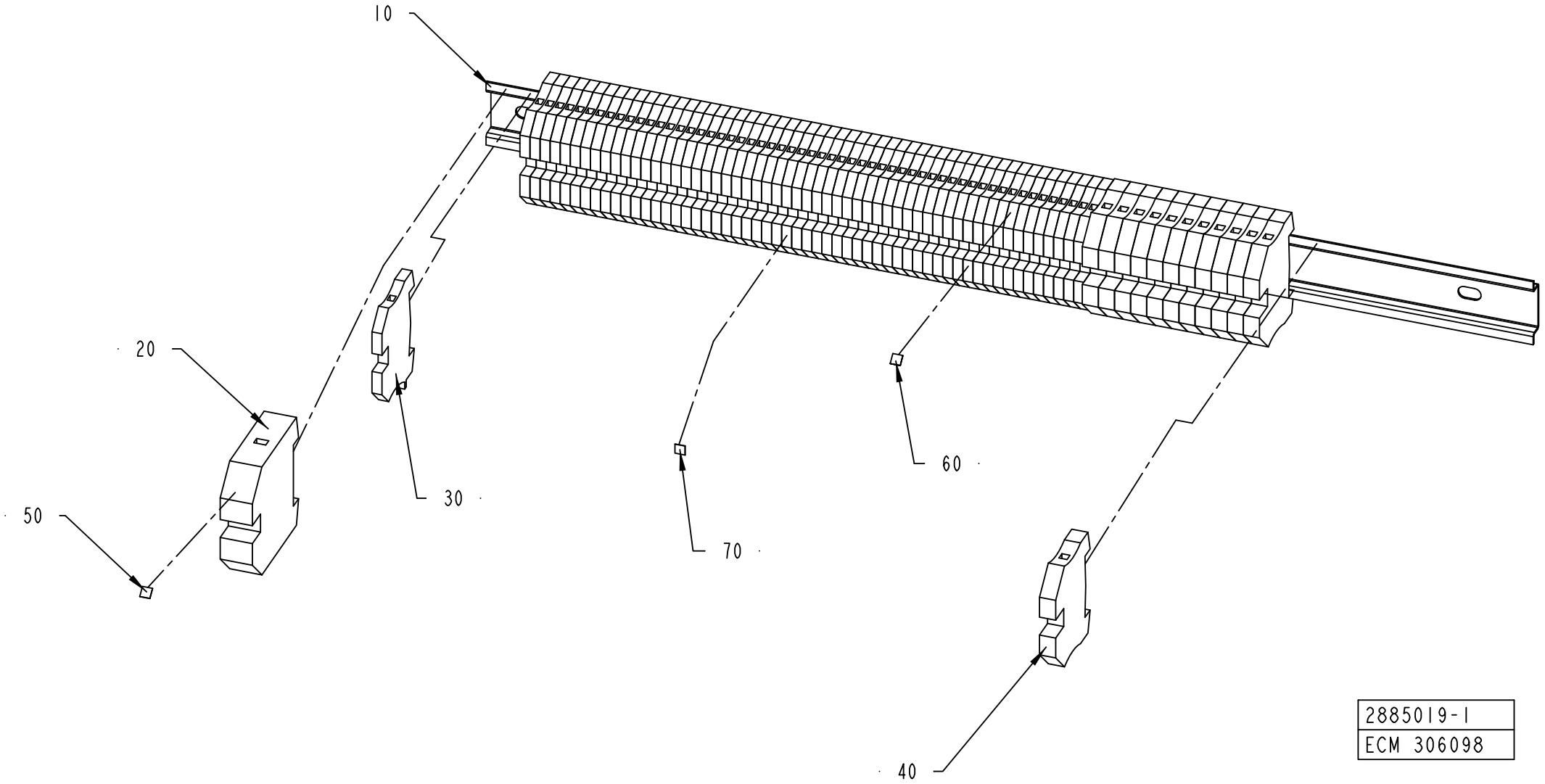
10
20
30
40
50
60
70
2885019-1
ECM 306098

ECM: 306291 - 20070701
Group number: 2885019-0100
Assembly Drawing: 2885019-1_1_AA

Pos	Part No	UN	Qty	Description	Page No
-					
10	2558934-0000		1	RAIL	
20	353024-0209		1	EARTH TERMINAL, 1010.5	
30	353024-0204		57	EARTH TERMINAL WPE 2,5	
40	353024-0206		12	EARTH TERMINAL, 1010.2	
50	359011-0807		1	MARKING PLATES 5-FW 1-50	
60	359011-0808		1	MARKING PLATES 5-FW 51-100	
70	359011-0809		1	MARKING PLATES 5-FW 101-150	

Pos	Part No	UN	Qty	Description	Page No

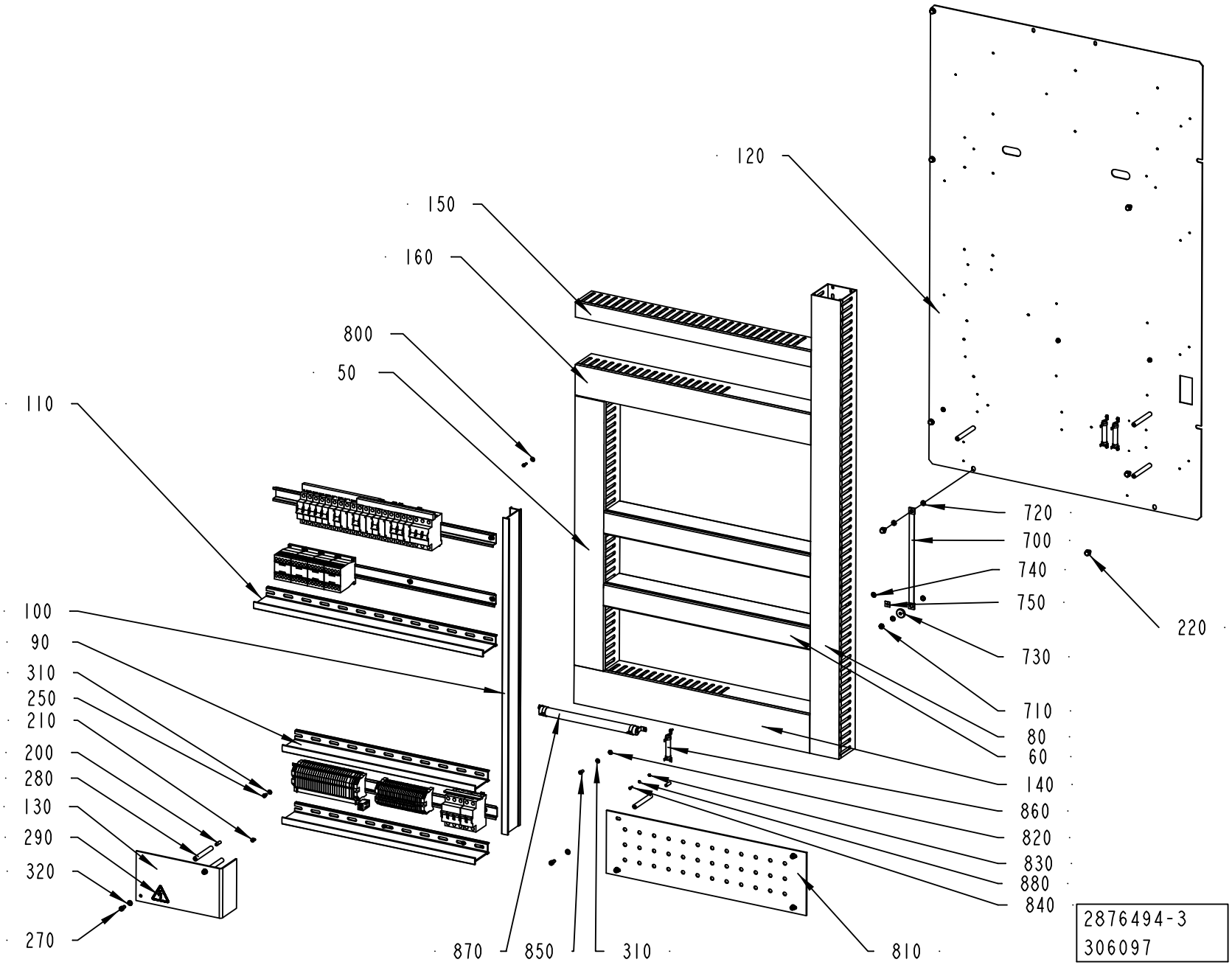
120
150
160
800
50
110
100
90
310
250
210
200
280
130
290
320
270
720
700
740
750
730
710
80
60
140
860
820
830
880
840
220
870
850
310
810
2876494-3
306097

ECM: 340648 - 20080215
Group number: 2876494-0100
Assembly Drawing: 2876494-3_1_AA

Pos	Part No	UN	Qty	Description	Page No
TBA/22					
10	2885020-0100		1	FUSE BOARD 2	**7-81**
130	2885024-0000		1	PROTECTION	
20	2885021-0100		1	FUSE BOARD 3	**7-83**
270	312111-0366		6	SCREW HEX.SOCK.HD.MC6S-TT 6X12 88 FZB	
280	1038275-0012		6	SPACER	
30	2885022-0100		1	PLINTH	**7-85**
310	315101-0146		5	WASHER PLAIN, BRB, 5,3/10 H=1	
320	315101-0153		6	WASHER PLAIN, BRB, 6,4/12 H=1,5	
810	2885023-0000		1	PROTECTION	
820	90062-0021		2	LOCK WASHER DIN 6797 TYPE A 5,3	
830	90062-0038		6	LOCK WASHER SERRAT.INT.GEAR,3,2/6 H=0,4	
840	312121-0224		6	SCREW ISO 1207 M3X10 4.8-5.8 Z.PL.	
850	312121-0325		2	SCREW ISO 1207 M5X10 4.8-5.8 Z.PL.	
860	90121-0114		3	RESISTANCE FIXED, 0,22 KOHM, 25 W	
870	90121-0115		1	RESISTANCE FIXED, 0,047 KOHM, 200 W	
880	315101-0124		6	WASHER PLAIN, BRB, 3,2/6 H=0,5	
Common Parts					
100	2889877-0000		1	DIVIDER	
110	2889878-0000		1	DIVIDER	
120	2876481-0000		1	MOUNTING PLATE	
140	2889876-0000		1	CABLE DUCT 100X80MM	
150	2889874-0000		1	CABLE DUCT 40X80MM	
160	2889875-0000		1	CABLE DUCT 80X80MM	
200	312318-0370		2	SCREW ISO4029 M6X20 A4	
210	90181-0064		12	LOCK ZP1 FOR CHANNEL T1	
220	90287-0157		7	SCREW M6SF FLAT HEAD M6X10 88	
230	90287-0124		28	SCREW PAN HEAD MSCS M4X12 NYLON	
250	312121-0323		3	SCREW ISO 1207 M5X8 4.8-5.8 Z.PL.	
290	359705-0015		1	WARNING SIGN ISO, RISK OF ELECTRIC SHOCK	
50	2892590-0000		1	CABLE DUCT	
60	2892591-0000		2	CABLE DUCT	
700	90135-0035		1	EARTH WIRE, L=250 MM 16 MM2	
710	312601-0316		1	HEXAGON NUT, DIN 934 M6 8 FZB	
720	90062-0015		4	LOCK WASHER SERRAT.EXT.GEAR,6,4/11 H=0,7	
730	315125-0153		1	WASHER TBRSB 6,4X22X4 A4	
740	2608177-0000		1	SIGN	
750	90194-0152		1	SIGN, EARTH	
80	2876496-0000		1	CABLE DUCT	
800	90459-3256		3	NYLON RETAINER, 82-32-301-12	
90	2892578-0000		2	DIVIDER	

Pos	Part No	UN	Qty	Description	Page No

Machine Type | Group Description | Used-In | Group Number | Page No

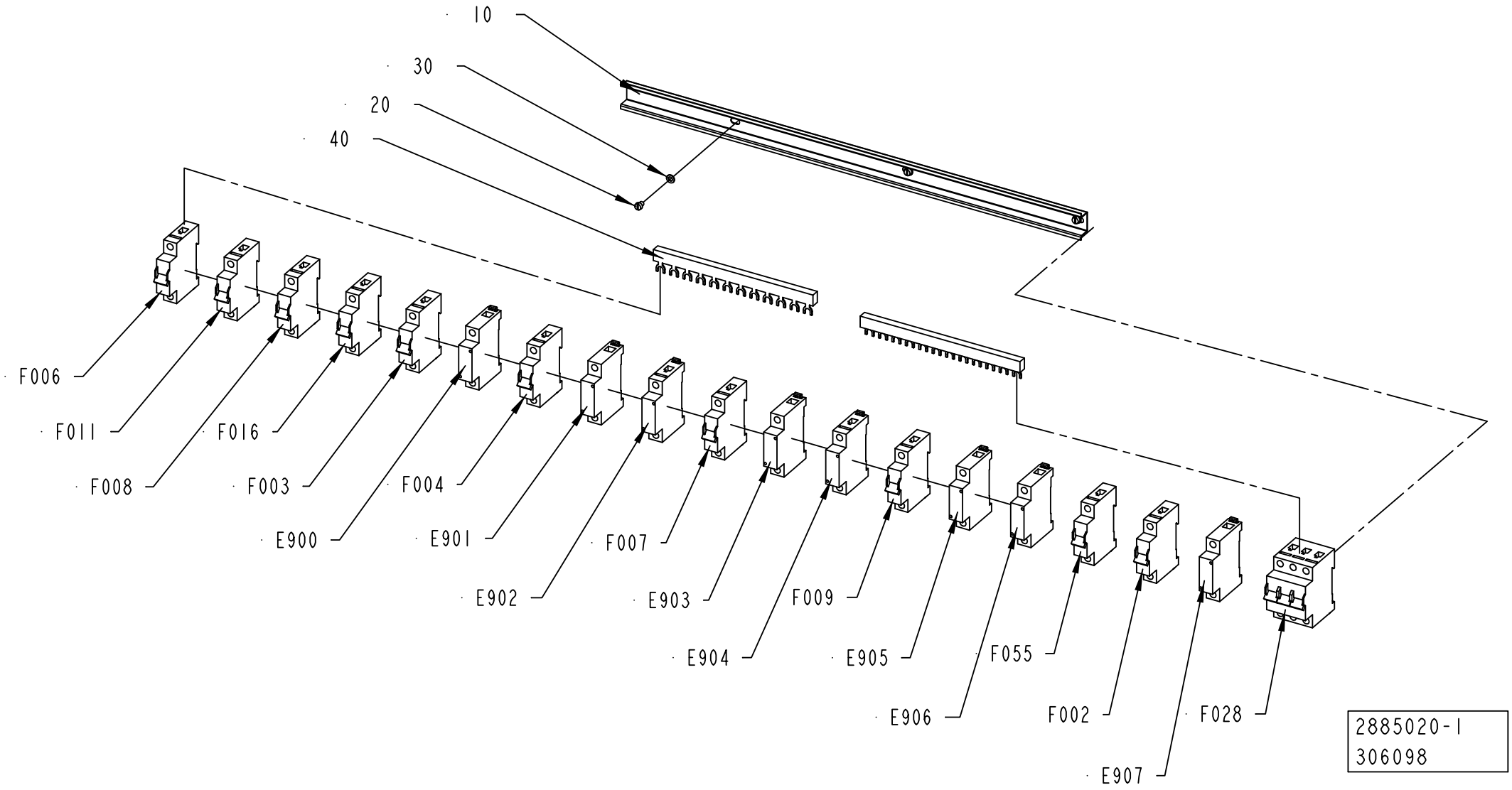
10
30
20
40
F006
F011
F016
F008
F003
F004
E900
E901
F007
E902
E903
F009
E904
E905
F055
E906
F002
F028
E907
2885020-1
306098

ECM: 306290 - 20070701
Group number: 2885020-0100
Assembly Drawing: 2885020-1_1_AA

Pos	Part No	UN	Qty	Description	Page No
-					
10	2892597-0000		1	RAIL	
20	312121-0321		3	SCREW ISO 1207 M5X6 4.8-5.8 Z.PL.	
30	315101-0146		3	WASHER PLAIN, BRB, 5,3/10 H=1	
40	90459-6855		2	COMMONING BUSBAR, 3-P 3-PH 12 100A	
E900	90459-6856		1	FEEDER BLOCK, FAZ/FIP-XVS-KL	
E901	90459-6856		1	FEEDER BLOCK, FAZ/FIP-XVS-KL	
E902	90459-6856		1	FEEDER BLOCK, FAZ/FIP-XVS-KL	
E903	90459-6856		1	FEEDER BLOCK, FAZ/FIP-XVS-KL	
E904	90459-6856		1	FEEDER BLOCK, FAZ/FIP-XVS-KL	
E905	90459-6856		1	FEEDER BLOCK, FAZ/FIP-XVS-KL	
E906	90459-6856		1	FEEDER BLOCK, FAZ/FIP-XVS-KL	
E907	90459-6856		1	FEEDER BLOCK, FAZ/FIP-XVS-KL	
F002	351416-0060		1	MINIATURE CIRC. BREAK., FAZ -D6 1-POLE	
F003	351416-0100		1	MINIATURE CIRC. BREAK., FAZ -D10 1-POLE	
F004	351416-0100		1	MINIATURE CIRC. BREAK., FAZ -D10 1-POLE	
F006	351416-0100		1	MINIATURE CIRC. BREAK., FAZ -D10 1-POLE	
F007	351416-0100		1	MINIATURE CIRC. BREAK., FAZ -D10 1-POLE	
F008	351416-0060		1	MINIATURE CIRC. BREAK., FAZ -D6 1-POLE	
F009	351416-0100		1	MINIATURE CIRC. BREAK., FAZ -D10 1-POLE	
F011	351416-0100		1	MINIATURE CIRC. BREAK., FAZ -D10 1-POLE	
F016	351416-0060		1	MINIATURE CIRC. BREAK., FAZ -D6 1-POLE	
F028	351418-0060		1	MINIATURE CIRC. BREAK., FAZ-D6/3 3-POLE	
F055	351416-0020		1	MINIATURE CIRC. BREAK., FAZ -D2 1-POLE	

Pos	Part No	UN	Qty	Description	Page No

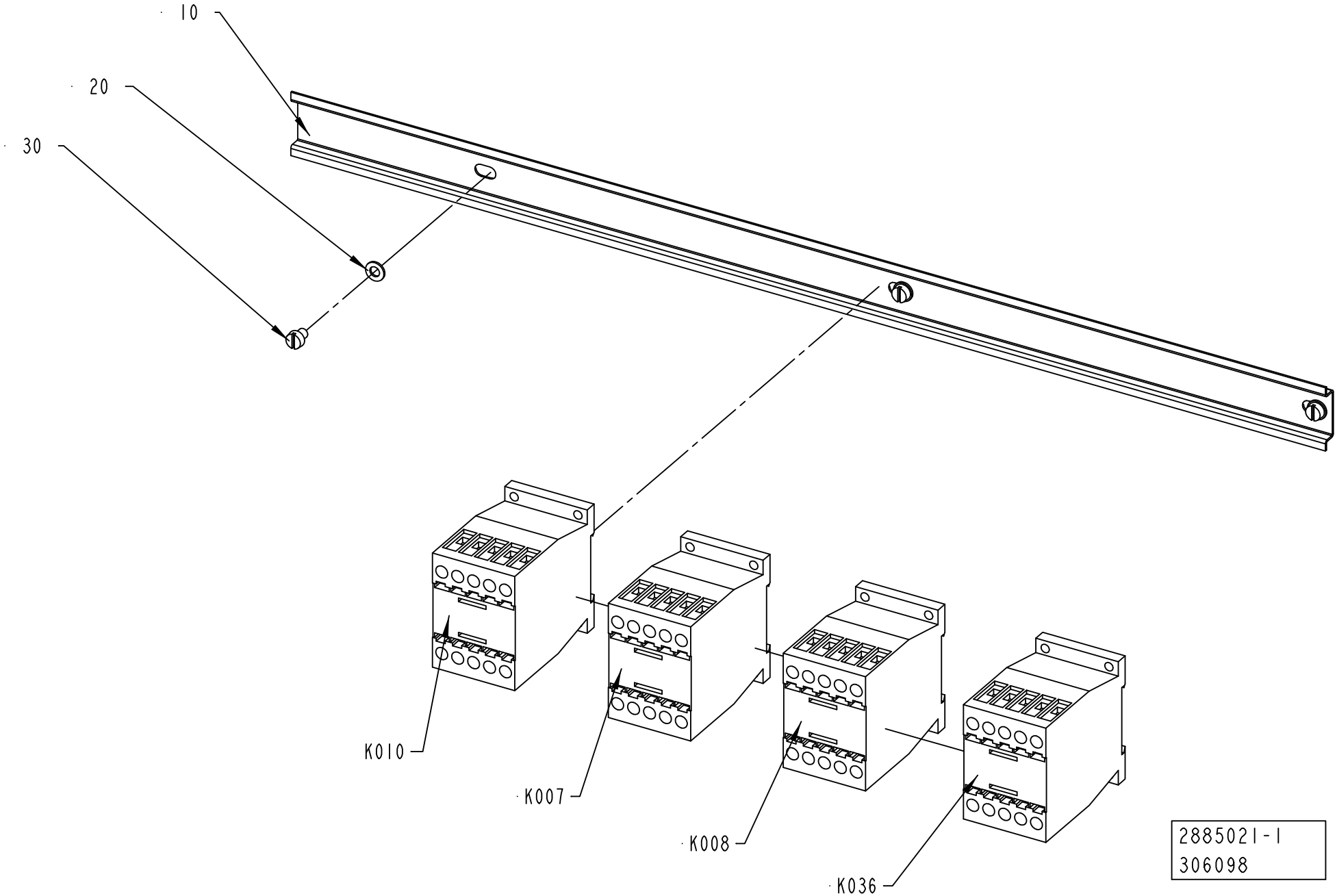
10
20
30
K010
K007
K008
K036
2885021-1
306098

ECM: 306289 - 20070701
Group number: 2885021-0100
Assembly Drawing: 2885021-1_1_AA

Pos	Part No	UN	Qty	Description	Page No
-					
10	2897670-0000		1	RAIL	
20	315101-0146		3	WASHER PLAIN, BRB, 5,3/10 H=1	
30	312121-0321		3	SCREW ISO 1207 M5X6 4.8-5.8 Z.PL.	
K007	90459-5440		1	CONTACTOR 4KW 24VDC, DILM9-01	
K008	90459-5440		1	CONTACTOR 4KW 24VDC, DILM9-01	
K010	90459-5440		1	CONTACTOR 4KW 24VDC, DILM9-01	
K036	90459-5440		1	CONTACTOR 4KW 24VDC, DILM9-01	

Pos	Part No	UN	Qty	Description	Page No

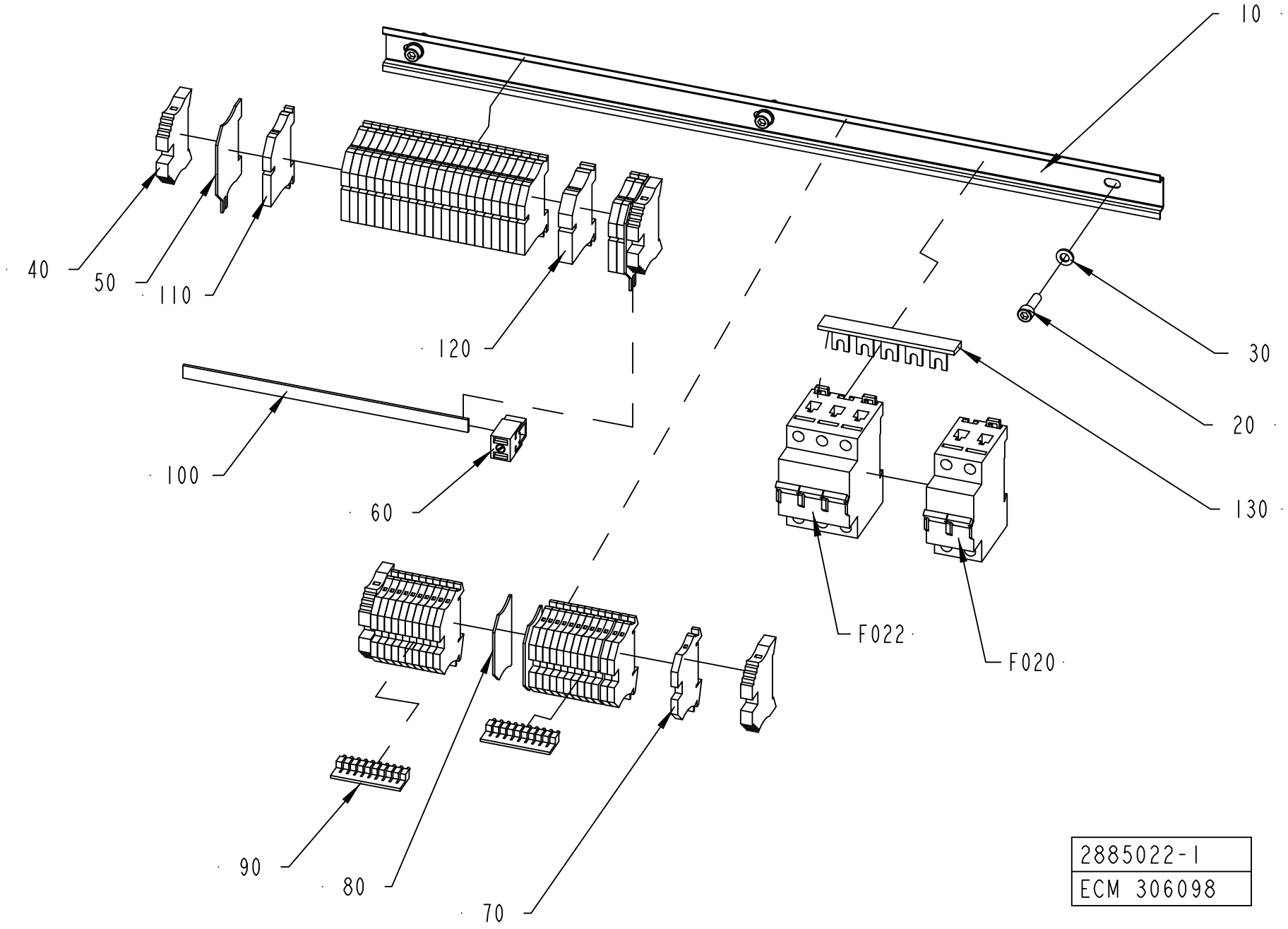
10
40
50
110
120
30
20
100
60
130
F022
F020
90
80
70
2885022-1
ECM 306098

ECM: 306288 - 20070701
Group number: 2885022-0100
Assembly Drawing: 2885022-1_1_AA

Pos	Part No	UN	Qty	Description	Page No
-					
10	2558933-0000		1	RAIL	
100	353041-0001	MM	205	BUS BAR RAIL 10X3MM SSCH	
110	353022-0002		25	NEUTRAL TERMINAL, 10107.8	
120	353022-0004		1	NEUTRAL TERMINAL, 10109.8	
130	90459-5883		1	COMMONING BUSBAR, 1-P 1-PH 1X57 MOD 63A	
20	312115-0370		3	SCREW ISO4762 M6X20 A4 80	
30	315105-0153		3	WASHER BRB 6,4X12 RFR	
40	353031-0203		4	END SUPPORT, WEW 35/2	
50	353033-0104		2	END PLATE, 10502.8	
60	353041-0106		2	HOLDER ZB35 K 5026.8	
70	353021-0212		23	FEED THROUGH TERMINAL, 10200.0	
80	353032-0004		2	END PLATE WAP 2,5-10 BEIGE	
90	353034-0030		2	BRIDGE CONNECTOR WQV 2,5/10, 10544.6	
F020	351417-0100		1	MINIATURE CIRC. BREAK.,FAZ-D10/2 2-POLE	
F022	351418-0100		1	MINIATURE CIRC. BREAK., FAZ-D10/3 3-POLE	

Pos	Part No	UN	Qty	Description	Page No

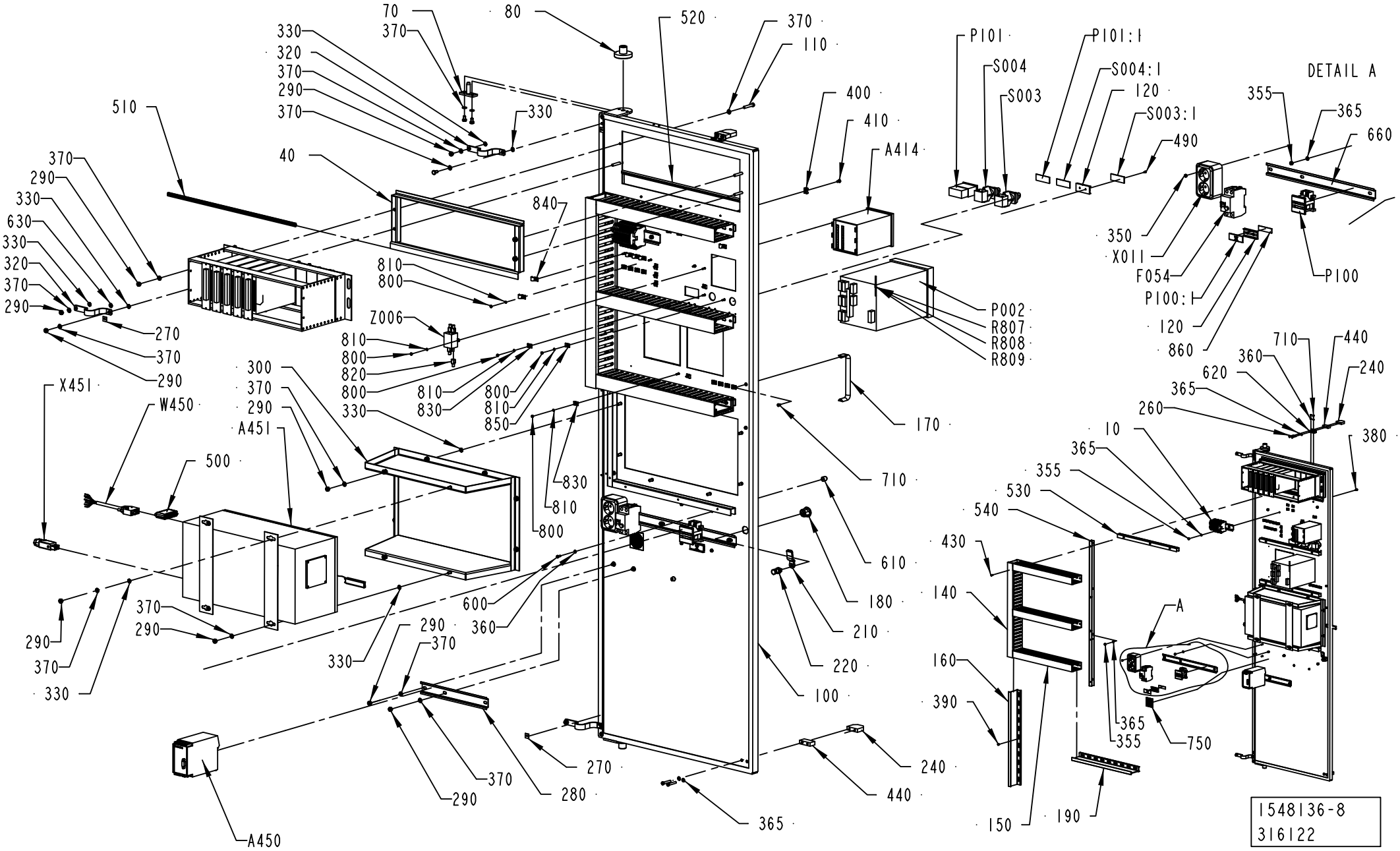
DETAIL A
A
1548136-8
316122

ECM: 360660 - 20081001
Group number: 1548136-0150
Assembly Drawing: 1548136-8_1_AB

This list covers pages from 7-86 to 7-89

Pos	Part No	UN	Qty	Description	Page No
TBA/22 NO PACKTRACE PRINT (See drawing on page: 7-86)					
010	2885027-0100		1	PLINTH	**7-91**
020	2885025-0100		1	RACK	**7-93, 7-95**
355	312605-0314		21	HEXAGON NUT, M6M M5 A280	
360	315105-0136		8	WASHER BRB 4,3X8 RFR	
365	315105-0146		25	WASHER BRB 5,3X10 RFR	
370	315105-0153		35	WASHER BRB 6,4X12 RFR	
500	90458-1102		1	INTOUCH OEM 2000 V.7.0/7.1 HW KEY	
800	312605-0310		28	HEXAGON NUT, M6M M3 A280	
810	315105-0124		28	WASHER BRB 3,2X6 RFR	
830	90165-0022		20	PIPE CLIP, FOR TUBE D=2,5 MM, B-3570	
840	90165-0007		6	PIPE CLIP FOR TUBE D=8 MM	
A414	90459-5187		1	CONDUCTIVITY TRANSMITTER CLM223-ID7105	
P002	90459-0080		1	RECORDER 6-CHANNEL, LOGOPRINT 500	
P100	90070-0017		1	WORKING HOURS COUNTER, 7991 DR H?NLE	
P100:1	359241-0201		1	SIGN: " HOUR METER"	
P101	90053-0029		1	COUNTER, F524.800FA3C 24VDC	
P101:1	359241-0482		1	SIGN "PACKAGE COUNTER"	
R807	90121-0120		1	RESISTANCE FIXED, 0,25 KOHM, 0,125 W	
R808	90121-0120		1	RESISTANCE FIXED, 0,25 KOHM, 0,125 W	
R809	90121-0120		1	RESISTANCE FIXED, 0,25 KOHM, 0,125 W	
W151	90220-0183	MM	3900	SCR. CABLE 2X0,34MM2	
W152	90220-0183	MM	5100	SCR. CABLE 2X0,34MM2	
TBA/22 PACKTRACE DOM (See drawing on page: 7-88)					
010	2885027-0100		1	PLINTH	**7-91**
020	2885025-0100		1	RACK	**7-93, 7-95**
355	312605-0314		21	HEXAGON NUT, M6M M5 A280	
360	315105-0136		8	WASHER BRB 4,3X8 RFR	
365	315105-0146		25	WASHER BRB 5,3X10 RFR	
370	315105-0153		35	WASHER BRB 6,4X12 RFR	
500	90458-1102		1	INTOUCH OEM 2000 V.7.0/7.1 HW KEY	
800	312605-0310		28	HEXAGON NUT, M6M M3 A280	
810	315105-0124		28	WASHER BRB 3,2X6 RFR	
830	90165-0022		20	PIPE CLIP, FOR TUBE D=2,5 MM, B-3570	
840	90165-0007		6	PIPE CLIP FOR TUBE D=8 MM	
A414	90459-5187		1	CONDUCTIVITY TRANSMITTER CLM223-ID7105	
A452	90600-1847		1	ETHERNET SWITCH, FL SWITCH SFN 5TX	
P002	90459-0080		1	RECORDER 6-CHANNEL, LOGOPRINT 500	
P100	90070-0017		1	WORKING HOURS COUNTER, 7991 DR H?NLE	
P100:1	359241-0201		1	SIGN: " HOUR METER"	
P101	90053-0029		1	COUNTER, F524.800FA3C 24VDC	
P101:1	359241-0482		1	SIGN "PACKAGE COUNTER"	
R807	90121-0120		1	RESISTANCE FIXED, 0,25 KOHM, 0,125 W	
R808	90121-0120		1	RESISTANCE FIXED, 0,25 KOHM, 0,125 W	
R809	90121-0120		1	RESISTANCE FIXED, 0,25 KOHM, 0,125 W	
W151	90220-0183	MM	3900	SCR. CABLE 2X0,34MM2	
W152	90220-0183	MM	5100	SCR. CABLE 2X0,34MM2	
W451	90459-1621		1	CABLE, ETHERNET RJ 45 CONNECT. 1 M	
W452	351501-0030		1	ETHERNET PATCH CABLE, FL CAT5 PATCH 3,0	
Common Parts					
050	312105-0364		4	SCREW M6S ISO 4017 M6X10 A480	
070	971346-0000		2	GUIDE PIN	
080	495377-0000		2	BUSH	
100	2765461-0000		1	SWING FRAME	
110	312125-0376		4	SCREW ISO 1207 M6X35 A4	
120	359240-0100		4	SIGN HOLDER FOR 359240-0001	
140	2558939-0000		1	CABLE DUCT	
150	2558938-0000		3	CABLE DUCT	
160	2558941-0000		1	DIVIDER	
170	90600-5161		1	HANDLE, 116.11.644	
180	90237-0319		1	LOCK HOUSING, 1000-U134	
190	2558940-0000		1	DIVIDER	
210	90237-0157		1	LOCK BOLT, 1000-230	
220	90237-0320		1	LOCK HOUSING, 1000-U136	
240	970215-0000		2	STOP BLOCK	
260	312125-0335		4	SCREW ISO 1207 M5X30 A4	
270	90194-0152		3	SIGN, EARTH	
280	2780072-0000		1	RAIL	
290	312605-0316		22	HEXAGON NUT, M6M M6 A280	
300	2601232-0000		1	FRAME	
310	312105-0366		2	SCREW M6S ISO 4017 M6X12 A480	
320	90135-0035		3	EARTH WIRE, L=250 MM 16 MM2	
330	90062-0022		18	LOCK WASHER D=6,4/11	
350	312605-0312		2	HEXAGON NUT, M6M M4 A280	
380	312125-0325		2	SCREW ISO 1207 M5X10 A4	
390	90181-0064		6	LOCK ZP1 FOR CHANNEL T1	
400	352113-0205		3	ANCHOR PLATES FOR STRIPS, TYPE TM2S8-C10	
410	312132-0287		3	SLOTTED HEAD, PAN SCREW, MSCS M4X8	
430	90287-0124		12	SCREW PAN HEAD MSCS M4X12 NYLON	
450	359241-0201		1	SIGN: " HOUR METER"	
490	311520-0320		6	RIVET, BLANK 2,4X6	
510	2530284-0000		1	GASKET	
520	2530285-0000		1	GASKET	
530	2563173-0000		4	PROFILE	

Machine Type | Group Description | Used-In | Group Number | Page No

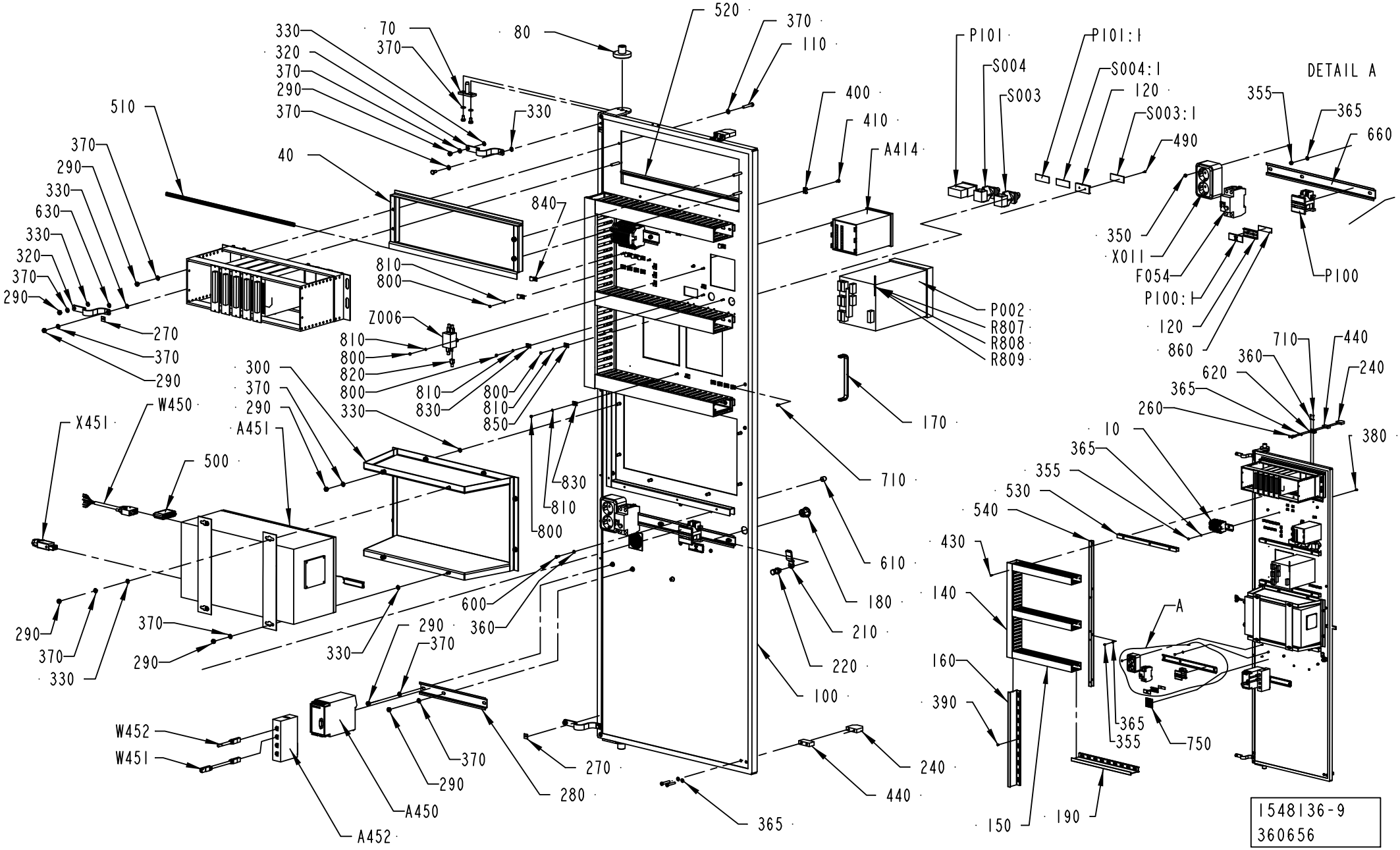
DETAIL A
A
1548136-9
360656

Pos	Part No	UN	Qty	Description	Page No
Common Parts (Cont'd)					
540	2563174-0000		1	PROFILE	
600	312125-0289		4	SCREW ISO 1207 M4X10 A4	
610	2601230-0000		4	BRACKET	
620	2606216-0000		1	BRACKET	
630	2608177-0000		3	SIGN	
660	2675521-0000		1	RAIL	
710	312125-0285		4	SCREW ISO 1207 M4X6 A4	
750	90459-1738		1	MANDATORY ACTION SIGN ISO, READ MAINTENA	
820	90459-3352		5	FLAT PIN SOCKET, 6,3X0,8	
860	90144-0072	MM	100	TAPE SCOTCH VHBS 4945 W=12,7MM	
A450	90453-0002		1	MODEM MD-12 DC	
A451	2518145-0101		1	FLEXBOX TETRA BRIK	**7-97**
F054	90459-5811		1	RESIDUAL CURRENT DEVICE, FI-25/2/003-A	
S003	90111-0122		1	KEY SWITCH, 2 NO CONTACTS	
S003:1	359241-0133		1	SIGN: " SERVICE SWITCH"	
S004	90111-0124		1	KEY SWITCH, 1NO,1NC CONTACT	
S004:1	359241-0122		1	SIGN: " CLEANING STEAM BARRIER SPACE"	
W450	1254442-0000		1	CABLE SERIAL	
X011	90001-0033		1	WALL SOCKET, E1834666	
X451	90110-0028		1	CONTACT UNIT 4-POLEADAPTER	
Z006	90459-1359		1	FILTER 1 A, 250 VAC, FN 332-1/05	

Pos	Part No	UN	Qty	Description	Page No

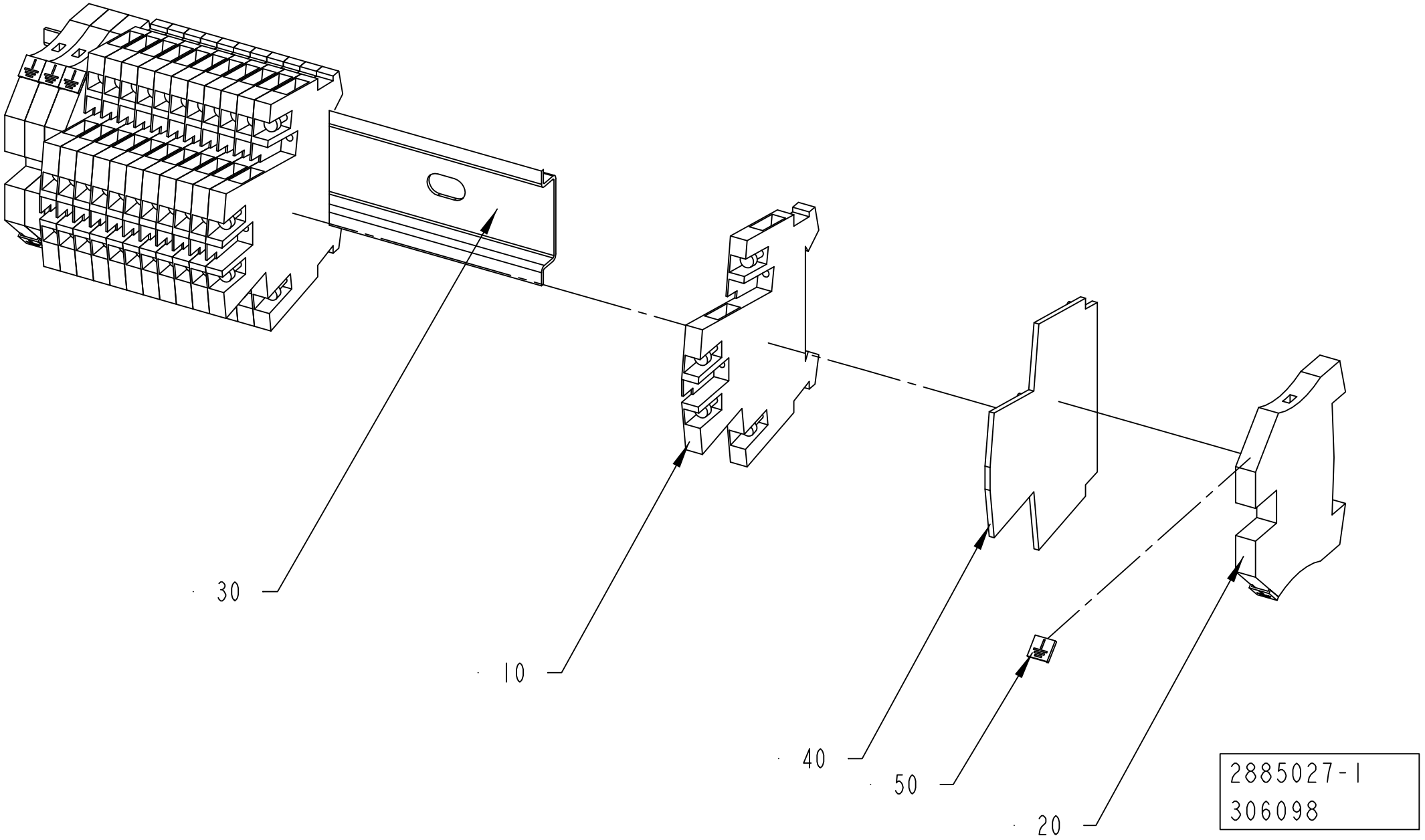
30
10
40
50
20
2885027-1
306098

ECM: 306285 - 20070701
Group number: 2885027-0100
Assembly Drawing: 2885027-1_1_AA

Pos	Part No	UN	Qty	Description	Page No
-					
10	353021-0120		12	FEED THROUGH TERMINAL, 10215.8	
20	353024-0205		4	EARTH TERMINAL, 1010.1	
30	2558937-0000		1	RAIL	
40	353032-0010		1	END PLATE WAP	
50	90459-6857		8	BUSBAR, 3-P 12 100A	

Pos	Part No	UN	Qty	Description	Page No

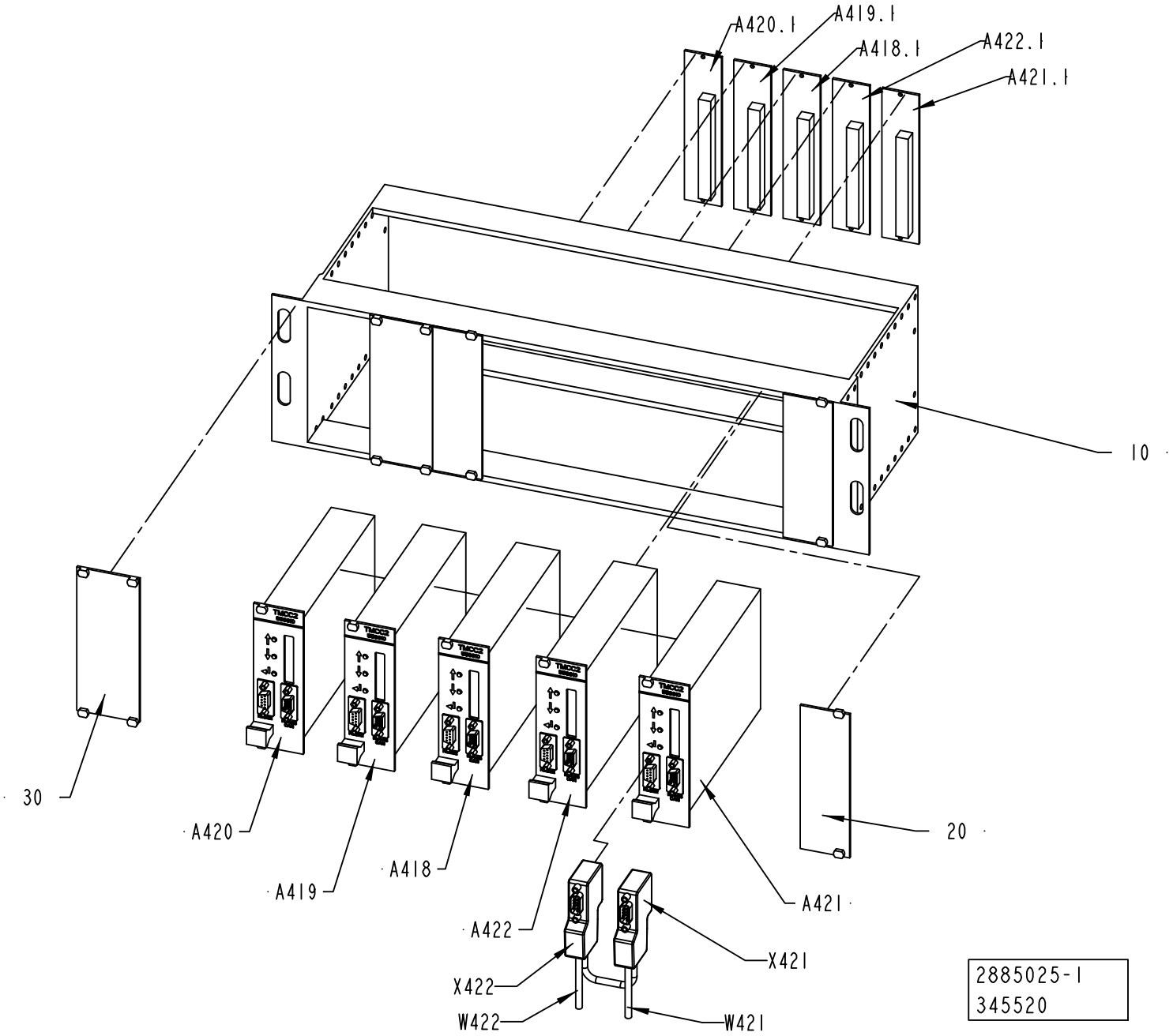
A420.1
A419.1
A418.1
A422.1
A421.1
10
30
20
A420
A419
A418
A422
A421
X421
X422
W422
W421
2885025-1
345520

ECM: 360659 - 20081001
Group number: 2885025-0100
Assembly Drawing: 2885025-1_1_AB

This list covers pages from 7-92 to 7-95

Pos	Part No	UN	Qty	Description	Page No
NO PACKTRACE PRINT (See drawing on page: 7-92)					
20	68445-0104		3	FRONT PLATE 8 TE	
010 4	*543921-0004*		*1*	*COMPONENTS WITHOUT TP-NO*	
PACKTRACE DOM (See drawing on page: 7-94)					
20	68445-0104		2	FRONT PLATE 8 TE	
010 4	*543921-0004*		*1*	*COMPONENTS WITHOUT TP-NO*	
A417	559810-0101		1	TMCC2 CONTROLLER	
A417.1	68262-0101		1	BACKPLANE FRONT RACK 8TE	
100	*543371-0000*		*1*	*CIRCUIT BOARD 8TE*	
110	*551927-0001*		*1*	*COMPONENTS WITHOUNT TP-NO*	
120	*551928-0000*		*1*	*TERMINAL LABELS 8TE*	
Common Parts					
10	67388-0102		1	RACK FRONTMOUNTED 84TE	
020 2	*542038-0002*		*1*	*COMPONENTS WITHOUT TP-NO*	
30	68445-0105		2	FRONT PLATE 10TE	
010 5	*543921-0005*		*1*	*COMPONENTS WITHOUT TP-NO*	
40	2846698-0000		1	CABLE	
A418	559810-0101		1	TMCC2 CONTROLLER	
A418.1	68262-0101		1	BACKPLANE FRONT RACK 8TE	
100	*543371-0000*		*1*	*CIRCUIT BOARD 8TE*	
110	*551927-0001*		*1*	*COMPONENTS WITHOUNT TP-NO*	
120	*551928-0000*		*1*	*TERMINAL LABELS 8TE*	
A419	559810-0101		1	TMCC2 CONTROLLER	
A419.1	68262-0101		1	BACKPLANE FRONT RACK 8TE	
100	*543371-0000*		*1*	*CIRCUIT BOARD 8TE*	
110	*551927-0001*		*1*	*COMPONENTS WITHOUNT TP-NO*	
120	*551928-0000*		*1*	*TERMINAL LABELS 8TE*	
A420	559810-0101		1	TMCC2 CONTROLLER	
A420.1	68262-0101		1	BACKPLANE FRONT RACK 8TE	
100	*543371-0000*		*1*	*CIRCUIT BOARD 8TE*	
110	*551927-0001*		*1*	*COMPONENTS WITHOUNT TP-NO*	
120	*551928-0000*		*1*	*TERMINAL LABELS 8TE*	
A421	559810-0101		1	TMCC2 CONTROLLER	
A421.1	68262-0101		1	BACKPLANE FRONT RACK 8TE	
100	*543371-0000*		*1*	*CIRCUIT BOARD 8TE*	
110	*551927-0001*		*1*	*COMPONENTS WITHOUNT TP-NO*	
120	*551928-0000*		*1*	*TERMINAL LABELS 8TE*	
A422	559810-0101		1	TMCC2 CONTROLLER	
A422.1	68262-0101		1	BACKPLANE FRONT RACK 8TE	
100	*543371-0000*		*1*	*CIRCUIT BOARD 8TE*	
110	*551927-0001*		*1*	*COMPONENTS WITHOUNT TP-NO*	
120	*551928-0000*		*1*	*TERMINAL LABELS 8TE*	

Pos	Part No	UN	Qty	Description	Page No

Machine Type | Group Description | Used-In | Group Number | Page No

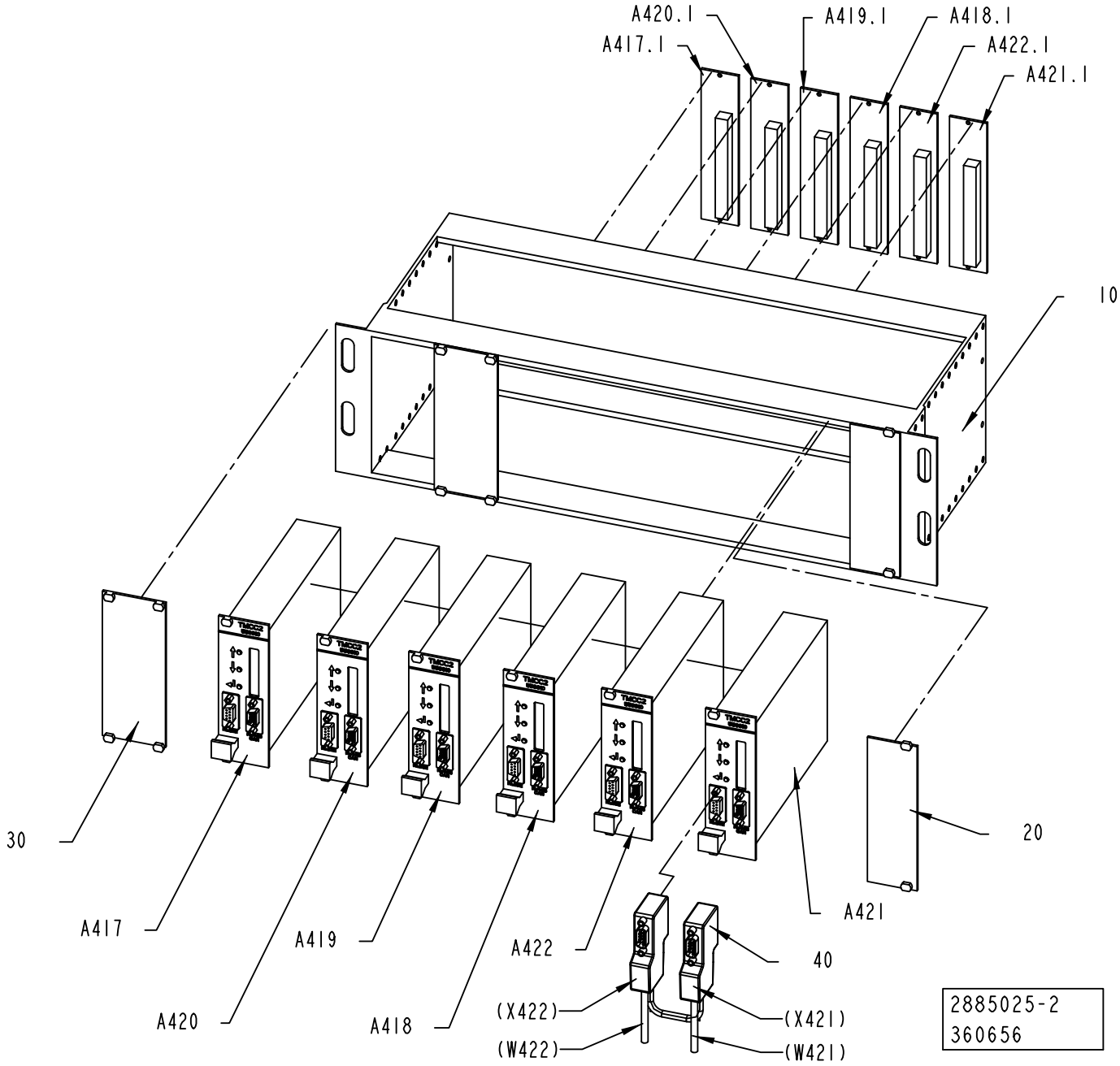
A420.1
A419.1
A418.1
A417.1
A422.1
A421.1
10
30
20
A417
A419
A422
A421
A420
A418
40
(X422)
(X421)
(W422)
(W421)
2885025-2
360656

Pos	Part No	UN	Qty	Description	Page No
NO PACKTRACE PRINT (See drawing on page: 7-92)					
20	68445-0104		3	FRONT PLATE 8 TE	
010 4	*543921-0004*		*1*	*COMPONENTS WITHOUT TP-NO*	
PACKTRACE DOM (See drawing on page: 7-94)					
20	68445-0104		2	FRONT PLATE 8 TE	
010 4	*543921-0004*		*1*	*COMPONENTS WITHOUT TP-NO*	
A417	559810-0101		1	TMCC2 CONTROLLER	
A417.1	68262-0101		1	BACKPLANE FRONT RACK 8TE	
100	*543371-0000*		*1*	*CIRCUIT BOARD 8TE*	
110	*551927-0001*		*1*	*COMPONENTS WITHOUNT TP-NO*	
120	*551928-0000*		*1*	*TERMINAL LABELS 8TE*	
Common Parts					
10	67388-0102		1	RACK FRONTMOUNTED 84TE	
020 2	*542038-0002*		*1*	*COMPONENTS WITHOUT TP-NO*	
30	68445-0105		2	FRONT PLATE 10TE	
010 5	*543921-0005*		*1*	*COMPONENTS WITHOUT TP-NO*	
40	2846698-0000		1	CABLE	
A418	559810-0101		1	TMCC2 CONTROLLER	
A418.1	68262-0101		1	BACKPLANE FRONT RACK 8TE	
100	*543371-0000*		*1*	*CIRCUIT BOARD 8TE*	
110	*551927-0001*		*1*	*COMPONENTS WITHOUNT TP-NO*	
120	*551928-0000*		*1*	*TERMINAL LABELS 8TE*	
A419	559810-0101		1	TMCC2 CONTROLLER	
A419.1	68262-0101		1	BACKPLANE FRONT RACK 8TE	
100	*543371-0000*		*1*	*CIRCUIT BOARD 8TE*	
110	*551927-0001*		*1*	*COMPONENTS WITHOUNT TP-NO*	
120	*551928-0000*		*1*	*TERMINAL LABELS 8TE*	
A420	559810-0101		1	TMCC2 CONTROLLER	
A420.1	68262-0101		1	BACKPLANE FRONT RACK 8TE	
100	*543371-0000*		*1*	*CIRCUIT BOARD 8TE*	
110	*551927-0001*		*1*	*COMPONENTS WITHOUNT TP-NO*	
120	*551928-0000*		*1*	*TERMINAL LABELS 8TE*	
A421	559810-0101		1	TMCC2 CONTROLLER	
A421.1	68262-0101		1	BACKPLANE FRONT RACK 8TE	
100	*543371-0000*		*1*	*CIRCUIT BOARD 8TE*	
110	*551927-0001*		*1*	*COMPONENTS WITHOUNT TP-NO*	
120	*551928-0000*		*1*	*TERMINAL LABELS 8TE*	
A422	559810-0101		1	TMCC2 CONTROLLER	
A422.1	68262-0101		1	BACKPLANE FRONT RACK 8TE	
100	*543371-0000*		*1*	*CIRCUIT BOARD 8TE*	
110	*551927-0001*		*1*	*COMPONENTS WITHOUNT TP-NO*	
120	*551928-0000*		*1*	*TERMINAL LABELS 8TE*	

Pos	Part No	UN	Qty	Description	Page No

Machine Type Group Description Used-In Group Number Page No

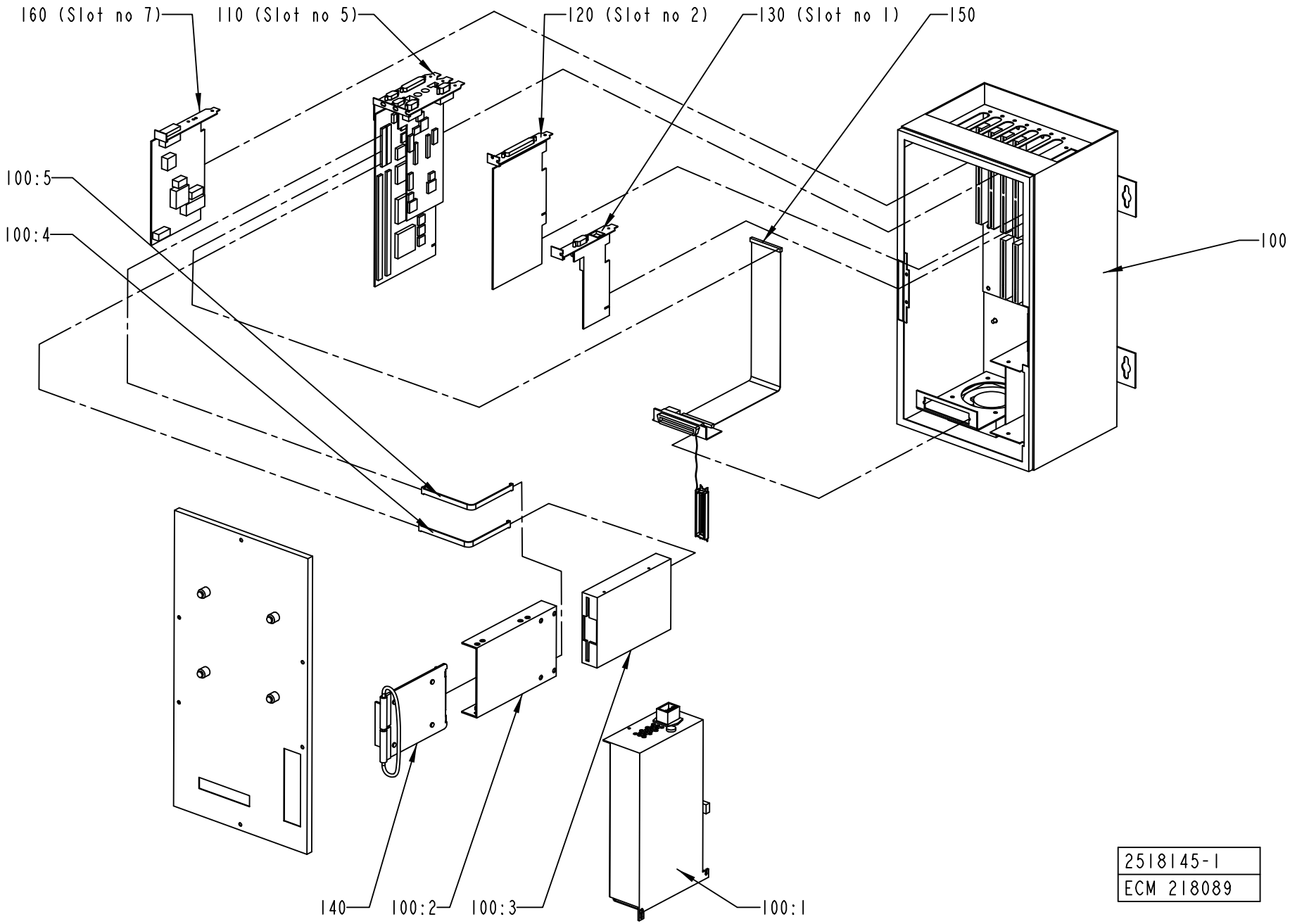

2518145-1
ECM 218089

ECM: 236016 - 20051006
Group number: 2518145-0101
Assembly Drawing: 2518145-1_1_AC

Pos	Part No	UN	Qty	Description	Page No
-					
100	90459-0275		1	PC ENCLOSURE FLEX BOX ISIC, 02760-000	**7-99**
110	90459-0284		1	PROCESSOR BOARD CLIPS V, 02021-000	
120	90459-1352		1	PCI COMMUNICATION INTERFACE PCI-1612B-A	
130	90459-0261		1	ETHERNET NETW. INTERFACE CARD, 01181-000	
140	90459-6472		1	HARD DISC 2,5" , 03589-002	
150	90459-0291		1	CABLE CD UNIT, 01310-000	

Pos	Part No	UN	Qty	Description	Page No

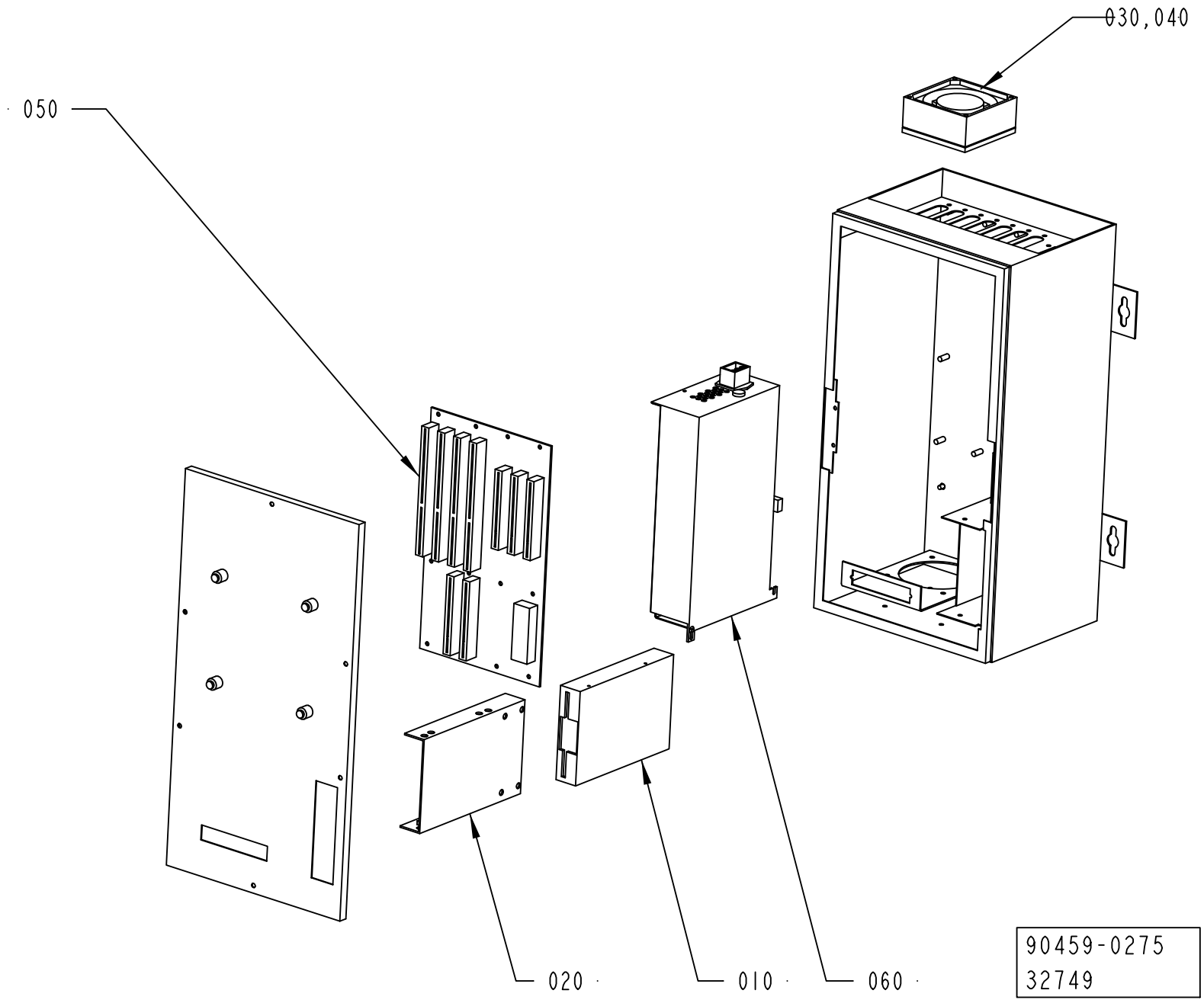
030,040
050
020
010
060
90459-0275
32749

ECM: 190912 - 20041104
Group number: 90459-0275
Assembly Drawing: 90459-275_1_AB

Pos	Part No	UN	Qty	Description	Page No
-					
010	90041-0029		1	FLOPPY DISC UNIT FD-235HF 1,4MB	
020	90041-0091		1	PC 2,5" HD BAY, 02330-000	
030	90264-0064		1	FAN / FL 12G308	
040	90264-0350		1	FILTER / 554141	
050	90459-0262		1	BACKPLANE CARD AR-MB7P	
060	90459-0283		1	POWER SUPPLY UNIT, 02571-000	

Pos	Part No	UN	Qty	Description	Page No

Machine Type | Group Description | Used-In | Group Number | Page No

COOLING UNIT

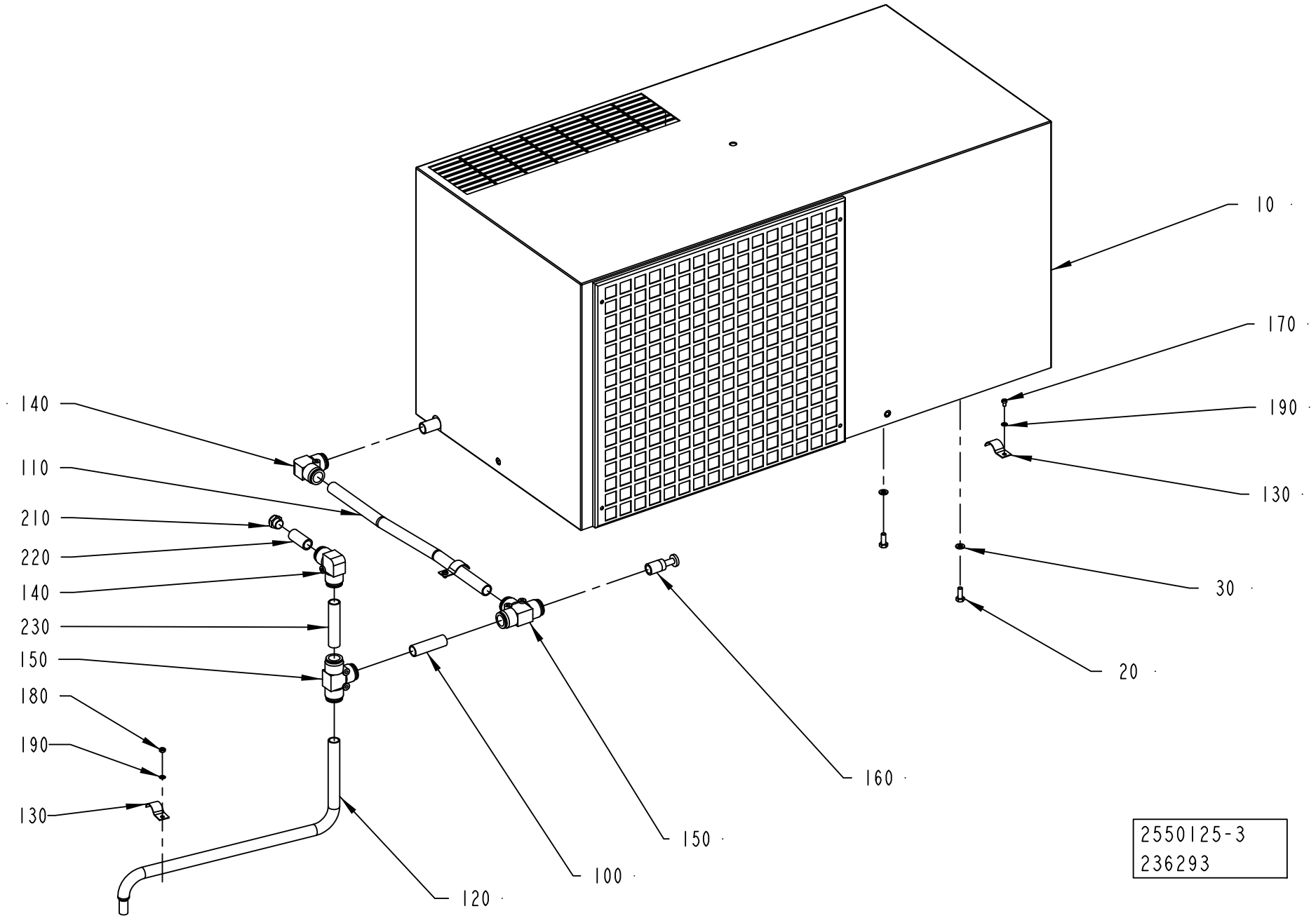

ECM: 306668 - 20070701
Group number: 2550125-0100
Assembly Drawing: 2550125-3_1_AA

Pos	Part No	UN	Qty	Description	Page No
TBA/22					
100	2601580-0000		1	HOSE	
110	2889867-0000		1	HOSE	
120	2601582-0000		1	HOSE	
130	90074-0011		3	CABLE CLIPS, D=14 MM	
140	90459-2553		2	ELBOW PIPE JOINT 16 MM	
180	312605-0312		1	HEXAGON NUT, M6M M4 A280	
190	315105-0136		3	WASHER BRB 4,3X8 RFR	
Common Parts					
010	90459-0363		1	COOLING UNIT, KB40A0721.03	
	90600-0676		*1*	*GRID, DISA1880AA*	
	90600-0675		*1*	*GASKET, A6411AA*	
	90600-0673		*1*	*THERMOSTAT, KELVIN TMI0000218*	
	90600-0672		*1*	*FAN, VBA0001499 , 50HZ_3UF , 60HZ_2UF*	
	90600-0670		*1*	*FAN, VBA0001508 ,50/60HZ 4UF*	
	90459-0364		*1*	*FILTER KB20/30/40 POLYURETH. FILTER 2001*	
020	312105-0368		6	SCREW M6S ISO 4017 M6X16 A480	
030	315105-0153		6	WASHER BRB 6,4X12 RFR	
150	90459-2555		2	T-CONNECTION 16MM	
160	90459-2557		1	BLIND PLUG 16 MM	
170	312125-0285		2	SCREW ISO 1207 M4X6 A4	
210	90257-0001		1	FILTER PLUG ART.NO.8145-00-140 TYPE F14	
220	2800104-0000		1	HOSE	
230	2800116-0000		1	HOSE	

Pos	Part No	UN	Qty	Description	Page No

Tetra Pak

SPC

Spare Parts Catalogue

TBA/22 050V

648571-0500

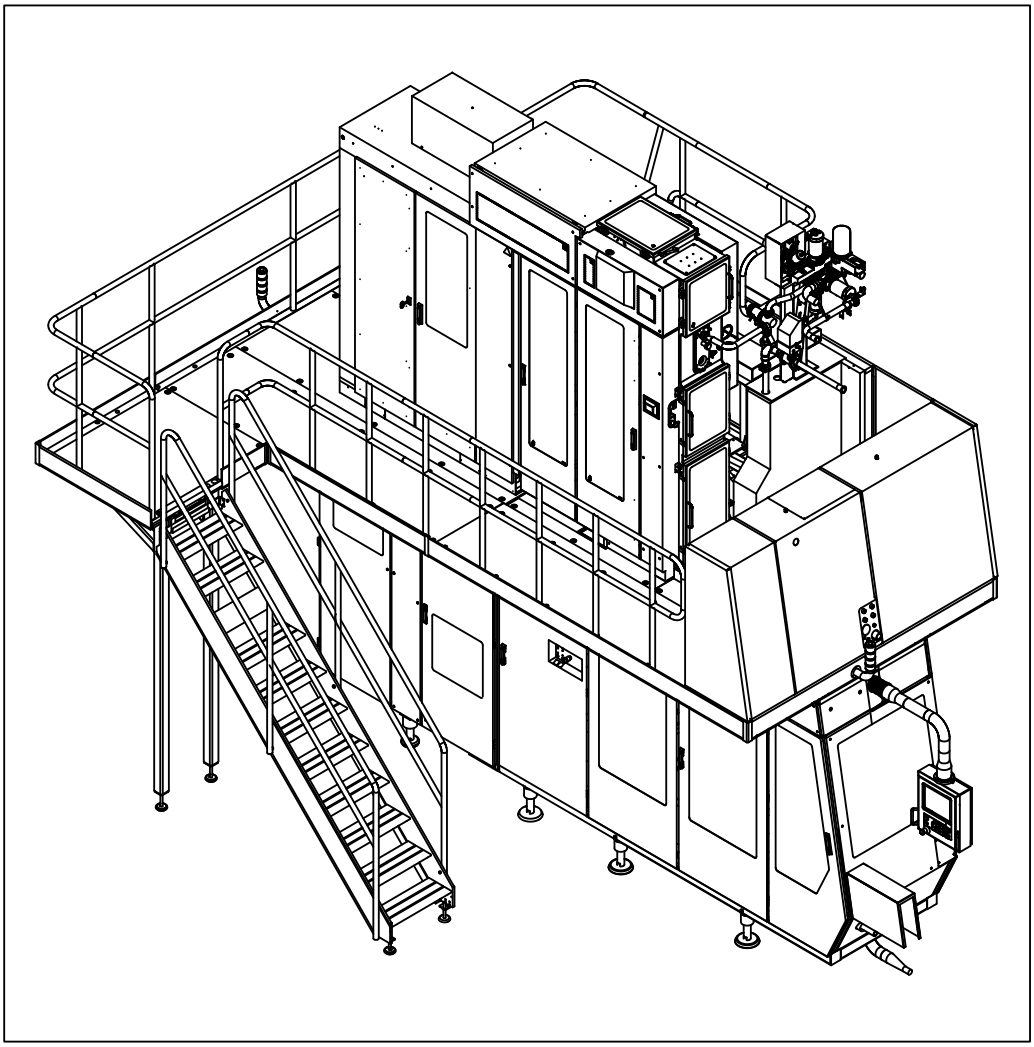

Tetra Pak

Doc. No: SPC-81765-0154

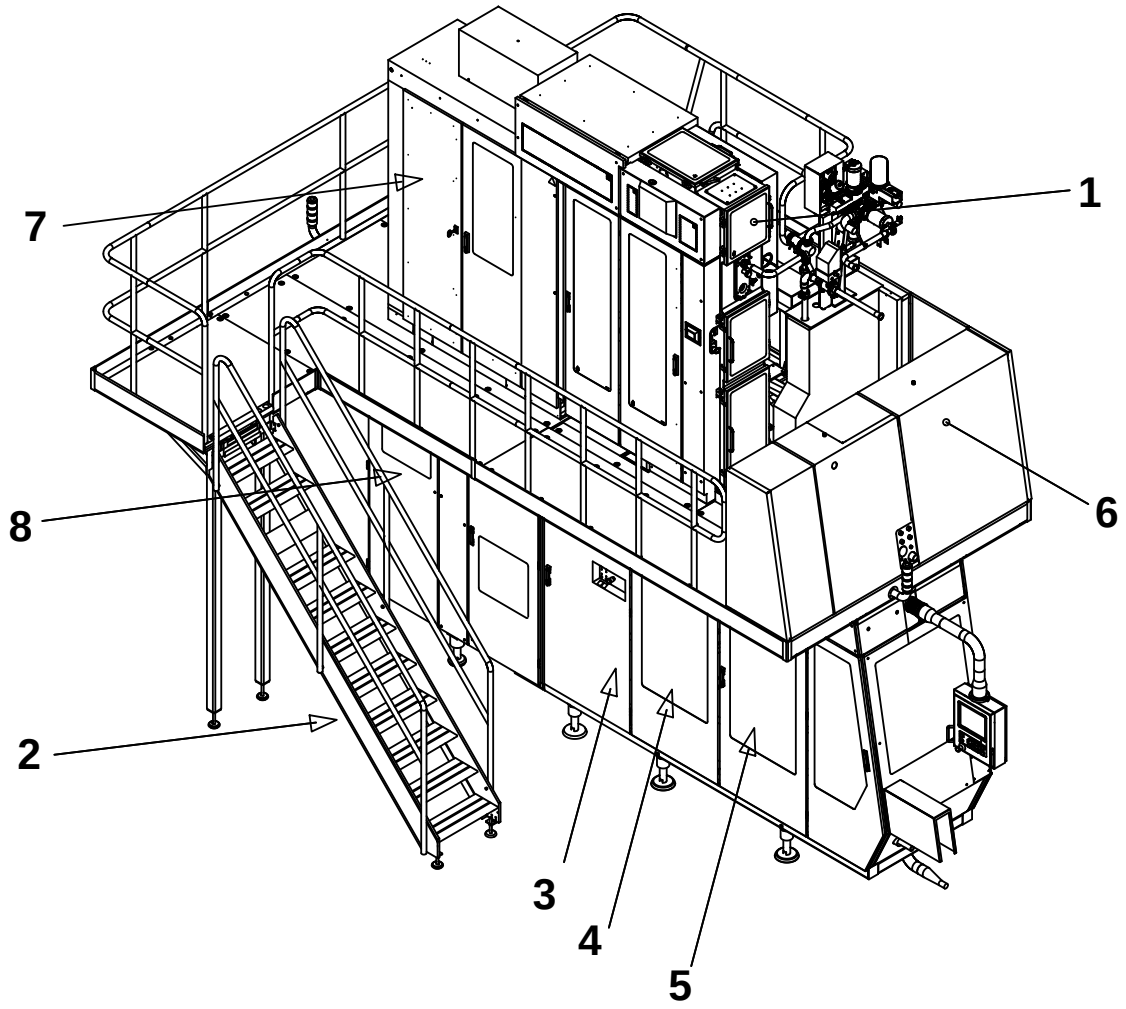

The position numbers in the illustration correspond with the chapter numbers listed on the next page.

Copyright © 2009 Tetra Pak Group

All rights reserved. No part of this document may be reproduced or copied in any form or by any means without written permission from Tetra Pak Packaging Solutions .

Tetra Pak and all Tetra Pak products are trademarks belonging to the Tetra Pak Group.

The content of this manual is in accordance with the design and construction of the machine or equipment at the time of publishing. Tetra Pak reserves the right to introduce design modifications without prior notice.

This document was produced by:

Tetra Pak Packaging Solutions
Via Delfini 1
411 00 Modena
ITALY

Additional copies can be ordered from Tetra Pak. When ordering additional copies, always provide the document number.

Doc. No. SPC-81765-0154

Issue 2009-03

This document is valid from:

21203/00430

Series No/Machine No Sign.

SPC

Spare Parts Catalogue

TBA/22 050V
648571-0500

BINDER 1

i Introduction

1 Superstructure

2 Machine Body

3 Drive

4 Jaw System

5 Final Folder

6 Service Unit

7 Electrical Cabinet

BINDER 2

8 Automatic Splicing Unit

9 Electric Equipment

10 Conveyor Section

11 Regular Accessories

12 Optional Accessories

ii Part Number Index

iii Ref. Des. Parts Index

Machine or equipment configurations that this catalogue is valid for are described on the next page.

Doc. No: SPC-81765-0154

Issue 2009-03

Tetra Pak

Tetra Pak Packaging Solutions

Valid for:

Name	Drawing Specification and Development Step	Additional Information
TBA/22 050V	648571-0500	-

SPC
Spare Parts Catalogue

Automatic Splicing Unit

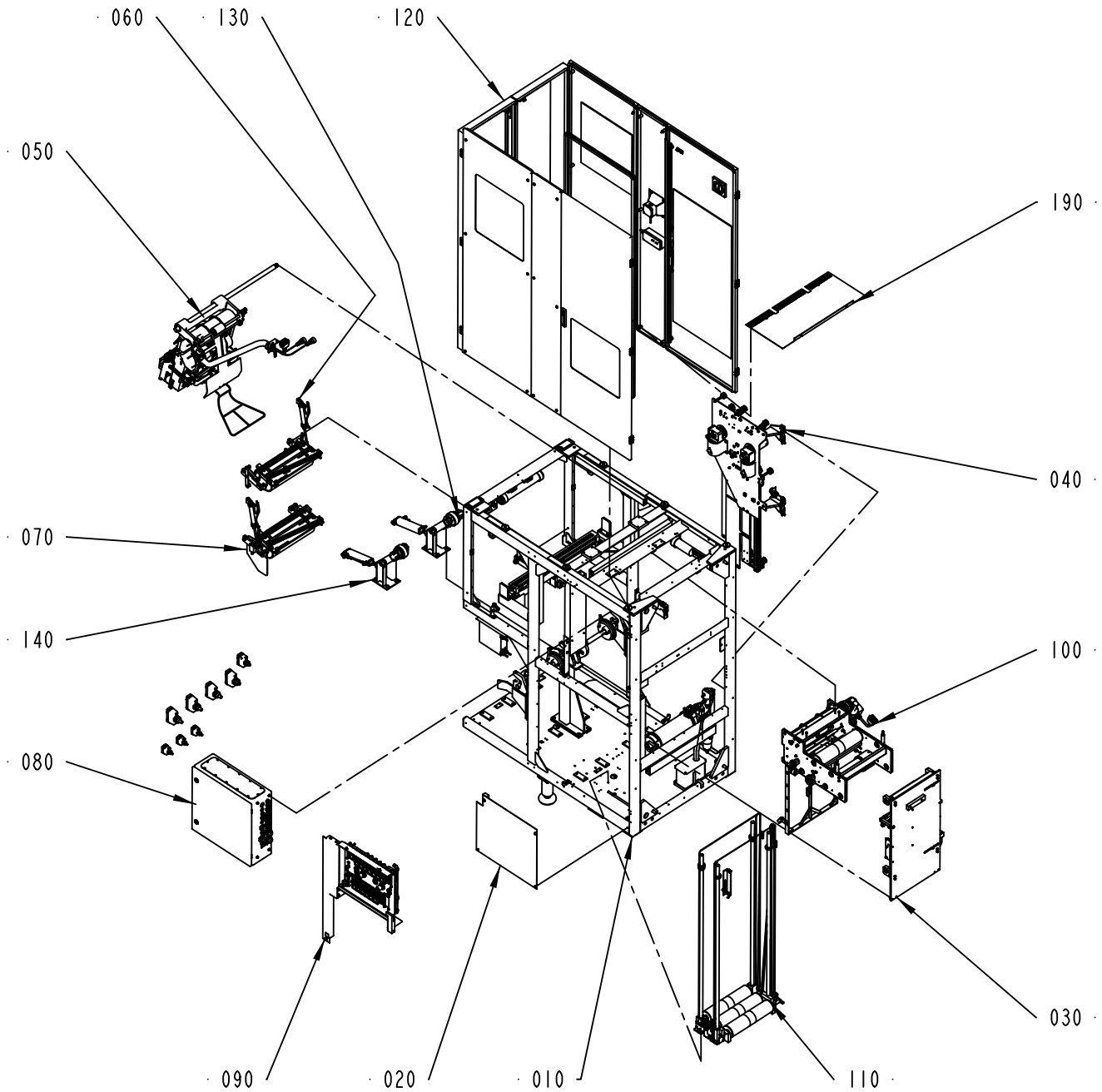

648528-5
ECM 266354

ECM: 342873 - 20080215
Group number: 648528-0200
Assembly Drawing: 648528-5_1_AD

Pos	Part No	UN	Qty	Description	Page No
TBA/22 WITHOUT ARL					
020	2832865-0100		1	COVER	**8-5**
030	2506668-0200		1	STRIP APPLICATOR	**8-7**
130	2506614-0100		1	BOBBIN BRAKE	**8-27**
140	2506615-0100		1	BOBBIN BRAKE	**8-29**
190	2613749-0100		1	COVER	**8-31**
Common Parts					
010	1487560-0200		1	MACHINE BODY	**8-33, 8-35**
040	1484707-0200		1	STRIP MAGAZINE	**8-55**
050	2588946-0100		1	SPLICING DEVICE	**8-71**
060	2588422-0100		1	MATERIAL HOLDER L1	**8-93**
070	2588423-0100		1	MATERIAL HOLDER L2	**8-101**
080	1548491-0200		1	ELECTRICAL CABINET	**8-109, 8-111, 8-113, 8-115, 8-117**
090	2564633-0100		1	VALVE PANEL	**8-129**
100	1487808-0200		1	BRACKET	**8-135**
110	1490831-0200		1	MAGAZINE	**8-145**
120	1490215-0200		1	COVERING PANEL	**8-149**

Pos	Part No	UN	Qty	Description	Page No

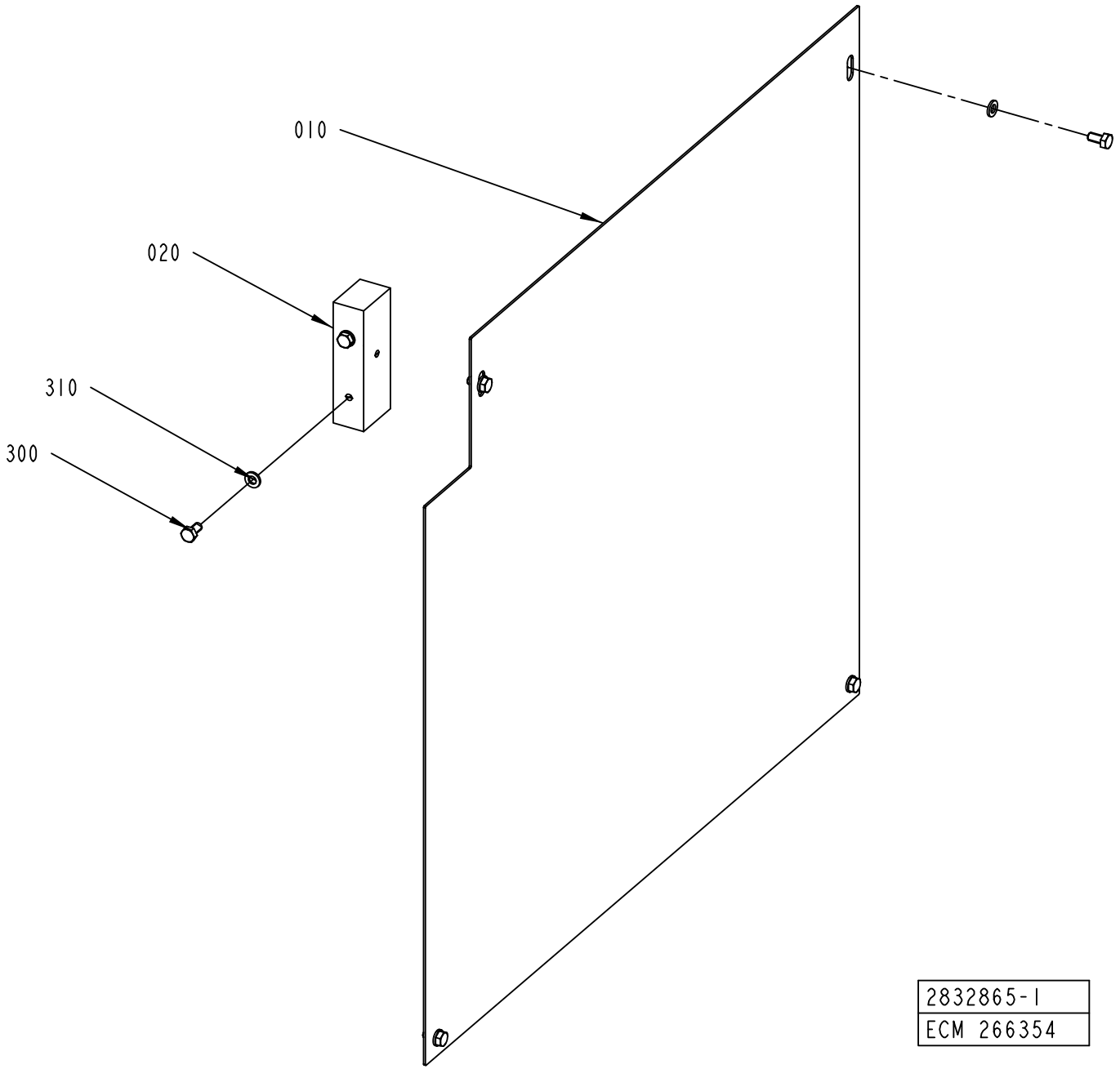
010
020
310
300
2832865-1
ECM 266354

ECM: 266854 - 20061101
Group number: 2832865-0100
Assembly Drawing: 2832865-1_1_AA

Pos	Part No	UN	Qty	Description	Page No
-					
010	2832866-0000		1	COVER	
020	2833334-0000		1	BRACKET	
300	312105-0366		6	SCREW M6S ISO 4017 M6X12 A480	
310	315105-0153		6	WASHER BRB 6,4X12 RFR	

Pos	Part No	UN	Qty	Description	Page No

STRIP APPLICATOR

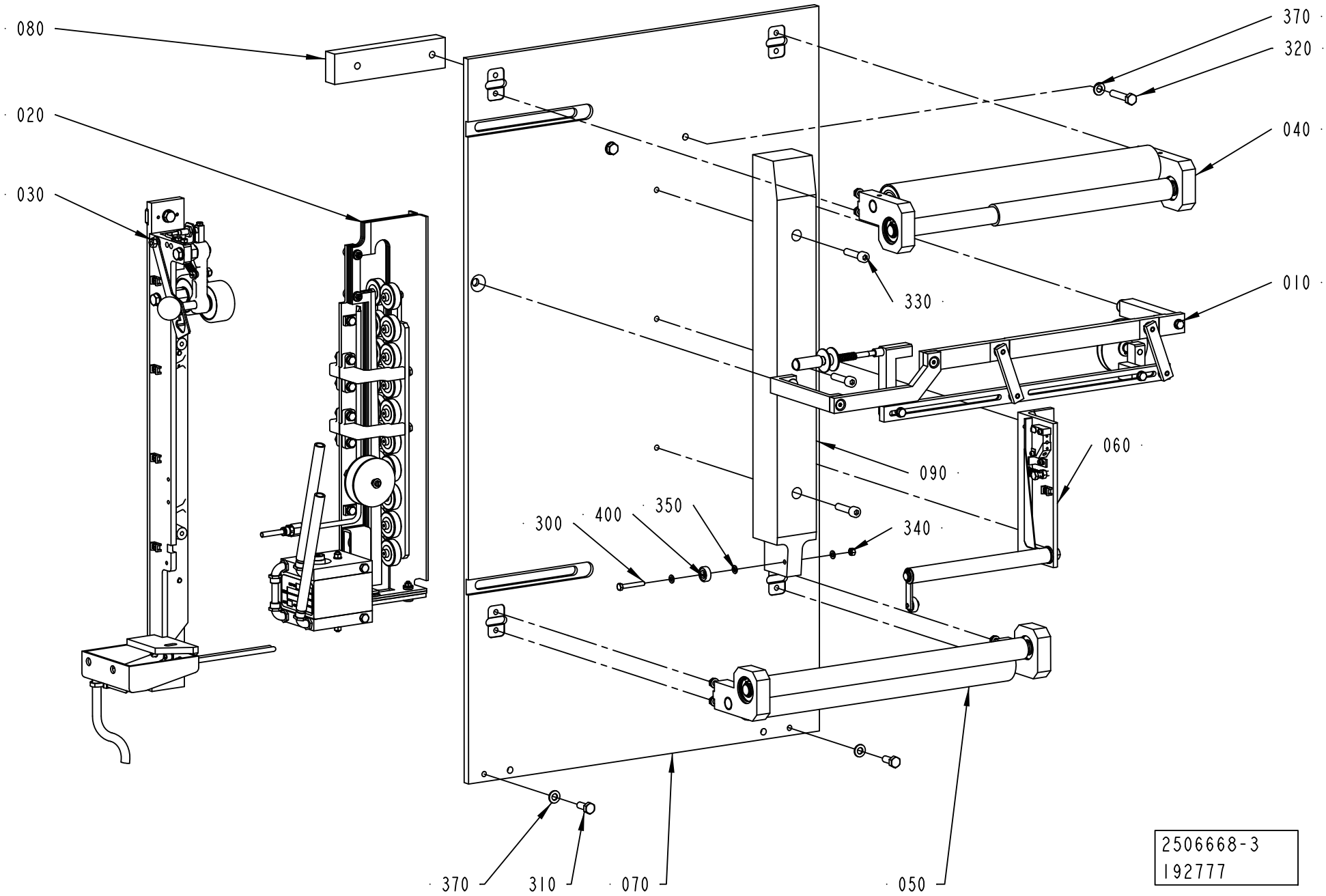

ECM: 272345 - 20060712
Group number: 2506668-0200
Assembly Drawing: 2506668-3_1_AB

Pos	Part No	UN	Qty	Description	Page No
-					
010	2530410-0200		1	STRIP GUIDE	**8-9**
020	2529569-0100		1	INDUCTOR	**8-11**
030	2529571-0100		1	PRESSURE ROLLER	**8-19**
040	2507019-0100		1	ROLLER	**8-21**
050	2507020-0100		1	ROLLER	**8-23**
060	2507022-0200		1	SPLICE DETECTOR	**8-25**
070	2602990-0000		1	SHEET	
080	2506660-0000		1	SPACER	
090	2506664-0000		1	STEERING	
300	312105-0337		1	SCREW M6S ISO 4014 M5X35 A480	
310	312105-0451		2	SCREW M6S ISO 4017 M8X20 A480	
320	312109-0459		2	SCREW M6S ISO 4017 M8X40 A480	
330	312115-0457		3	SCREW ISO4762 M8X35 A4 80	
340	312605-0314		1	HEXAGON NUT, M6M M5 A280	
350	315105-0146		3	WASHER BRB 5,3X10 RFR	
370	315105-0165		4	WASHER BRB 8,4X16 RFR	
400	90214-0138		1	BALL BEARING, 5X19X6 MM	

Pos	Part No	UN	Qty	Description	Page No

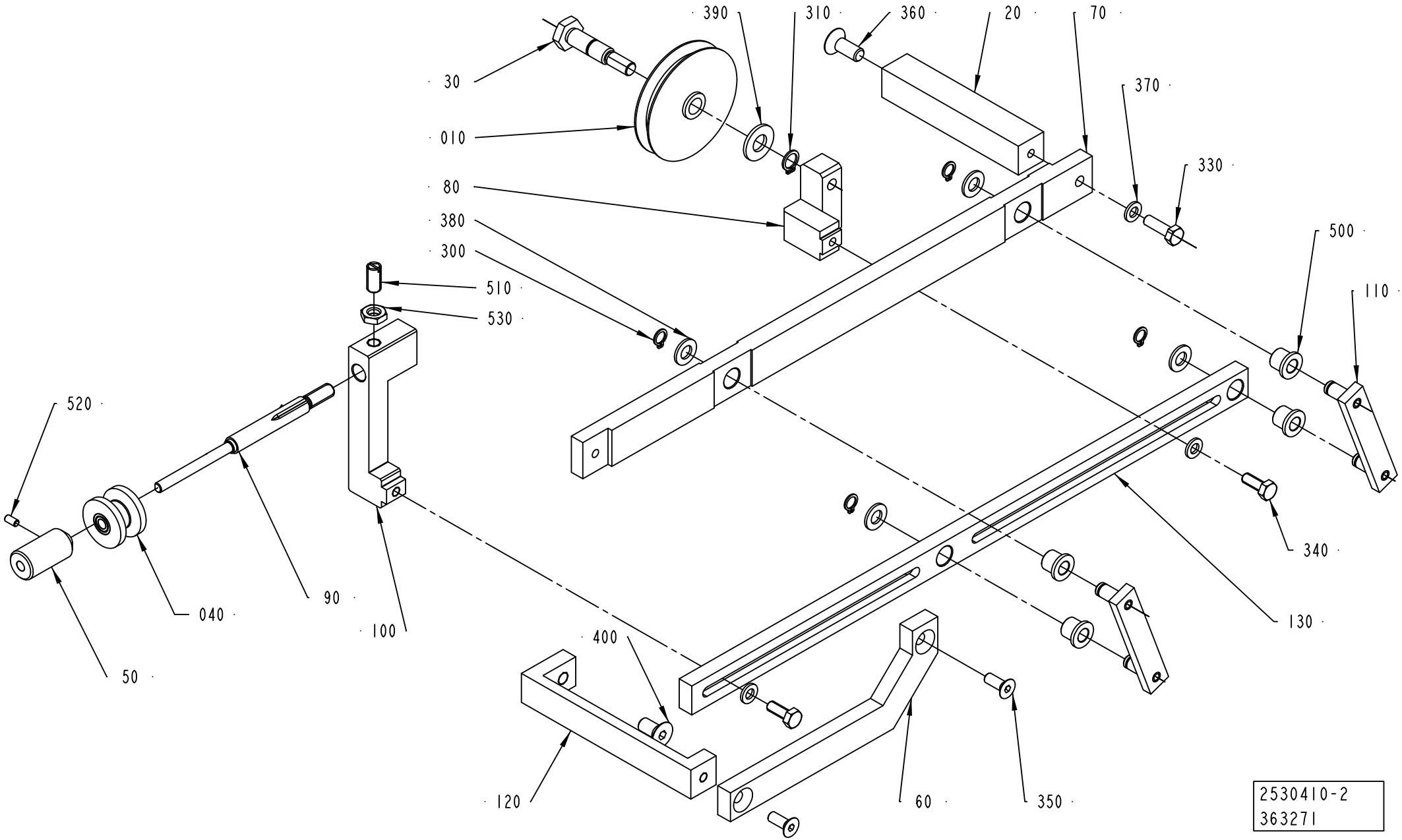
390
310
360
20
70
30
370
010
330
80
380
500
300
510
110
530
520
340
040
90
100
130
400
50
120
60
350
2530410-2
363271

ECM: 367664 - 20081002
Group number: 2530410-0200
Assembly Drawing: 2530410-2_1_AE

Pos	Part No	UN	Qty	Description	Page No
-					
010	2831687-0000		1	GUIDE WHEEL	
020	2504801-0000		1	BRACKET	
030	2504807-0000		1	AXLE PIN	
040	2831686-0000		1	ROLLER	
050	2748699-0000		1	KNOB	
060	2530399-0000		1	HANGER	
070	2602992-0000		1	ROD	
080	2530405-0000		1	BRACKET	
090	2748698-0000		1	ADJUSTING SCREW	
100	2748697-0000		1	BRACKET	
110	2530408-0000		2	LEVER	
120	2504808-0000		1	BRACKET	
130	2602991-0000		1	ROD	
300	90141-0015		4	RETAINING RING FOR SHAFT DIN 471 8 SS	
310	90141-0016		1	RETAINING RING FOR SHAFT DIN 471 10 SS	
330	312105-0370		1	SCREW M6S ISO 4017 M6X20 A480	
340	312105-0368		2	SCREW M6S ISO 4017 M6X16 A480	
350	312155-0368		2	SCREW DIN 7991 MF6S M6X16 A4 70	
360	312155-0451		1	SCREW DIN 7991 MF6S M8X20 A4 70	
370	315105-0153		3	WASHER BRB 6,4X12 RFR	
380	315105-0165		4	WASHER BRB 8,4X16 RFR	
390	315105-0173		1	WASHER BRB 10,5X22 RFR	
400	312155-0449		1	SCREW DIN 7991 MF6S M8X16 A4 70	
500	321111-0097		4	FLANGE BUSHING, 8X12X12 MM	
510	90287-0334		1	SCREW SPRINGLOAD. SLOTTED HEAD M8X16	
520	312318-0287		1	SCREW ISO4029 M4X8 A4	
530	312625-0318		1	HEXAGON THIN NUT, EN 24035 ML6M M8 A4	

Pos	Part No	UN	Qty	Description	Page No

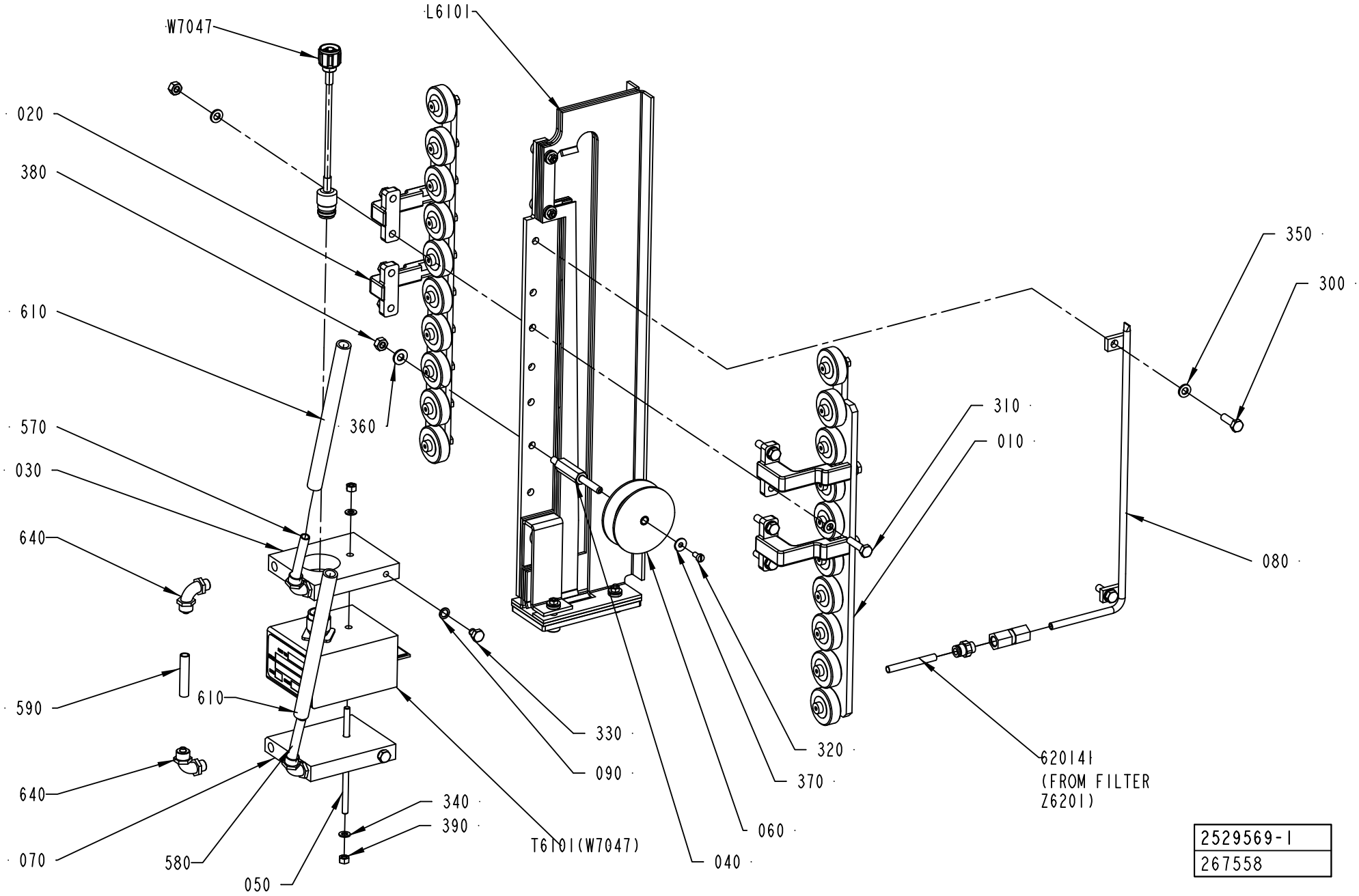
W7047
L6101
020
380
610
360
570
030
640
590
610
640
070
580
050
330
090
T6101(W7047)
340
390
040
060
370
320
620141
(FROM FILTER
Z6201)
310
010
350
300
080
2529569-1
267558

ECM: 367195 - 20081002
Group number: 2529569-0100
Assembly Drawing: 2529569-1_1_AF

Pos	Part No	UN	Qty	Description	Page No
TBA/22 TBA 0250B, TBA/22 TBA 0200B, TBA/22 TBA 0200M, TBA/22 TBA 0200S, TBA/22 TBA 0250S, TBA/22 TBA 0300S					
090	1140077-0000		2	RING	
330	312105-0362		2	SCREW M6S ISO 4017 M6X8 A480	
570	90166-0118	MM	1600	TUBE 8 MM PA BLACK	
580	90166-0118	MM	1600	TUBE 8 MM PA BLACK	
590	90166-0118	MM	70	TUBE 8 MM PA BLACK	
600	90458-2329	MM	1600	HOSE, SILICONE, 50 SHORE, 9/13 MM	
610	90458-2329	MM	1600	HOSE, SILICONE, 50 SHORE, 9/13 MM	
640	342931-0121		4	ELBOW 90 COUPL.,EXT.THREAD 8/6-G1/8"	
T6101	67380-0207		1	TRANSFORMER	
W7047	2540595-0008		1	COAXIAL CABLE	
Common Parts					
010	2506496-0100		1	PRESSURE ROLLER	**8-13**
020	2506497-0100		1	PRESSURE ROLLER	**8-15**
030	1129839-0000		1	COOLING PLATE	
040	2510366-0000		1	SHAFT	
050	1498430-0000		1	ROD	
060	2831685-0000		1	ROLLER	
070	1129869-0000		1	COOLING PLATE	
080	2529930-0000		1	AIR NOZZLE	
300	312105-0370		2	SCREW M6S ISO 4017 M6X20 A480	
310	312105-0372		4	SCREW M6S ISO 4017 M6X25 A480	
320	312125-0287		1	SCREW ISO 1207 M4X8 A4	
340	315105-0146		2	WASHER BRB 5,3X10 RFR	
350	315105-0153		10	WASHER BRB 6,4X12 RFR	
360	315105-0156		1	WASHER BRB 6,7X14 RFR	
370	90005-0082		1	WASHER PLAIN ROUND 4,3(M4)/12,H=1	
380	312605-0316		5	HEXAGON NUT, M6M M6 A280	
390	312605-0314		2	HEXAGON NUT, M6M M5 A280	
620141	90166-0193	MM	850	TUBE 6 MM PUR BLUE	
650	342722-0202		1	PIPE COUPLING 1/8" D=6MM	
660	342725-0102		1	CONN. STR. PIPE GAI06LR G1/8	
L6101	2509617-0100		1	INDUCTOR	**8-17**

Pos	Part No	UN	Qty	Description	Page No

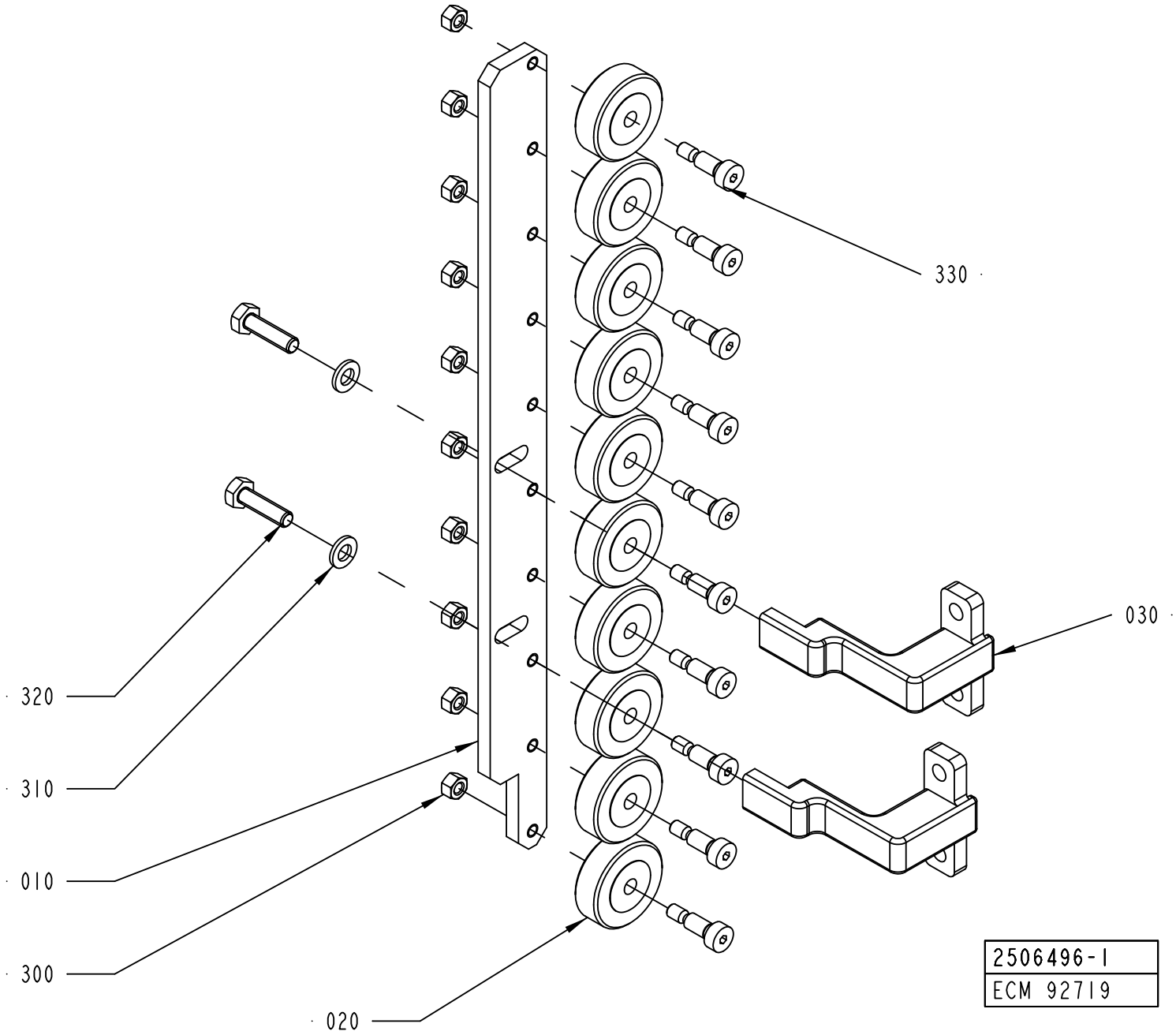
330
030
320
310
010
300
020
2506496-1
ECM 92719

ECM: 341518 - 20080215
Group number: 2506496-0100
Assembly Drawing: 2506496-1_1_AA

Pos	Part No	UN	Qty	Description	Page No
-					
010	1558914-0000		1	ROLLER BRACKET	
020	1558911-0000		10	PRESSURE ROLLER	
030	2529573-0000		2	BRACKET	
300	312605-0314		10	HEXAGON NUT, M6M M5 A280	
310	315105-0153		2	WASHER BRB 6,4X12 RFR	
320	312105-0371		2	SCREW M6S ISO 4017 M6X22 A480	
330	312180-0366		10	SCREW ISO7379 H6X12	

Pos	Part No	UN	Qty	Description	Page No

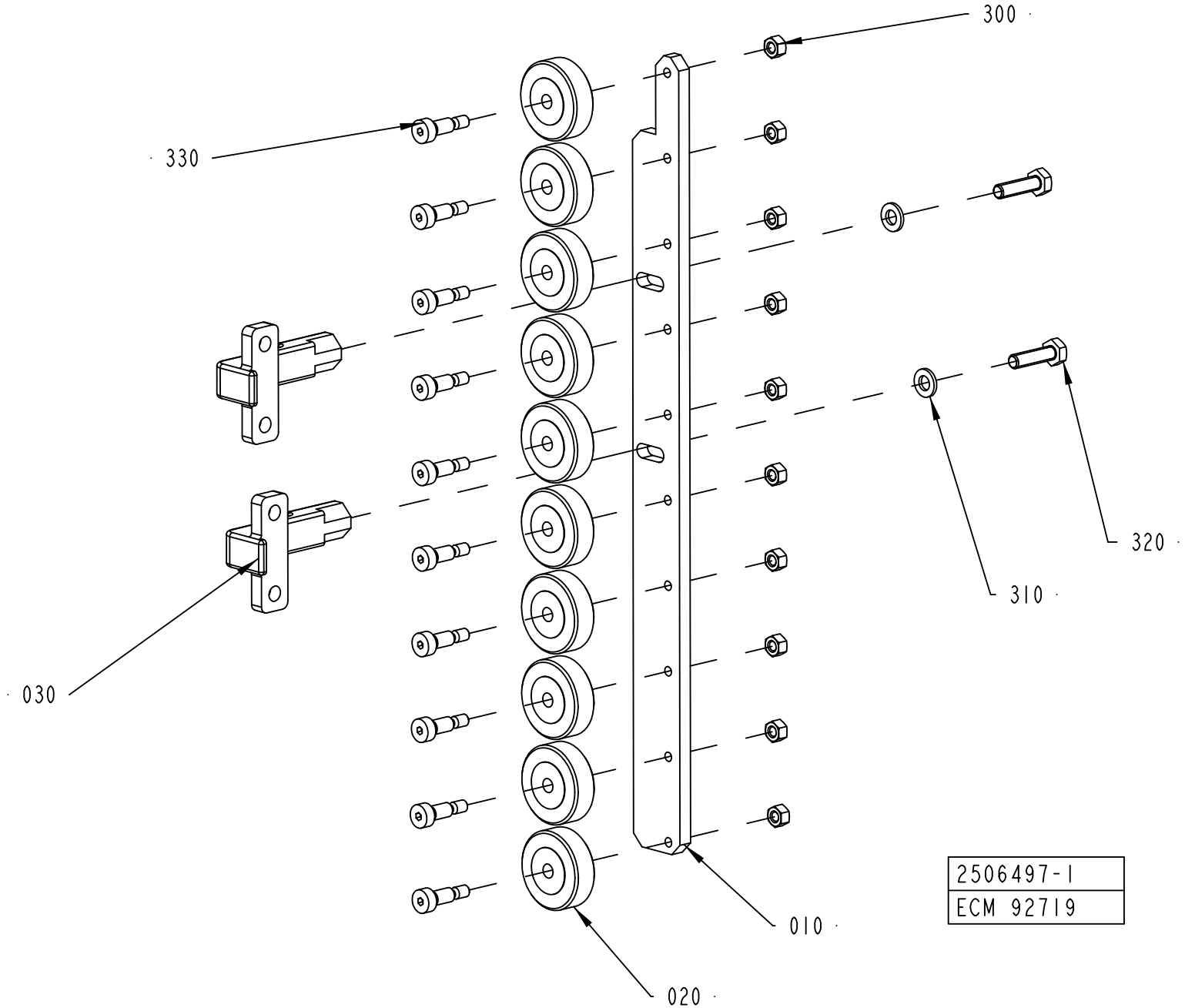
300
330
320
310
030
010
020
2506497-1
ECM 92719

ECM: 341519 - 20080215
Group number: 2506497-0100
Assembly Drawing: 2506497-1_1_AA

Pos	Part No	UN	Qty	Description	Page No
-					
010	1558914-0000		1	ROLLER BRACKET	
020	1558911-0000		10	PRESSURE ROLLER	
030	2529572-0000		2	BRACKET	
300	312605-0314		10	HEXAGON NUT, M6M M5 A280	
310	315105-0153		2	WASHER BRB 6,4X12 RFR	
320	312105-0371		2	SCREW M6S ISO 4017 M6X22 A480	
330	312180-0366		10	SCREW ISO7379 H6X12	

Pos	Part No	UN	Qty	Description	Page No

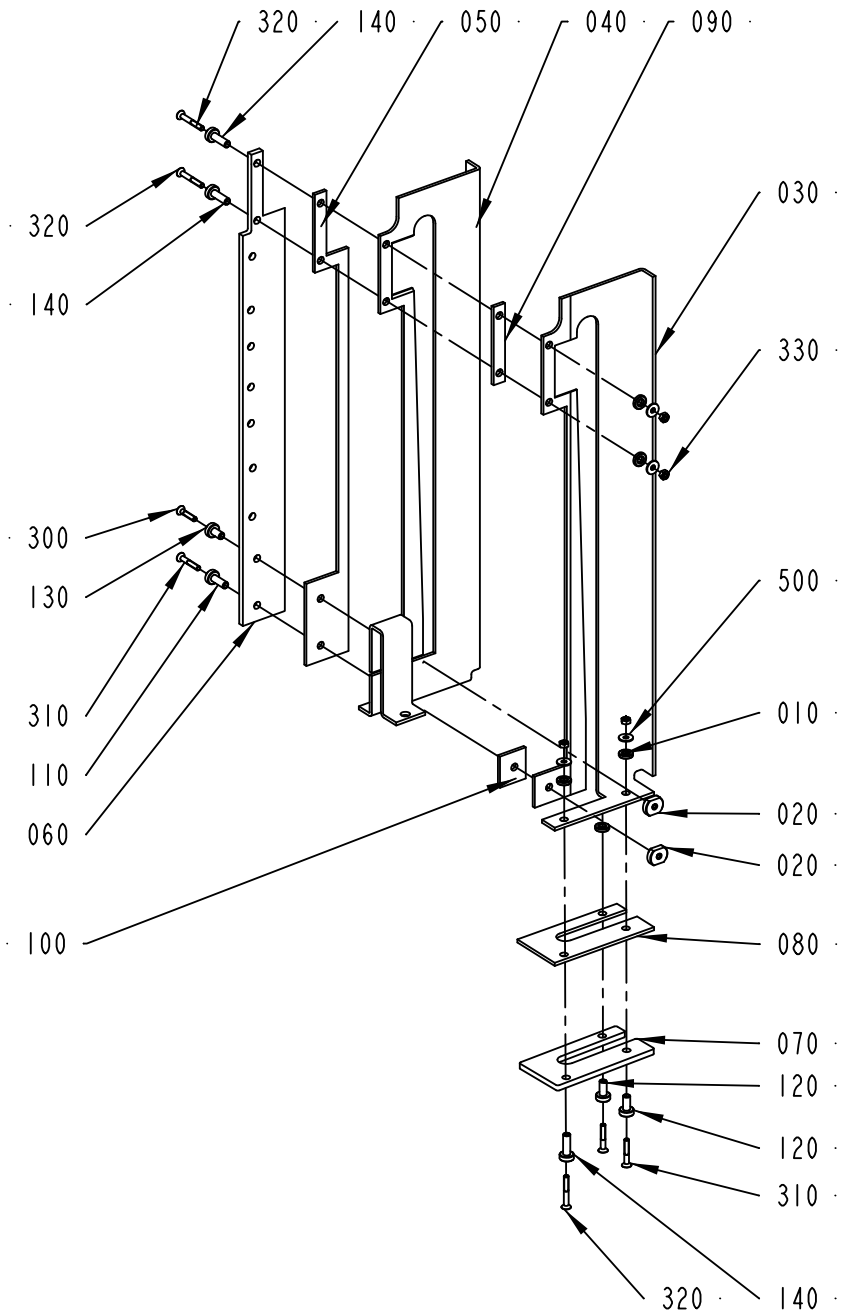

2509617-1
ECM 124683

ECM: 240441 - 20060419
Group number: 2509617-0100
Assembly Drawing: 2509617-1_1_AB

Pos	Part No	UN	Qty	Description	Page No
-					
010	1558917-0000		5	SPACER DISC	
020	1558918-0000		2	TIGHTENING NUT	
030	2506498-0000		1	SEALING PLATE	
040	2506499-0000		1	SEALING PLATE	
050	2506500-0000		1	PLATE	
060	2506501-0000		1	PLATE	
070	2506502-0000		1	PLATE	
080	2506503-0000		1	PLATE	
090	2506504-0000		1	PLATE	
100	2506505-0000		1	PLATE	
110	2509613-0000		1	BUSHING	
120	2509614-0000		2	BUSHING	
130	2529578-0000		1	BUSHING	
140	2597600-0000		3	BUSHING	
300	312155-0295		1	SCREW DIN 7991 MF6S M4X20 A4 70	
310	312155-0297		3	SCREW DIN 7991 MF6S M4X25 A4 70	
320	312155-0299		3	SCREW DIN 7991 MF6S M4X30 A4 70	
330	312605-0312		5	HEXAGON NUT, M6M M4 A280	
500	90005-0082		5	WASHER PLAIN ROUND 4,3(M4)/12,H=1	

Pos	Part No	UN	Qty	Description	Page No

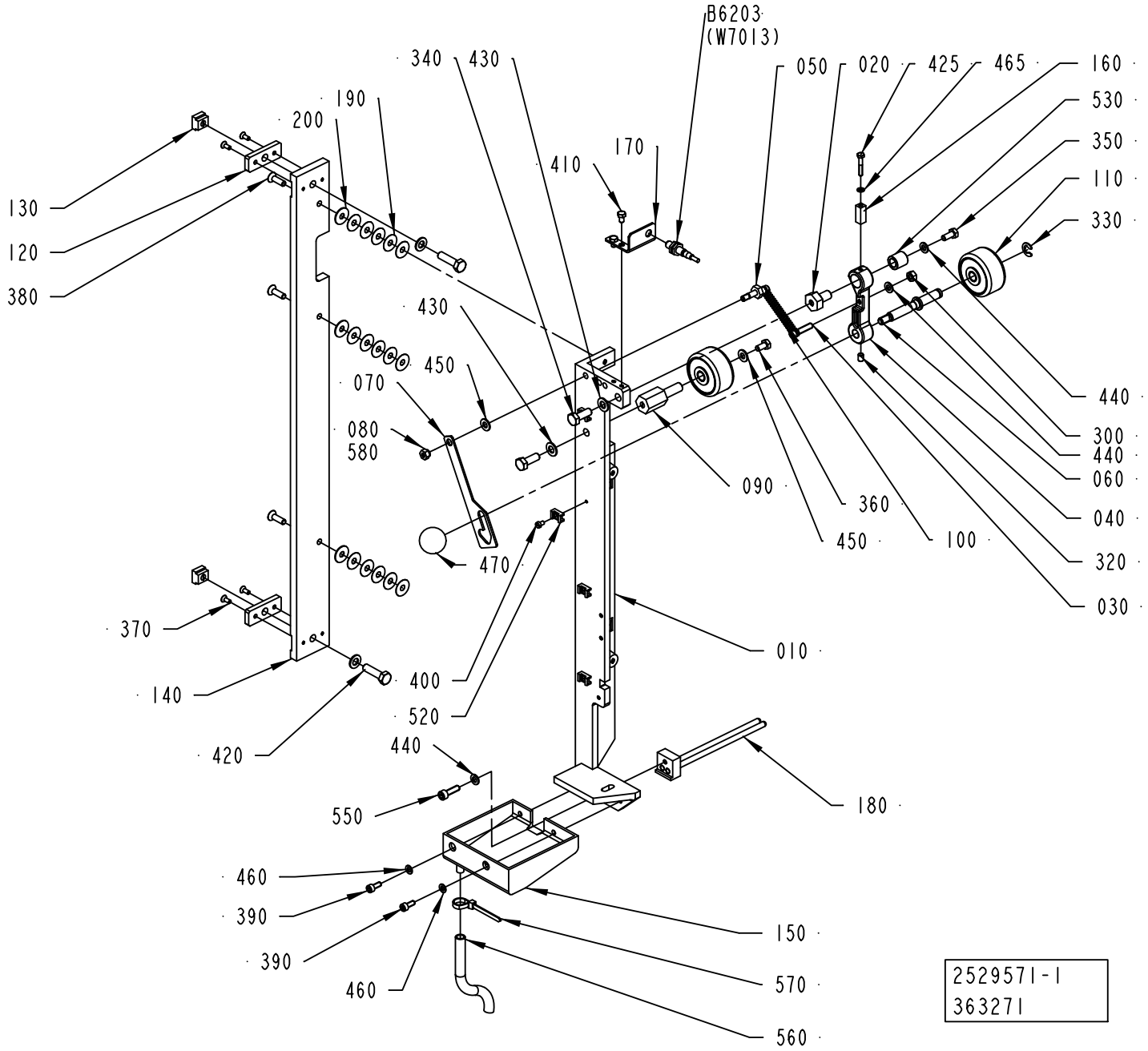
B6203
(W7013)
340
430
190
200
410
170
050
020
425
465
160
530
350
110
330
130
120
380
430
450
070
080
580
090
360
450
100
440
300
440
060
040
320
030
470
370
010
140
400
520
420
440
550
180
460
390
390
460
150
570
560
2529571-1
363271

ECM: 367632 - 20081002
Group number: 2529571-0100
Assembly Drawing: 2529571-1_1_AE

Pos	Part No	UN	Qty	Description	Page No
-					
010	2510359-0000		1	FASTENING BRACKET	
020	2510360-0000		1	SHAFT	
030	2510362-0000		1	SHAFT	
040	2510361-0000		1	CONNECTING ROD	
050	2510363-0000		1	SHAFT	
060	2510364-0000		1	SHAFT	
070	1349432-0000		1	CATCH	
080	1349994-0000		1	NUT	
090	1035895-0000		1	SHAFT	
100	1478303-0000		1	TENSION SPRING	
110	1346988-0000		2	ROLL	
010	*90166-0056*	*MM*	*40*	*SHRINKABLE HOSE (2,5")*	
020	*321120-0104*		*2*	*BEARING BUSH W/O FLANGE, 10X12X10 MM*	
120	2506656-0000		2	PLATE	
130	2506654-0000		2	BLOCK	
140	2506657-0000		1	SPACER	
150	2529550-0000		1	SUPPORT	
160	2535932-0000		1	CAM	
170	2535933-0000		1	SUPPORT	
180	1349672-0000		1	GUIDE	
190	2931920-0001		15	SHIM	
200	2931920-0002		3	SHIM	
300	312605-0316		1	HEXAGON NUT, M6M M6 A280	
320	312318-0362		1	SCREW ISO4029 M6X8 A4	
330	315755-0801		1	RETAINING RING SHAFT DIN 6799 8 A2	
340	312105-0452		2	SCREW M6S ISO 4017 M8X22 A480	
350	312105-0367		1	SCREW M6S ISO 4017 M6X14 A480	
360	312105-0366		1	SCREW M6S ISO 4017 M6X12 A480	
370	312155-0289		4	SCREW DIN 7991 MF6S M4X10 A4 70	
380	312155-0370		3	SCREW DIN 7991 MF6S M6X20 A4 70	
390	312115-0327		2	SCREW ISO4762 M5X12 A4 80	
400	312125-0285		4	SCREW ISO 1207 M4X6 A4	
410	312105-0323		2	SCREW M6S ISO 4017 M5X8 A480	
420	312105-0455		2	SCREW M6S ISO 4017 M8X30 A480	
425	312105-0297		1	SCREW M6S ISO 4017 M4X25 A470	
430	315105-0165		4	WASHER BRB 8,4X16 RFR	
440	315105-0153		3	WASHER BRB 6,4X12 RFR	
450	315105-0156		2	WASHER BRB 6,7X14 RFR	
460	315105-0146		2	WASHER BRB 5,3X10 RFR	
465	315105-0136		1	WASHER BRB 4,3X8 RFR	
470	318800-0104		1	HANDLE,SPHERICAL KNOB,INT.THRE.,D.30-M8	
520	352113-0205		4	ANCHOR PLATES FOR STRIPS, TYPE TM2S8-C10	
530	321105-0164		1	BEARING BUSH W/O FLANGE, 10X16X16 MM	
550	312115-0370		1	SCREW ISO4762 M6X20 A4 80	
560	90459-1126	MM	3000	PLASTIC HOSE PVC TRANSPARENT, 8X11MM	
570	352113-0102		1	CABLE TIE, BLACK 188X4,8 MM	
580	90157-0016	ML	1	LOCKING FLUID LOCTITE 242 50 ML	
B6203	90600-0473		1	INDUCTIVE SWITCH E2A-S08KS01-WP-B1-TP 5M	

Machine Type | Group Description | Used-In | Group Number | Page No

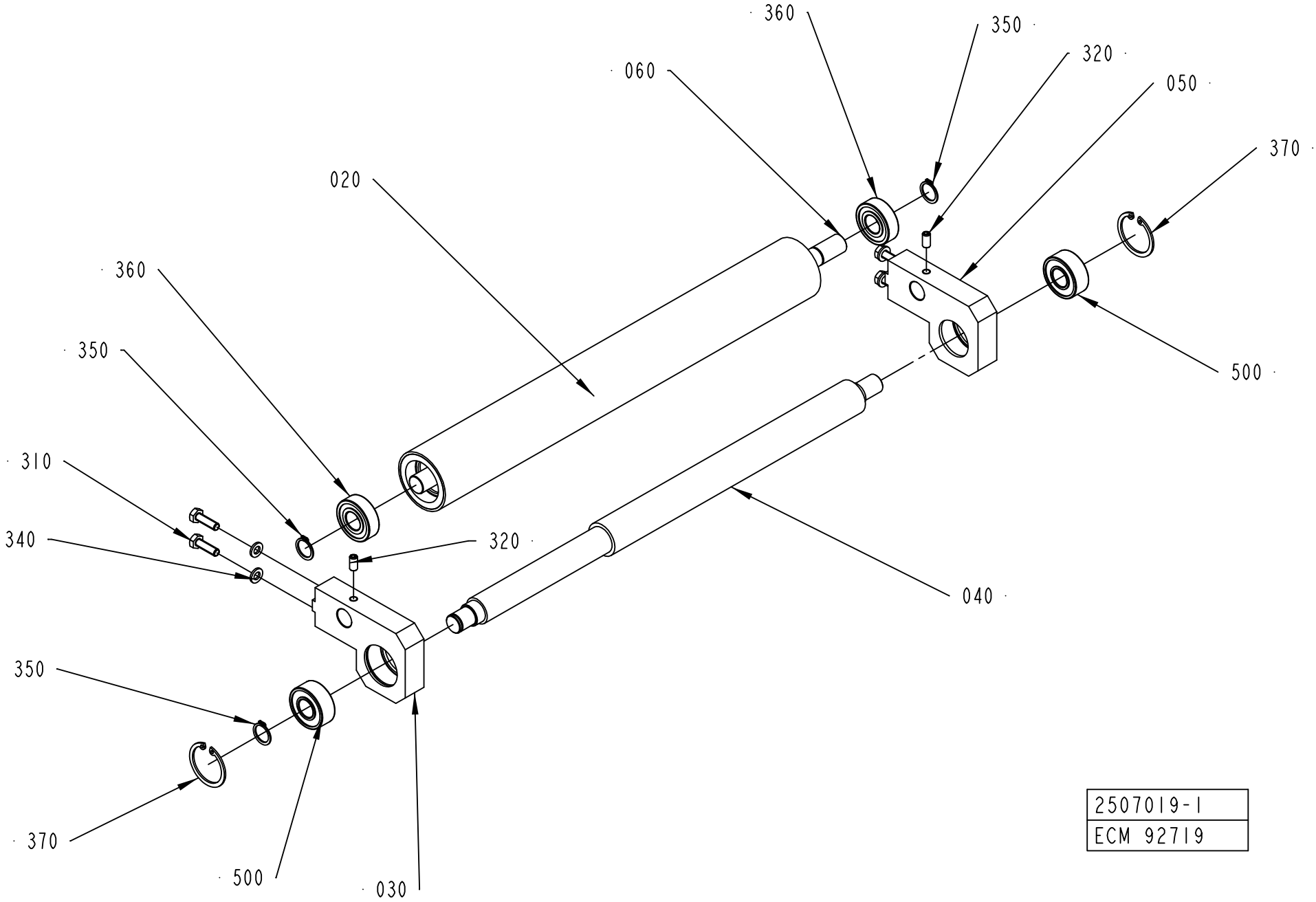
360
350
320
060
050
370
020
360
350
500
310
340
320
040
350
370
500
030
2507019-1
ECM 92719

ECM: 354676 - 20080704
Group number: 2507019-0100
Assembly Drawing: 2507019-1_1_AA

Pos	Part No	UN	Qty	Description	Page No
-					
020	2506661-0000		1	ROLLER	
030	2510404-0000		1	SUPPORT	
040	2506663-0000		1	SUPPORT	
050	2510405-0000		1	SUPPORT	
060	2506666-0000		1	AXEL	
310	312105-0370		4	SCREW M6S ISO 4017 M6X20 A480	
320	312318-0366		2	SCREW ISO4029 M6X12 A4	
340	315105-0153		4	WASHER BRB 6,4X12 RFR	
350	315751-0112		3	RETAINING RING FOR SHAFT DIN 471 15 SS	
360	321313-0102		2	BALL BEARING, 15X35X11 MM	
370	315753-0124		2	RETAINING RING FOR BORE DIN 472 35 A2	
500	90458-2737		2	SPHERICAL BALL BEARING, 15X35X14 MM	

Pos	Part No	UN	Qty	Description	Page No

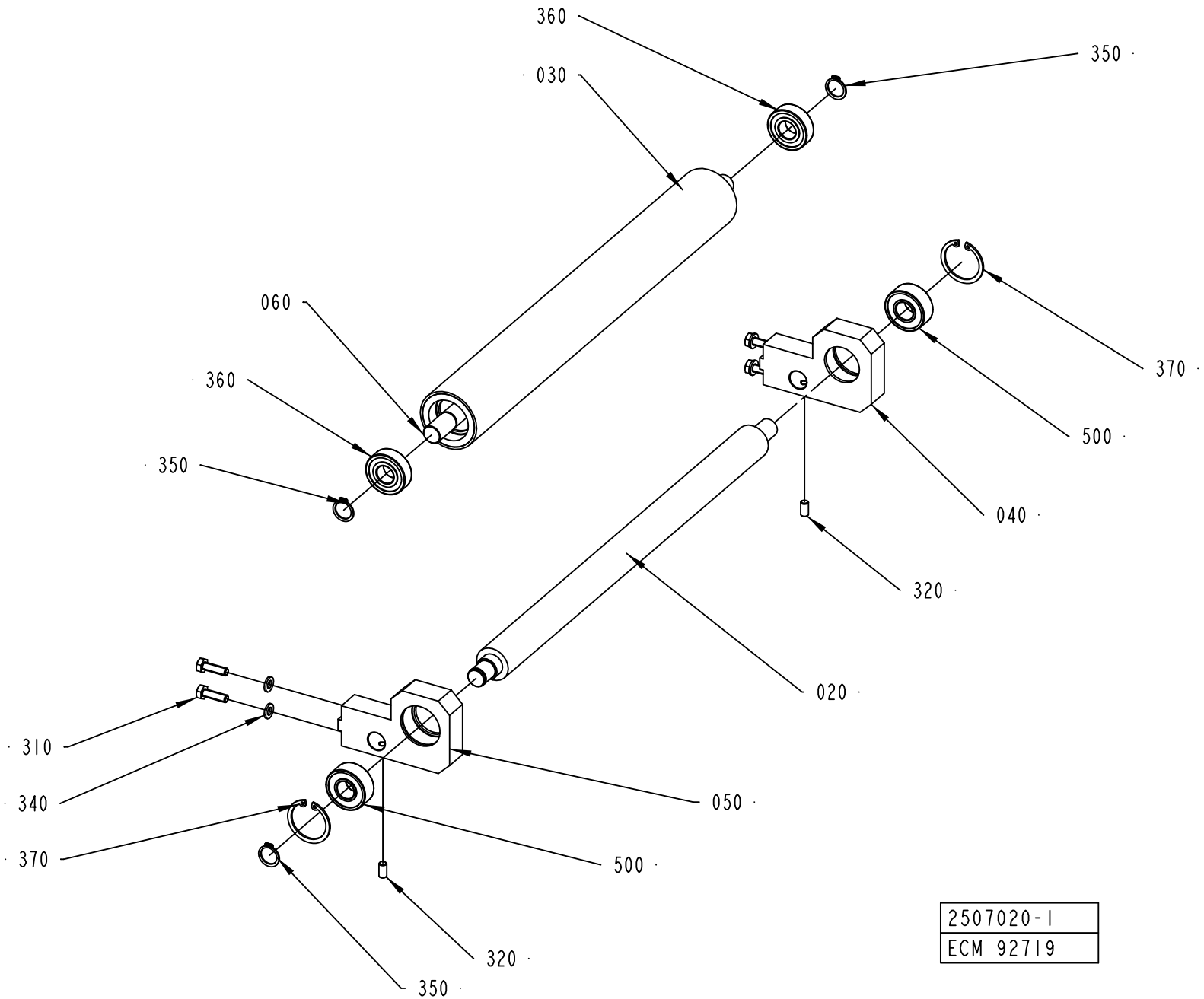
360
030
350
060
360
350
370
500
040
320
020
310
340
370
050
500
320
350
2507020-1
ECM 92719

ECM: 354677 - 20080704
Group number: 2507020-0100
Assembly Drawing: 2507020-1_1_AA

Pos	Part No	UN	Qty	Description	Page No
-					
020	2506659-0000		1	ROLLER	
030	2506661-0000		1	ROLLER	
040	2510404-0000		1	SUPPORT	
050	2510405-0000		1	SUPPORT	
060	2506666-0000		1	AXEL	
310	312105-0370		4	SCREW M6S ISO 4017 M6X20 A480	
320	312318-0366		2	SCREW ISO4029 M6X12 A4	
340	315105-0153		4	WASHER BRB 6,4X12 RFR	
350	315751-0112		3	RETAINING RING FOR SHAFT DIN 471 15 SS	
360	321313-0102		2	BALL BEARING, 15X35X11 MM	
370	315753-0124		2	RETAINING RING FOR BORE DIN 472 35 A2	
500	90458-2737		2	SPHERICAL BALL BEARING, 15X35X14 MM	

Pos	Part No	UN	Qty	Description	Page No

SPLICE DETECTOR

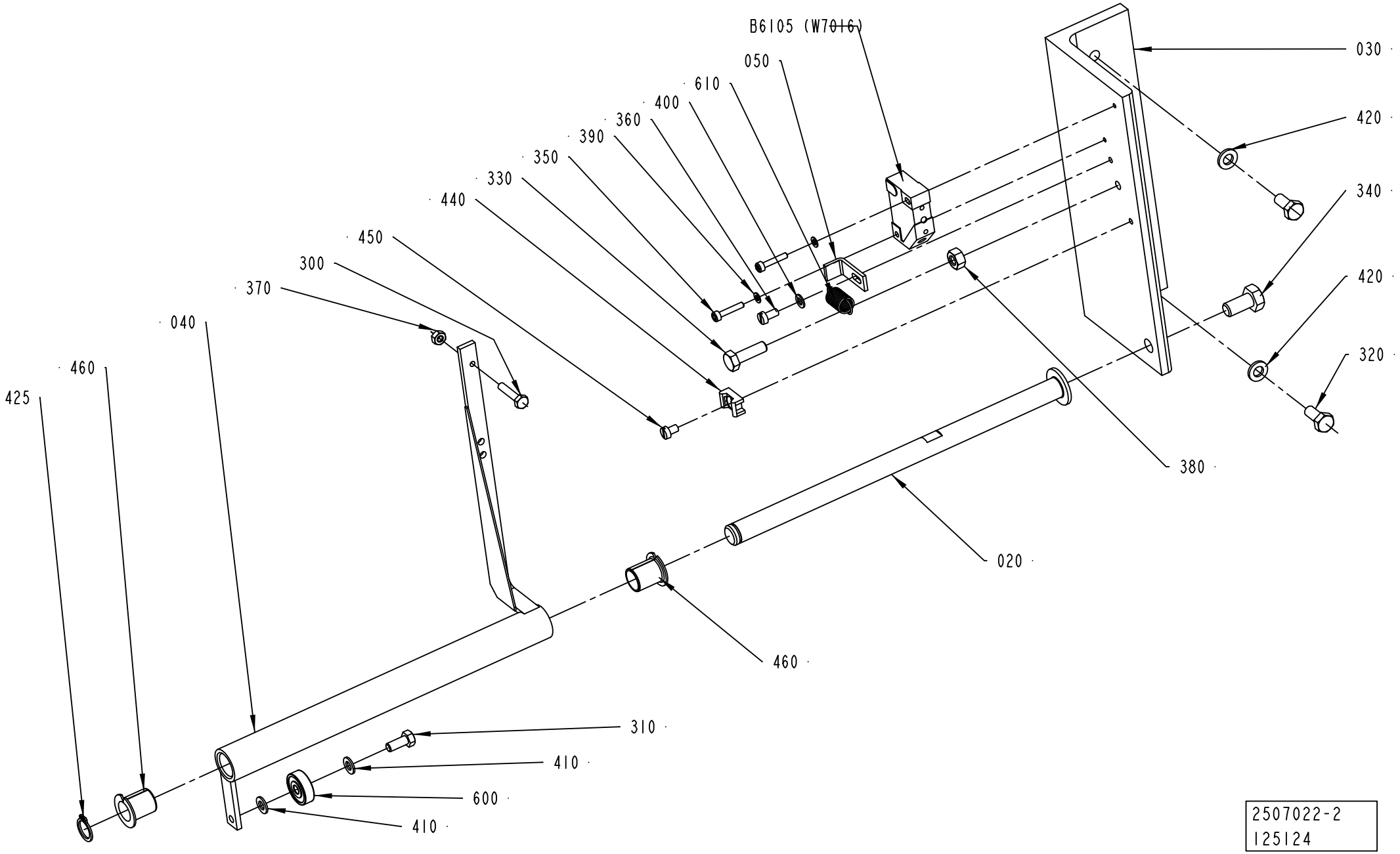

2507022-2
125124

ECM: 272337 - 20060712
Group number: 2507022-0200
Assembly Drawing: 2507022-2_1_AA

Pos	Part No	UN	Qty	Description	Page No
-					
020	2602995-0000		1	AXLE	
030	2602994-0000		1	BRACKET	
040	2602993-0000		1	LEVER	
050	2504812-0000		1	BLOCK	
300	312105-0295		1	SCREW M6S ISO 4017 M4X20 A470	
310	312105-0327		1	SCREW M6S ISO 4017 M5X12 A480	
320	312105-0367		2	SCREW M6S ISO 4017 M6X14 A480	
330	312105-0370		1	SCREW M6S ISO 4017 M6X20 A480	
340	312105-0449		1	SCREW M6S ISO 4017 M8X16 A480	
350	312115-0228		2	SCREW ISO4762 M3X16 A4 80	
360	312125-0287		1	SCREW ISO 1207 M4X8 A4	
370	312605-0312		1	HEXAGON NUT, M6M M4 A280	
380	312605-0316		1	HEXAGON NUT, M6M M6 A280	
390	315105-0124		2	WASHER BRB 3,2X6 RFR	
400	315105-0136		1	WASHER BRB 4,3X8 RFR	
410	315105-0146		2	WASHER BRB 5,3X10 RFR	
420	315105-0153		2	WASHER BRB 6,4X12 RFR	
425	315751-0109		1	RETAINING RING FOR SHAFT DIN 471 12 SS	
440	352113-0205		1	ANCHOR PLATES FOR STRIPS, TYPE TM2S8-C10	
450	312121-0285		1	SCREW ISO 1207 M4X6 4.8-5.8 Z.PL.	
460	321161-0185		2	FLANGE BUSHING, 12X14X17 MM	
600	90214-0138		1	BALL BEARING, 5X19X6 MM	
610	90335-0089		1	TENSION SPRING 41490, 0,9X10X23	
B6105	90044-0194		1	PROX.SW. IN5329/IN3002-BPKG(EX90044-104)	

Pos	Part No	UN	Qty	Description	Page No

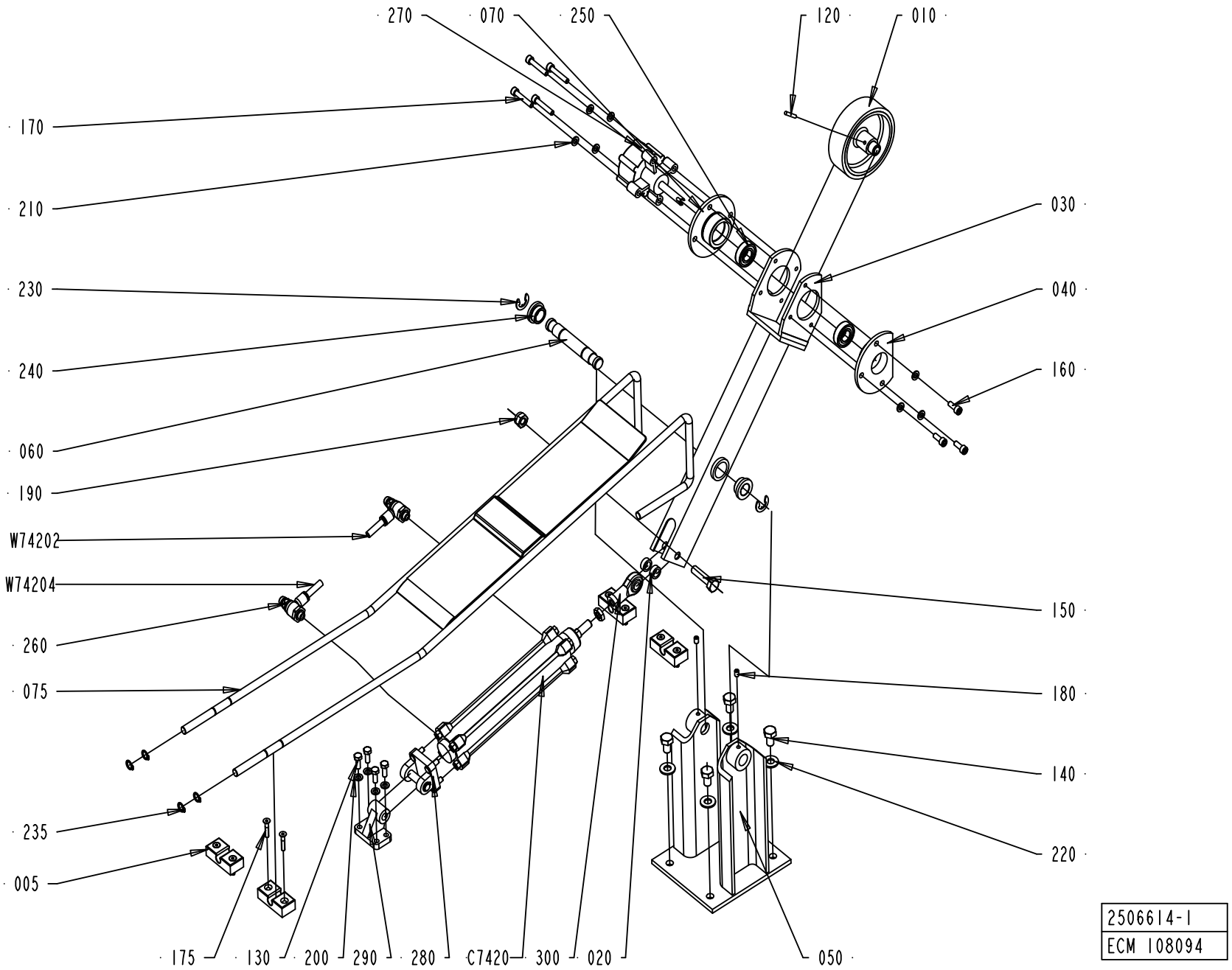
270
070
250
120
010
170
210
030
230
040
240
160
060
190
W74202
W74204
150
260
075
180
140
235
220
005
175
130
200
290
280
C7420
300
020
050
2506614-1
ECM 108094

ECM: 272280 - 20060712
Group number: 2506614-0100
Assembly Drawing: 2506614-1_1_AB

Pos	Part No	UN	Qty	Description	Page No
-					
010	1523483-0000		1	ROLLER	
020	1523486-0000		2	SPACER	
030	2506647-0000		1	LEVER	
040	2506649-0000		1	BEARING FLANGE	
050	2506650-0000		1	FRAME	
060	2506652-0000		1	AXLE PIN	
070	2507103-0000		1	BEARING FLANGE	
120	311103-1274		1	PARALLEL PIN ISO 2338 4M6X24 A1	
130	312105-0370		4	SCREW M6S ISO 4017 M6X20 A480	
140	312105-0491		4	SCREW M6S ISO 4017 M10X20 A480	
150	312105-0499		1	SCREW M6S ISO 4014 M10X40 A480	
160	312115-0366		3	SCREW ISO4762 M6X12 A4 80	
165	312115-0374		4	SCREW ISO4762 M6X30 A4 80	
180	312318-0362		2	SCREW ISO4029 M6X8 A4	
190	312812-0320		1	HEXAGON NUT, NY-LOCK M10 A480	
210	315105-0153		11	WASHER BRB 6,4X12 RFR	
220	315105-0173		4	WASHER BRB 10,5X22 RFR	
230	315755-0112		2	RETAINING RING SHAFT DIN 6799 12 A2	
240	321101-0202		2	FLANGE BUSHING, 16X22X12 MM	
250	321308-0202		2	BALL BEARING, 15X32X9 MM	
260	90235-0848		2	THROTTLE CHECK VALVE, G1/8", MANUAL,8	
270	90347-0054		1	ROTARY DASHPOT, S-CRD-P277	
280	90450-0654		1	BRACKET,REAR,EYE WITH AXLE 32	
290	90450-0655		1	BRACKET,REAR,CLEVIS FLANGE WITH FOOT 32	
300	90450-0723		1	ROD END,BALL JOINT EYE M10X1,25	
74202	90166-0194	MM	7000	TUBE 8 MM PUR BLUE	
74204	90166-0194	MM	7000	TUBE 8 MM PUR BLUE	
C7420	90459-3370		1	DOUBLE ACTING, PROFILE,CYL 32-140	

Pos	Part No	UN	Qty	Description	Page No

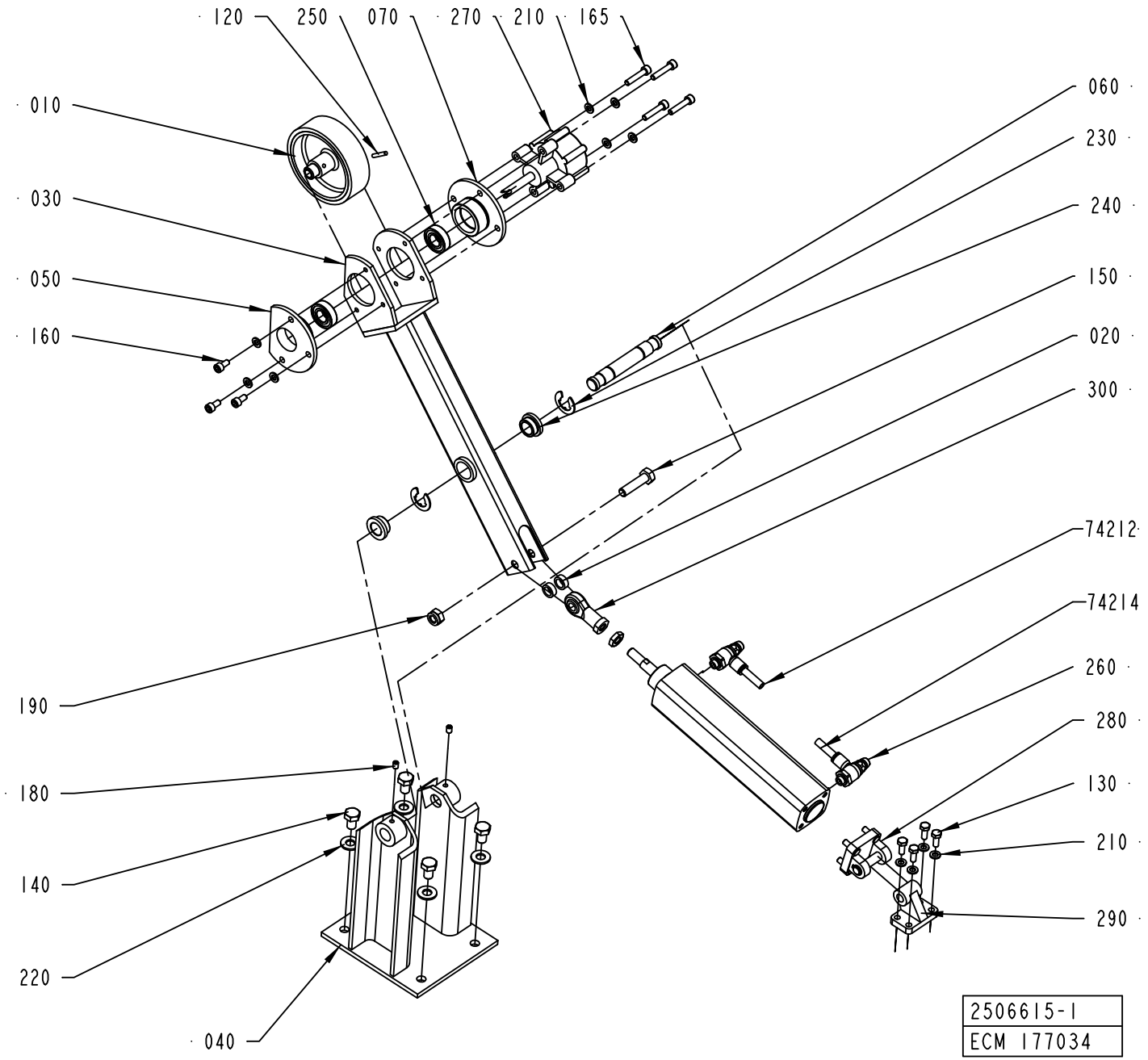
120
250
070
270
210
165
010
030
050
160
060
230
240
150
020
300
74212
74214
260
280
130
210
290
190
180
140
220
040
2506615-1
ECM 177034

ECM: 272281 - 20060712
Group number: 2506615-0100
Assembly Drawing: 2506615-1_1_AC

Pos	Part No	UN	Qty	Description	Page No
-					
010	1523483-0000		1	ROLLER	
020	1523486-0000		2	SPACER	
030	2506648-0000		1	LEVER	
040	2506650-0000		1	FRAME	
050	2506651-0000		1	BEARING FLANGE	
060	2506652-0000		1	AXLE PIN	
070	2507103-0000		1	BEARING FLANGE	
120	311103-1274		1	PARALLEL PIN ISO 2338 4M6X24 A1	
130	312105-0370		4	SCREW M6S ISO 4017 M6X20 A480	
140	312105-0491		4	SCREW M6S ISO 4017 M10X20 A480	
150	312105-0499		1	SCREW M6S ISO 4014 M10X40 A480	
160	312115-0366		3	SCREW ISO4762 M6X12 A4 80	
165	312115-0374		4	SCREW ISO4762 M6X30 A4 80	
180	312318-0362		2	SCREW ISO4029 M6X8 A4	
190	312812-0320		1	HEXAGON NUT, NY-LOCK M10 A480	
210	315105-0153		11	WASHER BRB 6,4X12 RFR	
220	315105-0173		4	WASHER BRB 10,5X22 RFR	
230	315755-0112		2	RETAINING RING SHAFT DIN 6799 12 A2	
240	321101-0202		2	FLANGE BUSHING, 16X22X12 MM	
250	321308-0202		2	BALL BEARING, 15X32X9 MM	
260	90235-0848		2	THROTTLE CHECK VALVE, G1/8", MANUAL,8	
270	90347-0054		1	ROTARY DASHPOT, S-CRD-P277	
280	90450-0654		1	BRACKET,REAR,EYE WITH AXLE 32	
290	90450-0655		1	BRACKET,REAR,CLEVIS FLANGE WITH FOOT 32	
300	90450-0723		1	ROD END,BALL JOINT EYE M10X1,25	
74212	90166-0194	MM	7000	TUBE 8 MM PUR BLUE	
74214	90166-0194	MM	7000	TUBE 8 MM PUR BLUE	
C7421	90459-3370		1	DOUBLE ACTING, PROFILE,CYL 32-140	

Pos	Part No	UN	Qty	Description	Page No

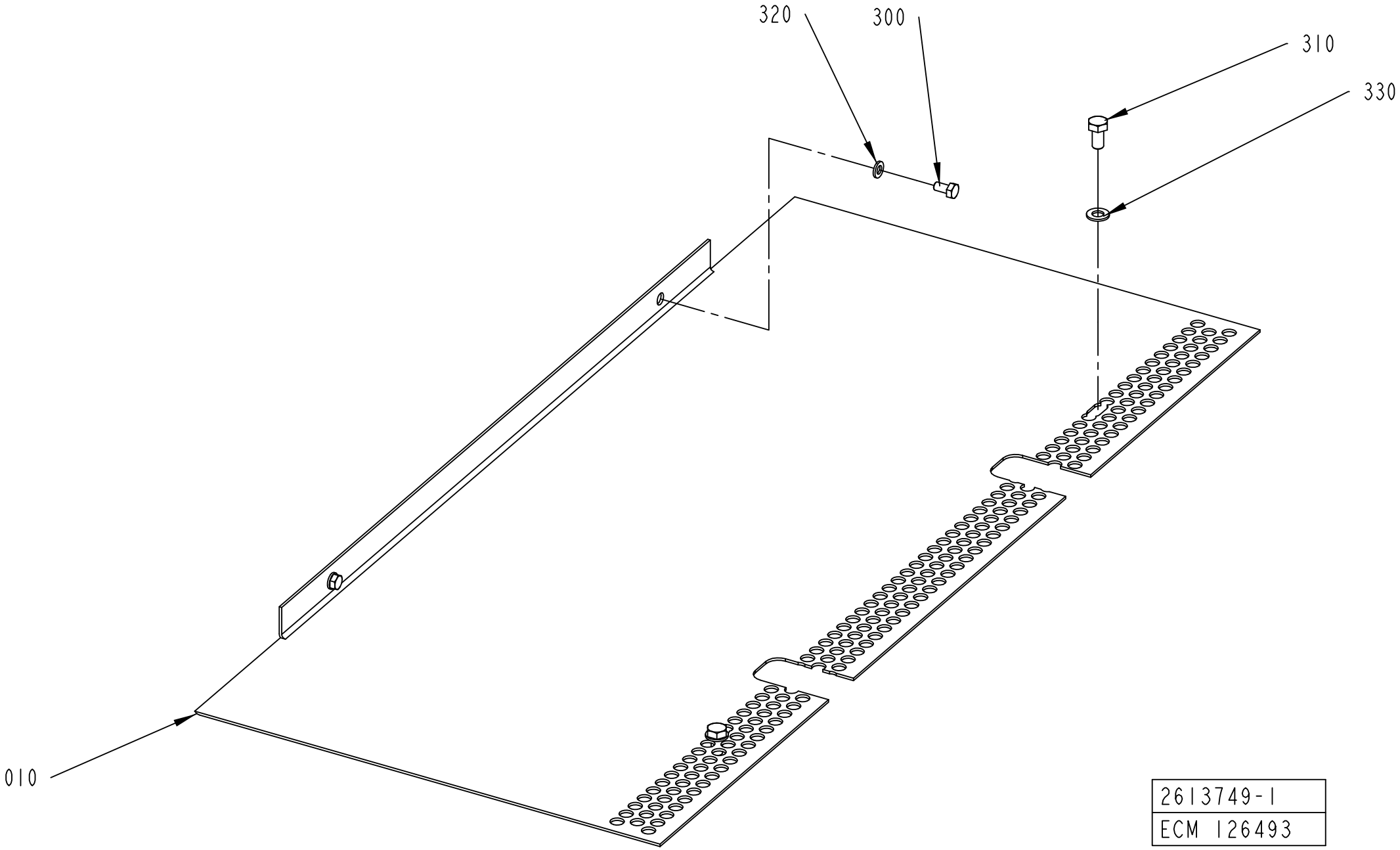
320
300
310
330
010
2613749-1
ECM 126493

ECM: 177222 - 20041005
Group number: 2613749-0100
Assembly Drawing: 2613749-1_1_AA

Pos	Part No	UN	Qty	Description	Page No
-					
010	2579996-0000		1	PLATE	
300	312105-0366		2	SCREW M6S ISO 4017 M6X12 A480	
310	312105-0449		2	SCREW M6S ISO 4017 M8X16 A480	
320	315105-0153		2	WASHER BRB 6,4X12 RFR	
330	315105-0165		2	WASHER BRB 8,4X16 RFR	

Pos	Part No	UN	Qty	Description	Page No

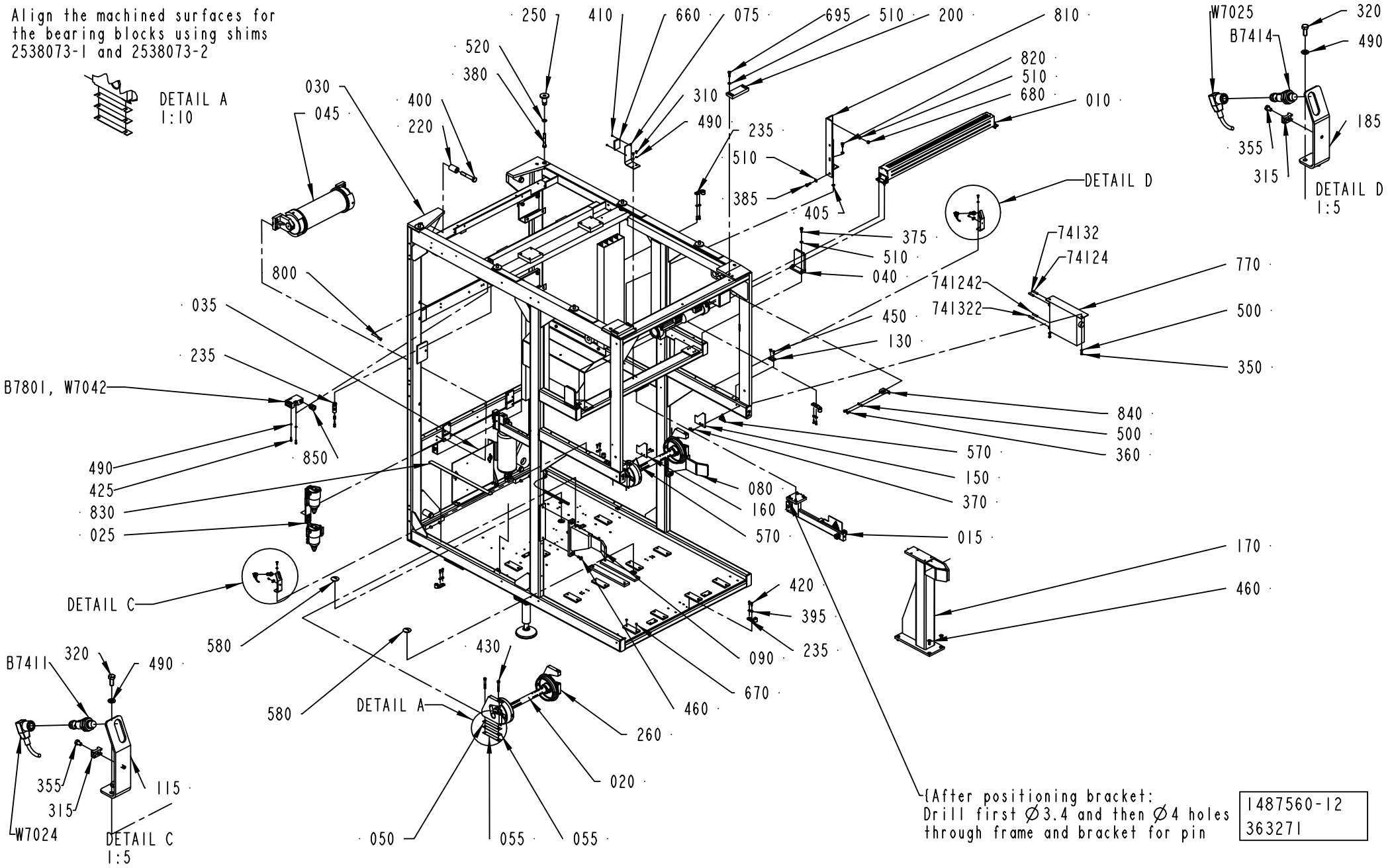
Align the machined surfaces for the bearing blocks using shims 2538073-1 and 2538073-2
DETAIL A 1:10
250
410
660
075
695
510
200
810
520
380
820
510
680
010
030
045
400
220
310
490
235
510
385
405
DETAIL D
375
510
040
800
035
235
B7801, W7042
490
425
830
025
850
450
130
741242
741322
74132
74124
770
500
350
840
500
360
570
150
370
080
160
570
015
170
460
420
395
235
090
670
460
260
020
430
580
DETAIL A
580
DETAIL C
050
055
055
B7411
320
490
355
315
115
W7024
DETAIL C 1:5
W7025
B7414
320
490
185
355
315
DETAIL D 1:5
(After positioning bracket: Drill first Ø3.4 and then Ø4 holes through frame and bracket for pin
1487560-12
363271

ECM: 369648 - 20081002
Group number: 1487560-0200
Assembly Drawing: 1487560-12_1_AD

This list covers pages from 8-32 to 8-35

Pos	Part No	UN	Qty	Description	Page No
TBA/22 WITHOUT ARL (See drawing on pages: 8-32, 8-34)					
020	2731217-0100		2	PAPER REEL HOLDER	**8-37, 12-17**
025	2541891-0100		1	FILTER	**8-39**
035	2888477-0100		1	PNEUMATIC ACCUMULATOR	**8-41**
045	2541083-0100		1	BENDING ROLLER	**8-43**
050	2538073-0001		4	SHIMS	
055	2538073-0002		8	SHIMS	
080	2553107-0000		1	HOLDER	
090	2553108-0000		1	HOLDER	
170	2553109-0000		1	HOLDER	
200	985756-0000		2	KEY	
250	2599941-0000		4	SPACER	
360	312105-0368		8	SCREW M6S ISO 4017 M6X16 A480	
380	312105-0506		4	SCREW M6S ISO 4014 M10X75 A480	
385	312105-0453		9	SCREW M6S ISO 4017 M8X25 A480	
460	312155-0493		8	SCREW DIN 7991 MF6S M10X25 A4 70	
500	315105-0153		16	WASHER BRB 6,4X12 RFR	
510	315105-0165		22	WASHER BRB 8,4X16 RFR	
520	315105-0173		4	WASHER BRB 10,5X22 RFR	
695	312105-0452		2	SCREW M6S ISO 4017 M8X22 A480	
780	90600-0724		2	FOOT 25000N, R0773 611223	
Common Parts					
010	1487544-0200		1	SIDE FEEDER	**8-45**
015	2541890-0100		1	BRACKET	**8-47**
030	1512279-0200		1	MACHINE BODY	**8-49, 8-51, 8-53**
040	2552821-0000		2	BRACKET	
070	1558487-0000		2	SUPPORT	
075	1548200-0000		1	BRACKET	
100	1499570-0000		1	HOLDER	
115	2538076-0000		1	BRACKET	
130	1512420-0000		2	PLATE	
140	1517101-0000		1	PIPE	
150	1558484-0000		1	PROTECTION PLATE	
160	2529551-0000		1	PROTECTION PLATE	
185	2538075-0000		1	BRACKET	
190	1519588-0000		1	PROTECTION PLATE	
220	1038865-0000		4	SPACER DISC	
235	1538868-0000		6	BRACKET	
260	1488005-0000		4	BEARING BLOCK	
310	312105-0323		5	SCREW M6S ISO 4017 M5X8 A480	
315	352113-0205		2	ANCHOR PLATES FOR STRIPS, TYPE TM2S8-C10	
320	312105-0327		4	SCREW M6S ISO 4017 M5X12 A480	
350	312105-0366		4	SCREW M6S ISO 4017 M6X12 A480	
355	312125-0285		2	SCREW ISO 1207 M4X6 A4	
370	312145-0327		4	SCREW ISO 2009 MFS M5X12 A4	
375	312105-0451		4	SCREW M6S ISO 4017 M8X20 A480	
395	315115-0153		12	WASHER PLAIN, TBRB 6,4/12 H=3	
400	312105-0640		4	SCREW M6S ISO 4014 M16X100 A480	
405	90062-0016		5	LOCK WASHER SERRAT.EXT.GEAR,8,4/15 H=0,8	
410	312125-0220		2	SCREW ISO 1207 M3X6 A4	
420	312105-0329		12	SCREW M6S ISO 4017 M5X16 A480	
425	312115-0329		10	SCREW ISO4762 M5X16 A4 80	
430	312115-0463		8	SCREW ISO4762 M8X60 A4 80	
450	312155-0366		4	SCREW DIN 7991 MF6S M6X12 A4 70	
470	312318-0455		4	SCREW ISO4029 M8X30 A4	
490	315105-0146		19	WASHER BRB 5,3X10 RFR	
570	359705-0005		2	WARNING SIGN ISO, MOVING PART	
580	90002-0010		2	BLANK-OFF PLUG, PR 37 SKINDICHT-BLK29	
590	90458-0323		1	NUT, M20X1,5	
630	90164-0303		4	LIGHT FIXTURE, BRACKET 70MM	
640	90165-0009		3	PIPE CLIP FOR TUBE D=12 MM	
660	90232-0333		1	REFLECTOR E39-R1	
670	90261-0016		24	PLUG, BLIND, PLASTIC GPN300V2	
680	312605-0318		6	HEXAGON NUT, M6M M8 A280	
74124	90166-0194	MM	3000	TUBE 8 MM PUR BLUE	
741242	90166-0194	MM	1500	TUBE 8 MM PUR BLUE	
74132	90166-0194	MM	3000	TUBE 8 MM PUR BLUE	
741322	90166-0194	MM	1500	TUBE 8 MM PUR BLUE	
770	90459-3832		1	VENTING BOX, P9852	
800	312927-0150		4	RIVET NUT M8, CLAMP. LENGTH 3,0 - 4,5	
810	1549324-0000		1	BRACKET	
820	312105-0449		1	SCREW M6S ISO 4017 M8X16 A480	
830	90459-1848		1	TAPE, SAFETY WALK R25MM X 18,3M	
840	1558798-0000		1	BRACKET	
850	90458-0315		5	CABLE GLAND, M20X1,5, NO.5311 1120	
B6209	90459-0472		1	KEY SAF.SW. AZ 16 02ZVRK-M20-2152-2254	
B7411	90600-0460		1	INDUCTIVE SWITCH, E2A-M12KN05-M1-B1-TP	
B7414	90600-0460		1	INDUCTIVE SWITCH, E2A-M12KN05-M1-B1-TP	
B7801	90459-0472		1	KEY SAF.SW. AZ 16 02ZVRK-M20-2152-2254	
B7806	90459-0472		1	KEY SAF.SW. AZ 16 02ZVRK-M20-2152-2254	
B7807	90459-0472		1	KEY SAF.SW. AZ 16 02ZVRK-M20-2152-2254	
E7702	90164-0015		1	LIGHT FIXTURE, RL70CV-111 / 230V 50HZ	
	92297-0301		*1*	*STARTER 4-65W S10, E 8219023*	
	90297-0007		*1*	*FLUORESCENT TUBE, PLS 11*	

Machine Type | Group Description | Used-In | Group Number | Page No

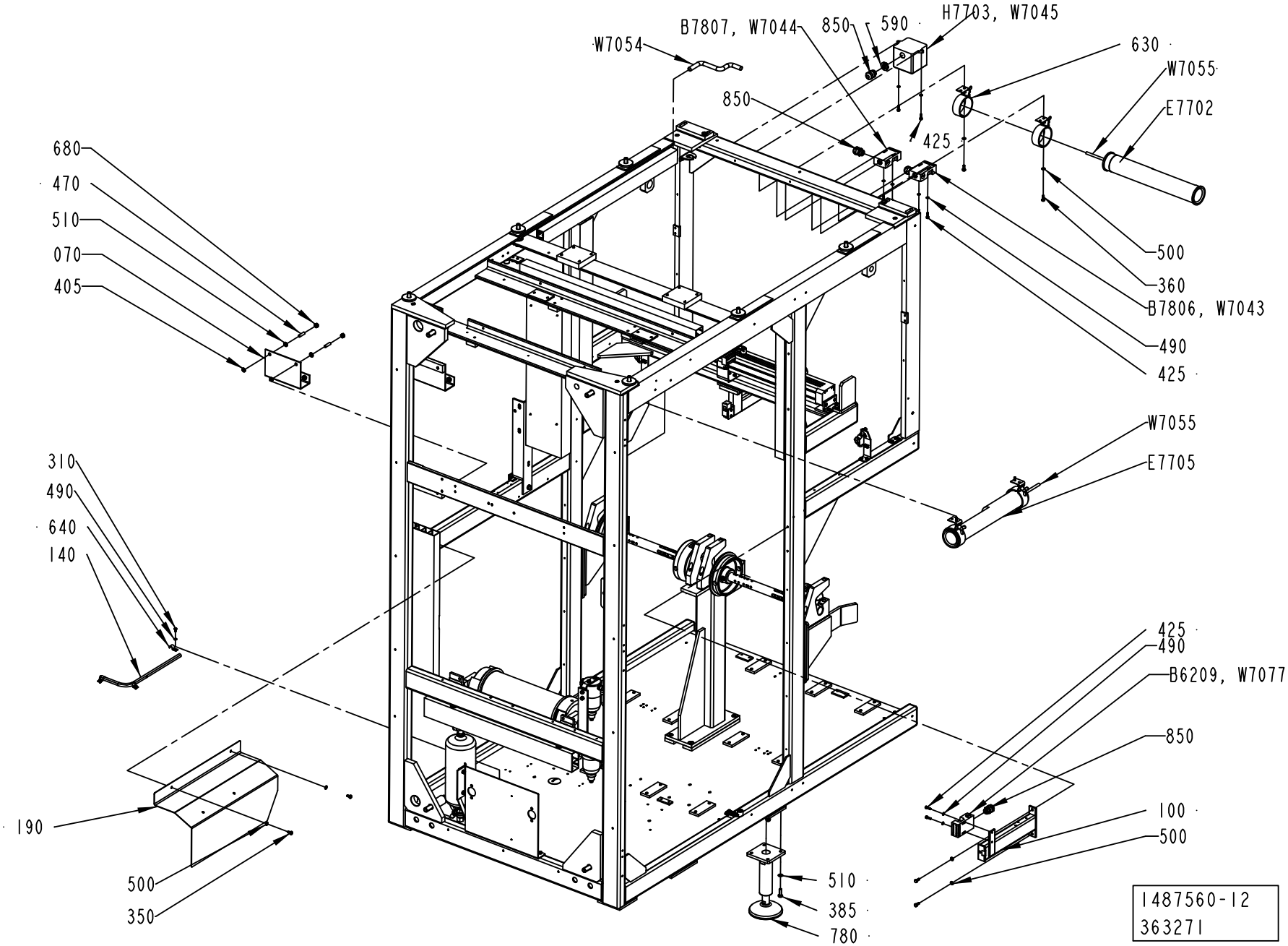
W7054
B7807, W7044
850
590
H7703, W7045
630
W7055
E7702
850
425
680
470
510
070
405
500
360
B7806, W7043
490
425
W7055
E7705
310
490
640
140
425
490
B6209, W7077
850
100
500
190
500
350
510
385
780
1487560-12
363271

ECM: 369648 - 20081002
Group number: 1487560-0200
Assembly Drawing: 1487560-12_2_AD

This list covers pages from 8-32 to 8-35

Pos	Part No	UN	Qty	Description	Page No
Common Parts (Cont'd)					
E7705	90164-0015		1	LIGHT FIXTURE, RL70CV-111 / 230V 50HZ	
	92297-0301		*1*	*STARTER 4-65W S10, E 8219023*	
	90297-0007		*1*	*FLUORESCENT TUBE, PLS 11*	
H7703	90052-0011		1	HORN HOOTERT 24:48VDC.PT NO.1YA030221	
W7014	351150-0412	MM	4000	CABLE OLFLEX 3X1,5 MM2 LIGHT/GREY	
W7024	90458-1076		1	L-SHAPED CONNECTOR CABLE 933 235-042	
W7025	90458-1076		1	L-SHAPED CONNECTOR CABLE 933 235-042	
W7042	351150-0405	MM	4000	CABLE OLFLEX 5X0,75 MM2 LIGHT/GREY	
W7043	351150-0405	MM	4000	CABLE OLFLEX 5X0,75 MM2 LIGHT/GREY	
W7044	351150-0405	MM	4000	CABLE OLFLEX 5X0,75 MM2 LIGHT/GREY	
W7045	351150-0431	MM	4000	CABLE OLFLEX 2X0,75 MM2 LIGHT/GREY	
W7054	351150-0406	MM	8000	CABLE OLFLEX 7X0,75 MM2 LIGHT/GREY	
W7055	351150-0412	MM	4000	CABLE OLFLEX 3X1,5 MM2 LIGHT/GREY	
W7077	351150-0405	MM	5000	CABLE OLFLEX 5X0,75 MM2 LIGHT/GREY	

Pos	Part No	UN	Qty	Description	Page No

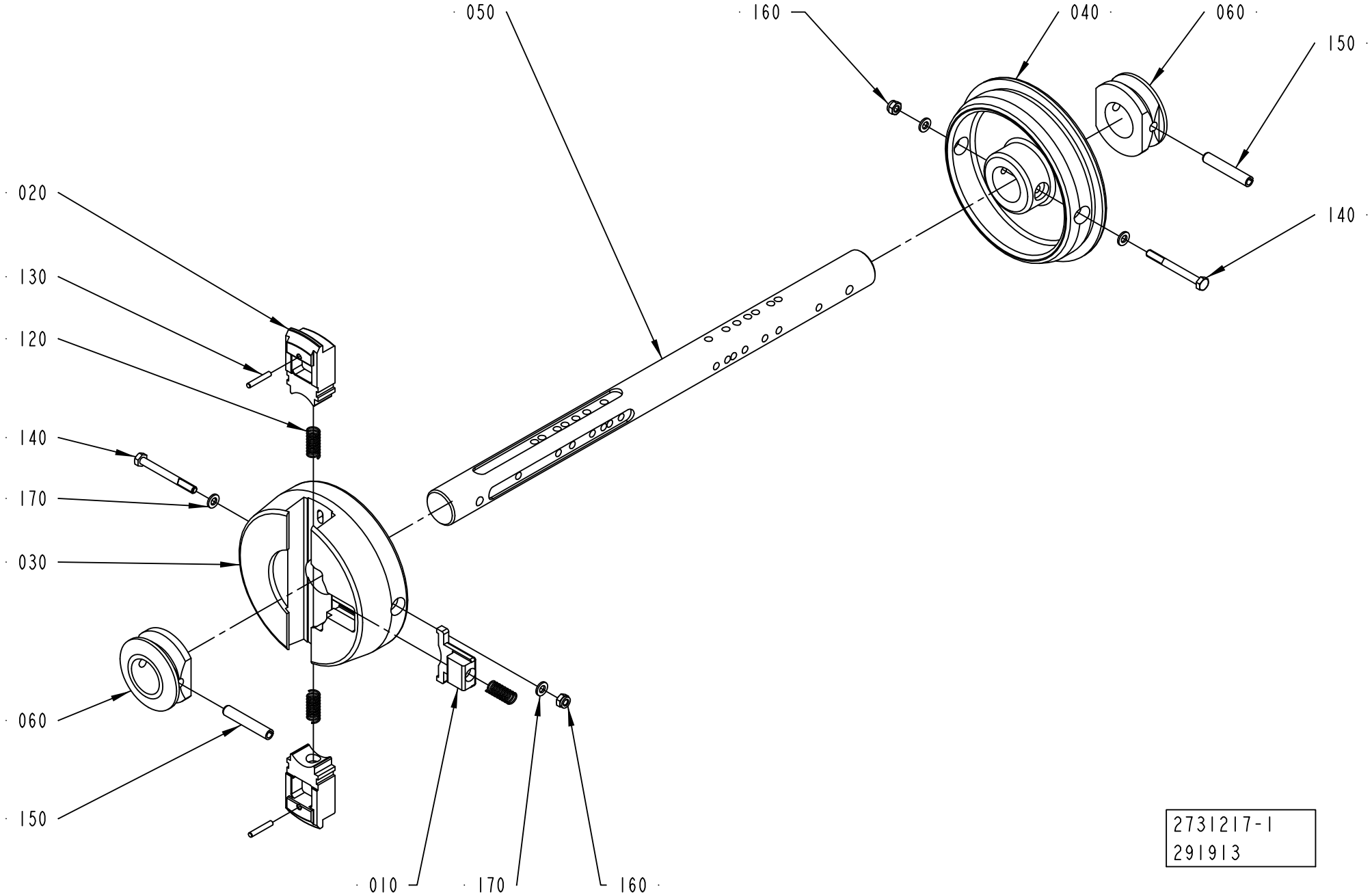
050
160
040
060
150
020
130
120
140
170
030
140
060
150
010
170
160
2731217-1
291913

ECM: 300589 - 20070508
Group number: 2731217-0100
Assembly Drawing: 2731217-1_1_AA

Pos	Part No	UN	Qty	Description	Page No
-					
010	272728-0000		1	BARRIER	
020	2851385-0000		2	PLUNGER	
030	2790925-0000		1	SLEEVE	
040	2731210-0000		1	SLEEVE	
050	2790929-0000		1	SHAFT	
060	2731212-0000		2	RING	
120	90335-0025		3	COMP. SPRING 22010, 1X11X26	
130	311103-0274		2	PARALLEL PIN ISO 2338 4M6X25 A1	
140	312105-0382		2	SCREW M6S ISO 4014 M6X60 A480	
150	311112-0385		2	SPRING PIN, ISO 8752 8X50-C	
160	312812-0316		2	HEXAGON NUT, NY-LOCK M6 A480	
170	315105-0153		4	WASHER BRB 6,4X12 RFR	

Pos	Part No	UN	Qty	Description	Page No

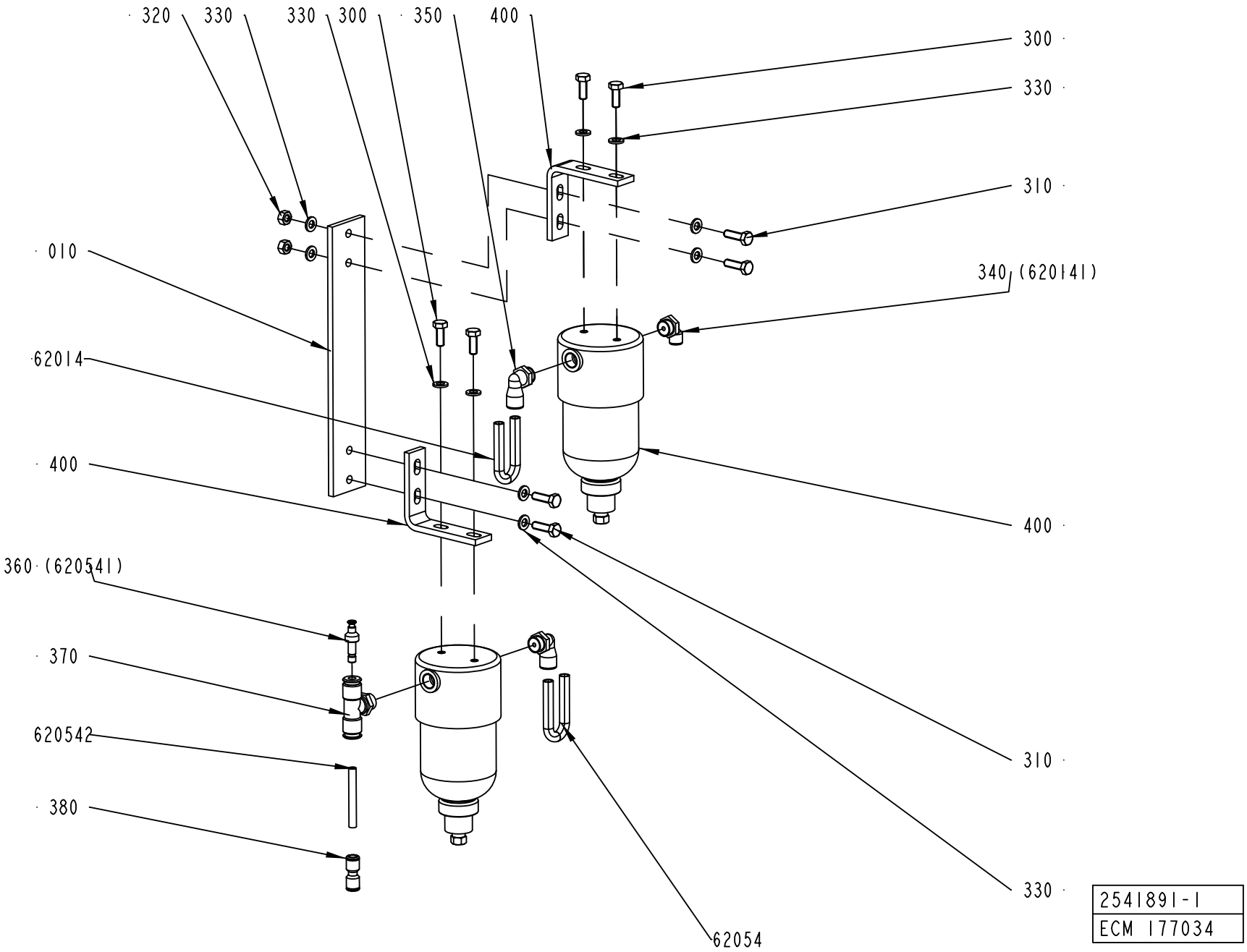
320
330
330
300
350
400
300
330
310
010
340 (620141)
62014
400
400
360 (620541)
370
620542
380
310
330
62054
2541891-1
ECM 177034

ECM: 178372 - 20041025
Group number: 2541891-0100
Assembly Drawing: 2541891-1_1_AC

Pos	Part No	UN	Qty	Description	Page No
-					
010	2518119-0000		1	PLATE	
300	312105-0368		4	SCREW M6S ISO 4017 M6X16 A480	
310	312105-0370		4	SCREW M6S ISO 4017 M6X20 A480	
320	312605-0316		2	HEXAGON NUT, M6M M6 A280	
330	315105-0153		10	WASHER BRB 6,4X12 RFR	
340	90458-2957		1	ELBOW PIPE JOINT, EXT.THREAD, D=6MM-G1/4	
350	90458-2958		2	ELBOW PIPE JOINT, EXT.THREAD, D=8MM-G1/4	
360	342716-0202		1	REDUCER 4-6	
370	342742-0103		1	T-COUPLING,ADJUST,F.PLASTIC TUBE 6-G1/4"	
380	342728-0102		1	PIPE COUPLING 6 MM	
400	90277-0116		2	FILTER HOUSING / ART.NO FILTER 58P-S5430	
	90277-0406		*1*	*FILTER CARTRIDGE 100-12-BX*	
62014	90166-0194	MM	3500	TUBE 8 MM PUR BLUE	
62054	90166-0194	MM	3500	TUBE 8 MM PUR BLUE	
620542	90166-0193	MM	2000	TUBE 6 MM PUR BLUE	

Pos	Part No	UN	Qty	Description	Page No

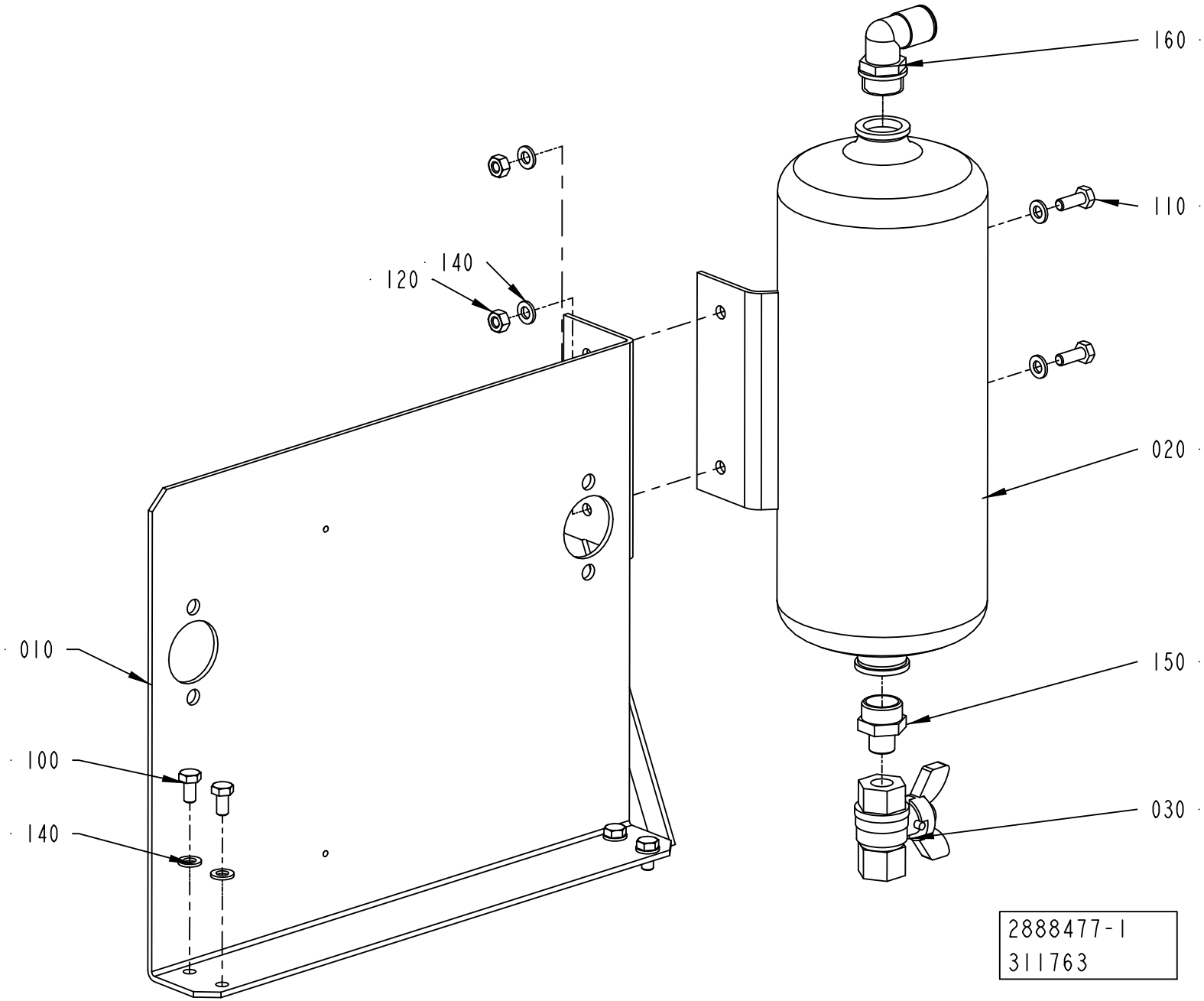
160
110
120
140
020
010
150
100
140
030
2888477-1
311763

ECM: 342687 - 20080215
Group number: 2888477-0100
Assembly Drawing: 2888477-1_1_AA

Pos	Part No	UN	Qty	Description	Page No
-					
010	1558221-0000		1	BRACKET	
020	90457-0100		1	ACCUMULATOR CRVZS-2	
030	90187-0088		1	BALL VALVE G1/4, NPBR	
100	312105-0366		4	SCREW M6S ISO 4017 M6X12 A480	
110	312105-0368		2	SCREW M6S ISO 4017 M6X16 A480	
120	312605-0316		2	HEXAGON NUT, M6M M6 A280	
140	315105-0153		8	WASHER BRB 6,4X12 RFR	
150	342700-0205		1	NIPPLES,HEXAGON,EXT.G-THREAD G1/2"-G1/4"	
160	350002-0016		1	PUSH-IN L-FITTING QSL-F-G1/2-12	

Pos	Part No	UN	Qty	Description	Page No

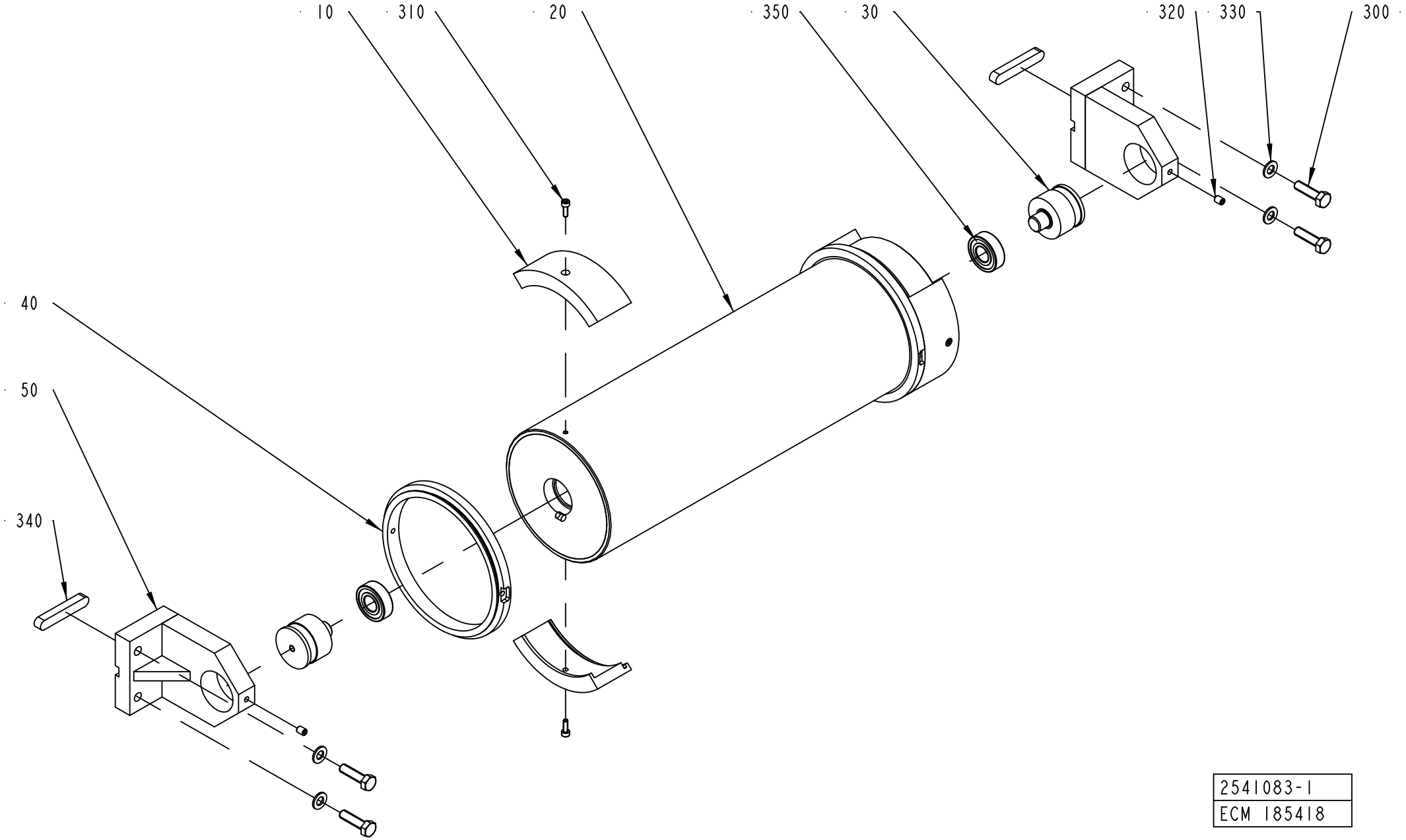

2541083-1
ECM 185418

ECM: 321099 - 20080101
Group number: 2541083-0100
Assembly Drawing: 2541083-1_1_AB

Pos	Part No	UN	Qty	Description	Page No
TBA 0200S (See drawing on page: 8-42)					
010	2523766-0010		4	BRACKET	
TBA 0200B, TBA 0250B, TBA 0300S (See drawing on page: 8-42)					
010	2523766-0007		4	BRACKET	
TBA 0200M, TBA 0250S (See drawing on page: 8-42)					
010	2523766-0009		4	BRACKET	
Common Parts					
020	2523765-0000		1	BENDING ROLLER	
030	1499584-0000		2	AXLE PIN	
040	2701880-0000		2	FLANGE	
050	2506328-0000		2	BRACKET	
300	312105-0455		4	SCREW M6S ISO 4017 M8X30 A480	
310	312115-0291		4	SCREW ISO4762 M4X12 A4 80	
320	312318-0362		2	SCREW ISO4029 M6X8 A4	
330	315105-0165		4	WASHER BRB 8,4X16 RFR	
340	315705-0305		2	PARALLEL KEY W. ROUND ENDS 10X8X60 MM	
350	321313-0102		2	BALL BEARING, 15X35X11 MM	

Pos	Part No	UN	Qty	Description	Page No

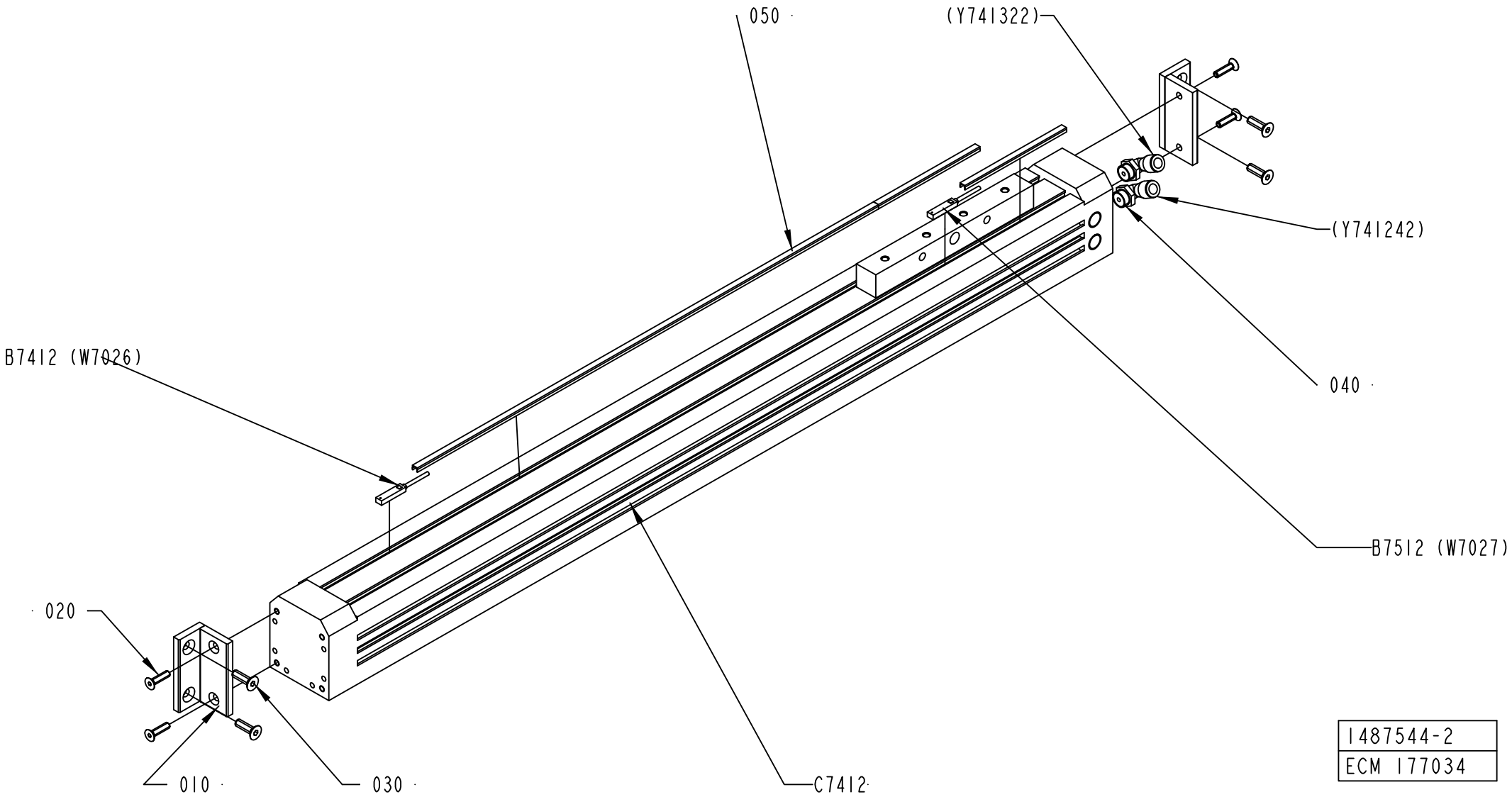
050
(Y741322)
(Y741242)
040
B7412 (W7026)
B7512 (W7027)
020
010
030
C7412
1487544-2
ECM 177034

ECM: 177932 - 20041025
Group number: 1487544-0200
Assembly Drawing: 1487544-2_1_AB

Pos	Part No	UN	Qty	Description	Page No
-					
010	1498457-0000		2	BRACKET	
020	312155-0331		4	SCREW DIN 7991 MF6S M5X20 A4 70	
030	312155-0370		4	SCREW DIN 7991 MF6S M6X20 A4 70	
040	90458-2958		2	ELBOW PIPE JOINT, EXT.THREAD, D=8MM-G1/4	
050	90458-0273		1	SLOT COVER ABP-5-S, 151680	
B7412	90044-0165		1	PROX.SWITCH SME-8-K5-LED-24	
B7512	90044-0165		1	PROX.SWITCH SME-8-K5-LED-24	
C7412	90459-1849		1	DOUBLE ACTING SHUTTLE CYL. 40-550 MM	

Pos	Part No	UN	Qty	Description	Page No

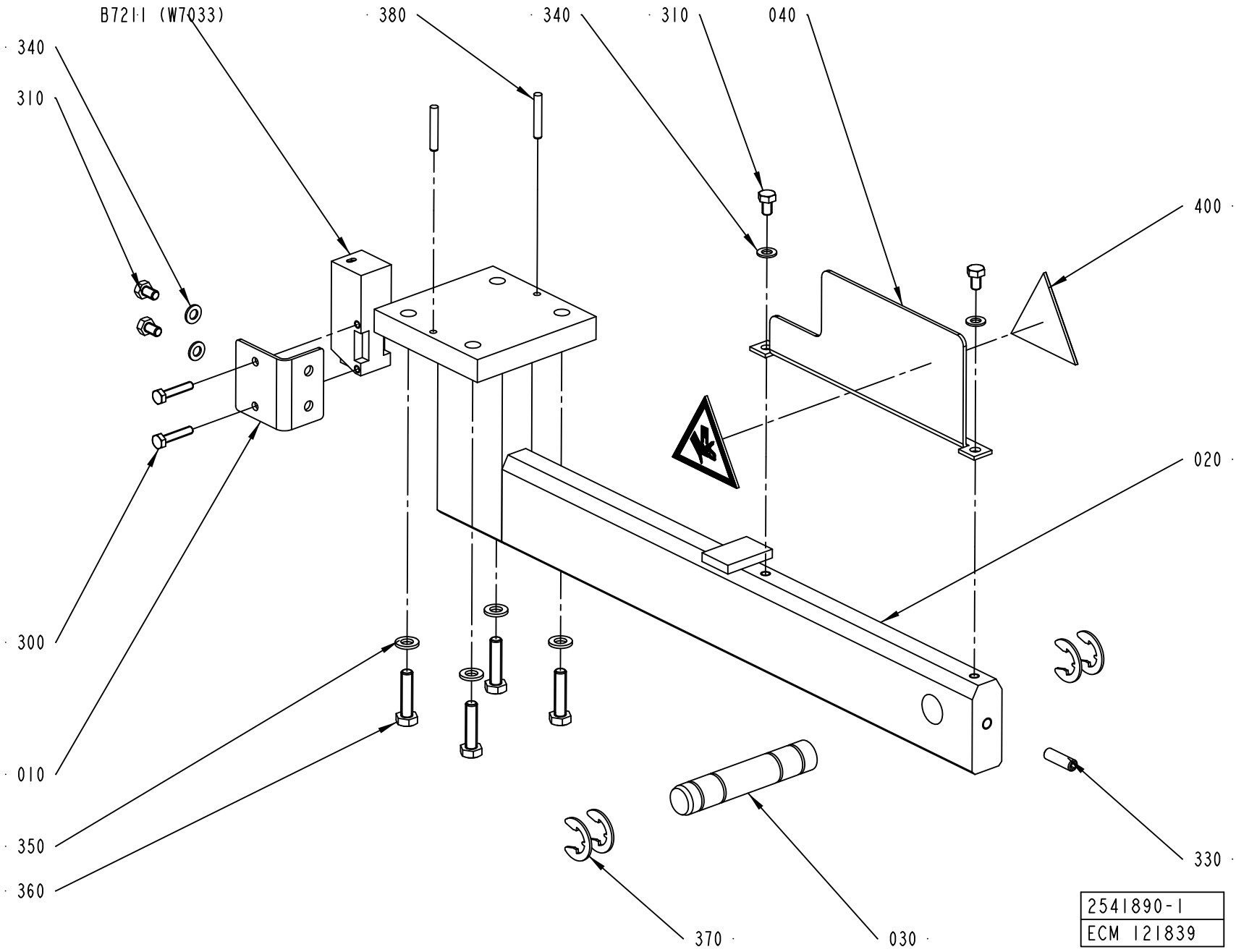
B721I (W7033)
380
340
310
040
340
310
400
020
300
010
350
360
330
370
030
2541890-1
ECM 121839

ECM: 178370 - 20041005
Group number: 2541890-0100
Assembly Drawing: 2541890-1_1_AB

Pos	Part No	UN	Qty	Description	Page No
-					
010	1490210-0000		1	PLATE	
020	1490219-0000		1	BRACKET	
030	1499573-0000		1	PIN	
040	1512275-0000		1	PROTECTION PLATE	
300	312105-0295		2	SCREW M6S ISO 4017 M4X20 A470	
310	312105-0323		4	SCREW M6S ISO 4017 M5X8 A480	
330	312318-0370		1	SCREW ISO4029 M6X20 A4	
340	315105-0146		4	WASHER BRB 5,3X10 RFR	
350	315105-0153		4	WASHER BRB 6,4X12 RFR	
360	312105-0372		4	SCREW M6S ISO 4017 M6X25 A480	
370	315755-0112		4	RETAINING RING SHAFT DIN 6799 12 A2	
380	311103-0274		2	PARALLEL PIN ISO 2338 4M6X25 A1	
400	359705-0005		2	WARNING SIGN ISO, MOVING PART	
B7211	90232-0129		1	PH.CELL E3S-CR61-5M	

Pos	Part No	UN	Qty	Description	Page No

Machine Type | Group Description | Used-In | Group Number | Page No

080
W7011
W7020
W7024
W7028
W7031
W7042
W7055
W7077
74202
74204
73032
73034
74142
74144

050
W7014
W7025
W7026
W7027
W7029
W7033
W7043
W7044
W7045
W7054
74154
74152
73154
73152

030

W7010	W7028	W7042	74204	74074
W7011	W7029	W7043	74202	74084
W7014	W7030	W7044	74154	74104
W7020	W7031	W7045	74152	74142
W7023	W7033	W7054	73034	74144
W7024	W7035	W7055	73032	74072
W7025	W7036	W7077	73154	74102
W7026	W7040	W7304	73152	620542
W7027	W7041	W7305		

040
W7024
W7028
W7031
W7077
73034
73032
74204
74202
74144
74142

060
W7024
W7028
W7031
W7077
74204
74202

060
W7025
W7026
W7027
W7033

100
W7046 62034
W7049 62032
W7013 62054
W7012 62014
W7015 MAIN AIR
W7017 620542
W7018
W7022
W7038
W7034
W7039
W7050
W7056
W7072
W7073
W7019
W7417

020
W7013
W7046
W7049
W7017
W7018
W7022
W7050
W7047
W7072
W7073
W7019
62034
62032
62054
62014
620542

010

INSIDE CABLE CONDUIT:
620542 W7010
74072 W7040
74074 W7041
74102 W7304
74104 W7305
74084

1512279-2
ECM 177034

ECM: 287797 - 20070227
Group number: 1512279-0200
Assembly Drawing: 1512279-2_1_AD

This list covers pages from 8-48 to 8-53

Pos	Part No	UN	Qty	Description	Page No
-					
010	2529990-0000		1	FRAME	
020	1512421-0000		1	CABLE DUCT	
030	2524606-0000		1	CABLE DUCT	
040	1512423-0000		1	CABLE DUCT	
050	2524607-0000		1	CABLE DUCT	
060	1512425-0000		2	CABLE DUCT	
080	1512426-0000		1	CABLE DUCT	
100	2529544-0000		1	CABLE DUCT	
110	312105-0364		2	SCREW M6S ISO 4017 M6X10 A480	
120	312115-0364		16	SCREW ISO4762 M6X10 A4 80	
130	312503-0275		4	TAPPING SCREW ISO 7049-ST3,5X6,5-C-Z	
150	90143-0060	MM	2600	EDGE STRIP 9,5X6,3MM BLACK PVC	
160	315125-0153		2	WASHER TBRSB 6,4X22X4 A4	
170	352113-0205		25	ANCHOR PLATES FOR STRIPS, TYPE TM2S8-C10	
180	312125-0285		25	SCREW ISO 1207 M4X6 A4	
190	352113-0102		25	CABLE TIE, BLACK 188X4,8 MM	

Pos	Part No	UN	Qty	Description	Page No

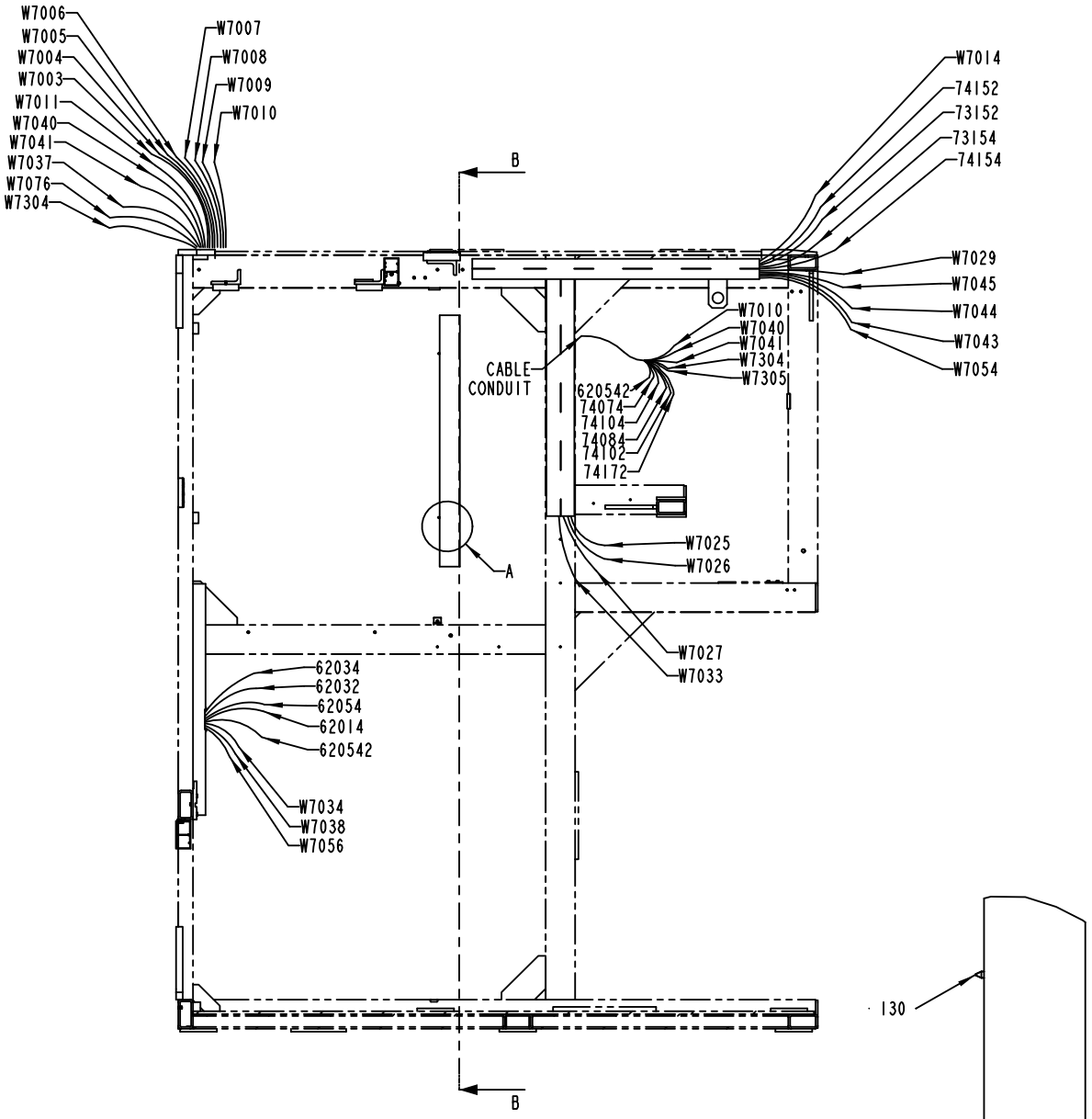
W7006
W7005
W7004
W7003
W7011
W7040
W7041
W7037
W7076
W7304
W7007
W7008
W7009
W7010
B
W7014
74152
73152
73154
74154
W7029
W7045
W7044
W7043
W7054
W7010
W7040
W7041
W7304
W7305
CABLE
CONDUIT
620542
74074
74104
74084
74102
74172
A
W7025
W7026
W7027
W7033
62034
62032
62054
62014
620542
W7034
W7038
W7056
B
A-A
RIGHT INSIDE

130
A
1:2

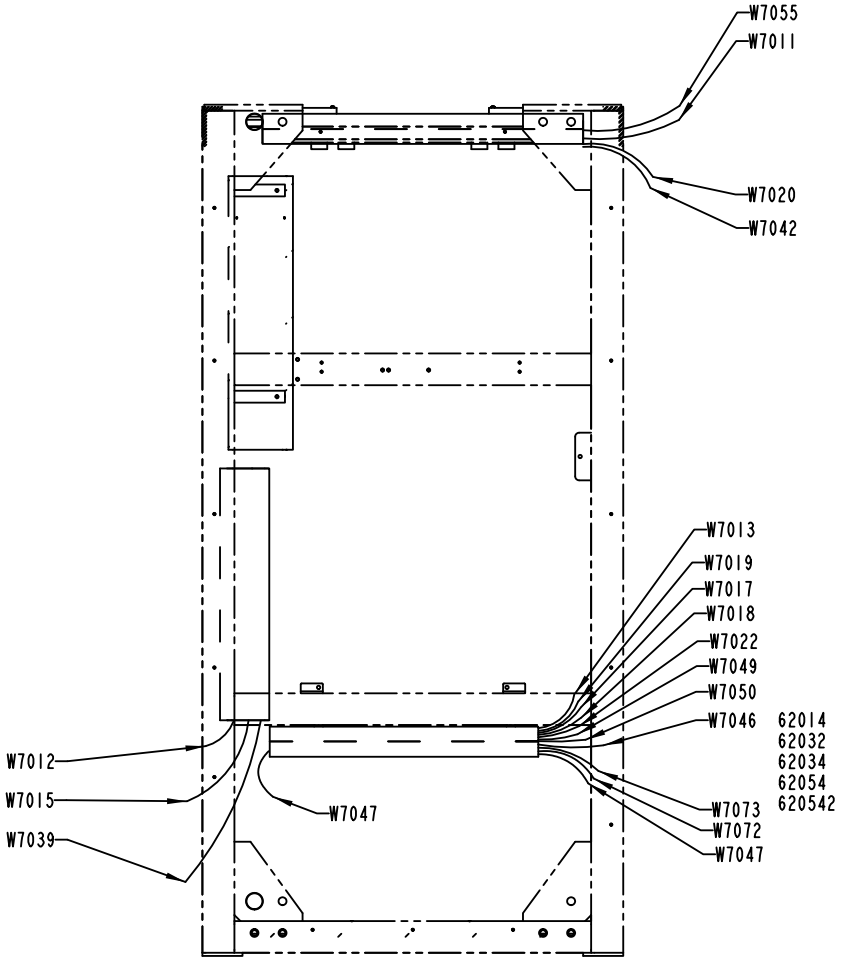
W7055
W7011
W7020
W7042
W7013
W7019
W7017
W7018
W7022
W7049
W7050
W7046
62014
62032
62034
62054
620542
W7012
W7015
W7039
W7047
W7073
W7072
W7047
B-B

ECM: 287797 - 20070227
Group number: 1512279-0200
Assembly Drawing: 1512279-2_2_AD

This list covers pages from 8-48 to 8-53

Pos	Part No	UN	Qty	Description	Page No
-					
010	2529990-0000		1	FRAME	
020	1512421-0000		1	CABLE DUCT	
030	2524606-0000		1	CABLE DUCT	
040	1512423-0000		1	CABLE DUCT	
050	2524607-0000		1	CABLE DUCT	
060	1512425-0000		2	CABLE DUCT	
080	1512426-0000		1	CABLE DUCT	
100	2529544-0000		1	CABLE DUCT	
110	312105-0364		2	SCREW M6S ISO 4017 M6X10 A480	
120	312115-0364		16	SCREW ISO4762 M6X10 A4 80	
130	312503-0275		4	TAPPING SCREW ISO 7049-ST3,5X6,5-C-Z	
150	90143-0060	MM	2600	EDGE STRIP 9,5X6,3MM BLACK PVC	
160	315125-0153		2	WASHER TBRSB 6,4X22X4 A4	
170	352113-0205		25	ANCHOR PLATES FOR STRIPS, TYPE TM2S8-C10	
180	312125-0285		25	SCREW ISO 1207 M4X6 A4	
190	352113-0102		25	CABLE TIE, BLACK 188X4,8 MM	

Pos	Part No	UN	Qty	Description	Page No

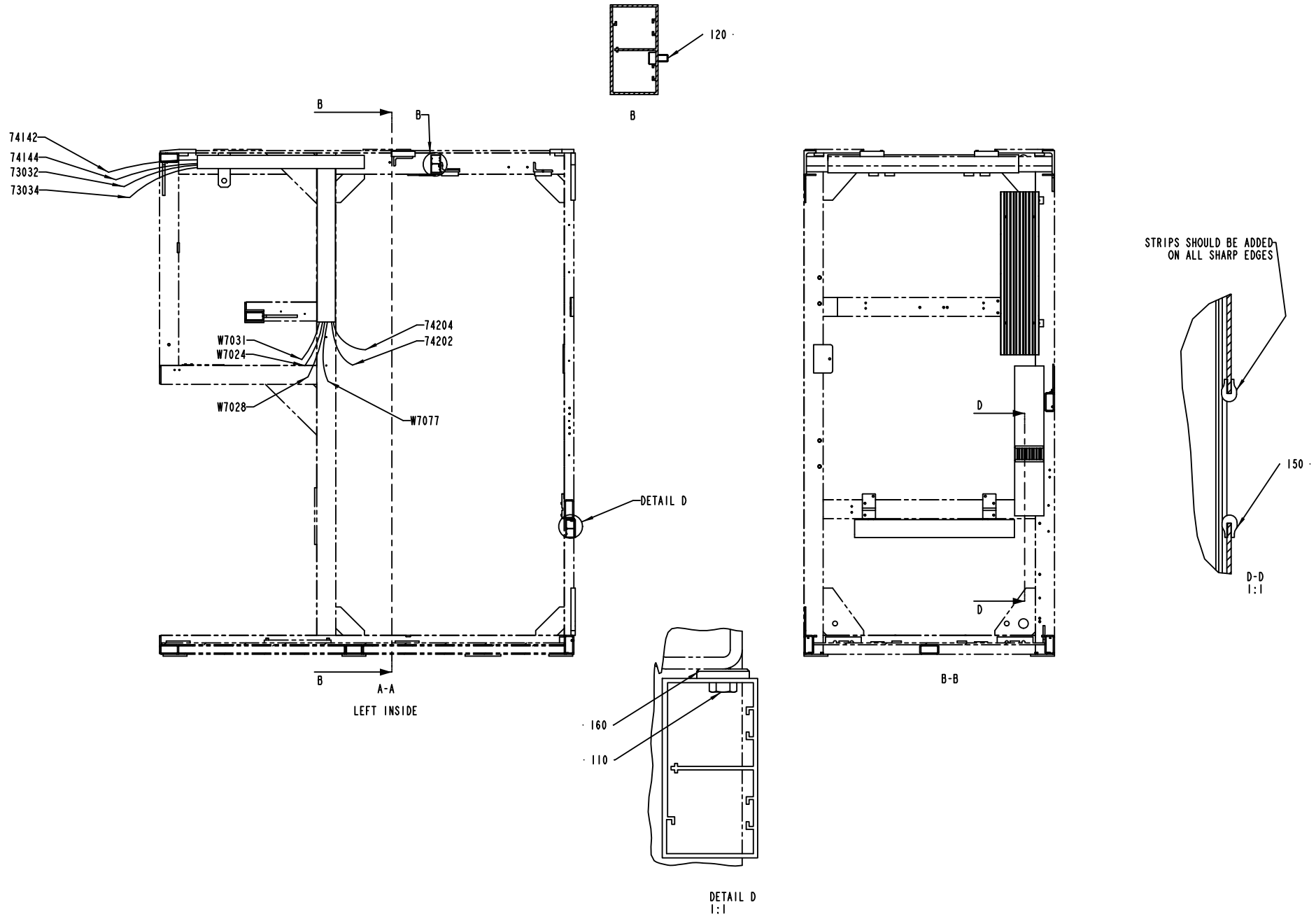
120
B
B
B
74142
74144
73032
73034
74204
74202
W7031
W7024
W7028
W7077
DETAIL D
B
A-A
LEFT INSIDE
D
D
B-B
STRIPS SHOULD BE ADDED ON ALL SHARP EDGES
150
D-D
1:1
160
110
DETAIL D
1:1

ECM: 287797 - 20070227
Group number: 1512279-0200
Assembly Drawing: 1512279-2_3_AD

This list covers pages from 8-48 to 8-53

Pos	Part No	UN	Qty	Description	Page No
-					
010	2529990-0000		1	FRAME	
020	1512421-0000		1	CABLE DUCT	
030	2524606-0000		1	CABLE DUCT	
040	1512423-0000		1	CABLE DUCT	
050	2524607-0000		1	CABLE DUCT	
060	1512425-0000		2	CABLE DUCT	
080	1512426-0000		1	CABLE DUCT	
100	2529544-0000		1	CABLE DUCT	
110	312105-0364		2	SCREW M6S ISO 4017 M6X10 A480	
120	312115-0364		16	SCREW ISO4762 M6X10 A4 80	
130	312503-0275		4	TAPPING SCREW ISO 7049-ST3,5X6,5-C-Z	
150	90143-0060	MM	2600	EDGE STRIP 9,5X6,3MM BLACK PVC	
160	315125-0153		2	WASHER TBRSB 6,4X22X4 A4	
170	352113-0205		25	ANCHOR PLATES FOR STRIPS, TYPE TM2S8-C10	
180	312125-0285		25	SCREW ISO 1207 M4X6 A4	
190	352113-0102		25	CABLE TIE, BLACK 188X4,8 MM	

Pos	Part No	UN	Qty	Description	Page No

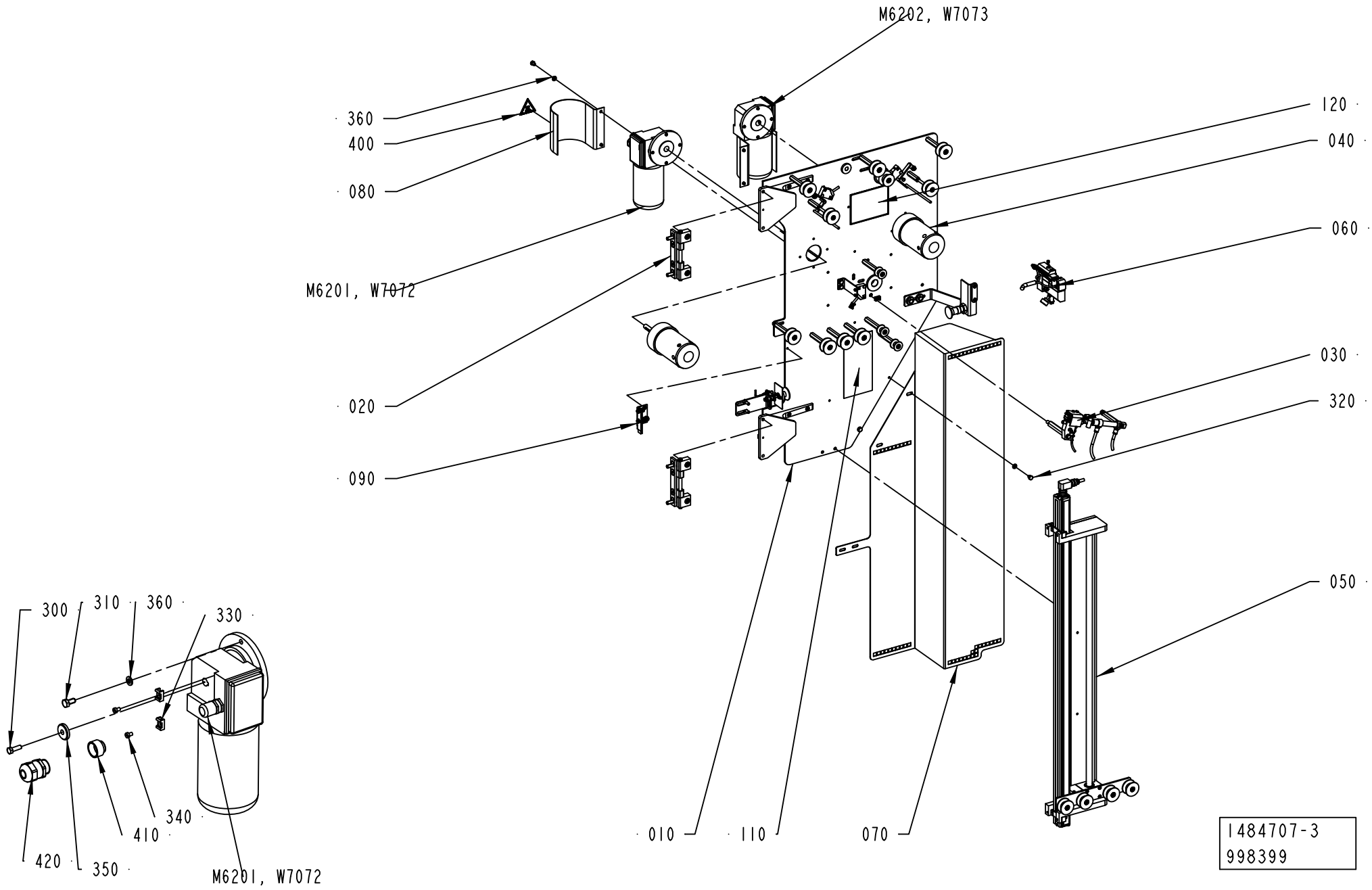
M6202, W7073
360
400
080
M6201, W7072
020
090
120
040
060
030
320
050
010
110
070
1484707-3
998399
300
310
360
330
340
410
420
350
M6201, W7072

ECM: 998399 - 20081002
Group number: 1484707-0200
Assembly Drawing: 1484707-3_1_AF

Pos	Part No	UN	Qty	Description	Page No
-					
010	1512428-0200		1	MOUNTING SHEET	**8-57**
020	1484720-0100		2	HINGE	**8-59**
030	1490806-0200		1	HEATING DEVICE	**8-61**
040	1484725-0100		2	HUB	**8-63**
050	1511585-0200		1	STRIP GUIDE	**8-65**
060	1524477-0200		1	CUTTING TABLE	**8-67**
070	1517107-0000		1	PROTECTION	
080	1498445-0000		2	COVER	
090	2510401-0100		1	HOLDER	**8-69**
110	2558879-0000		1	SIGN	
120	2558878-0000		1	SIGN	
300	312105-0329		2	SCREW M6S ISO 4017 M5X16 A480	
310	312105-0366		8	SCREW M6S ISO 4017 M6X12 A480	
320	312105-0362		6	SCREW M6S ISO 4017 M6X8 A480	
330	352113-0205		4	ANCHOR PLATES FOR STRIPS, TYPE TM2S8-C10	
340	312125-0285		4	SCREW ISO 1207 M4X6 A4	
350	315125-0153		2	WASHER TBRSB 6,4X22X4 A4	
360	315105-0153		14	WASHER BRB 6,4X12 RFR	
400	359705-0007		2	WARNING SIGN ISO, HOT SURFACE	
410	90458-1155		2	ENLARGING SLEEVE, 5210 4452	
420	90458-0307		2	CABLE GLAND, M20X1,5, NO.5311 1020	
430	312125-0285		4	SCREW ISO 1207 M4X6 A4	
440	352113-0205		4	ANCHOR PLATES FOR STRIPS, TYPE TM2S8-C10	
M6201	90459-6951		1	GEARS,WORM MOTOR MC 320P2T/15/B5S-SRD057	
M6202	90459-6950		1	GEARS, WORM MOTOR MC320P2T/15/B5D-SRD057	
W7072	90220-0104	MM	4500	SCR. CABLE 4X1,5MM2	
W7073	90220-0104	MM	4500	SCR. CABLE 4X1,5MM2	

Pos	Part No	UN	Qty	Description	Page No

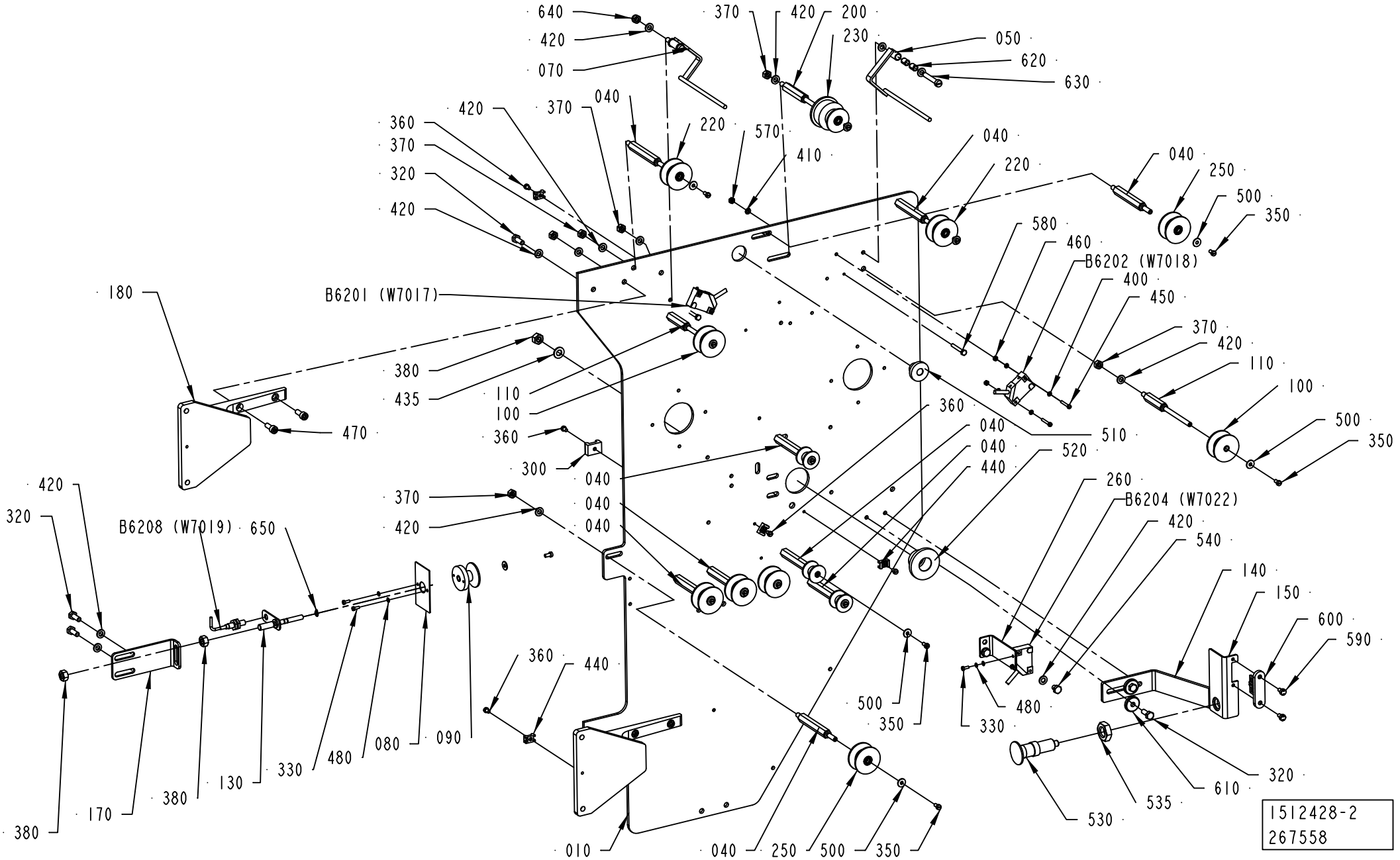
640
420
070
370
420
200
230
050
620
630
040
220
570
410
420
370
360
370
320
420
040
220
040
250
500
350
580
460
B6202 (W7018)
400
450
370
420
110
100
500
350
180
B6201 (W7017)
380
435
110
100
470
360
300
040
040
040
360
040
040
440
510
520
260
B6204 (W7022)
420
540
140
150
600
590
420
320
B6208 (W7019)
650
370
420
360
440
500
350
480
330
610
320
535
530
380
170
380
130
330
480
080
090
010
040
250
500
350
1512428-2
267558

ECM: 354667 - 20080704
Group number: 1512428-0200
Assembly Drawing: 1512428-2_1_AE

Pos	Part No	UN	Qty	Description	Page No
TBA/22					
170	2525339-0000		1	BRACKET	
Common Parts					
010	1484708-0000		1	MOUNTING PLATE	
040	536916-0000		10	AXLE PIN	
050	1490818-0000		1	ARM	
070	1490187-0000		1	ROCKER ARM	
080	1349581-0000		1	FLAG	
090	2831679-0000		1	ROLLER	
100	2831684-0000		2	ROLLER	
110	544725-0000		2	AXLE PIN	
130	1484718-0000		1	AXLE PIN	
140	1499569-0000		1	BRACKET	
150	1484740-0000		1	BRACKET	
180	1517087-0000		2	HINGE	
190	2831682-0000		3	ROLLER	
200	1538202-0000		1	AXLE PIN	
220	2831681-0000		2	ROLLER	
230	2831683-0000		1	ROLLER	
250	2831680-0000		5	ROLLER	
260	2515289-0000		1	BRACKET	
300	352113-0203		4	ANCHOR PLATES FOR STRIPS, TYPE TM3S8-M0	
320	312105-0366		6	SCREW M6S ISO 4017 M6X12 A480	
330	312125-0222		4	SCREW ISO 1207 M3X8 A4	
350	312125-0287		14	SCREW ISO 1207 M4X8 A4	
360	312125-0285		8	SCREW ISO 1207 M4X6 A4	
370	312605-0316		16	HEXAGON NUT, M6M M6 A280	
380	312605-0318		3	HEXAGON NUT, M6M M8 A280	
400	315103-0124		8	WASHER, BRB, 3,2/6,H=0,5 NI PL BR	
410	315105-0136		2	WASHER BRB 4,3X8 RFR	
420	315105-0153		28	WASHER BRB 6,4X12 RFR	
435	315105-0165		1	WASHER BRB 8,4X16 RFR	
440	352113-0205		4	ANCHOR PLATES FOR STRIPS, TYPE TM2S8-C10	
450	312125-0230		4	SCREW ISO 1207 M3X20 A4	
460	312605-0310		4	HEXAGON NUT, M6M M3 A280	
470	312115-0368		4	SCREW ISO4762 M6X16 A4 80	
480	315105-0124		6	WASHER BRB 3,2X6 RFR	
500	90005-0082		14	WASHER PLAIN ROUND 4,3(M4)/12,H=1	
510	90015-0021		1	LEAD-IN, TET10-14, E-1458023	
520	90015-0024		1	LEAD-IN, TET20-26, E-1458035	
530	90051-0088		1	ADJUSTMENT SCREW	
535	90099-0131		1	NUT HEX. M16X2 SS	
540	312105-0362		2	SCREW M6S ISO 4017 M6X8 A480	
570	312605-0312		2	HEXAGON NUT, M6M M4 A280	
580	312105-0299		2	SCREW M6S ISO 4017 M4X30 A470	
590	1539387-0000		2	SCREW	
600	90044-0310		1	KEY FOR SAFETY SWITCH AZ 15/16 B1	
610	315125-0153		2	WASHER TBRSB 6,4X22X4 A4	
620	321141-0064		4	BEARING BUSH W/O FLANGE, 6X8X10 MM	
630	312125-0376		2	SCREW ISO 1207 M6X35 A4	
640	312812-0316		2	HEXAGON NUT, NY-LOCK M6 A480	
650	315751-0103		1	RETAINING RING FOR SHAFT DIN 471 6 SS	
B6201	90044-0194		1	PROX.SW. IN5329/IN3002-BPKG(EX90044-104)	
B6202	90044-0194		1	PROX.SW. IN5329/IN3002-BPKG(EX90044-104)	
B6204	90044-0194		1	PROX.SW. IN5329/IN3002-BPKG(EX90044-104)	
B6208	90458-0138		1	PROX.SWITCH E2EG-X1R5B1-5M	

Machine Type	Group Description	Used-In	Group Number	Page No

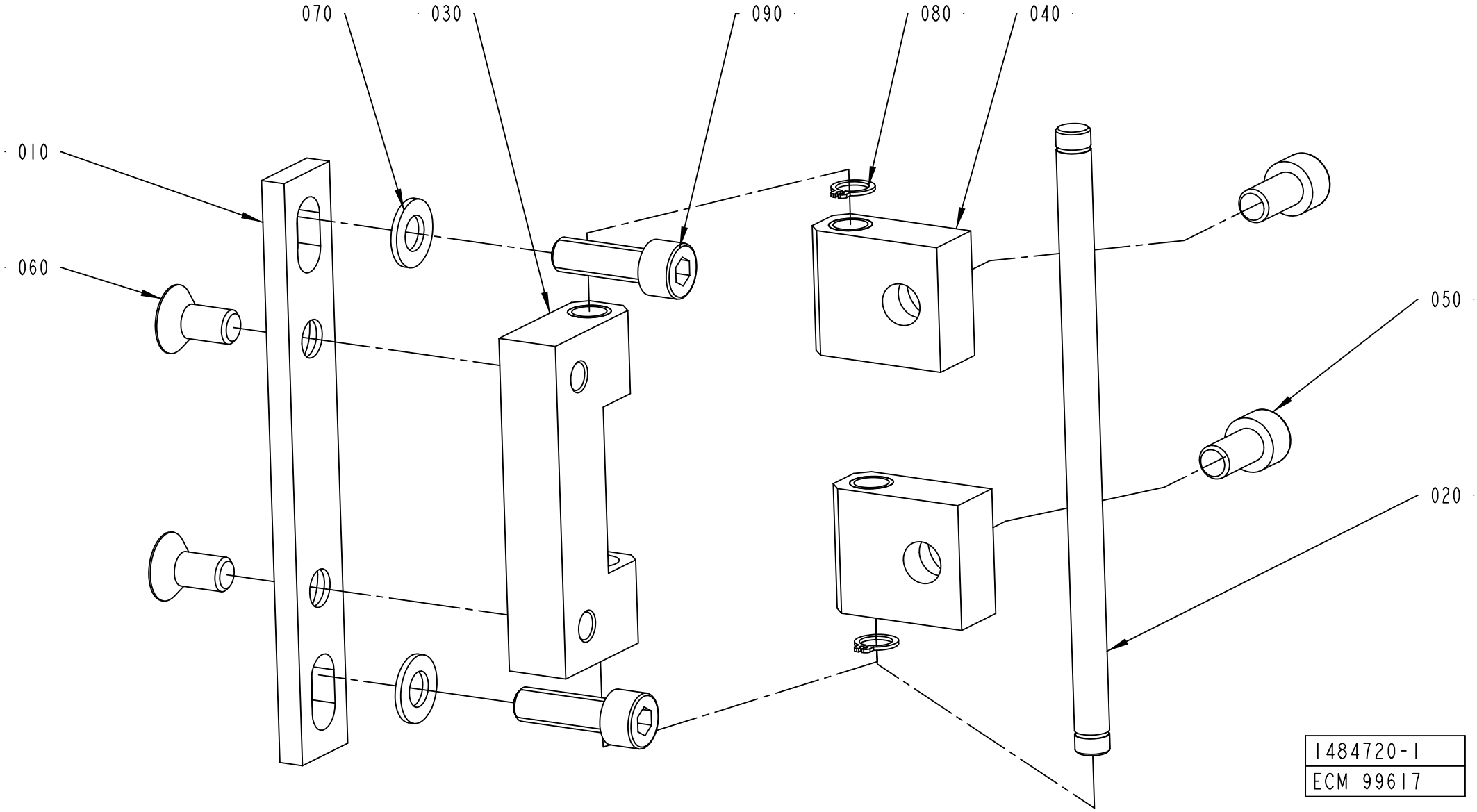
070
030
090
080
040
010
060
050
020
1484720-1
ECM 99617

ECM: 178404 - 20041005
Group number: 1484720-0100
Assembly Drawing: 1484720-1_1_AB

Pos	Part No	UN	Qty	Description	Page No
-					
010	1334187-0000		1	PLATE	
020	1334188-0000		1	AXLE PIN	
030	1334189-0000		1	BLOCK	
040	1334190-0000		2	BLOCK	
050	312115-0449		2	SCREW ISO4762 M8X16 A4 80	
060	312155-0449		2	SCREW DIN 7991 MF6S M8X16 A4 70	
070	315105-0165		2	WASHER BRB 8,4X16 RFR	
080	90141-0015		2	RETAINING RING FOR SHAFT DIN 471 8 SS	
090	312115-0453		2	SCREW ISO4762 M8X25 A4 80	

Pos	Part No	UN	Qty	Description	Page No

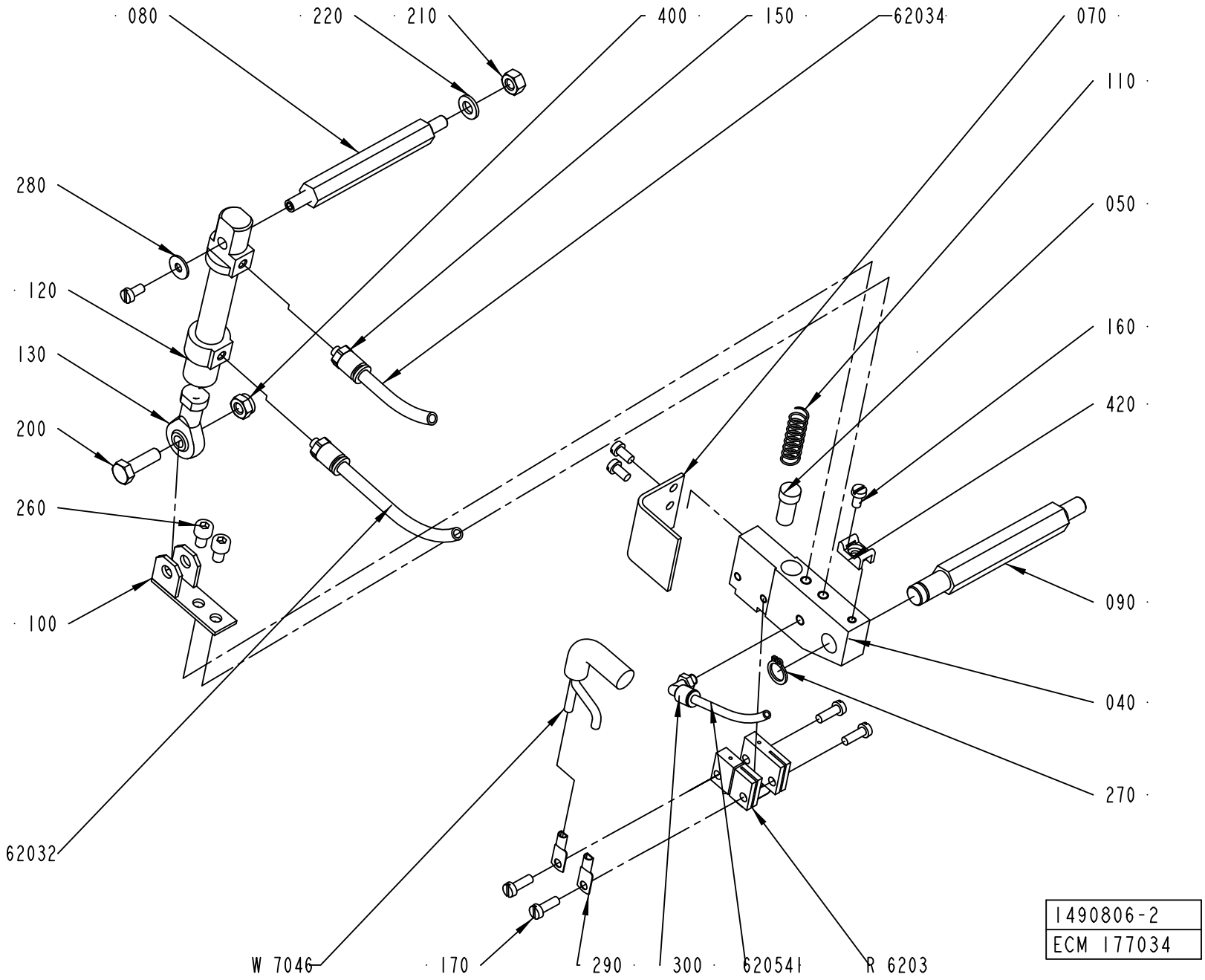
080
220
210
400
150
62034
070
110
280
050
120
160
130
420
200
260
090
100
040
270
62032
W 7046
170
290
300
620541
R 6203
1490806-2
ECM 177034

ECM: 341207 - 20080215
Group number: 1490806-0200
Assembly Drawing: 1490806-2_1_AC

Pos	Part No	UN	Qty	Description	Page No
-					
040	1490804-0000		1	HOLDER	
050	400833-0000		1	PLUNGER	
070	1349181-0000		1	TOUCH GUARD	
080	1037121-0000		1	SHAFT	
090	1037120-0000		1	SHAFT	
100	1037124-0000		1	HOLDER	
110	400828-0000		1	SPRING	
120	90450-0306		1	DOUBLE ACTING, MINI-ISO, CYL. 12-25	
130	90239-0491		1	ROD END, BALL JOINT EYE, MINI-ISO M6	
150	342722-0197		2	STRAIGHT COUPLING	
160	312125-0287		4	SCREW ISO 1207 M4X8 A4	
170	312125-0291		4	SCREW ISO 1207 M4X12 A4	
200	312105-0370		1	SCREW M6S ISO 4017 M6X20 A480	
210	312605-0316		1	HEXAGON NUT, M6M M6 A280	
220	315105-0153		1	WASHER BRB 6,4X12 RFR	
260	312115-0323		2	SCREW ISO4762 M5X8 A4 80	
270	90141-0016		1	RETAINING RING FOR SHAFT DIN 471 10 SS	
280	90005-0082		1	WASHER PLAIN ROUND 4,3(M4)/12,H=1	
290	353104-0140		2	CABLE SHOE, RING UNINS., YAV 06 M 4	
300	90458-2954		1	ELBOW PIPE JOINT, EXT.THREAD, D=4MM M5	
400	312812-0316		1	HEXAGON NUT, NY-LOCK M6 A480	
420	352113-0205		1	ANCHOR PLATES FOR STRIPS, TYPE TM2S8-C10	
62032	90166-0193	MM	4500	TUBE 6 MM PUR BLUE	
62034	90166-0193	MM	4500	TUBE 6 MM PUR BLUE	
620541	90166-0095	MM	1500	TUBE 4 MM PA BLUE (50M)	
R6203	1498047-0000		1	SEALING BLOCK	
W7046	351120-0126	MM	4000	CABLE SILFLEX SIHF 2X4 0046025	

Pos	Part No	UN	Qty	Description	Page No

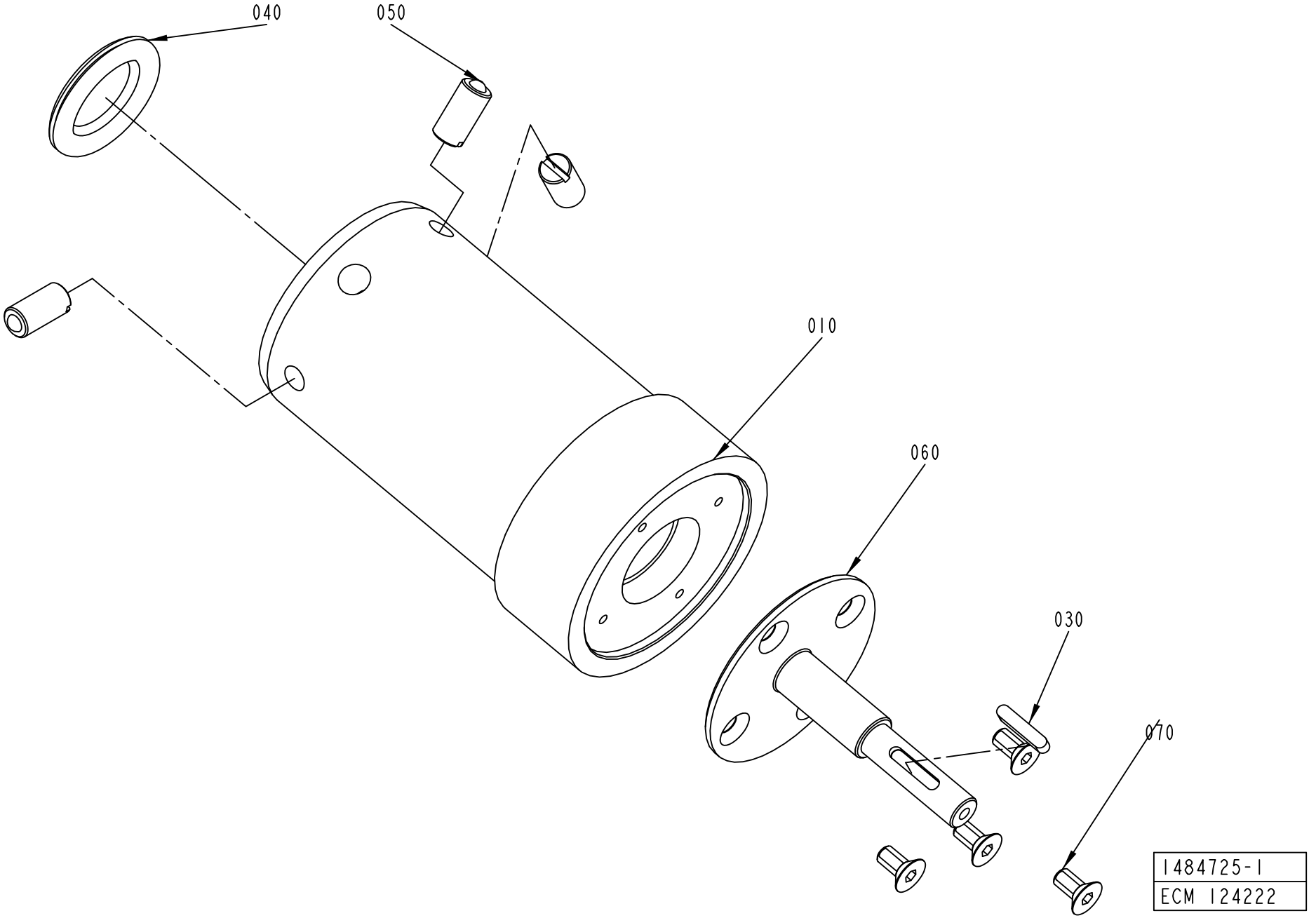
040
050
010
060
030
070
1484725-1
ECM 124222

ECM: 178406 - 20041005
Group number: 1484725-0100
Assembly Drawing: 1484725-1_1_AD

Pos	Part No	UN	Qty	Description	Page No
-					
010	1484724-0000		1	HUB	
030	315701-0170		1	PARALLEL KEY W. ROUND ENDS 4X4X20 MM	
040	90261-0049		1	PLUG, BLIND, PLASTIC, NO. SR1750	
050	90287-0106		3	SCREW SPRINGLOAD. SLOTTED HEAD M10X21	
060	1484726-0000		1	SHAFT	
070	312155-0366		4	SCREW DIN 7991 MF6S M6X12 A4 70	

Pos	Part No	UN	Qty	Description	Page No

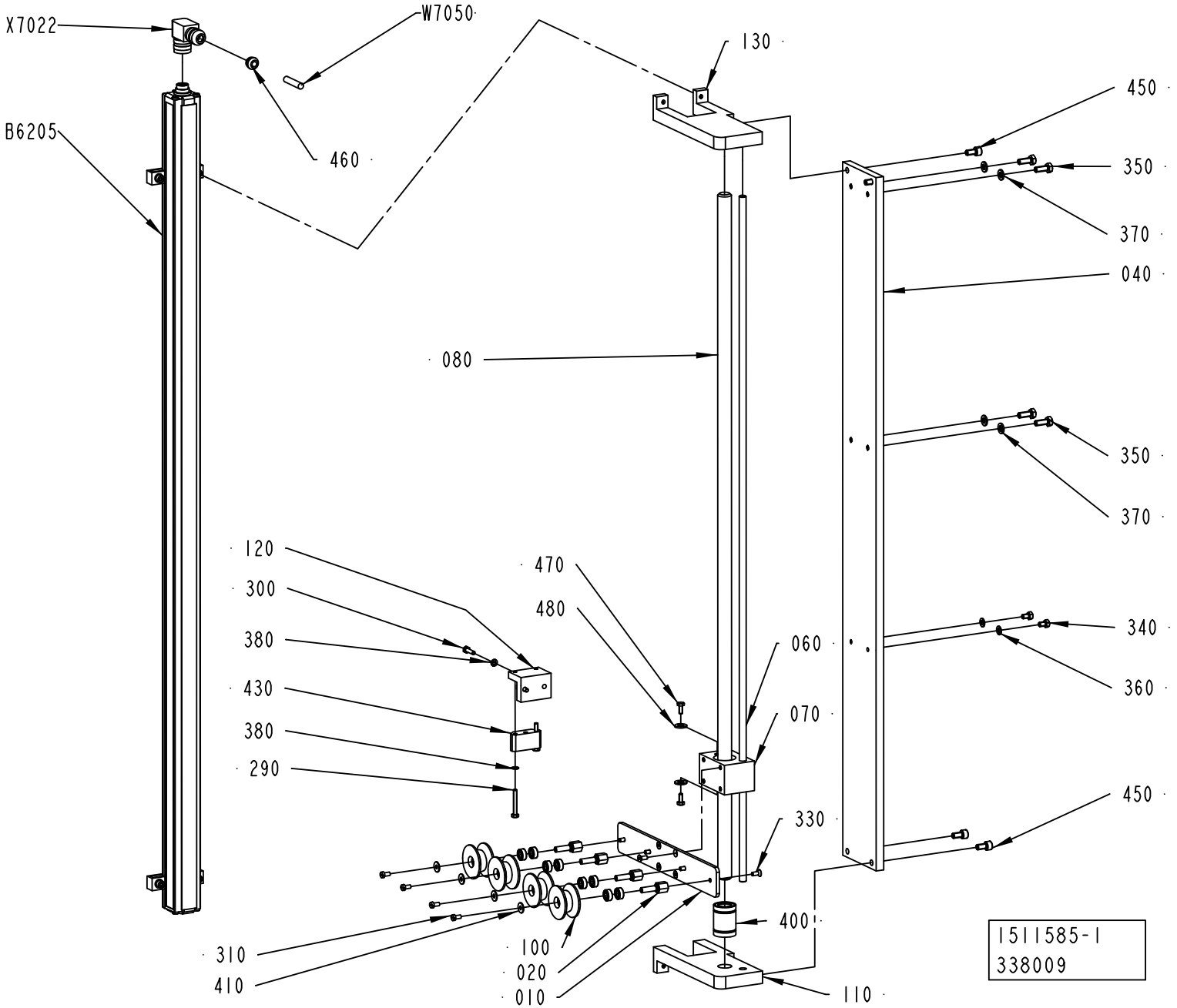
X7022
W7050
130
450
B6205
460
350
370
040
080
350
370
120
300
380
430
380
290
470
480
060
070
340
360
450
330
400
310
410
100
020
010
110
1511585-1
338009

ECM: 354666 - 20080704
Group number: 1511585-0200
Assembly Drawing: 1511585-1_1_AE

Pos	Part No	UN	Qty	Description	Page No
-					
010	1484711-0000		1	BRACKET	
020	1484719-0000		4	AXLE PIN	
040	1498450-0001		1	PLATE	
060	1498451-0001		1	SHAFT	
070	2958800-0000		1	BUSHING	
080	1511586-0001		1	BAR	
100	2831680-0000		4	ROLLER	
110	2501220-0000		1	BRACKET	
120	2501221-0000		1	BRACKET	
130	2501219-0000		1	BRACKET	
290	312105-0299		2	SCREW M6S ISO 4017 M4X30 A470	
300	312105-0293		2	SCREW M6S ISO 4017 M4X16 A470	
310	312125-0287		4	SCREW ISO 1207 M4X8 A4	
330	312155-0289		8	SCREW DIN 7991 MF6S M4X10 A4 70	
340	312105-0323		2	SCREW M6S ISO 4017 M5X8 A480	
350	312105-0368		4	SCREW M6S ISO 4017 M6X16 A480	
360	315105-0146		2	WASHER BRB 5,3X10 RFR	
370	315105-0153		4	WASHER BRB 6,4X12 RFR	
380	315105-0136		4	WASHER BRB 4,3X8 RFR	
400	90189-0011		1	BALL BUSHING, 16X26X36 MM	
410	90005-0082		4	WASHER PLAIN ROUND 4,3(M4)/12,H=1	
430	90458-1592		1	FLOATING MAGNET, BTL5-P-3800-2	
450	312115-0366		4	SCREW ISO4762 M6X12 A4 80	
460	90459-1501		1	CABLE SEALING, 12023/I, ELFA. 44-625-78	
470	312105-0289		2	SCREW M6S H4X10 A4 70 ISO4017/DIN933	
480	315103-0156		2	WASHER PLAIN, BRB 6,7/14,H=1,5 NI PL BR	
B6205	90458-1535		1	TRANSDUCER, BTL5-A11-M0850-P-S32	
W7050	90220-0092	MM	4000	PAIR TWISTED CABLE 3X2X0,25MM2	
X7022	90458-1595		1	CONNECTION, BKS-S 33M-00	

Pos	Part No	UN	Qty	Description	Page No

Machine Type | Group Description | Used-In | Group Number | Page No

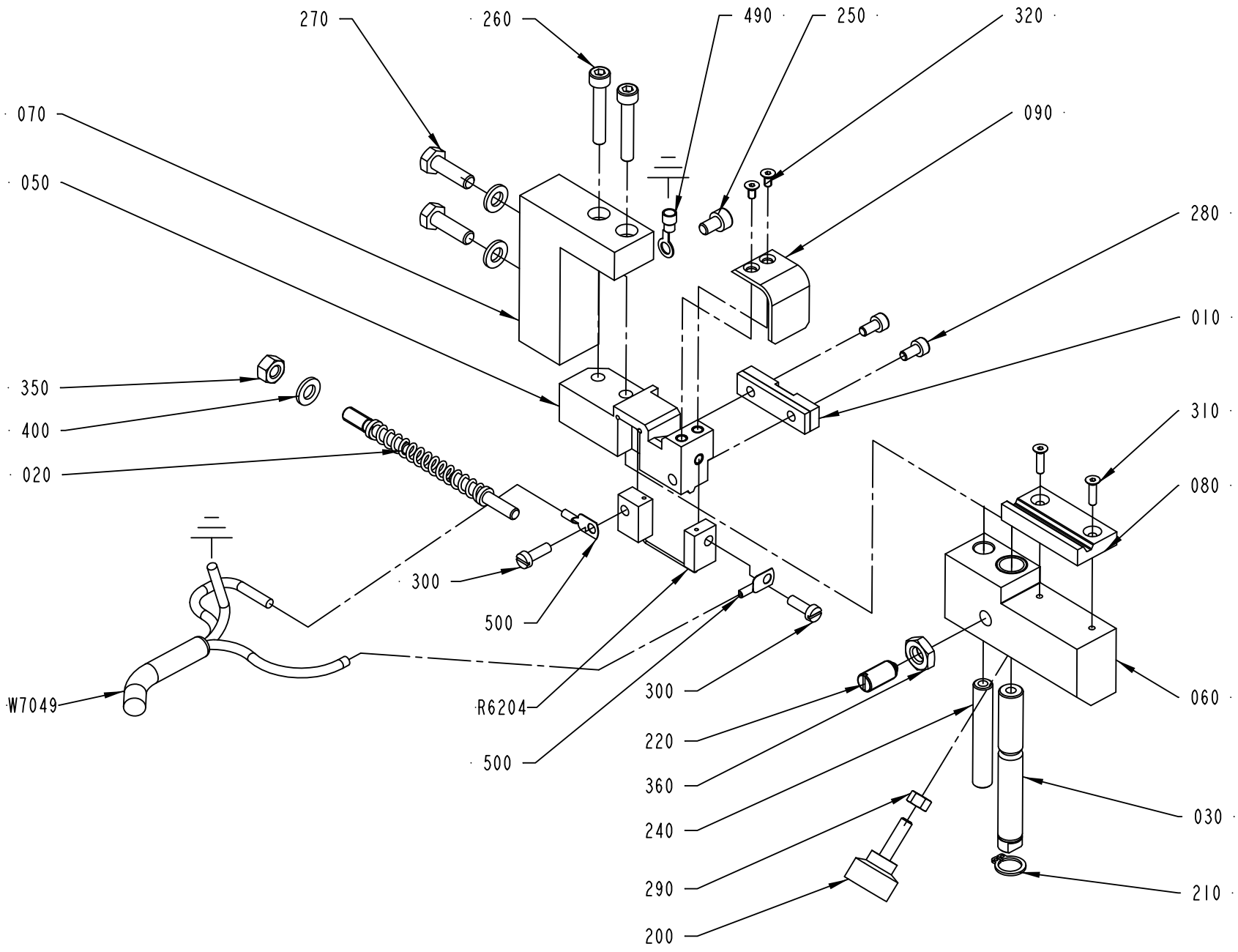

1524477-2
ECM 118596

ECM: 354669 - 20080704
Group number: 1524477-0200
Assembly Drawing: 1524477-2_1_AB

Pos	Part No	UN	Qty	Description	Page No
-					
010	1349014-0000		1	PAD	
020	1538194-0000		1	FINGER	
030	1517751-0000		1	SHAFT	
050	2523598-0000		1	SPLICING TABLE	
060	2523597-0000		1	SLIDER	
070	2531493-0000		1	BRACKET	
080	2523601-0000		1	PAD	
090	2579838-0000		1	TOUCH GUARD	
200	90051-0035		1	KNOB, EXTERNAL THREAD. NO. 8308-1135	
210	90141-0016		1	RETAINING RING FOR SHAFT DIN 471 10 SS	
220	90287-0112		1	SCREW SPRINGLOAD. SLOTTED HEAD M8X16	
240	2523600-0000		1	PIN	
250	312115-0323		1	SCREW ISO4762 M5X8 A4 80	
260	312115-0335		2	SCREW ISO4762 M5X30 A4 80	
270	312105-0370		2	SCREW M6S ISO 4017 M6X20 A480	
280	312115-0287		2	SCREW ISO4762 M4X8 A4 80	
290	312605-0314		1	HEXAGON NUT, M6M M5 A280	
300	312125-0291		2	SCREW ISO 1207 M4X12 A4	
310	312155-0226		2	SCREW DIN 7991 MF6S M3X12 A4 70	
320	312155-0220		2	SCREW DIN 7991 MF6S M3X6 A4 70	
350	312605-0316		1	HEXAGON NUT, M6M M6 A280	
360	312625-0318		1	HEXAGON THIN NUT, EN 24035 ML6M M8 A4	
400	315105-0153		3	WASHER BRB 6,4X12 RFR	
490	353101-0132		1	CABLE SHOE 1,5-2,5MM2 M5 BLUE	
500	353104-0130		2	CABLE SHOE, RING UNINS., YAV 025 M 4	
R6204	1524481-0000		1	SEALING BLOCK	
W7049	351120-0145	MM	4000	CABLE SILFLEX SIHF 3X2,5 0046020	

Pos	Part No	UN	Qty	Description	Page No

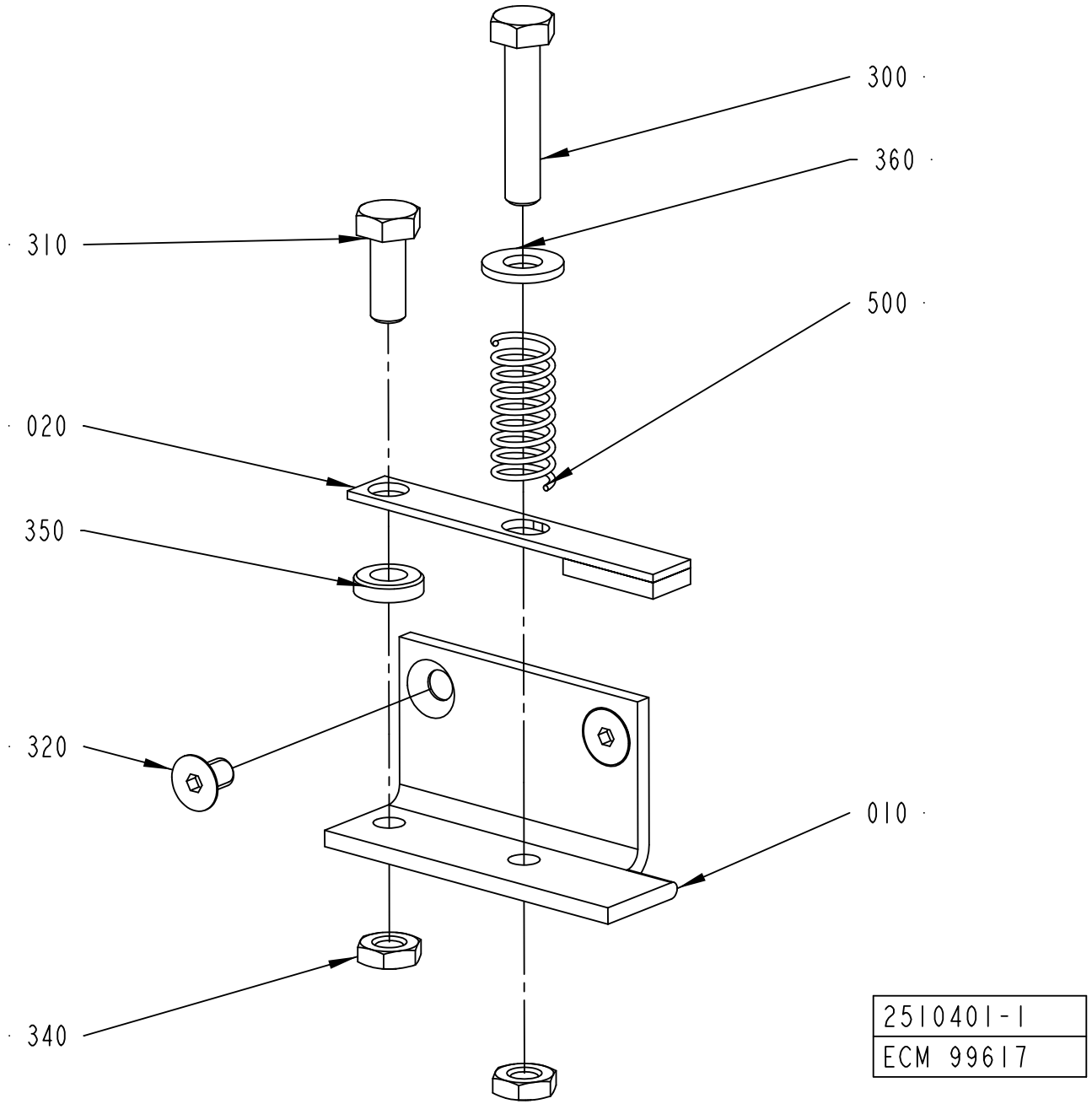
300
360
310
500
020
350
320
010
340
2510401-1
ECM 99617

ECM: 178408 - 20041005
Group number: 2510401-0100
Assembly Drawing: 2510401-1_1_AA

Pos	Part No	UN	Qty	Description	Page No
-					
010	2510399-0000		1	BRACKET	
020	2510400-0000		1	HOLDER	
300	312109-0374		1	SCREW M6S ISO 4017 M6X30 A480	
310	312105-0368		1	SCREW M6S ISO 4017 M6X16 A480	
320	312155-0323		2	SCREW DIN 7991 MF6S M5X8 A4 70	
340	312625-0316		2	HEXAGON THIN NUT, EN 24035 ML6M M6 A4	
350	315115-0153		1	WASHER PLAIN, TBRB 6,4/12 H=3	
360	315105-0156		1	WASHER BRB 6,7X14 RFR	
500	90335-0025		1	COMP. SPRING 22010, 1X11X26	

Pos	Part No	UN	Qty	Description	Page No

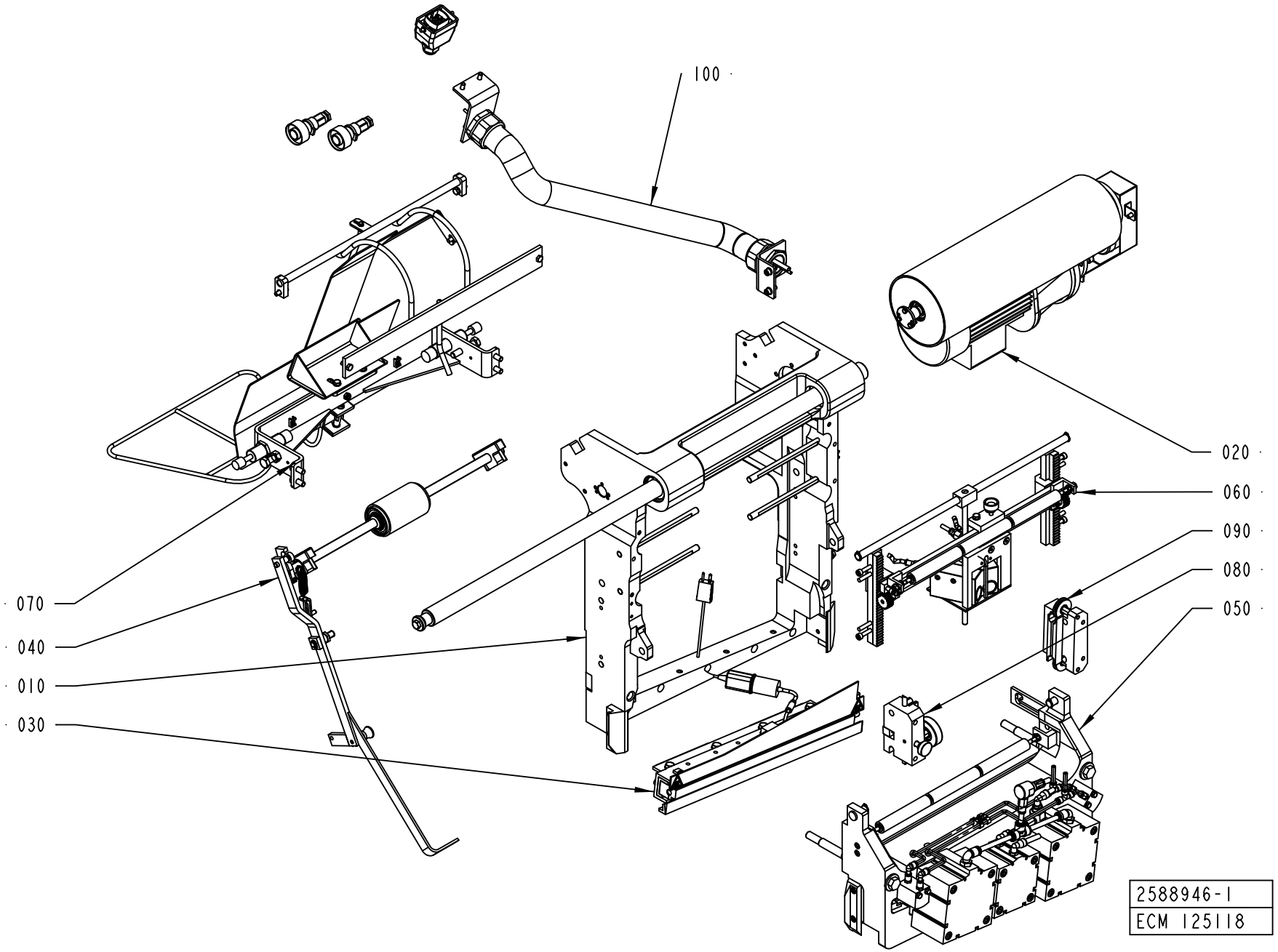
100
020
060
090
080
050
070
040
010
030
2588946-1
ECM 125118

ECM: 361598 - 20081001
Group number: 2588946-0100
Assembly Drawing: 2588946-1_1_AB

Pos	Part No	UN	Qty	Description	Page No
TBA/22					
040	2524600-0100		1	PRESSURE ROLLER	**8-73**
080	1484745-0100		1	WEB GUIDE	**8-75**
Common Parts					
010	2589104-0100		1	FRAME	**8-77**
020	2589105-0100		1	DRIVE UNIT	**8-79**
030	2589106-0100		1	HEATING UNIT	**8-81**
050	2592567-0100		1	PRESSURE JAW	**8-83**
060	2592568-0100		1	BAR CODE READER	**8-85**
070	2582003-0100		1	GUIDE RAIL	**8-87**
090	2529547-0100		1	PAPER GUIDE	**8-89**
100	1499578-0300		1	CABLE CONDUIT	**8-91**

Pos	Part No	UN	Qty	Description	Page No

PRESSURE ROLLER

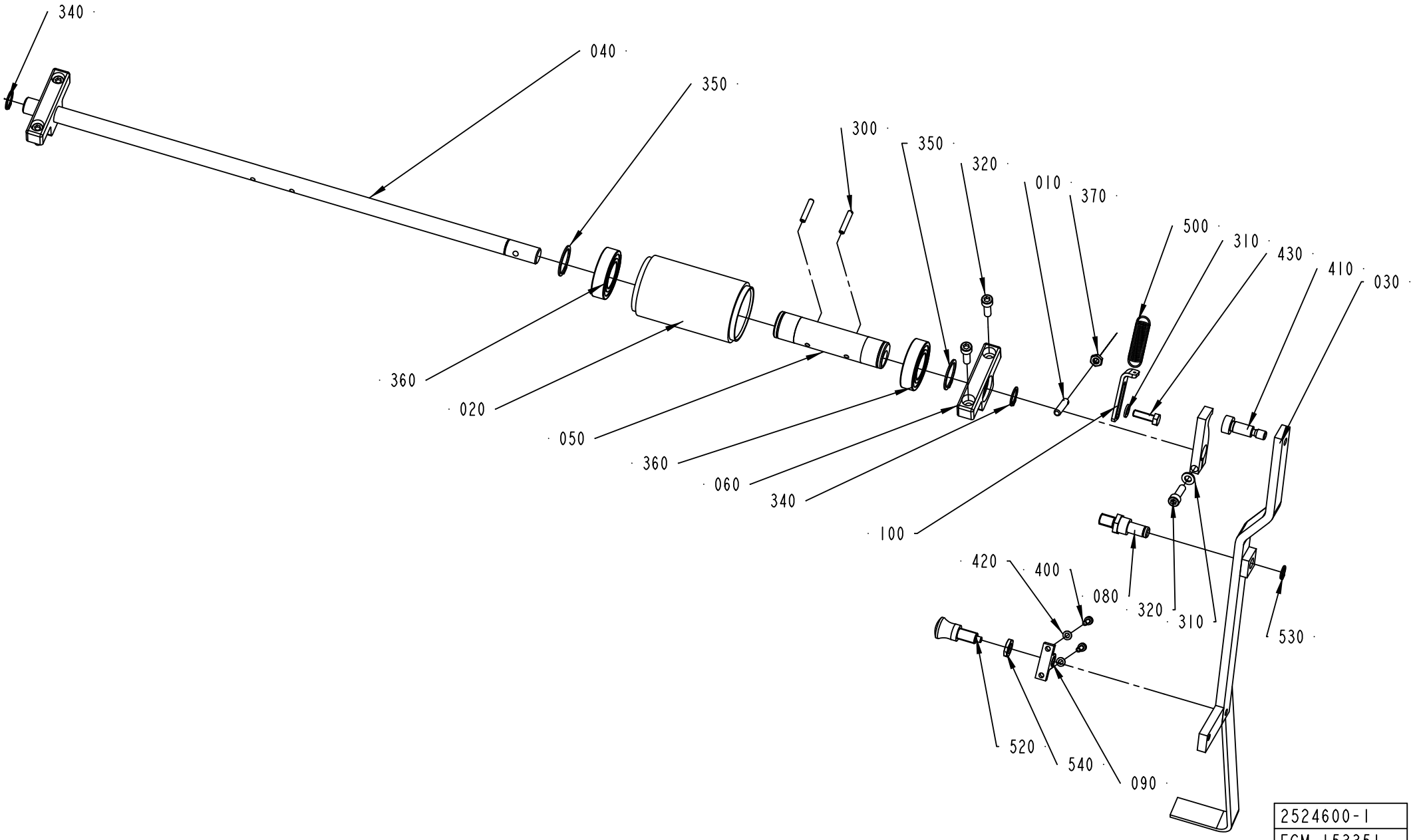

ECM: 354678 - 20080704
Group number: 2524600-0100
Assembly Drawing: 2524600-1_1_AB

Pos	Part No	UN	Qty	Description	Page No
TBA/22					
010	578684-0000		1	SPRING BRACKET	
020	906254-0000		1	ROLLER	
030	2524602-0000		1	HANDLE	
040	1487763-0000		1	SHAFT	
050	1512267-0000		1	ECCENTRIC BUSHING	
060	1519583-0000		2	BRACKET	
070	2524604-0000		1	ROCKER ARM	
080	2524601-0000		1	AXLE PIN	
090	2524603-0000		1	HOLDER	
100	2529549-0000		1	PLATE	
300	311112-0258		2	SPRING PIN, ISO 8752 4X24-C	
310	315105-0153		2	WASHER BRB 6,4X12 RFR	
320	312115-0370		5	SCREW ISO4762 M6X20 A4 80	
350	315751-0119		2	RETAINING RING FOR SHAFT DIN 471 25 SS	
360	321308-0205		2	BALL BEARING, 25X47X12MM	
370	312625-0316		1	HEXAGON THIN NUT, EN 24035 ML6M M6 A4	
400	312115-0291		2	SCREW ISO4762 M4X12 A4 80	
410	312180-0491		1	SCREW ISO7379 H10X20	
420	315105-0136		2	WASHER BRB 4,3X8 RFR	
430	312105-0370		1	SCREW M6S ISO 4017 M6X20 A480	
500	90335-0091		1	TENSION SPRING 41890, 1,2X13X48,2	
520	90051-0087		1	LOCK KNOB, NO. GN 617 A5	
530	90141-0016		1	RETAINING RING FOR SHAFT DIN 471 10 SS	
540	90099-0007		1	HEXAGON NUT, M10X1, E 63 137 10	
Common Parts					
340	315751-0112		2	RETAINING RING FOR SHAFT DIN 471 15 SS	

Pos	Part No	UN	Qty	Description	Page No

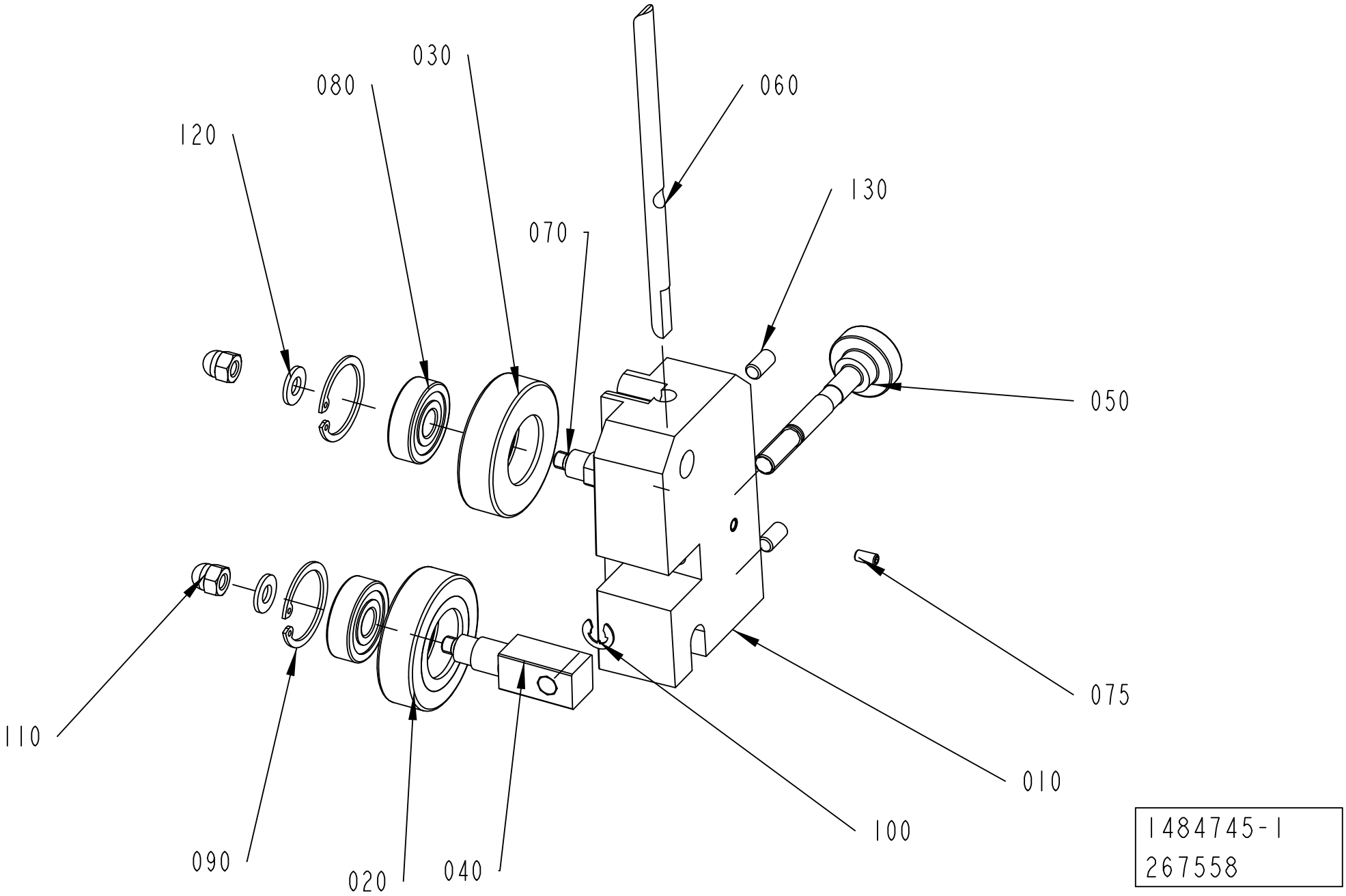
030
080
120
060
130
070
050
075
110
090
020
040
100
010
1484745-1
267558

ECM: 351540 - 20080704
Group number: 1484745-0100
Assembly Drawing: 1484745-1_1_AE

Pos	Part No	UN	Qty	Description	Page No
TBA/22					
010	2831675-0000		1	BRACKET	
Common Parts					
020	1036623-0000		1	GUIDE ROLLER	
030	1036622-0000		1	GUIDE ROLLER	
040	1317711-0000		1	SHAFT	
050	1317712-0000		1	SHAFT	
060	1512526-0000		1	STEERING	
070	583727-0000		1	SHAFT	
075	312318-0287		1	SCREW ISO4029 M4X8 A4	
080	321313-0100		2	BALL BEARING, 10X30X9 MM	
090	315753-0122		2	RETAINING RING FOR BORE DIN 472 30 A2	
100	315755-0108		1	RETAINING RING SHAFT DIN 6799 6 A2	
110	312705-0316		2	NUT HEX. DOMED CAP MHM-6 M6 A280	
120	315105-0156		2	WASHER BRB 6,7X14 RFR	
130	312318-0366		2	SCREW ISO4029 M6X12 A4	

Pos	Part No	UN	Qty	Description	Page No

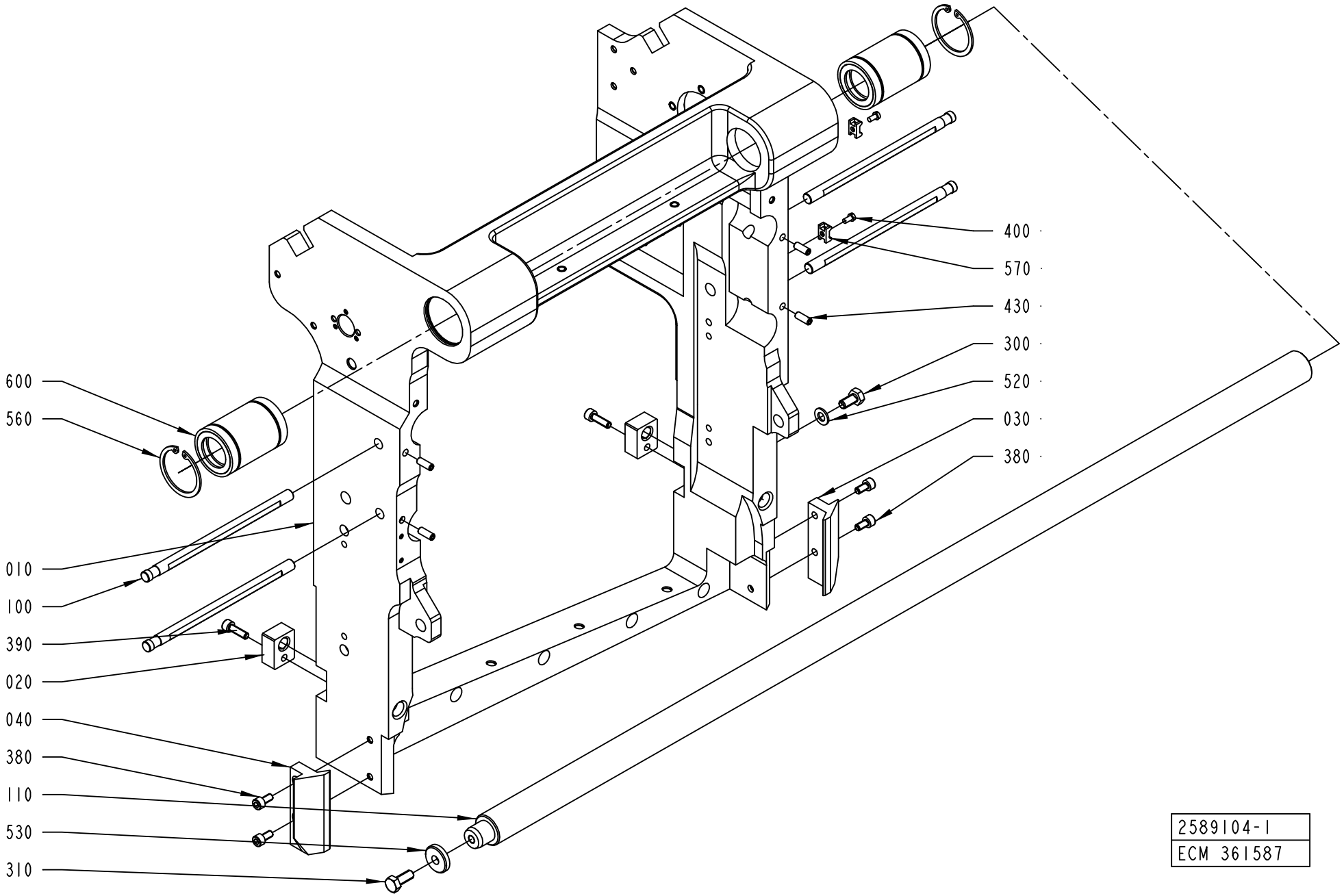
400
570
430
300
520
030
380
600
560
010
100
390
020
040
380
110
530
310
2589104-1
ECM 361587

ECM: 361758 - 20081001
Group number: 2589104-0100
Assembly Drawing: 2589104-1_1_AC

Pos	Part No	UN	Qty	Description	Page No
TBA/22					
100	1484704-0000		4	SHAFT	
Common Parts					
010	2574401-0000		1	FRAME	
020	2589119-0000		2	NUT	
030	2562551-0000		1	SLIDE PLANE	
040	2562552-0000		1	SLIDE PLANE	
110	1490820-0000		1	SHAFT	
300	312105-0449		1	SCREW M6S ISO 4017 M8X16 A480	
310	312105-0451		1	SCREW M6S ISO 4017 M8X20 A480	
380	312115-0366		4	SCREW ISO4762 M6X12 A4 80	
390	312115-0370		2	SCREW ISO4762 M6X20 A4 80	
400	312125-0287		2	SCREW ISO 1207 M4X8 A4	
430	312318-0368		4	SCREW ISO4029 M6X16 A4	
520	315105-0165		1	WASHER BRB 8,4X16 RFR	
530	315125-0165		1	WASHER TBRSB 8,4X26X5 A4	
560	315753-0130		2	RETAINING RING FOR BORE DIN 472 47 A2	
570	352113-0205		2	ANCHOR PLATES FOR STRIPS, TYPE TM2S8-C10	
600	90189-0005		2	BALL BUSHING, 30X47X68 MM	

Pos	Part No	UN	Qty	Description	Page No

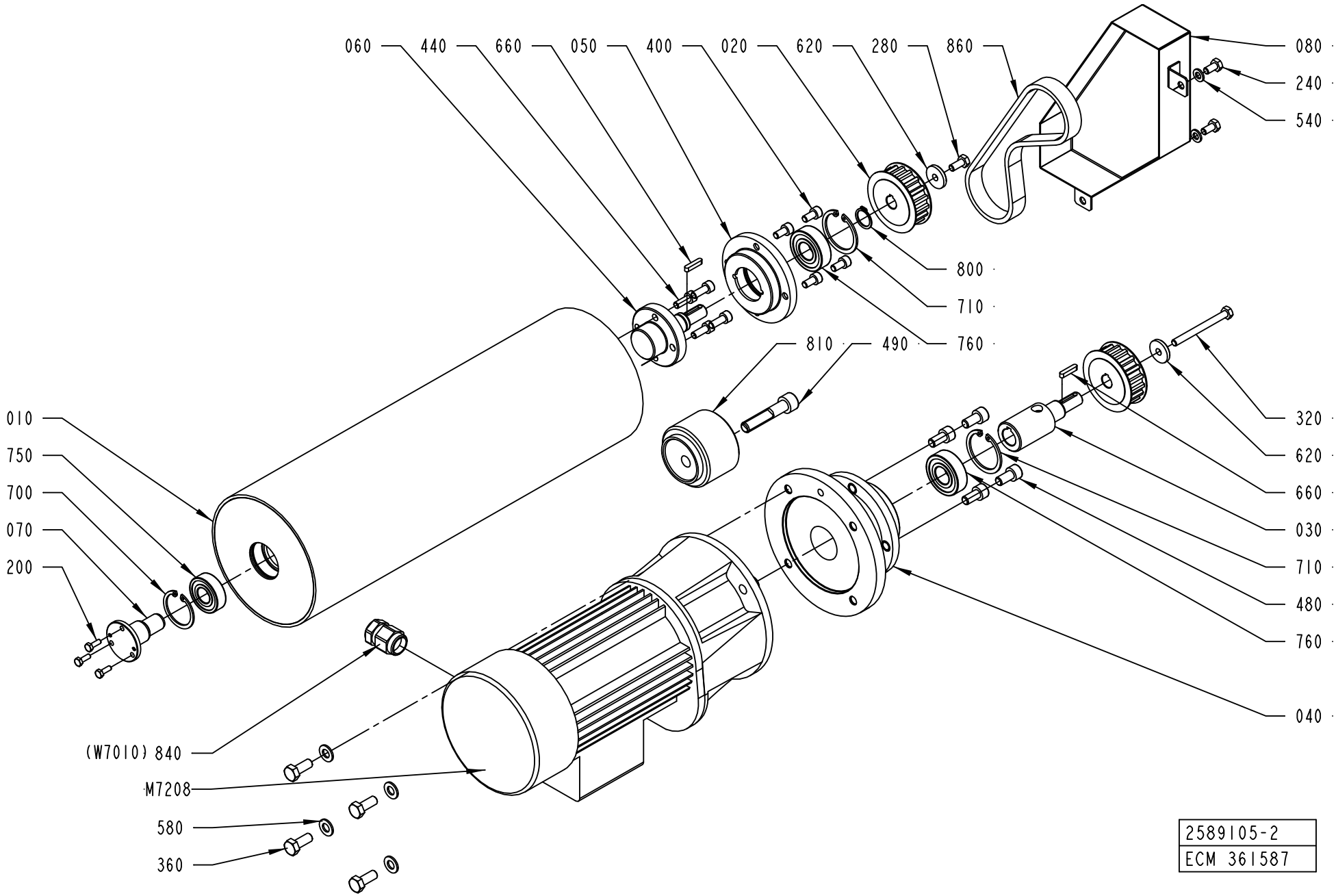
060
440
660
050
400
020
620
280
860
080
240
540
800
710
760
810
490
320
620
660
030
710
480
760
040
010
750
700
070
200
(W7010) 840
M7208
580
360
2589105-2
ECM 361587

ECM: 361599 - 20081001
Group number: 2589105-0100
Assembly Drawing: 2589105-2_1_AB

Pos	Part No	UN	Qty	Description	Page No
TBA/22					
010	2589108-0000		1	BENDING ROLLER	
Common Parts					
020	2589109-0000		2	TOOTHED PULLEY	
030	2589110-0000		1	SHAFT	
040	2589111-0000		1	FLANGE	
050	2589112-0000		1	FLANGE	
060	2589113-0000		1	SHAFT	
070	2589114-0000		1	SHAFT	
080	2589115-0000		1	COVER	
200	312105-0291		3	SCREW M6S ISO 4017 M4X12 A470	
240	312105-0366		2	SCREW M6S ISO 4017 M6X12 A480	
280	312105-0367		1	SCREW M6S ISO 4017 M6X14 A480	
320	312105-0383		1	SCREW M6S ISO 4014 M6X65 A480	
360	312105-0451		4	SCREW M6S ISO 4017 M8X20 A480	
400	312115-0366		4	SCREW ISO4762 M6X12 A4 80	
440	312115-0368		4	SCREW ISO4762 M6X16 A4 80	
480	312115-0449		4	SCREW ISO4762 M8X16 A4 80	
490	312115-0501		1	SCREW ISO4762 M10X50 A4 80	
540	315105-0153		2	WASHER BRB 6,4X12 RFR	
580	315105-0165		4	WASHER BRB 8,4X16 RFR	
620	315125-0153		2	WASHER TBRSB 6,4X22X4 A4	
660	315701-0170		2	PARALLEL KEY W. ROUND ENDS 4X4X20 MM	
700	315753-0124		1	RETAINING RING FOR BORE DIN 472 35 A2	
710	315753-0127		2	RETAINING RING FOR BORE DIN 472 40 A2	
750	321313-0102		1	BALL BEARING, 15X35X11 MM	
760	321313-0103		2	BALL BEARING, 17X40X12MM	
800	90141-0017		1	RETAINING RING FOR SHAFT DIN 471 17 SS	
810	90344-0078		1	PULLEY	
840	90458-0438		1	GLAND, EXTENDED WITH INSERT, M20X1,5	
860	90459-2198		1	TIMING BELT T10X480X16 POLYURETHANE	
M7208	90459-2826		1	GEARS, HELICAL MOTOR ME0102210012	

Pos	Part No	UN	Qty	Description	Page No

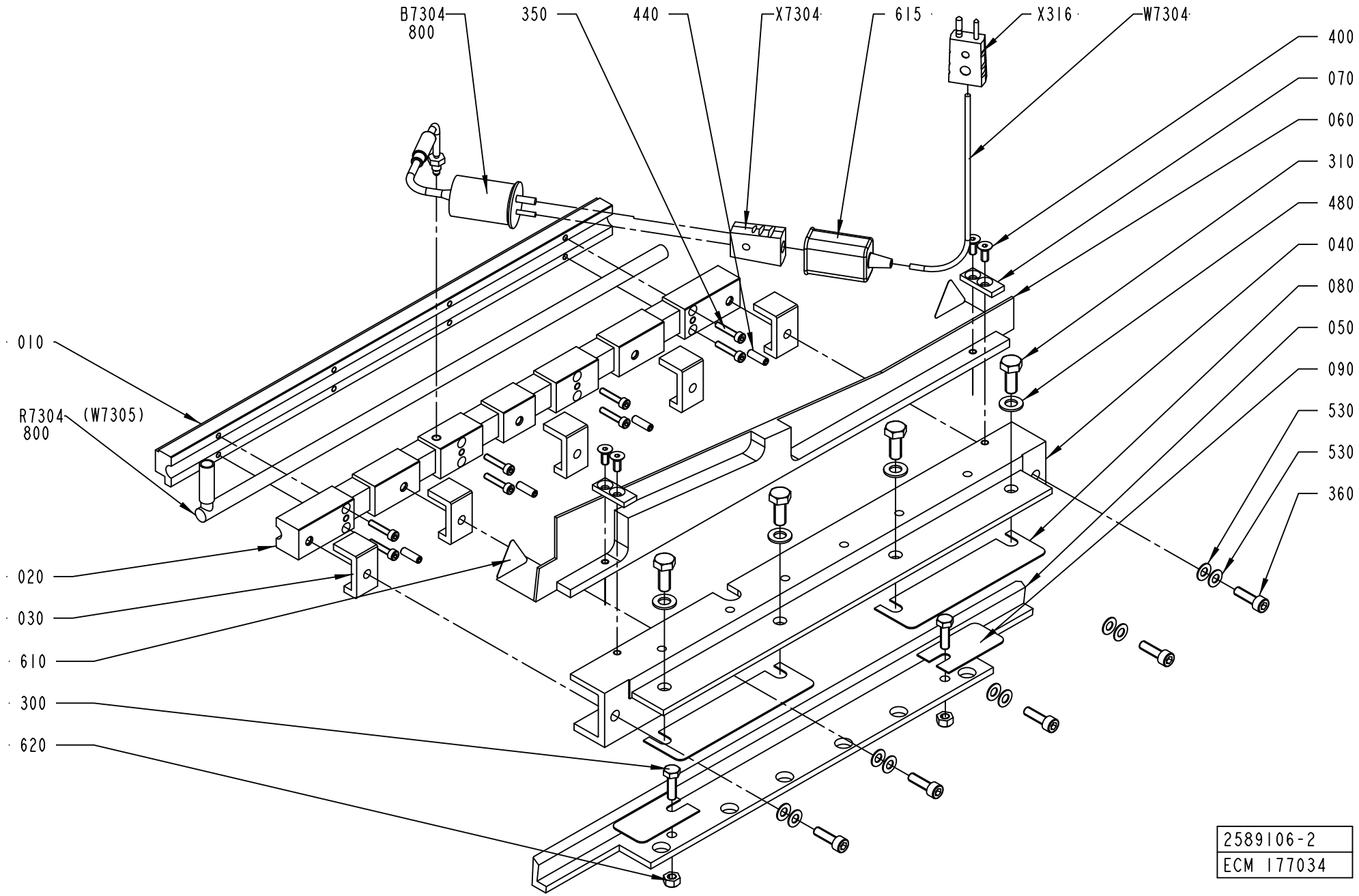
B7304
800
350
440
X7304
615
X316
W7304
400
070
060
310
480
040
080
050
090
530
530
360
010
R7304
800
(W7305)
020
030
610
300
620
2589106-2
ECM 177034

ECM: 178410 - 20041025
Group number: 2589106-0100
Assembly Drawing: 2589106-2_1_AB

Pos	Part No	UN	Qty	Description	Page No
TBA/22					
X316	90326-0022		1	PLUG, MALE YELLOW CR-AL	
Common Parts					
010	2559986-0000		1	SEALING PLATE	
020	2559987-0000		1	SEALING PLATE	
030	2566127-0000		5	SPACER	
040	2566128-0000		1	HOUSING	
050	2566129-0000		1	ADJUSTMENT ANGLE	
060	2566130-0000		1	PLATE	
070	2576396-0000		2	PLATE	
080	2588947-0000		2	SHIMS	
090	2588948-0000		2	SHIMS	
300	312105-0370		2	SCREW M6S ISO 4017 M6X20 A480	
310	312105-0451		4	SCREW M6S ISO 4017 M8X20 A480	
350	312115-0295		8	SCREW ISO4762 M4X20 A4 80	
360	312115-0370		5	SCREW ISO4762 M6X20 A4 80	
400	312155-0327		4	SCREW DIN 7991 MF6S M5X12 A4 70	
440	312318-0329		4	SCREW ISO4029 M5X16 A4	
480	315105-0165		4	WASHER BRB 8,4X16 RFR	
530	319030-0125		10	DISC SPRING, CONICAL 12,5X6,2X0,5 MM	
610	90194-0143		2	WARNING SIGN ISO, HOT SURFACE	
615	90326-0012		1	PROTECTIVE COVER, T31A4618	
620	90459-2635		2	NUT, HEX.LOCK "CONELOCK" M6 DIN 980V	
800	90296-0051	G	1	PASTE	
B7304	90326-0054		1	THERMOCOUPLE, CR-AL STD.GR, 12826-36	
R7304	90459-2843		1	HEATING CARTRIDGE, 800W 240V	
W7304	90220-0034	MM	9500	THERMOCABLE TEX/SITW-20F-KX 2X0,5MM2	
X7304	90326-0020		1	PLUG, FEMALE YELLOW CR-AL	

Pos	Part No	UN	Qty	Description	Page No

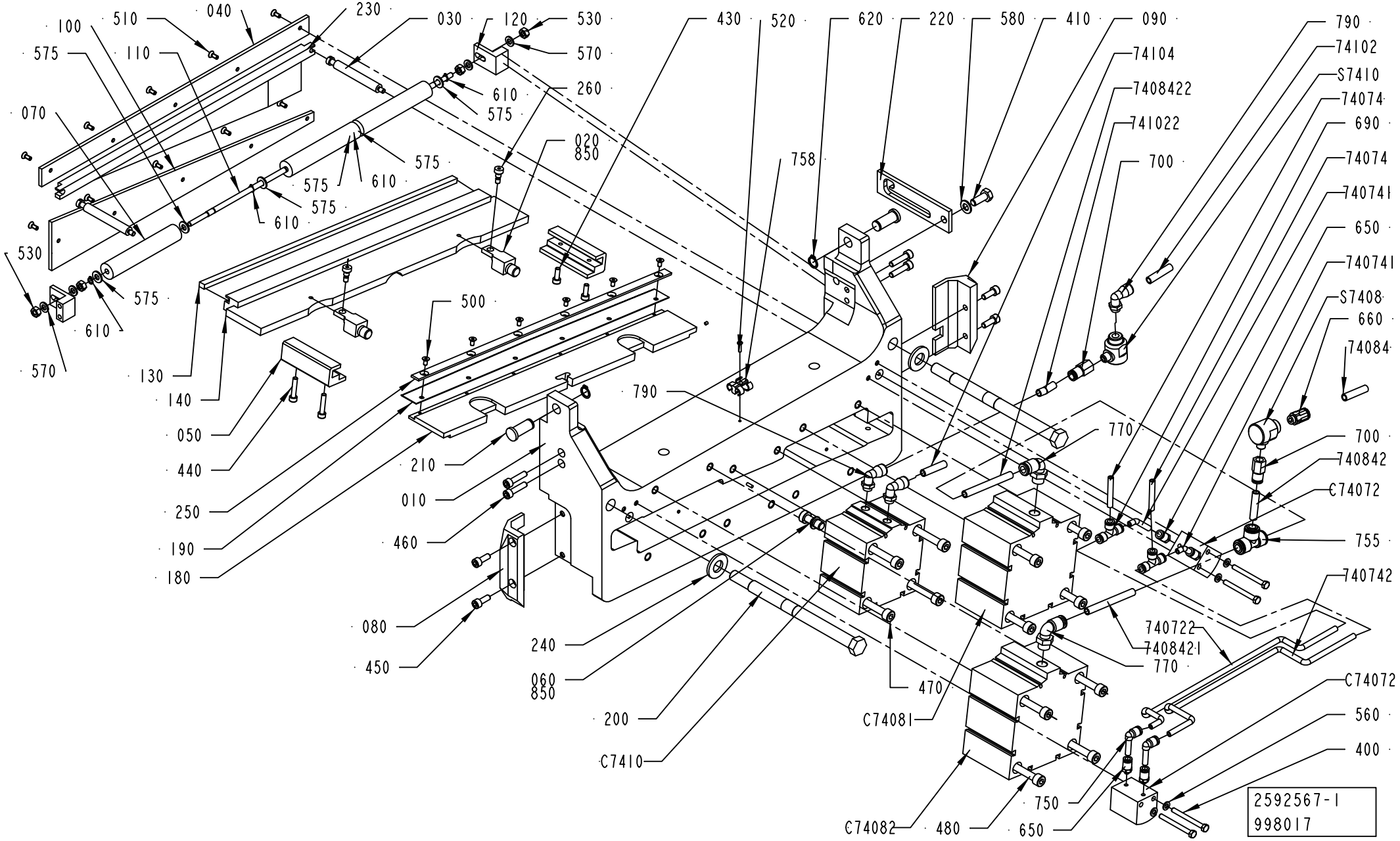
100
510
040
230
030
120
530
575
110
570
260
610
575
070
020
850
575
575
610
575
610
530
575
610
570
130
140
050
440
250
190
180
500
758
430
520
620
220
580
410
090
790
74102
S7410
74074
690
74074
740741
650
740741
S7408
660
74084
74104
7408422
741022
700
790
770
700
740842
C74072
755
740742
740722
740842-1
770
470
C74081
C74072
560
400
750
650
480
C74082
210
010
460
080
450
240
060
850
200
C7410
2592567-1
998017

ECM: 998017 - 20080704
Group number: 2592567-0100
Assembly Drawing: 2592567-1_1_AG

Pos	Part No	UN	Qty	Description	Page No
-					
010	2574402-0000		1	PRESSURE JAW	
020	2549829-0000		2	SPACER	
030	2552798-0000		2	COMPRESSION ROD	
040	2831672-0000		1	SLIDE PLATE	
050	2558148-0000		2	SLIDING STRIP	
060	2559439-0000		1	COUPLING BOLT	
070	2831674-0000		3	ROLLER	
080	2566123-0000		1	SLIDE PLANE	
090	2566124-0000		1	SLIDE PLANE	
100	2831673-0000		1	SLIDE PLATE	
110	2588046-0000		1	SHAFT	
120	2588290-0000		2	BRACKET	
130	2592780-0000		1	DOLLY	
140	2546463-0000		1	PRESSURE RAIL	
180	1484693-0000		1	KNIFE HOLDER	
190	1484695-0000		1	KNIFE	
200	1484703-0000		2	TIE ROD	
210	1484781-0000		2	PIN	
220	1487517-0000		1	CATCH	
230	2658058-0000		1	RAIL	
240	1519955-0000		2	WASHER	
250	1519967-0000		1	CLAMP	
260	1558801-0000		2	SHOULDER SCREW	
400	312105-0341		4	SCREW M6S ISO 4014 M5X50 A480	
410	312105-0451		1	SCREW M6S ISO 4017 M8X20 A480	
430	312115-0328		2	SCREW ISO4762 M5X14 A4 80	
440	312115-0333		2	SCREW ISO4762 M5X25 A4 80	
450	312115-0368		4	SCREW ISO4762 M6X16 A4 80	
460	312115-0372		4	SCREW ISO4762 M6X25 A4 80	
470	312115-0465		4	SCREW ISO4762 M8X70 A4 80	
480	312115-0467		8	SCREW ISO4762 M8X80 A4 80	
500	312155-0287		6	SCREW DIN 7991 MF6S M4X8 A4 70	
510	312155-0289		10	SCREW DIN 7991 MF6S M4X10 A4 70	
520	312145-0226		1	SCREW ISO 2009 MFS M3X12 A4	
530	312605-0316		4	HEXAGON NUT, M6M M6 A280	
560	315105-0146		4	WASHER BRB 5,3X10 RFR	
570	315105-0153		4	WASHER BRB 6,4X12 RFR	
575	315105-0156		6	WASHER BRB 6,7X14 RFR	
580	315105-0165		1	WASHER BRB 8,4X16 RFR	
610	315751-0103		4	RETAINING RING FOR SHAFT DIN 471 6 SS	
620	315751-0109		2	RETAINING RING FOR SHAFT DIN 471 12 SS	
650	342722-0197		4	STRAIGHT COUPLING	
660	342722-0204		1	PIPE COUPLING	
690	342748-0102		2	T-CONNECTION 6MM	
700	342770-0107		2	STRAIGHT COUPLING INT, D=8 MM - G1/8	
74072	90166-0193	MM	5000	TUBE 6 MM PUR BLUE	
740721	90166-0193	MM	60	TUBE 6 MM PUR BLUE	
740722	90166-0193	MM	400	TUBE 6 MM PUR BLUE	
74074	90166-0193	MM	5000	TUBE 6 MM PUR BLUE	
740741	90166-0193	MM	80	TUBE 6 MM PUR BLUE	
740742	90166-0193	MM	400	TUBE 6 MM PUR BLUE	
74084	90166-0194	MM	5000	TUBE 8 MM PUR BLUE	
740842	90166-0194	MM	40	TUBE 8 MM PUR BLUE	
7408421	90166-0194	MM	150	TUBE 8 MM PUR BLUE	
7408422	90166-0194	MM	150	TUBE 8 MM PUR BLUE	
74102	90166-0194	MM	5000	TUBE 8 MM PUR BLUE	
741022	90166-0194	MM	200	TUBE 8 MM PUR BLUE	
74104	90166-0194	MM	5000	TUBE 8 MM PUR BLUE	
750	90055-0217		2	ELBOW PIPE JOINT	
755	90055-0276		1	T-CONNECTION 8 MM	
758	90165-0087		1	T-CLIP T6 FOR TUBE D=6 - 7 MM	
770	90458-2448		2	ELBOW PIPE JOINT,EXT.THREAD,D=8 MM G1/4	
790	90458-2964		3	ELBOW PIPE JOINT, EXT.THREAD, D=8MM-G1/8	
850	90157-0016	ML	1	LOCKING FLUID LOCTITE 242 50 ML	
C74071	90459-1509		1	CYLINDER, ADVC-20-20-I-P	
C74072	90459-1509		1	CYLINDER, ADVC-20-20-I-P	
C74081	90459-2102		1	CYLINDER, AEVC 100-25-I-P	
C74082	90459-2102		1	CYLINDER, AEVC 100-25-I-P	
C7410	90459-2101		1	CYLINDER, ADVC-80-25-I-P	
S7408	90235-0206		1	QUICK EXHAUST VALVE, SEU-1/8	
S7410	90235-0206		1	QUICK EXHAUST VALVE, SEU-1/8	

Machine Type	Group Description	Used-In	Group Number	Page No

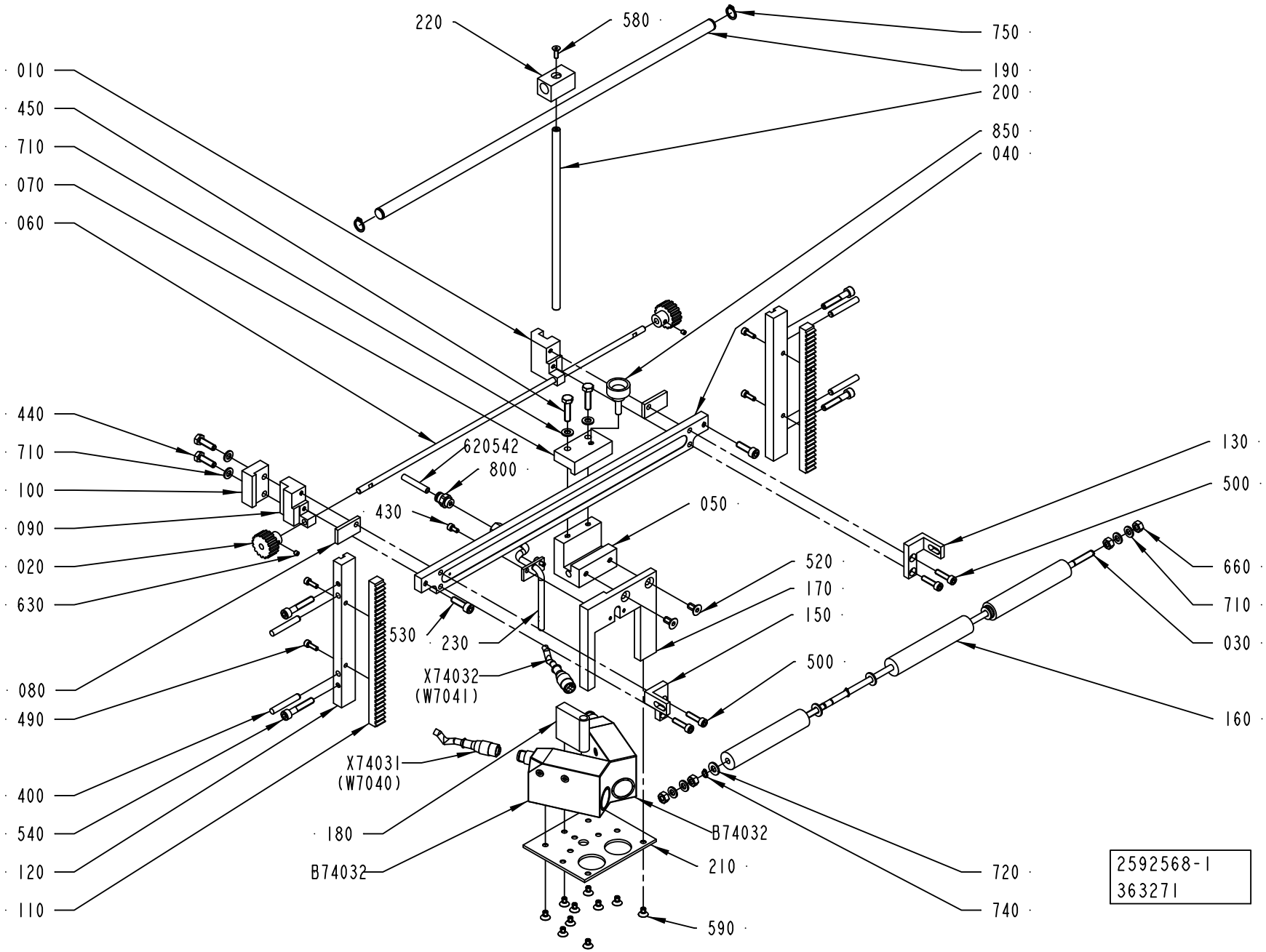
220
580
750
190
200
850
040
010
450
710
070
060
440
710
100
090
020
630
080
490
400
540
120
110
620542
800
430
050
520
170
150
500
530
230
X74032
(W7041)
X74031
(W7040)
180
B74032
B74032
210
590
720
740
130
500
660
710
030
160
2592568-1
363271

ECM: 366936 - 20081002
Group number: 2592568-0100
Assembly Drawing: 2592568-1_1_AE

Pos	Part No	UN	Qty	Description	Page No
TBA/22					
X74031	90458-0603		1	CONNECTOR FEMALE 5 PINS	
X74032	90458-0603		1	CONNECTOR FEMALE 5 PINS	
Common Parts					
010	1484705-0000		1	SLIDER	
020	1484706-0000		2	GEAR WHEEL	
030	2588046-0000		1	SHAFT	
040	1484776-0000		1	RAIL	
050	1484777-0000		1	SLIDER	
060	1484779-0000		1	ROD	
070	1484782-0000		1	CLAMP BLOCK	
080	1484783-0000		2	CLAMPING ELEMENT	
090	1484784-0000		1	LOCATING PIECE	
100	1484785-0000		1	LOCATING PIECE	
110	1487510-0000		2	RACK GEAR	
120	1487511-0000		2	BRACKET	
130	2588044-0000		1	BRACKET	
150	2588045-0000		1	BRACKET	
160	2831674-0000		3	ROLLER	
170	1487554-0000		1	BRACKET	
180	1487555-0000		1	BUSHING	
190	1487556-0000		1	BAR	
200	1487557-0000		1	BAR	
210	1487558-0000		1	FASTENING PLATE	
220	1487559-0000		1	SLIDER	
230	1519580-0000		1	GUIDE FINGER	
400	311103-0361		4	PARALLEL PIN ISO 2338 6M6X40 A1	
430	312115-0287		2	SCREW ISO4762 M4X8 A4 80	
440	312105-0370		2	SCREW M6S ISO 4017 M6X20 A480	
450	312105-0372		2	SCREW M6S ISO 4017 M6X25 A480	
490	312115-0291		4	SCREW ISO4762 M4X12 A4 80	
500	312115-0331		4	SCREW ISO4762 M5X20 A4 80	
520	312155-0366		2	SCREW DIN 7991 MF6S M6X12 A4 70	
530	312115-0370		2	SCREW ISO4762 M6X20 A4 80	
540	312115-0376		4	SCREW ISO4762 M6X35 A4 80	
580	312155-0291		1	SCREW DIN 7991 MF6S M4X12 A4 70	
590	312155-0323		10	SCREW DIN 7991 MF6S M5X8 A4 70	
620542	90166-0193	MM	4500	TUBE 6 MM PUR BLUE	
630	312318-0283		2	SCREW ISO4029 M4X4 A4	
660	312605-0316		4	HEXAGON NUT, M6M M6 A280	
710	315105-0153		8	WASHER BRB 6,4X12 RFR	
720	315105-0156		6	WASHER BRB 6,7X14 RFR	
740	315751-0103		4	RETAINING RING FOR SHAFT DIN 471 6 SS	
750	315751-0109		2	RETAINING RING FOR SHAFT DIN 471 12 SS	
800	342722-0202		1	PIPE COUPLING 1/8" D=6MM	
850	90051-0083		1	KNOB, EXTERNAL THREAD. NO. 8308-1321	
B74031	90458-0602		1	CONTRAST SCANNER, KT15W-P2110S01	
B74032	90458-0602		1	CONTRAST SCANNER, KT15W-P2110S01	

Machine Type	Group Description	Used-In	Group Number	Page No

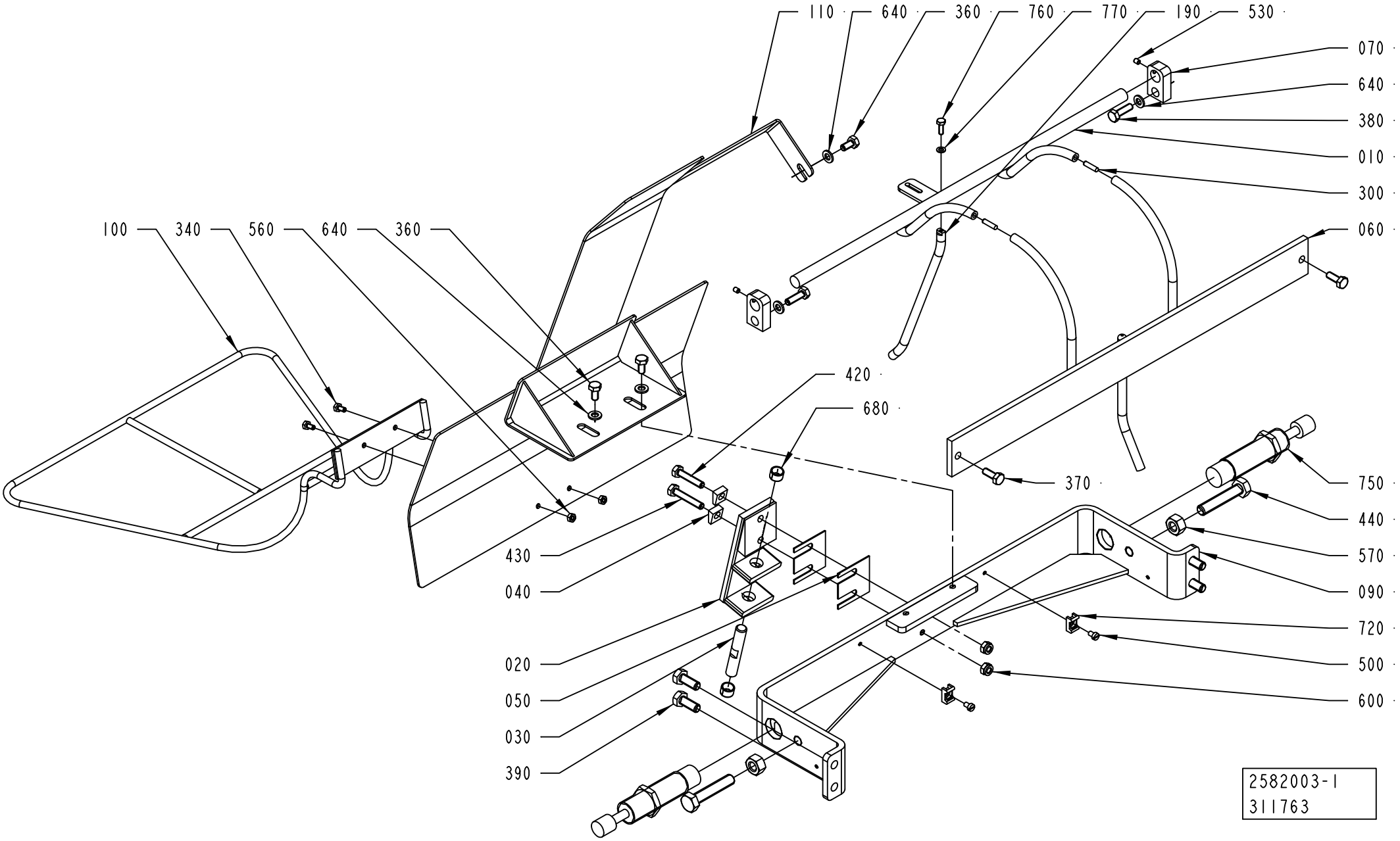
110
640
360
760
770
190
530
070
640
380
010
300
060
100
340
560
640
360
420
680
370
750
440
570
090
720
500
600
430
040
020
050
030
390
2582003-1
311763

ECM: 361858 - 20081001
Group number: 2582003-0100
Assembly Drawing: 2582003-1_1_AC

Pos	Part No	UN	Qty	Description	Page No
TBA/22					
010	1484697-0000		1	RAIL	
060	1517113-0000		1	RAIL	
070	1519578-0000		2	MOUNTING BLOCK	
110	2582668-0000		1	PLATE	
190	1519591-0000		1	RAIL PIN	
300	311103-0270		2	PARALLEL PIN ISO 2338 4M6X16 A1	
360	312105-0366		3	SCREW M6S ISO 4017 M6X12 A480	
640	315105-0153		5	WASHER BRB 6,4X12 RFR	
760	312105-0291		1	SCREW M6S ISO 4017 M4X12 A470	
770	315105-0136		1	WASHER BRB 4,3X8 RFR	
Common Parts					
020	1490220-0000		1	ANGLE BRACKET	
030	1494664-0000		1	AXLE LINK	
040	1499566-0000		2	WASHER	
050	1512430-0000		2	VOLUME SHIM	
090	1519944-0000		1	BRACKET	
100	2563183-0000		1	GUIDE RAIL	
340	312105-0287		2	SCREW M6S ISO 4017 M4X8 A470	
370	312105-0368		4	SCREW M6S ISO 4017 M6X16 A480	
380	312105-0370		2	SCREW M6S ISO 4017 M6X20 A480	
390	312105-0451		4	SCREW M6S ISO 4017 M8X20 A480	
420	312109-0374		1	SCREW M6S ISO 4017 M6X30 A480	
430	312109-0376		1	SCREW M6S ISO 4017 M6X35 A480	
440	312109-0501		2	SCREW M6S ISO 4017 M10X50 A480	
500	312125-0285		2	SCREW ISO 1207 M4X6 A4	
530	312318-0284		2	SCREW ISO4029 M4X5 A4	
560	312605-0312		2	HEXAGON NUT, M6M M4 A280	
570	312605-0320		2	HEXAGON NUT, M6M M10 A280	
600	312812-0316		2	HEXAGON NUT, NY-LOCK M6 A480	
680	321141-0138		2	BEARING BUSH W/O FLANGE, 10X12X8 MM	
720	352113-0205		2	ANCHOR PLATES FOR STRIPS, TYPE TM2S8-C10	
750	90347-0182		2	SHOCK ABSORBER, YSR-16-20-C	

Pos	Part No	UN	Qty	Description	Page No

Machine Type | Group Description | Used-In | Group Number | Page No

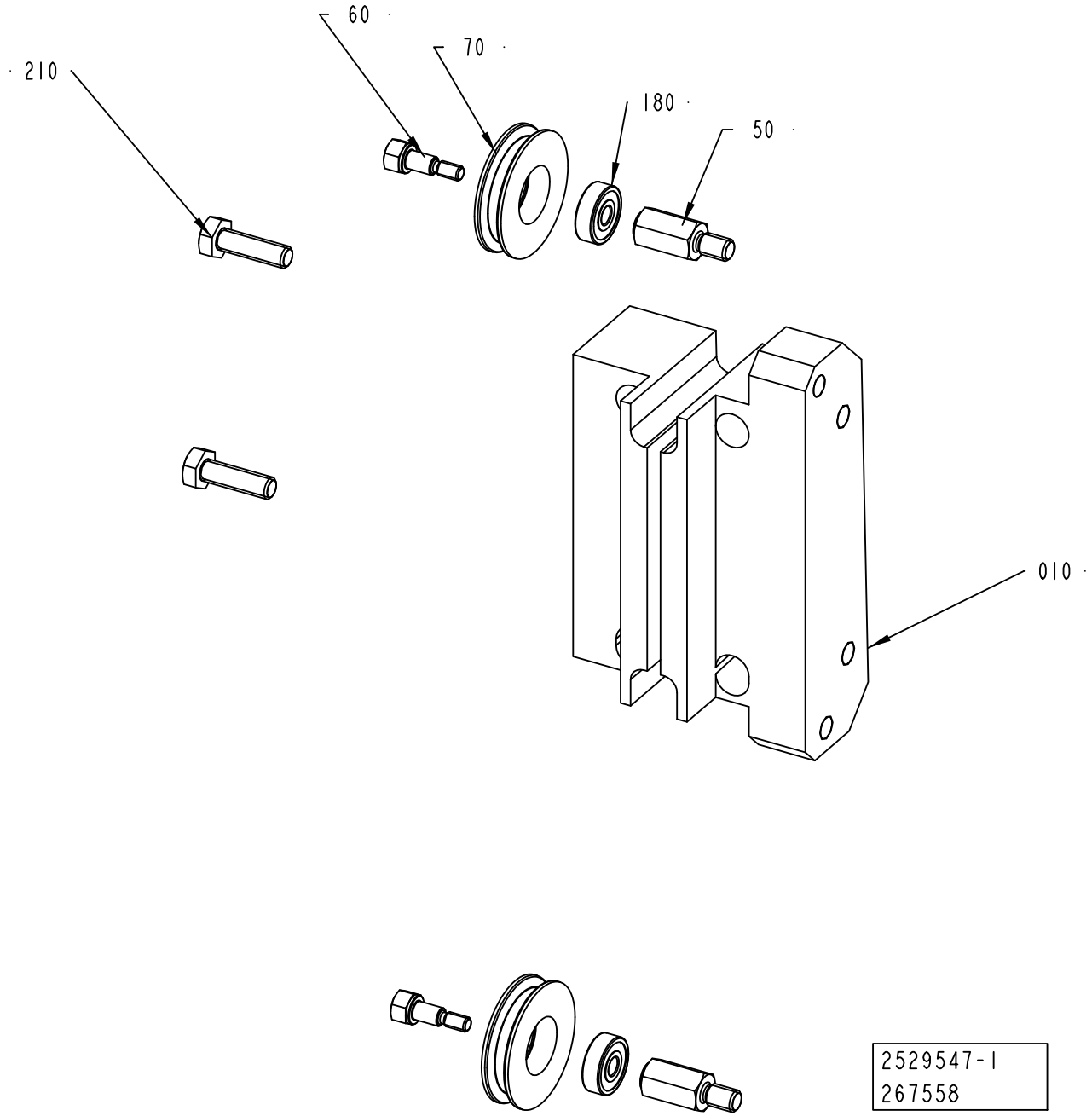
60
70
180
50
210
010
2529547-1
267558

ECM: 361597 - 20081001
Group number: 2529547-0100
Assembly Drawing: 2529547-1_1_AC

Pos	Part No	UN	Qty	Description	Page No
TBA/22					
010	2831677-0000		1	SUPPORT	
Common Parts					
050	1558251-0000		2	SHAFT	
060	1558252-0000		2	SCREW	
070	1558253-0000		2	ROLLER	
180	90458-2950		2	BALL BEARING, 5X16X5 MM	
210	312105-0370		2	SCREW M6S ISO 4017 M6X20 A480	

Pos	Part No	UN	Qty	Description	Page No

CABLE CONDUIT

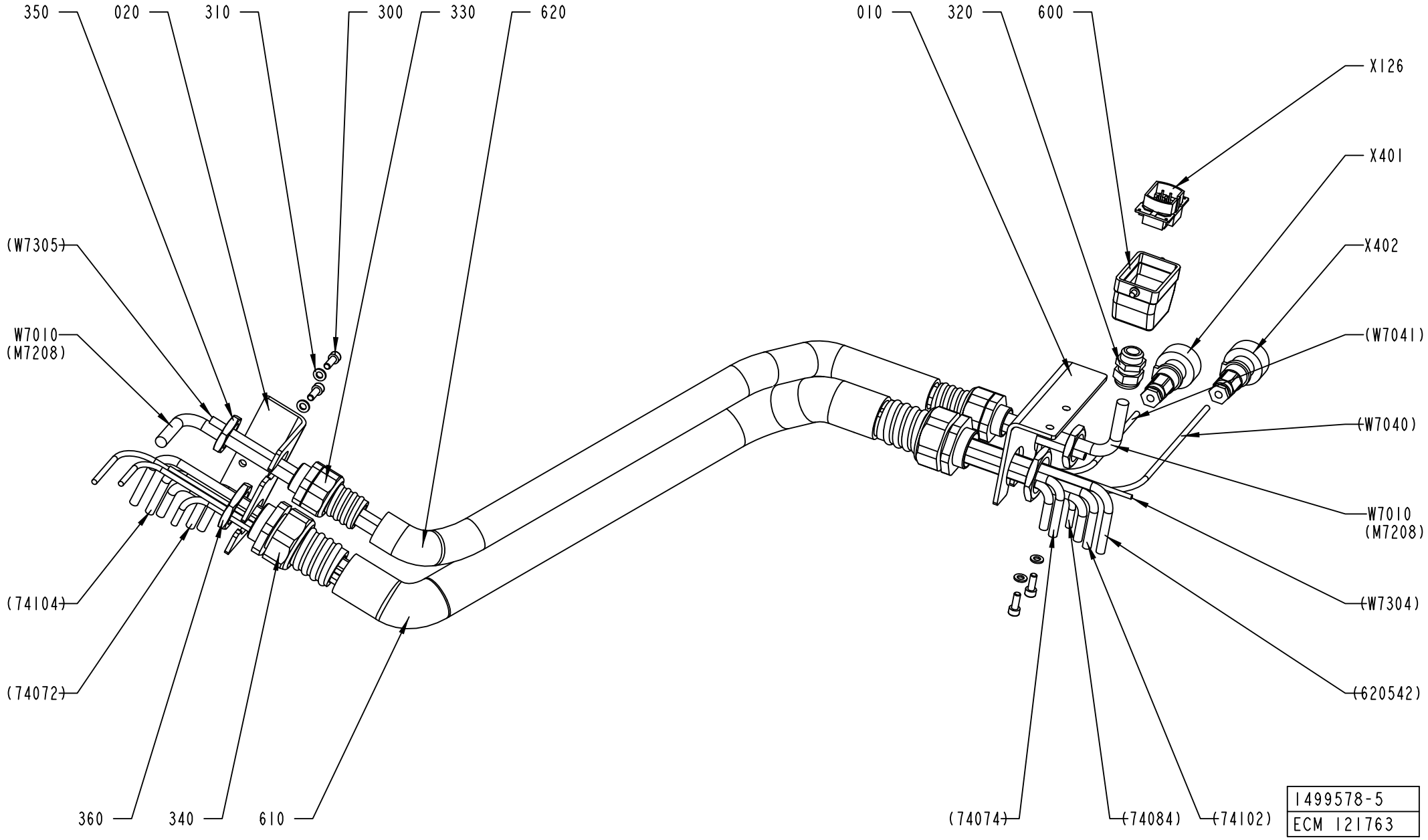

ECM: 195268 - 20041207
Group number: 1499578-0300
Assembly Drawing: 1499578-5_1_AA

Pos	Part No	UN	Qty	Description	Page No
TBA/22					
W7010	90220-0104	M	9	SCR. CABLE 4X1,5MM2	
Common Parts					
010	2628989-0000		1	BRACKET	
020	2628990-0000		1	BRACKET	
300	312115-0368		4	SCREW ISO4762 M6X16 A4 80	
310	315105-0153		4	WASHER BRB 6,4X12 RFR	
320	352103-0108		1	CABLE GLAND, ST 13,5 , PR20,4/PG13,5	
330	353243-0007		2	HOSE GLAND W/O INSERT PG21 EXTENDED	
340	353243-0008		2	HOSE GLAND W/O INSERT PG29 EXTENDED	
350	90099-0119		2	NUT, PR 28,3 (PG21)	
360	90099-0120		2	NUT, PR 37 (PG29)	
600	90110-0157		1	CABLE HOOD 6-POL 70.352.0628.1	
610	90152-0060	MM	850	SPIRAL CONDUIT, 42X35, UL3529	
620	90152-0070	MM	850	METAL HOSE, 32,5X26, UL 2621	
X126	90110-0159		1	MALE INSERT 70.310.0640.0	
X401	90110-0235		1	CABLE CONTACT, PX0739/P	
X402	90110-0235		1	CABLE CONTACT, PX0739/P	

Pos	Part No	UN	Qty	Description	Page No

MATERIAL HOLDER L1

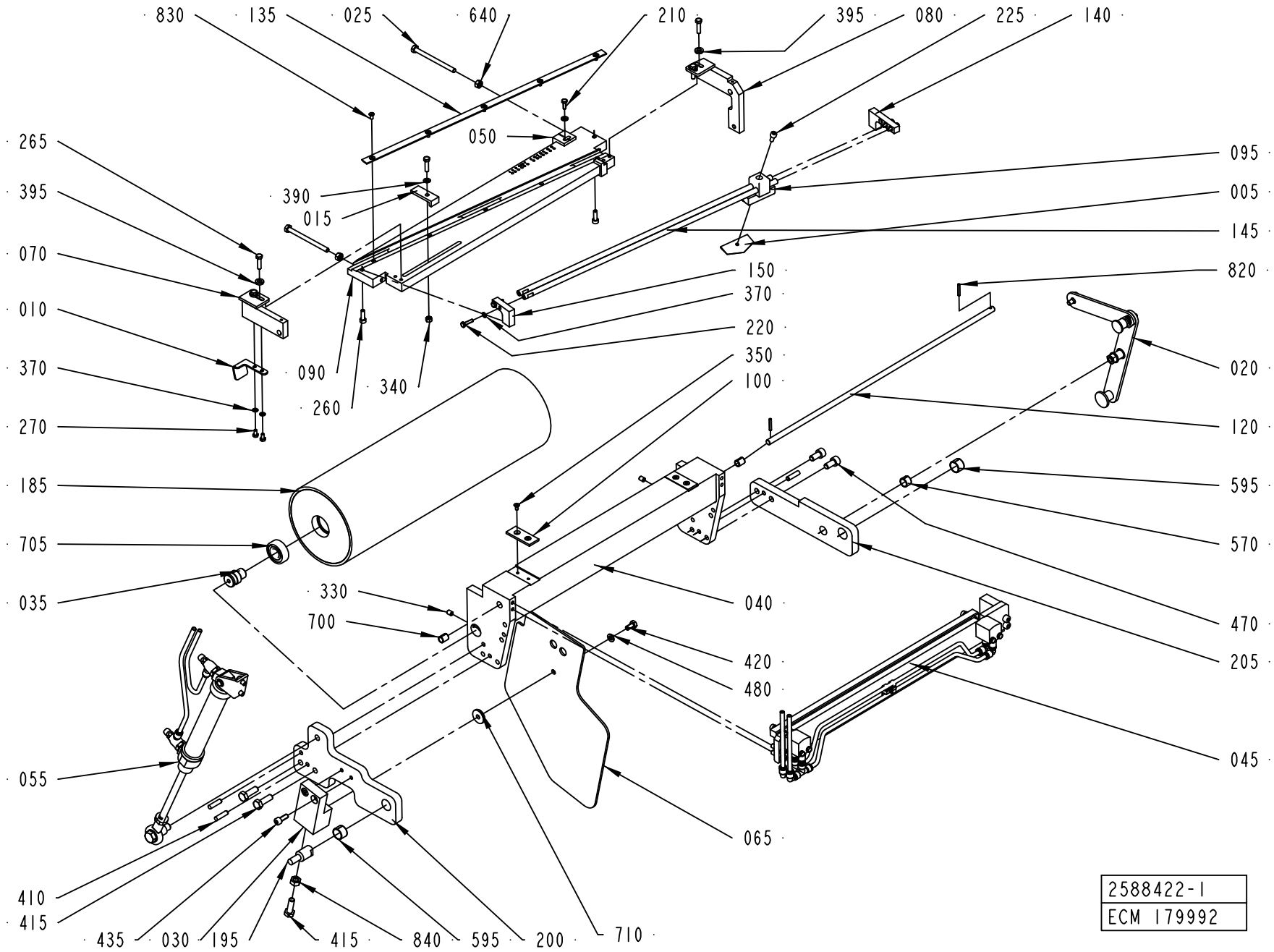

ECM: 366923 - 20081002
Group number: 2588422-0100
Assembly Drawing: 2588422-1_1_AE

Pos	Part No	UN	Qty	Description	Page No
TBA/22 WITHOUT ARL					
005	596678-0000		1	KNIFE	
050	2587251-0000		1	ANGLE PIECE	
090	2566117-0000		1	CUTTING TABLE	
095	2589791-0000		1	KNIFE HOLDER	
140	1487781-0000		1	BRACKET	
145	1487782-0000		2	SHAFT	
150	2566118-0000		1	BRACKET	
220	312105-0293		4	SCREW M6S ISO 4017 M4X16 A470	
225	312115-0327		1	SCREW ISO4762 M5X12 A4 80	
260	312115-0329		2	SCREW ISO4762 M5X16 A4 80	
370	315105-0136		6	WASHER BRB 4,3X8 RFR	
Common Parts					
010	2538065-0000		1	REFLECTOR	
015	1490821-0000		1	ANGLE PIECE	
020	1524398-0100		1	HANDLE	**8-95**
025	312109-0386		2	SCREW M6S ISO 4017 M6X80 A480	
030	2699996-0000		1	BLOCK	
035	1499582-0000		2	AXLE PIN	
040	1487770-0000		1	BRACKET	
045	2588383-0100		1	MATERIAL HOLDER	**8-97**
055	1524394-0100		1	CYLINDER	**8-99**
065	1512276-0000		1	PROTECTION PLATE	
070	2700019-0000		1	ROCKER ARM	
080	2700030-0000		1	ROCKER ARM	
100	2553275-0000		2	SLIDE PLATE	
120	1487779-0000		1	SHAFT	
135	1487518-0000		1	RULER	
185	1499588-0000		1	BENDING ROLLER	
195	1511568-0000		1	PIN	
200	2587250-0000		1	ARM	
205	1511575-0000		1	ARM	
210	312105-0291		1	SCREW M6S ISO 4017 M4X12 A470	
265	312105-0331		5	SCREW M6S ISO 4017 M5X20 A480	
270	312105-0287		2	SCREW M6S ISO 4017 M4X8 A470	
330	312318-0362		2	SCREW ISO4029 M6X8 A4	
340	312605-0314		1	HEXAGON NUT, M6M M5 A280	
350	312155-0287		4	SCREW DIN 7991 MF6S M4X8 A4 70	
390	315105-0146		2	WASHER BRB 5,3X10 RFR	
395	315115-0153		4	WASHER PLAIN, TBRB 6,4/12 H=3	
410	311103-1355		3	PARALLEL PIN ISO 2338 6M6X24 A1	
415	312105-0453		3	SCREW M6S ISO 4017 M8X25 A480	
420	312105-0366		1	SCREW M6S ISO 4017 M6X12 A480	
435	312115-0368		2	SCREW ISO4762 M6X16 A4 80	
470	312115-0449		2	SCREW ISO4762 M8X16 A4 80	
480	315105-0153		1	WASHER BRB 6,4X12 RFR	
570	321141-0178		1	BEARING BUSH W/O FLANGE, 12X14X10 MM	
595	321141-0216		2	BEARING BUSH W/O FLANGE, 16X18X12 MM	
640	312605-0316		2	HEXAGON NUT, M6M M6 A280	
700	321141-0104		2	BEARING BUSH W/O FLANGE, 8X10X12 MM	
705	321313-0102		2	BALL BEARING, 15X35X11 MM	
710	315125-0153		1	WASHER TBRSB 6,4X22X4 A4	
820	90258-0031		2	PIN, STRAIGHT SLOTTED SPRING FRP 3X20	
830	312145-0287		5	SCREW ISO 2009 MFS M4X8 A4	
840	312605-0318		1	HEXAGON NUT, M6M M8 A280	

Machine Type Group Description Used-In Group Number Page No

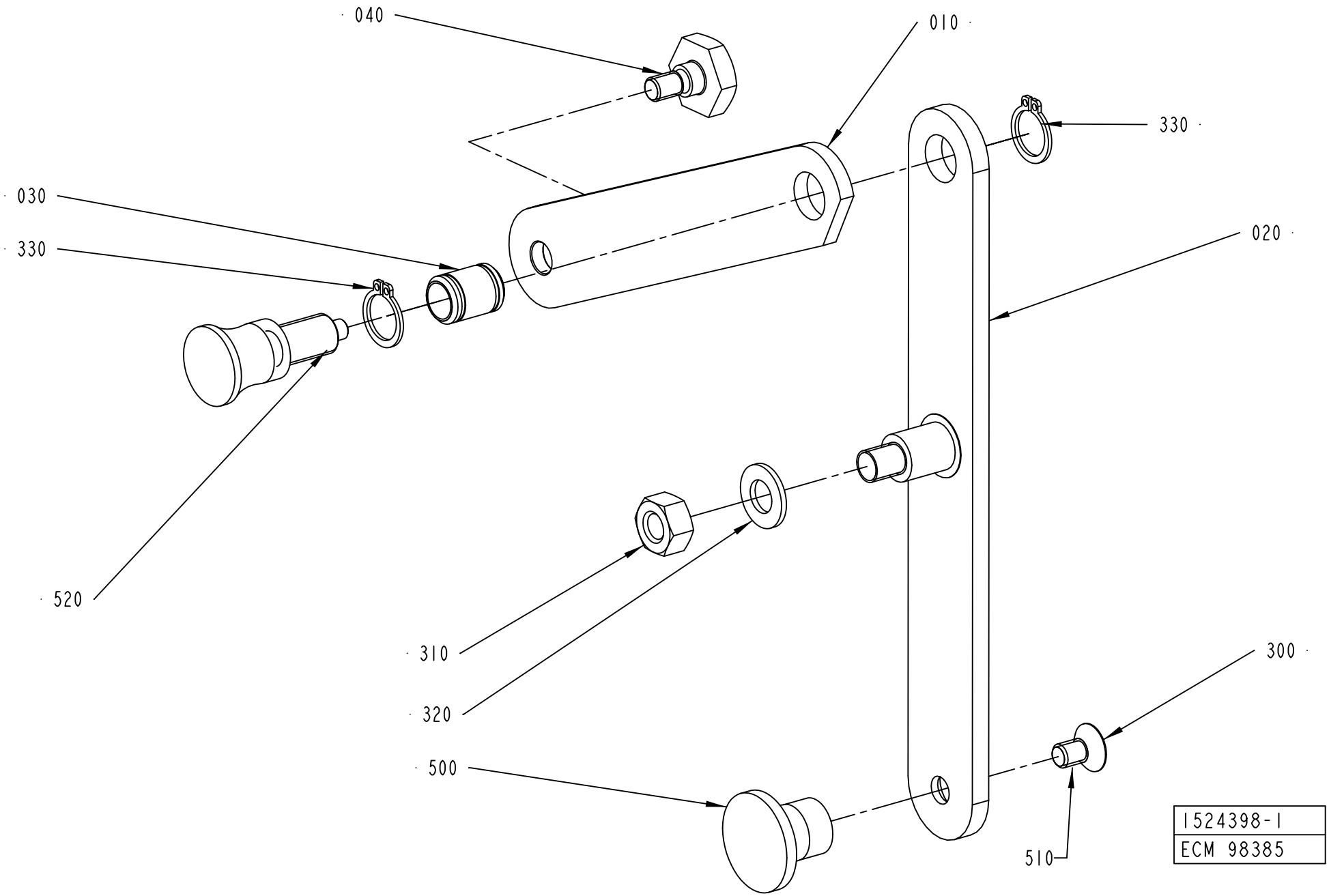
040
010
330
030
330
020
520
310
320
300
500
510
1524398-1
ECM 98385

ECM: 180696 - 20040910
Group number: 1524398-0100
Assembly Drawing: 1524398-1_1_AC

Pos	Part No	UN	Qty	Description	Page No
-					
010	1490809-0000		1	ARM	
020	1490810-0000		1	ARM	
030	1490812-0000		1	AXLE	
040	1490813-0000		1	SCREW	
300	312155-0364		1	SCREW DIN 7991 MF6S M6X10 A4 70	
310	312605-0318		1	HEXAGON NUT, M6M M8 A280	
320	315105-0165		1	WASHER BRB 8,4X16 RFR	
330	315751-0109		2	RETAINING RING FOR SHAFT DIN 471 12 SS	
500	90051-0082		1	KNOB, CIRCUL, THREADED BUSH, M6 25X21 MM	
510	90157-0016		1	LOCKING FLUID LOCTITE 242 50 ML	
520	90051-0087		1	LOCK KNOB, NO. GN 617 A5	

Pos	Part No	UN	Qty	Description	Page No

MATERIAL HOLDER

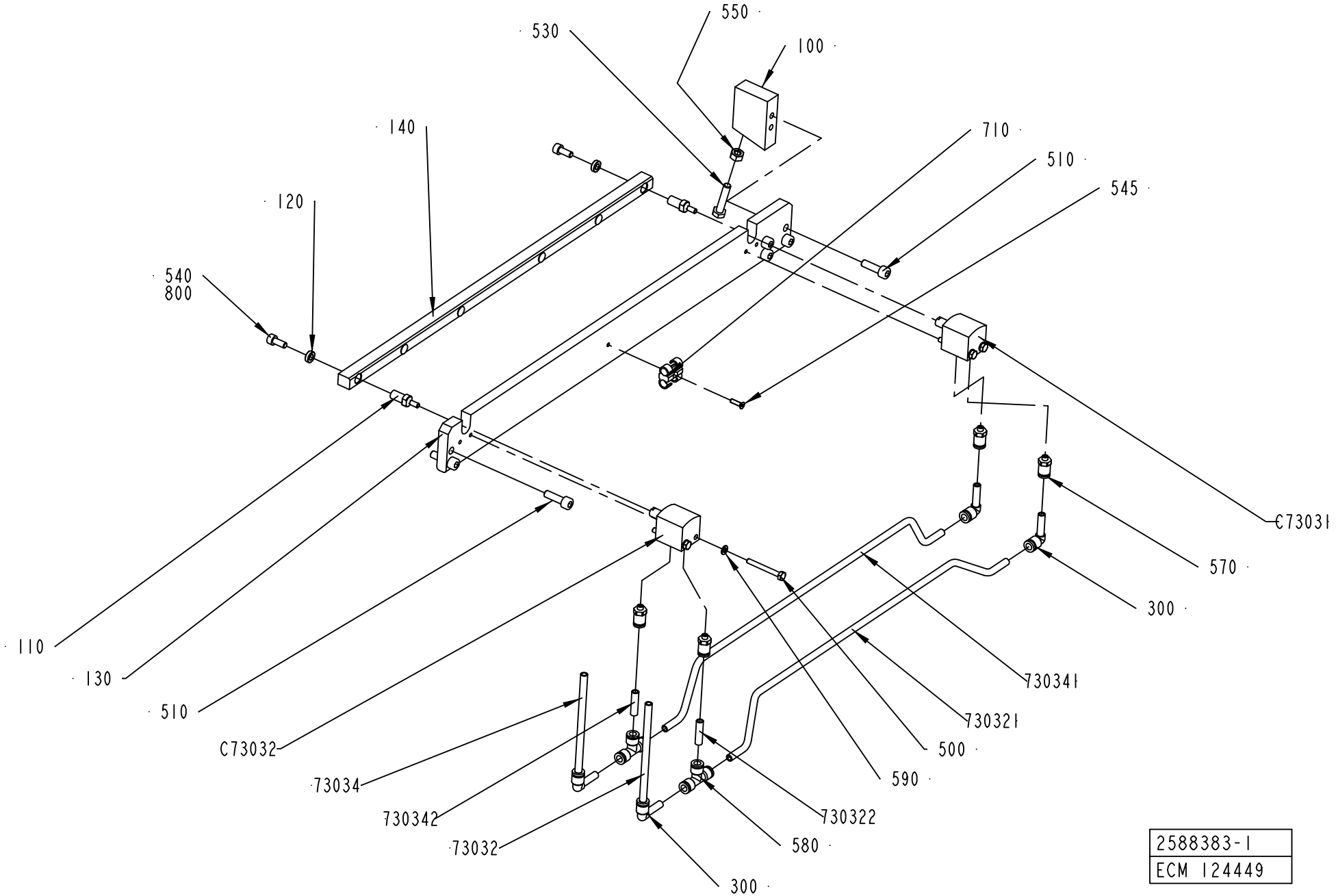

2588383-1
ECM 124449

ECM: 180657 - 20041005
Group number: 2588383-0100
Assembly Drawing: 2588383-1_1_AC

Pos	Part No	UN	Qty	Description	Page No
-					
100	2553272-0000		1	SUPPORT BLOCK	
110	2553273-0000		2	AXLE PIN	
120	2553799-0000		2	WASHER	
130	2582558-0000		1	BASE PLATE	
140	2582559-0000		1	RAIL	
300	90055-0217		4	ELBOW PIPE JOINT	
500	312105-0301		4	SCREW M6S ISO 4017 M4X35 A470	
510	312115-0370		6	SCREW ISO4762 M6X20 A4 80	
530	312109-0374		1	SCREW M6S ISO 4017 M6X30 A480	
540	312115-0327		2	SCREW ISO4762 M5X12 A4 80	
545	312155-0226		1	SCREW DIN 7991 MF6S M3X12 A4 70	
550	312605-0316		1	HEXAGON NUT, M6M M6 A280	
570	342722-0197		4	STRAIGHT COUPLING	
580	342748-0102		2	T-CONNECTION 6MM	
590	315105-0136		4	WASHER BRB 4,3X8 RFR	
710	90165-0087		1	T-CLIP T6 FOR TUBE D=6 - 7 MM	
73032	90166-0193	MM	6500	TUBE 6 MM PUR BLUE	
730321	90166-0193	MM	400	TUBE 6 MM PUR BLUE	
730322	90166-0193	MM	30	TUBE 6 MM PUR BLUE	
73034	90166-0193	MM	6500	TUBE 6 MM PUR BLUE	
730341	90166-0193	MM	400	TUBE 6 MM PUR BLUE	
730342	90166-0193	MM	30	TUBE 6 MM PUR BLUE	
800	90157-0016	ML	1	LOCKING FLUID LOCTITE 242 50 ML	
C73031	90459-0503		1	CYLINDER, ADVC-16-10-I-P	
C73032	90459-0503		1	CYLINDER, ADVC-16-10-I-P	

Pos	Part No	UN	Qty	Description	Page No

Machine Type | Group Description | Used-In | Group Number | Page No

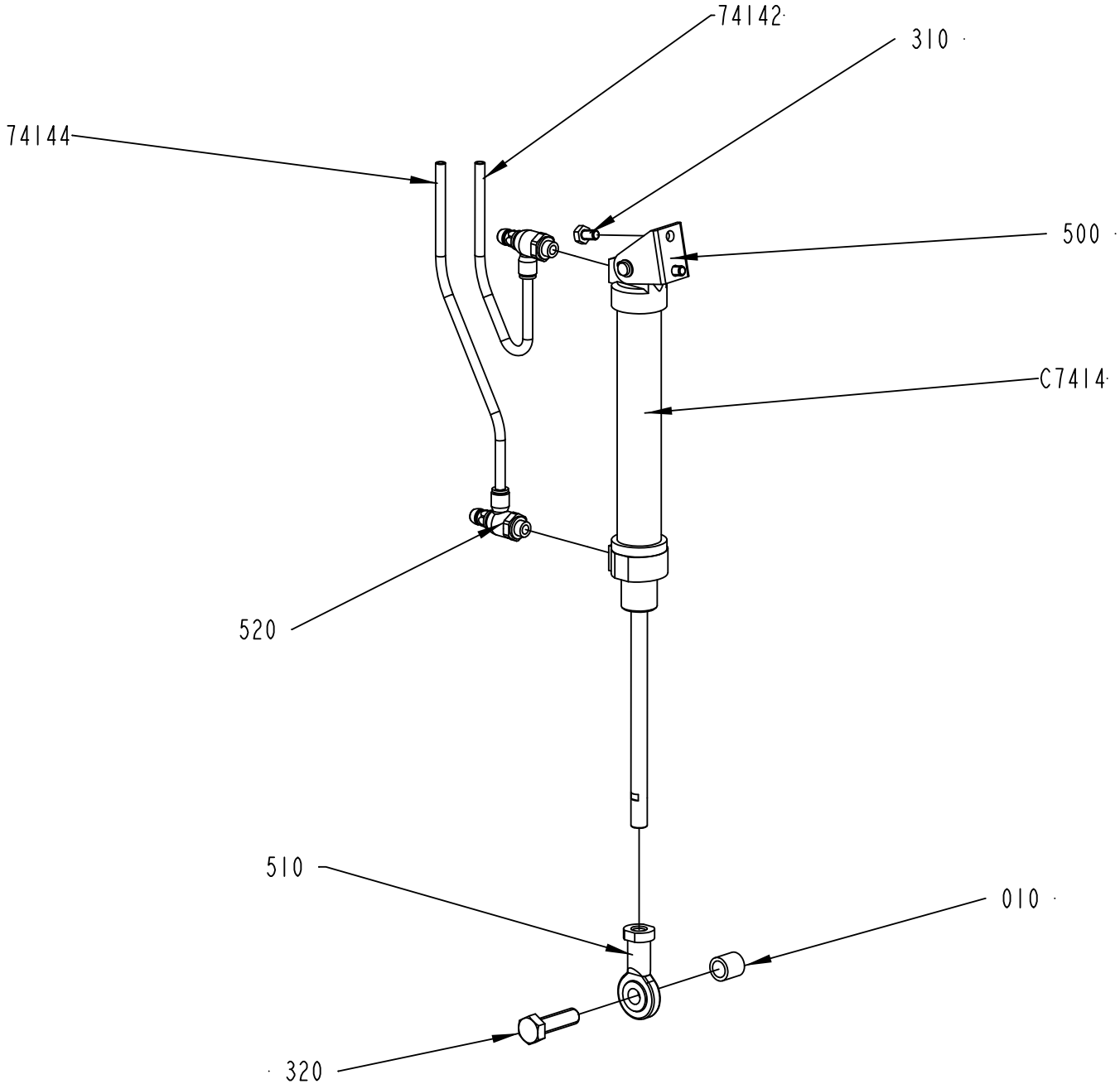

1524394-1
ECM 111238

ECM: 252903 - 20060303
Group number: 1524394-0100
Assembly Drawing: 1524394-1_1_AE

Pos	Part No	UN	Qty	Description	Page No
TBA/22					
74142	90166-0193	MM	6000	TUBE 6 MM PUR BLUE	
74144	90166-0193	MM	6000	TUBE 6 MM PUR BLUE	
C7414	90239-0832		1	DOUBLE ACTING, MINI-ISO, CYL. 25-125	
Common Parts					
010	1511569-0000		1	SPACER	
310	312105-0364		2	SCREW M6S ISO 4017 M6X10 A480	
320	312105-0497		1	SCREW M6S ISO 4017 M10X35 A480	
500	90239-0487		1	REAR, CLEVIS, MINI-ISO 20-25	
510	90239-0405		1	ROD END,BALL JOINT EYE M10X1,25	
520	90235-0846		2	THROTTLE CHECK VALVE G1/8", MANUAL, 6	

Pos	Part No	UN	Qty	Description	Page No

MATERIAL HOLDER L2

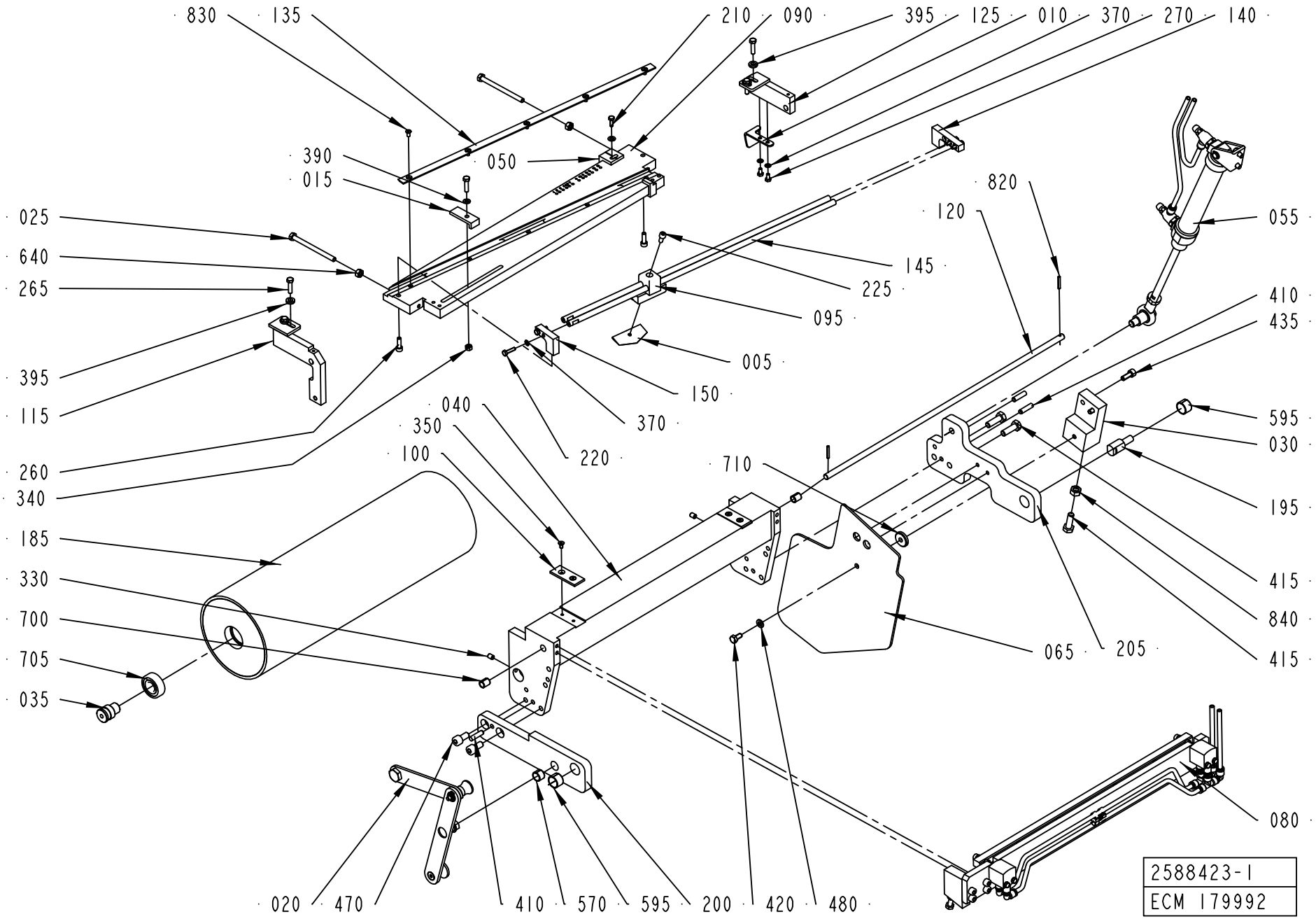

ECM: 366924 - 20081002
Group number: 2588423-0100
Assembly Drawing: 2588423-1_1_AE

Pos	Part No	UN	Qty	Description	Page No
TBA/22 WITHOUT ARL					
005	596678-0000		1	KNIFE	
050	2587251-0000		1	ANGLE PIECE	
090	2566117-0000		1	CUTTING TABLE	
095	2589791-0000		1	KNIFE HOLDER	
140	1487781-0000		1	BRACKET	
145	1487782-0000		2	SHAFT	
150	2566118-0000		1	BRACKET	
220	312105-0293		4	SCREW M6S ISO 4017 M4X16 A470	
225	312115-0327		1	SCREW ISO4762 M5X12 A4 80	
260	312115-0329		2	SCREW ISO4762 M5X16 A4 80	
370	315105-0136		6	WASHER BRB 4,3X8 RFR	
Common Parts					
010	2538064-0000		1	REFLECTOR	
015	1490821-0000		1	ANGLE PIECE	
020	1519589-0100		1	HANDLE	**8-103**
025	312109-0386		2	SCREW M6S ISO 4017 M6X80 A480	
030	2699996-0000		1	BLOCK	
035	1499582-0000		2	AXLE PIN	
040	1487770-0000		1	BRACKET	
055	1487528-0100		1	CYLINDER	**8-105**
065	1512276-0000		1	PROTECTION PLATE	
080	2588379-0100		1	MATERIAL HOLDER	**8-107**
100	2553275-0000		2	SLIDE PLATE	
115	2700034-0000		1	ROCKER ARM	
120	1487779-0000		1	SHAFT	
125	2700035-0000		1	ROCKER ARM	
135	1487518-0000		1	RULER	
185	1499588-0000		1	BENDING ROLLER	
195	1511568-0000		1	PIN	
200	1499577-0000		1	ARM	
205	2587250-0000		1	ARM	
210	312105-0291		1	SCREW M6S ISO 4017 M4X12 A470	
265	312105-0331		5	SCREW M6S ISO 4017 M5X20 A480	
270	312105-0287		2	SCREW M6S ISO 4017 M4X8 A470	
330	312318-0362		2	SCREW ISO4029 M6X8 A4	
340	312605-0314		1	HEXAGON NUT, M6M M5 A280	
350	312155-0287		4	SCREW DIN 7991 MF6S M4X8 A4 70	
390	315105-0146		2	WASHER BRB 5,3X10 RFR	
395	315115-0153		4	WASHER PLAIN, TBRB 6,4/12 H=3	
410	311103-1355		3	PARALLEL PIN ISO 2338 6M6X24 A1	
415	312105-0453		3	SCREW M6S ISO 4017 M8X25 A480	
420	312105-0366		1	SCREW M6S ISO 4017 M6X12 A480	
435	312115-0368		2	SCREW ISO4762 M6X16 A4 80	
470	312115-0449		2	SCREW ISO4762 M8X16 A4 80	
480	315105-0153		1	WASHER BRB 6,4X12 RFR	
570	321141-0178		1	BEARING BUSH W/O FLANGE, 12X14X10 MM	
595	321141-0216		2	BEARING BUSH W/O FLANGE, 16X18X12 MM	
640	312605-0316		2	HEXAGON NUT, M6M M6 A280	
700	321141-0104		2	BEARING BUSH W/O FLANGE, 8X10X12 MM	
705	321313-0102		2	BALL BEARING, 15X35X11 MM	
710	315125-0153		1	WASHER TBRSB 6,4X22X4 A4	
820	90258-0031		2	PIN, STRAIGHT SLOTTED SPRING FRP 3X20	
830	312145-0287		5	SCREW ISO 2009 MFS M4X8 A4	
840	312605-0318		1	HEXAGON NUT, M6M M8 A280	

Machine Type Group Description Used-In Group Number Page No

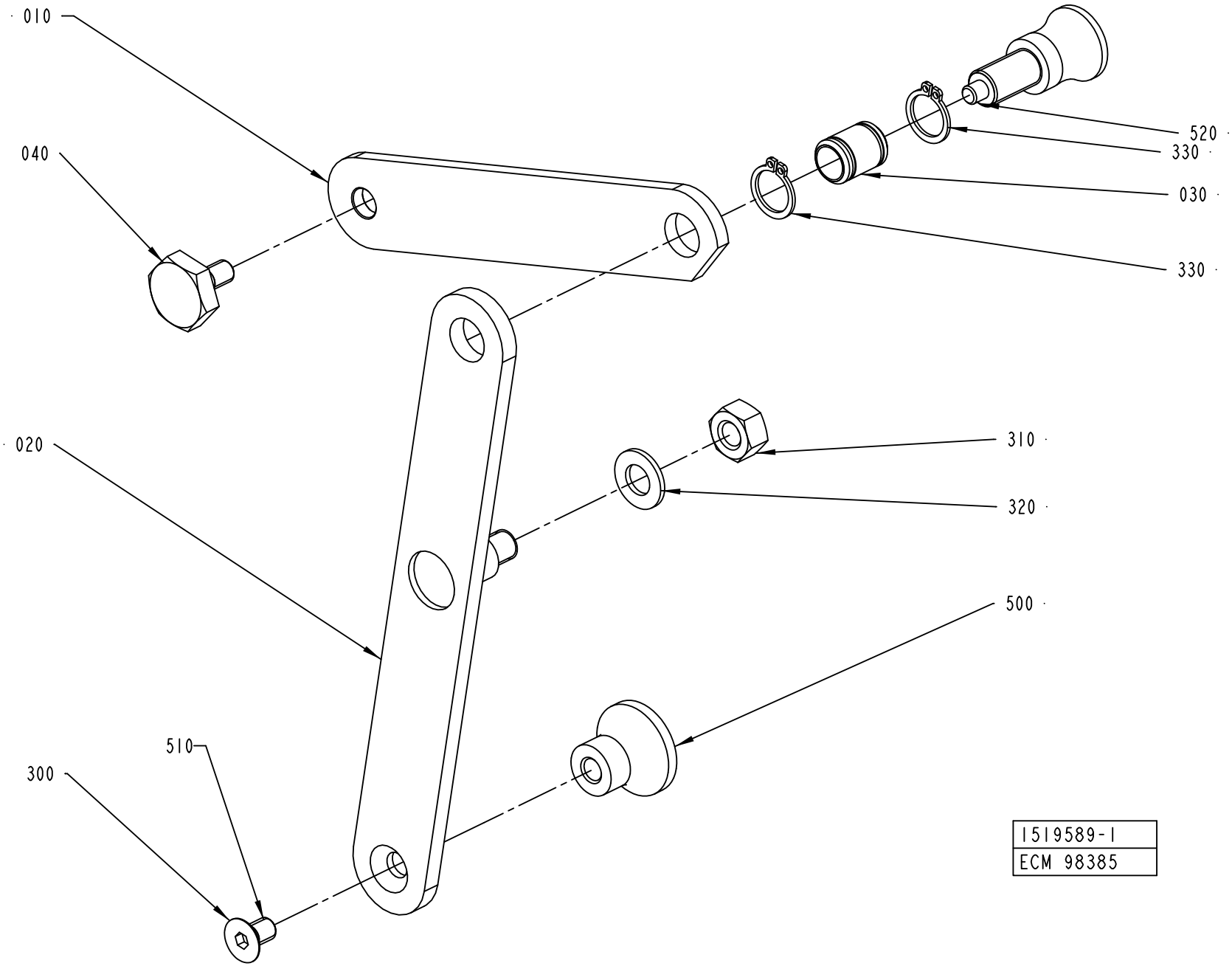
010
040
020
300
510
520
330
030
330
310
320
500
1519589-1
ECM 98385

ECM: 180681 - 20040910
Group number: 1519589-0100
Assembly Drawing: 1519589-1_1_AC

Pos	Part No	UN	Qty	Description	Page No
-					
010	1490809-0000		1	ARM	
020	1490810-0000		1	ARM	
030	1490812-0000		1	AXLE	
040	1490813-0000		1	SCREW	
300	312155-0364		1	SCREW DIN 7991 MF6S M6X10 A4 70	
310	312605-0318		1	HEXAGON NUT, M6M M8 A280	
320	315105-0165		1	WASHER BRB 8,4X16 RFR	
330	315751-0109		2	RETAINING RING FOR SHAFT DIN 471 12 SS	
500	90051-0082		1	KNOB, CIRCUL, THREADED BUSH, M6 25X21 MM	
510	90157-0016		1	LOCKING FLUID LOCTITE 242 50 ML	
520	90051-0087		1	LOCK KNOB, NO. GN 617 A5	

Pos	Part No	UN	Qty	Description	Page No

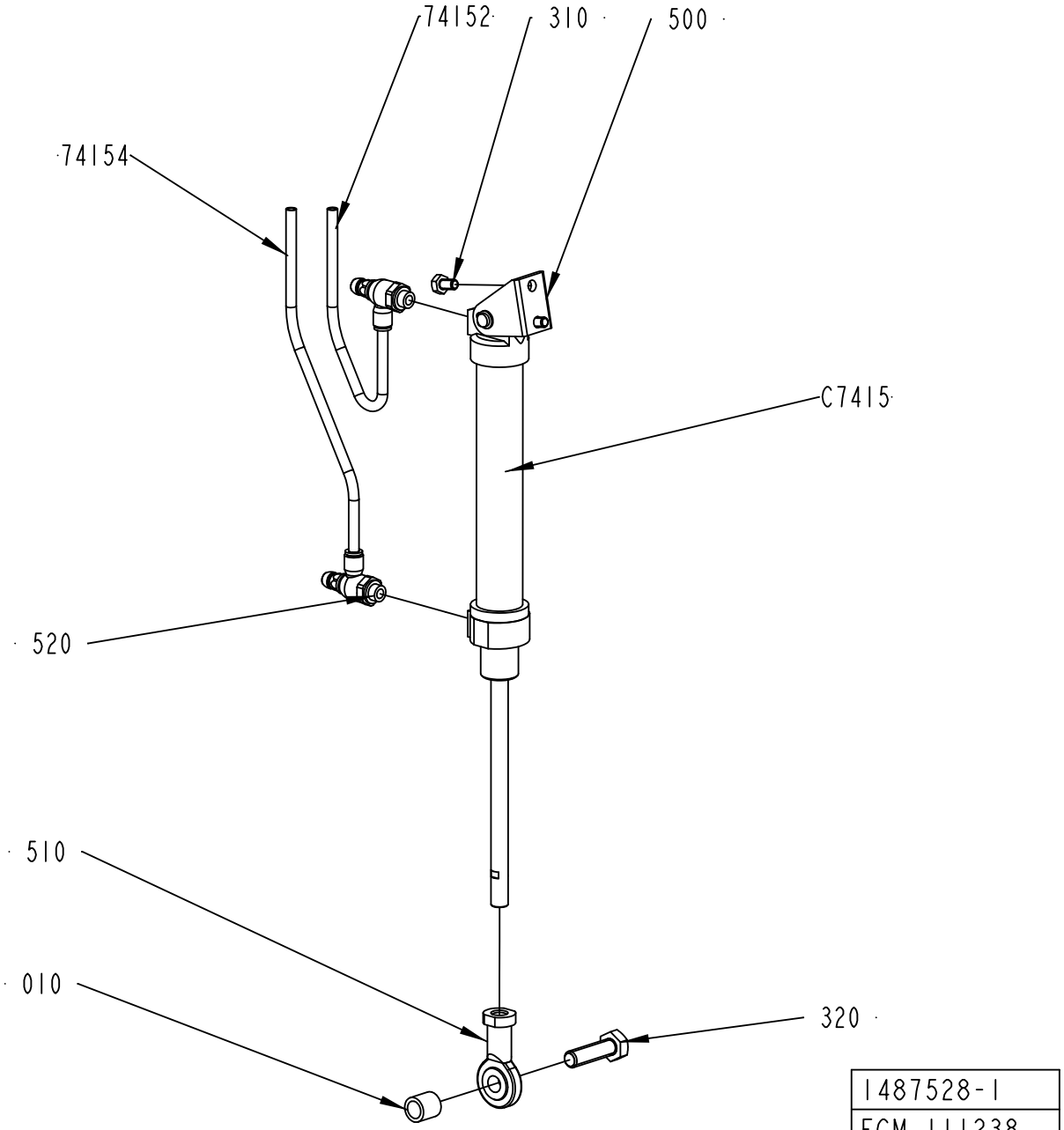
74152
310
500
74154
C7415
520
510
010
320
1487528-1
ECM 111238

ECM: 252904 - 20060303
Group number: 1487528-0100
Assembly Drawing: 1487528-1_1_AE

Pos	Part No	UN	Qty	Description	Page No
TBA/22					
74152	90166-0193	MM	5000	TUBE 6 MM PUR BLUE	
74154	90166-0193	MM	5000	TUBE 6 MM PUR BLUE	
C7415	90239-0832		1	DOUBLE ACTING, MINI-ISO, CYL. 25-125	
Common Parts					
010	1511569-0000		1	SPACER	
310	312105-0364		2	SCREW M6S ISO 4017 M6X10 A480	
320	312105-0497		1	SCREW M6S ISO 4017 M10X35 A480	
500	90239-0487		1	REAR, CLEVIS, MINI-ISO 20-25	
510	90239-0405		1	ROD END,BALL JOINT EYE M10X1,25	
520	90235-0846		2	THROTTLE CHECK VALVE G1/8", MANUAL, 6	

Pos	Part No	UN	Qty	Description	Page No

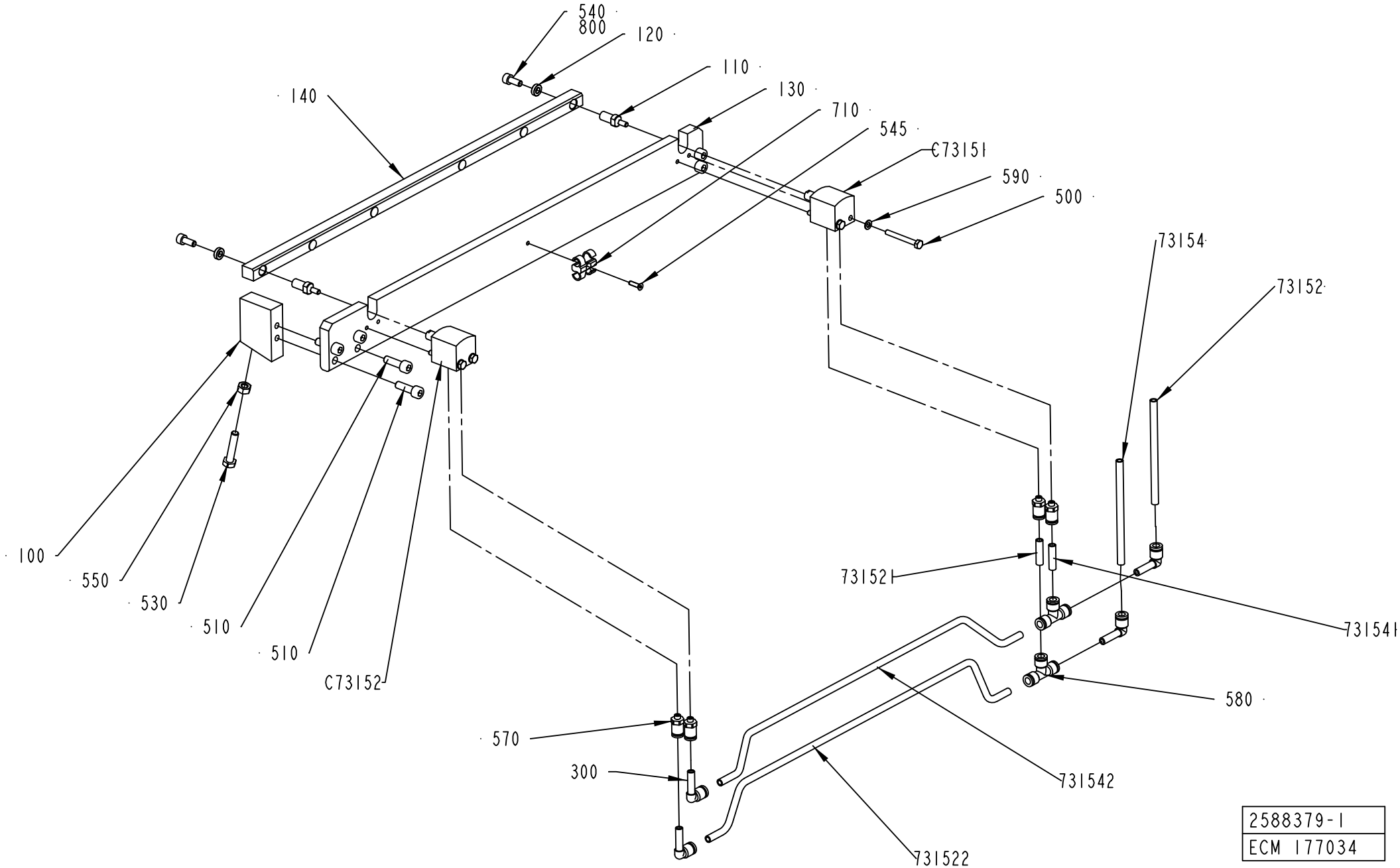

2588379-1
ECM 177034

ECM: 180663 - 20041025
Group number: 2588379-0100
Assembly Drawing: 2588379-1_1_AD

Pos	Part No	UN	Qty	Description	Page No
-					
100	2553272-0000		1	SUPPORT BLOCK	
110	2553273-0000		2	AXLE PIN	
120	2553799-0000		2	WASHER	
130	2582558-0000		1	BASE PLATE	
140	2582559-0000		1	RAIL	
300	90055-0217		4	ELBOW PIPE JOINT	
500	312105-0301		4	SCREW M6S ISO 4017 M4X35 A470	
510	312115-0370		6	SCREW ISO4762 M6X20 A4 80	
530	312109-0374		1	SCREW M6S ISO 4017 M6X30 A480	
540	312115-0327		2	SCREW ISO4762 M5X12 A4 80	
545	312155-0226		1	SCREW DIN 7991 MF6S M3X12 A4 70	
550	312605-0316		1	HEXAGON NUT, M6M M6 A280	
570	342722-0197		4	STRAIGHT COUPLING	
580	342748-0102		2	T-CONNECTION 6MM	
590	315105-0136		4	WASHER BRB 4,3X8 RFR	
710	90165-0087		1	T-CLIP T6 FOR TUBE D=6 - 7 MM	
73152	90166-0193	MM	5500	TUBE 6 MM PUR BLUE	
731521	90166-0193	MM	30	TUBE 6 MM PUR BLUE	
731522	90166-0193	MM	400	TUBE 6 MM PUR BLUE	
73154	90166-0193	MM	5500	TUBE 6 MM PUR BLUE	
731541	90166-0193	MM	30	TUBE 6 MM PUR BLUE	
731542	90166-0193	MM	400	TUBE 6 MM PUR BLUE	
800	90157-0016	ML	1	LOCKING FLUID LOCTITE 242 50 ML	
C73151	90459-0503		1	CYLINDER, ADVC-16-10-I-P	
C73152	90459-0503		1	CYLINDER, ADVC-16-10-I-P	

Pos	Part No	UN	Qty	Description	Page No

ELECTRICAL CABINET

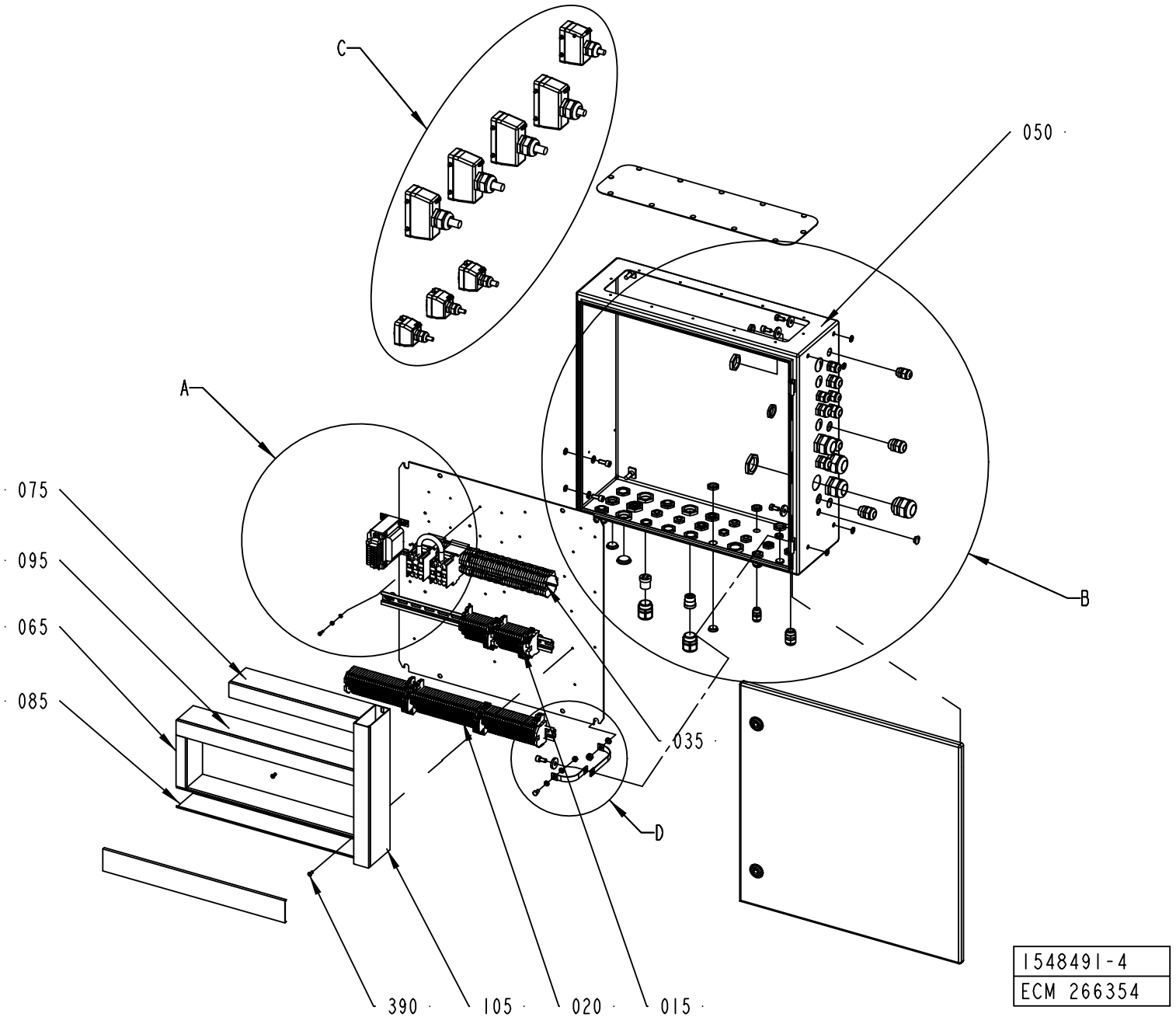

ECM: 998017 - 20070701
Group number: 1548491-0200
Assembly Drawing: 1548491-4_1_AC

This list covers pages from 8-108 to 8-117

Pos	Part No	UN	Qty	Description	Page No
TBA/22 (See drawing on pages: 8-108, 8-110, 8-112, 8-114, 8-116)					
180	352103-0101		3	CABLE GLAND, ST 9, PR15,2/PG9	
190	352103-0106		12	CABLE GLAND, ST 11, PR18,6/PG11	
200	352103-0111		9	CABLE GLAND, ST 16, PR22,5/PG16	
210	352103-0115		1	CABLE GLAND, STR 21, PR28,3/PG21	
230	353240-0005		3	GLAND W/O INSERT PG21 NORMAL	
240	353249-0051		1	INSERT, MULTI HOLE, E154M4X6	
250	90002-0004		6	BLANK-OFF PLUG, PR 22,5 SKINDICHT-BLK16	
260	90002-0009		4	BLANK-OFF PLUG, PR 18.6 SKINDICHT-BLK11	
270	90002-0012		3	BLANK-OFF PLUG, PR 28,3 SKINDICHT-BLK21	
280	90002-0013		2	BLANK-OFF PLUG, PR 15,2 SKINDICHT-BLK9	
W7004	351150-0413	M	5.3	CABLE OLFLEX 4GX1,5 MM2 LIGHT/GREY	
W7005	351150-0412	M	5.2	CABLE OLFLEX 3X1,5 MM2 LIGHT/GREY	
W7006	351150-0425	M	6.4	CABLE OLFLEX 25X0,75 MM2 LIGHT/GREY	
W7007	351150-0425	M	6.5	CABLE OLFLEX 25X0,75 MM2 LIGHT/GREY	
W7008	351150-0425	M	6.5	CABLE OLFLEX 25X0,75 MM2 LIGHT/GREY	
W7009	351150-0425	M	6	CABLE OLFLEX 25X0,75 MM2 LIGHT/GREY	
W7037	351150-0415	M	6	CABLE OLFLEX 7X1,5 MM2 LIGHT/GREY	
W7076	90220-0104	M	6.1	SCR. CABLE 4X1,5MM2	
X118	90110-0159		1	MALE INSERT 70.310.0640.0	
X221	90110-0150		1	MALE INSERT 121110 0000	
X225	90110-0150		1	MALE INSERT 121110 0000	
X226	90110-0150		1	MALE INSERT 121110 0000	
X231	90110-0150		1	MALE INSERT 121110 0000	
Common Parts					
015	2611462-0100		1	TERMINAL BLOCK	**8-119, 8-121**
020	1548496-0100		1	TERMINAL	**8-123**
035	2611463-0100		1	TERMINAL BLOCK	**8-125, 8-127**
050	1548492-0000		1	ELECTRICAL CABINET	
065	2611461-0000		1	CABLE DUCT	
075	2611458-0000		1	CABLE DUCT	
085	2611460-0000		1	CABLE DUCT	
095	2611459-0000		1	CABLE DUCT	
105	2611457-0000		1	CABLE DUCT	
115	312115-0449		2	SCREW ISO4762 M8X16 A4 80	
120	312115-0291		4	SCREW ISO4762 M4X12 A4 80	
135	312105-0449		2	SCREW M6S ISO 4017 M8X16 A480	
145	312115-0451		2	SCREW ISO4762 M8X20 A4 80	
150	312605-0318		1	HEXAGON NUT, M6M M8 A280	
160	315105-0136		4	WASHER BRB 4,3X8 RFR	
165	315105-0153		1	WASHER BRB 6,4X12 RFR	
170	315105-0165		2	WASHER BRB 8,4X16 RFR	
175	315125-0165		4	WASHER TBRSB 8,4X26X5 A4	
195	352103-0108		4	CABLE GLAND, ST 13,5 , PR20,4/PG13,5	
220	352103-0121		8	CABLE GLAND, ST 29, PR37,0/PG29	
290	90012-0125		2	GLAND FITTING	
310	90062-0016		7	LOCK WASHER SERRAT.EXT.GEAR,8,4/15 H=0,8	
320	90062-0059		4	LOCK WASKER SERRAT.EXT.GEAR,4,3/8 H=0,5	
330	90099-0104		5	NUT, PR 15,2 (PG9)	
340	90099-0110		18	NUT, PR 22,5 (PG16)	
350	90099-0117		12	NUT, PR 18,6 (PG11)	
355	90099-0118		2	NUT, PR 20,4 (PG13,5)	
360	90099-0119		6	NUT, PR 28,3 (PG21)	
370	90099-0120		4	NUT, PR 37 (PG29)	
380	90135-0040		2	EARTH WIRE, L=150 MM 16 MM2	
390	90181-0313		12	RIVET DUCTAFIX R4	
400	359005-0010		9	MARKING LABEL KIT 0 - 9, 04.841.2150.0	
410	359005-0050		1	MARKING LABEL KIT X, 04.841.4550.0	
440	90110-0152		4	CABLE HOOD 24-POL 70.352.2428.1	
450	90110-0157		3	CABLE HOOD 6-POL 70.352.0628.1	
460	90110-0385		8	MARKING HOLDER, 4.242.3853.0	
470	90110-0160		1	CABLE HOOD 6-16-POL 70.352.1628.1	
490	312605-0316		1	HEXAGON NUT, M6M M6 A280	
500	312105-0366		1	SCREW M6S ISO 4017 M6X12 A480	
510	90062-0015		1	LOCK WASHER SERRAT.EXT.GEAR,6,4/11 H=0,7	
T6203	90458-0258		1	TRANSFORMER, 220VAC/6-9-12VAC	
X132	90110-0159		1	MALE INSERT 70.310.0640.0	
X133	90110-0159		1	MALE INSERT 70.310.0640.0	
X220	90110-0150		1	MALE INSERT 121110 0000	
X504	90110-0156		1	MALE INSERT 70.210.0653.0	

Machine Type	Group Description	Used-In	Group Number	Page No

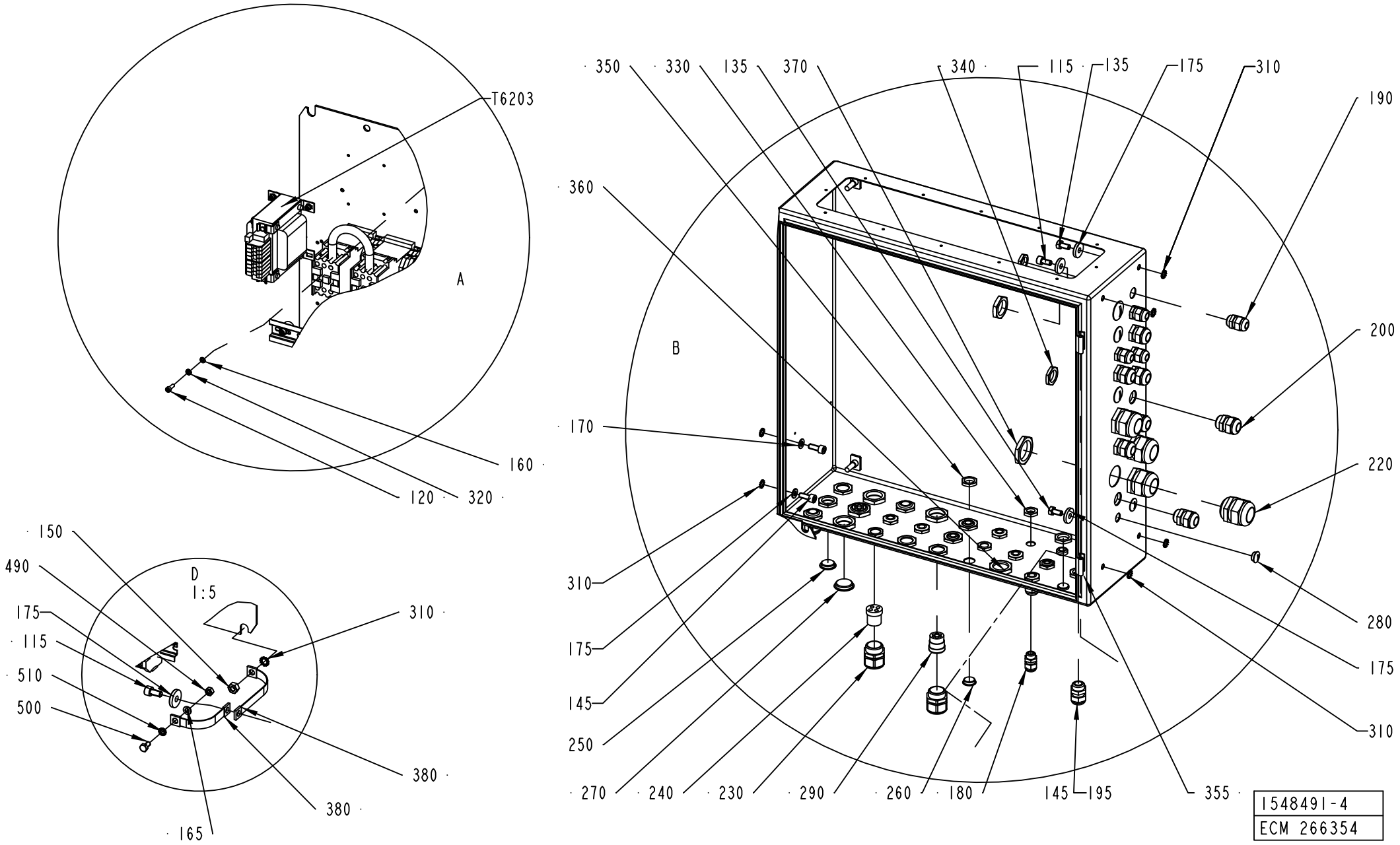
T6203
A
160
120
320
150
490
175
115
510
500
D
1:5
310
380
380
165
350
330
135
370
340
115
135
175
310
190
360
B
200
170
220
310
280
175
175
145
310
250
270
240
230
290
260
180
145
195
355
1548491-4
ECM 266354

ECM: 998017 - 20070701
Group number: 1548491-0200
Assembly Drawing: 1548491-4_2_AC

This list covers pages from 8-108 to 8-117

Pos	Part No	UN	Qty	Description	Page No
TBA/22 (See drawing on pages: 8-108, 8-110, 8-112, 8-114, 8-116)					
180	352103-0101		3	CABLE GLAND, ST 9, PR15,2/PG9	
190	352103-0106		12	CABLE GLAND, ST 11, PR18,6/PG11	
200	352103-0111		9	CABLE GLAND, ST 16, PR22,5/PG16	
210	352103-0115		1	CABLE GLAND, STR 21, PR28,3/PG21	
230	353240-0005		3	GLAND W/O INSERT PG21 NORMAL	
240	353249-0051		1	INSERT, MULTI HOLE, E154M4X6	
250	90002-0004		6	BLANK-OFF PLUG, PR 22,5 SKINDICHT-BLK16	
260	90002-0009		4	BLANK-OFF PLUG, PR 18.6 SKINDICHT-BLK11	
270	90002-0012		3	BLANK-OFF PLUG, PR 28,3 SKINDICHT-BLK21	
280	90002-0013		2	BLANK-OFF PLUG, PR 15,2 SKINDICHT-BLK9	
W7004	351150-0413	M	5.3	CABLE OLFLEX 4GX1,5 MM2 LIGHT/GREY	
W7005	351150-0412	M	5.2	CABLE OLFLEX 3X1,5 MM2 LIGHT/GREY	
W7006	351150-0425	M	6.4	CABLE OLFLEX 25X0,75 MM2 LIGHT/GREY	
W7007	351150-0425	M	6.5	CABLE OLFLEX 25X0,75 MM2 LIGHT/GREY	
W7008	351150-0425	M	6.5	CABLE OLFLEX 25X0,75 MM2 LIGHT/GREY	
W7009	351150-0425	M	6	CABLE OLFLEX 25X0,75 MM2 LIGHT/GREY	
W7037	351150-0415	M	6	CABLE OLFLEX 7X1,5 MM2 LIGHT/GREY	
W7076	90220-0104	M	6.1	SCR. CABLE 4X1,5MM2	
X118	90110-0159		1	MALE INSERT 70.310.0640.0	
X221	90110-0150		1	MALE INSERT 121110 0000	
X225	90110-0150		1	MALE INSERT 121110 0000	
X226	90110-0150		1	MALE INSERT 121110 0000	
X231	90110-0150		1	MALE INSERT 121110 0000	
Common Parts					
015	2611462-0100		1	TERMINAL BLOCK	**8-119, 8-121**
020	1548496-0100		1	TERMINAL	**8-123**
035	2611463-0100		1	TERMINAL BLOCK	**8-125, 8-127**
050	1548492-0000		1	ELECTRICAL CABINET	
065	2611461-0000		1	CABLE DUCT	
075	2611458-0000		1	CABLE DUCT	
085	2611460-0000		1	CABLE DUCT	
095	2611459-0000		1	CABLE DUCT	
105	2611457-0000		1	CABLE DUCT	
115	312115-0449		2	SCREW ISO4762 M8X16 A4 80	
120	312115-0291		4	SCREW ISO4762 M4X12 A4 80	
135	312105-0449		2	SCREW M6S ISO 4017 M8X16 A480	
145	312115-0451		2	SCREW ISO4762 M8X20 A4 80	
150	312605-0318		1	HEXAGON NUT, M6M M8 A280	
160	315105-0136		4	WASHER BRB 4,3X8 RFR	
165	315105-0153		1	WASHER BRB 6,4X12 RFR	
170	315105-0165		2	WASHER BRB 8,4X16 RFR	
175	315125-0165		4	WASHER TBRSB 8,4X26X5 A4	
195	352103-0108		4	CABLE GLAND, ST 13,5 , PR20,4/PG13,5	
220	352103-0121		8	CABLE GLAND, ST 29, PR37,0/PG29	
290	90012-0125		2	GLAND FITTING	
310	90062-0016		7	LOCK WASHER SERRAT.EXT.GEAR,8,4/15 H=0,8	
320	90062-0059		4	LOCK WASKER SERRAT.EXT.GEAR,4,3/8 H=0,5	
330	90099-0104		5	NUT, PR 15,2 (PG9)	
340	90099-0110		18	NUT, PR 22,5 (PG16)	
350	90099-0117		12	NUT, PR 18,6 (PG11)	
355	90099-0118		2	NUT, PR 20,4 (PG13,5)	
360	90099-0119		6	NUT, PR 28,3 (PG21)	
370	90099-0120		4	NUT, PR 37 (PG29)	
380	90135-0040		2	EARTH WIRE, L=150 MM 16 MM2	
390	90181-0313		12	RIVET DUCTAFIX R4	
400	359005-0010		9	MARKING LABEL KIT 0 - 9, 04.841.2150.0	
410	359005-0050		1	MARKING LABEL KIT X, 04.841.4550.0	
440	90110-0152		4	CABLE HOOD 24-POL 70.352.2428.1	
450	90110-0157		3	CABLE HOOD 6-POL 70.352.0628.1	
460	90110-0385		8	MARKING HOLDER, 4.242.3853.0	
470	90110-0160		1	CABLE HOOD 6-16-POL 70.352.1628.1	
490	312605-0316		1	HEXAGON NUT, M6M M6 A280	
500	312105-0366		1	SCREW M6S ISO 4017 M6X12 A480	
510	90062-0015		1	LOCK WASHER SERRAT.EXT.GEAR,6,4/11 H=0,7	
T6203	90458-0258		1	TRANSFORMER, 220VAC/6-9-12VAC	
X132	90110-0159		1	MALE INSERT 70.310.0640.0	
X133	90110-0159		1	MALE INSERT 70.310.0640.0	
X220	90110-0150		1	MALE INSERT 121110 0000	
X504	90110-0156		1	MALE INSERT 70.210.0653.0	

Machine Type	Group Description	Used-In	Group Number	Page No

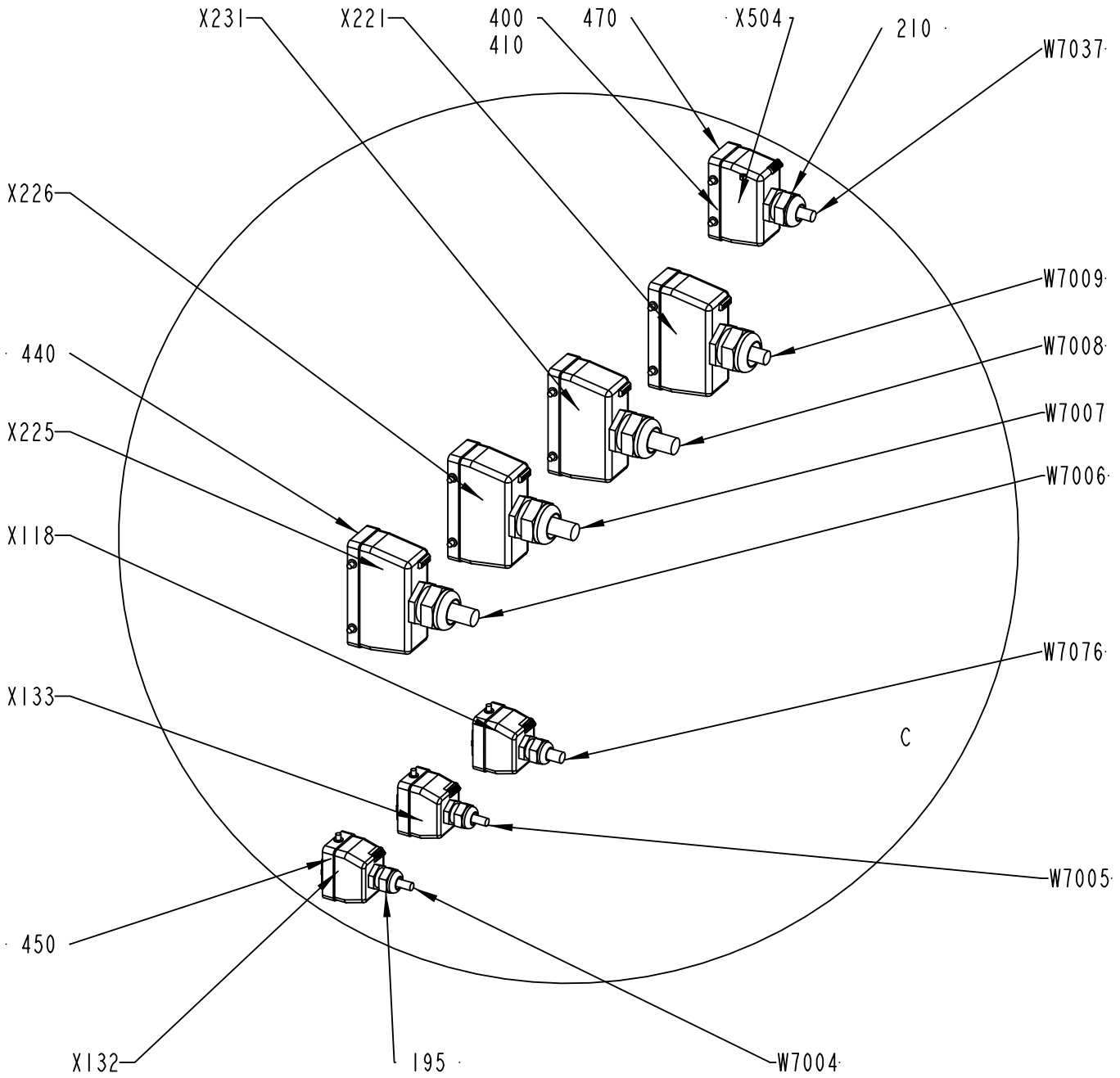

1548491-4
ECM 266354

ECM: 998017 - 20070701
Group number: 1548491-0200
Assembly Drawing: 1548491-4_3_AC

This list covers pages from 8-108 to 8-117

Pos	Part No	UN	Qty	Description	Page No
TBA/22 (See drawing on pages: 8-108, 8-110, 8-112, 8-114, 8-116)					
180	352103-0101		3	CABLE GLAND, ST 9, PR15,2/PG9	
190	352103-0106		12	CABLE GLAND, ST 11, PR18,6/PG11	
200	352103-0111		9	CABLE GLAND, ST 16, PR22,5/PG16	
210	352103-0115		1	CABLE GLAND, STR 21, PR28,3/PG21	
230	353240-0005		3	GLAND W/O INSERT PG21 NORMAL	
240	353249-0051		1	INSERT, MULTI HOLE, E154M4X6	
250	90002-0004		6	BLANK-OFF PLUG, PR 22,5 SKINDICHT-BLK16	
260	90002-0009		4	BLANK-OFF PLUG, PR 18.6 SKINDICHT-BLK11	
270	90002-0012		3	BLANK-OFF PLUG, PR 28,3 SKINDICHT-BLK21	
280	90002-0013		2	BLANK-OFF PLUG, PR 15,2 SKINDICHT-BLK9	
W7004	351150-0413	M	5.3	CABLE OLFLEX 4GX1,5 MM2 LIGHT/GREY	
W7005	351150-0412	M	5.2	CABLE OLFLEX 3X1,5 MM2 LIGHT/GREY	
W7006	351150-0425	M	6.4	CABLE OLFLEX 25X0,75 MM2 LIGHT/GREY	
W7007	351150-0425	M	6.5	CABLE OLFLEX 25X0,75 MM2 LIGHT/GREY	
W7008	351150-0425	M	6.5	CABLE OLFLEX 25X0,75 MM2 LIGHT/GREY	
W7009	351150-0425	M	6	CABLE OLFLEX 25X0,75 MM2 LIGHT/GREY	
W7037	351150-0415	M	6	CABLE OLFLEX 7X1,5 MM2 LIGHT/GREY	
W7076	90220-0104	M	6.1	SCR. CABLE 4X1,5MM2	
X118	90110-0159		1	MALE INSERT 70.310.0640.0	
X221	90110-0150		1	MALE INSERT 121110 0000	
X225	90110-0150		1	MALE INSERT 121110 0000	
X226	90110-0150		1	MALE INSERT 121110 0000	
X231	90110-0150		1	MALE INSERT 121110 0000	
Common Parts					
015	2611462-0100		1	TERMINAL BLOCK	**8-119, 8-121**
020	1548496-0100		1	TERMINAL	**8-123**
035	2611463-0100		1	TERMINAL BLOCK	**8-125, 8-127**
050	1548492-0000		1	ELECTRICAL CABINET	
065	2611461-0000		1	CABLE DUCT	
075	2611458-0000		1	CABLE DUCT	
085	2611460-0000		1	CABLE DUCT	
095	2611459-0000		1	CABLE DUCT	
105	2611457-0000		1	CABLE DUCT	
115	312115-0449		2	SCREW ISO4762 M8X16 A4 80	
120	312115-0291		4	SCREW ISO4762 M4X12 A4 80	
135	312105-0449		2	SCREW M6S ISO 4017 M8X16 A480	
145	312115-0451		2	SCREW ISO4762 M8X20 A4 80	
150	312605-0318		1	HEXAGON NUT, M6M M8 A280	
160	315105-0136		4	WASHER BRB 4,3X8 RFR	
165	315105-0153		1	WASHER BRB 6,4X12 RFR	
170	315105-0165		2	WASHER BRB 8,4X16 RFR	
175	315125-0165		4	WASHER TBRSB 8,4X26X5 A4	
195	352103-0108		4	CABLE GLAND, ST 13,5 , PR20,4/PG13,5	
220	352103-0121		8	CABLE GLAND, ST 29, PR37,0/PG29	
290	90012-0125		2	GLAND FITTING	
310	90062-0016		7	LOCK WASHER SERRAT.EXT.GEAR,8,4/15 H=0,8	
320	90062-0059		4	LOCK WASKER SERRAT.EXT.GEAR,4,3/8 H=0,5	
330	90099-0104		5	NUT, PR 15,2 (PG9)	
340	90099-0110		18	NUT, PR 22,5 (PG16)	
350	90099-0117		12	NUT, PR 18,6 (PG11)	
355	90099-0118		2	NUT, PR 20,4 (PG13,5)	
360	90099-0119		6	NUT, PR 28,3 (PG21)	
370	90099-0120		4	NUT, PR 37 (PG29)	
380	90135-0040		2	EARTH WIRE, L=150 MM 16 MM2	
390	90181-0313		12	RIVET DUCTAFIX R4	
400	359005-0010		9	MARKING LABEL KIT 0 - 9, 04.841.2150.0	
410	359005-0050		1	MARKING LABEL KIT X, 04.841.4550.0	
440	90110-0152		4	CABLE HOOD 24-POL 70.352.2428.1	
450	90110-0157		3	CABLE HOOD 6-POL 70.352.0628.1	
460	90110-0385		8	MARKING HOLDER, 4.242.3853.0	
470	90110-0160		1	CABLE HOOD 6-16-POL 70.352.1628.1	
490	312605-0316		1	HEXAGON NUT, M6M M6 A280	
500	312105-0366		1	SCREW M6S ISO 4017 M6X12 A480	
510	90062-0015		1	LOCK WASHER SERRAT.EXT.GEAR,6,4/11 H=0,7	
T6203	90458-0258		1	TRANSFORMER, 220VAC/6-9-12VAC	
X132	90110-0159		1	MALE INSERT 70.310.0640.0	
X133	90110-0159		1	MALE INSERT 70.310.0640.0	
X220	90110-0150		1	MALE INSERT 121110 0000	
X504	90110-0156		1	MALE INSERT 70.210.0653.0	

Machine Type	Group Description	Used-In	Group Number	Page No

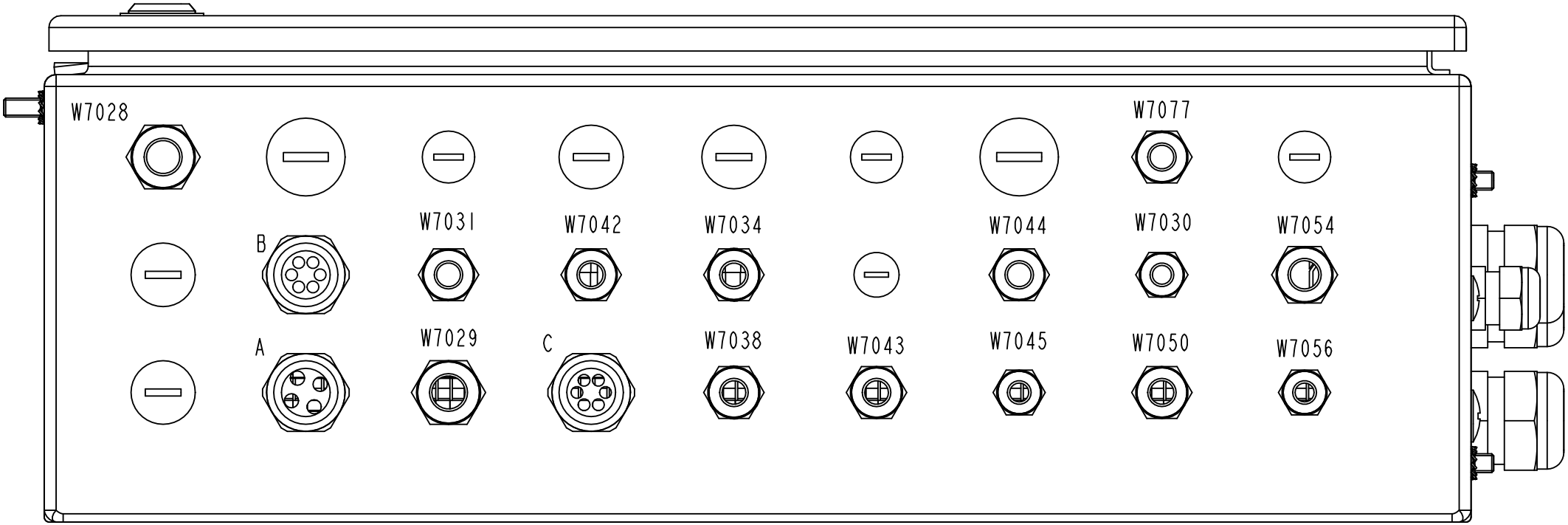

A*	B*	C*
W7016	W7020	W7015
W7017	W7023	W7019
W7018	W7024	W7013
W7022	W7025	W7033
	W7026	W7035
	W7027	W7036

1548491-4
ECM 266354

ECM: 998017 - 20070701
Group number: 1548491-0200
Assembly Drawing: 1548491-4_4_AC

This list covers pages from 8-108 to 8-117

Pos	Part No	UN	Qty	Description	Page No
TBA/22 (See drawing on pages: 8-108, 8-110, 8-112, 8-114, 8-116)					
180	352103-0101		3	CABLE GLAND, ST 9, PR15,2/PG9	
190	352103-0106		12	CABLE GLAND, ST 11, PR18,6/PG11	
200	352103-0111		9	CABLE GLAND, ST 16, PR22,5/PG16	
210	352103-0115		1	CABLE GLAND, STR 21, PR28,3/PG21	
230	353240-0005		3	GLAND W/O INSERT PG21 NORMAL	
240	353249-0051		1	INSERT, MULTI HOLE, E154M4X6	
250	90002-0004		6	BLANK-OFF PLUG, PR 22,5 SKINDICHT-BLK16	
260	90002-0009		4	BLANK-OFF PLUG, PR 18.6 SKINDICHT-BLK11	
270	90002-0012		3	BLANK-OFF PLUG, PR 28,3 SKINDICHT-BLK21	
280	90002-0013		2	BLANK-OFF PLUG, PR 15,2 SKINDICHT-BLK9	
W7004	351150-0413	M	5.3	CABLE OLFLEX 4GX1,5 MM2 LIGHT/GREY	
W7005	351150-0412	M	5.2	CABLE OLFLEX 3X1,5 MM2 LIGHT/GREY	
W7006	351150-0425	M	6.4	CABLE OLFLEX 25X0,75 MM2 LIGHT/GREY	
W7007	351150-0425	M	6.5	CABLE OLFLEX 25X0,75 MM2 LIGHT/GREY	
W7008	351150-0425	M	6.5	CABLE OLFLEX 25X0,75 MM2 LIGHT/GREY	
W7009	351150-0425	M	6	CABLE OLFLEX 25X0,75 MM2 LIGHT/GREY	
W7037	351150-0415	M	6	CABLE OLFLEX 7X1,5 MM2 LIGHT/GREY	
W7076	90220-0104	M	6.1	SCR. CABLE 4X1,5MM2	
X118	90110-0159		1	MALE INSERT 70.310.0640.0	
X221	90110-0150		1	MALE INSERT 121110 0000	
X225	90110-0150		1	MALE INSERT 121110 0000	
X226	90110-0150		1	MALE INSERT 121110 0000	
X231	90110-0150		1	MALE INSERT 121110 0000	
Common Parts					
015	2611462-0100		1	TERMINAL BLOCK	**8-119, 8-121**
020	1548496-0100		1	TERMINAL	**8-123**
035	2611463-0100		1	TERMINAL BLOCK	**8-125, 8-127**
050	1548492-0000		1	ELECTRICAL CABINET	
065	2611461-0000		1	CABLE DUCT	
075	2611458-0000		1	CABLE DUCT	
085	2611460-0000		1	CABLE DUCT	
095	2611459-0000		1	CABLE DUCT	
105	2611457-0000		1	CABLE DUCT	
115	312115-0449		2	SCREW ISO4762 M8X16 A4 80	
120	312115-0291		4	SCREW ISO4762 M4X12 A4 80	
135	312105-0449		2	SCREW M6S ISO 4017 M8X16 A480	
145	312115-0451		2	SCREW ISO4762 M8X20 A4 80	
150	312605-0318		1	HEXAGON NUT, M6M M8 A280	
160	315105-0136		4	WASHER BRB 4,3X8 RFR	
165	315105-0153		1	WASHER BRB 6,4X12 RFR	
170	315105-0165		2	WASHER BRB 8,4X16 RFR	
175	315125-0165		4	WASHER TBRSB 8,4X26X5 A4	
195	352103-0108		4	CABLE GLAND, ST 13,5 , PR20,4/PG13,5	
220	352103-0121		8	CABLE GLAND, ST 29, PR37,0/PG29	
290	90012-0125		2	GLAND FITTING	
310	90062-0016		7	LOCK WASHER SERRAT.EXT.GEAR,8,4/15 H=0,8	
320	90062-0059		4	LOCK WASKER SERRAT.EXT.GEAR,4,3/8 H=0,5	
330	90099-0104		5	NUT, PR 15,2 (PG9)	
340	90099-0110		18	NUT, PR 22,5 (PG16)	
350	90099-0117		12	NUT, PR 18,6 (PG11)	
355	90099-0118		2	NUT, PR 20,4 (PG13,5)	
360	90099-0119		6	NUT, PR 28,3 (PG21)	
370	90099-0120		4	NUT, PR 37 (PG29)	
380	90135-0040		2	EARTH WIRE, L=150 MM 16 MM2	
390	90181-0313		12	RIVET DUCTAFIX R4	
400	359005-0010		9	MARKING LABEL KIT 0 - 9, 04.841.2150.0	
410	359005-0050		1	MARKING LABEL KIT X, 04.841.4550.0	
440	90110-0152		4	CABLE HOOD 24-POL 70.352.2428.1	
450	90110-0157		3	CABLE HOOD 6-POL 70.352.0628.1	
460	90110-0385		8	MARKING HOLDER, 4.242.3853.0	
470	90110-0160		1	CABLE HOOD 6-16-POL 70.352.1628.1	
490	312605-0316		1	HEXAGON NUT, M6M M6 A280	
500	312105-0366		1	SCREW M6S ISO 4017 M6X12 A480	
510	90062-0015		1	LOCK WASHER SERRAT.EXT.GEAR,6,4/11 H=0,7	
T6203	90458-0258		1	TRANSFORMER, 220VAC/6-9-12VAC	
X132	90110-0159		1	MALE INSERT 70.310.0640.0	
X133	90110-0159		1	MALE INSERT 70.310.0640.0	
X220	90110-0150		1	MALE INSERT 121110 0000	
X504	90110-0156		1	MALE INSERT 70.210.0653.0	

Machine Type	Group Description	Used-In	Group Number	Page No

ELECTRICAL CABINET

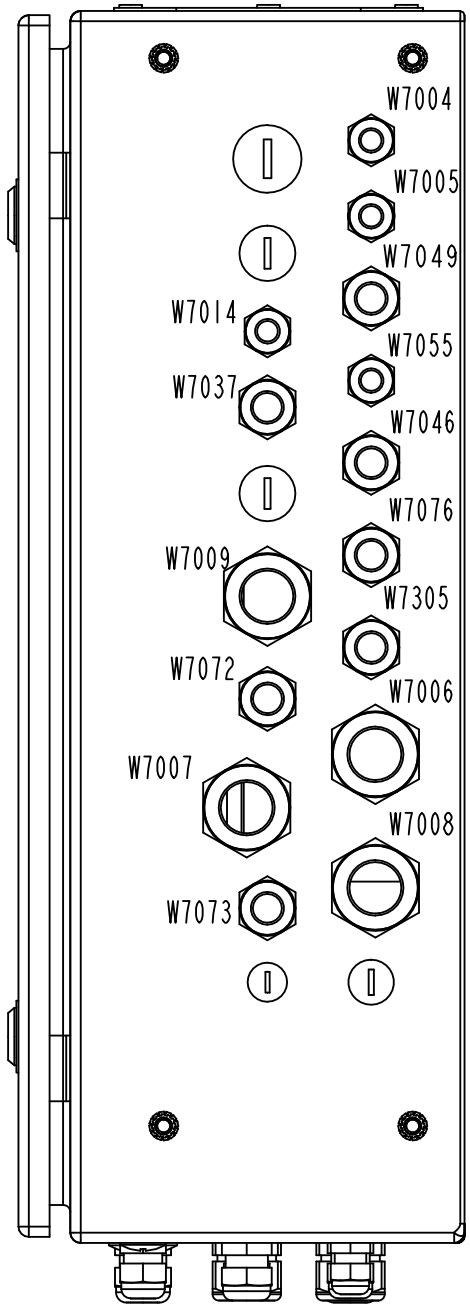

1548491-4
ECM 266354

ECM: 998017 - 20070701
Group number: 1548491-0200
Assembly Drawing: 1548491-4_5_AC

This list covers pages from 8-108 to 8-117

Pos	Part No	UN	Qty	Description	Page No
TBA/22 (See drawing on pages: 8-108, 8-110, 8-112, 8-114, 8-116)					
180	352103-0101		3	CABLE GLAND, ST 9, PR15,2/PG9	
190	352103-0106		12	CABLE GLAND, ST 11, PR18,6/PG11	
200	352103-0111		9	CABLE GLAND, ST 16, PR22,5/PG16	
210	352103-0115		1	CABLE GLAND, STR 21, PR28,3/PG21	
230	353240-0005		3	GLAND W/O INSERT PG21 NORMAL	
240	353249-0051		1	INSERT, MULTI HOLE, E154M4X6	
250	90002-0004		6	BLANK-OFF PLUG, PR 22,5 SKINDICHT-BLK16	
260	90002-0009		4	BLANK-OFF PLUG, PR 18.6 SKINDICHT-BLK11	
270	90002-0012		3	BLANK-OFF PLUG, PR 28,3 SKINDICHT-BLK21	
280	90002-0013		2	BLANK-OFF PLUG, PR 15,2 SKINDICHT-BLK9	
W7004	351150-0413	M	5.3	CABLE OLFLEX 4GX1,5 MM2 LIGHT/GREY	
W7005	351150-0412	M	5.2	CABLE OLFLEX 3X1,5 MM2 LIGHT/GREY	
W7006	351150-0425	M	6.4	CABLE OLFLEX 25X0,75 MM2 LIGHT/GREY	
W7007	351150-0425	M	6.5	CABLE OLFLEX 25X0,75 MM2 LIGHT/GREY	
W7008	351150-0425	M	6.5	CABLE OLFLEX 25X0,75 MM2 LIGHT/GREY	
W7009	351150-0425	M	6	CABLE OLFLEX 25X0,75 MM2 LIGHT/GREY	
W7037	351150-0415	M	6	CABLE OLFLEX 7X1,5 MM2 LIGHT/GREY	
W7076	90220-0104	M	6.1	SCR. CABLE 4X1,5MM2	
X118	90110-0159		1	MALE INSERT 70.310.0640.0	
X221	90110-0150		1	MALE INSERT 121110 0000	
X225	90110-0150		1	MALE INSERT 121110 0000	
X226	90110-0150		1	MALE INSERT 121110 0000	
X231	90110-0150		1	MALE INSERT 121110 0000	
Common Parts					
015	2611462-0100		1	TERMINAL BLOCK	**8-119, 8-121**
020	1548496-0100		1	TERMINAL	**8-123**
035	2611463-0100		1	TERMINAL BLOCK	**8-125, 8-127**
050	1548492-0000		1	ELECTRICAL CABINET	
065	2611461-0000		1	CABLE DUCT	
075	2611458-0000		1	CABLE DUCT	
085	2611460-0000		1	CABLE DUCT	
095	2611459-0000		1	CABLE DUCT	
105	2611457-0000		1	CABLE DUCT	
115	312115-0449		2	SCREW ISO4762 M8X16 A4 80	
120	312115-0291		4	SCREW ISO4762 M4X12 A4 80	
135	312105-0449		2	SCREW M6S ISO 4017 M8X16 A480	
145	312115-0451		2	SCREW ISO4762 M8X20 A4 80	
150	312605-0318		1	HEXAGON NUT, M6M M8 A280	
160	315105-0136		4	WASHER BRB 4,3X8 RFR	
165	315105-0153		1	WASHER BRB 6,4X12 RFR	
170	315105-0165		2	WASHER BRB 8,4X16 RFR	
175	315125-0165		4	WASHER TBRSB 8,4X26X5 A4	
195	352103-0108		4	CABLE GLAND, ST 13,5 , PR20,4/PG13,5	
220	352103-0121		8	CABLE GLAND, ST 29, PR37,0/PG29	
290	90012-0125		2	GLAND FITTING	
310	90062-0016		7	LOCK WASHER SERRAT.EXT.GEAR,8,4/15 H=0,8	
320	90062-0059		4	LOCK WASKER SERRAT.EXT.GEAR,4,3/8 H=0,5	
330	90099-0104		5	NUT, PR 15,2 (PG9)	
340	90099-0110		18	NUT, PR 22,5 (PG16)	
350	90099-0117		12	NUT, PR 18,6 (PG11)	
355	90099-0118		2	NUT, PR 20,4 (PG13,5)	
360	90099-0119		6	NUT, PR 28,3 (PG21)	
370	90099-0120		4	NUT, PR 37 (PG29)	
380	90135-0040		2	EARTH WIRE, L=150 MM 16 MM2	
390	90181-0313		12	RIVET DUCTAFIX R4	
400	359005-0010		9	MARKING LABEL KIT 0 - 9, 04.841.2150.0	
410	359005-0050		1	MARKING LABEL KIT X, 04.841.4550.0	
440	90110-0152		4	CABLE HOOD 24-POL 70.352.2428.1	
450	90110-0157		3	CABLE HOOD 6-POL 70.352.0628.1	
460	90110-0385		8	MARKING HOLDER, 4.242.3853.0	
470	90110-0160		1	CABLE HOOD 6-16-POL 70.352.1628.1	
490	312605-0316		1	HEXAGON NUT, M6M M6 A280	
500	312105-0366		1	SCREW M6S ISO 4017 M6X12 A480	
510	90062-0015		1	LOCK WASHER SERRAT.EXT.GEAR,6,4/11 H=0,7	
T6203	90458-0258		1	TRANSFORMER, 220VAC/6-9-12VAC	
X132	90110-0159		1	MALE INSERT 70.310.0640.0	
X133	90110-0159		1	MALE INSERT 70.310.0640.0	
X220	90110-0150		1	MALE INSERT 121110 0000	
X504	90110-0156		1	MALE INSERT 70.210.0653.0	

Machine Type	Group Description	Used-In	Group Number	Page No

TERMINAL BLOCK

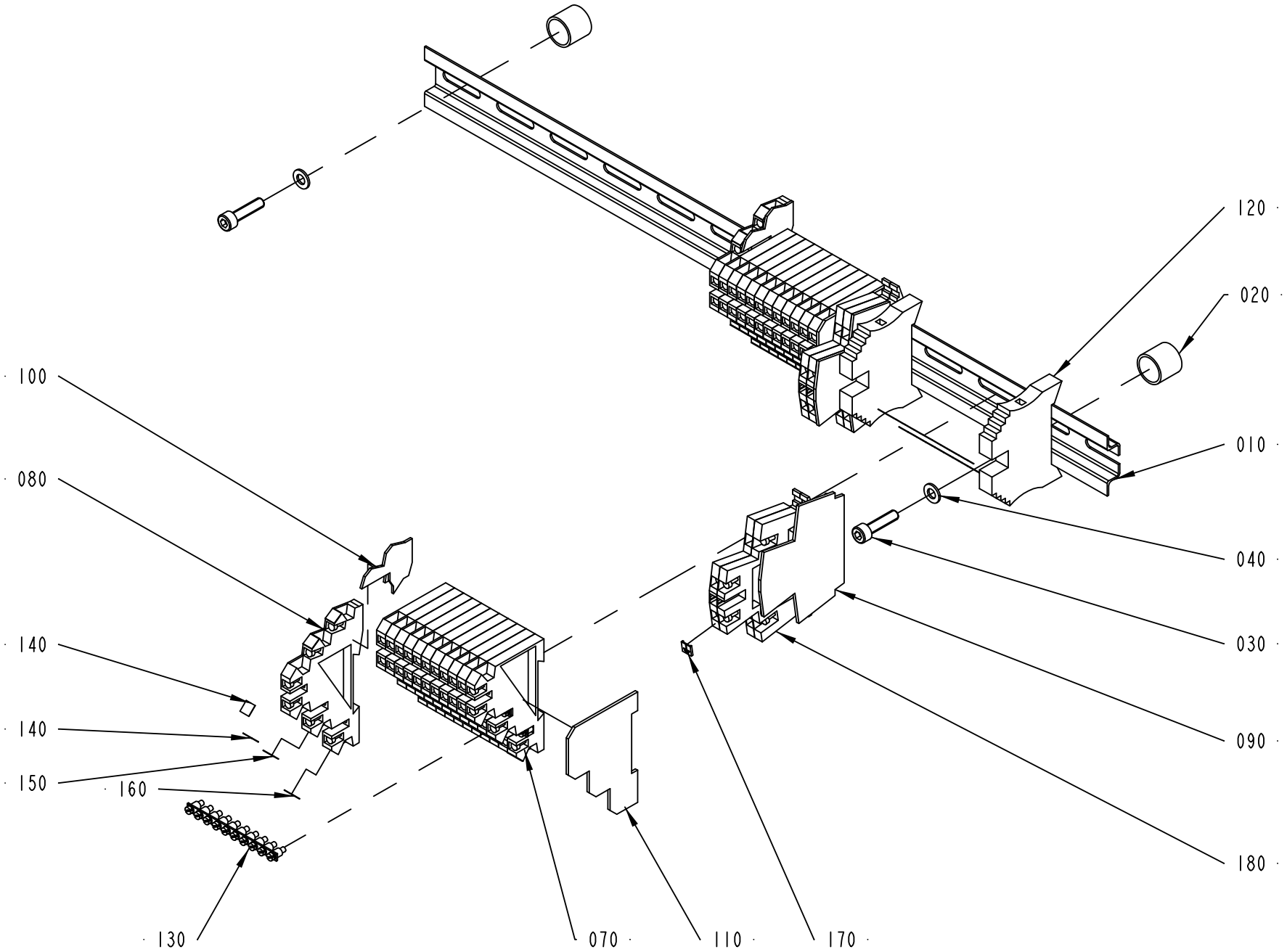

2611462-1
ECM 130325

ECM: 180665 - 20041005
Group number: 2611462-0100
Assembly Drawing: 2611462-1_1_AA

This list covers pages from 8-118 to 8-121

Pos	Part No	UN	Qty	Description	Page No
-					
010	2611464-0000		1	RAIL	
020	495118-0014		2	DISTANCE PIPE L=14 MM	
030	312115-0331		2	SCREW ISO4762 M5X20 A4 80	
040	315105-0146		2	WASHER BRB 5,3X10 RFR	
070	353021-0301		22	TERMINALS,TRIPLE-LEVEL, DLI 2,5/35 PA	
080	353021-0302		2	TERMINALS,TRIPLE-LEVEL, DLD 2,5/35 PA	
090	353032-0009		2	END PLATE, WAP FOR WDK	
100	353032-0013		2	END PLATE, 13818.6	
110	353032-0301		2	END PLATE WAP, 13132.6	
120	353031-0203		2	END SUPPORT, WEW 35/2	
130	353034-0404		4	BRIDGE CONNECTOR Q10, 13131.0	
140	359011-0824		2	SET OF SIGNS 6-FW 151-200	
150	359011-0832		26	SET OF SIGNS 6-GW (+)	
160	359011-0833		26	SET OF SIGNS 6-GW (-)	
170	359011-0834		1	SET OF SIGNS 6-GW(EARTH)	
180	90458-1136		4	TERMINAL BLOCK, 103630	
190	359011-0825		2	SET OF SIGNS 6-FW 201-250	

Pos	Part No	UN	Qty	Description	Page No

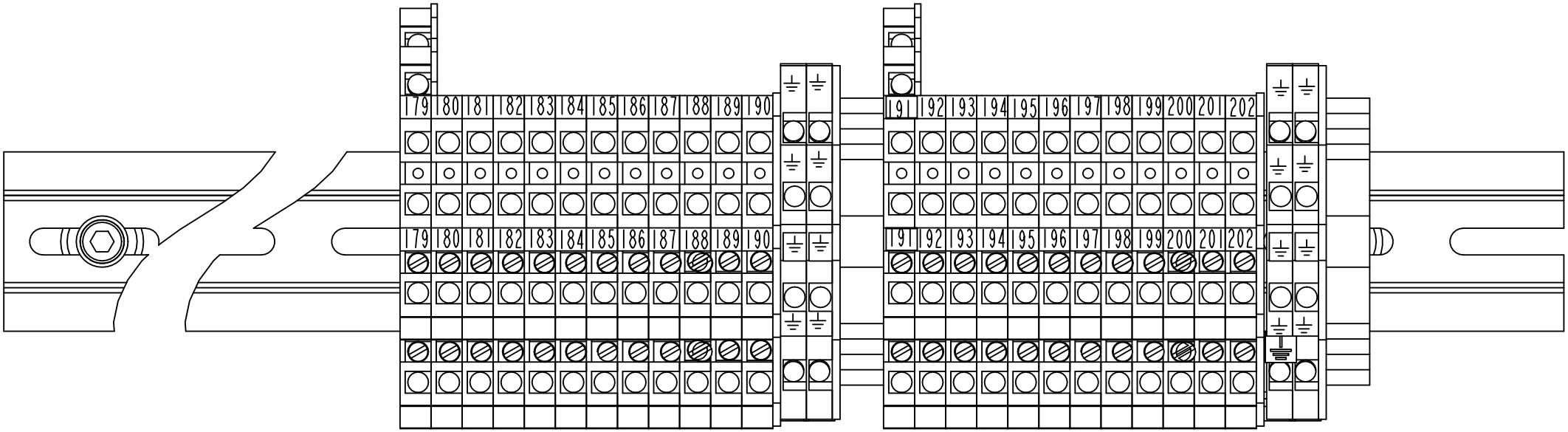

2611462-1
ECM 130325

ECM: 180665 - 20041005
Group number: 2611462-0100
Assembly Drawing: 2611462-1_2_AA

This list covers pages from 8-118 to 8-121

Pos	Part No	UN	Qty	Description	Page No
-					
010	2611464-0000		1	RAIL	
020	495118-0014		2	DISTANCE PIPE L=14 MM	
030	312115-0331		2	SCREW ISO4762 M5X20 A4 80	
040	315105-0146		2	WASHER BRB 5,3X10 RFR	
070	353021-0301		22	TERMINALS,TRIPLE-LEVEL, DLI 2,5/35 PA	
080	353021-0302		2	TERMINALS,TRIPLE-LEVEL, DLD 2,5/35 PA	
090	353032-0009		2	END PLATE, WAP FOR WDK	
100	353032-0013		2	END PLATE, 13818.6	
110	353032-0301		2	END PLATE WAP, 13132.6	
120	353031-0203		2	END SUPPORT, WEW 35/2	
130	353034-0404		4	BRIDGE CONNECTOR Q10, 13131.0	
140	359011-0824		2	SET OF SIGNS 6-FW 151-200	
150	359011-0832		26	SET OF SIGNS 6-GW (+)	
160	359011-0833		26	SET OF SIGNS 6-GW (-)	
170	359011-0834		1	SET OF SIGNS 6-GW(EARTH)	
180	90458-1136		4	TERMINAL BLOCK, 103630	
190	359011-0825		2	SET OF SIGNS 6-FW 201-250	

Pos	Part No	UN	Qty	Description	Page No

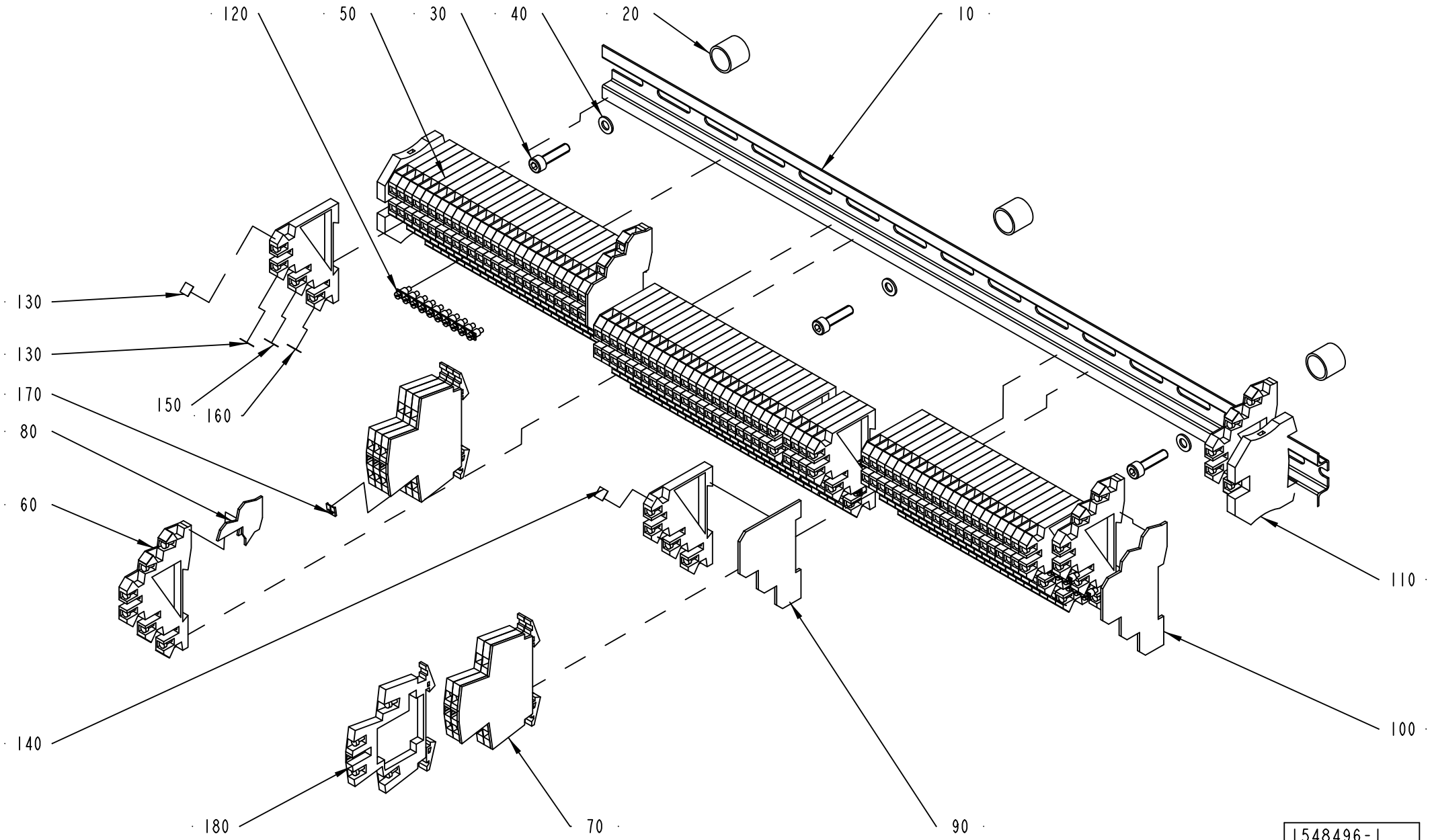

1548496-1
ECM 130325

ECM: 224785 - 20050831
Group number: 1548496-0100
Assembly Drawing: 1548496-1_1_AB

Pos	Part No	UN	Qty	Description	Page No
-					
010	2503654-0000		1	RAIL	
020	495118-0014		3	DISTANCE PIPE L=14 MM	
030	312115-0331		3	SCREW ISO4762 M5X20 A4 80	
040	315105-0146		3	WASHER BRB 5,3X10 RFR	
050	353021-0301		74	TERMINALS,TRIPLE-LEVEL, DLI 2,5/35 PA	
060	353021-0302		4	TERMINALS,TRIPLE-LEVEL, DLD 2,5/35 PA	
070	353032-0009		2	END PLATE, WAP FOR WDK	
080	353032-0013		1	END PLATE, 13818.6	
090	353032-0301		1	END PLATE WAP, 13132.6	
100	353032-0302		2	END PLATE, AP DLD2,5 DB	
110	353024-0205		2	EARTH TERMINAL, 1010.1	
120	353034-0404		17	BRIDGE CONNECTOR Q10, 13131.0	
130	359011-0823		2	SET OF SIGNS 6-FW 101-150	
140	359011-0824		2	SET OF SIGNS 6-FW 151-200	
150	359011-0832		2	SET OF SIGNS 6-GW (+)	
160	359011-0833		2	SET OF SIGNS 6-GW (-)	
170	359011-0834		1	SET OF SIGNS 6-GW(EARTH)	
180	90458-1136		6	TERMINAL BLOCK, 103630	

Pos	Part No	UN	Qty	Description	Page No

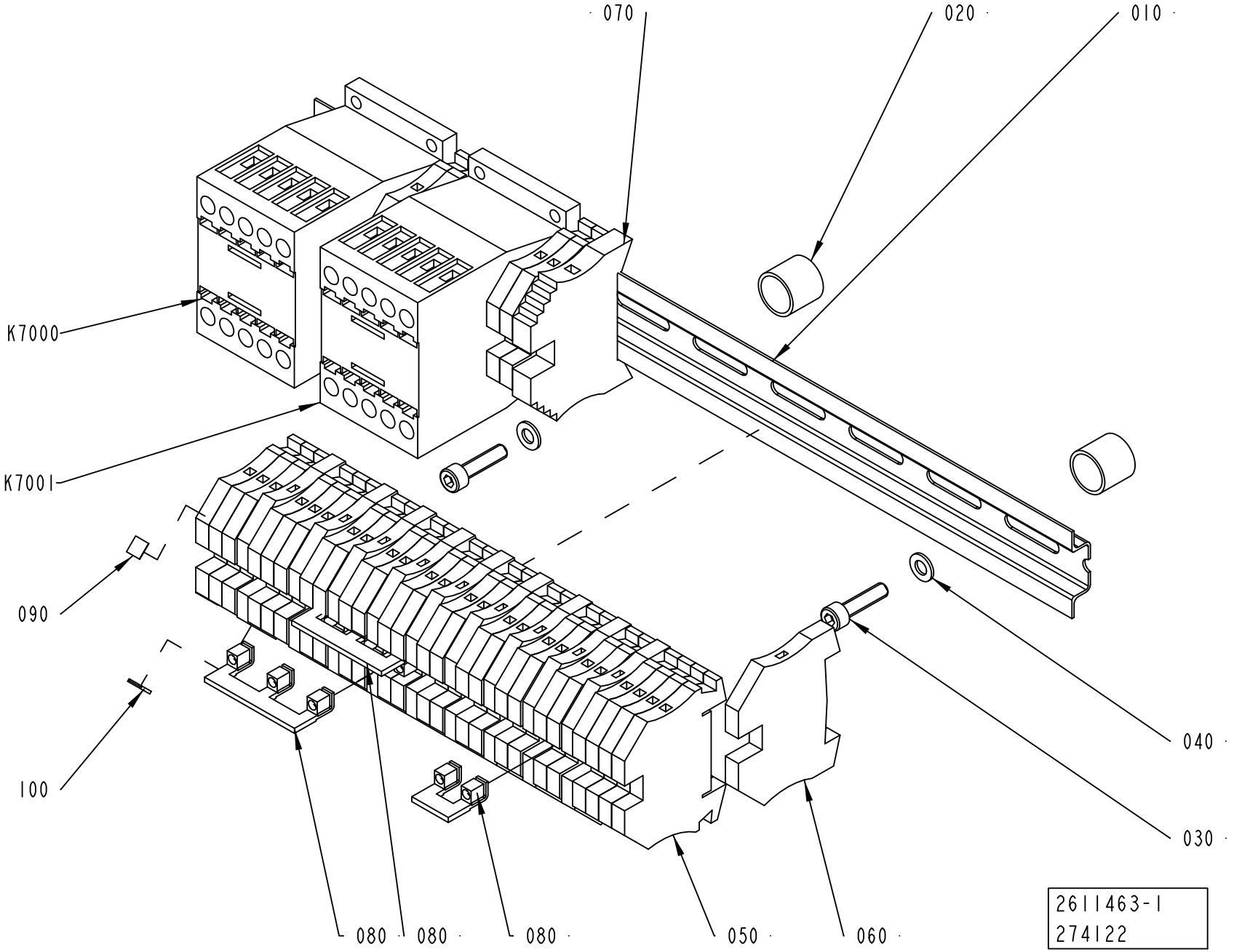
070
020
010
K7000
K7001
090
100
040
030
080
080
080
050
060
2611463-1
274122

ECM: 274124 - 20061101
Group number: 2611463-0100
Assembly Drawing: 2611463-1_1_AC

This list covers pages from 8-124 to 8-127

Pos	Part No	UN	Qty	Description	Page No
-					
010	2611465-0000		1	RAIL	
020	495118-0014		2	DISTANCE PIPE L=14 MM	
030	312115-0331		2	SCREW ISO4762 M5X20 A4 80	
040	315105-0146		2	WASHER BRB 5,3X10 RFR	
050	353021-0213		28	FEED THROUGH TERMINAL, 10201.0	
060	353024-0205		10	EARTH TERMINAL, 1010.1	
070	353031-0203		1	END SUPPORT, WEW 35/2	
080	353034-0031		3	BRIDGE CONNECTOR, WQV 4/10, 10520.6	
090	359011-0821		2	SET OF SIGNS 6-FW 1-50	
100	359011-0834		1	SET OF SIGNS 6-GW(EARTH)	
K7000	90459-5440		1	CONTACTOR 4KW 24VDC, DILM9-01	
K7001	90459-5440		1	CONTACTOR 4KW 24VDC, DILM9-01	

Pos	Part No	UN	Qty	Description	Page No

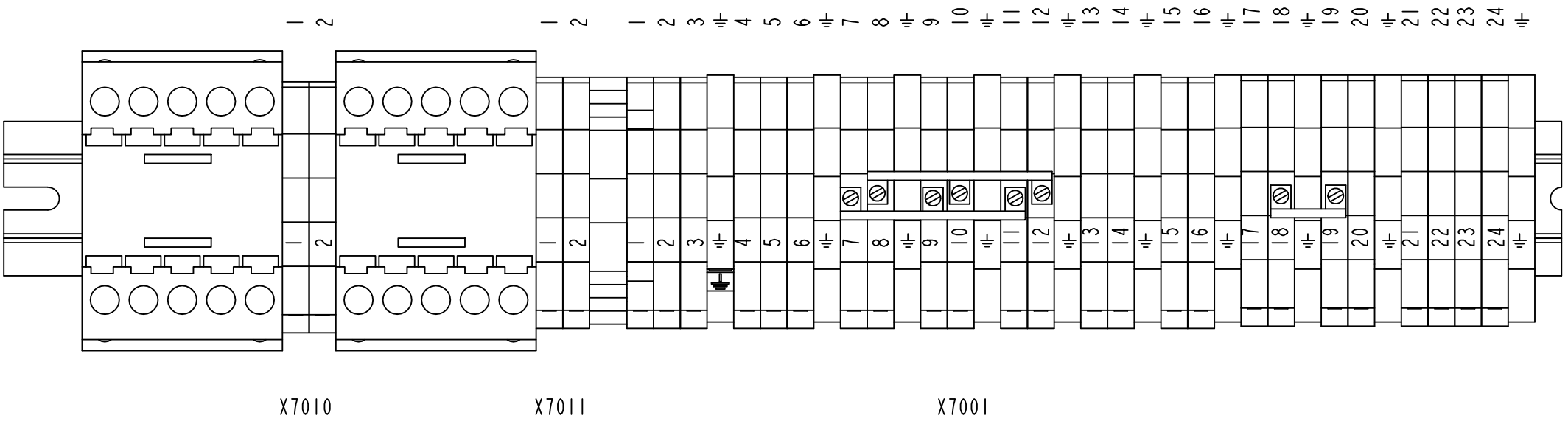

2611463-1
274122

ECM: 274124 - 20061101
Group number: 2611463-0100
Assembly Drawing: 2611463-1_2_AC

This list covers pages from 8-124 to 8-127

Pos	Part No	UN	Qty	Description	Page No
-					
010	2611465-0000		1	RAIL	
020	495118-0014		2	DISTANCE PIPE L=14 MM	
030	312115-0331		2	SCREW ISO4762 M5X20 A4 80	
040	315105-0146		2	WASHER BRB 5,3X10 RFR	
050	353021-0213		28	FEED THROUGH TERMINAL, 10201.0	
060	353024-0205		10	EARTH TERMINAL, 1010.1	
070	353031-0203		1	END SUPPORT, WEW 35/2	
080	353034-0031		3	BRIDGE CONNECTOR, WQV 4/10, 10520.6	
090	359011-0821		2	SET OF SIGNS 6-FW 1-50	
100	359011-0834		1	SET OF SIGNS 6-GW(EARTH)	
K7000	90459-5440		1	CONTACTOR 4KW 24VDC, DILM9-01	
K7001	90459-5440		1	CONTACTOR 4KW 24VDC, DILM9-01	

Pos	Part No	UN	Qty	Description	Page No

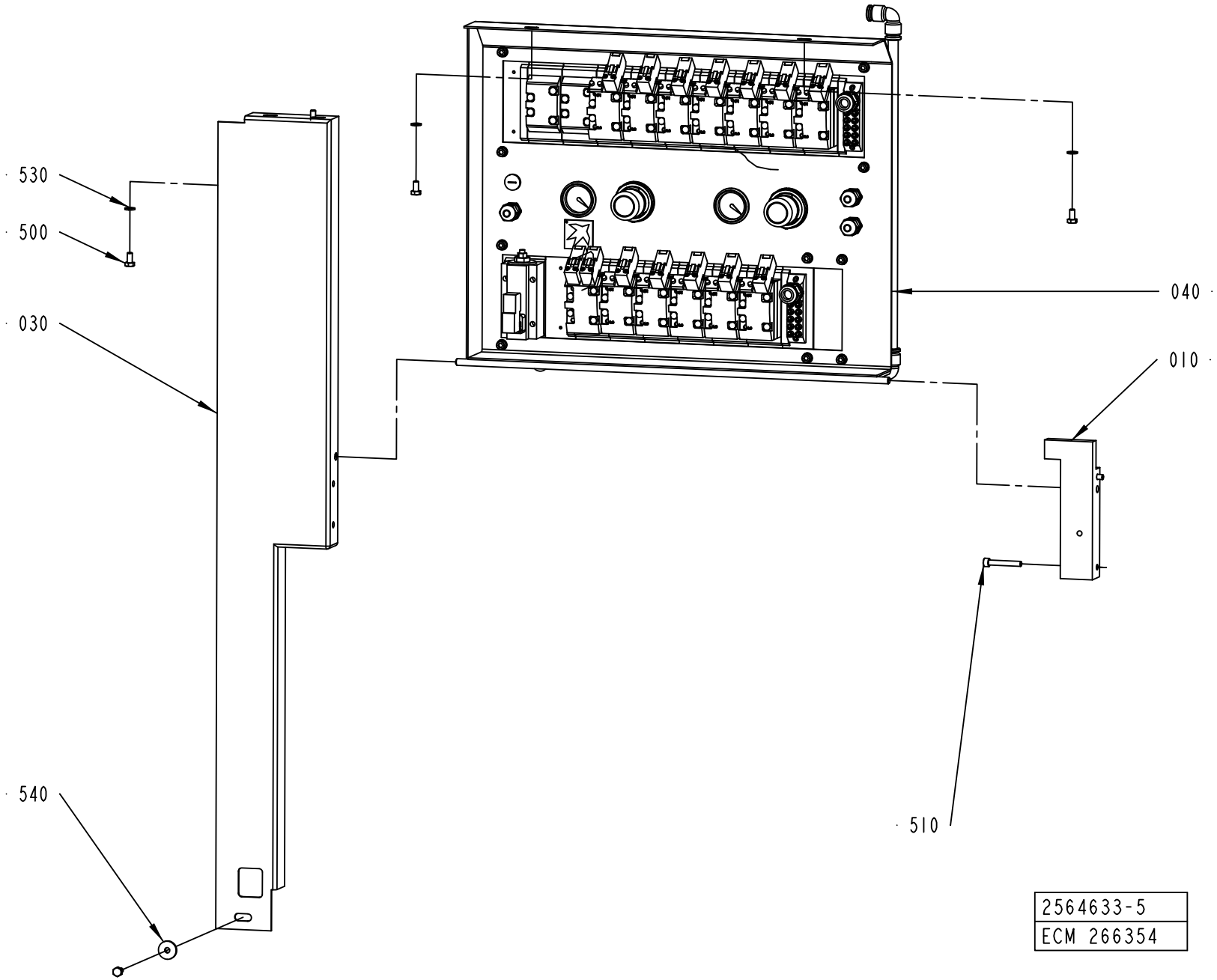
530
500
030
040
010
540
510
2564633-5
ECM 266354

ECM: 267322 - 20061101
Group number: 2564633-0100
Assembly Drawing: 2564633-5_1_AA

Pos	Part No	UN	Qty	Description	Page No
TBA/22 WITHOUT ARL					
500	312105-0366		5	SCREW M6S ISO 4017 M6X12 A480	
530	315105-0153		4	WASHER BRB 6,4X12 RFR	
Common Parts					
010	2564634-0000		1	BEARING BLOCK	
030	2570836-0000		1	PROTECTION PLATE	
040	2564632-0100		1	VALVE PANEL	**8-131, 8-133**
510	312115-0378		2	SCREW ISO4762 M6X40 A4 80	
540	315125-0153		1	WASHER TBRSB 6,4X22X4 A4	

Pos	Part No	UN	Qty	Description	Page No

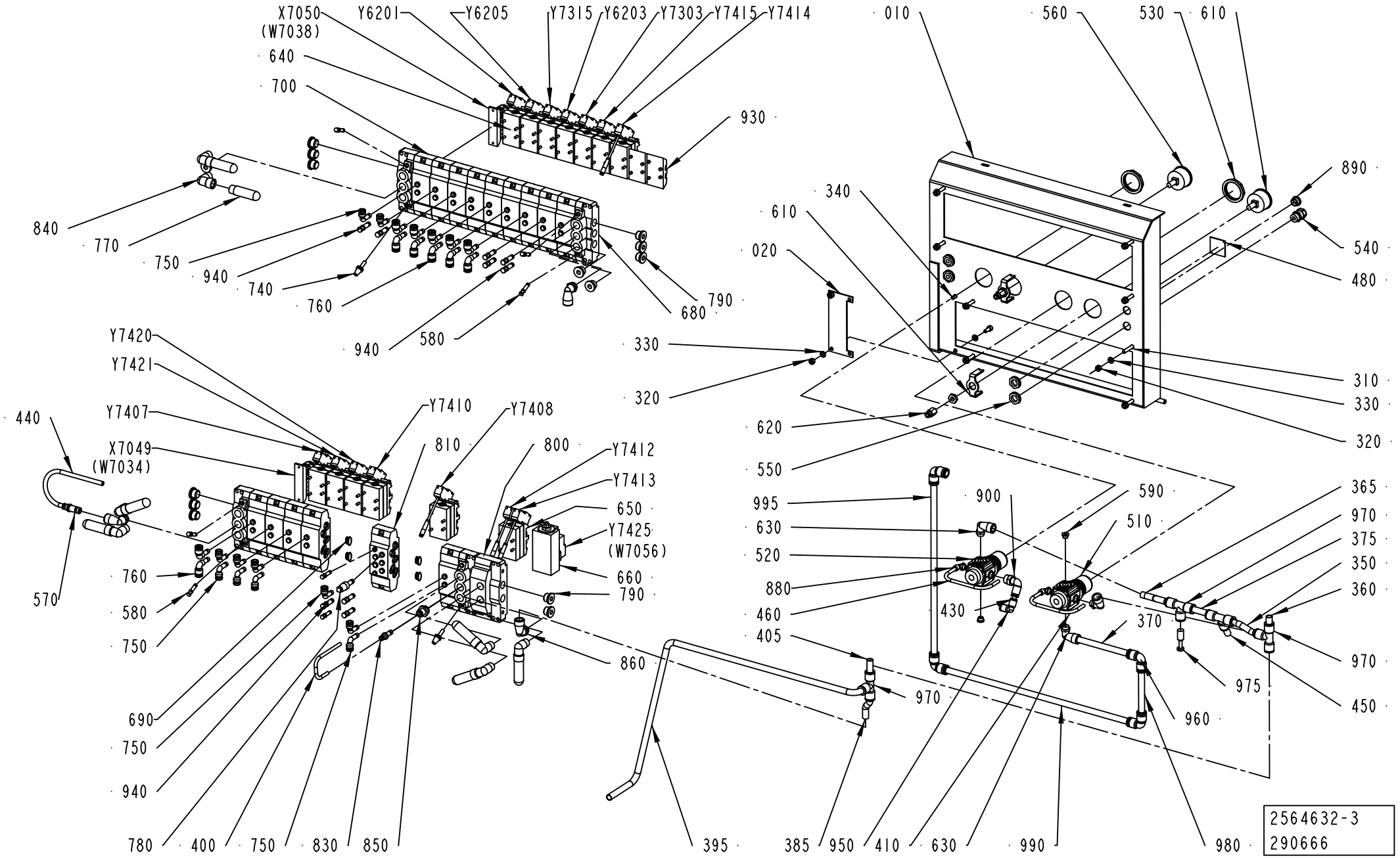
X7050
(W7038)
Y6201
Y6205
Y7315
Y6203
Y7303
Y7415
Y7414
640
700
930
840
770
750
940
740
760
940
580
680
790
010
560
530
610
890
340
610
020
540
480
330
320
620
550
310
330
320
Y7420
Y7421
Y7407
X7049
(W7034)
440
570
760
580
750
690
750
940
780
400
750
830
850
Y7410
Y7408
810
800
Y7412
Y7413
650
Y7425
(W7056)
660
790
860
395
995
630
520
880
460
405
970
385
950
410
630
990
900
590
510
430
370
365
970
375
350
360
970
975
450
960
980
2564632-3
290666

ECM: 361827 - 20081001
Group number: 2564632-0100
Assembly Drawing: 2564632-3_1_AD

This list covers pages from 8-130 to 8-133

Pos	Part No	UN	Qty	Description	Page No
TBA/22 WITHOUT ARL (See drawing on pages: 8-130, 8-132)					
020	2616034-0000		1	COVER PLATE	
100	2594393-0000		1	PNEUMATIC DIAGRAM	
320	312605-0316		10	HEXAGON NUT, M6M M6 A280	
330	315105-0153		20	WASHER BRB 6,4X12 RFR	
340	312115-0367		2	SCREW ISO4762 M6X14 A4 80	
370	90166-0068	MM	200	TUBE 12 MM PA BLUE	
385	90166-0068	MM	100	TUBE 12 MM PA BLUE	
395	90166-0068	MM	1200	TUBE 12 MM PA BLUE	
405	90166-0068	MM	100	TUBE 12 MM PA BLUE	
450	90166-0068	MM	30	TUBE 12 MM PA BLUE	
480	273458-0000		1	SIGN, AIR	
510	90113-0470		1	MANIFOLD REGULATOR 10 BAR	
520	90457-0144		1	REGULATOR 0,3-2 BAR	
540	90458-0306		3	CABLE GLAND, M16X1,5, NO.5311 1010	
560	90043-0064		1	PRESSURE GAUGE, 2048 D=40 MM	
570	342716-0209		1	REDUCER 8-12	
580	342715-0102		7	BLIND PLUG 6 MM	
610	90043-0065		1	MKC NEW FILL PUMP VACUUM PRESSURE GAUGE	
630	90458-2959		3	ELBOW PIPE JOINT, EXT.THREAD,D=12MM-G1/4	
640	90042-0215		12	VALVE BODY 5/2 UNISTABLE	
690	90042-0528		5	BLANKING KIT SEALS ISO SIZE 1	
750	90055-0172		11	ELBOW WITH TAILPIECE 8/8 MM	
760	90055-0173		12	ELBOW WITH TAILPIECE 8/6 MM	
790	342713-0211		14	PLUG, EXT THREAD HEX SOCKET 8638-00-380	
810	90042-0520		1	BASE PLATE ISO SIZE 1	
860	90458-2960		3	ELBOW PIPE JOINT, EXT.THREAD,D=12MM-G3/8	
890	90458-1307		1	BLIND PLUG CIRCULAR, M16X1,5 514GFK/216	
900	342732-0105		1	ELBOW PIPE JOINT ,EXT.THREAD,D=8 MM R3/8	
930	90042-0519		2	BLANK PLATE ISO SIZE 1	
940	342715-0103		9	BLIND PLUG 8 MM	
970	342748-0109		4	T-CONNECTION 12MM	
975	350013-0005		1	PLUG QSC-12H	
990	90166-0068	MM	600	TUBE 12 MM PA BLUE	
Y6201	90042-0591		1	PILOT VALVE, 04938-333-08	
Y7415	90042-0538		1	PILOT VALVE L=500MM	
Y7425	90042-0585		1	PILOT VALVE L=5M	
Common Parts					
010	2570821-0000		1	SHEET	
310	312115-0376		8	SCREW ISO4762 M6X35 A4 80	
350	90166-0068	MM	100	TUBE 12 MM PA BLUE	
360	90166-0068	MM	30	TUBE 12 MM PA BLUE	
365	90166-0068	MM	120	TUBE 12 MM PA BLUE	
375	90166-0068	MM	50	TUBE 12 MM PA BLUE	
400	90166-0117	MM	200	HOSE 4/6 PVC BLUE	
410	90166-0117	MM	220	HOSE 4/6 PVC BLUE	
430	90166-0194	MM	30	TUBE 8 MM PUR BLUE	
440	90166-0194	MM	270	TUBE 8 MM PUR BLUE	
460	90166-0117	MM	220	HOSE 4/6 PVC BLUE	
530	90457-0078		2	PANEL NUT	
550	90458-0322		4	NUT, M16X1,5	
590	342713-0210		2	PLUG, EXT THREAD HEX SOCKET	
620	342770-0105		2	STRAIGHT COUPLING INT, D=6 MM - G1/8	
650	90042-0221		1	VALVE BODY 5/2 BISTABLE	
660	90042-0265		1	HIGH SPEED VENTING VALVE 583-590-000-1	
680	90042-0522		4	PORTED END PIECE ISO SIZE 1	
700	90042-0532		14	BASE PLATE ISO SIZE 1	
740	90328-0017		2	SILENCER, D=6 MM	
770	90328-0024		7	SILENCER G3/8"	
780	90328-0038		1	SILENCER, D=8 MM	
800	90042-0545		1	SUB-BASE SOFT START ISO 1 AND VDMA 01	
830	342716-0203		1	REDUCER 6-8	
840	90140-0020		7	ELBOW, 90, INT/EXT. THREAD, NO. 2020-3/8	
850	342722-0206		1	STRAIGHT COUPLING D=8-G3/8"	
880	90458-2956		2	ELBOW PIPE JOINT, EXT.THREAD, D=6MM-G1/8	
950	342735-0103		1	ELBOW PIPE JOINT	
960	342735-0109		4	ELBOW PIPE JOINT	
980	90166-0068	MM	200	TUBE 12 MM PA BLUE	
995	90166-0068	MM	2000	TUBE 12 MM PA BLUE	
X7049	90042-0535		1	TERMINAL BOARD 19 CORDS	
X7050	90042-0535		1	TERMINAL BOARD 19 CORDS	
Y6203	90042-0539		1	PILOT VALVE L=350MM	
Y6205	90042-0591		1	PILOT VALVE, 04938-333-08	
Y7303	90042-0539		1	PILOT VALVE L=350MM	
Y7315	90042-0591		1	PILOT VALVE, 04938-333-08	
Y7407	90042-0591		1	PILOT VALVE, 04938-333-08	
Y7408	90042-0538		1	PILOT VALVE L=500MM	
Y7410	90042-0539		1	PILOT VALVE L=350MM	
Y7412	90042-0538		1	PILOT VALVE L=500MM	
Y7413	90042-0538		1	PILOT VALVE L=500MM	
Y7414	90042-0538		1	PILOT VALVE L=500MM	
Y7420	90042-0591		1	PILOT VALVE, 04938-333-08	
Y7421	90042-0591		1	PILOT VALVE, 04938-333-08	

Machine Type	Group Description	Used-In	Group Number	Page No

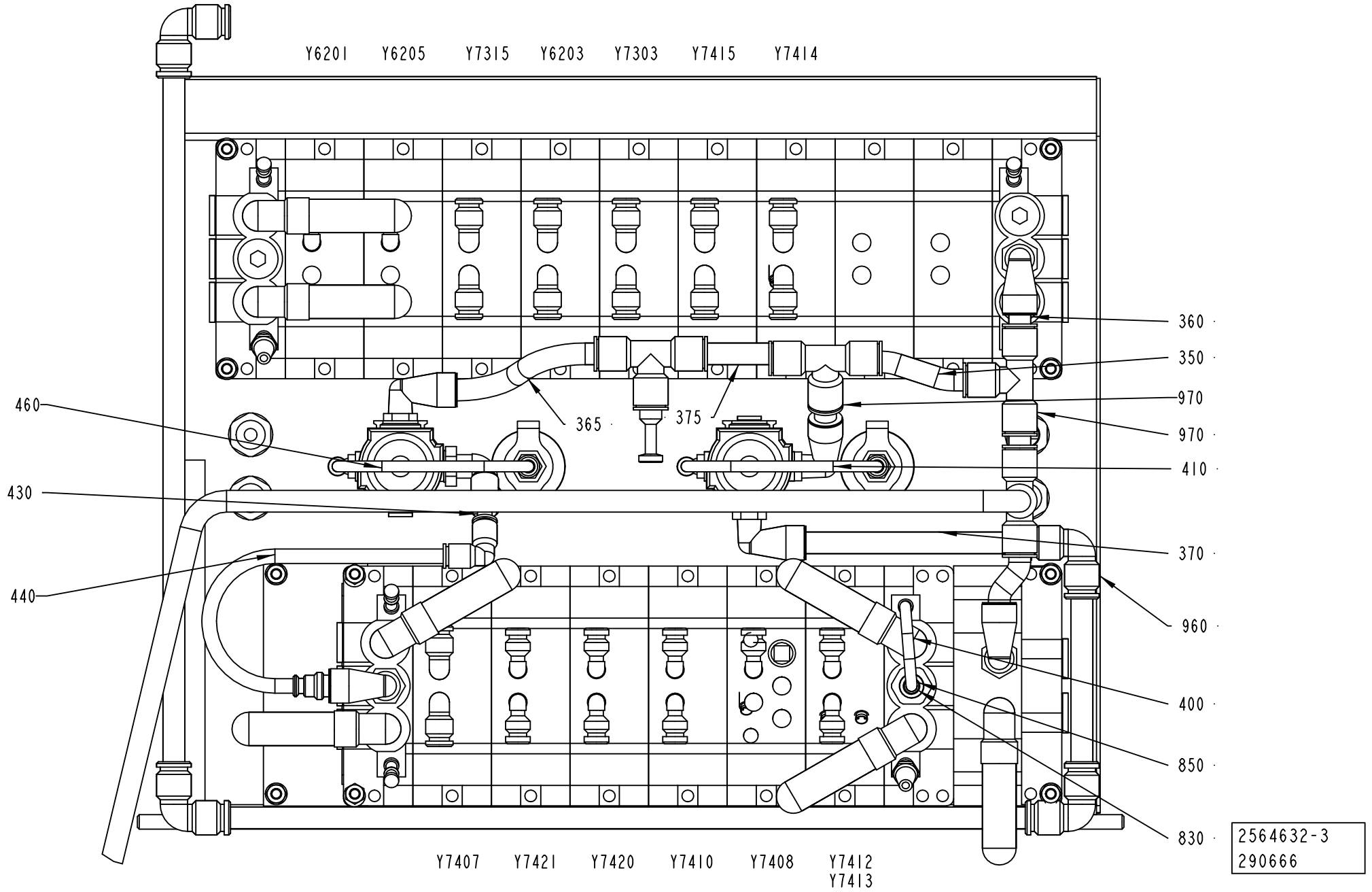
Y6201
Y6205
Y7315
Y6203
Y7303
Y7415
Y7414
360
350
970
970
410
370
960
400
850
830
460
430
440
365
375
Y7407
Y7421
Y7420
Y7410
Y7408
Y7412
Y7413
2564632-3
290666

ECM: 361827 - 20081001
Group number: 2564632-0100
Assembly Drawing: 2564632-3_2_AD

This list covers pages from 8-130 to 8-133

Pos	Part No	UN	Qty	Description	Page No
TBA/22 WITHOUT ARL (See drawing on pages: 8-130, 8-132)					
020	2616034-0000		1	COVER PLATE	
100	2594393-0000		1	PNEUMATIC DIAGRAM	
320	312605-0316		10	HEXAGON NUT, M6M M6 A280	
330	315105-0153		20	WASHER BRB 6,4X12 RFR	
340	312115-0367		2	SCREW ISO4762 M6X14 A4 80	
370	90166-0068	MM	200	TUBE 12 MM PA BLUE	
385	90166-0068	MM	100	TUBE 12 MM PA BLUE	
395	90166-0068	MM	1200	TUBE 12 MM PA BLUE	
405	90166-0068	MM	100	TUBE 12 MM PA BLUE	
450	90166-0068	MM	30	TUBE 12 MM PA BLUE	
480	273458-0000		1	SIGN, AIR	
510	90113-0470		1	MANIFOLD REGULATOR 10 BAR	
520	90457-0144		1	REGULATOR 0,3-2 BAR	
540	90458-0306		3	CABLE GLAND, M16X1,5, NO.5311 1010	
560	90043-0064		1	PRESSURE GAUGE, 2048 D=40 MM	
570	342716-0209		1	REDUCER 8-12	
580	342715-0102		7	BLIND PLUG 6 MM	
610	90043-0065		1	MKC NEW FILL PUMP VACUUM PRESSURE GAUGE	
630	90458-2959		3	ELBOW PIPE JOINT, EXT.THREAD,D=12MM-G1/4	
640	90042-0215		12	VALVE BODY 5/2 UNISTABLE	
690	90042-0528		5	BLANKING KIT SEALS ISO SIZE 1	
750	90055-0172		11	ELBOW WITH TAILPIECE 8/8 MM	
760	90055-0173		12	ELBOW WITH TAILPIECE 8/6 MM	
790	342713-0211		14	PLUG, EXT THREAD HEX SOCKET 8638-00-380	
810	90042-0520		1	BASE PLATE ISO SIZE 1	
860	90458-2960		3	ELBOW PIPE JOINT, EXT.THREAD,D=12MM-G3/8	
890	90458-1307		1	BLIND PLUG CIRCULAR, M16X1,5 514GFK/216	
900	342732-0105		1	ELBOW PIPE JOINT ,EXT.THREAD,D=8 MM R3/8	
930	90042-0519		2	BLANK PLATE ISO SIZE 1	
940	342715-0103		9	BLIND PLUG 8 MM	
970	342748-0109		4	T-CONNECTION 12MM	
975	350013-0005		1	PLUG QSC-12H	
990	90166-0068	MM	600	TUBE 12 MM PA BLUE	
Y6201	90042-0591		1	PILOT VALVE, 04938-333-08	
Y7415	90042-0538		1	PILOT VALVE L=500MM	
Y7425	90042-0585		1	PILOT VALVE L=5M	
Common Parts					
010	2570821-0000		1	SHEET	
310	312115-0376		8	SCREW ISO4762 M6X35 A4 80	
350	90166-0068	MM	100	TUBE 12 MM PA BLUE	
360	90166-0068	MM	30	TUBE 12 MM PA BLUE	
365	90166-0068	MM	120	TUBE 12 MM PA BLUE	
375	90166-0068	MM	50	TUBE 12 MM PA BLUE	
400	90166-0117	MM	200	HOSE 4/6 PVC BLUE	
410	90166-0117	MM	220	HOSE 4/6 PVC BLUE	
430	90166-0194	MM	30	TUBE 8 MM PUR BLUE	
440	90166-0194	MM	270	TUBE 8 MM PUR BLUE	
460	90166-0117	MM	220	HOSE 4/6 PVC BLUE	
530	90457-0078		2	PANEL NUT	
550	90458-0322		4	NUT, M16X1,5	
590	342713-0210		2	PLUG, EXT THREAD HEX SOCKET	
620	342770-0105		2	STRAIGHT COUPLING INT, D=6 MM - G1/8	
650	90042-0221		1	VALVE BODY 5/2 BISTABLE	
660	90042-0265		1	HIGH SPEED VENTING VALVE 583-590-000-1	
680	90042-0522		4	PORTED END PIECE ISO SIZE 1	
700	90042-0532		14	BASE PLATE ISO SIZE 1	
740	90328-0017		2	SILENCER, D=6 MM	
770	90328-0024		7	SILENCER G3/8"	
780	90328-0038		1	SILENCER, D=8 MM	
800	90042-0545		1	SUB-BASE SOFT START ISO 1 AND VDMA 01	
830	342716-0203		1	REDUCER 6-8	
840	90140-0020		7	ELBOW, 90, INT/EXT. THREAD, NO. 2020-3/8	
850	342722-0206		1	STRAIGHT COUPLING D=8-G3/8"	
880	90458-2956		2	ELBOW PIPE JOINT, EXT.THREAD, D=6MM-G1/8	
950	342735-0103		1	ELBOW PIPE JOINT	
960	342735-0109		4	ELBOW PIPE JOINT	
980	90166-0068	MM	200	TUBE 12 MM PA BLUE	
995	90166-0068	MM	2000	TUBE 12 MM PA BLUE	
X7049	90042-0535		1	TERMINAL BOARD 19 CORDS	
X7050	90042-0535		1	TERMINAL BOARD 19 CORDS	
Y6203	90042-0539		1	PILOT VALVE L=350MM	
Y6205	90042-0591		1	PILOT VALVE, 04938-333-08	
Y7303	90042-0539		1	PILOT VALVE L=350MM	
Y7315	90042-0591		1	PILOT VALVE, 04938-333-08	
Y7407	90042-0591		1	PILOT VALVE, 04938-333-08	
Y7408	90042-0538		1	PILOT VALVE L=500MM	
Y7410	90042-0539		1	PILOT VALVE L=350MM	
Y7412	90042-0538		1	PILOT VALVE L=500MM	
Y7413	90042-0538		1	PILOT VALVE L=500MM	
Y7414	90042-0538		1	PILOT VALVE L=500MM	
Y7420	90042-0591		1	PILOT VALVE, 04938-333-08	
Y7421	90042-0591		1	PILOT VALVE, 04938-333-08	

Machine Type	Group Description	Used-In	Group Number	Page No

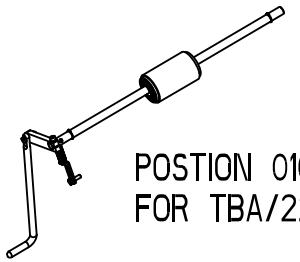

POSTION 010
FOR TBA/22

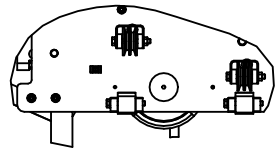

RIGHT SIDE

1487808-3
363271

ECM: 367435 - 20081002
Group number: 1487808-0200
Assembly Drawing: 1487808-3_1_AG

Pos	Part No	UN	Qty	Description	Page No
TBA/22					
010	1512429-0100		1	PRESSURE ROLLER	**8-137**
040	2529547-0100		1	PAPER GUIDE	**8-89**
050	1484745-0100		1	WEB GUIDE	**8-75**
070	1499584-0000		2	AXLE PIN	
080	1484704-0000		4	SHAFT	
350	321313-0102		2	BALL BEARING, 15X35X11 MM	
Common Parts					
020	1524731-0300		1	BRACKET	**8-139**
030	1524732-0200		1	DRIVE UNIT	**8-141**
060	2605228-0100		2	BENDING ROLLER	**8-143**
090	1484728-0000		4	BRACKET	
100	1484738-0000		4	BRACKET	
110	1484766-0000		1	DANCE ROLLER	
120	2831688-0000		3	ROLLER	
130	1558911-0000		4	PRESSURE ROLLER	
150	1487802-0000		2	SPACER	
160	2701319-0000		3	GUIDE PIN	
170	2550896-0000		1	RAIL	
180	1519960-0000		1	SPACER	
200	1519581-0000		5	ROLLER BAR	
210	1519586-0000		3	BRACKET	
220	1519592-0000		4	BOW	
230	1490814-0000		1	PLATE	
240	1490815-0000		1	PLATE	
250	1487795-0000		1	PLATE	
260	1487796-0000		1	PLATE	
270	1487800-0000		1	PLATE	
280	1538192-0000		1	BRACKET	
290	1539396-0000		1	BOW CLAMP	
360	315751-0103		4	RETAINING RING FOR SHAFT DIN 471 6 SS	
370	352113-0205		6	ANCHOR PLATES FOR STRIPS, TYPE TM2S8-C10	
390	315741-0102		8	RETAINING RING DIN 705 A2 6	
400	311103-1355		2	PARALLEL PIN ISO 2338 6M6X24 A1	
410	312105-0327		4	SCREW M6S ISO 4017 M5X12 A480	
420	312105-0372		11	SCREW M6S ISO 4017 M6X25 A480	
430	312105-0376		2	SCREW M6S ISO 4014 M6X35 A480	
440	312105-0380		8	SCREW M6S ISO 4014 M6X50 A480	
450	312115-0370		14	SCREW ISO4762 M6X20 A4 80	
460	312311-0372		4	SCREW ISO4028 M6X25 FZB	
470	312318-0368		5	SCREW ISO4029 M6X16 A4	
480	315103-0153		12	WASHER, BRB, 6,4/12,H=1,5 NIPL BR	
490	312607-0316		12	HEXAGON NUT, EN 24032 M6M M6 A480	
500	312605-0316		5	HEXAGON NUT, M6M M6 A280	
510	315105-0146		4	WASHER BRB 5,3X10 RFR	
520	315105-0153		25	WASHER BRB 6,4X12 RFR	
530	312125-0287		6	SCREW ISO 1207 M4X8 A4	
540	312105-0384		1	SCREW M6S ISO 4014 M6X70 A480	
550	312115-0374		2	SCREW ISO4762 M6X30 A4 80	
560	312109-0378		4	SCREW M6S ISO 4017 M6X40 A480	
570	90287-0154		1	SCREW, SOCK.SET DOGPOINT M6X10	
580	312318-0283		8	SCREW ISO4029 M4X4 A4	
B6107	90600-0460		1	INDUCTIVE SWITCH, E2A-M12KN05-M1-B1-TP	
W7020	90458-1076		1	L-SHAPED CONNECTOR CABLE 933 235-042	

Machine Type	Group Description	Used-In	Group Number	Page No

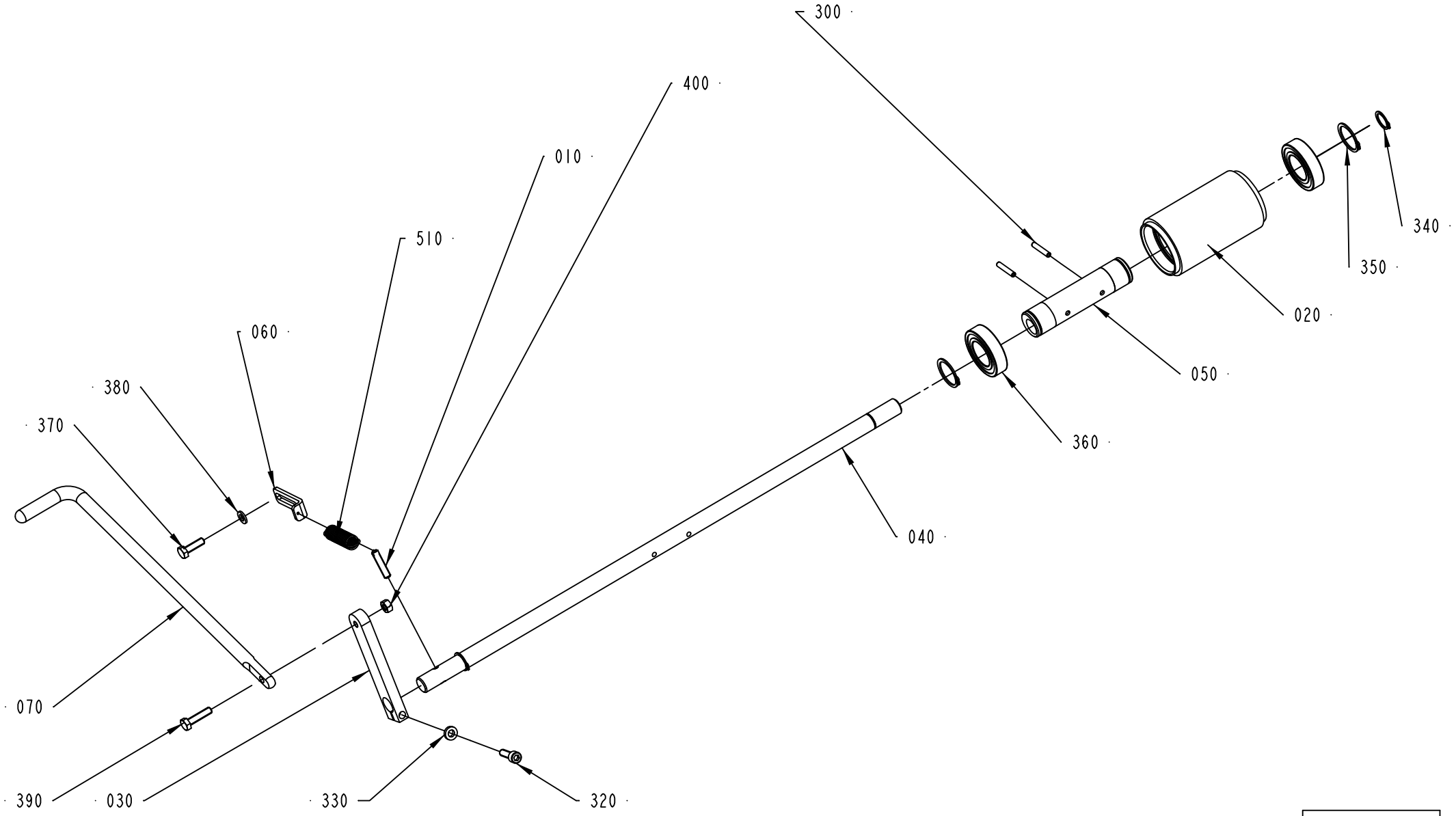

1512429-1
ECM 118625

ECM: 363392 - 20081002
Group number: 1512429-0100
Assembly Drawing: 1512429-1_1_AC

Pos	Part No	UN	Qty	Description	Page No
-					
010	578684-0000		1	SPRING BRACKET	
020	906254-0000		1	ROLLER	
030	2576379-0000		1	ROCKER ARM	
040	1487521-0000		1	SHAFT	
050	1512267-0000		1	ECCENTRIC BUSHING	
060	2529549-0000		1	PLATE	
070	2578455-0000		1	LIFTING HANDLE	
300	311112-0258		2	SPRING PIN, ISO 8752 4X24-C	
310	312105-0368		1	SCREW M6S ISO 4017 M6X16 A480	
320	312115-0370		1	SCREW ISO4762 M6X20 A4 80	
330	315115-0153		1	WASHER PLAIN, TBRB 6,4/12 H=3	
340	315751-0112		2	RETAINING RING FOR SHAFT DIN 471 15 SS	
350	315751-0119		2	RETAINING RING FOR SHAFT DIN 471 25 SS	
360	321308-0205		2	BALL BEARING, 25X47X12MM	
370	312105-0370		1	SCREW M6S ISO 4017 M6X20 A480	
380	315105-0153		1	WASHER BRB 6,4X12 RFR	
390	312105-0372		1	SCREW M6S ISO 4017 M6X25 A480	
400	312605-0316		1	HEXAGON NUT, M6M M6 A280	
510	90335-0091		1	TENSION SPRING 41890, 1,2X13X48,2	

Pos	Part No	UN	Qty	Description	Page No

Machine Type | Group Description | Used-In | Group Number | Page No

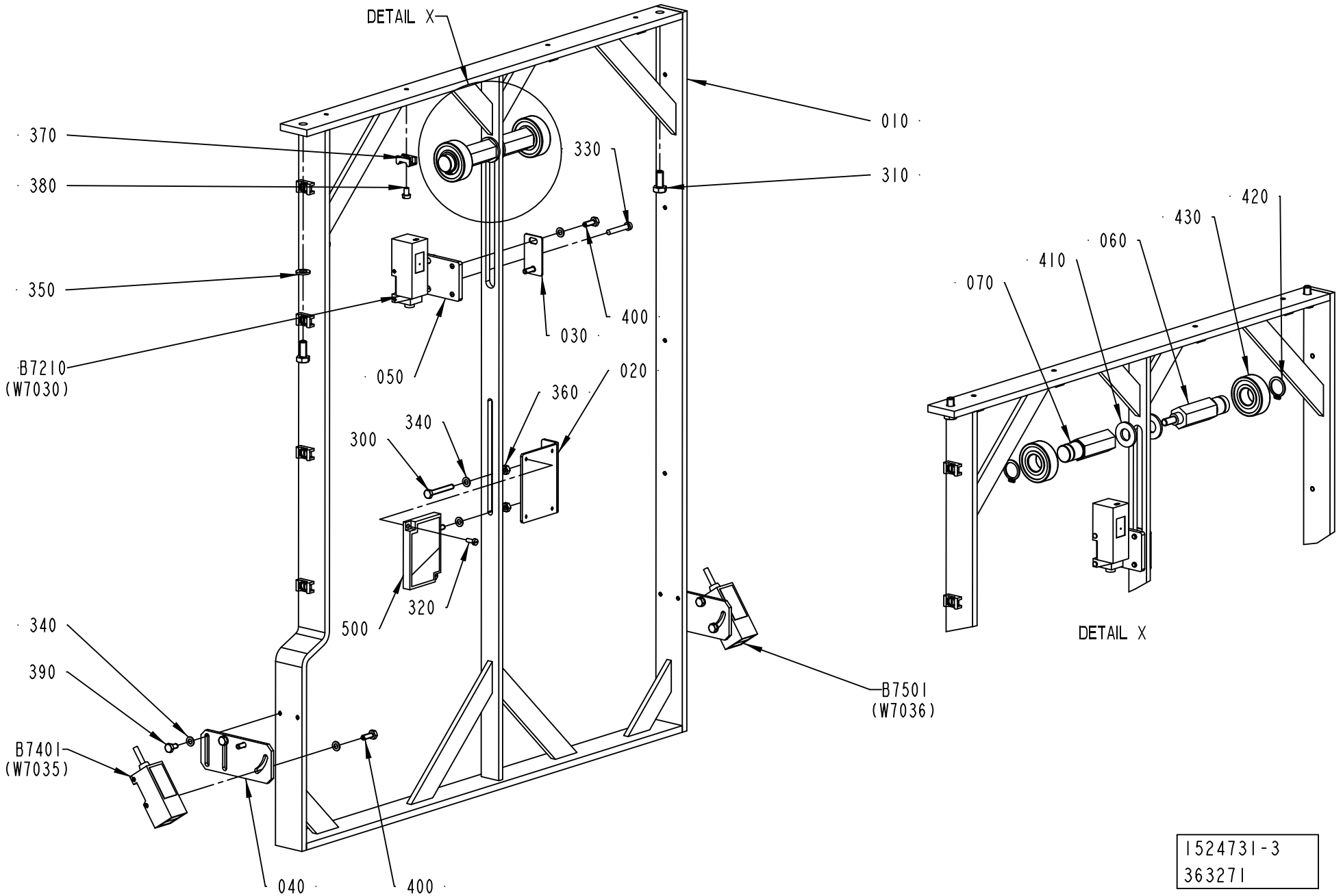
DETAIL X
010
310
330
370
380
350
B7210
(W7030)
050
030
400
020
360
340
300
320
500
340
390
B7401
(W7035)
040
400
B7501
(W7036)
420
430
060
410
070
DETAIL X
1524731-3
363271

ECM: 366935 - 20081002
Group number: 1524731-0300
Assembly Drawing: 1524731-3_1_AB

Pos	Part No	UN	Qty	Description	Page No
-					
010	2541942-0000		1	BRACKET	
020	1487784-0000		1	BRACKET	
030	1517105-0000		1	PLATE	
040	2542496-0000		2	BRACKET	
050	2651925-0000		1	PLATE	
060	2737841-0000		1	BRACKET	
070	2737842-0000		1	BRACKET	
300	312105-0299		2	SCREW M6S ISO 4017 M4X30 A470	
310	312105-0367		2	SCREW M6S ISO 4017 M6X14 A480	
320	312125-0222		2	SCREW ISO 1207 M3X8 A4	
330	312125-0297		2	SCREW ISO 1207 M4X25 A4	
340	315105-0136		14	WASHER BRB 4,3X8 RFR	
350	315105-0153		2	WASHER BRB 6,4X12 RFR	
360	312605-0312		4	HEXAGON NUT, M6M M4 A280	
370	352113-0205		12	ANCHOR PLATES FOR STRIPS, TYPE TM2S8-C10	
380	312125-0285		12	SCREW ISO 1207 M4X6 A4	
390	312105-0287		4	SCREW M6S ISO 4017 M4X8 A470	
400	312105-0291		6	SCREW M6S ISO 4017 M4X12 A470	
410	315105-0173		2	WASHER BRB 10,5X22 RFR	
420	315750-0112		2	RETAINING RING SHAFT DIN 471 ST 15	
430	321313-0102		2	BALL BEARING, 15X35X11 MM	
500	90232-0333		1	REFLECTOR E39-R1	
B7210	90232-0129		1	PH.CELL E3S-CR61-5M	
B7401	90232-0106		1	PH.CELL E3S-CR11-5M	
B7501	90232-0106		1	PH.CELL E3S-CR11-5M	

Pos	Part No	UN	Qty	Description	Page No

Machine Type | Group Description | Used-In | Group Number | Page No

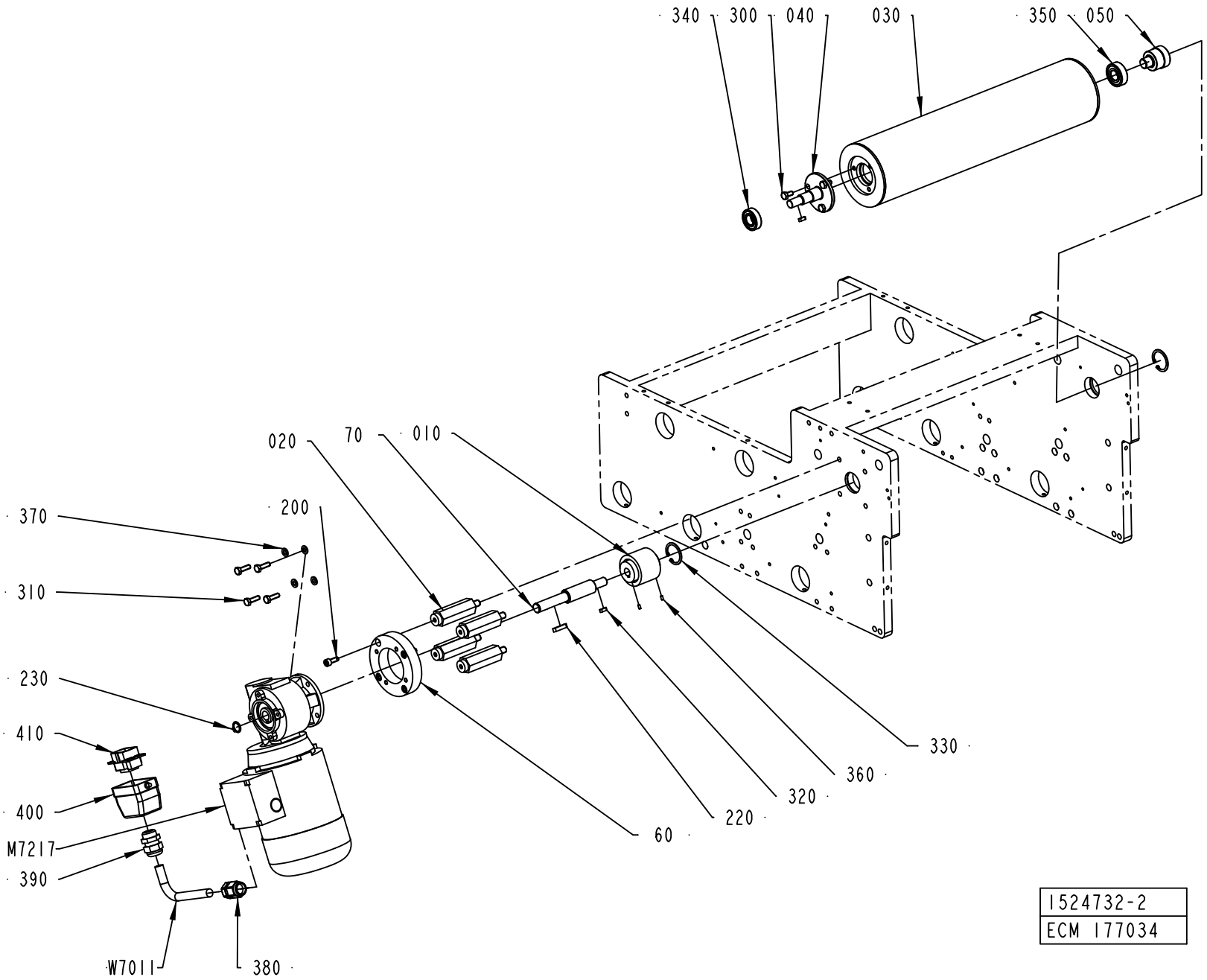
340
300
040
030
350
050
020
70
010
200
370
310
230
410
400
M7217
390
W7011
380
60
220
320
360
330
1524732-2
ECM 177034

ECM: 354675 - 20080704
Group number: 1524732-0200
Assembly Drawing: 1524732-2_1_AD

Pos	Part No	UN	Qty	Description	Page No
TBA/22					
030	2758256-0000		1	BENDING ROLLER	
W7011	90220-0104	M	9	SCR. CABLE 4X1,5MM2	
Common Parts					
010	979847-0000		1	SHAFT COUPLING	
020	1487788-0000		4	SPACER	
040	2523499-0000		1	SHAFT	
050	2523500-0000		1	AXLE PIN	
060	2532561-0000		1	SPACER	
070	2588067-0000		1	SHAFT	
200	312115-0368		4	SCREW ISO4762 M6X16 A4 80	
220	315705-0202		1	PARALLEL KEY W ROUND ENDS 5X5X25MM	
230	315751-0111		1	RETAINING RING FOR SHAFT DIN 471 14 SS	
300	312105-0366		3	SCREW M6S ISO 4017 M6X12 A480	
310	312105-0370		4	SCREW M6S ISO 4017 M6X20 A480	
320	315701-0166		2	PARALLEL KEY W. ROUND ENDS 4X4X12 MM	
330	315753-0123		2	RETAINING RING FOR BORE DIN 472 32 A2	
340	321308-0202		1	BALL BEARING, 15X32X9 MM	
350	321313-0102		1	BALL BEARING, 15X35X11 MM	
360	312318-0220		2	SCREW ISO4029 M3X6 A4	
370	315105-0153		4	WASHER BRB 6,4X12 RFR	
380	90458-0438		1	GLAND, EXTENDED WITH INSERT, M20X1,5	
390	352103-0108		1	CABLE GLAND, ST 13,5 , PR20,4/PG13,5	
400	90110-0157		1	CABLE HOOD 6-POL 70.352.0628.1	
410	90110-0159		1	MALE INSERT 70.310.0640.0	
M7217	90459-2096		1	GEARS, WORM MOTOR F2 15 P63 B14 B8 PV 75	

Pos	Part No	UN	Qty	Description	Page No

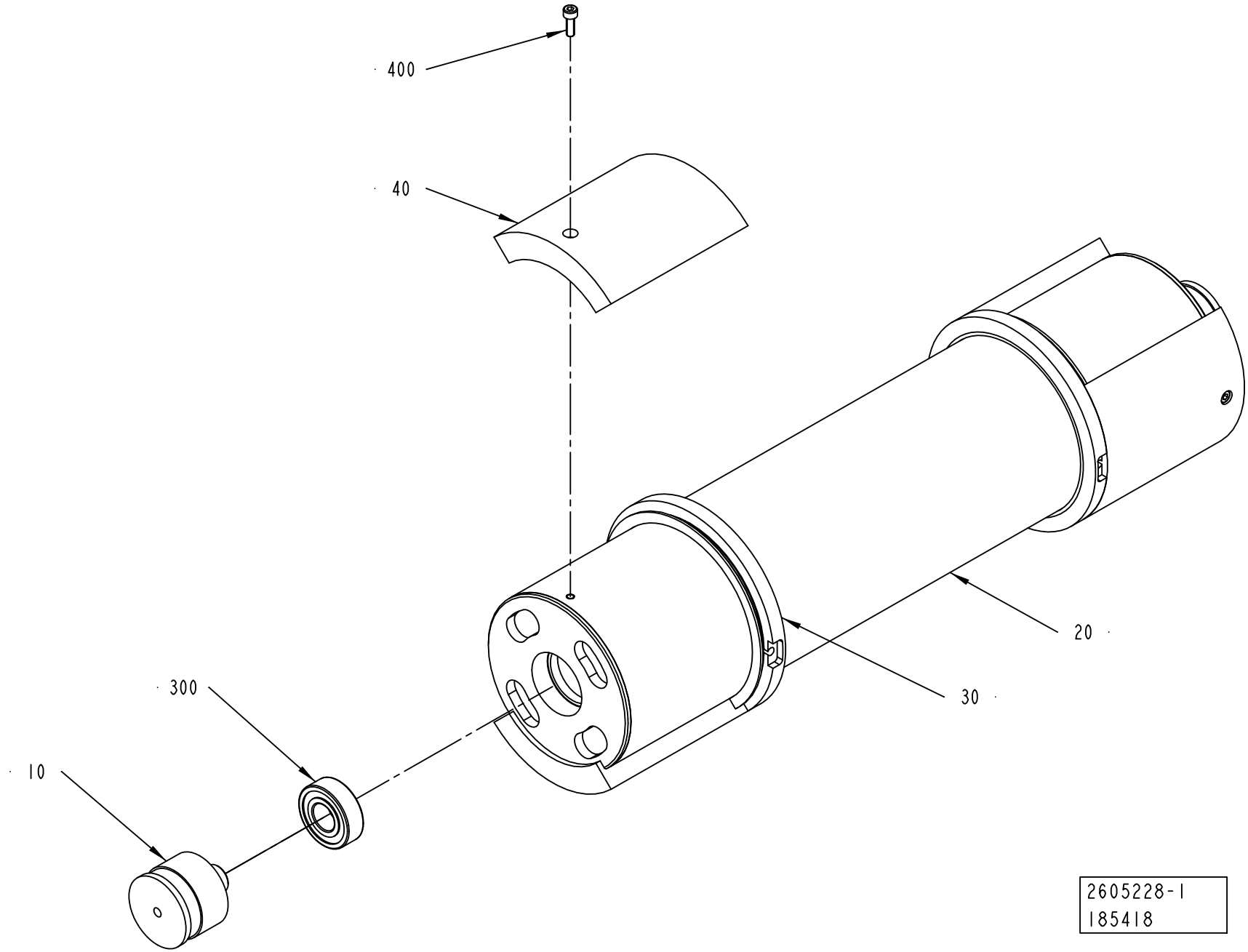
400
40
20
30
300
10
2605228-1
185418

ECM: 354690 - 20080704
Group number: 2605228-0100
Assembly Drawing: 2605228-1_1_AB

Pos	Part No	UN	Qty	Description	Page No
TBA 0200S (See drawing on page: 8-142)					
040	2508205-0010		4	BRACKET	
TBA 0200B, TBA 0250B, TBA 0300S (See drawing on page: 8-142)					
040	2508205-0007		4	BRACKET	
TBA 0200M, TBA 0250S (See drawing on page: 8-142)					
040	2508205-0009		4	BRACKET	
Common Parts					
010	1499584-0000		2	AXLE PIN	
020	2508206-0000		1	BENDING ROLLER	
030	2701846-0000		2	FLANGE	
300	321313-0102		2	BALL BEARING, 15X35X11 MM	
400	312115-0291		4	SCREW ISO4762 M4X12 A4 80	

Pos	Part No	UN	Qty	Description	Page No

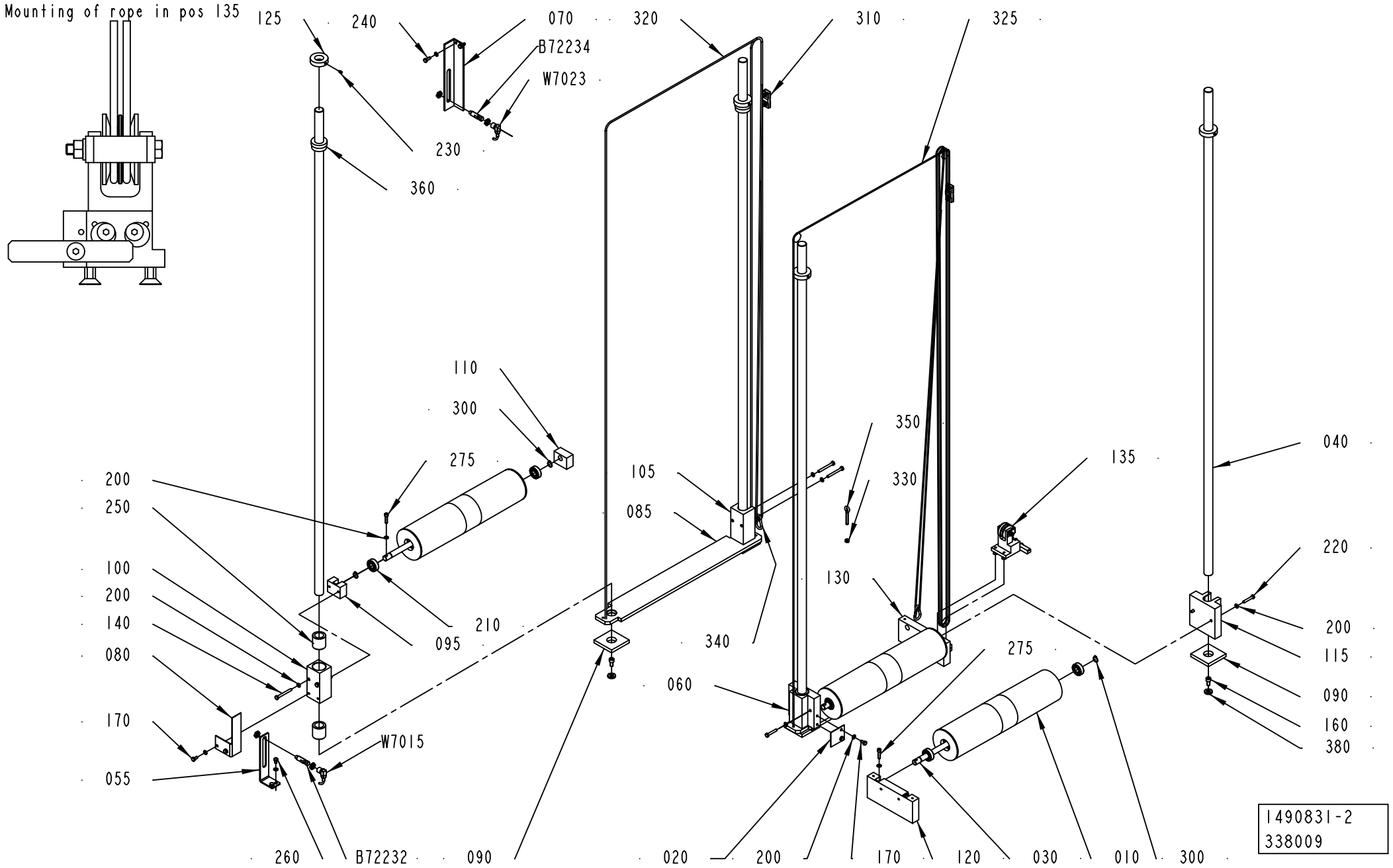
Mounting of rope in pos 135
125
240
070
B72234
W7023
320
310
325
230
360
110
300
275
200
250
100
200
140
080
170
055
095
210
W7015
105
085
350
330
135
040
220
130
340
275
060
200
115
090
160
380
260
B72232
090
020
200
170
120
030
010
300
1490831-2
338009

ECM: 354665 - 20080704
Group number: 1490831-0200
Assembly Drawing: 1490831-2_1_AE

Pos	Part No	UN	Qty	Description	Page No
-					
010	1484766-0000		3	DANCE ROLLER	
020	1484778-0000		1	PLATE	
030	1487519-0000		3	SHAFT	
040	1487530-0001		4	GUIDE ROD	
055	1484761-0000		1	ANGLE BRACKET	
060	1487536-0000		1	GUIDE BRACKET	
070	1487550-0000		1	ANGLE BRACKET	
080	1487551-0000		1	PLATE	
085	1519942-0000		2	PLATE	
090	1487765-0000		4	SPACER	
095	1511579-0000		1	BRACKET	
100	1484752-0000		1	SLIDER	
105	1484760-0000		1	SLIDER	
110	1490183-0000		1	BRACKET	
115	1511564-0000		1	BRACKET	
120	1487537-0000		1	BRACKET	
125	1487769-0000		4	SPACER	
130	1487538-0000		1	BRACKET	
135	1548210-0100		1	LOCKING DEVICE	**8-147**
140	312105-0381		4	SCREW M6S ISO 4014 M6X55 A480	
160	312115-0489		4	SCREW ISO4762 M10X16 A4 80	
170	312105-0366		4	SCREW M6S ISO 4017 M6X12 A480	
200	315105-0153		19	WASHER BRB 6,4X12 RFR	
210	321313-0102		6	BALL BEARING, 15X35X11 MM	
220	312105-0376		4	SCREW M6S ISO 4014 M6X35 A480	
230	90287-0154		4	SCREW, SOCK.SET DOGPOINT M6X10	
240	312105-0368		2	SCREW M6S ISO 4017 M6X16 A480	
250	90189-0025		4	BALL BUSHING, 25X37X37 MM	
260	312105-0364		2	SCREW M6S ISO 4017 M6X10 A480	
275	312115-0372		3	SCREW ISO4762 M6X25 A4 80	
300	315751-0112		6	RETAINING RING FOR SHAFT DIN 471 15 SS	
310	90211-0002		2	WIRE LOCK, 5 MM	
320	90319-0013	M	12	POLYESTER-SILKROPE 4MM 3900N, 102079	
325	90319-0013	M	8	POLYESTER-SILKROPE 4MM 3900N, 102079	
330	312605-0316		1	HEXAGON NUT, M6M M6 A280	
340	90459-2704		2	SNAP HOOK STAINLESS 50X5MM	
350	90459-2705		1	LIFTING EYE BOLT, M6X40MM	
360	353249-0054		2	INSERT, SINGLE HOLE, EK 156/25	
380	315115-0173		4	WASHER PLAIN, TBRB 10,5/22 H=4	
B72232	90458-0677		1	PROX.SWITCH E2EG-X5MB1-M1	
B72234	90458-0677		1	PROX.SWITCH E2EG-X5MB1-M1	
W7015	90458-1076		1	L-SHAPED CONNECTOR CABLE 933 235-042	
W7023	90458-1076		1	L-SHAPED CONNECTOR CABLE 933 235-042	

Machine Type	Group Description	Used-In	Group Number	Page No

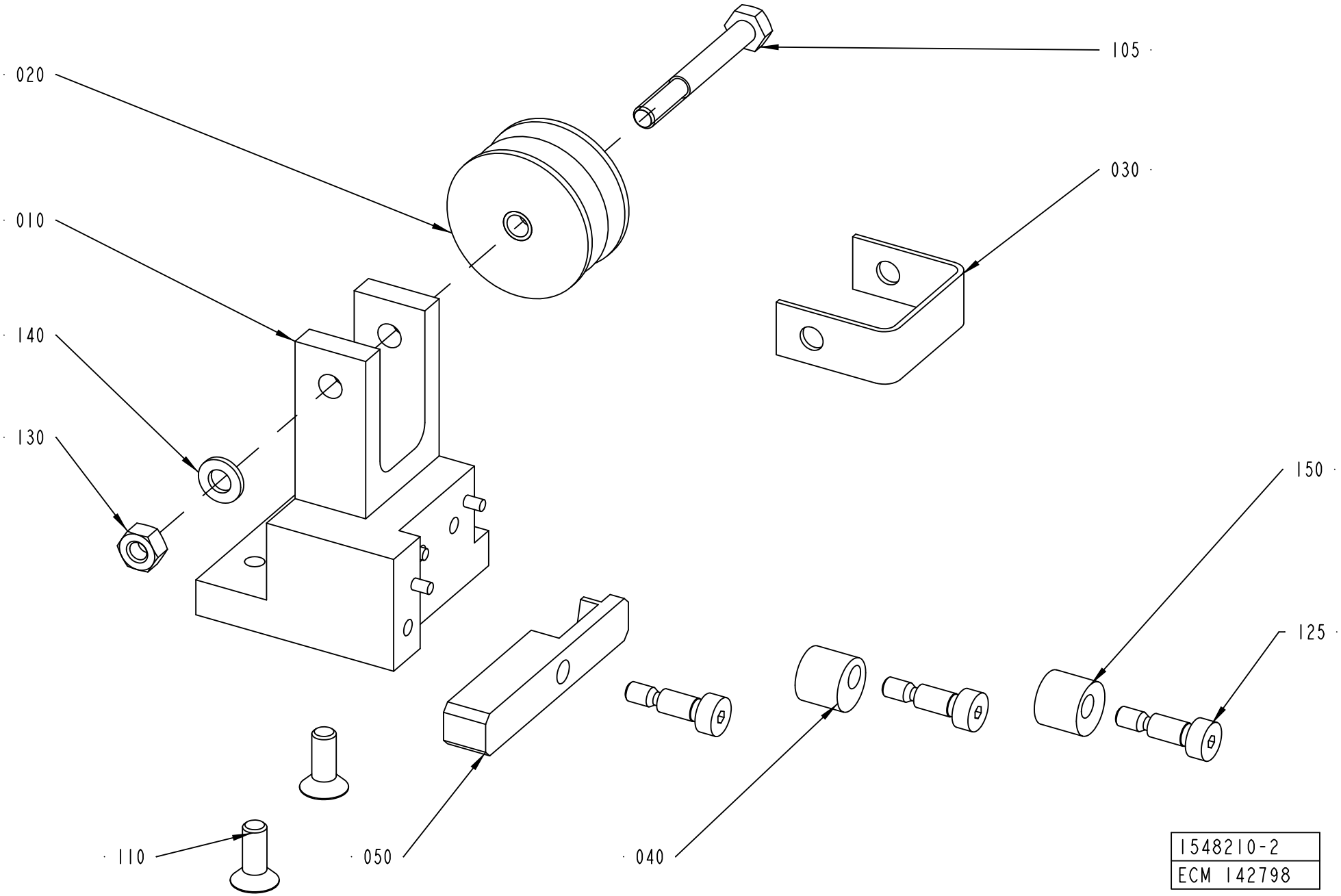
020
105
030
010
140
130
150
125
110
050
040
1548210-2
ECM 142798

ECM: 181010 - 20041005
Group number: 1548210-0100
Assembly Drawing: 1548210-2_1_AB

Pos	Part No	UN	Qty	Description	Page No
-					
010	2576244-0000		1	BRACKET	
020	1519581-0000		1	ROLLER BAR	
030	1519592-0000		1	BOW	
040	1539397-0000		1	ROLLER	
050	2576245-0000		1	ARM	
105	312105-0380		1	SCREW M6S ISO 4014 M6X50 A480	
110	312155-0368		2	SCREW DIN 7991 MF6S M6X16 A4 70	
125	312180-0366		3	SCREW ISO7379 H6X12	
130	312605-0316		1	HEXAGON NUT, M6M M6 A280	
140	315105-0153		1	WASHER BRB 6,4X12 RFR	
150	1549332-0000		1	ROLLER	

Pos	Part No	UN	Qty	Description	Page No

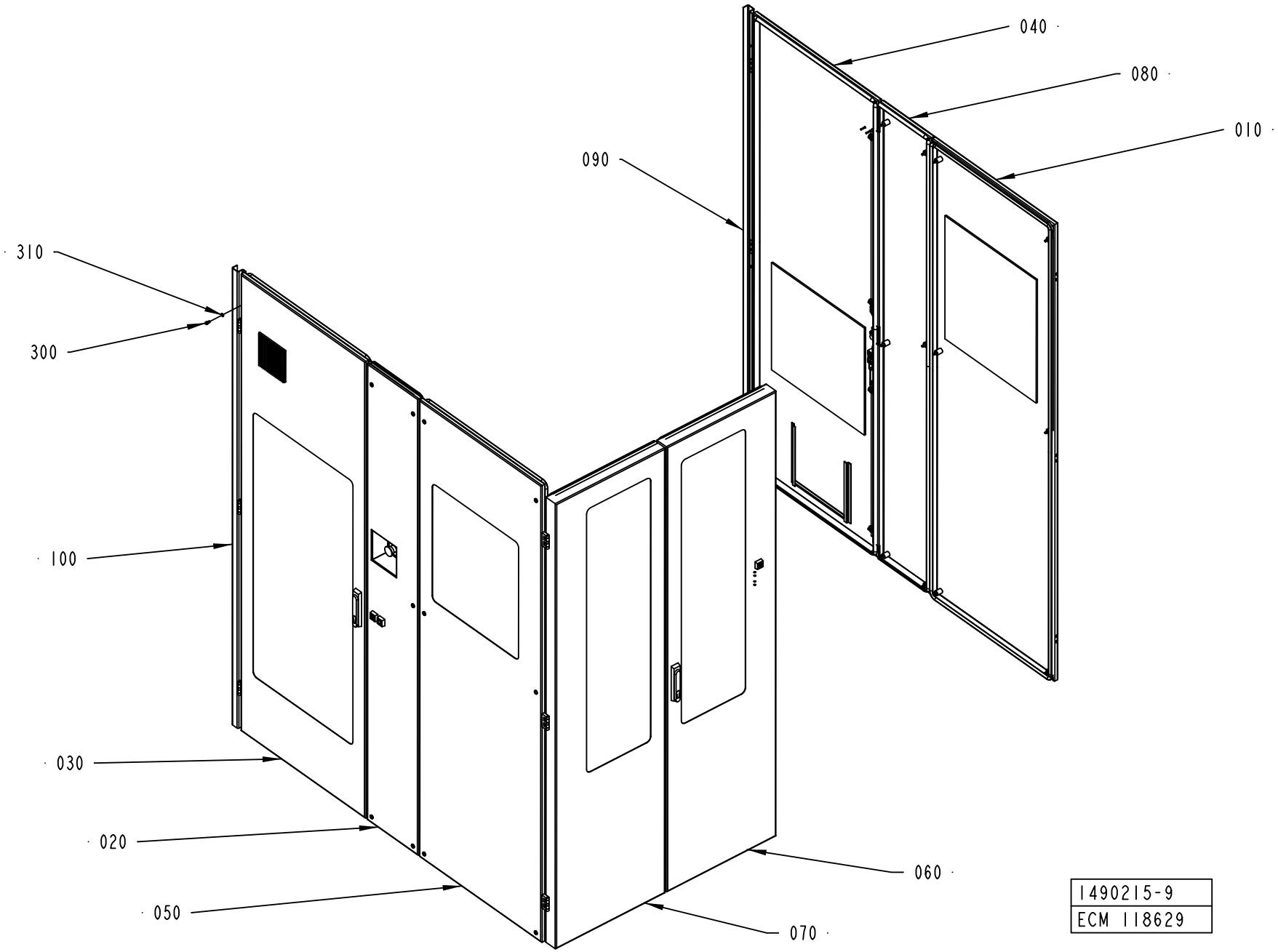
040
080
010
090
310
300
100
030
020
050
060
070
1490215-9
ECM 118629

ECM: 273552 - 20061102
Group number: 1490215-0200
Assembly Drawing: 1490215-9_1_AA

Pos	Part No	UN	Qty	Description	Page No
TBA/22 WITHOUT ARL					
090	2636084-0000		1	COVER STRIP	
100	2636085-0000		1	COVER STRIP	
300	315105-0153		6	WASHER BRB 6,4X12 RFR	
310	312115-0364		6	SCREW ISO4762 M6X10 A4 80	
Common Parts					
010	1499564-0100		1	COVER	**8-151**
020	1490190-0200		1	HATCH	**8-153**
030	1490191-0100		1	DOOR	**8-159**
040	1558988-0100		1	DOOR	**8-161**
050	1490193-0100		1	COVER	**8-163**
060	1498453-0200		1	DOOR	**8-165**
070	1498454-0200		1	DOOR	**8-169**
080	1490188-0100		1	COVER	**8-171**

Pos	Part No	UN	Qty	Description	Page No

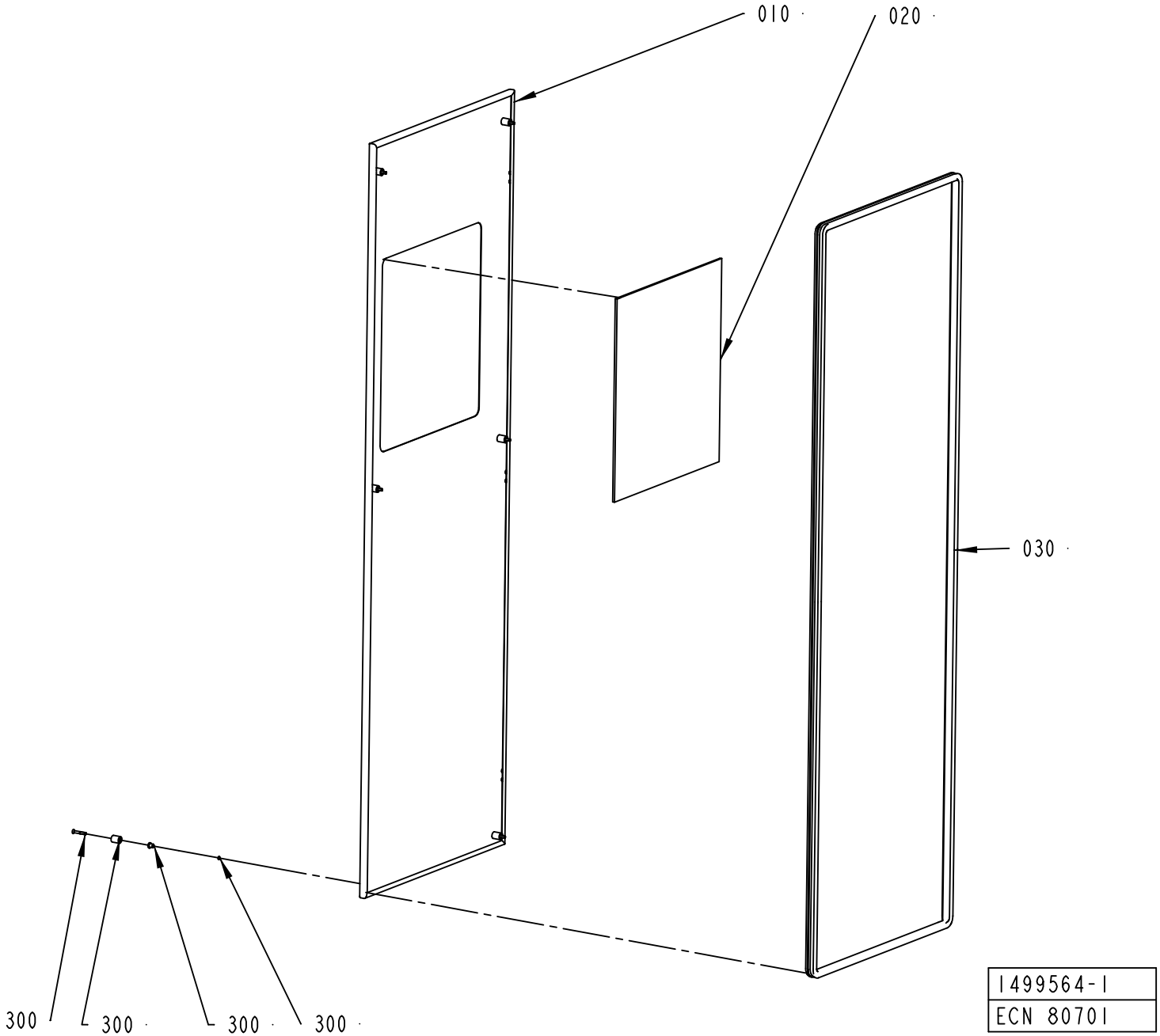
010
020
030
300
300
300
300
1499564-1
ECN 80701

ECM: 249408 - 20060303
Group number: 1499564-0100
Assembly Drawing: 1499564-1_1_AB

Pos	Part No	UN	Qty	Description	Page No
TBA/22 WITHOUT ARL					
010	1487995-0000		1	HATCH	
020	1498459-0003		1	GLASS PANE	
Common Parts					
030	1498461-0002		1	SEALING STRIP	
300	90226-0458		6	MOUNTING SCREW	

Pos	Part No	UN	Qty	Description	Page No

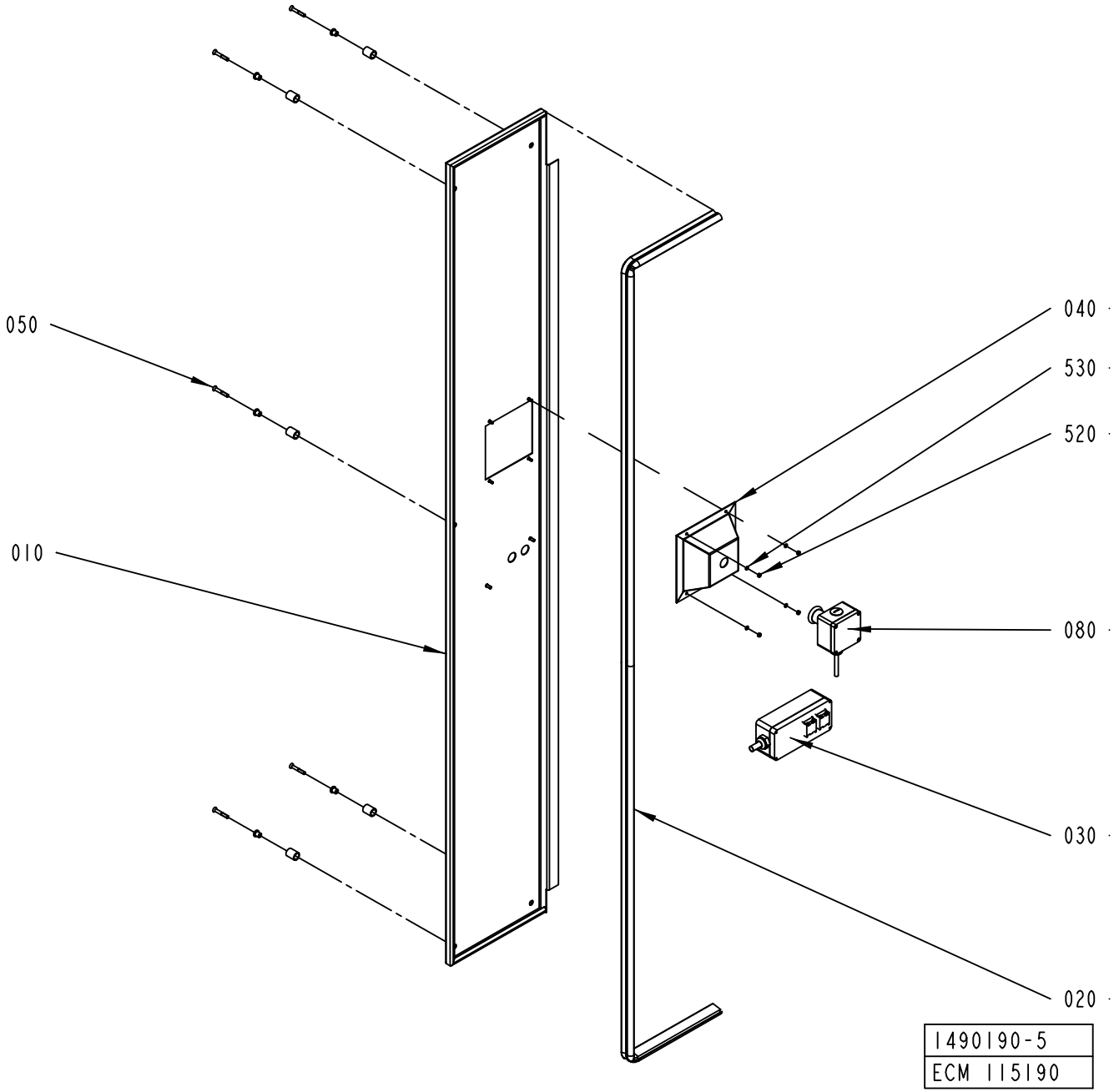
050
010
040
530
520
080
030
020
1490190-5
ECM 115190

ECM: 273532 - 20061102
Group number: 1490190-0200
Assembly Drawing: 1490190-5_1_AB

Pos	Part No	UN	Qty	Description	Page No
TBA/22					
010	2532535-0000		1	HATCH	
Common Parts					
020	1512414-0000		1	SEALING STRIP	
030	1512413-0200		1	CONTROL PANEL	**8-155**
040	1484363-0000		1	COVER	
050	90226-0458		5	MOUNTING SCREW	
080	2508187-0100		1	EMERGENCY STOP	**8-157**
520	312605-0312		4	HEXAGON NUT, M6M M4 A280	
530	315105-0136		4	WASHER BRB 4,3X8 RFR	

Pos	Part No	UN	Qty	Description	Page No

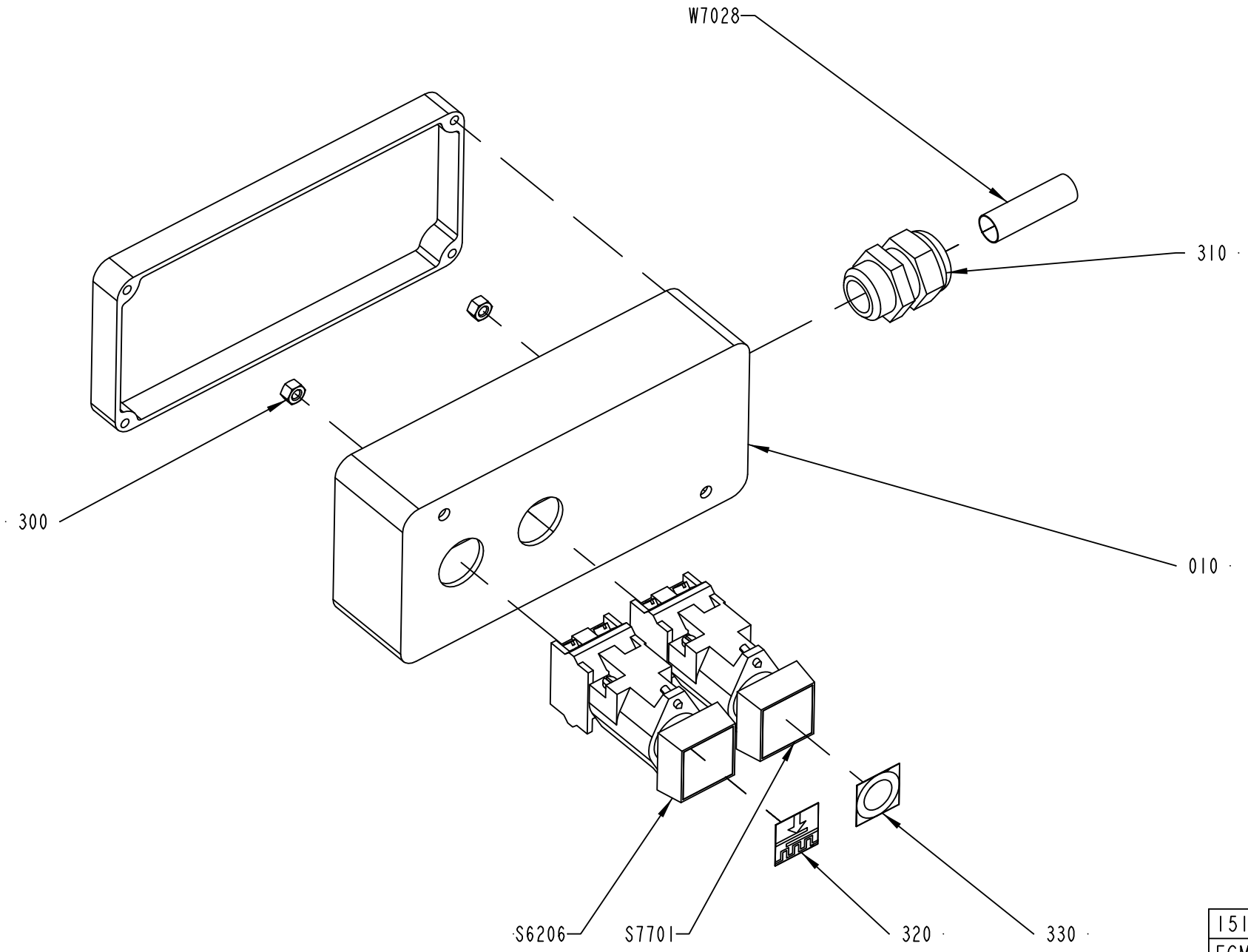

1512413-5
ECM 118629

ECM: 273551 - 20061102
Group number: 1512413-0200
Assembly Drawing: 1512413-5_1_AA

Pos	Part No	UN	Qty	Description	Page No
TBA/22					
010	2578785-0000		1	PUSH BUTTON BOX	
Common Parts					
300	312605-0314		2	HEXAGON NUT, M6M M5 A280	
310	352103-0111		1	CABLE GLAND, ST 16, PR22,5/PG16	
320	359301-0101		1	BUTTON SIGN, STRIP SPLICING ON	
330	359301-0110		1	BUTTON SIGN, SHORT STOP	
S6206	90064-0082		1	PUSH BUTTON, WHITE	
	90036-0057		*1*	*LIGHT BULB, BA9S 28V*	
S7701	90064-0084		1	PUSH BUTTON, YELLOW	
W7028	351150-0407	MM	5000	CABLE OLFLEX 12X0,75 MM2 LIGHT/GREY	

Pos	Part No	UN	Qty	Description	Page No

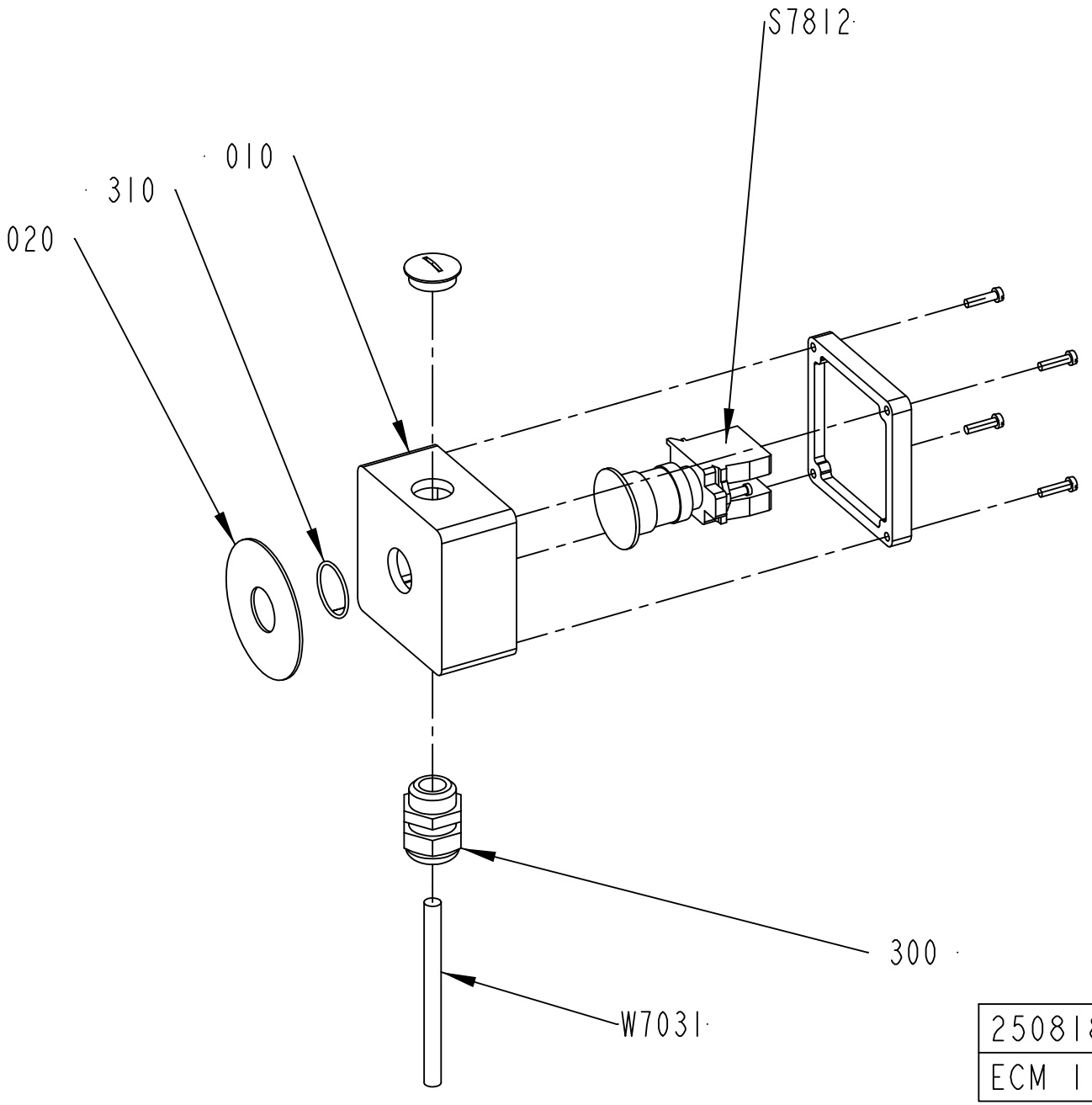

2508187-2
ECM 115190

ECM: 181016 - 20041005
Group number: 2508187-0100
Assembly Drawing: 2508187-2_1_AB

Pos	Part No	UN	Qty	Description	Page No
-					
010	1037130-0000		1	CONNECTION BOX	
020	486826-0001		1	SIGN "EMERGENCY STOP"	
300	352103-0110		1	CABLE GLAND, STR 16, PR22,5/PG16	
310	315202-0119		1	O-RING 25,1X1,6 MM	
S7812	90458-1651		1	EMERGENCY STOP, ZB4-BS-844 ZB4-BZ-104	
W7031	351150-0405	MM	5000	CABLE OLFLEX 5X0,75 MM2 LIGHT/GREY	

Pos	Part No	UN	Qty	Description	Page No

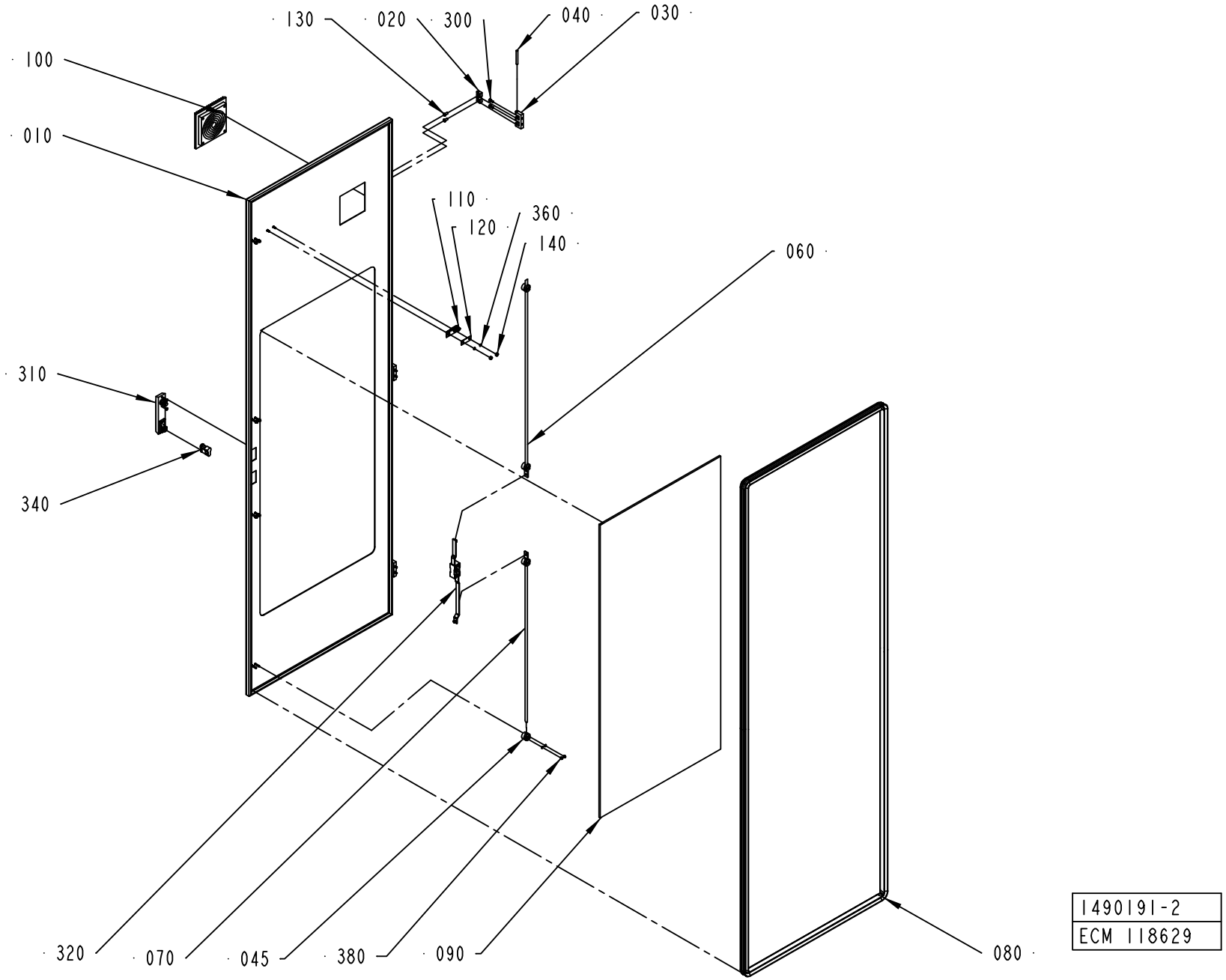
130
020
300
040
030
100
010
110
120
360
140
060
310
340
320
070
045
380
090
080
1490191-2
ECM 118629

ECM: 341204 - 20080215
Group number: 1490191-0100
Assembly Drawing: 1490191-2_1_AF

Pos	Part No	UN	Qty	Description	Page No
TBA/22					
010	1488000-0000		1	DOOR	
090	1498459-0002		1	GLASS PANE	
Common Parts					
020	1129770-0000		6	BLOCKING PIECE	
030	1035792-0000		3	E-HINGE	
040	988685-0000		3	PIN	
045	2550333-0000		4	GUIDE LUG	
060	1499562-0003		1	LOCKING ARM	
070	1499562-0004		1	LOCKING ARM	
080	1498461-0005		1	SEALING STRIP	
100	1490226-0000		1	FILTER	
110	975917-0000		1	KEY FOR SAFETY SWITCH 90044-103	
120	1036563-0000		1	WASHER	
130	1129767-0000		6	SCREW	
140	1539391-0000		2	ROUND NUT	
300	312115-0327		6	SCREW ISO4762 M5X12 A4 80	
310	90237-0175		1	TURNING HANDLE, 1125-U185-0A	
320	90237-0153		1	LOCK HOUSING, 1121-U26-0B	
340	90237-0128		1	LOCK CYLINDER, 1109-SU125	
360	315105-0136		10	WASHER BRB 4,3X8 RFR	
380	312705-0312		8	NUT HEX. DOMED CAP MHM-6 M4 A280	

Pos	Part No	UN	Qty	Description	Page No

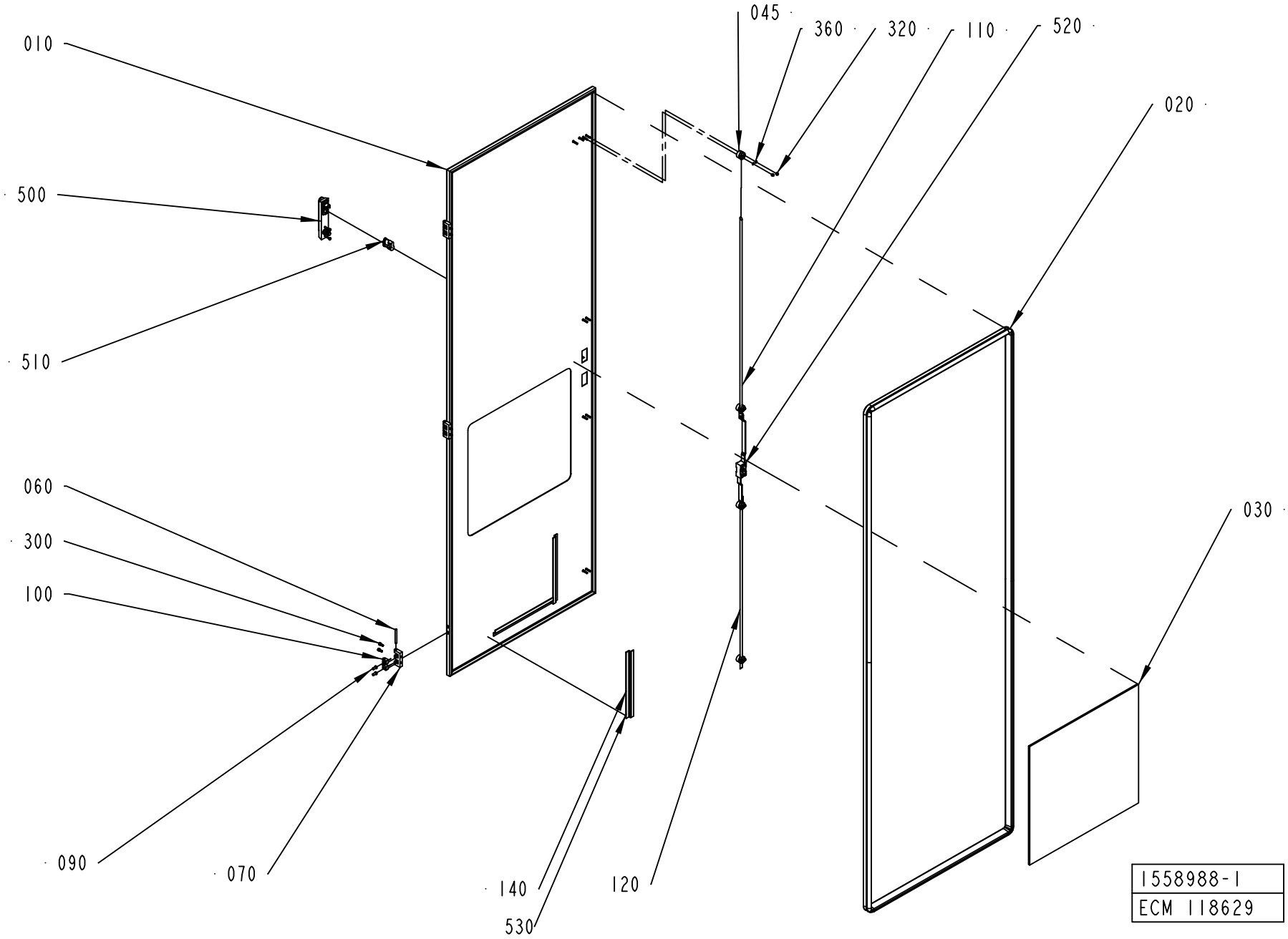
045
360
320
110
520
010
020
500
510
060
300
100
030
090
070
140
120
530
1558988-1
ECM 118629

ECM: 341213 - 20080215
Group number: 1558988-0100
Assembly Drawing: 1558988-1_1_AD

Pos	Part No	UN	Qty	Description	Page No
TBA/22					
010	1558983-0000		1	DOOR	
030	1498459-0004		1	GLASS PANE	
Common Parts					
020	1498461-0005		1	SEALING STRIP	
045	2550333-0000		4	GUIDE LUG	
060	988685-0000		3	PIN	
070	1035792-0000		3	E-HINGE	
090	1129767-0000		6	SCREW	
100	1129770-0000		6	BLOCKING PIECE	
110	1499562-0003		1	LOCKING ARM	
120	1499562-0004		1	LOCKING ARM	
140	988690-0000		3	RIM	
300	312115-0327		6	SCREW ISO4762 M5X12 A4 80	
320	312705-0312		8	NUT HEX. DOMED CAP MHM-6 M4 A280	
360	315105-0136		8	WASHER BRB 4,3X8 RFR	
500	90237-0175		1	TURNING HANDLE, 1125-U185-0A	
510	90237-0128		1	LOCK CYLINDER, 1109-SU125	
520	90237-0153		1	LOCK HOUSING, 1121-U26-0B	
530	90144-0072	MM	840	TAPE SCOTCH VHBS 4945 W=12,7MM	

Pos	Part No	UN	Qty	Description	Page No

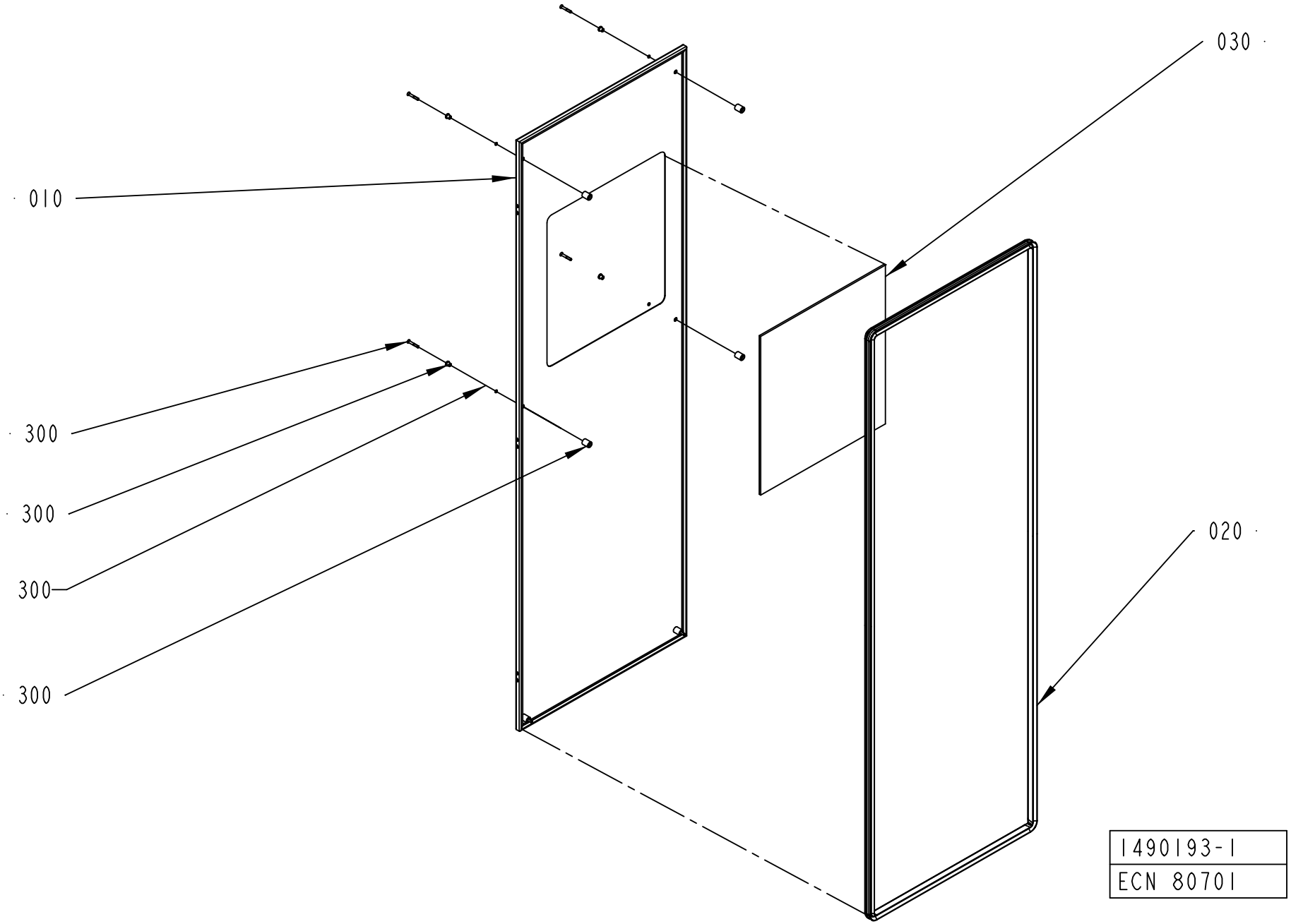
030
010
300
300
300
300
020
1490193-1
ECN 80701

ECM: 249411 - 20060303
Group number: 1490193-0100
Assembly Drawing: 1490193-1_1_AB

Pos	Part No	UN	Qty	Description	Page No
TBA/22 WITHOUT ARL					
010	1498460-0000		1	HATCH	
030	1498459-0003		1	GLASS PANE	
Common Parts					
020	1498461-0002		1	SEALING STRIP	
300	90226-0458		6	MOUNTING SCREW	

Pos	Part No	UN	Qty	Description	Page No

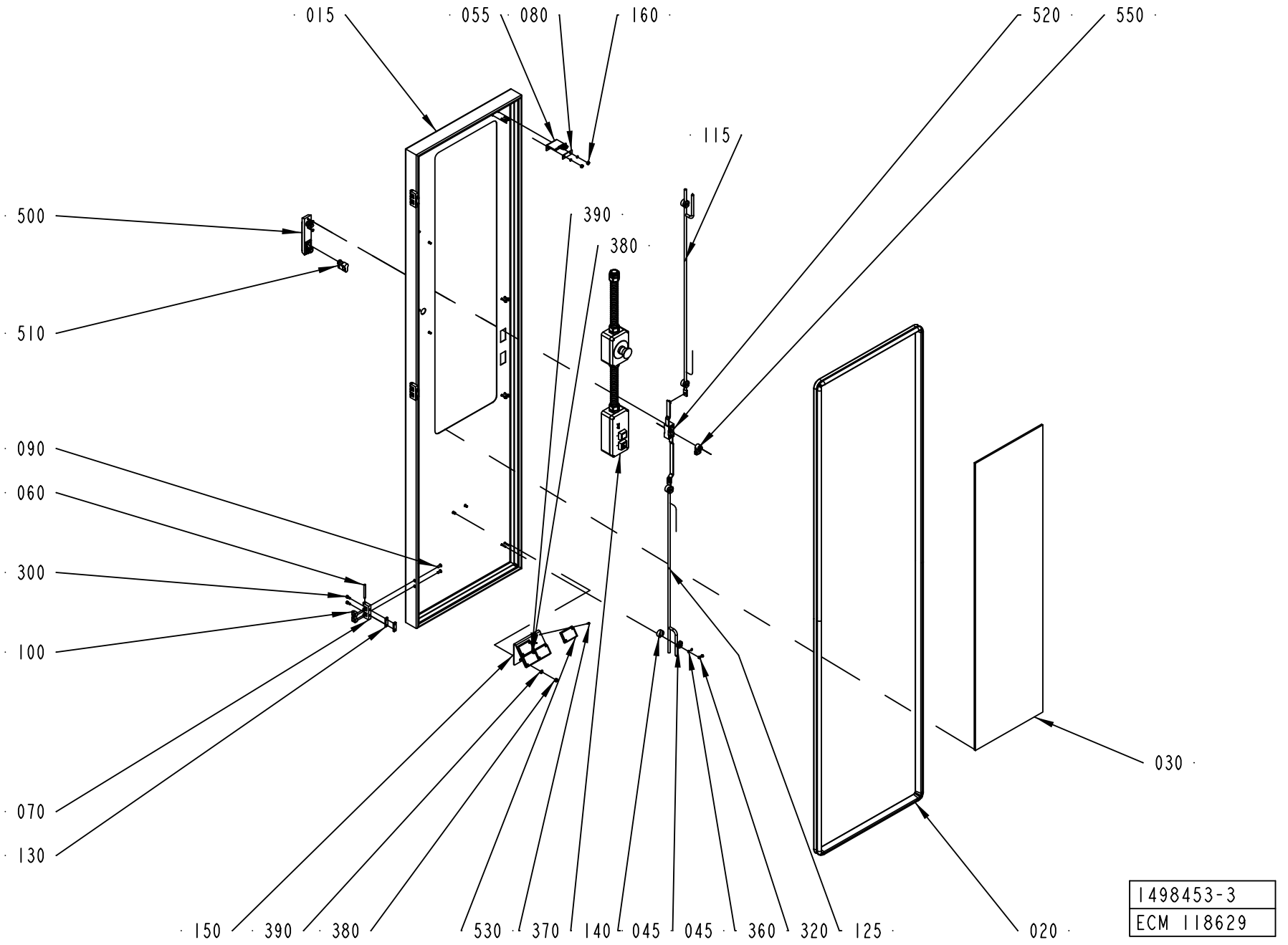
015
055
080
160
520
550
115
500
390
380
510
090
060
300
100
070
130
030
150
390
380
530
370
140
045
045
360
320
125
020
1498453-3
ECM 118629

ECM: 341209 - 20080215
Group number: 1498453-0200
Assembly Drawing: 1498453-3_1_AD

Pos	Part No	UN	Qty	Description	Page No
TBA/22					
015	2547666-0000		1	DOOR	
030	1498459-0001		1	GLASS PANE	
Common Parts					
020	1498461-0001		1	SEALING STRIP	
045	2550333-0000		4	GUIDE LUG	
055	2553072-0000		1	KEY FOR SAFETY SWITCH	
060	988685-0000		3	PIN	
070	1035792-0000		3	E-HINGE	
080	1036563-0000		1	WASHER	
090	1129767-0000		6	SCREW	
100	1129770-0000		6	BLOCKING PIECE	
115	2550269-0001		1	LOCKING ARM	
125	2550269-0002		1	LOCKING ARM	
130	1147253-0000		3	NUT	
140	1517088-0200		1	CONTROL PANEL	**8-167**
150	2541943-0000		1	BRACKET	
160	1539391-0000		2	ROUND NUT	
300	312115-0327		6	SCREW ISO4762 M5X12 A4 80	
320	312705-0312		8	NUT HEX. DOMED CAP MHM-6 M4 A280	
360	315105-0136		10	WASHER BRB 4,3X8 RFR	
370	312125-0222		8	SCREW ISO 1207 M3X8 A4	
380	312605-0316		2	HEXAGON NUT, M6M M6 A280	
390	315105-0153		2	WASHER BRB 6,4X12 RFR	
500	90237-0175		1	TURNING HANDLE, 1125-U185-0A	
510	90237-0128		1	LOCK CYLINDER, 1109-SU125	
520	90237-0153		1	LOCK HOUSING, 1121-U26-0B	
530	90232-0333		4	REFLECTOR E39-R1	
550	90237-0165		1	LATCH	

Pos	Part No	UN	Qty	Description	Page No

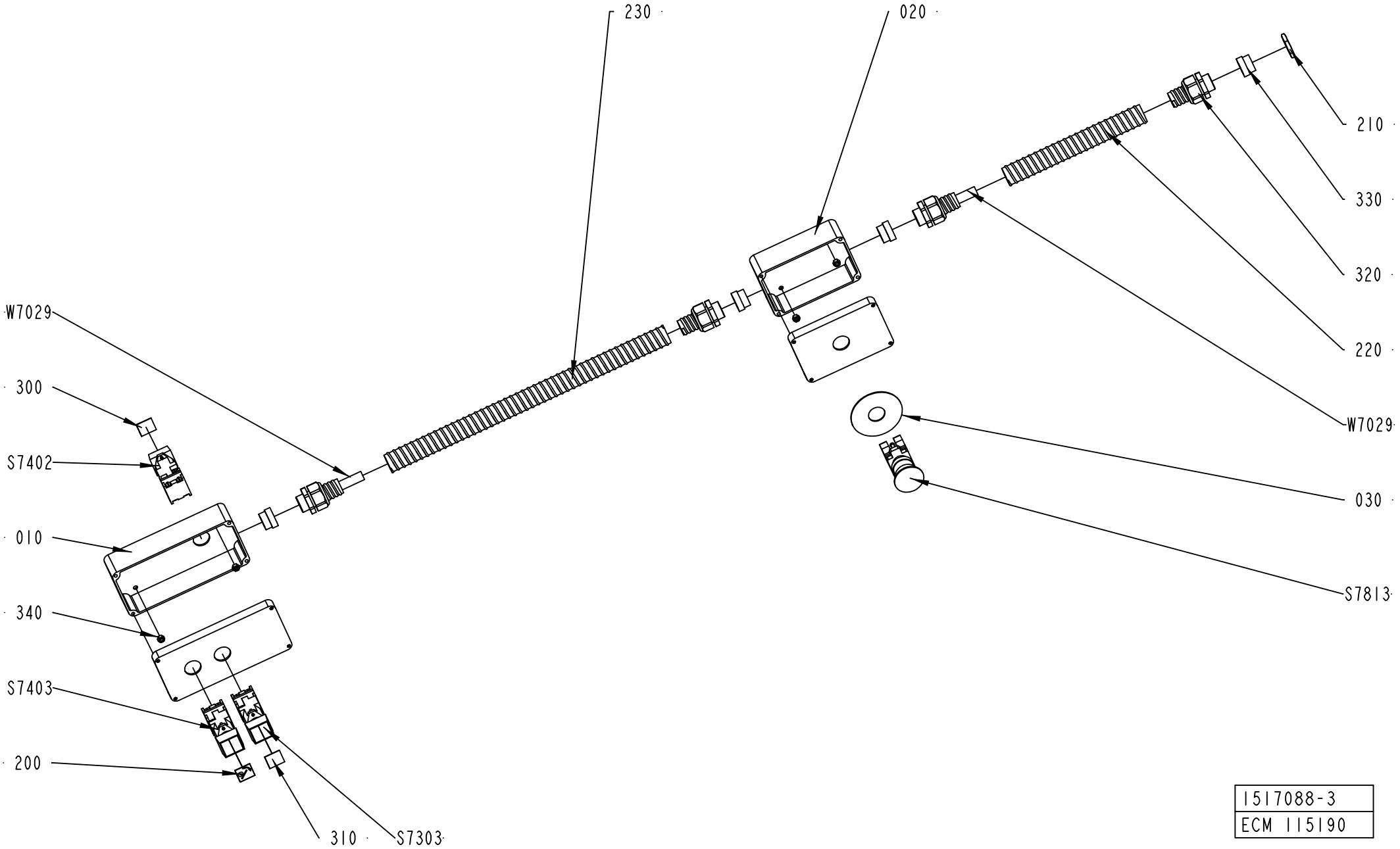

1517088-3
ECM 115190

ECM: 272277 - 20060712
Group number: 1517088-0200
Assembly Drawing: 1517088-3_1_AC

Pos	Part No	UN	Qty	Description	Page No
-					
010	2523482-0000		1	PUSH BUTTON BOX	
020	2523483-0000		1	PUSH BUTTON BOX	
030	486826-0001		1	SIGN "EMERGENCY STOP"	
200	90457-0920		1	BUTTON SIGN, ROTATION OF MATERIAL HOLDER	
210	90099-0110		1	NUT, PR 22,5 (PG16)	
220	90152-0051	MM	500	SPIRAL CONDUIT, 25X18, UL 1816	
230	90152-0051	MM	170	SPIRAL CONDUIT, 25X18, UL 1816	
300	359301-0100		1	BUTTON SIGN, SPLICING	
310	359301-0488		1	BUTTON SIGN, MATERIAL LOCKING	
320	353243-0005		4	HOSE GLAND W/O INSERT PG16 EXTENDED	
330	353249-0014		4	INSERT, SINGLE HOLE, EK 154/16	
340	312605-0314		4	HEXAGON NUT, M6M M5 A280	
S7303	90064-0082		1	PUSH BUTTON, WHITE	
	90036-0057		*1*	*LIGHT BULB, BA9S 28V*	
S7402	90064-0082		1	PUSH BUTTON, WHITE	
	90036-0057		*1*	*LIGHT BULB, BA9S 28V*	
S7403	90064-0082		1	PUSH BUTTON, WHITE	
	90036-0057		*1*	*LIGHT BULB, BA9S 28V*	
S7813	90458-1651		1	EMERGENCY STOP, ZB4-BS-844 ZB4-BZ-104	
W7029	351150-0407	MM	5000	CABLE OLFLEX 12X0,75 MM2 LIGHT/GREY	

Pos	Part No	UN	Qty	Description	Page No

Machine Type | Group Description | Used-In | Group Number | Page No

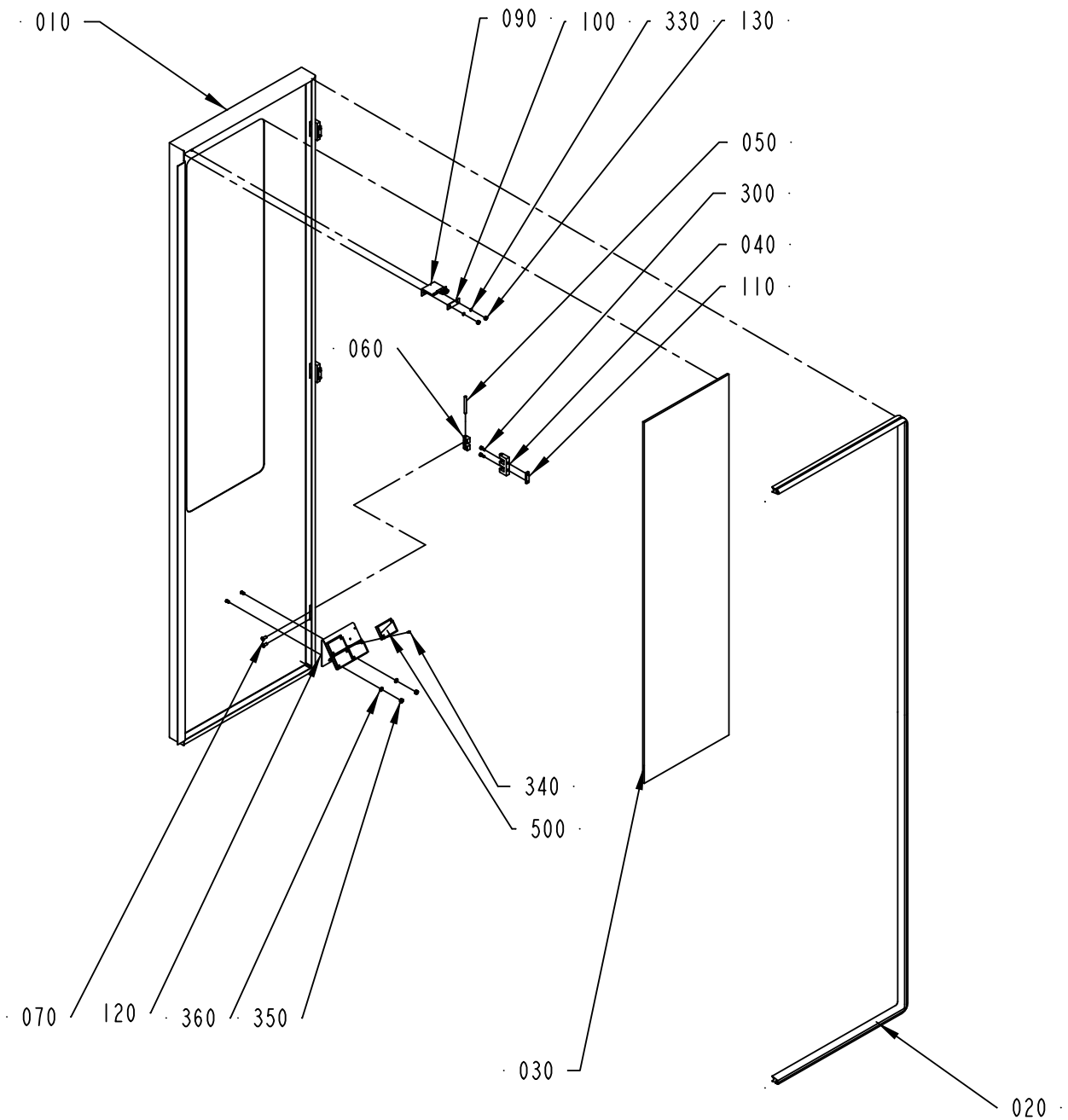

1498454-2
ECM 115190

ECM: 249413 - 20060303
Group number: 1498454-0200
Assembly Drawing: 1498454-2_1_AB

Pos	Part No	UN	Qty	Description	Page No
TBA/22					
010	2547667-0000		1	DOOR	
030	1498459-0001		1	GLASS PANE	
Common Parts					
020	1499579-0000		1	SEALING STRIP	
040	1035792-0000		3	E-HINGE	
050	988685-0000		3	PIN	
060	1129770-0000		6	BLOCKING PIECE	
070	1129767-0000		6	SCREW	
090	2553072-0000		1	KEY FOR SAFETY SWITCH	
100	1036563-0000		1	WASHER	
110	1147253-0000		3	NUT	
120	2541943-0000		1	BRACKET	
130	1539391-0000		2	ROUND NUT	
300	312115-0327		6	SCREW ISO4762 M5X12 A4 80	
330	315105-0136		2	WASHER BRB 4,3X8 RFR	
340	312125-0222		8	SCREW ISO 1207 M3X8 A4	
350	312605-0316		2	HEXAGON NUT, M6M M6 A280	
360	315105-0153		2	WASHER BRB 6,4X12 RFR	
500	90232-0333		4	REFLECTOR E39-R1	

Pos	Part No	UN	Qty	Description	Page No

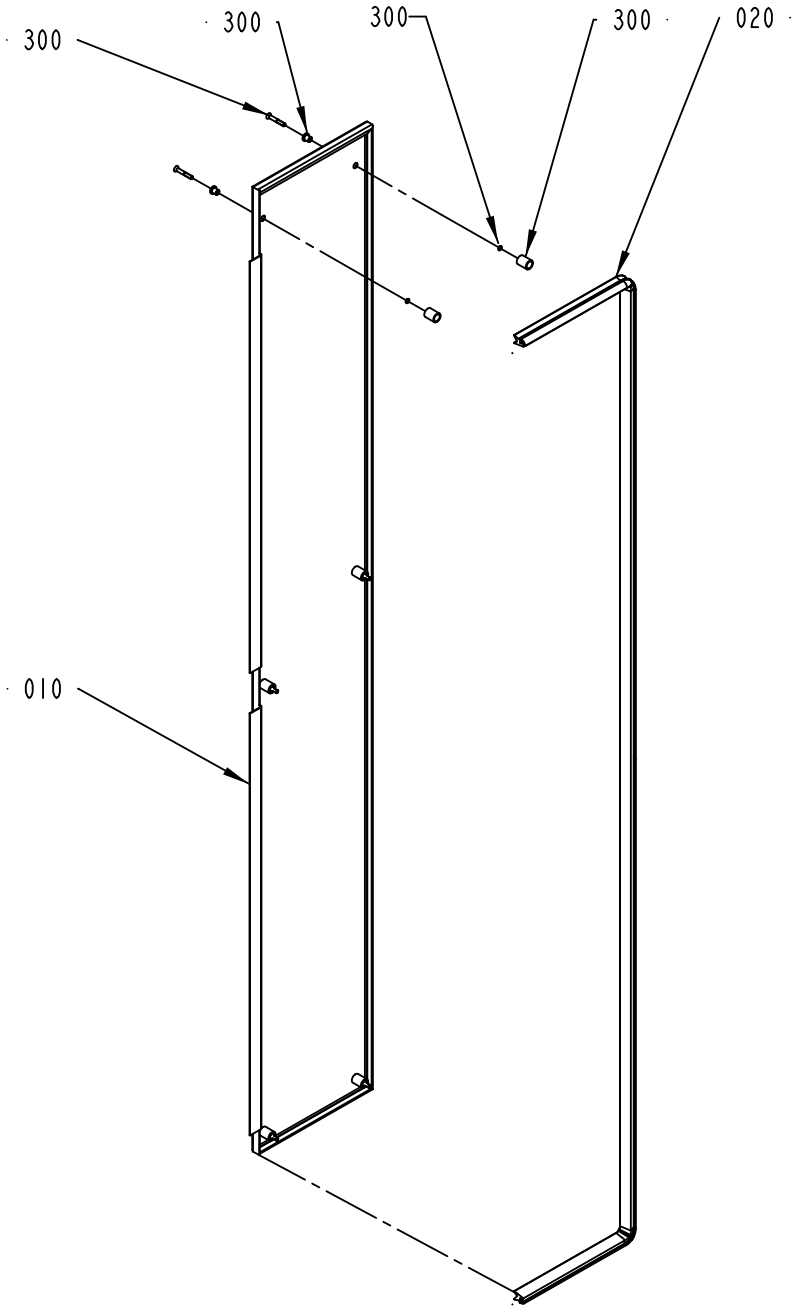

1490188-1
ECN 80701

ECM: 181163 - 20041005
Group number: 1490188-0100
Assembly Drawing: 1490188-1_1_AB

Pos	Part No	UN	Qty	Description	Page No
-					
010	1499568-0000		1	HATCH	
020	1512278-0000		1	SEALING STRIP	
300	90226-0458		6	MOUNTING SCREW	

Pos	Part No	UN	Qty	Description	Page No

Tetra Pak

SPC
Spare Parts Catalogue

This page is intentionally left blank.

ECM: 331822 - 20080401
Group number: 649470-0700
Assembly Drawing:

Pos	Part No	UN	Qty	Description	Page No
-					
0010	42930-0600		1	ELECTRICAL DOCUMENT	
0020	2939161-0100		1	SOFTWARE	**9-5**

Pos	Part No	UN	Qty	Description	Page No

This page is intentionally left blank.

ECM: 357947 - 20080402
Group number: 2939161-0100
Assembly Drawing:

Pos	Part No	UN	Qty	Description	Page No
-					
0010	2939162-0002		1	SOFTWARE CD	
0020	2912221-0001		1	TPOP BASIC SOFTWARE SUITE V2.5	
0030	2912214-0001		1	TPOP BASIC WINDOWS 2000 SP4 V2.5	

Pos	Part No	UN	Qty	Description	Page No

Tetra Pak

SPC
Spare Parts Catalogue

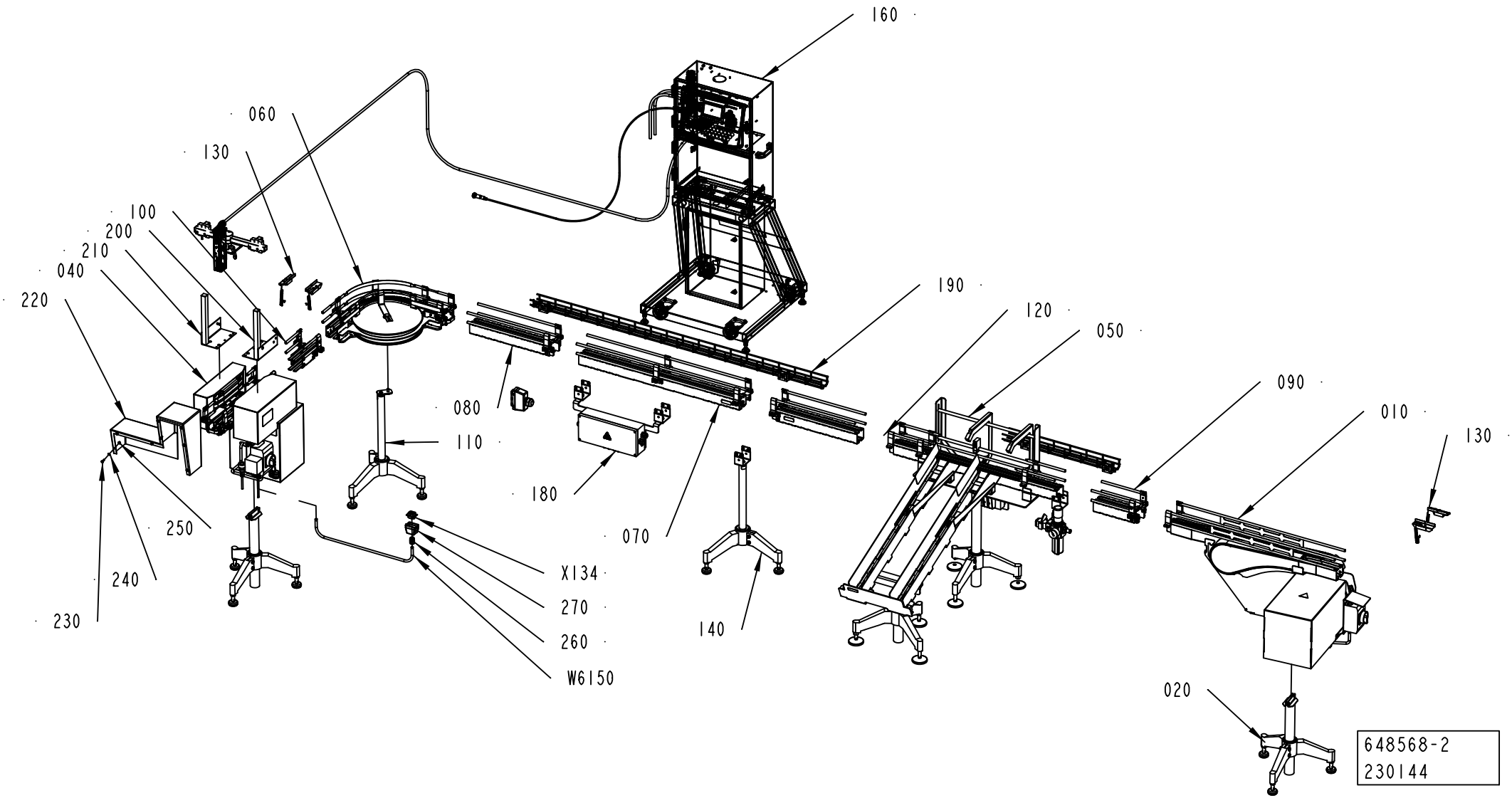
160
060
130
100
200
210
040
220
190
120
050
090
010
130
080
110
180
070
250
240
230
X134
270
260
W6150
140
020
648568-2
230144

ECM: 259791 - 20060719
Group number: 648568-0200
Assembly Drawing: 648568-2_1_AB

Pos	Part No	UN	Qty	Description	Page No
MOTOR ABOVE NO SAMPLING UNIT DOMINO					
010	2590210-0307		1	DRIVE AND END UNIT (MOTOP) PC23	**10-5**
160	90459-3021		1	INK JET PRINTER A300 HS	
220	2774478-0000		1	TUNNEL	
MOTOR ABOVE NO SAMPLING UNIT NO DATEUNIT					
010	2590210-0307		1	DRIVE AND END UNIT (MOTOP) PC23	**10-5**
220	2790373-0000		1	TUNNEL	
MOTOR ABOVE SAMPLING UNIT DOMINO					
010	2590210-0307		1	DRIVE AND END UNIT (MOTOP) PC23	**10-5**
050	597465-0102		1	SAMPLING UNIT	**10-31**
160	90459-3021		1	INK JET PRINTER A300 HS	
220	2774478-0000		1	TUNNEL	
MOTOR ABOVE SAMPLING UNIT NO DATEUNIT					
010	2590210-0307		1	DRIVE AND END UNIT (MOTOP) PC23	**10-5**
050	597465-0102		1	SAMPLING UNIT	**10-31**
220	2790373-0000		1	TUNNEL	
MOTOR BELOW NO SAMPLING UNIT DOMINO					
010	2590230-0207		1	DRIVE AND END UNIT PC23	**10-53**
160	90459-3021		1	INK JET PRINTER A300 HS	
220	2774478-0000		1	TUNNEL	
MOTOR BELOW NO SAMPLING UNIT NO DATEUNIT					
010	2590230-0207		1	DRIVE AND END UNIT PC23	**10-53**
220	2790373-0000		1	TUNNEL	
MOTOR BELOW SAMPLING UNIT DOMINO					
010	2590230-0207		1	DRIVE AND END UNIT PC23	**10-53**
050	597465-0102		1	SAMPLING UNIT	**10-31**
160	90459-3021		1	INK JET PRINTER A300 HS	
220	2774478-0000		1	TUNNEL	
MOTOR BELOW SAMPLING UNIT NO DATEUNIT					
010	2590230-0207		1	DRIVE AND END UNIT PC23	**10-53**
050	597465-0102		1	SAMPLING UNIT	**10-31**
220	2790373-0000		1	TUNNEL	
Common Parts					
020	1020164-0201		2	LEG, MOTOR	**10-57**
040	2590050-0100		1	BELT BRAKE	**10-61**
060	1550600-0200		1	WHEEL CURVE 90 DEGREES	**10-81**
070	1550620-0103		5	STRAIGHT CONVEYOR PC23 L1000	
810	*1086870-0000*		*1*	*SIGN*	
080	1550620-0102		2	STRAIGHT CONVEYOR PC23 L500	
810	*1086870-0000*		*1*	*SIGN*	
090	1550620-0101		1	STRAIGHT CONVEYOR PC23 L250	
800	*1550595-0000*	*M*	*1*	*SLIDING STRIP*	
800	*1550595-0000*	*M*	*2*	*SLIDING STRIP*	
810	*1086870-0000*		*1*	*SIGN*	
100	1550596-0100		1	ADJUSTABLE CONV. LINK	**10-91**
110	1020162-0205		1	LEG, CONVEYOR	**10-99**
120	1550700-0200		2	CONVEYOR CHAIN	**10-105**
130	2590003-0101		2	QUEUE GUARD, SINGLE W ATTACHM PC23	**10-109**
140	1020162-0212		5	LEG; CONVEYOR PC23	**10-113**
180	2775692-0100		1	CONNECTION BOX	**10-115, 10-117**
190	2699256-0101		2	CABLE TRENCH KIT	**10-119**
200	2559041-0000		1	BRACKET	
210	2562468-0000		1	BRACKET	
230	312105-0368		8	SCREW M6S ISO 4017 M6X16 A480	
240	315105-0153		8	WASHER BRB 6,4X12 RFR	
250	312605-0316		8	HEXAGON NUT, M6M M6 A280	
260	352103-0108		1	CABLE GLAND, ST 13,5 , PR20,4/PG13,5	
270	90110-0157		1	CABLE HOOD 6-POL 70.352.0628.1	
W6150	90220-0104	M	12	SCR. CABLE 4X1,5MM2	
X134	90110-0159		1	MALE INSERT 70.310.0640.0	

Machine Type | Group Description | Used-In | Group Number | Page No

DRIVE AND END UNIT (MOTOP) PC23

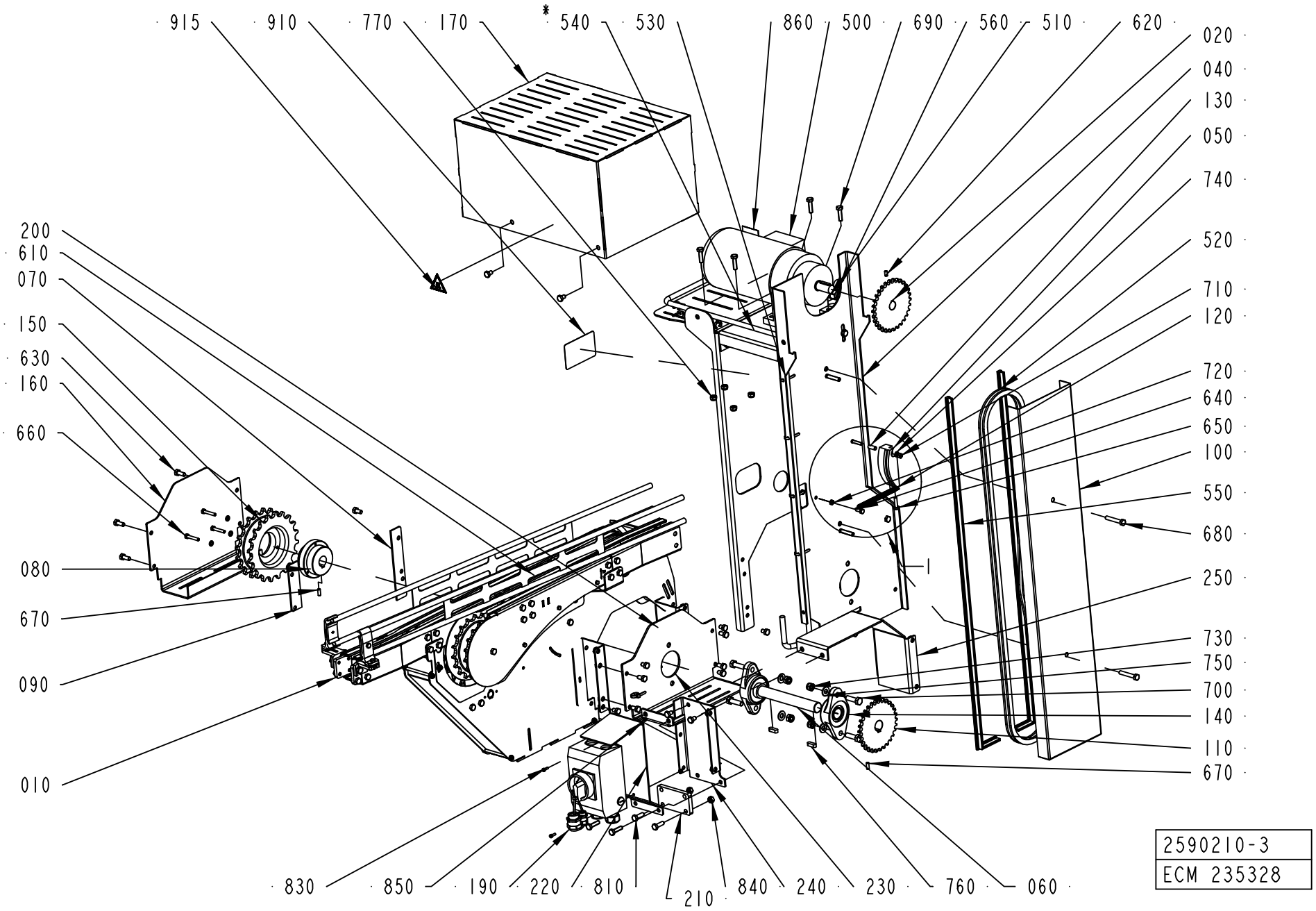

ECM: 235328 -
Group number: 2590210-0307
Assembly Drawing: 2590210-3_1_AB

Pos	Part No	UN	Qty	Description	Page No
50HZ 21M/MIN TBA, TPA,				**60HZ 21M/MIN TBA, TPA (See drawing on page: 10-4)**	
010	2590276-0201		1	DRIVE AND END UNIT	**10-7**
50HZ 25M/MIN TBA, TPA,				**60HZ 25M/MIN TBA, TPA (See drawing on page: 10-4)**	
010	2590276-0201		1	DRIVE AND END UNIT	**10-7**
150	2656677-0000		1	SPROCKET	
50HZ 33M/MIN TBA, TPA,				**60HZ 39M/MIN TBA, TPA (See drawing on page: 10-4)**	
010	2590276-0201		1	DRIVE AND END UNIT	**10-7**
150	2656677-0000		1	SPROCKET	
560	90458-1155		1	ENLARGING SLEEVE, 7216220	
50HZ 39M/MIN TBA, TPA (See drawing on page: 10-4)					
010	2590276-0201		1	DRIVE AND END UNIT	**10-7**
150	2656677-0000		1	SPROCKET	
500	90069-0181		1	GEARS, HELICAL MOTOR SK01V-80S/4	
560	90458-1155		1	ENLARGING SLEEVE, 7216220	
60HZ 33M/MIN TBA, TPA (See drawing on page: 10-4)					
010	2590276-0201		1	DRIVE AND END UNIT	**10-7**
560	90458-1155		1	ENLARGING SLEEVE, 7216220	
Common Parts					
020	1289743-0000		1	SPROCKET	
040	2590157-0200		1	SOLID	**10-25**
050	1550657-0000		1	CHAIN TENSIONER	
060	2590111-0000		1	SHAFT	
070	2590110-0000		1	PLATE	
080	2590154-0000		1	HUB	
090	2590109-0000		1	PLATE	
100	2656572-0000		1	CHAIN GUARD	
110	1550776-0000		1	SPROCKET	
120	1550594-0000		1	SPRING	
130	1550622-0000		1	SPACER	
140	2590114-0000		2	FLANGE BEARING	
160	2590108-0000		1	SIDE PLATE	
170	2590160-0000		1	MOTOR COVER	
190	1359581-0200		1	SWITCH GEAR	**10-27**
200	2561147-0000		2	BRACKET	
210	2561151-0000		1	SPACER	
220	2561152-0000		1	BRACKET	
230	2590104-0000		1	SIDE PLATE	
240	2590105-0000		1	COVER	
250	2590106-0000		1	COVER	
510	90458-0438		1	GLAND, EXTENDED WITH INSERT, M20X1,5	
520	318202-0000		150	CHAIN 1/2" X 5/16"	
530	352113-0102		9	CABLE TIE, BLACK 188X4,8 MM	
540	90220-0104	M	1	SCR. CABLE 4X1,5MM2	
550	90143-0057	M	2	STRIP EMKA 1011-05 21X11MM	
600	312105-0447		12	SCREW M6S ISO 4017 M8X12 A480	
610	312105-0449		8	SCREW M6S ISO 4017 M8X16 A480	
620	312318-0366		1	SCREW ISO4029 M6X12 A4	
630	312105-0451		4	SCREW M6S ISO 4017 M8X20 A480	
640	312105-0368		1	SCREW M6S ISO 4017 M6X16 A480	
650	312105-0372		1	SCREW M6S ISO 4017 M6X25 A480	
660	312105-0376		3	SCREW M6S ISO 4014 M6X35 A480	
670	312318-0368		2	SCREW ISO4029 M6X16 A4	
680	312105-0461		2	SCREW M6S ISO 4014 M8X50 A480	
690	312105-0455		4	SCREW M6S ISO 4017 M8X30 A480	
700	312105-0497		4	SCREW M6S ISO 4017 M10X35 A480	
710	312605-0316		1	HEXAGON NUT, M6M M6 A280	
720	312625-0316		2	HEXAGON THIN NUT, EN 24035 ML6M M6 A4	
730	312812-0320		4	HEXAGON NUT, NY-LOCK M10 A480	
740	315105-0153		4	WASHER BRB 6,4X12 RFR	
750	315105-0173		2	WASHER BRB 10,5X20 RFR	
760	315705-0265		2	PARALLEL KEY W. ROUND ENDS 8X7X25 MM	
770	312812-0318		4	HEXAGON NUT, NY-LOCK M8 A480	
800	315105-0173		2	WASHER BRB 10,5X20 RFR	
810	312105-0453		2	SCREW M6S ISO 4017 M8X25 A480	
820	312105-0455		2	SCREW M6S ISO 4017 M8X30 A480	
830	312115-0291		2	SCREW ISO4762 M4X12 A4 80	
840	312605-0318		2	HEXAGON NUT, M6M M8 A280	
850	312812-0312		2	HEXAGON NUT, NY-LOCK M4 A480	
860	90458-1253		2	MANDATORY ACTION SIGN CONSULT OM ISO	
910	1359055-0000		1	SIGN	
915	359705-0007		1	WARNING SIGN ISO, HOT SURFACE	
915	359725-0116		1	WARNING SIGN ANSI (H), HOT SURFACE	
920	2590290-0100		1	PACKING DESCRIPTION	**10-29**

Machine Type | Group Description | Used-In | Group Number | Page No

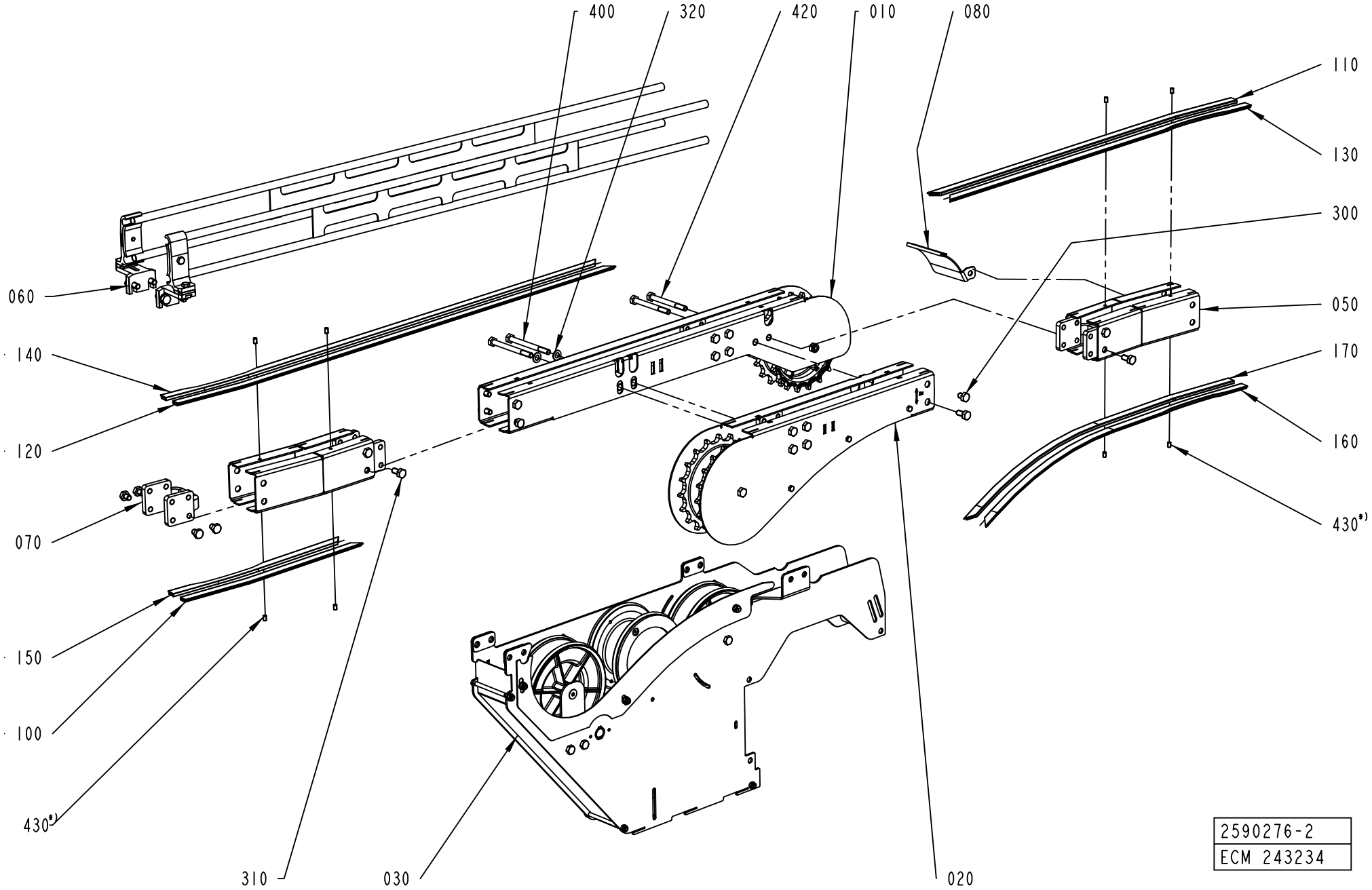
400
320
420
010
080
110
130
300
060
050
140
170
120
160
070
430*)
150
100
430*)
310
030
020
2590276-2
ECM 243234

ECM: 243234 -
Group number: 2590276-0201
Assembly Drawing: 2590276-2_1_AE

Pos	Part No	UN	Qty	Description	Page No
TBA, TPA					
060	2561156-0100		1	RAILING	**10-9**
Common Parts					
010	2561260-0200		1	INFEED	**10-13**
020	1550627-0200		1	END UNIT	**10-17**
030	2561290-0200		1	CHAIN TENSIONER	**10-19**
050	2561245-0100		2	SLIDING CURVE	**10-23**
070	2561206-0000		1	SPACER	
080	2699210-0000		1	COVER	
100	1550595-3453		1	SLIDING STRIP	
110	1550595-6403		1	SLIDING STRIP	
120	1550595-8853		1	SLIDING STRIP	
130	2699585-0640		1	SLIDING STRIP	
140	2699585-0880		1	SLIDING STRIP	
150	2699585-0335		1	SLIDING STRIP	
160	2699585-0565		1	SLIDING STRIP	
170	2589960-5653		1	SLIDING STRIP	
300	90459-4735		7	SCREW M6S ISO 4017 M8X10 A480	
310	312105-0449		8	SCREW M6S ISO 4017 M8X16 A480	
320	315105-0165		2	WASHER BRB 8,4X16 RFR	
400	312105-0469		2	SCREW M6S ISO 4014 M8X90 A480	
420	312105-0467		2	SCREW M6S ISO 4014 M8X80 A480	
430	90459-7293		8	SET SCREW DIN 551M5X8 PA66	

Pos	Part No	UN	Qty	Description	Page No

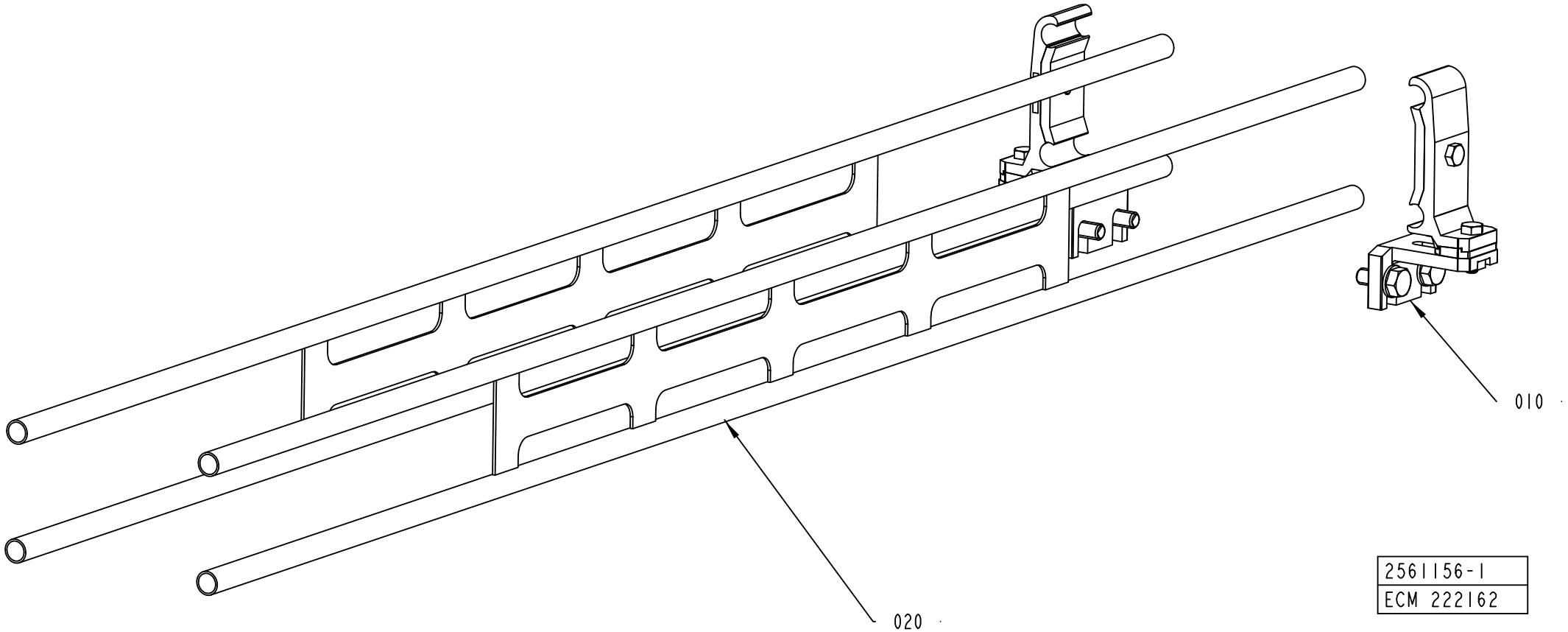
010
020
2561156-1
ECM 222162

ECM: 228033 - 20051222
Group number: 2561156-0100
Assembly Drawing: 2561156-1_1_AB

Pos	Part No	UN	Qty	Description	Page No
-					
010	1550743-0200		2	RAIL HOLDER	**5-39, 10-11**
020	2561242-0000		2	RAILING	

Pos	Part No	UN	Qty	Description	Page No

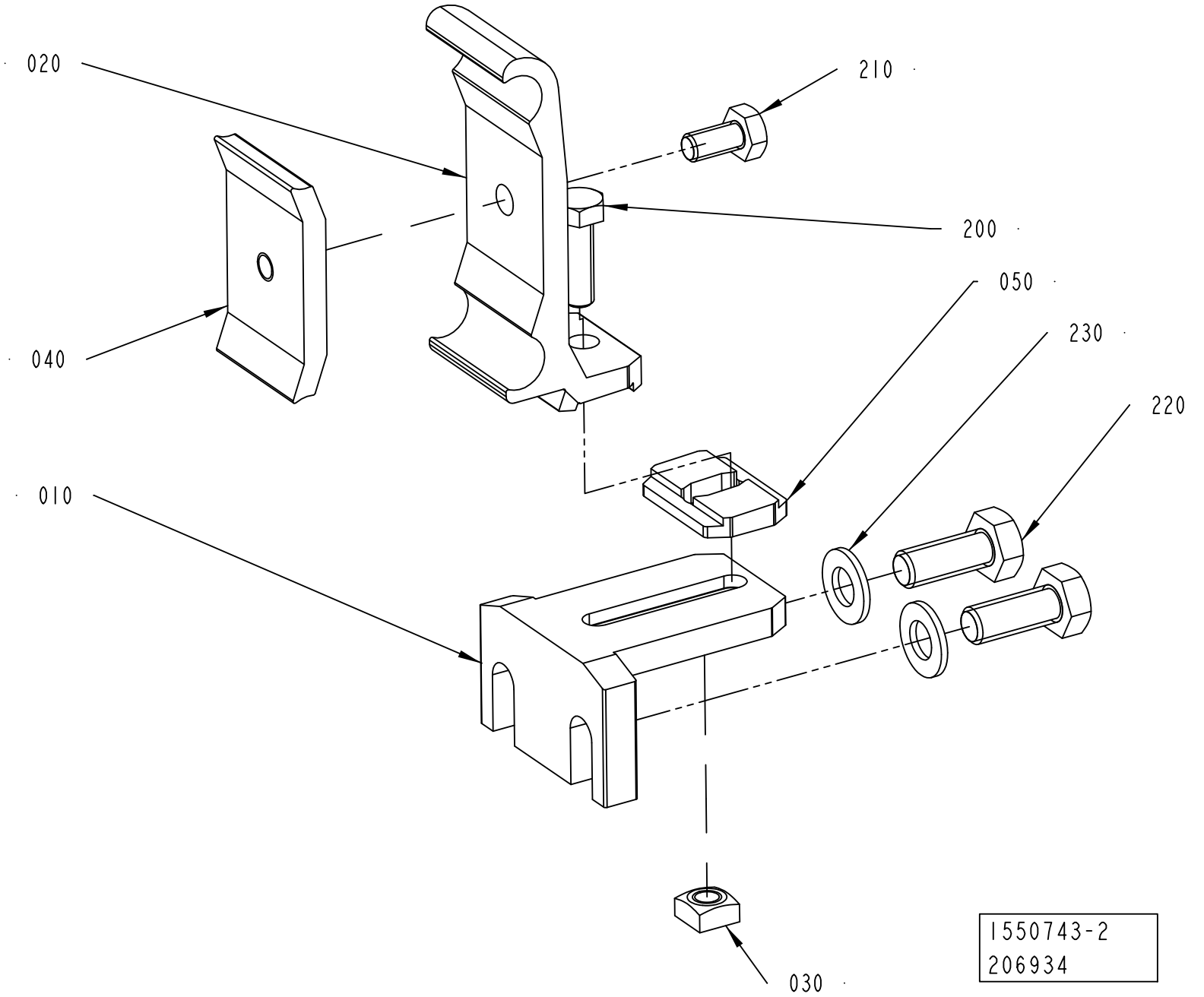
020
210
200
040
050
230
220
010
030
1550743-2
206934

ECM: 206965 - 20050602
Group number: 1550743-0200
Assembly Drawing: 1550743-2_1_AA

Pos	Part No	UN	Qty	Description	Page No
-					
010	1550772-0000		1	HOLDER	
020	2699437-0000		1	RAIL HOLDER	
030	1359565-0000		1	NUT	
040	1366727-0000		1	CLAMP	
050	2699436-0000		1	SPACER	
200	312105-0370		1	SCREW M6S ISO 4017 M6X20 A480	
210	312105-0366		1	SCREW M6S ISO 4017 M6X12 A480	
220	312105-0451		2	SCREW M6S ISO 4017 M8X20 A480	
230	315105-0165		2	WASHER BRB 8,4X16 RFR	

Pos	Part No	UN	Qty	Description	Page No

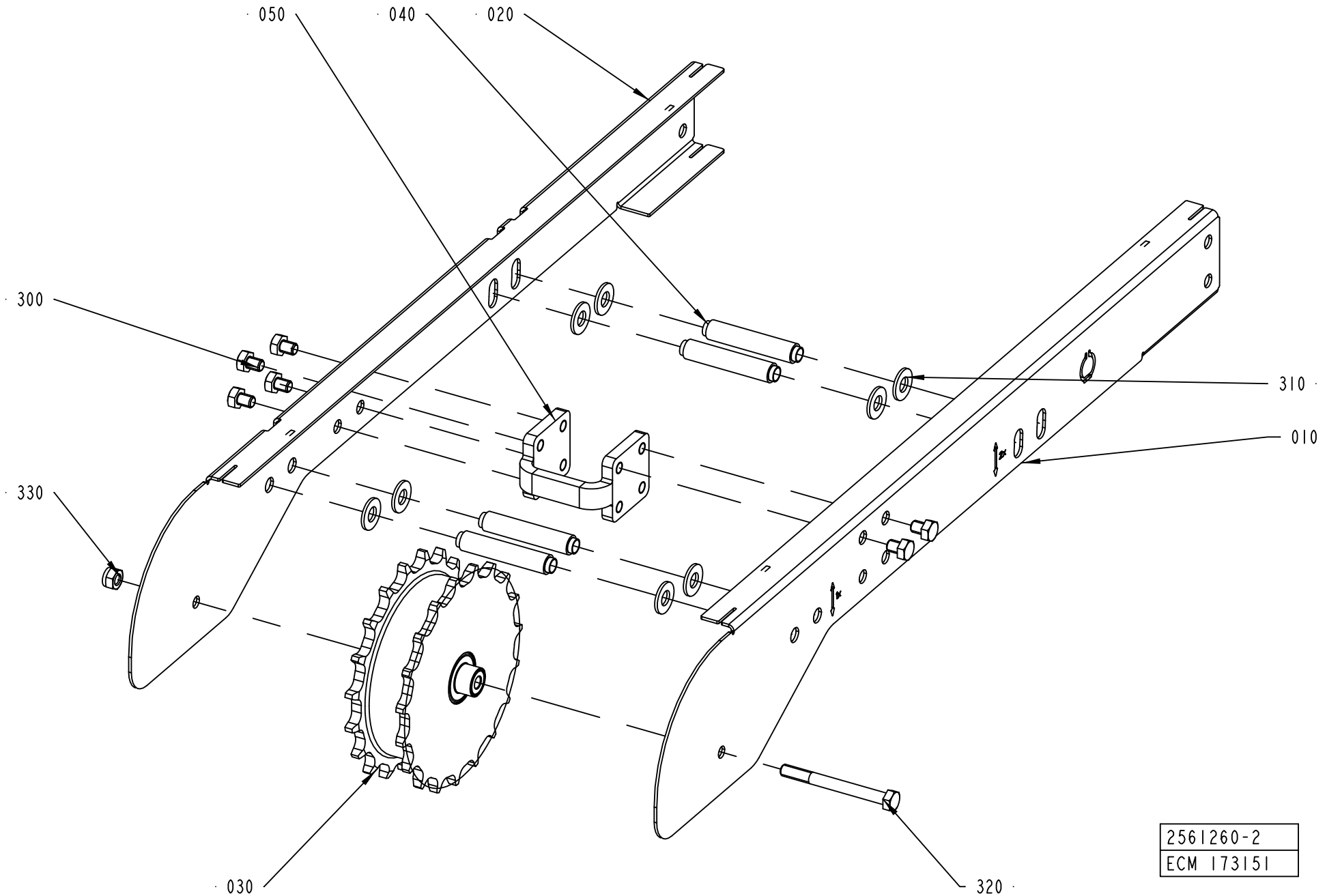
050
040
020
300
310
010
330
030
320
2561260-2
ECM 173151

ECM: 173267 - 20040614
Group number: 2561260-0200
Assembly Drawing: 2561260-2_1_AA

Pos	Part No	UN	Qty	Description	Page No
-					
010	2656680-0000		1	SIDE PLATE	
020	2656681-0000		1	SIDE PLATE	
030	2561244-0200		1	DRIVE WHEEL	**5-61, 10-15**
040	2561566-0000		4	SPACER	
050	2561206-0000		1	SPACER	
300	90459-4735		6	SCREW M6S ISO 4017 M8X10 A480	
310	315105-0173		8	WASHER BRB 10,5X20 RFR	
320	312105-0467		1	SCREW M6S ISO 4014 M8X80 A480	
330	312812-0318		1	HEXAGON NUT, NY-LOCK M8 A480	

Pos	Part No	UN	Qty	Description	Page No

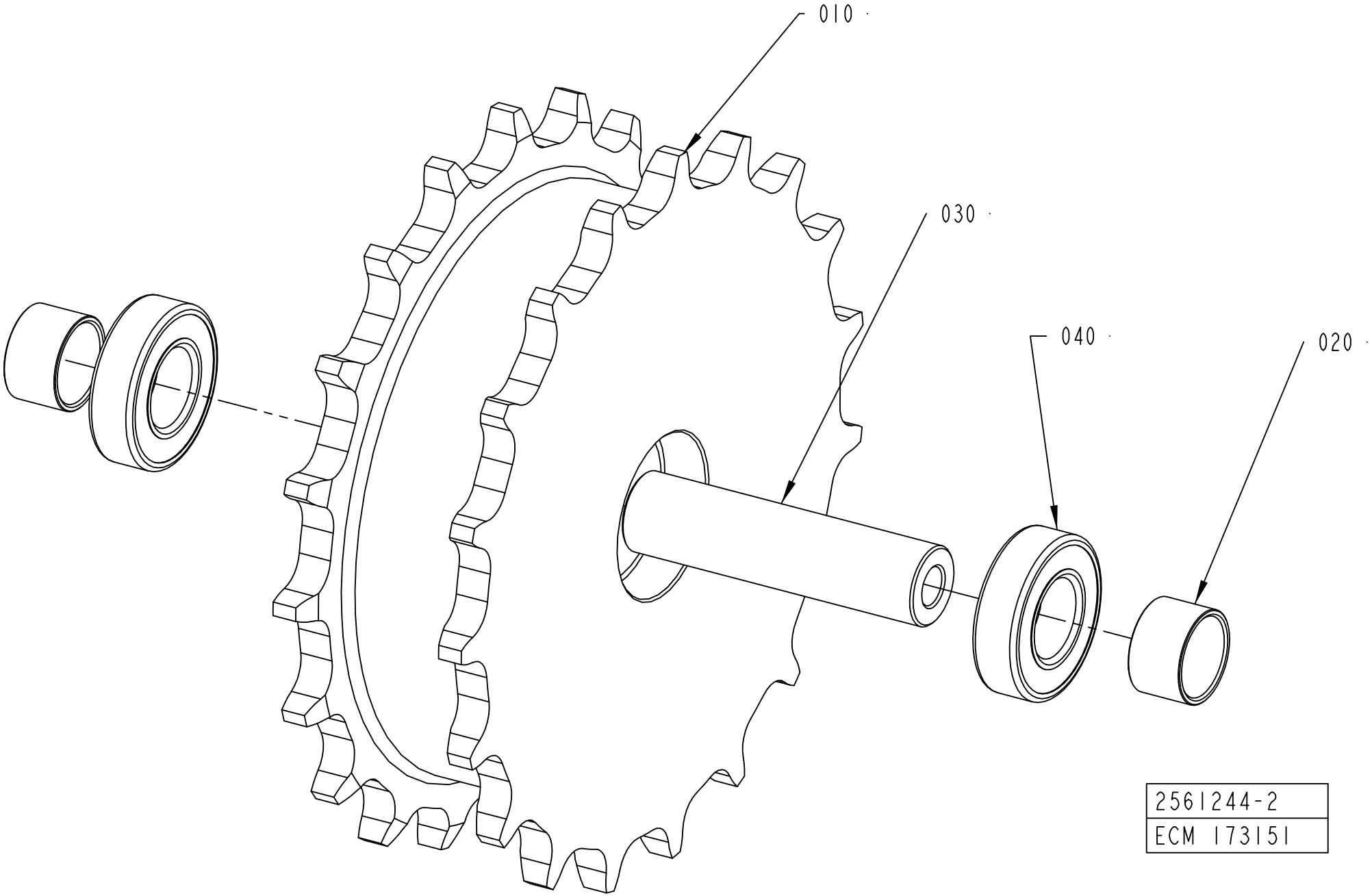
010
030
040
020
2561244-2
ECM 173151

ECM: 306227 - 20070817
Group number: 2561244-0200
Assembly Drawing: 2561244-2_1_AA

Pos	Part No	UN	Qty	Description	Page No
-					
010	2656672-0000		1	SPROCKET	
020	2656673-0000		2	SPACER	
030	2561267-0000		1	SHAFT	
040	1550348-0002		2	BEARING	
040	1550348-0001		2	BEARING	

Pos	Part No	UN	Qty	Description	Page No

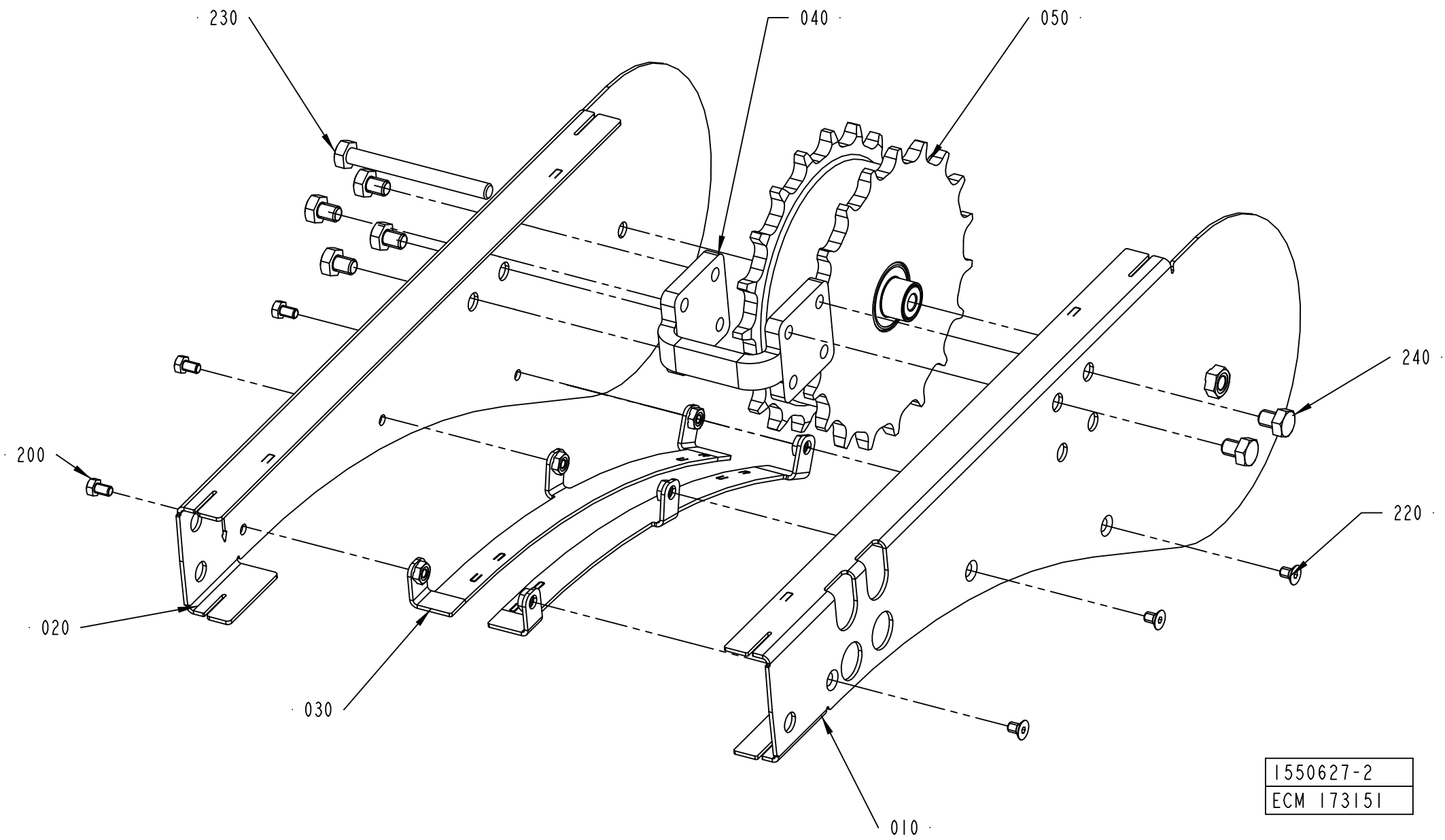
230
040
050
240
200
220
020
030
010
1550627-2
ECM 173151

ECM: 173266 - 20040614
Group number: 1550627-0200
Assembly Drawing: 1550627-2_1_AA

Pos	Part No	UN	Qty	Description	Page No
-					
010	2656674-0000		1	SIDE PLATE	
020	2656675-0000		1	SIDE PLATE	
030	2656407-0000		2	SLIDE RAIL	
040	2561206-0000		1	SPACER	
050	2561244-0200		1	DRIVE WHEEL	**5-61, 10-15**
200	312105-0323		3	SCREW M6S ISO 4017 M5X8 A480	
220	312155-0323		3	SCREW DIN 7991 MF6S M5X8 A4 70	
230	312105-0467		1	SCREW M6S ISO 4014 M8X80 A480	
240	90459-4735		6	SCREW M6S ISO 4017 M8X10 A480	

Pos	Part No	UN	Qty	Description	Page No

CHAIN TENSIONER

Drawing file: 2561290-2_1_AA.hpgl

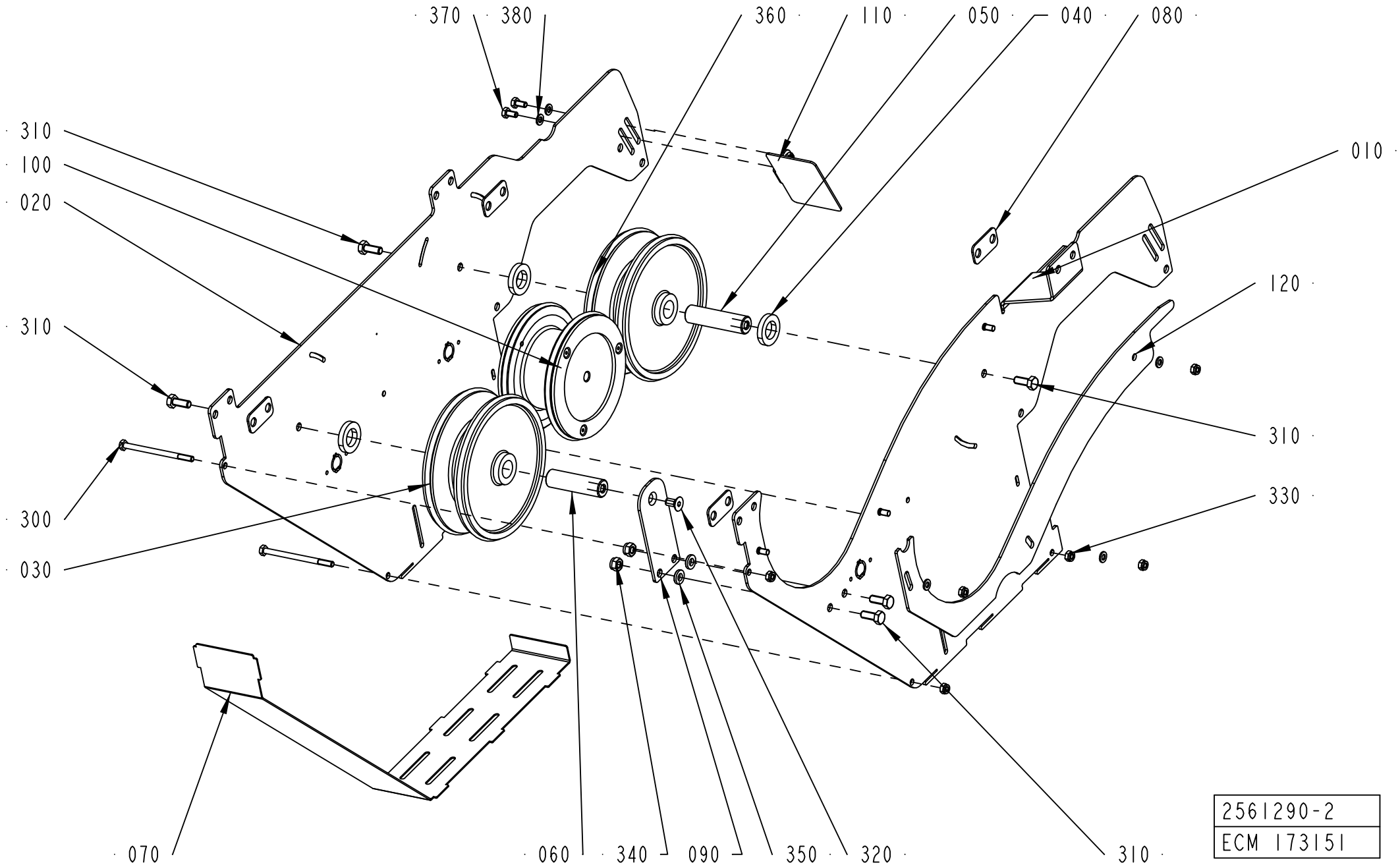

ECM: 178185 - 20041124
Group number: 2561290-0200
Assembly Drawing: 2561290-2_1_AA

Pos	Part No	UN	Qty	Description	Page No
-					
010	2656668-0000		1	SIDE PLATE	
020	2656669-0000		1	SIDE PLATE	
030	2656679-0000		2	WHEEL	
040	2561226-0000		3	SPACER	
050	2561227-0001		1	SHAFT	
060	2561227-0002		1	SHAFT	
070	2561229-0000		1	PROTECTION	
080	2561230-0001		4	SPACER	
090	2561231-0000		1	BRACKET	
100	2561225-0200		1	GUIDE SPROCKET	**10-21**
110	2589831-0000		1	COVER	
120	2656678-0000		1	COVER	
300	312105-0388		3	SCREW M6S ISO 4014 M6X90 A480	
310	312105-0451		5	SCREW M6S ISO 4017 M8X20 A480	
320	312155-0449		1	SCREW DIN 7991 MF6S M8X16 A4 70	
330	312812-0316		6	HEXAGON NUT, NY-LOCK M6 A480	
340	312812-0318		2	HEXAGON NUT, NY-LOCK M8 A480	
350	315115-0165		2	WASHER PLAIN, TBRB 8,4/16 H=3	
360	315202-0246		4	O-RING 144,3X5,7 MM	
370	312105-0366		2	SCREW M6S ISO 4017 M6X12 A480	
380	315105-0153		5	WASHER BRB 6,4X12 RFR	

Pos	Part No	UN	Qty	Description	Page No

GUIDE SPROCKET

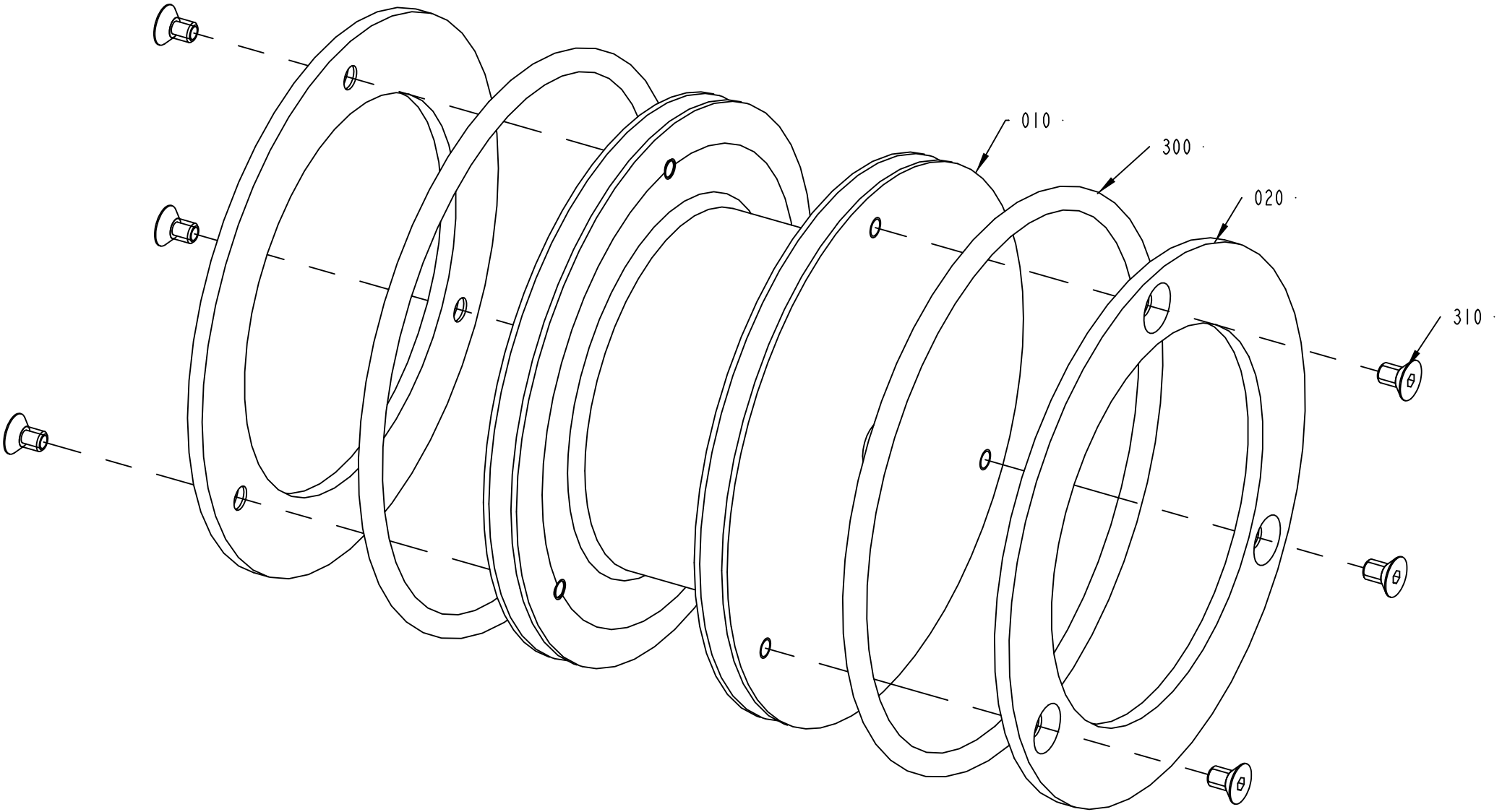

2561225-2
173151

ECM: 173358 - 20040614
Group number: 2561225-0200
Assembly Drawing: 2561225-2_1_AA

Pos	Part No	UN	Qty	Description	Page No
-					
010	2656683-0000		1	WHEEL	
020	2656682-0000		2	SLIDE PLATE	
300	315202-0242		2	O-RING 124,3X5,7 MM	
310	312155-0323		6	SCREW DIN 7991 MF6S M5X8 A4 70	

Pos	Part No	UN	Qty	Description	Page No

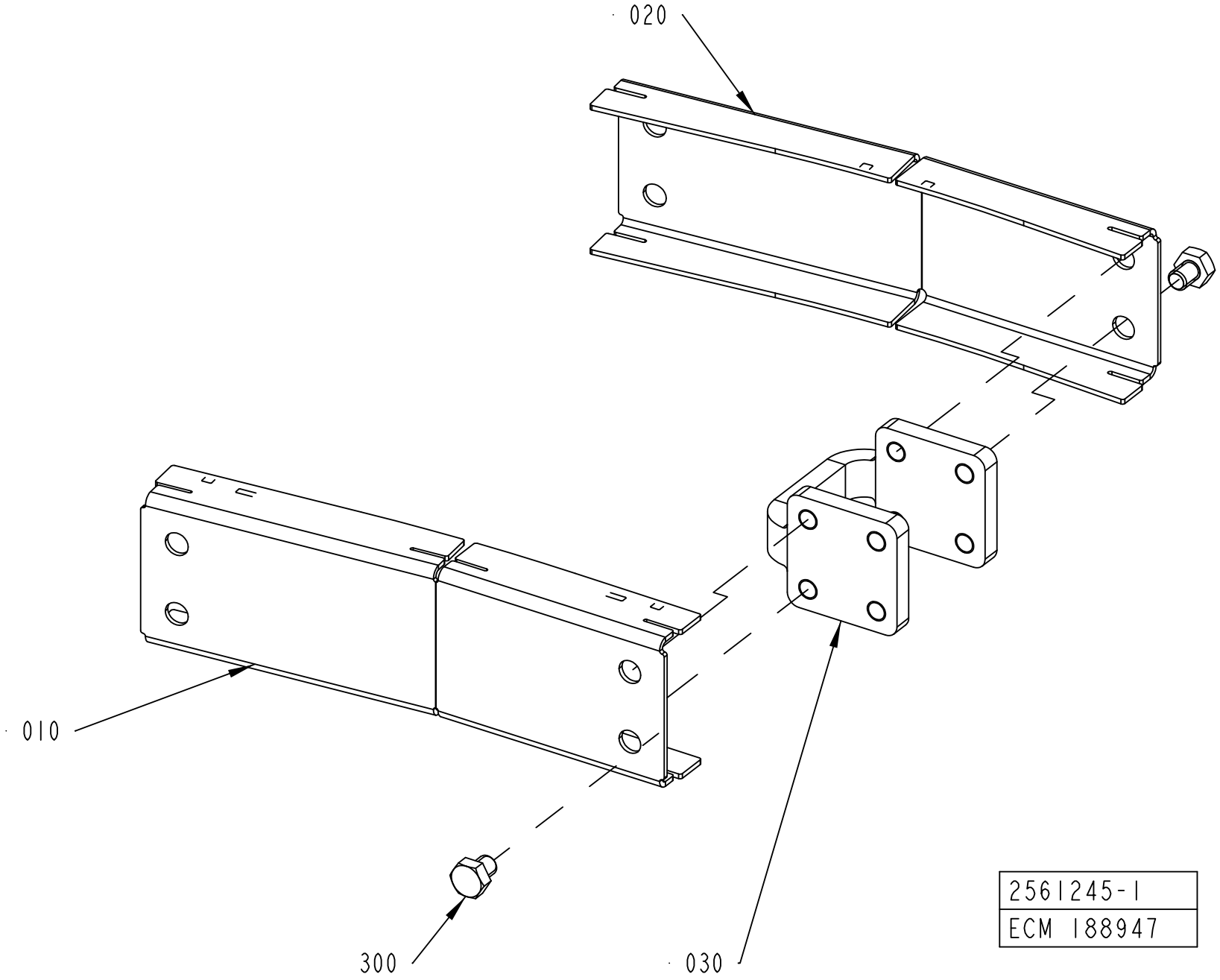
020
010
300
030
2561245-1
ECM 188947

ECM: 190728 - 20050121
Group number: 2561245-0100
Assembly Drawing: 2561245-1_1_AB

Pos	Part No	UN	Qty	Description	Page No
-					
010	2561157-0000		1	SIDE PLATE	
020	2561247-0000		1	SIDE PLATE	
030	2561206-0000		1	SPACER	
300	90459-4735		2	SCREW M6S ISO 4017 M8X10 A480	

Pos	Part No	UN	Qty	Description	Page No

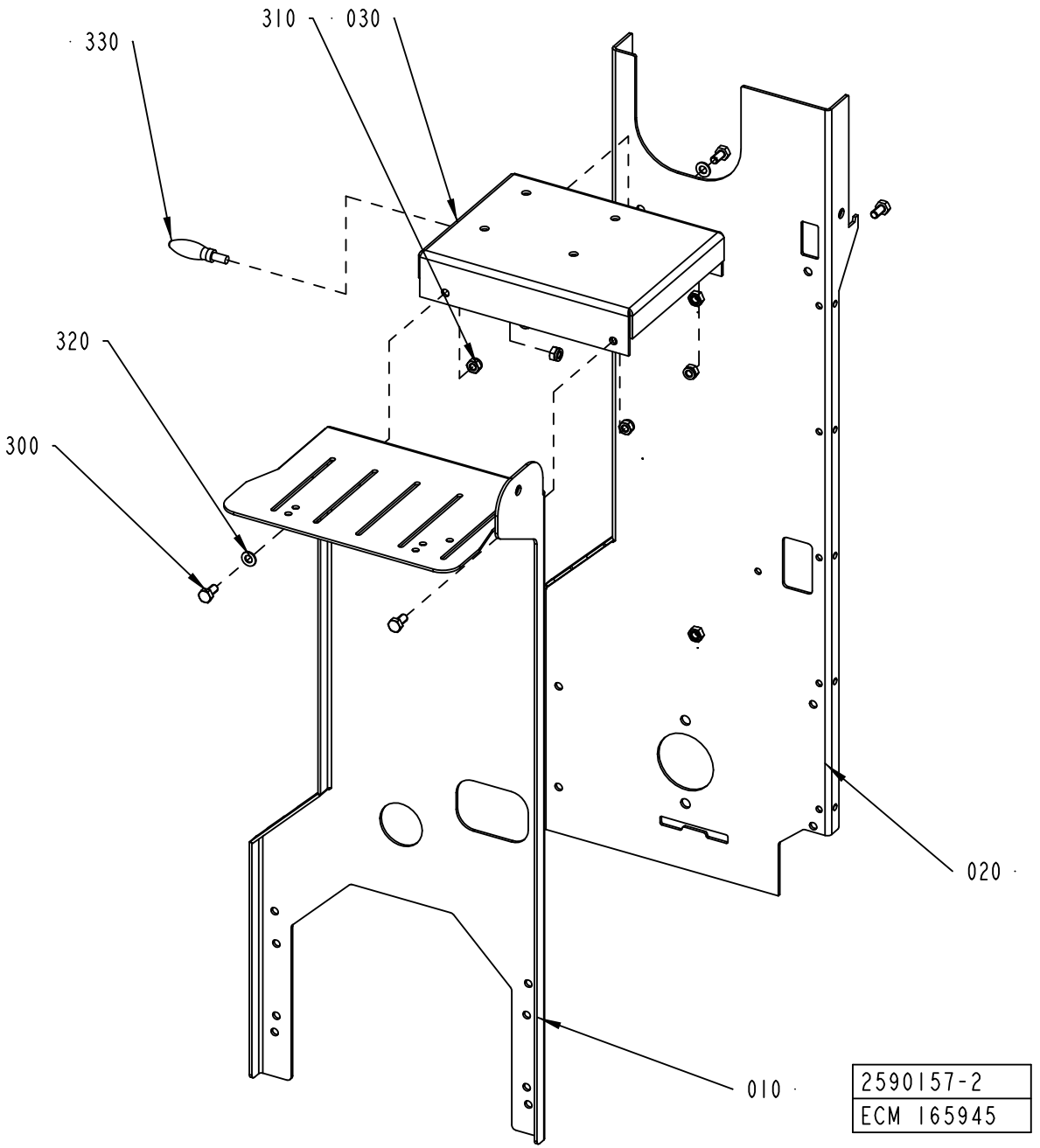
310
030
330
320
300
020
010
2590157-2
ECM 165945

ECM: 168212 - 20040506
Group number: 2590157-0200
Assembly Drawing: 2590157-2_1_AA

Pos	Part No	UN	Qty	Description	Page No
-					
010	2590158-0000		1	SIDE PLATE	
020	2656573-0000		1	SIDE PLATE	
030	2590161-0000		1	MOTOR SHELF	
300	312105-0449		4	SCREW M6S ISO 4017 M8X16 A480	
310	312812-0318		5	HEXAGON NUT, NY-LOCK M8 A480	
320	315105-0165		2	WASHER BRB 8,4X16 RFR	
330	318801-0108		1	HANDLE, THREADED TAP. NO. 8304-910	

Pos	Part No	UN	Qty	Description	Page No

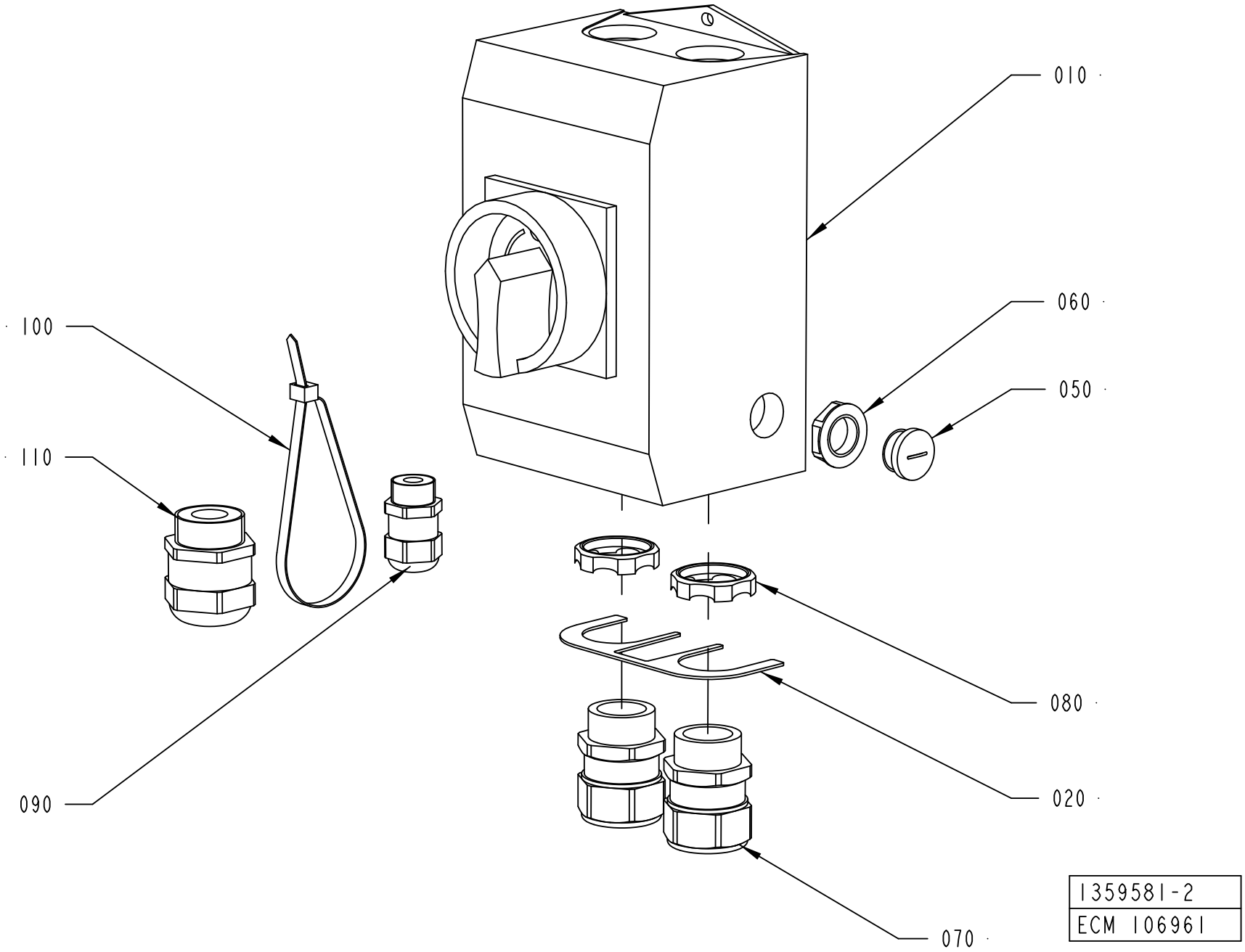
010
060
050
100
110
080
090
020
070
1359581-2
ECM 106961

ECM: 108686 - 20021106
Group number: 1359581-0200
Assembly Drawing: 1359581-2_1_AB

Pos	Part No	UN	Qty	Description	Page No
-					
010	1359831-0000		1	SWITCH GEAR	
020	1359734-0000		1	SHEET	
050	90458-1307		1	BLIND PLUG CIRCULAR, M16X1,5 514GFK/216	
060	90458-0322		1	NUT, M16X1,5	
070	90458-0440		2	GLAND, EXTENDED WITH INSERT, M25X1,5	
080	90458-0462		2	GLAND, LOCK NUT, M25X1,5	
090	90458-0306		1	CABLE GLAND, M16X1,5, NO.5311 1010	
100	352113-0102		1	CABLE TIE, BLACK 188X4,8 MM	
110	90458-0316		1	CABLE GLAND, M25X1,5, NO.5311 1130	

Pos	Part No	UN	Qty	Description	Page No

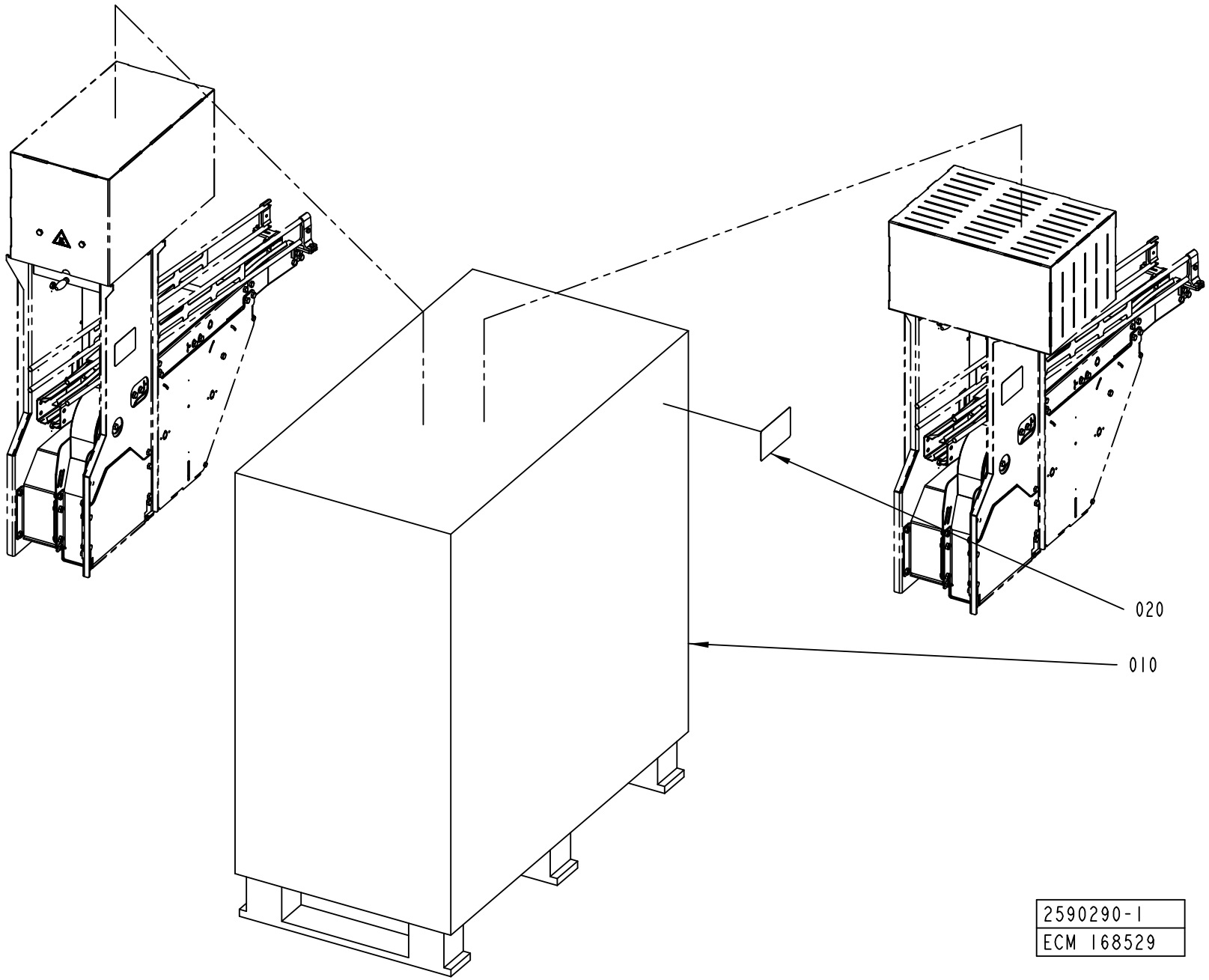
020
010
2590290-1
ECM 168529

ECM: 170895 - 20040506
Group number: 2590290-0100
Assembly Drawing: 2590290-1_1_AB

Pos	Part No	UN	Qty	Description	Page No
-					
010	2590291-0000		1	BOX	
020	1086871-0000		1	LABEL TAPE	

Pos	Part No	UN	Qty	Description	Page No

SAMPLING UNIT

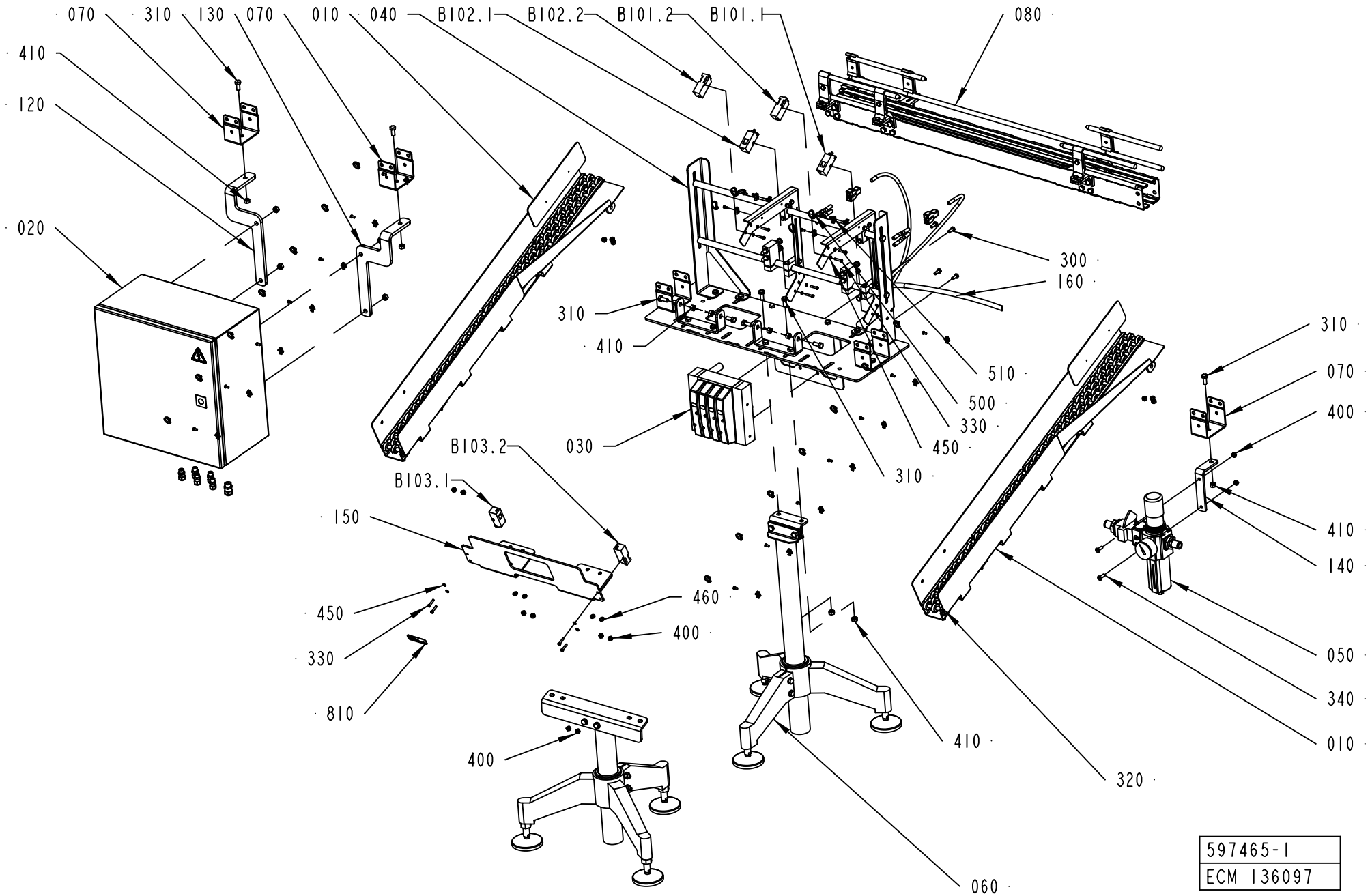

597465-1
ECM 136097

ECM: 136097 -
Group number: 597465-0102
Assembly Drawing: 597465-1_1_AD

Pos	Part No	UN	Qty	Description	Page No
-					
010	1550235-0100		2	CHUTE	**10-33**
030	1550855-0100		1	PNEUMATIC UNIT	**10-35**
040	1550878-0100		1	CANTILEVER	**10-37**
050	1550879-0100		1	PRESSURE REGULATOR	**10-39**
060	1550883-0100		1	LEG	**10-41**
070	1550874-0000		3	BRACKET FOR LEG PC23	
080	2656340-0100		1	STRAIGHT CONVEYOR	**10-43**
090	2733048-0101		1	TECHNICAL MANUAL	
100	1550865-0000		1	PNEUMATIC DIAGRAM	
120	1550881-0000		1	BRACKET	
130	1550882-0000		1	BRACKET	
140	1550407-0000		1	BRACKET	
150	2699366-0000		1	STOP	
160	2699304-0100		1	HOSE INSTALLATION	**10-49**
300	312105-0368		4	SCREW M6S ISO 4017 M6X16 A480	
310	312105-0451		9	SCREW M6S ISO 4017 M8X20 A480	
320	312125-0287		6	SCREW ISO 1207 M4X8 A4	
330	312125-0295		12	SCREW ISO 1207 M4X20 A4	
340	312155-0370		2	SCREW DIN 7991 MF6S M6X20 A4 70	
400	312605-0316		10	HEXAGON NUT, M6M M6 A280	
410	312605-0318		15	HEXAGON NUT, M6M M8 A280	
450	315105-0136		12	WASHER BRB 4,3X9 RFR	
460	315105-0153		4	WASHER BRB 6,4X12 RFR	
500	352113-0101		6	CABLE TIE, BLACK 92X2,5 MM	
510	352113-0205		6	ANCHOR PLATES FOR STRIPS, TYPE TM2S8-C10	
810	1086870-0000		1	SIGN	
820	1550863-0100		1	PACKING DESCRIPTION	**10-51**
B101.1	90232-0127		1	PH.CELL E3S-CT61-L-5-5M	
B101.2	90232-0104		1	PH.CELL E3S-CT61-D-5M	
B102.1	90232-0127		1	PH.CELL E3S-CT61-L-5-5M	
B102.2	90232-0104		1	PH.CELL E3S-CT61-D-5M	
B103.1	90232-0127		1	PH.CELL E3S-CT61-L-5-5M	
B103.2	90232-0104		1	PH.CELL E3S-CT61-D-5M	

Pos	Part No	UN	Qty	Description	Page No

Machine Type | Group Description | Used-In | Group Number | Page No

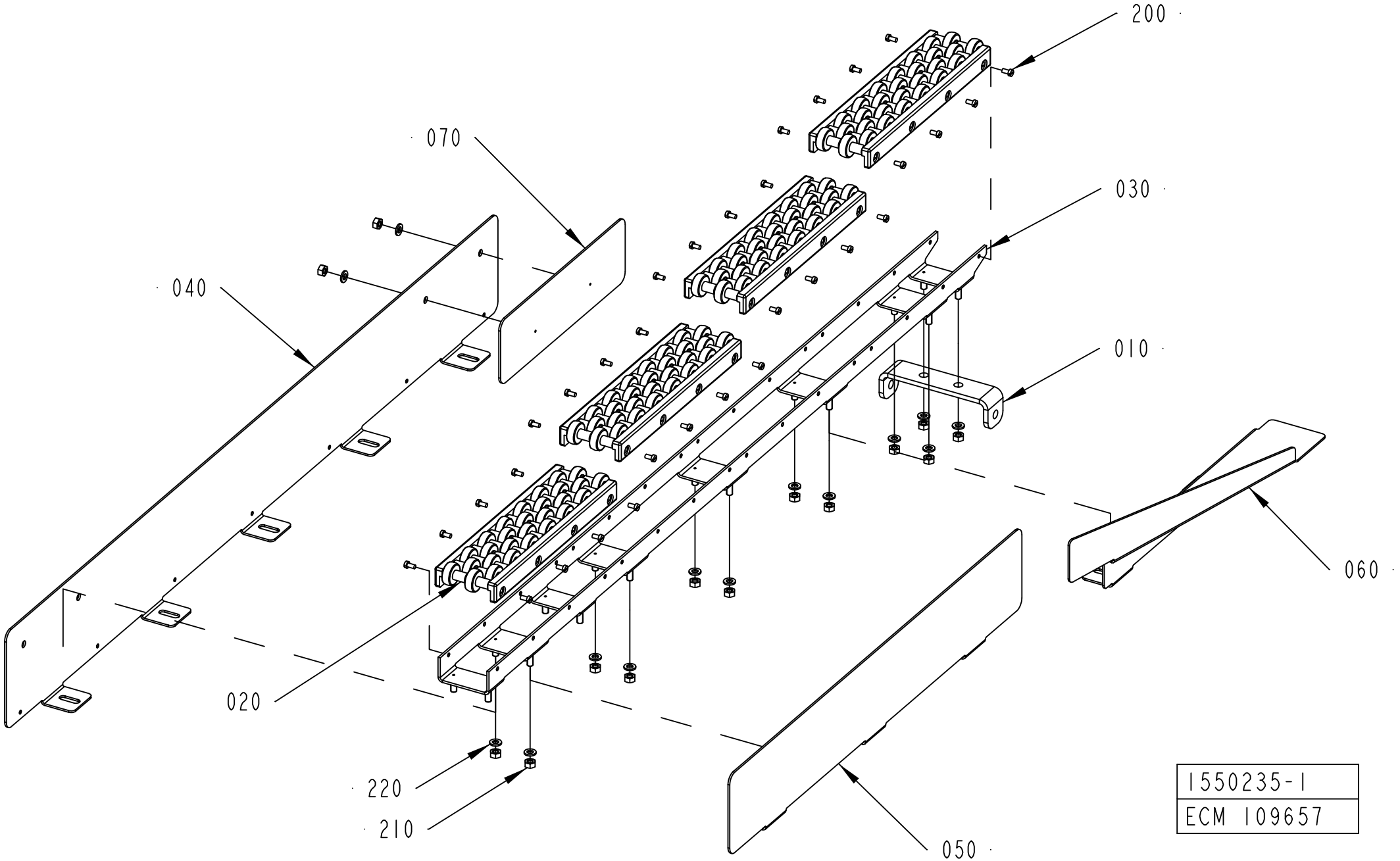
200
070
030
040
010
060
020
220
210
050
1550235-1
ECM 109657

ECM: 179207 - 20050420
Group number: 1550235-0100
Assembly Drawing: 1550235-1_1_AA

Pos	Part No	UN	Qty	Description	Page No
-					
010	1550179-0000		1	BOW CLAMP	
020	1550233-0000		4	ROLLER UNIT	
030	1550234-0000		1	CHUTE	
040	1550236-0000		1	SIDE PLATE	
050	1550237-0000		1	SIDE PLATE	
055	1550238-0000		1	SIDE PLATE	
060	1550239-0000		1	SIDE PLATE	
070	1550286-0000		1	PLATE	
200	312125-0287		39	SCREW ISO 1207 M4X8 A4	
210	312605-0316		14	HEXAGON NUT, M6M M6 A280	
220	315105-0153		14	WASHER BRB 6,4X12 RFR	
250	352113-0101		7	CABLE TIE, BLACK 92X2,5 MM	
270	352113-0205		7	ANCHOR PLATES FOR STRIPS, TYPE TM2S8-C10	

Pos	Part No	UN	Qty	Description	Page No

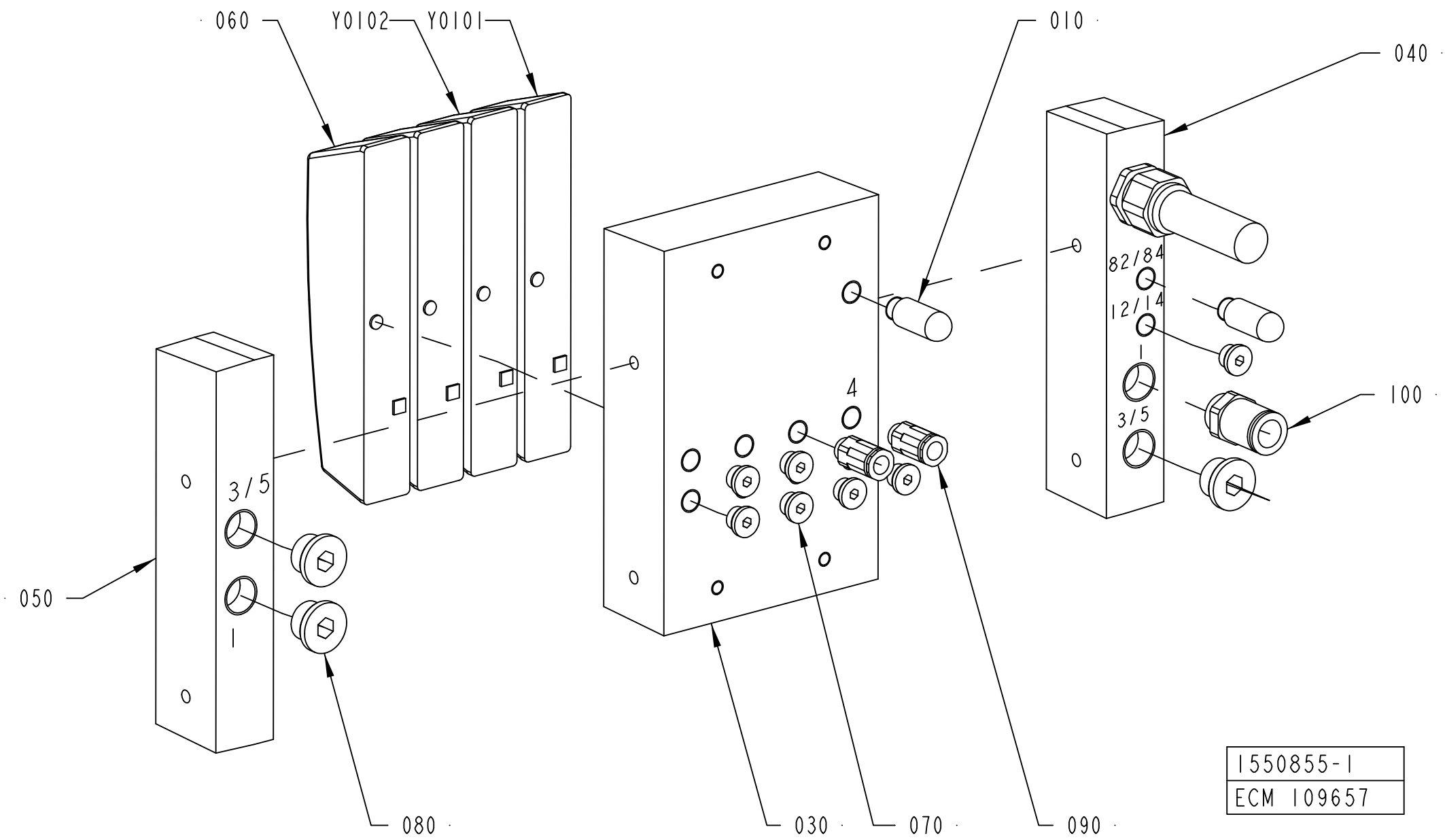

1550855-1
ECM 109657

ECM: 201532 - 20050420
Group number: 1550855-0100
Assembly Drawing: 1550855-1_1_AA

Pos	Part No	UN	Qty	Description	Page No
-					
010	90328-0047		2	SILENCER G1/8"	
030	90458-1204		1	BASIC SUB-BASE 4 VALVES, CDVI5.0-GB4-MP	
040	90458-1211		1	LEFT ENDPLATE INCL. 5M CABLE	
050	90458-1213		1	RIGHT ENDPLATE INTERNAL PILOT AIR	
060	90458-1215		2	COVER PLATE FOR EMPTY VALVE POSITION	
070	342713-0209		7	PLUG (QUANT.MINIMA= 10PC).	
080	342713-0211		3	PLUG, EXT THREAD HEX SOCKET 8638-00-380	
090	342722-0204		2	PIPE COUPLING	
100	342722-0210		1	STRAIGHT COUPLING, D=12 MM - G3/8"	
Y0101	90458-1194		1	MONOSTABLE VALVE 5/2	
Y0102	90458-1194		1	MONOSTABLE VALVE 5/2	

Pos	Part No	UN	Qty	Description	Page No

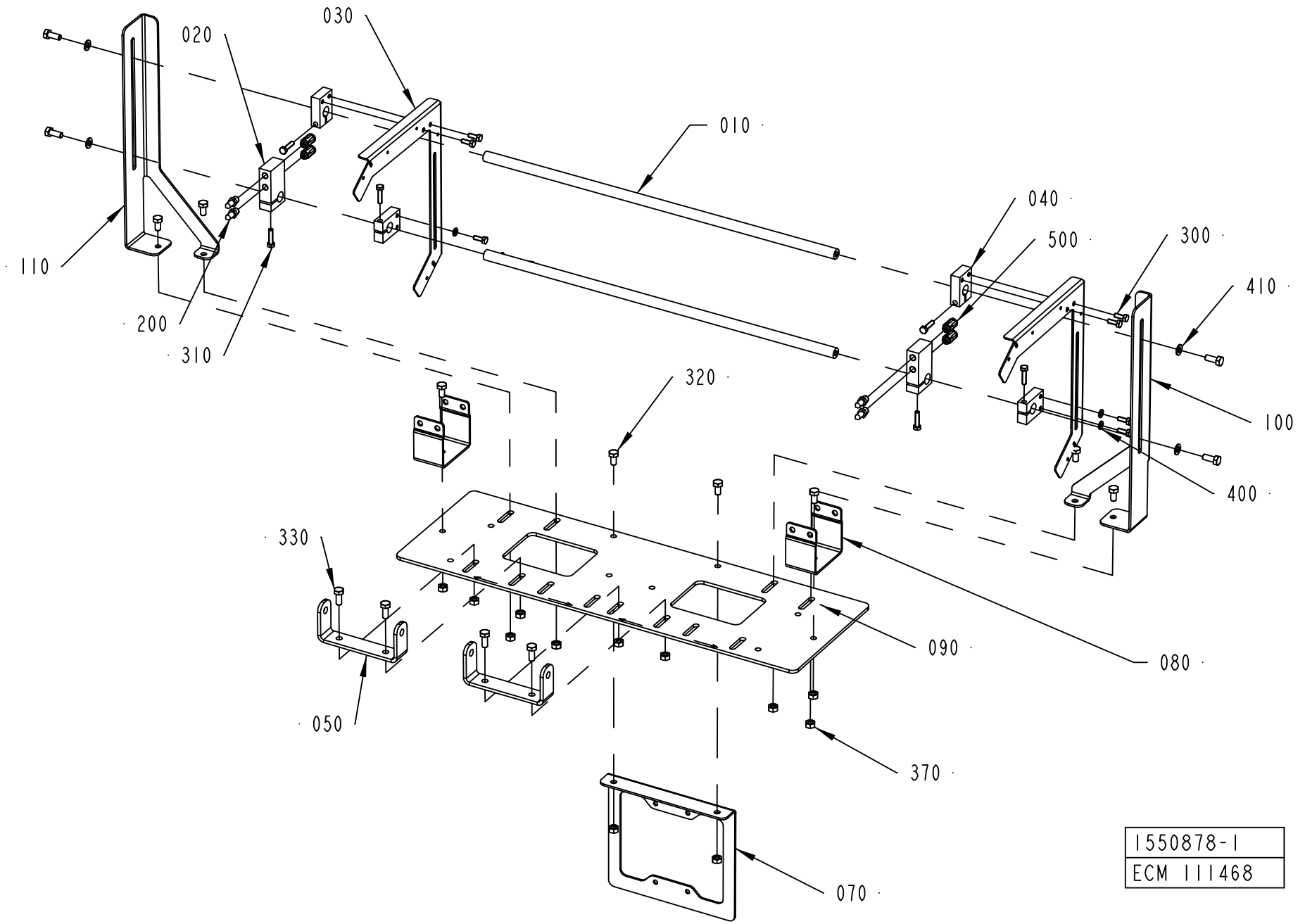
030
020
010
040
500
300
410
110
200
310
320
100
400
330
090
080
050
370
070
1550878-1
ECM 111468

ECM: 133432 - 20031113
Group number: 1550878-0100
Assembly Drawing: 1550878-1_1_AB

Pos	Part No	UN	Qty	Description	Page No
-					
010	1550177-0000		2	SHAFT	
020	1550206-0000		2	HOLDER	
030	1550302-0000		2	PHOTOCELL BRACKET	
040	1550319-0000		4	BRACKET	
050	1550401-0000		2	BOW CLAMP	
070	1550847-0000		1	BRACKET	
080	1550874-0000		2	BRACKET FOR LEG PC23	
090	1550875-0000		1	PLATE	
100	1550876-0000		1	BRACKET	
110	1550877-0000		1	BRACKET	
200	90424-0087		4	AIR NOZZLE	
300	312105-0368		8	SCREW M6S ISO 4017 M6X16 A480	
310	312105-0372		6	SCREW M6S ISO 4017 M6X25 A480	
320	312105-0449		8	SCREW M6S ISO 4017 M8X16 A480	
330	312105-0451		8	SCREW M6S ISO 4017 M8X20 A480	
370	312605-0318		12	HEXAGON NUT, M6M M8 A280	
400	315105-0153		4	WASHER BRB 6,4X12 RFR	
410	315105-0165		4	WASHER BRB 8,4X16 RFR	
500	342722-0204		4	PIPE COUPLING	

Pos	Part No	UN	Qty	Description	Page No

Machine Type | Group Description | Used-In | Group Number | Page No

PRESSURE REGULATOR

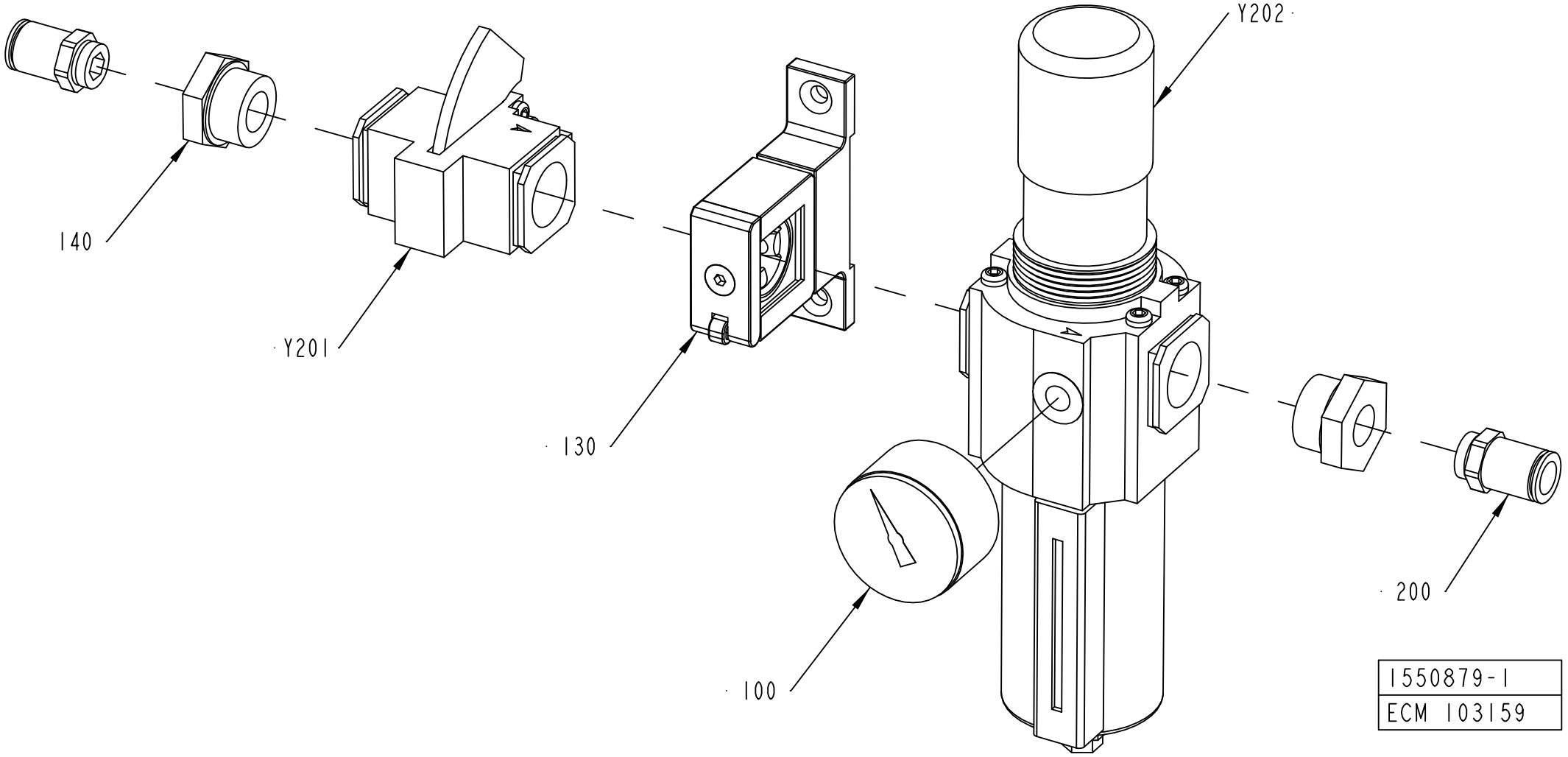

ECM: 124816 - 20040827
Group number: 1550879-0100
Assembly Drawing: 1550879-1_1_AA

Pos	Part No	UN	Qty	Description	Page No
-					
100	90043-0135		1	PRESSURE GAUGE 10 BAR	
130	90113-0449		1	QUICKCLAMP AND WALL MONT. BRACKET	
140	90224-0054		2	REDUCER, ART.NO RMM 3438	
200	342722-0210		2	STRAIGHT COUPLING, D=12 MM - G3/8"	
Y201	90113-0137		1	SHUT OF VALVE	
Y202	90113-0141		1	FILTER REGULATOR 0-10 BAR 40 MICRON	
	90113-0452		*1*	*FILTER ELEMENT 40 MICRON*	

Pos	Part No	UN	Qty	Description	Page No

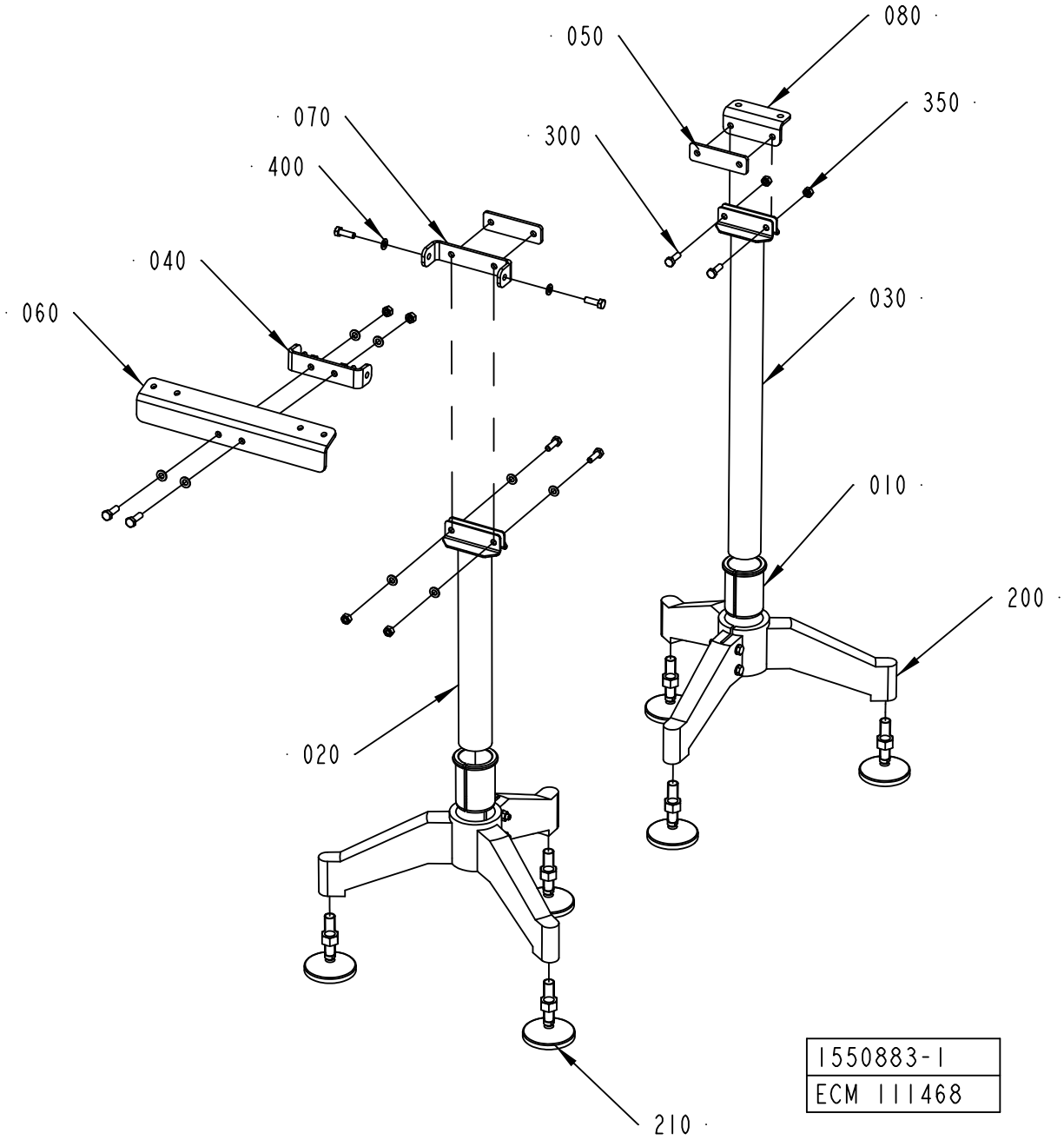
080
050
350
070
300
400
040
030
060
010
200
020
210
1550883-1
ECM 111468

ECM: 214425 - 20050920
Group number: 1550883-0100
Assembly Drawing: 1550883-1_1_AA

Pos	Part No	UN	Qty	Description	Page No
-					
010	562015-0000		2	REDUCTION CASING	
020	1020391-0003		1	PIPE	
030	1020391-0004		1	PIPE	
040	1550179-0000		1	BOW CLAMP	
050	1550199-0000		2	SPACER	
060	1550404-0000		1	BRACKET	
070	1550405-0000		1	BOW CLAMP	
080	1550406-0000		1	BRACKET	
200	90068-0016		2	FOOT, 3 LEGS. NO 15511	
210	90068-0017		6	ARTICULATED FOOT W. RUBBER PAD, NO 17532	
300	312105-0453		8	SCREW M6S ISO 4017 M8X25 A480	
350	312605-0318		8	HEXAGON NUT, M6M M8 A280	
400	315105-0165		12	WASHER BRB 8,4X16 RFR	

Pos	Part No	UN	Qty	Description	Page No

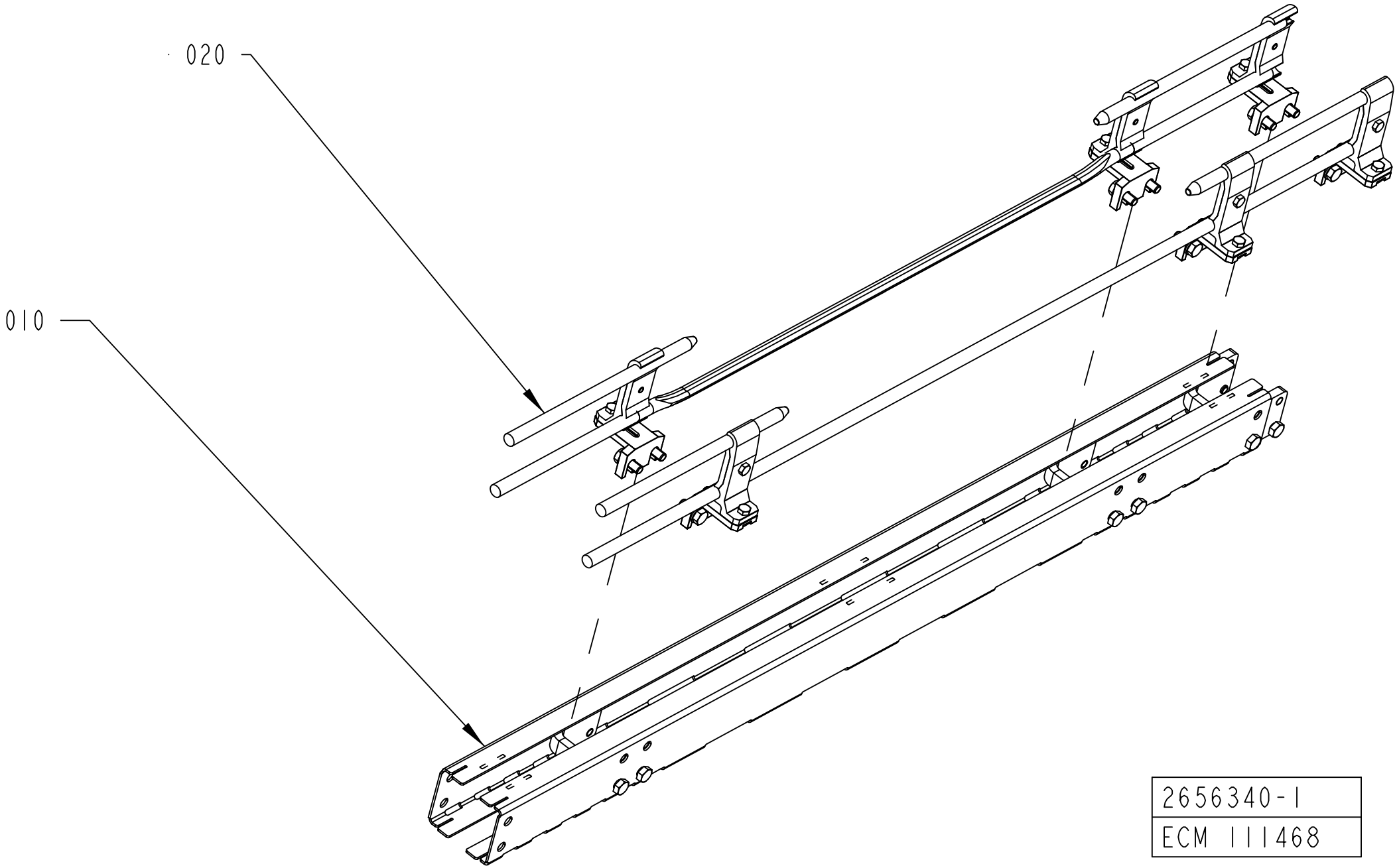

2656340-1
ECM 111468

ECM: 153134 - 20031113
Group number: 2656340-0100
Assembly Drawing: 2656340-1_1_AA

Pos	Part No	UN	Qty	Description	Page No
-					
010	2656341-0100		1	CONVEYOR BODY	**10-45**
020	2656342-0100		1	RAILING	**10-47**

Pos	Part No	UN	Qty	Description	Page No

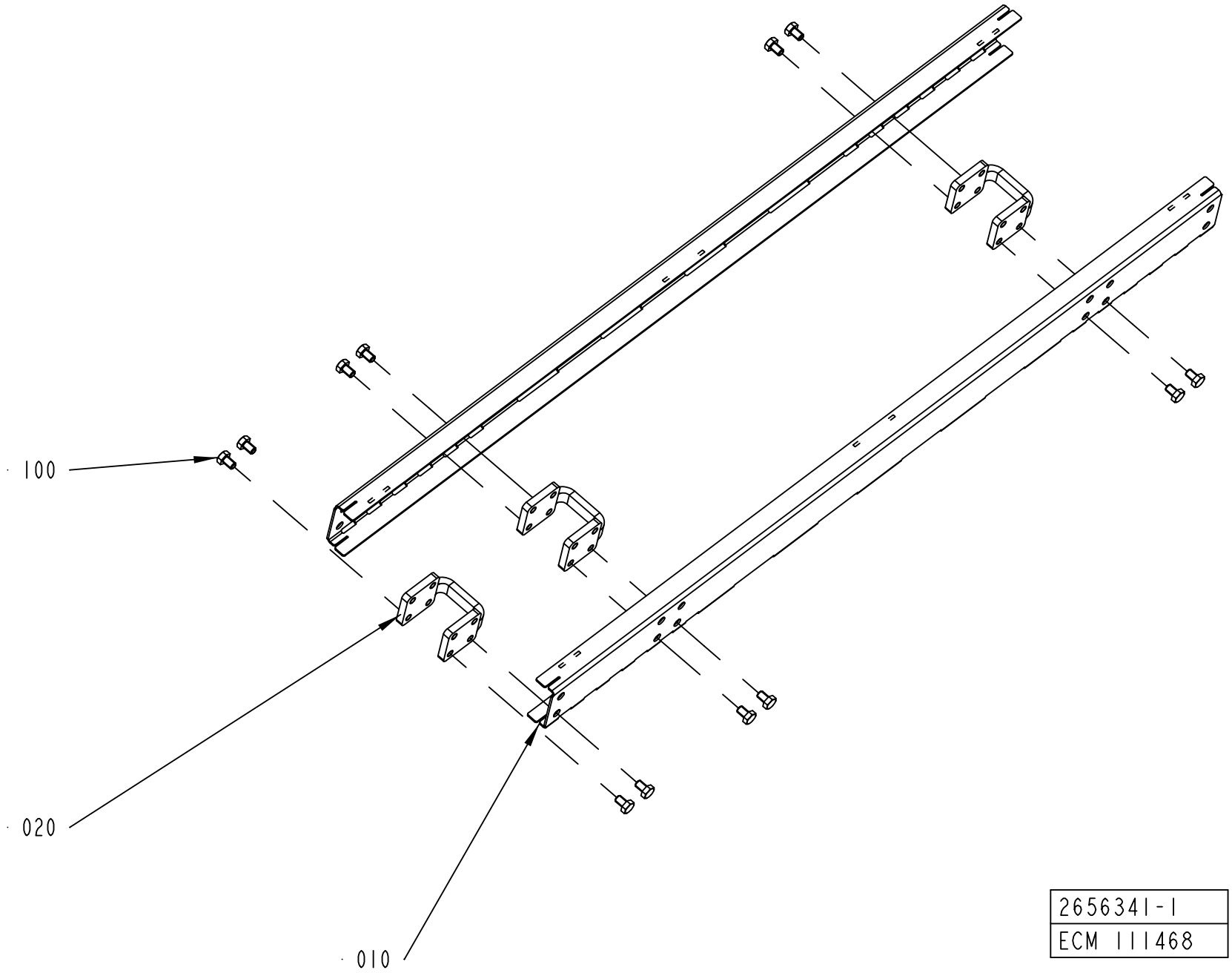
100
020
010
2656341-1
ECM 111468

ECM: 189319 - 20050121
Group number: 2656341-0100
Assembly Drawing: 2656341-1_1_AA

Pos	Part No	UN	Qty	Description	Page No
-					
010	2656345-0000		2	SIDE PLATE	
020	2561206-0000		3	SPACER	
100	90459-4735		12	SCREW M6S ISO 4017 M8X10 A480	
800	1550595-9960		4	SLIDING STRIP	

Pos	Part No	UN	Qty	Description	Page No

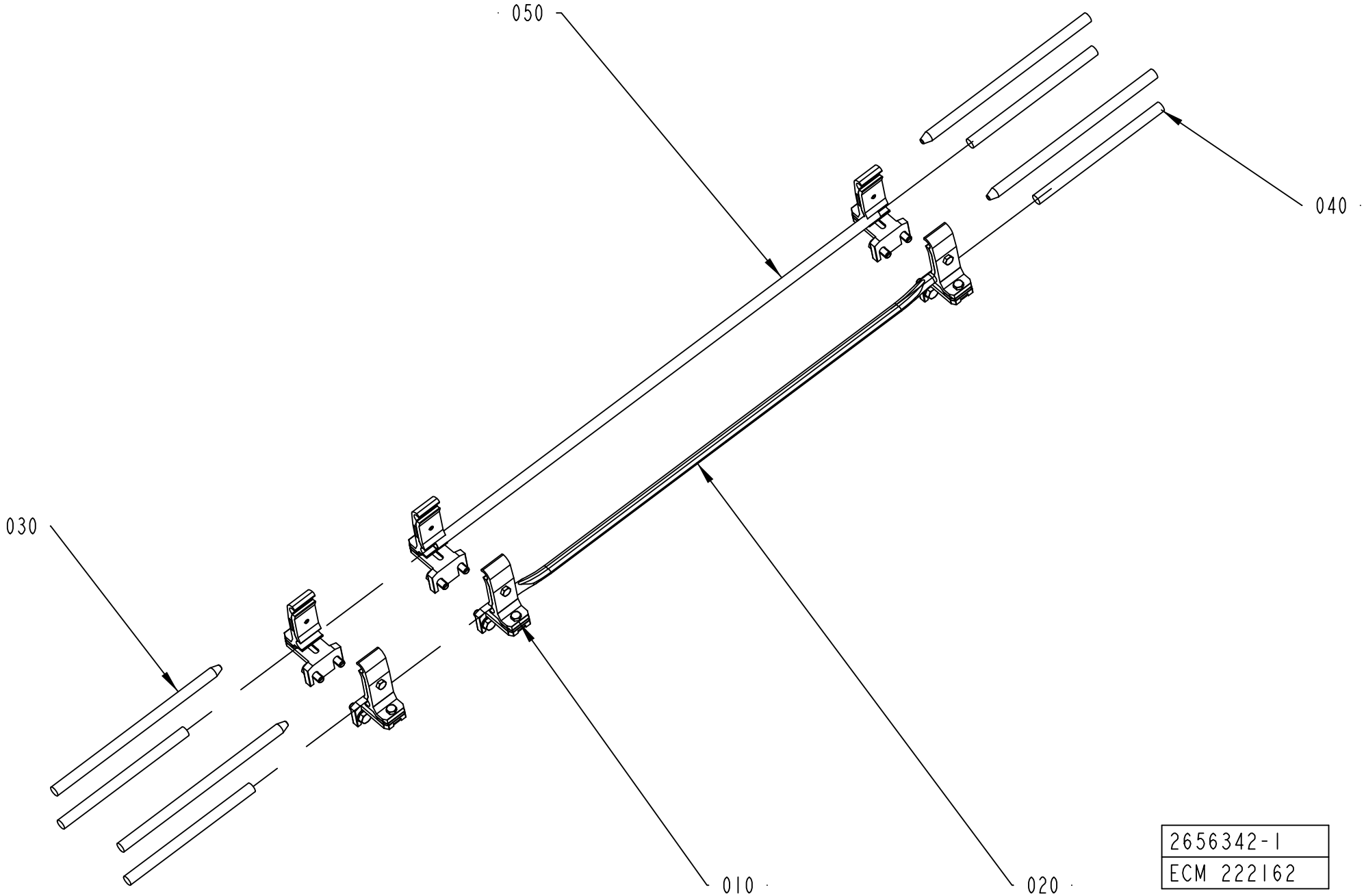
050
040
030
010
020
2656342-1
ECM 222162

ECM: 228042 - 20051222
Group number: 2656342-0100
Assembly Drawing: 2656342-1_1_AB

Pos	Part No	UN	Qty	Description	Page No
-					
010	1550743-0200		6	RAIL HOLDER	**5-39, 10-11**
020	2656343-0000		1	PIPE	
030	2656354-0000		4	PIPE	
040	2656356-0000		4	PIPE	
050	2656358-0000		1	PIPE	

Pos	Part No	UN	Qty	Description	Page No

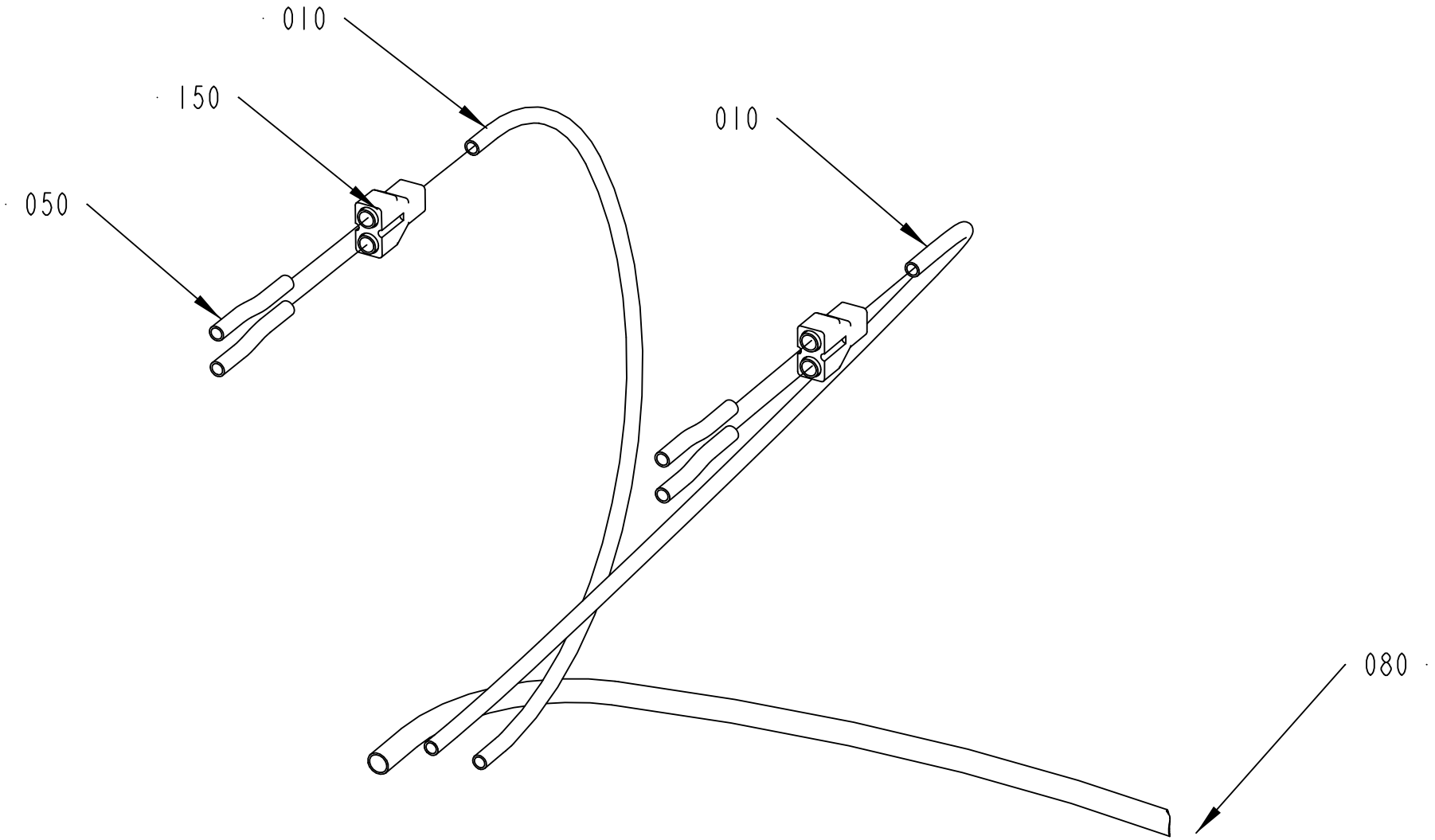
010
150
050
010
080
2699304-1
136097

ECM: 179201 - 20050420
Group number: 2699304-0100
Assembly Drawing: 2699304-1_1_AA

Pos	Part No	UN	Qty	Description	Page No
-					
010	90166-0013	MM	600	TUBE 8 MM PA BLUE	
050	90166-0013	MM	240	TUBE 8 MM PA BLUE	
080	90166-0195	MM	1000	TUBE 12 MM PA BLUE	
150	90055-0101		2	Y-CONNECTION, 8-8	

Pos	Part No	UN	Qty	Description	Page No

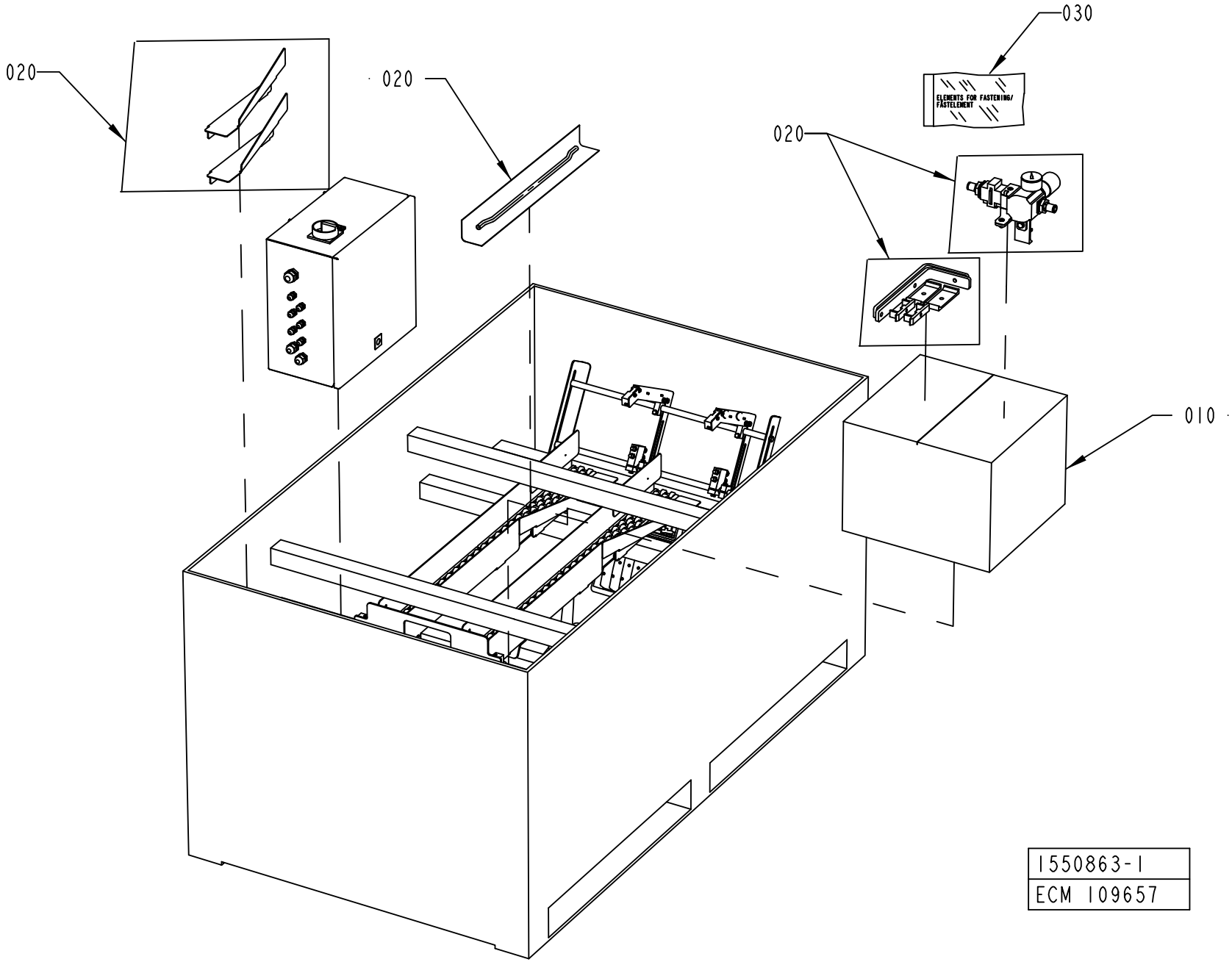
030
020
020
020
ELEMENTS FOR FASTENING/
FÄSTELEMENT
010
1550863-1
ECM 109657

ECM: 111797 - 20030211
Group number: 1550863-0100
Assembly Drawing: 1550863-1_1_AA

Pos	Part No	UN	Qty	Description	Page No
-					
010	1359473-0000		1	CORRUGATED CARDBOARD BOX	
020	90003-0474		1	PACKING	
030	90003-0019		1	BAG	

Pos	Part No	UN	Qty	Description	Page No

This page is intentionally left blank.

ECM: - -
Group number: 2590230-0207
Assembly Drawing:

Pos	Part No	UN	Qty	Description	Page No
-					
300	312105-0447		8	SCREW M6S ISO 4017 M8X12 A480	
810	1359055-0000		1	SIGN	
821	2590231-0100		1	PACKING DESCRIPTION	**10-55**

Pos	Part No	UN	Qty	Description	Page No

Machine Type	Group Description	Used-In	Group Number	Page No

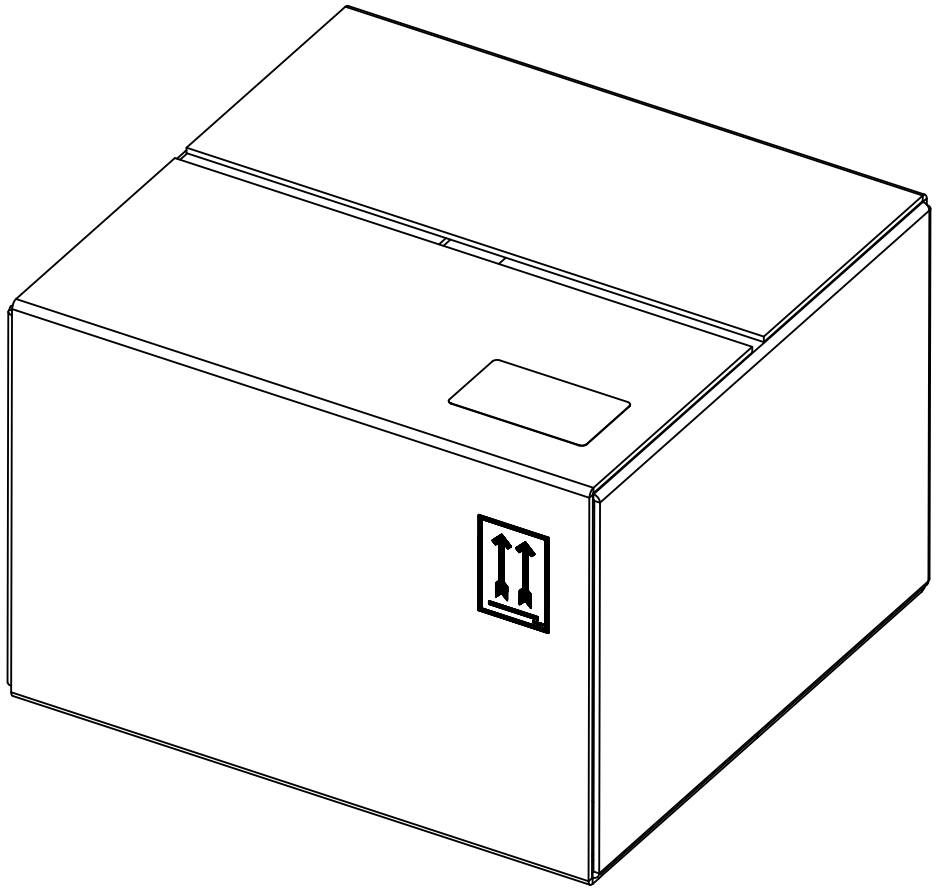

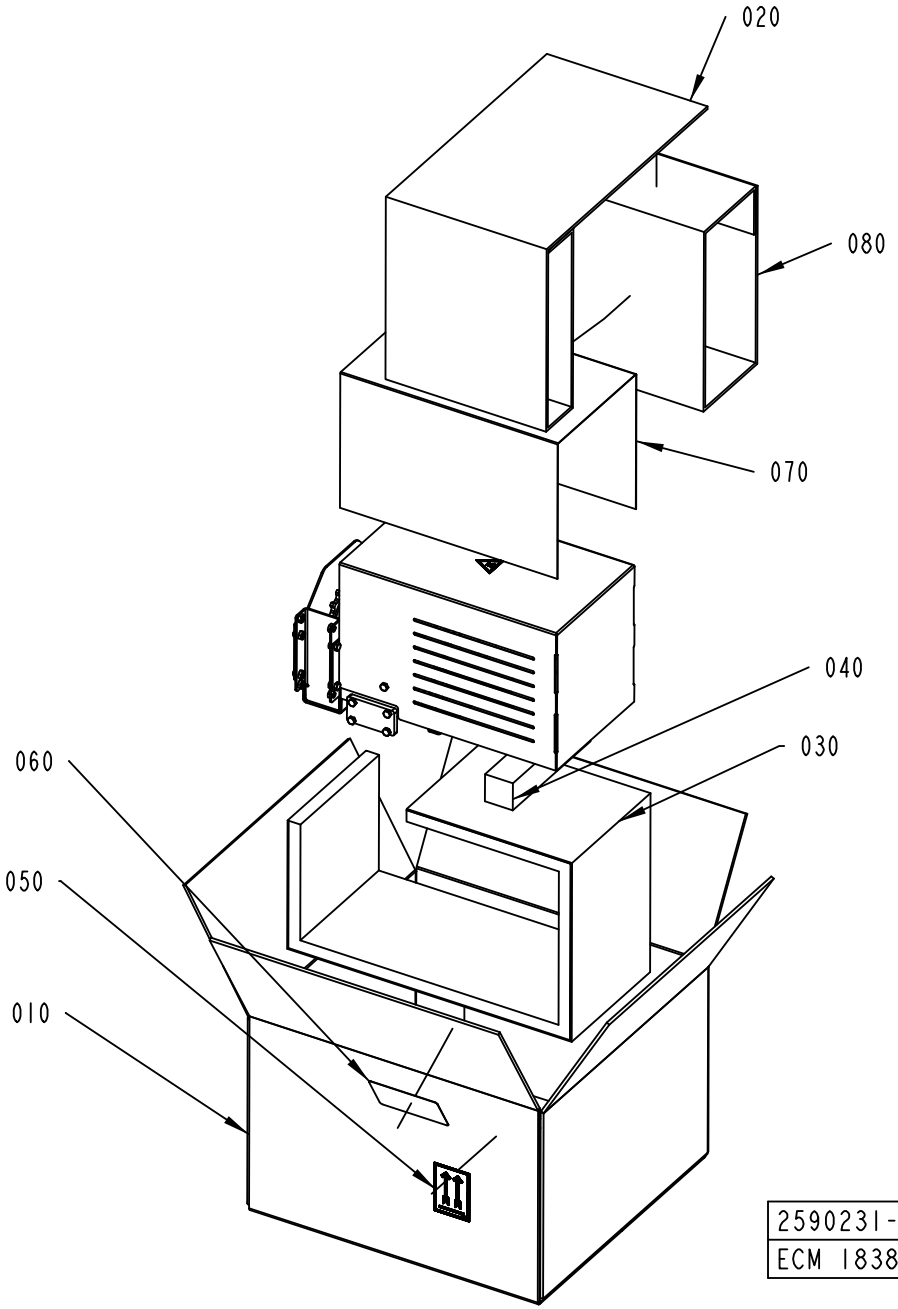

2590231-1
ECM 183860

ECM: 183865 - 20040827
Group number: 2590231-0100
Assembly Drawing: 2590231-1_1_AB

Pos	Part No	UN	Qty	Description	Page No
-					
010	2590232-0000		1	CORRUGATED CARDBOARD BOX	
020	2590233-0000		1	FILLING	
030	2590234-0000		1	FILLING	
040	2590235-0000		1	SUPPORT BLOCK	
050	543267-0000		2	LABEL TAPE	
060	1086872-0000		1	LABEL TAPE	
070	90003-0474		1	PACKING	
080	2699199-0000		1	FILLING	

Pos	Part No	UN	Qty	Description	Page No

LEG, MOTOR

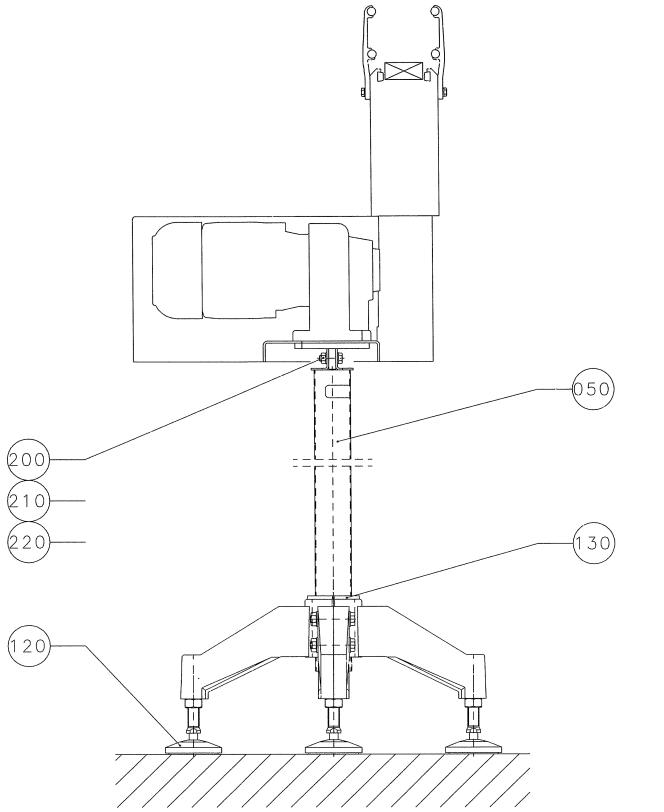

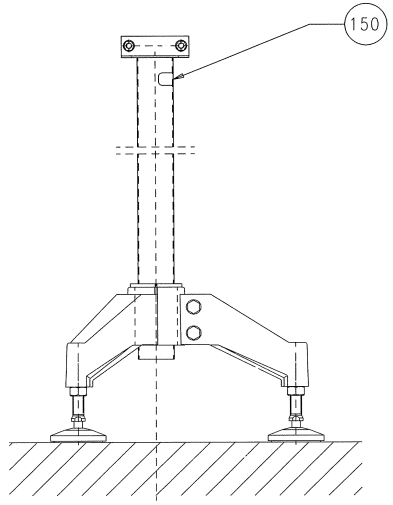

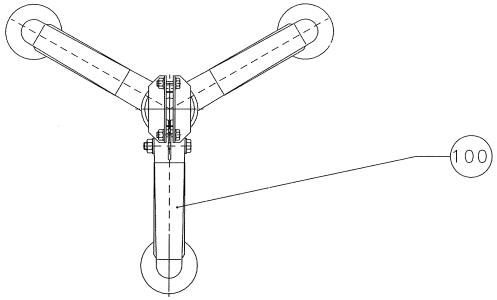

010	PACKNINGSBESKRIVNING PACKING DESCRIPT'ON

27110

ECM: 27110 -
Group number: 1020164-0201
Assembly Drawing: 1020164-2_1_AB

Pos	Part No	UN	Qty	Description	Page No
-					
010	1020418-0200		1	PACKING DESCRIPTION	**10-59**
050 1	1020391-0001		1	PIPE	
050 2	1020391-0002		1	PIPE	
100	90068-0016		1	FOOT, 3 LEGS. NO 15511	
120	90068-0017		3	ARTICULATED FOOT W. RUBBER PAD, NO 17532	
130	562015-0000		1	REDUCTION CASING	
150	1086870-0000		1	SIGN	
200	312105-0453		2	SCREW M6S ISO 4017 M8X25 A480	
210	312605-0318		2	HEXAGON NUT, M6M M8 A280	
220	315105-0165		4	WASHER BRB 8,4X16 RFR	

Pos	Part No	UN	Qty	Description	Page No

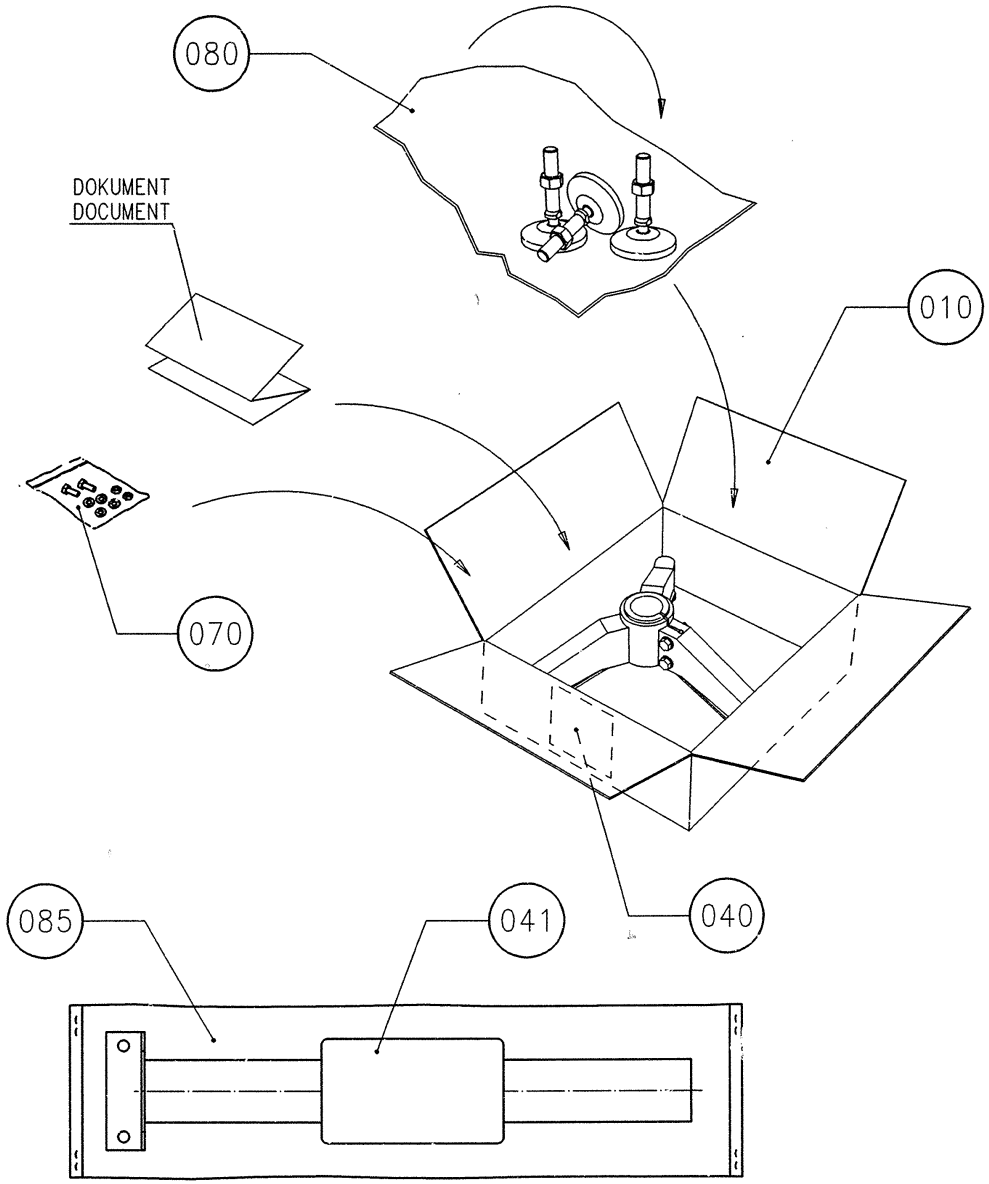
080
DOKUMENT
DOCUMENT
010
070
085
041
040

ECM: 221812 - 20050713
Group number: 1020418-0200
Assembly Drawing: 1020418-2_1_AA

Pos	Part No	UN	Qty	Description	Page No
-					
010	1020462-0000		1	CORRUGATED CARDBOARD BOX	
040	1086871-0000		1	LABEL TAPE	
070	90003-0019		1	BAG	
080	90003-0474			PACKING	

Pos	Part No	UN	Qty	Description	Page No

Machine Type | Group Description | Used-In | Group Number | Page No

BELT BRAKE

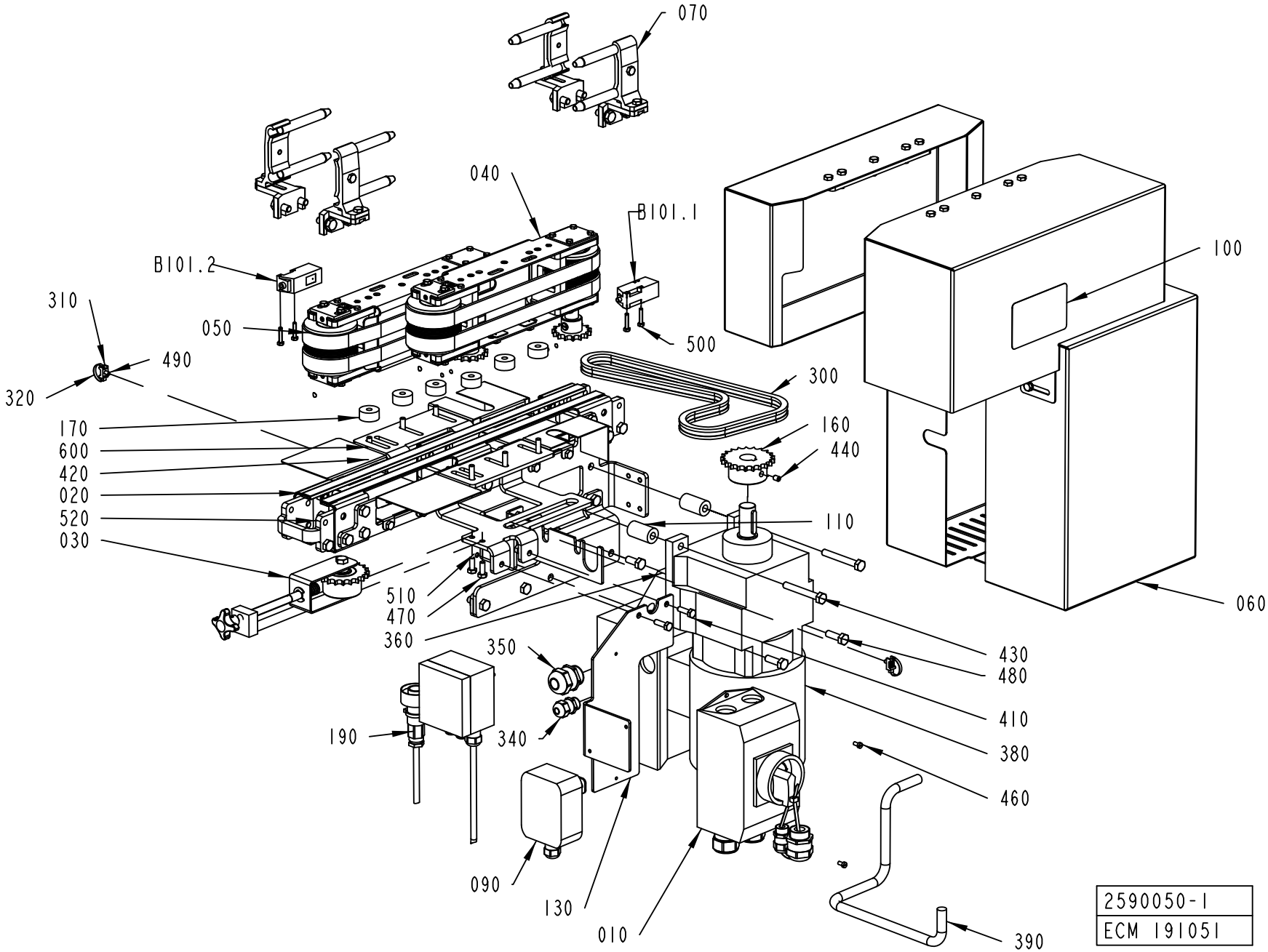
070
040
B101.1
B101.2
100
310
050
500
490
320
300
170
160
600
440
420
020
110
520
030
060
510
470
360
350
430
480
410
190
340
380
460
090
130
010
390
2590050-1
ECM 191051

ECM: 195238 - 20060127
Group number: 2590050-0100
Assembly Drawing: 2590050-1_1_AC

Pos	Part No	UN	Qty	Description	Page No
-					
010	1359581-0200		1	SWITCH GEAR	**10-27**
020	1550880-0100		1	CONVEYOR BODY	**10-63**
030	1550957-0100		1	CHAIN TENSIONER	**10-65**
040	1550977-0100		1	BELT UNIT	**10-67**
050	1550997-0100		1	BELT UNIT	**10-69**
060	2589838-0100		1	COVER	**10-71**
070	2590040-0100		1	RAILING KIT	**10-73**
090	2590048-0100		1	OPERATION DEVICE	**10-75**
100	1359055-0000		1	SIGN	
110	1550995-0000		2	SPACER	
130	1359938-0000		1	MOUNTING SHEET	
160	1550973-0000		1	SPROCKET	
170	1550994-0000		6	SPACER	
190	2590054-0100		1	CONNECTION BOX	**10-77**
300	2656374-0000		86	CHAIN	
310	352113-0205		2	ANCHOR PLATES FOR STRIPS, TYPE TM2S8-C10	
320	352113-0101		2	CABLE TIE, BLACK 92X2,5 MM	
340	90458-0306		1	CABLE GLAND, M16X1,5, NO.5311 1010	
350	90458-0308		1	CABLE GLAND, M25X1,5, NO.5311 1030	
360	90458-1328		1	TRANSFORMER, SEW MLU 11A NO: 823 3837	
380	90458-1327		1	GEARS, HELICAL MOTOR R17DT71DTD4MM05	
390	90220-0104	M		SCR. CABLE 4X1,5MM2	
410	312105-0370		2	SCREW M6S ISO 4017 M6X20 A480	
420	312105-0372		6	SCREW M6S ISO 4017 M6X25 A480	
430	312105-0463		2	SCREW M6S ISO 4014 M8X60 A480	
440	312318-0362		1	SCREW ISO4029 M6X8 A4	
460	312125-0287		2	SCREW ISO 1207 M4X8 A4	
470	312105-0368		2	SCREW M6S ISO 4017 M6X16 A480	
480	312105-0453		2	SCREW M6S ISO 4017 M8X25 A480	
490	312115-0287		2	SCREW ISO4762 M4X8 A4 80	
500	312105-0295		4	SCREW M6S ISO 4017 M4X20 A470	
510	312605-0316		2	HEXAGON NUT, M6M M6 A280	
520	312605-0318		4	HEXAGON NUT, M6M M8 A280	
600	315105-0153		6	WASHER BRB 6,4X12 RFR	
820	2590258-0100		1	PACKING DESCRIPTION	**10-79**
B101.1	90232-0127		1	PH.CELL E3S-CT61-L-5-5M	
B101.2	90232-0104		1	PH.CELL E3S-CT61-D-5M	

Pos	Part No	UN	Qty	Description	Page No

Machine Type	Group Description	Used-In	Group Number	Page No

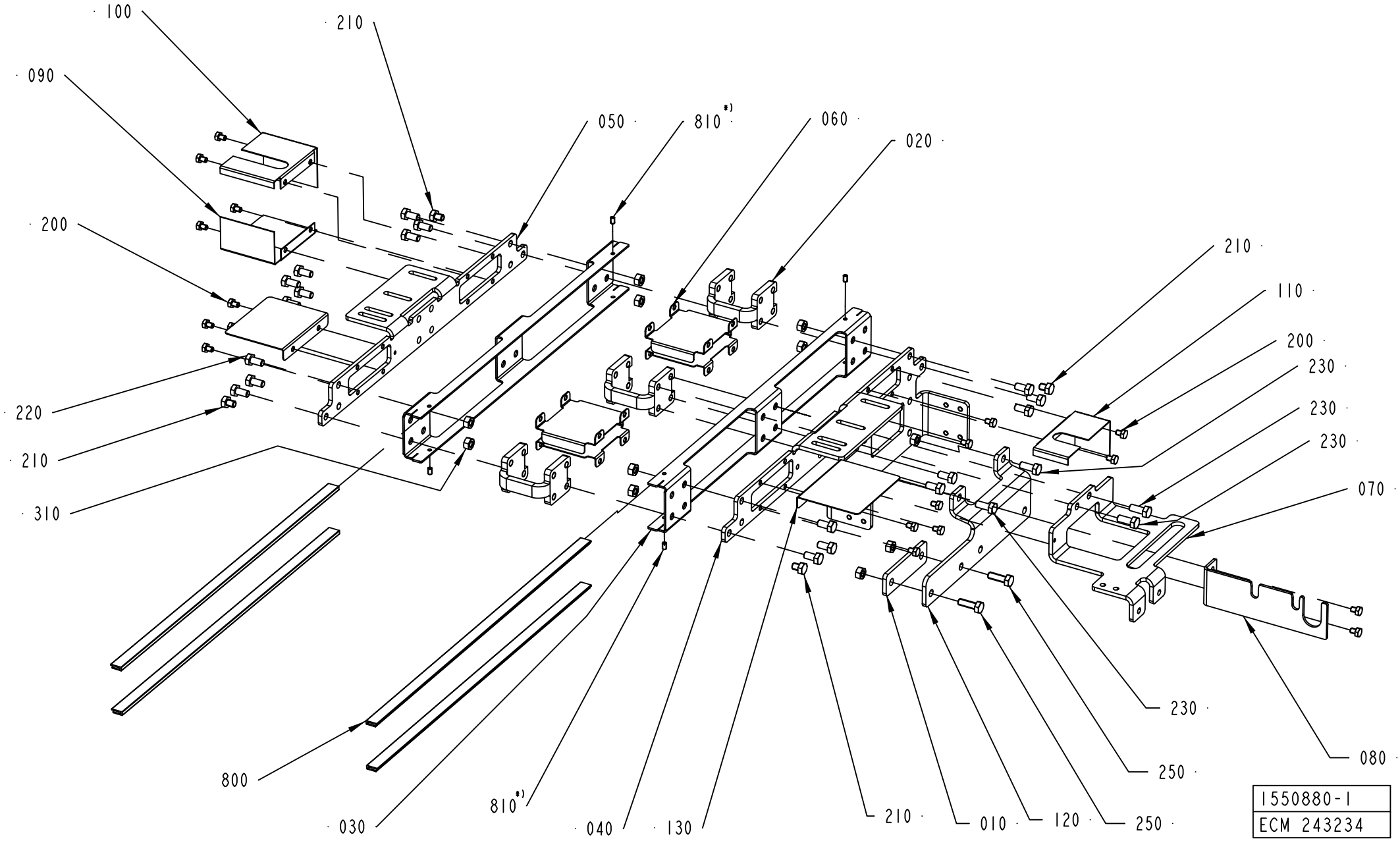
100
210
090
050
810*)
060
020
200
210
110
200
230
220
230
210
230
310
070
800
230
250
080
030
810*)
040
130
210
010
120
250
1550880-1
ECM 243234

ECM: 256562 - 20060710
Group number: 1550880-0100
Assembly Drawing: 1550880-1_1_AE

Pos	Part No	UN	Qty	Description	Page No
-					
010	1550199-0000		1	SPACER	
020	2561206-0000		3	SPACER	
030	1550911-0000		2	SIDE PLATE	
040	1550912-0000		1	PLATE	
050	1550913-0000		1	PLATE	
060	1550956-0000		4	PLATE	
070	1550958-0000		1	BRACKET	
080	2561609-0000		1	BRACKET	
090	2590044-0000		1	PLATE	
100	2590045-0000		1	PLATE	
110	2590046-0000		1	PLATE	
120	2590047-0000		1	BRACKET	
130	2590275-0000		2	COVER	
200	312105-0362		18	SCREW M6S ISO 4017 M6X8 A480	
210	90459-4735		4	SCREW M6S ISO 4017 M8X10 A480	
220	312105-0449		14	SCREW M6S ISO 4017 M8X16 A480	
230	312105-0451		4	SCREW M6S ISO 4017 M8X20 A480	
250	312105-0453		2	SCREW M6S ISO 4017 M8X25 A480	
310	312605-0318		12	HEXAGON NUT, M6M M8 A280	
800	1550595-4960		4	SLIDING STRIP	
810	90459-7293		4	SET SCREW DIN 551M5X8 PA66	

Pos	Part No	UN	Qty	Description	Page No

CHAIN TENSIONER

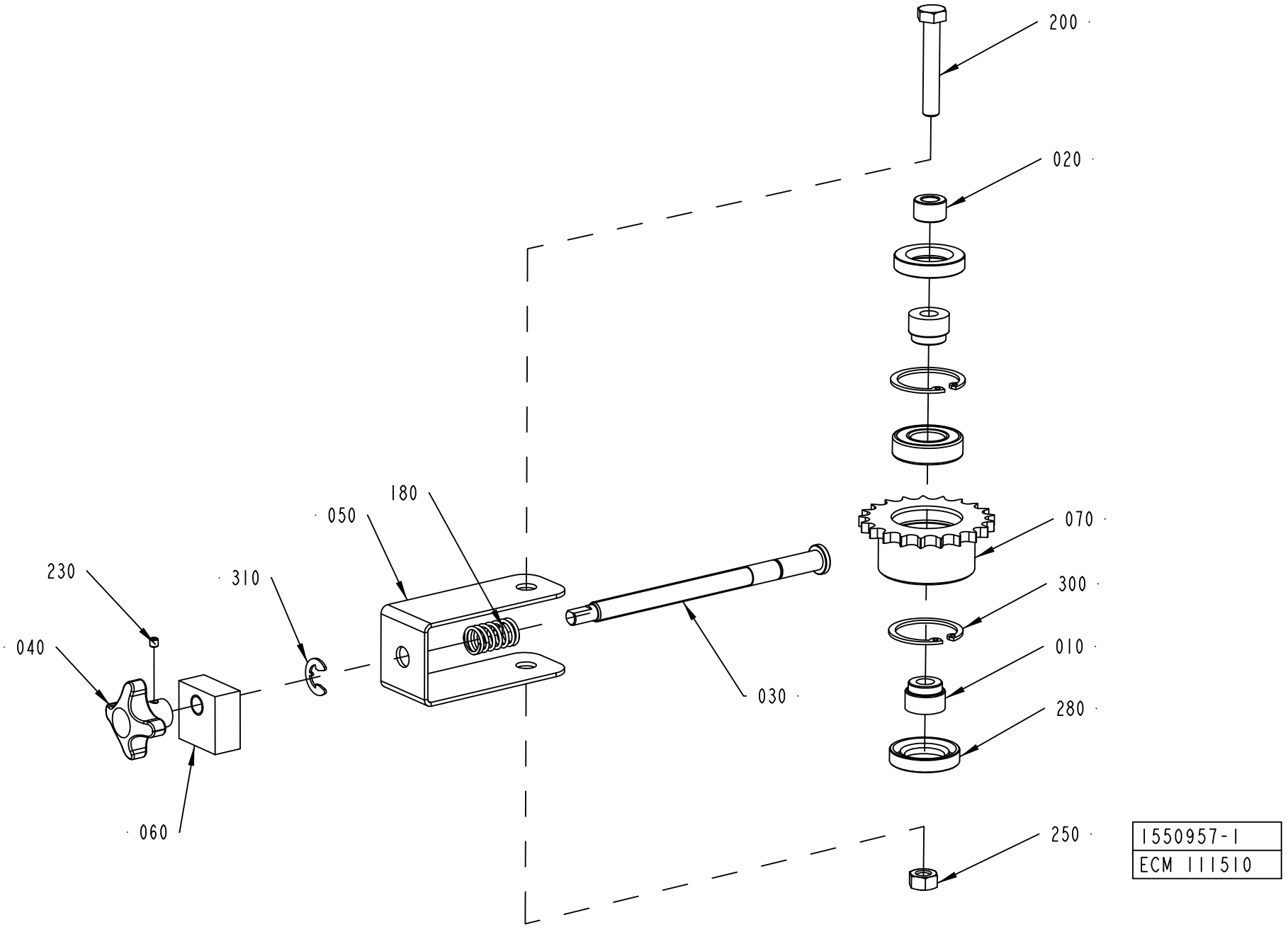

ECM: 133467 - 20040212
Group number: 1550957-0100
Assembly Drawing: 1550957-1_1_AB

Pos	Part No	UN	Qty	Description	Page No
-					
010	533237-0000		2	AXLE PIN	
020	2561613-0000		1	SPACER	
030	2590266-0000		1	PIN	
040	1550185-0000		1	COCK HANDLE	
050	1550959-0000		1	CLAMP	
060	1550960-0000		1	BLOCK	
070	1550971-0000		1	SPROCKET	
180	90335-0036		1	COMP. SPRING 22450, 1,6X14,1X24	
200	312105-0461		1	SCREW M6S ISO 4014 M8X50 A480	
230	312318-0283		1	SCREW ISO4029 M4X4 A4	
250	312605-0318		1	HEXAGON NUT, M6M M8 A280	
280	315221-0145		2	RADIAL SEAL 20X35X7 MM	
300	315753-0124		2	RETAINING RING FOR BORE DIN 472 35 A2	
310	315755-0110		1	RETAINING RING SHAFT DIN 6799 9 A2	
350	1550348-0002		1	BEARING	

Pos	Part No	UN	Qty	Description	Page No

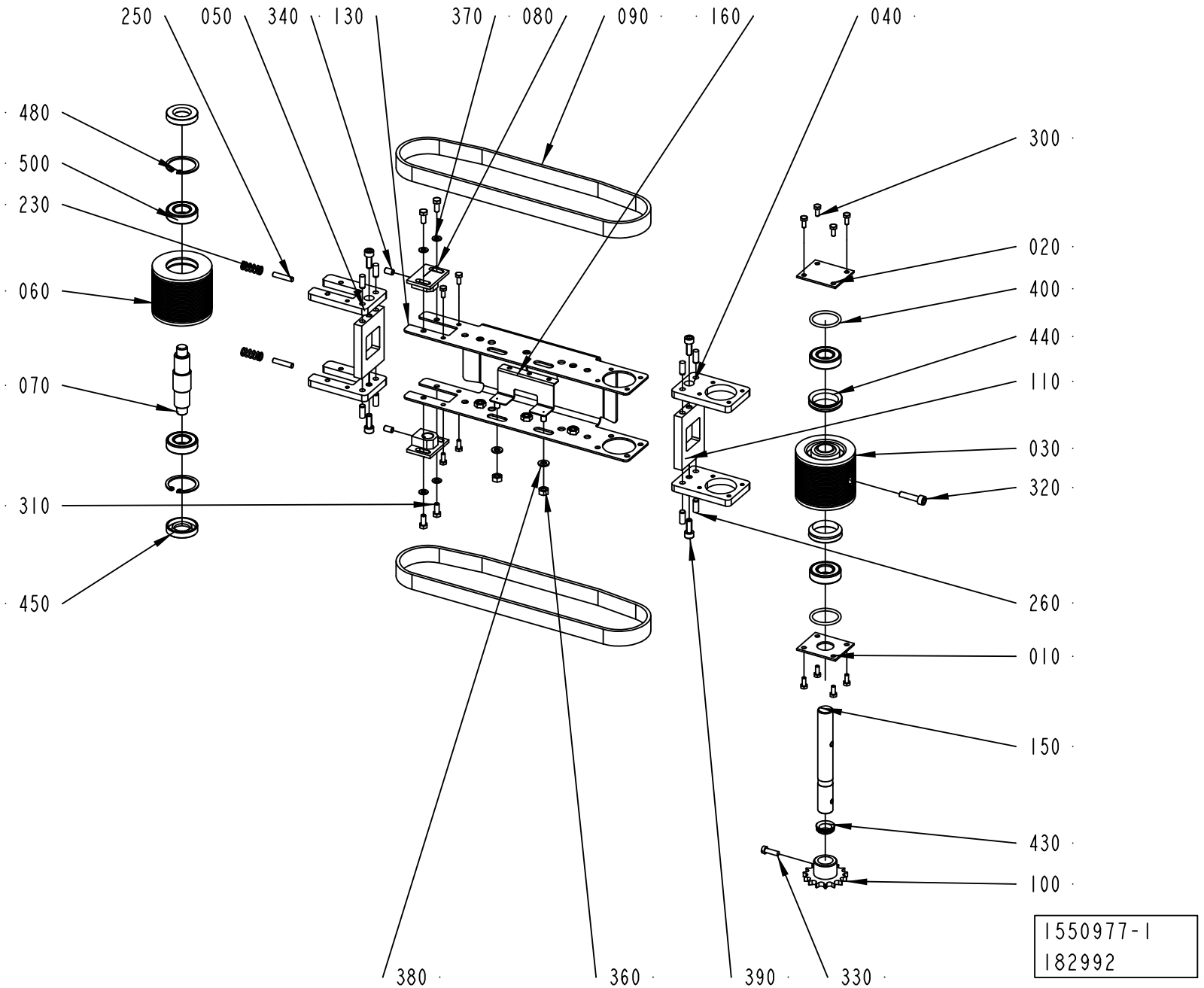
250
050
340
130
370
080
090
160
040
480
500
230
060
070
310
450
300
020
400
440
110
030
320
260
010
150
430
100
380
360
390
330
1550977-1
182992

ECM: 192239 - 20060127
Group number: 1550977-0100
Assembly Drawing: 1550977-1_1_AC

Pos	Part No	UN	Qty	Description	Page No
-					
010	533234-0000		1	LID	
020	533235-0000		1	LID	
030	561652-0000		1	WHEEL	
040	2656425-0000		2	PLATE	
050	2656426-0000		2	PLATE	
060	1359389-0000		1	ROLL	
070	1359390-0000		1	SHAFT	
080	1359391-0000		2	MOUNTING BLOCK	
090	1359776-0000		2	BELT	
100	1550972-0000		1	SPROCKET	
110	2656424-0000		2	PLATE	
130	1550978-0000		1	PLATE	
150	1550993-0000		1	SHAFT	
160	1550999-0000		1	PHOTOCELL BRACKET	
230	90335-0067		2	COMP. SPRING 22370, 1,6X9,6X31,75	
250	311103-1312		2	PARALLEL PIN ISO 2338 5M6X24 A1	
260	311103-0351		8	PARALLEL PIN ISO 2338 6M6X16 A1	
300	312105-0289		12	SCREW M6S ISO 4017 M4X10 A470	
310	312105-0327		4	SCREW M6S ISO 4017 M5X12 A480	
320	312115-0372		1	SCREW ISO4762 M6X25 A4 80	
330	312125-0329		1	SCREW ISO 1207 M5X16 A4	
340	312318-0364		2	SCREW ISO4029 M6X10 A4	
360	312605-0316		2	HEXAGON NUT, M6M M6 A280	
370	315105-0146		4	WASHER BRB 5,3X10 RFR	
380	315105-0153		2	WASHER BRB 6,4X12 RFR	
390	312115-0368		4	SCREW ISO4762 M6X16 A4 80	
400	315202-0219		2	O-RING 29,2X3 MM	
430	315220-0130		1	V-RINGS 14X20X7,7 MM V-16S	
440	315220-0172		2	V-RINGS 29X37X10,5 MM V-32S	
450	315221-0137		2	RADIAL SEAL 17X35X7 MM	
480	315753-0124		2	RETAINING RING FOR BORE DIN 472 35 A2	
500	1550348-0002		4	BEARING	

Pos	Part No	UN	Qty	Description	Page No

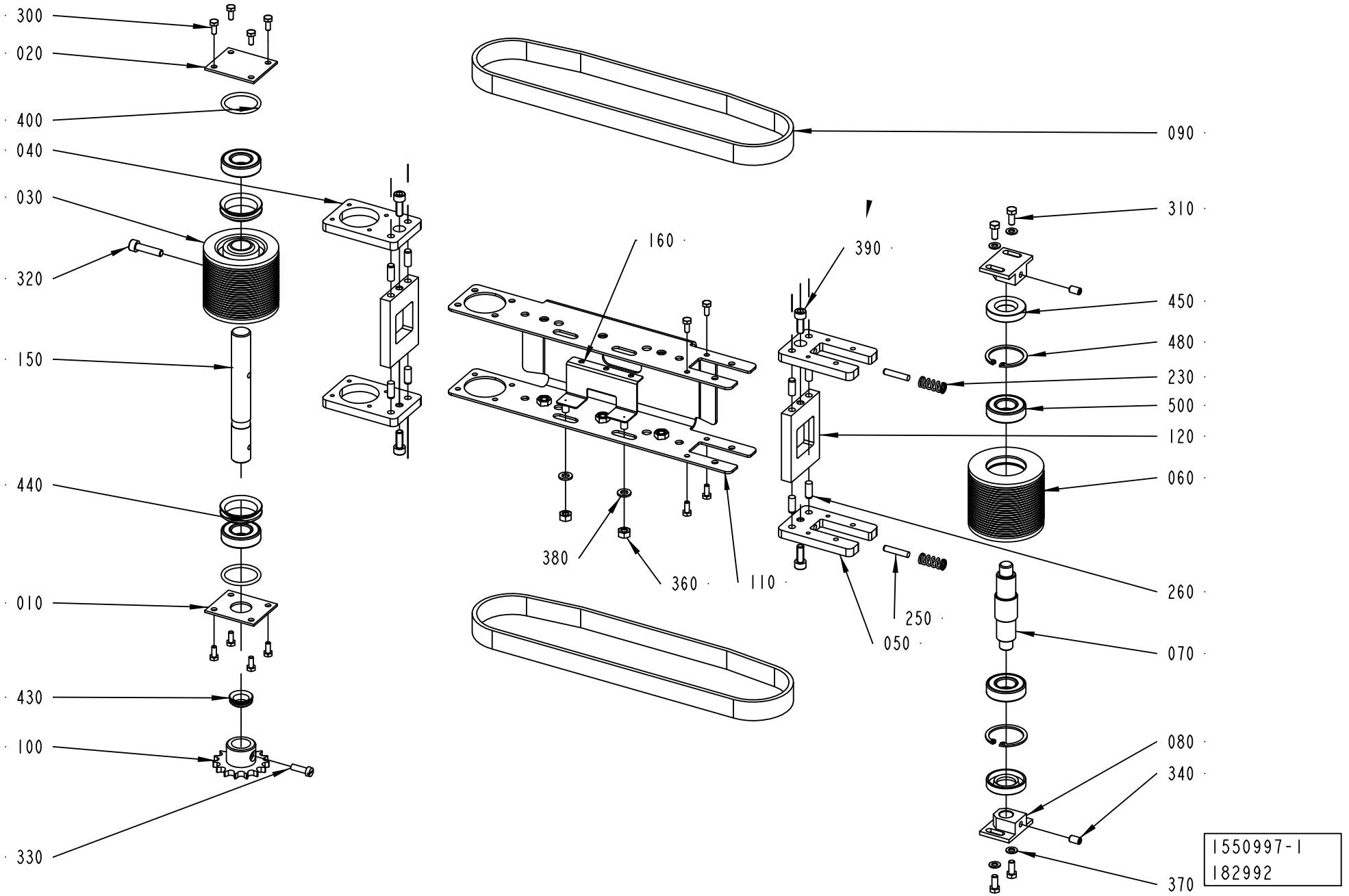
300
020
400
040
030
320
150
440
010
430
100
330
090
160
390
310
450
480
230
500
120
060
260
070
080
340
370
380
360
110
250
050
1550997-1
182992

ECM: 182992 - 20041124
Group number: 1550997-0100
Assembly Drawing: 1550997-1_1_AC

Pos	Part No	UN	Qty	Description	Page No
-					
010	533234-0000		1	LID	
020	533235-0000		1	LID	
030	561652-0000		1	WHEEL	
040	2656425-0000		2	PLATE	
050	2656426-0000		2	PLATE	
060	1359389-0000		1	ROLL	
070	1359390-0000		1	SHAFT	
080	1359391-0000		2	MOUNTING BLOCK	
090	1359776-0000		2	BELT	
100	1550972-0000		1	SPROCKET	
110	1550978-0000		1	PLATE	
120	2656424-0000		2	PLATE	
150	1550993-0000		1	SHAFT	
160	1550999-0000		1	PHOTOCELL BRACKET	
230	90335-0067		2	COMP. SPRING 22370, 1,6X9,6X31,75	
250	311103-1312		2	PARALLEL PIN ISO 2338 5M6X24 A1	
300	312105-0289		12	SCREW M6S ISO 4017 M4X10 A470	
310	312105-0327		4	SCREW M6S ISO 4017 M5X12 A480	
320	312115-0372		1	SCREW ISO4762 M6X25 A4 80	
330	312125-0329		1	SCREW ISO 1207 M5X16 A4	
340	312318-0364		2	SCREW ISO4029 M6X10 A4	
360	312605-0316		2	HEXAGON NUT, M6M M6 A280	
370	315105-0146		4	WASHER BRB 5,3X10 RFR	
380	315105-0153		2	WASHER BRB 6,4X12 RFR	
390	312115-0368		4	SCREW ISO4762 M6X16 A4 80	
400	315202-0219		2	O-RING 29,2X3 MM	
430	315220-0130		1	V-RINGS 14X20X7,7 MM V-16S	
440	315220-0172		2	V-RINGS 29X37X10,5 MM V-32S	
450	315221-0137		2	RADIAL SEAL 17X35X7 MM	
480	315753-0124		2	RETAINING RING FOR BORE DIN 472 35 A2	
500	1550348-0002		4	BEARING	

Pos	Part No	UN	Qty	Description	Page No

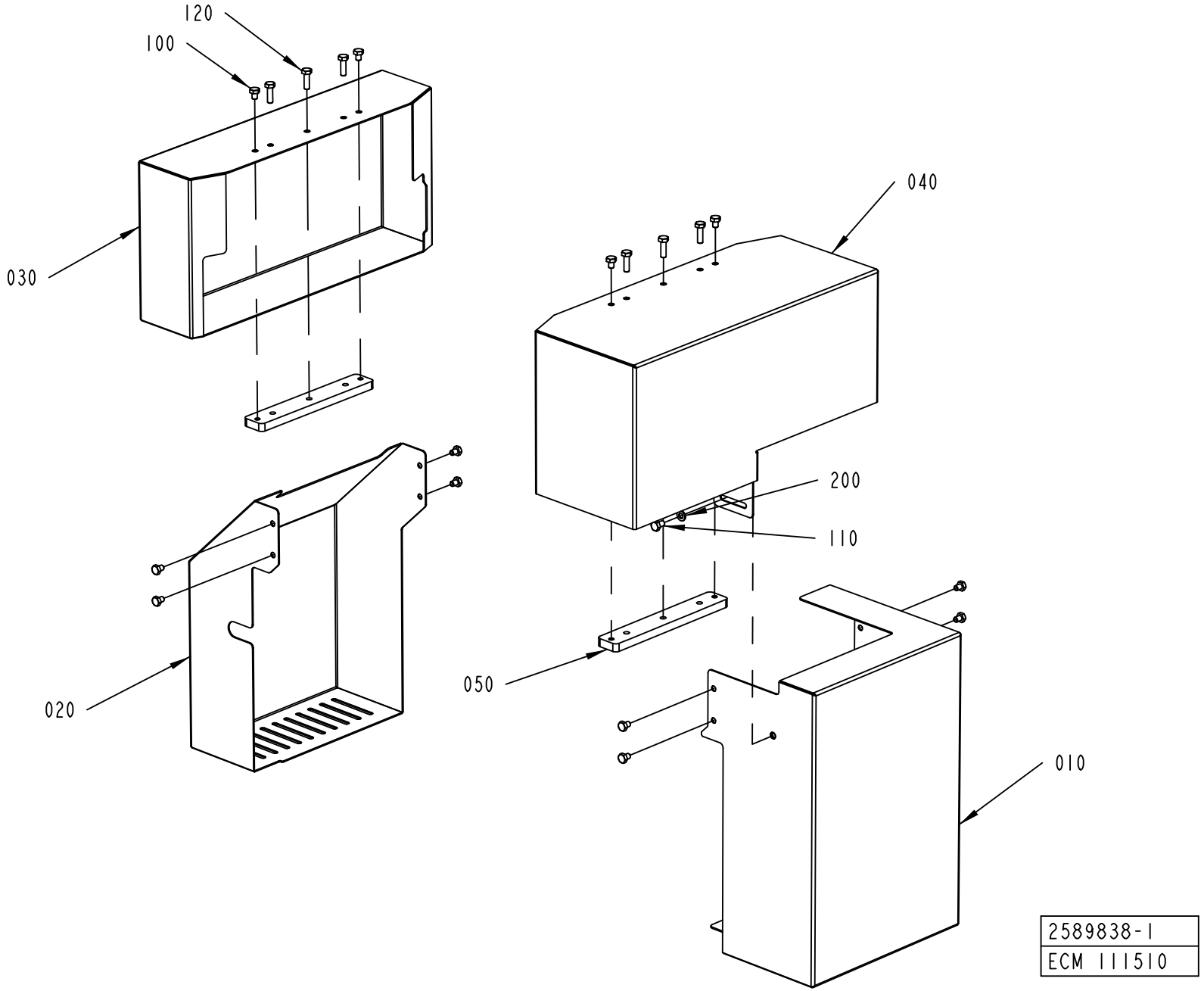
120
100
030
040
200
110
050
020
010
2589838-1
ECM 111510

ECM: 137759 - 20040212
Group number: 2589838-0100
Assembly Drawing: 2589838-1_1_AA

Pos	Part No	UN	Qty	Description	Page No
-					
010	2561620-0000		1	COVER	
020	2561622-0000		1	COVER	
030	2561623-0000		1	COVER	
040	2561624-0000		1	COVER	
050	2561625-0000		2	PLATE	
100	312105-0362		12	SCREW M6S ISO 4017 M6X8 A480	
110	312105-0364		1	SCREW M6S ISO 4017 M6X10 A480	
120	312105-0370		6	SCREW M6S ISO 4017 M6X20 A480	
200	315105-0153		1	WASHER BRB 6,4X12 RFR	

Pos	Part No	UN	Qty	Description	Page No

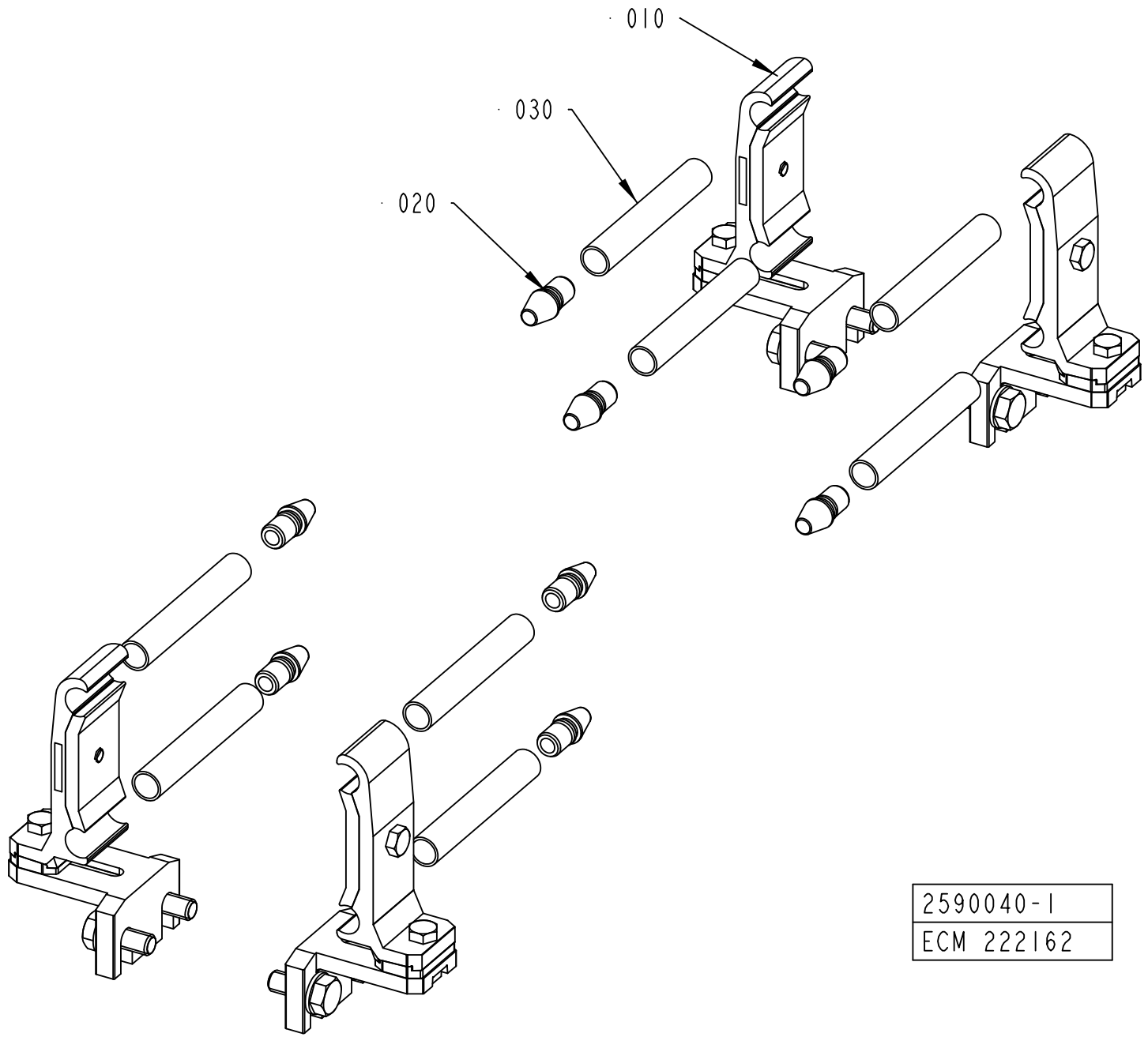
010
030
020
2590040-1
ECM 222162

ECM: 228041 - 20051222
Group number: 2590040-0100
Assembly Drawing: 2590040-1_1_AB

Pos	Part No	UN	Qty	Description	Page No
-					
010	1550743-0200		4	RAIL HOLDER	**5-39, 10-11**
020	540169-0000		8	DOWEL	
030	2590051-0000		8	PIPE	

Pos	Part No	UN	Qty	Description	Page No

Machine Type | Group Description | Used-In | Group Number | Page No

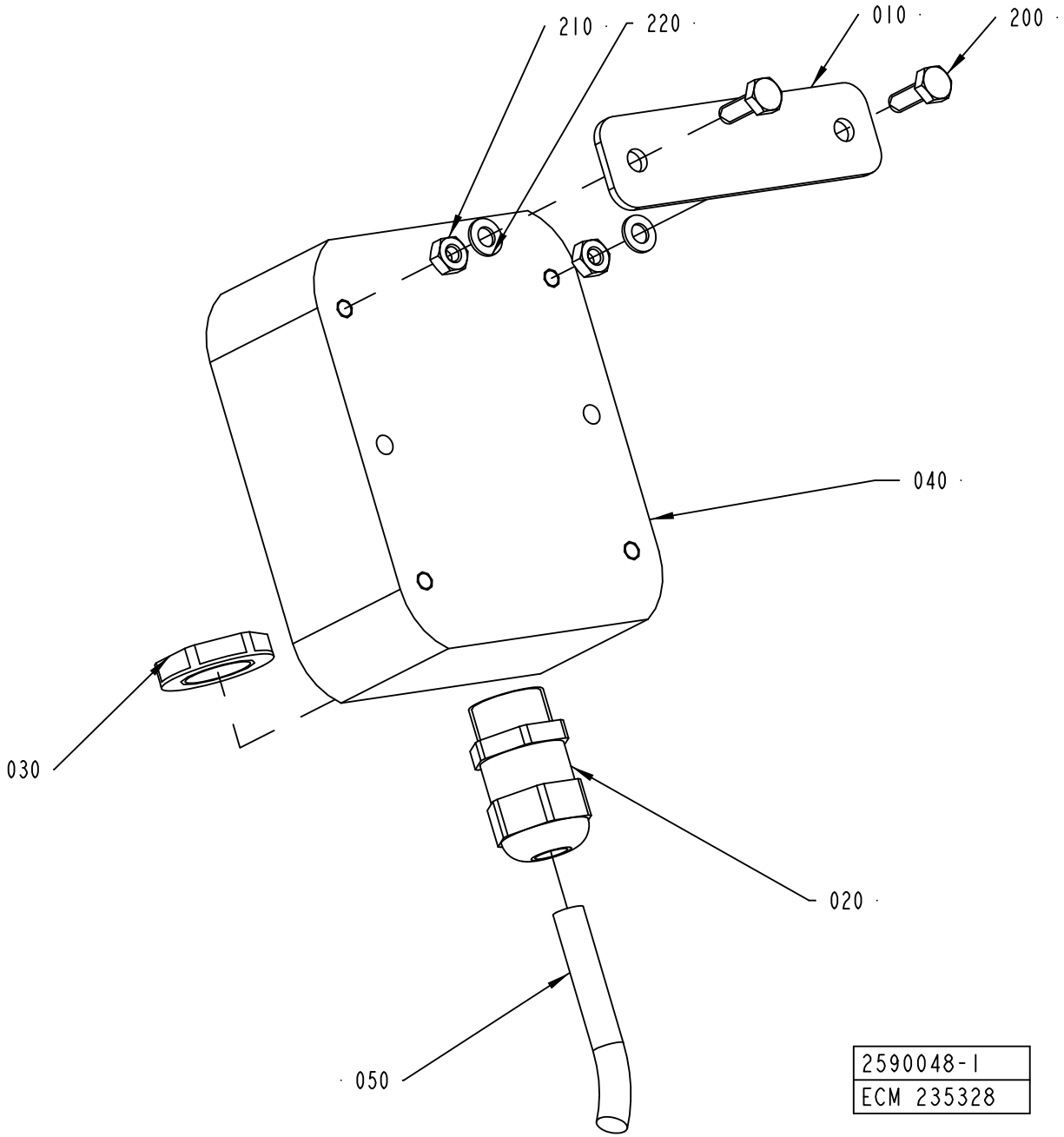
210
220
010
200
040
030
020
050
2590048-1
ECM 235328

ECM: 236000 - 20060118
Group number: 2590048-0100
Assembly Drawing: 2590048-1_1_AB

Pos	Part No	UN	Qty	Description	Page No
-					
010	2590049-0000		1	PLATE	
020	90458-0306		1	CABLE GLAND, M16X1,5, NO.5311 1010	
030	90458-0322		1	NUT, M16X1,5	
040	90458-1330		1	OPERATION DEVICE, MBG 22X, 823 8871	
050	90220-0091	CM	150	PAIR TWISTED CABLE 2X2X0,25MM2	
200	312105-0291		2	SCREW M6S ISO 4017 M4X12 A470	
210	312605-0312		2	HEXAGON NUT, M6M M4 A280	
220	315105-0136		2	WASHER BRB 4,3X9 RFR	

Pos	Part No	UN	Qty	Description	Page No

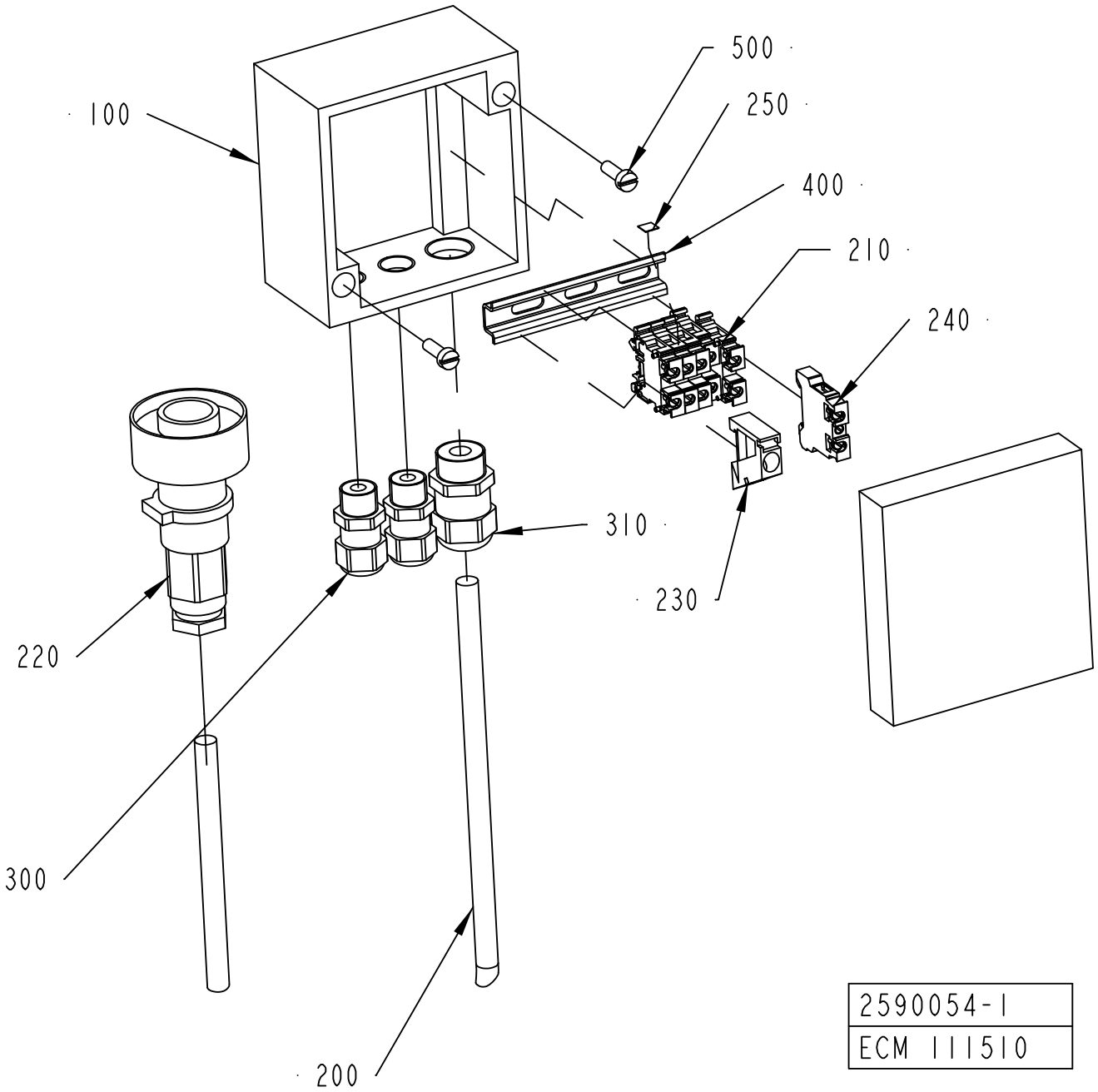

2590054-1
ECM 111510

ECM: 139024 - 20040212
Group number: 2590054-0100
Assembly Drawing: 2590054-1_1_AA

Pos	Part No	UN	Qty	Description	Page No
-					
100	2590053-0000		1	CONNECTION BOX	
200	351150-0404	M	5	CABLE OLFLEX 4X0,75 MM2 LIGHT/GREY	
210	90077-0123		5	FEED THROUGH TERMINAL, 017596	
220	90110-0235		1	CABLE CONTACT, PX0739/P	
230	90077-0308		1	END PLATE, 10-00038286-1	
240	90135-0042		1	EARTH TERMINAL, 130336	
250	359011-0807		1	MARKING PLATES 5-FW 1-50	
300	90458-0305		2	CABLE GLAND, M12X1,5, NO.5311 1000	
310	90458-0306		1	CABLE GLAND, M16X1,5, NO.5311 1010	
400	90077-0328	M		RAIL TS15/5	
500	312125-0291		2	SCREW ISO 1207 M4X12 A4	

Pos	Part No	UN	Qty	Description	Page No

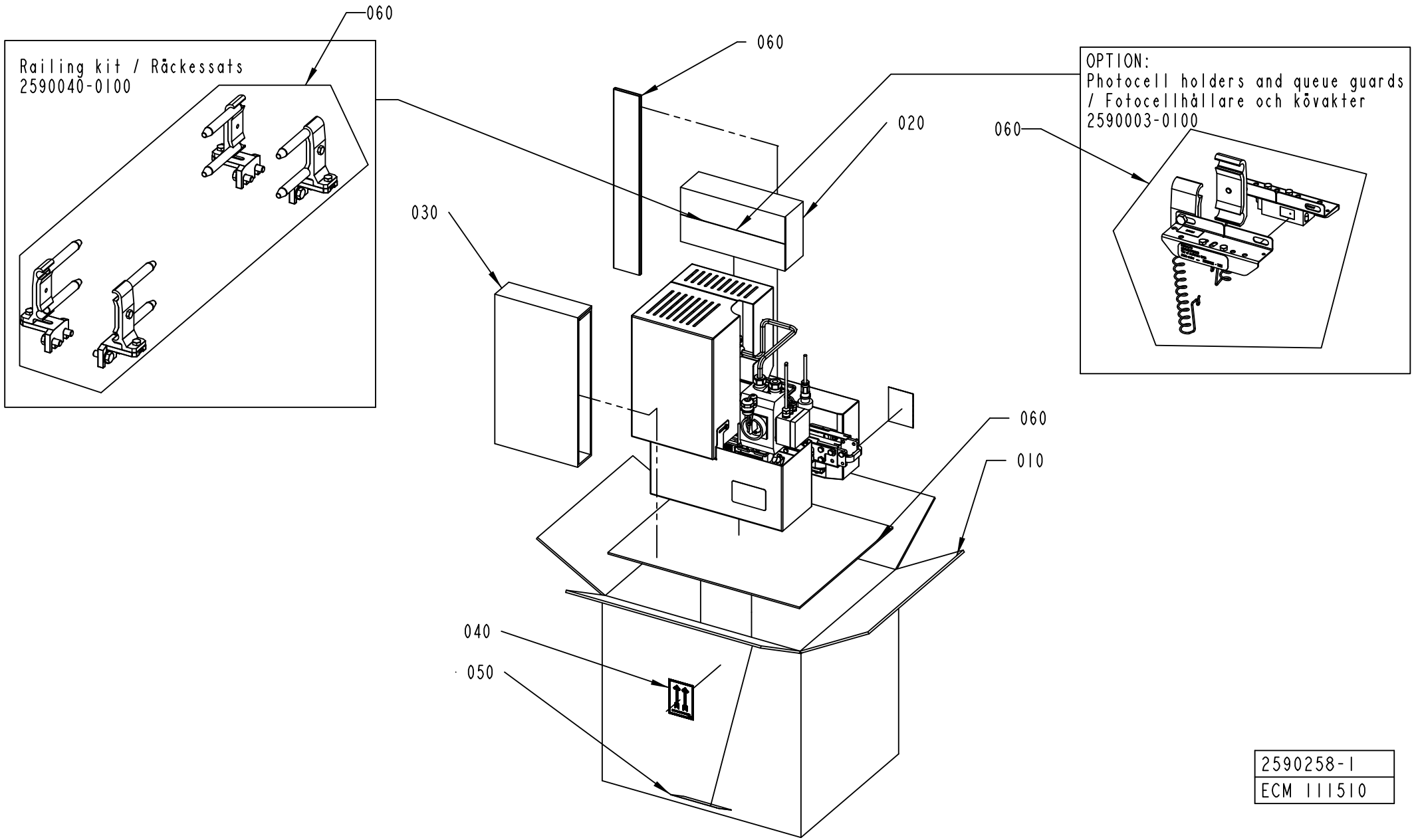
060
Railing kit / Räckessats
2590040-0100
060
020
030
OPTION:
Photocell holders and queue guards
/ Fotocellhållare och kövakter
2590003-0100
060
060
010
040
050
2590258-1
ECM 111510

ECM: 139005 - 20040212
Group number: 2590258-0100
Assembly Drawing: 2590258-1_1_AA

Pos	Part No	UN	Qty	Description	Page No
-					
010	2590259-0000		1	CORRUGATED CARDBOARD BOX	
020	2590260-0000		1	CORRUGATED CARDBOARD BOX	
030	2590261-0000		1	FILLING	
040	543267-0000		2	LABEL TAPE	
050	1086871-0000		1	LABEL TAPE	
060	90003-0474		1	PACKING	

Pos	Part No	UN	Qty	Description	Page No

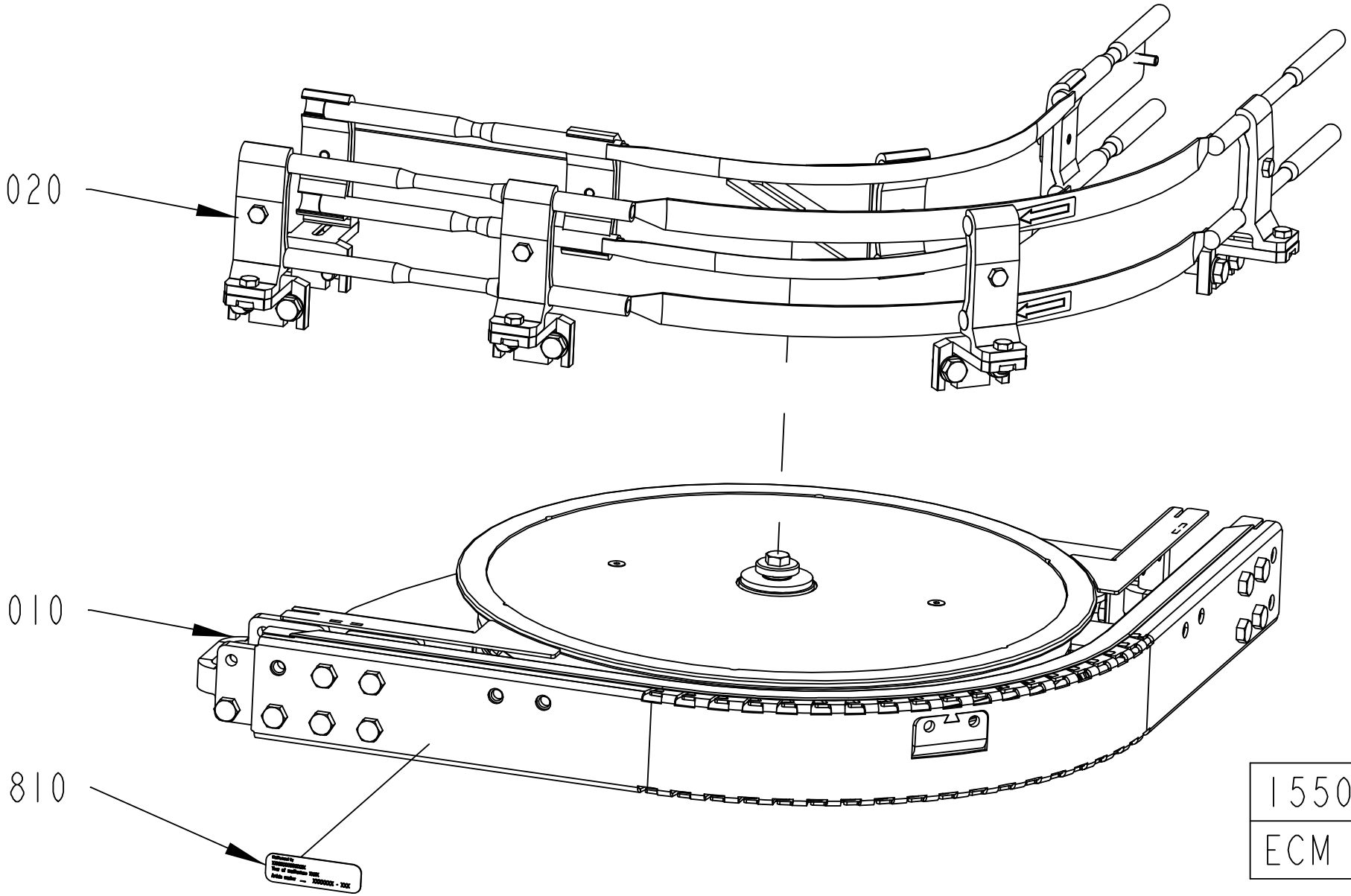

1550600-2
ECM 173056

ECM: 233808 - 20051212
Group number: 1550600-0200
Assembly Drawing: 1550600-2_1_AA

Pos	Part No	UN	Qty	Description	Page No
TBA, TPA					
020	1550683-0100		1	RAILING KIT	**10-83**
820	2590237-0100		1	PACKING DESCRIPTION	**10-87**
Common Parts					
010	1550698-0200		1	WHEEL CURVE 90 DEGREES	**5-53, 10-89**
810	1086870-0000		1	SIGN	

Pos	Part No	UN	Qty	Description	Page No

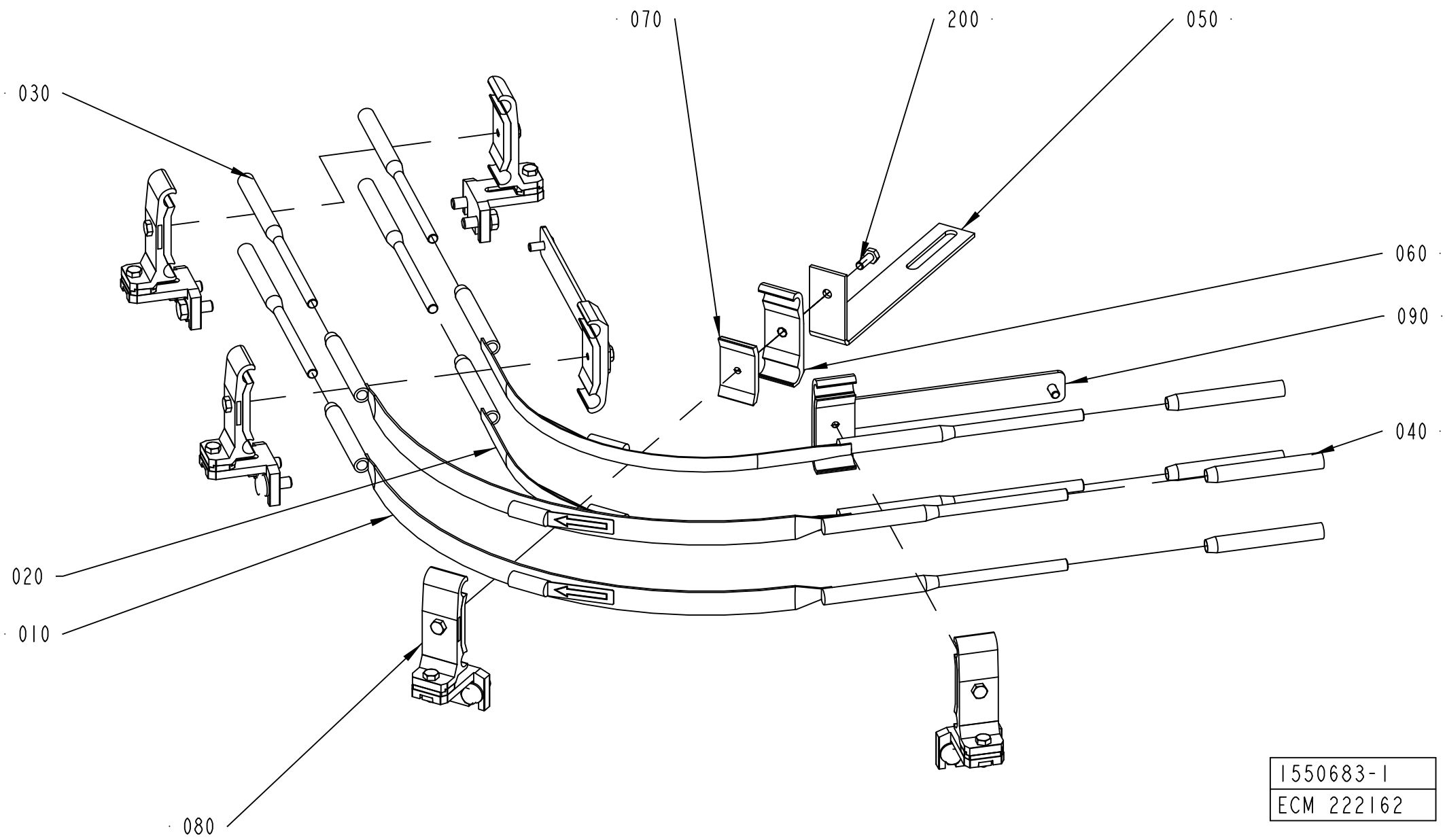
070
200
050
030
060
090
040
020
010
080
1550683-1
ECM 222162

ECM: 228030 - 20051222
Group number: 1550683-0100
Assembly Drawing: 1550683-1_1_AC

Pos	Part No	UN	Qty	Description	Page No
-					
010	1550684-0000		2	ARCH	
020	1550685-0000		2	ARCH	
030	1550664-0000		4	DOWEL	
040	1550665-0000		4	PIPE	
050	1550666-0000		1	HOLDER	
060	1366750-0000		1	HOLDER	
070	1366727-0000		1	CLAMP	
080	1550743-0200		5	RAIL HOLDER	**5-39, 10-11**
090	2561602-0100		2	RAIL HOLDER KIT	**5-57, 10-85**
200	312105-0368		1	SCREW M6S ISO 4017 M6X16 A480	

Pos	Part No	UN	Qty	Description	Page No

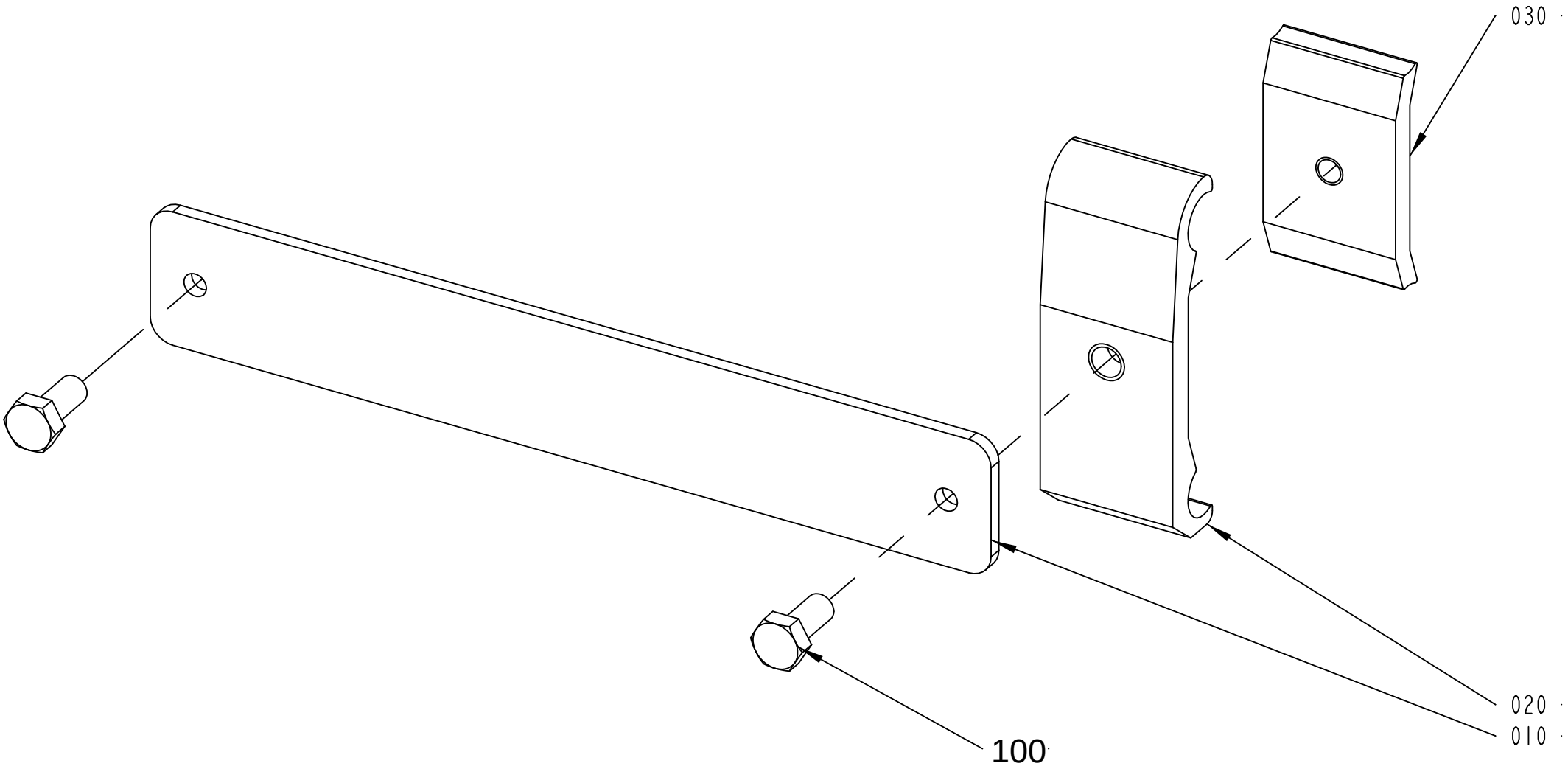

2561602-1
ECM 153837

ECM: 255321 - 20060302
Group number: 2561602-0100
Assembly Drawing: 2561602-1_1_AB

Pos	Part No	UN	Qty	Description	Page No
-					
010	2561596-0000		1	RAIL HOLDER KIT	
020	1366750-0000		1	HOLDER	
030	1366727-0000		1	CLAMP	
100	312105-0367		2	SCREW M6S ISO 4017 M6X14 A480	

Pos	Part No	UN	Qty	Description	Page No

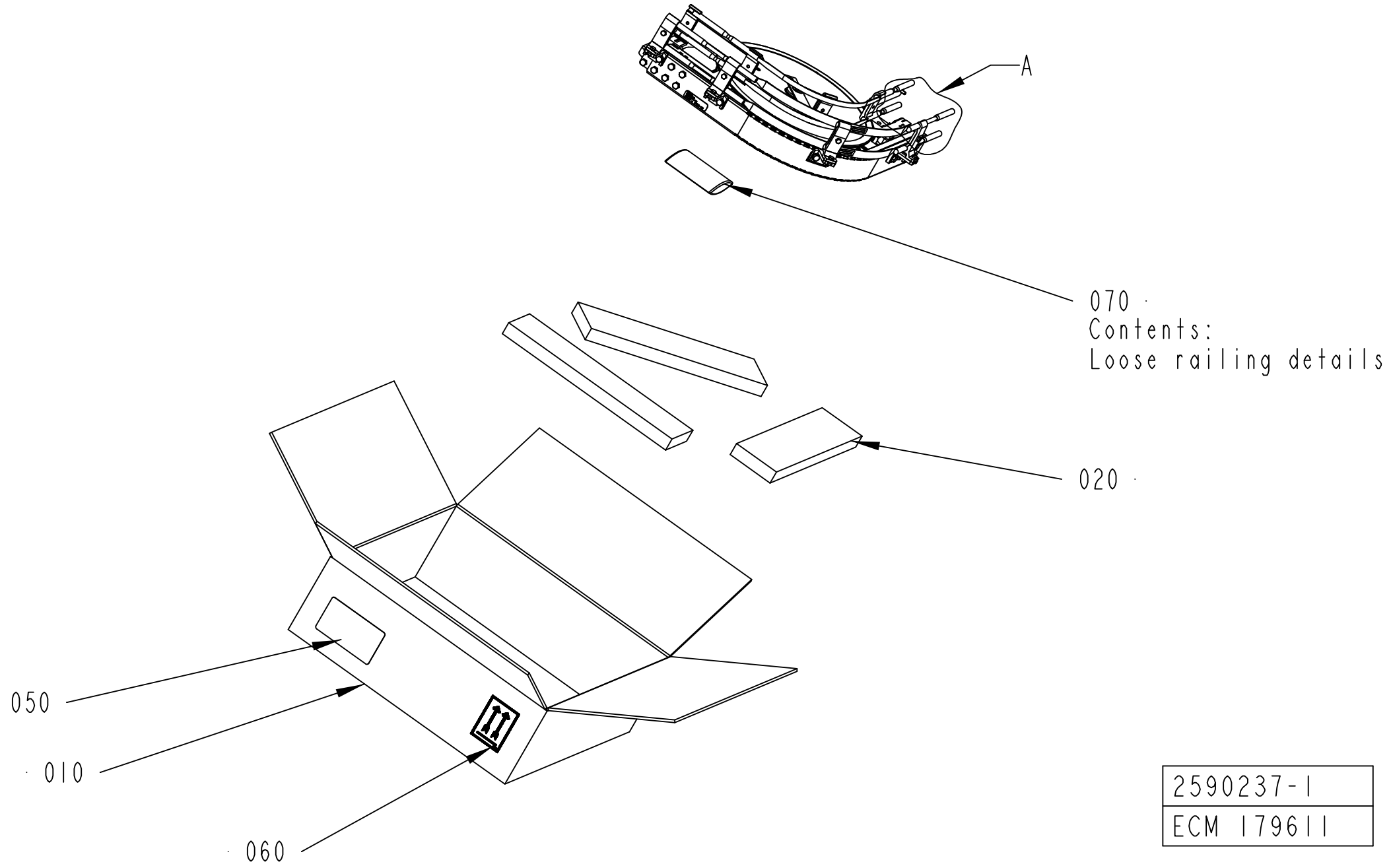

2590237-1
ECM 179611

ECM: 186687 - 20041124
Group number: 2590237-0100
Assembly Drawing: 2590237-1_1_AB

Pos	Part No	UN	Qty	Description	Page No
-					
010	2590229-0000		1	CORRUGATED CARDBOARD BOX	
020	2590245-0004		3	SUPPORT BLOCK	
050	1086871-0000		1	LABEL TAPE	
060	543267-0000		2	LABEL TAPE	
070	90003-0019		1	BAG	

Pos	Part No	UN	Qty	Description	Page No

WHEEL CURVE 90 DEGREES

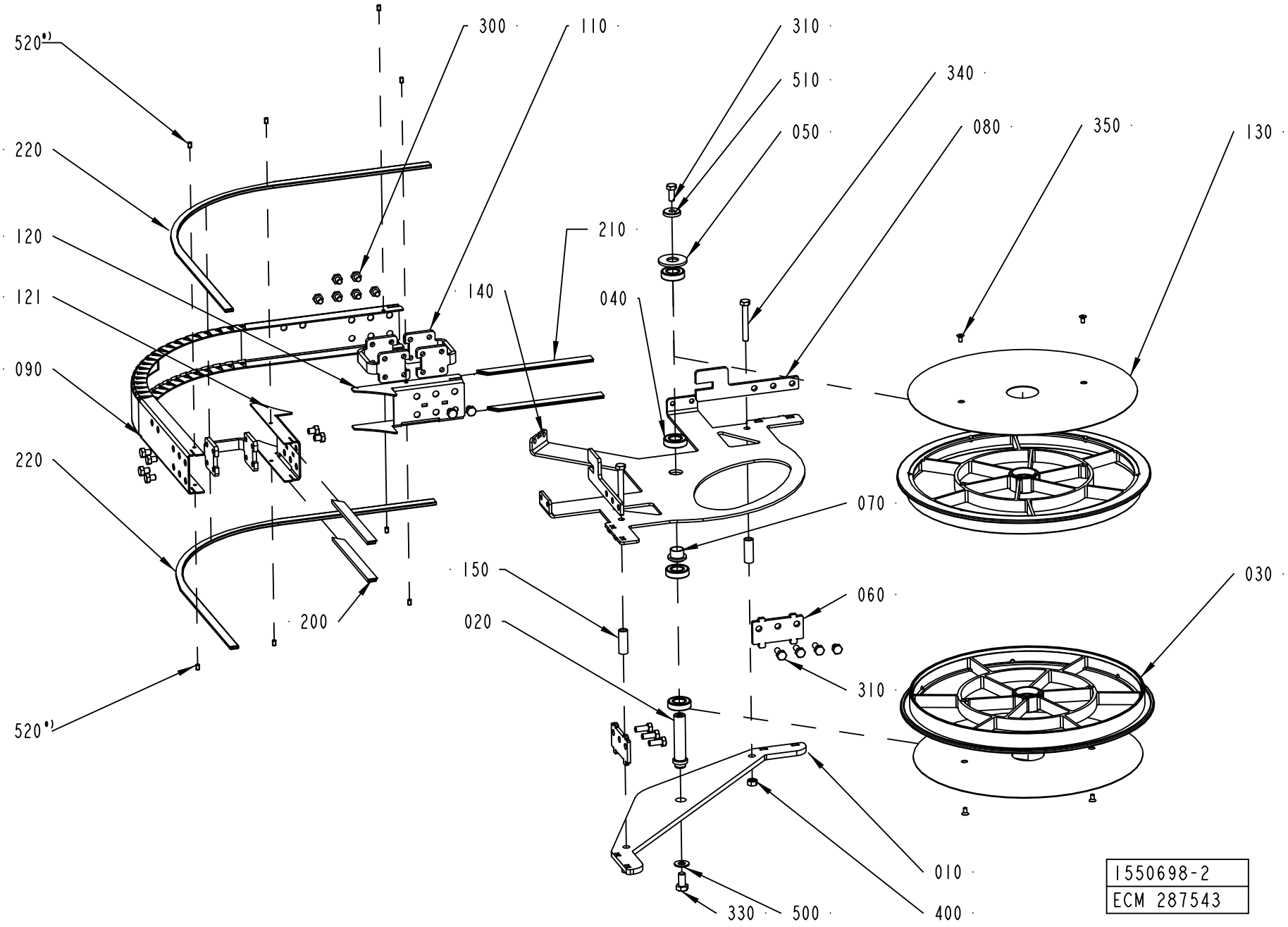

ECM: 306224 - 20070817
Group number: 1550698-0200
Assembly Drawing: 1550698-2_1_AF

Pos	Part No	UN	Qty	Description	Page No
-					
010	1550667-0000		1	BOTTOM PANEL	
020	1550689-0000		1	SHAFT	
030	2656655-0000		2	WHEEL	
040	1550348-0002		4	BEARING	
040	1550348-0001		4	BEARING	
050	1550693-0000		1	WASHER	
060	2561257-0000		2	SPACER	
070	1550690-0000		1	SLEEVE	
080	2561603-0000		2	SPACER	
090	1550669-0000		1	SIDE PLATE	
110	2561206-0000		3	SPACER	
120	1550687-0001		1	SIDE PLATE	
121	1550687-0002		1	SIDE PLATE	
130	2561232-0000		2	COVER	
140	1550668-0000		1	BRACKET	
150	1550626-0005		2	SPACER	
200	1550595-1801		2	SLIDING STRIP	
210	1550595-1802		2	SLIDING STRIP	
220	2699584-0830		2	SLIDING STRIP	
300	90459-4735		15	SCREW M6S ISO 4017 M8X10 A480	
310	312105-0451		7	SCREW M6S ISO 4017 M8X20 A480	
330	312105-0491		1	SCREW M6S ISO 4017 M10X20 A480	
340	312105-0463		2	SCREW M6S ISO 4014 M8X60 A480	
350	312155-0325		4	SCREW DIN 7991 MF6S M5X10 A4 70	
400	312605-0318		2	HEXAGON NUT, M6M M8 A280	
500	315105-0173		1	WASHER BRB 10,5X20 RFR	
510	315125-0165		1	WASHER TBRSB 8,4X26X5 A4	
520	90459-7293		8	SET SCREW DIN 551M5X8 PA66	

Pos	Part No	UN	Qty	Description	Page No

ADJUSTABLE CONV. LINK

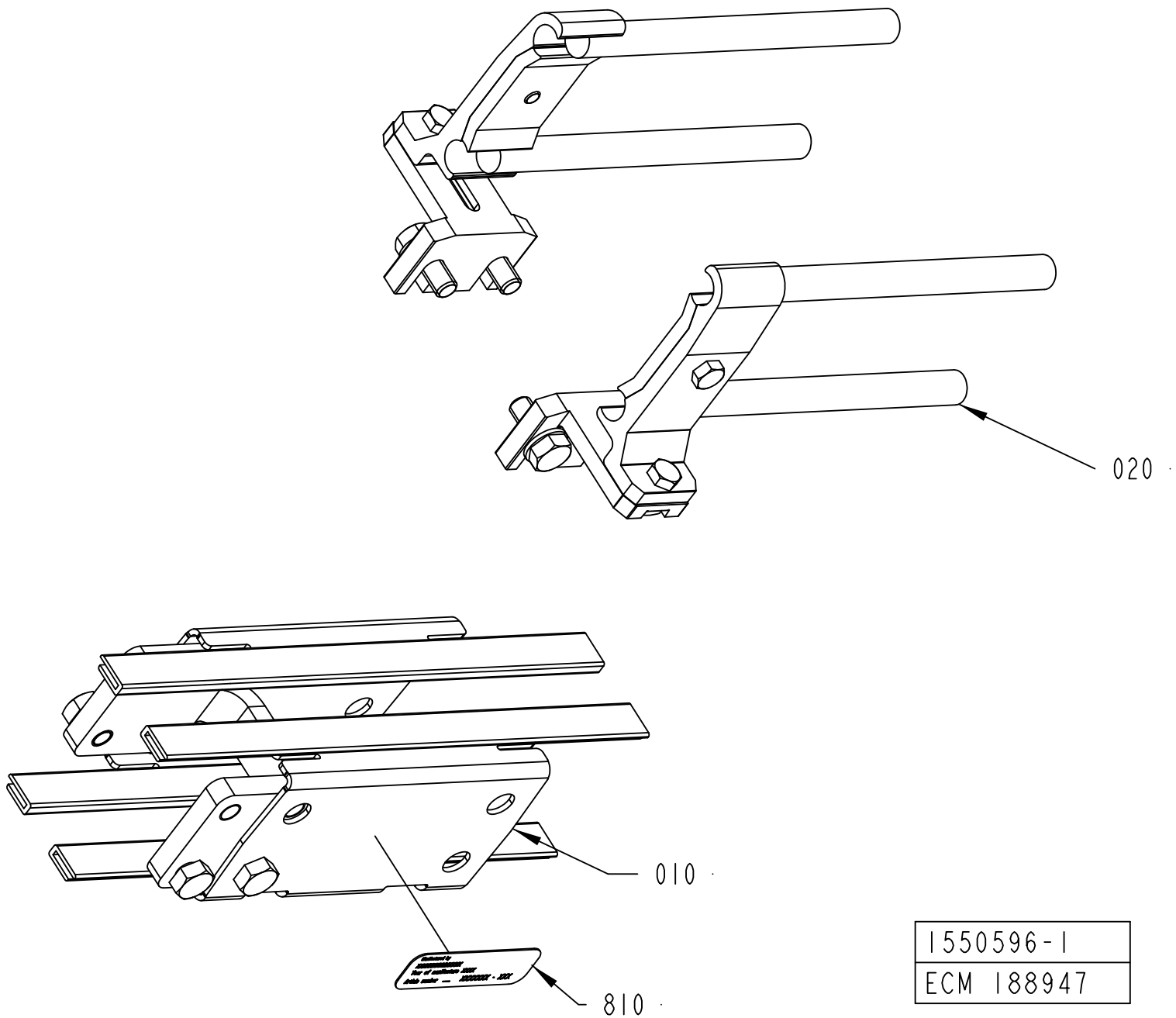

1550596-1
ECM 188947

ECM: 233811 - 20051212
Group number: 1550596-0100
Assembly Drawing: 1550596-1_1_AB

Pos	Part No	UN	Qty	Description	Page No
TBA, TPA					
020	2561543-0100		1	RAILING	**10-93**
820	2590257-0100		1	PACKING DESCRIPTION	**10-95**
Common Parts					
010	2561542-0100		1	BODY	**10-97**
810	1086870-0000		1	SIGN	

Pos	Part No	UN	Qty	Description	Page No

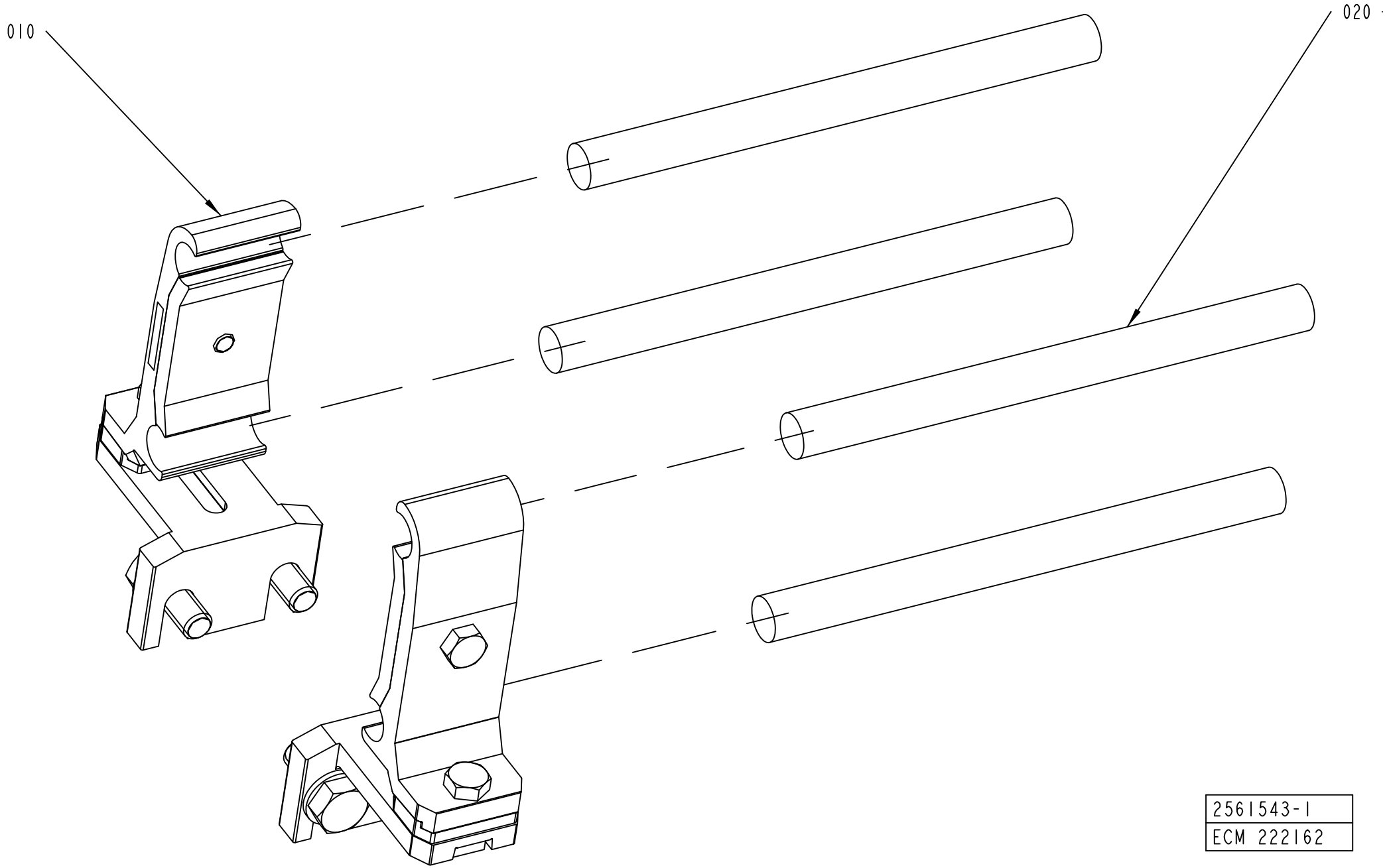

2561543-1
ECM 222162

ECM: 228026 - 20051222
Group number: 2561543-0100
Assembly Drawing: 2561543-1_1_AB

Pos	Part No	UN	Qty	Description	Page No
-					
010	1550743-0200		2	RAIL HOLDER	**5-39, 10-11**
020	499073-0000		4	ROD	

Pos	Part No	UN	Qty	Description	Page No

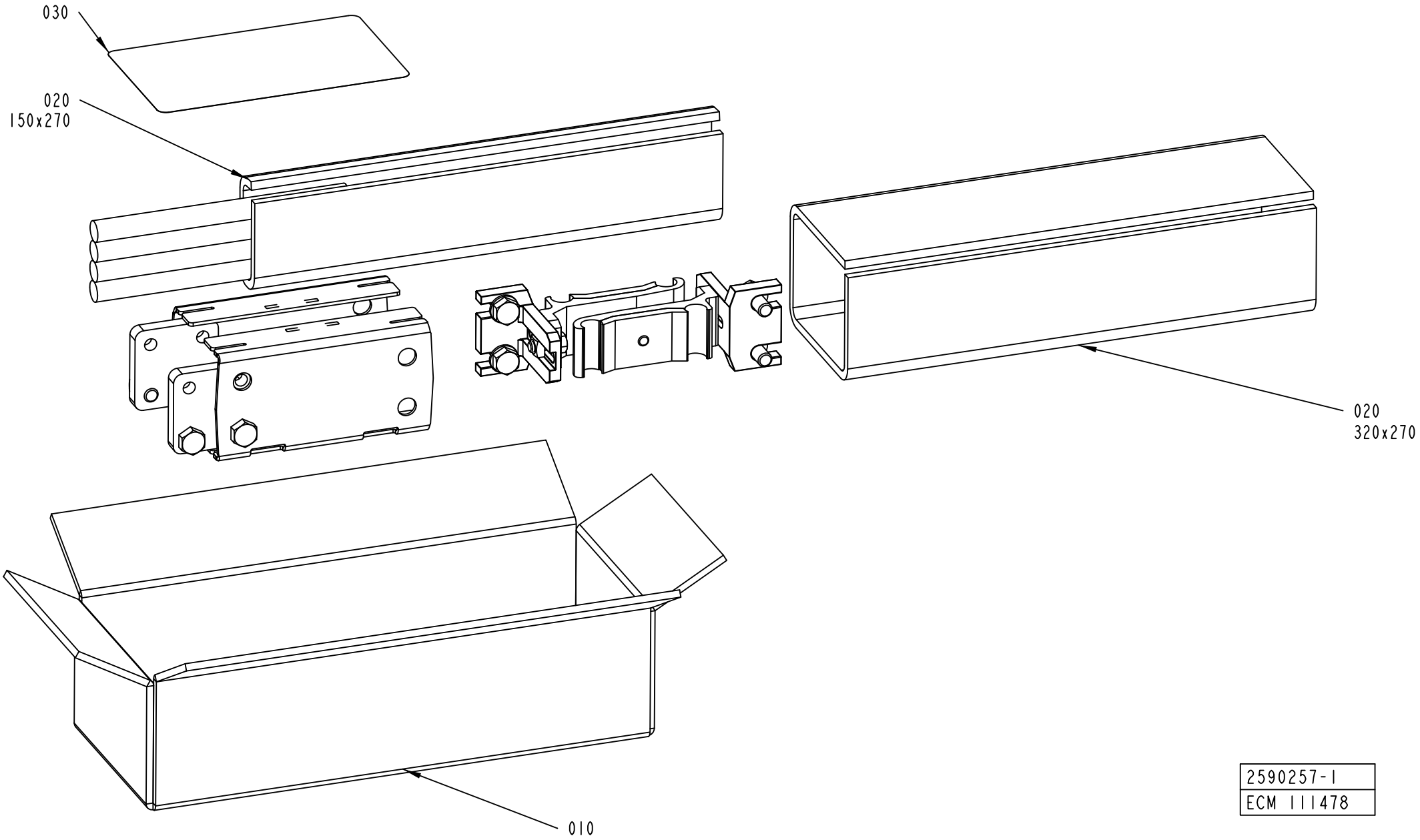

2590257-1
ECM 111478

ECM: 143747 - 20031113
Group number: 2590257-0100
Assembly Drawing: 2590257-1_1_AA

Pos	Part No	UN	Qty	Description	Page No
-					
010	2590254-0000		1	CORRUGATED CARDBOARD BOX	
020	90003-0474		1	PACKING	
030	1086871-0000		1	LABEL TAPE	

Pos	Part No	UN	Qty	Description	Page No

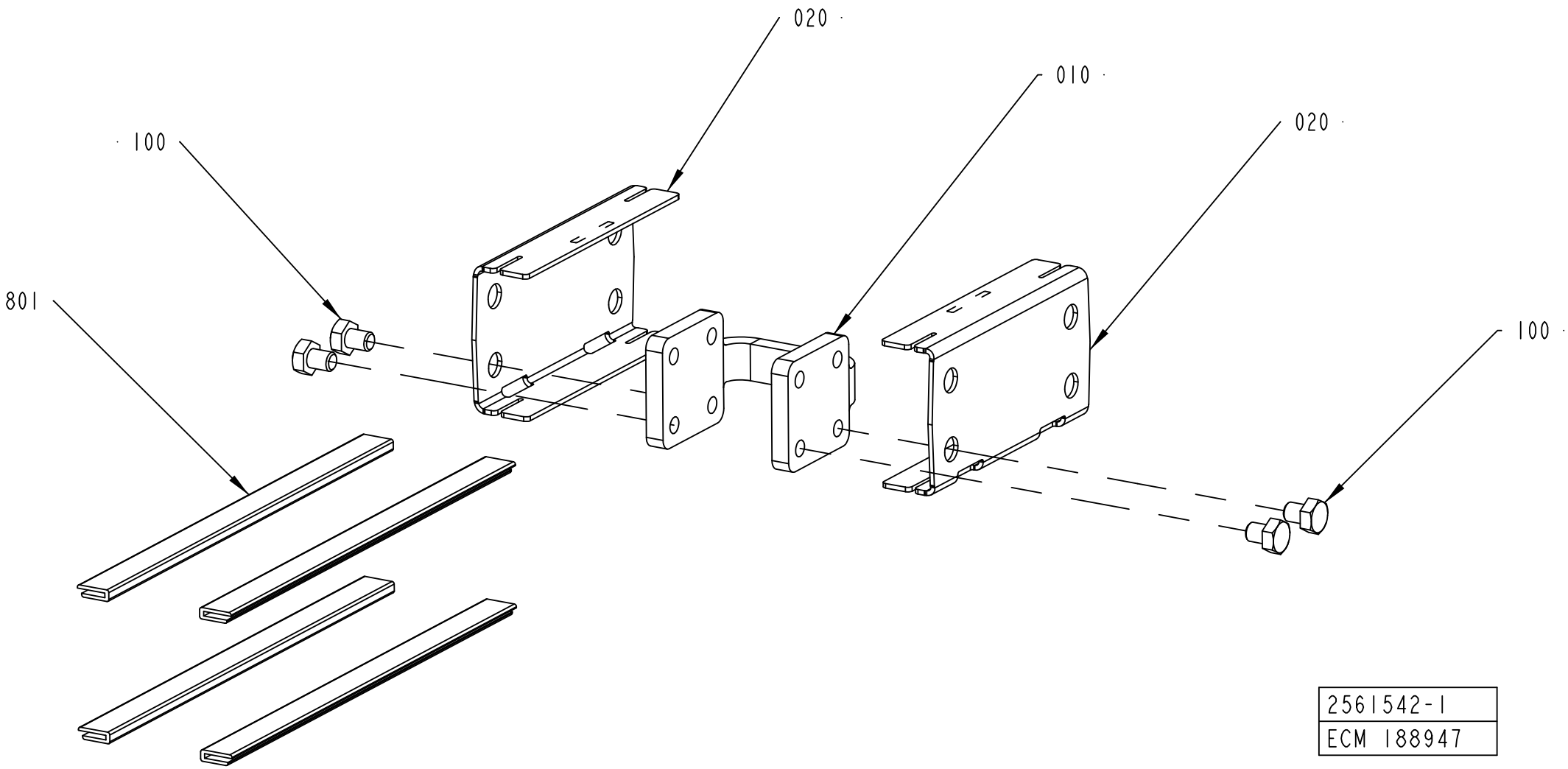
020
010
020
100
801
100
2561542-1
ECM 188947

ECM: 189962 - 20050121
Group number: 2561542-0100
Assembly Drawing: 2561542-1_1_AB

Pos	Part No	UN	Qty	Description	Page No
-					
010	2561206-0000		1	SPACER	
020	1550597-0000		2	SIDE PLATE	
100	90459-4735		4	SCREW M6S ISO 4017 M8X10 A480	
801	2589960-2250		4	SLIDING STRIP	

Pos	Part No	UN	Qty	Description	Page No

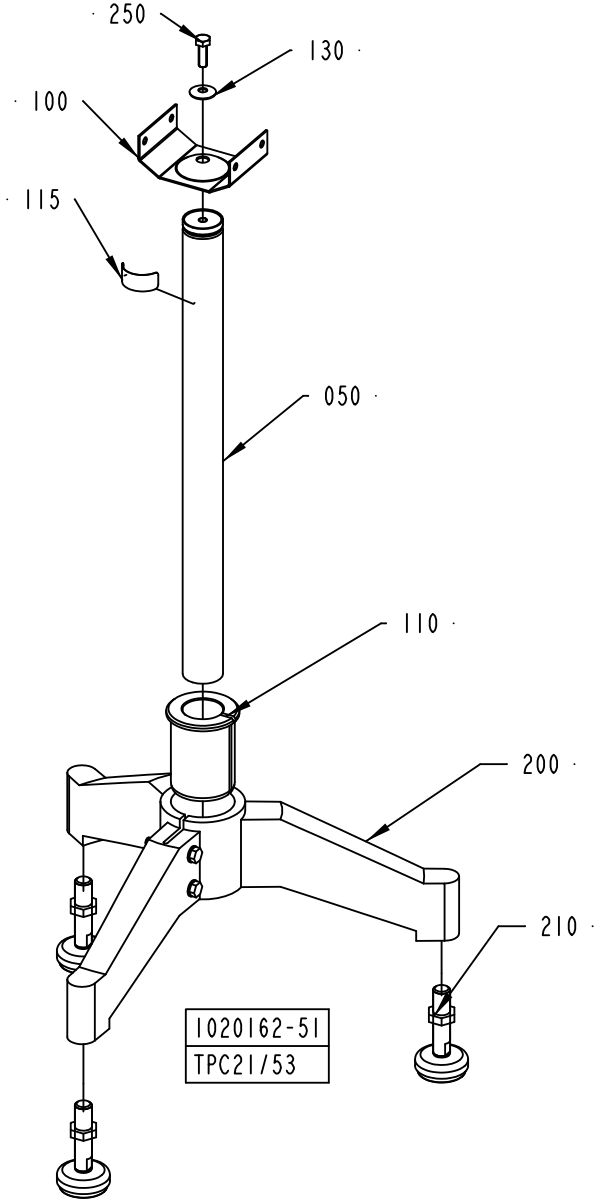

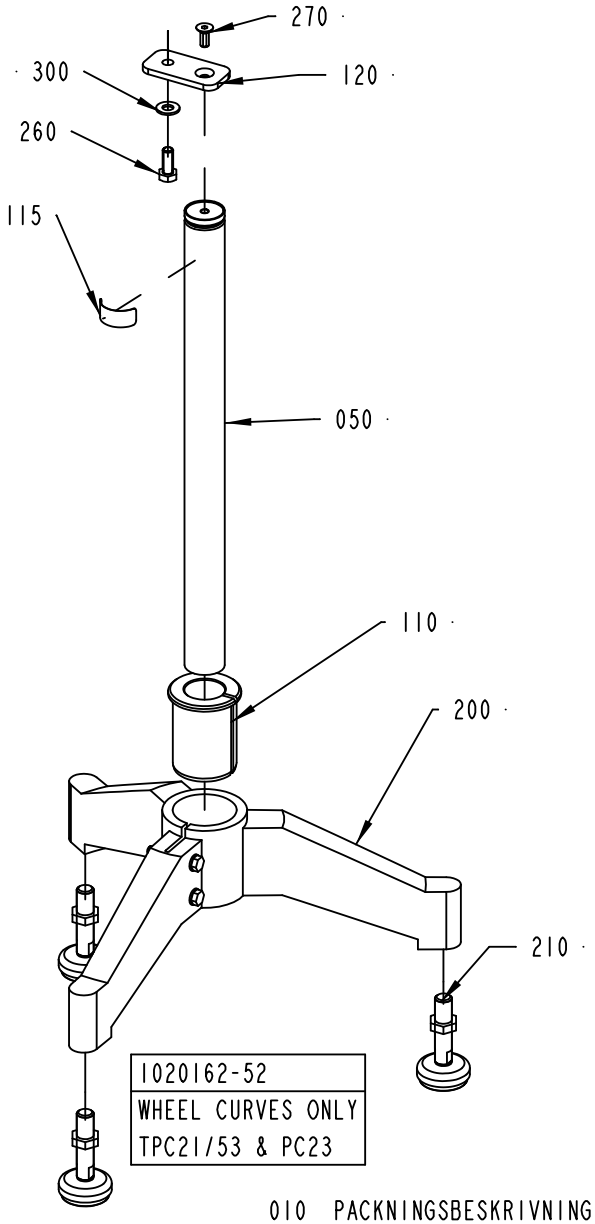

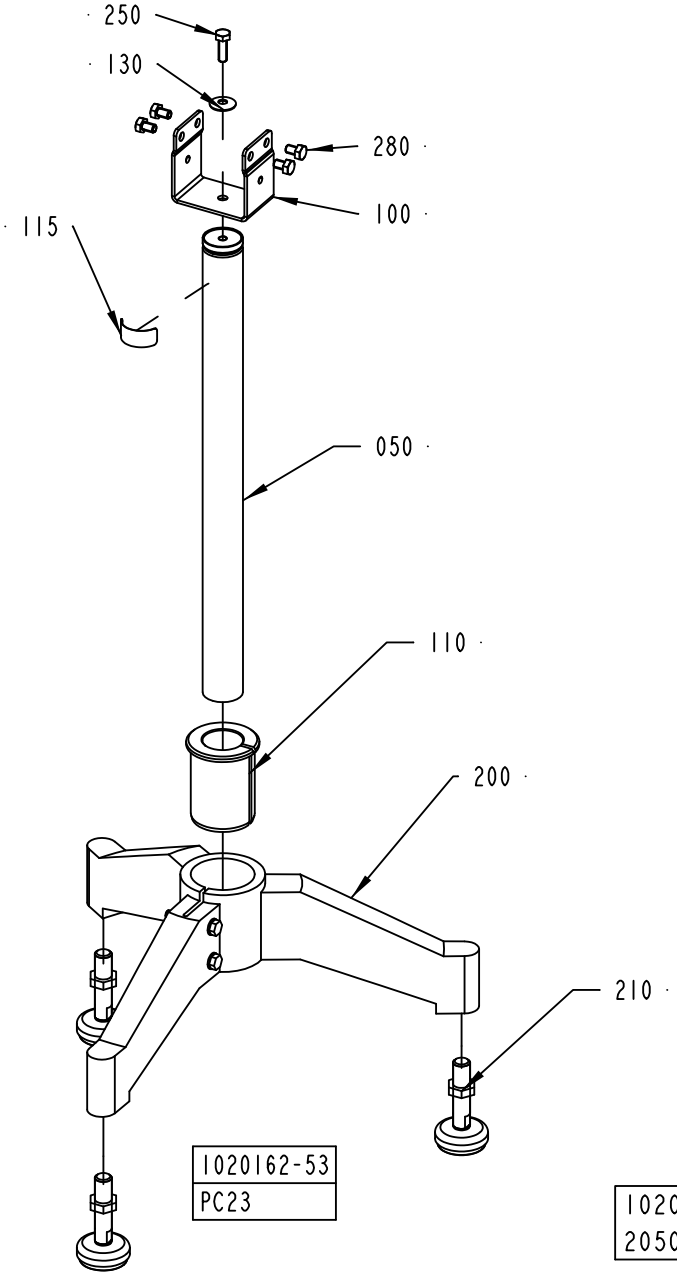

010 PACKNINGSBESKRIVNING
PACKING DESCRIPTION

1020162-2
205003

ECM: 205003 -
Group number: 1020162-0205
Assembly Drawing: 1020162-2_1_AD

Pos	Part No	UN	Qty	Description	Page No
PC23/TPC21/TPC53 WHEEL CURVE CH1000-1400, PC23/TPC21/TPC53 WHEEL CURVE CH400-600, PC23/TPC21/TPC53 WHEEL CURVE CH600-1000					
120	1359224-0000		1	FASTENING PLATE	
260	312105-0493		1	SCREW M6S ISO 4017 M10X25 A480	
270	312155-0451		1	SCREW DIN 7991 MF6S M8X20 A4 70	
300	315105-0173		1	WASHER BRB 10,5X20 RFR	
Common Parts					
010	1020416-0200		1	PACKING DESCRIPTION	**10-101, 10-103**
050	484171-0006		1	LEG	
100	1550874-0000		1	BRACKET FOR LEG PC23	
110	562016-0000		1	REDUCTION CASING	
115	1086870-0000		1	SIGN	
130	529076-0000		1	WASHER	
200	90068-0016		1	FOOT, 3 LEGS. NO 15511	
210	90458-2581		3	FOOT PLATE, M50-16-70	
250	312105-0453		1	SCREW M6S ISO 4017 M8X25 A480	
280	312105-0447		4	SCREW M6S ISO 4017 M8X12 A480	

Pos	Part No	UN	Qty	Description	Page No

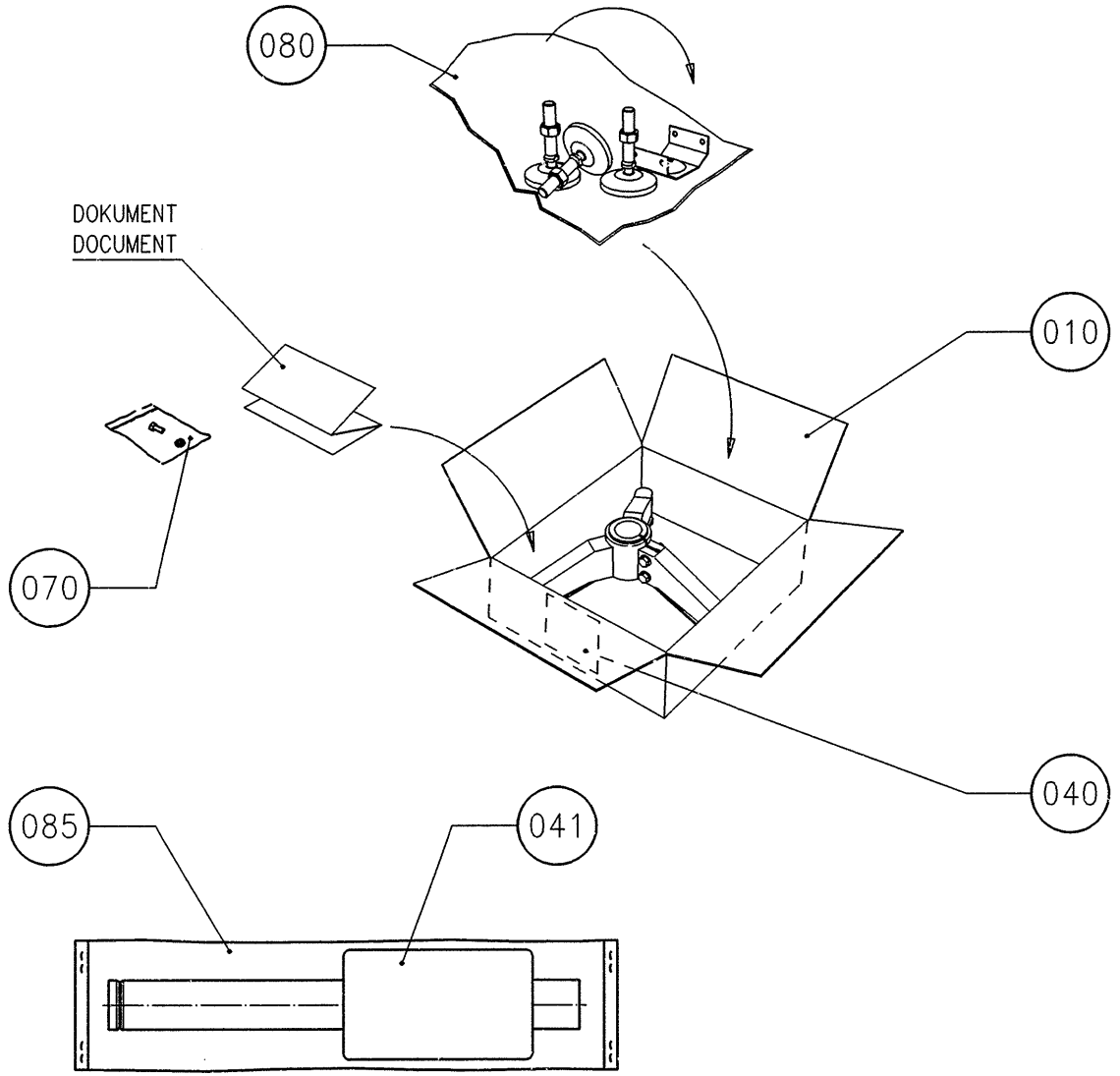
080
DOKUMENT
DOCUMENT
010
070
040
085
041

ECM: 27111 -
Group number: 1020416-0200
Assembly Drawing: 1020416-2_1_AA

This list covers pages from 10-100 to 10-103

Pos	Part No	UN	Qty	Description	Page No
-					
010	1020462-0000		1	CORRUGATED CARDBOARD BOX	
040	1086871-0000		1	LABEL TAPE	
041	1086872-0000		1	LABEL TAPE	
070	90003-0019		1	BAG	
080	90003-0474			PACKING	
085	90003-0483	M		HOSE	

Pos	Part No	UN	Qty	Description	Page No

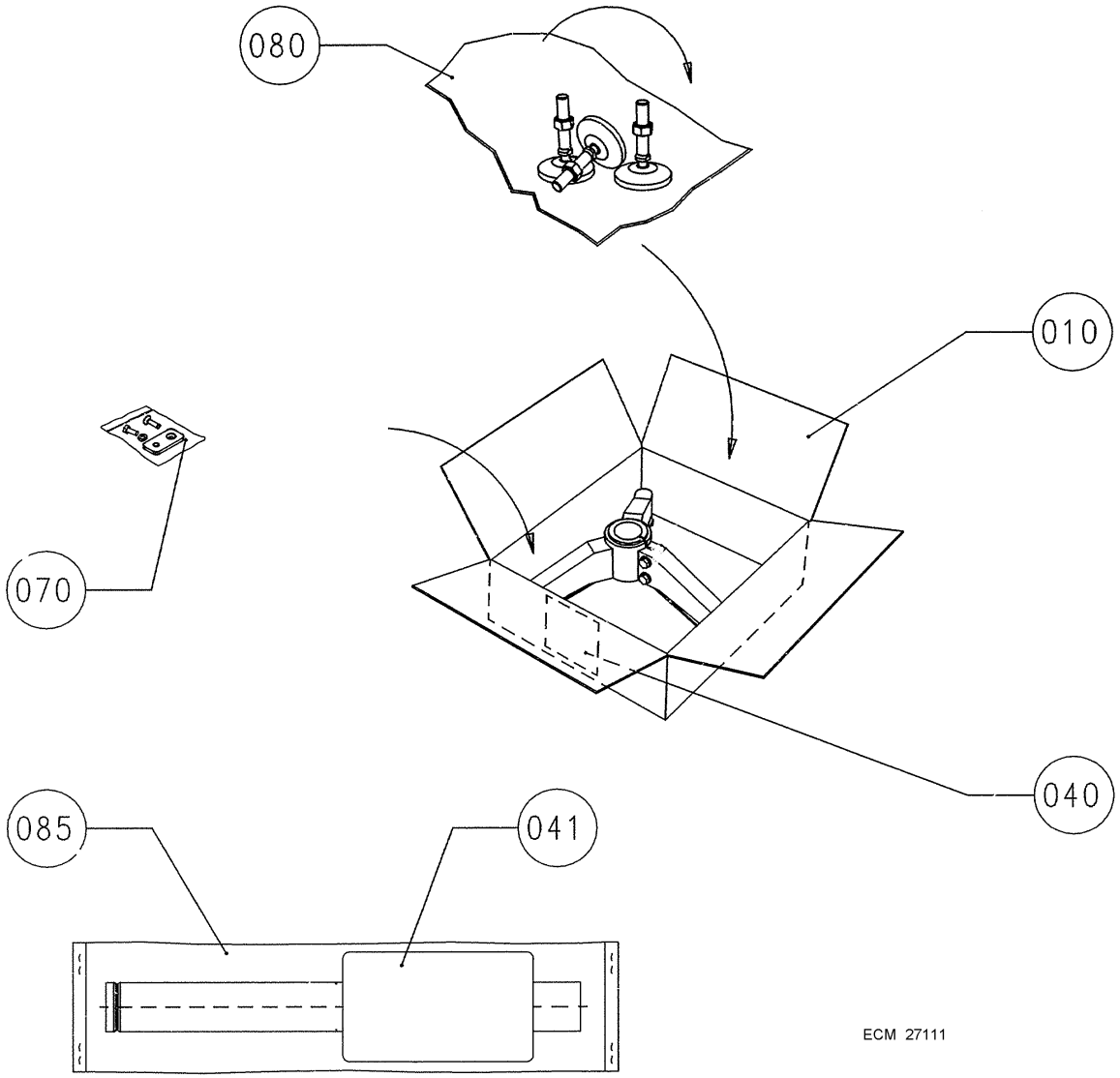
080
010
070
040
085
041
ECM 27111

ECM: 27111 -
Group number: 1020416-0200
Assembly Drawing: 1020416-3_1_AA

This list covers pages from 10-100 to 10-103

Pos	Part No	UN	Qty	Description	Page No
-					
010	1020462-0000		1	CORRUGATED CARDBOARD BOX	
040	1086871-0000		1	LABEL TAPE	
041	1086872-0000		1	LABEL TAPE	
070	90003-0019		1	BAG	
080	90003-0474			PACKING	
085	90003-0483	M		HOSE	

Pos	Part No	UN	Qty	Description	Page No

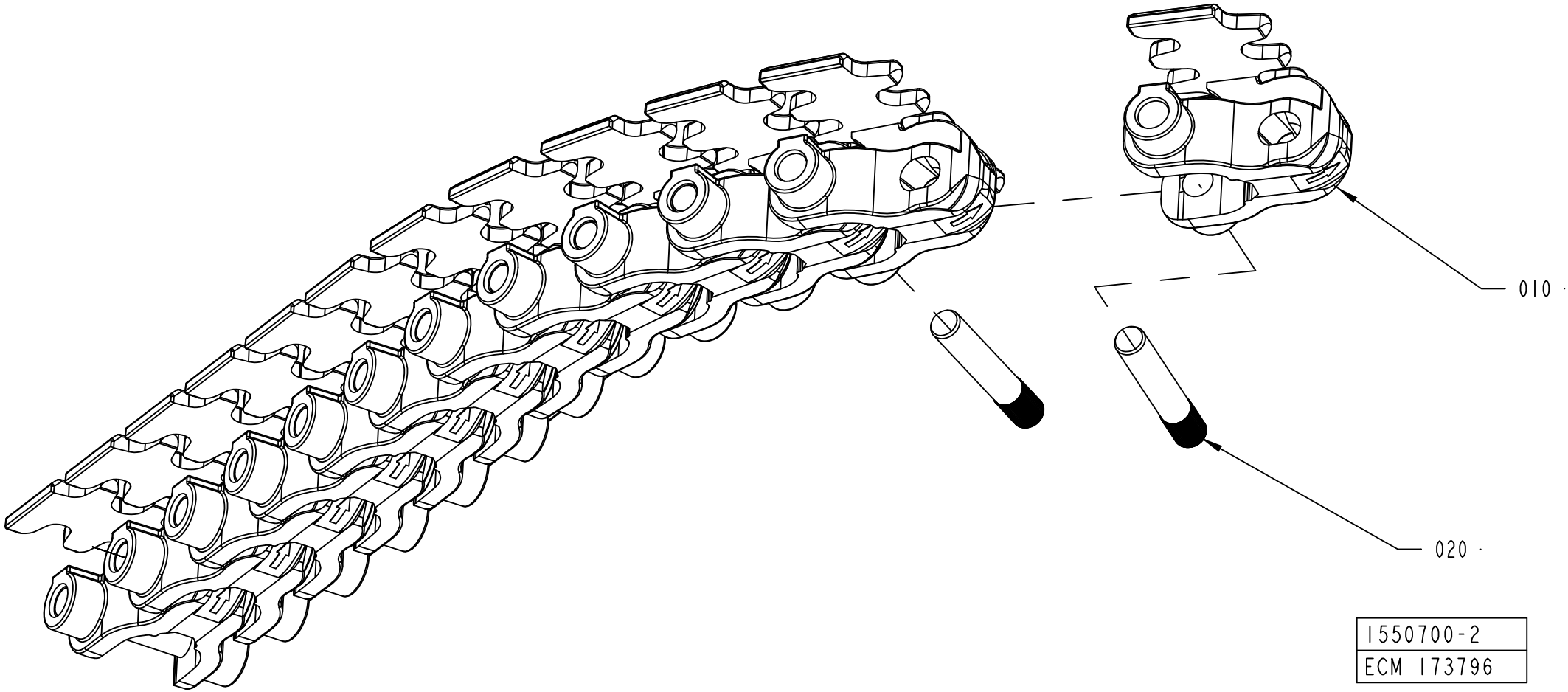

1550700-2
ECM 173796

ECM: 174382 - 20040615
Group number: 1550700-0200
Assembly Drawing: 1550700-2_1_AA

Pos	Part No	UN	Qty	Description	Page No
-					
010	2656670-0000		400	LINK	
020	2656671-0000		400	RIVET	
100	2589951-0100		1	PACKING DESCRIPTION	**10-107**

Pos	Part No	UN	Qty	Description	Page No

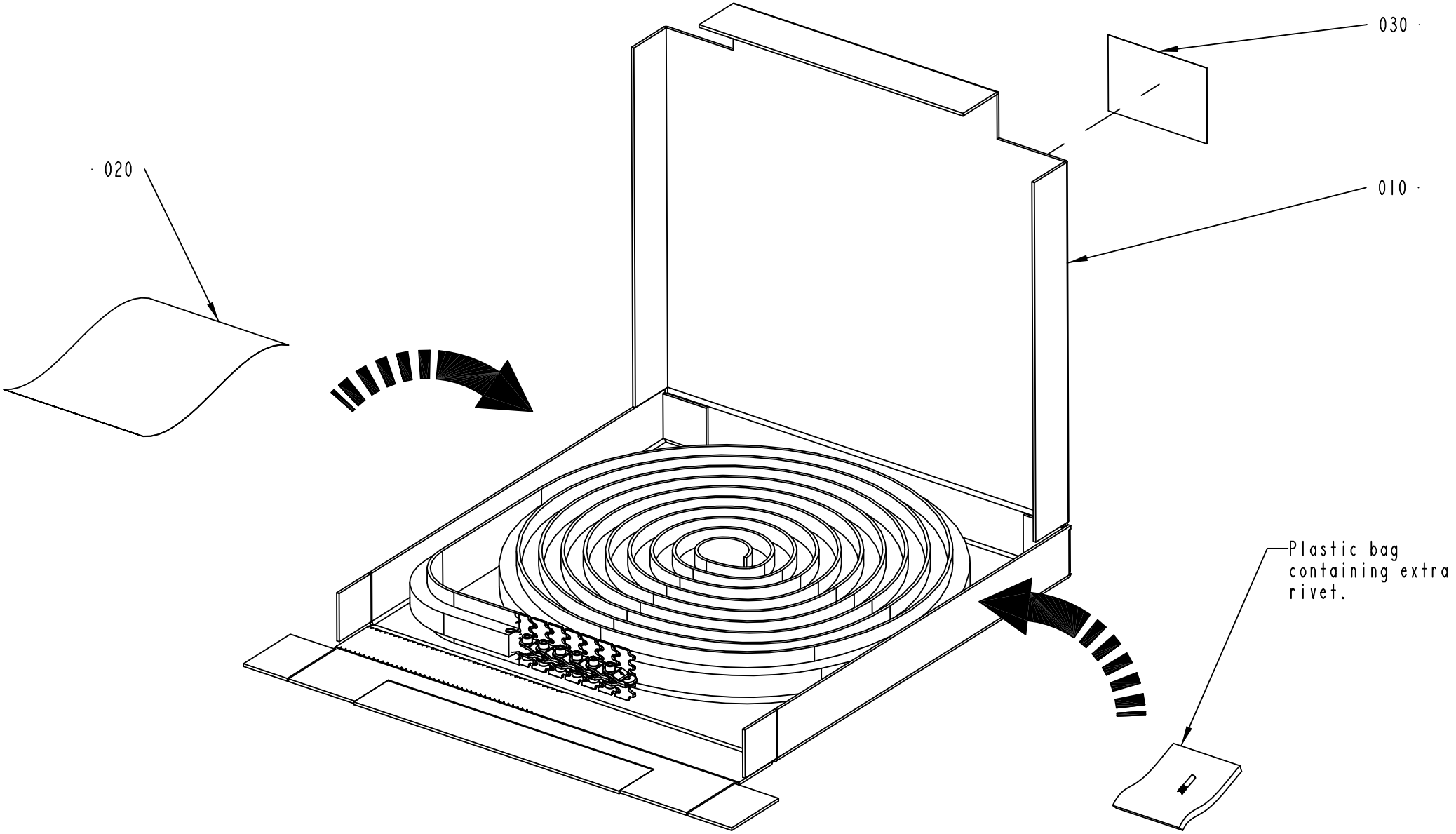

2589951-1
ECM 111488

ECM: 134951 - 20031113
Group number: 2589951-0100
Assembly Drawing: 2589951-1_1_AA

Pos	Part No	UN	Qty	Description	Page No
-					
010	2589955-0000		1	CORRUGATED CARDBOARD BOX	
020	2589953-0000		1	INSTRUCTION	
030	2589952-0000		1	LABEL	
040	90003-0018		1	BAG	

Pos	Part No	UN	Qty	Description	Page No

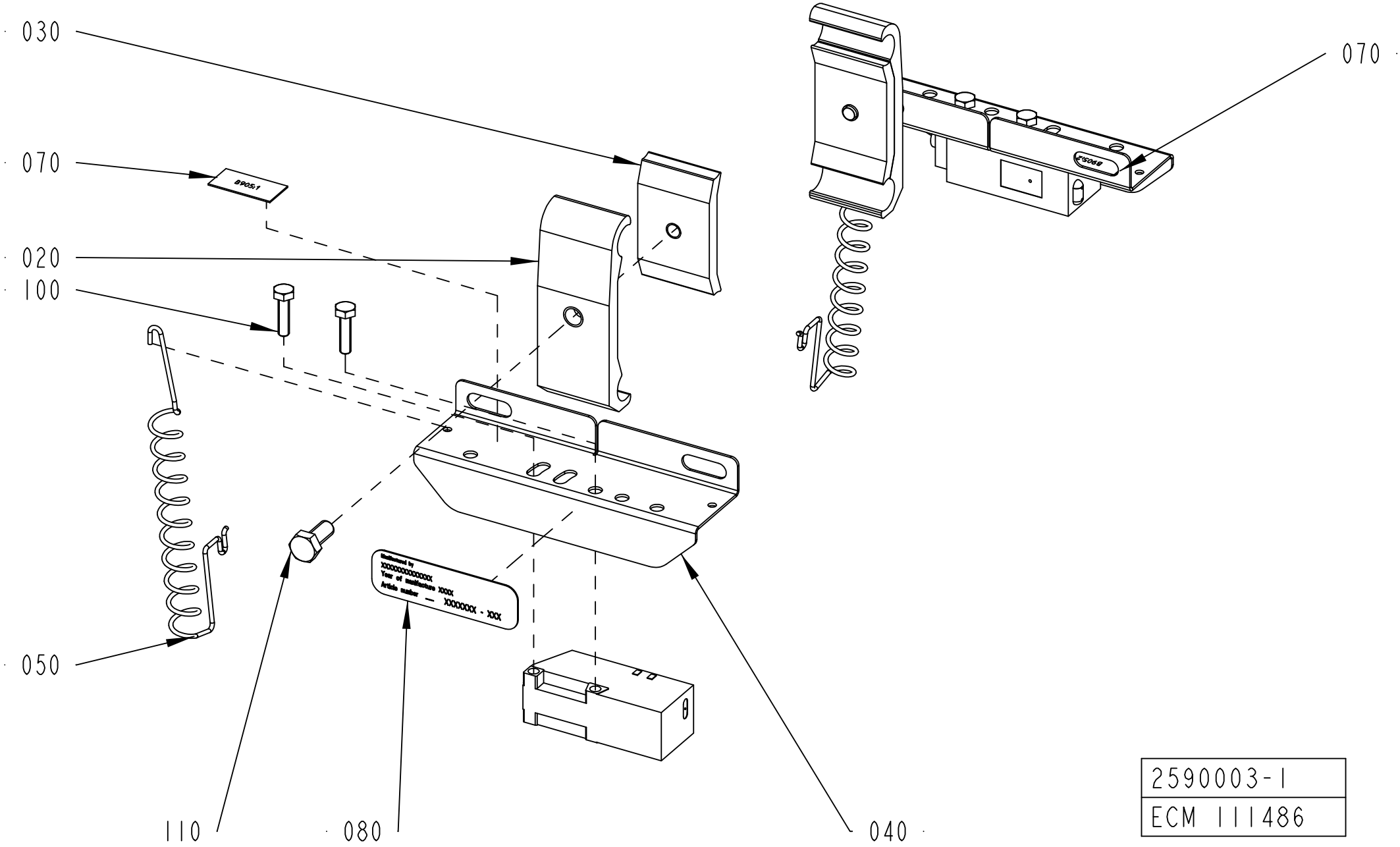

2590003-1
ECM 111486

ECM: 190497 - 20041124
Group number: 2590003-0101
Assembly Drawing: 2590003-1_1_AA

Pos	Part No	UN	Qty	Description	Page No
-					
010	1550369-0100		1	PACKING DESCRIPTION	**10-111**
020	1366750-0000		2	HOLDER	
030	1366727-0000		2	CLAMP	
040	1550024-0000		2	COVER	
050	2590004-0000		2	SPRING	
070	1086711-0000		1	SET OF SIGNS	
080	1086870-0000		1	SIGN	
100	312105-0293		4	SCREW M6S ISO 4017 M4X16 A470	
110	312105-0367		2	SCREW M6S ISO 4017 M6X14 A480	
B905:1	90232-0104		1	PH.CELL E3S-CT61-D-5M	
B905:2	90232-0127		1	PH.CELL E3S-CT61-L-5-5M	

Pos	Part No	UN	Qty	Description	Page No

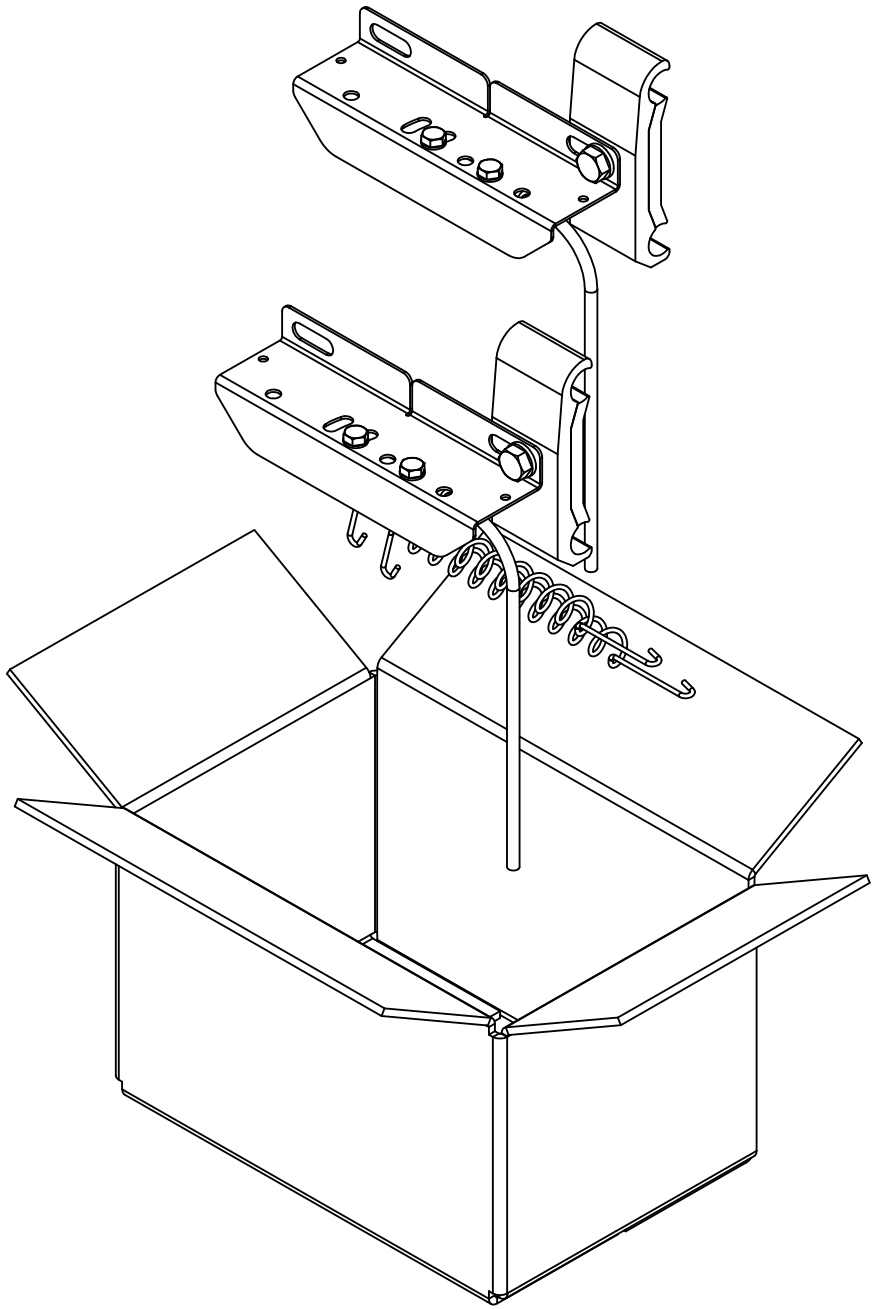

1550369-1
ECM 111486

ECM: 139012 - 20031113
Group number: 1550369-0100
Assembly Drawing: 1550369-1_1_AB

Pos	Part No	UN	Qty	Description	Page No
-					
010	1086871-0000		1	LABEL TAPE	
020	539161-0000		1	CORRUGATED CARDBOARD BOX	
060	90003-0474		1	PACKING	

Pos	Part No	UN	Qty	Description	Page No

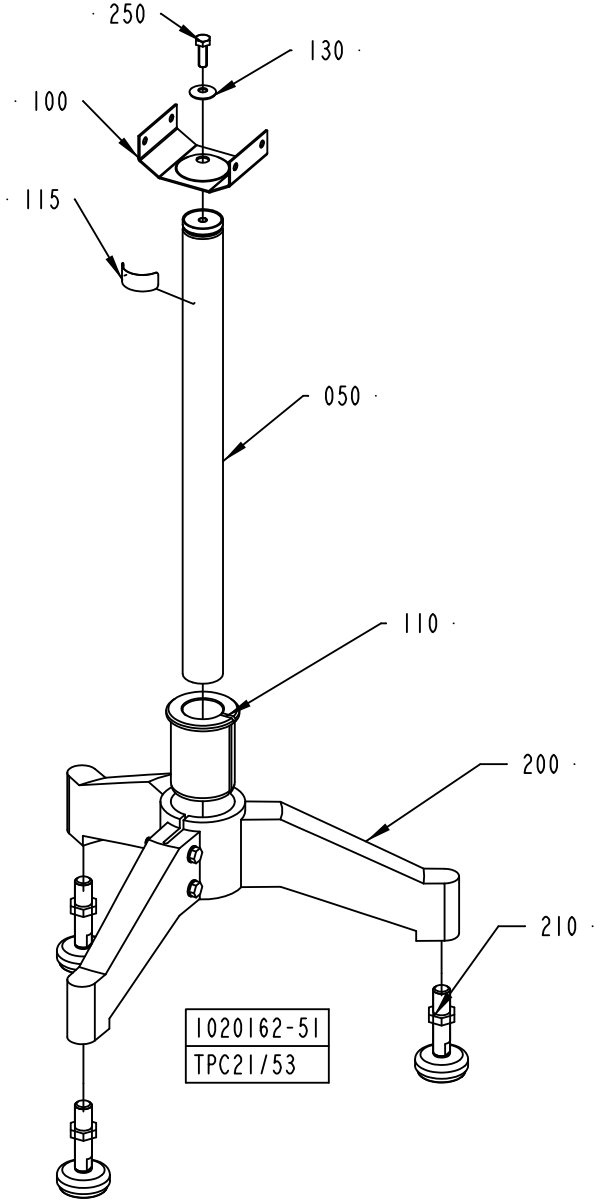

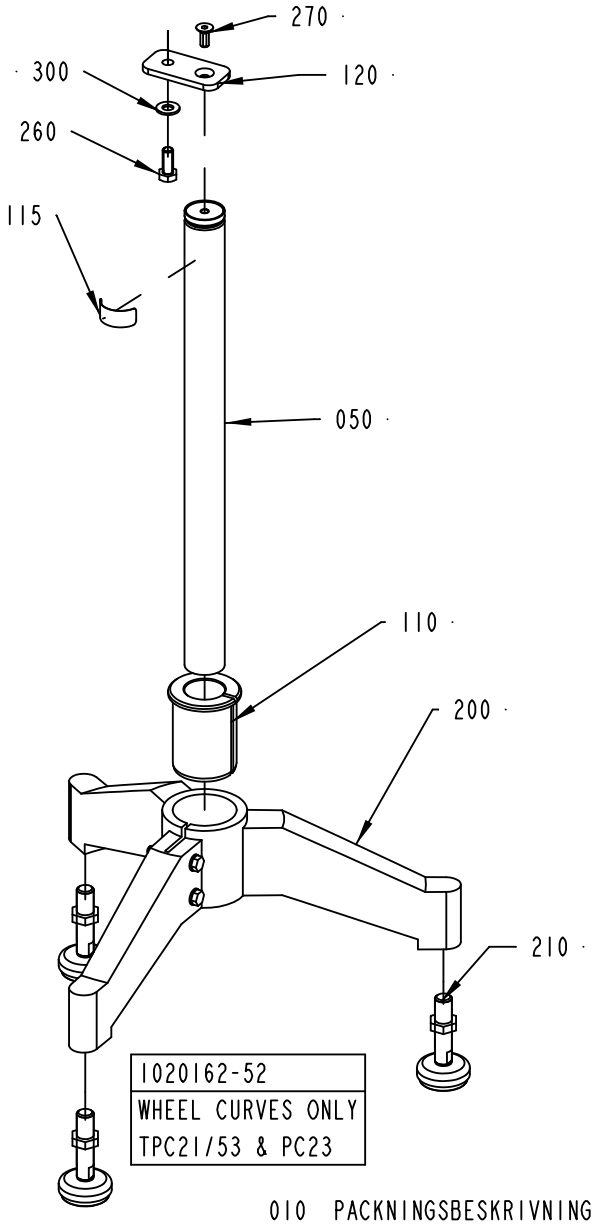

010 PACKNINGSBESKRIVNING
PACKING DESCRIPTION

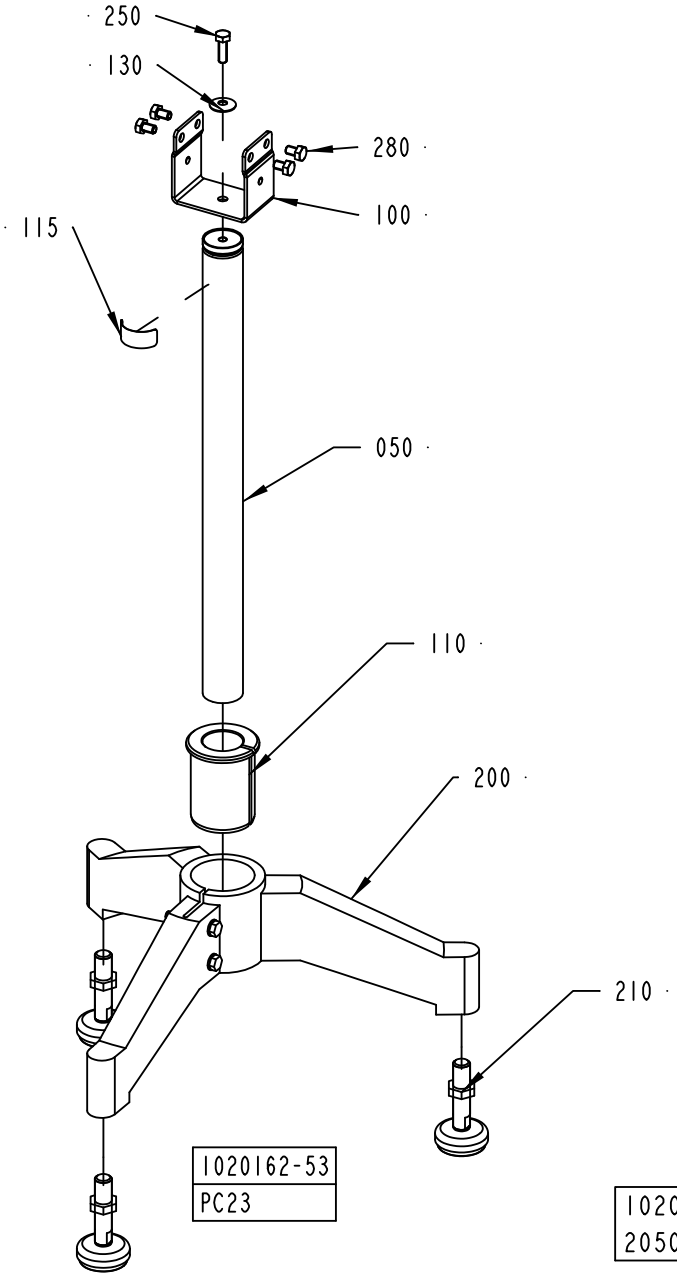

1020162-2
205003

ECM: 205003 -
Group number: 1020162-0212
Assembly Drawing: 1020162-2_1_AD

Pos	Part No	UN	Qty	Description	Page No
PC23 CH1000-1400, PC23 CH400-600					
100	1550874-0000		1	BRACKET FOR LEG PC23	
PC23 CH600-1000					
050	484171-0006		1	LEG	
100	1550874-0000		1	BRACKET FOR LEG PC23	
PC23 STRAIGHT CONVEYOR CH1000-1400, PC23 STRAIGHT CONVEYOR CH400-600, PC23 STRAIGHT CONVEYOR CH600-1000					
130	529076-0000		1	WASHER	
250	312105-0453		1	SCREW M6S ISO 4017 M8X25 A480	
280	312105-0447		4	SCREW M6S ISO 4017 M8X12 A480	
TPC21/TPC53 STRAIGHT CONVEYOR CH1000-1400, TPC21/TPC53 STRAIGHT CONVEYOR CH400-600, TPC21/TPC53 STRAIGHT CONVEYOR CH600-1000					
130	529076-0000		1	WASHER	
250	312105-0453		1	SCREW M6S ISO 4017 M8X25 A480	
TPC21 CH600-1000					
050	484171-0006		1	LEG	
Common Parts					
010	1020416-0200		1	PACKING DESCRIPTION	**10-101, 10-103**
110	562016-0000		1	REDUCTION CASING	
115	1086870-0000		1	SIGN	
120	1359224-0000		1	FASTENING PLATE	
200	90068-0016		1	FOOT, 3 LEGS. NO 15511	
210	90458-2581		3	FOOT PLATE, M50-16-70	
260	312105-0493		1	SCREW M6S ISO 4017 M10X25 A480	
270	312155-0451		1	SCREW DIN 7991 MF6S M8X20 A4 70	
300	315105-0173		1	WASHER BRB 10,5X20 RFR	

Pos	Part No	UN	Qty	Description	Page No

STANDARD CONFIGURATION

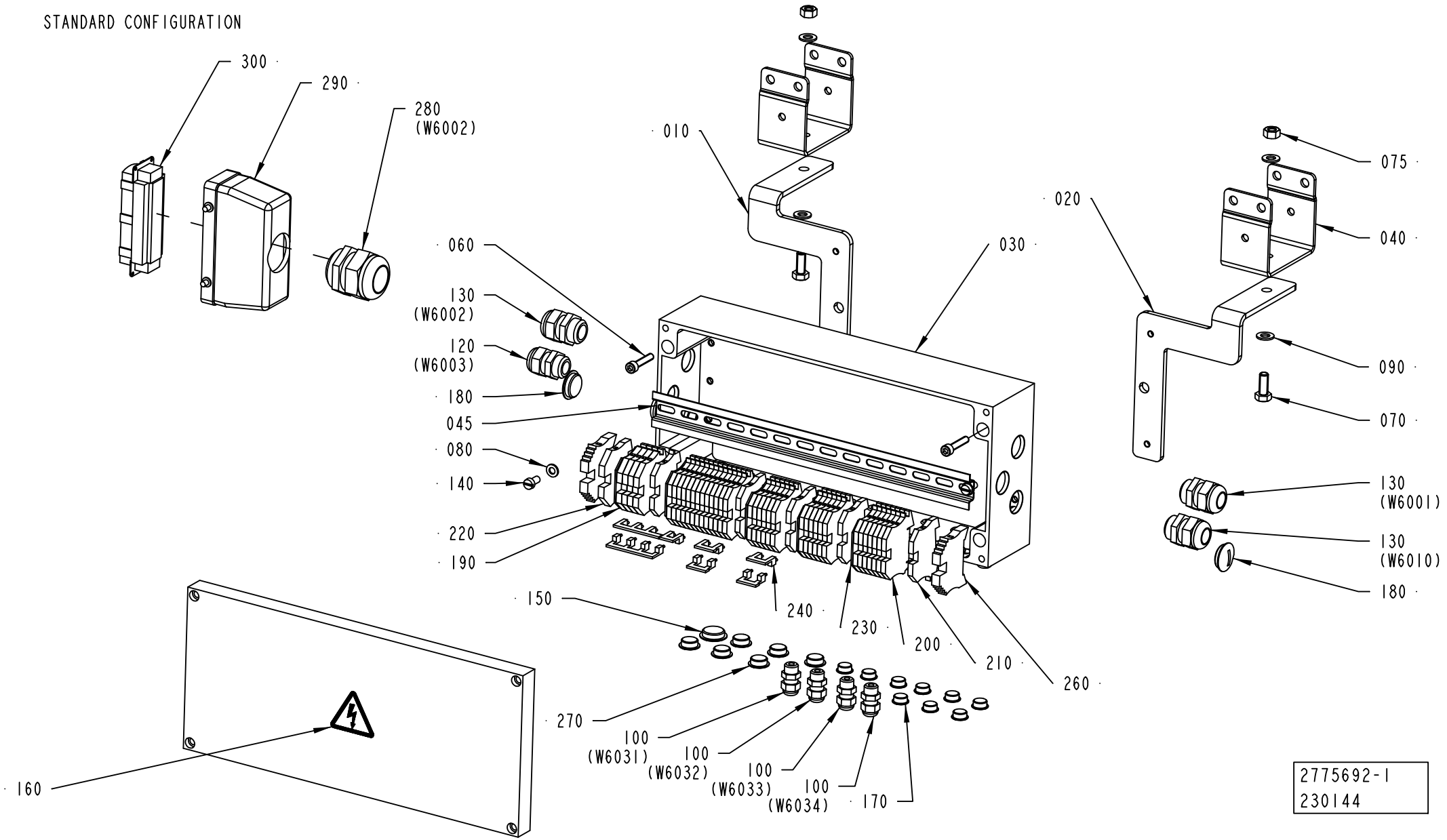

2775692-1
230144

ECM: 259790 - 20060719
Group number: 2775692-0100
Assembly Drawing: 2775692-1_1_AB

This list covers pages from 10-114 to 10-117

Pos	Part No	UN	Qty	Description	Page No
-					
010	2775694-0000		1	BRACKET	
020	2775695-0000		1	BRACKET	
030	2594818-0000		1	CONNECTION BOX	
040	1550874-0000		2	BRACKET FOR LEG PC23	
045	2635558-0000		1	RAIL	
060	312111-0374		4	SCREW HEX.SOCK.HD.MC6S-TT 6X30 88 FZB	
070	312105-0451		2	SCREW M6S ISO 4017 M8X20 A480	
075	312605-0318		2	HEXAGON NUT, M6M M8 A280	
080	315105-0153		2	WASHER BRB 6,4X12 RFR	
090	315105-0165		4	WASHER BRB 8,4X16 RFR	
100	352103-0095		10	CABLE GLAND, STR 7, PR 12,5/PG7	
120	352103-0108		2	CABLE GLAND, ST 13,5 , PR20,4/PG13,5	
130	352103-0111		4	CABLE GLAND, ST 16, PR22,5/PG16	
140	312125-0366		2	SCREW ISO 1207 M6X12 A4	
150	90002-0016		2	BLANK-OFF PLUG PR 20.4 SKINDICHT-BLK13,5	
160	359705-0015		1	WARNING SIGN ISO, RISK OF ELECTRIC SHOCK	
170	90002-0018		11	BLANK-OFF PLUG, PR 12,5 SKINDICHT-BLK7	
180	90002-0004		4	BLANK-OFF PLUG, PR 22,5 SKINDICHT-BLK16	
190	353021-0217		4	FEED THROUGH TERMINAL, 10201.8	
200	353021-0216		32	FEED THROUGH TERMINAL, 10200.8	
210	353024-0204		5	EARTH TERMINAL WPE 2,5	
220	353024-0205		1	EARTH TERMINAL, 1010.1	
230	353032-0005		5	END PLATE WAP 2,5-10 BLUE	
240	353034-0030		5	BRIDGE CONNECTOR WQV 2,5/10, 10544.6	
250	352103-0100		3	CABLE GLAND, STR 9, PR15,2/PG9	
260	353031-0203		2	END SUPPORT, WEW 35/2	
270	90002-0013		6	BLANK-OFF PLUG, PR 15,2 SKINDICHT-BLK9	
280	352103-0121		1	CABLE GLAND, ST 29, PR37,0/PG29	
290	90110-0152		1	CABLE HOOD 24-POL 70.352.2428.1	
300	90110-0150		1	MALE INSERT 121110 0000	
310	359011-0807		2	MARKING PLATES 5-FW 1-50	
W6002	351150-0424	M	16	CABLE OLFLEX 18X0,75 MM2 LIGHT/GREY	
W6003	351150-0406	M	12	CABLE OLFLEX 7X0,75 MM2 LIGHT/GREY	

Pos	Part No	UN	Qty	Description	Page No

WITH SAMPLING UNIT

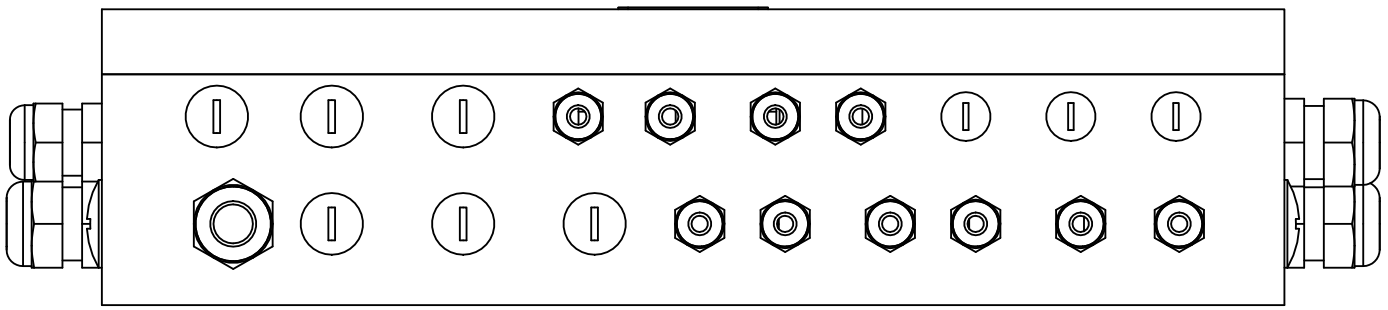

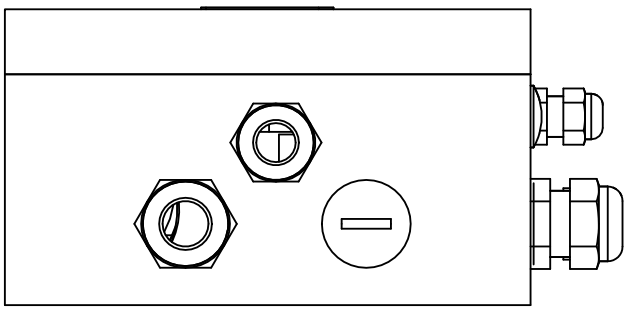

WITH DOMINO DATING UNIT

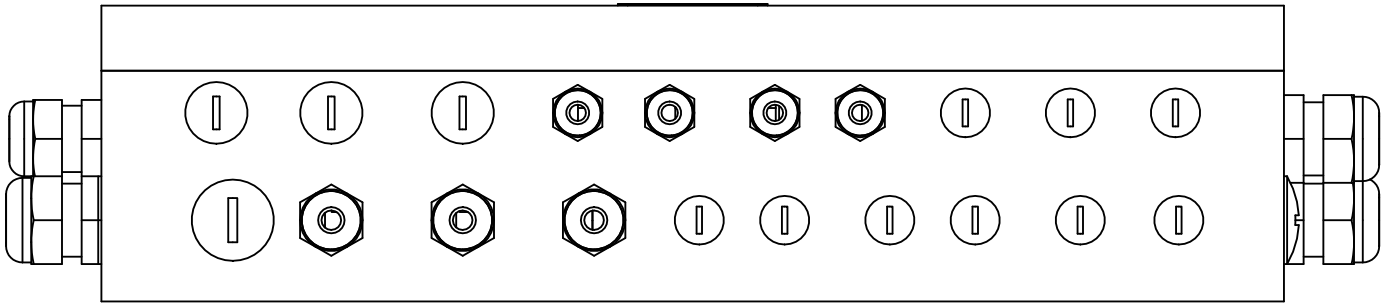

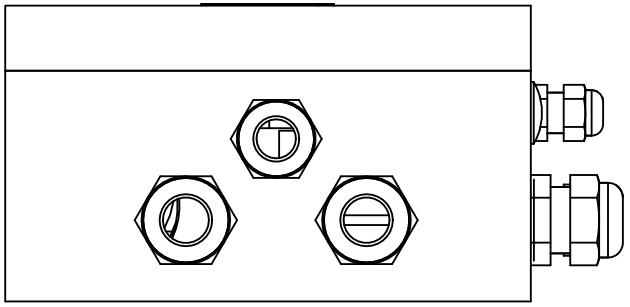

WITH SAMPLING UNIT AND DOMINO DATING UNIT

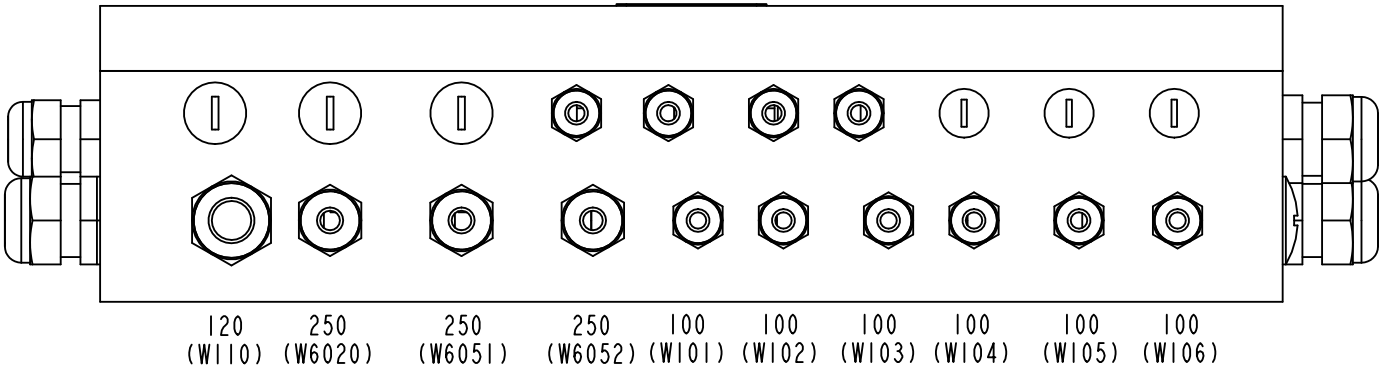

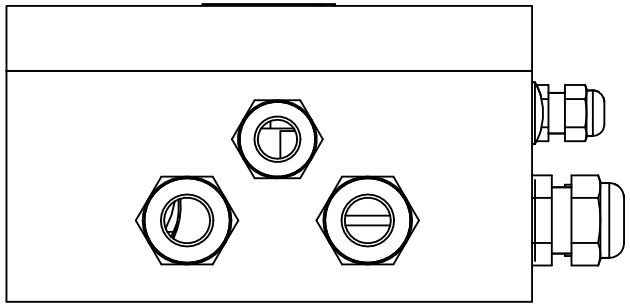

ECM: 259790 - 20060719
Group number: 2775692-0100
Assembly Drawing: 2775692-1_2_AB

This list covers pages from 10-114 to 10-117

Pos	Part No	UN	Qty	Description	Page No
-					
010	2775694-0000		1	BRACKET	
020	2775695-0000		1	BRACKET	
030	2594818-0000		1	CONNECTION BOX	
040	1550874-0000		2	BRACKET FOR LEG PC23	
045	2635558-0000		1	RAIL	
060	312111-0374		4	SCREW HEX.SOCK.HD.MC6S-TT 6X30 88 FZB	
070	312105-0451		2	SCREW M6S ISO 4017 M8X20 A480	
075	312605-0318		2	HEXAGON NUT, M6M M8 A280	
080	315105-0153		2	WASHER BRB 6,4X12 RFR	
090	315105-0165		4	WASHER BRB 8,4X16 RFR	
100	352103-0095		10	CABLE GLAND, STR 7, PR 12,5/PG7	
120	352103-0108		2	CABLE GLAND, ST 13,5 , PR20,4/PG13,5	
130	352103-0111		4	CABLE GLAND, ST 16, PR22,5/PG16	
140	312125-0366		2	SCREW ISO 1207 M6X12 A4	
150	90002-0016		2	BLANK-OFF PLUG PR 20.4 SKINDICHT-BLK13,5	
160	359705-0015		1	WARNING SIGN ISO, RISK OF ELECTRIC SHOCK	
170	90002-0018		11	BLANK-OFF PLUG, PR 12,5 SKINDICHT-BLK7	
180	90002-0004		4	BLANK-OFF PLUG, PR 22,5 SKINDICHT-BLK16	
190	353021-0217		4	FEED THROUGH TERMINAL, 10201.8	
200	353021-0216		32	FEED THROUGH TERMINAL, 10200.8	
210	353024-0204		5	EARTH TERMINAL WPE 2,5	
220	353024-0205		1	EARTH TERMINAL, 1010.1	
230	353032-0005		5	END PLATE WAP 2,5-10 BLUE	
240	353034-0030		5	BRIDGE CONNECTOR WQV 2,5/10, 10544.6	
250	352103-0100		3	CABLE GLAND, STR 9, PR15,2/PG9	
260	353031-0203		2	END SUPPORT, WEW 35/2	
270	90002-0013		6	BLANK-OFF PLUG, PR 15,2 SKINDICHT-BLK9	
280	352103-0121		1	CABLE GLAND, ST 29, PR37,0/PG29	
290	90110-0152		1	CABLE HOOD 24-POL 70.352.2428.1	
300	90110-0150		1	MALE INSERT 121110 0000	
310	359011-0807		2	MARKING PLATES 5-FW 1-50	
W6002	351150-0424	M	16	CABLE OLFLEX 18X0,75 MM2 LIGHT/GREY	
W6003	351150-0406	M	12	CABLE OLFLEX 7X0,75 MM2 LIGHT/GREY	

Pos	Part No	UN	Qty	Description	Page No

This page is intentionally left blank.

ECM: - -
Group number: 2699256-0101
Assembly Drawing:

Pos	Part No	UN	Qty	Description	Page No
75MM					
	90181-0180		1	CABLE TRAY	
	2590294-0000		4	BRACKET FOR CABLE DUCT PC23 75MM	
	1289983-0002		2	LID	
	1289983-0001		1	LID	
Common Parts					
	315125-0165		15	WASHER TBRSB 8,4X26X5 A4	
	312105-0447		15	SCREW M6S ISO 4017 M8X12 A480	
	90181-0315		1	CABLE TRENCH PARTS	
	90181-0314		1	CABLE TRENCH PARTS	
	90181-0185		1	CABLE TRENCH PARTS	
	90181-0184		2	CABLE TRENCH PARTS	
	90181-0183		4	JOINING FITTING	
	90181-0182		4	CABLE TRENCH PARTS	

Pos	Part No	UN	Qty	Description	Page No

Tetra Pak

SPC
Spare Parts Catalogue

This page is intentionally left blank.

ECM: 345958 - 20080401
Group number: 648547-0200
Assembly Drawing:

Pos	Part No	UN	Qty	Description	Page No
HI					
	342850-0304		1	GASKET 35,4X49,1X5,2 1"1/2 FDA	
	979813-0000		1	PLUG	
	1498699-0000		1	PIPE	
Common Parts					
	531345-0200		1	PERSONAL PROTECT. EQ H2O2	**11-5**
	1519819-0200		1	START-UP KIT	**11-7**
	1498691-0200		1	TOOLS AND TEMPLATES	**11-29**
	2552551-0100		1	TPOP DATA COLLECTION	**11-51**
	2555087-0100		1	SUPPORT	**11-53**
	2555088-0100		1	SUPPORT	**11-55**
	593682-0000		1	MACHINE SIGN, EEA(CE-MARK)	
	90220-0091	M	200	PAIR TWISTED CABLE 2X2X0,25MM2	
	90459-0246	KG	25	GREASE, KLüBERSYNTH UH1, ONLY IN BOM	
	90459-7413		*1*	*GREASE, KLüBERSYNTH UH1 14-1600, 1 KG*	
	90459-7414		*1*	*GREASE, KLüBERSYNTH UH1 14-1600, 25 KG*	
	90600-3339		1	PAPER REEL TROLLEY, TP A3	**11-57**
	311521-0142		4	RIVET, BLANK 3,2X6	
	351150-0407	M	50	CABLE OLFLEX 12X0,75 MM2 LIGHT/GREY	

Pos	Part No	UN	Qty	Description	Page No

This page is intentionally left blank.

ECM: 72190 - 19990628
Group number: 531345-0200
Assembly Drawing:

Pos	Part No	UN	Qty	Description	Page No	Pos	Part No	UN	Qty	Description	Page No
-											
	90303-0013		1	APRON							
	90303-0012		1	PROTECTIVE GLOVES							
	90303-0011		1	PROTECTIVE GOGGLES							

This page is intentionally left blank.

ECM: 99253 - 20020715
Group number: 1519819-0200
Assembly Drawing:

Pos	Part No	UN	Qty	Description	Page No
-					
010	2524610-0100		1	SUPERSTRUCTURE	**11-9, 11-11**
020	2524611-0100		1	JAW SYSTEM	**11-19**
030	2524612-0100		1	FINAL FOLDER	**11-21**
040	2524613-0100		1	AUTOMATIC SPLICING UNIT	**11-23**
050	2524614-0100		1	ELECTRICAL CABINET	**11-25**
060	2524615-0100		1	MACHINE BODY	**11-27**

Pos	Part No	UN	Qty	Description	Page No

This page is intentionally left blank.

ECM: 360138 - 20081001
Group number: 2524610-0100
Assembly Drawing:

This list covers pages from 11-8 to 11-11

Pos	Part No	UN	Qty	Description	Page No
TBA 0200B FLOATER, TBA 0250B FLOATER					
010	2529417-0000		1	SHAFT	
020	257330-0000		2	PRESSURE ROLLER (10 PCS)	
170	90459-0328		2	O-RING 20,29X2,62 MM	
180	2605148-0000		1	STOP PIN	
210	1490895-0000		3	TRIMMING ROLLER MINUS	
220	1490894-0000		3	TRIMMING ROLLER PLUS	
270	315229-0107		4	GASKETS, 73,9X80,9X3,7 MM 2"1/2 FD	
TBA 0200B LEVELPROBE, TBA 0250B LEVELPROBE, TBA 0300S LEVELPROBE					
010	2529418-0000		1	SHAFT	
020	257330-0000		2	PRESSURE ROLLER (10 PCS)	
030	1347511-0000		1	FITTING	
040	1349913-0000		1	BUSHING	
050	1348639-0000		1	SEALING GASKET	
060	1348555-0000		1	SEALING RING	
130	315204-0214		4	O-RING 17,3X2,4 MM	
210	1490895-0000		3	TRIMMING ROLLER MINUS	
220	1490894-0000		3	TRIMMING ROLLER PLUS	
270	315229-0107		4	GASKETS, 73,9X80,9X3,7 MM 2"1/2 FD	
TBA 0200M LEVELPROBE, TBA 0250S LEVELPROBE					
010	255977-0000		1	SHAFT	
020	272479-0000		2	PRESSURE ROLLER (10PCS)	
030	1347511-0000		1	FITTING	
040	1349913-0000		1	BUSHING	
050	1348639-0000		1	SEALING GASKET	
060	1348555-0000		1	SEALING RING	
130	315204-0214		4	O-RING 17,3X2,4 MM	
210	2551110-0000		3	TRIMMING ROLLER MINUS	
220	2551109-0000		3	TRIMMING ROLLER PLUS	
260	315229-0106		4	GASKETS, 61,2X68,2X3,7 MM 2"1/2 FD	
TBA 0200S FLOATER					
010	255977-0000		1	SHAFT	
020	272479-0000		2	PRESSURE ROLLER (10PCS)	
170	315207-0719		2	O-RING 23,47X2,62 MM	
180	2605148-0000		1	STOP PIN	
210	1558187-0000		3	TRIMMING ROLLER MINUS	
220	1558188-0000		3	TRIMMING ROLLER PLUS	
260	315229-0106		4	GASKETS, 61,2X68,2X3,7 MM 2"1/2 FD	
TBA 0200S LEVELPROBE					
010	255977-0000		1	SHAFT	
020	272479-0000		2	PRESSURE ROLLER (10PCS)	
030	1347511-0000		1	FITTING	
040	1349913-0000		1	BUSHING	
050	1348639-0000		1	SEALING GASKET	
060	1348555-0000		1	SEALING RING	
130	315204-0214		4	O-RING 17,3X2,4 MM	
210	1558187-0000		3	TRIMMING ROLLER MINUS	
220	1558188-0000		3	TRIMMING ROLLER PLUS	
260	315229-0106		4	GASKETS, 61,2X68,2X3,7 MM 2"1/2 FD	
TBA 0250S FLOATER					
010	255977-0000		1	SHAFT	
020	272479-0000		2	PRESSURE ROLLER (10PCS)	
170	90459-0328		2	O-RING 20,29X2,62 MM	
180	2605148-0000		1	STOP PIN	
210	2551110-0000		3	TRIMMING ROLLER MINUS	
220	2551109-0000		3	TRIMMING ROLLER PLUS	
260	315229-0106		4	GASKETS, 61,2X68,2X3,7 MM 2"1/2 FD	
TBA 0300S FLOATER					
010	2529417-0000		1	SHAFT	
020	257330-0000		2	PRESSURE ROLLER (10 PCS)	
170	315207-0514		2	O-RING 18,72X2,62 MM	
180	2605148-0000		1	STOP PIN	
210	1490895-0000		3	TRIMMING ROLLER MINUS	
220	1490894-0000		3	TRIMMING ROLLER PLUS	
270	315229-0107		4	GASKETS, 73,9X80,9X3,7 MM 2"1/2 FD	
320	2736701-0000		1	STOP PIN	
Common Parts					
070	925998-0000		2	DIAPHRAGM	
080	1348475-0000		2	GASKET	
090	342850-0304		4	GASKET 35,4X49,1X5,2 1"1/2 FDA	
100	90217-0347		4	GASKET 32X22,6X3,6 MM	
110	90217-0348		4	GASKET 35,4X46,8X4 MM	
120	90217-0307		4	GASKET 35,8X50,5X5,5 MM	
140	90206-0070		1	HEATING ELEMENT 6000W 380/220V	
	90206-0326		*1*	*CONNECTION BOX K2 FOR 90206-56 AND -70*	
	90269-0308		*1*	*GASKET 59X68X3 MM*	
150	315229-0105		5	GASKETS, 48,5X55,5X3,7 MM 2" FDA	
160	315229-0104		4	GASKETS, 35,8X42,8X3,7 MM 1"1/2 FD	
190	1538794-0000		2	O-RING	
200	1348474-0000		2	GASKET	
230	752156-0000		4	FLANGE BUSHING	
240	90296-0091		1	LUBRICATION GREASE	
250	38535-0001		1	LOCKING FINGER	
250	2715555-0000		1	PIN	

Machine Type | Group Description | Used-In | Group Number | Page No

This page is intentionally left blank.

Pos	Part No	UN	Qty	Description	Page No
Common Parts (Cont'd)					
280	736514-0000		2	SHOCK ABSORBER	
290	1296877-0100		1	SEAL KIT	**11-13**
290	90600-0495		4	O-RING 4X2 MM	
300	1296878-0100		1	SEAL KIT	**11-15**
310	1296879-0100		1	SEAL KIT	**11-17**

Pos	Part No	UN	Qty	Description	Page No

This page is intentionally left blank.

ECM: 70850 - 19970729
Group number: 1296877-0100
Assembly Drawing:

Pos	Part No	UN	Qty	Description	Page No
-					
010	530589-0000		4	SEAL RING	
020	530588-0000		1	SEAL RING	
030	533169-0000		1	DIAPHRAGM	
040	539212-0000		1	GASKET	
050	90091-0266		2	SEAL RING 10,4X16,3X2,5 MM	
060	90207-0363		1	GASKET 75X85X1,8 MM 3" FDA 3-A	
070	90207-0365		1	GASKET 53X63X1,8 MM 2,5" FDA 3-A	
100	315204-0215		1	O-RING 19,2X3 MM	
110	315204-0301		1	O-RING 49,5X3 MM	

Pos	Part No	UN	Qty	Description	Page No

This page is intentionally left blank.

ECM: 70850 - 19970729
Group number: 1296878-0100
Assembly Drawing:

Pos	Part No	UN	Qty	Description	Page No
-					
080	90030-0336		2	CONN. STRAIGHT, 316L-12M-BVCO-3	
090	90091-0237		5	ROD SEAL, GLIDORING 20X27,5X3 MM	
100	315204-0215		2	O-RING 19,2X3 MM	
120	90091-0238		4	WEAR RING 20X22X10 MM	
140	315204-0308		2	O-RING 84,5X3 MM	

Pos	Part No	UN	Qty	Description	Page No

This page is intentionally left blank.

ECM: 70850 - 19970729
Group number: 1296879-0100
Assembly Drawing:

Pos	Part No	UN	Qty	Description	Page No
-					
090	90091-0237		3	ROD SEAL, GLIDORING 20X27,5X3 MM	
100	315204-0215		1	O-RING 19,2X3 MM	
120	90091-0238		2	WEAR RING 20X22X10 MM	
130	90091-0335		1	PISTON SEAL GLIDE RING 62,5X70X3 MM	
150	90091-0304		1	RADIAL SEAL 45X65X8 MM DUST LIP	

Pos	Part No	UN	Qty	Description	Page No

This page is intentionally left blank.

ECM: 998408 - 20070101
Group number: 2524611-0100
Assembly Drawing:

Pos	Part No	UN	Qty	Description	Page No
TBA 0200B					
050	1533002-0000		2	INDUCTOR	
080	1498609-0000		40	VOLUME SHIM	
TBA 0200M					
050	1520166-0000		2	INDUCTOR	
080	1498604-0000		40	VOLUME SHIM	
TBA 0200S					
050	1533000-0000		2	INDUCTOR	
080	272991-0000		40	VOLUME SHIM	
TBA 0250B					
050	1533002-0000		2	INDUCTOR	
080	1348257-0000		40	VOLUME SHIM	
TBA 0250S					
050	1520166-0000		2	INDUCTOR	
080	574366-0000		40	VOLUME SHIM	
TBA 0300S					
050	1533002-0000		2	INDUCTOR	
080	272986-0005		40	VOLUME SHIM	
Common Parts					
010	1539348-0000		8	HOLDER	
020	1538148-0000		8	SPRING	
030	1538149-0000		8	SPRING	
040	1520564-0000		60	DOLLY	
060	1517289-0000		10	KNIFE	
100	2545308-0000		4	CARBON BRUSH	
110	32544-0000		10	INSULATION NUT	

Pos	Part No	UN	Qty	Description	Page No

This page is intentionally left blank.

ECM: 361237 - 20081001
Group number: 2524612-0100
Assembly Drawing:

Pos	Part No	UN	Qty	Description	Page No
TBA 0200B					
010	1523100-0000		1	BELT	
030	2523581-0000		2	CARRIER	
040	1519203-0000		2	BELT	
TBA 0200M					
010	1523101-0000		1	BELT	
030	1498101-0000		2	CARRIER	
040	2947460-0000		2	BELT	
TBA 0200S					
010	2525662-0000		1	BELT	
030	1498997-0000		2	CARRIER	
040	1499919-0000		2	BELT	
TBA 0250B					
010	1523101-0000		1	BELT	
030	1260067-0000		2	CARRIER	
040	1519203-0000		2	BELT	
TBA 0250S					
010	1549858-0000		1	BELT	
030	1498101-0000		2	CARRIER	
040	2947460-0000		2	BELT	
TBA 0300S					
010	2525662-0000		1	BELT	
030	1260067-0000		2	CARRIER	
040	1519203-0000		2	BELT	
Common Parts					
050	90206-0132		1	HOT AIR ELEMENT	
060	1348242-0000		1	SPROCKET	

Pos	Part No	UN	Qty	Description	Page No

This page is intentionally left blank.

ECM: 259283 - 20060419
Group number: 2524613-0100
Assembly Drawing:

Pos	Part No	UN	Qty	Description	Page No
-					
010	90458-0672		1	PROX.SENSOR E2E2-X5MB1-5M	
020	1346988-0000		2	ROLL	
010	*90166-0056*	*MM*	*40*	*SHRINKABLE HOSE (2,5")*	
020	*321120-0104*		*2*	*BEARING BUSH W/O FLANGE, 10X12X10 MM*	

Pos	Part No	UN	Qty	Description	Page No

This page is intentionally left blank.

ECM: 224916 - 20050831
Group number: 2524614-0100
Assembly Drawing:

Pos	Part No	UN	Qty	Description	Page No
-					
010	90233-0029		3	TUBE FUSE 25A, A070GRB25T13 L330014	
020	90233-0028		7	TUBE FUSE 10A, A070GRB10T13 G330010	

Pos	Part No	UN	Qty	Description	Page No

This page is intentionally left blank.

ECM: 106052 - 20020715
Group number: 2524615-0100
Assembly Drawing:

Pos	Part No	UN	Qty	Description	Page No	Pos	Part No	UN	Qty	Description	Page No
-											
010	315229-0104		2	GASKETS, 35,8X42,8X3,7 MM 1"1/2 FD							

This page is intentionally left blank.

ECM: 311576 - 20071001
Group number: 1498691-0200
Assembly Drawing:

Pos	Part No	UN	Qty	Description	Page No
-					
010	1498692-0200		1	TOOLS AND TEMPLATE,JAW SYSTEM	**11-31**
020	1498693-0100		1	TOOLS AND TEMPLATES, FINAL FOLDER	**11-35**
030	1498694-0100		1	TOOLS AND TEMPLATES, FILLING TUBE	**11-37**
040	2908997-0100		1	TOOL	**11-49**

Pos	Part No	UN	Qty	Description	Page No

This page is intentionally left blank.

ECM: 259278 - 20060419
Group number: 1498692-0200
Assembly Drawing:

Pos	Part No	UN	Qty	Description	Page No
-					
010	1487215-0100		1	TOOL	**11-33**
020	1512559-0000		1	SPRAY GUN	
030	90459-4501		1	EXTRACTOR DEVICE 14.756.082	
040	2640362-0000		1	TOOL	
050	2715353-0000		1	TOOL	

Pos	Part No	UN	Qty	Description	Page No

Machine Type	Group Description	Used-In	Group Number	Page No

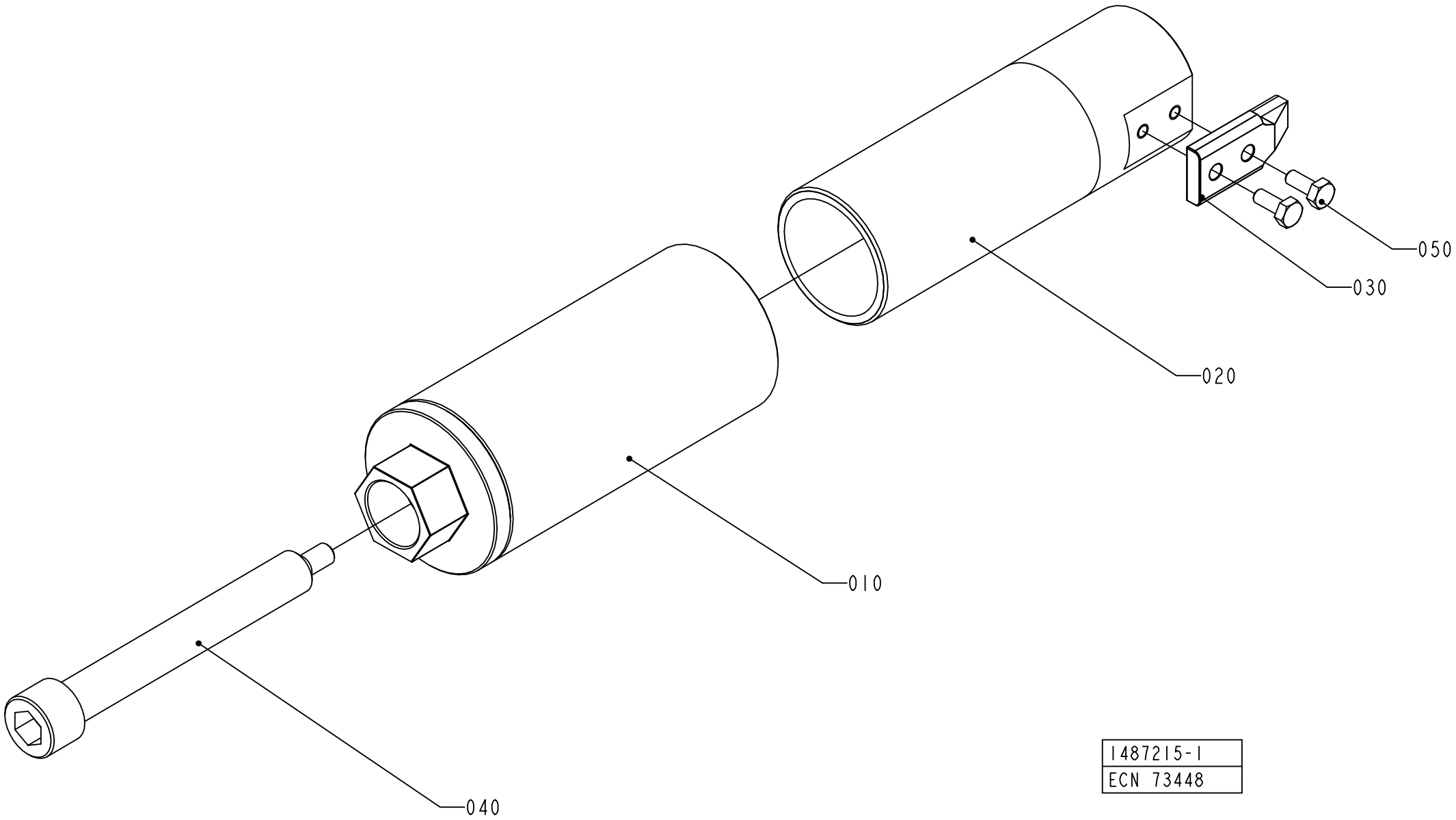
050
030
020
010
040
1487215-1
ECN 73448

ECM: 73448 - 20000302
Group number: 1487215-0100
Assembly Drawing: 1487215-1_1_AA

Pos	Part No	UN	Qty	Description	Page No
-					
010	1519725-0000		1	SHAFT	
020	1487213-0000		1	SHAFT	
030	1499129-0000		1	HOLDER	
030	1499186-0000		1	HOLDER	
040	1487214-0000		1	SCREW	
050	312105-0289		2	SCREW M6S H4X10 A4 70 ISO4017/DIN933	

Pos	Part No	UN	Qty	Description	Page No

This page is intentionally left blank.

ECM: 998409 - 20070101
Group number: 1498693-0100
Assembly Drawing:

Pos	Part No	UN	Qty	Description	Page No
TBA 0200B					
010	2508395-0000		1	TEMPLATE	
TBA 0200M					
010	2633499-0000		1	TEMPLATE	
TBA 0200S					
010	2632806-0000		1	TEMPLATE	
TBA 0250B					
010	2508396-0000		1	TEMPLATE	
TBA 0250S					
010	2633498-0000		1	TEMPLATE	
TBA 0300S					
010	2787764-0000		1	TEMPLATE	
Common Parts					
020	1350716-0000		1	SHAFT	

Pos	Part No	UN	Qty	Description	Page No

This page is intentionally left blank.

ECM: 998412 - 20070101
Group number: 1498694-0100
Assembly Drawing:

Pos	Part No	UN	Qty	Description	Page No
TBA 0200M, TBA 0200B, TBA 0250S, TBA 0250B					
030	1498687-0000		1	ADJUSTMENT BRACKET	
TBA 0200S					
030	2500588-0000		1	ADJUSTMENT BRACKET	
TBA 0300S					
030	2833232-0100		1	ADJUSTMENT BRACKET	**11-39**
Common Parts					
010	1498674-0100		1	TOOLS	**11-41, 11-43, 11-45**
020	1498676-0100		1	TOOLS	**11-47**

Pos	Part No	UN	Qty	Description	Page No

Machine Type | Group Description | Used-In | Group Number | Page No

ADJUSTMENT BRACKET

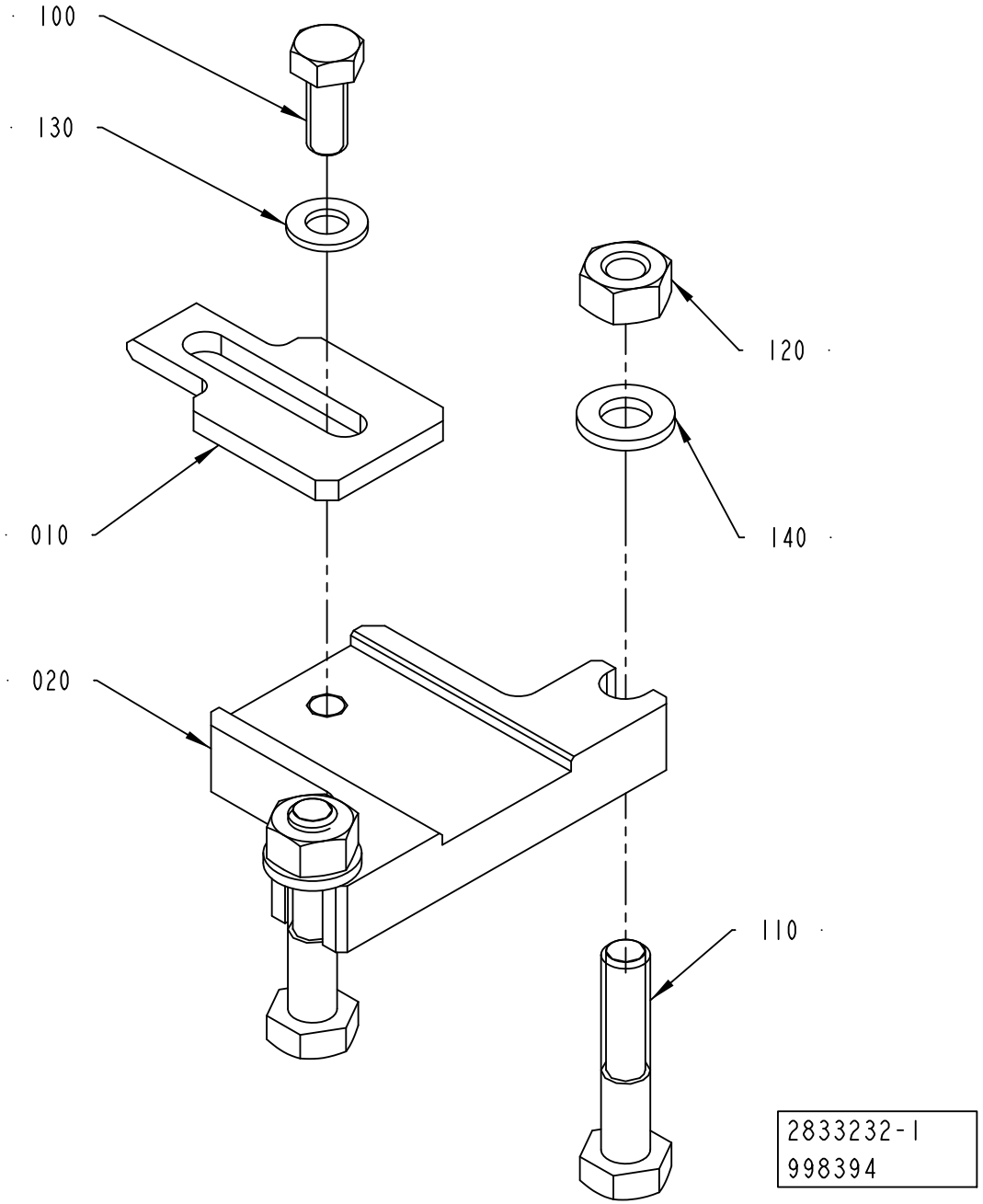

ECM: 998411 - 20070101
Group number: 2833232-0100
Assembly Drawing: 2833232-1_1_AA

Pos	Part No	UN	Qty	Description	Page No
-					
010	2736719-0000		1	PLATE	
020	2833230-0000		1	PLATE	
100	312105-0327		1	SCREW M6S ISO 4017 M5X12 A480	
110	312105-0374		2	SCREW M6S ISO 4014 M6X30 A480	
120	312605-0316		2	HEXAGON NUT, M6M M6 A280	
130	315105-0146		1	WASHER BRB 5,3X10 RFR	
140	315105-0153		2	WASHER BRB 6,4X12 RFR	

Pos	Part No	UN	Qty	Description	Page No

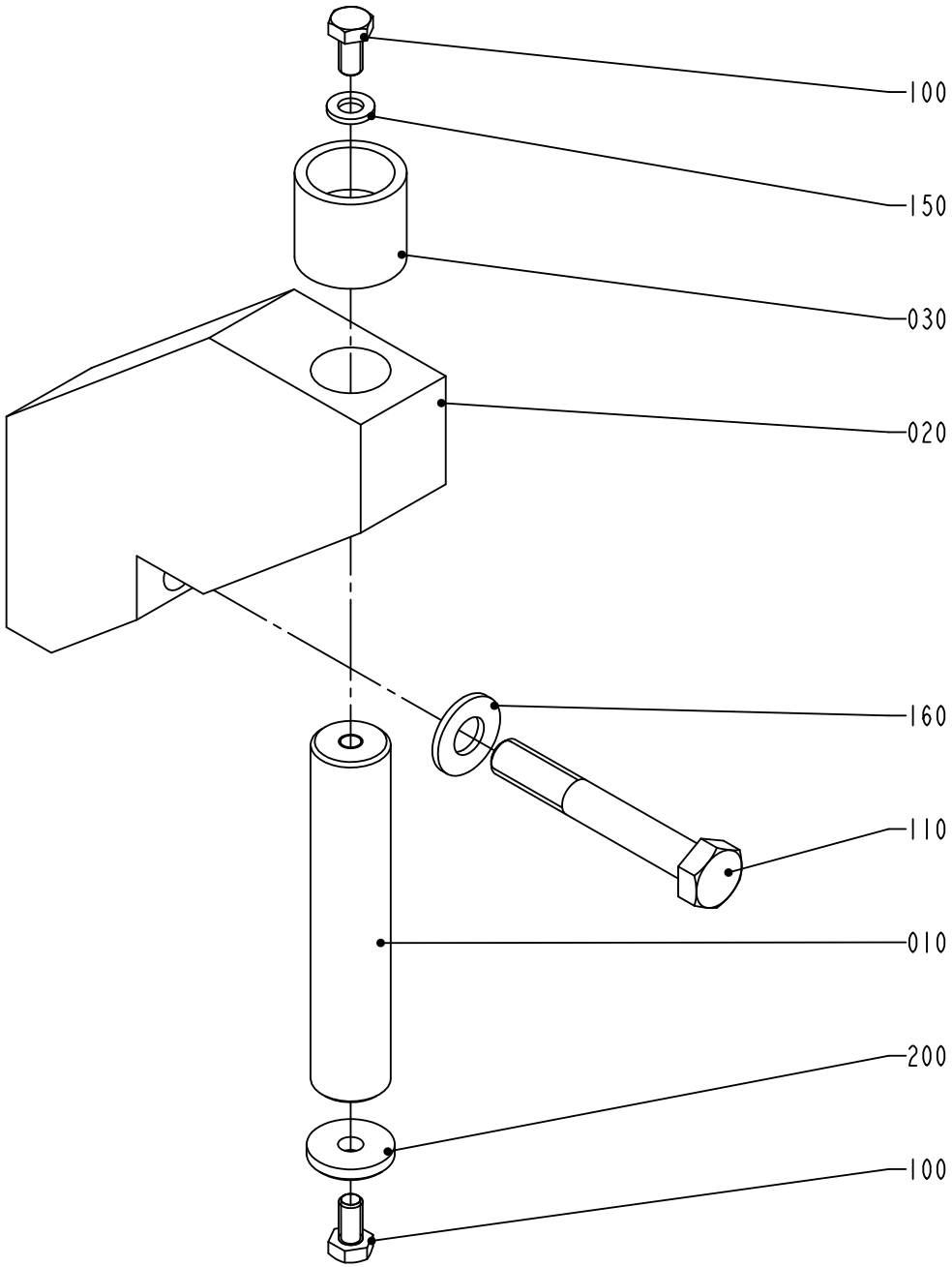

S-1498674-1
ECN 73448

Pos	Part No	UN	Qty	Description	Page No
TBA 0200B FLOATER, TBA 0250B FLOATER, TBA 0250S FLOATER, TBA 0200M FLOATER, TBA 0300S FLOATER (See drawing on page: 11-42)					
010	1548238-0000		1	SHAFT	
020	2525542-0000		1	SUPPORT	
030	1548240-0000		1	BUSHING	
TBA 0200B LEVELPROBE, TBA 0250B LEVELPROBE, TBA 0300S LEVELPROBE, TBA 0200M LEVELPROBE, TBA 0200S LEVELPROBE, TBA 0250S LEVELPROBE (See drawing on page: 11-40)					
010	1487482-0000		1	SHAFT	
020	1487483-0000		1	SUPPORT	
030	1498675-0000		1	BUSHING	
TBA 0200S FLOATER (See drawing on page: 11-44)					
010	1548238-0000		1	SHAFT	
020	2525542-0000		1	SUPPORT	
030	2555086-0000		1	BUSHING	
Common Parts					
100	312105-0366		2	SCREW M6S ISO 4017 M6X12 A480	
110	312105-0505		1	SCREW M6S ISO 4014 M10X70 A480	
150	315105-0153		1	WASHER BRB 6,4X12 RFR	
160	315105-0173		1	WASHER BRB 10,5X22 RFR	
200	315125-0153		1	WASHER TBRSB 6,4X22X4 A4	

Pos	Part No	UN	Qty	Description	Page No

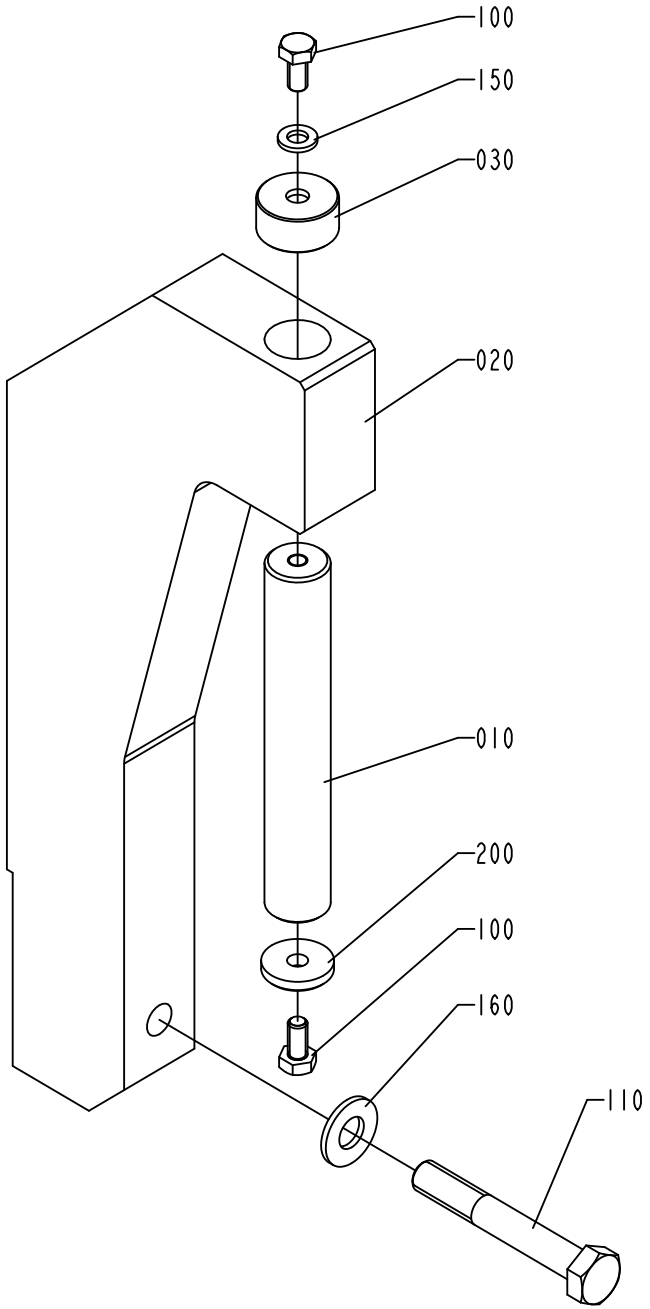

1498674-2
ECM 99258

Pos	Part No	UN	Qty	Description	Page No
TBA 0200B FLOATER, TBA 0250B FLOATER, TBA 0250S FLOATER, TBA 0200M FLOATER, TBA 0300S FLOATER (See drawing on page: 11-42)					
010	1548238-0000		1	SHAFT	
020	2525542-0000		1	SUPPORT	
030	1548240-0000		1	BUSHING	
TBA 0200B LEVELPROBE, TBA 0250B LEVELPROBE, TBA 0300S LEVELPROBE, TBA 0200M LEVELPROBE, TBA 0200S LEVELPROBE, TBA 0250S LEVELPROBE (See drawing on page: 11-40)					
010	1487482-0000		1	SHAFT	
020	1487483-0000		1	SUPPORT	
030	1498675-0000		1	BUSHING	
TBA 0200S FLOATER (See drawing on page: 11-44)					
010	1548238-0000		1	SHAFT	
020	2525542-0000		1	SUPPORT	
030	2555086-0000		1	BUSHING	
Common Parts					
100	312105-0366		2	SCREW M6S ISO 4017 M6X12 A480	
110	312105-0505		1	SCREW M6S ISO 4014 M10X70 A480	
150	315105-0153		1	WASHER BRB 6,4X12 RFR	
160	315105-0173		1	WASHER BRB 10,5X22 RFR	
200	315125-0153		1	WASHER TBRSB 6,4X22X4 A4	

Pos	Part No	UN	Qty	Description	Page No

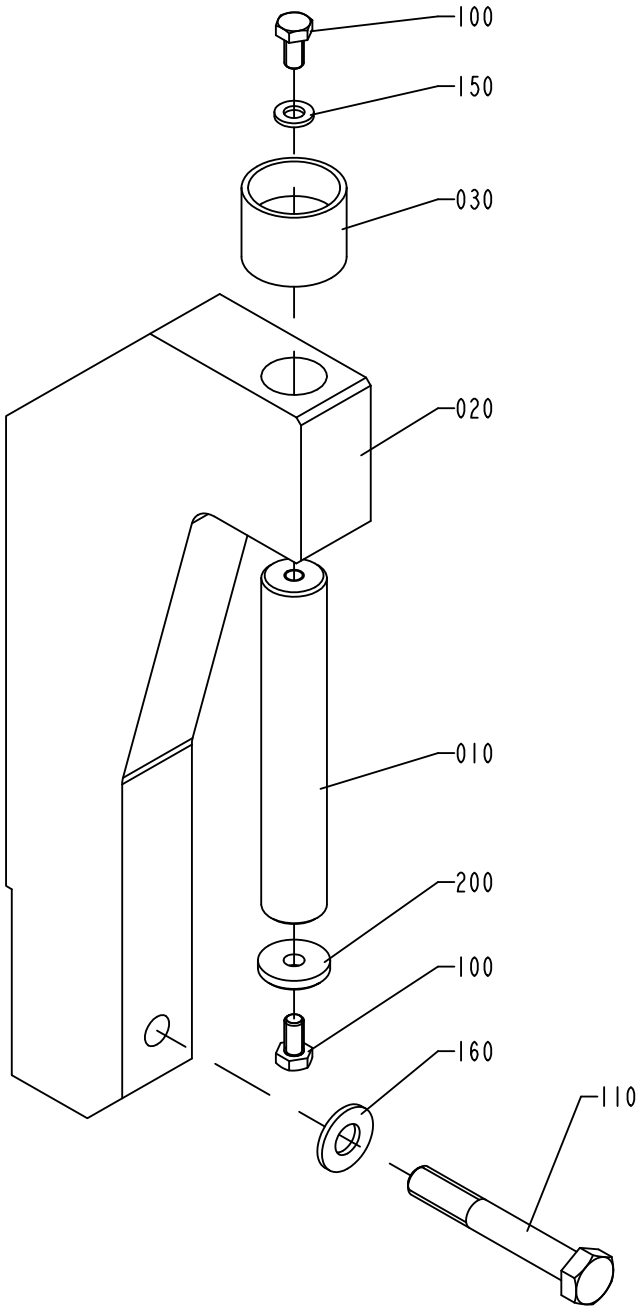

1498674-3
ECM 128280

Pos	Part No	UN	Qty	Description	Page No
TBA 0200B FLOATER, TBA 0250B FLOATER, TBA 0250S FLOATER, TBA 0200M FLOATER, TBA 0300S FLOATER (See drawing on page: 11-42)					
010	1548238-0000		1	SHAFT	
020	2525542-0000		1	SUPPORT	
030	1548240-0000		1	BUSHING	
TBA 0200B LEVELPROBE, TBA 0250B LEVELPROBE, TBA 0300S LEVELPROBE, TBA 0200M LEVELPROBE, TBA 0200S LEVELPROBE, TBA 0250S LEVELPROBE (See drawing on page: 11-40)					
010	1487482-0000		1	SHAFT	
020	1487483-0000		1	SUPPORT	
030	1498675-0000		1	BUSHING	
TBA 0200S FLOATER (See drawing on page: 11-44)					
010	1548238-0000		1	SHAFT	
020	2525542-0000		1	SUPPORT	
030	2555086-0000		1	BUSHING	
Common Parts					
100	312105-0366		2	SCREW M6S ISO 4017 M6X12 A480	
110	312105-0505		1	SCREW M6S ISO 4014 M10X70 A480	
150	315105-0153		1	WASHER BRB 6,4X12 RFR	
160	315105-0173		1	WASHER BRB 10,5X22 RFR	
200	315125-0153		1	WASHER TBRSB 6,4X22X4 A4	

Pos	Part No	UN	Qty	Description	Page No

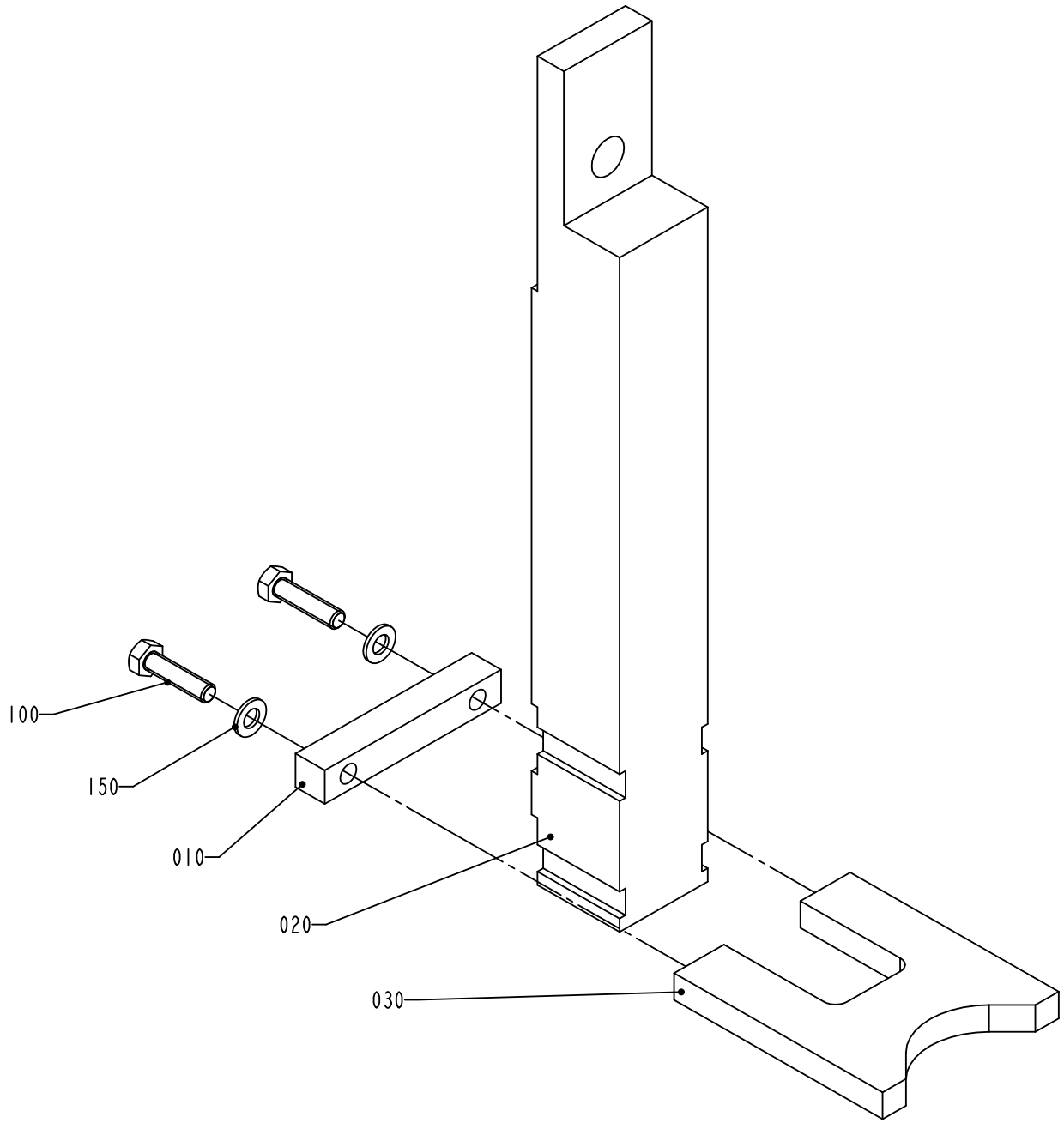
100
150
010
020
030
S-1498676-1
ECN 73448

ECM: 259277 - 20060419
Group number: 1498676-0100
Assembly Drawing: 1498676-1_1_AA

Pos	Part No	UN	Qty	Description	Page No
-					
010	1487494-0000		1	BAR	
020	1498677-0000		1	BAR	
030	1499407-0000		1	FORK	
100	312105-0331		2	SCREW M6S ISO 4017 M5X20 A480	
150	315105-0146		2	WASHER BRB 5,3X10 RFR	

Pos	Part No	UN	Qty	Description	Page No

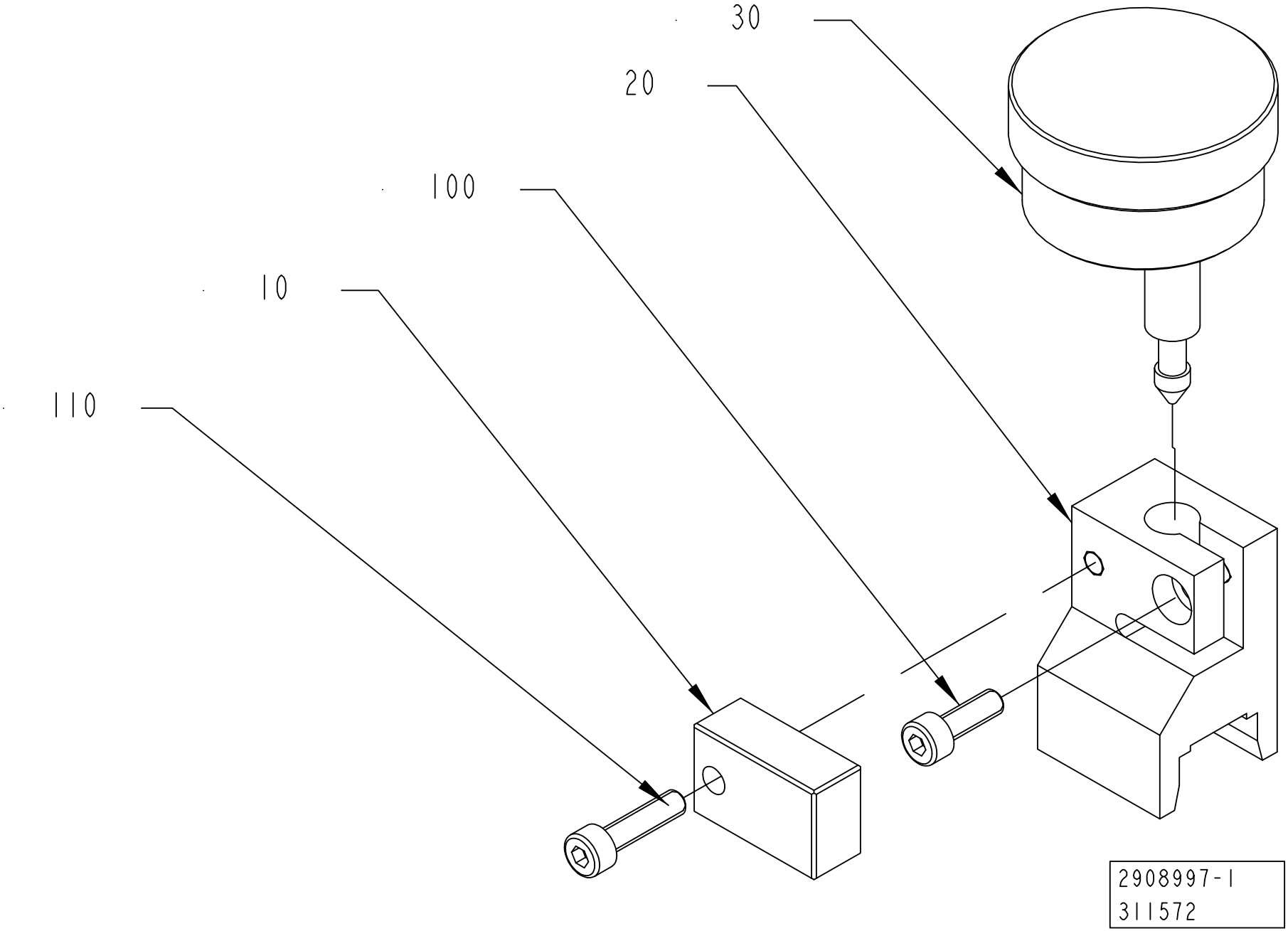
30
20
100
10
110
2908997-1
311572

ECM: 311575 - 20071001
Group number: 2908997-0100
Assembly Drawing: 2908997-1_1_AA

Pos	Part No	UN	Qty	Description	Page No
-					
010	2908996-0000		1	TOOL	
020	2908923-0000		1	TOOL	
030	90600-3053		1	DIAL GAUGE MITUTOYO 1160	
100	312115-0291		1	SCREW ISO4762 M4X12 A4 80	
110	312115-0293		1	SCREW ISO4762 M4X16 A4 80	

Pos	Part No	UN	Qty	Description	Page No

This page is intentionally left blank.

ECM: 224872 - 20050831
Group number: 2552551-0100
Assembly Drawing:

Pos	Part No	UN	Qty	Description	Page No
-					
	90121-0122		3	RESISTANCE FIXED, 0,11 KOHM, 0,25 W	
	90458-1141		10	FERRITE, RI-16-28-9	
010	90453-0001		1	MODEM MA-12	
020	90041-0068		1	DATACABLE MODEM PC	
030	90220-0091	M	200	PAIR TWISTED CABLE 2X2X0,25MM2	
040	1190007-0402		1	PLMS RECEIVE	
050	82197-0104		1	USER MANUAL	
060	1254471-0411		1	PLMS OFF-LINE	
0010	*47937-0411*		*1*	*PLMS OFF-LINE PROGRAM*	
0020	*2710271-0000*		*1*	*DOCUMENTATION DISKETTE*	
0030	*2710272-0000*		*1*	*LABELS, DISKETTE*	
0040	*2710273-0000*		*1*	*LABELS, CD*	
0050	*2710274-0000*		*1*	*SHORT FORM INSTRUCTIONS*	
0060	*47937-1411*		*1*	*SOFTWARE PLMS OFF-LINE*	
0070	*47937-2411*		*1*	*SOFTWARE 47937-1411 (PART 1)*	
0080	*47937-3411*		*1*	*SOFTWARE 47937-1411 (PART 2)*	
0020	*82351-0106*		*1*	*USER MANUAL PLMS OFF-LINE*	

Pos	Part No	UN	Qty	Description	Page No

Machine Type | Group Description | Used-In | Group Number | Page No

This page is intentionally left blank.

ECM: 112424 - 20020715
Group number: 2555087-0100
Assembly Drawing:

Pos	Part No	UN	Qty	Description	Page No
-					
	312105-0502		2	SCREW M6S ISO 4014 M10X55 A480	
	315105-0173		2	WASHER BRB 10,5X22 RFR	
	1558942-0000		1	BRACKET	

Pos	Part No	UN	Qty	Description	Page No

This page is intentionally left blank.

ECM: 112425 - 20020715
Group number: 2555088-0100
Assembly Drawing:

Pos	Part No	UN	Qty	Description	Page No
-					
	1558933-0000		1	FRAME	
	315105-0178		4	WASHER BRB 13X24 RFR	
	312605-0322		4	HEXAGON NUT, M6M M12 A280	
	90458-2138		2	SCREW M6S M12X120 A280	

Pos	Part No	UN	Qty	Description	Page No

This page is intentionally left blank.

ECM: 321306 - 20070903
Group number: 90600-3339
Assembly Drawing:

Pos	Part No	UN	Qty	Description	Page No
-					
	1558477-0100		1	WHEEL	**11-59**
	1558479-0100		1	HANDLE	**11-61**
	1558480-0100		1	LIFTING CYLINDER	**11-63**
	312812-0324		1	HEXAGON NUT, NY-LOCK M16 A480	
	312105-0634		1	SCREW M6S ISO 4014 M16X70 A480	
	312101-0678		2	SCREW M6S M20X70 FZB	
	90458-1473		1	PUMP, 34 73 521 7	**11-65**
	90067-0372		2	SHAFT, 32 04 174 1	
	90067-0371		4	SLEEVE, 32 04 175 8	
	90067-0370		2	WHEEL, 32 04 176 6	
	90067-0368		1	YOKE	
	90067-0365		1	HYDRAULIC HOSE, 32 04 169 1	

Pos	Part No	UN	Qty	Description	Page No

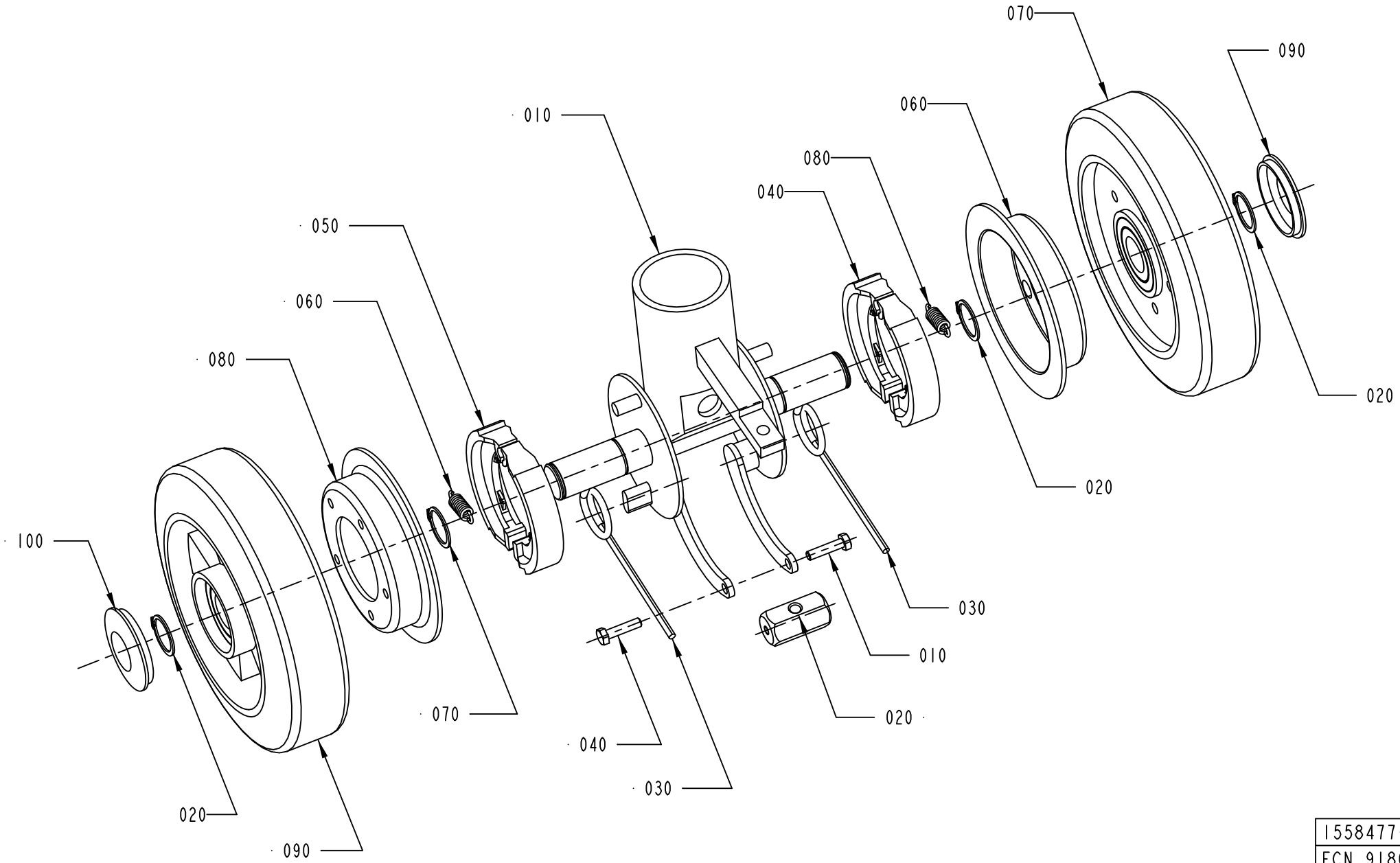

1558477-1
ECN 91803

ECM: 91832 - 20010504
Group number: 1558477-0100
Assembly Drawing: 1558477-1_1_AA

Pos	Part No	UN	Qty	Description	Page No
-					
010	90067-0336		1	GUIDE SHAFT UNIT, 32 82 123 3	
030	90067-0302		2	TORSION SPRING	
040	312105-0372		2	SCREW M6S ISO 4017 M6X25 A480	
050	90067-0317		2	BRAKE LINING	
060	90067-0342		2	TENSION SPRING	
070	315750-0119		4	RETAINING RING SHAFT DIN 471 ST 25	
080	90067-0337		2	BRAKE DRUM	
090	90067-0338		2	GUIDE ROLLER 32 44 117 2	
100	90458-1467		2	CAP, 32 44 129 7	

Pos	Part No	UN	Qty	Description	Page No

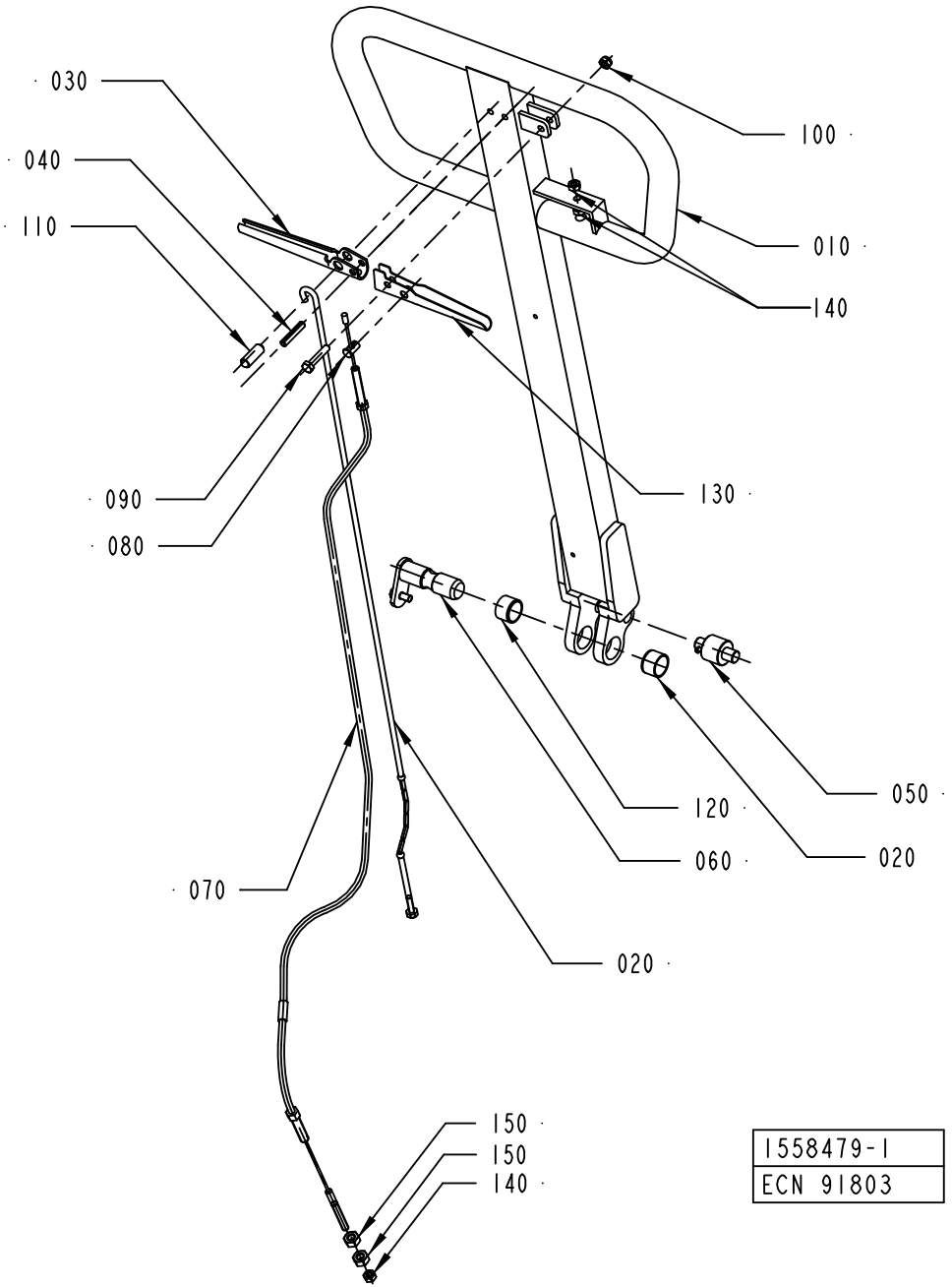
030
040
110
100
010
140
130
090
080
120
060
050
020
070
020
150
150
140
1558479-1
ECN 91803

ECM: 91830 - 20010504
Group number: 1558479-0100
Assembly Drawing: 1558479-1_1_AA

Pos	Part No	UN	Qty	Description	Page No
-					
010	90067-0361		1	TIE ROD	
020	90067-0359		1	SINK ROD, 34 74 021 7	
030	90067-0358		1	SINK HANDLE	
040	311111-0345		1	SPRING PIN ISO 8752 6X32-ST	
050	90067-0349		1	ROLLER KIT, 34 73 050 7	
060	90067-0350		1	AXLE PIN	
070	90067-0301		1	BRAKE WIRE, 32 82 138 1	
080	90067-0320		1	COTTER FOR 90067-301	
090	312109-0374		1	SCREW M6S ISO 4017 M6X30 A480	
100	312812-0316		1	HEXAGON NUT, NY-LOCK M6 A480	
110	90067-0360		1	MOUNTING KIT, 34 74 022 5	
120	321120-0137		2	BEARING BUSH W/O FLANGE, 20X23X15 MM	
130	90067-0364		1	BRAKE HANDLE	
140	312602-0316		3	NUT, EN 24032 M6M M6 NIPLBR	
150	312602-0318		2	HEXAGON NUT, EN 24032 M6M M8 NIPLBR	

Pos	Part No	UN	Qty	Description	Page No

LIFTING CYLINDER

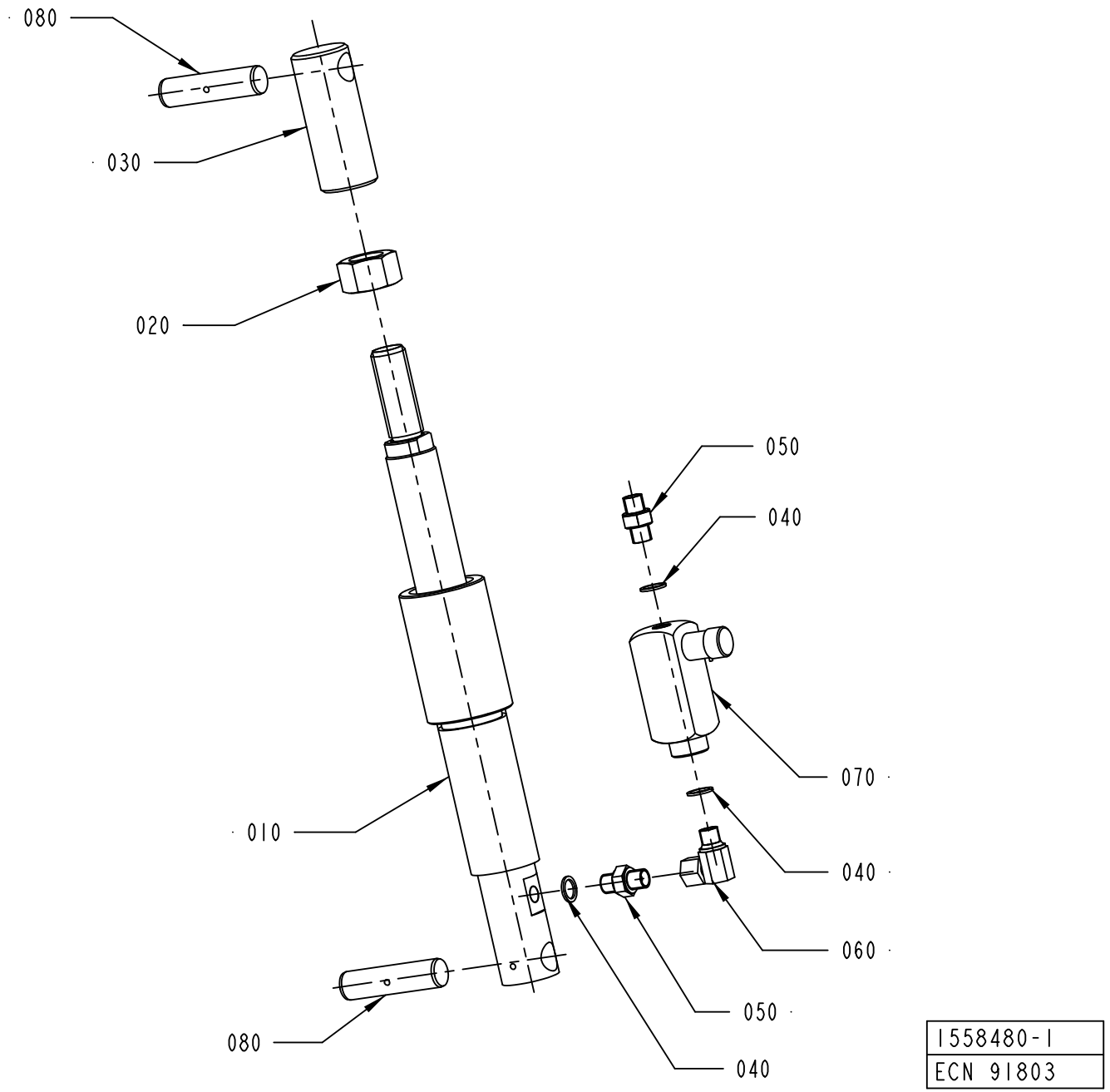

ECM: 289823 - 20070126
Group number: 1558480-0100
Assembly Drawing: 1558480-1_1_AA

Pos	Part No	UN	Qty	Description	Page No
-					
010	90458-1472		1	CYLINDER, 32 04 215 2	
020	312605-0328		1	HEXAGON NUT, M6M M24 A280	
030	90458-1471		1	PISTON ROD END, 32 04 214 5	
040	315234-0110		3	WASHER,PL.RND.CU.13,5/18 H=1,5	
050	90055-0042		2	NIPPLES, EXT. THREAD, HEXAGON, NO. 6835-	
060	90055-0145		1	ELBOW ADAPTOR-R1/4	
070	90201-0098		1	ADJ. FLOW CON. VALVE, NO. 9 PCCM 400SF	
080	90458-1476		2	AXLE PIN, 32 04 167 5	

Pos	Part No	UN	Qty	Description	Page No

PUMP, 34 73 521 7

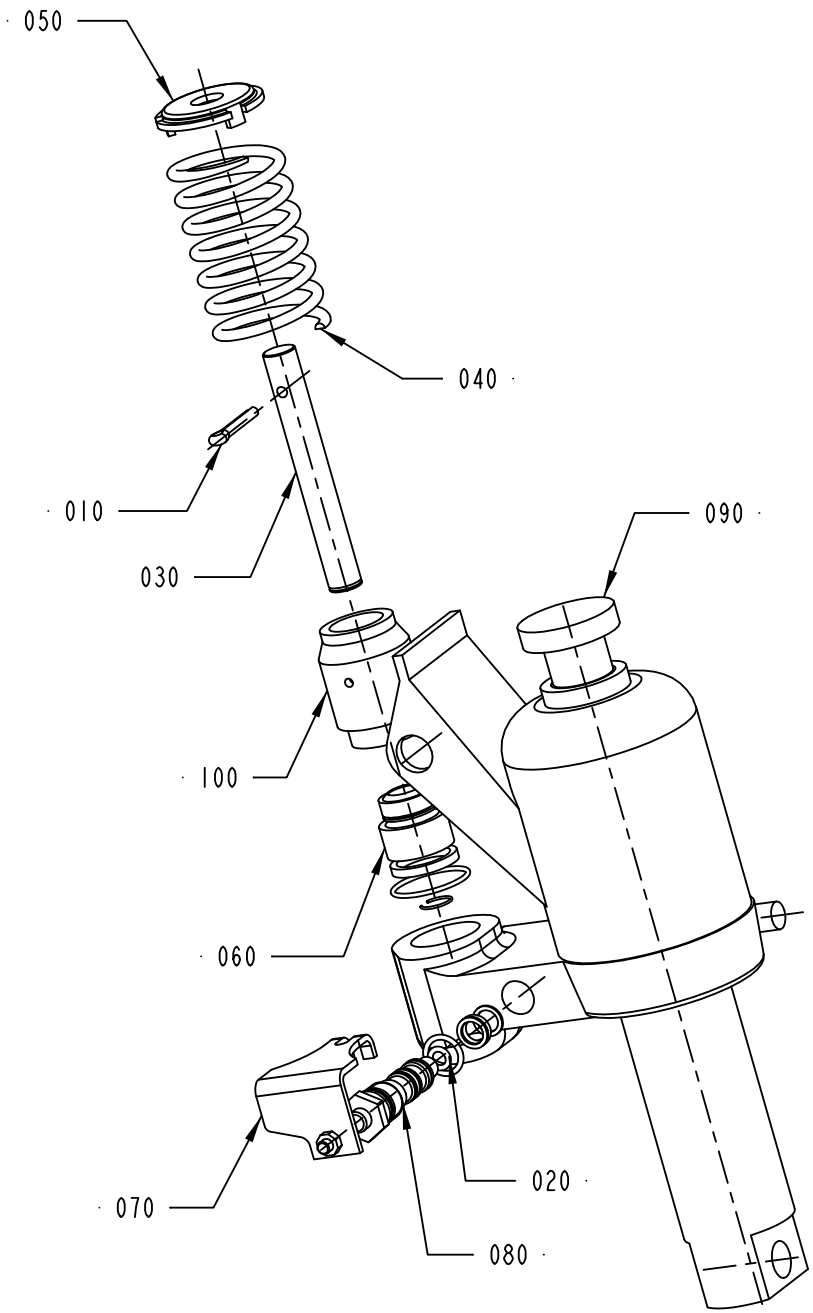

90458-1473
ECM 133556

ECM: 324175 - 20070903
Group number: 90458-1473
Assembly Drawing: 90458-1473_1_AB

Pos	Part No	UN	Qty	Description	Page No
-					
010	90458-1468		1	SPLIT PIN, 43 71 234 8	
020	90067-0351		1	SEAL KIT	
030	90067-0354		1	PUMP PISTON	
040	90067-0355		1	COMPRESSION SPRING	
050	90067-0356		1	TOP WASHER	
060	90067-0357		1	REPAIR KIT	
070	90067-0369		1	VALVE ARM	
080	90458-1470		1	SINK VALVE COMPL, 34 73 094 5	
100	90458-1393		1	PUMP CYLINDER, 34 73 522 5	

Pos	Part No	UN	Qty	Description	Page No

Tetra Pak

SPC
Spare Parts Catalogue

This page is intentionally left blank.

ECM: 107480 - 20020715
Group number: 648546-0500
Assembly Drawing:

Pos	Part No	UN	Qty	Description	Page No
-					
010	1498695-0200		1	ACCESSORIES	**12-5**

Pos	Part No	UN	Qty	Description	Page No

Machine Type | Group Description | Used-In | Group Number | Page No

This page is intentionally left blank.

ECM: 318887 - 20080101
Group number: 1498695-0200
Assembly Drawing:

Pos	Part No	UN	Qty	Description	Page No
-					
010	527898-0100		1	MKS CONTAINER H2O2	**2-97, 12-7**
020	529345-0100		1	FILLING STATION H2O2	**12-9**
030	532210-0100		1	PEROXIDE CONTAINER TROLLEY	**12-11**
040	2514392-0100		1	MACHINE CARRIAGE	**12-13**
050	2731217-0100		1	PAPER REEL HOLDER	**8-37, 12-17**
070	1185025-0100		1	LIFTING EQUIPMENT	**12-19**
080	90459-6473		1	HARDDISK COPYING TOOL, 03607-000	
090	90457-0048		1	INK JET PRINTER A300 HS	
100	1369439-0102		1	PLMS ON-LINE	**12-21**
110	90459-2334		1	PNEUMATIC GREASE PUMP, EL 06983501	
120	90459-0285		1	CD UNIT, 02413-000	
130	2760258-0100		1	CHAIN LIFT	**12-23**

Pos	Part No	UN	Qty	Description	Page No

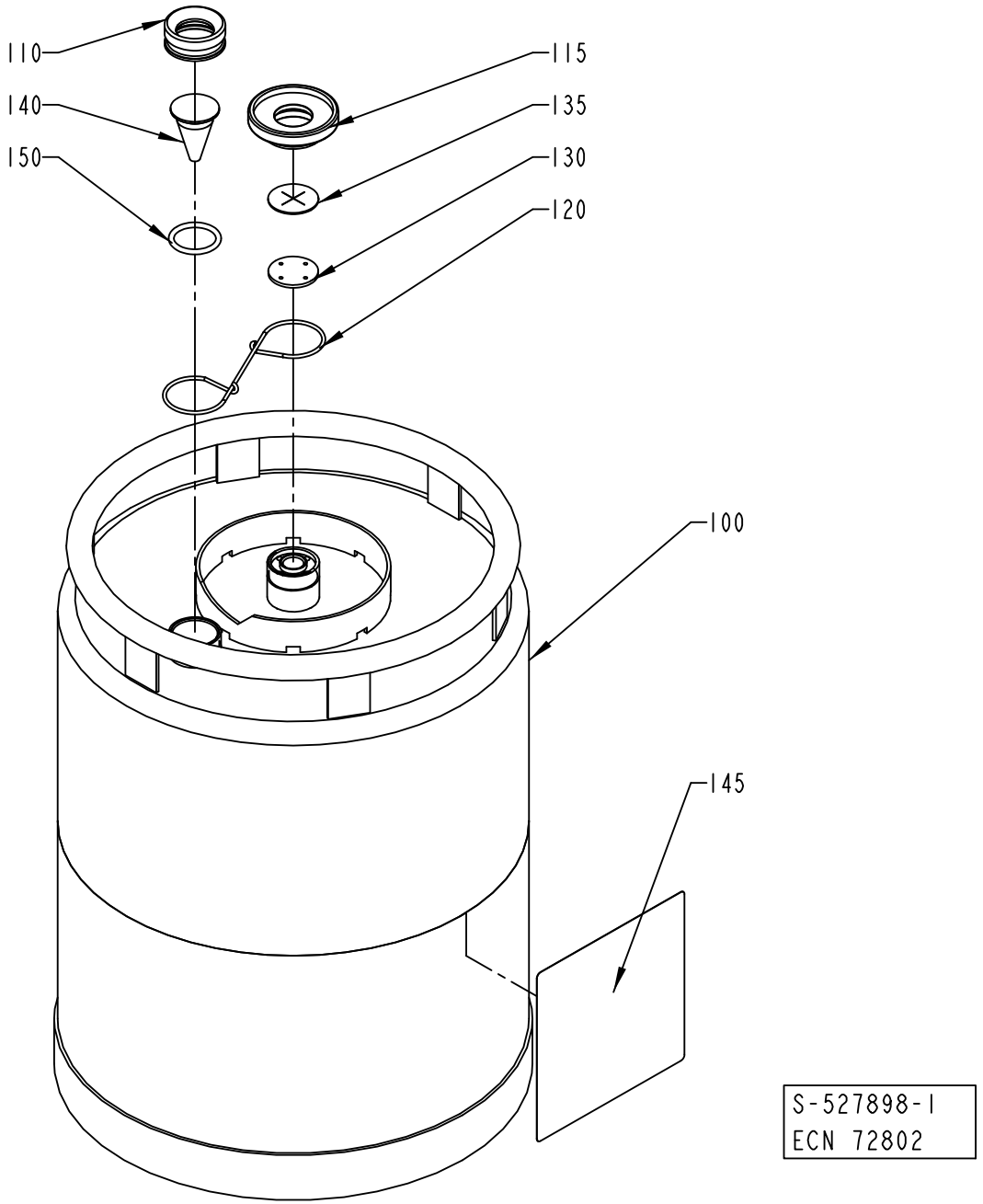
110
140
150
115
135
130
120
100
145
S-527898-I
ECN 72802

ECM: 224840 - 20050831
Group number: 527898-0100
Assembly Drawing: 527898-1_1_AB

Pos	Part No	UN	Qty	Description	Page No
-					
100	561427-0000		1	CONTAINER	
110	273977-0000		1	NUT	
115	273996-0000		1	NUT	
120	273980-0000		1	SPRING	
130	565250-0000		1	WASHER	
135	565251-0000		1	VALVE	
140	273978-0000		1	LEVEL GLAS	
145	532655-0000		1	CAUTION SIGN	
150	927422-0003		1	O.RING 24.2X3 SILICONE	

Pos	Part No	UN	Qty	Description	Page No

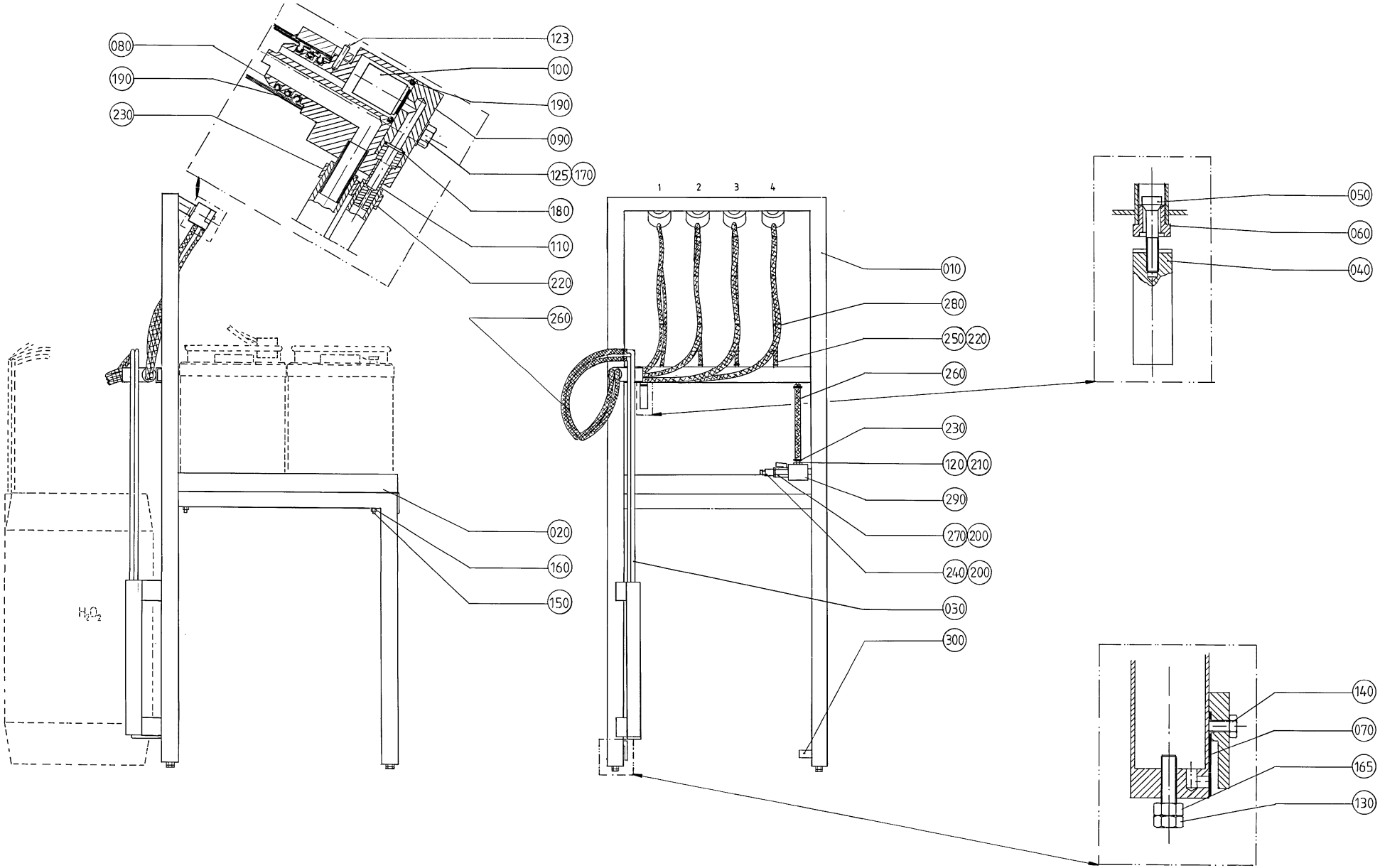
080
190
230
123
100
190
090
125
170
180
110
220
260
020
160
150
H_2O_2
1
2
3
4
010
280
250
220
260
230
120
210
290
270
200
240
200
030
300
050
060
040
140
070
165
130

ECM: - -
Group number: 529345-0100
Assembly Drawing: 529345-1_1_AA

Pos	Part No	UN	Qty	Description	Page No
-					
010	534692-0000		1	FRAME SECTION	
020	534693-0000		1	PLATE	
030	534694-0000		1	SUCTIONPIPE	
040	534695-0000		1	WEIGHT	
050	534696-0000		1	VALVE	
060	534697-0000		1	VALVE HOUSING	
070	534691-0000		1	DIAPHRAGM	
080	534637-0000		4	ATTACHMENT	
090	534636-0000		4	LEVEL GLAS	
100	534635-0000		4	VALVE	
110	534634-0000		4	PIPE	
120	534698-0000		1	NIPPLE	
123	311103-0235		1	PARALLEL PIN ISO 2338 3M6X14 A1	
125	312105-0374		8	SCREW M6S ISO 4014 M6X30 A480	
130	312105-0455		4	SCREW M6S ISO 4017 M8X30 A480	
140	312125-0327		1	SCREW ISO 1207 M5X12 A4	
150	312145-0380		4	SCREW ISO 2009 MFS M6X50 A4	
160	312812-0316		4	HEXAGON NUT, NY-LOCK M6 A480	
165	312605-0318		4	HEXAGON NUT, M6M M8 A280	
170	315105-0153		8	WASHER BRB 6,4X12 RFR	
180	927421-0005		4	O-RING 7.3X2.4 SILICONE	
190	927422-0001		16	O-RING 19.2X3 SILICONE	
200	315233-0110		2	WASHER CAPTIVE SEALING G1/4	
210	315233-0113		2	WASHER CAPTIVE SEALING G1/2	
220	342991-0100		8	HOSE CLIP,WORM DRIVE TYPE 10-13	
230	342991-0101		10	HOSE CLIP,WORM DRIVE TYPE (13)-16	
240	90163-0007		1	CONNECTION	
250	90166-0045	MM	3500	HOSE PVC TRANSP. 6/12	
260	90166-0113	MM	7500	HOSE	
270	90187-0045		1	BALL VALVE G1/4 CR PL	
280	352113-0102		30	CABLE TIE, BLACK 188X4,8 MM	
290	90425-0016		1	MECMAN TYPE E120 735-120-000	
300	90328-0025		1	SILENCER G1/2"	

Pos	Part No	UN	Qty	Description	Page No

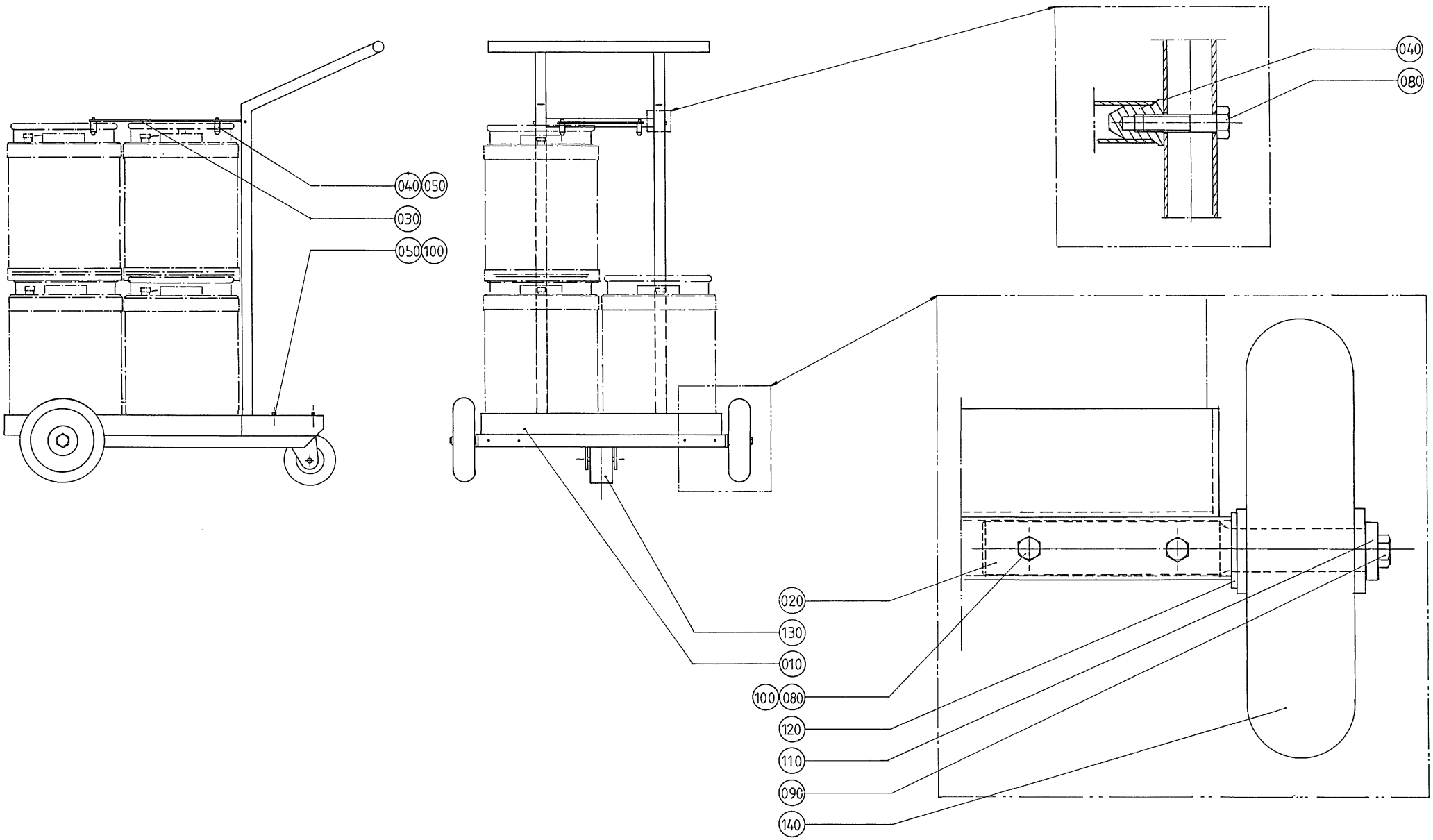
040
050
030
050
100
040
080
020
130
010
100
080
120
110
090
140

ECM: - -
Group number: 532210-0100
Assembly Drawing: 532210-1_1_AA

Pos	Part No	UN	Qty	Description	Page No
-					
010	273985-0000		1	CARRIAGE	
020	532208-0000		2	SHAFT	
030	532209-0000		1	SHEET	
040	532211-0000		6	DOWEL	
050	312105-0449		8	SCREW M6S ISO 4017 M8X16 A480	
080	312105-0459		6	SCREW M6S ISO 4014 M8X40 A480	
090	312105-0491		2	SCREW M6S ISO 4017 M10X20 A480	
100	312605-0318		4	HEXAGON NUT, M6M M8 A280	
110	315115-0173		2	WASHER PLAIN, TBRB 10,5/22 H=4	
120	315105-0192		2	WASHER BRB 21X36 RFR	
130	90191-0060		1	CASTOR WHEEL, NO. 1599PRT	
140	90191-0047		2	WHEEL, NO.798 821	

Pos	Part No	UN	Qty	Description	Page No

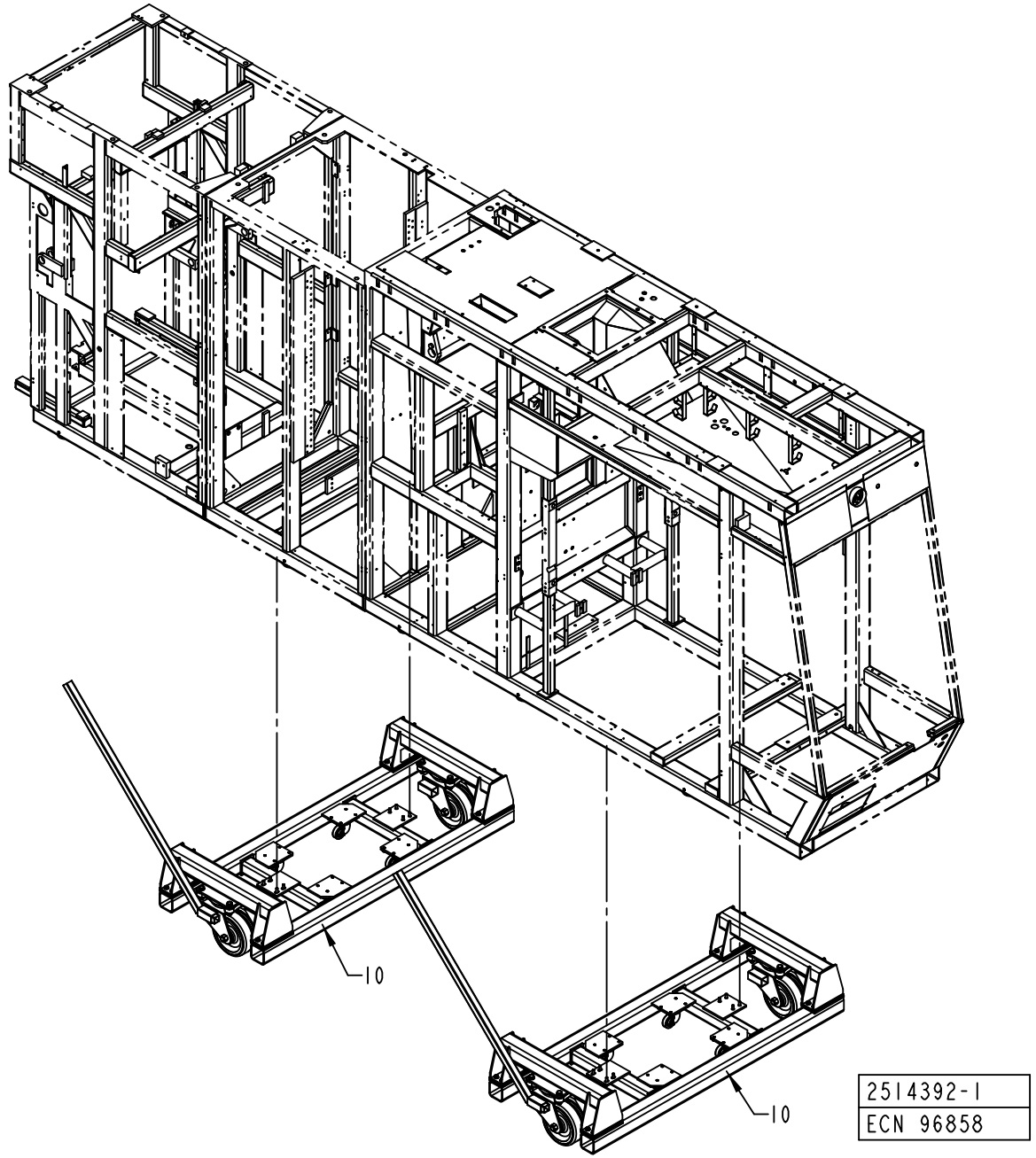
10
10
2514392-1
ECN 96858

ECM: 96863 - 20010830
Group number: 2514392-0100
Assembly Drawing: 2514392-1_1_AA

Pos	Part No	UN	Qty	Description	Page No
-					
0010	582526-0100		2	CARRIAGE	**12-15**

Pos	Part No	UN	Qty	Description	Page No

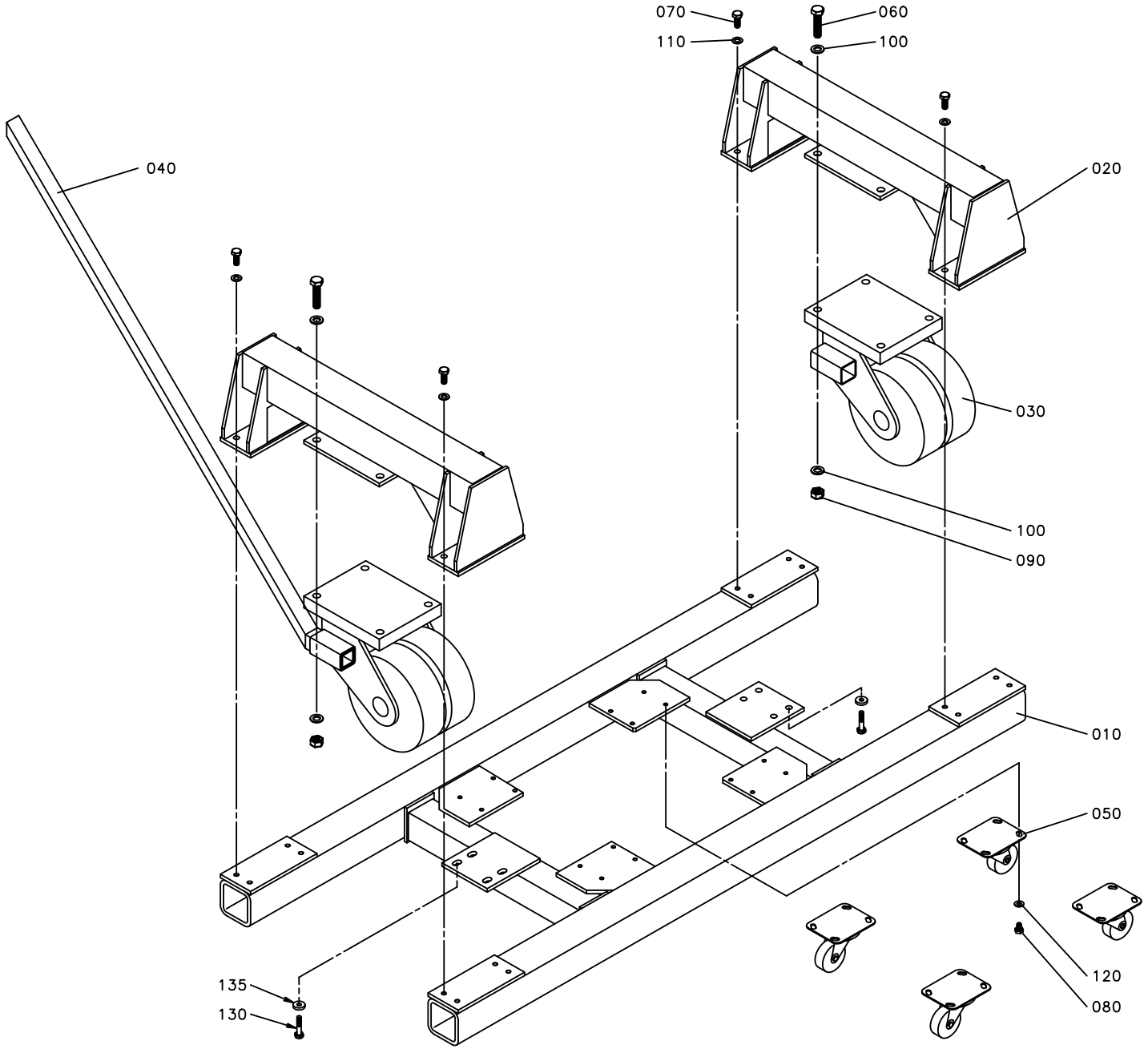
070
060
110
100
040
020
030
100
090
010
050
120
080
135
130

ECM: 96864 - 20010830
Group number: 582526-0100
Assembly Drawing: 582526-1_1_AA

Pos	Part No	UN	Qty	Description	Page No
-					
0010	1140039-0000		1	CONVEYOR FRAME	
0020	1140040-0000		2	BRACKET	
0030	1140840-0000		2	WHEEL	
0040	582527-0000		1	ROD	
0050	90191-0077		4	WHEEL	
0060	312105-0634		8	SCREW M6S ISO 4014 M16X70 A480	
0070	312105-0538		16	SCREW M6S ISO 4017 M12X35 A480	
0080	312105-0489		16	SCREW M6S ISO 4017 M10X16 A480	
0090	312605-0324		8	HEXAGON NUT, M6M M16 A280	
0100	315105-0186		16	WASHER BRB 17X30 RFR	
0110	315105-0178		16	WASHER BRB 13X24 RFR	
0120	315105-0173		16	WASHER BRB 10,5X22 RFR	
0130	312109-0499		8	SCREW M6S ISO 4017 M10X40 A480	
0135	315125-0173		8	WASHER TBRSB 10,5X28X6 A4	

Pos	Part No	UN	Qty	Description	Page No

PAPER REEL HOLDER

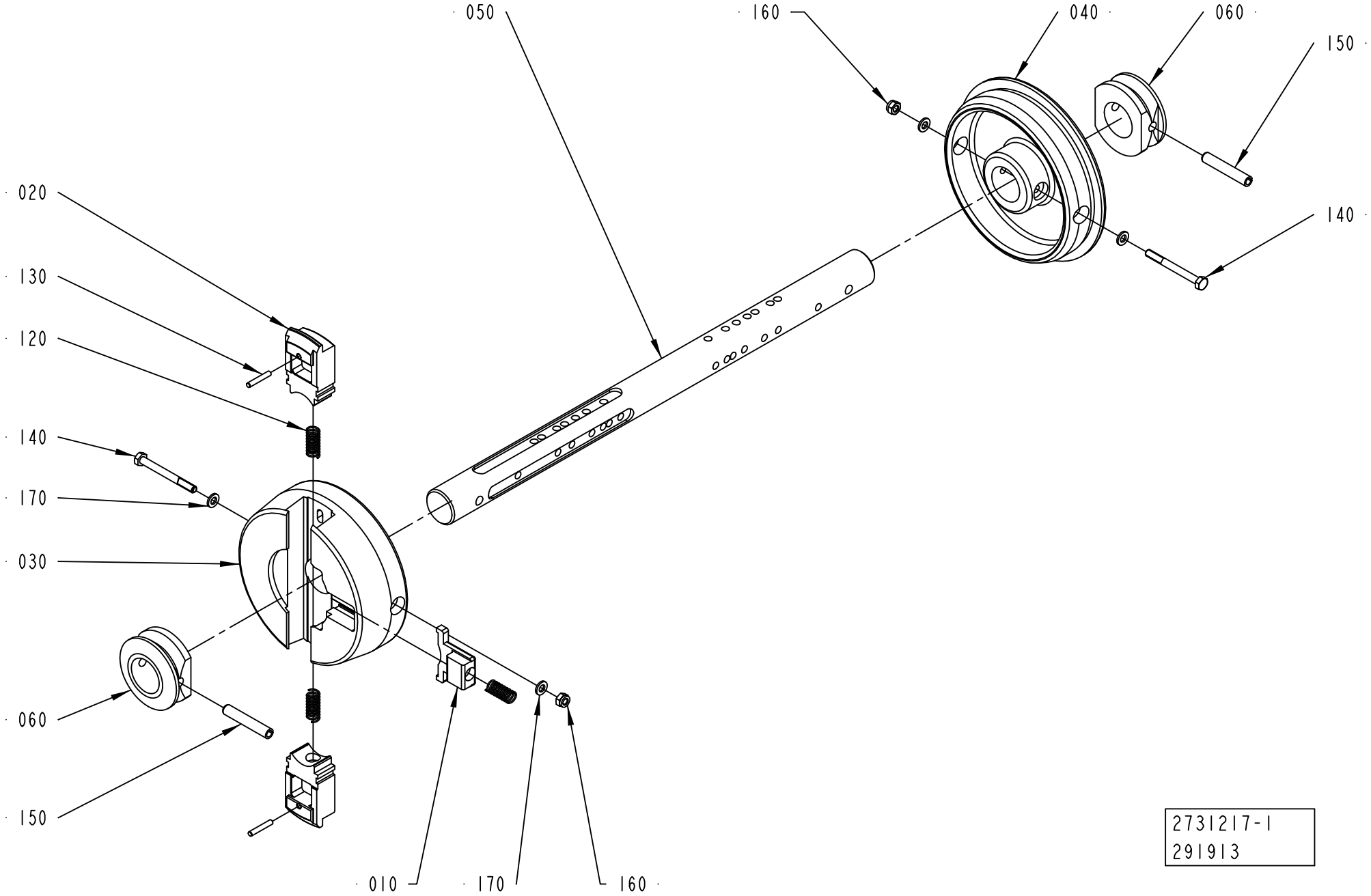

ECM: 300589 - 20070508
Group number: 2731217-0100
Assembly Drawing: 2731217-1_1_AA

Pos	Part No	UN	Qty	Description	Page No
-					
010	272728-0000		1	BARRIER	
020	2851385-0000		2	PLUNGER	
030	2790925-0000		1	SLEEVE	
040	2731210-0000		1	SLEEVE	
050	2790929-0000		1	SHAFT	
060	2731212-0000		2	RING	
120	90335-0025		3	COMP. SPRING 22010, 1X11X26	
130	311103-0274		2	PARALLEL PIN ISO 2338 4M6X25 A1	
140	312105-0382		2	SCREW M6S ISO 4014 M6X60 A480	
150	311112-0385		2	SPRING PIN, ISO 8752 8X50-C	
160	312812-0316		2	HEXAGON NUT, NY-LOCK M6 A480	
170	315105-0153		4	WASHER BRB 6,4X12 RFR	

Pos	Part No	UN	Qty	Description	Page No

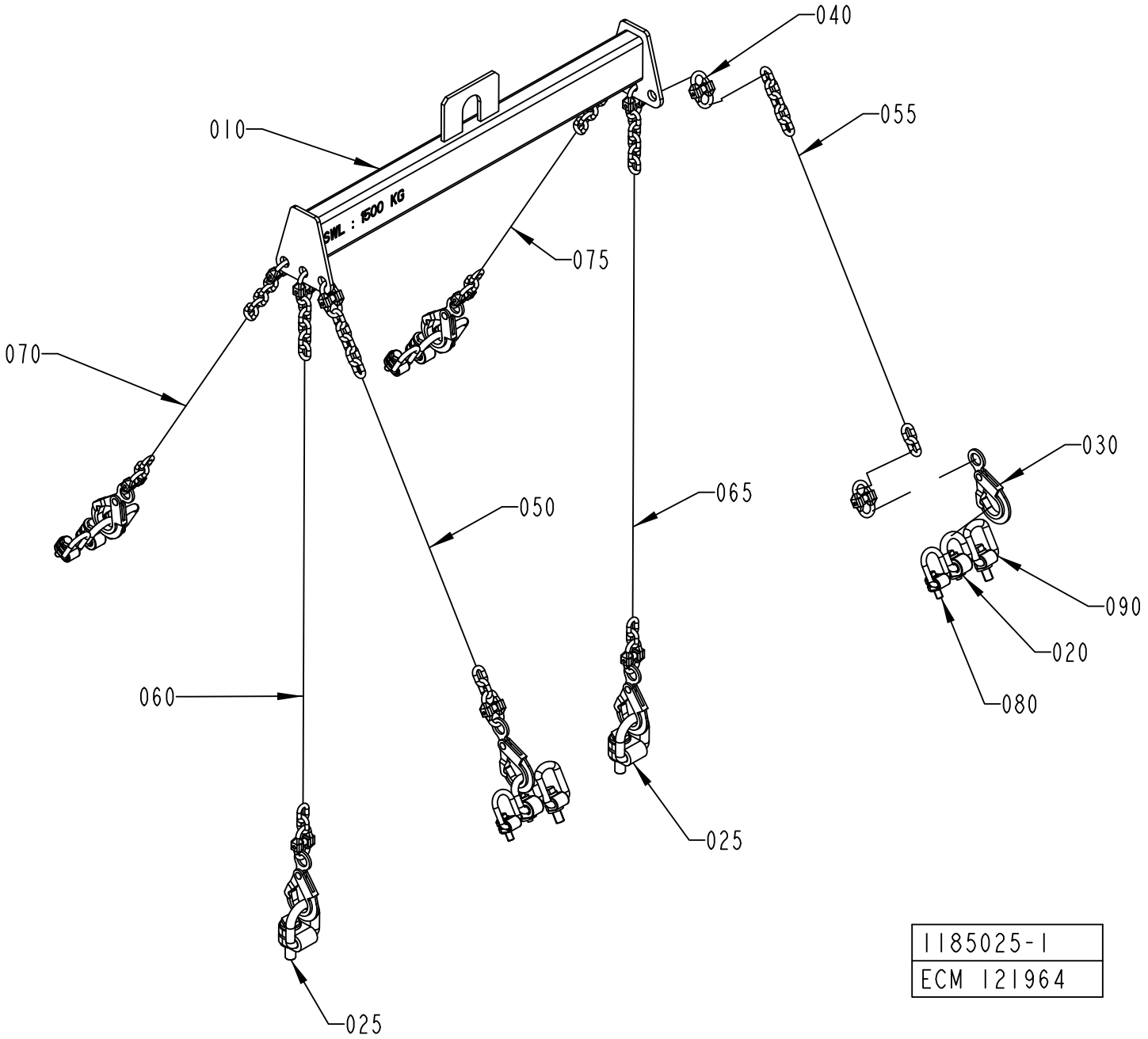
040
055
010
SWL : 500 KG
075
070
030
065
050
090
020
080
060
025
025
1185025-1
ECM 121964

ECM: 121978 - 20030403
Group number: 1185025-0100
Assembly Drawing: 1185025-1_1_AC

Pos	Part No	UN	Qty	Description	Page No
-					
010	985818-0000		1	LIFTING UNIT	
020	90040-0010		4	LIFTING EYE BOLT, NO. R 58 698	
025	90040-0011		2	LIFTING EYE BOLT, VLBG(4)2.5T M20	
030	90155-0309		6	SECURITY HOOK	
040	90155-0308		12	CONNECTION LINK	
050	90155-0033	MM	780	CHAIN	
055	90155-0033	MM	780	CHAIN	
060	90155-0033	MM	1200	CHAIN	
065	90155-0033	MM	1200	CHAIN	
070	90155-0033	MM	680	CHAIN	
075	90155-0033	MM	680	CHAIN	
080	90459-1898		4	LIFTING EYE BOLT, VLBG(1)1.0T M12 TURN.	
090	90459-2298		4	LIFTING EYE BOLT, VLBG 1.5T-M16	

Pos	Part No	UN	Qty	Description	Page No

This page is intentionally left blank.

ECM: 104246 - 20020226
Group number: 1369439-0102
Assembly Drawing:

Pos	Part No	UN	Qty	Description	Page No
-					
0010	48633-0102		1	PLMS ON-LINE CLIENT PROGRAM	
0020	*58789-0000*		*1*	*DOCUMENTATION DISKETT*	
0030	*1369432-0000*		*1*	*LABELS, DISKETT*	
0040	*58787-0000*		*1*	*SHORT FORM INSTRUCTIONS*	
0050	*58788-0000*		*1*	*MASTER DISKETT*	
0020	48635-0102		1	PLMS ON-LINE SERVER PROGRAM	
0020	*58801-0000*		*1*	*DOCUMENTATION DISKETT*	
0030	*1369437-0000*		*1*	*LABELS, DISKETT*	
0040	*58799-0000*		*1*	*SHORT FORM INSTRUCTIONS*	
0050	*58800-0000*		*1*	*MASTER DISKETT*	
0030	81595-0101		1	USER MANUAL PLMS ON-LINE	
0040	81596-0101		1	INSTALLATION MANUAL PLMS ON-LINE	

Pos	Part No	UN	Qty	Description	Page No

This page is intentionally left blank.

ECM: 256023 - 20060316
Group number: 2760258-0100
Assembly Drawing:

Pos	Part No	UN	Qty	Description	Page No
-					
000	2761530-0102		1	REBUILDING MANUAL	
010	2664393-0100		1	TOOL	**12-25**

Pos	Part No	UN	Qty	Description	Page No

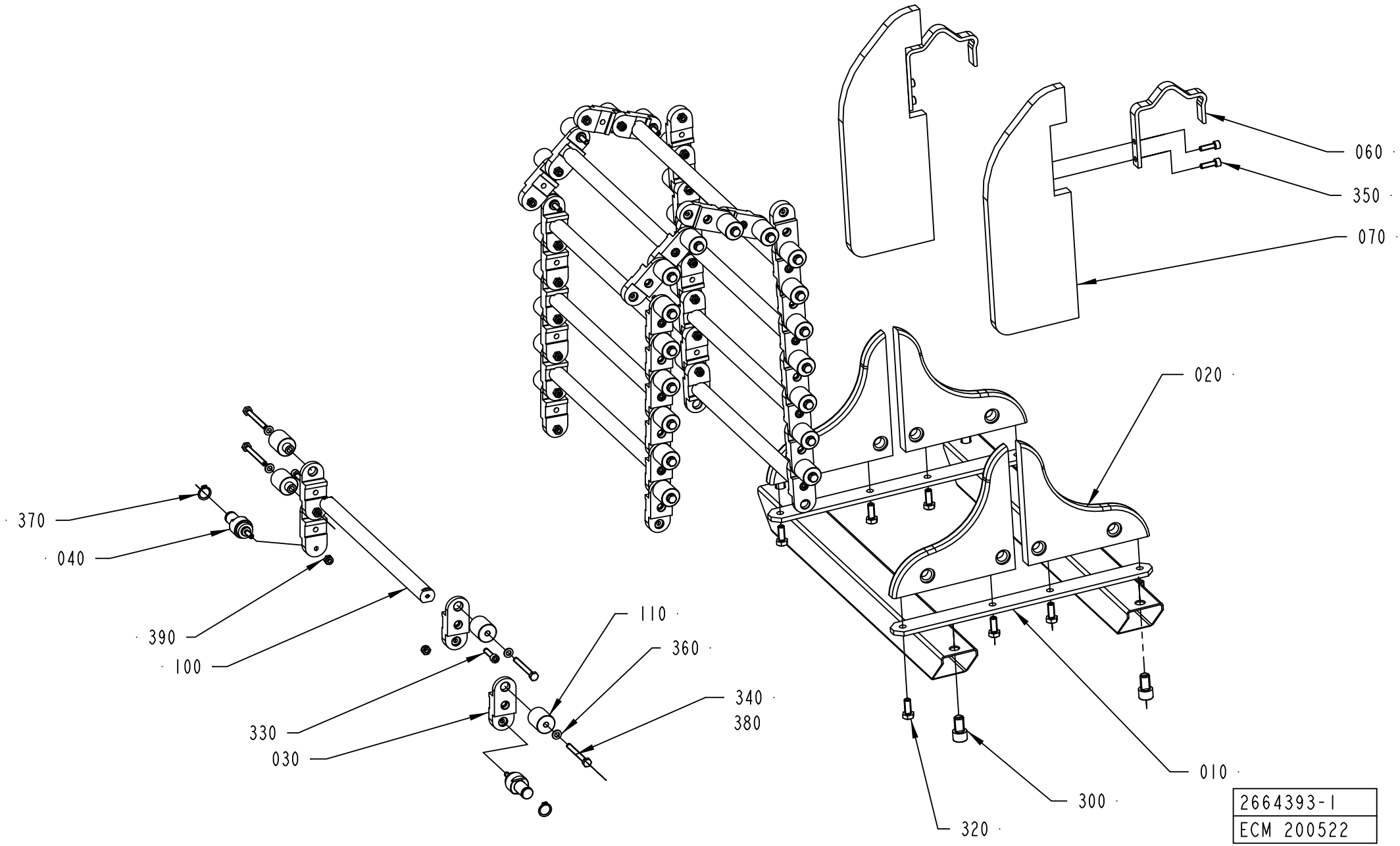
060
350
070
020
370
040
390
100
110
360
340
380
330
030
010
300
320
2664393-1
ECM 200522

ECM: 998395 - 20070102
Group number: 2664393-0100
Assembly Drawing: 2664393-1_1_AA

Pos	Part No	UN	Qty	Description	Page No
TBA/22-0500 TBA 0200B (See drawing on page: 12-24)					
010	2663328-0000		1	BRACKET	
020	2663329-0000		4	GUIDE	
030	2663330-0000		42	LINK	
040	2767843-0000		2	SHAFT	
070	2737605-0000		2	GUIDE	
100	2663331-0000		10	SPACER	
320	312105-0451		8	SCREW M6S ISO 4017 M8X20 A480	
390	312812-0316		40	HEXAGON NUT, NY-LOCK M6 A480	
TBA/22-0500 TBA 0200M, TBA/22-0500 TBA 0250B (See drawing on page: 12-24)					
010	2738370-0000		1	BRACKET	
020	2738366-0000		4	GUIDE	
030	2738364-0000		42	LINK	
040	2767843-0000		2	SHAFT	
070	2738368-0000		2	GUIDE	
100	2663331-0000		10	SPACER	
300	312115-0540		4	SCREW ISO4762 M12X40 A4 80	
320	312105-0451		8	SCREW M6S ISO 4017 M8X20 A480	
390	312812-0316		40	HEXAGON NUT, NY-LOCK M6 A480	
TBA/22-0500 TBA 0200S, TBA/22-0500 TBA 0300S (See drawing on page: 12-24)					
010	2736904-0000		1	BRACKET	
020	2737604-0000		4	GUIDE	
030	2737603-0000		42	LINK	
040	2767843-0000		2	SHAFT	
070	2737606-0000		2	GUIDE	
100	2663331-0000		10	SPACER	
300	312101-0542		4	SCREW M6S M12X50 FZB	
320	312105-0451		8	SCREW M6S ISO 4017 M8X20 A480	
390	312812-0316		40	HEXAGON NUT, NY-LOCK M6 A480	
TBA/22-0500 TBA 0250S (See drawing on page: 12-24)					
010	2738371-0000		1	BRACKET	
020	2738367-0000		4	GUIDE	
030	2738365-0000		42	LINK	
040	2767843-0000		2	SHAFT	
070	2738369-0000		2	GUIDE	
100	2663331-0000		10	SPACER	
300	312115-0546		4	SCREW ISO4762 M12X70 A4 80	
320	312105-0451		8	SCREW M6S ISO 4017 M8X20 A480	
390	312812-0316		40	HEXAGON NUT, NY-LOCK M6 A480	
Common Parts					
060	2728202-0000		2	BRACKET	
110	2677078-0000		38	SHAFT	
330	312115-0372		20	SCREW ISO4762 M6X25 A4 80	
340	312109-0381		38	SCREW M6S ISO 4017 M6X55 A480	
350	312115-0370		4	SCREW ISO4762 M6X20 A4 80	
360	315105-0153		38	WASHER BRB 6,4X12 RFR	
370	315751-0112		2	RETAINING RING FOR SHAFT DIN 471 15 SS	
380	90157-0016		1	LOCKING FLUID LOCTITE 242 50 ML	

Tetra Pak

SPC
Spare Parts Catalogue

Part No	Description	Page No
2033-0007	WASHER	1-17, 1-19, 1-27, 1-29
2033-0011	WASHER	1-17, 1-19, 1-21, 1-23, 1-27, 1-29, 1-31
12242-0001	GASKET 32X25X5,5	1-147
12242-0003	GASKET 48X38X5,5	1-15
24928-0000	LOCKING RUBBER	1-83, 1-85
29876-0000	COVER	1-153
30298-0000	INSULATION	1-153
32544-0000	INSULATION NUT	4-29, 4-31, 4-33, 4-39, 4-41, 4-43, 11-19
38535-0001	LOCKING FINGER	11-9, 11-11
42930-0600	ELECTRICAL DOCUMENT	9-3
47937-0410	PLMS OFF-LINE PROGRAM	7-5
48633-0102	PLMS ON-LINE CLIENT PROGRAM	12-21
48635-0102	PLMS ON-LINE SERVER PROGRAM	12-21
67379-0106	TRANSFORMER	4-21
67379-0248	TRANSFORMER	4-21
67379-0249	TRANSFORMER	4-21
67379-0408	TRANSFORMER	1-41
67379-0415	TRANSFORMER	1-41
67379-0416	TRANSFORMER	1-41
67380-0207	TRANSFORMER	8-11
67388-0102	RACK FRONTMOUNTED 84TE	7-93, 7-95
68262-0101	BACKPLANE FRONT RACK 8TE	7-93, 7-95
68445-0104	FRONT PLATE 8 TE	7-93, 7-95
68445-0105	FRONT PLATE 10TE	7-93, 7-95
68917-0100	ANGLE INDICATOR	3-17
81595-0101	USER MANUAL PLMS ON-LINE	12-21
81596-0101	INSTALLATION MANUAL PLMS ON-LINE	12-21
82197-0104	USER MANUAL	7-5, 11-51
82351-0106	USER MANUAL PLMS OFF-LINE	7-5
90001-0033	WALL SOCKET, E1834666	7-87, 7-89
90002-0004	BLANK-OFF PLUG, PR 22,5 SKINDICHT-BLK16	1-161, 1-163, 1-165, 1-237, 1-239, 6-63, 7-9, 8-109, 8-111, 8-113, 8-115, 8-117, 10-115, 10-117
90002-0009	BLANK-OFF PLUG, PR 18.6 SKINDICHT-BLK11	1-101, 1-161, 1-163, 1-165, 1-235, 1-237, 1-239, 2-9, 2-11, 2-129, 8-109, 8-111, 8-113, 8-115, 8-117
90002-0010	BLANK-OFF PLUG, PR 37 SKINDICHT-BLK29	8-33, 8-35
90002-0012	BLANK-OFF PLUG, PR 28,3 SKINDICHT-BLK21	2-9, 8-109, 8-111, 8-113, 8-115, 8-117
90002-0013	BLANK-OFF PLUG, PR 15,2 SKINDICHT-BLK9	1-161, 1-163, 1-165, 1-207, 1-235, 1-237, 1-239, 2-7, 2-9, 2-129, 6-25, 6-63, 8-109, 8-111, 8-113, 8-115, 8-117, 10-115, 10-117
90002-0016	BLANK-OFF PLUG PR 20.4 SKINDICHT-BLK13,5	1-161, 1-163, 1-165, 1-237, 1-239, 7-9, 10-115, 10-117
90002-0018	BLANK-OFF PLUG, PR 12,5 SKINDICHT-BLK7	10-115, 10-117
90003-0018	BAG	10-107
90003-0019	BAG	5-41, 10-51, 10-59, 10-87, 10-101, 10-103
90003-0474	PACKING	5-41, 10-51, 10-55, 10-59, 10-79, 10-95, 10-101, 10-103, 10-111
90003-0483	HOSE	10-101, 10-103
90005-0060	WASHER PLAIN, RBS 6,4/M6)/18,H=1,5	7-9
90005-0077	WASHER PL.RND.NYL.8,4/7, H=2	2-31, 7-13, 7-21
90005-0082	WASHER PLAIN ROUND 4,3(M4)/12,H=1	4-29, 4-31, 4-33, 4-39, 4-41, 4-43, 7-41, 7-51, 8-11, 8-17, 8-57, 8-61, 8-65
90005-0094	GASKET C 19438-EPR	5-43, 5-45, 5-47
90005-0114	WASHER PLAIN ROUND 5,3(M5)/15, H=1	2-109, 2-111, 2-119, 2-121
90005-0116	WASHER PLAIN ROUND 8,4(M8)/24, H=2	1-197
90012-0071	GLAND FITTING	1-13
90012-0117	GLAND, EXTENDED WITH INSERT, PG11	2-13, 2-15, 3-5, 3-13, 3-15
90012-0125	GLAND FITTING	8-109, 8-111, 8-113, 8-115, 8-117
90012-0126	HOSE GLAND W/O INSERT PG29 NORMAL	1-153
90012-0131	HOSE GLAND W/O INSERT PG21 NORMAL	1-187
90012-0137	GLAND, EXTENDED WITH INSERT, PG11	1-35
90012-0138	GLAND, EXTENDED WITH INSERT, PG13,5	1-161, 1-163, 1-165
90015-0020	LEAD-IN, TET5-7, E-1458016	1-105, 2-19, 2-21, 2-23, 3-7, 3-9, 5-63
90015-0021	LEAD-IN, TET10-14, E-1458023	2-19, 2-21, 2-23, 8-57
90015-0022	LEAD-IN, TET14-20, E-1458029	2-19, 2-21, 2-23
90015-0023	LEAD-IN, TET7-10, E-1458019	2-11, 2-19, 2-21, 2-23, 2-39, 2-41
90015-0024	LEAD-IN, TET20-26, E-1458035	2-19, 2-21, 2-23, 8-57
90015-0025	LEAD-IN, TET26-35, E-1458041	6-5
90015-0027	RUBBER BUSHING DI=6MM	4-11, 4-13
90015-0037	RUBBER BUSHING	6-21
90016-0024	DISC SPRING, CONICAL 20X8,2X0,8 MM	4-29, 4-31, 4-33, 4-39, 4-41, 4-43
90017-0015	HANDLE, NO. 14.4012.02.308	7-13
90017-0016	HANDLE, NO. 14.4012.02.120	1-231, 2-31, 7-21
90024-0036	FILTERED TERMINAL BLOCK, 52-160-002	6-5
90024-0039	FILTER 50 A, FN 351-50/33	7-35, 7-37, 7-39
90024-0060	POWER LINE FILTER, 80 A 250/440 VAC	6-5
90030-0058	CONN. T-PIPE T-12	1-103
90030-0062	CONN. STR. GE 6-1/4-18 NPTF	1-147
90030-0066	CONN. BULKHEAD SV 6-L/SY	4-11, 4-13
90030-0071	CONN. ELBOW WE08LR71	6-45
90030-0075	UNION FITTING 6MM, G06L71	1-185, 1-219, 1-221
90030-0076	CONN. T-PIPE T-6	1-219, 1-221
90030-0096	CONN. ELBOW W12L71	1-103
90030-0106	CONN. PIPE G-12	1-181
90030-0136	ADJUSTABLE ELBOW CONNECTION,EXT 12-G3/8	1-103, 1-181
90030-0171	ADJUSTABLE ELBOW CONNECTION, EVW06LR71	1-219, 1-221, 2-95, 4-53, 4-55, 4-57
90030-0180	CONN. STR. GE12L1/2NPT71	1-103

Part No	Description	Page No
90030-0184	CONN. STR. GE06LRED71	1-145, 1-219, 1-221, 1-237, 1-239, 2-19, 2-21, 2-23, 2-91, 4-11, 4-13, 4-53, 4-55, 4-57, 5-13, 5-15, 5-17
90030-0185	CONN. STR. GE08LRED71	1-103, 6-35, 6-37
90030-0187	CONN. STR. GA-12-G3/8	1-103, 1-181
90030-0188	CONN. STR. GA-15-G1/2	1-103, 1-151
90030-0202	CONN. STR., 6-G1/4, EXT. THREAD	1-61, 1-63
90030-0212	NIPPLES, REDUSING, INT. THR. NO. 2521	1-119, 1-121
90030-0336	CONN. STRAIGHT, 316L-12M-BVCO-3	1-107, 11-15
90030-0338	NUT, PIPE & CONNECTORS, SS-8-BVCO-4	1-107
90030-0465	STRAIGHT CONNECTION, MAD DN 15	6-31
90030-0549	CONN. STRAIGHT, BULKHEAD, SS-4-VCO-61	1-93
90030-0571	CONN. T-PIPE 6	1-61, 1-63, 1-93
90030-0599	CONN. CROSS, 12	1-181
90031-0031	ENHANCED GENIUS COMMUNICATION MODULE	7-45, 7-47
90031-0051	BASEPLATE, 10-SLOT	7-45, 7-47
90031-0053	BASEPLATE,10-SLOT	7-45, 7-47
90031-0057	PLC, DIGITAL INPUT MODULE	7-45, 7-47
90031-0058	PLC, DIGITAL INPUT MODULE	7-45, 7-47
90031-0059	PLC, DIGITAL OUTPUT MODULE	7-45, 7-47
90031-0060	PLC,ANALOG INPUT MODULE 16 PT/VOLTAGE	7-45, 7-47
90031-0061	PLC,ANALOG INPUT MODULE 16 PT/CURRENT	7-45, 7-47
90031-0062	PLC, ANALOG OUTPUT MODULE 8PT/CURR/VOLT	7-45, 7-47
90031-0065	PLC,TEMPERATUR CONTROL,INPUT MODULE 8 PT	7-45, 7-47
90031-0068	PLC, POWER SUPPLY	7-45, 7-47
90031-0305	I/O EXPANSION CABLE	7-45, 7-47
90036-0068	BULB 6.5W 24V	2-67
90040-0010	LIFTING EYE BOLT, NO. R 58 698	12-19
90040-0011	LIFTING EYE BOLT, VLBG(4)2.5T M20	12-19
90041-0029	FLOPPY DISC UNIT FD-235HF 1,4MB	7-99
90041-0068	DATACABLE MODEM PC	7-5, 11-51
90041-0091	PC 2,5" HD BAY, 02330-000	7-99
90042-0171	SOLENOID VALVE BURKERT	1-205
90042-0172	SOLENOID VALVE 4023/1005/1032 24VDC	1-151
90042-0203	SOLENOID VALVE BüRKERT	1-61, 1-63
90042-0206	SOLENOID VALVE G1/8, 444-111-000-1	2-89
90042-0215	VALVE BODY 5/2 UNISTABLE	1-213, 1-215, 1-217, 2-39, 2-41, 2-127, 6-71, 8-131, 8-133
90042-0221	VALVE BODY 5/2 BISTABLE	8-131, 8-133
90042-0230	VALVE BODY 5/3 OPEN CENTRE	1-213, 1-215, 2-39, 2-41
90042-0248	SOLENOID VALVE OFFICIENE DI ENSINO	2-47, 6-65, 6-67
90042-0249	SOLENOID VALVE OFFICINE DI ENSINO	6-65, 6-67
90042-0254	SOLENOID DIAPHRAGM VALVE, R1 1/2	6-29
90042-0265	HIGH SPEED VENTING VALVE 583-590-000-1	8-131, 8-133
90042-0487	COIL 24 VDC/15W, 04983 197 18	2-89
90042-0519	BLANK PLATE ISO SIZE 1	6-71, 8-131, 8-133
90042-0520	BASE PLATE ISO SIZE 1	1-213, 1-215, 2-39, 2-41, 2-127, 8-131, 8-133
90042-0522	PORTED END PIECE ISO SIZE 1	1-213, 1-215, 1-217, 2-39, 2-41, 2-127, 6-71, 8-131, 8-133
90042-0528	BLANKING KIT SEALS ISO SIZE 1	1-213, 1-215, 2-39, 2-41, 6-71, 8-131, 8-133
90042-0532	BASE PLATE ISO SIZE 1	1-213, 1-215, 1-217, 2-39, 2-41, 6-71, 8-131, 8-133
90042-0535	TERMINAL BOARD 19 CORDS	1-213, 1-215, 1-217, 2-39, 2-41, 2-127, 6-71, 8-131, 8-133
90042-0538	PILOT VALVE L=500MM	1-213, 1-215, 1-217, 2-39, 2-41, 2-127, 6-71, 8-131, 8-133
90042-0539	PILOT VALVE L=350MM	8-131, 8-133
90042-0545	SUB-BASE SOFT START ISO 1 AND VDMA 01	8-131, 8-133
90042-0550	PROTECTION PLUG FOR UNUSED CONNECTION	6-71
90042-0583	CABLE MECMAN 440-827 000-1	6-73
90042-0585	PILOT VALVE L=5M	6-73, 8-131, 8-133
90042-0591	PILOT VALVE, 04938-333-08	8-131, 8-133
90043-0002	PRESSURE GAUGE, 2040 D=63 MM	1-181
90043-0006	PRESSURE GAUGE, 2041 D=63 MM	6-65, 6-67
90043-0021	PRESSURE GAUGE 0-1 BAR 1/8" D=40	2-89
90043-0043	PRESSURE GAUGE 0-10 BAR 1/8"	6-31
90043-0064	PRESSURE GAUGE, 2048 D=40 MM	8-131, 8-133
90043-0065	MKC NEW FILL PUMP VACUUM PRESSURE GAUGE	6-71, 8-131, 8-133
90043-0082	PRESSURE GAUGE, 2740, D=63 MM	1-103
90043-0090	PRESSURE GAUGE, 2048 D=40 MM	2-39, 2-41
90043-0095	PRESSURE GAUGE, 2740, D=63 MM, GLYC.	1-145
90043-0100	PRESSURE GAUGE, 2948 D=63 MM	6-13
90043-0135	PRESSURE GAUGE 10 BAR	10-39
90044-0084	LIMIT SW. 14 CE1-4	1-87, 1-89, 1-97, 1-99, 1-183
90044-0104	PROX.SWITCH IN-3002-BPKG REPBY 90044-194	1-105, 1-197
90044-0145	PROX.SWITCH 922	1-123
90044-0165	PROX.SWITCH SME-8-K5-LED-24	8-45
90044-0191	PROX.SWITCH E2EG-X2B1	1-51
90044-0192	LIMIT SW. SZ2586.000	7-9
90044-0193	SENSOR, 322-31-0310	1-149
90044-0194	PROX.SW. IN5329/IN3002-BPKG(EX90044-104)	5-5, 5-7, 8-25, 8-57
90044-0310	KEY FOR SAFETY SWITCH AZ 15/16 B1	1-47, 1-49, 1-57, 1-65, 1-231, 8-57
90045-0164	SERVO MOTOR EP 075-112-44T3B	3-5
90045-0189	STEP MOTOR E22NSLT-LNN-NS-02	1-17, 1-19, 3-11
90045-0197	SERVO MOTOR EP 165-090-66T3B	3-13, 3-15
90045-0397	POWER SUPPLY 80A	7-45, 7-47
90051-0026	KNOB, CIRKUL, THREADED BUSH, M5 17X14 MM	1-209, 1-211
90051-0035	KNOB, EXTERNAL THREAD. NO. 8308-1135	8-67
90051-0045	STELLAR KNOB, NO. 8323-257	1-25
90051-0082	KNOB, CIRCUL, THREADED BUSH, M6 25X21 MM	8-95, 8-103

Machine Type Group Description Page No

Part No	Description	Page No
90051-0083	KNOB, EXTERNAL THREAD. NO. 8308-1321	8-85
90051-0087	LOCK KNOB, NO. GN 617 A5	8-73, 8-95, 8-103
90051-0088	ADJUSTMENT SCREW	8-57
90051-0112	LOCK KNOB, NO. GN 617 NIK5	2-39, 2-41, 2-125
90051-0127	HANDLE, NO. .601/90+X-M10-INOX	4-5, 5-19, 5-21
90052-0011	HORN HOOTERT 24:48VDC.PT NO.1YA030221	8-33, 8-35
90053-0029	COUNTER, F524.800FA3C 24VDC	7-87, 7-89
90055-0042	NIPPLES, EXT. THREAD, HEXAGON, NO. 6835-	11-63
90055-0051	HOSE NIPPLE, EXT.THR. R3/8X13 MM	2-85
90055-0097	STRAIGHT COUPLING	1-151, 2-47, 6-75
90055-0100	Y-CONNECTION, 6-6	2-47, 3-7, 3-9
90055-0101	Y-CONNECTION, 8-8	10-49
90055-0116	REDUCER 6-14	2-35, 2-37, 2-47
90055-0118	ELBOW WITH TAILPIECE 8/8 MM	1-213, 1-215
90055-0132	HOSE NIPPLE, EXT.THR. R1/4X7,8 MM	6-45
90055-0145	ELBOW ADAPTOR-R1/4	11-63
90055-0147	Y-FITTING QSY-12	1-209, 1-211
90055-0166	HOSE NIPPLE, EXT.THR. R11/2X38 MM	6-29
90055-0172	ELBOW WITH TAILPIECE 8/8 MM	8-131, 8-133
90055-0173	ELBOW WITH TAILPIECE 8/6 MM	1-213, 1-215, 1-217, 2-39, 2-41, 8-131, 8-133
90055-0204	ELBOW WITH TAILPIECE 8/8 MM LONG	2-39, 2-41, 2-127
90055-0217	ELBOW PIPE JOINT	2-19, 2-21, 2-23, 2-47, 8-83, 8-97, 8-107
90055-0227	Y-CONNECTION, 6-8	2-39, 2-41
90055-0276	T-CONNECTION 8 MM	8-83
90056-0164	WORM GEAR BS 71-F-TT	5-13, 5-15, 5-17
90056-0170	WORM GEAR BS 40 AL-TT ENV RH	5-5, 5-7
90062-0015	LOCK WASHER SERRAT.EXT.GEAR,6,4/11 H=0,7	6-5, 7-9, 7-15, 7-17, 7-19, 7-21, 7-53, 7-59, 7-67, 7-79, 8-109, 8-111, 8-113, 8-115, 8-117
90062-0016	LOCK WASHER SERRAT.EXT.GEAR,8,4/15 H=0,8	8-33, 8-35, 8-109, 8-111, 8-113, 8-115, 8-117
90062-0021	LOCK WASHER DIN 6797 TYPE A 5,3	7-79
90062-0022	LOCK WASHER D=6,4/11	7-35, 7-37, 7-39, 7-45, 7-47, 7-87, 7-89
90062-0029	LOCK WASHER 5,1X 8,6, T= 1,5 DIN 7980	6-11
90062-0038	LOCK WASHER SERRAT.INT.GEAR,3,2/6 H=0,4	7-79
90062-0059	LOCK WASKER SERRAT.EXT.GEAR,4,3/8 H=0,5	7-35, 7-37, 7-39, 8-109, 8-111, 8-113, 8-115, 8-117
90062-0061	LOCK WASHER NORD-LOCK,6,5/10,8, T=2,2	4-25, 4-27, 4-35, 4-37, 4-45, 4-47, 4-49, 4-51, 5-13, 5-15, 5-17
90064-0082	PUSH BUTTON, WHITE	2-31, 8-155, 8-167
90064-0084	PUSH BUTTON, YELLOW	2-31, 8-155
90064-0085	PUSH BUTTON, RED	1-237, 1-239
90064-0086	PUSH BUTTON, WHITE	2-31
90064-0093	PUSH BUTTON, GREEN	2-31
90064-0098	PUSH BUTTON, CLEAR	2-31
90064-0124	SWITCH, EM. STOP, ZB2-BS844+ZB2-BZ1045	1-13, 1-237, 1-239
90066-0021	PUSH BUTTON BOX XAP-M1501	1-13
90067-0301	BRAKE WIRE, 32 82 138 1	11-61
90067-0302	TORSION SPRING	11-59
90067-0317	BRAKE LINING	11-59
90067-0320	COTTER FOR 90067-301	11-61
90067-0336	GUIDE SHAFT UNIT, 32 82 123 3	11-59
90067-0337	BRAKE DRUM	11-59
90067-0338	GUIDE ROLLER 32 44 117 2	11-59
90067-0342	TENSION SPRING	11-59
90067-0349	ROLLER KIT, 34 73 050 7	11-61
90067-0350	AXLE PIN	11-61
90067-0351	SEAL KIT	11-65
90067-0354	PUMP PISTON	11-65
90067-0355	COMPRESSION SPRING	11-65
90067-0356	TOP WASHER	11-65
90067-0357	REPAIR KIT	11-65
90067-0358	SINK HANDLE	11-61
90067-0359	SINK ROD, 34 74 021 7	11-61
90067-0360	MOUNTING KIT, 34 74 022 5	11-61
90067-0361	TIE ROD	11-61
90067-0364	BRAKE HANDLE	11-61
90067-0365	HYDRAULIC HOSE, 32 04 169 1	11-57
90067-0368	YOKE	11-57
90067-0369	VALVE ARM	11-65
90067-0370	WHEEL, 32 04 176 6	11-57
90067-0371	SLEEVE, 32 04 175 8	11-57
90067-0372	SHAFT, 32 04 174 1	11-57
90068-0016	FOOT, 3 LEGS. NO 15511	10-41, 10-57, 10-99, 10-113
90068-0017	ARTICULATED FOOT W. RUBBER PAD, NO 17532	10-41, 10-57
90069-0181	GEARS, HELICAL MOTOR SK01V-80S/4	10-5
90069-0608	GEARS, WORM MOTOR ODM120-60KE3	1-35
90070-0017	WORKING HOURS COUNTER, 7991 DR H?NLE	7-87, 7-89
90074-0011	CABLE CLIPS, D=14 MM	7-9, 7-101
90077-0079	FEED THROUGH TERMINAL, 02943.6	2-33
90077-0123	FEED THROUGH TERMINAL, 017596	10-77
90077-0308	END PLATE, 10-00038286-1	10-77
90077-0328	RAIL TS15/5	2-33, 10-77
90082-0013	OVER VOLT. PROTECT. PU 4C-R 230 VAC	6-5
90083-0055	ROLLER BEARING, 15X35X19 MM	4-11, 4-13, 4-25, 4-27, 4-29, 4-31, 4-33, 4-35, 4-37, 4-39, 4-41, 4-43, 4-45, 4-47, 4-49
90087-0010	PLUG, EXT. THREAD, HEX. SOCKET NR. M10-	4-11, 4-13

Part No	Description	Page No
90087-0036	PLUG, KR 1/4	6-71
90089-0015	REDUCING SLEEVE, PR37M/PR28,3F	1-161, 1-163, 1-165
90089-0017	REDUCING SLEEVE, PR18,6/PR22,5	2-103
90089-0021	REDUCTION SLEEVE,PLASTIC GREY	1-13
90089-0029	ENLARGING SLEEVE	1-161, 1-163, 1-165, 2-13, 2-15
90091-0143	RADIAL SEAL 47X62X6 MM	1-43
90091-0237	ROD SEAL, GLIDORING 20X27,5X3 MM	1-109, 1-111, 1-113, 11-15, 11-17
90091-0238	WEAR RING 20X22X10 MM	1-109, 1-111, 1-113, 11-15, 11-17
90091-0263	RADIAL SEAL 24X47X7 MM DUST LIP	5-27, 5-29
90091-0266	SEAL RING 10,4X16,3X2,5 MM	1-107, 11-13
90091-0297	RADIAL SEAL 35X47X7 MM DUST LIP	1-35
90091-0298	RADIAL SEAL 45X65X8 MM DUST LIP	4-7, 4-9
90091-0303	RADIAL SEAL 20X35X7 MM DUST LIP	1-51
90091-0304	RADIAL SEAL 45X65X8 MM DUST LIP	11-17
90091-0320	RADIAL SEAL 20X30X7 MM DUST LIP	1-35
90091-0322	RADIAL SEAL 25X42X7 MM DUST LIP	1-17, 1-19, 5-13, 5-15, 5-17
90091-0335	PISTON SEAL GLIDE RING 62,5X70X3 MM	1-111, 11-17
90091-0336	PISTON SEAL GLIDE RING 79X90X4 MM	1-109, 1-113
90091-0357	VARISEAL ROTO 15X23X4 MM	1-37
90091-0406	RADIAL SEAL 25X40X7 MM DUST LIP	5-13, 5-15, 5-17
90091-0412	SEAL RING	2-95
90091-0430	RADIAL SEAL 15X35X7 MM DUST LIP	4-19
90091-0431	RADIAL SEAL 8X22X7 MM	4-19
90091-0436	RADIAL SEAL 20X40X7 MM DUST LIP	5-5, 5-7
90091-0437	RADIAL SEAL 17X40X7 MM DUST LIP	5-5, 5-7
90091-0438	RADIAL SEAL 25X52X10 MM DUST LIP	5-5, 5-7
90091-0439	RADIAL SEAL 35X62X7 MM DUST LIP	5-13, 5-15, 5-17
90091-0441	RADIAL SEAL 50X72X8 MM DUST LIP	5-13, 5-15, 5-17
90091-0449	VARILIP 40X52X7 MM	3-13, 3-15
90099-0003	NUT PR 22,5	1-179
90099-0004	NUT	2-13, 2-15
90099-0007	HEXAGON NUT, M10X1, E 63 137 10	8-73
90099-0051	NUT HEX. M10X1,25, FE FZB	1-143, 1-149
90099-0085	NUT	6-5
90099-0096	NUT	6-5
90099-0103	NUT, PR 47 (PG36)	4-23, 5-63
90099-0104	NUT, PR 15,2 (PG9)	1-25, 1-61, 1-63, 1-67, 1-69, 1-93, 1-105, 1-119, 1-121, 1-131, 1-139, 1-145 1-147, 1-149, 1-153, 1-161, 1-163, 1-165, 1-183, 1-187, 1-189, 1-197, 5-5, 5-7, 5-49, 5-63, 8-109 8-111, 8-113, 8-115, 8-117
90099-0110	NUT, PR 22,5 (PG16)	1-93, 1-141, 1-161, 1-163, 1-165, 3-17, 6-13, 7-9, 7-23, 7-25, 7-27, 7-29 7-31, 8-109, 8-111, 8-113, 8-115, 8-117, 8-167
90099-0117	NUT, PR 18,6 (PG11)	1-127, 1-129, 1-133, 1-135, 1-159, 1-161, 1-163, 1-165, 1-187, 1-209
90099-0118	NUT, PR 20,4 (PG13,5)	1-139, 1-161, 1-163, 1-165, 7-9, 7-23, 7-25, 7-27, 7-29, 7-31, 8-109 8-111, 8-113, 8-115, 8-117
90099-0119	NUT, PR 28,3 (PG21)	1-161, 1-163, 1-165, 8-91, 8-109, 8-111, 8-113, 8-115, 8-117
90099-0120	NUT, PR 37 (PG29)	1-105, 5-63, 8-91, 8-109, 8-111, 8-113, 8-115, 8-117
90099-0131	NUT HEX. M16X2 SS	1-43, 8-57
90110-0028	CONTACT UNIT 4-POLEADAPTER	7-87, 7-89
90110-0055	FEMALE INSERT HAN 6 HSB 09 31 006 2701	7-23, 7-25, 7-27, 7-29, 7-31
90110-0095	CONNECTOR 3 POLE + EARTH	1-205, 2-89, 6-65, 6-67
90110-0123	HOUSING, 09 30 006 0301	7-23, 7-25, 7-27, 7-29, 7-31
90110-0142	PLUG D-SUB 15 MALE, DE15P064TXLF	2-13, 2-15
90110-0145	COVER D-SUB 15, 8655MH1511LF	2-13, 2-15
90110-0150	MALE INSERT 121110 0000	1-161, 1-163, 1-165, 2-13, 2-15, 2-129, 4-23, 5-63, 6-63, 8-109 8-111, 8-113, 8-115, 8-117, 10-115, 10-117
90110-0151	FEMALE INSERT 24-POL 121130 0000	2-13, 2-15
90110-0152	CABLE HOOD 24-POL 70.352.2428.1	1-161, 1-163, 1-165, 2-13, 2-15, 2-129, 8-109, 8-111 8-113, 8-115, 8-117, 10-115, 10-117
90110-0156	MALE INSERT 70.210.0653.0	1-161, 1-163, 1-165, 2-13, 2-15, 6-35, 6-37, 8-109, 8-111, 8-113 8-115, 8-117
90110-0157	CABLE HOOD 6-POL 70.352.0628.1	1-161, 1-163, 1-165, 2-13, 2-15, 2-129, 8-91, 8-109, 8-111 8-113, 8-115, 8-117, 8-141, 10-3
90110-0159	MALE INSERT 70.310.0640.0	1-161, 1-163, 1-165, 2-13, 2-15, 2-129, 6-11, 6-21, 6-25, 8-91 8-109, 8-111, 8-113, 8-115, 8-117, 8-141, 10-3
90110-0160	CABLE HOOD 6-16-POL 70.352.1628.1	1-161, 1-163, 1-165, 2-13, 2-15, 8-109, 8-111, 8-113 8-115, 8-117
90110-0163	FEMALE INSERT 70 300 0640 0	2-13, 2-15
90110-0208	CABLE CONTACT	2-13, 2-15, 3-5, 3-13, 3-15
90110-0209	CONTACT PIN, RC20M13K	2-13, 2-15, 3-5, 3-13, 3-15
90110-0221	CHASSIS HOUSING 310162-33	2-13, 2-15
90110-0222	SOCKET FEMALE, MS 3102 E 16S-1S	1-95
90110-0223	CONTACT MALE, MS 3106 E 16S-1P	1-237, 1-239
90110-0224	CHASSIS HOUSING 310166-33	2-13, 2-15
90110-0225	CHASSIS HOUSING 310168-33	2-13, 2-15
90110-0226	CABLE HOOD 6-POL 70.350.0628.0	6-11, 6-21, 6-25
90110-0227	CABLE HOOD 6-16-POL 71.350.1628.0	6-35, 6-37
90110-0228	CABLE HOOD 24-POL 71.350.2428.0	4-23, 5-63, 6-63
90110-0235	CABLE CONTACT, PX0739/P	8-91, 10-77
90110-0236	CHASSIS CONTACT PX0767/S	2-13, 2-15, 7-23, 7-25, 7-27, 7-29, 7-31
90110-0247	FEMALE INSERT 70.200.0653.0	2-13, 2-15
90110-0381	COVER, 310601-33 CYR24.4	2-13, 2-15, 7-23, 7-25, 7-27, 7-29, 7-31
90110-0385	MARKING HOLDER, 4.242.3853.0	1-161, 1-163, 1-165, 8-109, 8-111, 8-113, 8-115, 8-117
90110-0513	CHASSIS HOUSING, CHP 24L S2	2-13, 2-15

Part No	Description	Page No
90111-0120	SWITCH, 2 POS.704.510 .0A+704.901.5/A	2-31
90111-0122	KEY SWITCH, 2 NO CONTACTS	7-87, 7-89
90111-0124	KEY SWITCH, 1NO,1NC CONTACT	7-87, 7-89
90113-0056	REGULATOR, 11-818-998	2-89
90113-0072	FILTER REGULATOR 40µ, 915-331242	6-73
90113-0095	PRESSURE REGULATOR	1-209, 1-211, 2-39, 2-41
90113-0096	PRESSURE REGULATOR	1-209, 1-211, 2-39, 2-41
90113-0097	PRESSURE REGULATOR	1-209, 1-211, 2-39, 2-41
90113-0098	PRESSURE REGULATOR	6-31
90113-0137	SHUT OF VALVE	10-39
90113-0141	FILTER REGULATOR 0-10 BAR 40 MICRON	10-39
90113-0374	SLOW STARTING VALVE	6-73
90113-0375	PRESSURE DISTRIBUTION	6-73
90113-0377	SHUT OFF VALVE G1/2, 915-331053	6-73
90113-0423	HIGH SPEED VENTING VALVE G1/2, R40403053	6-73
90113-0449	QUICKCLAMP AND WALL MONT. BRACKET	10-39
90113-0470	MANIFOLD REGULATOR 10 BAR	6-71, 8-131, 8-133
90113-0472	FILTER 0,01 MICRON, F72C-2GD-AEO	1-209, 1-211
90115-0173	ROD END, ID=6 MM, M6X1	2-103
90119-0056	RELAY, AUXILIARY MK3P5-S 24VDC	7-35, 7-37, 7-39
90119-0063	OPTO-RELAY, DC/DC AMMS-10-1/30VDC	1-235, 2-7, 7-49
90119-0082	SSR 90119-67 + HEAT SINK	7-57, 7-63, 7-65
90119-0089	SAFETY RELAY, JSBT4 24VDC	7-35, 7-37, 7-39
90119-0108	RELAY OMRON G2R-2-SNI-24DC	7-35, 7-37, 7-39
90121-0114	RESISTANCE FIXED, 0,22 KOHM, 25 W	7-79
90121-0115	RESISTANCE FIXED, 0,047 KOHM, 200 W	7-79
90121-0120	RESISTANCE FIXED, 0,25 KOHM, 0,125 W	7-87, 7-89
90121-0122	RESISTANCE FIXED, 0,11 KOHM, 0,25 W	11-51
90129-0006	BASE, S3-B	7-35, 7-37, 7-39
90129-0018	BASE OMRON P2RF-08-E	7-35, 7-37, 7-39
90132-0021	HOSE CLIP 6-10MM	1-93, 2-89
90132-0030	SUPORTE MV 87177 KS 580T	1-145, 1-151
90135-0026	EARTH TERMINAL, 3802.6	2-33
90135-0035	EARTH WIRE, L=250 MM 16 MM2	7-15, 7-17, 7-19, 7-21, 7-35, 7-37, 7-39, 7-45, 7-47, 7-53, 7-59, 7-67, 7-79, 7-87, 7-89
90135-0040	EARTH WIRE, L=150 MM 16 MM2	8-109, 8-111, 8-113, 8-115, 8-117
90135-0042	EARTH TERMINAL, 130336	10-77
90140-0010	T-PIPE, INT. THREAD, 20031/2	2-47
90140-0012	ELBOW, 90 INT/EXT, 2020-1/2-1/2	2-19, 2-21, 2-23
90140-0018	T-PIPE, INT. THREAD, 2003-1/4	6-13
90140-0020	ELBOW, 90, INT/EXT. THREAD, NO. 2020-3/8	6-65, 6-67, 8-131, 8-133
90140-0023	T-PIPE, INT. THREAD, NO. 2070-3/8-3/8	6-11, 6-65, 6-67
90141-0015	RETAINING RING FOR SHAFT DIN 471 8 SS	1-159, 8-9, 8-59
90141-0016	RETAINING RING FOR SHAFT DIN 471 10 SS	1-11, 8-9, 8-61, 8-67, 8-73
90141-0017	RETAINING RING FOR SHAFT DIN 471 17 SS	1-93, 5-5, 5-7, 8-79
90141-0020	RETAINING RING FOR BORE DIN 472 42 A2	3-5, 5-13, 5-15, 5-17, 5-27, 5-29
90141-0022	SNAP RING B 16	1-143, 1-149
90143-0020	STRIP	2-93
90143-0057	STRIP EMKA 1011-05 21X11MM	1-231, 2-31, 6-5, 7-9, 10-5
90143-0059	SELF GRIPPING GASKET, 4610069	1-219, 1-221, 7-9
90143-0060	EDGE STRIP 9,5X6,3MM BLACK PVC	1-231, 6-5, 6-51, 6-55, 7-9, 8-49, 8-51, 8-53
90143-0097	SELF GRIPPING GASKET, 1011-24	2-19, 2-21, 2-23
90143-0098	RUBBER STRIP, CLAMPING, NO. 1038-02	4-21
90144-0007	TAPE	1-183, 6-29, 6-31, 6-33, 6-39
90144-0072	TAPE SCOTCH VHBS 4945 W=12,7MM	7-87, 7-89, 8-161
90144-0073	TREBOFLON-TAPE W=13MM	1-145, 1-147, 1-151, 1-179, 1-181
90152-0016	HOSE (SPIRAL)	2-43
90152-0017	HOSE (SPIRAL)	2-51
90152-0050	SPIRAL CONDUIT, 20X13, UL 1313	1-91, 1-139, 1-161, 1-163, 1-165, 1-187, 1-237, 1-239
90152-0051	SPIRAL CONDUIT, 25X18, UL 1816	1-93, 1-139, 1-161, 1-163, 1-165, 1-187, 1-207, 8-167
90152-0058	SPIRAL CONDUIT, 15X9, UL 0909	1-237, 1-239
90152-0059	SPIRAL CONDUIT, 18X12, UL 1211	1-61, 1-63, 1-93, 1-237, 1-239, 5-5, 5-7, 5-49
90152-0060	SPIRAL CONDUIT, 42X35, UL3529	4-23, 5-23, 5-25, 5-63, 8-91
90152-0070	METAL HOSE, 32,5X26, UL 2621	1-161, 1-163, 1-165, 8-91
90153-0016	ADHESIVE,TUBE 100G RHODORSIL CAF 3	1-127, 1-129, 2-19, 2-21, 2-23
90153-0020	ADHESIVE, BOSTIK 1782 125ML	1-153
90153-0023	ADHESIVE, SILICON 251470 TUB 90CC(UN1993	1-25, 1-47, 1-49, 1-57, 1-65, 1-71, 1-189, 2-93
90153-0060	ADHESIVE, 3M DP-190 B/A	2-31
90155-0008	HANGER CHAIN, 18	1-93, 1-131
90155-0033	CHAIN	12-19
90155-0308	CONNECTION LINK	12-19
90155-0309	SECURITY HOOK	12-19
90157-0016	LOCKING FLUID LOCTITE 242 50 ML	5-11, 5-27, 5-29, 6-65, 6-67, 8-19, 8-83, 8-95, 8-97, 8-103, 8-107, 12-25
90157-0021	LOCKING FLUID LOCTITE 270	2-79, 2-81, 4-25, 4-27, 4-29, 4-31, 4-33, 4-35, 4-37, 4-39, 4-41, 4-43, 4-45, 4-47, 4-49
90157-0034	THREAD SEALANT LOCTITE 572 50 ML	1-183, 1-187
90157-0037	THREAD SEALANT LOCTITE 542	1-145, 1-151, 1-179, 1-181
90157-0041	SEALING COMPOUND, RHODORSEAL 5651	1-231, 2-109, 2-111, 2-115, 2-119, 2-121
90157-0044	SEALING COMPOUND, PROD. RTV 102Q WHITE	1-95
90163-0007	CONNECTION	12-9
90163-0039	HOSE NIPPLE EXT.THR. R1/2 2601-17 MM	2-19, 2-21, 2-23
90163-0052	HOSE NIPPLE, EXT.THR. 1/4-12 MM	1-151
90163-0057	QUICK COUPLING, (M) 5150-1/8	1-219, 1-221

Part No	Description	Page No
90163-0062	QUICK COUPLING, (F) 5053-1/8	1-219, 1-221
90164-0015	LIGHT FIXTURE, RL70CV-111 / 230V 50HZ	8-33, 8-35
90164-0303	LIGHT FIXTURE, BRACKET 70MM	8-33, 8-35
90165-0003	PIPE CLIP FOR TUBE D=4 MM	7-45, 7-47
90165-0007	PIPE CLIP FOR TUBE D=8 MM	7-35, 7-37, 7-39, 7-67, 7-87, 7-89
90165-0009	PIPE CLIP FOR TUBE D=12 MM	8-33, 8-35
90165-0019	TOOL CLIP, 81/3, OPEN, 20 - 30 MM	2-39, 2-41
90165-0022	PIPE CLIP, FOR TUBE D=2,5 MM, B-3570	7-67, 7-87, 7-89
90165-0039	PIPE CLAMP D=15 MM, GSK15/12	1-151
90165-0065	PIPE CLAMP D=8 MM, GSK08/12	6-73
90165-0087	T-CLIP T6 FOR TUBE D=6 - 7 MM	8-83, 8-97, 8-107
90166-0008	HOSE 7/10 PVC TRANSP.	6-45
90166-0013	TUBE 8 MM PA BLUE	1-205, 1-209, 1-211, 1-219, 1-221, 2-35, 2-37, 2-39, 2-41, 2-43, 3-7, 3-9, 5-63, 6-75, 10-49
90166-0045	HOSE PVC TRANSP. 6/12	6-11, 12-9
90166-0068	TUBE 12 MM PA BLUE	1-209, 1-211, 1-219, 1-221, 6-71, 8-131, 8-133
90166-0081	TUBE 6 MM PA BLUE	1-209, 1-211, 1-219, 1-221, 2-35, 2-37, 2-89, 2-127, 4-23, 4-53, 4-55, 4-57, 5-5, 5-7, 5-19, 5-21
90166-0087	HOSE 15/23 REINF.PVC TRANSP.	1-179, 2-91
90166-0089	TUBE, 6,2 MM PE BLUE	4-51, 5-63
90166-0095	TUBE 4 MM PA BLUE (50M)	6-71, 8-61
90166-0101	HOSE, SILICONE, 60 SHORE, 6/10 MM	2-89
90166-0113	HOSE	12-9
90166-0117	HOSE 4/6 PVC BLUE	8-131, 8-133
90166-0118	TUBE 8 MM PA BLACK	1-41, 2-49, 4-21, 4-23, 5-13, 5-15, 5-17, 5-19, 5-21, 5-63, 6-11, 6-13, 6-15, 6-23, 6-65, 6-67, 8-11
90166-0119	HOSE PUR 4/6 BLACK	5-5, 5-7
90166-0121	HOSE	1-151, 2-19, 2-21, 2-23, 2-55, 6-7, 6-9, 6-11, 6-13, 6-17, 6-31
90166-0129	HOSE 16/22 REINFORCED PVC	2-19, 2-21, 2-23
90166-0132	TUBE 6 MM PA,TRANSP.	2-47, 2-95, 2-103, 3-7, 3-9
90166-0133	TUBE 8 MM PA,TRANSP.	2-47, 4-51
90166-0138	HOSE	2-85
90166-0141	TUBE 10 MM PA,TRANSP. MIN.50M	2-51
90166-0151	HOSE	2-19, 2-21, 2-23, 2-85
90166-0153	TUBE 12 MM PA BLACK	1-209, 1-211
90166-0158	HOSE	2-91
90166-0161	HOSE	2-89
90166-0176	RUBBER HOSE	1-237, 1-239
90166-0193	TUBE 6 MM PUR BLUE	1-93, 1-205, 8-11, 8-39, 8-61, 8-83, 8-85, 8-97, 8-99, 8-105, 8-107
90166-0194	TUBE 8 MM PUR BLUE	8-27, 8-29, 8-33, 8-35, 8-39, 8-83, 8-131, 8-133
90166-0195	TUBE 12 MM PA BLUE	2-35, 2-37, 2-127, 10-49
90166-0196	TUBE 14MM PA BLUE	2-35, 2-37, 2-47, 6-73, 6-75
90166-0199	RUBBER HOSE	1-141, 1-219, 1-221
90166-0232	SHRINKABLE HOSE	6-5
90166-0233	HOSE	1-15, 1-87, 1-89, 1-97, 1-99, 2-47, 2-55, 2-57, 2-59, 6-41
90166-0236	HOSE, 38/51 REINFORCED RUBBER	6-29
90166-0260	HOSE	2-47
90166-0266	TUBE 6 MM PA BLACK	4-23
90181-0064	LOCK ZP1 FOR CHANNEL T1	7-35, 7-37, 7-39, 7-45, 7-47, 7-53, 7-59, 7-67, 7-79, 7-87, 7-89
90181-0180	CABLE TRAY	2-19, 2-21, 2-23, 10-119
90181-0182	CABLE TRENCH PARTS	10-119
90181-0183	JOINING FITTING	10-119
90181-0184	CABLE TRENCH PARTS	10-119
90181-0185	CABLE TRENCH PARTS	10-119
90181-0190	CABLE DUCT, WALL BRACKET, B4 MINI	2-19, 2-21, 2-23
90181-0313	RIVET DUCTAFIX R4	8-109, 8-111, 8-113, 8-115, 8-117
90181-0314	CABLE TRENCH PARTS	10-119
90181-0315	CABLE TRENCH PARTS	10-119
90187-0029	BALL VALVE G1/2, NPBR	6-19, 6-65, 6-67
90187-0045	BALL VALVE G1/4 CR PL	6-13, 6-21, 12-9
90187-0059	BALL VALVE FOR HYDR.PER. G1/2 3MM HOLE	2-85, 2-91
90187-0062	BALL VALVE G1/2, NPBR	1-181
90187-0082	BALL VALVE RP1/2	1-103
90187-0088	BALL VALVE G1/4, NPBR	8-41
90187-0110	DIAPHRAGM VALVE DN15, NC WELD CONN.	1-103
90187-0130	TEMP. CONTR. VALVE, R3/4 0-30øC	6-17
90187-0133	SAFETY VALVE, 10 BARS, R1/2, R1/2	6-31
90187-0147	BALL VALVE G11/2	6-29
90187-0148	BALL VALVE G1	6-41
90189-0005	BALL BUSHING, 30X47X68 MM	8-77
90189-0011	BALL BUSHING, 16X26X36 MM	8-65
90189-0025	BALL BUSHING, 25X37X37 MM	8-145
90191-0047	WHEEL, NO.798 821	12-11
90191-0060	CASTOR WHEEL, NO. 1599PRT	12-11
90191-0077	WHEEL	12-15
90194-0016	WARNING SIGN, RISK OF ELECTRIC SHOCK	2-9
90194-0075	WARNING SIGN ISO, HOT SURFACE	1-153, 1-187
90194-0080	SIGN, IDENTIFICATION OF WIRING	7-19
90194-0133	SIGN "DELIVERED DESIGN"	2-31, 7-19
90194-0143	WARNING SIGN ISO, HOT SURFACE	8-81
90194-0152	SIGN, EARTH	7-15, 7-17, 7-19, 7-21, 7-53, 7-59, 7-67, 7-79, 7-87, 7-89
90195-0028	TERMINAL BLOCK, 6440	1-153
90195-0029	CONN. LINK NO324 FOR -28	1-153
90201-0098	ADJ. FLOW CON. VALVE, NO. 9 PCCM 400SF	11-63

Part No	Description	Page No
90201-0450	PLUG	4-53, 4-55, 4-57
90206-0070	HEATING ELEMENT 6000W 380/220V	1-183, 1-187, 11-9, 11-11
90206-0132	HOT AIR ELEMENT	5-23, 5-25, 11-21
90206-0326	CONNECTION BOX K2 FOR 90206-56 AND -70	1-183, 1-187
90207-0363	GASKET 75X85X1,8 MM 3" FDA 3-A	1-107, 11-13
90207-0365	GASKET 53X63X1,8 MM 2,5" FDA 3-A	1-107, 11-13
90211-0002	WIRE LOCK, 5 MM	8-145
90214-0036	BALL BEARING, 10X22X6 MM	1-59, 3-7, 3-9
90214-0096	BALL BEARING, 25X52X15 MM	5-5, 5-7
90214-0138	BALL BEARING, 5X19X6 MM	1-197, 8-7, 8-25
90214-0165	BALL BEARING, 25X47X12 MM	5-13, 5-15, 5-17
90214-0189	BALL BEARING, 17X40X12 MM	5-5, 5-7
90214-0225	BALL BEARING SOLID OIL 20X42X12 MM	1-35, 5-13, 5-15, 5-17, 5-27, 5-29
90214-0236	BALL BEARING, 40X80X18 MM	4-7, 4-9
90217-0206	UNION NUT, 1 1/2 APV, 07-01-376/17	1-131
90217-0307	GASKET 35,8X50,5X5,5 MM	1-87, 1-89, 1-97, 1-99, 11-9, 11-11
90217-0347	GASKET 32X22,6X3,6 MM	1-119, 1-121, 11-9, 11-11
90217-0348	GASKET 35,4X46,8X4 MM	1-119, 1-121, 1-131, 11-9, 11-11
90220-0034	THERMOCABLE TEX/SITW-20F-KX 2X0,5MM2	1-161, 1-163, 1-165, 1-187, 2-13, 2-15, 5-63, 6-13, 8-81
90220-0072	SCR. CABLE 4X0,34MM2	1-207
90220-0084	MOTOR CABLE 4X2,5+2(2X0.75)+SHIELD	2-13, 2-15, 7-23, 7-25, 7-27, 7-29, 7-31
90220-0091	PAIR TWISTED CABLE 2X2X0,25MM2	2-13, 2-15, 7-5, 7-23, 7-25, 7-27, 7-29, 7-31, 10-75, 11-3, 11-51
90220-0092	PAIR TWISTED CABLE 3X2X0,25MM2	1-161, 1-163, 1-165, 1-237, 1-239, 8-65
90220-0095	SCR. CABLE 3X0,75MM2	6-5
90220-0104	SCR. CABLE 4X1,5MM2	1-161, 1-163, 1-165, 7-23, 7-25, 7-27, 7-29, 7-31, 8-55, 8-91, 8-109, 8-111, 8-113, 8-115, 8-117, 8-141, 10-3, 10-5, 10-61
90220-0105	SCR. CABLE 4X2,5MM2	2-13, 2-15
90220-0107	SCR. CABLE 5X0,75MM2	1-237, 1-239, 2-13, 2-15, 7-23, 7-25, 7-27, 7-29, 7-31
90220-0116	MOTOR CABLE 4X1,0+2(2X0,5)+SHIELD	2-13, 2-15, 7-23, 7-25, 7-27, 7-29, 7-31
90220-0131	PAIR TWISTED CABLE 3X2X0,25MM2	2-13, 2-15
90220-0165	SCR. CABLE 5X0,34MM2	2-13, 2-15
90220-0183	SCR. CABLE 2X0,34MM2	1-207, 1-237, 1-239, 7-23, 7-25, 7-27, 7-29, 7-31, 7-87, 7-89
90220-0303	CLAMP FOR SCR.CABLE, 10MM, 55-016-22	6-5
90220-0305	CLAMP FOR SCR.CABLE, 16MM,	6-5
90224-0054	REDUCER, ART.NO RMM 3438	10-39
90224-0308	CONN. BANJO, ART. NO. 2023-1/8-1/8	1-219, 1-221
90224-0349	CONN. BULKHEAD. 1250-6	1-139, 1-219, 1-221
90226-0458	MOUNTING SCREW1-231, 1-233, 2-107, 2-115, 6-49, 6-55, 6-59, 7-33, 8-151, 8-153, 8-163, 8-171	
90230-0025	NON-RETURN VALVE, 12MM, L=85	1-103
90230-0027	NON-RETURN VALVE QJ 8355-1/4"	5-43, 5-45, 5-47
90230-0028	NON-RETURN VALVE H 151 R 3/8"	6-13
90230-0041	OVERPRESSURE VALVE SS-4 CPA2-RTDG-3	6-21
90230-0042	NON-RETURN VALVE 1/2"	2-55, 6-31, 6-39
90230-0044	NON-RETURN VALVE 1"	2-55, 6-33
90230-0064	CHECK VALVE, 6 MM HIGH TEMP.	1-139, 2-95
90232-0103	PH.CELL E3S-CT61-L-5M	5-49
90232-0104	PH.CELL E3S-CT61-D-5M	5-49, 10-31, 10-61, 10-109
90232-0106	PH.CELL E3S-CR11-5M	8-139
90232-0127	PH.CELL E3S-CT61-L-5-5M	10-31, 10-61, 10-109
90232-0129	PH.CELL E3S-CR61-5M	8-47, 8-139
90232-0333	REFLECTOR E39-R1	8-33, 8-35, 8-139, 8-165, 8-169
90233-0027	TUBE FUSE 16A, A070GRB16T13 J330012	7-69, 7-71
90233-0028	TUBE FUSE 10A, A070GRB10T13 G330010	7-69, 7-71, 11-25
90233-0029	TUBE FUSE 25A, A070GRB25T13 L330014	7-69, 7-71, 11-25
90233-0034	TUBE FUSE, 1 A	7-69, 7-71
90233-0062	TUBE FUSE, 4A 600V	7-69, 7-71
90235-0151	NON-RETURN VALVE, 534 098 110 0	2-47, 6-39
90235-0206	QUICK EXHAUST VALVE, SEU-1/8	8-83
90235-0261	ANGLE SEAT VALVE G1/2, N.C. DN13	1-103
90235-0274	THROTTLE CHECK VALVE, G1/8", SCU-604-1/8	1-219, 1-221
90235-0282	THROTTLE CHECK VALVE, G1/8", SCO-604-1/8	1-219, 1-221
90235-0288	THROTTLE CHECK VALVE G1/8" MANUAL, 6	1-105
90235-0290	THROTTLE CHECK VALVE M5	2-103
90235-0846	THROTTLE CHECK VALVE G1/8", MANUAL, 6	8-99, 8-105
90235-0848	THROTTLE CHECK VALVE, G1/8", MANUAL,8	8-27, 8-29
90236-0041	BRACKET, 74504-50	1-205
90236-0045	SUPPORT	5-5, 5-7
90237-0128	LOCK CYLINDER, 1109-SU125	1-231, 2-109, 2-111, 2-119, 2-121, 6-53, 6-57, 7-15, 8-159, 8-161, 8-165
90237-0151	GUIDE, 1001-U11	1-231, 7-15, 7-17, 7-19, 7-21
90237-0152	GUIDE, 1001-U12	1-231, 7-15, 7-17, 7-19, 7-21
90237-0153	LOCK HOUSING, 1121-U26-0B	1-231, 2-109, 2-111, 2-119, 2-121, 6-53, 6-57, 7-15, 7-17, 7-19, 7-21, 8-159, 8-161, 8-165
90237-0154	LOCK HOUSING, 1121-U60-0C	1-231
90237-0155	LOCK ADAPTER, 1121-U40	7-15, 7-17, 7-19, 7-21
90237-0156	LOCK BOLT, 1000-16	1-231, 7-15, 7-17, 7-19, 7-21
90237-0157	LOCK BOLT, 1000-230	2-31, 6-61, 7-11, 7-13, 7-87, 7-89
90237-0160	ESCUTCHEON WITH SQUARE, 1121-U23/U13	7-17, 7-19, 7-21
90237-0165	LATCH	1-231, 2-109, 8-165
90237-0168	ROUND BAR WITH END WHEEL, 1049-U5	7-15, 7-17, 7-19, 7-21
90237-0169	LOCK ADAPTER, 1000-U49	1-231, 7-15, 7-17, 7-19, 7-21
90237-0175	TURNING HANDLE, 1125-U185-0A	1-231, 2-119, 2-121, 6-53, 6-57, 8-159, 8-161, 8-165
90237-0176	TURNING HANDLE, 1125-U190-A	1-231, 2-109, 2-111, 7-15

Part No	Description	Page No
90237-0214	LOCK ADAPTER, 1121-U40	1-231
90237-0319	LOCK HOUSING, 1000-U134	2-31, 6-61, 7-11, 7-13, 7-87, 7-89
90237-0320	LOCK HOUSING, 1000-U136	2-31, 6-61, 7-11, 7-13, 7-87, 7-89
90237-0322	LOCK GASKET, 1000-U137	6-61
90237-0323	LOCK O-RING, 1000-24	6-61
90237-0324	KEY, 1104-02 FOR SQUARE 8 MM	7-17, 7-19, 7-21
90239-0405	ROD END,BALL JOINT EYE M10X1,25	8-99, 8-105
90239-0487	REAR, CLEVIS, MINI-ISO 20-25	1-15, 8-99, 8-105
90239-0489	ROD END, CLEVIS WITH AXLE M6X1,25	1-37, 1-67, 1-69
90239-0490	ROD END, CLEVIS WITH AXLE M8X1,25	1-15
90239-0491	ROD END, BALL JOINT EYE, MINI-ISO M6	8-61
90239-0516	ROD END, CLEVIS WITH AXLE M10X1,25	1-11
90239-0532	ROD END, CLEVIS WITH AXLE M8X1,25	1-159, 4-51
90239-0579	SENSOR,BRACKET,FOR CYL 16	1-67, 1-69
90239-0582	SENSOR,BRACKET,FOR CYL 32	1-11
90239-0816	DOUBLE ACTING, MINI-ISO, CYL.16-25	1-67, 1-69
90239-0817	DOUBLE ACTING, MINI-ISO, CYL.16-50	1-37
90239-0822	DOUBLE ACTING, MINI-ISO, CYL.20-50	1-159, 4-51
90239-0832	DOUBLE ACTING, MINI-ISO, CYL. 25-125	8-99, 8-105
90239-0837	DOUBLE ACTING, MINI-ISO, CYL. 32-100	1-11
90239-0842	DOUBLE ACTING, MINI-ISO, CYL.16-50	2-103
90239-0847	DOUBLE ACTING, MINI-ISO, CYL.20-50	1-15
90240-0146	FLANGE BUSHING, 15X21X20 MM	1-183
90240-0172	FLANGE BUSHING, 8X12X10 MM	1-17, 1-19, 1-21, 1-23, 1-27, 1-29, 1-31
90240-0260	FLANGE BUSHING, 8X10X9 MM	4-25, 4-27, 4-29, 4-31, 4-33, 4-35, 4-37, 4-39, 4-41, 4-43, 4-45, 4-47, 4-49
90240-0261	FLANGE BUSHING, 12X14X9 MM	1-11, 4-25, 4-27, 4-29, 4-31, 4-33, 4-35, 4-37, 4-39, 4-41, 4-43, 4-45, 4-47, 4-49
90240-0263	FLANGE BUSHING, 15X17X12 MM	1-11, 1-37
90240-0264	FLANGE BUSHING, 15X17X17 MM	1-17, 1-19, 1-43
90240-0265	FLANGE BUSHING, 20X23X21 MM	4-15, 4-17, 5-19, 5-21
90240-0287	BUSHING, 10X12X10 MM	1-195
90240-0302	BUSHING, 10X12X10 MM	1-67, 1-69
90240-0321	BUSHING, 25X28X25 MM	1-17, 1-19
90240-0322	BUSHING, 25X28X30 MM	1-17, 1-19
90240-0325	FLANGE BUSHING, 16X18X12 MM	4-15, 4-17
90240-0332	FLANGE BUSHING, 16X18X12 MM	5-43, 5-45, 5-47
90242-0264	O-RING 16,1X1,6 MM	1-183
90242-0265	O-RING 32,2X3 MM	1-183
90243-0112	FLOW METER	2-47
90243-0245	MEASURING INSTRUMENT	6-31
90243-0430	FLOW METER, MAG 1100 FOOD PFA	1-133, 1-135
90245-0043	TRANSFORMER, Z-8782	1-95
90248-0047	HINGE, 1150-U50	2-31
90252-0047	TIMING BELT AT5 450X16 MM	3-5
90257-0001	FILTER PLUG ART.NO.8145-00-140 TYPE F14	7-101
90258-0031	PIN, STRAIGHT SLOTTED SPRING FRP 3X20	1-25, 8-93, 8-101
90259-0311	3 POLE BUSBAR, K&M B3.1/5	7-55
90259-0313	AUX. CONTACT K&M NHI21-PKZM0	7-55, 7-61
90261-0016	PLUG, BLIND, PLASTIC GPN300V2	8-33, 8-35
90261-0017	PLUG, BLIND, PLASTIC GPN300V3	5-5, 5-7
90261-0033	PLUG, BLIND, PLASTIC GPN300F182	2-69, 2-71, 2-73, 2-75
90261-0049	PLUG, BLIND, PLASTIC, NO. SR1750	8-63
90261-0069	PLUG, BLIND, PLASTIC, NO. 055-0615	6-43
90261-0071	PLUG, BLIND, PLASTIC, NO. GPN500B58	4-19
90264-0064	FAN / FL 12G308	7-99
90264-0350	FILTER / 554141	7-99
90266-0154	PIPE	5-43, 5-45, 5-47
90267-0027	CONVEYOR WHEEL, 12T	2-103
90269-0308	GASKET 59X68X3 MM	1-183
90270-0017	COMPRESSOR NASH/ELMO 112 MB/4-2083	1-141
90270-0349	CONSTANT FLOW VALVE, 1/2"X1/2" 2GPM	1-151
90274-0042	PRESSURE GUARD, 200 KPA	6-65, 6-67
90274-0045	PRESSURE GUARD, 14 KPA	1-145
90274-0056	PRESS. SW. 1 - 12 BAR, PEV-1/4-B-SA22358	6-21
90274-0074	PRESS. SW. 5,3 BAR, PEV-1/4-B-SA22357	6-73
90274-0082	FLOW SWITCH, 2 - 3 L/MIN	6-29
90274-0096	LEVEL PROBE, Z8778/1	1-95
90274-0099	IP-TRANSDUCER	1-119, 1-121
90274-0103	PRESSURE GUARD PEV-1/4-B (10773	2-39, 2-41
90274-0108	DUAL PRESSURE GUARD, -20 - 2800 KPA	6-11
90277-0045	FILTER / 9900-05-BK	2-39, 2-41
90277-0046	FILTER / 9933-05-101	2-39, 2-41
90277-0104	FILTER F64B-2GN-ARO	1-205
90277-0116	FILTER HOUSING / ART.NO FILTER 58P-S5430	8-39
90277-0323	FILTER HOUSING / ART.NO 95S6-1/4 S 5430	1-205
90277-0324	FILTER CARTRIDGE 050-11-A	1-205
90286-0013	GREASE NIPPLE STRAIGHT, H1 M6X1 2346	3-7, 3-9, 4-25, 4-27, 4-29, 4-31, 4-33, 4-35, 4-37, 4-39, 4-41, 4-43, 4-45, 4-47, 4-49, 5-27, 5-29
90287-0073	SCREW MC6S M5X70 129	6-73
90287-0106	SCREW SPRINGLOAD. SLOTTED HEAD M10X21	8-63
90287-0112	SCREW SPRINGLOAD. SLOTTED HEAD M8X16	1-97, 1-99, 3-7, 3-9, 8-67
90287-0124	SCREW PAN HEAD MSCS M4X12 NYLON	7-23, 7-25, 7-27, 7-29, 7-31, 7-35, 7-37, 7-39, 7-45, 7-47, 7-53, 7-59, 7-67, 7-79, 7-87, 7-89

Part No	Description	Page No
90287-0130	SCREW HEX.SOCK.SET FLATPT. MP6SS M20X30	2-25
90287-0137	SPACER BOLT DSSM60100	7-9
90287-0154	SCREW, SOCK.SET DOGPOINT M6X10	8-135, 8-145
90287-0157	SCREW M6SF FLAT HEAD M6X10 88 .	7-9, 7-35, 7-37, 7-39, 7-45, 7-47, 7-53, 7-59, 7-67, 7-79
90287-0159	SCREW, SOCK.SET DOGPOINT M6X16	2-95
90287-0295	SCREW HEX.SOCK.COUNT.MF6S M3X8 A280	1-93
90287-0334	SCREW SPRINGLOAD. SLOTTED HEAD M8X16	1-59, 8-9
90287-0335	SCREW MC6S M8X90 A280	5-19, 5-21
90287-0349	SCREW	1-189
90296-0051	PASTE	8-81
90296-0068	SHELL ALVANIA GREASE EP 2	5-5, 5-7, 5-43, 5-45, 5-47
90296-0070	SHELL ALVANIA GREASE EP 1	3-7, 3-9, 4-19
90296-0091	LUBRICATION GREASE	1-35, 1-67, 1-69, 1-95, 11-9, 11-11
90303-0011	PROTECTIVE GOGGLES	11-5
90303-0012	PROTECTIVE GLOVES	11-5
90303-0013	APRON	11-5
90304-0020	RECIPIENTE	1-181, 6-23
90304-0307	ATTACHMENT PIPE	1-181
90314-0044	SIGNAL CONVERTER	1-237, 1-239
90319-0013	POLYESTER-SILKROPE 4MM 3900N, 102079	8-145
90321-0100	PUMP PBK 16/A 220/380V 50 HZ 3 PH.	1-179
90321-0116	PUMP GRUNDFOS CHI 2-60	6-21
90321-0117	PUMP LOWARA SV8-14 F75T	6-35, 6-37
90321-0120	PUMP SV8-09 F756T, 380V60HZ	6-35, 6-37
90321-0127	CENTRIFUGAL PUMP LOWARA	1-179
90321-0134	CIRC. PUMP TCB25-6LV.230 HZ 50	1-187
90321-0135	CIRC. PUMP 230V60HZ	1-187
90326-0012	PROTECTIVE COVER, T31A4618 ...	1-25, 1-103, 1-139, 1-147, 1-153, 1-183, 1-187, 6-13, 8-81
90326-0020	PLUG, FEMALE YELLOW CR-AL	1-25, 1-103, 1-139, 1-147, 1-153, 1-183, 1-187, 2-13, 2-15, 6-13, 7-9, 8-81
90326-0022	PLUG, MALE YELLOW CR-AL	1-139, 1-161, 1-163, 1-165, 2-13, 2-15, 5-23, 5-25, 5-63, 6-13, 8-81
90326-0038	THERMOCOUPLE, CR-AL	1-183
90326-0051	THERMOCOUPLE, 12826-33	1-147, 1-153
90326-0053	THERMOCOUPLE, 12826-35	1-139, 1-183, 7-9
90326-0054	THERMOCOUPLE, CR-AL STD.GR, 12826-36	8-81
90326-0057	THERMOCOUPLE, CR-AL	1-187, 6-13
90326-0060	THERMOCOUPLE, CR-AL	1-93
90326-0077	CONTACT	5-23, 5-25
90326-0089	THERMOCOUPLE, 5110-089-000	1-103
90326-0306	GLAND FITTING 9041-45-KS-KR.1/8" D=4,5MM	1-183
90328-0007	SILENCER, 338/125 B140-00-380	6-73
90328-0017	SILENCER, D=6 MM	1-213, 1-215, 1-217, 2-39, 2-41, 2-127, 6-71, 8-131, 8-133
90328-0024	SILENCER G3/8"	1-213, 1-215, 1-217, 2-39, 2-41, 2-127, 6-71, 8-131, 8-133
90328-0025	SILENCER G1/2"	12-9
90328-0026	SILENCER G1/4"	1-123
90328-0038	SILENCER, D=8 MM	8-131, 8-133
90328-0047	SILENCER G1/8"	10-35
90330-0004	NIPPLES,HEXAGON,EXT.R-THREAD R3/4"-R3/4"	6-13, 6-17
90330-0012	SLEEVE, REDUCTION, INT, R-2021/4X1/8	1-145
90330-0014	ELBOW, 90 INT. THREAD, R-222R1	6-33
90330-0021	NIPPLES, EXT. THREAD. R-207R1/2	1-151, 2-91, 6-31
90330-0026	PLUG, EXT. G-THREAD, G1/4	2-19, 2-21, 2-23, 6-21
90330-0036	BUSHING, INT/EXT. THR. RP1/8-RP1/2	6-31
90330-0042	BUSHING, INT/EXT. THR. R3/8-RP1/4	6-11
90330-0043	NIPPLES, EXT. THREAD. R-207R1/4	1-61, 1-63, 1-187, 6-21, 6-39
90330-0045	NIPPLES, EXT. THREAD. R-209 KR11/2- KR1	6-33
90330-0048	BUSHING, INT/EXT. THR. R1/2-RP3/8	1-181
90330-0049	T-PIPE, INT. THREAD, R-221R1/2	1-151, 6-31, 6-73
90330-0054	SLEEVE, INT. THREAD, NO. R-201R1/2	2-91
90330-0056	NIPPLES, EXT. THREAD. R-207 KR11/2	6-29
90330-0057	ELBOW, 90 INT. THREAD, R-222R11/2	6-29
90330-0066	PLUG, EXT. G-THREAD, G1/8	1-25, 5-13, 5-15, 5-17
90330-0080	NIPPLES, EXT. THREAD. R3/4-R1/2	6-21, 6-31
90330-0083	NIPPLES, EXT. THREAD. R3/8-R1/4	6-13
90330-0085	BUSHING, INT/EXT. THR. R1/2-RP1/4	6-65, 6-67
90335-0012	SPRING	1-193
90335-0025	COMP. SPRING 22010, 1X11X26	8-37, 8-69, 12-17
90335-0036	COMP. SPRING 22450, 1,6X14,1X24	10-65
90335-0067	COMP. SPRING 22370, 1,6X9,6X31,75	10-67, 10-69
90335-0089	TENSION SPRING 41490, 0,9X10X23	1-197, 8-25
90335-0091	TENSION SPRING 41890, 1,2X13X48,2	8-73, 8-137
90337-0315	FILTER INSERT / MCS 4463	1-103
90342-0022	BELLOWS	1-143
90342-0024	RUBBER BELLOWS, 100X100 MM	2-79
90344-0078	PULLEY	8-79
90347-0004	VIBRATION DAMPER D=30 TH=M8 H=17 H2=21MM	1-179, 1-191
90347-0007	VIBRATION DAMPER	2-27
90347-0009	FLOOR PLATE, NO 1256730	2-73, 2-75, 2-77
90347-0029	DAMPER	2-25
90347-0034	VIBRATION DAMPER	1-231
90347-0039	DAMPER	1-65
90347-0054	ROTARY DASHPOT, S-CRD-P277	1-193, 8-27, 8-29
90347-0127	DAMPER	1-231
90347-0144	VIBRATION DAMPER, NO. RA 40EM-A	1-141

Part No	Description	Page No
90347-0182	SHOCK ABSORBER, YSR-16-20-C	8-87
90355-0369	COVER PLUG, 22X19X7 MM	4-19
90358-0091	REDUCING NIPPLE	6-13
90360-0020	STEAM TRAP / MK36/51 3/8 INCH	1-103
90360-0305	FLOAT, ART NO 10739920	1-145
90411-0001	INSULATING MAT	1-139
90411-0005	INSULATION 1200MM SERIE 21 89/154X30	1-153
90411-0020	INSULATING TUBE	2-47
90415-0032	FILTER / 3-02-00-1 1/2"	6-29
90415-0052	FILTER ART NO 12565 C-340-6E FOTVENTI EP	6-45
90415-0065	FILTER	6-13
90418-0045	ADAPTER, INT. CONN. NO. 7272CU/22-G3/4	6-17
90418-0057	ADAPTER, EXT. CONN. NO. 7276CU / 15-G1/2	6-17
90418-0062	T-PIPE, REDUCTION, INT, NO. 7130-22X15X2	6-17
90422-0037	HEAT EXCHANGER	6-17
90424-0054	SPRAY NOZZLE 120 DEG	1-151
90424-0087	AIR NOZZLE	10-37
90424-0089	AIR NOZZLE, BSPT1/4, AAB727-1/4-15	5-19, 5-21
90425-0016	MECMAN TYPE E120 735-120-000	12-9
90426-0003	HAND SHOWER	2-51
90450-0306	DOUBLE ACTING, MINI-ISO, CYL. 12-25	8-61
90450-0509	CYLINDER	1-43
90450-0654	BRACKET,REAR,EYE WITH AXLE 32	8-27, 8-29
90450-0655	BRACKET,REAR,CLEVIS FLANGE WITH FOOT 32	8-27, 8-29
90450-0723	ROD END,BALL JOINT EYE M10X1,25	8-27, 8-29
90450-0816	SENSOR, BRACKET,SERIES 2700/2702	1-149
90453-0001	MODEM MA-12	7-5, 11-51
90453-0002	MODEM MD-12 DC	7-87, 7-89
90457-0047	SENSOR 2750-1-5111-1 W.ADAPTER PNP	1-11, 1-67, 1-69
90457-0048	INK JET PRINTER A300 HS	12-5
90457-0049	TERMINAL BLOCK WDK 2.5V, 102230	7-49
90457-0078	PANEL NUT	6-71, 8-131, 8-133
90457-0090	FLEXIBLE COUPLING, 10X10 MM	2-103
90457-0092	SAFETY RELAY RT9-24VDC	7-35, 7-37, 7-39
90457-0100	ACCUMULATOR CRVZS-2	8-41
90457-0144	REGULATOR 0,3-2 BAR	8-131, 8-133
90457-0149	LIGHT FIXTURE, RL 70V-118D/230V 50 HZ	2-11
90457-0920	BUTTON SIGN, ROTATION OF MATERIAL HOLDER	8-167
90458-0031	CONNECTOR KIT 9032 010 353	7-45, 7-47
90458-0032	CONNECTOR KIT 9-032-010-496	7-45, 7-47
90458-0033	CONNECTOR KIT 9-032-010-851	7-45, 7-47
90458-0048	RETAINING RING FOR HOLE, 62X2 MM	5-13, 5-15, 5-17
90458-0068	BALL BEARING, STAINLESS 35X62X14 MM	5-13, 5-15, 5-17
90458-0072	SCREW ISO 7380 S M6X12 A2	2-73, 2-75
90458-0137	RADIAL SEAL 20X47X7 MM DUST LIP	5-27, 5-29
90458-0138	PROX.SWITCH E2EG-X1R5B1-5M	8-57
90458-0181	RETAINING RING FOR BORE DIN 472 80 A2	4-7, 4-9
90458-0200	PEROX. SAFETY VALVE, NO. 527-430 1/2X3/4	1-181
90458-0201	FLUID AUT. FEEDER, ALINOX 1/2 46.04.00	1-181
90458-0258	TRANSFORMER, 220VAC/6-9-12VAC	8-109, 8-111, 8-113, 8-115, 8-117
90458-0273	SLOT COVER ABP-5-S, 151680	8-45
90458-0274	DISC FOR COUPLING, HUCO 236.50T	2-95, 4-15, 4-17
90458-0289	PLUG,GPN 340-SW-5 MM	4-11, 4-13, 4-25, 4-27, 4-29, 4-31, 4-33, 4-35, 4-37, 4-39, 4-41, 4-43
90458-0292	BASE, KT70-1001	2-67
90458-0293	LIGHT ELEMENT, RED, KL70-401R	2-67
90458-0294	LIGHT ELEMENT, YELLOW, KL70-401Y	2-67
90458-0295	LIGHT ELEMENT, BLUE, KL70-401L	2-67
90458-0305	CABLE GLAND, M12X1,5, NO.5311 1000	10-77
90458-0306	CABLE GLAND, M16X1,5, NO.5311 1010	8-131, 8-133, 10-27, 10-61, 10-75, 10-77
90458-0307	CABLE GLAND, M20X1,5, NO.5311 1020	2-129, 8-55
90458-0308	CABLE GLAND, M25X1,5, NO.5311 1030	10-61
90458-0311	CABLE GLAND, M50X1,5, NO.5311 1060	7-23, 7-25, 7-27, 7-29, 7-31
90458-0315	CABLE GLAND, M20X1,5, NO.5311 1120	1-231, 8-33, 8-35
90458-0316	CABLE GLAND, M25X1,5, NO.5311 1130	10-27
90458-0322	NUT, M16X1,5	8-131, 8-133, 10-27, 10-75
90458-0323	NUT, M20X1,5	8-33, 8-35
90458-0341	THERMOCOUPLE, 5130050-001	1-25
90458-0353	BUSHING, 8X10X8 MM 4-25, 4-27, 4-29, 4-31, 4-33, 4-35, 4-37, 4-39, 4-41, 4-43, 4-45, 4-47, 4-49	
90458-0396	SERVO DRIVE DMC2 50720	7-45, 7-47
90458-0399	SERVO DRIVE DMC2 51540	7-45, 7-47
90458-0429	HOSE GLAND W/O INSERT M20 EXTENDED	1-47, 1-49, 1-57, 1-65
90458-0438	GLAND, EXTENDED WITH INSERT, M20X1,5	8-79, 8-141, 10-5
90458-0440	GLAND, EXTENDED WITH INSERT, M25X1,5	10-27
90458-0462	GLAND, LOCK NUT, M25X1,5	10-27
90458-0522	STEP MOTOR DRIVE L25	7-43
90458-0548	PARALLEL KEY W. ROUND ENDS 5X5X16 MM	4-15, 4-17
90458-0577	CONNECTION TERMINAL BK 25/3-PKZ 0	7-55, 7-61
90458-0601	CONTRAST SCANNER, KT15W-P2110S01	3-7, 3-9
90458-0602	CONTRAST SCANNER, KT15W-P2110S01	8-85
90458-0603	CONNECTOR FEMALE 5 PINS	8-85
90458-0672	PROX.SENSOR E2E2-X5MB1-5M	1-25, 1-159, 11-23
90458-0675	PROX.SENSOR, E2EG-X5MB1-5M	1-37
90458-0676	PROX.SWITCH E2EG-X5B1-6M ED 90600-0467	1-131
90458-0677	PROX.SWITCH E2EG-X5MB1-M1	8-145

Part No	Description	Page No
90458-0685	COUPLING DISC 25/57 COD.236.57-F25	4-7, 4-9
90458-0751	BUSHING,INT./EXT.G-THREAD G3/4"-G1/2"	1-181
90458-0921	FILTER SP 122-200	6-65, 6-67
90458-1076	L-SHAPED CONNECTOR CABLE 933 235-042	8-33, 8-35, 8-135, 8-145
90458-1102	INTOUCH OEM 2000 V.7.0/7.1 HW KEY	7-87, 7-89
90458-1136	TERMINAL BLOCK, 103630	8-119, 8-121, 8-123
90458-1140	FERRITE, RI-26-28-13	7-67
90458-1141	FERRITE, RI-16-28-9	11-51
90458-1155	ENLARGING SLEEVE, 5210 4452	8-55, 10-5
90458-1159	PH.CELL WS4-2D135	4-51
90458-1160	PH.CELL WE4-2P135	4-51
90458-1194	MONOSTABLE VALVE 5/2	10-35
90458-1204	BASIC SUB-BASE 4 VALVES, CDVI5.0-GB4-MP	10-35
90458-1211	LEFT ENDPLATE INCL. 5M CABLE	10-35
90458-1213	RIGHT ENDPLATE INTERNAL PILOT AIR	10-35
90458-1215	COVER PLATE FOR EMPTY VALVE POSITION	10-35
90458-1253	MANDATORY ACTION SIGN CONSULT OM ISO	10-5
90458-1279	PLUG CONNECTOR DP1	7-43
90458-1300	2 AXIS DOCKING STATION D2/PLC	7-43
90458-1307	BLIND PLUG CIRCULAR, M16X1,5 514GFK/216	8-131, 8-133, 10-27
90458-1327	GEARS, HELICAL MOTOR R17DT71DTD4MM05	10-61
90458-1328	TRANSFORMER, SEW MLU 11A NO: 823 3837	10-61
90458-1330	OPERATION DEVICE, MBG 22X, 823 8871	10-75
90458-1382	PLUG, M5X3.5 SMC - MS-5P	5-13, 5-15, 5-17
90458-1385	TIMING BELT T5X620X16 POLYURETHANE	5-13, 5-15, 5-17
90458-1386	TIMING BELT T5X660X16 POLYURETHANE	5-13, 5-15, 5-17
90458-1387	RADIAL SEAL 38X62X7 MM DUST LIP	5-13, 5-15, 5-17
90458-1393	PUMP CYLINDER, 34 73 522 5	11-65
90458-1404	FLANGE BUSHING, 12X16X16 MM	5-11
90458-1447	MOUNTING RAIL SUPPORT TST 128660	7-45, 7-47
90458-1467	CAP, 32 44 129 7	11-59
90458-1468	SPLIT PIN, 43 71 234 8	11-65
90458-1470	SINK VALVE COMPL, 34 73 094 5	11-65
90458-1471	PISTON ROD END, 32 04 214 5	11-63
90458-1472	CYLINDER, 32 04 215 2	11-63
90458-1473	PUMP, 34 73 521 7	11-57
90458-1476	AXLE PIN, 32 04 167 5	11-63
90458-1477	CONNECTOR 6-1/8 NPT, EXT. TAPERED	2-99
90458-1478	BALL VALVE SS-43T6MM-SH-10147	2-99
90458-1535	TRANSDUCER, BTL5-A11-M0850-P-S32	8-65
90458-1592	FLOATING MAGNET, BTL5-P-3800-2	8-65
90458-1595	CONNECTION, BKS-S 33M-00	8-65
90458-1651	EMERGENCY STOP, ZB4-BS-844 ZB4-BZ-104	2-31, 2-111, 7-21, 8-157, 8-167
90458-1704	BALL BEARING, 15X35X11 MM	1-11, 1-33, 1-37, 1-45, 1-51, 1-53
90458-1786	ADAPTER, SS-6-MTA-1-2RS	1-61, 1-63
90458-1792	FREE-WHEEL COUPLING, 14X14 MM	1-51
90458-1849	CONN. STR., 6-R1/8, EXT. THREAD	1-219, 1-221
90458-1856	ADHESIVE LABEL, CONNECTION DIAGRAM	7-43
90458-1977	REFRACTOMETER SET DA15FC15A DFTP A	2-99
90458-2138	SCREW M6S M12X120 A280	11-55
90458-2241	PRESSURE SWITCH 0,5-10 BAR ADJUSTABLE	1-205
90458-2290	ROTARY ACTUATOR DSM-16-270-P	1-51
90458-2329	HOSE, SILICONE, 50 SHORE, 9/13 MM	8-11
90458-2419	PLUG GPN 300 V 233	4-11, 4-13
90458-2448	ELBOW PIPE JOINT,EXT.THREAD,D=8 MM G1/4	8-83
90458-2466	MOTOR 3GVA071002-CSC-M2VA71B2	2-95
90458-2518	TIMING BELT T5X690X16 POLYURETHANE	5-13, 5-15, 5-17
90458-2557	CABLE OLFLEX 25X1 MM2	2-13, 2-15
90458-2580	LEVEL CONTROL RELAY RM4-LA32M	7-35, 7-37, 7-39
90458-2581	FOOT PLATE, M50-16-70	10-99, 10-113
90458-2602	BULKHEAD CONNECTOR, 12 MM	2-19, 2-21, 2-23
90458-2619	FLOW METER, D-6230-HGB-BB-AV-99-0-N2	1-205
90458-2737	SPHERICAL BALL BEARING, 15X35X14 MM	8-21, 8-23
90458-2845	SCREW,HEXAGON HEAD M6S ISO 4017 M10X45	2-65, 2-69, 2-71
90458-2850	HOSE CLIP , 51 MM	6-29
90458-2890	CONNECTOR, 21N-50N12N133NE	1-161, 1-163, 1-165, 4-23
90458-2892	CONNECTOR, 11 N-50-3-31/133 NE	1-161, 1-163, 1-165, 4-23
90458-2893	SLEEVE, 78 Z-0-3-4	1-161, 1-163, 1-165, 4-23
90458-2895	COAXIAL CABLE RG 400/U BROWN	1-161, 1-163, 1-165, 4-23
90458-2950	BALL BEARING, 5X16X5 MM	8-89
90458-2954	ELBOW PIPE JOINT, EXT.THREAD, D=4MM M5	8-61
90458-2955	ELBOW PIPE JOINT, EXT.THREAD,	6-71
90458-2956	ELBOW PIPE JOINT, EXT.THREAD, D=6MM-G1/8	1-11, 1-93, 1-103, 1-119, 1-121, 1-143, 1-159, 2-89, 3-7, 3-9, 4-7, 4-9, 8-131, 8-133
90458-2957	ELBOW PIPE JOINT, EXT.THREAD, D=6MM-G1/4	1-119, 1-121, 1-209, 1-211, 2-47, 2-89, 5-43, 5-45, 5-47, 8-39
90458-2958	ELBOW PIPE JOINT, EXT.THREAD, D=8MM-G1/4	1-209, 1-211, 2-39, 2-41, 5-23, 5-25, 6-71, 6-73, 8-39, 8-45
90458-2959	ELBOW PIPE JOINT, EXT.THREAD,D=12MM-G1/4	1-119, 1-121, 1-209, 1-211, 8-131, 8-133
90458-2960	ELBOW PIPE JOINT, EXT.THREAD,D=12MM-G3/8	1-213, 1-215, 1-217, 2-127, 6-71, 8-131, 8-133
90458-2964	ELBOW PIPE JOINT, EXT.THREAD, D=8MM-G1/8	4-51, 6-41, 8-83
90458-2965	ELBOW PIPE JOINT, EXT.THREAD,D=14MM-G1/2	6-73
90459-0075	HINGE, 1056-U30	1-93
90459-0080	RECORDER 6-CHANNEL, LOGOPRINT 500	7-87, 7-89

Part No	Description	Page No
90459-0173	AIR GUN ASSEMBLY, CEJN SERIE 208	2-43
90459-0246	GREASE, KLüBERSYNTH UH1, ONLY IN BOM	4-11, 4-13, 4-25, 4-27, 4-29, 4-31, 4-33, 4-35, 4-37, 4-39, 4-41, 4-43, 4-45, 4-47, 4-49, 11-3
90459-0250	HOSE , SILICONE, 53,8/62 MM	2-19, 2-21, 2-23
90459-0252	PROX.SWITCH IX 0208	1-87, 1-89, 1-97, 1-99
90459-0253	SENSOR CABLE S12-3FVW-050	1-87, 1-89, 1-97, 1-99
90459-0261	ETHERNET NETW. INTERFACE CARD, 01181-000	7-97
90459-0262	BACKPLANE CARD AR-MB7P	7-99
90459-0275	PC ENCLOSURE FLEX BOX ISIC, 02760-000	7-97
90459-0283	POWER SUPPLY UNIT, 02571-000	7-99
90459-0284	PROCESSOR BOARD CLIPS V, 02021-000	7-97
90459-0285	CD UNIT, 02413-000	12-5
90459-0287	DISPLAY UNIT 15", 02567-000	2-29
90459-0288	SLIM LINE TOUCH BEZEL 15", 1511	2-31
90459-0291	CABLE CD UNIT, 01310-000	7-97
90459-0307	PRESSURE GAUGE, 162838 MA-50-10-1/4-EN	6-73
90459-0328	O-RING 20,29X2,62 MM	11-9, 11-11
90459-0363	COOLING UNIT, KB40A0721.03	7-101
90459-0472	KEY SAF.SW. AZ 16 02ZVRK-M20-2152-2254	1-47, 1-49, 1-57, 1-65, 1-231, 8-33, 8-35
90459-0503	CYLINDER, ADVC-16-10-I-P	8-97, 8-107
90459-0835	THERMO CONTACT PANEL, 16 CONTACTS 2 ROWS	7-23, 7-25, 7-27, 7-29, 7-31
90459-0843	CONN. BANJO, 6-G1/8	2-19, 2-21, 2-23, 4-53, 4-55, 4-57
90459-0959	DISTRIBUTOR BLOCK 1492-PD3163	7-67
90459-1004	ROUND BAR W. END WHEEL, 1049-U18-L820	1-231
90459-1126	PLASTIC HOSE PVC TRANSPARENT, 8X11MM	8-19
90459-1186	FLANGE BUSHING, 20X23X11 MM	4-15, 4-17
90459-1254	TUBE FUSE, 4A 500V	7-69, 7-71
90459-1255	PUMP CYLINDER, 4415 000 00	4-53, 4-55, 4-57
90459-1352	PCI COMMUNICATION INTERFACE PCI-1612B-A	7-97
90459-1359	FILTER 1 A, 250 VAC, FN 332-1/05	7-87, 7-89
90459-1420	PROPORTIONAL VALVE 0 - 10V/0-6 BAR	1-205
90459-1424	CONN. STR., 6-G1/8, EXT. THREAD	1-61, 1-63, 1-93
90459-1450	FLANGE BUSHING, 32X36X15 MM	1-11
90459-1501	CABLE SEALING, 12023/I, ELFA. 44-625-78	8-65
90459-1509	CYLINDER, ADVC-20-20-I-P	8-83
90459-1536	FLEXIBLE COUPLING DISC, 14 MM	2-95
90459-1621	CABLE, ETHERNET RJ 45 CONNECT. 1 M	7-87, 7-89
90459-1736	PURGE VALVE, 2RM-PG4L-SS	1-183, 6-21
90459-1738	MANDATORY ACTION SIGN ISO, READ MAINTENA	7-87, 7-89
90459-1795	LUBRICATION PUMP UNIT 10KG, BK 03173001	2-131
90459-1825	ELBOW WITH TAILPIECE 12/12 MM	1-209, 1-211
90459-1844	ANGLE ENCODER, BAY1G.24P1024/405884	4-7, 4-9
90459-1848	TAPE, SAFETY WALK R25MM X 18,3M	8-33, 8-35
90459-1849	DOUBLE ACTING SHUTTLE CYL. 40-550 MM	8-45
90459-1898	LIFTING EYE BOLT, VLBG(1)1.0T M12 TURN.	12-19
90459-2096	GEARS, WORM MOTOR F2 15 P63 B14 B8 PV 75	8-141
90459-2101	CYLINDER, ADVC-80-25-I-P	8-83
90459-2102	CYLINDER, AEVC 100-25-I-P	8-83
90459-2122	THERMOCOUPLE, EN-5130060-0001	1-139
90459-2193	CABLE, BAUMER Z169.005	4-23
90459-2198	TIMING BELT T10X480X16 POLYURETHANE	8-79
90459-2246	END PLATE, MS4-AGB	2-89
90459-2247	BRACKET, MS4-WP	2-89
90459-2298	LIFTING EYE BOLT, VLBG 1.5T-M16	12-19
90459-2334	PNEUMATIC GREASE PUMP, EL 06983501	12-5
90459-2338	FILTER, MS4-LF-1/4-CRV	2-89
90459-2341	HOSE ASSEMBLY, EL 03600101	2-131
90459-2342	HOSE ASSEMBLY, EL 03600102	2-131
90459-2343	HOSE ASSEMBLY, EL 03600103	2-131
90459-2366	HOSE CLIP, (32)-35	1-15, 1-87, 1-89, 1-97, 1-99, 2-47, 2-55, 2-57, 2-59, 6-41
90459-2553	ELBOW PIPE JOINT 16 MM	7-101
90459-2555	T-CONNECTION 16MM	7-101
90459-2557	BLIND PLUG 16 MM	7-101
90459-2635	NUT, HEX.LOCK "CONELOCK" M6 DIN 980V	8-81
90459-2704	SNAP HOOK STAINLESS 50X5MM	8-145
90459-2705	LIFTING EYE BOLT, M6X40MM	8-145
90459-2735	ROT.SPRAY NOZZLE, 5MC.049.17.AF.00.02	1-25, 2-55, 2-57
90459-2826	GEARS, HELICAL MOTOR ME0102210012	8-79
90459-2843	HEATING CARTRIDGE, 800W 240V	8-81
90459-2851	GAS SPRING A1 A1N-52-060-205/900N	5-19, 5-21
90459-2938	POWER SUPPLY, 6EP1437-3BA00	7-9
90459-2959	COOLER, AIR14616.30.CU.10.AL.06.10.0150.	2-39, 2-41, 6-71
90459-2960	FILTER, SOLBERG FS-18P-126	2-39, 2-41
90459-3021	INK JET PRINTER A300 HS	10-3
90459-3154	CABLE OLFLONPTFE 1X4,72 MM² YELLOW-GREEN	1-139
90459-3165	CABLE OLFLON PTFE 1X4,72 MM² BLACK	1-139
90459-3256	NYLON RETAINER, 82-32-301-12	7-79
90459-3339	GASKET NBR/PTFE 17X24X2 MM 3/4"	6-11, 6-13, 6-17
90459-3352	FLAT PIN SOCKET, 6,3X0,8	7-87, 7-89
90459-3370	DOUBLE ACTING, PROFILE,CYL 32-140	8-27, 8-29
90459-3449	VARIABLE FREQUENCY DRIVE 22A-A2P3N104	7-67
90459-3450	VARIABLE FREQUENCY DRIVE 22A-A4P5N104	7-67
90459-3460	FOOTPRINT FILTER 22-RF010-AL	7-67
90459-3698	FILTER, 6 A, 250 VAC, FN2070M-6/06	7-43

Part No	Description	Page No
90459-3747	FLAT PIN SOCKET, 6,3X0,8	7-43
90459-3832	VENTING BOX, P9852	8-33, 8-35
90459-4109	WORM GEAR 10.756.261	5-43, 5-45, 5-47
90459-4147	GEARS, WORM MOTOR IGK 80-40 VE31-D-L-2-S	2-103
90459-4501	EXTRACTOR DEVICE 14.756.082	11-31
90459-4511	CONN. ELBOW, 6	1-139
90459-4512	CONN. BULKHEAD. SS-6MO-61	1-139
90459-4705	LOCKING PLUG, S 103 A 053-130+ AND 90220	1-91
90459-4735	SCREW M6S ISO 4017 M8X10 A4-80	5-35, 5-53, 10-7, 10-13, 10-17, 10-23, 10-45, 10-63, 10-89, 10-97
90459-4810	PRESS TRANSD (DIFF) 0 - 2000PA, 2681-20C	1-237, 1-239
90459-4811	WORM GEAR 10.756.248	4-7, 4-9
90459-4812	WORM GEAR 10.756.247	4-7, 4-9
90459-4813	WORM GEAR 10.756.249	4-7, 4-9
90459-4814	WORM GEAR 10.756.250	4-7, 4-9
90459-5177	ANGLE SEAT VALVE W. FLANGES, N.O.8498668	2-87
90459-5178	ANGLE SEAT VALVE W. FLANGES, N.O.8498669	2-87
90459-5187	CONDUCTIVITY TRANSMITTER CLM223-ID7105	7-87, 7-89
90459-5308	CONTACTOR 4KW 24VDC, DILM9-10	7-55
90459-5316	CONTACTOR 4KW 24VDC, DILM9-32	7-55
90459-5317	CONTACTOR 7,5KW 24VDC, DILM17-32	7-61
90459-5321	OVERLOAD PROTECTION, PKZM0-0,4	7-55
90459-5323	OVERLOAD PROTECTION, PKZM0-1	7-55, 7-61
90459-5324	OVERLOAD PROTECTION, PKZM0-1,6	7-55
90459-5325	OVERLOAD PROTECTION, PKZM0-2,5	7-55, 7-61
90459-5326	OVERLOAD PROTECTION, PKZM0-4	7-55
90459-5328	OVERLOAD PROTECTION, PKZM0-10	7-55
90459-5330	OVERLOAD PROTECTION, PKZM0-16	7-55
90459-5332	OVERLOAD PROTECTION, PKZM0-25	7-61
90459-5440	CONTACTOR 4KW 24VDC, DILM9-01	7-55, 7-61, 7-73, 7-75, 7-83, 8-125, 8-127
90459-5441	CONTACTOR 7,5KW 24VDC, DILM17-01	7-55, 7-61, 7-73, 7-75
90459-5811	RESIDUAL CURRENT DEVICE, FI-25/2/003-A	7-87, 7-89
90459-5883	COMMONING BUSBAR, 1-P 1-PH 1X57 MOD 63A	7-85
90459-5901	DIAPHRAGM, 425 EPM SIZE 15	1-103
90459-6215	FLOW SWITCH BFS-10-N-G1/4-MS-NO-ST	1-205
90459-6472	HARD DISC 2,5" , 03589-002	7-97
90459-6473	HARDDISK COPYING TOOL, 03607-000	12-5
90459-6568	CONNECTOR M12 5-POLES FEMALE, RKCN5/7	2-13, 2-15
90459-6570	CONNECTOR M12 5-POLES MALE, RSCN5/7	3-7, 3-9
90459-6620	HANDLE, NZM1-XTVDV	6-61
90459-6624	FEMALE INSERT HAN E AV, 09 33 006 4735	7-23, 7-25, 7-27, 7-29, 7-31
90459-6627	FEMALE INSERT HAN E AV, 09 33 024 4735	7-23, 7-25, 7-27, 7-29, 7-31
90459-6638	HOUSING 16B BULKHEAD, 09 30 016 0301	7-23, 7-25, 7-27, 7-29, 7-31
90459-6639	HOUSING 24B BULKHEAD, 09 30 024 0301	7-23, 7-25, 7-27, 7-29, 7-31
90459-6850	CONNECTION, PKZM0-XDM12	7-55, 7-61
90459-6851	BASE UNIT, PKZM0-XDM32	7-55, 7-61
90459-6855	COMMONING BUSBAR, 3-P 3-PH 12 100A	7-81
90459-6856	FEEDER BLOCK, FAZ/FIP-XVS-KL	7-81
90459-6857	BUSBAR, 3-P 12 100A	7-69, 7-71, 7-91
90459-6950	GEARS, WORM MOTOR MC320P2T/15/B5D-SRD057	8-55
90459-6951	GEARS,WORM MOTOR MC 320P2T/15/B5S-SRD057	8-55
90459-6975	SOLENOID VALVE G1/4, 2401186082702400	1-61, 1-63
90459-6977	SOLENOID VALVE G1/4, V04B286N-B423A	1-61, 1-63
90459-6982	ANGLE SEAT VALVE W. FLANGES, N.O. D=16	1-87, 1-89
90459-7079	INSERT, MULTI HOLE, E155G1X5,5/1X7,5/1X1	1-161, 1-163, 1-165
90459-7081	GLAND, EXTENDED, M16X1,5	1-237, 1-239
90459-7084	FILTER, CPDI000M1	6-15
90459-7110	BRACKET, 4224-50	1-209, 1-211
90459-7198	AUXILIARY BATTERY MODULE, IC693ACC302	7-35, 7-37, 7-39
90459-7293	SET SCREW DIN 551M5X8 PA66	5-35, 5-53, 10-7, 10-63, 10-89
90600-0276	SNAP-IN BALL LOCK, 43X14,5 MM	1-93
90600-0459	INDUCTIVE SWITCH, E2A-M12KN05-WP-B1 5M	4-15, 4-17
90600-0460	INDUCTIVE SWITCH, E2A-M12KN05-M1-B1-TP	8-33, 8-35, 8-135
90600-0463	INDUCTIVE SWITCH,E2A-M12LN05-WP-B1-TP 5M	1-93, 4-5, 4-23
90600-0473	INDUCTIVE SWITCH E2A-S08KS01-WP-B1-TP 5M	8-19
90600-0495	O-RING 4X2 MM	1-93, 11-9, 11-11
90600-0590	FLANGE BUSHING, 12X14X4,5 MM	4-25, 4-27, 4-29, 4-31, 4-33, 4-35, 4-37, 4-39, 4-41, 4-43, 4-45, 4-47, 4-49
90600-0724	FOOT 25000N, R0773 611223	8-33, 8-35
90600-0775	BALL VALVE G1/4, 406F-1/4"	1-187, 2-19, 2-21, 2-23, 5-43, 5-45, 5-47
90600-0975	HOSE GLAND W/O INSERT PG13,5 EXTENDED	1-139, 1-161, 1-163, 1-165
90600-0976	INSERT, SINGLE HOLE, HI.TEMP, EK153I9	1-139, 1-161, 1-163, 1-165
90600-1032	PUSH-IN FITTING CRQS-M5-6	4-7, 4-9
90600-1203	BUS BAR 3-POLE+AUX. CONT., B3.1/2-PKZ0	7-61
90600-1223	CPU374, ETHERNET COMMUNICATION	7-45, 7-47
90600-1407	TIMING BELT AT10 1000X32 MM SECA-V 32	5-5, 5-7
90600-1412	TIMING BELT AT10 1150X32 MM SECA-V 32	5-5, 5-7
90600-1738	WARNING SIGN ISO, ELECTRIC SHOCK	1-139
90600-1847	ETHERNET SWITCH, FL SWITCH SFN 5TX	7-87, 7-89
90600-2134	TERMINAL DISCONNECATBLE, WTR 2,5/O.TNHE	7-49
90600-2135	MODULE CONNECTOR 250V, BEST/D 1878560000	7-49
90600-2896	SPRAY NOZZLE 125 DEG B1/8 K - SS ,75	4-51
90600-3050	REGULATOR, SA-235942A	2-39, 2-41
90600-3053	DIAL GAUGE MITUTOYO 1160	11-49
90600-3339	PAPER REEL TROLLEY, TP A3	11-3

Part No	Description	Page No
90600-3924	CONDUCTIVITY SENSOR CLS 54-ACS1022	1-133, 1-135
90600-4050	LIGHT FIXTURE, TCH128 1XTL5-28W/830 HF	7-9
90600-4648	FUSE HOLDER CYLINDRICAL FUSE, CMS101SP	7-69, 7-71
90600-4650	FUSE HOLDER CYLINDRICAL FUSE, CMS103SP	7-69, 7-71
90600-5009	SAFETY SWITCH, AZ 16-02 ZVRK-STL-2612-1	2-117
90600-5010	SAFETY SWITCH, AZ 16-02 ZVRK-STR-2612-2	2-117
90600-5161	HANDLE, 116.11.644	7-87, 7-89
90600-5341	BALL VALVE, 2F-MB6X5PFA-SSP	1-103
90600-5392	INTERMEDIARY SHAFT, ZA/60/636/24H7/14H7	5-13, 5-15, 5-17
90600-5393	INTERMEDIARY SHAFT, ZA/60/583/24H7/14H7	5-13, 5-15, 5-17
90600-5394	INTERMEDIARY SHAFT, ZA/60/607/24H7/14H7	5-13, 5-15, 5-17
90600-5395	INTERMEDIARY SHAFT, ZA/60/624/24H7/14H7K	5-13, 5-15, 5-17
90600-5461	CONN. ELBOW, 8-1/8 NPT, EXT.THREAD	1-103
90600-5462	CONN. STR 8-1/8 NPT, EXT TAPERED	1-103
90600-5463	PLUG, SS-2-P	1-103
90600-5905	COMP. SPRING D23060, 2,5X22,5X81,5	4-11, 4-13
90600-6015	VENTING VALVE, 12003 (+ 11163)	1-187
209183-0000	RING	1-93, 1-131
230551-0000	GASKET	1-141
243989-0000	TENSION SPRING	4-21
247355-0000	LOCK WASHER	1-9
247358-0000	SHIFTER HANDLE	1-9
255977-0000	SHAFT	1-83, 1-85, 1-95, 11-9, 11-11
255978-0000	FORK	1-83, 1-85, 1-95
257050-0000	SHAFT	1-21, 1-23
257330-0000	PRESSURE ROLLER (10 PCS)	11-9, 11-11
266737-0000	WASHER	1-197
269859-0000	BRACKET	1-141
271860-0000	CLAMP BLOCK	1-47, 1-49, 1-57, 1-65
272479-0000	PRESSURE ROLLER (10PCS)	1-83, 1-85, 1-95, 11-9, 11-11
272728-0000	BARRIER	8-37, 12-17
272986-0005	VOLUME SHIM	4-25, 4-27, 4-29, 4-31, 4-33, 4-35, 4-37, 4-39, 4-41, 4-43, 4-45, 4-47, 4-49, 11-19
272990-0000	VOLUME BULGE	4-25, 4-27, 4-29, 4-31, 4-33, 4-35, 4-37, 4-39, 4-41, 4-43, 4-45, 4-47, 4-49
272991-0000	VOLUME SHIM	4-25, 4-27, 4-29, 4-31, 4-33, 4-35, 4-37, 4-39, 4-41, 4-43, 4-45, 4-47, 4-49, 11-19
273429-0000	WASHER	1-147, 1-153
273450-0000	SIGN, AIR SPRAY	1-209, 1-211
273452-0000	SIGN, ROLLING MACHINE FOR FABRICS	1-209, 1-211
273455-0000	SIGN, COLD WATER	6-65, 6-67
273458-0000	SIGN, AIR	6-73, 8-131, 8-133
273953-0000	SEAL	1-55
273961-0000	SEAL	1-25
273977-0000	NUT	2-97, 12-7
273978-0000	LEVEL GLAS	2-97, 12-7
273980-0000	SPRING	2-97, 12-7
273981-0000	GASKET	2-89
273985-0000	CARRIAGE	12-11
273996-0000	NUT	2-97, 12-7
295377-0001	HOOD	1-83, 1-85, 1-95
311102-0308	PARALLEL PIN ISO 2338 5M6X16 ST	4-39, 4-41, 4-43
311103-0232	PARALLEL PIN ISO 2338 3M6X8 A1	1-39
311103-0235	PARALLEL PIN ISO 2338 3M6X14 A1	4-21, 12-9
311103-0268	PARALLEL PIN ISO 2338 4M6X12 A1	4-25, 4-27, 4-29, 4-31, 4-33, 4-35, 4-37, 4-39, 4-41, 4-43, 4-45, 4-47, 4-49
311103-0269	PARALLEL PIN ISO 2338 4M6X14 A1	1-39
311103-0270	PARALLEL PIN ISO 2338 4M6X16 A1	2-95, 8-87
311103-0272	PARALLEL PIN ISO 2338 4M6X20 A1	3-7, 3-9, 5-43, 5-45, 5-47
311103-0274	PARALLEL PIN ISO 2338 4M6X25 A1	8-37, 8-47, 12-17
311103-0276	PARALLEL PIN ISO 2338 4M6X30 A1	1-39
311103-0308	PARALLEL PIN ISO 2338 5M6X16 A1	4-53, 4-55, 4-57, 5-27, 5-29, 5-43, 5-45, 5-47
311103-0351	PARALLEL PIN ISO 2338 6M6X16 A1	1-55, 4-7, 4-9, 4-51, 4-53, 4-55, 4-57, 5-13, 5-15, 5-17, 10-67
311103-0353	PARALLEL PIN ISO 2338 6M6X20 A1	3-7, 3-9, 5-43, 5-45, 5-47
311103-0355	PARALLEL PIN ISO 2338 6M6X25 A1	1-17, 1-19
311103-0357	PARALLEL PIN ISO 2338 6M6X30 A1	4-7, 4-9, 5-27, 5-29
311103-0358	PARALLEL PIN ISO 2338 6M6X32 A1	4-19
311103-0361	PARALLEL PIN ISO 2338 6M6X40 A1	8-85
311103-0401	PARALLEL PIN ISO 2338 8M6X20 A1	1-183, 2-19, 2-21, 2-23, 3-7, 3-9, 5-13, 5-15, 5-17
311103-0405	PARALLEL PIN ISO 2338 8M6X30 A1	1-87, 1-89, 5-5, 5-7, 5-63
311103-0413	PARALLEL PIN ISO 2338 8M6X50 A1	1-47, 1-49, 1-57, 1-65
311103-0454	PARALLEL PIN ISO 2338 10M6X20 A1	4-7, 4-9
311103-0466	PARALLEL PIN ISO 2338 10M6X50 A1	4-11, 4-13
311103-1274	PARALLEL PIN ISO 2338 4M6X24 A1	8-27, 8-29
311103-1312	PARALLEL PIN ISO 2338 5M6X24 A1	10-67, 10-69
311103-1355	PARALLEL PIN ISO 2338 6M6X24 A1	8-93, 8-101, 8-135
311103-1403	PARALLEL PIN ISO 2338 8M6X24 A1	5-63
311111-0345	SPRING PIN ISO 8752 6X32-ST	11-61
311112-0258	SPRING PIN, ISO 8752 4X24-C	8-73, 8-137
311112-0262	SPRING PIN, ISO 8752 4X32-C	1-9
311112-0306	SPRING PIN, ISO 8752 5X16-C	4-29, 4-31, 4-33, 4-39, 4-41, 4-43
311112-0308	SPRING PIN, ISO 8752 5X20-C	4-29, 4-31, 4-33
311112-0385	SPRING PIN, ISO 8752 8X50-C	8-37, 12-17
311520-0320	RIVET, BLANK 2,4X6	7-87, 7-89
311520-0329	RIVET, BLANK 2,4X8	2-39, 2-41, 6-61
311521-0142	RIVET, BLANK 3,2X6	1-103, 11-3
312101-0542	SCREW M6S M12X50 FZB	12-25

Part No	Description	Page No
312101-0559 ..	SCREW M6S M12X140 FZB	5-43, 5-45, 5-47
312101-0630 ..	SCREW M6S M16X50 FZB	2-73, 2-75
312101-0678 ..	SCREW M6S M20X70 FZB	11-57
312104-0461 ..	SCREW M6S M8X50H FZB	1-191, 2-77
312105-0287 ..	SCREW M6S ISO 4017 M4X8 A470	1-11, 1-103, 1-105, 1-123, 1-145, 1-147, 1-153, 2-47, 4-29, 4-31, 4-33, 4-39, 4-41, 4-43, 5-19, 5-21, 5-27, 5-29, 7-9, 8-87, 8-93, 8-101, 8-139
312105-0289 ..	SCREW M6S H4X10 A4 70 ISO4017/DIN933	5-27, 5-29, 8-65, 10-67, 10-69, 11-33
312105-0291 ..	SCREW M6S ISO 4017 M4X12 A470	1-103, 1-205, 5-49, 8-79, 8-87, 8-93, 8-101, 8-139, 10-75
312105-0293 ..	SCREW M6S ISO 4017 M4X16 A470	1-67, 1-69, 5-19, 5-21, 8-65, 8-93, 8-101, 10-109
312105-0295 ..	SCREW M6S ISO 4017 M4X20 A470	1-197, 4-29, 4-31, 4-33, 4-39, 4-41, 4-43, 8-25, 8-47, 10-61
312105-0297 ..	SCREW M6S ISO 4017 M4X25 A470	8-19
312105-0299 ..	SCREW M6S ISO 4017 M4X30 A470	1-41, 1-103, 8-57, 8-65, 8-139
312105-0301 ..	SCREW M6S ISO 4017 M4X35 A470	8-97, 8-107
312105-0303 ..	SCREW M6S ISO 4017 M4X40 A470	1-205
312105-0323 ..	SCREW M6S ISO 4017 M5X8 A480	1-103, 1-119, 1-121, 1-139, 5-23, 5-25, 5-59, 7-9, 8-19, 8-33, 8-35, 8-47, 8-65, 10-17
312105-0325 ..	SCREW M6S ISO 4017 M5X10 A480	1-9, 1-25, 2-89
312105-0327 ..	SCREW M6S ISO 4017 M5X12 A480	1-39, 1-209, 1-211, 2-19, 2-21, 2-23, 3-5, 4-21, 4-25, 4-27, 4-29, 4-31, 4-33, 4-35, 4-37, 4-39, 4-41, 4-43, 4-45, 4-47, 4-49, 5-49, 5-55, 6-13, 6-17, 8-25, 8-33, 8-35, 8-135, 10-67, 10-69, 11-39
312105-0329 ..	SCREW M6S ISO 4017 M5X16 A480	1-17, 1-19, 1-25, 1-103, 1-219, 1-221, 3-7, 3-9, 5-19, 5-21, 6-17, 8-33, 8-35, 8-55
312105-0331 ..	SCREW M6S ISO 4017 M5X20 A480	8-93, 8-101, 11-47
312105-0332 ..	SCREW M6S ISO 4017 M5X22 A470	1-159, 2-103
312105-0333 ..	SCREW M6S ISO 4017 M5X25 A480	1-61, 1-63, 1-93, 1-103, 1-197, 2-79, 3-5
312105-0335 ..	SCREW M6S ISO 4014 M5X30 A480	1-51
312105-0337 ..	SCREW M6S ISO 4014 M5X35 A480	8-7
312105-0339 ..	SCREW M6S ISO 4014 M5X40 A480	1-61, 1-63
312105-0340 ..	SCREW M6S ISO 4014 M5X45 A480	1-205
312105-0341 ..	SCREW M6S ISO 4014 M5X50 A480	8-83
312105-0362 ..	SCREW M6S ISO 4017 M6X8 A480	1-141, 1-189, 1-205, 1-231, 2-31, 2-103, 8-11, 8-55, 8-57, 10-63, 10-71
312105-0364 ..	SCREW M6S ISO 4017 M6X10 A480	1-11, 1-39, 1-67, 1-69, 1-103, 1-161, 1-163, 1-165, 3-7, 3-9, 4-7, 4-9, 4-25, 4-27, 4-29, 4-31, 4-33, 4-35, 4-37, 4-39, 4-41, 4-43, 4-45, 4-47, 4-49, 7-9, 7-87, 7-89, 8-49, 8-51, 8-53, 8-99, 8-105, 8-145, 10-71
312105-0366 ..	SCREW M6S ISO 4017 M6X12 A480	1-21, 1-23, 1-59, 1-67, 1-69, 1-93, 1-123, 1-131, 1-141, 1-153, 1-185, 1-193, 1-195, 1-205, 1-209, 1-211, 1-219, 1-221, 1-233, 1-235, 2-7, 2-11, 2-13, 2-15, 2-19, 2-21, 2-23, 2-39, 2-41, 2-69, 2-71, 2-89, 2-99, 2-101, 2-103, 2-127, 3-7, 3-9, 4-11, 4-13, 4-15, 4-17, 4-19, 4-29, 4-31, 4-33, 4-39, 4-41, 4-43, 5-13, 5-15, 5-17, 5-39, 5-43, 5-45, 5-47, 5-51, 5-63, 6-13, 6-23, 7-87, 7-89, 8-5, 8-19, 8-31, 8-33, 8-35, 8-41, 8-55, 8-57, 8-79, 8-87, 8-93, 8-101, 8-109, 8-111, 8-113, 8-115, 8-117, 8-129, 8-141, 8-145, 10-11, 10-19, 11-41, 11-43, 11-45
312105-0367 ..	SCREW M6S ISO 4017 M6X14 A480	1-47, 1-49, 1-57, 1-65, 1-161, 1-163, 1-165, 2-13, 2-15, 4-7, 4-9, 4-23, 5-57, 8-19, 8-25, 8-79, 8-139, 10-85, 10-109
312105-0368 ..	SCREW M6S ISO 4017 M6X16 A480	1-25, 1-39, 1-55, 1-61, 1-63, 1-91, 1-141, 1-181, 1-183, 1-185, 1-205, 1-209, 1-211, 1-219, 1-221, 2-11, 2-39, 2-41, 2-47, 2-55, 2-103, 2-125, 4-23, 4-25, 4-27, 4-35, 4-37, 4-45, 4-47, 4-49, 4-51, 4-53, 4-55, 4-57, 5-5, 5-7, 5-13, 5-15, 5-17, 5-19, 5-21, 5-31, 5-43, 5-45, 5-47, 5-51, 5-55, 6-5, 6-17, 6-43, 6-45, 6-47, 6-51, 6-63, 6-71, 6-73, 7-101, 8-9, 8-33, 8-35, 8-39, 8-41, 8-65, 8-69, 8-87, 8-137, 8-145, 10-3, 10-5, 10-31, 10-37, 10-61, 10-83
312105-0370 ..	SCREW M6S ISO 4017 M6X20 A480	1-11, 1-15, 1-25, 1-33, 1-35, 1-37, 1-45, 1-51, 1-53, 1-67, 1-69, 1-87, 1-89, 1-97, 1-99, 1-123, 1-139, 1-161, 1-163, 1-165, 1-193, 1-195, 1-197, 1-219, 1-221, 2-55, 2-95, 2-103, 4-19, 4-51, 4-53, 4-55, 4-57, 5-13, 5-15, 5-17, 5-23, 5-25, 5-39, 5-43, 5-45, 5-47, 5-49, 6-65, 6-67, 8-9, 8-11, 8-21, 8-23, 8-25, 8-27, 8-29, 8-39, 8-61, 8-67, 8-73, 8-81, 8-85, 8-87, 8-89, 8-137, 8-141, 10-11, 10-61, 10-71
312105-0371 ..	SCREW M6S ISO 4017 M6X22 A480	1-17, 1-19, 1-27, 1-29, 1-183, 8-13, 8-15
312105-0372 ..	SCREW M6S ISO 4017 M6X25 A480	1-11, 1-21, 1-23, 1-31, 1-35, 1-37, 1-43, 1-67, 1-69, 1-87, 1-89, 1-97, 1-99, 1-183, 1-185, 1-195, 1-231, 1-233, 1-237, 1-239, 2-19, 2-21, 2-23, 2-95, 3-7, 3-9, 4-21, 4-25, 4-27, 4-29, 4-31, 4-33, 4-35, 4-37, 4-39, 4-41, 4-43, 4-45, 4-47, 4-49, 4-51, 5-23, 5-25, 5-27, 5-29, 8-11, 8-47, 8-85, 8-135, 8-137, 10-5, 10-37, 10-61, 11-59
312105-0374 ..	SCREW M6S ISO 4014 M6X30 A480	4-51, 5-13, 5-15, 5-17, 11-39, 12-9
312105-0376 ..	SCREW M6S ISO 4014 M6X35 A480	5-19, 5-21, 6-71, 8-135, 8-145, 10-5
312105-0378 ..	SCREW M6S ISO 4014 M6X40 A480	1-103, 2-89, 4-7, 4-9
312105-0379 ..	SCREW M6S ISO 4014 M6X45 A480	5-13, 5-15, 5-17
312105-0380 ..	SCREW M6S ISO 4014 M6X50 A480	5-43, 5-45, 5-47, 8-135, 8-147
312105-0381 ..	SCREW M6S ISO 4014 M6X55 A480	1-145, 1-151, 1-181, 1-195, 8-145
312105-0382 ..	SCREW M6S ISO 4014 M6X60 A480	8-37, 12-17
312105-0383 ..	SCREW M6S ISO 4014 M6X65 A480	1-189, 8-79
312105-0384 ..	SCREW M6S ISO 4014 M6X70 A480	4-19, 8-135
312105-0386 ..	SCREW M6S ISO 4014 M6X80 A480	1-103, 4-19
312105-0388 ..	SCREW M6S ISO 4014 M6X90 A480	10-19
312105-0447 ..	SCREW M6S ISO 4017 M8X12 A480	1-67, 1-69, 1-127, 1-129, 1-159, 1-187, 2-31, 2-73, 2-75, 2-91, 4-7, 4-9, 5-19, 5-21, 5-59, 7-13, 10-5, 10-53, 10-99, 10-113, 10-119
312105-0449 ..	SCREW M6S ISO 4017 M8X16 A480	1-65, 1-87, 1-89, 1-141, 1-143, 1-149, 1-183, 1-231, 2-57, 2-77, 2-85, 2-87, 2-99, 2-103, 5-13, 5-15, 5-17, 5-27, 5-29, 5-43, 5-45, 5-47, 6-43, 7-21, 8-25, 8-31, 8-33, 8-35, 8-77, 8-109, 8-111, 8-113, 8-115, 8-117, 10-5, 10-7, 10-25, 10-37, 10-63, 12-11
312105-0451 ..	SCREW M6S ISO 4017 M8X20 A480	1-25, 1-37, 1-47, 1-49, 1-57, 1-65, 1-67, 1-69, 1-73, 1-93, 1-101, 1-139, 1-141, 1-153, 1-183, 1-185, 1-187, 1-189, 1-191, 1-197, 2-55, 2-57, 2-59, 2-77, 2-87, 2-91, 2-103, 3-5, 3-7, 3-9, 3-13, 3-15, 5-19, 5-21, 5-39, 5-51, 5-53, 6-23, 6-43, 6-45, 7-41, 8-7, 8-33, 8-35, 8-77, 8-79, 8-81, 8-83, 8-87, 10-5, 10-11, 10-19, 10-31, 10-37, 10-63, 10-89, 10-115, 10-117, 12-25
312105-0452 ..	SCREW M6S ISO 4017 M8X22 A480	1-11, 8-19, 8-33, 8-35
312105-0453 ..	SCREW M6S ISO 4017 M8X25 A480	1-15, 1-25, 1-39, 1-87, 1-89, 1-97, 1-99, 1-105, 1-143, 1-145, 1-147, 1-149, 1-151, 1-153, 1-155, 1-157, 1-179, 1-185, 1-189, 2-85, 2-87, 3-7, 3-9, 4-7, 4-9, 4-21, 5-5, 5-7, 5-13, 5-15, 5-17, 5-19, 5-21, 5-43, 5-45, 5-47, 6-21, 6-35, 6-37, 8-33, 8-35, 8-93, 8-101, 10-5, 10-41, 10-57, 10-61, 10-63, 10-99, 10-113

Part No	Description	Page No
312105-0455 ..	SCREW M6S ISO 4017 M8X30 A480	1-9, 1-37, 1-43, 1-103, 1-147, 1-183, 1-187, 1-189, 2-55, 2-57, 4-5, 4-11, 4-13, 4-15, 4-17, 5-13, 5-15, 5-17, 5-43, 5-45, 5-47, 8-19, 8-43, 10-5, 12-9
312105-0457 ..	SCREW M6S ISO 4014 M8X35 A480	1-91, 4-11, 4-13, 5-13, 5-15, 5-17
312105-0459 ..	SCREW M6S ISO 4014 M8X40 A480	5-63, 12-11
312105-0460 ..	SCREW M6S ISO 4014 M8X45 A480	4-7, 4-9, 4-21
312105-0461 ..	SCREW M6S ISO 4014 M8X50 A480	4-29, 4-31, 4-33, 4-39, 4-41, 4-43, 5-19, 5-21, 5-43, 5-45, 5-47, 10-5, 10-65
312105-0462 ..	SCREW M6S ISO 4014 M8X55 A480	1-187, 1-189, 4-11, 4-13, 4-15, 4-17
312105-0463 ..	SCREW M6S ISO 4014 M8X60 A480	5-53, 10-61, 10-89
312105-0464 ..	SCREW M6S ISO 4014 M8X65 A480	1-39, 3-7, 3-9
312105-0465 ..	SCREW M6S ISO 4014 M8X70 A480	4-11, 4-13
312105-0466 ..	SCREW M6S ISO 4014 M8X75 A480	2-93, 4-11, 4-13, 4-15, 4-17, 4-19
312105-0467 ..	SCREW M6S ISO 4014 M8X80 A480	4-11, 4-13, 4-15, 4-17, 5-59, 10-7, 10-13, 10-17
312105-0469 ..	SCREW M6S ISO 4014 M8X90 A480	10-7
312105-0471 ..	SCREW M6S ISO 4014 M8X100 A480	1-231, 3-13, 3-15, 4-15, 4-17, 4-21, 5-5, 5-7
312105-0475 ..	SCREW M6S ISO 4014 M8X120 A480	4-15, 4-17
312105-0489 ..	SCREW M6S ISO 4017 M10X16 A480	12-15
312105-0491 ..	SCREW M6S ISO 4017 M10X20 A480	1-141, 2-69, 2-71, 3-13, 3-15, 5-53, 5-63, 8-27, 8-29, 10-89, 12-11
312105-0493 ..	SCREW M6S ISO 4017 M10X25 A480	1-27, 1-29, 1-43, 1-141, 5-5, 5-7, 5-13, 5-15, 5-17, 10-99, 10-113
312105-0495 ..	SCREW M6S ISO 4017 M10X30 A480	1-17, 1-19, 1-31, 1-43, 1-59, 1-141, 1-153, 1-193, 2-73, 2-75, 2-77, 5-27, 5-29, 6-43
312105-0497 ..	SCREW M6S ISO 4017 M10X35 A480	1-25, 1-127, 1-129, 8-99, 8-105, 10-5
312105-0499 ..	SCREW M6S ISO 4014 M10X40 A480	5-13, 5-15, 5-17, 6-35, 6-37, 8-27, 8-29
312105-0500 ..	SCREW M6S ISO 4014 M10X45 A480	4-11, 4-13
312105-0502 ..	SCREW M6S ISO 4014 M10X55 A480	5-13, 5-15, 5-17, 11-53
312105-0505 ..	SCREW M6S ISO 4014 M10X70 A480	2-69, 2-71, 11-41, 11-43, 11-45
312105-0506 ..	SCREW M6S ISO 4014 M10X75 A480	8-33, 8-35
312105-0513 ..	SCREW M6S ISO 4014 M10X110 A480	1-189
312105-0532 ..	SCREW M6S ISO 4017 M12X20 A480	2-19, 2-21, 2-23, 4-11, 4-13
312105-0534 ..	SCREW M6S ISO 4017 M12X25 A480	3-13, 3-15, 7-9
312105-0536 ..	SCREW M6S ISO 4017 M12X30 A480	1-189, 2-73, 2-75
312105-0538 ..	SCREW M6S ISO 4017 M12X35 A480	4-7, 4-9, 4-51, 5-63, 7-9, 12-15
312105-0541 ..	SCREW M6S ISO 4014 M12X45 A480	4-7, 4-9
312105-0542 ..	SCREW M6S ISO 4014 M12X50 A480	4-11, 4-13, 6-35, 6-37
312105-0548 ..	SCREW M6S ISO 4014 M12X80 A480	1-189
312105-0622 ..	SCREW M6S ISO 4017 M16X25 A480	2-73, 2-75
312105-0634 ..	SCREW M6S ISO 4014 M16X70 A480	11-57, 12-15
312105-0640 ..	SCREW M6S ISO 4014 M16X100 A480	8-33, 8-35
312109-0335 ..	SCREW M6S ISO 4017 M5X30 A480	1-47, 1-49, 1-57, 1-65
312109-0374 ..	SCREW M6S ISO 4017 M6X30 A480	1-21, 1-23, 1-61, 1-63, 2-85, 2-127, 4-29, 4-31, 4-33, 4-39, 4-41, 4-43, 8-69, 8-87, 8-97, 8-107, 11-61
312109-0376 ..	SCREW M6S ISO 4017 M6X35 A480	1-41, 1-209, 1-211, 2-39, 2-41, 4-15, 4-17, 4-29, 4-31, 4-33, 4-39, 4-41, 4-43, 8-87
312109-0378 ..	SCREW M6S ISO 4017 M6X40 A480	1-39, 2-69, 2-71, 8-135
312109-0380 ..	SCREW M6S ISO 4017 M6X50 A480	2-95, 2-103, 6-23
312109-0381 ..	SCREW M6S ISO 4017 M6X55 A480	12-25
312109-0386 ..	SCREW M6S ISO 4017 M6X80 A480	8-93, 8-101
312109-0457 ..	SCREW M6S ISO 4017 M8X35 A480	1-127, 1-129, 1-139, 1-159, 3-7, 3-9, 4-11, 4-13, 5-5, 5-7, 5-27, 5-29, 6-43
312109-0459 ..	SCREW M6S ISO 4017 M8X40 A480	4-15, 4-17, 8-7
312109-0499 ..	SCREW M6S ISO 4017 M10X40 A480	12-15
312109-0501 ..	SCREW M6S ISO 4017 M10X50 A480	8-87
312109-0544 ..	SCREW M6S ISO 4017 M12X60 A480	2-85
312111-0297 ..	SCREW HEX.SOCK.HD.MC6S-TT 4X25 88 FZB	7-9
312111-0366 ..	SCREW HEX.SOCK.HD.MC6S-TT 6X12 88 FZB	7-45, 7-47, 7-79
312111-0374 ..	SCREW HEX.SOCK.HD.MC6S-TT 6X30 88 FZB	10-115, 10-117
312115-0222 ..	SCREW ISO4762 M3X8 A4 80	7-9
312115-0226 ..	SCREW ISO4762 M3X12 A4 80	1-51
312115-0228 ..	SCREW ISO4762 M3X16 A4 80	1-197, 5-5, 5-7, 8-25
312115-0230 ..	SCREW ISO4762 M3X20 A4 80	1-139
312115-0285 ..	SCREW ISO4762 M4X6 A4 80	1-209, 1-211
312115-0287 ..	SCREW ISO4762 M4X8 A4 80	1-17, 1-19, 1-123, 1-139, 1-205, 8-67, 8-85, 10-61
312115-0289 ..	SCREW ISO4762 M4X10 A4 80	7-35, 7-37, 7-39
312115-0291 ..	SCREW ISO4762 M4X12 A4 80	1-113, 2-95, 8-43, 8-73, 8-85, 8-109, 8-111, 8-113, 8-115, 8-117, 8-143, 10-5, 11-49
312115-0293 ..	SCREW ISO4762 M4X16 A4 80	1-145, 11-49
312115-0295 ..	SCREW ISO4762 M4X20 A4 80	8-81
312115-0305 ..	SCREW ISO4762 M4X50 A4 80	1-205
312115-0323 ..	SCREW ISO4762 M5X8 A4 80	2-111, 8-61, 8-67
312115-0325 ..	SCREW ISO4762 M5X10 A4 80	4-19
312115-0327 ..	SCREW ISO4762 M5X12 A4 80	1-17, 1-19, 1-93, 1-205, 1-209, 1-211, 1-231, 2-39, 2-41, 2-77, 2-109, 2-111, 2-119, 2-121, 4-25, 4-27, 4-29, 4-31, 4-33, 4-35, 4-37, 4-39, 4-41, 4-43, 4-45, 4-47, 4-49, 6-43, 6-53, 6-57, 6-61, 7-67, 8-19, 8-93, 8-97, 8-101, 8-107, 8-159, 8-161, 8-165, 8-169
312115-0328 ..	SCREW ISO4762 M5X14 A4 80	8-83
312115-0329 ..	SCREW ISO4762 M5X16 A4 80	1-17, 1-19, 1-183, 2-65, 2-69, 2-71, 7-15, 7-17, 7-19, 7-21, 8-33, 8-35, 8-93, 8-101
312115-0331 ..	SCREW ISO4762 M5X20 A4 80	1-87, 1-89, 1-97, 1-99, 2-95, 8-85, 8-119, 8-121, 8-123, 8-125, 8-127
312115-0333 ..	SCREW ISO4762 M5X25 A4 80	1-13, 4-15, 4-17, 6-17, 8-83
312115-0335 ..	SCREW ISO4762 M5X30 A4 80	8-67
312115-0337 ..	SCREW ISO4762 M5X35 A4 80	1-103
312115-0339 ..	SCREW ISO4762 M5X40 A4 80	3-11
312115-0364 ..	SCREW ISO4762 M6X10 A4 80	2-95, 6-25, 6-63, 8-49, 8-51, 8-53, 8-149
312115-0366 ..	SCREW ISO4762 M6X12 A4 80	1-87, 1-89, 1-97, 1-99, 1-183, 3-11, 4-11, 4-13, 4-19, 7-15, 7-17

Part No	Description	Page No
		7-19, 7-21, 8-27, 8-29, 8-65, 8-77, 8-79
312115-0367 ..	SCREW ISO4762 M6X14 A4 80	8-131, 8-133
312115-0368 ..	SCREW ISO4762 M6X16 A4 80	5-5, 5-7, 5-23, 5-25, 6-7, 6-9, 6-11, 8-57, 8-79, 8-83, 8-91, 8-93, 8-101, 8-141, 10-67, 10-69
312115-0370 ..	SCREW ISO4762 M6X20 A4 80	4-25, 4-27, 4-29, 4-31, 4-33, 4-35, 4-37, 4-39, 4-41, 4-43, 4-45, 4-47, 4-49, 6-63, 7-85, 8-19, 8-73, 8-77, 8-81, 8-85, 8-97, 8-107, 8-135, 8-137, 12-25
312115-0372 ..	SCREW ISO4762 M6X25 A4 80	1-235, 2-7, 2-9, 2-55, 2-129, 3-5, 3-13, 3-15, 8-83, 8-145, 10-67, 10-69, 12-25
312115-0374 ..	SCREW ISO4762 M6X30 A4 80	1-193, 1-237, 1-239, 5-23, 5-25, 6-25, 8-27, 8-29, 8-135
312115-0376 ..	SCREW ISO4762 M6X35 A4 80	4-15, 4-17, 8-85, 8-131, 8-133
312115-0378 ..	SCREW ISO4762 M6X40 A4 80	5-23, 5-25, 8-129
312115-0380 ..	SCREW ISO4762 M6X50 A4 80	5-23, 5-25
312115-0382 ..	SCREW ISO4762 M6X60 A4 80	3-7, 3-9
312115-0384 ..	SCREW ISO4762 M6X70 A4 80	5-23, 5-25
312115-0449 ..	SCREW ISO4762 M8X16 A4 80	5-43, 5-45, 5-47, 5-49, 8-59, 8-79, 8-93, 8-101, 8-109, 8-111, 8-113, 8-115, 8-117
312115-0451 ..	SCREW ISO4762 M8X20 A4 80	1-25, 8-109, 8-111, 8-113, 8-115, 8-117
312115-0453 ..	SCREW ISO4762 M8X25 A4 80	4-5, 5-59, 6-39, 8-59
312115-0455 ..	SCREW ISO4762 M8X30 A4 80	3-13, 3-15, 5-43, 5-45, 5-47
312115-0457 ..	SCREW ISO4762 M8X35 A4 80	8-7
312115-0459 ..	SCREW ISO4762 M8X40 A4 80	4-11, 4-13
312115-0463 ..	SCREW ISO4762 M8X60 A4 80	8-33, 8-35
312115-0465 ..	SCREW ISO4762 M8X70 A4 80	8-83
312115-0467 ..	SCREW ISO4762 M8X80 A4 80	8-83
312115-0478 ..	SCREW ISO4762 M8X140 A4 80	5-43, 5-45, 5-47
312115-0489 ..	SCREW ISO4762 M10X16 A4 80	8-145
312115-0491 ..	SCREW ISO4762 M10X20 A4 80	2-81, 5-5, 5-7
312115-0495 ..	SCREW ISO4762 M10X30 A4 80	3-13, 3-15
312115-0497 ..	SCREW ISO4762 M10X35 A4 80	1-199
312115-0499 ..	SCREW ISO4762 M10X40 A4 80	2-79
312115-0501 ..	SCREW ISO4762 M10X50 A4 80	2-19, 2-21, 2-23, 3-13, 3-15, 8-79
312115-0540 ..	SCREW ISO4762 M12X40 A4 80	12-25
312115-0546 ..	SCREW ISO4762 M12X70 A4 80	12-25
312115-0630 ..	SCREW ISO4762 M16X50 A4 80	1-199, 2-65, 2-69, 2-71
312115-0634 ..	SCREW ISO4762 M16X70 A4 80	2-69, 2-71
312121-0220 ..	SCREW ISO 1207 M3X4 4.8-5.8 Z.PL.	7-43
312121-0224 ..	SCREW ISO 1207 M3X10 4.8-5.8 Z.PL.	7-79
312121-0285 ..	SCREW ISO 1207 M4X6 4.8-5.8 Z.PL.	8-25
312121-0289 ..	SCREW ISO 1207 M4X10 4.8-5.8 Z.PL.	7-9, 7-35, 7-37, 7-39, 7-45, 7-47, 7-67
312121-0321 ..	SCREW ISO 1207 M5X6 4.8-5.8 Z.PL.	7-35, 7-37, 7-39, 7-43, 7-45, 7-47, 7-57, 7-63, 7-65, 7-69, 7-71, 7-73, 7-75, 7-81, 7-83
312121-0323 ..	SCREW ISO 1207 M5X8 4.8-5.8 Z.PL.	7-9, 7-67, 7-79
312121-0325 ..	SCREW ISO 1207 M5X10 4.8-5.8 Z.PL.	7-79
312121-0364 ..	SCREW ISO 1207 M6X10 4.8-5.8 Z.PL.	2-7
312122-0366 ..	SCREW ISO 1207 M6X12 NI PL BRASS	7-43
312125-0220 ..	SCREW ISO 1207 M3X6 A4	2-39, 2-41, 6-13, 8-33, 8-35
312125-0222 ..	SCREW ISO 1207 M3X8 A4	1-95, 2-129, 7-23, 7-25, 7-27, 7-29, 7-31, 8-57, 8-139, 8-165, 8-169
312125-0224 ..	SCREW ISO 1207 M3X10 A4	4-51
312125-0226 ..	SCREW ISO 1207 M3X12 A4	4-21
312125-0230 ..	SCREW ISO 1207 M3X20 A4	1-15, 1-105, 2-13, 2-15, 8-57
312125-0285 ..	SCREW ISO 1207 M4X6 A4	1-61, 1-63, 1-95, 1-145, 2-85, 2-103, 4-21, 7-87, 7-89, 7-101, 8-19, 8-33, 8-35, 8-49, 8-51, 8-53, 8-55, 8-57, 8-87, 8-139
312125-0287 ..	SCREW ISO 1207 M4X8 A4	1-39, 1-93, 1-105, 1-193, 2-13, 2-15, 6-43, 6-73, 7-51, 8-11, 8-25, 8-57, 8-61, 8-65, 8-77, 8-135, 10-31, 10-33, 10-61
312125-0289 ..	SCREW ISO 1207 M4X10 A4	1-237, 1-239, 6-7, 6-9, 7-23, 7-25, 7-27, 7-29, 7-31, 7-41, 7-67, 7-87, 7-89
312125-0291 ..	SCREW ISO 1207 M4X12 A4	3-17, 5-63, 8-61, 8-67, 10-77
312125-0295 ..	SCREW ISO 1207 M4X20 A4	10-31
312125-0297 ..	SCREW ISO 1207 M4X25 A4	8-139
312125-0323 ..	SCREW ISO 1207 M5X8 A4	1-109, 1-111, 1-113, 1-151, 1-153, 4-7, 4-9, 4-11, 4-13, 4-53, 4-55, 4-57, 6-45, 7-35, 7-37, 7-39
312125-0325 ..	SCREW ISO 1207 M5X10 A4	1-237, 1-239, 7-55, 7-61, 7-87, 7-89
312125-0327 ..	SCREW ISO 1207 M5X12 A4	2-19, 2-21, 2-23, 12-9
312125-0329 ..	SCREW ISO 1207 M5X16 A4	1-231, 10-67, 10-69
312125-0331 ..	SCREW ISO 1207 M5X20 A4	1-153, 2-117
312125-0335 ..	SCREW ISO 1207 M5X30 A4	7-87, 7-89
312125-0339 ..	SCREW ISO 1207 M5X40 A4	2-39, 2-41
312125-0364 ..	SCREW ISO 1207 M6X10 A4	1-237, 1-239, 2-9, 2-129
312125-0366 ..	SCREW ISO 1207 M6X12 A4	1-189, 1-235, 2-55, 2-69, 2-71, 10-115, 10-117
312125-0370 ..	SCREW ISO 1207 M6X20 A4	2-89
312125-0374 ..	SCREW ISO 1207 M6X30 A4	1-207
312125-0376 ..	SCREW ISO 1207 M6X35 A4	7-87, 7-89, 8-57
312132-0284 ..	SLOTTED HEAD, PAN SCREW, MSCS M4X5	1-183
312132-0287 ..	SLOTTED HEAD, PAN SCREW, MSCS M4X8	7-87, 7-89
312132-0289 ..	SLOTTED HEAD, PAN SCREW, MSCS M4X10	6-11
312145-0224 ..	SCREW ISO 2009 MFS M3X10 A4	4-25, 4-27, 4-35, 4-37, 4-45, 4-47, 4-49
312145-0226 ..	SCREW ISO 2009 MFS M3X12 A4	8-83
312145-0285 ..	SCREW ISO 2009 MFS M4X6 A4	7-35, 7-37, 7-39
312145-0287 ..	SCREW ISO 2009 MFS M4X8 A4	1-95, 4-25, 4-27, 4-29, 4-31, 4-33, 4-35, 4-37, 4-39, 4-41, 4-43, 4-45, 4-47, 4-49, 8-93, 8-101
312145-0327 ..	SCREW ISO 2009 MFS M5X12 A4	8-33, 8-35
312145-0380 ..	SCREW ISO 2009 MFS M6X50 A4	12-9
312155-0220 ..	SCREW DIN 7991 MF6S M3X6 A4 70	8-67
312155-0226 ..	SCREW DIN 7991 MF6S M3X12 A4 70	1-93, 8-67, 8-97, 8-107

Part No	Description	Page No
312155-0287 ..	SCREW DIN 7991 MF6S M4X8 A4 70	8-83, 8-93, 8-101
312155-0289 ..	SCREW DIN 7991 MF6S M4X10 A4 70	5-5, 5-7, 8-19, 8-65, 8-83
312155-0291 ..	SCREW DIN 7991 MF6S M4X12 A4 70	7-51, 8-85
312155-0295 ..	SCREW DIN 7991 MF6S M4X20 A4 70	8-17
312155-0297 ..	SCREW DIN 7991 MF6S M4X25 A4 70	8-17
312155-0299 ..	SCREW DIN 7991 MF6S M4X30 A4 70	8-17
312155-0323 ..	SCREW DIN 7991 MF6S M5X8 A4 70	1-207, 8-69, 8-85, 10-17, 10-21
312155-0325 ..	SCREW DIN 7991 MF6S M5X10 A4 70	2-125, 5-53, 10-89
312155-0327 ..	SCREW DIN 7991 MF6S M5X12 A4 70	1-93, 1-231, 4-21, 4-23, 8-81
312155-0329 ..	SCREW DIN 7991 MF6S M5X16 A4 70	1-43, 1-47, 1-49, 1-57, 1-65, 1-231, 4-19
312155-0331 ..	SCREW DIN 7991 MF6S M5X20 A4 70	8-45
312155-0364 ..	SCREW DIN 7991 MF6S M6X10 A4 70	8-95, 8-103
312155-0366 ..	SCREW DIN 7991 MF6S M6X12 A4 70	2-65, 2-69, 2-71, 4-15, 4-17, 5-5, 5-7, 5-27, 5-29, 8-33, 8-35, 8-63, 8-85
312155-0368 ..	SCREW DIN 7991 MF6S M6X16 A4 70	2-103, 8-9, 8-147
312155-0370 ..	SCREW DIN 7991 MF6S M6X20 A4 70	1-189, 2-73, 2-75, 8-19, 8-45, 10-31
312155-0372 ..	SCREW DIN 7991 MF6S M6X25 A4 70	4-21
312155-0449 ..	SCREW DIN 7991 MF6S M8X16 A4 70	5-5, 5-7, 8-9, 8-59, 10-19
312155-0451 ..	SCREW DIN 7991 MF6S M8X20 A4 70	8-9, 10-99, 10-113
312155-0453 ..	SCREW DIN 7991 MF6S M8X25 A4 70	2-27
312155-0493 ..	SCREW DIN 7991 MF6S M10X25 A4 70	8-33, 8-35
312155-0495 ..	SCREW DIN 7991 MF6S M10X30 A4 70	2-69, 2-71
312180-0366 ..	SCREW ISO7379 H6X12	8-13, 8-15, 8-147
312180-0491 ..	SCREW ISO7379 H10X20	8-73
312180-0534 ..	SCREW ISO7379 H12X25	1-189
312309-0536 ..	SCREW ISO4026 M12X30 A4	2-19, 2-21, 2-23
312311-0327 ..	SCREW ISO4028 M5X12 FZB	2-79
312311-0372 ..	SCREW ISO4028 M6X25 FZB	8-135
312311-0374 ..	SCREW ISO4028 M6X30 FZB	1-87, 1-89, 1-97, 1-99
312311-0624 ..	SCREW ISO4028 M16X30 FZB	2-25
312318-0220 ..	SCREW ISO4029 M3X6 A4	8-141
312318-0283 ..	SCREW ISO4029 M4X4 A4	1-21, 1-23, 5-23, 5-25, 8-85, 8-135, 10-65
312318-0284 ..	SCREW ISO4029 M4X5 A4	8-87
312318-0285 ..	SCREW ISO4029 M4X6 A4	4-7, 4-9
312318-0287 ..	SCREW ISO4029 M4X8 A4	8-9, 8-75
312318-0291 ..	SCREW ISO4029 M4X12 A4	1-187
312318-0321 ..	SCREW ISO4029 M5X6 A4	4-19
312318-0323 ..	SCREW ISO4029 M5X8 A4	1-35
312318-0327 ..	SCREW ISO4029 M5X12 A4	1-17, 1-19
312318-0329 ..	SCREW ISO4029 M5X16 A4	8-81
312318-0360 ..	SCREW ISO4029 M6X6 A4	1-51
312318-0362 ..	SCREW ISO4029 M6X8 A4	1-9, 8-19, 8-27, 8-29, 8-43, 8-93, 8-101, 10-61
312318-0364 ..	SCREW ISO4029 M6X10 A4	2-27, 10-67, 10-69
312318-0366 ..	SCREW ISO4029 M6X12 A4	1-195, 4-21, 8-21, 8-23, 8-75, 10-5
312318-0368 ..	SCREW ISO4029 M6X16 A4	8-77, 8-135, 10-5
312318-0370 ..	SCREW ISO4029 M6X20 A4	7-79, 8-47
312318-0372 ..	SCREW ISO4029 M6X25 A4	2-81
312318-0447 ..	SCREW ISO4029 M8X12 A4	4-11, 4-13
312318-0453 ..	SCREW ISO4029 M8X25 A4	1-199, 2-65, 2-69, 2-71, 2-73, 2-75
312318-0455 ..	SCREW ISO4029 M8X30 A4	8-33, 8-35
312502-0120 ..	DRIVE SCREW ROUND HEAD KDS 0X5	1-209, 1-211, 2-39, 2-41, 2-111, 6-65, 6-67, 6-71, 6-73
312503-0229 ..	TAPPING SCREW ISO 7049-ST2,9X16-C-Z	7-67
312503-0275 ..	TAPPING SCREW ISO 7049-ST3,5X6,5-C-Z	8-49, 8-51, 8-53
312601-0316 ..	HEXAGON NUT, DIN 934 M6 8 FZB	7-9, 7-53, 7-59, 7-67, 7-79
312602-0316 ..	NUT, EN 24032 M6M M6 NIPLBR	11-61
312602-0318 ..	HEXAGON NUT, EN 24032 M6M M8 NIPLBR	11-61
312605-0310 ..	HEXAGON NUT, M6M M3 A280	1-21, 1-23, 1-105, 1-139, 6-5, 7-87, 7-89, 8-57
312605-0312 ..	HEXAGON NUT, M6M M4 A280	1-41, 1-61, 1-63, 1-145, 1-183, 1-197, 1-205, 2-85, 3-7, 3-9, 7-9, 7-23, 7-25, 7-27, 7-29, 7-31, 7-87, 7-89, 7-101, 8-17, 8-25, 8-57, 8-87, 8-139, 8-153, 10-75
312605-0314 ..	HEXAGON NUT, M6M M5 A280	1-41, 1-47, 1-49, 1-57, 1-61, 1-63, 1-65, 1-143, 1-149, 1-151, 1-161, 1-163, 1-165, 1-205, 2-19, 2-21, 2-23, 2-103, 3-17, 5-19, 5-21, 5-49, 6-17, 6-71, 7-87, 7-89, 8-7, 8-11, 8-13, 8-15, 8-67, 8-93, 8-101, 8-155, 8-167
312605-0316 ..	HEXAGON NUT, M6M M6 A280	1-11, 1-15, 1-25, 1-33, 1-35, 1-37, 1-41, 1-45, 1-51, 1-53, 1-67, 1-69, 1-87, 1-89, 1-97, 1-99, 1-103, 1-141, 1-161, 1-163, 1-165, 1-183, 1-185, 1-197, 1-205, 1-207, 1-209, 1-211, 1-219, 1-221, 1-233, 2-11, 2-13, 2-15, 2-27, 2-31, 2-39, 2-41, 2-55, 2-65, 2-81, 2-89, 2-91, 2-95, 2-103, 2-111, 2-115, 2-127, 3-7, 3-9, 4-23, 5-19, 5-21, 5-43, 5-45, 5-47, 5-63, 6-5, 6-23, 6-45, 6-71, 7-9, 7-15, 7-17, 7-19, 7-21, 7-87, 7-89, 8-11, 8-19, 8-25, 8-39, 8-41, 8-57, 8-61, 8-67, 8-83, 8-85, 8-93, 8-97, 8-101, 8-107, 8-109, 8-111, 8-113, 8-115, 8-117, 8-131, 8-133, 8-135, 8-137, 8-145, 8-147, 8-165, 8-169, 10-3, 10-5, 10-31, 10-33, 10-61, 10-67, 10-69, 11-39
312605-0318 ..	HEXAGON NUT, M6M M8 A280	1-9, 1-15, 1-25, 1-35, 1-59, 1-73, 1-87, 1-89, 1-91, 1-97, 1-99, 1-101, 1-127, 1-129, 1-139, 1-143, 1-145, 1-147, 1-149, 1-151, 1-153, 1-155, 1-157, 1-159, 1-179, 1-183, 1-185, 1-187, 1-189, 1-191, 1-231, 2-55, 2-57, 2-77, 2-87, 2-93, 2-103, 3-7, 3-9, 4-51, 5-53, 6-35, 6-37, 6-39, 6-43, 8-33, 8-35, 8-57, 8-93, 8-95, 8-101, 8-103, 8-109, 8-111, 8-113, 8-115, 8-117, 10-5, 10-31, 10-37, 10-41, 10-57, 10-61, 10-63, 10-65, 10-89, 10-115, 10-117, 12-9, 12-11
312605-0320 ..	HEXAGON NUT, M6M M10 A280	1-127, 1-129, 1-153, 1-193, 5-19, 5-21, 8-87
312605-0322 ..	HEXAGON NUT, M6M M12 A280	2-85, 3-7, 3-9, 11-55
312605-0324 ..	HEXAGON NUT, M6M M16 A280	2-25, 2-73, 2-75, 2-77, 12-15
312605-0326 ..	HEXAGON NUT, M6M M20 A280	5-5, 5-7
312605-0328 ..	HEXAGON NUT, M6M M24 A280	11-63
312607-0312 ..	HEXAGON NUT, EN 24032 M6M M4 A480	1-139
312607-0314 ..	HEXAGON NUT, EN 24032 M6M M5 A480	2-39, 2-41
312607-0316 ..	HEXAGON NUT, EN 24032 M6M M6 A480	8-135
312607-0322 ..	HEXAGON NUT, EN 24032 M6M M12 A480	2-19, 2-21, 2-23
312625-0316 ..	HEXAGON THIN NUT, EN 24035 ML6M M6 A4	8-69, 8-73, 10-5

Part No	Description	Page No
312625-0318 ..	HEXAGON THIN NUT, EN 24035 ML6M M8 A4	1-97, 1-99, 1-191, 8-9, 8-67
312625-0320 ..	HEXAGON THIN NUT, EN 24035 ML6M M10 A4	1-17, 1-19, 4-5
312705-0312 ..	NUT HEX. DOMED CAP MHM-6 M4 A280	2-109, 2-111, 2-119, 2-121, 6-53, 6-57, 8-159, 8-161, 8-165
312705-0314 ..	NUT HEX. DOMED CAP MHM-6 M5 A280	1-21, 1-23, 1-161, 1-163, 1-165
312705-0316 ..	NUT HEX. DOMED CAP MHM-6 M6 A280	1-17, 1-19, 1-21, 1-23, 1-27, 1-29, 1-31, 1-195, 2-101, 2-115, 8-75
312705-0318 ..	NUT HEX. DOMED CAP MHM-6 M8 A280	5-19, 5-21
312705-0320 ..	NUT HEX. DOMED CAP MHM-6 M10 A280	1-39, 1-43
312805-0100 ..	NUT ROUND WITH SLOTS M10X0,75 FE	4-19
312805-0103 ..	NUT ROUND WITH SLOTS M17X1 FE	2-95
312810-0316 ..	HEXAGON NUT, NY-LOCK M6 FZB	7-9
312812-0310 ..	HEXAGON NUT, NY-LOCK M3 A480	4-21
312812-0312 ..	HEXAGON NUT, NY-LOCK M4 A480	2-109, 2-119, 2-121, 7-9, 10-5
312812-0314 ..	HEXAGON NUT, NY-LOCK M5 A480	1-93, 2-117
312812-0316 ..	HEXAGON NUT, NY-LOCK M6 A480	1-25, 1-181, 1-205, 1-209, 1-211, 1-231, 5-13, 5-15, 5-17, 5-19, 5-21, 5-43, 5-45, 5-47, 8-37, 8-57, 8-61, 8-87, 10-19, 11-61, 12-9, 12-17, 12-25
312812-0318 ..	HEXAGON NUT, NY-LOCK M8 A480	2-65, 2-69, 2-71, 5-59, 10-5, 10-13, 10-19, 10-25
312812-0320 ..	HEXAGON NUT, NY-LOCK M10 A480	8-27, 8-29, 10-5
312812-0324 ..	HEXAGON NUT, NY-LOCK M16 A480	11-57
312927-0150 ..	RIVET NUT M8, CLAMP. LENGTH 3,0 - 4,5	8-33, 8-35
315101-0124 ..	WASHER PLAIN, BRB, 3,2/6 H=0,5	7-43, 7-79
315101-0136 ..	WASHER BRB, 4,3/8 H=0,8	7-35, 7-37, 7-39, 7-45, 7-47, 7-67
315101-0146 ..	WASHER PLAIN, BRB, 5,3/10 H=1	1-209, 1-211, 7-9, 7-35, 7-37, 7-39, 7-43, 7-45, 7-47, 7-57, 7-63, 7-65, 7-67, 7-69, 7-71, 7-73, 7-75, 7-79, 7-81, 7-83
315101-0153 ..	WASHER PLAIN, BRB, 6,4/12 H=1,5	7-9, 7-45, 7-47, 7-79
315101-0165 ..	WASHER PLAIN, BRB, 8,4/16 H=1,5	1-191
315101-0176 ..	WASHER PLAIN, BRB, 12/22 H=2	5-43, 5-45, 5-47
315102-0146 ..	SPARE PART	7-55
315103-0124 ..	WASHER, BRB, 3,2/6,H=0,5 NI PL BR	8-57
315103-0153 ..	WASHER, BRB, 6,4/12,H=1,5 NIPL BR	8-135
315103-0156 ..	WASHER PLAIN, BRB 6,7/14,H=1,5 NI PL BR	8-65
315105-0124 ..	WASHER BRB 3,2X6 RFR	1-15, 1-105, 1-197, 4-51, 5-5, 5-7, 6-5, 7-9, 7-67, 7-87, 7-89, 8-25, 8-57
315105-0136 ..	WASHER BRB 4,3X8 RFR	1-61, 1-63, 1-103, 1-105, 1-123, 1-139, 1-145, 1-183, 1-205, 2-47, 2-85, 2-109, 2-111, 2-119, 2-121, 3-7, 3-9, 5-19, 5-21, 6-73, 7-9, 7-23, 7-25, 7-27, 7-29, 7-31, 7-35, 7-37, 7-39, 7-67, 7-87, 7-89, 7-101, 8-19, 8-25, 8-57, 8-65, 8-73, 8-87, 8-93, 8-97, 8-101, 8-107, 8-109, 8-111, 8-113, 8-115, 8-117, 8-139, 8-153, 8-159, 8-161, 8-165, 8-169, 10-31, 10-75
315105-0146 ..	WASHER BRB 5,3X10 RFR	1-9, 1-25, 1-41, 1-47, 1-49, 1-57, 1-61, 1-63, 1-65, 1-93, 1-103, 1-151, 1-153, 1-161, 1-163, 1-165, 1-197, 1-205, 1-231, 1-237, 1-239, 2-19, 2-21, 2-23, 2-65, 2-69, 2-71, 2-77, 2-89, 2-103, 2-117, 3-5, 3-7, 3-9, 3-11, 3-17, 4-21, 4-25, 4-27, 4-29, 4-31, 4-33, 4-35, 4-37, 4-39, 4-41, 4-43, 4-45, 4-47, 4-49, 5-19, 5-21, 5-23, 5-25, 5-49, 5-55, 6-43, 6-53, 6-57, 6-61, 6-71, 7-35, 7-37, 7-39, 7-61, 7-87, 7-89, 8-7, 8-11, 8-19, 8-25, 8-33, 8-35, 8-47, 8-65, 8-83, 8-93, 8-101, 8-119, 8-121, 8-123, 8-125, 8-127, 8-135, 10-67, 10-69, 11-39, 11-47
315105-0153 ..	WASHER BRB 6,4X12 RFR	1-15, 1-21, 1-23, 1-39, 1-41, 1-59, 1-61, 1-63, 1-67, 1-69, 1-91, 1-93, 1-103, 1-123, 1-131, 1-139, 1-193, 1-195, 1-205, 1-209, 1-211, 1-219, 1-221, 1-231, 1-233, 1-235, 2-11, 2-13, 2-15, 2-47, 2-55, 2-69, 2-71, 2-73, 2-75, 2-89, 2-95, 2-99, 2-101, 2-103, 2-111, 2-115, 2-125, 2-127, 3-5, 3-7, 3-9, 4-11, 4-13, 4-15, 4-17, 4-19, 4-21, 4-23, 4-29, 4-31, 4-33, 4-39, 4-41, 4-43, 4-51, 4-53, 4-55, 4-57, 5-5, 5-7, 5-13, 5-15, 5-17, 5-19, 5-21, 5-23, 5-25, 5-27, 5-29, 5-31, 5-43, 5-45, 5-47, 5-49, 5-63, 6-5, 6-13, 6-23, 6-43, 6-45, 6-47, 6-51, 6-63, 6-71, 7-9, 7-15, 7-17, 7-19, 7-21, 7-45, 7-47, 7-85, 7-87, 7-89, 7-101, 8-5, 8-9, 8-11, 8-13, 8-15, 8-19, 8-21, 8-23, 8-25, 8-27, 8-29, 8-31, 8-33, 8-35, 8-37, 8-39, 8-41, 8-47, 8-55, 8-57, 8-61, 8-65, 8-67, 8-73, 8-79, 8-83, 8-85, 8-87, 8-91, 8-93, 8-101, 8-109, 8-111, 8-113, 8-115, 8-117, 8-129, 8-131, 8-133, 8-135, 8-137, 8-139, 8-141, 8-145, 8-147, 8-149, 8-165, 8-169, 10-3, 10-5, 10-19, 10-31, 10-33, 10-37, 10-61, 10-67, 10-69, 10-71, 10-115, 10-117, 11-39, 11-41, 11-43, 11-45, 12-9, 12-17, 12-25
315105-0156 ..	WASHER BRB 6,7X14 RFR	1-195, 2-19, 2-21, 2-23, 4-51, 5-13, 5-15, 5-17, 8-11, 8-19, 8-69, 8-75, 8-83, 8-85
315105-0165 ..	WASHER BRB 8,4X16 RFR	1-25, 1-35, 1-39, 1-59, 1-91, 1-139, 1-153, 1-183, 1-187, 1-189, 1-231, 2-57, 2-69, 2-71, 2-73, 2-75, 2-77, 2-85, 2-99, 2-103, 3-5, 3-7, 3-9, 3-13, 3-15, 4-5, 4-11, 4-13, 4-15, 4-17, 4-19, 4-21, 5-5, 5-7, 5-13, 5-15, 5-17, 5-19, 5-21, 5-27, 5-29, 5-39, 5-43, 5-45, 5-47, 5-51, 5-63, 6-21, 6-43, 6-45, 7-21, 7-41, 8-7, 8-9, 8-19, 8-31, 8-33, 8-35, 8-43, 8-57, 8-59, 8-77, 8-79, 8-81, 8-83, 8-95, 8-103, 8-109, 8-111, 8-113, 8-115, 8-117, 10-7, 10-11, 10-25, 10-37, 10-41, 10-57, 10-115, 10-117
315105-0171 ..	WASHER BRB 10X18 RFR	5-27, 5-29, 5-63
315105-0173 ..	WASHER BRB 10,5X22 RFR	1-11, 1-39, 1-127, 1-129, 1-141, 1-193, 2-65, 2-69, 2-71, 2-73, 2-75, 2-77, 2-81, 3-13, 3-15, 4-11, 4-13, 5-5, 5-7, 5-13, 5-15, 5-17, 5-53, 6-35, 6-37, 6-43, 8-9, 8-27, 8-29, 8-33, 8-35, 8-139, 10-5, 10-13, 10-89, 10-99, 10-113, 11-41, 11-43, 11-45, 11-53, 12-15
315105-0178 ..	WASHER BRB 13X24 RFR	1-189, 2-73, 2-75, 2-85, 2-89, 3-13, 3-15, 4-7, 4-9, 4-11, 4-13, 5-63, 7-9, 11-55, 12-15
315105-0186 ..	WASHER BRB 17X30 RFR	2-73, 2-75, 12-15
315105-0191 ..	WASHER BRB 20X36 RFR	5-5, 5-7
315105-0192 ..	WASHER BRB 21X36 RFR	12-11
315105-0195 ..	WASHER BRB 23X40 RFR	5-13, 5-15, 5-17
315106-0136 ..	WASHER ISO 7089-4-200 HV A4	1-209, 1-211
315106-0178 ..	WASHER ISO 7089-12-200 HV A4	4-5
315111-0186 ..	WASHER PLAIN, TBRB 17/30 H=6	2-65, 2-69, 2-71, 2-73, 2-75
315115-0153 ..	WASHER PLAIN, TBRB 6,4/12 H=3	1-219, 1-221, 5-19, 5-21, 6-11, 6-17, 8-33, 8-35, 8-69, 8-93, 8-101, 8-137
315115-0165 ..	WASHER PLAIN, TBRB 8,4/16 H=3	1-9, 1-93, 1-183, 1-189, 2-103, 10-19
315115-0173 ..	WASHER PLAIN, TBRB 10,5/22 H=4	1-25, 1-189, 1-199, 6-43, 8-145, 12-11
315125-0153 ..	WASHER TBRSB 6,4X22X4 A4	1-55, 1-87, 1-89, 1-97, 1-99, 1-161, 1-163, 1-165, 1-185, 1-189, 1-193, 2-55, 2-65, 3-17, 4-15, 4-17, 5-13, 5-15, 5-17, 5-19, 5-21, 6-47, 6-51, 6-65, 6-67, 7-53, 7-59, 7-67, 7-79, 8-49, 8-51, 8-53, 8-55, 8-57, 8-79, 8-93, 8-101, 8-129, 11-41, 11-43, 11-45
315125-0165 ..	WASHER TBRSB 8,4X26X5 A4	1-43, 1-105, 1-143, 1-149, 2-85, 5-13, 5-15, 5-17, 5-27, 5-29, 5-53, 6-23, 8-77, 8-109, 8-111, 8-113, 8-115, 8-117, 10-89, 10-119
315125-0173 ..	WASHER TBRSB 10,5X28X6 A4	12-15

Part No	Description	Page No
315202-0119 ..	O-RING 25,1X1,6 MM	1-155, 1-157, 2-111, 8-157
315202-0204 ..	O-RING 5,3X2,4 MM	1-15
315202-0213 ..	O-RING 15,3X2,4 MM	5-23, 5-25
315202-0219 ..	O-RING 29,2X3 MM	10-67, 10-69
315202-0221 ..	O-RING 34,2X3 MM	1-51
315202-0223 ..	O-RING 39,2X3 MM	4-19
315202-0242 ..	O-RING 124,3X5,7 MM	10-21
315202-0246 ..	O-RING 144,3X5,7 MM	10-19
315202-0301 ..	O-RING 49,5X3 MM	5-27, 5-29
315202-0303 ..	O-RING 59,5X3 MM	1-51
315202-0304 ..	O-RING 64,5X3 MM	1-111, 5-27, 5-29
315202-0307 ..	O-RING 79,5X3 MM	2-81
315202-0308 ..	O-RING 84,5X3 MM	1-15, 1-109, 1-113
315202-0335 ..	O-RING 239,3X5,7 MM	1-55
315202-0604 ..	O-RING 50,39X3,53 MM	4-7, 4-9
315202-0621 ..	O-RING 104,37X3,53 MM	4-7, 4-9
315202-0803 ..	O-RING 44,17X1,78 MM	5-19, 5-21
315204-0103 ..	O-RING 5,1X1,6 MM	2-89
315204-0109 ..	O-RING 11,1X1,6 MM	1-9
315204-0119 ..	O-RING 25,1X1,6 MM	1-95
315204-0207 ..	O-RING 8,3X2,4 MM	6-45
315204-0208 ..	O-RING 9,3X2,4 MM	1-67, 1-69, 1-93
315204-0213 ..	O-RING 15,2X2,4 MM	1-145
315204-0214 ..	O-RING 17,3X2,4 MM	1-93, 1-95, 11-9, 11-11
315204-0215 ..	O-RING 19,2X3 MM	1-109, 1-111, 1-113, 11-13, 11-15, 11-17
315204-0221 ..	O-RING 34,2X3 MM	1-9
315204-0222 ..	O-RING 36,2X3 MM	2-95
315204-0301 ..	O-RING 49,5X3 MM	1-111, 11-13
315204-0306 ..	O-RING 74,5X3 MM	5-13, 5-15, 5-17
315204-0308 ..	O-RING 84,5X3 MM	11-15
315204-0317 ..	O-RING 129,5X3 MM	1-145, 1-151
315205-0505 ..	O-RING 6,07X1,78 MM	1-93
315205-0508 ..	O-RING 9,19X2,62 MM	4-21
315205-0729 ..	O-RING 39,34X2,62 MM	4-7, 4-9
315206-0523 ..	O-RING 31,34X3,53 MM	4-25, 4-27, 4-35, 4-37, 4-45, 4-47, 4-49
315207-0514 ..	O-RING 18,72X2,62 MM	1-83, 1-85, 11-9, 11-11
315207-0719 ..	O-RING 23,47X2,62 MM	1-83, 1-85, 11-9, 11-11
315220-0130 ..	V-RINGS 14X20X7,7 MM V-16S	10-67, 10-69
315220-0167 ..	V-RINGS 27X35X10,5 MM V-30S	3-7, 3-9
315220-0172 ..	V-RINGS 29X37X10,5 MM V-32S	10-67, 10-69
315220-0198 ..	V-RINGS 45X55X13 MM V-50S	1-83, 1-85, 1-95, 2-103
315221-0137 ..	RADIAL SEAL 17X35X7 MM	10-67, 10-69
315221-0145 ..	RADIAL SEAL 20X35X7 MM	10-65
315221-0147 ..	RADIAL SEAL 20X47X7 MM	3-5, 3-11
315221-0156 ..	RADIAL SEAL 25X35X7 MM	5-19, 5-21
315229-0101 ..	GASKETS, 10,4X17,4X3,7 MM 1/2" FDA	1-185
315229-0102 ..	GASKETS, 16,8X23,8X3,7 MM 3/4" FDA	1-87, 1-89, 1-97, 1-99
315229-0103 ..	GASKETS, 23,1X30,1X3,7 MM 1" FDA	1-15, 1-179, 1-185, 1-187, 2-55, 2-57, 2-59, 2-87, 6-35, 6-37, 6-41
315229-0104 ..	GASKETS, 35,8X42,8X3,7 MM 1"1/2 FD	1-87, 1-89, 1-97, 1-99, 1-187, 2-87, 11-9, 11-11, 11-27
315229-0105 ..	GASKETS, 48,5X55,5X3,7 MM 2" FDA	1-185, 2-87, 2-91, 11-9, 11-11
315229-0106 ..	GASKETS, 61,2X68,2X3,7 MM 2"1/2 FD	1-87, 1-89, 1-97, 1-99, 11-9, 11-11
315229-0107 ..	GASKETS, 73,9X80,9X3,7 MM 2"1/2 FD	1-87, 1-89, 1-97, 1-99, 2-87, 11-9, 11-11
315229-0203 ..	GASKET 22,1X30,1X3,7 MM 1"	1-145, 1-155, 1-157
315229-0204 ..	GASKET 34,8X42,8X3,7 MM 1"1/2	1-151, 1-159
315229-0205 ..	GASKET 47,5X55,5X3,7 MM 2 INCH	1-143, 1-149, 1-151, 1-159
315229-0206 ..	GASKET 60,2X68,2X3,7 MM 2"1/2	1-143, 1-147, 1-149, 1-153, 1-187
315229-0208 ..	GASKET 97,4X105,4X3,7 MM 4"	1-139
315233-0101 ..	WASHER CAPTIVE SEALING M5(NEW315239-101)	1-109, 1-111, 1-113
315233-0110 ..	WASHER CAPTIVE SEALING G1/4	12-9
315233-0113 ..	WASHER CAPTIVE SEALING G1/2	2-55, 6-19, 12-9
315234-0109 ..	WASHER,PL.RND.CU.10,3/13,5 H=1,0	1-183
315234-0110 ..	WASHER,PL.RND.CU.13,5/18 H=1,5	1-139, 11-63
315234-0113 ..	WASHER PL.RND.CU.21,3//26 H=1,5	1-141
315237-0109 ..	WASHER,PL.RND.AL.10/14,H=1,5	1-179, 1-219, 1-221
315237-0110 ..	WASHER,PL.RND.AL.13,5/18,H=1,5	1-183, 2-19, 2-21, 2-23
315239-0109 ..	NYLON WASHER G1/8, 1/8RRP	6-65, 6-67
315239-0110 ..	NYLON WASHER G1/4, 1/4RRP	6-65, 6-67, 6-73
315239-0111 ..	NYLON WASHER G3/8, 3/8RRP	6-65, 6-67
315239-0113 ..	NYLON WASHER G1/2, 1/2RRP	2-47, 6-65, 6-67, 6-73
315400-0004 ..	TUBE PUN-H-8X1,25-BL	4-51, 6-71
315402-0136 ..	LOCK WASHER FBB 4,1	1-113
315402-0156 ..	LOCK WASHER FBB 6,5	4-51
315402-0173 ..	LOCK WASHER FBB 10,2	2-79
315410-0100 ..	LOCK WASHER MB 0 D=10 H=1	4-19
315410-0103 ..	LOCK WASHER MB 3 D=17 H=1	2-95
315701-0166 ..	PARALLEL KEY W. ROUND ENDS 4X4X12 MM	8-141
315701-0168 ..	PARALLEL KEY W. ROUND ENDS 4X4X16 MM	1-35, 4-19
315701-0170 ..	PARALLEL KEY W. ROUND ENDS 4X4X20 MM	8-63, 8-79
315701-0197 ..	PARALLEL KEY W. ROUND ENDS 5X5X12 MM	3-5
315701-0199 ..	PARALLEL KEY W. ROUND ENDS 5X5X16 MM	3-5, 5-13, 5-15, 5-17
315705-0201 ..	PARALLEL KEY W. ROUND ENDS 5X5X20 MM	1-11
315705-0202 ..	PARALLEL KEY W ROUND ENDS 5X5X25MM	5-13, 5-15, 5-17, 8-141
315705-0230 ..	PARALLEL KEY W. ROUND ENDS 6X6X16 MM	3-11, 4-19

Part No	Description	Page No
315705-0232 ..	PARALLEL KEY W. ROUND ENDS 6X6X20 MM	1-37
315705-0236 ..	PARALLEL KEY W. ROUND ENDS 6X6X30 MM	5-5, 5-7
315705-0238 ..	PARALLEL KEY W. ROUND ENDS 6X6X36 MM	5-13, 5-15, 5-17
315705-0240 ..	PARALLEL KEY W. ROUND ENDS 6X6X45 MM	5-5, 5-7
315705-0265 ..	PARALLEL KEY W. ROUND ENDS 8X7X25 MM	5-13, 5-15, 5-17, 10-5
315705-0267 ..	PARALLEL KEY W. ROUND ENDS 8X7X30 MM	2-103
315705-0305 ..	PARALLEL KEY W. ROUND ENDS 10X8X60 MM	8-43
315705-0307 ..	PARALLEL KEY W. ROUND ENDS 10X8X70 MM	5-13, 5-15, 5-17
315705-0330 ..	PARALLEL KEY W. ROUND ENDS 12X8X32 MM	5-13, 5-15, 5-17
315741-0102 ..	RETAINING RING DIN 705 A2 6	8-135
315742-0122 ..	RETAINING RING 30 SMS 199	2-103
315750-0112 ..	RETAINING RING SHAFT DIN 471 ST 15	8-139
315750-0119 ..	RETAINING RING SHAFT DIN 471 ST 25	11-59
315751-0103 ..	RETAINING RING FOR SHAFT DIN 471 6 SS	1-37, 1-67, 1-69, 2-103, 2-119, 2-121, 8-57, 8-83, 8-85, 8-135
315751-0109 ..	RETAINING RING FOR SHAFT DIN 471 12 SS	1-197, 4-25, 4-27, 4-29, 4-31, 4-33, 4-35, 4-37, 4-39, 4-41, 4-43, 4-45, 4-47, 4-49, 8-25, 8-83, 8-85, 8-95, 8-103
315751-0111 ..	RETAINING RING FOR SHAFT DIN 471 14 SS	8-141
315751-0112 ..	RETAINING RING FOR SHAFT DIN 471 15 SS	1-193, 3-13, 3-15, 4-11, 4-13, 8-21, 8-23, 8-73, 8-137, 8-145, 12-25
315751-0113 ..	RETAINING RING FOR SHAFT DIN 471 16 SS	2-79, 4-15, 4-17
315751-0116 ..	RETAINING RING FOR SHAFT DIN 471 20 SS	3-5, 3-11, 5-13, 5-15, 5-17, 5-27, 5-29
315751-0119 ..	RETAINING RING FOR SHAFT DIN 471 25 SS	5-5, 5-7, 5-13, 5-15, 5-17, 5-19, 5-21, 8-73, 8-137
315753-0117 ..	RETAINING RING FOR BORE DIN 472 22 A2	4-19
315753-0122 ..	RETAINING RING FOR BORE DIN 472 30 A2	1-195, 8-75
315753-0123 ..	RETAINING RING FOR BORE DIN 472 32 A2	4-19, 8-141
315753-0124 ..	RETAINING RING FOR BORE DIN 472 35 A2	1-33, 1-37, 1-51, 1-53, 8-21, 8-23, 8-79, 10-65, 10-67, 10-69
315753-0127 ..	RETAINING RING FOR BORE DIN 472 40 A2	8-79
315753-0130 ..	RETAINING RING FOR BORE DIN 472 47 A2	3-11, 5-13, 5-15, 5-17, 8-77
315753-0132 ..	RETAINING RING FOR BORE DIN 472 52 A2	5-5, 5-7
315754-0113 ..	LOCKING WAE 15	1-109, 1-111, 1-113
315755-0105 ..	RETAINING RING SHAFT DIN 6799 3,2 A2	1-73
315755-0106 ..	RETAINING RING SHAFT DIN 6799 4 A2	1-231
315755-0108 ..	RETAINING RING SHAFT DIN 6799 6 A2	8-75
315755-0110 ..	RETAINING RING SHAFT DIN 6799 9 A2	10-65
315755-0112 ..	RETAINING RING SHAFT DIN 6799 12 A2	4-11, 4-13, 8-27, 8-29, 8-47
315755-0113 ..	RETAINING RING SHAFT DIN 6799 15 A2	3-7, 3-9
315755-0801 ..	RETAINING RING SHAFT DIN 6799 8 A2	2-27, 3-7, 3-9, 8-19
316810-0106 ..	PIPE CLIP FOR TUBE D=8 MM	5-19, 5-21, 6-45
318202-0000 ..	CHAIN 1/2" X 5/16"	10-5
318800-0104 ..	HANDLE,SPHERICAL KNOB,INT.THRE.,D.30-M8	8-19
318801-0108 ..	HANDLE, THREADED TAP. NO. 8304-910	10-25
318856-0101 ..	KNOB, EXTERNAL THREAD. NO. 8308-1011	6-15
318860-0106 ..	KNOB, ADJUST.HI.EXT.THREAD, NO 8324-3674	2-79
319030-0125 ..	DISC SPRING, CONICAL 12,5X6,2X0,5 MM	8-81
321101-0202 ..	FLANGE BUSHING, 16X22X12 MM	8-27, 8-29
321101-0273 ..	FLANGE BUSHING, 30X40X30 MM	4-11, 4-13
321105-0164 ..	BEARING BUSH W/O FLANGE, 10X16X16 MM	8-19
321111-0049 ..	FLANGE BUSHING, 5X9X8 MM	4-51
321111-0097 ..	FLANGE BUSHING, 8X12X12 MM	8-9
321111-0188 ..	FLANGE BUSHING, 14X20X20 MM	4-51
321120-0104 ..	BEARING BUSH W/O FLANGE, 10X12X10 MM	1-15
321120-0111 ..	BEARING BUSH W/O FLANGE, 12X14X15 MM	1-197
321120-0137 ..	BEARING BUSH W/O FLANGE, 20X23X15 MM	11-61
321136-0183 ..	BUSHING, 12X14X15 MM	3-7, 3-9
321136-0260 ..	BUSHING, 20X23X20 MM	3-7, 3-9
321141-0064 ..	BEARING BUSH W/O FLANGE, 6X8X10 MM	8-57
321141-0104 ..	BEARING BUSH W/O FLANGE, 8X10X12 MM	8-93, 8-101
321141-0138 ..	BEARING BUSH W/O FLANGE, 10X12X8 MM	8-87
321141-0178 ..	BEARING BUSH W/O FLANGE, 12X14X10 MM	8-93, 8-101
321141-0216 ..	BEARING BUSH W/O FLANGE, 16X18X12 MM	8-93, 8-101
321153-0296 ..	FLANGE BUSHING, 25X28X21,5 MM	5-19, 5-21
321155-0221 ..	FLANGE BUSHING, 16X18X17 MM	4-15, 4-17
321156-0145 ..	FLANGE BUSHING, 10X12X15 MM	5-43, 5-45, 5-47
321156-0270 ..	FLANGE BUSHING, 20X23X30 MM	3-7, 3-9
321156-0420 ..	FLANGE BUSHING, 40X44X40 MM	3-7, 3-9
321161-0185 ..	FLANGE BUSHING, 12X14X17 MM	8-25
321161-0221 ..	FLANGE BUSHING, 16X18X17 MM	2-79
321302-0298 ..	BALL BEARING, 8X22X7 MM	4-19
321308-0202 ..	BALL BEARING, 15X32X9 MM	8-27, 8-29, 8-141
321308-0204 ..	BALL BEARING, 20X42X12 MM	3-5
321308-0205 ..	BALL BEARING, 25X47X12MM	8-73, 8-137
321313-0100 ..	BALL BEARING, 10X30X9 MM	1-195, 8-75
321313-0101 ..	BALL BEARING, 12X32X10 MM	4-19
321313-0102 ..	BALL BEARING, 15X35X11 MM	1-193, 2-27, 8-21, 8-23, 8-43, 8-79, 8-93, 8-101, 8-135, 8-139, 8-141, 8-143, 8-145
321313-0103 ..	BALL BEARING, 17X40X12MM	2-95, 8-79
321313-0104 ..	BALL BEARING, 20X47X14 MM	3-11
321330-0108 ..	ANG. BALL BEAR, 40X80X30,2 MM	5-13, 5-15, 5-17
342203-0120 ..	NIPPLES, EXT. THREAD, HEXAGON,ÿNO. 209	6-33
342206-0109 ..	BUSHING, TAPERED, INT/EXT. THR NO. R211	1-145
342245-0102 ..	T-PIPE, INT. THREAD, R1/4XKR1/4	2-89
342700-0113 ..	NIPPLES,HEXAGON,EXT.G-THREAD G1/2"-G1/2"	1-181, 6-73

Part No	Description	Page No
342700-0203 ..	NIPPLES,HEXAGON,EXT.G-THREAD G3/8"-G1/4"	6-65, 6-67
342700-0205 ..	NIPPLES,HEXAGON,EXT.G-THREAD G1/2"-G1/4"	6-73, 8-41
342701-0201 ..	BUSHING,INT./EXT.G-THREAD G1/4"-G1/8"	2-89
342701-0202 ..	BUSHING,INT./EXT.G-THREAD G3/8"-G1/8"	6-11, 6-21, 6-65, 6-67
342701-0203 ..	BUSHING, INT/EXT. G-THREAD NO. 3/8-1/4	1-181
342701-0205 ..	BUSHING,INT./EXT.G-THREAD G1/2"-G1/4"	2-51
342701-0206 ..	BUSHING,INT./EXT.G-THREAD G1/2"-G3/8"	6-11
342701-0209 ..	BUSHING,INT./EXT.G-THREAD G3/4"-G3/8"	1-181
342706-0130 ..	ACCESSORIES, INSERT SLEEVE 6 MM	1-139, 1-219, 1-221, 2-95, 4-23
342708-0109 ..	REINFORCING RING VSH 15X1 MM	6-19, 6-65, 6-67
342713-0209 ..	PLUG (QUANT.MINIMA= 10PC).	1-179, 1-183, 4-21, 10-35
342713-0210 ..	PLUG, EXT THREAD HEX SOCKET	1-205, 1-209, 1-211, 2-39, 2-41, 8-131, 8-133
342713-0211 ..	PLUG, EXT THREAD HEX SOCKET 8638-00-380	1-181, 1-213, 1-215, 1-217, 2-39, 2-41, 2-127, 6-71, 8-131, 8-133, 10-35
342713-0213 ..	PLUG, EXT THREAD HEX SOCKET 8638-00-120	1-141, 2-47, 6-17, 6-43
342715-0100 ..	BLIND PLUG 4 MM	1-213, 1-215
342715-0102 ..	BLIND PLUG 6 MM	1-213, 1-215, 1-217, 2-39, 2-41, 2-127, 6-71, 8-131, 8-133
342715-0103 ..	BLIND PLUG 8 MM	1-213, 1-215, 1-217, 2-39, 2-41, 2-127, 6-71, 8-131, 8-133
342716-0202 ..	REDUCER 4-6	8-39
342716-0203 ..	REDUCER 6-8	2-39, 2-41, 2-127, 8-131, 8-133
342716-0209 ..	REDUCER 8-12	1-205, 2-35, 2-37, 8-131, 8-133
342716-0210 ..	REDUCER 6-12	2-127
342716-0211 ..	REDUCER 12-14	2-35, 2-37, 6-73
342720-0103 ..	CONN. STR. GA-8-G1/8	3-7, 3-9
342720-0114 ..	CONN. STR. GA-15-G1/2	2-47, 6-19, 6-65, 6-67
342720-0119 ..	CONN. STR., GA-22-G3/4	6-17
342722-0197 ..	STRAIGHT COUPLING	1-37, 1-51, 1-67, 1-69, 8-61, 8-83, 8-97, 8-107
342722-0202 ..	PIPE COUPLING 1/8" D=6MM	1-105, 1-149, 2-127, 4-51, 4-53, 4-55, 4-57, 5-5, 5-7, 8-11, 8-85
342722-0203 ..	STRAIGHT COUPLING	1-87, 1-89, 1-97, 1-99, 1-209, 1-211, 2-47, 2-87, 2-89
342722-0204 ..	PIPE COUPLING	8-83, 10-35, 10-37
342722-0205 ..	STRAIGHT COUPLING D=8-G1/4"	6-39
342722-0206 ..	STRAIGHT COUPLING D=8-G3/8"	2-19, 2-21, 2-23, 6-13, 6-71, 8-131, 8-133
342722-0209 ..	STRAIGHT COUPLING D=12-G1/4"	1-209, 1-211
342722-0210 ..	STRAIGHT COUPLING, D=12 MM - G3/8"	2-19, 2-21, 2-23, 10-35, 10-39
342724-0102 ..	CONN. STR. PIPE GI 6-G1/8	1-219, 1-221
342725-0102 ..	CONN. STR. PIPE GAI06LR G1/8	8-11
342725-0103 ..	CONN. STR. PIPE GAI08LR G1/4	1-103
342728-0102 ..	PIPE COUPLING 6 MM	8-39
342732-0102 ..	ELBOW PIPE JOINT, EXT.THREAD, D=6MM-G1/8	1-15, 1-105
342732-0105 ..	ELBOW PIPE JOINT ,EXT.THREAD,D=8 MM R3/8	1-213, 1-215, 8-131, 8-133
342733-0114 ..	CONN. ELBOW WI-15-G1/2	1-151
342735-0103 ..	ELBOW PIPE JOINT	5-63, 6-15, 8-131, 8-133
342735-0109 ..	ELBOW PIPE JOINT	2-35, 2-37, 8-131, 8-133
342735-0110 ..	ELBOW PIPE	2-35, 2-37, 2-47
342737-0204 ..	CONN. ELBOW W-6 LRFR	4-53, 4-55, 4-57
342737-0221 ..	CONN. ELBOW W-15 LRFR	1-151, 1-179
342738-0221 ..	ADJUSTABLE ELBOW CONNECTION,EXT 15-G1/2	1-145
342742-0103 ..	T-COUPLING,ADJUST,F.PLASTIC TUBE 6-G1/4"	2-47, 8-39
342748-0102 ..	T-CONNECTION 6MM	1-219, 1-221, 2-35, 2-37, 8-83, 8-97, 8-107
342748-0103 ..	T-CONNECTION 8MM	2-39, 2-41
342748-0109 ..	T-CONNECTION 12MM	1-205, 1-209, 1-211, 2-35, 2-37, 2-127, 6-71, 8-131, 8-133
342748-0110 ..	T-CONNECTION 14MM	2-35, 2-37, 2-47, 6-73
342751-0215 ..	CONN. L-PIPE, EXT. LE-12-R3/8	1-181
342755-0102 ..	CONN. T-PIPE ADJ. , EVT06LROMD	5-13, 5-15, 5-17
342759-0102 ..	CONN. L-PIPE ADJ.,EVL,EXT,T-6-G1/8	1-219, 1-221
342767-0100 ..	CONN. BULKHEAD G1/8	1-237, 1-239
342767-0104 ..	CONN. BULKHEAD G1/4	2-19, 2-21, 2-23, 2-43, 2-51
342768-0102 ..	BULKHEAD CONNECTOR, 6 MM	1-93, 2-19, 2-21, 2-23
342768-0103 ..	BULKHEAD CONNECTOR, 8 MM	2-19, 2-21, 2-23
342770-0101 ..	STRAIGHT COUPLING INT, D=4 MM - G1/8	6-71
342770-0105 ..	STRAIGHT COUPLING INT, D=6 MM - G1/8	8-131, 8-133
342770-0107 ..	STRAIGHT COUPLING INT, D=8 MM - G1/8	2-39, 2-41, 8-83
342772-0113 ..	ELBOW FITTING, 6 - G1/8	4-53, 4-55, 4-57
342772-0122 ..	ELBOW FITTING, 8 - G1/4	2-39, 2-41
342797-0121 ..	CONN. BANJO, RINGPIECE 6-1/8	1-61, 1-63, 1-219, 1-221, 5-5, 5-7
342797-0122 ..	CONN. BANJO, RINGPIECE 6-1/4	1-145, 1-219, 1-221
342840-0101 ..	CLAMP, 12,7 AND 19,1 MM 3-A PCS+PMCS	1-93
342840-0103 ..	CLAMPING PIECE	1-87, 1-89, 1-93, 1-97, 1-99, 1-119, 1-121, 1-125, 1-131, 1-133, 1-135, 1-147, 2-57
342840-0105 ..	CLAMPING PIECE	1-105, 1-133, 1-135, 1-145, 1-151
342840-0107 ..	CLAMPING PIECE	2-19, 2-21, 2-23
342840-0108 ..	CLAMP, 101,6 MM 3-A PCS+PMCS	1-145
342850-0103 ..	GASKET 22,7X49,1X5,2 MM 1" FDA	2-57
342850-0107 ..	GASKET, FDA, 3-A, 3	2-19, 2-21, 2-23
342850-0304 ..	GASKET 35,4X49,1X5,2 1"1/2 FDA	1-119, 1-121, 1-125, 1-131, 1-133, 1-135, 1-147, 11-3, 11-9, 11-11
342850-0305 ..	GASKET 47,8X62,6X5,2 MM 2" FDA	1-105, 1-133, 1-135
342850-0405 ..	GASKET 47,8X62,6X5,2 MM 2" FDA	1-145, 1-151
342850-0408 ..	GASKET 97X117,7X5,2 MM 4" FDA	1-145
342901-0101 ..	HOSE NIPPLE, EXT.THR. R1/8-7 MM	2-89
342901-0102 ..	HOSE NIPPLE, EXT.THR. R1/4-7 MM	6-11, 6-65, 6-67
342901-0105 ..	HOSE NIPPLE, EXT.THR. R1/2-12 MM	1-151, 2-19, 2-21, 2-23, 2-55, 6-19, 6-31, 6-65, 6-67
342920-0122 ..	STRAIGHT COUPLING,EXT.THREADED 8/6-R1/4"	1-205, 2-43, 6-65, 6-67
342920-0123 ..	STRAIGHT COUPLING,EXT.THREADED 8/6-R3/8"	6-13
342920-0124 ..	STRAIGHT COUPLING,EXT.THREADED 8/6-R1/2"	6-65, 6-67
342920-0132 ..	STRAIGHT COUPL.,EXT.THREADED 10/8-R1/4"	2-51

Part No	Description	Page No
342921-0113 ..	STRAIGHT COUPLING,EXT.THREADED 6/4-G1/8"	1-237, 1-239
342921-0114 ..	STRAIGHT COUPLING,EXT.THREADED 6/4-G1/4"	2-19, 2-21, 2-23
342921-0121 ..	STRAIGHT CPLNG,EXT.THREADED 8/6-G1/8INCH	4-21
342921-0122 ..	STRAIGHT COUPLING,EXT.THREADED 8/6-G1/4"	1-205, 2-19, 2-21, 2-23, 5-13, 5-15, 5-17, 5-19, 5-21
342922-0122 ..	STRAIG.COUPL.,ADJUST.,EXT.THRE.8/6-R1/4"	6-13, 6-21
342923-0121 ..	STRAIGHT COUPL.,INT.THREADED 8/6-G1/8"	1-219, 1-221
342930-0122 ..	ELBOW 90 COUPL.,EXT.THREAD 8/6-R1/4"	1-205
342930-0133 ..	ELBOW 90 COUPL.,EXT.THREADED 10/8-R3/8"	6-65, 6-67
342931-0121 ..	ELBOW 90 COUPL.,EXT.THREAD 8/6-G1/8"	1-41, 4-21, 6-11, 8-11
342931-0122 ..	ELBOW 90 COUPL.,EXT.THREAD 8/6-G1/4"	5-13, 5-15, 5-17, 5-43, 5-45, 5-47, 6-13
342933-0122 ..	ELBOW 90 COUPL.,INT.THREAD 8/6-G1/4	6-13
342940-0122 ..	T-COUPLING,EXT.THREAD 8/6-R1/4"	1-205, 6-23
342946-0112 ..	T-COUPLING,UNION 6/4	5-5, 5-7
342960-0121 ..	BULKHEAD COUPLING 8/6-6/4	1-205
342960-0122 ..	BULKHEAD COUPLING 8/6	1-205
342980-0112 ..	BANJO-CONNECTION,RING 6/4-M6	2-103
342980-0303 ..	BANJO-HOLLOW BOLT COUPL,EXT.THR.01-G1/8	1-61, 1-63, 1-219, 1-221
342980-0304 ..	BANJO-HOLLOW BOLT COUPL,EXT.THR.01-G1/4	1-145, 1-219, 1-221
342980-0313 ..	BANJO-HOLLOW BOLT COUPL,EXT.THR.02-G1/8	4-7, 4-9, 5-5, 5-7
342980-0314 ..	BANJO-HOLLOW BOLT COUPL,EXT.THR.02-G1/4	1-145, 2-19, 2-21, 2-23
342981-0113 ..	BANJO CONNEC,RING,FOR PLAST.TUBE 6-G1/8"	4-7, 4-9, 5-5, 5-7
342981-0114 ..	BANJO CONNEC,RING,FOR PLAST.TUBE 6-G1/4"	2-19, 2-21, 2-23
342991-0100 ..	HOSE CLIP,WORM DRIVE TYPE 10-13	6-11, 6-31, 6-45, 12-9
342991-0101 ..	HOSE CLIP,WORM DRIVE TYPE (13)-16	1-151, 2-19, 2-21, 2-23, 2-85, 2-89, 6-7, 6-9, 6-11, 6-13, 6-17, 12-9
342991-0102 ..	HOSE CLIP,WORM DRIVE TYPE (16)-19	2-55, 6-43
342991-0103 ..	HOSE CLIP,WORM DRIVE TYPE (19)-23	1-179, 2-19, 2-21, 2-23, 2-91
342991-0104 ..	HOSE CLIP,WORM DRIVE TYPE (23)-27	2-47, 2-85
342991-0105 ..	HOSE CLIP,WORM DRIVE TYPE (27)-30	2-19, 2-21, 2-23
342991-0106 ..	HOSE CLIP,WORM DRIVE TYPE (30)-36	2-91
342991-0109 ..	HOSE CLIP,WORM DRIVE TYPE (48)-50	1-143
342991-0110 ..	HOSE CLIP,WORM DRIVE TYPE (54)-63	2-19, 2-21, 2-23, 2-85, 2-91
342991-0111 ..	HOSE CLIP,WORM DRIVE TYPE (63)-73	1-141
342991-0114 ..	HOSE CLIP,WORM DRIVE TYPE (93)-110	2-79
346800-0110 ..	SILENCER FILTER R1/4"	1-61, 1-63, 1-119, 1-121, 1-205
350002-0011 ..	PUSH-IN L-FITTING QSL-F-G1/4-12	1-209, 1-211
350002-0016 ..	PUSH-IN L-FITTING QSL-F-G1/2-12	8-41
350004-0003 ..	PUSH-IN L-FITTING QSL-F-8	2-39, 2-41
350008-0004 ..	PUSH-IN FITTING QSF-F-G1/4-6	5-19, 5-21
350008-0005 ..	PUSH-IN FITTING QSF-F-G1/8-8	4-51
350010-0005 ..	PUSH-IN BULKHEAD FITTING QSS-F-12	1-209, 1-211
350013-0005 ..	PLUG QSC-12H	8-131, 8-133
351120-0126 ..	CABLE SILFLEX SIHF 2X4 0046025	8-61
351120-0145 ..	CABLE SILFLEX SIHF 3X2,5 0046020	8-67
351120-0164 ..	CABLE SIHF 4X1,5MM2 GREEN/YELLOW	1-187
351120-0165 ..	CABLE SIHF 4X2,5MM2 GREEN/YELLOW	1-161, 1-163, 1-165
351120-0168 ..	CABLE SIHF 4X10MM2 GREEN/YELLOW	1-161, 1-163, 1-165
351150-0166 ..	CABLE OLFLEX 4X4 MM2 LIGHT/GREY	2-13, 2-15, 6-35, 6-37
351150-0403 ..	CABLE OLFLEX 3X0,75 MM2 LIGHT/GREY	1-61, 1-63, 1-161, 1-163, 1-165, 1-207, 1-235, 1-237, 1-239, 2-7, 2-47, 2-89, 6-29, 6-65, 6-67
351150-0404 ..	CABLE OLFLEX 4X0,75 MM2 LIGHT/GREY	1-61, 1-63, 1-237, 1-239, 10-77
351150-0405 ..	CABLE OLFLEX 5X0,75 MM2 LIGHT/GREY	1-161, 1-163, 1-165, 1-237, 1-239, 2-13, 2-15, 2-111, 8-33, 8-35, 8-157
351150-0406 ..	CABLE OLFLEX 7X0,75 MM2 LIGHT/GREY	2-13, 2-15, 6-25, 8-33, 8-35, 10-115, 10-117
351150-0407 ..	CABLE OLFLEX 12X0,75 MM2 LIGHT/GREY	1-207, 1-237, 1-239, 2-13, 2-15, 8-155, 8-167, 11-3
351150-0412 ..	CABLE OLFLEX 3X1,5 MM2 LIGHT/GREY	1-161, 1-163, 1-165, 1-187, 2-11, 2-13, 2-15, 8-33, 8-35, 8-109, 8-111, 8-113, 8-115, 8-117
351150-0413 ..	CABLE OLFLEX 4GX1,5 MM2 LIGHT/GREY	8-109, 8-111, 8-113, 8-115, 8-117
351150-0415 ..	CABLE OLFLEX 7X1,5 MM2 LIGHT/GREY	8-109, 8-111, 8-113, 8-115, 8-117
351150-0418 ..	CABLE OLFLEX 4X2,5 MM2 LIGHT/GREY	1-161, 1-163, 1-165, 2-13, 2-15, 2-95, 2-103, 2-129, 6-11, 6-21
351150-0419 ..	CABLE OLFLEX 5X2,5 MM2 LIGHT/GREY	2-13, 2-15, 5-63
351150-0424 ..	CABLE OLFLEX 18X0,75 MM2 LIGHT/GREY	10-115, 10-117
351150-0425 ..	CABLE OLFLEX 25X0,75 MM2 LIGHT/GREY	1-235, 1-237, 1-239, 2-13, 2-15, 2-129, 6-63, 8-109, 8-111, 8-113, 8-115, 8-117
351150-0426 ..	CABLE OLFLEX 5X25 MM2 LIGHT/GREY	2-13, 2-15
351150-0431 ..	CABLE OLFLEX 2X0,75 MM2 LIGHT/GREY	6-11, 6-21, 8-33, 8-35
351160-0102 ..	WIRE AWM 1X0,75 MM2 DARKBLUE	1-237, 1-239, 6-63
351161-0110 ..	WIRE AWM 1X25 MM2 LIGHTBLUE	6-5
351161-0111 ..	WIRE AWM 1X35 MM2 LIGHTBLUE	6-5
351162-0109 ..	WIRE AWM 1X16 MM2 YELLOW-GREEN	6-5
351164-0111 ..	WIRE AWM 1X35 MM2 BLACK	6-5, 7-7
351416-0020 ..	MINIATURE CIRC. BREAK., FAZ -D2 1-POLE	7-81
351416-0060 ..	MINIATURE CIRC. BREAK., FAZ -D6 1-POLE	7-81
351416-0100 ..	MINIATURE CIRC. BREAK., FAZ -D10 1-POLE	7-81
351417-0100 ..	MINIATURE CIRC. BREAK.,FAZ-D10/2 2-POLE	7-85
351418-0060 ..	MINIATURE CIRC. BREAK., FAZ-D6/3 3-POLE	7-81
351418-0100 ..	MINIATURE CIRC. BREAK., FAZ-D10/3 3-POLE	7-85
351501-0030 ..	ETHERNET PATCH CABLE, FL CAT5 PATCH 3,0	7-87, 7-89
352103-0095 ..	CABLE GLAND, STR 7, PR 12,5/PG7	10-115, 10-117
352103-0100 ..	CABLE GLAND, STR 9, PR15,2/PG9	1-161, 1-163, 1-165, 1-237, 1-239, 2-7, 6-63, 10-115, 10-117
352103-0101 ..	CABLE GLAND, ST 9, PR15,2/PG9	1-105, 1-119, 1-121, 1-131, 1-145, 1-151, 1-161, 1-163, 1-165, 1-183, 1-205, 1-207, 1-235, 1-237, 1-239, 2-7, 2-9, 2-89, 2-129, 6-25, 6-29, 6-63, 6-65

Part No	Description	Page No
		6-67, 6-73, 8-109, 8-111, 8-113, 8-115, 8-117
352103-0106 ..	CABLE GLAND, ST 11, PR18,6/PG11	1-161, 1-163, 1-165, 1-205, 1-237, 1-239, 2-7, 2-9, 2-11
		2-129, 6-5, 8-109, 8-111, 8-113, 8-115, 8-117
352103-0108 ..	CABLE GLAND, ST 13,5 , PR20,4/PG13,5	1-161, 1-163, 1-165, 2-7, 2-13, 2-15, 6-11, 6-21, 6-25
		7-9, 7-23, 7-25, 7-27, 7-29, 7-31, 8-91, 8-109, 8-111, 8-113, 8-115, 8-117, 8-141, 10-3, 10-115, 10-117
352103-0110 ..	CABLE GLAND, STR 16, PR22,5/PG16	1-161, 1-163, 1-165, 2-95, 2-111, 6-21, 6-25, 6-63, 8-157
352103-0111 ..	CABLE GLAND, ST 16, PR22,5/PG16	1-141, 1-161, 1-163, 1-165, 1-179, 1-235, 1-237, 1-239
		2-13, 2-15, 2-103, 3-17, 6-35, 6-37, 7-23, 7-25, 7-27, 7-29, 7-31, 8-109, 8-111, 8-113, 8-115, 8-117
		8-155, 10-115, 10-117
352103-0115 ..	CABLE GLAND, STR 21, PR28,3/PG21	2-13, 2-15, 2-81, 2-129, 6-35, 6-37, 8-109, 8-111, 8-113
		8-115, 8-117
352103-0116 ..	CABLE GLAND, ST 21, PR28,3/PG21	1-161, 1-163, 1-165, 1-235, 1-237, 1-239, 2-7, 2-9, 2-13
		2-15, 2-129, 6-63
352103-0120 ..	CABLE GLAND, STR 29, PR37,0/PG29	1-161, 1-163, 1-165, 2-13, 2-15, 2-129, 6-63
352103-0121 ..	CABLE GLAND, ST 29, PR37,0/PG29	1-161, 1-163, 1-165, 2-13, 2-15, 8-109, 8-111, 8-113
		8-115, 8-117, 10-115, 10-117
352103-0123 ..	CABLE GLAND, ST 42, PR54,0/PG42	6-5
352113-0101 ..	CABLE TIE, BLACK 92X2,5 MM	10-31, 10-33, 10-61
352113-0102 ..	CABLE TIE, BLACK 188X4,8 MM	5-63, 8-19, 8-49, 8-51, 8-53, 10-5, 10-27, 12-9
352113-0103 ..	CABLE TIE, BLACK 290X7,6 MM	1-93
352113-0203 ..	ANCHOR PLATES FOR STRIPS, TYPE TM3S8-M0	1-93, 2-103, 6-7, 6-9, 7-9, 8-57
352113-0204 ..	ANCHOR PLATES FOR STRIPS, TYPE TM3S25-M	1-189, 2-19, 2-21, 2-23, 2-55, 2-69, 2-71
		4-7, 4-9, 4-11, 4-13, 4-53, 4-55, 4-57
352113-0205 ..	ANCHOR PLATES FOR STRIPS, TYPE TM2S8-C10	1-193, 5-63, 6-43, 7-9, 7-23, 7-25, 7-27
		7-29, 7-31, 7-87, 7-89, 8-19, 8-25, 8-33, 8-35, 8-49, 8-51, 8-53, 8-55, 8-57, 8-61, 8-77, 8-87, 8-135
		8-139, 10-31, 10-33, 10-61
353021-0120 ..	FEED THROUGH TERMINAL, 10215.8	2-9, 7-91
353021-0212 ..	FEED THROUGH TERMINAL, 10200.0	7-85
353021-0213 ..	FEED THROUGH TERMINAL, 10201.0	2-7, 2-9, 2-129, 8-125, 8-127
353021-0216 ..	FEED THROUGH TERMINAL, 10200.8	1-207, 1-237, 1-239, 6-25, 6-63, 10-115, 10-117
353021-0217 ..	FEED THROUGH TERMINAL, 10201.8	10-115, 10-117
353021-0226 ..	BY-PASS TERMINAL WDU 35	7-67
353021-0301 ..	TERMINALS,TRIPLE-LEVEL, DLI 2,5/35 PA	8-119, 8-121, 8-123
353021-0302 ..	TERMINALS,TRIPLE-LEVEL, DLD 2,5/35 PA	1-235, 1-237, 1-239, 2-7, 2-129, 8-119, 8-121, 8-123
353022-0002 ..	NEUTRAL TERMINAL, 10107.8	7-85
353022-0004 ..	NEUTRAL TERMINAL, 10109.8	7-85
353024-0204 ..	EARTH TERMINAL WPE 2,5	1-207, 2-7, 2-9, 2-129, 6-63, 7-77, 10-115, 10-117
353024-0205 ..	EARTH TERMINAL, 1010.1	1-207, 1-235, 1-237, 1-239, 2-7, 2-9, 2-129, 6-25, 6-63, 7-91, 8-123
		8-125, 8-127, 10-115, 10-117
353024-0206 ..	EARTH TERMINAL, 1010.2	7-77
353024-0209 ..	EARTH TERMINAL, 1010.5	6-5, 7-67, 7-77
353031-0203 ..	END SUPPORT, WEW 35/2	1-207, 2-7, 2-9, 6-25, 6-63, 7-49, 7-85, 8-119, 8-121, 8-125, 8-127
		10-115, 10-117
353032-0004 ..	END PLATE WAP 2,5-10 BEIGE	7-85
353032-0005 ..	END PLATE WAP 2,5-10 BLUE	1-207, 10-115, 10-117
353032-0009 ..	END PLATE, WAP FOR WDK	7-49, 8-119, 8-121, 8-123
353032-0010 ..	END PLATE WAP	2-9, 7-91
353032-0013 ..	END PLATE, 13818.6	8-119, 8-121, 8-123
353032-0301 ..	END PLATE WAP, 13132.6	8-119, 8-121, 8-123
353032-0302 ..	END PLATE, AP DLD2,5 DB	1-235, 1-237, 1-239, 2-7, 8-123
353033-0104 ..	END PLATE, 10502.8	7-85
353033-0106 ..	PARTITITION, 10501.8	1-237, 1-239
353034-0030 ..	BRIDGE CONNECTOR WQV 2,5/10, 10544.6	2-9, 6-25, 6-63, 7-49, 7-85, 10-115, 10-117
353034-0031 ..	BRIDGE CONNECTOR, WQV 4/10, 10520.6	2-9, 8-125, 8-127
353034-0039 ..	BRIDGE CONNECTOR WQV 4/4, 10546.6	2-9
353034-0402 ..	BRIDGE CONNECTOR Q3, 13126.0	2-7
353034-0404 ..	BRIDGE CONNECTOR Q10, 13131.0	1-235, 1-237, 1-239, 2-7, 8-119, 8-121, 8-123
353041-0001 ..	BUS BAR RAIL 10X3MM SSCH	7-85
353041-0106 ..	HOLDER ZB35 K 5026.8	7-85
353042-0004 ..	RAIL TS 35/7,5	7-43
353042-0005 ..	RAIL TS 35/7.5	6-5
353101-0132 ..	CABLE SHOE 1,5-2,5MM2 M5 BLUE	8-67
353104-0130 ..	CABLE SHOE, RING UNINS., YAV 025 M 4	8-67
353104-0140 ..	CABLE SHOE, RING UNINS., YAV 06 M 4	8-61
353104-0168 ..	CABLE SHOE, RING UNINS., YAV 16 M 6	6-5
353105-0200 ..	PIN CABLE SHOE A4630SR	6-5
353240-0004 ..	GLAND W/O INSERT PG16 NORMAL	1-161, 1-163, 1-165
353240-0005 ..	GLAND W/O INSERT PG21 NORMAL	5-23, 5-25, 8-109, 8-111, 8-113, 8-115, 8-117
353240-0006 ..	GLAND W/O INSERT PG29 NORMAL	1-105, 1-161, 1-163, 1-165
353240-0007 ..	GLAND W/O INSERT PG36 NORMAL	4-23
353241-0003 ..	GLAND W/O INSERT PG21 EXTENDED	4-23, 5-63
353242-0002 ..	HOSE GLAND W/O INSERT PG16 NORMAL	1-93
353242-0004 ..	HOSE GLAND W/O INSERT PG36 NORMAL	4-23, 5-63
353243-0001 ..	HOSE GLAND W/O INSERT PG9 EXTENDED	1-25, 1-61, 1-63, 1-67, 1-69, 1-93, 1-139, 1-147
		1-149, 1-153, 1-161, 1-163, 1-165, 1-183, 1-187, 1-189, 1-197, 1-237, 1-239, 5-5, 5-7, 5-49, 5-63
353243-0002 ..	HOSE GLAND W/O INSERT PG11 EXTENDED	1-61, 1-63, 1-127, 1-129, 1-159, 1-161, 1-163
		1-165, 1-237, 1-239
353243-0003 ..	HOSE GLAND W/O INSERT PG11 EXTENDED	1-91, 1-133, 1-135, 1-161, 1-163, 1-165, 1-187
		1-209, 1-211, 1-237, 1-239
353243-0004 ..	HOSE GLAND W/O INSERT PG13,5 EXTENDED	1-139, 1-161, 1-163, 1-165, 1-207
353243-0005 ..	HOSE GLAND W/O INSERT PG16 EXTENDED	1-237, 1-239, 8-167
353243-0007 ..	HOSE GLAND W/O INSERT PG21 EXTENDED	1-161, 1-163, 1-165, 1-183, 8-91
353243-0008 ..	HOSE GLAND W/O INSERT PG29 EXTENDED	5-23, 5-25, 5-63, 8-91
353244-0002 ..	HOSE GLAND W/O INSERT PG13,5 EXTENDED	1-133, 1-135

Part No	Description	Page No
353245-0004 ..	GLAND, EXTENDED WITH INSERT, PG16/PR 22,	2-13, 2-15, 3-5
353245-0005 ..	GLAND, EXTENDED WITH INSERT, PG16/PR 22,	2-13, 2-15, 3-13, 3-15
353249-0008 ..	INSERT, SINGLE HOLE, EK 152/7	1-25, 1-67, 1-69, 1-93, 1-139, 1-147, 1-153, 1-161, 1-163, 1-165, 1-183, 1-187, 1-189, 1-197, 1-237, 1-239, 5-49, 5-63
353249-0009 ..	INSERT, SINGLE HOLE, EK 152/9	1-61, 1-63, 1-127, 1-129, 1-161, 1-163, 1-165, 1-237, 1-239, 5-5, 5-7
353249-0011 ..	INSERT, SINGLE HOLE, EK 153/11	1-47, 1-49, 1-57, 1-65, 1-133, 1-135, 1-161, 1-163, 1-165, 1-187, 1-209, 1-211, 1-237, 1-239
353249-0013 ..	INSERT, SINGLE HOLE, EK 154/13	1-161, 1-163, 1-165, 1-183, 1-187
353249-0014 ..	INSERT, SINGLE HOLE, EK 154/16	1-161, 1-163, 1-165, 1-207, 8-167
353249-0018 ..	INSERT, SINGLE HOLE, HI.TEMP, EK152I9	1-133, 1-135
353249-0026 ..	INSERT, MULTI HOLE, E153M6X4	1-93, 1-237, 1-239
353249-0028 ..	INSERT, MULTI HOLE, E153M2X8	1-161, 1-163, 1-165
353249-0036 ..	INSERT, MULTI HOLE, EK152 M 2X4	1-149, 1-159, 1-161, 1-163, 1-165
353249-0051 ..	INSERT, MULTI HOLE, E154M4X6	8-109, 8-111, 8-113, 8-115, 8-117
353249-0054 ..	INSERT, SINGLE HOLE, EK 156/25	8-145
353249-0060 ..	INSERT, MULTI HOLE, E155M2X13	1-161, 1-163, 1-165
353249-0061 ..	INSERT, SINGLE HOLE, EK 155/20	1-161, 1-163, 1-165
353249-0071 ..	INSERT, SINGLE HOLE, E155/18	1-161, 1-163, 1-165
353249-0079 ..	INSERT, MULTI HOLE, E155M8X5,5	1-105
353249-0085 ..	INSERT, SINGLE HOLE, HI.TEMP, EK153I7	1-91
353249-0307 ..	SEALING PIN, 7,5X20	1-161, 1-163, 1-165
353250-0050 ..	GLAND, LOCK NUT M50X1,5	7-23, 7-25, 7-27, 7-29, 7-31
359000-0024 ..	WIRE MARKING, YELLOW, PA2/4"-"	2-35, 2-37, 2-39, 2-41
359000-0025 ..	WIRE MARKING, YELLOW, PA3/6"-"	2-35, 2-37
359000-0400 ..	WIRE MARKING, YELLOW, PA2/4"0"	2-35, 2-37, 2-39, 2-41, 2-49, 2-103
359000-0401 ..	WIRE MARKING, YELLOW, PA2/4"1"	2-35, 2-37, 2-39, 2-41, 2-49, 2-103
359000-0402 ..	WIRE MARKING, YELLOW, PA2/4"2"	2-35, 2-37, 2-39, 2-41, 2-49, 2-103
359000-0403 ..	WIRE MARKING, YELLOW, PA2/4"3"	2-35, 2-37, 2-39, 2-41, 2-49
359000-0404 ..	WIRE MARKING, YELLOW, PA2/4"4"	2-35, 2-37, 2-39, 2-41, 2-49, 2-103
359000-0405 ..	WIRE MARKING, YELLOW, PA2/4"5"	2-35, 2-37, 2-39, 2-41, 2-49, 2-103
359000-0406 ..	WIRE MARKING, YELLOW, PA2/4"6"	2-35, 2-37, 2-39, 2-41
359000-0408 ..	WIRE MARKING, YELLOW, PA2/4"8"	2-49
359000-0409 ..	WIRE MARKING, YELLOW, PA2/4"9"	2-49
359000-0500 ..	WIRE MARKING, YELLOW, PA3/6"0"	2-35, 2-37, 2-47
359000-0501 ..	WIRE MARKING, YELLOW, PA3/6"1"	2-35, 2-37
359000-0502 ..	WIRE MARKING, YELLOW, PA3/6"2"	2-35, 2-37
359000-0503 ..	WIRE MARKING, YELLOW, PA3/6"3"	2-35, 2-37
359000-0765 ..	WIRE MARKING, YELLOW, PA2/4"P"	2-35, 2-37
359000-0800 ..	WIRE MARKING, YELLOW, PA3/6"A"	2-35, 2-37
359000-0815 ..	WIRE MARKING, YELLOW, PA3/6"P"	2-35, 2-37, 2-47
359000-0818 ..	WIRE MARKING, YELLOW, PA3/6"S"	2-35, 2-37
359000-0820 ..	WIRE MARKING, YELLOW, PA3/6"U"	2-35, 2-37
359005-0010 ..	MARKING LABEL KIT 0 - 9, 04.841.2150.0	1-161, 1-163, 1-165, 1-207, 6-11, 6-21, 6-25, 6-35, 6-37, 6-63, 8-109, 8-111, 8-113, 8-115, 8-117
359005-0050 ..	MARKING LABEL KIT X, 04.841.4550.0	1-161, 1-163, 1-165, 1-207, 6-11, 6-21, 6-25, 6-35, 6-37, 6-63, 8-109, 8-111, 8-113, 8-115, 8-117
359011-0807 ..	MARKING PLATES 5-FW 1-50	7-77, 10-77, 10-115, 10-117
359011-0808 ..	MARKING PLATES 5-FW 51-100	7-49, 7-77
359011-0809 ..	MARKING PLATES 5-FW 101-150	1-207, 2-9, 6-25, 6-63, 7-49, 7-77
359011-0810 ..	MARKING PLATES 5-FW 151-200	1-237, 1-239, 2-9, 7-49
359011-0811 ..	MARKING PLATES 5-FW 201-2	7-49
359011-0819 ..	MARKING PLATES 5-GW (EARTH)	1-207, 2-7, 2-9, 2-33, 7-67
359011-0821 ..	SET OF SIGNS 6-FW 1-50	2-7, 2-9, 2-33, 7-67, 8-125, 8-127
359011-0823 ..	SET OF SIGNS 6-FW 101-150	1-235, 1-237, 1-239, 2-7, 8-123
359011-0824 ..	SET OF SIGNS 6-FW 151-200	1-237, 1-239, 2-7, 8-119, 8-121, 8-123
359011-0825 ..	SET OF SIGNS 6-FW 201-250	8-119, 8-121
359011-0832 ..	SET OF SIGNS 6-GW (+)	1-235, 1-237, 1-239, 2-7, 8-119, 8-121, 8-123
359011-0833 ..	SET OF SIGNS 6-GW (-)	1-235, 1-237, 1-239, 2-7, 8-119, 8-121, 8-123
359011-0834 ..	SET OF SIGNS 6-GW(EARTH)	1-235, 1-237, 1-239, 2-7, 2-9, 8-119, 8-121, 8-123, 8-125, 8-127
359240-0100 ..	SIGN HOLDER FOR 359240-0001	2-39, 2-41, 6-61, 7-87, 7-89
359241-0122 ..	SIGN: " CLEANING STEAM BARRIER SPACE"	7-87, 7-89
359241-0133 ..	SIGN: " SERVICE SWITCH"	7-87, 7-89
359241-0201 ..	SIGN: " HOUR METER"	7-87, 7-89
359241-0431 ..	SIGN: " MAIN SWITCH"	6-61
359241-0482 ..	SIGN "PACKAGE COUNTER"	7-87, 7-89
359243-0917 ..	SIGN"400V, 50HZ, 100A"	6-61
359243-0918 ..	SIGN"400V, 60HZ, 100A"	6-61
359301-0001 ..	BUTTON SIGN, UP	2-31
359301-0005 ..	BUTTON SIGN, DOWN	2-31
359301-0050 ..	BUTTON SIGN, DROP CHUTE BRIK	2-31
359301-0090 ..	BUTTON SIGN, INCHING	2-31
359301-0091 ..	BUTTON SIGN, INCHING FINAL FOLDER	2-31
359301-0100 ..	BUTTON SIGN, SPLICING	8-167
359301-0101 ..	BUTTON SIGN, STRIP SPLICING ON	8-155
359301-0110 ..	BUTTON SIGN, SHORT STOP	1-237, 1-239, 2-31, 8-155
359301-0130 ..	BUTTON SIGN, LAMP TEST	2-31
359301-0160 ..	BUTTON SIGN, DRAINAGE OF PRODUCT TUBE	2-31
359301-0170 ..	BUTTON SIGN, SPOOLING OF FINAL FOLDER	2-31
359301-0488 ..	BUTTON SIGN, MATERIAL LOCKING	8-167
359301-0519 ..	SIGN "TPOP RESET"	2-31
359705-0003 ..	WARNING SIGN ISO, DANGEROUS CHEMICALS	1-87, 1-89, 1-97, 1-99
359705-0004 ..	WARNING SIGN ISO, DANGEROUS CHEMICALS	1-183, 2-85
359705-0005 ..	WARNING SIGN ISO, MOVING PART	8-33, 8-35, 8-47

Part No	Description	Page No
359705-0007 ..	WARNING SIGN ISO, HOT SURFACE	1-87, 1-89, 1-93, 1-97, 1-99, 1-103, 1-139, 1-151, 4-7 4-9, 5-19, 5-21, 8-55, 10-5
359705-0015 ..	WARNING SIGN ISO, RISK OF ELECTRIC SHOCK	1-183, 1-187, 1-207, 1-235, 1-237, 1-239 2-7, 2-31, 2-129, 5-23, 5-25, 6-25, 6-61, 6-63, 7-11, 7-13, 7-15, 7-17, 7-19, 7-21, 7-33, 7-67, 7-79 10-115, 10-117
359725-0116 ..	WARNING SIGN ANSI (H), HOT SURFACE	10-5
400828-0000 ..	SPRING	8-61
400833-0000 ..	PLUNGER	8-61
440650-0000 ..	WASHER	1-113
440655-0000 ..	RING	1-109
440659-0000 ..	CYLINDRICAL PIN	1-113
440660-0000 ..	COMPRESSION SPRING	1-113
440661-0000 ..	COMPRESSION SPRING	1-113
440662-0000 ..	COMPRESSION SPRING	1-111
440663-0000 ..	COMPRESSION SPRING	1-109, 1-113
441737-0000 ..	WASHER	1-47, 1-49, 1-57, 1-65
441739-0000 ..	WASHER	1-47, 1-49, 1-57, 1-65
441871-0000 ..	PENDULUM SUSPENSION	1-143, 1-149
442237-0000 ..	NUT	1-155, 1-157
449939-0001 ..	HEATING ELEMENT 15KW	1-153
450833-0000 ..	FILTER	1-61, 1-63
451423-0000 ..	CIRCUIT BOARD	3-17
451430-0000 ..	CONNECTION HOUS.(MINOR)	1-153
456123-0000 ..	SUPPORT	1-153
456139-0000 ..	LOCK PLATE	1-17, 1-19
476087-0000 ..	LID	1-25
476221-0009 ..	PIPE	5-37
479234-0000 ..	WASHER	1-145
479261-0000 ..	NIPPLE	1-151, 6-65, 6-67
484171-0006 ..	LEG	10-99, 10-113
484701-0000 ..	SHUTTER	5-43, 5-45, 5-47
486826-0001 ..	SIGN "EMERGENCY STOP"	1-13, 1-237, 1-239, 2-111, 7-21, 8-157, 8-167
490901-0000 ..	SEAL	1-55
490998-0000 ..	THROTTLE SCREW	1-155, 1-157
491230-0000 ..	GRUB SCREW(LI - CHINE)	4-25, 4-27, 4-29, 4-31, 4-33, 4-35, 4-37, 4-39, 4-41, 4-43, 4-45, 4-47, 4-49
491305-0000 ..	CONN.DIAGRAM AIR SUPERH.	1-153
491880-0000 ..	FASTENING PLATE	3-7, 3-9
495118-0014 ..	DISTANCE PIPE L=14 MM	8-119, 8-121, 8-123, 8-125, 8-127
495377-0000 ..	BUSH	7-87, 7-89
497748-0000 ..	PIN	1-115, 1-117
499011-0000 ..	SHAFT	1-83, 1-85
499073-0000 ..	ROD	10-93
527898-0100 ..	MKS CONTAINER H2O2	2-83, 12-5
527912-0000 ..	NON-RETURN VALVE	2-89
529076-0000 ..	WASHER	10-99, 10-113
529345-0100 ..	FILLING STATION H2O2	12-5
530551-0000 ..	WASHER	2-89
530587-0000 ..	WASHER	1-111
530588-0000 ..	SEAL RING	11-13
530589-0000 ..	SEAL RING	1-143, 1-149, 11-13
530590-0000 ..	VALVE CONE	1-143, 1-149
530591-0000 ..	HOLDER	1-113
530595-0000 ..	SEAL RING HOLDER	1-109
530597-0000 ..	WASHER	1-113
530598-0000 ..	WASHER	1-113
530599-0000 ..	RING	1-113, 1-143, 1-149
531191-0000 ..	BUSHING	1-9
531345-0200 ..	PERSONAL PROTECT. EQ H2O2	11-3
531616-0000 ..	HOLDER	2-115
531731-0000 ..	GASKET	1-153
532117-0000 ..	CLAMP RING	1-115
532118-0000 ..	CLAMP RING	1-117
532208-0000 ..	SHAFT	12-11
532209-0000 ..	SHEET	12-11
532210-0100 ..	PEROXIDE CONTAINER TROLLEY	12-5
532211-0000 ..	DOWEL	12-11
532349-0000 ..	PLAIN BEARING	1-143, 1-149
532655-0000 ..	CAUTION SIGN	2-97, 12-7
533169-0000 ..	DIAPHRAGM	1-109, 11-13
533234-0000 ..	LID	10-67, 10-69
533235-0000 ..	LID	10-67, 10-69
533237-0000 ..	AXLE PIN	10-65
534310-0001 ..	NOZZLE	5-43, 5-45, 5-47
534634-0000 ..	PIPE	12-9
534635-0000 ..	VALVE	12-9
534636-0000 ..	LEVEL GLAS	12-9
534637-0000 ..	ATTACHMENT	12-9
534691-0000 ..	DIAPHRAGM	12-9
534692-0000 ..	FRAME SECTION	12-9
534693-0000 ..	PLATE	12-9
534694-0000 ..	SUCTIONPIPE	12-9
534695-0000 ..	WEIGHT	12-9
534696-0000 ..	VALVE	12-9
534697-0000 ..	VALVE HOUSING	12-9

Part No	Description	Page No
534698-0000 ..	NIPPLE	12-9
536916-0000 ..	AXLE PIN	8-57
539161-0000 ..	CORRUGATED CARDBOARD BOX	10-111
539212-0000 ..	GASKET	1-107, 11-13
540169-0000 ..	DOWEL	10-73
540306-0001 ..	COMPONENTS WITHOUT TP-NO	3-19
540307-0000 ..	PRINTED CIRCUIT BOARD	3-19
541163-0200 ..	CLAMP RING	1-107
541164-0200 ..	CLAMP RING	1-107
541165-0000 ..	WASHER	1-115, 1-117
541166-0000 ..	WASHER	1-109
541177-0000 ..	BENDING ROLLER	1-183
543267-0000 ..	LABEL TAPE	10-55, 10-79, 10-87
544725-0000 ..	AXLE PIN	8-57
546929-0000 ..	FILTER	1-145, 1-151
549267-0000 ..	LID	1-61, 1-63
553607-0000 ..	SLEEVE	1-109, 1-111, 1-113
554141-0000 ..	FILTER	1-61, 1-63
554142-0000 ..	FILTER HOUSING	1-61, 1-63
554162-0000 ..	SCREW	1-115, 1-117
554585-0000 ..	STUD SCREW	1-61, 1-63
555458-0000 ..	SEALING WASHER	1-113
556133-0000 ..	SEALING WASHER	1-111
556702-0000 ..	AP-VALVE-BODY (51-38)	1-107
559810-0101 ..	TMCC2 CONTROLLER	7-93, 7-95
560931-0000 ..	BRACKET	1-145
561427-0000 ..	CONTAINER	2-97, 12-7
561652-0000 ..	WHEEL	10-67, 10-69
562015-0000 ..	REDUCTION CASING	10-41, 10-57
562016-0000 ..	REDUCTION CASING	10-99, 10-113
563285-0000 ..	BLIND PLUG	2-89
565250-0000 ..	WASHER	2-97, 12-7
565251-0000 ..	VALVE	2-97, 12-7
566171-0000 ..	CUP SPRING	2-93
566194-0000 ..	WEIGHT	2-93
566195-0000 ..	LID	2-93
566196-0100 ..	LID WITH WEIGHT	2-91
567018-0000 ..	STEAM HOUSE	1-107
567070-0011 ..	ELECTRODE	1-183
568583-0000 ..	FORK	1-83, 1-85
574336-0000 ..	SEAL	1-55
574366-0000 ..	VOLUME SHIM	4-25, 4-27, 4-29, 4-31, 4-33, 4-35, 4-37, 4-39, 4-41, 4-43, 4-45, 4-47, 4-49, 11-19
574367-0000 ..	VOLUME BULGE	4-25, 4-27, 4-29, 4-31, 4-33, 4-35, 4-37, 4-39, 4-41, 4-43, 4-45, 4-47, 4-49
574397-0000 ..	ROLL	1-31
574417-0000 ..	ROLL	1-27, 1-29
574418-0000 ..	ROLL	1-27, 1-29
574479-0000 ..	ROLL	1-17, 1-19
574480-0000 ..	ROLL	1-17, 1-19
574481-0000 ..	ROLL	1-17, 1-19
575034-0000 ..	ROUND NUT	1-47, 1-49, 1-57, 1-65
576434-0100 ..	AP-VALVE 51-38	1-105
576436-0100 ..	A-CYLINDER	1-107
576437-0100 ..	C-CYLINDER	1-107
576438-0100 ..	B-CYLINDER	1-107
576439-0000 ..	CYLINDER HOUSING	1-109, 1-113
576440-0000 ..	END SECTION	1-109, 1-113
576441-0000 ..	PISTON	1-109, 1-113
576442-0000 ..	PISTON ROD	1-113
576443-0000 ..	CYLINDER HOUSING	1-111
576444-0000 ..	END SECTION	1-111
576445-0000 ..	PISTON	1-111
576446-0000 ..	PISTON ROD	1-109
576447-0000 ..	PISTON ROD	1-111
576448-0000 ..	SPACER	1-109
576449-0000 ..	SPACER	1-109
576450-0000 ..	SPACER	1-113
576451-0000 ..	SPACER	1-111
577102-0400 ..	ASEPTIC CHAMBER	1-3, 1-5
577103-0300 ..	FILLING SYSTEM	1-3, 1-5
577104-0300 ..	STERILE AIR SYSTEM	1-3, 1-5
577111-0500 ..	CONVEYOR	5-3
577112-0500 ..	FINAL FOLDER	5-3
577113-0400 ..	DISCHARGE DEVICE	5-3
577114-0300 ..	WASTE CONVEYOR	2-3
577115-0400 ..	FRAME	5-3
577117-0400 ..	ELECTRICAL SYSTEM	2-3
577118-0600 ..	MACHINE BODY	2-3
577119-0400 ..	PNEUMATIC SYSTEM	2-3
577120-0400 ..	DOORS AND COVERS	2-3
577121-0400 ..	PIPE WORK	2-3
577122-0300 ..	EXTERNAL CLEANING SYSTEM	2-3
578640-0000 ..	CLAMPING RING	1-199
578684-0000 ..	SPRING BRACKET	8-73, 8-137
582526-0100 ..	CARRIAGE	12-13

Part No	Description	Page No
582527-0000 ..	ROD	12-15
583727-0000 ..	SHAFT	8-75
583859-0000 ..	WASHER	1-41
583860-0000 ..	WASHER	1-41
591341-0000 ..	PIN	2-19, 2-21, 2-23
593682-0000 ..	MACHINE SIGN, EEA(CE-MARK)	11-3
596678-0000 ..	KNIFE	8-93, 8-101
597465-0102 ..	SAMPLING UNIT	10-3
736514-0000 ..	SHOCK ABSORBER	1-123, 11-9, 11-11
751009-0000 ..	INSULATION	1-153
751284-0000 ..	ROLL	1-27, 1-29
751395-0000 ..	FLANGE	2-95
751457-0000 ..	CANTILEVER	3-7, 3-9
751485-0000 ..	SCREW	1-199
751491-0000 ..	ROLL	1-17, 1-19
751492-0000 ..	ROLL	1-17, 1-19
751493-0000 ..	ROLL	1-17, 1-19
751499-0000 ..	ROLL	1-31
752126-0000 ..	FORMING ROLLER	1-17, 1-19
752127-0000 ..	FORMING ROLLER	1-17, 1-19
752128-0000 ..	FORMING ROLLER	1-17, 1-19
752129-0000 ..	FORMING ROLLER	1-27, 1-29
752130-0000 ..	FORMING ROLLER	1-27, 1-29
752132-0000 ..	FORMING ROLLER	1-31
752156-0000 ..	FLANGE BUSHING	1-17, 1-19, 11-9, 11-11
752186-0002 ..	SHAFT	1-17, 1-19
752186-0003 ..	SHAFT	1-27, 1-29, 1-31
752186-0004 ..	SHAFT	1-21, 1-23, 1-27, 1-29, 1-31
752186-0005 ..	SHAFT	1-17, 1-19, 1-31
752186-0006 ..	SHAFT	1-17, 1-19, 1-21, 1-23, 1-31
752186-0007 ..	SHAFT	1-31
752186-0008 ..	SHAFT	1-17, 1-19
752186-0009 ..	SHAFT	1-17, 1-19
752186-0010 ..	SHAFT	1-27, 1-29
752186-0012 ..	SHAFT	1-27, 1-29
752186-0014 ..	SHAFT	1-31
752186-0016 ..	SHAFT	1-21, 1-23
752186-0017 ..	SHAFT	1-27, 1-29
752739-0000 ..	VOLUME BULGE	4-25, 4-27, 4-29, 4-31, 4-33, 4-35, 4-37, 4-39, 4-41, 4-43, 4-45, 4-47, 4-49
906254-0000 ..	ROLLER	8-73, 8-137
925998-0000 ..	DIAPHRAGM	1-123, 11-9, 11-11
926906-0000 ..	SPACER	1-123
926907-0000 ..	SCREW	1-123
926909-0000 ..	COMPRESSION SPRING	1-123
926934-0000 ..	SUPPORT	1-123
927044-0000 ..	SPACER	1-123
927203-0000 ..	COVER	1-123
927420-0001 ..	O-RING 5.1X1.6 SILICONE	1-61, 1-63
927421-0002 ..	O-RING 12.3X2.4 SILICONE	1-61, 1-63
927421-0003 ..	O-RING 13.3X2.4 SILICONE	1-185
927421-0004 ..	O-RING 15.3X2.4 SILICONE	1-61, 1-63, 1-183
927421-0005 ..	O-RING 7.3X2.4 SILICONE	12-9
927422-0001 ..	O-RING 19.2X3 SILICONE	1-61, 1-63, 12-9
927422-0003 ..	O.RING 24.2X3 SILICONE	2-97, 12-7
927422-0005 ..	O-RING 36.2X3 SILICONE	2-95
927422-0006 ..	O-RING 42.2X3 SILICONE	1-61, 1-63, 2-95
927422-0007 ..	O-RING 44.2X3 SILICONE	1-61, 1-63
927422-0009 ..	O-RING 54.5X3 SILICONE	1-61, 1-63
927422-0016 ..	O-RING 79.5X3 SILICONE	2-85
970215-0000 ..	STOP BLOCK	7-87, 7-89
971346-0000 ..	GUIDE PIN	7-87, 7-89
975917-0000 ..	KEY FOR SAFETY SWITCH 90044-103	8-159
978380-0000 ..	BLIND PLUG	1-93
978381-0000 ..	WASHER 56X2MM	1-93
978603-0000 ..	SIGN	2-39, 2-41
978735-0000 ..	FASTENING PLATE	3-7, 3-9
979256-0000 ..	CLEANING PIPE	1-87, 1-89, 1-97, 1-99
979434-0000 ..	FERRULE	1-123
979500-0003 ..	ELECTRODE	1-145
979813-0000 ..	PLUG	11-3
979847-0000 ..	SHAFT COUPLING	8-141
985328-0000 ..	CONNECTION	2-65, 2-69, 2-71, 2-73, 2-75
985756-0000 ..	KEY	8-33, 8-35
985818-0000 ..	LIFTING UNIT	12-19
988666-0000 ..	GASKET	7-15, 7-17, 7-19, 7-21
988685-0000 ..	PIN	1-205, 1-209, 1-211, 1-231, 2-39, 2-41, 2-109, 6-53, 6-57, 6-61, 7-15, 7-17, 7-19, 7-21, 8-159, 8-161, 8-165, 8-169
988690-0000 ..	RIM	8-161
996451-0100 ..	CRANK	1-7
996475-0200 ..	COMPRESSOR UNIT	1-137
1010822-0000 .	RAILING	1-199, 2-69, 2-71, 2-73, 2-75
1010947-0000 .	GASKET	5-23, 5-25
1020162-0205 .	LEG, CONVEYOR	10-3
1020162-0212 .	LEG; CONVEYOR PC23	10-3

Part No	Description	Page No
1020164-0201	.LEG, MOTOR	10-3
1020391-0001	.PIPE	10-57
1020391-0002	.PIPE	10-57
1020391-0003	.PIPE	10-41
1020391-0004	.PIPE	10-41
1020416-0200	.PACKING DESCRIPTION	10-99, 10-113
1020418-0200	.PACKING DESCRIPTION	10-57
1020462-0000	.CORRUGATED CARDBOARD BOX	10-59, 10-101, 10-103
1020637-0000	.HOLDER	5-55
1035008-0400	.BATH	1-177
1035076-0100	.LEG	2-19, 2-21, 2-23
1035259-0300	.INTERMEDIATE PART	1-75, 1-77, 1-79, 1-81
1035382-0100	.EMERGENCY STOP	1-7
1035654-0000	.CONNECTION	1-199
1035792-0000	.E-HINGE	1-205, 1-209, 1-211, 1-231, 2-39, 2-41, 2-109, 6-53, 6-57, 6-61, 7-15, 7-17, 7-19, 7-21, 8-159, 8-161, 8-165, 8-169
1035794-0000	.BLOCKING PIECE	6-53, 6-57, 6-61
1035882-0000	.BENDING ROLLER	2-27
1035895-0000	.SHAFT	8-19
1035897-0000	.SHAFT	1-197
1035898-0000	.BRACKET	1-197
1035942-0000	.HEATING PIPE	1-153
1036119-0000	.LEG	2-25
1036120-0000	.SLEEVE	2-25
1036174-0000	.BEARING COVER	1-37
1036178-0000	.SHAFT	1-37, 1-67, 1-69
1036187-0000	.T-PIPE	1-143
1036188-0000	.SHAFT	1-143, 1-149
1036189-0000	.SPINDEL GUIDE	1-143, 1-149
1036191-0000	.SEAL HOLDER	1-143, 1-149
1036194-0000	.T-PIPE	1-143, 1-149
1036227-0000	.BRACKET	6-71
1036241-0000	.WASHER	1-189, 2-65, 2-69, 2-71, 2-73, 2-75
1036293-0000	.HOLDER	1-147, 1-149
1036294-0000	.GASKET	1-159
1036304-0001	.LOCKING ARM	6-57
1036304-0006	.LOCKING ARM	2-109, 2-111
1036304-0007	.LOCKING ARM	2-111
1036304-0013	.LOCKING ARM	2-109
1036304-0014	.LOCKING ARM	6-57
1036304-0018	.LOCKING ARM	2-119, 2-121
1036314-0000	.BOTTOM PANEL	1-141
1036315-0000	.FRONT PLATE	1-141
1036318-0000	.PIPE	1-141
1036319-0000	.BRACKET	1-141
1036328-0000	.LID	1-37
1036329-0000	.PIN	1-231
1036372-0000	.PIPE	1-153
1036373-0000	.HOLDER	1-25, 1-153
1036465-0000	.LID	1-25
1036475-0000	.PIN	1-25
1036478-0000	.GASKET	1-25
1036496-0000	.WHEEL	1-45
1036516-0000	.CANTILEVER	2-27
1036553-0000	.WHEEL	1-183
1036563-0000	.WASHER	2-109, 2-119, 2-121, 8-159, 8-165, 8-169
1036587-0000	.PIPE	1-143
1036610-0000	.BRACKET	1-197
1036622-0000	.GUIDE ROLLER	1-195, 8-75
1036623-0000	.GUIDE ROLLER	1-195, 8-75
1036753-0000	.UPPER SECTION	1-145
1036777-0000	.GASKET	1-127, 1-129
1036778-0000	.GASKET	1-127, 1-129
1036794-0000	.PIPE	6-33
1036810-0000	.HOLDER	1-145
1036811-0000	.CLAMP	1-145, 1-151
1036826-0000	.PIPE	6-31
1036827-0000	.PIPE	6-31, 6-39
1036828-0000	.TANK	6-35, 6-37
1036832-0000	.WHEEL	1-9
1036833-0000	.SCREW	1-9
1036841-0000	.SHAFT	1-9
1036868-0000	.CHAIN	1-9
1036910-0000	.UPPER SECTION	1-151
1036911-0000	.CONTAINER	1-151
1036939-0000	.SIDE PIECE	1-191
1036940-0000	.SIDE PIECE	1-191
1036963-0000	.HOOK HOLDER	1-191
1036965-0000	.HOOK HOLDER	1-191
1037011-0000	.PIPE	1-151
1037012-0000	.AXLE PIN	2-27
1037041-0000	.HOLDER	1-151
1037044-0000	.RAILING	1-199
1037048-0000	.PLATE	1-47, 1-49, 1-57, 1-65

Part No	Description	Page No
1037081-0000	.GASKET	1-65
1037089-0000	.SPACER	1-65
1037093-0000	.SENSOR BRACKET	1-105
1037102-0000	.SPACER PIPE	2-85
1037120-0000	.SHAFT	8-61
1037121-0000	.SHAFT	8-61
1037124-0000	.HOLDER	8-61
1037129-0000	.LID	1-155, 1-157
1037130-0000	.CONNECTION BOX	2-111, 8-157
1037184-0000	.SPACER SCREW	6-5
1037199-0000	.BRACKET	1-67, 1-69
1037267-0000	.PIPE	1-155, 1-157
1037268-0000	.LID	1-155, 1-157
1037314-0000	.PIPE CONNECTION	1-179
1037391-0000	.CANTILEVER	2-77
1037423-0000	.SEAT RING	1-15
1037424-0000	.SEAT RING	1-15
1037425-0000	.LEVER	1-15
1037443-0000	.GASKET	2-55, 2-57
1037456-0000	.BRACKET	1-25
1037502-0000	.COVERING PLATE	1-233
1037508-0000	.COVERING PLATE	1-233
1037528-0000	.COVERING PLATE	1-233
1037552-0000	.SPACER	1-233
1037562-0000	.SHAFT	2-103
1037565-0000	.BEARING UNIT	2-103
1037571-0000	.GUIDE BUSHING	2-69, 2-71
1037572-0000	.COVER PLATE	7-23, 7-25, 7-27, 7-29, 7-31
1037573-0000	.GASKET	7-23, 7-25, 7-27, 7-29, 7-31
1037574-0000	.COVER PLATE	7-23, 7-25, 7-27, 7-29, 7-31
1037575-0000	.GASKET	7-23, 7-25, 7-27, 7-29, 7-31
1037583-0000	.HOLDER	6-65, 6-67
1037761-0000	.PIN	2-19, 2-21, 2-23
1037762-0000	.PIN	2-19, 2-21, 2-23
1038249-0000	.BUSHING	1-67, 1-69
1038275-0012	.SPACER	7-79
1038334-0000	.PIPE	1-133, 1-135
1038358-0000	.PIPE	1-237, 1-239
1038408-0000	.COVERING PLATE	7-9
1038409-0000	.WASHER	1-15
1038428-0000	.LOCK PLATE	1-27, 1-29
1038464-0000	.SPROCKET	1-9
1038628-0000	.PUMP	6-45
1038634-0000	.DRAINING	1-145
1038659-0000	.STRAIGHT PIPE UNION	1-151
1038688-0000	.HOLDER	1-185
1038699-0000	.BRACKET	7-21
1038820-0000	.COVER PLATE	7-23, 7-25, 7-27, 7-29, 7-31
1038850-0000	.ANGLE BRACKET	1-189
1038857-0000	.FLANGE	1-183
1038858-0000	.FLANGE	1-183
1038860-0000	.BRACKET	1-183
1038861-0000	.BRACKET	1-183
1038865-0000	.SPACER DISC	8-33, 8-35
1038866-0000	.INTERMEDIARY SECTION	1-145
1038876-0000	.COVERING PLATE	2-13, 2-15
1038879-0000	.PIPE	1-185
1038905-0000	.VALVE	1-97, 1-99
1038964-0000	.INTERMEDIATE PART	1-125
1038965-0000	.HOLDER	1-125
1040777-0000	.CARRIER	1-9
1040796-0000	.PIPE	2-95
1040807-0000	.LID	2-91
1040808-0000	.GASKET	2-91
1040840-0000	.FLANGE	2-85
1040841-0000	.FLANGE	2-85
1040852-0000	.SEALING RING	2-85
1040853-0000	.SEALING RING	2-85
1040856-0000	.SPACER	1-189
1040859-0000	.COVER	1-141
1040874-0000	.COVER	1-141
1040875-0000	.COVER	1-141
1040876-0000	.COVER	1-141
1040877-0000	.PLATE	1-141
1040878-0000	.PLATE	1-141
1040970-0000	.BRACKET	1-61, 1-63, 1-183, 1-187
1041046-0000	.FLOW METER	6-13
1041215-0000	.BLOCKING PIECE	4-11, 4-13
1041216-0000	.SHAFT	3-13, 3-15
1041549-0000	.0,012WASHER	4-15, 4-17
1041603-0000	.BRACKET	2-27
1041606-0000	.SHAFT	2-27
1041609-0000	.NUT	2-31
1041688-0000	.FITTING BOLT	1-37

Part No	Description	Page No
1041921-0000	.HOLDER	6-73
1041925-0000	.PIPE	6-29
1041926-0000	.PIPE	6-29
1041930-0000	.PIPE	6-19
1041931-0000	.PIPE	6-19
1041932-0000	.PIPE	6-65, 6-67
1041933-0000	.PIPE	6-65, 6-67
1041934-0000	.PIPE	6-39
1041937-0000	.SIGN	1-209, 1-211
1041938-0000	.SIGN	6-71
1041943-0000	.CONNECTION BOX	6-25
1041946-0000	.PIPE	6-35, 6-37
1041949-0000	.CHECKER PLATE	2-65
1041963-0000	.WASTE BOX	6-43
1041967-0000	.COVERING PANEL	6-51
1041970-0000	.DOOR	6-57
1041978-0000	.HINGE FLANGE	1-47, 1-49, 1-57, 1-65
1041979-0000	.HINGE FLANGE	1-47, 1-49, 1-57, 1-65
1041984-0000	.ATTACHMENT PIPE	6-13
1086711-0000	.SET OF SIGNS	10-109
1086870-0000	.SIGN	5-33, 10-31, 10-57, 10-81, 10-91, 10-99, 10-109, 10-113
1086871-0000	.LABEL TAPE	5-41, 10-29, 10-59, 10-79, 10-87, 10-95, 10-101, 10-103, 10-111
1086872-0000	.LABEL TAPE	10-55, 10-101, 10-103
1095597-0100	.TERMINAL	2-31
1095607-0200	.COVERING PANEL	6-3
1095608-0100	.WATER PANEL	6-3
1095609-0200	.PNEUMATIC UNIT	6-69
1095610-0300	.MAIN SWITCH	6-3
1095611-0300	.VALVE PANEL	6-69
1095612-0300	.COOLING WATER SYSTEM	6-3
1095627-0300	.FOAM CLEANING UNIT	6-3
1095630-0200	.CONNECTION BOX	6-3
1095672-0100	.PIPE	6-27
1095673-0100	.SIDE	6-27
1095675-0100	.PIPE	6-27
1095676-0100	.PUMP	6-27
1095677-0100	.BRANCHING PIPE	6-27
1095678-0300	.BALL VALVE	6-27
1095681-0100	.SPRAY GUN	2-45
1095682-0100	.AIR JET GUN	2-35, 2-37
1095705-0300	.FLOW METER	6-7, 6-9
1095706-0300	.COOLING WATER PUMP	6-7, 6-9
1095709-0200	.CONNECTION BOX	6-7, 6-9
1095710-0300	.COMPRESSOR UNIT	6-7, 6-9
1095714-0300	.SUPPLY SYSTEM	6-3
1095715-0100	.ICE WATER	6-17
1095716-0100	.PIPE WORK-AIR	6-69
1095790-0200	.COVERING PLATE	1-7
1095803-0100	.BENDING ROLLER	2-19, 2-21, 2-23
1095853-0300	.CLEANING PIPE	2-53
1095861-0100	.LIGHT FIXTURE	2-5
1095862-0100	.LADDER	1-189
1095863-0200	.PIVOT ARM	2-3
1095883-0200	.GABLE PLATE	6-47
1095886-0200	.COVERING PANEL	6-47
1095888-0200	.HATCH	6-47
1095889-0100	.DOOR	6-47
1095890-0200	.HATCH	6-47
1095891-0200	.DOOR	6-47
1103300-0000	.NON-SKID	2-19, 2-21, 2-23
1103391-0000	.PIPE	1-179
1116048-0000	.SPACER	2-69, 2-71
1129042-0000	.KEY	2-109, 2-119, 2-121
1129066-0000	.RETURN PIPE	6-21
1129101-0000	.BRACKET	1-181
1129141-0000	.MACHINE BODY	6-7, 6-9
1129150-0000	.PNEUMATIC DIAGRAM	6-73
1129182-0000	.BRACKET	6-63
1129194-0000	.FRAME	1-231
1129195-0000	.OPENING	1-231
1129196-0000	.FRAME	1-231
1129197-0000	.OPENING	1-231
1129199-0000	.DOOR	1-231
1129202-0000	.CONNECTION BOX	6-63
1129209-0000	.MOUNTING RAIL	6-63
1129210-0000	.MOUNTING RAIL	6-25
1129247-0000	.FRAME	2-103
1129248-0001	.GUARD PLATE	2-103
1129253-0000	.FASTENING PLATE	2-103
1129274-0000	.GUIDE LUG	2-109, 2-111, 2-119, 2-121, 6-53, 6-57
1129275-0000	.BOX FOR DIAGRAM	2-111
1129298-0000	.SHAFT COUPLING	1-35
1129318-0000	.BRACKET	7-9
1129324-0000	.WASHER	2-109

Part No	Description	Page No
1129325-0000	.SEALING FLANGE	2-109
1129328-0000	.ATTACHMENT	2-89
1129378-0000	.BRACKET	2-55
1129379-0000	.PIPE	2-55
1129383-0000	.PIPE	1-25, 2-55
1129387-0000	.CONNECTION TABLE	6-43
1129402-0000	.SPACER SCREW	6-5
1129432-0000	.LID	6-45
1129441-0001	.ELECTRODE	2-85
1129441-0002	.ELECTRODE	2-85
1129441-0003	.ELECTRODE	2-85
1129441-0004	.ELECTRODE	2-85
1129444-0000	.LID	2-101
1129475-0000	.HOLDER	1-237, 1-239
1129478-0000	.GASKET	7-23, 7-25, 7-27, 7-29, 7-31
1129480-0000	.CABLE DUCT	1-237, 1-239
1129481-0000	.COVERING PLATE	7-23, 7-25, 7-27, 7-29, 7-31
1129504-0000	.MOUNTING RAIL	2-9
1129549-0000	.SHEET	7-23, 7-25, 7-27, 7-29, 7-31
1129550-0000	.GASKET	2-13, 2-15, 7-23, 7-25, 7-27, 7-29, 7-31
1129594-0000	.BRACKET	2-103
1129600-0000	.BRAID	2-13, 2-15
1129637-0000	.COVER PLATE	1-189
1129638-0000	.WASHER	1-189
1129641-0000	.SILICON RUBBER PROFILE	1-189
1129643-0000	.STAIR	1-191
1129644-0000	.BRACKET	1-191
1129710-0000	.CANTILEVER	2-13, 2-15
1129741-0000	.RAILING	1-199
1129767-0000	.SCREW	1-231, 2-109, 2-111, 2-119, 2-121, 8-159, 8-161, 8-165, 8-169
1129770-0000	.BLOCKING PIECE	1-205, 1-209, 1-211, 1-231, 2-39, 2-41, 2-109, 2-111, 2-119, 2-121, 7-15, 7-17, 7-19, 7-21, 8-159, 8-161, 8-165, 8-169
1129801-0000	.PIPE	1-105
1129837-0000	.BALL	1-15
1129839-0000	.COOLING PLATE	8-11
1129855-0000	.HOUSE	1-15
1129869-0000	.COOLING PLATE	8-11
1129871-0000	.SPINDLE	1-15
1140039-0000	.CONVEYOR FRAME	12-15
1140040-0000	.BRACKET	12-15
1140077-0000	.RING	8-11
1140129-0000	.HOLDER	2-11
1140208-0000	.BRACKET	2-103
1140221-0000	.STUD	1-61, 1-63
1140233-0000	.WASHER	4-25, 4-27, 4-35, 4-37, 4-45, 4-47, 4-49
1140287-0000	.CAM	4-11, 4-13
1140288-0000	.CAM	4-11, 4-13
1140437-0000	.BUSHING	4-19, 4-29, 4-31, 4-33, 4-39, 4-41, 4-43
1140479-0000	.ROLLER	4-25, 4-27, 4-29, 4-31, 4-33, 4-35, 4-37, 4-39, 4-41, 4-43, 4-45, 4-47, 4-49
1140488-0000	.SHAFT	4-29, 4-31, 4-33, 4-39, 4-41, 4-43
1140515-0000	.SCREW	1-41
1140603-0000	.COMPRESSOR UNIT	6-11
1140641-0000	.ARM	2-103
1140645-0000	.BRACKET	1-181
1140670-0000	.BRACKET	6-35, 6-37
1140716-0000	.PIN	4-21
1140717-0000	.PIN	4-21
1140769-0000	.DOOR STOPPER	7-9
1140837-0000	.PULLEY	3-5
1140839-0000	.PULLEY	3-5
1140840-0000	.WHEEL	12-15
1140844-0000	.CURVE	4-15, 4-17
1140845-0000	.ROLLER	4-15, 4-17
1140846-0000	.ECCENTRIC SHAFT	4-15, 4-17
1140851-0000	.WASHER	3-5
1140856-0000	.PROTECTION	4-11, 4-13
1140865-0000	.ROLL	3-13, 3-15
1140866-0000	.BRACKET	3-13, 3-15
1140872-0000	.BRACKET	4-11, 4-13
1147253-0000	.NUT	8-165, 8-169
1185025-0100	.LIFTING EQUIPMENT	12-5
1190007-0402	.PLMS RECEIVE	7-5, 11-51
1195161-0300	.MOVABLE FORMING RING	1-7
1195162-0200	.LOWER FORMING RING	1-7
1195163-0300	.PILLAR	1-7
1195164-0200	.UPPER FORMING RING	1-7
1195165-0300	.FORMING RING	1-7
1195166-0200	.PAPER GUIDE	1-7
1195173-0300	.PENDULUM ROLLER	1-7
1195174-0400	.LONGITUDINAL SEALING	1-7
1195175-0200	.SHORT STOP	1-7
1195180-0100	.BENDING ROLLER	1-7
1195181-0150	.DOOR	1-7
1195182-0150	.DOOR	1-7

Part No	Description	Page No
1195191-0000	.MOVABLE FORMING RING	1-17, 1-19
1195209-0200	.BENDING ROLLER	1-7
1195214-0100	.SEAL	1-7
1195266-0000	.BRACKET	2-103
1195269-0150	.DOOR	1-7
1195270-0000	.FRAME	1-47
1195272-0000	.GASKET	1-47
1195273-0000	.FRAME	1-49
1195275-0000	.GASKET	1-49
1195276-0000	.FRAME	1-57
1195278-0000	.GASKET	1-57
1195284-0300	.PIPE-LINE	1-137
1195285-0300	.PRE-HEATING VALVE	1-137
1195318-0000	.PLATE	1-31
1195319-0000	.FITTING BOLT	1-21, 1-23, 1-31
1195322-0000	.BRACKET	1-25
1195460-0000	.BRACKET	1-183
1195466-0000	.PIPE	2-55, 2-57, 2-59, 6-41
1254025-0000	.STRIP	2-65
1254027-0000	.CORNER STRIP	2-65
1254028-0000	.FASTENING PLATE	2-65
1254030-0000	.CHECKER PLATE	2-65
1254118-0000	.CHECKER PLATE	2-65
1254442-0000	.CABLE SERIAL	7-87, 7-89
1254471-0411	.PLMS OFF-LINE	11-51
1254481-0000	.HOLDER	1-205
1254494-0000	.SPACER	2-79
1255293-0000	.CROSS BAR	6-43
1255365-0000	.MOUNTING PLATE	6-17
1255493-0000	.PIPE	2-55
1255504-0000	.PIPE	1-15
1255551-0000	.SEAL CLOTH	1-185
1255557-0000	.GASKET	2-95
1255559-0000	.PEROXIDE TANK	2-85
1255633-0000	.HATCH	6-55
1255635-0000	.HATCH	6-59
1255636-0000	.COVERING PANEL	6-47
1255637-0000	.COVER	6-47
1255638-0000	.COVERING PANEL	6-47
1255671-0000	.GABLE PLATE	6-49
1255839-0000	.SHAFT	1-183
1255970-0000	.WASHER	1-43
1255975-0000	.SEAL HOLDER	1-55
1255976-0000	.SEAL HOLDER	1-55
1255979-0300	.SCRUBBER	1-137
1255980-0200	.PRODUCT VALVE GROUP	1-75, 1-77, 1-79, 1-81
1255984-0300	.CLEANING PIPE	1-75, 1-77, 1-79, 1-81
1255986-0000	.VALVE BRACKET	1-105
1255987-0000	.COVER	1-105
1260050-0000	.SHAFT	4-19
1260051-0000	.HOUSING	4-19
1260067-0000	.CARRIER	5-43, 5-45, 5-47, 11-21
1260068-0000	.SHAFT	5-43, 5-45, 5-47
1260070-0000	.SHAFT	5-43, 5-45, 5-47
1260097-0300	.CLEANING PIPEWORK UPPER	2-53
1260098-0300	.CLEANING PIPEWORK	2-53
1260101-0000	.PIPE	2-55
1260120-0100	.VOLUME ADJUSTER	3-3
1260128-0000	.SHAFT	5-5, 5-7
1260129-0000	.PULLEY	5-5, 5-7
1260148-0000	.ECCENTRIC SHAFT	4-19
1260149-0000	.WORM SCREW	4-19
1260151-0000	.BRACKET	4-19
1260152-0000	.WORM WHEEL	4-19
1260153-0000	.SPACER	4-19
1260154-0000	.WORM SCREW	4-19
1260167-0000	.WASHER	5-5, 5-7
1260169-0000	.WORM WHEEL	4-19
1260170-0000	.SHAFT	4-19
1260171-0000	.SHAFT	3-11
1260172-0000	.BUSHING	3-11
1260177-0000	.COVER	4-19
1260185-0000	.PIPE	2-57
1260187-0000	.SPACER	3-11
1260247-0000	.CLIP	6-17
1260303-0000	.WASHER	1-233
1260327-0000	.TUBE	6-17
1260547-0100	.ICE WATER UNIT	6-7, 6-9
1260749-0000	.HOLDER	4-23
1260751-0000	.HINGE	4-11, 4-13
1260752-0000	.SHAFT	4-11, 4-13
1260753-0000	.PIN	2-19, 2-21, 2-23
1260863-0000	.PLATE	3-5
1260865-0000	.SPACER	3-5

Part No	Description	Page No
1260950-0000	.CURVE	4-15, 4-17
1279075-0000	.SEALING STRIP	2-121
1279076-0000	.SEALING STRIP	2-119
1279088-0000	.LOCKING PLATE	1-27, 1-29
1279089-0000	.LOCKING PLATE	1-27, 1-29
1279091-0000	.LOCKING PLATE	1-17, 1-19
1279456-0000	.LABEL	1-103
1279603-0000	.SHAFT	1-193
1279802-0200	.FRAME	1-3, 1-5
1279803-0200	.BENDING ROLLER	1-189
1282796-0000	.WASHER	5-19, 5-21
1282876-0000	.PIPE	2-87
1282879-0000	.CONNECTING PIPE	2-87
1282889-0000	.PIPE	1-185
1282891-0000	.PIPE	2-85
1282892-0000	.TANK	2-91
1282893-0000	.PIPE	2-91
1282894-0100	.PEROXIDE TANK	2-83
1282895-0200	.PEROXIDE PIPE	2-83
1282896-0100	.TANK	2-83
1282898-0000	.HOSE	2-91
1282899-0000	.HOSE	2-85
1282901-0000	.PIPE	2-87
1282902-0000	.HEAT EXCHANGER	1-179
1282903-0000	.FLANGE	2-85
1282904-0000	.LID	2-85
1282906-0000	.NIPPLE	2-85
1282995-0000	.SCREW	4-11, 4-13
1285329-0000	.PIPE	1-87, 1-89, 1-97, 1-99
1285363-0000	.TUBE	6-17
1285400-0350	.COVERING PANEL	1-3, 1-5
1285403-0000	.COVERING	1-231
1285844-0000	.LOCKING ARM	2-119
1285845-0000	.BRACKET	2-119, 2-121
1285846-0000	.LINK	2-119, 2-121
1285847-0000	.SHAFT	2-119, 2-121
1285848-0000	.SHAFT	2-119, 2-121
1289743-0000	.SPROCKET	10-5
1289983-0001	.LID	10-119
1289983-0002	.LID	10-119
1296109-0000	.BRACKET	1-21, 1-23
1296219-0000	.SEALING STRIP	2-115
1296754-0000	.SHAFT	1-17, 1-19
1296755-0000	.SHAFT	1-17, 1-19
1296756-0000	.EIXO	1-43
1296757-0000	.EIXO	1-43
1296758-0000	.ROLL	1-17, 1-19
1296759-0000	.ROLO	1-43
1296760-0000	.NUT	1-17, 1-19, 1-43
1296764-0000	.CARRIL	1-43
1296847-0300	.CONNECTION BOX	1-3, 1-5
1296877-0100	.SEAL KIT	11-9, 11-11
1296878-0100	.SEAL KIT	11-9, 11-11
1296879-0100	.SEAL KIT	11-9, 11-11
1296997-0000	.WASHER	1-39
1317102-0100	.HYDROGEN PEROXIDE	2-3
1317103-0100	.PUMP	2-83
1317104-0000	.BRACKETS, FASTENING PLATES, - BRACKETS	2-89
1317105-0000	.BRACKET	2-89
1317226-0000	.WEIGHT	2-89
1317248-0200	.TPOP DATA COLLECTION	7-3
1317268-0100	.COVERS	2-105
1317271-0000	.DOOR	2-109
1317272-0000	.DOOR	2-109
1317273-0200	.DOOR	2-105
1317274-0000	.SEALING STRIP	2-109
1317275-0000	.SEALING STRIP	2-109
1317386-0000	.DOOR	2-111
1317387-0000	.DOOR	2-111
1317388-0100	.DOORS	2-105
1317389-0000	.COVER	2-111
1317390-0000	.COVER	2-111
1317391-0000	.SEALING STRIP	2-111
1317392-0000	.COVER	2-111
1317438-0000	.FORK	1-95
1317447-0000	.PIPE	2-57
1317450-0000	.BRACKET	2-57
1317451-0000	.BRACKET	2-57
1317453-0000	.BRACKET	2-55
1317486-0000	.BRACKET	2-55
1317711-0000	.SHAFT	8-75
1317712-0000	.SHAFT	8-75
1317784-0000	.BRACKET	2-89
1317998-0000	.BRACKET	1-11

Part No	Description	Page No
1317999-0000	.BLOCK	1-11
1334000-0000	.STOP	1-11
1334003-0000	.FLANGE	1-11
1334004-0000	.ARM	1-11
1334006-0000	.SHAFT	1-11
1334008-0300	.CALENDER ROLLER	1-7
1334056-0000	.COMPRESSION GLAND	1-95
1334187-0000	.PLATE	8-59
1334188-0000	.AXLE PIN	8-59
1334189-0000	.BLOCK	8-59
1334190-0000	.BLOCK	8-59
1334506-0200	.HEATING UNIT	1-177
1334507-0000	.TUBE	1-187
1334510-0000	.PIPE	1-185
1334511-0000	.PIPE	1-185
1334512-0000	.PIPE	1-185
1334513-0000	.PIPE	1-185
1334514-0000	.PIPE	1-185
1334516-0000	.PIPE	1-187
1334810-0200	.PIPE WORK	2-45
1334812-0100	.COOLING HOSES	2-45
1346353-0000	.LOCK PIN	1-97, 1-99
1346523-0000	.CHUTE	2-103
1346524-0000	.HATCH	2-103
1346525-0000	.COVER	2-103
1346541-0000	.CONVEYOR CHAIN	2-103
1346557-0000	.GASKET	1-183
1346558-0000	.COVER	1-183
1346568-0000	.HEAT EXCHANGER	1-187
1346571-0000	.BATH	1-183
1346613-0300	.VALVE PANEL	2-35, 2-37
1346656-0000	.ROD	1-143, 1-149
1346657-0000	.CYLINDER BRACKET	1-143, 1-149
1346658-0000	.BRACKET	1-143, 1-149
1346659-0000	.SCREW	1-143, 1-149
1346665-0000	.PIPE	2-55
1346677-0000	.CYLINDER	1-143, 1-149
1346756-0000	.COVER	2-107
1346757-0000	.GASKET	2-107
1346758-0000	.COVER	2-107
1346759-0000	.GASKET	2-107
1346822-0000	.SHAFT	2-103
1346823-0200	.FRONT COVER	2-105
1346988-0000	.ROLL	8-19, 11-23
1347069-0100	.SAFETY SWITCH	2-105
1347073-0000	.PULLEY	5-19, 5-21
1347077-0000	.BRUSH	5-5, 5-7
1347090-0000	.CHUTE	5-49
1347113-0000	.PIPE	1-143
1347116-0000	.PIPE	1-147
1347124-0000	.PIPE	1-181
1347126-0000	.PIPE	1-179
1347129-0000	.PIPE	1-151
1347130-0000	.PIPE	1-181
1347131-0000	.PIPE	1-181
1347134-0000	.PIPE	1-147
1347135-0000	.PIPE	1-145
1347136-0000	.PIPE	1-145
1347140-0200	.CABLE TRENCH	1-3, 1-5
1347141-0100	.VALVE HEAT EXCHANGER	1-137
1347142-0200	.SEPARATOR	1-137
1347171-0200	.HYDROGEN PEROXIDE	1-3, 1-5
1347172-0200	.PEROXIDE PIPE	1-177
1347174-0200	.WATER CIRCULATION	1-177
1347191-0200	.CONNECTION BOX	1-3, 1-5
1347192-0000	.LID	1-161, 1-163, 1-165
1347193-0000	.LID	1-161, 1-163, 1-165
1347195-0000	.LID	1-161, 1-163, 1-165
1347223-0000	.PIPE	1-159
1347245-0000	.HEAT EXCHANGER	1-153
1347246-0100	.AIR SUPER-HEATER	1-137
1347484-0000	.SPACER	1-35
1347485-0100	.DRIVEN CALENDER ROLLER	1-7
1347493-0150	.DOOR	1-7
1347494-0000	.FRAME	1-65
1347499-0000	.BEARING BUSHING	1-11
1347500-0000	.SHAFT	1-11
1347511-0000	.FITTING	1-95, 11-9, 11-11
1347513-0000	.SHEET	1-25
1347521-0000	.ROLLER	1-59, 3-7, 3-9
1347522-0000	.NOZZLE	3-7, 3-9
1347547-0200	.PNEUMATIC SYSTEM	1-3, 1-5
1347548-0400	.VALVE PANEL	1-201, 1-203
1347549-0300	.VALVE RAMP	1-209, 1-211

Part No	Description	Page No
1347550-0300	.VALVE RAMP	1-209, 1-211
1347551-0200	.HOSE INSTALLATION	1-201, 1-203
1347556-0000	.ECCENTRIC	1-17, 1-19
1347557-0000	.MOVABLE FORMING RING	1-17, 1-19
1347558-0000	.SUPPORT	1-17, 1-19
1347559-0000	.SHAFT	1-17, 1-19
1347615-0100	.COVERING PANEL	1-3, 1-5
1347616-0000	.COVERING PLATE	1-233
1347617-0000	.COVERING PLATE	1-233
1347638-0000	.PIPE	2-19, 2-21, 2-23
1347639-0100	.RAILING	1-189
1347640-0000	.RAILING	1-199
1347641-0000	.RAILING	1-199
1347671-0000	.GASKET	1-183
1347691-0000	.CABLE DUCT	1-205
1347695-0000	.FRAME	1-189
1347696-0000	.FRAME	1-189
1347697-0000	.FRAME	1-189
1347703-0000	.SIGN BOARD	1-205
1347704-0000	.THERMOCOUPLE	2-85
1347766-0000	.SIGN	2-111
1347767-0000	.SIGN	2-111
1347867-0000	.CHECKER PLATE	1-189
1347868-0000	.CHECKER PLATE	1-189
1347869-0000	.BRACKET	1-189
1347870-0000	.BRACKET	1-189
1347872-0000	.LID	1-161, 1-163, 1-165
1347873-0000	.CABLE DUCT	1-161, 1-163, 1-165
1347874-0000	.LID	1-161, 1-163, 1-165
1347875-0100	.BALL	1-7
1347877-0000	.HOLDER	1-235
1347878-0000	.RAIL	2-7
1347938-0000	.PENDULUM ARM	1-37
1347940-0000	.SHAFT	1-37
1347941-0000	.LID	1-37
1348063-0000	.LEVER	1-37
1348090-0200	.CABLE HARNESS	2-5
1348099-0000	.PIPE	1-97, 1-99
1348197-0000	.HOLDER	2-39, 2-41
1348232-0000	.FRAME	2-111
1348242-0000	.SPROCKET	11-21
1348256-0000	.VOLUME BULGE	4-25, 4-27, 4-29, 4-31, 4-33, 4-35, 4-37, 4-39, 4-41, 4-43, 4-45, 4-47, 4-49
1348257-0000	.VOLUME SHIM	4-25, 4-27, 4-29, 4-31, 4-33, 4-35, 4-37, 4-39, 4-41, 4-43, 4-45, 4-47, 4-49, 11-19
1348287-0000	.GUIDE	4-19
1348474-0000	.GASKET	1-87, 1-89, 1-97, 1-99, 11-9, 11-11
1348475-0000	.GASKET	1-87, 1-89, 1-97, 1-99, 11-9, 11-11
1348496-0100	.CONNECTION BOX	2-5
1348497-0100	.CONNECTION BOX	2-5
1348498-0000	.HOLDER	2-7
1348499-0000	.CONNECTION BOX	2-9
1348500-0000	.CONNECTION BOX	2-7
1348510-0000	.PLATE	4-23, 5-63
1348529-0000	.STRAINER	2-87
1348530-0000	.LID	2-87
1348555-0000	.SEALING RING	1-95, 11-9, 11-11
1348622-0000	.O-RING	1-25
1348639-0000	.SEALING GASKET	1-95, 11-9, 11-11
1348751-0400	.OUTFEED UNIT L1	5-31
1348938-0000	.,LOCK PLATE	1-31
1348940-0000	.PIPE	1-219, 1-221
1348941-0000	.PIPE	1-15
1349014-0000	.PAD	8-67
1349181-0000	.TOUCH GUARD	8-61
1349367-0000	.BRACKET	4-11, 4-13
1349375-0000	.CURVE	4-15, 4-17
1349377-0000	.CURVE	4-15, 4-17
1349379-0000	.CURVE	4-15, 4-17
1349380-0000	.CURVE	4-15, 4-17
1349381-0000	.ECCENTRIC SHAFT	4-15, 4-17
1349386-0000	.SHAFT	4-19
1349387-0000	.SHAFT	4-19
1349397-0000	.SHIM	1-43
1349398-0000	.NUT	1-143, 1-149
1349399-0000	.WASHER	4-29, 4-31, 4-33, 4-39, 4-41, 4-43
1349432-0000	.CATCH	8-19
1349464-0300	.CONNECTION BOX	3-3
1349465-0000	.CONNECTION BOX	3-17
1349505-0000	.FRAME	1-187
1349581-0000	.FLAG	8-57
1349608-0000	.HOLDER	1-187
1349672-0000	.GUIDE	8-19
1349762-0000	.SHAFT	1-159
1349913-0000	.BUSHING	1-95, 11-9, 11-11
1349915-0000	.SHAFT	1-43

Part No	Description	Page No
1349994-0000	.NUT	8-19
1350289-0000	.ROLL	1-31
1350705-0000	.PIPE	1-179
1350708-0000	.LOCKING ARM	2-119, 2-121
1350716-0000	.SHAFT	11-35
1350718-0000	.CURVE	4-15, 4-17
1350902-0000	.GLASS PANE	2-19, 2-21, 2-23
1350904-0000	.ROLL	1-27, 1-29
1350905-0000	.LOCKING PLATE	1-27, 1-29
1350906-0000	.LOCKING PLATE	1-27, 1-29
1350907-0000	.UPPER FORMING RING	1-27, 1-29
1359055-0000	.SIGN	10-5, 10-53, 10-61
1359224-0000	.FASTENING PLATE	10-99, 10-113
1359389-0000	.ROLL	10-67, 10-69
1359390-0000	.SHAFT	10-67, 10-69
1359391-0000	.MOUNTING BLOCK	10-67, 10-69
1359473-0000	.CORRUGATED CARDBOARD BOX	10-51
1359565-0000	.NUT	5-39, 5-51, 10-11
1359581-0200	.SWITCH GEAR	10-5, 10-61
1359734-0000	.SHEET	10-27
1359776-0000	.BELT	10-67, 10-69
1359831-0000	.SWITCH GEAR	10-27
1359938-0000	.MOUNTING SHEET	10-61
1361560-0000	.PLATE	6-11
1363297-0000	.CABLE LVDS 10M	2-13, 2-15
1366727-0000	.CLAMP	5-39, 5-51, 5-55, 5-57, 10-11, 10-83, 10-85, 10-109
1366750-0000	.HOLDER	5-55, 5-57, 10-83, 10-85, 10-109
1369439-0102	.PLMS ON-LINE	12-5
1369439-0301	.PLMS ON-LINE PROGRAM	7-5
1478005-0000	.LOCKING ARM	2-121
1478170-0000	.CONTAINER	1-61, 1-63
1478182-0000	.SPACER	1-17, 1-19
1478236-0000	.COVERING	1-231
1478267-0000	.ROLL	1-21, 1-23
1478303-0000	.TENSION SPRING	8-19
1478558-0000	.WASHER	5-43, 5-45, 5-47
1478570-0000	.AXLE PIN	1-17, 1-19
1478618-0000	.SHIM	5-27, 5-29
1478630-0200	.HEATING CHAMBER	5-9
1478631-0000	.SUPPORT	5-5, 5-7
1478636-0000	.PLATE	5-27, 5-29
1478637-0000	.SHAFT	5-27, 5-29
1478638-0000	.PULLEY	5-27, 5-29
1478639-0000	.FLANGE	5-27, 5-29
1478640-0000	.SPACER	5-27, 5-29
1478765-0100	.PRESSURE REGULATOR	1-137
1478766-0000	.PIPE	1-155, 1-157
1478813-0000	.SPACER	1-123
1478814-0000	.SENSOR	1-123
1478959-0000	.ARM	4-29, 4-31, 4-33, 4-39, 4-41, 4-43
1478960-0000	.LINK ARM	4-29, 4-31, 4-33, 4-39, 4-41, 4-43
1484081-0000	.BRACKET	6-23
1484234-0000	.FORMING RING	1-27, 1-29
1484285-0000	.SCREW	1-127, 1-129
1484336-0000	.CURVE	4-15, 4-17
1484337-0000	.CURVE	4-15, 4-17
1484363-0000	.COVER	8-153
1484425-0000	.PIPE	1-219, 1-221
1484428-0000	.PLASTIC PLUG	1-183
1484470-0000	.CABLE	1-149
1484479-0000	.SUPPORT	4-15, 4-17
1484480-0000	.ADJUSTER	4-15, 4-17
1484511-0000	.WATER DIAGRAM	2-113, 6-45, 6-65, 6-67
1484514-0000	.HOUSING	1-35
1484515-0000	.LID	1-95
1484516-0000	.GASKET	1-95
1484550-0000	.FORK	1-95
1484693-0000	.KNIFE HOLDER	8-83
1484695-0000	.KNIFE	8-83
1484697-0000	.RAIL	8-87
1484703-0000	.TIE ROD	8-83
1484704-0000	.SHAFT	8-77, 8-135
1484705-0000	.SLIDER	8-85
1484706-0000	.GEAR WHEEL	8-85
1484707-0200	.STRIP MAGAZINE	8-3
1484708-0000	.MOUNTING PLATE	8-57
1484711-0000	.BRACKET	8-65
1484718-0000	.AXLE PIN	8-57
1484719-0000	.AXLE PIN	8-65
1484720-0100	.HINGE	8-55
1484724-0000	.HUB	8-63
1484725-0100	.HUB	8-55
1484726-0000	.SHAFT	8-63
1484728-0000	.BRACKET	8-135

Part No	Description	Page No
1484738-0000	.BRACKET	8-135
1484740-0000	.BRACKET	8-57
1484745-0100	.WEB GUIDE	8-71, 8-135
1484752-0000	.SLIDER	8-145
1484760-0000	.SLIDER	8-145
1484761-0000	.ANGLE BRACKET	8-145
1484766-0000	.DANCE ROLLER	8-135, 8-145
1484776-0000	.RAIL	8-85
1484777-0000	.SLIDER	8-85
1484778-0000	.PLATE	8-145
1484779-0000	.ROD	8-85
1484781-0000	.PIN	8-83
1484782-0000	.CLAMP BLOCK	8-85
1484783-0000	.CLAMPING ELEMENT	8-85
1484784-0000	.LOCATING PIECE	8-85
1484785-0000	.LOCATING PIECE	8-85
1484793-0000	.ROLLER	1-59, 3-7, 3-9
1484823-0000	.PLATE	1-9
1484826-0000	.CURVE	4-15, 4-17
1484859-0000	.ROLLER	1-21, 1-23
1484860-0000	.LOCK PLATE	1-21, 1-23
1484861-0000	.LOCK PLATE	1-21, 1-23
1484862-0000	.FORMING RING	1-21, 1-23
1484863-0000	.FORMING RING	1-21, 1-23
1484886-0000	.SIGN LANGUAGEINDEPENDENT	6-13
1484887-0000	.PLATE	6-45
1484888-0000	.PIPE	6-45
1484889-0100	.DOOR	6-51
1484890-0000	.DOOR	6-53
1484892-0000	.PNEUMATIC DIAGRAM	2-113, 6-71
1484893-0000	.EXTERNAL CLEANING DIAGRAM	2-113, 6-27
1487023-0000	.PIPE	6-41
1487037-0000	.FLANGE	1-97, 1-99
1487051-0000	.SPACER	5-27, 5-29
1487055-0000	.SLIDER	5-27, 5-29
1487099-0000	.COVER	3-5
1487114-0000	.BLOCK	1-61, 1-63
1487127-0000	.SPACER SCREW	3-5
1487164-0000	.PLATE	1-43
1487165-0000	.SCREW	1-43
1487166-0000	.SCREW	1-43
1487167-0000	.AXLE PIN	1-43
1487168-0000	.PLATE	1-43
1487198-0000	.PIPE	1-87, 1-89, 1-97, 1-99
1487200-0000	.CLAMP	1-103
1487203-0000	.NOZZLE	3-7, 3-9
1487204-0000	.CANTILEVER	3-7, 3-9
1487209-0000	.ROLLER	1-59, 3-7, 3-9
1487213-0000	.SHAFT	11-33
1487214-0000	.SCREW	11-33
1487215-0100	.TOOL	11-31
1487219-0000	.CURVE	4-11, 4-13
1487249-0000	.WASHER	4-21
1487263-0000	.BRACKET	1-159
1487332-0000	.SHAFT	4-21
1487373-0000	.WASHER	4-21
1487482-0000	.SHAFT	11-41, 11-43, 11-45
1487483-0000	.SUPPORT	11-41, 11-43, 11-45
1487494-0000	.BAR	11-47
1487510-0000	.RACK GEAR	8-85
1487511-0000	.BRACKET	8-85
1487517-0000	.CATCH	8-83
1487518-0000	.RULER	8-93, 8-101
1487519-0000	.SHAFT	8-145
1487521-0000	.SHAFT	8-137
1487528-0100	.CYLINDER	8-101
1487530-0001	.GUIDE ROD	8-145
1487536-0000	.GUIDE BRACKET	8-145
1487537-0000	.BRACKET	8-145
1487538-0000	.BRACKET	8-145
1487544-0200	.SIDE FEEDER	8-33, 8-35
1487550-0000	.ANGLE BRACKET	8-145
1487551-0000	.PLATE	8-145
1487554-0000	.BRACKET	8-85
1487555-0000	.BUSHING	8-85
1487556-0000	.BAR	8-85
1487557-0000	.BAR	8-85
1487558-0000	.FASTENING PLATE	8-85
1487559-0000	.SLIDER	8-85
1487560-0200	.MACHINE BODY	8-3
1487687-0000	.LOCK PLATE	1-17, 1-19
1487688-0000	.MOVABLE FORMING RING	1-17, 1-19
1487689-0000	.LOCK PLATE	1-17, 1-19
1487691-0000	.ROLL	1-31

Part No	Description	Page No
1487693-0000	.SEAL HOLDER	1-55
1487694-0000	.SEAL HOLDER	1-55
1487700-0000	.SHAFT	1-17, 1-19
1487763-0000	.SHAFT	8-73
1487765-0000	.SPACER	8-145
1487769-0000	.SPACER	8-145
1487770-0000	.BRACKET	8-93, 8-101
1487779-0000	.SHAFT	8-93, 8-101
1487781-0000	.BRACKET	8-93, 8-101
1487782-0000	.SHAFT	8-93, 8-101
1487784-0000	.BRACKET	8-139
1487788-0000	.SPACER	8-141
1487795-0000	.PLATE	8-135
1487796-0000	.PLATE	8-135
1487800-0000	.PLATE	8-135
1487802-0000	.SPACER	8-135
1487808-0200	.BRACKET	8-3
1487830-0000	.MOVABLE FORMING RING	1-17, 1-19
1487837-0000	.CLAMP	1-103
1487838-0000	.CLAMP	1-103
1487839-0000	.CLAMP	1-103
1487840-0000	.CLAMP	1-103
1487848-0000	.PIPE	1-181
1487874-0000	.SHIM	5-27, 5-29
1487995-0000	.HATCH	8-151
1488000-0000	.DOOR	8-159
1488005-0000	.BEARING BLOCK	8-33, 8-35
1490183-0000	.BRACKET	8-145
1490187-0000	.ROCKER ARM	8-57
1490188-0100	.COVER	8-149
1490190-0200	.HATCH	8-149
1490191-0100	.DOOR	8-149
1490193-0100	.COVER	8-149
1490210-0000	.PLATE	8-47
1490215-0200	.COVERING PANEL	8-3
1490219-0000	.BRACKET	8-47
1490220-0000	.ANGLE BRACKET	8-87
1490226-0000	.FILTER	8-159
1490265-0100	.WATER CIRCULATION	1-177
1490279-0000	.SCREW	1-71
1490405-0000	.ROLLER	1-33, 1-53
1490406-0000	.WASHER	1-33, 1-37, 1-51, 1-53
1490407-0000	.WASHER	1-33, 1-37, 1-45, 1-51, 1-53
1490408-0000	.SHAFT	1-33, 1-51
1490409-0000	.ROLLER	1-37
1490410-0000	.SHAFT	1-37
1490411-0000	.ROLLER	1-45
1490412-0000	.SHAFT	1-45
1490413-0000	.SHAFT	1-45
1490415-0000	.SHAFT	1-53
1490804-0000	.HOLDER	8-61
1490806-0200	.HEATING DEVICE	8-55
1490809-0000	.ARM	8-95, 8-103
1490810-0000	.ARM	8-95, 8-103
1490812-0000	.AXLE	8-95, 8-103
1490813-0000	.SCREW	8-95, 8-103
1490814-0000	.PLATE	8-135
1490815-0000	.PLATE	8-135
1490818-0000	.ARM	8-57
1490820-0000	.SHAFT	8-77
1490821-0000	.ANGLE PIECE	8-93, 8-101
1490831-0200	.MAGAZINE	8-3
1490886-0000	.SHAFT	1-51
1490887-0000	.WASHER	1-51
1490893-0000	.BRACKET	1-189
1490894-0000	.TRIMMING ROLLER PLUS	11-9, 11-11
1490895-0000	.TRIMMING ROLLER MINUS	11-9, 11-11
1490902-0000	.BRACKET	1-25
1494664-0000	.AXLE LINK	8-87
1498047-0000	.SEALING BLOCK	8-61
1498078-0000	.PLATE	5-13, 5-15, 5-17
1498101-0000	.CARRIER	5-43, 5-45, 5-47, 11-21
1498278-0000	.CAM	4-11, 4-13
1498279-0000	.SHAFT	4-11, 4-13
1498430-0000	.ROD	8-11
1498445-0000	.COVER	8-55
1498450-0001	.PLATE	8-65
1498451-0001	.SHAFT	8-65
1498453-0200	.DOOR	8-149
1498454-0200	.DOOR	8-149
1498457-0000	.BRACKET	8-45
1498459-0001	.GLASS PANE	8-165, 8-169
1498459-0002	.GLASS PANE	8-159
1498459-0003	.GLASS PANE	8-151, 8-163

Part No	Description	Page No
1498459-0004	.GLASS PANE	8-161
1498460-0000	.HATCH	8-163
1498461-0001	.SEALING STRIP	8-165
1498461-0002	.SEALING STRIP	8-151, 8-163
1498461-0005	.SEALING STRIP	8-159, 8-161
1498479-0000	.GUIDE	4-29, 4-31, 4-33, 4-39, 4-41, 4-43
1498502-0000	.BRACKET	2-19, 2-21, 2-23
1498524-0000	.PIPE	1-151
1498526-0000	.REGULATOR BODY	1-123
1498527-0000	.MOUNTING PLATE	1-127, 1-129
1498551-0000	.PULLEY	5-5, 5-7
1498552-0000	.FLANGE	5-5, 5-7
1498554-0000	.PULLEY	5-5, 5-7
1498578-0000	.CURVE	4-11, 4-13
1498579-0000	.CURVE	4-11, 4-13
1498587-0000	.PLATE	4-11, 4-13
1498588-0000	.PLATE	4-11, 4-13
1498589-0000	.PLATE	4-11, 4-13
1498590-0000	.PLATE	4-11, 4-13
1498591-0000	.PROTECTION	4-11, 4-13
1498592-0000	.BRACKET	4-11, 4-13
1498593-0000	.CURVE	4-11, 4-13
1498601-0000	.SHAFT	4-19
1498602-0000	.SHAFT	4-19
1498603-0000	.VOLUME BULGE	4-25, 4-27, 4-29, 4-31, 4-33, 4-35, 4-37, 4-39, 4-41, 4-43, 4-45, 4-47, 4-49
1498604-0000	.VOLUME SHIM	4-25, 4-27, 4-29, 4-31, 4-33, 4-35, 4-37, 4-39, 4-41, 4-43, 4-45, 4-47, 4-49, 11-19
1498608-0000	.VOLUME BULGE	4-25, 4-27, 4-29, 4-31, 4-33, 4-35, 4-37, 4-39, 4-41, 4-43, 4-45, 4-47, 4-49
1498609-0000	.VOLUME SHIM	4-25, 4-27, 4-29, 4-31, 4-33, 4-35, 4-37, 4-39, 4-41, 4-43, 4-45, 4-47, 4-49, 11-19
1498614-0000	.SENSOR	1-43
1498615-0000	.CASQUILHO	1-43
1498616-0000	.BUSHING	1-43
1498624-0100	.WEB GUIDE	1-193
1498629-0000	.SHAFT	1-11
1498667-0100	.FASTENING PLATE	1-75, 1-77, 1-79, 1-81
1498668-0300	.FILLING PIPE	1-75, 1-77, 1-79, 1-81
1498669-0200	.REGULATING VALVE	1-119, 1-121
1498670-0000	.LID	1-25
1498671-0000	.PAPER GUIDE	1-25
1498673-0200	.CLEANING SLEEVE	1-75, 1-77, 1-79, 1-81
1498674-0100	.TOOLS	11-37
1498675-0000	.BUSHING	11-41, 11-43, 11-45
1498676-0100	.TOOLS	11-37
1498677-0000	.BAR	11-47
1498687-0000	.ADJUSTMENT BRACKET	11-37
1498691-0200	.TOOLS AND TEMPLATES	11-3
1498692-0200	.TOOLS AND TEMPLATE,JAW SYSTEM	11-29
1498693-0100	.TOOLS AND TEMPLATES, FINAL FOLDER	11-29
1498694-0100	.TOOLS AND TEMPLATES, FILLING TUBE	11-29
1498695-0200	.ACCESSORIES	12-3
1498697-0000	.FILLING PIPE	1-95
1498698-0000	.PIPE	1-119, 1-121
1498699-0000	.PIPE	1-119, 1-121, 11-3
1498700-0200	.FLOW REGULATOR	1-75, 1-77, 1-79, 1-81
1498973-0000	.BRACKET	5-43, 5-45, 5-47
1498977-0000	.GUIDE	5-43, 5-45, 5-47
1498997-0000	.CARRIER	5-43, 5-45, 5-47, 11-21
1499004-0000	.SLIDER	5-27, 5-29
1499005-0000	.SPACER	5-27, 5-29
1499010-0000	.SLIDER	5-27, 5-29
1499011-0000	.SPACER	5-27, 5-29
1499016-0000	.PULLEY	5-27, 5-29
1499024-0000	.BAR	1-195
1499025-0000	.ROLLER	1-195
1499026-0000	.SHAFT	1-195
1499027-0000	.BRACKET	1-195
1499089-0000	.INSERT	5-63
1499125-0000	.SEAL	1-97, 1-99
1499126-0000	.SEAL	1-97, 1-99
1499127-0000	.FLANGE	1-87, 1-89, 1-97, 1-99
1499129-0000	.HOLDER	11-33
1499186-0000	.HOLDER	11-33
1499407-0000	.FORK	11-47
1499562-0003	.LOCKING ARM	8-159, 8-161
1499562-0004	.LOCKING ARM	8-159, 8-161
1499564-0100	.COVER	8-149
1499566-0000	.WASHER	8-87
1499568-0000	.HATCH	8-171
1499569-0000	.BRACKET	8-57
1499570-0000	.HOLDER	8-33, 8-35
1499573-0000	.PIN	8-47
1499577-0000	.ARM	8-101
1499578-0300	.CABLE CONDUIT	8-71
1499579-0000	.SEALING STRIP	8-169
1499582-0000	.AXLE PIN	8-93, 8-101

Part No	Description	Page No
1499584-0000	.AXLE PIN	8-43, 8-135, 8-143
1499588-0000	.BENDING ROLLER	8-93, 8-101
1499602-0000	.CAM	4-11, 4-13
1499603-0000	.CAM	4-11, 4-13
1499604-0000	.CAM	4-11, 4-13
1499634-0000	.INTERNAL PIPE	1-147
1499642-0201	.TPIH GENERATOR	7-41
1499688-0000	.SLIDER	5-27, 5-29
1499689-0000	.SPACER	5-27, 5-29
1499690-0300	.SQUEEZER	5-9
1499786-0000	.BRACKET	6-35, 6-37
1499908-0000	.PULLEY	5-5, 5-7
1499909-0000	.FLANGE	5-5, 5-7
1499919-0000	.BELT	5-27, 5-29, 11-21
1499935-0000	.SLIDER	5-27, 5-29
1511000-0000	.PLATE	1-195
1511001-0000	.SHAFT	1-195
1511002-0000	.HOLDER	1-195
1511003-0000	.WEIGHT	1-195
1511242-0000	.WASHER	4-15, 4-17
1511396-0000	.CAM	4-11, 4-13
1511397-0000	.CAM	4-11, 4-13
1511503-0000	.PIPE	1-147
1511521-0000	.LABEL	2-39, 2-41
1511522-0000	.LABEL	2-39, 2-41
1511525-0000	.LABEL	2-39, 2-41
1511526-0000	.LABEL	2-39, 2-41
1511564-0000	.BRACKET	8-145
1511568-0000	.PIN	8-93, 8-101
1511569-0000	.SPACER	8-99, 8-105
1511575-0000	.ARM	8-93
1511579-0000	.BRACKET	8-145
1511585-0200	.STRIP GUIDE	8-55
1511586-0001	.BAR	8-65
1511600-0000	.SPACER	1-123
1511615-0000	.BRACKET	6-17
1511616-0000	.BRACKET	6-17
1511673-0000	.BRACKET	3-17
1511680-0000	.TUBE	6-17
1512267-0000	.ECCENTRIC BUSHING	8-73, 8-137
1512275-0000	.PROTECTION PLATE	8-47
1512276-0000	.PROTECTION PLATE	8-93, 8-101
1512278-0000	.SEALING STRIP	8-171
1512279-0200	.MACHINE BODY	8-33, 8-35
1512299-0000	.SPRAY NOZZLE DOME	1-147
1512300-0000	.SPRAY NOZZLE NUT	1-147
1512301-0000	.SPACER	1-147
1512302-0000	.SPRAY NOZZLE GASKET	1-147
1512319-0000	.SPRAY NOZZLE BODY	1-147
1512322-0000	.COPPER BRAID	7-45, 7-47
1512346-0000	.CURVE	4-15, 4-17
1512365-0000	.BRACKET	4-11, 4-13
1512366-0000	.CURVE	4-15, 4-17
1512367-0000	.CURVE	4-15, 4-17
1512368-0000	.ECCENTRIC SHAFT	4-15, 4-17
1512398-0100	.DIAGRAM	2-111
1512405-0000	.NUT	1-147
1512409-0000	.SPRAY NOZZLE INJECTOR	1-147
1512410-0000	.SPRAY NOZZLE PLUG	1-147
1512413-0200	.CONTROL PANEL	8-153
1512414-0000	.SEALING STRIP	8-153
1512420-0000	.PLATE	8-33, 8-35
1512421-0000	.CABLE DUCT	8-49, 8-51, 8-53
1512423-0000	.CABLE DUCT	8-49, 8-51, 8-53
1512425-0000	.CABLE DUCT	8-49, 8-51, 8-53
1512426-0000	.CABLE DUCT	8-49, 8-51, 8-53
1512428-0200	.MOUNTING SHEET	8-55
1512429-0100	.PRESSURE ROLLER	8-135
1512430-0000	.VOLUME SHIM	8-87
1512526-0000	.STEERING	8-75
1512559-0000	.SPRAY GUN	11-31
1512584-0000	.DRIVE SHAFT	2-103
1512590-0000	.RUBBER BUSHING	4-25, 4-27, 4-35, 4-37, 4-45, 4-47, 4-49
1512598-0000	.GUIDE	4-19
1512599-0000	.VOLUME CAM	4-19
1512600-0000	.PIPE	4-11, 4-13
1512601-0000	.PIPE	4-11, 4-13
1512604-0000	.SHAFT	4-25, 4-27, 4-29, 4-31, 4-33, 4-35, 4-37, 4-39, 4-41, 4-43, 4-45, 4-47, 4-49
1512605-0000	.BRACKET	4-25, 4-27, 4-29, 4-31, 4-33, 4-35, 4-37, 4-39, 4-41, 4-43, 4-45, 4-47, 4-49
1512607-0000	.BRACKET	4-25, 4-27, 4-29, 4-31, 4-33, 4-35, 4-37, 4-39, 4-41, 4-43, 4-45, 4-47, 4-49
1512608-0000	.SHAFT	4-25, 4-27, 4-29, 4-31, 4-33, 4-35, 4-37, 4-39, 4-41, 4-43, 4-45, 4-47, 4-49
1512616-0000	.PIPE	4-11, 4-13
1512617-0000	.PIPE	4-11, 4-13
1512644-0000	.ROUND NUT	2-109

Part No	Description	Page No
1512649-0000	.SHAFT	3-5
1512650-0000	.BEARING HOUSING	3-5
1512651-0000	.CURVE	4-15, 4-17
1512652-0000	.SHAFT	4-19
1512653-0000	.SHAFT	4-19
1512658-0000	.NOZZLE	3-7, 3-9
1512823-0000	.NUT	5-13, 5-15, 5-17
1512835-0000	.EXTERNAL PIPE	1-147
1512836-0000	.LID	1-147
1517055-0000	.MOTOR COVER	2-103
1517087-0000	.HINGE	8-57
1517088-0200	.CONTROL PANEL	8-165
1517101-0000	.PIPE	8-33, 8-35
1517105-0000	.PLATE	8-139
1517107-0000	.PROTECTION	8-55
1517113-0000	.RAIL	8-87
1517188-0000	.BRACKET	5-49
1517277-0000	.SPACER	3-7, 3-9
1517278-0000	.SPACER	3-7, 3-9
1517289-0000	.KNIFE	4-25, 4-27, 4-35, 4-37, 4-45, 4-47, 4-49, 11-19
1517291-0000	.SHAFT	4-25, 4-27, 4-35, 4-37, 4-45, 4-47, 4-49
1517295-0000	.SHEET	6-71
1517316-0000	.ROLL	1-31
1517318-0000	.MOVABLE FORMING RING	1-17, 1-19
1517483-0000	.NET	1-147
1517707-0000	.BRACKET	1-187
1517714-0000	.SPROCKET	5-13, 5-15, 5-17
1517715-0100	.STATION CHAIN	5-9
1517717-0000	.SHAFT	5-11
1517718-0000	.SCREW	5-11
1517720-0000	.FRAME	5-13, 5-15, 5-17
1517721-0000	.FLANGE	5-13, 5-15, 5-17
1517722-0000	.FLANGE	5-13, 5-15, 5-17
1517723-0000	.SPACER	5-13, 5-15, 5-17
1517724-0000	.SPACER	5-13, 5-15, 5-17
1517727-0000	.FLANGE	5-13, 5-15, 5-17
1517731-0000	.PIN	5-19, 5-21
1517732-0000	.SPACER	5-13, 5-15, 5-17
1517733-0000	.GUIDE	5-13, 5-15, 5-17
1517734-0000	.GUIDE	5-13, 5-15, 5-17
1517735-0300	.CHAIN SUPPORT	5-9
1517736-0000	.GUIDE	5-13, 5-15, 5-17
1517737-0000	.GUIDE	5-13, 5-15, 5-17
1517740-0200	.SWING FRAME	5-9
1517751-0000	.SHAFT	8-67
1517968-0000	.SLIDER	5-27, 5-29
1519178-0000	.SPACER	3-7, 3-9
1519184-0000	.FLANGE	1-67, 1-69
1519185-0000	.FLANGE	1-67, 1-69
1519186-0000	.SHAFT	1-67, 1-69
1519187-0000	.SPACER	1-67, 1-69
1519188-0000	.ARM	1-67, 1-69
1519189-0000	.LEVER	1-67, 1-69
1519190-0000	.LID	1-67, 1-69
1519203-0000	.BELT	5-27, 5-29, 11-21
1519303-0000	.GASKET	1-25
1519304-0000	.TUNNEL	1-25
1519428-0000	.GUIDE	5-19, 5-21
1519429-0000	.GUIDE	5-19, 5-21
1519434-0000	.GUIDE	5-19, 5-21
1519435-0000	.PLATE	5-19, 5-21
1519442-0000	.TOUCH GUARD	5-19, 5-21
1519443-0000	.PLATE	5-13, 5-15, 5-17
1519450-0000	.SPACER	5-19, 5-21
1519486-0000	.FILTER HOUSING	1-61, 1-63
1519491-0000	.LOCK PLATE	1-31
1519492-0000	.LOCK PLATE	1-31
1519502-0000	.SEAL HOLDER	1-55
1519503-0000	.SEAL HOLDER	1-55
1519510-0000	.AXLE PIN	1-17, 1-19
1519521-0000	.SPACER	1-189
1519578-0000	.MOUNTING BLOCK	8-87
1519580-0000	.GUIDE FINGER	8-85
1519581-0000	.ROLLER BAR	8-135, 8-147
1519583-0000	.BRACKET	8-73
1519586-0000	.BRACKET	8-135
1519588-0000	.PROTECTION PLATE	8-33, 8-35
1519589-0100	.HANDLE	8-101
1519591-0000	.RAIL PIN	8-87
1519592-0000	.BOW	8-135, 8-147
1519725-0000	.SHAFT	11-33
1519813-0000	.SHAFT	4-15, 4-17
1519814-0000	.ECCENTRIC SHAFT	4-15, 4-17
1519819-0200	.START-UP KIT	11-3

Part No	Description	Page No
1519942-0000	.PLATE	8-145
1519944-0000	.BRACKET	8-87
1519955-0000	.WASHER	8-83
1519960-0000	.SPACER	8-135
1519967-0000	.CLAMP	8-83
1519975-0200	.LEVEL CONTROL DEVICE	1-75, 1-77, 1-79, 1-81
1520166-0000	.INDUCTOR	4-29, 4-31, 4-33, 4-39, 4-41, 4-43, 11-19
1520564-0000	.DOLLY	11-19
1520564-0003	.DOLLY	4-25, 4-27, 4-35, 4-37, 4-45, 4-47, 4-49
1523100-0000	.BELT	5-27, 5-29, 11-21
1523101-0000	.BELT	5-27, 5-29, 11-21
1523154-0003	.SPRAY NOZZLE	1-93
1523154-0004	.SPRAY NOZZLE	1-93
1523154-0005	.SPRAY NOZZLE	1-93
1523154-0006	.SPRAY NOZZLE	1-93
1523483-0000	.ROLLER	8-27, 8-29
1523486-0000	.SPACER	8-27, 8-29
1523777-0100	.STAIR CASE	2-61, 2-63
1523780-0000	.SHAFT	2-65, 2-69, 2-71
1523781-0000	.CHECKER PLATE	2-65
1523782-0000	.CHECKER PLATE	2-65
1523783-0000	.TOE PLATE	2-65
1523784-0000	.TOE PLATE	2-65
1523793-0000	.TOE PLATE	2-69, 2-71
1523980-0000	.MOUNTING BLOCK	4-25, 4-27, 4-35, 4-37, 4-45, 4-47, 4-49
1523981-0000	.GUIDE	4-29, 4-31, 4-33, 4-39, 4-41, 4-43
1524167-0000	.CORNER STRIP	2-69, 2-71, 2-73, 2-75
1524168-0000	.CORNER STRIP	2-69, 2-71
1524171-0000	.FRAME	2-73, 2-75
1524172-0000	.CHECKER PLATE	2-73, 2-75
1524173-0000	.CHECKER PLATE	2-73, 2-75
1524174-0000	.HOOK	2-73, 2-75
1524175-0000	.LEG	2-73, 2-75
1524176-0000	.CLAMP	2-73, 2-75
1524177-0000	.TOE PLATE	2-73, 2-75
1524178-0000	.TOE PLATE	2-73, 2-75
1524179-0000	.TOE PLATE	2-73, 2-75
1524180-0000	.TOE PLATE	2-73, 2-75
1524181-0000	.PIN	2-73, 2-75
1524182-0000	.RAILING	2-73, 2-75
1524185-0000	.EXTENSION PIECE	2-73, 2-75, 2-77
1524186-0000	.PROFILE	2-77
1524187-0000	.PROFILE	2-77
1524188-0000	.STAIR	2-77
1524190-0000	.BRACKET	2-77
1524191-0000	.RIM	2-77
1524192-0000	.RAILING	2-77
1524193-0000	.RAILING	2-77
1524260-0000	.SHAFT	4-11, 4-13
1524267-0000	.HOLDER	4-11, 4-13
1524394-0100	.CYLINDER	8-93
1524398-0100	.HANDLE	8-93
1524474-0000	.PIPE	1-103
1524477-0200	.CUTTING TABLE	8-55
1524481-0000	.SEALING BLOCK	8-67
1524517-0000	.SUPPORT	5-27, 5-29
1524518-0000	.SHAFT	5-13, 5-15, 5-17
1524519-0000	.PLATE	5-13, 5-15, 5-17
1524520-0000	.PIN	5-13, 5-15, 5-17, 5-19, 5-21
1524521-0000	.FLANGE	5-19, 5-21
1524525-0000	.SHAFT	5-13, 5-15, 5-17
1524526-0000	.FLANGE	5-13, 5-15, 5-17
1524528-0000	.BRACKET	5-19, 5-21
1524529-0000	.WASHER	5-13, 5-15, 5-17
1524532-0000	.SPACER	5-13, 5-15, 5-17
1524539-0000	.PROTECTION	5-19, 5-21
1524731-0300	.BRACKET	8-135
1524732-0200	.DRIVE UNIT	8-135
1524752-0000	.BRACKET	4-11, 4-13
1524763-0000	.PIPE	4-11, 4-13
1524764-0000	.PIPE	4-11, 4-13
1524845-0100	.BACK PLATFORM	2-61, 2-63
1524847-0000	.PLATFORM	2-69, 2-71
1524848-0000	.PLATFORM	2-69, 2-71
1524850-0000	.CHECKER PLATE	2-69, 2-71
1524851-0000	.CHECKER PLATE	2-69, 2-71
1524854-0000	.BEAM	2-69, 2-71
1524855-0000	.TOE PLATE	2-69, 2-71
1524856-0000	.TOE PLATE	2-69, 2-71
1524857-0000	.TOE PLATE	2-69, 2-71
1524858-0000	.TOE PLATE	2-69, 2-71
1524859-0000	.RAILING	2-69, 2-71
1524860-0000	.RAILING	2-69, 2-71
1524861-0000	.RAILING	2-69, 2-71

Part No	Description	Page No
1524862-0000	.RAILING	2-69, 2-71
1524864-0000	.RAILING	2-73, 2-75
1524866-0100	.FRONT PLATFORM	2-61, 2-63
1524867-0000	.PLATFORM	2-65
1524868-0000	.PLATFORM	2-65
1524869-0000	.TOE PLATE	2-65
1524870-0000	.RAILING	2-65
1524871-0100	.PLATFORM	2-3
1532492-0000	.COOLING PLATE	4-21
1532493-0000	.COOLING PLATE	4-21
1532495-0000	.SCREW	4-21
1532496-0000	.COVER	4-21
1532902-0250	.CABINET	7-3
1532904-0100	.DOOR	7-9
1532905-0000	.PLATE	7-33
1532908-0250	.CONTROL BOARD LEFT	7-3
1532909-0000	.PLATE	7-9
1532911-0000	.FASTENING PLATE	7-9
1532912-0000	.FRAME	7-41
1532920-0100	.DOOR	7-9
1532921-0000	.DOOR	7-15
1532923-0100	.DOOR	7-9
1532924-0000	.DOOR	7-17
1532926-0000	.GASKET	7-9
1532927-0000	.FASTENING PLATE	7-9
1532928-0000	.COVERING PLATE	7-9
1532929-0000	.COVERING PLATE	7-9
1532932-0250	.DOOR	7-9
1532933-0000	.DOOR	7-19
1532935-0100	.DOOR	7-9
1532936-0000	.DOOR	7-21
1532946-0000	.FLAG	4-45, 4-47, 4-49
1532949-0000	.FLAG	4-45, 4-47, 4-49
1533000-0000	.INDUCTOR	4-29, 4-31, 4-33, 4-39, 4-41, 4-43, 11-19
1533002-0000	.INDUCTOR	4-29, 4-31, 4-33, 4-39, 4-41, 4-43, 11-19
1533428-0000	.BUSBAR	4-21
1535036-0000	.PLATE	2-69, 2-71
1535038-0000	.CHECKER PLATE	2-69, 2-71
1535042-0000	.WASHER	2-69, 2-71
1535043-0000	.PLATFORM	2-69, 2-71
1538011-0000	.FLANGE	1-193
1538012-0000	.ROLLER	1-193
1538013-0000	.BRACKET	1-193
1538014-0000	.ROLLER	1-193
1538015-0000	.SHAFT	1-193
1538016-0000	.SHAFT	1-193
1538017-0000	.SPACER	1-193
1538040-0000	.PLATE	1-193
1538041-0000	.PLATE	1-197
1538048-0000	.PIPE	1-187
1538049-0000	.PIPE	1-187
1538134-0000	.BRACKET	4-25, 4-27, 4-29, 4-31, 4-33, 4-35, 4-37, 4-39, 4-41, 4-43, 4-45, 4-47, 4-49
1538135-0000	.SHAFT	4-25, 4-27, 4-29, 4-31, 4-33, 4-35, 4-37, 4-39, 4-41, 4-43, 4-45, 4-47, 4-49
1538138-0000	..SPACER	3-7, 3-9
1538139-0000	.HOLDER	3-7, 3-9
1538148-0000	.SPRING	11-19
1538149-0000	.SPRING	11-19
1538192-0000	.BRACKET	8-135
1538194-0000	.FINGER	8-67
1538202-0000	.AXLE PIN	8-57
1538302-0000	.HUB	4-15, 4-17
1538306-0000	.ROLLER	5-43, 5-45, 5-47
1538494-0000	.LID	1-73
1538567-0000	.CARTON STATION	5-11
1538570-0000	.FRAME	5-13, 5-15, 5-17
1538575-0000	.GUIDE	5-19, 5-21
1538576-0000	.GUIDE	5-19, 5-21
1538577-0000	.PLATE	5-19, 5-21
1538578-0000	.PULLEY	5-19, 5-21
1538787-0000	.SUPPORT	1-87, 1-89, 1-97, 1-99
1538794-0000	.O-RING	1-87, 1-89, 1-97, 1-99, 11-9, 11-11
1538800-0000	.PIPE	1-219, 1-221
1538809-0100	.SPLICE DETECTOR	1-193
1538826-0000	.PIPE	1-219, 1-221
1538827-0000	.PIPE	1-219, 1-221
1538828-0000	.PIPE	1-219, 1-221
1538829-0000	.PIPE	1-219, 1-221
1538830-0000	.PIPE	1-219, 1-221
1538831-0000	.PIPE	1-219, 1-221
1538846-0000	.SEAL	1-87, 1-89
1538847-0000	.CABLE DUCT	1-161, 1-163, 1-165
1538868-0000	.BRACKET	2-109, 2-111, 2-119, 2-121, 6-43, 8-33, 8-35
1538870-0100	.PLATFORM	2-61, 2-63
1538960-0000	.PIPE	2-57

Part No	Description	Page No
1538961-0000	.PIPE	2-59
1538962-0000	.PIPE	2-55
1539348-0000	.HOLDER	11-19
1539354-0000	.COOLING PLATE	1-41
1539355-0000	.COOLING PLATE	1-41
1539376-0000	.PULLEY	4-15, 4-17
1539387-0000	.SCREW	8-57
1539391-0000	.ROUND NUT	8-159, 8-165, 8-169
1539396-0000	.BOW CLAMP	8-135
1539397-0000	.ROLLER	8-147
1539579-0000	.FORMING RING	1-21, 1-23
1539580-0000	.FORMING RING	1-21, 1-23
1548001-0000	.SIGN	1-209, 1-211
1548011-0000	.GUIDE	5-13, 5-15, 5-17
1548012-0000	.GUIDE	5-13, 5-15, 5-17
1548013-0000	.PIPE	5-13, 5-15, 5-17
1548016-0000	.GUIDE	5-19, 5-21
1548017-0000	.GUIDE	5-19, 5-21
1548018-0000	.TOP SECTION	5-19, 5-21
1548019-0000	.FRAME	5-13, 5-15, 5-17
1548020-0000	.CARTON STATION	5-11
1548021-0000	.SHAFT	5-13, 5-15, 5-17
1548022-0000	.SHAFT	5-13, 5-15, 5-17
1548024-0000	.CARTON STATION	5-11
1548025-0000	.GUIDE	5-13, 5-15, 5-17
1548026-0000	.GUIDE	5-13, 5-15, 5-17
1548027-0000	.SLIDER	5-19, 5-21
1548028-0000	.GUIDE	5-19, 5-21
1548029-0000	.GUIDE	5-19, 5-21
1548030-0000	.PLATE	5-19, 5-21
1548031-0000	.GUIDE	5-19, 5-21
1548032-0000	.PULLEY	5-19, 5-21
1548033-0000	.FRAME	5-13, 5-15, 5-17
1548035-0000	.TOP SECTION	5-19, 5-21
1548036-0000	.CARTON STATION	5-11
1548037-0000	.GUIDE	5-19, 5-21
1548038-0000	.GUIDE	5-19, 5-21
1548039-0000	.FRAME	5-13, 5-15, 5-17
1548123-0150	.CONTROL BOARD RIGHT	7-3
1548127-0250	.POWER SUPPLY UNIT	7-3
1548136-0150	.DOOR	7-3
1548186-0000	.WASHER	5-13, 5-15, 5-17
1548200-0000	.BRACKET	8-33, 8-35
1548210-0100	.LOCKING DEVICE	8-145
1548211-0000	.RAILING	2-69, 2-71
1548238-0000	.SHAFT	11-41, 11-43, 11-45
1548240-0000	.BUSHING	11-41, 11-43, 11-45
1548241-0005	.WASHER	1-159
1548245-0000	.PIPE	1-219, 1-221
1548249-0000	.PIPE	1-159
1548253-0000	.PLATE	1-231
1548432-0000	.SPACER	5-13, 5-15, 5-17
1548433-0000	.ROUND NUT	5-13, 5-15, 5-17
1548491-0200	.ELECTRICAL CABINET	8-3
1548492-0000	.ELECTRICAL CABINET	8-109, 8-111, 8-113, 8-115, 8-117
1548496-0100	.TERMINAL	8-109, 8-111, 8-113, 8-115, 8-117
1548539-0000	.CANTILEVER	2-47
1548598-0000	.FORMING RING	1-27, 1-29
1548760-0000	.SPACER ROD	1-143, 1-149
1548766-0000	.SHAFT	4-25, 4-27, 4-29, 4-31, 4-33, 4-35, 4-37, 4-39, 4-41, 4-43, 4-45, 4-47, 4-49
1548767-0000	.SHAFT	4-15, 4-17
1548768-0000	.ECCENTRIC SHAFT	4-15, 4-17
1548769-0000	.PULLEY	4-15, 4-17
1548789-0000	.MOTOR PLATE	2-103
1548798-0000	.TIMING BELT	4-15, 4-17
1548804-0000	.CURVE	4-15, 4-17
1548805-0000	.CURVE	4-15, 4-17
1548806-0000	.ECCENTRIC SHAFT	4-15, 4-17
1548807-0000	.CURVE	4-15, 4-17
1548808-0000	.CURVE	4-15, 4-17
1548810-0000	.PIVOT PIN	4-19
1548813-0000	.LINK ARM	4-21
1548818-0000	.BRACKET	4-21
1548854-0000	.CAM	5-5, 5-7
1548861-0000	.MOUNTING PLATE	1-127, 1-129
1549122-0000	.FLANGE BEARING	4-29, 4-31, 4-33, 4-39, 4-41, 4-43
1549123-0000	.PIVOT PIN	4-29, 4-31, 4-33, 4-39, 4-41, 4-43
1549324-0000	.BRACKET	8-33, 8-35
1549332-0000	.ROLLER	8-147
1549601-0000	.WASHER	4-25, 4-27, 4-35, 4-37, 4-45, 4-47, 4-49
1549858-0000	.BELT	11-21
1549970-0000	.SLIDER	5-43, 5-45, 5-47
1549971-0000	.FASTENING PLATE	5-43, 5-45, 5-47
1549972-0000	.FOOT	5-43, 5-45, 5-47

Part No	Description	Page No
1550024-0000	.COVER	10-109
1550177-0000	.SHAFT	10-37
1550179-0000	.BOW CLAMP	10-33, 10-41
1550185-0000	.COCK HANDLE	10-65
1550199-0000	.SPACER	10-41, 10-63
1550206-0000	.HOLDER	10-37
1550233-0000	.ROLLER UNIT	10-33
1550234-0000	.CHUTE	10-33
1550235-0100	.CHUTE	10-31
1550236-0000	.SIDE PLATE	10-33
1550237-0000	.SIDE PLATE	10-33
1550238-0000	.SIDE PLATE	10-33
1550239-0000	.SIDE PLATE	10-33
1550286-0000	.PLATE	10-33
1550302-0000	.PHOTOCELL BRACKET	10-37
1550319-0000	.BRACKET	10-37
1550348-0001	.BEARING	5-53, 5-61, 10-15, 10-89
1550348-0002	.BEARING	5-53, 5-61, 10-15, 10-65, 10-67, 10-69, 10-89
1550369-0100	.PACKING DESCRIPTION	10-109
1550401-0000	.BOW CLAMP	10-37
1550404-0000	.BRACKET	10-41
1550405-0000	.BOW CLAMP	10-41
1550406-0000	.BRACKET	10-41
1550407-0000	.BRACKET	10-31
1550594-0000	.SPRING	10-5
1550595-1801	.SLIDING STRIP	5-53, 10-89
1550595-1802	.SLIDING STRIP	5-53, 10-89
1550595-2460	.SLIDING STRIP	5-35
1550595-3453	.SLIDING STRIP	10-7
1550595-4960	.SLIDING STRIP	10-63
1550595-6403	.SLIDING STRIP	10-7
1550595-8853	.SLIDING STRIP	10-7
1550595-9960	.SLIDING STRIP	10-45
1550596-0100	.ADJUSTABLE CONV. LINK	10-3
1550597-0000	.SIDE PLATE	10-97
1550600-0200	.WHEEL CURVE 90 DEGREES	10-3
1550620-0101	.STRAIGHT CONVEYOR PC23 L250	10-3
1550620-0102	.STRAIGHT CONVEYOR PC23 L500	10-3
1550620-0103	.STRAIGHT CONVEYOR PC23 L1000	10-3
1550622-0000	.SPACER	10-5
1550626-0005	.SPACER	5-53, 10-89
1550627-0200	.END UNIT	10-7
1550657-0000	.CHAIN TENSIONER	10-5
1550664-0000	.DOWEL	10-83
1550665-0000	.PIPE	5-55, 10-83
1550666-0000	.HOLDER	5-55, 10-83
1550667-0000	.BOTTOM PANEL	5-53, 10-89
1550668-0000	.BRACKET	5-53, 10-89
1550669-0000	.SIDE PLATE	5-53, 10-89
1550683-0100	.RAILING KIT	10-81
1550684-0000	.ARCH	10-83
1550685-0000	.ARCH	10-83
1550687-0001	.SIDE PLATE	5-53, 10-89
1550687-0002	.SIDE PLATE	5-53, 10-89
1550689-0000	.SHAFT	5-53, 10-89
1550690-0000	.SLEEVE	5-53, 10-89
1550693-0000	.WASHER	5-53, 10-89
1550698-0200	.WHEEL CURVE 90 DEGREES	5-49, 10-81
1550700-0200	.CONVEYOR CHAIN	10-3
1550743-0100	.RAIL HOLDER	5-49, 5-55
1550743-0200	.RAIL HOLDER	5-37, 10-9, 10-47, 10-73, 10-83, 10-93
1550772-0000	.HOLDER	5-39, 5-51, 10-11
1550773-0000	.RAIL HOLDER	5-51
1550776-0000	.SPROCKET	10-5
1550847-0000	.BRACKET	10-37
1550855-0100	.PNEUMATIC UNIT	10-31
1550863-0100	.PACKING DESCRIPTION	10-31
1550865-0000	.PNEUMATIC DIAGRAM	10-31
1550874-0000	.BRACKET FOR LEG PC23	10-31, 10-37, 10-99, 10-113, 10-115, 10-117
1550875-0000	.PLATE	10-37
1550876-0000	.BRACKET	10-37
1550877-0000	.BRACKET	10-37
1550878-0100	.CANTILEVER	10-31
1550879-0100	.PRESSURE REGULATOR	10-31
1550880-0100	.CONVEYOR BODY	10-61
1550881-0000	.BRACKET	10-31
1550882-0000	.BRACKET	10-31
1550883-0100	.LEG	10-31
1550911-0000	.SIDE PLATE	10-63
1550912-0000	.PLATE	10-63
1550913-0000	.PLATE	10-63
1550956-0000	.PLATE	10-63
1550957-0100	.CHAIN TENSIONER	10-61
1550958-0000	.BRACKET	10-63

Part No	Description	Page No
1550959-0000	.CLAMP	10-65
1550960-0000	.BLOCK	10-65
1550971-0000	.SPROCKET	10-65
1550972-0000	.SPROCKET	10-67, 10-69
1550973-0000	.SPROCKET	10-61
1550977-0100	.BELT UNIT	10-61
1550978-0000	.PLATE	10-67, 10-69
1550993-0000	.SHAFT	10-67, 10-69
1550994-0000	.SPACER	10-61
1550995-0000	.SPACER	10-61
1550997-0100	.BELT UNIT	10-61
1550999-0000	.PHOTOCELL BRACKET	10-67, 10-69
1558062-0000	.PRESSURE RAIL	4-25, 4-27, 4-35, 4-37, 4-45, 4-47, 4-49
1558162-0000	.ROLLER	1-21, 1-23
1558186-0000	.ROLLER	1-21, 1-23
1558187-0000	.TRIMMING ROLLER MINUS	11-9, 11-11
1558188-0000	.TRIMMING ROLLER PLUS	11-9, 11-11
1558221-0000	.BRACKET	8-41
1558251-0000	.SHAFT	8-89
1558252-0000	.SCREW	8-89
1558253-0000	.ROLLER	8-89
1558406-0000	.HOLDER	5-23, 5-25
1558418-0000	.SHAFT	1-73
1558477-0100	.WHEEL	11-57
1558479-0100	.HANDLE	11-57
1558480-0100	.LIFTING CYLINDER	11-57
1558484-0000	.PROTECTION PLATE	8-33, 8-35
1558487-0000	.SUPPORT	8-33, 8-35
1558771-0000	.FLANGE	1-145
1558795-0000	.RAILING	2-69, 2-71
1558798-0000	.BRACKET	8-33, 8-35
1558801-0000	.SHOULDER SCREW	8-83
1558911-0000	.PRESSURE ROLLER	8-13, 8-15, 8-135
1558914-0000	.ROLLER BRACKET	8-13, 8-15
1558917-0000	.SPACER DISC	8-17
1558918-0000	.TIGHTENING NUT	8-17
1558933-0000	.FRAME	11-55
1558942-0000	.BRACKET	11-53
1558945-0000	.PIVOT PIN	2-79
1558946-0000	.PLUG	2-77
1558947-0000	.STRIP	2-69, 2-71
1558948-0000	.PLATE	2-81
1558949-0000	.PLATE	2-79
1558974-0000	.PIPE BRACKET	2-79
1558975-0000	.BLOCKING PIECE	2-79
1558983-0000	.DOOR	8-161
1558988-0100	.DOOR	8-149
2500015-0000	.PIPE	1-97, 1-99
2500016-0000	.PIPE	1-87, 1-89, 1-97, 1-99
2500017-0000	.PIPE	1-87, 1-89, 1-97, 1-99
2500364-0000	.SPACER	3-7, 3-9
2500370-0000	.CURVE	4-11, 4-13
2500371-0000	.CURVE	4-11, 4-13
2500376-0000	.ARM	4-29, 4-31, 4-33, 4-39, 4-41, 4-43
2500377-0000	.LINK ARM	4-29, 4-31, 4-33, 4-39, 4-41, 4-43
2500424-0000	.PIPE	1-219, 1-221
2500425-0000	.PIPE	1-219, 1-221
2500426-0000	.PIPE	1-219, 1-221
2500427-0000	.PIPE	1-219, 1-221
2500428-0000	.PIPE	1-219, 1-221
2500432-0000	.PIPE	1-219, 1-221
2500433-0000	.PIPE	1-219, 1-221
2500434-0000	.PIPE	1-219, 1-221
2500435-0000	.BRACKET	1-219, 1-221
2500436-0000	.PLATE	1-219, 1-221
2500437-0000	.BRACKET	1-219, 1-221
2500504-0000	.SPACER	5-23, 5-25
2500505-0000	.CLAMP	5-23, 5-25
2500506-0000	.AXLE PIN	5-23, 5-25
2500507-0000	.GASKET	5-23, 5-25
2500588-0000	.ADJUSTMENT BRACKET	11-37
2501219-0000	.BRACKET	8-65
2501220-0000	.BRACKET	8-65
2501221-0000	.BRACKET	8-65
2501223-0000	.RAIL	5-43, 5-45, 5-47
2501231-0000	.BRUSH	5-13, 5-15, 5-17
2501378-0000	.PIPE	2-99
2501513-0000	.PIPE	1-219, 1-221
2501515-0000	.PIPE	1-147
2501516-0000	.CONTAINER	1-147
2501518-0000	.PIPE	1-147
2501519-0000	.PIPE	1-147
2501520-0000	.PIPE	1-181
2501521-0000	.PIPE	1-181

Part No	Description	Page No
2501522-0000	.PIPE	1-185
2501523-0000	.PIPE	1-185
2501524-0000	.PIPE	1-185
2501527-0000	.CLAMP	1-87, 1-89
2501838-0000	.COVER HOUSING	5-23, 5-25
2501839-0000	.GASKET	5-23, 5-25
2501840-0000	.GASKET	5-23, 5-25
2501843-0000	.INSERT	5-23, 5-25, 5-63
2501844-0000	.INSERT	5-23, 5-25, 5-63
2502402-0000	.PLATE	4-11, 4-13
2502403-0000	.PLATE	4-11, 4-13
2502404-0000	.PLATE	4-11, 4-13
2502405-0000	.PLATE	4-11, 4-13
2502406-0000	.PROTECTION	4-11, 4-13
2502409-0000	.CURVE	4-15, 4-17
2502410-0000	.CURVE	4-15, 4-17
2502411-0000	.CURVE	4-15, 4-17
2502412-0000	.CURVE	4-15, 4-17
2502414-0000	.ECCENTRIC SHAFT	4-15, 4-17
2502415-0000	.PIPE	4-11, 4-13
2502969-0000	.FLANGE	5-27, 5-29
2503654-0000	.RAIL	8-123
2504426-0000	.SHAFT	3-7, 3-9
2504427-0000	.ROUND NUT	3-7, 3-9
2504428-0000	.SUPPORT	3-7, 3-9
2504429-0000	.GUIDE HOLDER	3-7, 3-9
2504430-0000	.GUIDE ROD	3-7, 3-9
2504431-0000	.SHAFT	3-7, 3-9
2504433-0000	.BEARING HOUSING	3-7, 3-9
2504434-0000	.KNOB	3-7, 3-9
2504625-0000	.RAIL	1-207
2504641-0000	.GEAR WHEEL	4-7, 4-9
2504725-0000	.SUPPORT	5-5, 5-7
2504727-0000	.GEAR	5-13, 5-15, 5-17
2504730-0000	.CARTON STATION	5-11
2504735-0000	.BRACKET	5-43, 5-45, 5-47
2504736-0000	.SLIDER	5-43, 5-45, 5-47
2504801-0000	.BRACKET	8-9
2504807-0000	.AXLE PIN	8-9
2504808-0000	.BRACKET	8-9
2504812-0000	.BLOCK	8-25
2506263-0000	.WASHER	3-7, 3-9
2506264-0000	.GASKET	3-7, 3-9
2506317-0000	.SHAFT	3-7, 3-9
2506328-0000	.BRACKET	8-43
2506496-0100	.PRESSURE ROLLER	8-11
2506497-0100	.PRESSURE ROLLER	8-11
2506498-0000	.SEALING PLATE	8-17
2506499-0000	.SEALING PLATE	8-17
2506500-0000	.PLATE	8-17
2506501-0000	.PLATE	8-17
2506502-0000	.PLATE	8-17
2506503-0000	.PLATE	8-17
2506504-0000	.PLATE	8-17
2506505-0000	.PLATE	8-17
2506614-0100	.BOBBIN BRAKE	8-3
2506615-0100	.BOBBIN BRAKE	8-3
2506647-0000	.LEVER	8-27
2506648-0000	.LEVER	8-29
2506649-0000	.BEARING FLANGE	8-27
2506650-0000	.FRAME	8-27, 8-29
2506651-0000	.BEARING FLANGE	8-29
2506652-0000	.AXLE PIN	8-27, 8-29
2506654-0000	.BLOCK	8-19
2506656-0000	.PLATE	8-19
2506657-0000	.SPACER	8-19
2506659-0000	.ROLLER	8-23
2506660-0000	.SPACER	8-7
2506661-0000	.ROLLER	8-21, 8-23
2506663-0000	.SUPPORT	8-21
2506664-0000	.STEERING	8-7
2506666-0000	.AXEL	8-21, 8-23
2506668-0200	.STRIP APPLICATOR	8-3
2506714-0000	.WASHER	5-5, 5-7
2506828-0000	.PIPE	1-145
2506832-0000	.PLUG	1-87, 1-89
2506839-0000	.COLUMN	1-25
2506840-0000	.FLANGE	1-51
2506841-0000	.ROLLER	1-51
2506842-0100	.BENDING ROLLER	1-7
2506843-0000	.CLEANING SLEEVE	1-87, 1-89
2506845-0000	.DIAGRAM	1-209, 1-211, 2-113
2506846-0000	.PIPE	1-151
2507019-0100	.ROLLER	8-7

Part No	Description	Page No
2507020-0100	.ROLLER	8-7
2507022-0200	.SPLICE DETECTOR	8-7
2507103-0000	.BEARING FLANGE	8-27, 8-29
2508187-0100	.EMERGENCY STOP	8-153
2508205-0007	.BRACKET	8-143
2508205-0009	.BRACKET	8-143
2508205-0010	.BRACKET	8-143
2508206-0000	.BENDING ROLLER	8-143
2508263-0000	.NOZZLE	5-23, 5-25
2508265-0000	.NOZZLE	5-23, 5-25
2508395-0000	.TEMPLATE	11-35
2508396-0000	.TEMPLATE	11-35
2508408-0000	.PIPE	4-11, 4-13
2508420-0000	.PIPE	4-11, 4-13
2508421-0000	.PIPE	4-11, 4-13
2509551-0000	.LINK ARM	4-29, 4-31, 4-33, 4-39, 4-41, 4-43
2509613-0000	.BUSHING	8-17
2509614-0000	.BUSHING	8-17
2509617-0100	.INDUCTOR	8-11
2510243-0000	.GEAR WHEEL	3-7, 3-9
2510359-0000	.FASTENING BRACKET	8-19
2510360-0000	.SHAFT	8-19
2510361-0000	.CONNECTING ROD	8-19
2510362-0000	.SHAFT	8-19
2510363-0000	.SHAFT	8-19
2510364-0000	.SHAFT	8-19
2510366-0000	.SHAFT	8-11
2510399-0000	.BRACKET	8-69
2510400-0000	.HOLDER	8-69
2510401-0100	.HOLDER	8-55
2510404-0000	.SUPPORT	8-21, 8-23
2510405-0000	.SUPPORT	8-21, 8-23
2510416-0000	.TUBE	5-13, 5-15, 5-17
2510417-0000	.TUBE	5-13, 5-15, 5-17
2510418-0000	.TUBE	5-13, 5-15, 5-17
2510419-0000	.TUBE	5-13, 5-15, 5-17
2511242-0000	.PROTECTION	4-29, 4-31, 4-33, 4-39, 4-41, 4-43
2511245-0000	.PROTECTION	4-11, 4-13
2511246-0000	.BUSHING	4-29, 4-31, 4-33, 4-39, 4-41, 4-43
2511247-0100	.DESIGN CORRECTION DEVICE	3-3
2511248-0400	.PLATE	3-3
2511249-0100	.PHOTOCELL UNIT	3-3
2511255-0100	.FRAME	4-3
2511256-0300	.DRIVE	4-3
2511257-0100	.DESIGN CORRECTION	4-3
2511258-0100	.VOLUME ADJUSTER	4-3
2511260-0400	.CABLE HARNESS	4-3
2511263-0000	.WASHER	4-29, 4-31, 4-33, 4-39, 4-41, 4-43
2511330-0000	.SPACER	1-205
2511410-0000	.TOUCH GUARD	1-103
2511417-0000	.PIPE	1-219, 1-221
2511418-0000	.BRACKET	1-103
2511419-0000	.DISTRIBUTOR BLOCK	1-103
2511420-0000	.DISTRIBUTOR BLOCK	1-103
2511424-0000	.PIPE	1-103
2511665-0000	.BRACKET	1-91
2511666-0000	.HOLDER	1-91
2511667-0000	.COVER PLATE	7-23, 7-25, 7-27, 7-29, 7-31
2512806-0000	.PIPE	1-119, 1-121
2512991-0000	.PULLEY	5-13, 5-15, 5-17
2512992-0000	.PULLEY	5-13, 5-15, 5-17
2514077-0100	.EXPANSION VESSEL	6-7, 6-9
2514083-0000	.REDUCTION NIPPLE	6-23
2514087-0000	.PLATE	6-23
2514127-0000	.SUPPORT	4-51
2514132-0000	.PIN	5-19, 5-21
2514133-0000	.BRACKET	5-43, 5-45, 5-47
2514136-0000	.CHUTE	5-49
2514139-0000	.SUPPORT	5-43, 5-45, 5-47
2514140-0000	.GUIDE	5-43, 5-45, 5-47
2514213-0000	.PIPE	1-87, 1-89, 1-97, 1-99
2514216-0200	.PNEUMATIC PANEL	1-201, 1-203
2514217-0000	.PIPE	1-61, 1-63
2514258-0000	.TUBE HOLDER	5-13, 5-15, 5-17
2514281-0000	.COUNTER	1-51
2514285-0000	.PLATE	1-25
2514316-0000	.NOZZLE	1-93
2514392-0100	.MACHINE CARRIAGE	12-5
2514449-0200	.CONNECTION BOX	1-205
2515213-0200	.SPRAY SYSTEM	1-7
2515238-0000	.SPACER	1-197
2515289-0000	.BRACKET	8-57
2517064-0000	.ROLLER	1-51
2517065-0000	.ROLLER	1-51

Part No	Description	Page No
2517171-0000	.CABLE	4-21
2517363-0000	.PIPE	1-219, 1-221
2517364-0000	.CONNECTION BOX	1-235
2517365-0000	.RAIL	1-235
2517370-0000	.CLAMP	1-103
2517371-0000	.CLAMP	1-103
2517372-0100	.LID	1-7
2517373-0000	.FLANGE	1-73
2517375-0000	.COVER	1-103
2517376-0000	.RAIL	1-237, 1-239
2518119-0000	.PLATE	8-39
2518145-0101	.FLEXBOX TETRA BRIK	7-87, 7-89
2518146-0100	.TPOP PANEL 15"	2-3
2518147-0108	.PANEL UNIT 15"	2-29
2518148-0000	.PANEL	2-31
2518149-0000	.FOIL	2-31
2518157-0000	.DOOR	2-31
2519471-0000	.PIPE	1-219, 1-221
2519472-0000	.BRACKET	1-119, 1-121
2519554-0000	.PIPE	2-87
2519555-0000	.PIPE	2-87
2519556-0000	.BRACKET	2-99
2519574-0100	.HYDROGEN PEROXIDE CONCENTRATION METER	2-83
2520199-0000	.GEAR	5-13, 5-15, 5-17
2520225-0000	.TUBE	5-13, 5-15, 5-17
2520226-0000	.TUBE	5-13, 5-15, 5-17
2520227-0000	.TUBE	5-13, 5-15, 5-17
2520228-0000	.TUBE	5-13, 5-15, 5-17
2520475-0000	.PIPE	1-219, 1-221
2520476-0000	.PIPE	1-219, 1-221
2520562-0000	.PIPE	1-219, 1-221
2520563-0000	.PIPE	1-219, 1-221
2522094-0200	.ELECTRICAL CONNECTION	4-3
2522125-0000	.CLAMP	1-219, 1-221
2522126-0000	.CLAMP	1-219, 1-221
2522148-0000	.PIPE	6-41
2522150-0000	.PLATE	1-71
2522151-0000	.GASKET	1-71
2522161-0100	.LID	1-7
2522184-0000	.PIPE	6-41
2522188-0000	.GASKET	1-39
2522189-0000	.PLATE	1-39
2522190-0000	.PLATE	1-39
2522195-0000	.CONNECTION	1-103
2522261-0000	.PLATE	1-41
2523482-0000	.PUSH BUTTON BOX	8-167
2523483-0000	.PUSH BUTTON BOX	8-167
2523499-0000	.SHAFT	8-141
2523500-0000	.AXLE PIN	8-141
2523581-0000	.CARRIER	5-43, 5-45, 5-47, 11-21
2523597-0000	.SLIDER	8-67
2523598-0000	.SPLICING TABLE	8-67
2523600-0000	.PIN	8-67
2523601-0000	.PAD	8-67
2523610-0000	.PLATE	4-11, 4-13
2523611-0000	.PLATE	4-11, 4-13
2523612-0000	.PLATE	4-11, 4-13
2523613-0000	.PLATE	4-11, 4-13
2523614-0000	.PLATE	4-11, 4-13
2523615-0000	.PLATE	4-11, 4-13
2523616-0000	.PLATE	4-11, 4-13
2523617-0000	.PLATE	4-11, 4-13
2523618-0000	.PROTECTION	4-11, 4-13
2523622-0000	.PIPE	4-11, 4-13
2523642-0000	.PIPE	1-103
2523644-0100	.STEAM SYSTEM	1-75, 1-77, 1-79, 1-81
2523645-0000	.FILTER	1-103
2523647-0000	.PIPE	1-87, 1-89
2523648-0000	.PIPE	1-87, 1-89
2523649-0000	.COUNTER ROLLER	1-21, 1-23
2523655-0000	.ROLLER	1-21, 1-23
2523660-0000	.RAIL	1-237, 1-239
2523661-0000	.CONNECTION BOX	1-237, 1-239
2523663-0000	.PIPE	1-103
2523664-0100	.BUTTERFLY VALVE	1-137
2523665-0000	.ARM	1-159
2523670-0400	.FILLING PIPE	1-75, 1-77, 1-79, 1-81
2523695-0000	.INTERMEDIARY SHAFT	5-5, 5-7
2523724-0000	.PLATE	1-39
2523765-0000	.BENDING ROLLER	8-43
2523766-0007	.BRACKET	8-43
2523766-0009	.BRACKET	8-43
2523766-0010	.BRACKET	8-43
2524349-0000	.CONNECTING PIPE	1-131

Part No	Description	Page No
2524351-0000	.PIPE SUPPORT	1-131
2524363-0000	.HANGER	6-43
2524403-0000	.PIPE	1-219, 1-221
2524404-0000	.PIPE	1-219, 1-221
2524453-0000	.CABLE DUCT	1-161, 1-163, 1-165
2524454-0000	.CABLE DUCT	1-161, 1-163, 1-165
2524600-0100	.PRESSURE ROLLER	8-71
2524601-0000	.AXLE PIN	8-73
2524602-0000	.HANDLE	8-73
2524603-0000	.HOLDER	8-73
2524604-0000	.ROCKER ARM	8-73
2524606-0000	.CABLE DUCT	8-49, 8-51, 8-53
2524607-0000	.CABLE DUCT	8-49, 8-51, 8-53
2524610-0100	.SUPERSTRUCTURE	11-7
2524611-0100	.JAW SYSTEM	11-7
2524612-0100	.FINAL FOLDER	11-7
2524613-0100	.AUTOMATIC SPLICING UNIT	11-7
2524614-0100	.ELECTRICAL CABINET	11-7
2524615-0100	.MACHINE BODY	11-7
2525338-0000	.PLUG	1-131
2525339-0000	.BRACKET	8-57
2525518-0100	.CLEANING PIPE	1-75, 1-77, 1-79, 1-81
2525531-0000	.PIPE	1-103
2525532-0000	.STEAM PIPE	1-103
2525533-0000	.STEAM PIPE	1-103
2525537-0000	.LOCK RING	1-83, 1-85
2525540-0000	.SHAFT	1-59
2525541-0200	.TUBE SUPPORT	1-7
2525542-0000	.SUPPORT	11-41, 11-43, 11-45
2525660-0000	.SHAFT	3-5
2525661-0000	.SHAFT	3-5
2525662-0000	.BELT	5-27, 5-29, 11-21
2525675-0000	.INTERMEDIARY SHAFT	5-5, 5-7
2525678-0000	.CURVE	4-15, 4-17
2526931-0000	.BRACKET	4-21
2526932-0000	.SPACER	4-21
2527133-0000	.GUIDE ROD	3-7, 3-9
2527141-0000	.BRACKET	4-21
2527290-0000	.PLATE	4-21
2527350-0000	.GUIDE	5-19, 5-21
2527351-0000	.GUIDE	5-19, 5-21
2527401-0000	.DISTRIBUTOR BLOCK	2-19, 2-21, 2-23
2527413-0000	.HOUSING	4-23
2527727-0000	.BRACKET	4-21
2527728-0000	.SPACER	4-21
2527729-0000	.PLATE	4-21
2527740-0000	.CLEANING PIPE	1-87, 1-89, 1-97, 1-99
2527741-0000	.CLEANING PIPE	1-87, 1-89, 1-97, 1-99
2528968-0000	.PNEUMATIC DIAGRAM	2-113
2529022-0000	.PIPE	4-53, 4-55, 4-57
2529042-0000	.BRACKET	4-53, 4-55, 4-57
2529043-0000	.PIPE	4-53, 4-55, 4-57
2529127-0000	.PIPE	5-13, 5-15, 5-17
2529128-0000	.PIPE	5-13, 5-15, 5-17
2529129-0000	.PIPE	5-13, 5-15, 5-17
2529130-0000	.PIPE	5-13, 5-15, 5-17
2529131-0000	.FRAME	5-13, 5-15, 5-17
2529412-0000	.PUMP HOUSING	2-95
2529417-0000	.SHAFT	1-83, 1-85, 11-9, 11-11
2529418-0000	.SHAFT	1-95, 11-9, 11-11
2529496-0000	.BRACKET	4-21
2529544-0000	.CABLE DUCT	8-49, 8-51, 8-53
2529547-0100	.PAPER GUIDE	8-71, 8-135
2529549-0000	.PLATE	8-73, 8-137
2529550-0000	.SUPPORT	8-19
2529551-0000	.PROTECTION PLATE	8-33, 8-35
2529569-0100	.INDUCTOR	8-7
2529571-0100	.PRESSURE ROLLER	8-7
2529572-0000	.BRACKET	8-15
2529573-0000	.BRACKET	8-13
2529578-0000	.BUSHING	8-17
2529626-0000	.PIPE	4-53, 4-55, 4-57
2529677-0000	.SPACER	4-21
2529735-0000	.BRACKET	4-21
2529791-0300	.PRESSURE JAW	4-3
2529792-0300	.PRESSURE JAW	4-3
2529793-0300	.PRESSURE JAW	4-3
2529794-0300	.SEALING JAW	4-3
2529795-0300	.SEALING JAW	4-3
2529930-0000	.AIR NOZZLE	8-11
2529990-0000	.FRAME	8-49, 8-51, 8-53
2530121-0000	.CARTON STATION	5-11
2530284-0000	.GASKET	7-87, 7-89
2530285-0000	.GASKET	7-87, 7-89

Part No	Description	Page No
2530286-0000	.RAIL	7-9
2530287-0000	.PLATE	7-9
2530288-0000	.GLASS PANE	7-15
2530399-0000	.HANGER	8-9
2530405-0000	.BRACKET	8-9
2530408-0000	.LEVER	8-9
2530410-0200	.STRIP GUIDE	8-7
2531245-0000	.HOSE NIPPLE	6-11, 6-13, 6-17
2531269-0000	.DOOR	1-231
2531270-0000	.DOOR	1-231
2531271-0000	.COVERING	1-231
2531272-0000	.TOP COVER	1-231
2531273-0000	.BRACKET	1-25
2531413-0000	.INSERT	4-23
2531417-0000	.RAIL	2-129
2531423-0000	.NUT	6-11, 6-13, 6-17
2531428-0000	.CLEANING PIPE	1-97, 1-99
2531429-0000	.CONTAINER	1-87, 1-89, 1-97, 1-99
2531430-0000	.CLEANING PIPE	1-87, 1-89, 1-97, 1-99
2531434-0000	.BRACKET	1-159
2531435-0000	.PLUG	1-159
2531474-0000	.STEERING	4-5
2531489-0000	.SLEEVE	4-5
2531493-0000	.BRACKET	8-67
2531500-0000	.PIPE	2-99
2531501-0000	.PIPE	2-99
2531502-0000	.SPACER	1-231
2531710-0000	.TUBE	5-13, 5-15, 5-17
2531711-0000	.TUBE	5-13, 5-15, 5-17
2531712-0000	.TUBE	5-13, 5-15, 5-17
2531713-0000	.TUBE	5-13, 5-15, 5-17
2531955-0000	.GUIDE ROD	3-7, 3-9
2532535-0000	.HATCH	8-153
2532561-0000	.SPACER	8-141
2532574-0000	.COVER	6-11, 6-17
2532806-0000	.ATTACHMENT PIPE	6-21
2533624-0000	.GLASS PANE	2-119
2533625-0000	.GLASS PANE	2-115
2533626-0000	.GLASS PANE	2-109
2533651-0100	.IH EQUIPMENT	7-35, 7-37, 7-39
2533724-0000	.GLASS PANE	2-121
2533725-0100	.DOOR	2-105
2533726-0100	.DOOR	2-105
2535468-0000	.DISTRIBUTOR BLOCK	1-61, 1-63
2535472-0000	.CONNECTION BOX	1-207
2535665-0000	.PIPE	4-53, 4-55, 4-57
2535745-0000	.INSERT	5-63
2535932-0000	.CAM	8-19
2535933-0000	.SUPPORT	8-19
2537835-0000	.PLUG	1-87, 1-89
2538064-0000	.REFLECTOR	8-101
2538065-0000	.REFLECTOR	8-93
2538073-0001	.SHIMS	8-33, 8-35
2538073-0002	.SHIMS	8-33, 8-35
2538075-0000	.BRACKET	8-33, 8-35
2538076-0000	.BRACKET	8-33, 8-35
2539463-0000	.BRACKET	1-25
2539532-0000	.GASKET	7-23, 7-25, 7-27, 7-29, 7-31
2540595-0008	.COAXIAL CABLE	8-11
2540716-0100	.SIGNAL LAMP	2-65, 2-69, 2-71
2540767-0000	.PIPE	2-67
2540801-0000	.PLUG	1-145
2540802-0100	.CLEANING SLEEVE	1-75, 1-77, 1-79, 1-81
2540803-0000	.CLEANING SLEEVE	1-97, 1-99
2540806-0000	.GASKET	1-39
2541083-0100	.BENDING ROLLER	8-33, 8-35
2541129-0000	.DOOR	2-121
2541130-0000	.DOOR	2-119
2541890-0100	.BRACKET	8-33, 8-35
2541891-0100	.FILTER	8-33, 8-35
2541942-0000	.BRACKET	8-139
2541943-0000	.BRACKET	8-165, 8-169
2541983-0000	.PIPE	4-53, 4-55, 4-57
2542496-0000	.BRACKET	8-139
2544899-0000	.BRACKET	4-21
2544900-0000	.SPACER	4-21
2544913-0000	.PIPE	4-53, 4-55, 4-57
2544915-0000	.PIPE	4-53, 4-55, 4-57
2544916-0000	.PIPE	4-53, 4-55, 4-57
2544918-0000	.PIPE	4-53, 4-55, 4-57
2544919-0000	.PIPE	4-53, 4-55, 4-57
2544926-0000	.PIPE	4-53, 4-55, 4-57
2545016-0000	.SUPPORT	1-87, 1-89, 1-97, 1-99
2545262-0000	.PIPE	4-53, 4-55, 4-57

Part No	Description	Page No
2545308-0000	.CARBON BRUSH	4-29, 4-31, 4-33, 4-39, 4-41, 4-43, 11-19
2546212-0000	.COVER	1-103
2546213-0000	.COVER	1-103
2546214-0000	.COVER	1-103
2546215-0000	.COVER	1-103
2546463-0000	.PRESSURE RAIL	8-83
2547013-0000	.CAP	1-231
2547061-0000	.HOLDER	6-65, 6-67
2547143-0000	.INSERT	5-63
2547150-0100	.PLUG	1-75, 1-77, 1-79, 1-81
2547153-0000	.CONTAINER	1-87, 1-89, 1-97, 1-99
2547154-0000	.CLEANING PIPE	1-87, 1-89, 1-97, 1-99
2547155-0000	.CLEANING PIPE	1-97, 1-99
2547666-0000	.DOOR	8-165
2547667-0000	.DOOR	8-169
2549829-0000	.SPACER	8-83
2550125-0100	.COOLING UNIT	7-3
2550126-0000	.RAIL	7-35, 7-37, 7-39
2550129-0000	.CABLE DUCT	7-35, 7-37, 7-39
2550269-0001	.LOCKING ARM	8-165
2550269-0002	.LOCKING ARM	8-165
2550333-0000	.GUIDE LUG	8-159, 8-161, 8-165
2550896-0000	.RAIL	8-135
2551062-0000	.PIPE	1-87, 1-89, 1-97, 1-99
2551067-0000	.PLATE	1-205
2551068-0000	.BRACKET	1-205
2551109-0000	.TRIMMING ROLLER PLUS	11-9, 11-11
2551110-0000	.TRIMMING ROLLER MINUS	11-9, 11-11
2551115-0000	.PIPE	1-125
2551116-0000	.FLOAT	1-83, 1-85
2551988-0000	.CABLE DUCT	7-23, 7-25, 7-27, 7-29, 7-31
2551989-0000	.CABLE DUCT	7-23, 7-25, 7-27, 7-29, 7-31
2552246-0000	.CATCH HANDLE	1-209, 1-211
2552551-0100	.TPOP DATA COLLECTION	11-3
2552798-0000	.COMPRESSION ROD	8-83
2552821-0000	.BRACKET	8-33, 8-35
2552980-0000	.LOCK RING	1-83, 1-85
2553072-0000	.KEY FOR SAFETY SWITCH	8-165, 8-169
2553107-0000	.HOLDER	8-33, 8-35
2553108-0000	.HOLDER	8-33, 8-35
2553109-0000	.HOLDER	8-33, 8-35
2553167-0000	.LID	1-61, 1-63
2553272-0000	.SUPPORT BLOCK	8-97, 8-107
2553273-0000	.AXLE PIN	8-97, 8-107
2553275-0000	.SLIDE PLATE	8-93, 8-101
2553799-0000	.WASHER	8-97, 8-107
2555083-0000	.FILLING PIPE	1-83, 1-85
2555086-0000	.BUSHING	11-41, 11-43, 11-45
2555087-0100	.SUPPORT	11-3
2555088-0100	.SUPPORT	11-3
2555091-0000	.LOCK RING	1-83, 1-85
2555094-0000	.CLEANING PIPE	1-87, 1-89
2557587-0000	.CABLE DUCT	7-45, 7-47
2557591-0000	.DIVIDER	7-35, 7-37, 7-39
2557594-0000	.RAIL	7-49
2558133-0000	.PRESSURE REGULATOR	1-103
2558134-0000	.PRESSURE REGULATOR	1-103
2558136-0000	.LINK	1-11
2558148-0000	.SLIDING STRIP	8-83
2558848-0000	.SCREW	1-87, 1-89, 1-97, 1-99
2558849-0000	.CLEANING PIPE	1-87, 1-89
2558850-0100	.CABLE DUCT	2-3
2558851-0000	.CABLE DUCT	2-101
2558853-0200	.WASTE BOX	4-3
2558878-0000	.SIGN	8-55
2558879-0000	.SIGN	8-55
2558933-0000	.RAIL	7-85
2558934-0000	.RAIL	7-77
2558937-0000	.RAIL	7-91
2558938-0000	.CABLE DUCT	7-87, 7-89
2558939-0000	.CABLE DUCT	7-87, 7-89
2558940-0000	.DIVIDER	7-87, 7-89
2558941-0000	.DIVIDER	7-87, 7-89
2559041-0000	.BRACKET	10-3
2559045-0003	.ELECTRODE	1-61, 1-63
2559045-0004	.ELECTRODE	1-61, 1-63
2559439-0000	.COUPLING BOLT	8-83
2559986-0000	.SEALING PLATE	8-81
2559987-0000	.SEALING PLATE	8-81
2561147-0000	.BRACKET	10-5
2561151-0000	.SPACER	10-5
2561152-0000	.BRACKET	10-5
2561156-0100	.RAILING	10-7
2561157-0000	.SIDE PLATE	10-23

Part No	Description	Page No
2561206-0000	.SPACER	5-35, 5-53, 5-59, 10-7, 10-13, 10-17, 10-23, 10-45, 10-63, 10-89, 10-97
2561225-0200	.GUIDE SPROCKET	10-19
2561226-0000	.SPACER	10-19
2561227-0001	.SHAFT	10-19
2561227-0002	.SHAFT	10-19
2561229-0000	.PROTECTION	10-19
2561230-0001	.SPACER	10-19
2561231-0000	.BRACKET	10-19
2561232-0000	.COVER	5-53, 10-89
2561242-0000	.RAILING	10-9
2561244-0200	.DRIVE WHEEL	5-59, 10-13, 10-17
2561245-0100	.SLIDING CURVE	10-7
2561247-0000	.SIDE PLATE	10-23
2561257-0000	.SPACER	5-53, 10-89
2561260-0200	.INFEED	10-7
2561267-0000	.SHAFT	5-61, 10-15
2561274-0101	.RAILING	5-33
2561290-0200	.CHAIN TENSIONER	10-7
2561542-0100	.BODY	10-91
2561543-0100	.RAILING	10-91
2561566-0000	.SPACER	10-13
2561596-0000	.RAIL HOLDER KIT	5-57, 10-85
2561602-0100	.RAIL HOLDER KIT	5-55, 10-83
2561603-0000	.SPACER	5-53, 10-89
2561609-0000	.BRACKET	10-63
2561613-0000	.SPACER	10-65
2561620-0000	.COVER	10-71
2561622-0000	.COVER	10-71
2561623-0000	.COVER	10-71
2561624-0000	.COVER	10-71
2561625-0000	.PLATE	10-71
2562308-0000	.INSERT	1-161, 1-163, 1-165, 1-207
2562310-0000	.BRACKET	1-61, 1-63
2562315-0000	.PLUG	1-139
2562468-0000	.BRACKET	10-3
2562551-0000	.SLIDE PLANE	8-77
2562552-0000	.SLIDE PLANE	8-77
2563166-0250	.CONNECTOR	7-9
2563173-0000	.PROFILE	7-87, 7-89
2563174-0000	.PROFILE	7-87, 7-89
2563183-0000	.GUIDE RAIL	8-87
2564030-0000	.INTERMEDIARY SHAFT	5-5, 5-7
2564342-0000	.SPACER	2-95
2564561-0000	.PIPE	2-95
2564589-0000	.EXTENSION PIPE	4-53, 4-55, 4-57
2564632-0100	.VALVE PANEL	8-129
2564633-0100	.VALVE PANEL	8-3
2564634-0000	.BEARING BLOCK	8-129
2564898-0000	.BRACKET	4-53, 4-55, 4-57
2564899-0100	.LUBRICATION UNIT	4-3
2564953-0000	.GRUB SCREW	5-11
2564978-0000	.PIPE	2-95
2565291-0000	.BRACKET	4-53, 4-55, 4-57
2565549-0000	.PIPE	4-53, 4-55, 4-57
2565550-0000	.PIPE	4-53, 4-55, 4-57
2565551-0000	.PIPE	4-53, 4-55, 4-57
2565552-0000	.PIPE	4-53, 4-55, 4-57
2565553-0000	.PIPE	4-53, 4-55, 4-57
2566117-0000	.CUTTING TABLE	8-93, 8-101
2566118-0000	.BRACKET	8-93, 8-101
2566123-0000	.SLIDE PLANE	8-83
2566124-0000	.SLIDE PLANE	8-83
2566127-0000	.SPACER	8-81
2566128-0000	.HOUSING	8-81
2566129-0000	.ADJUSTMENT ANGLE	8-81
2566130-0000	.PLATE	8-81
2566204-0300	.SUPPORT	2-123
2566415-0000	.PIPE	4-53, 4-55, 4-57
2569802-0000	.CLEANING PIPE	1-97, 1-99
2569803-0000	.CLEANING PIPE	1-97, 1-99
2569804-0000	.CLEANING PIPE	1-97, 1-99
2569805-0000	.CLEANING PIPE	1-87, 1-89
2569806-0000	.CLEANING PIPE	1-87, 1-89
2569972-0000	.CABLE PROTECTION	4-11, 4-13
2570379-0000	.PNEUMATIC DIAGRAM	2-113
2570616-0100	.FASTENING PLATE	2-79
2570671-0000	.BRACKET	1-39
2570674-0000	.PIN	1-39
2570676-0000	.HOLDER	1-39
2570821-0000	.SHEET	8-131, 8-133
2570836-0000	.PROTECTION PLATE	8-129
2574072-0000	.BRACKET	4-53, 4-55, 4-57
2574382-0100	.VALVE PANEL	2-123
2574383-0100	.ELECTRIC EQUIPMENT	2-123

Part No	Description	Page No
2574401-0000	.FRAME	8-77
2574402-0000	.PRESSURE JAW	8-83
2574421-0000	.PIPE	2-91
2575105-0000	.BRACKET	4-53, 4-55, 4-57
2575419-0000	.BRACKET	4-53, 4-55, 4-57
2575521-0000	.PIPE	4-53, 4-55, 4-57
2575522-0000	.PIPE	4-53, 4-55, 4-57
2575629-0000	.PIPE	4-53, 4-55, 4-57
2576244-0000	.BRACKET	8-147
2576245-0000	.ARM	8-147
2576379-0000	.ROCKER ARM	8-137
2576396-0000	.PLATE	8-81
2578455-0000	.LIFTING HANDLE	8-137
2578482-0000	.BRACKET	4-53, 4-55, 4-57
2578483-0000	.BRACKET	4-53, 4-55, 4-57
2578486-0000	.BRACKET	1-61, 1-63
2578772-0000	.PIPE	4-53, 4-55, 4-57
2578773-0000	.PIPE	4-53, 4-55, 4-57
2578782-0000	.PIPE	4-53, 4-55, 4-57
2578785-0000	.PUSH BUTTON BOX	8-155
2579689-0000	.BRACKET	4-53, 4-55, 4-57
2579707-0000	.PIPE	4-53, 4-55, 4-57
2579743-0000	.SUPPORT	1-139
2579744-0200	.HEATER	1-137
2579745-0000	.INSERT	1-139, 1-161, 1-163, 1-165
2579810-0000	.CARBON BRUSH HOLDER	4-29, 4-31, 4-33, 4-39, 4-41, 4-43
2579811-0000	.WASHER	4-29, 4-31, 4-33, 4-39, 4-41, 4-43
2579829-0000	.PIPE	4-53, 4-55, 4-57
2579838-0000	.TOUCH GUARD	8-67
2579861-0002	.PIVOT BRACKET	6-13
2579901-0000	.PIPE	4-53, 4-55, 4-57
2579906-0000	.PIPE	4-53, 4-55, 4-57
2579908-0000	.PIPE	4-53, 4-55, 4-57
2579909-0000	.PIPE	4-53, 4-55, 4-57
2579910-0000	.PIPE	4-53, 4-55, 4-57
2579921-0000	.PIPE	4-53, 4-55, 4-57
2579985-0000	.PIPE	4-53, 4-55, 4-57
2579996-0000	.PLATE	8-31
2580000-0000	.BRACKET	4-53, 4-55, 4-57
2580001-0000	.BRACKET	4-53, 4-55, 4-57
2580102-0000	.BRACKET	4-53, 4-55, 4-57
2580103-0000	.PIPE	4-53, 4-55, 4-57
2580104-0000	.BRACKET	4-53, 4-55, 4-57
2581995-0000	.PIPE	4-53, 4-55, 4-57
2582003-0100	.GUIDE RAIL	8-71
2582019-0000	.SHAFT COUPLING	4-19
2582558-0000	.BASE PLATE	8-97, 8-107
2582559-0000	.RAIL	8-97, 8-107
2582668-0000	.PLATE	8-87
2582671-0000	.HYDRAULIC DIAGRAM	2-113
2582672-0000	.PNEUMATIC DIAGRAM	2-113
2587250-0000	.ARM	8-93, 8-101
2587251-0000	.ANGLE PIECE	8-93, 8-101
2588014-0000	.SHAFT	4-25, 4-27, 4-35, 4-37, 4-45, 4-47, 4-49
2588015-0000	.SLEEVE	4-25, 4-27, 4-35, 4-37, 4-45, 4-47, 4-49
2588044-0000	.BRACKET	8-85
2588045-0000	.BRACKET	8-85
2588046-0000	.SHAFT	8-83, 8-85
2588067-0000	.SHAFT	8-141
2588290-0000	.BRACKET	8-83
2588379-0100	.MATERIAL HOLDER	8-101
2588383-0100	.MATERIAL HOLDER	8-93
2588389-0000	.PIPE	1-219, 1-221
2588422-0100	.MATERIAL HOLDER L1	8-3
2588423-0100	.MATERIAL HOLDER L2	8-3
2588946-0100	.SPLICING DEVICE	8-3
2588947-0000	.SHIMS	8-81
2588948-0000	.SHIMS	8-81
2589104-0100	.FRAME	8-71
2589105-0100	.DRIVE UNIT	8-71
2589106-0100	.HEATING UNIT	8-71
2589108-0000	.BENDING ROLLER	8-79
2589109-0000	.TOOTHED PULLEY	8-79
2589110-0000	.SHAFT	8-79
2589111-0000	.FLANGE	8-79
2589112-0000	.FLANGE	8-79
2589113-0000	.SHAFT	8-79
2589114-0000	.SHAFT	8-79
2589115-0000	.COVER	8-79
2589119-0000	.NUT	8-77
2589791-0000	.KNIFE HOLDER	8-93, 8-101
2589831-0000	.COVER	10-19
2589838-0100	.COVER	10-61
2589951-0100	.PACKING DESCRIPTION	10-105

Part No	Description	Page No
2589952-0000	.LABEL	10-107
2589953-0000	.INSTRUCTION	10-107
2589955-0000	.CORRUGATED CARDBOARD BOX	10-107
2589960-2120	.SLIDING STRIP	5-59
2589960-2250	.SLIDING STRIP	10-97
2589960-3220	.SLIDING STRIP	5-59
2589960-5653	.SLIDING STRIP	10-7
2590003-0101	.QUEUE GUARD, SINGLE W ATTACHM PC23	10-3
2590004-0000	.SPRING	10-109
2590040-0100	.RAILING KIT	10-61
2590044-0000	.PLATE	10-63
2590045-0000	.PLATE	10-63
2590046-0000	.PLATE	10-63
2590047-0000	.BRACKET	10-63
2590048-0100	.OPERATION DEVICE	10-61
2590049-0000	.PLATE	10-75
2590050-0100	.BELT BRAKE	10-3
2590051-0000	.PIPE	10-73
2590053-0000	.CONNECTION BOX	10-77
2590054-0100	.CONNECTION BOX	10-61
2590104-0000	.SIDE PLATE	10-5
2590105-0000	.COVER	10-5
2590106-0000	.COVER	10-5
2590108-0000	.SIDE PLATE	10-5
2590109-0000	.PLATE	10-5
2590110-0000	.PLATE	10-5
2590111-0000	.SHAFT	10-5
2590114-0000	.FLANGE BEARING	10-5
2590154-0000	.HUB	10-5
2590157-0200	.SOLID	10-5
2590158-0000	.SIDE PLATE	10-25
2590160-0000	.MOTOR COVER	10-5
2590161-0000	.MOTOR SHELF	10-25
2590210-0307	.DRIVE AND END UNIT (MOTOP) PC23	10-3
2590229-0000	.CORRUGATED CARDBOARD BOX	10-87
2590230-0207	.DRIVE AND END UNIT PC23	10-3
2590231-0100	.PACKING DESCRIPTION	10-53
2590232-0000	.CORRUGATED CARDBOARD BOX	10-55
2590233-0000	.FILLING	10-55
2590234-0000	.FILLING	10-55
2590235-0000	.SUPPORT BLOCK	10-55
2590237-0100	.PACKING DESCRIPTION	10-81
2590245-0004	.SUPPORT BLOCK	10-87
2590253-0100	.PACKING DESCRIPTION	5-33
2590254-0000	.CORRUGATED CARDBOARD BOX	5-41, 10-95
2590257-0100	.PACKING DESCRIPTION	10-91
2590258-0100	.PACKING DESCRIPTION	10-61
2590259-0000	.CORRUGATED CARDBOARD BOX	10-79
2590260-0000	.CORRUGATED CARDBOARD BOX	10-79
2590261-0000	.FILLING	10-79
2590266-0000	.PIN	10-65
2590275-0000	.COVER	10-63
2590276-0201	.DRIVE AND END UNIT	10-5
2590290-0100	.PACKING DESCRIPTION	10-5
2590291-0000	.BOX	10-29
2590294-0000	.BRACKET FOR CABLE DUCT PC23 75MM	10-119
2592567-0100	.PRESSURE JAW	8-71
2592568-0100	.BAR CODE READER	8-71
2592780-0000	.DOLLY	8-83
2594227-0000	.PLATE	1-231
2594228-0000	.PLATE	1-231
2594229-0000	.PLATE	1-231
2594230-0000	.PLATE	1-231
2594393-0000	.PNEUMATIC DIAGRAM	8-131, 8-133
2594415-0000	.CONNECTION BOX	2-129
2594544-0000	.SIGN	2-39, 2-41
2594818-0000	.CONNECTION BOX	10-115, 10-117
2594979-0000	.INSERT	4-23
2595005-0000	.INSERT	4-23
2597526-0100	.IH EQUIPMENT	1-39
2597527-0000	.PLUG	1-87, 1-89
2597600-0000	.BUSHING	8-17
2598084-0000	.PLATE	1-139
2598085-0000	.SPACER	1-139
2598086-0000	.INSERT	1-161, 1-163, 1-165
2598203-0200	.PUMP UNIT	2-3
2598215-0100	.HAND CRANK	4-3
2598528-0000	.PLATE	2-13, 2-15
2598529-0000	.PLATE	3-13, 3-15
2598530-0000	.FRAME	2-19, 2-21, 2-23
2598532-0000	.SHAFT	3-13, 3-15
2598533-0000	.HINGE	4-11, 4-13
2598689-0000	.HOSE	2-87
2599941-0000	.SPACER	8-33, 8-35

Part No	Description	Page No
2601230-0000	.BRACKET	7-87, 7-89
2601232-0000	.FRAME	7-87, 7-89
2601580-0000	.HOSE	7-101
2601582-0000	.HOSE	7-101
2602990-0000	.SHEET	8-7
2602991-0000	.ROD	8-9
2602992-0000	.ROD	8-9
2602993-0000	.LEVER	8-25
2602994-0000	.BRACKET	8-25
2602995-0000	.AXLE	8-25
2603493-0000	.SHAFT	1-59
2603494-0000	.SCREW	1-59
2603495-0000	.BRACKET	1-59
2603496-0000	.BRACKET	1-59
2603497-0000	.BRACKET	1-59
2603957-0000	.SUPPORT	2-127
2605148-0000	.STOP PIN	11-9, 11-11
2605199-0100	.PUMP UNIT	2-123
2605228-0100	.BENDING ROLLER	8-135
2605704-0000	.PLATE	4-7, 4-9
2605705-0000	.SHAFT	4-7, 4-9
2605706-0000	.BRACKET	4-7, 4-9
2605707-0000	.GEAR WHEEL	4-7, 4-9
2605709-0000	.DISC	4-7, 4-9
2605710-0000	.DISC	4-7, 4-9
2606215-0000	.BRACKET	7-9
2606216-0000	.BRACKET	7-87, 7-89
2606897-0000	.INDUCTOR	1-39
2607080-0000	.PLATE	1-205
2607089-0000	.PRESSURE ROLLER	1-83, 1-85, 1-95
2607090-0000	.BRACKET	1-39
2607092-0000	.BLOCK	1-39
2607093-0000	.PLATE	1-39
2607094-0000	.PLATE	1-39
2607095-0000	.BRACKET	1-39
2607096-0000	.BRACKET	1-39
2607100-0000	.PLATE	1-41
2607101-0000	.INSULATOR	1-41
2608106-0000	.BRACKET	7-9
2608107-0000	.BRACKET	7-9
2608177-0000	.SIGN	7-15, 7-17, 7-19, 7-21, 7-53, 7-59, 7-67, 7-79, 7-87, 7-89
2608195-0000	.BRACKET	4-53, 4-55, 4-57
2609885-0001	.PLATE	4-51
2609885-0002	.PLATE	4-51
2609885-0003	.PLATE	4-51
2609886-0001	.PLATE	4-51
2609886-0002	.PLATE	4-51
2609886-0003	.PLATE	4-51
2609887-0000	.PLATE	4-51
2609888-0000	.PLATE	4-51
2609889-0000	.PLATE	4-51
2609890-0000	.PLATE	4-51
2609891-0001	.PLATE	4-51
2609891-0002	.PLATE	4-51
2609891-0003	.PLATE	4-51
2609892-0000	.GUIDE	4-51
2609893-0000	.AIR GUIDE	4-51
2609894-0000	.PLATE	4-51
2609895-0000	.LOCK COMPONENT	4-51
2609896-0000	.SPACER	4-51
2610631-0000	.BRACKET	1-11
2610633-0000	.ROLLER	1-11
2610634-0000	.PLUG	1-11
2611128-0000	.LINK	4-25, 4-27, 4-29, 4-31, 4-33, 4-35, 4-37, 4-39, 4-41, 4-43, 4-45, 4-47, 4-49
2611155-0000	.BRACKET	1-39
2611156-0000	.ROLLER	1-21, 1-23
2611161-0000	.INDUCTOR	1-39
2611162-0000	.SUPPORT	1-21, 1-23
2611166-0000	.ROLLER	1-31
2611167-0000	.ROLLER	1-31
2611168-0000	.FORMING RING	1-31
2611169-0000	.FORMING RING	1-31
2611398-0000	.LINK	4-25, 4-27, 4-29, 4-31, 4-33, 4-35, 4-37, 4-39, 4-41, 4-43, 4-45, 4-47, 4-49
2611417-0000	.LINK	4-25, 4-27, 4-29, 4-31, 4-33, 4-35, 4-37, 4-39, 4-41, 4-43, 4-45, 4-47, 4-49
2611446-0000	.VOLUME FLAP	4-25, 4-27, 4-29, 4-31, 4-33, 4-35, 4-37, 4-39, 4-41, 4-43, 4-45, 4-47, 4-49
2611447-0000	.VOLUME FLAP	4-25, 4-27, 4-29, 4-31, 4-33, 4-35, 4-37, 4-39, 4-41, 4-43, 4-45, 4-47, 4-49
2611448-0000	.VOLUME FLAP	4-25, 4-27, 4-29, 4-31, 4-33, 4-35, 4-37, 4-39, 4-41, 4-43, 4-45, 4-47, 4-49
2611449-0000	.VOLUME FLAP	4-25, 4-27, 4-29, 4-31, 4-33, 4-35, 4-37, 4-39, 4-41, 4-43, 4-45, 4-47, 4-49
2611450-0000	.VOLUME FLAG	4-25, 4-27, 4-29, 4-31, 4-33, 4-35, 4-37, 4-39, 4-41, 4-43, 4-45, 4-47, 4-49
2611457-0000	.CABLE DUCT	8-109, 8-111, 8-113, 8-115, 8-117
2611458-0000	.CABLE DUCT	8-109, 8-111, 8-113, 8-115, 8-117
2611459-0000	.CABLE DUCT	8-109, 8-111, 8-113, 8-115, 8-117
2611460-0000	.CABLE DUCT	8-109, 8-111, 8-113, 8-115, 8-117
2611461-0000	.CABLE DUCT	8-109, 8-111, 8-113, 8-115, 8-117

Part No	Description	Page No
2611462-0100	.TERMINAL BLOCK	8-109, 8-111, 8-113, 8-115, 8-117
2611463-0100	.TERMINAL BLOCK	8-109, 8-111, 8-113, 8-115, 8-117
2611464-0000	.RAIL	8-119, 8-121
2611465-0000	.RAIL	8-125, 8-127
2613033-0000	.MACHINE BODY	6-43
2613034-0100	.MACHINE BODY	6-3
2613749-0100	.COVER	8-3
2616034-0000	.COVER PLATE	8-131, 8-133
2616147-0001	.SPACER	5-23, 5-25
2616147-0002	.SPACER	5-23, 5-25
2616147-0003	.SPACER	5-23, 5-25
2616149-0000	.PLATE	5-23, 5-25
2616150-0000	.THERMOCOUPLE	5-23, 5-25
2616152-0000	.GUIDE	5-49
2616153-0000	.GUIDE	5-5, 5-7
2616154-0000	.SPACER	5-19, 5-21
2616155-0001	.HEATING PIPE	5-23, 5-25
2616155-0002	.HEATING PIPE	5-23, 5-25
2616156-0000	.FRAME	5-5, 5-7
2616157-0000	.BRACKET	5-5, 5-7
2616158-0000	.FRAME	5-5, 5-7
2616159-0000	.BRACKET	5-19, 5-21
2616160-0000	.PLATE	5-13, 5-15, 5-17
2616164-0000	.SUPPORT	5-13, 5-15, 5-17
2618700-0000	.SUPPORT	1-21, 1-23
2618701-0000	.FORMING RING	1-31
2618702-0000	.SUPPORT	1-21, 1-23
2618703-0000	.FORMING RING	1-31
2618704-0000	.ROLLER	1-31
2618705-0000	.ROLLER	1-31
2618706-0000	.FORMING RING	1-31
2618707-0000	.FORMING RING	1-31
2618708-0000	.ROLLER	1-31
2623625-0000	.SWING FRAME	5-19, 5-21
2623627-0000	.SLIDER	5-19, 5-21
2623628-0000	.SUPPORT	5-13, 5-15, 5-17
2623630-0000	.SWING FRAME	5-19, 5-21
2623631-0000	.SWING FRAME	5-19, 5-21
2623632-0000	.SWING FRAME	5-19, 5-21
2623797-0000	.PIPE	2-103
2628989-0000	.BRACKET	8-91
2628990-0000	.BRACKET	8-91
2629310-0000	.ARM	4-29, 4-31, 4-33, 4-39, 4-41, 4-43
2629311-0000	.ARM	4-29, 4-31, 4-33, 4-39, 4-41, 4-43
2629312-0000	.ARM	4-29, 4-31, 4-33, 4-39, 4-41, 4-43
2629313-0000	.SHAFT	4-29, 4-31, 4-33, 4-39, 4-41, 4-43
2629317-0200	.INJECTION SYSTEM	1-75, 1-77, 1-79, 1-81
2629320-0000	.PNEUMATIC DIAGRAM	1-209, 1-211
2632629-0000	.ROLLER	1-31
2632631-0000	.SCREW	1-39
2632763-0000	.NOZZLE	5-23, 5-25
2632764-0000	.NOZZLE	5-23, 5-25
2632806-0000	.TEMPLATE	11-35
2633447-0000	.BUSHING	4-7, 4-9
2633465-0000	.LINK	4-25, 4-27, 4-29, 4-31, 4-33, 4-35, 4-37, 4-39, 4-41, 4-43, 4-45, 4-47, 4-49
2633496-0000	.NOZZLE	5-23, 5-25
2633497-0000	.ITOZZLE	5-23, 5-25
2633498-0000	.TEMPLATE	11-35
2633499-0000	.TEMPLATE	11-35
2634972-0000	.SHAFT	1-83, 1-85
2635131-0150	.CABLE SET	7-3
2635558-0000	.RAIL	10-115, 10-117
2636084-0000	.COVER STRIP	8-149
2636085-0000	.COVER STRIP	8-149
2639390-0000	.CUP	3-13, 3-15
2639555-0000	.GASKET	2-103
2640362-0000	.TOOL	11-31
2640501-0000	.FRAME	5-63
2640502-0000	.SUPPORT	5-63
2640503-0000	.SUPPORT	5-63
2640504-0000	.PLATE	5-5, 5-7
2640505-0000	.SUPPORT	5-63
2640506-0000	.SUPPORT	5-63
2640507-0000	.CHUTE	5-5, 5-7
2640509-0000	.BOX	5-63
2640510-0000	.CAM	5-43, 5-45, 5-47
2640822-0000	.SIGN	1-209, 1-211
2641241-0000	.PIN	4-7, 4-9
2641243-0000	.FLANGE	4-7, 4-9
2641392-0000	.PIN	4-51
2641393-0000	.PLATE	4-51
2641394-0000	.SCREW	4-51
2641395-0000	.PLATE	4-51
2642679-0000	.BRACKET	4-53, 4-55, 4-57

Part No	Description	Page No
2644108-0000	.WHEEL	4-7, 4-9
2644109-0000	.WHEEL	4-7, 4-9
2644110-0000	.WHEEL	4-7, 4-9
2644111-0000	.WHEEL	4-7, 4-9
2644425-0000	.BUSBAR	4-29, 4-31, 4-33, 4-39, 4-41, 4-43
2649684-0000	.CHUTE	5-5, 5-7
2649685-0000	.CHUTE	5-5, 5-7
2649686-0000	.CHUTE	5-5, 5-7
2649687-0000	.CHUTE	5-5, 5-7
2649691-0000	.INSERT	5-23, 5-25
2649692-0000	.PLATE	5-43, 5-45, 5-47
2649694-0000	.SUPPORT	5-13, 5-15, 5-17
2649695-0000	.DRUM	5-43, 5-45, 5-47
2650719-0000	.SPLASH PLATE	6-45
2650720-0100	.CHEMICALS	6-43
2651251-0000	.PLATE	3-13, 3-15
2651252-0000	.PLATE	3-13, 3-15
2651253-0000	.PLATE	3-13, 3-15
2651254-0000	.PIPE	4-53, 4-55, 4-57
2651255-0000	.PIPE	4-53, 4-55, 4-57
2651256-0000	.PIPE	4-53, 4-55, 4-57
2651925-0000	.PLATE	8-139
2652083-0000	.CONTACT RAIL	4-21
2653662-0000	.PIPE	4-53, 4-55, 4-57
2656340-0100	.STRAIGHT CONVEYOR	10-31
2656341-0100	.CONVEYOR BODY	10-43
2656342-0100	.RAILING	10-43
2656343-0000	.PIPE	10-47
2656345-0000	.SIDE PLATE	10-45
2656354-0000	.PIPE	10-47
2656356-0000	.PIPE	10-47
2656358-0000	.PIPE	10-47
2656374-0000	.CHAIN	10-61
2656407-0000	.SLIDE RAIL	10-17
2656424-0000	.PLATE	10-67, 10-69
2656425-0000	.PLATE	10-67, 10-69
2656426-0000	.PLATE	10-67, 10-69
2656572-0000	.CHAIN GUARD	10-5
2656573-0000	.SIDE PLATE	10-25
2656655-0000	.WHEEL	5-53, 10-89
2656668-0000	.SIDE PLATE	10-19
2656669-0000	.SIDE PLATE	10-19
2656670-0000	.LINK	10-105
2656671-0000	.RIVET	10-105
2656672-0000	.SPROCKET	5-61, 10-15
2656673-0000	.SPACER	5-61, 10-15
2656674-0000	.SIDE PLATE	10-17
2656675-0000	.SIDE PLATE	10-17
2656677-0000	.SPROCKET	10-5
2656678-0000	.COVER	10-19
2656679-0000	.WHEEL	10-19
2656680-0000	.SIDE PLATE	10-13
2656681-0000	.SIDE PLATE	10-13
2656682-0000	.SLIDE PLATE	10-21
2656683-0000	.WHEEL	10-21
2657862-0000	.PLATE	1-205
2657867-0000	.HOLDER	1-127, 1-129
2658058-0000	.RAIL	8-83
2659861-0000	.CAP	5-23, 5-25
2663328-0000	.BRACKET	12-25
2663329-0000	.GUIDE	12-25
2663330-0000	.LINK	12-25
2663331-0000	.SPACER	12-25
2664393-0100	.TOOL	12-23
2665129-0000	.GABLE PLATE	6-51
2665131-0000	.LOCKING ARM	6-53
2665132-0000	.LOCKING ARM	6-53
2665191-0000	.PLATE	5-27, 5-29
2665207-0000	.CONTACT RAIL	4-21
2665229-0000	.CONTACT RAIL	4-21
2665270-0000	.CONTACT RAIL	4-21
2665658-0000	.ROLLER	5-27, 5-29
2665719-0000	.SHAFT	5-27, 5-29
2665852-0000	.SUPPORT	5-27, 5-29
2666550-0000	.SUPPORT	5-27, 5-29
2666551-0000	.SUPPORT	5-27, 5-29
2666552-0000	.SUPPORT	5-27, 5-29
2666553-0000	.SHAFT	5-27, 5-29
2666554-0000	.SHAFT	5-27, 5-29
2666555-0000	.SHAFT	5-27, 5-29
2666556-0000	.ROLLER	5-27, 5-29
2666557-0000	.ROLLER	5-27, 5-29
2666558-0000	.ROLLER	5-27, 5-29
2672972-0000	.ELECTRODE	1-61, 1-63

Part No	Description	Page No
2672973-0000	.ELECTRODE	1-61, 1-63
2672974-0000	.BUSHING	1-61, 1-63
2675519-0000	.CABLE DUCT	7-35, 7-37, 7-39
2675521-0000	.RAIL	7-87, 7-89
2675522-0000	.DIVIDER	7-45, 7-47
2677078-0000	.SHAFT	12-25
2681388-0000	.LINK	4-25, 4-27, 4-29, 4-31, 4-33, 4-35, 4-37, 4-39, 4-41, 4-43, 4-45, 4-47, 4-49
2685290-0000	.FLOAT	1-83, 1-85
2685314-0000	.COIL	1-139
2685319-0000	.FILLING PIPE	1-95
2685320-0000	.FILLING PIPE	1-95
2685322-0000	.FILLING PIPE	1-95
2685323-0000	.FILLING PIPE	1-95
2685324-0000	.FILLING PIPE	1-95
2685325-0000	.FILLING PIPE	1-83, 1-85
2685326-0000	.FILLING PIPE	1-83, 1-85
2685339-0000	.GASKET	1-139
2685340-0000	.COVER	1-139
2685341-0000	.COVER	1-139
2685342-0000	.HEATING ELEMENT	1-139
2685376-0000	.PIPE	1-139
2685377-0000	.PIPE	1-139
2685379-0000	.SUPPORT	1-139
2685381-0000	.PIPE	1-139
2685383-0000	.COVER	1-139
2685384-0000	.BRACKET	1-139
2687772-0000	.SIDE PLATE	5-59
2687773-0000	.SIDE PLATE	5-59
2687774-0000	.SIDE PLATE	5-59
2687776-0000	.SUPPORT	5-59
2687778-0000	.SHAFT	5-43, 5-45, 5-47
2687780-0100	.END UNIT	5-31
2690208-0000	.SPRING	4-25, 4-27, 4-35, 4-37, 4-45, 4-47, 4-49
2691417-0000	.SPACER	4-25, 4-27, 4-29, 4-31, 4-33, 4-35, 4-37, 4-39, 4-41, 4-43, 4-45, 4-47, 4-49
2691641-0000	.LINK	4-25, 4-27, 4-29, 4-31, 4-33, 4-35, 4-37, 4-39, 4-41, 4-43, 4-45, 4-47, 4-49
2691667-0000	.PLATE	4-25, 4-27, 4-35, 4-37, 4-45, 4-47, 4-49
2691818-0000	.BUSHING	4-25, 4-27, 4-35, 4-37, 4-45, 4-47, 4-49
2693207-0000	.LINK	4-25, 4-27, 4-29, 4-31, 4-33, 4-35, 4-37, 4-39, 4-41, 4-43, 4-45, 4-47, 4-49
2693208-0000	.LINK	4-25, 4-27, 4-29, 4-31, 4-33, 4-35, 4-37, 4-39, 4-41, 4-43, 4-45, 4-47, 4-49
2693209-0000	.SHAFT	4-25, 4-27, 4-35, 4-37, 4-45, 4-47, 4-49
2693210-0000	.SPRING	4-25, 4-27, 4-35, 4-37, 4-45, 4-47, 4-49
2694026-0000	.HUB	3-13, 3-15
2694027-0000	.SHAFT	3-13, 3-15
2694079-0000	.INSERT	4-23
2694080-0000	.MOTOR BRACKET	3-13, 3-15
2694081-0000	.MOTOR BRACKET	3-13, 3-15
2694094-0000	.SHAFT	3-13, 3-15
2694884-0000	.SHAFT	4-25, 4-27, 4-29, 4-31, 4-33, 4-35, 4-37, 4-39, 4-41, 4-43, 4-45, 4-47, 4-49
2694885-0000	.SHAFT	4-25, 4-27, 4-29, 4-31, 4-33, 4-35, 4-37, 4-39, 4-41, 4-43, 4-45, 4-47, 4-49
2695311-0000	.INSERT	4-23
2695416-0000	.PRESSURE JAW	4-25, 4-27, 4-35, 4-37, 4-45, 4-47, 4-49
2695417-0000	.PRESSURE JAW	4-25, 4-27, 4-35, 4-37, 4-45, 4-47, 4-49
2695418-0000	.PRESSURE JAW	4-25, 4-27, 4-35, 4-37, 4-45, 4-47, 4-49
2695419-0000	.SEALING JAW	4-29, 4-31, 4-33, 4-39, 4-41, 4-43
2695420-0000	.SEALING JAW	4-29, 4-31, 4-33, 4-39, 4-41, 4-43
2695421-0000	.SEALING JAW	4-29, 4-31, 4-33, 4-39, 4-41, 4-43
2695422-0000	.PRESSURE JAW	4-25, 4-27, 4-35, 4-37, 4-45, 4-47, 4-49
2695423-0000	.PRESSURE JAW	4-25, 4-27, 4-35, 4-37, 4-45, 4-47, 4-49
2695424-0000	.SEALING JAW	4-29, 4-31, 4-33, 4-39, 4-41, 4-43
2695425-0000	.SEALING JAW	4-29, 4-31, 4-33, 4-39, 4-41, 4-43
2695962-0100	.RAILING KIT	5-49
2695963-0000	.ARCH	5-55
2696111-0000	.VALVE BODY	1-93
2696485-0000	.ARCH	5-55
2697052-0000	.PIPE	5-13, 5-15, 5-17
2697053-0000	.PIPE	5-13, 5-15, 5-17
2697054-0000	.PIPE	5-13, 5-15, 5-17
2697055-0000	.PIPE	5-13, 5-15, 5-17
2699199-0000	.FILLING	10-55
2699210-0000	.COVER	10-7
2699256-0101	.CABLE TRENCH KIT	10-3
2699304-0100	.HOSE INSTALLATION	10-31
2699366-0000	.STOP	10-31
2699436-0000	.SPACER	5-39, 10-11
2699437-0000	.RAIL HOLDER	5-39, 10-11
2699584-0830	.SLIDING STRIP	5-53, 10-89
2699585-0335	.SLIDING STRIP	10-7
2699585-0565	.SLIDING STRIP	10-7
2699585-0640	.SLIDING STRIP	10-7
2699585-0880	.SLIDING STRIP	10-7
2699996-0000	.BLOCK	8-93, 8-101
2700019-0000	.ROCKER ARM	8-93
2700030-0000	.ROCKER ARM	8-93
2700034-0000	.ROCKER ARM	8-101

Part No	Description	Page No
2700035-0000	.ROCKER ARM	8-101
2701319-0000	.GUIDE PIN	8-135
2701846-0000	.FLANGE	8-143
2701880-0000	.FLANGE	8-43
2704281-0000	.PLATE	4-11, 4-13
2704282-0000	.PLATE	4-11, 4-13
2705811-0000	.INDUCTOR	1-39
2706654-0000	.STOPPER	5-27, 5-29
2707530-0000	.SLIDER	5-27, 5-29
2708125-0000	.SLIDER	5-27, 5-29
2715353-0000	.TOOL	11-31
2715554-0000	.PIN	1-83, 1-85
2715555-0000	.PIN	1-95, 11-9, 11-11
2715619-0000	.WASHER	1-39
2715649-0008	.SPACER	1-21, 1-23
2715650-0010	.SCREW	1-21, 1-23
2719688-0000	.PLATE	5-13, 5-15, 5-17
2721805-0000	.PLATE	2-39, 2-41
2723038-0000	.SUPPORT	5-43, 5-45, 5-47
2726983-0000	.SLIDER	5-27, 5-29
2726984-0000	.SLIDER	5-27, 5-29
2727703-0000	.GASKET	3-7, 3-9
2728202-0000	.BRACKET	12-25
2730017-0000	.PLATE	5-27, 5-29
2730018-0000	.SLIDER	5-27, 5-29
2730020-0000	.PULLEY	5-27, 5-29
2731210-0000	.SLEEVE	8-37, 12-17
2731212-0000	.RING	8-37, 12-17
2731217-0100	.PAPER REEL HOLDER	8-33, 8-35, 12-5
2732816-0000	.GUIDE	5-5, 5-7
2733048-0101	.TECHNICAL MANUAL	10-31
2734100-0100	.PEROXIDE PUMP	2-83
2734101-0000	.EXTENSION PIPE	2-95
2734102-0000	.BUSHING	2-95
2734104-0000	.BUSHING	2-95
2736144-0000	.PNEUMATIC DIAGRAM	2-113
2736698-0000	.FILLING PIPE	1-83, 1-85
2736699-0000	.LOWER FILLING TUBE	1-83, 1-85
2736701-0000	.STOP PIN	1-83, 1-85, 11-9, 11-11
2736706-0000	.LOWER FILLING TUBE	1-83, 1-85
2736707-0000	.PIPE	1-139
2736719-0000	.PLATE	11-39
2736904-0000	.BRACKET	12-25
2737603-0000	.LINK	12-25
2737604-0000	.GUIDE	12-25
2737605-0000	.GUIDE	12-25
2737606-0000	.GUIDE	12-25
2737841-0000	.BRACKET	8-139
2737842-0000	.BRACKET	8-139
2738364-0000	.LINK	12-25
2738365-0000	.LINK	12-25
2738366-0000	.GUIDE	12-25
2738367-0000	.GUIDE	12-25
2738368-0000	.GUIDE	12-25
2738369-0000	.GUIDE	12-25
2738370-0000	.BRACKET	12-25
2738371-0000	.BRACKET	12-25
2744234-0000	.SPACER	2-95
2744963-0000	.INTERMEDIARY SHAFT	5-43, 5-45, 5-47
2748697-0000	.BRACKET	8-9
2748698-0000	.ADJUSTING SCREW	8-9
2748699-0000	.KNOB	8-9
2754798-0000	.FLOAT	1-83, 1-85
2755376-0000	.SUPPORT	5-43, 5-45, 5-47
2755380-0000	.INTERMEDIARY SHAFT	5-43, 5-45, 5-47
2758256-0000	.BENDING ROLLER	8-141
2758698-0000	.INTERMEDIARY SHAFT	5-43, 5-45, 5-47
2758699-0000	.INTERMEDIARY SHAFT	5-43, 5-45, 5-47
2758700-0000	.PLATE	5-5, 5-7
2760258-0100	.CHAIN LIFT	12-5
2761530-0102	.REBUILDING MANUAL	12-23
2763600-0101	.STRAIGHT CONVEYOR L=250MM.	5-31
2763616-0101	.CONVEYOR BODY	5-33
2763617-0001	.SIDE PLATE	5-35
2763969-0000	.REDUCER	1-61, 1-63
2765461-0000	.SWING FRAME	7-87, 7-89
2765462-0001	.COVERING PANEL	7-9
2767843-0000	.SHAFT	12-25
2771119-0000	.SPACER	5-43, 5-45, 5-47
2771120-0000	.SPACER	5-43, 5-45, 5-47
2774348-0000	.EXTENSION SHAFT	6-61
2774477-0000	.SUPPORT	5-49
2774478-0000	.TUNNEL	10-3
2774479-0000	.COVER	2-115

Part No	Description	Page No
2774491-0100	.CURVE WHEEL	5-31
2775692-0100	.CONNECTION BOX	10-3
2775694-0000	.BRACKET	10-115, 10-117
2775695-0000	.BRACKET	10-115, 10-117
2778709-0000	.FOLDING FLAP	4-29, 4-31, 4-33, 4-39, 4-41, 4-43
2778710-0000	.FOLDING FLAP	4-29, 4-31, 4-33, 4-39, 4-41, 4-43
2778711-0000	.FOLDING FLAP	4-29, 4-31, 4-33, 4-39, 4-41, 4-43
2778712-0000	.FOLDING FLAP	4-29, 4-31, 4-33, 4-39, 4-41, 4-43
2778713-0000	.FOLDING FLAP	4-29, 4-31, 4-33, 4-39, 4-41, 4-43
2778714-0000	.FOLDING FLAP	4-29, 4-31, 4-33, 4-39, 4-41, 4-43
2778715-0000	.FOLDING FLAP	4-29, 4-31, 4-33, 4-39, 4-41, 4-43
2778716-0000	.FOLDING FLAP	4-29, 4-31, 4-33, 4-39, 4-41, 4-43
2778796-0000	.PIN	5-49
2778801-0000	.PIPE	5-43, 5-45, 5-47
2778802-0000	.PIPE	5-43, 5-45, 5-47
2778803-0000	.PIPE	5-43, 5-45, 5-47
2778804-0000	.PIPE	5-43, 5-45, 5-47
2779653-0000	.PULLEY	5-19, 5-21
2780072-0000	.RAIL	7-87, 7-89
2781160-0000	.CALENDER ROLLER	1-35
2781168-0000	.BRACKET	5-43, 5-45, 5-47
2781201-0000	.HOLDER	5-49
2783524-0000	.CRANK	4-5
2784685-0000	.HOLDER	5-49
2787764-0000	.TEMPLATE	11-35
2789106-0000	.RAIL	7-67
2789107-0100	.DOOR	7-9
2789108-0000	.DOOR	7-13
2789109-0100	.DOOR	7-9
2789110-0000	.DOOR	7-11
2790373-0000	.TUNNEL	10-3
2790431-0000	.SHUTTER	1-123
2790433-0000	.BODY	1-123
2790925-0000	.SLEEVE	8-37, 12-17
2790929-0000	.SHAFT	8-37, 12-17
2792115-0000	.SUPPORT	1-61, 1-63
2792118-0000	.SUPPORT	6-15
2792119-0100	.FILTER	6-13
2792120-0000	.SUPPORT	6-15
2792303-0000	.PIPE	1-219, 1-221
2792440-0000	.SUPPORT	5-27, 5-29
2792446-0000	.PLATE	5-27, 5-29
2792619-0000	.GUIDE	5-19, 5-21
2792625-0000	.CAM	4-11, 4-13
2792626-0000	.CAM	4-11, 4-13
2792666-0000	.PLATE	5-27, 5-29
2793907-0000	.FASTENING PLATE	6-15
2793908-0000	.CONNECTOR	6-15
2794054-0000	.MOUNTING PLATE	1-237, 1-239
2794928-0000	.PLATE	5-19, 5-21
2797397-0000	.PRESSURE JAW	4-25, 4-27, 4-35, 4-37, 4-45, 4-47, 4-49
2797887-0000	.VOLUME FLAP	4-25, 4-27, 4-29, 4-31, 4-33, 4-35, 4-37, 4-39, 4-41, 4-43, 4-45, 4-47, 4-49
2798051-0000	.SEALING JAW	4-29, 4-31, 4-33, 4-39, 4-41, 4-43
2798497-0000	.FLOAT	1-83, 1-85
2800104-0000	.HOSE	7-101
2800116-0000	.HOSE	7-101
2801653-0000	.WATER DIAGRAM	2-113, 6-65, 6-67
2802425-0000	.PLUG	1-93
2803808-0000	.SHIM	4-53, 4-55, 4-57
2804486-0000	.FILLING PIPE	1-83, 1-85
2806294-0000	.SHAFT	5-5, 5-7
2807061-0000	.COVER	4-7, 4-9
2807062-0000	.PLATE	4-7, 4-9
2809845-0000	.STOP PIN	1-83, 1-85
2812438-0000	.SHAFT	4-25, 4-27, 4-29, 4-31, 4-33, 4-35, 4-37, 4-39, 4-41, 4-43, 4-45, 4-47, 4-49
2812439-0000	.BUSHING	4-25, 4-27, 4-29, 4-31, 4-33, 4-35, 4-37, 4-39, 4-41, 4-43, 4-45, 4-47, 4-49
2812440-0000	.SPRING	4-25, 4-27, 4-29, 4-31, 4-33, 4-35, 4-37, 4-39, 4-41, 4-43, 4-45, 4-47, 4-49
2812441-0000	.LEVER	4-25, 4-27, 4-29, 4-31, 4-33, 4-35, 4-37, 4-39, 4-41, 4-43, 4-45, 4-47, 4-49
2812442-0000	.WASHER	4-25, 4-27, 4-29, 4-31, 4-33, 4-35, 4-37, 4-39, 4-41, 4-43, 4-45, 4-47, 4-49
2812443-0000	.SHAFT	4-25, 4-27, 4-29, 4-31, 4-33, 4-35, 4-37, 4-39, 4-41, 4-43, 4-45, 4-47, 4-49
2812444-0000	.BUSHING	4-25, 4-27, 4-29, 4-31, 4-33, 4-35, 4-37, 4-39, 4-41, 4-43, 4-45, 4-47, 4-49
2812445-0000	.PIN	4-29, 4-31, 4-33, 4-39, 4-41, 4-43
2812446-0000	.SPRING	4-29, 4-31, 4-33, 4-39, 4-41, 4-43
2812447-0000	.LEVER	4-29, 4-31, 4-33, 4-39, 4-41, 4-43
2812451-0000	.SPRING	4-25, 4-27, 4-29, 4-31, 4-33, 4-35, 4-37, 4-39, 4-41, 4-43, 4-45, 4-47, 4-49
2814266-0000	.SUPPORT	5-31
2814267-0000	.SUPPORT	5-31
2818515-0000	.SUPPORT	5-43, 5-45, 5-47
2818547-0000	.PIPE	1-133, 1-135
2818549-0000	.SUPPORT	5-43, 5-45, 5-47
2818550-0000	.GUIDE	5-43, 5-45, 5-47
2818552-0000	.GUIDE	5-43, 5-45, 5-47
2818553-0000	.SLIDE PLATE	5-43, 5-45, 5-47
2819097-0000	.GUIDE	2-125

Part No	Description	Page No
2826255-0000	.PIPE	1-93
2826392-0000	.SPRING	1-83, 1-85
2826439-0000	.VALVE CONE	1-111
2826440-0000	.SEAL RING	1-111
2826441-0000	.SEAL RING	1-109, 1-113
2826442-0000	.VALVE CONE	1-109, 1-113
2826649-0000	.BRACKET	7-35, 7-37, 7-39
2827786-0000	.TOP SECTION	5-19, 5-21
2827787-0000	.TOP SECTION	5-19, 5-21
2827790-0000	.TOUCH GUARD	5-19, 5-21
2829262-0000	.RAIL	7-35, 7-37, 7-39
2831672-0000	.SLIDE PLATE	8-83
2831673-0000	.SLIDE PLATE	8-83
2831674-0000	.ROLLER	8-83, 8-85
2831675-0000	.BRACKET	8-75
2831677-0000	.SUPPORT	8-89
2831679-0000	.ROLLER	8-57
2831680-0000	.ROLLER	8-57, 8-65
2831681-0000	.ROLLER	8-57
2831682-0000	.ROLLER	8-57
2831683-0000	.ROLLER	8-57
2831684-0000	.ROLLER	8-57
2831685-0000	.ROLLER	8-11
2831686-0000	.ROLLER	8-9
2831687-0000	.GUIDE WHEEL	8-9
2831688-0000	.ROLLER	8-135
2832779-0000	.CAM	4-19
2832865-0100	.COVER	8-3
2832866-0000	.COVER	8-5
2833037-0000	.SEAL RING	1-109
2833230-0000	.PLATE	11-39
2833232-0100	.ADJUSTMENT BRACKET	11-37
2833234-0000	.FORMING RING	1-21, 1-23
2833235-0000	.1ROLLER	1-21, 1-23
2833334-0000	.BRACKET	8-5
2834201-0000	.DAMPER	4-25, 4-27, 4-29, 4-31, 4-33, 4-35, 4-37, 4-39, 4-41, 4-43, 4-45, 4-47, 4-49
2835130-0000	.SPACER	4-25, 4-27, 4-35, 4-37, 4-39, 4-41, 4-43, 4-45, 4-47, 4-49
2838968-0000	.VALVE BODY	1-93
2841125-0000	.CABLE DUCT	7-35, 7-37, 7-39
2841128-0000	.MOUNTING PLATE	7-45, 7-47
2841130-0000	.CABLE DUCT	7-35, 7-37, 7-39
2841131-0000	.CABLE DUCT	7-45, 7-47
2841372-0000	.ROLLER	1-21, 1-23
2841374-0000	.ROLLER	1-21, 1-23
2841497-0000	.RAIL	7-35, 7-37, 7-39
2841498-0000	.GASKET	7-23, 7-25, 7-27, 7-29, 7-31
2841622-0000	.PLATE	4-51
2841623-0000	.PLATE	4-51
2841624-0000	.SHIM	4-51
2842999-0000	.CABINET	6-5
2843000-0000	.DOOR	6-61
2844054-0000	.PROTECTION	7-67
2844055-0001	.WELDED CABINET	7-9
2844056-0000	.MOUNTING PLATE	7-35, 7-37, 7-39
2844057-0000	.MOUNTING PLATE	7-35, 7-37, 7-39
2844198-0000	.LEVER	4-29, 4-31, 4-33, 4-39, 4-41, 4-43
2844227-0000	.CAM	4-25, 4-27, 4-35, 4-37, 4-45, 4-47, 4-49
2845033-0000	.BRACKET	1-21, 1-23
2845034-0000	.BRACKET	1-83, 1-85
2845035-0000	.FORK	1-83, 1-85
2845298-0000	.HOOD	1-83, 1-85
2845412-0000	.ROLLER	1-21, 1-23
2845579-0000	.CAM	4-19
2846213-0000	.PLATE	1-209, 1-211
2846471-0000	.GUIDE	5-13, 5-15, 5-17
2846472-0000	.GUIDE	5-13, 5-15, 5-17
2846698-0000	.CABLE	7-93, 7-95
2847904-0000	.CAM	4-19
2850659-0000	.CABLE DUCT	7-45, 7-47
2850660-0000	.DIVIDER	7-45, 7-47
2851385-0000	.PLUNGER	8-37, 12-17
2852113-0000	.LOWER FILLING TUBE	1-83, 1-85
2852114-0000	.LOWER FILLING TUBE	1-83, 1-85
2852433-0000	.BELT	5-27, 5-29
2858820-0000	.HOLDER	4-25, 4-27, 4-35, 4-37, 4-45, 4-47, 4-49
2863176-0000	.BUSBAR	1-39
2863177-0000	.INSULATING PLATE	1-39
2868080-0000	.SLIDER - SEE PN. 1517719-0000 FOR STOCK	5-11
2868081-0000	.GUIDE	5-13, 5-15, 5-17
2874757-0000	.GLASS PANE	1-49
2874758-0000	.GLASS PANE	1-57
2874759-0000	.GLASS PANE	1-65
2874760-0000	.GLASS PANE	1-47
2874764-0000	.GLASS PANE	1-231

Part No	Description	Page No
2876480-0000	.MOUNTING PLATE	7-67
2876481-0000	.MOUNTING PLATE	7-79
2876491-0100	.COMPONENT PLATES	7-51
2876492-0100	.COMPONENT PLATES	7-51
2876493-0100	.COMPONENT PLATES	7-51
2876494-0100	.COMPONENT PLATES	7-51
2876495-0000	.CABLE DUCT	7-67
2876496-0000	.CABLE DUCT	7-79
2878583-0000	.PLATE	3-7, 3-9
2885010-0000	.PLATE	7-51
2885012-0100	.MOTOR DRIVE CONTROL	7-35, 7-37, 7-39
2885013-0100	.RELAY UNIT 1	7-53
2885014-0100	.FUSE BOARD 1	7-53
2885015-0100	.RELAY UNIT 1	7-59
2885016-0100	.FUSE BOARD 1	7-59
2885017-0100	.FUSE BOARD 2	7-67
2885018-0100	.FUSE BOARD 3	7-67
2885019-0100	.PLINTH	7-67
2885020-0100	.FUSE BOARD 2	7-79
2885021-0100	.FUSE BOARD 3	7-79
2885022-0100	.PLINTH	7-79
2885023-0000	.PROTECTION	7-79
2885024-0000	.PROTECTION	7-79
2885025-0100	.RACK	7-87, 7-89
2885026-0100	.PLINTH	7-45, 7-47
2885027-0100	.PLINTH	7-87, 7-89
2886651-0000	.BRACKET	1-93
2886652-0000	.PIPE	1-93
2886653-0000	.COVER	1-93
2886655-0000	.COVER	1-93
2886656-0000	.PIPE	1-139
2886659-0000	.BRACKET	1-139
2886660-0000	.PIPE	1-139
2888477-0100	.PNEUMATIC ACCUMULATOR	8-33, 8-35
2889859-0000	.COVER PLATE	7-9
2889860-0000	.COVER PLATE	7-23, 7-25, 7-27, 7-29, 7-31
2889861-0000	.PROFILE	7-9
2889862-0000	.CONNECTOR	7-45, 7-47
2889864-0000	.DIVIDER	7-53
2889865-0000	.GASKET	7-23, 7-25, 7-27, 7-29, 7-31
2889867-0000	.HOSE	7-101
2889868-0000	.DIVIDER	7-59
2889869-0000	.CABLE DUCT 60X80MM	7-59
2889870-0000	.CABLE DUCT 80X80MM	7-59
2889871-0000	.DIVIDER	7-67
2889872-0000	.CABLE DUCT 100X80MM	7-67
2889873-0000	.CABLE DUCT 40X80MM	7-67
2889874-0000	.CABLE DUCT 40X80MM	7-79
2889875-0000	.CABLE DUCT 80X80MM	7-79
2889876-0000	.CABLE DUCT 100X80MM	7-79
2889877-0000	.DIVIDER	7-79
2889878-0000	.DIVIDER	7-79
2890625-0000	.SUPPORT	4-51
2890626-0000	.SUPPORT	4-51
2890627-0000	.BAR	4-51
2891537-0000	.SUPPORT	2-125
2891538-0000	.BRACKET	2-125
2892563-0000	.SLIDER	5-19, 5-21
2892573-0000	.CABLE DUCT 60X80MM	7-53
2892574-0000	.CABLE DUCT 80X80MM	7-53
2892575-0000	.MOUNTING PLATE	7-59
2892576-0000	.MOUNTING PLATE	7-53
2892577-0000	.CABLE DUCT	7-53
2892578-0000	.DIVIDER	7-79
2892581-0000	.CABLE DUCT	7-67
2892582-0000	.CABLE DUCT	7-67
2892583-0000	.CABLE DUCT	7-59
2892585-0000	.CABLE DUCT	7-35, 7-37, 7-39
2892590-0000	.CABLE DUCT	7-79
2892591-0000	.CABLE DUCT	7-79
2892592-0000	.DIVIDER	7-53
2892593-0000	.DIVIDER	7-59
2892595-0000	.RAIL	7-63, 7-65
2892596-0000	.RAIL	7-61
2892597-0000	.RAIL	7-81
2892599-0000	.RAIL	7-55
2892600-0000	.RAIL	7-69, 7-71
2892602-0000	.RAIL	7-57
2894087-0000	.CABLE DUCT	7-45, 7-47
2894088-0000	.CABLE DUCT	7-45, 7-47
2894090-0000	.CABLE DUCT	7-35, 7-37, 7-39
2894091-0000	.CABLE DUCT	7-35, 7-37, 7-39
2894222-0000	.SPRING	1-83, 1-85, 1-95
2894385-0000	.SPRING	1-95

Part No	Description	Page No
2895702-0000	.CABLE DUCT	7-35, 7-37, 7-39
2895703-0000	.DIVIDER	7-35, 7-37, 7-39
2895704-0000	.DIVIDER	7-35, 7-37, 7-39
2897668-0000	.PROFILE	7-9
2897669-0000	.RAIL	7-73, 7-75
2897670-0000	.RAIL	7-83
2897671-0000	.FUSE PANEL LABEL	7-19
2897672-0000	.CABLE DUCT	7-45, 7-47
2898203-0000	.VALVE CONE	1-109
2898459-0000	.PROTECTION	1-187
2908571-0000	.PNEUMATIC DIAGRAM	2-39, 2-41
2908923-0000	.TOOL	11-49
2908996-0000	.TOOL	11-49
2908997-0100	.TOOL	11-29
2909143-0000	.VOLUME CAM	4-19
2909144-0000	.CAM	4-19
2909522-0000	.SPRING	1-83, 1-85
2912004-0000	.CAM	4-19
2912214-0001	.TPOP BASIC WINDOWS 2000 SP4 V2.5	9-5
2912221-0001	.TPOP BASIC SOFTWARE SUITE V2.5	9-5
2915911-0000	.VOLUME CAM	4-19
2915912-0000	.CAM	4-19
2915913-0000	.CAM	4-19
2916157-0000	.SLIDER	5-43, 5-45, 5-47
2917260-0000	.CARRIER	5-43, 5-45, 5-47
2918132-0000	.CHUTE	5-5, 5-7
2918312-0000	.GUIDE	5-5, 5-7
2918313-0000	.GUIDE	5-5, 5-7
2918735-0000	.DIVIDER	7-35, 7-37, 7-39
2918736-0000	.CABLE DUCT	7-35, 7-37, 7-39
2918737-0000	.DIVIDER	7-45, 7-47
2918738-0000	.DIVIDER	7-45, 7-47, 7-67
2925286-0000	.VOLUME CAM	4-19
2925287-0000	.CAM	4-19
2925288-0000	.CAM	4-19
2927007-0000	.DIVIDER	7-35, 7-37, 7-39
2927008-0000	.DIVIDER	7-35, 7-37, 7-39
2930905-0000	.VOLUME CAM	4-19
2930906-0000	.CAM	4-19
2930907-0000	.CAM	4-19
2931191-0000	.FILLING PIPE	1-83, 1-85
2931192-0000	.IMPELLER WHEEL	2-95
2931920-0001	.SHIM	8-19
2931920-0002	.SHIM	8-19
2939161-0100	.SOFTWARE	9-3
2939162-0002	.SOFTWARE CD	9-5
2939863-0000	.CLAMP	1-93
2947460-0000	.BELT	5-27, 5-29, 11-21
2958800-0000	.BUSHING	8-65
2966771-0000	.PROTECTION	1-187
2968260-0000	.LEVEL PROBE	1-91
2982524-0000	.PIPE	1-103
2982525-0000	.PIPE	1-103
2982526-0000	.PIPE	1-103
2982527-0000	.PIPE	1-103
2982547-0000	.COVER	1-103
2982548-0000	.LABEL	1-103

Part No	Description	Page No	Part No	Description	Page No

Machine Type	Group Description	Page No

Tetra Pak

SPC
Spare Parts Catalogue

Pos	Part No	Description	Page No
A			
SPARE6	90042-0538	PILOT VALVE L=500MM	1-213
SPARE7	90042-0538	PILOT VALVE L=500MM	1-213
SPARE1	90042-0538	PILOT VALVE L=500MM	1-213
SPARE2	90042-0538	PILOT VALVE L=500MM	1-213
SPARE4	90042-0538	PILOT VALVE L=500MM	1-213
SPARE6	90042-0538	PILOT VALVE L=500MM	1-215
SPARE7	90042-0538	PILOT VALVE L=500MM	1-215
SPARE1	90042-0538	PILOT VALVE L=500MM	1-215
SPARE2	90042-0538	PILOT VALVE L=500MM	1-215
SPARE4	90042-0538	PILOT VALVE L=500MM	1-215
SPARE3	90042-0538	PILOT VALVE L=500MM	1-217
SPARE5	90042-0538	PILOT VALVE L=500MM	1-217
A101	90031-0058	PLC, DIGITAL INPUT MODULE	7-45, 7-47
A102	90031-0059	PLC, DIGITAL OUTPUT MODULE	7-45, 7-47
A103	90031-0065	PLC,TEMPERATUR CONTROL,INPUT MODULE 8 PT	7-45, 7-47
A104	90031-0065	PLC,TEMPERATUR CONTROL,INPUT MODULE 8 PT	7-45, 7-47
A105	90031-0061	PLC,ANALOG INPUT MODULE 16 PT/CURRENT	7-45, 7-47
A106	90031-0060	PLC,ANALOG INPUT MODULE 16 PT/VOLTAGE	7-45, 7-47
A107	90031-0062	PLC, ANALOG OUTPUT MODULE 8PT/CURR/VOLT	7-45, 7-47
A108	90031-0062	PLC, ANALOG OUTPUT MODULE 8PT/CURR/VOLT	7-45, 7-47
A109	90031-0031	ENHANCED GENIUS COMMUNICATION MODULE	7-45, 7-47
A110	90031-0057	PLC, DIGITAL INPUT MODULE	7-45, 7-47
A111	90031-0057	PLC, DIGITAL INPUT MODULE	7-45, 7-47
A112	90031-0057	PLC, DIGITAL INPUT MODULE	7-45, 7-47
A113	90031-0057	PLC, DIGITAL INPUT MODULE	7-45, 7-47
A114	90031-0057	PLC, DIGITAL INPUT MODULE	7-45, 7-47
A115	90031-0057	PLC, DIGITAL INPUT MODULE	7-45, 7-47
A116	90031-0057	PLC, DIGITAL INPUT MODULE	7-45, 7-47
A117	90031-0057	PLC, DIGITAL INPUT MODULE	7-45, 7-47
A118	90031-0057	PLC, DIGITAL INPUT MODULE	7-45, 7-47
A119	90031-0057	PLC, DIGITAL INPUT MODULE	7-45, 7-47
A120	90031-0057	PLC, DIGITAL INPUT MODULE	7-45, 7-47
A121	90031-0057	PLC, DIGITAL INPUT MODULE	7-45, 7-47
A122	90031-0057	PLC, DIGITAL INPUT MODULE	7-45, 7-47
A123	90031-0057	PLC, DIGITAL INPUT MODULE	7-45, 7-47
A124	90031-0057	PLC, DIGITAL INPUT MODULE	7-45, 7-47
A125	90031-0057	PLC, DIGITAL INPUT MODULE	7-45, 7-47
A126	90031-0057	PLC, DIGITAL INPUT MODULE	7-45, 7-47
A127	90031-0057	PLC, DIGITAL INPUT MODULE	7-45, 7-47
A128	90031-0057	PLC, DIGITAL INPUT MODULE	7-45, 7-47
A129	90031-0057	PLC, DIGITAL INPUT MODULE	7-45, 7-47
A130	90031-0059	PLC, DIGITAL OUTPUT MODULE	7-45, 7-47
A131	90031-0059	PLC, DIGITAL OUTPUT MODULE	7-45, 7-47
A132	90031-0059	PLC, DIGITAL OUTPUT MODULE	7-45, 7-47
A133	90031-0059	PLC, DIGITAL OUTPUT MODULE	7-45, 7-47
A134	90031-0059	PLC, DIGITAL OUTPUT MODULE	7-45, 7-47
A135	90031-0059	PLC, DIGITAL OUTPUT MODULE	7-45, 7-47
A136	90031-0059	PLC, DIGITAL OUTPUT MODULE	7-45, 7-47
A137	90031-0059	PLC, DIGITAL OUTPUT MODULE	7-45, 7-47
A138	90031-0059	PLC, DIGITAL OUTPUT MODULE	7-45, 7-47
A139	90031-0059	PLC, DIGITAL OUTPUT MODULE	7-45, 7-47
A140	90031-0057	PLC, DIGITAL INPUT MODULE	7-45, 7-47
A141	90031-0057	PLC, DIGITAL INPUT MODULE	7-45, 7-47
A142	90031-0057	PLC, DIGITAL INPUT MODULE	7-45, 7-47
A143	90031-0057	PLC, DIGITAL INPUT MODULE	7-45, 7-47
A145	90031-0059	PLC, DIGITAL OUTPUT MODULE	7-45, 7-47
A146	90031-0059	PLC, DIGITAL OUTPUT MODULE	7-45, 7-47
A147	90031-0059	PLC, DIGITAL OUTPUT MODULE	7-45, 7-47
A160	90031-0051	BASEPLATE, 10-SLOT	7-45, 7-47
A161	90031-0053	BASEPLATE,10-SLOT	7-45, 7-47
A162	90031-0053	BASEPLATE,10-SLOT	7-45, 7-47
A163	90031-0053	BASEPLATE,10-SLOT	7-45, 7-47
A164	90031-0053	BASEPLATE,10-SLOT	7-45, 7-47
A300	90458-2580	LEVEL CONTROL RELAY RM4-LA32M	7-35, 7-37, 7-39
A301	90458-2580	LEVEL CONTROL RELAY RM4-LA32M	7-35, 7-37, 7-39
A302	90458-2580	LEVEL CONTROL RELAY RM4-LA32M	7-35, 7-37, 7-39
A303	90458-2580	LEVEL CONTROL RELAY RM4-LA32M	7-35, 7-37, 7-39
A304	90458-2580	LEVEL CONTROL RELAY RM4-LA32M	7-35, 7-37, 7-39
A305	90458-2580	LEVEL CONTROL RELAY RM4-LA32M	7-35, 7-37, 7-39
A306	90458-2580	LEVEL CONTROL RELAY RM4-LA32M	7-35, 7-37, 7-39
A307	90458-2580	LEVEL CONTROL RELAY RM4-LA32M	7-35, 7-37, 7-39
A308	90458-2580	LEVEL CONTROL RELAY RM4-LA32M	7-35, 7-37, 7-39
A309	90458-2580	LEVEL CONTROL RELAY RM4-LA32M	7-35, 7-37, 7-39
A410	90459-3450	VARIABLE FREQUENCY DRIVE 22A-A4P5N104	7-67
A411	90459-3449	VARIABLE FREQUENCY DRIVE 22A-A2P3N104	7-67
A412	90459-3449	VARIABLE FREQUENCY DRIVE 22A-A2P3N104	7-67
A413	90459-3449	VARIABLE FREQUENCY DRIVE 22A-A2P3N104	7-67
A414	90459-5187	CONDUCTIVITY TRANSMITTER CLM223-ID7105	7-87, 7-89
A415	90459-3450	VARIABLE FREQUENCY DRIVE 22A-A4P5N104	7-67
A417	559810-0101	TMCC2 CONTROLLER	7-93, 7-95
A417.1	68262-0101	BACKPLANE FRONT RACK 8TE	7-93, 7-95
A418	559810-0101	TMCC2 CONTROLLER	7-93, 7-95

Pos	Part No	Description	Page No
A			
A418.1	68262-0101	BACKPLANE FRONT RACK 8TE	7-93, 7-95
A419	559810-0101	TMCC2 CONTROLLER	7-93, 7-95
A419.1	68262-0101	BACKPLANE FRONT RACK 8TE	7-93, 7-95
A420	559810-0101	TMCC2 CONTROLLER	7-93, 7-95
A420.1	68262-0101	BACKPLANE FRONT RACK 8TE	7-93, 7-95
A421	559810-0101	TMCC2 CONTROLLER	7-93, 7-95
A421.1	68262-0101	BACKPLANE FRONT RACK 8TE	7-93, 7-95
A422	559810-0101	TMCC2 CONTROLLER	7-93, 7-95
A422.1	68262-0101	BACKPLANE FRONT RACK 8TE	7-93, 7-95
A424	90458-0522	STEP MOTOR DRIVE L25	7-43
A425	90458-0522	STEP MOTOR DRIVE L25	7-43
A450	90453-0002	MODEM MD-12 DC	7-87, 7-89
A451	2518145-0101	FLEXBOX TETRA BRIK	7-87, 7-89
A452	90600-1847	ETHERNET SWITCH, FL SWITCH SFN 5TX	7-87, 7-89
A500	90459-2938	POWER SUPPLY, 6EP1437-3BA00	7-9
A501	1499642-0201	TPIH GENERATOR	7-41
A502	1499642-0201	TPIH GENERATOR	7-41
A503	1499642-0201	TPIH GENERATOR	7-41
A505	90045-0397	POWER SUPPLY 80A	7-45, 7-47
A505:1	90458-0033	CONNECTOR KIT 9-032-010-851	7-45, 7-47
A506	90458-0399	SERVO DRIVE DMC2 51540	7-45, 7-47
A506:1	90458-0032	CONNECTOR KIT 9-032-010-496	7-45, 7-47
A507	90458-0399	SERVO DRIVE DMC2 51540	7-45, 7-47
A507:1	90458-0032	CONNECTOR KIT 9-032-010-496	7-45, 7-47
A508	90458-0396	SERVO DRIVE DMC2 50720	7-45, 7-47
A508:1	90458-0031	CONNECTOR KIT 9032 010 353	7-45, 7-47
A600	90457-0092	SAFETY RELAY RT9-24VDC	7-35, 7-37, 7-39
A601	90457-0092	SAFETY RELAY RT9-24VDC	7-35, 7-37, 7-39
A602	90119-0089	SAFETY RELAY, JSBT4 24VDC	7-35, 7-37, 7-39
A603	90457-0092	SAFETY RELAY RT9-24VDC	7-35, 7-37, 7-39
A604	90457-0092	SAFETY RELAY RT9-24VDC	7-35, 7-37, 7-39
A724:1	90458-1300	2 AXIS DOCKING STATION D2/PLC	7-43
A1304	90314-0044	SIGNAL CONVERTER	1-237, 1-239
A9115	90459-1420	PROPORTIONAL VALVE 0 - 10V/0-6 BAR	1-205
B			
B001	90326-0053	THERMOCOUPLE, 12826-35	7-9
B002	90044-0192	LIMIT SW. SZ2586.000	7-9
B003	90044-0192	LIMIT SW. SZ2586.000	7-9
B004	90044-0192	LIMIT SW. SZ2586.000	7-9
B005	90044-0192	LIMIT SW. SZ2586.000	7-9
B101.1	90232-0127	PH.CELL E3S-CT61-L-5-5M	10-31, 10-61
B101.2	90232-0104	PH.CELL E3S-CT61-D-5M	10-31, 10-61
B102.1	90232-0127	PH.CELL E3S-CT61-L-5-5M	10-31
B102.2	90232-0104	PH.CELL E3S-CT61-D-5M	10-31
B103.1	90232-0127	PH.CELL E3S-CT61-L-5-5M	10-31
B103.2	90232-0104	PH.CELL E3S-CT61-D-5M	10-31
B905:1	90232-0104	PH.CELL E3S-CT61-D-5M	10-109
B905:2	90232-0127	PH.CELL E3S-CT61-L-5-5M	10-109
B1102	90274-0045	PRESSURE GUARD, 14 KPA	1-145
B1103	90459-4810	PRESS TRANSD (DIFF) 0 - 2000PA, 2681-20C	1-237, 1-239
B1104	979500-0003	ELECTRODE	1-145
B1105	90326-0051	THERMOCOUPLE, 12826-33	1-153
B1106	90326-0051	THERMOCOUPLE, 12826-33	1-147
B1109	90458-0341	THERMOCOUPLE, 5130050-001	1-25
B1111	90044-0193	SENSOR, 322-31-0310	1-149
B1112	90044-0193	SENSOR, 322-31-0310	1-149
B1113	90458-0675	PROX.SENSOR, E2EG-X5MB1-5M	1-37
B1201	567070-0011	ELECTRODE	1-183
B1208	90326-0038	THERMOCOUPLE, CR-AL	1-183
B1209	90326-0057	THERMOCOUPLE, CR-AL	1-187
B1220	567070-0011	ELECTRODE	1-183
B1222	90326-0053	THERMOCOUPLE, 12826-35	1-183
B1224	90044-0084	LIMIT SW. 14 CE1-4	1-183
B1225	90044-0084	LIMIT SW. 14 CE1-4	1-183
B1230:1	2559045-0004	ELECTRODE	1-61, 1-63
B1230:2	2559045-0003	ELECTRODE	1-61, 1-63
B1241	90458-0672	PROX.SENSOR E2E2-X5MB1-5M	1-159
B1242	90458-0672	PROX.SENSOR E2E2-X5MB1-5M	1-159
B1301	90044-0104	PROX.SWITCH IN-3002-BPKG REPBY 90044-194	1-105
B1302	90044-0104	PROX.SWITCH IN-3002-BPKG REPBY 90044-194	1-105
B1303	90044-0104	PROX.SWITCH IN-3002-BPKG REPBY 90044-194	1-105
B1304	90274-0096	LEVEL PROBE, Z8778/1	1-95
B1306	90458-0676	PROX.SWITCH E2EG-X5B1-6M ED 90600-0467	1-131
B1307	90458-0676	PROX.SWITCH E2EG-X5B1-6M ED 90600-0467	1-131
B1310	90326-0089	THERMOCOUPLE, 5110-089-000	1-103
B1314	2968260-0000	LEVEL PROBE	1-91
B1315	90600-3924	CONDUCTIVITY SENSOR CLS 54-ACS1022	1-133, 1-135
B1316	90243-0430	FLOW METER, MAG 1100 FOOD PFA	1-133, 1-135
B1321	90044-0145	PROX.SWITCH 922	1-123
B1322	1478814-0000	SENSOR	1-123
B1330	90459-0252	PROX.SWITCH IX 0208	1-87, 1-89, 1-97, 1-99
B1350	90458-0672	PROX.SENSOR E2E2-X5MB1-5M	1-25

Machine Type Group Description Page No

Pos	Part No	Description	Page No
B			
B1403	90044-0104	PROX.SWITCH IN-3002-BPKG REPBY 90044-194	1-197
B1405	90044-0191	PROX.SWITCH E2EG-X2B1	1-51
B1502	90457-0047	SENSOR 2750-1-5111-1 W.ADAPTER PNP	1-11
B1504	90459-0472	KEY SAF.SW. AZ 16 02ZVRK-M20-2152-2254	1-65
B1505	90459-0472	KEY SAF.SW. AZ 16 02ZVRK-M20-2152-2254	1-47
B1506	90459-0472	KEY SAF.SW. AZ 16 02ZVRK-M20-2152-2254	1-49
B1507	90459-0472	KEY SAF.SW. AZ 16 02ZVRK-M20-2152-2254	1-57
B1508	90459-0472	KEY SAF.SW. AZ 16 02ZVRK-M20-2152-2254	1-231
B 2102	90274-0042	PRESSURE GUARD, 200 KPA	6-65, 6-67
B2115	1498614-0000	SENSOR	1-43
B2116	1498614-0000	SENSOR	1-43
B2201	90274-0074	PRESS. SW. 5,3 BAR, PEV-1/4-B-SA22357	6-73
B 2501	90274-0056	PRESS. SW. 1 - 12 BAR, PEV-1/4-B-SA22358	6-21
B 2510	90326-0057	THERMOCOUPLE, CR-AL	6-13
B 2520	90326-0020	PLUG, FEMALE YELLOW CR-AL	6-13
B2540	90274-0108	DUAL PRESSURE GUARD, -20 - 2800 KPA	6-11
B2810	90600-5010	SAFETY SWITCH, AZ 16-02 ZVRK-STR-2612-2	2-117
B2811	90600-5009	SAFETY SWITCH, AZ 16-02 ZVRK-STL-2612-1	2-117
B2812	90600-5010	SAFETY SWITCH, AZ 16-02 ZVRK-STR-2612-2	2-117
B2830	90600-5009	SAFETY SWITCH, AZ 16-02 ZVRK-STL-2612-1	2-117
B2831	90600-5010	SAFETY SWITCH, AZ 16-02 ZVRK-STR-2612-2	2-117
B2832	90600-5009	SAFETY SWITCH, AZ 16-02 ZVRK-STL-2612-1	2-117
B3102	90274-0082	FLOW SWITCH, 2 - 3 L/MIN	6-29
B3105	90243-0245	MEASURING INSTRUMENT	6-31
B 4001	68917-0100	ANGLE INDICATOR	3-17
B4102	90600-0463	INDUCTIVE SWITCH,E2A-M12LN05-WP-B1-TP 5M	4-5
B4103	90459-1844	ANGLE ENCODER, BAY1G.24P1024/405884	4-7, 4-9
B4200	90600-0463	INDUCTIVE SWITCH,E2A-M12LN05-WP-B1-TP 5M	4-23
B4202	90600-0459	INDUCTIVE SWITCH, E2A-M12KN05-WP-B1 5M	4-15, 4-17
B5103	90044-0194	PROX.SW. IN5329/IN3002-BPKG(EX90044-104)	5-5, 5-7
B5307	2616150-0000	THERMOCOUPLE	5-23, 5-25
B5308	2616150-0000	THERMOCOUPLE	5-23, 5-25
B5309	2616150-0000	THERMOCOUPLE	5-23, 5-25
B5310	2616150-0000	THERMOCOUPLE	5-23, 5-25
B6105	90044-0194	PROX.SW. IN5329/IN3002-BPKG(EX90044-104)	8-25
B6107	90600-0460	INDUCTIVE SWITCH, E2A-M12KN05-M1-B1-TP	8-135
B6201	90044-0194	PROX.SW. IN5329/IN3002-BPKG(EX90044-104)	8-57
B6202	90044-0194	PROX.SW. IN5329/IN3002-BPKG(EX90044-104)	8-57
B6203	90600-0473	INDUCTIVE SWITCH E2A-S08KS01-WP-B1-TP 5M	8-19
B6204	90044-0194	PROX.SW. IN5329/IN3002-BPKG(EX90044-104)	8-57
B6205	90458-1535	TRANSDUCER, BTL5-A11-M0850-P-S32	8-65
B6208	90458-0138	PROX.SWITCH E2EG-X1R5B1-5M	8-57
B6209	90459-0472	KEY SAF.SW. AZ 16 02ZVRK-M20-2152-2254	8-33, 8-35
B7210	90232-0129	PH.CELL E3S-CR61-5M	8-139
B7211	90232-0129	PH.CELL E3S-CR61-5M	8-47
B7304	90326-0054	THERMOCOUPLE, CR-AL STD.GR, 12826-36	8-81
B7401	90232-0106	PH.CELL E3S-CR11-5M	8-139
B7411	90600-0460	INDUCTIVE SWITCH, E2A-M12KN05-M1-B1-TP	8-33, 8-35
B7412	90044-0165	PROX.SWITCH SME-8-K5-LED-24	8-45
B7414	90600-0460	INDUCTIVE SWITCH, E2A-M12KN05-M1-B1-TP	8-33, 8-35
B7501	90232-0106	PH.CELL E3S-CR11-5M	8-139
B7512	90044-0165	PROX.SWITCH SME-8-K5-LED-24	8-45
B7801	90459-0472	KEY SAF.SW. AZ 16 02ZVRK-M20-2152-2254	8-33, 8-35
B7806	90459-0472	KEY SAF.SW. AZ 16 02ZVRK-M20-2152-2254	8-33, 8-35
B7807	90459-0472	KEY SAF.SW. AZ 16 02ZVRK-M20-2152-2254	8-33, 8-35
B9104	90458-2241	PRESSURE SWITCH 0,5-10 BAR ADJUSTABLE	1-205
B9105	90458-2619	FLOW METER, D-6230-HGB-BB-AV-99-0-N2	1-205
B9106	90326-0060	THERMOCOUPLE, CR-AL	1-93
B9107	90600-0463	INDUCTIVE SWITCH,E2A-M12LN05-WP-B1-TP 5M	1-93
B9108	90600-0463	INDUCTIVE SWITCH,E2A-M12LN05-WP-B1-TP 5M	1-93
B9109	90600-0463	INDUCTIVE SWITCH,E2A-M12LN05-WP-B1-TP 5M	1-93
B9110	90600-0463	INDUCTIVE SWITCH,E2A-M12LN05-WP-B1-TP 5M	1-93
B9111	90600-0463	INDUCTIVE SWITCH,E2A-M12LN05-WP-B1-TP 5M	1-93
B9113:1	2672972-0000	ELECTRODE	1-61, 1-63
B9113:2	2672973-0000	ELECTRODE	1-61, 1-63
B9115	90326-0053	THERMOCOUPLE, 12826-35	1-139
B9116	90459-2122	THERMOCOUPLE, EN-5130060-0001	1-139
B9120	90459-6215	FLOW SWITCH BFS-10-N-G1/4-MS-NO-ST	1-205
B43011	90458-0601	CONTRAST SCANNER, KT15W-P2110S01	3-7, 3-9
B43012	90458-0601	CONTRAST SCANNER, KT15W-P2110S01	3-7, 3-9
B54051	90458-1159	PH.CELL WS4-2D135	4-51
B54052	90458-1160	PH.CELL WE4-2P135	4-51
B54101	90232-0103	PH.CELL E3S-CT61-L-5M	5-49
B54102	90232-0104	PH.CELL E3S-CT61-D-5M	5-49
B72232	90458-0677	PROX.SWITCH E2EG-X5MB1-M1	8-145
B72234	90458-0677	PROX.SWITCH E2EG-X5MB1-M1	8-145
B74031	90458-0602	CONTRAST SCANNER, KT15W-P2110S01	8-85
B74032	90458-0602	CONTRAST SCANNER, KT15W-P2110S01	8-85
C			
C1314	90274-0099	IP-TRANSDUCER	1-119, 1-121
C7410	90459-2101	CYLINDER, ADVC-80-25-I-P	8-83
C7412	90459-1849	DOUBLE ACTING SHUTTLE CYL. 40-550 MM	8-45

Pos	Part No	Description	Page No
C			
C7414	90239-0832	DOUBLE ACTING, MINI-ISO, CYL. 25-125	8-99
C7415	90239-0832	DOUBLE ACTING, MINI-ISO, CYL. 25-125	8-105
C7420	90459-3370	DOUBLE ACTING, PROFILE,CYL 32-140	8-27
C7421	90459-3370	DOUBLE ACTING, PROFILE,CYL 32-140	8-29
C73031	90459-0503	CYLINDER, ADVC-16-10-I-P	8-97
C73032	90459-0503	CYLINDER, ADVC-16-10-I-P	8-97
C73151	90459-0503	CYLINDER, ADVC-16-10-I-P	8-107
C73152	90459-0503	CYLINDER, ADVC-16-10-I-P	8-107
C74071	90459-1509	CYLINDER, ADVC-20-20-I-P	8-83
C74072	90459-1509	CYLINDER, ADVC-20-20-I-P	8-83
C74081	90459-2102	CYLINDER, AEVC 100-25-I-P	8-83
C74082	90459-2102	CYLINDER, AEVC 100-25-I-P	8-83
D			
D100	90600-1223	CPU374, ETHERNET COMMUNICATION	7-45, 7-47
E			
E001	90600-4050	LIGHT FIXTURE, TCH128 1XTL5-28W/830 HF	7-9
E002	90600-4050	LIGHT FIXTURE, TCH128 1XTL5-28W/830 HF	7-9
E900	90459-6856	FEEDER BLOCK, FAZ/FIP-XVS-KL	7-81
E901	90459-6856	FEEDER BLOCK, FAZ/FIP-XVS-KL	7-81
E902	90459-6856	FEEDER BLOCK, FAZ/FIP-XVS-KL	7-81
E903	90459-6856	FEEDER BLOCK, FAZ/FIP-XVS-KL	7-81
E904	90459-6856	FEEDER BLOCK, FAZ/FIP-XVS-KL	7-81
E905	90459-6856	FEEDER BLOCK, FAZ/FIP-XVS-KL	7-81
E906	90459-6856	FEEDER BLOCK, FAZ/FIP-XVS-KL	7-81
E907	90459-6856	FEEDER BLOCK, FAZ/FIP-XVS-KL	7-81
E 2001	90457-0149	LIGHT FIXTURE, RL 70V-118D/230V 50 HZ	2-11
E 2002	90457-0149	LIGHT FIXTURE, RL 70V-118D/230V 50 HZ	2-11
E7702	90164-0015	LIGHT FIXTURE, RL70CV-111 / 230V 50HZ	8-33, 8-35
E7705	90164-0015	LIGHT FIXTURE, RL70CV-111 / 230V 50HZ	8-33, 8-35
F			
F002	351416-0060	MINIATURE CIRC. BREAK., FAZ -D6 1-POLE	7-81
F003	351416-0100	MINIATURE CIRC. BREAK., FAZ -D10 1-POLE	7-81
F004	351416-0100	MINIATURE CIRC. BREAK., FAZ -D10 1-POLE	7-81
F006	351416-0100	MINIATURE CIRC. BREAK., FAZ -D10 1-POLE	7-81
F007	351416-0100	MINIATURE CIRC. BREAK., FAZ -D10 1-POLE	7-81
F008	351416-0060	MINIATURE CIRC. BREAK., FAZ -D6 1-POLE	7-81
F009	351416-0100	MINIATURE CIRC. BREAK., FAZ -D10 1-POLE	7-81
F011	351416-0100	MINIATURE CIRC. BREAK., FAZ -D10 1-POLE	7-81
F012	90233-0028	TUBE FUSE 10A, A070GRB10T13 G330010	7-69, 7-71
F014	90233-0028	TUBE FUSE 10A, A070GRB10T13 G330010	7-69, 7-71
F016	351416-0060	MINIATURE CIRC. BREAK., FAZ -D6 1-POLE	7-81
F020	351417-0100	MINIATURE CIRC. BREAK.,FAZ-D10/2 2-POLE	7-85
F022	351418-0100	MINIATURE CIRC. BREAK., FAZ-D10/3 3-POLE	7-85
F028	351418-0060	MINIATURE CIRC. BREAK., FAZ-D6/3 3-POLE	7-81
F054	90459-5811	RESIDUAL CURRENT DEVICE, FI-25/2/003-A	7-87, 7-89
F055	351416-0020	MINIATURE CIRC. BREAK., FAZ -D2 1-POLE	7-81
F101	90233-0029	TUBE FUSE 25A, A070GRB25T13 L330014	7-69, 7-71
F102	90233-0029	TUBE FUSE 25A, A070GRB25T13 L330014	7-69, 7-71
F103	90233-0029	TUBE FUSE 25A, A070GRB25T13 L330014	7-69, 7-71
F104	90233-0028	TUBE FUSE 10A, A070GRB10T13 G330010	7-69, 7-71
F105	90233-0028	TUBE FUSE 10A, A070GRB10T13 G330010	7-69, 7-71
F106	90459-1254	TUBE FUSE, 4A 500V	7-69, 7-71
F107	90459-1254	TUBE FUSE, 4A 500V	7-69, 7-71
F108	90459-1254	TUBE FUSE, 4A 500V	7-69, 7-71
F112	90233-0034	TUBE FUSE, 1 A	7-69, 7-71
F115	90233-0062	TUBE FUSE, 4A 600V	7-69, 7-71
F910	90233-0027	TUBE FUSE 16A, A070GRB16T13 J330012	7-69, 7-71
G			
G100	90031-0068	PLC, POWER SUPPLY	7-45, 7-47
G101	90031-0068	PLC, POWER SUPPLY	7-45, 7-47
G102	90031-0068	PLC, POWER SUPPLY	7-45, 7-47
G103	90031-0068	PLC, POWER SUPPLY	7-45, 7-47
G104	90031-0068	PLC, POWER SUPPLY	7-45, 7-47
G108	90459-7198	AUXILIARY BATTERY MODULE, IC693ACC302	7-35, 7-37, 7-39
H			
H2801	2540716-0100	SIGNAL LAMP	2-65
H2802	2540716-0100	SIGNAL LAMP	2-69, 2-71
H7703	90052-0011	HORN HOOTERT 24:48VDC.PT NO.1YA030221	8-33, 8-35
K			
K001	90459-5316	CONTACTOR 4KW 24VDC, DILM9-32	7-55
K002	90459-5440	CONTACTOR 4KW 24VDC, DILM9-01	7-55
K003	90459-5441	CONTACTOR 7,5KW 24VDC, DILM17-01	7-55
K005	90459-5440	CONTACTOR 4KW 24VDC, DILM9-01	7-55, 7-73, 7-75
K007	90459-5440	CONTACTOR 4KW 24VDC, DILM9-01	7-83
K008	90459-5440	CONTACTOR 4KW 24VDC, DILM9-01	7-83
K010	90459-5440	CONTACTOR 4KW 24VDC, DILM9-01	7-83
K011	90459-5308	CONTACTOR 4KW 24VDC, DILM9-10	7-55
K012	90459-5441	CONTACTOR 7,5KW 24VDC, DILM17-01	7-73, 7-75
K013	90459-5441	CONTACTOR 7,5KW 24VDC, DILM17-01	7-73, 7-75
K014	90459-5440	CONTACTOR 4KW 24VDC, DILM9-01	7-73, 7-75
K015	90459-5317	CONTACTOR 7,5KW 24VDC, DILM17-32	7-61
K016	90459-5308	CONTACTOR 4KW 24VDC, DILM9-10	7-55

Pos	Part No	Description	Page No
K			
K020	90459-5441	CONTACTOR 7,5KW 24VDC, DILM17-01	7-55
K022	90459-5440	CONTACTOR 4KW 24VDC, DILM9-01	7-55
K023	90459-5440	CONTACTOR 4KW 24VDC, DILM9-01	7-61
K024	90459-5441	CONTACTOR 7,5KW 24VDC, DILM17-01	7-61
K025	90459-5441	CONTACTOR 7,5KW 24VDC, DILM17-01	7-61
K026	90459-5440	CONTACTOR 4KW 24VDC, DILM9-01	7-73, 7-75
K027	90459-5440	CONTACTOR 4KW 24VDC, DILM9-01	7-73, 7-75
K028	90459-5441	CONTACTOR 7,5KW 24VDC, DILM17-01	7-73, 7-75
K029	90459-5441	CONTACTOR 7,5KW 24VDC, DILM17-01	7-73, 7-75
K030	90459-5441	CONTACTOR 7,5KW 24VDC, DILM17-01	7-73, 7-75
K031	90459-5440	CONTACTOR 4KW 24VDC, DILM9-01	7-73, 7-75
K032	90459-5441	CONTACTOR 7,5KW 24VDC, DILM17-01	7-73, 7-75
K033	90459-5440	CONTACTOR 4KW 24VDC, DILM9-01	7-73, 7-75
K036	90459-5440	CONTACTOR 4KW 24VDC, DILM9-01	7-83
K100	90119-0108	RELAY OMRON G2R-2-SNI-24DC	7-35, 7-37, 7-39
K101	90119-0108	RELAY OMRON G2R-2-SNI-24DC	7-35, 7-37, 7-39
K102	90119-0108	RELAY OMRON G2R-2-SNI-24DC	7-35, 7-37, 7-39
K104	90119-0108	RELAY OMRON G2R-2-SNI-24DC	7-35, 7-37, 7-39
K105	90119-0108	RELAY OMRON G2R-2-SNI-24DC	7-35, 7-37, 7-39
K107	90119-0108	RELAY OMRON G2R-2-SNI-24DC	7-35, 7-37, 7-39
K108	90119-0108	RELAY OMRON G2R-2-SNI-24DC	7-35, 7-37, 7-39
K110	90119-0108	RELAY OMRON G2R-2-SNI-24DC	7-35, 7-37, 7-39
K111	90119-0108	RELAY OMRON G2R-2-SNI-24DC	7-35, 7-37, 7-39
K112	90119-0056	RELAY, AUXILIARY MK3P5-S 24VDC	7-35, 7-37, 7-39
K113	90119-0108	RELAY OMRON G2R-2-SNI-24DC	7-35, 7-37, 7-39
K114	90119-0108	RELAY OMRON G2R-2-SNI-24DC	7-35, 7-37, 7-39
K115	90119-0108	RELAY OMRON G2R-2-SNI-24DC	7-35, 7-37, 7-39
K116	90119-0108	RELAY OMRON G2R-2-SNI-24DC	7-35, 7-37, 7-39
K118	90119-0108	RELAY OMRON G2R-2-SNI-24DC	7-35, 7-37, 7-39
K120	90119-0108	RELAY OMRON G2R-2-SNI-24DC	7-35, 7-37, 7-39
K121	90119-0108	RELAY OMRON G2R-2-SNI-24DC	7-35, 7-37, 7-39
K122	90459-5440	CONTACTOR 4KW 24VDC, DILM9-01	7-55
K125	90119-0056	RELAY, AUXILIARY MK3P5-S 24VDC	7-35, 7-37, 7-39
K125	90119-0063	OPTO-RELAY, DC/DC AMMS-10-1/30VDC	7-49
K126	90119-0108	RELAY OMRON G2R-2-SNI-24DC	7-35, 7-37, 7-39
K132	90119-0056	RELAY, AUXILIARY MK3P5-S 24VDC	7-35, 7-37, 7-39
K133	90119-0108	RELAY OMRON G2R-2-SNI-24DC	7-35, 7-37, 7-39
K140	90119-0108	RELAY OMRON G2R-2-SNI-24DC	7-35, 7-37, 7-39
K143	90119-0108	RELAY OMRON G2R-2-SNI-24DC	7-35, 7-37, 7-39
K144	90119-0108	RELAY OMRON G2R-2-SNI-24DC	7-35, 7-37, 7-39
K150	90119-0108	RELAY OMRON G2R-2-SNI-24DC	7-35, 7-37, 7-39
K151	90119-0108	RELAY OMRON G2R-2-SNI-24DC	7-35, 7-37, 7-39
K200	90119-0082	SSR 90119-67 + HEAT SINK	7-57
K201	90119-0082	SSR 90119-67 + HEAT SINK	7-57
K202	90119-0082	SSR 90119-67 + HEAT SINK	7-57
K203	90119-0082	SSR 90119-67 + HEAT SINK	7-57
K204	90119-0082	SSR 90119-67 + HEAT SINK	7-57
K205	90119-0082	SSR 90119-67 + HEAT SINK	7-57
K206	90119-0082	SSR 90119-67 + HEAT SINK	7-57
K207	90119-0082	SSR 90119-67 + HEAT SINK	7-57
K208	90119-0082	SSR 90119-67 + HEAT SINK	7-57
K209	90119-0082	SSR 90119-67 + HEAT SINK	7-57
K210	90119-0082	SSR 90119-67 + HEAT SINK	7-57
K211	90119-0082	SSR 90119-67 + HEAT SINK	7-57
K212	90119-0082	SSR 90119-67 + HEAT SINK	7-63, 7-65
K650	90119-0063	OPTO-RELAY, DC/DC AMMS-10-1/30VDC	7-49
K910	90459-5441	CONTACTOR 7,5KW 24VDC, DILM17-01	7-73, 7-75
K911	90119-0082	SSR 90119-67 + HEAT SINK	7-63, 7-65
K7000	90459-5440	CONTACTOR 4KW 24VDC, DILM9-01	8-125, 8-127
K7001	90459-5440	CONTACTOR 4KW 24VDC, DILM9-01	8-125, 8-127
L			
L1402	2606897-0000	INDUCTOR	1-39
L1402	2611161-0000	INDUCTOR	1-39
L1402	2705811-0000	INDUCTOR	1-39
L6101	2509617-0100	INDUCTOR	8-11
M			
M1101	90270-0017	COMPRESSOR NASH/ELMO 112 MB/4-2083	1-141
M1205	90321-0100	PUMP PBK 16/A 220/380V 50 HZ 3 PH.	1-179
M1205	90321-0127	CENTRIFUGAL PUMP LOWARA	1-179
M1206	90321-0134	CIRC. PUMP TCB25-6LV.230 HZ 50	1-187
M1206	90321-0135	CIRC. PUMP 230V60HZ	1-187
M1213	90458-2466	MOTOR 3GVA071002-CSC-M2VA71B2	2-95
M1501	90069-0608	GEARS, WORM MOTOR ODM120-60KE3	1-35
M1503	90045-0189	STEP MOTOR E22NSLT-LNN-NS-02	3-11
M1504	90045-0189	STEP MOTOR E22NSLT-LNN-NS-02	1-17, 1-19
M 2501	90321-0116	PUMP GRUNDFOS CHI 2-60	6-21
M3102	90321-0117	PUMP LOWARA SV8-14 F75T	6-35, 6-37
M3102	90321-0120	PUMP SV8-09 F756T, 380V60HZ	6-35, 6-37
M4105	90045-0197	SERVO MOTOR EP 165-090-66T3B	3-13, 3-15
M4302	90045-0164	SERVO MOTOR EP 075-112-44T3B	3-5
M4304	90045-0197	SERVO MOTOR EP 165-090-66T3B	3-13, 3-15
M5503	90459-4147	GEARS, WORM MOTOR IGK 80-40 VE31-D-L-2-S	2-103

Pos	Part No	Description	Page No
M			
M6201	90459-6951	GEARS,WORM MOTOR MC 320P2T/15/B5S-SRD057	8-55
M6202	90459-6950	GEARS, WORM MOTOR MC320P2T/15/B5D-SRD057	8-55
M7208	90459-2826	GEARS, HELICAL MOTOR ME0102210012	8-79
M7217	90459-2096	GEARS, WORM MOTOR F2 15 P63 B14 B8 PV 75	8-141
O			
O2530	90304-0020	RECIPIENTE	6-23
P			
P1-06	90166-0013	TUBE 8 MM PA BLUE	2-35, 2-37
P1-02	90166-0195	TUBE 12 MM PA BLUE	2-35
P1-03	90166-0195	TUBE 12 MM PA BLUE	2-35
P1-04	90166-0195	TUBE 12 MM PA BLUE	2-35
P1-05	90166-0195	TUBE 12 MM PA BLUE	2-35
P1-ASU1	90166-0195	TUBE 12 MM PA BLUE	2-35
P1-ASU2	90166-0195	TUBE 12 MM PA BLUE	2-35
P1-S	90166-0195	TUBE 12 MM PA BLUE	2-35
P1-02	90166-0195	TUBE 12 MM PA BLUE	2-37
P1-03	90166-0195	TUBE 12 MM PA BLUE	2-37
P1-04	90166-0195	TUBE 12 MM PA BLUE	2-37
P1-05	90166-0195	TUBE 12 MM PA BLUE	2-37
P1-ASU1	90166-0195	TUBE 12 MM PA BLUE	2-37
P1-ASU2	90166-0195	TUBE 12 MM PA BLUE	2-37
P1-S	90166-0195	TUBE 12 MM PA BLUE	2-37
P1	90166-0196	TUBE 14MM PA BLUE	2-35
P1-01	90166-0196	TUBE 14MM PA BLUE	2-35
P1	90166-0196	TUBE 14MM PA BLUE	2-37
P1-01	90166-0196	TUBE 14MM PA BLUE	2-37
P1_01	90166-0068	TUBE 12 MM PA BLUE	1-219, 1-221
P1_08	90166-0068	TUBE 12 MM PA BLUE	1-219, 1-221
P2	90166-0013	TUBE 8 MM PA BLUE	1-219, 1-221
P2-14	90166-0081	TUBE 6 MM PA BLUE	2-35, 2-37
P2-S012	90166-0081	TUBE 6 MM PA BLUE	2-127
P2-03	90166-0195	TUBE 12 MM PA BLUE	2-35
P2-S	90166-0195	TUBE 12 MM PA BLUE	2-35
P2-S02	90166-0195	TUBE 12 MM PA BLUE	2-35
P2-03	90166-0195	TUBE 12 MM PA BLUE	2-37
P2-S	90166-0195	TUBE 12 MM PA BLUE	2-37
P2-S02	90166-0195	TUBE 12 MM PA BLUE	2-37
P2-S01	90166-0195	TUBE 12 MM PA BLUE	2-127
P2-S011	90166-0195	TUBE 12 MM PA BLUE	2-127
P2	90166-0196	TUBE 14MM PA BLUE	2-35
P2-01	90166-0196	TUBE 14MM PA BLUE	2-35
P2-02	90166-0196	TUBE 14MM PA BLUE	2-35
P2	90166-0196	TUBE 14MM PA BLUE	2-37
P2-01	90166-0196	TUBE 14MM PA BLUE	2-37
P2-02	90166-0196	TUBE 14MM PA BLUE	2-37
P002	90459-0080	RECORDER 6-CHANNEL, LOGOPRINT 500	7-87, 7-89
P100	90070-0017	WORKING HOURS COUNTER, 7991 DR H?NLE	7-87, 7-89
P100:1	359241-0201	SIGN: " HOUR METER"	7-87, 7-89
P101	90053-0029	COUNTER, F524.800FA3C 24VDC	7-87, 7-89
P101:1	359241-0482	SIGN "PACKAGE COUNTER"	7-87, 7-89
Q			
Q001	90459-5323	OVERLOAD PROTECTION, PKZM0-1	7-55
Q002	90459-5324	OVERLOAD PROTECTION, PKZM0-1,6	7-55
Q003	90459-5330	OVERLOAD PROTECTION, PKZM0-16	7-55
Q005	90459-5326	OVERLOAD PROTECTION, PKZM0-4	7-55
Q009	90459-5321	OVERLOAD PROTECTION, PKZM0-0,4	7-55
Q015	90459-5323	OVERLOAD PROTECTION, PKZM0-1	7-61
Q016	90459-5324	OVERLOAD PROTECTION, PKZM0-1,6	7-55
Q020	90459-5328	OVERLOAD PROTECTION, PKZM0-10	7-55
Q022	90459-5325	OVERLOAD PROTECTION, PKZM0-2,5	7-55
Q023	90459-5325	OVERLOAD PROTECTION, PKZM0-2,5	7-61
Q024	90459-5332	OVERLOAD PROTECTION, PKZM0-25	7-61
Q122	90459-5323	OVERLOAD PROTECTION, PKZM0-1	7-55
R			
R807	90121-0120	RESISTANCE FIXED, 0,25 KOHM, 0,125 W	7-87, 7-89
R808	90121-0120	RESISTANCE FIXED, 0,25 KOHM, 0,125 W	7-87, 7-89
R809	90121-0120	RESISTANCE FIXED, 0,25 KOHM, 0,125 W	7-87, 7-89
R1105	449939-0001	HEATING ELEMENT 15KW	1-153
R1206	90206-0070	HEATING ELEMENT 6000W 380/220V	1-183
R1207	90206-0070	HEATING ELEMENT 6000W 380/220V	1-183
R1208	90206-0070	HEATING ELEMENT 6000W 380/220V	1-187
R1209	90206-0070	HEATING ELEMENT 6000W 380/220V	1-187
R5307	90206-0132	HOT AIR ELEMENT	5-23, 5-25
R5308	90206-0132	HOT AIR ELEMENT	5-23, 5-25
R5309	90206-0132	HOT AIR ELEMENT	5-23, 5-25
R5310	90206-0132	HOT AIR ELEMENT	5-23, 5-25
R6203	1498047-0000	SEALING BLOCK	8-61
R6204	1524481-0000	SEALING BLOCK	8-67
R7304	90459-2843	HEATING CARTRIDGE, 800W 240V	8-81
R9100	2685342-0000	HEATING ELEMENT	1-139
S			
S001	90458-1651	EMERGENCY STOP, ZB4-BS-844 ZB4-BZ-104	7-21

Pos	Part No	Description	Page No
S			
S003	90111-0122	KEY SWITCH, 2 NO CONTACTS	7-87, 7-89
S003:1	359241-0133	SIGN: " SERVICE SWITCH"	7-87, 7-89
S004	90111-0124	KEY SWITCH, 1NO,1NC CONTACT	7-87, 7-89
S004:1	359241-0122	SIGN: " CLEANING STEAM BARRIER SPACE"	7-87, 7-89
S005	90458-1651	EMERGENCY STOP, ZB4-BS-844 ZB4-BZ-104	7-21
SPARE 8	90042-0538	PILOT VALVE L=500MM	1-217
SPARE10	90042-0538	PILOT VALVE L=500MM	1-217
SPARE11	90042-0538	PILOT VALVE L=500MM	1-217
S900	90458-1651	EMERGENCY STOP, ZB4-BS-844 ZB4-BZ-104	2-31
S901	90064-0082	PUSH BUTTON, WHITE	2-31
S901:1	359301-0519	SIGN "TPOP RESET"	2-31
S902	90064-0082	PUSH BUTTON, WHITE	2-31
S902:1	359301-0130	BUTTON SIGN, LAMP TEST	2-31
S903	90111-0120	SWITCH, 2 POS.704.510 .0A+704.901.5/A	2-31
S904	90064-0082	PUSH BUTTON, WHITE	2-31
S904:1	359301-0170	BUTTON SIGN, SPOOLING OF FINAL FOLDER	2-31
S905	90064-0098	PUSH BUTTON, CLEAR	2-31
S905:1	359301-0091	BUTTON SIGN, INCHING FINAL FOLDER	2-31
S906	90064-0082	PUSH BUTTON, WHITE	2-31
S906:1	359301-0050	BUTTON SIGN, DROP CHUTE BRIK	2-31
S907	90064-0098	PUSH BUTTON, CLEAR	2-31
S907:1	359301-0090	BUTTON SIGN, INCHING	2-31
S908	90064-0084	PUSH BUTTON, YELLOW	2-31
S908:1	359301-0110	BUTTON SIGN, SHORT STOP	2-31
S909	90064-0086	PUSH BUTTON, WHITE	2-31
S909:1	359301-0160	BUTTON SIGN, DRAINAGE OF PRODUCT TUBE	2-31
S911	90064-0093	PUSH BUTTON, GREEN	2-31
S911:1	359301-0001	BUTTON SIGN, UP	2-31
S912	90064-0082	PUSH BUTTON, WHITE	2-31
S912:1	359301-0005	BUTTON SIGN, DOWN	2-31
S1003	90064-0085	PUSH BUTTON, RED	1-237, 1-239
S1802	90064-0124	SWITCH, EM. STOP, ZB2-BS844+ZB2-BZ1045	1-237, 1-239
S2803	90458-1651	EMERGENCY STOP, ZB4-BS-844 ZB4-BZ-104	2-111
S2804	90458-1651	EMERGENCY STOP, ZB4-BS-844 ZB4-BZ-104	2-111
S6206	90064-0082	PUSH BUTTON, WHITE	8-155
S7303	90064-0082	PUSH BUTTON, WHITE	8-167
S7402	90064-0082	PUSH BUTTON, WHITE	8-167
S7403	90064-0082	PUSH BUTTON, WHITE	8-167
S7408	90235-0206	QUICK EXHAUST VALVE, SEU-1/8	8-83
S7410	90235-0206	QUICK EXHAUST VALVE, SEU-1/8	8-83
S7701	90064-0084	PUSH BUTTON, YELLOW	8-155
S7812	90458-1651	EMERGENCY STOP, ZB4-BS-844 ZB4-BZ-104	8-157
S7813	90458-1651	EMERGENCY STOP, ZB4-BS-844 ZB4-BZ-104	8-167
S7814	90044-0084	LIMIT SW. 14 CE1-4	1-87, 1-89, 1-97, 1-99
T			
T1231	90113-0095	PRESSURE REGULATOR	1-209, 1-211
T1304	90245-0043	TRANSFORMER, Z-8782	1-95
T1326	90113-0097	PRESSURE REGULATOR	1-209, 1-211
T1402	67379-0408	TRANSFORMER	1-41
T1402	67379-0415	TRANSFORMER	1-41
T1402	67379-0416	TRANSFORMER	1-41
T1501	90113-0096	PRESSURE REGULATOR	1-209, 1-211
T1502	90113-0095	PRESSURE REGULATOR	1-209, 1-211
T6101	67380-0207	TRANSFORMER	8-11
T6203	90458-0258	TRANSFORMER, 220VAC/6-9-12VAC	8-109, 8-111, 8-113, 8-115, 8-117
T9114	90113-0095	PRESSURE REGULATOR	1-209, 1-211
V			
V17	90600-2135	MODULE CONNECTOR 250V, BEST/D 1878560000	7-49
V18	90600-2135	MODULE CONNECTOR 250V, BEST/D 1878560000	7-49
W			
W0001	351150-0426	CABLE OLFLEX 5X25 MM2 LIGHT/GREY	2-13, 2-15
W100	90031-0305	I/O EXPANSION CABLE	7-45, 7-47
W101	90031-0305	I/O EXPANSION CABLE	7-45, 7-47
W102	90031-0305	I/O EXPANSION CABLE	7-45, 7-47
W103	90031-0305	I/O EXPANSION CABLE	7-45, 7-47
W120	90220-0183	SCR. CABLE 2X0,34MM2	7-23, 7-25, 7-27, 7-29, 7-31
W121	90220-0183	SCR. CABLE 2X0,34MM2	7-23, 7-25, 7-27, 7-29, 7-31
W122	90220-0183	SCR. CABLE 2X0,34MM2	7-23, 7-25, 7-27, 7-29, 7-31
W123	90220-0183	SCR. CABLE 2X0,34MM2	7-23, 7-25, 7-27, 7-29, 7-31
W124	90220-0183	SCR. CABLE 2X0,34MM2	7-23, 7-25, 7-27, 7-29, 7-31
W125	90220-0183	SCR. CABLE 2X0,34MM2	7-23, 7-25, 7-27, 7-29, 7-31
W126	90220-0183	SCR. CABLE 2X0,34MM2	7-23, 7-25, 7-27, 7-29, 7-31
W127	90220-0183	SCR. CABLE 2X0,34MM2	7-23, 7-25, 7-27, 7-29, 7-31
W128	90220-0183	SCR. CABLE 2X0,34MM2	7-23, 7-25, 7-27, 7-29, 7-31
W129	90220-0183	SCR. CABLE 2X0,34MM2	7-23, 7-25, 7-27, 7-29, 7-31
W130	90220-0183	SCR. CABLE 2X0,34MM2	7-23, 7-25, 7-27, 7-29, 7-31
W131	90220-0183	SCR. CABLE 2X0,34MM2	7-23, 7-25, 7-27, 7-29, 7-31
W132	90220-0183	SCR. CABLE 2X0,34MM2	7-23, 7-25, 7-27, 7-29, 7-31
W133	90220-0183	SCR. CABLE 2X0,34MM2	7-23, 7-25, 7-27, 7-29, 7-31
W134	90220-0183	SCR. CABLE 2X0,34MM2	7-23, 7-25, 7-27, 7-29, 7-31
W136	90220-0183	SCR. CABLE 2X0,34MM2	7-23, 7-25, 7-27, 7-29, 7-31
W137	90220-0091	PAIR TWISTED CABLE 2X2X0,25MM2	7-23, 7-25, 7-27, 7-29, 7-31

Pos	Part No	Description	Page No
W			
W138	90220-0183	SCR. CABLE 2X0,34MM2	7-23, 7-25, 7-27, 7-29, 7-31
W151	90220-0183	SCR. CABLE 2X0,34MM2	7-87, 7-89
W152	90220-0183	SCR. CABLE 2X0,34MM2	7-87, 7-89
W173	1512322-0000	COPPER BRAID	7-45, 7-47
W174	1512322-0000	COPPER BRAID	7-45, 7-47
W175	1512322-0000	COPPER BRAID	7-45, 7-47
W176	1512322-0000	COPPER BRAID	7-45, 7-47
W177	1512322-0000	COPPER BRAID	7-45, 7-47
W178	1512322-0000	COPPER BRAID	7-45, 7-47
W190	90220-0183	SCR. CABLE 2X0,34MM2	7-23, 7-25, 7-27, 7-29, 7-31
W191	90220-0183	SCR. CABLE 2X0,34MM2	7-23, 7-25, 7-27, 7-29, 7-31
W192	90220-0183	SCR. CABLE 2X0,34MM2	7-23, 7-25, 7-27, 7-29, 7-31
W201	90220-0104	SCR. CABLE 4X1,5MM2	7-23, 7-25, 7-27, 7-29, 7-31
W202	90220-0104	SCR. CABLE 4X1,5MM2	7-23, 7-25, 7-27, 7-29, 7-31
W203	90220-0104	SCR. CABLE 4X1,5MM2	7-23, 7-25, 7-27, 7-29, 7-31
W204	90220-0104	SCR. CABLE 4X1,5MM2	7-23, 7-25, 7-27, 7-29, 7-31
W205	90220-0104	SCR. CABLE 4X1,5MM2	7-23, 7-25, 7-27, 7-29, 7-31
W400	1512322-0000	COPPER BRAID	7-45, 7-47
W424	90220-0107	SCR. CABLE 5X0,75MM2	7-23, 7-25, 7-27, 7-29, 7-31
W425	90220-0107	SCR. CABLE 5X0,75MM2	7-23, 7-25, 7-27, 7-29, 7-31
W440	90220-0107	SCR. CABLE 5X0,75MM2	7-23, 7-25, 7-27, 7-29, 7-31
W441	90220-0107	SCR. CABLE 5X0,75MM2	7-23, 7-25, 7-27, 7-29, 7-31
W450	1254442-0000	CABLE SERIAL	7-87, 7-89
W451	90459-1621	CABLE, ETHERNET RJ 45 CONNECT. 1 M	7-87, 7-89
W452	351501-0030	ETHERNET PATCH CABLE, FL CAT5 PATCH 3,0	7-87, 7-89
W501	90458-2895	COAXIAL CABLE RG 400/U BROWN	1-161, 1-163, 1-165
W503	90458-2895	COAXIAL CABLE RG 400/U BROWN	4-23
W504	90458-2895	COAXIAL CABLE RG 400/U BROWN	4-23
W549	90220-0084	MOTOR CABLE 4X2,5+2(2X0.75)+SHIELD	7-23, 7-25, 7-27, 7-29, 7-31
W550	90220-0084	MOTOR CABLE 4X2,5+2(2X0.75)+SHIELD	7-23, 7-25, 7-27, 7-29, 7-31
W551	90220-0084	MOTOR CABLE 4X2,5+2(2X0.75)+SHIELD	7-23, 7-25, 7-27, 7-29, 7-31
W552	90220-0084	MOTOR CABLE 4X2,5+2(2X0.75)+SHIELD	7-23, 7-25, 7-27, 7-29, 7-31
W553	90220-0116	MOTOR CABLE 4X1,0+2(2X0,5)+SHIELD	7-23, 7-25, 7-27, 7-29, 7-31
W1001	351150-0425	CABLE OLFLEX 25X0,75 MM2 LIGHT/GREY	1-235
W1002	351150-0425	CABLE OLFLEX 25X0,75 MM2 LIGHT/GREY	1-235
W1003	351150-0425	CABLE OLFLEX 25X0,75 MM2 LIGHT/GREY	1-237, 1-239
W1004	351150-0425	CABLE OLFLEX 25X0,75 MM2 LIGHT/GREY	1-237, 1-239
W1005	351150-0425	CABLE OLFLEX 25X0,75 MM2 LIGHT/GREY	1-235
W1006	351150-0407	CABLE OLFLEX 12X0,75 MM2 LIGHT/GREY	1-237, 1-239
W1007	351150-0425	CABLE OLFLEX 25X0,75 MM2 LIGHT/GREY	1-237, 1-239
W1011	351150-0405	CABLE OLFLEX 5X0,75 MM2 LIGHT/GREY	1-237, 1-239
W1015	351150-0403	CABLE OLFLEX 3X0,75 MM2 LIGHT/GREY	1-235
W1018	351150-0403	CABLE OLFLEX 3X0,75 MM2 LIGHT/GREY	1-235
W1019	351150-0403	CABLE OLFLEX 3X0,75 MM2 LIGHT/GREY	1-235
W1024	351150-0405	CABLE OLFLEX 5X0,75 MM2 LIGHT/GREY	1-237, 1-239
W1027	351150-0403	CABLE OLFLEX 3X0,75 MM2 LIGHT/GREY	1-237, 1-239
W1028	351150-0403	CABLE OLFLEX 3X0,75 MM2 LIGHT/GREY	1-237, 1-239
W1029	351150-0404	CABLE OLFLEX 4X0,75 MM2 LIGHT/GREY	1-237, 1-239
W1030	351150-0403	CABLE OLFLEX 3X0,75 MM2 LIGHT/GREY	1-237, 1-239
W1031	351150-0403	CABLE OLFLEX 3X0,75 MM2 LIGHT/GREY	1-237, 1-239
W1044	351150-0405	CABLE OLFLEX 5X0,75 MM2 LIGHT/GREY	1-237, 1-239
W1045	351150-0405	CABLE OLFLEX 5X0,75 MM2 LIGHT/GREY	1-237, 1-239
W1046	351150-0405	CABLE OLFLEX 5X0,75 MM2 LIGHT/GREY	1-237, 1-239
W1048	351150-0405	CABLE OLFLEX 5X0,75 MM2 LIGHT/GREY	1-237, 1-239
W1049	351150-0403	CABLE OLFLEX 3X0,75 MM2 LIGHT/GREY	1-161, 1-163, 1-165
W1051	90220-0092	PAIR TWISTED CABLE 3X2X0,25MM2	1-161, 1-163, 1-165
W1052	351150-0404	CABLE OLFLEX 4X0,75 MM2 LIGHT/GREY	1-237, 1-239
W1053	90220-0092	PAIR TWISTED CABLE 3X2X0,25MM2	1-237, 1-239
W1056	90459-4705	LOCKING PLUG, S 103 A 053-130+ AND 90220	1-91
W1058	351150-0403	CABLE OLFLEX 3X0,75 MM2 LIGHT/GREY	1-237, 1-239
W1065	351150-0403	CABLE OLFLEX 3X0,75 MM2 LIGHT/GREY	1-237, 1-239
W1068	351150-0405	CABLE OLFLEX 5X0,75 MM2 LIGHT/GREY	1-161, 1-163, 1-165
W1084	90220-0107	SCR. CABLE 5X0,75MM2	1-237, 1-239
W1103	90220-0183	SCR. CABLE 2X0,34MM2	1-237, 1-239
W1206	351150-0425	CABLE OLFLEX 25X0,75 MM2 LIGHT/GREY	2-129
W1207	351150-0407	CABLE OLFLEX 12X0,75 MM2 LIGHT/GREY	2-13, 2-15
W1232	351150-0403	CABLE OLFLEX 3X0,75 MM2 LIGHT/GREY	1-237, 1-239
W1233	351150-0403	CABLE OLFLEX 3X0,75 MM2 LIGHT/GREY	1-237, 1-239
W1256	90220-0183	SCR. CABLE 2X0,34MM2	7-23, 7-25, 7-27, 7-29, 7-31
W1300	90220-0034	THERMOCABLE TEX/SITW-20F-KX 2X0,5MM2	1-161, 1-163, 1-165
W1301	90220-0034	THERMOCABLE TEX/SITW-20F-KX 2X0,5MM2	1-161, 1-163, 1-165
W1302	90220-0034	THERMOCABLE TEX/SITW-20F-KX 2X0,5MM2	1-161, 1-163, 1-165
W1303	90220-0034	THERMOCABLE TEX/SITW-20F-KX 2X0,5MM2	1-187
W1304	90220-0034	THERMOCABLE TEX/SITW-20F-KX 2X0,5MM2	2-13, 2-15
W1305	90220-0034	THERMOCABLE TEX/SITW-20F-KX 2X0,5MM2	1-161, 1-163, 1-165
W1306	90220-0034	THERMOCABLE TEX/SITW-20F-KX 2X0,5MM2	1-161, 1-163, 1-165
W1307	90220-0034	THERMOCABLE TEX/SITW-20F-KX 2X0,5MM2	1-161, 1-163, 1-165
W1330	90459-0253	SENSOR CABLE S12-3FVW-050	1-87, 1-89, 1-97, 1-99
W1402	2863176-0000	BUSBAR	1-39
W1500	351150-0418	CABLE OLFLEX 4X2,5 MM2 LIGHT/GREY	1-161, 1-163, 1-165
W1501	351120-0168	CABLE SIHF 4X10MM2 GREEN/YELLOW	1-161, 1-163, 1-165
W1502	351120-0165	CABLE SIHF 4X2,5MM2 GREEN/YELLOW	1-161, 1-163, 1-165

Pos	Part No	Description	Page No
W			
W1503	351120-0165	CABLE SIHF 4X2,5MM2 GREEN/YELLOW	1-161, 1-163, 1-165
W2001	351150-0418	CABLE OLFLEX 4X2,5 MM2 LIGHT/GREY	1-161, 1-163, 1-165
W2002	351150-0418	CABLE OLFLEX 4X2,5 MM2 LIGHT/GREY	2-13, 2-15, 2-95
W2003	351150-0166	CABLE OLFLEX 4X4 MM2 LIGHT/GREY	2-13, 2-15
W2004	90220-0107	SCR. CABLE 5X0,75MM2	2-13, 2-15
W2005	351150-0412	CABLE OLFLEX 3X1,5 MM2 LIGHT/GREY	2-13, 2-15
W2007	351150-0418	CABLE OLFLEX 4X2,5 MM2 LIGHT/GREY	2-13, 2-15
W2008	351150-0418	CABLE OLFLEX 4X2,5 MM2 LIGHT/GREY	2-13, 2-15
W2014	351150-0418	CABLE OLFLEX 4X2,5 MM2 LIGHT/GREY	2-13, 2-15, 2-103
W2017	351150-0419	CABLE OLFLEX 5X2,5 MM2 LIGHT/GREY	5-63
W2018	351150-0419	CABLE OLFLEX 5X2,5 MM2 LIGHT/GREY	5-63
W2021	90220-0034	THERMOCABLE TEX/SITW-20F-KX 2X0,5MM2	5-63
W2022	90220-0034	THERMOCABLE TEX/SITW-20F-KX 2X0,5MM2	5-63
W2023	90220-0034	THERMOCABLE TEX/SITW-20F-KX 2X0,5MM2	5-63
W2024	90220-0034	THERMOCABLE TEX/SITW-20F-KX 2X0,5MM2	5-63
W2027	90220-0095	SCR. CABLE 3X0,75MM2	6-5
W2029	90220-0104	SCR. CABLE 4X1,5MM2	1-161, 1-163, 1-165
W2031	351150-0412	CABLE OLFLEX 3X1,5 MM2 LIGHT/GREY	1-161, 1-163, 1-165
W2040	351150-0412	CABLE OLFLEX 3X1,5 MM2 LIGHT/GREY	1-187
W2041	351120-0164	CABLE SIHF 4X1,5MM2 GREEN/YELLOW	1-187
W2042	351120-0164	CABLE SIHF 4X1,5MM2 GREEN/YELLOW	1-187
W2050	351150-0425	CABLE OLFLEX 25X0,75 MM2 LIGHT/GREY	2-13, 2-15
W2054	351150-0425	CABLE OLFLEX 25X0,75 MM2 LIGHT/GREY	2-13, 2-15
W2055	90220-0034	THERMOCABLE TEX/SITW-20F-KX 2X0,5MM2	2-13, 2-15
W2056	351150-0425	CABLE OLFLEX 25X0,75 MM2 LIGHT/GREY	2-13, 2-15
W2057	351150-0425	CABLE OLFLEX 25X0,75 MM2 LIGHT/GREY	2-13, 2-15
W2060	351150-0407	CABLE OLFLEX 12X0,75 MM2 LIGHT/GREY	1-207
W2062	351150-0425	CABLE OLFLEX 25X0,75 MM2 LIGHT/GREY	2-13, 2-15
W2064	90220-0091	PAIR TWISTED CABLE 2X2X0,25MM2	2-13, 2-15
W2066	90458-2557	CABLE OLFLEX 25X1 MM2	2-13, 2-15
W2067	90458-2557	CABLE OLFLEX 25X1 MM2	2-13, 2-15
W2068	1363297-0000	CABLE LVDS 10M	2-13, 2-15
W2110	351150-0403	CABLE OLFLEX 3X0,75 MM2 LIGHT/GREY	6-65, 6-67
W2201	90042-0583	CABLE MECMAN 440-827 000-1	6-73
W 2211	351150-0412	CABLE OLFLEX 3X1,5 MM2 LIGHT/GREY	2-11
W 2213	351150-0418	CABLE OLFLEX 4X2,5 MM2 LIGHT/GREY	6-21
W 2214	351150-0418	CABLE OLFLEX 4X2,5 MM2 LIGHT/GREY	6-11
W 2220	351150-0403	CABLE OLFLEX 3X0,75 MM2 LIGHT/GREY	6-65, 6-67
W2222	351150-0403	CABLE OLFLEX 3X0,75 MM2 LIGHT/GREY	6-29
W2232	351150-0406	CABLE OLFLEX 7X0,75 MM2 LIGHT/GREY	2-13, 2-15
W2233	351150-0406	CABLE OLFLEX 7X0,75 MM2 LIGHT/GREY	2-13, 2-15
W2235	351150-0403	CABLE OLFLEX 3X0,75 MM2 LIGHT/GREY	2-47
W 2242	90220-0034	THERMOCABLE TEX/SITW-20F-KX 2X0,5MM2	6-13
W 2243	351150-0403	CABLE OLFLEX 3X0,75 MM2 LIGHT/GREY	6-65, 6-67
W 2244	351150-0412	CABLE OLFLEX 3X1,5 MM2 LIGHT/GREY	2-11
W2250	351150-0406	CABLE OLFLEX 7X0,75 MM2 LIGHT/GREY	6-25
W 2251	351150-0431	CABLE OLFLEX 2X0,75 MM2 LIGHT/GREY	6-21
W2252	351150-0431	CABLE OLFLEX 2X0,75 MM2 LIGHT/GREY	6-11
W2254	351150-0405	CABLE OLFLEX 5X0,75 MM2 LIGHT/GREY	2-111
W2255	351150-0405	CABLE OLFLEX 5X0,75 MM2 LIGHT/GREY	2-111
W2256	351150-0166	CABLE OLFLEX 4X4 MM2 LIGHT/GREY	6-35, 6-37
W2258	351150-0425	CABLE OLFLEX 25X0,75 MM2 LIGHT/GREY	6-63
W4000	90220-0084	MOTOR CABLE 4X2,5+2(2X0.75)+SHIELD	2-13, 2-15
W4001	90220-0116	MOTOR CABLE 4X1,0+2(2X0,5)+SHIELD	2-13, 2-15
W4002	90220-0084	MOTOR CABLE 4X2,5+2(2X0.75)+SHIELD	2-13, 2-15
W4003	351150-0407	CABLE OLFLEX 12X0,75 MM2 LIGHT/GREY	2-13, 2-15
W4004	351150-0425	CABLE OLFLEX 25X0,75 MM2 LIGHT/GREY	2-13, 2-15
W4005	351150-0419	CABLE OLFLEX 5X2,5 MM2 LIGHT/GREY	2-13, 2-15
W4006	351150-0419	CABLE OLFLEX 5X2,5 MM2 LIGHT/GREY	2-13, 2-15
W4010	90220-0131	PAIR TWISTED CABLE 3X2X0,25MM2	2-13, 2-15
W4011	90220-0131	PAIR TWISTED CABLE 3X2X0,25MM2	2-13, 2-15
W4012	90220-0034	THERMOCABLE TEX/SITW-20F-KX 2X0,5MM2	2-13, 2-15
W4013	90220-0034	THERMOCABLE TEX/SITW-20F-KX 2X0,5MM2	2-13, 2-15
W4014	90220-0034	THERMOCABLE TEX/SITW-20F-KX 2X0,5MM2	2-13, 2-15
W4015	90220-0034	THERMOCABLE TEX/SITW-20F-KX 2X0,5MM2	2-13, 2-15
W4016	90220-0165	SCR. CABLE 5X0,34MM2	2-13, 2-15
W4017	90220-0165	SCR. CABLE 5X0,34MM2	2-13, 2-15
W4018	351150-0407	CABLE OLFLEX 12X0,75 MM2 LIGHT/GREY	2-13, 2-15
W4019	90459-2193	CABLE, BAUMER Z169.005	4-23
W4021	351150-0407	CABLE OLFLEX 12X0,75 MM2 LIGHT/GREY	2-13, 2-15
W4022	351150-0403	CABLE OLFLEX 3X0,75 MM2 LIGHT/GREY	2-89
W4054	351150-0405	CABLE OLFLEX 5X0,75 MM2 LIGHT/GREY	2-13, 2-15
W4081	90220-0131	PAIR TWISTED CABLE 3X2X0,25MM2	2-13, 2-15
W4120	351150-0418	CABLE OLFLEX 4X2,5 MM2 LIGHT/GREY	2-129
W4240	351150-0403	CABLE OLFLEX 3X0,75 MM2 LIGHT/GREY	2-47
W4502	90220-0091	PAIR TWISTED CABLE 2X2X0,25MM2	2-13, 2-15
W5503	351150-0403	CABLE OLFLEX 3X0,75 MM2 LIGHT/GREY	2-7
W6001	90220-0105	SCR. CABLE 4X2,5MM2	2-13, 2-15
W6002	351150-0424	CABLE OLFLEX 18X0,75 MM2 LIGHT/GREY	10-115, 10-117
W6003	351150-0406	CABLE OLFLEX 7X0,75 MM2 LIGHT/GREY	10-115, 10-117
W6150	90220-0104	SCR. CABLE 4X1,5MM2	10-3
W7004	351150-0413	CABLE OLFLEX 4GX1,5 MM2 LIGHT/GREY	8-109, 8-111, 8-113, 8-115, 8-117

Pos	Part No	Description	Page No
W			
W7005	351150-0412	CABLE OLFLEX 3X1,5 MM2 LIGHT/GREY	8-109, 8-111, 8-113, 8-115, 8-117
W7006	351150-0425	CABLE OLFLEX 25X0,75 MM2 LIGHT/GREY	8-109, 8-111, 8-113, 8-115, 8-117
W7007	351150-0425	CABLE OLFLEX 25X0,75 MM2 LIGHT/GREY	8-109, 8-111, 8-113, 8-115, 8-117
W7008	351150-0425	CABLE OLFLEX 25X0,75 MM2 LIGHT/GREY	8-109, 8-111, 8-113, 8-115, 8-117
W7009	351150-0425	CABLE OLFLEX 25X0,75 MM2 LIGHT/GREY	8-109, 8-111, 8-113, 8-115, 8-117
W7010	90220-0104	SCR. CABLE 4X1,5MM2	8-91
W7011	90220-0104	SCR. CABLE 4X1,5MM2	8-141
W7014	351150-0412	CABLE OLFLEX 3X1,5 MM2 LIGHT/GREY	8-33, 8-35
W7015	90458-1076	L-SHAPED CONNECTOR CABLE 933 235-042	8-145
W7020	90458-1076	L-SHAPED CONNECTOR CABLE 933 235-042	8-135
W7023	90458-1076	L-SHAPED CONNECTOR CABLE 933 235-042	8-145
W7024	90458-1076	L-SHAPED CONNECTOR CABLE 933 235-042	8-33, 8-35
W7025	90458-1076	L-SHAPED CONNECTOR CABLE 933 235-042	8-33, 8-35
W7028	351150-0407	CABLE OLFLEX 12X0,75 MM2 LIGHT/GREY	8-155
W7029	351150-0407	CABLE OLFLEX 12X0,75 MM2 LIGHT/GREY	8-167
W7031	351150-0405	CABLE OLFLEX 5X0,75 MM2 LIGHT/GREY	8-157
W7037	351150-0415	CABLE OLFLEX 7X1,5 MM2 LIGHT/GREY	8-109, 8-111, 8-113, 8-115, 8-117
W7042	351150-0405	CABLE OLFLEX 5X0,75 MM2 LIGHT/GREY	8-33, 8-35
W7043	351150-0405	CABLE OLFLEX 5X0,75 MM2 LIGHT/GREY	8-33, 8-35
W7044	351150-0405	CABLE OLFLEX 5X0,75 MM2 LIGHT/GREY	8-33, 8-35
W7045	351150-0431	CABLE OLFLEX 2X0,75 MM2 LIGHT/GREY	8-33, 8-35
W7046	351120-0126	CABLE SILFLEX SIHF 2X4 0046025	8-61
W7047	2540595-0008	COAXIAL CABLE	8-11
W7049	351120-0145	CABLE SILFLEX SIHF 3X2,5 0046020	8-67
W7050	90220-0092	PAIR TWISTED CABLE 3X2X0,25MM2	8-65
W7054	351150-0406	CABLE OLFLEX 7X0,75 MM2 LIGHT/GREY	8-33, 8-35
W7055	351150-0412	CABLE OLFLEX 3X1,5 MM2 LIGHT/GREY	8-33, 8-35
W7072	90220-0104	SCR. CABLE 4X1,5MM2	8-55
W7073	90220-0104	SCR. CABLE 4X1,5MM2	8-55
W7076	90220-0104	SCR. CABLE 4X1,5MM2	8-109, 8-111, 8-113, 8-115, 8-117
W7077	351150-0405	CABLE OLFLEX 5X0,75 MM2 LIGHT/GREY	8-33, 8-35
W7304	90220-0034	THERMOCABLE TEX/SITW-20F-KX 2X0,5MM2	8-81
W9100:1	90459-3165	CABLE OLFLON PTFE 1X4,72 MM² BLACK	1-139
W9100:2	90459-3165	CABLE OLFLON PTFE 1X4,72 MM² BLACK	1-139
W9100:3	90459-3154	CABLE OLFLONPTFE 1X4,72 MM² YELLOW-GREEN	1-139
W9101	351150-0403	CABLE OLFLEX 3X0,75 MM2 LIGHT/GREY	1-207
W9103	351150-0403	CABLE OLFLEX 3X0,75 MM2 LIGHT/GREY	1-207
W9104	351150-0403	CABLE OLFLEX 3X0,75 MM2 LIGHT/GREY	1-207
W9105	90220-0072	SCR. CABLE 4X0,34MM2	1-207
W9106	90220-0034	THERMOCABLE TEX/SITW-20F-KX 2X0,5MM2	1-161, 1-163, 1-165
W9112	351150-0403	CABLE OLFLEX 3X0,75 MM2 LIGHT/GREY	1-61, 1-63
W9113	351150-0404	CABLE OLFLEX 4X0,75 MM2 LIGHT/GREY	1-61, 1-63
W9114	351150-0403	CABLE OLFLEX 3X0,75 MM2 LIGHT/GREY	1-61, 1-63
W9115	90220-0034	THERMOCABLE TEX/SITW-20F-KX 2X0,5MM2	1-161, 1-163, 1-165
W9116	90220-0034	THERMOCABLE TEX/SITW-20F-KX 2X0,5MM2	1-161, 1-163, 1-165
W9117	90220-0072	SCR. CABLE 4X0,34MM2	1-207
W9118	90220-0183	SCR. CABLE 2X0,34MM2	1-207
W9119	90220-0183	SCR. CABLE 2X0,34MM2	1-207
W9120	351150-0403	CABLE OLFLEX 3X0,75 MM2 LIGHT/GREY	1-207
X			
X001	90459-0959	DISTRIBUTOR BLOCK 1492-PD3163	7-67
X011	90001-0033	WALL SOCKET, E1834666	7-87, 7-89
X021	90458-1279	PLUG CONNECTOR DP1	7-43
X025	90326-0020	PLUG, FEMALE YELLOW CR-AL	7-9
X101	90110-0159	MALE INSERT 70.310.0640.0	2-13, 2-15
X101	90459-6624	FEMALE INSERT HAN E AV, 09 33 006 4735	7-23, 7-25, 7-27, 7-29, 7-31
X102	90110-0159	MALE INSERT 70.310.0640.0	2-13, 2-15
X102	90459-6624	FEMALE INSERT HAN E AV, 09 33 006 4735	7-23, 7-25, 7-27, 7-29, 7-31
X103	90110-0159	MALE INSERT 70.310.0640.0	2-13, 2-15
X103	90459-6624	FEMALE INSERT HAN E AV, 09 33 006 4735	7-23, 7-25, 7-27, 7-29, 7-31
X105	90110-0159	MALE INSERT 70.310.0640.0	1-161, 1-163, 1-165
X107	90110-0159	MALE INSERT 70.310.0640.0	2-13, 2-15
X107	90459-6624	FEMALE INSERT HAN E AV, 09 33 006 4735	7-23, 7-25, 7-27, 7-29, 7-31
X108	90110-0159	MALE INSERT 70.310.0640.0	2-13, 2-15
X108	90459-6624	FEMALE INSERT HAN E AV, 09 33 006 4735	7-23, 7-25, 7-27, 7-29, 7-31
X110	90110-0159	MALE INSERT 70.310.0640.0	1-161, 1-163, 1-165
X110	90459-6624	FEMALE INSERT HAN E AV, 09 33 006 4735	7-23, 7-25, 7-27, 7-29, 7-31
X111	90110-0159	MALE INSERT 70.310.0640.0	2-13, 2-15
X111	90459-6624	FEMALE INSERT HAN E AV, 09 33 006 4735	7-23, 7-25, 7-27, 7-29, 7-31
X112	90110-0159	MALE INSERT 70.310.0640.0	2-13, 2-15
X112	90459-6624	FEMALE INSERT HAN E AV, 09 33 006 4735	7-23, 7-25, 7-27, 7-29, 7-31
X113	90110-0159	MALE INSERT 70.310.0640.0	2-13, 2-15
X113	90459-6624	FEMALE INSERT HAN E AV, 09 33 006 4735	7-23, 7-25, 7-27, 7-29, 7-31
X115	90110-0159	MALE INSERT 70.310.0640.0	2-13, 2-15
X115	90459-6624	FEMALE INSERT HAN E AV, 09 33 006 4735	7-23, 7-25, 7-27, 7-29, 7-31
X116	90110-0159	MALE INSERT 70.310.0640.0	2-13, 2-15
X116	90459-6624	FEMALE INSERT HAN E AV, 09 33 006 4735	7-23, 7-25, 7-27, 7-29, 7-31
X117	90110-0159	MALE INSERT 70.310.0640.0	2-13, 2-15
X117	90459-6624	FEMALE INSERT HAN E AV, 09 33 006 4735	7-23, 7-25, 7-27, 7-29, 7-31
X118	90110-0159	MALE INSERT 70.310.0640.0	8-109, 8-111, 8-113, 8-115, 8-117
X118	90459-6624	FEMALE INSERT HAN E AV, 09 33 006 4735	7-23, 7-25, 7-27, 7-29, 7-31
X119	90110-0159	MALE INSERT 70.310.0640.0	1-161, 1-163, 1-165

Pos	Part No	Description	Page No
X			
X119	90459-6624	FEMALE INSERT HAN E AV, 09 33 006 4735	7-23, 7-25, 7-27, 7-29, 7-31
X122	90459-6624	FEMALE INSERT HAN E AV, 09 33 006 4735	7-23, 7-25, 7-27, 7-29, 7-31
X122:1	90110-0159	MALE INSERT 70.310.0640.0	2-129
X125	90110-0159	MALE INSERT 70.310.0640.0	2-13, 2-15
X125	90459-6624	FEMALE INSERT HAN E AV, 09 33 006 4735	7-23, 7-25, 7-27, 7-29, 7-31
X126	90110-0159	MALE INSERT 70.310.0640.0	8-91
X126	90459-6624	FEMALE INSERT HAN E AV, 09 33 006 4735	7-23, 7-25, 7-27, 7-29, 7-31
X127	90459-6624	FEMALE INSERT HAN E AV, 09 33 006 4735	7-23, 7-25, 7-27, 7-29, 7-31
X129	90110-0159	MALE INSERT 70.310.0640.0	1-161, 1-163, 1-165
X129	90459-6624	FEMALE INSERT HAN E AV, 09 33 006 4735	7-23, 7-25, 7-27, 7-29, 7-31
X130	90110-0159	MALE INSERT 70.310.0640.0	1-161, 1-163, 1-165
X130	90459-6624	FEMALE INSERT HAN E AV, 09 33 006 4735	7-23, 7-25, 7-27, 7-29, 7-31
X131	90110-0159	MALE INSERT 70.310.0640.0	1-161, 1-163, 1-165
X131	90459-6624	FEMALE INSERT HAN E AV, 09 33 006 4735	7-23, 7-25, 7-27, 7-29, 7-31
X132	90110-0159	MALE INSERT 70.310.0640.0	8-109, 8-111, 8-113, 8-115, 8-117
X132	90459-6624	FEMALE INSERT HAN E AV, 09 33 006 4735	7-23, 7-25, 7-27, 7-29, 7-31
X133	90110-0159	MALE INSERT 70.310.0640.0	8-109, 8-111, 8-113, 8-115, 8-117
X133	90459-6624	FEMALE INSERT HAN E AV, 09 33 006 4735	7-23, 7-25, 7-27, 7-29, 7-31
X134	90110-0159	MALE INSERT 70.310.0640.0	10-3
X134	90459-6624	FEMALE INSERT HAN E AV, 09 33 006 4735	7-23, 7-25, 7-27, 7-29, 7-31
X135	90110-0159	MALE INSERT 70.310.0640.0	1-161, 1-163, 1-165
X135	90459-6624	FEMALE INSERT HAN E AV, 09 33 006 4735	7-23, 7-25, 7-27, 7-29, 7-31
X136	90110-0159	MALE INSERT 70.310.0640.0	1-161, 1-163, 1-165
X136	90459-6624	FEMALE INSERT HAN E AV, 09 33 006 4735	7-23, 7-25, 7-27, 7-29, 7-31
X137	90110-0159	MALE INSERT 70.310.0640.0	1-161, 1-163, 1-165
X137	90459-6624	FEMALE INSERT HAN E AV, 09 33 006 4735	7-23, 7-25, 7-27, 7-29, 7-31
X138	90110-0159	MALE INSERT 70.310.0640.0	1-161, 1-163, 1-165
X138	90459-6624	FEMALE INSERT HAN E AV, 09 33 006 4735	7-23, 7-25, 7-27, 7-29, 7-31
X140	90458-2890	CONNECTOR, 21N-50N12N133NE	1-161, 1-163, 1-165
X203	90459-6627	FEMALE INSERT HAN E AV, 09 33 024 4735	7-23, 7-25, 7-27, 7-29, 7-31
X206	90459-6627	FEMALE INSERT HAN E AV, 09 33 024 4735	7-23, 7-25, 7-27, 7-29, 7-31
X206:1	90110-0150	MALE INSERT 121110 0000	2-129
X207	90459-6627	FEMALE INSERT HAN E AV, 09 33 024 4735	7-23, 7-25, 7-27, 7-29, 7-31
X207:1	90110-0150	MALE INSERT 121110 0000	2-13, 2-15
X210	90110-0150	MALE INSERT 121110 0000	1-161, 1-163, 1-165
X210	90459-6627	FEMALE INSERT HAN E AV, 09 33 024 4735	7-23, 7-25, 7-27, 7-29, 7-31
X211	90459-6627	FEMALE INSERT HAN E AV, 09 33 024 4735	7-23, 7-25, 7-27, 7-29, 7-31
X212	90110-0150	MALE INSERT 121110 0000	1-161, 1-163, 1-165
X212	90459-6627	FEMALE INSERT HAN E AV, 09 33 024 4735	7-23, 7-25, 7-27, 7-29, 7-31
X213	90110-0150	MALE INSERT 121110 0000	2-13, 2-15
X213	90459-6627	FEMALE INSERT HAN E AV, 09 33 024 4735	7-23, 7-25, 7-27, 7-29, 7-31
X214	90110-0150	MALE INSERT 121110 0000	2-13, 2-15
X214	90459-6627	FEMALE INSERT HAN E AV, 09 33 024 4735	7-23, 7-25, 7-27, 7-29, 7-31
X215	90110-0150	MALE INSERT 121110 0000	2-13, 2-15
X215	90459-6627	FEMALE INSERT HAN E AV, 09 33 024 4735	7-23, 7-25, 7-27, 7-29, 7-31
X216	90110-0150	MALE INSERT 121110 0000	2-13, 2-15
X216	90459-6627	FEMALE INSERT HAN E AV, 09 33 024 4735	7-23, 7-25, 7-27, 7-29, 7-31
X217	90110-0150	MALE INSERT 121110 0000	1-161, 1-163, 1-165
X217	90459-6627	FEMALE INSERT HAN E AV, 09 33 024 4735	7-23, 7-25, 7-27, 7-29, 7-31
X218	90110-0150	MALE INSERT 121110 0000	1-161, 1-163, 1-165
X218	90459-6627	FEMALE INSERT HAN E AV, 09 33 024 4735	7-23, 7-25, 7-27, 7-29, 7-31
X219	90110-0150	MALE INSERT 121110 0000	2-13, 2-15
X219	90459-6627	FEMALE INSERT HAN E AV, 09 33 024 4735	7-23, 7-25, 7-27, 7-29, 7-31
X220	90110-0150	MALE INSERT 121110 0000	2-13, 2-15, 8-109, 8-111, 8-113, 8-115, 8-117
X220	90459-6627	FEMALE INSERT HAN E AV, 09 33 024 4735	7-23, 7-25, 7-27, 7-29, 7-31
X221	90110-0150	MALE INSERT 121110 0000	8-109, 8-111, 8-113, 8-115, 8-117
X221	90459-6627	FEMALE INSERT HAN E AV, 09 33 024 4735	7-23, 7-25, 7-27, 7-29, 7-31
X222	90110-0150	MALE INSERT 121110 0000	2-13, 2-15
X222	90459-6627	FEMALE INSERT HAN E AV, 09 33 024 4735	7-23, 7-25, 7-27, 7-29, 7-31
X223	90110-0150	MALE INSERT 121110 0000	1-161, 1-163, 1-165
X223	90459-6627	FEMALE INSERT HAN E AV, 09 33 024 4735	7-23, 7-25, 7-27, 7-29, 7-31
X224	90110-0150	MALE INSERT 121110 0000	1-161, 1-163, 1-165
X224	90459-6627	FEMALE INSERT HAN E AV, 09 33 024 4735	7-23, 7-25, 7-27, 7-29, 7-31
X225	90110-0150	MALE INSERT 121110 0000	8-109, 8-111, 8-113, 8-115, 8-117
X225	90459-6627	FEMALE INSERT HAN E AV, 09 33 024 4735	7-23, 7-25, 7-27, 7-29, 7-31
X226	90110-0150	MALE INSERT 121110 0000	8-109, 8-111, 8-113, 8-115, 8-117
X226	90459-6627	FEMALE INSERT HAN E AV, 09 33 024 4735	7-23, 7-25, 7-27, 7-29, 7-31
X227	90110-0150	MALE INSERT 121110 0000	1-161, 1-163, 1-165
X227	90459-6627	FEMALE INSERT HAN E AV, 09 33 024 4735	7-23, 7-25, 7-27, 7-29, 7-31
X228	90459-6627	FEMALE INSERT HAN E AV, 09 33 024 4735	7-23, 7-25, 7-27, 7-29, 7-31
X229	90110-0150	MALE INSERT 121110 0000	1-161, 1-163, 1-165
X229	90459-6627	FEMALE INSERT HAN E AV, 09 33 024 4735	7-23, 7-25, 7-27, 7-29, 7-31
X230	90110-0150	MALE INSERT 121110 0000	1-161, 1-163, 1-165
X230	90459-6627	FEMALE INSERT HAN E AV, 09 33 024 4735	7-23, 7-25, 7-27, 7-29, 7-31
X231	90110-0150	MALE INSERT 121110 0000	8-109, 8-111, 8-113, 8-115, 8-117
X231	90459-6627	FEMALE INSERT HAN E AV, 09 33 024 4735	7-23, 7-25, 7-27, 7-29, 7-31
X232	90110-0150	MALE INSERT 121110 0000	1-161, 1-163, 1-165
X232	90459-6627	FEMALE INSERT HAN E AV, 09 33 024 4735	7-23, 7-25, 7-27, 7-29, 7-31
X233	90459-6627	FEMALE INSERT HAN E AV, 09 33 024 4735	7-23, 7-25, 7-27, 7-29, 7-31
X234	90110-0150	MALE INSERT 121110 0000	2-13, 2-15
X234	90459-6627	FEMALE INSERT HAN E AV, 09 33 024 4735	7-23, 7-25, 7-27, 7-29, 7-31
X236	90110-0381	COVER, 310601-33 CYR24.4	2-13, 2-15

Pos	Part No	Description	Page No
X			
X300	90459-0835	THERMO CONTACT PANEL, 16 CONTACTS 2 ROWS	7-23, 7-25, 7-27, 7-29, 7-31
X301	90326-0022	PLUG, MALE YELLOW CR-AL	2-13, 2-15
X302	90326-0022	PLUG, MALE YELLOW CR-AL	2-13, 2-15
X303	90326-0022	PLUG, MALE YELLOW CR-AL	2-13, 2-15
X304	90326-0022	PLUG, MALE YELLOW CR-AL	2-13, 2-15
X305	90326-0022	PLUG, MALE YELLOW CR-AL	2-13, 2-15
X306	90326-0022	PLUG, MALE YELLOW CR-AL	1-161, 1-163, 1-165
X307	90326-0022	PLUG, MALE YELLOW CR-AL	1-161, 1-163, 1-165
X308	90326-0022	PLUG, MALE YELLOW CR-AL	1-161, 1-163, 1-165
X309	90326-0022	PLUG, MALE YELLOW CR-AL	2-13, 2-15
X310	90326-0022	PLUG, MALE YELLOW CR-AL	1-161, 1-163, 1-165
X311	90326-0022	PLUG, MALE YELLOW CR-AL	1-161, 1-163, 1-165
X313	90326-0022	PLUG, MALE YELLOW CR-AL	1-161, 1-163, 1-165
X315	90326-0022	PLUG, MALE YELLOW CR-AL	1-161, 1-163, 1-165
X316	90326-0022	PLUG, MALE YELLOW CR-AL	8-81
X317	90326-0022	PLUG, MALE YELLOW CR-AL	1-161, 1-163, 1-165
X318	90326-0022	PLUG, MALE YELLOW CR-AL	1-161, 1-163, 1-165
X319	90326-0022	PLUG, MALE YELLOW CR-AL	1-161, 1-163, 1-165
X352	90110-0142	PLUG D-SUB 15 MALE, DE15P064TXLF	2-13, 2-15
X354	90110-0142	PLUG D-SUB 15 MALE, DE15P064TXLF	2-13, 2-15
X356	90110-0142	PLUG D-SUB 15 MALE, DE15P064TXLF	2-13, 2-15
X401	90110-0235	CABLE CONTACT, PX0739/P	8-91
X401	90110-0236	CHASSIS CONTACT PX0767/S	7-23, 7-25, 7-27, 7-29, 7-31
X402	90110-0235	CABLE CONTACT, PX0739/P	8-91
X402	90110-0236	CHASSIS CONTACT PX0767/S	7-23, 7-25, 7-27, 7-29, 7-31
X451	90110-0028	CONTACT UNIT 4-POLEADAPTER	7-87, 7-89
X501	90110-0055	FEMALE INSERT HAN 6 HSB 09 31 006 2701	7-23, 7-25, 7-27, 7-29, 7-31
X501	90110-0156	MALE INSERT 70.210.0653.0	1-161, 1-163, 1-165
X502	90110-0055	FEMALE INSERT HAN 6 HSB 09 31 006 2701	7-23, 7-25, 7-27, 7-29, 7-31
X502	90110-0156	MALE INSERT 70.210.0653.0	1-161, 1-163, 1-165
X503	90110-0055	FEMALE INSERT HAN 6 HSB 09 31 006 2701	7-23, 7-25, 7-27, 7-29, 7-31
X503	90110-0156	MALE INSERT 70.210.0653.0	2-13, 2-15
X504	90110-0055	FEMALE INSERT HAN 6 HSB 09 31 006 2701	7-23, 7-25, 7-27, 7-29, 7-31
X504	90110-0156	MALE INSERT 70.210.0653.0	8-109, 8-111, 8-113, 8-115, 8-117
X511	90458-2892	CONNECTOR, 11 N-50-3-31/133 NE	1-161, 1-163, 1-165
X513	90458-2892	CONNECTOR, 11 N-50-3-31/133 NE	4-23
X514	90458-2892	CONNECTOR, 11 N-50-3-31/133 NE	4-23
X901	1095597-0100	TERMINAL	2-31
X1001	1347191-0200	CONNECTION BOX	1-3, 1-5
X1003	1296847-0300	CONNECTION BOX	1-3, 1-5
X1053	90110-0223	CONTACT MALE, MS 3106 E 16S-1P	1-237, 1-239
X1250	90042-0535	TERMINAL BOARD 19 CORDS	1-217
X1251	90042-0535	TERMINAL BOARD 19 CORDS	1-213, 1-215
X1252	90042-0535	TERMINAL BOARD 19 CORDS	1-213, 1-215
X1253	90042-0535	TERMINAL BOARD 19 CORDS	1-217
X1300	90326-0020	PLUG, FEMALE YELLOW CR-AL	1-153
X1301	90326-0020	PLUG, FEMALE YELLOW CR-AL	1-147
X1302	90326-0020	PLUG, FEMALE YELLOW CR-AL	1-25
X1304	90326-0020	PLUG, FEMALE YELLOW CR-AL	2-13, 2-15
X1307	90326-0020	PLUG, FEMALE YELLOW CR-AL	1-103
X2038	90326-0020	PLUG, FEMALE YELLOW CR-AL	2-13, 2-15
X 2038	90326-0022	PLUG, MALE YELLOW CR-AL	6-13
X2051	90042-0535	TERMINAL BOARD 19 CORDS	6-71
X2062	90110-0163	FEMALE INSERT 70 300 0640 0	2-13, 2-15
X2241	90110-0163	FEMALE INSERT 70 300 0640 0	2-13, 2-15
X2242	90110-0163	FEMALE INSERT 70 300 0640 0	2-13, 2-15
X2243	90110-0247	FEMALE INSERT 70.200.0653.0	2-13, 2-15
X2244	90110-0151	FEMALE INSERT 24-POL 121130 0000	2-13, 2-15
X 4001	451423-0000	CIRCUIT BOARD	3-17
X4002	90110-0150	MALE INSERT 121110 0000	4-23
X4002	90110-0151	FEMALE INSERT 24-POL 121130 0000	2-13, 2-15
X4003	90110-0151	FEMALE INSERT 24-POL 121130 0000	2-13, 2-15
X4003	90110-0228	CABLE HOOD 24-POL 71.350.2428.0	5-63
X4004	90110-0151	FEMALE INSERT 24-POL 121130 0000	2-13, 2-15
X4004	90110-0228	CABLE HOOD 24-POL 71.350.2428.0	5-63
X4005	90110-0150	MALE INSERT 121110 0000	4-23
X4005	90110-0151	FEMALE INSERT 24-POL 121130 0000	2-13, 2-15
X4010	90326-0020	PLUG, FEMALE YELLOW CR-AL	2-13, 2-15
X4010	90326-0022	PLUG, MALE YELLOW CR-AL	5-63
X4011	90326-0020	PLUG, FEMALE YELLOW CR-AL	2-13, 2-15
X4011	90326-0022	PLUG, MALE YELLOW CR-AL	5-63
X4012	90326-0020	PLUG, FEMALE YELLOW CR-AL	2-13, 2-15
X4012	90326-0022	PLUG, MALE YELLOW CR-AL	5-63
X4013	90326-0020	PLUG, FEMALE YELLOW CR-AL	2-13, 2-15
X4013	90326-0022	PLUG, MALE YELLOW CR-AL	5-63
X4050	90110-0208	CABLE CONTACT	2-13, 2-15, 3-5
X4051	90110-0208	CABLE CONTACT	2-13, 2-15, 3-13, 3-15
X4054	90110-0236	CHASSIS CONTACT PX0767/S	2-13, 2-15
X4055	90110-0236	CHASSIS CONTACT PX0767/S	2-13, 2-15
X4056	90110-0208	CABLE CONTACT	2-13, 2-15, 3-13, 3-15
X4058	90042-0535	TERMINAL BOARD 19 CORDS	2-39, 2-41
X4059	90042-0535	TERMINAL BOARD 19 CORDS	2-39, 2-41

Pos	Part No	Description	Page No
X			
X4071	90458-2890	CONNECTOR, 21N-50N12N133NE	4-23
X4073	90458-2890	CONNECTOR, 21N-50N12N133NE	4-23
X4121	90042-0535	TERMINAL BOARD 19 CORDS	2-127
X5006-1	90326-0022	PLUG, MALE YELLOW CR-AL	5-23, 5-25
X5006-2	90326-0077	CONTACT	5-23, 5-25
X5007-1	90326-0022	PLUG, MALE YELLOW CR-AL	5-23, 5-25
X5007-2	90326-0077	CONTACT	5-23, 5-25
X5008-1	90326-0022	PLUG, MALE YELLOW CR-AL	5-23, 5-25
X5008-2	90326-0077	CONTACT	5-23, 5-25
X5009-1	90326-0022	PLUG, MALE YELLOW CR-AL	5-23, 5-25
X5009-2	90326-0077	CONTACT	5-23, 5-25
X7022	90458-1595	CONNECTION, BKS-S 33M-00	8-65
X7049	90042-0535	TERMINAL BOARD 19 CORDS	8-131, 8-133
X7050	90042-0535	TERMINAL BOARD 19 CORDS	8-131, 8-133
X7304	90326-0020	PLUG, FEMALE YELLOW CR-AL	8-81
X9106:1	90326-0020	PLUG, FEMALE YELLOW CR-AL	1-139
X9106:2	90326-0022	PLUG, MALE YELLOW CR-AL	1-139
X9115	90326-0020	PLUG, FEMALE YELLOW CR-AL	1-139
X9116	90326-0020	PLUG, FEMALE YELLOW CR-AL	1-139
X74031	90458-0603	CONNECTOR FEMALE 5 PINS	8-85
X74032	90458-0603	CONNECTOR FEMALE 5 PINS	8-85
Y			
Y0101	90458-1194	MONOSTABLE VALVE 5/2	10-35
Y0102	90458-1194	MONOSTABLE VALVE 5/2	10-35
Y201	90113-0137	SHUT OF VALVE	10-39
Y202	90113-0141	FILTER REGULATOR 0-10 BAR 40 MICRON	10-39
Y1104	90042-0172	SOLENOID VALVE 4023/1005/1032 24VDC	1-151
Y1105	90042-0172	SOLENOID VALVE 4023/1005/1032 24VDC	1-151
Y1107	90042-0538	PILOT VALVE L=500MM	1-213, 1-215
Y1108	90042-0538	PILOT VALVE L=500MM	1-217
Y1111	90042-0538	PILOT VALVE L=500MM	1-217
Y1210	90042-0206	SOLENOID VALVE G1/8, 444-111-000-1	2-89
Y1220	90042-0538	PILOT VALVE L=500MM	2-39, 2-41
Y1221	90042-0538	PILOT VALVE L=500MM	2-39, 2-41
Y1230	90042-0203	SOLENOID VALVE BüRKERT	1-61, 1-63
Y1231	90042-0203	SOLENOID VALVE BüRKERT	1-63
Y1232	90459-6975	SOLENOID VALVE G1/4, 2401186082702400	1-61, 1-63
Y1233	90459-6977	SOLENOID VALVE G1/4, V04B286N-B423A	1-61, 1-63
Y1241	90042-0538	PILOT VALVE L=500MM	1-217
Y1280	90042-0538	PILOT VALVE L=500MM	1-217
Y1281	90042-0538	PILOT VALVE L=500MM	1-217
Y1301	90042-0538	PILOT VALVE L=500MM	1-213, 1-215
Y1302	90042-0538	PILOT VALVE L=500MM	1-213, 1-215
Y1303	90042-0538	PILOT VALVE L=500MM	1-217
Y1325	90042-0538	PILOT VALVE L=500MM	1-213, 1-215
Y1401	90042-0538	PILOT VALVE L=500MM	1-217
Y1405	90042-0538	PILOT VALVE L=500MM	1-217
Y1501	90042-0538	PILOT VALVE L=500MM	1-213, 1-215
Y1502	90042-0538	PILOT VALVE L=500MM	1-213, 1-215
Y2104	90042-0538	PILOT VALVE L=500MM	2-39, 2-41
Y2106	90042-0248	SOLENOID VALVE OFFICIENE DI ENSINO	2-47
Y 2108	90042-0249	SOLENOID VALVE OFFICINE DI ENSINO	6-65, 6-67
Y2109	90042-0248	SOLENOID VALVE OFFICIENE DI ENSINO	2-47
Y2110	90042-0248	SOLENOID VALVE OFFICIENE DI ENSINO	6-65, 6-67
Y2201	90042-0585	PILOT VALVE L=5M	6-73
Y3101	90042-0254	SOLENOID DIAPHRAGM VALVE, R1 1/2	6-29
Y3103	90042-0538	PILOT VALVE L=500MM	6-71
Y3105	90042-0538	PILOT VALVE L=500MM	6-71
Y3109	90042-0538	PILOT VALVE L=500MM	6-71
Y3110	90042-0538	PILOT VALVE L=500MM	6-71
Y3111	90042-0538	PILOT VALVE L=500MM	6-71
Y3112	90042-0538	PILOT VALVE L=500MM	6-71
Y3116	90042-0538	PILOT VALVE L=500MM	1-213, 1-215
Y4200	90042-0538	PILOT VALVE L=500MM	2-39, 2-41
Y4210	90042-0538	PILOT VALVE L=500MM	2-39, 2-41
Y4220	90042-0538	PILOT VALVE L=500MM	2-39, 2-41
Y4230	90042-0538	PILOT VALVE L=500MM	2-39, 2-41
Y4261	90042-0538	PILOT VALVE L=500MM	2-127
Y4262	90042-0538	PILOT VALVE L=500MM	2-127
Y5306	90042-0538	PILOT VALVE L=500MM	2-39, 2-41
Y5307	90042-0538	PILOT VALVE L=500MM	2-39, 2-41
Y5501	90042-0538	PILOT VALVE L=500MM	2-39, 2-41
Y5502	90042-0538	PILOT VALVE L=500MM	2-39, 2-41
Y5503	90042-0538	PILOT VALVE L=500MM	2-39, 2-41
Y5504	90042-0538	PILOT VALVE L=500MM	2-39, 2-41
Y6201	90042-0591	PILOT VALVE, 04938-333-08	8-131, 8-133
Y6203	90042-0539	PILOT VALVE L=350MM	8-131, 8-133
Y6205	90042-0591	PILOT VALVE, 04938-333-08	8-131, 8-133
Y7303	90042-0539	PILOT VALVE L=350MM	8-131, 8-133
Y7315	90042-0591	PILOT VALVE, 04938-333-08	8-131, 8-133
Y7407	90042-0591	PILOT VALVE, 04938-333-08	8-131, 8-133
Y7408	90042-0538	PILOT VALVE L=500MM	8-131, 8-133

Pos	Part No	Description	Page No
Y			
Y7410	90042-0539	PILOT VALVE L=350MM	8-131, 8-133
Y7412	90042-0538	PILOT VALVE L=500MM	8-131, 8-133
Y7413	90042-0538	PILOT VALVE L=500MM	8-131, 8-133
Y7414	90042-0538	PILOT VALVE L=500MM	8-131, 8-133
Y7415	90042-0538	PILOT VALVE L=500MM	8-131, 8-133
Y7420	90042-0591	PILOT VALVE, 04938-333-08	8-131, 8-133
Y7421	90042-0591	PILOT VALVE, 04938-333-08	8-131, 8-133
Y7425	90042-0585	PILOT VALVE L=5M	8-131, 8-133
Y9101	90042-0171	SOLENOID VALVE BURKERT	1-205
Y9103	90042-0171	SOLENOID VALVE BURKERT	1-205
Y9105	90042-0538	PILOT VALVE L=500MM	1-213, 1-215
Y9106	90042-0538	PILOT VALVE L=500MM	1-213, 1-215
Y9112	90042-0203	SOLENOID VALVE BüRKERT	1-63
Y11142	90042-0538	PILOT VALVE L=500MM	1-213, 1-215
Y11144	90042-0538	PILOT VALVE L=500MM	1-213, 1-215
Z			
Z001	90024-0060	POWER LINE FILTER, 80 A 250/440 VAC	6-5
Z002	90082-0013	OVER VOLT. PROTECT. PU 4C-R 230 VAC	6-5
Z004	90024-0036	FILTERED TERMINAL BLOCK, 52-160-002	6-5
Z006	90459-1359	FILTER 1 A, 250 VAC, FN 332-1/05	7-87, 7-89
Z018	90458-1140	FERRITE, RI-26-28-13	7-67
Z019	90458-1140	FERRITE, RI-26-28-13	7-67
Z020	90458-1140	FERRITE, RI-26-28-13	7-67
Z021	90458-1140	FERRITE, RI-26-28-13	7-67
Z022	90458-1140	FERRITE, RI-26-28-13	7-67
Z023	90458-1140	FERRITE, RI-26-28-13	7-67
Z024	90458-1140	FERRITE, RI-26-28-13	7-67
Z025	90458-1140	FERRITE, RI-26-28-13	7-67
Z026	90458-1140	FERRITE, RI-26-28-13	7-67
Z027	90458-1140	FERRITE, RI-26-28-13	7-67
Z410	90459-3460	FOOTPRINT FILTER 22-RF010-AL	7-67
Z411	90459-3460	FOOTPRINT FILTER 22-RF010-AL	7-67
Z412	90459-3460	FOOTPRINT FILTER 22-RF010-AL	7-67
Z413	90459-3460	FOOTPRINT FILTER 22-RF010-AL	7-67
Z415	90459-3460	FOOTPRINT FILTER 22-RF010-AL	7-67
Z702	90459-3698	FILTER, 6 A, 250 VAC, FN2070M-6/06	7-43
Z91031	90277-0104	FILTER F64B-2GN-ARO	1-205
Z91032	90277-0323	FILTER HOUSING / ART.NO 95S6-1/4 S 5430	1-205

Tetra Pak

SPC binder labels. 40 mm Full width *Note! This page is generated* **automatically.**
using the **variable definitions** *made in the* **front page** *file!!*

TBA/22 050V 1(2)
648571-0500
Issue: 2009-03 Doc No: SPC-81765-0154

TBA/22 050V 1(2)
648571-0500
Issue: 2009-03 Doc No: SPC-81765-0154

TBA/22 050V 2(2)
648571-0500
Issue: 2009-03 Doc No: SPC-81765-0154

TBA/22 050V 2(2)
648571-0500
Issue: 2009-03 Doc No: SPC-81765-0154

TBA/22 050V 1(2)
648571-0500
Issue: 2009-03 Doc No: SPC-81765-0154

TBA/22 050V 1(2)
648571-0500
Issue: 2009-03 Doc No: SPC-81765-0154

TBA/22 050V 2(2)
648571-0500
Issue: 2009-03 Doc No: SPC-81765-0154

TBA/22 050V 2(2)
648571-0500
Issue: 2009-03 Doc No: SPC-81765-0154

TBA/22 050V 1(2)
648571-0500
Issue: 2009-03 Doc No: SPC-81765-0154

TBA/22 050V 1(2)
648571-0500
Issue: 2009-03 Doc No: SPC-81765-0154

TBA/22 050V 2(2)
648571-0500
Issue: 2009-03 Doc No: SPC-81765-0154

TBA/22 050V 2(2)
648571-0500
Issue: 2009-03 Doc No: SPC-81765-0154