SPC
Spare Parts Catalogue

TBA/22 050V

648571-0500

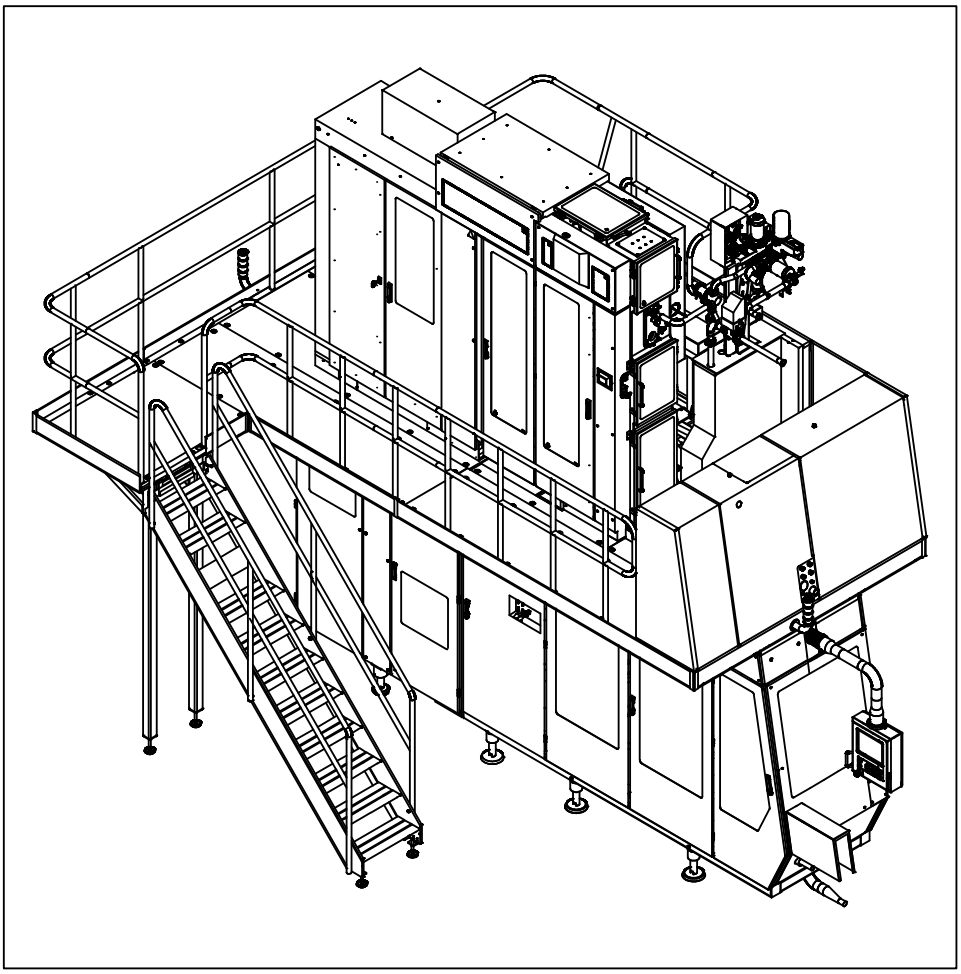

Tetra Pak

Doc. No: SPC-81765-0125

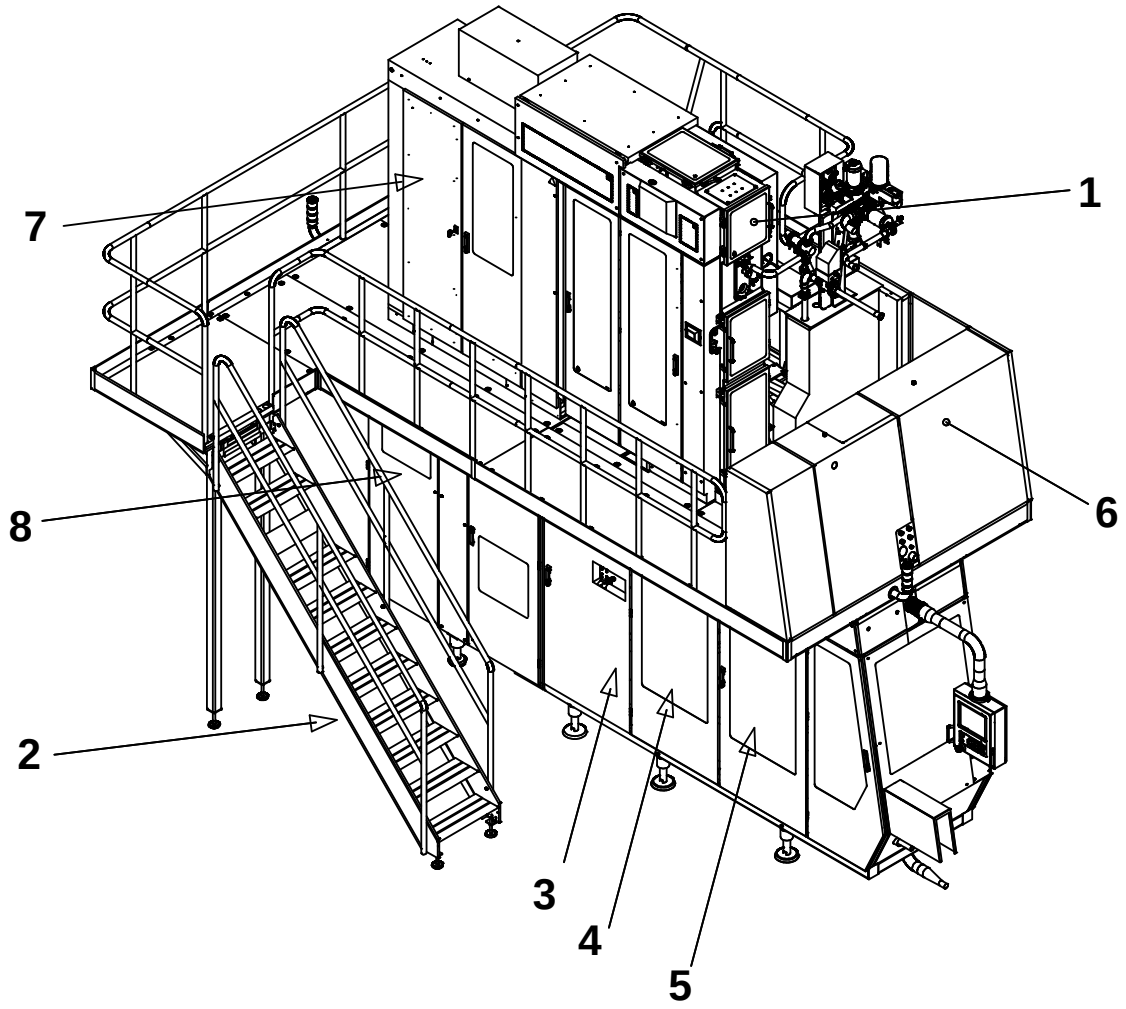

The position numbers in the illustration correspond with the chapter numbers listed on the next page.

Copyright © 2004 Tetra Pak Group

All rights reserved. No part of this document may be reproduced or copied in any form or by any means without written permission from Tetra Pak Carton Ambient AB.

Tetra Pak and all Tetra Pak products are trademarks belonging to the Tetra Pak Group.

The content of this manual is in accordance with the design and construction of the machine or equipment at the time of publishing. Tetra Pak reserves the right to introduce design modifications without prior notice.

This document was produced by:

Tetra Pak Carton Ambient S.p.A.
Technical Publications
Via Delfini 1
41100 Modena /Italy

This Tetra Pak equipment was manufactured by:

Tetra Pak Carton Ambient S.p.A.
Via Delfini 1
41100 Modena /Italy

Additional copies can be ordered from Tetra Pak Parts or the nearest Tetra Pak office. When ordering additional copies, always provide the document number. This can be found in the machine specification document. It is also printed on the front cover and in the footer on each page of the manual.

Doc. No. SPC-81765-0125

Issue 2004-05

This document is valid for:

21203/00101

Series No/Machine No Sign.

SPC

Spare Parts Catalogue

Tetra Brik Aseptic
TBA/22 050V
648571-0500

BINDER 1

i Introduction

1 Superstructure
B-648521-0400

2 Machine Body
B-648522-0600

3 Drive
B-648563-0100

4 Jaw System
B-648554-0100

5 Final Folder
B-648525-0500

6 Service Unit
B-648506-0400

7 Electrical Cabinet
B-648538-0300

BINDER 2

8 Automatic Splicing Unit
B-648528-0200

9 Regular Accessories
B-648547-0200

10 Optional Accessories
B-648546-0500

ii Part Number Index

iii Electrical Parts Index

A list of all optional equipment, optional kits, and rebuilding kits that this catalogue is valid for is found on the next page.

Doc. No: SPC-81765-0125

Issue 2004-05

Tetra Pak

Tetra Pak Carton Ambient S.p.A.

Valid for:

Adustable LS inductor
2611157-0100

ASU Venting Box
2660463-0100

Automatic greasing
2574340-0100

Constant heat
2635113-0100

Filling pipe with float
2540810-0100

Gearbox improvement
2581919-0100

Jumo recorders
2654346-0100

Movable tube support
2598520-0100

Rotating carbon brushes
2606212-0100

Titanium links
2581813-0100

Update Log for Doc. No. SPC-81765-0125

This table shows all changes made to this catalogue, such as kits installed and pages added or removed.

Date	Installed Kit	Added Pages (Doc. No.)	Removed Pages	Signature

Date	Installed Kit	Added Pages (Doc. No.)	Removed Pages	Signature

i Introduction

TechPub-2660371-0101

en About the Introduction Chapter
This chapter contains basic information about this catalogue and related Tetra Pak equipment.

da Om indledningen
Kapitlet indeholder grundlæggende oplysninger om dette katalog og tilhørende Tetra Pak-udstyr.

de Zur Einleitung
Dieses Kapitel enthält grundlegende Informationen zu diesem Handbuch und der entsprechenden Tetra Pak Ausrüstung.

el Σχετικά με το Κεφάλαιο 'Εισαγωγή'
Αυτό το κεφάλαιο περιέχει βασικές πληροφορίες για τον παρόντα κατάλογο και τον σχετικό εξοπλισμό της Tetra Pak.

es Sobre el Capítulo de Introducción
Este capítulo contiene información básica sobre este manual y el equipo Tetra Pak relacionado.

fi Tietoja Johdanto-luvusta
Tässä luvussa on perustietoja tästä luettelosta ja Tetra Pak -laitteesta.

fr Concernant le chapitre d'Introduction
Le présent chapitre contient les renseignements de base concernant ce manuel et l'équipement Tetra Pak concerné.

it Informazioni sulla sezione Introduzione
Questa sezione contiene informazioni generali sul presente catalogo e la relativa macchina Tetra Pak.

nl Omtrent het hoofdstuk Inleiding
Dit hoofdstuk bevat basisinformatie betreffende dit handboek en daarmee verband houdende apparatuur van Tetra Pak.

no Om kapitlet Introduksjon
Dette kapitlet inneholder grunnleggende informasjon om denne katalogen og relatert Tetra Pak-ustyr.

po Sobre o capítulo Introdução
Este capítulo contém informações básicas sobre este catálogo e ao equipamento Tetra Pak relacionado.

sv Om inledningskapitlet
Det här kapitlet innehåller grundläggande information om katalogen och Tetra Pak-utrustningen.

TechPub-2660371-0101

Introduction

Illustrations . . . . . i - 5
English Text . . . . . i - 7

Indledning

Illustrationer . . . . . i - 5
Dansk tekst . . . . . i - 11

Einleitung

Abbildungen . . . . . i - 5
Deutscher Text . . . . . i - 15

Εισαγωγή

Εικόνες . . . . . i - 5
Ελληνικό Κείμενο . . . . . i- 19

Introducción

Ilustraciones . . . . . i - 5
Texto español . . . . . i - 23

Johdanto

Kuvat . . . . . i - 5
Suomenkielinen teksti . . . . . i - 27

Introduction

Figures . . . . . i - 5
Texte français . . . . . i - 31

Introduzione

Figure . . . . . i - 5
Testo in italiano . . . . . i - 35

Inleiding

Illustraties . . . . . i - 5
Nederlands tekst . . . . . i - 39

Introduksjon

Illustrasjoner . . . . . i - 5
Norsk tekst . . . . . i - 43

Introdução

Ilustrações . . . . . i - 5
Texto em portugese . . . . . i - 47

TechPub-2660371-0101

Inledning

Bilder . . . . . i - 5
Svensk text . . . . . i - 51

TechPub-2660371-0101

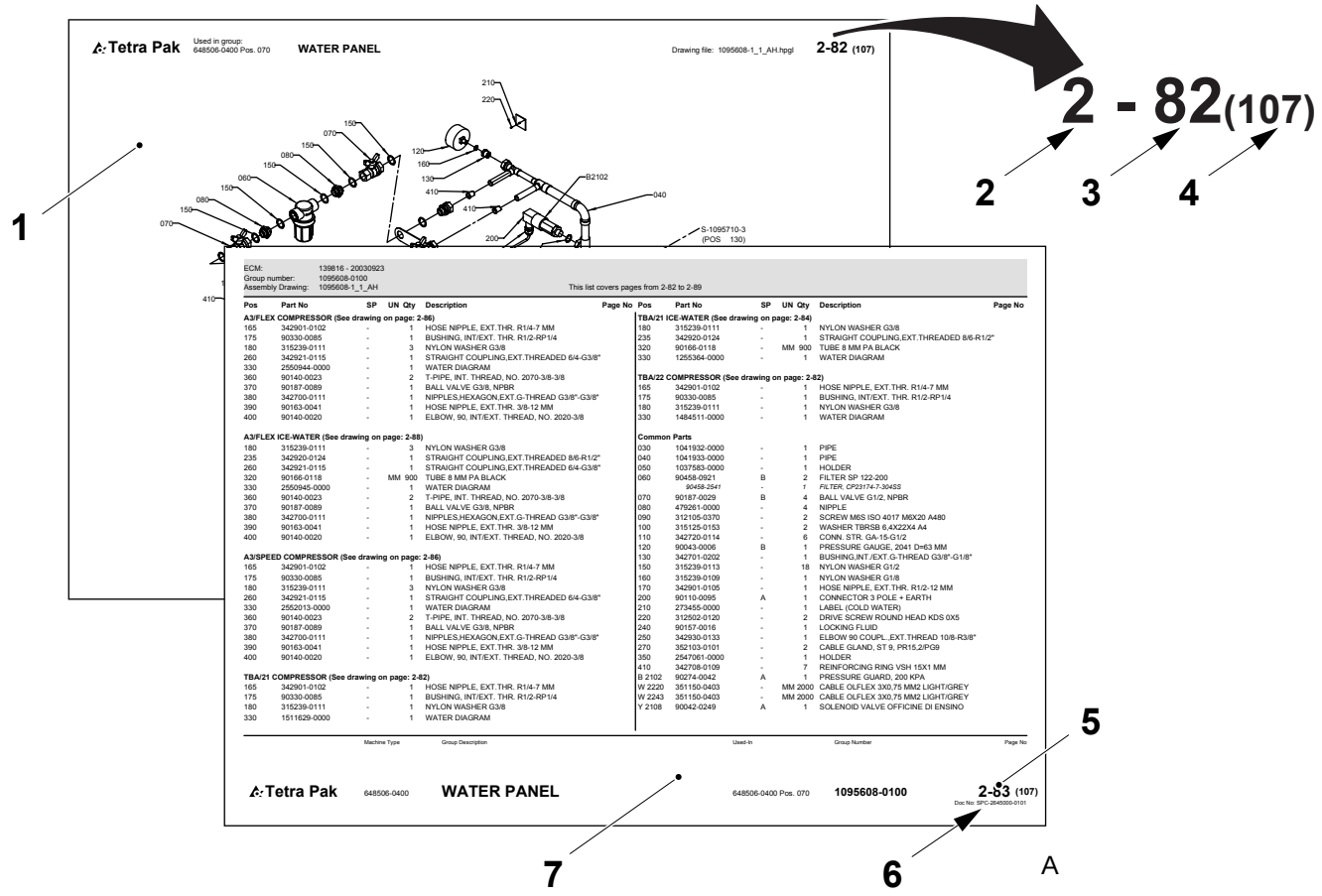

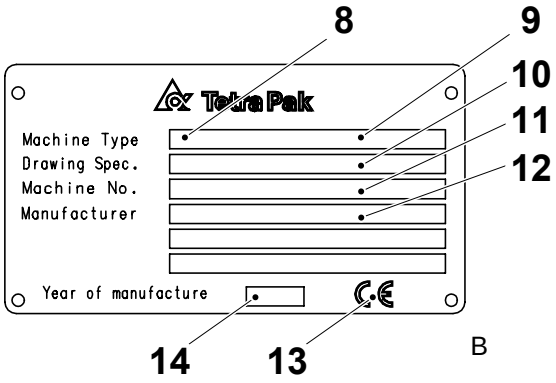

MACHINE SPECIFICATION

Machine Sign Data

Machine Type	: TBA/22 - 200 B
Drawing Spec.	: 648571-0400
Machine No.	: 21070 /83816
Designed by	: Tetra Brik Packaging Systems S.p.A. Via A. Delfini 41100 Modena Italy
Manufacturer	: Tetra Brik Packaging Systems S.p.A. Via A. Delfini 41100 Modena Italy
Year of Manufacture	: 2000

Machine No. : 21070 / 83816

Date of Issue	: 10/23/2000
Machine Type	: **TBA/22 - 200 Baseline**
Issued by	: Tetra Brik
No. of Sheets	: 1/1
No of M. Dev.	: 1

Basic Design

Machine Body	B-648522 0400
Drive Unit	B-648523 - 0500
Jaw System	B-648524 - 0400
Final Folder	B-648525 - 0400
Service Unit	B-648506 - 0300
Strip Applicator	B-648507 - 0400
Regular Accessories	B-648547 - 0100
Superstructure	B-648521 - 0300
Aut. Splicing Unit	B-648513 - 0400
Electrical Cabinet	BE-648538 - 0200

Equipment Included

1282762-0101 Trolley

527898-0101 Container H2O2

Variables

ECN No. EL	71390
Frequency	Hz - 50
Voltage	400/230
Machine Speed	20000/H

Documentation Included

SPC 81511-102 MM 82302-104
MM 82302-604 OM 82346-104
OM 82346-604 IM 82358-103
IM 82358-603 UM 82351-103
UM 82351-603 UM 82197-102
TEM 27080-102 TEM 27085-602
EM 82318-104 EM 82318-604

C

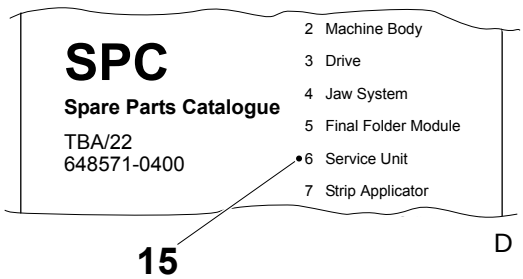

TechPub-2660371-0101

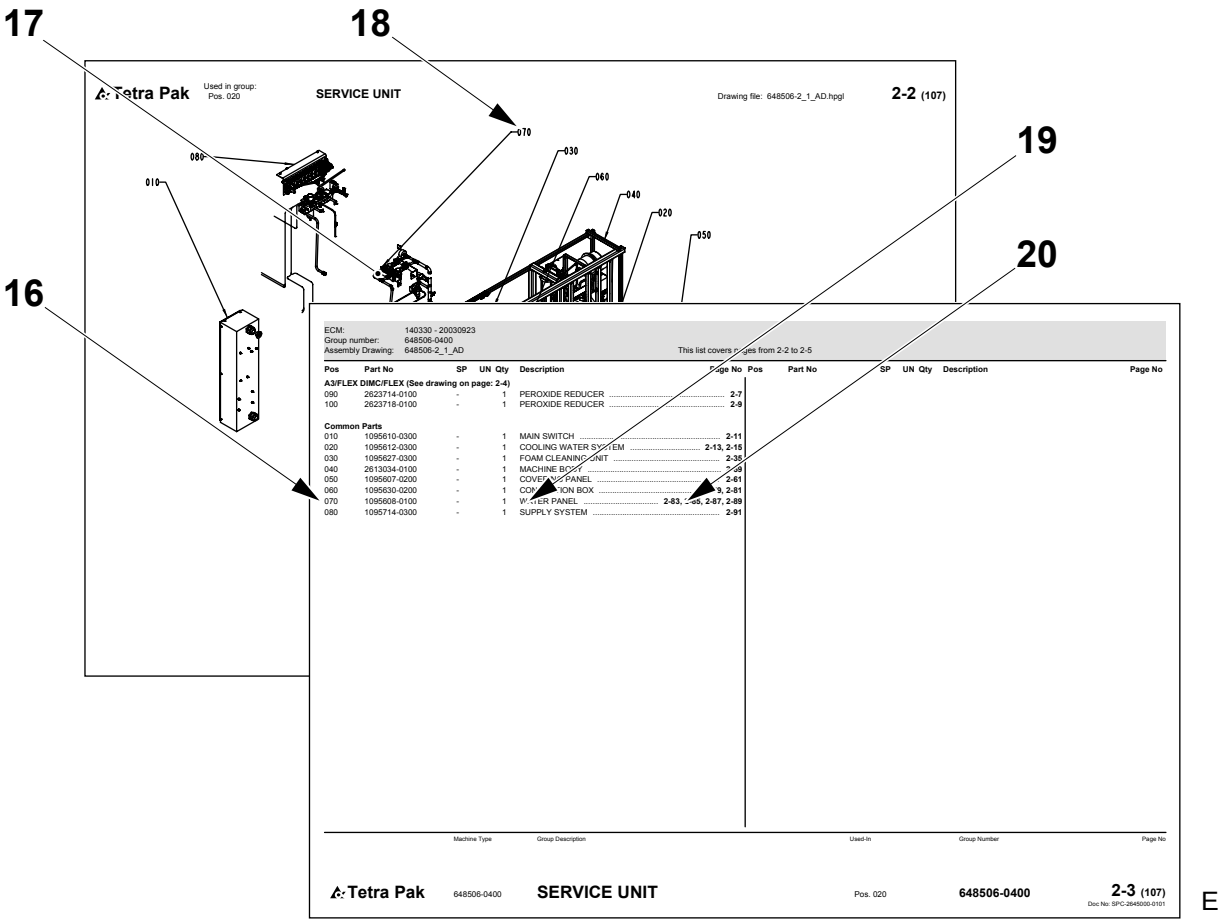

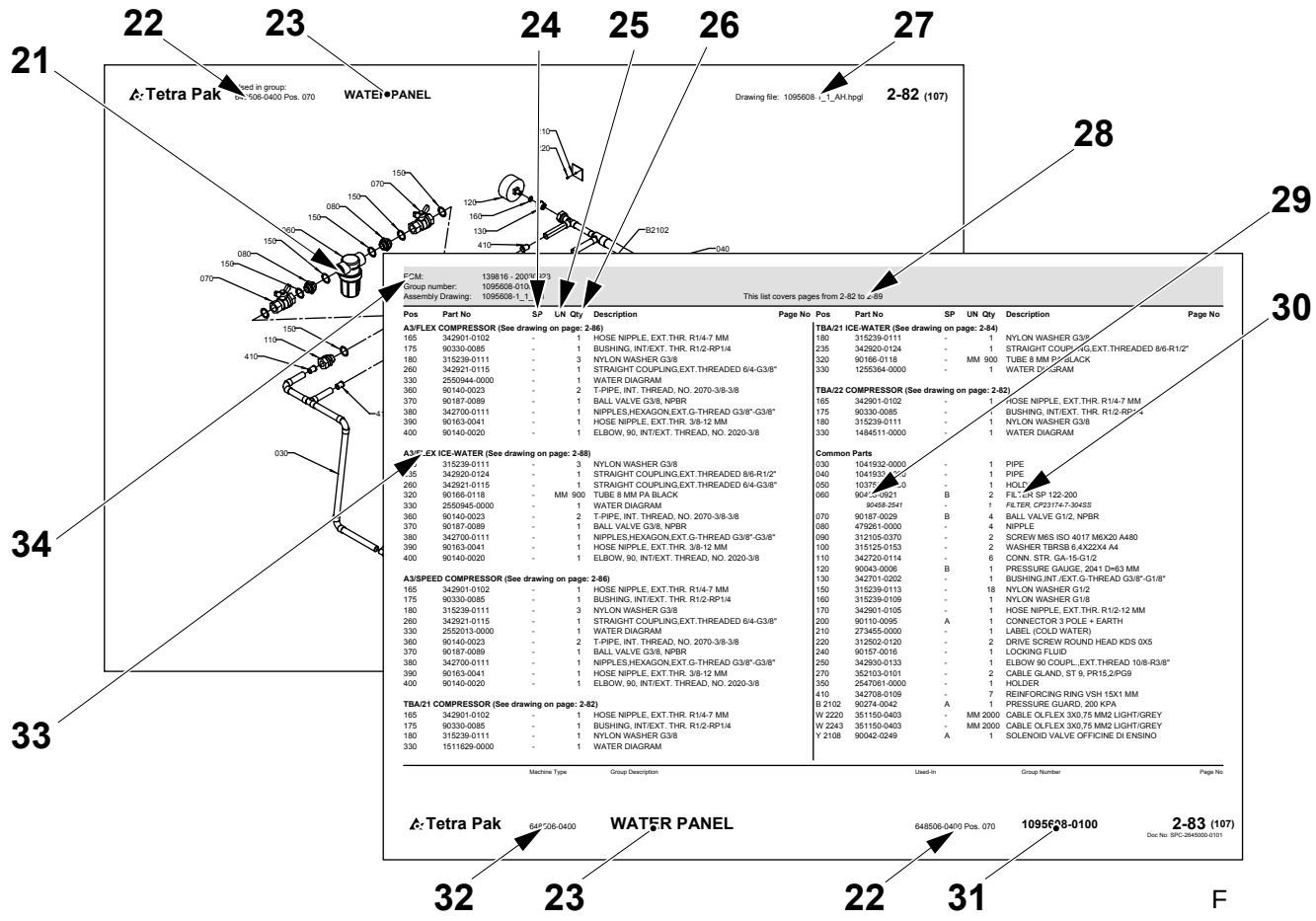

TechPub-2660371-0101

Introduction

Manual Information

Tetra Pak recommends reading all delivered manuals carefully. Make sure that the delivered manuals are available to personnel who operate or maintain the equipment.

It is important to keep this catalogue for the lifetime of the equipment and to pass the catalogue on to any subsequent holder or user.

Tetra Pak will not be held responsible for any damage to the equipment caused by not following the instructions given in the manuals that accompany this equipment.

Delivered Manuals

The manuals delivered with this equipment may include

- Conversion Manual (CM)
  This manual provides technicians with information on converting the equipment between different production modes.
- Electrical Manual (EM)
  This manual provides technicians with information about the equipment's electrical system.
- Installation Manual (IM)
  This manual provides technicians with information required to safely install the equipment.
- Maintenance Manual (MM)
  This manual provides technicians with information on maintaining the equipment.
- Operation Manual (OM)
  This manual provides the operator with information on handling and operating the equipment before, during, and after production.
- Spare Parts Catalogue (SPC)
  This manual provides the information necessary to order spare parts from Tetra Pak
- Technical Manual (TeM)
  - provides technicians with information required to safely install the equipment
  - provides technicians with information on maintaining the equipment
  - provides technicians with information about the equipment's electrical system
  - provides the information necessary to order spare parts from Tetra Pak

TechPub-2660371-0101

Page Layout

Refer to the illustration (A) on page i-5: The main pages in a Spare Parts Catalogue consist of an illustration page (1) and a corresponding list page (7). The page number (5) is shown in the header of an illustration page and in the footer of a list page. The document number (6) is shown in the footer of a list page.

Page Numbering

Refer to the illustration (A) on page i-5: A page number (5) has three parts:

- chapter number (2)
- consecutive page number within the chapter (3)
- total number of pages in the chapter (4)

Machine Introduction

Manufacturer

For the manufacturer’s name and address, see the second page of this catalogue.

Service

To order spare parts for this machine, or to report problems associated with operating this machine, contact the nearest Tetra Pak office.

Contact the Liaison with other inquiries, comments, or suggestions for improvement regarding the equipment and its documentation.

Identification

CE Classification

This equipment complies with the basic health and safety regulations of the European Economic Area (EEA).

TechPub-2660371-0101

Machine Plate

The illustration (B) on page i-5 shows an example of a machine plate. An illustration of the valid machine plate and its location on the equipment is shown in the Introduction chapter of the manuals delivered with this equipment. The machine plate contains the data listed below, needed when contacting Tetra Pak concerning this specific equipment.

- Machine type (8)
- Volume (9)
- Drawing specifications (10)
- Machine serial number (11)
- Manufacturer (12)
- CE mark (13)
- Year of manufacture (14)

The illustration (C) on page i-5 shows an example of a machine specification. Make sure that the equipment data listed in the front pages of this manual corresponds to the machine plate data and the machine specification.

TechPub-2660371-0101

How to Use This Spare Parts Catalogue

Locate a Spare Part Number

a) Refer to the illustration (D) on page i-5: Go to the chapter number (15) indicated beside the main group that contains the part you want to locate.

Items b) and c) refer to the illustration (E) on page i-6.

b) On the main group illustration, look for the machine subgroup (17) that contains the part or subgroup you are looking for. Note the position number (18) and go to the list page that follows the illustration.

c) Look for the position number (16) or the subgroup name (19). Go to the corresponding page number (20) listed in the right-hand column.

Items d) and e) refer to the illustration (F) on page i-6.

d) Locate the part (21) that you are looking for on the subgroup illustration and note the part's position number.

e) The part number (29) and part description (30) are listed beside the position number on the list page.

Information Listed in a Spare Parts Catalogue

The list below refers to the illustration (F) on page i-6. A Spare Parts Catalogue contains the following information about groups, subgroups, and spare parts for the equipment:

- Group structure reference (22). Indicates the next higher group in the equipment list structure.
- Group name (23)
- Spare part code (24). See the Spare Part Codes section.
- Unit of measure (25)
- Quantity (26)
- Assembly drawing number (27)
- List page range (28). Included if there are multiple pages in the group illustration or list.
- Part or subgroup number (29)
- Subgroup name or part description (30)
- Group number (31)
- Equipment number (32)
- Group information heading (33). Indicates if the section below the heading is for a specific machine variant or if it is a list of common parts. If a list has more than one variant and each variant has its own assembly drawing, a page reference to the variant's assembly drawing is shown.
- Internal information (34)

TechPub-2660371-0101

Spare Part Codes

The tables below show the two possible types of Spare Part (SP) Code that may be listed in the SP column of a Spare Parts Catalogue list page.

SP Code	Meaning
A	Critical part
B	Non-critical part

SP Code	Meaning
U	Start-up kit supplied with machine delivery
P	Production kit to be held at production site
S	Service kit to be held at service stations store
C	Central depot kit to be available at the central store

Indledning

Information om manualen

Tetra Pak anbefaler, at alle leverede manualer læses omhyggeligt. Sørg for, at de leverede manualer er tilgængelige for medarbejdere, der betjener eller vedligeholder udstyret.

Det er vigtigt at opbevare dette katalog hele udstyrets levetid og give kataloget videre til eventuelt kommende ejere eller brugere.

Tetra Pak kan ikke holdes ansvarlig for eventuel beskadigelse af udstyr, der opstår, fordi instruktionerne i manualerne til dette udstyr ikke følges.

Leverede manualer

De manualer, der leveres sammen med dette udstyr, kan omfatte:

- Konverteringsmanual (CM)
  Denne manual forsyner teknikere med informationer om konvertering af udstyret mellem forskellige produktionstilstande.
- Elektrisk manual (EM)
  Denne manual forsyner teknikere med informationer om udstyrets elektriske system.
- Installationsmanual (IM)
  Denne manual forsyner teknikere med informationer, der er nødvendige for en sikker installation af udstyret.
- Vedligeholdelsesmanual (MM)
  Denne manual forsyner teknikere med informationer om vedligeholdelse af udstyret.
- Betjeningsmanual (OM)
  Denne manual forsyner operatøren med informationer om håndtering og betjening af udstyret før, under og efter produktion.
- Reservedelskatalog (SPC)
  Denne manual indeholder de informationer, der er nødvendige for at kunne bestille reservedele fra Tetra Pak.
- Teknisk manual (TeM)
  - forsyner teknikere med informationer, der er nødvendige for en sikker installation af udstyret.
  - forsyner teknikere med informationer om vedligeholdelse af udstyret.
  - forsyner teknikere med informationer om udstyrets elektriske system.
  - indeholder de informationer, der er nødvendige for at kunne bestille reservedele fra Tetra Pak.

TechPub-2660371-0101

Sidelayout

Se illustrationen (A) på side i-5: Hovedsiderne i et reservedelskatalog består af en illustrationsside (1) og en tilsvarende listeside (7). Sidenummeret (5) vises i sidehovedet på en illlustrationsside og i sidefoden på en listeside. Dokumentnummeret (6) vises i sidefoden på en listeside.

Sidenummerering

Se illustrationen (A) på side i-5: Et sidenummer (5) har tre dele:

- kapitelnummer (2)
- fortløbende sidenummer i kapitlet (3)
- samlet sideantal i kapitlet (4)

Præsentation af maskinen

Producent

Producentens navn og adresse findes på side to i dette katalog.

Service

Kontakt nærmeste Tetra Pak-kontor for at bestille reservedele eller rapportere problemer i forbindelse med betjening af denne maskine.

Kontakt kontaktpersonen med andre forespørgsler, kommentarer eller forslag til forbedringer af udstyret og dets dokumentation.

Identifikation

CE-klassificering

Dette udstyr overholder de grundlæggende sundheds- og sikkerheds-bestemmelser for Det Europæiske Økonomiske Samarbejdsområde (EØS).

TechPub-2660371-0101

Maskinskilt

Illustrationen (B) på side i-5 viser et eksempel på et maskinskilt. En illustration af et gyldigt maskinskilt og dets placering på udstyret er vist i indledningskapitlet i de manualer, der leveres med dette udstyr. Maskinskiltet indeholder nedennævnte data. Disse er nødvendige ved kontakt med Tetra Pak vedrørende dette specifikke udstyr.

- Maskintype (8)
- Volumen (9)
- Tegningsspecifikationer (10)
- Maskinens serienummer (11)
- Producent (12)
- CE-mærke (13)
- Produktionsår (14)

Illustrationen (C) på side i-5 viser et eksempel på en maskinspecifikation. Kontroller, at de udstyrsdata, der er anført på de første sider i denne manual, svarer til maskinskiltsdataene og maskinspecifikationen.

TechPub-2660371-0101

Sådan bruges dette reservedelskatalog

Find et reservedelsnummer

a) Se illustrationen (D) på side i-5: Gå til kapitelnummeret (15), der er angivet ved siden af hovedgruppen, der indeholder den del, der ønskes fundet.

Punkterne b) og c) refererer til illustrationen (E) på side i-6.

b) I hovedgruppeillustrationen skal man se efter maskinundergruppen (17), som indeholder den del eller undergruppe, der søges. Bemærk placeringsnummeret (18), og gå til listesiden, som følger illustrationen.

c) Se efter placeringsnummeret (16) eller undergruppens navn (19). Gå til det tilsvarende sidenummer (20) angivet i den højre kolonne.

Punkterne d) og e) refererer til illustrationen (F) på side i-6.

d) Find den del (21), du søger i undergruppeillustrationen, og notér delens placeringsnummer.

e) Reservedelsnummeret (29) og -beskrivelsen (30) er angivet ved siden af placeringsnummeret på listesiden.

Informationer der er angivet i et reservedelskatalog

Listen nedenfor refererer til illustrationen (F) på side i-6. Et reservedelskatalog indeholder følgende informationer om grupper, undergrupper og reservedele til udstyret:

- Gruppestrukturreference (22). Angiver næste overordnede gruppe i udstyrslistestrukturen.
- Gruppenavn (23)
- Reservedelskode (24). Se afsnit Reservedelskoder.
- Måleenhed (25)
- Antal (26)
- Samletegningsnummer (27)
- Listens sideområde (28). Er angivet, hvis gruppeillustrationen eller -listen inkluderer mange sider.
- Del- eller undergruppenummer (29)
- Undergruppens navn eller delsbeskrivelse (30)
- Gruppenummer (31)
- Udstyrsnummer (32)
- Overskrift for gruppeinformation (33). Angiver om afsnittet under overskriften er for en specifik maskinvariant, eller om det er en liste over fælles dele. Hvis en liste har mere end én variant, og hver variant har sin egen samletegning, vises en sidereference til variantens samletegning.
- Intern information (34)

Reservedelskoder

Tabellerne nedenfor viser de to mulige typer reservedelskoder (SP), som kan være anført i SP-kolonnen på listesiden i et reservedelskatalog.

SP-kode	Betydning
A	Kritisk del
B	Ikke-kritisk del

SP-kode	Betydning
U	Startsæt der leveres med maskinen
P	Produktionssæt til opbevaring på produktionsstedet
S	Servicesæt til opbevaring på servicestationslager
C	Centraldepotsæt der skal være til rådighed på centrallageret

TechPub-2660371-0101

Einleitung

Handbuch-Informationen

Tetra Pak empfiehlt, alle gelieferten Handbücher sorgfältig zu lesen. Es muss sichergestellt werden, dass die gelieferten Handbücher dem Bediener- oder Wartungspersonal der Ausrüstung verfügbar sind.

Es ist wichtig, dieses Handbuch während der Lebensdauer der Ausrüstung vorzuhalten und es an nachfolgende Halter oder Benutzer weiterzugeben.

Tetra Pak ist nicht verantwortlich für Schäden an der Ausrüstung, die durch die Nichtbefolgung der Anweisungen dieses Handbuchs verursacht werden.

Gelieferte Handbücher

Die mit dieser Ausrüstung gelieferten Handbücher umfassen

- Umbauhandbuch (CM)
  Dieses Handbuch liefert den Technikern Informationen über den Umbau der Ausrüstung zwischen den verschiedenen Produktionsweisen.
- Elektrohandbuch (EM)
  Dieses Handbuch liefert den Technikern Informationen zum Elektrosystem der Ausrüstung.
- Installationshandbuch (IM)
  Dieses Handbuch liefert den Technikern Informationen für die sichere Installation der Ausrüstung.
- Wartungshandbuch (MM)
  Dieses Handbuch liefert den Technikern Informationen über die Wartung der Ausrüstung.
- Betriebshandbuch (OM)
  Dieses Handbuch liefert dem Bediener Informationen über die Handhabung und den Betrieb der Ausrüstung vor, während und nach der Produktion.
- Ersatzteilkatalog (SPC)
  Dieses Handbuch liefert Informationen, wie sie für die Bestellung von Ersatzteilen bei Tetra Pak erforderlich sind.
- Technisches Handbuch (TeM)
  - liefert den Technikern Informationen für die sichere Installation der Ausrüstung
  - liefert den Technikern Informationen über die Wartung der Ausrüstung
  - liefert den Technikern Informationen über das Elektrosystem der Ausrüstung
  - liefert die erforderlichen Informationen für die Bestellung von Ersatzteilen bei Tetra Pak.

TechPub-2660371-0101

Seitenlayout

Bezugnahme Abbildung (A) auf Seite i-5: Die Hauptseiten in einem Ersatzteilkatalog bestehen aus einer Abbildungsseite (1) und einer entsprechenden Listenseite (7). Die Seitennummer (5) ist im Kopf einer Abbilldungsseite und im Fuß einer Listenseite aufgeführt. Die Dokumentennummer (6) ist ist im Fuß einer Listenseite angegeben.

Seitennummerierung

Bezugnahme Abbildung (A) auf Seite i-5: Eine Seitennummer (5) besteht aus drei Teilen:

- Kapitelnummer (2)
- Fortlaufende Seitennummer innerhalb des Kapitels (3)
- Gesamtanzahl der Seiten im Kapitel (4)

Einführung in die Maschine

Hersteller

Für Name und Anschrift des Herstellers, siehe die zweite Seite dieses Kataloges.

Service

Um Ersatzteile für diese Maschine zu bestellen oder um über Probleme beim Betrieb dieser Maschine zu berichten, ist das nächstgelegene Büro von Tetra Pak anzusprechen.

Mit anderen Anfragen. Kommentaren oder Vorschlägen zur Ausrüstung und der Dokumentation ist die Verbindungsstelle anzusprechen.

Identifizierung

CE-Klassifizierung

Diese Ausrüstung entspricht den grundlegenden Gesundheits- und Sicherheitsvorschriften des Europäischen Wirtschaftsraumes (EEA).

TechPub-2660371-0101

Maschinenschild

Die Abbildung (B) auf Seite i-5 zeigt das Beispiel eines Maschinenschildes. Die Abbildung eines gültigen Maschinenschildes und die Lage desselben auf der Ausrüstung befindet sich im Einleitungskapitel der mit der Ausrüstung gelieferten Handbücher. Das Maschinenschild enthält die nachstehend aufgeführten Daten, wie sie erforderlich sind, wenn Tetra Pak wegen dieser spezifischen Ausrüstung anzusprechen ist.

- Maschinentyp (8)
- Volumen (9)
- Zeichnungs-Spezifikationen (10)
- Serien-Nummer der Maschine (11)
- Hersteller (12)
- CE-Markierung (13)
- Baujahr (14)

Die Abbildung (C) auf Seite i-5 zeigt das Beispiel einer Maschinenspezifikation. Es muss sichergestellt sein, dass die in den Frontseiten dieses Handbuchs aufgeführten Ausrüstungsdaten mit den Daten des Maschinenschildes und der Maschinenspezifikation übereinstimmen.

TechPub-2660371-0101

Verwendung dieses Ersatzteilkatalogs

Anordnung einer Ersatzteilnummer

a) Bezugnahme auf Abbildung (D) auf Seite i-5: Weiter zur Kapitelnummer (15), die neben der Hauptgruppe angegeben ist, die das entsprechende Teil enthält.

Die Pos. b) und c) beziehen sich auf die Abbildung (E) auf Seite i-6.

b) Auf der Hauptgruppenabbildung die Maschinen-Untergruppe (17) suchen, die das gesuchte Teil oder die gesuchte Untergruppe enthält. Die Positionsnummer (18) notieren und weiter zur Listenseite gehen, die der Abbildung folgt.

c) Die Positionsnummer (16) oder den Namen der Untergruppe (19) suchen. Dann zur entsprechenden Seitennummer (20) in der rechten Spalte gehen.

Pos. d) und e) beziehen sich auf die Abbildung (F) auf Seite i-6.

d) Suchen Sie Teil (21) auf der Untergruppen-Abbildung und notieren Sie die Positionsnummer des Teils.

e) Die Teilnummer (29) und die Teilebeschreibung (30) finden Sie neben der Positionsnummer auf der Listenseite.

In einem Ersatzteilkatalog enthaltene Information

Die nachstehende Liste bezieht sich auf die Abbildung (F) auf Seite i-6.
Ein Ersatzteilkatalog enthält folgende Informationen über Gruppen, Untergruppen und Ersatzteile für die Ausrüstung:

- Gruppenstrukturreferenz (22). Sie gibt die nächst höhere Gruppe in der Ausrüstungslistenstruktur an
- Gruppenname (23)
- Ersatzteilcode (24). Siehe Kapitel Spare Part Codes
- Maßeinheit (25)
- Menge (26)
- Nummer der Zusammenbauzeichnung (27)
- Listenseite, Bereich (28). Eingeschlossen, wenn Mehrfachseiten in der Gruppenabbildung oder Liste enthalten sind
- Teile- oder Untergruppennummer (29)
- Untergruppenname oder Teilebeschreibung (30)
- Gruppennummer (31)
- Ausrüstungsnummer (32)
- Gruppeninformationsüberschrift (33). Gibt an, ob der Abschnitt unter der Überschrift sich auf eine spezifische Maschinenvariante bezieht oder eine Liste der allgemeinen Teile ist. Wenn eine Liste sich auf mehr als eine Variante bezieht und jede Variante eine eigene Zusammenbauzeichnung hat, wird eine Seitenreferenz zur Zusammenbauzeichnung der Variante vorgestellt.
- Interne Information (34)

TechPub-2660371-0101

Ersatzteilcode

Die nachstehenden Tabellen zeigen die beiden möglichen Typen von Ersatzteilcode (SP), die in der SP-Spalte einer Listenseite des Ersatzteilkatalogs enthalten sein können.

SP Code	Bedeutung
A	Kritisches Teil
B	Unkritisches Teil

SP Code	Bedeutung
U	Mit der Maschine gelieferterAnfahr-Kit
P	Vor Ort vorzuhaltender Produktions-Kit
S	Im Lager der Servicestation vorzuhaltender Service-Kit
C	Im Zentrallager vorzuhaltender Zentraldepot-Kit

Εισαγωγή

Πληροφορίες για τα Εγχειρίδια

Η Tetra Pak σάς συνιστά να διαβάζετε προσεκτικά όλα τα παρεχόμενα εγχειρίδια. Εξασφαλίζετε ότι όλα τα παρεχόμενα εγχειρίδια διατίθενται στο προσωπικό που χειρίζεται ή συντηρεί τον εξοπλισμό.

Είναι σημαντικό να διατηρείτε αυτό τον κατάλογο καθ' όλη τη διάρκεια ζωής του εξοπλισμού καθώς και να παραδίδετε τον κατάλογο στον τυχόν επόμενο ιδιοκτήτη ή χρήστη του εξοπλισμού.

Η Tetra Pak δεν πρόκειται να αναλάβει καμία ευθύνη για οποιαδήποτε ζημιά που μπορεί να προκληθεί στον εξοπλισμό εξαιτίας της μη τήρησης των οδηγιών οι οποίες παρέχονται στα εγχειρίδια που συνοδεύουν αυτό τον εξοπλισμό.

Παρεχόμενα Εγχειρίδια

Στα εγχειρίδια που παρέχονται μαζί μ' αυτό τον εξοπλισμό, μπορεί να περιλαμβάνονται τα εξής:

- Εγχειρίδιο Μετατροπής (CM)
  Αυτό το εγχειρίδιο παρέχει στους τεχνικούς πληροφορίες για τη μετατροπή του εξοπλισμού μεταξύ των διάφορων λειτουργιών παραγωγής.
- Ηλεκτρικό Εγχειρίδιο (EM)
  Αυτό το εγχειρίδιο παρέχει στους τεχνικούς πληροφορίες για το ηλεκτρικό σύστημα του εξοπλισμού.
- Εγχειρίδιο Εγκατάστασης (IM)
  Αυτό το εγχειρίδιο παρέχει στους τεχνικούς τις απαιτούμενες πληροφορίες για την ασφαλή εγκατάσταση του εξοπλισμού.
- Εγχειρίδιο Συντήρησης (MM)
  Αυτό το εγχειρίδιο παρέχει στους τεχνικούς πληροφορίες για τη συντήρηση του εξοπλισμού.
- Εγχειρίδιο Χειρισμού (OM)
  Αυτό το εγχειρίδιο παρέχει στο χειριστή πληροφορίες για το χειρισμό και τη λειτουργία του εξοπλισμού πριν, κατά τη διάρκεια και μετά την παραγωγή.
- Κατάλογος Ανταλλακτικών (SPC)
  Αυτό το εγχειρίδιο παρέχει τις απαραίτητες πληροφορίες για την παραγγελία ανταλλακτικών από την Tetra Pak.
- Τεχνικό Εγχειρίδιο (TeM)
  - παρέχει στους τεχνικούς τις απαιτούμενες πληροφορίες για την ασφαλή εγκατάσταση του εξοπλισμού
  - παρέχει στους τεχνικούς πληροφορίες για τη συντήρηση του εξοπλισμού
  - παρέχει στους τεχνικούς πληροφορίες για το ηλεκτρικό σύστημα του εξοπλισμού
  - παρέχει τις απαραίτητες πληροφορίες για την παραγγελία ανταλλακτικών από την Tetra Pak

TechPub-2660371-0101

ιάταξη Σελίδων

Ανατρέξτε στην εικόνα (A) της σελίδας i-5: Οι κύριες σελίδες ενός Καταλόγου Ανταλλακτικών αποτελούνται από μία εικονογραφημένη σελίδα (1) και από μία αντίστοιχη σελίδα λίστας (7). Ο αριθμός σελίδας (5) εμφανίζεται στην κεφαλίδα μιας εικονογραφημένης σελίδας και στο υποσέλιδο μιας σελίδας λίστας. Ο αριθμός εγγράφου (6) εμφανίζεται στο υποσέλιδο μιας σελίδας λίστας.

Αρίθμηση Σελίδων

Ανατρέξτε στην εικόνα (A) της σελίδας i-5: Ένας αριθμός σελίδας (5) αποτελείται από τα εξής τρία μέρη:

- αριθμός κεφαλαίου (2)
- αύξων αριθμός σελίδας του κεφαλαίου (3)
- συνολικός αριθμός σελίδων του κεφαλαίου (4)

Παρουσίαση Μηχανής

Κατασκευαστής

Για το όνομα και τη διεύθυνση του κατασκευαστή, ανατρέξτε στη δεύτερη σελίδα αυτού του καταλόγου.

Τεχνική εξυπηρέτηση

Για να παραγγείλετε ανταλλακτικά για τη συγκεκριμένη μηχανή ή για να αναφέρετε προβλήματα που σχετίζονται με τη λειτουργία αυτής της μηχανής, επικοινωνήστε με το πλησιέστερο γραφείο της Tetra Pak.

Εάν έχετε άλλου είδους ερωτήσεις, σχόλια ή προτάσεις βελτίωσης σχετικά με τον εξοπλισμό και την έγγραφη τεκμηρίωσή του, επικοινωνήστε με το Τμήμα Σχέσεων.

Στοιχεία ταυτότητας

Σήμανση CE

Αυτός ο εξοπλισμός συμμορφώνεται με τους βασικούς κανονισμούς υγείας και ασφάλειας του Ευρωπαϊκού Οικονομικού Χώρου (ΕΟΧ).

TechPub-2660371-0101

Πινακίδα Αναγνώρισης Μηχανής

Η εικόνα (B) της σελίδας i-5 δείχνει ένα παράδειγμα μιας πινακίδας αναγνώρισης μηχανής. Μια εικόνα που δείχνει την ενδεδειγμένη μορφή και θέση της πινακίδας αναγνώρισης μηχανής στον εξοπλισμό, παρουσιάζεται στο κεφάλαιο 'Εισαγωγή' των εγχειριδίων που παρέχονται μ' αυτόν τον εξοπλισμό. Η πινακίδα αναγνώρισης μηχανής αναγράφει τα δεδομένα που παρατίθενται στη συνέχεια, τα οποία είναι απαραίτητα όταν επικοινωνείτε με την Tetra Pak για θέματα που αφορούν αυτό το συγκεκριμένο εξοπλισμό.

- Τύπος μηχανής (8)
- Χωρητικότητα (9)
- Στοιχεία σχεδίου (10)
- Αριθμός σειράς μηχανής (11)
- Κατασκευαστής (12)
- Σήμανση CE (13)
- Έτος κατασκευής (14)

Η εικόνα (C) της σελίδας i-5 δείχνει ένα παράδειγμα τεχνικών χαρακτηριστικών μηχανής. Βεβαιωθείτε ότι τα δεδομένα εξοπλισμού που παρατίθενται στις πρώτες σελίδες αυτού του εγχειριδίου συμφωνούν με τα δεδομένα της πινακίδας αναγνώρισης μηχανής και των τεχνικών χαρακτηριστικών μηχανής.

TechPub-2660371-0101

Πώς Χρησιμοποιείται Αυτός ο Κατάλογος Ανταλλακτικών

Εύρεση ενός Αριθμού Ανταλλακτικού

a) Ανατρέξτε στην εικόνα (D) της σελίδας i-5: Πηγαίνετε στον αριθμό κεφαλαίου (15) που υποδεικνύεται δίπλα από την κύρια ομάδα της μηχανής η οποία περιλαμβάνει το εξάρτημα που θέλετε να βρείτε.

Τα βήματα b) και c) αναφέρονται στην εικόνα (E) της σελίδας i-6.

b) Στην εικόνα της κύριας ομάδας μηχανής, αναζητήστε την υποομάδα μηχανής (17) η οποία περιλαμβάνει το εξάρτημα ή την υποομάδα που αναζητάτε. Σημειώστε τον αριθμό θέσης (18) και πηγαίνετε στη σελίδα λίστας που ακολουθεί την εικόνα.

c) Αναζητήστε τον αριθμό θέσης (16) ή το όνομα υποομάδας (19). Πηγαίνετε στον αντίστοιχο αριθμό σελίδας (20) που αναγράφεται στη δεξιά στήλη.

Τα βήματα d) και e) αναφέρονται στην εικόνα (F) της σελίδας i-6.

d) Βρείτε το εξάρτημα (21) που αναζητάτε στην εικόνα υποομάδας μηχανής και σημειώστε τον αριθμό θέσης του εξαρτήματος.

e) Ο αριθμός του εξαρτήματος (29) και η περιγραφή του εξαρτήματος (30) παρατίθενται δίπλα στον αριθμό θέσης στη σελίδα λίστας.

Πληροφορίες που Περιέχονται σε έναν Κατάλογο Ανταλλακτικών

Η λίστα που ακολουθεί αναφέρεται στην εικόνα (F) της σελίδας i-6. Ένας Κατάλογος Ανταλλακτικών περιέχει τις παρακάτω πληροφορίες σχετικά με τις ομάδες, τις υποομάδες και τα ανταλλακτικά του εξοπλισμού:

- Αναφορά δομής ομάδας (22). Υποδηλώνει την επόμενη μεγαλύτερη ομάδα στη δομή λίστας του εξοπλισμού.
- Όνομα ομάδας (23)
- Κωδικός ανταλλακτικού (24). είτε την ενότητα Κωδικοί Ανταλλακτικών.
- Μονάδα μέτρησης (25)
- Ποσότητα (26)
- Αριθμός σχεδίου συγκροτήματος (27)
- Περιοχή σελίδων λίστας (28). Περιλαμβάνεται εφόσον η εικόνα ή η λίστα μιας ομάδας εκτίθεται σε περισσότερες από μία σελίδες.
- Αριθμός εξαρτήματος ή υποομάδας (29)
- Αριθμός υποομάδας ή περιγραφή εξαρτήματος (30)
- Αριθμός ομάδας (31)
- Αριθμός εξοπλισμού (32)
- Επικεφαλίδα πληροφοριών ομάδας (33). Υποδεικνύει εάν η ενότητα κάτω από την επικεφαλίδα αφορά μια συγκεκριμένη παραλλαγή μηχανής ή αποτελεί μια λίστα κοινών εξαρτημάτων. Σε περίπτωση που μια λίστα περιέχει περισσότερες από μία παραλλαγές και κάθε παραλλαγή έχει ξεχωριστό σχέδιο συγκροτήματος, εμφανίζεται μια παραπομπή προς τη σελίδα όπου βρίσκεται το σχέδιο συγκροτήματος της παραλλαγής.
- Εσωτερικές πληροφορίες (34)

Κωδικοί Ανταλλακτικών

Οι πίνακες που ακολουθούν δείχνουν τους δύο δυνατούς τύπους Κωδικών Ανταλλακτικών που μπορεί να αναγράφονται στη στήλη Κωδικών Ανταλλακτικών (SP) σε μία σελίδα λίστας ενός Καταλόγου Ανταλλακτικών.

Κωδικός Ανταλλακτικού	**Σημασία**
A	Βασικό εξάρτημα
B	Μη βασικό εξάρτημα

Κωδικός Ανταλλακτικού	**Σημασία**
U	Κιτ εκκίνησης που παραδίδεται μαζί με τη μηχανή
P	Κιτ παραγωγής που διατηρείται στο χώρο παραγωγής
S	Κιτ συντήρησης που διατηρείται στις αποθήκες των κέντρων εξυπηρέτησης
C	Κιτ κεντρικής αποθήκης που διατίθεται στην κεντρική αποθήκη

TechPub-2660371-0101

Introducción

Información del manual

Tetra Pak recomienda que se lean cuidadosamente todos los manuales entregados. Comprobar que todos los manuales entregados estén disponibles para el personal que efectúe la operación o el mantenimiento del equipo.

Es importante conservar este manual durante la vida útil del equipo, así como facilitárselo a cualquier propietario o usuario posterior.

Tetra Pak no se responsabilizará de daños en la máquina o equipo debidos a la inobservancia de las instrucciones dadas en los manuales que acompañan este equipo.

Manuales entregados

Los manuales entregados con este equipo pueden incluir

- Manual de conversión (CM)
  Este manual proporciona a los técnicos información sobre cómo convertir el equipo entre diferentes modos de producción.
- Manual eléctrico (EM)
  Este manual proporciona a los técnicos información acerca del sistema eléctrico del sistema.
- Manual de instalación (IM)
  Este manual proporciona a los técnicos la información necesaria para la instalación segura del equipo.
- Manual de mantenimiento (MM)
  Este manual proporciona a los técnicos la información acerca del mantenimiento del equipo.
- Manual de servicio (OM)
  Este manual proporciona al operador información acerca de la manipulación y operación de la máquina antes, durante y después de la producción.
- Catálogo de piezas de recambio (SPC)
  Este manual proporciona la información necesaria para pedir piezas de recambio a Tetra Pak.
- Manual técnico (TeM)
  - proporciona a los técnicos la información necesaria para la instalación segura del equipo
  - proporciona a los técnicos la información acerca del mantenimiento del equipo
  - proporciona a los técnicos información acerca del sistema eléctrico del sistema
  - proporciona la información necesaria para pedir piezas de recambio a Tetra Pak

TechPub-2660371-0101

Organización de las páginas

Remitirse a la ilustración (A) en la página i-5: Las páginas principales en un Catálogo de piezas de recambio se componen de una página de ilustración (1) y una página de lista correspondiente (7). El número de la página (5) se muestra en el encabezado de una página de ilustración y en el pie de página de una página de lista. El número del documento (6) se muestra en el pie de página de una página de lista.

Numeración de las páginas

Remitirse a la ilustración (A) en la página i-5: Un número de página (5) se compone de tres partes:

- Número de capítulo (2)
- número de página consecutivo (2) dentro del capítulo (3)
- número total de páginas del capítulo (4)

Introducción a la máquina

Fabricante

Para el nombre y la dirección del fabricante, ver la segunda página de este catálogo.

Servicio

Para pedir piezas de recambio para esta máquina o informar problemas asociados con la operación de esta máquina, contactar con la oficina de Tetra Pak más cercana.

Ponerse en contacto con el responsable correspondiente para otras preguntas, comentarios o sugerencias sobre mejoras de la máquina o equipo y su documentación.

Identificación

Clasificación de la CE

Este equipo cumple los requisitos esenciales relativos a la salud y la seguridad del Área Económica Europea (EEA).

TechPub-2660371-0101

Placa de la máquina

La ilustración (B) en la página i-5 muestra un ejemplo de placa de máquina. En la Introducción del capítulo de los manuales entregados con este equipo se muestra una ilustración de la placa de máquina válida y su ubicación en el equipo La placa de máquina contiene los datos listados a continuación requeridos al contactar con Tetra Pak en relaciôn a este equipo específico.

- Tipo de máquina (8)
- Volumen (9)
- Especificaciones de plano (10)
- Número de serie de la máquina (11)
- Fabricante (12)
- Marca de la CE (13)
- Año de fabricación (14)

La ilustración (C) en la página i-5 muestra un ejemplo de especificación máquina. Asegúrese que los datos de equipo listados en las páginas de cubierta de este manual corresponden a los datos de la placa de máquina y la especificación máquinav.

TechPub-2660371-0101

Cómo utilizar este Catálogo de piezas de recambio

Localizar un número de pieza de recambio

a) Remitirse a la ilustración (D) en la página i-5: Ir al número de capítulo (15) indicado detrás el grupo principal que contiene la parte que usted desea localizar.

Los items b) y c) se refieren a la ilustracióni (E) en la página i-6.

b) En la ilustración del grupo principal, buscar el subgrupo máquina (17) que contiene la pieza o subgrupo que usted busca. Anote el número de posición (18) y vaya a la página de lista que sigue la ilustración.

c) Busque el número de posición (16) o el nombre del subgrupo (19). Vaya al número de página correspondiente (20) listado en la columna de la derecha.

Los items d) y e) se refieren a la ilustración (F) en la página i-6.

d) Localizar la pieza (21) que busca en la ilustración del subgrupo y anotar el número de posición de la pieza.

e) El número de pieza (29) y la descripción de pieza (30) están listadas detrás del número de posición en la página de lista.

Información listada en un Catálogo de piezas de recambio

La lista a continuación remite a la ilustración (F) en la página i-6.
Un Catálogo de piezas de recambio contiene la siguiente información sobre grupos, subgrupos y piezas de recambio para el equipo:

- Referencia de estructura de grupo (22). Indica el siguiente grupo más alto en la estructura de lista del equipo.
- Nombre del grupo (23)
- Código de pieza de recambio (24). Consultar la sección Spare Part Codes.
- Unidad de medida (25)
- Cantidad (26)
- Número de plano de conjunto (27)
- Gama de página lista (28). Incluida si hay páginas múltiples en la ilustración o lista de grupo.
- Número de pieza o subgrupo (29)
- Nombre, subgrupo o descripción de pieza (30)
- Número de grupo (31)
- Número de equipo (32)
- Encabezado de información grupo (33). Indica si la sección debajo del encabezado es para una variante máquina específica o si es una lista de piezas comunes. Si la lista tiene más de una variante y cada variante tiene su propio plano de conjunto, se muestra una referencia página para el plano de conjunto de la variante.
- Información interna (34)

TechPub-2660371-0101

Códigos de piezas de recambio

Las tablas a continuación muestran los dos tipos posibles de códigos de Piezas de recambio (PR) que se pueden listar en la columna PR o en una página de lista de Catálogo de piezas de recambio.

Código PR	Significado
A	Pieza crítica
B	Pieza no crítica

Código PR	Significado
U	Kit de inicio suministrado con la entrega de la máquina.
P	Kit de producción debe guardarse en el sitio de producción.
S	Kit de servicio; debe guardarse en el almacén de las estaciones de servicio.
C	Kit de almacén central; debe guardarse en el almacén central.

Johdanto

Tietoja käsikirjasta

Tetra Pak suosittelee kaikkien toimitettavien oppaiden lukemista huolellisesti. Varmista, että toimitetut oppaat ovat laitetta käyttävän tai huoltavan henkilökunnan saatavilla.

Tämä luettelo on säilytettävä laitteen käyttöiän ajan ja toimitettava edelleen mahdolliselle seuraavalle omistajalle tai käyttäjälle.

Tetra Pak ei vastaa laitevaurioista, jotka aiheutuvat laitteen mukana tulevissa oppaissa annettujen ohjeiden noudattamatta jättämisestä.

Toimitettavat ohjeet

Tämän laitteen mukana toimitettaviin ohjeisiin kuuluvat:

- Muutoskirja (CM)
  Tässä oppaassa on teknikoille tarkoitettuja ohjeita laitteiston muuttamisesta eti tuotantotiloihin.
- Sähkökirja (EM)
  Tässä oppaassa on teknikoille tarkoitettuja tietoja laitteen sähköjärjestelmästä.
- Asennuskäsikirja (IM)
  Tässä oppaassa on teknikoille tarkoitettuja tietoja, jotka tarvitaan laitteen turvallista asentamista varten.
- Huoltokäsikirja (MM)
  Tässä oppaassa on teknikoille tarkoitettuja tietoja tämän laitteen huoltamisesta.
- Käyttäjän käsikirja (OM)
  Tässä oppaassa on käyttäjälle tarkoitettuja tietoja laitteiston käsittelystä ja käyttämisestä ennen tuotantoa, tuotannon aikana ja sen jälkeen.
- Varaosakuvasto (SPC)
  Tässä oppaassa on tietoja, joita tarvitaan varaosien tilaamiseen Tetra Pakilta.
- Tekninen käsikirja (TeM)
  - sisältää teknikoille tarkoitettuja tietoja, joita tarvitaan laitteen turvallista asentamista varten
  - sisältää teknikoille tarkoitettuja tietoja laitteen huoltamisesta
  - sisältää teknikoille tarkoitettuja tietoja laitteen sähköjärjestelmästä
  - sisältää tietoja, joita tarvitaan varaosien tilaamiseen Tetra Pakilta.

TechPub-2660371-0101

Sivujen asettelu

Katso kuva (A) sivulla i-5: Varaosaluettelon pääsivut koostuvat kuvasivusta (1) ja sitä vastaavasta luettelosivusta (7). Sivunumero (5) näytetään kuvasivun ylätunnisteessa ja luettelosivun alatunnisteessa. Asiakirjan numero (6) näytetään luettelosivun alatunnisteessa.

Sivunumerointi

Katso kuva (A) sivulla i-5: Sivunumerossa (5) on kolme osaa:

- luvun numero (2)
- perättäinen sivunumero (3) luvun sisällä
- luvun kokonaissivumäärä (4).

Koneen esittely

Valmistaja

Valmistajan nimi ja osoite on ilmoitettu tämän luettelon toisella sivulla.

Huolto

Jos haluat tilata tähän koneeseen varaosia tai jos tämän koneen käytössä ilmenee ongelmia, jotka haluat raportoida, ota yhteyttä lähimpään Tetra Pakin toimistoon.

Jos sinulla on muuta kysyttävää, huomautettavaa tai ehdotuksia laitteistoa ja sen asiakirjoja koskevista parannuksista, ota yhteys yhteyshenkilöön.

Tunnistetiedot

CE-luokitus

Tämä laite vastaa Euroopan talousalueen (EEA) perustason terveys- ja turvallisuusvaatimuksia.

TechPub-2660371-0101

Koneen tyyppikilpi

Kuvassa (B) sivulla i-5 on esimerkki koneen tyyppikilvestä. Voimassa olevan tyyppikilven kuva ja sen sijainti koneessa käy ilmi laitteiston mukana tulleiden ohjeiden Johdanto-luvusta. Tyyppikilvessä on tarvitsemasi Tetra Pakin voimassa olevat yhteystiedot, kun on kyseessä tämä nimenomainen laite.

- Konetyyppi (8)
- Tilavuus (9)
- Piirustuserittelyt (10)
- Koneen sarjanumero (11)
- Valmistaja (12)
- CE-merkki (13)
- Valmistusvuosi (14)

Kuvassa (C) sivulla i-5 on esimerkki koneen erittelystä. Varmista, että tämän ohjeen etusivuilla ilmoitetut laitetiedot vastaavat tyyppikilven ja kone-erittelyn tietoja.

Tämän varaosaluettelon käyttäminen

Etsi varaosan numero

a) Katso kuva (D) sivulla i-5: Siirry lukuun (15), joka on ilmoitettu etsittävän osan pääryhmän vieressä.

Kohdat b) ja c) viittaavat kuvaan (E) sivulla i-6.

b) Etsi pääryhmän kuvasta koneen alaryhmä (17), joka sisältää etsimäsi osan tai alaryhmän. Merkitse muistiin paikkanumero (18) ja siirry luettelosivulle, joka seuraa kuvaa.

c) Etsi paikkanumero (16) tai alaryhmän nimi (19). Siirry vastaavalle sivunumerolle (20), joka on ilmoitettu oikeassa sarakkeessa.

Kohdat d) ja e) viittaavat kuvaan (F) sivulla i-6.

d) Hae etsittävä osa (21) alaryhmän kuvasta ja merkitse osan paikkanumero muistiin.

e) Osanumero (29) ja osan kuvaus (30) on annettu paikkanumeron vieressä luettelosivulla.

TechPub-2660371-0101

Varaosaluettelossa olevat tiedot

Alla oleva luettelo viittaa kuvaan (F) sivulla i-6. Varaosaluettelo sisältää seuraavat tiedot ryhmistä, alaryhmistä ja laitteen varaosista:

- Ryhmärakenneviite (22). Osoittaa seuraavaksi ylemmän ryhmän laiteluettelorakenteessa.
- Ryhmän nimi (23)
- Varaosan koodi (24). Katso osio Varaosakoodit.
- Mittayksikkö (25)
- Määrä (26)
- Kokoonpanopiirustuksen numero (27)
- Luettelosivun väli (28). Tämä on mukana, jos ryhmäkuvassa tai luettelossa on useita sivuja.
- Osan tai alaryhmän numero (29)
- Alaryhmän nimi tai osan kuvaus (30)
- Ryhmän numero (31)
- Laitteen numero (32)
- Ryhmätietojen otsikko (33). Osoittaa, koskeeko alla oleva osio tiettyä koneversiota vai onko kyseessä yleisten osien luettelo. Jos luettelolla on useampi kuin yksi versio ja kullakin versiolla on oma kokoonpanopiirustuksensa, näytetään version kokoonpanopiirustuksen sivuviittaus.
- Sisäiset tiedot (34)

Varaosakoodit

Alla oleva taulukko osoittaa kaksi mahdollista varaosan (SP) koodin tyyppiä, jotka voidaan luetella varaosaluettelon luettelosivun SP-sarakkeessa.

SP-koodi	Merkitys
A	Kriittinen osa
B	Ei-kriittinen osa

SP-koodi	Merkitys
U	Aloituspaketti, joka toimitetaan koneen mukana
P	Tuotantopaketti, joka pidetään tuotantopaikassa
S	Huoltosarja, joka pidetään huoltokorjaamon varastossa
C	Keskusvarastosarja, jonka saa keskusvarastolta

TechPub-2660371-0101

Introduction

Information sur le manuel

Tetra Pak recommande de lire attentivement tous les manuels fournis. S'assurer que les manuels fournis soient accessibles au personnel qui s'occupe du fonctionnement ou de la maintenance de l'équipement.

Il est important de conserver ce manuel pendant toute la durée d'utilisation de la machine et de le transmettre à tout détenteur ou utilisateur ultérieur.

Tetra Pak ne sera pas tenu responsable d’un dommage causé à la machine ou à l’équipement par le fait de ne pas avoir respecté les instructions figurant dans le présent manuel.

Manuels fournis

Les manuels fournis avec cette machine comprennent

- Le Manuel de Conversion (CM)
  Ce manuel fournit aux techniciens les informations nécessaires pour convertir la machine en vue des différents modes de production.
- Manuel Electrique (EM)
  Ce manuel fournit aux techniciens les informations sur le système électrique de la machine.
- Manuel de Mise en Place (IM)
  Ce manuel fournit aux techniciens les informations nécessaires pour l'installation de la machine en toute sécurité.
- Manuel de Maintenance (MM)
  Ce manuel fournit aux techniciens les informations pour la maintenance.
- Manuel d'Opérateur (OM)
  Ce manuel fournit aux opérateurs les informations nécessaires pour la manutention et le fonctionnement de la machine avant, pendant et après la production.
- Catalogue de Pièces de Rechange (SPC)
  Ce manuel fournit l'information nécessaire à la commande de pièces de rechange auprès de Tetra Pak
- Manuel Technique (TeM)
  - fournit aux techniciens les informations nécessaires pour l'installation de la machine en toute sécurité
  - fournit aux techniciens les informations pour la maintenance
  - fournit aux techniciens les informations sur le système électrique de la machine
  - fournit l' information nécessaire à la commande de pièces de rechange auprès de Tetra Pak

TechPub-2660371-0101

Présentation d’une page

Se référer à la figure (A) à la page i-5: Les pages principales du Catalogue des Pièces de Rechange sont composées d'une page de figure (1) et d'une page de liste correspondante (7). Le numéro de page (5) est indiqué dans le titre de la page de figure et dans le bas de page d'une page de liste.
Le numéro de document (6) est indiqué dans le bas de page de la page de liste.

Numérotation de page

Se référer (A) à la page i-5: Un numéro de page (5) possède trois parties:

- Numéro de chapitre (2)
- numéro de page consécutif (2) à l'intérieur du chapitre (3)
- nombre total de pages dans le chapitre (4)

Présentation de la machine

Fabricant

Pour le nom et l'adresse du fabricant, voir la deuxième page de ce catalogue.

Assistance technique

Pour commander les pièces de rechange de cette machine ou pour rapporter les problèmes associés au fonctionnement de celle-ci, prendre contact avec le bureau Tetra Pak le plus proche.

Prendre contact avec le responsable de liaison pour les renseignements, commentaires ou suggestions concernant la machine ou l’équipement et sa documentation.

Identification

Certification CE

Cet équipement est conforme aux réglementations essentielles d'hygiène et de sécurité de la Communauté Economique Européenne (CEE).

TechPub-2660371-0101

Plaque signalétique de machine

La figure (B) à la page i-5 montre un exemple d'une plaque signalétique de machine.
Une représentation de la plaque de machine valable et son emplacement sur l'équipement est indiquée au Chapitre Introduction des manuels fournis avec l'équipement. La plaque de machine contient les caractéristiques figurant dans la liste ci-dessous, nécessaires pour prendre contact avec Tetra Pak au sujet de cet équipement spécifique.

- Type de machine (8)
- Volume (9)
- Spécifications du plan (10)
- Numéro de série de la machine (11)
- Fabricant (12)
- Marquage CE (13)
- Année de fabrication (14)

La figure (C) à la page i-5 montre un exemple d'une spécification de machine. S'assurer que les caractéristiques de l'équipement figurant dans la liste des pages de garde de ce manuel correspondent aux caractéristiques de la plaque signalétique de la machine et à ses spécifications.

TechPub-2660371-0101

Comment utiliser ce Catalogue de Pièces de Rechange

Localiser un numéro de pièce de rechange

a) Se référer à la figure (D) à la page i-5: Aller au numéro de chapitre (15) indiqué à côté du groupe principal qui contient la pièce que vous souhaitez localiser.

Les articles b) et c) se réfèrent à la figure (E) à la page i-6.

b) Sur la figure du groupe principal, chercher la sous-groupe de machine (17) qui contient la pièce ou le sous-groupe que vous recherchez. Noter le numéro de repère (18) et aller à la page de liste qui suit la figure.

c) Rechercher le numéro de repère (16) ou le nom de sous-groupe (19). Aller au numéro de page correspondant (20) figurant dans la liste de la colonne de droite.

Les articles d) et e) se réfèrent à la figure (F) à la page i-6.

d) Localiser la pièce (21) que vous recherchez sur la figure de sous-groupe et noter le numéro de repère de la pièce.

e) Le numéro de pièce (29) et la description de la pièce (30) figurent dans la liste à côté du numéro de repère sur la page de liste.

Informations figurant dans la liste dans un Catalogue de Pièces de Rechange

La liste ci-dessous se réfère à la figure (F) à la page i-6. Un Catalogue de Pièces de Rechange contient les renseignements suivants relatifs aux groupes, sous-groupes et pièces de rechange de l'équipement:

- Référence de structure de groupe (22). Indique le groupe supérieur suivant dans la structure de liste d'équipement.
- Nom du groupe (23).
- Code de pièce de rechange (24). Voir la section Spare Part Codes.
- Unité de mesure (25).
- Quantité (26).
- Numéro de plan de montage (27).
- Gamme de la page de liste (28). Incluse s'il y a des pages multiples dans la figure de groupe ou dans la liste.
- Numéro de pièce ou de sous-groupe (29).
- Nom de sous-groupe ou description de la pièce (30).
- Numéro de groupe (31).
- Numéro de l'équipement (32).
- Titre des informations de groupe (33). Indique si la section sous le titre est pour une variante de machine spécifique ou s'il y a une liste de pièces communes. Si une liste comporte plus d'une variante et que chaque variante possède son propre plan de montage, une référence de page au plan de montage de la variante est alors indiqué.
- Renseignements internes (34).

TechPub-2660371-0101

Codes des pièces de rechange

Les tableaux ci-dessous montrent les deux types possibles de Code de Pièces de rechange (SP) qui peuvent figurer dans la liste dans la colonne de pièces de rechange d'une page de liste de Catalogue de Pièces de Rechange.

Code SP	Signification
A	Pièce critique
B	Pièce non critique

Code SP	Signification
U	Kit de mise en route avec livraison de la machine
P	Kit de production à conserver sur le site de production
S	Kit d'assistance à conserver au magasin des postes d'assistance
C	Kit de dépôt central disponible au magasin central

Introduzione

Informazioni sul manuale

Tetra Pak consiglia di leggere con attenzione tutti i manuali forniti in dotazione. Assicurarsi che tutti i manuali in dotazione siano disponibili per il personale addetto al funzionamento e alla manutenzione della macchina.

È importante conservare il presente catalogo per tutta la durata della macchina e consegnarlo al successivo proprietario o utilizzatore.

Tetra Pak non sarà da ritenersi responsabile per eventuali danni alla macchina causati dal mancato rispetto delle istruzioni fornite nei manuali che accompagnano le macchine.

Manuali in dotazione

I manuali consegnati con la presente macchina possono comprendere:

- Manuale di Conversione (CM)
  Questo manuale fornisce ai tecnici le informazioni necessarie per la conversione della macchina da una modalità di produzione a un'altra.
- Manuale Elettrico (EM)
  Questo manuale fornisce ai tecnici informazioni sull'impianto elettrico della macchina.
- Manuale di Installazione (IM)
  Questo manuale fornisce ai tecnici le informazioni necessarie per installare in sicurezza la macchina.
- Manuale di Manutenzione (MM)
  Questo manuale fornisce ai tecnici le informazioni necessarie per la manutenzione della macchina.
- Manuale Operativo (OM)
  Questo manuale fornisce all'operatore le informazioni sull'utilizzo e il funzionamento della macchina prima, durante e dopo la produzione.
- Catalogo Pezzi di Ricambio (SPC)
  Questo manuale fornisce le informazioni necessarie per ordinare a Tetra Pak i pezzi di ricambio.
- Manuale Tecnico (TeM)
  - fornisce ai tecnici le informazioni necessarie per installare in sicurezza la macchina
  - fornisce ai tecnici le informazioni necessarie per la manutenzione della macchina
  - fornisce ai tecnici informazioni sull'impianto elettrico della macchina
  - fornisce le informazioni necessarie per ordinare a Tetra Pak i pezzi di ricambio.

TechPub-2660371-0101

Schema della pagina

Consultare la figura (A) a pagina i-5. Le pagine principali del Catalogo Pezzi di Ricambio consistono in una pagina con la figura (1) e una pagina elenco corrispondente (7). Il numero di pagina (5) è indicato nell'intestazione delle pagine con le figure e nel piè di pagina delle pagine elenco. Il codice del documento (6) è indicato nel piè di pagina delle pagine elenco.

Numerazione delle pagine

Consultare la figura (A) a pagina i-5. Il numero di pagina (5) è suddiviso in tre parti:

- numero della sezione (2)
- numero progressivo di pagina all'interno della sezione (3)
- numero totale di pagine della sezione (4)

Introduzione alla macchina

Fabbricante

Il nome e l'indirizzo del fabbricante sono riportati sulla seconda pagina del presente catalogo.

Assistenza

Per ordinare i pezzi di ricambio per questa macchina oppure per riferire problemi associati con il funzionamento della macchina, contattare il più vicino ufficio Tetra Pak.

Per tutte le altre richieste, commenti o suggerimenti per eventuali miglioramenti da apportare alla macchina e alla relativa documentazione, contattare il responsabile di collegamento.

Identificazione

Marchio CE

La macchina è conforme alle principali norme sanitarie e di sicurezza dell'Area Economica Europea (EEA).

TechPub-2660371-0101

Targhetta della macchina

La figura (B) a pagina i-5 illustra un esempio di targhetta della macchina. La sezione Introduzione di tutti i manuali consegnati con la presente macchina contiene invece la figura della targhetta della macchina valida e l'illustrazione della sua posizione sulla macchina. La targhetta riporta i dati elencati sotto che sono necessari per contattare Tetra Pak in relazione a questa macchina specifica.

- Tipo di macchina (8)
- Volume (9)
- Specifiche disegno (10)
- Numero di matricola della macchina (11)
- Fabbricante (12)
- Marchio CE (13)
- Anno di fabbricazione (14)

La figura (C) a pagina i-5 mostra un esempio delle specifiche di una macchina. Verificare che i dati relativi alla macchina elencati nelle pagine iniziali del manuale corrispondano ai dati riportati sulla targhetta della macchina e nelle specifiche della macchina.

TechPub-2660371-0101

Come usare questo Catalogo Pezzi di Ricambio

Individuare il numero del pezzo di ricambio

f) Vedere la figura (D) a pagina i-5. Andare al numero della sezione (15) indicato accanto al gruppo principale che contiene il pezzo che si desidera individuare.

I punti b) e c) fanno riferimento alla figura (E) a pagina i-6.

g) Nella figura del gruppo principale, identificare il sottogruppo della macchina (17) che contiene il pezzo o il sottogruppo cercato. Annotare il numero di posizione (18) e andare alla pagina elenco che segue la figura.

h) Identificare il numero di posizione (16) o il nome del sottogruppo (19). Andare al numero di pagina corrispondente (20) indicato nella colonna di destra.

I punti d) e e) fanno riferimento alla figura (F) a pagina i-6.

i) Individuare il pezzo (21) cercato sulla figura del sottogruppo e annotare il numero di posizione del pezzo.

j) Il numero del pezzo (29) e la descrizione del pezzo (30) sono indicati accanto al numero di posizione sulla pagina elenco.

Informazioni contenute nel Catalogo Pezzi di Ricambio

L'elenco seguente fa riferimento alla figura (F) a pagina i-6. Il Catalogo Pezzi di Ricambio contiene le seguenti informazioni sui gruppi, i sottogruppi e i pezzi di ricambio della macchina:

- Riferimento struttura gruppo (22). Indica il gruppo superiore più prossimo nella struttura elenco della macchina.
- Nome gruppo (23)
- Codice pezzo di ricambio (24). Vedere la sezione Codici pezzi di ricambio.
- Unità di misura (25)
- Quantità (26)
- Numero disegno di assemblaggio (27)
- Pagine dell'elenco (28). Questa informazione è presente se la figura o l'elenco relativi al gruppo occupano più di una pagina del manuale.
- Numero pezzo o sottogruppo (29)
- Nome sottogruppo o descrizione pezzo (30)
- Numero gruppo (31)
- Numero macchina (32)
- Titolo informazioni gruppo (33). Indica se la sezione che segue il titolo si riferisce a una variante di macchina specifica oppure se si tratta di un elenco di parti comuni. Se un elenco contiene più di una variante ed esiste un disegno di assemblaggio specifico per ogni variante, viene fornito il riferimento alla pagina in cui è riportato il disegno di assemblaggio relativo alla variante.
- Informazioni interne (34)

Codici pezzi di ricambio

Le tabelle seguenti mostrano le due tipologie di codici dei pezzi di ricambio (SP) che è possibile trovare nella colonna SP di una pagina elenco del Catalogo Pezzi di Ricambio.

Codice SP	Spiegazione
A	Pezzo critico
B	Pezzo non critico

Codice SP	Spiegazione
U	Kit d'avviamento fornito insieme alla macchina
P	Kit di produzione da conservare nei locali di produzione
S	Kit d'assistenza da conservare presso il magazzino del centro di assistenza
C	Kit magazzino centrale che deve essere disponibile presso il magazzino centrale

TechPub-2660371-0101

Inleiding

Informatie betreffende dit handboek

Tetra Pak raadt aan alle geleverde documentatie zorgvuldig te lezen. Ga na of de geleverde documentatie ter beschikking is van het personeel dat de machine moet bedienen of servicewerkzaamheden moet uitvoeren.

Het is belangrijk deze catalogus voor de duur van de machine te bewaren en de catalogus door te geven aan elke volgende eigenaar of gebruiker.

Tetra Pak aanvaardt geen verantwoordelijkheid voor om het even welke soort beschadiging aan de machine als gevolg van het niet opvolgen van de in dit handboek gegeven instructies.

Bijgeleverde handboeken

De met deze apparatuur geleverde handboeken omvatten

- Conversiehandboek (CM)
  Dit handboek geeft technici informatie over het ombouwen van de apparatuur tussen verschillende productiemodi.
- Handboek Elektriciteit (EM)
  Dit handboek geeft elektriciens en servicetechnici informatie betreffende het elektrisch systeem van de apparatuur.
- Installatiehandboek (IM)
  Dit handboek geeft installatiepersoneel informatie om op veilige wijze de apparatuur te installeren.
- Onderhoudshandboek (MM)
  Dit handboek geeft technici informatie over het onderhoud van de apparatuur.
- Bedieningshandboek (OM)
  Dit handboek geeft de operator informatie betreffende het omgaan met en bedienen van de apparatuur, voor, tijdens en na productie.
- Catalogus reservedelen (SPC).
  Dit handboek geeft de nodige informatie om reserveonderdelen bij Tetra Pak te bestellen.
- Technisch Handboek (TeM)
  - Dit handboek geeft technici informatie, nodig om op veilige wijze de apparatuur te installeren
  - Dit handboek geeft technici informatie over het onderhoud van de apparatuur
  - Dit handboek geeft technici informatie betreffende het elektrisch systeem van de apparatuur
  - geeft de nodige informatie, nodig om reserveonderdelen bij Tetra Pak te bestellen

TechPub-2660371-0101

Pagina lay-out

Refereer naar de illustratie (A) op bladzijde i-5: De belangrijkste bladzijden van een Catalogus Reserveonderdelen bestaan uit een bladzijde met een illustratie (1) en een corresponderende bladzijde met een lijst (7).
Het bladzijdenummer (5) is te vinden in de kop van een illustratiebladzijde en in de voetnoot van de lijstbladzijde. Het documentnummer (6) is te vinden in de voetnoot van een lijstbladzijde.

Bladzijdenummering

Refereer naar de illustratie (A) op bladzijde i-5: een bladzijdenummer (5) bestaat uit drie delen:

- hoofdstuknummer (2)
- opeenvolgende bladzijdenummer in het hoofdstuk (3)
- totaal aantal bladzijden in het hoofdstuk (4)

Introductie van de machine

Fabrikant

Voor naam en adres van de fabrikant, zie de tweede bladzijde van deze catalogus.

Service

Voor het bestellen van reserveonderdelen of om bedieningsproblemen van deze machine te melden, contacteer de dichtst bijzijnde vestiging van Tetra Pak.

Neem contact op met de contactpersoon voor andere informatie, opmerkingen of suggesties ter verbetering van de machine en de bijbehorende documentatie.

Identificatie

CE-classificatie

Deze apparatuur voldoet aan de basiseisen voor gezondheid en veiligheid voor het Europese Economische Gebied (EEA).

TechPub-2660371-0101

Machineplaatje

De illustratie (B) op bladzijde i-5 toont een voorbeeld van een machineplaatje.
Een illustratie van het wettige machineplaatje en de plaatsing ervan wordt getoond in het hoofdstuk Introductie van de handboeken, meegeleverd met deze apparatuur. Het machineplaatje bevat onderstaande gegevens die nodig zijn wanneer Tetra Pak moet worden gecontacteerd betreffende deze apparatuur.

- Machinetype (8)
- Volume (9)
- Tekeningspecificaties (10)
- Serienummer machine (11)
- Fabrikant (12)
- CE-markering (13)
- Fabricagejaar (14)

De illustratie (C) op bladzijde i-5 toont een voorbeeld van een machineplaatje. Controleer of de gegevens betreffende de apparatuur in de voorste bladzijden van dit handboek overeenkomen met de gegevens op het machineplaatje en de machinespecificaties.

TechPub-2660371-0101

Hoe dient deze catalogus reserveonderdelen te worden gebruikt

Lokaliseren van een nummer van een reserveonderdeel

a) Refereer naar de illustratie (D) op bladzijde i-5: ga naar het hoofdstuknummer (15), naast de hoofdgroep die het gewenste deel bevat.

Items b) en c) refereer naar de illustratie (E) op bladzijde i-6.

b) Op de illustratie van de hoofdgroep, zoek de machinesub-groep (17) op die het deel van de gewenste sub-groep bevat. Noteer het positienummer (18) en ga naar de lijstbladzijde die op de illustratie volgt.

c) Op de illustratie van de hoofdgroep, zoek de machinesub-groep (17) op die het deel van de gewenste sub-groep bevat. Noteer het positienummer (18) en ga naar de lijstbladzijde die op de illustratie volgt.

Items d) en e) refereren naar de illustratie (F) op bladzijde i-6.

d) Lokaliseer het gewenste onderdeel (21) in de illustratie van de sub-groep en noteer het positienummer van het onderdeel.

e) Het onderdeelnummer (29) en de beschrijving ervan (30) worden naast het positienummer op de lijstbladzijde weergegeven.

Informatie die in een Catalogus reserveonderdelen wordt gegeven

Onderstaande lijst verwijst naar de illustratie (F) op bladzijde i-6.
Een Catalogus reserveonderdelen bevat de volgende informatie betreffende groepen, sub-groepen en reserveonderdelen voor de apparatuur:

- Referentie groepsstructuur (22). Geeft de volgende hoogste groep in de structuur van de apparatuur aan.
- Groepsnaam(23)
- Code reserveonderdeel (24). Zie deel Spare Part Codes.
- Meeteenheid (25)
- Hoeveelheid (26)
- Tekeningnummer montage (27)
- Lijst met bladzijdenreeks (28). Inclusief indien er meerdere bladzijden in de groepsillustratie of lijst voorkomen.
- Onderdeel of sub-groepsnummer (29)
- Naam sub-groep of beschrijving onderdeel (30)
- Groepsnummer (31)
- Apparatuurnummer (32)
- Titel groepsinformatie (33). Geeft aan of het deel onder de titel voor een specifieke machine is, voor een variant of een lijst is met algemene onderdelen. Indien een lijst meer dan één variant bevat en elke variant heeft zijn eigen montagetekening, wordt een bladzijdenreferentie naar de montagetekening van de variant gegeven.
- Interne informatie (34)

Codes reserveonderdelen

Onderstaande tabellen tonen de twee mogelijke codetypes van reserveonderdelen (SP) die vermeld kunnen worden in de SP-kolom van een bladzijde van de Catalogus reserveonderdelen.

SP-code	Omschrijving
A	Essentieel onderdeel
B	Niet essentieel onderdeel

SP-code	Omschrijving
U	Start-up kit, met de machine meegeleverd
P	Productiekit, op te slaan op productielocatie
S	Servicekit, op te slaan op servicelocatie
C	Kit centrale depot, beschikbaar te zijn in centraal magazijn

TechPub-2660371-0101

Introduksjon

Informasjon om håndboken

Tetra Pak anbefaler at du leser nøye gjennom alle leverte håndbøker. Sørg for at håndbøkene er tilgjengelige for alle som betjener eller vedlikeholder utstyret.

Det er viktig at du tar vare på denne katalogen under hele levetiden til utstyret og at du gir den videre til eventuelle nye eiere eller brukere.

Tetra Pak vil ikke være ansvarlig for skader på utstyret som oppstår fordi brukeren ikke følger instruksjonene i håndbøkene som følger med utstyret.

Leverte håndbøker

Håndbøkene som leveres med dette utstyret, kan inkludere

- Konverteringsmanual (CM)
  Denne håndboken gir teknikere informasjon om hvordan de konverterer utstyret mellom ulike produksjonsmodi.
- Electrisk manual (EM)
  Denne håndboken gir teknikere informasjon om utstyrets elektriske system.
- Installasjonsmanual (IM)
  Denne håndboken gir teknikere informasjon som kreves for å kunne installere utstyret på en sikker måte.
- Vedlikeholdsmanual (MM)
  Denne håndboken gir teknikere informasjon om vedlikehold av utstyret.
- Driftsmanual (OM)
  Denne håndboken gir operatøren informasjon om hvordan han håndterer og bruker utstyret før, under og etter produksjon.
- Reservedelskatalog (SPC)
  Denne håndboken inneholder informasjon som du trenger for å bestille reservedeler fra Tetra Pak.
- Teknisk manual (TeM)
  - gir teknikere informasjon om sikker installasjon av utstyret
  - gir teknikere informasjon om vedlikehold av utstyret
  - gir teknikere informasjon om utstyrets elektriske system
  - inneholder informasjon som du trenger for å bestille reservedeler fra Tetra Pak

TechPub-2660371-0101

Sideoppsett

Se illustrasjonen (A) på side i-5: Hovedsidene i reservedelskatalogen består av en illustrasjonsside (1) og en korresponderende listeside (7). Sidenummeret (5) vises i topptekstenpå illustrasjonssiden og i bunnteksten listesiden. Dokumentnummeret (6) vises i bunnteksten på listesiden.

Sidenummerering

Se illustrasjonen (A) på side i-5: Et sidenummer (5) består av tre deler:

- kapittelnummer (2)
- etterfølgende sidenummer i kapitlet (3)
- det totale antall sider i kapitlet (4)

Introduksjon av maskinen

Produsent

Hvis du ønsker produsentens navn og adresse, kan du se side to i denne katalogen.

Service

Når du skal bestille reservedeler til denne maskinen eller rapportere problemer forbundet med driften av denne maskinen, må du kontakte ditt nærmeste Tetra Pak-kontor.

Når det gjelder andre forespørsler, kommentarer eller forslag til forbedringer av utstyret og dets dokumentasjon, kan du ta kontakt med din kontaktperson.

Identifisering

CE-klassifisering

Dette utstyret er i overensstemmelse med de grunnleggende helse- og sikkerhetsforskriftene i Det europeiske økonomiske samarbeidsområdet (EØS).

TechPub-2660371-0101

Maskinplate

Illustrasjonen (B) på side i-5 viser et eksempel på en maskinplate. En illustrasjon av en gyldig maskinplate og hvor denne er plassert på utstyret, er vist i introduksjonskapitlet i håndbøkene som følger med dette utstyret. Maskinplaten inneholder nedenstående data, som du trenger når du skal kontakte Tetra Pak angående dette bestemte utstyret.

- Maskintype (8)
- Volum (9)
- Tegningsspesifikasjoner (10)
- Maskin-serienummer (11)
- Produsent (12)
- CE-merke (13)
- Produksjonsår (14)

Illustrasjonen (C) på side i-5 viser et eksempel på en maskinspesifikasjon. Sørg for at utstyrsdataene som står oppført foran i denne håndboken samsvarer med dataene på maskinplaten og maskinspesifikasjonen.

TechPub-2660371-0101

Hvordan bruke denne reservedelskatalogen

Finn et reservedelsnummer

a) Se illustrasjonen (D) på side i-5: Gå til kapittelnummeret (15) som er angitt ved siden av hovedgruppen som inneholder delen du vil finne.

Punkt b) og c) viser til illustrasjonen (E) på side i-6.

b) På hovedgruppeillustrasjonen ser du etter maskinundergruppen (17) som inneholder delen eller undergruppen du ser etter. Merk deg posisjonsnummeret (18), og gå til listesiden som kommer etter illustrasjonen.

c) Se etter posisjonsnummeret (16) eller undergruppenavnet (19). Gå til det korresponderende sidenummeret (20) som står oppført i høyre kolonne.

Punkt d) og e) viser til illustrasjonen (F) på side i-6.

d) Finn delen (21) du ser etter på undergruppeillustrasjonen, og merk deg delens posisjonsnummer.

e) Delenummeret (29) og delebeskrivelsen (30) finner du ved siden av posisjonsnummeret på listesiden.

Informasjon i en reservedelskatalog

Listen nedenfor viser til illustrasjonen (F) på side i-6. En reservedelskatalog inneholder følgende informasjon om grupper, undergrupper og reservedeler for utstyret:

- Gruppeinndelingsreferanse (22). Angir den neste gruppen opp i inndelingen av utstyrslisten.
- Gruppenavn (23)
- Reservedelskode (24). Se avsnittet Reservedelskoder.
- Målenhet (25)
- Antall (26)
- Tegningsnummer (27)
- Listesideområde (28). Inkludert hvis det er flere sider i gruppeillustrasjonen eller listen.
- Dele- eller undergruppenummer (29)
- Undergruppenavn eller delebeskrivelse (30)
- Gruppenummer (31)
- Utstyrsnummer (32)
- Gruppeinformasjonsoverskrift (33). Angir om avsnittet under overskriften er for en bestemt maskinvariant eller om det er en liste over vanlige deler. Hvis en liste har flere varianter og hver variant har sin egen sammenstillingstegning, vises det en sidereferanse til variantens sammenstillingstegning.
- Intern informasjon (34)

Reservedelskoder

Tabellene nedenfor viser de to mulige typene av reservedelskode (SP) som kan stå oppført i SP-kolonnen på en listeside i en reservedelskatalog.

SP-kode	Betydning
A	Kritisk del
B	Ikke-kritisk del

SP-kode	Betydning
U	Oppstartsett som følger med maskinleveransen
P	Produksjonssett som skal være på produksjonsstedet
S	Servicesett som skal være på servicestasjonen
C	Sentrallagersett som skal være tilgjengelig på sentrallageret

TechPub-2660371-0101

Introdução

Informação do Manual

A Tetra Pak recomenda ler cuidadosamente todos os manuais fornecidos. Verificar se os manuais fornecidos estão ao dispor do pessoal que trabalha com o equipamento ou que faz a manutenção do mesmo.

É importante guardar este catálogo durante o tempo útil de vida da máquina ou do equipamento e de entregar o catálogo a qualquer proprietário ou utilizador subsequente.

A Tetra Pak não toma a responsabilidade por quaisquer danos no equipamento causados devido ao facto de que as instruções dadas nos manuais que acompanham este equipamento não foram seguidas.

Manuais fornecidos

Os manuais fornecidos com este equipamento incluem

- Manual de Conversão (CM)
  Este manual fornece aos técnicos as informações sobre a conversão do equipamento entre os diferentes modos de produção.
- Manual Eléctrico (EM)
  Este manual fornece aos técnicos as informações sobre o sistema eléctrico do equipamento.
- Manual de Instalação (IM)
  Este manual fornece aos técnicos as informações necessárias para instalar seguramente o equipamento.
- Manual de Manutenção (MM)
  Este manual fornece aos técnicos as informações para a manutenção do equipamento.
- Manual de Operação (OM)
  Este manual fornece ao operador as informações que ele necessita para manejar e accionar o equipamento antes, durante e depois da produção.
- Catálogo de Peças Sobressalentes (SPC)
  Este manual fornece as informações necessárias para encomendar peças sobressalentes à Tetra Pak.
- Manual Técnico (TeM)
  - fornece aos técnicos as informações necessárias para instalar seguramente o equipamento
  - fornece aos técnicos as informações para a manutenção do equipamento
  - fornece aos técnicos as informações sobre o sistema eléctrico do equipamento
  - fornece as informações necessárias para encomendar peças sobressalentes à Tetra Pak

TechPub-2660371-0101

Disposição da página

Referência à ilustração (A) na página i-5: As páginas principais num Catálogo de Peças Sobressalentes consistem numa página ilustrada (1) e numa página com a lista correspondente (7). O número da página (5) é mostrado no cabeçalho de uma página ilustrada e no rodapé de uma página com lista. O número do documento (6) é mostrado no rodapé de uma página com lista.

Numeração da página

Referência à ilustração (A) na página i-5: Um número de página (5) tem três partes:

- Número do capítulo (2)
- número consecutivo da página dentro do capítulo (3)
- número total de páginas no capítulo (4)

Introdução da máquina

Fabricante

Para o nome e morada do fabricante, ver a segunda página deste catálogo.

Assistência técnica

Para encomendar peças sobressalentes para esta máquina, ou para relatar problemas associados com a operação desta máquina, contactar a companhia Tetra Pak mais próxima.

Contactar a Liaison se tiver quaisquer questões, comentários ou sugestões para o desenvolvimento relacionado com o equipamento e a sua documentação.

Identificação

Classificação CE

Este equipamento está de acordo com os regulamentos de segurança e saúde da Área Económica Europeia (EEA).

TechPub-2660371-0101

Placa da máquina

A ilustração (B) na página i-5 mostra um exemplo de uma placa da máquina. Uma ilustração da placa da máquina válida e a sua localização no equipamento é mostrada no capítulo Introdução dos manuais fornecidos com este equipamento. A placa da máquina contem os dados alistados em baixo, necessários quando se contactar a Tetra Pak relacionando-se a este equipamento em específico.

- Tipo da máquina (8)
- Volume (9)
- Especificações dos desenhos (10)
- Número de série da máquina (11)
- Fabricante (12)
- Marca CE (13)
- Ano de construção (14)

A ilustração (C) na página i-5 mostra um exemplo de uma especificação da máquina. Verificar se os dados do equipamento alistados nas páginas da frente deste manual correspondem aos dados na placa da máquina e à especificação da máquina.

TechPub-2660371-0101

Como usar este Catálogo de Peças Sobressalentes

Localizar um Número da peça sobressalente

f) Referência à ilustração (D) na página i-5: Para o número do capítulo (15) indicado ao lado do grupo principal que contem a peça que quer localizar.

Pos. b) e c) referem-se à ilustração (E) na página i-6.

g) Na ilustração do grupo principal, procurar o subgrupo da máquina (17) que contem a peça ou subgrupo que está à procura. Anotar o número da posição (18) e passar para a página da lista que segue a ilustração.

h) Procurar o número da posição (16) ou o nome do subgrupo (19). Passar para o número da página correspondente (20) alistado na coluna do lado direito.

Pos. d) e e) referem-se à ilustração (F) na página i-6.

i) Localizar a peça (21) que está à procura na ilustração do subgrupo e anotar o número da posição da peça.

j) O número da peça (29) e a descrição da peça (30) estão alistados ao lado do número da posição na página da lista.

Informações indicadas num Catálogo de Peças Sobressalentes

A lista em baixo refere-se à ilustração (F) na página i-6. Um Catálogo de Peças Sobressalentes contem as seguintes informações sobre grupos, subgrupos e peças sobressalentes para o equipamento:

- Referência da estrutura do grupo (22). Indica o grupo a seguir mais elevado na estrutura da lista do equipamento.
- Nome do grupo (23)
- Código da peça sobressalente (24). Ver o capítulo Spare Part Codes.
- Unidade de medição (25)
- Quantidade (26)
- Número do desenho de montagem (27)
- Gama da página de lista (28). Incluída se houver páginas múltiplas na ilustração do grupo ou lista.
- Número da peça ou do subgrupo (29)
- Nome do subgrupo ou descrição da peça (30)
- Número do grupo (31)
- Número do equipamento (32)
- Título da informação do grupo (33). Indica se a secção abaixo do título é para uma variante de máquina específica ou se é uma lista de peças comuns. Se uma lista tiver mais do que uma variante e cada variante tiver o seu próprio desenho de montagem, é mostrada uma referência para a página do desenho de montagem da variante.
- Informação interna (34)

Códigos de peças sobressalentes

As tabelas em baixo mostram os dois tipos possíveis do código de Peça Sobressalente (SP) que podem estar alistadas na coluna SP de uma página de lista do Catálogo de Peças Sobressalentes.

Código SP	Significado
A	Peça crítica
B	Peça não crítica

Código SP	Significado
U	Kit de colocação ao serviço fornecido com a máquina
P	Kit de produção que deve estar presente no local de produção
S	Conjunto de serviço de assistência para ser mantido no armazém das estações de serviço.
C	Conjunto do depósito geral para estar disponível no armazém central.

TechPub-2660371-0101

Inledning

Information om manualerna

Tetra Pak rekommenderar att alla manualer läses noggrant. Se till att manualerna är tillgängliga för personalen som använder eller underhåller utrustningen.

Det är viktigt att denna katalog behålls under utrustningens livslängd, och att den överlämnas till varje efterföljande innehavare eller användare av utrustningen.

Tetra Pak tar inte ansvar för någon skada på utrustningen som orsakats av att instruktionerna i medföljande manualer inte har följts.

Medföljande manualer

Följande manualer levereras tillsammans med utrustningen:

- Konverteringsmanual (CM)
  Manualen innehåller information för tekniker om hur utrustningen ska konverteras mellan olika produktionslägen.
- Elektrisk manual (EM)
  Manualen innehåller information för tekniker om utrustningens elektriska system.
- Installationsmanual (IM)
  Manualen innehåller information för tekniker om hur utrustningen installeras på ett säkert sätt.
- Underhållsmanual (MM)
  Manualen innehåller information för tekniker om hur utrustningen ska underhållas.
- Driftsmanual (OM)
  Manualen innehåller information för operatören om hur utrustningen ska hanteras före, under och efter produktion.
- Reservdelskatalog (SPC)
  Manualen innehåller information som behövs för beställning av reservdelar från Tetra Pak.
- Teknisk manual (TeM)
  - innehåller information för tekniker om hur utrustningen installeras på ett säkert sätt.
  - innehåller information för tekniker om hur utrustningen ska underhållas.
  - innehåller information för tekniker om utrustningens elektriska system.
  - innehåller information som behövs för beställning av reservdelar från Tetra Pak.

TechPub-2660371-0101

Sidlayout

Se bilden (A) på sidan i-5: Huvudsidorna i reservdelskatalogen består av en bildsida (1) och en motsvarande listsida (7). Sidnumret (5) visas i sidhuvudet på bildsidan och i sidfoten på listsidan. Dokumentnumret (6) visas i sidfoten på listsidan.

Sidnumrering

Se bilden (A) på sidan i-5: Ett sidnummer (5) består av tre delar:

- kapitelnummer (2)
- löpande sidnummer inom kapitlet (3)
- totalt sidantal i kapitlet (4)

Introduktion till maskinen

Tillverkare

Tillverkarens namn och adress finns på sidan 2 i katalogen.

Service

För att beställa reservdelar till denna maskin eller för att rapportera problem som uppstått i samband med driften kontaktar du närmaste Tetra Pak-kontor.

Har du andra frågor, kommentarer eller förslag som gäller förbättring av maskinen eller utrustningen och dokumentationen vänder du dig till din kontaktperson på Tetra Pak.

Identifiering

CE-klassificering

Denna utrustning överensstämmer med de grundläggande hälso- och säkerhetsbestämmelserna inom den europeiska ekonomiska unionen (EEA).

TechPub-2660371-0101

Maskinskylt

Bilden (B) på sidan i-5 visar ett exempel på en maskinskylt. En bild på giltig maskinskylt och dess placering på utrustningen visas i inledningskapitlet som medföljer utrustningen. Skylten innehåller de uppgifter som listas nedan och som behövs vid kontakt med Tetra Pak angående utrustningen.

- Maskintyp (8)
- Volym (9)
- Ritningsspecifikationer (10)
- Maskinnummer (11)
- Tillverkare (12)
- CE-märkning (13)
- Tillverkningsår (14)

Bilden (C) på sidan i-5 visar ett exempel på en maskinspecifikation. Kontrollera att informationen om utrustningen som listas på manualens framsida motsvarar informationen på maskinskylten och i maskinspecifikationen.

Använda reservdelskatalogen

Hitta ett reservdelsnummer

a) Se bilden (D) på sidan i-5: Gå till kapitelnumret (15) som står vid sidan om huvudgruppen som innehåller den del du vill leta reda på.

Punkt b) och c) hänvisar till bilden (E) på sidan i-6.

b) På huvudgruppsbilden letar du efter den maskinundergrupp (17) som innehåller delen eller undergruppen du letar efter. Notera positionsnumret (18) och gå till listsidan som följer efter bilden.

c) Leta efter positionsnumret (16) eller undergruppsnamnet (19). Gå till motsvarande sidnummer (20) som listas i den högra kolumnen.

Punkt d) och e) hänvisar till bilden (F) på sidan i-6.

d) Leta reda på delen (21) i undergruppsbilden och notera delens positionsnummer.

e) Reservdelsnumret (29) och reservdelsbeskrivningen (30) står bredvid positionsnumret på listsidan.

TechPub-2660371-0101

Information i reservdelskatalogen

Listan nedan hänvisar till bilden (F) på sidan i-6. Reservdelskatalogen innehåller följande information om grupper, undergrupper och reservdelar för utrustningen:

- Gruppstrukturreferens (22). Anger nästa högre grupp i utrustningslistans struktur.
- Gruppnamn (23)
- Reservdelskod (24). Se avsnittet Reservdelskoder.
- Måttenhet (25)
- Kvantitet (26)
- Monteringsritningsnummer (27)
- Listsidesintervall (28). Står med om det finns flera sidor i gruppbilden eller listan.
- Reservdels- eller undergruppsnummer (29)
- Undergruppsnamn eller reservdelsbeskrivning (30)
- Gruppnummer (31)
- Utrustningsnummer (32)
- Gruppinformationsrubrik (33). Anger om avsnittet under rubriken gäller en viss maskinvariant eller om det är en lista över allmänna delar. Om en lista har fler än en variant och varje variant har sin egen monteringsritning, visas en sidhänvisning till variantens monteringsritning.
- Intern information (34)

Reservdelskoder

Tabellerna nedan visar de två typerna av reservdelskoder (SP) som kan finnas i SP-kolumnen på en listsida i reservdelskatalogen.

SP-kod	Betydelse
A	Primär reservdel
B	Sekundär reservdel

SP-kod	Betydelse
U	Startsats som ingår i maskinleveransen
P	Produktionssats som bör finnas på produktionsplatsen
S	Servicesats som bör finnas på servicestationen
C	Central lagringssats tillgänglig vid centrallagret

TechPub-2660371-0101

SPC
Spare Parts Catalogue

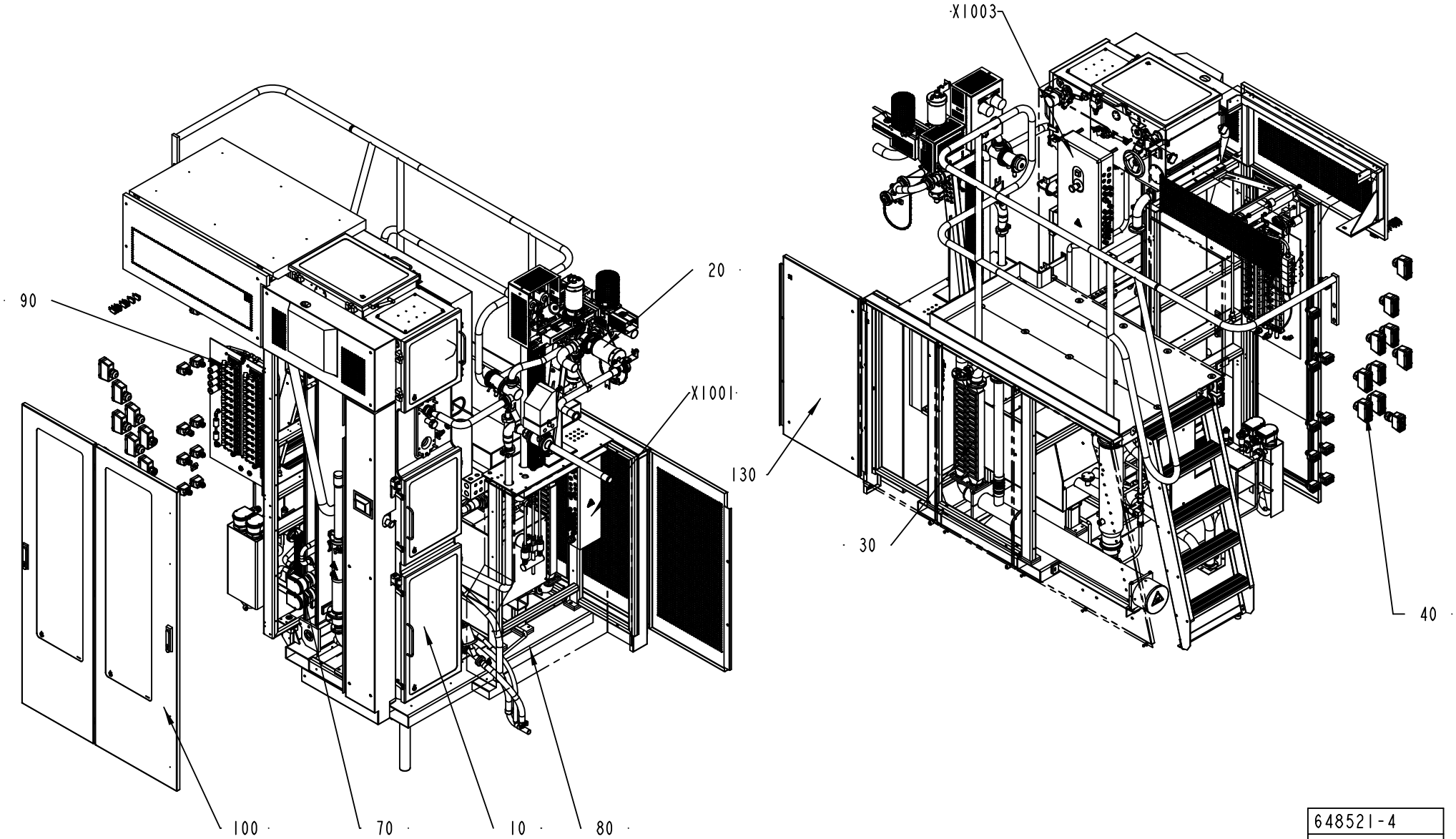

648521-4
ECM 107819

ECM: 137547 - 20030922
Group number: 648521-0400
Assembly Drawing: 648521-4_1_AB

This list covers pages from 1-2 to 1-5

Pos	Part No	SP	UN	Qty	Description	Page No
-						
010	577102-0400	-		1	ASEPTIC CHAMBER	**1-7**
020	577103-0300	-		1	FILLING SYSTEM	**1-73, 1-75, 1-77, 1-79**
030	577104-0300	-		1	STERILE AIR SYSTEM	**1-139**
040	1347140-0200	-		1	CABLE TRENCH	**1-163, 1-165, 1-167, 1-169, 1-171, 1-173, 1-175, 1-177**
070	1347171-0200	-		1	HYDROGEN PEROXIDE	**1-179**
080	1279802-0200	-		1	FRAME	**1-191**
090	1347547-0200	-		1	PNEUMATIC SYSTEM	**1-203, 1-205**
100	1285400-0300	-		1	COVERING PANEL	**1-233**
130	1347615-0100	-		1	COVERING PANEL	**1-235**
X1001	1347191-0200	-		1	CONNECTION BOX	**1-237**
X1003	1296847-0300	-		1	CONNECTION BOX	**1-239, 1-241, 1-243, 1-245, 1-247, 1-249, 1-251, 1-253**

Pos	Part No	SP	UN	Qty	Description	Page No

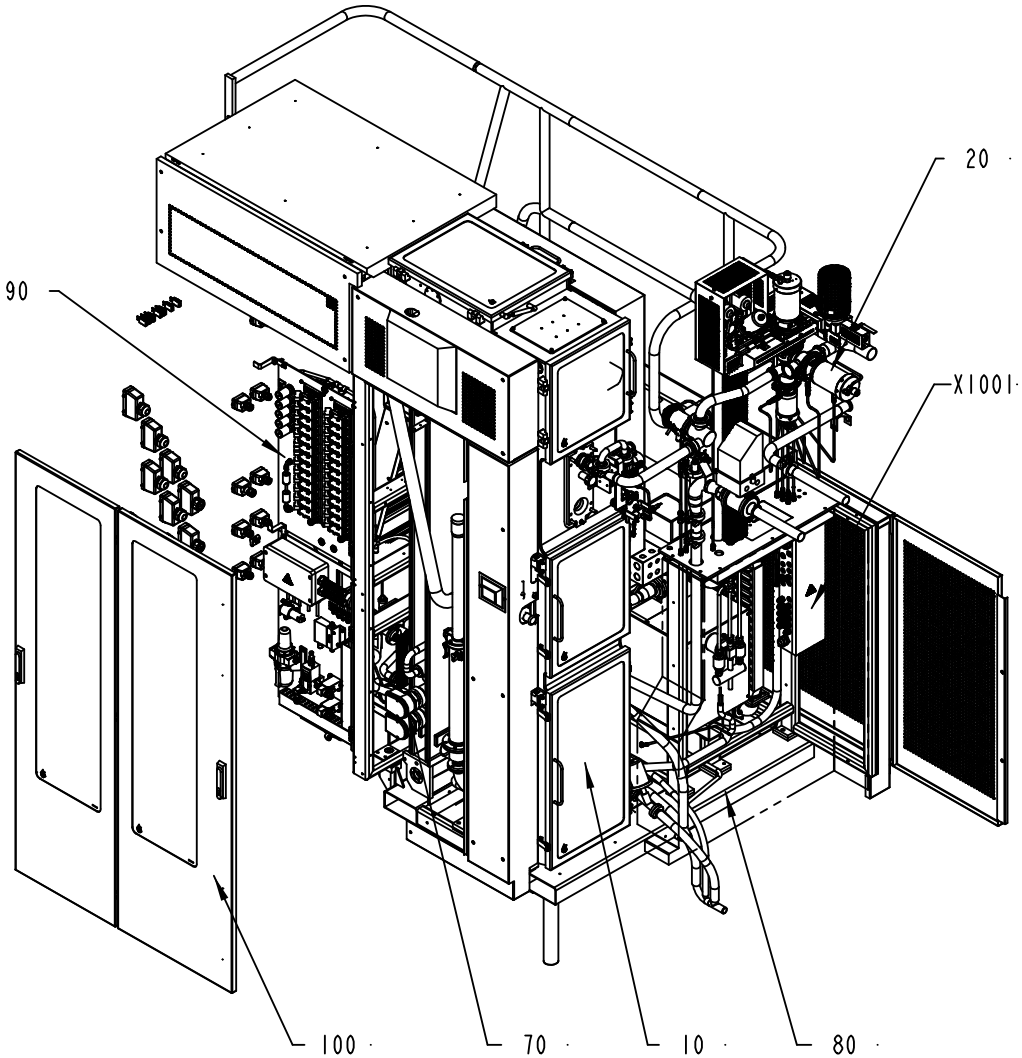

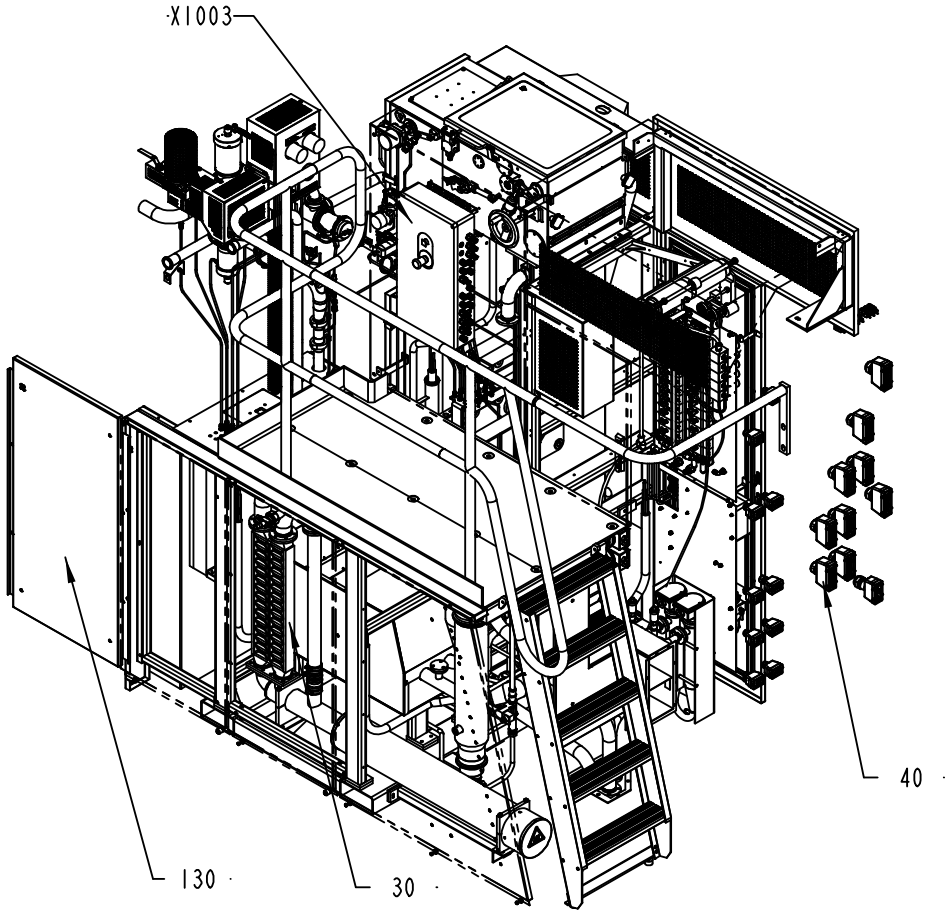

648521-5
ECM 134026

ECM: 137547 - 20030922
Group number: 648521-0400
Assembly Drawing: 648521-5_1_AA

This list covers pages from 1-2 to 1-5

Pos	Part No	SP	UN	Qty	Description	Page No
-						
010	577102-0400	-		1	ASEPTIC CHAMBER	**1-7**
020	577103-0300	-		1	FILLING SYSTEM	**1-73, 1-75, 1-77, 1-79**
030	577104-0300	-		1	STERILE AIR SYSTEM	**1-139**
040	1347140-0200	-		1	CABLE TRENCH	**1-163, 1-165, 1-167, 1-169, 1-171, 1-173, 1-175, 1-177**
070	1347171-0200	-		1	HYDROGEN PEROXIDE	**1-179**
080	1279802-0200	-		1	FRAME	**1-191**
090	1347547-0200	-		1	PNEUMATIC SYSTEM	**1-203, 1-205**
100	1285400-0300	-		1	COVERING PANEL	**1-233**
130	1347615-0100	-		1	COVERING PANEL	**1-235**
X1001	1347191-0200	-		1	CONNECTION BOX	**1-237**
X1003	1296847-0300	-		1	CONNECTION BOX	**1-239, 1-241, 1-243, 1-245, 1-247, 1-249, 1-251, 1-253**

Pos	Part No	SP	UN	Qty	Description	Page No

ASEPTIC CHAMBER

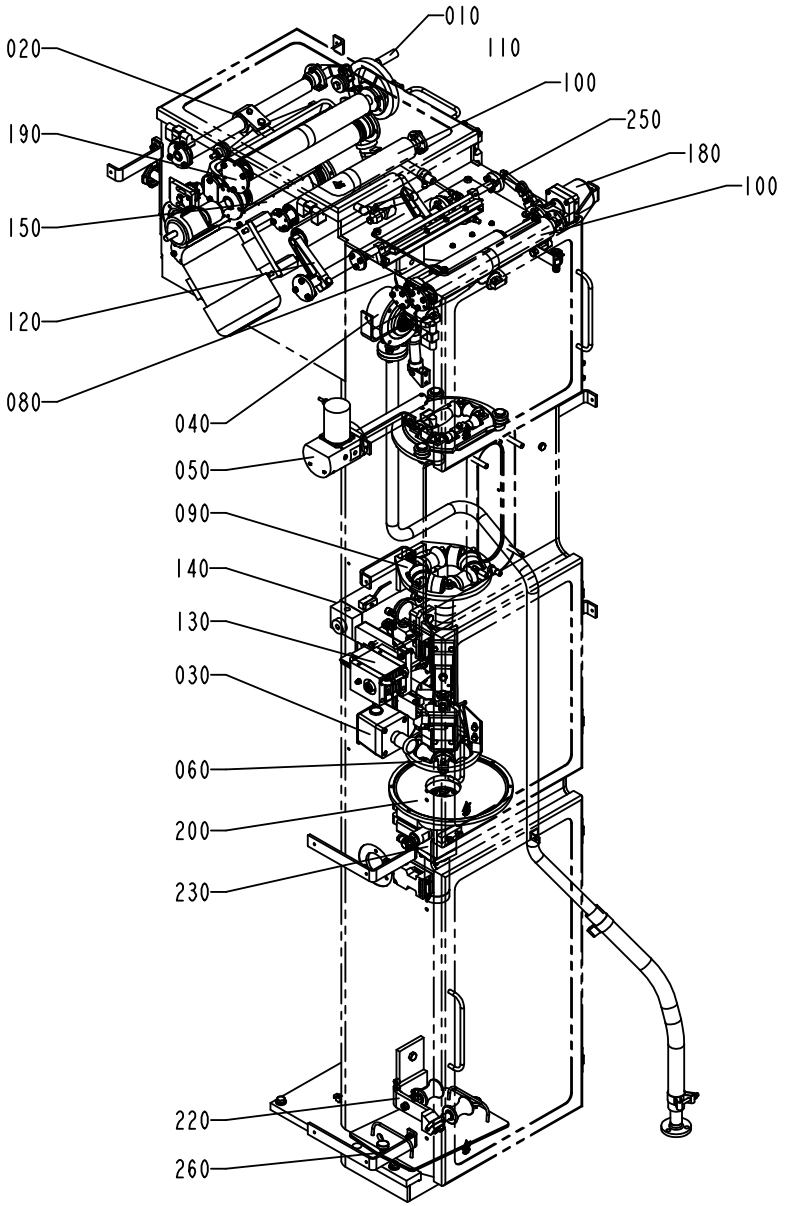

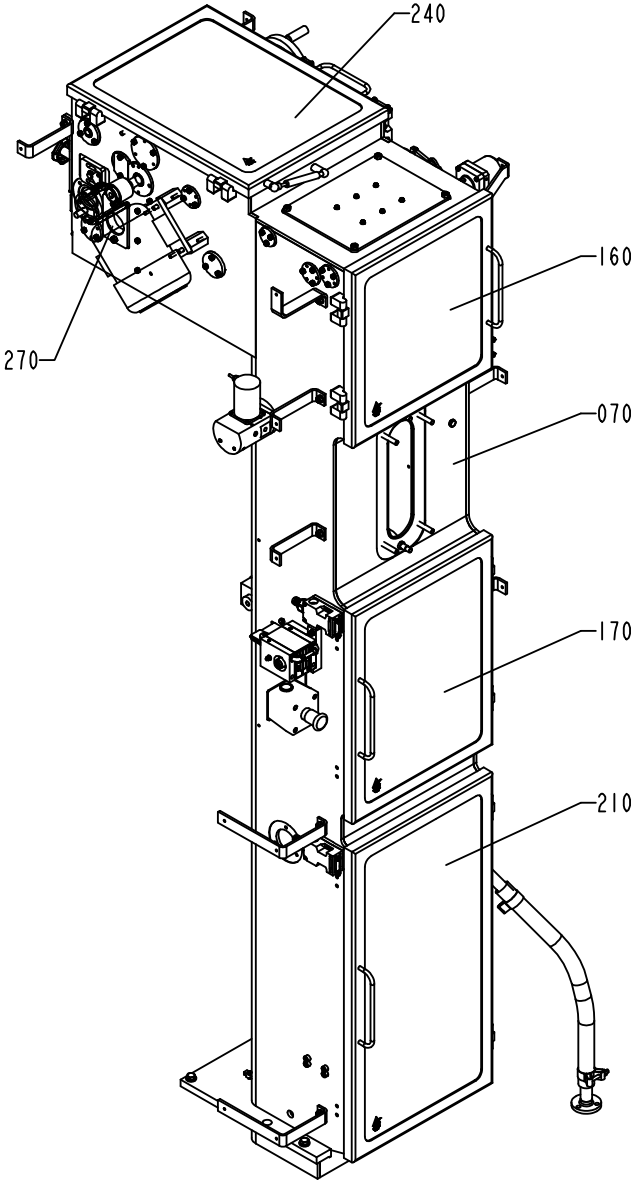

577102-4
ECM 126658

ECM: 149797 - 20040202
Group number: 577102-0400
Assembly Drawing: 577102-4_1_AE

Pos	Part No	SP	UN	Qty	Description	Page No
-						
010	996451-0100	-		1	CRANK	1-9
020	1334008-0300	-		1	CALENDER ROLLER	1-11
030	1035382-0100	-		1	EMERGENCY STOP	1-13
040	1347875-0100	-		1	BALL	1-15
050	1195161-0300	-		1	MOVABLE FORMING RING	1-17, 1-19
060	1195162-0200	-		1	LOWER FORMING RING	1-21
070	1195163-0300	-		1	PILLAR	1-23
080	1195164-0200	-		1	UPPER FORMING RING	1-25, 1-27
090	1195165-0300	-		1	FORMING RING	1-29
100	1195166-0200	-		2	PAPER GUIDE	1-31
110	1347485-0100	-		1	DRIVEN CALENDER ROLLER	1-33
120	1195173-0300	-		1	PENDULUM ROLLER	1-35
130	1195174-0400	-		1	LONGITUDINAL SEALING	1-37
140	1195175-0200	-		1	SHORT STOP	1-41
150	1195180-0100	-		1	BENDING ROLLER	1-43
160	1195181-0100	-		1	DOOR	1-45
170	1195182-0100	-		1	DOOR	1-47
180	2506842-0100	-		1	BENDING ROLLER	1-49
190	1195209-0200	-		1	BENDING ROLLER	1-51
200	1195214-0100	-		1	SEAL	1-53
210	1195269-0100	-		1	DOOR	1-55
220	2525541-0200	-		1	TUBE SUPPORT	1-57
230	2515213-0100	-		1	SPRAY SYSTEM	1-59, 1-61
240	1347493-0100	-		1	DOOR	1-63
250	1095790-0200	-		1	COVERING PLATE	1-65, 1-67
260	2522161-0100	-		1	LID	1-69
270	2517372-0100	-		1	LID	1-71

Pos	Part No	SP	UN	Qty	Description	Page No

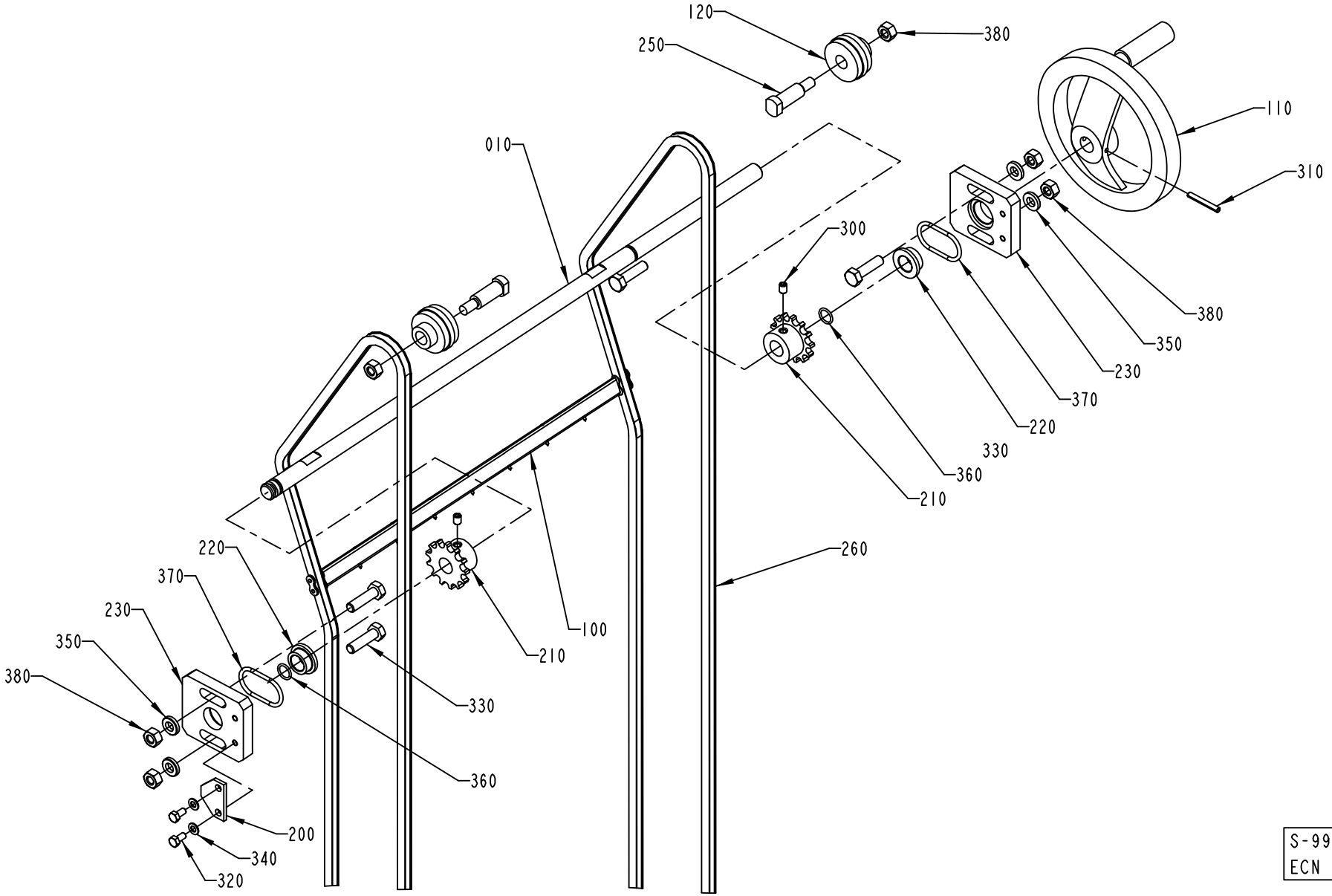

S-996451-1
ECN 73102

ECM: 111159 - 20020628
Group number: 996451-0100
Assembly Drawing: 996451-1_1_AB

Pos	Part No	SP	UN	Qty	Description	Page No
-						
010	1036841-0000	-		1	SHAFT	
100	1040777-0000	-		1	CARRIER	
110	247358-0000	-		1	SHIFTER HANDLE	
120	1036832-0000	B		2	WHEEL	
200	247355-0000	-		1	LOCK WASHER	
210	1038464-0000	-		2	SPROCKET	
220	531191-0000	B		2	BUSHING	
230	1484823-0000	-		2	PLATE	
250	1036833-0000	-		2	SCREW	
260	1036868-0000	A		2	CHAIN	
300	312318-0362	-		2	SCREW ISO4029 M6X8 A4	
310	311112-0262	-		1	SPRING PIN, ISO 8752 4X32-C	
320	312105-0325	-		2	SCREW M6S ISO 4017 M5X10 A480	
330	312105-0455	-		4	SCREW M6S ISO 4017 M8X30 A480	
340	315105-0146	-		2	BRICKA BRB5,3X10RFR	
350	315115-0165	-		4	WASHER PLAIN, TBRB 8,4/16 H=3	
360	315204-0109	B		2	O-RING 11,1X1,6 MM	
370	315204-0221	B		2	O-RING 34,2X3 MM	
380	312605-0318	-		6	HEXAGON NUT, M6M M8 A280	

Pos	Part No	SP	UN	Qty	Description	Page No

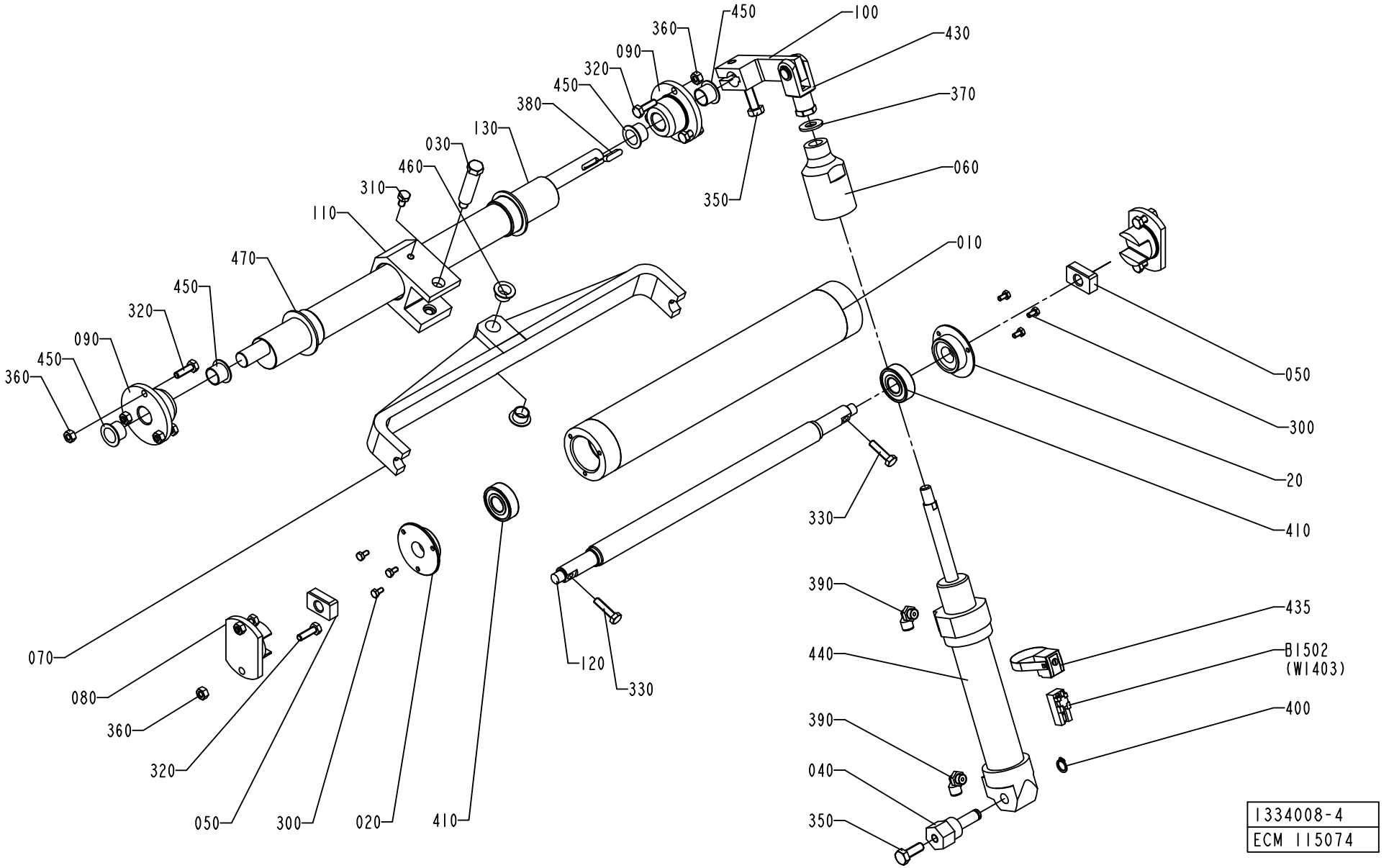
450
100
360
430
090
320
370
450
380
130
030
060
460
350
310
110
010
470
450
320
050
090
450
300
360
20
410
330
390
435
070
440
B1502
(W1403)
080
120
330
360
390
400
320
040
050
300
020
410
350
1334008-4
ECM 115074

ECM: 115107 - 20040202
Group number: 1334008-0300
Assembly Drawing: 1334008-4_1_AA

Pos	Part No	SP	UN	Qty	Description	Page No
-						
010	2610633-0000	A		1	ROLLER	
020	2610634-0000	A		2	PLUG	
030	1498629-0000	A		1	SHAFT	
040	1317998-0000	-		1	BRACKET	
050	1317999-0000	A		2	BLOCK	
060	1334000-0000	B		1	STOP	
070	2610631-0000	-		1	BRACKET	
080	1347499-0000	A		2	BEARING BUSHING	
090	1334003-0000	-		2	FLANGE	
100	1334004-0000	A		1	ARM	
110	2558136-0000	-		1	LINK	
120	1334006-0000	A		1	SHAFT	
130	1347500-0000	A		1	SHAFT	
300	312105-0287	-		6	SCREW M6S ISO4017 M4X8 A480	
310	312105-0364	-		1	SCREW M6S ISO 4017 M6X10 A480	
320	312105-0370	-		10	SCREW M6S ISO 4017 M6X20 A480	
330	312105-0372	-		2	SCREW M6S ISO 4017 M6X25 A480	
350	312105-0452	-		2	SCREW M6S ISO 4017 M8X22 A4 80	
360	312605-0316	-		10	HEXAGON NUT, M6M M6 A280	
370	315105-0173	-		1	WASHER BRB10,5X22RFR	
380	315705-0201	A		1	PARALLEL KEY W. ROUND ENDS 5X5X20 MM	
390	90458-2956	-		2	ELBOW PIPE JOINT, EXT.THREAD, D=6MM-G1/8	
400	90141-0016	B		1	RETAINING RING FOR SHAFT DIN 471 10 A2	
410	90458-1704	A		2	BALL BEARING, 15X35X11 MM	
430	90239-0516	A		1	ROD END, CLEVIS WITH AXLE M10X1,25	
435	90239-0582	A		1	SENSOR,BRACKET,FOR CYL 32	
440	90239-0837	A		1	DOUBLE ACTING, MINI-ISO, CYL. 32-100	
450	90240-0263	A		4	FLANGE BUSHING, 15X17X12 MM	
460	90240-0261	A		2	FLANGE BUSHING, 12X14X9 MM	
470	90459-1450	-		2	FLANGE BUSHING, 32X36X15 MM	
B1502	90457-0047	A		1	SENSOR 2750-1-5111-1 W.ADAPTER PNP	

Pos	Part No	SP	UN	Qty	Description	Page No

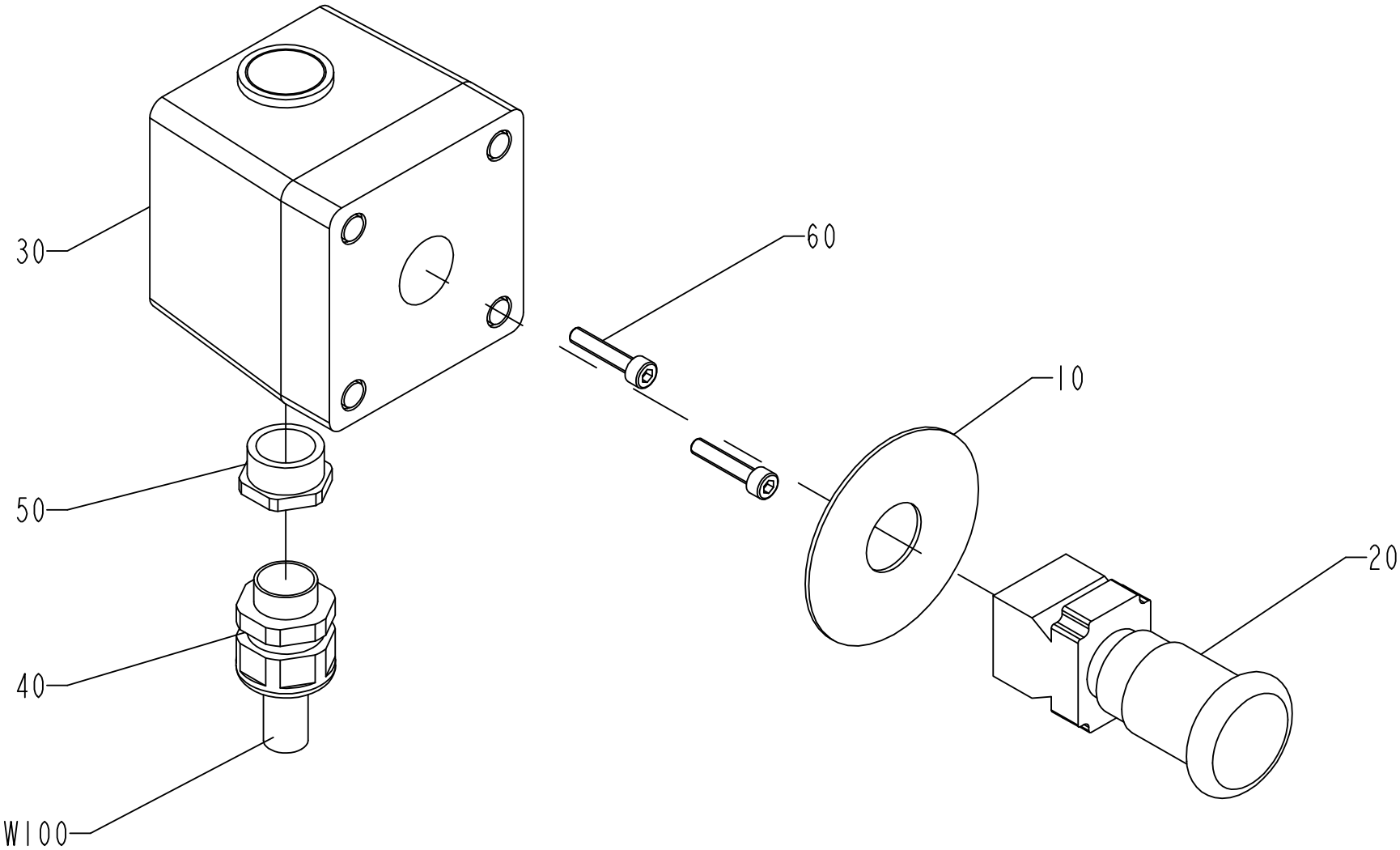

1035382-1
ECN 130094

ECM: 130096 - 20040101
Group number: 1035382-0100
Assembly Drawing: 1035382-1_1_AC

Pos	Part No	SP	UN	Qty	Description	Page No
-						
010	486826-0001	-		1	SIGN "EMERGENCY STOP"	
020	90064-0124	A		1	SWITCH, EM. STOP, ZB2-BS844+ZB2-BZ1045	
030	90066-0021	-		1	PUSH BUTTON BOX XAP-M1501	
040	90012-0071	-		1	GLAND FITTING	
050	90089-0021	-		1	REDUCTION SLEEVE,PLASTIC GREY	
060	312115-0333	-		2	SCREW ISO4762 M5X25 A4	

Pos	Part No	SP	UN	Qty	Description	Page No

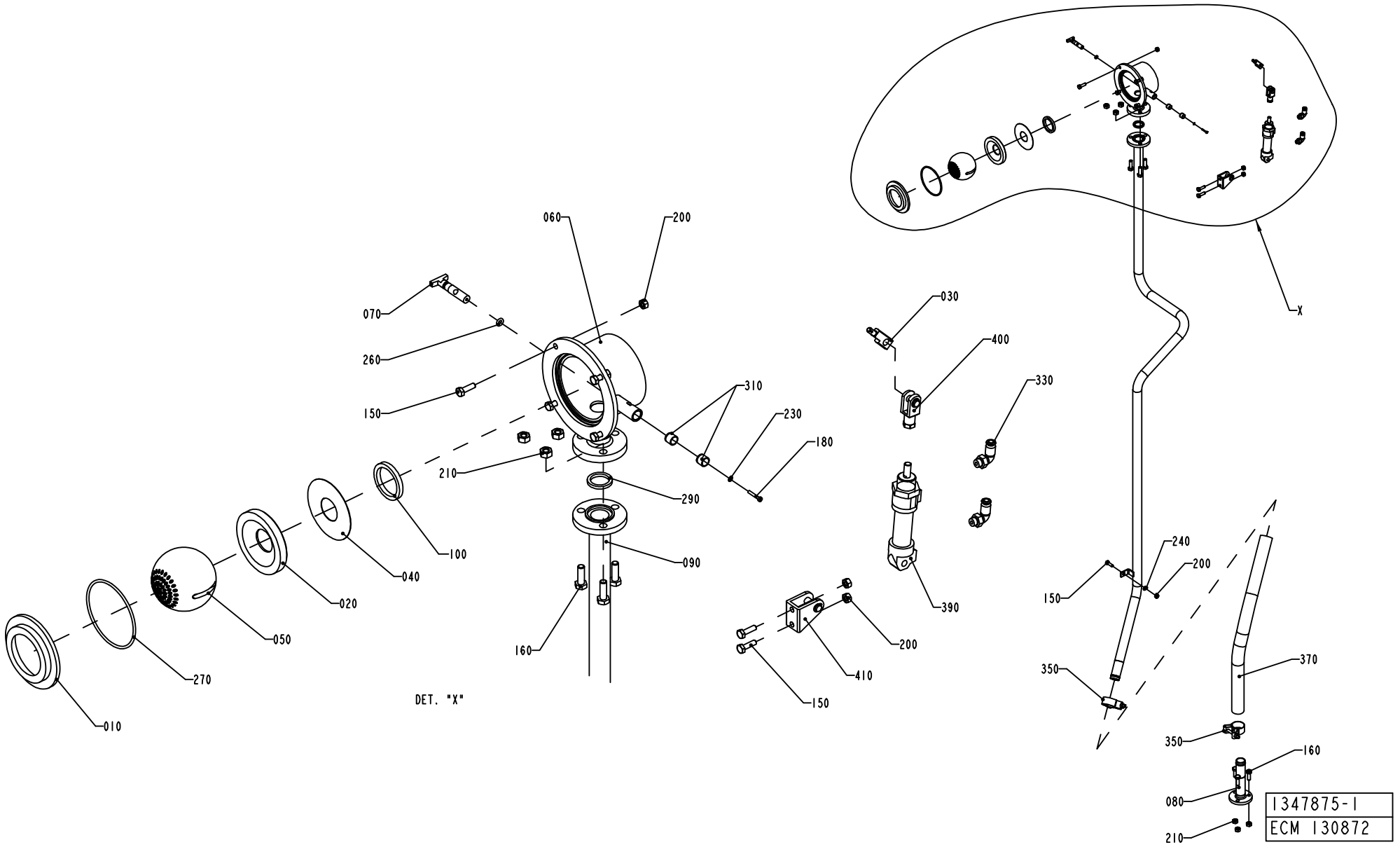
060
200
070
260
150
210
310
230
180
290
090
100
040
020
050
270
010
160
DET. "X"
030
400
330
390
200
410
150
X
240
200
150
350
370
350
160
080
210
1347875-1
ECM 130872

ECM: 137965 - 20031201
Group number: 1347875-0100
Assembly Drawing: 1347875-1_1_AB

Pos	Part No	SP	UN	Qty	Description	Page No
-						
010	1037423-0000	B		1	SEAT RING	
020	1037424-0000	B		1	SEAT RING	
030	1037425-0000	-		1	LEVER	
040	1038409-0000	-		1	WASHER	
050	1129837-0000	-		1	BALL	
060	1129855-0000	-		1	HOUSE	
070	1129871-0000	-		1	SPINDLE	
080	1255504-0000	-		1	PIPE	
090	1348941-0000	-		1	PIPE	
100	12242-0003	-		1	GASKET 48X38X5,5	
150	312105-0370	-		7	SCREW M6S ISO 4017 M6X20 A480	
160	312105-0453	-		6	SCREW M6S ISO 4017 M8X25 A480	
180	312125-0230	-		1	SCREW ISO 1207 M3X20 A4	
200	312605-0316	-		7	HEXAGON NUT, M6M M6 A280	
210	312605-0318	-		6	HEXAGON NUT, M6M M8 A280	
230	315105-0124	-		1	BRICKA BRB3,2X6RFR	
240	315105-0153	-		1	WASHER BRB6,4X12RFR	
260	315202-0204	B		1	O-RING 5,3X2,4 MM	
270	315202-0308	B		1	O-RING 84,5X3 MM	
290	315229-0103	B		1	GASKETS, 23,1X30,1X3,7 MM 1" FDA	
310	321120-0104	-		2	BEARBUSHING W/O FL,ANGE 10/12X10	
330	342732-0102	-		2	ELBOW PIPE JOINT, EXT.THREAD, D=6MM-G1/8	
350	90459-2366	B		2	HOSE CLIP, (32)-35	
370	90166-0233	-	MM	600	HOSE	
390	90239-0487	-		1	REAR,CLEVIS,MINI-ISO 20-25	
400	90239-0490	-		1	ROD END, CLEVIS WITH AXLE M8X1,25	
410	90239-0847	-		1	DOUBLE ACTING, MINI-ISO, CYL.20-50	

Pos	Part No	SP	UN	Qty	Description	Page No

MOVABLE FORMING RING

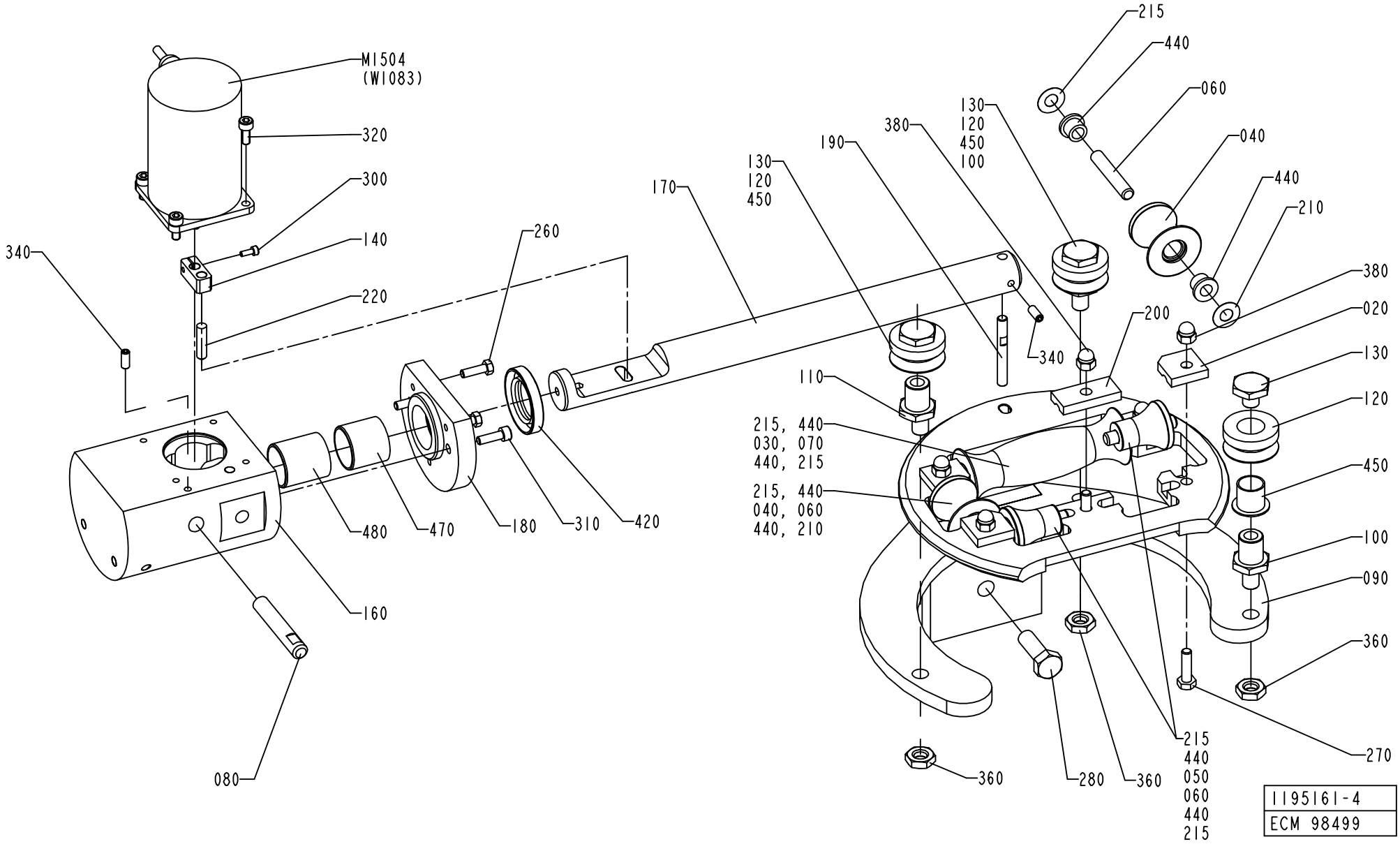

ECM: 113457 - 20020911
Group number: 1195161-0300
Assembly Drawing: 1195161-4_1_AA

This list covers pages from 1-16 to 1-19

Pos	Part No	SP	UN	Qty	Description	Page No
TBA 0200S (See drawing on page: 1-18)						
010	752156-0000	A		4	FLANGE BUSHING	
020	1279091-0000	B		4	LOCKING PLATE	
030	752126-0000	A		1	FORMING ROLLER	
040	752127-0000	A		2	FORMING ROLLER	
050	752128-0000	A		2	FORMING ROLLER	
055	752186-0002	A		2	SHAFT	
060	752186-0006	A		2	SHAFT	
070	752186-0008	A		1	SHAFT	
090	1487830-0000	-		1	MOVABLE FORMING RING	
150	1517318-0000	-		1	MOVABLE FORMING RING	
170	1487700-0000	-		1	SHAFT	
200	1487689-0000	A		1	LOCK PLATE	
215	2033-0011	A		10	WASHER	
440	90240-0172	A		6	FLANGE BUSHING, 8X12X10 MM	
TBA 0250S, TBA 0200M (See drawing on page: 1-18)						
010	752156-0000	A		4	FLANGE BUSHING	
020	1279091-0000	B		4	LOCKING PLATE	
030	574479-0000	B		1	ROLL	
040	574480-0000	A		2	ROLL	
050	574481-0000	A		2	ROLL	
055	752186-0002	A		2	SHAFT	
060	752186-0006	A		2	SHAFT	
070	752186-0008	A		1	SHAFT	
090	1487830-0000	-		1	MOVABLE FORMING RING	
150	1487688-0000	-		1	MOVABLE FORMING RING	
170	1487700-0000	-		1	SHAFT	
200	1487689-0000	A		1	LOCK PLATE	
215	2033-0011	A		10	WASHER	
440	90240-0172	A		6	FLANGE BUSHING, 8X12X10 MM	
TBA 0200B, TBA 0250B (See drawing on page: 1-16)						
020	456139-0000	A		4	LOCK PLATE	
030	751491-0000	A		1	ROLL	
040	751492-0000	A		2	ROLL	
050	751493-0000	A		2	ROLL	
060	752186-0005	A		4	SHAFT	
070	752186-0009	A		1	SHAFT	
090	1195191-0000	-		1	MOVABLE FORMING RING	
150	1347557-0000	-		1	MOVABLE FORMING RING	
170	1347559-0000	-		1	SHAFT	
200	1487687-0000	A		1	LOCK PLATE	
210	2033-0007	A		2	WASHER	
215	2033-0011	A		8	WASHER	
440	90240-0172	A		10	FLANGE BUSHING, 8X12X10 MM	
Common Parts						
080	1519510-0000	-		1	AXLE PIN	
100	1296754-0000	-		2	SHAFT	
110	1296755-0000	-		1	SHAFT	
120	1296758-0000	A		3	ROLL	
130	1296760-0000	-		3	NUT	
140	1347556-0000	-		1	ECCENTRIC	
160	1347558-0000	-		1	SUPPORT	
180	1478182-0000	-		1	SPACER	
190	1478570-0000	B		1	AXLE PIN	
220	311103-0355	B		1	PARALLELL PIN, M6, 6X25 MM	
260	312105-0329	-		3	SCREW M6S ISO 4017 M5X16 A480	
270	312105-0371	-		5	SCREW M6S ISO 4017 M6X22 A480	
280	312105-0495	-		1	SCREW M6S ISO 4017 M10X30 A480	
300	312115-0287	-		1	SCREW ISO4762 M4X8 A4	
310	312115-0329	-		2	SCREW ISO4762 M5X16 A4	
320	312115-0327	-		4	SCREW ISO4762 M5X12 A4	
340	312318-0327	-		2	SCREW ISO4029 M5X12 A4	
360	312625-0320	-		3	HEXAGON THIN NUT, EN 24035 ML6M M10 A4	
380	312705-0316	-		5	NUT HEX. DOMED CAP MHM-6 M6 A280	
420	90091-0322	A		1	RADIAL SEAL 25X42X7 MM DUST LIP	
450	90240-0264	A		3	FLANGE BUSHING, 15X17X17 MM	
470	90240-0321	A		1	BUSHING, 25X28X25 MM	
480	90240-0322	A		1	BUSHING, 25X28X30 MM	
M1504	90045-0189	A		1	STEP MOTOR E22NSLT-LNN-NS-02	

Machine Type	Group Description	Used-In	Group Number	Page No

MOVABLE FORMING RING

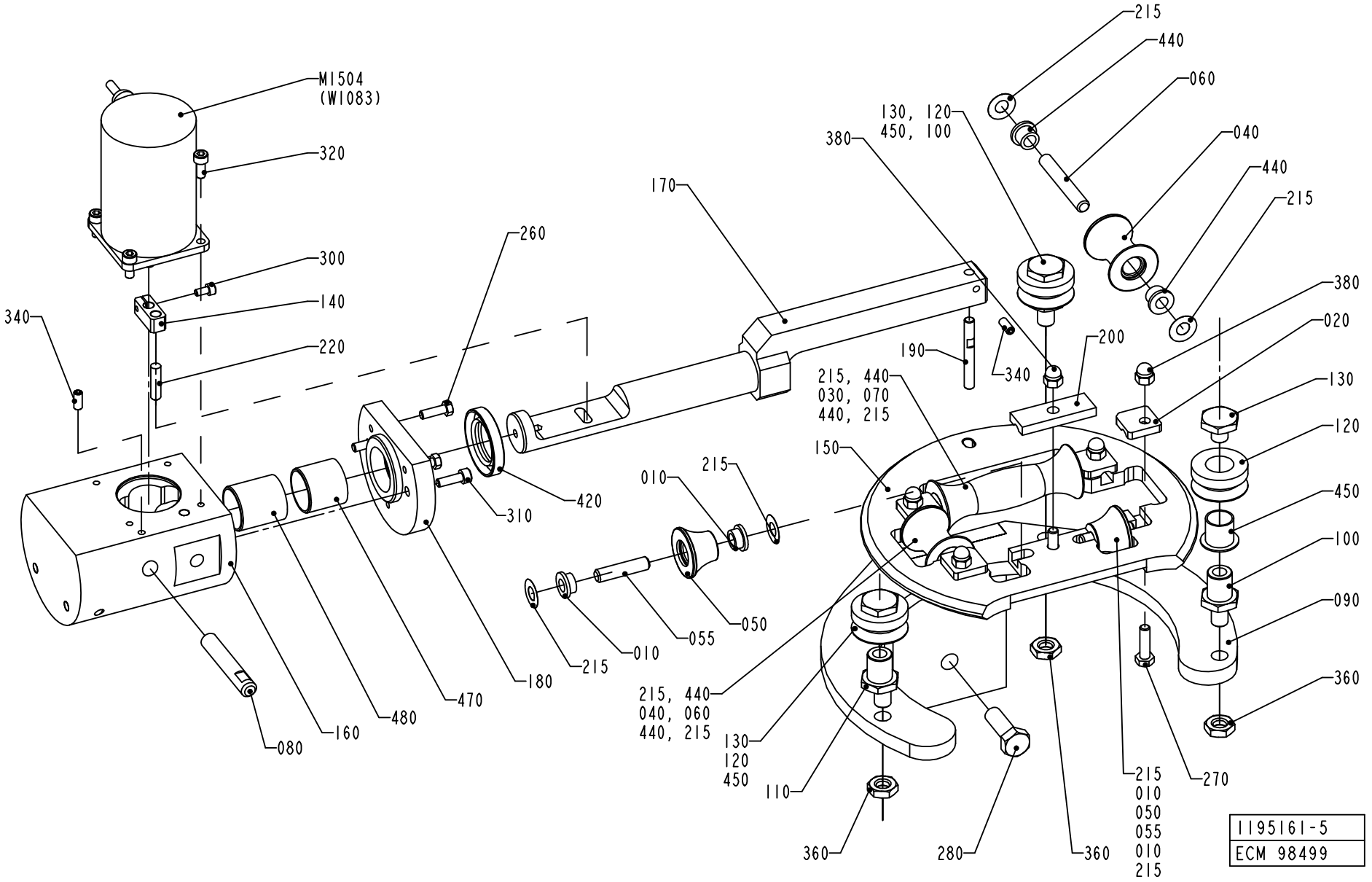

ECM: 113457 - 20020911
Group number: 1195161-0300
Assembly Drawing: 1195161-5_1_AA

This list covers pages from 1-16 to 1-19

Pos	Part No	SP	UN	Qty	Description	Page No
TBA 0200S (See drawing on page: 1-18)						
010	752156-0000	A		4	FLANGE BUSHING	
020	1279091-0000	B		4	LOCKING PLATE	
030	752126-0000	A		1	FORMING ROLLER	
040	752127-0000	A		2	FORMING ROLLER	
050	752128-0000	A		2	FORMING ROLLER	
055	752186-0002	A		2	SHAFT	
060	752186-0006	A		2	SHAFT	
070	752186-0008	A		1	SHAFT	
090	1487830-0000	-		1	MOVABLE FORMING RING	
150	1517318-0000	-		1	MOVABLE FORMING RING	
170	1487700-0000	-		1	SHAFT	
200	1487689-0000	A		1	LOCK PLATE	
215	2033-0011	A		10	WASHER	
440	90240-0172	A		6	FLANGE BUSHING, 8X12X10 MM	
TBA 0250S, TBA 0200M (See drawing on page: 1-18)						
010	752156-0000	A		4	FLANGE BUSHING	
020	1279091-0000	B		4	LOCKING PLATE	
030	574479-0000	B		1	ROLL	
040	574480-0000	A		2	ROLL	
050	574481-0000	A		2	ROLL	
055	752186-0002	A		2	SHAFT	
060	752186-0006	A		2	SHAFT	
070	752186-0008	A		1	SHAFT	
090	1487830-0000	-		1	MOVABLE FORMING RING	
150	1487688-0000	-		1	MOVABLE FORMING RING	
170	1487700-0000	-		1	SHAFT	
200	1487689-0000	A		1	LOCK PLATE	
215	2033-0011	A		10	WASHER	
440	90240-0172	A		6	FLANGE BUSHING, 8X12X10 MM	
TBA 0200B, TBA 0250B (See drawing on page: 1-16)						
020	456139-0000	A		4	LOCK PLATE	
030	751491-0000	A		1	ROLL	
040	751492-0000	A		2	ROLL	
050	751493-0000	A		2	ROLL	
060	752186-0005	A		4	SHAFT	
070	752186-0009	A		1	SHAFT	
090	1195191-0000	-		1	MOVABLE FORMING RING	
150	1347557-0000	-		1	MOVABLE FORMING RING	
170	1347559-0000	-		1	SHAFT	
200	1487687-0000	A		1	LOCK PLATE	
210	2033-0007	A		2	WASHER	
215	2033-0011	A		8	WASHER	
440	90240-0172	A		10	FLANGE BUSHING, 8X12X10 MM	
Common Parts						
080	1519510-0000	-		1	AXLE PIN	
100	1296754-0000	-		2	SHAFT	
110	1296755-0000	-		1	SHAFT	
120	1296758-0000	A		3	ROLL	
130	1296760-0000	-		3	NUT	
140	1347556-0000	-		1	ECCENTRIC	
160	1347558-0000	-		1	SUPPORT	
180	1478182-0000	-		1	SPACER	
190	1478570-0000	B		1	AXLE PIN	
220	311103-0355	B		1	PARALLELL PIN, M6, 6X25 MM	
260	312105-0329	-		3	SCREW M6S ISO 4017 M5X16 A480	
270	312105-0371	-		5	SCREW M6S ISO 4017 M6X22 A480	
280	312105-0495	-		1	SCREW M6S ISO 4017 M10X30 A480	
300	312115-0287	-		1	SCREW ISO4762 M4X8 A4	
310	312115-0329	-		2	SCREW ISO4762 M5X16 A4	
320	312115-0327	-		4	SCREW ISO4762 M5X12 A4	
340	312318-0327	-		2	SCREW ISO4029 M5X12 A4	
360	312625-0320	-		3	HEXAGON THIN NUT, EN 24035 ML6M M10 A4	
380	312705-0316	-		5	NUT HEX. DOMED CAP MHM-6 M6 A280	
420	90091-0322	A		1	RADIAL SEAL 25X42X7 MM DUST LIP	
450	90240-0264	A		3	FLANGE BUSHING, 15X17X17 MM	
470	90240-0321	A		1	BUSHING, 25X28X25 MM	
480	90240-0322	A		1	BUSHING, 25X28X30 MM	
M1504	90045-0189	A		1	STEP MOTOR E22NSLT-LNN-NS-02	

Machine Type	Group Description	Used-In	Group Number	Page No

LOWER FORMING RING

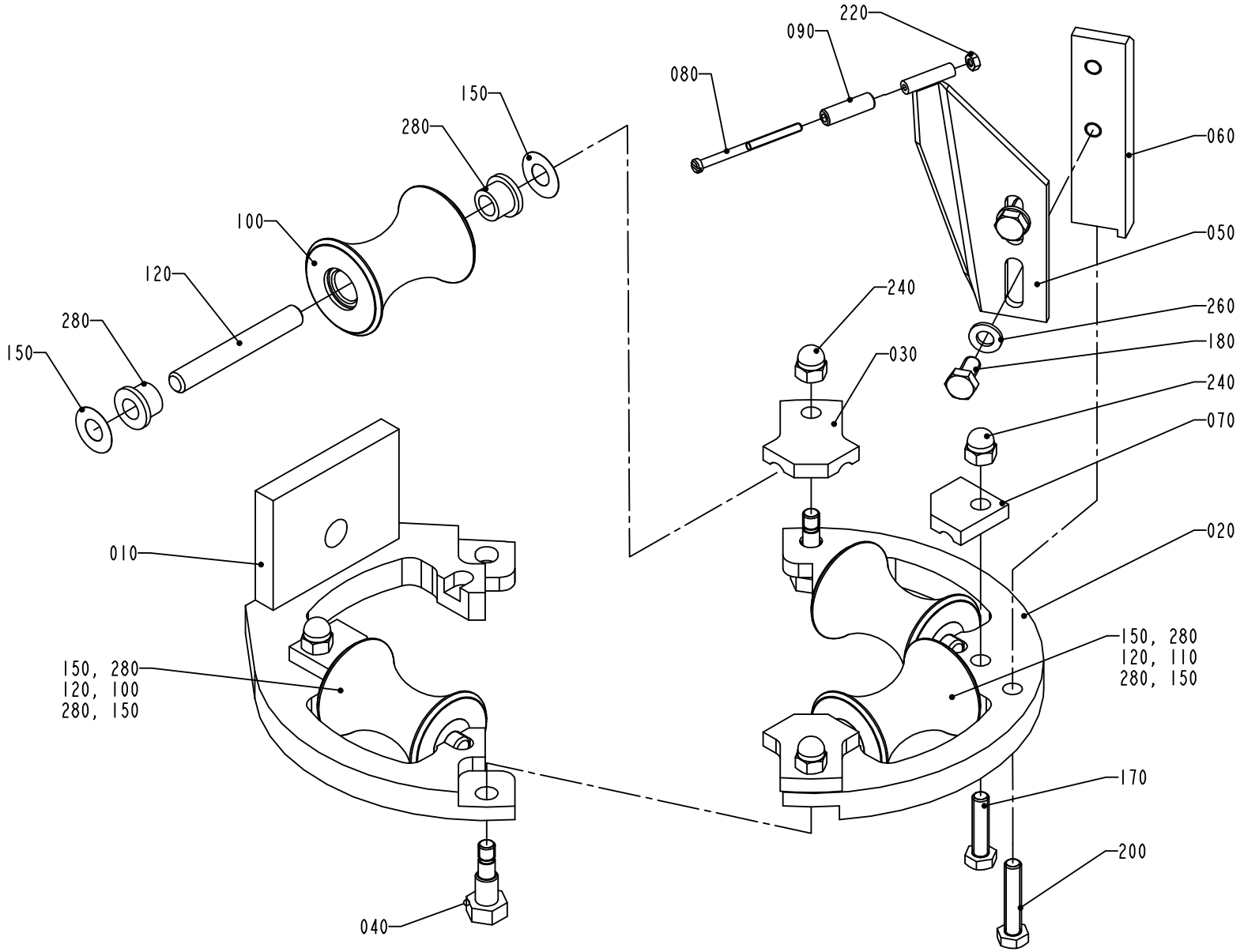

1195162-4
ECM 126249

ECM: 143927 - 20031215
Group number: 1195162-0200
Assembly Drawing: 1195162-4_1_AA

Pos	Part No	SP	UN	Qty	Description	Page No
TBA 0200S						
010	1539580-0000	-		1	FORMING RING	
020	1539579-0000	-		1	FORMING RING	
060	2611162-0000	-		1	SUPPORT	
100	1558186-0000	-		3	ROLLER	
110	1558162-0000	A		1	ROLLER	
120	752186-0006	A		4	SHAFT	
TBA 0250S, TBA 0200M						
010	1484862-0000	-		1	FORMING RING	
020	1484863-0000	-		1	FORMING RING	
060	2618702-0000	-		1	SUPPORT	
100	2523655-0000	A		3	ROLLER	
110	2523649-0000	A		1	COUNTER ROLLER	
120	752186-0016	A		4	SHAFT	
150	2033-0011	A		8	WASHER	
230	312705-0314	-		4	NUT HEX. DOMED CAP MHM-6 M5 A280	
TBA 0200B, TBA 0250B						
010	1484862-0000	-		1	FORMING RING	
020	1484863-0000	-		1	FORMING RING	
060	2618700-0000	-		1	SUPPORT	
100	1484859-0000	A		3	ROLLER	
110	2611156-0000	A		1	ROLLER	
120	752186-0016	A		4	SHAFT	
150	2033-0011	A		8	WASHER	
Common Parts						
030	1484860-0000	A		2	LOCK PLATE	
040	1195319-0000	-		2	FITTING BOLT	
050	1296109-0000	A		1	BRACKET	
070	1484861-0000	A		2	LOCK PLATE	
080	257050-0000	A		1	SHAFT	
090	1478267-0000	A		1	ROLL	
170	312105-0372	-		2	SCREW M6S ISO 4017 M6X25 A480	
180	312105-0366	-		2	SCREW M6S M6X12 A280	
200	312109-0374	-		1	SCREW M6S ISO 4017 M6X30 A480	
220	312605-0310	-		1	HEXAGON NUT, M6M M3 A280	
240	312705-0316	-		4	NUT HEX. DOMED CAP MHM-6 M6 A280	
260	315105-0153	-		2	WASHER BRB6,4X12RFR	
280	90240-0172	A		8	FLANGE BUSHING, 8X12X10 MM	

Pos	Part No	SP	UN	Qty	Description	Page No

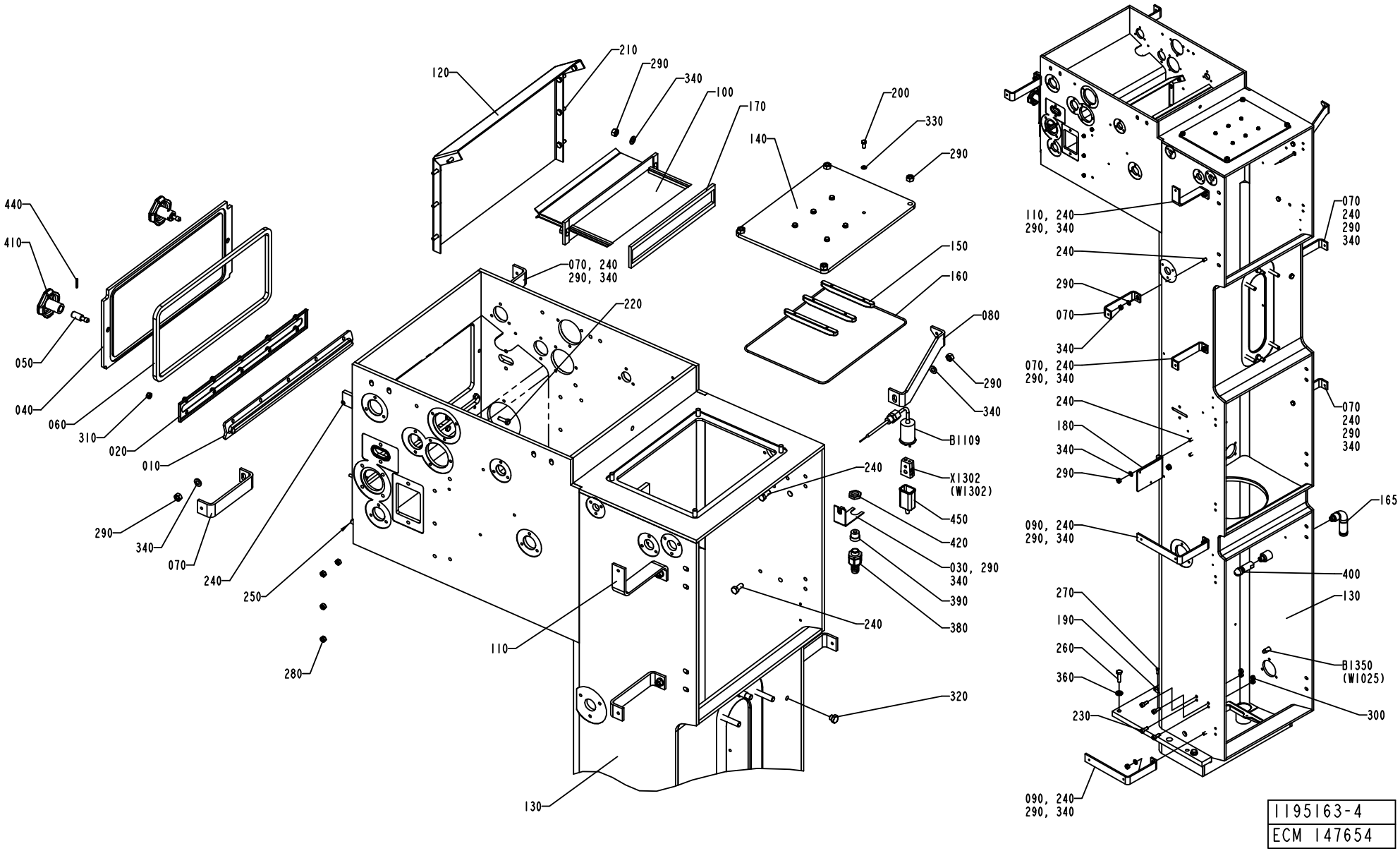
120
210
290
340
100
170
140
200
330
290
150
160
070, 240
290, 340
220
080
290
340
B1109
240
X1302
(W1302)
450
420
030, 290
340
390
380
240
320
110
130
280
250
240
440
410
050
040
060
310
020
010
290
340
070
110, 240
290, 340
070
240
290
340
240
290
070
340
070, 240
290, 340
240
180
340
290
070
240
290
340
165
090, 240
290, 340
400
130
270
190
260
360
230
B1350
(W1025)
300
090, 240
290, 340
1195163-4
ECM 147654

ECM: 147656 - 20031218
Group number: 1195163-0300
Assembly Drawing: 1195163-4_1_AE

Pos	Part No	SP	UN	Qty	Description	Page No
FLOATER NOHI						
320	90330-0066	-		1	PLUG, EXT. G-THREAD, G1/8	
LEVELPROBE HI						
230	312115-0451	-		4	SCREW ISO4762 M8X20 A4	
300	312605-0318	-		4	HEXAGON NUT, M6M M8 A280	
LEVELPROBE NOHI						
230	312115-0451	-		4	SCREW ISO4762 M8X20 A4	
300	312605-0318	-		4	HEXAGON NUT, M6M M8 A280	
320	90330-0066	-		1	PLUG, EXT. G-THREAD, G1/8	
Common Parts						
010	273961-0000	A		1	SEAL	
020	476087-0000	-		1	LID	
030	1036373-0000	B		1	HOLDER	
040	1036465-0000	-		1	LID	
050	1036475-0000	B		2	PIN	
060	1036478-0000	B		1	GASKET	
070	1037456-0000	-		6	BRACKET	
080	2514285-0000	-		1	PLATE	
090	2531273-0000	-		2	BRACKET	
100	1519304-0000	-		1	TUNNEL	
110	1195322-0000	-		1	BRACKET	
120	1347513-0000	-		1	SHEET	
130	2506839-0000	-		1	COLUMN	
140	1498670-0000	-		1	LID	
150	1498671-0000	A		3	PAPER GUIDE	
160	1348622-0000	B		1	O-RING	
165	1129383-0000	-		1	PIPE	
170	1519303-0000	-		1	GASKET	
180	1490902-0000	-		1	BRACKET	
190	2539463-0000	-		2	BRACKET	
200	312105-0327	-		6	SCREW M6S ISO 4017 M5X12 A480	
210	312105-0368	-		8	SCREW M6S M6X16 A280	
220	312105-0370	-		10	SCREW M6S ISO 4017 M6X20 A480	
240	312105-0451	-		13	SCREW M6S ISO 4017 M8X20 A480	
250	312105-0453	-		3	SCREW M6S ISO 4017 M8X25 A480	
260	312105-0497	-		4	SCREW M6S ISO 4017 M10X35 A480	
270	312105-0329	-		2	SCREW M6S ISO 4017 M5X16 A480	
280	312605-0316	-		8	HEXAGON NUT, M6M M6 A280	
290	312605-0318	-		19	HEXAGON NUT, M6M M8 A280	
310	312812-0316	-		10	HEXAGON NUT, NY-LOCK M6 A480	
330	315105-0146	-		6	BRICKA BRB5,3X10RFR	
340	315105-0165	-		15	WASHER BRB8,4X16RFR	
360	315115-0173	-		4	WASHER PLAIN, TBRB 10,5/22 H=4	
380	353243-0001	-		1	EXTENDED WITHOUT INSERT, PG9	
390	353249-0008	-		1	INSERT, SINGEL HOLE, EK 152/7	
400	90459-2735	-		1	ROT.SPRAY NOZZLE, 5MC.049.17.AF.00.02	
410	90051-0045	-		2	STELLAR KNOB, NO. 8323-2575	
420	90099-0104	-		1	NUT, PR 15,2 (PG9)	
430	90153-0023	-		1	ADHESIVE, SILICON 251470 TUB 90CC	
440	90258-0031	-		2	PIN, STRAIGHT SLOTTED SPRING FRP 3X20	
450	90326-0012	B		1	PROTECTIVE COVER, T31A4618	
B1109	90458-0341	A		1	THERMOCOUPLE, 5130050-001	
B1350	90458-0672	A		1	PROXIMITY SENSOR E2E2-X5MB1-5M	
X1302	90326-0020	B		1	PLUG, FEMALE YELLOW CR-AL	

Machine Type | Group Description | Used-In | Group Number | Page No

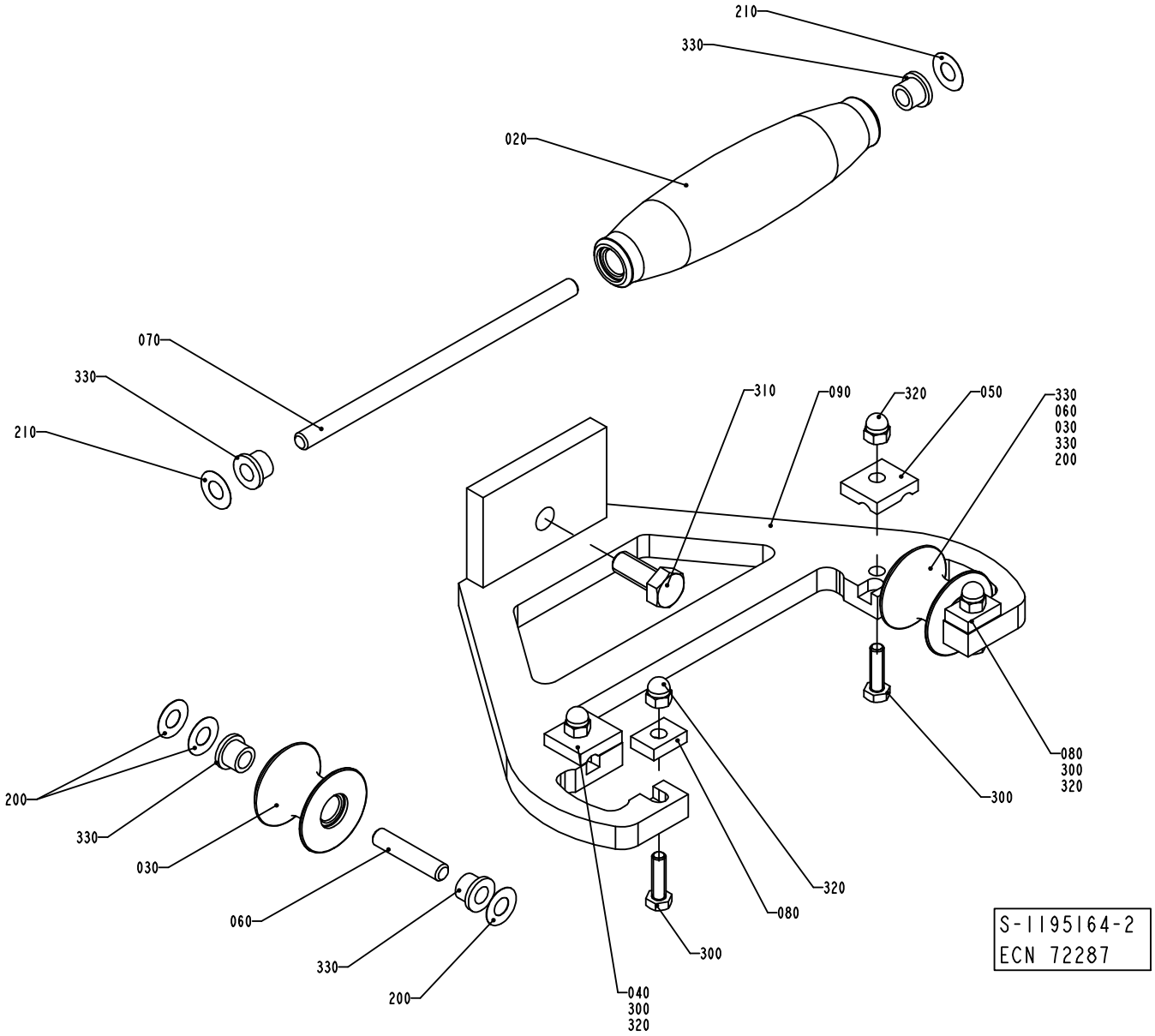
210
330
020
070
330
210
310
090
320
050
330
060
030
330
200
080
300
320
200
330
030
060
330
200
040
300
320
320
080
300
S-1195164-2
ECN 72287

ECM: 113461 - 20020911
Group number: 1195164-0200
Assembly Drawing: 1195164-2_1_AB

This list covers pages from 1-24 to 1-27

Pos	Part No	SP	UN	Qty	Description	Page No
TBA 0200S (See drawing on page: 1-26)						
020	752129-0000	A		1	FORMING ROLLER	
030	752130-0000	A		2	FORMING ROLLER	
040	1279089-0000	A		1	LOCKING PLATE	
050	1279088-0000	A		1	LOCKING PLATE	
060	752186-0004	A		2	SHAFT	
070	752186-0010	A		1	SHAFT	
090	1548598-0000	-		1	FORMING RING	
200	2033-0007	A		2	WASHER	
210	2033-0011	A		4	WASHER	
TBA 0250S, TBA 0200M (See drawing on page: 1-26)						
020	574417-0000	A		1	ROLL	
030	574418-0000	A		2	ROLL	
040	1279089-0000	A		1	LOCKING PLATE	
050	1279088-0000	A		1	LOCKING PLATE	
060	752186-0012	A		2	SHAFT	
070	752186-0010	A		1	SHAFT	
090	1484234-0000	-		1	FORMING RING	
200	2033-0007	A		2	WASHER	
210	2033-0011	A		4	WASHER	
TBA 0200B, TBA 0250B (See drawing on page: 1-24)						
020	1350904-0000	A		1	ROLL	
030	751284-0000	A		2	ROLL	
040	1350905-0000	A		1	LOCKING PLATE	
050	1350906-0000	A		1	LOCKING PLATE	
060	752186-0003	A		2	SHAFT	
070	752186-0017	A		1	SHAFT	
090	1350907-0000	-		1	UPPER FORMING RING	
200	2033-0007	A		6	WASHER	
210	2033-0011	A		2	WASHER	
Common Parts						
080	1038428-0000	A		2	LOCK PLATE	
300	312105-0371	-		4	SCREW M6S ISO 4017 M6X22 A480	
310	312105-0493	-		1	SCREW M6S ISO 4017 M10X25 A480	
320	312705-0316	-		4	NUT HEX. DOMED CAP MHM-6 M6 A280	
330	90240-0172	A		6	FLANGE BUSHING, 8X12X10 MM	

Pos	Part No	SP	UN	Qty	Description	Page No

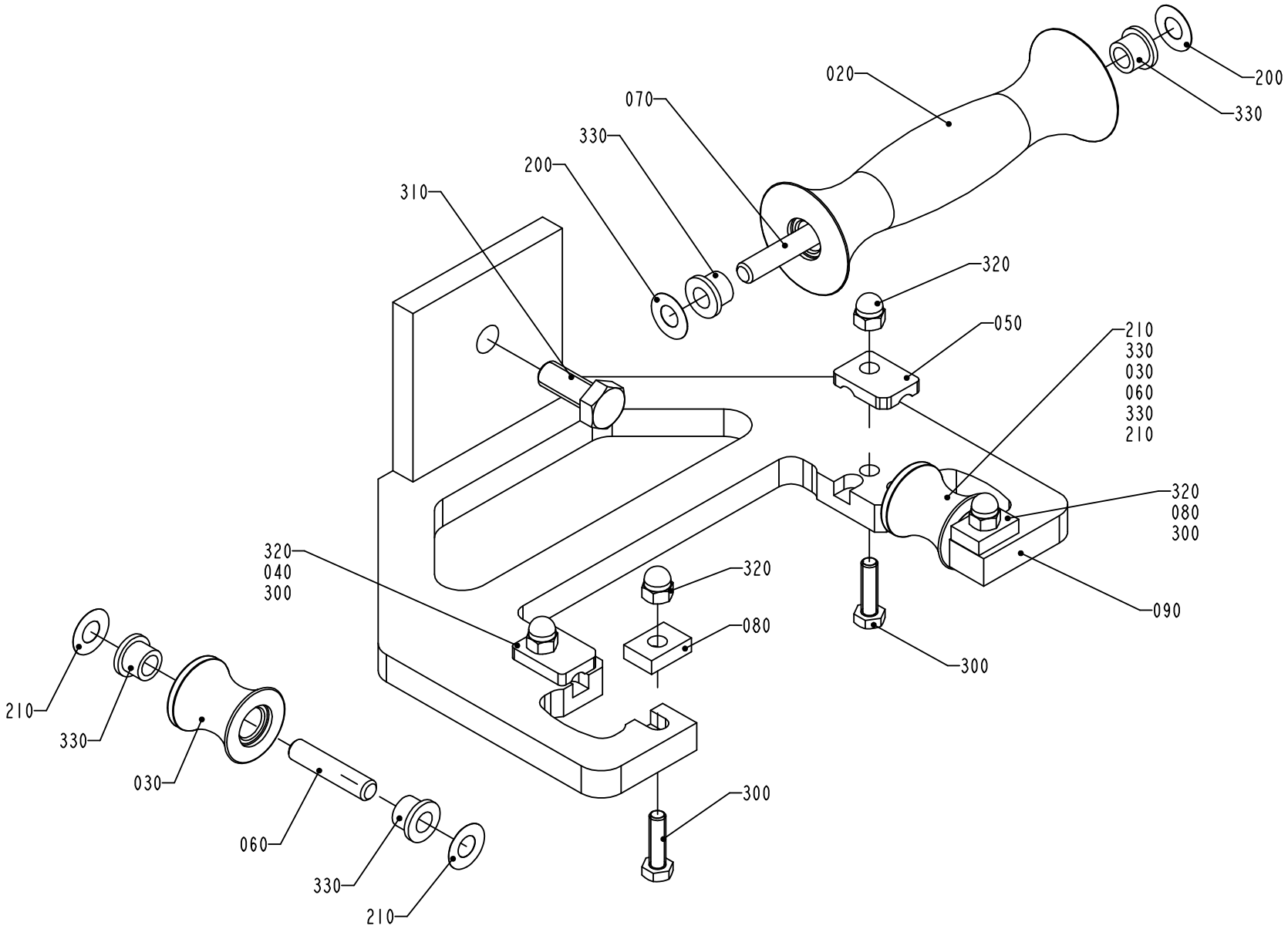

1195164-3
ECN 73368

ECM: 113461 - 20020911
Group number: 1195164-0200
Assembly Drawing: 1195164-3_1_AA

This list covers pages from 1-24 to 1-27

Pos	Part No	SP	UN	Qty	Description	Page No
TBA 0200S (See drawing on page: 1-26)						
020	752129-0000	A		1	FORMING ROLLER	
030	752130-0000	A		2	FORMING ROLLER	
040	1279089-0000	A		1	LOCKING PLATE	
050	1279088-0000	A		1	LOCKING PLATE	
060	752186-0004	A		2	SHAFT	
070	752186-0010	A		1	SHAFT	
090	1548598-0000	-		1	FORMING RING	
200	2033-0007	A		2	WASHER	
210	2033-0011	A		4	WASHER	
TBA 0250S, TBA 0200M (See drawing on page: 1-26)						
020	574417-0000	A		1	ROLL	
030	574418-0000	A		2	ROLL	
040	1279089-0000	A		1	LOCKING PLATE	
050	1279088-0000	A		1	LOCKING PLATE	
060	752186-0012	A		2	SHAFT	
070	752186-0010	A		1	SHAFT	
090	1484234-0000	-		1	FORMING RING	
200	2033-0007	A		2	WASHER	
210	2033-0011	A		4	WASHER	
TBA 0200B, TBA 0250B (See drawing on page: 1-24)						
020	1350904-0000	A		1	ROLL	
030	751284-0000	A		2	ROLL	
040	1350905-0000	A		1	LOCKING PLATE	
050	1350906-0000	A		1	LOCKING PLATE	
060	752186-0003	A		2	SHAFT	
070	752186-0017	A		1	SHAFT	
090	1350907-0000	-		1	UPPER FORMING RING	
200	2033-0007	A		6	WASHER	
210	2033-0011	A		2	WASHER	
Common Parts						
080	1038428-0000	A		2	LOCK PLATE	
300	312105-0371	-		4	SCREW M6S ISO 4017 M6X22 A480	
310	312105-0493	-		1	SCREW M6S ISO 4017 M10X25 A480	
320	312705-0316	-		4	NUT HEX. DOMED CAP MHM-6 M6 A280	
330	90240-0172	A		6	FLANGE BUSHING, 8X12X10 MM	

Pos	Part No	SP	UN	Qty	Description	Page No

FORMING RING

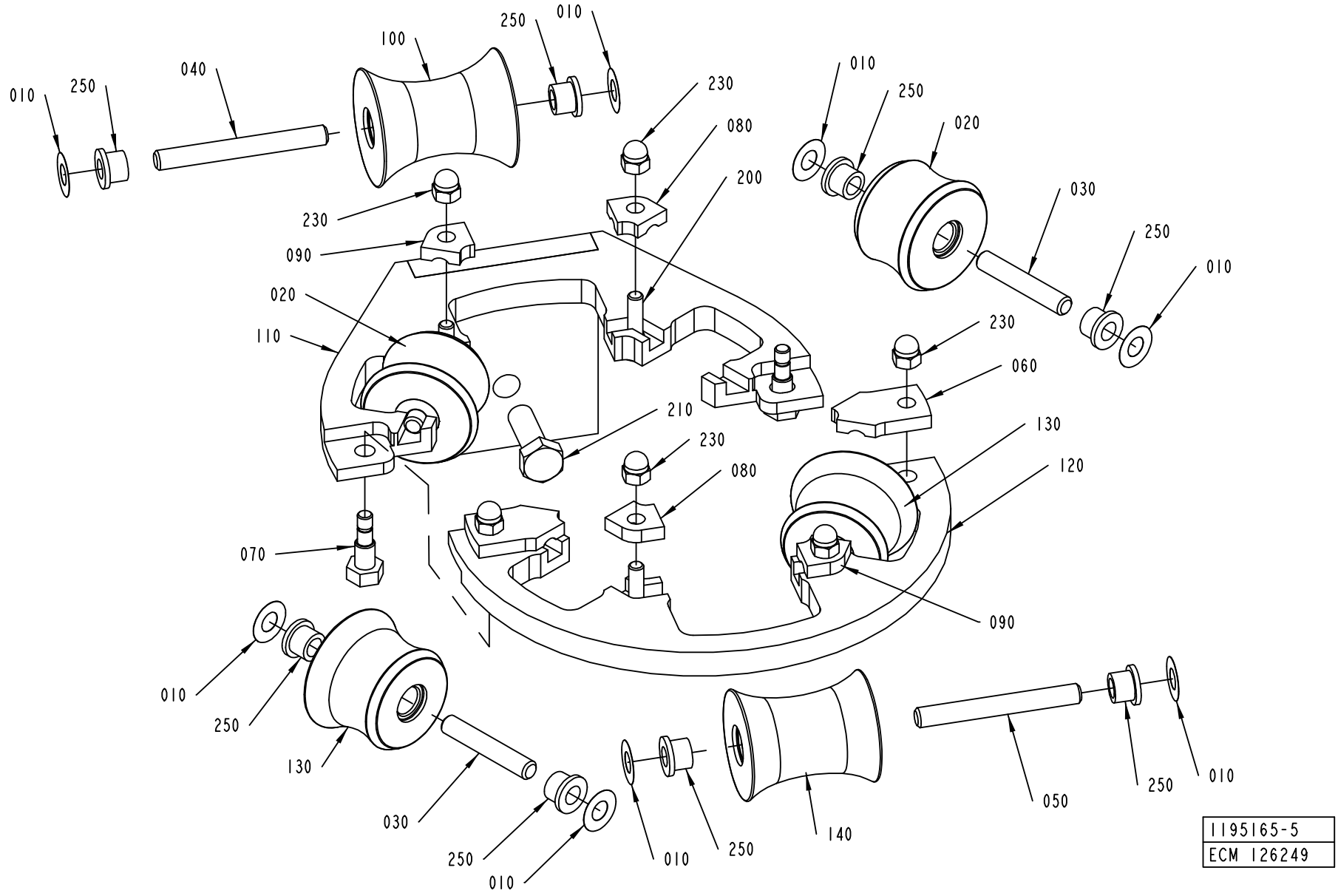

ECM: 135658 - 20031215
Group number: 1195165-0300
Assembly Drawing: 1195165-5_1_AA

Pos	Part No	SP	UN	Qty	Description	Page No
TBA 0200S						
020	752132-0000	-		2	FORMING ROLLER	
030	752186-0003	-		4	SHAFT	
040	752186-0006	-		1	SHAFT	
050	752186-0006	-		1	SHAFT	
080	1519491-0000	-		2	LOCK PLATE	
090	1519492-0000	-		2	LOCK PLATE	
100	1517316-0000	-		1	ROLL	
110	2611168-0000	-		1	FORMING RING	
120	2611169-0000	-		1	FORMING RING	
130	2611166-0000	-		2	ROLLER	
140	2611167-0000	-		1	ROLLER	
TBA 0250S, TBA 0200M						
020	574397-0000	-		2	ROLL	
030	752186-0004	-		4	SHAFT	
040	752186-0006	-		1	SHAFT	
050	752186-0006	-		1	SHAFT	
080	1348938-0000	-		2	LOCK PLATE	
090	1348938-0000	-		2	LOCK PLATE	
100	1487691-0000	-		1	ROLL	
110	2618706-0000	-		1	FORMING RING	
120	2618707-0000	-		1	FORMING RING	
130	2618708-0000	-		2	ROLLER	
140	2632629-0000	-		1	ROLLER	
TBA 0200B, TBA 0250B						
020	751499-0000	-		2	ROLL	
030	752186-0005	-		4	SHAFT	
040	752186-0007	-		1	SHAFT	
050	752186-0014	-		1	SHAFT	
080	1348938-0000	-		2	LOCK PLATE	
090	1348938-0000	-		2	LOCK PLATE	
100	1350289-0000	-		1	ROLL	
110	2618701-0000	-		1	FORMING RING	
120	2618703-0000	-		1	FORMING RING	
130	2618704-0000	-		2	ROLLER	
140	2618705-0000	-		1	ROLLER	
Common Parts						
010	2033-0011	-		12	WASHER	
060	1195318-0000	-		2	PLATE	
070	1195319-0000	-		2	FITTING BOLT	
200	312105-0372	-		4	SCREW M6S ISO 4017 M6X25 A480	
210	312105-0495	-		1	SCREW M6S ISO 4017 M10X30 A480	
230	312705-0316	-		6	NUT HEX. DOMED CAP MHM-6 M6 A280	
250	90240-0172	-		12	FLANGE BUSHING, 8X12X10 MM	

Machine Type | Group Description | Used-In | Group Number | Page No

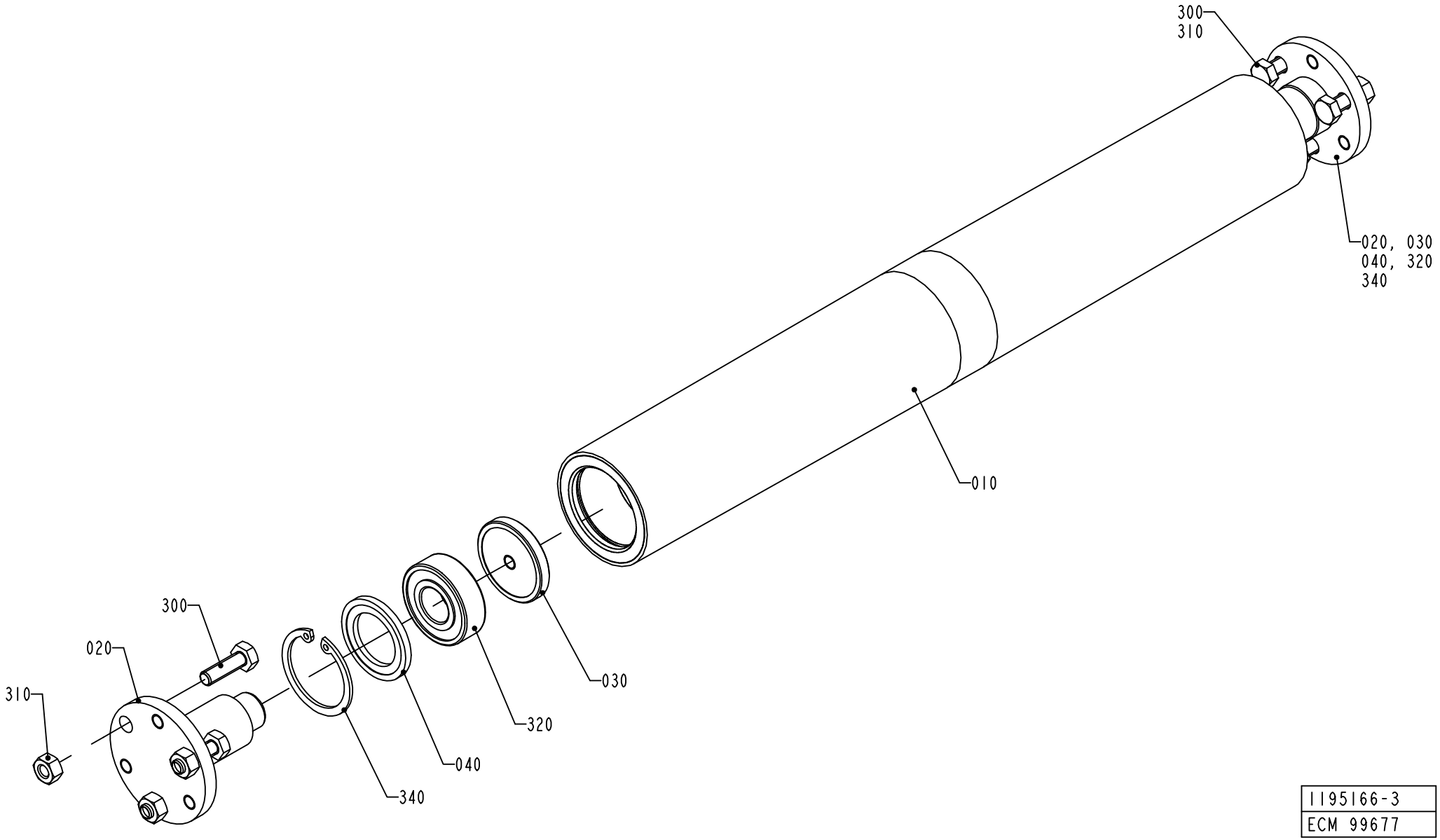

1195166-3
ECM 99677

ECM: 102585 - 20011123
Group number: 1195166-0200
Assembly Drawing: 1195166-3_1_AB

Pos	Part No	SP	UN	Qty	Description	Page No
-						
010	1490405-0000	A		1	ROLLER	
020	1490408-0000	-		2	SHAFT	
030	1490407-0000	-		2	WASHER	
040	1490406-0000	-		2	WASHER	
300	312105-0370	-		6	SCREW M6S ISO 4017 M6X20 A480	
310	312605-0316	-		6	HEXAGON NUT, M6M M6 A280	
320	90458-1704	A		2	BALL BEARING, 15X35X11 MM	
340	315753-0124	-		2	RETAINING RING FOR BORE DIN 472 35 A2	

Pos	Part No	SP	UN	Qty	Description	Page No

DRIVEN CALENDER ROLLER

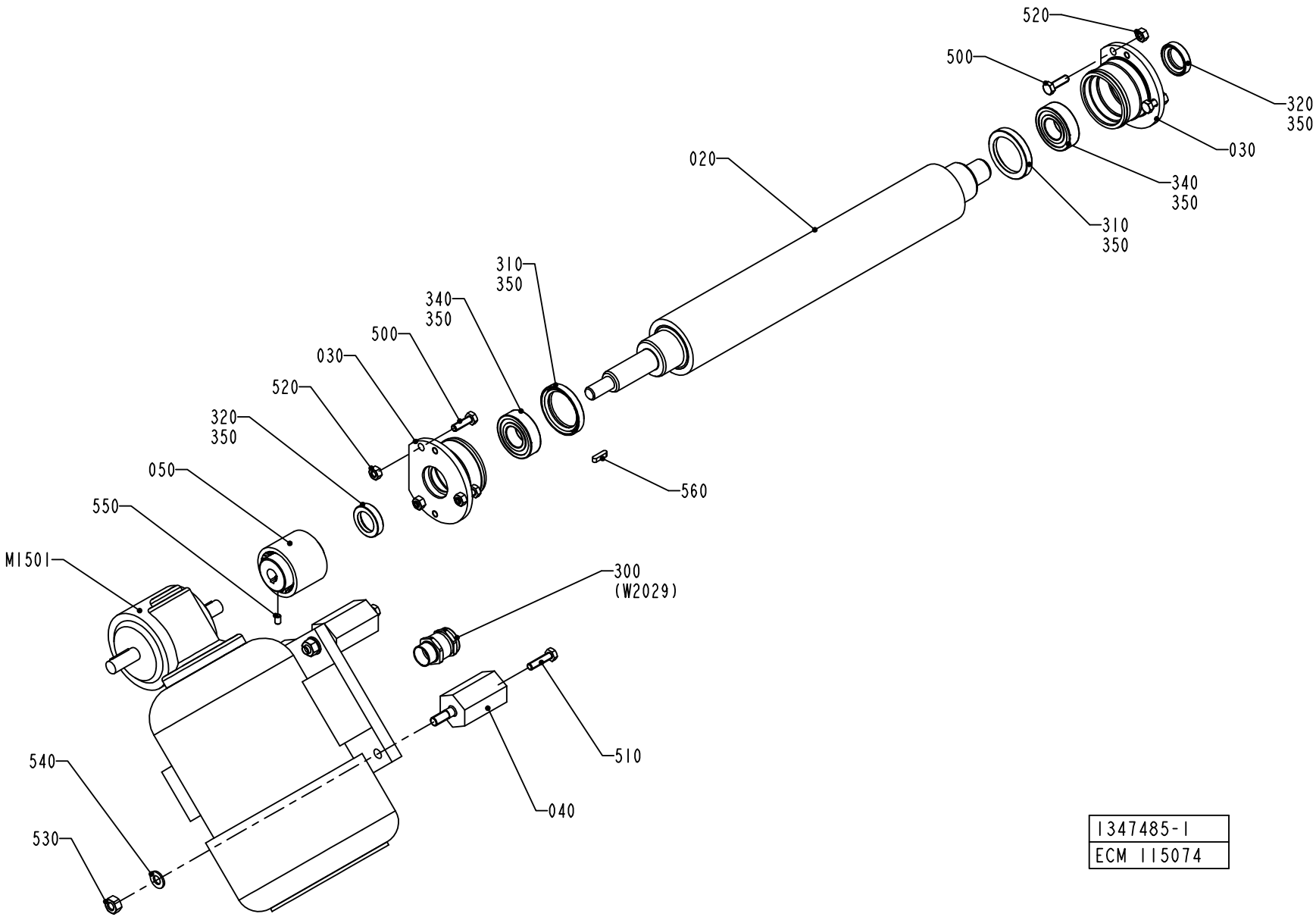

1347485-1
ECM 115074

ECM: 147903 - 20040202
Group number: 1347485-0100
Assembly Drawing: 1347485-1_1_AC

Pos	Part No	SP	UN	Qty	Description	Page No
-						
020	2570132-0000	A		1	CALENDER ROLLER	
030	1484514-0000	A		2	HOUSING	
040	1347484-0000	-		4	SPACER	
050	1129298-0000	-		1	SHAFT COUPLING	
300	90012-0137	-		1	GLAND, EXTENDED WITH INSERT, PG11	
310	90091-0297	B		2	RADIAL SEAL 35X47X7 MM DUST LIP	
320	90091-0320	-		2	RADIAL SEAL 20X30X7 MM DUST LIP	
340	90214-0225	A		2	BALL BEARING SOLID OIL 20X42X12 MM	
350	90296-0091	-		1	LUBRICATION GREASE	
500	312105-0370	-		6	SCREW M6S ISO 4017 M6X20 A480	
510	312105-0372	-		4	SCREW M6S ISO 4017 M6X25 A480	
520	312605-0316	-		6	HEXAGON NUT, M6M M6 A280	
530	312605-0318	-		4	HEXAGON NUT, M6M M8 A280	
540	315105-0165	-		4	WASHER BRB8,4X16RFR	
550	312318-0323	-		2	SCREW ISO4029 M5X8 A4	
560	315701-0168	A		1	PARALLEL KEY W. ROUND ENDS 4X4X16 MM	
M1501	90069-0608	A		1	GEARS, WORM MOTOR ODM120-60KE3	

Pos	Part No	SP	UN	Qty	Description	Page No

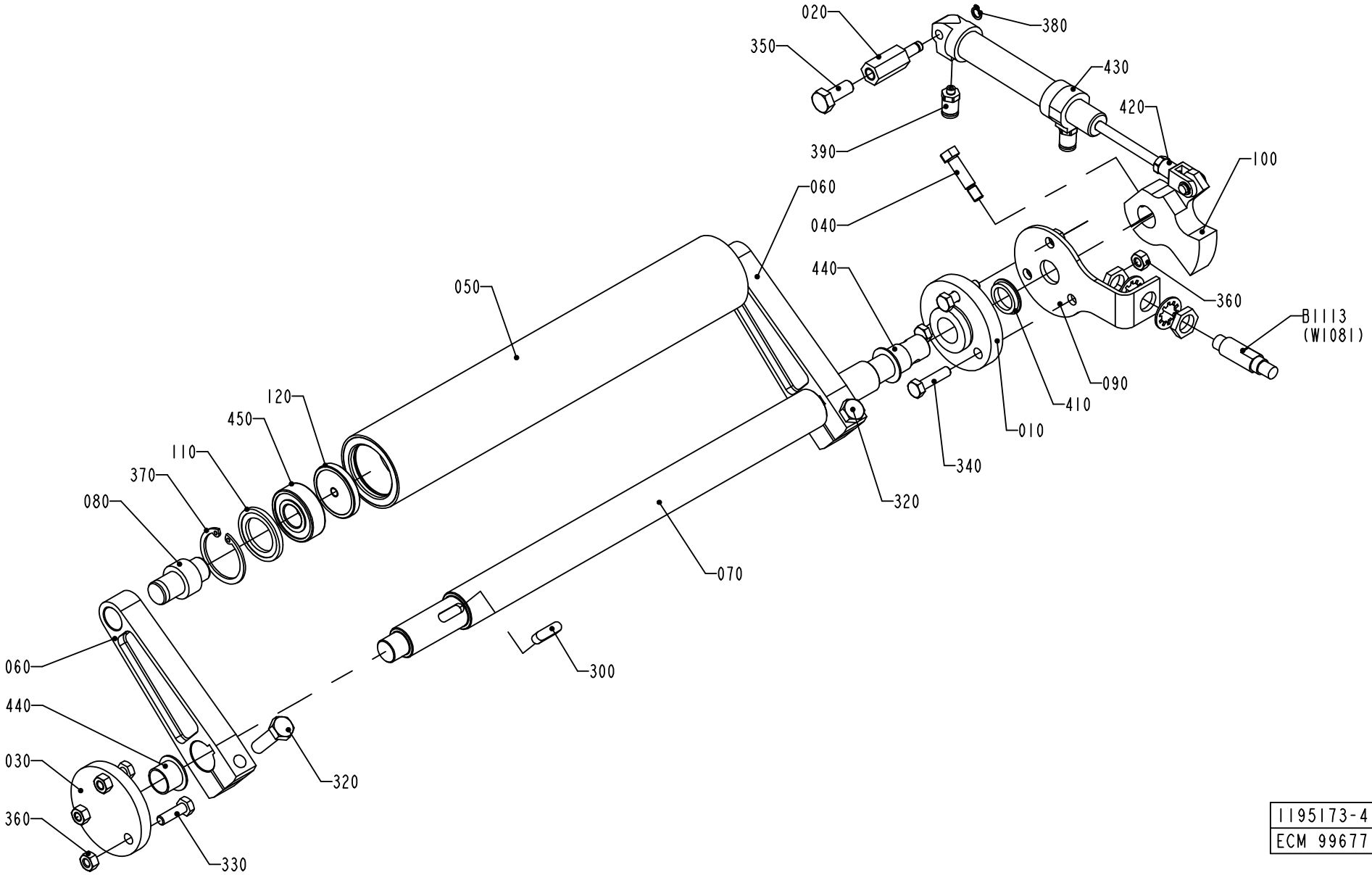

1195173-4
ECM 99677

ECM: 113472 - 20020911
Group number: 1195173-0300
Assembly Drawing: 1195173-4_1_AB

Pos	Part No	SP	UN	Qty	Description	Page No
-						
010	1036174-0000	A		1	BEARING COVER	
020	1036178-0000	-		1	SHAFT	
030	1036328-0000	-		1	LID	
040	1041688-0000	-		1	FITTING BOLT	
050	1490409-0000	A		1	ROLLER	
060	1347938-0000	A		2	PENDULUM ARM	
070	1347940-0000	-		1	SHAFT	
080	1490410-0000	-		2	SHAFT	
090	1347941-0000	-		1	LID	
100	1348063-0000	-		1	LEVER	
110	1490406-0000	-		2	WASHER	
120	1490407-0000	-		2	WASHER	
300	315705-0232	A		2	PARALLEL KEY W. ROUND ENDS 6X6X20 MM	
320	312105-0455	-		2	SCREW M6S ISO 4017 M8X30 A480	
330	312105-0370	-		3	SCREW M6S ISO 4017 M6X20 A480	
340	312105-0372	-		3	SCREW M6S ISO 4017 M6X25 A480	
350	312105-0451	-		1	SCREW M6S ISO 4017 M8X20 A480	
360	312605-0316	-		6	HEXAGON NUT, M6M M6 A280	
370	315753-0124	-		2	RETAINING RING FOR BORE DIN 472 35 A2	
380	315751-0103	-		1	RETAINING RING FOR SHAFT DIN 471 6 A2	
390	342722-0197	-		2	STRAIGHT COUPLING	
410	90091-0357	A		1	VARISEAL ROTO 15X23X4 MM	
420	90239-0489	-		1	ROD END, CLEVIS WITH AXLE M6X1,25	
430	90239-0817	A		1	DOUBLE ACTING, MINI-ISO, CYL.16-50	
440	90240-0263	A		2	FLANGE BUSHING, 15X17X12 MM	
450	90458-1704	A		2	BALL BEARING, 15X35X11 MM	
B1113	90458-0675	-		1	PROXIMITY SENSOR, E2EG-X5MB1-5M	

Pos	Part No	SP	UN	Qty	Description	Page No

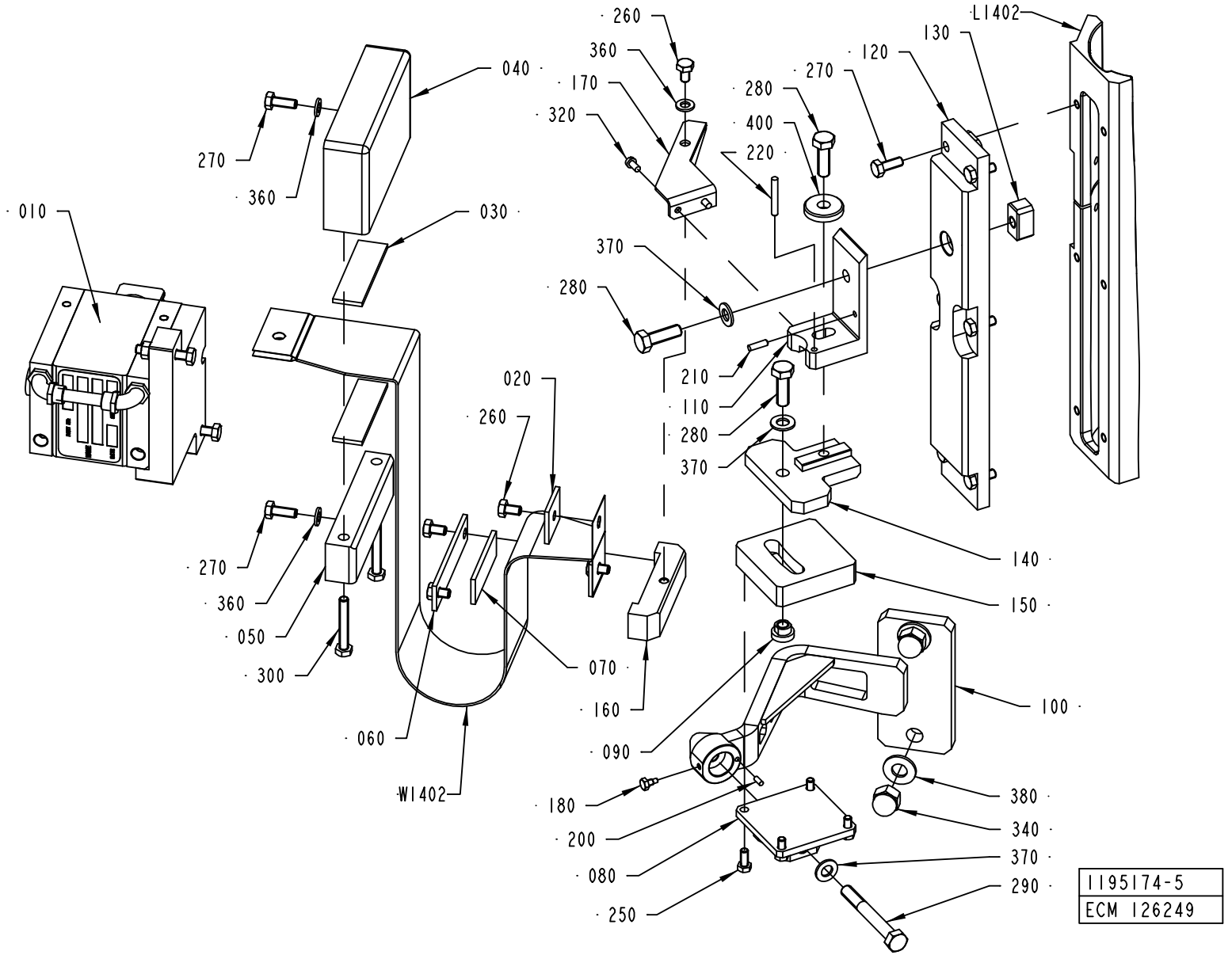
260
360
170
320
040
270
360
010
030
370
280
020
260
270
360
050
300
060
W1402
070
160
090
180
200
080
250
L1402
130
120
270
280
400
220
210
110
280
370
140
150
100
380
340
370
290
1195174-5
ECM 126249

ECM: 126252 - 20031215
Group number: 1195174-0400
Assembly Drawing: 1195174-5_1_AA

Pos	Part No	SP	UN	Qty	Description	Page No
TBA 0200B						
110	2607090-0000	-		1	BRACKET	
L1402	2606897-0000	-		1	INDUCTOR	
TBA 0200M						
110	2611155-0000	-		1	BRACKET	
L1402	2501526-0000	-		1	INDUCTOR	
TBA 0200S						
110	2611155-0000	-		1	BRACKET	
L1402	2611161-0000	-		1	INDUCTOR	
TBA 0250B						
110	2607090-0000	-		1	BRACKET	
L1402	2606897-0000	-		1	INDUCTOR	
TBA 0250S						
110	2611155-0000	-		1	BRACKET	
L1402	2501526-0000	-		1	INDUCTOR	
Common Parts						
010	2597526-0100	-		1	IH EQUIPMENT	**1-39**
020	1296997-0000	-		2	WASHER	
030	2522188-0000	-		2	GASKET	
040	2522189-0000	-		1	PLATE	
050	2522190-0000	-		1	PLATE	
060	2523724-0000	-		1	PLATE	
070	2540806-0000	-		1	GASKET	
080	2570671-0000	-		1	BRACKET	
090	2570674-0000	-		1	PIN	
100	2570676-0000	-		1	HOLDER	
120	2607091-0000	-		1	BRACKET	
130	2607092-0000	-		1	BLOCK	
140	2607093-0000	-		1	PLATE	
150	2607094-0000	-		1	PLATE	
160	2607095-0000	-		1	BRACKET	
170	2607096-0000	-		1	BRACKET	
180	2632631-0000	-		1	SCREW	
200	311103-0232	-		1	PARALLEL PIN ISO 2338 3M6X8 A1	
210	311103-0269	-		1	PARALLEL PIN ISO 2338 4M6X14 A1	
220	311103-0276	-		1	PARALLEL PIN ISO 2338 4M6X30 A1	
250	312105-0327	-		4	SCREW M6S ISO 4017 M5X12 A480	
260	312105-0364	-		5	SCREW M6S ISO 4017 M6X10 A480	
270	312105-0368	-		8	SCREW M6S M6X16 A280	
280	312105-0453	-		3	SCREW M6S ISO 4017 M8X25 A480	
290	312105-0464	-		1	SCREW M6S ISO 4014 M8X65 A480	
300	312109-0378	-		2	SCREW M6S ISO4017 M6X40 A480	
320	312125-0287	-		2	SCREW ISO 1207 M4X8 A4	
340	312705-0320	-		2	NUT HEX. DOMED CAP MHM-6 M10 A280	
360	315105-0153	-		3	WASHER BRB6,4X12RFR	
370	315105-0165	-		3	WASHER BRB8,4X16RFR	
380	315105-0173	-		2	WASHER BRB10,5X22RFR	
400	315125-0165	-		1	WASHER TBRSB 8,4X26X5 A4	
W1402	1520726-0000	-		1	BUSBAR	

Machine Type | Group Description | Used-In | Group Number | Page No

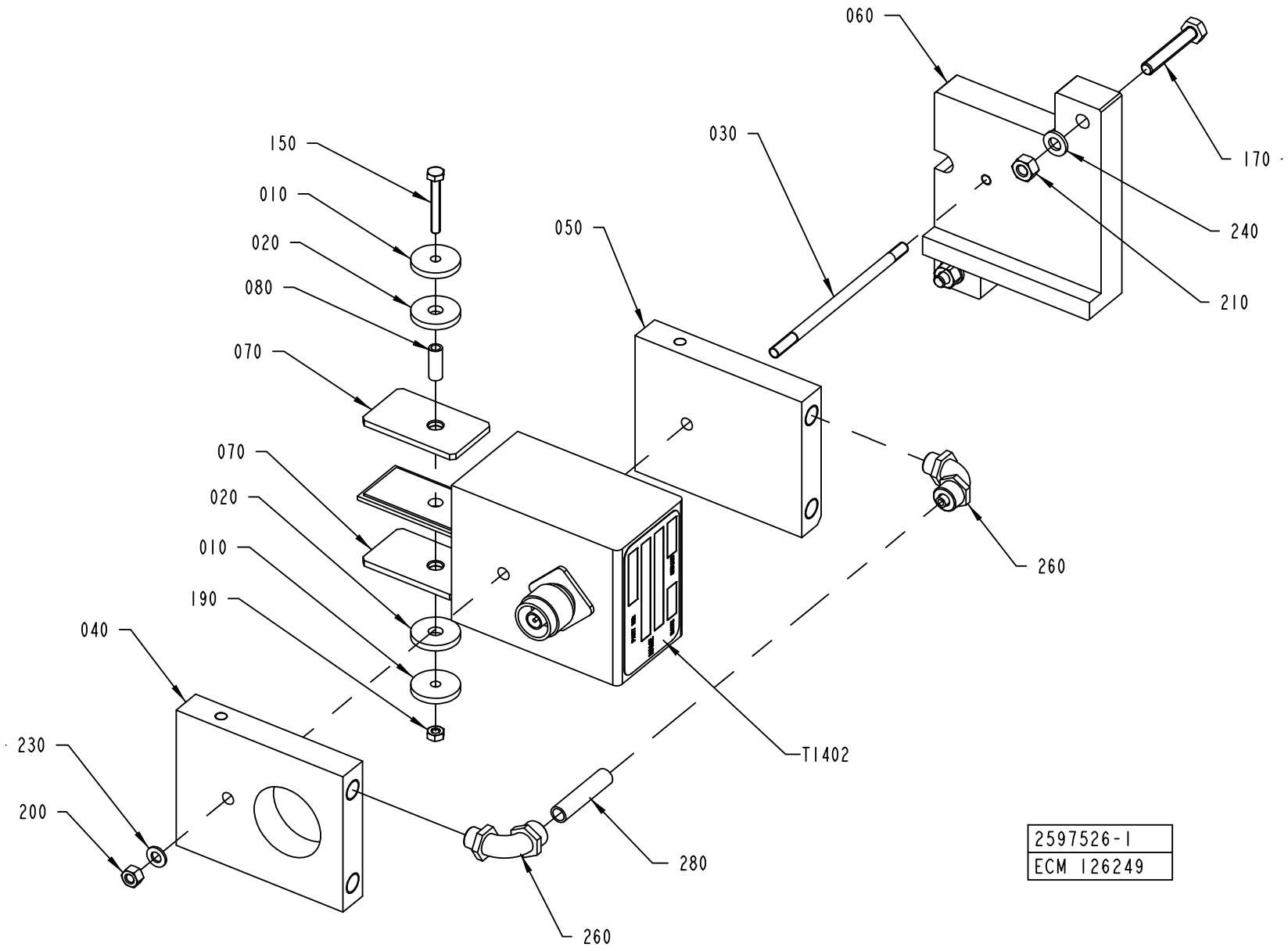
060
030
170
240
210
150
010
020
080
070
050
070
020
010
190
040
260
T1402
230
200
280
260
2597526-1
ECM 126249

ECM: 126284 - 20031215
Group number: 2597526-0100
Assembly Drawing: 2597526-1_1_AA

Pos	Part No	SP	UN	Qty	Description	Page No
TBA 0200B						
T1402	67379-0416	-		1	TRANSFORMER	
T1402	67379-0416	-		1	TRANSFORMER	
TBA 0200M						
T1402	67379-0416	-		1	TRANSFORMER	
T1402	67379-0416	-		1	TRANSFORMER	
TBA 0200S						
T1402	67379-0415	-		1	TRANSFORMER	
T1402	67379-0415	-		1	TRANSFORMER	
TBA 0250B						
T1402	67379-0408	-		1	TRANSFORMER	
T1402	67379-0408	-		1	TRANSFORMER	
TBA 0250S						
T1402	67379-0416	-		1	TRANSFORMER	
T1402	67379-0416	-		1	TRANSFORMER	
Common Parts						
010	583859-0000	-		2	WASHER	
020	583860-0000	-		2	WASHER	
030	1140515-0000	-		1	SCREW	
040	1539354-0000	-		1	COOLING PLATE	
050	1539355-0000	-		1	COOLING PLATE	
060	2522261-0000	-		1	PLATE	
070	2607100-0000	-		2	PLATE	
080	2607101-0000	-		1	INSULATOR	
150	312105-0299	-		1	SCREW M6S ISO 4017 M4X30 A480	
170	312109-0376	-		2	SCREW M6S ISO 4017 M6X35 A480	
190	312605-0312	-		1	HEXAGON NUT, M6M M4 A280	
200	312605-0314	-		1	HEXAGON NUT, M6M M5 A280	
210	312605-0316	-		2	HEXAGON NUT, M6M M6 A280	
230	315105-0146	-		1	BRICKA BRB5,3X10RFR	
240	315105-0153	-		2	WASHER BRB6,4X12RFR	
260	342931-0121	-		2	ELBOW 90 COUPL.,EXT.THREAD 8/6-G1/8"	
280	90166-0118	-	MM	36	TUBE 8 MM PA BLACK	

Pos	Part No	SP	UN	Qty	Description	Page No

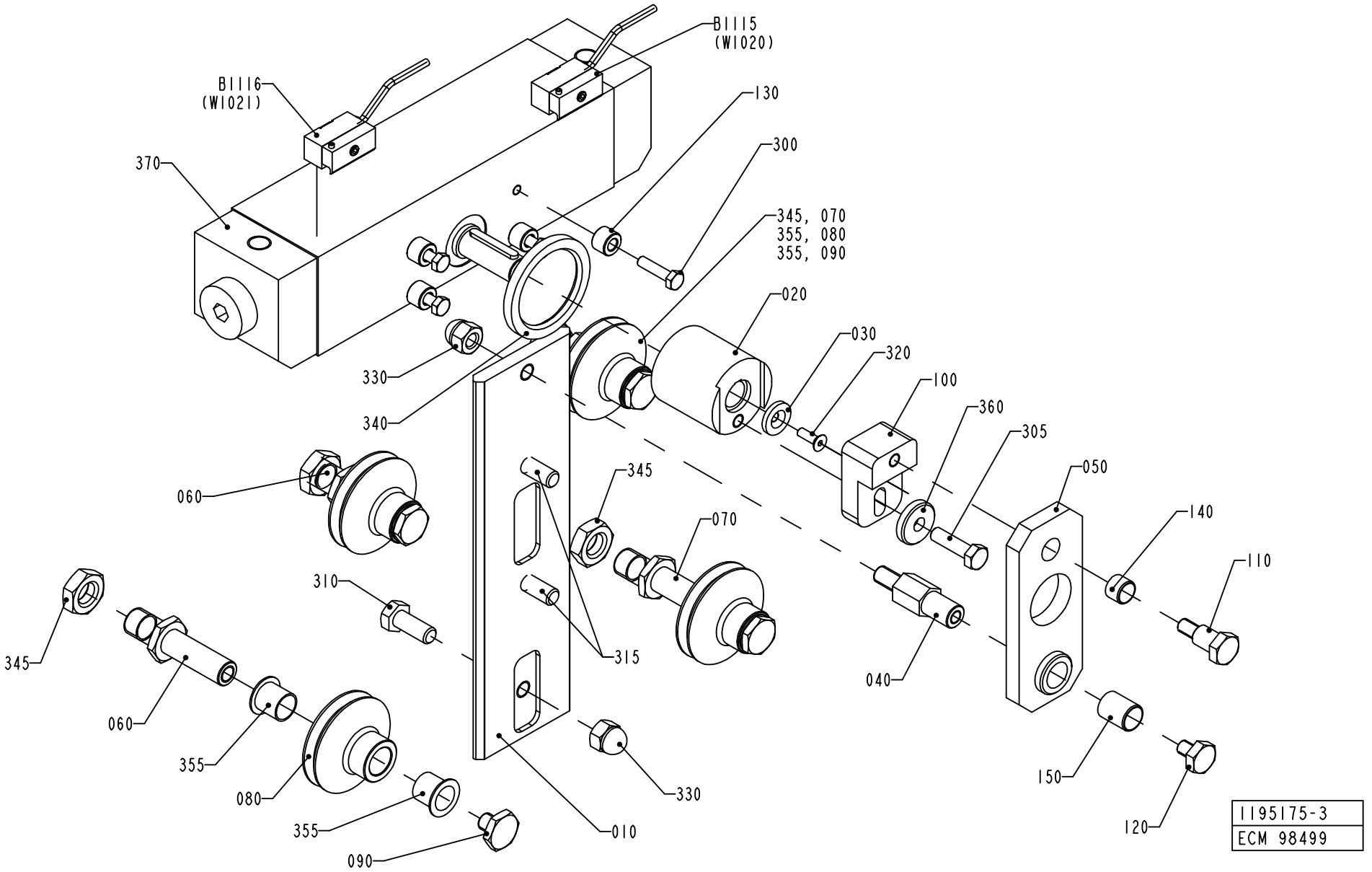
B1115
(W1020)
B1116
(W1021)
130
300
370
345, 070
355, 080
355, 090
020
030
320
100
360
305
050
140
110
330
340
060
345
070
310
315
040
345
060
355
080
355
090
010
330
150
120
1195175-3
ECM 98499

ECM: 113473 - 20020911
Group number: 1195175-0200
Assembly Drawing: 1195175-3_1_AA

Pos	Part No	SP	UN	Qty	Description	Page No
-						
010	1296764-0000	A		1	RAIL	
020	1349915-0000	-		1	SHAFT	
030	1255970-0000	-		1	WASHER	
040	1487167-0000	-		1	AXLE PIN	
050	1487168-0000	-		1	PLATE	
060	1296756-0000	-		2	SHAFT	
070	1296757-0000	-		2	SHAFT	
080	1296759-0000	A		4	ROLL	
090	1296760-0000	-		4	NUT	
100	1487164-0000	-		1	PLATE	
110	1487165-0000	-		1	SCREW	
120	1487166-0000	-		1	SCREW	
130	1349397-0000	-		4	SHIM	
140	1498615-0000	A		1	BUSHING	
150	1498616-0000	A		1	BUSHING	
300	312105-0372	-		4	SCREW M6S ISO 4017 M6X25 A480	
305	312105-0455	-		1	SCREW M6S ISO 4017 M8X30 A480	
310	312105-0493	-		1	SCREW M6S ISO 4017 M10X25 A480	
315	312105-0495	-		2	SCREW M6S ISO 4017 M10X30 A480	
320	312155-0329	-		1	SCREW EN 10642 MF6S M5X16 A480	
330	312705-0320	-		2	NUT HEX. DOMED CAP MHM-6 M10 A280	
340	90091-0143	A		1	RADIAL SEAL 47X62X6 MM	
345	90099-0131	-		4	NUT HEX. M16X2 SS	
355	90240-0264	A		8	FLANGE BUSHING, 15X17X17 MM	
360	315125-0165	-		1	WASHER TBRSB 8,4X26X5 A4	
370	90450-0509	A		1	CYLINDER	
B2115	1498614-0000	A		1	SENSOR	
B2116	1498614-0000	A		1	SENSOR	

Pos	Part No	SP	UN	Qty	Description	Page No

BENDING ROLLER

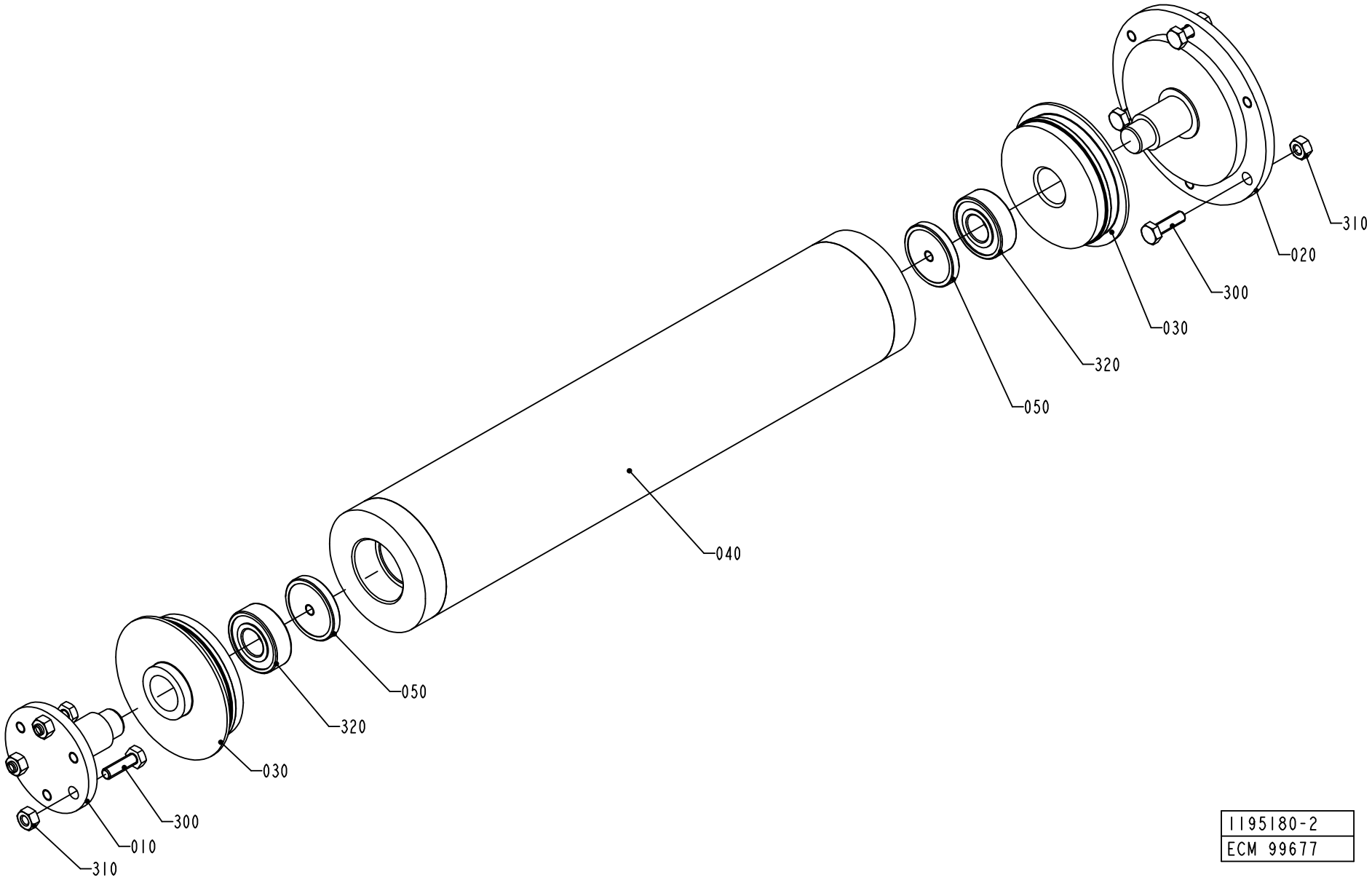

1195180-2
ECM 99677

ECM: 102587 - 20011123
Group number: 1195180-0100
Assembly Drawing: 1195180-2_1_AB

Pos	Part No	SP	UN	Qty	Description	Page No
-						
010	1490413-0000	A		1	SHAFT	
020	1490412-0000	-		1	SHAFT	
030	1036496-0000	-		2	WHEEL	
040	1490411-0000	A		1	ROLLER	
050	1490407-0000	-		2	WASHER	
300	312105-0370	-		6	SCREW M6S ISO 4017 M6X20 A480	
310	312605-0316	-		6	HEXAGON NUT, M6M M6 A280	
320	90458-1704	A		2	BALL BEARING, 15X35X11 MM	

Pos	Part No	SP	UN	Qty	Description	Page No

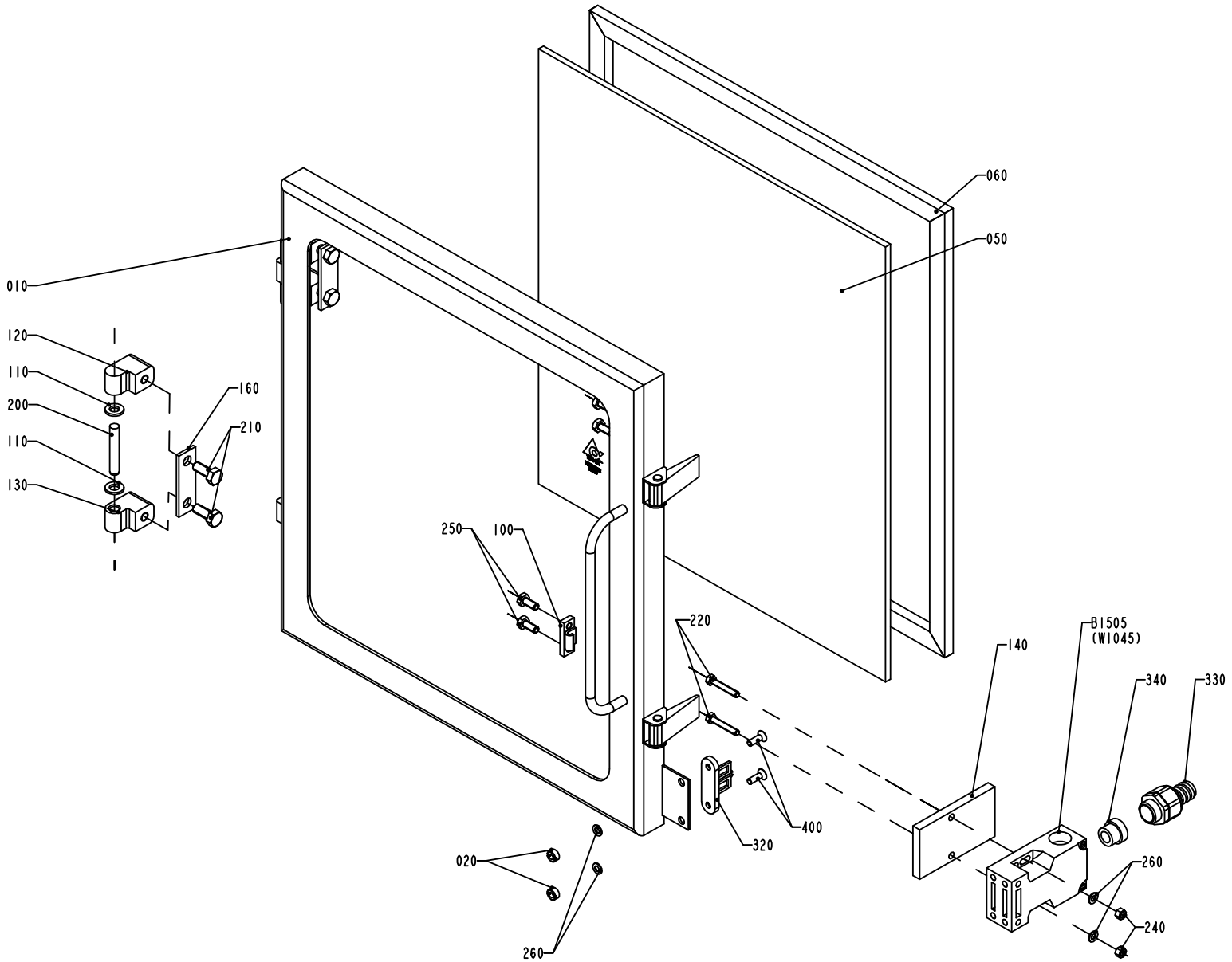

1195181-1
ECM 140845

ECM: 143601 - 20031110
Group number: 1195181-0100
Assembly Drawing: 1195181-1_1_AC

Pos	Part No	SP	UN	Qty	Description	Page No
-						
010	1195270-0000	-		1	FRAME	
020	575034-0000	-		2	ROUND NUT	
050	1195271-0000	-		1	GLASS PANE	
060	1195272-0000	-		1	GASKET	
100	271860-0000	-		2	CLAMP BLOCK	
110	441739-0000	-		4	WASHER	
120	1041979-0000	-		2	HINGE FLANGE	
130	1041978-0000	-		2	HINGE FLANGE	
140	1037048-0000	-		1	PLATE	
160	441737-0000	-		2	WASHER	
200	311103-0413	-		2	PARALLEL PIN ISO 2338 8M6X50 A1	
210	312105-0451	-		4	SCREW M6S ISO 4017 M8X20 A480	
220	312109-0335	-		2	SCREW M6S ISO 4017 M5X30 A480	
240	312605-0314	-		2	HEXAGON NUT, M6M M5 A280	
250	312105-0367	-		4	SCREW M6S M6X14 A280	
260	315105-0146	-		4	BRICKA BRB5,3X10RFR	
320	90044-0310	-		1	KEY FOR SAFETY SWITCH, AZ 15/16 B1	
330	90458-0429	-		1	EXTENDED WITHOUT INSERT, M20X1,5	
340	353249-0011	-		1	INSERT, SINGEL HOLE, EK 153/11	
400	312155-0329	-		2	SCREW EN 10642 MF6S M5X16 A480	
420	90153-0023	-		1	ADHESIVE, SILICON 251470 TUB 90CC	
B1505	90459-0472	A		1	KEY SAF.SW. AZ 16 02ZVRK-M20-2152-2254	

Pos	Part No	SP	UN	Qty	Description	Page No

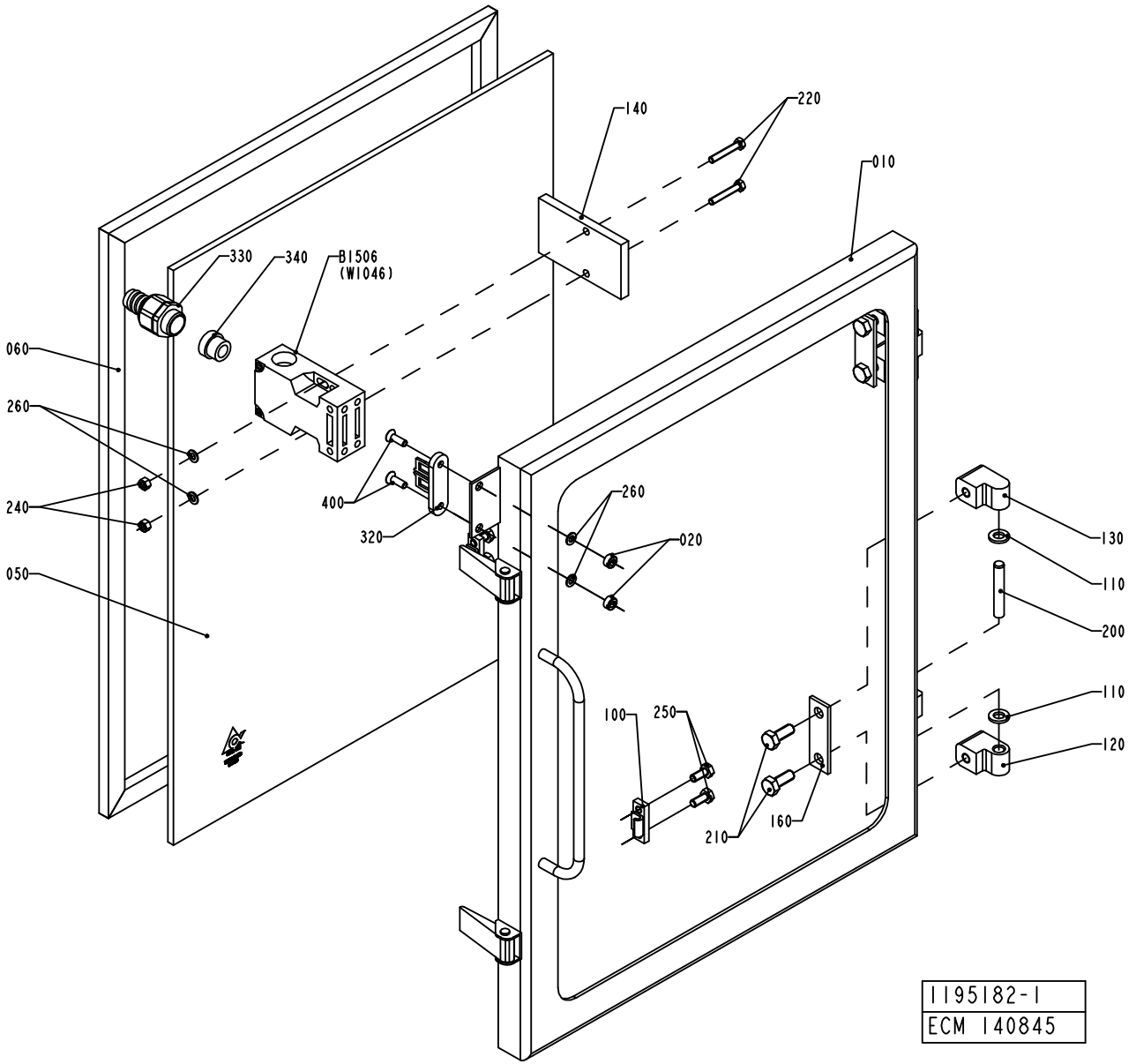
140
220
010
330
340
B1506
(W1046)
060
260
240
050
400
320
260
020
130
110
200
110
120
100
250
210
160
1195182-1
ECM 140845

ECM: 143602 - 20031110
Group number: 1195182-0100
Assembly Drawing: 1195182-1_1_AC

Pos	Part No	SP	UN	Qty	Description	Page No
-						
010	1195273-0000	-		1	FRAME	
020	575034-0000	-		2	ROUND NUT	
050	1195274-0000	-		1	GLASS PANE	
060	1195275-0000	B		1	GASKET	
100	271860-0000	-		2	CLAMP BLOCK	
110	441739-0000	-		4	WASHER	
120	1041979-0000	-		2	HINGE FLANGE	
130	1041978-0000	-		2	HINGE FLANGE	
140	1037048-0000	-		1	PLATE	
160	441737-0000	-		2	WASHER	
200	311103-0413	-		2	PARALLEL PIN ISO 2338 8M6X50 A1	
210	312105-0451	-		4	SCREW M6S ISO 4017 M8X20 A480	
220	312109-0335	-		2	SCREW M6S ISO 4017 M5X30 A480	
240	312605-0314	-		2	HEXAGON NUT, M6M M5 A280	
250	312105-0367	-		4	SCREW M6S M6X14 A280	
260	315105-0146	-		4	BRICKA BRB5,3X10RFR	
320	90044-0310	-		1	KEY FOR SAFETY SWITCH, AZ 15/16 B1	
330	90458-0429	B		1	EXTENDED WITHOUT INSERT, M20X1,5	
340	353249-0011	B		1	INSERT, SINGEL HOLE, EK 153/11	
400	312155-0329	-		2	SCREW EN 10642 MF6S M5X16 A480	
420	90153-0023	-		1	ADHESIVE, SILICON 251470 TUB 90CC	
B1506	90459-0472	A		1	KEY SAF.SW. AZ 16 02ZVRK-M20-2152-2254	

Pos	Part No	SP	UN	Qty	Description	Page No

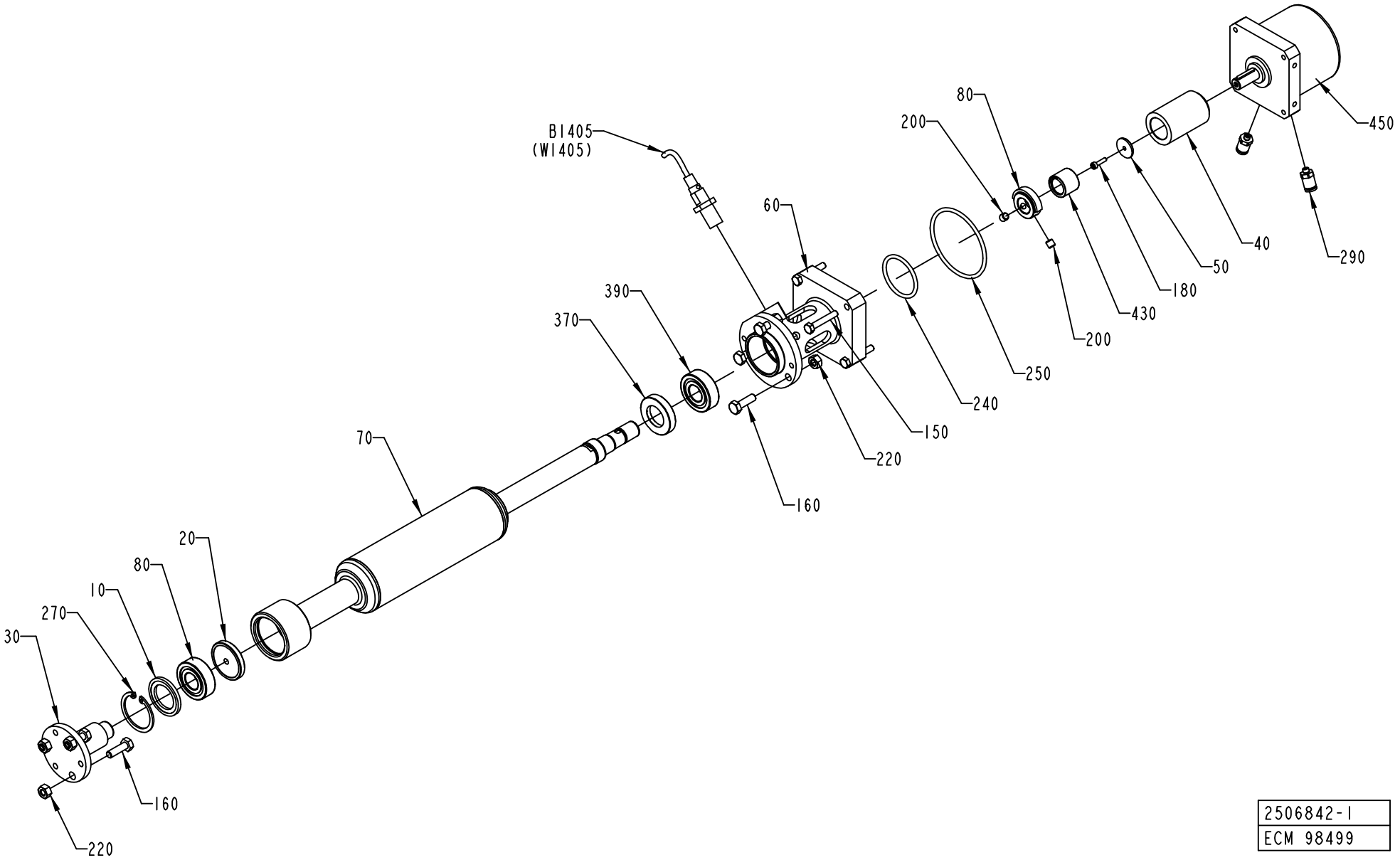

2506842-1
ECM 98499

ECM: 113477 - 20020911
Group number: 2506842-0100
Assembly Drawing: 2506842-1_1_AB

Pos	Part No	SP	UN	Qty	Description	Page No
TBA 0200B, TBA 0250B						
070	2517065-0000	A		1	ROLLER	
TBA 0200S						
070	2506841-0000	A		1	ROLLER	
TBA 0250S, TBA 0200M						
070	2517064-0000	A		1	ROLLER	
Common Parts						
010	1490406-0000	A		1	WASHER	
020	1490407-0000	A		1	WASHER	
030	1490408-0000	A		1	SHAFT	
040	1490886-0000	-		1	SHAFT	
050	1490887-0000	-		1	WASHER	
060	2506840-0000	-		1	FLANGE	
080	2514281-0000	-		1	COUNTER	
150	312105-0335	-		4	SCREW M6S ISO 4014 M5X30 A480	
160	312105-0370	-		6	SCREW M6S ISO 4017 M6X20 A480	
180	312115-0226	-		1	SCREW ISO4762 M3X12 A4	
200	312318-0360	-		2	SCREW ISO4029 M6X6 A4	
220	312605-0316	-		6	HEXAGON NUT, M6M M6 A280	
240	315202-0221	B		1	O-RING 34,2X3 MM	
250	315202-0303	B		1	O-RING 59,5X3 MM	
270	315753-0124	B		1	RETAINING RING FOR BORE DIN 472 35 A2	
290	342722-0197	-		2	STRAIGHT COUPLING	
370	90091-0303	-		1	RADIAL SEAL 20X35X7 MM DUST LIP	
390	90458-1704	A		2	BALL BEARING, 15X35X11 MM	
430	90458-1792	-		1	FREE-WHEEL COUPLING, 14X14 MM	
450	90458-2290	-		1	ROTARY ACTUATOR DSM-16-270-P	
B1405	90044-0191	A		1	PROX.SW. E2EG-X2B1	

Pos	Part No	SP	UN	Qty	Description	Page No

BENDING ROLLER

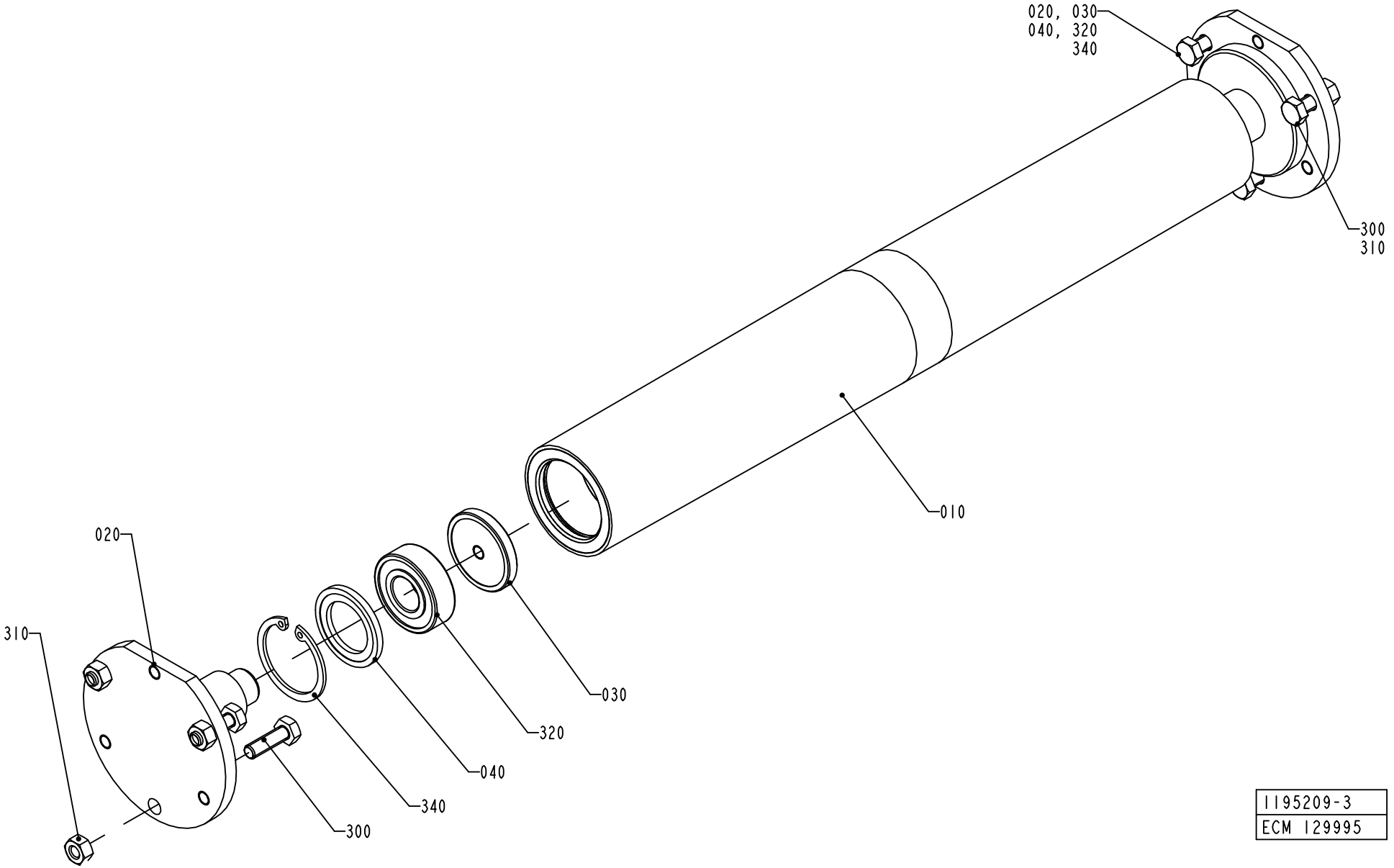

1195209-3
ECM 129995

ECM: 131340 - 20030630
Group number: 1195209-0200
Assembly Drawing: 1195209-3_1_AC

Pos	Part No	SP	UN	Qty	Description	Page No
-						
010	1490405-0000	A		1	ROLLER	
020	1490415-0000	A		2	SHAFT	
030	1490407-0000	-		2	WASHER	
040	1490406-0000	-		2	WASHER	
300	312105-0370	-		6	SCREW M6S ISO 4017 M6X20 A480	
310	312605-0316	-		6	HEXAGON NUT, M6M M6 A280	
320	90458-1704	A		2	BALL BEARING, 15X35X11 MM	
340	315753-0124	B		2	RETAINING RING FOR BORE DIN 472 35 A2	

Pos	Part No	SP	UN	Qty	Description	Page No

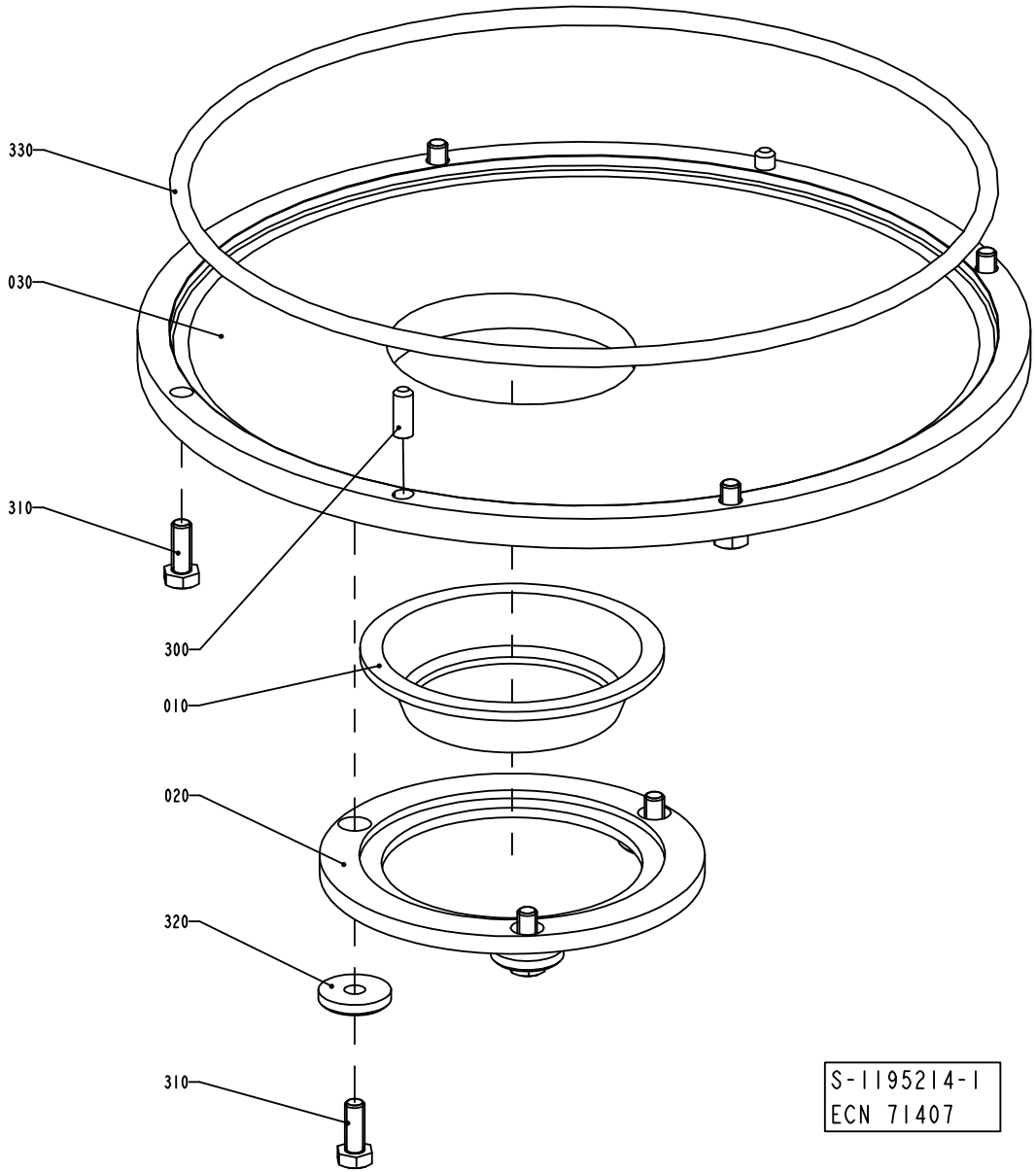
330
030
310
300
010
020
320
310
S-1195214-1
ECN 71407

ECM: 113479 - 20020911
Group number: 1195214-0100
Assembly Drawing: 1195214-1_1_AA

Pos	Part No	SP	UN	Qty	Description	Page No
TBA 0200B, TBA 0250B						
010	273953-0000	A		1	SEAL	
020	1255975-0000	-		1	SEAL HOLDER	
030	1255976-0000	-		1	SEAL HOLDER	
TBA 0200S						
010	490901-0000	A		1	SEAL	
020	1519503-0000	-		1	SEAL HOLDER	
030	1519502-0000	-		1	SEAL HOLDER	
TBA 0250S, TBA 0200M						
010	574336-0000	A		1	SEAL	
020	1487694-0000	-		1	SEAL HOLDER	
030	1487693-0000	-		1	SEAL HOLDER	
Common Parts						
300	311103-0351	-		2	PARALLEL PIN ISO 2338 6M6X16 A1	
310	312105-0368	-		7	SCREW M6S M6X16 A280	
320	315125-0153	-		3	WASHER TBRSB 6,4X22X4 A4	
330	315202-0335	B		1	O-RING 239,3X5,7 MM	

Pos	Part No	SP	UN	Qty	Description	Page No

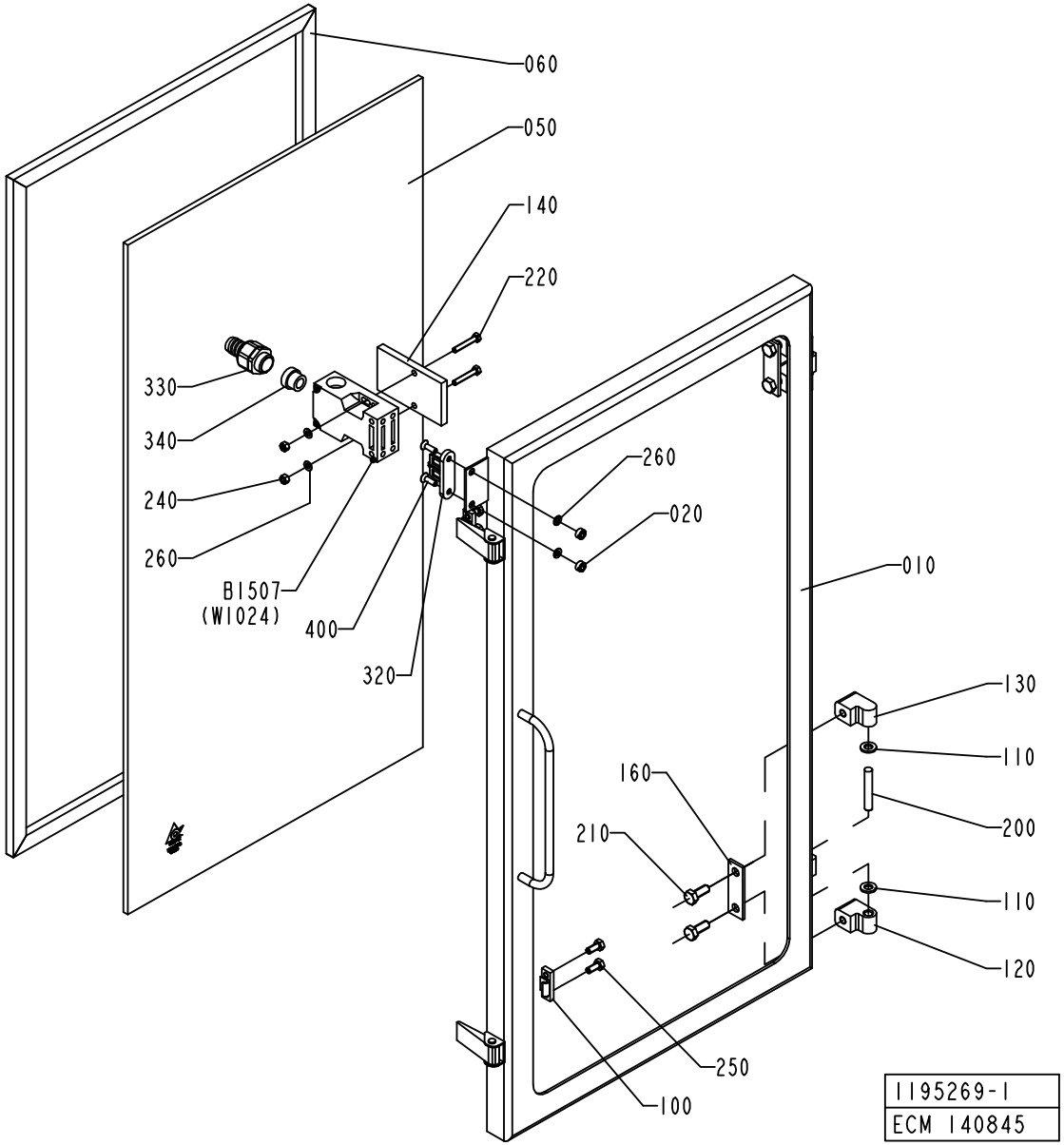
060
050
140
220
330
340
240
260
B1507
(W1024)
400
320
260
020
010
130
110
200
110
120
160
210
250
100
1195269-1
ECM 140845

ECM: 143603 - 20031110
Group number: 1195269-0100
Assembly Drawing: 1195269-1_1_AD

Pos	Part No	SP	UN	Qty	Description	Page No
-						
010	1195276-0000	-		1	FRAME	
020	575034-0000	-		2	ROUND NUT	
050	1195277-0000	-		1	GLASS PANE	
060	1195278-0000	B		1	GASKET	
100	271860-0000	-		2	CLAMP BLOCK	
110	441739-0000	-		4	WASHER	
120	1041979-0000	-		2	HINGE FLANGE	
130	1041978-0000	-		2	HINGE FLANGE	
140	1037048-0000	-		1	PLATE	
160	441737-0000	-		2	WASHER	
200	311103-0413	-		2	PARALLEL PIN ISO 2338 8M6X50 A1	
210	312105-0451	-		4	SCREW M6S ISO 4017 M8X20 A480	
220	312109-0335	-		2	SCREW M6S ISO 4017 M5X30 A480	
240	312605-0314	-		2	HEXAGON NUT, M6M M5 A280	
250	312105-0367	-		4	SCREW M6S M6X14 A280	
260	315105-0146	-		4	BRICKA BRB5,3X10RFR	
320	90044-0310	A		1	KEY FOR SAFETY SWITCH, AZ 15/16 B1	
330	90458-0429	B		1	EXTENDED WITHOUT INSERT, M20X1,5	
340	353249-0011	B		1	INSERT, SINGEL HOLE, EK 153/11	
400	312155-0329	-		2	SCREW EN 10642 MF6S M5X16 A480	
420	90153-0023	-		1	ADHESIVE, SILICON 251470 TUB 90CC	
B1507	90459-0472	A		1	KEY SAF.SW. AZ 16 02ZVRK-M20-2152-2254	

Pos	Part No	SP	UN	Qty	Description	Page No

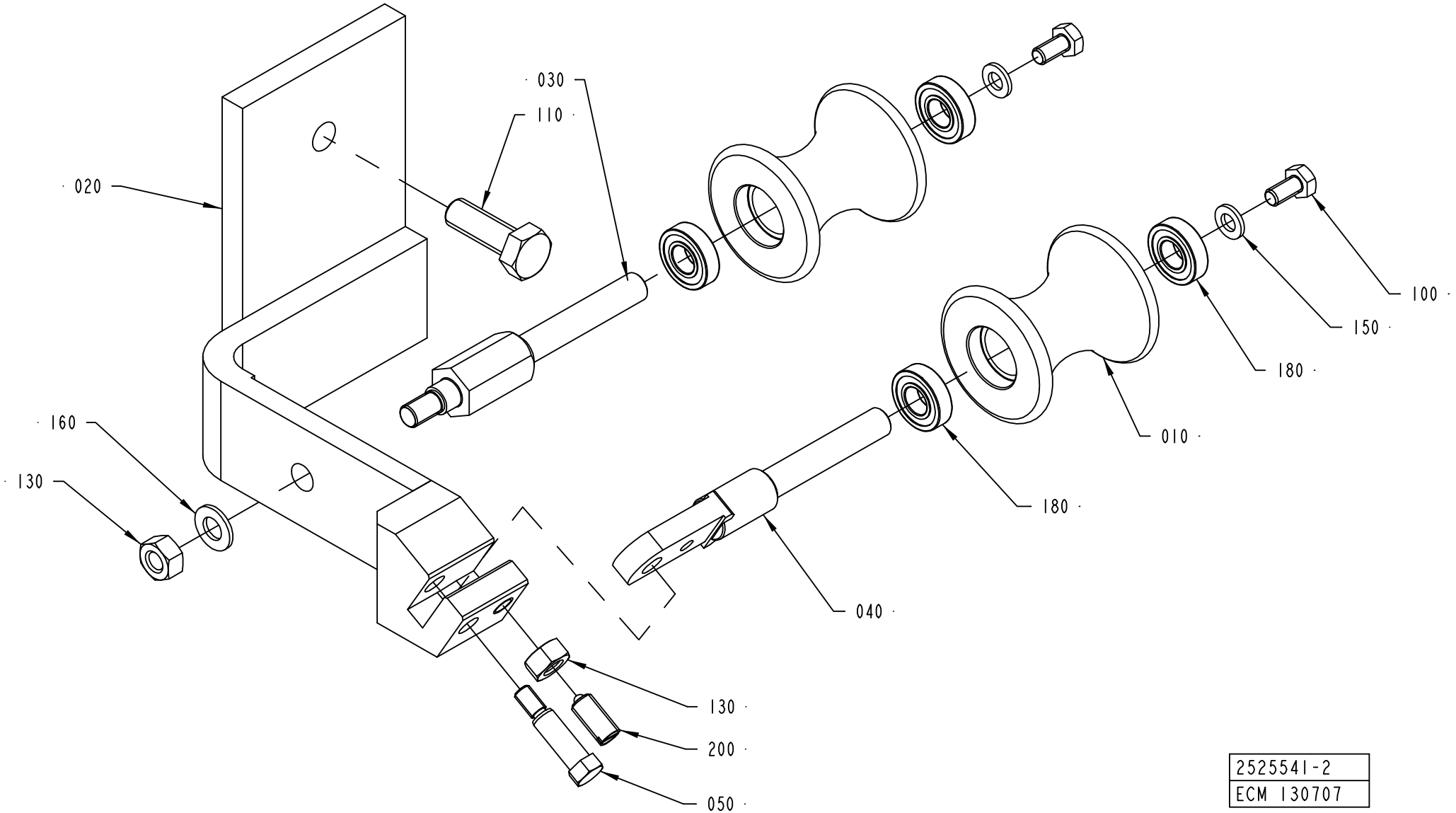
030
110
020
160
130
100
150
180
010
180
040
130
200
050
2525541-2
ECM 130707

ECM: 130707 - 20030707
Group number: 2525541-0200
Assembly Drawing: 2525541-2_1_AA

Pos	Part No	SP	UN	Qty	Description	Page No
TBA 0200S						
010	1487209-0000	-		2	ROLLER	
020	2603495-0000	-		1	BRACKET	
TBA 0250S, TBA 0200M						
010	1484793-0000	-		2	ROLLER	
020	2603497-0000	-		1	BRACKET	
TBA 0200B, TBA 0250B						
010	1347521-0000	-		2	ROLLER	
020	2603496-0000	-		1	BRACKET	
Common Parts						
030	2525540-0000	-		1	SHAFT	
040	2603493-0000	-		1	SHAFT	
050	2603494-0000	-		1	SCREW	
100	312105-0366	-		2	SCREW M6S M6X12 A280	
110	312105-0495	-		1	SCREW M6S ISO 4017 M10X30 A480	
130	312605-0318	-		2	HEXAGON NUT, M6M M8 A280	
150	315105-0153	-		2	WASHER BRB6,4X12RFR	
160	315105-0165	-		1	WASHER BRB8,4X16RFR	
180	90214-0036	-		4	BALL BEARING, 10X22X6 MM	
200	90287-0334	-		1	SCREW SPRINGLOAD. SLOTTED HEAD M8X16	

Pos	Part No	SP	UN	Qty	Description	Page No

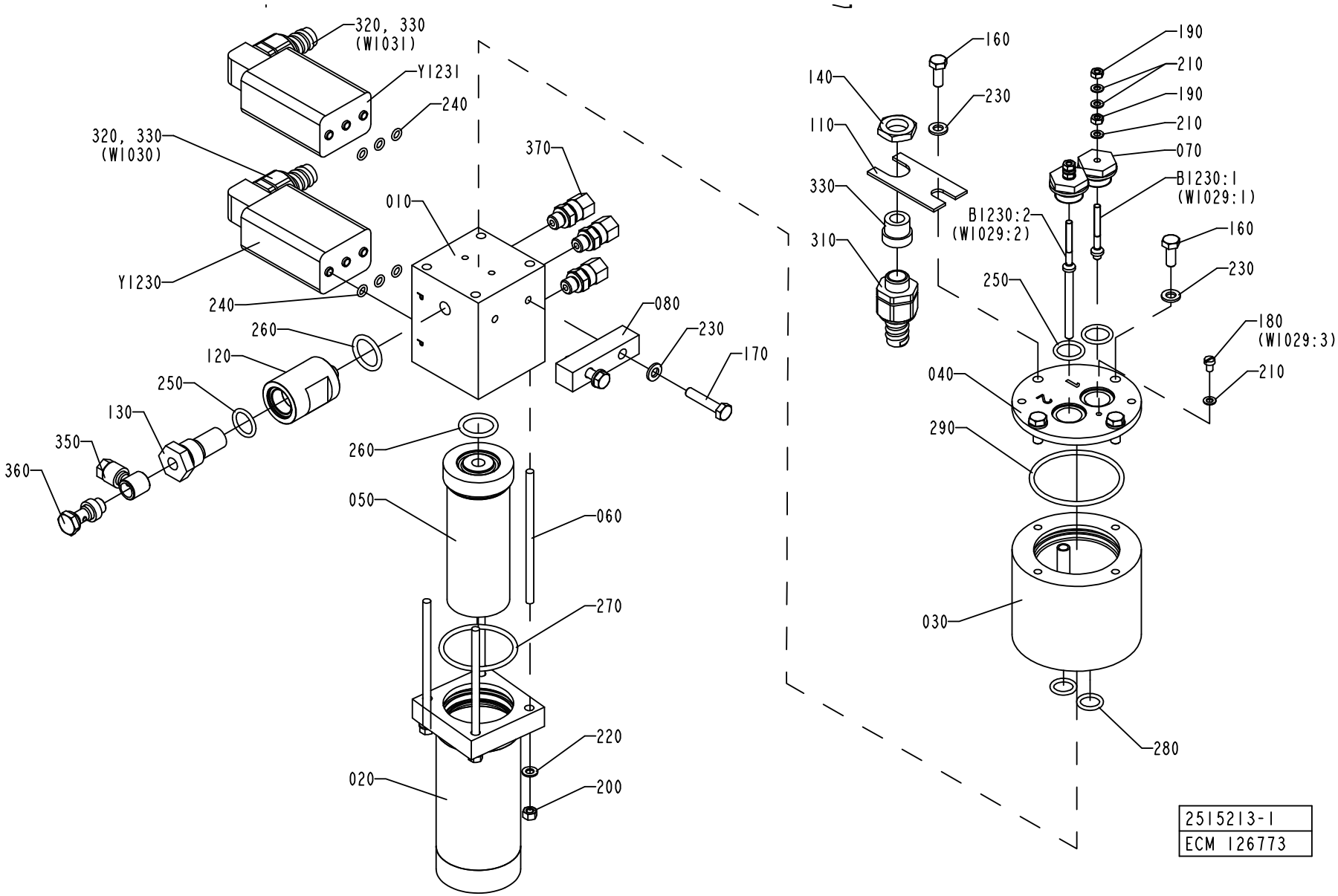
320, 330
(W1031)
Y1231
240
320, 330
(W1030)
370
010
Y1230
240
080
230
260
120
170
250
130
350
360
260
050
060
270
220
020
200
160
190
210
140
230
190
210
110
070
330
B1230:1
(W1029:1)
B1230:2
(W1029:2)
310
160
250
230
180
(W1029:3)
210
040
290
030
280
2515213-1
ECM 126773

ECM: 135551 - 20030922
Group number: 2515213-0100
Assembly Drawing: 2515213-1_1_AC

This list covers pages from 1-58 to 1-61

Pos	Part No	SP	UN	Qty	Description	Page No
HI (See drawing on page: 1-60)						
010	2535468-0000	A		1	DISTRIBUTOR BLOCK	
060	1140221-0000	-		4	STUD	
090	2553167-0000	-		1	LID	
100	2562310-0000	-		1	BRACKET	
120	1519486-0000	-		2	FILTER HOUSE	
130	450833-0000	-		2	FILTER	
140	2514217-0000	-		1	PIPE	
200	90099-0104	-		2	NUT, PR 15,2 (PG9)	
230	312105-0333	-		4	SCREW M6S ISO 4017 M5X25 A480	
250	312605-0312	-		8	HEXAGON NUT, M6M M4 A280	
270	315105-0136	-		9	WASHER BRB4,3XRFR	
280	315105-0146	-		8	BRICKA BRB5,3X10RFR	
300	927420-0001	A		12	O-RING 5.1X1.6 SILICON	
310	927421-0004	A		5	O-RING 15.3X2.4 SILICON	
320	927422-0001	A		3	O-RING 19.2X3 SILICON	
370	353243-0001	-		2	EXTENDED WITHOUT INSERT, PG9	
380	353243-0002	-		4	EXTENDED WITHOUT INSERT, PG11	
390	353249-0009	-		5	INSERT, SINGEL HOLE, EK 152/9	
400	342797-0121	-		2	CONN. BANJO, RINGPIECE 6-1/8	
410	342980-0303	-		2	BANJO-HOLLOW BOLT COUPL,EXT.THR.01-G1/8"	
420	90030-0184	-		5	CONN. STR. GA-6-G1/8	
440	90152-0059	-	M	8	SPIRAL CONDUIT, 18X12, UL 1211	
B9113:1	2559045-0001	-		1	ELECTRODE	
B9113:2	2559045-0002	-		1	ELECTRODE	
W9112	351150-0403	-	M	4	CABLE OLFLEX 3X0,75 MM2 LIGHT/GREY	
W9113	351150-0404	-	M	4	CABLE OLFLEX 4X0,75 MM2 LIGHT/GREY	
W9114	351150-0403	-	M	4	CABLE OLFLEX 3X0,75 MM2 LIGHT/GREY	
Y9112	90042-0203	-		1	SOLENOID VALVE BURKERT	
Y9114	90042-0203	-		1	SOLENOID VALVE BURKERT	
NOHI (See drawing on page: 1-58)						
010	1487114-0000	A		1	BLOCK	
060	554585-0000	-		4	STUD SCREW	
120	1519486-0000	-		1	FILTER HOUSE	
130	450833-0000	A		1	FILTER	
200	90099-0104	-		1	NUT, PR 15,2 (PG9)	
250	312605-0312	-		4	HEXAGON NUT, M6M M4 A280	
270	315105-0136	-		5	WASHER BRB4,3XRFR	
280	315105-0146	-		4	BRICKA BRB5,3X10RFR	
300	927420-0001	A		6	O-RING 5.1X1.6 SILICON	
310	927421-0004	A		3	O-RING 15.3X2.4 SILICON	
320	927422-0001	A		2	O-RING 19.2X3 SILICON	
370	353243-0001	-		1	EXTENDED WITHOUT INSERT, PG9	
380	353243-0002	-		2	EXTENDED WITHOUT INSERT, PG11	
390	353249-0009	-		3	INSERT, SINGEL HOLE, EK 152/9	
400	342797-0121	-		1	CONN. BANJO, RINGPIECE 6-1/8	
410	342980-0303	-		1	BANJO-HOLLOW BOLT COUPL,EXT.THR.01-G1/8"	
420	90030-0184	-		3	CONN. STR. GA-6-G1/8	
Common Parts						
020	554142-0000	A		1	FILTER HOUSING	
030	1478170-0000	A		1	CONTAINER	
040	549267-0000	A		1	LID	
050	554141-0000	A		1	FILTER	
070	2578486-0000	-		2	BRACKET	
080	560932-0000	-		1	INTERMEDIATE PART	
110	1040970-0000	-		1	BRACKET	
210	312105-0368	-		4	SCREW M6S M6X16 A280	
220	312109-0374	-		2	SCREW M6S ISO 4017 M6X30 A480	
240	312125-0285	-		1	SCREW ISO 1207 M4X6 A4	
260	312605-0314	-		4	HEXAGON NUT, M6M M5 A280	
290	315105-0153	-		6	WASHER BRB6,4X12RFR	
330	927422-0007	A		1	O-RING 44.2X3 SILICON	
340	927421-0002	A		2	O-RING 12.3X2.4 SILICON	
350	927422-0009	A		1	O-RING 54.5X3 SILICON	
360	315202-0224	-		1	O-RING 42,2X3 MM	
430	90030-0076	-		1	CONN. T-PIPE T-6	
B1230:1	2559045-0004	A		1	ELECTRODE	
B1230:2	2559045-0003	A		1	ELECTRODE	
Y1230	90042-0203	A		1	SOLENOID VALVE BURKERT	
Y1231	90042-0203	A		1	SOLENOID VALVE BURKERT	

Machine Type | Group Description | Used-In | Group Number | Page No

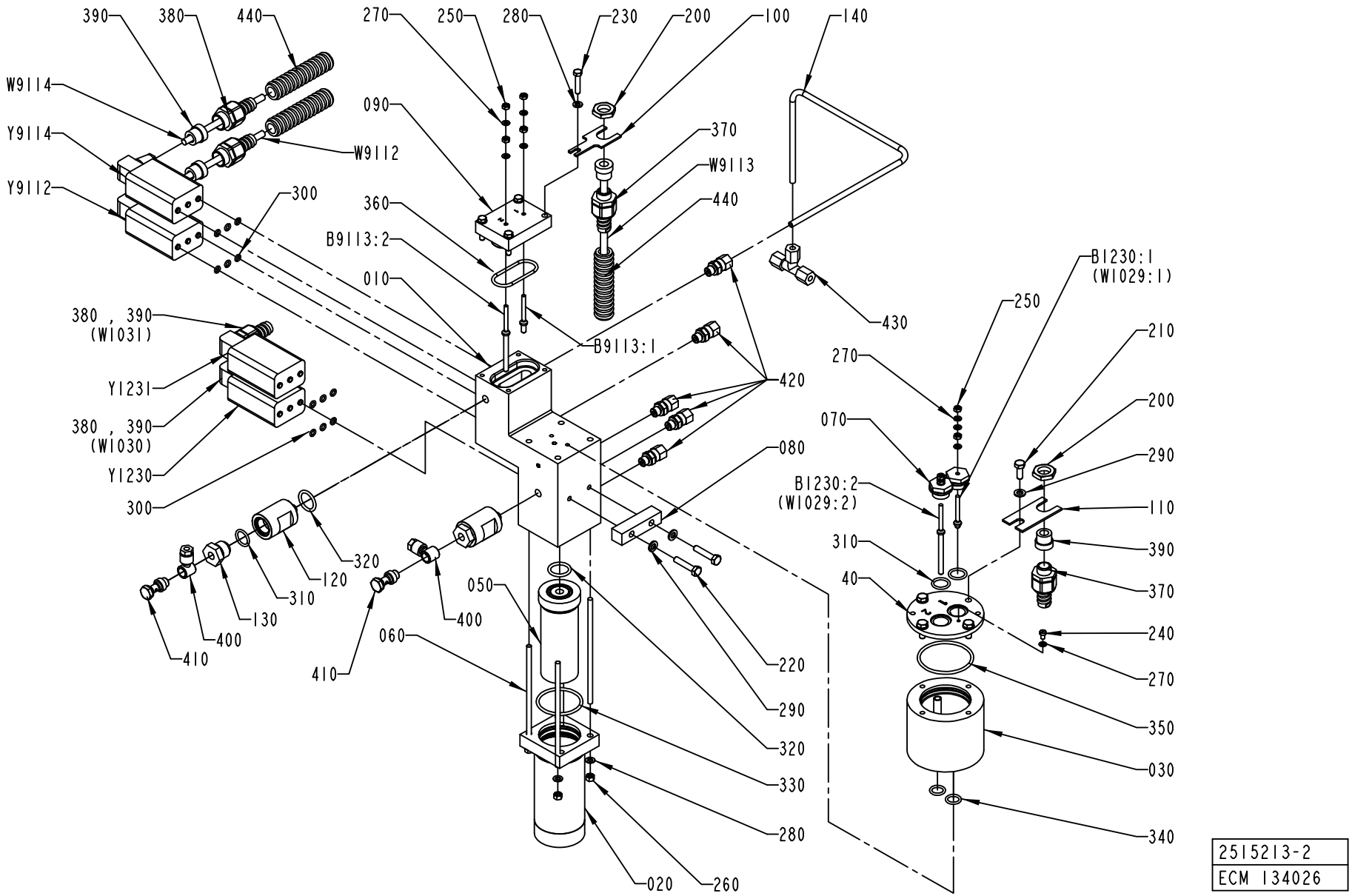

2515213-2
ECM 134026

ECM: 135551 - 20030922
Group number: 2515213-0100
Assembly Drawing: 2515213-2_1_AA

This list covers pages from 1-58 to 1-61

Pos	Part No	SP	UN	Qty	Description	Page No
HI (See drawing on page: 1-60)						
010	2535468-0000	A		1	DISTRIBUTOR BLOCK	
060	1140221-0000	-		4	STUD	
090	2553167-0000	-		1	LID	
100	2562310-0000	-		1	BRACKET	
120	1519486-0000	-		2	FILTER HOUSE	
130	450833-0000	-		2	FILTER	
140	2514217-0000	-		1	PIPE	
200	90099-0104	-		2	NUT, PR 15,2 (PG9)	
230	312105-0333	-		4	SCREW M6S ISO 4017 M5X25 A480	
250	312605-0312	-		8	HEXAGON NUT, M6M M4 A280	
270	315105-0136	-		9	WASHER BRB4,3XRFR	
280	315105-0146	-		8	BRICKA BRB5,3X10RFR	
300	927420-0001	A		12	O-RING 5.1X1.6 SILICON	
310	927421-0004	A		5	O-RING 15.3X2.4 SILICON	
320	927422-0001	A		3	O-RING 19.2X3 SILICON	
370	353243-0001	-		2	EXTENDED WITHOUT INSERT, PG9	
380	353243-0002	-		4	EXTENDED WITHOUT INSERT, PG11	
390	353249-0009	-		5	INSERT, SINGEL HOLE, EK 152/9	
400	342797-0121	-		2	CONN. BANJO, RINGPIECE 6-1/8	
410	342980-0303	-		2	BANJO-HOLLOW BOLT COUPL,EXT.THR.01-G1/8"	
420	90030-0184	-		5	CONN. STR. GA-6-G1/8	
440	90152-0059	-	M	8	SPIRAL CONDUIT, 18X12, UL 1211	
B9113:1	2559045-0001	-		1	ELECTRODE	
B9113:2	2559045-0002	-		1	ELECTRODE	
W9112	351150-0403	-	M	4	CABLE OLFLEX 3X0,75 MM2 LIGHT/GREY	
W9113	351150-0404	-	M	4	CABLE OLFLEX 4X0,75 MM2 LIGHT/GREY	
W9114	351150-0403	-	M	4	CABLE OLFLEX 3X0,75 MM2 LIGHT/GREY	
Y9112	90042-0203	-		1	SOLENOID VALVE BURKERT	
Y9114	90042-0203	-		1	SOLENOID VALVE BURKERT	
NOHI (See drawing on page: 1-58)						
010	1487114-0000	A		1	BLOCK	
060	554585-0000	-		4	STUD SCREW	
120	1519486-0000	-		1	FILTER HOUSE	
130	450833-0000	A		1	FILTER	
200	90099-0104	-		1	NUT, PR 15,2 (PG9)	
250	312605-0312	-		4	HEXAGON NUT, M6M M4 A280	
270	315105-0136	-		5	WASHER BRB4,3XRFR	
280	315105-0146	-		4	BRICKA BRB5,3X10RFR	
300	927420-0001	A		6	O-RING 5.1X1.6 SILICON	
310	927421-0004	A		3	O-RING 15.3X2.4 SILICON	
320	927422-0001	A		2	O-RING 19.2X3 SILICON	
370	353243-0001	-		1	EXTENDED WITHOUT INSERT, PG9	
380	353243-0002	-		2	EXTENDED WITHOUT INSERT, PG11	
390	353249-0009	-		3	INSERT, SINGEL HOLE, EK 152/9	
400	342797-0121	-		1	CONN. BANJO, RINGPIECE 6-1/8	
410	342980-0303	-		1	BANJO-HOLLOW BOLT COUPL,EXT.THR.01-G1/8"	
420	90030-0184	-		3	CONN. STR. GA-6-G1/8	
Common Parts						
020	554142-0000	A		1	FILTER HOUSING	
030	1478170-0000	A		1	CONTAINER	
040	549267-0000	A		1	LID	
050	554141-0000	A		1	FILTER	
070	2578486-0000	-		2	BRACKET	
080	560932-0000	-		1	INTERMEDIATE PART	
110	1040970-0000	-		1	BRACKET	
210	312105-0368	-		4	SCREW M6S M6X16 A280	
220	312109-0374	-		2	SCREW M6S ISO 4017 M6X30 A480	
240	312125-0285	-		1	SCREW ISO 1207 M4X6 A4	
260	312605-0314	-		4	HEXAGON NUT, M6M M5 A280	
290	315105-0153	-		6	WASHER BRB6,4X12RFR	
330	927422-0007	A		1	O-RING 44.2X3 SILICON	
340	927421-0002	A		2	O-RING 12.3X2.4 SILICON	
350	927422-0009	A		1	O-RING 54.5X3 SILICON	
360	315202-0224	-		1	O-RING 42,2X3 MM	
430	90030-0076	-		1	CONN. T-PIPE T-6	
B1230:1	2559045-0004	A		1	ELECTRODE	
B1230:2	2559045-0003	A		1	ELECTRODE	
Y1230	90042-0203	A		1	SOLENOID VALVE BURKERT	
Y1231	90042-0203	A		1	SOLENOID VALVE BURKERT	

Machine Type | Group Description | Used-In | Group Number | Page No

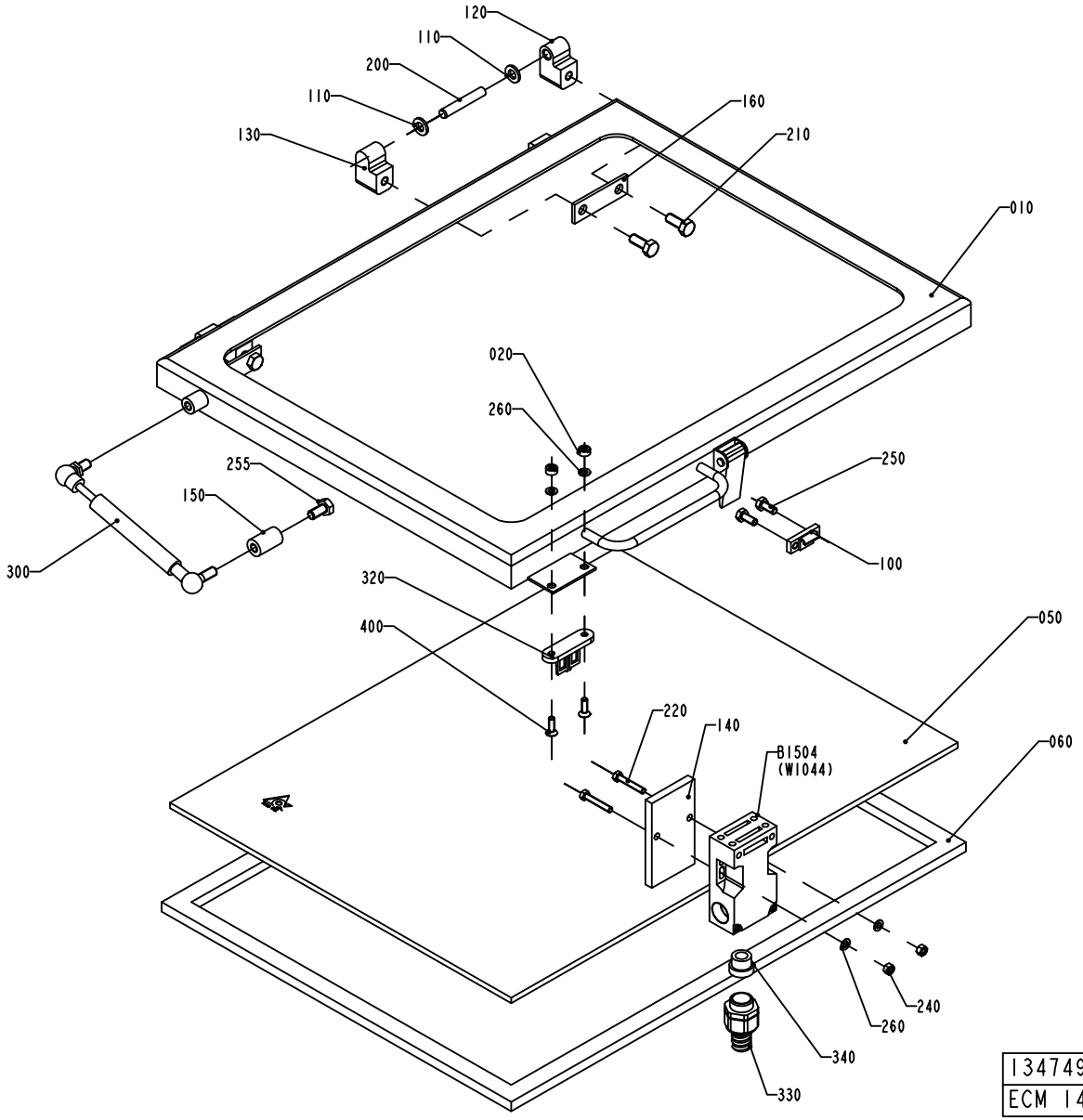

1347493-1
ECM 140845

ECM: 143645 - 20031110
Group number: 1347493-0100
Assembly Drawing: 1347493-1_1_AC

Pos	Part No	SP	UN	Qty	Description	Page No
-						
010	1347494-0000	-		1	FRAME	
020	575034-0000	-		2	ROUND NUT	
050	1037080-0000	-		1	GLASS PANE	
060	1037081-0000	-		1	GASKET	
100	271860-0000	-		1	CLAMP BLOCK	
110	441739-0000	-		4	WASHER	
120	1041979-0000	-		2	HINGE FLANGE	
130	1041978-0000	-		2	HINGE FLANGE	
140	1037048-0000	-		1	PLATE	
150	1037089-0000	-		1	SPACER	
160	441737-0000	-		2	WASHER	
200	311103-0413	-		2	PARALLEL PIN ISO 2338 8M6X50 A1	
210	312105-0451	-		4	SCREW M6S ISO 4017 M8X20 A480	
220	312109-0335	-		2	SCREW M6S ISO 4017 M5X30 A480	
240	312605-0314	-		2	HEXAGON NUT, M6M M5 A280	
250	312105-0367	-		2	SCREW M6S M6X14 A280	
255	312105-0449	-		1	SCREW M6S ISO 4017 M8X16 A480	
260	315105-0146	-		4	BRICKA BRB5,3X10RFR	
300	90347-0039	-		1	DAMPER	
320	90044-0310	-		1	KEY FOR SAFETY SWITCH, AZ 15/16 B1	
330	90458-0429	-		1	EXTENDED WITHOUT INSERT, M20X1,5	
340	353249-0011	-		1	INSERT, SINGEL HOLE, EK 153/11	
400	312155-0329	-		2	SCREW EN 10642 MF6S M5X16 A480	
420	90153-0023	-		1	ADHESIVE, SILICON 251470 TUB 90CC	
B1504	90459-0472	A		1	KEY SAF.SW. AZ 16 02ZVRK-M20-2152-2254	

Pos	Part No	SP	UN	Qty	Description	Page No

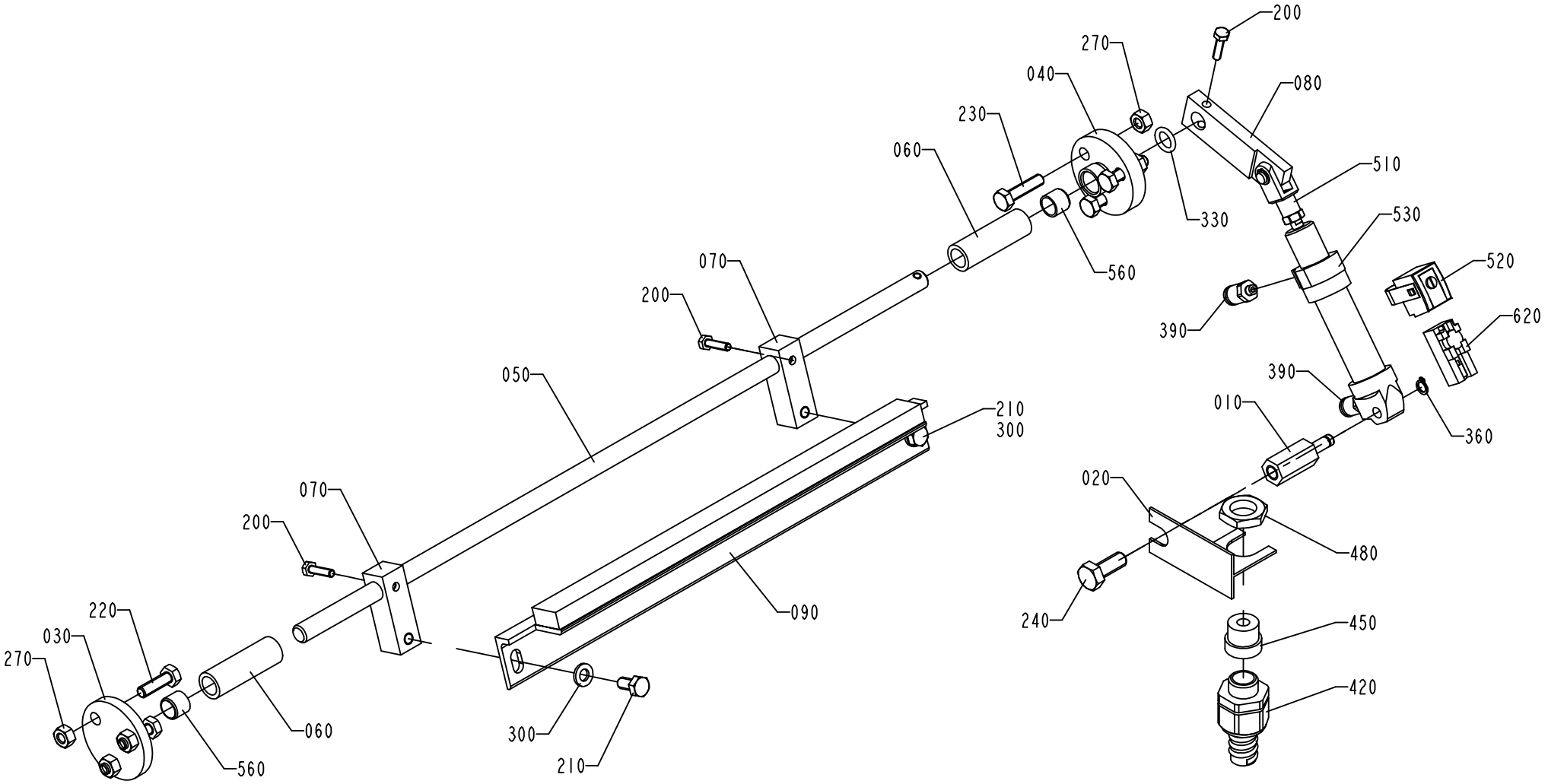

1095790-3
ECN 81466

ECM: 113453 - 20020911
Group number: 1095790-0200
Assembly Drawing: 1095790-3_1_AA

This list covers pages from 1-64 to 1-67

Pos	Part No	SP	UN	Qty	Description	Page No
FULLYEQUIP (See drawing on page: 1-64)						
010	1036178-0000	-		1	SHAFT	
020	1037199-0000	-		1	BRACKET	
030	1519184-0000	-		1	FLANGE	
040	1519185-0000	-		1	FLANGE	
050	1519186-0000	-		1	SHAFT	
060	1519187-0000	-		2	SPACER	
070	1519188-0000	-		2	ARM	
080	1519189-0000	-		1	LEVER	
090	1519190-0000	B		1	LID	
200	312105-0293	-		3	SCREW M6S ISO 4017 M4X16 A480	
210	312105-0366	-		2	SCREW M6S M6X12 A280	
220	312105-0370	-		3	SCREW M6S ISO 4017 M6X20 A480	
230	312105-0372	-		3	SCREW M6S ISO 4017 M6X25 A480	
240	312105-0451	-		1	SCREW M6S ISO 4017 M8X20 A480	
300	315105-0153	-		2	WASHER BRB6,4X12RFR	
330	315204-0208	A		1	O-RING 9,3X2,4 MM	
360	315751-0103	B		1	RETAINING RING FOR SHAFT DIN 471 6 A2	
390	342722-0197	-		2	STRAIGHT COUPLING	
420	353243-0001	-		1	EXTENDED WITHOUT INSERT, PG9	
450	353249-0008	-		1	INSERT, SINGEL HOLE, EK 152/7	
480	90099-0104	-		1	NUT, PR 15,2 (PG9)	
510	90239-0489	-		1	ROD END, CLEVIS WITH AXLE M6X1,25	
520	90239-0579	A		1	SENSOR,BRACKET,FOR CYL 16	
530	90239-0816	A		1	DOUBLE ACTING, MINI-ISO, CYL.16-25	
560	90240-0302	B		2	BUSHING	
590	90296-0091	-		1	LUBRICATION GREASE	
620	90457-0047	A		1	SENSOR 2750-1-5111-1 W.ADAPTER PNP	
HIGH HYGIEN., STD (See drawing on page: 1-66)						
100	1038249-0000	-		2	BUSHING	
190	312105-0364	-		2	SCREW M6S ISO 4017 M6X10 A480	
220	312105-0370	-		6	SCREW M6S ISO 4017 M6X20 A480	
250	312105-0447	-		1	SCREW M6S ISO 4017 M8X12 A480	
Common Parts						
270	312605-0316	-		6	HEXAGON NUT, M6M M6 A280	

Pos	Part No	SP	UN	Qty	Description	Page No

COVERING PLATE

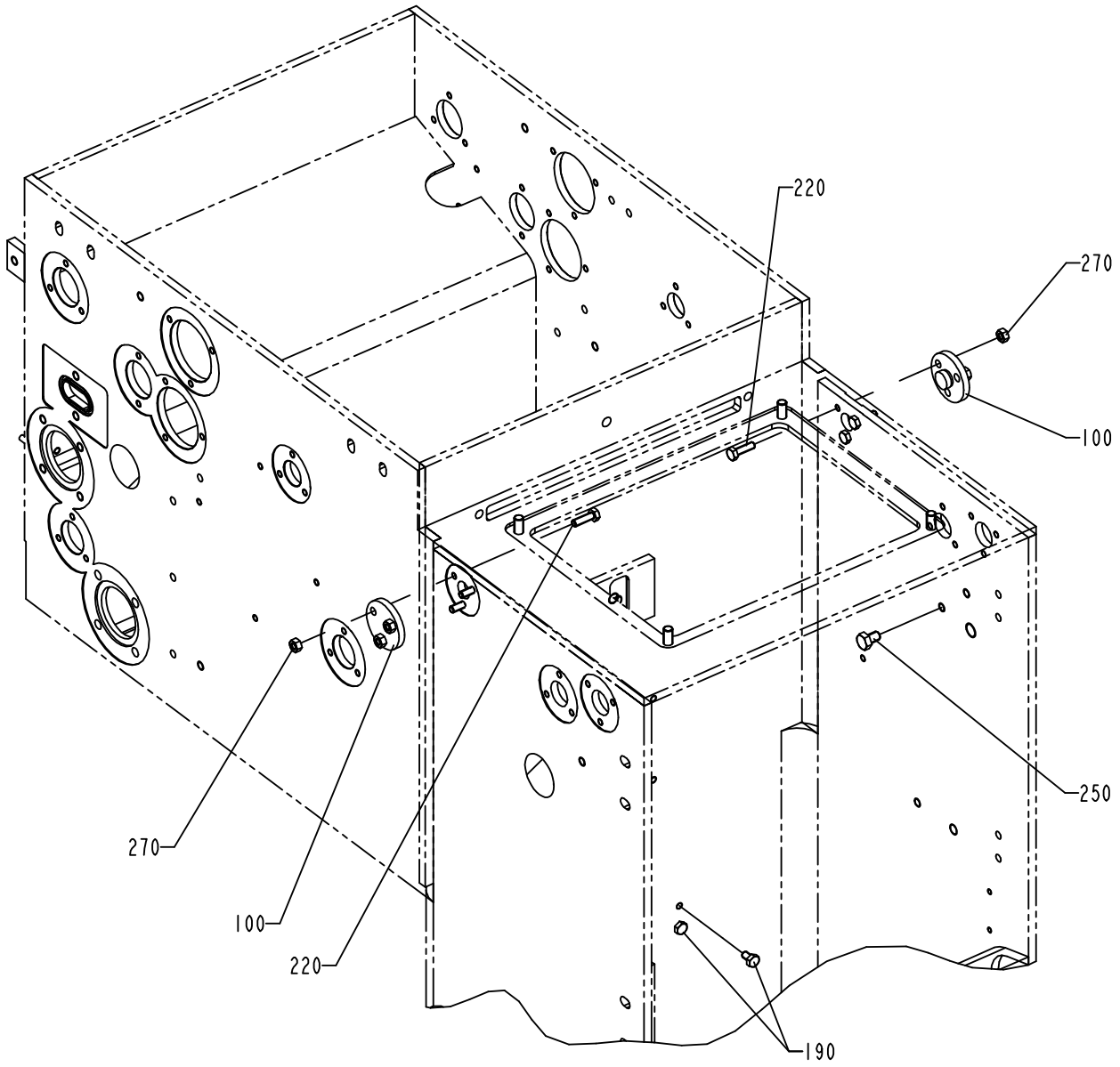

1095790-4
ECN 81466

ECM: 113453 - 20020911
Group number: 1095790-0200
Assembly Drawing: 1095790-4_1_AA

This list covers pages from 1-64 to 1-67

Pos	Part No	SP	UN	Qty	Description	Page No
FULLYEQUIP (See drawing on page: 1-64)						
010	1036178-0000	-		1	SHAFT	
020	1037199-0000	-		1	BRACKET	
030	1519184-0000	-		1	FLANGE	
040	1519185-0000	-		1	FLANGE	
050	1519186-0000	-		1	SHAFT	
060	1519187-0000	-		2	SPACER	
070	1519188-0000	-		2	ARM	
080	1519189-0000	-		1	LEVER	
090	1519190-0000	B		1	LID	
200	312105-0293	-		3	SCREW M6S ISO 4017 M4X16 A480	
210	312105-0366	-		2	SCREW M6S M6X12 A280	
220	312105-0370	-		3	SCREW M6S ISO 4017 M6X20 A480	
230	312105-0372	-		3	SCREW M6S ISO 4017 M6X25 A480	
240	312105-0451	-		1	SCREW M6S ISO 4017 M8X20 A480	
300	315105-0153	-		2	WASHER BRB6,4X12RFR	
330	315204-0208	A		1	O-RING 9,3X2,4 MM	
360	315751-0103	B		1	RETAINING RING FOR SHAFT DIN 471 6 A2	
390	342722-0197	-		2	STRAIGHT COUPLING	
420	353243-0001	-		1	EXTENDED WITHOUT INSERT, PG9	
450	353249-0008	-		1	INSERT, SINGEL HOLE, EK 152/7	
480	90099-0104	-		1	NUT, PR 15,2 (PG9)	
510	90239-0489	-		1	ROD END, CLEVIS WITH AXLE M6X1,25	
520	90239-0579	A		1	SENSOR,BRACKET,FOR CYL 16	
530	90239-0816	A		1	DOUBLE ACTING, MINI-ISO, CYL.16-25	
560	90240-0302	B		2	BUSHING	
590	90296-0091	-		1	LUBRICATION GREASE	
620	90457-0047	A		1	SENSOR 2750-1-5111-1 W.ADAPTER PNP	
HIGH HYGIEN., STD (See drawing on page: 1-66)						
100	1038249-0000	-		2	BUSHING	
190	312105-0364	-		2	SCREW M6S ISO 4017 M6X10 A480	
220	312105-0370	-		6	SCREW M6S ISO 4017 M6X20 A480	
250	312105-0447	-		1	SCREW M6S ISO 4017 M8X12 A480	
Common Parts						
270	312605-0316	-		6	HEXAGON NUT, M6M M6 A280	

Pos	Part No	SP	UN	Qty	Description	Page No

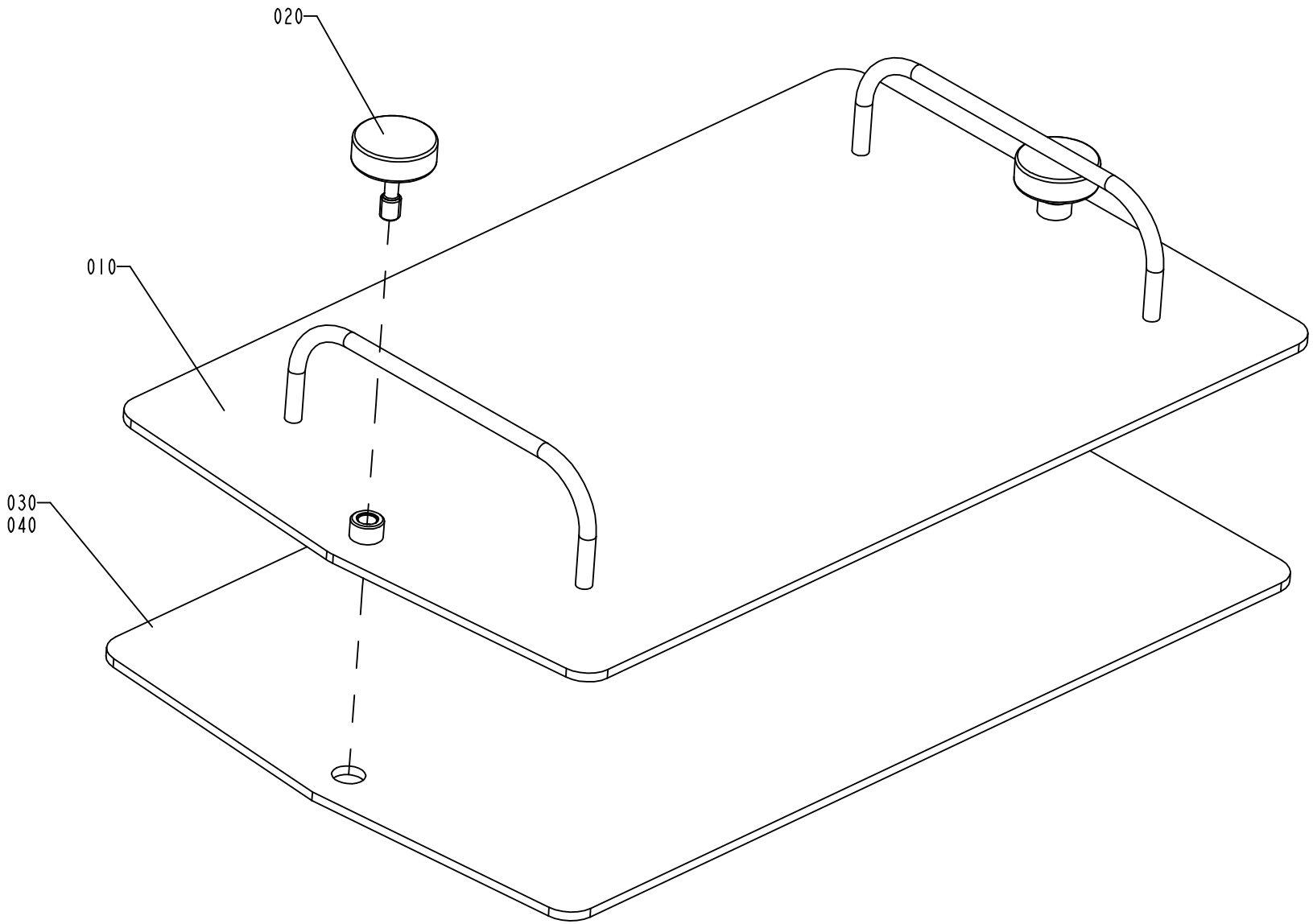

2522161-1
ECM 98499

ECM: 113494 - 20020911
Group number: 2522161-0100
Assembly Drawing: 2522161-1_1_AA

Pos	Part No	SP	UN	Qty	Description	Page No
-						
010	2522150-0000	-		1	PLATE	
020	1490279-0000	-		2	SCREW	
030	2522151-0000	A		1	GASKET	
040	90153-0023	A		1	ADHESIVE, SILICON 251470 TUB 90CC	

Pos	Part No	SP	UN	Qty	Description	Page No

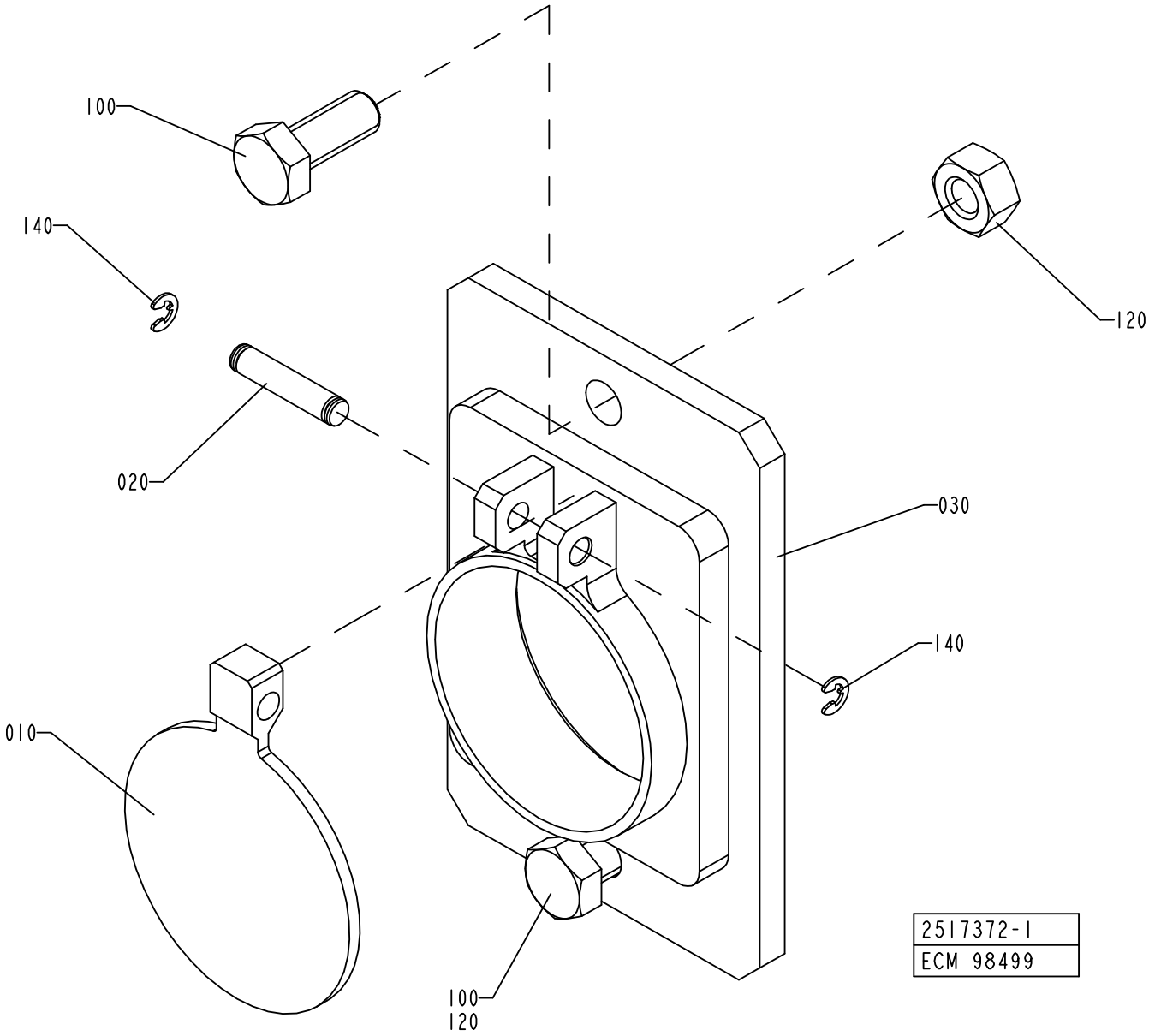
100
140
120
020
030
140
010
100
120
2517372-1
ECM 98499

ECM: 113495 - 20020911
Group number: 2517372-0100
Assembly Drawing: 2517372-1_1_AA

Pos	Part No	SP	UN	Qty	Description	Page No
-						
010	1538494-0000	A		1	LID	
020	1558418-0000	-		1	SHAFT	
030	2517373-0000	-		1	FLANGE	
100	312105-0451	-		2	SCREW M6S ISO 4017 M8X20 A480	
120	312605-0318	-		2	HEXAGON NUT, M6M M8 A280	
140	315755-0105	B		2	RETAINING RING SHAFT DIN 6799 3,2 A2	

Pos	Part No	SP	UN	Qty	Description	Page No

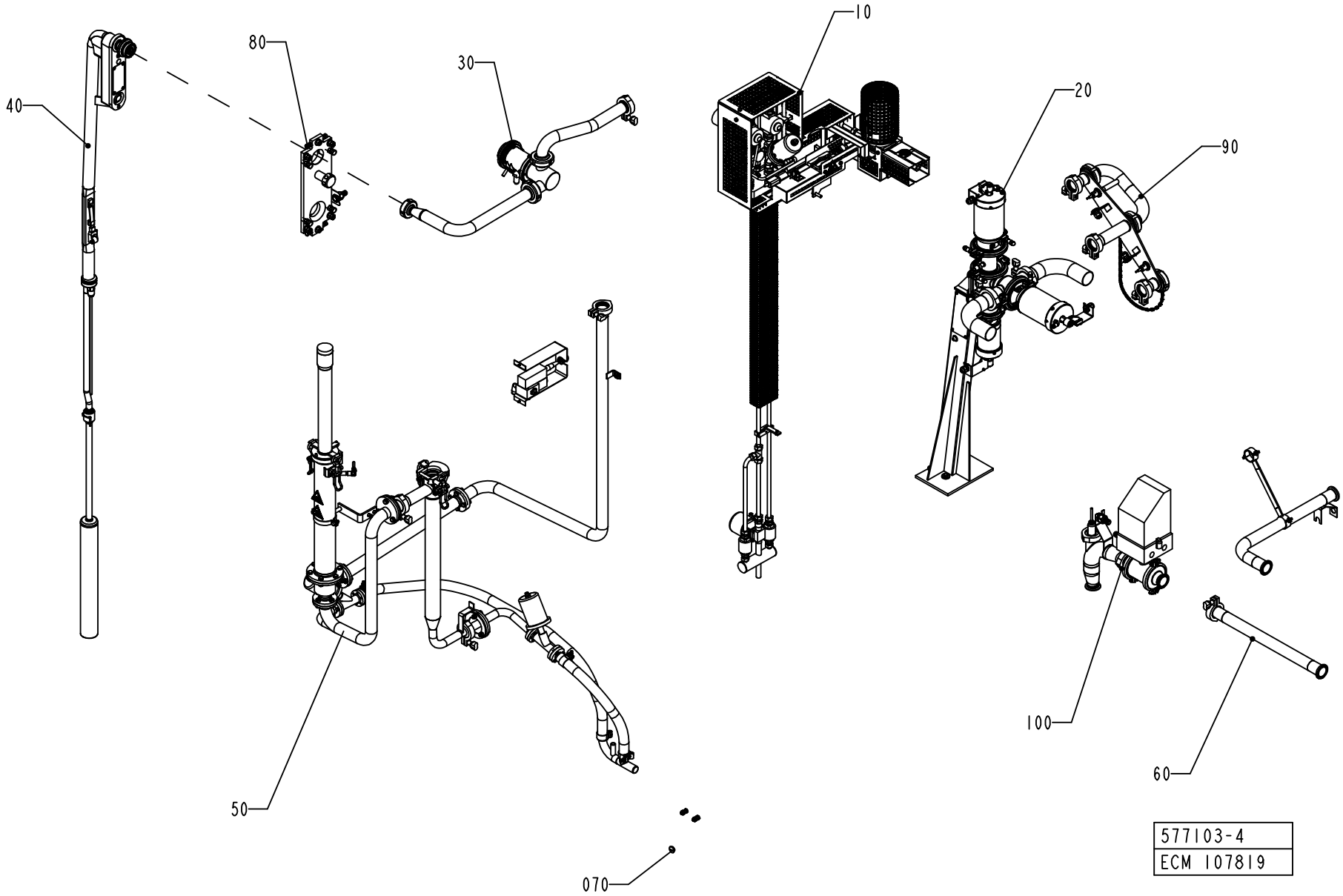
10
20
30
40
50
60
70
80
90
100
577103-4
ECM 107819

ECM: 140539 - 20031215
Group number: 577103-0300
Assembly Drawing: 577103-4_1_AB

This list covers pages from 1-72 to 1-79

Pos	Part No	SP	UN	Qty	Description	Page No
FLOATER HI (See drawing on page: 1-78)						
040	2523670-0300	-		1	FILLING PIPE	**1-81, 1-83**
050	2540802-0100	-		1	CLEANING SLEEVE	**1-85, 1-87**
070	1519975-0100	-		1	LEVEL CONTROL DEVICE	**1-89**
110	2629317-0100	-		1	INJECTION SYSTEM	**1-95**
FLOATER NOHI (See drawing on page: 1-74)						
040	2523670-0300	-		1	FILLING PIPE	**1-81, 1-83**
050	2540802-0100	-		1	CLEANING SLEEVE	**1-85, 1-87**
070	1519975-0100	-		1	LEVEL CONTROL DEVICE	**1-89**
LEVELPROBE HI (See drawing on page: 1-76)						
040	1498668-0300	-		1	FILLING PIPE	**1-97**
050	1498673-0200	-		1	CLEANING SLEEVE	**1-99, 1-101**
070	2547150-0100	-		1	PLUG	**1-103**
110	2629317-0100	-		1	INJECTION SYSTEM	**1-95**
LEVELPROBE NOHI (See drawing on page: 1-72)						
040	1498668-0300	-		1	FILLING PIPE	**1-97**
050	1498673-0200	-		1	CLEANING SLEEVE	**1-99, 1-101**
070	2547150-0100	-		1	PLUG	**1-103**
Common Parts						
010	2523644-0100	-		1	STEAM SYSTEM	**1-105**
020	1255980-0200	-		1	PRODUCT VALVE GROUP	**1-107**
030	1498700-0200	-		1	FLOW REGULATOR	**1-121, 1-123**
060	1255984-0300	-		1	CLEANING PIPE	**1-127**
080	1498667-0100	-		1	FASTENING PLATE	**1-129, 1-131**
090	2525518-0100	-		1	CLEANING PIPE	**1-133**
100	1035259-0200	-		1	INTERMEDIATE PART	**1-135, 1-137**

Pos	Part No	SP	UN	Qty	Description	Page No

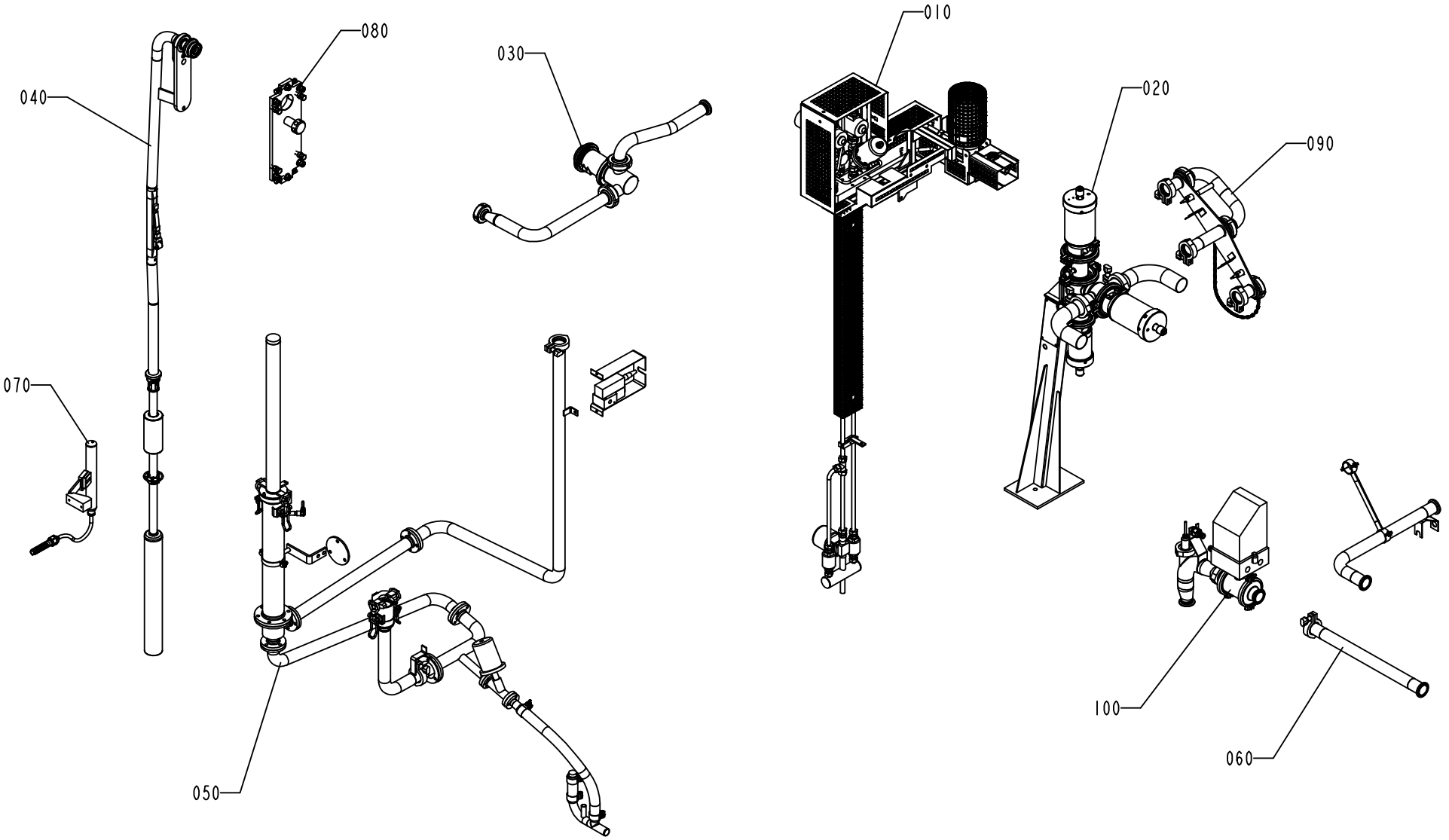

577103-5
ECM 106392

Pos	Part No	SP	UN	Qty	Description	Page No
FLOATER HI (See drawing on page: 1-78)						
040	2523670-0300	-		1	FILLING PIPE	**1-81, 1-83**
050	2540802-0100	-		1	CLEANING SLEEVE	**1-85, 1-87**
070	1519975-0100	-		1	LEVEL CONTROL DEVICE	**1-89**
110	2629317-0100	-		1	INJECTION SYSTEM	**1-95**
FLOATER NOHI (See drawing on page: 1-74)						
040	2523670-0300	-		1	FILLING PIPE	**1-81, 1-83**
050	2540802-0100	-		1	CLEANING SLEEVE	**1-85, 1-87**
070	1519975-0100	-		1	LEVEL CONTROL DEVICE	**1-89**
LEVELPROBE HI (See drawing on page: 1-76)						
040	1498668-0300	-		1	FILLING PIPE	**1-97**
050	1498673-0200	-		1	CLEANING SLEEVE	**1-99, 1-101**
070	2547150-0100	-		1	PLUG	**1-103**
110	2629317-0100	-		1	INJECTION SYSTEM	**1-95**
LEVELPROBE NOHI (See drawing on page: 1-72)						
040	1498668-0300	-		1	FILLING PIPE	**1-97**
050	1498673-0200	-		1	CLEANING SLEEVE	**1-99, 1-101**
070	2547150-0100	-		1	PLUG	**1-103**
Common Parts						
010	2523644-0100	-		1	STEAM SYSTEM	**1-105**
020	1255980-0200	-		1	PRODUCT VALVE GROUP	**1-107**
030	1498700-0200	-		1	FLOW REGULATOR	**1-121, 1-123**
060	1255984-0300	-		1	CLEANING PIPE	**1-127**
080	1498667-0100	-		1	FASTENING PLATE	**1-129, 1-131**
090	2525518-0100	-		1	CLEANING PIPE	**1-133**
100	1035259-0200	-		1	INTERMEDIATE PART	**1-135, 1-137**

Pos	Part No	SP	UN	Qty	Description	Page No

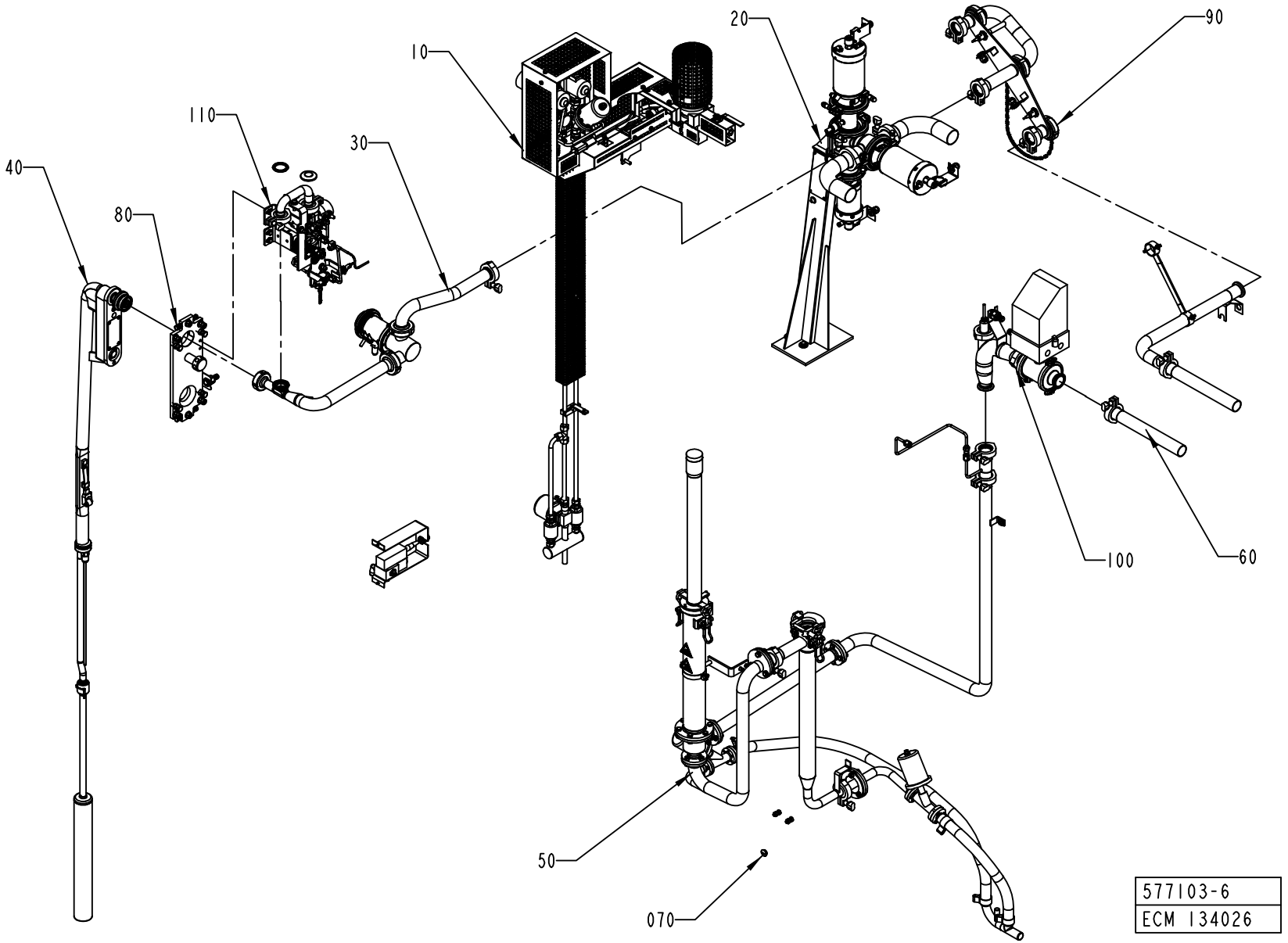
10
20
90
110
30
40
80
100
60
50
070
577103-6
ECM 134026

ECM: 140539 - 20031215
Group number: 577103-0300
Assembly Drawing: 577103-6_1_AA

This list covers pages from 1-72 to 1-79

Pos	Part No	SP	UN	Qty	Description	Page No
FLOATER HI (See drawing on page: 1-78)						
040	2523670-0300	-		1	FILLING PIPE	**1-81, 1-83**
050	2540802-0100	-		1	CLEANING SLEEVE	**1-85, 1-87**
070	1519975-0100	-		1	LEVEL CONTROL DEVICE	**1-89**
110	2629317-0100	-		1	INJECTION SYSTEM	**1-95**
FLOATER NOHI (See drawing on page: 1-74)						
040	2523670-0300	-		1	FILLING PIPE	**1-81, 1-83**
050	2540802-0100	-		1	CLEANING SLEEVE	**1-85, 1-87**
070	1519975-0100	-		1	LEVEL CONTROL DEVICE	**1-89**
LEVELPROBE HI (See drawing on page: 1-76)						
040	1498668-0300	-		1	FILLING PIPE	**1-97**
050	1498673-0200	-		1	CLEANING SLEEVE	**1-99, 1-101**
070	2547150-0100	-		1	PLUG	**1-103**
110	2629317-0100	-		1	INJECTION SYSTEM	**1-95**
LEVELPROBE NOHI (See drawing on page: 1-72)						
040	1498668-0300	-		1	FILLING PIPE	**1-97**
050	1498673-0200	-		1	CLEANING SLEEVE	**1-99, 1-101**
070	2547150-0100	-		1	PLUG	**1-103**
Common Parts						
010	2523644-0100	-		1	STEAM SYSTEM	**1-105**
020	1255980-0200	-		1	PRODUCT VALVE GROUP	**1-107**
030	1498700-0200	-		1	FLOW REGULATOR	**1-121, 1-123**
060	1255984-0300	-		1	CLEANING PIPE	**1-127**
080	1498667-0100	-		1	FASTENING PLATE	**1-129, 1-131**
090	2525518-0100	-		1	CLEANING PIPE	**1-133**
100	1035259-0200	-		1	INTERMEDIATE PART	**1-135, 1-137**

Pos	Part No	SP	UN	Qty	Description	Page No

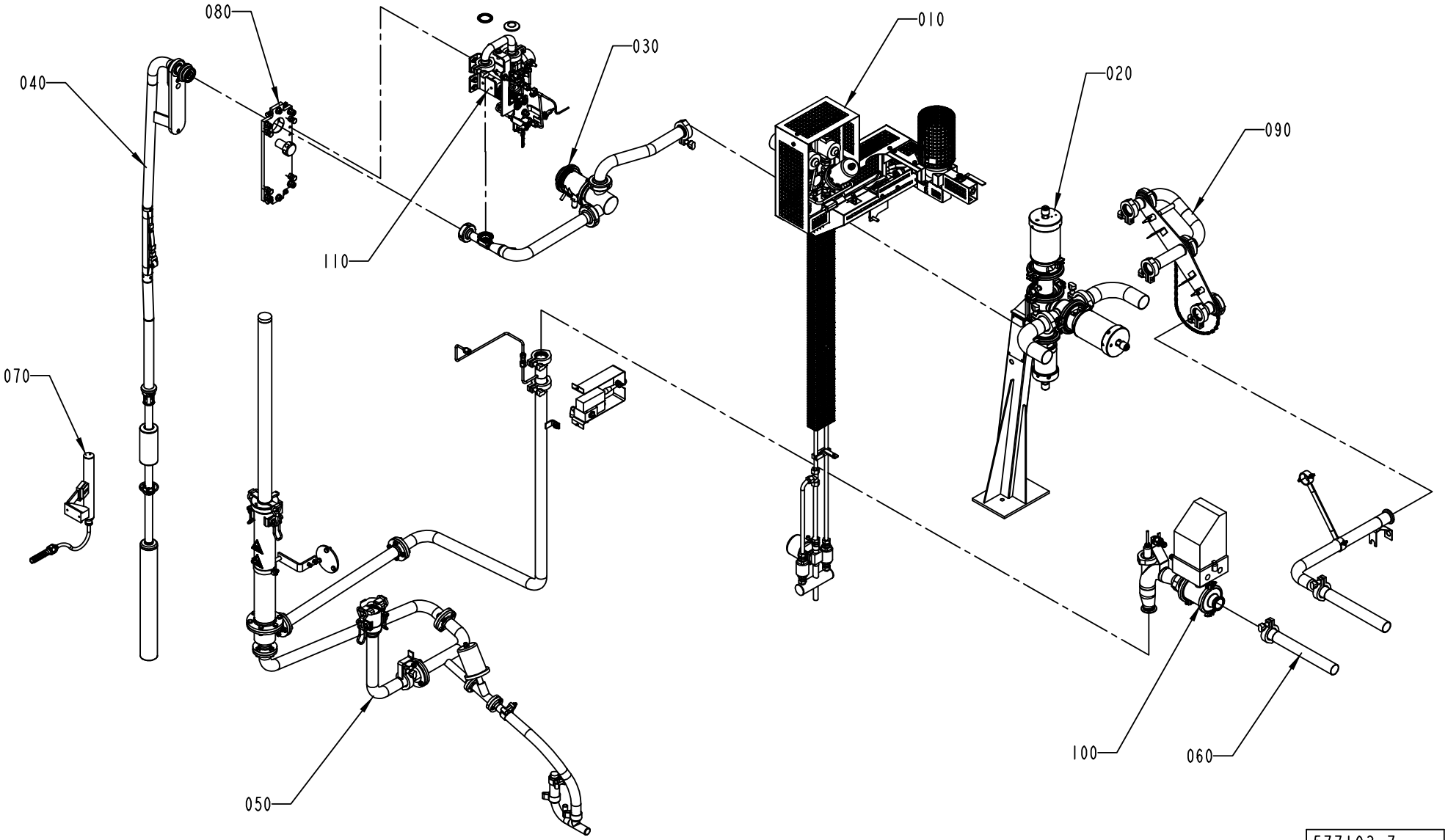

577103-7
ECM 134026

Pos	Part No	SP	UN	Qty	Description	Page No
FLOATER HI (See drawing on page: 1-78)						
040	2523670-0300	-		1	FILLING PIPE	**1-81, 1-83**
050	2540802-0100	-		1	CLEANING SLEEVE	**1-85, 1-87**
070	1519975-0100	-		1	LEVEL CONTROL DEVICE	**1-89**
110	2629317-0100	-		1	INJECTION SYSTEM	**1-95**
FLOATER NOHI (See drawing on page: 1-74)						
040	2523670-0300	-		1	FILLING PIPE	**1-81, 1-83**
050	2540802-0100	-		1	CLEANING SLEEVE	**1-85, 1-87**
070	1519975-0100	-		1	LEVEL CONTROL DEVICE	**1-89**
LEVELPROBE HI (See drawing on page: 1-76)						
040	1498668-0300	-		1	FILLING PIPE	**1-97**
050	1498673-0200	-		1	CLEANING SLEEVE	**1-99, 1-101**
070	2547150-0100	-		1	PLUG	**1-103**
110	2629317-0100	-		1	INJECTION SYSTEM	**1-95**
LEVELPROBE NOHI (See drawing on page: 1-72)						
040	1498668-0300	-		1	FILLING PIPE	**1-97**
050	1498673-0200	-		1	CLEANING SLEEVE	**1-99, 1-101**
070	2547150-0100	-		1	PLUG	**1-103**
Common Parts						
010	2523644-0100	-		1	STEAM SYSTEM	**1-105**
020	1255980-0200	-		1	PRODUCT VALVE GROUP	**1-107**
030	1498700-0200	-		1	FLOW REGULATOR	**1-121, 1-123**
060	1255984-0300	-		1	CLEANING PIPE	**1-127**
080	1498667-0100	-		1	FASTENING PLATE	**1-129, 1-131**
090	2525518-0100	-		1	CLEANING PIPE	**1-133**
100	1035259-0200	-		1	INTERMEDIATE PART	**1-135, 1-137**

Pos	Part No	SP	UN	Qty	Description	Page No

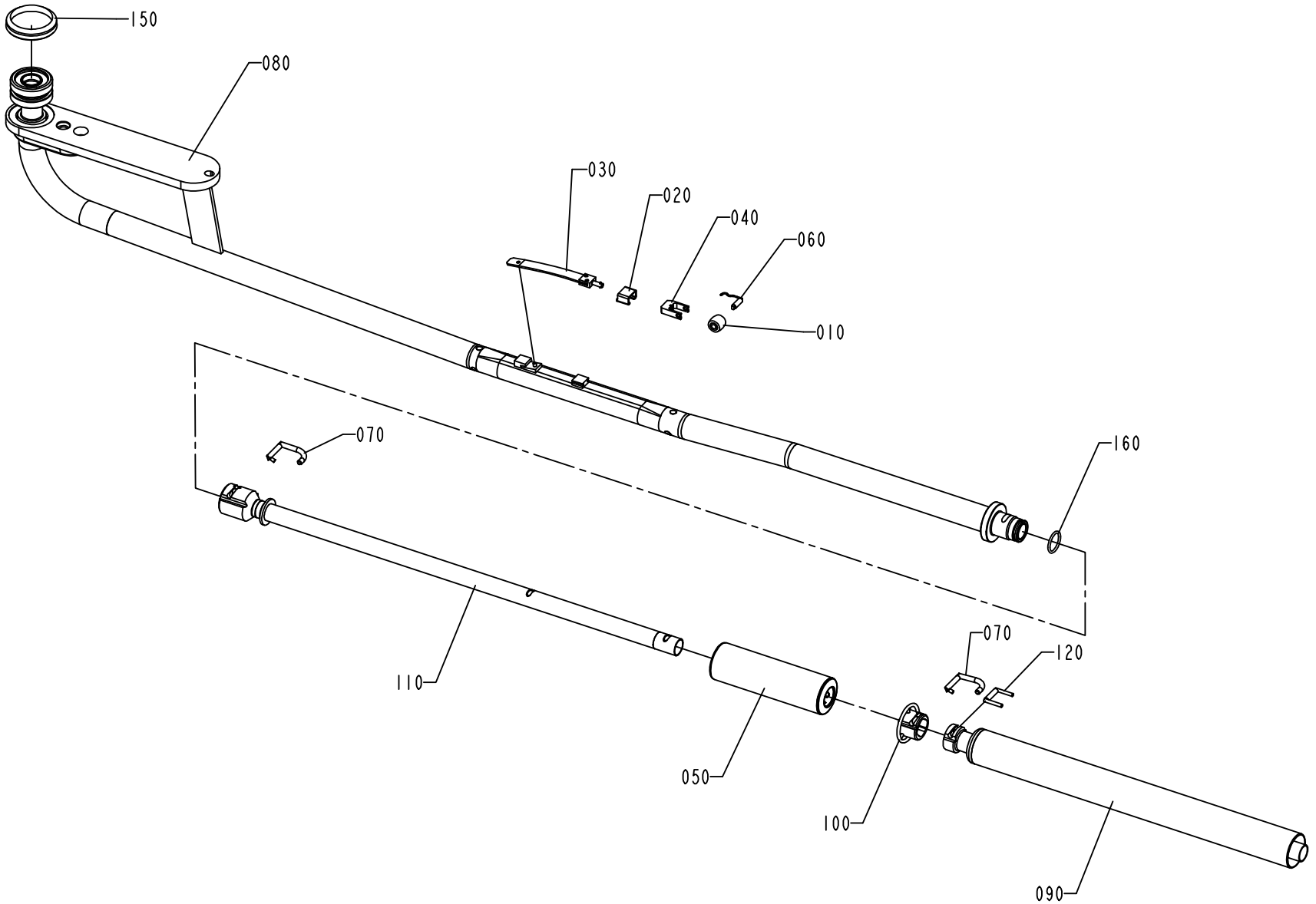

2523670-3
ECM 128280

ECM: 147836 - 20031216
Group number: 2523670-0300
Assembly Drawing: 2523670-3_1_AA

This list covers pages from 1-80 to 1-83

Pos	Part No	SP	UN	Qty	Description	Page No
TBA 0200B (See drawing on page: 1-82)						
010	2607089-0000	A		1	PRESSURE ROLLER	
030	2603500-0000	A		1	SPRING	
040	568583-0000	A		1	FORK	
050	979326-0000	A		1	FLOAT	
060	2529417-0000	A		1	SHAFT	
070	1487378-0000	A		2	LOCKING PIN	
080	2506837-0000	A		1	FILLING PIPE	
090	2569800-0000	A		1	FILLING PIPE	
100	2525537-0000	A		1	LOCKING RING	
160	90459-0328	A		1	O-RING 20,29X2,62 MM	
TBA 0200S (See drawing on page: 1-80)						
010	272479-0000	A		1	PRESSURE ROLLER	
030	751604-0000	A		1	SPRING	
040	255978-0000	A		1	FORK	
050	2551116-0000	A		1	FLOAT	
060	255977-0000	A		1	SHAFT	
070	2530190-0000	A		2	LOCKING DEVICE	
080	2555083-0000	A		1	FILLING PIPE	
090	2552979-0000	A		1	FILLING PIPE	
100	2552980-0000	A		1	LOCKING RING	
110	2552978-0000	-		1	FILLING PIPE	
120	2506836-0000	-		1	PIN	
160	315207-0719	A		1	O-RING 23,47X2,62 MM	
TBA 0250B (See drawing on page: 1-82)						
010	2607089-0000	A		1	PRESSURE ROLLER	
030	2603500-0000	A		1	SPRING	
040	568583-0000	A		1	FORK	
050	979326-0000	A		1	FLOAT	
060	2529417-0000	A		1	SHAFT	
070	1487378-0000	A		2	LOCKING PIN	
080	2506837-0000	A		1	FILLING PIPE	
090	2569801-0000	A		1	FILLING PIPE	
100	2525537-0000	A		1	LOCKING RING	
160	90459-0328	A		1	O-RING 20,29X2,62 MM	
TBA 0250S (See drawing on page: 1-82)						
010	272479-0000	A		1	PRESSURE ROLLER	
030	751604-0000	A		1	SPRING	
040	255978-0000	A		1	FORK	
050	2555089-0000	-		1	FLOAT	
060	255977-0000	A		1	SHAFT	
070	1487378-0000	A		2	LOCKING PIN	
080	2506837-0000	A		1	FILLING PIPE	
090	2555092-0000	-		1	FILLING PIPE	
100	2555091-0000	-		1	LOCKING RING	
160	90459-0328	A		1	O-RING 20,29X2,62 MM	
Common Parts						
020	295377-0001	A		1	HOOD	
150	315220-0198	B		1	V-RINGS 45X55X13 MM V-50S	

Machine Type | Group Description | Used-In | Group Number | Page No

FILLING PIPE

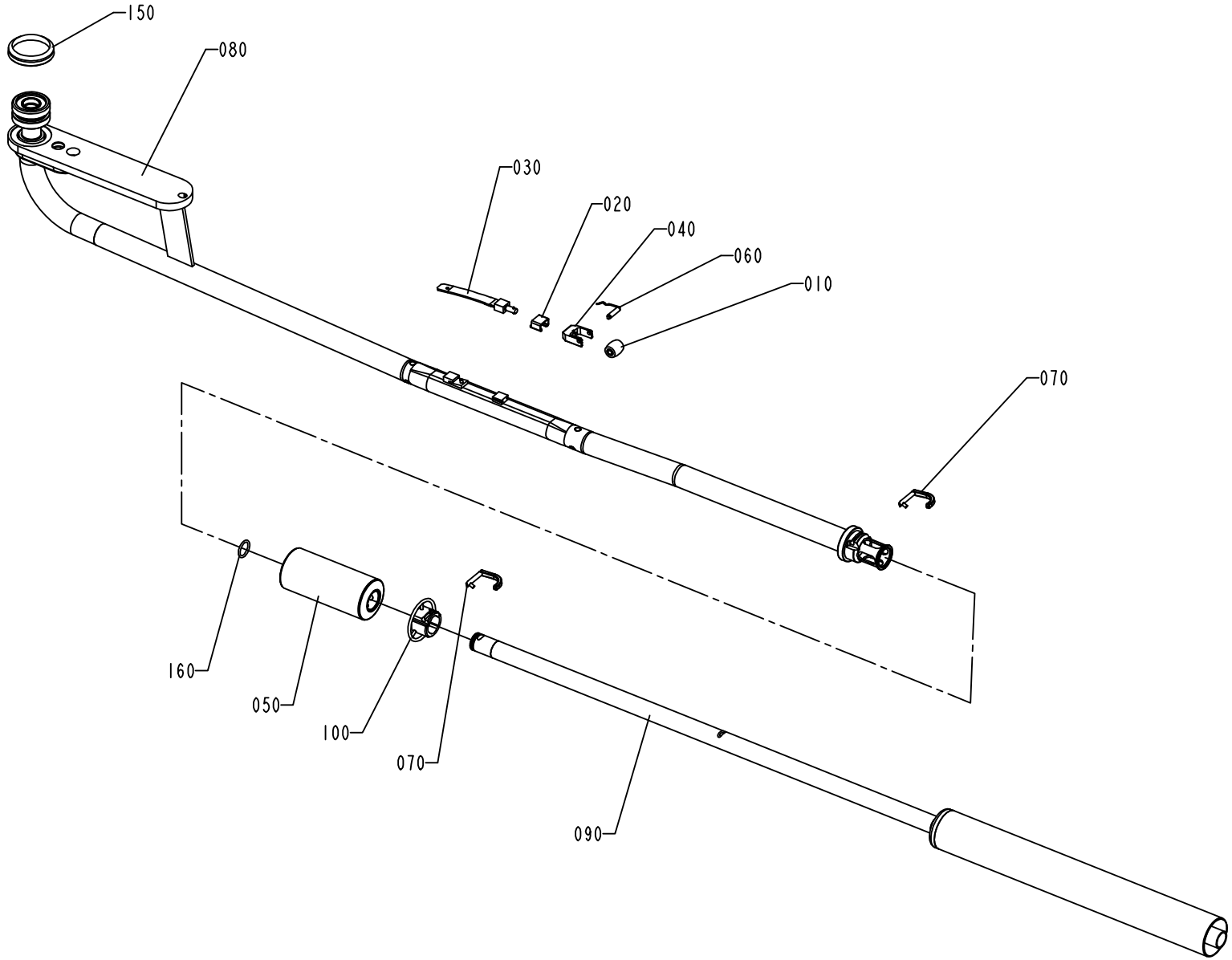

2523670-4
ECM 126249

Pos	Part No	SP	UN	Qty	Description	Page No
TBA 0200B (See drawing on page: 1-82)						
010	2607089-0000	A		1	PRESSURE ROLLER	
030	2603500-0000	A		1	SPRING	
040	568583-0000	A		1	FORK	
050	979326-0000	A		1	FLOAT	
060	2529417-0000	A		1	SHAFT	
070	1487378-0000	A		2	LOCKING PIN	
080	2506837-0000	A		1	FILLING PIPE	
090	2569800-0000	A		1	FILLING PIPE	
100	2525537-0000	A		1	LOCKING RING	
160	90459-0328	A		1	O-RING 20,29X2,62 MM	
TBA 0200S (See drawing on page: 1-80)						
010	272479-0000	A		1	PRESSURE ROLLER	
030	751604-0000	A		1	SPRING	
040	255978-0000	A		1	FORK	
050	2551116-0000	A		1	FLOAT	
060	255977-0000	A		1	SHAFT	
070	2530190-0000	A		2	LOCKING DEVICE	
080	2555083-0000	A		1	FILLING PIPE	
090	2552979-0000	A		1	FILLING PIPE	
100	2552980-0000	A		1	LOCKING RING	
110	2552978-0000	-		1	FILLING PIPE	
120	2506836-0000	-		1	PIN	
160	315207-0719	A		1	O-RING 23,47X2,62 MM	
TBA 0250B (See drawing on page: 1-82)						
010	2607089-0000	A		1	PRESSURE ROLLER	
030	2603500-0000	A		1	SPRING	
040	568583-0000	A		1	FORK	
050	979326-0000	A		1	FLOAT	
060	2529417-0000	A		1	SHAFT	
070	1487378-0000	A		2	LOCKING PIN	
080	2506837-0000	A		1	FILLING PIPE	
090	2569801-0000	A		1	FILLING PIPE	
100	2525537-0000	A		1	LOCKING RING	
160	90459-0328	A		1	O-RING 20,29X2,62 MM	
TBA 0250S (See drawing on page: 1-82)						
010	272479-0000	A		1	PRESSURE ROLLER	
030	751604-0000	A		1	SPRING	
040	255978-0000	A		1	FORK	
050	2555089-0000	-		1	FLOAT	
060	255977-0000	A		1	SHAFT	
070	1487378-0000	A		2	LOCKING PIN	
080	2506837-0000	A		1	FILLING PIPE	
090	2555092-0000	-		1	FILLING PIPE	
100	2555091-0000	-		1	LOCKING RING	
160	90459-0328	A		1	O-RING 20,29X2,62 MM	
Common Parts						
020	295377-0001	A		1	HOOD	
150	315220-0198	B		1	V-RINGS 45X55X13 MM V-50S	

Machine Type | Group Description | Used-In | Group Number | Page No

CLEANING SLEEVE

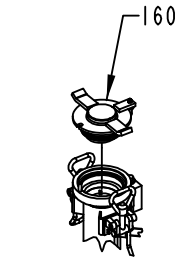

Volume 200S

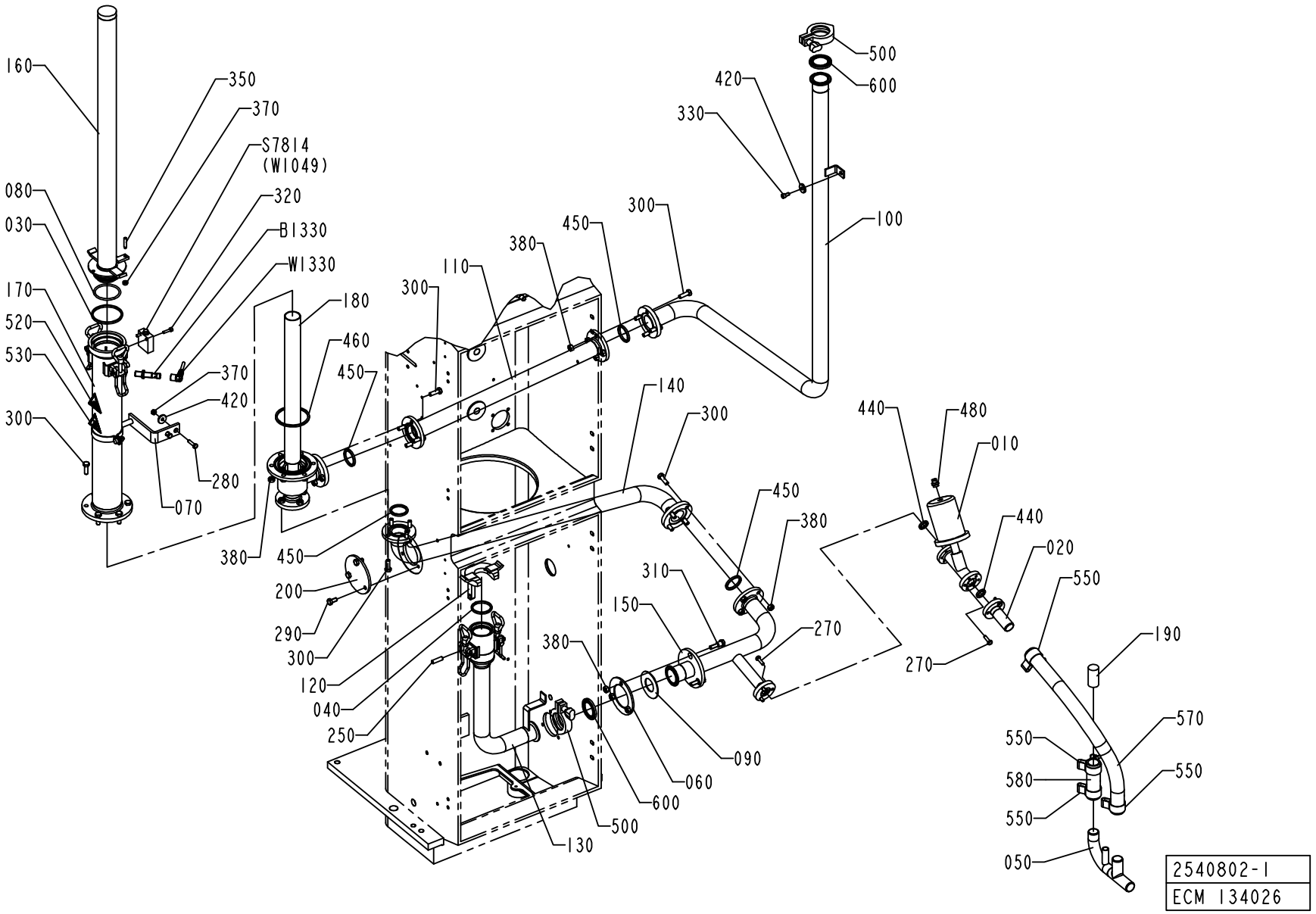

2540802-1
ECM 134026

ECM: 140554 - 20031216
Group number: 2540802-0100
Assembly Drawing: 2540802-1_1_AC

This list covers pages from 1-84 to 1-87

Pos	Part No	SP	UN	Qty	Description	Page No
TBA 0200B HI (See drawing on page: 1-86)						
070	1538787-0000	-		1	SUPPORT	
100	2551062-0000	-		1	PIPE	
160	2569805-0000	-		1	CLEANING PIPE	
170	2527740-0000	-		1	CLEANING PIPE	
180	2527741-0000	-		1	CLEANING PIPE	
210	979256-0000	-		1	CLEANING PIPE	
220	2514213-0000	-		1	PIPE	
460	315229-0107	-		1	GASKETS, 73,9X80,9X3,7 MM 2"1/2 FD	
500	342840-0103	-		3	CLAMPING PIECE	
600	90217-0307	A		3	GASKET 35,8X50,5X5,5 MM	
TBA 0200B NOHI (See drawing on page: 1-84)						
070	1538787-0000	-		1	SUPPORT	
100	2500016-0000	-		1	PIPE	
160	2569805-0000	-		1	CLEANING PIPE	
170	2527740-0000	-		1	CLEANING PIPE	
180	2527741-0000	-		1	CLEANING PIPE	
460	315229-0107	-		1	GASKETS, 73,9X80,9X3,7 MM 2"1/2 FD	
500	342840-0103	-		2	CLAMPING PIECE	
600	90217-0307	A		2	GASKET 35,8X50,5X5,5 MM	
TBA 0200S HI (See drawing on page: 1-86)						
070	2545016-0000	-		1	SUPPORT	
	312115-0368	*-*		*2*	*SCREW ISO4762 M6X16 A4*	
	2545430-0000	*-*		*1*	*CLAMP*	
	2545431-0000	*-*		*1*	*SUPPORT*	
100	2551062-0000	-		1	PIPE	
160	2597527-0000	-		1	PLUG	
170	2531429-0000	-		1	CONTAINER	
180	2531430-0000	-		1	CLEANING PIPE	
210	979256-0000	-		1	CLEANING PIPE	
220	2514213-0000	-		1	PIPE	
460	315229-0106	-		1	GASKETS, 61,2X68,2X3,7 MM 2"1/2 FD	
500	342840-0103	-		3	CLAMPING PIECE	
600	90217-0307	A		3	GASKET 35,8X50,5X5,5 MM	
TBA 0200S NOHI (See drawing on page: 1-84)						
070	2545016-0000	-		1	SUPPORT	
	312115-0368	*-*		*2*	*SCREW ISO4762 M6X16 A4*	
	2545430-0000	*-*		*1*	*CLAMP*	
	2545431-0000	*-*		*1*	*SUPPORT*	
100	2500016-0000	-		1	PIPE	
160	2597527-0000	-		1	PLUG	
170	2531429-0000	-		1	CONTAINER	
180	2531430-0000	-		1	CLEANING PIPE	
460	315229-0106	-		1	GASKETS, 61,2X68,2X3,7 MM 2"1/2 FD	
500	342840-0103	-		2	CLAMPING PIECE	
600	90217-0307	A		2	GASKET 35,8X50,5X5,5 MM	
TBA 0250B HI (See drawing on page: 1-86)						
070	1538787-0000	-		1	SUPPORT	
100	2551062-0000	-		1	PIPE	
160	2569806-0000	-		1	CLEANING PIPE	
170	2527740-0000	-		1	CLEANING PIPE	
180	2527741-0000	-		1	CLEANING PIPE	
210	979256-0000	-		1	CLEANING PIPE	
220	2514213-0000	-		1	PIPE	
460	315229-0107	-		1	GASKETS, 73,9X80,9X3,7 MM 2"1/2 FD	
500	342840-0103	-		3	CLAMPING PIECE	
600	90217-0307	A		3	GASKET 35,8X50,5X5,5 MM	
TBA 0250B NOHI (See drawing on page: 1-84)						
070	1538787-0000	-		1	SUPPORT	
100	2500016-0000	-		1	PIPE	
160	2569806-0000	-		1	CLEANING PIPE	
170	2527740-0000	-		1	CLEANING PIPE	
180	2527741-0000	-		1	CLEANING PIPE	
460	315229-0107	-		1	GASKETS, 73,9X80,9X3,7 MM 2"1/2 FD	
500	342840-0103	-		2	CLAMPING PIECE	
600	90217-0307	A		2	GASKET 35,8X50,5X5,5 MM	
TBA 0250S HI (See drawing on page: 1-86)						
070	2545016-0000	-		1	SUPPORT	
	312115-0368	*-*		*2*	*SCREW ISO4762 M6X16 A4*	
	2545430-0000	*-*		*1*	*CLAMP*	
	2545431-0000	*-*		*1*	*SUPPORT*	
100	2551062-0000	-		1	PIPE	
160	2555094-0000	-		1	CLEANING PIPE	
170	2547153-0000	-		1	CONTAINER	
180	2547154-0000	-		1	CLEANING PIPE	
210	979256-0000	-		1	CLEANING PIPE	
220	2514213-0000	-		1	PIPE	
460	315229-0106	-		1	GASKETS, 61,2X68,2X3,7 MM 2"1/2 FD	
500	342840-0103	-		3	CLAMPING PIECE	
600	90217-0307	A		3	GASKET 35,8X50,5X5,5 MM	
TBA 0250S NOHI (See drawing on page: 1-84)						
070	2545016-0000	-		1	SUPPORT	
	312115-0368	*-*		*2*	*SCREW ISO4762 M6X16 A4*	
	2545430-0000	*-*		*1*	*CLAMP*	

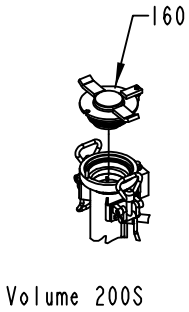
160
Volume 200S

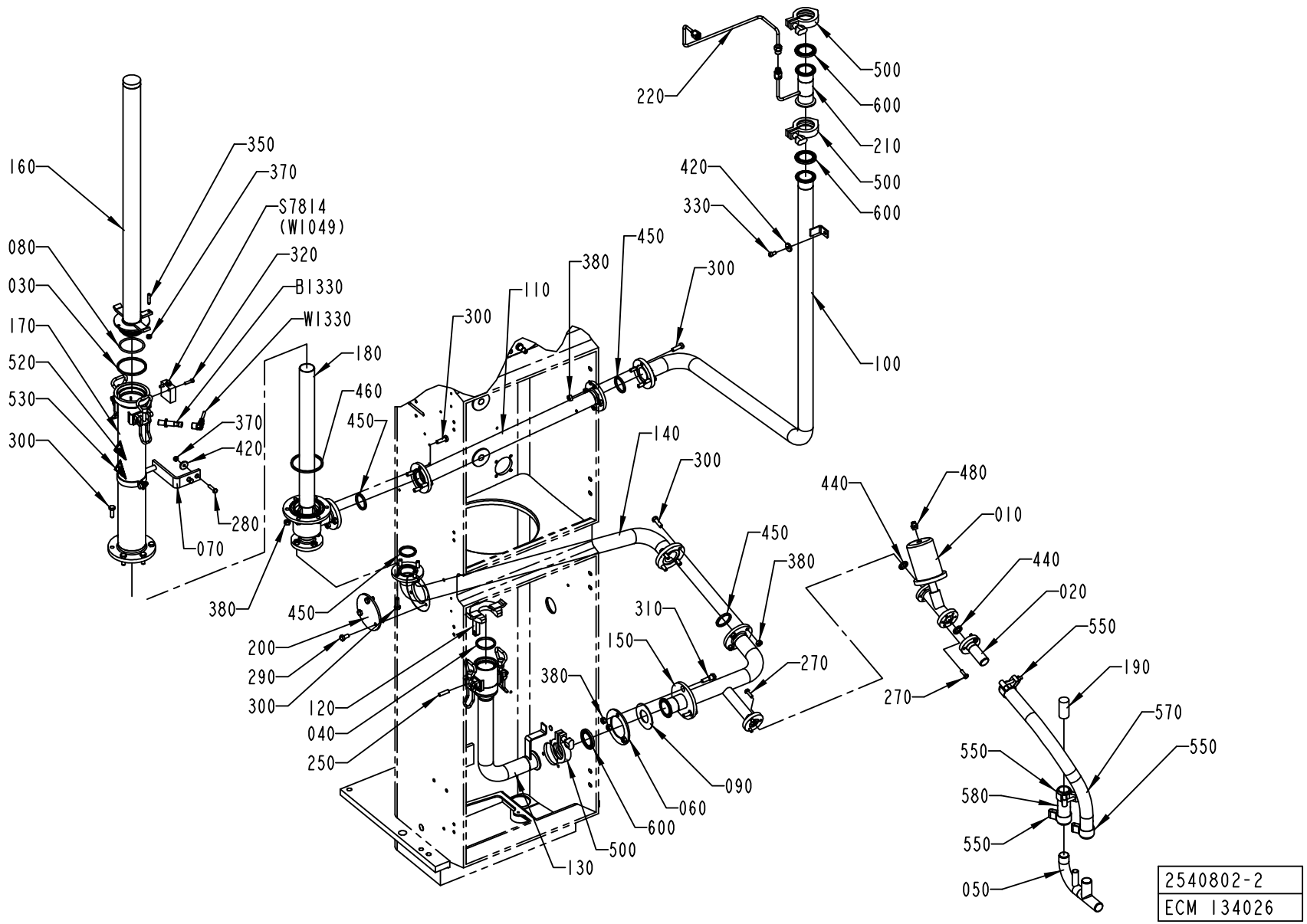
160
350
370
S7814
(W1049)
320
B1330
W1330
080
030
170
520
530
300
180
460
450
370
420
280
070
380
450
200
290
300
120
040
250
300
110
380
450
300
140
300
450
380
310
150
270
380
090
060
600
500
130
220
500
600
210
500
600
420
330
100
440
480
010
440
020
550
190
570
550
270
550
580
550
050
2540802-2
ECM 134026

ECM: 140554 - 20031216
Group number: 2540802-0100
Assembly Drawing: 2540802-2_1_AA

This list covers pages from 1-84 to 1-87

Pos	Part No	SP	UN	Qty	Description	Page No
TBA 0250S NOHI (Cont'd) (See drawing on page: 1-84)						
100	2500016-0000	-		1	PIPE	
160	2555094-0000	-		1	CLEANING PIPE	
170	2547153-0000	-		1	CONTAINER	
180	2547154-0000	-		1	CLEANING PIPE	
460	315229-0106	-		1	GASKETS, 61,2X68,2X3,7 MM 2"1/2 FD	
500	342840-0103	-		2	CLAMPING PIECE	
600	90217-0307	A		2	GASKET 35,8X50,5X5,5 MM	
Common Parts						
010	1038905-0000	-		1	VALVE	
020	1285329-0000	-		1	PIPE	
030	1348474-0000	-		1	GASKET	
040	1348475-0000	A		1	GASKET	
050	1487198-0000	-		1	PIPE	
060	1499127-0000	-		1	FLANGE	
080	1538794-0000	A		1	O-RING	
090	1538846-0000	-		1	SEAL	
110	2500017-0000	-		1	PIPE	
120	2501527-0000	-		1	CLAMP	
130	2506843-0000	-		1	CLEANING SLEEVE	
140	2523647-0000	-		1	PIPE	
150	2523648-0000	-		1	PIPE	
190	2537835-0000	-		1	PLUG	
200	2506832-0000	-		1	PLUG	
250	311103-0405	-		1	PARALLEL PIN ISO 2338 8M6X30 A1	
270	312105-0370	-		6	SCREW M6S ISO 4017 M6X20 A480	
280	312105-0372	-		2	SCREW M6S ISO 4017 M6X25 A480	
290	312105-0449	-		3	SCREW M6S ISO 4017 M8X16 A480	
300	312105-0453	-		22	SCREW M6S ISO 4017 M8X25 A480	
310	2558848-0000	-		3	SCREW	
320	312115-0331	-		2	SCREW ISO4762 M5X20 A4	
330	312115-0366	-		1	SCREW ISO4762 M6X12 A4	
350	312311-0374	-		1	SCREW ISO4028 M6X30 FZB	
370	312605-0316	-		3	HEXAGON NUT, M6M M6 A280	
380	312605-0318	-		25	HEXAGON NUT, M6M M8 A280	
420	315125-0153	-		3	WASHER TBRSB 6,4X22X4 A4	
440	315229-0102	-		2	GASKETS, 16,8X23,8X3,7 MM 3/4" FDA	
450	315229-0104	-		4	GASKETS, 35,8X42,8X3,7 MM 1"1/2 FD	
480	342722-0203	-		1	STRAIGHT COUPLING	
520	359705-0003	-		1	WARNING SIGN ISO, DANGEROUS CHEMICALS	
530	359705-0007	-		1	WARNING SIGN ISO, HOT SURFACE	
550	90459-2366	-		4	HOSE CLIP, (32)-35	
570	90166-0233	-	MM	500	HOSE	
580	90166-0233	-	MM	100	HOSE	
B1330	90459-0252	A		1	PROXIMITY SWITCH	
S7814	90044-0084	A		1	LIMIT SW. 14 CE1-4	
W1330	90459-0253	A		1	CONNECTOR W. CABLE S12-3FVW-050	

Machine Type	Group Description	Used-In	Group Number	Page No

LEVEL CONTROL DEVICE

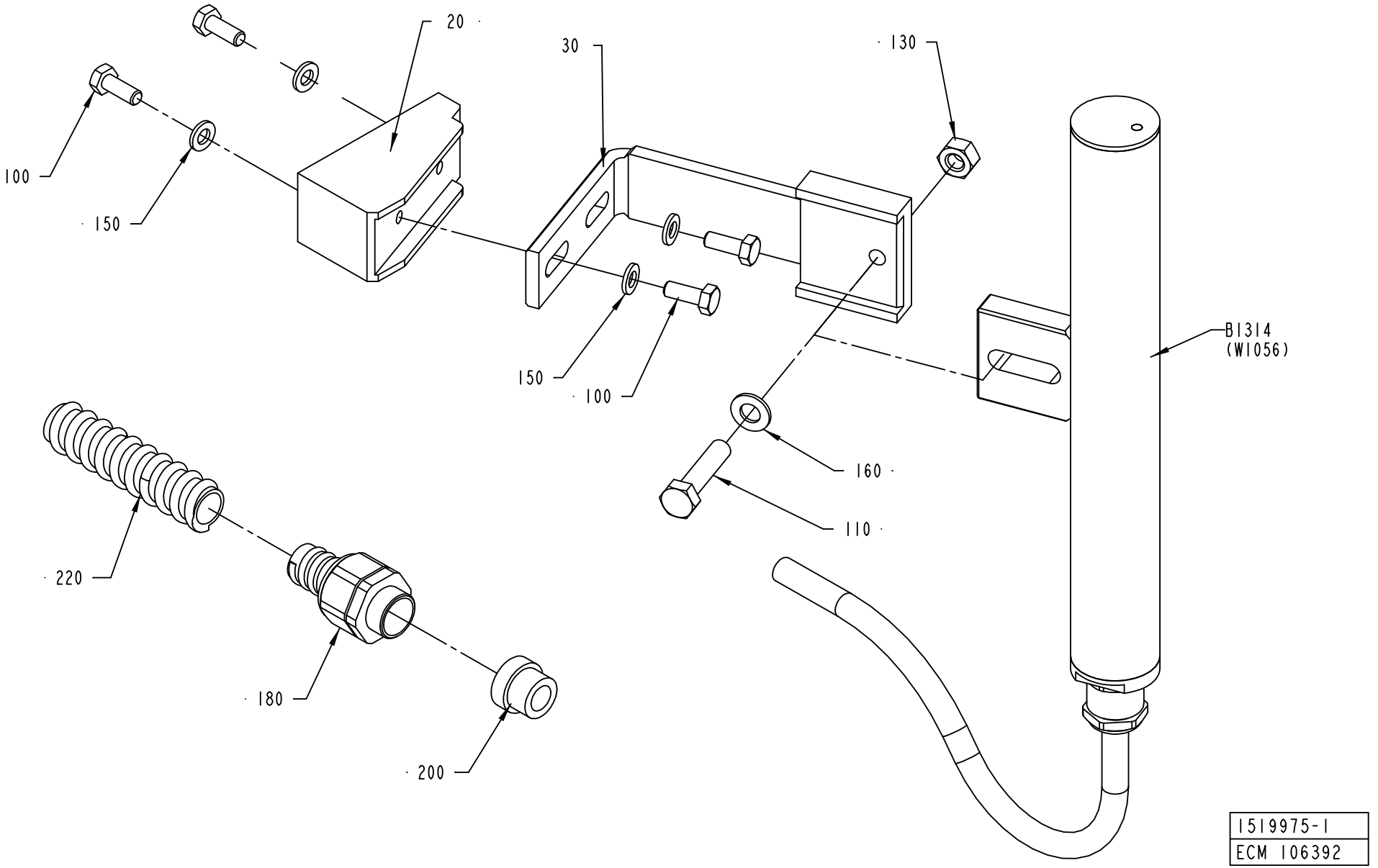

ECM: 114230 - 20020911
Group number: 1519975-0100
Assembly Drawing: 1519975-1_1_AA

Pos	Part No	SP	UN	Qty	Description	Page No
-						
020	2511665-0000	-		1	BRACKET	
030	2511666-0000	-		1	HOLDER	
100	312105-0368	-		4	SCREW M6S M6X16 A280	
110	312105-0457	-		1	SCREW M6S ISO 4014 M8X35 A480	
130	312605-0318	-		1	HEXAGON NUT, M6M M8 A280	
150	315105-0153	-		4	WASHER BRB6,4X12RFR	
160	315105-0165	-		1	WASHER BRB8,4X16RFR	
180	353243-0003	-		1	EXTENDED WITHOUT INSERT, PG11	
200	353249-0011	-		1	INSERT, SINGEL HOLE, EK 153/11	
220	90152-0050	-	M	1	SPIRAL CONDUIT, 20X13, UL 1313	
B1314	1334989-0100	A		1	LEVEL PROBE	**1-91**

Pos	Part No	SP	UN	Qty	Description	Page No

LEVEL PROBE

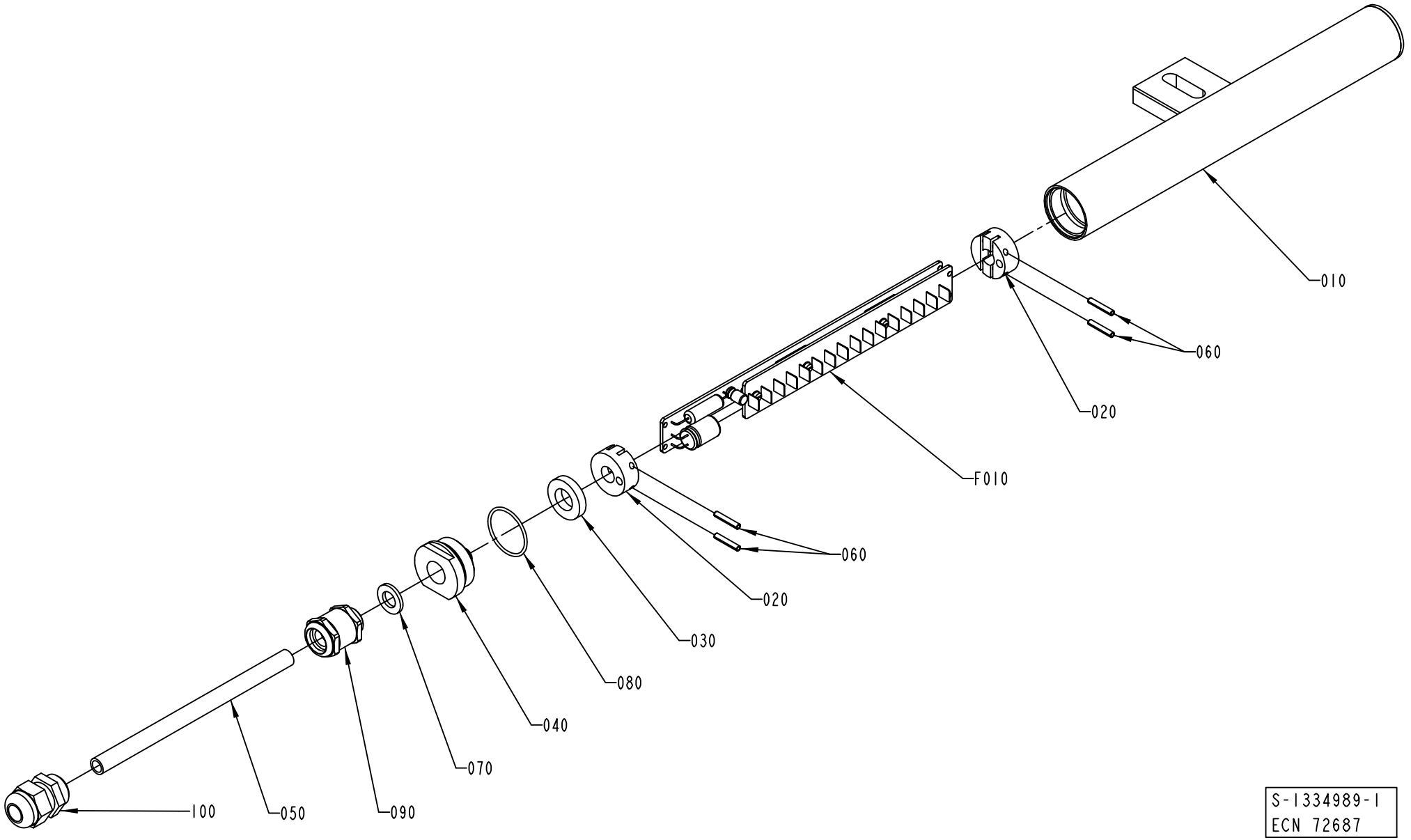

S-1334989-1
ECN 72687

ECM: 72687 - 20000214
Group number: 1334989-0100
Assembly Drawing: 1334989-1_1_AA

Pos	Part No	SP	UN	Qty	Description	Page No
-						
010	925999-0000	C		1	PROTECTION PIPE	
020	925877-0000	C		2	SUPPORT	
030	736514-0000	C		1	SHOCK ABSORBER	
040	926820-0000	C		1	PLUG	
050	90220-0085	-	M	11	CABLES, MULTI-CONDUCTOR SCREENED	
060	311111-0209	-		4	SPRING PIN ISO 8752 3X18-ST	
070	315105-0171	-		1	WASHER BRB10X18	
080	315202-0120	C		1	O-RING 27,1X1,6 MM	
090	90012-0119	-		1	GLAND, EXTENDED WITH INSERT, PG9	
100	352103-0106	-		1	CABLE GLAND, ST 11, PR18,6/PG11	
F010	42063-0100	C		1	LEVEL DETECTOR	**1-93**

Pos	Part No	SP	UN	Qty	Description	Page No

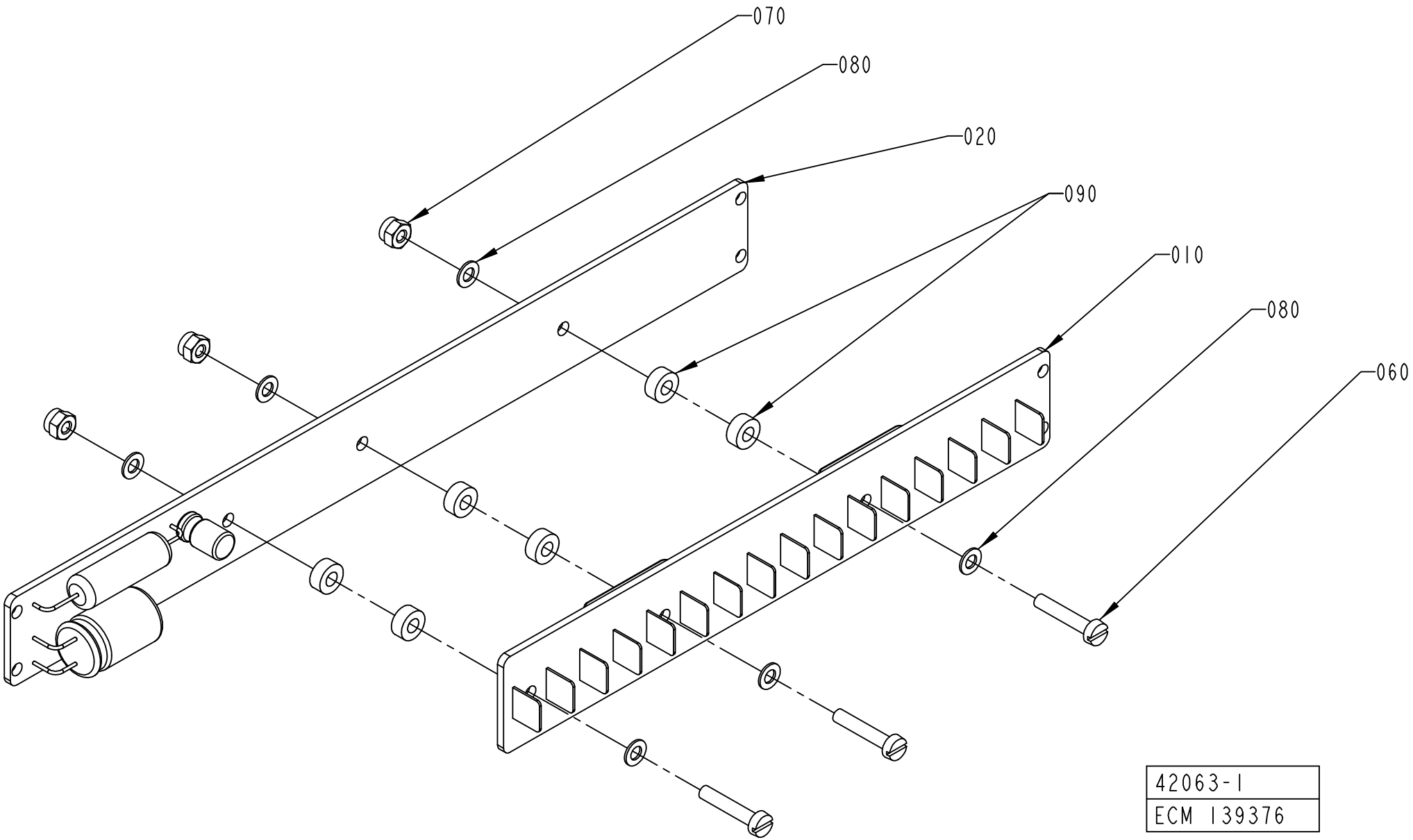
070
080
020
090
010
080
060
42063-1
ECM 139376

ECM: 142247 - 20031020
Group number: 42063-0100
Assembly Drawing: 42063-1_1_AB

Pos	Part No	SP	UN	Qty	Description	Page No
-						
010	42067-0100	-		1	SENSOR BOARD	
020	42068-0100	-		1	CONVERTER BOARD	
060	312125-0228	-		3	SCREW ISO 1207 M3X16 A4	
070	312812-0310	-		3	HEXAGON NUT, NY-LOCK M3 A480	
080	315105-0124	-		6	BRICKA BRB3,2X6RFR	
090	90005-0143	-		6	SPACER 3,3/7, H=3	

Pos	Part No	SP	UN	Qty	Description	Page No

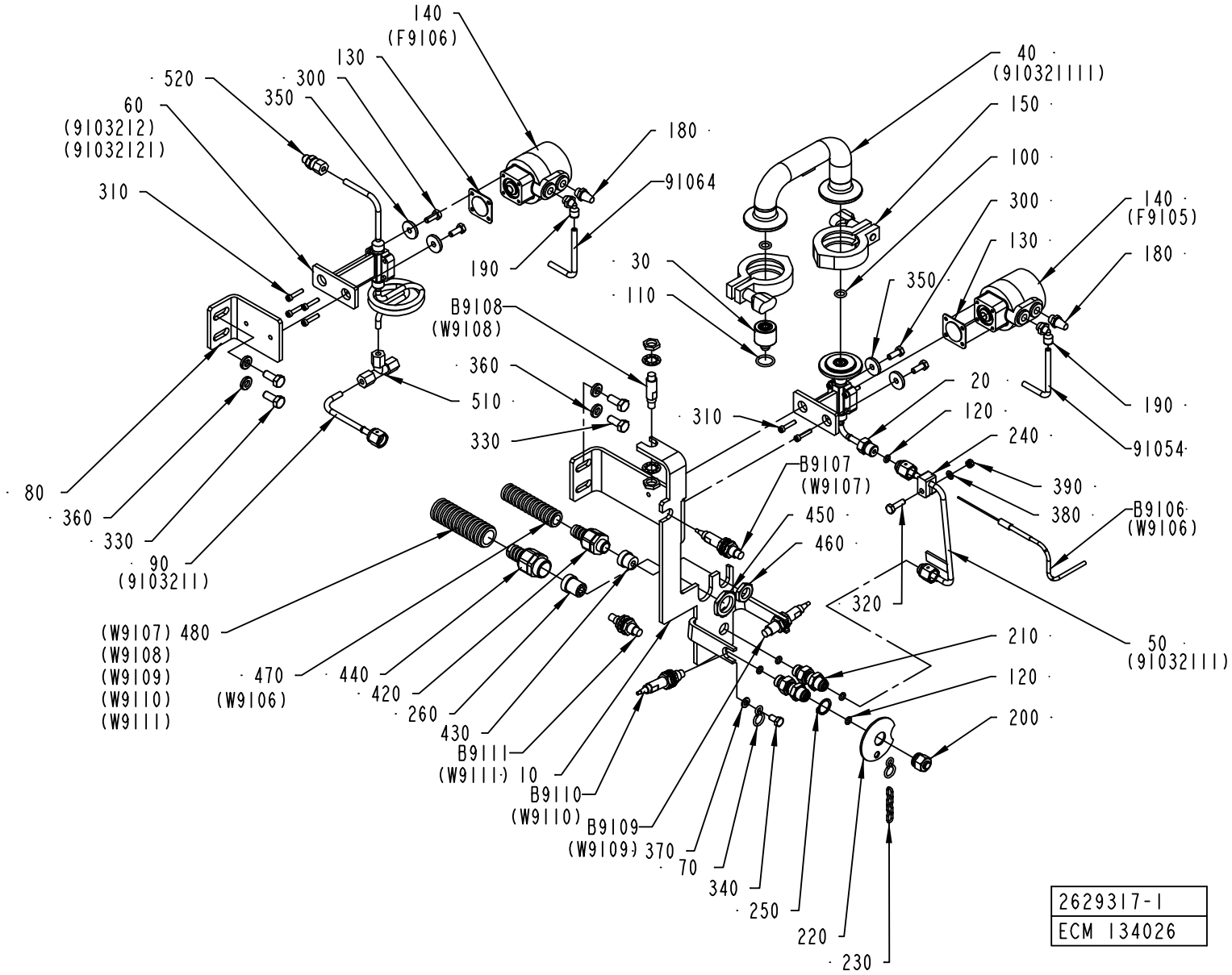
140
(F9106)
130
520
300
350
60
(91032121)
(91032121)
310
180
91064
190
30
110
B9108
(W9108)
360
510
330
80
360
330
90
(91032111)
(W9107) 480
(W9108)
(W9109)
(W9110)
(W9111)
470
(W9106)
440
420
260
430
B9111
(W9111) 10
B9110
(W9110)
B9109
(W9109) 370
70
340
250
220
230
40
(91032111)
150
100
300
130
350
140
(F9105)
180
190
91054
20
120
240
390
380
B9106
(W9106)
310
B9107
(W9107)
450
460
320
210
120
200
50
(91032111)
2629317-1
ECM 134026

ECM: 135174 - 20030922
Group number: 2629317-0100
Assembly Drawing: 2629317-1_1_AA

Pos	Part No	SP	UN	Qty	Description	Page No
-						
010	2551064-0000	-		1	BRACKET	
020	1254475-0000	-		1	VALVE BODY	
030	1523154-0003	-		1	SPRAY NOZZLE	
030	1523154-0004	-		1	SPRAY NOZZLE	
030	1523154-0005	-		1	SPRAY NOZZLE	
030	1523154-0006	-		1	SPRAY NOZZLE	
030	2514316-0000	-		1	NOZZLE	
040	2512802-0000	-		1	TRANSITION PIPE	
050	2551066-0000	-		1	PIPE	
060	2551070-0000	-		1	VALVE	
070	209183-0000	-		2	RING	
080	2551069-0000	-		1	BRACKET	
090	2551063-0000	-		1	PIPE	
100	315204-0208	-		2	O-RING 9,3X2,4 MM	
110	315204-0214	-		1	O-RING 17,3X2,4 MM	
120	315205-0505	-		5	O-RING 6,07X1,78 MM	
130	90187-0325	-		2	DIAPHRAGM, 214/300 AO08 4-B -20-150§C	
140	90187-0176	-		2	ACTUATOR ECC 008 FOR DIAPHR. VALVE	
150	342840-0103	-		2	CLAMPING PIECE	
180	90328-0003	-		2	SILENCER	
190	90458-2956	-		2	ELBOW PIPE JOINT, EXT.THREAD, D=6MM-G1/8	
200	978380-0000	-		1	BLIND PLUG	
210	90030-0549	-		2	CONN. STRAIGHT, BULKHEAD, SS-4-VCO-61	
220	978381-0000	-		1	WASHER 56X2MM	
230	90155-0008	-	MM	200	HANGER CHAIN, 18	
240	978440-0000	-		1	CRAMP	
250	90141-0017	-		1	RETAINING RING FOR SHAFT DIN 471 17 A2	
260	353249-0026	-		1	INSERT, MULTI HOLE, E153M6X4	
300	312105-0368	-		4	SCREW M6S M6X16 A280	
310	312115-0295	-		8	SCREW ISO4762 M4X20 A4	
320	312105-0370	-		1	SCREW M6S ISO 4017 M6X20 A480	
330	312105-0451	-		4	SCREW M6S ISO 4017 M8X20 A480	
340	312105-0366	-		1	SCREW M6S M6X12 A280	
350	315125-0153	-		4	WASHER TBRSB 6,4X22X4 A4	
360	315115-0165	-		4	WASHER PLAIN, TBRB 8,4/16 H=3	
370	315105-0153	-		1	WASHER BRB6,4X12RFR	
380	315105-0146	-		1	BRICKA BRB5,3X10RFR	
390	312812-0314	-		1	HEXAGON NUT, NY-LOCK M5 A480	
420	353243-0001	-		1	EXTENDED WITHOUT INSERT, PG9	
430	353249-0008	-		1	INSERT, SINGEL HOLE, EK 152/7	
440	353242-0002	-		1	NORMAL WITHOUT INSERT, PG16	
450	90099-0110	-		1	NUT, PR 22,5 (PG16)	
460	90099-0104	-		1	NUT, PR 15,2 (PG9)	
470	90152-0059	-	M	2	SPIRAL CONDUIT, 18X12, UL 1211	
480	90152-0051	-	M	1	SPIRAL CONDUIT, 25X18, UL 1816	
510	90030-0076	-		1	CONN. T-PIPE T-6	
520	90030-0184	-		1	CONN. STR. GA-6-G1/8	
91054	90166-0193	-	M	8	TUBE 6 MM PUR BLUE	
91064	90166-0193	-	M	8	TUBE 6 MM PUR BLUE	
B9106	90326-0060	-		1	THERMOCOUPLE, CR-AL	
B9107	90458-0672	-		1	PROXIMITY SENSOR E2E2-X5MB1-5M	
B9108	90458-0675	-		1	PROXIMITY SENSOR, E2EG-X5MB1-5M	
B9109	90458-0672	-		1	PROXIMITY SENSOR E2E2-X5MB1-5M	
B9110	90458-0672	-		1	PROXIMITY SENSOR E2E2-X5MB1-5M	
B9111	90458-0675	-		1	PROXIMITY SENSOR, E2EG-X5MB1-5M	

Machine Type | Group Description | Used-In | Group Number | Page No

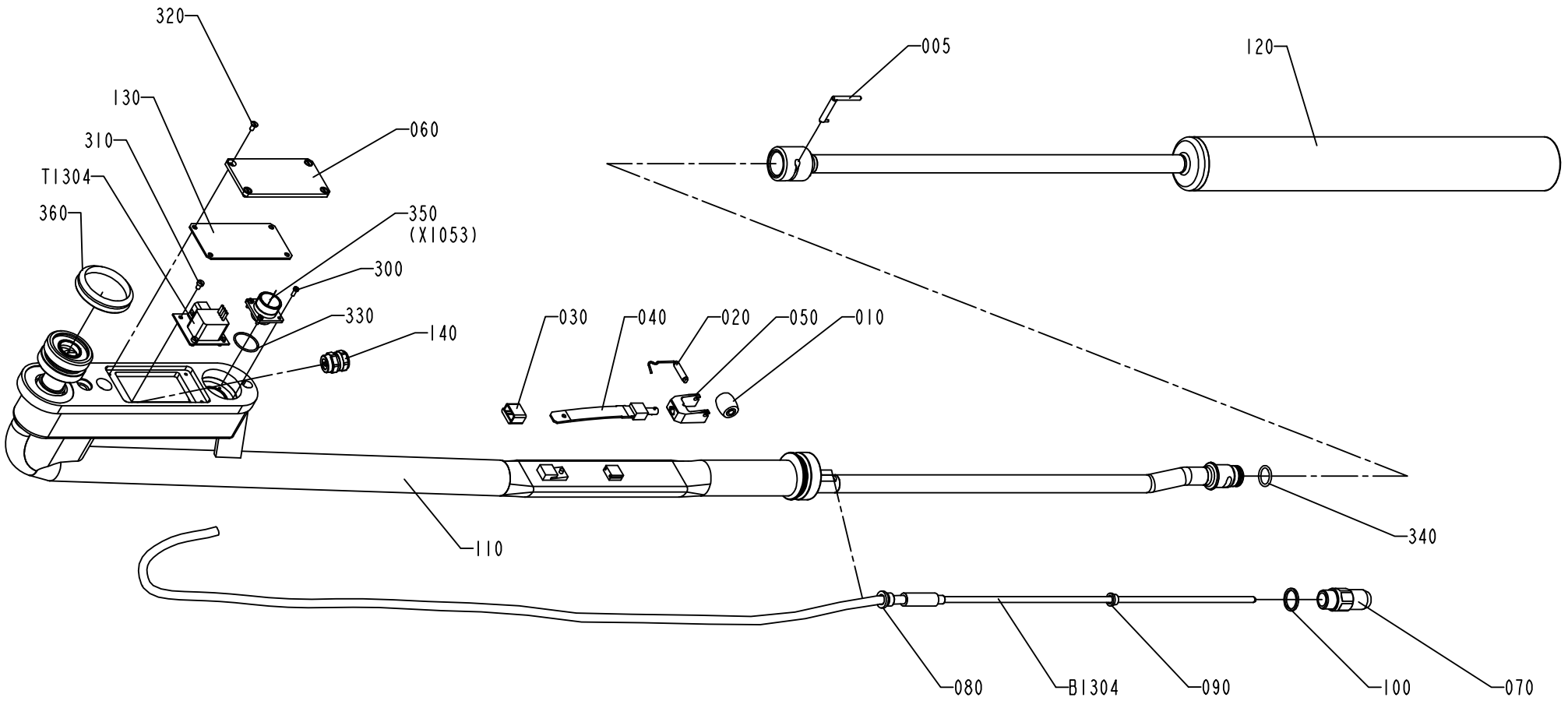

1498668-3
ECM 126249

ECM: 143981 - 20031215
Group number: 1498668-0300
Assembly Drawing: 1498668-3_1_AA

Pos	Part No	SP	UN	Qty	Description	Page No
TBA 0200B						
010	2607089-0000	A		1	PRESSURE ROLLER	
020	2529418-0000	A		1	SHAFT	
040	2603500-0000	A		1	SPRING	
050	1317438-0000	A		1	FORK	
120	2558854-0000	A		1	FILLING PIPE	
TBA 0200M						
010	272479-0000	A		1	PRESSURE ROLLER	
020	255977-0000	A		1	SHAFT	
040	2611163-0000	A		1	SPRING	
050	1484550-0000	A		1	FORK	
120	2569799-0000	A		1	FILLING PIPE	
TBA 0200S						
010	272479-0000	A		1	PRESSURE ROLLER	
020	255977-0000	A		1	SHAFT	
040	2611163-0000	A		1	SPRING	
050	255978-0000	A		1	FORK	
120	1519501-0000	A		1	FILLING PIPE	
TBA 0250B						
010	2607089-0000	A		1	PRESSURE ROLLER	
020	2529418-0000	A		1	SHAFT	
040	2603500-0000	A		1	SPRING	
050	1317438-0000	A		1	FORK	
120	2558855-0000	A		1	FILLING PIPE	
TBA 0250S						
010	272479-0000	A		1	PRESSURE ROLLER	
020	255977-0000	A		1	SHAFT	
040	2611163-0000	A		1	SPRING	
050	1484550-0000	A		1	FORK	
120	2500368-0000	A		1	FILLING PIPE	
Common Parts						
005	38535-0001	A		1	LOCKING FINGER	
030	295377-0001	A		1	HOOD	
060	1484515-0000	-		1	LID	
070	1347511-0000	A		1	FITTING	
080	1349913-0000	A		1	BUSHING	
090	1348639-0000	A		1	SEALING GASKET	
100	1348555-0000	A		1	SEALING RING	
110	1498697-0000	A		1	FILLING PIPE	
130	1484516-0000	B		1	GASKET	
140	1334056-0000	-		1	COMPRESSION GLAND	
300	312125-0222	-		4	SCREW ISO 1207 M3X8 A4	
310	312125-0285	-		4	SCREW ISO 1207 M4X6 A4	
320	312145-0287	-		4	SCREW ISO 2009 MFS M4X8 A4	
330	315204-0119	B		1	O-RING 25,1X1,6 MM	
340	315204-0214	A		1	O-RING 17,3X2,4 MM	
350	90110-0222	B		1	SOCKET FEMALE, MS 3102 E 16S-1S	
360	315220-0198	B		1	V-RINGS 45X55X13 MM V-50S	
400	90296-0091	B		1	LUBRICATION GREASE	
410	90157-0044	B		1	SEALING COMPOUND	
B1304	90274-0096	A		1	LEVEL PROBE, Z8778/1	
T1304	90245-0043	A		1	TRANSFORMER, Z-8782	

Machine Type | Group Description | Used-In | Group Number | Page No

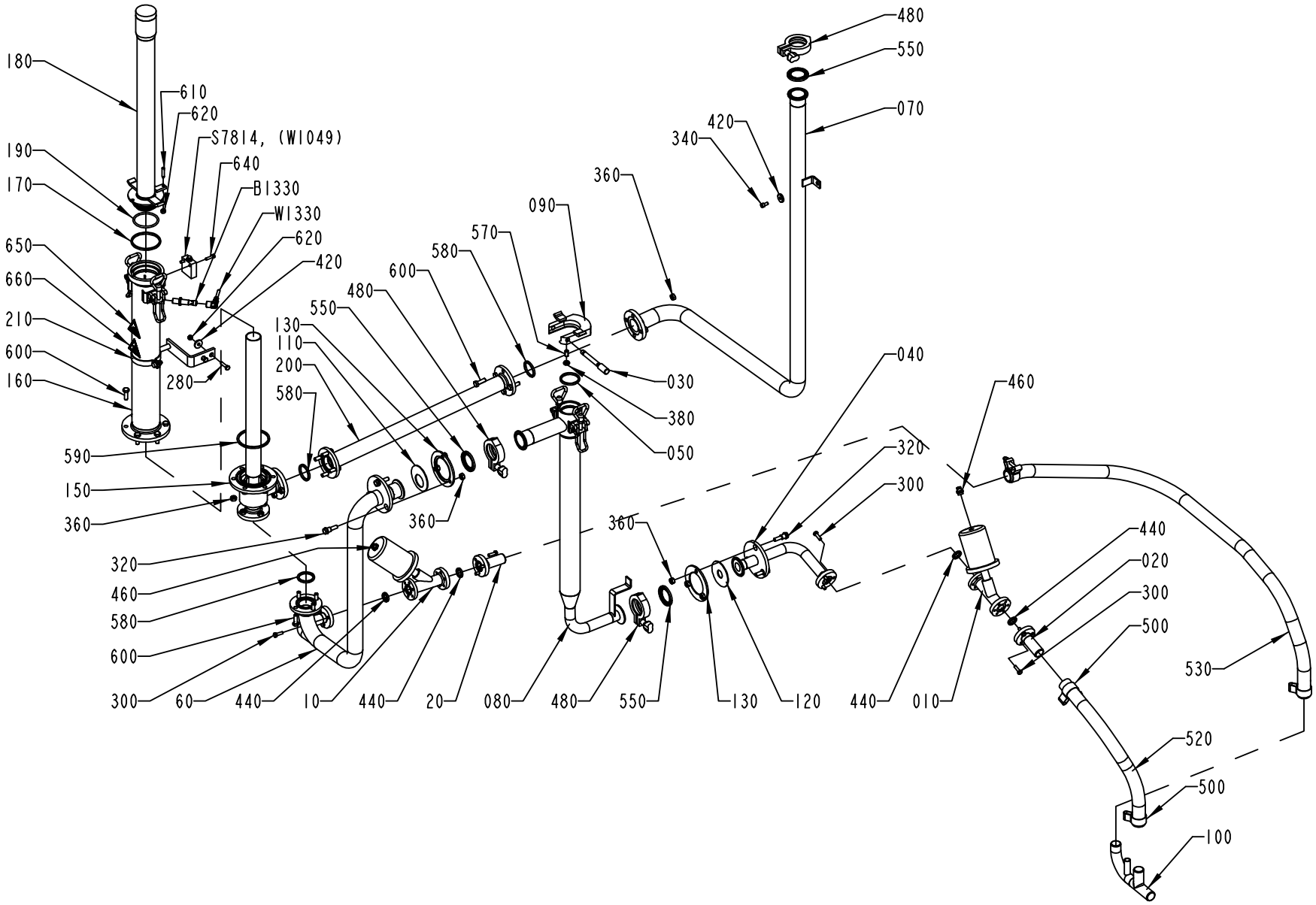

1498673-3
ECM 134026

ECM: 136694 - 20030922
Group number: 1498673-0200
Assembly Drawing: 1498673-3_1_AD

This list covers pages from 1-98 to 1-101

Pos	Part No	SP	UN	Qty	Description	Page No
TBA 0200B HI (See drawing on page: 1-100)						
070	2551062-0000	-		1	PIPE	
140	979256-0000	-		1	CLEANING PIPE	
150	2527741-0000	-		1	CLEANING PIPE	
160	2527740-0000	-		1	CLEANING PIPE	
180	2569802-0000	-		1	CLEANING PIPE	
210	1538787-0000	-		1	SUPPORT	
220	2514213-0000	-		1	PIPE	
480	342840-0103	-		4	CLAMPING PIECE	
550	90217-0307	-		4	GASKET 35,8X50,5X5,5 MM	
590	315229-0107	A		1	GASKETS, 73,9X80,9X3,7 MM 2"1/2 FD	
TBA 0200B NOHI (See drawing on page: 1-98)						
070	2500016-0000	-		1	PIPE	
150	2527741-0000	-		1	CLEANING PIPE	
160	2527740-0000	-		1	CLEANING PIPE	
180	2569802-0000	-		1	CLEANING PIPE	
210	1538787-0000	-		1	SUPPORT	
480	342840-0103	-		3	CLAMPING PIECE	
550	90217-0307	A		3	GASKET 35,8X50,5X5,5 MM	
590	315229-0107	A		1	GASKETS, 73,9X80,9X3,7 MM 2"1/2 FD	
TBA 0200M HI (See drawing on page: 1-100)						
070	2551062-0000	-		1	PIPE	
140	979256-0000	-		1	CLEANING PIPE	
150	2547154-0000	-		1	CLEANING PIPE	
160	2547153-0000	-		1	CONTAINER	
180	2569804-0000	-		1	CLEANING PIPE	
210	2545016-0000	-		1	SUPPORT	
	312115-0368	*-*		*2*	*SCREW ISO4762 M6X16 A4*	
	2545430-0000	*-*		*1*	*CLAMP*	
	2545431-0000	*-*		*1*	*SUPPORT*	
220	2514213-0000	-		1	PIPE	
480	342840-0103	-		4	CLAMPING PIECE	
550	90217-0307	-		4	GASKET 35,8X50,5X5,5 MM	
590	315229-0106	A		1	GASKETS, 61,2X68,2X3,7 MM 2"1/2 FD	
TBA 0200M NOHI (See drawing on page: 1-98)						
070	2500016-0000	-		1	PIPE	
150	2547154-0000	-		1	CLEANING PIPE	
160	2547153-0000	-		1	CONTAINER	
180	2569804-0000	-		1	CLEANING PIPE	
210	2545016-0000	-		1	SUPPORT	
	312115-0368	*-*		*2*	*SCREW ISO4762 M6X16 A4*	
	2545430-0000	*-*		*1*	*CLAMP*	
	2545431-0000	*-*		*1*	*SUPPORT*	
480	342840-0103	-		3	CLAMPING PIECE	
550	90217-0307	A		3	GASKET 35,8X50,5X5,5 MM	
590	315229-0106	A		1	GASKETS, 61,2X68,2X3,7 MM 2"1/2 FD	
TBA 0200S HI (See drawing on page: 1-100)						
070	2551062-0000	-		1	PIPE	
140	979256-0000	-		1	CLEANING PIPE	
150	2531430-0000	-		1	CLEANING PIPE	
160	2531429-0000	-		1	CONTAINER	
180	2531428-0000	-		1	CLEANING PIPE	
210	2545016-0000	-		1	SUPPORT	
	312115-0368	*-*		*2*	*SCREW ISO4762 M6X16 A4*	
	2545430-0000	*-*		*1*	*CLAMP*	
	2545431-0000	*-*		*1*	*SUPPORT*	
220	2514213-0000	-		1	PIPE	
480	342840-0103	-		4	CLAMPING PIECE	
550	90217-0307	-		4	GASKET 35,8X50,5X5,5 MM	
590	315229-0106	A		1	GASKETS, 61,2X68,2X3,7 MM 2"1/2 FD	
TBA 0200S NOHI (See drawing on page: 1-98)						
070	2500016-0000	-		1	PIPE	
150	2531430-0000	-		1	CLEANING PIPE	
160	2531429-0000	-		1	CONTAINER	
180	2531428-0000	-		1	CLEANING PIPE	
210	2545016-0000	-		1	SUPPORT	
	312115-0368	*-*		*2*	*SCREW ISO4762 M6X16 A4*	
	2545430-0000	*-*		*1*	*CLAMP*	
	2545431-0000	*-*		*1*	*SUPPORT*	
480	342840-0103	-		3	CLAMPING PIECE	
550	90217-0307	A		3	GASKET 35,8X50,5X5,5 MM	
590	315229-0106	A		1	GASKETS, 61,2X68,2X3,7 MM 2"1/2 FD	
TBA 0250B HI (See drawing on page: 1-100)						
070	2551062-0000	-		1	PIPE	
140	979256-0000	-		1	CLEANING PIPE	
150	2527741-0000	-		1	CLEANING PIPE	
160	2527740-0000	-		1	CLEANING PIPE	
180	2569803-0000	-		1	CLEANING PIPE	
210	1538787-0000	-		1	SUPPORT	
220	2514213-0000	-		1	PIPE	
480	342840-0103	-		4	CLAMPING PIECE	
550	90217-0307	-		4	GASKET 35,8X50,5X5,5 MM	
590	315229-0107	A		1	GASKETS, 73,9X80,9X3,7 MM 2"1/2 FD	
TBA 0250B NOHI (See drawing on page: 1-98)						

Machine Type | Group Description | Used-In | Group Number | Page No

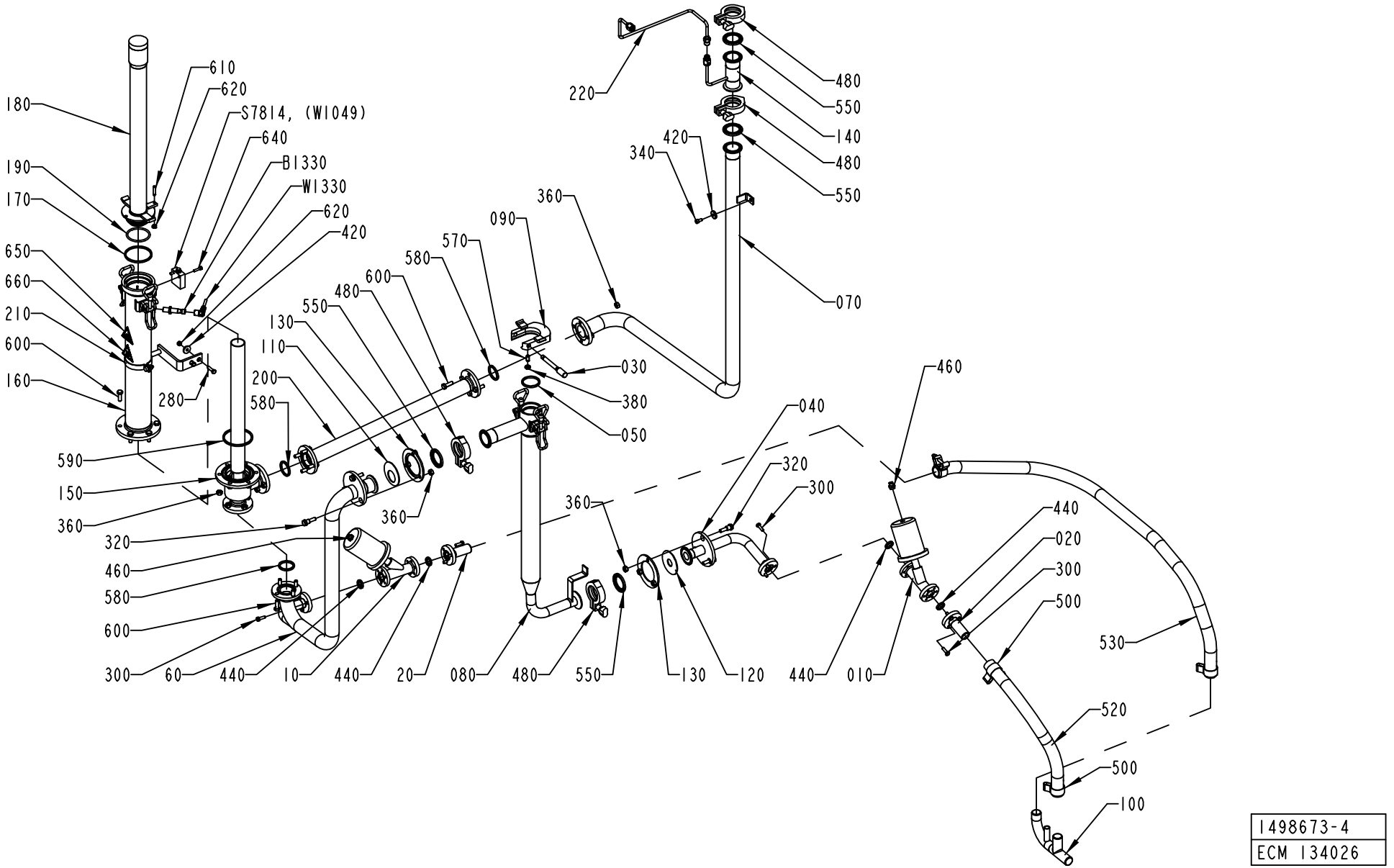

1498673-4
ECM 134026

ECM: 136694 - 20030922
Group number: 1498673-0200
Assembly Drawing: 1498673-4_1_AA

This list covers pages from 1-98 to 1-101

Pos	Part No	SP	UN	Qty	Description	Page No
TBA 0250B NOHI (Cont'd) (See drawing on page: 1-98)						
070	2500016-0000	-		1	PIPE	
150	2527741-0000	-		1	CLEANING PIPE	
160	2527740-0000	-		1	CLEANING PIPE	
180	2569803-0000	-		1	CLEANING PIPE	
210	1538787-0000	-		1	SUPPORT	
480	342840-0103	-		3	CLAMPING PIECE	
550	90217-0307	A		3	GASKET 35,8X50,5X5,5 MM	
590	315229-0107	A		1	GASKETS, 73,9X80,9X3,7 MM 2"1/2 FD	
TBA 0250S HI (See drawing on page: 1-100)						
070	2551062-0000	-		1	PIPE	
140	979256-0000	-		1	CLEANING PIPE	
150	2547154-0000	-		1	CLEANING PIPE	
160	2547153-0000	-		1	CONTAINER	
180	2547155-0000	-		1	CLEANING PIPE	
210	2545016-0000	-		1	SUPPORT	
	312115-0368	-		*2*	*SCREW ISO4762 M6X16 A4*	
	2545430-0000	-		*1*	*CLAMP*	
	2545431-0000	-		*1*	*SUPPORT*	
220	2514213-0000	-		1	PIPE	
480	342840-0103	-		4	CLAMPING PIECE	
550	90217-0307	-		4	GASKET 35,8X50,5X5,5 MM	
590	315229-0106	A		1	GASKETS, 61,2X68,2X3,7 MM 2"1/2 FD	
TBA 0250S NOHI (See drawing on page: 1-98)						
070	2500016-0000	-		1	PIPE	
150	2547154-0000	-		1	CLEANING PIPE	
160	2547153-0000	-		1	CONTAINER	
180	2547155-0000	-		1	CLEANING PIPE	
210	2545016-0000	-		1	SUPPORT	
	312115-0368	-		*2*	*SCREW ISO4762 M6X16 A4*	
	2545430-0000	-		*1*	*CLAMP*	
	2545431-0000	-		*1*	*SUPPORT*	
480	342840-0103	-		3	CLAMPING PIECE	
550	90217-0307	A		3	GASKET 35,8X50,5X5,5 MM	
590	315229-0106	A		1	GASKETS, 61,2X68,2X3,7 MM 2"1/2 FD	
Common Parts						
010	1038905-0000	A		2	VALVE	
020	1285329-0000	-		2	PIPE	
030	1346353-0000	A		1	LOCK PIN	
040	1348099-0000	-		1	PIPE	
050	1348475-0000	A		1	GASKET	
060	2500015-0000	-		1	PIPE	
080	2540803-0000	A		1	CLEANING SLEEVE	
090	1487037-0000	A		1	FLANGE	
100	1487198-0000	-		1	PIPE	
110	1499125-0000	B		1	SEAL	
120	1499126-0000	B		1	SEAL	
130	1499127-0000	-		2	FLANGE	
170	1348474-0000	A		1	GASKET	
190	1538794-0000	A		1	O-RING	
200	2500017-0000	-		1	PIPE	
280	312105-0372	-		2	SCREW M6S ISO 4017 M6X25 A480	
300	312105-0370	-		12	SCREW M6S ISO 4017 M6X20 A480	
320	2558848-0000	-		6	SCREW	
340	312115-0366	-		1	SCREW ISO4762 M6X12 A4	
360	312605-0318	-		24	HEXAGON NUT, M6M M8 A280	
380	312625-0318	-		1	HEXAGON THIN NUT, EN 24035 ML6M M8 A4	
420	315125-0153	-		3	WASHER TBRSB 6,4X22X4 A4	
440	315229-0102	A		4	GASKETS, 16,8X23,8X3,7 MM 3/4" FDA	
460	342722-0203	-		2	STRAIGHT COUPLING	
500	90459-2366	-		4	HOSE CLIP, (32)-35	
520	90166-0233	-	MM	500	HOSE	
530	90166-0233	-	MM	1500	HOSE	
570	90287-0112	-		1	SCREW SPRINGLOAD. SLOTTED HEAD M8X16	
580	315229-0104	A		3	GASKETS, 35,8X42,8X3,7 MM 1"1/2 FD	
600	312105-0453	-		18	SCREW M6S ISO 4017 M8X25 A480	
610	312311-0374	-		1	SCREW ISO4028 M6X30 FZB	
620	312605-0316	-		3	HEXAGON NUT, M6M M6 A280	
640	312115-0331	-		2	SCREW ISO4762 M5X20 A4	
650	359705-0003	-		1	WARNING SIGN ISO, DANGEROUS CHEMICALS	
660	359705-0007	-		1	WARNING SIGN ISO, HOT SURFACE	
B1330	90459-0252	A		1	PROXIMITY SWITCH	
S7814	90044-0084	A		1	LIMIT SW. 14 CE1-4	
W1330	90459-0253	A		1	CONNECTOR W. CABLE S12-3FVW-050	

Machine Type | Group Description | Used-In | Group Number | Page No

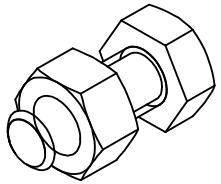

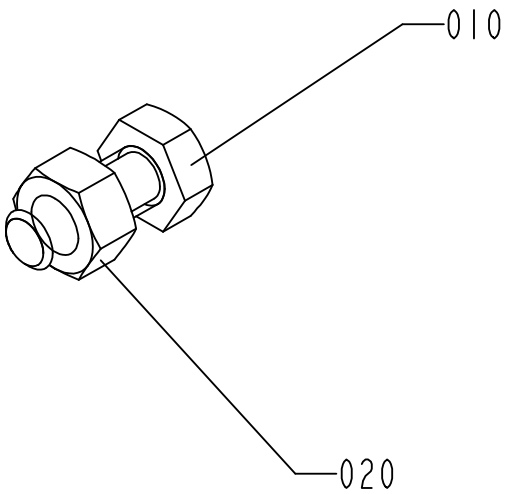

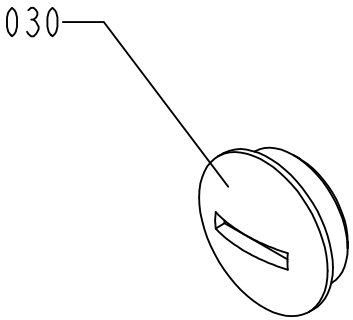

2547150-1
ECM 107819

ECM: 108871 - 20010926
Group number: 2547150-0100
Assembly Drawing: 2547150-1_1_AA

Pos	Part No	SP	UN	Qty	Description	Page No
-						
010	312105-0451	-		2	SCREW M6S ISO 4017 M8X20 A480	
020	312605-0318	-		2	HEXAGON NUT, M6M M8 A280	
030	90002-0009	-		1	BLANK-OFF PLUG, PR 18.6 SKINDICHT-BLK11	

Pos	Part No	SP	UN	Qty	Description	Page No

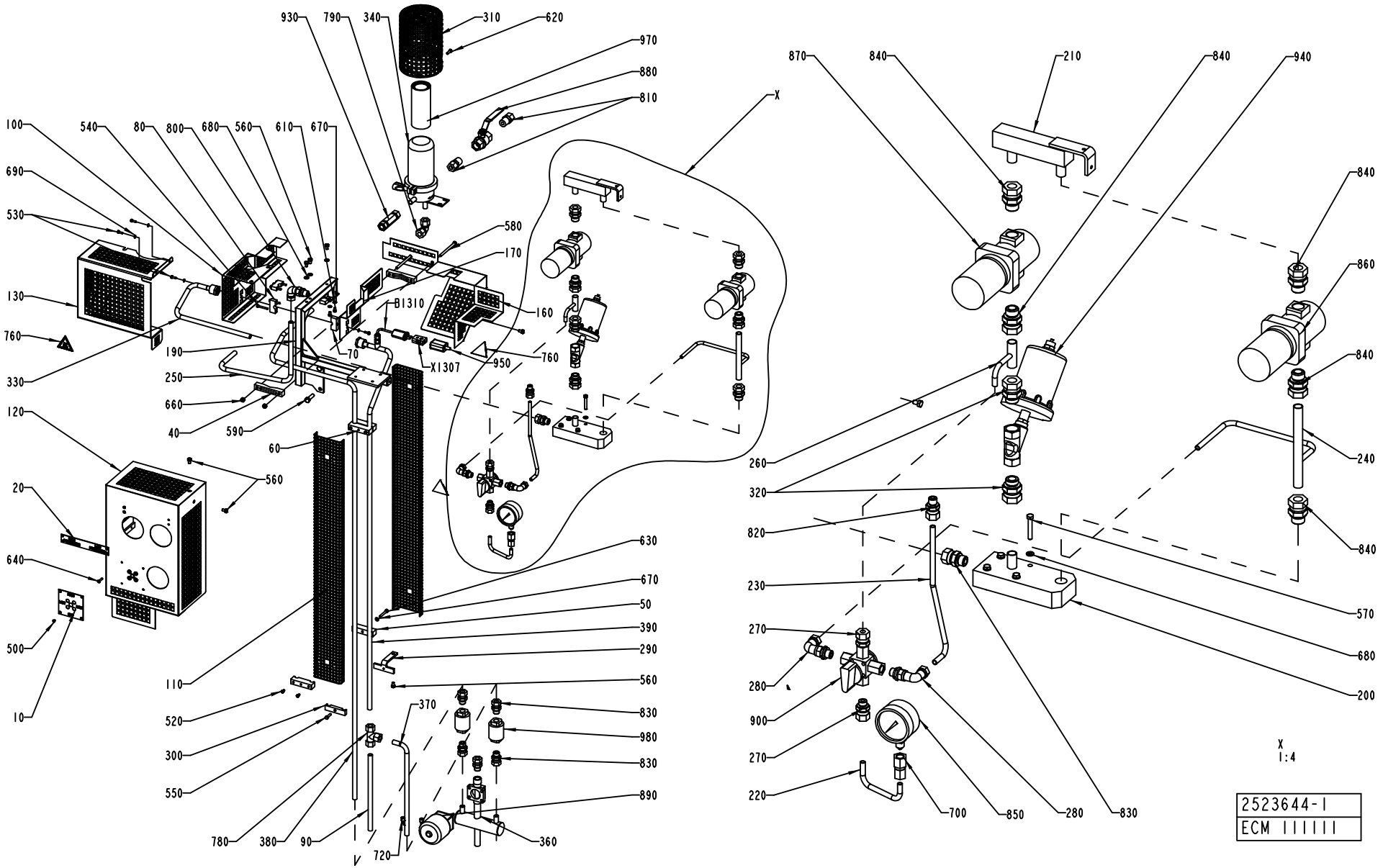
930
790
340
310
620
970
880
810
X
870
840
210
840
940
100
540
80
800
680
560
610
670
690
530
580
170
840
860
130
B1310
160
760
190
70
X1307
950
760
840
330
250
660
40
590
60
240
120
560
260
320
20
820
840
640
630
230
570
670
50
270
680
500
390
290
280
200
110
560
900
10
520
370
830
270
300
980
830
220
700
850
280
830
550
890
780
380
90
720
360
X
1:4
2523644-1
ECM 111111

ECM: 112719 - 20020911
Group number: 2523644-0100
Assembly Drawing: 2523644-1_1_AC

Pos	Part No	SP	UN	Qty	Description	Page No
-						
010	1255924-0000	-		1	LABEL	
020	1279456-0000	-		1	LABEL	
040	1487200-0000	-		2	CLAMP	
050	1487837-0000	-		2	CLAMP	
060	1487838-0000	-		2	CLAMP	
070	1487839-0000	-		2	CLAMP	
080	1487840-0000	-		2	CLAMP	
090	1524474-0000	-		1	PIPE	
100	2546215-0000	-		1	COVER	
110	2511410-0000	-		2	TOUCH GUARD	
120	2546211-0000	-		1	COVER	
130	2546212-0000	-		1	COVER	
160	2546213-0000	-		1	COVER	
170	2546214-0000	-		1	COVER	
190	2511418-0000	-		1	BRACKET	
200	2511419-0000	-		1	DISTRIBUTOR BLOCK	
210	2511420-0000	-		1	DISTRIBUTOR BLOCK	
220	2511421-0000	-		1	PIPE	
230	2511422-0000	-		1	PIPE	
240	2511423-0000	-		1	PIPE	
250	2511424-0000	-		1	PIPE	
260	2511426-0000	-		1	PIPE	
270	2517368-0000	-		2	STRAIGHT CONNECTION	
280	2517369-0000	-		2	CONNECTION	
290	2517370-0000	-		1	CLAMP	
300	2517371-0000	-		1	CLAMP	
310	2517375-0000	-		1	COVER	
320	2522195-0000	-		2	CONNECTION	
330	2523642-0000	-		1	PIPE	
340	2523645-0000	-		1	FILTER	
360	2523663-0000	-		1	PIPE	
370	2525531-0000	-		1	PIPE	
380	2525532-0000	-		1	STEAM PIPE	
390	2525533-0000	-		1	STEAM PIPE	
500	311521-0142	-		8	BLANK RIVET 3,2X6	
520	312105-0287	-		8	SCREW M6S ISO4017 M4X8 A480	
530	312105-0291	-		6	SCREW M6S ISO 4017 M4X12 A480	
540	312105-0299	-		4	SCREW M6S ISO 4017 M4X30 A480	
550	312105-0333	-		1	SCREW M6S ISO 4017 M5X25 A480	
560	312105-0364	-		7	SCREW M6S ISO 4017 M6X10 A480	
570	312105-0378	-		4	SCREW M6S ISO 4014 M6X40 A480	
580	312105-0386	-		2	SCREW M6S ISO 4014 M6X80 A480	
590	312105-0455	-		2	SCREW M6S ISO 4017 M8X30 A480	
610	312105-0323	-		2	SCREW M6S ISO 4017 M5X8 A480	
620	312105-0329	-		1	SCREW M6S ISO 4017 M5X16 A480	
630	312115-0337	-		2	SCREW ISO4762 M5X35 A4	
640	312155-0295	-		4	SCREW EN 10642 MF6S M4X20 A480	
660	312605-0316	-		2	HEXAGON NUT, M6M M6 A280	
670	315105-0146	-		4	BRICKA BRB5,3X10RFR	
680	315105-0153	-		7	WASHER BRB6,4X12RFR	
690	315105-0136	-		2	WASHER BRB4,3XRFR	
700	342725-0103	-		1	CONN. STR. PIPE GI-8-G1/4	
720	90458-2956	-		2	ELBOW PIPE JOINT, EXT.THREAD, D=6MM-G1/8	
760	359705-0007	-		3	WARNING SIGN ISO, HOT SURFACE	
780	90030-0058	-		1	CONN. T-PIPE T-12	
790	90030-0096	-		1	CONN. ELBOW W-12	
800	90030-0136	-		1	ADJUSTABLE ELBOW CONNECTION,EXT 12-G3/8	
810	90030-0180	-		2	CONN. STR. GE 12-1/2-14 NPTF	
820	90030-0185	-		1	CONN. STR. GA-8-G1/4	
830	90030-0187	-		6	CONN. STR. GA-12-G3/8	
840	90030-0188	-		5	CONN. STR. GA-15-G1/2	
850	90043-0082	-		1	PRESSURE GAUGE, 2740, D=63 MM	
860	2558133-0000	A		1	PRESSURE REGULATOR	
870	2558134-0000	A		1	PRESSURE REGULATOR	
880	90187-0082	-		1	BALL VALVE G1/2	
890	90187-0110	A		1	DIAPHRAGM VALVE DN15, N.C. WELD CONN.	
900	90187-0112	-		1	COCK VALVE, G1/4, 4-WAY, VITON	
930	90230-0025	A		1	NON-RETURN VALVE, 12MM, L=85	
940	90235-0261	A		1	ANGLE SEAT VALVE G1/2, N.C. DN13	
950	90326-0012	-		1	PROTECTIVE COVER, T31A4618	
970	90337-0315	A		1	FILTERINSERT / MCS 4463	
980	90360-0020	A		2	STEAM TRAP / MK36/51 3/8"	
	90360-0309	-		*1*	*STRAINER, FOR STEAM TRAP 90360-20*	
	90360-0310	-		*1*	*CAPSULE, FOR STEAM TRAP 90360-20*	
B1310	90326-0089	A		1	THERMOCOUPLE, 5110-089-000	
X1307	90326-0020	-		1	PLUG, FEMALE YELLOW CR-AL	

Machine Type | Group Description | Used-In | Group Number | Page No

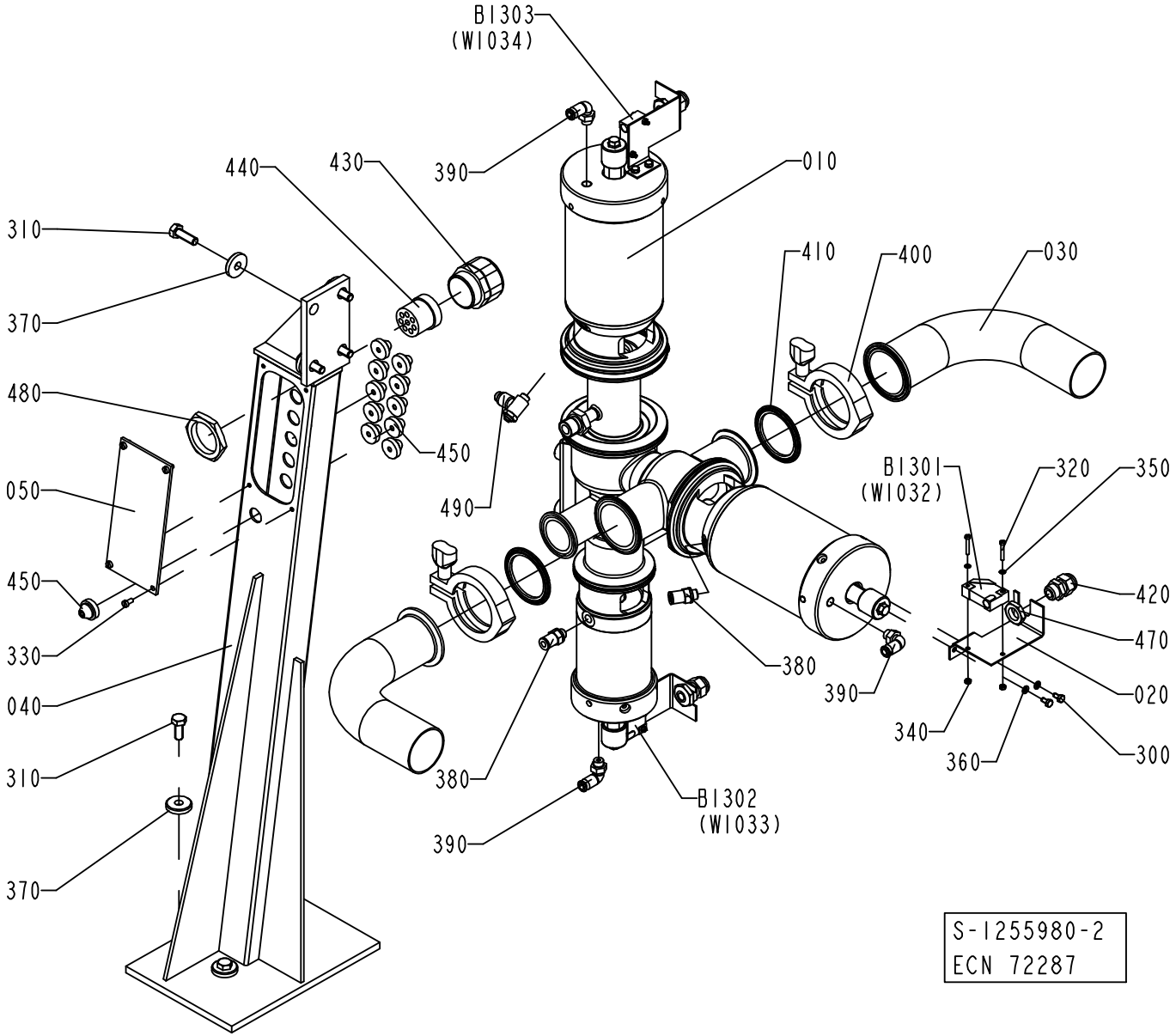
BI303
(WI034)
440
430
390
010
310
410
400
030
370
480
450
050
490
BI301
(WI032)
320
350
420
450
470
330
380
390
040
020
340
310
360
300
380
BI302
(WI033)
390
370
S-1255980-2
ECN 72287

ECM: 113496 - 20020911
Group number: 1255980-0200
Assembly Drawing: 1255980-2_1_AB

Pos	Part No	SP	UN	Qty	Description	Page No
TBA 0200B, TBA 0250S, TBA 0200S, TBA 0200M, TBA 0250B						
010	576434-0100	-		1	AP-VALVE 51-38	**1-109**
030	1129801-0000	-		2	PIPE	
400	342840-0105	-		2	CLAMPING PIECE	
410	342850-0305	A		2	GASKET 47,8X62,6X5,2 MM 2" FDA	
Common Parts						
020	1037093-0000	-		3	SENSOR BRACKET	
040	1255986-0000	-		1	VALVE BRACKET	
050	1255987-0000	-		1	COVER	
300	312105-0287	-		6	SCREW M6S ISO4017 M4X8 A480	
310	312105-0453	-		8	SCREW M6S ISO 4017 M8X25 A480	
320	312125-0230	-		6	SCREW ISO 1207 M3X20 A4	
330	312125-0287	-		4	SCREW ISO 1207 M4X8 A4	
340	312605-0310	-		6	HEXAGON NUT, M6M M3 A280	
350	315105-0124	-		6	BRICKA BRB3,2X6RFR	
360	315105-0136	-		6	WASHER BRB4,3XRFR	
370	315125-0165	-		8	WASHER TBRSB 8,4X26X5 A4	
380	342722-0202	-		2	PIPE COUPLING 1/8" D=6MM	
390	342732-0102	-		3	ELBOW PIPE JOINT, EXT.THREAD, D=6MM-G1/8	
420	352103-0101	-		3	CABLE GLAND, ST 9, PR15,2/PG9	
430	353240-0006	-		1	FöRSKRUVNING PG 29	
440	353249-0079	-		1	INSERT, MULTI HOLE, E155M8X5,5	
450	90015-0020	-		11	LEAD-IN, TET5-7, E-1458016	
470	90099-0104	-		3	NUT, PR 15,2 (PG9)	
480	90099-0120	-		1	MUTTER PR 37 (PG29)	
490	90235-0288	-		1	THROTTLE CHECK VALVE G1/8" MANUAL, 6	
B1301	90044-0104	A		1	PROX.SWITCH IFM IN 3002	
B1302	90044-0104	A		1	PROX.SWITCH IFM IN 3002	
B1303	90044-0104	A		1	PROX.SWITCH IFM IN 3002	

Pos	Part No	SP	UN	Qty	Description	Page No

Machine Type | Group Description | Used-In | Group Number | Page No

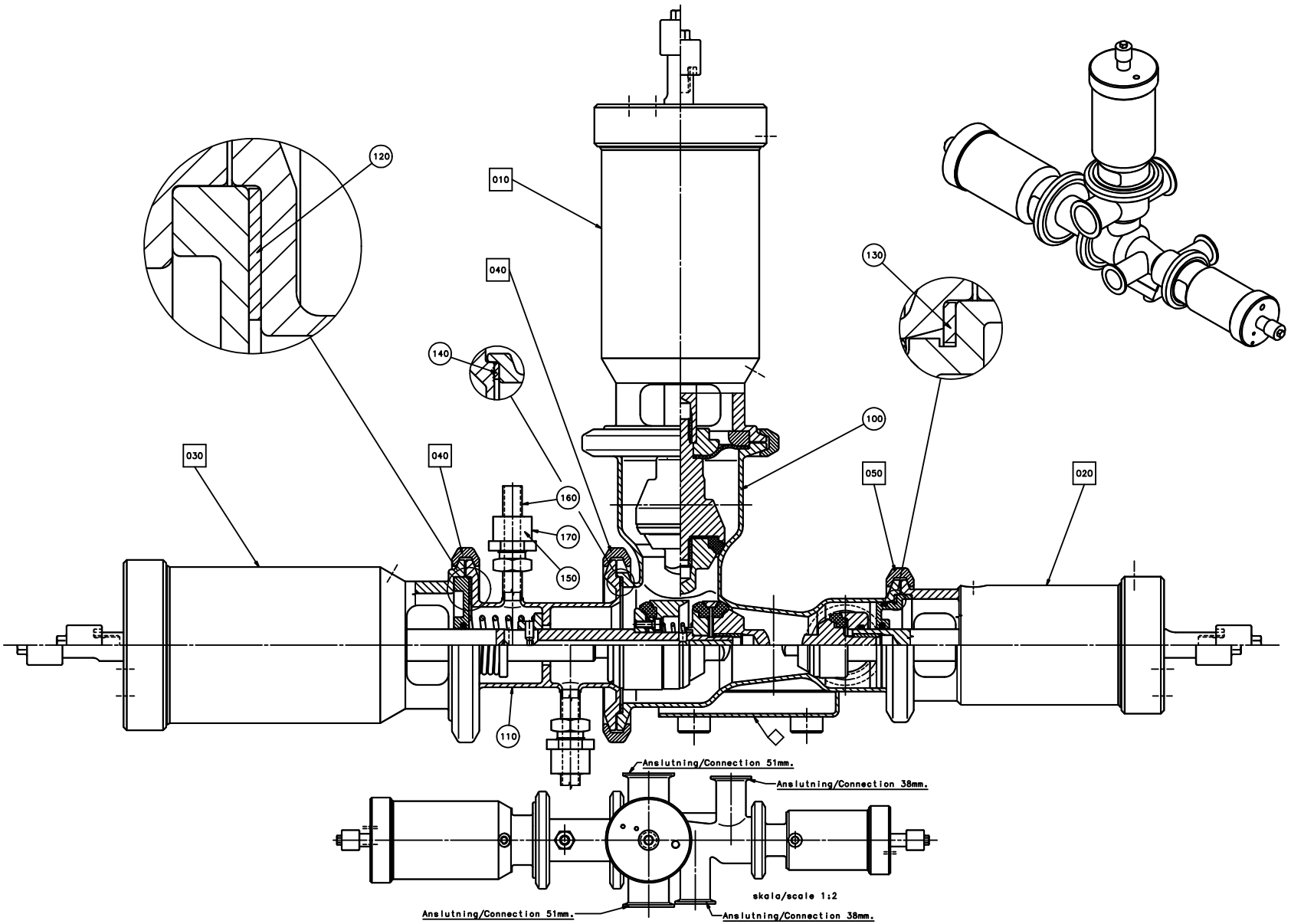
120
010
040
130
140
100
030
040
050
020
160
170
150
110
Anslutning/Connection 51mm.
Anslutning/Connection 38mm.
skala/scale 1:2
Anslutning/Connection 51mm.
Anslutning/Connection 38mm.

ECM: 158029 - 20040128
Group number: 576434-0100
Assembly Drawing: 576434-1_1_AB

Pos	Part No	SP	UN	Qty	Description	Page No
-						
010	576436-0100	-		1	A-CYLINDER	**1-111**
020	576438-0100	-		1	B-CYLINDER	**1-113**
030	576437-0100	-		1	C-CYLINDER	**1-115**
040	541163-0200	-		3	CLAMP RING	**1-117**
050	541164-0200	-		1	CLAMP RING	**1-119**
100	556702-0000	5		1	AP-VALVE-BODY (51-38)	
110	567018-0000	5		1	STEAM HOUSE	
120	539212-0000	5		1	GASKET	
130	90207-0365	5		1	GASKET	
140	90207-0363	5		1	GASKET	
150	90091-0266	5		2	SEAL RING 10,4X16,3X2,5 MM	
160	90030-0336	-		2	CONN. STRAIGHT, 316L-12M-BVCO-3	
170	90030-0338	-		2	NUT, PIPE & CONNECTORS, SS-8-BVCO-4	

Pos	Part No	SP	UN	Qty	Description	Page No

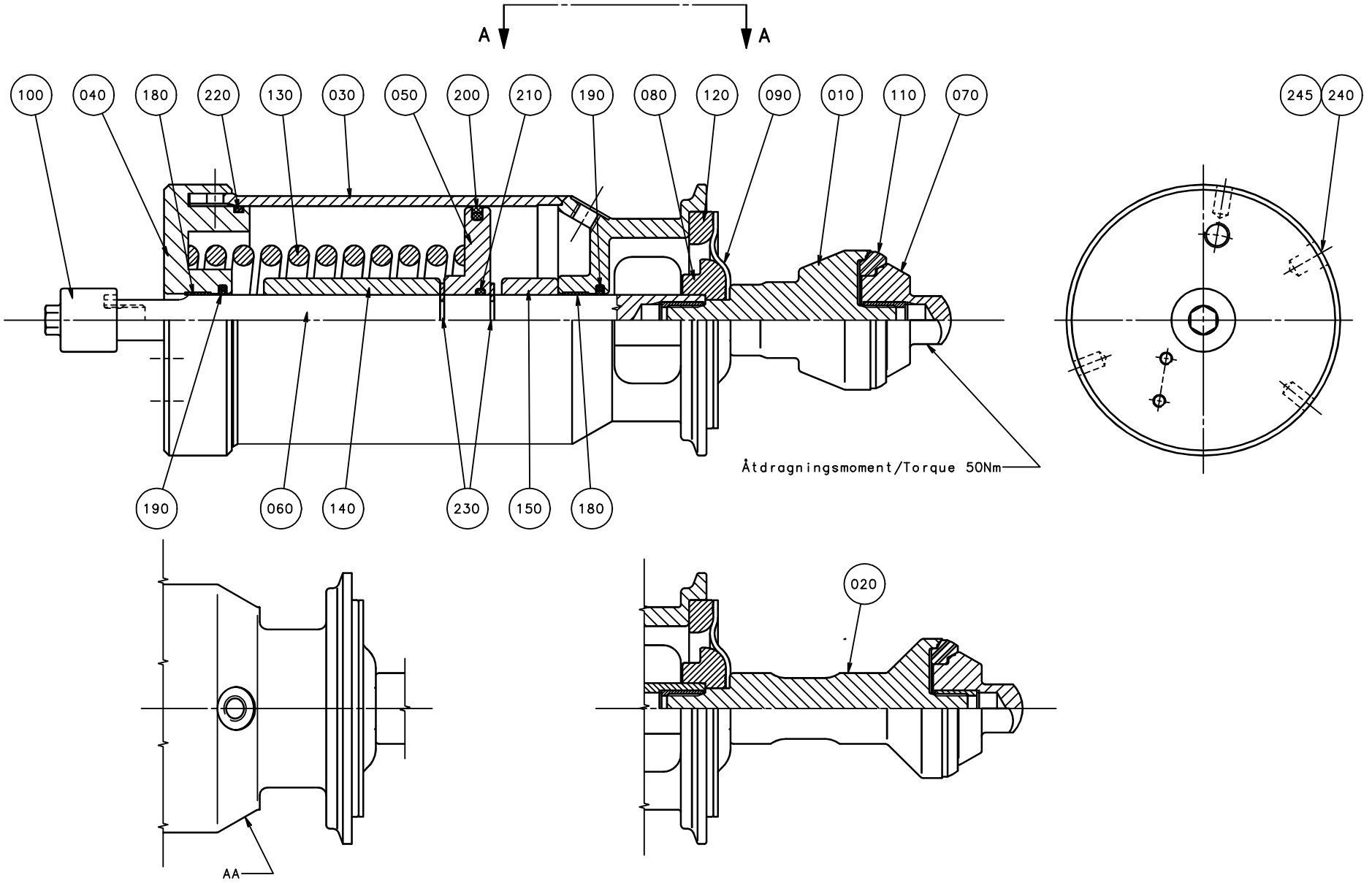
A
A
100
040
180
220
130
030
050
200
210
190
080
120
090
010
110
070
245
240
190
060
140
230
150
180
Åtdragningsmoment/Torque 50Nm
020
AA

ECM: 156408 - 20040128
Group number: 576436-0100
Assembly Drawing: 576436-1_1_AB

Pos	Part No	SP	UN	Qty	Description	Page No
2"						
	576436-0101	-		1	===CAD MODEL===	
010	530592-0000	5		1	SEAL RING HOLDER	
3"						
	576436-0102	-		1	===CAD MODEL===	
010	530595-0000	5		1	SEAL RING HOLDER	
Common Parts						
030	576439-0000	-		1	CYLINDER HOUSING	
040	576440-0000	-		1	END SECTION	
050	576441-0000	5		1	PISTON	
060	576446-0000	5		1	PISTON ROD	
070	530590-0000	5		1	VALVE CONE	
080	541166-0000	5		1	WASHER	
090	533169-0000	1		1	DIAPHRAGM	
100	553607-0000	-		1	SLEEVE	
110	530589-0000	1		1	SEAL RING	
120	440655-0000	5		1	RING	
130	440663-0000	5		1	COMPRESSION SPRING	
140	576448-0000	-		1	SPACER	
150	576449-0000	-		1	SPACER	
180	90091-0238	1		2	WEAR RING 20X22X10 MM	
190	90091-0237	1		2	ROD SEAL, GLIDORING 20X27,5X3 MM	
200	90091-0336	1		1	PISTON SEAL, GLIDORING 79X90X4 MM	
210	315204-0215	3		1	O-RING 19,2X3 MM	
220	315202-0308	3		1	O-RING 84,5X3 MM	
230	315754-0113	3		2	LOCKING WAE 15	
240	312125-0323	7		1	SCREW ISO 1207 M5X8 A4	
245	315233-0101	7		1	WASHER CAPTIVE SEALING M5	

Pos	Part No	SP	UN	Qty	Description	Page No

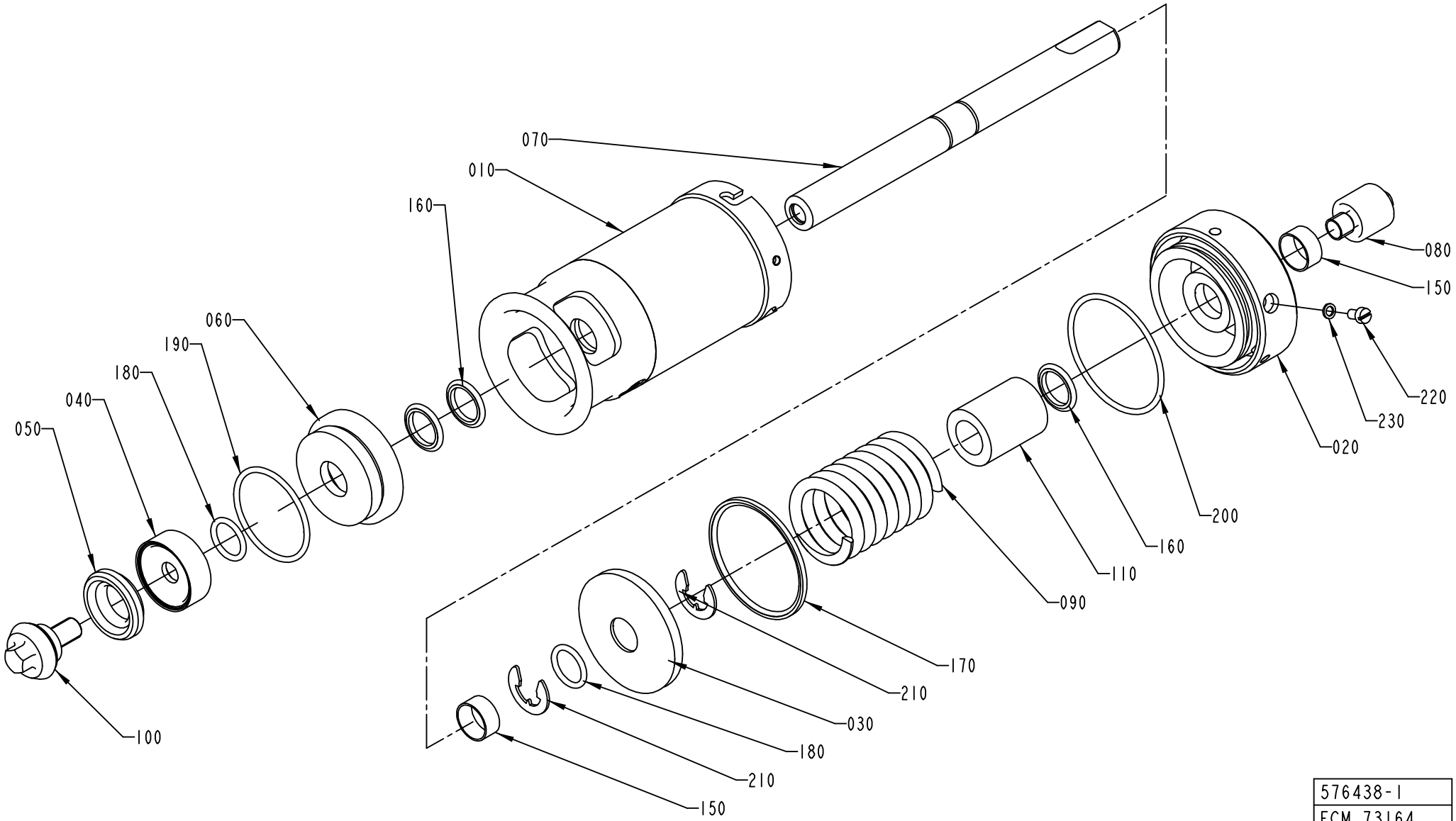

576438-1
ECM 73164

ECM: 156410 - 20040128
Group number: 576438-0100
Assembly Drawing: 576438-1_1_AB

Pos	Part No	SP	UN	Qty	Description	Page No
-						
010	576443-0000	-		1	CYLINDER HOUSING	
020	576444-0000	-		1	END SECTION	
030	576445-0000	5		1	PISTON	
040	530587-0000	5		1	WASHER	
050	530588-0000	1		1	SEAL RING	
060	556133-0000	-		1	SEALING WASHER	
070	576447-0000	5		1	PISTON ROD	
080	553607-0000	-		1	SLEEVE	
090	440662-0000	5		1	COMPRESSION SPRING	
100	476185-0000	5		1	VALVE CONE	
110	576451-0000	-		1	SPACER	
150	90091-0238	1		2	WEAR RING 20X22X10 MM	
160	90091-0237	1		3	ROD SEAL, GLIDORING 20X27,5X3 MM	
170	90091-0335	1		1	PISTON SEAL,GLIDORING 62,5X70X3 MM	
180	315204-0215	3		2	O-RING 19,2X3 MM	
190	315204-0301	3		1	O-RING 49,5X3 MM	
200	315202-0304	3		1	O-RING 64,5X3 MM	
210	315754-0113	3		2	LOCKING WAE 15	
220	312125-0323	7		1	SCREW ISO 1207 M5X8 A4	
230	315233-0101	7		1	WASHER CAPTIVE SEALING M5	

Pos	Part No	SP	UN	Qty	Description	Page No

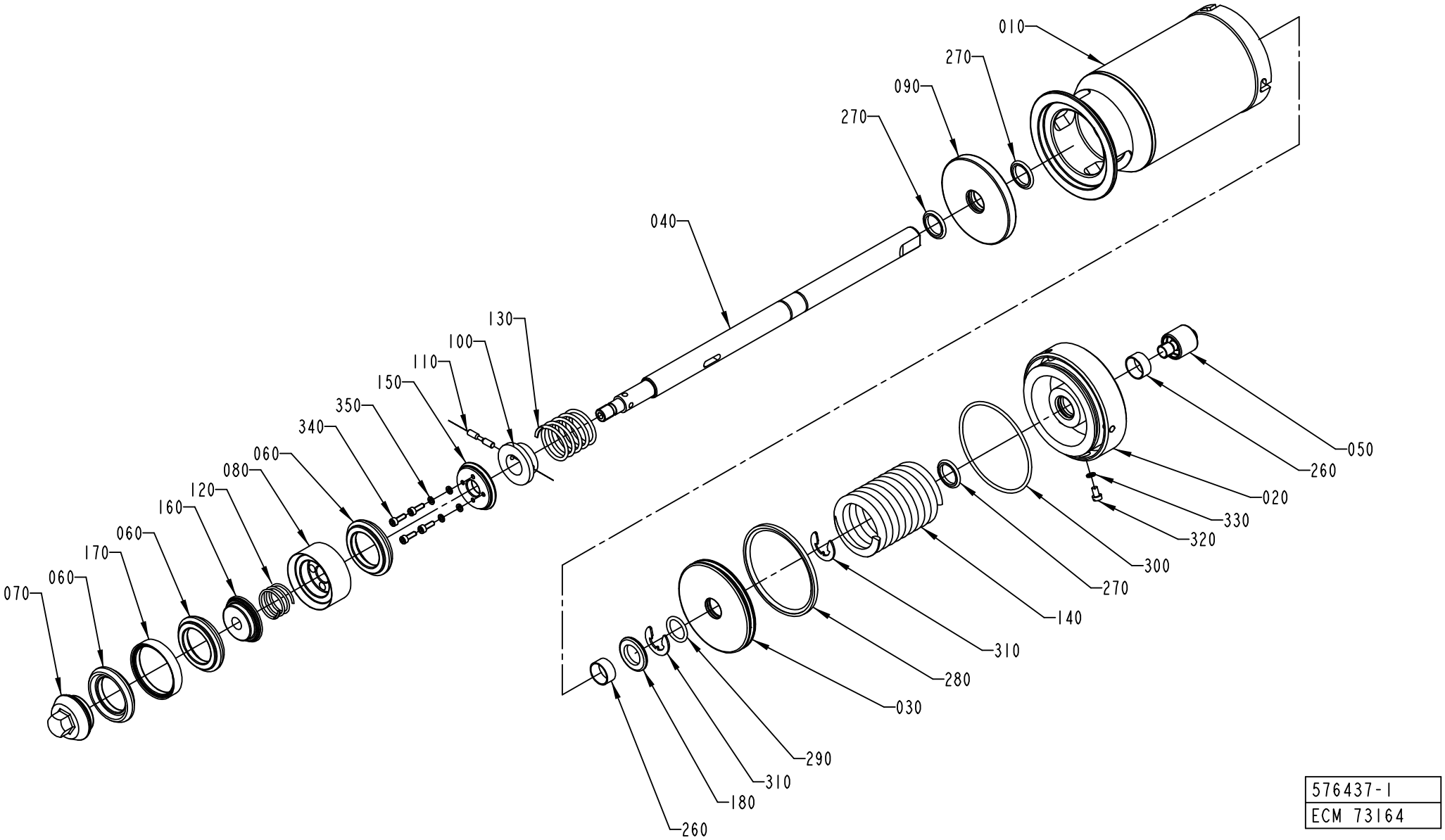

576437-1
ECM 73164

ECM: 156409 - 20040128
Group number: 576437-0100
Assembly Drawing: 576437-1_1_AB

Pos	Part No	SP	UN	Qty	Description	Page No
-						
010	576439-0000	-		1	CYLINDER HOUSING	
020	576440-0000	-		1	END SECTION	
030	576441-0000	5		1	PISTON	
040	576442-0000	5		1	PISTON ROD	
050	553607-0000	-		1	SLEEVE	
060	530589-0000	1		3	SEAL RING	
070	530590-0000	1		1	VALVE CONE	
080	530591-0000	-		1	HOLDER	
090	555458-0000	-		1	SEALING WASHER	
100	440650-0000	-		1	WASHER	
110	440659-0000	3		1	CYLINDRICAL PIN	
120	440660-0000	5		1	COMPRESSION SPRING	
130	440661-0000	5		1	COMPRESSION SPRING	
140	440663-0000	5		1	COMPRESSION SPRING	
150	530597-0000	-		1	WASHER	
160	530598-0000	-		1	WASHER	
170	530599-0000	-		2	RING	
180	576450-0000	-		1	SPACER	
260	90091-0238	1		2	WEAR RING 20X22X10 MM	
270	90091-0237	1		3	ROD SEAL, GLIDORING 20X27,5X3 MM	
280	90091-0336	1		1	PISTON SEAL, GLIDORING 79X90X4 MM	
290	315204-0215	3		1	O-RING 19,2X3 MM	
300	315202-0308	3		1	O-RING 84,5X3 MM	
310	315754-0113	3		2	LOCKING WAE 15	
320	312125-0323	7		1	SCREW ISO 1207 M5X8 A4	
330	315233-0101	7		1	WASHER CAPTIVE SEALING M5	
340	312115-0291	7		4	SCREW ISO4762 M4X12 A4	
350	315402-0136	7		4	LOCK WASHER FBB 4,1	

Pos	Part No	SP	UN	Qty	Description	Page No

CLAMP RING

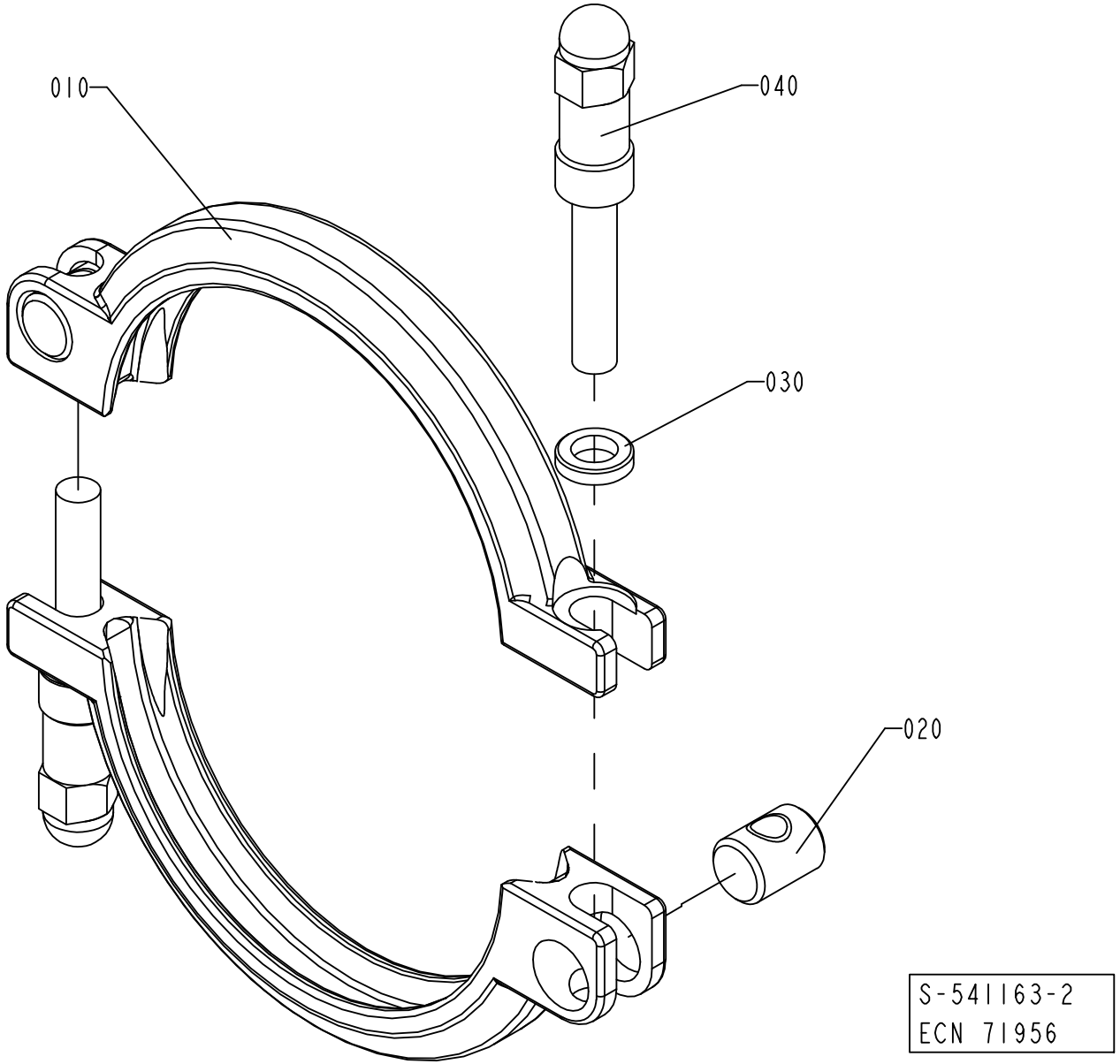

ECM: 156361 - 20040128
Group number: 541163-0200
Assembly Drawing: 541163-2_1_AB

Pos	Part No	SP	UN	Qty	Description	Page No
-						
010	532117-0000	6		2	CLAMP RING	
020	497748-0000	6		2	PIN	
030	541165-0000	6		2	WASHER	
040	554162-0000	6		2	SCREW	

Pos	Part No	SP	UN	Qty	Description	Page No

CLAMP RING

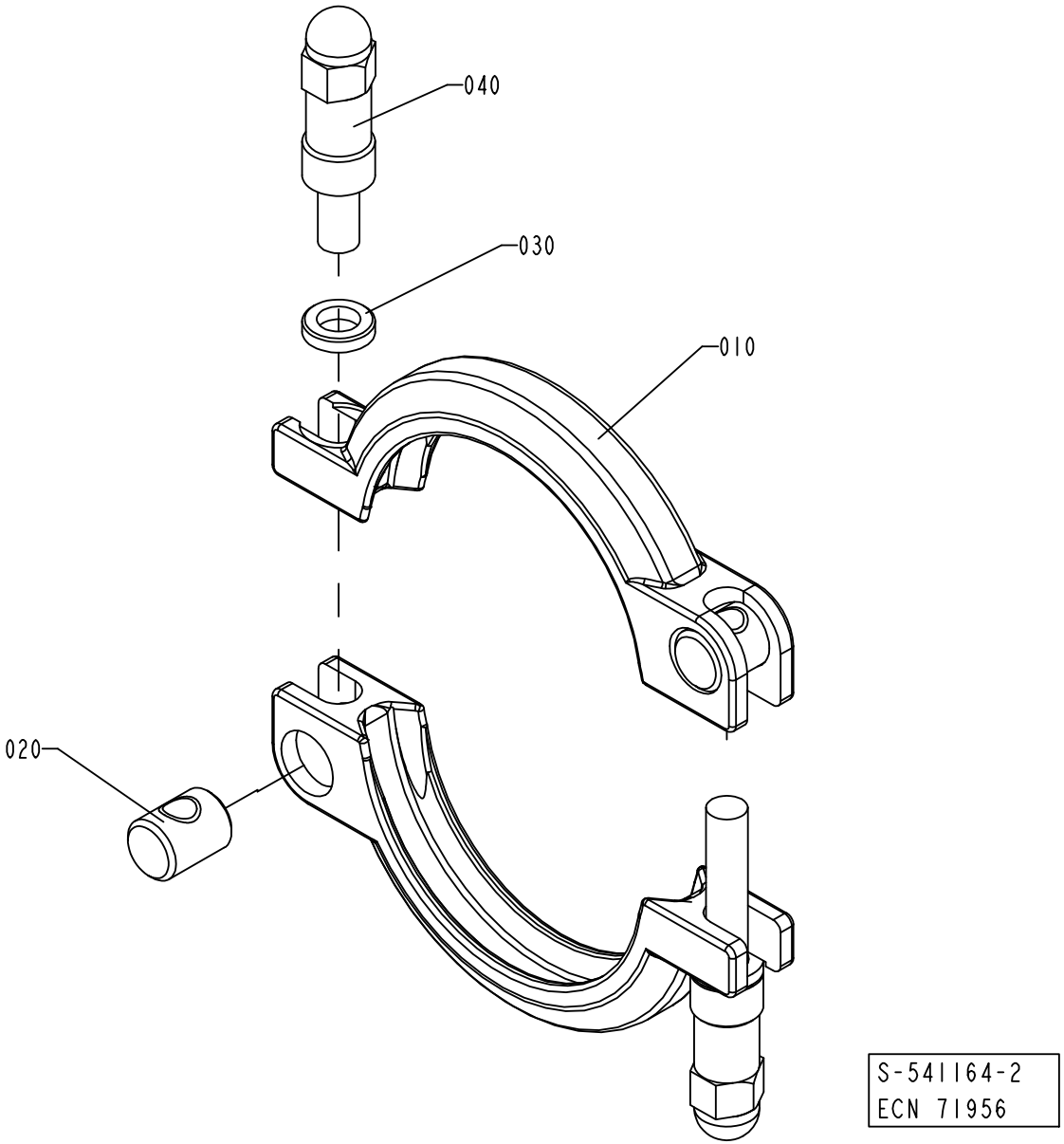

ECM: 156406 - 20040128
Group number: 541164-0200
Assembly Drawing: 541164-2_1_AB

Pos	Part No	SP	UN	Qty	Description	Page No
-						
010	532118-0000	6		2	CLAMP RING	
020	497748-0000	6		2	PIN	
030	541165-0000	6		2	WASHER	
040	554162-0000	6		2	SCREW	

Pos	Part No	SP	UN	Qty	Description	Page No

FLOW REGULATOR

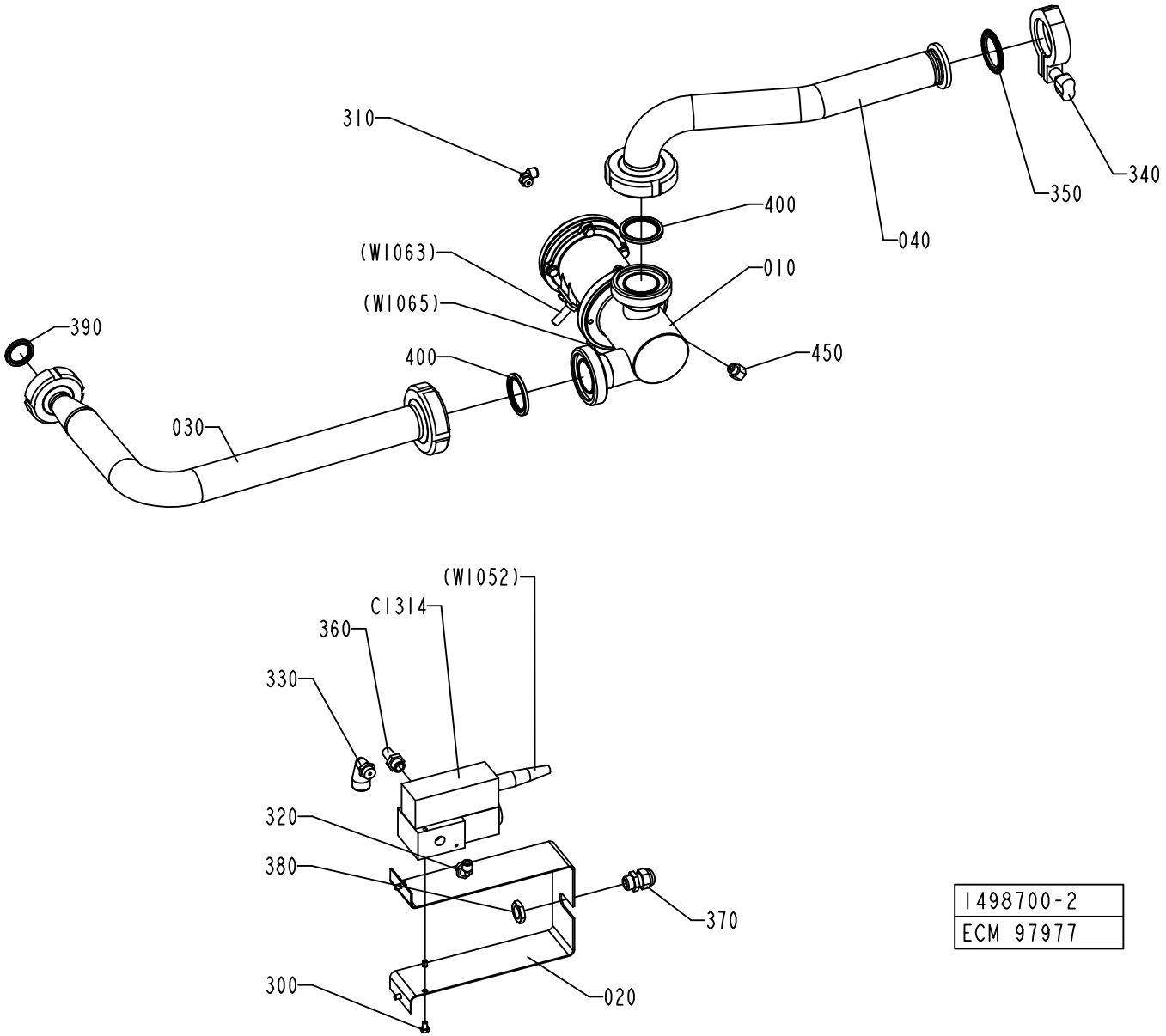

1498700-2
ECM 97977

ECM: 135183 - 20030922
Group number: 1498700-0200
Assembly Drawing: 1498700-2_1_AA

This list covers pages from 1-120 to 1-123

Pos	Part No	SP	UN	Qty	Description	Page No
HI (See drawing on page: 1-122)						
030	2512806-0000	-		1	PIPE	
NOHI (See drawing on page: 1-120)						
030	1498699-0000	-		1	PIPE	
Common Parts						
010	1498669-0100	-		1	REGULATING VALVE	**1-125**
020	2519472-0000	-		1	BRACKET	
040	1498698-0000	-		1	PIPE	
300	312105-0323	-		4	SCREW M6S ISO 4017 M5X8 A480	
310	90458-2956	-		1	ELBOW PIPE JOINT, EXT.THREAD, D=6MM-G1/8	
320	90458-2957	-		1	ELBOW PIPE JOINT, EXT.THREAD, D=6MM-G1/4	
330	90458-2959	-		1	ELBOW PIPE JOINT, EXT.THREAD,D=12MM-G1/4	
340	342840-0103	-		1	CLAMPING PIECE	
350	342850-0304	A		1	GASKET 35,4X49,1X5,2 1"1/2 FDA	
360	346800-0110	-		1	SILENCER FILTER R1/4"	
370	352103-0101	-		1	CABLE GLAND, ST 9, PR15,2/PG9	
380	90099-0104	-		1	NUT, PR 15,2 (PG9)	
390	90217-0347	A		1	GASKET 32X22,6X3,6 MM	
400	90217-0348	A		2	GASKET 35,4X46,8X4 MM	
450	90030-0212	-		1	NIPPLES, REDUSING, INT. THR. NO. 2521	
C1314	90274-0099	A		1	IP-TRANSDUCER	

Pos	Part No	SP	UN	Qty	Description	Page No

FLOW REGULATOR

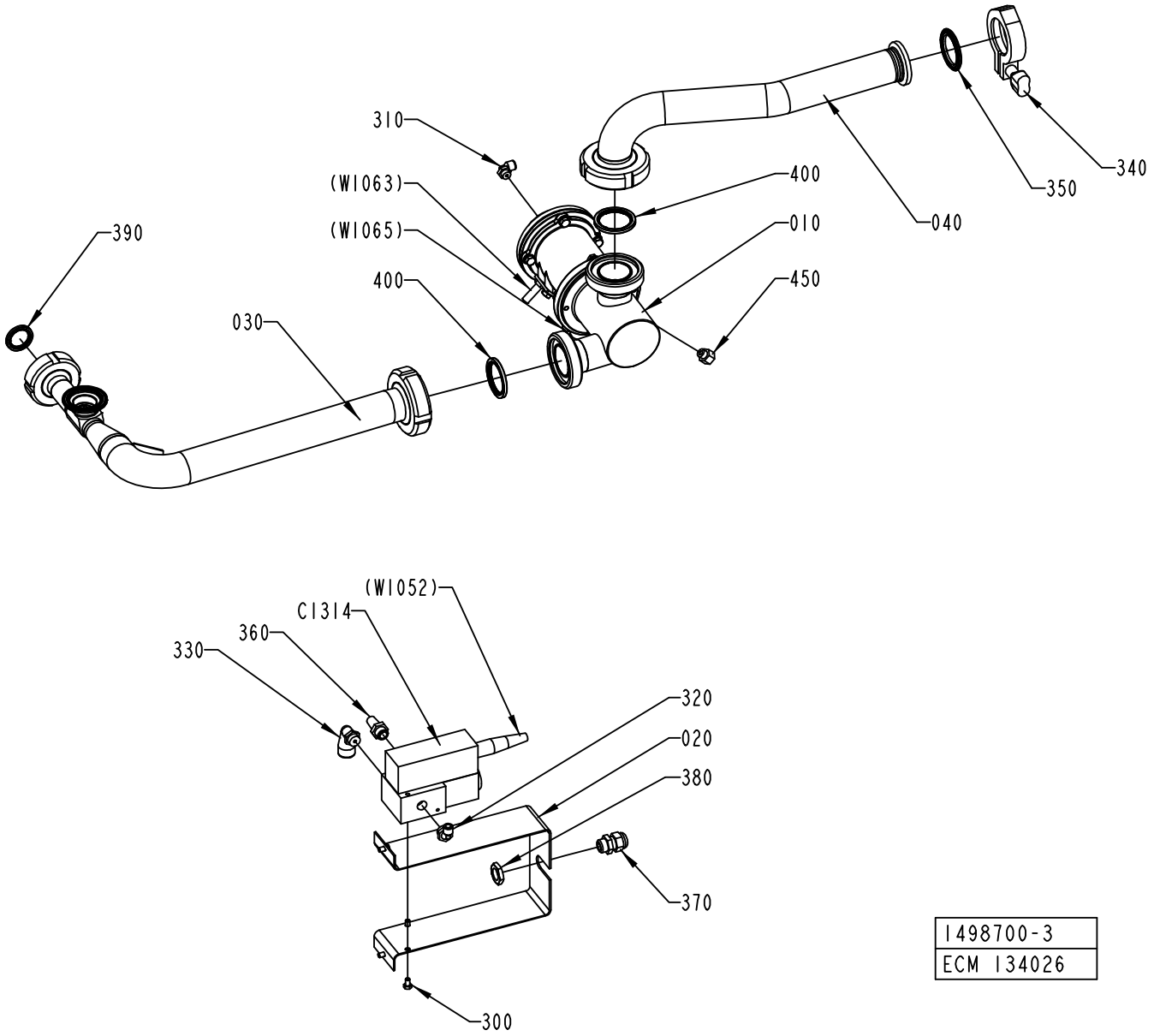

1498700-3
ECM 134026

ECM: 135183 - 20030922
Group number: 1498700-0200
Assembly Drawing: 1498700-3_1_AA

This list covers pages from 1-120 to 1-123

Pos	Part No	SP	UN	Qty	Description	Page No
HI (See drawing on page: 1-122)						
030	2512806-0000	-		1	PIPE	
NOHI (See drawing on page: 1-120)						
030	1498699-0000	-		1	PIPE	
Common Parts						
010	1498669-0100	-		1	REGULATING VALVE	**1-125**
020	2519472-0000	-		1	BRACKET	
040	1498698-0000	-		1	PIPE	
300	312105-0323	-		4	SCREW M6S ISO 4017 M5X8 A480	
310	90458-2956	-		1	ELBOW PIPE JOINT, EXT.THREAD, D=6MM-G1/8	
320	90458-2957	-		1	ELBOW PIPE JOINT, EXT.THREAD, D=6MM-G1/4	
330	90458-2959	-		1	ELBOW PIPE JOINT, EXT.THREAD,D=12MM-G1/4	
340	342840-0103	-		1	CLAMPING PIECE	
350	342850-0304	A		1	GASKET 35,4X49,1X5,2 1"1/2 FDA	
360	346800-0110	-		1	SILENCER FILTER R1/4"	
370	352103-0101	-		1	CABLE GLAND, ST 9, PR15,2/PG9	
380	90099-0104	-		1	NUT, PR 15,2 (PG9)	
390	90217-0347	A		1	GASKET 32X22,6X3,6 MM	
400	90217-0348	A		2	GASKET 35,4X46,8X4 MM	
450	90030-0212	-		1	NIPPLES, REDUSING, INT. THR. NO. 2521	
C1314	90274-0099	A		1	IP-TRANSDUCER	

Pos	Part No	SP	UN	Qty	Description	Page No

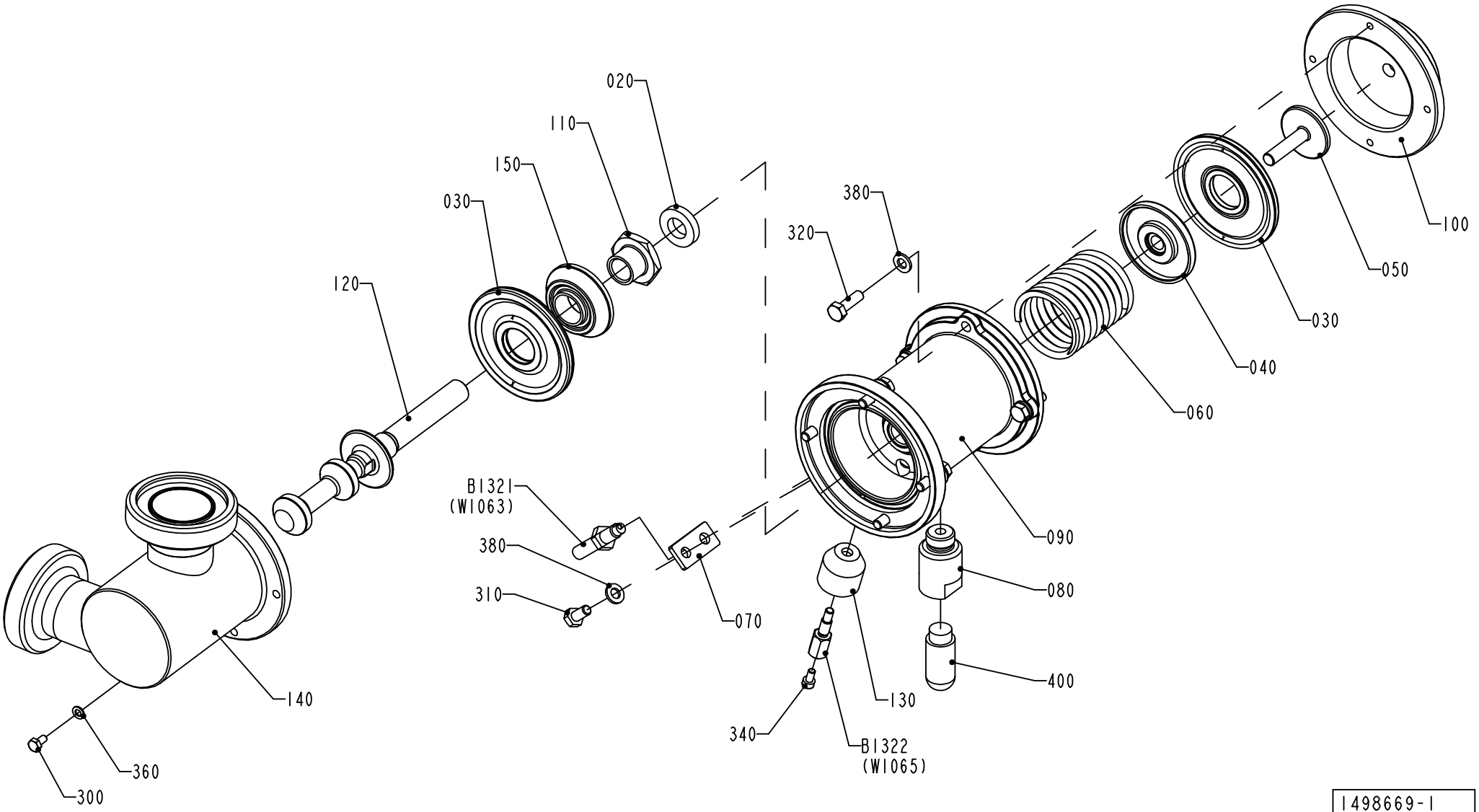

1498669-1
ECM 97977

ECM: 113498 - 20020911
Group number: 1498669-0100
Assembly Drawing: 1498669-1_1_AB

Pos	Part No	SP	UN	Qty	Description	Page No
-						
020	736514-0000	A		1	SHOCK ABSORBER	
030	925998-0000	A		2	DIAPHRAGM	
040	926906-0000	-		1	SPACER	
050	926907-0000	-		1	SCREW	
060	926909-0000	A		1	COMPRESSION SPRING	
070	926934-0000	-		1	SUPPORT	
080	927044-0000	-		1	SPACER	
090	927194-0000	-		1	BODY	
100	927203-0000	-		1	COVER	
110	979434-0000	A		1	FERRULE	
120	1129321-0000	A		1	SHUTTER	
130	1478813-0000	-		1	SPACER	
140	1498526-0000	-		1	REGULATOR BODY	
150	1511600-0000	-		1	SPACER	
300	312105-0287	-		1	SCREW M6S ISO4017 M4X8 A480	
310	312105-0366	-		1	SCREW M6S M6X12 A280	
320	312105-0370	-		8	SCREW M6S ISO 4017 M6X20 A480	
340	312115-0287	-		1	SCREW ISO4762 M4X8 A4	
360	315105-0136	-		1	WASHER BRB4,3XRFR	
380	315105-0153	-		9	WASHER BRB6,4X12RFR	
400	90328-0026	B		1	SILENCER G1/4	
B1321	90044-0145	A		1	PROX.SW. 922 AAIY-A9P-050-LZ876	
B1322	1478814-0000	A		1	SENSOR	

Pos	Part No	SP	UN	Qty	Description	Page No

CLEANING PIPE

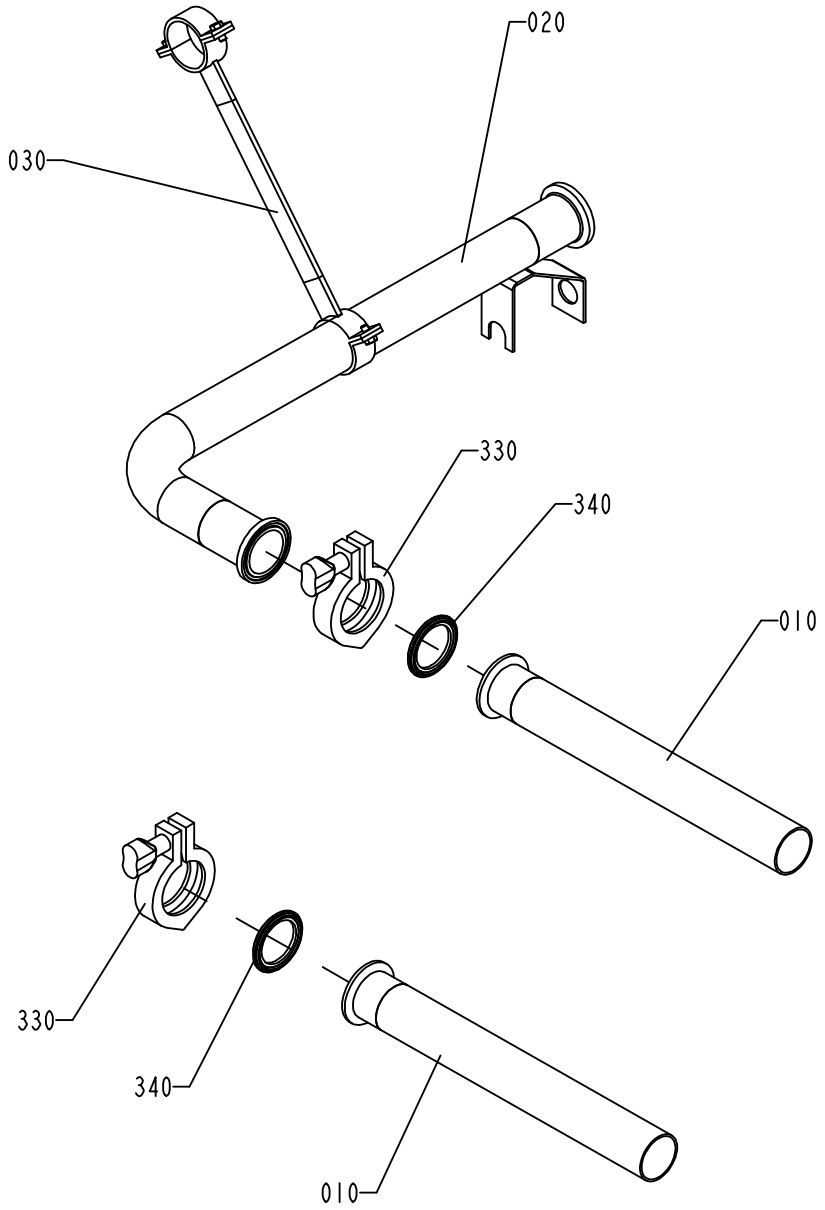

1255984-3
ECM 102299

ECM: 113455 - 20020911
Group number: 1255984-0300
Assembly Drawing: 1255984-3_1_AB

Pos	Part No	SP	UN	Qty	Description	Page No
-						
010	2551115-0000	-		2	PIPE	
020	1038964-0000	-		1	INTERMEDIATE PART	
030	1038965-0000	-		1	HOLDER	
330	342840-0103	-		2	CLAMPING PIECE	
340	342850-0304	B		2	GASKET 35,4X49,1X5,2 1"1/2 FDA	

Pos	Part No	SP	UN	Qty	Description	Page No

FASTENING PLATE

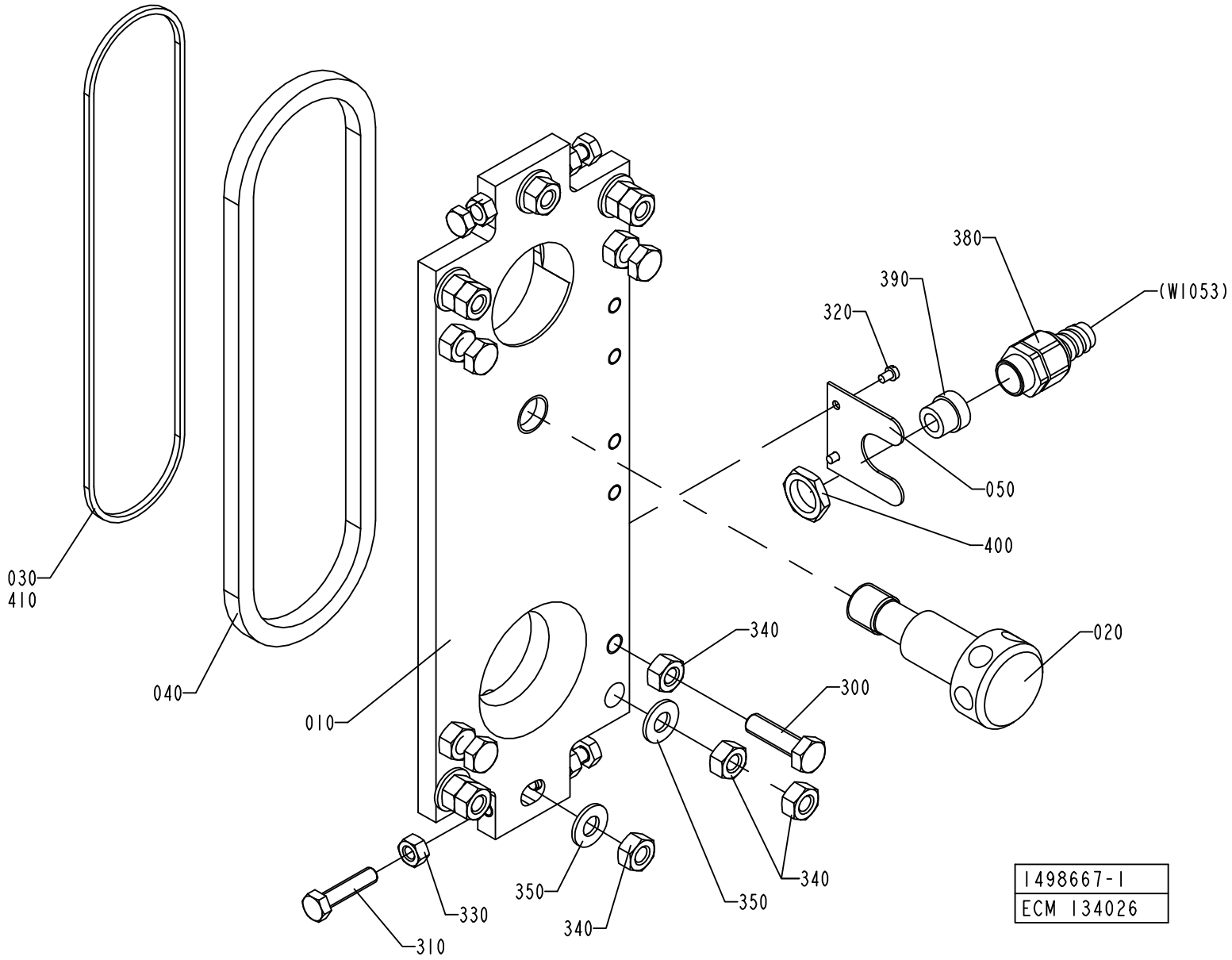

ECM: 138223 - 20030922
Group number: 1498667-0100
Assembly Drawing: 1498667-1_1_AB

This list covers pages from 1-128 to 1-131

Pos	Part No	SP	UN	Qty	Description	Page No
FLOATER (See drawing on page: 1-130)						
010	1548861-0000	-		1	MOUNTING PLATE	
LEVELPROBE (See drawing on page: 1-128)						
010	1498527-0000	-		1	MOUNTING PLATE	
050	1036782-0000	-		1	HOLDER	
320	312125-0285	-		2	SCREW ISO 1207 M4X6 A4	
380	353243-0002	-		1	EXTENDED WITHOUT INSERT, PG11	
390	353249-0009	-		1	INSERT, SINGEL HOLE, EK 152/9	
400	90099-0117	-		1	NUT, PR 18,6 (PG11)	
Common Parts						
020	1484285-0000	-		1	SCREW	
030	1036777-0000	B		1	GASKET	
040	1036778-0000	B		1	GASKET	
300	312105-0497	-		4	SCREW M6S ISO 4017 M10X35 A480	
310	312109-0457	-		4	SCREW M6S ISO 4017 M8X35 A480	
330	312605-0318	-		4	HEXAGON NUT, M6M M8 A280	
340	312605-0320	-		14	HEXAGON NUT, M6M M10 A280	
350	315105-0173	-		6	WASHER BRB10,5X22RFR	
410	90153-0016	-	L	1	ADHESIVE,TUBE 100G RHODORSIL CAF 3	

Pos	Part No	SP	UN	Qty	Description	Page No

FASTENING PLATE

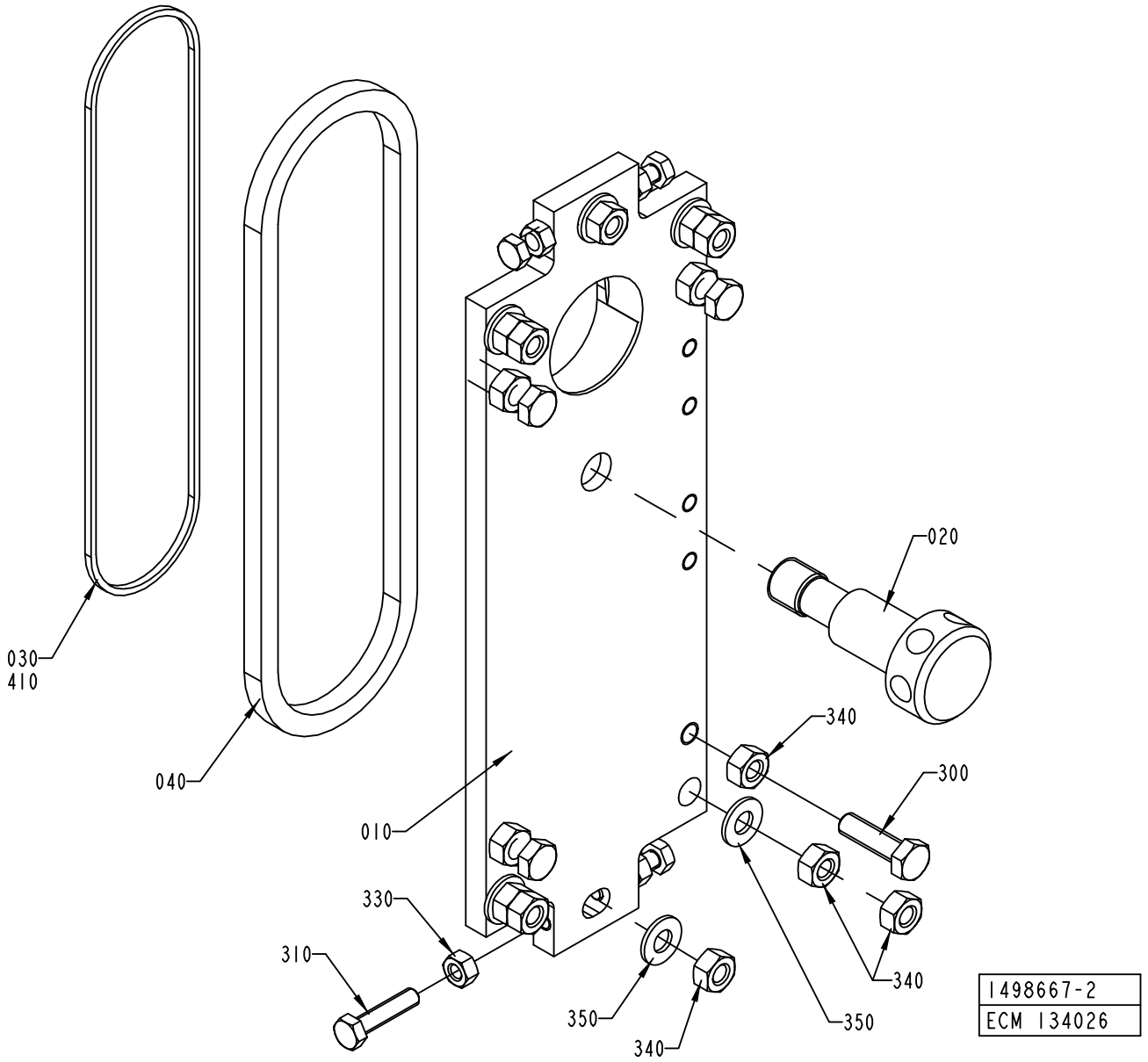

ECM: 138223 - 20030922
Group number: 1498667-0100
Assembly Drawing: 1498667-2_1_AB

This list covers pages from 1-128 to 1-131

Pos	Part No	SP	UN	Qty	Description	Page No
FLOATER (See drawing on page: 1-130)						
010	1548861-0000	-		1	MOUNTING PLATE	
LEVELPROBE (See drawing on page: 1-128)						
010	1498527-0000	-		1	MOUNTING PLATE	
050	1036782-0000	-		1	HOLDER	
320	312125-0285	-		2	SCREW ISO 1207 M4X6 A4	
380	353243-0002	-		1	EXTENDED WITHOUT INSERT, PG11	
390	353249-0009	-		1	INSERT, SINGEL HOLE, EK 152/9	
400	90099-0117	-		1	NUT, PR 18,6 (PG11)	
Common Parts						
020	1484285-0000	-		1	SCREW	
030	1036777-0000	B		1	GASKET	
040	1036778-0000	B		1	GASKET	
300	312105-0497	-		4	SCREW M6S ISO 4017 M10X35 A480	
310	312109-0457	-		4	SCREW M6S ISO 4017 M8X35 A480	
330	312605-0318	-		4	HEXAGON NUT, M6M M8 A280	
340	312605-0320	-		14	HEXAGON NUT, M6M M10 A280	
350	315105-0173	-		6	WASHER BRB10,5X22RFR	
410	90153-0016	-	L	1	ADHESIVE,TUBE 100G RHODORSIL CAF 3	

Pos	Part No	SP	UN	Qty	Description	Page No

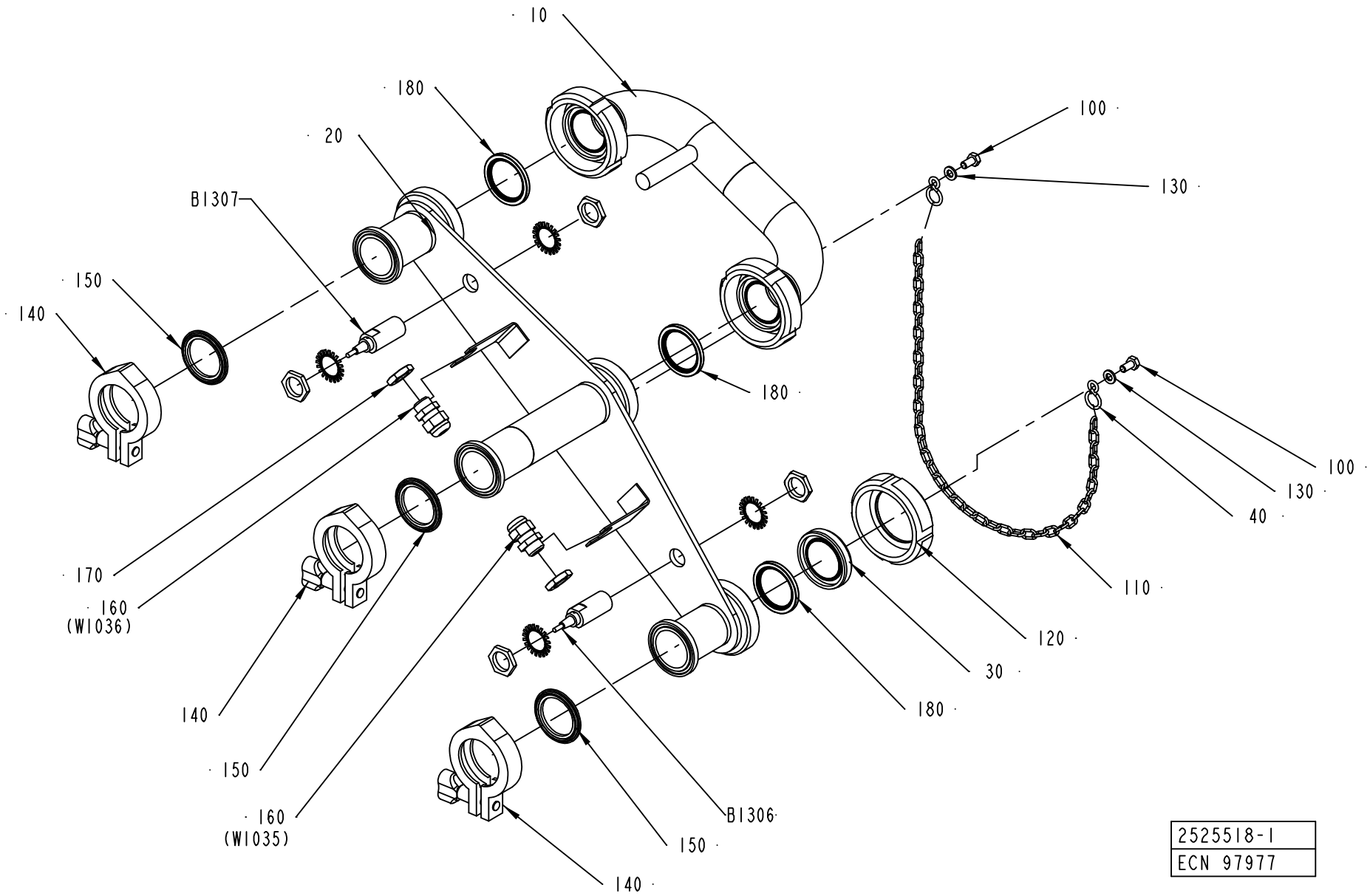

2525518-1
ECN 97977

ECM: 113454 - 20020911
Group number: 2525518-0100
Assembly Drawing: 2525518-1_1_AA

Pos	Part No	SP	UN	Qty	Description	Page No
-						
010	2524349-0000	-		1	CONNECTING PIPE	
020	2524351-0000	-		1	PIPE SUPPORT	
030	2525338-0000	-		1	PLUG	
040	209183-0000	-		2	RING	
100	312105-0366	-		2	SCREW M6S M6X12 A280	
110	90155-0008	-	MM	500	HANGER CHAIN, 18	
120	90217-0206	-		1	UNION NUT, 1 1/2 APV, 07-01-376/17	
130	315105-0153	-		2	WASHER BRB6,4X12RFR	
140	342840-0103	-		3	CLAMPING PIECE	
150	342850-0304	-		3	GASKET 35,4X49,1X5,2 1"1/2 FDA	
160	352103-0101	-		2	CABLE GLAND, ST 9, PR15,2/PG9	
170	90099-0104	-		2	NUT, PR 15,2 (PG9)	
180	90217-0348	B		3	GASKET 35,4X46,8X4 MM	
B1306	90458-0676	A		1	PROXIMITY SWITCH,E2EG-X5B1-6M	
B1307	90458-0676	A		1	PROXIMITY SWITCH,E2EG-X5B1-6M	

Pos	Part No	SP	UN	Qty	Description	Page No

INTERMEDIATE PART

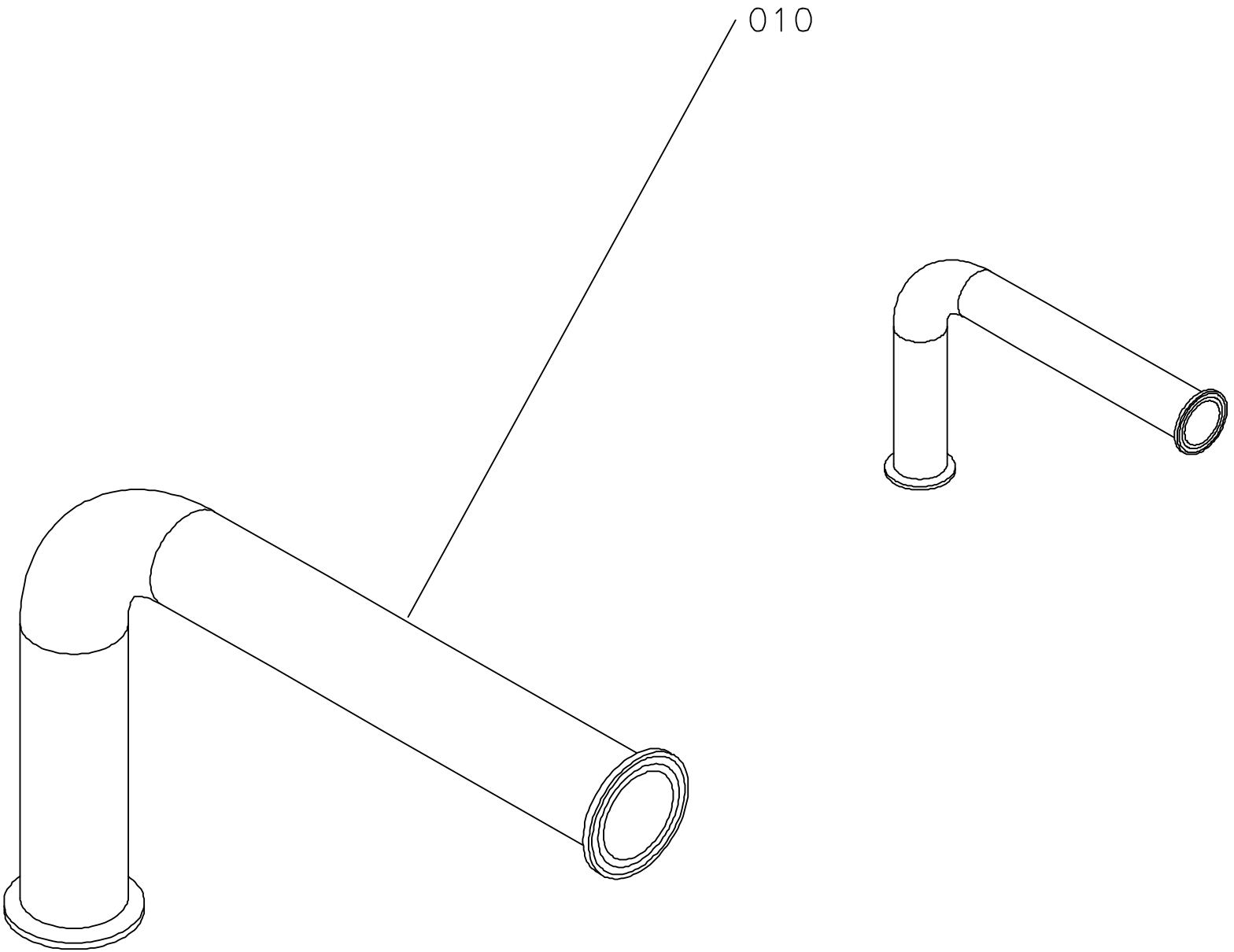

ECM: 81845 - 20010116
Group number: 1035259-0200
Assembly Drawing: 1035259-1_1_AA

This list covers pages from 1-134 to 1-137

Pos	Part No	SP	UN	Qty	Description	Page No
CIPSUPERV (See drawing on page: 1-136)						
020	1037461-0000	-		1	CONDUCTIVITY PIPE	
300	342840-0103	-		2	CLAMPING PIECE	
310	342850-0304	-		2	GASKET 35,4X49,1X5,2 1"1/2 FDA	
600	353243-0003	-		1	EXTENDED WITHOUT INSERT, PG11	
605	353249-0011	-		1	INSERT, SINGEL HOLE, EK 153/11	
610	353244-0002	-		2	EXTENDED WITHOUT INSERT, HIGH TEMP, PG13	
620	90099-0117	-		1	NUT, PR 18,6 (PG11)	
650	353249-0018	-		2	INSERT, SINGEL HOLE, HI.TEMP, EK152I9	
B1315	90243-0321	-		1	CONDUCTIVITY SENSOR, TP5EL. 00343-10803	
	90242-0198	*-*		*1*	*O-RING*	
B1316	90243-0430	-		1	FLOW METER, MAG 1100 FOOD PFA	
	90458-1617	*-*		*1*	*GASKET, DN40 FOR MAG 1100 FOOD*	
NOCIPSUPERV (See drawing on page: 1-134)						
010	1038334-0000	-		1	PIPE	

Pos	Part No	SP	UN	Qty	Description	Page No

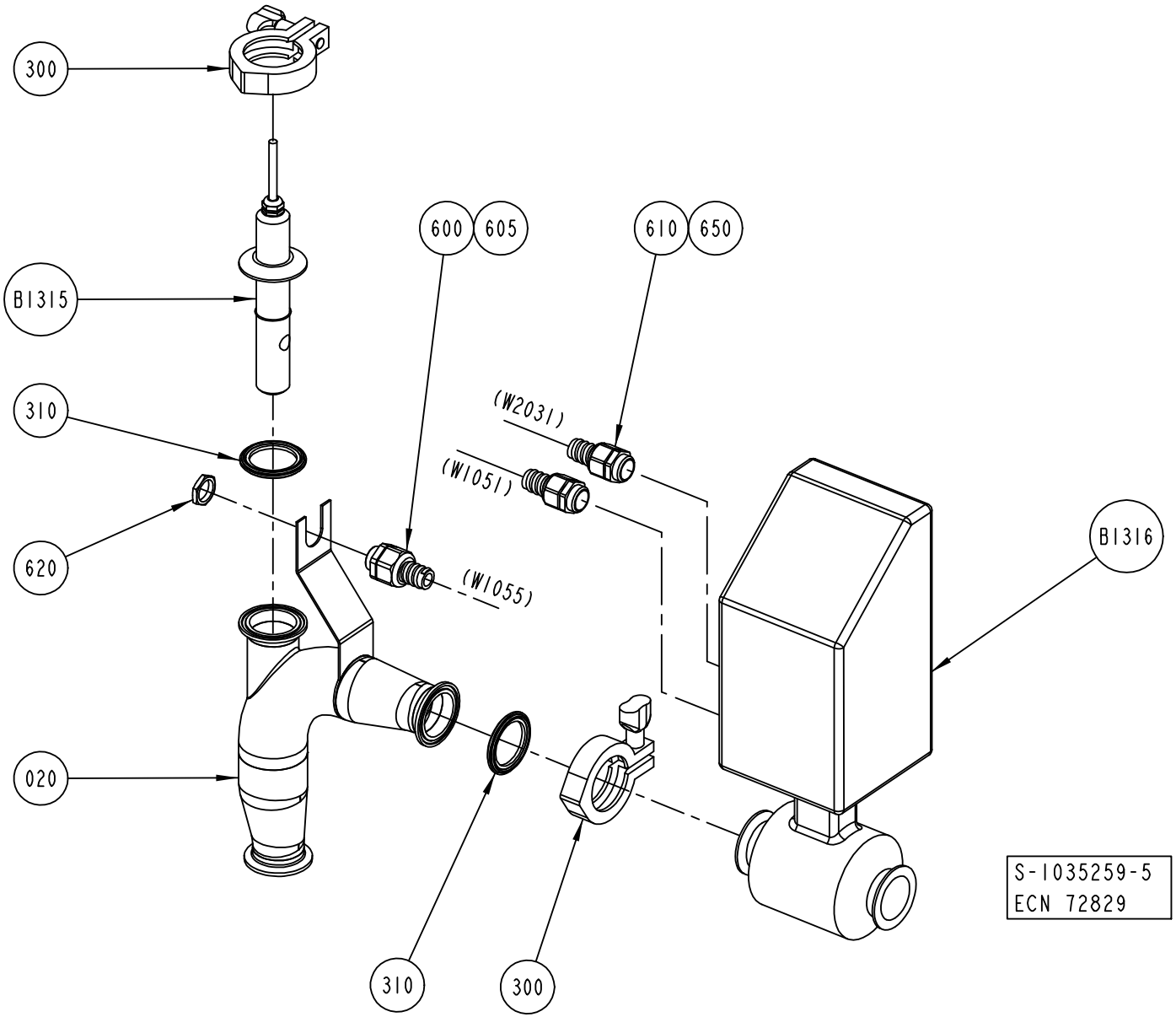
300
B1315
310
620
020
600
605
610
650
(W2031)
(W1051)
(W1055)
B1316
310
300
S-1035259-5
ECN 72829

ECM: 81845 - 20010116
Group number: 1035259-0200
Assembly Drawing: 1035259-5_1_AA

This list covers pages from 1-134 to 1-137

Pos	Part No	SP	UN	Qty	Description	Page No
CIPSUPERV (See drawing on page: 1-136)						
020	1037461-0000	-		1	CONDUCTIVITY PIPE	
300	342840-0103	-		2	CLAMPING PIECE	
310	342850-0304	-		2	GASKET 35,4X49,1X5,2 1"1/2 FDA	
600	353243-0003	-		1	EXTENDED WITHOUT INSERT, PG11	
605	353249-0011	-		1	INSERT, SINGEL HOLE, EK 153/11	
610	353244-0002	-		2	EXTENDED WITHOUT INSERT, HIGH TEMP, PG13	
620	90099-0117	-		1	NUT, PR 18,6 (PG11)	
650	353249-0018	-		2	INSERT, SINGEL HOLE, HI.TEMP, EK152I9	
B1315	90243-0321	-		1	CONDUCTIVITY SENSOR, TP5EL. 00343-10803	
	90242-0198	*-*		*1*	*O-RING*	
B1316	90243-0430	-		1	FLOW METER, MAG 1100 FOOD PFA	
	90458-1617	*-*		*1*	*GASKET, DN40 FOR MAG 1100 FOOD*	
NOCIPSUPERV (See drawing on page: 1-134)						
010	1038334-0000	-		1	PIPE	

Pos	Part No	SP	UN	Qty	Description	Page No

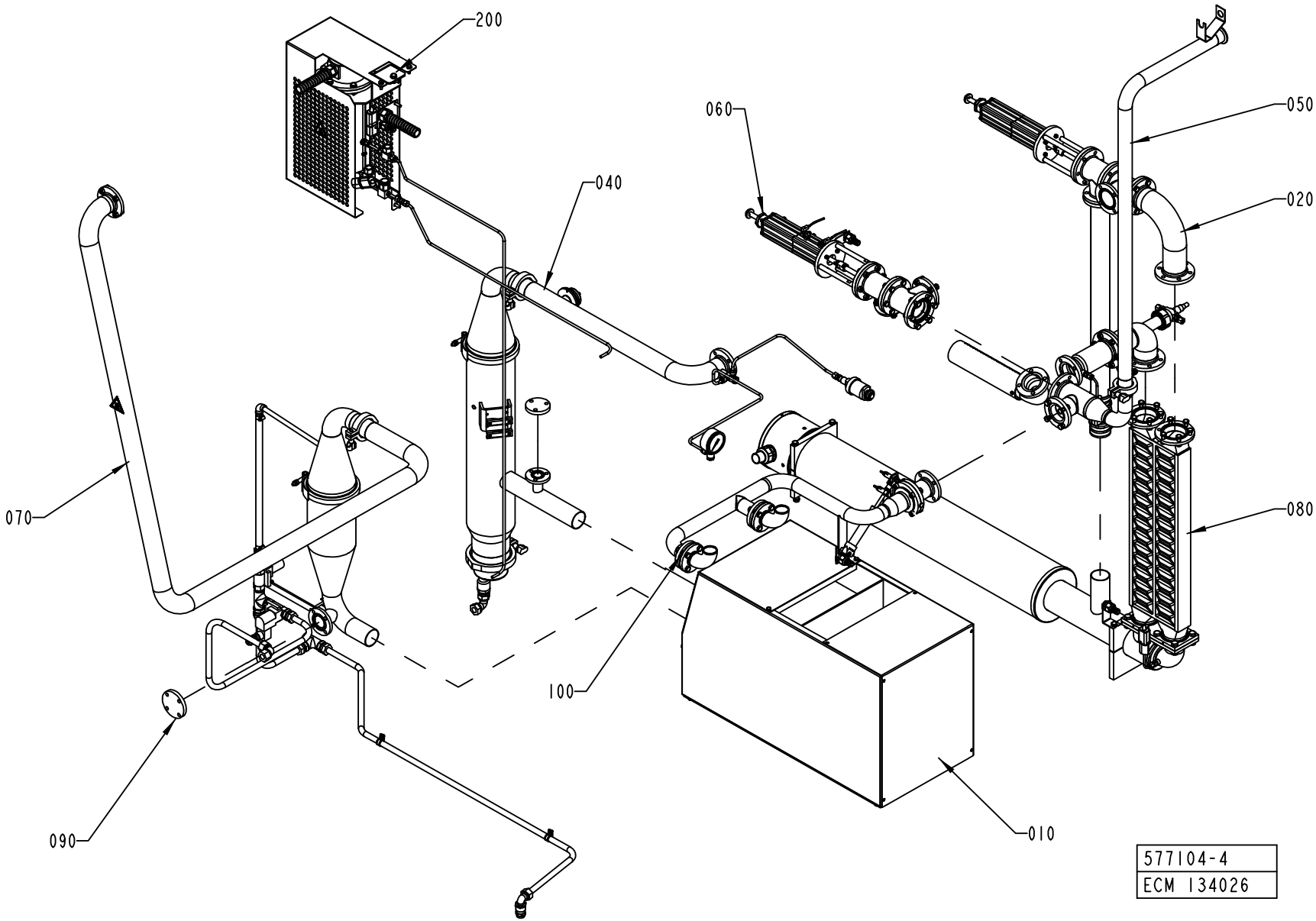
200
060
050
040
020
070
080
100
090
010
577104-4
ECM 134026

ECM: 136683 - 20030922
Group number: 577104-0300
Assembly Drawing: 577104-4_1_AB

Pos	Part No	SP	UN	Qty	Description	Page No
HI						
200	2579744-0100	-		1	HEATER	**1-141**
Common Parts						
010	996475-0200	-		1	COMPRESSOR UNIT	**1-143**
020	1347141-0100	-		1	VALVE HEAT EXCHANGER	**1-145**
040	1347142-0200	-		1	SEPARATOR	**1-147**
050	1195284-0300	-		1	PIPE-LINE	**1-149**
060	1195285-0300	-		1	PRE-HEATING VALVE	**1-151**
070	1255979-0300	-		1	SCRUBBER	**1-153**
080	1347246-0100	-		1	AIR SUPER-HEATER	**1-155**
090	1478765-0100	-		1	PRESSURE REGULATOR	**1-157, 1-159**
100	2523664-0100	-		1	BUTTERFLY VALVE	**1-161**

Pos	Part No	SP	UN	Qty	Description	Page No

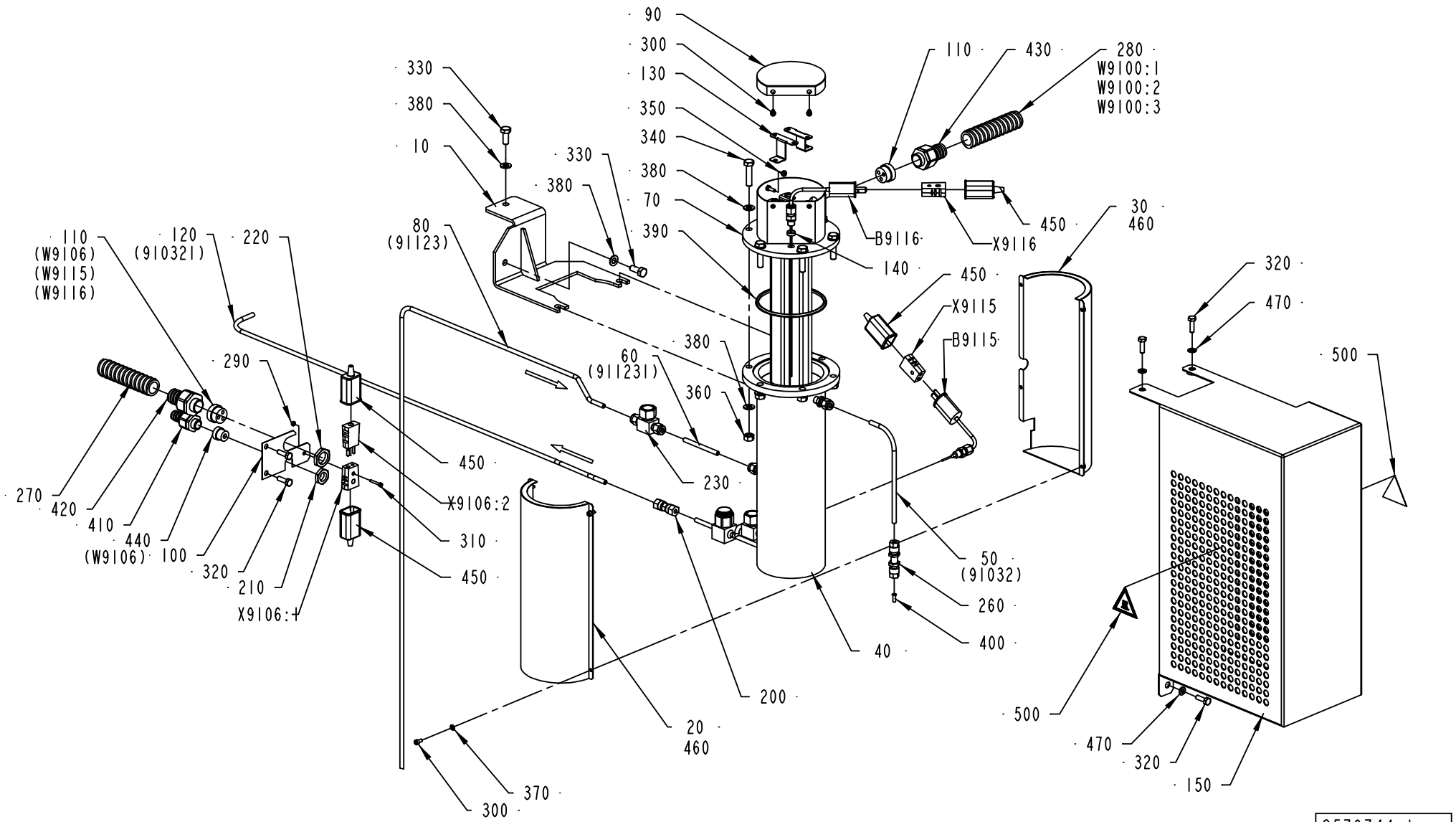

2579744-1
ECM 96648

ECM: 119961 - 20030724
Group number: 2579744-0100
Assembly Drawing: 2579744-1_1_AA

Pos	Part No	SP	UN	Qty	Description	Page No
-						
010	2558138-0000	-		1	SUPPORT	
020	2579746-0000	-		1	COVER	
030	2579747-0000	-		1	COVER	
040	2558143-0000	-		1	COIL	
	90277-0407	*A*		*1*	*FILTER ELEMENT 60µ, SS-4F-K4-60*	
050	2562306-0000	-		1	PIPE	
060	2562307-0000	-		1	PIPE	
070	2558137-0000	A		1	HEATING ELEMENT	
080	2579748-0000	-		1	PIPE	
090	2562315-0000	-		1	PLUG	
100	2579743-0000	-		1	SUPPORT	
110	2579745-0000	-		2	INSERT	
120	2579749-0000	-		1	PIPE	
130	2598084-0000	-		2	PLATE	
140	2598085-0000	-		1	SPACER	
150	2554309-0000	-		1	COVER	
200	90030-0075	-		1	PIPE CONNECTION G-6	
210	90099-0104	-		1	NUT, PR 15,2 (PG9)	
220	90099-0118	-		1	NUT, PR 20,4 (PG13,5)	
230	90230-0064	A		1	CHECK VALVE, 6 MM HIGH TEMP.	
260	90224-0349	-		1	BULKHEAD LEAD-IN	
270	90152-0051	-	M	4	SPIRAL CONDUIT, 25X18, UL 1816	
280	90152-0051	-	M	4	SPIRAL CONDUIT, 25X18, UL 1816	
290	312607-0310	-		1	HEXAGON NUT, EN 24032 M6M M3 A480	
300	312115-0287	-		6	SCREW ISO4762 M4X8 A4	
310	312115-0230	-		1	SCREW ISO4762 M3X20 A4	
320	312105-0370	-		5	SCREW M6S ISO 4017 M6X20 A480	
330	312105-0451	-		2	SCREW M6S ISO 4017 M8X20 A480	
340	312109-0457	-		6	SCREW M6S ISO 4017 M8X35 A480	
350	312607-0312	-		1	HEXAGON NUT, EN 24032 M6M M4 A480	
360	312605-0318	-		6	HEXAGON NUT, M6M M8 A280	
370	315105-0136	-		4	WASHER BRB4,3XRFR	
380	315105-0165	-		14	WASHER BRB8,4X16RFR	
390	315229-0208	A		1	GASKET 97,4X105,4X3,7 MM 4"	
400	342706-0130	-		1	ACCESSORIES, INSERT SLEEVE 6 MM	
410	353243-0001	-		1	EXTENDED WITHOUT INSERT, PG9	
420	353243-0004	-		1	EXTENDED WITHOUT INSERT, PG13,5	
430	353244-0003	-		1	EXTENDED WITHOUT INSERT, HIGH TEMP, PG13	
440	353249-0008	-		1	INSERT, SINGEL HOLE, EK 152/7	
450	90326-0012	-		4	PROTECTIVE COVER, T31A4618	
460	90411-0001	-	MM	1000	INSULATING MAT	
470	315105-0153	-		3	WASHER BRB6,4X12RFR	
500	359705-0007	-		2	WARNING SIGN ISO, HOT SURFACE	
B9115	90326-0051	A		1	THERMOCOUPLE, 12826-33	
B9116	90459-2122	A		1	THERMOCOUPLE, EN-5130060-0001	
W9100:1	90459-3165	A	M	7	CABLE ÖLFLON PTFE 1X4,72MM² BLACK	
W9100:2	90459-3165	A	M	7	CABLE ÖLFLON PTFE 1X4,72MM² BLACK	
W9100:3	90459-3154	A	M	7	CABLE ÖLFLON PTFE 1X4,72MM² YELLOW-GREEN	
X9106:1	90326-0020	-		1	PLUG, FEMALE YELLOW CR-AL	
X9106:2	90326-0022	-		1	PLUG, MALE YELLOW CR-AL	
X9115	90326-0020	-		1	PLUG, FEMALE YELLOW CR-AL	
X9116	90326-0020	-		1	PLUG, FEMALE YELLOW CR-AL	

Machine Type | Group Description | Used-In | Group Number | Page No

COMPRESSOR UNIT

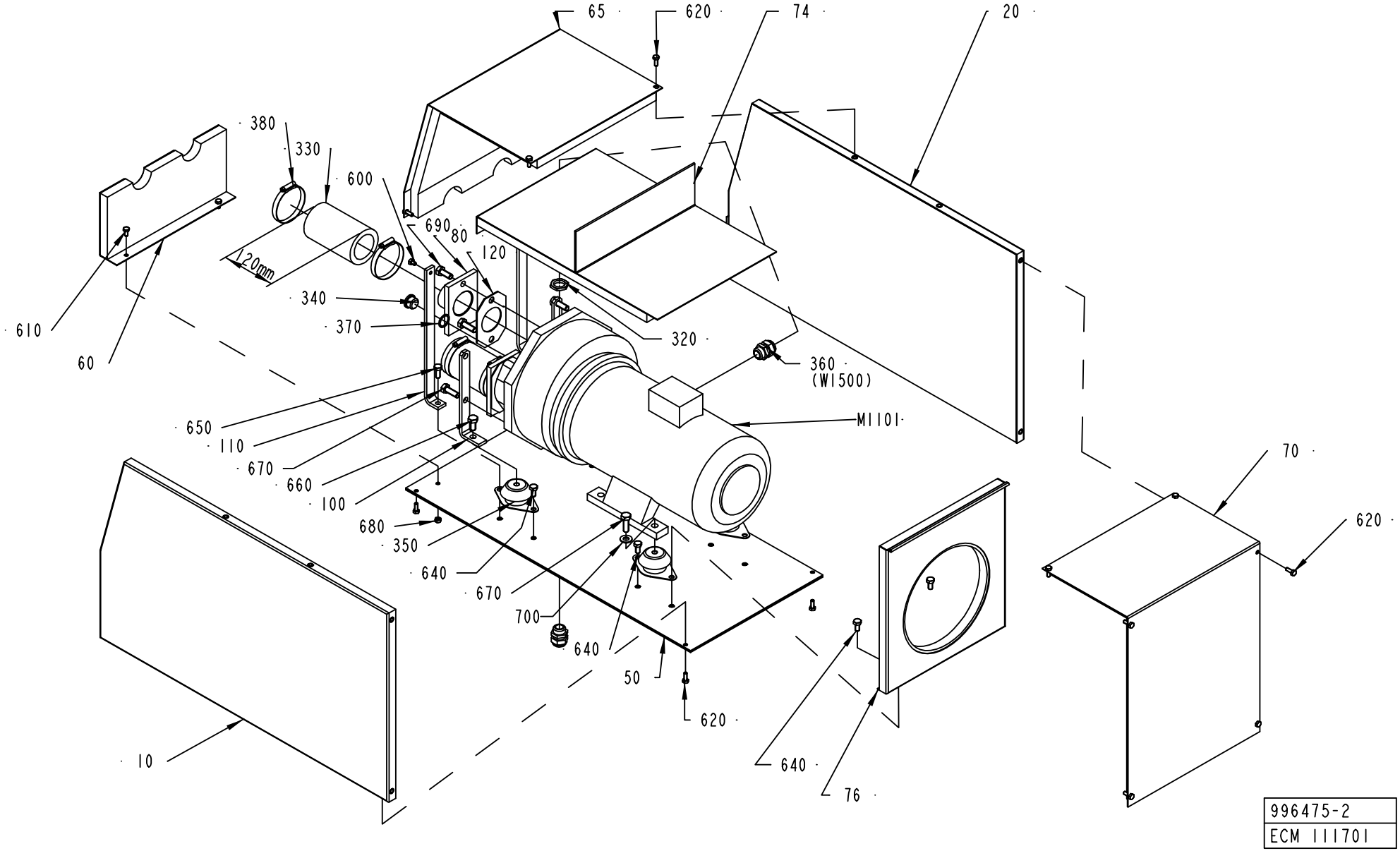

ECM: 112759 - 20021216
Group number: 996475-0200
Assembly Drawing: 996475-2_1_AD

Pos	Part No	SP	UN	Qty	Description	Page No
-						
010	1040859-0000	-		1	COVER	
020	1040874-0000	-		1	COVER	
050	1036314-0000	-		1	BOTTOM PANEL	
060	1036315-0000	-		1	FRONT PLATE	
065	1040875-0000	-		1	COVER	
070	1040876-0000	-		1	COVER	
074	1040877-0000	-		1	PLATE	
076	1040878-0000	-		1	PLATE	
080	1036318-0000	-		2	PIPE	
100	269859-0000	-		2	BRACKET	
110	1036319-0000	-		2	BRACKET	
120	230551-0000	A		2	GASKET	
320	90099-0110	-		1	NUT, PR 22,5 (PG16)	
330	90166-0199	A	MM	240	RUBBER HOSE	
340	342713-0213	-		1	PLUG, EXT THREAD HEX SOCKET 8638-00-120	
350	90347-0144	-		4	VIBRATION DAMPER, NO. RA 40EM-A	
360	352103-0111	-		2	CABLE GLAND, ST 16, PR22,5/PG16	
370	315234-0113	A		1	WASHER PL.RND.CU.21,3//26 H=1,5	
380	342991-0111	-		4	HOSE CLIP,WORM DRIVE TYPE (63)-73	
600	312105-0362	-		2	SCREW M6S ISO 4017 M6X8 A480	
610	312105-0366	-		2	SCREW M6S M6X12 A280	
620	312105-0368	-		14	SCREW M6S M6X16 A280	
640	312105-0449	-		6	SCREW M6S ISO 4017 M8X16 A480	
650	312105-0451	-		2	SCREW M6S ISO 4017 M8X20 A480	
660	312105-0491	-		2	SCREW M6S ISO 4017 M10X20 A480	
670	312105-0495	-		6	SCREW M6S ISO 4017 M10X30 A480	
680	312605-0316	-		2	HEXAGON NUT, M6M M6 A280	
690	312105-0493	-		4	SCREW M6S ISO 4017 M10X25 A480	
700	315105-0173	-		2	WASHER BRB10,5X22RFR	
M1101	90270-0017	A		1	COMPRESSOR NASH/ELMO 112 MB/4-2083	

Pos	Part No	SP	UN	Qty	Description	Page No

VALVE HEAT EXCHANGER

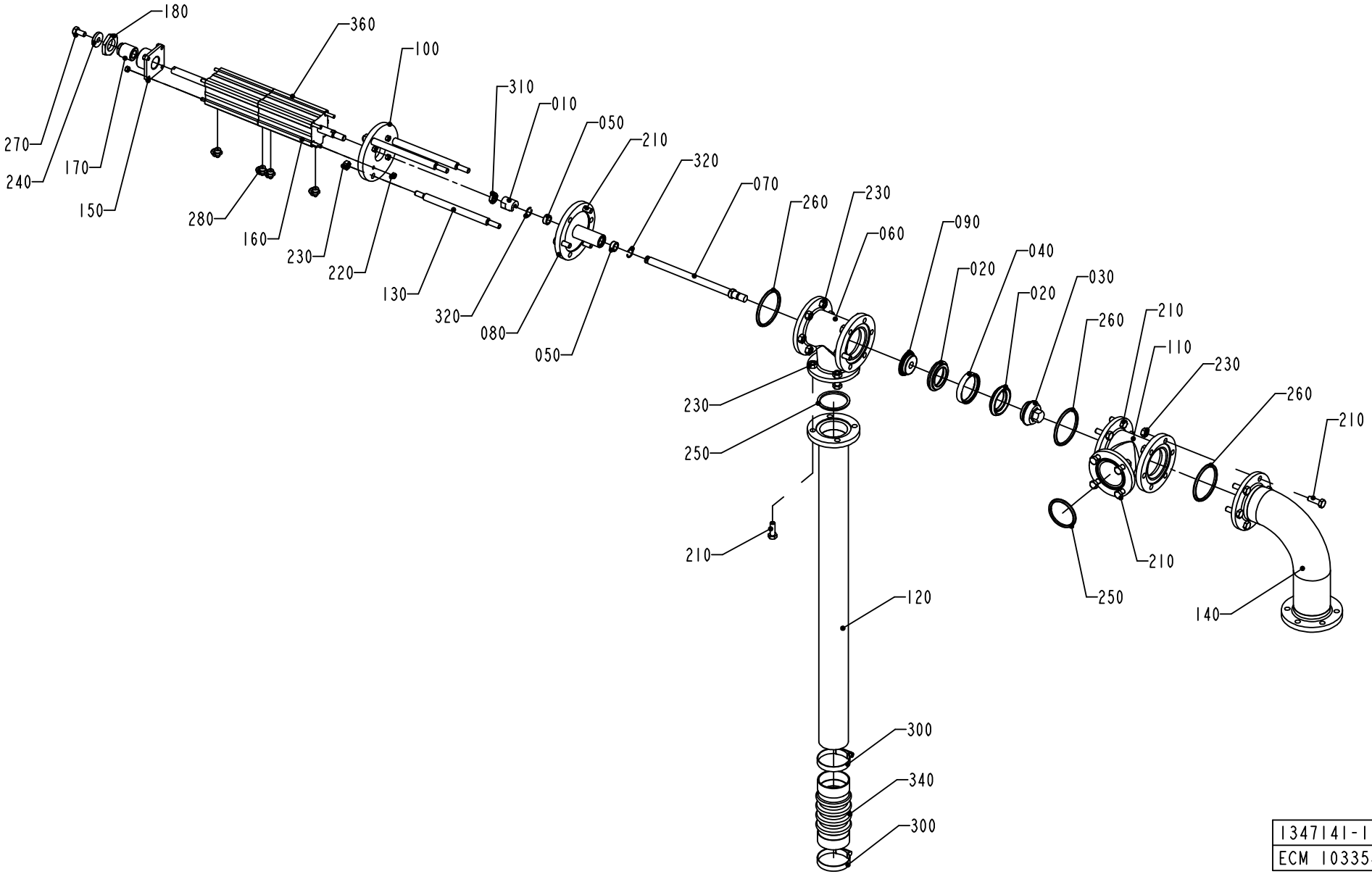

ECM: 113503 - 20020911
Group number: 1347141-0100
Assembly Drawing: 1347141-1_1_AD

Pos	Part No	SP	UN	Qty	Description	Page No
-						
010	441871-0000	B		1	PENDULUM SUSPENSION	
020	530589-0000	A		2	SEAL RING	
030	530590-0000	-		1	VALVE CONE	
040	530599-0000	-		1	RING	
050	532349-0000	A		2	PLAIN BEARING	
060	1036187-0000	-		1	T-PIPE	
070	1036188-0000	B		1	SHAFT	
080	1036189-0000	-		1	SPINDLE GUIDE	
090	1036191-0000	-		1	SEAL HOLDER	
100	1346657-0000	-		1	CYLINDER BRACKET	
110	1036194-0000	-		1	T-PIPE	
120	1036587-0000	-		1	PIPE	
130	1548760-0000	B		3	SPACER ROD	
140	1347113-0000	-		1	PIPE	
150	1346658-0000	-		1	BRACKET	
160	1346656-0000	-		4	ROD	
170	1346659-0000	B		1	SCREW	
180	1349398-0000	-		1	NUT	
210	312105-0453	-		23	SCREW M6S ISO 4017 M8X25 A480	
220	312605-0314	-		8	HEXAGON NUT, M6M M5 A280	
230	312605-0318	-		29	HEXAGON NUT, M6M M8 A280	
240	315125-0165	-		1	WASHER TBRSB 8,4X26X5 A4	
250	315229-0205	A		2	GASKET 47,5X55,5X3,7 MM 2"	
260	315229-0206	A		3	GASKET 60,2X68,2X3,7 MM 2"1/2	
270	312105-0449	-		1	SCREW M6S ISO 4017 M8X16 A480	
280	90458-2956	-		4	ELBOW PIPE JOINT, EXT.THREAD, D=6MM-G1/8	
300	342991-0109	-		2	HOSE CLIP,WORM DRIVE TYPE (48)-50	
310	90099-0051	-		1	NUT HEX. M10X1,25, FE FZB	
320	90141-0022	B		2	SNAP RING B 16	
340	90342-0022	B		1	BELLOWS	
360	1346677-0000	A		1	CYLINDER	

Pos	Part No	SP	UN	Qty	Description	Page No

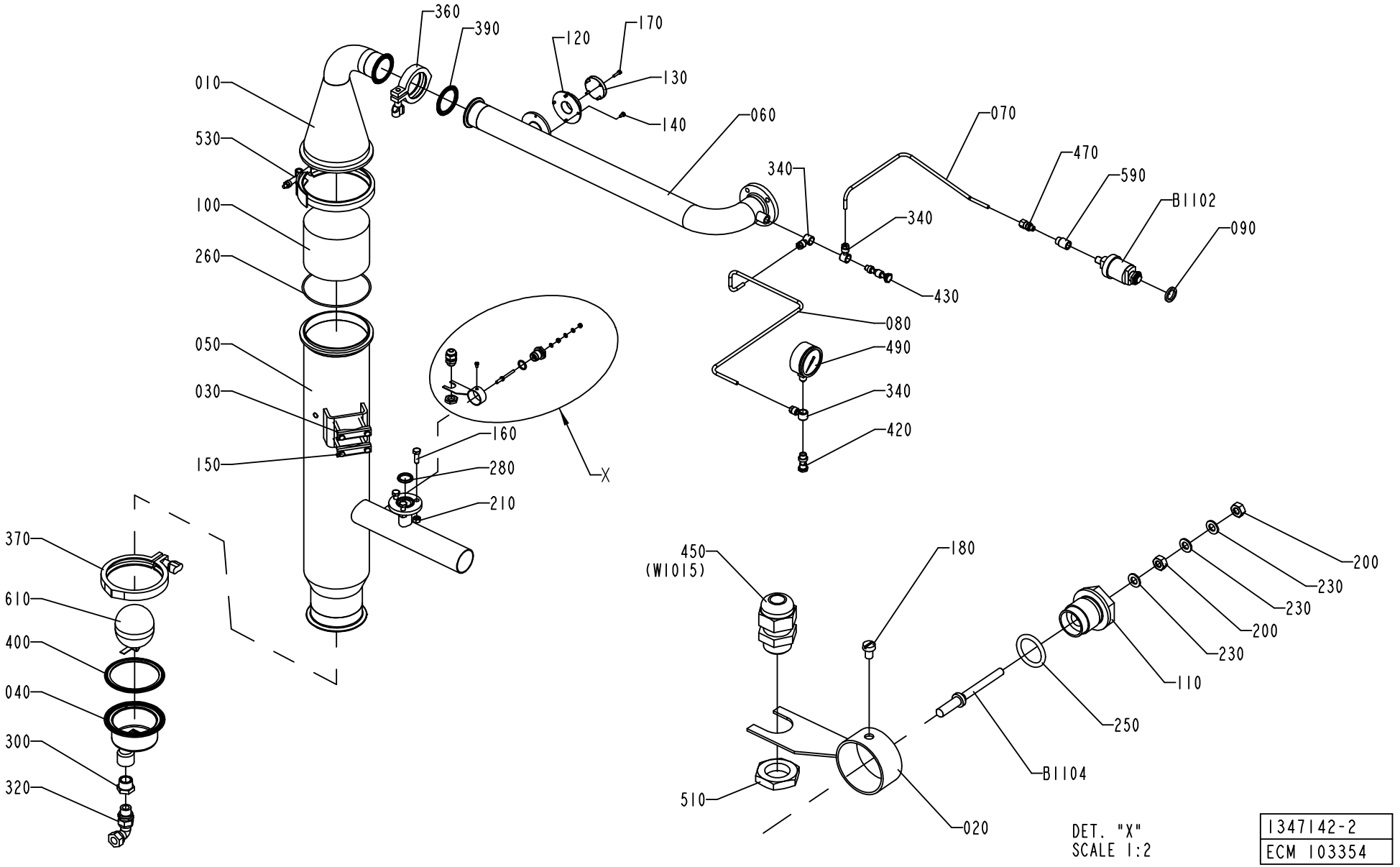

1347142-2
ECM 103354

ECM: 113500 - 20020911
Group number: 1347142-0200
Assembly Drawing: 1347142-2_1_AA

Pos	Part No	SP	UN	Qty	Description	Page No
-						
010	1036753-0000	-		1	UPPER SECTION	
020	1036810-0000	-		1	HOLDER	
030	1036811-0000	-		2	CLAMP	
040	1038634-0000	A		1	DRAINING	
050	1038866-0000	-		1	INTERMEDIARY SECTION	
060	2506828-0000	-		1	PIPE	
070	1347135-0000	-		1	PIPE	
080	1347136-0000	-		1	PIPE	
090	479234-0000	-		1	WASHER	
100	546929-0000	B		1	FILTER	
110	560931-0000	B		1	BRACKET	
120	1558771-0000	-		1	FLANGE	
130	2540801-0000	-		1	PLUG	
140	312105-0287	-		4	SCREW M6S ISO4017 M4X8 A480	
150	312105-0381	-		4	SCREW M6S ISO 4014 M6X55 A480	
160	312105-0453	-		3	SCREW M6S ISO 4017 M8X25 A480	
170	312115-0293	-		4	SCREW ISO4762 M4X16 A4	
180	312125-0285	-		1	SCREW ISO 1207 M4X6 A4	
200	312605-0312	-		2	HEXAGON NUT, M6M M4 A280	
210	312605-0318	-		3	HEXAGON NUT, M6M M8 A280	
230	315105-0136	-		3	WASHER BRB4,3XRFR	
250	315204-0213	B		1	O-RING 15,2X2,4 MM	
260	315204-0317	B		1	O-RING 129,5X3 MM	
280	315229-0203	B		1	GASKET 22,1X31,1X3,7 MM 1"	
300	342206-0109	-		1	BUSHING, TAPERED, INT/EXT. THRÿNO. R211	
320	342738-0221	-		1	ADJUSTABLE ELBOW CONNECTION,EXT 15-G1/2	
340	342797-0122	-		3	CONN. BANJO, RINGPIECE 6-1/4	
360	342840-0105	-		1	CLAMPING PIECE	
370	342840-0108	-		1	CLAMP, 101,6 MM 3-A PCS+PMCS	
390	342850-0405	A		1	GASKET 47,8X62,6X5,2 MM 2" FDA	
400	342850-0408	A		1	GASKET 97X117,7X5,2 MM 4" FDA	
420	342980-0304	-		1	BANJO-HOLLOW BOLT COUPL,EXT.THR.01-G1/4"	
430	342980-0314	-		1	BANJO-HOLLOW BOLT COUPL,EXT.THR.02-G1/4"	
450	352103-0101	-		1	CABLE GLAND, ST 9, PR15,2/PG9	
470	90030-0184	-		1	CONN. STR. GA-6-G1/8	
490	90043-0095	A		1	PRESSURE GAUGE, 2740, D=63 MM, GLYC.	
510	90099-0104	-		1	NUT, PR 15,2 (PG9)	
530	90132-0030	-		1	HOLDER MV 87177 KS 580T	
540	90144-0073	-		1	TREBOFLON-TAPE W=13MM	
590	90330-0012	-		1	SLEEVE, REDUCTION, INT, R-2021/4X1/8	
610	90360-0305	A		1	FLOAT, ART NO 10739920	
620	90157-0037	-		1	SEALING COMPOUND	
B1102	90274-0045	A		1	PRESSURE GUARD, 14 KPA	
B1104	979500-0003	A		1	ELECTRODE	

Machine Type | Group Description | Used-In | Group Number | Page No

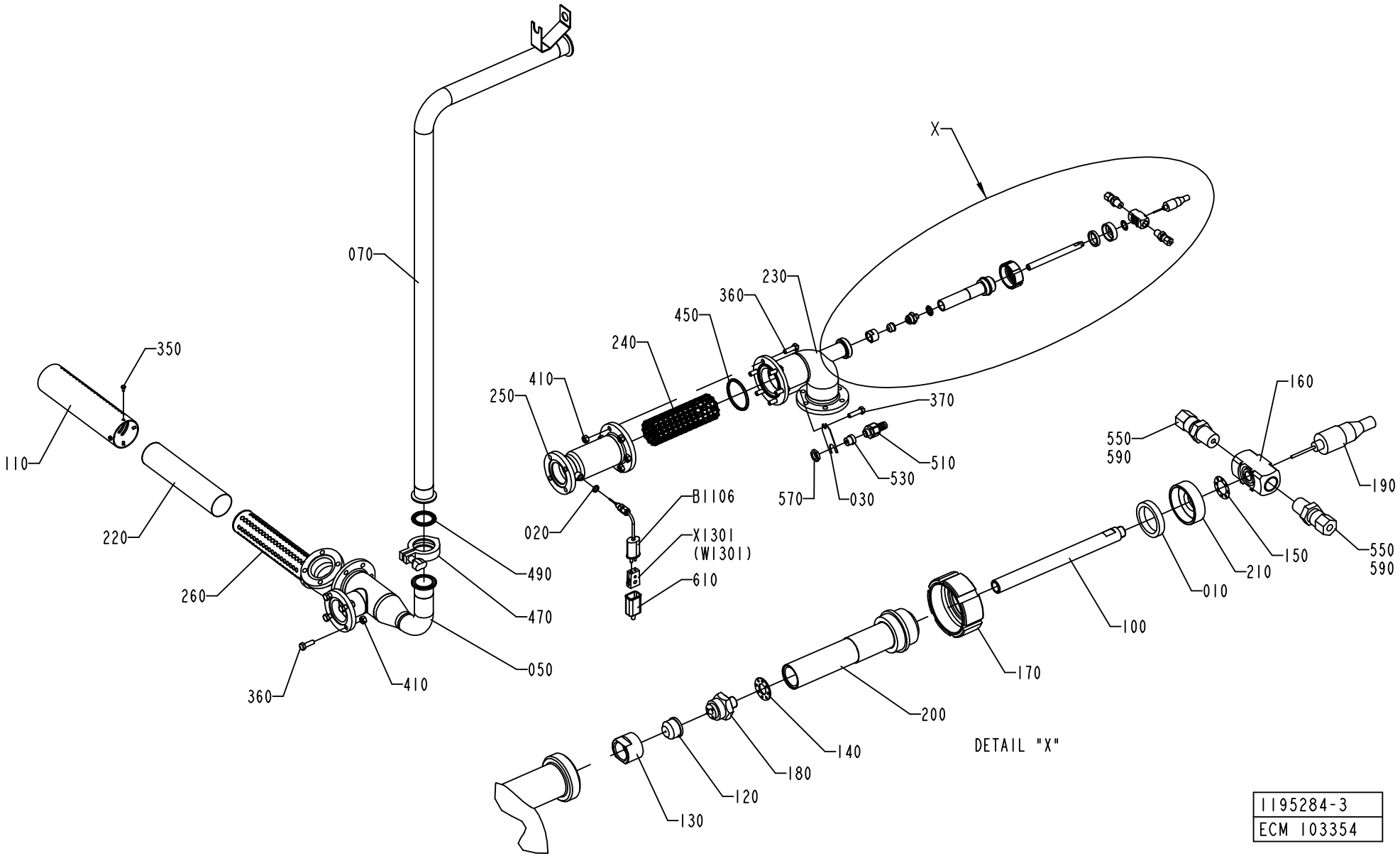
070
350
110
220
260
360
410
050
490
470
020
250
410
240
450
360
230
X
370
510
530
570
030
B1106
X1301
(W1301)
610
160
550
590
190
550
590
150
210
010
100
170
200
140
180
120
130
DETAIL "X"
1195284-3
ECM 103354

ECM: 113501 - 20020911
Group number: 1195284-0300
Assembly Drawing: 1195284-3_1_AA

Pos	Part No	SP	UN	Qty	Description	Page No
-						
010	12242-0001	A		1	GASKET 32X25X5,5	
020	273429-0000	-		1	WASHER	
030	1036293-0000	-		1	HOLDER	
050	1347116-0000	-		1	PIPE	
070	1347134-0000	-		1	PIPE	
100	1499634-0000	-		1	INTERNAL PIPE	
110	1511503-0000	-		1	PIPE	
120	1512299-0000	A		1	SPRAY NOZZLE DOME	
130	1512300-0000	-		1	SPRAY NOZZLE NUT	
140	1512301-0000	A		1	SPACER	
150	1512302-0000	A		1	SPRAY NOZZLE GASKET	
160	1512319-0000	-		1	SPRAY NOZZLE BODY	
170	1512405-0000	-		1	NUT	
180	1512409-0000	A		1	SPRAY NOZZLE INJECTOR	
190	1512410-0000	-		1	SPRAY NOZZLE PLUG	
200	1512835-0000	-		1	EXTERNAL PIPE	
210	1512836-0000	-		1	LID	
220	1517483-0000	-		1	NET	
230	2501515-0000	-		1	PIPE	
240	2501516-0000	-		1	CONTAINER	
250	2501518-0000	-		1	PIPE	
260	2501519-0000	-		1	PIPE	
350	312105-0287	-		4	SCREW M6S ISO4017 M4X8 A480	
360	312105-0453	-		10	SCREW M6S ISO 4017 M8X25 A480	
370	312105-0455	-		1	SCREW M6S ISO 4017 M8X30 A480	
410	312605-0318	-		10	HEXAGON NUT, M6M M8 A280	
450	315229-0206	B		1	GASKET 60,2X68,2X3,7 MM 2"1/2	
470	342840-0103	-		1	CLAMPING PIECE	
490	342850-0304	B		1	GASKET 35,4X49,1X5,2 1"1/2 FDA	
510	353243-0001	-		1	EXTENDED WITHOUT INSERT, PG9	
530	353249-0008	-		1	INSERT, SINGEL HOLE, EK 152/7	
550	90030-0062	-		2	CONN. STR. GE 6-1/4-18 NPTF	
570	90099-0104	-		1	NUT, PR 15,2 (PG9)	
590	90144-0073	-		1	TREBOFLON-TAPE W=13MM	
610	90326-0012	-		1	PROTECTIVE COVER, T31A4618	
B1106	90326-0051	A		1	THERMOCOUPLE, 12826-33	
X1301	90326-0020	A		1	PLUG, FEMALE YELLOW CR-AL	

Pos	Part No	SP	UN	Qty	Description	Page No

Machine Type | Group Description | Used-In | Group Number | Page No

PRE-HEATING VALVE

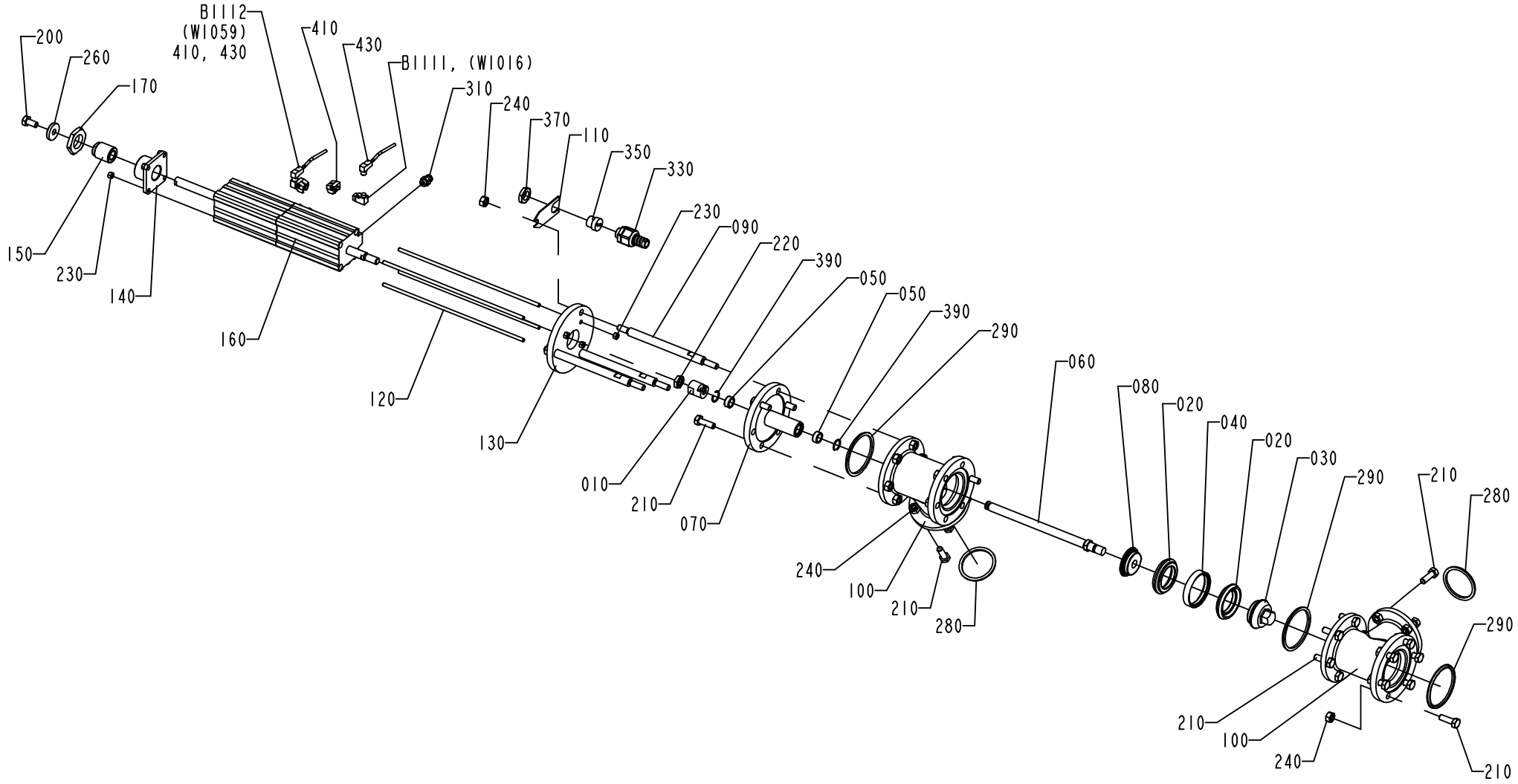

1195285-3
ECM 103354

ECM: 113466 - 20020911
Group number: 1195285-0300
Assembly Drawing: 1195285-3_1_AA

Pos	Part No	SP	UN	Qty	Description	Page No
-						
010	441871-0000	B		1	PENDULUM SUSPENSION	
020	530589-0000	A		2	SEAL RING	
030	530590-0000	-		1	VALVE CONE	
040	530599-0000	B		1	RING	
050	532349-0000	A		2	PLAIN BEARING	
060	1036188-0000	-		1	SHAFT	
070	1036189-0000	-		1	SPINDLE GUIDE	
080	1036191-0000	-		1	SEAL HOLDER	
090	1548760-0000	B		3	SPACER ROD	
100	1036194-0000	-		2	T-PIPE	
110	1036293-0000	-		1	HOLDER	
120	1346656-0000	-		4	ROD	
130	1346657-0000	-		1	CYLINDER BRACKET	
140	1346658-0000	-		1	BRACKET	
150	1346659-0000	B		1	SCREW	
160	1346677-0000	A		1	CYLINDER	
170	1349398-0000	-		1	NUT	
200	312105-0449	-		1	SCREW M6S ISO 4017 M8X16 A480	
210	312105-0453	-		23	SCREW M6S ISO 4017 M8X25 A480	
220	90099-0051	-		1	NUT HEX. M10X1,25, FE FZB	
230	312605-0314	-		8	HEXAGON NUT, M6M M5 A280	
240	312605-0318	-		29	HEXAGON NUT, M6M M8 A280	
260	315125-0165	-		1	WASHER TBRSB 8,4X26X5 A4	
280	315229-0205	A		2	GASKET 47,5X55,5X3,7 MM 2"	
290	315229-0206	A		3	GASKET 60,2X68,2X3,7 MM 2"1/2	
310	342722-0202	-		4	PIPE COUPLING 1/8" D=6MM	
330	353243-0001	-		1	EXTENDED WITHOUT INSERT, PG9	
350	353249-0036	-		1	INSERT, MULTI HOLE, EK152 M 2X4	
370	90099-0104	-		1	NUT, PR 15,2 (PG9)	
390	90141-0022	B		2	SNAP RING B 16	
410	90450-0816	A		2	SENSOR, BRACKET,SERIES 2700/2702	
430	1484470-0000	-		2	CABLE	
B1111	90044-0193	A		1	SENSOR, 322-31-0310	
B1112	90044-0193	A		1	SENSOR, 322-31-0310	

Pos	Part No	SP	UN	Qty	Description	Page No

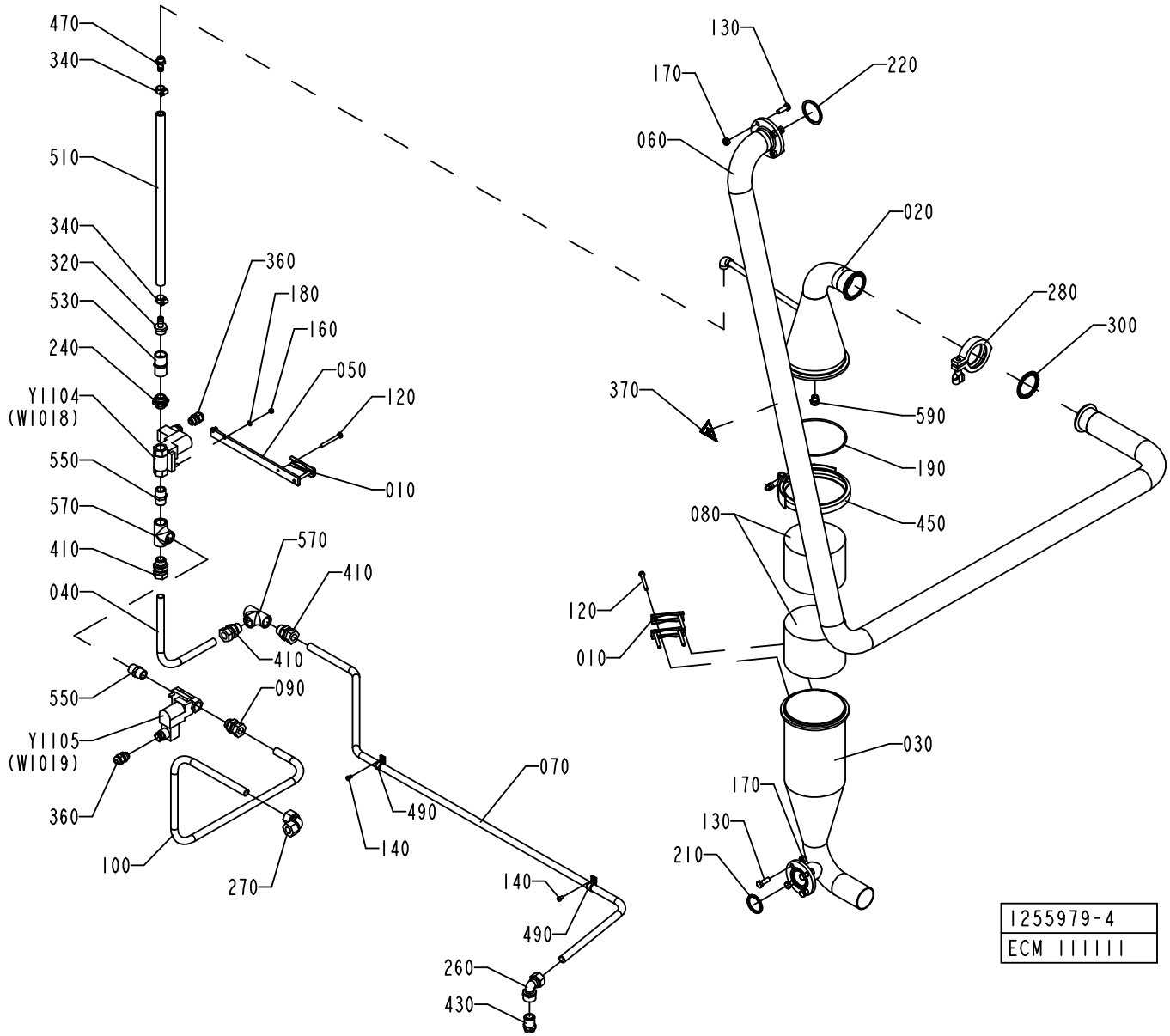
470
340
510
340
320
530
240
Y1104
(W1018)
550
570
410
040
550
Y1105
(W1019)
360
100
270
360
180
160
050
120
010
570
410
410
090
490
140
070
140
490
260
430
130
170
220
060
020
280
300
370
590
190
450
080
120
010
030
170
130
210
1255979-4
ECM 111111

ECM: 113515 - 20020911
Group number: 1255979-0300
Assembly Drawing: 1255979-4_1_AB

Pos	Part No	SP	UN	Qty	Description	Page No
-						
010	1036811-0000	-		3	CLAMP	
020	1036910-0000	B		1	UPPER SECTION	
030	1036911-0000	-		1	CONTAINER	
040	1037011-0000	-		1	PIPE	
050	1037041-0000	-		1	HOLDER	
060	2506846-0000	-		1	PIPE	
070	1347129-0000	-		1	PIPE	
080	546929-0000	B		2	FILTER	
090	1038659-0000	-		1	STRAIGHT PIPE UNION	
100	1498524-0000	-		1	PIPE	
120	312105-0381	-		6	SCREW M6S ISO 4014 M6X55 A480	
130	312105-0453	-		8	SCREW M6S ISO 4017 M8X25 A480	
140	312125-0323	-		2	SCREW ISO 1207 M5X8 A4	
160	312605-0314	-		2	HEXAGON NUT, M6M M5 A280	
170	312605-0318	-		8	HEXAGON NUT, M6M M8 A280	
180	315105-0146	-		2	BRICKA BRB5,3X10RFR	
190	315204-0317	B		1	O-RING 129,5X3 MM	
210	315229-0204	B		1	GASKET 34,8X42,8X3,7 MM 1"1/2	
220	315229-0205	B		1	GASKET 47,5X55,5X3,7 MM 2"	
240	479261-0000	-		1	NIPPLE	
260	342733-0114	-		1	CONN. ELBOW WI-15-G1/2	
270	342737-0221	-		1	CONN. ELBOW W-15 LRFR	
280	342840-0105	-		1	CLAMPING PIECE	
300	342850-0405	B		1	GASKET 47,8X62,6X5,2 MM 2" FDA	
320	342901-0105	-		1	HOSE NIPPLE, EXT.THR. R1/2-12 MM	
340	342991-0101	-		2	HOSE CLIP,WORM DRIVE TYPE (13)-16	
360	352103-0101	-		2	CABLE GLAND, ST 9, PR15,2/PG9	
370	359705-0007	-		1	WARNING SIGN ISO, HOT SURFACE	
410	90030-0188	-		3	CONN. STR. GA-15-G1/2	
430	90055-0097	-		1	STRAIGHT COUPLING	
450	90132-0030	-		1	HOLDER MV 87177 KS 580T	
470	90163-0052	-		1	HOSE NIPPLE, EXT.THR. 1/4-12 MM	
490	90165-0039	-		2	PIPE CLAMP, RSGU 1.15/12, D=15 MM	
510	90166-0121	-	MM	450	HOSE	
530	90270-0349	A		1	CONSTANT FLOW VALVE, 1/2"X1/2" 2GPM	
550	90330-0021	-		2	NIPPLES, EXT. THREAD. R-207R1/2	
570	90330-0049	-		2	T-PIPE, INT. THREAD, R-221R1/2	
590	90424-0054	A		1	SPRAY NOZZLE 120 DEG	
610	90144-0073	-		1	TREBOFLON-TAPE W=13MM	
620	90157-0037	-		1	SEALING COMPOUND	
Y1104	90042-0172	A		1	SOLENOID VALVE 4023/1005/1032 24VDC	
	90042-0467	*A*		*1*	*COIL 24VDC GSR*	
Y1105	90042-0172	A		1	SOLENOID VALVE 4023/1005/1032 24VDC	
	90042-0467	*A*		*1*	*COIL 24VDC GSR*	

Machine Type	Group Description	Used-In	Group Number	Page No

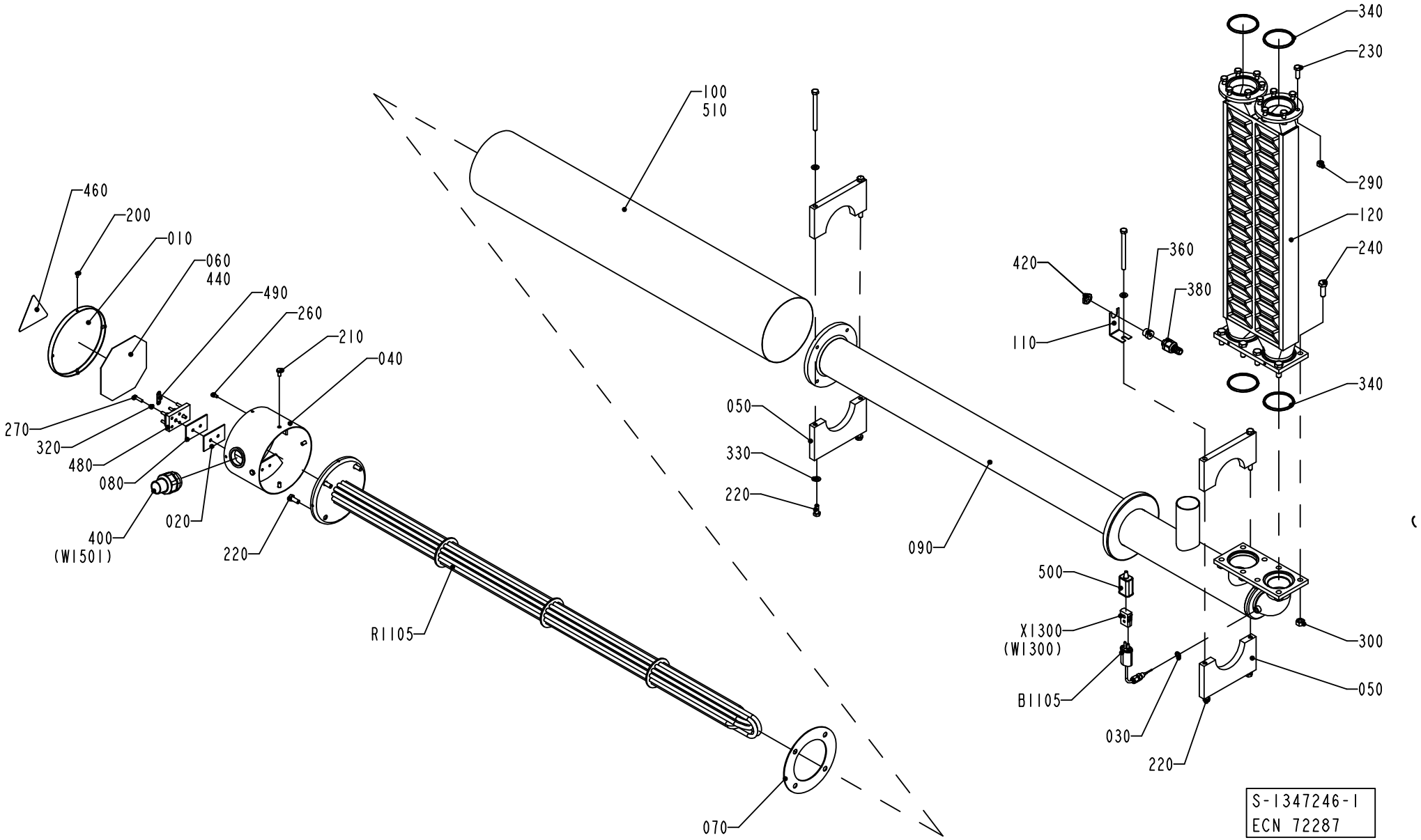
460
200
010
060
440
490
260
210
040
270
320
480
080
400
(W1501)
020
220
100
510
050
330
220
R1105
070
090
340
230
290
120
240
420
360
380
110
340
500
X1300
(W1300)
B1105
030
220
300
050
S-1347246-1
ECN 72287

ECM: 113516 - 20020911
Group number: 1347246-0100
Assembly Drawing: 1347246-1_1_AB

Pos	Part No	SP	UN	Qty	Description	Page No
-						
010	29876-0000	-		1	COVER	
020	30298-0000	-		1	INSULATION	
030	273429-0000	-		1	WASHER	
040	451430-0000	-		1	CONNECTION HOUS.(MINOR)	
050	456123-0000	-		2	SUPPORT	
	315105-0165	*-*		*2*	*WASHER BRB8,4X16RFR*	
	312105-0471	*-*		*2*	*SCREW M6S ISO 4014 M8X100 A480*	
060	491305-0000	-		1	CONN.DIAGRAM AIR SUPERH.	
070	531731-0000	A		1	GASKET	
080	751009-0000	-		1	INSULATION	
090	1035942-0000	-		1	HEATING PIPE	
100	1036372-0000	-		1	PIPE	
110	1036373-0000	-		1	HOLDER	
120	1347245-0000	A		1	HEAT EXCHANGER	
200	312105-0287	-		4	SCREW M6S ISO4017 M4X8 A480	
210	312105-0366	-		4	SCREW M6S M6X12 A280	
220	312105-0451	-		8	SCREW M6S ISO 4017 M8X20 A480	
230	312105-0453	-		12	SCREW M6S ISO 4017 M8X25 A480	
240	312105-0495	-		8	SCREW M6S ISO 4017 M10X30 A480	
260	312125-0323	-		1	SCREW ISO 1207 M5X8 A4	
270	312125-0331	-		2	SCREW ISO 1207 M5X20 A4	
290	312605-0318	-		12	HEXAGON NUT, M6M M8 A280	
300	312605-0320	-		8	HEXAGON NUT, M6M M10 A280	
320	315105-0146	-		2	BRICKA BRB5,3X10RFR	
330	315105-0165	-		2	WASHER BRB8,4X16RFR	
340	315229-0206	A		4	GASKET 60,2X68,2X3,7 MM 2"1/2	
360	353243-0001	-		1	EXTENDED WITHOUT INSERT, PG9	
380	353249-0008	-		1	INSERT, SINGEL HOLE, EK 152/7	
400	90012-0126	-		1	NORMAL WITHOUT INSERT, PG29	
420	90099-0104	-		1	NUT, PR 15,2 (PG9)	
440	90153-0020	-	L	1	ADHESIVE, BOSTIK 1782 125ML	
460	90194-0075	-		1	WARNING SIGN ISO, HOT SURFACE	
480	90195-0028	A		1	TERM.BLOCK 6-POLE STEATIT	
490	90195-0029	A		3	CONN. LINK NO324 FOR -28	
500	90326-0012	-		1	PROTECTIVE COVER, T31A4618	
510	90411-0005	-	MM	900	INSULATOR	
B1105	90326-0051	A		1	THERMOCOUPLE, 12826-33	
R1105	449939-0001	A		1	HEATING ELEMENT 15KW	
	449938-0001	*C*		*2*	*HEATING PIPE*	
	449938-0002	*C*		*2*	*HEATING PIPE*	
	449938-0003	*C*		*2*	*HEATING PIPE*	
X1300	90326-0020	A		1	PLUG, FEMALE YELLOW CR-AL	

Machine Type	Group Description	Used-In	Group Number	Page No

PRESSURE REGULATOR

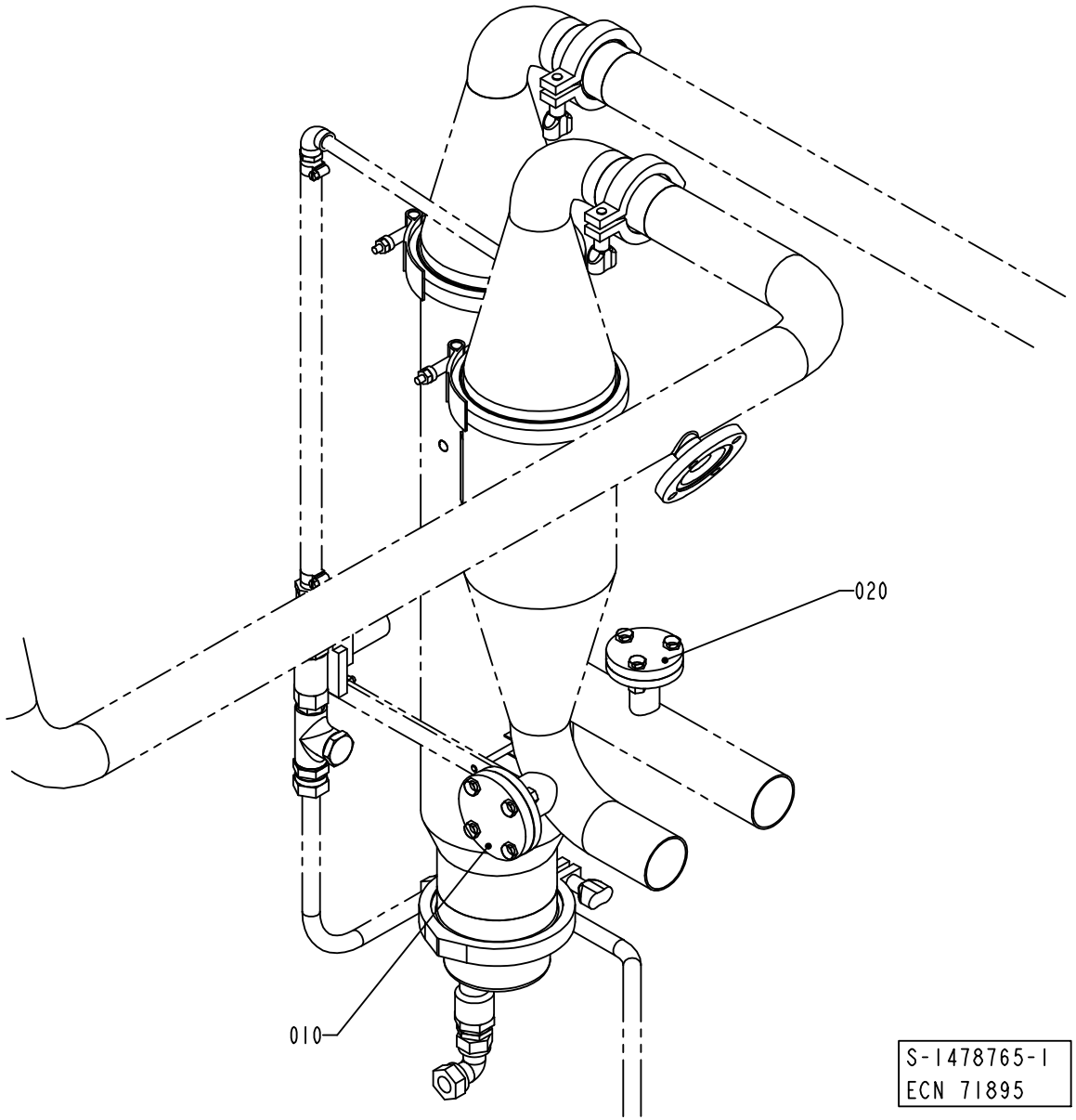

ECM: 113517 - 20020911
Group number: 1478765-0100
Assembly Drawing: 1478765-1_1_AA

This list covers pages from 1-156 to 1-159

Pos	Part No	SP	UN	Qty	Description	Page No
50HZ (See drawing on page: 1-156)						
010	1037268-0000	-		1	LID	
020	1037129-0000	-		1	LID	
60HZ (See drawing on page: 1-158)						
050	1478766-0000	-		1	PIPE	
060	1037267-0000	-		1	PIPE	
070	442237-0000	-		1	NUT	
080	490998-0000	A		1	THROTTLE SCREW	
600	312105-0453	-		3	SCREW M6S ISO 4017 M8X25 A480	
610	312605-0318	-		3	HEXAGON NUT, M6M M8 A280	
620	315202-0119	A		1	O-RING 25,1X1,6 MM	
630	315229-0203	A		1	GASKET 22,1X31,1X3,7 MM 1"	

Pos	Part No	SP	UN	Qty	Description	Page No

PRESSURE REGULATOR

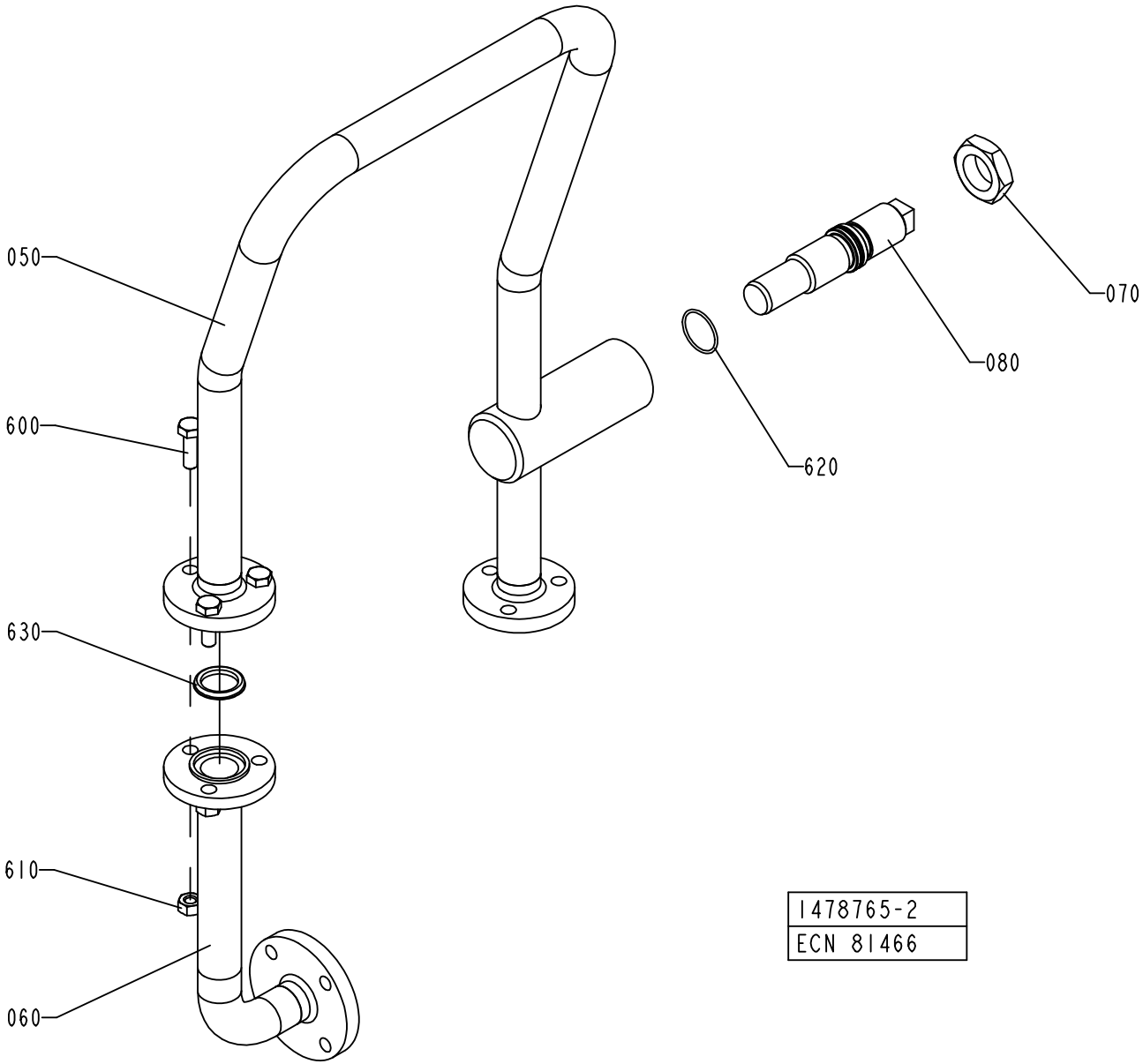

ECM: 113517 - 20020911
Group number: 1478765-0100
Assembly Drawing: 1478765-2_1_AB

This list covers pages from 1-156 to 1-159

Pos	Part No	SP	UN	Qty	Description	Page No
50HZ (See drawing on page: 1-156)						
010	1037268-0000	-		1	LID	
020	1037129-0000	-		1	LID	
60HZ (See drawing on page: 1-158)						
050	1478766-0000	-		1	PIPE	
060	1037267-0000	-		1	PIPE	
070	442237-0000	-		1	NUT	
080	490998-0000	A		1	THROTTLE SCREW	
600	312105-0453	-		3	SCREW M6S ISO 4017 M8X25 A480	
610	312605-0318	-		3	HEXAGON NUT, M6M M8 A280	
620	315202-0119	A		1	O-RING 25,1X1,6 MM	
630	315229-0203	A		1	GASKET 22,1X31,1X3,7 MM 1"	

Pos	Part No	SP	UN	Qty	Description	Page No

BUTTERFLY VALVE

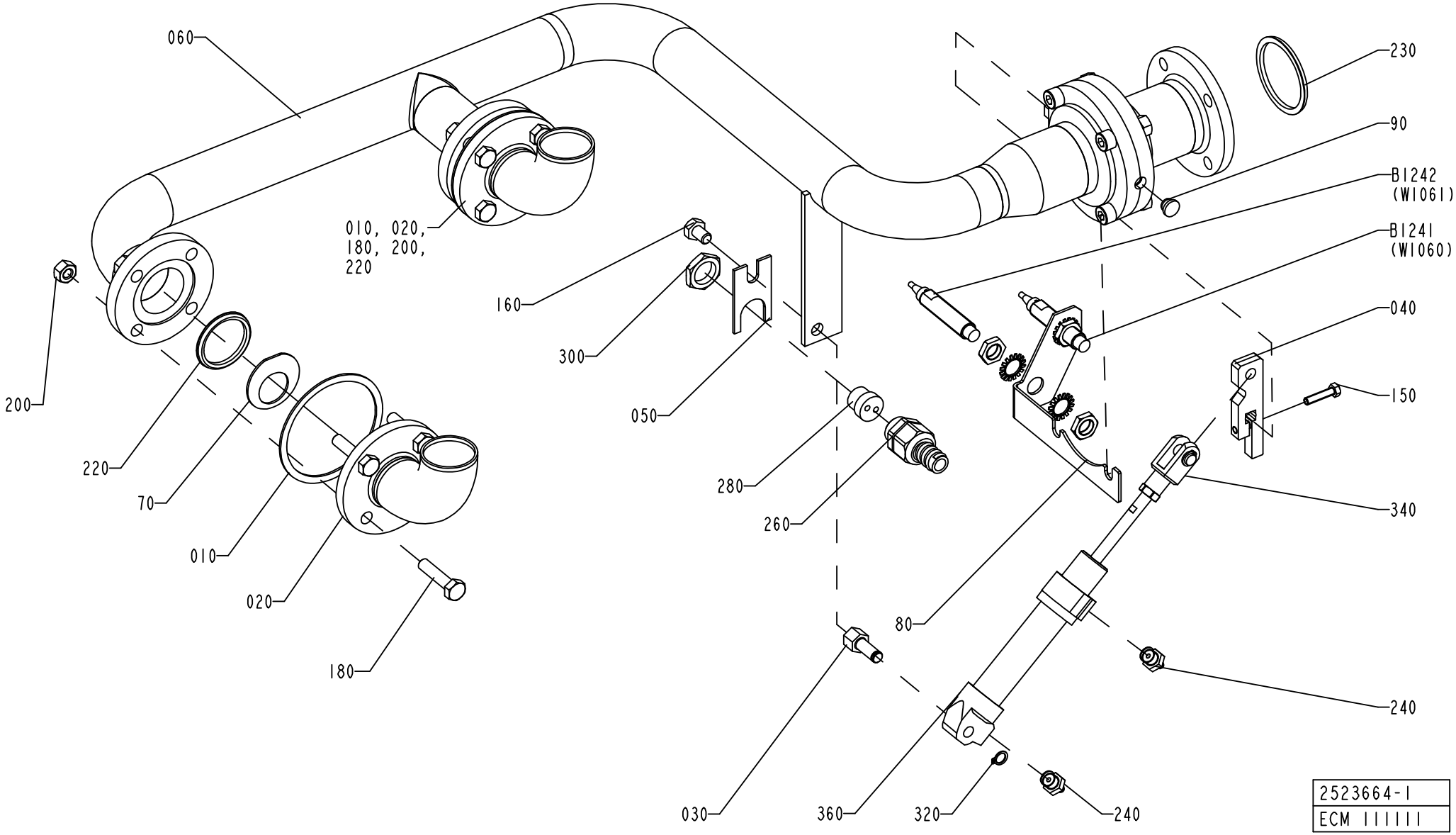

ECM: 113518 - 20020911
Group number: 2523664-0100
Assembly Drawing: 2523664-1_1_AB

Pos	Part No	SP	UN	Qty	Description	Page No
-						
010	1036294-0000	-		2	GASKET	
020	1347223-0000	-		2	PIPE	
030	1349762-0000	-		1	SHAFT	
040	2523665-0000	-		1	ARM	
050	1487263-0000	-		1	BRACKET	
060	1548249-0000	-		1	PIPE	
070	1548241-0005	-		2	WASHER	
080	2531434-0000	-		1	BRACKET	
090	2531435-0000	-		1	PLUG	
150	312105-0332	-		1	SCREW M6S ISO 4017 M5X22 A480	
160	312105-0447	-		1	SCREW M6S ISO 4017 M8X12 A480	
180	312109-0457	-		8	SCREW M6S ISO 4017 M8X35 A480	
200	312605-0318	-		8	HEXAGON NUT, M6M M8 A280	
220	315229-0204	A		2	GASKET 34,8X42,8X3,7 MM 1"1/2	
230	315229-0205	A		1	GASKET 47,5X55,5X3,7 MM 2"	
240	90458-2956	-		2	ELBOW PIPE JOINT, EXT.THREAD, D=6MM-G1/8	
260	353243-0002	-		1	EXTENDED WITHOUT INSERT, PG11	
280	353249-0036	-		1	INSERT, MULTI HOLE, EK152 M 2X4	
300	90099-0117	-		1	NUT, PR 18,6 (PG11)	
320	90141-0015	B		1	RETAINING RING FOR SHAFT DIN 471 8 A2	
340	90239-0532	-		1	ROD END, CLEVIS WITH AXLE M8X1,25	
360	90239-0822	A		1	DOUBLE ACTING, MINI-ISO, CYL.20-50	
B1241	90458-0672	A		1	PROXIMITY SENSOR E2E2-X5MB1-5M	
B1242	90458-0672	A		1	PROXIMITY SENSOR E2E2-X5MB1-5M	

Pos	Part No	SP	UN	Qty	Description	Page No

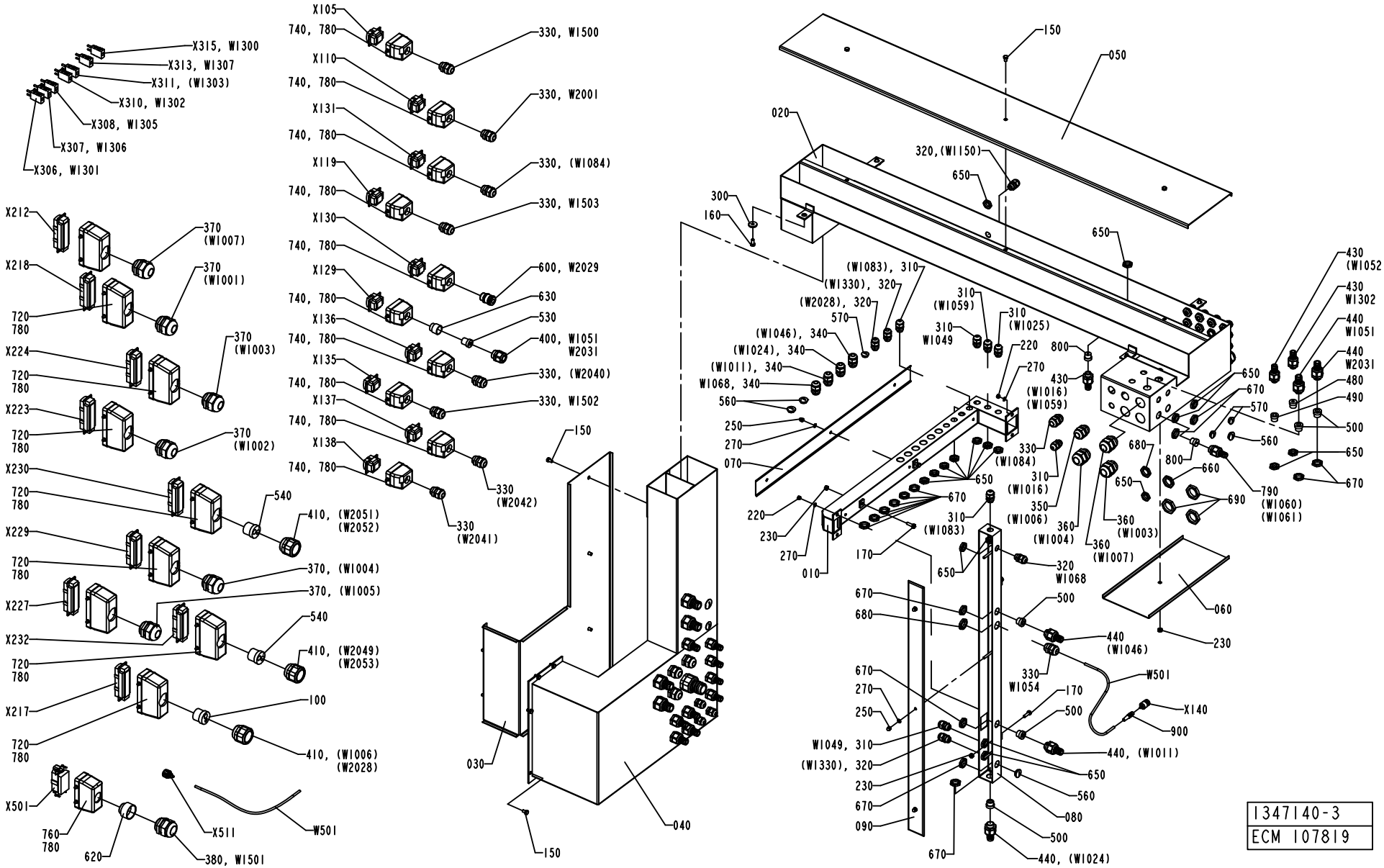
X315, W1300
X313, W1307
X311, (W1303)
X310, W1302
X308, W1305
X307, W1306
X306, W1301
X105
740, 780
330, W1500
X110
740, 780
330, W2001
X131
740, 780
330, (W1084)
X119
740, 780
330, W1503
X130
740, 780
600, W2029
X129
740, 780
630
530
400, W1051
W2031
X136
740, 780
330, (W2040)
X135
740, 780
330, W1502
X137
740, 780
330
(W2042)
X138
740, 780
330
(W2041)
X212
370
(W1007)
X218
370
(W1001)
720
780
X224
370
(W1003)
720
780
X223
370
(W1002)
720
780
X230
720
780
540
410, (W2051)
(W2052)
X229
720
780
370, (W1004)
370, (W1005)
X227
X232
540
410, (W2049)
(W2053)
720
780
X217
100
720
780
410, (W1006)
(W2028)
X501
760
780
620
X511
380, W1501
W501
150
030
040
150
050
020
320,(W1150)
650
300
160
650
(W1083), 310
(W1330), 320
(W2028), 320
570
(W1046), 340
(W1024), 340
(W1011), 340
W1068, 340
560
250
270
070
310
(W1059)
310
(W1025)
310
W1049
220
800
270
430
(W1016)
(W1059)
650
670
570
560
680
800
660
650
650
690
790
(W1060)
(W1061)
330
(W1084)
310
(W1016)
350
(W1006)
360
(W1004)
360
(W1003)
360
(W1007)
650
670
310
(W1083)
220
230
270
010
170
650
320
W1068
430
(W1052)
430
W1302
440
W1051
440
W2031
480
490
500
650
670
060
230
670
680
500
440
(W1046)
330
W1054
W501
X140
900
670
270
250
W1049, 310
(W1330), 320
230
670
090
170
500
440, (W1011)
650
560
080
500
670
440, (W1024)
1347140-3
ECM 107819

ECM: 135516 - 20030922
Group number: 1347140-0200
Assembly Drawing: 1347140-3_1_AC

This list covers pages from 1-162 to 1-177

Pos	Part No	SP	UN	Qty	Description	Page No
FLOATER HI (See drawing on pages: 1-174, 1-176)						
110	2562308-0000	-		1	INSERT	
120	2579745-0000	-		1	INSERT	
130	2598086-0000	-		1	INSERT	
340	352103-0106	-		5	CABLE GLAND, ST 11, PR18,6/PG11	
410	353240-0006	-		4	FöRSKRUVNING PG 29	
440	353243-0003	-		11	EXTENDED WITHOUT INSERT, PG11	
450	353240-0004	-		8	NORMAL WITHOUT INSERT, PG 16	
460	353243-0007	-		2	EXTENDED WITHOUT INSERT, PG21	
470	353249-0014	-		1	INSERT, SINGEL HOLE, EK 154/16	
500	353249-0011	-		11	INSERT, SINGEL HOLE, EK 153/11	
560	90002-0009	-		3	BLANK-OFF PLUG, PR 18.6 SKINDICHT-BLK11	
610	353249-0071	-		1	INSERT, SINGEL HOLE, E155/18	
660	90099-0110	-		4	NUT, PR 22,5 (PG16)	
680	90099-0118	-		10	NUT, PR 20,4 (PG13,5)	
720	90110-0152	-		10	CABLE HOOD 24-POL 70.352.2428.1	
760	90110-0160	-		2	CABLE HOOD 6-16-POL 70.352.1628.1	
780	90110-0385	-		22	HOLDER	
810	359005-0050	-		4	MARKING LABEL KIT X, 04.841.4550.0	
820	359005-0010	-		25	MARKING LABEL KIT 0 - 9, 04.841.2150.0	
870	90152-0070	-	M	14	METAL HOSE, 32,5X26, UL 2621	
W9106	90220-0034	-	M	7	THERMOCOUPLE CABLE K/ 2X0,5MM2	
W9115	90220-0034	-	M	7	THERMOCOUPLE CABLE K/ 2X0,5MM2	
W9116	90220-0034	-	M	7	THERMOCOUPLE CABLE K/ 2X0,5MM2	
X210	90110-0150	-		1	MALE INSERT 121110 0000	
X317	90326-0022	-		1	PLUG, MALE YELLOW CR-AL	
X318	90326-0022	-		1	PLUG, MALE YELLOW CR-AL	
X319	90326-0022	-		1	PLUG, MALE YELLOW CR-AL	
X502	90110-0156	-		1	MALE INSERT 70.210.0653.0	
FLOATER NOHI (See drawing on pages: 1-166, 1-168)						
340	352103-0106	-		5	CABLE GLAND, ST 11, PR18,6/PG11	
410	353240-0006	-		3	FöRSKRUVNING PG 29	
440	353243-0003	-		11	EXTENDED WITHOUT INSERT, PG11	
450	353243-0004	-		4	EXTENDED WITHOUT INSERT, PG13,5	
460	353243-0007	-		1	EXTENDED WITHOUT INSERT, PG21	
500	353249-0011	-		11	INSERT, SINGEL HOLE, EK 153/11	
550	90002-0004	-		1	BLANK-OFF PLUG, PR 22,5 SKINDICHT-BLK16	
560	90002-0009	-		3	BLANK-OFF PLUG, PR 18.6 SKINDICHT-BLK11	
660	90099-0110	-		5	NUT, PR 22,5 (PG16)	
680	90099-0118	-		6	NUT, PR 20,4 (PG13,5)	
720	90110-0152	-		9	CABLE HOOD 24-POL 70.352.2428.1	
760	90110-0160	-		1	CABLE HOOD 6-16-POL 70.352.1628.1	
780	90110-0385	-		20	HOLDER	
810	359005-0050	-		2	MARKING LABEL KIT X, 04.841.4550.0	
820	359005-0010	-		20	MARKING LABEL KIT 0 - 9, 04.841.2150.0	
870	90152-0070	-	MM	1000	METAL HOSE, 32,5X26, UL 2621	
LEVELPROBE HI (See drawing on pages: 1-170, 1-172)						
110	2562308-0000	-		1	INSERT	
120	2579745-0000	-		1	INSERT	
130	2598086-0000	-		1	INSERT	
340	352103-0106	-		4	CABLE GLAND, ST 11, PR18,6/PG11	
410	353240-0006	-		4	FöRSKRUVNING PG 29	
440	353243-0003	-		10	EXTENDED WITHOUT INSERT, PG11	
450	353240-0004	-		8	NORMAL WITHOUT INSERT, PG 16	
460	353243-0007	-		2	EXTENDED WITHOUT INSERT, PG21	
470	353249-0014	-		1	INSERT, SINGEL HOLE, EK 154/16	
500	353249-0011	-		10	INSERT, SINGEL HOLE, EK 153/11	
560	90002-0009	-		5	BLANK-OFF PLUG, PR 18.6 SKINDICHT-BLK11	
610	353249-0071	-		1	INSERT, SINGEL HOLE, E155/18	
660	90099-0110	-		4	NUT, PR 22,5 (PG16)	
680	90099-0118	-		10	NUT, PR 20,4 (PG13,5)	
720	90110-0152	-		10	CABLE HOOD 24-POL 70.352.2428.1	
760	90110-0160	-		2	CABLE HOOD 6-16-POL 70.352.1628.1	
780	90110-0385	-		22	HOLDER	
810	359005-0050	-		4	MARKING LABEL KIT X, 04.841.4550.0	
820	359005-0010	-		25	MARKING LABEL KIT 0 - 9, 04.841.2150.0	
870	90152-0070	-	M	14	METAL HOSE, 32,5X26, UL 2621	
W9106	90220-0034	-	M	7	THERMOCOUPLE CABLE K/ 2X0,5MM2	
W9115	90220-0034	-	M	7	THERMOCOUPLE CABLE K/ 2X0,5MM2	
W9116	90220-0034	-	M	7	THERMOCOUPLE CABLE K/ 2X0,5MM2	
X210	90110-0150	-		1	MALE INSERT 121110 0000	
X317	90326-0022	-		1	PLUG, MALE YELLOW CR-AL	
X318	90326-0022	-		1	PLUG, MALE YELLOW CR-AL	
X319	90326-0022	-		1	PLUG, MALE YELLOW CR-AL	
X502	90110-0156	-		1	MALE INSERT 70.210.0653.0	
LEVELPROBE NOHI (See drawing on pages: 1-162, 1-164)						
340	352103-0106	-		4	CABLE GLAND, ST 11, PR18,6/PG11	
410	353240-0006	-		3	FöRSKRUVNING PG 29	
440	353243-0003	-		10	EXTENDED WITHOUT INSERT, PG11	
450	353243-0004	-		4	EXTENDED WITHOUT INSERT, PG13,5	
460	353243-0007	-		1	EXTENDED WITHOUT INSERT, PG21	
500	353249-0011	-		10	INSERT, SINGEL HOLE, EK 153/11	
550	90002-0004	-		1	BLANK-OFF PLUG, PR 22,5 SKINDICHT-BLK16	
560	90002-0009	-		5	BLANK-OFF PLUG, PR 18.6 SKINDICHT-BLK11	

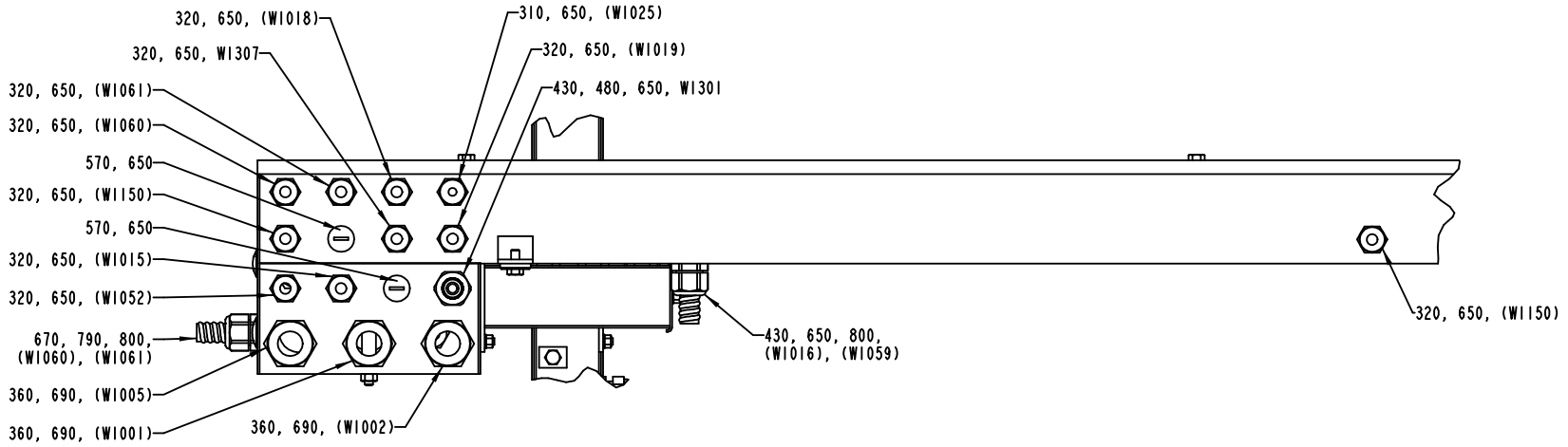

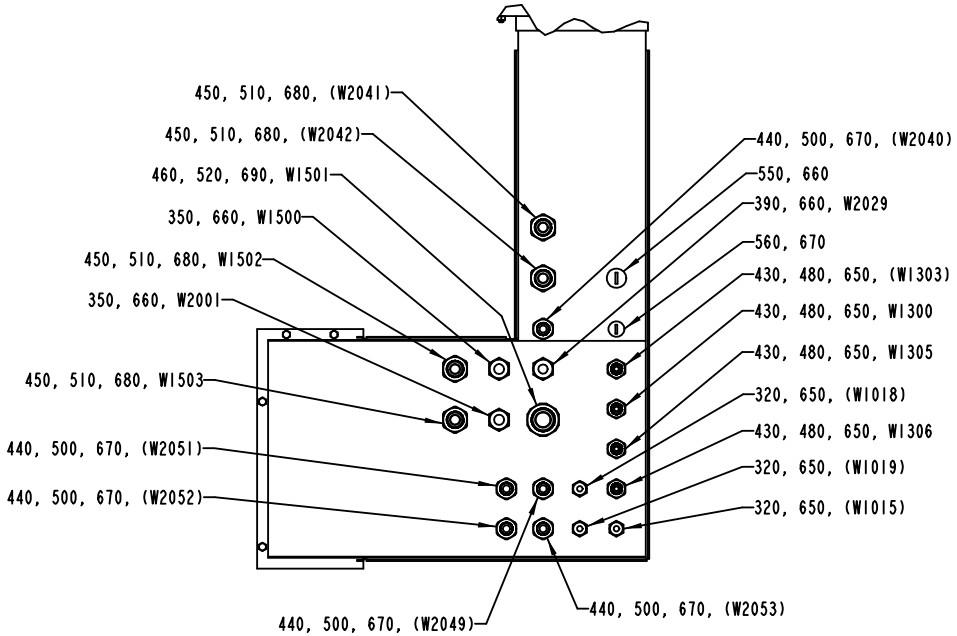

1347140-3
ECM 107819

ECM: 135516 - 20030922
Group number: 1347140-0200
Assembly Drawing: 1347140-3_2_AC

This list covers pages from 1-162 to 1-177

Pos	Part No	SP	UN	Qty	Description	Page No
LEVELPROBE NOHI (Cont'd) (See drawing on pages: 1-162, 1-164)						
660	90099-0110	-		5	NUT, PR 22,5 (PG16)	
680	90099-0118	-		6	NUT, PR 20,4 (PG13,5)	
720	90110-0152	-		9	CABLE HOOD 24-POL 70.352.2428.1	
760	90110-0160	-		1	CABLE HOOD 6-16-POL 70.352.1628.1	
780	90110-0385	-		20	HOLDER	
810	359005-0050	-		2	MARKING LABEL KIT X, 04.841.4550.0	
820	359005-0010	-		20	MARKING LABEL KIT 0 - 9, 04.841.2150.0	
870	90152-0070	-	MM	1000	METAL HOSE, 32,5X26, UL 2621	
Common Parts						
010	2524453-0000	-		1	CABLE DUCT	
020	2524454-0000	-		1	CABLE DUCT	
030	1347195-0000	-		1	LID	
040	1538847-0000	-		1	CABLE DUCT	
050	1347193-0000	-		1	LID	
060	1347192-0000	-		1	LID	
070	1347872-0000	-		1	LID	
080	1347873-0000	-		1	CABLE DUCT	
090	1347874-0000	-		1	LID	
100	1347880-0000	-		1	INSERT	
150	312105-0364	-		12	SCREW M6S ISO 4017 M6X10 A480	
160	312105-0367	-		4	SCREW M6S M6X14 A280	
170	312105-0370	-		4	SCREW M6S ISO 4017 M6X20 A480	
220	312605-0314	-		4	HEXAGON NUT, M6M M5 A280	
230	312605-0316	-		5	HEXAGON NUT, M6M M6 A280	
250	312705-0314	-		6	NUT HEX. DOMED CAP MHM-6 M5 A280	
270	315105-0146	-		10	BRICKA BRB5,3X10RFR	
300	315125-0153	-		4	WASHER TBRSB 6,4X22X4 A4	
310	352103-0100	-		8	CABLE GLAND, STR 9, PR15,2/PG9	
320	352103-0101	-		16	CABLE GLAND, ST 9, PR15,2/PG9	
330	352103-0108	-		10	CABLE GLAND, ST 13,5 , PR20,4/PG13,5	
350	352103-0111	-		3	CABLE GLAND, ST 16, PR22,5/PG16	
360	352103-0116	-		6	CABLE GLAND, ST 21, PR28,3/PG21	
370	352103-0120	-		6	CABLE GLAND, STR 29, PR37,0/PG29	
380	352103-0121	-		1	CABLE GLAND, ST 29, PR37,0/PG29	
390	352103-0110	-		1	CABLE GLAND, STR 16, PR22,5/PG16	
400	353240-0004	-		1	NORMAL WITHOUT INSERT, PG 16	
430	353243-0001	-		8	EXTENDED WITHOUT INSERT, PG9	
480	353249-0008	-		6	INSERT, SINGEL HOLE, EK 152/7	
490	353249-0009	-		1	INSERT, SINGEL HOLE, EK 152/9	
510	353249-0013	-		4	INSERT, SINGEL HOLE, EK 154/13	
520	353249-0061	-		1	INSERT, SINGEL HOLE, EK 155/20	
530	353249-0028	-		1	INSERT, MULTI HOLE, E153M2X8	
540	353249-0060	-		2	INSERT, MULTI HOLE, E155M2X13	
570	90002-0013	-		5	BLANK-OFF PLUG, PR 15,2 SKINDICHT-BLK9	
600	90012-0138	-		1	GLAND, EXTENDED WITH INSERT, PG13,5	
620	90089-0015	-		1	REDUCING SLEEVE, PR37M/PR28,3F	
630	90089-0029	-		1	ENLARGING SLEEVE	
650	90099-0104	-		36	NUT, PR 15,2 (PG9)	
670	90099-0117	-		21	NUT, PR 18,6 (PG11)	
690	90099-0119	-		7	NUT, PR 28,3 (PG21)	
740	90110-0157	-		10	CABLE HOOD 6-POL 70.352.0628.1	
790	353243-0002	-		1	EXTENDED WITHOUT INSERT, PG11	
800	353249-0036	-		2	INSERT, MULTI HOLE, EK152 M 2X4	
850	90152-0051	-	MM	3200	SPIRAL CONDUIT, 25X18, UL 1816	
880	90152-0050	-	M	16	SPIRAL CONDUIT, 20X13, UL 1313	
900	90458-2893	A		1	SLEEVE, 78 Z-0-3-4	
W1049	351150-0403	-	M	4	CABLE OLFLEX 3X0,75 MM2 LIGHT/GREY	
W1051	90220-0092	-	MM	6000	PAIR TWISTED CABLE 3X2X0,25MM2	
W1068	351150-0405	-	M	4	CABLE OLFLEX 5X0,75 MM2 LIGHT/GREY	
W1300	90220-0034	-	MM	5700	THERMOCOUPLE CABLE K/ 2X0,5MM2	
W1301	90220-0034	-	MM	6300	THERMOCOUPLE CABLE K/ 2X0,5MM2	
W1302	90220-0034	-	MM	6700	THERMOCOUPLE CABLE K/ 2X0,5MM2	
W1305	90220-0034	-	MM	5400	THERMOCOUPLE CABLE K/ 2X0,5MM2	
W1306	90220-0034	-	MM	5300	THERMOCOUPLE CABLE K/ 2X0,5MM2	
W1307	90220-0034	-	MM	7000	THERMOCOUPLE CABLE K/ 2X0,5MM2	
W1500	351150-0418	-	MM	5100	CABLE OLFLEX 4X2,5 MM2 LIGHT/GREY	
W1501	351120-0168	-	MM	4000	CABLE SIHF 4X10MM2 GREEN/YELLOW	
W1502	351120-0165	-	MM	4500	CABLE SIHF 4X2,5MM2 GREEN/YELLOW	
W1503	351120-0165	-	MM	4500	CABLE SIHF 4X2,5MM2 GREEN/YELLOW	
W2001	351150-0418	-	MM	4300	CABLE OLFLEX 4X2,5 MM2 LIGHT/GREY	
W2029	90220-0104	-	MM	6500	SCR. CABLE 4X1,5MM2	
W2031	351150-0412	-	MM	6000	CABLE OLFLEX 3X1,5 MM2 LIGHT/GREY	
W501	90458-2895	A	M	10	COAXIAL CABLE RG 400/U BROWN	
X105	90110-0159	-		1	MALE INSERT 70.310.0640.0	
X110	90110-0159	-		1	MALE INSERT 70.310.0640.0	
X119	90110-0159	-		1	MALE INSERT 70.310.0640.0	
X129	90110-0159	-		1	MALE INSERT 70.310.0640.0	
X130	90110-0159	-		1	MALE INSERT 70.310.0640.0	
X131	90110-0159	-		1	MALE INSERT 70.310.0640.0	
X135	90110-0159	-		1	MALE INSERT 70.310.0640.0	
X136	90110-0159	-		1	MALE INSERT 70.310.0640.0	
X137	90110-0159	-		1	MALE INSERT 70.310.0640.0	
X138	90110-0159	-		1	MALE INSERT 70.310.0640.0	

Machine Type | Group Description | Used-In | Group Number | Page No

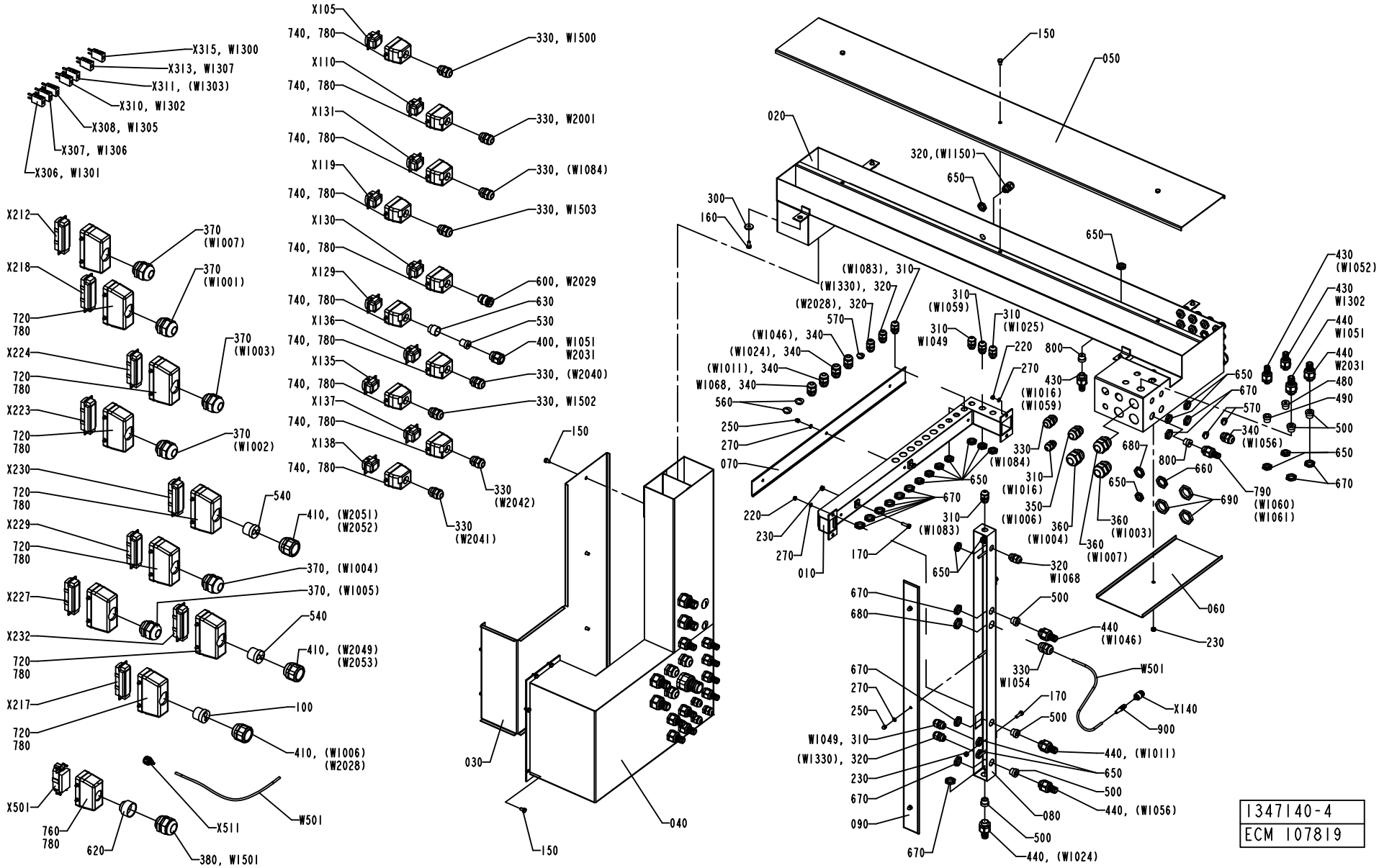
X315, W1300
X313, W1307
X311, (W1303)
X310, W1302
X308, W1305
X307, W1306
X306, W1301
X105
740, 780
330, W1500
X110
330, W2001
X131
330, (W1084)
X119
330, W1503
X130
600, W2029
X129
630
X136
530
400, W1051 W2031
X135
330, (W2040)
X137
330, W1502
X138
330 (W2042)
330 (W2041)
X212
370 (W1007)
X218
370 (W1001)
720 780
X224
370 (W1003)
X223
370 (W1002)
X230
540
410, (W2051) (W2052)
X229
370, (W1004)
370, (W1005)
X227
X232
410, (W2049) (W2053)
X217
100
410, (W1006) (W2028)
X501
760 780
620
X511
380, W1501
W501
150
050
020
320,(W1150)
650
300
160
(W1083), 310
(W1330), 320
(W2028), 320
570
(W1046), 340
(W1024), 340
(W1011), 340
W1068, 340
560
250
270
070
310 (W1059)
310 (W1025)
310 W1049
220
800
270
430 (W1016) (W1059)
650
670
570
340 (W1056)
500
650
670
430 (W1052)
430 W1302
440 W1051
440 W2031
480
490
680
800
660
790 (W1060) (W1061)
690
330 (W1084)
310 (W1016)
350 (W1006)
360 (W1004)
360 (W1003)
360 (W1007)
650
670
310 (W1083)
220
230
270
010
170
650
320 W1068
060
230
670
680
500
440 (W1046)
330 W1054
W501
X140
900
170
500
440, (W1011)
650
500
440, (W1056)
080
500
440, (W1024)
670
090
670
270
250
W1049, 310
(W1330), 320
230
670
030
040
150
1347140-4
ECM 107819

Pos	Part No	SP	UN	Qty	Description	Page No
Common Parts (Cont'd)						
X140	90458-2890	A		1	CONNECTOR, 21N-50N12N133NE	
X212	90110-0150	-		1	MALE INSERT 121110 0000	
X217	90110-0150	-		1	MALE INSERT 121110 0000	
X218	90110-0150	-		1	MALE INSERT 121110 0000	
X223	90110-0150	-		1	MALE INSERT 121110 0000	
X224	90110-0150	-		1	MALE INSERT 121110 0000	
X227	90110-0150	-		1	MALE INSERT 121110 0000	
X229	90110-0150	-		1	MALE INSERT 121110 0000	
X230	90110-0150	-		1	MALE INSERT 121110 0000	
X232	90110-0150	-		1	MALE INSERT 121110 0000	
X306	90326-0022	-		1	PLUG, MALE YELLOW CR-AL	
X307	90326-0022	-		1	PLUG, MALE YELLOW CR-AL	
X308	90326-0022	-		1	PLUG, MALE YELLOW CR-AL	
X310	90326-0022	-		1	PLUG, MALE YELLOW CR-AL	
X311	90326-0022	-		1	PLUG, MALE YELLOW CR-AL	
X313	90326-0022	-		1	PLUG, MALE YELLOW CR-AL	
X315	90326-0022	-		1	PLUG, MALE YELLOW CR-AL	
X501	90110-0156	-		1	MALE INSERT 70.210.0653.0	
X511	90458-2892	A		1	CONNECTOR, 11 N-50-3-31/133 NE	

Pos	Part No	SP	UN	Qty	Description	Page No

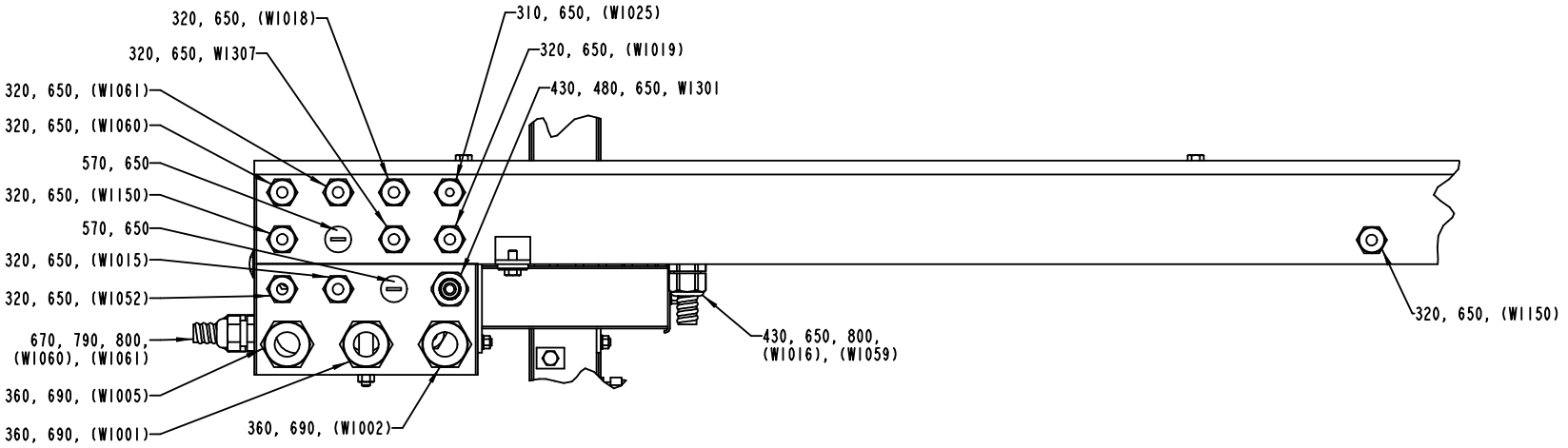

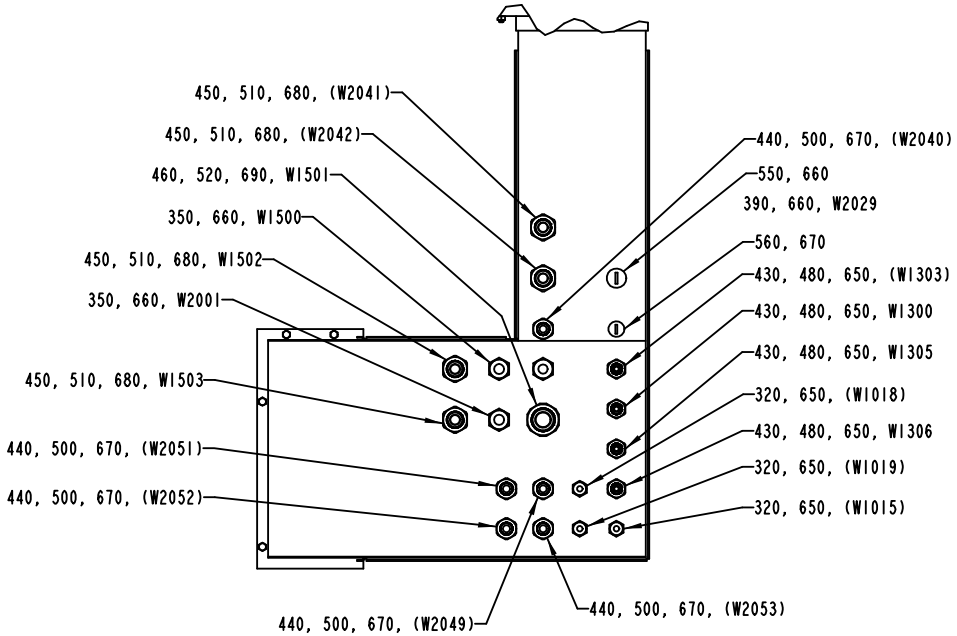

1347140-4
ECM 107819

ECM: 135516 - 20030922
Group number: 1347140-0200
Assembly Drawing: 1347140-4_2_AB

This list covers pages from 1-162 to 1-177

Pos	Part No	SP	UN	Qty	Description	Page No
SEE PREVIOUS LISTS PAGES: 1-163, 1-165, 1-167.						

Pos	Part No	SP	UN	Qty	Description	Page No

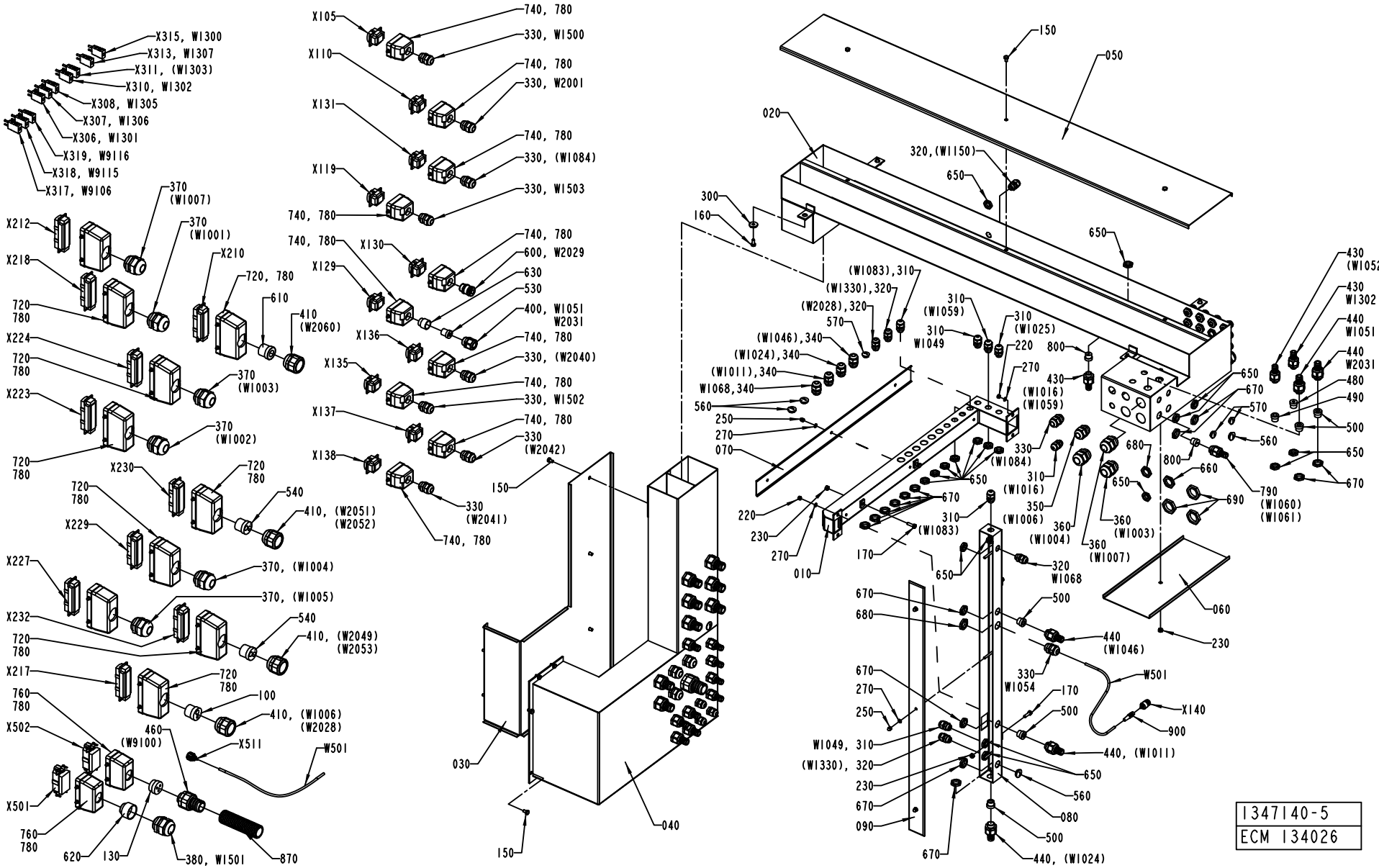
X315, W1300
X313, W1307
X311, (W1303)
X310, W1302
X308, W1305
X307, W1306
X306, W1301
X319, W9116
X318, W9115
X317, W9106
370 (W1007)
370 (W1001)
X212
X218
X210
720, 780
610
410 (W2060)
720 780
X224
370 (W1003)
X223
370 (W1002)
X230
540
410, (W2051) (W2052)
X229
370, (W1004)
X227
370, (W1005)
X232
410, (W2049) (W2053)
X217
100
410, (W1006) (W2028)
760 780
X502
460 (W9100)
X511
W501
X501
620
130
380, W1501
870
X105
740, 780
330, W1500
X110
330, W2001
X131
330, (W1084)
X119
330, W1503
X130
600, W2029
630
530
400, W1051 W2031
X129
X136
330, (W2040)
X135
330, W1502
X137
330 (W2042)
X138
330 (W2041)
030
040
150
050
020
320,(W1150)
300
160
(W1083),310
(W1330),320
(W2028),320
570
(W1046),340
(W1024),340
(W1011),340
W1068,340
560
250
270
070
310 (W1059)
310 W1049
310 (W1025)
220
800
430 (W1016) (W1059)
330 (W1084)
310 (W1016)
350 (W1006)
310 (W1083)
220
230
270
010
170
650
320 W1068
670
680
500
440 (W1046)
330 W1054
W501
X140
900
170
500
440, (W1011)
W1049, 310
(W1330), 320
230
670
090
650
560
080
500
440, (W1024)
670
270
250
680
360 (W1004)
360 (W1007)
360 (W1003)
060
230
430 (W1052)
430 W1302
440 W1051
440 W2031
480
490
500
650
670
570
560
650
670
680
800
660
690
790 (W1060) (W1061)
1347140-5
ECM 134026

ECM: 135516 - 20030922
Group number: 1347140-0200
Assembly Drawing: 1347140-5_1_AA

This list covers pages from 1-162 to 1-177

Pos	Part No	SP	UN	Qty	Description	Page No
SEE PREVIOUS LISTS PAGES: 1-163, 1-165, 1-167.						

Pos	Part No	SP	UN	Qty	Description	Page No

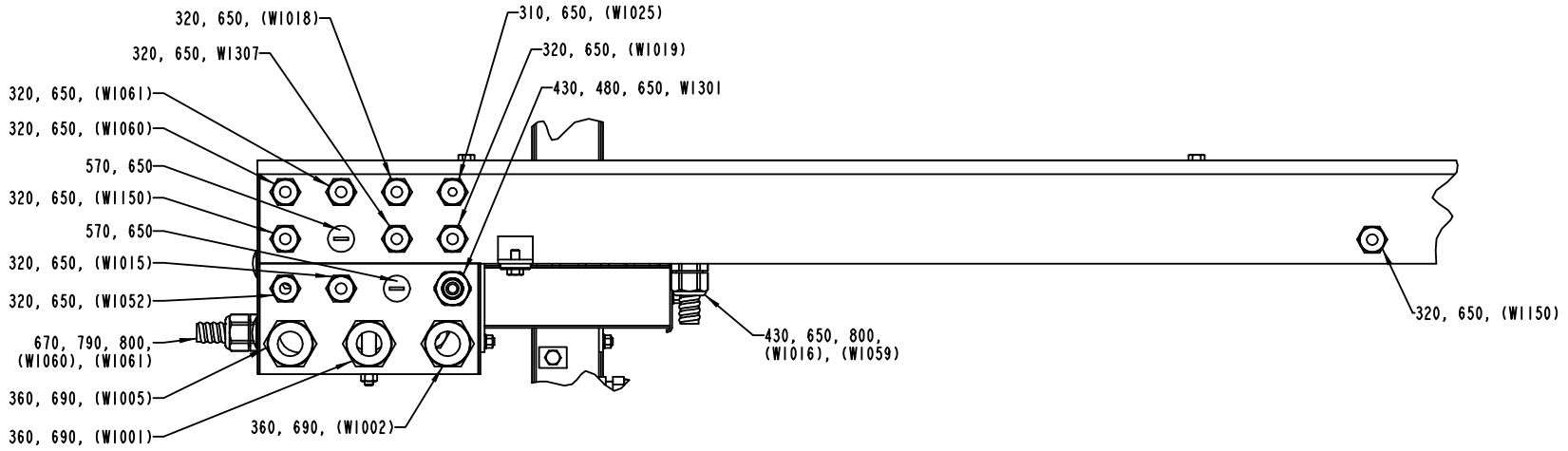

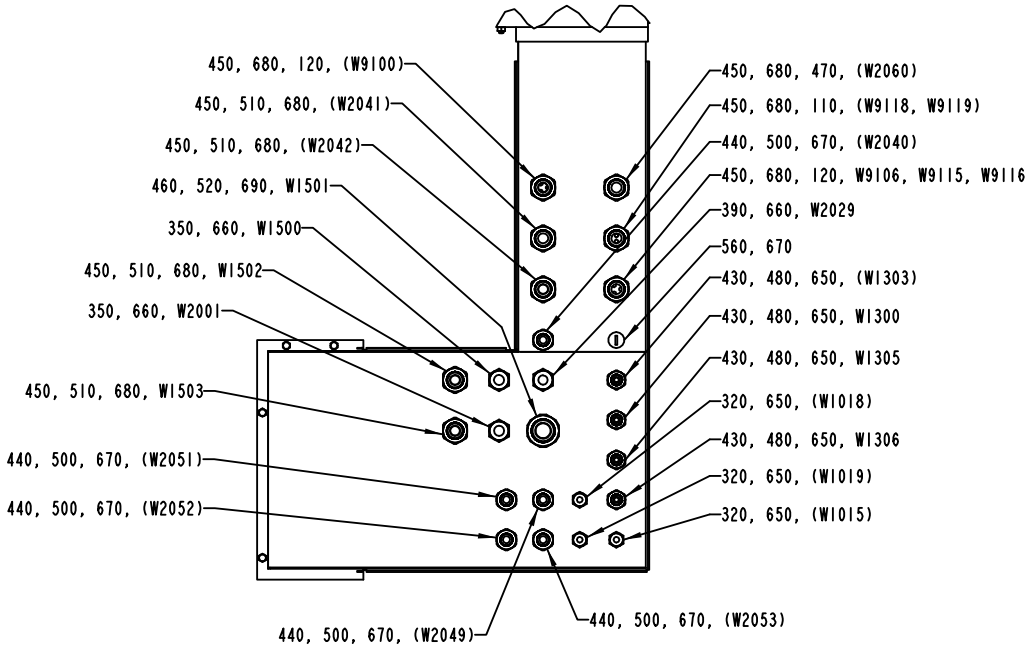

1347140-5
ECM 134026

ECM: 135516 - 20030922
Group number: 1347140-0200
Assembly Drawing: 1347140-5_2_AA

This list covers pages from 1-162 to 1-177

Pos	Part No	SP	UN	Qty	Description	Page No
SEE PREVIOUS LISTS PAGES: 1-163, 1-165, 1-167.						

Pos	Part No	SP	UN	Qty	Description	Page No

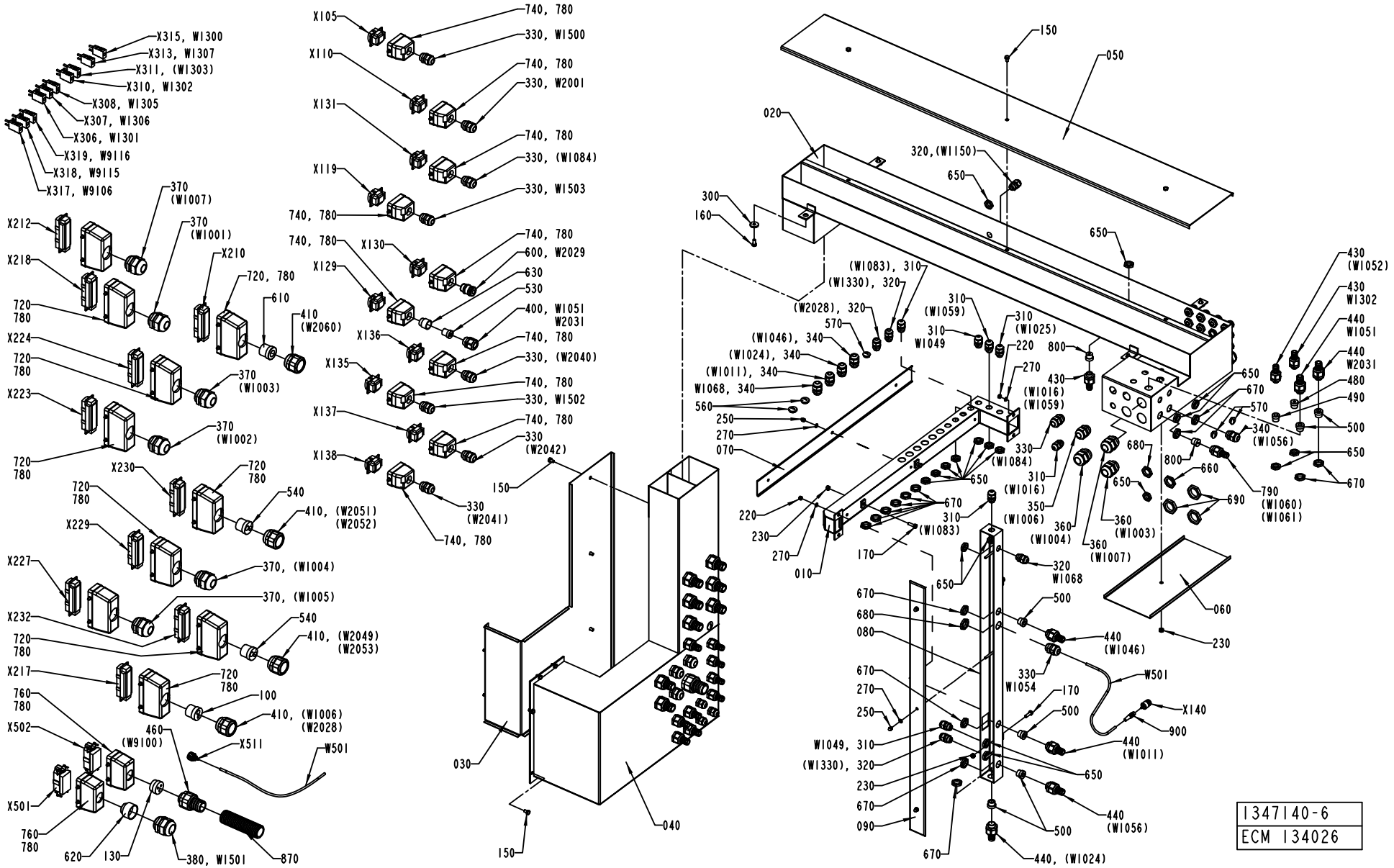
X315, W1300
X313, W1307
X311, (W1303)
X310, W1302
X308, W1305
X307, W1306
X306, W1301
X319, W9116
X318, W9115
X317, W9106
370 (W1007)
370 (W1001)
X212
X218
X210
720, 780
610
410 (W2060)
720 780
X224
370 (W1003)
X223
370 (W1002)
X230
540
410, (W2051) (W2052)
X229
370, (W1004)
X227
370, (W1005)
X232
410, (W2049) (W2053)
X217
100
410, (W1006) (W2028)
760 780
X502
460 (W9100)
X511
W501
X501
620
130
380, W1501
870
X105
740, 780
330, W1500
X110
330, W2001
X131
330, (W1084)
X119
330, W1503
X130
600, W2029
X129
630
530
400, W1051 W2031
X136
330, (W2040)
X135
330, W1502
X137
330 (W2042)
X138
330 (W2041)
150
030
040
050
020
320,(W1150)
300
160
(W1083), 310
(W1330), 320
(W2028), 320
(W1046), 340
(W1024), 340
(W1011), 340
W1068, 340
560
250
270
070
310 (W1059)
310 (W1025)
310 W1049
220
800
270
430 (W1016) (W1059)
330 (W1084)
310 (W1016)
350 (W1006)
310 (W1083)
360 (W1004)
360 (W1007)
360 (W1003)
680
800
660
690
790 (W1060) (W1061)
340 (W1056)
430 (W1052)
430 W1302
440 W1051
440 W2031
480
490
500
010
170
320 W1068
W1054
W501
X140
900
440 (W1046)
440 (W1011)
440 (W1056)
440, (W1024)
1347140-6
ECM 134026

ECM: 135516 - 20030922
Group number: 1347140-0200
Assembly Drawing: 1347140-6_1_AA

This list covers pages from 1-162 to 1-177

Pos	Part No	SP	UN	Qty	Description	Page No
SEE PREVIOUS LISTS PAGES: 1-163, 1-165, 1-167.						

Pos	Part No	SP	UN	Qty	Description	Page No

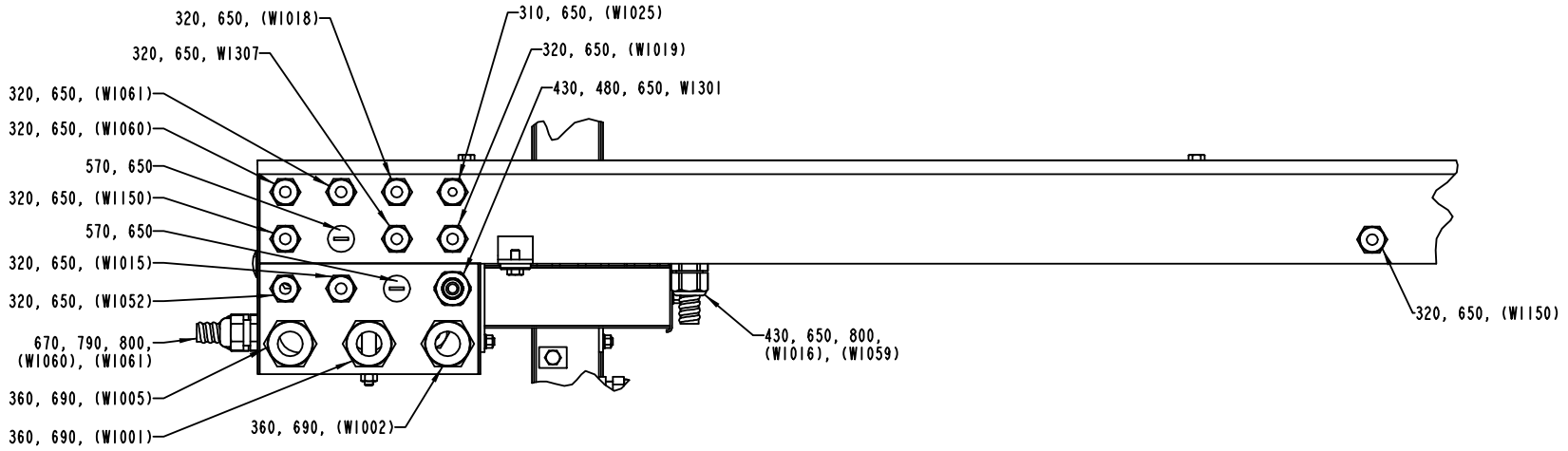

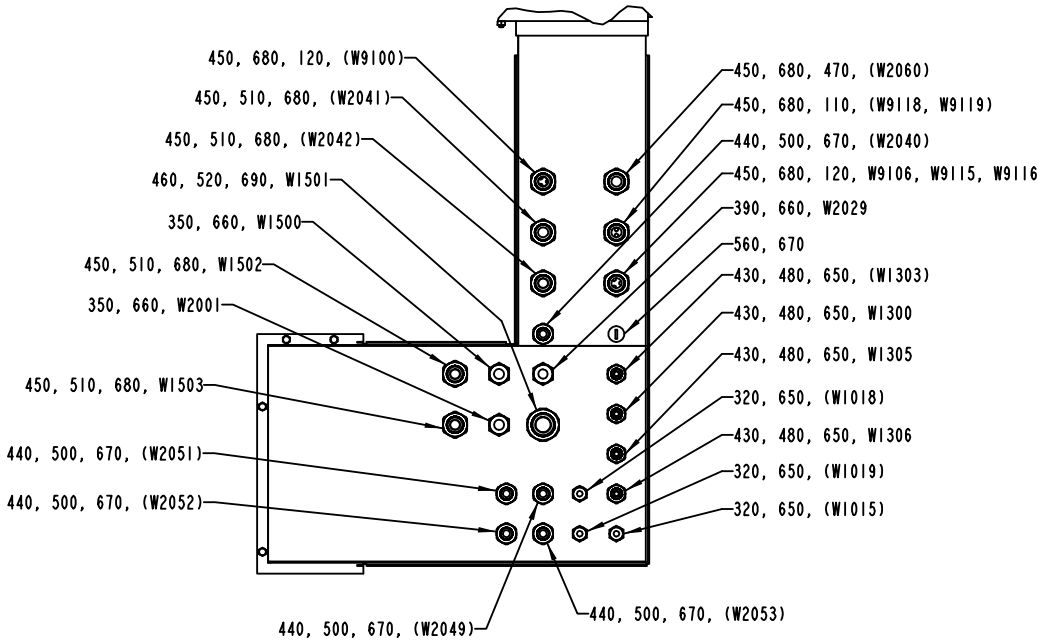

1347140-6
ECM 134026

ECM: 135516 - 20030922
Group number: 1347140-0200
Assembly Drawing: 1347140-6_2_AA

This list covers pages from 1-162 to 1-177

Pos	Part No	SP	UN	Qty	Description	Page No
SEE PREVIOUS LISTS PAGES: 1-163, 1-165, 1-167.						

Pos	Part No	SP	UN	Qty	Description	Page No

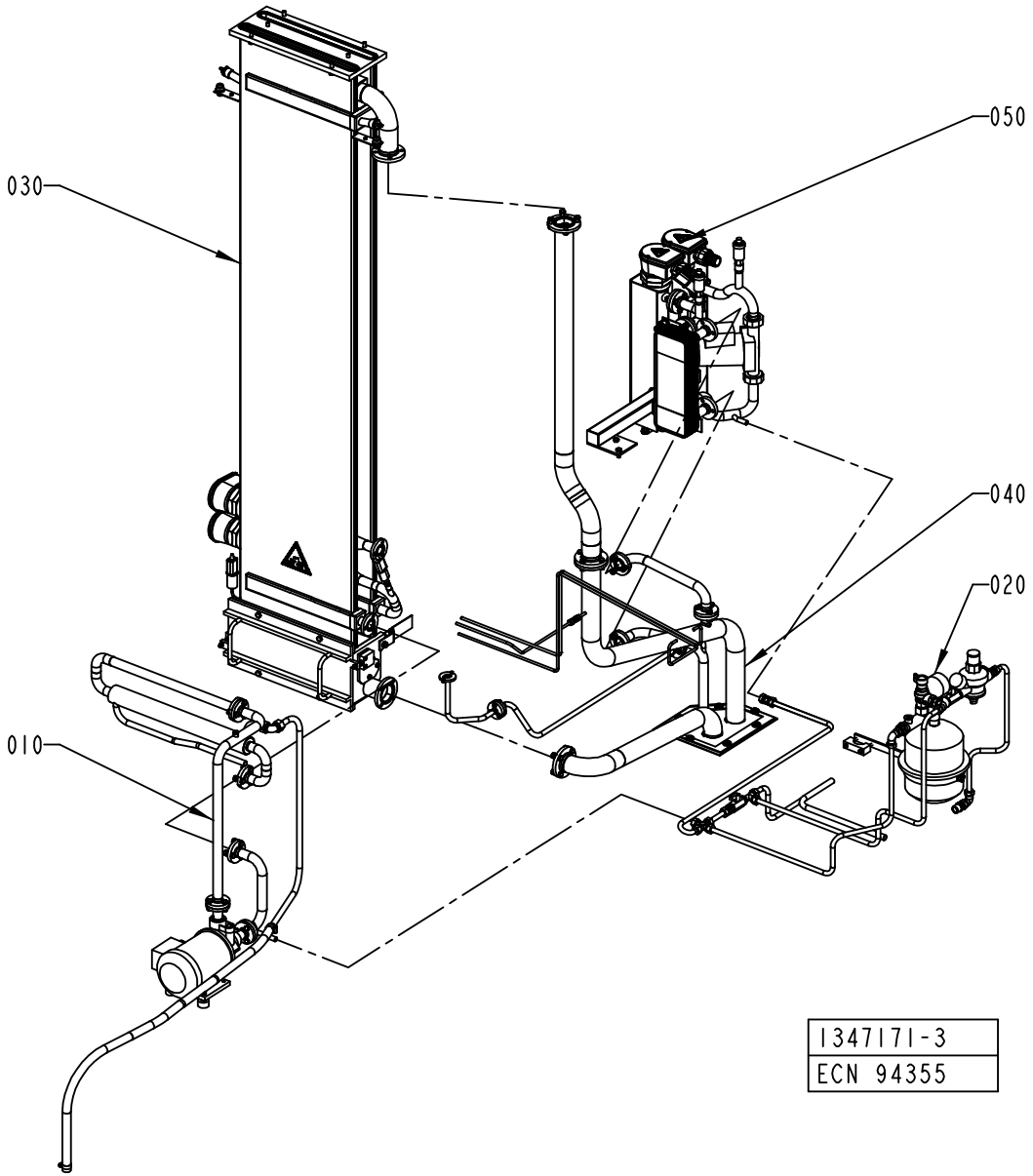
050
030
040
020
010
1347171-3
ECN 94355

ECM: 94389 - 20010925
Group number: 1347171-0200
Assembly Drawing: 1347171-3_1_AA

Pos	Part No	SP	UN	Qty	Description	Page No
-						
010	1490265-0100	-		1	WATER CIRCULATION	**1-181**
020	1347174-0200	-		1	WATER CIRCULATION	**1-183**
030	1035008-0400	-		1	BATH	**1-185**
040	1347172-0200	-		1	PEROXIDE PIPE	**1-187**
050	1334506-0200	-		1	HEATING UNIT	**1-189**

Pos	Part No	SP	UN	Qty	Description	Page No

WATER CIRCULATION

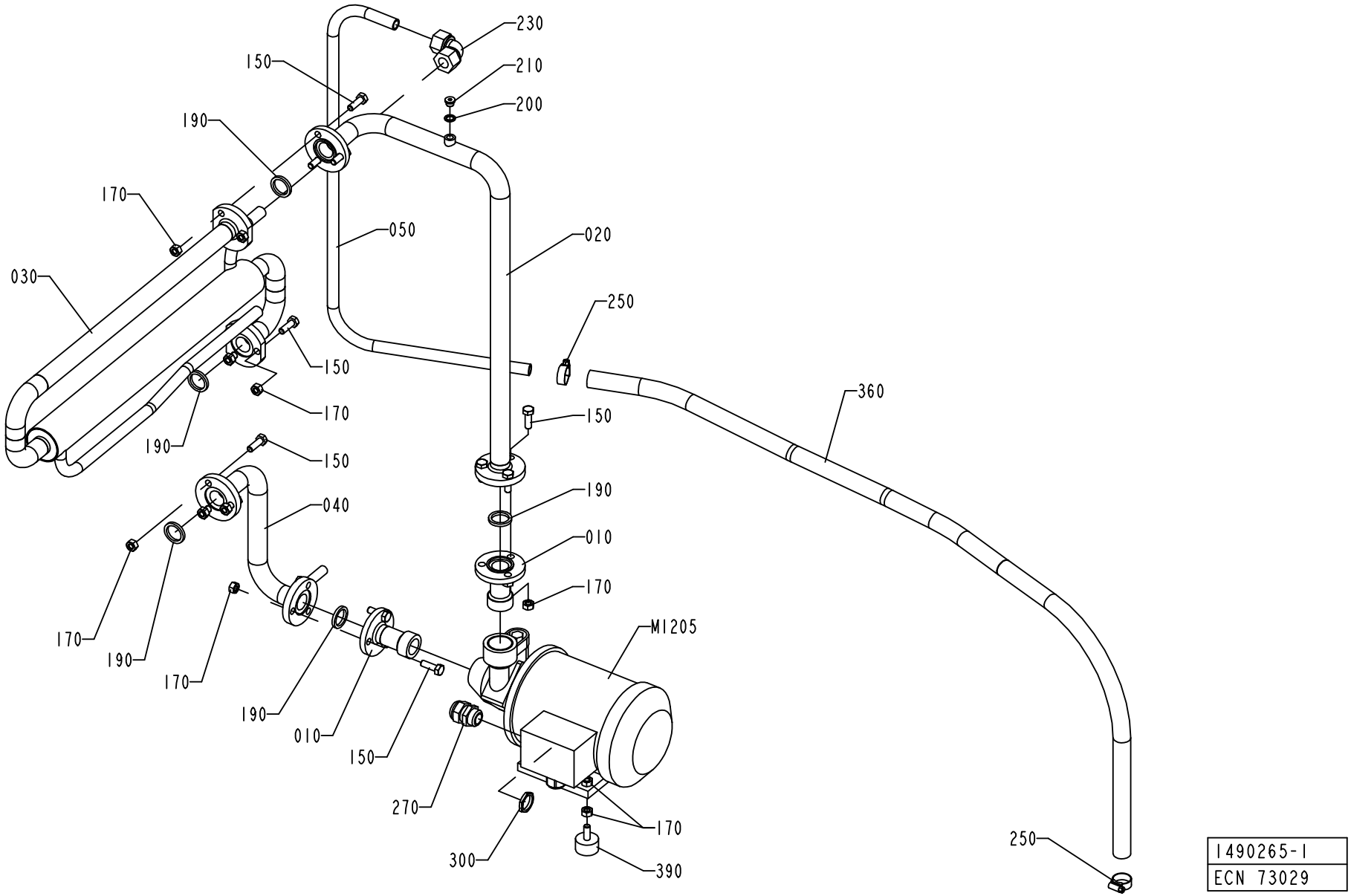

ECM: 113502 - 20020911
Group number: 1490265-0100
Assembly Drawing: 1490265-1_1_AA

Pos	Part No	SP	UN	Qty	Description	Page No
50HZ						
M1205	90321-0100	A		1	PUMP PBK 16/A 220/380V 50 HZ 3 PH.	
	90321-0567	*-*		*1*	*IMPELLER*	
	90321-0568	*-*		*1*	*SEAL*	
	90321-0569	*-*		*1*	*O-RING*	
60HZ						
M1205	90321-0127	A		1	CENTRIFUGAL PUMP LOWARA	
	90459-0044	*A*		*1*	*IMPELLER WHEEL, 260720310 FOR 90321-0127*	
	90321-0569	*A*		*1*	*O-RING*	
	90321-0568	*A*		*1*	*SEAL*	
Common Parts						
010	1037314-0000	-		2	PIPE CONNECTION	
020	1103391-0000	-		1	PIPE	
030	1282902-0000	-		1	HEAT EXCHANGER	
040	1347126-0000	-		1	PIPE	
050	1350705-0000	-		1	PIPE	
150	312105-0453	-		15	SCREW M6S ISO 4017 M8X25 A480	
170	312605-0318	-		19	HEXAGON NUT, M6M M8 A280	
190	315229-0103	B		5	GASKETS, 23,1X30,1X3,7 MM 1" FDA	
200	315237-0109	B		1	WASHER,PL.RND.AL.10/14,H=1,5	
210	342713-0209	B		1	PLUG, EXT THREAD HEX SOCKET 8638-00-180	
230	342737-0221	-		1	CONN. ELBOW W-15 LRFR	
250	342991-0103	-		2	HOSE CLIP,WORM DRIVE TYPE (19)-23	
270	352103-0111	-		1	CABLE GLAND, ST 16, PR22,5/PG16	
300	90099-0003	-		1	NUT	
320	90144-0073	-	MM	1	TREBOFLON-TAPE W=13MM	
330	90157-0037	-		1	SEALING COMPOUND	
360	90166-0087	-	MM	1200	HOSE 15/23 REINF.PVC TRANSP.	
390	90347-0004	-		2	VIBRATION DAMPER D=30 TH=M8 H=17 H2=21MM	

Pos	Part No	SP	UN	Qty	Description	Page No

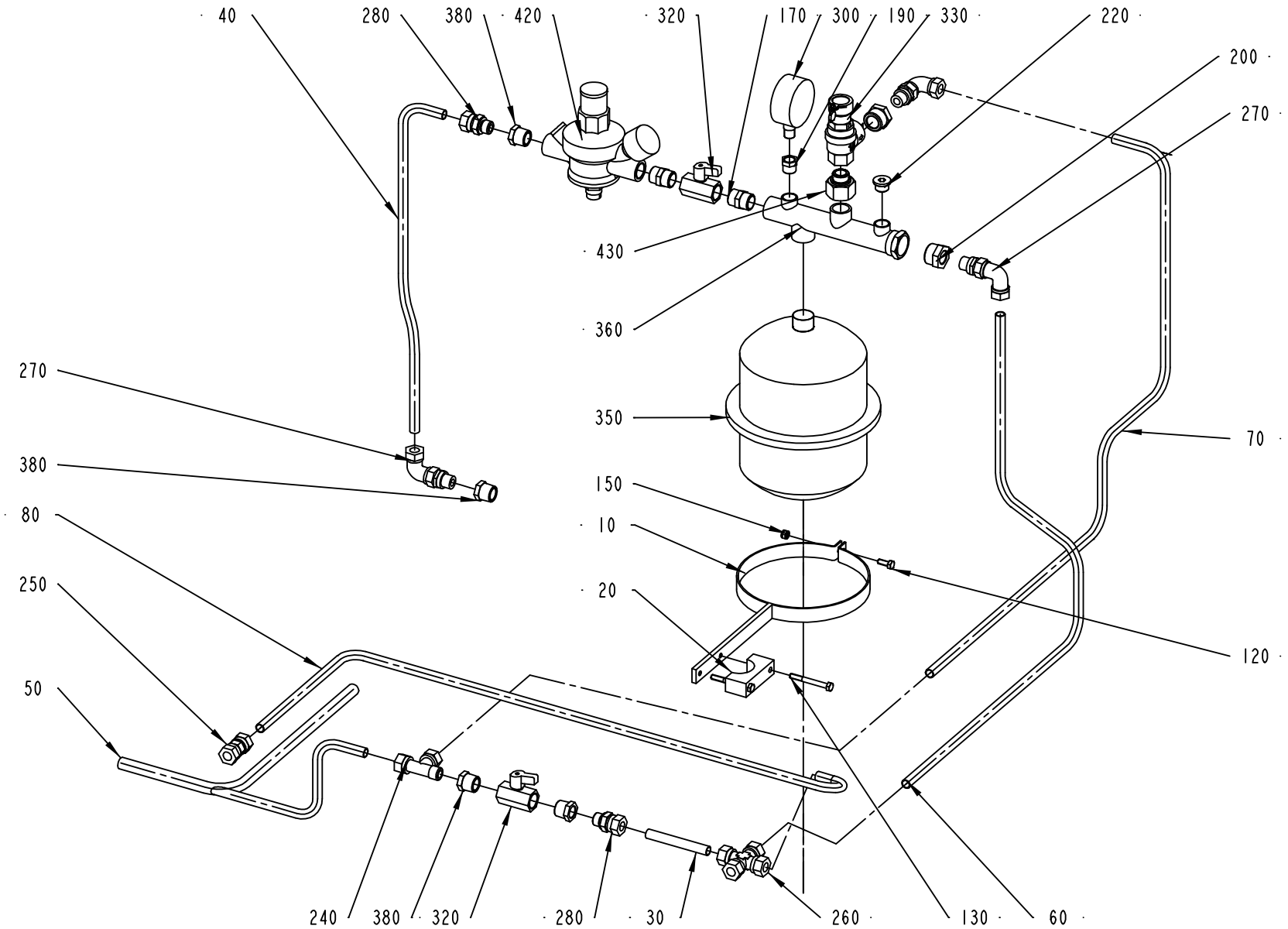

1347174-3
ECN 94355

ECM: 113519 - 20020911
Group number: 1347174-0200
Assembly Drawing: 1347174-3_1_AA

Pos	Part No	SP	UN	Qty	Description	Page No
-						
010	1129101-0000	-		1	BRACKET	
020	1140645-0000	-		1	BRACKET	
030	1347124-0000	-		1	PIPE	
040	2501520-0000	-		1	PIPE	
050	1347130-0000	-		1	PIPE	
060	1347131-0000	-		1	PIPE	
070	2501521-0000	-		1	PIPE	
080	1487848-0000	-		1	PIPE	
120	312105-0368	-		1	SCREW M6S M6X16 A280	
130	312105-0381	-		2	SCREW M6S ISO 4014 M6X55 A480	
150	312812-0316	-		1	HEXAGON NUT, NY-LOCK M6 A480	
170	342700-0113	-		2	NIPPLES,HEXAGON,EXT.G-THREAD G1/2"-G1/2"	
190	342701-0203	-		1	BUSHING, INT/EXT. G-THREAD NO. 3/8-1/4	
200	342701-0209	-		2	BUSHING,INT./EXT.G-THREAD G3/4"-G3/8"	
220	342713-0211	-		1	PLUG, EXT THREAD HEX SOCKET 8638-00-380	
240	342751-0215	-		1	CONN. L-PIPE, EXT. LE-12-R3/8	
250	90030-0106	-		1	CONN. PIPE G-12	
260	90030-0599	-		1	CONN. CROSS, 12	
270	90030-0136	-		3	ADJUSTABLE ELBOW CONNECTION,EXT 12-G3/8	
280	90030-0187	-		2	CONN. STR. GA-12-G3/8	
300	90043-0002	A		1	PRESSURE GAUGE, 2040 D=63 MM	
320	90187-0062	B		2	BALL VALVE G1/2, NPBR	
330	90458-0200	A		1	PEROX. SAFETY VALVE, NO. 527-430 1/2X3/4	
350	90304-0020	A		1	LIQUID CONTAINER	
360	90304-0307	A		1	ATTACHMENT PIPE	
380	90330-0048	-		4	BUSHING, INT/EXT. THR. R1/2-RP3/8	
400	90144-0073	-	MM	1	TREBOFLON-TAPE W=13MM	
410	90157-0037	-		1	SEALING COMPOUND	
420	90458-0201	A		1	FLUID AUT. FEEDER, ALINOX 1/2 46.04.00	
430	90458-0751	-		1	BUSHING,INT./EXT.G-THREAD G3/4"-G1/2"	

Pos	Part No	SP	UN	Qty	Description	Page No

Machine Type | Group Description | Used-In | Group Number | Page No

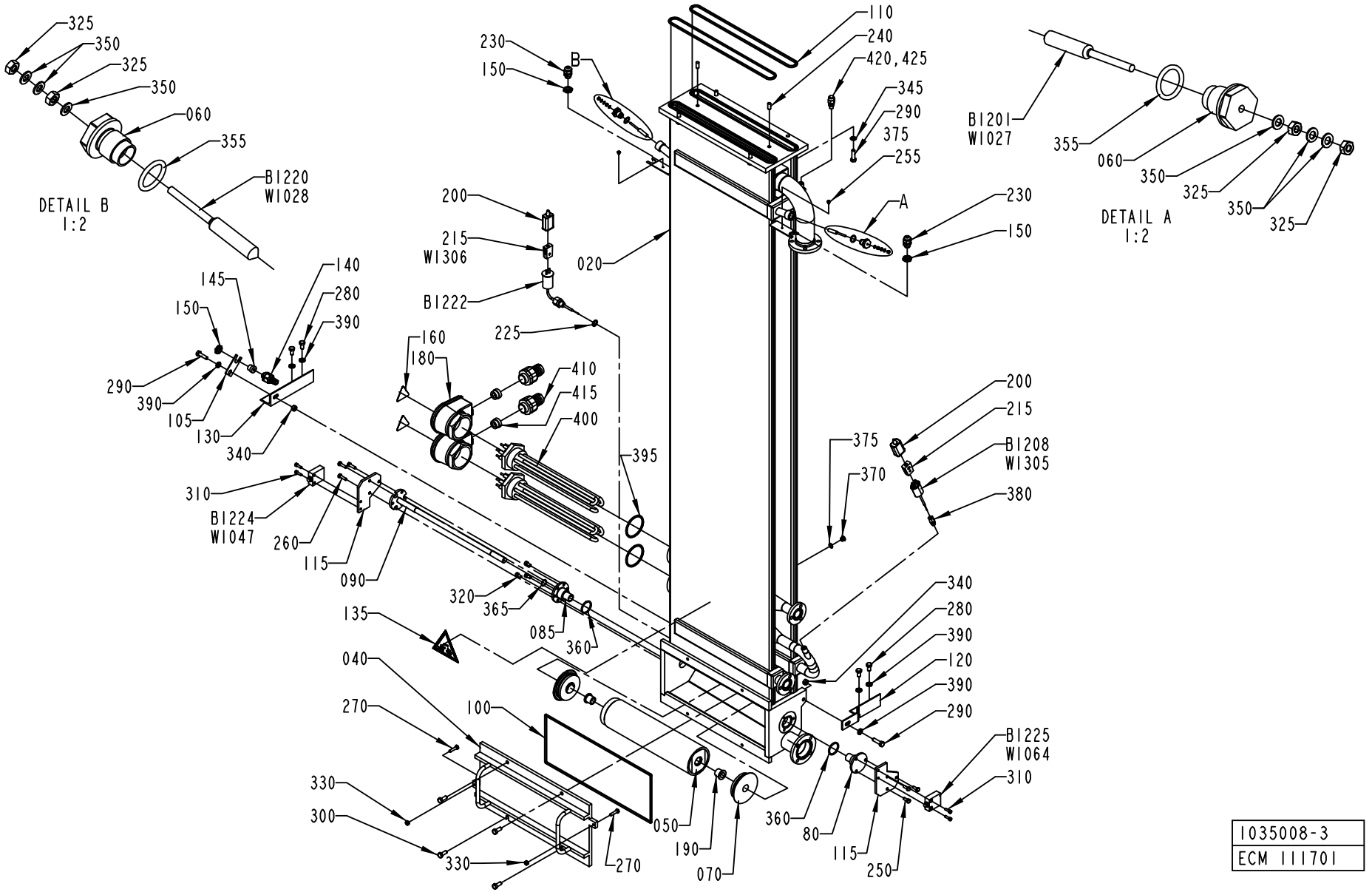

1035008-3
ECM 111701

ECM: 116601 - 20021216
Group number: 1035008-0400
Assembly Drawing: 1035008-3_1_AD

Pos	Part No	SP	UN	Qty	Description	Page No
-						
020	1346571-0000	-		1	BATH	
040	1346558-0000	-		1	COVER	
050	541177-0000	A		1	BENDING ROLLER	
060	1484428-0000	-		2	PLASTIC PLUG	
070	1036553-0000	A		2	WHEEL	
080	1038857-0000	A		1	FLANGE	
085	1038858-0000	-		1	FLANGE	
090	1255839-0000	A		1	SHAFT	
100	1347671-0000	A		1	GASKET	
105	1040970-0000	-		1	BRACKET	
110	1346557-0000	A		2	GASKET	
115	1195460-0000	-		2	BRACKET	
120	1038860-0000	-		1	BRACKET	
130	1038861-0000	-		1	BRACKET	
135	359705-0004	-		1	WARNING SIGN ISO, DANGEROUS CHEMICALS	
140	353243-0001	-		1	EXTENDED WITHOUT INSERT, PG9	
145	353249-0008	-		1	INSERT, SINGEL HOLE, EK 152/7	
150	90099-0104	-		3	NUT, PR 15,2 (PG9)	
160	359705-0015	-		2	WARNING SIGN ISO, RISK OF ELECTRIC SHOCK	
180	90206-0326	-		2	JUNCTION BOX FOR 90206-56	
190	90240-0146	A		2	FLANGE BUSHING,15X21X20 MM	
200	90326-0012	-		2	PROTECTIVE COVER, T31A4618	
215	90326-0020	-		2	PLUG, FEMALE YELLOW CR-AL	
225	315237-0110	A		1	WASHER,PL.RND.AL.13,5/18,H=1,5	
230	352103-0101	-		2	CABLE GLAND, ST 9, PR15,2/PG9	
240	311103-0401	-		2	PARALLEL PIN ISO 2338 8M6X20 A1	
250	312105-0368	-		3	SCREW M6S M6X16 A280	
255	312132-0284	-		2	SCREW SLOT. PAN HEAD MSCS M4X5	
260	312105-0371	-		3	SCREW M6S ISO 4017 M6X22 A480	
270	312105-0372	-		2	SCREW M6S ISO 4017 M6X25 A480	
280	312105-0449	-		4	SCREW M6S ISO 4017 M8X16 A480	
290	312105-0455	-		6	SCREW M6S ISO 4017 M8X30 A480	
300	312105-0451	-		4	SCREW M6S ISO 4017 M8X20 A480	
310	312115-0329	-		4	SCREW ISO4762 M5X16 A4	
320	312115-0366	-		3	SCREW ISO4762 M6X12 A4	
325	312605-0312	-		4	HEXAGON NUT, M6M M4 A280	
330	312605-0316	-		2	HEXAGON NUT, M6M M6 A280	
340	312605-0318	-		2	HEXAGON NUT, M6M M8 A280	
345	315105-0165	-		4	WASHER BRB8,4X16RFR	
350	315105-0136	-		6	WASHER BRB4,3XRFR	
355	927421-0004	A		2	O-RING 15.3X2.4 SILICON	
360	90242-0265	A		2	O-RING 32,2X3 MM	
365	90242-0264	A		1	O-RING 16,1X1,6 MM	
370	342713-0209	-		1	PLUG, EXT THREAD HEX SOCKET 8638-00-180	
375	315234-0109	-		1	WASHER,PL.RND.CU.10,3/13,5 H=1,0	
380	90326-0306	-		1	GLAND FITTING 9041-45-KS-KR.1/8" D=4,5MM	
390	315115-0165	-		6	WASHER PLAIN, TBRB 8,4/16 H=3	
395	90269-0308	A		2	GASKET 59X68X3 MM	
400	90157-0034	-			SEALING COMPOUND LOCTITE 572 50 ML	
410	353243-0007	-		2	EXTENDED WITHOUT INSERT, PG21	
415	353249-0013	-		2	INSERT, SINGEL HOLE, EK 154/13	
420	90459-1736	-		1	PURGE VALVE, 2RM-PG4L-SS	
425	90144-0007	-	M		TAPE	
B1201	567070-0011	A		1	ELECTRODE	
B1208	90326-0038	A		1	THERMOCOUPLE, CR-AL	
B1220	567070-0011	A		1	ELECTRODE	
B1222	90326-0053	A		1	THERMOCOUPLE, 12826-35	
B1224	90044-0084	A		1	LIMIT SW. 14 CE1-4	
B1225	90044-0084	A		1	LIMIT SW. 14 CE1-4	
R1206	90206-0070	A		1	HEATING ELEMENT 6000W 380/220V	
	90269-0308	-		*1*	*GASKET 59X68X3 MM*	
	90206-0326	-		*1*	*JUNCTION BOX FOR 90206-56*	
R1207	90206-0070	A		1	HEATING ELEMENT 6000W 380/220V	
	90269-0308	-		*1*	*GASKET 59X68X3 MM*	
	90206-0326	-		*1*	*JUNCTION BOX FOR 90206-56*	

Machine Type | Group Description | Used-In | Group Number | Page No

PEROXIDE PIPE

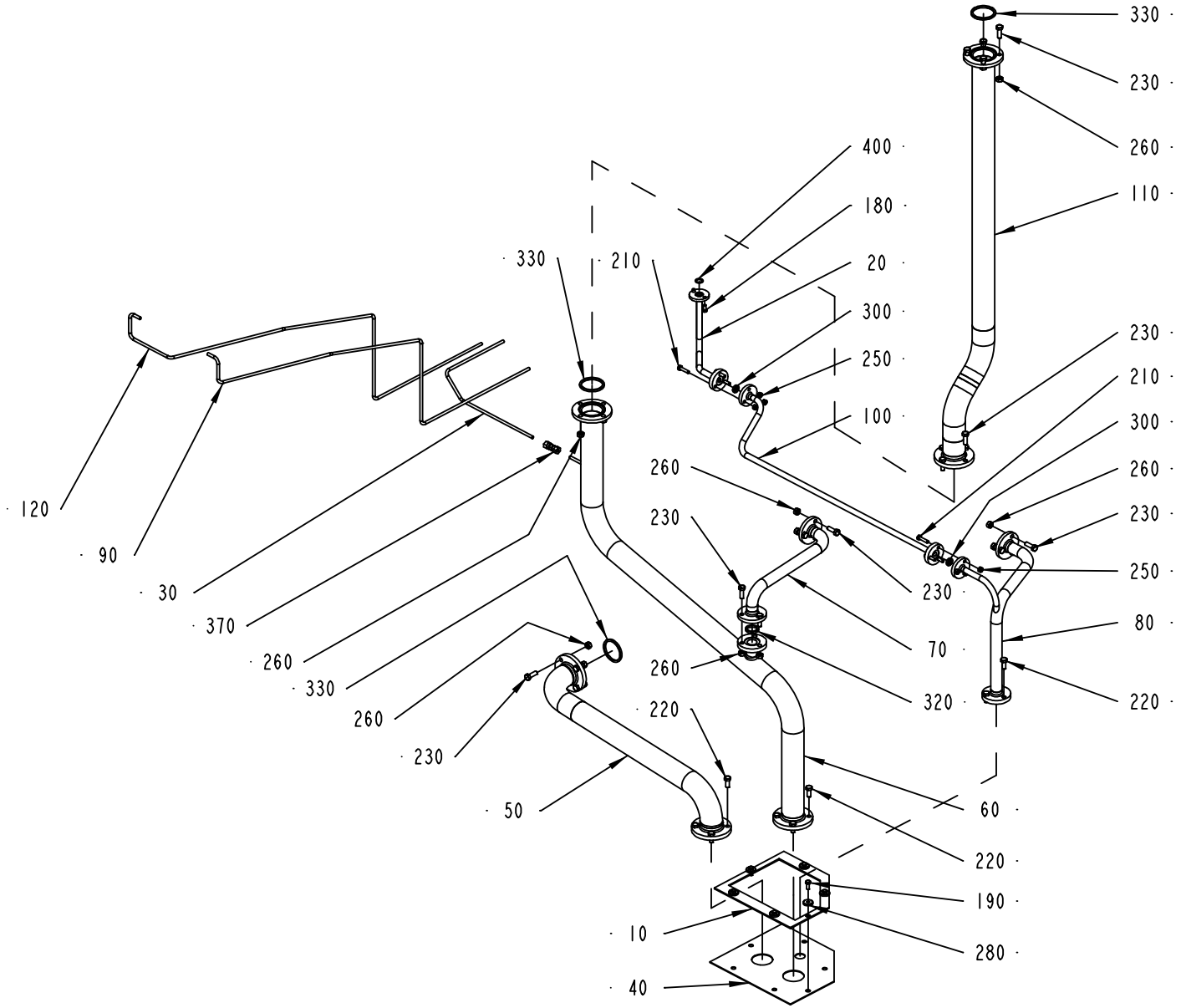

1347172-2
ECN 94355

ECM: 113520 - 20020911
Group number: 1347172-0200
Assembly Drawing: 1347172-2_1_AA

Pos	Part No	SP	UN	Qty	Description	Page No
-						
010	1038688-0000	-		1	HOLDER	
020	1038879-0000	-		1	PIPE	
030	2501524-0000	-		1	PIPE	
040	1255551-0000	-		1	SEAL CLOTH	
050	1282889-0000	-		1	PIPE	
060	1334510-0000	-		1	PIPE	
070	1334511-0000	-		1	PIPE	
080	1334512-0000	-		1	PIPE	
090	2501522-0000	-		1	PIPE	
100	1334513-0000	-		1	PIPE	
110	1334514-0000	-		1	PIPE	
120	2501523-0000	-		1	PIPE	
180	312105-0366	-		2	SCREW M6S M6X12 A280	
190	312105-0368	-		6	SCREW M6S M6X16 A280	
210	312105-0372	-		6	SCREW M6S ISO 4017 M6X25 A480	
220	312105-0451	-		11	SCREW M6S ISO 4017 M8X20 A480	
230	312105-0453	-		21	SCREW M6S ISO 4017 M8X25 A480	
250	312605-0316	-		6	HEXAGON NUT, M6M M6 A280	
260	312605-0318	-		21	HEXAGON NUT, M6M M8 A280	
280	315125-0153	-		6	WASHER TBRSB 6,4X22X4 A4	
300	315229-0101	B		2	GASKETS, 10,4X17,4X3,7 MM 1/2" FDA	
320	315229-0103	B		1	GASKETS, 23,1X30,1X3,7 MM 1" FDA	
330	315229-0105	B		3	GASKETS, 48,5X55,5X3,7 MM 2" FDA	
370	90030-0075	-		1	PIPE CONNECTION G-6	
400	927421-0003	B		1	O-RING 13.3X2.4 SILICON	

Pos	Part No	SP	UN	Qty	Description	Page No

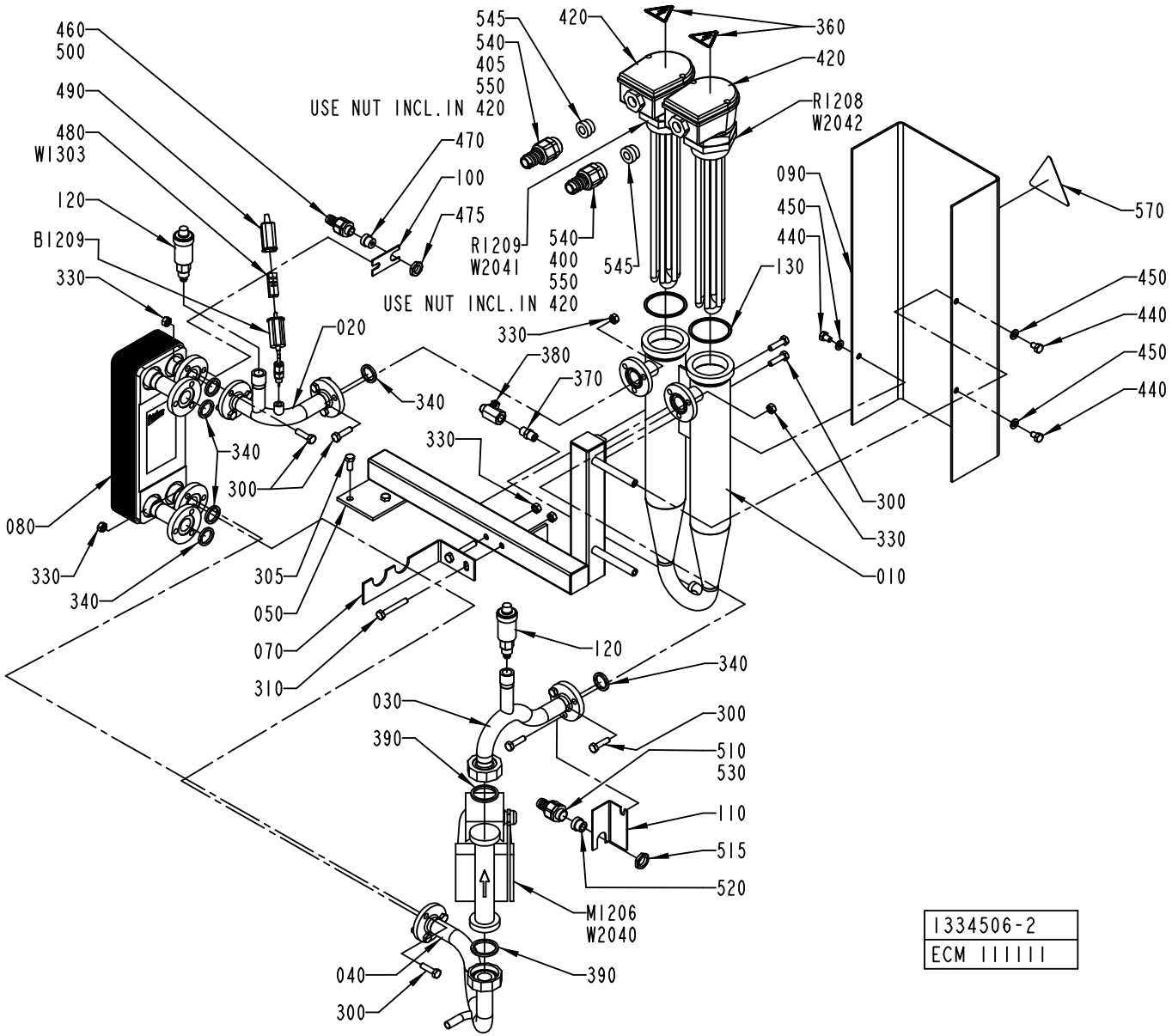

1334506-2
ECM IIIIII

ECM: 111765 - 20020911
Group number: 1334506-0200
Assembly Drawing: 1334506-2_1_AE

Pos	Part No	SP	UN	Qty	Description	Page No
50HZ						
M1206	90321-0134	A		1	CIRC. PUMP TMB 40/2 230V50HZ	
60HZ						
M1206	90321-0135	A		1	CIRC. PUMP TMB 40/2 230V60HZ	
Common Parts						
010	1334507-0000	-		1	TUBE	
020	1538048-0000	-		1	PIPE	
030	1538049-0000	-		1	PIPE	
040	1334516-0000	-		1	PIPE	
050	1349505-0000	-		1	FRAME	
070	1349608-0000	-		1	HOLDER	
080	1346568-0000	A		1	HEAT EXCHANGER	
090	1346574-0000	-		1	PROTECTION	
100	1040970-0000	-		1	BRACKET	
110	1517707-0000	-		1	BRACKET	
120	90187-0105	A		2	PURGING VALVE, G3/8 FOR WATER	
130	90269-0308	A		2	GASKET 59X68X3 MM	
300	312105-0455	-		14	SCREW M6S ISO 4017 M8X30 A480	
305	312105-0451	-		2	SCREW M6S ISO 4017 M8X20 A480	
310	312105-0462	-		2	SCREW M6S ISO 4014 M8X55 A480	
330	312605-0318	-		14	HEXAGON NUT, M6M M8 A280	
340	315229-0103	A		6	GASKETS, 23,1X30,1X3,7 MM 1" FDA	
360	359705-0015	-		2	WARNING SIGN ISO, RISK OF ELECTRIC SHOCK	
370	90330-0043	-		1	NIPPLES, EXT. THREAD. R-207R1/4	
380	90187-0158	A		1	THROTTLE BALL VALVE G1/4, R1/4	
390	315229-0104	-		2	GASKETS, 35,8X42,8X3,7 MM 1"1/2 FD	
400	90152-0051	-	MM	1800	SPIRAL CONDUIT, 25X18, UL 1816	
405	90152-0051	-	MM	1800	SPIRAL CONDUIT, 25X18, UL 1816	
420	90206-0326	-		2	JUNCTION BOX FOR 90206-56	
440	312105-0447	-		3	SCREW M6S ISO 4017 M8X12 A480	
450	315105-0165	-		3	WASHER BRB8,4X16RFR	
460	353243-0001	-		1	EXTENDED WITHOUT INSERT, PG9	
470	353249-0008	-		1	INSERT, SINGEL HOLE, EK 152/7	
475	90099-0104	-		1	NUT, PR 15,2 (PG9)	
480	90326-0020	-		1	PLUG, FEMALE YELLOW CR-AL	
490	90326-0012	-		1	PROTECTIVE COVER, T31A4618	
500	90152-0050	-	MM	1500	SPIRAL CONDUIT, 20X13, UL 1313	
510	353243-0003	-		1	EXTENDED WITHOUT INSERT, PG11	
515	90099-0117	-		1	NUT, PR 18,6 (PG11)	
520	353249-0011	-		1	INSERT, SINGEL HOLE, EK 153/11	
530	90152-0050	-	MM	1750	SPIRAL CONDUIT, 20X13, UL 1313	
540	90012-0131	-		2	NORMAL WITHOUT INSERT, PG21	
545	353249-0013	-		2	INSERT, SINGEL HOLE, EK 154/13	
550	90157-0034	-			SEALING COMPOUND LOCTITE 572 50 ML	
570	90194-0075	-		1	WARNING SIGN ISO, HOT SURFACE	
B1209	90326-0057	A		1	THERMOCOUPLE, CR-AL	
R1208	90206-0070	A		1	HEATING ELEMENT 6000W 380/220V	
	90269-0308	*-*		*1*	*GASKET 59X68X3 MM*	
	90206-0326	*-*		*1*	*JUNCTION BOX FOR 90206-56*	
R1209	90206-0070	A		1	HEATING ELEMENT 6000W 380/220V	
	90269-0308	*-*		*1*	*GASKET 59X68X3 MM*	
	90206-0326	*-*		*1*	*JUNCTION BOX FOR 90206-56*	
W1303	90220-0034	-	M	5	THERMOCOUPLE CABLE K/ 2X0,5MM2	
W2040	351150-0412	-	M	4	CABLE OLFLEX 3X1,5 MM2 LIGHT/GREY	
W2041	351120-0164	-	M	4	CABLE SIHF 4X1,5MM2 GREEN/YELLOW	
W2042	351120-0164	-	M	4	CABLE SIHF 4X1,5MM2 GREEN/YELLOW	

Machine Type | Group Description | Used-In | Group Number | Page No

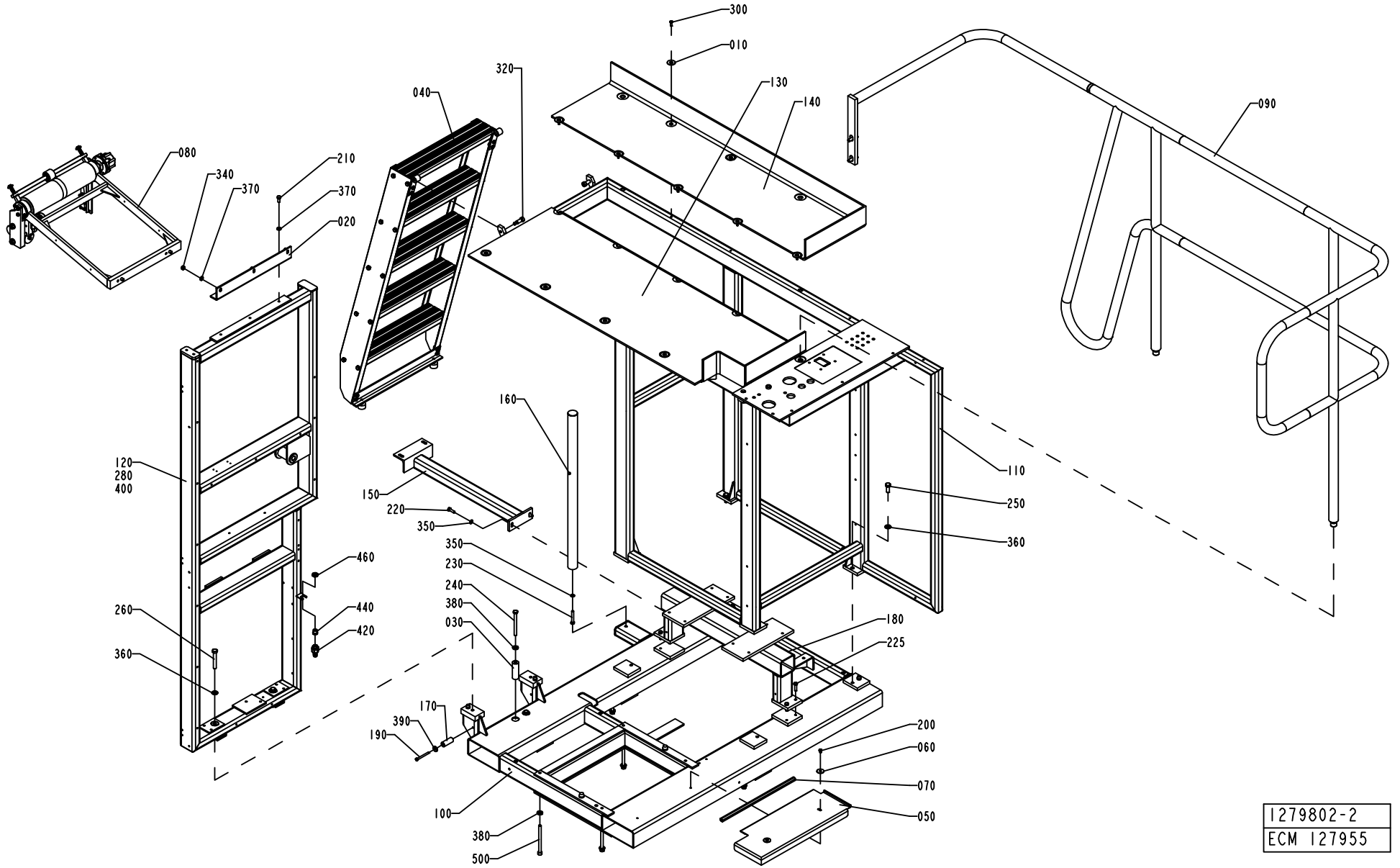
300
010
320
040
130
140
090
080
340
370
210
370
020
160
110
120
280
400
150
220
350
250
360
350
230
240
380
030
460
440
420
260
360
180
225
170
390
190
200
060
070
050
100
380
500
1279802-2
ECM 127955

ECM: 128214 - 20030630
Group number: 1279802-0200
Assembly Drawing: 1279802-2_1_AE

Pos	Part No	SP	UN	Qty	Description	Page No
-						
010	1036241-0000	-		13	WASHER	
020	1038850-0000	-		1	ANGLE BRACKET	
030	1040856-0000	-		2	SPACER	
040	1095862-0100	-		1	LADDER	**1-193**
050	1129637-0000	-		1	COVER PLATE	
060	1129638-0000	-		2	WASHER	
070	1129641-0000	-		1	SILICON RUBBER PROFILE	
080	1279803-0200	-		1	BENDING ROLLER	**1-195**
090	1347639-0100	-		1	RAILING	**1-201**
100	1347695-0000	-		1	FRAME	
110	1347696-0000	-		1	FRAME	
120	1347697-0000	-		1	FRAME	
130	1347867-0000	-		1	CHECKER PLATE	
140	1347868-0000	-		1	CHECKER PLATE	
150	1347869-0000	-		1	BRACKET	
160	1347870-0000	-		1	BRACKET	
170	1519521-0000	-		1	SPACER	
180	1490893-0000	-		1	BRACKET	
190	312105-0383	-		1	SCREW M6S ISO 4014 M6X65 A480	
200	312105-0362	-		2	SCREW M6S ISO 4017 M6X8 A480	
210	312105-0451	-		3	SCREW M6S ISO 4017 M8X20 A480	
220	312105-0453	-		2	SCREW M6S ISO 4017 M8X25 A480	
225	312105-0455	-		4	SCREW M6S ISO 4017 M8X30 A480	
230	312105-0462	-		1	SCREW M6S ISO 4014 M8X55 A480	
240	312105-0513	-		2	SCREW M6S ISO 4014 M10X110 A480	
250	312105-0536	-		4	SCREW M6S ISO 4017 M12X30 A480	
260	312105-0548	-		2	SCREW M6S ISO 4014 M12X80 A480	
280	312125-0366	-		37	SCREW ISO 1207 M6X12 A4	
300	312155-0370	-		13	SCREW EN 10642 MF6S M6X20 A480	
320	312180-0534	-		2	SCREW ISO7379 H12X25	
340	312605-0318	-		3	HEXAGON NUT, M6M M8 A280	
350	315105-0165	-		3	WASHER BRB8,4X16RFR	
360	315105-0178	-		6	WASHER BRB13X24RFR	
370	315115-0165	-		6	WASHER PLAIN, TBRB 8,4/16 H=3	
380	315115-0173	-		8	WASHER PLAIN, TBRB 10,5/22 H=4	
390	315125-0153	-		1	WASHER TBRSB 6,4X22X4 A4	
400	352113-0204	-		37	ANCHOR PLATES FOR STRIPS, TYPE TM3S25-M	
420	353243-0001	-		1	EXTENDED WITHOUT INSERT, PG9	
440	353249-0008	-		1	INSERT, SINGEL HOLE, EK 152/7	
460	90099-0104	-		1	NUT, PR 15,2 (PG9)	
480	90153-0023	-		1	ADHESIVE, SILICON 251470 TUB 90CC	
500	90287-0349	-		6	SCREW	

Machine Type | Group Description | Used-In | Group Number | Page No

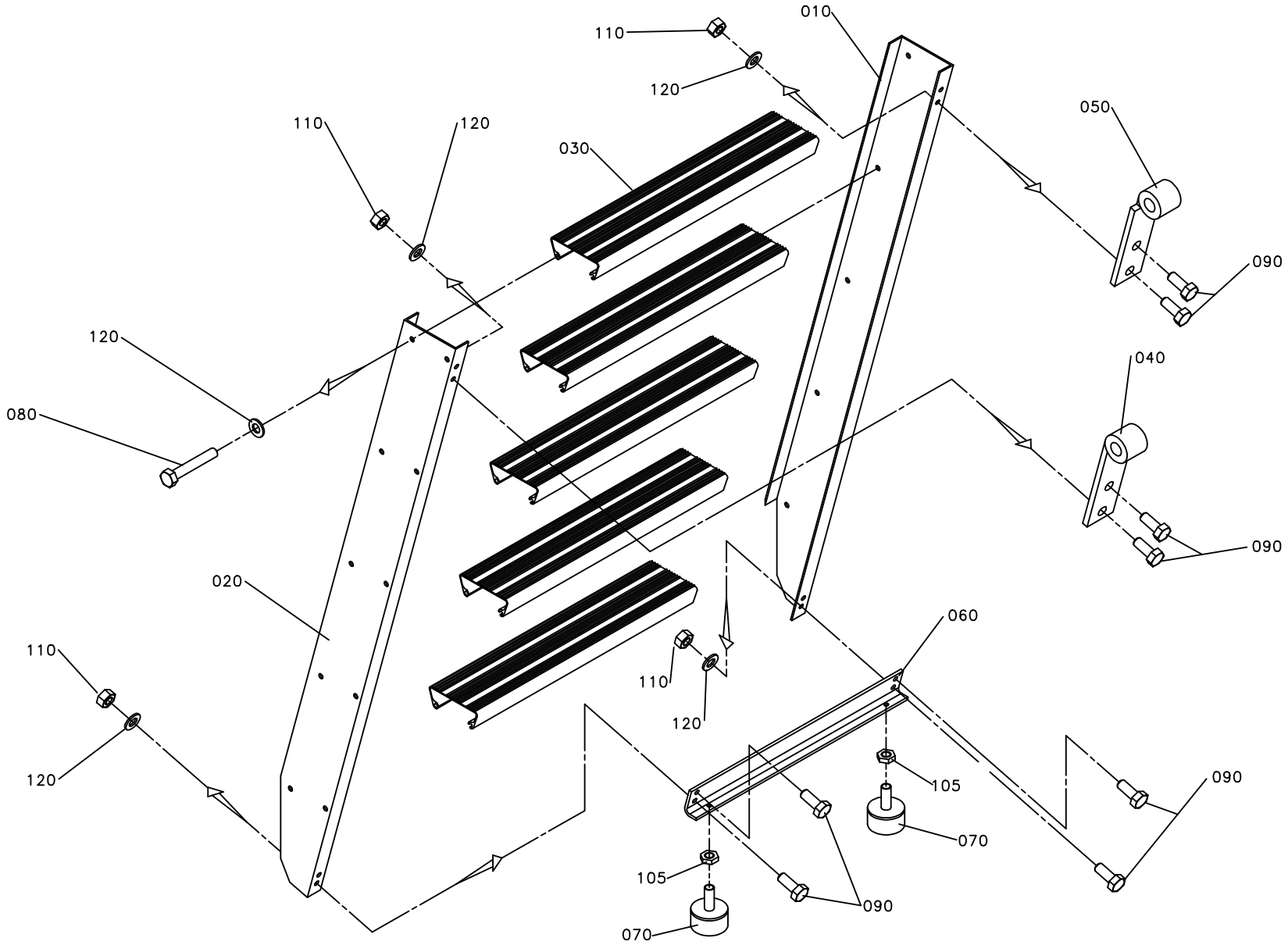
010
110
120
050
110
120
030
090
120
080
040
090
020
060
110
120
105
090
070
105
090
070

ECM: 71741 - 19980902
Group number: 1095862-0100
Assembly Drawing: 1095862-1_1_AA

Pos	Part No	SP	UN	Qty	Description	Page No
-						
010	1036939-0000	-		1	SIDE PIECE	
020	1036940-0000	-		1	SIDE PIECE	
030	1129643-0000	-		5	STAIR	
040	1036963-0000	-		1	HOOK HOLDER	
050	1036965-0000	-		1	HOOK HOLDER	
060	1129644-0000	-		2	BRACKET	
070	90347-0004	-		2	VIBRATION DAMPER D=30 TH=M8 H=17 H2=21MM	
080	312104-0461	-		20	SCREW M6S M8X50H FZB	
090	312105-0451	-		8	SCREW M6S ISO 4017 M8X20 A480	
105	312625-0318	-		2	HEXAGON THIN NUT, EN 24035 ML6M M8 A4	
110	312605-0318	-		8	HEXAGON NUT, M6M M8 A280	
120	315101-0165	-		28	WASHER PLAIN, BRB, 8,4/16 H=1,5	

Pos	Part No	SP	UN	Qty	Description	Page No

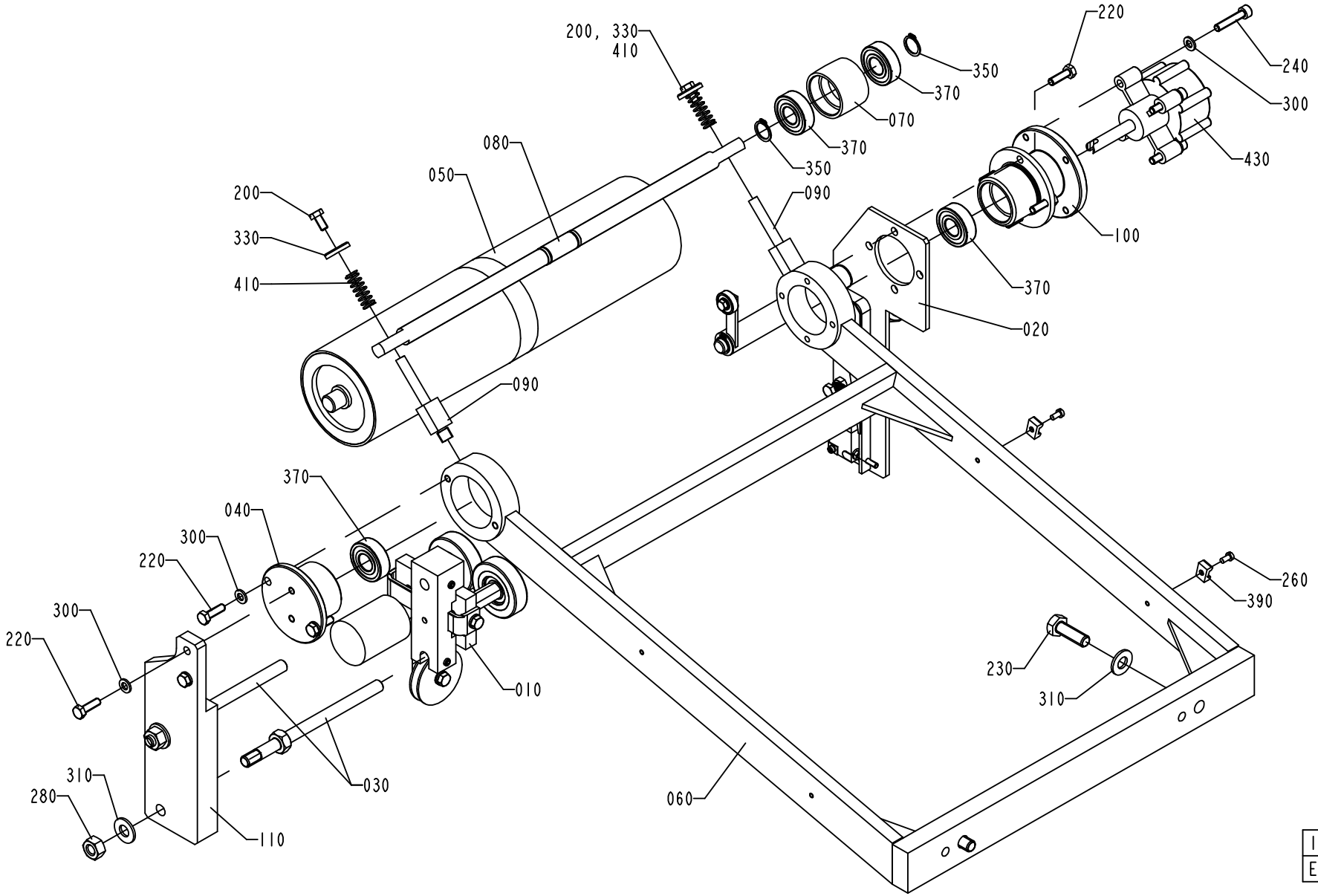

1279803-2
ECN 90751

ECM: 113521 - 20020911
Group number: 1279803-0200
Assembly Drawing: 1279803-2_1_AB

Pos	Part No	SP	UN	Qty	Description	Page No
-						
010	1498624-0100	-		1	WEB GUIDE	**1-197**
020	1538809-0100	-		1	SPLICE DETECTOR	**1-199**
030	1279603-0000	-		2	SHAFT	
040	1538011-0000	-		1	FLANGE	
050	1538012-0000	A		1	ROLLER	
060	1538013-0000	-		1	BRACKET	
070	1538014-0000	-		1	ROLLER	
080	1538015-0000	-		1	SHAFT	
090	1538016-0000	-		2	SHAFT	
100	1538017-0000	-		1	SPACER	
110	1538040-0000	-		1	PLATE	
200	312105-0366	-		2	SCREW M6S M6X12 A280	
220	312105-0370	-		8	SCREW M6S ISO 4017 M6X20 A480	
230	312105-0495	-		2	SCREW M6S ISO 4017 M10X30 A480	
240	312115-0374	-		4	SCREW ISO4762 M6X30 A4	
260	312125-0287	-		2	SCREW ISO 1207 M4X8 A4	
280	312605-0320	-		2	HEXAGON NUT, M6M M10 A280	
300	315105-0153	-		8	WASHER BRB6,4X12RFR	
310	315105-0173	-		4	WASHER BRB10,5X22RFR	
330	315125-0153	-		2	WASHER TBRSB 6,4X22X4 A4	
350	315751-0112	B		2	RETAINING RING FOR SHAFT DIN 471 15 A2	
370	321313-0102	A		4	BALL BEARING, 15X35X11 MM	
390	352113-0205	B		2	ANCHOR PLATES FOR STRIPS, TYPE TM2S8-C10	
410	90335-0012	A		2	SPRING	
430	90347-0054	B		1	DAMPER	

Pos	Part No	SP	UN	Qty	Description	Page No

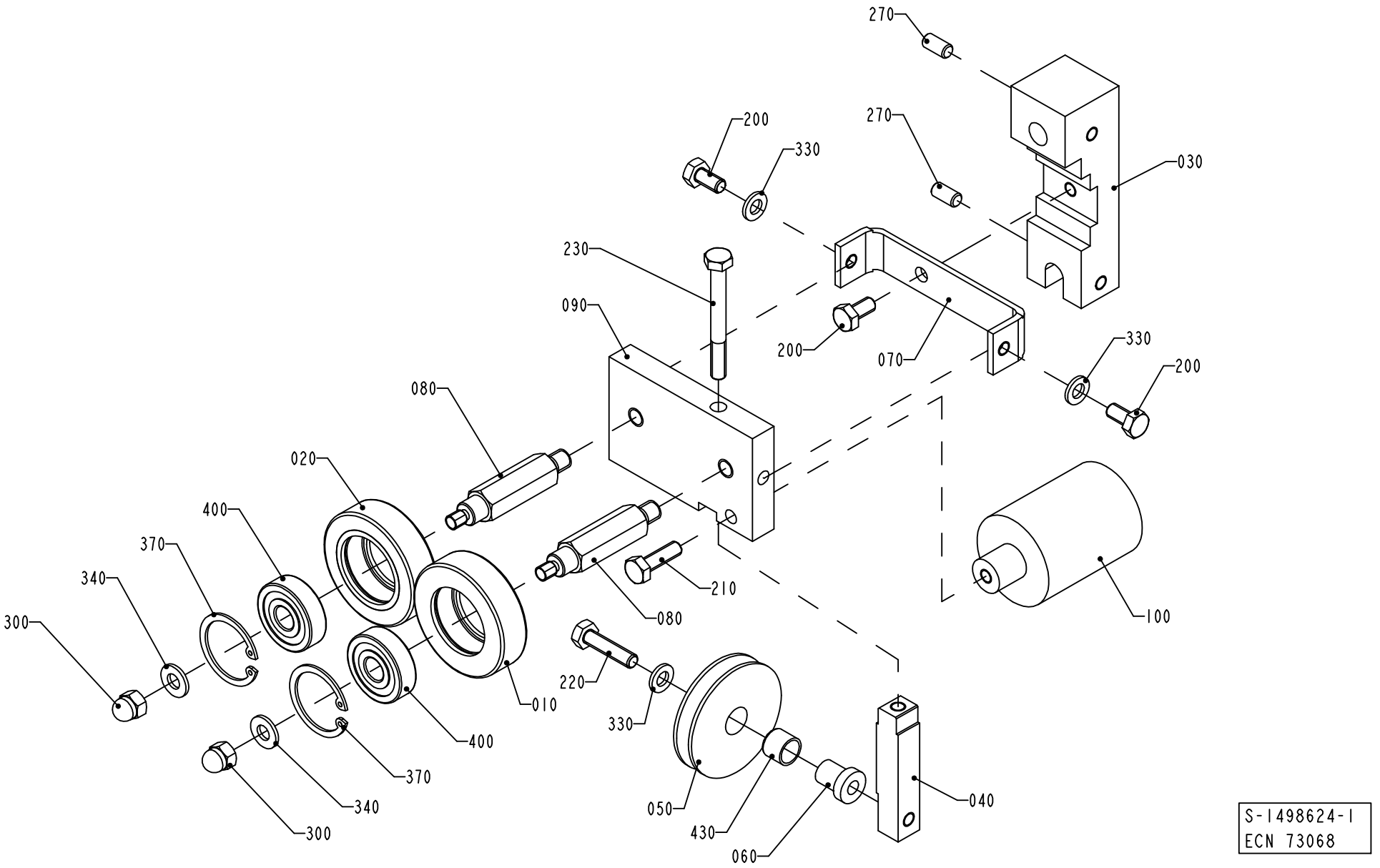

S-1498624-1
ECN 73068

ECM: 113523 - 20020911
Group number: 1498624-0100
Assembly Drawing: 1498624-1_1_AA

Pos	Part No	SP	UN	Qty	Description	Page No
-						
010	1036622-0000	A		1	GUIDE ROLLER	
020	1036623-0000	A		1	GUIDE ROLLER	
030	1511002-0000	-		1	HOLDER	
040	1499024-0000	-		1	BAR	
050	1499025-0000	A		1	ROLLER	
060	1499026-0000	-		1	SHAFT	
070	1499027-0000	-		1	BRACKET	
080	1511001-0000	-		2	SHAFT	
090	1511000-0000	-		1	PLATE	
100	1511003-0000	-		1	WEIGHT	
200	312105-0366	-		3	SCREW M6S M6X12 A280	
210	312105-0370	-		1	SCREW M6S ISO 4017 M6X20 A480	
220	312105-0372	-		1	SCREW M6S ISO 4017 M6X25 A480	
230	312105-0381	-		1	SCREW M6S ISO 4014 M6X55 A480	
270	312318-0366	-		2	SCREW ISO4029 M6X12 A4	
300	312705-0316	-		2	NUT HEX. DOMED CAP MHM-6 M6 A280	
330	315105-0153	-		3	WASHER BRB6,4X12RFR	
340	315105-0156	-		2	WASHER BRB 6.7X14 RFR	
370	315753-0122	-		2	RETAINING RING FOR BORE DIN 472 30 A2	
400	321313-0100	A		2	BALL BEARING, 10X30X9 MM	
430	90240-0287	A		1	BUSHING, 10X12X10 MM	

Pos	Part No	SP	UN	Qty	Description	Page No

SPLICE DETECTOR

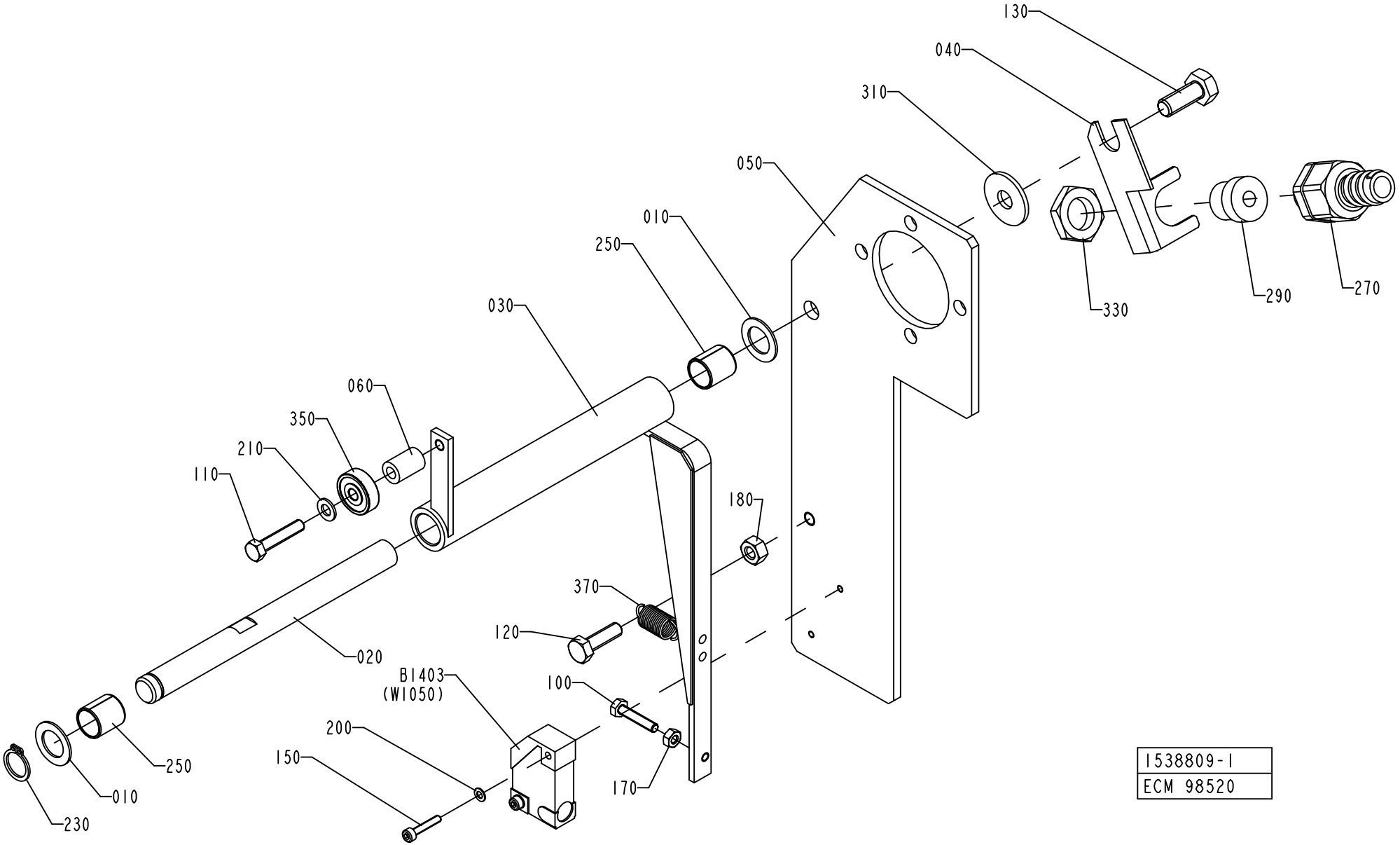

ECM: 113522 - 20020911
Group number: 1538809-0100
Assembly Drawing: 1538809-1_1_AC

Pos	Part No	SP	UN	Qty	Description	Page No
-						
010	266737-0000	-		2	WASHER	
020	1035897-0000	-		1	SHAFT	
030	1035898-0000	-		1	BRACKET	
040	1036610-0000	-		1	BRACKET	
050	1538041-0000	-		1	PLATE	
060	2515238-0000	-		1	SPACER	
100	312105-0295	-		1	SCREW M6S ISO4017 M4X20 A480	
110	312105-0333	-		1	SCREW M6S ISO 4017 M5X25 A480	
120	312105-0370	-		1	SCREW M6S ISO 4017 M6X20 A480	
130	312105-0451	-		1	SCREW M6S ISO 4017 M8X20 A480	
150	312115-0228	-		2	SCREW ISO4762 M3X16 A4	
170	312605-0312	-		1	HEXAGON NUT, M6M M4 A280	
180	312605-0316	-		1	HEXAGON NUT, M6M M6 A280	
200	315105-0124	-		2	BRICKA BRB3,2X6RFR	
210	315105-0146	-		1	BRICKA BRB5,3X10RFR	
230	315751-0109	B		1	RETAINING RING FOR SHAFT DIN 471 12 A2	
250	321120-0111	-		2	BEARING BUSHING W/O FLANGE,12/14X15	
270	353243-0001	-		1	EXTENDED WITHOUT INSERT, PG9	
290	353249-0008	-		1	INSERT, SINGEL HOLE, EK 152/7	
310	90005-0116	-		1	WASHER PLAIN ROUND 8,4(M8)/24, H=2	
330	90099-0104	-		1	NUT, PR 15,2 (PG9)	
350	90214-0138	B		1	BALL BEARING, 5X19X6 MM	
370	90335-0089	B		1	TENSION SPRING 41490, 0,9X10X23	
B1403	90044-0104	A		1	PROX.SWITCH IFM IN 3002	

Pos	Part No	SP	UN	Qty	Description	Page No

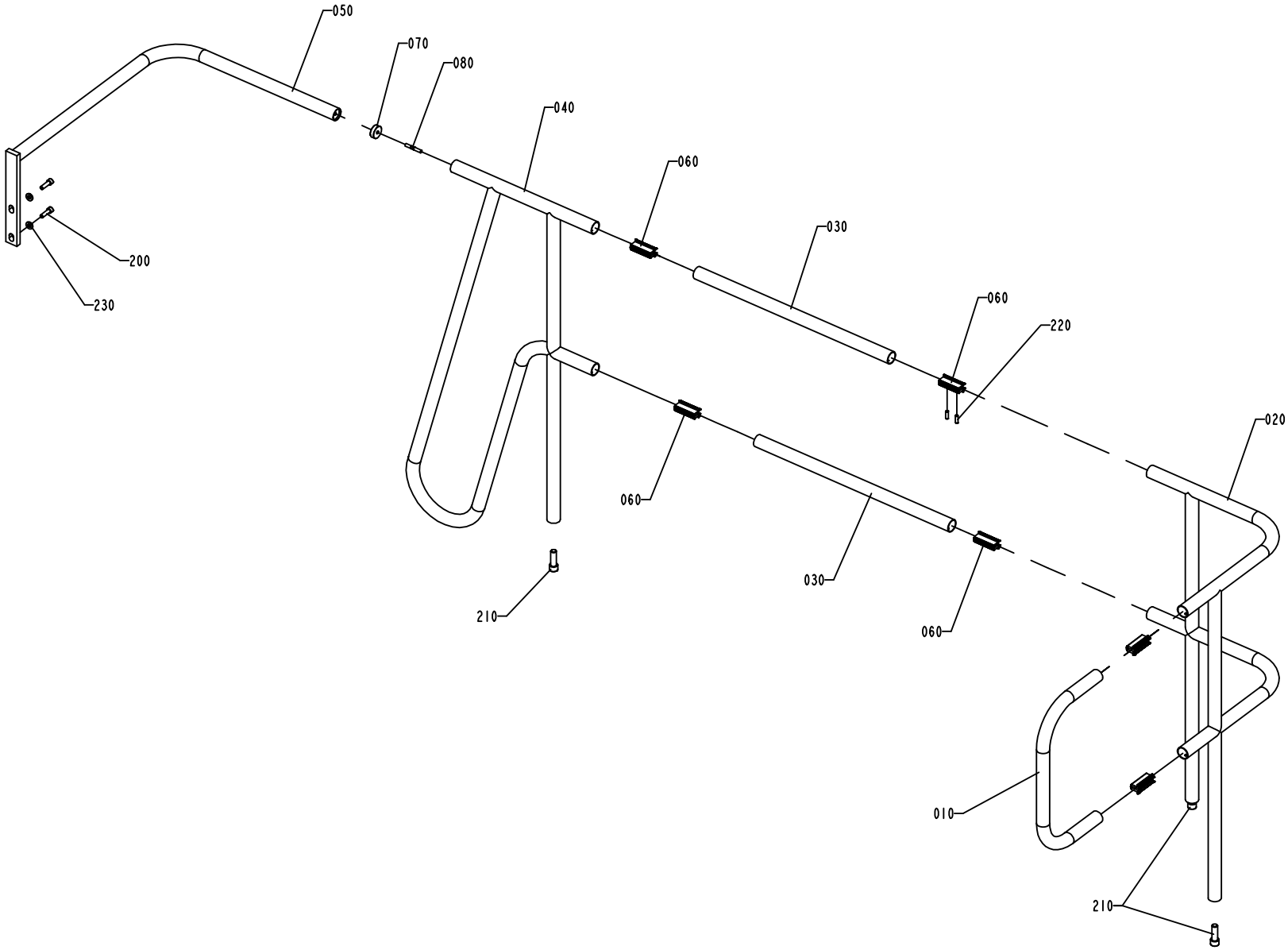

1347639-1
ECN 81466

ECM: 81474 - 20001012
Group number: 1347639-0100
Assembly Drawing: 1347639-1_1_AB

Pos	Part No	SP	UN	Qty	Description	Page No
TBA 0200B, TBA 0250S, TBA 0200M, TBA 0250B						
050	1347640-0000	-		1	RAILING	
Common Parts						
010	1347641-0000	-		1	RAILING	
020	1010822-0000	-		1	RAILING	
030	1037044-0000	-		2	RAILING	
040	1129741-0000	-		1	RAILING	
060	1035654-0000	-		6	CONNECTION	
070	578640-0000	-		1	CLAMPING RING	
080	751485-0000	-		1	SCREW	
200	312115-0497	-		2	SCREW ISO4762 M10X35 A4	
210	312115-0630	-		3	SCREW ISO4762 M16X50 A4	
220	312318-0453	-		12	SCREW ISO4029 M8X25 A4	
230	315115-0173	-		2	WASHER PLAIN, TBRB 10,5/22 H=4	

Pos	Part No	SP	UN	Qty	Description	Page No

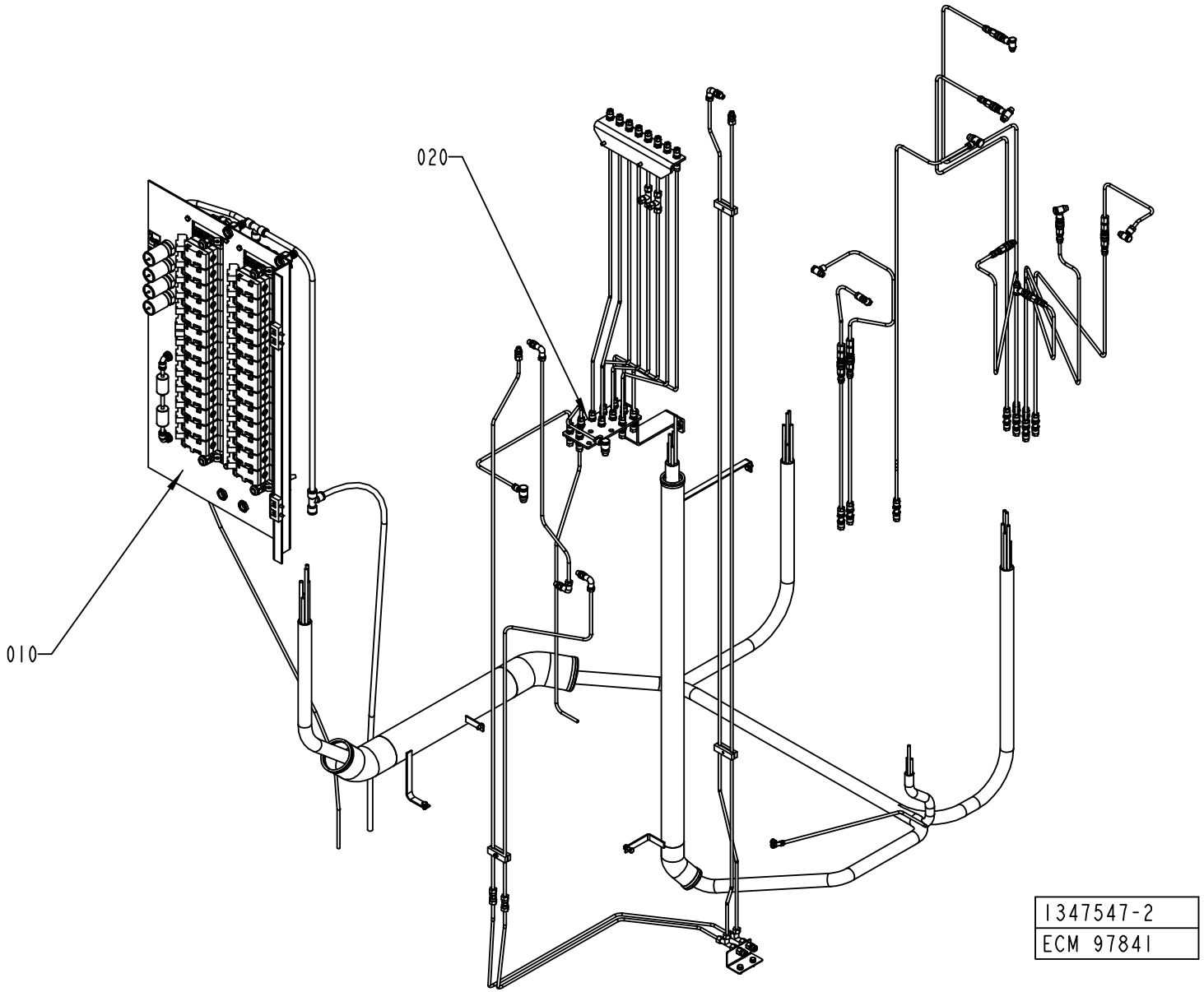
020
010
1347547-2
ECM 97841

ECM: 137382 - 20030922
Group number: 1347547-0200
Assembly Drawing: 1347547-2_1_AA

This list covers pages from 1-202 to 1-205

Pos	Part No	SP	UN	Qty	Description	Page No
HI (See drawing on page: 1-204)						
030	2514216-0100	-		1	PNEUMATIC PANEL	**1-207**
Common Parts						
010	1347548-0300	-		1	VALVE PANEL	**1-211, 1-213**
020	1347551-0200	-		1	HOSE INSTALLATION	**1-221, 1-223, 1-225, 1-227, 1-229, 1-231**

Pos	Part No	SP	UN	Qty	Description	Page No

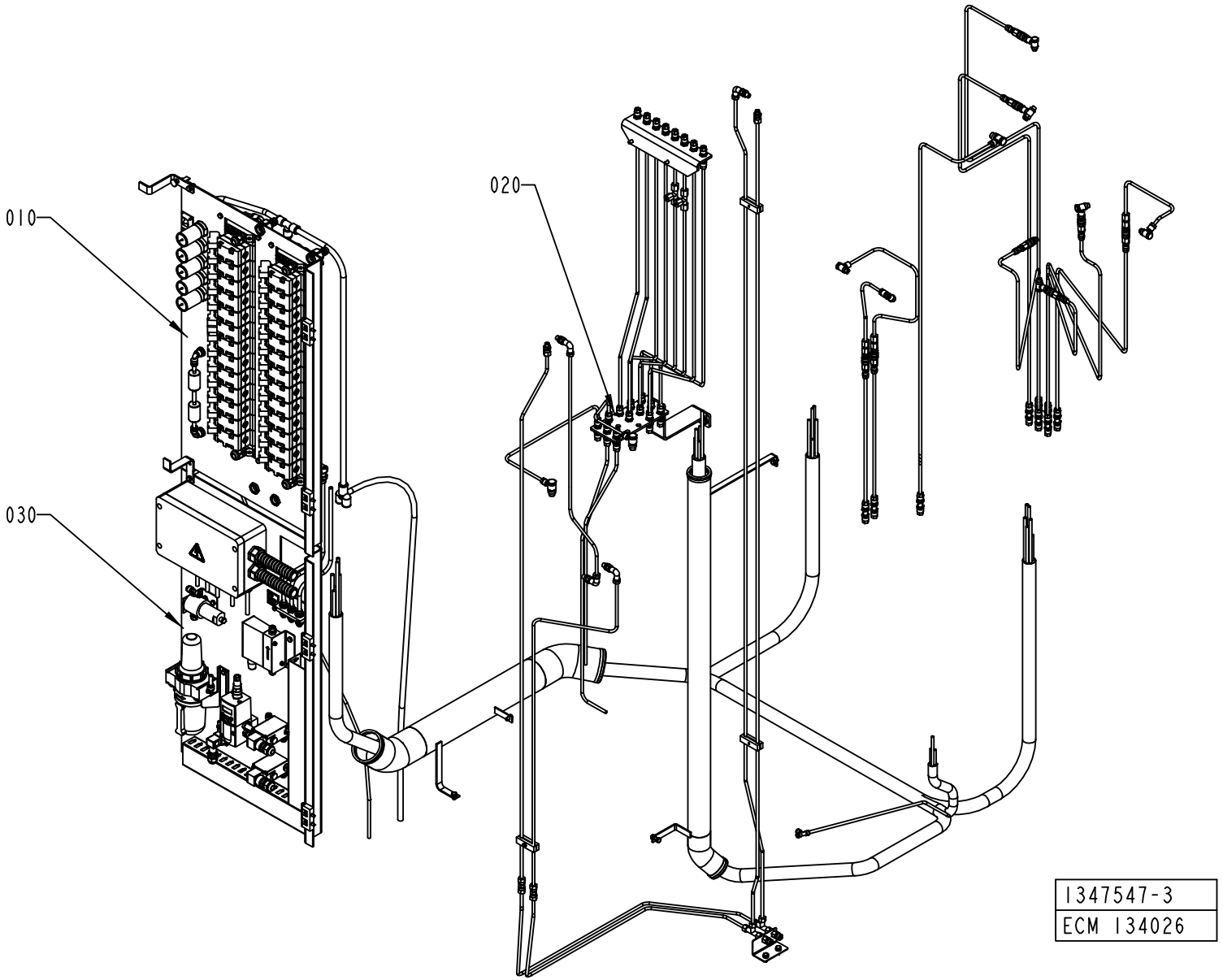
010
020
030
1347547-3
ECM 134026

ECM: 137382 - 20030922
Group number: 1347547-0200
Assembly Drawing: 1347547-3_1_AA

This list covers pages from 1-202 to 1-205

Pos	Part No	SP	UN	Qty	Description	Page No
HI (See drawing on page: 1-204)						
030	2514216-0100	-		1	PNEUMATIC PANEL	**1-207**
Common Parts						
010	1347548-0300	-		1	VALVE PANEL	**1-211, 1-213**
020	1347551-0200	-		1	HOSE INSTALLATION	**1-221, 1-223, 1-225, 1-227, 1-229, 1-231**

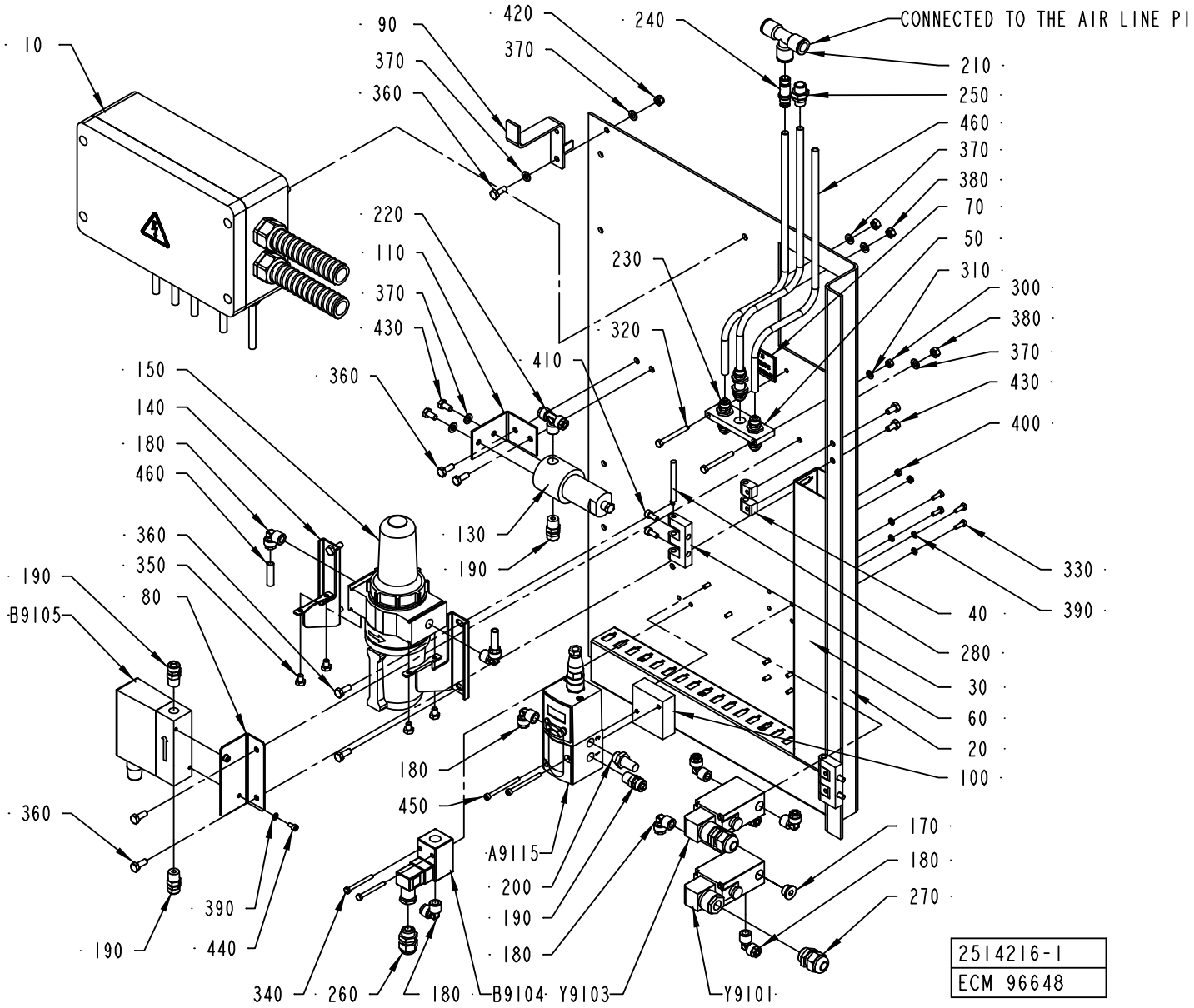
10
90
370
360
420
370
240
CONNECTED TO THE AIR LINE PI
210
250
460
370
380
70
50
310
300
380
370
430
400
330
390
40
280
30
60
20
100
220
110
370
430
360
150
140
180
460
360
350
80
190
B9105
410
320
230
130
190
180
450
A9115
200
190
180
360
390
440
190
340
260
180
B9104
Y9103
Y9101
170
180
270
2514216-1
ECM 96648

ECM: 110783 - 20030724
Group number: 2514216-0100
Assembly Drawing: 2514216-1_1_AA

Pos	Part No	SP	UN	Qty	Description	Page No
-						
010	2514449-0100	-		1	CONNECTION BOX	**1-209**
020	2551067-0000	-		1	PLATE	
030	1035792-0000	-		2	E-HINGE	
040	1129770-0000	-		4	BLOCKING PIECE	
050	1254481-0000	-		1	HOLDER	
060	1347691-0000	-		2	CABLE DUCT	
070	1347703-0000	-		1	SIGN BOARD	
080	2551068-0000	-		1	BRACKET	
090	2552246-0000	-		1	CATCH HANDLE	
100	2511330-0000	-		1	SPACER	
110	2607080-0000	-		1	PLATE	
130	90277-0323	-		1	FILTER HOUSING / ART.NO 95S6-1/4 S 5430	
140	90236-0041	-		1	BRACKET	
150	90277-0104	A		1	FILTER F64B-2GN-ARO	
	90113-0457	*-*		*1*	*FILTER ELEMENTS*	
	90113-0458	*-*		*1*	*FILTER ELEMENTS*	
170	342713-0210	-		1	PLUG, EXT THREAD HEX SOCKET 8638-00-140	
180	342930-0122	-		9	ELBOW 90 COUPL.,EXT.THREAD 8/6-R1/4"	
190	342920-0122	-		4	STRAIGHT COUPLING,EXT.THREADED 8/6-R1/4"	
200	346800-0110	-		1	SILENCER FILTER R1/4"	
210	342748-0109	-		1	T-CONNECTION 12MM	
220	342940-0122	-		1	T-COUPLING,EXT.THREAD 8/6-R1/4"	
230	342960-0122	-		3	BULKHEAD COUPLING 8/6	
240	342716-0209	-		1	REDUCER 8-12	
250	342921-0122	-		1	STRAIGHT COUPLING,EXT.THREADED 8/6-G1/4"	
260	352103-0101	-		1	CABLE GLAND, ST 9, PR15,2/PG9	
270	352103-0106	-		2	CABLE GLAND, ST 11, PR18,6/PG11	
280	988685-0000	-		2	PIN	
300	312605-0314	-		2	HEXAGON NUT, M6M M5 A280	
310	315105-0146	-		2	BRICKA BRB5,3X10RFR	
320	312105-0340	-		2	SCREW M6S ISO 4014 M5X45 A480	
330	312105-0291	-		10	SCREW M6S ISO 4017 M4X12 A480	
340	312105-0303	-		2	SCREW M6S ISO 4017 M4X40 A480	
350	312105-0362	-		6	SCREW M6S ISO 4017 M6X8 A480	
360	312105-0368	-		9	SCREW M6S M6X16 A280	
370	315105-0153	-		12	WASHER BRB6,4X12RFR	
380	312605-0316	-		8	HEXAGON NUT, M6M M6 A280	
390	315105-0136	-		12	WASHER BRB4,3XRFR	
400	312605-0312	-		4	HEXAGON NUT, M6M M4 A280	
410	312115-0327	-		4	SCREW ISO4762 M5X12 A4	
420	312812-0316	-		1	HEXAGON NUT, NY-LOCK M6 A480	
430	312105-0366	-		4	SCREW M6S M6X12 A280	
440	312115-0287	-		2	SCREW ISO4762 M4X8 A4	
450	312115-0305	-		2	SCREW ISO4762 M4X50 A4	
460	90166-0013	-	M	15	TUBE 8 MM PA BLUE	
A9115	90459-1420	A		1	PROPORTIONAL VALVE 0 - 10V/0-6 BAR	
	90458-1262	*-*		*1*	*CONNECTOR 131028001 FOR PROP. VALVE*	
B9104	90274-0110	A		1	PRESSURE SWITCH, 50 - 1000 KPA	
B9105	90458-2619	A		1	FLOW METER, D-6230-HGB-BB-AV-99-0-N2	
Y9101	90042-0171	A		1	SOLENOID VALVE BUERKERT	
	90042-0466	*C*		*1*	*DIAPHRAGM 330.95.2 VITON*	
Y9103	90042-0171	A		1	SOLENOID VALVE BUERKERT	
	90042-0466	*C*		*1*	*DIAPHRAGM 330.95.2 VITON*	

Machine Type | Group Description | Used-In | Group Number | Page No

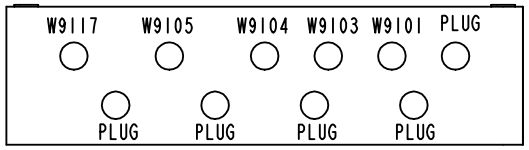

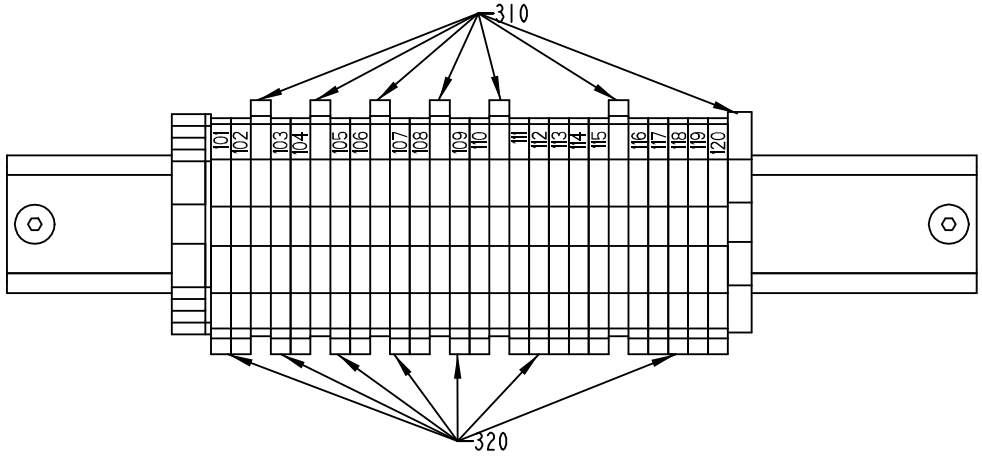

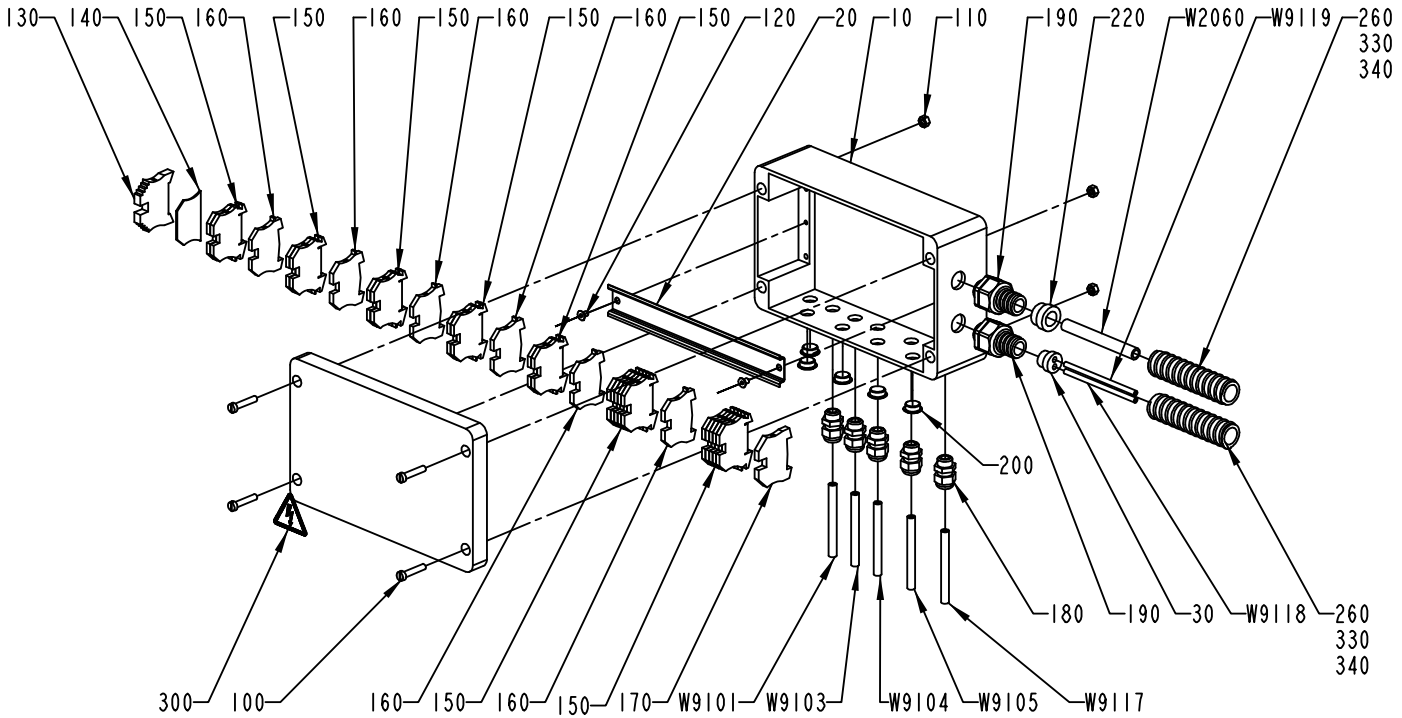

2514449-1
ECM 96648

ECM: 110385 - 20030724
Group number: 2514449-0100
Assembly Drawing: 2514449-1_1_AA

Pos	Part No	SP	UN	Qty	Description	Page No
-						
010	2535472-0000	-		1	CONNECTION BOX	
020	2504625-0000	-		1	RAIL	
030	2562308-0000	-		1	INSERT	
100	312125-0374	-		4	SCREW ISO 1207 M6X30 A4	
110	312605-0316	-		4	HEXAGON NUT, M6M M6 A280	
120	312155-0323	-		2	SCREW EN 10642 MF6S M5X8 A480	
130	353031-0203	-		1	END SUPPORT, WEW 35/2	
140	353032-0005	-		1	END PLATE WAP 2,5-10 BLUE	
150	353021-0216	-		20	FEED THROUGH TERMINAL, 10200.8	
160	353024-0204	-		6	EARTH TERMINAL WPE 2,5	
170	353024-0205	-		1	EARTH TERMINAL, 1010.1	
180	352103-0101	-		5	CABLE GLAND, ST 9, PR15,2/PG9	
190	353243-0004	-		2	EXTENDED WITHOUT INSERT, PG13,5	
200	90002-0013	-		5	BLANK-OFF PLUG, PR 15,2 SKINDICHT-BLK9	
220	353249-0014	-		1	INSERT, SINGEL HOLE, EK 154/16	
260	90152-0051	-	M	7	SPIRAL CONDUIT, 25X18, UL 1816	
300	359705-0015	A		1	WARNING SIGN ISO, RISK OF ELECTRIC SHOCK	
310	359011-0819	-		2	MARKING PLATES 5-GW (EARTH)	
320	359011-0809	-		2	MARKING PLATES 5-FW 101-150	
330	359005-0050	-		1	MARKING LABEL KIT X, 04.841.4550.0	
340	359005-0010	-		1	MARKING LABEL KIT 0 - 9, 04.841.2150.0	
W2060	351150-0407	-	M	7	CABLE OLFLEX 12X0,75 MM2 LIGHT/GREY	
W9101	351150-0403	-	M	2	CABLE OLFLEX 3X0,75 MM2 LIGHT/GREY	
W9103	351150-0403	-	M	2	CABLE OLFLEX 3X0,75 MM2 LIGHT/GREY	
W9104	351150-0403	-	M	2	CABLE OLFLEX 3X0,75 MM2 LIGHT/GREY	
W9105	90220-0072	A	M	2	SCR. CABLE 4X0,34MM2	
W9117	90220-0072	A	M	2	SCR. CABLE 4X0,34MM2	
W9118	90220-0183	A	M	10	SCR. CABLE 2X0,34MM2	
W9119	90220-0183	A	M	10	SCR. CABLE 2X0,34MM2	

Pos	Part No	SP	UN	Qty	Description	Page No

VALVE PANEL

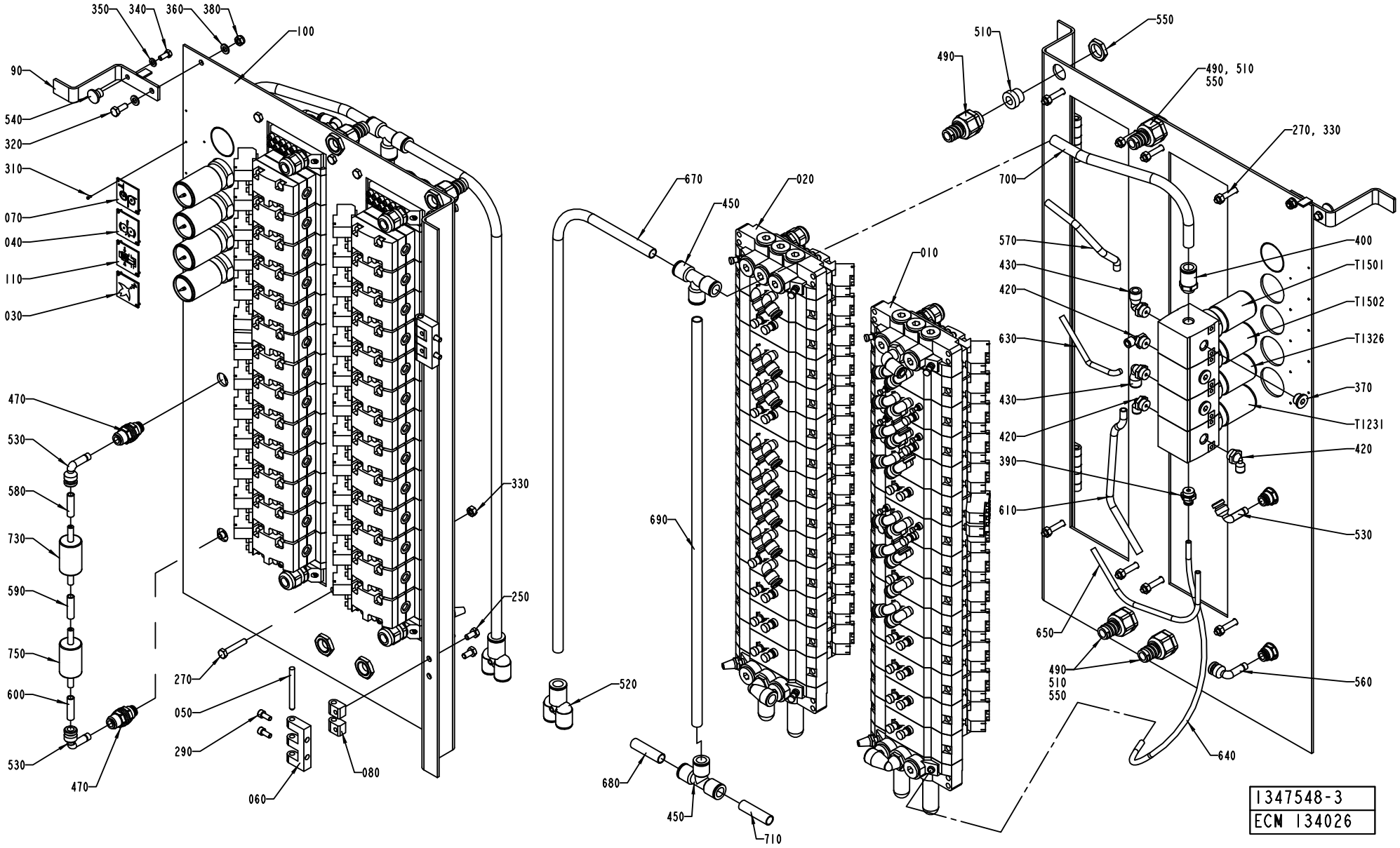
350
340
360
380
100
90
540
320
310
070
040
110
030
470
530
580
730
590
750
600
530
470
270
050
290
060
080
330
250
670
450
020
010
690
520
680
450
710
510
490
550
490, 510
550
270, 330
700
570
430
420
630
430
420
390
610
400
T1501
T1502
T1326
370
T1231
420
530
650
490
510
550
560
640
1347548-3
ECM 134026

ECM: 136029 - 20030922
Group number: 1347548-0300
Assembly Drawing: 1347548-3_1_AD

This list covers pages from 1-210 to 1-213

Pos	Part No	SP	UN	Qty	Description	Page No
HI (See drawing on page: 1-212)						
000	2629320-0000	-		1	PNEUMATIC DIAGRAM	
030	273450-0000	-		2	SIGN	
310	312502-0120	-		10	DRIVE SCREW ROUND HEAD KDS 0X5	
370	342713-0210	-		4	PLUG, EXT THREAD HEX SOCKET 8638-00-140	
420	90458-2957	-		4	ELBOW PIPE JOINT, EXT.THREAD, D=6MM-G1/4	
T9114	90113-0095	-		1	PRESSURE REGULATOR	
NOHI (See drawing on page: 1-210)						
000	2506845-0000	-		1	DIAGRAM	
030	273450-0000	-		1	SIGN	
310	312502-0120	-		8	DRIVE SCREW ROUND HEAD KDS 0X5	
370	342713-0210	-		3	PLUG, EXT THREAD HEX SOCKET 8638-00-140	
420	90458-2957	-		3	ELBOW PIPE JOINT, EXT.THREAD, D=6MM-G1/4	
Common Parts						
010	1347549-0300	-		1	VALVE RAMP	**1-215, 1-217**
020	1347550-0300	-		1	VALVE RAMP	**1-219**
040	273452-0000	-		1	SIGN	
050	988685-0000	-		2	PIN	
060	1035792-0000	-		2	E-HINGE	
070	1041937-0000	-		1	SIGN	
080	1129770-0000	-		4	BLOCKING PIECE	
090	2552246-0000	-		1	CATCH HANDLE	
100	2506844-0000	-		1	PLATE	
110	1548001-0000	-		1	SIGN	
250	312105-0366	-		4	SCREW M6S M6X12 A280	
270	312109-0376	-		8	SCREW M6S ISO 4017 M6X35 A480	
290	312115-0327	-		4	SCREW ISO4762 M5X12 A4	
320	312105-0368	-		1	SCREW M6S M6X16 A280	
330	312605-0316	-		8	HEXAGON NUT, M6M M6 A280	
340	312105-0327	-		1	SCREW M6S ISO 4017 M5X12 A480	
350	315105-0146	-		1	BRICKA BRB5,3X10RFR	
360	315105-0153	-		2	WASHER BRB6,4X12RFR	
380	312812-0316	-		1	HEXAGON NUT, NY-LOCK M6 A480	
390	342722-0203	-		1	STRAIGHT COUPLING	
400	342722-0209	-		1	STRAIGHT COUPLING D=12-G1/4"	
430	90458-2958	-		2	ELBOW PIPE JOINT, EXT.THREAD, D=8MM-G1/4	
450	342748-0109	-		2	T-CONNECTION 12MM	
470	342768-0103	-		2	BULKHEAD CONNECTOR, 8 MM	
490	353243-0003	-		4	EXTENDED WITHOUT INSERT, PG11	
510	353249-0011	-		4	INSERT, SINGEL HOLE, EK 153/11	
520	90055-0147	-		1	HOSE,Y-CONNECTION,PARALLEL,FPT, 12X12MM	
530	90055-0118	-		3	ELBOW PIPE JOINT -8MM	
540	90051-0026	-		1	KNOB, CIRKUL, THREADED BUSH, M5 17X14 MM	
550	90099-0117	-		4	NUT, PR 18,6 (PG11)	
560	90055-0173	-		1	ELBOW WITH TAILPIECE 8/6 MM	
570	90166-0013	-	MM	150	TUBE 8 MM PA BLUE	
580	90166-0013	-	MM	30	TUBE 8 MM PA BLUE	
590	90166-0013	-	MM	30	TUBE 8 MM PA BLUE	
600	90166-0013	-	MM	30	TUBE 8 MM PA BLUE	
610	90166-0013	-	MM	300	TUBE 8 MM PA BLUE	
630	90166-0081	-	MM	250	TUBE 6 MM PA BLUE	
640	90166-0081	-	MM	450	TUBE 6 MM PA BLUE	
650	90166-0081	-	MM	300	TUBE 6 MM PA BLUE	
670	90166-0153	-	MM	1000	TUBE 12 MM PA BLACK	
680	90166-0153	-	MM	40	TUBE 12 MM PA BLACK	
690	90166-0153	-	MM	600	TUBE 12 MM PA BLACK	
700	90166-0153	-	MM	250	TUBE 12 MM PA BLACK	
710	90166-0153	-	MM	40	TUBE 12 MM PA BLACK	
730	90277-0045	-		1	FILTER / 9900-05-BK	
750	90277-0046	-		1	FILTER / 9933-05-101	
T1231	90113-0095	A		1	PRESSURE REGULATOR	
T1326	90113-0097	A		1	PRESSURE REGULATOR	
T1501	90113-0096	A		1	PRESSURE REGULATOR	
T1502	90113-0095	A		1	PRESSURE REGULATOR	

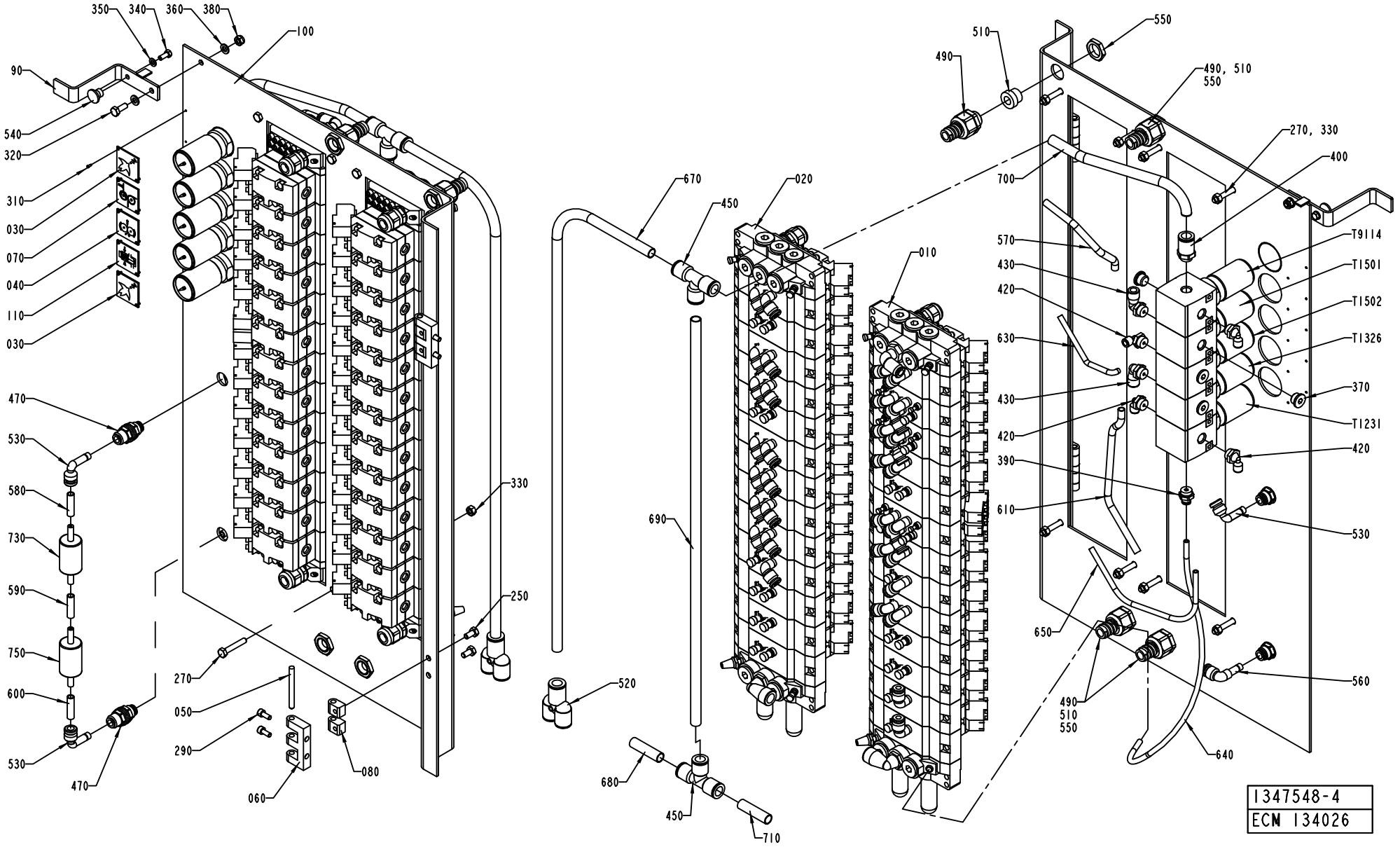
350
340
360
380
100
90
540
320
310
030
070
040
110
030
470
530
580
730
590
750
600
530
470
270
050
290
060
080
330
250
670
450
020
010
690
520
680
450
710
510
490
550
490, 510
550
270, 330
400
700
570
430
420
630
430
420
390
610
650
490
510
550
640
T9114
T1501
T1502
T1326
370
T1231
420
530
560
1347548-4
ECM 134026

ECM: 136029 - 20030922
Group number: 1347548-0300
Assembly Drawing: 1347548-4_1_AA

This list covers pages from 1-210 to 1-213

Pos	Part No	SP	UN	Qty	Description	Page No
HI (See drawing on page: 1-212)						
000	2629320-0000	-		1	PNEUMATIC DIAGRAM	
030	273450-0000	-		2	SIGN	
310	312502-0120	-		10	DRIVE SCREW ROUND HEAD KDS 0X5	
370	342713-0210	-		4	PLUG, EXT THREAD HEX SOCKET 8638-00-140	
420	90458-2957	-		4	ELBOW PIPE JOINT, EXT.THREAD, D=6MM-G1/4	
T9114	90113-0095	-		1	PRESSURE REGULATOR	
NOHI (See drawing on page: 1-210)						
000	2506845-0000	-		1	DIAGRAM	
030	273450-0000	-		1	SIGN	
310	312502-0120	-		8	DRIVE SCREW ROUND HEAD KDS 0X5	
370	342713-0210	-		3	PLUG, EXT THREAD HEX SOCKET 8638-00-140	
420	90458-2957	-		3	ELBOW PIPE JOINT, EXT.THREAD, D=6MM-G1/4	
Common Parts						
010	1347549-0300	-		1	VALVE RAMP	**1-215, 1-217**
020	1347550-0300	-		1	VALVE RAMP	**1-219**
040	273452-0000	-		1	SIGN	
050	988685-0000	-		2	PIN	
060	1035792-0000	-		2	E-HINGE	
070	1041937-0000	-		1	SIGN	
080	1129770-0000	-		4	BLOCKING PIECE	
090	2552246-0000	-		1	CATCH HANDLE	
100	2506844-0000	-		1	PLATE	
110	1548001-0000	-		1	SIGN	
250	312105-0366	-		4	SCREW M6S M6X12 A280	
270	312109-0376	-		8	SCREW M6S ISO 4017 M6X35 A480	
290	312115-0327	-		4	SCREW ISO4762 M5X12 A4	
320	312105-0368	-		1	SCREW M6S M6X16 A280	
330	312605-0316	-		8	HEXAGON NUT, M6M M6 A280	
340	312105-0327	-		1	SCREW M6S ISO 4017 M5X12 A480	
350	315105-0146	-		1	BRICKA BRB5,3X10RFR	
360	315105-0153	-		2	WASHER BRB6,4X12RFR	
380	312812-0316	-		1	HEXAGON NUT, NY-LOCK M6 A480	
390	342722-0203	-		1	STRAIGHT COUPLING	
400	342722-0209	-		1	STRAIGHT COUPLING D=12-G1/4"	
430	90458-2958	-		2	ELBOW PIPE JOINT, EXT.THREAD, D=8MM-G1/4	
450	342748-0109	-		2	T-CONNECTION 12MM	
470	342768-0103	-		2	BULKHEAD CONNECTOR, 8 MM	
490	353243-0003	-		4	EXTENDED WITHOUT INSERT, PG11	
510	353249-0011	-		4	INSERT, SINGEL HOLE, EK 153/11	
520	90055-0147	-		1	HOSE,Y-CONNECTION,PARALLEL,FPT, 12X12MM	
530	90055-0118	-		3	ELBOW PIPE JOINT -8MM	
540	90051-0026	-		1	KNOB, CIRKUL, THREADED BUSH, M5 17X14 MM	
550	90099-0117	-		4	NUT, PR 18,6 (PG11)	
560	90055-0173	-		1	ELBOW WITH TAILPIECE 8/6 MM	
570	90166-0013	-	MM	150	TUBE 8 MM PA BLUE	
580	90166-0013	-	MM	30	TUBE 8 MM PA BLUE	
590	90166-0013	-	MM	30	TUBE 8 MM PA BLUE	
600	90166-0013	-	MM	30	TUBE 8 MM PA BLUE	
610	90166-0013	-	MM	300	TUBE 8 MM PA BLUE	
630	90166-0081	-	MM	250	TUBE 6 MM PA BLUE	
640	90166-0081	-	MM	450	TUBE 6 MM PA BLUE	
650	90166-0081	-	MM	300	TUBE 6 MM PA BLUE	
670	90166-0153	-	MM	1000	TUBE 12 MM PA BLACK	
680	90166-0153	-	MM	40	TUBE 12 MM PA BLACK	
690	90166-0153	-	MM	600	TUBE 12 MM PA BLACK	
700	90166-0153	-	MM	250	TUBE 12 MM PA BLACK	
710	90166-0153	-	MM	40	TUBE 12 MM PA BLACK	
730	90277-0045	-		1	FILTER / 9900-05-BK	
750	90277-0046	-		1	FILTER / 9933-05-101	
T1231	90113-0095	A		1	PRESSURE REGULATOR	
T1326	90113-0097	A		1	PRESSURE REGULATOR	
T1501	90113-0096	A		1	PRESSURE REGULATOR	
T1502	90113-0095	A		1	PRESSURE REGULATOR	

Machine Type | Group Description | Used-In | Group Number | Page No

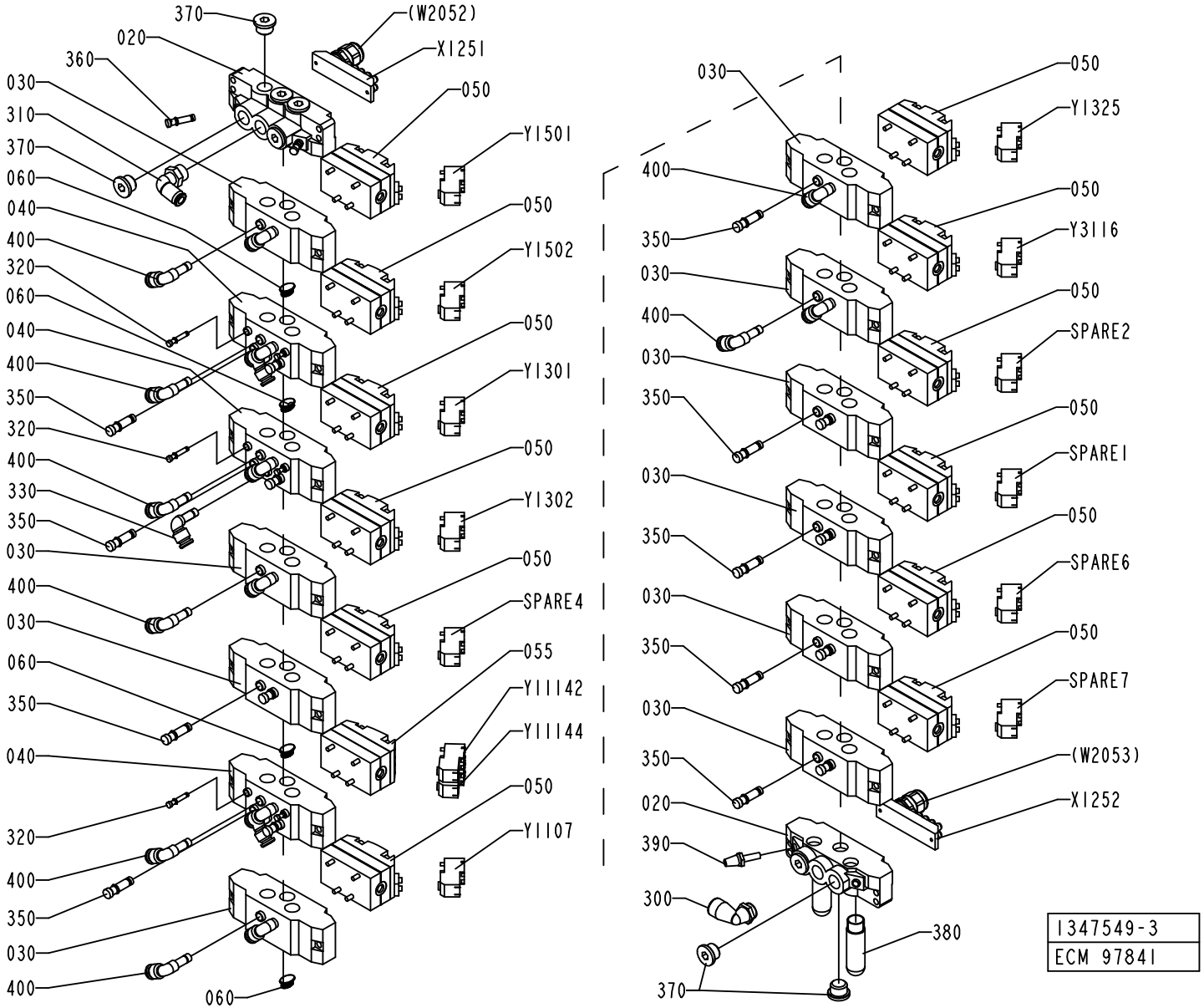
370
(W2052)
020
X1251
360
050
030
Y1501
310
370
050
060
Y1502
040
400
050
320
060
Y1301
040
400
050
350
320
Y1302
400
330
350
050
030
SPARE4
400
030
055
060
Y1142
350
Y1144
040
050
320
Y1107
400
350
030
400
060
030
050
Y1325
400
050
Y3116
350
030
050
400
SPARE2
030
350
050
SPARE1
030
350
050
SPARE6
030
350
050
SPARE7
030
350
(W2053)
020
X1252
390
300
380
370
1347549-3
ECM 97841

ECM: 135894 - 20030922
Group number: 1347549-0300
Assembly Drawing: 1347549-3_1_AA

This list covers pages from 1-214 to 1-217

Pos	Part No	SP	UN	Qty	Description	Page No
HI (See drawing on page: 1-216)						
350	342715-0103	-		15	BLIND PLUG 8 MM	
400	90055-0173	-		19	ELBOW WITH TAILPIECE 8/6 MM	
Y9105	90042-0538	-		1	PILOT VALVE L=500MM	
Y9106	90042-0538	-		1	PILOT VALVE L=500MM	
NOHI (See drawing on page: 1-214)						
350	342715-0103	-		17	BLIND PLUG 8 MM	
400	90055-0173	-		17	ELBOW WITH TAILPIECE 8/6 MM	
SPARE6	90042-0538	A		1	PILOT VALVE L=500MM	
SPARE7	90042-0538	A		1	PILOT VALVE L=500MM	
Common Parts						
020	90042-0522	-		2	PORTED END PIECE ISO SIZE 1	
030	90042-0532	-		10	BASE PLATE ISO SIZE 1	
040	90042-0520	-		3	BASE PLATE ISO SIZE 1	
050	90042-0215	A		12	VALVE BODY 5/2 UNISTABLE	
055	90042-0230	A		1	VALVE BODY 5/3 OPEN CENTRE	
060	90042-0528	-		4	BLANKING KIT SEALS ISO SIZE 1	
300	90458-2960	-		1	ELBOW PIPE JOINT, EXT.THREAD,D=12MM-G3/8	
310	342732-0105	-		1	ELBOW PIPE D8-R3/8"	
320	342715-0100	-		6	BLIND PLUG 4 MM	
330	90055-0118	-		1	ELBOW PIPE JOINT -8MM	
360	342715-0102	-		2	BLIND PLUG 6 MM	
370	342713-0211	-		8	PLUG, EXT THREAD HEX SOCKET 8638-00-380	
380	90328-0024	B		2	SILENCER G3/8	
390	90328-0017	B		1	SILENCER, D=6 MM	
SPARE1	90042-0538	-		1	PILOT VALVE L=500MM	
SPARE2	90042-0538	-		1	PILOT VALVE L=500MM	
SPARE4	90042-0538	A		1	PILOT VALVE L=500MM	
X1251	90042-0535	-		1	TERMINAL BOARD 19 CORDS	
X1252	90042-0535	-		1	TERMINAL BOARD 19 CORDS	
Y1107	90042-0538	A		1	PILOT VALVE L=500MM	
Y11142	90042-0538	A		1	PILOT VALVE L=500MM	
Y11144	90042-0538	A		1	PILOT VALVE L=500MM	
Y1301	90042-0538	A		1	PILOT VALVE L=500MM	
Y1302	90042-0538	A		1	PILOT VALVE L=500MM	
Y1325	90042-0538	A		1	PILOT VALVE L=500MM	
Y1501	90042-0538	A		1	PILOT VALVE L=500MM	
Y1502	90042-0538	A		1	PILOT VALVE L=500MM	
Y3116	90042-0538	A		1	PILOT VALVE L=500MM	

Pos	Part No	SP	UN	Qty	Description	Page No

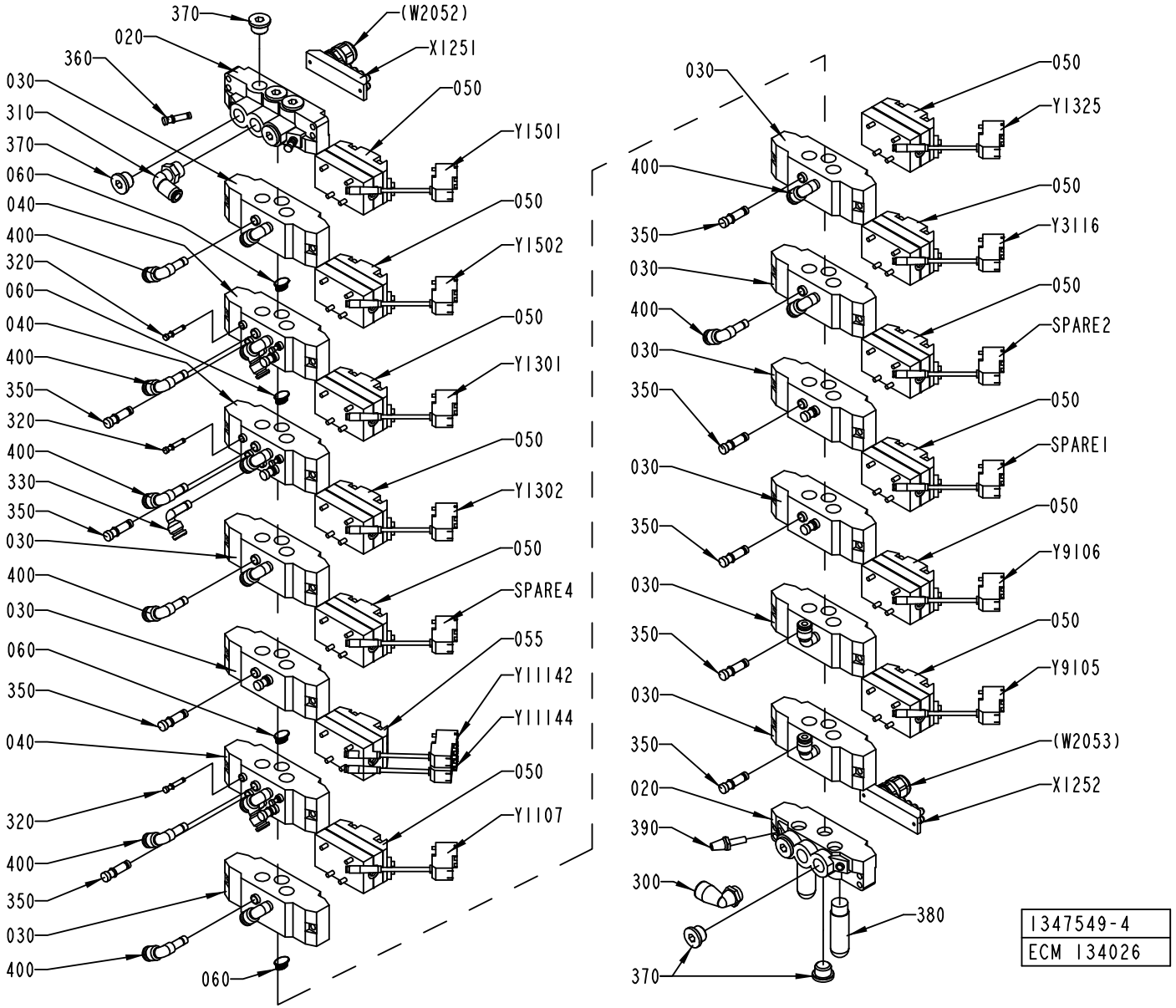
370
020
360
030
310
370
060
040
400
320
060
040
400
350
320
400
330
350
030
400
030
060
350
040
320
400
350
030
400
060
(W2052)
X1251
050
Y1501
050
Y1502
050
Y1301
050
Y1302
050
SPARE4
055
Y11142
Y11144
050
Y1107
030
050
Y1325
400
050
Y3116
350
030
050
400
SPARE2
030
350
050
SPARE1
030
050
350
Y9106
030
050
350
Y9105
030
350
(W2053)
X1252
020
390
300
380
370
1347549-4
ECM 134026

ECM: 135894 - 20030922
Group number: 1347549-0300
Assembly Drawing: 1347549-4_1_AA

This list covers pages from 1-214 to 1-217

Pos	Part No	SP	UN	Qty	Description	Page No
HI (See drawing on page: 1-216)						
350	342715-0103	-		15	BLIND PLUG 8 MM	
400	90055-0173	-		19	ELBOW WITH TAILPIECE 8/6 MM	
Y9105	90042-0538	-		1	PILOT VALVE L=500MM	
Y9106	90042-0538	-		1	PILOT VALVE L=500MM	
NOHI (See drawing on page: 1-214)						
350	342715-0103	-		17	BLIND PLUG 8 MM	
400	90055-0173	-		17	ELBOW WITH TAILPIECE 8/6 MM	
SPARE6	90042-0538	A		1	PILOT VALVE L=500MM	
SPARE7	90042-0538	A		1	PILOT VALVE L=500MM	
Common Parts						
020	90042-0522	-		2	PORTED END PIECE ISO SIZE 1	
030	90042-0532	-		10	BASE PLATE ISO SIZE 1	
040	90042-0520	-		3	BASE PLATE ISO SIZE 1	
050	90042-0215	A		12	VALVE BODY 5/2 UNISTABLE	
055	90042-0230	A		1	VALVE BODY 5/3 OPEN CENTRE	
060	90042-0528	-		4	BLANKING KIT SEALS ISO SIZE 1	
300	90458-2960	-		1	ELBOW PIPE JOINT, EXT.THREAD,D=12MM-G3/8	
310	342732-0105	-		1	ELBOW PIPE D8-R3/8"	
320	342715-0100	-		6	BLIND PLUG 4 MM	
330	90055-0118	-		1	ELBOW PIPE JOINT -8MM	
360	342715-0102	-		2	BLIND PLUG 6 MM	
370	342713-0211	-		8	PLUG, EXT THREAD HEX SOCKET 8638-00-380	
380	90328-0024	B		2	SILENCER G3/8	
390	90328-0017	B		1	SILENCER, D=6 MM	
SPARE1	90042-0538	-		1	PILOT VALVE L=500MM	
SPARE2	90042-0538	-		1	PILOT VALVE L=500MM	
SPARE4	90042-0538	A		1	PILOT VALVE L=500MM	
X1251	90042-0535	-		1	TERMINAL BOARD 19 CORDS	
X1252	90042-0535	-		1	TERMINAL BOARD 19 CORDS	
Y1107	90042-0538	A		1	PILOT VALVE L=500MM	
Y11142	90042-0538	A		1	PILOT VALVE L=500MM	
Y11144	90042-0538	A		1	PILOT VALVE L=500MM	
Y1301	90042-0538	A		1	PILOT VALVE L=500MM	
Y1302	90042-0538	A		1	PILOT VALVE L=500MM	
Y1325	90042-0538	A		1	PILOT VALVE L=500MM	
Y1501	90042-0538	A		1	PILOT VALVE L=500MM	
Y1502	90042-0538	A		1	PILOT VALVE L=500MM	
Y3116	90042-0538	A		1	PILOT VALVE L=500MM	

Pos	Part No	SP	UN	Qty	Description	Page No

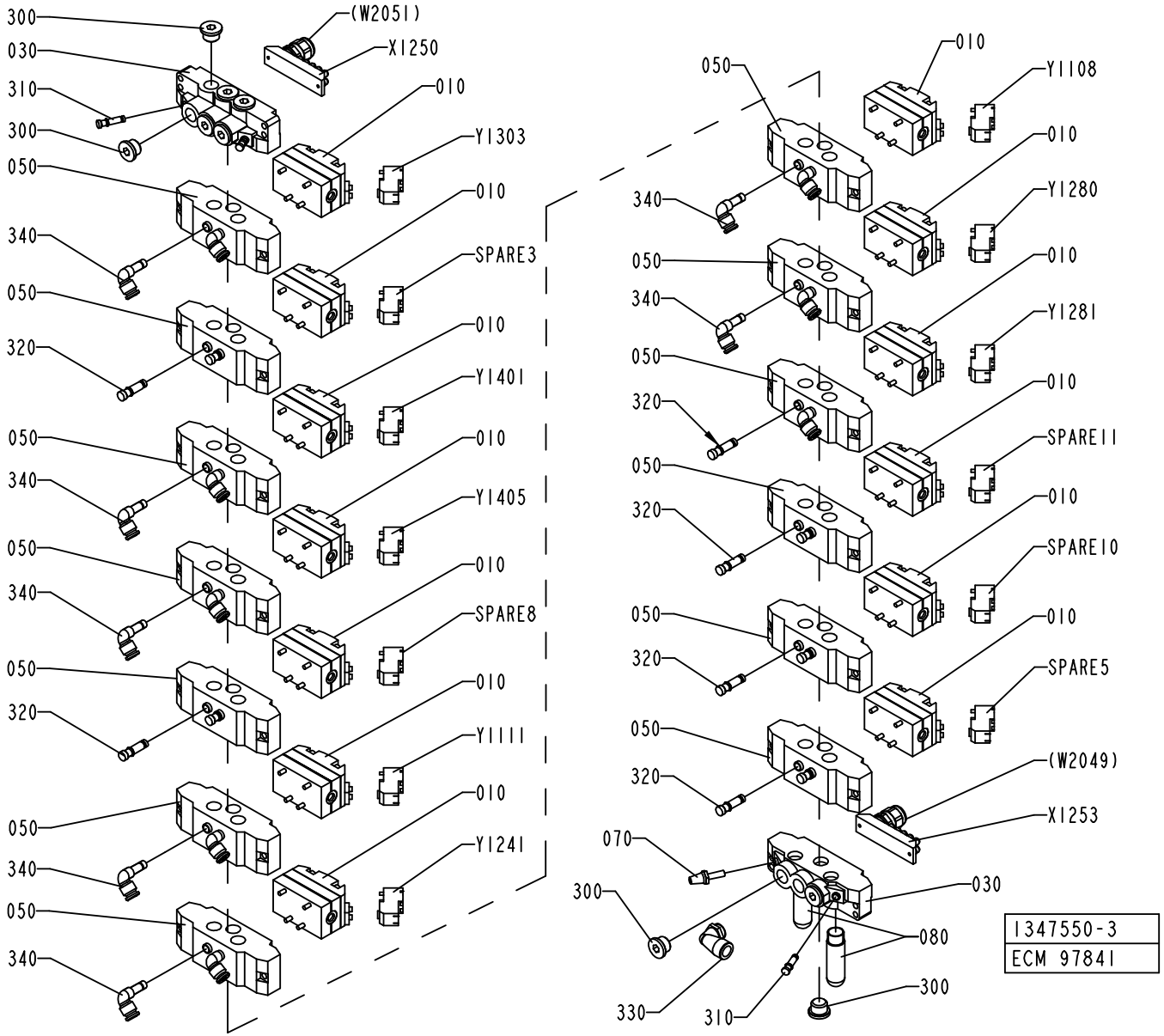
300
030
310
300
050
340
050
320
050
340
050
340
050
320
050
340
050
340
(W2051)
X1250
010
Y1303
010
SPARE3
010
Y1401
010
Y1405
010
SPARE8
010
Y1111
010
Y1241
050
010
Y1108
010
340
Y1280
050
010
340
Y1281
050
010
320
SPARE11
050
010
320
SPARE10
050
010
320
SPARE5
050
(W2049)
320
X1253
070
030
300
080
330
310
300
1347550-3
ECM 97841

ECM: 114232 - 20020911
Group number: 1347550-0300
Assembly Drawing: 1347550-3_1_AA

Pos	Part No	SP	UN	Qty	Description	Page No
-						
010	90042-0215	A		13	VALVE BODY 5/2 UNISTABLE	
030	90042-0522	-		2	PORTED END PIECE ISO SIZE 1	
050	90042-0532	-		13	BASE PLATE ISO SIZE 1	
070	90328-0017	B		1	SILENCER, D=6 MM	
080	90328-0024	B		2	SILENCER G3/8	
300	342713-0211	-		9	PLUG, EXT THREAD HEX SOCKET 8638-00-380	
310	342715-0102	-		3	BLIND PLUG 6 MM	
320	342715-0103	-		11	BLIND PLUG 8 MM	
330	90458-2960	-		1	ELBOW PIPE JOINT, EXT.THREAD,D=12MM-G3/8	
340	90055-0173	-		15	ELBOW WITH TAILPIECE 8/6 MM	
SPARE 8	90042-0538	A		1	PILOT VALVE L=500MM	
SPARE10	90042-0538	A		1	PILOT VALVE L=500MM	
SPARE11	90042-0538	A		1	PILOT VALVE L=500MM	
SPARE3	90042-0538	A		1	PILOT VALVE L=500MM	
SPARE5	90042-0538	A		1	PILOT VALVE L=500MM	
X1250	90042-0535	-		1	TERMINAL BOARD 19 CORDS	
X1253	90042-0535	-		1	TERMINAL BOARD 19 CORDS	
Y1108	90042-0538	A		1	PILOT VALVE L=500MM	
Y1111	90042-0538	A		1	PILOT VALVE L=500MM	
Y1241	90042-0538	A		1	PILOT VALVE L=500MM	
Y1280	90042-0538	A		1	PILOT VALVE L=500MM	
Y1281	90042-0538	A		1	PILOT VALVE L=500MM	
Y1303	90042-0538	A		1	PILOT VALVE L=500MM	
Y1401	90042-0538	A		1	PILOT VALVE L=500MM	
Y1405	90042-0538	A		1	PILOT VALVE L=500MM	

Pos	Part No	SP	UN	Qty	Description	Page No

HOSE INSTALLATION

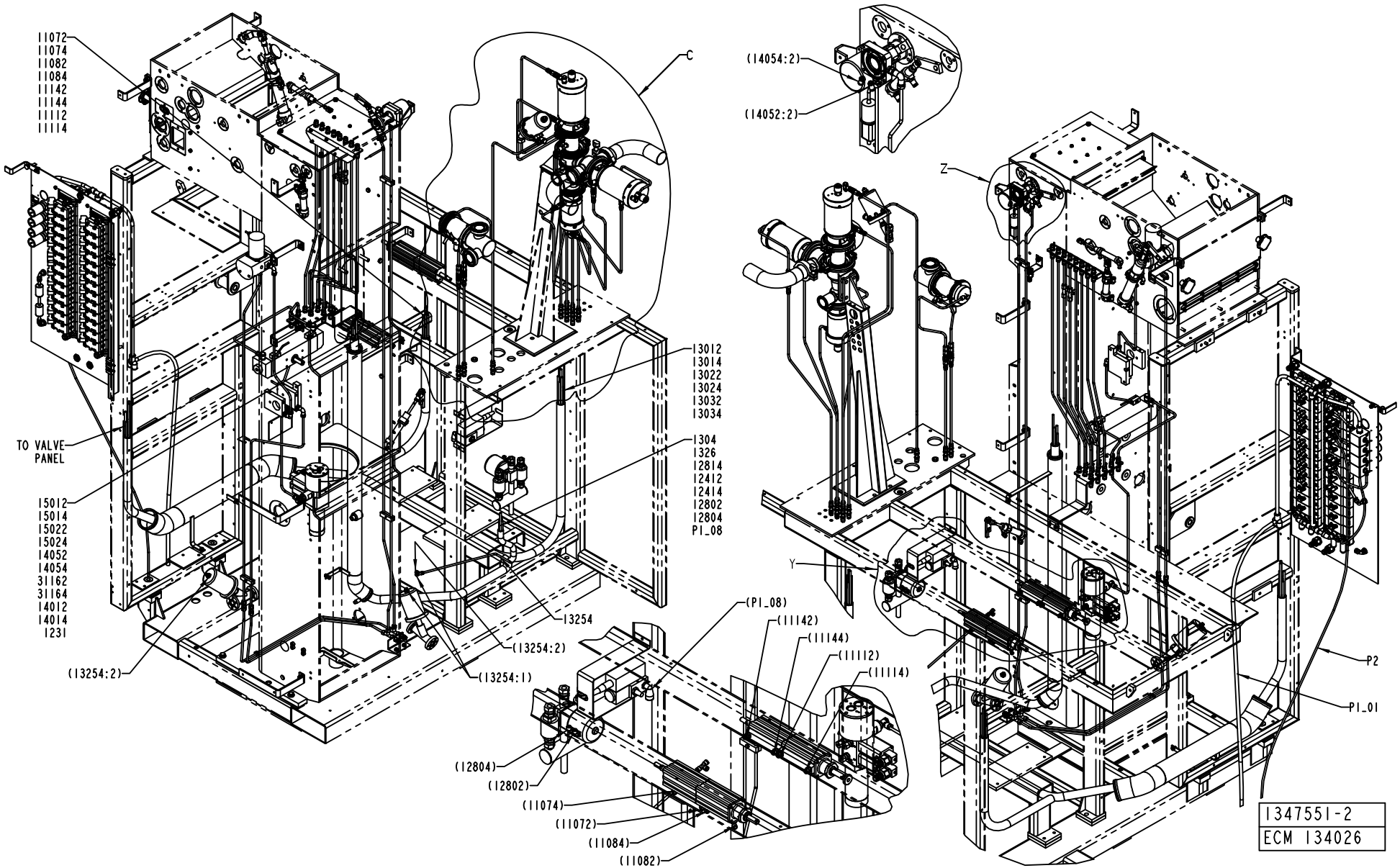

ECM: 136091 - 20030922
Group number: 1347551-0200
Assembly Drawing: 1347551-2_1_AB

This list covers pages from 1-220 to 1-231

Pos	Part No	SP	UN	Qty	Description	Page No
HI (See drawing on pages: 1-226, 1-228, 1-230)						
120	2588389-0000	-		1	PIPE	
590	342706-0130	-		29	ACCESSORIES, INSERT SLEEVE 6 MM	
850	90224-0349	-		29	BULKHEAD LEAD-IN	
9114	90166-0199	-	M	5	RUBBER HOSE	
NOHI (See drawing on pages: 1-220, 1-222, 1-224)						
590	342706-0130	-		28	ACCESSORIES, INSERT SLEEVE 6 MM	
850	90224-0349	-		28	BULKHEAD LEAD-IN	
Common Parts						
010	1348940-0000	-		1	PIPE	
020	1484425-0000	-		2	PIPE	
030	1538800-0000	-		1	PIPE	
040	1538826-0000	-		1	PIPE	
050	1538827-0000	-		1	PIPE	
060	1538828-0000	-		1	PIPE	
070	1538829-0000	-		1	PIPE	
080	1538830-0000	-		1	PIPE	
090	1538831-0000	-		1	PIPE	
100	1548245-0000	-		2	PIPE	
110	2588388-0000	-		1	PIPE	
11072	90166-0081	-	MM	3900	TUBE 6 MM PA BLUE	
11074	90166-0081	-	MM	3900	TUBE 6 MM PA BLUE	
11082	90166-0081	-	MM	3900	TUBE 6 MM PA BLUE	
11084	90166-0081	-	MM	3900	TUBE 6 MM PA BLUE	
11112	90166-0081	-	MM	3900	TUBE 6 MM PA BLUE	
11114	90166-0081	-	MM	3900	TUBE 6 MM PA BLUE	
11142	90166-0081	-	MM	3900	TUBE 6 MM PA BLUE	
11144	90166-0081	-	MM	3900	TUBE 6 MM PA BLUE	
120	2500424-0000	-		2	PIPE	
1231	90166-0081	-	MM	5900	TUBE 6 MM PA BLUE	
12412	90166-0081	-	MM	5500	TUBE 6 MM PA BLUE	
12414	90166-0081	-	MM	5500	TUBE 6 MM PA BLUE	
12802	90166-0081	-	MM	5900	TUBE 6 MM PA BLUE	
12804	90166-0081	-	MM	5900	TUBE 6 MM PA BLUE	
12814	90166-0081	-	MM	5900	TUBE 6 MM PA BLUE	
130	2500425-0000	-		2	PIPE	
13012	90166-0081	-	MM	5000	TUBE 6 MM PA BLUE	
13014	90166-0081	-	MM	5100	TUBE 6 MM PA BLUE	
13022	90166-0081	-	MM	5300	TUBE 6 MM PA BLUE	
13024	90166-0081	-	MM	5100	TUBE 6 MM PA BLUE	
13032	90166-0081	-	MM	4900	TUBE 6 MM PA BLUE	
13034	90166-0081	-	MM	4900	TUBE 6 MM PA BLUE	
1304	90166-0081	-	MM	500	TUBE 6 MM PA BLUE	
13254	90166-0081	-	MM	4400	TUBE 6 MM PA BLUE	
13254:1	90166-0081	-	MM	250	TUBE 6 MM PA BLUE	
13254:2	90166-0081	-	MM	1000	TUBE 6 MM PA BLUE	
1326	90166-0081	-	MM	4800	TUBE 6 MM PA BLUE	
140	2500426-0000	-		1	PIPE	
14012	90166-0081	-	MM	5900	TUBE 6 MM PA BLUE	
14014	90166-0081	-	MM	5900	TUBE 6 MM PA BLUE	
14052	90166-0081	-	MM	6000	TUBE 6 MM PA BLUE	
14052:2	90166-0081	-	MM	650	TUBE 6 MM PA BLUE	
14054	90166-0081	-	MM	6000	TUBE 6 MM PA BLUE	
14054:2	90166-0081	-	MM	650	TUBE 6 MM PA BLUE	
150	2500427-0000	-		1	PIPE	
15012	90166-0081	-	MM	5800	TUBE 6 MM PA BLUE	
15012:2	90166-0081	-	MM	600	TUBE 6 MM PA BLUE	
15014	90166-0081	-	MM	6000	TUBE 6 MM PA BLUE	
15014:2	90166-0081	-	MM	300	TUBE 6 MM PA BLUE	
15022	90166-0081	-	MM	5900	TUBE 6 MM PA BLUE	
15022:2	90166-0081	-	MM	400	TUBE 6 MM PA BLUE	
15024	90166-0081	-	MM	6100	TUBE 6 MM PA BLUE	
15024:2	90166-0081	-	MM	450	TUBE 6 MM PA BLUE	
160	2500428-0000	-		2	PIPE	
170	2500432-0000	-		1	PIPE	
180	2500433-0000	-		1	PIPE	
190	2500434-0000	-		1	PIPE	
200	2500435-0000	-		1	BRACKET	
210	2500436-0000	-		1	PLATE	
220	2500437-0000	-		1	BRACKET	
230	2501513-0000	-		1	PIPE	
240	2517363-0000	-		1	PIPE	
250	2519471-0000	-		1	PIPE	
260	2520475-0000	-		1	PIPE	
270	2520476-0000	-		1	PIPE	
280	2520562-0000	-		1	PIPE	
290	2520563-0000	-		1	PIPE	
300	2522125-0000	-		3	CLAMP	
310	2522126-0000	-		3	CLAMP	
31162	90166-0081	-	MM	6000	TUBE 6 MM PA BLUE	
31162:1	90166-0081	-	MM	400	TUBE 6 MM PA BLUE	
31162:2	90166-0081	-	MM	600	TUBE 6 MM PA BLUE	
31164	90166-0081	-	MM	6000	TUBE 6 MM PA BLUE	
31164:1	90166-0081	-	MM	400	TUBE 6 MM PA BLUE	

Machine Type | Group Description | Used-In | Group Number | Page No

HOSE INSTALLATION

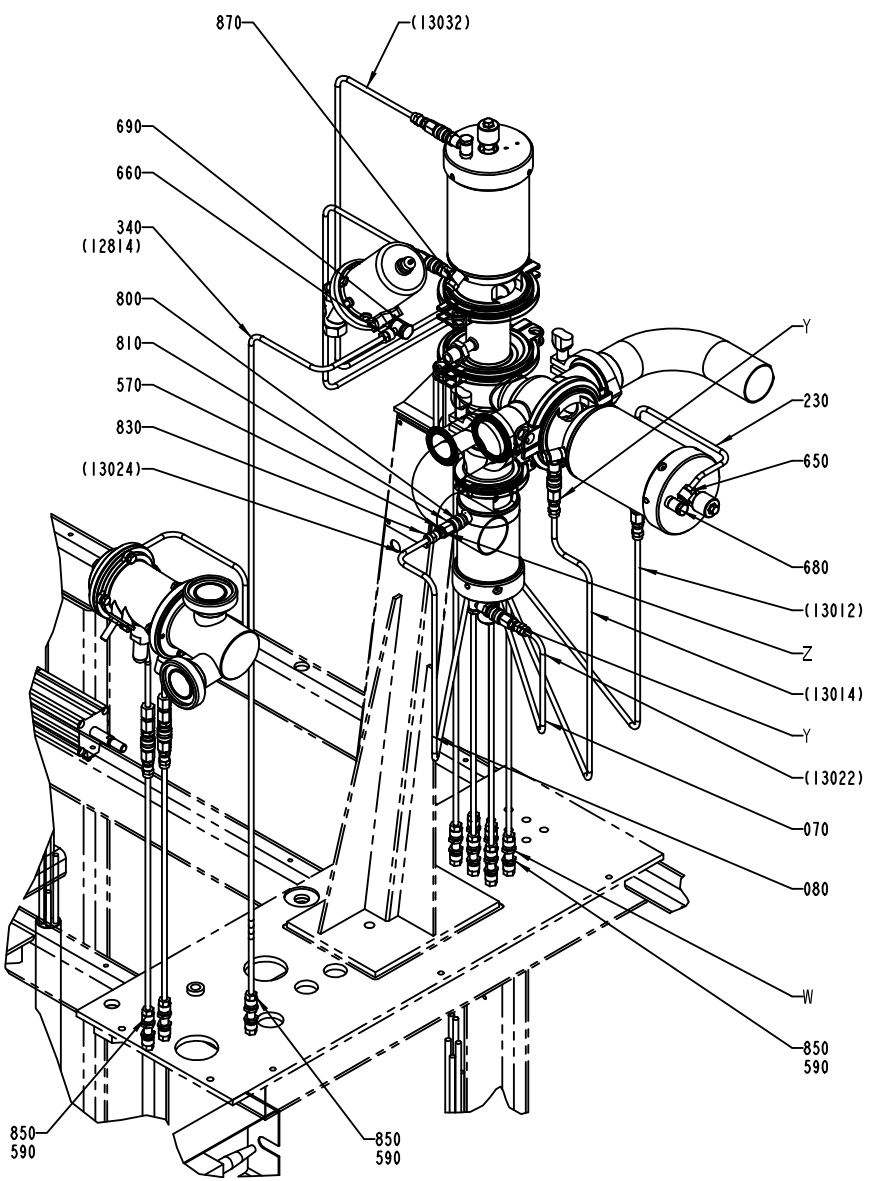

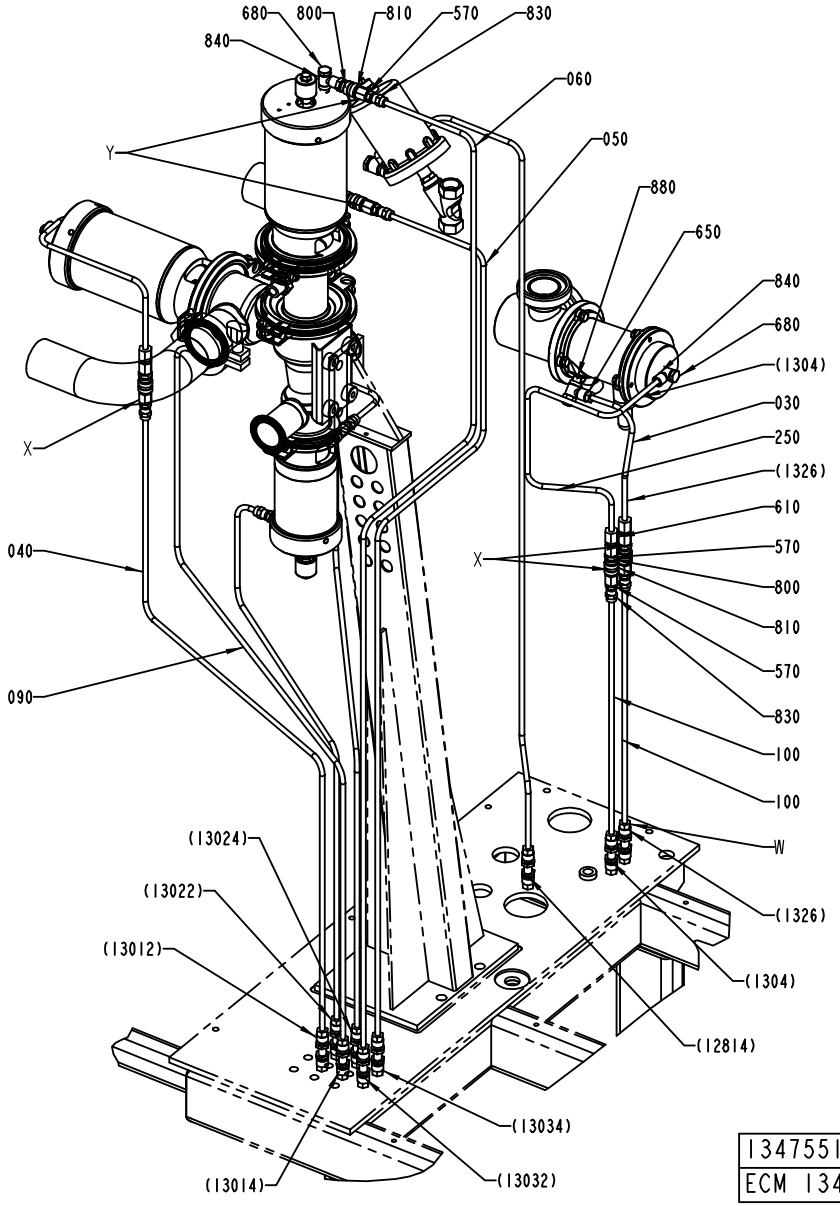

1347551-2
ECM 134026

ECM: 136091 - 20030922
Group number: 1347551-0200
Assembly Drawing: 1347551-2_2_AB

This list covers pages from 1-220 to 1-231

Pos	Part No	SP	UN	Qty	Description	Page No
Common Parts (Cont'd)						
31164:2	90166-0081	-	MM	600	TUBE 6 MM PA BLUE	
320	2524403-0000	-		1	PIPE	
330	2524404-0000	-		1	PIPE	
340	2511417-0000	-		1	PIPE	
450	312105-0329	-		3	SCREW M6S ISO 4017 M5X16 A480	
470	312105-0366	-		5	SCREW M6S M6X12 A280	
480	312105-0368	-		4	SCREW M6S M6X16 A280	
490	312105-0370	-		1	SCREW M6S ISO 4017 M6X20 A480	
510	312605-0316	-		1	HEXAGON NUT, M6M M6 A280	
530	315105-0153	-		8	WASHER BRB6,4X12RFR	
550	315115-0153	-		2	WASHER PLAIN, TBRB 6,4/12 H=3	
570	315237-0109	-		11	WASHER,PL.RND.AL.10/14,H=1,5	
610	342724-0102	-		3	CONN. STR. PIPE GI 6-G1/8	
630	342759-0102	-		2	CONN. L-PIPE ADJ.,EVL,EXT,T-6-G1/8	
650	342797-0121	-		2	CONN. BANJO, RINGPIECE 6-1/8	
660	342797-0122	-		3	CONN. BANJO, RINGPIECE 6-1/4	
670	342923-0121	-		2	STRAIGHT COUPL.,INT.THREADED 8/6-G1/8"	
680	342980-0303	-		5	BANJO-HOLLOW BOLT COUPL,EXT.THR.01-G1/8"	
690	342980-0304	-		3	BANJO-HOLLOW BOLT COUPL,EXT.THR.01-G1/4"	
710	90030-0075	-		2	PIPE CONNECTION G-6	
720	90030-0076	-		2	CONN. T-PIPE T-6	
730	90030-0171	-		4	ADJUSTABLE ELBOW CONNECTION,EXT 6-G1/8	
740	90030-0184	-		2	CONN. STR. GA-6-G1/8	
780	90143-0059	-	MM	700	SEAL STRIP 4610069	
800	90163-0057	-		8	NIPPLE 1/8" BRASS	
810	90163-0062	-		8	QUICK COUPLING, (F) 5053-1/8	
830	90458-1849	-		8	CONN. STR., 6-R1/8, EXT. THREAD	
840	90224-0308	-		5	CONN. BANJO, ART. NO. 2023-1/8-1/8	
870	90235-0274	-		1	THROTTLE CHECK VALVES,G1/8"	
880	90235-0282	-		1	THROTTLE CHECK VALVES,G1/8	
890	342748-0102	-		1	T-CONNECTION 6MM	
P1_01	90166-0068	-	MM	2000	TUBE 12 MM PA BLUE	
P1_08	90166-0068	-	MM	3800	TUBE 12 MM PA BLUE	
P2	90166-0013	-	MM	2000	TUBE 8 MM PA BLUE	

Pos	Part No	SP	UN	Qty	Description	Page No

HOSE INSTALLATION

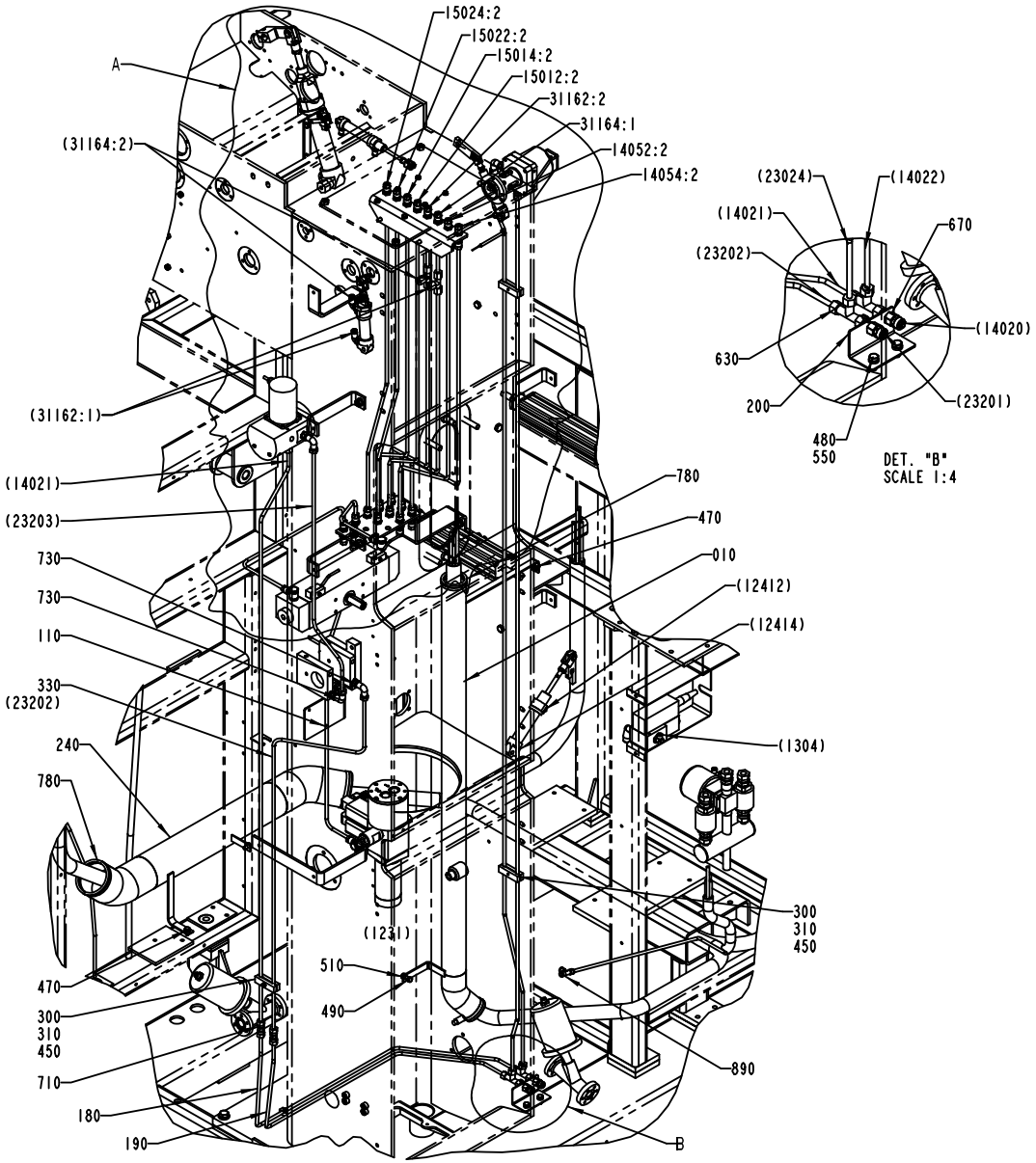

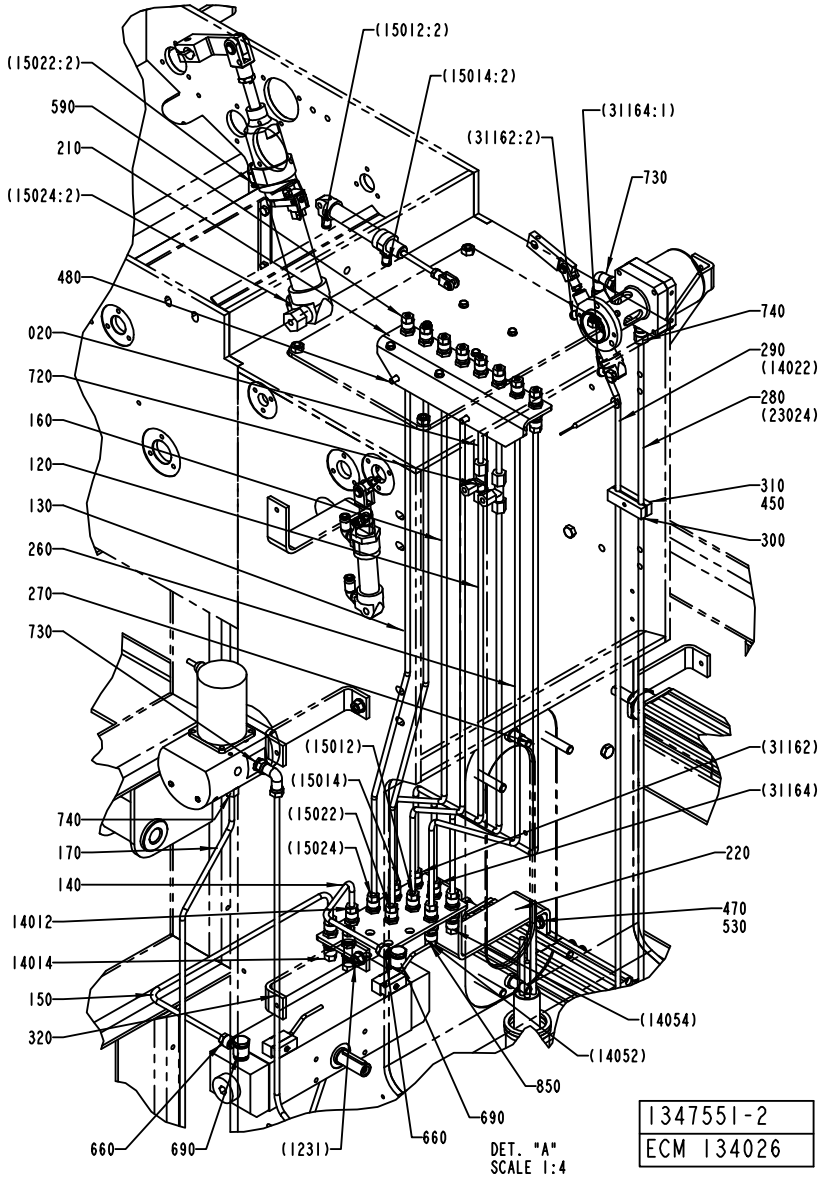

ECM: 136091 - 20030922
Group number: 1347551-0200
Assembly Drawing: 1347551-2_3_AB

This list covers pages from 1-220 to 1-231

Pos	Part No	SP	UN	Qty	Description	Page No
SEE PREVIOUS LISTS PAGES: 1-221, 1-223.						

Pos	Part No	SP	UN	Qty	Description	Page No

HOSE INSTALLATION

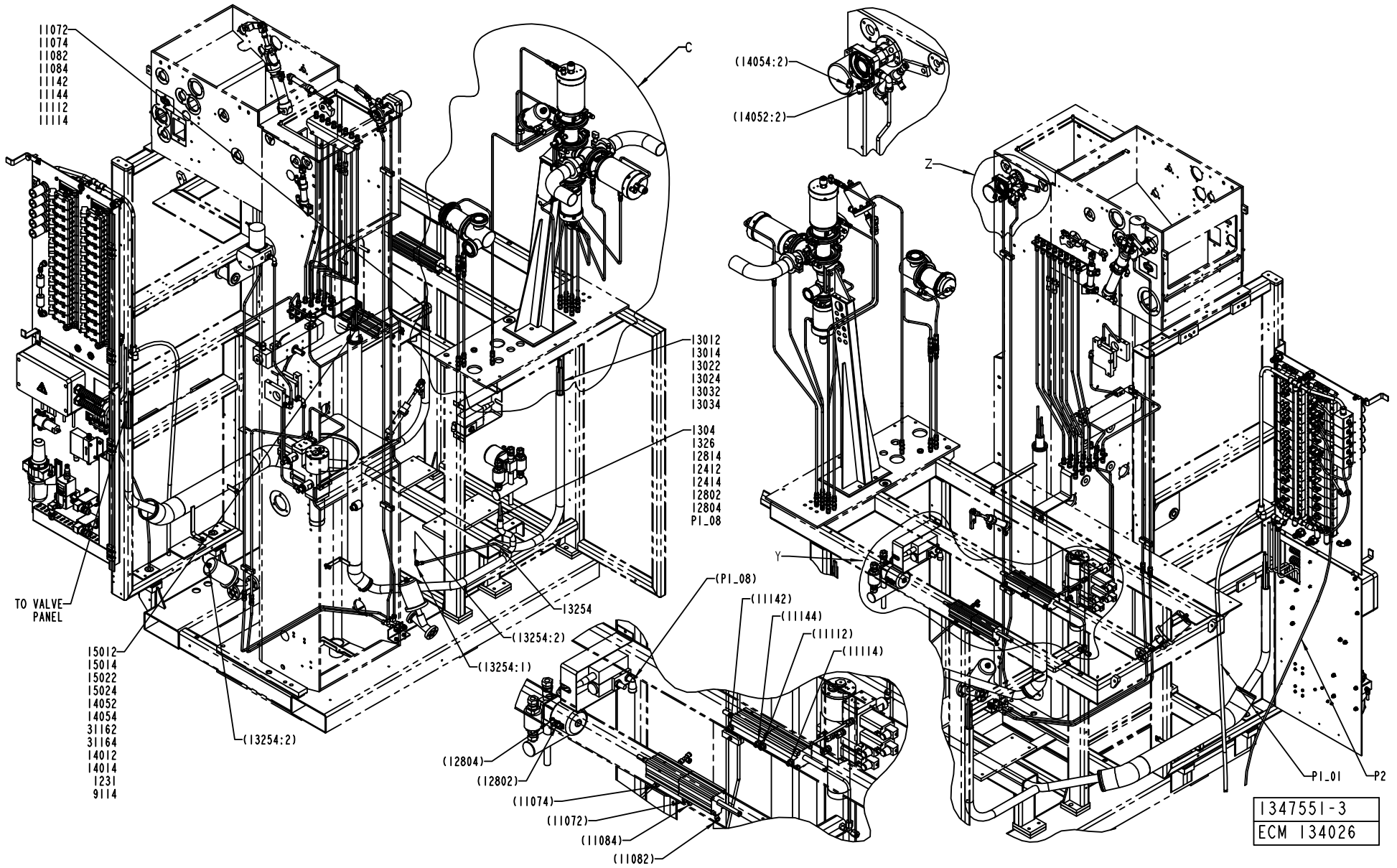

ECM: 136091 - 20030922
Group number: 1347551-0200
Assembly Drawing: 1347551-3_1_AA

This list covers pages from 1-220 to 1-231

Pos	Part No	SP	UN	Qty	Description	Page No
SEE PREVIOUS LISTS PAGES: 1-221, 1-223.						

Pos	Part No	SP	UN	Qty	Description	Page No

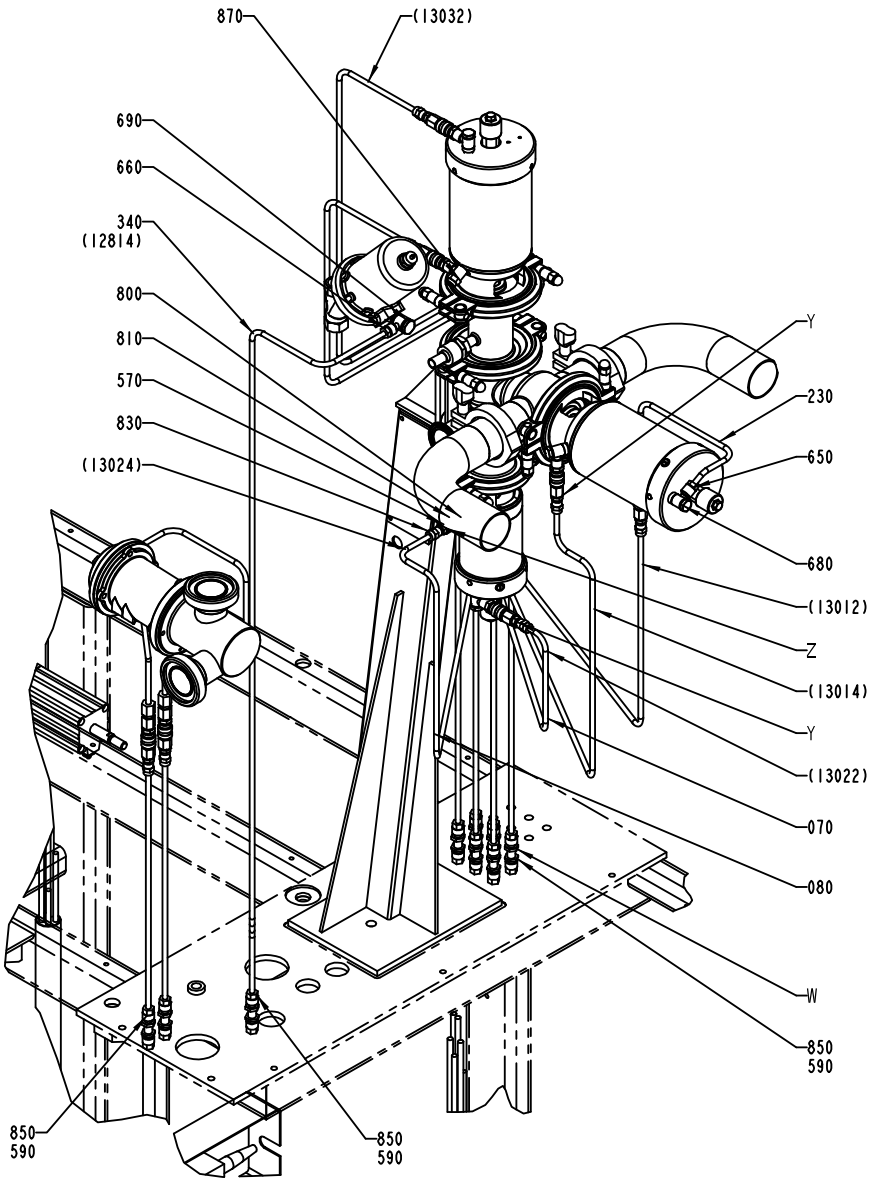

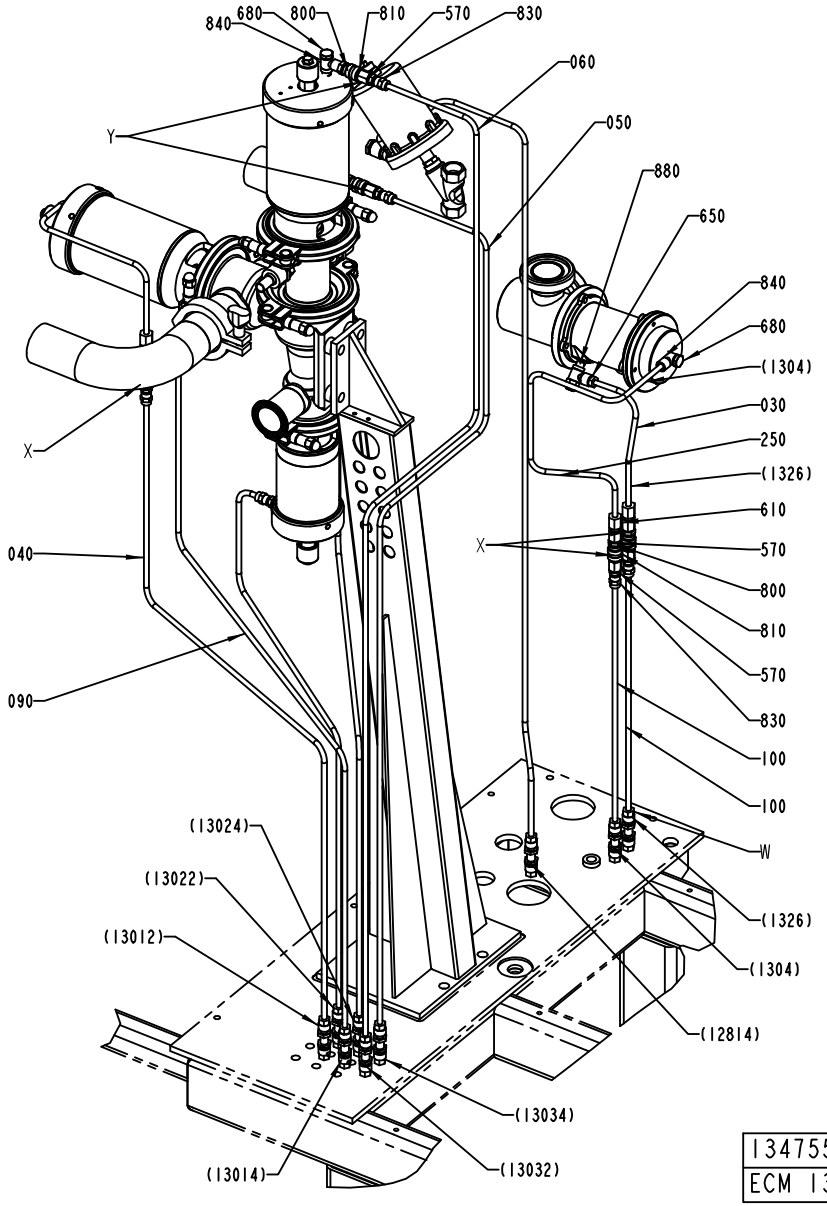

1347551-3
ECM 134026

ECM: 136091 - 20030922
Group number: 1347551-0200
Assembly Drawing: 1347551-3_2_AA

This list covers pages from 1-220 to 1-231

Pos	Part No	SP	UN	Qty	Description	Page No
SEE PREVIOUS LISTS PAGES: 1-221, 1-223.						

Pos	Part No	SP	UN	Qty	Description	Page No

HOSE INSTALLATION

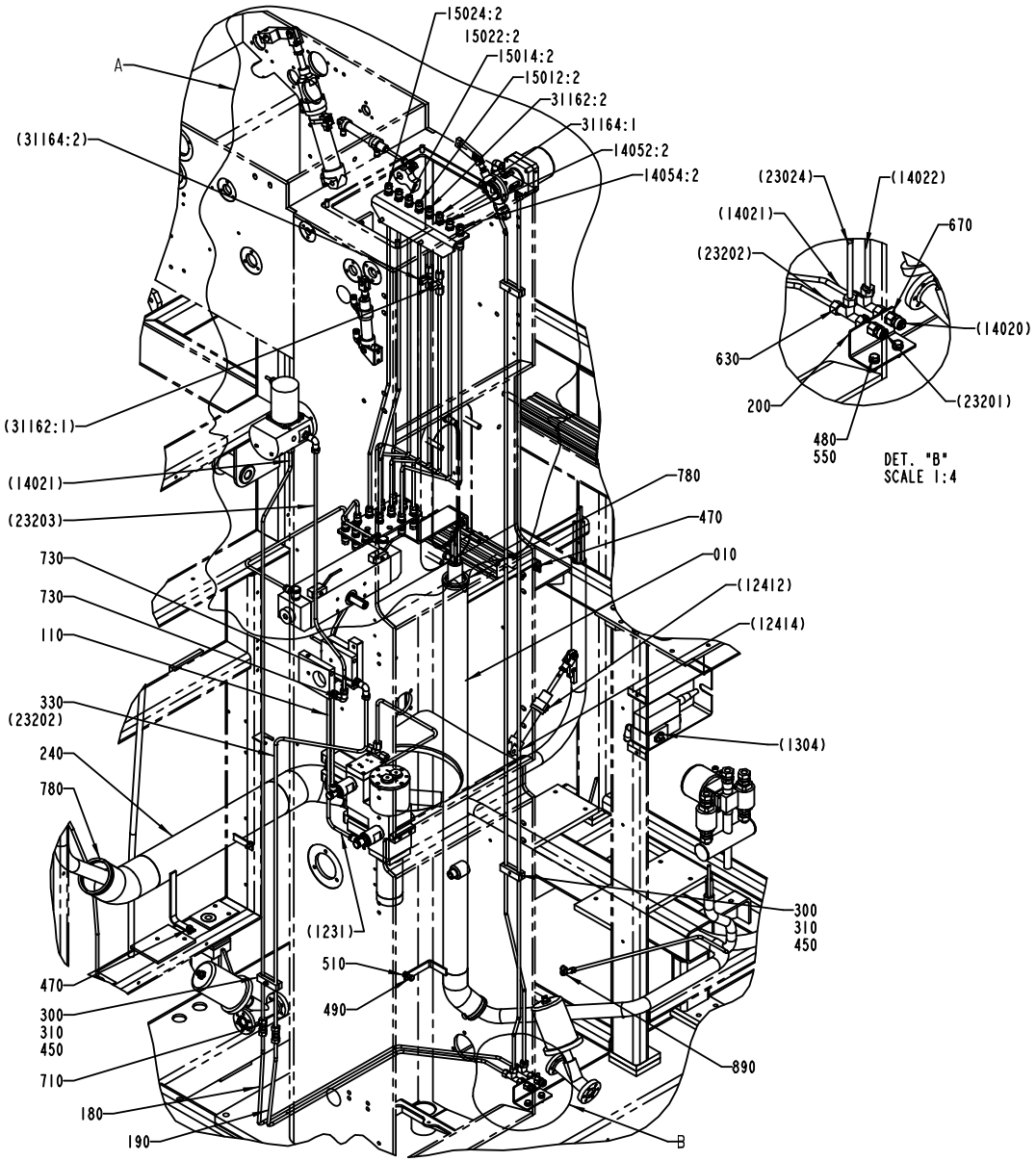

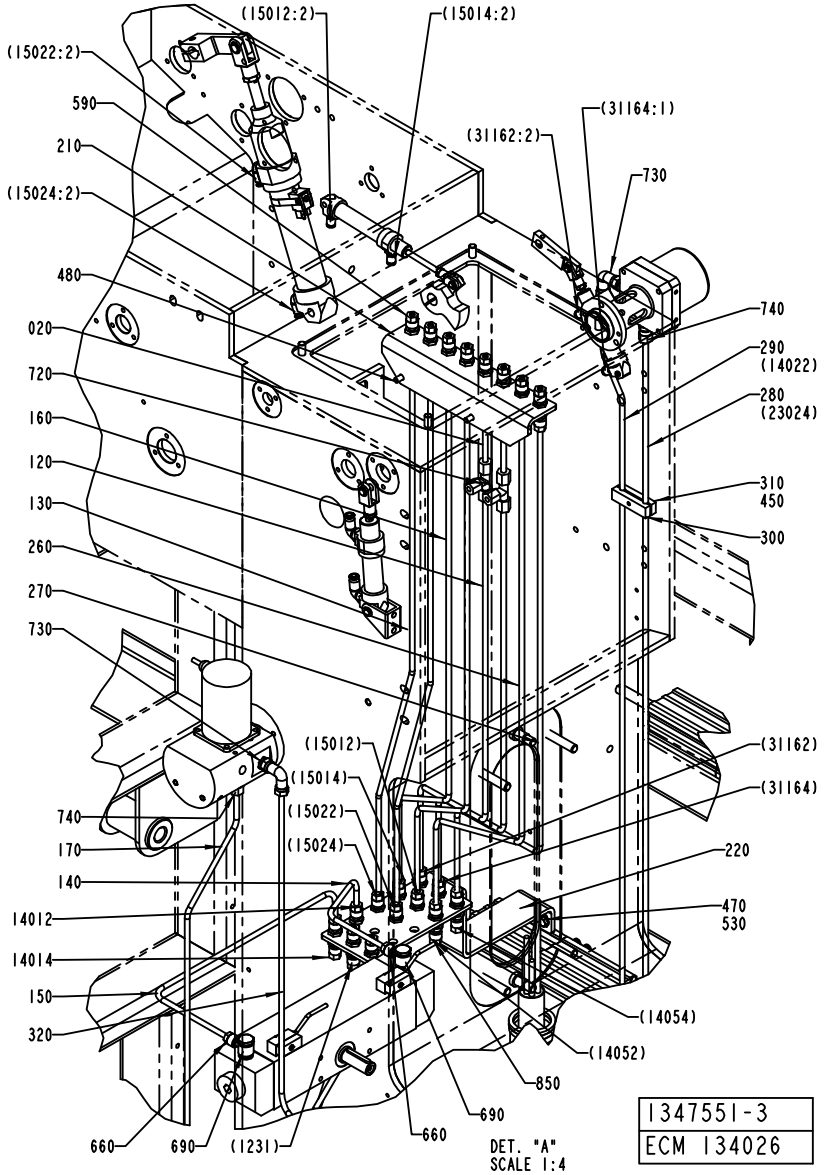

1347551-3
ECM 134026

ECM: 136091 - 20030922
Group number: 1347551-0200
Assembly Drawing: 1347551-3_3_AA

This list covers pages from 1-220 to 1-231

Pos	Part No	SP	UN	Qty	Description	Page No
SEE PREVIOUS LISTS PAGES: 1-221, 1-223.						

Pos	Part No	SP	UN	Qty	Description	Page No

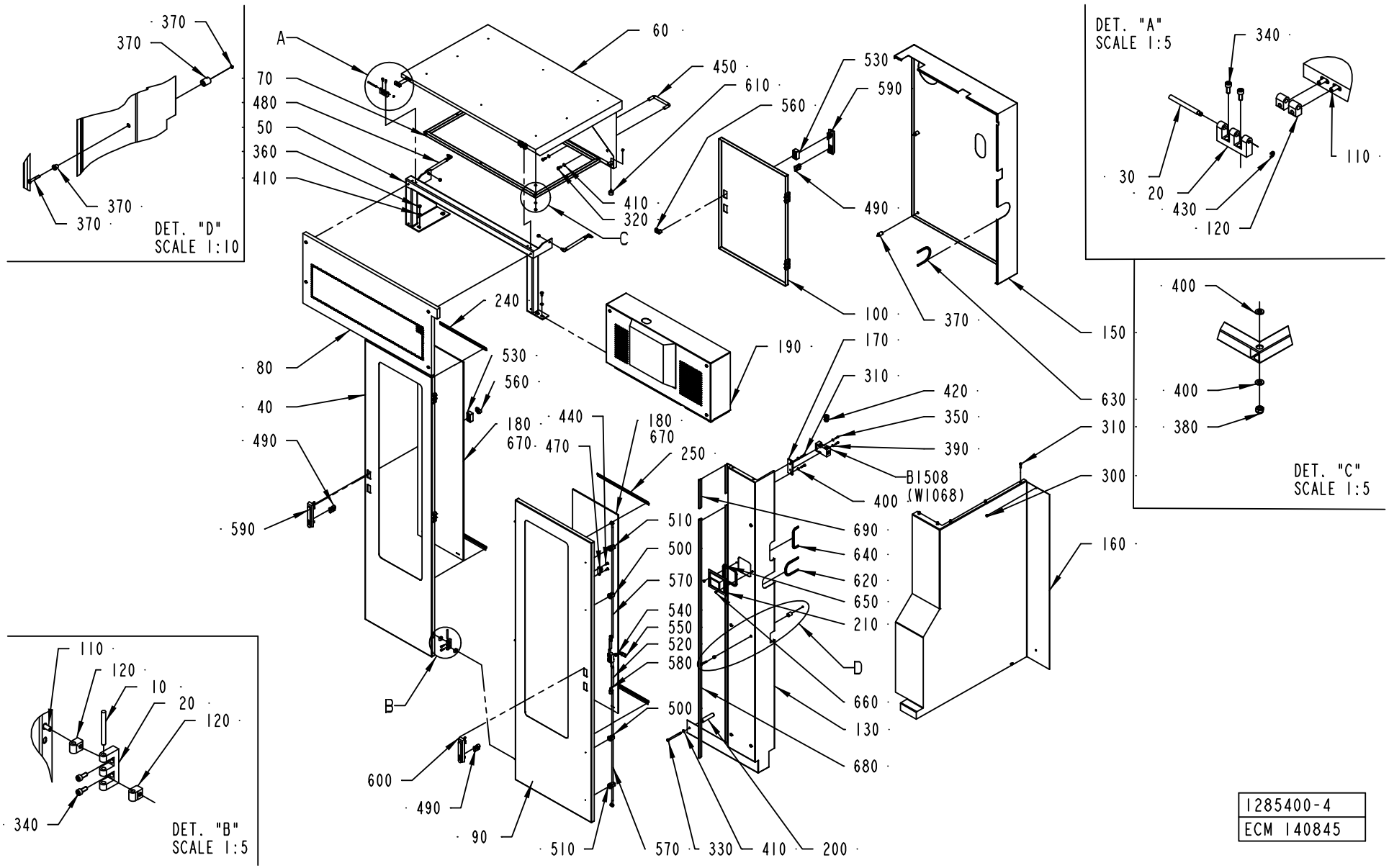
DET. "D" SCALE 1:10
DET. "A" SCALE 1:5
DET. "C" SCALE 1:5
DET. "B" SCALE 1:5
B1508 (W1068)
1285400-4
ECM 140845

ECM: 143636 - 20031110
Group number: 1285400-0300
Assembly Drawing: 1285400-4_1_AE

Pos	Part No	SP	UN	Qty	Description	Page No
-						
010	988685-0000	-		5	PIN	
020	1035792-0000	-		7	E-HINGE	
030	1036329-0000	-		2	PIN	
040	2531269-0000	-		1	DOOR	
050	1129194-0000	-		1	FRAME	
060	1129195-0000	-		1	OPENING	
070	1129196-0000	-		1	FRAME	
080	1129197-0000	-		1	OPENING	
090	2531270-0000	-		1	DOOR	
100	1129199-0000	-		1	DOOR	
110	1129767-0000	-		14	SCREW	
120	1129770-0000	-		14	BLOCKING PIECE	
130	2531271-0000	-		1	COVERING	
150	1285403-0000	-		1	COVERING	
160	1478236-0000	-		1	COVERING	
170	1548253-0000	-		1	PLATE	
180	2546451-0000	-		2	GLASS PANE	
190	2531272-0000	-		1	TOP COVER	
200	2531502-0000	-		1	SPACER	
210	2547013-0000	-		1	CAP	
220	2594227-0000	-		1	PLATE	
230	2594228-0000	-		1	PLATE	
240	2594229-0000	-		1	PLATE	
250	2594230-0000	-		1	PLATE	
300	312105-0362	-		2	SCREW M6S ISO 4017 M6X8 A480	
310	312105-0372	-		7	SCREW M6S ISO 4017 M6X25 A480	
320	312105-0449	-		4	SCREW M6S ISO 4017 M8X16 A480	
330	312105-0471	-		1	SCREW M6S ISO 4014 M8X100 A480	
340	312115-0327	-		14	SCREW ISO4762 M5X12 A4	
350	312125-0329	-		2	SCREW ISO 1207 M5X16 A4	
360	312605-0318	-		4	HEXAGON NUT, M6M M8 A280	
370	90226-0458	-		18	MOUNTING SCREW	
380	312812-0316	-		10	HEXAGON NUT, NY-LOCK M6 A480	
390	315105-0146	-		2	BRICKA BRB5,3X10RFR	
400	315105-0153	-		18	WASHER BRB6,4X12RFR	
410	315105-0165	-		7	WASHER BRB8,4X16RFR	
420	90458-0315	-		1	CABLE GLAND, M20X1,5, NO.5311 1120	
430	315755-0106	-		2	RETAINING RING SHAFT DIN 6799 4 A2	
440	312155-0329	-		2	SCREW EN 10642 MF6S M5X16 A480	
450	90017-0016	-		1	HANDLE, NO. 14.4012.02.120	
470	90044-0310	A		1	KEY FOR SAFETY SWITCH, AZ 15/16 B1	
480	90347-0127	-		2	DAMPER	
490	90237-0128	-		3	LOCK CYLINDER, 1109-U3	
500	90237-0151	-		2	GUIDE, 1001-U11	
510	90237-0152	-		2	GUIDE, 1001-U12	
520	90237-0153	-		1	LOCK HOUSING, 1121-U26-0B	
530	90237-0154	-		2	LOCK HOUSING, 1121-U60-0C	
540	90237-0155	-		1	LOCK ADAPTER, 1121-U40	
550	90237-0156	-		1	LOCK BOLT, 1000-16	
560	90237-0165	-		2	LATCH	
570	90459-1004	-		2	ROUND BAR W. END WHEEL, 1049-U18-L820	
580	90237-0169	-		2	LOCK ADAPTER, 1000-U49	
590	90237-0175	-		2	TURNING HANDLE	
600	90237-0176	-		1	TURNING HANDLE	
610	90347-0034	-		2	VIBRATION DAMPER	
620	90143-0060	-	MM	250	EDGE STRIP 9,5X6,3MM BLACK PVC	
630	90143-0060	-	MM	260	EDGE STRIP 9,5X6,3MM BLACK PVC	
640	90143-0060	-	MM	195	EDGE STRIP 9,5X6,3MM BLACK PVC	
650	90143-0060	-	MM	380	EDGE STRIP 9,5X6,3MM BLACK PVC	
660	312155-0327	-		2	SCREW EN 10642 MF6S M5X12 A480	
670	90157-0041	-		1	SEALING COMPOUND	
680	90143-0057	-	MM	1690	STRIP EMKA 1011-05 21X11MM	
690	90143-0057	-	MM	200	STRIP EMKA 1011-05 21X11MM	
B1508	90459-0472	A		1	KEY SAF.SW. AZ 16 02ZVRK-M20-2152-2254	

Machine Type | Group Description | Used-In | Group Number | Page No

COVERING PANEL

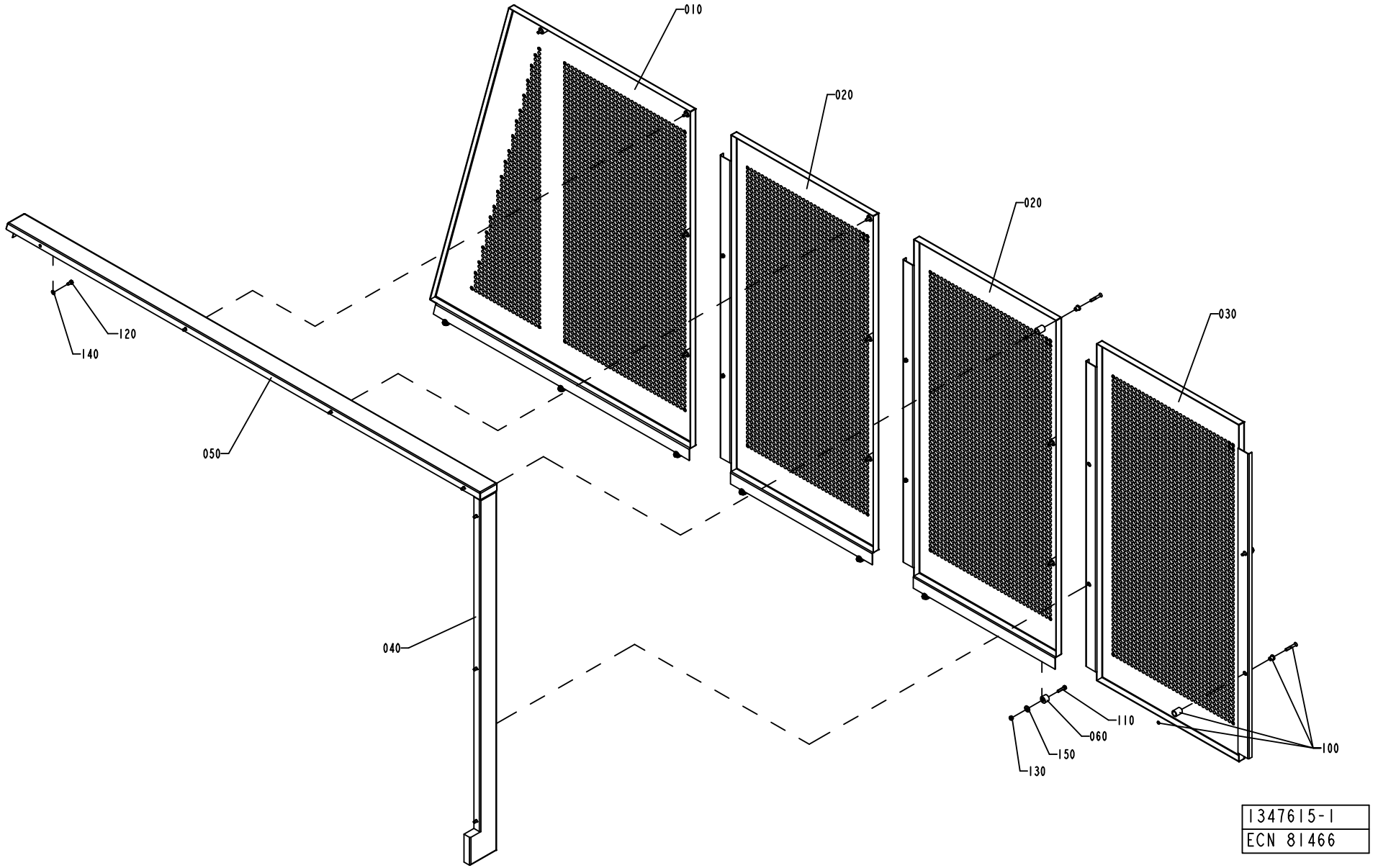

ECM: 81479 - 20001012
Group number: 1347615-0100
Assembly Drawing: 1347615-1_1_AB

Pos	Part No	SP	UN	Qty	Description	Page No
-						
010	1037502-0000	-		1	COVERING PLATE	
020	1037508-0000	-		2	COVERING PLATE	
030	1037528-0000	-		1	COVERING PLATE	
040	1347616-0000	-		1	COVERING PLATE	
050	1347617-0000	-		1	COVERING PLATE	
060	1037552-0000	-		7	SPACER	
100	90226-0458	-		12	MOUNTING SCREW	
110	312105-0372	-		7	SCREW M6S ISO 4017 M6X25 A480	
120	312105-0366	-		7	SCREW M6S M6X12 A280	
130	312605-0316	-		7	HEXAGON NUT, M6M M6 A280	
140	315105-0153	-		7	WASHER BRB6,4X12RFR	
150	1260303-0000	-		7	WASHER	

Pos	Part No	SP	UN	Qty	Description	Page No

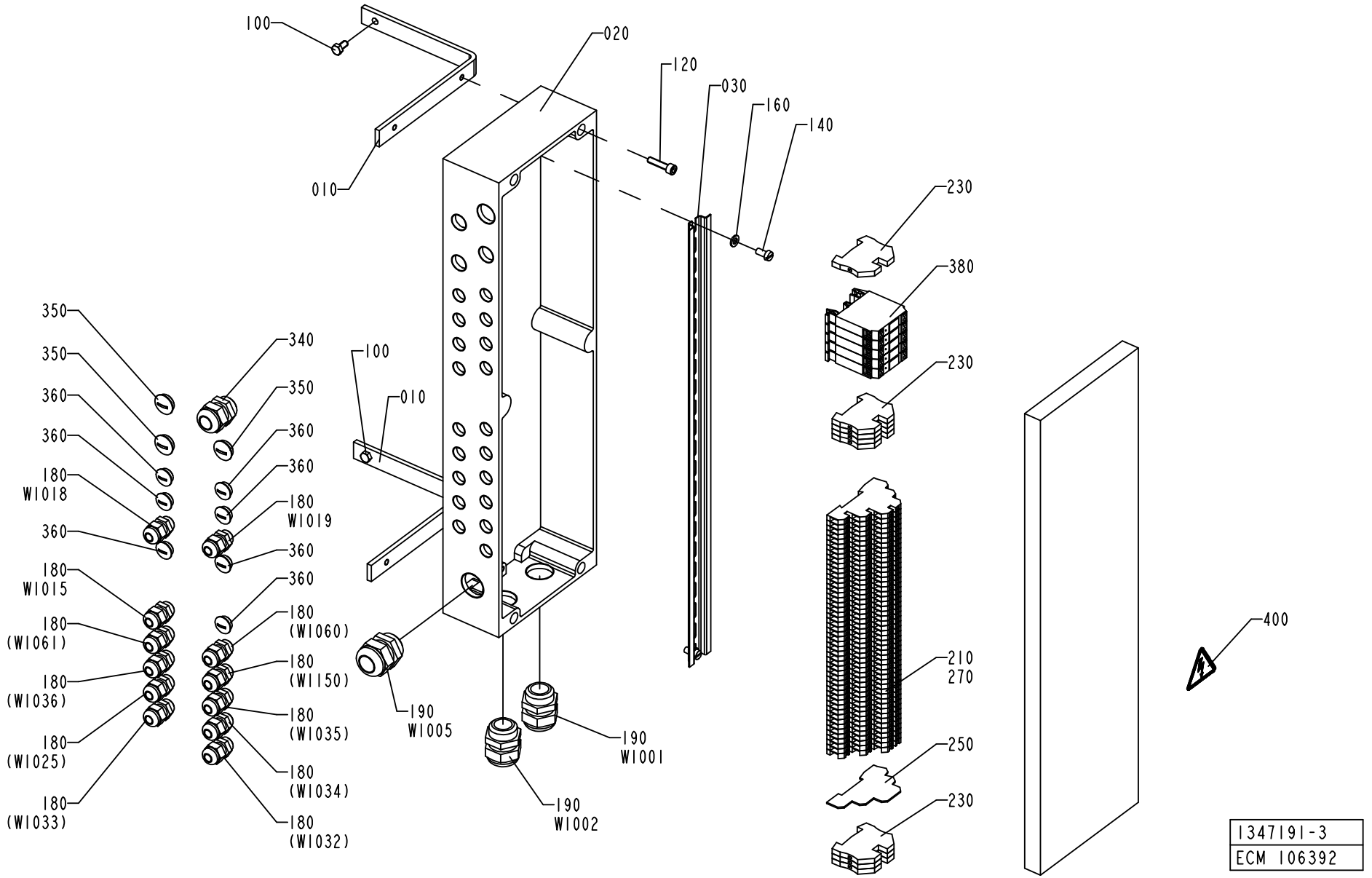
100
020
120
030
160
140
010
230
380
230
350
350
360
360
180
W1018
360
180
W1015
180
(W1061)
180
(W1036)
180
(W1025)
180
(W1033)
340
350
360
360
180
W1019
360
360
180
(W1060)
180
(W1150)
180
(W1035)
180
(W1034)
180
(W1032)
100
010
190
W1005
190
W1001
190
W1002
210
270
250
230
400
1347191-3
ECM 106392

ECM: 114233 - 20020911
Group number: 1347191-0200
Assembly Drawing: 1347191-3_1_AB

Pos	Part No	SP	UN	Qty	Description	Page No
-						
010	1347877-0000	-		2	HOLDER	
020	2517364-0000	-		1	CONNECTION BOX	
030	2517365-0000	-		1	RAIL	
100	312105-0366	-		2	SCREW M6S M6X12 A280	
120	312115-0372	-		4	SCREW ISO4762 M6X25 A4	
140	312125-0366	-		2	SCREW ISO 1207 M6X12 A4	
160	315105-0153	-		2	WASHER BRB6,4X12RFR	
180	352103-0101	-		12	CABLE GLAND, ST 9, PR15,2/PG9	
190	352103-0116	-		3	CABLE GLAND, ST 21, PR28,3/PG21	
210	353021-0302	-		49	TERMINALS,TRIPLE-LEVEL, DLD 2,5/35 PA	
230	353024-0205	-		8	EARTH TERMINAL, 1010.1	
250	353032-0302	-		1	END PLATE WAP	
270	353034-0404	-		10	BRIDGE CONNECTOR Q10, 13131.0	
290	359011-0823	-		2	SET OF SIGNS 6-FW 101-150	
300	359011-0832	-		2	SET OF SIGNS 6-GW (+)	
310	359011-0833	-		2	SET OF SIGNS 6-GW (-)	
320	359011-0834	-		1	SET OF SIGNS 6-GW(EARTH)	
340	352103-0111	-		1	CABLE GLAND, ST 16, PR22,5/PG16	
350	90002-0009	-		3	BLANK-OFF PLUG, PR 18.6 SKINDICHT-BLK11	
360	90002-0013	-		7	BLANK-OFF PLUG, PR 15,2 SKINDICHT-BLK9	
380	90119-0063	B		5	OPTO-RELAY, DC/DC AMMS-10-1/30VDC	
400	359705-0015	-		1	WARNING SIGN ISO, RISK OF ELECTRIC SHOCK	
W1001	351150-0425	-	MM	6000	CABLE OLFLEX 25X0,75 MM2 LIGHT/GREY	
W1002	351150-0425	-	MM	6000	CABLE OLFLEX 25X0,75 MM2 LIGHT/GREY	
W1005	351150-0425	-	MM	6000	CABLE OLFLEX 25X0,75 MM2 LIGHT/GREY	
W1015	351150-0403	-	MM	3600	CABLE OLFLEX 3X0,75 MM2 LIGHT/GREY	
W1018	351150-0403	-	MM	3400	CABLE OLFLEX 3X0,75 MM2 LIGHT/GREY	
W1019	351150-0403	-	MM	3400	CABLE OLFLEX 3X0,75 MM2 LIGHT/GREY	

Pos	Part No	SP	UN	Qty	Description	Page No

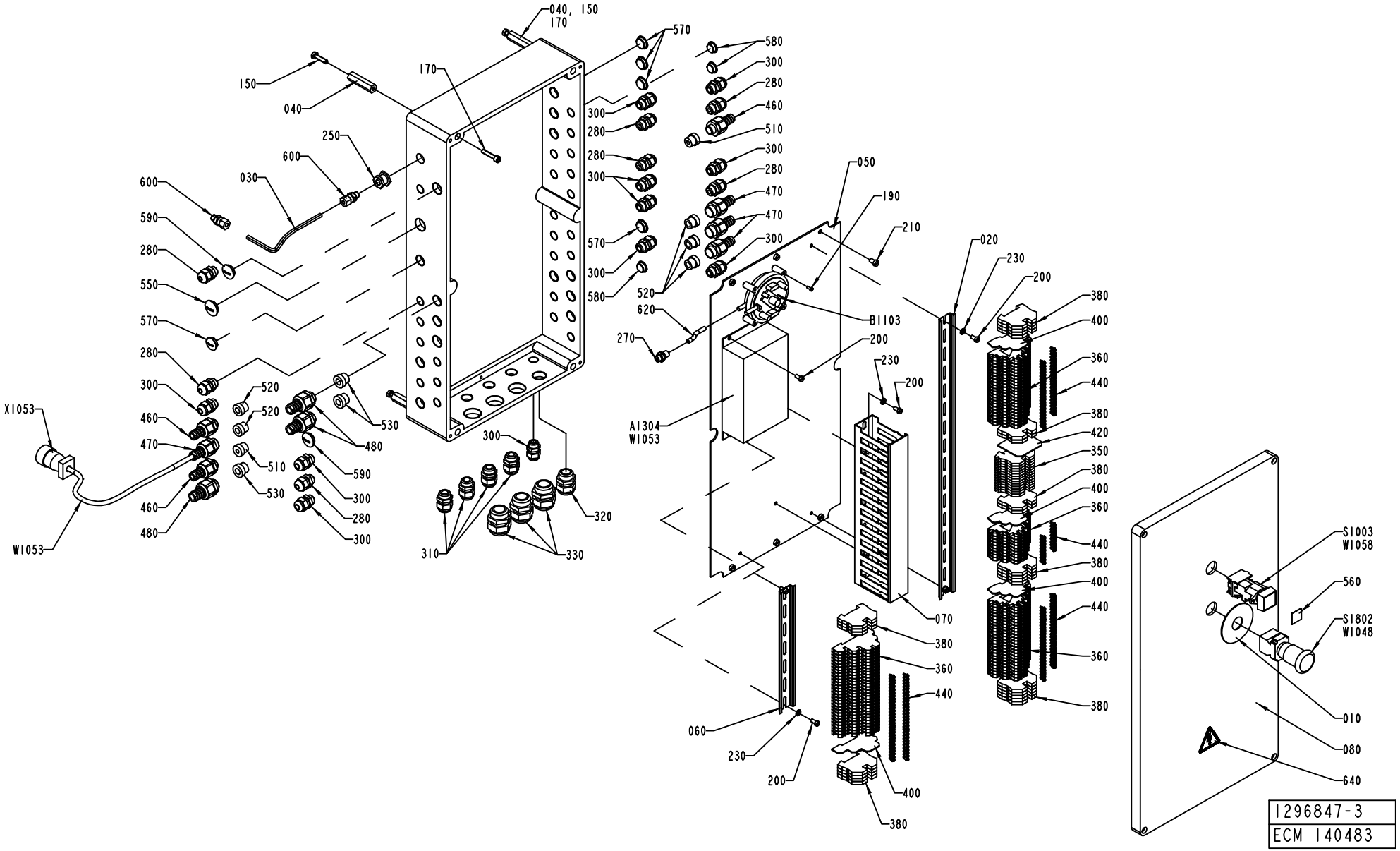
040, 150
170
150
040
170
250
600
030
600
590
280
550
570
280
300
460
470
460
480
X1053
W1053
520
520
510
530
530
480
590
300
280
300
300
310
320
330
570
580
300
280
460
510
300
280
470
470
300
570
300
580
520
620
270
050
190
210
020
230
200
B1103
200
230
200
A1304
W1053
380
400
360
440
380
420
350
380
400
360
440
380
400
440
360
380
070
380
360
440
060
230
200
400
380
S1003
W1058
560
S1802
W1048
010
080
640
1296847-3
ECM 140483

ECM: 142439 - 20031216
Group number: 1296847-0300
Assembly Drawing: 1296847-3_1_AC

This list covers pages from 1-238 to 1-253

Pos	Part No	SP	UN	Qty	Description	Page No
FLOATER HI (See drawing on pages: 1-250, 1-252)						
200	312125-0325	-		6	SCREW ISO 1207 M5X10 A4	
310	352103-0106	-		5	CABLE GLAND, ST 11, PR18,6/PG11	
470	353243-0002	-		6	EXTENDED WITHOUT INSERT, PG11	
490	353243-0005	-		1	EXTENDED WITHOUT INSERT, PG16	
520	353249-0009	-		7	INSERT, SINGEL HOLE, EK 152/9	
540	353249-0026	-		1	INSERT, MULTI HOLE, E153M6X4	
570	90002-0009	-		2	BLANK-OFF PLUG, PR 18.6 SKINDICHT-BLK11	
FLOATER NOHI (See drawing on pages: 1-242, 1-244)						
200	312125-0325	-		6	SCREW ISO 1207 M5X10 A4	
310	352103-0106	-		5	CABLE GLAND, ST 11, PR18,6/PG11	
470	353243-0002	-		3	EXTENDED WITHOUT INSERT, PG11	
520	353249-0009	-		4	INSERT, SINGEL HOLE, EK 152/9	
550	90002-0004	-		1	BLANK-OFF PLUG, PR 22,5 SKINDICHT-BLK16	
570	90002-0009	-		5	BLANK-OFF PLUG, PR 18.6 SKINDICHT-BLK11	
LEVELPROBE HI (See drawing on pages: 1-246, 1-248)						
200	312125-0325	-		10	SCREW ISO 1207 M5X10 A4	
310	352103-0106	-		4	CABLE GLAND, ST 11, PR18,6/PG11	
470	353243-0002	-		7	EXTENDED WITHOUT INSERT, PG11	
490	353243-0005	-		1	EXTENDED WITHOUT INSERT, PG16	
520	353249-0009	-		8	INSERT, SINGEL HOLE, EK 152/9	
540	353249-0026	-		1	INSERT, MULTI HOLE, E153M6X4	
570	90002-0009	-		2	BLANK-OFF PLUG, PR 18.6 SKINDICHT-BLK11	
A1304	90314-0044	A		1	SIGNAL CONVERTER	
W1053	90220-0092	-	MM	1100	PAIR TWISTED CABLE 3X2X0,25MM2	
X1053	90110-0223	A		1	CONTACT MALE, MS 3106 E 16S-1P	
LEVELPROBE NOHI (See drawing on pages: 1-238, 1-240)						
200	312125-0325	-		10	SCREW ISO 1207 M5X10 A4	
310	352103-0106	-		4	CABLE GLAND, ST 11, PR18,6/PG11	
470	353243-0002	-		4	EXTENDED WITHOUT INSERT, PG11	
520	353249-0009	-		5	INSERT, SINGEL HOLE, EK 152/9	
550	90002-0004	-		1	BLANK-OFF PLUG, PR 22,5 SKINDICHT-BLK16	
570	90002-0009	-		5	BLANK-OFF PLUG, PR 18.6 SKINDICHT-BLK11	
A1304	90314-0044	A		1	SIGNAL CONVERTER	
W1053	90220-0092	-	MM	1100	PAIR TWISTED CABLE 3X2X0,25MM2	
X1053	90110-0223	A		1	CONTACT MALE, MS 3106 E 16S-1P	
Common Parts						
010	486826-0001	-		1	SIGN "EMERGENCY STOP"	
020	2517376-0000	-		1	RAIL	
030	1038358-0000	-		1	PIPE	
040	1129475-0000	-		3	HOLDER	
050	1349872-0000	-		1	MOUNTING PLATE	
060	2523660-0000	-		1	RAIL	
070	1129480-0000	-		1	CABLE DUCT	
080	2523661-0000	-		1	CONNECTION BOX	
150	312105-0372	-		3	SCREW M6S ISO 4017 M6X25 A480	
170	312115-0374	-		3	SCREW ISO4762 M6X30 A4	
190	312125-0222	-		4	SCREW ISO 1207 M3X8 A4	
210	312125-0364	-		6	SCREW ISO 1207 M6X10 A4	
230	315105-0146	-		6	BRICKA BRB5,3X10RFR	
250	342767-0100	-		1	CONN. BULKHEAD G1/8	
270	342921-0113	-		1	STRAIGHT COUPLING,EXT.THREADED 6/4-G1/8"	
280	352103-0100	-		7	CABLE GLAND, STR 9, PR15,2/PG9	
300	352103-0101	-		11	CABLE GLAND, ST 9, PR15,2/PG9	
320	352103-0111	-		1	CABLE GLAND, ST 16, PR22,5/PG16	
330	352103-0116	-		3	CABLE GLAND, ST 21, PR28,3/PG21	
350	353021-0216	-		13	FEED THROUGH TERMINAL, 10200.8	
360	353021-0302	-		83	TERMINALS,TRIPLE-LEVEL, DLD 2,5/35 PA	
380	353024-0205	-		24	EARTH TERMINAL, 1010.1	
400	353032-0302	-		4	END PLATE WAP	
420	353033-0106	-		1	PARTITITION, 10501.8	
440	353034-0404	-		18	BRIDGE CONNECTOR Q10, 13131.0	
460	353243-0001	-		3	EXTENDED WITHOUT INSERT, PG9	
480	353243-0003	-		3	EXTENDED WITHOUT INSERT, PG11	
510	353249-0008	-		2	INSERT, SINGEL HOLE, EK 152/7	
530	353249-0011	-		3	INSERT, SINGEL HOLE, EK 153/11	
560	359301-0110	-		1	SIGN "SHORT STOP"	
580	90002-0013	-		3	BLANK-OFF PLUG, PR 15,2 SKINDICHT-BLK9	
590	90002-0016	-		2	BLANK-OFF PLUG PR 20.4 SKINDICHT-BLK13,5	
600	90030-0184	-		2	CONN. STR. GA-6-G1/8	
620	90166-0176	-	MM	50	RUBBER HOSE	
640	359705-0015	-		1	WARNING SIGN ISO, RISK OF ELECTRIC SHOCK	
660	359011-0810	-		2	MARKING PLATES 5-FW 151-200	
670	359011-0823	-		2	SET OF SIGNS 6-FW 101-150	
680	359011-0824	-		2	SET OF SIGNS 6-FW 151-200	
690	359011-0832	-		4	SET OF SIGNS 6-GW (+)	
700	359011-0833	-		4	SET OF SIGNS 6-GW (-)	
710	359011-0834	-		1	SET OF SIGNS 6-GW(EARTH)	
760	351160-0102	-	MM	3500	CABLE AWM 1X0,75 MM2 DARKBLUE	
770	90152-0050	-	MM	9000	SPIRAL CONDUIT, 20X13, UL 1313	
780	90152-0059	-	MM	350	SPIRAL CONDUIT, 18X12, UL 1211	
B1103	90274-0088	A		1	PRESSURE GUARD, 1,5 KPA	
S1003	90064-0085	A		1	PUSH BUTTON, RED	
S1802	90064-0124	A		1	SWITCH, EM. STOP, ZB2-BS844+ZB2-BZ1045	

Machine Type | Group Description | Used-In | Group Number | Page No

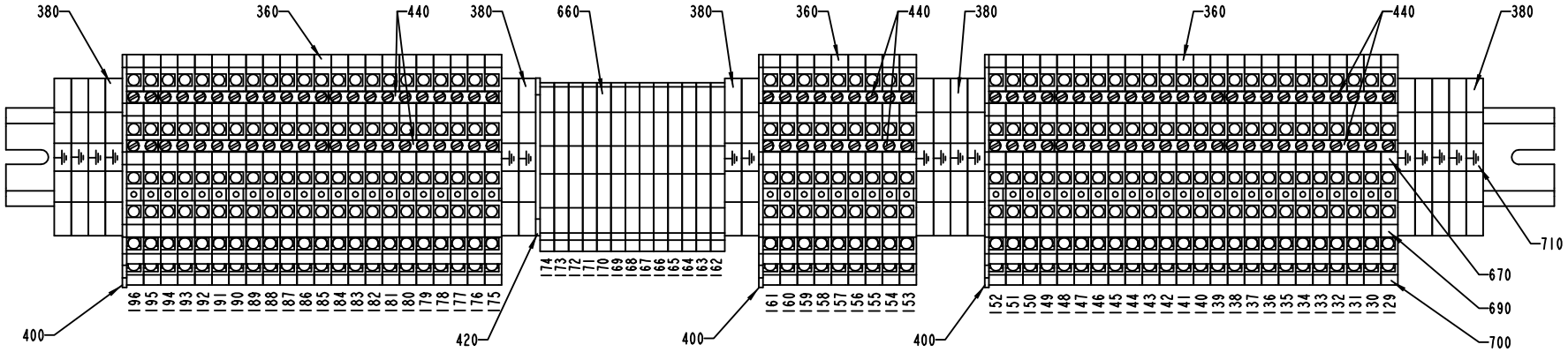

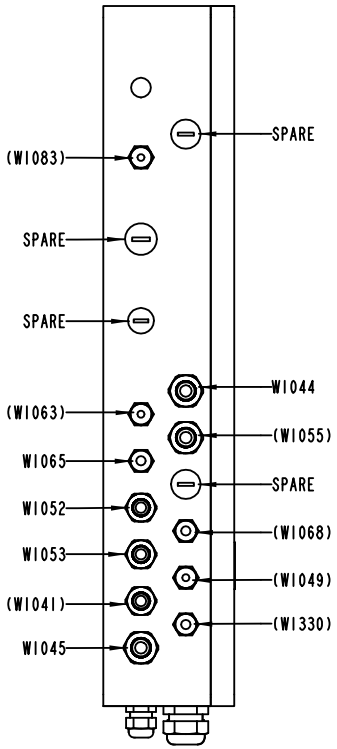

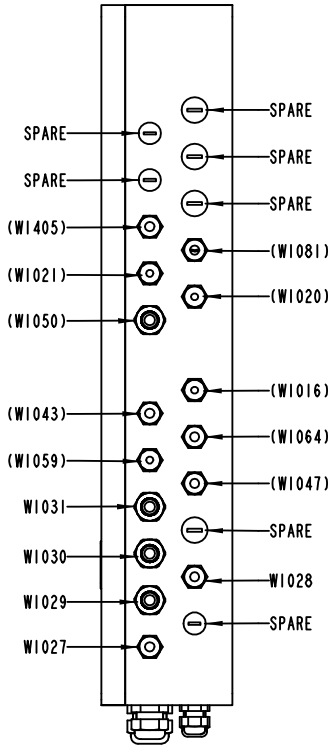

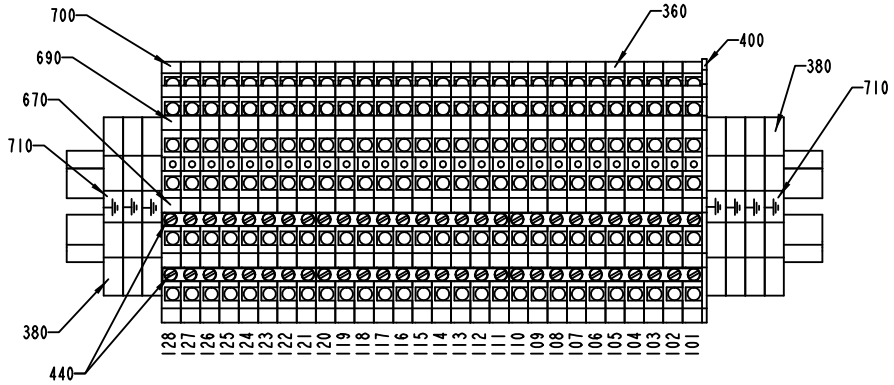

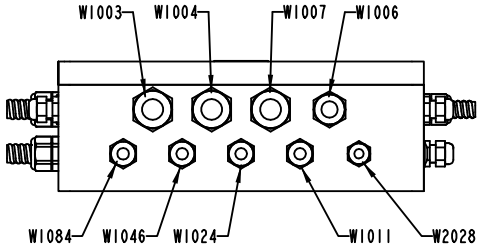

1296847-3
ECM 140483

ECM: 142439 - 20031216
Group number: 1296847-0300
Assembly Drawing: 1296847-3_2_AC

This list covers pages from 1-238 to 1-253

Pos	Part No	SP	UN	Qty	Description	Page No
Common Parts (Cont'd)						
W1003	351150-0425	-	MM	6000	CABLE OLFLEX 25X0,75 MM2 LIGHT/GREY	
W1004	351150-0425	-	MM	5800	CABLE OLFLEX 25X0,75 MM2 LIGHT/GREY	
W1006	351150-0407	-	MM	5800	CABLE OLFLEX 12X0,75 MM2 LIGHT/GREY	
W1007	351150-0425	-	MM	5800	CABLE OLFLEX 25X0,75 MM2 LIGHT/GREY	
W1011	351150-0405	-	MM	3000	CABLE OLFLEX 5X0,75 MM2 LIGHT/GREY	
W1024	351150-0405	-	MM	3000	CABLE OLFLEX 5X0,75 MM2 LIGHT/GREY	
W1027	351150-0403	-	MM	2000	CABLE OLFLEX 3X0,75 MM2 LIGHT/GREY	
W1028	351150-0403	-	MM	3000	CABLE OLFLEX 3X0,75 MM2 LIGHT/GREY	
W1029	351150-0404	-	MM	3000	CABLE OLFLEX 4X0,75 MM2 LIGHT/GREY	
W1030	351150-0403	-	MM	3000	CABLE OLFLEX 3X0,75 MM2 LIGHT/GREY	
W1031	351150-0403	-	MM	3000	CABLE OLFLEX 3X0,75 MM2 LIGHT/GREY	
W1044	351150-0405	-	MM	2500	CABLE OLFLEX 5X0,75 MM2 LIGHT/GREY	
W1045	351150-0405	-	MM	2000	CABLE OLFLEX 5X0,75 MM2 LIGHT/GREY	
W1046	351150-0405	-	MM	3000	CABLE OLFLEX 5X0,75 MM2 LIGHT/GREY	
W1048	351150-0405	-	MM	1000	CABLE OLFLEX 5X0,75 MM2 LIGHT/GREY	
W1052	351150-0404	-	MM	3000	CABLE OLFLEX 4X0,75 MM2 LIGHT/GREY	
W1058	351150-0403	-	MM	1000	CABLE OLFLEX 3X0,75 MM2 LIGHT/GREY	
W1065	351150-0403	-	MM	2500	CABLE OLFLEX 3X0,75 MM2 LIGHT/GREY	
W1084	90220-0107	-	MM	6500	SCR. CABLE 5X0,75MM2	
W2028	90220-0162	-	MM	6200	SCR. CABLE 10X0,25MM2	

Pos	Part No	SP	UN	Qty	Description	Page No

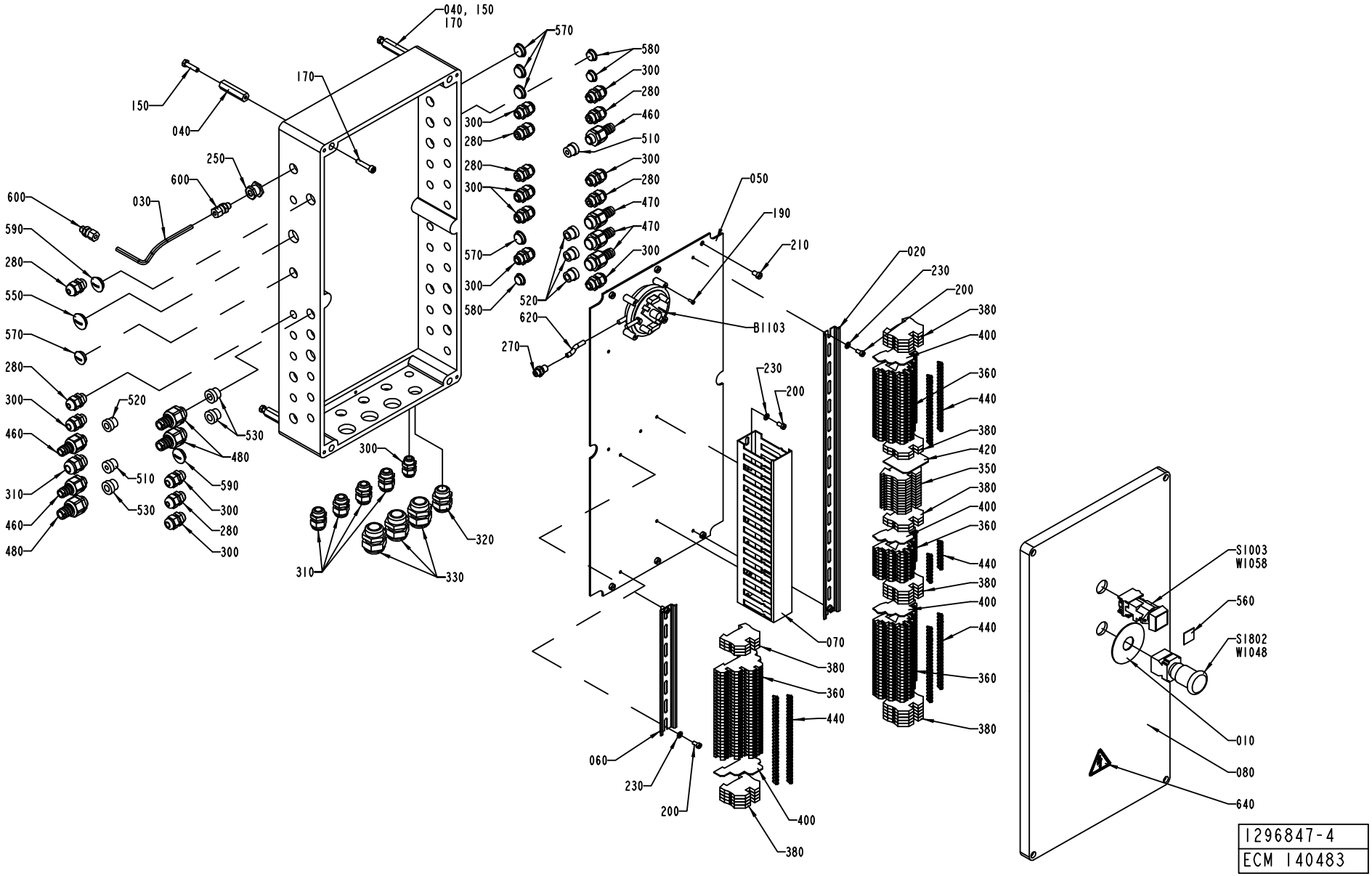
040, 150
170
570
580
300
280
460
510
300
280
470
470
300
050
190
210
020
230
200
380
400
360
440
380
420
350
380
400
360
440
380
400
440
360
380
B1103
230
200
070
380
360
440
400
380
060
230
200
S1003
W1058
560
S1802
W1048
010
080
640
1296847-4
ECM 140483
170
150
040
250
600
030
600
590
280
550
570
280
300
460
310
460
480
520
510
530
530
480
590
300
280
300
300
280
300
570
300
580
520
620
270
300
310
330
320

Pos	Part No	SP	UN	Qty	Description	Page No
SEE PREVIOUS LISTS PAGES: 1-239, 1-241.						

Pos	Part No	SP	UN	Qty	Description	Page No

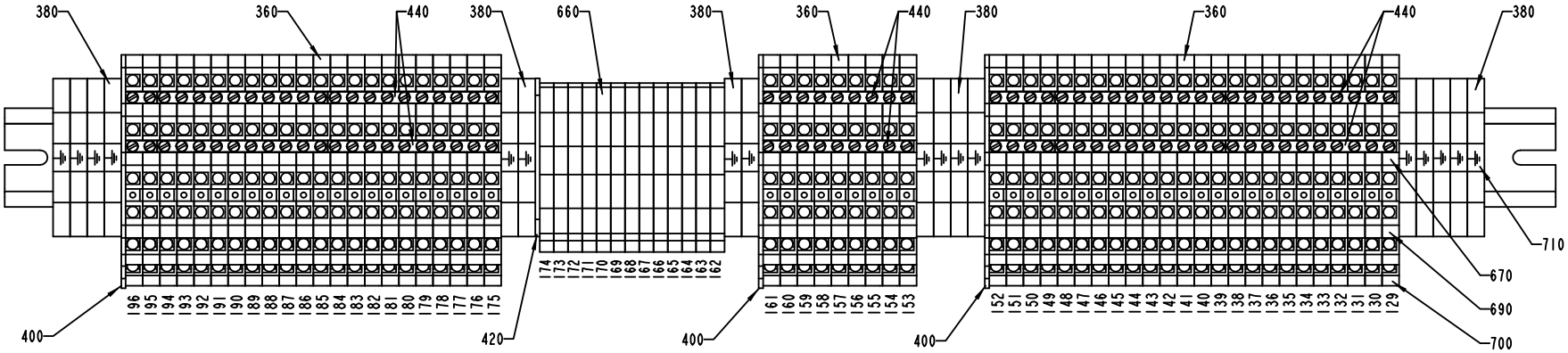

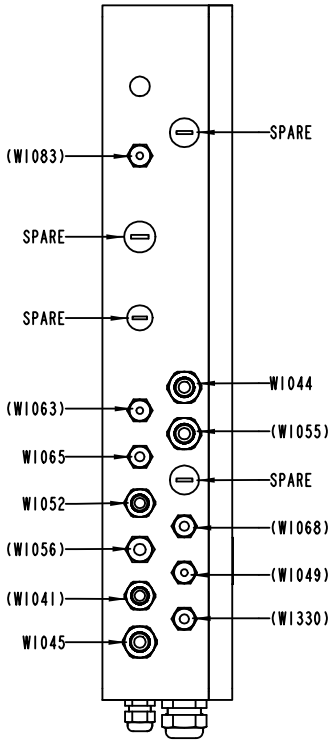

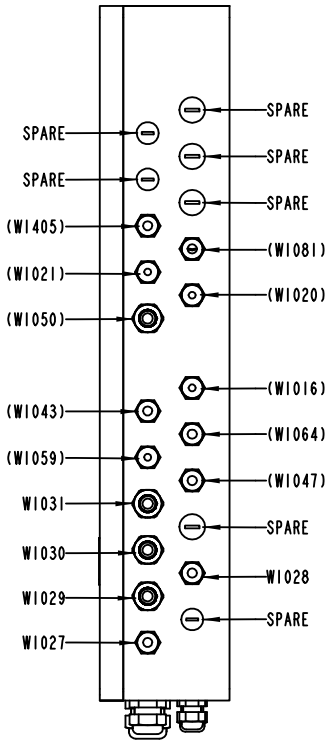

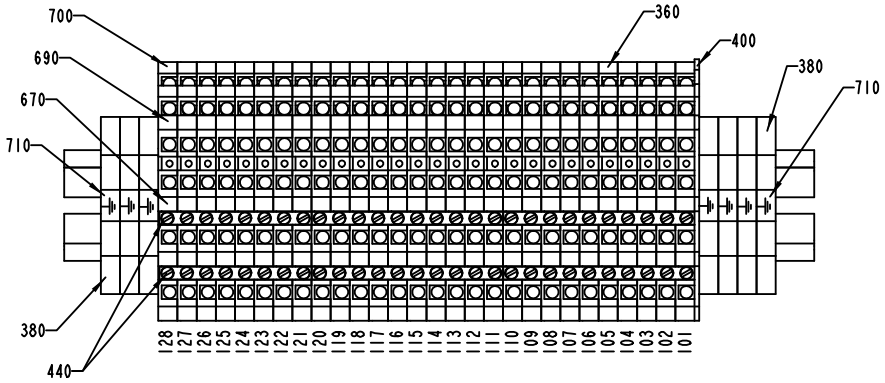

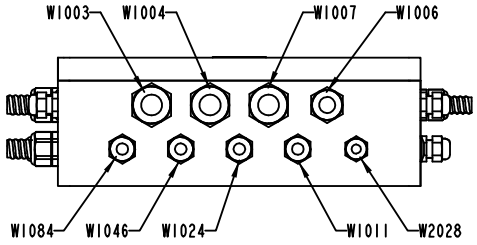

1296847-4
ECM 140483

Pos	Part No	SP	UN	Qty	Description	Page No
SEE PREVIOUS LISTS PAGES: 1-239, 1-241.						

Pos	Part No	SP	UN	Qty	Description	Page No

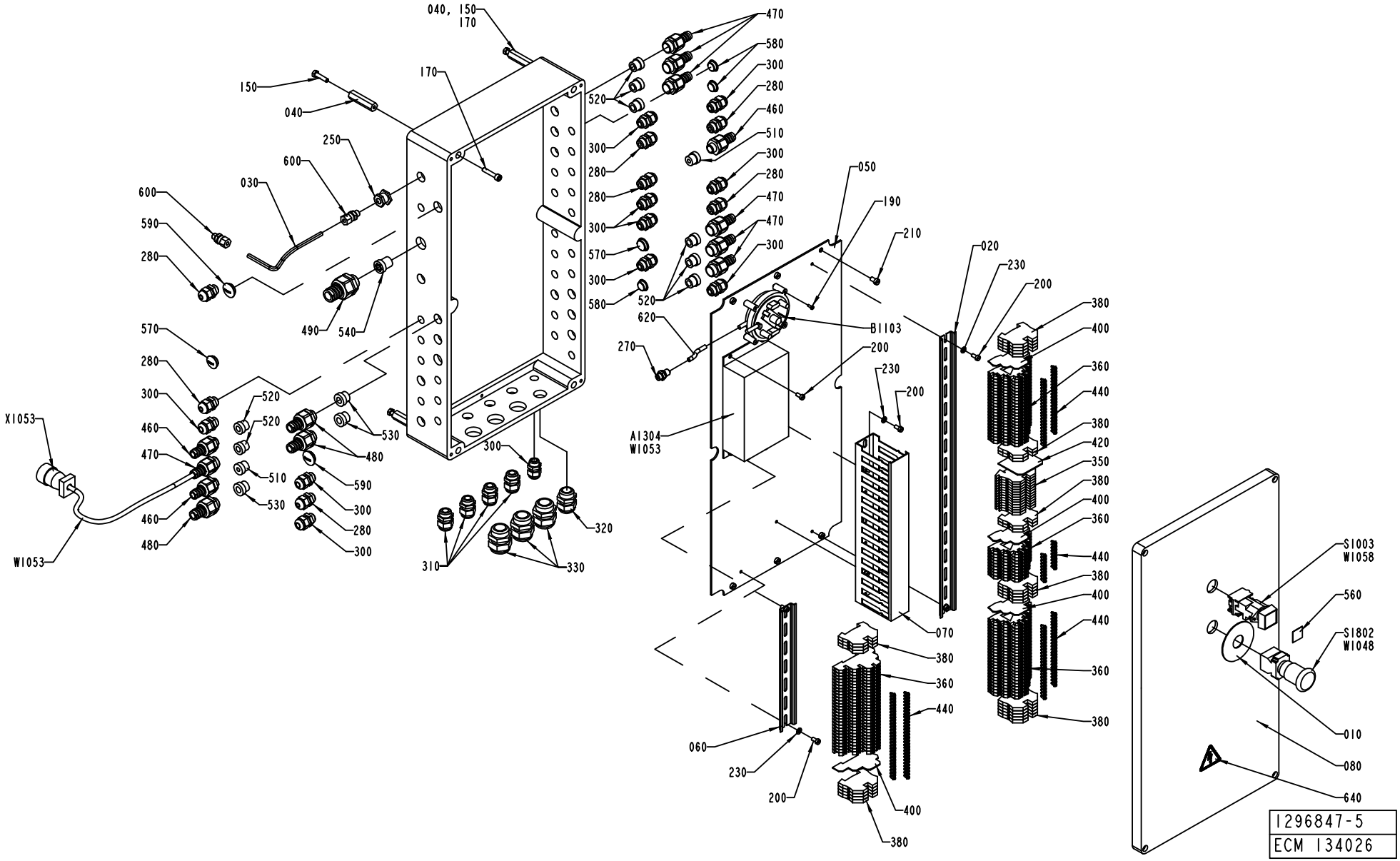
040, 150
170
150
040
170
250
600
030
600
590
280
490
540
570
280
300
460
470
460
480
X1053
W1053
520
520
510
530
530
480
590
300
280
300
300
310
330
320
520
300
280
280
300
570
300
580
470
580
300
280
460
510
300
280
470
470
300
050
190
210
620
270
B1103
200
A1304
W1053
230
200
020
230
200
380
400
360
440
380
420
350
380
400
360
440
380
400
440
360
380
070
380
360
440
060
230
200
400
380
S1003
W1058
560
S1802
W1048
010
080
640
1296847-5
ECM 134026

Pos	Part No	SP	UN	Qty	Description	Page No
SEE PREVIOUS LISTS PAGES: 1-239, 1-241.						

Pos	Part No	SP	UN	Qty	Description	Page No

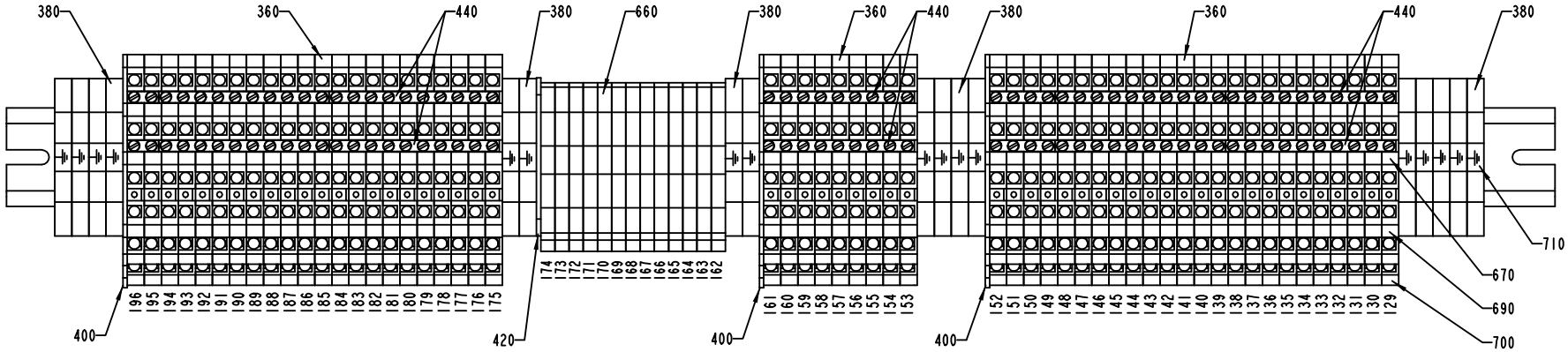

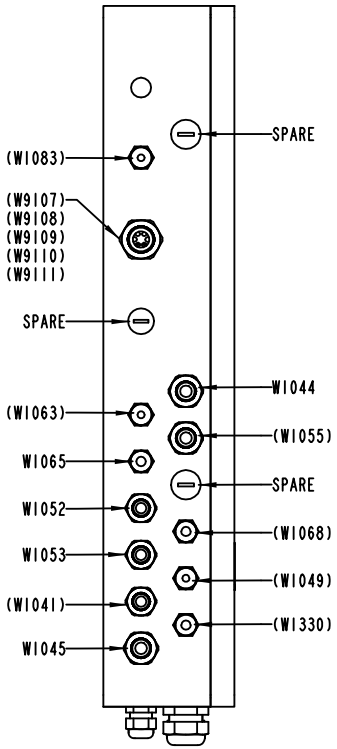

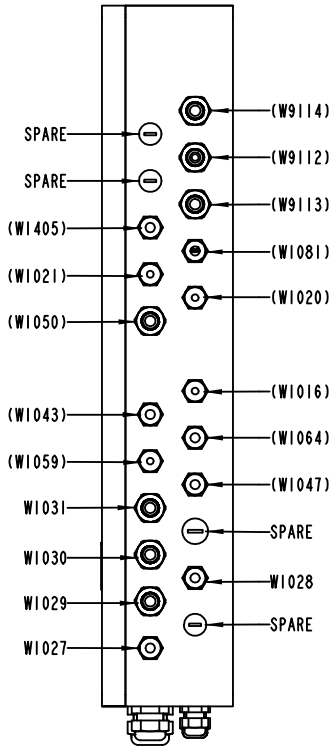

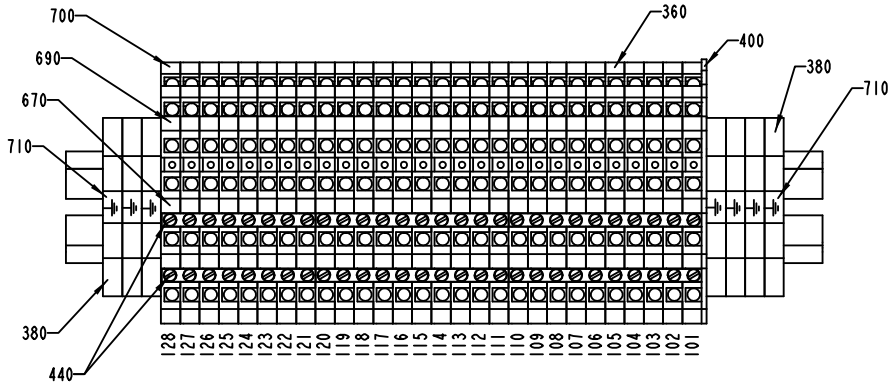

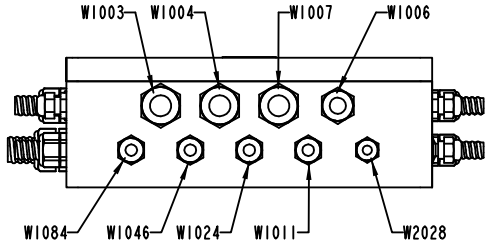

1296847-5
ECM 134026

Pos	Part No	SP	UN	Qty	Description	Page No
SEE PREVIOUS LISTS PAGES: 1-239, 1-241.						

Pos	Part No	SP	UN	Qty	Description	Page No

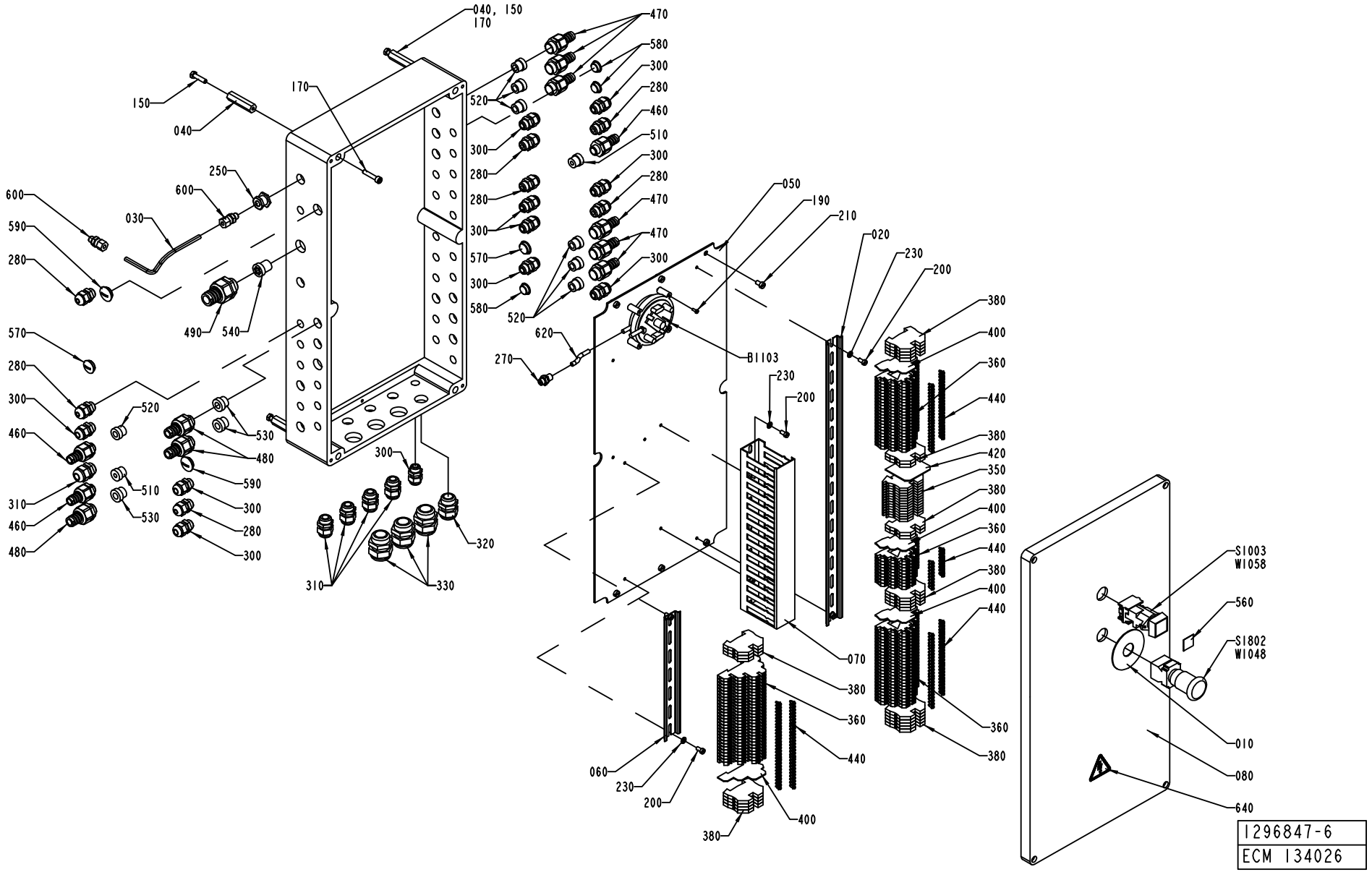
040, 150
170
150
040
170
520
300
280
460
510
300
280
470
470
300
580
250
600
600
030
590
280
490
540
570
280
300
460
310
460
480
520
530
480
590
300
280
300
510
530
300
310
330
320
050
190
210
020
230
200
620
270
B1103
230
200
380
400
360
440
380
420
350
380
400
360
440
380
400
440
360
380
070
380
360
440
400
060
230
200
380
S1003
W1058
560
S1802
W1048
010
080
640
1296847-6
ECM 134026

Pos	Part No	SP	UN	Qty	Description	Page No

SEE PREVIOUS LISTS PAGES: 1-239, 1-241.

Pos	Part No	SP	UN	Qty	Description	Page No

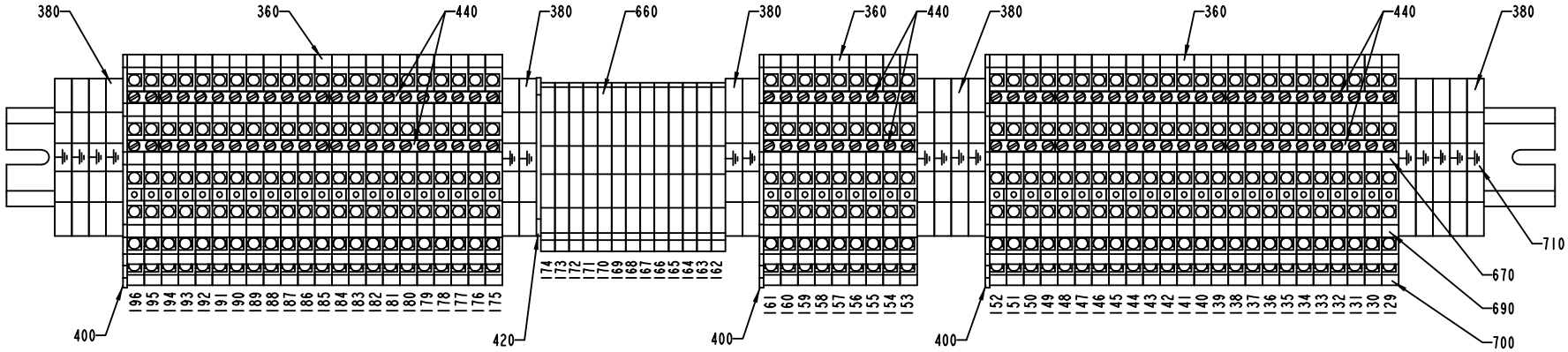

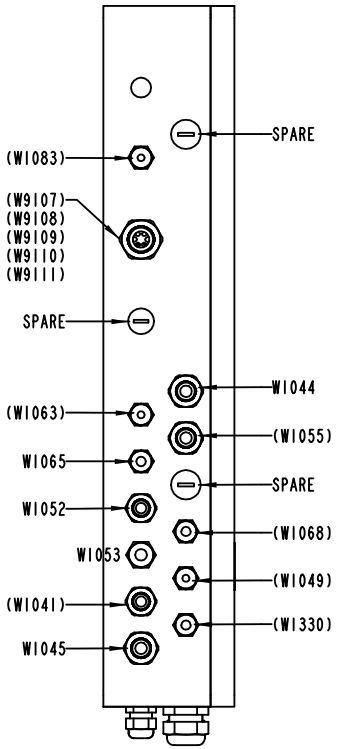

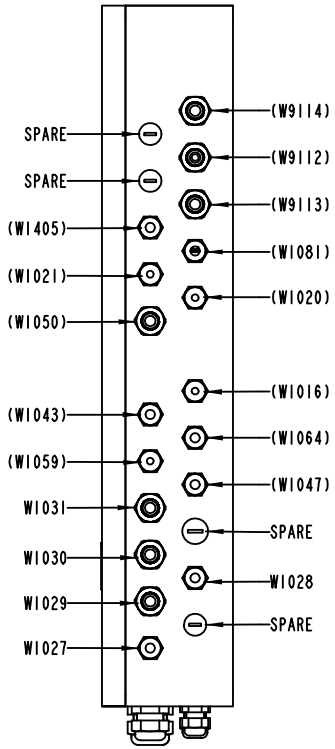

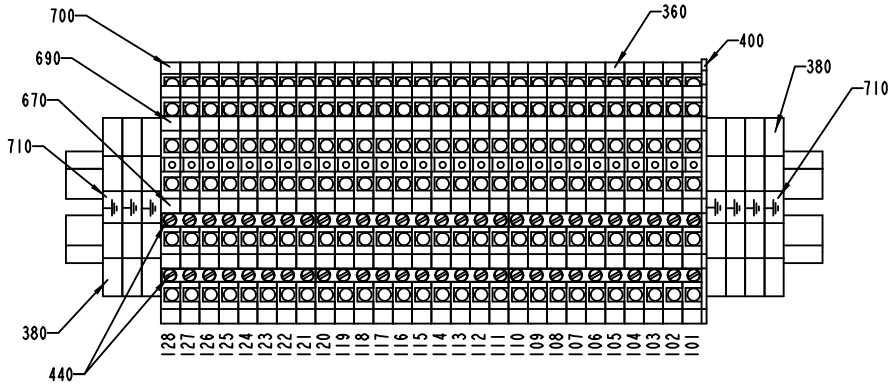

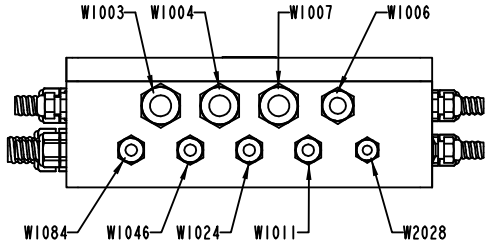

1296847-6
ECM 134026

Pos	Part No	SP	UN	Qty	Description	Page No
SEE PREVIOUS LISTS PAGES: 1-239, 1-241.						

Pos	Part No	SP	UN	Qty	Description	Page No

Tetra Pak

SPC
Spare Parts Catalogue

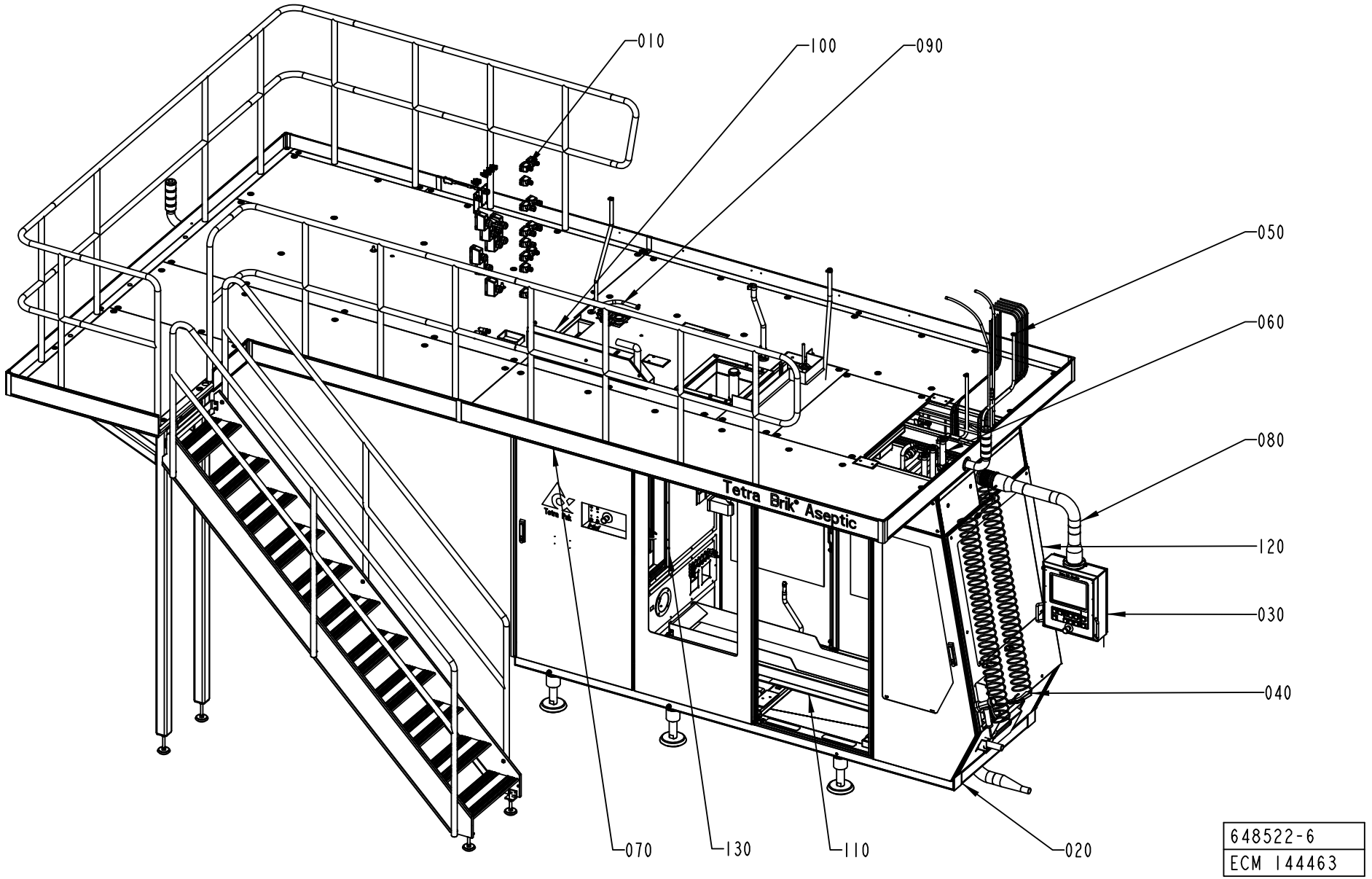
010
100
090
050
060
080
120
030
040
070
130
110
020
Tetra Brik® Aseptic
648522-6
ECM 144463

ECM: 153574 - 20031204
Group number: 648522-0600
Assembly Drawing: 648522-6_1_AE

Pos	Part No	SP	UN	Qty	Description	Page No
-						
010	577117-0400	-		1	ELECTRICAL SYSTEM	**2-5**
020	577118-0600	-		1	MACHINE BODY	**2-19, 2-21, 2-23**
030	1364345-0300	-		1	TPOP PANEL 12"	**2-29**
040	577119-0400	-		1	PNEUMATIC SYSTEM	**2-37**
050	577121-0400	-		1	PIPE WORK	**2-43**
060	577122-0300	-		1	EXTERNAL CLEANING SYSTEM	**2-51**
070	1524871-0100	-		1	PLATFORM	**2-59, 2-61**
080	1095863-0200	-		1	PIVOT ARM	**2-77**
090	1317102-0100	-		1	HYDROGEN PEROXIDE	**2-81**
100	2558850-0100	-		1	CABLE DUCT	**2-99**
110	577114-0300	-		1	WASTE CONVEYOR	**2-101**
120	577120-0400	-		1	DOORS AND COVERS	**2-103**
130	2598203-0100	-		1	PUMP UNIT	**2-123**

Pos	Part No	SP	UN	Qty	Description	Page No

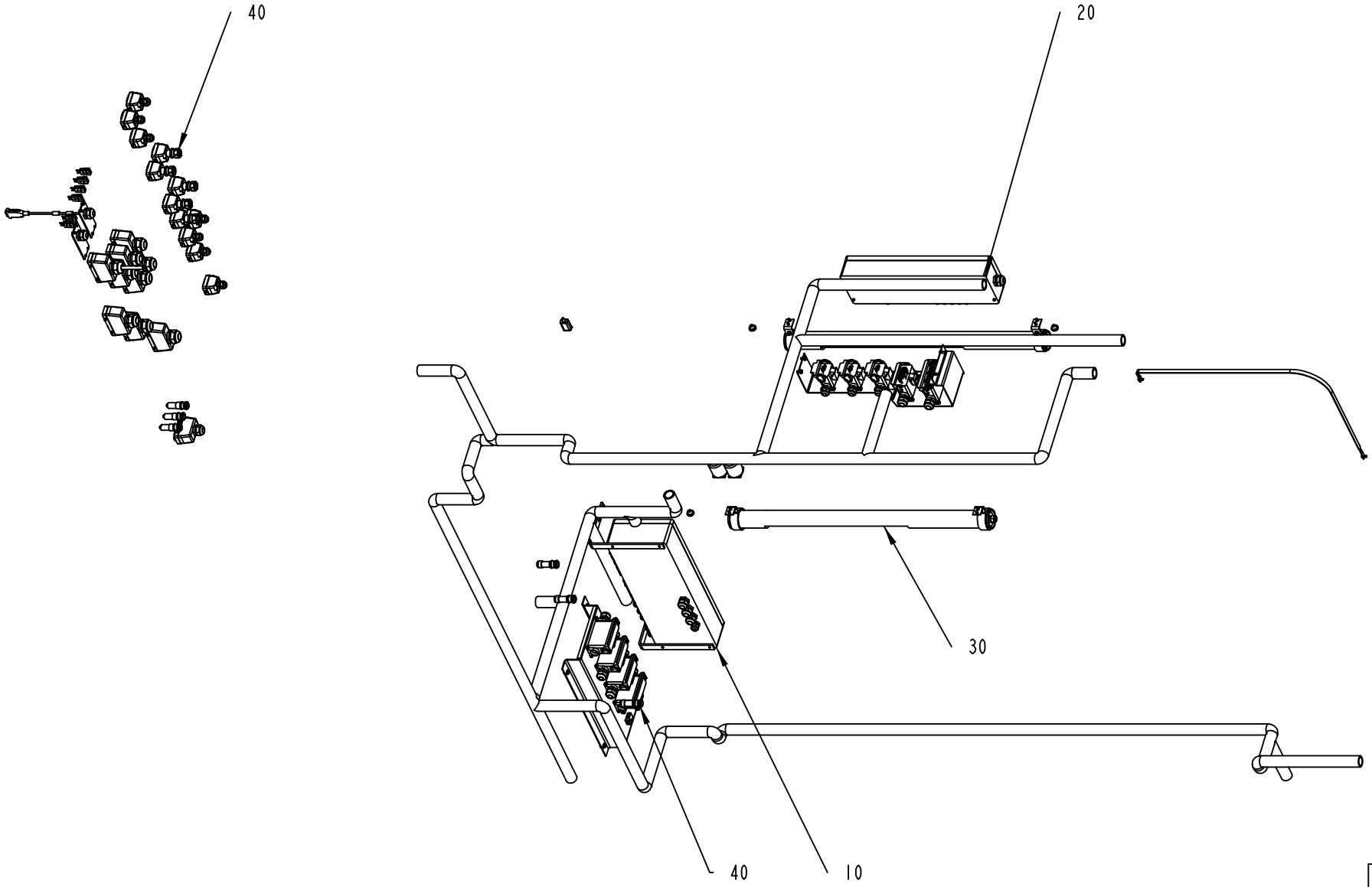

577117-5
ECM 144463

ECM: 147449 - 20031204
Group number: 577117-0400
Assembly Drawing: 577117-5_1_AA

Pos	Part No	SP	UN	Qty	Description	Page No
-						
010	1348496-0100	-		1	CONNECTION BOX	**2-7**
020	1348497-0100	-		1	CONNECTION BOX	**2-9**
030	1095861-0100	-		1	LIGHT FIXTURE	**2-11**
040	1348090-0200	-		1	CABLE HARNESS	**2-13, 2-15, 2-17**

Pos	Part No	SP	UN	Qty	Description	Page No

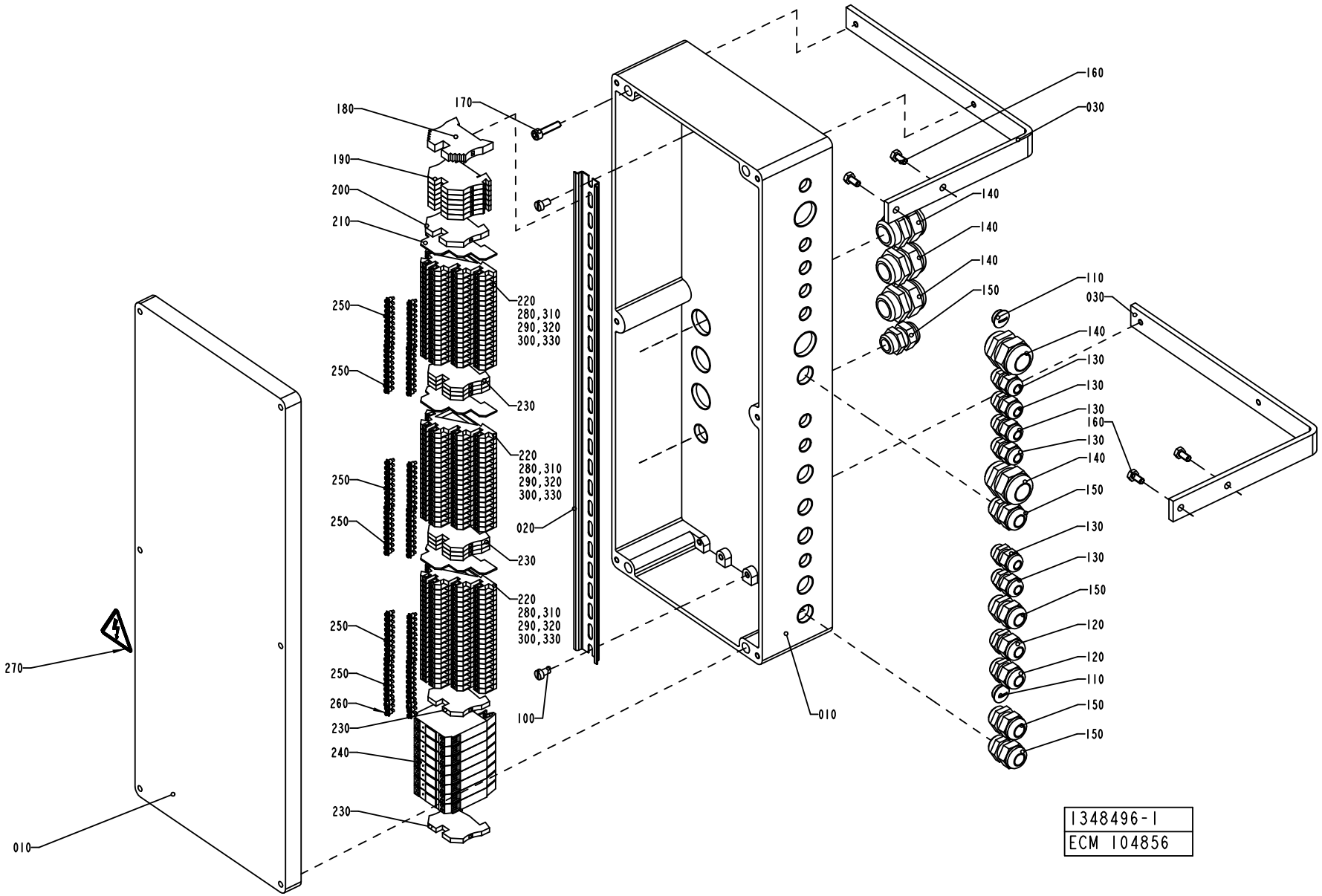
160
030
140
140
140
150
110
030
140
130
130
130
160
130
140
150
130
130
150
120
120
110
150
150
180
170
190
200
210
250
250
220
280,310
290,320
300,330
230
250
250
220
280,310
290,320
300,330
020
230
250
250
220
280,310
290,320
300,330
260
230
240
230
100
010
270
010
1348496-1
ECM 104856

ECM: 105689 - 20010925
Group number: 1348496-0100
Assembly Drawing: 1348496-1_1_AD

Pos	Part No	SP	UN	Qty	Description	Page No
-						
010	1348500-0000	-		1	CONNECTION BOX	
020	1347878-0000	-		1	RAIL	
030	1348498-0000	-		2	HOLDER	
100	312121-0364	-		2	SCREW ISO 1207 M6X10 4.8 - 5.8 Z.PL.	
110	90002-0013	-		2	BLANK-OFF PLUG, PR 15,2 SKINDICHT-BLK9	
120	352103-0106	-		2	CABLE GLAND, ST 11, PR18,6/PG11	
130	352103-0101	-		6	CABLE GLAND, ST 9, PR15,2/PG9	
140	352103-0116	-		5	CABLE GLAND, ST 21, PR28,3/PG21	
150	352103-0108	-		5	CABLE GLAND, ST 13,5 , PR20,4/PG13,5	
160	312105-0366	-		4	SCREW M6S ISO 4017 M6X12 A480	
170	312115-0372	-		4	SCREW ISO4762 M6X25 A4	
180	353031-0203	-		1	END SUPPORT, WEW 35/2	
190	353021-0213	-		6	FEED THROUGH TERMINAL, 10201.0	
200	353024-0205	-		1	EARTH TERMINAL, 1010.1	
210	353032-0302	-		3	END PLATE WAP	
220	353021-0302	-		59	TERMINALS,TRIPLE-LEVEL, DLD 2,5/35 PA	
230	353024-0204	-		8	EARTH TERMINAL WPE 2,5	
240	90119-0063	-		8	OPTO-RELAY, DC/DC AMMS-10-1/30VDC	
250	353034-0404	-		12	BRIDGE CONNECTOR Q10, 13131.0	
260	353034-0402	-		2	BRIDGE CONNECTOR Q3, 13126.0	
270	359705-0015	-		1	WARNING SIGN ISO, RISK OF ELECTRIC SHOCK	
280	359011-0823	-		2	SET OF SIGNS 6-FW 101-150	
290	359011-0819	-		1	MARKING PLATES 5-GW (EARTH)	
300	359011-0834	-		1	SET OF SIGNS 6-GW(EARTH)	
310	359011-0832	-		3	SET OF SIGNS 6-GW (+)	
320	359011-0833	-		3	SET OF SIGNS 6-GW (-)	
330	359011-0824	-		2	SET OF SIGNS 6-FW 151-200	
340	359011-0821	-		2	SET OF SIGNS 6-FW 1-50	

Pos	Part No	SP	UN	Qty	Description	Page No

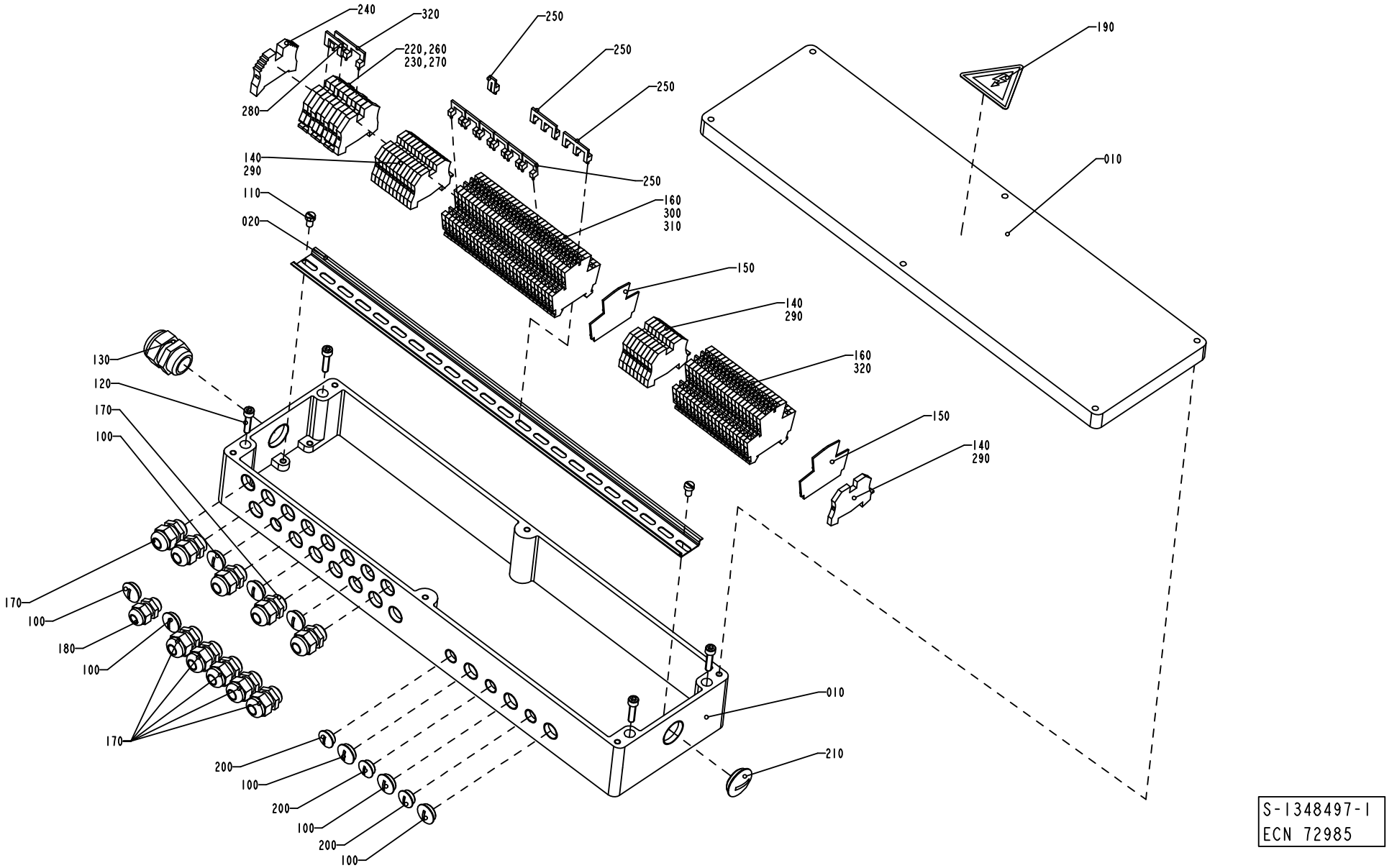
240
320
220,260
230,270
280
250
250
250
140
290
250
110
020
160
300
310
190
010
150
140
290
160
320
150
140
290
130
120
170
100
170
100
180
100
170
010
210
200
100
200
100
200
100
S-1348497-I
ECN 72985

ECM: 72985 - 20000201
Group number: 1348497-0100
Assembly Drawing: 1348497-1_1_AC

Pos	Part No	SP	UN	Qty	Description	Page No
-						
010	1348499-0000	-		1	CONNECTION BOX	
020	1129504-0000	-		1	MOUNTING RAIL	
100	90002-0009	-		8	BLANK-OFF PLUG, PR 18.6 SKINDICHT-BLK11	
110	312125-0364	-		2	SCREW ISO 1207 M6X10 A4	
120	312115-0372	-		4	SCREW ISO4762 M6X25 A4	
130	352103-0116	-		1	CABLE GLAND, ST 21, PR28,3/PG21	
140	353024-0204	-		20	EARTH TERMINAL WPE 2,5	
150	353032-0010	-		2	END PLATE WAP	
160	353021-0120	-		52	FEED THROUGH TERMINAL, 10215.8	
170	352103-0106	-		10	CABLE GLAND, ST 11, PR18,6/PG11	
180	352103-0101	-		1	CABLE GLAND, ST 9, PR15,2/PG9	
190	90194-0016	-		1	WARNING SIGN, RISK OF ELECTRIC SHOCK	
200	90002-0013	-		3	BLANK-OFF PLUG, PR 15,2 SKINDICHT-BLK9	
210	90002-0012	-		1	BLANK-OFF PLUG, PR 28,3 SKINDICHT-BLK21	
220	353024-0205	-		3	EARTH TERMINAL, 1010.1	
230	353021-0213	-		6	FEED THROUGH TERMINAL, 10201.0	
240	353031-0203	-		1	END SUPPORT, WEW 35/2	
250	353034-0030	-		10	BRIDGE CONNECTOR WQV 2,5/10, 10544.6	
260	359011-0821	-		2	SET OF SIGNS 6-FW 1-50	
270	359011-0834	-		1	SET OF SIGNS 6-GW(EARTH)	
280	353034-0039	-		1	BRIDGE CONNECTOR WQV 4/4, 10546.6	
290	359011-0819	-		1	MARKING PLATES 5-GW (EARTH)	
300	359011-0809	-		2	MARKING PLATES 5-FW 101-150	
310	359011-0810	-		2	MARKING PLATES 5-FW 151-200	
320	353034-0031	-		1	BRIDGE CONNECTOR, WQV 4/10, 10520.6	
330	359011-0821	-		2	SET OF SIGNS 6-FW 1-50	

Pos	Part No	SP	UN	Qty	Description	Page No

LIGHT FIXTURE

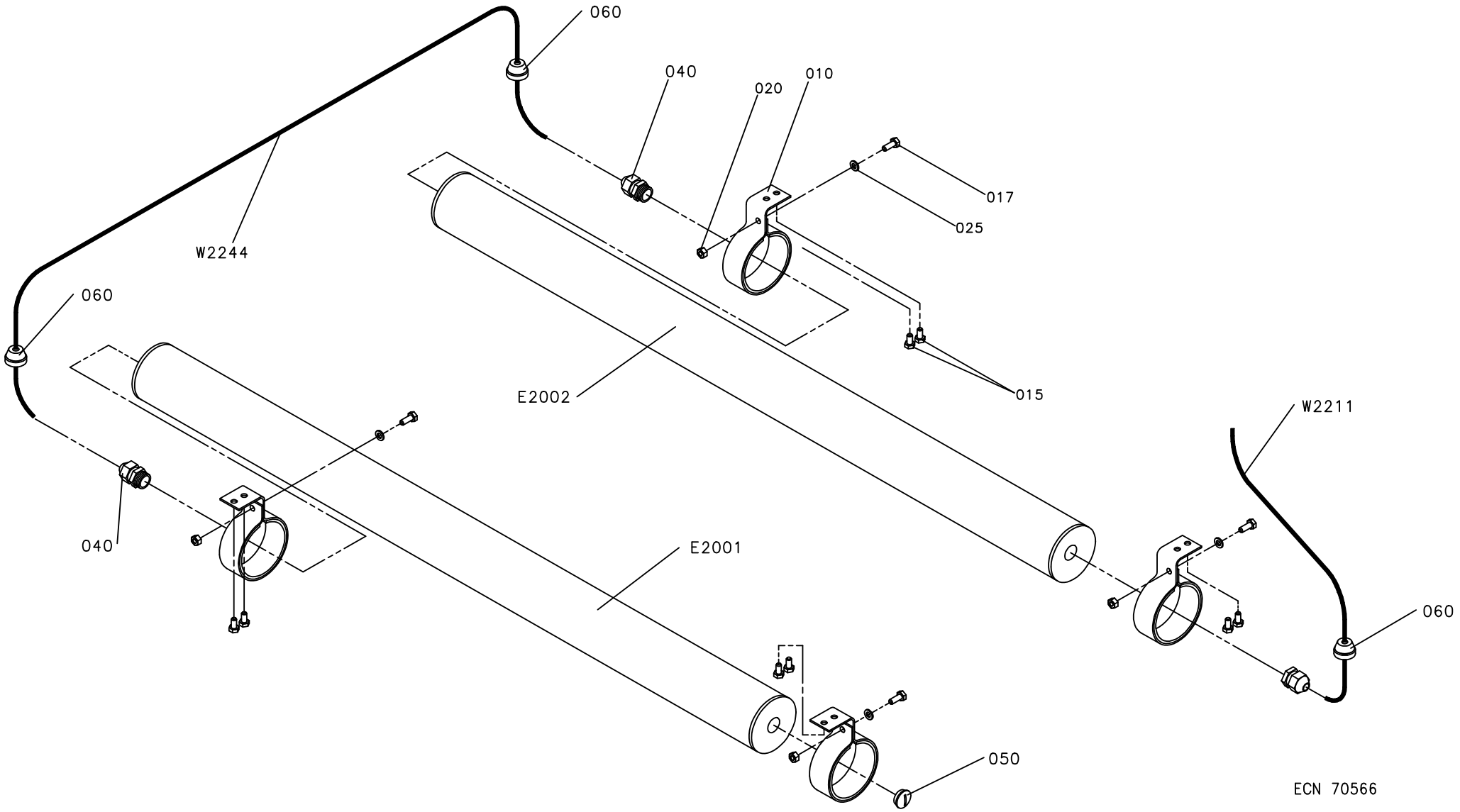

ECM: 81705 - 20001031
Group number: 1095861-0100
Assembly Drawing: 1095861-1_1_AB

Pos	Part No	SP	UN	Qty	Description	Page No
-						
010	1140129-0000	-		4	HOLDER	
015	312105-0366	-		8	SCREW M6S ISO 4017 M6X12 A480	
017	312105-0368	-		4	SCREW M6S ISO 4017 M6X16 A480	
020	312605-0316	-		4	HEXAGON NUT, M6M M6 A280	
025	315105-0153	-		4	WASHER BRB6,4X12RFR	
040	352103-0106	-		3	CABLE GLAND, ST 11, PR18,6/PG11	
050	90002-0009	-		1	BLANK-OFF PLUG, PR 18.6 SKINDICHT-BLK11	
060	90015-0023	-		3	LEAD-IN, TET7-10, E-1458019	
E 2001	90457-0149	B		1	LIGHT FIXTURE, RL 70V-118D	
	90297-0002	*-*		*1*	*FLUORESCENT TUBE, TLD 18/33*	
	90164-0303	*-*		*1*	*BRACKET SK2202 WALDMANN*	
	90164-0302	*-*		*1*	*BRACKET*	
E 2002	90457-0149	B		1	LIGHT FIXTURE, RL 70V-118D	
	90297-0002	*-*		*1*	*FLUORESCENT TUBE, TLD 18/33*	
	90164-0303	*-*		*1*	*BRACKET SK2202 WALDMANN*	
	90164-0302	*-*		*1*	*BRACKET*	
W 2211	351150-0412	-	MM	1800	CABLE OLFLEX 3X1,5 MM2 LIGHT/GREY	
W 2244	351150-0412	-	MM	2000	CABLE OLFLEX 3X1,5 MM2 LIGHT/GREY	

Pos	Part No	SP	UN	Qty	Description	Page No

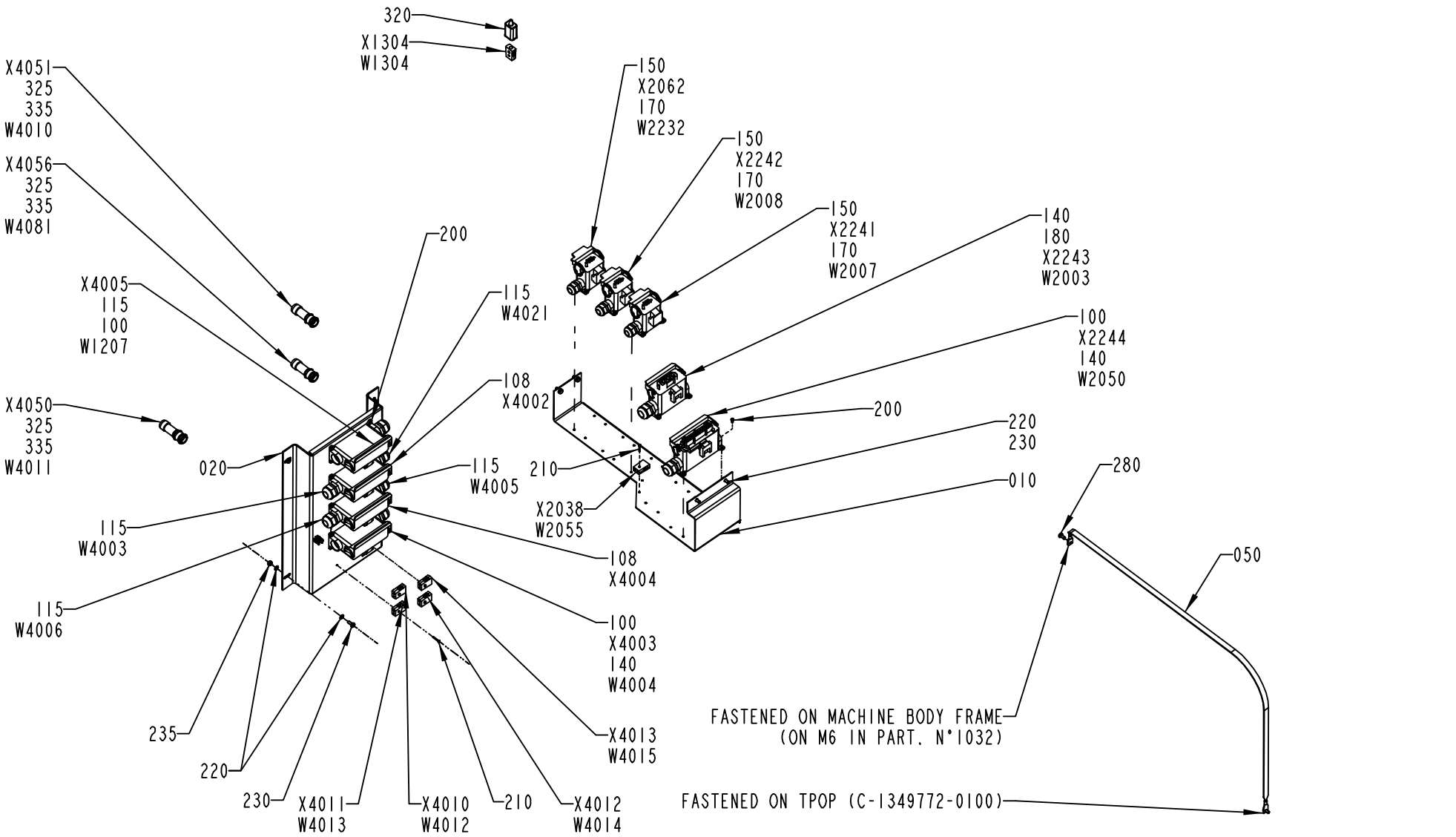

1348090-3
ECM 144463

ECM: 147529 - 20031204
Group number: 1348090-0200
Assembly Drawing: 1348090-3_1_AA

This list covers pages from 2-12 to 2-17

Pos	Part No	SP	UN	Qty	Description	Page No
-						
010	1129710-0000	-		1	CANTILEVER	
020	2598528-0000	-		1	PLATE	
030	90110-0152	-		9	CABLE HOOD 24-POL 70.352.2428.1	
040	352103-0121	-		8	CABLE GLAND, ST 29, PR37,0/PG29	
050	1129600-0000	-		1	BRAID	
060	90110-0157	-		12	CABLE HOOD 6-POL 70.352.0628.1	
070	352103-0108	-		9	CABLE GLAND, ST 13,5 , PR20,4/PG13,5	
075	353245-0004	-		3	GLAND, EXTENDED WITH INSERT, PG16/PR 22,	
080	1038876-0000	-		2	COVERING PLATE	
085	1129550-0000	-		2	GASKET	
095	353245-0005	-		2	GLAND, EXTENDED WITH INSERT, PG16/PR 22,	
100	90110-0225	-		3	CHASSIS HOUSING 310168-33	
105	90089-0029	-		5	ENLARGING SLEEVE	
108	90110-0513	A		2	CHASSIS CONTACT	
115	352103-0115	-		7	CABLE GLAND, STR 21, PR28,3/PG21	
120	90099-0004	-		2	NUT	
140	352103-0116	-		4	CABLE GLAND, ST 21, PR28,3/PG21	
150	90110-0221	-		3	CHASSIS HOUSING 310162-33	
170	352103-0111	-		3	CABLE GLAND, ST 16, PR22,5/PG16	
180	90110-0224	-		1	CHASSIS HOUSING 310166-33	
200	312125-0287	-		44	SCREW ISO 1207 M4X8 A4	
210	312125-0230	-		5	SCREW ISO 1207 M3X20 A4	
220	315105-0153	-		12	WASHER BRB6,4X12RFR	
230	312105-0367	-		8	SCREW M6S ISO 4017 M6X14 A480	
235	312605-0316	-		4	HEXAGON NUT, M6M M6 A280	
240	90110-0160	-		1	CABLE HOOD 6-16-POL 70.352.1628.1	
270	1037673-0000	-		2	SLEEVE	
275	2503209-0000	-		2	GASKET	
280	312105-0366	-		2	SCREW M6S ISO 4017 M6X12 A480	
290	312125-0226	-		8	SCREW ISO 1207 M3X12 A4	
300	315105-0124	-		8	WASHER BRB3,2X6RFR	
325	90012-0117	-		6	GLAND, EXTENDED WITH INSERT, PG11	
330	90110-0380	-		21	CONTACT PIN	
335	90110-0209	-		21	CONTACT PIN, RC20M13K	
337	352103-0120	-		1	CABLE GLAND, STR 29, PR37,0/PG29	
340	90110-0209	-		21	CONTACT PIN, RC20M13K	
W0001	351150-0426	-	M	6	CABLE OLFLEX 5X25 MM2 LIGHT/GREY	
W1207	351150-0407	-	M	8	CABLE OLFLEX 12X0,75 MM2 LIGHT/GREY	
W1304	90220-0034	B	M	5	THERMOCABLE TEX/SITW-20F-KX 2X0,5MM2	
W2002	351150-0418	-	M	5	CABLE OLFLEX 4X2,5 MM2 LIGHT/GREY	
W2003	351150-0166	-	M	4	CABLE OLFLEX 4X4 MM2 LIGHT/GREY	
W2004	90220-0107	-	M	5	SCR. CABLE 5X0,75MM2	
W2005	351150-0412	-	M	7	CABLE OLFLEX 3X1,5 MM2 LIGHT/GREY	
W2007	351150-0418	-	M	6	CABLE OLFLEX 4X2,5 MM2 LIGHT/GREY	
W2008	351150-0418	-	M	6	CABLE OLFLEX 4X2,5 MM2 LIGHT/GREY	
W2014	351150-0418	-	M	9	CABLE OLFLEX 4X2,5 MM2 LIGHT/GREY	
W2015	90220-0105	-	M	16	SCR. CABLE 4X2,5MM2	
W2050	351150-0425	-	M	4	CABLE OLFLEX 25X0,75 MM2 LIGHT/GREY	
W2054	351150-0425	-	M	7	CABLE OLFLEX 25X0,75 MM2 LIGHT/GREY	
W2055	90220-0034	-	M	6	THERMOCABLE TEX/SITW-20F-KX 2X0,5MM2	
W2056	351150-0425	-	M	5	CABLE OLFLEX 25X0,75 MM2 LIGHT/GREY	
W2057	351150-0425	-	M	5	CABLE OLFLEX 25X0,75 MM2 LIGHT/GREY	
W2062	351150-0425	-	M	5	CABLE OLFLEX 25X0,75 MM2 LIGHT/GREY	
W2064	90220-0091	-	MM	6500	PAIR TWISTED CABLE 2X2X0,25MM2	
W2066	90458-2557	-	M	8	CABLE OLFLEX 25X1 MM2	
W2067	90458-2557	-	M	8	CABLE OLFLEX 25X1 MM2	
W2068	1363297-0000	-		1	CABLE LVDS 10M	
W2232	351150-0406	-	M	3	CABLE OLFLEX 7X0,75 MM2 LIGHT/GREY	
W2233	351150-0406	-	M	3	CABLE OLFLEX 7X0,75 MM2 LIGHT/GREY	
W4000	90220-0084	-	M	6	MOTOR CABLE 4X2,5+2(2X0.75)+SHIELD	
W4001	90220-0116	-	M	5	MOTOR CABLE 4X1,0+2(2X0,5)+SHIELD	
W4002	90220-0084	-	M	5	MOTOR CABLE 4X2,5+2(2X0.75)+SHIELD	
W4003	351150-0407	-	M	3	CABLE OLFLEX 12X0,75 MM2 LIGHT/GREY	
W4004	351150-0425	-	M	3	CABLE OLFLEX 25X0,75 MM2 LIGHT/GREY	
W4005	351150-0419	-	M	7	CABLE OLFLEX 5X2,5 MM2 LIGHT/GREY	
W4006	351150-0419	-	M	7	CABLE OLFLEX 5X2,5 MM2 LIGHT/GREY	
W4010	90220-0131	-	M	4	PAIR TWISTED CABLE 3X2X0,25MM2	
W4011	90220-0131	-	M	4	PAIR TWISTED CABLE 3X2X0,25MM2	
W4012	90220-0034	B	M	7	THERMOCABLE TEX/SITW-20F-KX 2X0,5MM2	
W4013	90220-0034	B	M	7	THERMOCABLE TEX/SITW-20F-KX 2X0,5MM2	
W4014	90220-0034	B	M	7	THERMOCABLE TEX/SITW-20F-KX 2X0,5MM2	
W4015	90220-0034	B	M	7	THERMOCABLE TEX/SITW-20F-KX 2X0,5MM2	
W4016	90220-0107	-	M	6	SCR. CABLE 5X0,75MM2	
W4017	90220-0107	-	M	6	SCR. CABLE 5X0,75MM2	
W4018	351150-0407	-	MM	4500	CABLE OLFLEX 12X0,75 MM2 LIGHT/GREY	
W4021	351150-0407	-	MM	3500	CABLE OLFLEX 12X0,75 MM2 LIGHT/GREY	
W4054	351150-0405	-	M	3	CABLE OLFLEX 5X0,75 MM2 LIGHT/GREY	
W4081	90220-0131	-	M	4	PAIR TWISTED CABLE 3X2X0,25MM2	
W4502	90220-0091	-	M	8	PAIR TWISTED CABLE 2X2X0,25MM2	
X101	90110-0159	A		1	MALE INSERT 70.310.0640.0	
X102	90110-0159	-		1	MALE INSERT 70.310.0640.0	
X103	90110-0159	-		1	MALE INSERT 70.310.0640.0	
X107	90110-0159	-		1	MALE INSERT 70.310.0640.0	

Machine Type | Group Description | Used-In | Group Number | Page No

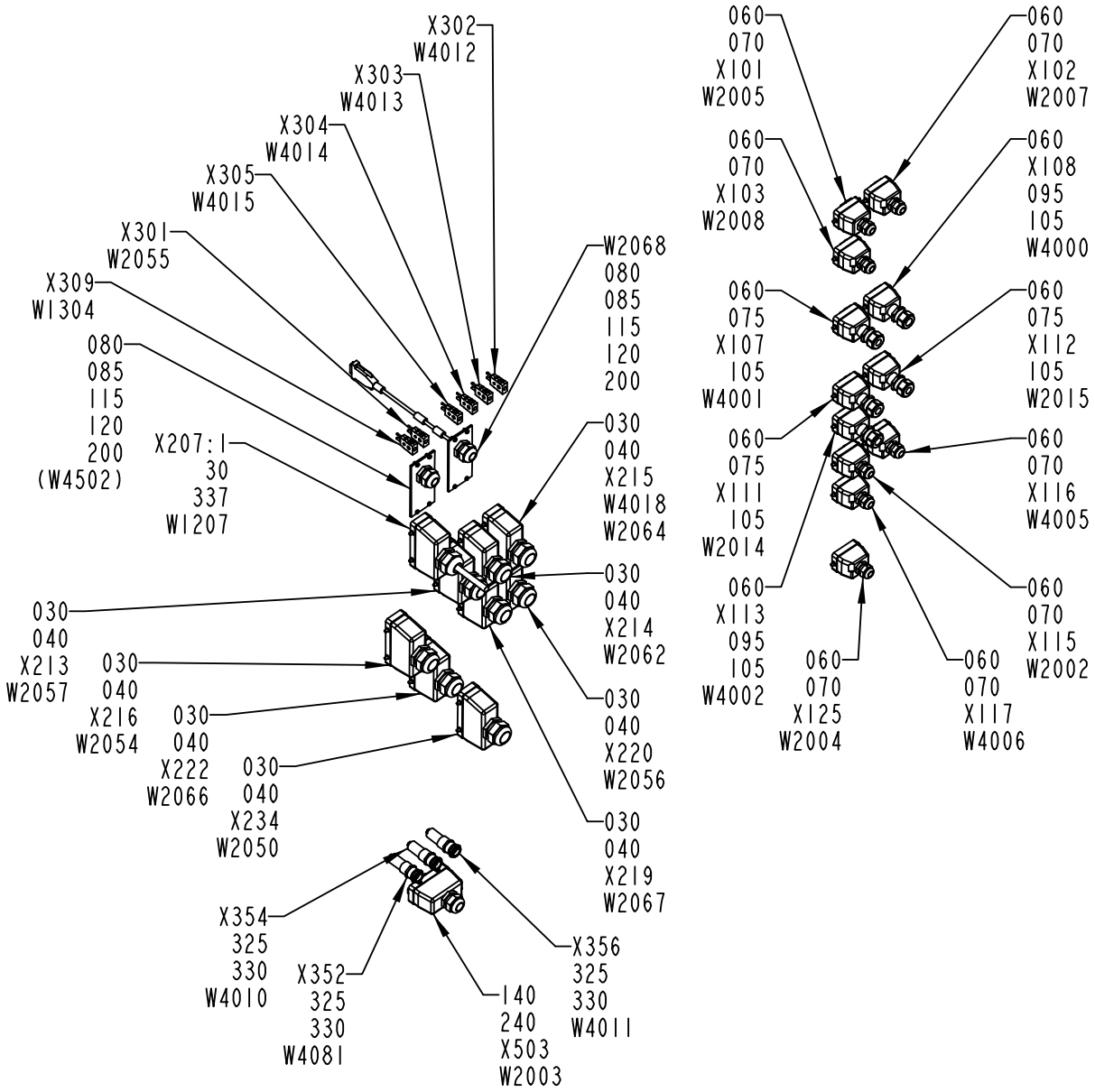

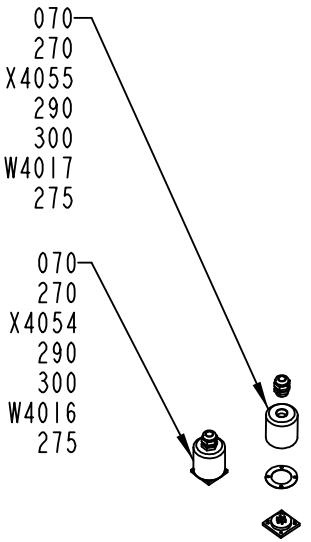

1348090-3
ECM 144463

Pos	Part No	SP	UN	Qty	Description	Page No
- (Cont'd)						
X108	90110-0159	-		1	MALE INSERT 70.310.0640.0	
X111	90110-0159	-		1	MALE INSERT 70.310.0640.0	
X112	90110-0159	-		1	MALE INSERT 70.310.0640.0	
X113	90110-0159	-		1	MALE INSERT 70.310.0640.0	
X115	90110-0159	-		1	MALE INSERT 70.310.0640.0	
X116	90110-0159	-		1	MALE INSERT 70.310.0640.0	
X117	90110-0159	-		1	MALE INSERT 70.310.0640.0	
X125	90110-0159	-		1	MALE INSERT 70.310.0640.0	
X1304	90326-0020	-		1	PLUG, FEMALE YELLOW CR-AL	
X2038	90326-0020	-		1	PLUG, FEMALE YELLOW CR-AL	
X2062	90110-0163	-		1	FEMALE INSERT 70 300 0640 0	
X207:1	90110-0150	-		1	MALE INSERT 121110 0000	
X213	90110-0150	-		1	MALE INSERT 121110 0000	
X214	90110-0150	-		1	MALE INSERT 121110 0000	
X215	90110-0150	-		1	MALE INSERT 121110 0000	
X216	90110-0150	-		1	MALE INSERT 121110 0000	
X219	90110-0150	-		1	MALE INSERT 121110 0000	
X220	90110-0150	-		1	MALE INSERT 121110 0000	
X222	90110-0150	-		1	MALE INSERT 121110 0000	
X2241	90110-0163	-		1	FEMALE INSERT 70 300 0640 0	
X2242	90110-0163	-		1	FEMALE INSERT 70 300 0640 0	
X2243	90110-0247	-		1	FEMALE INSERT 70.200.0653.0	
X2244	90110-0151	-		1	FEMALE INSERT 24-POL 121130 0000	
X234	90110-0150	-		1	MALE INSERT 121110 0000	
X301	90326-0022	-		1	PLUG, MALE YELLOW CR-AL	
X302	90326-0022	-		1	PLUG, MALE YELLOW CR-AL	
X303	90326-0022	-		1	PLUG, MALE YELLOW CR-AL	
X304	90326-0022	-		1	PLUG, MALE YELLOW CR-AL	
X305	90326-0022	-		1	PLUG, MALE YELLOW CR-AL	
X309	90326-0022	-		1	PLUG, MALE YELLOW CR-AL	
X352	90110-0504	A		1	CABLE CONTACT	
X354	90110-0504	-		1	CABLE CONTACT	
X356	90110-0504	-		1	CABLE CONTACT	
X4002	90110-0151	-		1	FEMALE INSERT 24-POL 121130 0000	
X4003	90110-0151	-		1	FEMALE INSERT 24-POL 121130 0000	
X4004	90110-0151	-		1	FEMALE INSERT 24-POL 121130 0000	
X4005	90110-0151	-		1	FEMALE INSERT 24-POL 121130 0000	
X4010	90326-0020	-		1	PLUG, FEMALE YELLOW CR-AL	
X4011	90326-0020	-		1	PLUG, FEMALE YELLOW CR-AL	
X4012	90326-0020	-		1	PLUG, FEMALE YELLOW CR-AL	
X4013	90326-0020	-		1	PLUG, FEMALE YELLOW CR-AL	
X4050	90110-0208	A		1	CABLE CONTACT	
X4051	90110-0208	-		1	CABLE CONTACT	
X4054	90110-0236	A		1	CHASSIS CONTACT PX0767/S	
X4055	90110-0236	-		1	CHASSIS CONTACT PX0767/S	
X4056	90110-0208	-		1	CABLE CONTACT	
X503	90110-0156	A		1	MALE INSERT 70.210.0653.0	

Machine Type | Group Description | Used-In | Group Number | Page No

CABLE HARNESS

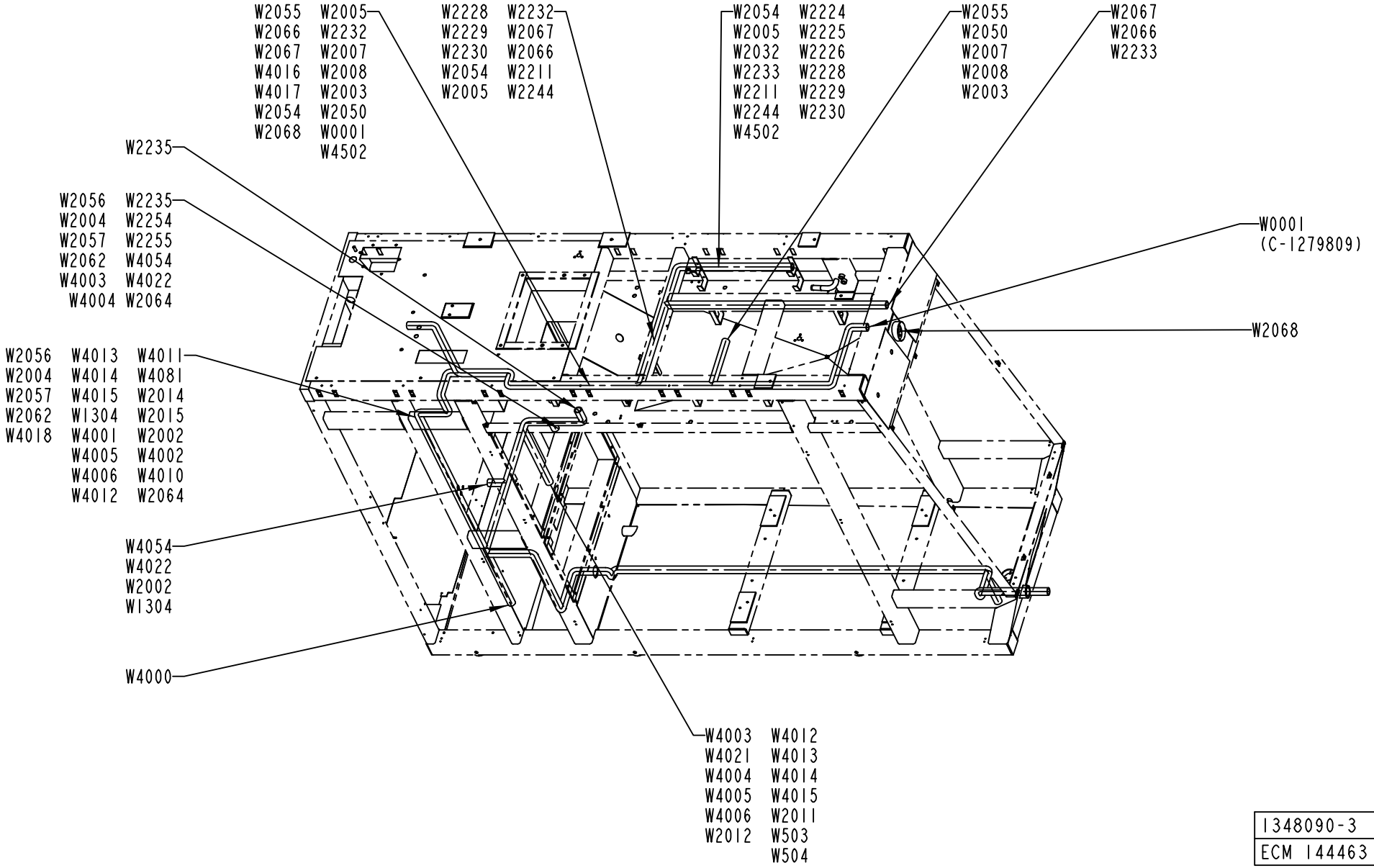

1348090-3
ECM 144463

Pos	Part No	SP	UN	Qty	Description	Page No
SEE PREVIOUS LISTS PAGES: 2-13, 2-15.						

Pos	Part No	SP	UN	Qty	Description	Page No

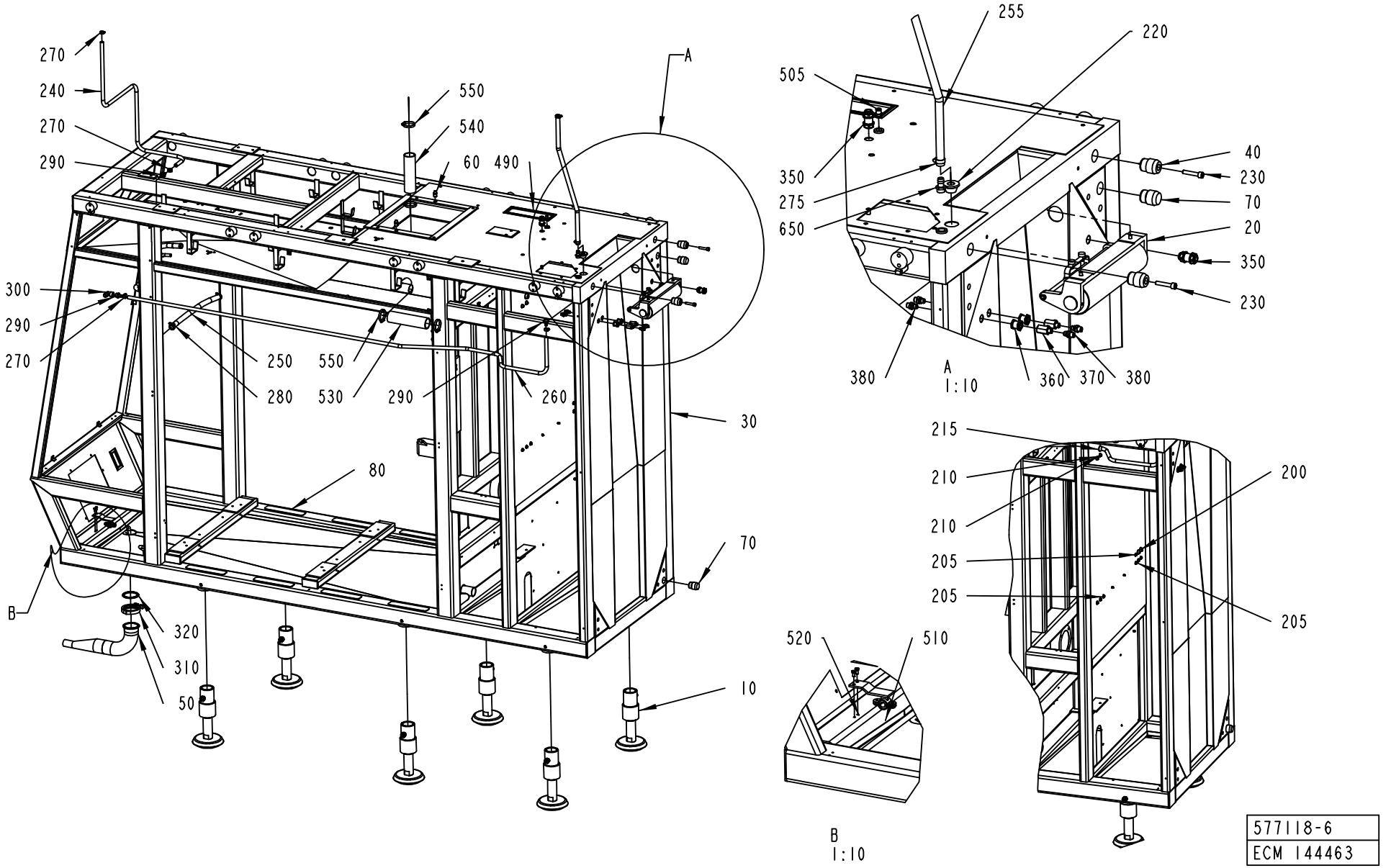
270
240
270
290
550
540
60
490
A
300
290
270
250
280
550
530
290
260
30
80
70
B
320
310
50
10
255
220
505
350
275
650
40
230
70
20
350
230
380
360
370
380
A
1:10
215
210
210
205
205
200
205
520
510
B
1:10
577118-6
ECM 144463

ECM: 144463 - 20031204
Group number: 577118-0600
Assembly Drawing: 577118-6_1_AA

This list covers pages from 2-18 to 2-23

Pos	Part No	SP	UN	Qty	Description	Page No
-						
010	1035076-0100	-		6	LEG	**2-25**
020	1095803-0100	-		1	BENDING ROLLER	**2-27**
030	2598530-0000	-		1	FRAME	
040	591341-0000	-		2	PIN	
050	1347638-0000	-		1	PIPE	
060	1037761-0000	-		2	PIN	
070	1037762-0000	-		2	PIN	
080	1103300-0000	-		8	NON-SKID	
090	2527401-0000	-		1	DISTRIBUTOR BLOCK	
100	1350902-0000	-		1	GLASS PANE	
200	90015-0021	-		3	LEAD-IN, TET10-14, E-1458023	
205	90015-0020	-		7	LEAD-IN, TET5-7, E-1458016	
210	90015-0023	-		2	LEAD-IN, TET7-10, E-1458019	
215	90015-0022	-		1	LEAD-IN, TET14-20, E-1458029	
220	90015-0024	-		1	LEAD-IN, TET20-26, E-1458035	
230	312115-0501	-		2	SCREW ISO4762 M10X50 A4	
240	90166-0121	-	MM	1600	HOSE	
250	90166-0151	-	MM	400	HOSE	
255	90166-0129	-	MM	2900	HOSE 16/22 REINFORCED PVC	
260	90166-0121	-	MM	2800	HOSE	
270	342991-0101	-		4	HOSE CLIP,WORM DRIVE TYPE (13)-16	
275	342991-0103	-		2	HOSE CLIP,WORM DRIVE TYPE (19)-23	
280	342991-0105	-		2	HOSE CLIP,WORM DRIVE TYPE (27)-30	
290	342901-0105	-		3	HOSE NIPPLE, EXT.THR. R1/2-12 MM	
300	90140-0012	-		1	ELBOW, 90 INT/EXT, 2020-1/2-1/2	
310	342840-0107	-		1	CLAMPING PIECE	
320	342850-0107	-		1	GASKET, FDA, 3-A, 3	
330	342768-0102	-		9	BULKHEAD CONNECTOR, 6 MM	
340	90330-0026	-		2	PLUG, EXT. G-THREAD, G1/4	
350	90458-2602	-		2	BULKHEAD CONNECTOR, 12 MM	
360	342767-0104	-		2	CONN. BULKHEAD G1/4	
370	90187-0158	-		8	THROTTLE BALL VALVE G1/4, R1/4	
380	342921-0122	-		16	STRAIGHT COUPLING,EXT.THREADED 8/6-G1/4"	
400	352113-0204	-		26	ANCHOR PLATES FOR STRIPS, TYPE TM3S25-M	
410	315237-0110	-		2	WASHER,PL.RND.AL.13,5/18,H=1,5	
420	90030-0184	-		4	CONN. STR. GA-6-G1/8	
430	342722-0210	-		1	STRAIGHT COUPLING, D=12 MM - G3/8"	
440	312605-0314	-		3	HEXAGON NUT, M6M M5 A280	
450	312125-0327	-		26	SCREW ISO 1207 M5X12 A4	
490	90143-0059	-	MM	1300	SEAL STRIP 4610069	
500	311103-0401	-		4	PARALLEL PIN ISO 2338 8M6X20 A1	
505	342722-0206	-		1	STRAIGHT COUPLING D=8-G3/8"	
510	1498502-0000	-		1	BRACKET	
520	312105-0366	-		2	SCREW M6S ISO 4017 M6X12 A480	
530	90459-0250	-	MM	220	HOSE , SILICONE, 53,8/62 MM	
540	90459-0250	-	MM	250	HOSE , SILICONE, 53,8/62 MM	
550	342991-0110	-		4	HOSE CLIP,WORM DRIVE TYPE (54)-63	
560	342768-0103	-		5	BULKHEAD CONNECTOR, 8 MM	
570	342980-0314	-		1	BANJO-HOLLOW BOLT COUPL,EXT.THR.02-G1/4"	
580	342981-0114	-		2	BANJO CONNEC,RING,FOR PLAST.TUBE 6-G1/4"	
600	90055-0217	-		2	ELBOW PIPE JOINT	
610	312105-0372	-		4	SCREW M6S ISO 4017 M6X25 A480	
620	315105-0156	-		4	WASHER BRB 6.7X14 RFR	
630	90459-0843	-		6	CONN. BANJO, 6-G1/8	
640	90153-0016	-		1	ADHESIVE,TUBE 100G RHODORSIL CAF 3	
650	90163-0039	-		1	HOSE NIPPLE EXT.THR. R1/2 2601-17 MM	
660	312309-0536	-		2	SCREW ISO4026 M12X30 A4	
670	1260753-0000	-		1	PIN	
680	342921-0114	-		1	STRAIGHT COUPLING,EXT.THREADED 6/4-G1/4"	

Machine Type	Group Description	Used-In	Group Number	Page No

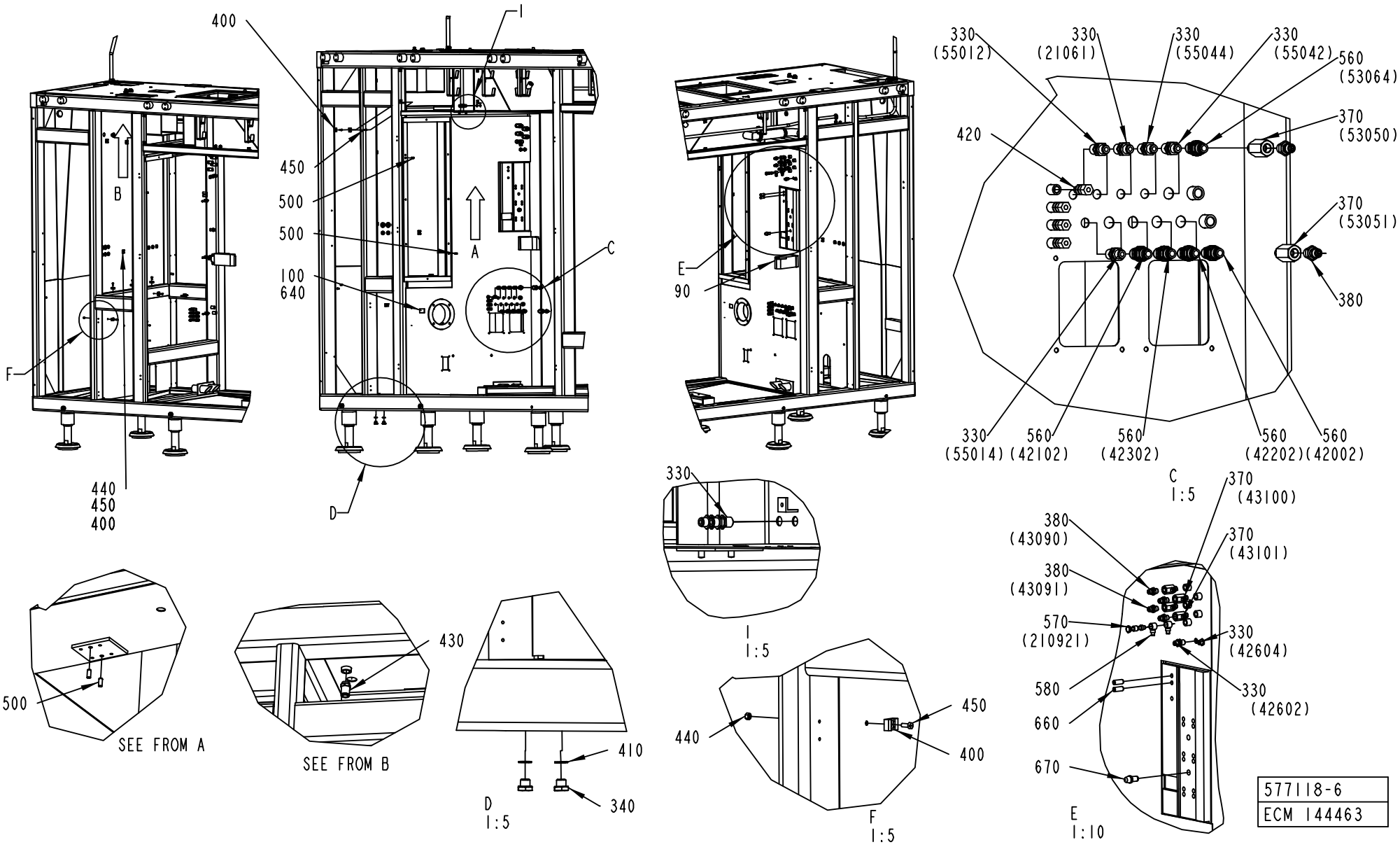
400
450
500
500
100
640
440
450
400
B
A
C
D
F
I
II
E
90
330
(55012)
330
(21061)
330
(55044)
330
(55042)
560
(53064)
370
(53050)
420
370
(53051)
380
330
(55014)
560
(42102)
560
(42302)
560
(42202)
560
(42002)
C
1:5
370
(43100)
380
(43090)
370
(43101)
380
(43091)
570
(210921)
330
(42604)
580
330
(42602)
660
670
E
1:10
330
I
1:5
500
SEE FROM A
430
SEE FROM B
410
340
D
1:5
440
450
400
F
1:5
577118-6
ECM 144463

ECM: 144463 - 20031204
Group number: 577118-0600
Assembly Drawing: 577118-6_2_AA

This list covers pages from 2-18 to 2-23

Pos	Part No	SP	UN	Qty	Description	Page No
-						
010	1035076-0100	-		6	LEG	**2-25**
020	1095803-0100	-		1	BENDING ROLLER	**2-27**
030	2598530-0000	-		1	FRAME	
040	591341-0000	-		2	PIN	
050	1347638-0000	-		1	PIPE	
060	1037761-0000	-		2	PIN	
070	1037762-0000	-		2	PIN	
080	1103300-0000	-		8	NON-SKID	
090	2527401-0000	-		1	DISTRIBUTOR BLOCK	
100	1350902-0000	-		1	GLASS PANE	
200	90015-0021	-		3	LEAD-IN, TET10-14, E-1458023	
205	90015-0020	-		7	LEAD-IN, TET5-7, E-1458016	
210	90015-0023	-		2	LEAD-IN, TET7-10, E-1458019	
215	90015-0022	-		1	LEAD-IN, TET14-20, E-1458029	
220	90015-0024	-		1	LEAD-IN, TET20-26, E-1458035	
230	312115-0501	-		2	SCREW ISO4762 M10X50 A4	
240	90166-0121	-	MM	1600	HOSE	
250	90166-0151	-	MM	400	HOSE	
255	90166-0129	-	MM	2900	HOSE 16/22 REINFORCED PVC	
260	90166-0121	-	MM	2800	HOSE	
270	342991-0101	-		4	HOSE CLIP,WORM DRIVE TYPE (13)-16	
275	342991-0103	-		2	HOSE CLIP,WORM DRIVE TYPE (19)-23	
280	342991-0105	-		2	HOSE CLIP,WORM DRIVE TYPE (27)-30	
290	342901-0105	-		3	HOSE NIPPLE, EXT.THR. R1/2-12 MM	
300	90140-0012	-		1	ELBOW, 90 INT/EXT, 2020-1/2-1/2	
310	342840-0107	-		1	CLAMPING PIECE	
320	342850-0107	-		1	GASKET, FDA, 3-A, 3	
330	342768-0102	-		9	BULKHEAD CONNECTOR, 6 MM	
340	90330-0026	-		2	PLUG, EXT. G-THREAD, G1/4	
350	90458-2602	-		2	BULKHEAD CONNECTOR, 12 MM	
360	342767-0104	-		2	CONN. BULKHEAD G1/4	
370	90187-0158	-		8	THROTTLE BALL VALVE G1/4, R1/4	
380	342921-0122	-		16	STRAIGHT COUPLING,EXT.THREADED 8/6-G1/4"	
400	352113-0204	-		26	ANCHOR PLATES FOR STRIPS, TYPE TM3S25-M	
410	315237-0110	-		2	WASHER,PL.RND.AL.13,5/18,H=1,5	
420	90030-0184	-		4	CONN. STR. GA-6-G1/8	
430	342722-0210	-		1	STRAIGHT COUPLING, D=12 MM - G3/8"	
440	312605-0314	-		3	HEXAGON NUT, M6M M5 A280	
450	312125-0327	-		26	SCREW ISO 1207 M5X12 A4	
490	90143-0059	-	MM	1300	SEAL STRIP 4610069	
500	311103-0401	-		4	PARALLEL PIN ISO 2338 8M6X20 A1	
505	342722-0206	-		1	STRAIGHT COUPLING D=8-G3/8"	
510	1498502-0000	-		1	BRACKET	
520	312105-0366	-		2	SCREW M6S ISO 4017 M6X12 A480	
530	90459-0250	-	MM	220	HOSE , SILICONE, 53,8/62 MM	
540	90459-0250	-	MM	250	HOSE , SILICONE, 53,8/62 MM	
550	342991-0110	-		4	HOSE CLIP,WORM DRIVE TYPE (54)-63	
560	342768-0103	-		5	BULKHEAD CONNECTOR, 8 MM	
570	342980-0314	-		1	BANJO-HOLLOW BOLT COUPL,EXT.THR.02-G1/4"	
580	342981-0114	-		2	BANJO CONNEC,RING,FOR PLAST.TUBE 6-G1/4"	
600	90055-0217	-		2	ELBOW PIPE JOINT	
610	312105-0372	-		4	SCREW M6S ISO 4017 M6X25 A480	
620	315105-0156	-		4	WASHER BRB 6.7X14 RFR	
630	90459-0843	-		6	CONN. BANJO, 6-G1/8	
640	90153-0016	-		1	ADHESIVE,TUBE 100G RHODORSIL CAF 3	
650	90163-0039	-		1	HOSE NIPPLE EXT.THR. R1/2 2601-17 MM	
660	312309-0536	-		2	SCREW ISO4026 M12X30 A4	
670	1260753-0000	-		1	PIN	
680	342921-0114	-		1	STRAIGHT COUPLING,EXT.THREADED 6/4-G1/4"	

Machine Type | Group Description | Used-In | Group Number | Page No

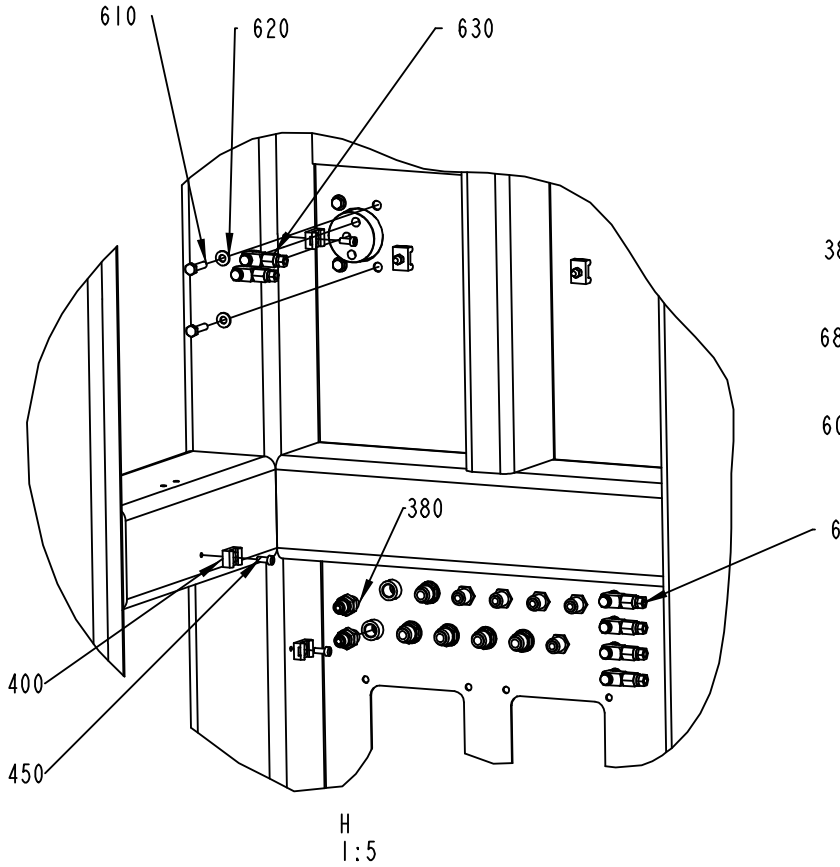

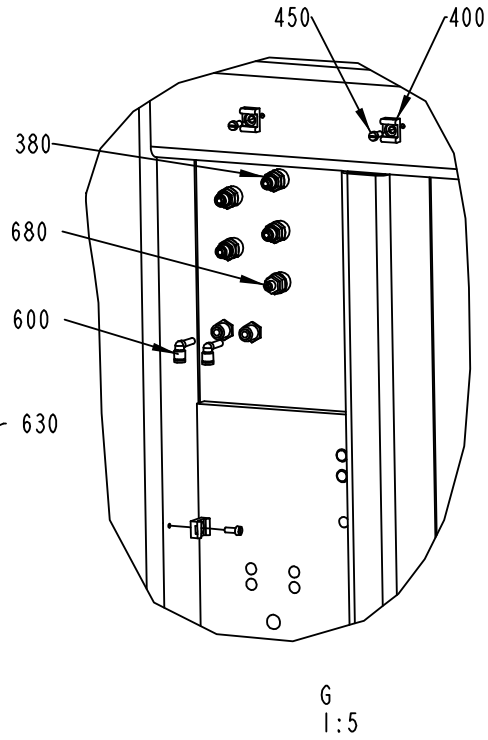

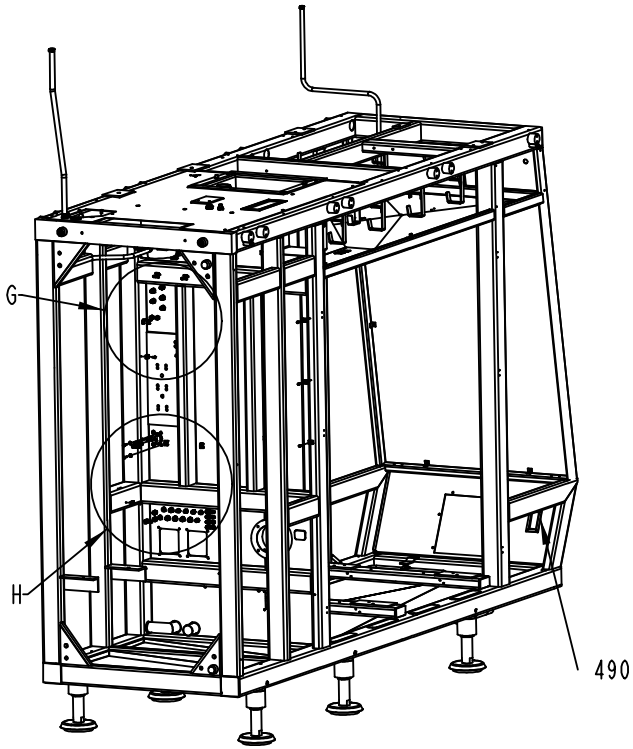

577118-6
ECM 144463

ECM: 144463 - 20031204
Group number: 577118-0600
Assembly Drawing: 577118-6_3_AA

This list covers pages from 2-18 to 2-23

Pos	Part No	SP	UN	Qty	Description	Page No
-						
010	1035076-0100	-		6	LEG	**2-25**
020	1095803-0100	-		1	BENDING ROLLER	**2-27**
030	2598530-0000	-		1	FRAME	
040	591341-0000	-		2	PIN	
050	1347638-0000	-		1	PIPE	
060	1037761-0000	-		2	PIN	
070	1037762-0000	-		2	PIN	
080	1103300-0000	-		8	NON-SKID	
090	2527401-0000	-		1	DISTRIBUTOR BLOCK	
100	1350902-0000	-		1	GLASS PANE	
200	90015-0021	-		3	LEAD-IN, TET10-14, E-1458023	
205	90015-0020	-		7	LEAD-IN, TET5-7, E-1458016	
210	90015-0023	-		2	LEAD-IN, TET7-10, E-1458019	
215	90015-0022	-		1	LEAD-IN, TET14-20, E-1458029	
220	90015-0024	-		1	LEAD-IN, TET20-26, E-1458035	
230	312115-0501	-		2	SCREW ISO4762 M10X50 A4	
240	90166-0121	-	MM	1600	HOSE	
250	90166-0151	-	MM	400	HOSE	
255	90166-0129	-	MM	2900	HOSE 16/22 REINFORCED PVC	
260	90166-0121	-	MM	2800	HOSE	
270	342991-0101	-		4	HOSE CLIP,WORM DRIVE TYPE (13)-16	
275	342991-0103	-		2	HOSE CLIP,WORM DRIVE TYPE (19)-23	
280	342991-0105	-		2	HOSE CLIP,WORM DRIVE TYPE (27)-30	
290	342901-0105	-		3	HOSE NIPPLE, EXT.THR. R1/2-12 MM	
300	90140-0012	-		1	ELBOW, 90 INT/EXT, 2020-1/2-1/2	
310	342840-0107	-		1	CLAMPING PIECE	
320	342850-0107	-		1	GASKET, FDA, 3-A, 3	
330	342768-0102	-		9	BULKHEAD CONNECTOR, 6 MM	
340	90330-0026	-		2	PLUG, EXT. G-THREAD, G1/4	
350	90458-2602	-		2	BULKHEAD CONNECTOR, 12 MM	
360	342767-0104	-		2	CONN. BULKHEAD G1/4	
370	90187-0158	-		8	THROTTLE BALL VALVE G1/4, R1/4	
380	342921-0122	-		16	STRAIGHT COUPLING,EXT.THREADED 8/6-G1/4"	
400	352113-0204	-		26	ANCHOR PLATES FOR STRIPS, TYPE TM3S25-M	
410	315237-0110	-		2	WASHER,PL.RND.AL.13,5/18,H=1,5	
420	90030-0184	-		4	CONN. STR. GA-6-G1/8	
430	342722-0210	-		1	STRAIGHT COUPLING, D=12 MM - G3/8"	
440	312605-0314	-		3	HEXAGON NUT, M6M M5 A280	
450	312125-0327	-		26	SCREW ISO 1207 M5X12 A4	
490	90143-0059	-	MM	1300	SEAL STRIP 4610069	
500	311103-0401	-		4	PARALLEL PIN ISO 2338 8M6X20 A1	
505	342722-0206	-		1	STRAIGHT COUPLING D=8-G3/8"	
510	1498502-0000	-		1	BRACKET	
520	312105-0366	-		2	SCREW M6S ISO 4017 M6X12 A480	
530	90459-0250	-	MM	220	HOSE , SILICONE, 53,8/62 MM	
540	90459-0250	-	MM	250	HOSE , SILICONE, 53,8/62 MM	
550	342991-0110	-		4	HOSE CLIP,WORM DRIVE TYPE (54)-63	
560	342768-0103	-		5	BULKHEAD CONNECTOR, 8 MM	
570	342980-0314	-		1	BANJO-HOLLOW BOLT COUPL,EXT.THR.02-G1/4"	
580	342981-0114	-		2	BANJO CONNEC,RING,FOR PLAST.TUBE 6-G1/4"	
600	90055-0217	-		2	ELBOW PIPE JOINT	
610	312105-0372	-		4	SCREW M6S ISO 4017 M6X25 A480	
620	315105-0156	-		4	WASHER BRB 6.7X14 RFR	
630	90459-0843	-		6	CONN. BANJO, 6-G1/8	
640	90153-0016	-		1	ADHESIVE,TUBE 100G RHODORSIL CAF 3	
650	90163-0039	-		1	HOSE NIPPLE EXT.THR. R1/2 2601-17 MM	
660	312309-0536	-		2	SCREW ISO4026 M12X30 A4	
670	1260753-0000	-		1	PIN	
680	342921-0114	-		1	STRAIGHT COUPLING,EXT.THREADED 6/4-G1/4"	

Machine Type | Group Description | Used-In | Group Number | Page No

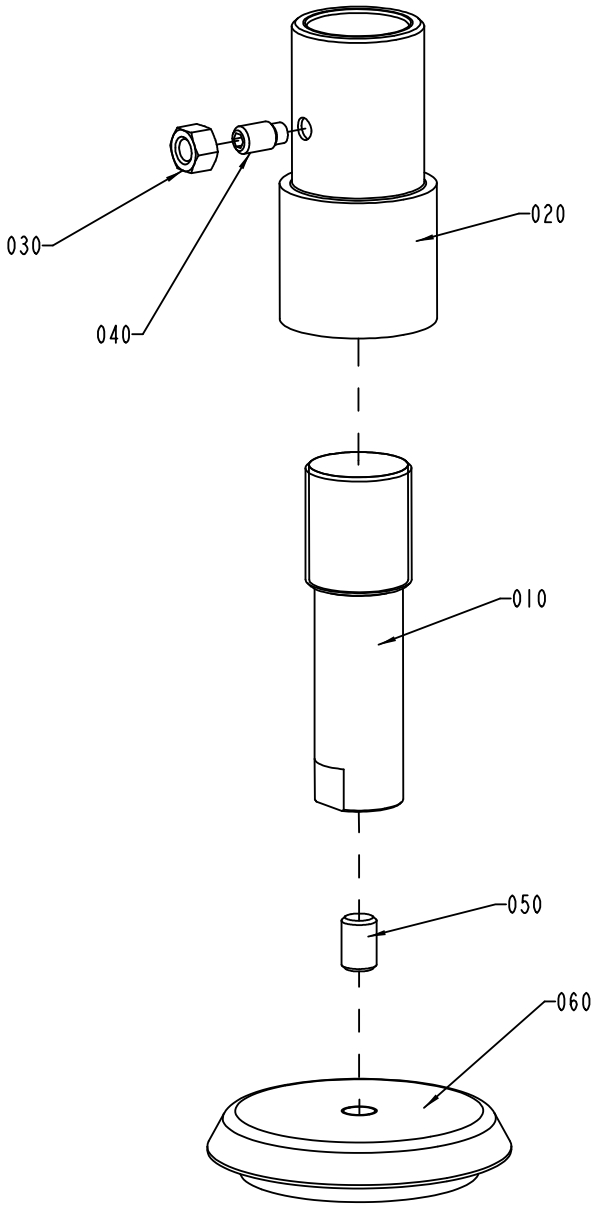

S-1035076-1
ECN 71019

ECM: 71870 - 19981029
Group number: 1035076-0100
Assembly Drawing: 1035076-1_1_AB

Pos	Part No	SP	UN	Qty	Description	Page No
-						
010	1036119-0000	-		1	LEG	
020	1036120-0000	-		1	SLEEVE	
030	312605-0324	-		1	HEXAGON NUT, M6M M16 A280	
040	312311-0624	-		1	SCREW ISO4028 M16X30 FZB	
050	90347-0029	-		1	DAMPER	
060	90287-0130	-		1	SCREW HEX.SOCK.SET FLATPT. MP6SS M20X30	

Pos	Part No	SP	UN	Qty	Description	Page No

BENDING ROLLER

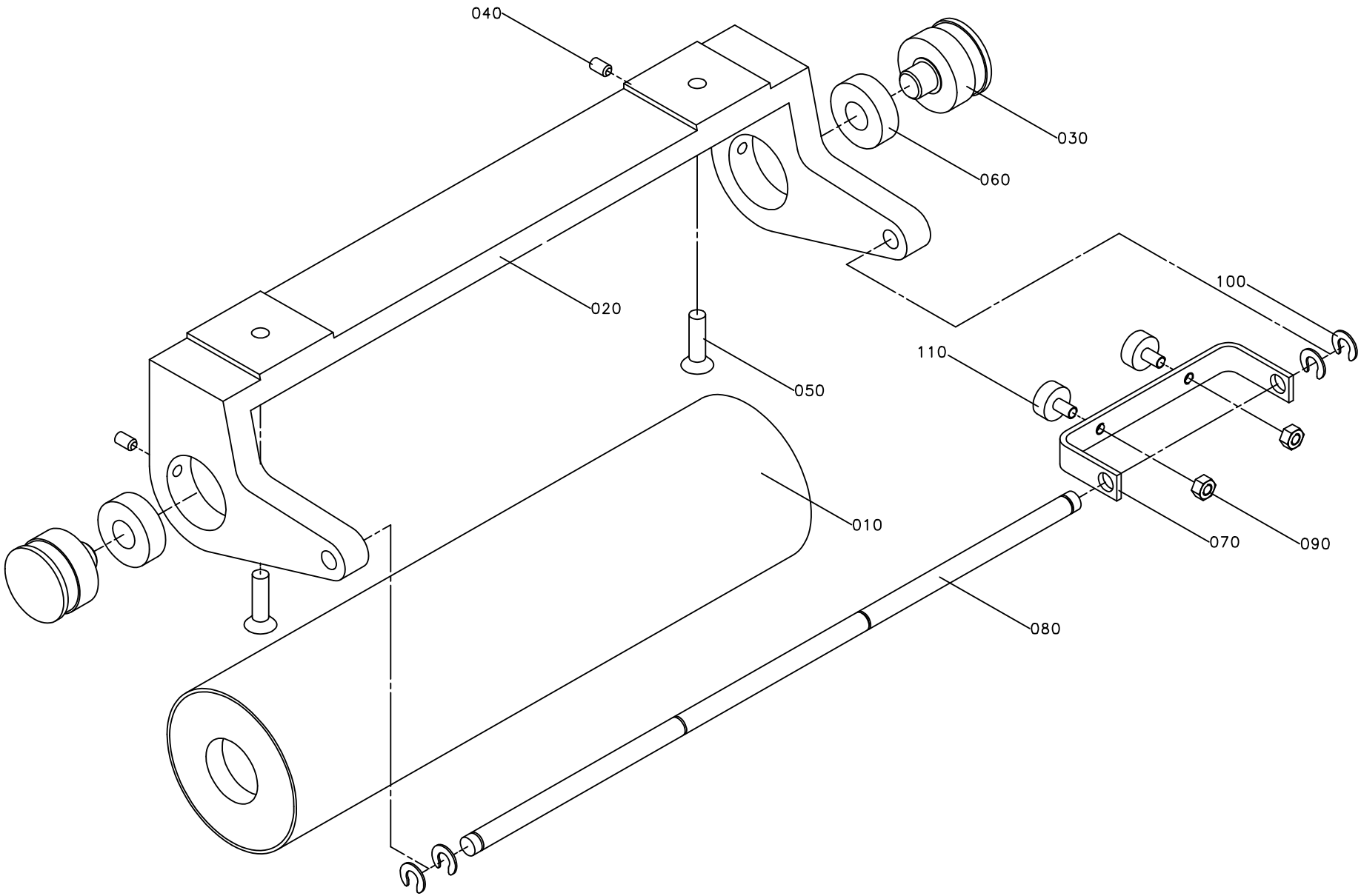

ECM: 71742 - 19980903
Group number: 1095803-0100
Assembly Drawing: 1095803-1_1_AA

Pos	Part No	SP	UN	Qty	Description	Page No
-						
010	1035882-0000	D		1	BENDING ROLLER	
020	1036516-0000	-		1	CANTILEVER	
030	1037012-0000	D		2	AXLE PIN	
040	312318-0364	-		2	SCREW ISO4029 M6X10 A4	
050	312155-0453	-		2	SCREW EN 10642 MF6S M8X25 A480	
060	321313-0102	C		2	BALL BEARING, 15X35X11 MM	
070	1041603-0000	-		1	BRACKET	
080	1041606-0000	D		1	SHAFT	
090	312605-0316	-		2	HEXAGON NUT, M6M M6 A280	
100	315755-0801	-		4	RETAINING RING SHAFT DIN 6799 8 A2	
110	90347-0007	D		2	VIBRATION DAMPER	

Pos	Part No	SP	UN	Qty	Description	Page No

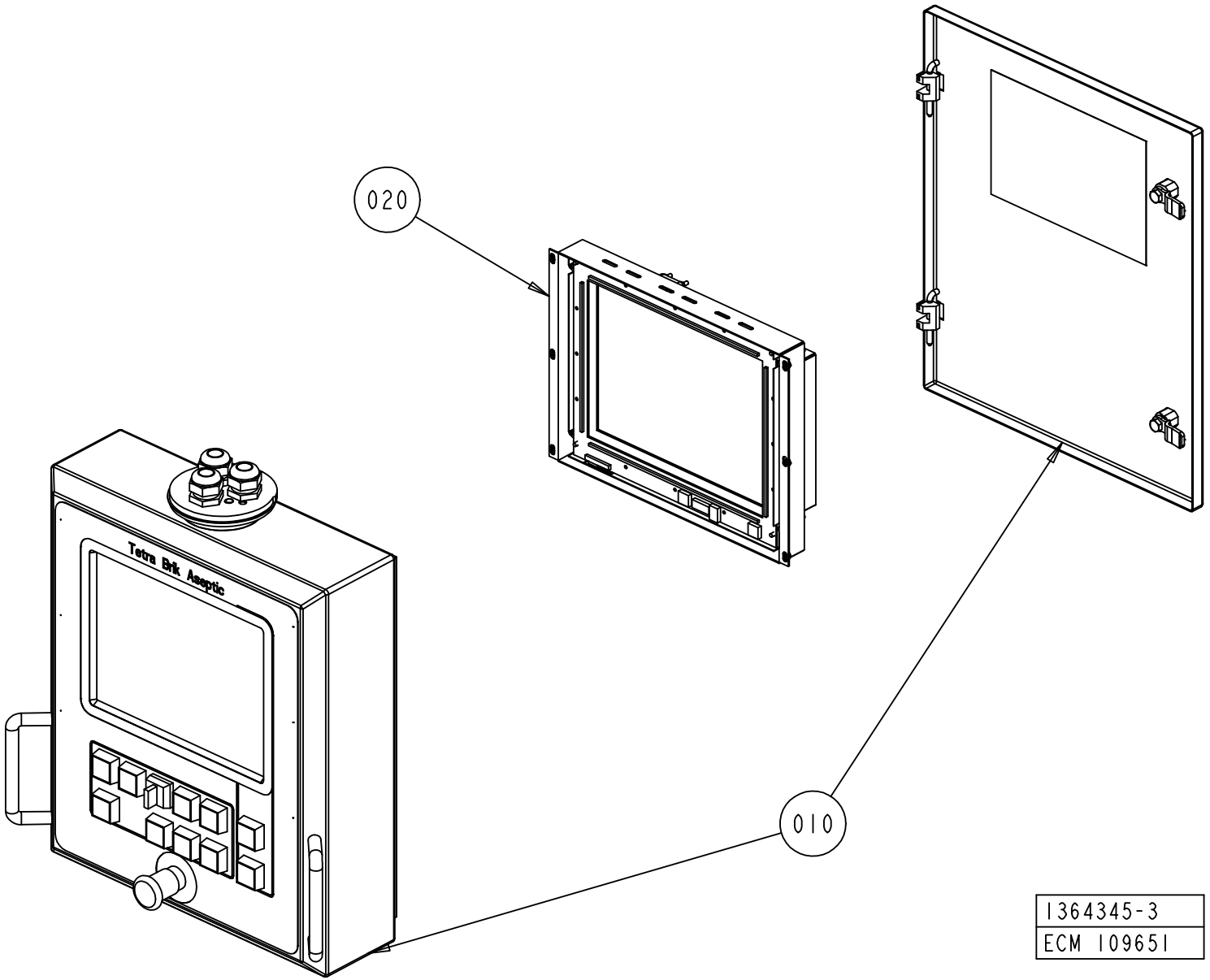

1364345-3
ECM 109651

ECM: 120877 - 20021126
Group number: 1364345-0300
Assembly Drawing: 1364345-3_1_AA

Pos	Part No	SP	UN	Qty	Description	Page No
TBA/22						
010	1364346-0304	-		1	PANEL UNIT 12"	**2-31**
Common Parts						
020	1348707-0101	-		1	DISPLAY UNIT 12"	**2-35**

Pos	Part No	SP	UN	Qty	Description	Page No

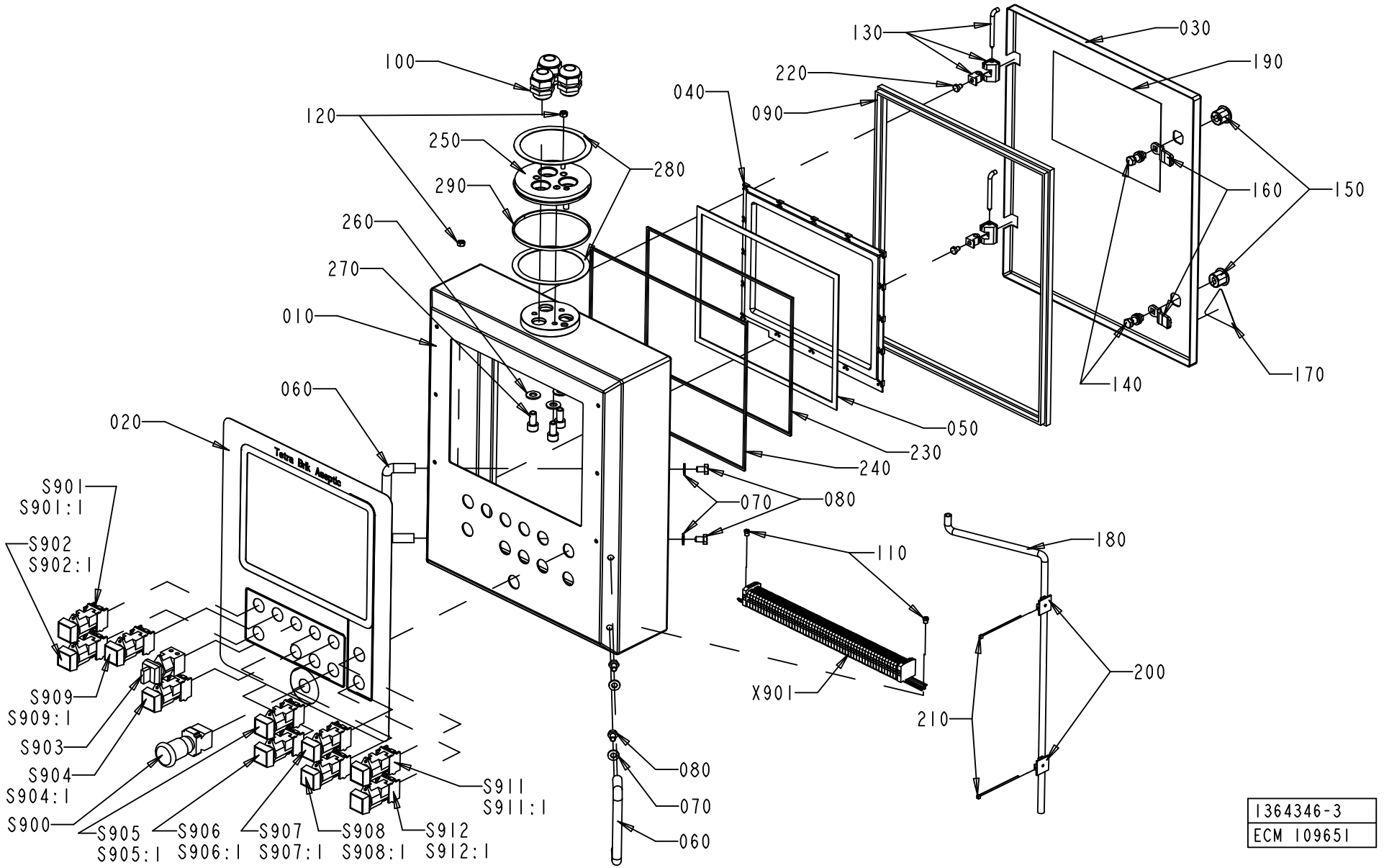
130
030
100
190
220
040
090
120
250
280
160
150
290
260
270
010
060
140
170
020
050
230
240
S901
S901:1
070
080
S902
S902:1
110
180
S909
S909:1
X901
200
S903
210
S904
S904:1
080
S911
S911:1
S900
070
S905
S905:1
S906
S906:1
S907
S907:1
S908
S908:1
S912
S912:1
060
1364346-3
ECM 109651

ECM: 109651 -
Group number: 1364346-0304
Assembly Drawing: 1364346-3_1_AA

Pos	Part No	SP	UN	Qty	Description	Page No
TBA/22						
020	2536019-0000	-		1	FOIL BRIK ASEPTIC	
S905	90064-0098	A		1	PUSH BUTTON, CLEAR	
S905:1	359301-0091	-		1	SIGN "INCHING FFU"	
Common Parts						
010	2536017-0000	-		1	PANEL	
030	1349777-0000	-		1	DOOR	
040	90041-0095	-		1	FRAME 12" , 12I1-V2.0	
050	90153-0060	-		1	ADHESIVE, 3M DP-190 B/A	
060	90017-0016	-		2	HANDLE, NO. 14.4012.02.120	
070	90005-0077	-		4	WASHER PL.RND.NYL.8,4/7, H=2	
080	312105-0447	-		4	SCREW M6S ISO 4017 M8X12 A480	
090	90143-0057	-	MM	1800	STRIP EMKA 1011-05 21X11MM	
100	352103-0115	-		3	CABLE GLAND, STR 21, PR28,3/PG21	
110	1041609-0000	-		2	NUT	
120	312605-0316	-		1	HEXAGON NUT, M6M M6 A280	
130	90248-0047	-		2	HINGE, 1150-U50	
140	90237-0320	-		2	LOCK HOUSING, 1000-U136	
150	90237-0319	-		2	LOCK HOUSING, 1000-U134	
160	90237-0157	-		2	LOCK BOLT, 1000-230	
170	359705-0015	-		1	WARNING SIGN ISO, RISK OF ELECTRIC SHOCK	
180	90166-0008	-	MM	650	HOSE 7/10 PVC TRANSP.	
190	90194-0133	-		1	SIGN "DELIVERED DESIGN"	
200	352113-0206	-		2	ANCHOR PLATES FOR STRIPS, TYPE ABM100-AT	
210	352113-0101	-		2	CLIP STRIP, 92X2,5 MM	
220	312105-0362	-		2	SCREW M6S ISO 4017 M6X8 A480	
230	90144-0075	-		1	SHIELDING SEAL STRIP EMC, 1,02X3,18 MM	
240	90144-0075	-		1	SHIELDING SEAL STRIP EMC, 1,02X3,18 MM	
S900	90064-0124	A		1	SWITCH, EM. STOP, ZB2-BS844+ZB2-BZ1045	
S901	90064-0082	A		1	PUSH BUTTON, WHITE	
	90036-0057	*B*		*1*	*LIGHT BULB, BA9S 28V*	
S901:1	359301-0519	-		1	SIGN "TPOP RESET"	
S902	90064-0082	A		1	PUSH BUTTON, WHITE	
	90036-0057	*B*		*1*	*LIGHT BULB, BA9S 28V*	
S902:1	359301-0130	-		1	SIGN "LAMPTEST"	
S903	90111-0120	A		1	SWITCH, 2 POS.704.510 .0A+704.901.5/A	
S904	90064-0082	A		1	PUSH BUTTON, WHITE	
	90036-0057	*B*		*1*	*LIGHT BULB, BA9S 28V*	
S904:1	359301-0170	-		1	SIGN "MANUAL FLUSHING FFU"	
S906	90064-0082	A		1	PUSH BUTTON, WHITE	
	90036-0057	*B*		*1*	*LIGHT BULB, BA9S 28V*	
S906:1	359301-0050	-		1	SIGN "DROP CHUTE"	
S907	90064-0098	A		1	PUSH BUTTON, CLEAR	
S907:1	359301-0090	-		1	SIGN "INCHING"	
S908	90064-0084	A		1	PUSH BUTTON, YELLOW	
S908:1	359301-0110	-		1	SIGN "SHORT STOP"	
S911	90064-0093	A		1	PUSH BUTTON, GREEN	
	90036-0057	*C*		*1*	*LIGHT BULB, BA9S 28V*	
S911:1	359301-0001	-		1	SIGN "UP"	
S912	90064-0082	A		1	PUSH BUTTON, WHITE	
	90036-0057	*B*		*1*	*LIGHT BULB, BA9S 28V*	
S912:1	359301-0005	-		1	SIGN "DOWN"	
X901	1095597-0100	-		1	TERMINAL	**2-33**

Machine Type	Group Description	Used-In	Group Number	Page No

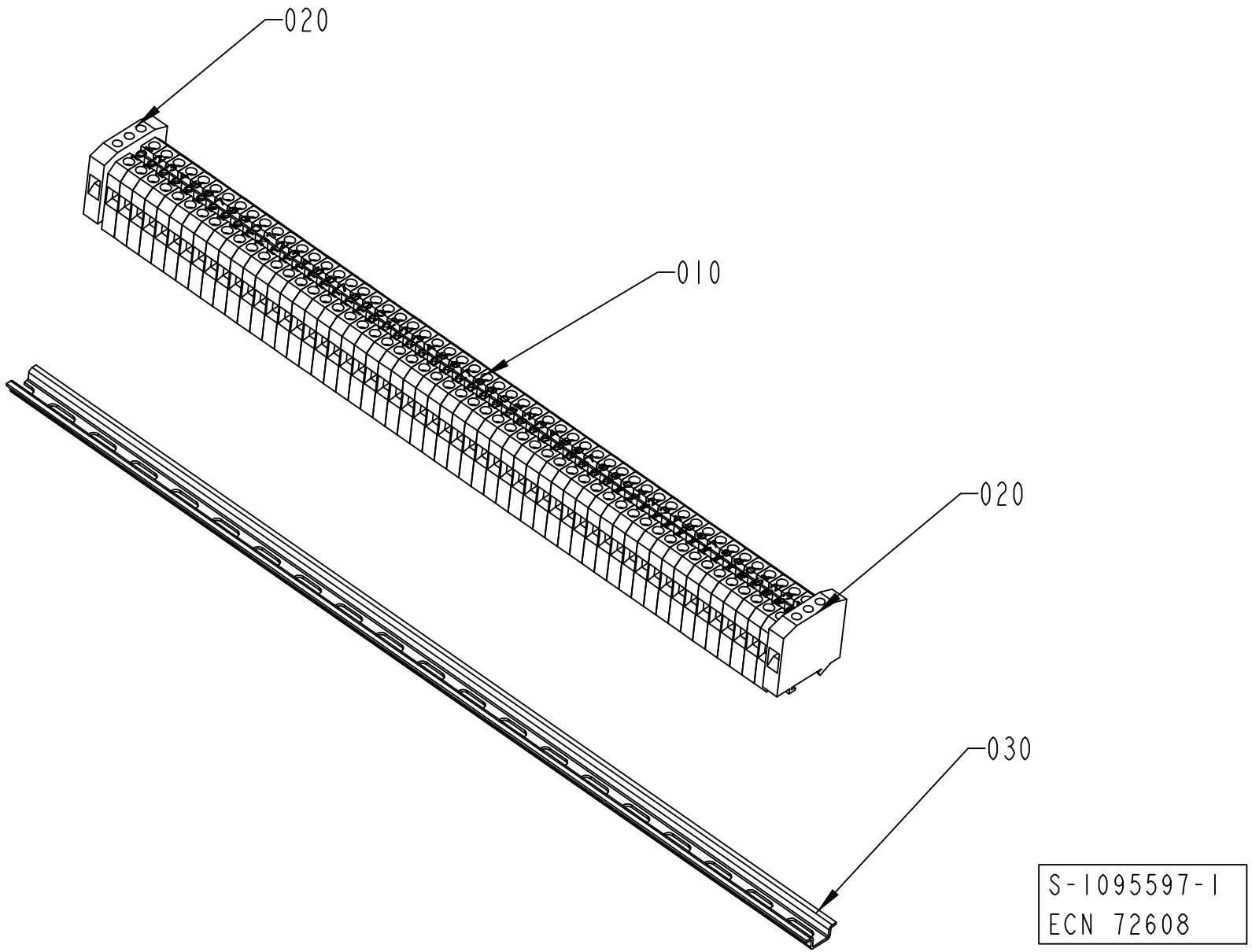
020
010
020
030
S-1095597-1
ECN 72608

ECM: 72608 - 19990604
Group number: 1095597-0100
Assembly Drawing: 1095597-1_1_AB

Pos	Part No	SP	UN	Qty	Description	Page No
-						
010	90077-0079	-		56	FEED THROUGH TERMINAL, 02943.6	
020	90135-0026	-		2	EARTH TERMINAL, 3802.6	
030	90077-0328	-	MM	390	RAIL TS15/5	
040	359011-0821	-		2	SET OF SIGNS 6-FW 1-50	
050	359011-0819	-		1	MARKING PLATES 5-GW (EARTH)	

Pos	Part No	SP	UN	Qty	Description	Page No

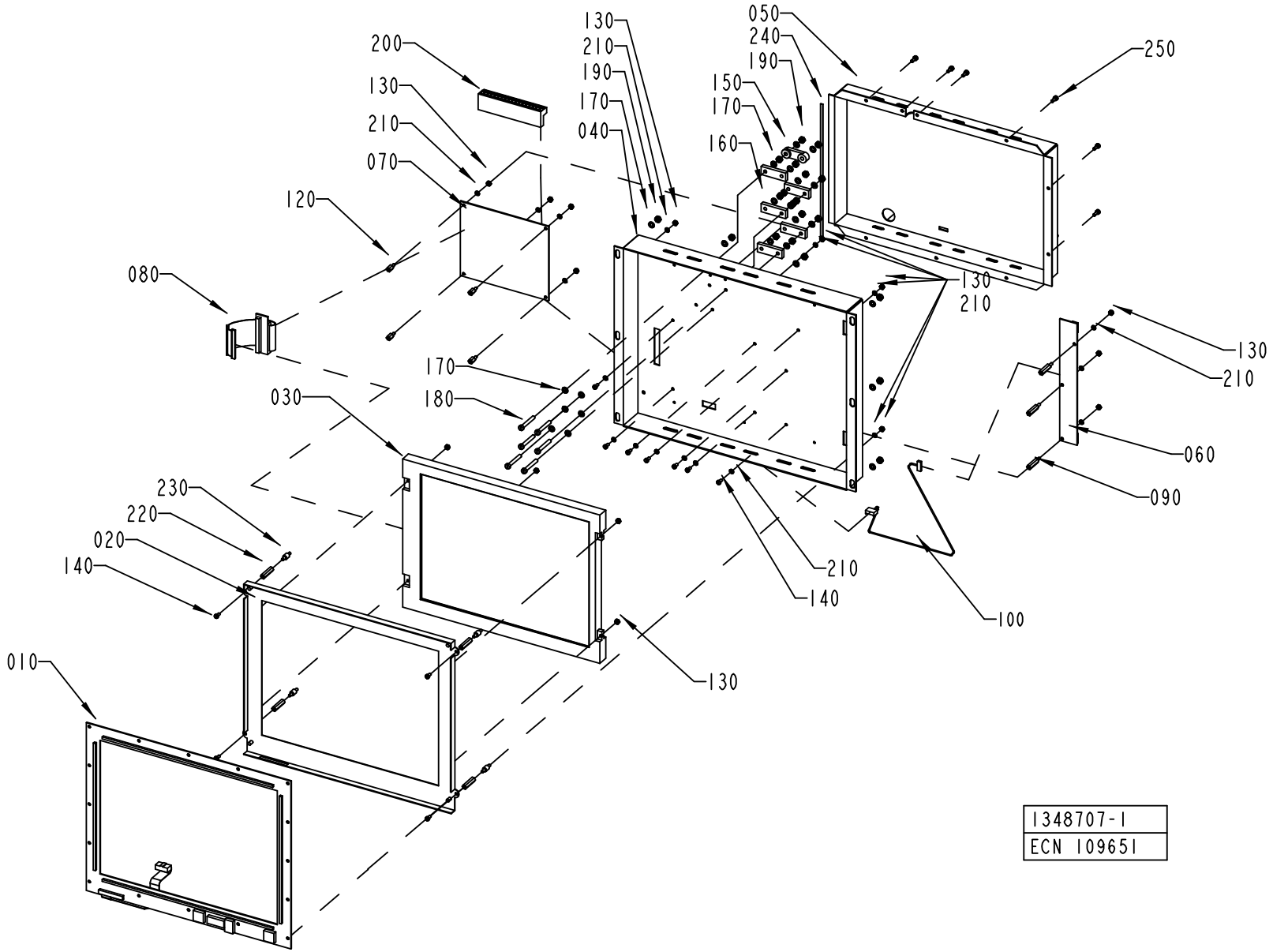
200
130
210
070
120
080
130
210
190
170
040
050
240
190
150
170
160
250
130
210
170
180
030
130
210
060
090
230
220
020
140
010
210
140
100
130
1348707-1
ECN 109651

ECM: 114458 - 20020828
Group number: 1348707-0101
Assembly Drawing: 1348707-1_1_AE

Pos	Part No	SP	UN	Qty	Description	Page No
-						
010	90041-0099	A		1	IR TOUCH PCB, 12.1" , IRT 12I1-V2.1	
020	90041-0104	-		1	CHASSIS FOR TOUCH, 12,1" , M0089A39	
030	90041-0093	A		1	DISPLAY, TOSHIBA 12,1"	
040	1348708-0000	-		1	COVER PLATE	
050	1348709-0000	-		1	COVER PLATE	
060	90041-0079	A		1	ADAPTER BACKLIGHT, 50000007	
070	90041-0078	A		1	REMOTE COMMUNIKATION LINK BOARD,E000014B	
080	90041-0103	A		1	DATA CABLE DISPLAY, E000018B	
090	90316-0022	-		3	SPACER NUT DSNF M3060X20	
100	90041-0082	A		1	CABLE, DISPLAY POWER, 2223-0022-018	
120	90316-0023	-		4	SPACER NUT DSM M3055X8	
130	312605-0310	-		15	HEXAGON NUT, M6M M3 A280	
140	312125-0220	-		11	SCREW ISO 1207 M3X6 A4	
150	90220-0302	-		1	CLAMP FOR SCR.CABLE, 16MM, 55-016-89	
160	90220-0304	-		5	CLAMP FOR SCR.CABLE, 24MM,	
170	315105-0136	-		24	WASHER BRB4,3XRFR	
180	312125-0299	-		6	SCREW ISO 1207 M4X30 A4	
190	312605-0312	-		20	HEXAGON NUT, M6M M4 A280	
200	1129570-0000	-		1	LDS, LVDS TERMINAL 1	
210	315105-0124	-		18	WASHER BRB3,2X6RFR	
220	90316-0029	-		4	SPACER NUT, M3X16	
230	90316-0030	-		4	ELASTIC SCREW, 15060002	
240	90144-0074	-		1	SHIELDING SEAL STRIP EMC, 3,17X3,17 MM	
250	312115-0222	-		9	SCREW ISO4762 M3X8 A4	

Pos	Part No	SP	UN	Qty	Description	Page No

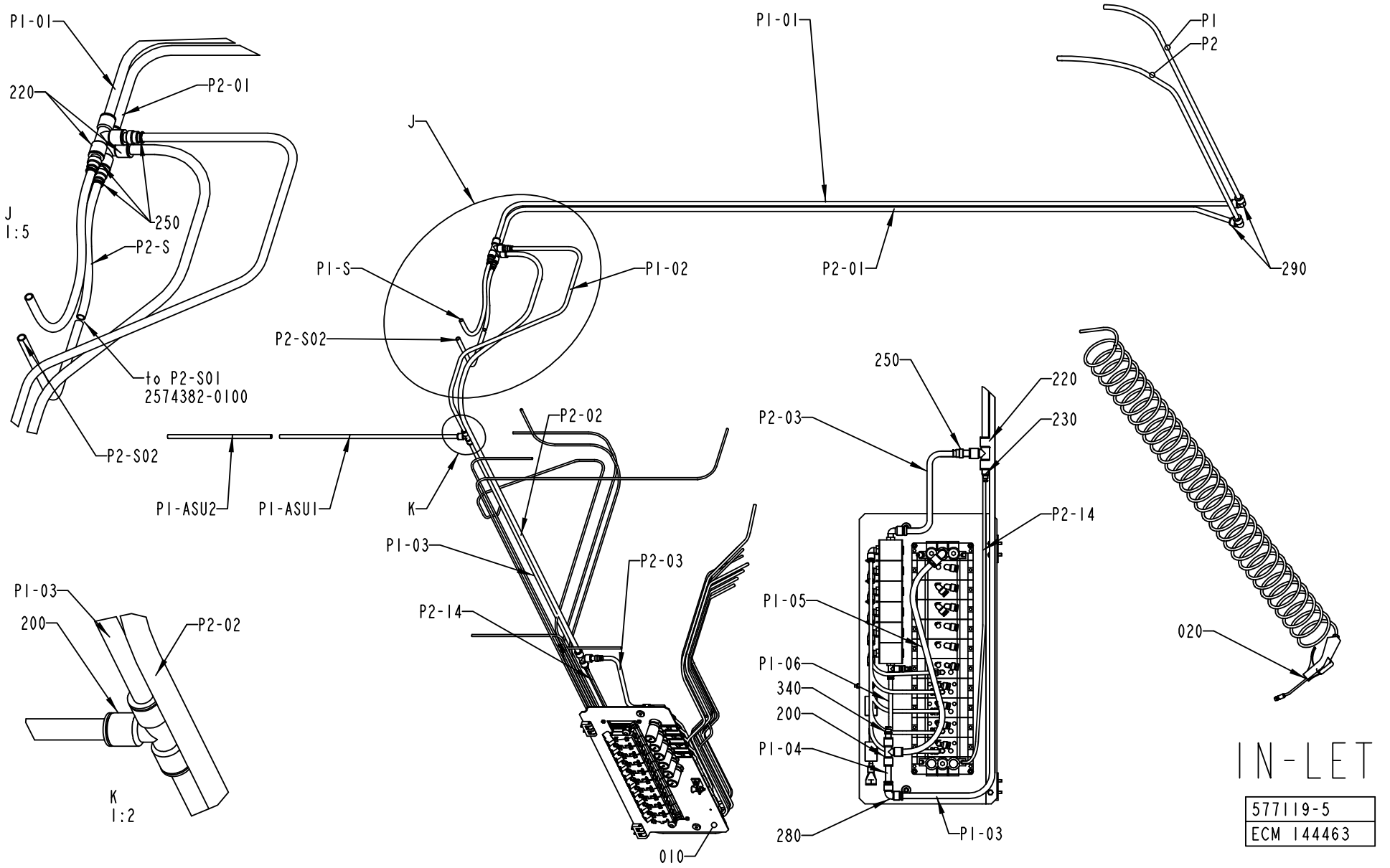
P1-01
220
P2-01
J
1:5
250
P2-S
P2-S02
to P2-S01
2574382-0100
J
P1-S
P1-02
P2-S02
P1-ASU2
P1-ASU1
K
P2-02
P1-03
P2-03
P2-14
010
P1-03
200
P2-02
K
1:2
P1-01
P2-01
290
P1
P2
250
220
P2-03
230
P2-14
P1-05
P1-06
340
200
P1-04
280
P1-03
020
IN-LET
577119-5
ECM 144463

ECM: 152813 - 20031204
Group number: 577119-0400
Assembly Drawing: 577119-5_1_AF

Pos	Part No	SP	UN	Qty	Description	Page No
-						
010	1346613-0200	-		1	VALVE PANEL	**2-39**
020	1095682-0100	-		1	AIR JET GUN	**2-41**
1210-01	90166-0081	-	MM	1200	TUBE 6 MM PA BLUE	
12204	90166-0081	-	MM	2800	TUBE 6 MM PA BLUE	
12214	90166-0081	-	MM	2800	TUBE 6 MM PA BLUE	
200	342748-0109	-		2	T-CONNECTION 12MM	
21044	90166-0081	-	MM	460	TUBE 6 MM PA BLUE	
210441	90166-0081	-	MM	200	TUBE 6 MM PA BLUE	
210442	90166-0081	-	MM	1500	TUBE 6 MM PA BLUE	
220	342748-0110	-		3	T-CONNECTION 14MM	
230	90055-0116	-		1	REDUCER 6-14	
240	342748-0102	-		1	T-CONNECTION 6MM	
250	342716-0211	-		4	REDUCER 12-14	
280	342735-0109	-		1	ELBOW PIPE JOINT	
290	342735-0110	-		2	ELBOW PIPE	
340	342716-0209	-		1	REDUCER 8-12	
350	359000-0400	-		38	MARKING CO2/4"0"	
360	359000-0401	-		32	MARKING COLLAR 2/4 "1" YELLOW	
370	359000-0402	-		42	MARKING COLLAR 2/4 "2" YELLOW	
380	359000-0403	-		6	MARKING COLLAR PA2/4 "3" YELLOW	
390	359000-0404	-		42	MARKING COLLAR PA2/4 "4" YELLOW	
400	359000-0405	-		18	MARKING CO2/4"5"	
410	359000-0406	-		2	MARKING COLLAR PA2/4 "6" YELLOW	
420	359000-0765	-		4	MARKING CO2/4"P"	
42002	90166-0013	-	MM	2100	TUBE 8 MM PA BLUE	
42102	90166-0013	-	MM	2100	TUBE 8 MM PA BLUE	
42202	90166-0013	-	MM	2100	TUBE 8 MM PA BLUE	
42302	90166-0013	-	MM	2100	TUBE 8 MM PA BLUE	
430	359000-0024	-		6	MARKING CO2/4 "-"	
4301-04	90166-0081	-	MM	3500	TUBE 6 MM PA BLUE	
440	359000-0501	-		16	MARKING COLLAR 3/6 "1" YELLOW	
450	359000-0502	-		13	MARKING CO3/6"2"	
460	359000-0503	-		2	MARKING CO3/6"3"	
470	359000-0815	-		21	MARKING CO3/6"P"	
480	359000-0800	-		3	MARKING CO3/6"A"	
490	359000-0818	-		7	MARKING CO3/6"S"	
500	359000-0820	-		3	MARKING CO3/6"U"	
510	359000-0025	-		17	MARKING CO3/6 "-"	
520	359000-0500	-		10	MARKING COLLAR 3/6 "0" YELLOW	
53064	90166-0013	-	MM	1800	TUBE 8 MM PA BLUE	
55012	90166-0081	-	MM	2000	TUBE 6 MM PA BLUE	
55014	90166-0081	-	MM	2000	TUBE 6 MM PA BLUE	
55042	90166-0081	-	MM	1800	TUBE 6 MM PA BLUE	
55044	90166-0081	-	MM	1800	TUBE 6 MM PA BLUE	
P1	90166-0196	-	MM	1100	TUBE 14MM PA BLUE	
P1-01	90166-0196	-	MM	2600	TUBE 14MM PA BLUE	
P1-02	90166-0195	-	MM	1130	TUBE 12 MM PA BLUE	
P1-03	90166-0195	-	MM	2140	TUBE 12 MM PA BLUE	
P1-04	90166-0195	-	MM	100	TUBE 12 MM PA BLUE	
P1-05	90166-0195	-	MM	500	TUBE 12 MM PA BLUE	
P1-06	90166-0013	-	MM	140	TUBE 8 MM PA BLUE	
P1-ASU1	90166-0195	-	MM	550	TUBE 12 MM PA BLUE	
P1-ASU2	90166-0195	-	MM	1500	TUBE 12 MM PA BLUE	
P1-S	90166-0195	-	MM	450	TUBE 12 MM PA BLUE	
P2	90166-0196	-	MM	1250	TUBE 14MM PA BLUE	
P2-01	90166-0196	-	MM	2600	TUBE 14MM PA BLUE	
P2-02	90166-0196	-	MM	2000	TUBE 14MM PA BLUE	
P2-03	90166-0195	-	MM	250	TUBE 12 MM PA BLUE	
P2-14	90166-0081	-	MM	700	TUBE 6 MM PA BLUE	
P2-S	90166-0195	-	MM	200	TUBE 12 MM PA BLUE	
P2-S02	90166-0195	-	MM	300	TUBE 12 MM PA BLUE	

Machine Type | Group Description | Used-In | Group Number | Page No

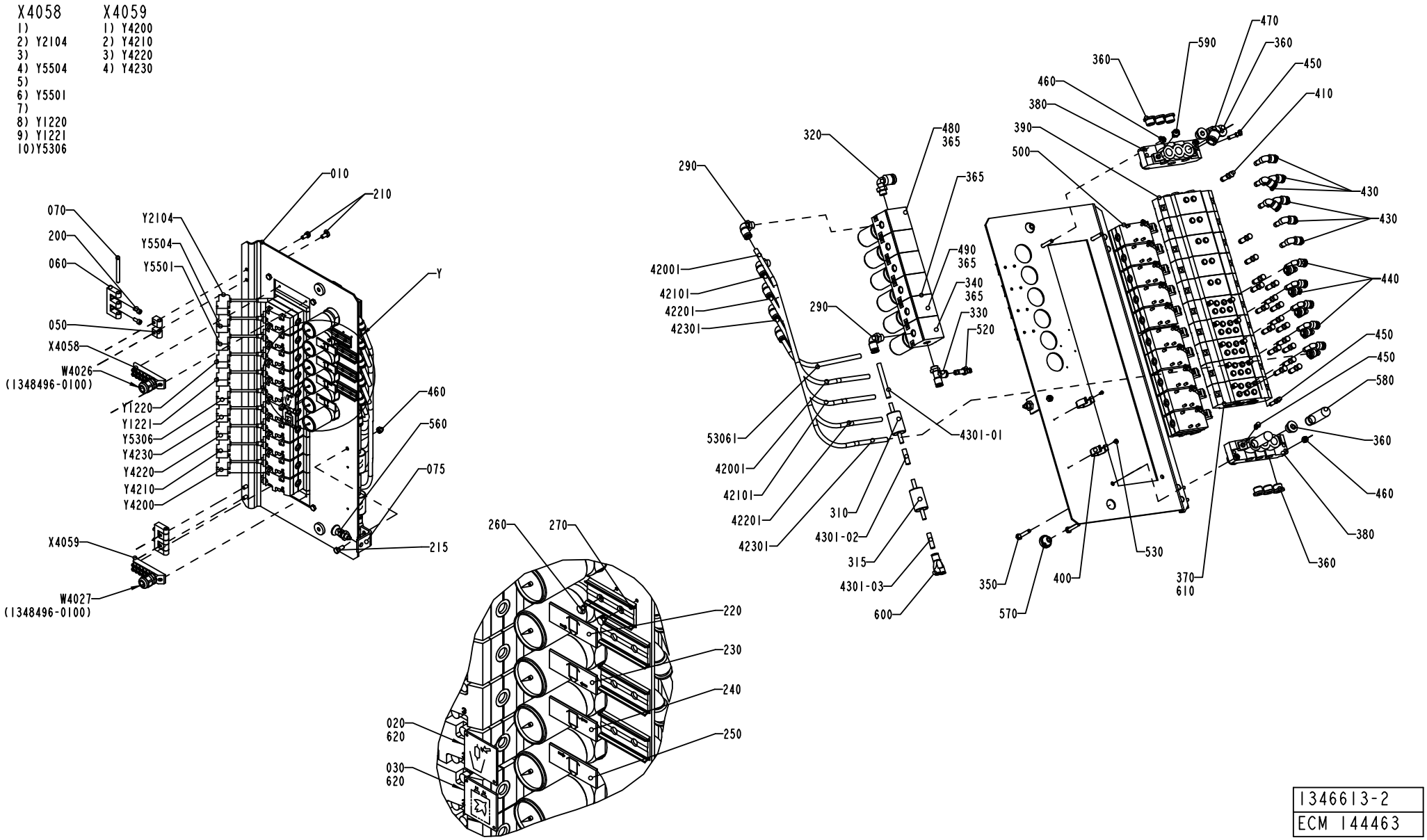

1346613-2
ECM 144463

ECM: 152811 - 20031204
Group number: 1346613-0200
Assembly Drawing: 1346613-2_1_AE

Pos	Part No	SP	UN	Qty	Description	Page No
-						
005	1512376-0000	-		1	PNEUMATIC DIAGRAM	
010	1512321-0000	-		1	PLATE	
020	2594544-0000	-		1	SIGN	
030	978603-0000	-		1	SIGN	
050	1129770-0000	-		4	BLOCKING PIECE	
060	1035792-0000	-		2	E-HINGE	
070	988685-0000	-		2	PIN	
075	1348197-0000	-		1	HOLDER	
200	312115-0327	-		4	SCREW ISO4762 M5X12 A4	
210	312105-0366	-		4	SCREW M6S ISO 4017 M6X12 A480	
215	312105-0368	-		1	SCREW M6S ISO 4017 M6X16 A480	
220	1511522-0000	-		1	LABEL	
230	1511521-0000	-		1	LABEL	
240	1511525-0000	-		1	LABEL	
250	1511526-0000	-		1	LABEL	
260	311520-0329	-		8	RIVET, BLANK 2,4X8	
270	359240-0100	-		4	SIGN HOLDER FOR 359240-0001	
290	342732-0104	-		6	ELBOW PIPE JOINT, EXT.THREAD, D=8MM-G1/4	
310	90277-0045	B		1	FILTER / 9900-05-BK	
315	90277-0046	B		1	FILTER / 9933-05-101	
320	342732-0109	-		1	ELBOW PIPE JOINT, EXT.THREAD, D=1MM-G1/4	
330	342772-0122	-		1	ELBOW FITTING, 8 - G1/4	
340	90113-0097	B		1	PRESSURE REGULATOR	
350	312109-0376	-		4	SCREW M6S ISO 4017 M6X35 A480	
360	342713-0211	-		9	PLUG, EXT THREAD HEX SOCKET 8638-00-380	
365	342713-0210	-		7	PLUG, EXT THREAD HEX SOCKET 8638-00-140	
370	90042-0520	-		5	BASE PLATE ISO SIZE 1	
380	90042-0522	-		2	PORTED END PIECE ISO SIZE 1	
390	90042-0532	-		5	BASE PLATE ISO SIZE 1	
400	90165-0019	-		2	TOOL CLIP, 81/3, OPEN, 20 - 30 MM	
410	342715-0103	-		18	BLIND PLUG 8 MM	
42001	90166-0013	-	MM	600	TUBE 8 MM PA BLUE	
42101	90166-0013	-	MM	600	TUBE 8 MM PA BLUE	
42201	90166-0013	-	MM	600	TUBE 8 MM PA BLUE	
42301	90166-0013	-	MM	600	TUBE 8 MM PA BLUE	
430	90055-0173	-		7	ELBOW WITH TAILPIECE 8/6 MM	
4301-01	90166-0013	-	MM	70	TUBE 8 MM PA BLUE	
4301-02	90166-0013	-	MM	50	TUBE 8 MM PA BLUE	
4301-03	90166-0013	-	MM	50	TUBE 8 MM PA BLUE	
440	90055-0204	-		10	ELBOW WITH TAILPIECE 8/8 MM LONG	
450	342715-0102	-		12	BLIND PLUG 6 MM	
460	312605-0316	-		5	HEXAGON NUT, M6M M6 A280	
470	342732-0110	-		1	ELBOW PIPE JOINT, EXT.THREAD,D=12MM-G3/8	
480	90113-0096	B		4	PRESSURE REGULATOR	
490	90113-0095	B		1	PRESSURE REGULATOR	
500	90042-0215	B		10	VALVE BODY 5/2 UNISTABLE	
520	342716-0203	-		1	REDUCER 6-8	
530	312125-0220	-		2	SCREW ISO 1207 M3X6 A4	
53061	90166-0013	-	MM	450	TUBE 8 MM PA BLUE	
560	90051-0112	-		1	LOCK KNOB, NO. GN 617 NIK5	
570	90015-0023	-		2	LEAD-IN, TET7-10, E-1458019	
580	90328-0024	B		2	SILENCER G3/8	
590	90328-0017	B		1	SILENCER, D=6 MM	
600	90055-0227	-		1	Y-CONNECTION, 6-8	
610	90042-0528	B		5	BLANKING KIT SEALS ISO SIZE 1	
620	312502-0120	-		4	DRIVE SCREW ROUND HEAD KDS 0X5	
630	359000-0400	-		24	MARKING CO2/4"0"	
640	359000-0401	-		18	MARKING COLLAR 2/4 "1" YELLOW	
650	359000-0402	-		12	MARKING COLLAR 2/4 "2" YELLOW	
660	359000-0403	-		12	MARKING COLLAR PA2/4 "3" YELLOW	
670	359000-0404	-		14	MARKING COLLAR PA2/4 "4" YELLOW	
680	359000-0405	-		2	MARKING CO2/4"5"	
690	359000-0406	-		2	MARKING COLLAR PA2/4 "6" YELLOW	
700	359000-0024	-		6	MARKING CO2/4 "-"	
X4058	90042-0535	-		1	TERMINAL BOARD 19 CORDS	
X4059	90042-0535	-		1	TERMINAL BOARD 19 CORDS	
Y1220	90042-0538	B		1	PILOT VALVE L=500MM	
Y1221	90042-0538	B		1	PILOT VALVE L=500MM	
Y2104	90042-0538	B		1	PILOT VALVE L=500MM	
Y4200	90042-0538	B		1	PILOT VALVE L=500MM	
Y4210	90042-0538	B		1	PILOT VALVE L=500MM	
Y4220	90042-0538	B		1	PILOT VALVE L=500MM	
Y4230	90042-0538	B		1	PILOT VALVE L=500MM	
Y5306	90042-0538	B		1	PILOT VALVE L=500MM	
Y5501	90042-0538	B		1	PILOT VALVE L=500MM	
Y5504	90042-0538	B		1	PILOT VALVE L=500MM	

Machine Type | Group Description | Used-In | Group Number | Page No

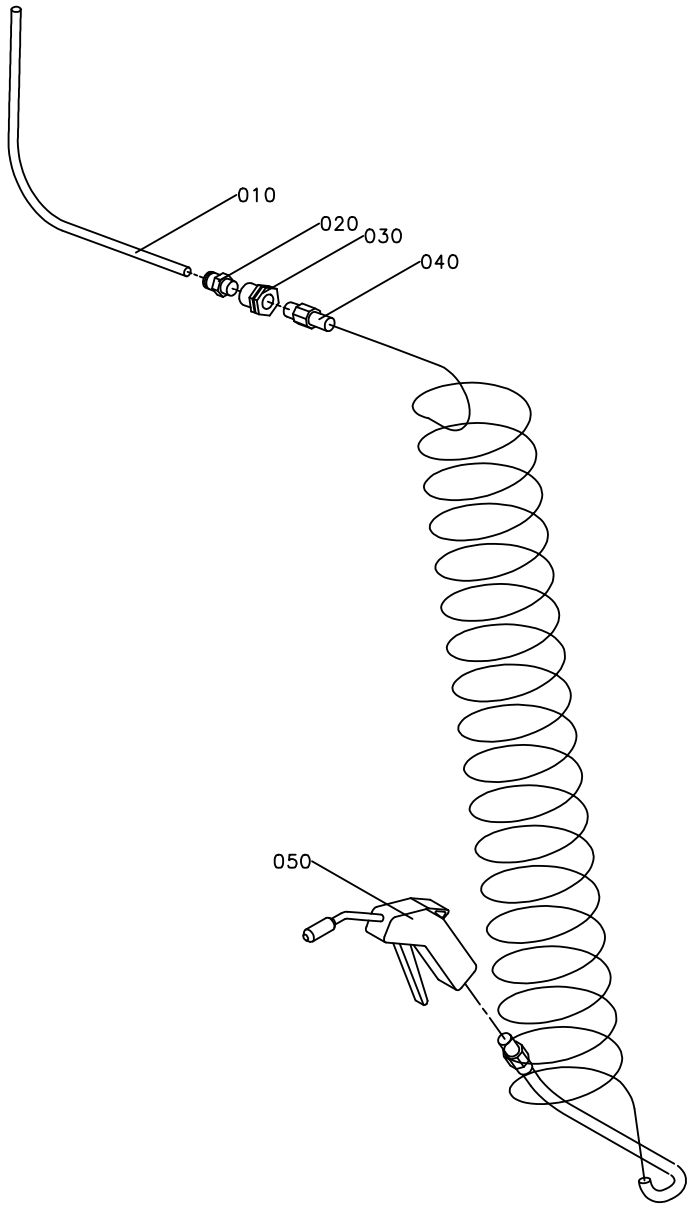
010
020
030
040
050

ECM: 71742 - 19980903
Group number: 1095682-0100
Assembly Drawing: 1095682-1_1_AA

Pos	Part No	SP	UN	Qty	Description	Page No
-						
010	90166-0013	-	MM	1800	TUBE 8 MM PA BLUE	
020	342920-0122	-		1	STRAIGHT COUPLING,EXT.THREADED 8/6-R1/4"	
030	342767-0104	-		1	CONN. BULKHEAD G1/4	
040	90152-0016	-		1	HOSE (SPIRAL)	
050	90243-0061	-		1	AIR GUN, CEJN SERIE 204 ED: 90459-0173	

Pos	Part No	SP	UN	Qty	Description	Page No

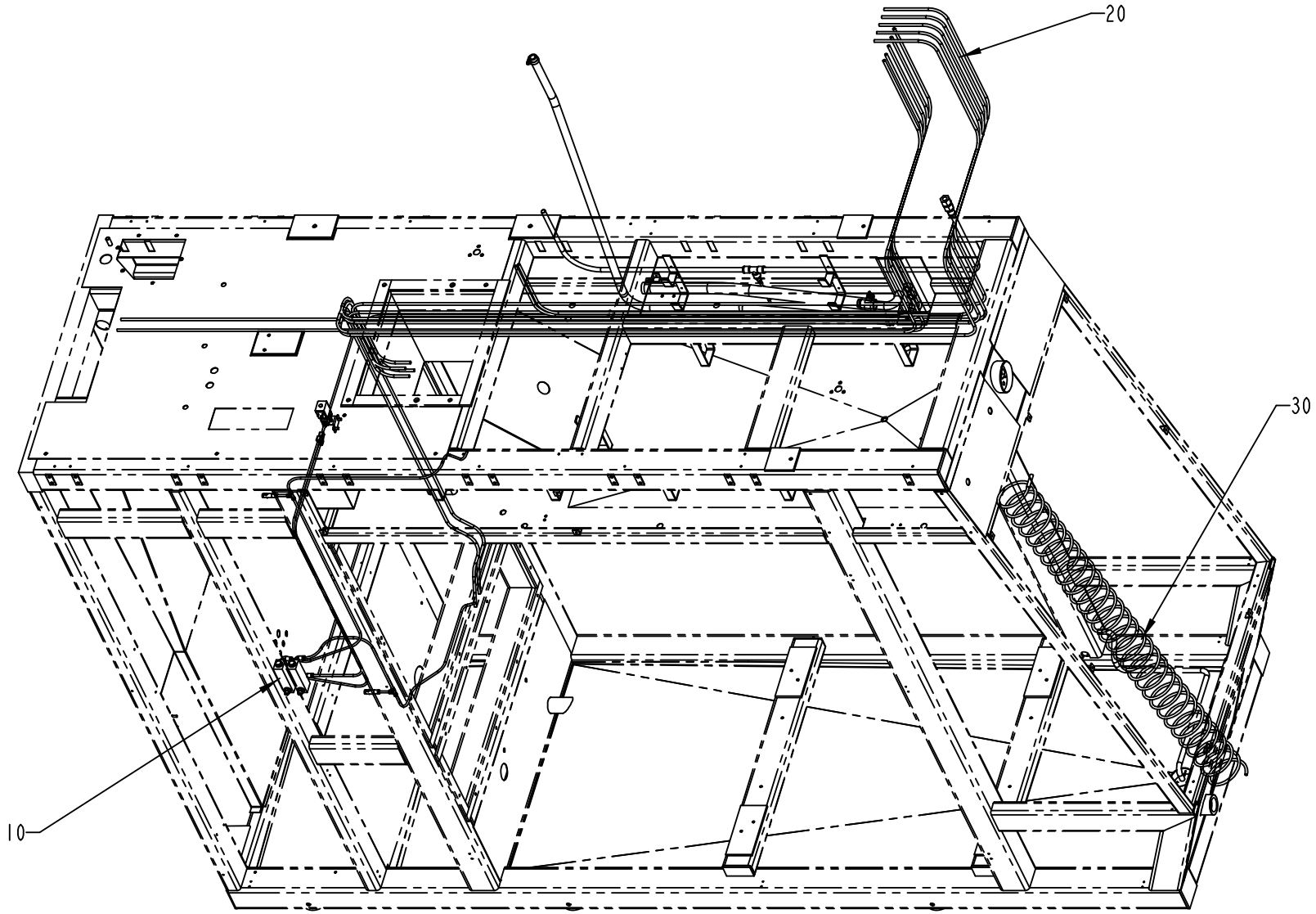

S-577121-4
ECN 72985

ECM: 72985 - 20000201
Group number: 577121-0400
Assembly Drawing: 577121-4_1_AA

Pos	Part No	SP	UN	Qty	Description	Page No
-						
010	1334810-0200	-		1	PIPE WORK	**2-45**
020	1334812-0100	-		1	COOLING HOSES	**2-47**
030	1095681-0100	-		1	SPRAY GUN	**2-49**

Pos	Part No	SP	UN	Qty	Description	Page No

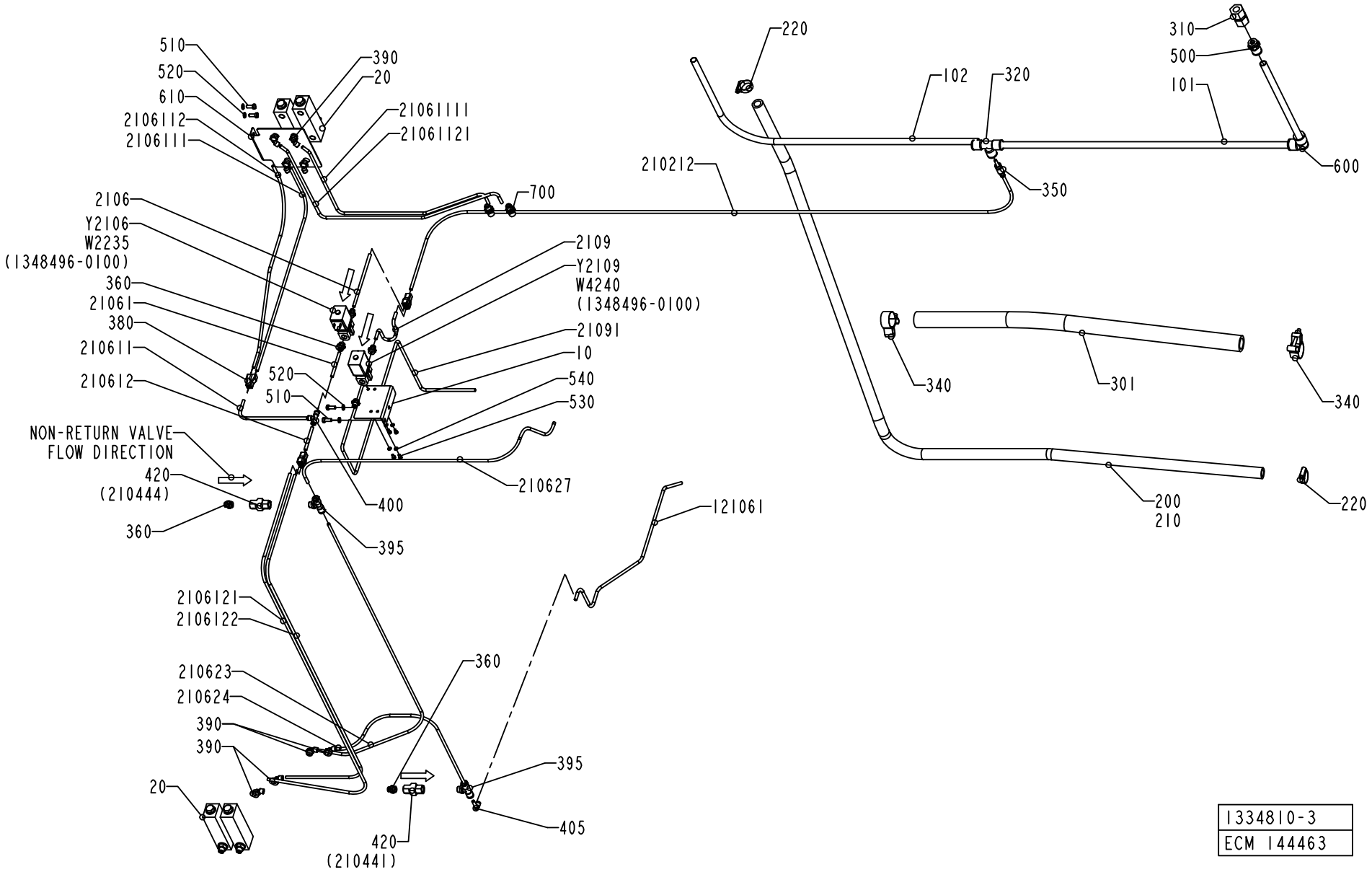
510
520
610
2106112
2106111
390
20
21061111
21061121
700
220
102
320
310
500
101
600
350
210212
2106
Y2106
W2235
(1348496-0100)
360
21061
380
210611
210612
520
510
2109
Y2109
W4240
(1348496-0100)
21091
10
540
530
340
301
340
NON-RETURN VALVE
FLOW DIRECTION
420
(210444)
360
400
395
210627
121061
200
210
220
2106121
2106122
210623
210624
390
390
20
360
395
405
420
(210441)
1334810-3
ECM 144463

ECM: 153187 - 20031204
Group number: 1334810-0200
Assembly Drawing: 1334810-3_1_AF

Pos	Part No	SP	UN	Qty	Description	Page No
-						
010	1548539-0000	-		1	CANTILEVER	
020	90243-0112	-		4	FLOW METER	
101	90166-0196	-	MM	1650	TUBE 14MM PA BLUE	
102	90166-0196	-	MM	1000	TUBE 14MM PA BLUE	
121061	90166-0132	-	MM	2100	TUBE 6 MM PA,TRANSP.	
200	90166-0260	-	MM	2000	HOSE	
210	90411-0020	-	MM	2000	INSULATING TUBE	
210212	90166-0132	-	MM	1500	TUBE 6 MM PA,TRANSP.	
2106	90166-0132	-	MM	150	TUBE 6 MM PA,TRANSP.	
21061	90166-0132	-	MM	75	TUBE 6 MM PA,TRANSP.	
210611	90166-0132	-	MM	360	TUBE 6 MM PA,TRANSP.	
2106111	90166-0132	-	MM	490	TUBE 6 MM PA,TRANSP.	
21061111	90166-0132	-	MM	560	TUBE 6 MM PA,TRANSP.	
2106112	90166-0132	-	MM	520	TUBE 6 MM PA,TRANSP.	
21061121	90166-0132	-	MM	700	TUBE 6 MM PA,TRANSP.	
210612	90166-0132	-	MM	160	TUBE 6 MM PA,TRANSP.	
2106121	90166-0132	-	MM	1450	TUBE 6 MM PA,TRANSP.	
2106122	90166-0132	-	MM	1450	TUBE 6 MM PA,TRANSP.	
210623	90166-0132	-	MM	1050	TUBE 6 MM PA,TRANSP.	
210624	90166-0132	-	MM	1100	TUBE 6 MM PA,TRANSP.	
210627	90166-0132	-	MM	1000	TUBE 6 MM PA,TRANSP.	
2109	90166-0132	-	MM	200	TUBE 6 MM PA,TRANSP.	
21091	90166-0132	-	MM	1450	TUBE 6 MM PA,TRANSP.	
220	342991-0104	-		2	HOSE CLIP,WORM DRIVE TYPE (23)-27	
301	90166-0233	-	MM	1000	HOSE	
310	342725-0114	-		1	CONN. STR. PIPE GI-15-G1/2	
320	342748-0110	-		1	T-CONNECTION 14MM	
340	90459-2366	-		2	HOSE CLIP, (32)-35	
350	90055-0116	-		1	REDUCER 6-14	
360	342722-0203	-		6	STRAIGHT COUPLING	
380	90055-0100	-		3	Y-CONNECTION, 6-6	
390	90458-2957	-		8	ELBOW PIPE JOINT, EXT.THREAD, D=6MM-G1/4	
395	342742-0103	-		2	T-COUPLING,ADJUST,F.PLASTIC TUBE 6-G1/4"	
400	342748-0102	-		1	T-CONNECTION 6MM	
405	90055-0217	-		1	ELBOW PIPE JOINT	
420	90235-0151	-		2	NON-RETURN VALVE	
500	90055-0097	-		1	STRAIGHT COUPLING	
510	312105-0368	-		4	SCREW M6S ISO 4017 M6X16 A480	
520	315105-0153	-		4	WASHER BRB6,4X12RFR	
530	312105-0287	-		4	SCREW M6S ISO4017 M4X8 A470	
540	315105-0136	-		4	WASHER BRB4,3XRFR	
550	359000-0815	-		4	MARKING CO3/6"P"	
560	359000-0500	-		4	MARKING COLLAR 3/6 "0" YELLOW	
600	342735-0110	-		1	ELBOW PIPE	
610	2542343-0000	-		1	BRACKET	
700	342768-0102	-		2	BULKHEAD CONNECTOR, 6 MM	
W2235	351150-0403	-	MM	3000	CABLE OLFLEX 3X0,75 MM2 LIGHT/GREY	
W4240	351150-0403	-	MM	3000	CABLE OLFLEX 3X0,75 MM2 LIGHT/GREY	
Y2106	90042-0248	-		1	SOLENOID VALVE OFFICIENE DI ENSINO	
Y2109	90042-0248	-		1	SOLENOID VALVE OFFICIENE DI ENSINO	

Machine Type | Group Description | Used-In | Group Number | Page No

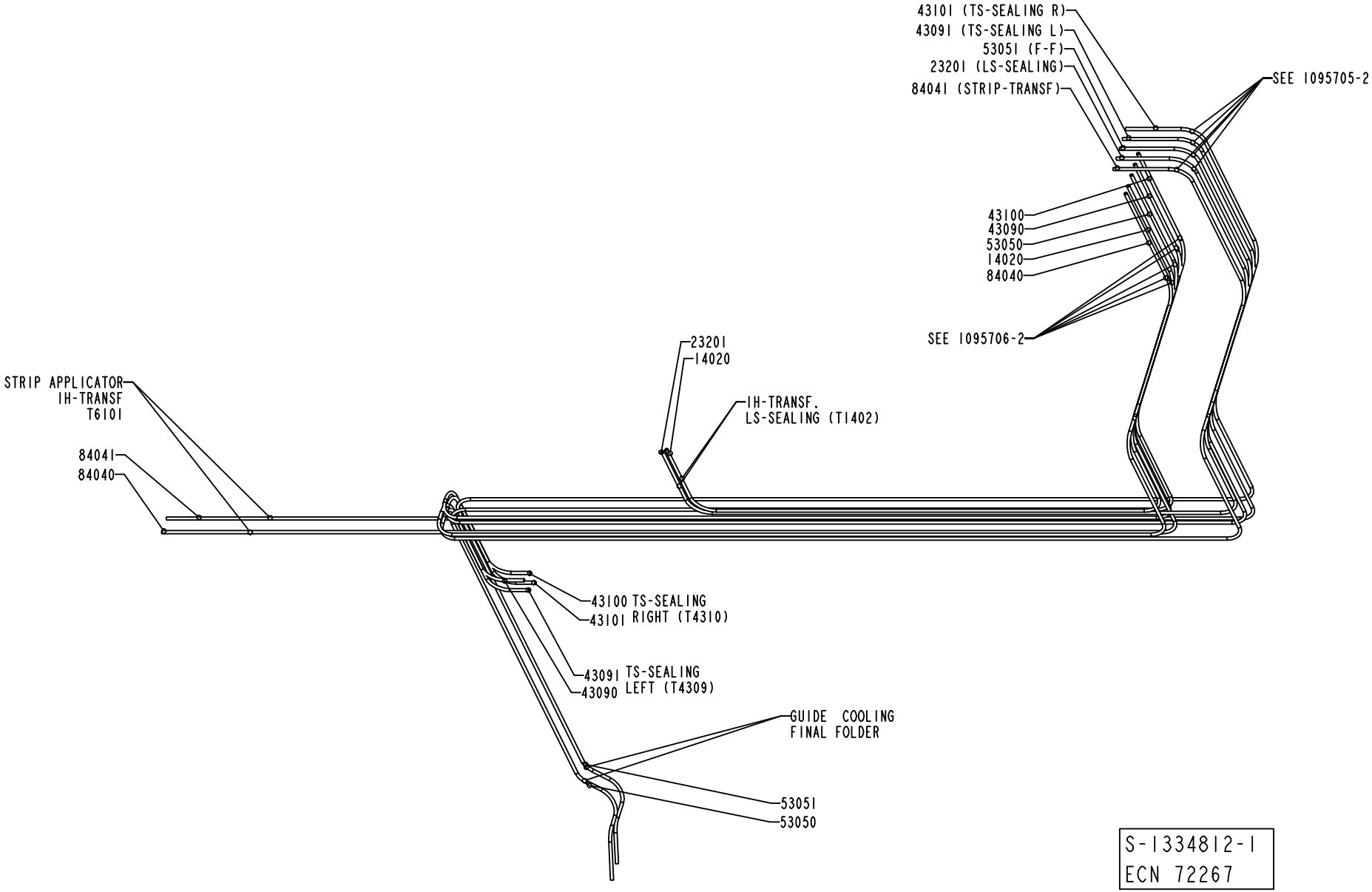
43101 (TS-SEALING R)
43091 (TS-SEALING L)
53051 (F-F)
23201 (LS-SEALING)
84041 (STRIP-TRANSF)
SEE 1095705-2
43100
43090
53050
14020
84040
SEE 1095706-2
23201
14020
IH-TRANSF.
LS-SEALING (T1402)
STRIP APPLICATOR
IH-TRANSF
T6101
84041
84040
43100 TS-SEALING
43101 RIGHT (T4310)
43091 TS-SEALING
43090 LEFT (T4309)
GUIDE COOLING
FINAL FOLDER
53051
53050
S-1334812-1
ECN 72267

ECM: 72985 - 20000201
Group number: 1334812-0100
Assembly Drawing: 1334812-1_1_AB

Pos	Part No	SP	UN	Qty	Description	Page No
-						
100	359000-0400	-		30	MARKING CO2/4"0"	
110	359000-0401	-		16	MARKING COLLAR 2/4 "1" YELLOW	
120	359000-0402	-		6	MARKING COLLAR 2/4 "2" YELLOW	
130	359000-0403	-		14	MARKING COLLAR PA2/4 "3" YELLOW	
140	359000-0404	-		18	MARKING COLLAR PA2/4 "4" YELLOW	
14020	90166-0118	-	MM	2800	TUBE 8 MM PA BLACK	
150	359000-0405	-		8	MARKING CO2/4"5"	
160	359000-0408	-		4	MARKING COLLAR PA2/4 "8" YELLOW	
170	359000-0409	-		4	MARKING COLLAR PA2/4 "9" YELLOW	
23201	90166-0118	-	MM	3500	TUBE 8 MM PA BLACK	
43090	90166-0118	-	MM	4000	TUBE 8 MM PA BLACK	
43091	90166-0118	-	MM	4550	TUBE 8 MM PA BLACK	
43100	90166-0118	-	MM	4000	TUBE 8 MM PA BLACK	
43101	90166-0118	-	MM	4500	TUBE 8 MM PA BLACK	
53050	90166-0118	-	MM	5200	TUBE 8 MM PA BLACK	
53051	90166-0118	-	MM	5400	TUBE 8 MM PA BLACK	
84040	90166-0118	-	MM	4200	TUBE 8 MM PA BLACK	
84041	90166-0118	-	MM	4600	TUBE 8 MM PA BLACK	

Pos	Part No	SP	UN	Qty	Description	Page No

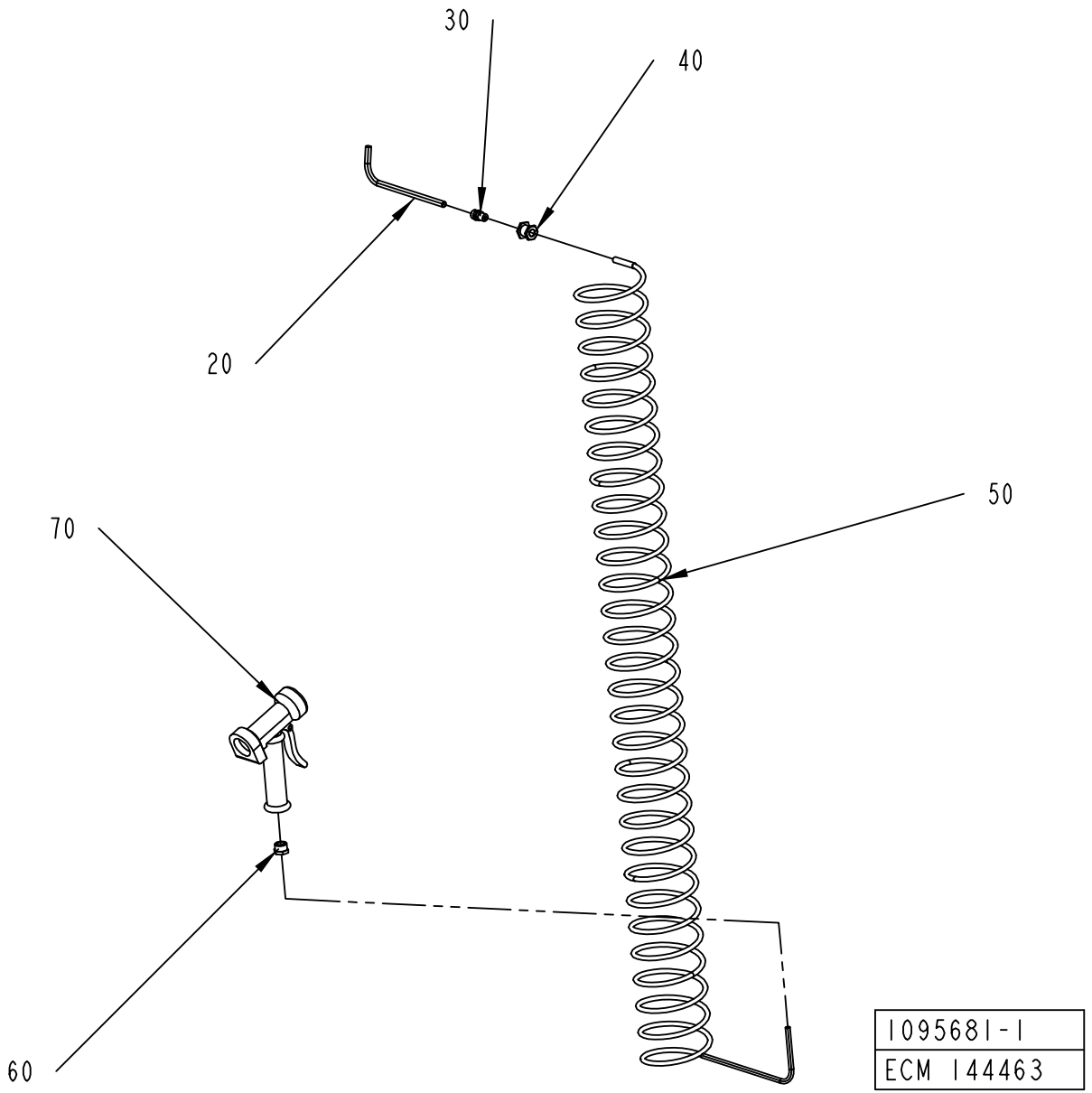
30
40
20
50
70
60
1095681-1
ECM 144463

ECM: 153186 - 20031204
Group number: 1095681-0100
Assembly Drawing: 1095681-1_1_AB

Pos	Part No	SP	UN	Qty	Description	Page No
-						
020	90166-0141	-	MM	1600	TUBE 10 MM PA,TRANSP.	
030	342920-0132	-		1	STRAIGHT COUPL.,EXT.THREADED 10/8-R1/4"	
040	342767-0104	-		1	CONN. BULKHEAD G1/4	
050	90152-0017	-		1	HOSE (SPIRAL)	
060	342701-0205	-		1	BUSHING,INT./EXT.G-THREAD G1/2"-G1/4"	
070	90426-0003	-		1	HAND SHOWER	

Pos	Part No	SP	UN	Qty	Description	Page No

EXTERNAL CLEANING SYSTEM

Drawing file: 577122-3_1_AB.hpgl

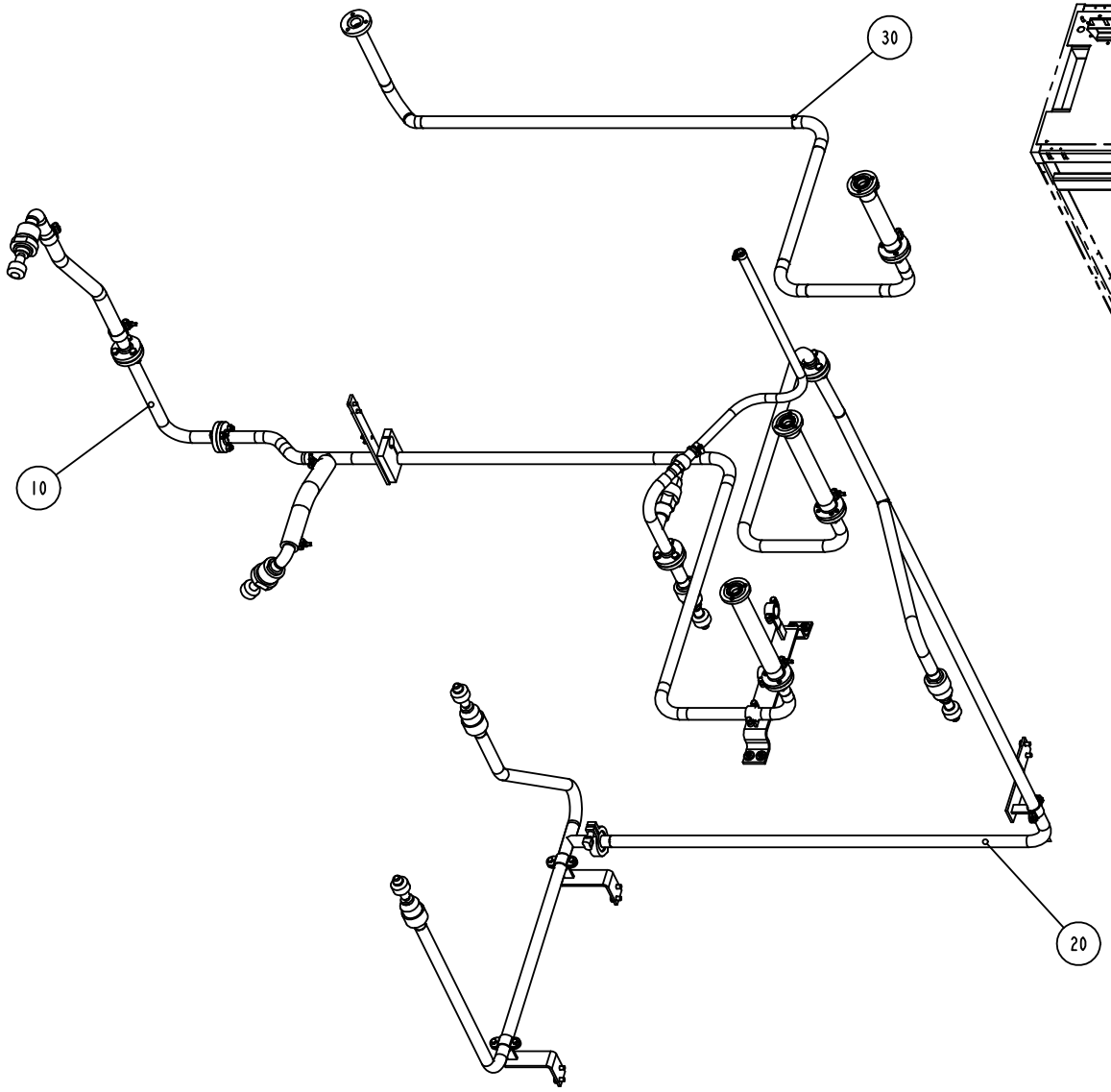

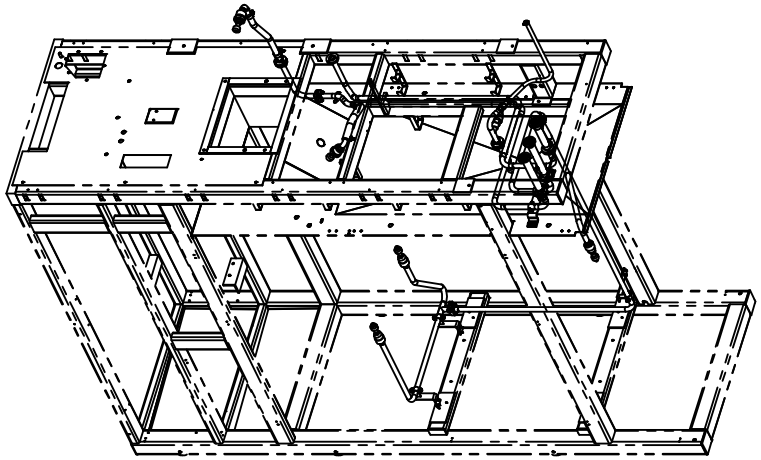

577122-3
ECN 84210

ECM: 84808 - 20000913
Group number: 577122-0300
Assembly Drawing: 577122-3_1_AB

Pos	Part No	SP	UN	Qty	Description	Page No
-						
010	1260097-0300	-		1	CLEANING PIPEWORK UPPER	**2-53**
020	1260098-0300	-		1	CLEANING PIPEWORK	**2-55**
030	1095853-0300	-		1	CLEANING PIPE	**2-57**

Pos	Part No	SP	UN	Qty	Description	Page No

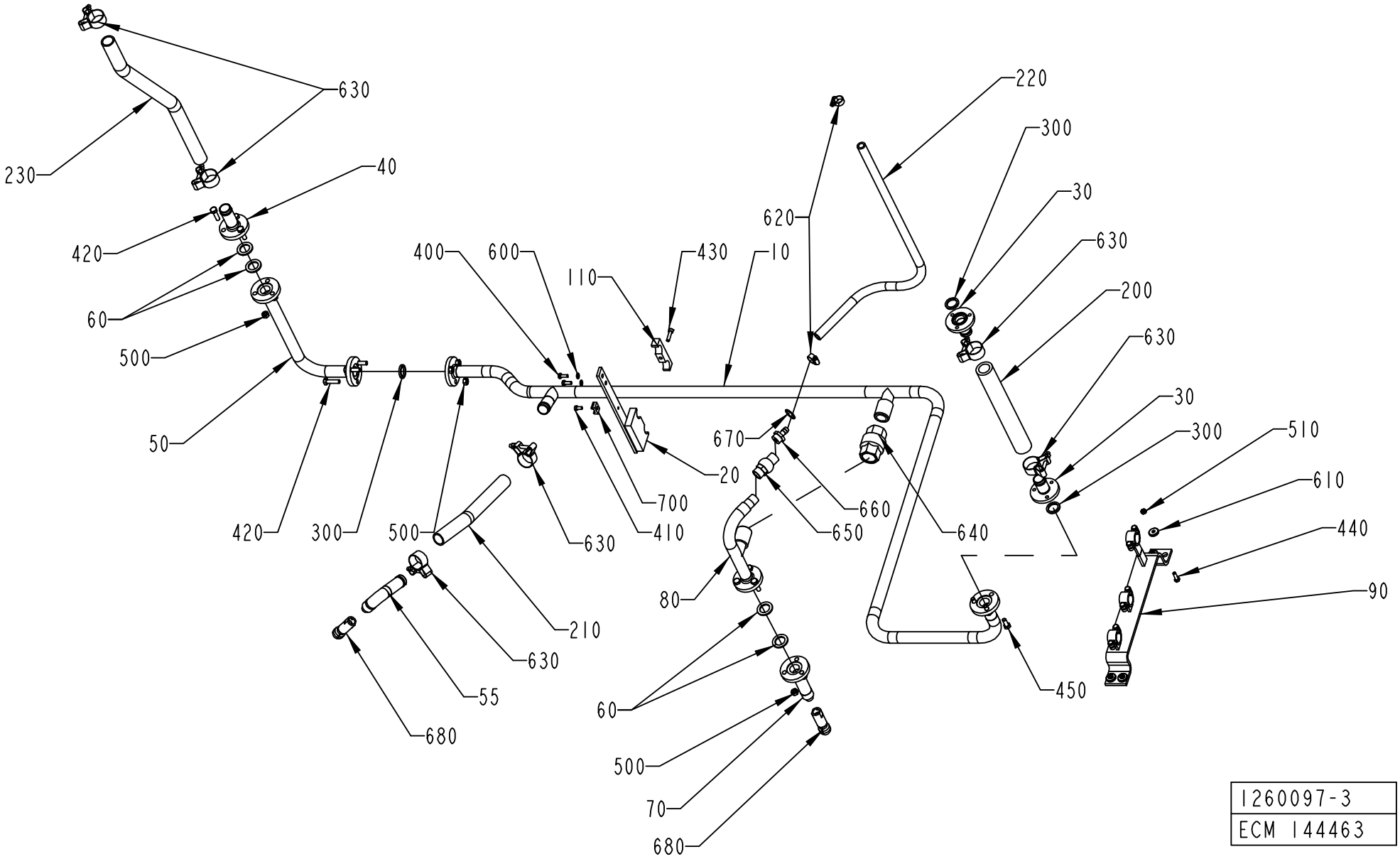

1260097-3
ECM 144463

ECM: 153193 - 20031204
Group number: 1260097-0300
Assembly Drawing: 1260097-3_1_AG

Pos	Part No	SP	UN	Qty	Description	Page No
-						
010	1538962-0000	-		1	PIPE	
020	1317453-0000	-		1	BRACKET	
030	1195466-0000	-		2	PIPE	
040	1346665-0000	-		1	PIPE	
050	1260101-0000	-		1	PIPE	
055	1129383-0000	-		1	PIPE	
060	1037443-0000	B		4	GASKET	
070	1129379-0000	-		1	PIPE	
080	1255493-0000	-		1	PIPE	
090	1129378-0000	-		1	BRACKET	
110	1317486-0000	-		1	BRACKET	
200	90166-0233	B	MM	340	HOSE	
210	90166-0233	B	MM	300	HOSE	
220	90166-0121	-	MM	1000	HOSE	
230	90166-0233	-	MM	630	HOSE	
300	315229-0103	B		2	GASKETS, 23,1X30,1X3,7 MM 1" FDA	
400	312105-0368	-		2	SCREW M6S ISO 4017 M6X16 A480	
410	312125-0366	-		1	SCREW ISO 1207 M6X12 A4	
420	312105-0455	-		6	SCREW M6S ISO 4017 M8X30 A480	
430	312115-0372	-		1	SCREW ISO4762 M6X25 A4	
440	312105-0370	-		4	SCREW M6S ISO 4017 M6X20 A480	
450	312105-0451	-		3	SCREW M6S ISO 4017 M8X20 A480	
500	312605-0318	-		9	HEXAGON NUT, M6M M8 A280	
510	312605-0316	-		4	HEXAGON NUT, M6M M6 A280	
600	315105-0153	-		2	WASHER BRB6,4X12RFR	
610	315125-0153	-		4	WASHER TBRSB 6,4X22X4 A4	
620	342991-0102	-		2	HOSE CLIP,WORM DRIVE TYPE (16)-19	
630	90459-2366	-		6	HOSE CLIP, (32)-35	
640	90230-0044	B		1	NON-RETURN VALVE 1"	
	90230-0308	*C*		*1*	*GASKET KIT*	
650	90230-0042	B		1	NON-RETURN VALVE 1/2"	
660	342901-0105	-		1	HOSE NIPPLE, EXT.THR. R1/2-12 MM	
670	315233-0113	-		1	WASHER CAPTIVE SEALING G1/2	
680	90459-2735	-		2	ROT.SPRAY NOZZLE, 5MC.049.17.AF.00.02	
700	352113-0204	-		1	ANCHOR PLATES FOR STRIPS, TYPE TM3S25-M	

Pos	Part No	SP	UN	Qty	Description	Page No

Machine Type | Group Description | Used-In | Group Number | Page No

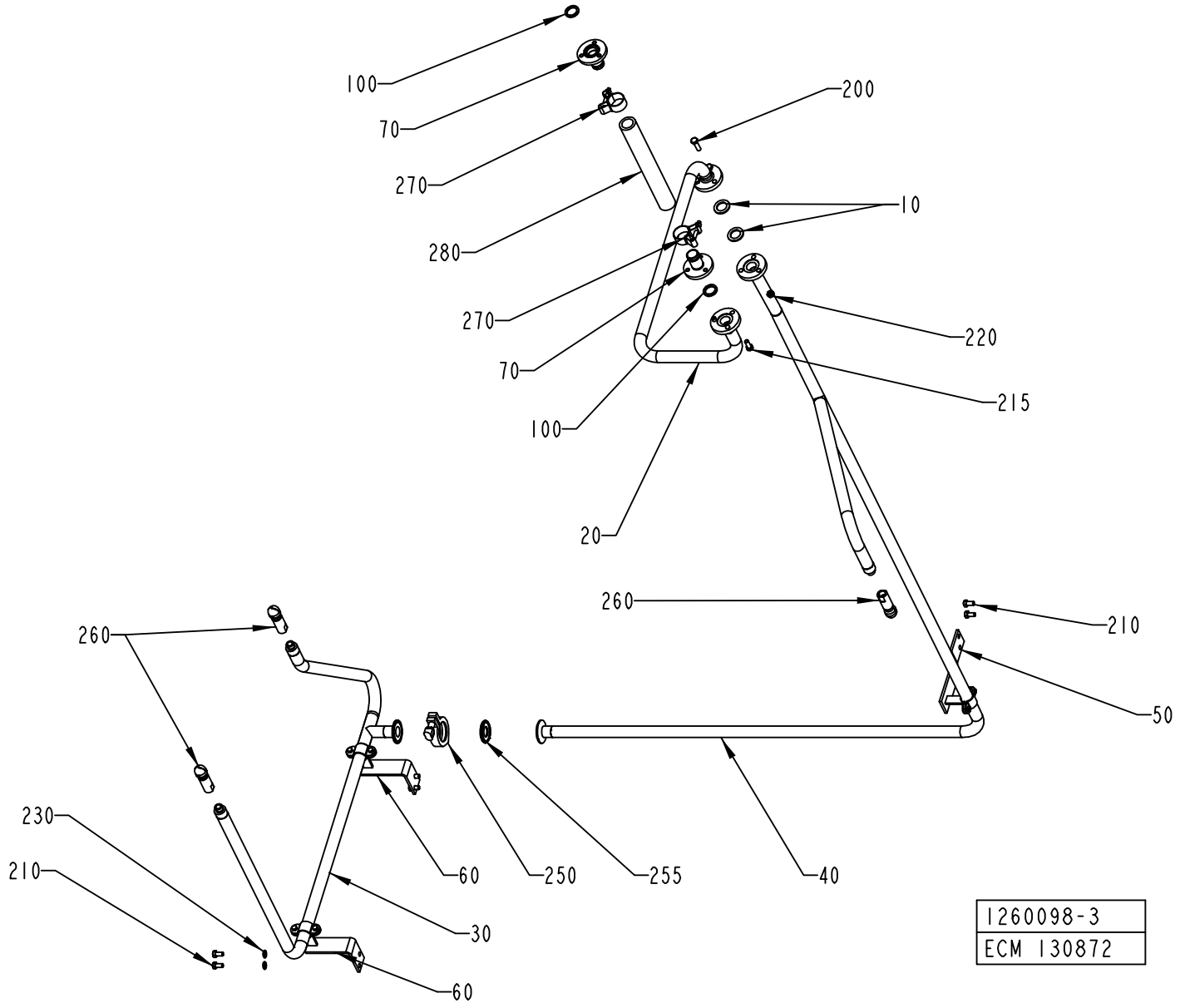
100
70
270
280
270
70
100
20
200
10
220
215
260
210
50
40
255
250
60
30
60
230
210
260
1260098-3
ECM 130872

ECM: 131090 - 20031201
Group number: 1260098-0300
Assembly Drawing: 1260098-3_1_AC

Pos	Part No	SP	UN	Qty	Description	Page No
-						
010	1037443-0000	B		2	GASKET	
020	1538960-0000	-		1	PIPE	
030	1260185-0000	-		1	PIPE	
040	1317447-0000	-		1	PIPE	
050	1317451-0000	-		1	BRACKET	
060	1317450-0000	-		2	BRACKET	
070	1195466-0000	-		2	PIPE	
100	315229-0103	B		1	GASKETS, 23,1X30,1X3,7 MM 1" FDA	
200	312105-0455	-		3	SCREW M6S ISO 4017 M8X30 A480	
210	312105-0449	-		6	SCREW M6S ISO 4017 M8X16 A480	
215	312105-0451	-		3	SCREW M6S ISO 4017 M8X20 A480	
220	312605-0318	-		3	HEXAGON NUT, M6M M8 A280	
230	315105-0165	-		4	WASHER BRB8,4X16RFR	
250	342840-0103	-		1	CLAMPING PIECE	
255	342850-0103	B		1	GASKET 22,7X49,1X5,2 MM 1" FDA	
260	90459-2735	-		3	ROT.SPRAY NOZZLE, 5MC.049.17.AF.00.02	
270	90459-2366	-		2	HOSE CLIP, (32)-35	
280	90166-0233	B	MM	340	HOSE	

Pos	Part No	SP	UN	Qty	Description	Page No

Machine Type | Group Description | Used-In | Group Number | Page No

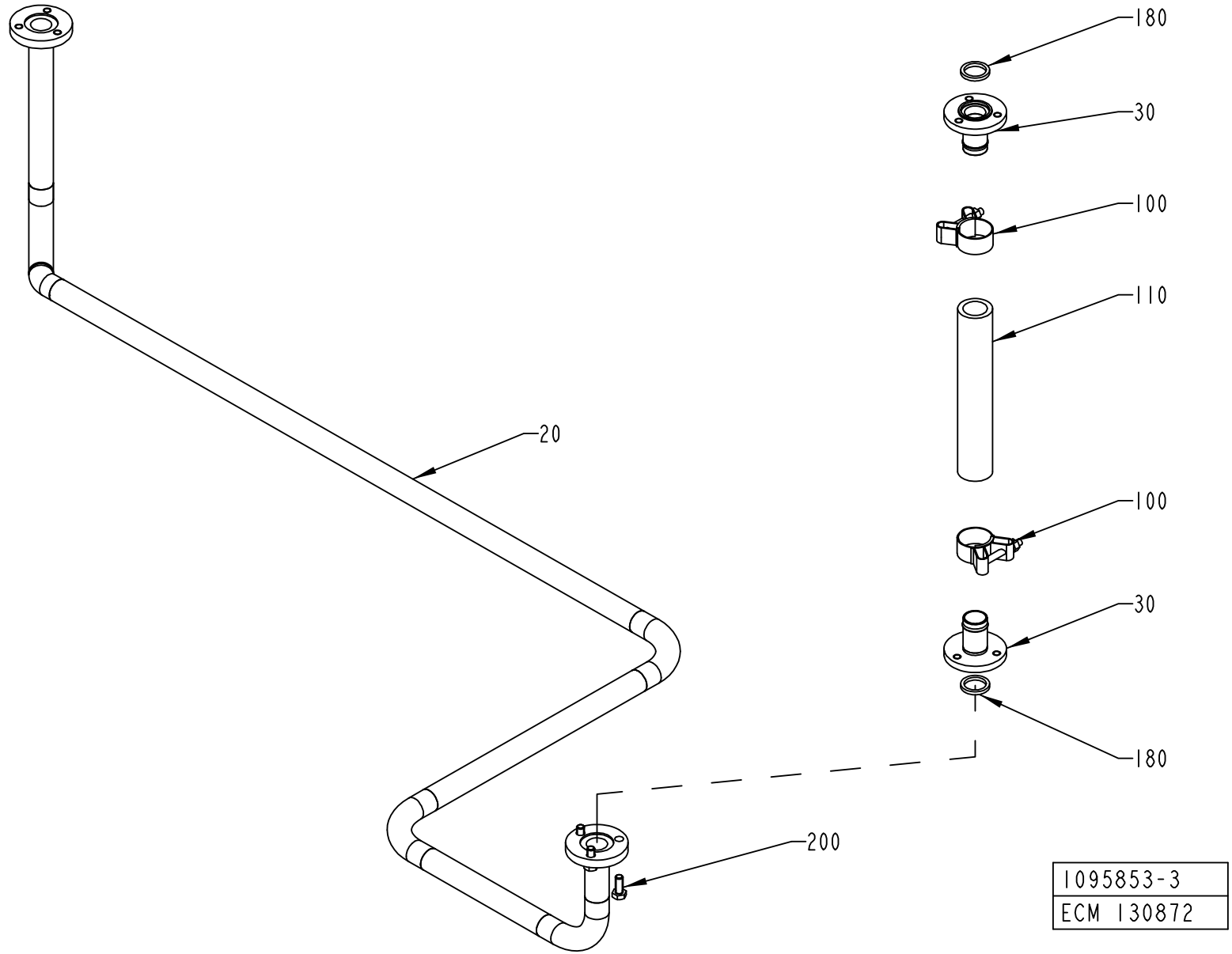
180
30
100
110
100
30
180
20
200
1095853-3
ECM 130872

ECM: 137929 - 20031201
Group number: 1095853-0300
Assembly Drawing: 1095853-3_1_AB

Pos	Part No	SP	UN	Qty	Description	Page No
-						
020	1538961-0000	-		1	PIPE	
030	1195466-0000	-		2	PIPE	
100	90459-2366	-		2	HOSE CLIP, (32)-35	
110	90166-0233	B	MM	300	HOSE	
180	315229-0103	B		2	GASKETS, 23,1X30,1X3,7 MM 1" FDA	
200	312105-0451	-		3	SCREW M6S ISO 4017 M8X20 A480	

Pos	Part No	SP	UN	Qty	Description	Page No

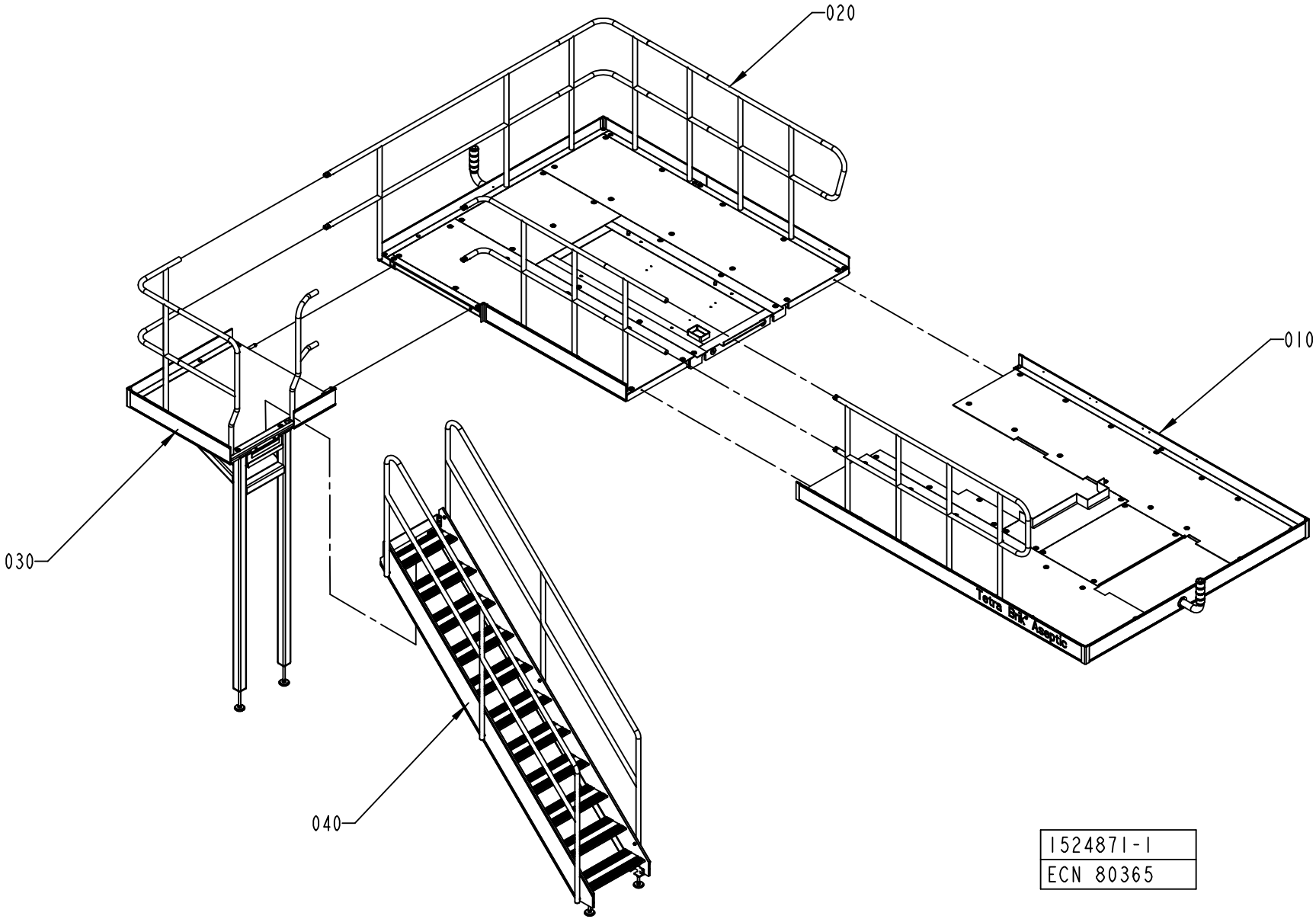

1524871-1
ECN 80365

ECM: 140256 - 20031002
Group number: 1524871-0100
Assembly Drawing: 1524871-1_1_AA

This list covers pages from 2-58 to 2-61

Pos	Part No	SP	UN	Qty	Description	Page No
-						
010	1524866-0100	-		1	FRONT PLATFORM	**2-63**
020	1524845-0100	-		1	BACK PLATFORM	**2-67, 2-69**
030	1538870-0100	-		1	PLATFORM	**2-71, 2-73**
040	1523777-0100	-		1	STAIR CASE	**2-75**

Pos	Part No	SP	UN	Qty	Description	Page No

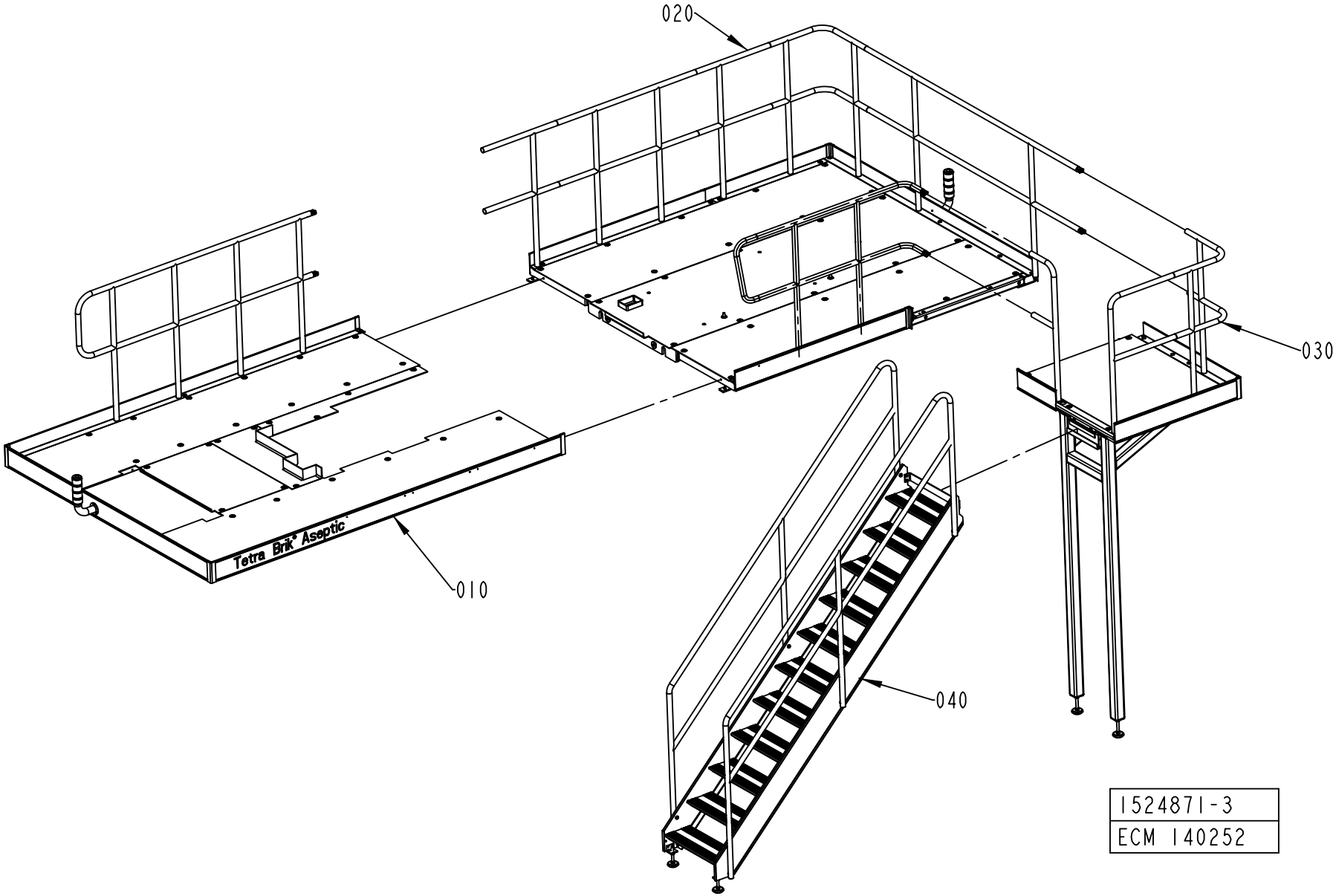
020
030
010
040
Tetra Brik Aseptic
1524871-3
ECM 140252

ECM: 140256 - 20031002
Group number: 1524871-0100
Assembly Drawing: 1524871-3_1_AA

This list covers pages from 2-58 to 2-61

Pos	Part No	SP	UN	Qty	Description	Page No
-						
010	1524866-0100	-		1	FRONT PLATFORM	**2-63**
020	1524845-0100	-		1	BACK PLATFORM	**2-67, 2-69**
030	1538870-0100	-		1	PLATFORM	**2-71, 2-73**
040	1523777-0100	-		1	STAIR CASE	**2-75**

Pos	Part No	SP	UN	Qty	Description	Page No

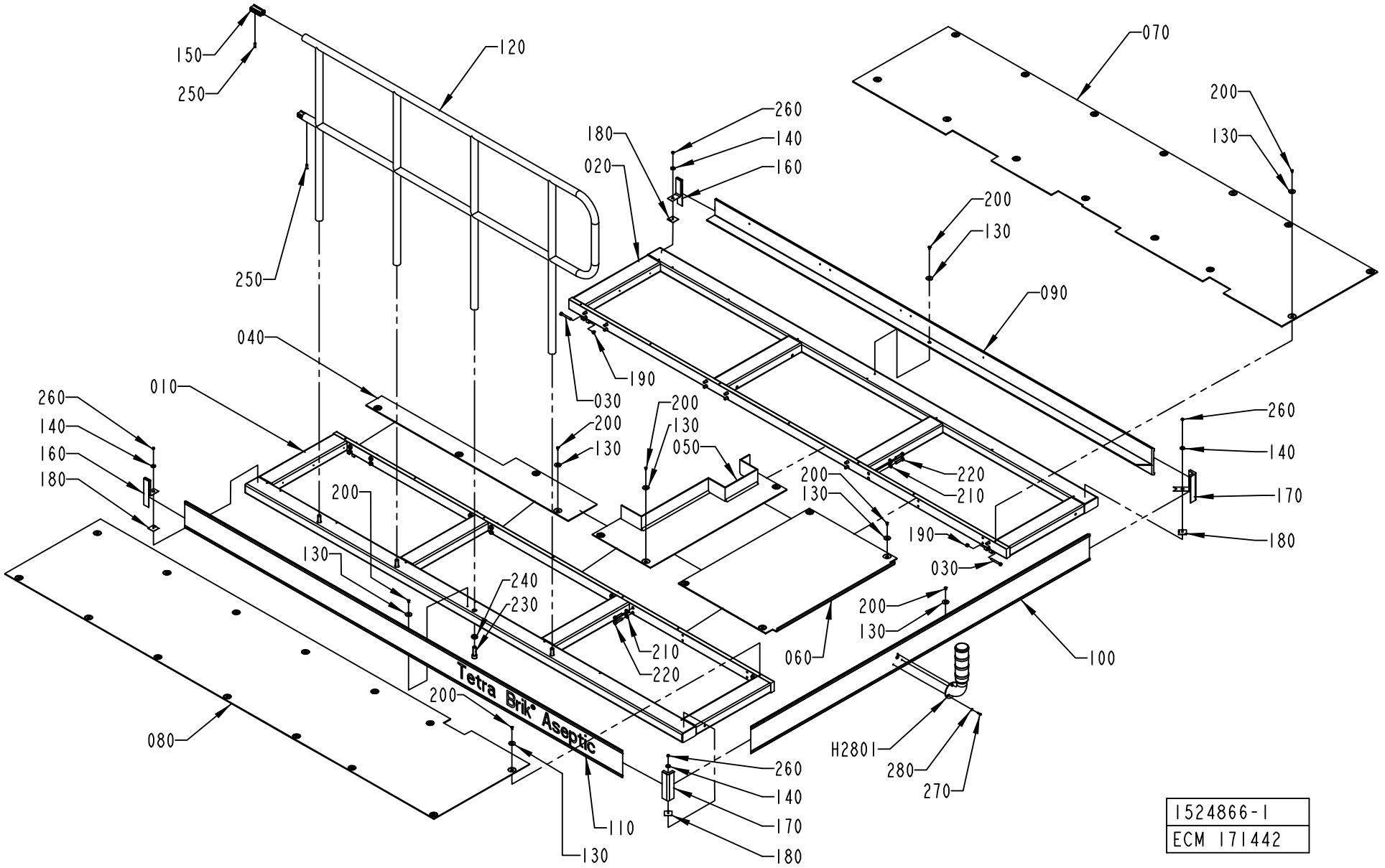
150
250
120
250
040
010
260
140
160
180
180
020
260
140
160
030
190
200
130
200
130
050
200
130
070
200
130
090
200
130
220
210
260
140
170
180
190
030
200
130
060
100
200
130
240
230
210
220
200
080
Tetra Brik® Aseptic
110
130
260
140
170
180
H2801
280
270
1524866-1
ECM 171442

ECM: 171446 - 20040322
Group number: 1524866-0100
Assembly Drawing: 1524866-1_1_AD

Pos	Part No	SP	UN	Qty	Description	Page No
-						
010	1524867-0000	-		1	PLATFORM	
020	1524868-0000	-		1	PLATFORM	
030	1523780-0000	-		4	SHAFT	
040	1254118-0000	-		1	CHECKER PLATE	
050	1041949-0000	-		1	CHECKER PLATE	
060	1254030-0000	-		1	CHECKER PLATE	
070	1523781-0000	-		1	CHECKER PLATE	
080	1523782-0000	-		1	CHECKER PLATE	
090	1523783-0000	-		1	TOE PLATE	
100	1523784-0000	-		1	TOE PLATE	
110	1524869-0000	-		1	TOE PLATE	
120	1524870-0000	-		1	RAILING	
130	1036241-0000	-		42	WASHER	
140	315125-0153	-		4	WASHER TBRSB 6,4X22X4 A4	
150	985328-0000	-		2	CONNECTION	
160	1254025-0000	-		2	STRIP	
170	1254027-0000	-		2	CORNER STRIP	
180	1254028-0000	-		4	FASTENING PLATE	
190	312812-0318	-		4	HEXAGON NUT, NY-LOCK M8 A480	
200	312155-0366	-		42	SCREW EN 10642 MF6S M6X12 A480	
210	315105-0173	-		28	WASHER BRB10,5X22RFR	
220	90458-2845	-		28	SCREW,HEXAGON HEAD M6S ISO 4017 M10X45	
230	312115-0630	-		4	SCREW ISO4762 M16X50 A4	
240	315111-0186	-		4	WASHER PLAIN, TBRB 17/30 H=6	
250	312318-0453	-		4	SCREW ISO4029 M8X25 A4	
260	312605-0316	-		4	HEXAGON NUT, M6M M6 A280	
270	312115-0329	-		3	SCREW ISO4762 M5X16 A4	
280	315105-0146	-		3	WASHER BRB5,3X10RFR	
H2801	2540716-0100	-		1	SIGNAL LAMP	**2-65**

Pos	Part No	SP	UN	Qty	Description	Page No

Machine Type | Group Description | Used-In | Group Number | Page No

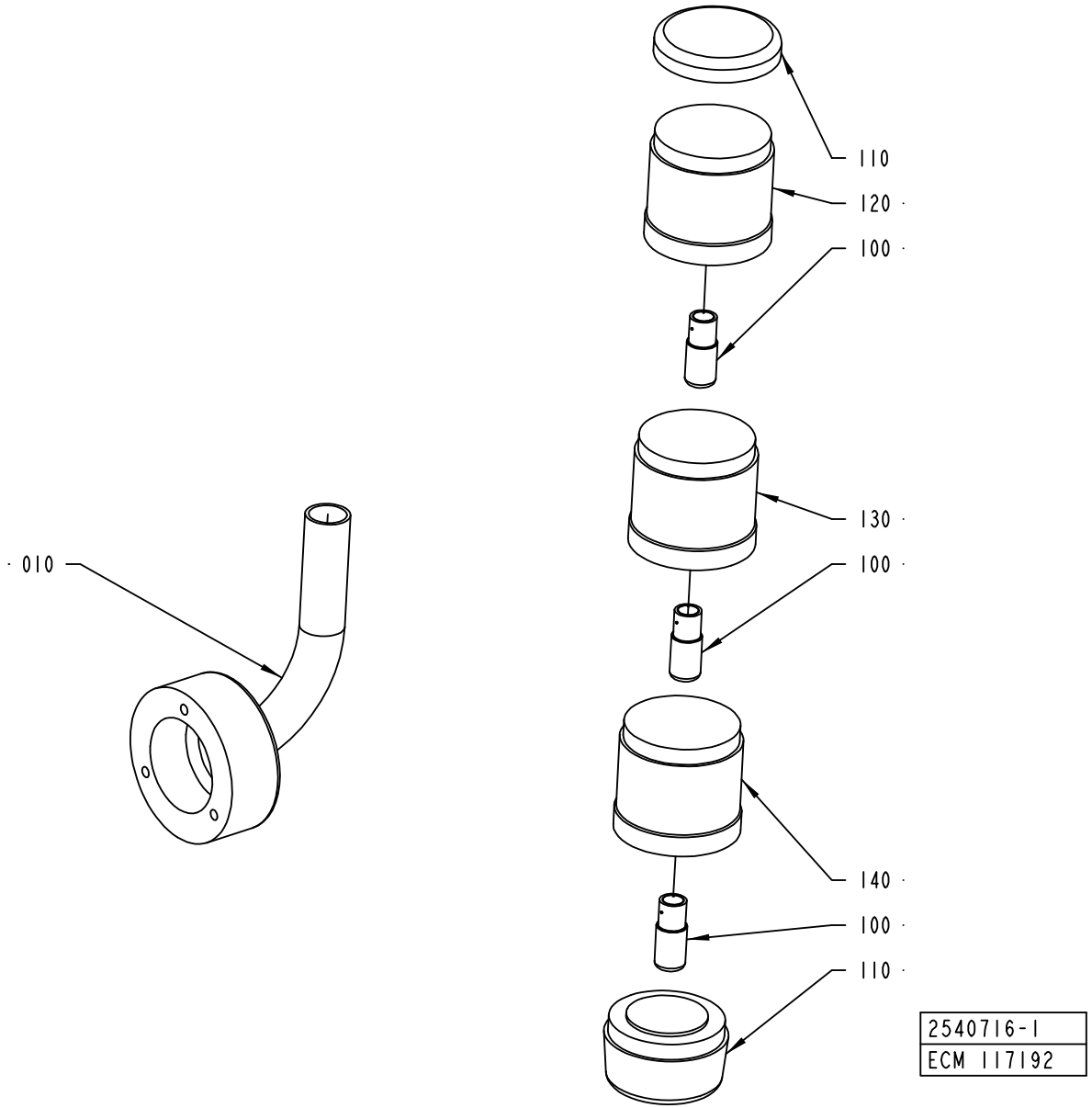
010
110
120
100
130
100
140
100
110
2540716-1
ECM 117192

ECM: 117192 - 20030403
Group number: 2540716-0100
Assembly Drawing: 2540716-1_1_AA

Pos	Part No	SP	UN	Qty	Description	Page No
-						
010	2540767-0000	-		1	PIPE	
100	90036-0068	A		3	BULB 6.5W 24V	
110	90458-0292	B		1	BASE, KT70-1001	
120	90458-0293	B		1	LIGHT ELEMENT, RED, KL70-401R	
130	90458-0294	B		1	LIGHT ELEMENT, YELLOW, KL70-401Y	
140	90458-0295	B		1	LIGHT ELEMENT, BLUE, KL70-401L	

Pos	Part No	SP	UN	Qty	Description	Page No

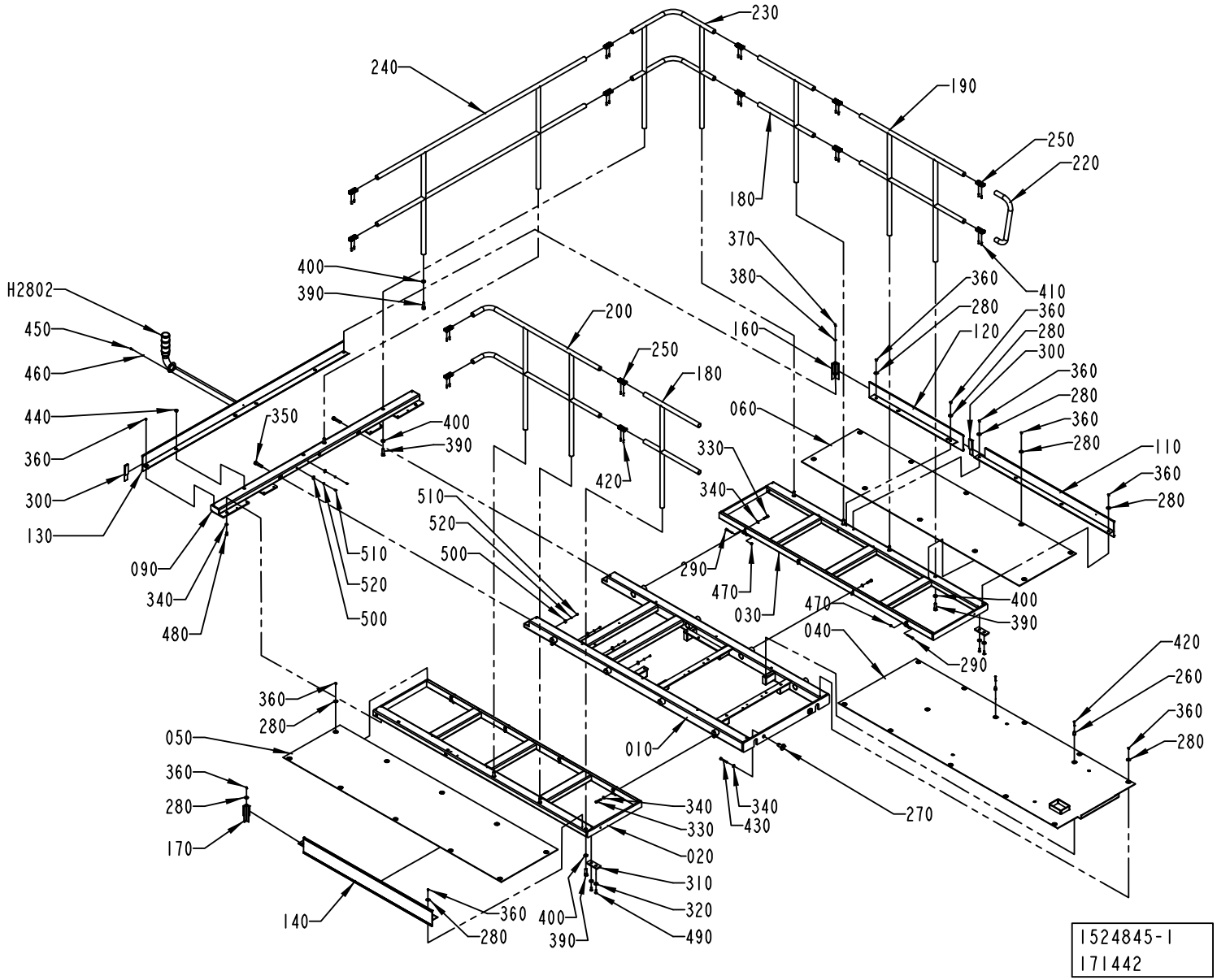
230
240
190
250
220
180
370
380
410
400
390
H2802
450
460
440
360
300
130
200
250
180
160
360
280
120
280
300
360
280
360
280
110
360
280
060
330
340
420
350
400
390
510
520
500
290
470
030
470
400
390
040
290
420
260
360
280
090
340
480
510
520
500
360
280
050
360
280
170
140
010
340
330
020
310
320
490
340
430
270
360
280
400
390
1524845-1
171442

ECM: 171445 - 20040322
Group number: 1524845-0100
Assembly Drawing: 1524845-1_1_AD

This list covers pages from 2-66 to 2-69

Pos	Part No	SP	UN	Qty	Description	Page No
LEFTSTAIR (See drawing on page: 2-66)						
120	1524856-0000	-		1	TOE PLATE	
200	1524861-0000	-		1	RAILING	
RIGHTSTAIR (See drawing on page: 2-68)						
120	1524858-0000	-		1	TOE PLATE	
200	1524862-0000	-		1	RAILING	
Common Parts						
010	1535043-0000	-		1	PLATFORM	
020	1524847-0000	-		1	PLATFORM	
030	1524848-0000	-		1	PLATFORM	
040	1535038-0000	-		1	CHECKER PLATE	
050	1524850-0000	-		1	CHECKER PLATE	
060	1524851-0000	-		1	CHECKER PLATE	
090	1524854-0000	-		1	BEAM	
110	1524855-0000	-		1	TOE PLATE	
130	1523793-0000	-		1	TOE PLATE	
140	1524857-0000	-		1	TOE PLATE	
160	1524167-0000	-		1	CORNER STRIP	
170	1524168-0000	-		1	CORNER STRIP	
180	1524859-0000	-		2	RAILING	
190	1524860-0000	-		1	RAILING	
220	1558795-0000	-		1	RAILING	
230	1010822-0000	-		1	RAILING	
240	1548211-0000	-		1	RAILING	
250	985328-0000	-		14	CONNECTION	
260	1037571-0000	-		2	GUIDE BUSHING	
270	1116048-0000	-		2	SPACER	
280	1036241-0000	-		38	WASHER	
290	1523780-0000	-		4	SHAFT	
300	1558947-0000	-		2	STRIP	
310	1535036-0000	-		2	PLATE	
320	1535042-0000	-		4	WASHER	
330	90458-2845	-		16	SCREW,HEXAGON HEAD M6S ISO 4017 M10X45	
340	315105-0173	-		20	WASHER BRB10,5X22RFR	
350	312115-0634	-		2	SCREW ISO4762 M16X70 A4	
360	312155-0366	-		38	SCREW EN 10642 MF6S M6X12 A480	
370	312105-0366	-		1	SCREW M6S ISO 4017 M6X12 A480	
380	315105-0165	-		1	WASHER BRB8,4X16RFR	
390	312115-0630	-		10	SCREW ISO4762 M16X50 A4	
400	315111-0186	-		10	WASHER PLAIN, TBRB 17/30 H=6	
410	312318-0453	-		28	SCREW ISO4029 M8X25 A4	
420	312109-0378	-		2	SCREW M6S ISO4017 M6X40 A480	
430	312105-0505	-		2	SCREW M6S ISO 4014 M10X70 A480	
440	90261-0033	-		3	PLUG, BLIND, PLASTIC GPN300F182	
450	312115-0329	-		3	SCREW ISO4762 M5X16 A4	
460	315105-0146	-		3	WASHER BRB5,3X10RFR	
470	312812-0318	-		4	HEXAGON NUT, NY-LOCK M8 A480	
480	312105-0491	-		2	SCREW M6S ISO 4017 M10X20 A480	
490	312155-0495	-		4	SCREW EN 10642 MF6S M10X30 A480	
500	352113-0204	-		6	ANCHOR PLATES FOR STRIPS, TYPE TM3S25-M	
510	312125-0366	-		6	SCREW ISO 1207 M6X12 A4	
520	315105-0153	-		6	WASHER BRB6,4X12RFR	
H2802	2540716-0100	-		1	SIGNAL LAMP	**2-65**

Machine Type | Group Description | Used-In | Group Number | Page No

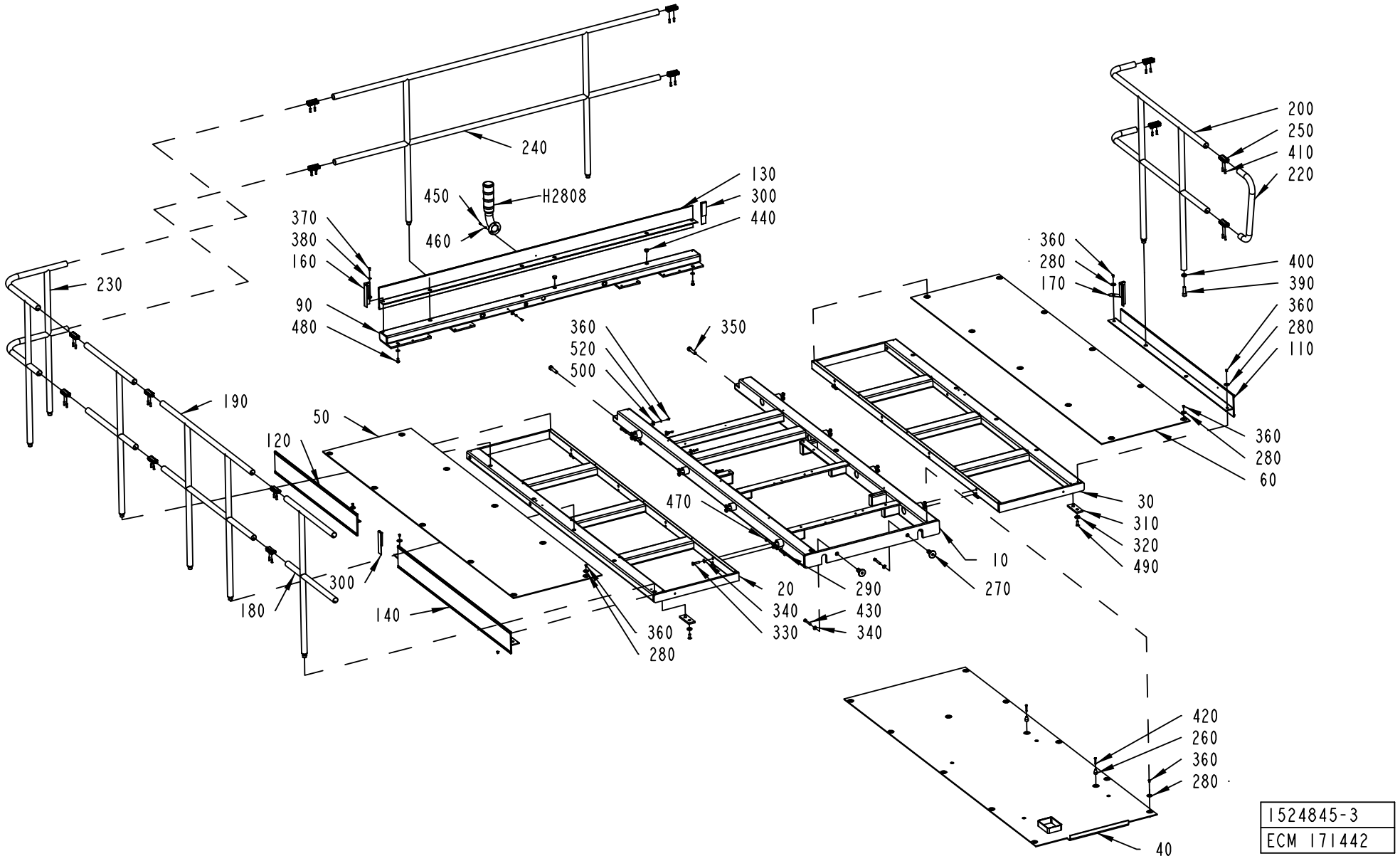
240
450
H2808
460
130
300
440
370
380
160
230
90
480
190
50
120
300
180
140
360
520
500
350
470
20
340
330
290
430
340
360
280
10
270
200
250
410
220
360
280
170
400
390
360
280
110
360
280
60
30
310
320
490
420
260
360
280
40
1524845-3
ECM 171442

ECM: 171445 - 20040322
Group number: 1524845-0100
Assembly Drawing: 1524845-3_1_AB

This list covers pages from 2-66 to 2-69

Pos	Part No	SP	UN	Qty	Description	Page No
LEFTSTAIR (See drawing on page: 2-66)						
120	1524856-0000	-		1	TOE PLATE	
200	1524861-0000	-		1	RAILING	
RIGHTSTAIR (See drawing on page: 2-68)						
120	1524858-0000	-		1	TOE PLATE	
200	1524862-0000	-		1	RAILING	
Common Parts						
010	1535043-0000	-		1	PLATFORM	
020	1524847-0000	-		1	PLATFORM	
030	1524848-0000	-		1	PLATFORM	
040	1535038-0000	-		1	CHECKER PLATE	
050	1524850-0000	-		1	CHECKER PLATE	
060	1524851-0000	-		1	CHECKER PLATE	
090	1524854-0000	-		1	BEAM	
110	1524855-0000	-		1	TOE PLATE	
130	1523793-0000	-		1	TOE PLATE	
140	1524857-0000	-		1	TOE PLATE	
160	1524167-0000	-		1	CORNER STRIP	
170	1524168-0000	-		1	CORNER STRIP	
180	1524859-0000	-		2	RAILING	
190	1524860-0000	-		1	RAILING	
220	1558795-0000	-		1	RAILING	
230	1010822-0000	-		1	RAILING	
240	1548211-0000	-		1	RAILING	
250	985328-0000	-		14	CONNECTION	
260	1037571-0000	-		2	GUIDE BUSHING	
270	1116048-0000	-		2	SPACER	
280	1036241-0000	-		38	WASHER	
290	1523780-0000	-		4	SHAFT	
300	1558947-0000	-		2	STRIP	
310	1535036-0000	-		2	PLATE	
320	1535042-0000	-		4	WASHER	
330	90458-2845	-		16	SCREW,HEXAGON HEAD M6S ISO 4017 M10X45	
340	315105-0173	-		20	WASHER BRB10,5X22RFR	
350	312115-0634	-		2	SCREW ISO4762 M16X70 A4	
360	312155-0366	-		38	SCREW EN 10642 MF6S M6X12 A480	
370	312105-0366	-		1	SCREW M6S ISO 4017 M6X12 A480	
380	315105-0165	-		1	WASHER BRB8,4X16RFR	
390	312115-0630	-		10	SCREW ISO4762 M16X50 A4	
400	315111-0186	-		10	WASHER PLAIN, TBRB 17/30 H=6	
410	312318-0453	-		28	SCREW ISO4029 M8X25 A4	
420	312109-0378	-		2	SCREW M6S ISO4017 M6X40 A480	
430	312105-0505	-		2	SCREW M6S ISO 4014 M10X70 A480	
440	90261-0033	-		3	PLUG, BLIND, PLASTIC GPN300F182	
450	312115-0329	-		3	SCREW ISO4762 M5X16 A4	
460	315105-0146	-		3	WASHER BRB5,3X10RFR	
470	312812-0318	-		4	HEXAGON NUT, NY-LOCK M8 A480	
480	312105-0491	-		2	SCREW M6S ISO 4017 M10X20 A480	
490	312155-0495	-		4	SCREW EN 10642 MF6S M10X30 A480	
500	352113-0204	-		6	ANCHOR PLATES FOR STRIPS, TYPE TM3S25-M	
510	312125-0366	-		6	SCREW ISO 1207 M6X12 A4	
520	315105-0153	-		6	WASHER BRB6,4X12RFR	
H2802	2540716-0100	-		1	SIGNAL LAMP	**2-65**

Machine Type | Group Description | Used-In | Group Number | Page No

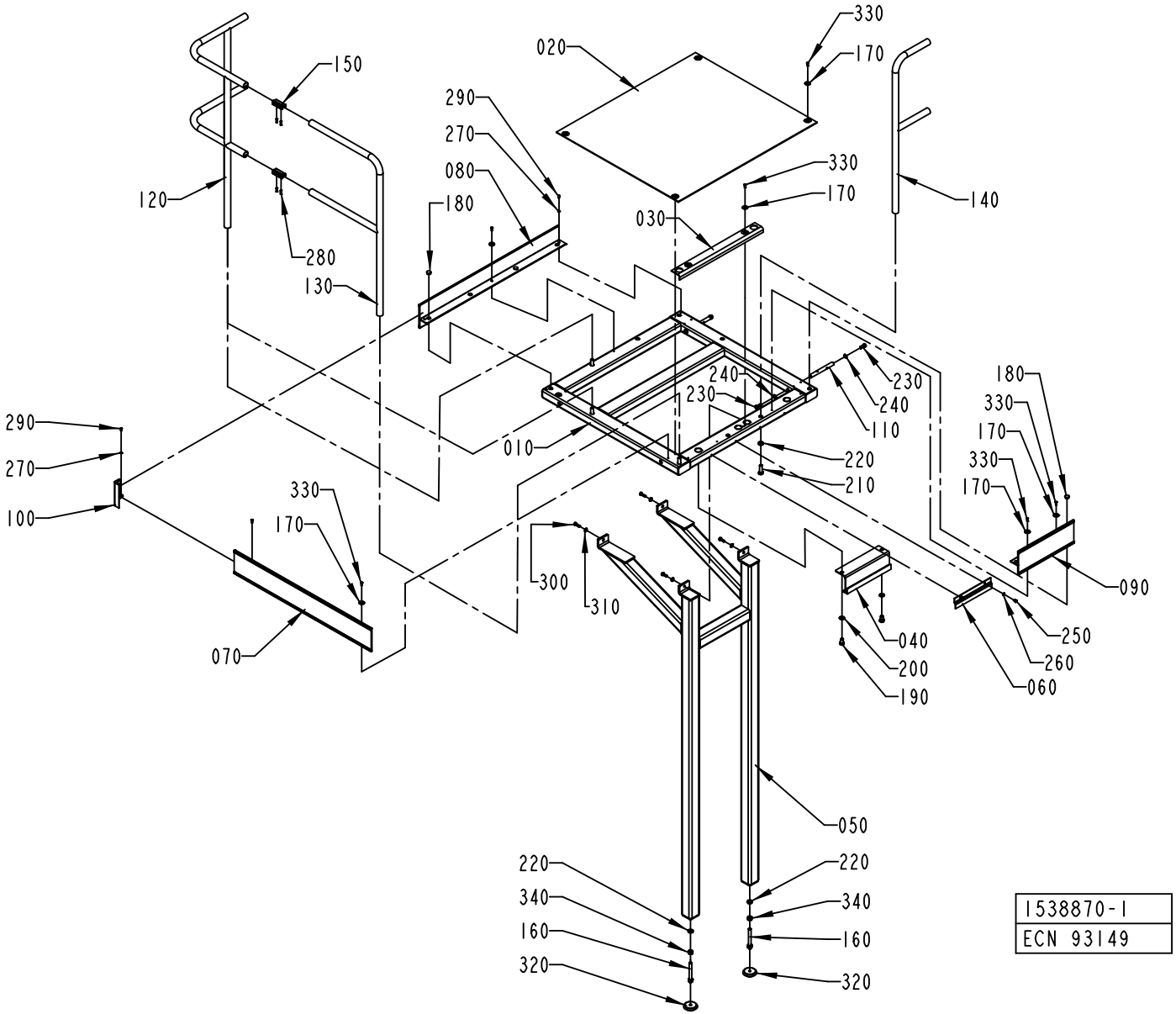
330
020
170
150
290
270
080
330
120
180
170
140
030
280
130
240
230
180
230
330
240
290
110
170
270
220
330
210
170
100
010
090
300
310
040
250
070
200
260
190
060
050
220
220
340
340
160
160
320
320
1538870-1
ECN 93149

ECM: 140255 - 20031002
Group number: 1538870-0100
Assembly Drawing: 1538870-1_1_AB

This list covers pages from 2-70 to 2-73

Pos	Part No	SP	UN	Qty	Description	Page No
LEFTSTAIR (See drawing on page: 2-70)						
070	1524177-0000	-		1	TOE PLATE	
RIGHTSTAIR (See drawing on page: 2-72)						
070	1524180-0000	-		1	TOE PLATE	
Common Parts						
010	1524171-0000	-		1	FRAME	
020	1524172-0000	-		1	CHECKER PLATE	
030	1524173-0000	-		1	CHECKER PLATE	
040	1524174-0000	-		1	HOOK	
050	1524175-0000	-		1	LEG	
060	1524176-0000	-		1	CLAMP	
080	1524178-0000	-		1	TOE PLATE	
090	1524179-0000	-		1	TOE PLATE	
100	1524167-0000	-		1	CORNER STRIP	
110	1524181-0000	-		2	PIN	
120	1010822-0000	-		1	RAILING	
130	1524182-0000	-		1	RAILING	
140	1524864-0000	-		1	RAILING	
150	985328-0000	-		2	CONNECTION	
160	1524185-0000	-		2	EXTENSION PIECE	
170	1036241-0000	-		11	WASHER	
180	90261-0033	-		3	PLUG, BLIND, PLASTIC GPN300F182	
190	312105-0622	-		2	SCREW M6S ISO 4017 M16X25 A480	
200	315105-0186	-		2	WASHER BRB17X30RFR	
210	312101-0630	-		4	SCREW M6S M16X50 FZB	
220	315111-0186	-		6	WASHER PLAIN, TBRB 17/30 H=6	
230	312105-0536	-		4	SCREW M6S ISO 4017 M12X30 A480	
240	315105-0178	-		4	WASHER BRB13X24RFR	
250	312105-0447	-		2	SCREW M6S ISO 4017 M8X12 A480	
260	315105-0165	-		2	WASHER BRB8,4X16RFR	
270	315105-0153	-		2	WASHER BRB6,4X12RFR	
280	312318-0453	-		4	SCREW ISO4029 M8X25 A4	
290	90458-0072	-		2	SCREW ISO 7380 S M6X12 A2	
300	312105-0495	-		4	SCREW M6S ISO 4017 M10X30 A480	
310	315105-0173	-		4	WASHER BRB10,5X22RFR	
320	90347-0009	-		2	FLOOR PLATE, NO 1256730	
330	312155-0370	-		11	SCREW EN 10642 MF6S M6X20 A480	
340	312605-0324	-		2	HEXAGON NUT, M6M M16 A280	

Pos	Part No	SP	UN	Qty	Description	Page No

Machine Type | Group Description | Used-In | Group Number | Page No

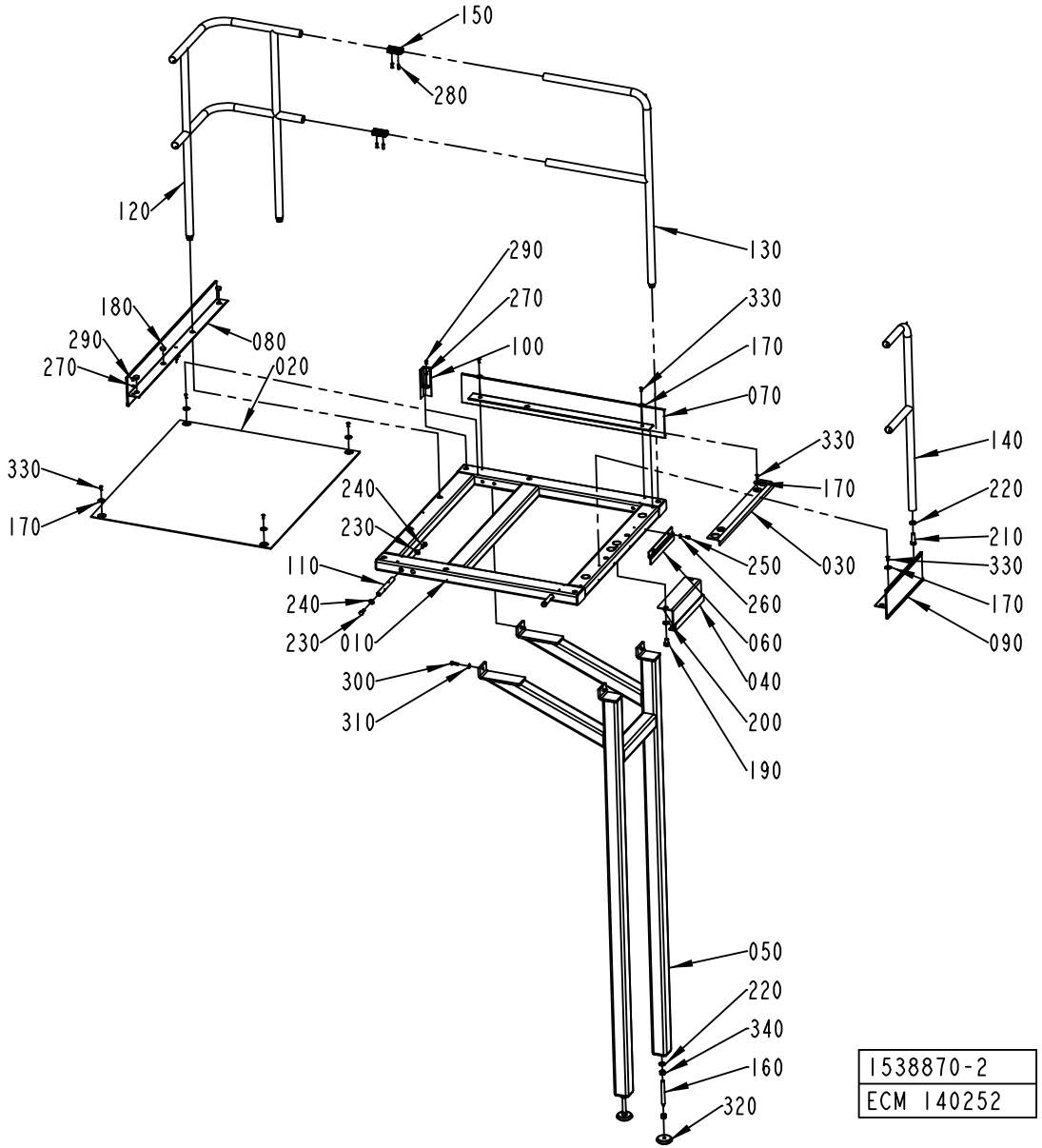
150
280
120
130
290
270
100
180
290
270
080
020
330
170
330
170
240
230
110
240
230
010
250
260
060
040
200
190
030
140
220
210
330
170
090
300
310
050
220
340
160
320
1538870-2
ECM 140252

ECM: 140255 - 20031002
Group number: 1538870-0100
Assembly Drawing: 1538870-2_1_AA

This list covers pages from 2-70 to 2-73

Pos	Part No	SP	UN	Qty	Description	Page No
LEFTSTAIR (See drawing on page: 2-70)						
070	1524177-0000	-		1	TOE PLATE	
RIGHTSTAIR (See drawing on page: 2-72)						
070	1524180-0000	-		1	TOE PLATE	
Common Parts						
010	1524171-0000	-		1	FRAME	
020	1524172-0000	-		1	CHECKER PLATE	
030	1524173-0000	-		1	CHECKER PLATE	
040	1524174-0000	-		1	HOOK	
050	1524175-0000	-		1	LEG	
060	1524176-0000	-		1	CLAMP	
080	1524178-0000	-		1	TOE PLATE	
090	1524179-0000	-		1	TOE PLATE	
100	1524167-0000	-		1	CORNER STRIP	
110	1524181-0000	-		2	PIN	
120	1010822-0000	-		1	RAILING	
130	1524182-0000	-		1	RAILING	
140	1524864-0000	-		1	RAILING	
150	985328-0000	-		2	CONNECTION	
160	1524185-0000	-		2	EXTENSION PIECE	
170	1036241-0000	-		11	WASHER	
180	90261-0033	-		3	PLUG, BLIND, PLASTIC GPN300F182	
190	312105-0622	-		2	SCREW M6S ISO 4017 M16X25 A480	
200	315105-0186	-		2	WASHER BRB17X30RFR	
210	312101-0630	-		4	SCREW M6S M16X50 FZB	
220	315111-0186	-		6	WASHER PLAIN, TBRB 17/30 H=6	
230	312105-0536	-		4	SCREW M6S ISO 4017 M12X30 A480	
240	315105-0178	-		4	WASHER BRB13X24RFR	
250	312105-0447	-		2	SCREW M6S ISO 4017 M8X12 A480	
260	315105-0165	-		2	WASHER BRB8,4X16RFR	
270	315105-0153	-		2	WASHER BRB6,4X12RFR	
280	312318-0453	-		4	SCREW ISO4029 M8X25 A4	
290	90458-0072	-		2	SCREW ISO 7380 S M6X12 A2	
300	312105-0495	-		4	SCREW M6S ISO 4017 M10X30 A480	
310	315105-0173	-		4	WASHER BRB10,5X22RFR	
320	90347-0009	-		2	FLOOR PLATE, NO 1256730	
330	312155-0370	-		11	SCREW EN 10642 MF6S M6X20 A480	
340	312605-0324	-		2	HEXAGON NUT, M6M M16 A280	

Pos	Part No	SP	UN	Qty	Description	Page No

Machine Type | Group Description | Used-In | Group Number | Page No

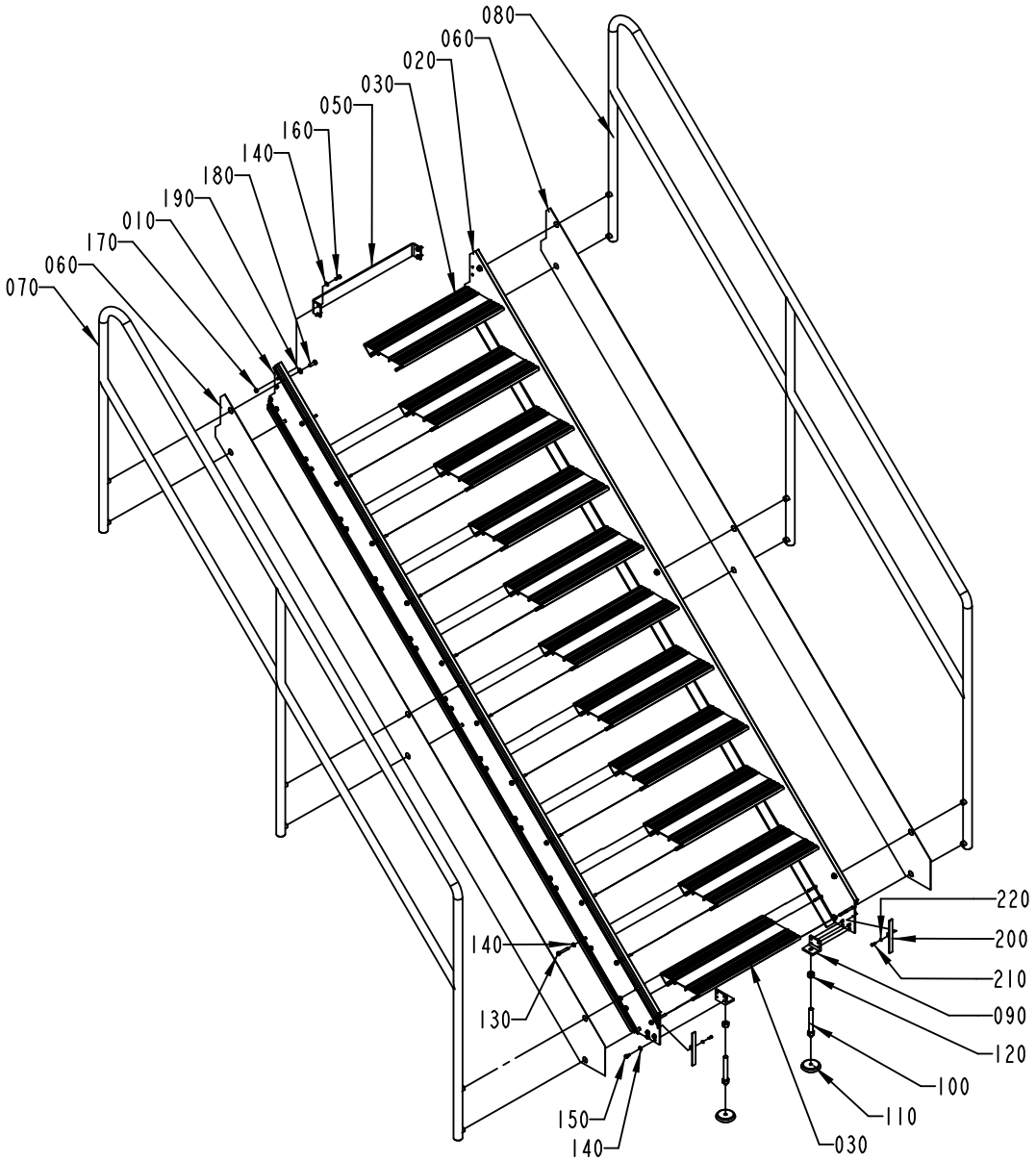

1523777-1
ECN 93149

ECM: 93184 - 20010715
Group number: 1523777-0100
Assembly Drawing: 1523777-1_1_AB

Pos	Part No	SP	UN	Qty	Description	Page No
-						
010	1524186-0000	-		1	PROFILE	
020	1524187-0000	-		1	PROFILE	
030	1524188-0000	-		10	STAIR	
050	1524190-0000	-		1	BRACKET	
060	1524191-0000	-		2	RIM	
070	1524192-0000	-		1	RAILING	
080	1524193-0000	-		1	RAILING	
090	1037391-0000	-		2	CANTILEVER	
100	1524185-0000	-		2	EXTENSION PIECE	
110	90347-0009	-		2	FLOOR PLATE, NO 1256730	
120	312605-0324	-		2	HEXAGON NUT, M6M M16 A280	
130	312104-0461	-		88	SCREW M6S M8X50H FZB	
140	315105-0165	-		94	WASHER BRB8,4X16RFR	
150	312105-0449	-		8	SCREW M6S ISO 4017 M8X16 A480	
160	312105-0451	-		6	SCREW M6S ISO 4017 M8X20 A480	
170	312605-0318	-		4	HEXAGON NUT, M6M M8 A280	
180	312105-0495	-		12	SCREW M6S ISO 4017 M10X30 A480	
190	315105-0173	-		12	WASHER BRB10,5X22RFR	
200	1558946-0000	-		2	PLUG	
210	312115-0327	-		2	SCREW ISO4762 M5X12 A4	
220	315105-0146	-		2	WASHER BRB5,3X10RFR	

Pos	Part No	SP	UN	Qty	Description	Page No

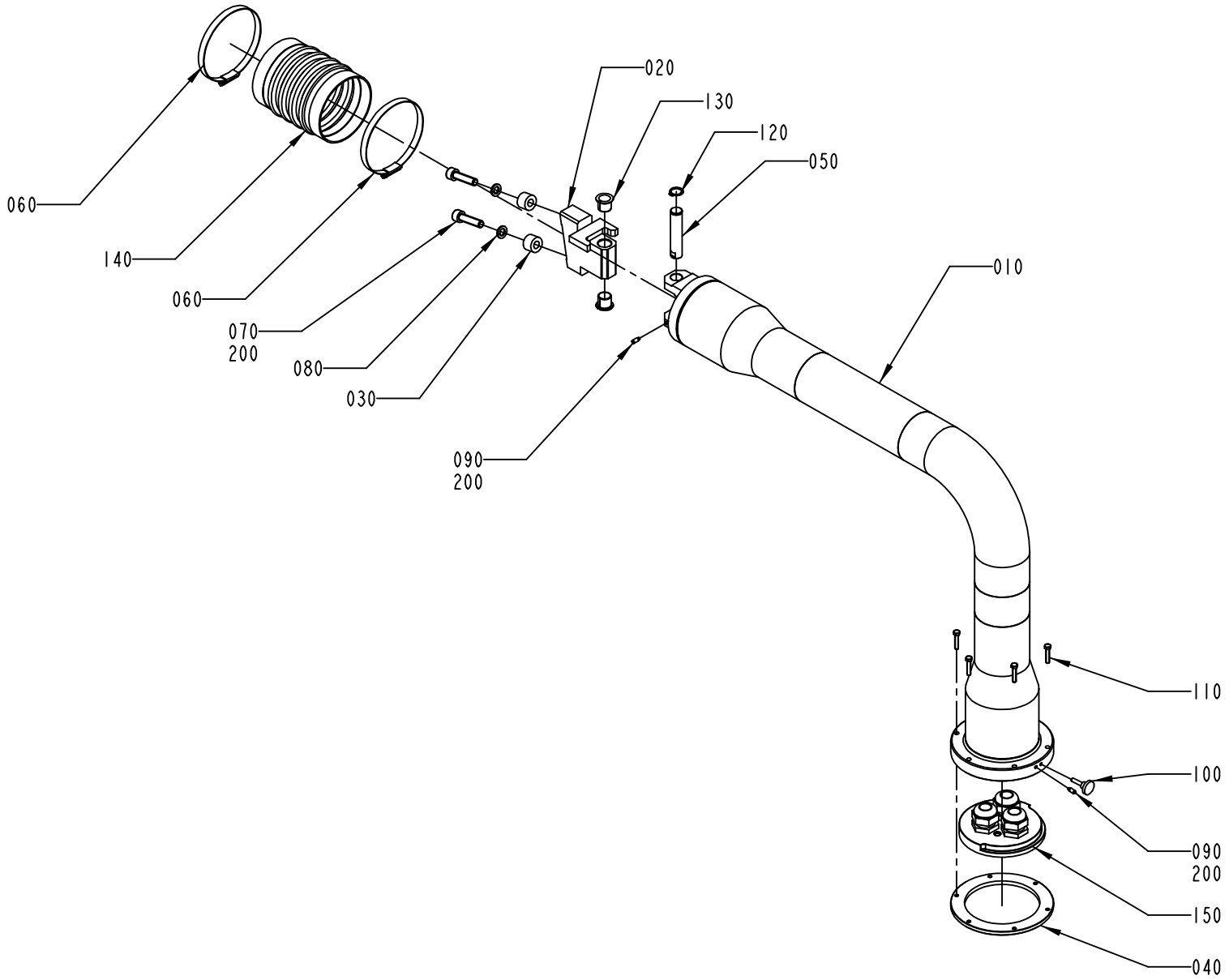

1095863-2
ECM 116300

ECM: 116300 - 20021110
Group number: 1095863-0200
Assembly Drawing: 1095863-2_1_AA

Pos	Part No	SP	UN	Qty	Description	Page No
-						
010	1558974-0000	-		1	PIPE BRACKET	
020	1558975-0000	-		1	BLOCKING PIECE	
030	1254494-0000	-		1	SPACER	
040	1558949-0000	-		1	PLATE	
050	1558945-0000	-		1	PIVOT PIN	
060	342991-0114	-		2	HOSE CLIP,WORM DRIVE TYPE (93)-110	
070	312115-0499	-		2	SCREW ISO4762 M10X40 A4	
080	315402-0173	-		2	LOCK WASHER FBB 10,2	
090	312311-0327	-		2	SCREW ISO4028 M5X12 FZB	
100	318860-0106	-		1	KNOB, ADJUST.HI.EXT.THREAD, NO 8324-3674	
110	312105-0333	-		6	SCREW M6S ISO 4017 M5X25 A480	
120	315751-0113	-		1	RETAINING RING FOR SHAFT DIN 471 16 A2	
130	321161-0221	B		2	FLANGE BUSHING, 16X18X17 MM	
140	90342-0024	-		1	RUBBER BELLOWS, 100X100 MM	
150	2570616-0100	-		1	FASTENING PLATE	**2-79**
200	90157-0021	-	KG	1	LOCKING FLUID	

Pos	Part No	SP	UN	Qty	Description	Page No

FASTENING PLATE

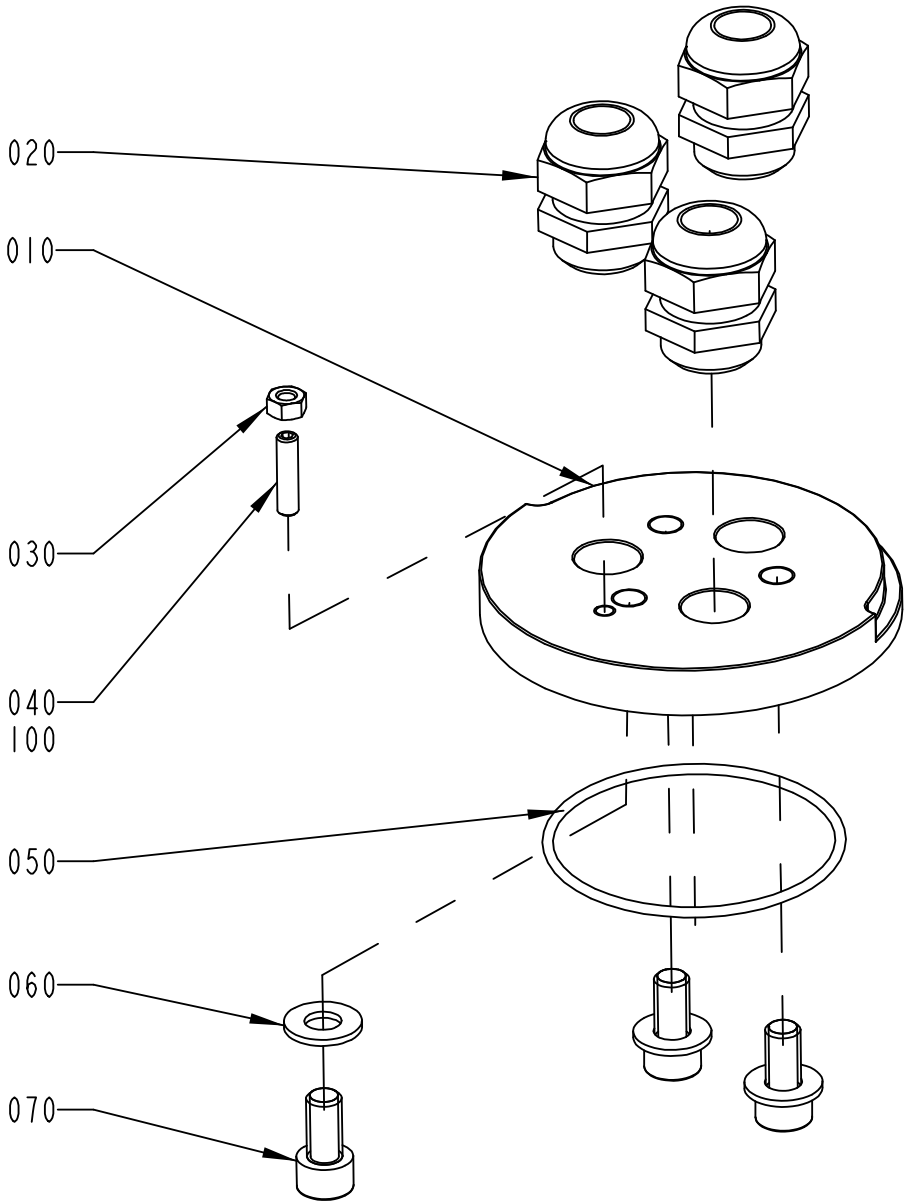

2570616-1
ECM 116300

ECM: 117183 - 20021110
Group number: 2570616-0100
Assembly Drawing: 2570616-1_1_AA

Pos	Part No	SP	UN	Qty	Description	Page No
-						
010	1558948-0000	-		1	PLATE	
020	352103-0115	-		3	CABLE GLAND, STR 21, PR28,3/PG21	
030	312605-0316	-		1	HEXAGON NUT, M6M M6 A280	
040	312318-0372	-		1	SCREW ISO4029 M6X25 A4	
050	315202-0307	-		1	O-RING 79,5X3 MM	
060	315105-0173	-		3	WASHER BRB10,5X22RFR	
070	312115-0491	-		3	SCREW ISO4762 M10X20 A4	
100	90157-0021	-		1	LOCKING FLUID	

Pos	Part No	SP	UN	Qty	Description	Page No

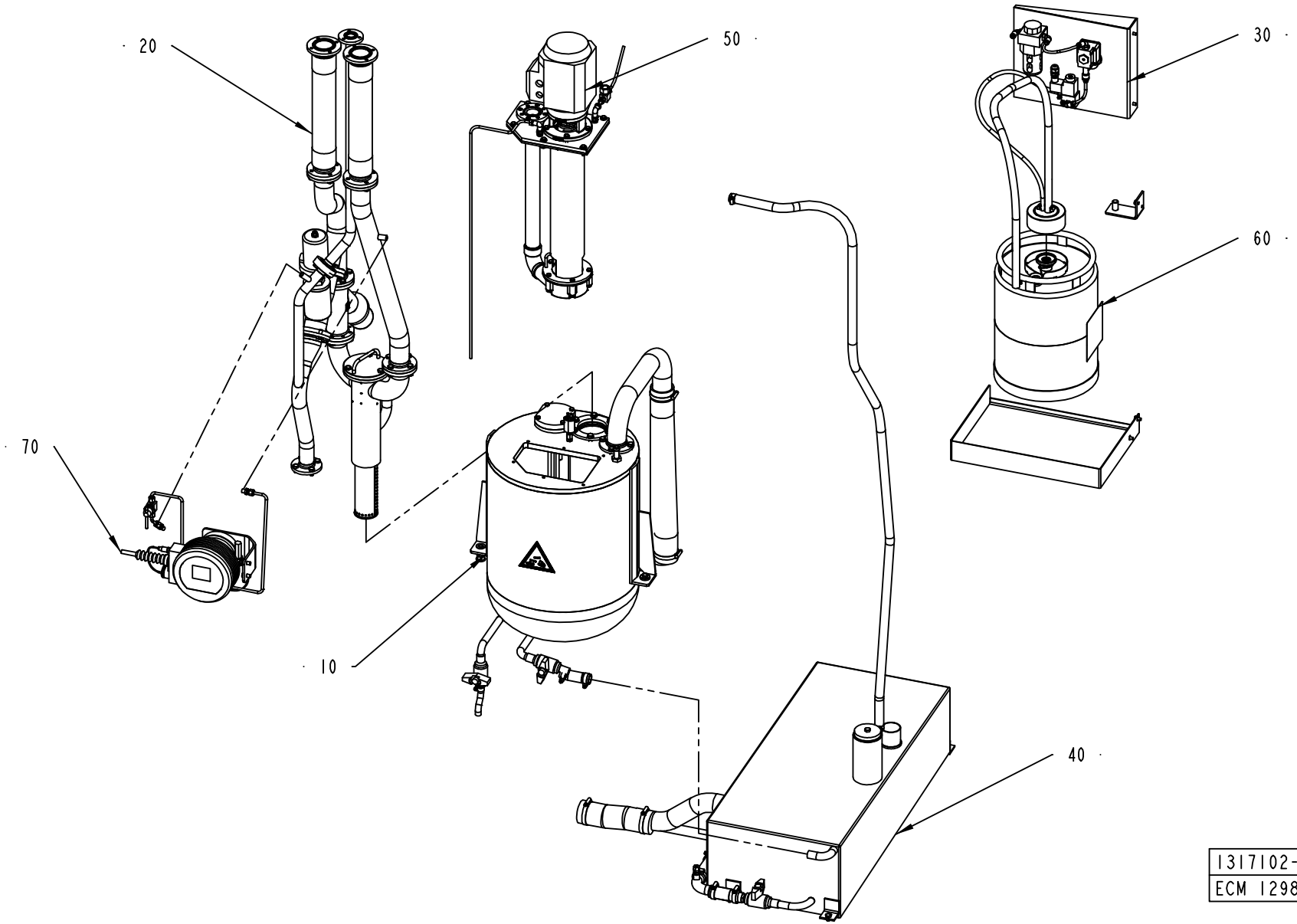
20
50
30
60
70
10
40
1317102-1
ECM 129832

ECM: 130031 - 20030630
Group number: 1317102-0100
Assembly Drawing: 1317102-1_1_AC

Pos	Part No	SP	UN	Qty	Description	Page No
-						
010	1282894-0100	-		1	PEROXIDE TANK	**2-83**
020	1282895-0200	-		1	PEROXIDE PIPE	**2-85**
030	1317103-0100	-		1	PUMP	**2-87**
040	1282896-0100	-		1	TANK	**2-89**
050	996388-0500	-		1	PEROXIDE PUMP	**2-93**
060	527898-0100	-		1	CONTAINER H2O2	**2-95, 10-7**
070	2519574-0100	-		1	HYDROGEN PEROXIDE CONCENTRATION METER	**2-97**

Pos	Part No	SP	UN	Qty	Description	Page No

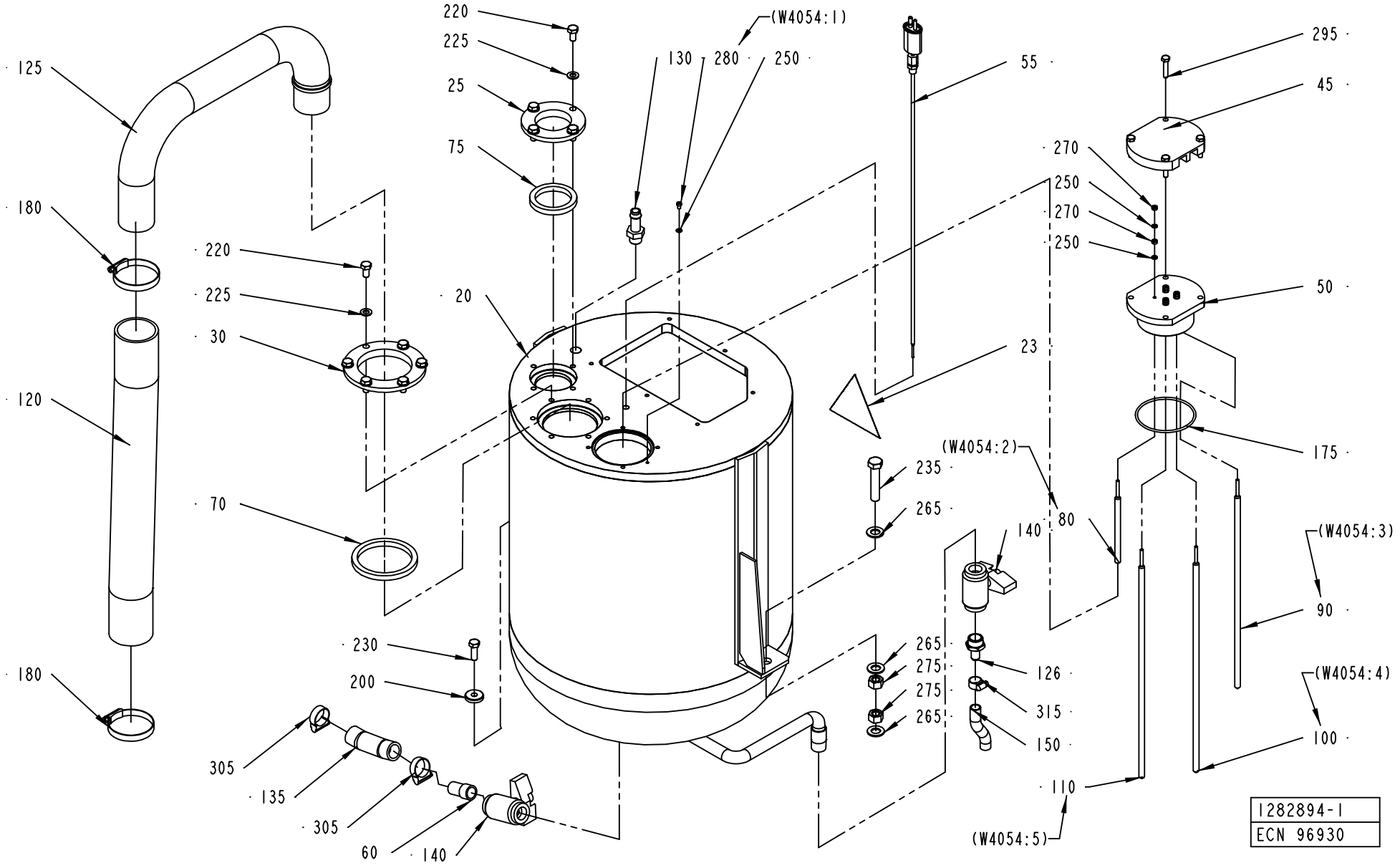
125
180
120
180
220
225
30
70
230
200
305
135
305
60
140
220
225
25
75
20
(W4054:1)
130
280
250
55
23
235
265
(W4054:2)
140
80
265
275
275
265
126
315
150
110
(W4054:5)
295
45
270
250
270
250
50
175
(W4054:3)
90
(W4054:4)
100
1282894-1
ECN 96930

ECM: 135641 - 20030922
Group number: 1282894-0100
Assembly Drawing: 1282894-1_1_AD

Pos	Part No	SP	UN	Qty	Description	Page No
TBA/22						
045	1282903-0000	-		1	FLANGE	
050	1282904-0000	-		1	LID	
080	1129441-0001	D		1	ELECTRODE	
090	1129441-0002	D		1	ELECTRODE	
100	1129441-0003	D		1	ELECTRODE	
110	1129441-0004	D		1	ELECTRODE	
250	315105-0136	-		9	WASHER BRB4,3XRFR	
270	312605-0312	-		8	HEXAGON NUT, M6M M4 A280	
Common Parts						
020	1255559-0000	-		1	PEROXIDE TANK	
023	359705-0004	-		1	WARNING SIGN ISO, DANGEROUS CHEMICALS	
025	1040840-0000	-		1	FLANGE	
030	1040841-0000	-		1	FLANGE	
055	1347704-0000	D		1	THERMOCOUPLE	
	90326-0306	*-*		*1*	*GLAND FITTING 9041-45-KS-KR.1/8" D=4,5MM*	
	1040890-0000	*D*		*1*	*THERMOCOUPLE*	
060	1037102-0000	-		1	SPACER PIPE	
070	1040852-0000	C		1	SEALING RING	
075	1040853-0000	C		1	SEALING RING	
120	1282899-0000	C		1	HOSE	
125	1282891-0000	-		1	PIPE	
126	1282906-0000	-		1	NIPPLE	
130	90055-0051	-		1	HOSE NIPPLE, EXT.THR. R3/8X13 MM	
135	90166-0151	C	MM	140	HOSE	
140	90187-0059	C		2	BALL VALVE FOR HYDR.PER. G1/2 3MM HOLE	
150	90166-0138	C	MM	85	HOSE	
175	927422-0016	C		1	O-RING 79.5X3 SILICON	
180	342991-0110	-		2	HOSE CLIP,WORM DRIVE TYPE (54)-63	
200	315125-0165	-		1	WASHER TBRSB 8,4X26X5 A4	
220	312105-0449	-		10	SCREW M6S ISO 4017 M8X16 A480	
225	315105-0165	-		10	WASHER BRB8,4X16RFR	
230	312105-0453	-		1	SCREW M6S ISO 4017 M8X25 A480	
235	312109-0544	-		1	SCREW M6S ISO 4017 M12X60 A480	
265	315105-0178	-		3	WASHER BRB13X24RFR	
275	312605-0322	-		2	HEXAGON NUT, M6M M12 A280	
280	312125-0285	-		1	SCREW ISO 1207 M4X6 A4	
295	312109-0374	-		4	SCREW M6S ISO 4017 M6X30 A480	
305	342991-0104	-		2	HOSE CLIP,WORM DRIVE TYPE (23)-27	
315	342991-0101	-		1	HOSE CLIP,WORM DRIVE TYPE (13)-16	

Pos	Part No	SP	UN	Qty	Description	Page No

Machine Type | Group Description | Used-In | Group Number | Page No

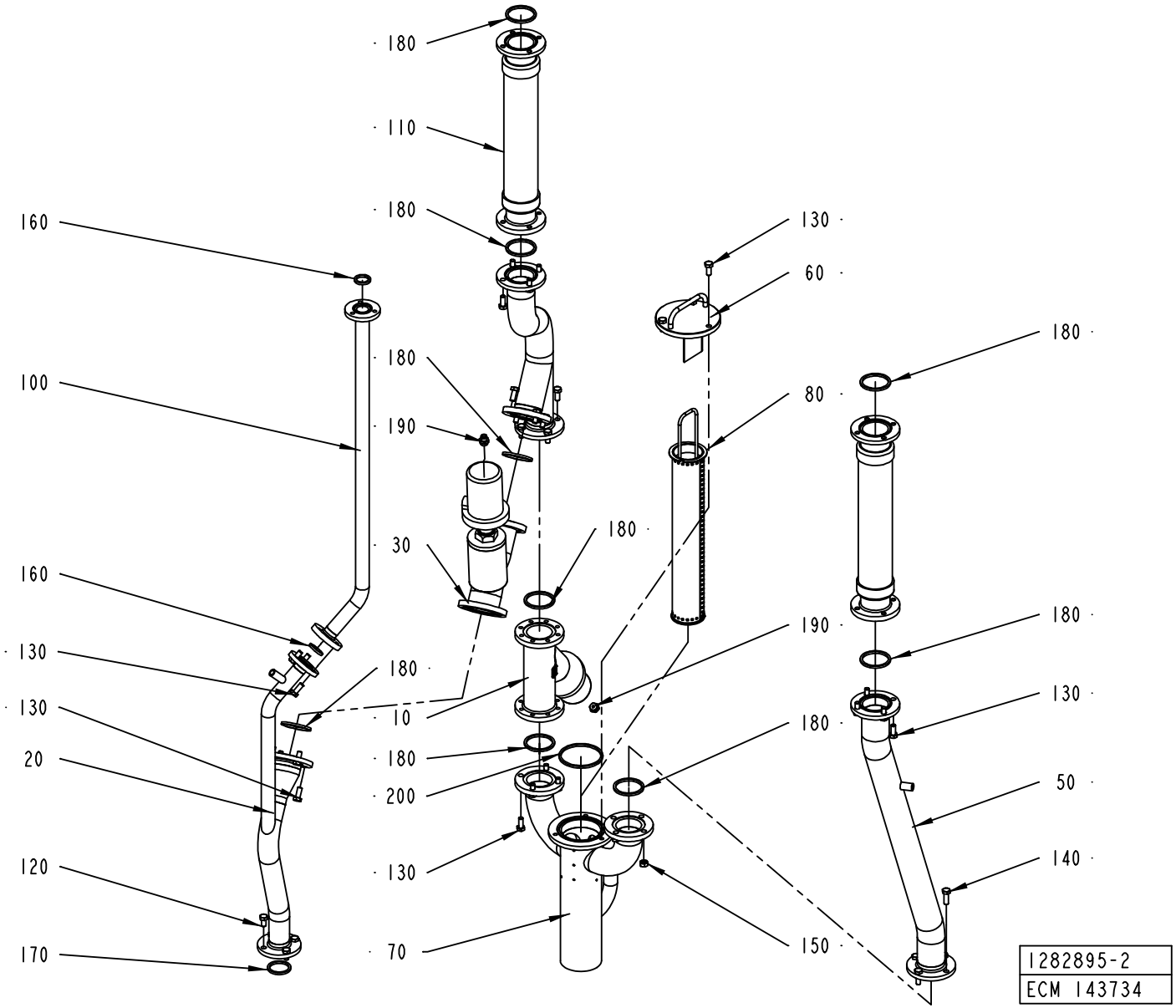
180
110
180
160
130
60
180
180
100
190
80
180
30
160
180
190
180
130
10
180
130
180
20
180
200
50
120
130
140
70
150
170
1282895-2
ECM 143734

ECM: 143749 - 20031215
Group number: 1282895-0200
Assembly Drawing: 1282895-2_1_AB

Pos	Part No	SP	UN	Qty	Description	Page No
-						
010	978999-0000	A		1	VALVE	
	90235-0483	*C*		*1*	*WASHER,PL.RND.AL, 60/68,H=2,5*	
020	2519554-0000	-		1	PIPE	
030	1346565-0000	A		1	VALVE	
	90235-0483	*C*		*1*	*WASHER,PL.RND.AL, 60/68,H=2,5*	
040	1282876-0000	-		1	PIPE	
050	2519555-0000	-		1	PIPE	
060	1348530-0000	-		1	LID	
070	1282879-0000	-		1	CONNECTING PIPE	
080	1348529-0000	B		1	STRAINER	
100	1282901-0000	-		1	PIPE	
110	2598689-0000	B		2	HOSE	
120	312105-0449	-		4	SCREW M6S ISO 4017 M8X16 A480	
130	312105-0451	-		30	SCREW M6S ISO 4017 M8X20 A480	
140	312105-0453	-		4	SCREW M6S ISO 4017 M8X25 A480	
150	312605-0318	-		4	HEXAGON NUT, M6M M8 A280	
160	315229-0103	B		2	GASKETS, 23,1X30,1X3,7 MM 1" FDA	
170	315229-0104	B		1	GASKETS, 35,8X42,8X3,7 MM 1"1/2 FD	
180	315229-0105	B		9	GASKETS, 48,5X55,5X3,7 MM 2" FDA	
190	342722-0203	-		2	STRAIGHT COUPLING	
200	315229-0107	B		1	GASKETS, 73,9X80,9X3,7 MM 2"1/2 FD	

Pos	Part No	SP	UN	Qty	Description	Page No

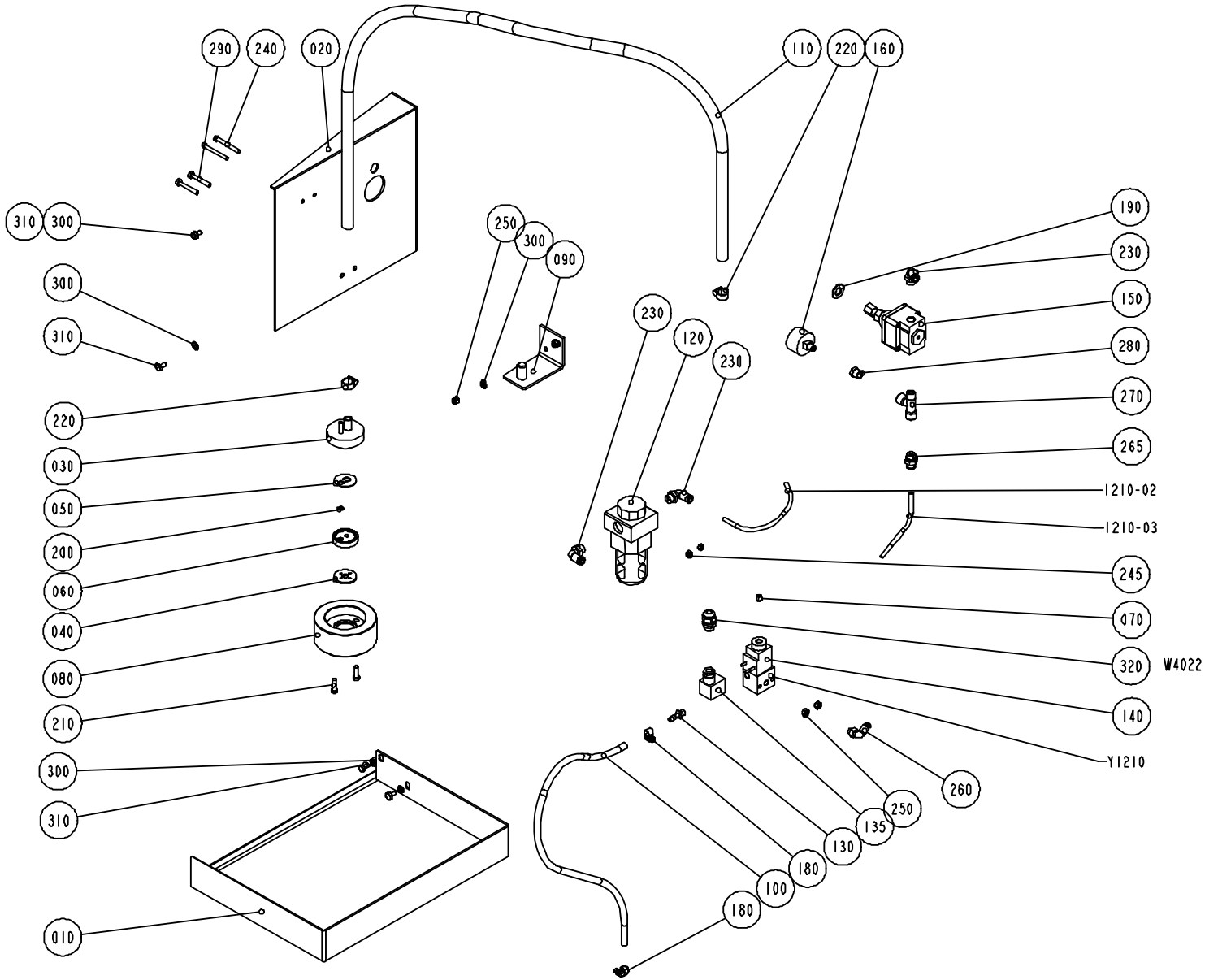

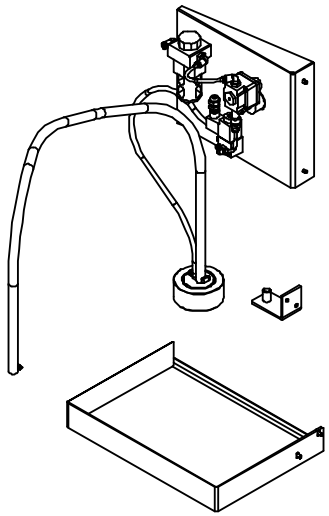

S - 1317103-1
ECN 71406

ECM: 84809 - 20000913
Group number: 1317103-0100
Assembly Drawing: 1317103-1_1_AA

Pos	Part No	SP	UN	Qty	Description	Page No
-						
010	1317104-0000	-		1	BRACKETS, FASTENING PLATES, - BRACKETS	
020	1317105-0000	-		1	BRACKET	
030	1129328-0000	B		1	ATTACHMENT	
040	273981-0000	B		1	GASKET	
050	527912-0000	B		1	NON-RETURN VALVE	
060	530551-0000	B		1	WASHER	
070	563285-0000	-		1	BLIND PLUG	
080	1317226-0000	B		1	WEIGHT	
090	1317784-0000	-		1	BRACKET	
100	90166-0101	B	MM	680	HOSE, SILICONE, 60 SHORE, 6/10 MM	
110	90166-0161	B	MM	1500	HOSE	
120	90277-0039	B		1	FILTER TYP LF -1/4-S-5M-B	
	90234-0328	*C*		*1*	*COVER*	
	90277-0346	*C*		*1*	*FILTER CATRIDGE LFP-1/4-S-5M*	
1210-02	90166-0081	B	MM	210	TUBE 6 MM PA BLUE	
1210-03	90166-0081	B	MM	150	TUBE 6 MM PA BLUE	
130	342901-0101	-		1	HOSE NIPPLE, EXT.THR. R1/8-7 MM	
135	90042-0398	B		1	CONTACT 3 POLE+EARTH	
140	90042-0487	B		1	COIL 24 VDC MECMAN	
150	90113-0056	B		1	REGULATOR	
160	90043-0021	B		1	PRESSURE GAUGE WIEGAND 0-1 BAR 1/8"	
180	90132-0021	-		2	HOSE CLIP 6-10MM	
190	315105-0178	-		1	WASHER BRB13X24RFR	
200	315204-0103	B		1	O-RING 5,1X1,6 MM	
210	312125-0370	-		2	SCREW ISO 1207 M6X20 A4	
220	342991-0101	-		2	HOSE CLIP,WORM DRIVE TYPE (13)-16	
230	342732-0103	-		3	ELBOW PIPE JOINT, EXT.THREAD, D=6MM-G1/4	
240	312125-0341	-		2	SCREW ISO 1207 M5X50 A4	
245	312605-0314	-		2	HEXAGON NUT, M6M M5 A280	
250	312605-0316	-		4	HEXAGON NUT, M6M M6 A280	
260	342732-0102	-		1	ELBOW PIPE JOINT, EXT.THREAD, D=6MM-G1/8	
265	342722-0203	-		1	STRAIGHT COUPLING	
270	342245-0102	-		1	T-PIPE, INT. THREAD, R1/4XKR1/4	
280	342701-0201	-		1	BUSHING,INT./EXT.G-THREAD G1/4"-G1/8"	
290	312105-0378	-		2	SCREW M6S ISO 4014 M6X40 A480	
300	315105-0153	-		6	WASHER BRB6,4X12RFR	
310	312105-0366	-		4	SCREW M6S ISO 4017 M6X12 A480	
W4022	351150-0403	-	MM	2500	CABLE OLFLEX 3X0,75 MM2 LIGHT/GREY	
Y1210	90042-0206	B		1	SOLENOID VALVE 444-111-000-1	

Pos	Part No	SP	UN	Qty	Description	Page No

Machine Type | Group Description | Used-In | Group Number | Page No

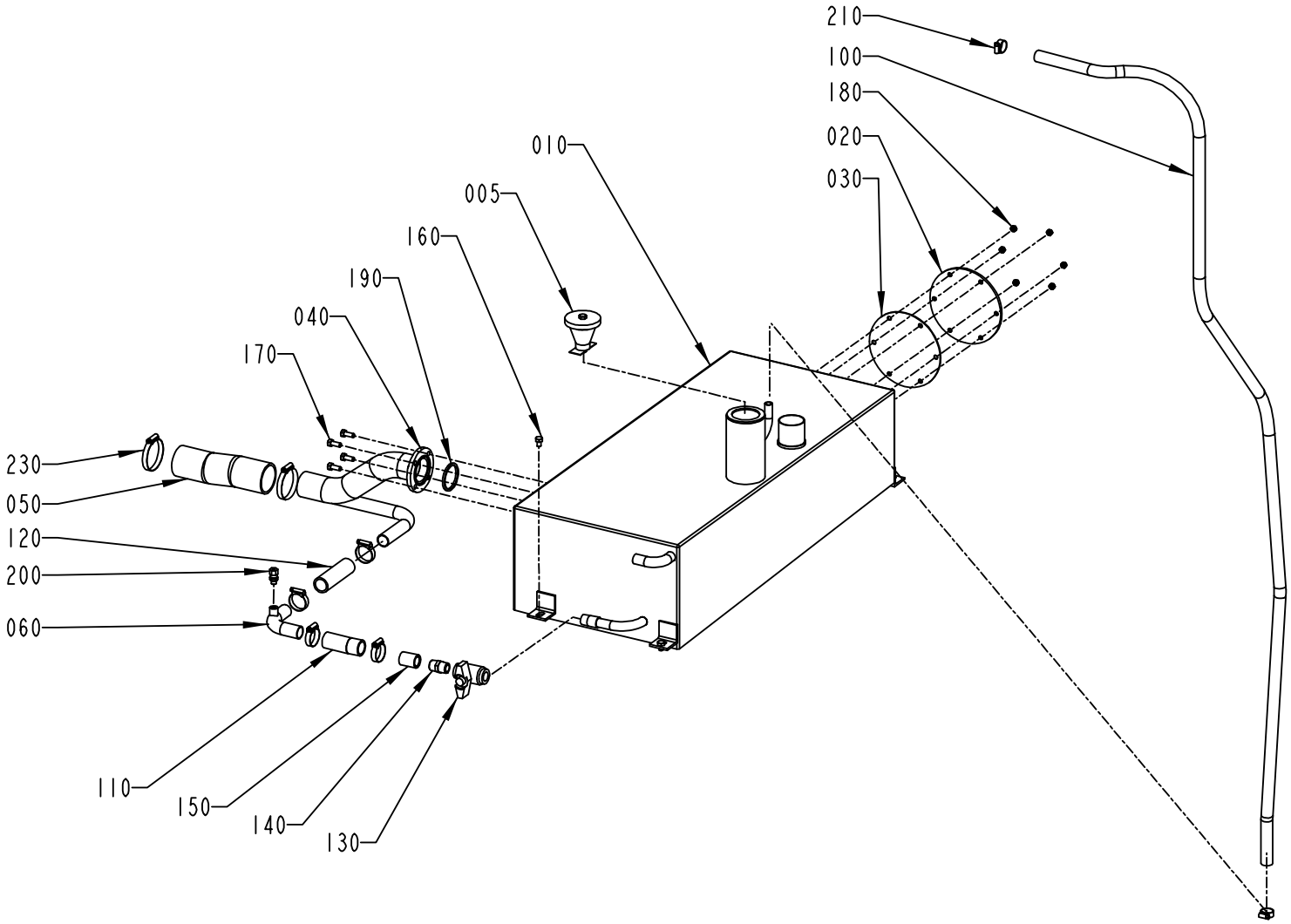

1282896-1
ECM 121676

ECM: 129825 - 20030630
Group number: 1282896-0100
Assembly Drawing: 1282896-1_1_AB

Pos	Part No	SP	UN	Qty	Description	Page No
-						
005	566196-0100	-		1	LID WITH WEIGHT	**2-91**
010	1282892-0000	-		1	TANK	
020	1040807-0000	-		1	LID	
030	1040808-0000	A		1	GASKET	
040	1282893-0000	-		1	PIPE	
050	1282898-0000	A		1	HOSE	
060	2574421-0000	-		1	PIPE	
100	90166-0087	A	MM	2500	HOSE 15/23 REINF.PVC TRANSP.	
110	90166-0158	A	MM	85	HOSE	
120	90166-0158	A	MM	105	HOSE	
130	90187-0059	A		1	BALL VALVE FOR HYDR.PER. G1/2 3MM HOLE	
140	90330-0021	-		1	NIPPLES, EXT. THREAD. R-207R1/2	
150	90330-0054	-		1	SLEEVE, INT. THREAD, NO. R-201R1/2	
160	312105-0447	-		4	SCREW M6S ISO 4017 M8X12 A480	
170	312105-0451	-		4	SCREW M6S ISO 4017 M8X20 A480	
180	312605-0316	-		6	HEXAGON NUT, M6M M6 A280	
190	315229-0105	A		1	GASKETS, 48,5X55,5X3,7 MM 2" FDA	
200	90030-0184	-		1	CONN. STR. GA-6-G1/8	
210	342991-0103	-		2	HOSE CLIP,WORM DRIVE TYPE (19)-23	
220	342991-0106	-		4	HOSE CLIP,WORM DRIVE TYPE (30)-36	
230	342991-0110	-		2	HOSE CLIP,WORM DRIVE TYPE (54)-63	

Pos	Part No	SP	UN	Qty	Description	Page No

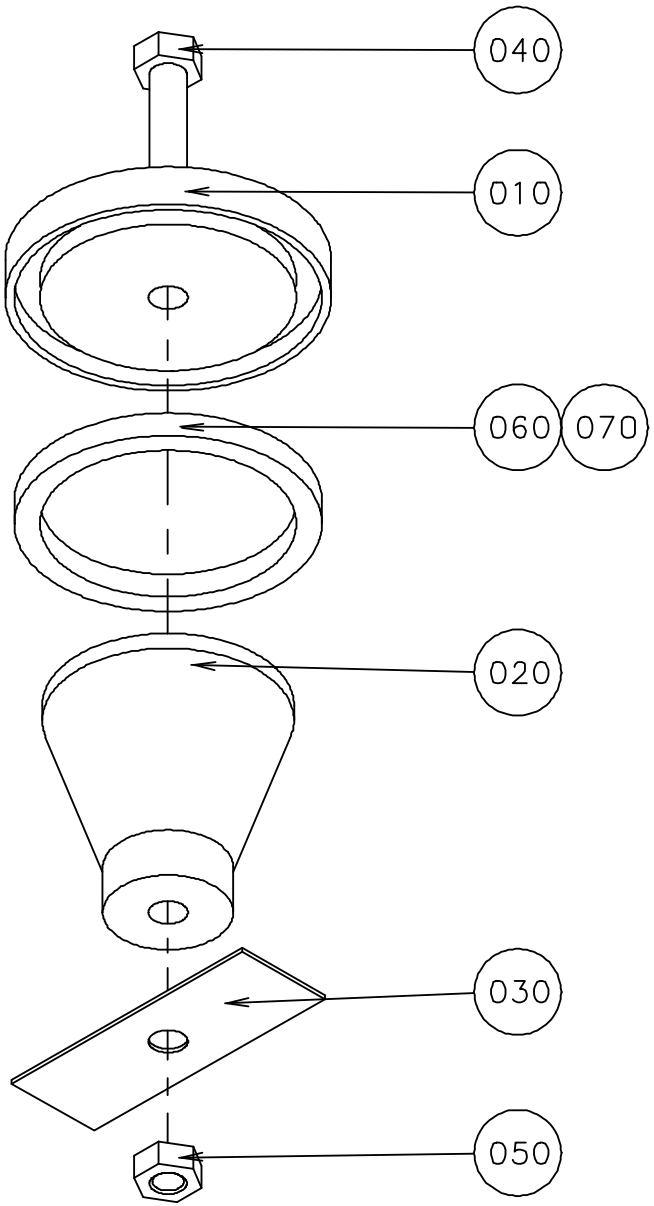

S-566196-1
ECN 70662

ECM: 72091 - 19981216
Group number: 566196-0100
Assembly Drawing: 566196-1_1_AA

Pos	Part No	SP	UN	Qty	Description	Page No
-						
010	566195-0000	-		1	LID	
020	566194-0000	-		1	WEIGHT	
030	566171-0000	-		1	CUP SPRING	
040	312105-0466	-		1	SCREW M6S ISO 4014 M8X75 A480	
050	312605-0318	-		1	HEXAGON NUT, M6M M8 A280	
060	90143-0020	-	MM	190	STRIP	
070	90153-0023	-		1	ADHESIVE, SILICON 251470 TUB 90CC	

Pos	Part No	SP	UN	Qty	Description	Page No

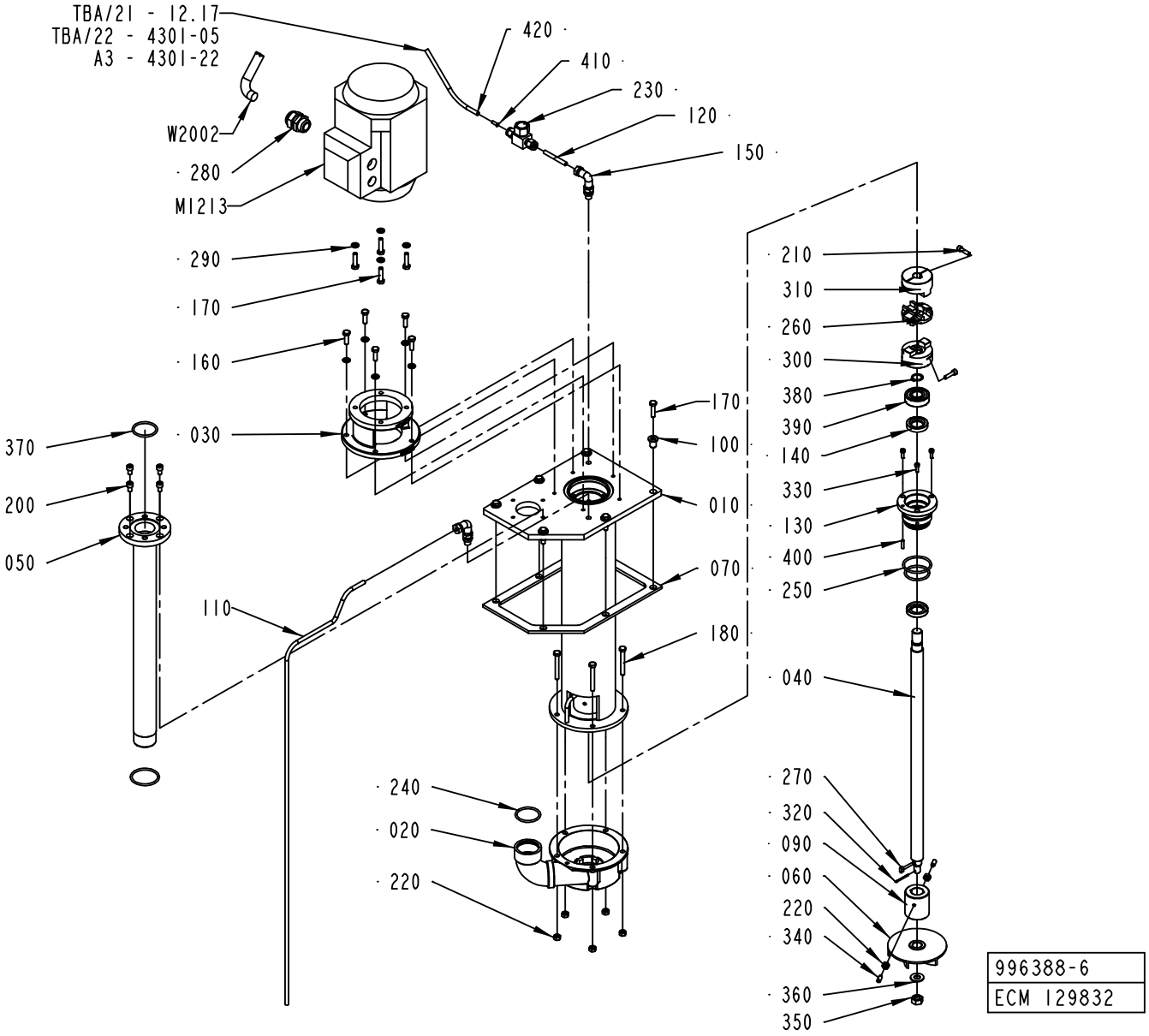
TBA/21 - 12.17
TBA/22 - 4301-05
A3 - 4301-22
W2002
280
M1213
290
170
160
030
370
200
050
110
240
020
220
420
410
230
120
150
210
310
260
300
380
390
140
330
130
400
250
040
270
320
090
060
220
340
360
350
170
100
010
070
180
996388-6
ECM 129832

ECM: 129832 - 20030630
Group number: 996388-0500
Assembly Drawing: 996388-6_1_AB

Pos	Part No	SP	UN	Qty	Description	Page No
-						
010	2529413-0000	-		1	EXTENSION PIPE	
020	2529412-0000	A		1	PUMP HOUSING	
030	751395-0000	-		1	FLANGE	
040	2523266-0000	A		1	PUMP SHAFT	
050	1040796-0000	-		1	PIPE	
060	491929-0000	A		1	IMPELLER WHEEL	
070	1255557-0000	A		1	GASKET	
090	2510372-0000	A		1	BUSHING	
100	2564342-0000	A		6	SPACER	
110	2564561-0000	-		1	PIPE	
120	2564978-0000	-		1	PIPE	
130	2564225-0000	-		1	BUSHING	
140	90091-0412	A		2	SEAL RING	
150	90030-0171	-		2	ADJUSTABLE ELBOW CONNECTION,EXT 6-G1/8	
160	312105-0370	-		5	SCREW M6S ISO 4017 M6X20 A480	
170	312105-0372	-		10	SCREW M6S ISO 4017 M6X25 A480	
180	312109-0380	-		5	SCREW M6S ISO 4017 M6X50 A480	
200	312115-0364	-		4	SCREW ISO4762 M6X10 A4	
210	312115-0331	-		2	SCREW ISO4762 M5X20 A4	
220	312605-0316	-		7	HEXAGON NUT, M6M M6 A280	
230	90230-0064	B		1	CHECK VALVE, 6 MM HIGH TEMP.	
240	927422-0005	A		2	O-RING 36.2X3 SILICON	
250	927422-0006	A		2	O-RING 42.2X3 SILICON	
260	90458-0274	A		1	DISC FOR COUPLING, HUCO 236.50T	
270	315705-0196	-		1	PARALLEL KEY W.ROUND ENDS 5X5X10	
280	352103-0110	-		1	CABLE GLAND, STR 16, PR22,5/PG16	
290	315105-0153	-		9	WASHER BRB6,4X12RFR	
300	90459-1535	A		1	FLEXIBLE COUPLING DISC, 16 MM	
310	90459-1536	A		1	FLEXIBLE COUPLING DISC, 14 MM	
320	311411-0169	A		1	SPLIT PIN SP2,5X25RFR	
330	312115-0291	-		3	SCREW ISO4762 M4X12 A4	
340	312311-0368	-		2	SCREW ISO4028 M6X16 FZB	
350	312605-0320	-		1	HEXAGON NUT, M6M M10 A280	
360	315105-0173	-		1	WASHER BRB10,5X22RFR	
370	315204-0222	A		1	O-RING 36,2X3 MM	
380	315751-0113	A		1	RETAINING RING FOR SHAFT DIN 471 16 A2	
390	321313-0103	A		1	BALL BEARING, 17X40X12MM	
400	311103-0270	-		1	PARALLEL PIN ISO 2338 4M6X16 A1	
410	342706-0130	-		1	ACCESSORIES, INSERT SLEEVE 6 MM	
420	90166-0081	-	M	1	TUBE 6 MM PA BLUE	
M 1213	90458-2466	A		1	MOTOR 3GVA071002-CSB	
W 2002	351150-0418	-	M	4	CABLE OLFLEX 4X2,5 MM2 LIGHT/GREY	

Machine Type | Group Description | Used-In | Group Number | Page No

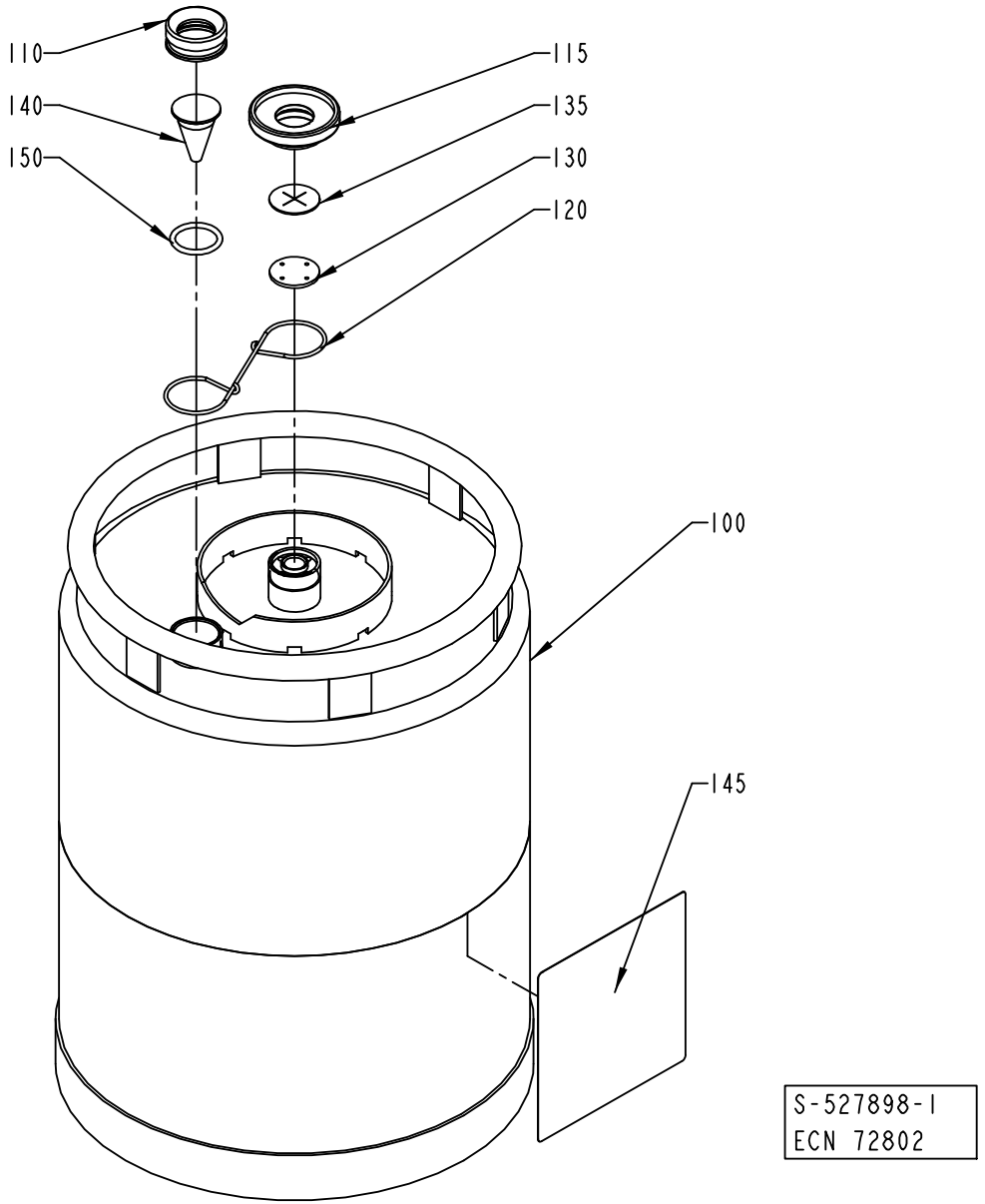
110
140
150
115
135
130
120
100
145
S-527898-1
ECN 72802

ECM: 115873 - 20020930
Group number: 527898-0100
Assembly Drawing: 527898-1_1_AB

Pos	Part No	SP	UN	Qty	Description	Page No
-						
100	561427-0000	-		1	CONTAINER	
110	273977-0000	-		1	NUT	
115	273996-0000	-		1	NUT	
120	273980-0000	-		1	SPRING	
130	565250-0000	B		1	WASHER	
135	565251-0000	B		1	VALVE	
140	273978-0000	-		1	LEVEL GLASS	
145	532655-0000	A		1	CAUTION SIGN	
150	927422-0003	B		1	O.RING 24.2X3 SILICON	

Pos	Part No	SP	UN	Qty	Description	Page No

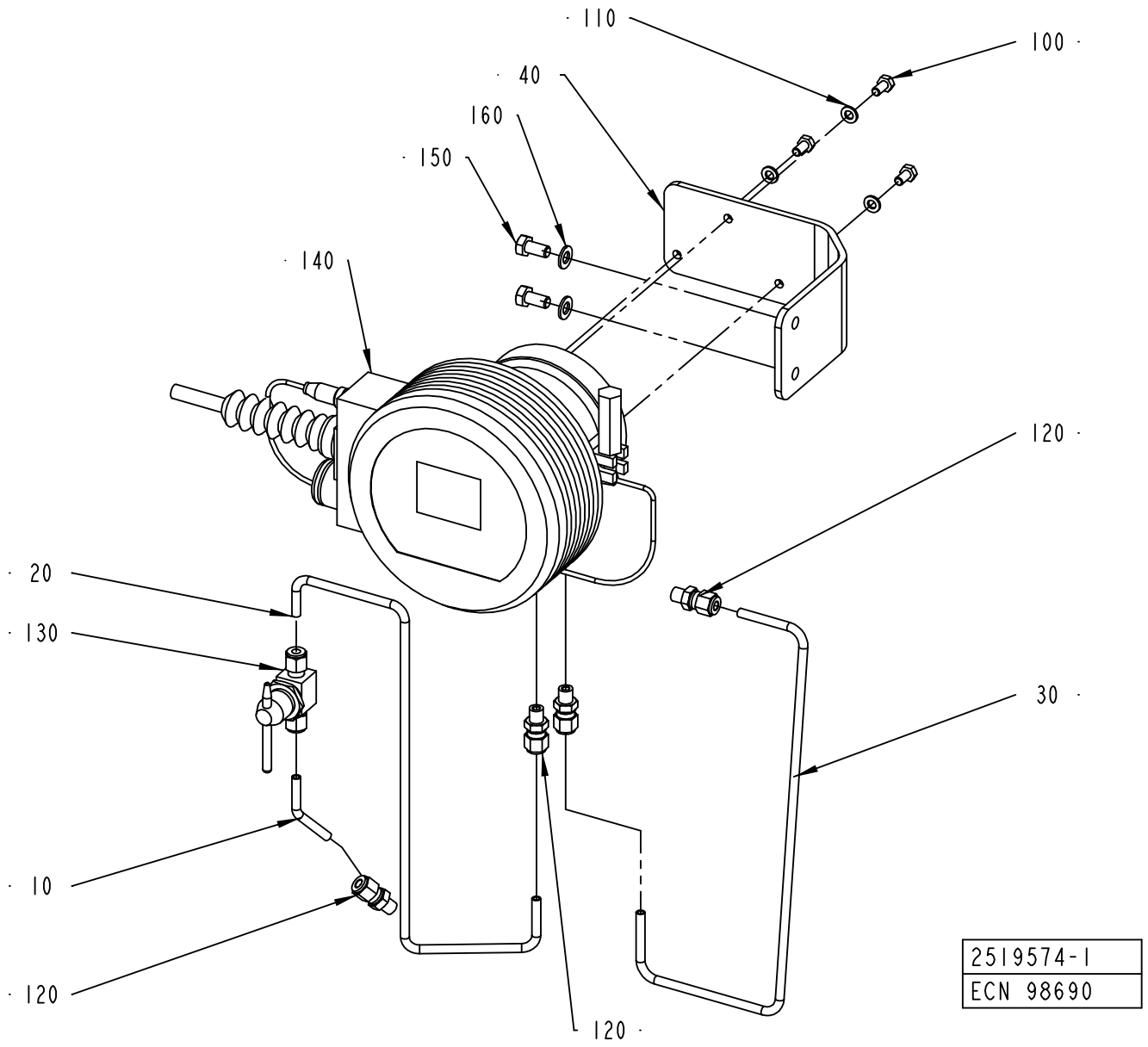
110
100
40
160
150
140
120
20
130
30
10
120
120
2519574-1
ECN 98690

ECM: 98810 - 20010925
Group number: 2519574-0100
Assembly Drawing: 2519574-1_1_AA

Pos	Part No	SP	UN	Qty	Description	Page No
-						
010	2501378-0000	-		1	PIPE	
020	2531500-0000	-		1	PIPE	
030	2531501-0000	-		1	PIPE	
040	2519556-0000	-		1	BRACKET	
100	312105-0366	-		3	SCREW M6S ISO 4017 M6X12 A480	
110	315105-0153	-		3	WASHER BRB6,4X12RFR	
120	90458-1477	-		4	CONNECTOR 6-1/8 NPT, EXT. TAPERED	
130	90458-1478	-		1	BALL VALVE SS-43T6MM-SH-10147	
140	90458-1977	-		1	REFRACTOMETER SET DA15FC15A DFTP A	
	90458-2269	-		*1*	*DEFLECTOR A0808137*	
	90458-1980	-		*1*	*REFRACTOMETER DA16FC16B*	
	90458-1979	-		*1*	*BELLOWS A0710020*	
	90458-1976	-		*1*	*CABLE A0804273*	
	90458-1950	-		*1*	*PROBE A0803021 IPT100 1/8" GAS TRIC-B*	
	90458-1943	-		*1*	*O-RING A0701145 53,65X2,62 MM*	
	90458-1941	-		*1*	*O-RING A0701180 10,82X1,78 MM*	
	90458-1940	-		*1*	*CLAMP A0515170 3" AISI 304*	
	90458-1893	-		*1*	*FILTER CARTRIDGE A0111004*	
	90458-1892	-		*1*	*GASKET A0539066 80,5X90,5X2 MM*	
150	312105-0449	-		2	SCREW M6S ISO 4017 M8X16 A480	
160	315105-0165	-		2	WASHER BRB8,4X16RFR	

Pos	Part No	SP	UN	Qty	Description	Page No

Machine Type | Group Description | Used-In | Group Number | Page No

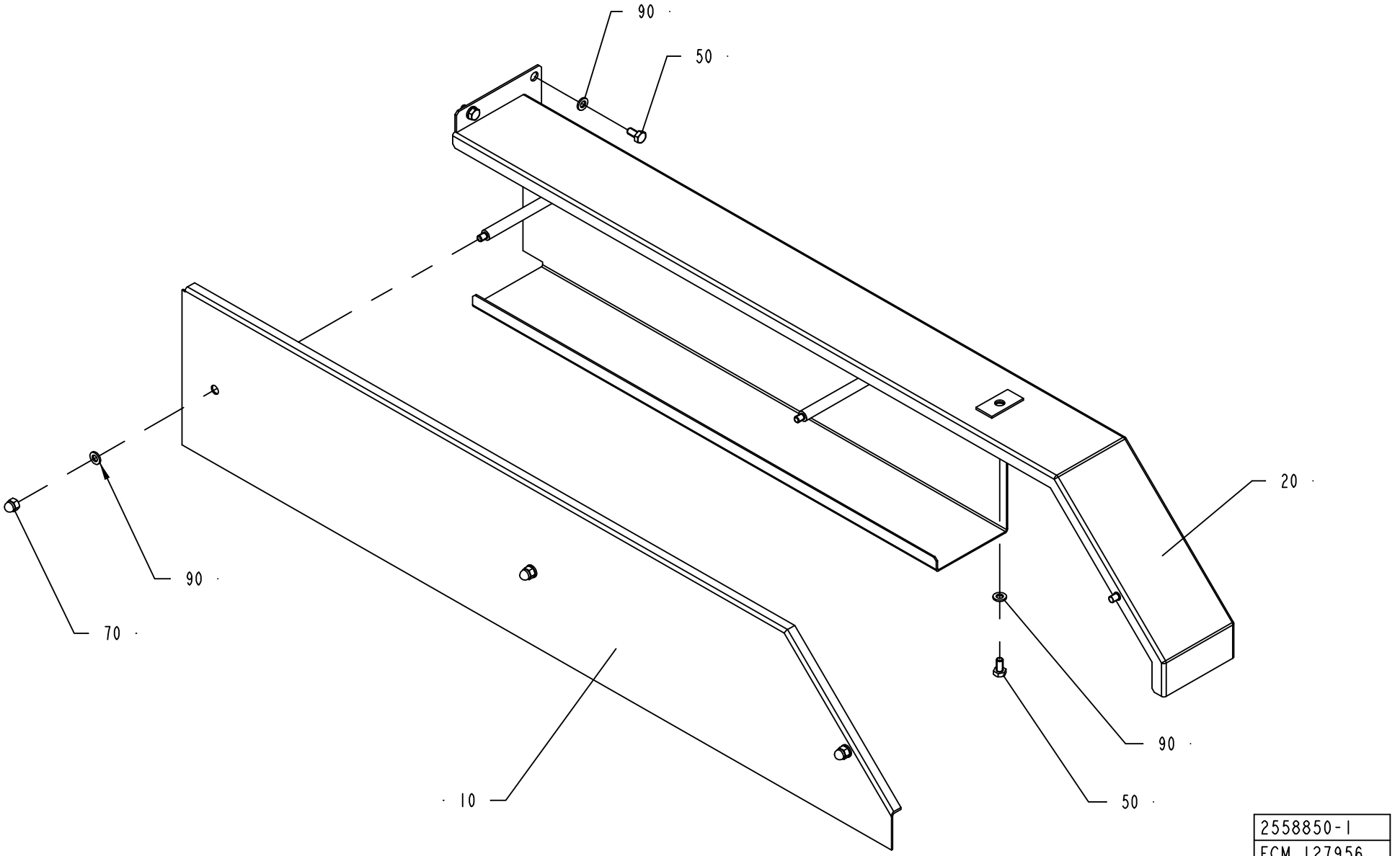

2558850-1
ECM 127956

ECM: 127958 - 20030630
Group number: 2558850-0100
Assembly Drawing: 2558850-1_1_AA

Pos	Part No	SP	UN	Qty	Description	Page No
-						
010	1129444-0000	-		1	LID	
020	2558851-0000	-		1	CABLE DUCT	
050	312105-0366	-		5	SCREW M6S ISO 4017 M6X12 A480	
070	312705-0316	-		3	NUT HEX. DOMED CAP MHM-6 M6 A280	
090	315105-0153	-		8	WASHER BRB6,4X12RFR	

Pos	Part No	SP	UN	Qty	Description	Page No

WASTE CONVEYOR

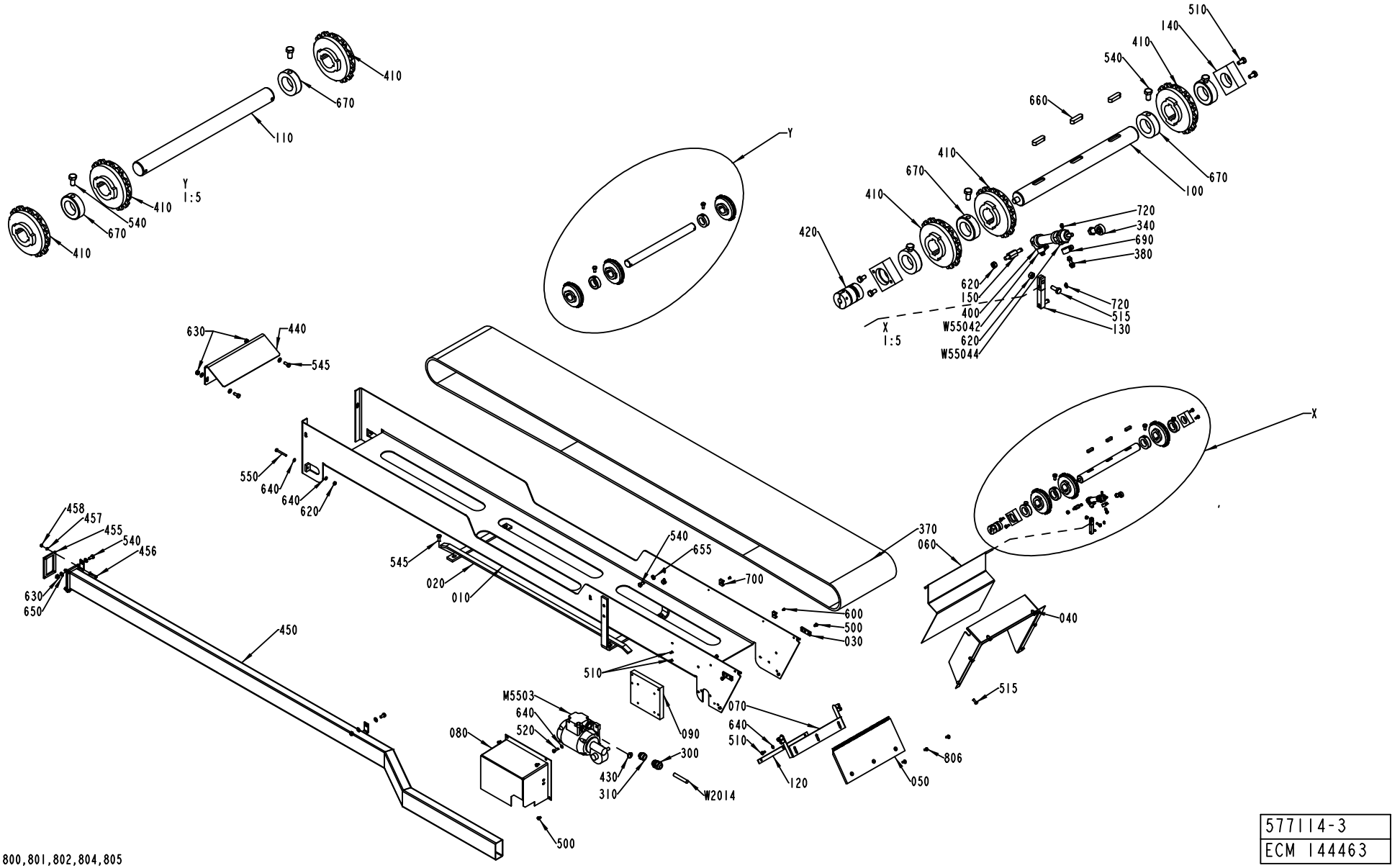

800,801,802,804,805

577114-3
ECM 144463

ECM: 152802 - 20031204
Group number: 577114-0300
Assembly Drawing: 577114-3_1_AC

Pos	Part No	SP	UN	Qty	Description	Page No
-						
010	1346523-0000	-		1	CHUTE	
020	1195266-0000	-		1	BRACKET	
030	1140208-0000	-		2	BRACKET	
040	1129247-0000	-		1	FRAME	
050	1129248-0001	-		1	GUARD PLATE	
060	1346524-0000	-		1	HATCH	
070	1129594-0000	-		1	BRACKET	
080	1517055-0000	-		1	MOTOR COVER	
090	1548789-0000	-		1	MOTOR PLATE	
100	1512584-0000	B		1	DRIVE SHAFT	
110	1037562-0000	B		1	SHAFT	
120	1129253-0000	-		1	FASTENING PLATE	
130	1140641-0000	-		1	ARM	
140	1037565-0000	B		2	BEARING UNIT	
150	1346822-0000	B		1	SHAFT	
300	352103-0111	-		1	CABLE GLAND, ST 16, PR22,5/PG16	
310	90089-0017	-		1	REDUCING SLEEVE, PR18,6/PR22,5	
340	90115-0173	B		1	ROD END, ID=6 MM, M6X1	
370	1346541-0000	A		1	CONVEYOR CHAIN	
380	90235-0290	-		2	THROTTLE CHECK VALVES M5	
400	90239-0842	B		1	DOUBLE ACTING, MINI-ISO, CYL.16-50	
410	90267-0027	B		6	CONVEYOR WHEEL, 12T	
420	90457-0090	B		1	FLEXIBLE COUPLING, 10X10 MM	
430	90002-0009	-		1	BLANK-OFF PLUG, PR 18.6 SKINDICHT-BLK11	
440	1346525-0000	-		1	COVER	
450	2623797-0000	-		1	PIPE	
455	2639555-0000	-		1	GASKET	
456	312105-0332	-		4	SCREW M6S ISO 4017 M5X22 A480	
457	315105-0146	-		8	WASHER BRB5,3X10RFR	
458	312605-0314	-		4	HEXAGON NUT, M6M M5 A280	
500	312105-0362	-		5	SCREW M6S ISO 4017 M6X8 A480	
510	312105-0366	-		12	SCREW M6S ISO 4017 M6X12 A480	
515	312105-0368	-		7	SCREW M6S ISO 4017 M6X16 A480	
520	312105-0370	-		4	SCREW M6S ISO 4017 M6X20 A480	
540	312105-0449	-		10	SCREW M6S ISO 4017 M8X16 A480	
545	312105-0451	-		6	SCREW M6S ISO 4017 M8X20 A480	
550	312109-0380	-		2	SCREW M6S ISO 4017 M6X50 A480	
55042	90166-0132	-	MM	3000	TUBE 6 MM PA,TRANSP.	
55044	90166-0132	-	MM	3000	TUBE 6 MM PA,TRANSP.	
600	312125-0285	-		2	SCREW ISO 1207 M4X6 A4	
620	312605-0316	-		4	HEXAGON NUT, M6M M6 A280	
630	312605-0318	-		4	HEXAGON NUT, M6M M8 A280	
640	315105-0153	-		10	WASHER BRB6,4X12RFR	
650	315105-0165	-		8	WASHER BRB8,4X16RFR	
655	315115-0165	-		4	WASHER PLAIN, TBRB 8,4/16 H=3	
660	315705-0267	-		3	PARALLEL KEY W. ROUND ENDS 8X7X30 MM	
670	315742-0122	B		6	RETAINING RING 30 SMS 199	
680	315220-0198	-		2	V-RINGS 45X55X13 MM V-50S	
690	342980-0112	-		2	BANJO-CONNECTION,RING 6/4-M6	
700	352113-0203	-		2	ANCHOR PLATES FOR STRIPS, TYPE TM3S8-M0	
720	315751-0103	B		2	RETAINING RING FOR SHAFT DIN 471 6 A2	
800	359000-0400	-		6	MARKING CO2/4"0"	
801	359000-0401	-		2	MARKING COLLAR 2/4 "1" YELLOW	
802	359000-0402	-		4	MARKING COLLAR 2/4 "2" YELLOW	
804	359000-0404	-		8	MARKING COLLAR PA2/4 "4" YELLOW	
805	359000-0405	-		8	MARKING CO2/4"5"	
806	312155-0368	-		3	SCREW EN 10642 MF6S M6X16 A480	
M5503	90069-0257	A		1	GEARS, WORM MOTOR WKM/DM90-60WE2A	
W2014	351150-0418	-	M	3	CABLE OLFLEX 4X2,5 MM2 LIGHT/GREY	

Machine Type	Group Description	Used-In	Group Number	Page No

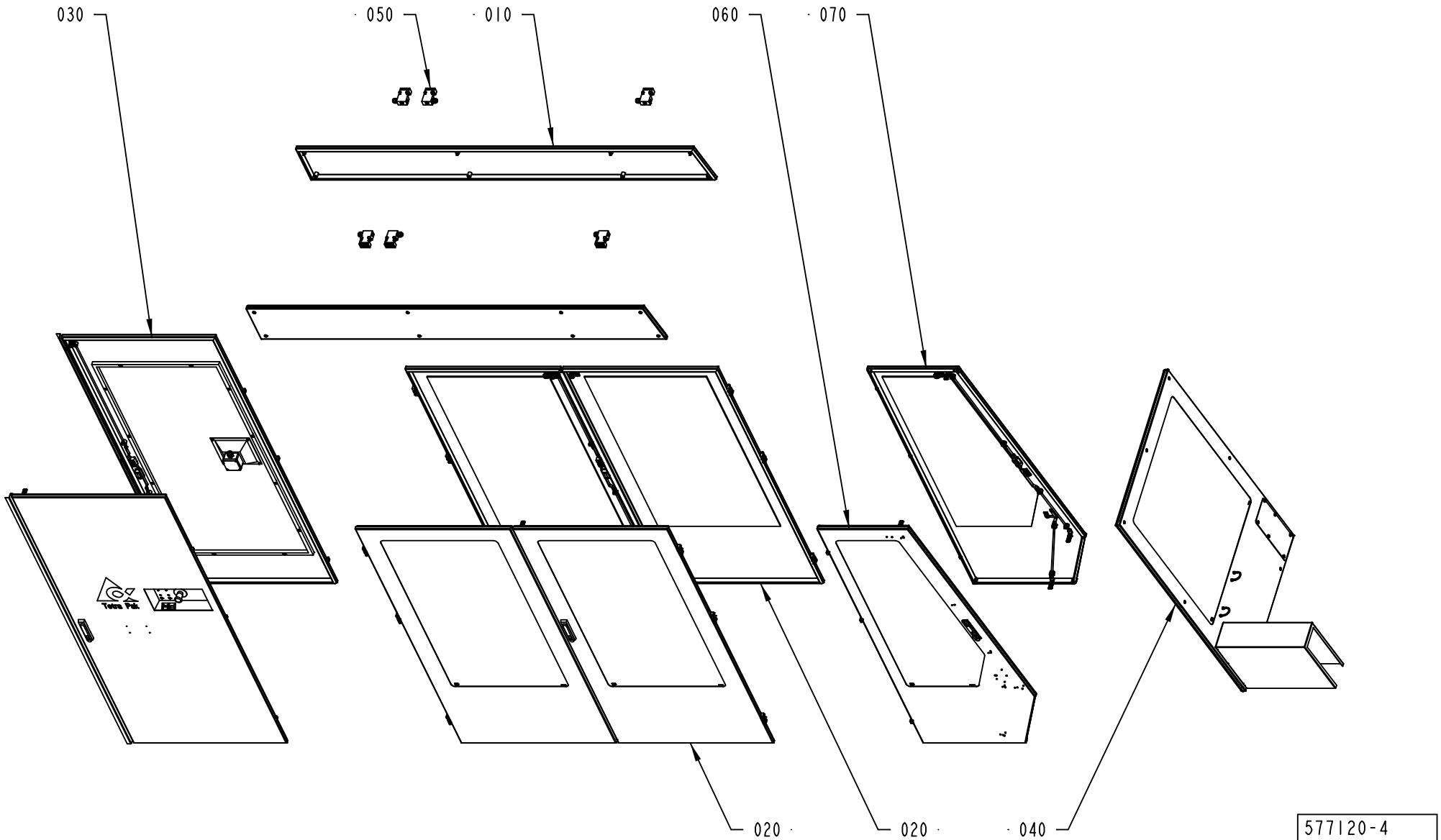
030
050
010
060
070
020
020
040
577120-4
ECM 104856

ECM: 105014 - 20010925
Group number: 577120-0400
Assembly Drawing: 577120-4_1_AA

Pos	Part No	SP	UN	Qty	Description	Page No
-						
010	1317268-0100	-		1	COVERS	**2-105**
020	1317273-0200	-		2	DOOR	**2-107**
030	1317388-0100	-		1	DOORS	**2-109**
040	1346823-0200	-		1	FRONT COVER	**2-113**
050	1347069-0100	-		1	SAFETY SWITCH	**2-117**
060	2533725-0100	-		1	DOOR	**2-119**
070	2533726-0100	-		1	DOOR	**2-121**

Pos	Part No	SP	UN	Qty	Description	Page No

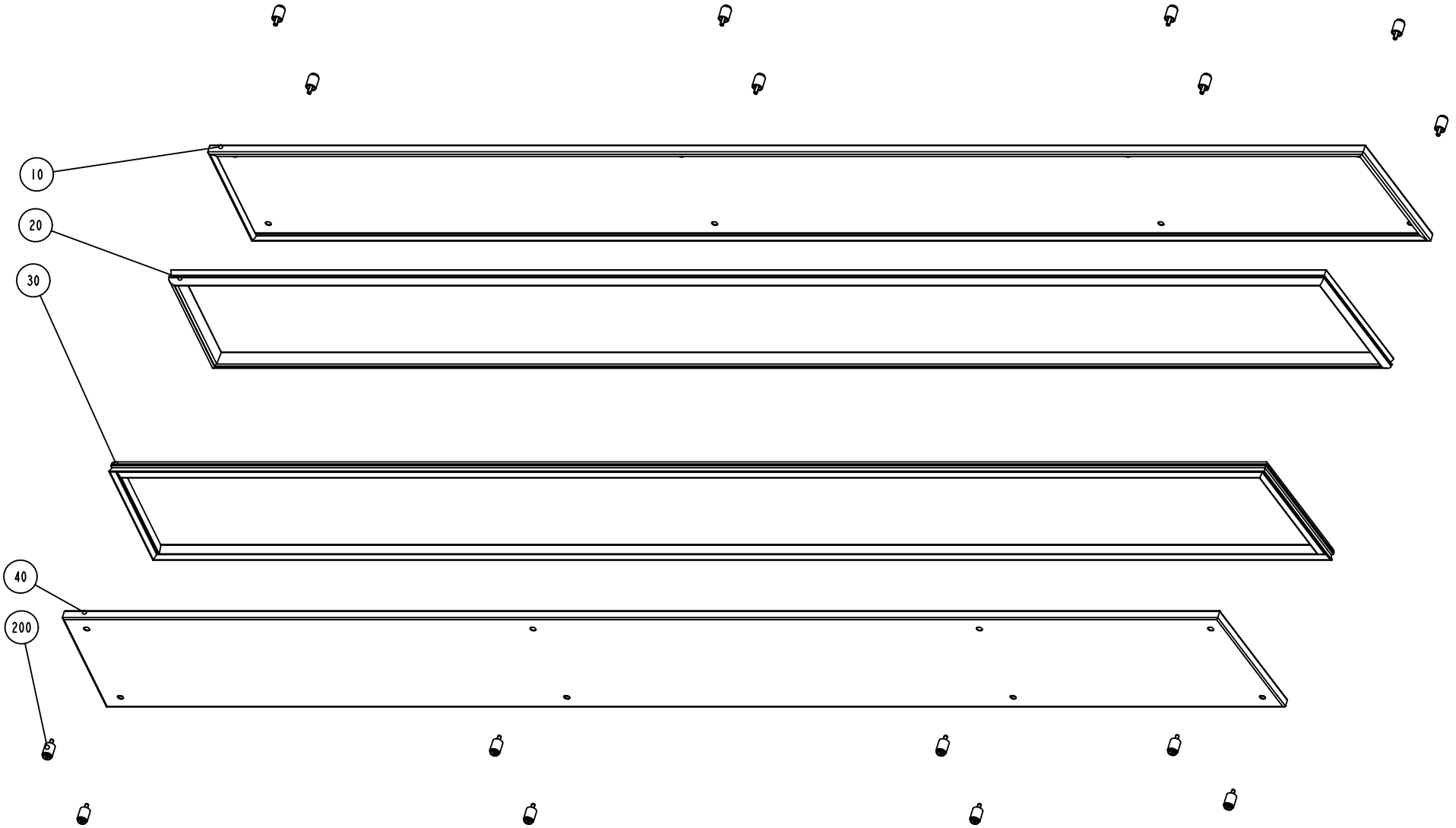

S-1317268-1
ECN 71879

ECM: 71879 - 19981005
Group number: 1317268-0100
Assembly Drawing: 1317268-1_1_AA

Pos	Part No	SP	UN	Qty	Description	Page No
-						
010	1346758-0000	-		1	COVER	
020	1346759-0000	-		1	GASKET	
030	1346757-0000	-		1	GASKET	
040	1346756-0000	-		1	COVER	
200	90226-0458	-		16	MOUNTING SCREW	

Pos	Part No	SP	UN	Qty	Description	Page No

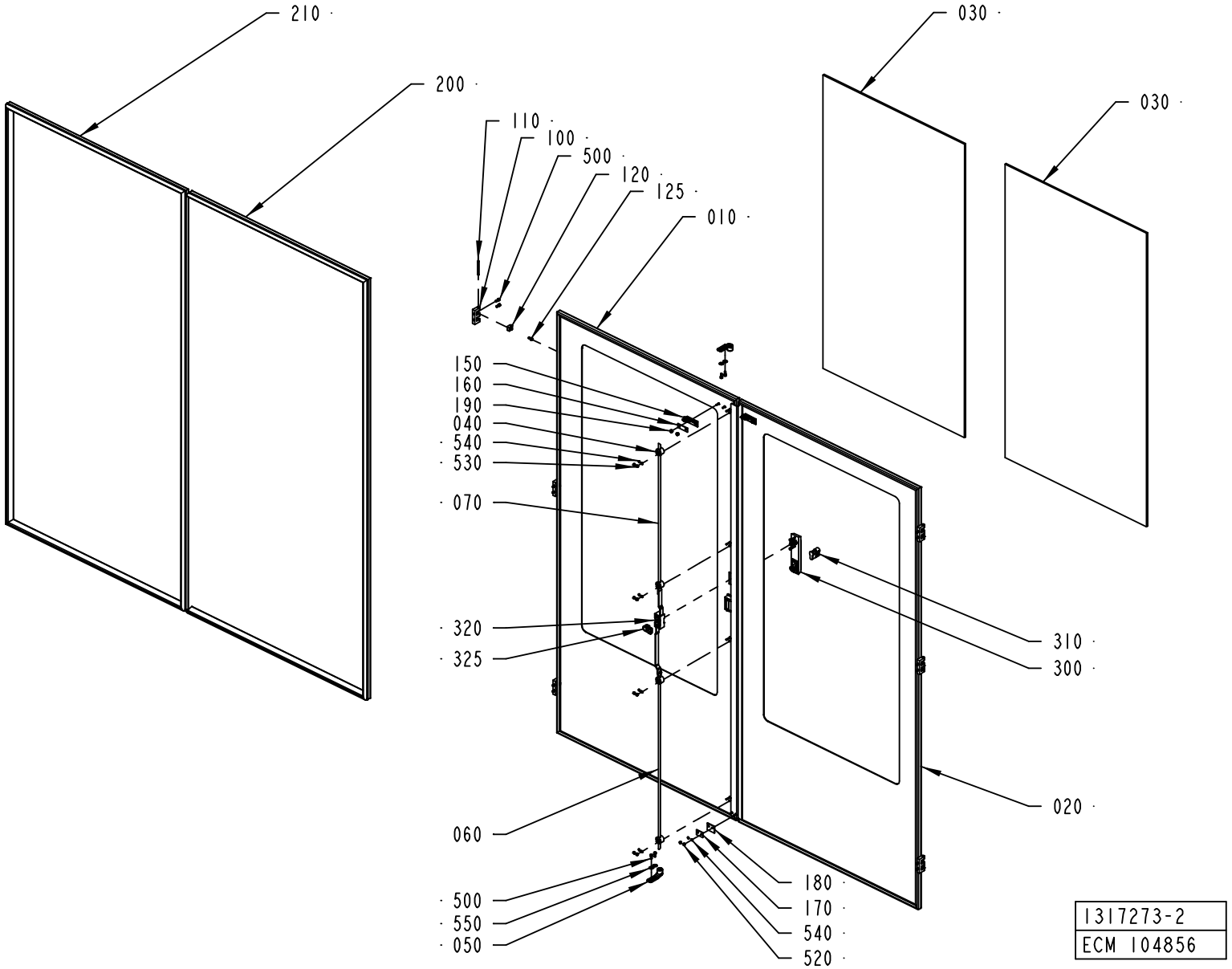
210
200
030
030
110
100
500
120
125
010
150
160
190
040
540
530
070
320
325
310
300
020
060
500
550
050
180
170
540
520
1317273-2
ECM 104856

ECM: 105010 - 20010925
Group number: 1317273-0200
Assembly Drawing: 1317273-2_1_AA

Pos	Part No	SP	UN	Qty	Description	Page No
-						
010	1317271-0000	-		1	DOOR	
020	1317272-0000	-		1	DOOR	
030	2533626-0000	-		2	GLASS PANE	
040	1129274-0000	-		4	GUIDE LUG	
050	1538868-0000	-		2	BRACKET	
060	1036304-0006	-		1	LOCKING ARM	
070	1036304-0013	-		1	LOCKING ARM	
100	1035792-0000	-		6	E-HINGE	
110	988685-0000	-		6	PIN	
120	1129770-0000	-		6	BLOCKING PIECE	
125	1129767-0000	-		6	SCREW	
150	1129042-0000	-		2	KEY	
160	1036563-0000	-		2	WASHER	
170	1129324-0000	-		1	WASHER	
180	1129325-0000	-		1	SEALING FLANGE	
190	1512644-0000	-		4	ROUND NUT	
200	1317274-0000	-		1	SEALING STRIP	
210	1317275-0000	-		1	SEALING STRIP	
300	90237-0176	A		1	TURNING HANDLE	
310	90237-0128	-		1	LOCK CYLINDER, 1109-U3	
320	90237-0153	-		1	LOCK HOUSING, 1121-U26-0B	
325	90237-0165	-		1	LATCH	
350	90157-0041	-		1	SEALING COMPOUND	
360	90153-0049	-			ADHESIVE, LOCTITE 409 20G	
500	312115-0327	-		16	SCREW ISO4762 M5X12 A4	
520	312812-0312	-		2	HEXAGON NUT, NY-LOCK M4 A480	
530	312705-0312	-		8	NUT HEX. DOMED CAP MHM-6 M4 A280	
540	315105-0136	-		10	WASHER BRB4,3XRFR	
550	90005-0114	-		4	WASHER PLAIN ROUND 5,3(M5)/15, H=1	

Pos	Part No	SP	UN	Qty	Description	Page No

Machine Type | Group Description | Used-In | Group Number | Page No

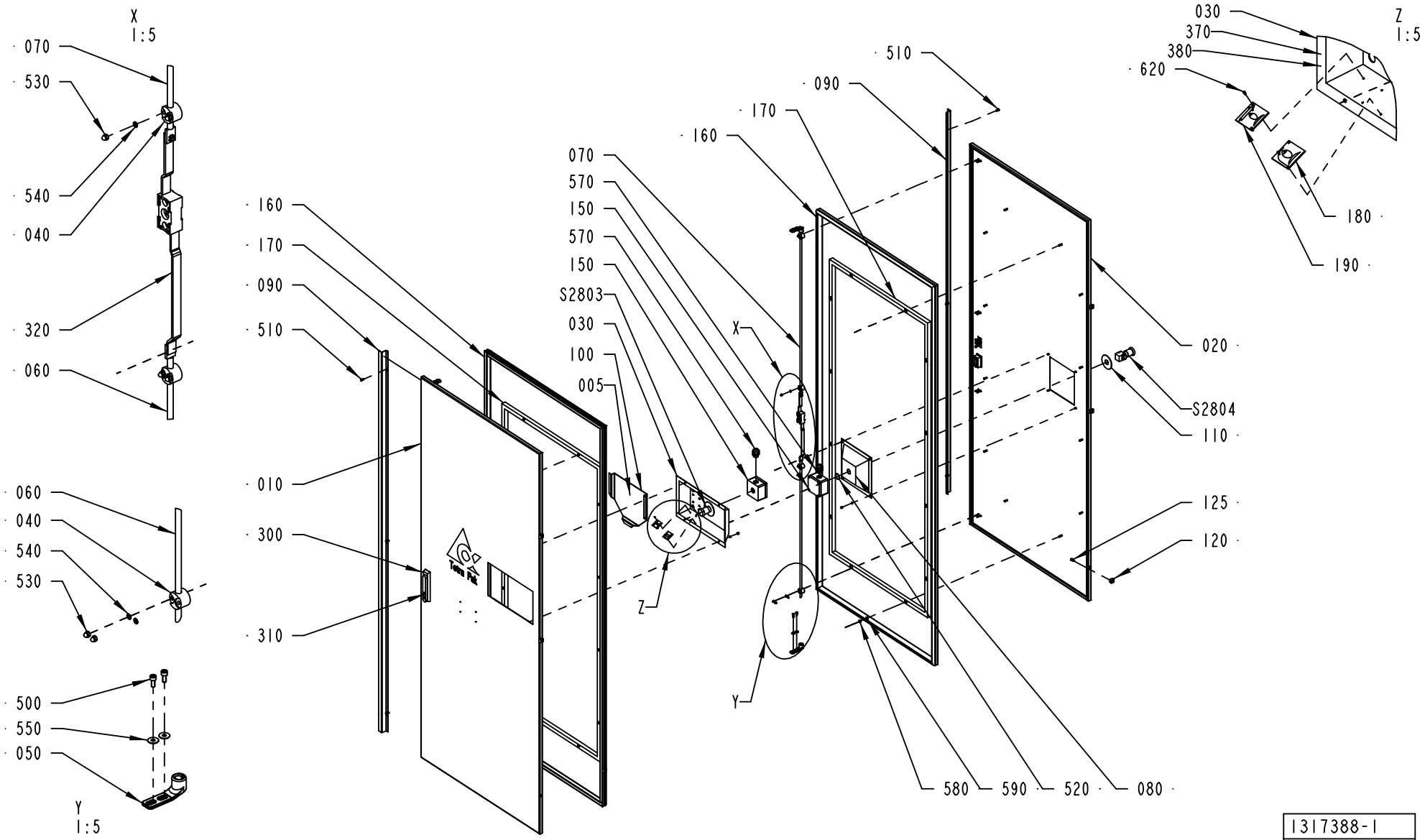

1317388-1
ECM 104856

ECM: 104856 - 20011123
Group number: 1317388-0100
Assembly Drawing: 1317388-1_1_AD

Pos	Part No	SP	UN	Qty	Description	Page No
-						
005	1512398-0100	-		1	DIAGRAM	**2-111**
010	1317386-0000	-		1	DOOR	
020	1317387-0000	-		1	DOOR	
030	1317389-0000	-		1	COVER	
040	1129274-0000	-		8	GUIDE LUG	
050	1538868-0000	-		4	BRACKET	
060	1036304-0006	-		2	LOCKING ARM	
070	1036304-0007	-		2	LOCKING ARM	
080	1317390-0000	-		1	COVER	
090	1317392-0000	-		2	COVER	
100	1129275-0000	-		1	BOX FOR DIAGRAM	
110	486826-0001	-		2	SIGN "EMERGENCY STOP"	
120	1129770-0000	-		6	BLOCKING PIECE	
125	1129767-0000	-		6	SCREW	
150	1037130-0000	-		2	CONNECTION BOX	
160	1317391-0000	-		2	SEALING STRIP	
170	1348232-0000	-		2	FRAME	
180	1347766-0000	-		1	SIGN	
190	1347767-0000	-		1	SIGN	
300	90237-0176	-		2	TURNING HANDLE	
310	90237-0128	-		2	LOCK CYLINDER, 1109-U3	
320	90237-0153	-		2	LOCK HOUSING, 1121-U26-0B	
370	90157-0041	-		1	SEALING COMPOUND	
380	90153-0049	-		1	ADHESIVE, LOCTITE 409 20G	
500	312115-0327	-		8	SCREW ISO4762 M5X12 A4	
510	312115-0323	-		6	SCREW ISO4762 M5X8 A4	
520	315202-0119	-		2	O-RING 25,1X1,6 MM	
530	312705-0312	-		24	NUT HEX. DOMED CAP MHM-6 M4 A280	
540	315105-0136	-		24	WASHER BRB4,3XRFR	
550	90005-0114	-		8	WASHER PLAIN ROUND 5,3(M5)/15, H=1	
570	352103-0110	-		2	CABLE GLAND, STR 16, PR22,5/PG16	
580	312605-0316	-		24	HEXAGON NUT, M6M M6 A280	
590	315105-0153	-		24	WASHER BRB6,4X12RFR	
620	312502-0120	-		4	DRIVE SCREW ROUND HEAD KDS 0X5	
S2803	90064-0124	-		1	SWITCH, EM. STOP, ZB2-BS844+ZB2-BZ1045	
S2804	90064-0124	-		1	SWITCH, EM. STOP, ZB2-BS844+ZB2-BZ1045	
W2254	351150-0405	-	MM	2000	CABLE OLFLEX 5X0,75 MM2 LIGHT/GREY	
W2255	351150-0405	-	MM	3000	CABLE OLFLEX 5X0,75 MM2 LIGHT/GREY	

Pos	Part No	SP	UN	Qty	Description	Page No

Machine Type | Group Description | Used-In | Group Number | Page No

This page is intentionally left blank.

ECM: 144382 - 20031110
Group number: 1512398-0100
Assembly Drawing:

Pos	Part No	SP	UN	Qty	Description	Page No
-						
010	1512376-0000	-		1	PNEUMATIC DIAGRAM	
020	1484892-0000	-		1	PNEUMATIC DIAGRAM	
030	2506845-0000	-		1	DIAGRAM	
040	1484511-0000	-		1	WATER DIAGRAM	
050	1484893-0000	-		1	EXTERNAL CLEANING DIAGRAM	
060	2528968-0000	-		1	PNEUMATIC DIAGRAM	
070	2582671-0000	-		1	HYDRAULIC DIAGRAM	
080	2570379-0000	-		1	PNEUMATIC DIAGRAM	
090	2582672-0000	-		1	PNEUMATIC DIAGRAM	

Pos	Part No	SP	UN	Qty	Description	Page No

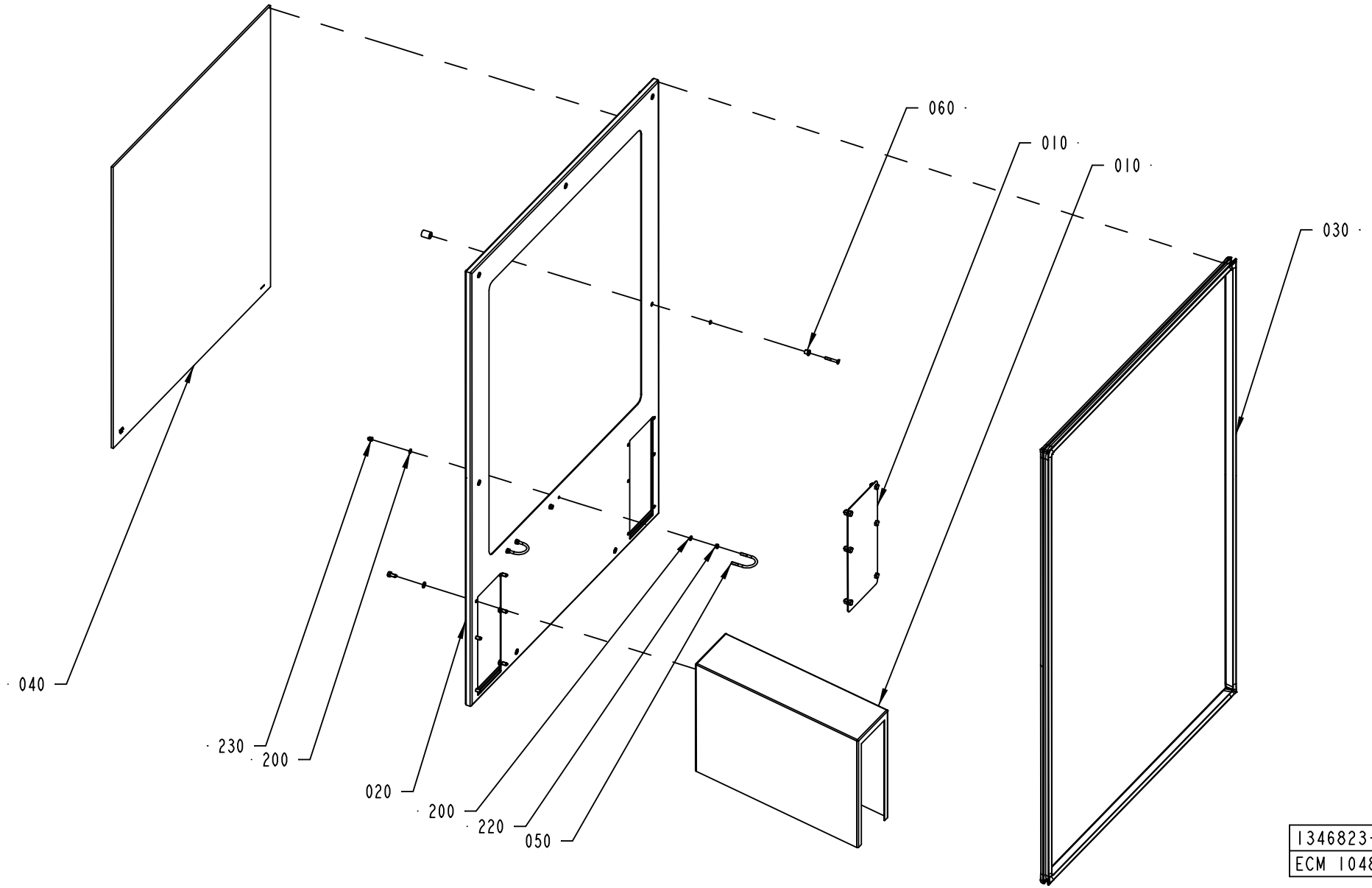
060
010
010
030
040
230
200
020
200
220
050
1346823-2
ECM 104856

ECM: 105011 - 20010925
Group number: 1346823-0200
Assembly Drawing: 1346823-2_1_AA

Pos	Part No	SP	UN	Qty	Description	Page No
-						
010	1346959-0100	-		1	LID	**2-115**
020	1346819-0000	-		1	COVER	
030	1296219-0000	-		1	SEALING STRIP	
040	2533625-0000	-		1	GLASS PANE	
050	531616-0000	-		2	HOLDER	
060	90226-0458	-		7	MOUNTING SCREW	
070	90157-0041	-		1	SEALING COMPOUND	
200	315105-0153	-		8	WASHER BRB6,4X12RFR	
220	312605-0316	-		4	HEXAGON NUT, M6M M6 A280	
230	312705-0316	-		4	NUT HEX. DOMED CAP MHM-6 M6 A280	

Pos	Part No	SP	UN	Qty	Description	Page No

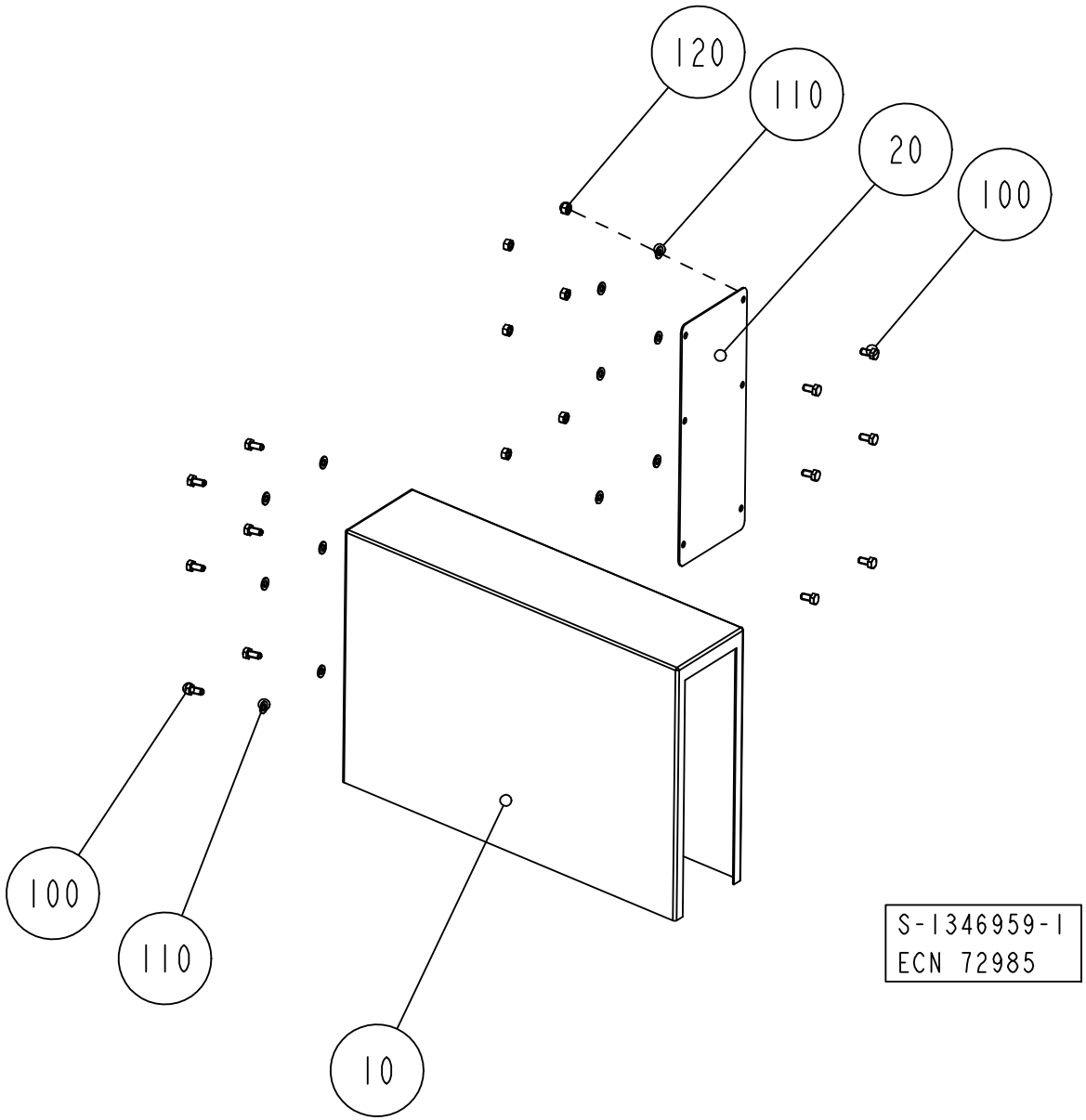
120
110
20
100
100
110
10
S-1346959-1
ECN 72985

ECM: 72985 - 20000201
Group number: 1346959-0100
Assembly Drawing: 1346959-1_1_AB

Pos	Part No	SP	UN	Qty	Description	Page No
-						
010	1346957-0000	-		1	TUNNEL	
020	1346958-0000	-		1	PLATE	
100	312105-0449	-		12	SCREW M6S ISO 4017 M8X16 A480	
110	315105-0165	-		12	WASHER BRB8,4X16RFR	
120	312605-0318	-		6	HEXAGON NUT, M6M M8 A280	

Pos	Part No	SP	UN	Qty	Description	Page No

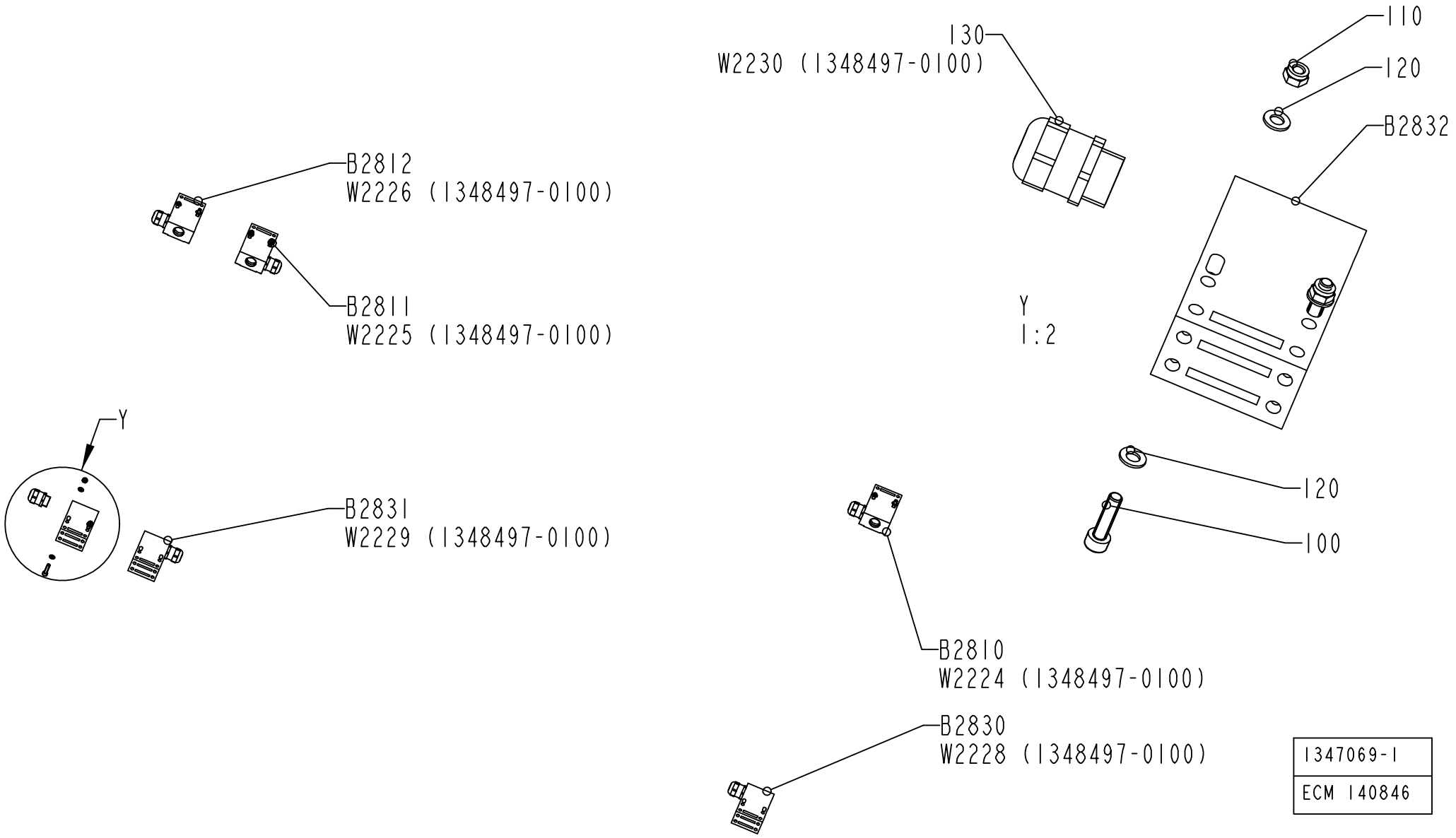

1347069-1
ECM 140846

ECM: 143651 - 20030113
Group number: 1347069-0100
Assembly Drawing: 1347069-1_1_AC

Pos	Part No	SP	UN	Qty	Description	Page No
-						
100	312125-0331	-		12	SCREW ISO 1207 M5X20 A4	
110	312812-0314	-		12	HEXAGON NUT, NY-LOCK M5 A480	
120	315105-0146	-		24	WASHER BRB5,3X10RFR	
130	90458-0315	-		6	CABLE GLAND, M20X1,5, NO.5311 1120	
B2810	90459-0472	C		1	KEY SAF.SW. AZ 16 02ZVRK-M20-2152-2254	
B2811	90459-0472	C		1	KEY SAF.SW. AZ 16 02ZVRK-M20-2152-2254	
B2812	90459-0472	C		1	KEY SAF.SW. AZ 16 02ZVRK-M20-2152-2254	
B2830	90459-0472	C		1	KEY SAF.SW. AZ 16 02ZVRK-M20-2152-2254	
B2831	90459-0472	C		1	KEY SAF.SW. AZ 16 02ZVRK-M20-2152-2254	
B2832	90459-0472	C		1	KEY SAF.SW. AZ 16 02ZVRK-M20-2152-2254	
W2224	351150-0405	-	MM	2500	CABLE OLFLEX 5X0,75 MM2 LIGHT/GREY	
W2225	351150-0405	-	MM	2500	CABLE OLFLEX 5X0,75 MM2 LIGHT/GREY	
W2226	351150-0405	-	MM	2500	CABLE OLFLEX 5X0,75 MM2 LIGHT/GREY	
W2228	351150-0405	-	MM	4500	CABLE OLFLEX 5X0,75 MM2 LIGHT/GREY	
W2229	351150-0405	-	MM	3500	CABLE OLFLEX 5X0,75 MM2 LIGHT/GREY	
W2230	351150-0405	-	MM	3500	CABLE OLFLEX 5X0,75 MM2 LIGHT/GREY	

Pos	Part No	SP	UN	Qty	Description	Page No

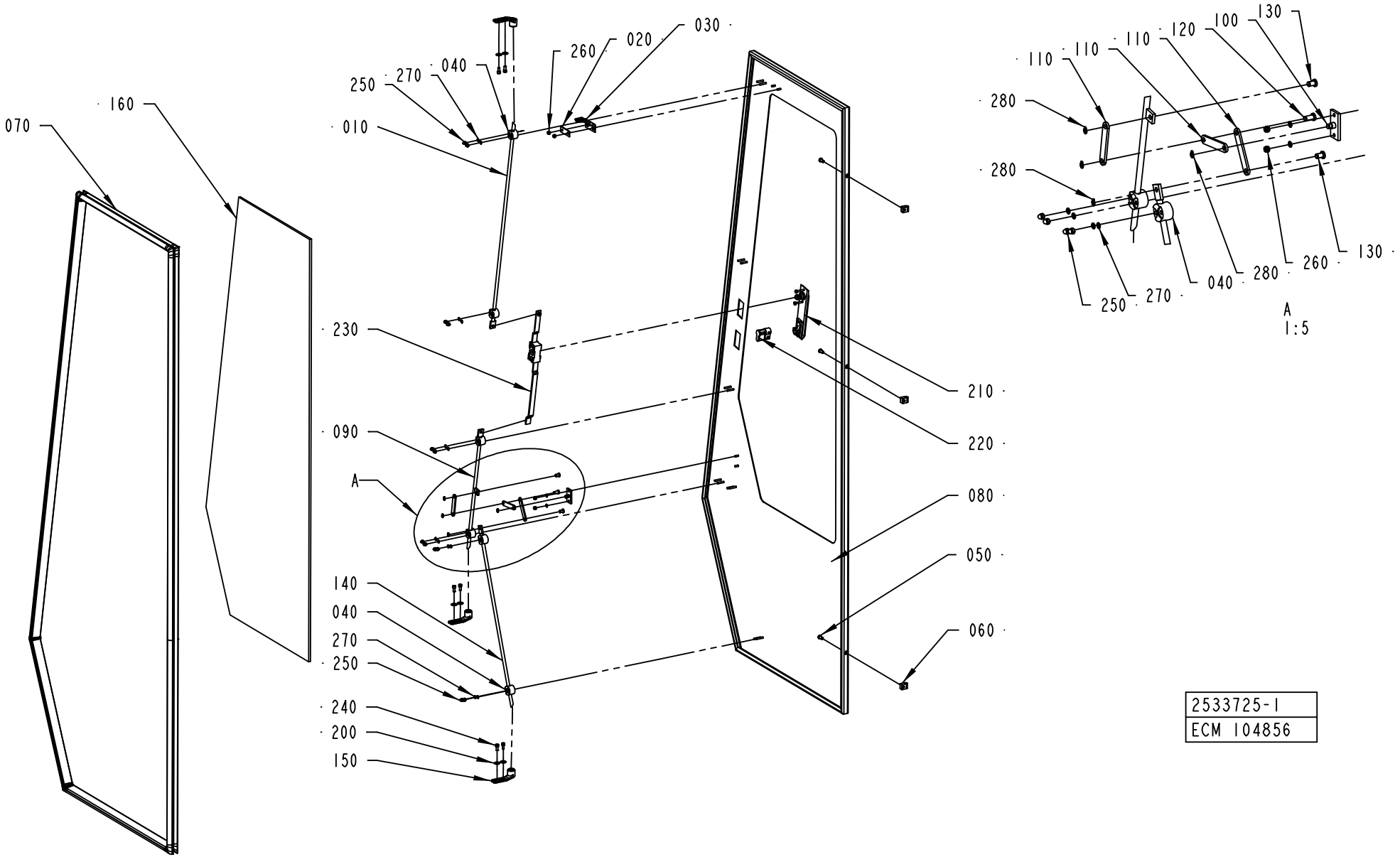
070
160
010
250
270
040
260
020
030
230
090
A
140
040
270
250
240
200
150
210
220
080
050
060
280
280
110
110
110
120
100
130
130
260
280
040
270
250
A
1:5
2533725-1
ECM 104856

ECM: 105013 - 20010925
Group number: 2533725-0100
Assembly Drawing: 2533725-1_1_AA

Pos	Part No	SP	UN	Qty	Description	Page No
-						
010	1036304-0018	-		1	LOCKING ARM	
020	1036563-0000	-		1	WASHER	
030	1129042-0000	-		1	KEY	
040	1129274-0000	-		6	GUIDE LUG	
050	1129767-0000	-		3	SCREW	
060	1129770-0000	-		3	BLOCKING PIECE	
070	1279076-0000	-		1	SEALING STRIP	
080	2541130-0000	-		1	DOOR	
090	1285844-0000	-		1	LOCKING ARM	
100	1285845-0000	-		1	BRACKET	
110	1285846-0000	-		3	LINK	
120	1285847-0000	-		1	SHAFT	
130	1285848-0000	-		2	SHAFT	
140	1350708-0000	-		1	LOCKING ARM	
150	1538868-0000	-		3	BRACKET	
160	2533624-0000	-		1	GLASS PANE	
200	90005-0114	-		6	WASHER PLAIN ROUND 5,3(M5)/15, H=1	
210	90237-0175	-		1	TURNING HANDLE	
220	90237-0128	-		1	LOCK CYLINDER, 1109-U3	
230	90237-0153	-		1	LOCK HOUSING, 1121-U26-0B	
240	312115-0327	-		6	SCREW ISO4762 M5X12 A4	
250	312705-0312	-		12	NUT HEX. DOMED CAP MHM-6 M4 A280	
260	312812-0312	-		4	HEXAGON NUT, NY-LOCK M4 A480	
270	315105-0136	-		14	WASHER BRB4,3XRFR	
280	315751-0103	-		4	RETAINING RING FOR SHAFT DIN 471 6 A2	
290	90153-0049	-		1	ADHESIVE, LOCTITE 409 20G	
300	90157-0041	-		1	SEALING COMPOUND	

Pos	Part No	SP	UN	Qty	Description	Page No

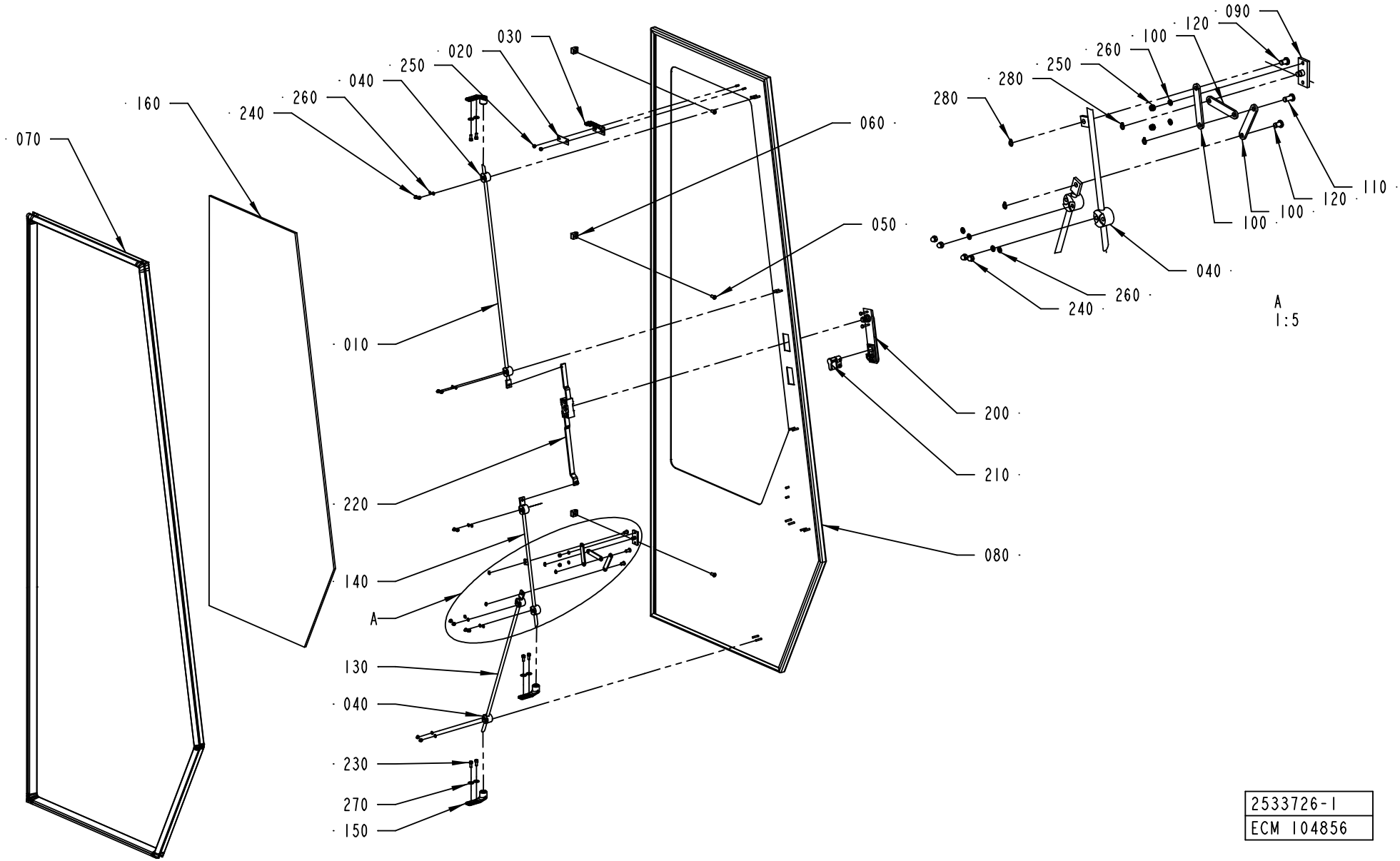

2533726-1
ECM 104856

ECM: 105012 - 20010925
Group number: 2533726-0100
Assembly Drawing: 2533726-1_1_AA

Pos	Part No	SP	UN	Qty	Description	Page No
-						
010	1036304-0018	-		1	LOCKING ARM	
020	1036563-0000	-		1	WASHER	
030	1129042-0000	-		1	KEY	
040	1129274-0000	-		6	GUIDE LUG	
050	1129767-0000	-		3	SCREW	
060	1129770-0000	-		3	BLOCKING PIECE	
070	1279075-0000	-		1	SEALING STRIP	
080	2541129-0000	-		1	DOOR	
090	1285845-0000	-		1	BRACKET	
100	1285846-0000	-		3	LINK	
110	1285847-0000	-		1	SHAFT	
120	1285848-0000	-		2	SHAFT	
130	1350708-0000	-		1	LOCKING ARM	
140	1478005-0000	-		1	LOCKING ARM	
150	1538868-0000	-		3	BRACKET	
160	2533724-0000	-		1	GLASS PANE	
200	90237-0175	-		1	TURNING HANDLE	
210	90237-0128	-		1	LOCK CYLINDER, 1109-U3	
220	90237-0153	-		1	LOCK HOUSING, 1121-U26-0B	
230	312115-0327	-		6	SCREW ISO4762 M5X12 A4	
240	312705-0312	-		12	NUT HEX. DOMED CAP MHM-6 M4 A280	
250	312812-0312	-		4	HEXAGON NUT, NY-LOCK M4 A480	
260	315105-0136	-		14	WASHER BRB4,3XRFR	
270	90005-0114	-		6	WASHER PLAIN ROUND 5,3(M5)/15, H=1	
280	315751-0103	-		4	RETAINING RING FOR SHAFT DIN 471 6 A2	
290	90153-0049	-		1	ADHESIVE, LOCTITE 409 20G	
300	90157-0041	-		1	SEALING COMPOUND	

Pos	Part No	SP	UN	Qty	Description	Page No

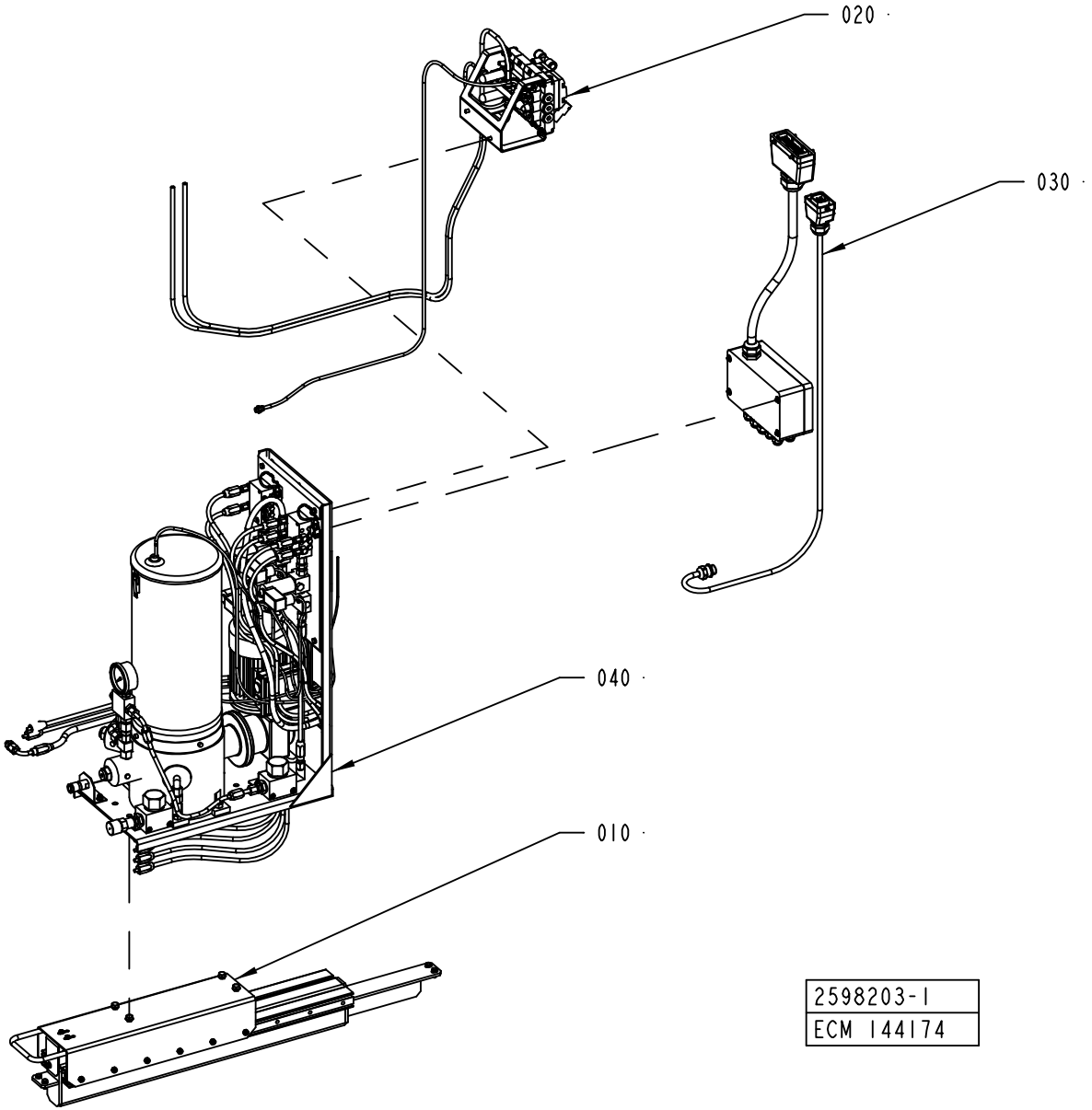
020
030
040
010
2598203-1
ECM 144174

ECM: 144174 - 20031110
Group number: 2598203-0100
Assembly Drawing: 2598203-1_1_AA

Pos	Part No	SP	UN	Qty	Description	Page No
TBA/22						
010	2566204-0100	-		1	SUPPORT	**2-125**
020	2574382-0100	-		1	VALVE PANEL	**2-127**
030	2574383-0100	-		1	ELECTRIC EQUIPMENT	**2-129**
040	2605199-0100	-		1	PUMP UNIT	**2-131**

Pos	Part No	SP	UN	Qty	Description	Page No

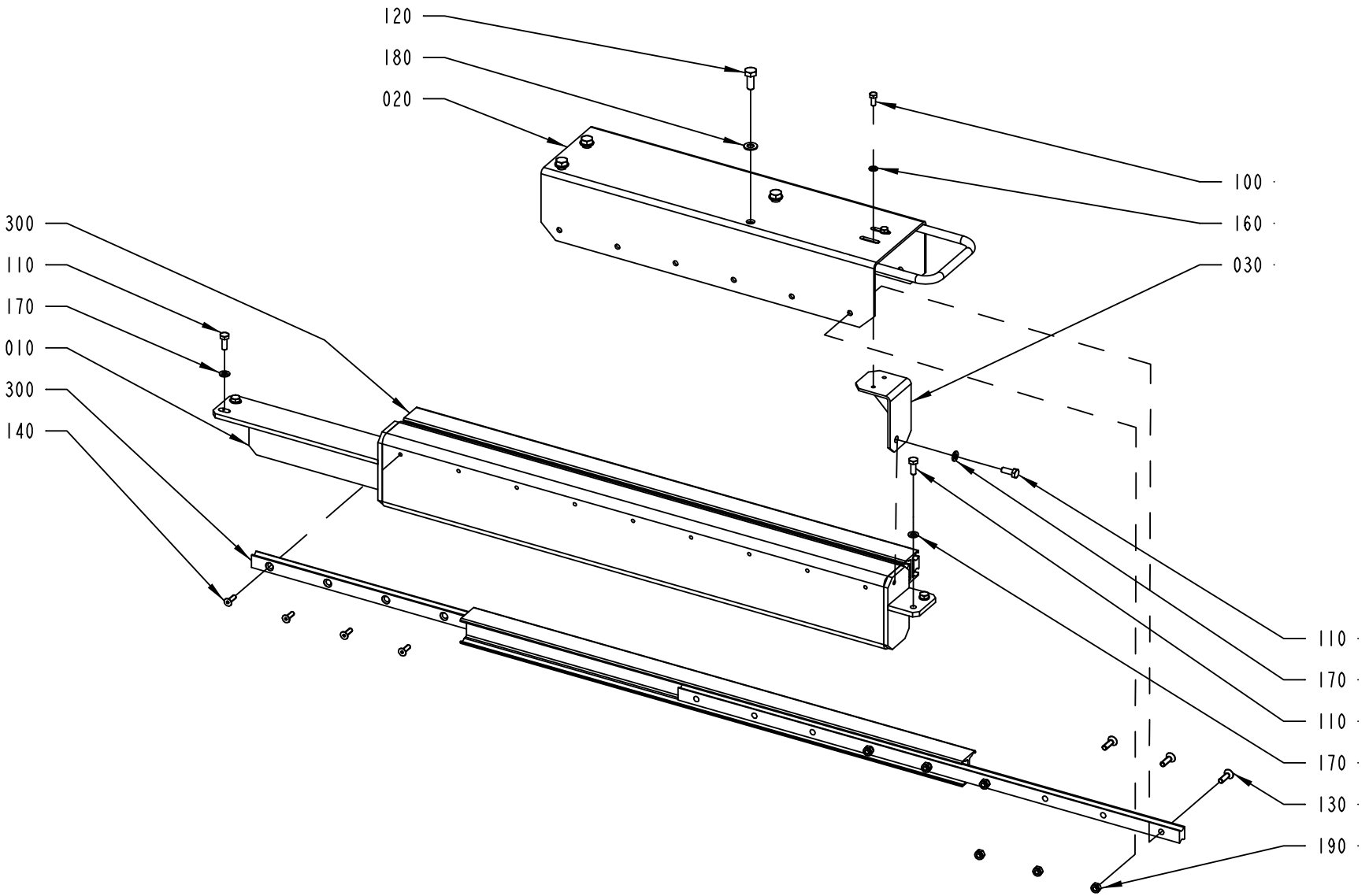

2566204-1
ECM 115290

ECM: 124953 - 20031023
Group number: 2566204-0100
Assembly Drawing: 2566204-1_1_AA

Pos	Part No	SP	UN	Qty	Description	Page No
-						
010	2566205-0000	-		1	FRAME	
020	2566206-0000	-		1	SUPPORT	
030	2566207-0000	-		1	HOLDER	
100	312105-0327	-		2	SCREW M6S ISO 4017 M5X12 A480	
110	312105-0368	-		5	SCREW M6S ISO 4017 M6X16 A480	
120	312105-0451	-		4	SCREW M6S ISO 4017 M8X20 A480	
130	312155-0370	-		12	SCREW EN 10642 MF6S M6X20 A480	
140	312155-0329	-		18	SCREW EN 10642 MF6S M5X16 A480	
160	315105-0146	-		2	WASHER BRB5,3X10RFR	
170	315105-0153	-		5	WASHER BRB6,4X12RFR	
180	315105-0165	-		4	WASHER BRB8,4X16RFR	
190	312812-0316	-		12	HEXAGON NUT, NY-LOCK M6 A480	
300	90459-2284	-		2	TELESCOPIC GUIDE, DE-V-35-690-878	

Pos	Part No	SP	UN	Qty	Description	Page No

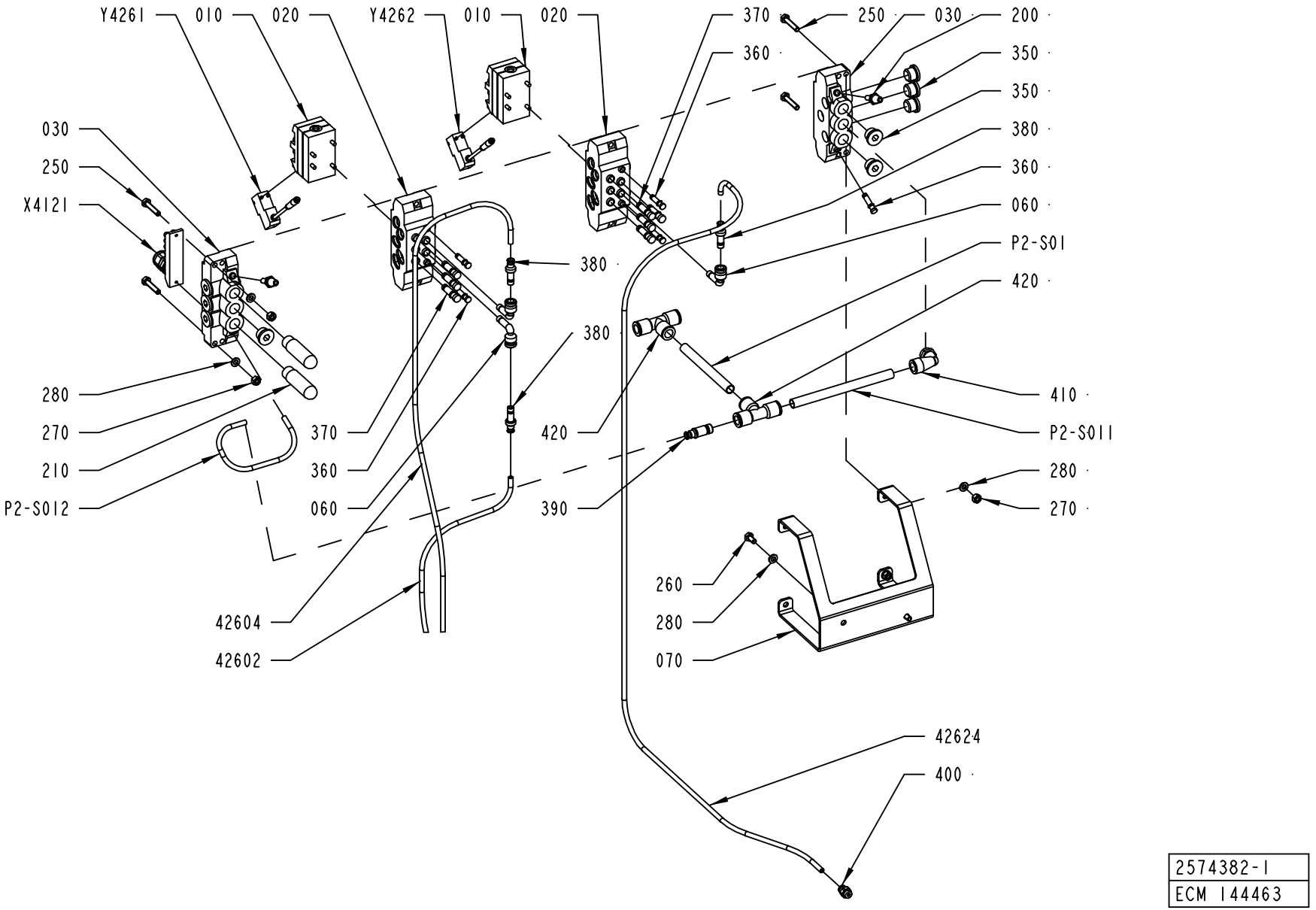

2574382-1
ECM 144463

ECM: 149519 - 20031204
Group number: 2574382-0100
Assembly Drawing: 2574382-1_1_AB

Pos	Part No	SP	UN	Qty	Description	Page No
-						
010	90042-0215	-		2	VALVE BODY 5/2 UNISTABLE	
020	90042-0520	-		2	BASE PLATE ISO SIZE 1	
030	90042-0522	-		2	PORTED END PIECE ISO SIZE 1	
060	90055-0204	-		3	ELBOW WITH TAILPIECE 8/8 MM LONG	
070	2603957-0000	-		1	SUPPORT	
200	90328-0017	-		2	SILENCER, D=6 MM	
210	90328-0024	-		2	SILENCER G3/8	
250	312109-0374	-		4	SCREW M6S ISO 4017 M6X30 A480	
260	312105-0366	-		2	SCREW M6S ISO 4017 M6X12 A480	
270	312605-0316	-		4	HEXAGON NUT, M6M M6 A280	
280	315105-0153	-		6	WASHER BRB6,4X12RFR	
350	342713-0211	-		9	PLUG, EXT THREAD HEX SOCKET 8638-00-380	
360	342715-0102	-		5	BLIND PLUG 6 MM	
370	342715-0103	-		7	BLIND PLUG 8 MM	
380	342716-0203	-		3	REDUCER 6-8	
390	342716-0210	-		1	REDUCER 6-12	
400	342722-0202	-		1	PIPE COUPLING 1/8" D=6MM	
410	90458-2960	-		1	ELBOW PIPE JOINT, EXT.THREAD,D=12MM-G3/8	
420	342748-0109	-		2	T-CONNECTION 12MM	
42602	90166-0081	-	MM	1300	TUBE 6 MM PA BLUE	
42604	90166-0081	-	MM	1300	TUBE 6 MM PA BLUE	
42624	90166-0081	-	MM	1150	TUBE 6 MM PA BLUE	
P2-S01	90166-0195	-	MM	900	TUBE 12 MM PA BLUE	
P2-S011	90166-0195	-	MM	140	TUBE 12 MM PA BLUE	
P2-S012	90166-0081	-	MM	400	TUBE 6 MM PA BLUE	
X4121	90042-0535	-		1	TERMINAL BOARD 19 CORDS	
Y4261	90042-0538	-		1	PILOT VALVE L=500MM	
Y4262	90042-0538	-		1	PILOT VALVE L=500MM	

Pos	Part No	SP	UN	Qty	Description	Page No

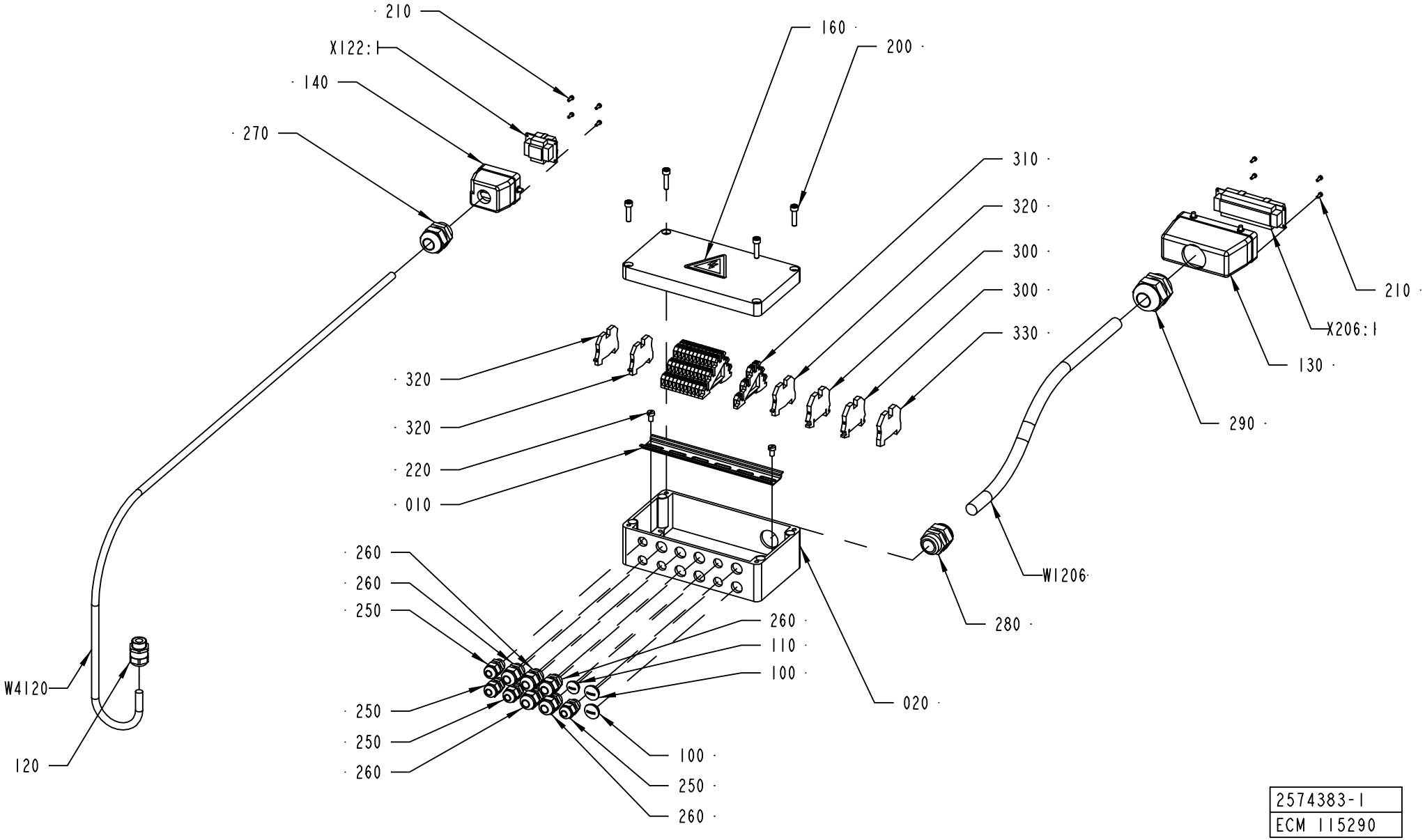

2574383-1
ECM 115290

ECM: 124954 - 20031023
Group number: 2574383-0100
Assembly Drawing: 2574383-1_1_AA

Pos	Part No	SP	UN	Qty	Description	Page No
-						
010	2531417-0000	-		1	RAIL	
020	2594415-0000	-		1	CONNECTION BOX	
100	90002-0009	-		2	BLANK-OFF PLUG, PR 18.6 SKINDICHT-BLK11	
110	90002-0013	-		1	BLANK-OFF PLUG, PR 15,2 SKINDICHT-BLK9	
120	90458-0307	-		1	CABLE GLAND, M20X1,5, NO.5311 1020	
130	90110-0152	-		1	CABLE HOOD 24-POL 70.352.2428.1	
140	90110-0157	-		1	CABLE HOOD 6-POL 70.352.0628.1	
160	359705-0015	-		1	WARNING SIGN ISO, RISK OF ELECTRIC SHOCK	
200	312115-0372	-		8	SCREW ISO4762 M6X25 A4	
210	312125-0222	-		8	SCREW ISO 1207 M3X8 A4	
220	312125-0364	-		2	SCREW ISO 1207 M6X10 A4	
250	352103-0101	-		4	CABLE GLAND, ST 9, PR15,2/PG9	
260	352103-0106	-		5	CABLE GLAND, ST 11, PR18,6/PG11	
270	352103-0115	-		1	CABLE GLAND, STR 21, PR28,3/PG21	
280	352103-0116	-		1	CABLE GLAND, ST 21, PR28,3/PG21	
290	352103-0120	-		1	CABLE GLAND, STR 29, PR37,0/PG29	
300	353021-0213	-		2	FEED THROUGH TERMINAL, 10201.0	
310	353021-0302	-		12	TERMINALS,TRIPLE-LEVEL, DLD 2,5/35 PA	
320	353024-0204	-		3	EARTH TERMINAL WPE 2,5	
330	353024-0205	-		1	EARTH TERMINAL, 1010.1	
W1206	351150-0425	-	MM	8000	CABLE OLFLEX 25X0,75 MM2 LIGHT/GREY	
W4120	351150-0418	-	MM	9000	CABLE OLFLEX 4X2,5 MM2 LIGHT/GREY	
X122:1	90110-0159	-		1	MALE INSERT 70.310.0640.0	
X206:1	90110-0150	-		1	MALE INSERT 121110 0000	

Pos	Part No	SP	UN	Qty	Description	Page No

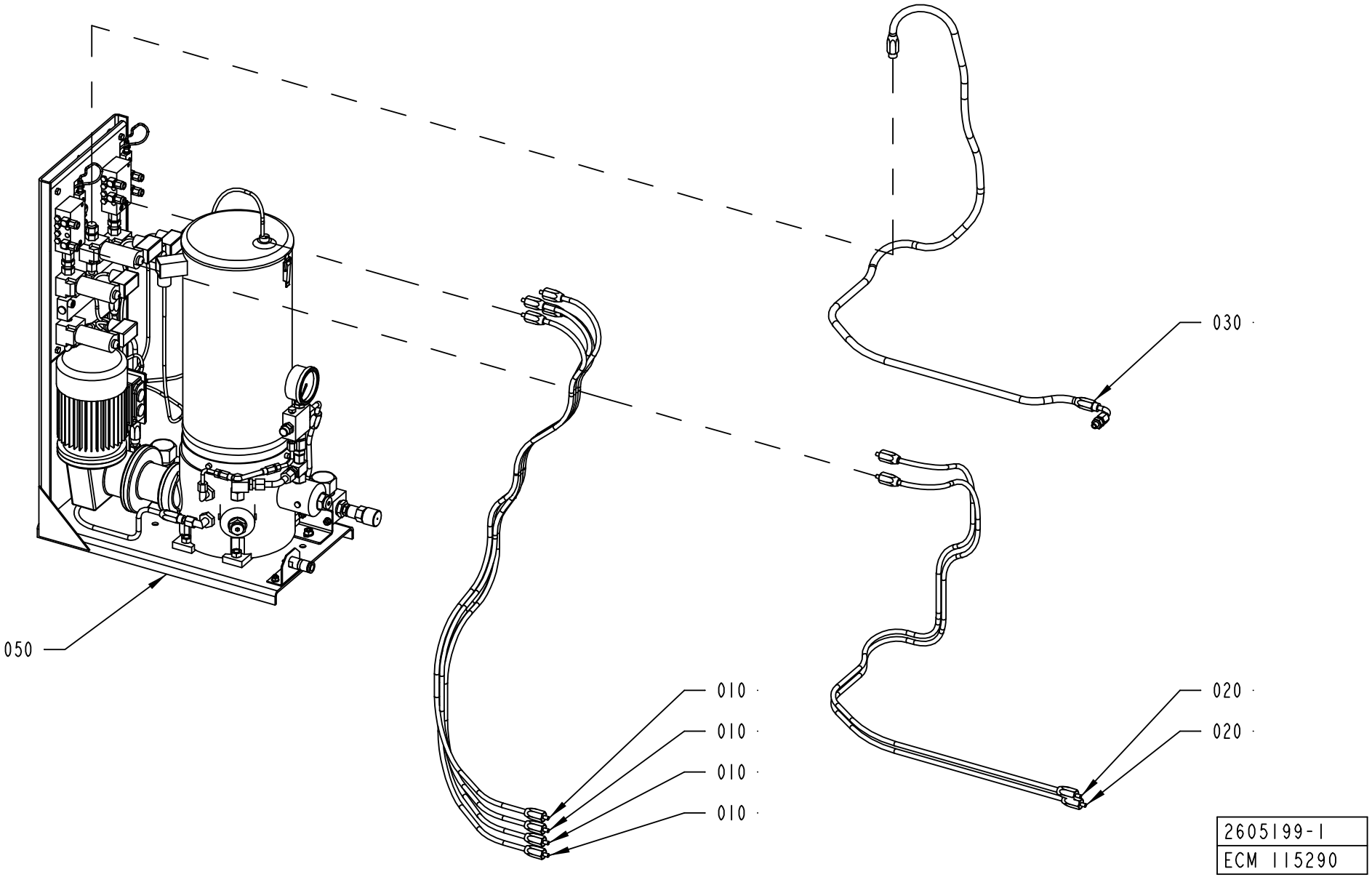
030
050
010
010
010
010
020
020
2605199-1
ECM 115290

ECM: 127887 - 20031023
Group number: 2605199-0100
Assembly Drawing: 2605199-1_1_AA

Pos	Part No	SP	UN	Qty	Description	Page No
-						
010	90459-2341	-		4	HOSE ASSEMBLY, EL 03600101	
020	90459-2342	-		2	HOSE ASSEMBLY, EL 03600102	
030	90459-2343	-		1	HOSE ASSEMBLY, EL 03600103	
050	90459-1795	-		1	LUBRICATION PUMP UNIT 10KG, BK 03173001	**2-133**

Pos	Part No	SP	UN	Qty	Description	Page No

LUBRICATION PUMP UNIT 10KG, BK 03173001

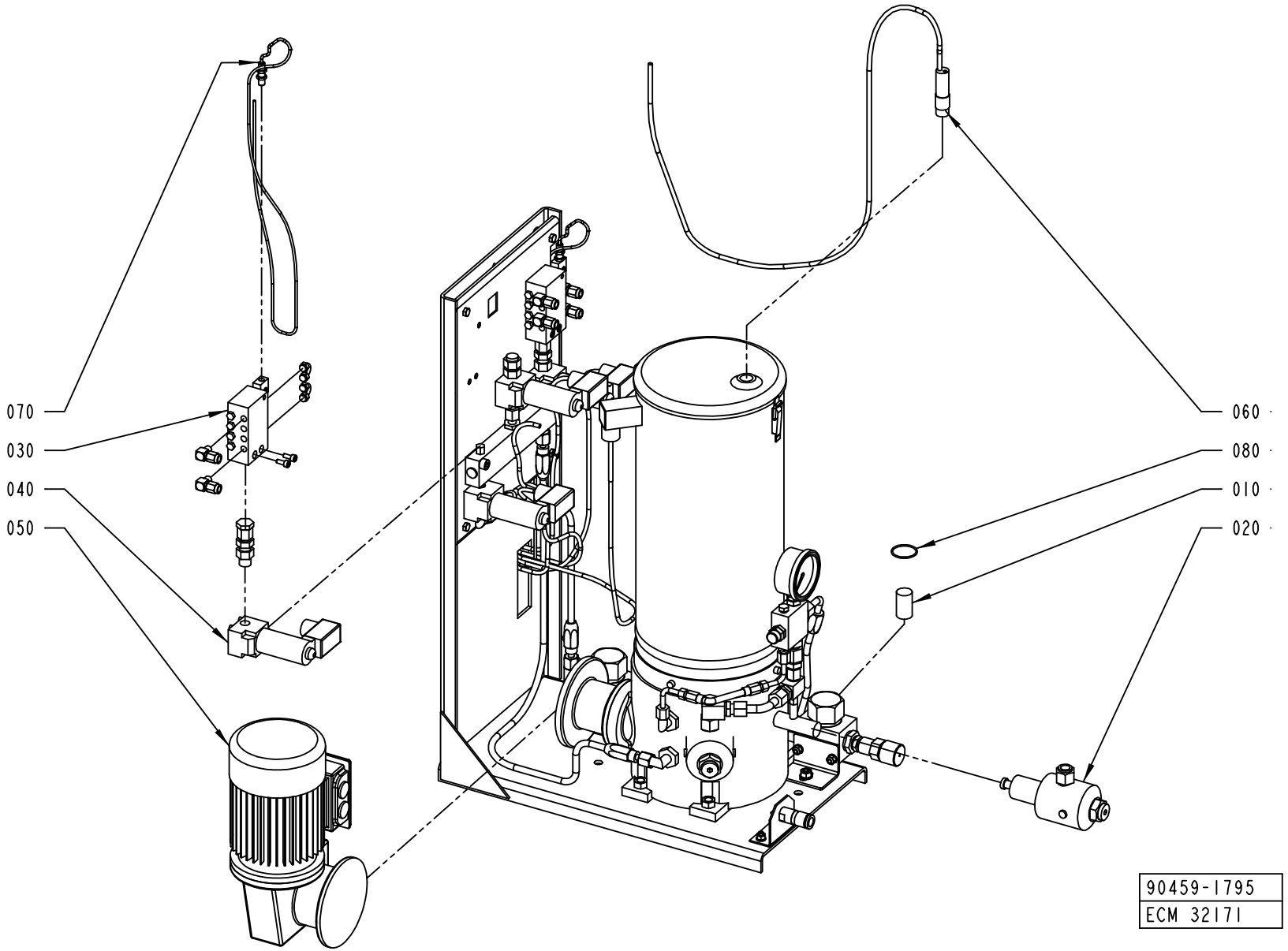

ECM: 146194 - 20031006
Group number: 90459-1795
Assembly Drawing: 90459-1795_1_AA

Pos	Part No	SP	UN	Qty	Description	Page No
-						
10	90459-2068	B		2	GREASE FILTER 100µ, EL 03530304	
20	90459-2147	B		2	PUMP PISTON, COD 2152 99 06 50 103	
30	90459-2150	B		2	DISTRIBUTION BLOCK, BK 06011304	
40	90459-2152	B		3	SOLENOID VALVE, COD. GR2-0-A24	
50	90459-2177	B		1	GEARED MOTOR, SK 15 40 VF-63 L/4	
60	90459-2186	B		2	CAPACITIVE SENSOR, KCN-T18PU/007-K1.5V	
70	90459-2626	B		2	PROXIMITY SWITCH, KIB-M08PS/1.5-KL6	
80	315202-0713	B		2	O-RING 29,87X1,78 MM	

Pos	Part No	SP	UN	Qty	Description	Page No

Tetra Pak

SPC
Spare Parts Catalogue

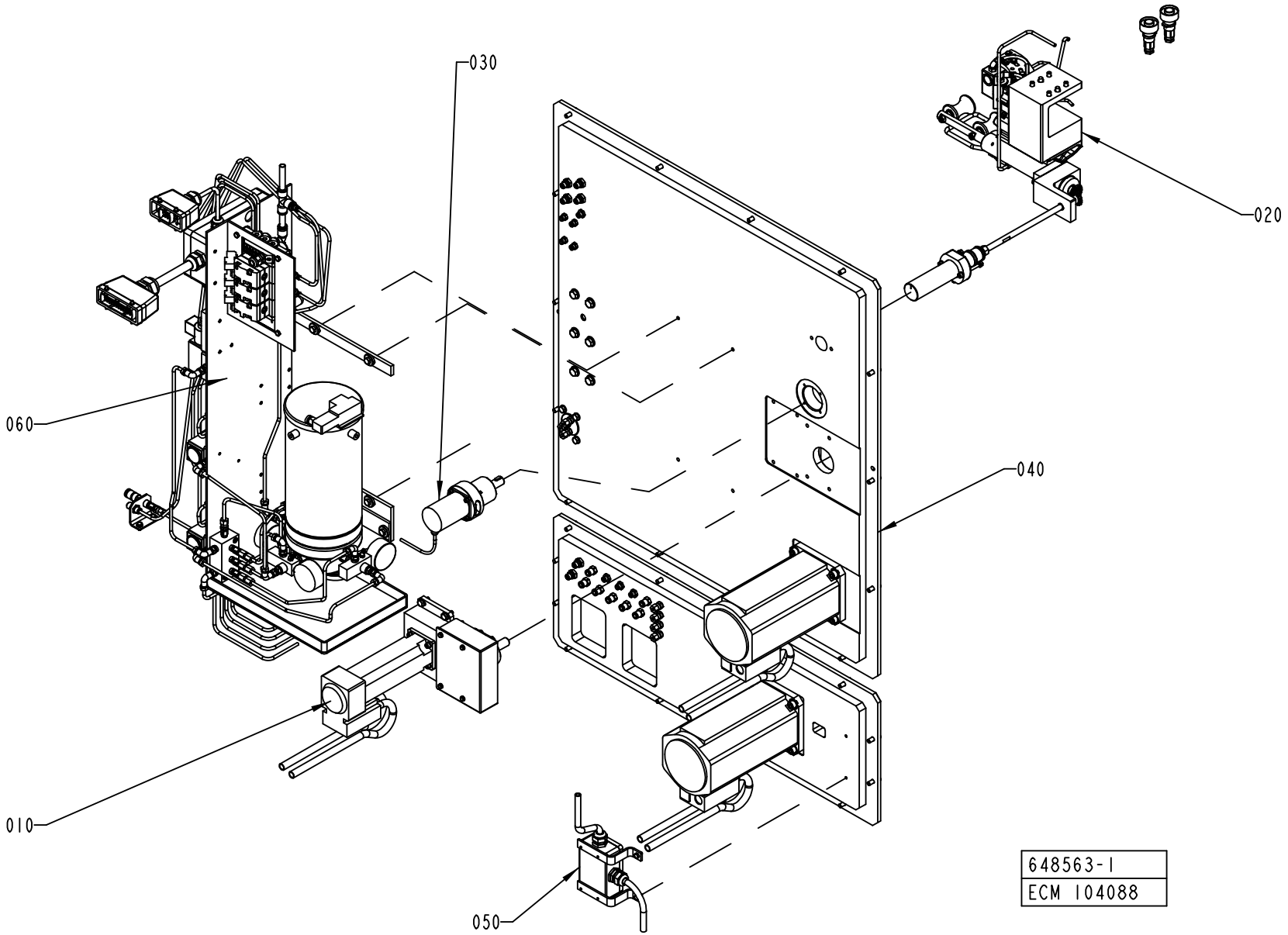
030
020
060
040
010
050
648563-1
ECM 104088

ECM: 126449 - 20031110
Group number: 648563-0100
Assembly Drawing: 648563-1_1_AB

Pos	Part No	SP	UN	Qty	Description	Page No
-						
010	2511247-0100	-		1	DESIGN CORRECTION DEVICE	**3-5**
020	2511249-0100	-		1	PHOTOCELL UNIT	**3-7, 3-9**
030	1260120-0100	-		1	VOLUME ADJUSTER	**3-11**
040	2511248-0200	-		1	PLATE	**3-13, 3-15**
050	1349464-0300	-		1	CONNECTION BOX	**3-17**

Pos	Part No	SP	UN	Qty	Description	Page No

DESIGN CORRECTION DEVICE

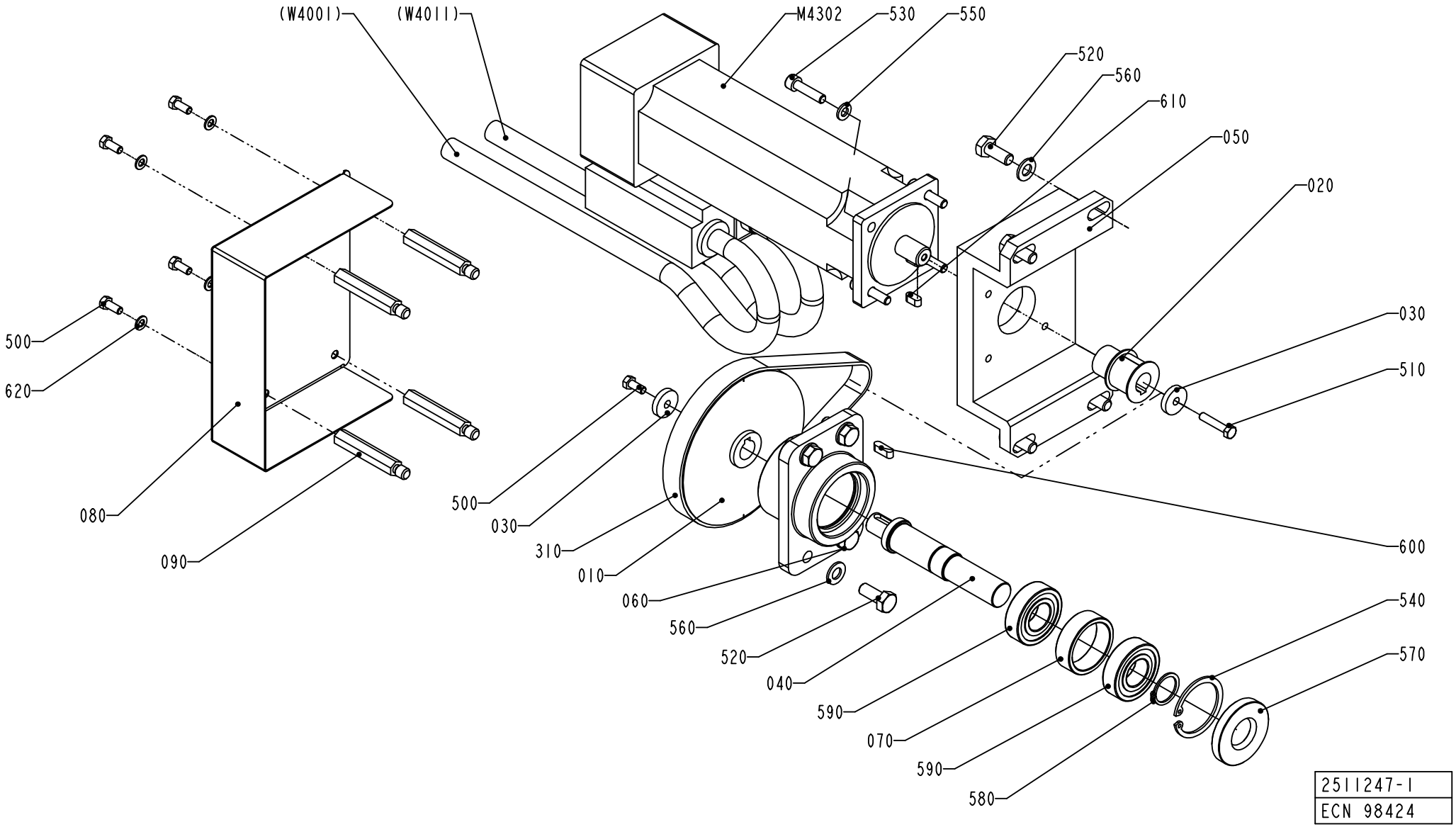

ECM: 116550 - 20030403
Group number: 2511247-0100
Assembly Drawing: 2511247-1_1_AA

Pos	Part No	SP	UN	Qty	Description	Page No
TBA 0200B (See drawing on page: 3-4)						
040	2525660-0000	-		1	SHAFT	
TBA 0200M, TBA 0250B (See drawing on page: 3-4)						
040	2525661-0000	-		1	SHAFT	
TBA 0250S, TBA 0200S (See drawing on page: 3-4)						
040	1512649-0000	-		1	SHAFT	
Common Parts						
010	1140839-0000	A		1	PULLEY	
020	1140837-0000	A		1	PULLEY	
030	1140851-0000	-		2	WASHER	
050	1260863-0000	-		1	PLATE	
060	1512650-0000	-		1	BEARING HOUSING	
070	1260865-0000	-		1	SPACER	
080	1487099-0000	-		1	COVER	
090	1487127-0000	-		4	SPACER SCREW	
310	90252-0047	A		1	TIMING BELT AT5 450X16 MM	
500	312105-0327	-		5	SCREW M6S ISO 4017 M5X12 A480	
510	312105-0333	-		1	SCREW M6S ISO 4017 M5X25 A480	
520	312105-0451	-		8	SCREW M6S ISO 4017 M8X20 A480	
530	312115-0372	-		4	SCREW ISO4762 M6X25 A4	
540	90141-0020	-		1	RETAIN. RING, 42	
550	315105-0153	-		4	WASHER BRB6,4X12RFR	
560	315105-0165	-		8	WASHER BRB8,4X16RFR	
570	315221-0147	B		1	RADIAL SEAL 20X47X7 MM	
580	315751-0116	-		1	RETAIN. RING, 20	
590	321308-0204	A		2	BALL BEARING, 20X42X12 MM	
600	315701-0199	A		1	PARALLEL KEY W. ROUND ENDS 5X5X16 MM	
610	315701-0197	A		1	PARALLEL KEY W. ROUND ENDS 5X5X12 MM	
620	315105-0146	-		4	BRICKA BRB5,3X10RFR	
M4302	90045-0164	A		1	SERVO MOTOR EP 075-112-44T3B	

Pos	Part No	SP	UN	Qty	Description	Page No

Machine Type | Group Description | Used-In | Group Number | Page No

PHOTOCELL UNIT

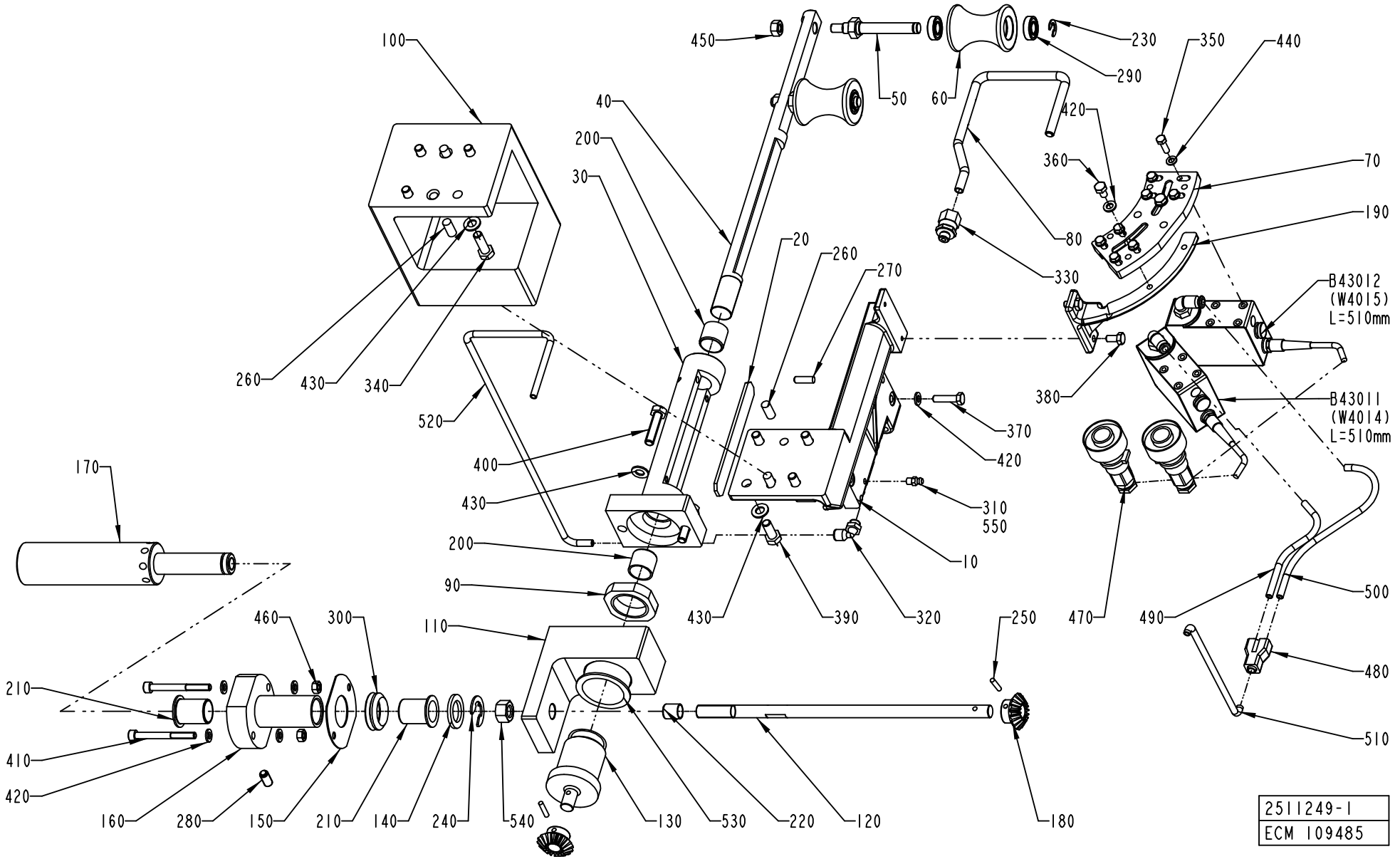

ECM: 120436 - 20020902
Group number: 2511249-0100
Assembly Drawing: 2511249-1_1_AB

This list covers pages from 3-6 to 3-9

Pos	Part No	SP	UN	Qty	Description	Page No
TBA 0200B						
040	2504430-0000	-		1	GUIDE ROD	
060	1347521-0000	A		2	ROLLER	
070	978735-0000	-		1	FASTENING PLATE	
080	1347522-0000	-		1	NOZZLE	
100	1517278-0000	-		1	SPACER	
190	751457-0000	-		1	CANTILEVER	
340	312105-0453	-		4	SCREW M6S ISO 4017 M8X25 A480	
390	312105-0451	-		4	SCREW M6S ISO 4017 M8X20 A480	
430	315105-0165	-		10	WASHER BRB8,4X16RFR	
490	90166-0013	-	MM	200	TUBE 8 MM PA BLUE	
500	90166-0013	-	MM	150	TUBE 8 MM PA BLUE	
510	90166-0013	-	MM	350	TUBE 8 MM PA BLUE	
520	90166-0132	-	MM	520	TUBE 6 MM PA,TRANSP.	
TBA 0200M						
040	2531955-0000	-		1	GUIDE ROD	
060	1484793-0000	A		2	ROLLER	
070	491880-0000	-		1	FASTENING PLATE	
080	1487203-0000	-		1	NOZZLE	
100	1517277-0000	-		1	SPACER	
190	1487204-0000	-		1	CANTILEVER	
340	312105-0453	-		4	SCREW M6S ISO 4017 M8X25 A480	
390	312105-0451	-		4	SCREW M6S ISO 4017 M8X20 A480	
430	315105-0165	-		10	WASHER BRB8,4X16RFR	
490	90166-0013	-	MM	250	TUBE 8 MM PA BLUE	
500	90166-0013	-	MM	220	TUBE 8 MM PA BLUE	
510	90166-0013	-	MM	230	TUBE 8 MM PA BLUE	
520	90166-0132	-	MM	500	TUBE 6 MM PA,TRANSP.	
TBA 0200S						
040	2527133-0000	-		1	GUIDE ROD	
060	1487209-0000	A		2	ROLLER	
070	491880-0000	-		1	FASTENING PLATE	
080	1512658-0000	-		1	NOZZLE	
100	1519178-0000	-		1	SPACER	
190	1487204-0000	-		1	CANTILEVER	
340	312105-0453	-		4	SCREW M6S ISO 4017 M8X25 A480	
390	312105-0451	-		4	SCREW M6S ISO 4017 M8X20 A480	
430	315105-0165	-		10	WASHER BRB8,4X16RFR	
490	90166-0013	-	MM	200	TUBE 8 MM PA BLUE	
500	90166-0013	-	MM	150	TUBE 8 MM PA BLUE	
510	90166-0013	-	MM	280	TUBE 8 MM PA BLUE	
520	90166-0132	-	MM	450	TUBE 6 MM PA,TRANSP.	

Pos	Part No	SP	UN	Qty	Description	Page No
TBA 0250B						
040	2504430-0000	-		1	GUIDE ROD	
060	1347521-0000	A		2	ROLLER	
070	978735-0000	-		1	FASTENING PLATE	
080	1347522-0000	-		1	NOZZLE	
100	1517277-0000	-		1	SPACER	
190	751457-0000	-		1	CANTILEVER	
340	312105-0453	-		4	SCREW M6S ISO 4017 M8X25 A480	
390	312105-0451	-		4	SCREW M6S ISO 4017 M8X20 A480	
430	315105-0165	-		10	WASHER BRB8,4X16RFR	
490	90166-0013	-	MM	200	TUBE 8 MM PA BLUE	
500	90166-0013	-	MM	150	TUBE 8 MM PA BLUE	
510	90166-0013	-	MM	280	TUBE 8 MM PA BLUE	
520	90166-0132	-	MM	450	TUBE 6 MM PA,TRANSP.	
TBA 0250S						
040	2531955-0000	-		1	GUIDE ROD	
060	1484793-0000	A		2	ROLLER	
070	491880-0000	-		1	FASTENING PLATE	
080	1487203-0000	-		1	NOZZLE	
100	2500364-0000	-		1	SPACER	
190	1487204-0000	-		1	CANTILEVER	
390	312105-0464	-		4	SCREW M6S ISO 4014 M8X65 A480	
430	315105-0165	-		6	WASHER BRB8,4X16RFR	
490	90166-0013	-	MM	250	TUBE 8 MM PA BLUE	
500	90166-0013	-	MM	220	TUBE 8 MM PA BLUE	
510	90166-0013	-	MM	130	TUBE 8 MM PA BLUE	
520	90166-0132	-	MM	390	TUBE 6 MM PA,TRANSP.	
Common Parts						
010	1538139-0000	-		1	HOLDER	
020	1538138-0000	A		1	SPACER	
030	2504429-0000	-		1	GUIDE HOLDER	
050	2506317-0000	-		2	SHAFT	
090	2504427-0000	-		1	ROUND NUT	
110	2504428-0000	-		1	SUPPORT	
120	2504431-0000	-		1	SHAFT	
130	2504426-0000	-		1	SHAFT	
140	2506263-0000	-		1	WASHER	
150	2506264-0000	-		1	GASKET	
160	2504433-0000	-		1	BEARING HOUSING	
170	2504434-0000	-		1	KNOB	
180	2510243-0000	B		2	GEAR WHEEL	
200	321136-0260	A		2	BUSHING, 20X23X20 MM	

Machine Type | Group Description | Used-In | Group Number | Page No

PHOTOCELL UNIT

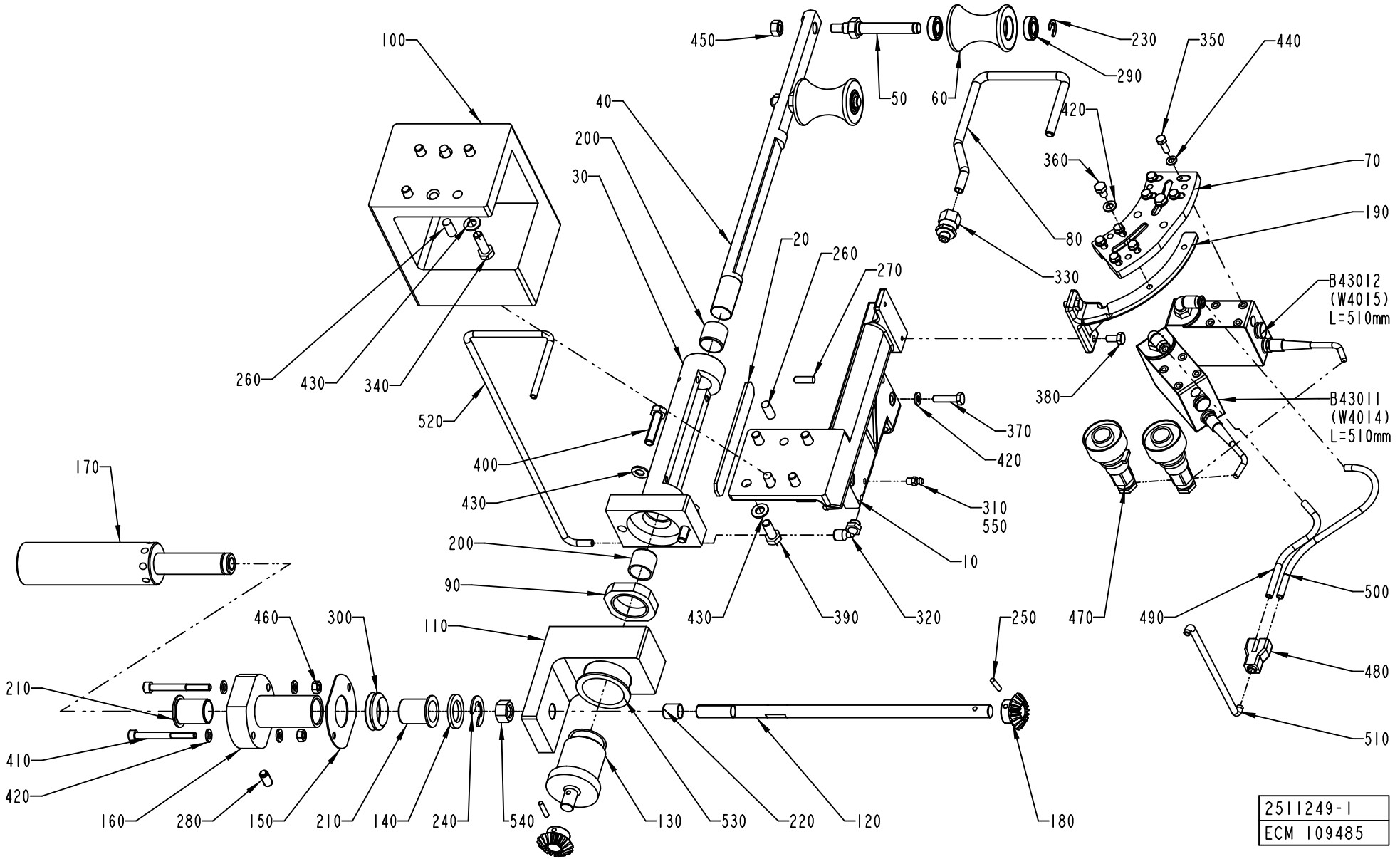

Pos	Part No	SP	UN	Qty	Description	Page No
Common Parts (Cont'd)						
210	321156-0270	A		2	FLANGE BUSHING, 20X23X30 MM	
220	321136-0183	A		1	BUSHING, 12X14X15 MM	
230	315755-0801	-		2	LOCKING WASHER 8	
240	315755-0113	-		1	LOCKING WASHER 15	
250	311103-0272	-		2	PARALLEL PIN ISO 2338 4M6X20 A1	
260	311103-0401	-		4	PARALLEL PIN ISO 2338 8M6X20 A1	
270	311103-0353	-		2	PARALLEL PIN ISO 2338 6M6X20 A1	
280	90287-0112	-		1	SCREW SPRINGLOAD. SLOTTED HEAD M8X16	
290	90214-0036	A		4	BALL BEARING, 10X22X6 MM	
300	315220-0167	-		1	V-RINGS 27X35X10,5 MM V-30S	
310	90286-0013	-		1	GREASE NIPPLE STRAIGHT M6	
320	90458-2956	-		1	ELBOW PIPE JOINT, EXT.THREAD, D=6MM-G1/8	
330	342720-0103	-		1	CONN. STR. GA-8-G1/8	
350	312105-0329	-		8	SCREW M6S ISO 4017 M5X16 A480	
360	312105-0364	-		2	SCREW M6S ISO 4017 M6X10 A480	
370	312105-0372	-		2	SCREW M6S ISO 4017 M6X25 A480	
380	312105-0366	-		2	SCREW M6S M6X12 A280	
400	312109-0457	-		2	SCREW M6S ISO 4017 M8X35 A480	
410	312115-0382	-		2	SCREW ISO4762 M6X60 A4	
420	315105-0153	-		8	WASHER BRB6,4X12RFR	
440	315105-0146	-		8	BRICKA BRB5,3X10RFR	
450	312605-0318	-		2	HEXAGON NUT, M6M M8 A280	
460	312605-0316	-		2	HEXAGON NUT, M6M M6 A280	
470	90110-0235	-		2	CABLE CONTACT, PX0739/S	
480	90055-0100	-		1	Y-CONNECTION, 6-6	
530	321156-0420	A		1	FLANGE BUSHING, 40X44X40 MM	
540	312605-0322	-		1	HEXAGON NUT, M6M M12 A280	
550	90296-0070	-		1	GREASE	
B43011	90458-0601	A		1	PHOTOCELL, SICK PHOTOCELL 1	
	342732-0102	*-*		*1*	*ELBOW PIPE JOINT, EXT.THREAD, D=6MM-G1/8*	
B43012	90458-0601	A		1	PHOTOCELL, SICK PHOTOCELL 1	
	342732-0102	*-*		*1*	*ELBOW PIPE JOINT, EXT.THREAD, D=6MM-G1/8*	

Pos	Part No	SP	UN	Qty	Description	Page No

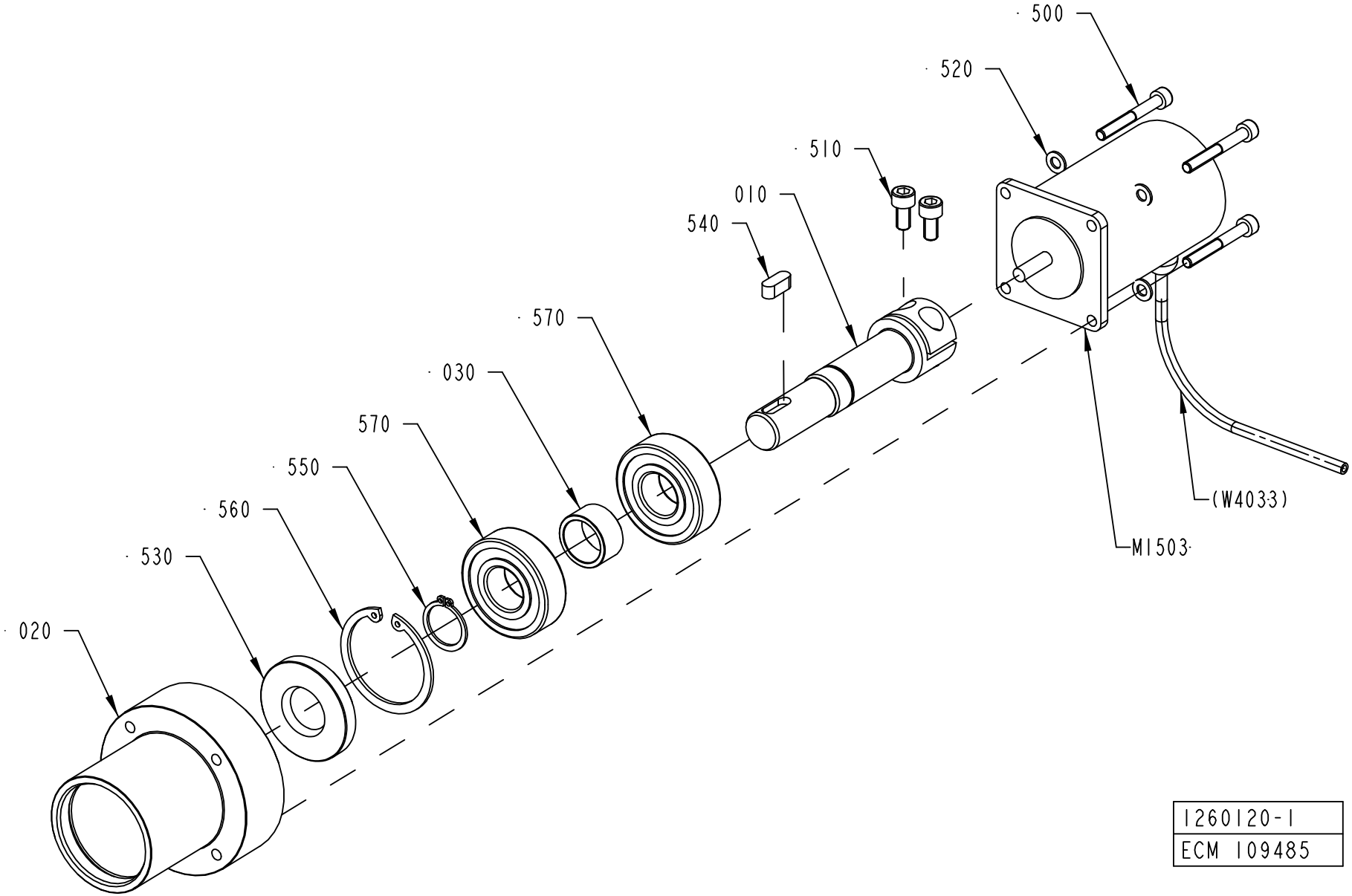

1260120-1
ECM 109485

ECM: 113417 - 20020830
Group number: 1260120-0100
Assembly Drawing: 1260120-1_1_AB

Pos	Part No	SP	UN	Qty	Description	Page No
-						
010	1260171-0000	-		1	SHAFT	
020	1260172-0000	-		1	BUSHING	
030	1260187-0000	-		1	SPACER	
500	312115-0339	-		4	SCREW ISO4762 M5X40 A4	
510	312115-0366	-		2	SCREW ISO4762 M6X12 A4	
520	315105-0146	-		4	BRICKA BRB5,3X10RFR	
530	315221-0147	A		1	RADIAL SEAL 20X47X7 MM	
540	315705-0230	A		1	PARALLEL KEY W. ROUND ENDS 6X6X16 MM	
550	315751-0116	-		1	RETAIN. RING, 20	
560	315753-0130	-		1	RETAINING RING FOR HOLE, 47X1,75 MM	
570	321313-0104	A		2	BALL BEARING, 20X47X14 MM	
M1503	90045-0189	A		1	STEP MOTOR E22NSLT-LNN-NS-02	

Pos	Part No	SP	UN	Qty	Description	Page No

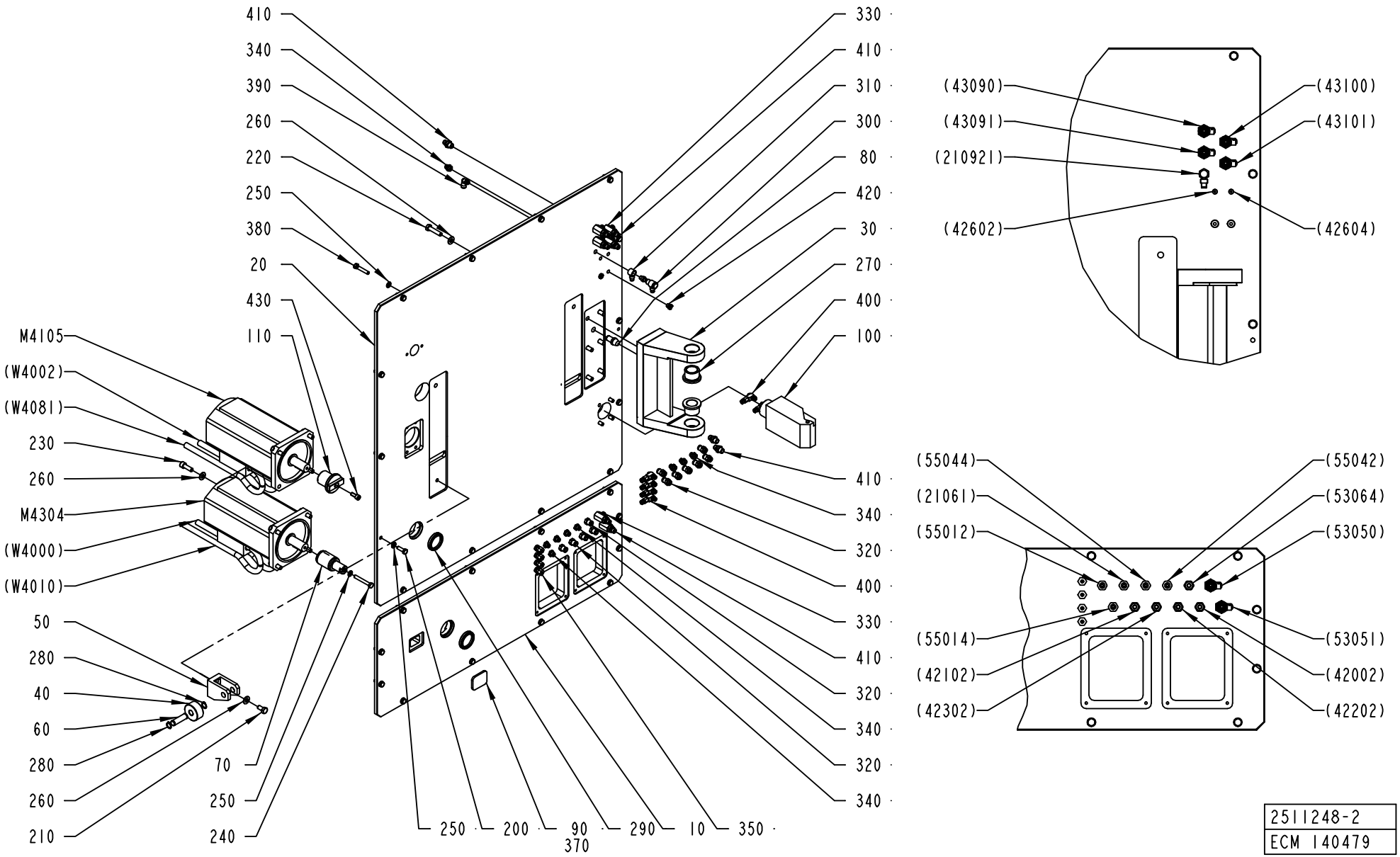

2511248-2
ECM 140479

ECM: 140646 - 20031110
Group number: 2511248-0200
Assembly Drawing: 2511248-2_1_AA

This list covers pages from 3-12 to 3-15

Pos	Part No	SP	UN	Qty	Description	Page No
TBA 0200B (See drawing on page: 3-12)						
020	2523319-0000	-		1	PLATE	
110	2570649-0000	-		1	SHAFT	
230	312115-0495	-		8	SCREW ISO4762 M10X30 A4	
TBA 0200M, TBA 0250B (See drawing on page: 3-12)						
020	2523494-0000	-		1	PLATE	
110	2570605-0000	-		1	SHAFT	
230	312115-0495	-		8	SCREW ISO4762 M10X30 A4	
TBA 0200S (See drawing on page: 3-14)						
020	2511243-0000	-		1	PLATE	
110	2570605-0000	-		1	SHAFT	
120	2572069-0000	-		1	MOTOR BRACKET	
230	312115-0495	-		4	SCREW ISO4762 M10X30 A4	
440	312115-0501	-		4	SCREW ISO4762 M10X50 A4	
TBA 0250S (See drawing on page: 3-14)						
020	2500367-0000	-		1	PLATE	
110	2573687-0000	-		1	SHAFT	
120	2572069-0000	-		1	MOTOR BRACKET	
230	312115-0495	-		4	SCREW ISO4762 M10X30 A4	
440	312115-0501	-		4	SCREW ISO4762 M10X50 A4	
Common Parts						
010	2500366-0000	-		1	PLATE	
030	1260750-0000	-		1	HINGE	
040	1140865-0000	-		1	ROLL	
050	1140866-0000	-		1	BRACKET	
060	1041216-0000	-		1	SHAFT	
070	2500369-0000	-		1	SHAFT	
080	1260753-0000	-		1	PIN	
090	1350902-0000	-		1	GLASS PANE	
100	2527401-0000	-		1	DISTRIBUTOR BLOCK	
200	312105-0453	-		26	SCREW M6S ISO 4017 M8X25 A480	
210	312105-0491	-		1	SCREW M6S ISO 4017 M10X20 A480	
220	312105-0500	-		6	SCREW M6S ISO 4014 M10X45 A480	
240	312105-0463	-		1	SCREW M6S ISO 4014 M8X60 A480	
250	315105-0165	-		31	WASHER BRB8,4X16RFR	
260	315105-0173	-		15	WASHER BRB10,5X22RFR	
270	321101-0273	-		2	FLANGE BUSHING, 30X40X30 MM	
280	315751-0112	-		2	RETAIN. RING, 15	
290	90091-0449	B		2	VARILIP 40X52X7 MM	
300	342980-0314	-		1	BANJO-HOLLOW BOLT COUPL,EXT.THR.02-G1/4"	
310	342981-0114	-		2	BANJO CONNEC,RING,FOR PLAST.TUBE 6-G1/4"	
320	342722-0205	-		12	STRAIGHT COUPLING D=8-G1/4"	
330	90187-0158	-		6	THROTTLE BALL VALVE G1/4, R1/4	
340	342722-0203	-		9	STRAIGHT COUPLING	
350	90030-0184	-		4	CONN. STR. GA-6-G1/8	
370	90153-0016	-		1	ADHESIVE,TUBE 100G RHODORSIL CAF 3	
380	312105-0460	-		4	SCREW M6S ISO 4014 M8X45 A480	
390	90458-2964	-		2	ELBOW PIPE JOINT, EXT.THREAD, D=8MM-G1/8	
400	90459-0843	-		6	CONN. BANJO, 6-G1/8	
410	342921-0122	-		12	STRAIGHT COUPLING,EXT.THREADED 8/6-G1/4"	
420	90201-0450	-		4	PLUG	
430	312115-0451	-		1	SCREW ISO4762 M8X20 A4	
M4105	90045-0197	A		1	SERVO MOTOR EP 165-090-66T3B	
M4304	90045-0197	A		1	SERVO MOTOR EP 165-090-66T3B	

Machine Type	Group Description	Used-In	Group Number	Page No

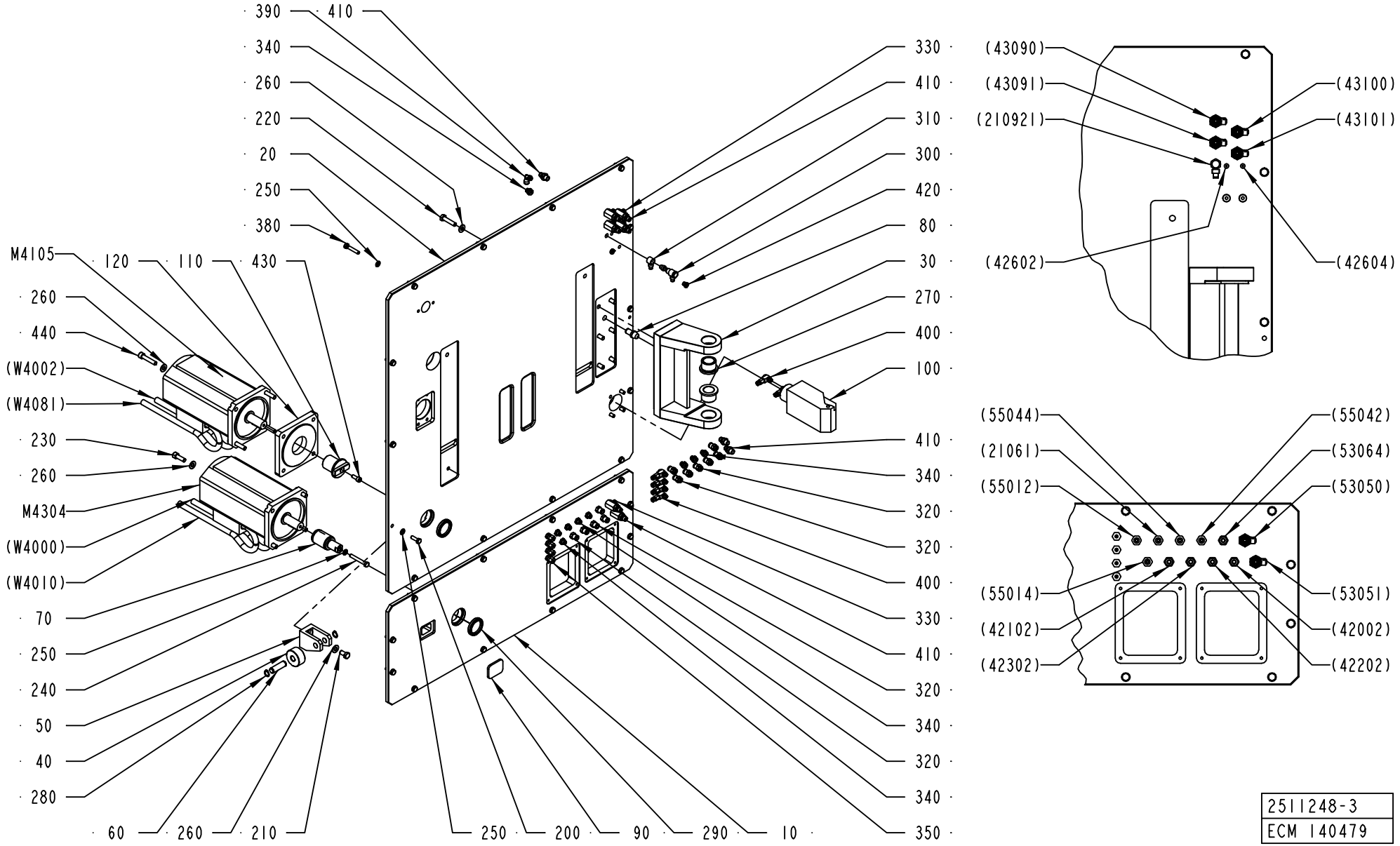
390
410
340
260
220
20
250
380
M4105
120
110
430
260
440
(W4002)
(W4081)
230
260
M4304
(W4000)
(W4010)
70
250
240
50
40
280
60
260
210
250
200
90
290
10
330
410
310
300
420
80
30
270
400
100
410
340
320
320
400
330
410
320
340
320
340
350
(43090)
(43091)
(210921)
(43100)
(43101)
(42602)
(42604)
(55044)
(21061)
(55012)
(55042)
(53064)
(53050)
(55014)
(42102)
(42302)
(53051)
(42002)
(42202)
2511248-3
ECM 140479

ECM: 140646 - 20031110
Group number: 2511248-0200
Assembly Drawing: 2511248-3_1_AA

This list covers pages from 3-12 to 3-15

Pos	Part No	SP	UN	Qty	Description	Page No
TBA 0200B (See drawing on page: 3-12)						
020	2523319-0000	-		1	PLATE	
110	2570649-0000	-		1	SHAFT	
230	312115-0495	-		8	SCREW ISO4762 M10X30 A4	
TBA 0200M, TBA 0250B (See drawing on page: 3-12)						
020	2523494-0000	-		1	PLATE	
110	2570605-0000	-		1	SHAFT	
230	312115-0495	-		8	SCREW ISO4762 M10X30 A4	
TBA 0200S (See drawing on page: 3-14)						
020	2511243-0000	-		1	PLATE	
110	2570605-0000	-		1	SHAFT	
120	2572069-0000	-		1	MOTOR BRACKET	
230	312115-0495	-		4	SCREW ISO4762 M10X30 A4	
440	312115-0501	-		4	SCREW ISO4762 M10X50 A4	
TBA 0250S (See drawing on page: 3-14)						
020	2500367-0000	-		1	PLATE	
110	2573687-0000	-		1	SHAFT	
120	2572069-0000	-		1	MOTOR BRACKET	
230	312115-0495	-		4	SCREW ISO4762 M10X30 A4	
440	312115-0501	-		4	SCREW ISO4762 M10X50 A4	
Common Parts						
010	2500366-0000	-		1	PLATE	
030	1260750-0000	-		1	HINGE	
040	1140865-0000	-		1	ROLL	
050	1140866-0000	-		1	BRACKET	
060	1041216-0000	-		1	SHAFT	
070	2500369-0000	-		1	SHAFT	
080	1260753-0000	-		1	PIN	
090	1350902-0000	-		1	GLASS PANE	
100	2527401-0000	-		1	DISTRIBUTOR BLOCK	
200	312105-0453	-		26	SCREW M6S ISO 4017 M8X25 A480	
210	312105-0491	-		1	SCREW M6S ISO 4017 M10X20 A480	
220	312105-0500	-		6	SCREW M6S ISO 4014 M10X45 A480	
240	312105-0463	-		1	SCREW M6S ISO 4014 M8X60 A480	
250	315105-0165	-		31	WASHER BRB8,4X16RFR	
260	315105-0173	-		15	WASHER BRB10,5X22RFR	
270	321101-0273	-		2	FLANGE BUSHING, 30X40X30 MM	
280	315751-0112	-		2	RETAIN. RING, 15	
290	90091-0449	B		2	VARILIP 40X52X7 MM	
300	342980-0314	-		1	BANJO-HOLLOW BOLT COUPL,EXT.THR.02-G1/4"	
310	342981-0114	-		2	BANJO CONNEC,RING,FOR PLAST.TUBE 6-G1/4"	
320	342722-0205	-		12	STRAIGHT COUPLING D=8-G1/4"	
330	90187-0158	-		6	THROTTLE BALL VALVE G1/4, R1/4	
340	342722-0203	-		9	STRAIGHT COUPLING	
350	90030-0184	-		4	CONN. STR. GA-6-G1/8	
370	90153-0016	-		1	ADHESIVE,TUBE 100G RHODORSIL CAF 3	
380	312105-0460	-		4	SCREW M6S ISO 4014 M8X45 A480	
390	90458-2964	-		2	ELBOW PIPE JOINT, EXT.THREAD, D=8MM-G1/8	
400	90459-0843	-		6	CONN. BANJO, 6-G1/8	
410	342921-0122	-		12	STRAIGHT COUPLING,EXT.THREADED 8/6-G1/4"	
420	90201-0450	-		4	PLUG	
430	312115-0451	-		1	SCREW ISO4762 M8X20 A4	
M4105	90045-0197	A		1	SERVO MOTOR EP 165-090-66T3B	
M4304	90045-0197	A		1	SERVO MOTOR EP 165-090-66T3B	

Machine Type	Group Description	Used-In	Group Number	Page No

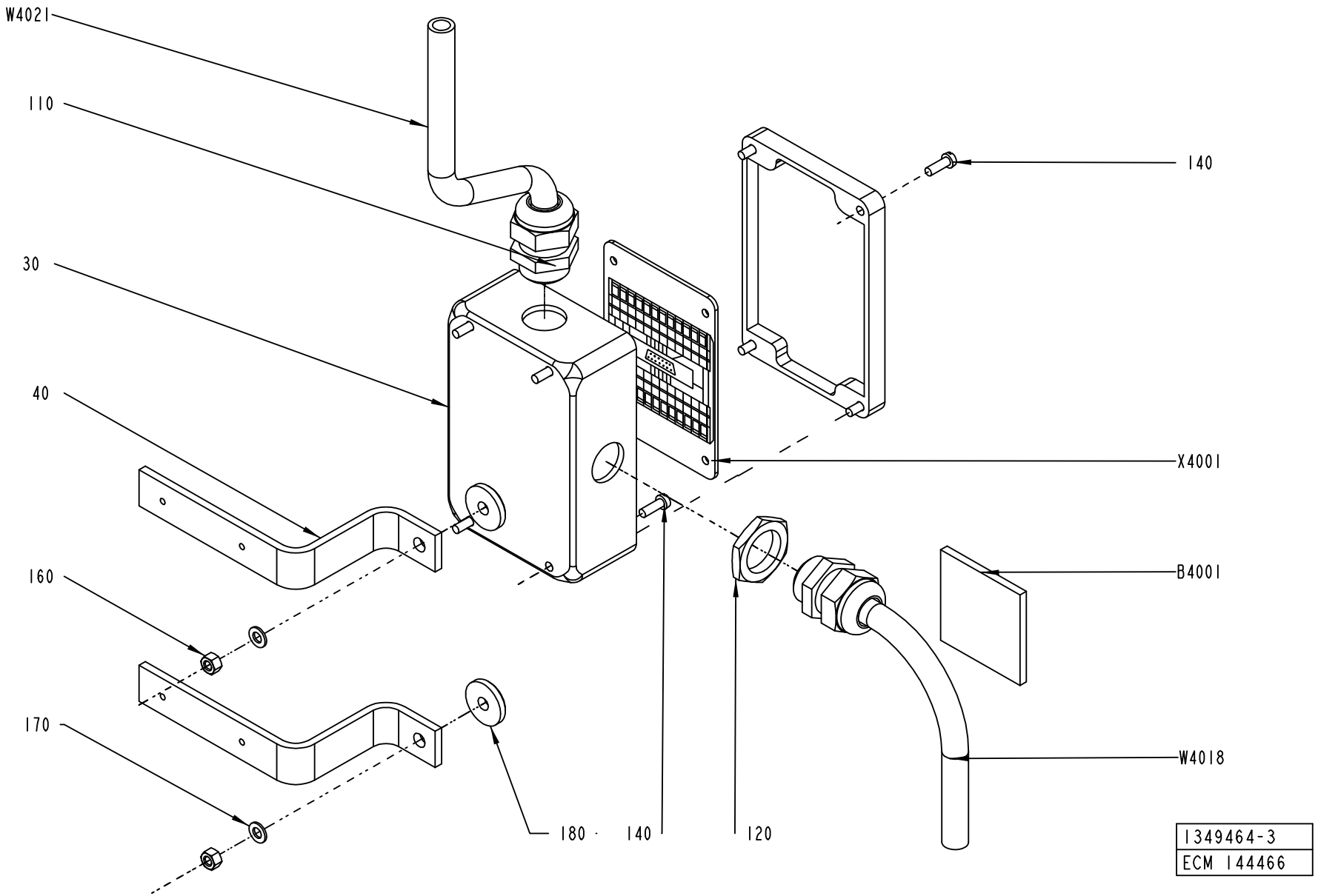
W4021
110
30
40
160
170
180
140
120
140
X4001
B4001
W4018
1349464-3
ECM 144466

ECM: 147560 - 20031201
Group number: 1349464-0300
Assembly Drawing: 1349464-3_1_AB

Pos	Part No	SP	UN	Qty	Description	Page No
-						
030	1349465-0000	-		1	CONNECTION BOX	
040	1511673-0000	-		2	BRACKET	
110	352103-0111	-		2	CABLE GLAND, ST 16, PR22,5/PG16	
120	90099-0110	-		1	NUT, PR 22,5 (PG16)	
140	312125-0291	-		8	SLOTTED CHEESE HEAD SCREW MCS 4X12 SS	
160	312605-0314	-		2	HEXAGON NUT, M6M M5 A280	
170	315105-0146	-		2	BRICKA BRB5,3X10RFR	
180	315125-0153	-		2	WASHER TBRSB 6,4X22X4 A4	
B 4001	68917-0100	A		1	ANGLE INDICATOR	**3-19**
X 4001	451423-0000	A		1	CIRCUIT BOARD	

Pos	Part No	SP	UN	Qty	Description	Page No

This page is intentionally left blank.

ECM: - -
Group number: 68917-0100
Assembly Drawing:

Pos	Part No	SP	UN	Qty	Description	Page No
-						
010	540306-0001	-		1	COMPONENTS WITHOUT TP-NO	
020	540307-0000	-		1	PRINTED CIRCUIT BOARD	

Pos	Part No	SP	UN	Qty	Description	Page No

Tetra Pak

SPC
Spare Parts Catalogue

JAW SYSTEM

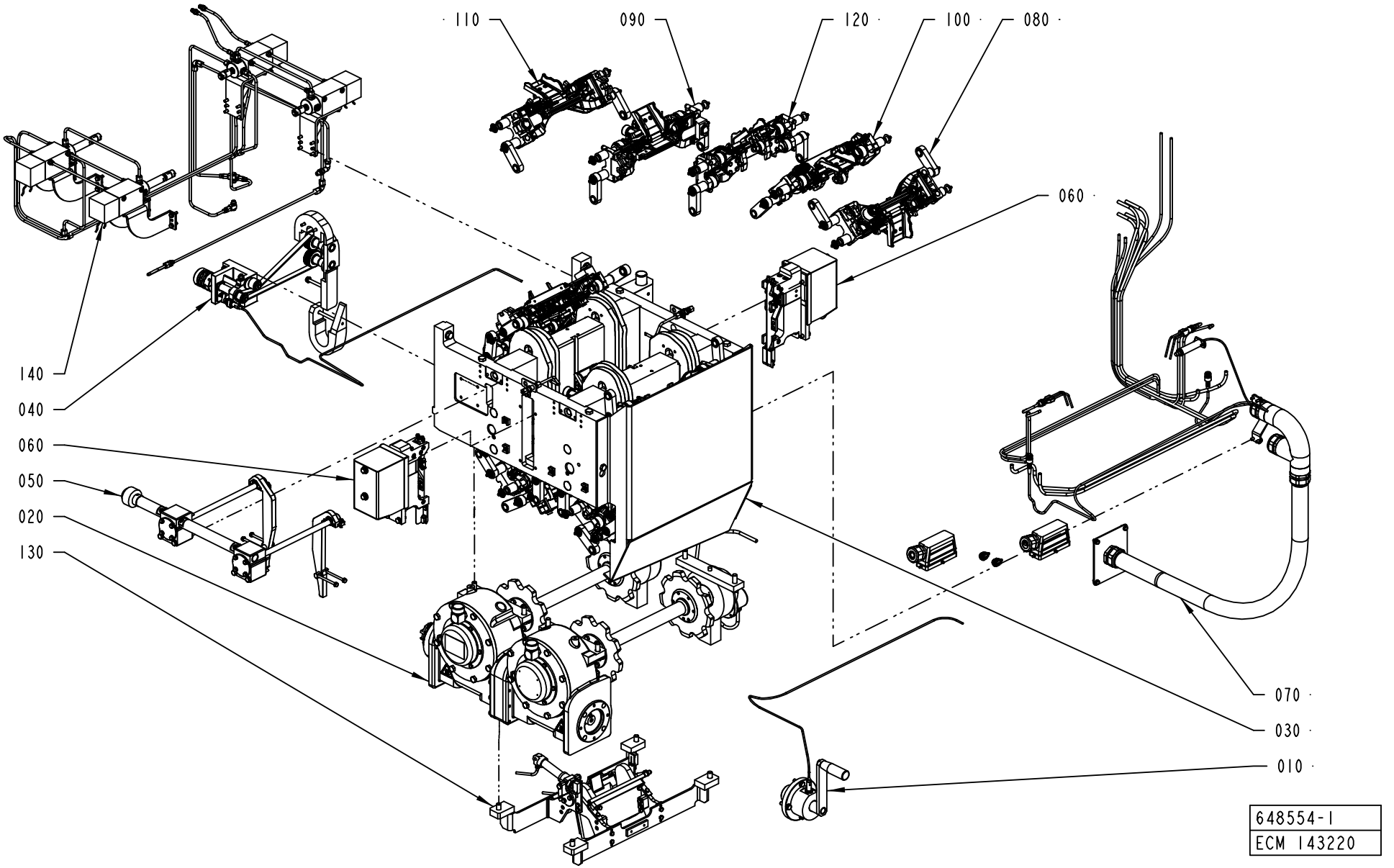
110
090
120
100
080
060
140
040
060
050
020
130
070
030
010
648554-1
ECM 143220

ECM: 148941 - 20040105
Group number: 648554-0100
Assembly Drawing: 648554-1_1_AE

Pos	Part No	SP	UN	Qty	Description	Page No
-						
010	2598215-0100	-		1	HAND CRANK	**4-5**
020	2511256-0200	-		1	DRIVE UNIT	**4-7, 4-9**
030	2511255-0100	-		1	FRAME	**4-11, 4-13**
040	2511257-0100	-		1	DESIGN CORRECTION	**4-15**
050	2511258-0100	-		1	VOLUME ADJUSTER	**4-17**
060	2522094-0100	-		2	ELECTRICAL CONNECTION	**4-19**
070	2511260-0200	-		1	CABLE HARNESS	**4-21**
080	2529792-0200	-		4	PRESSURE JAW	**4-23, 4-25**
090	2529794-0200	-		5	SEALING JAW	**4-27, 4-29**
100	2529793-0200	-		5	PRESSURE JAW	**4-31, 4-33**
110	2529795-0200	-		5	SEALING JAW	**4-35, 4-37**
120	2529791-0200	-		1	PRESSURE JAW	**4-39, 4-41**
130	2558853-0200	-		1	WASTE BOX	**4-43**
140	2564899-0100	-		1	LUBRICATION UNIT	**4-45, 4-47, 4-49**

Pos	Part No	SP	UN	Qty	Description	Page No

HAND CRANK

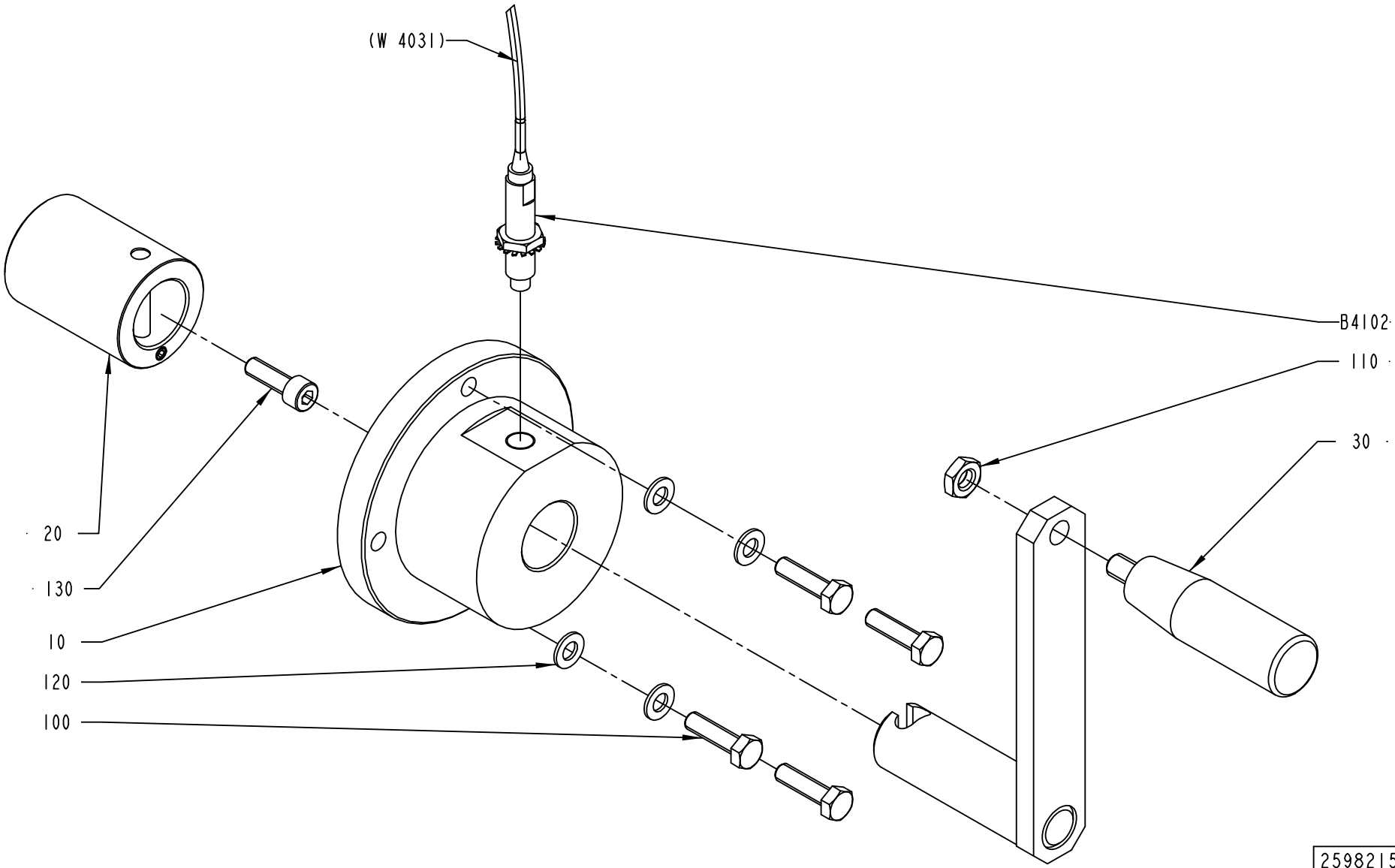

ECM: 132217 - 20031111
Group number: 2598215-0100
Assembly Drawing: 2598215-1_1_AA

Pos	Part No	SP	UN	Qty	Description	Page No
-						
010	2531474-0000	-		1	STEERING	
020	2531489-0000	-		1	SLEEVE	
	311102-0413	*-*		*1*	*PARALLELL PIN ISO 2338 8M6X50 ST*	
	312318-0362	*-*		*1*	*SCREW ISO4029 M6X8 A4*	
030	90051-0127	B		1	HANDLE, NO. .601/90+X-M10-INOX	
040	1082974-0000	B		1	CRANK	
100	312105-0455	-		4	SCREW M6S ISO 4017 M8X30 A480	
110	312625-0320	-		1	HEXAGON THIN NUT, EN 24035 ML6M M10 A4	
120	315105-0165	-		4	WASHER BRB8,4X16RFR	
130	312115-0453	-		1	SCREW ISO4762 M8X25 A4	
B4102	90458-0672	A		1	PROXIMITY SENSOR E2E2-X5MB1-5M	

Pos	Part No	SP	UN	Qty	Description	Page No

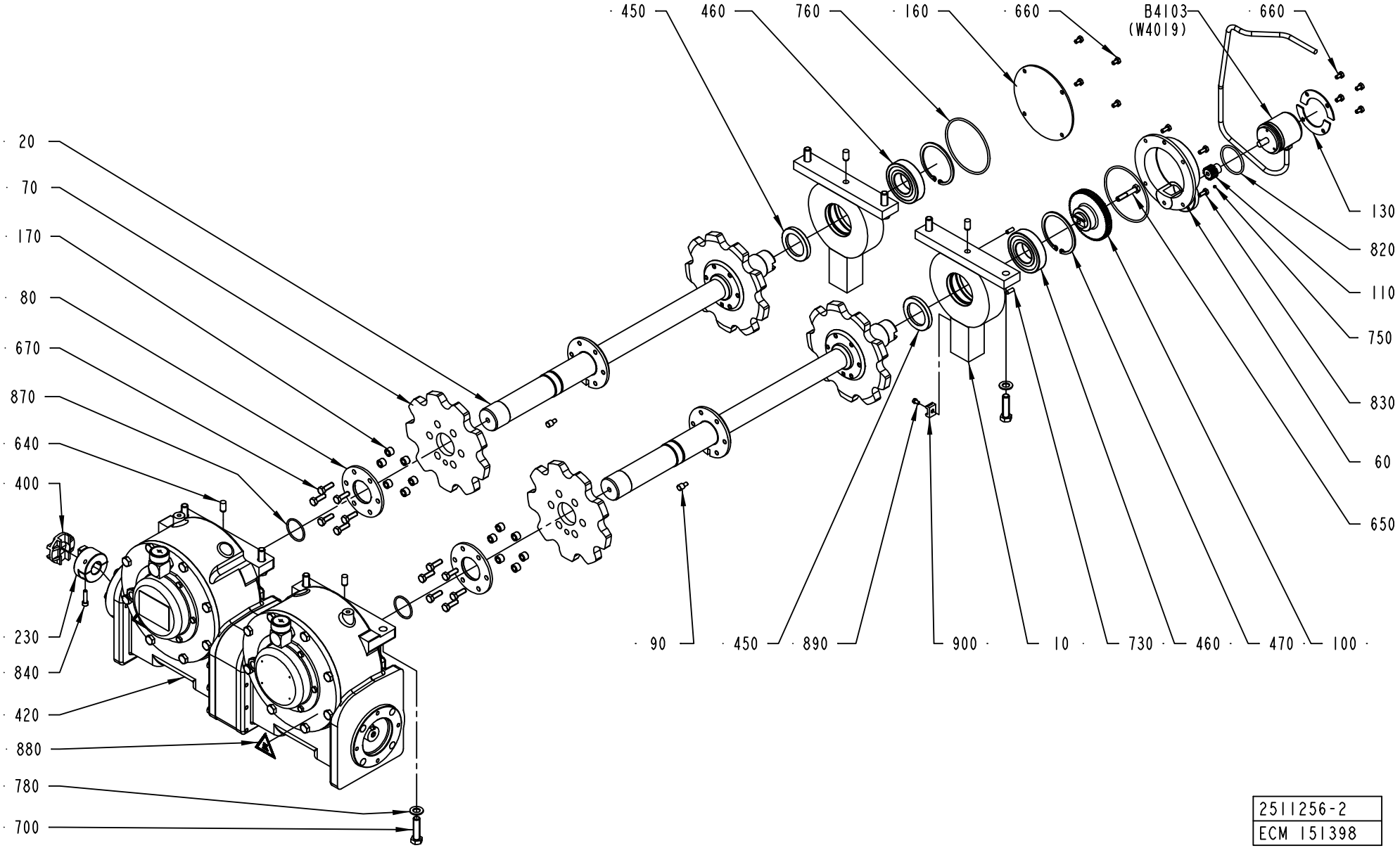

2511256-2
ECM 151398

ECM: 152262 - 20031216
Group number: 2511256-0200
Assembly Drawing: 2511256-2_1_AB

This list covers pages from 4-6 to 4-9

Pos	Part No	SP	UN	Qty	Description	Page No
TBA 0200B (See drawing on page: 4-8)						
070	2644108-0000	A		4	WHEEL	
230	1524438-0000	-		1	HUB	
420	90459-0355	A		1	WORM GEAR 10.756.232	
700	312105-0541	-		4	SCREW M6S ISO 4014 M12X45 A480	
850	312105-0538	-		4	SCREW M6S ISO 4017 M12X35 A480	
TBA 0200M (See drawing on page: 4-6)						
070	2644109-0000	A		4	WHEEL	
230	2571846-0000	-		1	HUB	
420	90459-0356	A		1	WORM GEAR 10.756.233	
700	312105-0541	-		8	SCREW M6S ISO 4014 M12X45 A480	
TBA 0200S (See drawing on page: 4-6)						
070	2644110-0000	A		4	WHEEL	
230	1524438-0000	-		1	HUB	
420	90459-1914	A		1	WORM GEAR 10.756.234	
700	312105-0541	-		8	SCREW M6S ISO 4014 M12X45 A480	
TBA 0250B (See drawing on page: 4-6)						
070	2644109-0000	A		4	WHEEL	
230	2571846-0000	-		1	HUB	
420	90459-0356	A		1	WORM GEAR 10.756.233	
700	312105-0541	-		8	SCREW M6S ISO 4014 M12X45 A480	
TBA 0250S (See drawing on page: 4-6)						
070	2644111-0000	A		4	WHEEL	
230	2571846-0000	-		1	HUB	
420	90459-1794	A		1	WORM GEAR 10.756.235	
700	312105-0541	-		8	SCREW M6S ISO 4014 M12X45 A480	
Common Parts						
010	2605704-0000	-		2	PLATE	
020	2605705-0000	-		2	SHAFT	
060	2605706-0000	-		1	BRACKET	
080	2641243-0000	-		4	FLANGE	
090	2641241-0000	-		4	PIN	
100	2605707-0000	-		1	GEAR WHEEL	
110	2504641-0000	-		1	GEAR WHEEL	
130	2605709-0000	-		2	DISC	
160	2605710-0000	-		1	DISC	
170	2633447-0000	-		24	BUSHING	
400	90458-0685	A		1	COUPLING DISC 25/57 COD.236.57-F25	
450	90091-0298	A		2	RADIAL SEAL 45X65X8 MM DUST LIP	
460	90214-0236	A		2	BALL BEARING, 40X80X18 MM	
470	90458-0181	A		2	RETAINING RING FOR BORE DIN 472 80 A2	
630	311103-0357	-		8	PARALLEL PIN ISO 2338 6M6X30 A1	
640	311103-0454	-		4	PARALLEL PIN ISO 2338 10M6X20 A1	
650	312105-0460	-		1	SCREW M6S ISO 4014 M8X45 A480	
660	312105-0364	-		8	SCREW M6S ISO 4017 M6X10 A480	
670	312105-0453	-		24	SCREW M6S ISO 4017 M8X25 A480	
730	311103-0351	-		2	PARALLEL PIN ISO 2338 6M6X16 A1	
750	90459-1395	-		1	SCREW HEX.SOCK.SET CONEPT.MS6SS M4X4 A2	
760	315202-0621	-		2	O-RING 104,37X3,53 MM	
780	315105-0178	-		8	WASHER BRB13X24RFR	
820	315202-0604	-		1	O-RING 50,40X3,53 MM	
830	312105-0367	-		4	SCREW M6S M6X14 A280	
840	312115-0372	-		1	SCREW ISO4762 M6X25 A4	
870	315205-0729	-		2	O-RING 39,34X2,62 MM	
880	359705-0007	-		1	WARNING SIGN ISO, HOT SURFACE	
890	312125-0323	-		1	SCREW ISO 1207 M5X8 A4	
900	352113-0204	-		1	ANCHOR PLATES FOR STRIPS, TYPE TM3S25-M	
B4103	90061-0027	A		1	ANGLE ENCODER 670900035	

Machine Type	Group Description	Used-In	Group Number	Page No

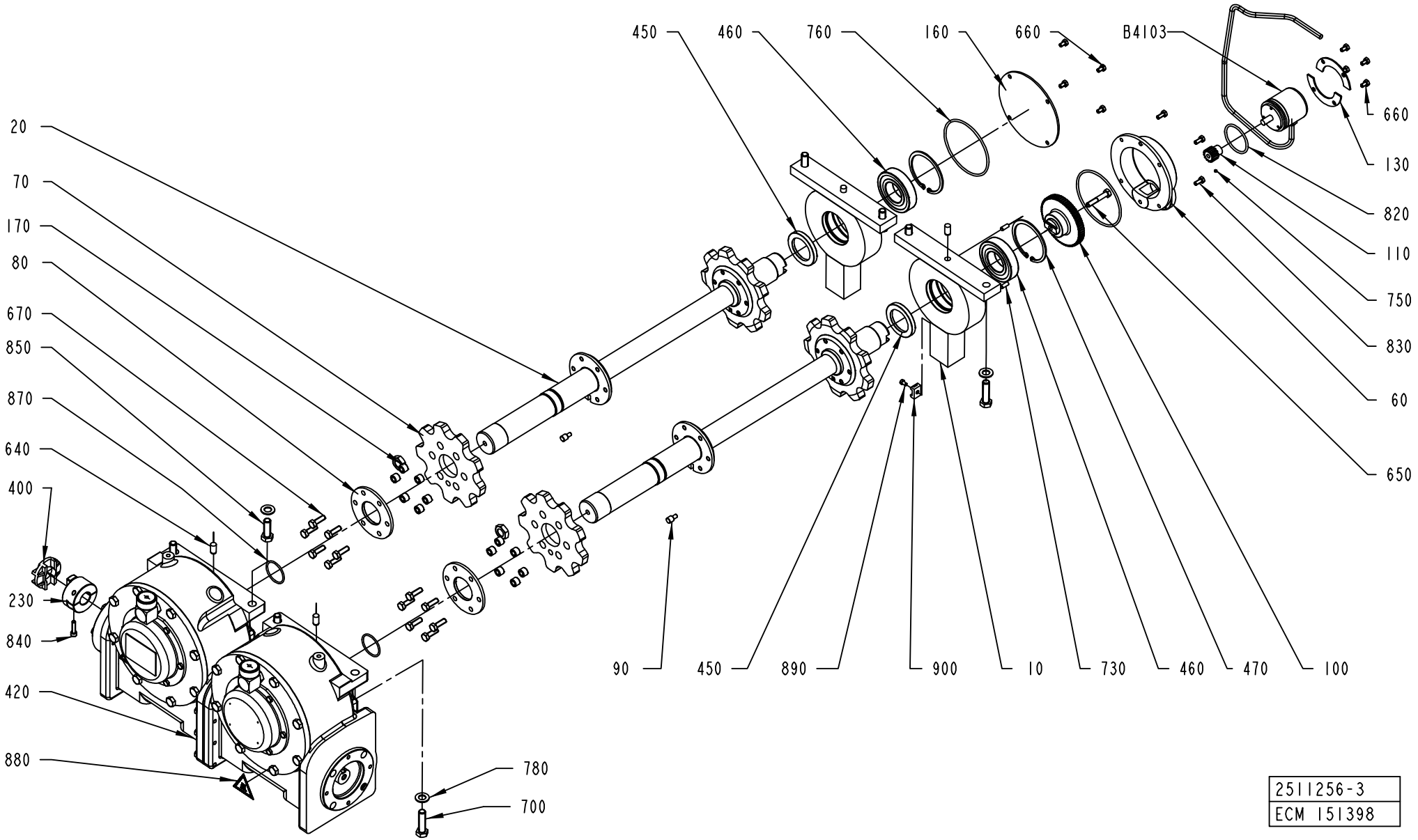
450
460
760
160
660
B4103
660
130
820
110
750
830
60
650
20
70
170
80
670
850
870
640
400
230
840
420
880
780
700
90
450
890
900
10
730
460
470
100
2511256-3
ECM 151398

ECM: 152262 - 20031216
Group number: 2511256-0200
Assembly Drawing: 2511256-3_1_AB

This list covers pages from 4-6 to 4-9

Pos	Part No	SP	UN	Qty	Description	Page No
TBA 0200B (See drawing on page: 4-8)						
070	2644108-0000	A		4	WHEEL	
230	1524438-0000	-		1	HUB	
420	90459-0355	A		1	WORM GEAR 10.756.232	
700	312105-0541	-		4	SCREW M6S ISO 4014 M12X45 A480	
850	312105-0538	-		4	SCREW M6S ISO 4017 M12X35 A480	
TBA 0200M (See drawing on page: 4-6)						
070	2644109-0000	A		4	WHEEL	
230	2571846-0000	-		1	HUB	
420	90459-0356	A		1	WORM GEAR 10.756.233	
700	312105-0541	-		8	SCREW M6S ISO 4014 M12X45 A480	
TBA 0200S (See drawing on page: 4-6)						
070	2644110-0000	A		4	WHEEL	
230	1524438-0000	-		1	HUB	
420	90459-1914	A		1	WORM GEAR 10.756.234	
700	312105-0541	-		8	SCREW M6S ISO 4014 M12X45 A480	
TBA 0250B (See drawing on page: 4-6)						
070	2644109-0000	A		4	WHEEL	
230	2571846-0000	-		1	HUB	
420	90459-0356	A		1	WORM GEAR 10.756.233	
700	312105-0541	-		8	SCREW M6S ISO 4014 M12X45 A480	
TBA 0250S (See drawing on page: 4-6)						
070	2644111-0000	A		4	WHEEL	
230	2571846-0000	-		1	HUB	
420	90459-1794	A		1	WORM GEAR 10.756.235	
700	312105-0541	-		8	SCREW M6S ISO 4014 M12X45 A480	
Common Parts						
010	2605704-0000	-		2	PLATE	
020	2605705-0000	-		2	SHAFT	
060	2605706-0000	-		1	BRACKET	
080	2641243-0000	-		4	FLANGE	
090	2641241-0000	-		4	PIN	
100	2605707-0000	-		1	GEAR WHEEL	
110	2504641-0000	-		1	GEAR WHEEL	
130	2605709-0000	-		2	DISC	
160	2605710-0000	-		1	DISC	
170	2633447-0000	-		24	BUSHING	
400	90458-0685	A		1	COUPLING DISC 25/57 COD.236.57-F25	
450	90091-0298	A		2	RADIAL SEAL 45X65X8 MM DUST LIP	
460	90214-0236	A		2	BALL BEARING, 40X80X18 MM	
470	90458-0181	A		2	RETAINING RING FOR BORE DIN 472 80 A2	
630	311103-0357	-		8	PARALLEL PIN ISO 2338 6M6X30 A1	
640	311103-0454	-		4	PARALLEL PIN ISO 2338 10M6X20 A1	
650	312105-0460	-		1	SCREW M6S ISO 4014 M8X45 A480	
660	312105-0364	-		8	SCREW M6S ISO 4017 M6X10 A480	
670	312105-0453	-		24	SCREW M6S ISO 4017 M8X25 A480	
730	311103-0351	-		2	PARALLEL PIN ISO 2338 6M6X16 A1	
750	90459-1395	-		1	SCREW HEX.SOCK.SET CONEPT.MS6SS M4X4 A2	
760	315202-0621	-		2	O-RING 104,37X3,53 MM	
780	315105-0178	-		8	WASHER BRB13X24RFR	
820	315202-0604	-		1	O-RING 50,40X3,53 MM	
830	312105-0367	-		4	SCREW M6S M6X14 A280	
840	312115-0372	-		1	SCREW ISO4762 M6X25 A4	
870	315205-0729	-		2	O-RING 39,34X2,62 MM	
880	359705-0007	-		1	WARNING SIGN ISO, HOT SURFACE	
890	312125-0323	-		1	SCREW ISO 1207 M5X8 A4	
900	352113-0204	-		1	ANCHOR PLATES FOR STRIPS, TYPE TM3S25-M	
B4103	90061-0027	A		1	ANGLE ENCODER 670900035	

Machine Type	Group Description	Used-In	Group Number	Page No

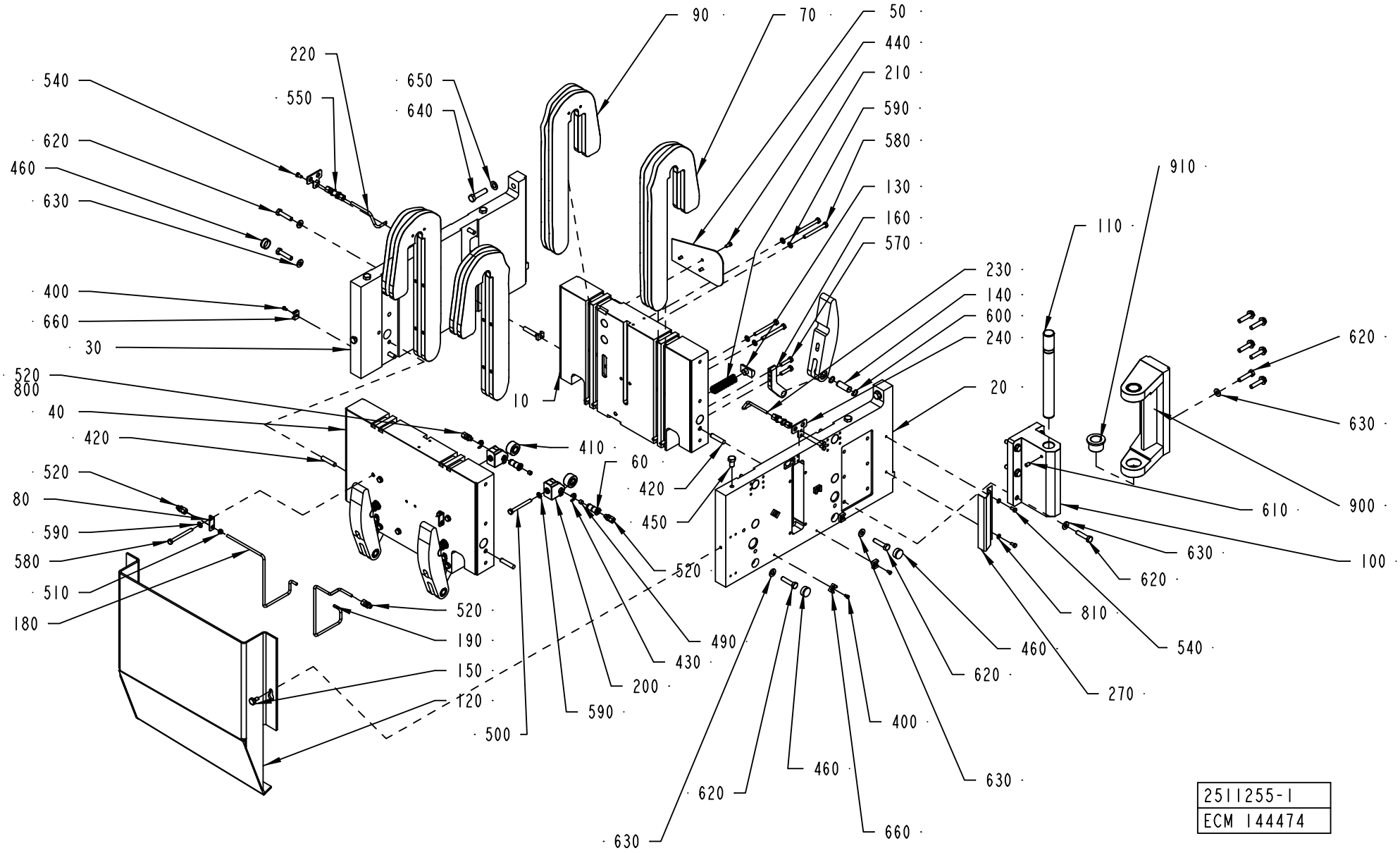
90
70
50
440
210
590
580
130
160
570
220
550
650
640
540
620
460
630
400
660
30
520
800
40
420
520
80
590
580
510
180
520
190
150
120
500
590
200
430
490
520
450
420
60
410
10
230
140
600
240
20
910
110
620
630
900
100
610
630
620
810
540
460
620
270
400
630
460
620
630
660
2511255-1
ECM 144474

ECM: 151266 - 20031201
Group number: 2511255-0100
Assembly Drawing: 2511255-1_1_AF

This list covers pages from 4-10 to 4-13

Pos	Part No	SP	UN	Qty	Description	Page No
TBA 0200B (See drawing on page: 4-12)						
010	2523614-0000	-		1	PLATE	
020	2523617-0000	-		1	PLATE	
030	2523616-0000	-		1	PLATE	
040	2523615-0000	-		1	PLATE	
070	1511397-0000	-		4	CAM	
090	1511396-0000	-		4	CAM	
120	2523618-0000	B		1	PROTECTION	
160	1349367-0000	-		4	BRACKET	
170	1487219-0000	A		4	CURVE	
180	1512600-0000	-		1	PIPE	
190	1512601-0000	-		1	PIPE	
220	2523622-0000	-		1	PIPE	
240	2511239-0000	-		1	PLATE	
250	2523621-0000	-		1	PLATE	
460	90458-2419	-		9	PLUG GPN 300 V 233	
500	312109-0457	-		2	SCREW M6S ISO 4017 M8X35 A480	
560	312115-0459	-		2	SCREW ISO4762 M8X40 A4	
570	312105-0455	-		8	SCREW M6S ISO 4017 M8X30 A480	
580	312105-0465	-		14	SCREW M6S ISO 4014 M8X70 A480	
590	315105-0165	-		18	WASHER BRB8,4X16RFR	
620	312105-0500	-		23	SCREW M6S ISO 4014 M10X45 A480	
630	315105-0173	-		23	WASHER BRB10,5X22RFR	
TBA 0200M (See drawing on page: 4-10)						
010	2523610-0000	-		1	PLATE	
020	2523613-0000	-		1	PLATE	
030	2523612-0000	-		1	PLATE	
040	2523611-0000	-		1	PLATE	
070	1512628-0000	-		4	CURVE	
090	1512629-0000	-		4	CURVE	
120	2511245-0000	B		1	PROTECTION	
160	1140872-0000	-		4	BRACKET	
170	1498278-0000	A		4	CAM	
180	1524763-0000	-		1	PIPE	
190	1524764-0000	-		1	PIPE	
220	2508420-0000	-		1	PIPE	
240	2511239-0000	-		2	PLATE	
460	90458-2419	-		10	PLUG GPN 300 V 233	
500	312105-0462	-		2	SCREW M6S ISO 4014 M8X55 A480	
580	312105-0467	-		16	SCREW M6S ISO 4014 M8X80 A480	
590	315105-0165	-		10	WASHER BRB8,4X16RFR	
620	312105-0500	-		24	SCREW M6S ISO 4014 M10X45 A480	
630	315105-0173	-		24	WASHER BRB10,5X22RFR	
TBA 0200S (See drawing on page: 4-10)						
010	2502402-0000	-		1	PLATE	
020	2502404-0000	-		1	PLATE	
030	2502405-0000	-		1	PLATE	
040	2502403-0000	-		1	PLATE	
070	1499604-0000	-		4	CAM	
090	1499603-0000	-		4	CAM	
120	2502406-0000	B		1	PROTECTION	
160	1512365-0000	-		4	BRACKET	
170	1499602-0000	A		4	CAM	
180	2502415-0000	-		1	PIPE	
190	2508408-0000	-		1	PIPE	
220	2508420-0000	-		1	PIPE	
240	2511239-0000	-		2	PLATE	
460	90458-2419	-		10	PLUG GPN 300 V 233	
500	312105-0466	-		2	SCREW M6S ISO 4014 M8X75 A480	
570	312105-0457	-		8	SCREW M6S ISO 4014 M8X35 A480	
580	312105-0467	-		16	SCREW M6S ISO 4014 M8X80 A480	
590	315105-0165	-		18	WASHER BRB8,4X16RFR	
620	312105-0500	-		24	SCREW M6S ISO 4014 M10X45 A480	
630	315105-0173	-		24	WASHER BRB10,5X22RFR	
TBA 0250B (See drawing on page: 4-10)						
010	2523610-0000	-		1	PLATE	
020	2523613-0000	-		1	PLATE	
030	2523612-0000	-		1	PLATE	
040	2523611-0000	-		1	PLATE	
070	1140287-0000	-		4	CAM	
090	1140288-0000	-		4	CAM	
120	2511245-0000	B		1	PROTECTION	
160	1140872-0000	-		4	BRACKET	
170	1498278-0000	A		4	CAM	
180	1524763-0000	-		1	PIPE	
190	1524764-0000	-		1	PIPE	
220	2508420-0000	-		1	PIPE	
240	2511239-0000	-		2	PLATE	
460	90458-2419	-		10	PLUG GPN 300 V 233	
500	312105-0462	-		2	SCREW M6S ISO 4014 M8X55 A480	
580	312105-0467	-		16	SCREW M6S ISO 4014 M8X80 A480	
590	315105-0165	-		10	WASHER BRB8,4X16RFR	
620	312105-0500	-		24	SCREW M6S ISO 4014 M10X45 A480	
630	315105-0173	-		24	WASHER BRB10,5X22RFR	

Machine Type | Group Description | Used-In | Group Number | Page No

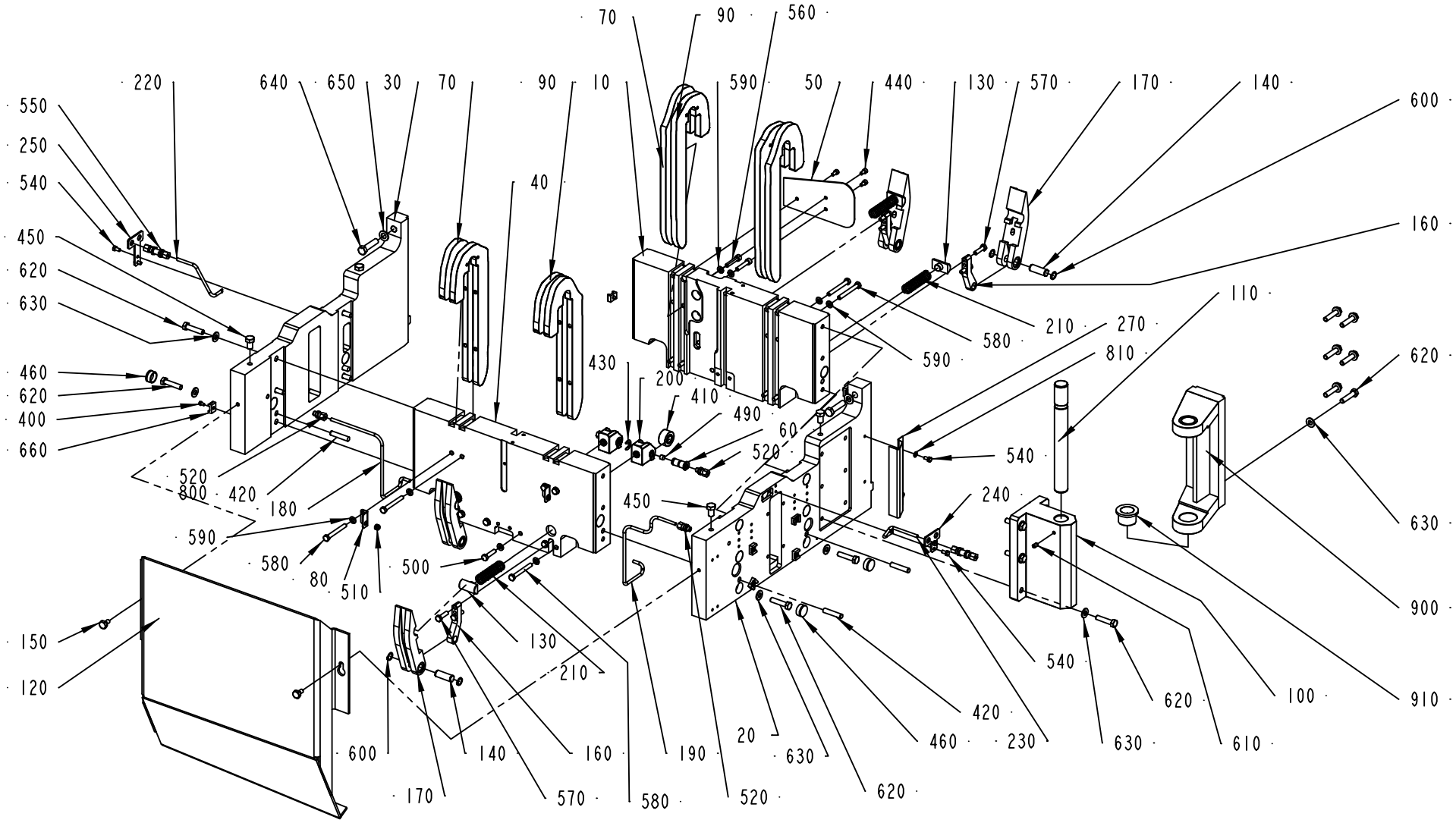

2511255-2
ECM 144474

Pos	Part No	SP	UN	Qty	Description	Page No
TBA 0250S (Cont'd) (See drawing on page: 4-10)						
010	1498587-0000	-		1	PLATE	
020	1498589-0000	-		1	PLATE	
030	1498590-0000	-		1	PLATE	
040	1498588-0000	-		1	PLATE	
070	1498578-0000	-		4	CURVE	
090	1498579-0000	-		4	CURVE	
120	1498591-0000	B		1	PROTECTION	
160	1498592-0000	-		4	BRACKET	
170	1498593-0000	A		4	CURVE	
180	1512616-0000	-		1	PIPE	
190	1512617-0000	-		1	PIPE	
220	2508420-0000	-		1	PIPE	
240	2511239-0000	-		2	PLATE	
460	90458-2419	-		10	PLUG GPN 300 V 233	
500	312105-0466	-		2	SCREW M6S ISO 4014 M8X75 A480	
570	312105-0457	-		8	SCREW M6S ISO 4014 M8X35 A480	
580	312105-0467	-		16	SCREW M6S ISO 4014 M8X80 A480	
590	315105-0165	-		18	WASHER BRB8,4X16RFR	
620	312105-0500	-		24	SCREW M6S ISO 4014 M10X45 A480	
630	315105-0173	-		24	WASHER BRB10,5X22RFR	
Common Parts						
050	1140856-0000	-		1	PROTECTION	
060	1524260-0000	-		2	SHAFT	
080	1524752-0000	A		2	BRACKET	
100	1260751-0000	A		1	HINGE	
110	1260752-0000	A		1	SHAFT	
130	1041215-0000	A		4	BLOCKING PIECE	
140	1498279-0000	A		4	SHAFT	
150	1282995-0000	A		2	SCREW	
200	1524267-0000	-		2	HOLDER	
210	1487205-0000	A		4	SPRING	
230	2508421-0000	-		1	PIPE	
270	2569972-0000	-		1	CABLE PROTECTION	
400	312125-0323	-		9	SCREW ISO 1207 M5X8 A4	
410	90083-0055	A		2	BEARING ROLLER, 15X35X19 MM	
420	311103-0466	A		4	PARALLEL PIN ISO 2338 10M6X50 A1	
430	315755-0112	-		2	RETAINING RING 12	
440	312115-0366	-		3	SCREW ISO4762 M6X12 A4	
450	312105-0532	-		4	SCREW M6S ISO 4017 M12X20 A480	
490	90087-0010	-		2	PLUG, EXT. THREAD, HEX. SOCKET NR. M10-	
510	90015-0027	-		2	RUBBER BUSHING DI=6MM	
520	90030-0184	-		4	CONN. STR. GA-6-G1/8	
540	312105-0366	-		6	SCREW M6S M6X12 A280	
550	90030-0066	-		2	CONN. BULKHEAD SV 6-L/SY	
600	315751-0112	A		8	RETAINING RING FOR SHAFT DIN 471 15 A2	
610	312318-0447	-		1	SCREW ISO4029 M8X12 A4	
640	312105-0542	-		2	SCREW M6S ISO 4014 M12X50 A480	
650	315105-0178	-		2	WASHER BRB13X24RFR	
660	352113-0204	-		9	ANCHOR PLATES FOR STRIPS, TYPE TM3S25-M	
800	90459-0246	-	KG	1	GREASE, KLüBERSYNTH UH1 14-1600	
810	315105-0153	-		2	WASHER BRB6,4X12RFR	
900	2598533-0000	-		1	HINGE	
910	321101-0273	-		2	FLANGE BUSHING, 30X40X30 MM	

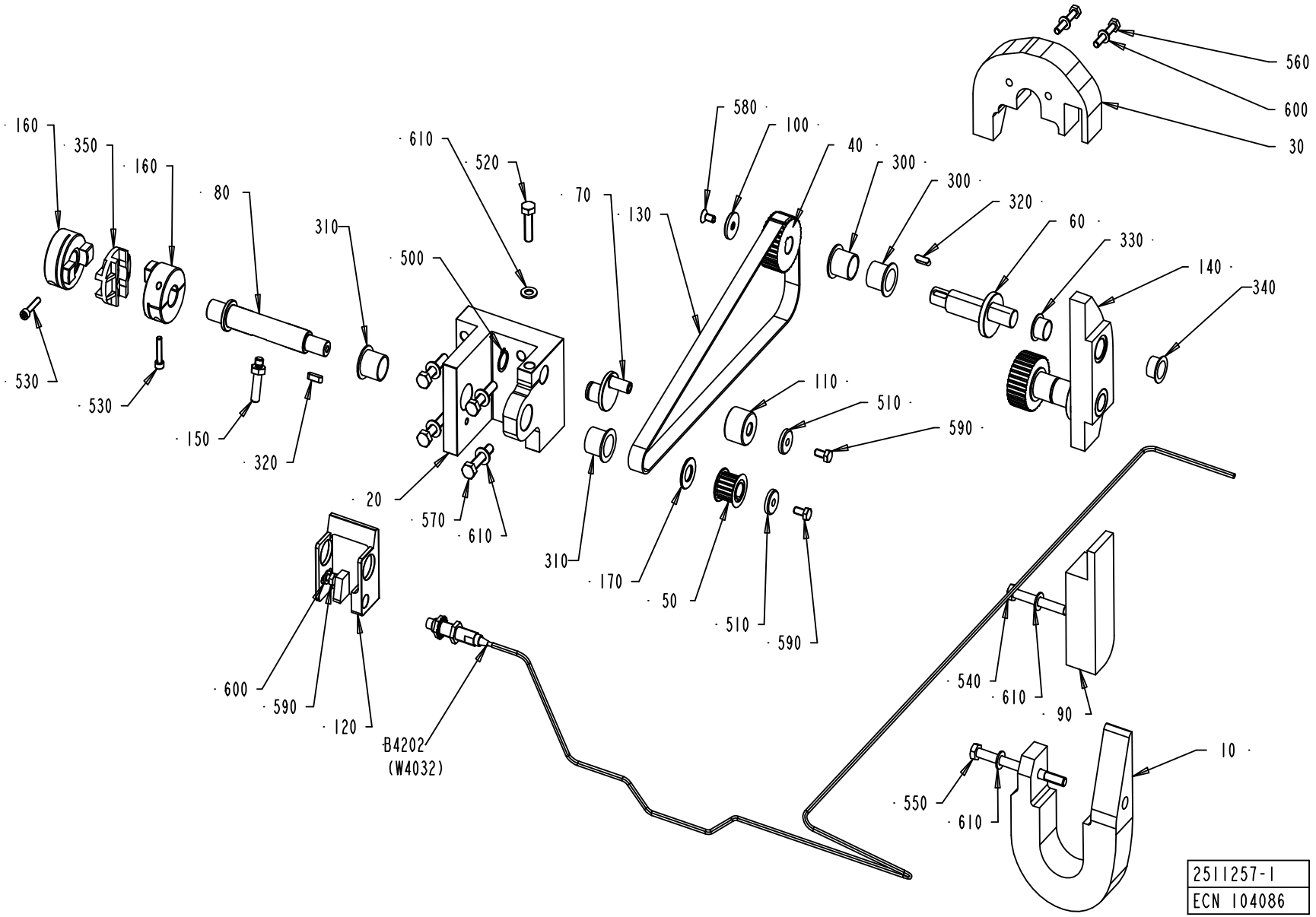
160
350
160
530
530
80
150
320
310
610
520
500
20
570
610
70
130
580
100
40
310
170
50
510
590
110
510
590
560
600
30
300
300
320
60
330
140
340
600
590
120
B4202
(W4032)
540
610
90
10
550
610
2511257-1
ECN 104086

ECM: 114648 - 20030113
Group number: 2511257-0100
Assembly Drawing: 2511257-1_1_AB

Pos	Part No	SP	UN	Qty	Description	Page No
TBA 0200B						
010	1349377-0000	A		1	CURVE	
030	1349380-0000	A		1	CURVE	
060	1349381-0000	A		2	ECCENTRIC SHAFT	
090	1349379-0000	A		1	CURVE	
140	1349375-0000	A		1	CURVE	
300	90459-1186	A		4	FLANGE BUSHING, 20X23X11 MM	
330	90240-0325	A		2	FLANGE BUSHING, 16X18X12 MM	
540	312105-0462	-		1	SCREW M6S ISO 4014 M8X55 A480	
550	312105-0466	-		1	SCREW M6S ISO 4014 M8X75 A480	
560	312115-0376	-		2	SCREW ISO4762 M6X35 A4	
TBA 0200M						
010	1484336-0000	A		1	CURVE	
030	1484337-0000	A		1	CURVE	
060	1548768-0000	A		2	ECCENTRIC SHAFT	
090	2525678-0000	A		1	CURVE	
140	1484826-0000	A		1	CURVE	
300	90240-0265	A		4	FLANGE BUSHING, 20X23X21 MM	
330	321155-0221	A		2	FLANGE BUSHING, 16X18X17 MM	
540	312105-0467	-		1	SCREW M6S ISO 4014 M8X80 A480	
550	312105-0471	-		1	SCREW M6S ISO 4014 M8X100 A480	
560	312109-0376	-		2	SCREW M6S ISO 4017 M6X35 A480	
TBA 0200S						
010	1512346-0000	A		1	CURVE	
030	1512651-0000	A		1	CURVE	
060	1512368-0000	A		2	ECCENTRIC SHAFT	
090	1512367-0000	A		1	CURVE	
140	1512366-0000	A		1	CURVE	
300	90240-0265	A		4	FLANGE BUSHING, 20X23X21 MM	
330	90240-0325	A		2	FLANGE BUSHING, 16X18X12 MM	
340	90240-0325	A		2	FLANGE BUSHING, 16X18X12 MM	
540	312105-0467	-		1	SCREW M6S ISO 4014 M8X80 A480	
550	312105-0471	-		1	SCREW M6S ISO 4014 M8X100 A480	
560	312109-0376	-		2	SCREW M6S ISO 4017 M6X35 A480	
TBA 0250B						
010	1140844-0000	A		1	CURVE	
030	1260950-0000	A		1	CURVE	
060	1140846-0000	A		2	ECCENTRIC SHAFT	
090	2525678-0000	A		1	CURVE	
140	1350718-0000	A		1	CURVE	
300	90240-0265	A		4	FLANGE BUSHING, 20X23X21 MM	
330	90240-0325	A		2	FLANGE BUSHING, 16X18X12 MM	
540	312105-0467	-		1	SCREW M6S ISO 4014 M8X80 A480	
550	312105-0471	-		1	SCREW M6S ISO 4014 M8X100 A480	
560	312109-0376	-		2	SCREW M6S ISO 4017 M6X35 A480	
TBA 0250S						
010	1548808-0000	A		1	CURVE	
030	1548804-0000	A		1	CURVE	
060	1548806-0000	A		2	ECCENTRIC SHAFT	
090	1548807-0000	A		1	CURVE	
140	1548805-0000	A		1	CURVE	
300	90240-0265	A		4	FLANGE BUSHING, 20X23X21 MM	
330	321155-0221	A		2	FLANGE BUSHING, 16X18X17 MM	
540	312105-0467	-		1	SCREW M6S ISO 4014 M8X80 A480	
550	312105-0475	-		1	SCREW M6S ISO 4014 M8X120 A480	
560	312109-0376	-		2	SCREW M6S ISO 4017 M6X35 A480	
Common Parts						
020	1484479-0000	-		1	SUPPORT	
040	1539376-0000	A		2	PULLEY	
050	1548769-0000	A		1	PULLEY	
070	1519814-0000	A		1	ECCENTRIC SHAFT	
080	1548767-0000	A		1	SHAFT	
100	1041549-0000	-		2	WASHER	
110	1140845-0000	A		1	ROLLER	
120	1484480-0000	A		1	ADJUSTER	
130	1548798-0000	A		1	TIMING BELT	
150	1519813-0000	A		1	SHAFT	
160	1538302-0000	-		2	HUB	
170	1511242-0000	-		1	WASHER	
310	90240-0265	A		2	FLANGE BUSHING, 20X23X21 MM	
320	90458-0548	A		3	PARALLEL KEY W. ROUND ENDS 5X5X16 MM	
350	90458-0274	A		1	DISC FOR COUPLING, HUCO 236.50T	
500	315751-0113	-		1	RETAINING RING FOR SHAFT DIN 471 16 A2	
510	315125-0153	-		2	WASHER TBRSB 6,4X22X4 A4	
520	312105-0455	-		1	SCREW M6S ISO 4017 M8X30 A480	
530	312115-0333	-		2	SCREW ISO4762 M5X25 A4	
570	312109-0459	-		4	SCREW M6S ISO 4017 M8X40 A480	
580	312155-0366	-		2	SCREW EN 10642 MF6S M6X12 A480	
590	312105-0366	-		3	SCREW M6S M6X12 A280	
600	315105-0153	-		3	WASHER BRB6,4X12RFR	
610	315105-0165	-		7	WASHER BRB8,4X16RFR	
B4202	90458-0672	A		1	PROXIMITY SENSOR E2E2-X5MB1-5M	

Machine Type | Group Description | Used-In | Group Number | Page No

VOLUME ADJUSTER

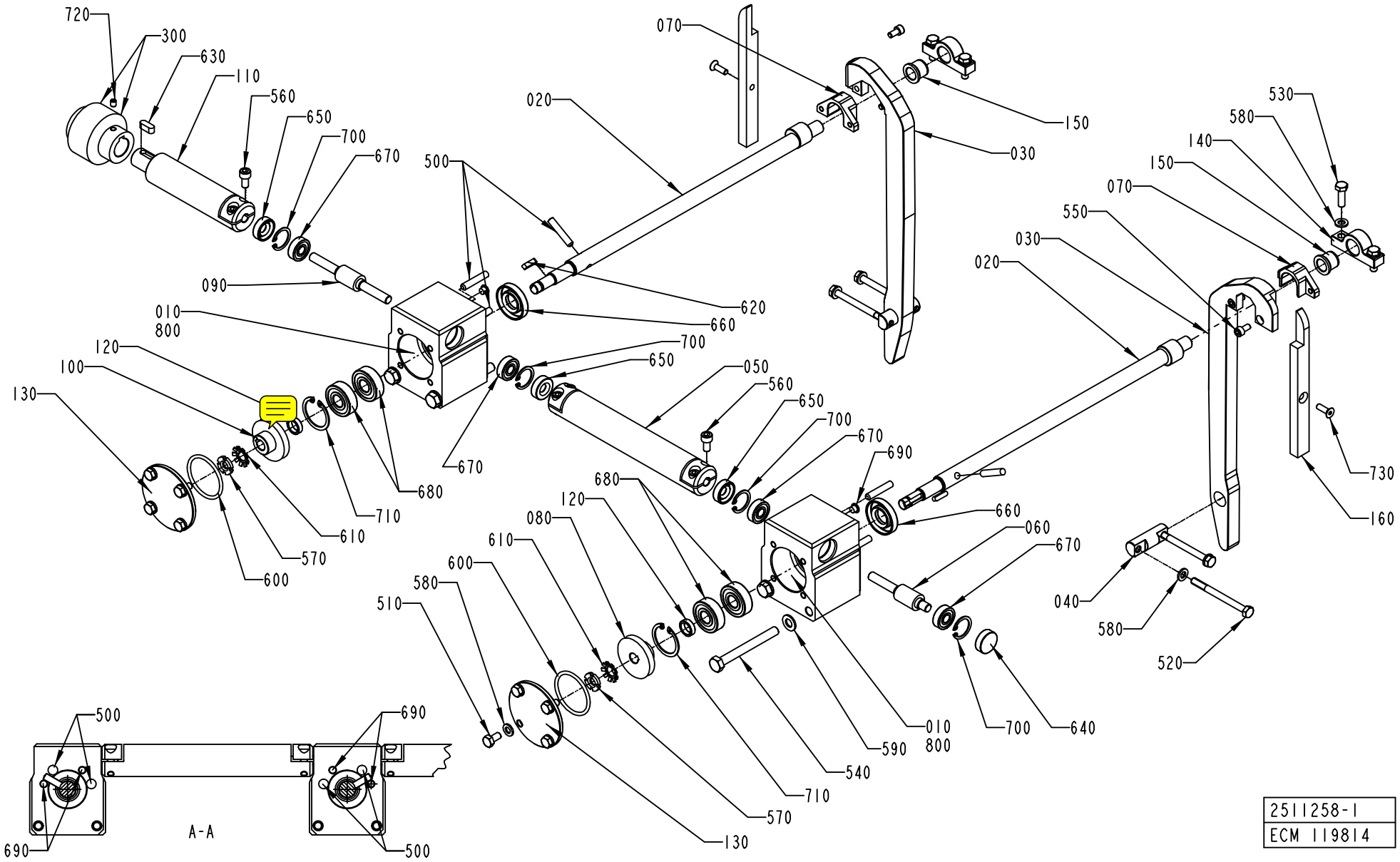

ECM: 122905 - 20030114
Group number: 2511258-0100
Assembly Drawing: 2511258-1_1_AB

Pos	Part No	SP	UN	Qty	Description	Page No
TBA 0200B						
030	1512599-0000	A		2	VOLUME CAM	
050	1349386-0000	A		1	SHAFT	
110	1349387-0000	A		1	SHAFT	
160	1512598-0000	-		2	GUIDE	
520	312105-0384	-		4	SCREW M6S ISO 4014 M6X70 A480	
730	312155-0329	-		2	SCREW EN 10642 MF6S M5X16 A480	
TBA 0200M						
030	1484335-0000	A		2	VOLUME CAM	
050	1260050-0000	A		1	SHAFT	
110	1260170-0000	A		1	SHAFT	
520	312105-0386	-		4	SCREW M6S ISO 4014 M6X80 A480	
TBA 0200S						
030	2523609-0000	A		2	VOLUME CAM	
050	1512652-0000	A		1	SHAFT	
110	1512653-0000	A		1	SHAFT	
520	312105-0386	-		4	SCREW M6S ISO 4014 M6X80 A480	
TBA 0250B						
030	1523368-0000	A		2	VOLUME CAM	
050	1260050-0000	A		1	SHAFT	
110	1260170-0000	A		1	SHAFT	
520	312105-0386	-		4	SCREW M6S ISO 4014 M6X80 A480	
TBA 0250S						
030	2514374-0000	A		2	VOLUME CAM	
050	1498601-0000	A		1	SHAFT	
110	1498602-0000	A		1	SHAFT	
520	312105-0386	-		4	SCREW M6S ISO 4014 M6X80 A480	
Common Parts						
010	1260051-0000	-		2	HOUSING	
020	1260148-0000	A		2	ECCENTRIC SHAFT	
040	1548810-0000	-		2	PIVOT PIN	
060	1260149-0000	A		1	WORM SCREW	
070	1348287-0000	A		2	GUIDE	
080	1260152-0000	A		1	WORM WHEEL	
090	1260154-0000	A		1	WORM SCREW	
100	1260169-0000	A		1	WORM WHEEL	
120	1260153-0000	A		2	SPACER	
130	1260177-0000	-		2	COVER	
140	1260151-0000	A		2	BRACKET	
150	1140437-0000	A		2	BUSHING	
300	2582019-0000	A		1	SHAFT COUPLING	
500	311103-0358	A		6	PARALLEL PIN ISO 2338 6M6X32 A1	
510	312105-0366	-		8	SCREW M6S M6X12 A280	
530	312105-0370	-		4	SCREW M6S ISO 4017 M6X20 A480	
540	312105-0466	-		4	SCREW M6S ISO 4014 M8X75 A480	
550	312115-0325	-		4	SCREW ISO4762 M5X10 A4	
560	312115-0366	-		6	SCREW ISO4762 M6X12 A4	
570	312805-0100	-		2	NUT ROUND WITH SLOTS M10X0,75 FE	
580	315105-0153	-		16	WASHER BRB6,4X12RFR	
590	315105-0165	-		4	WASHER BRB8,4X16RFR	
600	315202-0223	B		2	O-RING 39,2X3 MM	
610	315410-0100	B		2	LOCK WASHER MB 0 D=10 H=1	
620	315701-0168	A		2	PARALLEL KEY W. ROUND ENDS 4X4X16 MM	
630	315705-0230	A		1	PARALLEL KEY W. ROUND ENDS 6X6X16 MM	
640	90355-0369	-		1	COVER PLUG, 22X19X7 MM	
650	90091-0431	B		3	RADIAL SEAL 8X22X7 MM	
660	90091-0430	B		2	RADIAL SEAL 15X35X7 MM DUST LIP	
670	321302-0298	A		4	BALL BEARING, 8X22X7 MM	
680	321313-0101	A		4	BALL BEARING, 12X32X10 MM	
690	90261-0071	-		4	PLUG, BLIND, PLASTIC, NO. GPN500B58	
700	315753-0117	A		4	RETAINING RING FOR BORE DIN 472 22 A2	
710	315753-0123	A		2	RETAINING RING FOR BORE DIN 472 32 A2	
720	312318-0321	-		2	SCREW ISO4029 M5X6 A4	
800	90296-0070	A		1	GREASE	

Machine Type | Group Description | Used-In | Group Number | Page No

ELECTRICAL CONNECTION

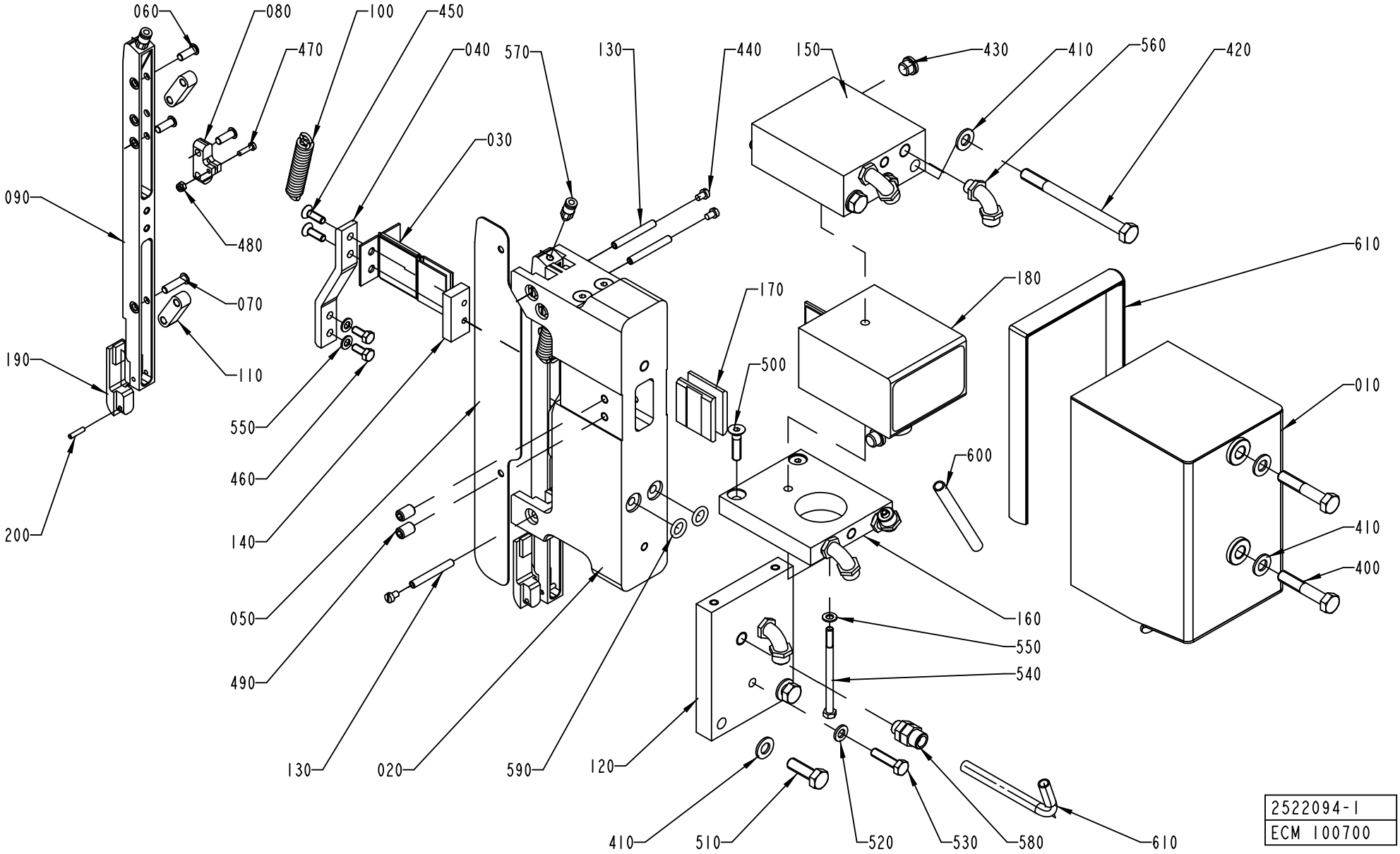

ECM: 122903 - 20030114
Group number: 2522094-0100
Assembly Drawing: 2522094-1_1_AA

Pos	Part No	SP	UN	Qty	Description	Page No
TBA 0200B						
020	2526931-0000	A		1	BRACKET	
050	2526932-0000	A		1	SPACER	
090	2526930-0000	A		2	CONTACT RAIL	
120	2527290-0000	-		1	PLATE	
180	67379-0106	A		1	TRANSFORMER	
180	67379-0106	A		1	TRANSFORMER	
190	2529735-0000	A		2	BRACKET	
TBA 0200M						
020	2527727-0000	A		1	BRACKET	
050	2527728-0000	A		1	SPACER	
090	2527726-0000	A		2	CONTACT RAIL	
120	2527729-0000	-		1	PLATE	
180	67379-0249	A		1	TRANSFORMER	
180	67379-0249	A		1	TRANSFORMER	
190	2527141-0000	A		2	BRACKET	
TBA 0200S						
020	2529496-0000	A		1	BRACKET	
050	2529677-0000	A		1	SPACER	
090	2529495-0000	A		2	CONTACT RAIL	
120	2527729-0000	-		1	PLATE	
180	67379-0248	A		1	TRANSFORMER	
180	67379-0248	A		1	TRANSFORMER	
190	2527141-0000	A		2	BRACKET	
TBA 0250B						
020	2527727-0000	A		1	BRACKET	
050	2527728-0000	A		1	SPACER	
090	2527726-0000	A		2	CONTACT RAIL	
120	2527729-0000	-		1	PLATE	
180	67379-0106	A		1	TRANSFORMER	
180	67379-0106	A		1	TRANSFORMER	
190	2527141-0000	A		2	BRACKET	
TBA 0250S						
020	2544899-0000	A		1	BRACKET	
050	2544900-0000	A		1	SPACER	
090	2544901-0000	A		2	CONTACT RAIL	
120	2527729-0000	-		1	PLATE	
180	67379-0248	A		1	TRANSFORMER	
180	67379-0248	A		1	TRANSFORMER	
190	2527141-0000	A		2	BRACKET	
Common Parts						
010	1532496-0000	-		1	COVER	
030	1533428-0000	A		1	BUSBAR	
040	2517171-0000	A		2	CABLE	
060	1140716-0000	A		6	PIN	
070	1140717-0000	A		2	PIN	
080	1548818-0000	A		2	BRACKET	
100	243989-0000	A		2	TENSION SPRING	
110	1548813-0000	A		4	LINK ARM	
130	1487332-0000	A		3	SHAFT	
140	1487373-0000	A		2	WASHER	
150	1532492-0000	-		1	COOLING PLATE	
160	1532493-0000	-		1	COOLING PLATE	
170	1487249-0000	A		2	WASHER	
200	311103-0235	A		2	PARALLEL PIN ISO 2338 3M6X14	
400	312105-0460	-		2	SCREW M6S ISO 4014 M8X45 A480	
410	315105-0165	-		6	WASHER BRB8,4X16RFR	
420	312105-0471	-		3	SCREW M6S ISO 4014 M8X100 A480	
430	342713-0209	-		2	PLUG, EXT THREAD HEX SOCKET 8638-00-180	
440	312125-0285	-		6	SCREW ISO 1207 M4X6 A4	
450	312155-0327	-		4	SCREW EN 10642 MF6S M5X12 A480	
460	312105-0327	-		4	SCREW M6S ISO 4017 M5X12 A480	
470	312125-0226	-		2	SCREW ISO 1207 M3X12 A4	
480	312812-0310	-		2	HEXAGON NUT, NY-LOCK M3 A480	
490	312318-0366	-		4	SCREW ISO4029 M6X12 A4	
500	312155-0372	-		2	SCREW EN 10642 MF6S M6X25 A480	
510	312105-0453	-		2	SCREW M6S ISO 4017 M8X25 A480	
520	315105-0153	-		1	WASHER BRB6,4X12RFR	
530	312105-0372	-		1	SCREW M6S ISO 4017 M6X25 A480	
540	1532495-0000	-		1	SCREW	
550	315105-0146	-		4	BRICKA BRB5,3X10RFR	
560	342931-0121	-		5	ELBOW 90 COUPL.,EXT.THREAD 8/6-G1/8"	
570	342722-0198	-		2	STRAIGHT COUPLING	
580	342921-0121	-		1	STRAIGHT COUPLING,EXT.THREADED 8/6-G1/8"	
590	315205-0508	B		2	O-RING 9,19X2,62 MM	
600	90166-0118	-	MM	80	TUBE 8 MM PA BLACK	
610	90143-0098	-	MM	395	RUBBER STRIP, CLAMPING, NO. 1038-02	

Machine Type Group Description Used-In Group Number Page No

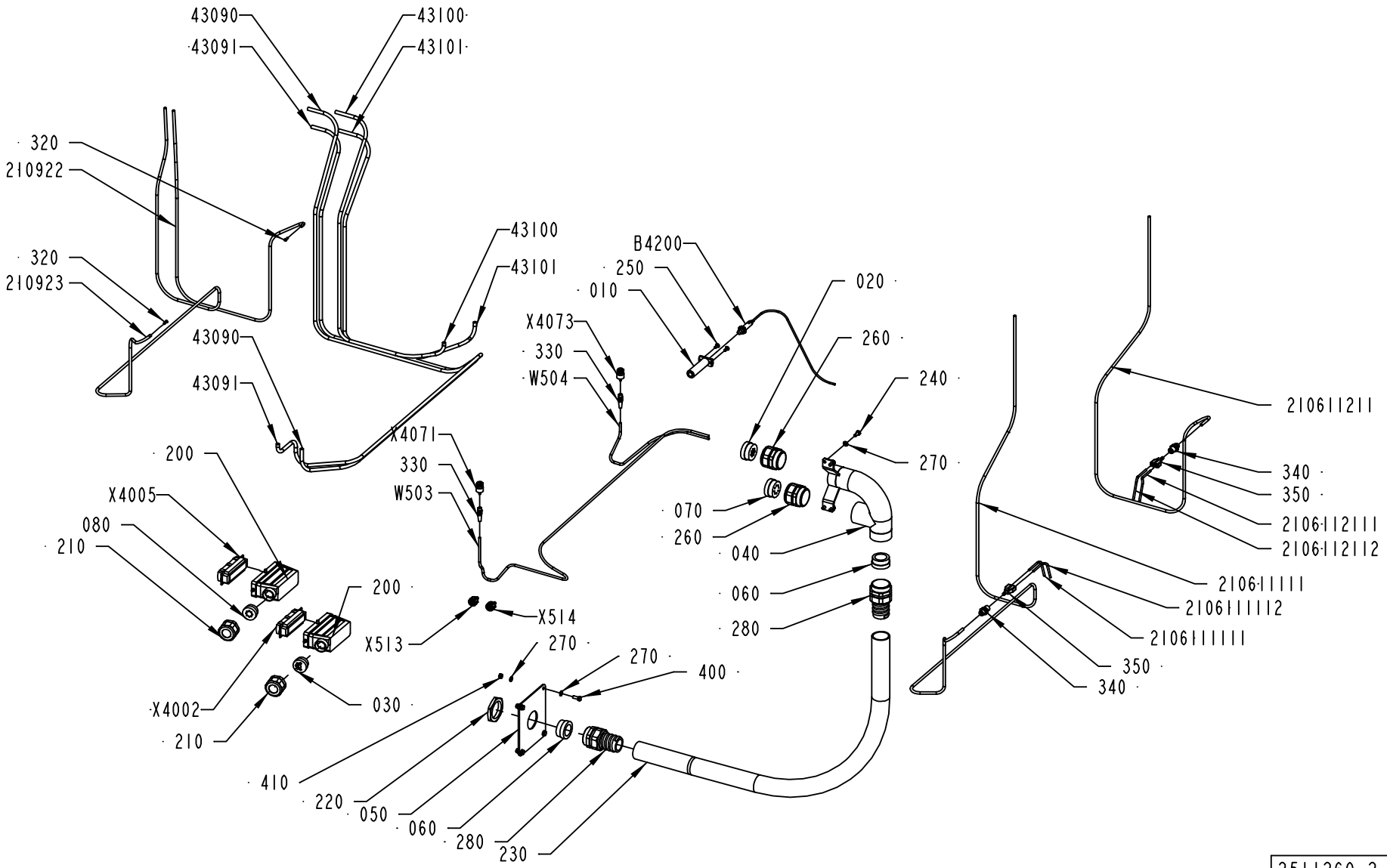

2511260-2
ECM 144474

ECM: 151267 - 20031201
Group number: 2511260-0200
Assembly Drawing: 2511260-2_1_AB

Pos	Part No	SP	UN	Qty	Description	Page No
-						
010	1260749-0000	-		1	HOLDER	
020	2556606-0000	-		1	INSERT	
030	2500363-0000	-		1	INSERT	
040	2527413-0000	-		1	HOUSING	
050	1348510-0000	-		1	PLATE	
060	2531413-0000	-		2	INSERT	
070	2594979-0000	-		1	INSERT	
080	2595005-0000	-		1	INSERT	
200	90110-0228	-		2	CABLE HOOD 24-POL 71.350.2428.0	
210	353241-0003	-		2	EXTENDED WITHOUT INSERT, PG 21	
210611111	90166-0266	-	MM	2500	TUBE, 6 MM PA BLACK	
2106111111	90458-0061	-	MM	125	TUBE, 4 MM PA BLACK	
2106111112	90458-0061	-	MM	125	TUBE, 4 MM PA BLACK	
210611211	90166-0266	-	MM	1800	TUBE, 6 MM PA BLACK	
2106112111	90458-0061	-	MM	125	TUBE, 4 MM PA BLACK	
2106112112	90458-0061	-	MM	125	TUBE, 4 MM PA BLACK	
210922	90166-0266	-	MM	1800	TUBE, 6 MM PA BLACK	
210923	90166-0266	-	MM	2500	TUBE, 6 MM PA BLACK	
220	90099-0103	-		1	NUT, PR 47 (PG36)	
230	90152-0060	-	MM	1100	SPIRAL CONDUIT, 42X35, UL3529	
240	312105-0367	-		4	SCREW M6S M6X14 A280	
250	312155-0327	-		2	SCREW EN 10642 MF6S M5X12 A480	
260	353240-0007	-		2	NORMAL WITHOUT INSERT, PG 36	
270	315105-0153	-		12	WASHER BRB6,4X12RFR	
280	353242-0004	-		2	NORMAL WITHOUT INSERT, PG36	
320	342706-0130	-		2	ACCESSORIES, INSERT SLEEVE 6 MM	
330	90458-2893	-		2	SLEEVE, 78 Z-0-3-4	
340	342768-0102	-		2	BULKHEAD CONNECTOR, 6 MM	
350	90224-0345	-		2	Y-CONNECTION	
400	312105-0368	-		4	SCREW M6S M6X16 A280	
410	312605-0316	-		4	HEXAGON NUT, M6M M6 A280	
43090	90166-0118	-	MM	2500	TUBE 8 MM PA BLACK	
43091	90166-0118	-	MM	2500	TUBE 8 MM PA BLACK	
43100	90166-0118	-	MM	1400	TUBE 8 MM PA BLACK	
43101	90166-0118	-	MM	1400	TUBE 8 MM PA BLACK	
B4200	90458-0672	-		1	PROXIMITY SENSOR E2E2-X5MB1-5M	
W503	90458-2895	-	M	12	COAXIAL CABLE RG 400/U BROWN	
W504	90458-2895	-	M	12	COAXIAL CABLE RG 400/U BROWN	
X4002	90110-0150	-		1	MALE INSERT 121110 0000	
X4005	90110-0150	-		1	MALE INSERT 121110 0000	
X4071	90458-2890	-		1	CONNECTOR, 21N-50N12N133NE	
X4073	90458-2890	-		1	CONNECTOR, 21N-50N12N133NE	
X513	90458-2892	-		1	CONNECTOR, 11 N-50-3-31/133 NE	
X514	90458-2892	-		1	CONNECTOR, 11 N-50-3-31/133 NE	

Machine Type Group Description Used-In Group Number Page No

PRESSURE JAW

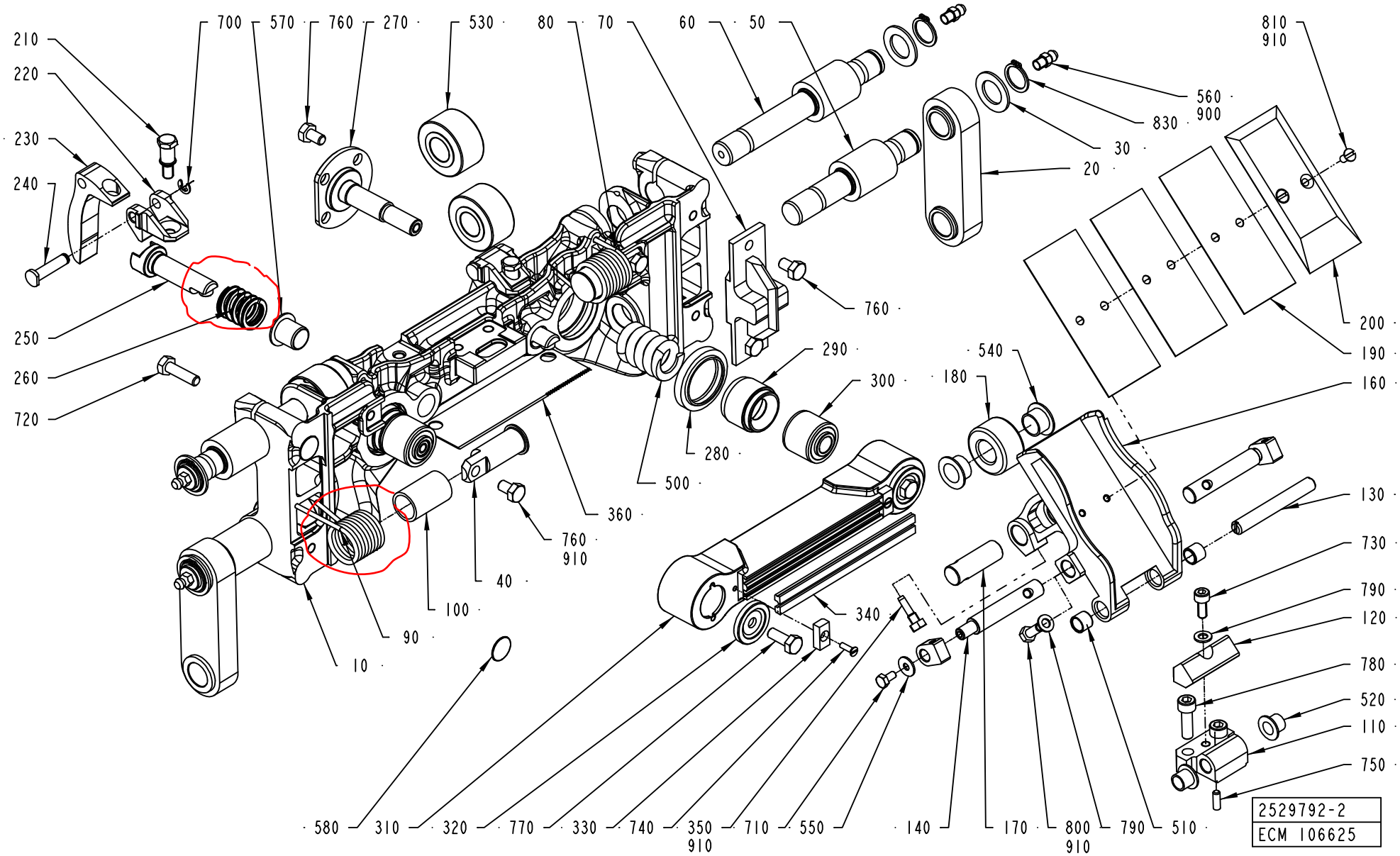

ECM: 125960 - 20040105
Group number: 2529792-0200
Assembly Drawing: 2529792-2_1_AA

This list covers pages from 4-22 to 4-25

Pos	Part No	SP	UN	Qty	Description	Page No
TBA 0200B						
010	2595643-0000	A		1	PRESSURE JAW	
020	1349360-0000	A		2	LINK	
110	1512605-0000	A		1	BRACKET	
130	1512604-0000	A		1	SHAFT	
160	1539924-0000	A		1	VOLUME FLAP	
190	1498609-0000	B		2	VOLUME SHIM	
200	1498608-0000	A		1	VOLUME BULGE	
TBA 0200M						
010	2595644-0000	A		1	PRESSURE JAW	
020	1195208-0000	A		2	LINK	
110	1512607-0000	A		1	BRACKET	
130	1512608-0000	A		1	SHAFT	
160	1548565-0000	A		1	VOLUME FLAP	
190	1498604-0000	B		3	VOLUME SHIM	
200	1498603-0000	A		1	VOLUME BULGE	
TBA 0200S						
010	2595648-0000	A		1	PRESSURE JAW	
020	1511305-0000	A		2	LINK	
110	1538134-0000	A		1	BRACKET	
130	1538135-0000	A		1	SHAFT	
160	1539993-0000	A		1	VOLUME FLAP	
190	272991-0000	B		3	VOLUME SHIM	
200	272990-0000	A		1	VOLUME BULGE	
TBA 0250B						
010	2595642-0000	A		1	PRESSURE JAW	
020	1195208-0000	A		2	LINK	
110	1512605-0000	A		1	BRACKET	
130	1512604-0000	A		1	SHAFT	
160	1539992-0000	A		1	VOLUME FLAP	
190	1348257-0000	B		3	VOLUME SHIM	
200	1348256-0000	A		1	VOLUME BULGE	
TBA 0250S						
010	2595649-0000	A		1	PRESSURE JAW	
020	1498583-0000	A		2	LINK	
110	1512607-0000	A		1	BRACKET	
130	1512608-0000	A		1	SHAFT	
160	1512606-0000	A		1	VOLUME FLAP	
190	574366-0000	B		3	VOLUME SHIM	
200	574367-0000	A		1	VOLUME BULGE	
Common Parts						
030	1548817-0000	A		4	WASHER	
040	1519811-0000	A		2	SHAFT	
050	1140312-0000	A		2	SHAFT	
060	1140313-0000	A		2	SHAFT	
070	1523980-0000	A		1	MOUNTING BLOCK	
080	1538149-0000	A		1	SPRING	
090	1538148-0000	A		1	SPRING	
100	1538521-0000	A		2	BUSHING	
120	1538141-0000	A		1	DAMPER	
140	1548215-0000	A		2	SHAFT	
150	1539348-0000	A		2	HOLDER	
170	1548766-0000	A		1	SHAFT	
180	1140479-0000	A		1	ROLLER	
210	1549412-0000	A		2	SCREW	
220	1517290-0000	A		2	HOLDER	
230	1499397-0000	A		2	CAM	
240	1517291-0000	A		2	SHAFT	
250	2502408-0000	A		2	SHAFT	
260	2502413-0000	A		2	SPRING	
270	1195293-0000	A		2	SHAFT	
280	1195317-0000	A		2	SEALING RING	
290	1195294-0000	A		2	SLEEVE	
300	1512590-0000	A		2	RUBBER BUSHING	
310	1558062-0000	A		1	PRESSURE RAIL	
320	1549601-0000	A		2	WASHER	
330	1140233-0000	A		2	WASHER	
340	1520564-0003	A		2	DOLLY	
340	1520564-0003	A		2	DOLLY	
350	491230-0000	A		1	GRUB SCREW	
360	1517289-0000	A		1	KNIFE	
500	2547233-0000	A		2	SPRING	
510	90458-0353	A		2	BUSHING, 8X10X8 MM	
520	90240-0260	A		2	FLANGE BUSHING, 8X10X9 MM	
540	90240-0261	A		2	FLANGE BUSHING, 12X14X9 MM	
540	90083-0055	A		4	BEARING ROLLER, 15X35X19 MM	
550	90005-0082	-		2	WASHER PLAIN ROUND 4,3(M4)/12,H=1	
560	90286-0013	A		4	GREASE NIPPLE STRAIGHT M6	
570	90458-0060	A		2	FLANGE BUSHING, 12X14X15 MM	
580	90458-0289	-		2	PLUG,GPN 340-SW-5 MM	
700	315755-0106	-		2	RETAINING RING 4	
710	312105-0287	-		2	SCREW M6S ISO4017 M4X8 A480	
720	312105-0371	-		4	SCREW M6S ISO 4017 M6X22 A480	
730	312115-0327	-		1	SCREW ISO4762 M5X12 A4	

Machine Type | Group Description | Used-In | Group Number | Page No

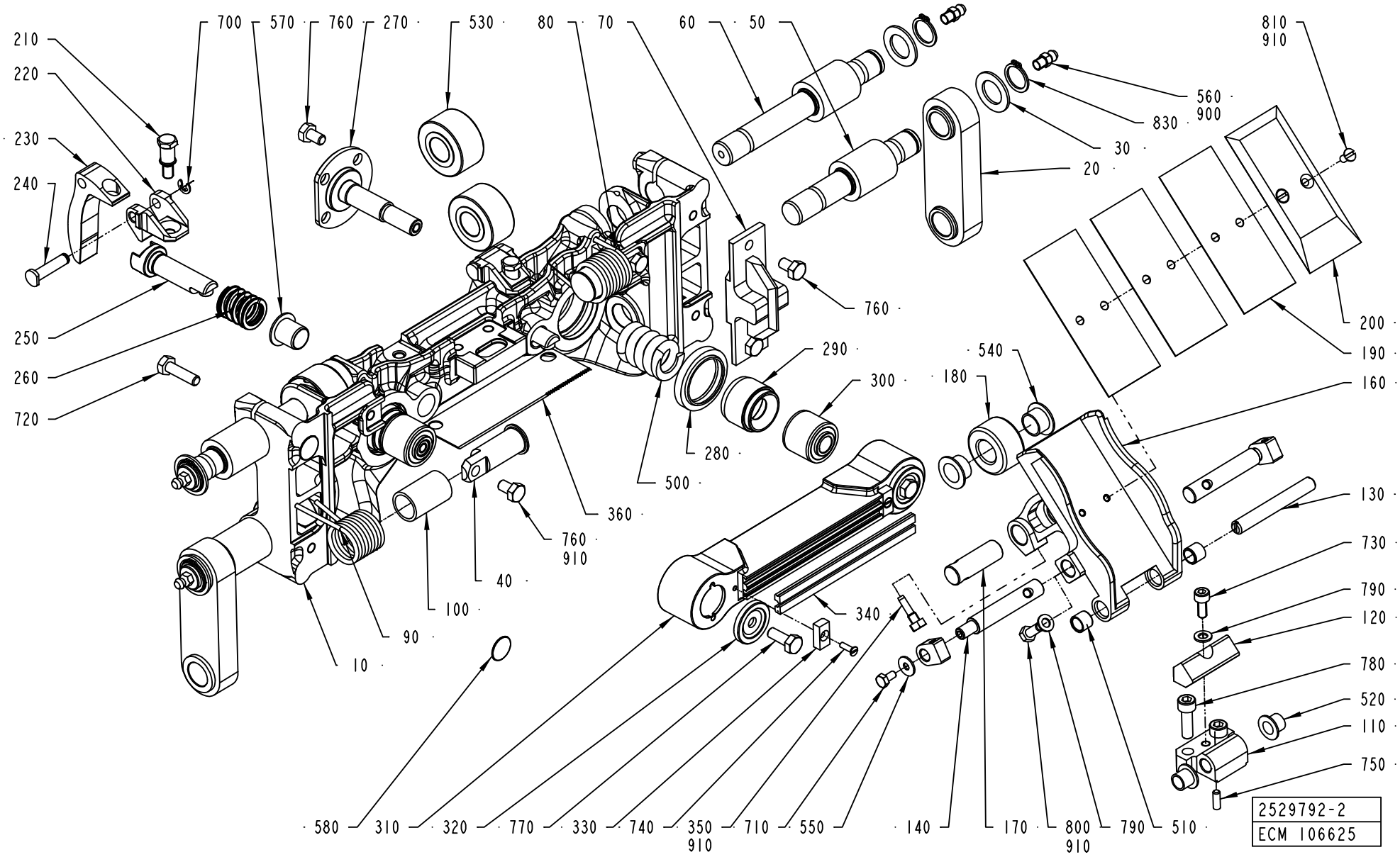
210
220
230
240
250
260
720
700
570
760
270
530
80
70
60
50
760
290
300
280
500
360
760
910
40
100
90
10
580
310
320
770
330
740
350
910
710
550
340
140
170
800
910
790
510
560
900
830
30
20
810
910
200
190
160
540
180
130
730
790
120
780
520
110
750
2529792-2
ECM 106625

Pos	Part No	SP	UN	Qty	Description	Page No
Common Parts (Cont'd)						
740	312145-0224	-		2	SCREW ISO 2009 MFS M3X10 A4	
750	311103-0268	-		1	PARALLEL PIN ISO 2338 4M6X12 A1	
760	312105-0364	-		12	SCREW M6S ISO 4017 M6X10 A480	
770	312105-0368	-		2	SCREW M6S M6X16 A280	
780	312115-0370	-		2	SCREW ISO4762 M6X20 A4	
790	315105-0146	-		3	BRICKA BRB5,3X10RFR	
800	312105-0327	-		2	SCREW M6S ISO 4017 M5X12 A480	
810	312145-0287	A		2	SCREW ISO 2009 MFS M4X8 A4	
830	315751-0112	A		4	RETAINING RING FOR SHAFT DIN 471 15 A2	
900	90459-0246	A	KG	1	GREASE, KLüBERSYNTH UH1 14-1600	
910	90157-0016	-		1	LOCKING FLUID	

Pos	Part No	SP	UN	Qty	Description	Page No

SEALING JAW

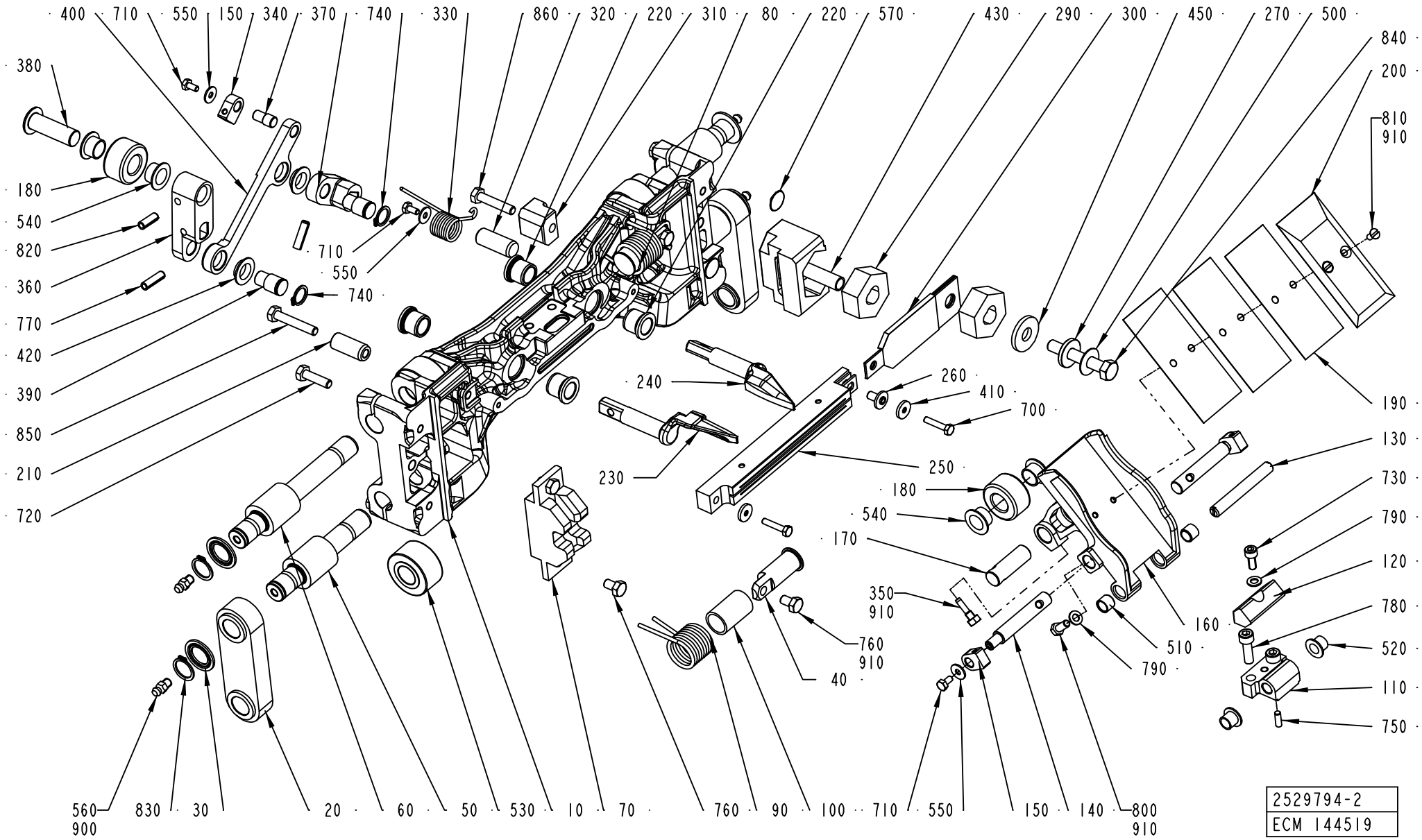

2529794-2
ECM 144519

ECM: 144793 - 20040106
Group number: 2529794-0200
Assembly Drawing: 2529794-2_1_AB

This list covers pages from 4-26 to 4-29

Pos	Part No	SP	UN	Qty	Description	Page No
TBA 0200B						
010	2595646-0000	A		1	SEALING JAW	
020	1349360-0000	A		2	LINK	
110	1512605-0000	A		1	BRACKET	
130	1512604-0000	A		1	SHAFT	
160	1539924-0000	A		1	VOLUME FLAP	
190	1498609-0000	B		3	VOLUME SHIM	
200	1498608-0000	A		1	VOLUME BULGE	
230	1512626-0000	A		1	FOLDING FLAP	
240	1512627-0000	A		1	FOLDING FLAP	
250	1533002-0000	A		1	INDUCTOR	
250	1533002-0000	A		1	INDUCTOR	
360	2629312-0000	A		1	ARM	
370	2500376-0000	A		1	ARM	
400	2500377-0000	A		1	LINK ARM	
TBA 0200M						
010	2595647-0000	A		1	SEALING JAW	
020	1195208-0000	A		2	LINK	
110	1512607-0000	A		1	BRACKET	
130	1512608-0000	A		1	SHAFT	
160	1548565-0000	A		1	VOLUME FLAP	
190	1498604-0000	B		3	VOLUME SHIM	
200	1498603-0000	A		1	VOLUME BULGE	
210	2511246-0000	A		1	BUSHING	
230	1512609-0000	A		1	FOLDING FLAP	
240	1512610-0000	A		1	FOLDING FLAP	
250	1520166-0000	A		1	INDUCTOR	
250	1520166-0000	A		1	INDUCTOR	
360	2629310-0000	A		1	ARM	
370	1478959-0000	A		1	ARM	
400	1478960-0000	A		1	LINK ARM	
850	312109-0376	-		1	SCREW M6S ISO 4017 M6X35 A480	
TBA 0200S						
010	2595650-0000	A		1	SEALING JAW	
020	1511305-0000	A		2	LINK	
110	1538134-0000	A		1	BRACKET	
130	1538135-0000	A		1	SHAFT	
160	1539993-0000	A		1	VOLUME FLAP	
190	272991-0000	B		3	VOLUME SHIM	
200	272990-0000	A		1	VOLUME BULGE	
210	2511246-0000	A		1	BUSHING	
230	1511400-0000	A		1	FOLDING FLAP	
240	1511399-0000	A		1	FOLDING FLAP	
250	1533000-0000	A		1	INDUCTOR	
250	1533000-0000	A		1	INDUCTOR	
360	2629311-0000	A		1	ARM	
370	1478959-0000	A		1	ARM	
400	2509551-0000	A		1	LINK ARM	
850	312109-0376	-		1	SCREW M6S ISO 4017 M6X35 A480	
TBA 0250B						
010	2595645-0000	A		1	SEALING JAW	
020	1195208-0000	A		2	LINK	
110	1512605-0000	A		1	BRACKET	
130	1512604-0000	A		1	SHAFT	
160	1539992-0000	A		1	VOLUME FLAP	
190	1348257-0000	B		3	VOLUME SHIM	
200	1348256-0000	A		1	VOLUME BULGE	
230	1487599-0000	A		1	FOLDING FLAP	
240	1487600-0000	A		1	FOLDING FLAP	
250	1533002-0000	A		1	INDUCTOR	
250	1533002-0000	A		1	INDUCTOR	
360	2629312-0000	A		1	ARM	
370	2500376-0000	A		1	ARM	
400	2500377-0000	A		1	LINK ARM	
TBA 0250S						
010	2595651-0000	A		1	SEALING JAW	
020	1498583-0000	A		2	LINK	
110	1512607-0000	A		1	BRACKET	
130	1512608-0000	A		1	SHAFT	
160	1512606-0000	A		1	VOLUME FLAP	
190	574366-0000	B		3	VOLUME SHIM	
200	574367-0000	A		1	VOLUME BULGE	
210	2511246-0000	A		1	BUSHING	
230	1512609-0000	A		1	FOLDING FLAP	
240	1512610-0000	A		1	FOLDING FLAP	
250	1520166-0000	A		1	INDUCTOR	
250	1520166-0000	A		1	INDUCTOR	
360	2629310-0000	A		1	ARM	
370	1478959-0000	A		1	ARM	
400	1478960-0000	A		1	LINK ARM	
850	312109-0376	-		1	SCREW M6S ISO 4017 M6X35 A480	
Common Parts						
030	1548817-0000	A		4	WASHER	
040	1519811-0000	A		2	SHAFT	

Machine Type | Group Description | Used-In | Group Number | Page No

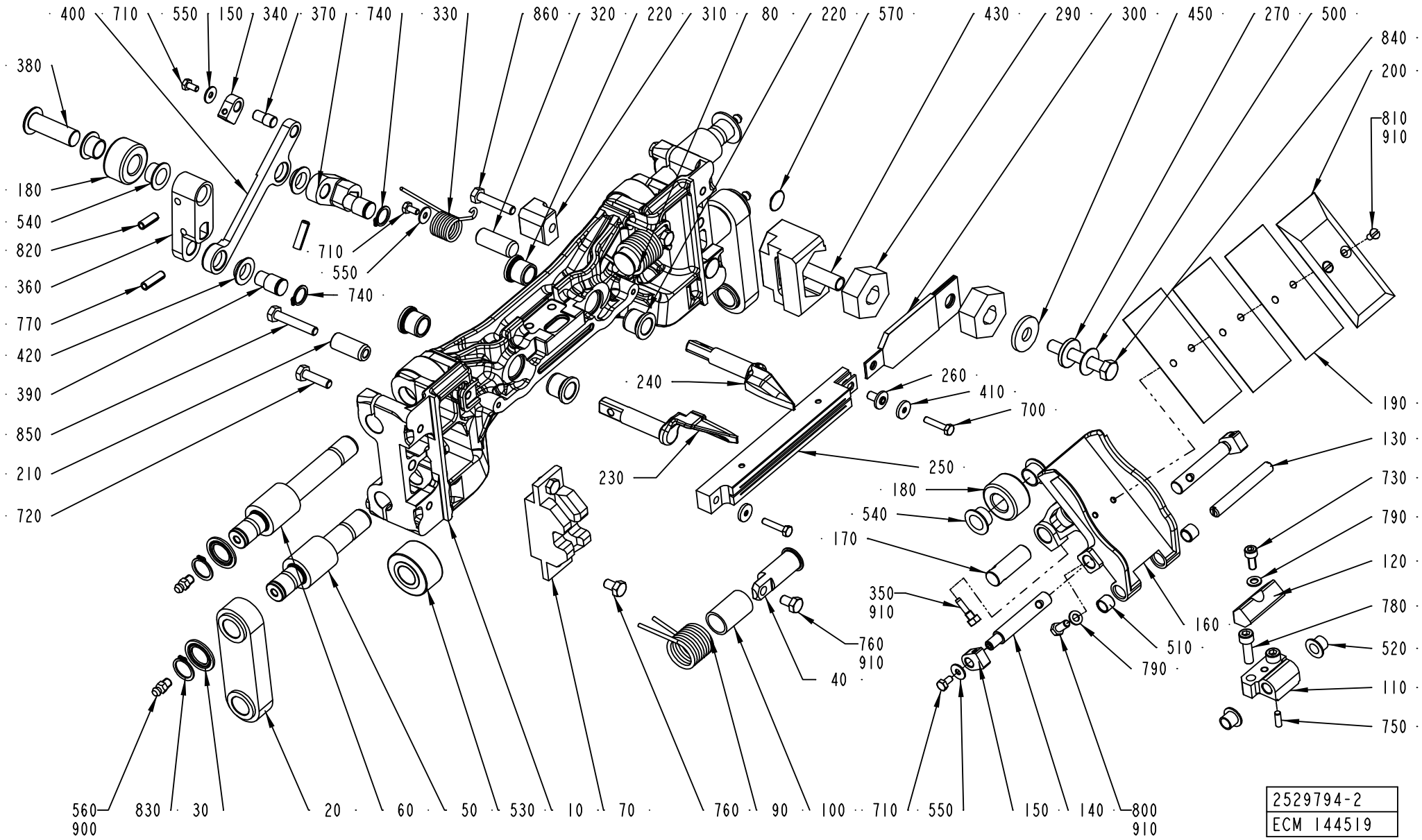
400 710 550 150 340 370 740 330 860 320 220 310 80 220 570 430 290 300 450 270 500
380
180
540
820
360
770
420
390
850
210
720
710
550
740
240
230
260
410
700
250
180
540
170
350
910
760
910
40
840
200
810
910
190
130
730
790
120
780
520
110
750
160
510
790
560
900
830
30
20
60
50
530
10
70
760
90
100
710
550
150
140
800
910
2529794-2
ECM 144519

Pos	Part No	SP	UN	Qty	Description	Page No
Common Parts (Cont'd)						
050	1140312-0000	A		2	SHAFT	
060	1140313-0000	A		2	SHAFT	
070	1523981-0000	A		1	GUIDE	
080	1538149-0000	A		1	SPRING	
090	1538148-0000	A		1	SPRING	
100	1538521-0000	A		2	BUSHING	
120	1538141-0000	A		1	DAMPER	
140	1548215-0000	A		2	SHAFT	
150	1539348-0000	A		3	HOLDER	
170	1548766-0000	A		1	SHAFT	
180	1140479-0000	A		2	ROLLER	
220	1140437-0000	A		4	BUSHING	
260	32544-0000	A		1	INSULATION NUT	
270	2511263-0000	A		1	WASHER	
280	2579810-0000	A		1	CARBON BRUSH HOLDER	
290	2545308-0000	A		2	CARBON BRUSH	
300	2644425-0000	A		1	BUSBAR	
310	1498479-0000	A		1	GUIDE	
320	1140492-0000	A		1	PIN	
330	1140485-0000	A		1	SPRING	
340	1549123-0000	A		1	PIVOT PIN	
350	491230-0000	A		1	GRUB SCREW	
380	2629313-0000	A		1	SHAFT	
390	1140488-0000	A		2	SHAFT	
410	1349399-0000	A		2	WASHER	
420	1549122-0000	A		4	FLANGE BEARING	
430	2511242-0000	A		1	PROTECTION	
450	2579811-0000	A		1	WASHER	
500	90016-0024	A		1	DISC SPRING, CONICAL 20X8,2X0,8 MM	
510	90458-0353	A		2	BUSHING, 8X10X8 MM	
520	90240-0260	A		2	FLANGE BUSHING, 8X10X9 MM	
530	90083-0055	A		4	BEARING ROLLER, 15X35X19 MM	
540	90240-0261	A		4	FLANGE BUSHING, 12X14X9 MM	
550	90005-0082	-		4	WASHER PLAIN ROUND 4,3(M4)/12,H=1	
560	90286-0013	A		4	GREASE NIPPLE STRAIGHT M6	
570	90458-0289	-		2	PLUG,GPN 340-SW-5 MM	
700	312105-0295	-		2	SCREW M6S ISO4017 M4X20 A480	
710	312105-0287	-		4	SCREW M6S ISO4017 M4X8 A480	
720	312105-0371	-		4	SCREW M6S ISO 4017 M6X22 A480	
730	312115-0327	-		1	SCREW ISO4762 M5X12 A4	
740	315751-0109	A		2	RETAINING RING FOR SHAFT DIN 471 12 A2	
750	311103-0268	-		1	PARALLEL PIN ISO 2338 4M6X12 A1	
760	312105-0364	-		4	SCREW M6S ISO 4017 M6X10 A480	
770	311112-0308	A		2	SPRING PIN, ISO 8752 5X20-C	
780	312115-0370	-		2	SCREW ISO4762 M6X20 A4	
790	315105-0146	-		3	BRICKA BRB5,3X10RFR	
800	312105-0327	-		2	SCREW M6S ISO 4017 M5X12 A480	
810	312145-0287	A		2	SCREW ISO 2009 MFS M4X8 A4	
820	311112-0306	-		1	SPRING PIN, ISO 8752 5X16-C	
830	315751-0112	A		4	RETAINING RING FOR SHAFT DIN 471 15 A2	
840	312105-0461	-		1	SCREW M6S ISO 4014 M8X50 A480	
860	312109-0374	-		1	SCREW M6S ISO 4017 M6X30 A480	
900	90459-0246	A	KG	1	GREASE, KLüBERSYNTH UH1 14-1600	
910	90157-0016	A		1	LOCKING FLUID	

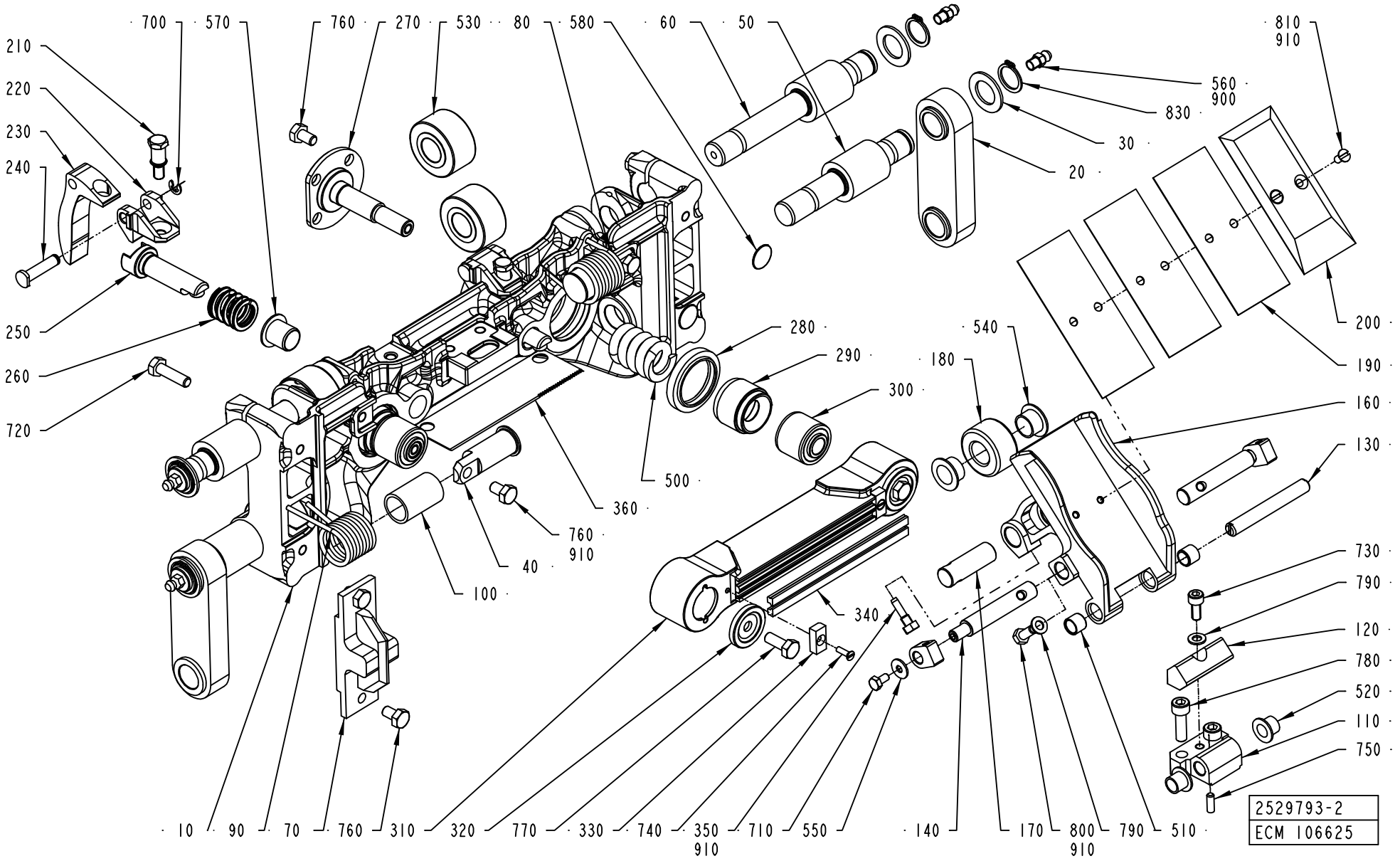
700
570
760
270
530
80
580
60
50
810
910
210
220
230
240
560
900
830
30
20
250
260
720
280
290
300
540
180
200
190
160
130
500
360
760
910
40
100
730
790
120
780
520
110
750
340
10
90
70
760
310
320
770
330
740
350
910
710
550
140
170
800
910
790
510
2529793-2
ECM 106625

ECM: 125961 - 20040105
Group number: 2529793-0200
Assembly Drawing: 2529793-2_1_AA

This list covers pages from 4-30 to 4-33

Pos	Part No	SP	UN	Qty	Description	Page No
TBA 0200B						
010	2595643-0000	A		1	PRESSURE JAW	
020	1349360-0000	A		2	LINK	
110	1512605-0000	A		1	BRACKET	
130	1512604-0000	A		1	SHAFT	
160	1539924-0000	A		1	VOLUME FLAP	
190	1498609-0000	B		2	VOLUME SHIM	
200	1498608-0000	A		1	VOLUME BULGE	
TBA 0200M						
010	2595644-0000	A		1	PRESSURE JAW	
020	1195208-0000	A		2	LINK	
110	1512607-0000	A		1	BRACKET	
130	1512608-0000	A		1	SHAFT	
160	1548565-0000	A		1	VOLUME FLAP	
190	1498604-0000	B		3	VOLUME SHIM	
200	1498603-0000	A		1	VOLUME BULGE	
TBA 0200S						
010	2595648-0000	A		1	PRESSURE JAW	
020	1511305-0000	A		2	LINK	
110	1538134-0000	A		1	BRACKET	
130	1538135-0000	A		1	SHAFT	
160	1539993-0000	A		1	VOLUME FLAP	
190	272991-0000	B		3	VOLUME SHIM	
200	272990-0000	A		1	VOLUME BULGE	
TBA 0250B						
010	2595642-0000	A		1	PRESSURE JAW	
020	1195208-0000	A		2	LINK	
110	1512605-0000	A		1	BRACKET	
130	1512604-0000	A		1	SHAFT	
160	1539992-0000	A		1	VOLUME FLAP	
190	1348257-0000	B		3	VOLUME SHIM	
200	1348256-0000	A		1	VOLUME BULGE	
TBA 0250S						
010	2595649-0000	A		1	PRESSURE JAW	
020	1498583-0000	A		2	LINK	
110	1512607-0000	A		1	BRACKET	
130	1512608-0000	A		1	SHAFT	
160	1512606-0000	A		1	VOLUME FLAP	
190	574366-0000	B		3	VOLUME SHIM	
200	574367-0000	A		1	VOLUME BULGE	
Common Parts						
030	1548817-0000	A		4	WASHER	
040	1519811-0000	A		2	SHAFT	
050	1140312-0000	A		2	SHAFT	
060	1140313-0000	A		2	SHAFT	
070	1523980-0000	A		1	MOUNTING BLOCK	
080	1538149-0000	A		1	SPRING	
090	1538148-0000	A		1	SPRING	
100	1538521-0000	A		2	BUSHING	
120	1538141-0000	A		1	DAMPER	
140	1548215-0000	A		2	SHAFT	
150	1539348-0000	A		2	HOLDER	
170	1548766-0000	A		1	SHAFT	
180	1140479-0000	A		1	ROLLER	
210	1549412-0000	A		2	SCREW	
220	1517290-0000	A		2	HOLDER	
230	1499397-0000	A		2	CAM	
240	1517291-0000	A		2	SHAFT	
250	2502408-0000	A		2	SHAFT	
260	2502413-0000	A		2	SPRING	
270	1195293-0000	A		2	SHAFT	
280	1195317-0000	A		2	SEALING RING	
290	1195294-0000	A		2	SLEEVE	
300	1512590-0000	A		2	RUBBER BUSHING	
310	1558062-0000	A		1	PRESSURE RAIL	
320	1549601-0000	A		2	WASHER	
330	1140233-0000	A		2	WASHER	
340	1520564-0003	A		2	DOLLY	
340	1520564-0003	A		2	DOLLY	
350	491230-0000	A		1	GRUB SCREW	
360	1517289-0000	A		1	KNIFE	
500	2547233-0000	A		2	SPRING	
510	90458-0353	A		2	BUSHING, 8X10X8 MM	
520	90240-0260	A		2	FLANGE BUSHING, 8X10X9 MM	
540	90083-0055	A		4	BEARING ROLLER, 15X35X19 MM	
540	90240-0261	A		2	FLANGE BUSHING, 12X14X9 MM	
550	90005-0082	-		2	WASHER PLAIN ROUND 4,3(M4)/12,H=1	
560	90286-0013	A		4	GREASE NIPPLE STRAIGHT M6	
570	90458-0060	A		2	FLANGE BUSHING, 12X14X15 MM	
580	90458-0289	-		2	PLUG,GPN 340-SW-5 MM	
700	315755-0106	-		2	RETAINING RING 4	
710	312105-0287	-		2	SCREW M6S ISO4017 M4X8 A480	
720	312105-0371	-		4	SCREW M6S ISO 4017 M6X22 A480	
730	312115-0327	-		1	SCREW ISO4762 M5X12 A4	

Machine Type | Group Description | Used-In | Group Number | Page No

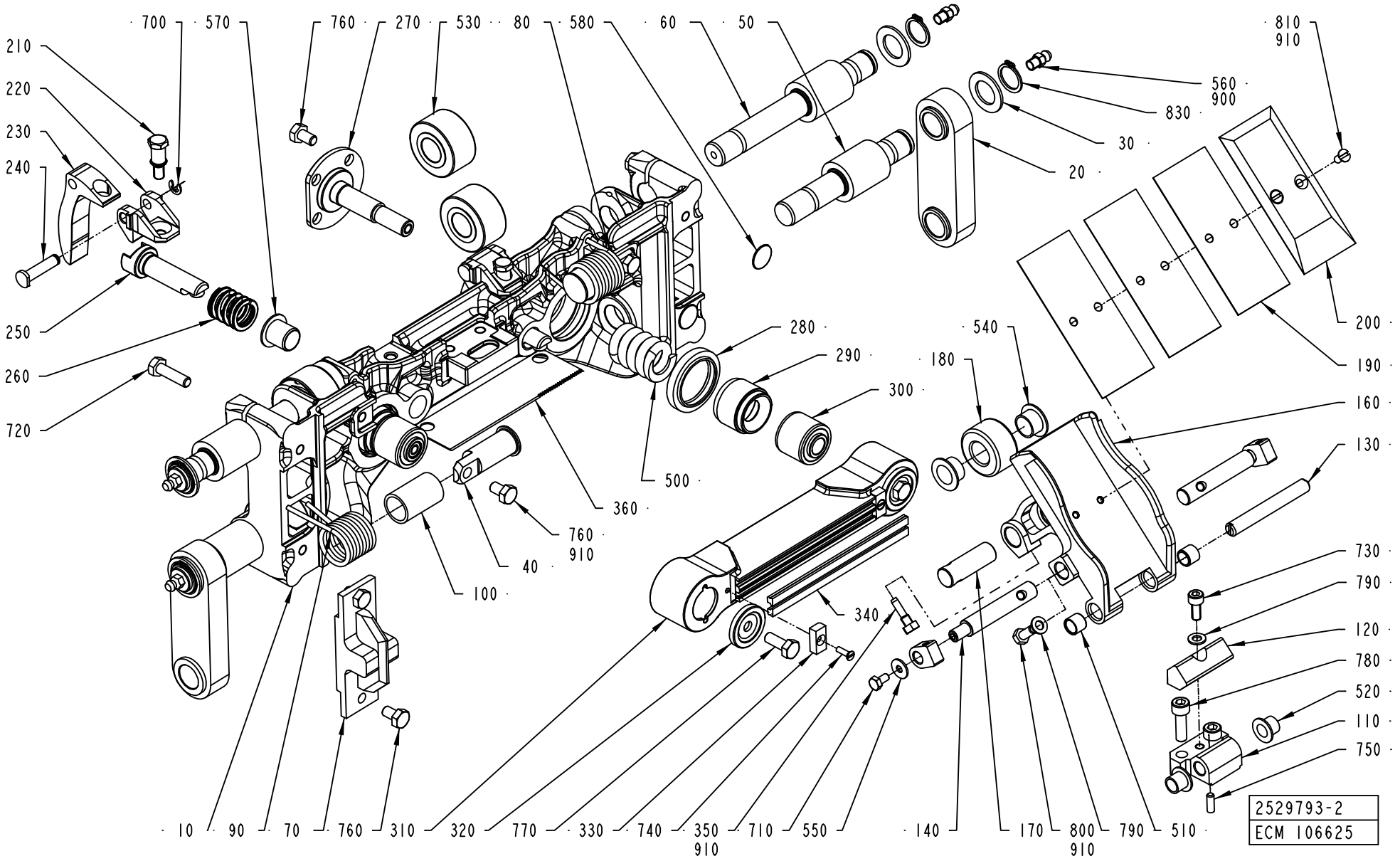
700
570
760
270
530
80
580
60
50
810
910
210
220
230
240
560
900
830
30
20
250
260
720
280
290
300
540
180
200
190
160
130
500
360
760
910
40
100
730
790
120
780
520
110
750
340
10
90
70
760
310
320
770
330
740
350
910
710
550
140
170
800
910
790
510
2529793-2
ECM 106625

Pos	Part No	SP	UN	Qty	Description	Page No
Common Parts (Cont'd)						
740	312145-0224	-		2	SCREW ISO 2009 MFS M3X10 A4	
750	311103-0268	-		1	PARALLEL PIN ISO 2338 4M6X12 A1	
760	312105-0364	-		12	SCREW M6S ISO 4017 M6X10 A480	
770	312105-0368	-		2	SCREW M6S M6X16 A280	
780	312115-0370	-		2	SCREW ISO4762 M6X20 A4	
790	315105-0146	-		3	BRICKA BRB5,3X10RFR	
800	312105-0327	-		2	SCREW M6S ISO 4017 M5X12 A480	
810	312145-0287	A		2	SCREW ISO 2009 MFS M4X8 A4	
830	315751-0112	A		4	RETAINING RING FOR SHAFT DIN 471 15 A2	
900	90459-0246	A	KG	1	GREASE, KLüBERSYNTH UH1 14-1600	
910	90157-0016	-		1	LOCKING FLUID	

Pos	Part No	SP	UN	Qty	Description	Page No

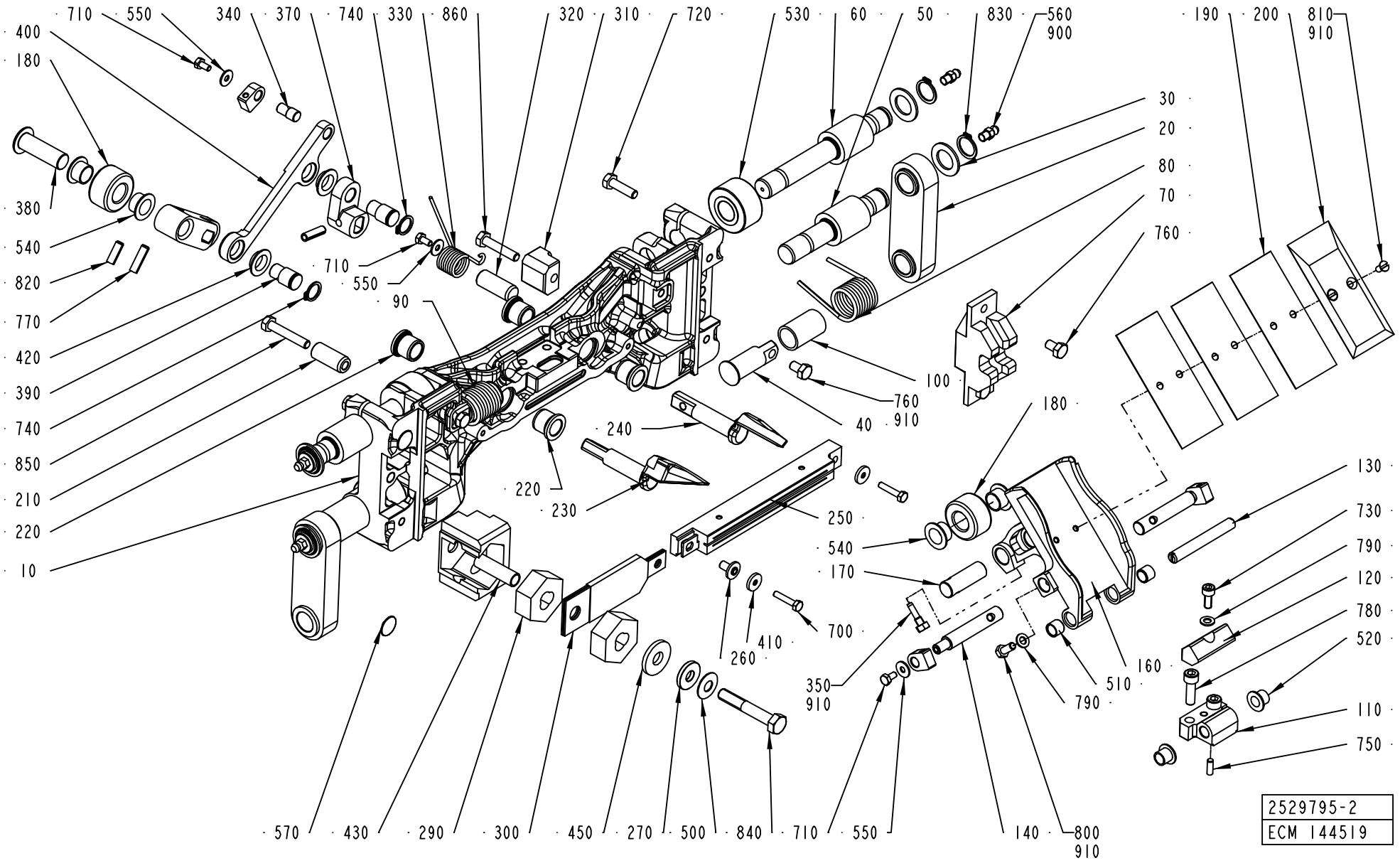
710
550
340
370
740
330
860
320
310
720
530
60
50
830
560
900
190
200
810
910
400
180
380
540
820
770
420
390
740
850
210
220
10
710
550
90
30
20
80
70
760
100
760
910
40
180
240
220
230
250
540
170
700
410
260
130
730
790
120
780
520
160
510
790
350
910
110
750
570
430
290
300
450
270
500
840
710
550
140
800
910
2529795-2
ECM 144519

ECM: 144794 - 20040106
Group number: 2529795-0200
Assembly Drawing: 2529795-2_1_AB

This list covers pages from 4-34 to 4-37

Pos	Part No	SP	UN	Qty	Description	Page No
TBA 0200B						
010	2595646-0000	A		1	SEALING JAW	
020	1349360-0000	A		2	LINK	
110	1512605-0000	A		1	BRACKET	
130	1512604-0000	A		1	SHAFT	
160	1539924-0000	A		1	VOLUME FLAP	
190	1498609-0000	B		3	VOLUME SHIM	
200	1498608-0000	A		1	VOLUME BULGE	
230	1512626-0000	A		1	FOLDING FLAP	
240	1512627-0000	A		1	FOLDING FLAP	
250	1533002-0000	A		1	INDUCTOR	
250	1533002-0000	A		1	INDUCTOR	
360	2629312-0000	A		1	ARM	
370	2500376-0000	A		1	ARM	
400	2500377-0000	A		1	LINK ARM	
TBA 0200M						
010	2595647-0000	A		1	SEALING JAW	
020	1195208-0000	A		2	LINK	
110	1512607-0000	A		1	BRACKET	
130	1512608-0000	A		1	SHAFT	
160	1548565-0000	A		1	VOLUME FLAP	
190	1498604-0000	B		3	VOLUME SHIM	
200	1498603-0000	A		1	VOLUME BULGE	
210	2511246-0000	A		1	BUSHING	
230	1512609-0000	A		1	FOLDING FLAP	
240	1512610-0000	A		1	FOLDING FLAP	
250	1520166-0000	A		1	INDUCTOR	
250	1520166-0000	A		1	INDUCTOR	
360	2629310-0000	A		1	ARM	
370	1478959-0000	A		1	ARM	
400	1478960-0000	A		1	LINK ARM	
850	312109-0376	-		1	SCREW M6S ISO 4017 M6X35 A480	
TBA 0200S						
010	2595650-0000	A		1	SEALING JAW	
020	1511305-0000	A		2	LINK	
110	1538134-0000	A		1	BRACKET	
130	1538135-0000	A		1	SHAFT	
160	1539993-0000	A		1	VOLUME FLAP	
190	272991-0000	B		3	VOLUME SHIM	
200	272990-0000	A		1	VOLUME BULGE	
210	2511246-0000	A		1	BUSHING	
230	1511400-0000	A		1	FOLDING FLAP	
240	1511399-0000	A		1	FOLDING FLAP	
250	1533000-0000	A		1	INDUCTOR	
250	1533000-0000	A		1	INDUCTOR	
360	2629311-0000	A		1	ARM	
370	1478959-0000	A		1	ARM	
400	2509551-0000	A		1	LINK ARM	
850	312109-0376	-		1	SCREW M6S ISO 4017 M6X35 A480	
TBA 0250B						
010	2595645-0000	A		1	SEALING JAW	
020	1195208-0000	A		2	LINK	
110	1512605-0000	A		1	BRACKET	
130	1512604-0000	A		1	SHAFT	
160	1539992-0000	A		1	VOLUME FLAP	
190	1348257-0000	B		3	VOLUME SHIM	
200	1348256-0000	A		1	VOLUME BULGE	
230	1487599-0000	A		1	FOLDING FLAP	
240	1487600-0000	A		1	FOLDING FLAP	
250	1533002-0000	A		1	INDUCTOR	
250	1533002-0000	A		1	INDUCTOR	
360	2629312-0000	A		1	ARM	
370	2500376-0000	A		1	ARM	
400	2500377-0000	A		1	LINK ARM	
TBA 0250S						
010	2595651-0000	A		1	SEALING JAW	
020	1498583-0000	A		2	LINK	
110	1512607-0000	A		1	BRACKET	
130	1512608-0000	A		1	SHAFT	
160	1512606-0000	A		1	VOLUME FLAP	
190	574366-0000	B		3	VOLUME SHIM	
200	574367-0000	A		1	VOLUME BULGE	
210	2511246-0000	A		1	BUSHING	
230	1512609-0000	A		1	FOLDING FLAP	
240	1512610-0000	A		1	FOLDING FLAP	
250	1520166-0000	A		1	INDUCTOR	
250	1520166-0000	A		1	INDUCTOR	
360	2629310-0000	A		1	ARM	
370	1478959-0000	A		1	ARM	
400	1478960-0000	A		1	LINK ARM	
850	312109-0376	-		1	SCREW M6S ISO 4017 M6X35 A480	
Common Parts						
030	1548817-0000	A		4	WASHER	
040	1519811-0000	A		2	SHAFT	

Machine Type | Group Description | Used-In | Group Number | Page No

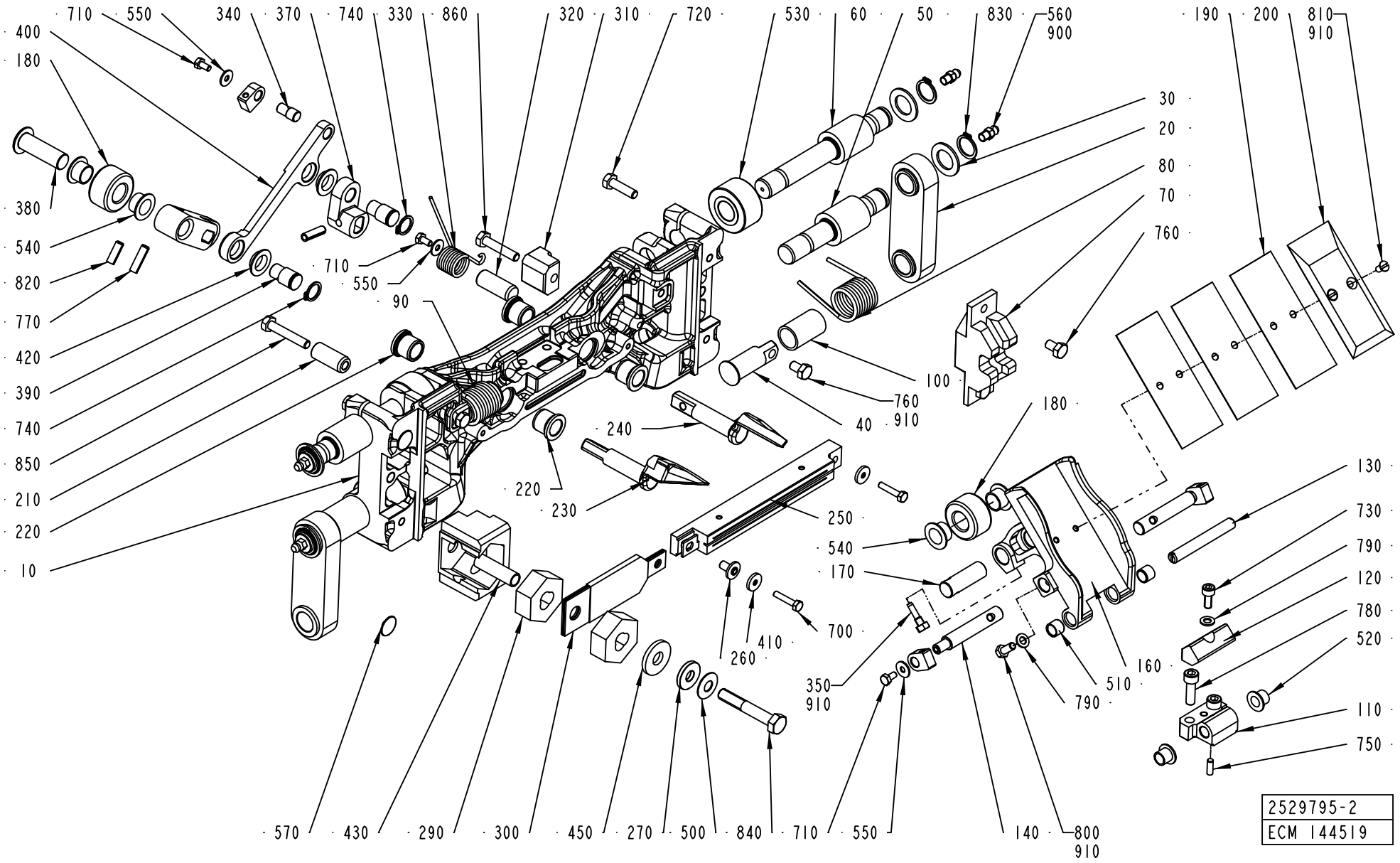
710
550
340
370
740
330
860
320
310
720
530
60
50
830
560
900
190
200
810
910
400
180
380
540
820
770
420
390
740
850
210
220
10
710
550
90
30
20
80
70
760
100
760
910
40
180
240
220
230
250
540
170
700
410
260
130
730
790
120
780
520
160
510
790
350
910
110
750
570
430
290
300
450
270
500
840
710
550
140
800
910
2529795-2
ECM 144519

Pos	Part No	SP	UN	Qty	Description	Page No
Common Parts (Cont'd)						
050	1140312-0000	A		2	SHAFT	
060	1140313-0000	A		2	SHAFT	
070	1523981-0000	A		1	GUIDE	
080	1538149-0000	A		1	SPRING	
090	1538148-0000	A		1	SPRING	
100	1538521-0000	A		2	BUSHING	
120	1538141-0000	A		1	DAMPER	
140	1548215-0000	A		2	SHAFT	
150	1539348-0000	A		3	HOLDER	
170	1548766-0000	A		1	SHAFT	
180	1140479-0000	A		2	ROLLER	
220	1140437-0000	A		4	BUSHING	
260	32544-0000	A		1	INSULATION NUT	
270	2511263-0000	A		1	WASHER	
280	2579810-0000	A		1	CARBON BRUSH HOLDER	
290	2545308-0000	A		2	CARBON BRUSH	
300	2644425-0000	A		1	BUSBAR	
310	1498479-0000	A		1	GUIDE	
320	1140492-0000	A		1	PIN	
330	1140485-0000	A		1	SPRING	
340	1549123-0000	A		1	PIVOT PIN	
350	491230-0000	A		1	GRUB SCREW	
380	2629313-0000	A		1	SHAFT	
390	1140488-0000	A		2	SHAFT	
410	1349399-0000	A		2	WASHER	
420	1549122-0000	A		4	FLANGE BEARING	
430	2511242-0000	A		1	PROTECTION	
450	2579811-0000	A		1	WASHER	
500	90016-0024	A		1	DISC SPRING, CONICAL 20X8,2X0,8 MM	
510	90458-0353	A		2	BUSHING, 8X10X8 MM	
520	90240-0260	A		2	FLANGE BUSHING, 8X10X9 MM	
530	90083-0055	A		4	BEARING ROLLER, 15X35X19 MM	
540	90240-0261	A		4	FLANGE BUSHING, 12X14X9 MM	
550	90005-0082	-		4	WASHER PLAIN ROUND 4,3(M4)/12,H=1	
560	90286-0013	A		4	GREASE NIPPLE STRAIGHT M6	
570	90458-0289	-		2	PLUG,GPN 340-SW-5 MM	
700	312105-0295	-		2	SCREW M6S ISO4017 M4X20 A480	
710	312105-0287	-		4	SCREW M6S ISO4017 M4X8 A480	
720	312105-0371	-		4	SCREW M6S ISO 4017 M6X22 A480	
730	312115-0327	-		1	SCREW ISO4762 M5X12 A4	
740	315751-0109	A		2	RETAINING RING FOR SHAFT DIN 471 12 A2	
750	311103-0268	-		1	PARALLEL PIN ISO 2338 4M6X12 A1	
760	312105-0364	-		4	SCREW M6S ISO 4017 M6X10 A480	
770	311112-0308	A		2	SPRING PIN, ISO 8752 5X20-C	
780	312115-0370	-		2	SCREW ISO4762 M6X20 A4	
790	315105-0146	-		3	BRICKA BRB5,3X10RFR	
800	312105-0327	-		2	SCREW M6S ISO 4017 M5X12 A480	
810	312145-0287	A		2	SCREW ISO 2009 MFS M4X8 A4	
820	311112-0306	-		1	SPRING PIN, ISO 8752 5X16-C	
830	315751-0112	A		4	RETAINING RING FOR SHAFT DIN 471 15 A2	
840	312105-0461	-		1	SCREW M6S ISO 4014 M8X50 A480	
860	312109-0374	-		1	SCREW M6S ISO 4017 M6X30 A480	
900	90459-0246	A	KG	1	GREASE, KLüBERSYNTH UH1 14-1600	
910	90157-0016	A		1	LOCKING FLUID	

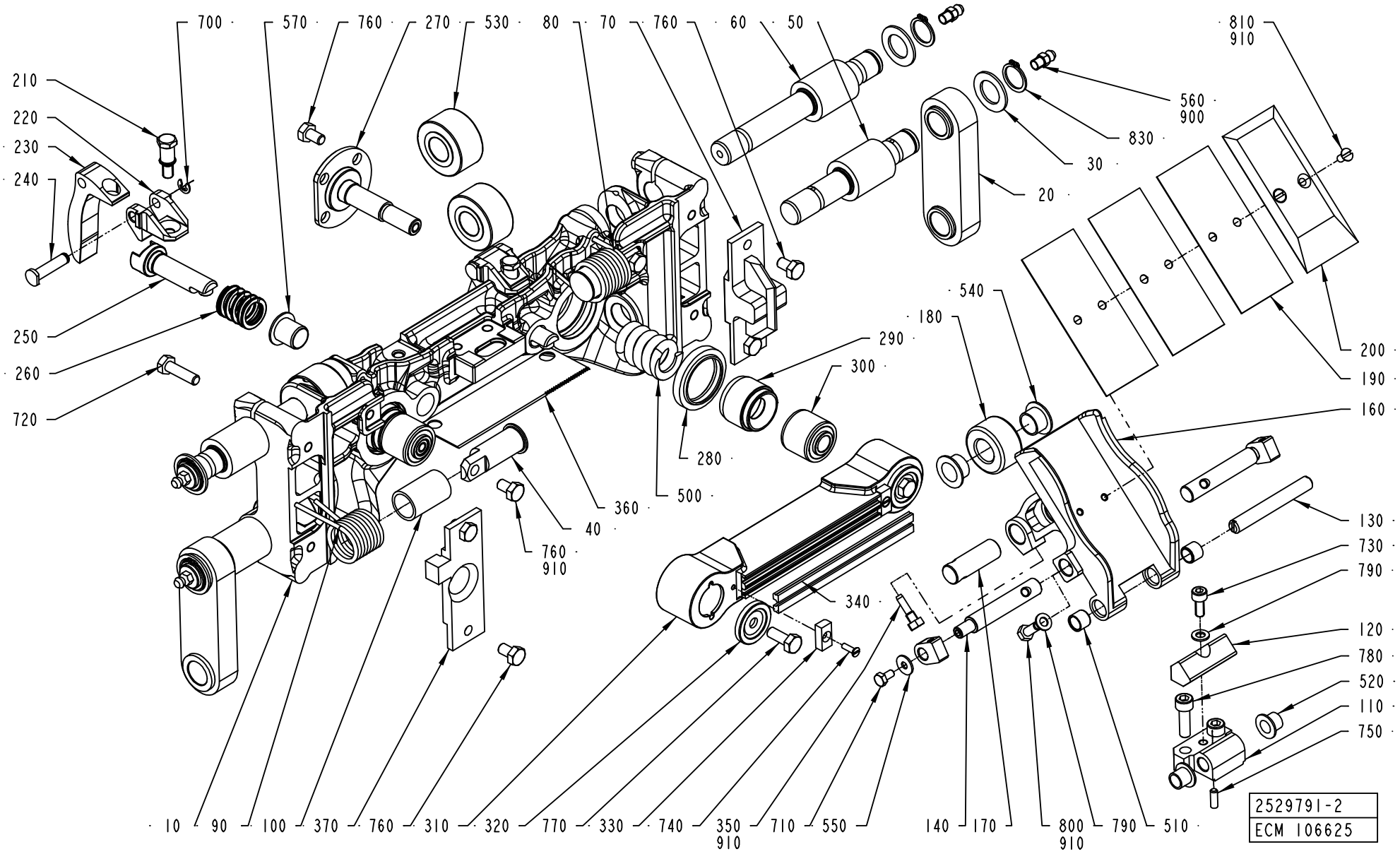
700
570
760
270
530
80
70
760
60
50
810
910
210
220
230
240
560
900
830
30
20
250
260
720
540
180
290
300
200
190
160
280
500
360
40
760
910
130
730
790
340
120
780
520
110
750
10
90
100
370
760
310
320
770
330
740
350
910
710
550
140
170
800
910
790
510
2529791-2
ECM 106625

ECM: 145370 - 20040106
Group number: 2529791-0200
Assembly Drawing: 2529791-2_1_AA

This list covers pages from 4-38 to 4-41

Pos	Part No	SP	UN	Qty	Description	Page No
TBA 0200B						
010	2595643-0000	A		1	PRESSURE JAW	
020	1349360-0000	A		2	LINK	
110	1512605-0000	A		1	BRACKET	
130	1512604-0000	A		1	SHAFT	
160	1539924-0000	A		1	VOLUME FLAP	
190	1498609-0000	B		2	VOLUME SHIM	
200	1498608-0000	A		1	VOLUME BULGE	
370	1532949-0000	-		1	FLAG	
TBA 0200M						
010	2595644-0000	A		1	PRESSURE JAW	
020	1195208-0000	A		2	LINK	
110	1512607-0000	A		1	BRACKET	
130	1512608-0000	A		1	SHAFT	
160	1548565-0000	A		1	VOLUME FLAP	
190	1498604-0000	B		3	VOLUME SHIM	
200	1498603-0000	A		1	VOLUME BULGE	
370	1532946-0000	A		1	FLAG	
TBA 0200S						
010	2595648-0000	A		1	PRESSURE JAW	
020	1511305-0000	A		2	LINK	
110	1538134-0000	A		1	BRACKET	
130	1538135-0000	A		1	SHAFT	
160	1539993-0000	A		1	VOLUME FLAP	
190	272991-0000	B		3	VOLUME SHIM	
200	272990-0000	A		1	VOLUME BULGE	
370	1532946-0000	A		1	FLAG	
TBA 0250B						
010	2595642-0000	A		1	PRESSURE JAW	
020	1195208-0000	A		2	LINK	
110	1512605-0000	A		1	BRACKET	
130	1512604-0000	A		1	SHAFT	
160	1539992-0000	A		1	VOLUME FLAP	
190	1348257-0000	B		3	VOLUME SHIM	
200	1348256-0000	A		1	VOLUME BULGE	
370	1532946-0000	A		1	FLAG	
TBA 0250S						
010	2595649-0000	A		1	PRESSURE JAW	
020	1498583-0000	A		2	LINK	
110	1512607-0000	A		1	BRACKET	
130	1512608-0000	A		1	SHAFT	
160	1512606-0000	A		1	VOLUME FLAP	
190	574366-0000	B		3	VOLUME SHIM	
200	574367-0000	A		1	VOLUME BULGE	
370	1532946-0000	A		1	FLAG	
Common Parts						
030	1548817-0000	A		4	WASHER	
040	1519811-0000	A		2	SHAFT	
050	1140312-0000	A		2	SHAFT	
060	1140313-0000	A		2	SHAFT	
070	1523980-0000	A		1	MOUNTING BLOCK	
080	1538149-0000	A		1	SPRING	
090	1538148-0000	A		1	SPRING	
100	1538521-0000	A		2	BUSHING	
120	1538141-0000	A		1	DAMPER	
140	1548215-0000	A		2	SHAFT	
150	1539348-0000	A		2	HOLDER	
170	1548766-0000	A		1	SHAFT	
180	1140479-0000	A		1	ROLLER	
210	1549412-0000	A		2	SCREW	
220	1517290-0000	A		2	HOLDER	
230	1499397-0000	A		2	CAM	
240	1517291-0000	A		2	SHAFT	
250	2502408-0000	A		2	SHAFT	
260	2502413-0000	A		2	SPRING	
270	1195293-0000	A		2	SHAFT	
280	1195317-0000	A		2	SEALING RING	
290	1195294-0000	A		2	SLEEVE	
300	1512590-0000	A		2	RUBBER BUSHING	
310	1558062-0000	A		1	PRESSURE RAIL	
320	1549601-0000	A		2	WASHER	
330	1140233-0000	A		2	WASHER	
340	1520564-0003	A		2	DOLLY	
340	1520564-0003	A		2	DOLLY	
350	491230-0000	A		1	GRUB SCREW	
360	1517289-0000	A		1	KNIFE	
500	2547233-0000	A		2	SPRING	
510	90458-0353	A		2	BUSHING, 8X10X8 MM	
520	90240-0260	A		2	FLANGE BUSHING, 8X10X9 MM	
530	90083-0055	A		4	BEARING ROLLER, 15X35X19 MM	
540	90240-0261	A		2	FLANGE BUSHING, 12X14X9 MM	
550	90005-0082	-		2	WASHER PLAIN ROUND 4,3(M4)/12,H=1	
560	90286-0013	A		4	GREASE NIPPLE STRAIGHT M6	
570	90458-0060	A		2	FLANGE BUSHING, 12X14X15 MM	

Machine Type | Group Description | Used-In | Group Number | Page No

PRESSURE JAW

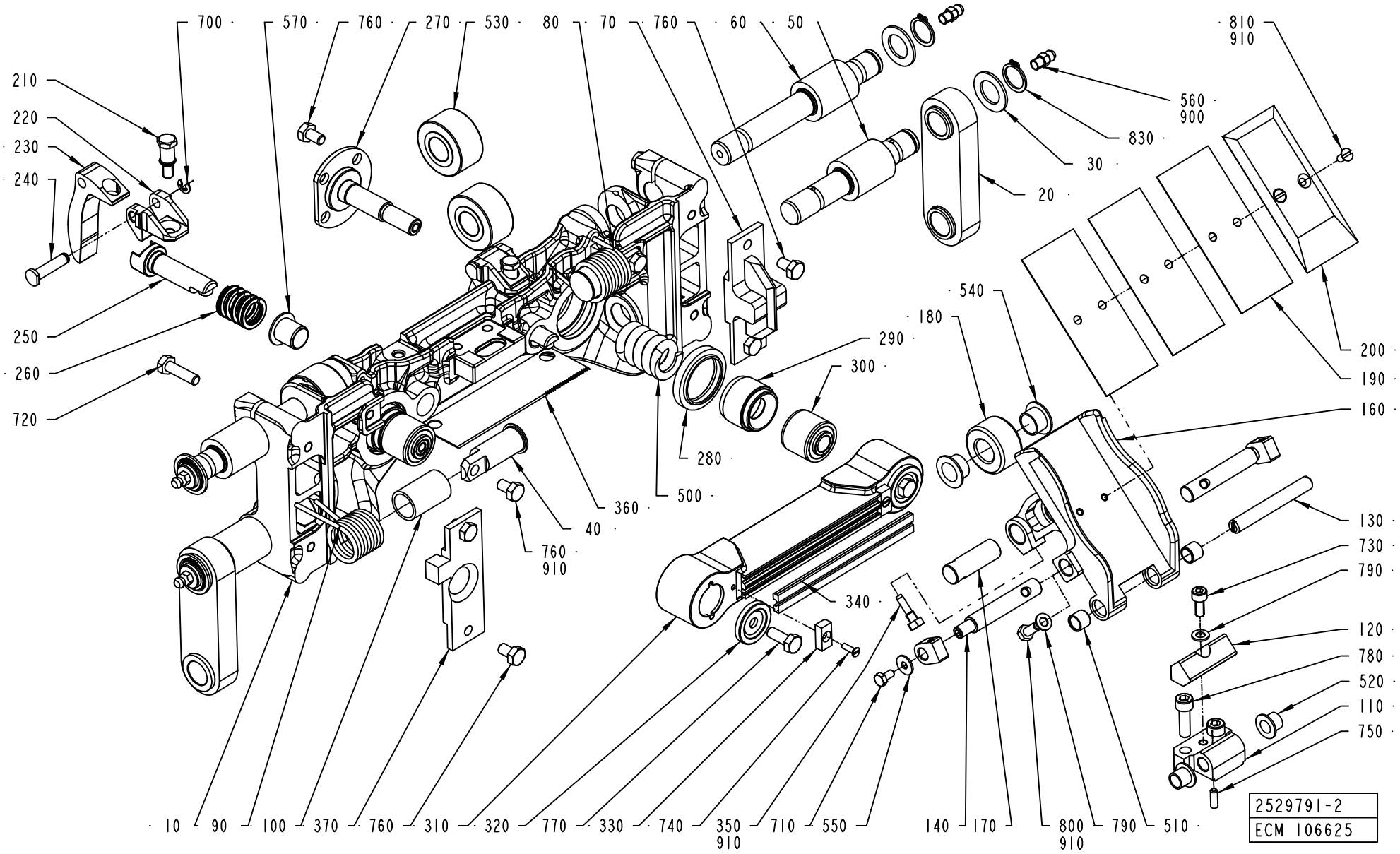

Pos	Part No	SP	UN	Qty	Description	Page No
Common Parts (Cont'd)						
700	315755-0106	-		2	RETAINING RING 4	
710	312105-0287	-		2	SCREW M6S ISO4017 M4X8 A480	
720	312105-0371	-		4	SCREW M6S ISO 4017 M6X22 A480	
730	312115-0327	-		1	SCREW ISO4762 M5X12 A4	
740	312145-0224	-		2	SCREW ISO 2009 MFS M3X10 A4	
750	311103-0268	-		1	PARALLEL PIN ISO 2338 4M6X12 A1	
760	312105-0364	-		14	SCREW M6S ISO 4017 M6X10 A480	
770	312105-0368	-		2	SCREW M6S M6X16 A280	
780	312115-0370	-		2	SCREW ISO4762 M6X20 A4	
790	315105-0146	-		3	BRICKA BRB5,3X10RFR	
800	312105-0327	-		2	SCREW M6S ISO 4017 M5X12 A480	
810	312145-0287	A		2	SCREW ISO 2009 MFS M4X8 A4	
830	315751-0112	A		4	RETAINING RING FOR SHAFT DIN 471 15 A2	
900	90459-0246	A	KG	1	GREASE, KLüBERSYNTH UH1 14-1600	
910	90157-0016	-		1	LOCKING FLUID	

WASTE BOX

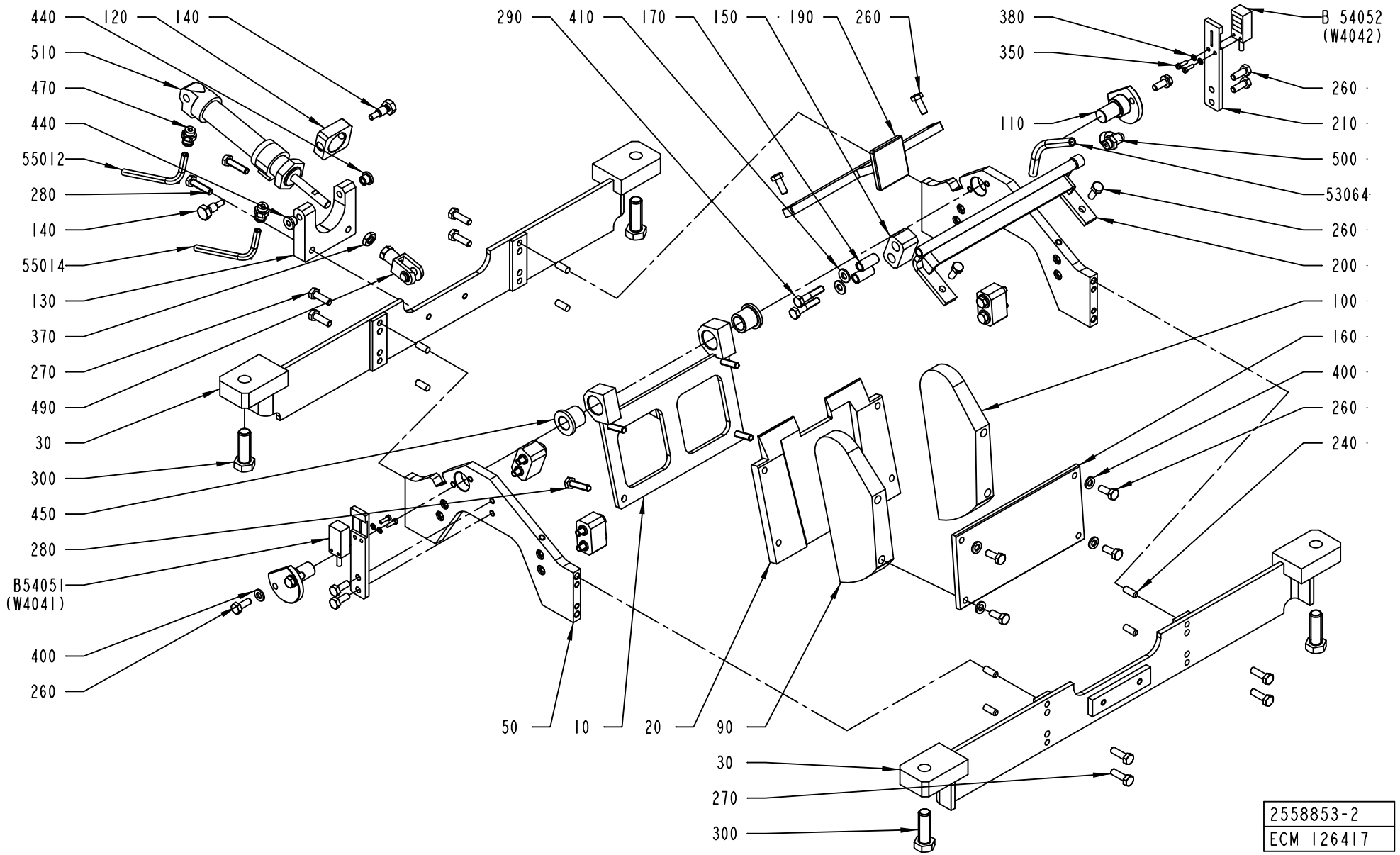
440
120
140
510
470
440
55012
280
140
55014
130
370
270
490
30
300
450
280
B54051
(W4041)
400
260
290
410
170
150
190
260
380
350
110
B 54052
(W4042)
260
210
500
53064
260
200
100
160
400
260
240
50
10
20
90
30
270
300
2558853-2
ECM 126417

ECM: 129593 - 20031111
Group number: 2558853-0200
Assembly Drawing: 2558853-2_1_AA

Pos	Part No	SP	UN	Qty	Description	Page No
TBA 0200B						
010	2609885-0001	B		1	PLATE	
020	2609886-0001	B		1	PLATE	
030	2609887-0000	B		2	PLATE	
160	2609891-0001	B		1	PLATE	
TBA 0200M						
010	2609885-0002	B		1	PLATE	
020	2609886-0002	B		1	PLATE	
030	2609888-0000	B		2	PLATE	
160	2609891-0002	B		1	PLATE	
TBA 0200S						
010	2609885-0003	B		1	PLATE	
020	2609886-0003	B		1	PLATE	
030	2609889-0000	B		2	PLATE	
160	2609891-0003	B		1	PLATE	
TBA 0250B						
010	2609885-0001	B		1	PLATE	
020	2609886-0001	B		1	PLATE	
030	2609888-0000	B		2	PLATE	
160	2609891-0001	B		1	PLATE	
TBA 0250S						
010	2609885-0002	B		1	PLATE	
020	2609886-0002	B		1	PLATE	
030	2609890-0000	B		2	PLATE	
160	2609891-0002	B		1	PLATE	
Common Parts						
050	2609894-0000	B		2	PLATE	
090	2506697-0000	B		1	PLATE	
100	2506698-0000	B		1	PLATE	
110	2641392-0000	A		2	PIN	
120	2641395-0000	-		1	PLATE	
130	2641393-0000	B		1	PLATE	
140	2641394-0000	A		2	SCREW	
150	2609895-0000	B		4	LOCK COMPONENT	
170	2609896-0000	B		8	SPACER	
190	2609892-0000	B		1	GUIDE	
200	2609893-0000	B		1	AIR GUIDE	
210	2514127-0000	B		2	SUPPORT	
240	311103-0351	-		8	PARALLEL PIN ISO 2338 6M6X16 A1	
260	312105-0368	-		16	SCREW M6S M6X16 A280	
270	312105-0370	-		8	SCREW M6S ISO 4017 M6X20 A480	
280	312105-0372	-		6	SCREW M6S ISO 4017 M6X25 A480	
290	312105-0374	-		8	SCREW M6S ISO 4014 M6X30 A480	
300	312105-0538	-		4	SCREW M6S ISO 4017 M12X35 A480	
350	312125-0224	-		4	SCREW ISO 1207 M3X10 A4	
370	312605-0318	-		1	HEXAGON NUT, M6M M8 A280	
380	315105-0124	-		4	BRICKA BRB3,2X6RFR	
400	315105-0153	-		8	WASHER BRB6,4X12RFR	
410	315105-0156	-		8	WASHER BRB 6.7X14 RFR	
440	321111-0049	A		2	FLANGE BUSHING, 5X9X8 MM	
450	321111-0188	A		2	FLANGE BUSHING, 14X20X20 MM	
470	342722-0202	A		2	PIPE COUPLING 1/8" D=6MM	
490	90239-0532	B		1	ROD END, CLEVIS WITH AXLE M8X1,25	
500	90458-2964	-		1	ELBOW PIPE JOINT, EXT.THREAD, D=8MM-G1/8	
510	90239-0822	A		1	DOUBLE ACTING, MINI-ISO, CYL.20-50	
53064	315400-0004	-	MM	1500	TUBE PUN-H-8X1,25-BL	
55012	90166-0089	-	MM	1500	HOSE 4/6.2 PE BLUE	
55014	90166-0089	-	MM	1500	HOSE 4/6.2 PE BLUE	
B54051	90458-1159	A		1	PH.CELL WS4-2D135	
B54052	90458-1160	A		1	PH.CELL WE4-2P135	

Machine Type | Group Description | Used-In | Group Number | Page No

LUBRICATION UNIT

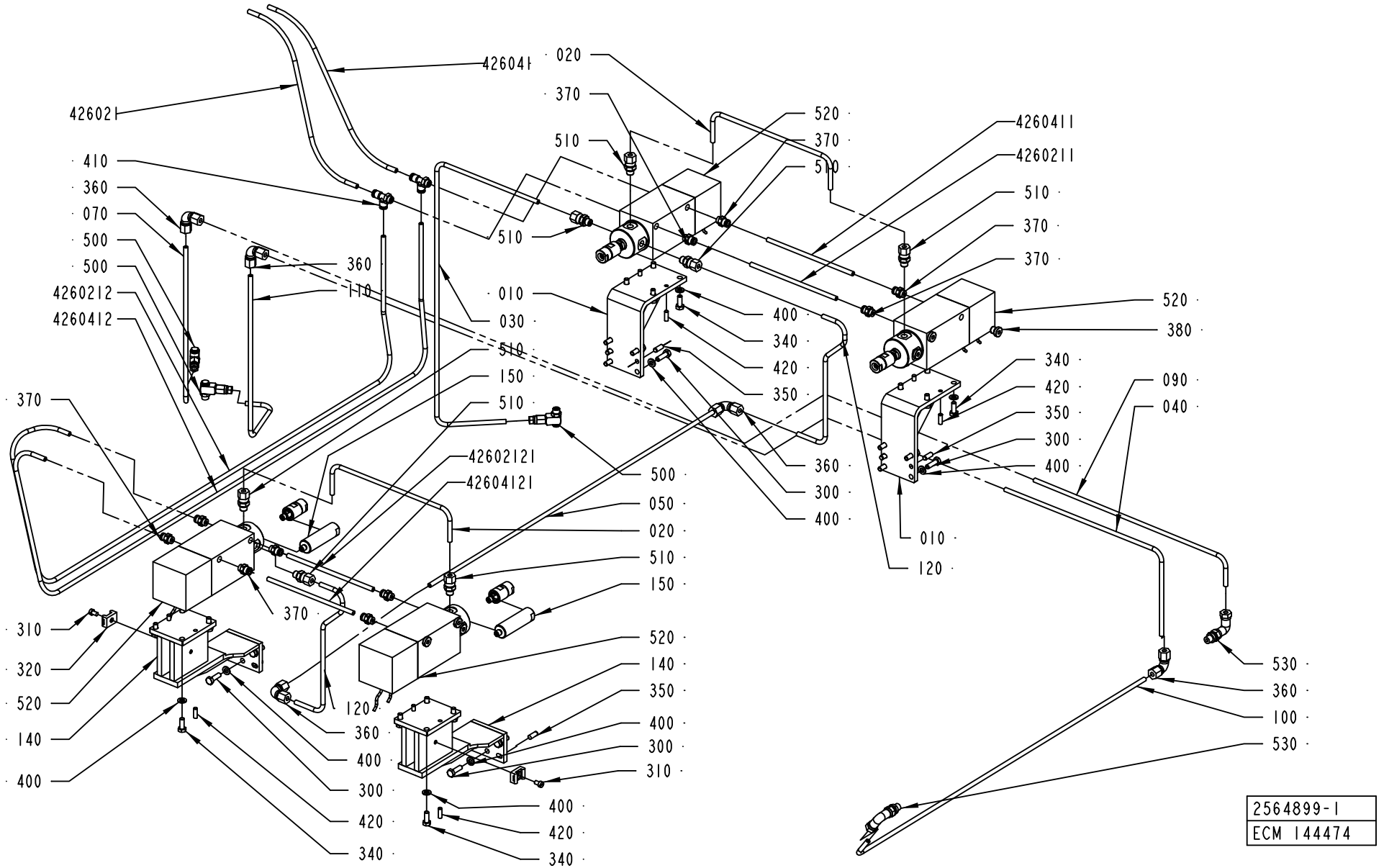

ECM: 150497 - 20031201
Group number: 2564899-0100
Assembly Drawing: 2564899-1_1_AB

This list covers pages from 4-44 to 4-49

Pos	Part No	SP	UN	Qty	Description	Page No
TBA 0200B (See drawing on page: 4-44)						
010	2565291-0000	-		2	BRACKET	
020	2535665-0000	-		2	PIPE	
030	2565550-0000	-		1	PIPE	
040	2565552-0000	-		1	PIPE	
050	2541983-0000	-		1	PIPE	
070	2579707-0000	-		1	PIPE	
090	2565549-0000	-		1	PIPE	
100	2565551-0000	-		1	PIPE	
110	2565553-0000	-		1	PIPE	
120	2653662-0000	-		2	PIPE	
140	2564898-0000	-		2	BRACKET	
150	2564589-0000	-		2	EXTENSION PIPE	
310	312125-0323	-		2	SCREW ISO 1207 M5X8 A4	
320	352113-0204	-		2	ANCHOR PLATES FOR STRIPS, TYPE TM3S25-M	
400	315105-0153	-		30	WASHER BRB6,4X12RFR	
426021	90166-0081	-	MM	300	TUBE 6 MM PA BLUE	
4260211	90166-0081	-	MM	160	TUBE 6 MM PA BLUE	
4260212	90166-0081	-	MM	1400	TUBE 6 MM PA BLUE	
42602121	90166-0081	-	MM	160	TUBE 6 MM PA BLUE	
426041	90166-0081	-	MM	300	TUBE 6 MM PA BLUE	
4260411	90166-0081	-	MM	160	TUBE 6 MM PA BLUE	
4260412	90166-0081	-	MM	1400	TUBE 6 MM PA BLUE	
42604121	90166-0081	-	MM	160	TUBE 6 MM PA BLUE	
510	90030-0184	-		7	CONN. STR. GA-6-G1/8	
530	90030-0171	-		2	ADJUSTABLE ELBOW CONNECTION,EXT 6-G1/8	
TBA 0200M (See drawing on page: 4-46)						
010	2580000-0000	-		1	BRACKET	
015	2580102-0000	-		1	BRACKET	
020	2580103-0000	-		2	PIPE	
030	2529626-0000	-		1	PIPE	
040	2578773-0000	-		1	PIPE	
050	2578782-0000	-		1	PIPE	
070	2544919-0000	-		1	PIPE	
080	2544918-0000	-		1	PIPE	
090	2578772-0000	-		1	PIPE	
100	2544916-0000	-		1	PIPE	
110	2529022-0000	-		1	PIPE	
120	2544913-0000	-		1	PIPE	
130	2580104-0000	-		1	BRACKET	
140	2580001-0000	-		1	BRACKET	
150	2564589-0000	-		2	EXTENSION PIPE	
400	315105-0153	-		32	WASHER BRB6,4X12RFR	
426021	90166-0081	-	MM	200	TUBE 6 MM PA BLUE	
4260211	90166-0081	-	MM	240	TUBE 6 MM PA BLUE	
4260212	90166-0081	-	MM	1800	TUBE 6 MM PA BLUE	
42602121	90166-0081	-	MM	240	TUBE 6 MM PA BLUE	
426041	90166-0081	-	MM	200	TUBE 6 MM PA BLUE	
4260411	90166-0081	-	MM	240	TUBE 6 MM PA BLUE	
4260412	90166-0081	-	MM	1800	TUBE 6 MM PA BLUE	
42604121	90166-0081	-	MM	240	TUBE 6 MM PA BLUE	
510	90030-0184	-		8	CONN. STR. GA-6-G1/8	
530	90030-0171	-		1	ADJUSTABLE ELBOW CONNECTION,EXT 6-G1/8	
TBA 0200S (See drawing on page: 4-48)						
010	2642679-0000	-		1	BRACKET	
015	2575105-0000	-		1	BRACKET	
020	2579829-0000	-		2	PIPE	
030	2579901-0000	-		1	PIPE	
040	2579910-0000	-		1	PIPE	
050	2544926-0000	-		1	PIPE	
070	2579909-0000	-		1	PIPE	
080	2579921-0000	-		1	PIPE	
090	2579908-0000	-		1	PIPE	
100	2579985-0000	-		1	PIPE	
110	2579906-0000	-		1	PIPE	
120	2581995-0000	-		1	PIPE	
130	2578482-0000	-		1	BRACKET	
140	2578483-0000	-		1	BRACKET	
400	315105-0153	-		32	WASHER BRB6,4X12RFR	
426021	90166-0081	-	MM	200	TUBE 6 MM PA BLUE	
4260211	90166-0081	-	MM	240	TUBE 6 MM PA BLUE	
4260212	90166-0081	-	MM	1800	TUBE 6 MM PA BLUE	
42602121	90166-0081	-	MM	240	TUBE 6 MM PA BLUE	
426041	90166-0081	-	MM	200	TUBE 6 MM PA BLUE	
4260411	90166-0081	-	MM	240	TUBE 6 MM PA BLUE	
4260412	90166-0081	-	MM	1800	TUBE 6 MM PA BLUE	
42604121	90166-0081	-	MM	240	TUBE 6 MM PA BLUE	
510	90030-0184	-		8	CONN. STR. GA-6-G1/8	
530	90030-0171	-		1	ADJUSTABLE ELBOW CONNECTION,EXT 6-G1/8	
TBA 0250B (See drawing on page: 4-46)						
010	2579689-0000	-		1	BRACKET	
015	2579689-0000	-		1	BRACKET	
020	2544915-0000	-		2	PIPE	
030	2529626-0000	-		1	PIPE	

Machine Type | Group Description | Used-In | Group Number | Page No

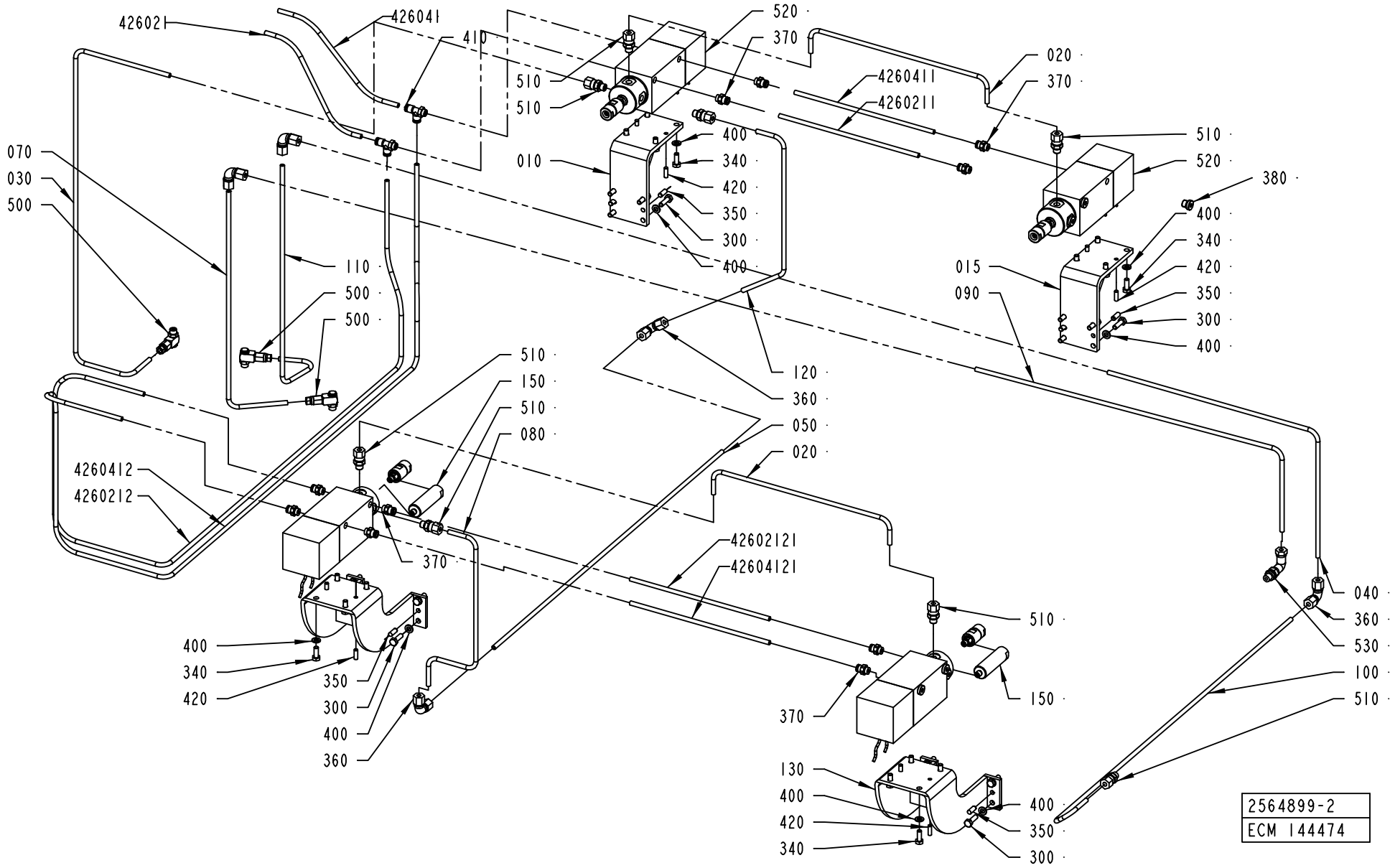
42602I
426041
410
520 ·
370 ·
510 ·
510 ·
4260411
4260211
020 ·
370 ·
510 ·
520 ·
380 ·
400 ·
340 ·
420 ·
350 ·
300 ·
400 ·
010 ·
070 ·
030 ·
500 ·
110 ·
500 ·
500 ·
015 ·
090 ·
120 ·
360 ·
050 ·
020 ·
510 ·
150 ·
510 ·
080 ·
4260412
4260212
370 ·
42602121
42604121
400
340
420
350
300
400
360
370
510 ·
150 ·
130
400
420
340
400 ·
350 ·
300 ·
040 ·
360 ·
530 ·
100 ·
510 ·
2564899-2
ECM 144474

Pos	Part No	SP	UN	Qty	Description	Page No
TBA 0250B (Cont'd) (See drawing on page: 4-46)						
040	2578773-0000	-		1	PIPE	
050	2578782-0000	-		1	PIPE	
070	2544919-0000	-		1	PIPE	
080	2544918-0000	-		1	PIPE	
090	2578772-0000	-		1	PIPE	
100	2544916-0000	-		1	PIPE	
110	2529022-0000	-		1	PIPE	
120	2544913-0000	-		1	PIPE	
130	2574072-0000	-		1	BRACKET	
140	2574072-0000	-		1	BRACKET	
150	2564589-0000	-		2	EXTENSION PIPE	
400	315105-0153	-		32	WASHER BRB6,4X12RFR	
426021	90166-0081	-	MM	200	TUBE 6 MM PA BLUE	
4260211	90166-0081	-	MM	250	TUBE 6 MM PA BLUE	
4260212	90166-0081	-	MM	1800	TUBE 6 MM PA BLUE	
42602121	90166-0081	-	MM	250	TUBE 6 MM PA BLUE	
426041	90166-0081	-	MM	200	TUBE 6 MM PA BLUE	
4260411	90166-0081	-	MM	250	TUBE 6 MM PA BLUE	
4260412	90166-0081	-	MM	1800	TUBE 6 MM PA BLUE	
42604121	90166-0081	-	MM	250	TUBE 6 MM PA BLUE	
510	90030-0184	-		8	CONN. STR. GA-6-G1/8	
530	90030-0171	-		1	ADJUSTABLE ELBOW CONNECTION,EXT 6-G1/8	
TBA 0250S (See drawing on page: 4-48)						
010	2529042-0000	-		1	BRACKET	
015	2529042-0000	-		1	BRACKET	
020	2529043-0000	-		2	PIPE	
030	2651254-0000	-		1	PIPE	
040	2566415-0000	-		1	PIPE	
050	2544926-0000	-		1	PIPE	
070	2651255-0000	-		1	PIPE	
080	2575521-0000	-		1	PIPE	
090	2575522-0000	-		1	PIPE	
100	2545262-0000	-		1	PIPE	
110	2651256-0000	-		1	PIPE	
120	2575629-0000	-		1	PIPE	
130	2608195-0000	-		1	BRACKET	
140	2575419-0000	-		1	BRACKET	
400	315105-0153	-		32	WASHER BRB6,4X12RFR	
426021	90166-0081	-	MM	200	TUBE 6 MM PA BLUE	
4260211	90166-0081	-	MM	260	TUBE 6 MM PA BLUE	
4260212	90166-0081	-	MM	1800	TUBE 6 MM PA BLUE	
42602121	90166-0081	-	MM	260	TUBE 6 MM PA BLUE	
426041	90166-0081	-	MM	200	TUBE 6 MM PA BLUE	
4260411	90166-0081	-	MM	260	TUBE 6 MM PA BLUE	
4260412	90166-0081	-	MM	1800	TUBE 6 MM PA BLUE	
42604121	90166-0081	-	MM	260	TUBE 6 MM PA BLUE	
510	90030-0184	-		8	CONN. STR. GA-6-G1/8	
530	90030-0171	-		1	ADJUSTABLE ELBOW CONNECTION,EXT 6-G1/8	
Common Parts						
300	312105-0370	-		16	SCREW M6S ISO 4017 M6X20 A480	
340	312105-0368	-		16	SCREW M6S M6X16 A280	
350	311103-0351	-		8	PARALLEL PIN ISO 2338 6M6X16 A1	
360	342737-0204	-		5	CONN. ELBOW W-6 LRFR	
370	342722-0202	-		10	PIPE COUPLING 1/8" D=6MM	
380	90201-0450	-		13	PLUG	
410	342772-0113	-		2	ELBOW FITTING, 6 - G1/8	
420	311103-0308	-		8	PARALLEL PIN ISO 2338 5M6X16 A1	
500	90459-0843	-		3	CONN. BANJO, 6-G1/8	
520	90459-1255	-		4	PUMP CYLINDER, 4415 000 00	
10	*90459-1471*	*B*		*1*	*LUBRICATION HEAD, 4415 051 00*	
20	*90459-2626*	*B*		*2*	*PROXIMITY SWITCH, KIB-M08PS/1.5-KL6*	

Machine Type | Group Description | Used-In | Group Number | Page No

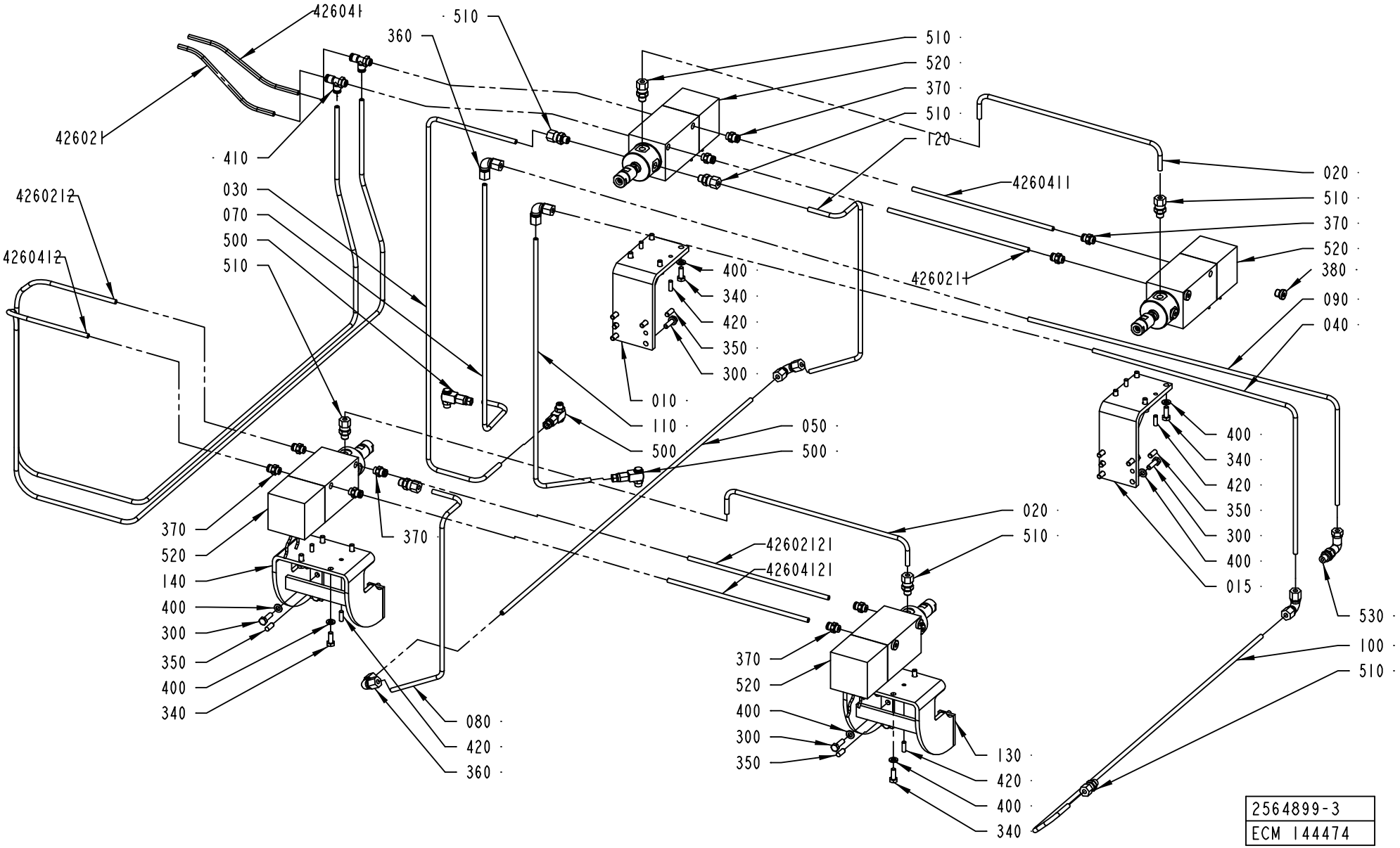
426041
360
510
510
520
370
510
120
426021
410
030
070
500
510
4260212
4260412
4260411
020
510
370
520
380
090
040
426021
400
340
420
350
300
010
110
500
050
500
400
340
420
350
300
400
015
530
100
510
370
520
140
400
300
350
400
340
370
080
420
360
020
510
42602121
42604121
370
520
400
300
350
130
420
400
340
2564899-3
ECM 144474

Pos	Part No	SP	UN	Qty	Description	Page No
SEE PREVIOUS LISTS PAGES: 4-45, 4-47.						

Pos	Part No	SP	UN	Qty	Description	Page No

Tetra Pak

SPC
Spare Parts Catalogue

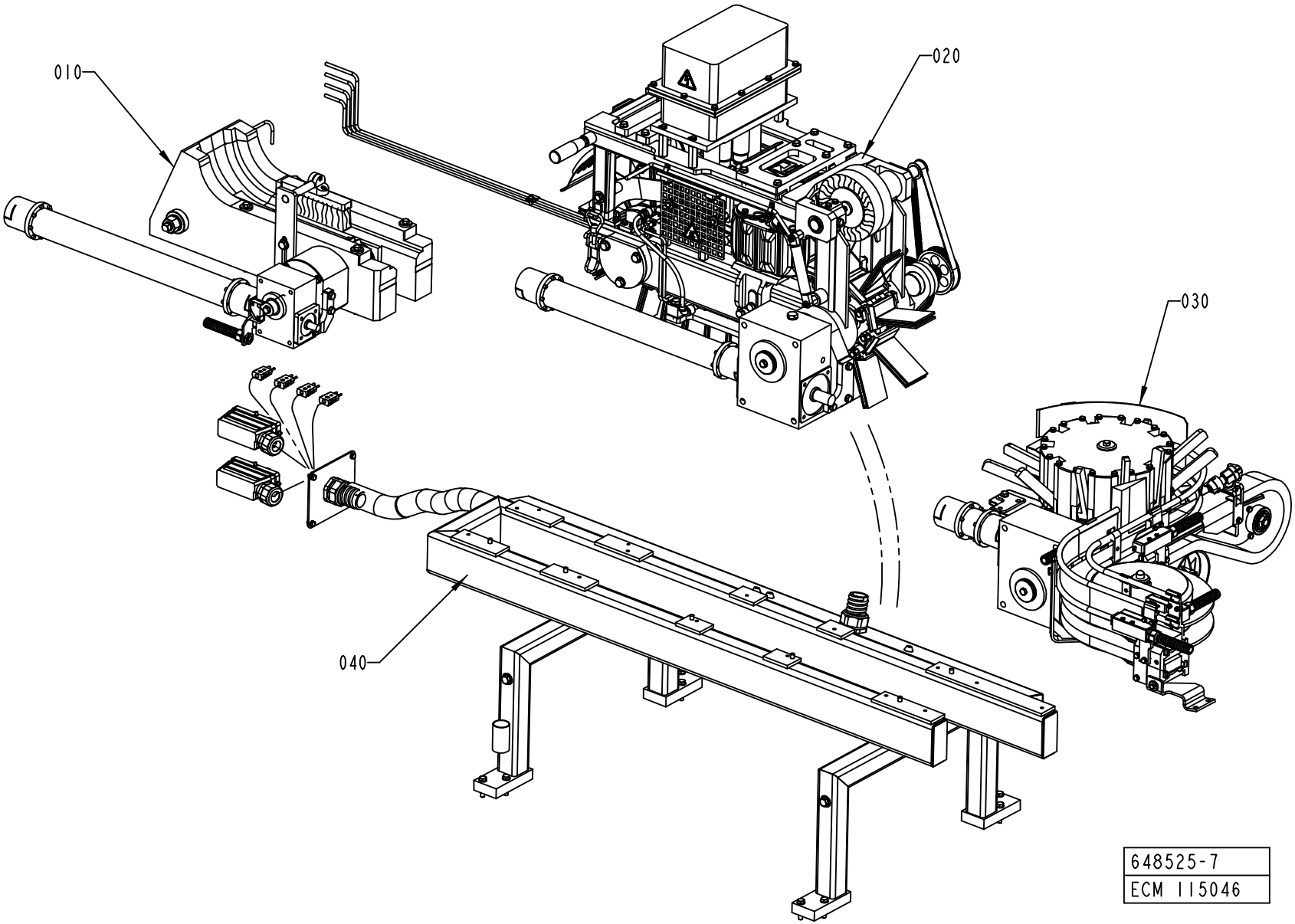
010
020
030
040
648525-7
ECM 115046

ECM: 116403 - 20021021
Group number: 648525-0500
Assembly Drawing: 648525-7_1_AB

Pos	Part No	SP	UN	Qty	Description	Page No
-						
010	577111-0400	-		1	CONVEYOR	**5-5, 5-7**
020	577112-0400	-		1	FINAL FOLDER	**5-9**
030	577113-0300	-		1	DISCHARGE DEVICE	**5-29**
040	577115-0300	-		1	FRAME	**5-37**

Pos	Part No	SP	UN	Qty	Description	Page No

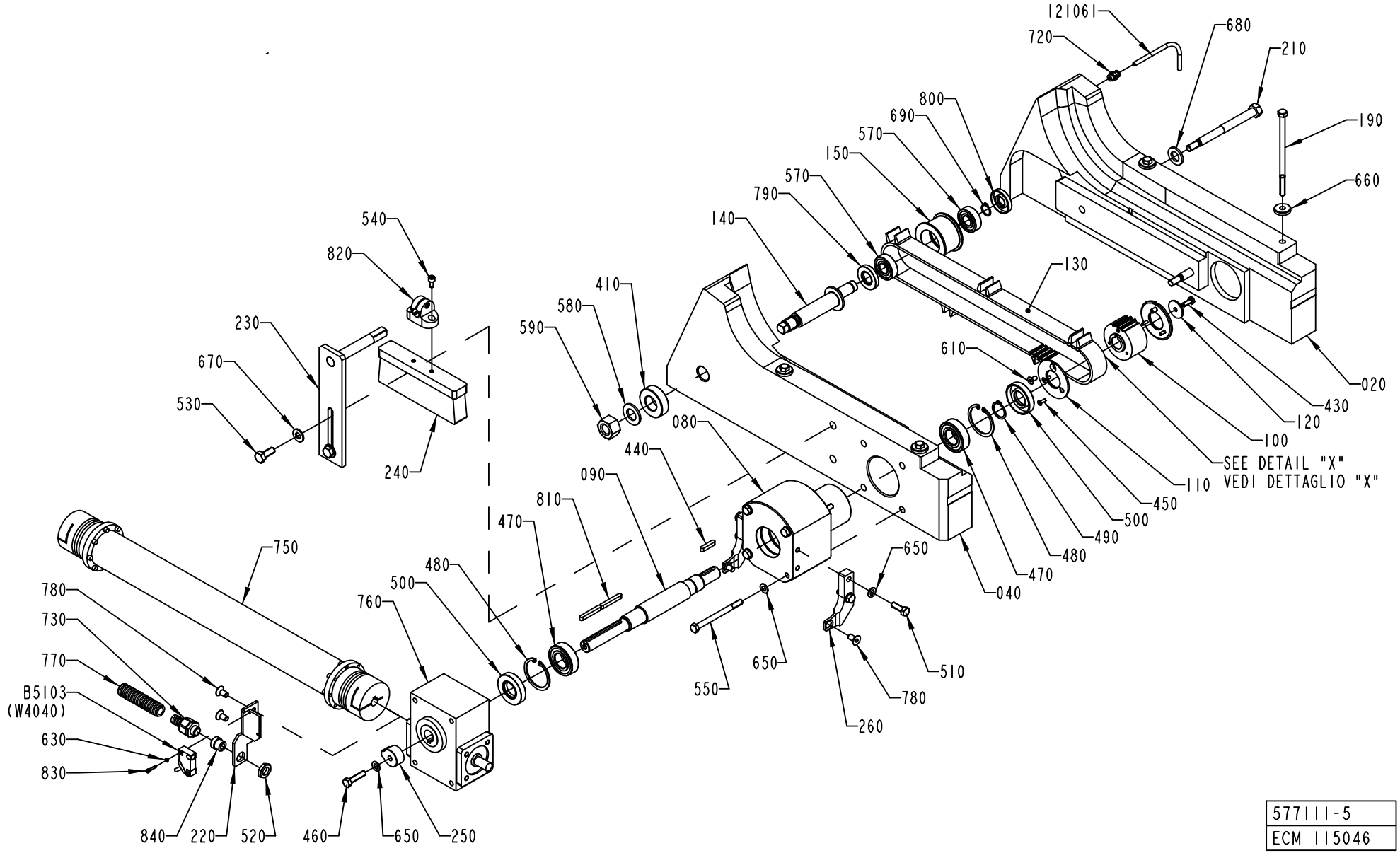

577111-5
ECM 115046

ECM: 115372 - 20021021
Group number: 577111-0400
Assembly Drawing: 577111-5_1_AA

This list covers pages from 5-4 to 5-7

Pos	Part No	SP	UN	Qty	Description	Page No
TBA 0200B						
020	2506707-0000	B		1	FRAME	
040	2506706-0000	B		1	FRAME	
100	1499908-0000	A		1	PULLEY	
110	1499909-0000	B		2	FLANGE	
130	1260168-0000	A		1	BELT	
150	1260129-0000	A		1	PULLEY	
750	2564030-0000	A		1	INTERMEDIARY SHAFT	
	1524431-0000	*A*		*1*	*HUB*	
	Remark : Hole Ø 24mm.					
	1538304-0000	*A*		*1*	*HUB*	
	Remark : Hole Ø 14mm.					
TBA 0200M						
020	2521085-0000	B		1	FRAME	
040	2521084-0000	B		1	FRAME	
100	1499908-0000	A		1	PULLEY	
110	1499909-0000	B		2	FLANGE	
130	1260168-0000	A		1	BELT	
150	1260129-0000	A		1	PULLEY	
750	2523695-0000	A		1	INTERMEDIARY SHAFT	
	1538304-0000	*A*		*1*	*HUB*	
	Remark : Hole Ø 14mm.					
	1524431-0000	*A*		*1*	*HUB*	
	Remark : Hole Ø 24mm.					
TBA 0200S						
020	2514124-0000	B		1	FRAME	
040	2514123-0000	B		1	FRAME	
100	1498551-0000	B		1	PULLEY	
110	1498552-0000	B		2	FLANGE	
130	1498553-0000	A		1	BELT	
150	1498554-0000	A		1	PULLEY	
750	2525675-0000	A		1	INTERMEDIARY SHAFT	
	1538304-0000	*A*		*1*	*HUB*	
	Remark : Hole Ø 14mm.					
	1524431-0000	*A*		*1*	*HUB*	
	Remark : Hole Ø 24mm.					
TBA 0250B						
020	2511353-0000	B		1	FRAME	
040	2511352-0000	B		1	FRAME	
100	1499908-0000	A		1	PULLEY	
110	1499909-0000	B		2	FLANGE	
130	1260168-0000	A		1	BELT	
150	1260129-0000	A		1	PULLEY	
750	2523695-0000	A		1	INTERMEDIARY SHAFT	
	1538304-0000	*A*		*1*	*HUB*	
	Remark : Hole Ø 14mm.					
	1524431-0000	*A*		*1*	*HUB*	
	Remark : Hole Ø 24mm.					
TBA 0250S						
020	2511362-0000	B		1	FRAME	
040	2511361-0000	B		1	FRAME	
100	1498551-0000	B		1	PULLEY	
110	1498552-0000	B		2	FLANGE	
130	1498553-0000	A		1	BELT	
150	1498554-0000	A		1	PULLEY	
750	2525675-0000	A		1	INTERMEDIARY SHAFT	
	1538304-0000	*A*		*1*	*HUB*	
	Remark : Hole Ø 14mm.					
	1524431-0000	*A*		*1*	*HUB*	
	Remark : Hole Ø 24mm.					
Common Parts						
080	2504723-0000	B		1	HOLDER	
090	2504724-0000	A		1	SHAFT	
1000	312155-0291	-		4	SCREW EN 10642 MF6S M4X12 A480	
1140	90296-0068	B		1	GREASE UNIWAY LI62 CARTRID.400GR	
120	1260167-0000	-		1	WASHER	
121061	90166-0119	A	MM	1500	HOSE PUR 4/6 BLACK	
140	1260128-0000	B		1	SHAFT	
190	1260139-0000	B		4	BOLT	
210	1260174-0000	B		2	BOLT	
220	2504725-0000	-		1	SUPPORT	
230	1478631-0000	B		1	SUPPORT	
240	1347077-0000	A		1	BRUSH	
250	1548854-0000	-		1	CAM	
260	2504722-0000	B		2	PLATE	
410	2506714-0000	B		1	WASHER	
460	312109-0457	-		1	SCREW M6S ISO 4017 M8X35 A480	
470	90214-0096	A		2	BALL BEARING, 25X52X15 MM	
480	315753-0132	B		2	RETAINING RING FOR HOLE, 52X2 MM	
490	315751-0119	B		1	RETAIN. RING, 25	
500	90091-0438	A		2	RADIAL SEAL 25X52X10 MM DUST LIP	
510	312105-0453	B		4	SCREW M6S ISO 4017 M8X25 A480	
520	90099-0104	-		1	NUT, PR 15,2 (PG9)	
530	312105-0493	-		2	SCREW M6S ISO 4017 M10X25 A480	

130 (new part no.)2545371
Old belt 1260168 : internal wires made in KEVLAR cord (belt with junction)
New belt 2545371 : internal wires made in FIBERGLASS (belt without junction)

Used-In Group Number Page No

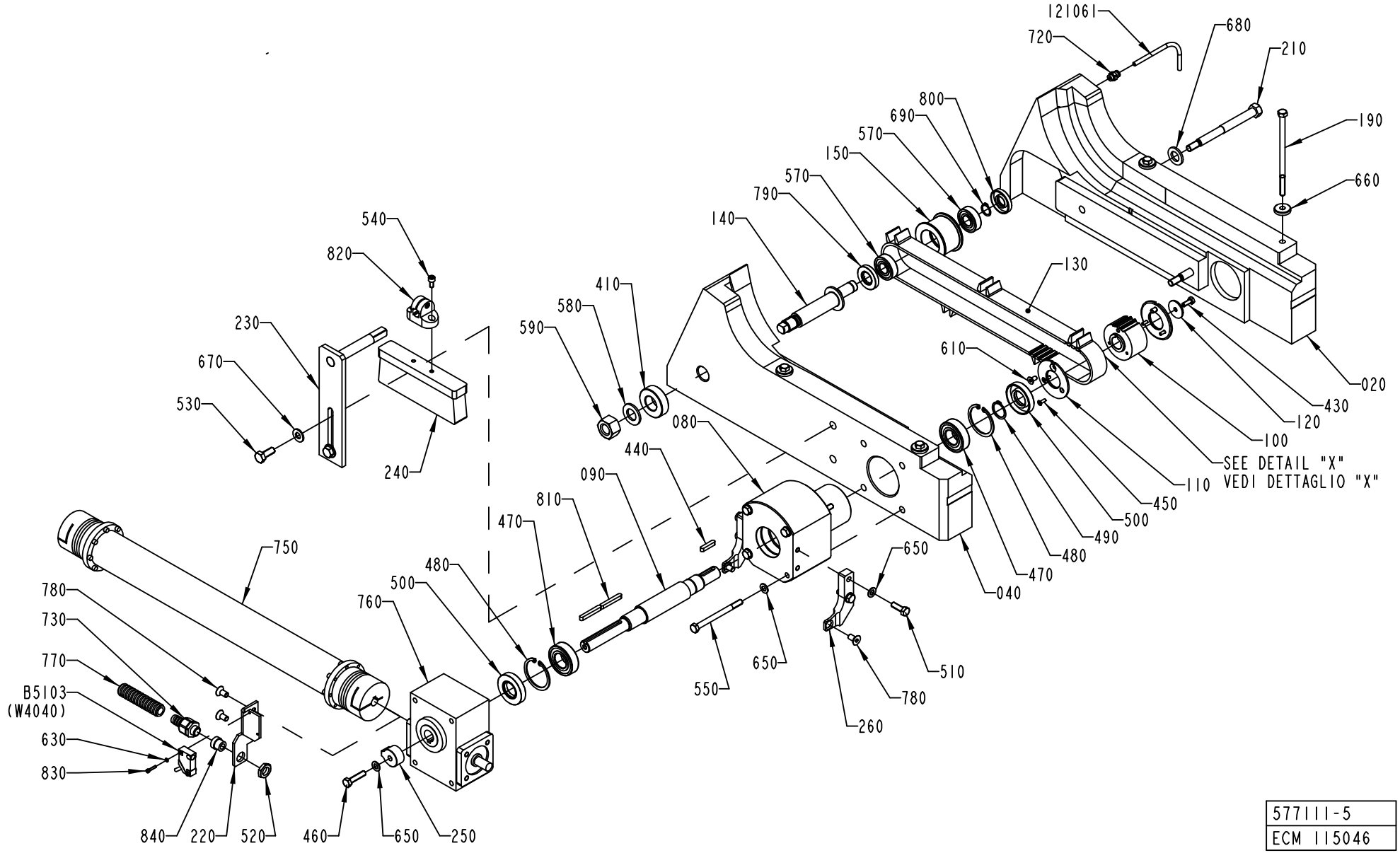

577111-5
ECM 115046

Pos	Part No	SP	UN	Qty	Description	Page No
Common Parts (Cont'd)						
540	312115-0366	-		2	SCREW ISO4762 M6X12 A4	
550	312105-0471	-		4	SCREW M6S ISO 4014 M8X100 A480	
570	90214-0189	A		2	BALL BEARING, 17X40X12 MM	
580	315105-0191	-		1	WASHER PLAIN, BRB, 20/36 H=3	
590	312605-0326	-		1	HEXAGON NUT, M6M M20 A280	
610	312155-0366	-		2	SCREW EN 10642 MF6S M6X12 A480	
630	315105-0124	-		2	BRICKA BRB3,2X6RFR	
650	315105-0165	-		9	WASHER BRB8,4X16RFR	
660	315125-0165	-		4	WASHER TBRSB 8,4X26X5 A4	
670	315105-0173	-		2	WASHER BRB10,5X22RFR	
680	315105-0186	-		2	WASHER BRB17X30RFR	
690	90141-0017	B		1	RETAINING RING FOR SHAFT, 17X1MM	
720	342722-0202	A		1	PIPE COUPLING 1/8" D=6MM	
730	353243-0001	-		1	EXTENDED WITHOUT INSERT, PG9	
760	90056-0170	A		1	WORM GEAR BS 40 AL-TT ENV RH	
770	90152-0059	-	M	2	SPIRAL CONDUIT, 18X12, UL 1211	
780	312155-0449	-		4	SCREW EN 10642 MF6S M8X16 A480	
790	90091-0436	A		1	RADIAL SEAL 20X40X7 MM DUST LIP	
800	90091-0437	A		1	RADIAL SEAL 17X40X7 MM DUST LIP	
810	315705-0240	A		2	PARALLEL KEY W. ROUND ENDS 6X6X45 MM	
820	90236-0045	A		1	SUPPORT	
830	312115-0228	-		2	SCREW ISO4762 M3X16 A4	
840	353249-0009	-		1	INSERT, SINGEL HOLE, EK 152/9	
880	312105-0368	-		1	SCREW M6S M6X16 A280	
890	315705-0236	A		1	PARALLEL KEY W. ROUND ENDS 6X6X30 MM	
B5103	90044-0194	A		1	PROX.SW. IN5329/IN3002-BPKG	

Pos	Part No	SP	UN	Qty	Description	Page No

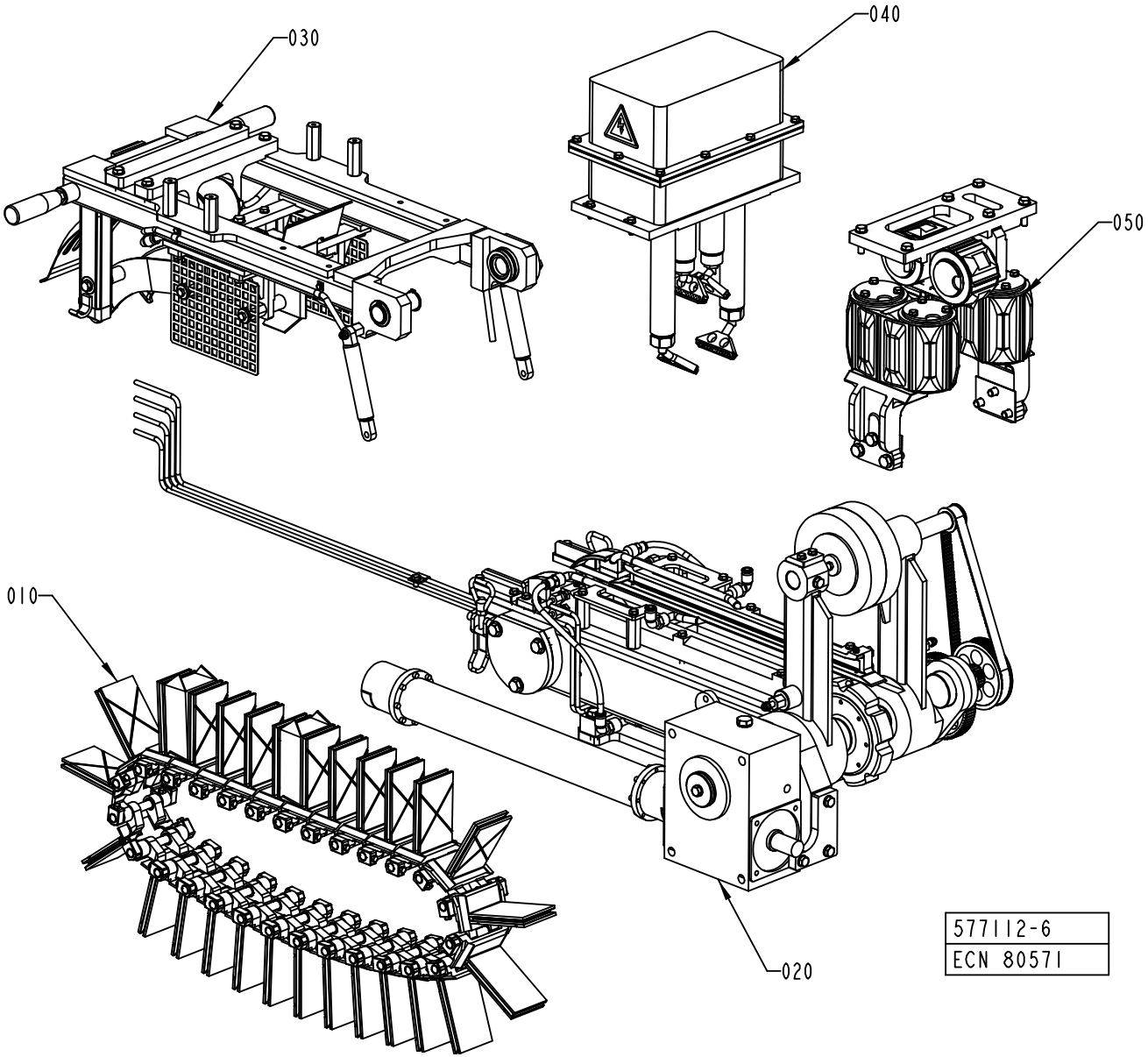
030
040
050
010
020
577112-6
ECN 80571

ECM: 116404 - 20021021
Group number: 577112-0400
Assembly Drawing: 577112-6_1_AA

Pos	Part No	SP	UN	Qty	Description	Page No
-						
010	1517715-0100	-		1	STATION CHAIN	**5-11**
020	1517735-0100	-		1	CHAIN SUPPORT	**5-13, 5-15**
030	1517740-0100	-		1	SWING FRAME	**5-17, 5-19**
040	1478630-0100	-		1	HEATING CHAMBER	**5-21, 5-23**
050	1499690-0200	-		1	SQUEEZER	**5-25, 5-27**

Pos	Part No	SP	UN	Qty	Description	Page No

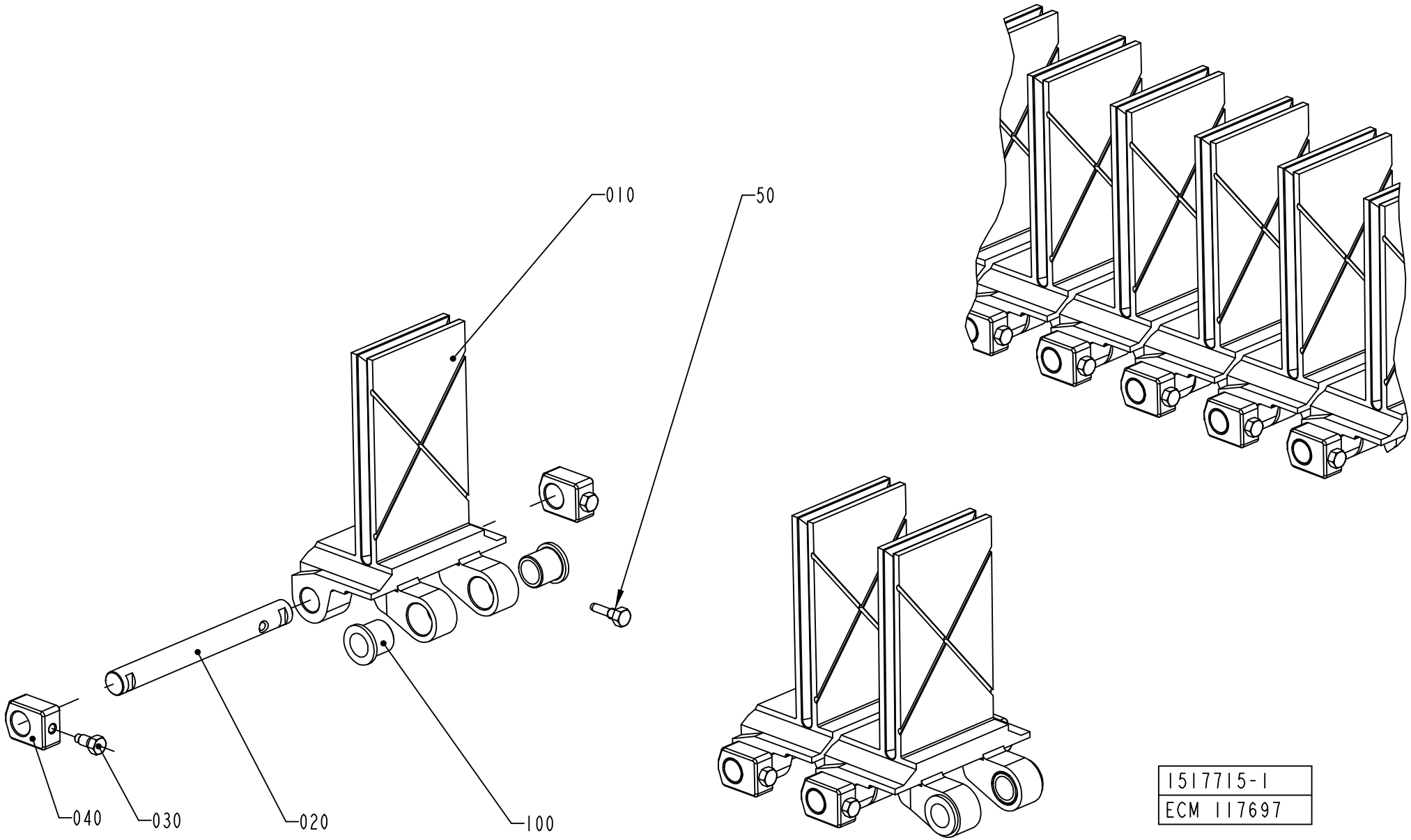

1517715-1
ECM 117697

ECM: 117697 - 20021017
Group number: 1517715-0100
Assembly Drawing: 1517715-1_1_AB

Pos	Part No	SP	UN	Qty	Description	Page No
TBA 0200B						
010	1548020-0000	A		27	CARTON STATION	
TBA 0200M						
010	1548036-0000	A		27	CARTON STATION	
TBA 0200S						
010	1538567-0000	A		27	CARTON STATION	
TBA 0250B						
010	2530121-0000	A		27	CARTON STATION	
TBA 0250S						
010	1548024-0000	A		27	CARTON STATION	
Common Parts						
	90157-0016	-		1	LOCKING FLUID	
020	1517717-0000	A		27	SHAFT	
030	1517718-0000	B		54	SCREW	
040	1517719-0000	A		54	SLIDER	
050	2564953-0000	B		27	GRUB SCREW	
100	90458-1404	A		54	FLANGE BUSHING, 12X16X16 MM	

Pos	Part No	SP	UN	Qty	Description	Page No

CHAIN SUPPORT

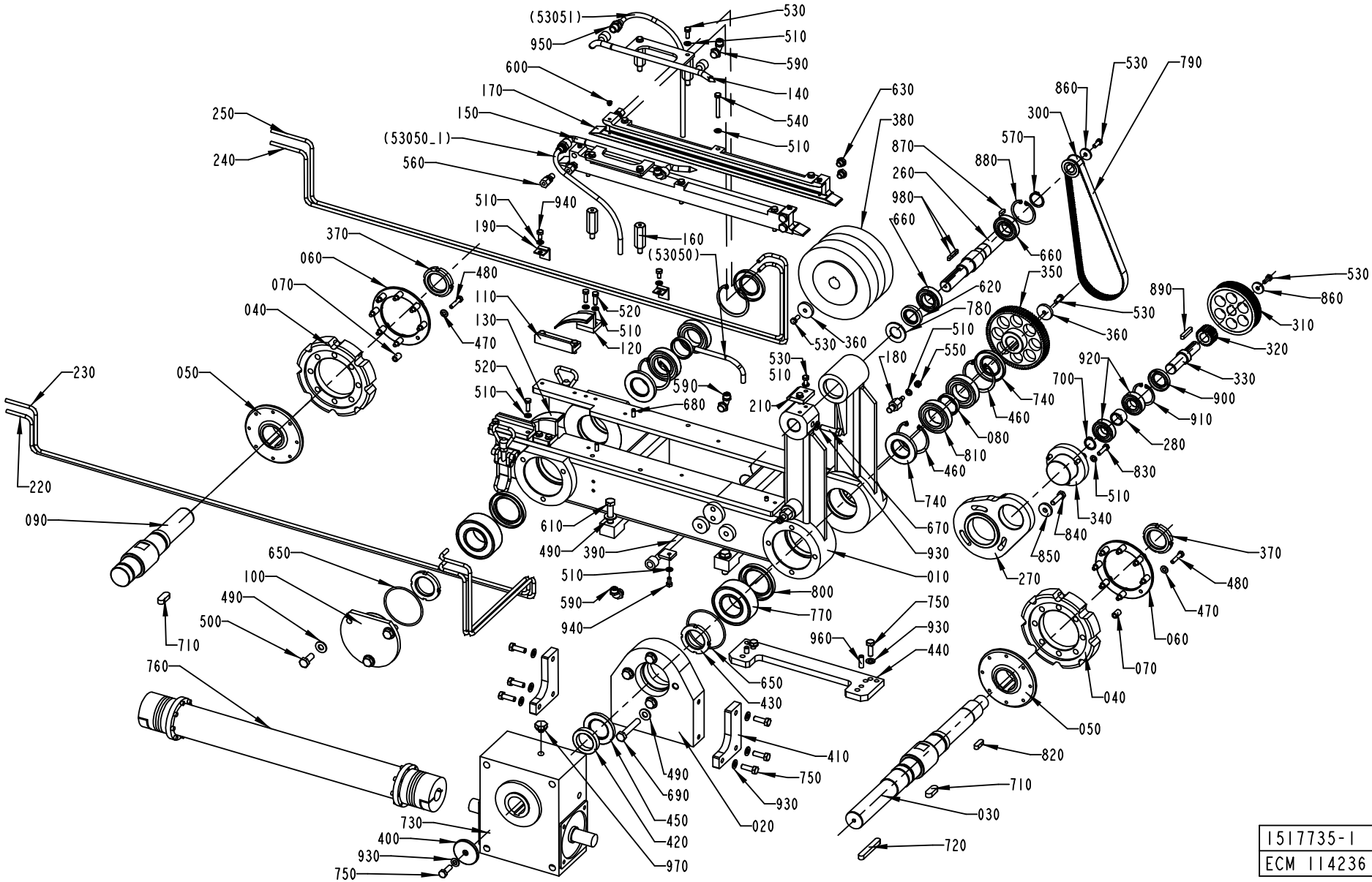

ECM: 116406 - 20021021
Group number: 1517735-0100
Assembly Drawing: 1517735-1_1_AB

This list covers pages from 5-12 to 5-15

Pos	Part No	SP	UN	Qty	Description	Page No
TBA 0200B						
010	1548019-0000	-		1	FRAME	
120	1517736-0000	B		1	GUIDE	
130	1517737-0000	B		1	GUIDE	
140	1517733-0000	B		1	GUIDE	
150	1517734-0000	B		1	GUIDE	
220	2531713-0000	-		1	TUBE	
230	2531712-0000	-		1	TUBE	
240	2531710-0000	-		1	TUBE	
250	2531711-0000	-		1	TUBE	
760	2523693-0000	A		1	INTERMEDIARY SHAFT	
	1538304-0000	*A*		*1*	*HUB*	
	Remark : Hole Ø 14mm.					
	1524431-0000	*A*		*1*	*HUB*	
	Remark : Hole Ø 24mm.					
790	90458-1385	A		1	TIMING BELT T5X620X16 POLYURETHANE	
TBA 0200M						
010	1548039-0000	-		1	FRAME	
120	1548012-0000	B		1	GUIDE	
130	1548011-0000	B		1	GUIDE	
140	1548025-0000	B		1	GUIDE	
150	1548026-0000	B		1	GUIDE	
220	2510419-0000	-		1	TUBE	
230	2510418-0000	-		1	TUBE	
240	2510416-0000	-		1	TUBE	
250	2510417-0000	-		1	TUBE	
760	2523694-0000	A		1	INTERMEDIARY SHAFT	
	1524431-0000	*A*		*1*	*HUB*	
	Remark : Hole Ø 24mm.					
	1538304-0000	*A*		*1*	*HUB*	
	Remark : Hole Ø 14mm.					
790	90458-1386	A		1	TIMING BELT T5X660X16 POLYURETHANE	
TBA 0200S						
010	1538570-0000	-		1	FRAME	
120	1548012-0000	B		1	GUIDE	
130	1548011-0000	B		1	GUIDE	
140	1538569-0000	B		1	GUIDE	
150	1538568-0000	B		1	GUIDE	
220	2520228-0000	-		1	TUBE	
230	2520227-0000	-		1	TUBE	
240	2520225-0000	-		1	TUBE	
250	2520226-0000	-		1	TUBE	
760	2525676-0000	A		1	INTERMEDIARY SHAFT	
	1538304-0000	*A*		*1*	*HUB*	
	Remark : Hole Ø 14mm.					
	1524431-0000	*A*		*1*	*HUB*	
	Remark : Hole Ø 24mm.					
790	90458-2518	A		1	TIMING BELT T5X690X16 POLYURETHANE	
TBA 0250B						
010	1517720-0000	-		1	FRAME	
120	1517736-0000	B		1	GUIDE	
130	1517737-0000	B		1	GUIDE	
140	1517733-0000	B		1	GUIDE	
150	1517734-0000	B		1	GUIDE	
220	2510419-0000	-		1	TUBE	
230	2510418-0000	-		1	TUBE	
240	2510416-0000	-		1	TUBE	
250	2510417-0000	-		1	TUBE	
760	2523694-0000	A		1	INTERMEDIARY SHAFT	
	1524431-0000	*A*		*1*	*HUB*	
	Remark : Hole Ø 24mm.					
	1538304-0000	*A*		*1*	*HUB*	
	Remark : Hole Ø 14mm.					
790	90458-1386	A		1	TIMING BELT T5X660X16 POLYURETHANE	
TBA 0250S						
010	1548033-0000	-		1	FRAME	
120	1548012-0000	B		1	GUIDE	
130	1548011-0000	B		1	GUIDE	
140	1548025-0000	B		1	GUIDE	
150	1548026-0000	B		1	GUIDE	
220	2529130-0000	-		1	PIPE	
230	2529129-0000	-		1	PIPE	
240	2529127-0000	-		1	PIPE	
250	2529128-0000	-		1	PIPE	
760	2514142-0000	A		1	INTERMEDIARY SHAFT	
790	90458-2518	A		1	TIMING BELT T5X690X16 POLYURETHANE	
Common Parts						
020	2504711-0000	-		1	SUPPORT	
030	1548021-0000	A		1	SHAFT	
040	1517714-0000	A		2	SPROCKET	
050	1517721-0000	-		2	FLANGE	
060	1517722-0000	-		2	FLANGE	
070	1517723-0000	-		16	SPACER	
080	1517724-0000	-		2	SPACER	

Machine Type | Group Description | Used-In | Group Number | Page No

CHAIN SUPPORT

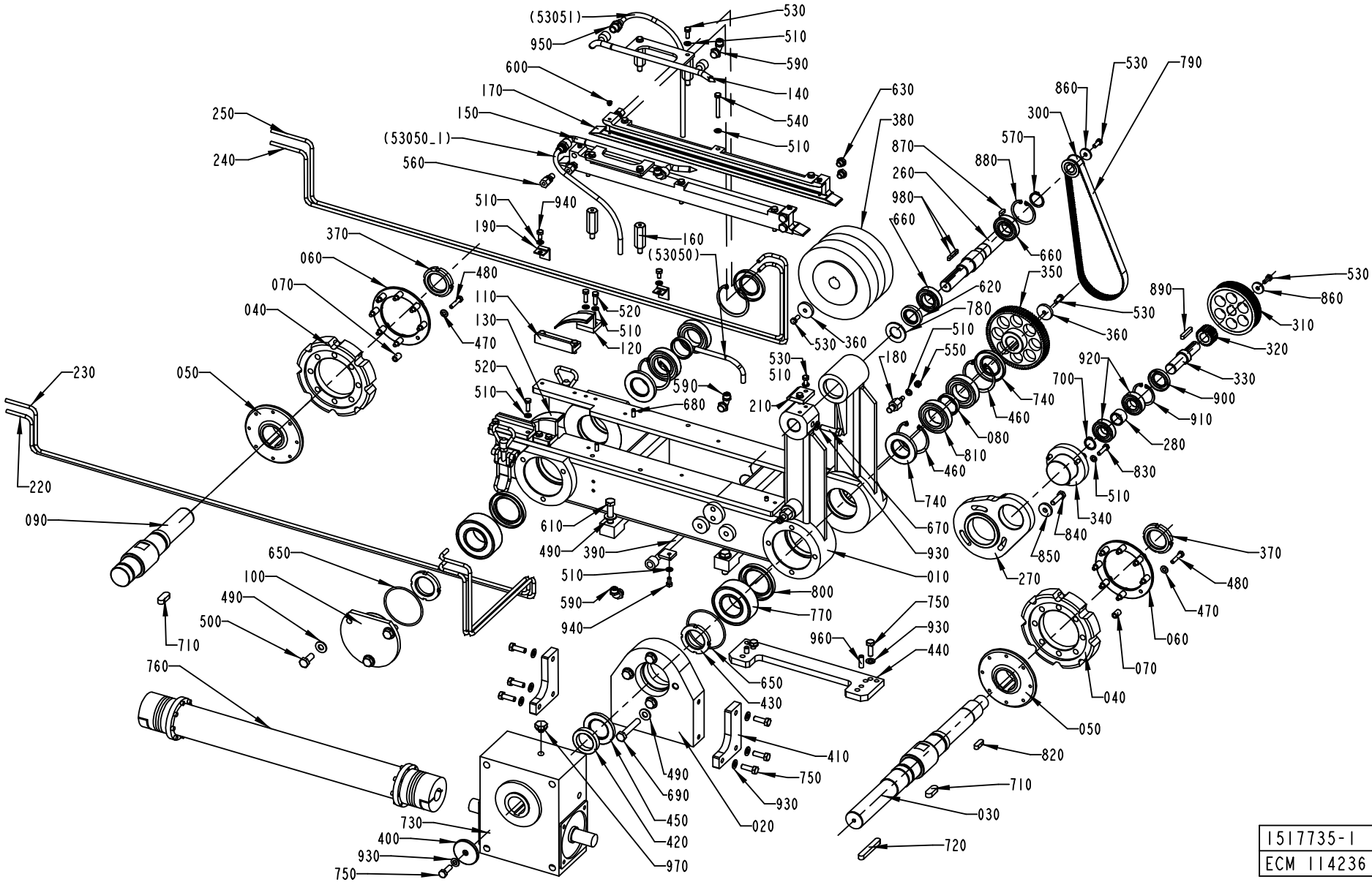

ECM: 116406 - 20021021
Group number: 1517735-0100
Assembly Drawing: 1517735-1_1_AB

This list covers pages from 5-12 to 5-15

Pos	Part No	SP	UN	Qty	Description	Page No
Common Parts (Cont'd)						
090	1548022-0000	B		1	SHAFT	
100	1517727-0000	-		1	FLANGE	
110	1498078-0000	-		2	PLATE	
160	1517732-0000	-		4	SPACER	
170	1517738-0000	A		2	GUIDE	
180	1524520-0000	-		2	PIN	
190	2514258-0000	-		2	TUBE HOLDER	
210	1519443-0000	-		1	PLATE	
260	1524518-0000	-		1	SHAFT	
270	1524519-0000	-		1	PLATE	
280	1524532-0000	-		1	SPACER	
300	2512991-0000	A		1	PULLEY	
310	2512992-0000	A		1	PULLEY	
320	2504727-0000	A		1	GEAR	
330	1524525-0000	A		1	SHAFT	
340	1524526-0000	-		1	FLANGE	
350	2520199-0000	A		1	GEAR	
360	1524529-0000	-		2	WASHER	
370	1512823-0000	-		2	NUT	
380	2501231-0000	A		2	BRUSH	
390	1548013-0000	-		1	PIPE	
400	1548186-0000	-		1	WASHER	
410	2504712-0000	-		2	PLATE	
420	1548432-0000	-		1	SPACER	
430	1548433-0000	-		2	ROUND NUT	
440	1519444-0000	-		2	PLATE	
450	90458-1387	A		1	RADIAL SEAL 38X62X7 MM DUST LIP	
460	90458-0048	-		4	RETAINING RING FOR HOLE, 62X2 MM	
470	315105-0156	-		16	WASHER BRB 6.7X14 RFR	
480	312105-0374	-		16	SCREW M6S ISO 4014 M6X30 A480	
490	315105-0173	-		11	WASHER BRB10,5X22RFR	
500	312105-0493	-		3	SCREW M6S ISO 4017 M10X25 A480	
510	315105-0153	-		29	WASHER BRB6,4X12RFR	
520	312105-0370	-		8	SCREW M6S ISO 4017 M6X20 A480	
530	312105-0368	-		10	SCREW M6S M6X16 A280	
53050	90166-0118	A	MM	2000	TUBE 8 MM PA BLACK	
53050_1	90166-0118	A	MM	500	TUBE 8 MM PA BLACK	
53051	90166-0118	A	MM	2000	TUBE 8 MM PA BLACK	
540	312105-0379	-		6	SCREW M6S ISO 4014 M6X45 A480	
550	312812-0316	-		2	HEXAGON NUT, NY-LOCK M6 A480	
560	90030-0208	-		4	CONN. STR. GE 6-1/8-27 NPTF	
570	315751-0119	-		1	RETAIN. RING, 25	
590	342931-0122	-		4	ELBOW 90 COUPL.,EXT.THREAD 8/6-G1/4"	
600	90458-1382	-		4	PLUG, M5X3.5 SMC - MS-5P	
610	312105-0499	-		4	SCREW M6S ISO 4014 M10X40 A480	
620	90091-0406	A		1	RADIAL SEAL 25X40X7 MM DUST LIP	
630	90330-0066	-		4	PLUG, EXT. G-THREAD, G1/8	
650	315204-0306	A		2	O-RING 74,5X3 MM	
660	90214-0165	A		2	BALL BEARING, 25X47X12 MM	
670	312105-0457	-		1	SCREW M6S ISO 4014 M8X35 A480	
680	311103-0351	-		4	PARALLELL PIN ISO2338 6X16 A1	
690	312105-0503	-		4	SCREW M6S ISO 4014 M10X60 A480	
700	315751-0116	-		1	RETAIN. RING, 20	
710	315705-0330	A		2	PARALLEL KEY W. ROUND ENDS 12X8X32 MM	
720	315705-0307	A		1	PARALLEL KEY W. ROUND ENDS 10X8X70 MM	
730	90056-0164	A		1	WORM GEAR BS 71-F-TT	
740	90091-0439	A		4	RADIAL SEAL 35X62X7 MM DUST LIP	
750	312105-0453	-		11	SCREW M6S ISO 4017 M8X25 A480	
770	321330-0108	A		2	ANG. BALL BEAR, 40X80X30,2 MM	
780	315105-0195	-		1	WASHER PLAIN ROUND 23/40, H=3	
800	90091-0441	A		2	RADIAL SEAL 50X72X8 MM DUST LIP	
810	90458-0068	A		4	BALL BEARING, STAINLESS 35X62X14 MM	
820	315705-0265	A		1	PARALLEL KEY W. ROUND ENDS 8X7X25 MM	
830	312105-0372	-		3	SCREW M6S ISO 4017 M6X25 A480	
840	312105-0455	-		3	SCREW M6S ISO 4017 M8X30 A480	
850	315125-0165	-		3	WASHER TBRSB 8,4X26X5 A4	
860	315125-0153	-		2	WASHER TBRSB 6,4X22X4 A4	
870	315701-0199	A		1	PARALLEL KEY W. ROUND ENDS 5X5X16 MM	
880	315753-0130	-		1	RETAINING RING FOR HOLE, 47X1,75 MM	
890	315705-0238	A		1	PARALLEL KEY W. ROUND ENDS 6X6X36 MM	
900	90091-0322	A		1	RADIAL SEAL 25X42X7 MM DUST LIP	
910	90141-0020	-		1	RETAIN. RING, 42	
920	90214-0225	A		2	BALL BEARING SOLID OIL 20X42X12 MM	
930	315105-0165	-		12	WASHER BRB8,4X16RFR	
940	312105-0366	-		4	SCREW M6S M6X12 A280	
950	342921-0122	-		2	STRAIGHT COUPLING,EXT.THREADED 8/6-G1/4"	
960	311103-0403	-		2	PARALLELL PIN, M6, 8X25 MM	
970	90458-0270	-		1	VENTING DEVICETCDF 1/8G ELESA 58669	
980	315705-0202	A		2	PARALLEL KEY W ROUND ENDS 5X5X25MM	

Machine Type | Group Description | Used-In | Group Number | Page No

SWING FRAME

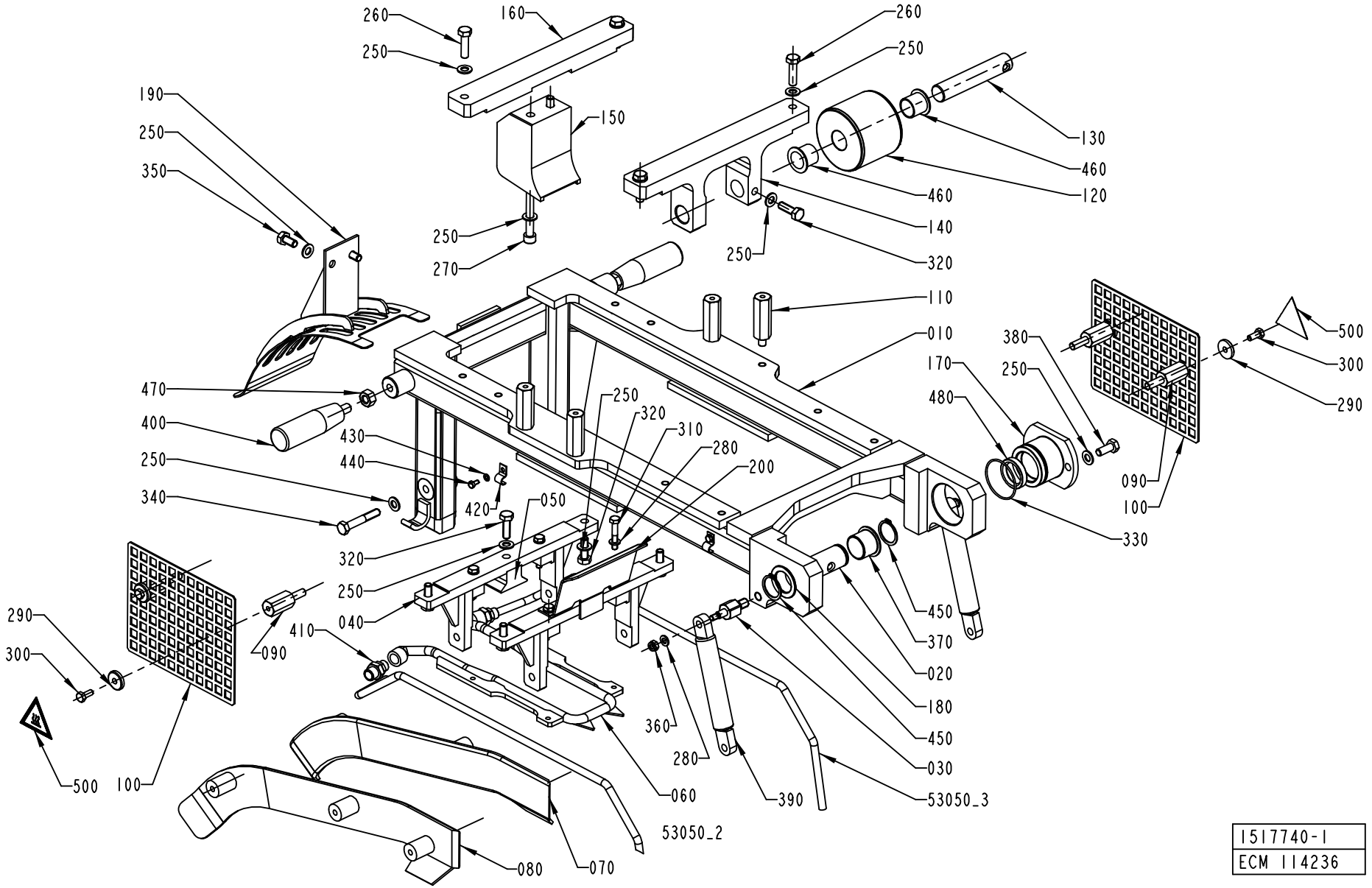

1517740-1
ECM 114236

ECM: 116407 - 20021021
Group number: 1517740-0100
Assembly Drawing: 1517740-1_1_AB

This list covers pages from 5-16 to 5-19

Pos	Part No	SP	UN	Qty	Description	Page No
TBA 0200B						
010	1548015-0000	-		1	SWING FRAME	
050	1519435-0000	-		1	PLATE	
060	1519434-0000	-		1	GUIDE	
070	1548016-0000	-		1	GUIDE	
080	1548017-0000	-		1	GUIDE	
120	1347073-0000	A		1	PULLEY	
150	1519433-0000	-		1	SLIDER	
160	1519432-0000	-		1	BRACKET	
190	1548018-0000	-		1	TOP SECTION	
TBA 0200M						
010	1519430-0000	-		1	SWING FRAME	
050	1548030-0000	-		1	PLATE	
060	1548031-0000	-		1	GUIDE	
070	1548038-0000	-		1	GUIDE	
080	1548037-0000	-		1	GUIDE	
120	1548032-0000	A		1	PULLEY	
150	1548027-0000	-		1	SLIDER	
160	1538574-0000	-		1	BRACKET	
190	1524531-0000	-		1	TOP SECTION	
TBA 0200S						
010	1538571-0000	-		1	SWING FRAME	
050	1538577-0000	-		1	PLATE	
060	1538572-0000	-		1	GUIDE	
070	1538576-0000	-		1	GUIDE	
080	1538575-0000	-		1	GUIDE	
120	1538578-0000	A		1	PULLEY	
150	1538573-0000	-		1	SLIDER	
160	1538574-0000	-		1	BRACKET	
190	1538579-0000	-		1	TOP SECTION	
TBA 0250B						
010	1519430-0000	-		1	SWING FRAME	
050	1519435-0000	-		1	PLATE	
060	1519434-0000	-		1	GUIDE	
070	1519429-0000	-		1	GUIDE	
080	1519428-0000	-		1	GUIDE	
120	1347073-0000	A		1	PULLEY	
150	1519433-0000	-		1	SLIDER	
160	1519432-0000	-		1	BRACKET	
190	1524531-0000	-		1	TOP SECTION	
TBA 0250S						
010	1548034-0000	-		1	SWING FRAME	
050	1548030-0000	-		1	PLATE	
060	1548031-0000	-		1	GUIDE	
070	1548029-0000	-		1	GUIDE	
080	1548028-0000	-		1	GUIDE	
120	1548032-0000	A		1	PULLEY	
150	1548027-0000	-		1	SLIDER	
160	1538574-0000	-		1	BRACKET	
190	1548035-0000	-		1	TOP SECTION	
Common Parts						
020	1517731-0000	-		1	PIN	
030	1524520-0000	A		2	PIN	
040	1524528-0000	A		2	BRACKET	
090	1519450-0000	-		4	SPACER	
100	1519442-0000	-		2	TOUCH GUARD	
110	1519438-0000	-		4	SPACER	
130	2514132-0000	A		1	PIN	
140	2514131-0000	-		1	BRACKET	
170	1524521-0000	-		1	FLANGE	
180	1282796-0000	-		1	WASHER	
200	1524539-0000	-		1	PROTECTION	
250	315105-0165	-		18	WASHER BRB8,4X16RFR	
260	312105-0455	-		4	SCREW M6S ISO 4017 M8X30 A480	
270	312115-0467	-		2	SCREW ISO4762 M8X80 A4	
280	315105-0153	-		6	WASHER BRB6,4X12RFR	
290	315125-0153	-		4	WASHER TBRSB 6,4X22X4 A4	
300	312105-0367	-		4	SCREW M6S M6X14 A280	
310	312105-0376	-		4	SCREW M6S ISO 4014 M6X35 A480	
320	312105-0453	-		6	SCREW M6S ISO 4017 M8X25 A480	
330	315202-0803	B		1	O-RING 44,17X1,78 MM	
340	312105-0461	-		2	SCREW M6S ISO 4014 M8X50 A480	
350	312105-0449	-		2	SCREW M6S ISO 4017 M8X16 A480	
360	312812-0316	-		2	HEXAGON NUT, NY-LOCK M6 A480	
370	321153-0296	A		1	FLANGE BUSHING, 25X28X21,5 MM	
380	312105-0451	-		2	SCREW M6S ISO 4017 M8X20 A480	
390	90347-0183	A		2	GAS SPRING NO. A1 A1N-52-060-205/800N	
400	90051-0127	A		2	HANDLE, NO. .601/90+X-M10-INOX	
410	342921-0122	-		2	STRAIGHT COUPLING,EXT.THREADED 8/6-G1/4"	
420	316810-0106	-		4	PIPE CLIP FOR TUBE D=8 MM	
430	315105-0136	-		4	WASHER BRB4,3XRFR	
440	312105-0287	-		4	SCREW M6S ISO4017 M4X8 A480	
450	315751-0119	A		2	RETAIN. RING, 25	
460	90240-0265	A		4	FLANGE BUSHING, 20X23X21 MM	

Machine Type | Group Description | Used-In | Group Number | Page No

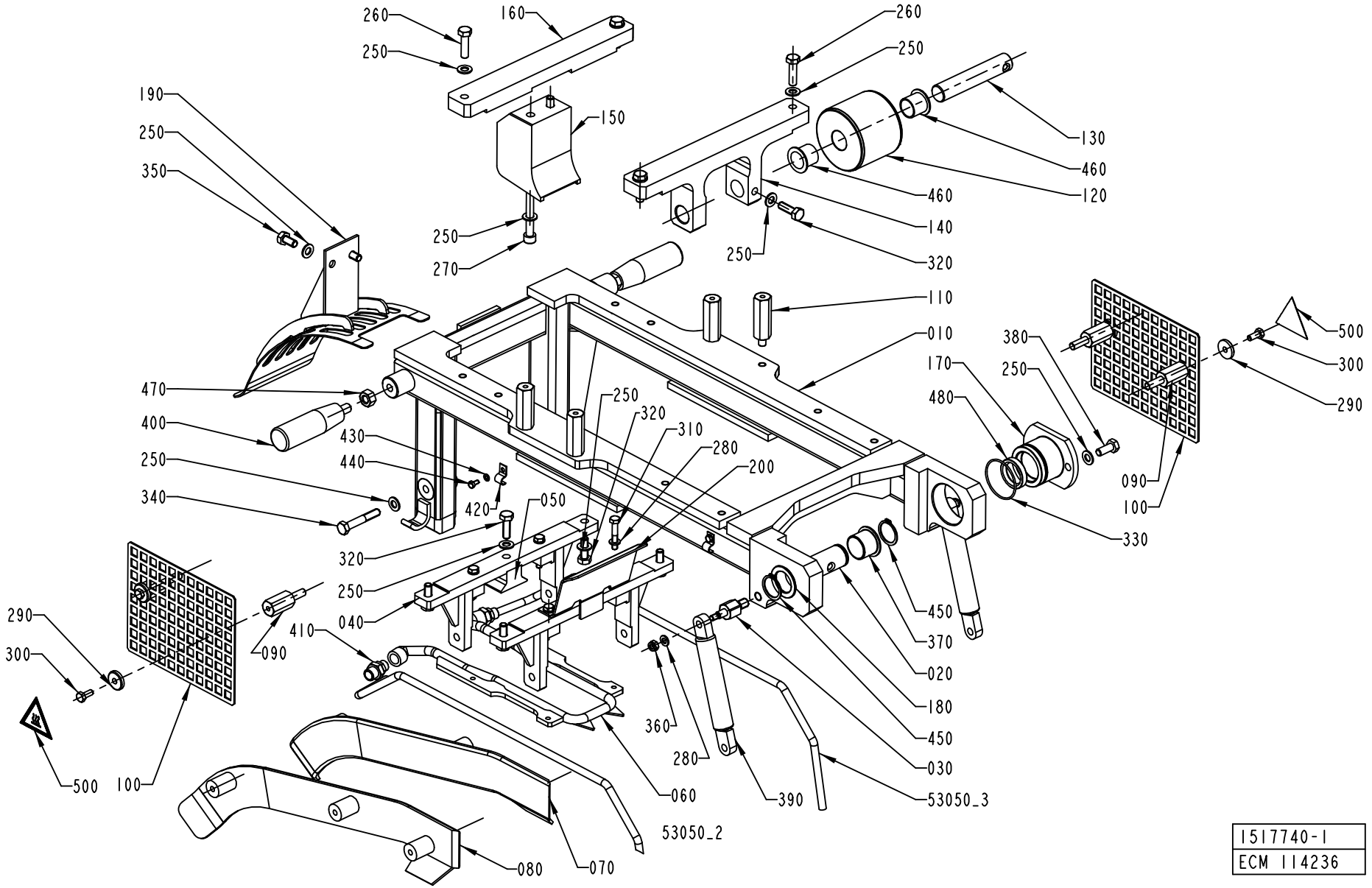
260
250
160
150
190
250
350
270
260
250
130
460
120
460
140
320
250
110
010
380
250
170
480
500
300
290
090
100
330
470
400
430
440
420
250
340
250
320
310
280
200
050
320
250
040
410
090
290
300
500
100
450
370
020
180
450
030
53050_3
360
280
390
060
53050_2
080
070
1517740-1
ECM 114236

Pos	Part No	SP	UN	Qty	Description	Page No
Common Parts (Cont'd)						
470	312605-0320	-		2	HEXAGON NUT, M6M M10 A280	
480	315221-0156	A		1	RADIAL SEAL 25X35X7 MM	
490	312605-0320	-		2	HEXAGON NUT, M6M M10 A280	
500	359705-0007	-		2	WARNING SIGN ISO, HOT SURFACE	
53050_2	90166-0118	A	MM	1000	TUBE 8 MM PA BLACK	
53050_3	90166-0118	A	MM	1000	TUBE 8 MM PA BLACK	

Pos	Part No	SP	UN	Qty	Description	Page No

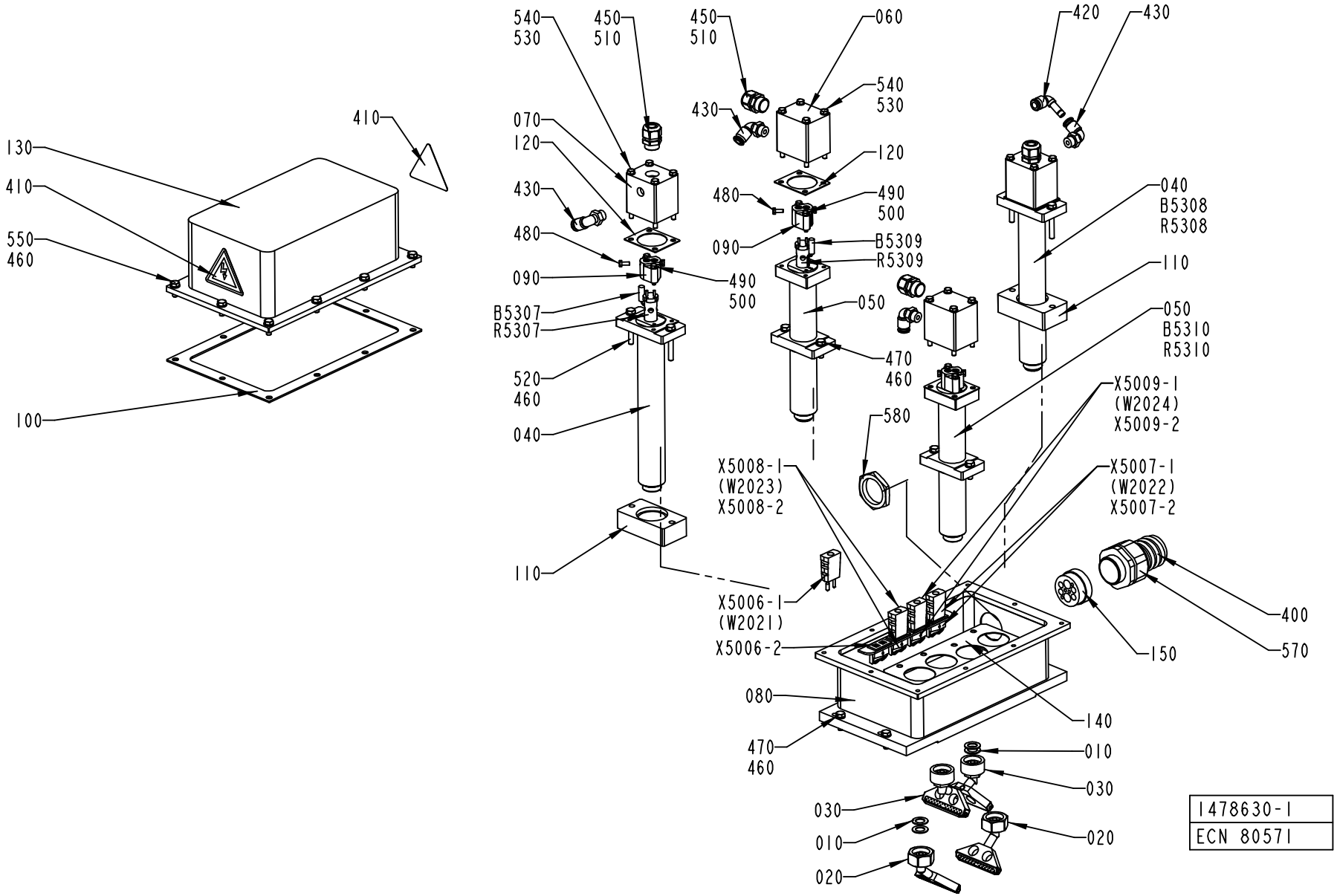
410
130
410
550
460
100
540
530
450
510
070
120
430
480
090
B5307
R5307
520
460
040
110
450
510
060
540
530
430
120
480
490
500
090
B5309
R5309
050
470
460
580
X5008-1
(W2023)
X5008-2
X5006-1
(W2021)
X5006-2
080
470
460
420
430
040
B5308
R5308
110
050
B5310
R5310
X5009-1
(W2024)
X5009-2
X5007-1
(W2022)
X5007-2
400
150
570
140
010
030
030
010
020
020
1478630-1
ECN 80571

ECM: 116443 - 20021021
Group number: 1478630-0100
Assembly Drawing: 1478630-1_1_AB

This list covers pages from 5-20 to 5-23

Pos	Part No	SP	UN	Qty	Description	Page No
TBA 0200B						
010	1010947-0000	A		8	GASKET	
020	2508263-0000	A		2	NOZZLE	
030	2508265-0000	A		2	NOZZLE	
110	1478627-0000	-		2	SPACER	
TBA 0200M						
010	1010947-0000	A		8	GASKET	
020	1548043-0000	A		2	NOZZLE	
030	1548042-0000	A		2	NOZZLE	
110	1478623-0000	-		2	SPACER	
TBA 0200S						
010	1010947-0000	A		8	GASKET	
020	1548041-0000	A		2	NOZZLE	
030	1548040-0000	A		2	NOZZLE	
110	1498969-0000	-		2	SPACER	
TBA 0250B						
010	1010947-0000	A		8	GASKET	
020	2508263-0000	A		2	NOZZLE	
030	2508265-0000	A		2	NOZZLE	
110	1478623-0000	-		2	SPACER	
TBA 0250S						
010	1010947-0000	A		12	GASKET	
020	1548043-0000	A		2	NOZZLE	
030	1548042-0000	A		2	NOZZLE	
Common Parts						
040	1478616-0000	-		2	HEATING PIPE	
050	1478617-0000	-		2	HEATING PIPE	
060	1478629-0000	-		2	CAP	
070	1478619-0000	-		2	CAP	
080	1478620-0000	-		1	BRACKET	
090	1478621-0000	-		4	CLAMP	
100	1487075-0000	A		1	GASKET	
120	1487076-0000	A		4	GASKET	
130	1478625-0000	-		1	COVER HOUSING	
140	1478626-0000	A		1	GASKET	
150	1498980-0000	-		1	INSERT	
400	90152-0060	-	MM	800	SPIRAL CONDUIT, 42X35, UL3529	
410	359705-0015	-		2	WARNING SIGN ISO, RISK OF ELECTRIC SHOCK	
420	90055-0118	-		1	ELBOW PIPE JOINT -8MM	
430	90458-2958	-		4	ELBOW PIPE JOINT, EXT.THREAD, D=8MM-G1/4	
450	353240-0002	-		4	NORMAL WITHOUT INSERT, PG 11	
460	315105-0153	-		22	WASHER BRB6,4X12RFR	
470	312105-0370	-		8	SCREW M6S ISO 4017 M6X20 A480	
480	312105-0289	-		8	SCREW M6S ISO 4017 M4X10 A480	
490	315105-0136	-		8	WASHER BRB4,3XRFR	
500	312105-0297	-		8	SCREW M6S ISO 4017 M4X25 A480	
510	353249-0041	-		4	INSERT, SOLID, E151G	
520	312105-0379	-		4	SCREW M6S ISO 4014 M6X45 A480	
530	315105-0146	-		16	BRICKA BRB5,3X10RFR	
540	312101-0344	-		16	SCREW M6S M5X65 FZB	
550	312105-0368	-		10	SCREW M6S M6X16 A280	
570	353243-0008	-		1	EXTENDED WITHOUT INSERT, PG29	
580	90099-0120	-		1	MUTTER PR 37 (PG29)	
B5307	1512463-0000	A		1	THERMOCOUPLE	
B5308	1512463-0000	A		1	THERMOCOUPLE	
B5309	1512463-0000	A		1	THERMOCOUPLE	
B5310	1512463-0000	A		1	THERMOCOUPLE	
R5307	90206-0132	A		1	HOT AIR ELEMENT	
R5308	90206-0132	A		1	HOT AIR ELEMENT	
R5309	90206-0132	A		1	HOT AIR ELEMENT	
R5310	90206-0132	A		1	HOT AIR ELEMENT	
X5006-1	90326-0022	-		1	PLUG, MALE YELLOW CR-AL	
X5006-2	90326-0077	-		1	CONTACT	
X5007-1	90326-0022	-		1	PLUG, MALE YELLOW CR-AL	
X5007-2	90326-0077	-		1	CONTACT	
X5008-1	90326-0022	-		1	PLUG, MALE YELLOW CR-AL	
X5008-2	90326-0077	-		1	CONTACT	
X5009-1	90326-0022	-		1	PLUG, MALE YELLOW CR-AL	
X5009-2	90326-0077	-		1	CONTACT	

Machine Type | Group Description | Used-In | Group Number | Page No

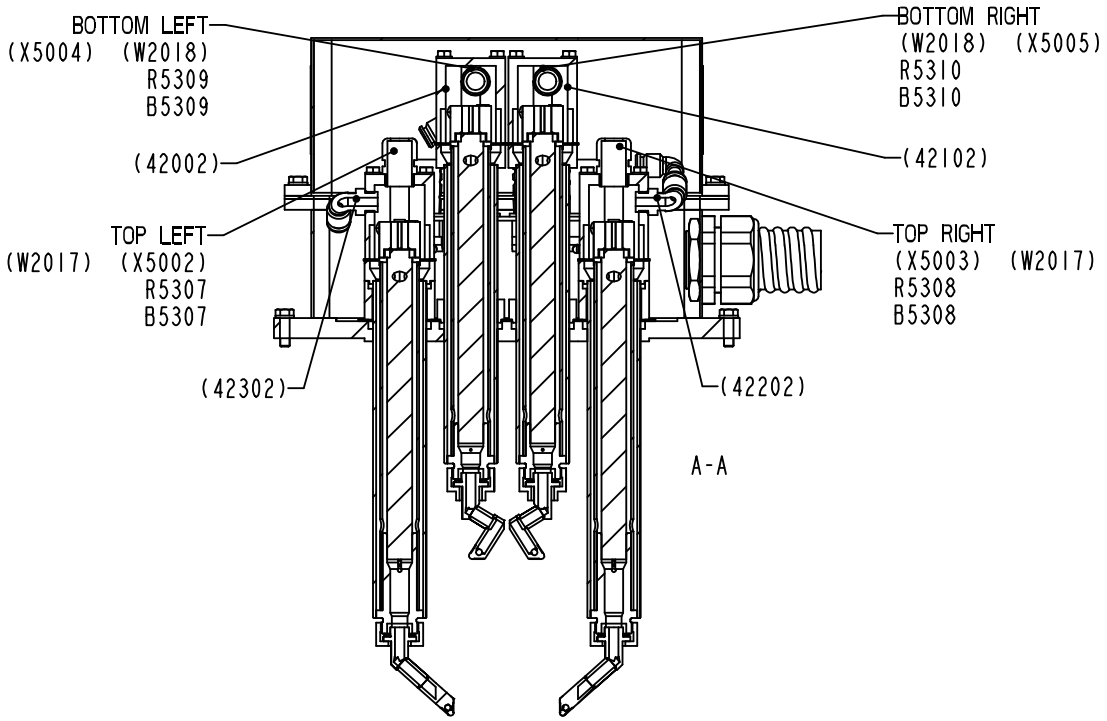

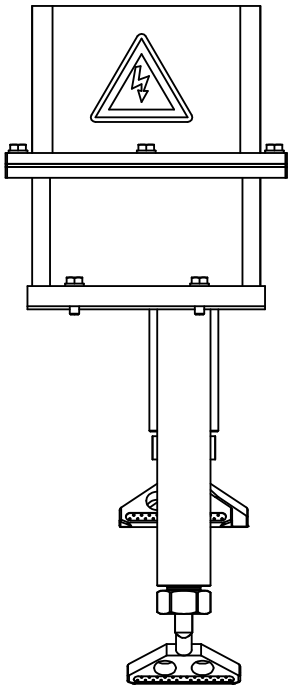

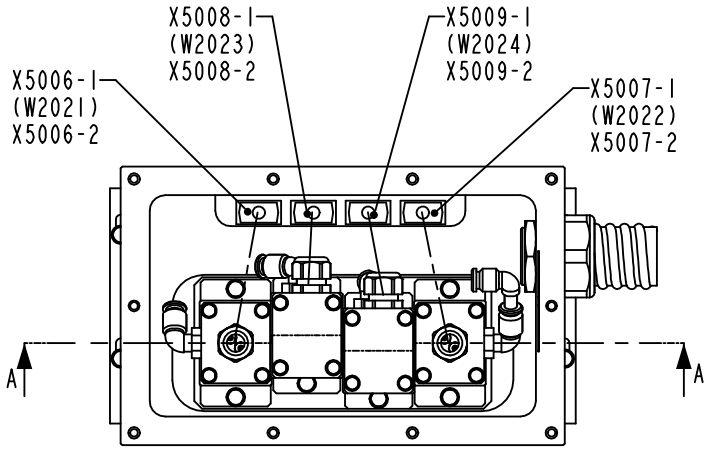

1478630-1
ECN 80571

ECM: 116443 - 20021021
Group number: 1478630-0100
Assembly Drawing: 1478630-1_2_AB

This list covers pages from 5-20 to 5-23

Pos	Part No	SP	UN	Qty	Description	Page No
TBA 0200B						
010	1010947-0000	A		8	GASKET	
020	2508263-0000	A		2	NOZZLE	
030	2508265-0000	A		2	NOZZLE	
110	1478627-0000	-		2	SPACER	
TBA 0200M						
010	1010947-0000	A		8	GASKET	
020	1548043-0000	A		2	NOZZLE	
030	1548042-0000	A		2	NOZZLE	
110	1478623-0000	-		2	SPACER	
TBA 0200S						
010	1010947-0000	A		8	GASKET	
020	1548041-0000	A		2	NOZZLE	
030	1548040-0000	A		2	NOZZLE	
110	1498969-0000	-		2	SPACER	
TBA 0250B						
010	1010947-0000	A		8	GASKET	
020	2508263-0000	A		2	NOZZLE	
030	2508265-0000	A		2	NOZZLE	
110	1478623-0000	-		2	SPACER	
TBA 0250S						
010	1010947-0000	A		12	GASKET	
020	1548043-0000	A		2	NOZZLE	
030	1548042-0000	A		2	NOZZLE	
Common Parts						
040	1478616-0000	-		2	HEATING PIPE	
050	1478617-0000	-		2	HEATING PIPE	
060	1478629-0000	-		2	CAP	
070	1478619-0000	-		2	CAP	
080	1478620-0000	-		1	BRACKET	
090	1478621-0000	-		4	CLAMP	
100	1487075-0000	A		1	GASKET	
120	1487076-0000	A		4	GASKET	
130	1478625-0000	-		1	COVER HOUSING	
140	1478626-0000	A		1	GASKET	
150	1498980-0000	-		1	INSERT	
400	90152-0060	-	MM	800	SPIRAL CONDUIT, 42X35, UL3529	
410	359705-0015	-		2	WARNING SIGN ISO, RISK OF ELECTRIC SHOCK	
420	90055-0118	-		1	ELBOW PIPE JOINT -8MM	
430	90458-2958	-		4	ELBOW PIPE JOINT, EXT.THREAD, D=8MM-G1/4	
450	353240-0002	-		4	NORMAL WITHOUT INSERT, PG 11	
460	315105-0153	-		22	WASHER BRB6,4X12RFR	
470	312105-0370	-		8	SCREW M6S ISO 4017 M6X20 A480	
480	312105-0289	-		8	SCREW M6S ISO 4017 M4X10 A480	
490	315105-0136	-		8	WASHER BRB4,3XRFR	
500	312105-0297	-		8	SCREW M6S ISO 4017 M4X25 A480	
510	353249-0041	-		4	INSERT, SOLID, E151G	
520	312105-0379	-		4	SCREW M6S ISO 4014 M6X45 A480	
530	315105-0146	-		16	BRICKA BRB5,3X10RFR	
540	312101-0344	-		16	SCREW M6S M5X65 FZB	
550	312105-0368	-		10	SCREW M6S M6X16 A280	
570	353243-0008	-		1	EXTENDED WITHOUT INSERT, PG29	
580	90099-0120	-		1	MUTTER PR 37 (PG29)	
B5307	1512463-0000	A		1	THERMOCOUPLE	
B5308	1512463-0000	A		1	THERMOCOUPLE	
B5309	1512463-0000	A		1	THERMOCOUPLE	
B5310	1512463-0000	A		1	THERMOCOUPLE	
R5307	90206-0132	A		1	HOT AIR ELEMENT	
R5308	90206-0132	A		1	HOT AIR ELEMENT	
R5309	90206-0132	A		1	HOT AIR ELEMENT	
R5310	90206-0132	A		1	HOT AIR ELEMENT	
X5006-1	90326-0022	-		1	PLUG, MALE YELLOW CR-AL	
X5006-2	90326-0077	-		1	CONTACT	
X5007-1	90326-0022	-		1	PLUG, MALE YELLOW CR-AL	
X5007-2	90326-0077	-		1	CONTACT	
X5008-1	90326-0022	-		1	PLUG, MALE YELLOW CR-AL	
X5008-2	90326-0077	-		1	CONTACT	
X5009-1	90326-0022	-		1	PLUG, MALE YELLOW CR-AL	
X5009-2	90326-0077	-		1	CONTACT	

Machine Type | Group Description | Used-In | Group Number | Page No

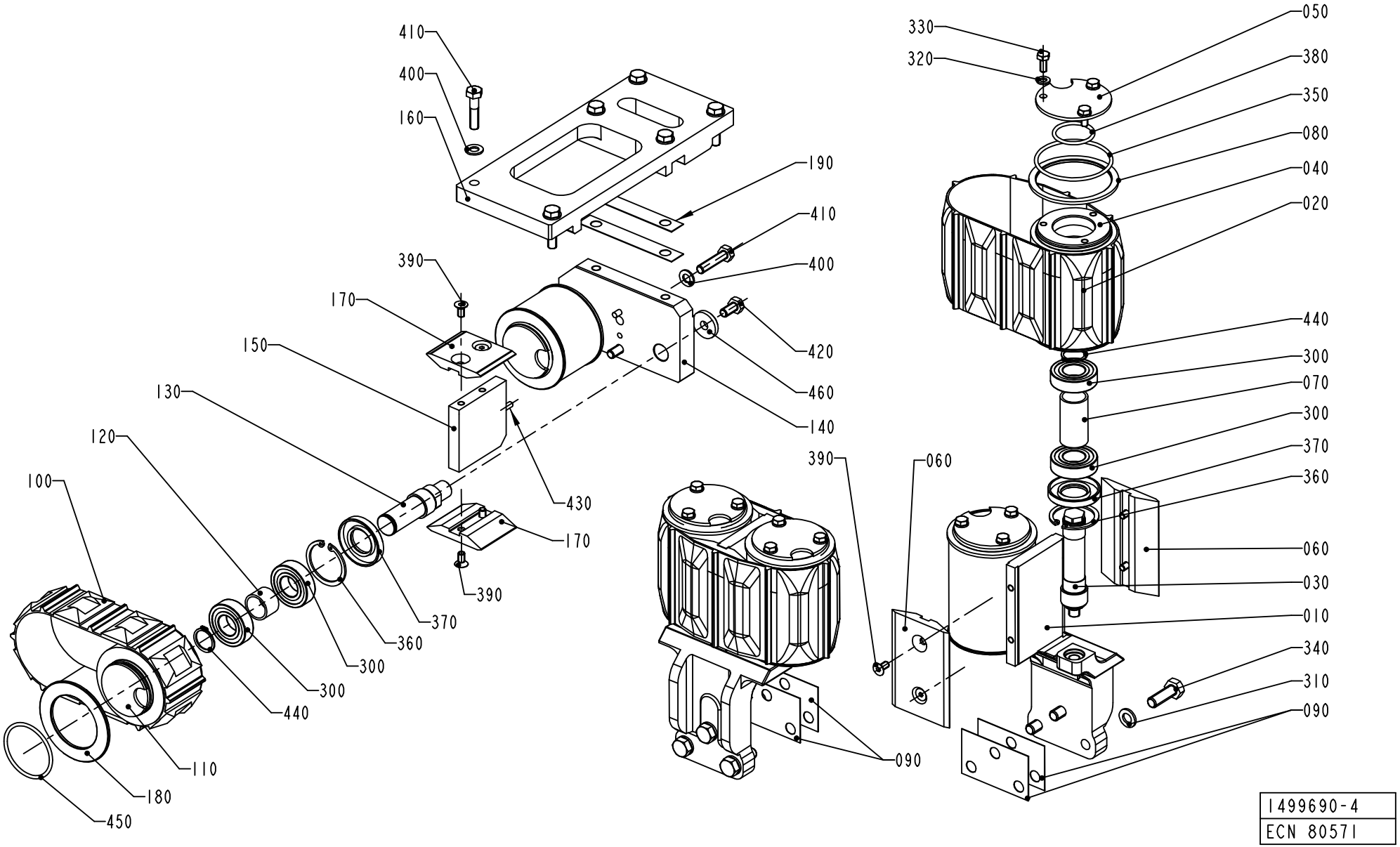

1499690-4
ECN 80571

ECM: 116444 - 20021021
Group number: 1499690-0200
Assembly Drawing: 1499690-4_1_AA

This list covers pages from 5-24 to 5-27

Pos	Part No	SP	UN	Qty	Description	Page No
TBA 0200B						
010	1499013-0000	-		2	SUPPORT	
020	1523100-0000	A		2	BELT	
030	1499686-0000	B		4	SHAFT	
040	1499687-0000	B		4	ROLLER	
060	1499688-0000	A		4	SLIDER	
070	1499689-0000	-		4	SPACER	
100	1519203-0000	A		1	BELT	
110	1478638-0000	A		2	PULLEY	
150	1478635-0000	-		1	PLATE	
170	1499935-0000	A		2	SLIDER	
190	1487874-0000	A		2	SHIM	
TBA 0200M						
010	1487881-0000	-		2	SUPPORT	
020	1523101-0000	A		2	BELT	
030	1487054-0000	B		4	SHAFT	
040	1487053-0000	B		4	ROLLER	
060	1487055-0000	A		4	SLIDER	
070	1487051-0000	-		4	SPACER	
100	1499919-0000	A		1	BELT	
110	1499016-0000	A		2	PULLEY	
150	1511652-0000	-		1	PLATE	
170	1517968-0000	A		2	SLIDER	
190	1487874-0000	A		2	SHIM	
TBA 0200S						
010	1499007-0000	-		2	SUPPORT	
020	1532490-0000	A		2	BELT	
	1499012-0000	*-*		*1*	*BELT*	
	1532489-0000	*-*		*8*	*PUSHER*	
030	1499008-0000	B		4	SHAFT	
040	1499009-0000	B		4	ROLLER	
060	1499010-0000	A		4	SLIDER	
070	1499011-0000	-		4	SPACER	
100	1499919-0000	A		1	BELT	
110	1499016-0000	A		2	PULLEY	
150	1511652-0000	-		1	PLATE	
170	1517968-0000	A		2	SLIDER	
TBA 0250B						
010	1487881-0000	-		2	SUPPORT	
020	1523101-0000	A		2	BELT	
030	1487054-0000	B		4	SHAFT	
040	1487053-0000	B		4	ROLLER	
060	1487055-0000	A		4	SLIDER	
070	1487051-0000	-		4	SPACER	
100	1519203-0000	A		1	BELT	
110	1478638-0000	A		2	PULLEY	
150	1478635-0000	-		1	PLATE	
170	1499935-0000	A		2	SLIDER	
190	1487874-0000	A		2	SHIM	
TBA 0250S						
010	1499001-0000	-		2	SUPPORT	
020	1549858-0000	A		2	BELT	
030	1499002-0000	B		4	SHAFT	
040	1499003-0000	B		4	ROLLER	
060	1499004-0000	A		4	SLIDER	
070	1499005-0000	-		4	SPACER	
100	1499919-0000	A		1	BELT	
110	1499016-0000	A		2	PULLEY	
150	1511652-0000	-		1	PLATE	
170	1517968-0000	A		2	SLIDER	
190	1487874-0000	A		2	SHIM	
Common Parts						
050	1487052-0000	-		4	FLANGE	
080	2502969-0000	-		4	FLANGE	
090	1478618-0000	A		4	SHIM	
120	1478640-0000	-		2	SPACER	
130	1478637-0000	-		2	SHAFT	
140	1478636-0000	-		1	PLATE	
160	1524517-0000	-		1	SUPPORT	
180	1478639-0000	-		2	FLANGE	
200	2556248-0000	-		2	STOPPER	
300	90214-0225	A		12	BALL BEARING SOLID OIL 20X42X12 MM	
310	315105-0171	-		6	WASHER BRB10X18	
320	315105-0153	-		16	WASHER BRB6,4X12RFR	
330	312105-0367	-		12	SCREW M6S M6X14 A280	
340	312105-0495	-		6	SCREW M6S ISO 4017 M10X30 A480	
350	315202-0304	A		4	O-RING 64,5X3 MM	
360	90141-0020	A		6	RETAIN. RING, 42	
370	90091-0263	A		6	RADIAL SEAL 24X47X7 MM DUST LIP	
380	315202-0220	A		4	O-RING 32,2X3 MM	
390	312155-0366	-		12	SCREW EN 10642 MF6S M6X12 A480	
400	315105-0165	-		8	WASHER BRB8,4X16RFR	
410	312109-0457	-		8	SCREW M6S ISO 4017 M8X35 A480	
420	312105-0449	-		2	SCREW M6S ISO 4017 M8X16 A480	

Machine Type | Group Description | Used-In | Group Number | Page No

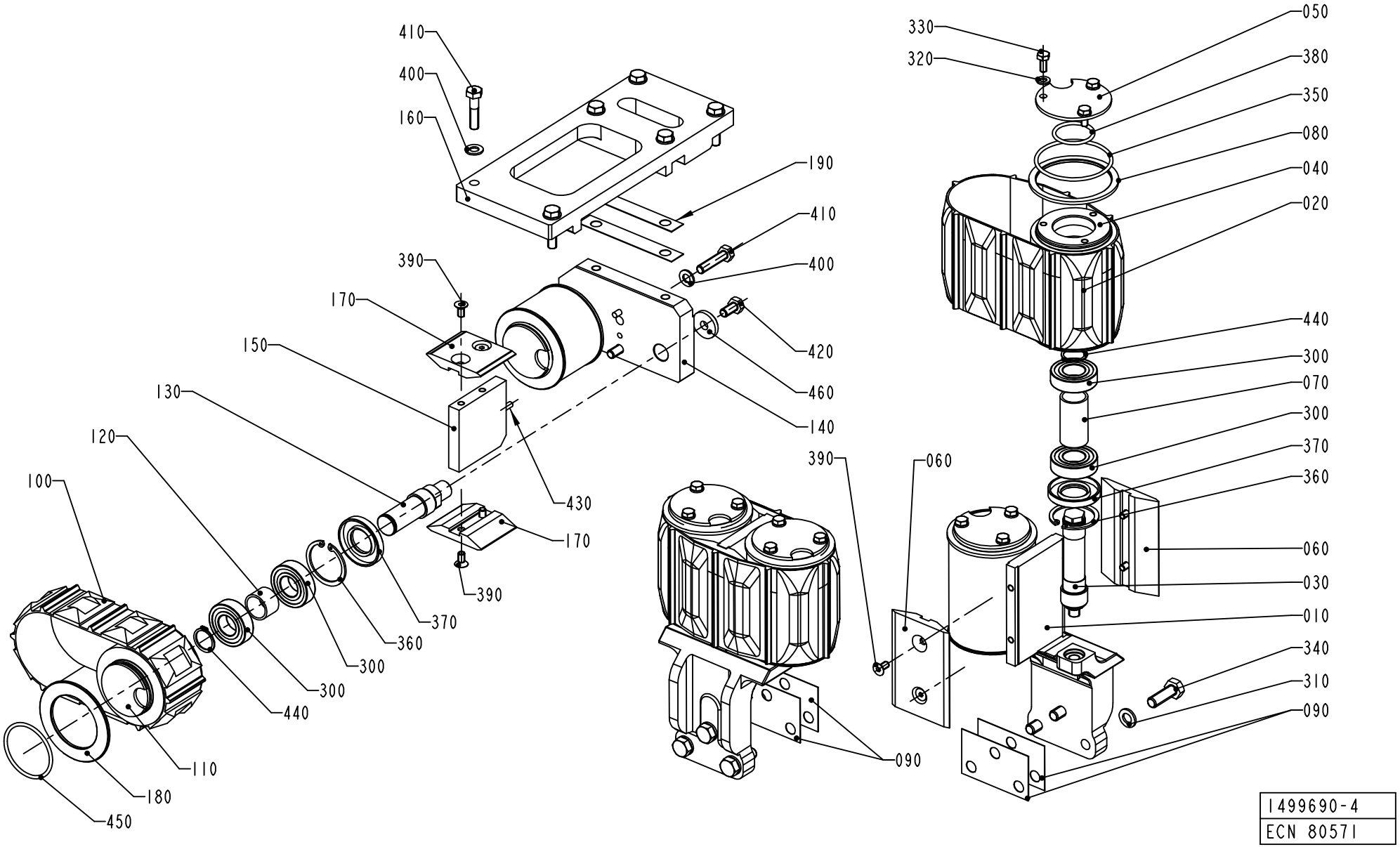
410
400
160
190
410
400
390
170
150
130
120
100
420
460
140
430
170
390
370
360
300
300
440
110
180
450
330
320
050
380
350
080
040
020
440
300
070
300
370
360
390
060
060
030
010
340
310
090
090
1499690-4
ECN 80571

Pos	Part No	SP	UN	Qty	Description	Page No
Common Parts (Cont'd)						
430	311103-0308	-		2	PARALLELL PIN ISO2338 5X16 A1	
440	315751-0116	A		6	RETAIN. RING, 20	
450	315202-0301	A		2	O-RING 49,5X3 MM	
460	315125-0165	-		2	WASHER TBRSB 8,4X26X5 A4	
470	90157-0016	-		1	LOCKING FLUID	
480	312105-0368	-		4	SCREW M6S M6X16 A280	

Pos	Part No	SP	UN	Qty	Description	Page No

DISCHARGE DEVICE

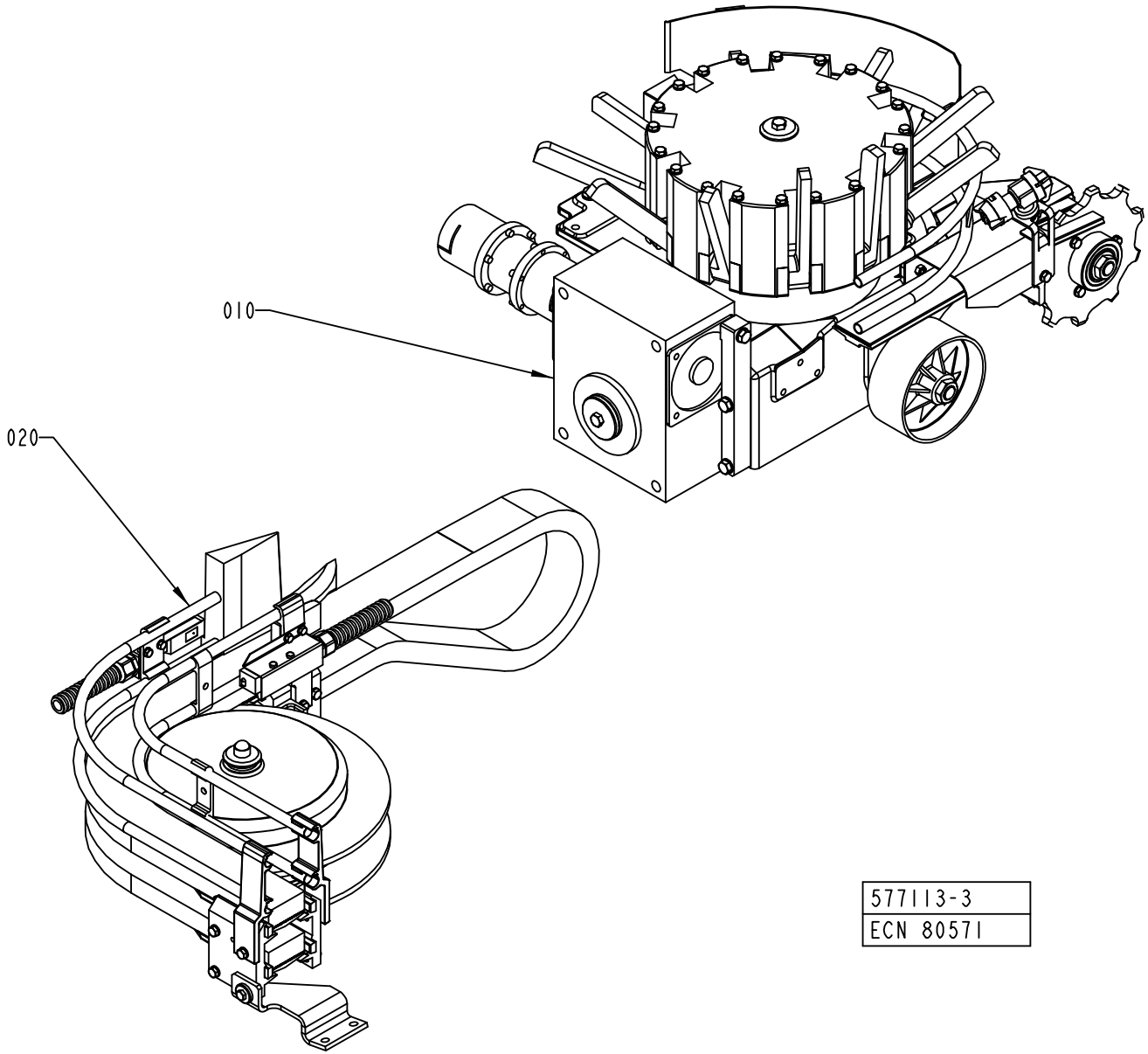

ECM: 116445 - 20021021
Group number: 577113-0300
Assembly Drawing: 577113-3_1_AA

Pos	Part No	SP	UN	Qty	Description	Page No
-						
010	1348751-0200	-		1	OUTFEED UNIT	**5-31, 5-33**
020	1260142-0200	-		1	CURVE WHEEL	**5-35**

Pos	Part No	SP	UN	Qty	Description	Page No

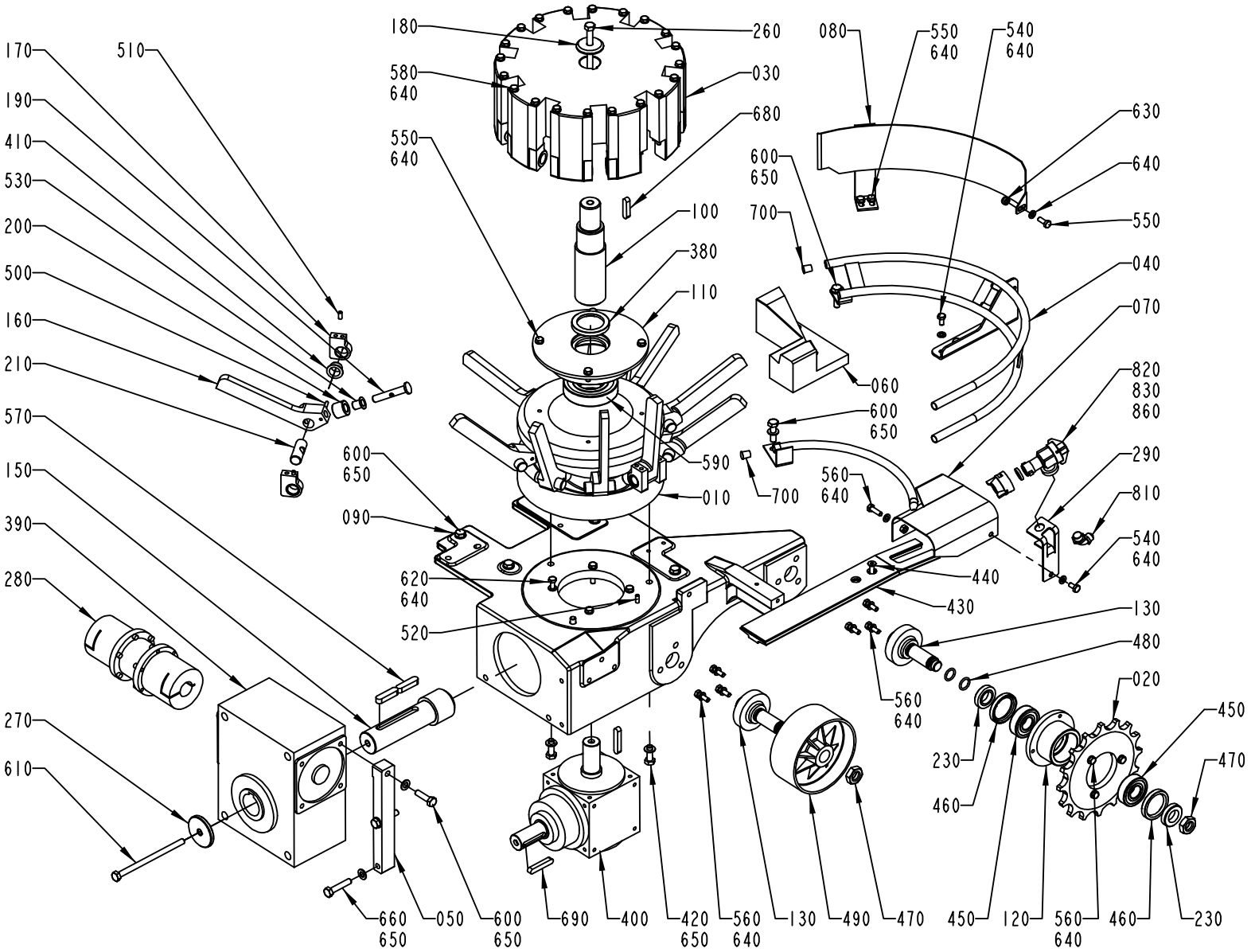

1348751-3
ECM 127556

ECM: 127559 - 20030707
Group number: 1348751-0200
Assembly Drawing: 1348751-3_1_AB

This list covers pages from 5-30 to 5-33

Pos	Part No	SP	UN	Qty	Description	Page No
TBA 0200B (See drawing on page: 5-32)						
140	1549972-0000	-		2	FOOT	
160	2523581-0000	A		10	CARRIER	
220	1549971-0000	-		1	FASTENING PLATE	
240	1549969-0000	-		1	SLIDE PLATE	
250	1549970-0000	A		1	SLIDER	
540	312105-0366	-		1	SCREW M6S M6X12 A280	
550	312105-0368	-		6	SCREW M6S M6X16 A280	
560	312105-0370	-		9	SCREW M6S ISO 4017 M6X20 A480	
600	312105-0455	-		6	SCREW M6S ISO 4017 M8X30 A480	
640	315105-0153	-		42	WASHER BRB6,4X12RFR	
650	315105-0165	-		12	WASHER BRB8,4X16RFR	
710	90266-0154	-	MM	200	PIPE	
720	312105-0449	-		1	SCREW M6S ISO 4017 M8X16 A480	
730	312115-0449	-		2	SCREW ISO4762 M8X16 A4	
740	312115-0455	-		2	SCREW ISO4762 M8X30 A4	
750	312105-0372	-		1	SCREW M6S ISO 4017 M6X25 A480	
760	312605-0316	-		1	HEXAGON NUT, M6M M6 A280	
770	1524431-0000	A		2	HUB	
780	2523679-0000	-		1	CONNECTION	
790	312105-0327	-		12	SCREW M6S ISO 4017 M5X12 A480	
800	312115-0453	-		2	SCREW ISO4762 M8X25 A4	
840	90458-2957	-		1	ELBOW PIPE JOINT, EXT.THREAD, D=6MM-G1/4	
850	90187-0158	-		1	THROTTLE BALL VALVE G1/4, R1/4	
TBA 0200M (See drawing on page: 5-30)						
040	2501223-0000	-		1	RAIL	
060	2511339-0000	A		1	SLIDER	
070	1348746-0000	-		1	GUIDE	
080	2506711-0000	-		1	GUIDE	
160	1498101-0000	A		10	CARRIER	
280	2523696-0000	A		1	INTERMEDIARY SHAFT	
	1524431-0000	*A*		*2*	*HUB*	
	Remark : Hole Ø 24mm.					
290	2514139-0000	-		1	SUPPORT	
540	312105-0366	-		3	SCREW M6S M6X12 A280	
550	312105-0368	-		7	SCREW M6S M6X16 A280	
560	312105-0370	-		10	SCREW M6S ISO 4017 M6X20 A480	
600	312105-0455	-		8	SCREW M6S ISO 4017 M8X30 A480	
630	312812-0316	-		1	HEXAGON NUT, NY-LOCK M6 A480	
640	315105-0153	-		44	WASHER BRB6,4X12RFR	
650	315105-0165	-		13	WASHER BRB8,4X16RFR	
700	484701-0000	-		5	SHUTTER	
810	342931-0122	-		1	ELBOW 90 COUPL.,EXT.THREAD 8/6-G1/4"	
820	90230-0027	-		1	NON-RETURN VALVE QJ 8355-1/4"	
	90230-0300	*C*		*1*	*STRAINER*	
	90230-0301	*C*		*1*	*DIAPHRAGM*	
830	534310-0001	-		1	NOZZLE	
860	90005-0094	-		1	GASKET C 19438-EPR	
TBA 0200S (See drawing on page: 5-30)						
040	2501223-0000	-		1	RAIL	
060	1498973-0000	A		1	BRACKET	
070	2514128-0000	-		1	GUIDE	
080	2514140-0000	-		1	GUIDE	
160	1498997-0000	A		10	CARRIER	
280	2525677-0000	A		1	INTERMEDIARY SHAFT	
	1524431-0000	*A*		*2*	*HUB*	
	Remark : Hole Ø 24mm.					
290	2514139-0000	-		1	SUPPORT	
540	312105-0366	-		3	SCREW M6S M6X12 A280	
550	312105-0368	-		7	SCREW M6S M6X16 A280	
560	312105-0370	-		10	SCREW M6S ISO 4017 M6X20 A480	
600	312105-0455	-		8	SCREW M6S ISO 4017 M8X30 A480	
630	312812-0316	-		1	HEXAGON NUT, NY-LOCK M6 A480	
640	315105-0153	-		44	WASHER BRB6,4X12RFR	
650	315105-0165	-		13	WASHER BRB8,4X16RFR	
700	484701-0000	-		5	SHUTTER	
810	342931-0122	-		1	ELBOW 90 COUPL.,EXT.THREAD 8/6-G1/4"	
820	90230-0027	-		1	NON-RETURN VALVE QJ 8355-1/4"	
	90230-0300	*C*		*1*	*STRAINER*	
	90230-0301	*C*		*1*	*DIAPHRAGM*	
830	534310-0001	-		1	NOZZLE	
860	90005-0094	-		1	GASKET C 19438-EPR	
TBA 0250B (See drawing on page: 5-30)						
040	2501223-0000	-		1	RAIL	
060	2514133-0000	A		1	BRACKET	
070	1348746-0000	-		1	GUIDE	
080	2506711-0000	-		1	GUIDE	
160	1260067-0000	A		10	CARRIER	
280	2523696-0000	A		1	INTERMEDIARY SHAFT	
	1524431-0000	*A*		*2*	*HUB*	
	Remark : Hole Ø 24mm.					
290	2514139-0000	-		1	SUPPORT	
540	312105-0366	-		3	SCREW M6S M6X12 A280	
550	312105-0368	-		7	SCREW M6S M6X16 A280	

Machine Type | Group Description | Used-In | Group Number | Page No

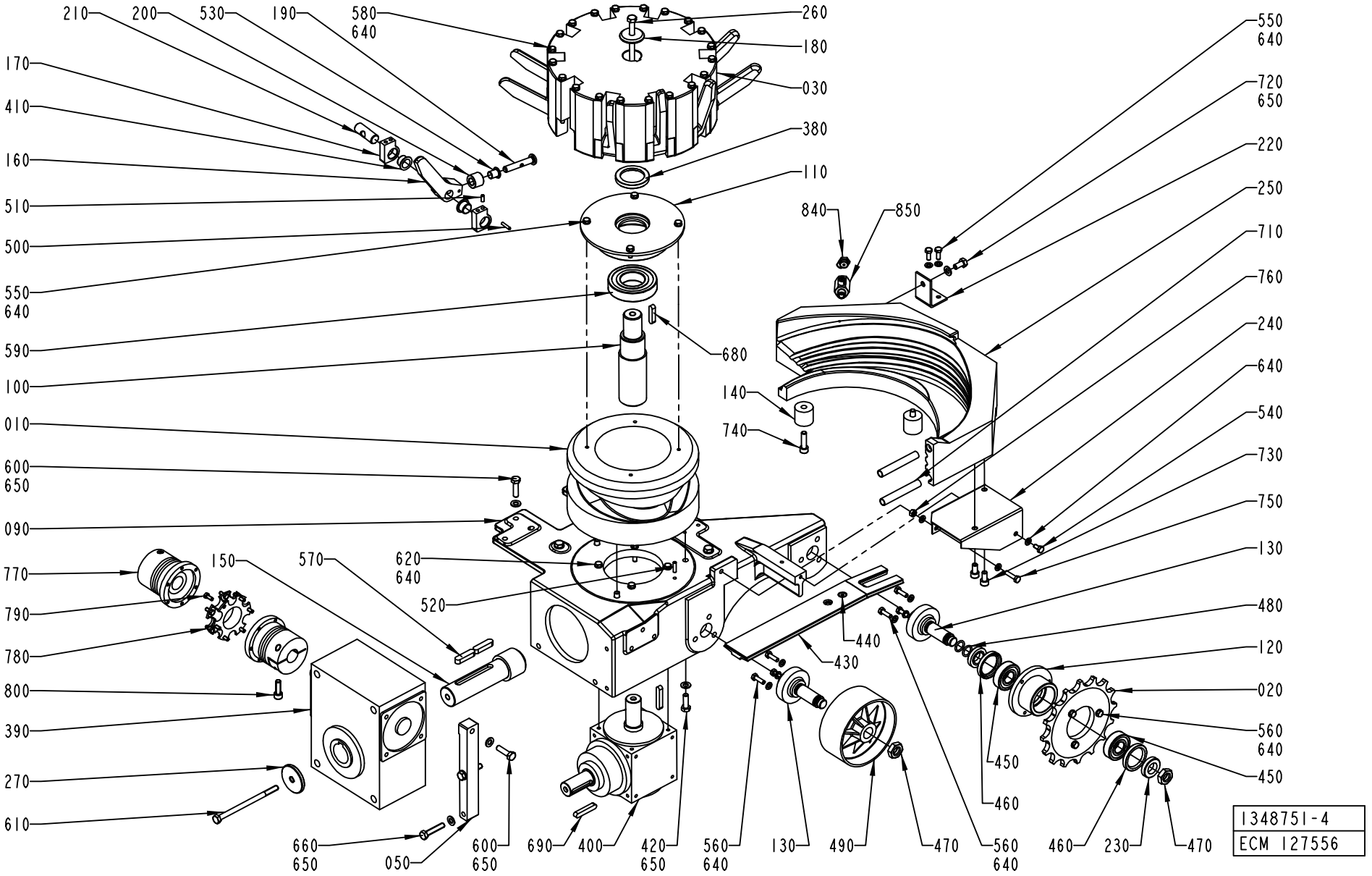
210
200
530
190
580
640
260
180
030
380
110
170
410
160
510
500
550
640
590
100
010
600
650
090
770
790
780
800
390
270
610
150
570
620
640
520
680
140
740
840
850
550
640
720
650
220
250
710
760
240
640
540
730
750
130
480
120
020
560
640
450
460
440
430
660
650
050
600
650
690
400
420
650
560
640
130
490
470
560
640
460
230
470
1348751-4
ECM 127556

Pos	Part No	SP	UN	Qty	Description	Page No
TBA 0250B (Cont'd) (See drawing on page: 5-30)						
560	312105-0370	-		10	SCREW M6S ISO 4017 M6X20 A480	
600	312105-0455	-		8	SCREW M6S ISO 4017 M8X30 A480	
630	312812-0316	-		1	HEXAGON NUT, NY-LOCK M6 A480	
640	315105-0153	-		44	WASHER BRB6,4X12RFR	
650	315105-0165	-		13	WASHER BRB8,4X16RFR	
700	484701-0000	-		5	SHUTTER	
810	342931-0122	-		1	ELBOW 90 COUPL.,EXT.THREAD 8/6-G1/4"	
820	90230-0027	-		1	NON-RETURN VALVE QJ 8355-1/4"	
	90230-0300	*C*		*1*	*STRAINER*	
	90230-0301	*C*		*1*	*DIAPHRAGM*	
830	534310-0001	-		1	NOZZLE	
860	90005-0094	-		1	GASKET C 19438-EPR	
TBA 0250S (See drawing on page: 5-30)						
040	2501223-0000	-		1	RAIL	
060	2504736-0000	A		1	SLIDER	
070	1498972-0000	-		1	GUIDE	
080	1498977-0000	-		1	GUIDE	
160	1498101-0000	A		10	CARRIER	
280	2514141-0000	-		1	INTERMEDIARY SHAFT	
290	2514139-0000	-		1	SUPPORT	
540	312105-0366	-		3	SCREW M6S M6X12 A280	
550	312105-0368	-		7	SCREW M6S M6X16 A280	
560	312105-0370	-		10	SCREW M6S ISO 4017 M6X20 A480	
600	312105-0455	-		8	SCREW M6S ISO 4017 M8X30 A480	
630	312812-0316	-		1	HEXAGON NUT, NY-LOCK M6 A480	
640	315105-0153	-		44	WASHER BRB6,4X12RFR	
650	315105-0165	-		13	WASHER BRB8,4X16RFR	
700	484701-0000	-		5	SHUTTER	
810	342931-0122	-		1	ELBOW 90 COUPL.,EXT.THREAD 8/6-G1/4"	
820	90230-0027	-		1	NON-RETURN VALVE QJ 8355-1/4"	
	90230-0300	*C*		*1*	*STRAINER*	
	90230-0301	*C*		*1*	*DIAPHRAGM*	
830	534310-0001	-		1	NOZZLE	
860	90005-0094	-		1	GASKET C 19438-EPR	
Common Parts						
010	1348744-0000	A		1	CAM	
020	1550605-0000	B		1	SPROCKET	
030	1260064-0000	-		1	DRUM	
050	2504726-0000	A		1	PLATE	
090	1348244-0000	-		1	BRACKET	
100	2506686-0000	B		1	SHAFT	
110	1260061-0000	-		1	HOUSING	
120	1348241-0000	B		1	HOSE CLAMP	
130	1347910-0000	B		2	SHAFT	
150	2528454-0000	A		1	SHAFT	
170	1260065-0000	-		20	BRACKET	
180	1260066-0000	-		1	WASHER	
190	1260068-0000	A		10	SHAFT	
200	1538306-0000	A		10	ROLLER	
210	1260070-0000	A		10	SHAFT	
230	1348243-0000	-		2	SPACER	
260	1548044-0000	-		1	SCREW	
270	1548186-0000	-		1	WASHER	
380	90091-0305	A		1	RADIAL SEAL 40X55X7 MM DUST LIP	
390	90056-0171	A		1	WORM GEAR BS71 F ENV RH	
400	90458-1888	A		1	GEARS, BEVEL Z10-CY-1.25-ILT-1-N	
410	90240-0332	A		20	FLANGE BUSHING, 16X18X12 MM	
420	312105-0453	-		3	SCREW M6S ISO 4017 M8X25 A480	
430	531503-0000	-		1	SLIDE RAIL	
440	312155-0370	-		1	SCREW EN 10642 MF6S M6X20 A480	
450	90214-0232	A		2	BALL BEARING, 20X47X14 MM	
460	315221-0175	A		2	RADIAL SEAL 35X47X7 MM	
470	90099-0131	-		2	NUT HEX. M16X2 SS	
480	315202-0213	A		2	O-RING 15,3X2,4 MM	
490	476975-0000	A		1	WHEEL	
500	311103-0272	-		10	PARALLELL PIN ISO2338 4X20 A1	
510	311103-0306	-		20	PARALLELL PIN ISO2338 5X12 A1	
520	311103-0310	-		1	PARALLELL PIN ISO2338 5X20 A1	
530	321156-0145	A		10	FLANGE BUSHING, 10X12X15 MM	
570	315705-0301	A		2	PARALLEL KEY W. ROUND ENDS 10X8X40 MM	
580	312105-0388	-		20	SCREW M6S ISO 4014 M6X90 A480	
590	90214-0236	A		1	BALL BEARING, 40X80X18 MM	
610	312105-0477	-		1	SCREW M6S ISO 4014 M8X130 A480	
620	312109-0374	-		4	SCREW M6S ISO 4017 M6X30 A480	
660	312109-0459	-		2	SCREW M6S ISO 4017 M8X40 A480	
670	90296-0068	B		1	GREASE UNIWAY LI62 CARTRID.400GR	
680	315705-0269	A		1	PARALLEL KEY W. ROUND ENDS 8X7X35 MM	
690	315705-0271	A		2	PARALLEL KEY W. ROUND ENDS 8X7X45 MM	

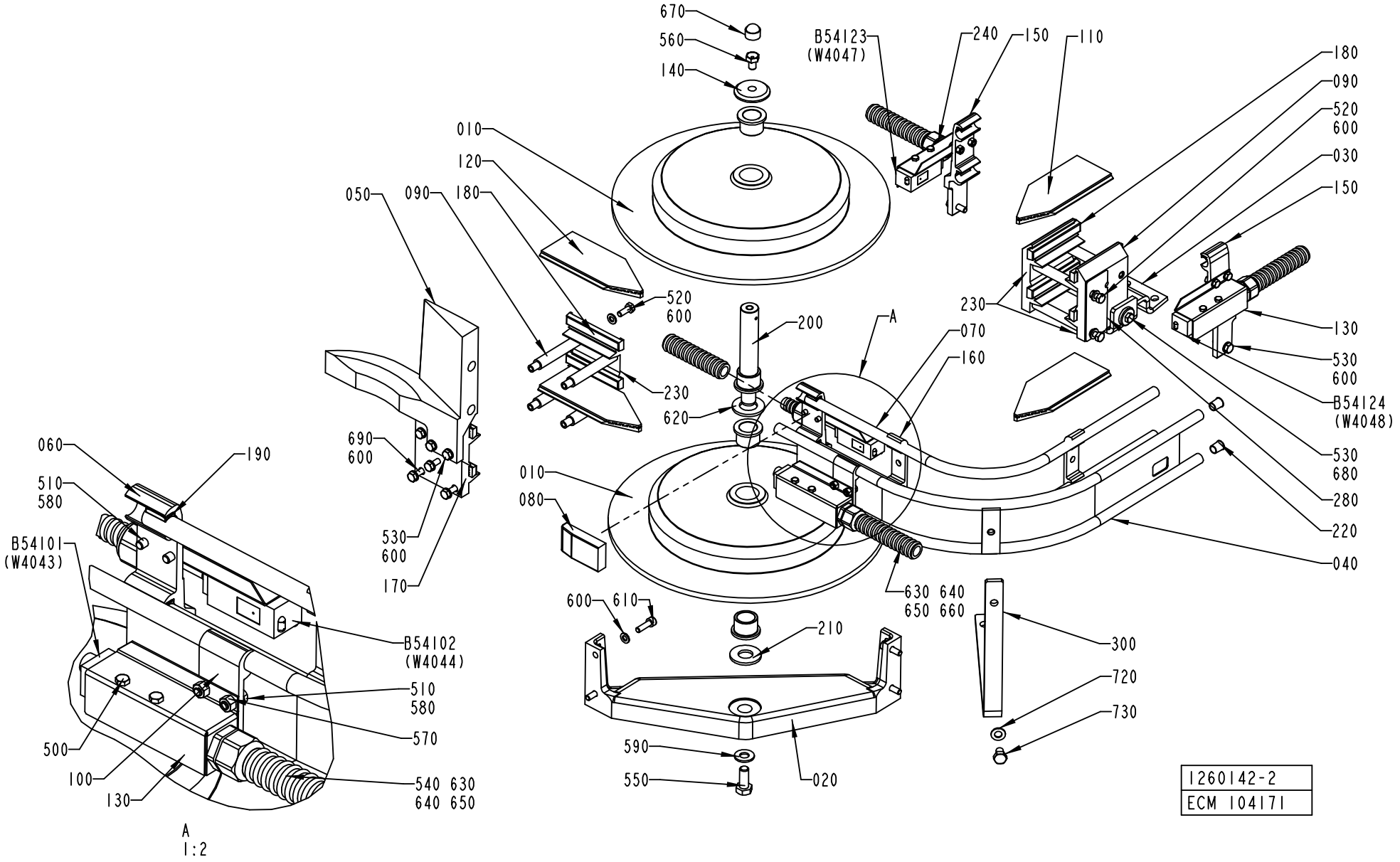
670
560
140
010
120
050
090
180
B54123
(W4047)
240
150
110
180
090
520
600
030
150
230
130
530
600
B54124
(W4048)
530
680
280
220
040
520
600
200
A
070
160
230
620
690
600
530
600
170
060
190
510
580
B54101
(W4043)
B54102
(W4044)
510
580
570
500
100
130
540 630
640 650
A
1:2
010
080
600
610
210
630 640
650 660
300
720
730
590
550
020
1260142-2
ECM 104171

ECM: 104176 - 20010926
Group number: 1260142-0200
Assembly Drawing: 1260142-2_1_AC

Pos	Part No	SP	UN	Qty	Description	Page No
TBA 0200B (See drawing on page: 5-34)						
030	1478634-0000	-		1	SUPPORT	
070	2546322-0000	-		2	ARCH	
080	1347090-0000	-		1	CHUTE	
160	1020635-0001	-		2	HOLDER	
TBA 0200S (See drawing on page: 5-34)						
030	1511651-0000	-		1	SUPPORT	
070	2514134-0000	-		1	GUIDE	
080	2514136-0000	-		1	CHUTE	
TBA 0250B (See drawing on page: 5-34)						
030	1347902-0000	-		1	SUPPORT	
070	2546322-0000	-		2	ARCH	
080	1347090-0000	-		1	CHUTE	
160	1020635-0001	-		2	HOLDER	
Common Parts						
010	561650-0102	-		2	CURVE WHEEL	
010 2	*497991-0000*	-		*1*	*CURVE WHEEL*	
020 2	*321111-0304*	-		*2*	*FLANGE BUSHING, 20X26X20 MM*	
020	476243-0000	-		1	BOTTOM PLATE	
040	2546189-0000	-		1	GUIDE	
050	2503573-0000	-		1	GUIDE	
060	1347905-0000	-		1	HOLDER	
090	1347900-0000	-		8	SPACER	
100	1020637-0000	-		1	HOLDER	
110	1086625-0000	-		2	SLIDE RAIL	
	499101-0000	-		*1*	*SLIDE RAIL*	
120	1086626-0000	-		2	SLIDE RAIL	
	499101-0000	-		*1*	*SLIDE RAIL*	
130	1347907-0000	-		3	HOLDER	
140	1260066-0000	-		1	WASHER	
150	2546203-0000	-		2	HOLDER	
170	1348750-0000	-		1	BRACKET	
180	466074-0002	-		8	SLIDER	
190	1020146-0000	-		6	LOCKING BLOCK REPL BY 1020290-101	
200	476978-0000	-		1	SHAFT	
210	476979-0000	-		1	WASHER	
220	484701-0000	-		6	SHUTTER	
230	457696-0001	-		3	JOINT PIECE	
240	2546227-0000	-		1	HOLDER	
280	1549865-0000	-		1	SPACER	
300	2532808-0000	-		1	HOLDER	
500	312105-0291	-		8	SCREW M6S ISO 4017 M4X12 A480	
510	312105-0327	-		8	SCREW M6S ISO 4017 M5X12 A480	
520	312105-0368	-		5	SCREW M6S M6X16 A280	
530	312105-0370	-		6	SCREW M6S ISO 4017 M6X20 A480	
540	90152-0059	-	MM	3000	SPIRAL CONDUIT, 18X12, UL 1211	
550	312105-0493	-		1	SCREW M6S ISO 4017 M10X25 A480	
560	526767-0000	-		1	SCREW	
570	312605-0314	-		6	HEXAGON NUT, M6M M5 A280	
580	315105-0146	-		8	BRICKA BRB5,3X10RFR	
590	315105-0173	-		1	WASHER BRB10,5X22RFR	
600	315105-0153	-		18	WASHER BRB6,4X12RFR	
610	312115-0370	-		4	SCREW ISO4762 M6X20 A4	
620	315105-0191	-		1	WASHER PLAIN, BRB, 20/36 H=3	
630	353243-0001	-		4	EXTENDED WITHOUT INSERT, PG9	
640	353249-0008	-		4	INSERT, SINGEL HOLE, EK 152/7	
650	90099-0104	-		2	NUT, PR 15,2 (PG9)	
660	90152-0059	-	MM	3000	SPIRAL CONDUIT, 18X12, UL 1211	
670	90261-0038	-		1	HOOD GPN 1000/893	
680	315125-0153	-		1	WASHER TBRSB 6,4X22X4 A4	
690	312105-0372	-		4	SCREW M6S ISO 4017 M6X25 A480	
720	315105-0165	-		1	WASHER BRB8,4X16RFR	
730	312105-0447	-		1	SCREW M6S ISO 4017 M8X12 A480	
B54101	90232-0103	A		1	PH.CELL E3S-CT61-L-5M	
B54102	90232-0104	A		1	PH.CELL E3S-CT61-D-5M	
B54123	90232-0104	A		1	PH.CELL E3S-CT61-D-5M	
B54124	90232-0103	A		1	PH.CELL E3S-CT61-L-5M	

Machine Type | Group Description | Used-In | Group Number | Page No

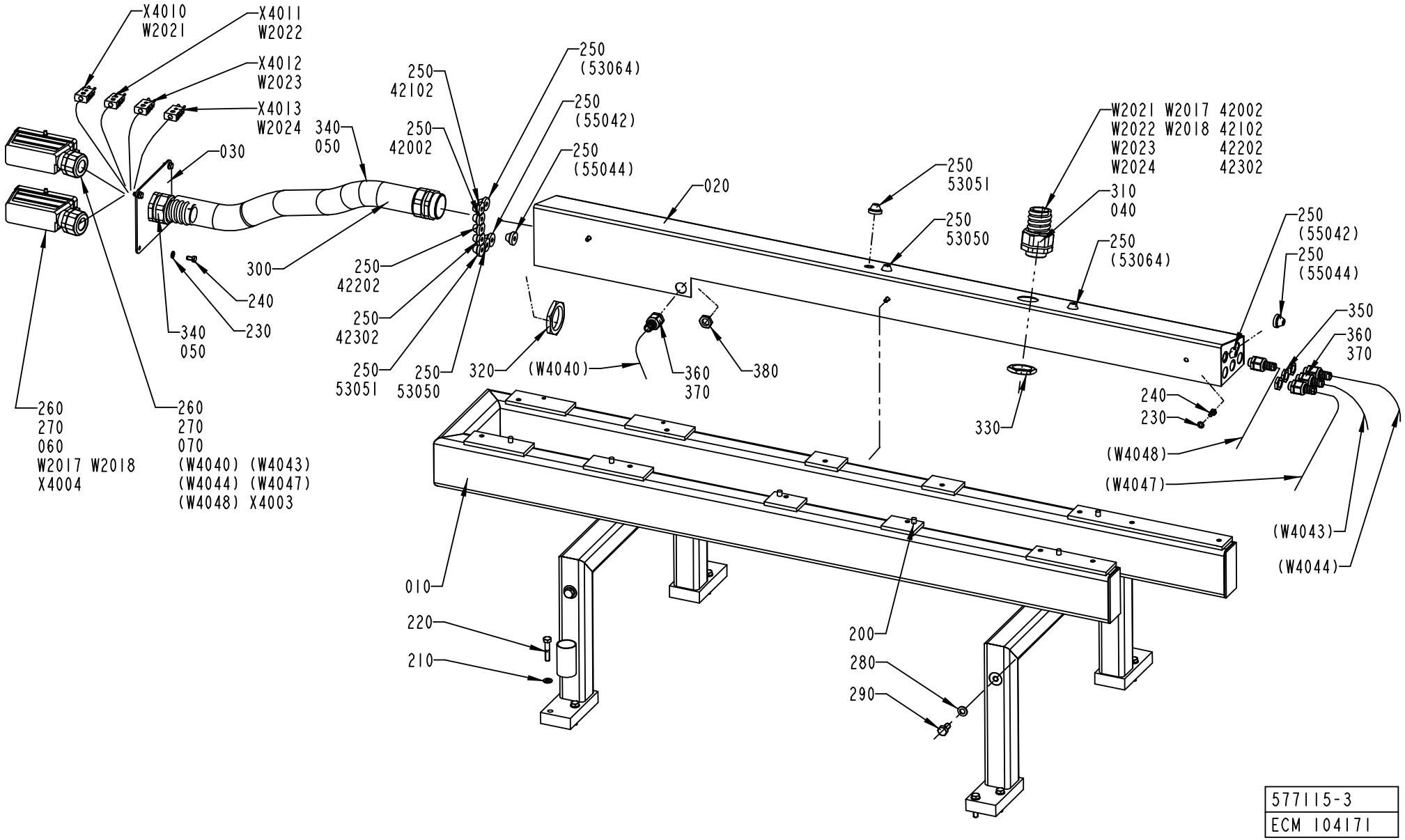

577115-3
ECM 104171

ECM: 121218 - 20021022
Group number: 577115-0300
Assembly Drawing: 577115-3_1_AB

Pos	Part No	SP	UN	Qty	Description	Page No
TBA 0200B						
010	1487048-0000	-		1	FRAME	
TBA 0200M, TBA 0250B						
010	1260052-0000	-		1	FRAME	
TBA 0250S						
010	1498550-0000	-		1	FRAME	
TBA 0200S						
010	1498953-0000	-		1	FRAME	
Common Parts						
020	1348752-0000	-		1	BOX	
030	1348510-0000	-		1	PLATE	
040	1498980-0000	-		1	INSERT	
050	2547143-0000	-		2	INSERT	
060	1499089-0000	-		1	INSERT	
070	2535745-0000	-		1	INSERT	
200	311103-0403	-		6	PARALLELL PIN, M6, 8X25 MM	
210	315105-0165	-		8	WASHER BRB8,4X16RFR	
220	312105-0459	-		8	SCREW M6S ISO 4014 M8X40 A480	
230	315105-0153	-		7	WASHER BRB6,4X12RFR	
240	312105-0366	-		7	SCREW M6S M6X12 A280	
250	90015-0020	-		14	LEAD-IN, TET5-7, E-1458016	
260	90110-0150	-		2	MALE INSERT 121110 0000	
270	353241-0003	-		2	EXTENDED WITHOUT INSERT, PG 21	
280	315105-0171	-		4	WASHER BRB10X18	
290	312105-0491	-		4	SCREW M6S ISO 4017 M10X20 A480	
300	90152-0060	-	MM	550	SPIRAL CONDUIT, 42X35, UL3529	
310	353243-0008	-		1	EXTENDED WITHOUT INSERT, PG29	
320	90099-0103	-		2	NUT, PR 47 (PG36)	
330	90099-0120	-		1	MUTTER PR 37 (PG29)	
340	353242-0004	-		2	NORMAL WITHOUT INSERT, PG36	
350	90099-0104	-		3	NUT, PR 15,2 (PG9)	
360	353243-0001	-		5	EXTENDED WITHOUT INSERT, PG9	
370	353249-0008	-		5	INSERT, SINGEL HOLE, EK 152/7	
42002	90166-0013	-	MM	3000	TUBE 8 MM PA BLUE	
42102	90166-0013	-	MM	3000	TUBE 8 MM PA BLUE	
42202	90166-0013	-	MM	3000	TUBE 8 MM PA BLUE	
42302	90166-0013	-	MM	3000	TUBE 8 MM PA BLUE	
53050	90166-0118	-	MM	2000	TUBE 8 MM PA BLACK	
53051	90166-0118	-	MM	2000	TUBE 8 MM PA BLACK	
W2017	351150-0419	-	MM	5000	CABLE OLFLEX 5X2,5 MM2 LIGHT/GREY	
W2018	351150-0419	-	MM	5000	CABLE OLFLEX 5X2,5 MM2 LIGHT/GREY	
W2021	90220-0034	-	MM	5000	THERMOCOUPLE CABLE K/ 2X0,5MM2	
W2022	90220-0034	-	MM	5000	THERMOCOUPLE CABLE K/ 2X0,5MM2	
W2023	90220-0034	-	MM	5000	THERMOCOUPLE CABLE K/ 2X0,5MM2	
W2024	90220-0034	-	MM	5000	THERMOCOUPLE CABLE K/ 2X0,5MM2	
X4003	90110-0228	-		1	CABLE HOOD 24-POL 71.350.2428.0	
X4004	90110-0228	-		1	CABLE HOOD 24-POL 71.350.2428.0	
X4010	90326-0022	-		1	PLUG, MALE YELLOW CR-AL	
X4011	90326-0022	-		1	PLUG, MALE YELLOW CR-AL	
X4012	90326-0022	-		1	PLUG, MALE YELLOW CR-AL	
X4013	90326-0022	-		1	PLUG, MALE YELLOW CR-AL	

Machine Type | Group Description | Used-In | Group Number | Page No

Tetra Pak

SPC
Spare Parts Catalogue

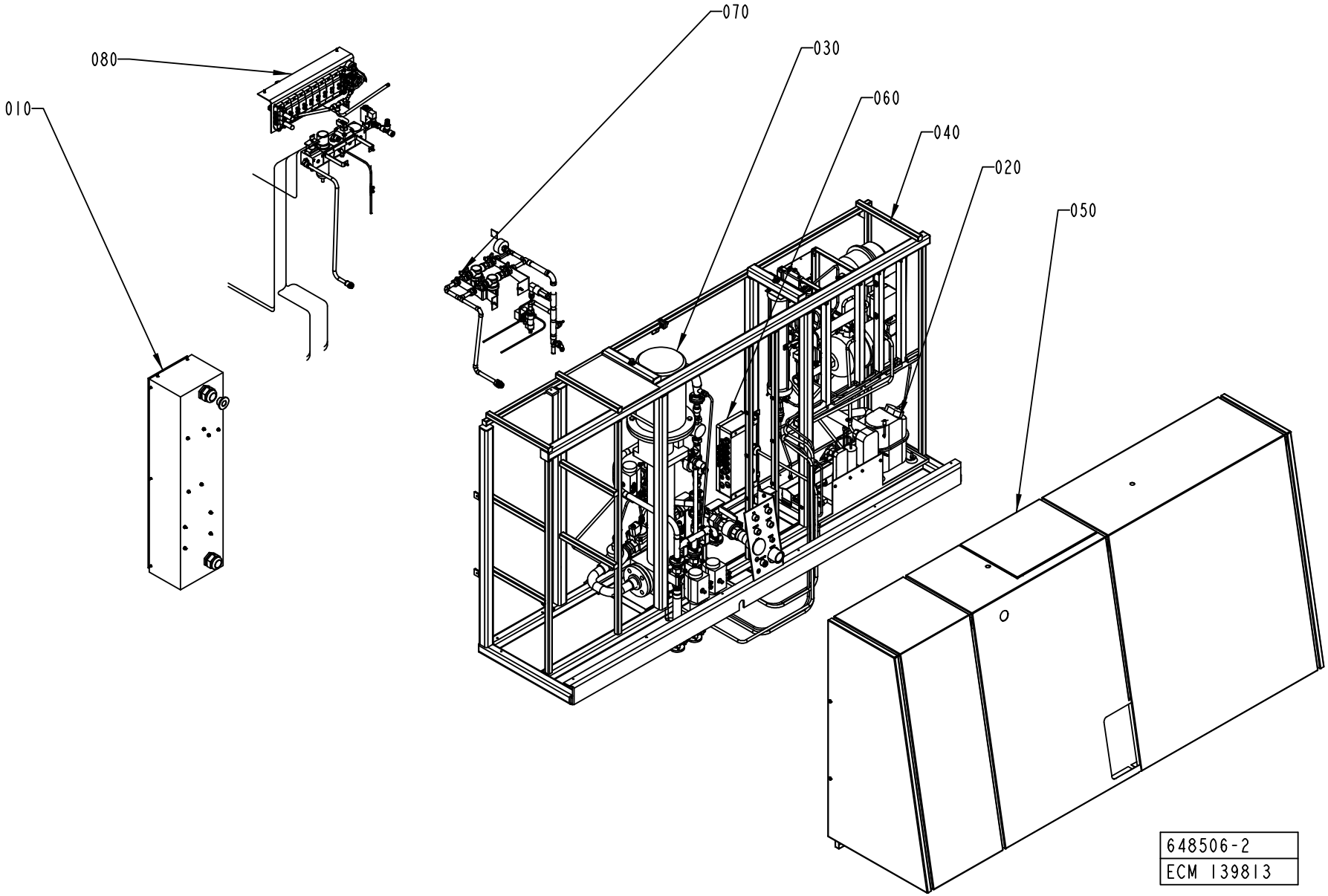
070
030
060
040
020
050
080
010
648506-2
ECM 139813

ECM: 139813 - 20031208
Group number: 648506-0400
Assembly Drawing: 648506-2_1_AD

Pos	Part No	SP	UN	Qty	Description	Page No
-						
010	1095610-0300	-		1	MAIN SWITCH	**6-5**
020	1095612-0300	-		1	COOLING WATER SYSTEM	**6-7**
030	1095627-0300	-		1	FOAM CLEANING UNIT	**6-15**
040	2613034-0100	-		1	MACHINE BODY	**6-31**
050	1095607-0200	-		1	COVERING PANEL	**6-33**
060	1095630-0200	-		1	CONNECTION BOX	**6-49**
070	1095608-0100	-		1	WATER PANEL	**6-51**
080	1095714-0300	-		1	SUPPLY SYSTEM	**6-53**

Pos	Part No	SP	UN	Qty	Description	Page No

MAIN SWITCH

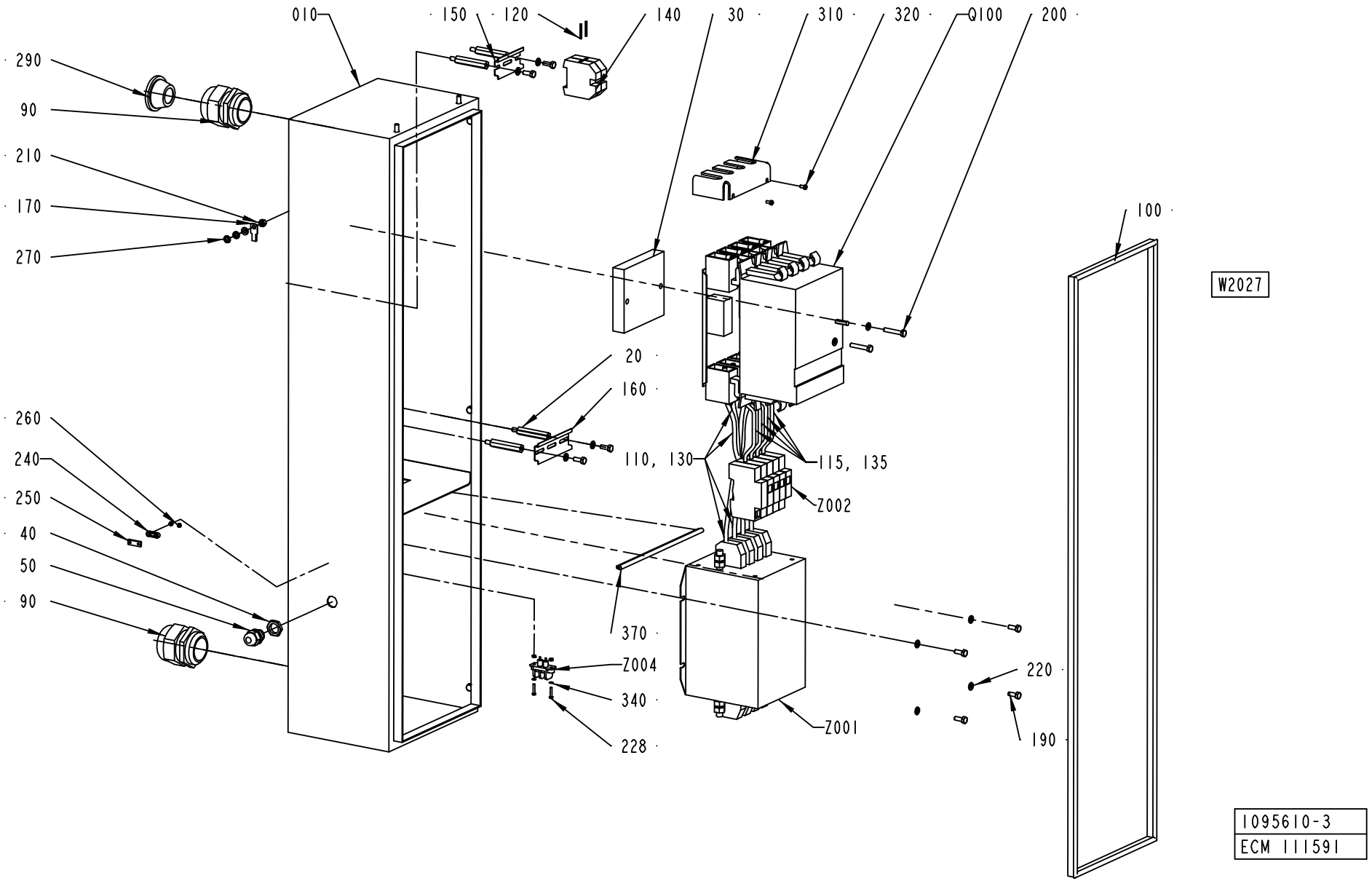
010
150
120
140
30
310
320
Q100
200
290
90
210
170
270
100
W2027
20
160
260
240
250
40
50
90
110, 130
115, 135
Z002
370
Z004
340
228
Z001
220
190
1095610-3
ECM 111591

ECM: 117187 - 20030403
Group number: 1095610-0300
Assembly Drawing: 1095610-3_1_AC

Pos	Part No	SP	UN	Qty	Description	Page No
-						
010	2524515-0000	-		1	CABINET	
020	1037184-0000	-		4	SPACER SCREW	
030	1037531-0000	-		1	SPACER PLATE	
040	90099-0117	-		1	NUT, PR 18,6 (PG11)	
050	352103-0106	-		1	CABLE GLAND, ST 11, PR18,6/PG11	
060	90099-0085	-		1	NUT	
070	90099-0096	-		1	NUT	
090	352103-0123	-		2	CABLE GLAND, ST 42, PR54,0/PG42	
100	90143-0057	-	MM	2600	STRIP EMKA 1011-05 21X11MM	
110	351161-0110	-	MM	2400	CABLE AWM 1X25 MM2 LIGHTBLUE	
115	351161-0111	-	MM	240	CABLE AWM 1X35 MM2 LIGHTBLUE	
120	351162-0109	-	MM	850	CABLE AWM 1X16 MM2 YELLOW-GREEN	
130	351164-0110	-	MM	6000	CABLE AWM 1X25 MM2 BLACK	
135	351164-0111	-	MM	600	CABLE AWM 1X35 MM2 BLACK	
140	353024-0209	-		2	EARTH TERMINAL, 1010.5	
150	353042-0005	-	MM	75	RAIL TS 35/7.5	
160	353042-0005	-	MM	100	RAIL TS 35/7.5	
170	353104-0168	-		1	CABLE SHOE YAV 16 M6*	
180	353105-0200	-		9	PIN CABLE SKO A4630SR	
190	312105-0368	-		13	SCREW M6S ISO 4017 M6X16 A480	
200	312105-0376	-		2	SCREW M6S ISO 4014 M6X35 A480	
210	312605-0316	-		1	HEXAGON NUT, M6M M6 A280	
220	315105-0153	-		16	WASHER BRB6,4X12RFR	
230	90143-0060	-	MM	600	EDGE STRIP 9,5X6,3MM BLACK PVC	
240	90220-0303	-		1	CLAMP FOR SCR.CABLE, 10MM, 55-016-22	
250	90220-0305	-		1	CLAMP FOR SCR.CABLE, 16MM,	
260	312605-0310	-		2	HEXAGON NUT, M6M M3 A280	
270	90062-0015	-		2	LOCK WASHER SERRAT.EXT.GEAR,6,4/11 H=0,7	
280	90166-0232	-	MM	500	SHRINKABLE HOSE	
290	90015-0025	-		1	LEAD-IN, TET26-35, E-1458041	
300	1129402-0000	-		4	SPACER SCREW	
310	1255866-0000	-		1	PROTECTION	
320	312125-0287	-		2	SCREW ISO 1207 M4X8 A4	
340	315105-0124	-		4	WASHER BRB3,2X6RFR	
370	90143-0060	-	MM	250	EDGE STRIP 9,5X6,3MM BLACK PVC	
Q100	90111-0173	A		1	MAIN SW.NZM64-100/ZM64-100-760+AS4-NZM64	
W2027	90220-0095	-	MM	3000	SCR. CABLE 3X0,75MM2	
Z001	90024-0060	A		1	POWER LINE FILTER, 80 A 250/440 VAC	
Z002	90082-0013	A		1	OVERVOLTAGE PROTECTOR	
	90082-0301	*A*		*3*	*OVERVOLTOLTAGE PROTECTOR*	
Z004	90024-0036	A		1	FILTERED TERMINAL BLOCK	

Pos	Part No	SP	UN	Qty	Description	Page No

Machine Type | Group Description | Used-In | Group Number | Page No

This page is intentionally left blank.

ECM: 139554 - 20030711
Group number: 1095612-0300
Assembly Drawing:

Pos	Part No	SP	UN	Qty	Description	Page No
-						
020	1095706-0300	-		1	COOLING WATER PUMP	**6-9**
030	2514077-0100	-		1	EXPANSION VESSEL	**6-11**
040	1095709-0200	-		1	CONNECTION BOX	**6-13**
050	1129141-0000	-		1	MACHINE BODY	
060	312115-0368	-		4	SCREW ISO4762 M6X16 A4	
070	90166-0121	-	MM	1000	HOSE	
080	342991-0101	-		1	HOSE CLIP,WORM DRIVE TYPE (13)-16	
090	352113-0203	-		9	ANCHOR PLATES FOR STRIPS, TYPE TM3S8-M0	
100	312125-0289	-		9	SCREW ISO 1207 M4X10 A4	

Pos	Part No	SP	UN	Qty	Description	Page No

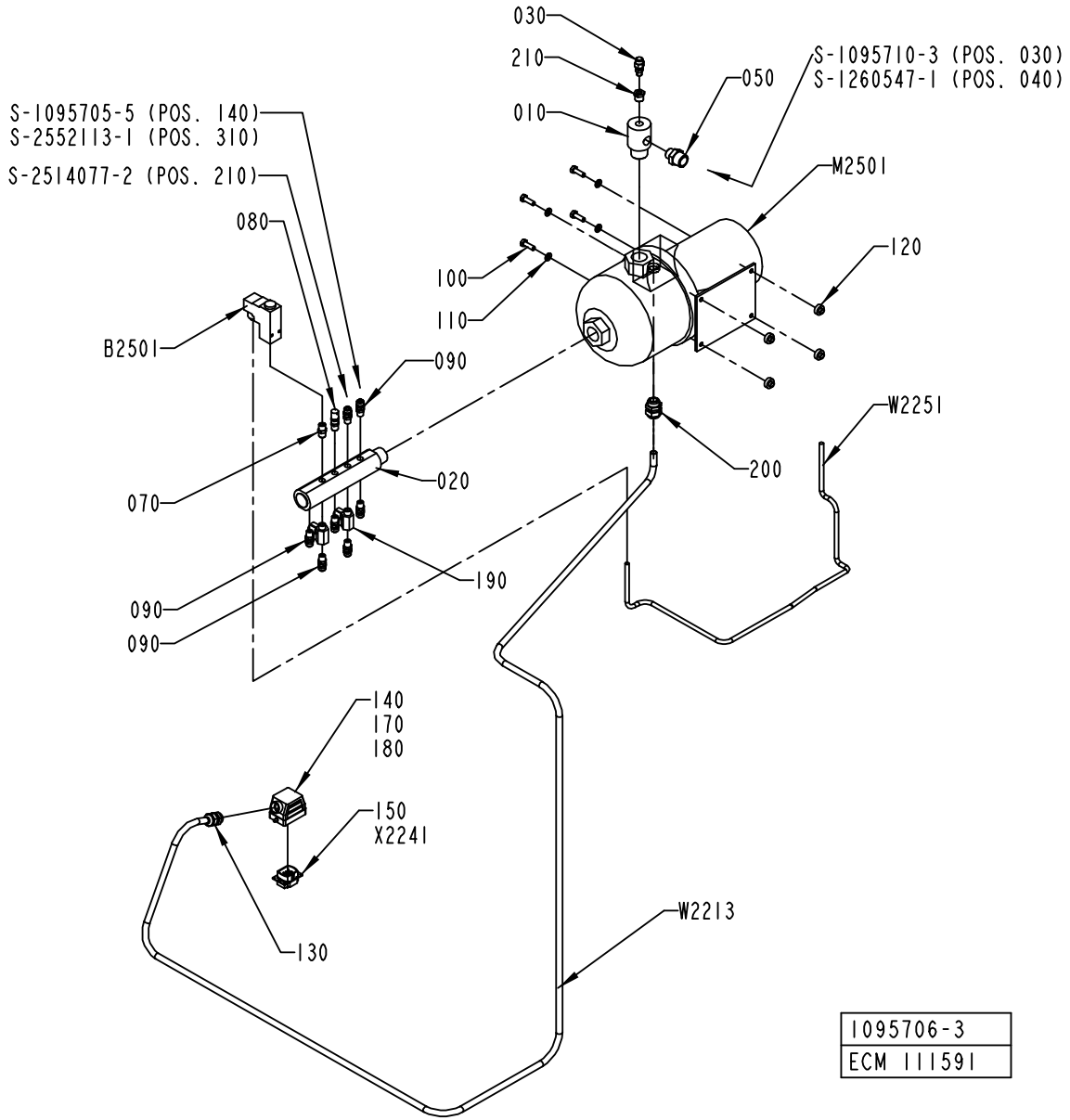
030
210
010
050
S-1095710-3 (POS. 030)
S-1260547-1 (POS. 040)
S-1095705-5 (POS. 140)
S-2552113-1 (POS. 310)
S-2514077-2 (POS. 210)
080
M2501
120
100
110
B2501
090
W2251
200
020
070
190
090
090
140
170
180
150
X2241
130
W2213
1095706-3
ECM 111591

ECM: 148827 - 20031208
Group number: 1095706-0300
Assembly Drawing: 1095706-3_1_AD

Pos	Part No	SP	UN	Qty	Description	Page No
TBA/22						
090	342922-0122	-		7	STRAIG.COUPL.,ADJUST.,EXT.THRE.8/6-R1/4"	
190	90187-0045	-		2	BALL VALVE G1/4 CR PL	
220	90330-0026	-		1	PLUG, EXT. G-THREAD, G1/4	
W 2213	351150-0418	-	MM	3000	CABLE OLFLEX 4X2,5 MM2 LIGHT/GREY	
Common Parts						
010	2532806-0000	B		1	ATTACHMENT PIPE	
020	1129066-0000	-		1	RETURN PIPE	
030	90459-1736	-		1	PURGE VALVE, 2RM-PG4L-SS	
050	90330-0080	-		1	NIPPLES, EXT. THREAD. R3/4-R1/2	
070	90330-0043	-		1	NIPPLES, EXT. THREAD. R-207R1/4	
080	90230-0041	A		1	OVERPRESSURE VALVE SS-4 CPA2-RTDG-3	
100	312105-0453	-		4	SCREW M6S ISO 4017 M8X25 A480	
110	315105-0165	-		4	WASHER BRB8,4X16RFR	
120	90015-0037	B		4	RUBBER BUSHING	
130	352103-0108	-		1	CABLE GLAND, ST 13,5 , PR20,4/PG13,5	
140	90110-0226	A		1	CABLE HOOD 6-POL 70.350.0628.0	
150	90110-0159	A		1	MALE INSERT 70.310.0640.0	
170	359005-0050	-		1	MARKING LABEL KIT X, 04.841.4550.0	
180	359005-0010	-		1	MARKING LABEL KIT 0 - 9, 04.841.2150.0	
200	352103-0110	-		1	CABLE GLAND, STR 16, PR22,5/PG16	
210	342701-0202	-		1	BUSHING,INT./EXT.G-THREAD G3/8"-G1/8"	
B 2501	90274-0056	A		1	PRESSURE SWITCH, 100 - 1200 KPA	
M 2501	90321-0116	A		1	PUMP GRUNDFOSS CHI 2-60	
	90321-0618	-		*1*	*SEAL KIT FOR REPAIR OF PUMP*	
W 2251	351150-0431	-	MM	1000	CABLE OLFLEX 2X0,75 MM2 LIGHT/GREY	

Pos	Part No	SP	UN	Qty	Description	Page No

Machine Type | Group Description | Used-In | Group Number | Page No

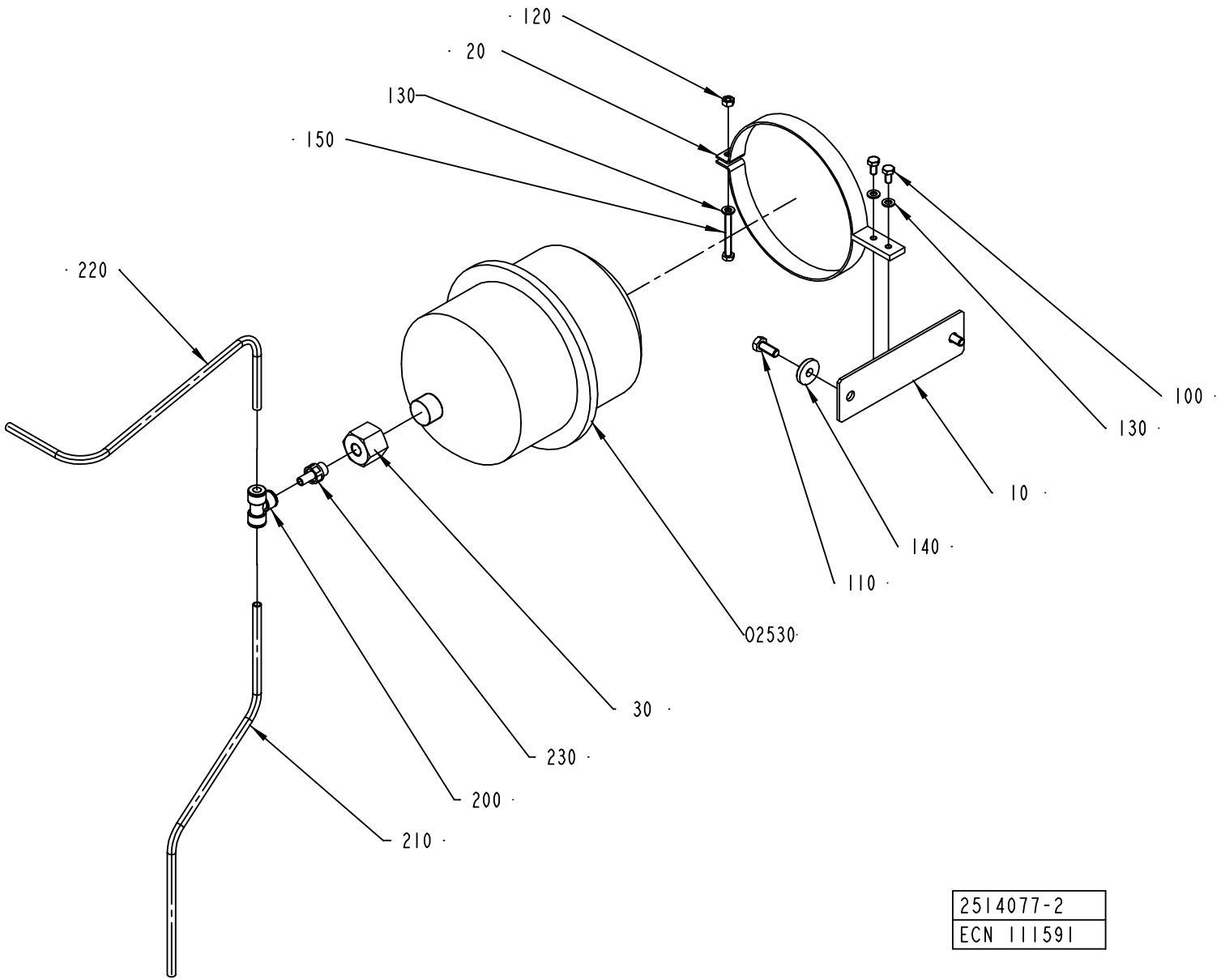
120
20
130
150
220
100
130
10
140
110
02530
30
230
200
210
2514077-2
ECN 111591

ECM: 139557 - 20030711
Group number: 2514077-0100
Assembly Drawing: 2514077-2_1_AA

Pos	Part No	SP	UN	Qty	Description	Page No
TBA/22						
200	342940-0122	-		1	T-COUPLING,EXT.THREAD 8/6-R1/4"	
Common Parts						
010	2514087-0000	-		1	PLATE	
020	1484081-0000	-		1	BRACKET	
030	2514083-0000	-		1	REDUCTION NIPPLE	
100	312105-0366	-		2	SCREW M6S ISO 4017 M6X12 A480	
110	312105-0451	-		2	SCREW M6S ISO 4017 M8X20 A480	
120	312605-0316	-		1	HEXAGON NUT, M6M M6 A280	
130	315105-0153	-		3	WASHER BRB6,4X12RFR	
140	315125-0165	-		2	WASHER TBRSB 8,4X26X5 A4	
150	312109-0380	-		1	SCREW M6S ISO 4017 M6X50 A480	
210	90166-0118	-	MM	450	TUBE 8 MM PA BLACK	
220	90166-0118	-	MM	500	TUBE 8 MM PA BLACK	
O2530	90304-0020	A		1	LIQUID CONTAINER	

Pos	Part No	SP	UN	Qty	Description	Page No

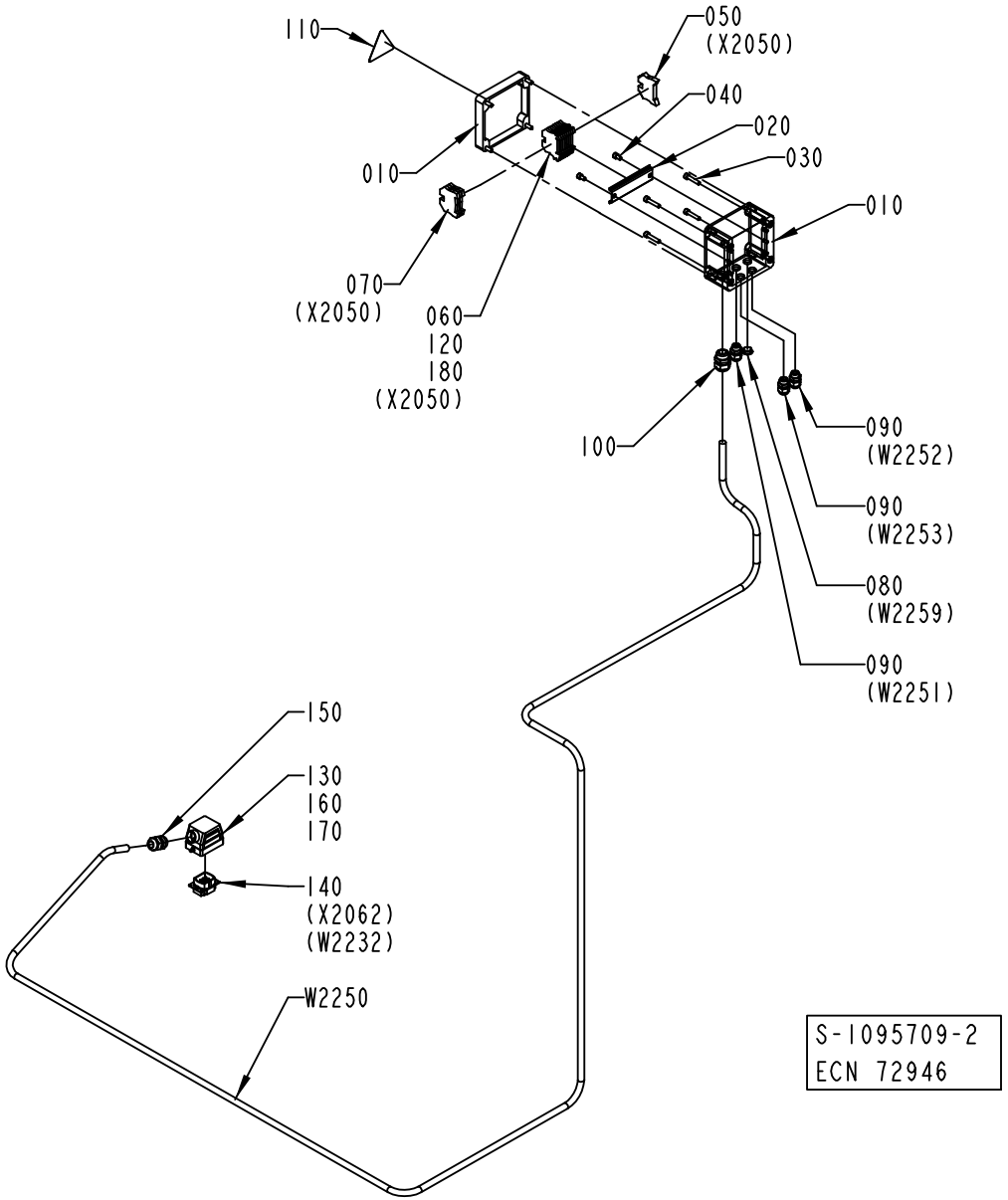
110
050
(X2050)
040
020
030
010
010
070
(X2050)
060
120
180
(X2050)
100
090
(W2252)
090
(W2253)
080
(W2259)
090
(W2251)
150
130
160
170
140
(X2062)
(W2232)
W2250
S-1095709-2
ECN 72946

ECM: 139556 - 20030711
Group number: 1095709-0200
Assembly Drawing: 1095709-2_1_AB

Pos	Part No	SP	UN	Qty	Description	Page No
TBA/22						
W2250	351150-0406	-	MM	3500	CABLE OLFLEX 7X0,75 MM2 LIGHT/GREY	
Common Parts						
010	1041943-0000	-		1	CONNECTION BOX	
020	1129210-0000	-		1	MOUNTING RAIL	
030	312115-0374	-		4	SCREW ISO4762 M6X30 A4	
040	312115-0364	-		2	SCREW ISO4762 M6X10 A4	
050	353031-0203	-		1	END SUPPORT, WEW 35/2	
060	353021-0216	-		8	FEED THROUGH TERMINAL, 10200.8	
070	353024-0205	-		3	EARTH TERMINAL, 1010.1	
080	90002-0013	-		1	BLANK-OFF PLUG, PR 15,2 SKINDICHT-BLK9	
090	352103-0101	-		3	CABLE GLAND, ST 9, PR15,2/PG9	
100	352103-0110	-		1	CABLE GLAND, STR 16, PR22,5/PG16	
110	90194-0016	-		1	WARNING SIGN, RISK OF ELECTRIC SHOCK	
120	359011-0809	-		1	MARKING PLATES 5-FW 101-150	
130	90110-0226	A		1	CABLE HOOD 6-POL 70.350.0628.0	
140	90110-0159	A		1	MALE INSERT 70.310.0640.0	
150	352103-0108	-		1	CABLE GLAND, ST 13,5 , PR20,4/PG13,5	
160	359005-0050	-		1	MARKING LABEL KIT X, 04.841.4550.0	
170	359005-0010	-		1	MARKING LABEL KIT 0 - 9, 04.841.2150.0	
180	353034-0030	-		1	BRIDGE CONNECTOR WQV 2,5/10, 10544.6	

Pos	Part No	SP	UN	Qty	Description	Page No

FOAM CLEANING UNIT

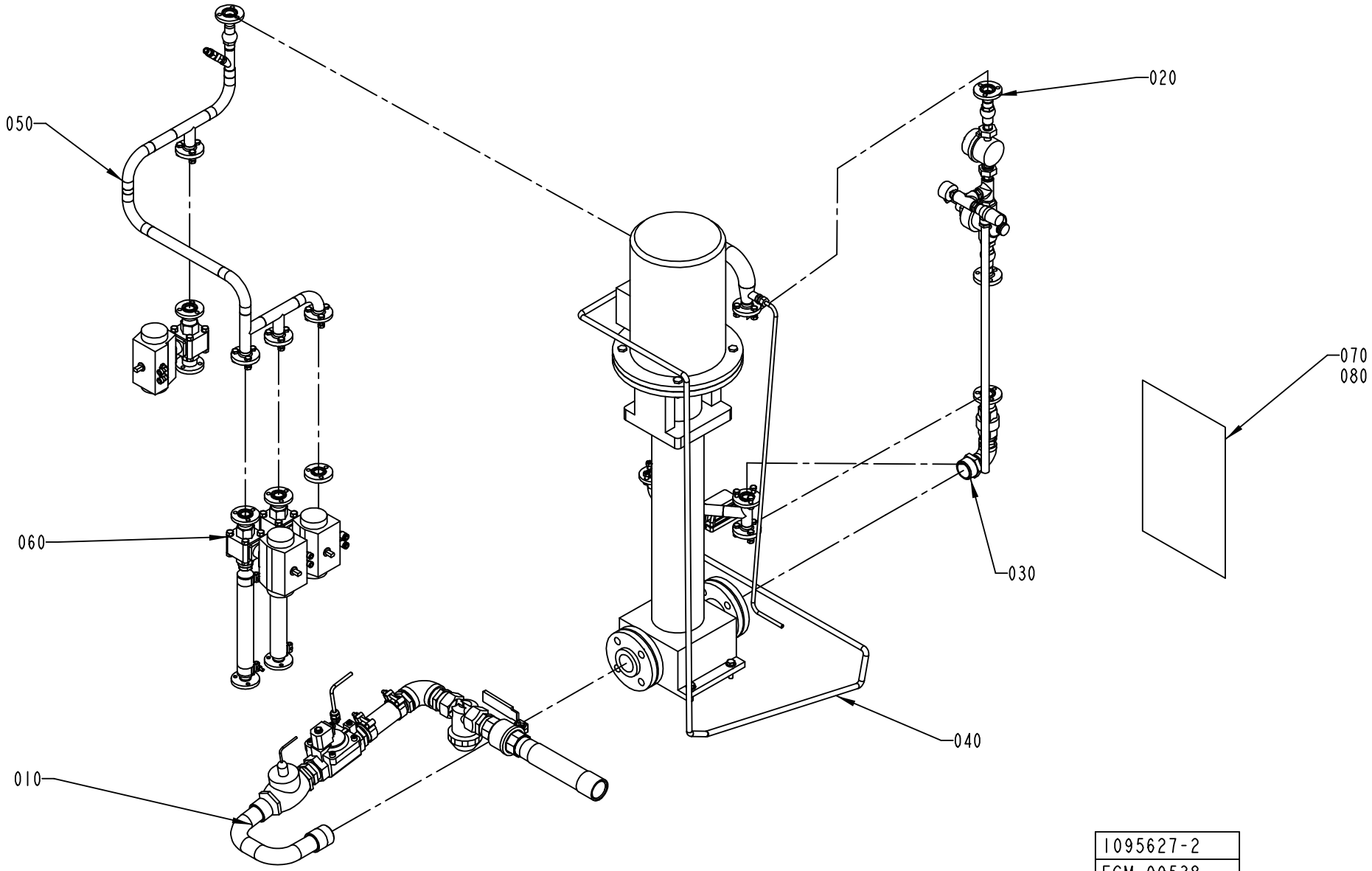

ECM: 139558 - 20030711
Group number: 1095627-0300
Assembly Drawing: 1095627-2_1_AB

Pos	Part No	SP	UN	Qty	Description	Page No
TBA/22 50HZ						
080	1484893-0000	-		1	EXTERNAL CLEANING DIAGRAM	
TBA/22 60HZ						
080	1484893-0000	-		1	EXTERNAL CLEANING DIAGRAM	
Common Parts						
010	1095672-0100	-		1	PIPE	**6-17**
020	1095673-0100	-		1	SIDE	**6-19**
030	1095675-0100	-		1	PIPE	**6-21**
040	1095676-0100	-		1	PUMP	**6-23, 6-25**
050	1095677-0100	-		1	BRANCHING PIPE	**6-27**
060	1095678-0300	-		1	BALL VALVE	**6-29**

Pos	Part No	SP	UN	Qty	Description	Page No

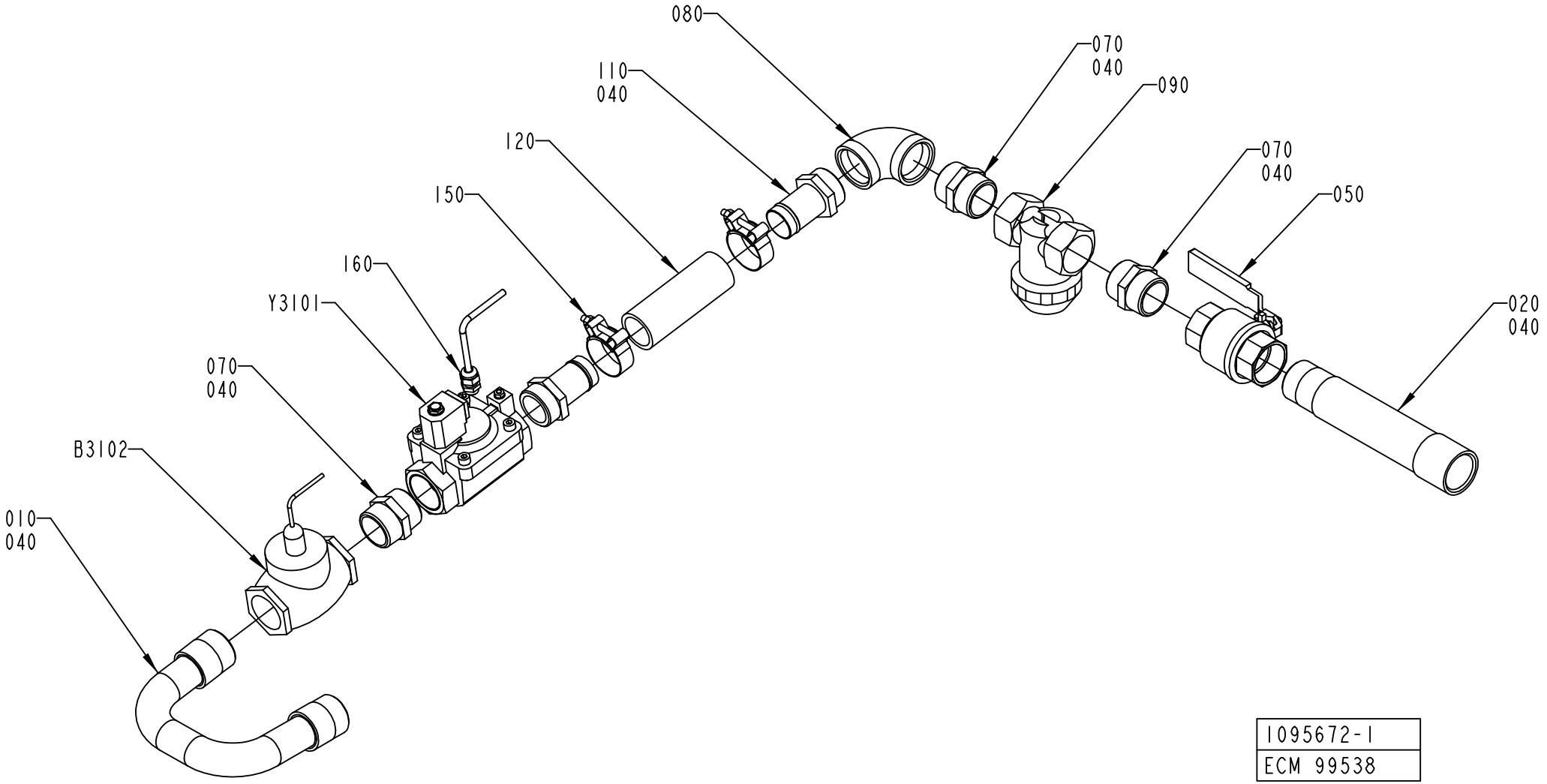
080
070
040
090
110
040
120
070
040
150
050
160
Y3101
020
040
070
040
B3102
010
040
1095672-1
ECM 99538

ECM: 102579 - 20020812
Group number: 1095672-0100
Assembly Drawing: 1095672-1_1_AD

Pos	Part No	SP	UN	Qty	Description	Page No
-						
010	1041925-0000	-		1	PIPE	
020	1041926-0000	-		1	PIPE	
040	90144-0007	-	MM	1	TAPE	
050	90187-0147	B		1	BALL VALVE G11/2	
070	90330-0056	-		3	NIPPLES, EXT. THREAD. R-207 KR11/2	
080	90330-0057	-		1	ELBOW, 90 INT. THREAD, R-222R11/2	
090	90415-0032	A		1	FILTER / 3-02-00-1 1/2"	
	90415-0328	*C*		*1*	*FILTER INSERT*	
110	90055-0166	-		2	HOSE NIPPLE, EXT.THR. R11/2X38 MM	
120	90166-0236	-	MM	150	HOSE, 38/51 REINFORCED RUBBER	
150	90458-2850	-		2	HOSE CLIP , 51 MM	
160	352103-0101	-		1	CABLE GLAND, ST 9, PR15,2/PG9	
B3102	90274-0082	A		1	FLOW SWITCH, 2 - 3 L/MIN	
	90274-0322	*C*		*1*	*SPARE PART KIT*	
W2222	351150-0403	-	M	2	CABLE OLFLEX 3X0,75 MM2 LIGHT/GREY	
Y3101	90042-0254	A		1	SOLENOID VALVE, R1 1/2	
	90042-0557	*-*		*1*	*COIL V24DC-N3*	
	90458-2575	*-*		*1*	*DIAPHRAGM, R450466/B FOR 90042-0254*	

Pos	Part No	SP	UN	Qty	Description	Page No

Machine Type | Group Description | Used-In | Group Number | Page No

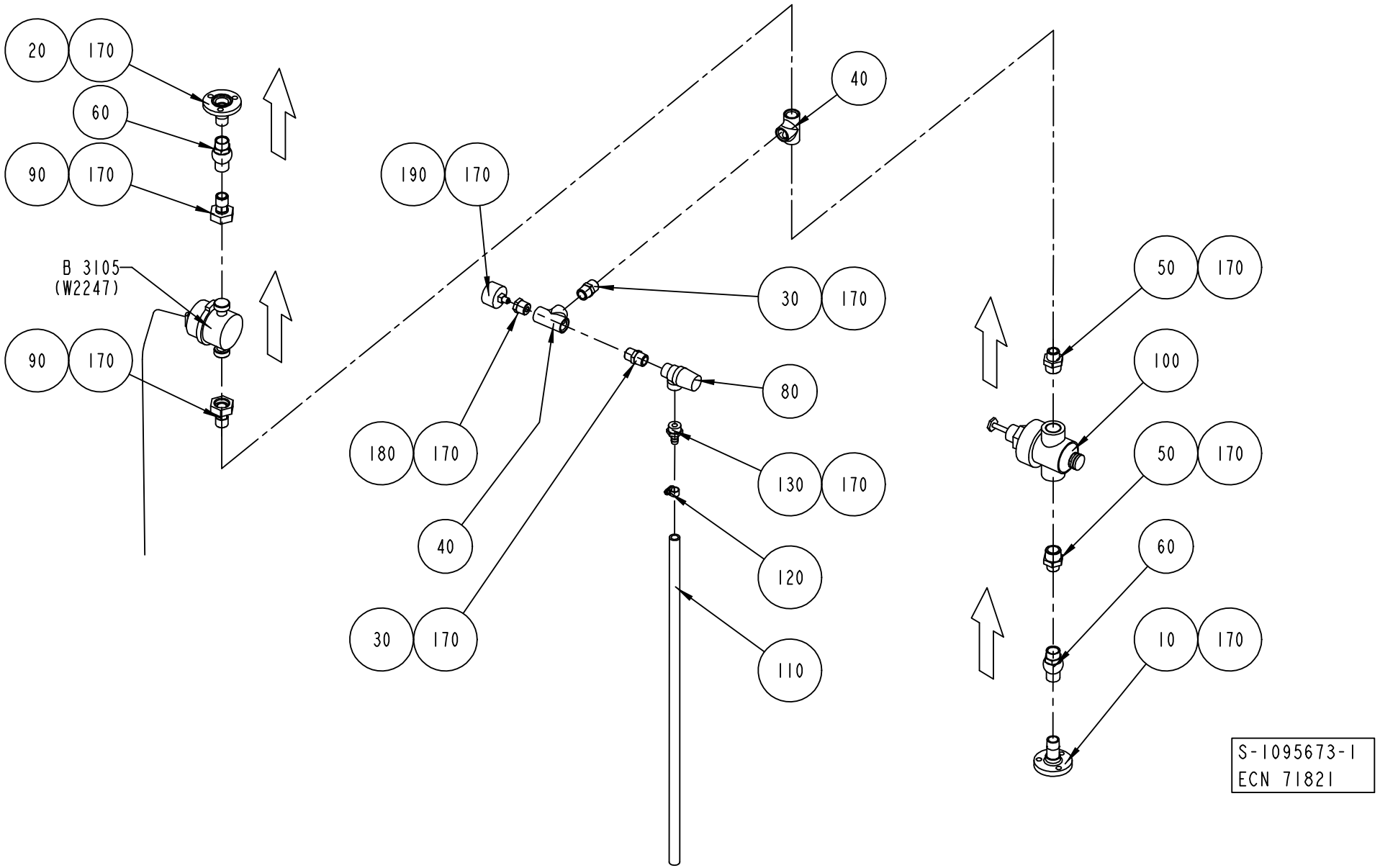
20
170
60
90
170
B 3105
(W2247)
90
170
190
170
40
30
170
80
180
170
130
170
40
120
30
170
110
50
170
100
50
170
60
10
170
S-1095673-1
ECN 71821

ECM: 89430 - 20010203
Group number: 1095673-0100
Assembly Drawing: 1095673-1_1_AD

Pos	Part No	SP	UN	Qty	Description	Page No
-						
010	1036826-0000	-		1	PIPE	
020	1036827-0000	-		1	PIPE	
030	90330-0021	-		2	NIPPLES, EXT. THREAD. R-207R1/2	
040	90330-0049	-		2	T-PIPE, INT. THREAD, R-221R1/2	
050	90330-0080	-		2	NIPPLES, EXT. THREAD. R3/4-R1/2	
060	90230-0042	-		2	NON-RETURN VALVE 1/2"	
080	90187-0133	-		1	SAFETY VALVE, 10 BARS, R1/2, R1/2	
090	90030-0465	-		2	STRAIGHT CONNECTION, MAD DN 15	
	90005-0156	*C*		*1*	*WASHER PLAIN ROUND 16/24, H=1,5*	
100	90113-0098	A		1	PRESSURE REGULATOR	
110	90166-0121	-	MM	700	HOSE	
120	342991-0100	-		1	HOSE CLIP,WORM DRIVE TYPE 10-13	
130	342901-0105	-		1	HOSE NIPPLE, EXT.THR. R1/2-12 MM	
170	90144-0007	-	MM	1	TAPE	
180	90330-0036	-		1	BUSHING, INT/EXT. THR. RP1/8-RP1/2	
190	90043-0043	B		1	PRESSURE GAUGE WIEGAND 0-10 BAR 1/8"	
B3105	90243-0245	A		1	MEASURING INSTRUMENT	

Pos	Part No	SP	UN	Qty	Description	Page No

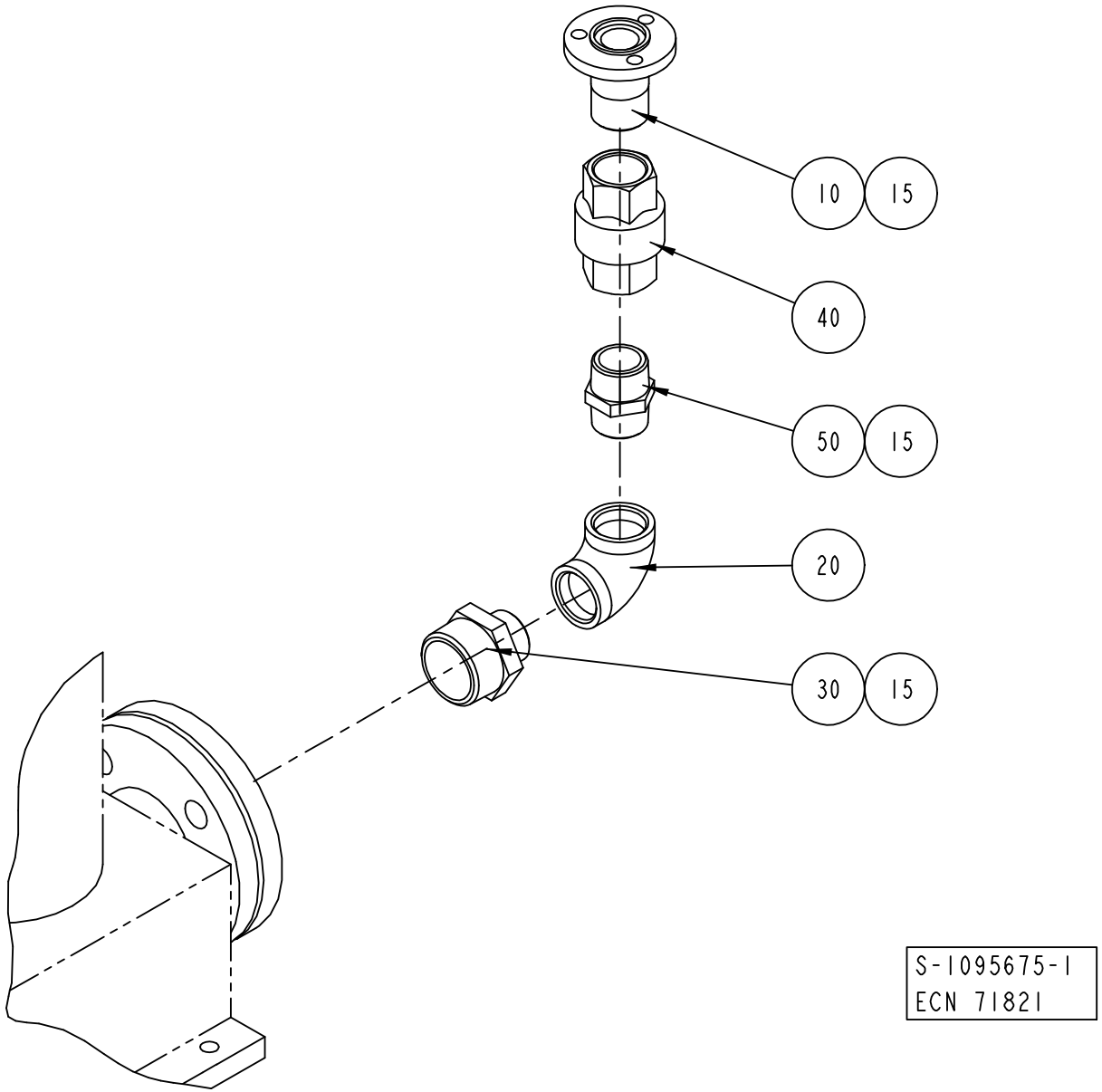
10
15
40
50
15
20
30
15
S-1095675-1
ECN 71821

ECM: 89431 - 20010203
Group number: 1095675-0100
Assembly Drawing: 1095675-1_1_AB

Pos	Part No	SP	UN	Qty	Description	Page No
-						
010	1036794-0000	-		1	PIPE	
015	90144-0007	-	MM	1	TAPE	
020	90330-0014	-		1	ELBOW, 90 INT. THREAD, R-222R1	
030	90330-0045	-		1	NIPPLES, EXT. THREAD. R-209 KR11/2- KR1	
040	90230-0044	A		1	NON-RETURN VALVE 1"	
	90230-0308	*C*		*1*	*GASKET KIT*	
050	342203-0120	-		1	NIPPLES, EXT. THREAD, HEXAGON,ÿNO. 209	

Pos	Part No	SP	UN	Qty	Description	Page No

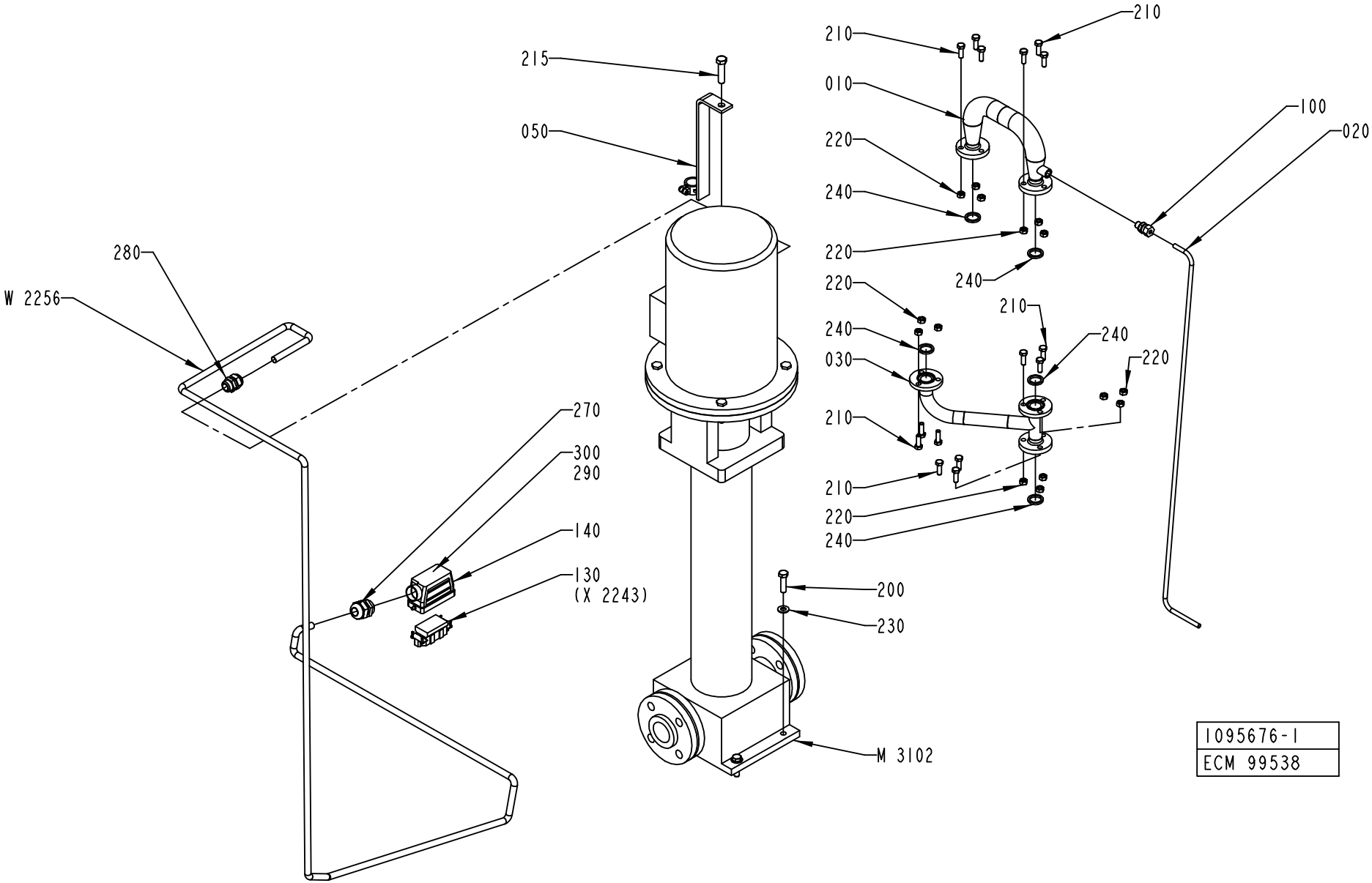
210
210
010
220
240
220
240
100
020
215
050
280
W 2256
220
240
210
240
030
220
210
210
220
240
270
300
290
140
130
(X 2243)
200
230
M 3102
1095676-1
ECM 99538

ECM: 139559 - 20030711
Group number: 1095676-0100
Assembly Drawing: 1095676-1_1_AC

This list covers pages from 6-22 to 6-25

Pos	Part No	SP	UN	Qty	Description	Page No
TBA/22 50HZ (See drawing on page: 6-22)						
050	1140670-0000	-		1	BRACKET	
M3102	90321-0117	A		1	PUMP LOWARA SV8-14 F75T	
	90321-0593	*-*		*1*	*SEAL*	
W2256	351150-0166	-	MM	3300	CABLE OLFLEX 4X4 MM2 LIGHT/GREY	
TBA/22 60HZ (See drawing on page: 6-24)						
050	1499786-0000	-		1	BRACKET	
M3102	90321-0120	A		1	PUMP SV8-09 F756T, 380V60HZ	
	90321-0593	*-*		*1*	*SEAL*	
W2256	351150-0166	-	MM	3300	CABLE OLFLEX 4X4 MM2 LIGHT/GREY	
Common Parts						
010	1036828-0000	B		1	TANK	
030	1041946-0000	-		1	PIPE	
100	90030-0185	-		1	CONN. STR. GA-8-G1/4	
130	90110-0156	A		1	MALE INSERT 70.210.0653.0	
140	90110-0227	A		1	CABLE HOOD 6-16-POL 71.350.1628.0	
200	312105-0499	-		4	SCREW M6S ISO 4014 M10X40 A480	
210	312105-0453	-		15	SCREW M6S ISO 4017 M8X25 A480	
215	312105-0542	-		1	SCREW M6S ISO 4014 M12X50 A480	
220	312605-0318	-		15	HEXAGON NUT, M6M M8 A280	
230	315105-0173	-		4	WASHER BRB10,5X22RFR	
240	315229-0103	A		5	GASKETS, 23,1X30,1X3,7 MM 1" FDA	
270	352103-0115	-		1	CABLE GLAND, STR 21, PR28,3/PG21	
280	352103-0111	-		1	CABLE GLAND, ST 16, PR22,5/PG16	
290	359005-0010	-		2	MARKING LABEL KIT 0 - 9, 04.841.2150.0	
300	359005-0050	-		1	MARKING LABEL KIT X, 04.841.4550.0	

Pos	Part No	SP	UN	Qty	Description	Page No

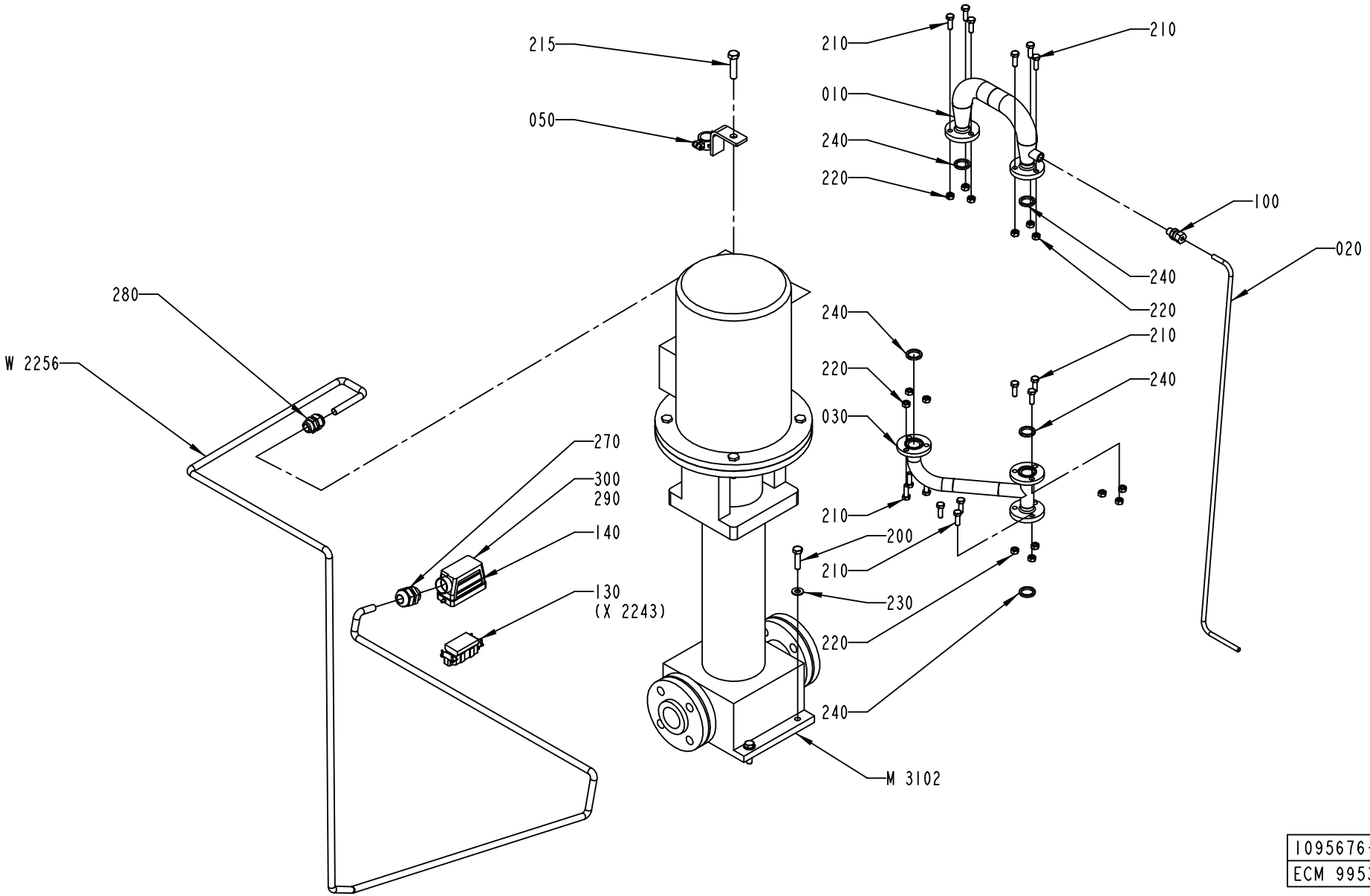

1095676-2
ECM 99538

ECM: 139559 - 20030711
Group number: 1095676-0100
Assembly Drawing: 1095676-2_1_AA

This list covers pages from 6-22 to 6-25

Pos	Part No	SP	UN	Qty	Description	Page No
TBA/22 50HZ (See drawing on page: 6-22)						
050	1140670-0000	-		1	BRACKET	
M3102	90321-0117	A		1	PUMP LOWARA SV8-14 F75T	
	90321-0593	*-*		*1*	*SEAL*	
W2256	351150-0166	-	MM	3300	CABLE OLFLEX 4X4 MM2 LIGHT/GREY	
TBA/22 60HZ (See drawing on page: 6-24)						
050	1499786-0000	-		1	BRACKET	
M3102	90321-0120	A		1	PUMP SV8-09 F756T, 380V60HZ	
	90321-0593	*-*		*1*	*SEAL*	
W2256	351150-0166	-	MM	3300	CABLE OLFLEX 4X4 MM2 LIGHT/GREY	
Common Parts						
010	1036828-0000	B		1	TANK	
030	1041946-0000	-		1	PIPE	
100	90030-0185	-		1	CONN. STR. GA-8-G1/4	
130	90110-0156	A		1	MALE INSERT 70.210.0653.0	
140	90110-0227	A		1	CABLE HOOD 6-16-POL 71.350.1628.0	
200	312105-0499	-		4	SCREW M6S ISO 4014 M10X40 A480	
210	312105-0453	-		15	SCREW M6S ISO 4017 M8X25 A480	
215	312105-0542	-		1	SCREW M6S ISO 4014 M12X50 A480	
220	312605-0318	-		15	HEXAGON NUT, M6M M8 A280	
230	315105-0173	-		4	WASHER BRB10,5X22RFR	
240	315229-0103	A		5	GASKETS, 23,1X30,1X3,7 MM 1" FDA	
270	352103-0115	-		1	CABLE GLAND, STR 21, PR28,3/PG21	
280	352103-0111	-		1	CABLE GLAND, ST 16, PR22,5/PG16	
290	359005-0010	-		2	MARKING LABEL KIT 0 - 9, 04.841.2150.0	
300	359005-0050	-		1	MARKING LABEL KIT X, 04.841.4550.0	

Pos	Part No	SP	UN	Qty	Description	Page No

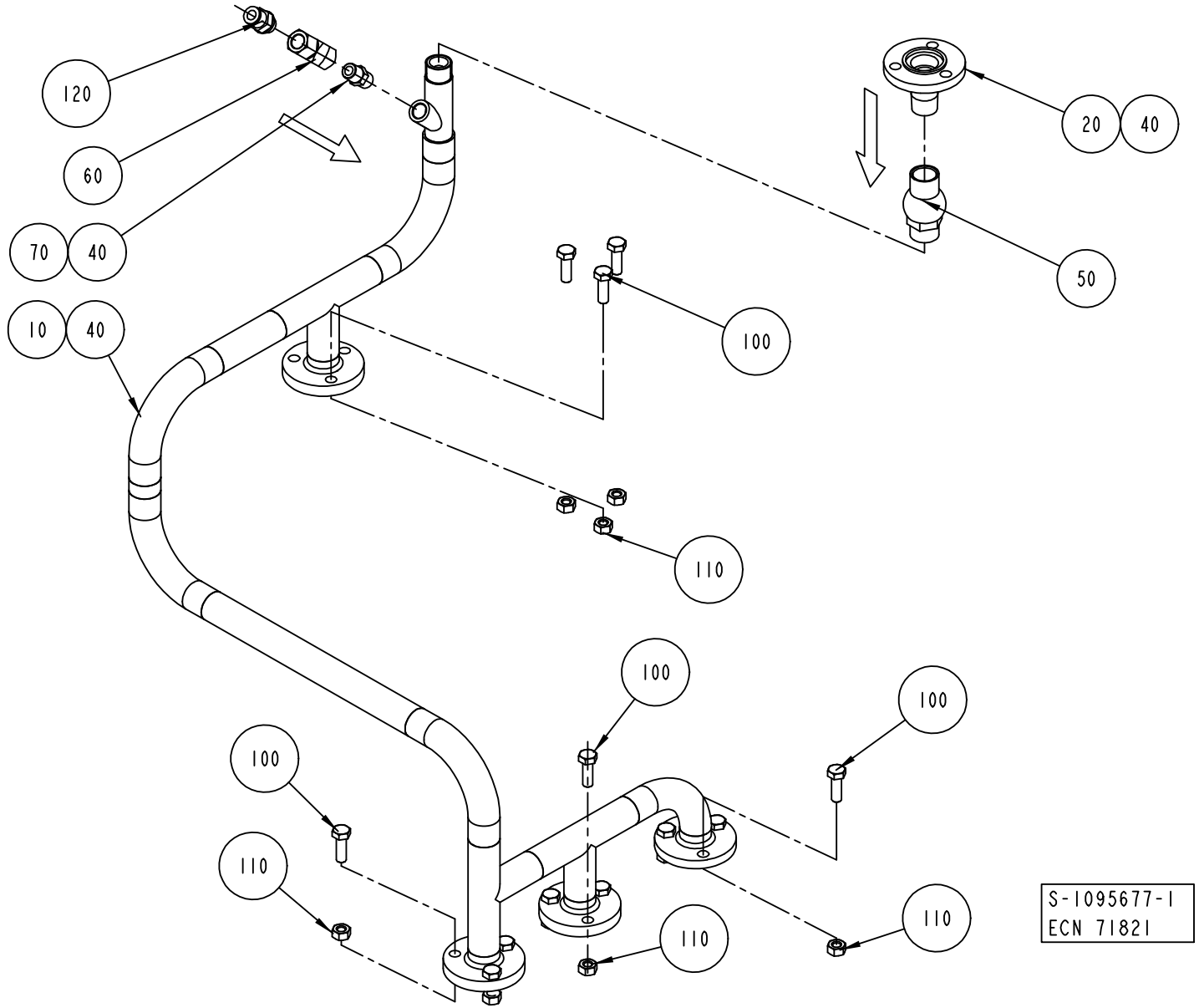
120
60
70
40
10
40
20
40
50
100
110
100
100
100
110
110
110
S-1095677-1
ECN 71821

ECM: 89433 - 20010203
Group number: 1095677-0100
Assembly Drawing: 1095677-1_1_AB

Pos	Part No	SP	UN	Qty	Description	Page No
-						
010	1041934-0000	-		1	PIPE	
020	1036827-0000	-		1	PIPE	
040	90144-0007	-	MM	1	TAPE	
050	90230-0042	A		1	NON-RETURN VALVE 1/2"	
060	90235-0151	A		1	NON-RETURN VALVE	
070	90330-0043	-		1	NIPPLES, EXT. THREAD. R-207R1/4	
100	312115-0453	-		12	SCREW ISO4762 M8X25 A4	
110	312605-0318	-		12	HEXAGON NUT, M6M M8 A280	
120	342722-0205	-		1	STRAIGHT COUPLING D=8-G1/4"	

Pos	Part No	SP	UN	Qty	Description	Page No

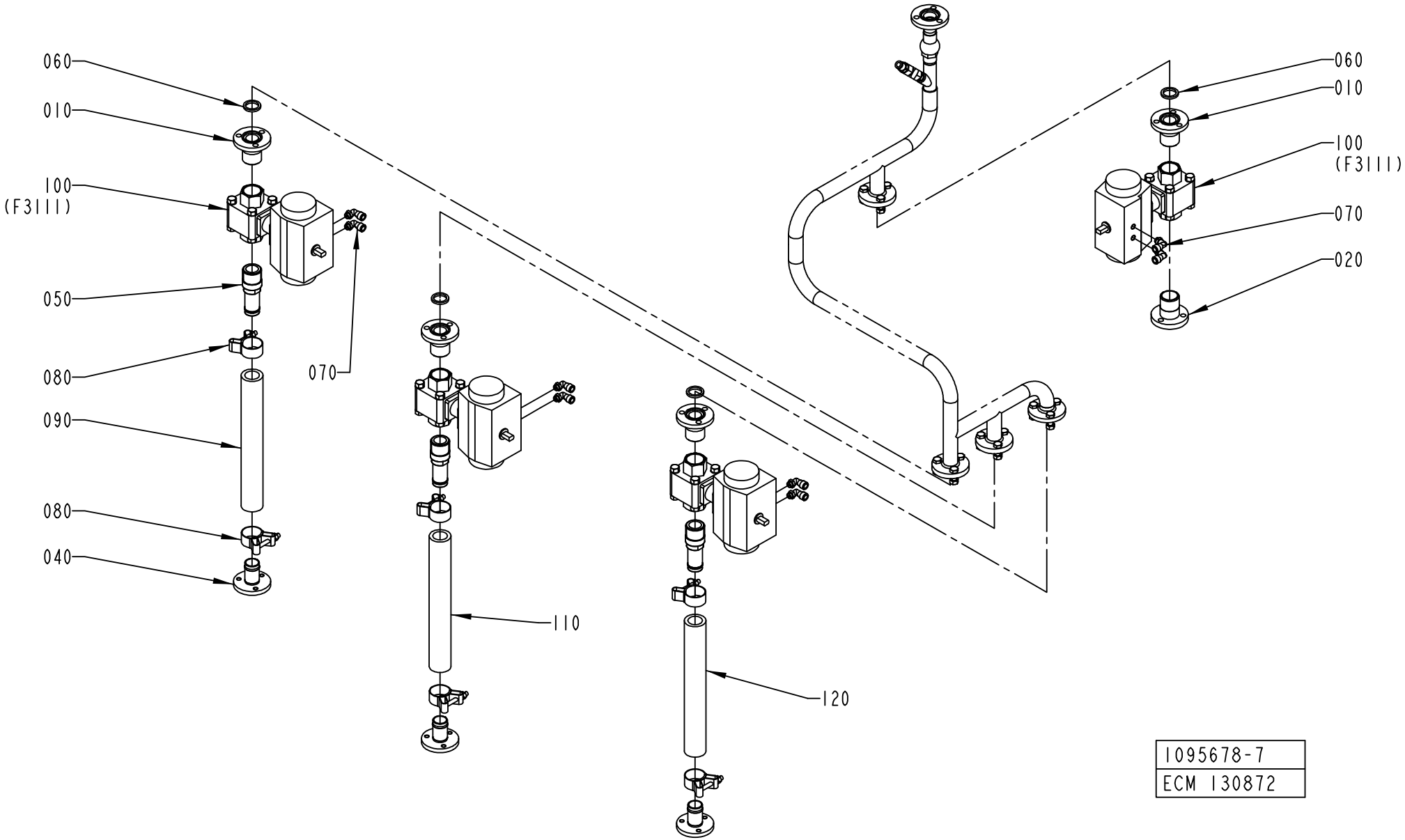
060
010
100
(F3111)
050
080
090
080
040
070
110
120
060
010
100
(F3111)
070
020
1095678-7
ECM 130872

ECM: 148670 - 20031208
Group number: 1095678-0300
Assembly Drawing: 1095678-7_1_AB

Pos	Part No	SP	UN	Qty	Description	Page No
TBA/22						
010	2522148-0000	-		4	PIPE	
020	2522184-0000	-		2	PIPE	
040	1195466-0000	-		3	PIPE	
050	1487023-0000	-		3	PIPE	
070	90458-2964	-		8	ELBOW PIPE JOINT, EXT.THREAD, D=8MM-G1/8	
080	90459-2366	-		6	HOSE CLIP, (32)-35	
100	90187-0148	-		4	BALL VALVE G1	
	90187-0319	*-*		*1*	*GASKET UNIT*	
120	90166-0233	-	MM	300	HOSE	
Common Parts						
060	315229-0103	A		4	GASKETS, 23,1X30,1X3,7 MM 1" FDA	
090	90166-0233	-	MM	300	HOSE	
110	90166-0233	-	MM	300	HOSE	

Pos	Part No	SP	UN	Qty	Description	Page No

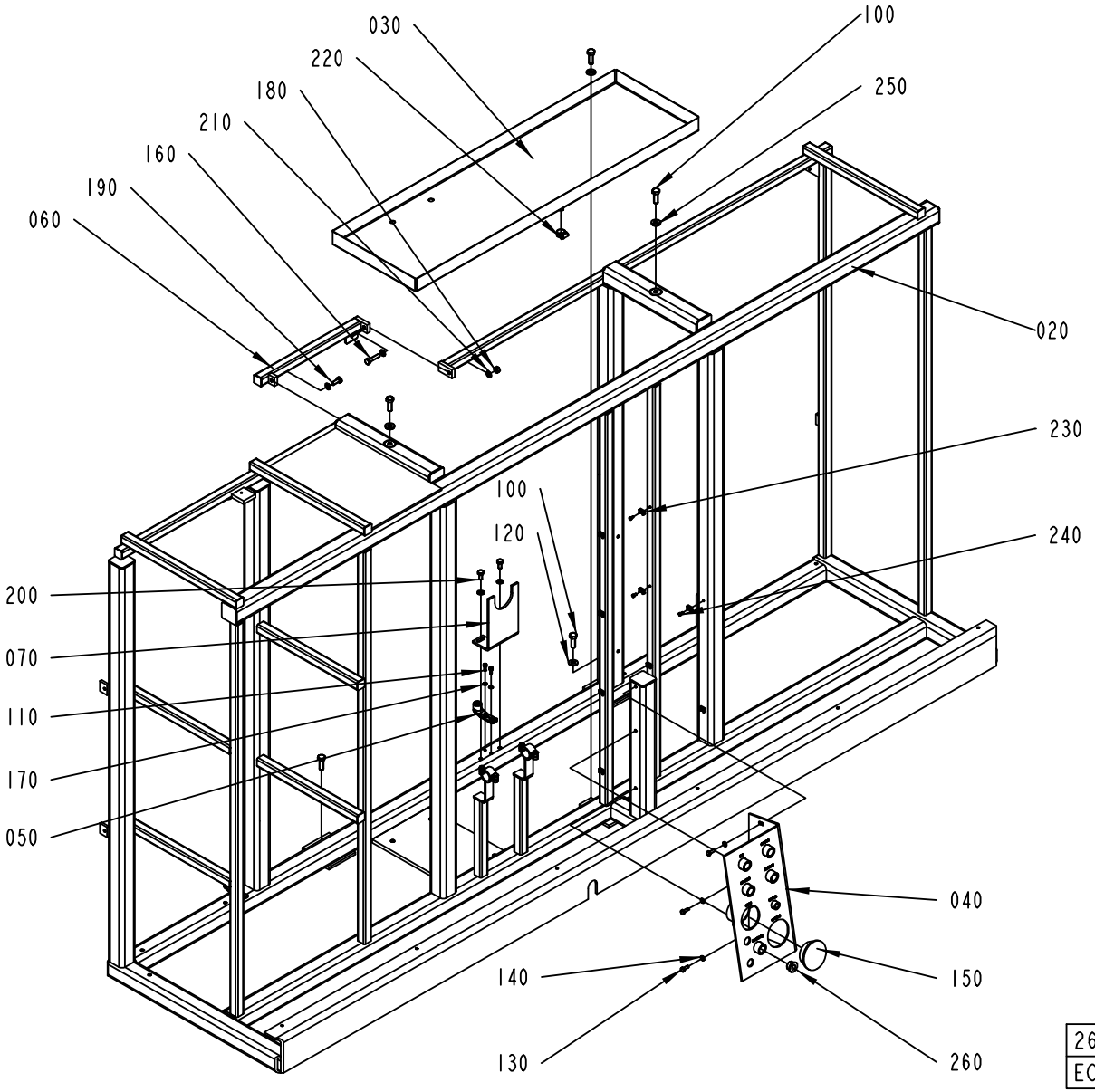

2613034-1
ECM 139813

ECM: 139818 - 20030923
Group number: 2613034-0100
Assembly Drawing: 2613034-1_1_AB

Pos	Part No	SP	UN	Qty	Description	Page No
-						
020	2613033-0000	-		1	MACHINE BODY	
030	1041963-0000	-		1	WASTE BOX	
040	1129387-0000	-		1	CONNECTION TABLE	
050	1538868-0000	-		3	BRACKET	
060	1255293-0000	-		1	CROSS BAR	
070	2524363-0000	-		1	HANGER	
100	312105-0495	-		5	SCREW M6S ISO 4017 M10X30 A480	
110	312115-0327	-		6	SCREW ISO4762 M5X12 A4	
120	315105-0173	-		3	WASHER BRB10,5X22RFR	
130	312105-0368	-		3	SCREW M6S ISO 4017 M6X16 A480	
140	315105-0153	-		3	WASHER BRB6,4X12RFR	
150	90261-0069	-		1	PLUG, BLIND, PLASTIC, NO. 055-0615	
160	312109-0457	-		1	SCREW M6S ISO 4017 M8X35 A480	
170	315105-0146	-		6	WASHER BRB5,3X10RFR	
180	312605-0318	-		1	HEXAGON NUT, M6M M8 A280	
190	312105-0451	-		1	SCREW M6S ISO 4017 M8X20 A480	
200	312105-0449	-		2	SCREW M6S ISO 4017 M8X16 A480	
210	315105-0165	-		5	WASHER BRB8,4X16RFR	
220	342991-0102	-		1	HOSE CLIP,WORM DRIVE TYPE (16)-19	
230	352113-0205	-		15	ANCHOR PLATES FOR STRIPS, TYPE TM2S8-C10	
240	312125-0287	-		15	SCREW ISO 1207 M4X8 A4	
250	315115-0173	-		2	WASHER PLAIN, TBRB 10,5/22 H=4	
260	342713-0213	-		1	PLUG, EXT THREAD HEX SOCKET 8638-00-120	

Pos	Part No	SP	UN	Qty	Description	Page No

Machine Type | Group Description | Used-In | Group Number | Page No

COVERING PANEL

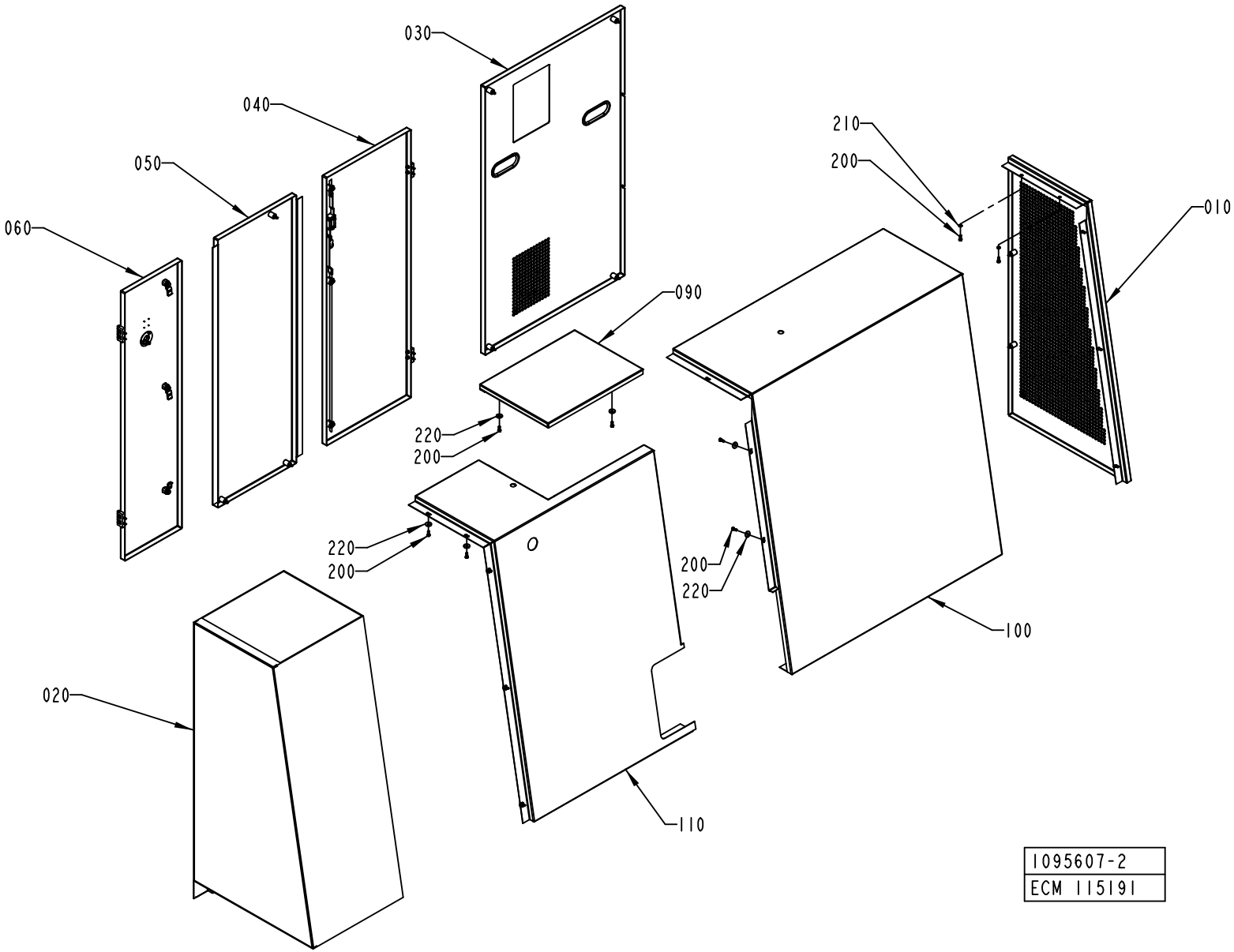

ECM: 115191 - 20030403
Group number: 1095607-0200
Assembly Drawing: 1095607-2_1_AC

Pos	Part No	SP	UN	Qty	Description	Page No
-						
010	1095883-0200	-		1	GABLE PLATE	**6-35**
020	1095886-0200	-		1	COVERING PANEL	**6-37**
030	1095888-0200	-		1	HATCH	**6-41**
040	1095889-0100	-		1	DOOR	**6-43**
050	1095890-0200	-		1	HATCH	**6-45**
060	1095891-0200	-		1	DOOR	**6-47**
090	1255637-0000	-		1	COVER	
100	1255636-0000	-		1	COVERING PANEL	
110	1255638-0000	-		1	COVERING PANEL	
200	312105-0368	-		19	SCREW M6S ISO 4017 M6X16 A480	
210	315105-0153	-		5	WASHER BRB6,4X12RFR	
220	315125-0153	-		14	WASHER TBRSB 6,4X22X4 A4	

Pos	Part No	SP	UN	Qty	Description	Page No

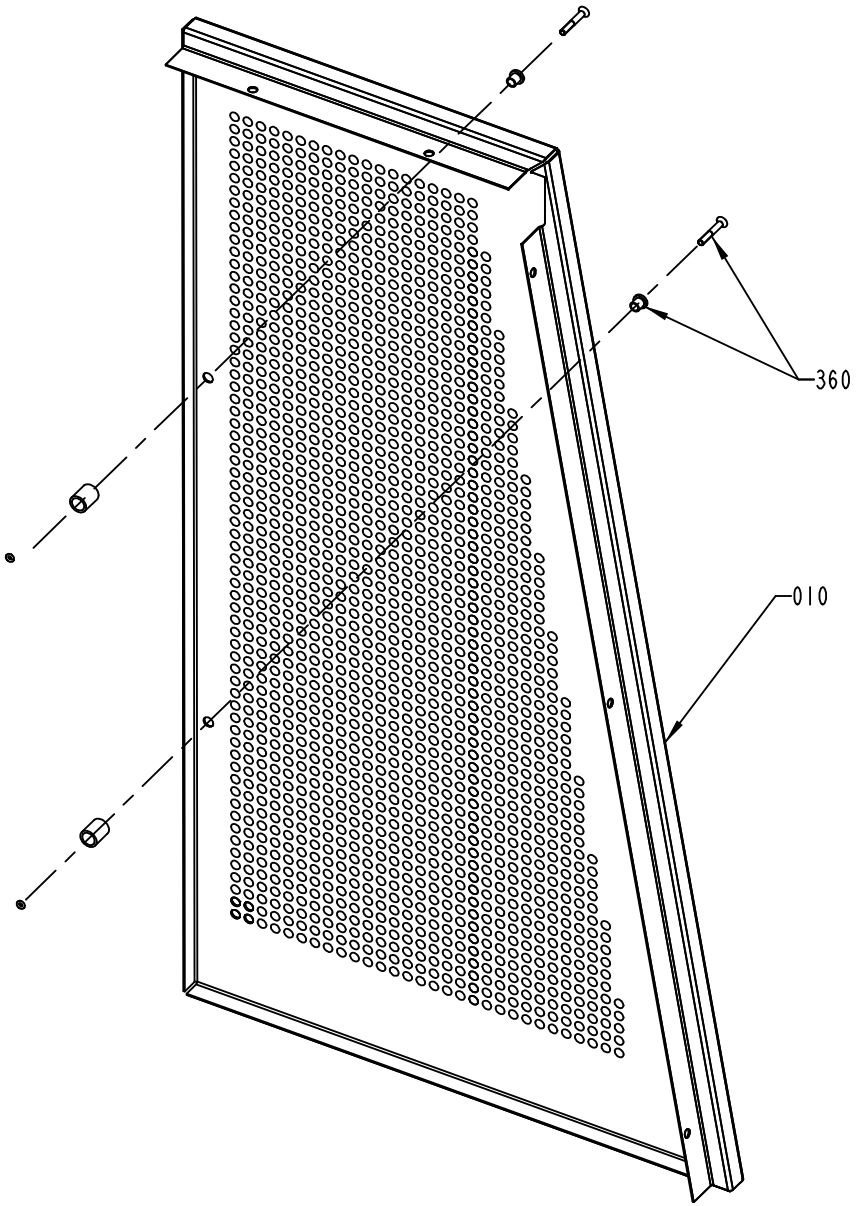
360
010

ECM: 70233 - 19960523
Group number: 1095883-0200
Assembly Drawing: 1095883-2_1_AA

Pos	Part No	SP	UN	Qty	Description	Page No
-						
010	1255671-0000	-		1	GABLE PLATE	
360	90226-0458	-		2	MOUNTING SCREW	

Pos	Part No	SP	UN	Qty	Description	Page No

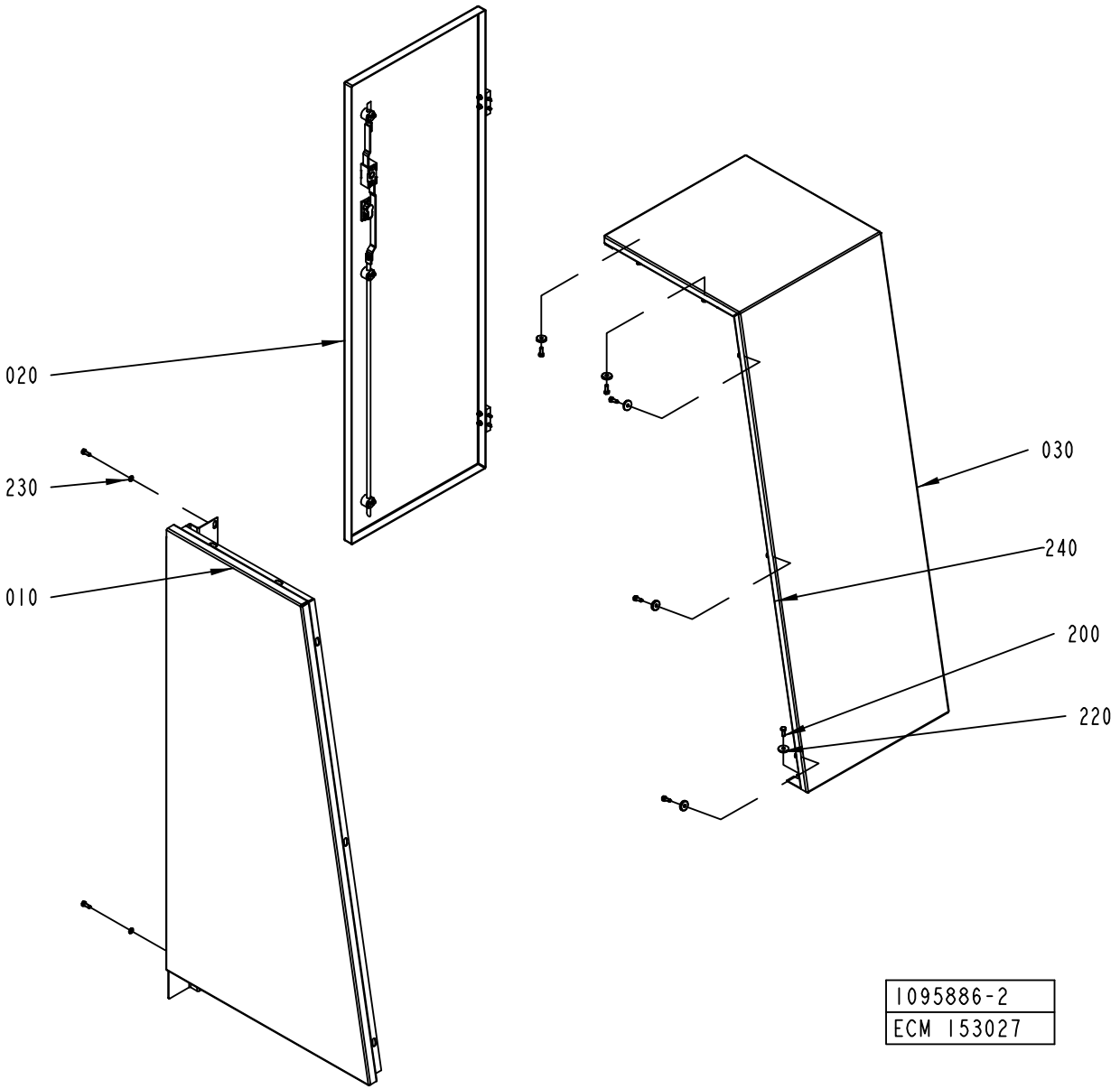
020
230
010
030
240
200
220
1095886-2
ECM 153027

ECM: 153027 - 20031117
Group number: 1095886-0200
Assembly Drawing: 1095886-2_1_AF

Pos	Part No	SP	UN	Qty	Description	Page No
-						
010	2665129-0000	-		1	GABLE PLATE	
020	1484889-0100	-		1	DOOR	**6-39**
030	1041967-0000	-		1	COVERING PANEL	
200	312105-0368	-		7	SCREW M6S ISO 4017 M6X16 A480	
220	315125-0153	-		7	WASHER TBRSB 6,4X22X4 A4	
230	315105-0153	-		2	WASHER BRB6,4X12RFR	
240	90143-0060	-	MM	1120	EDGE STRIP 9,5X6,3MM BLACK PVC	

Pos	Part No	SP	UN	Qty	Description	Page No

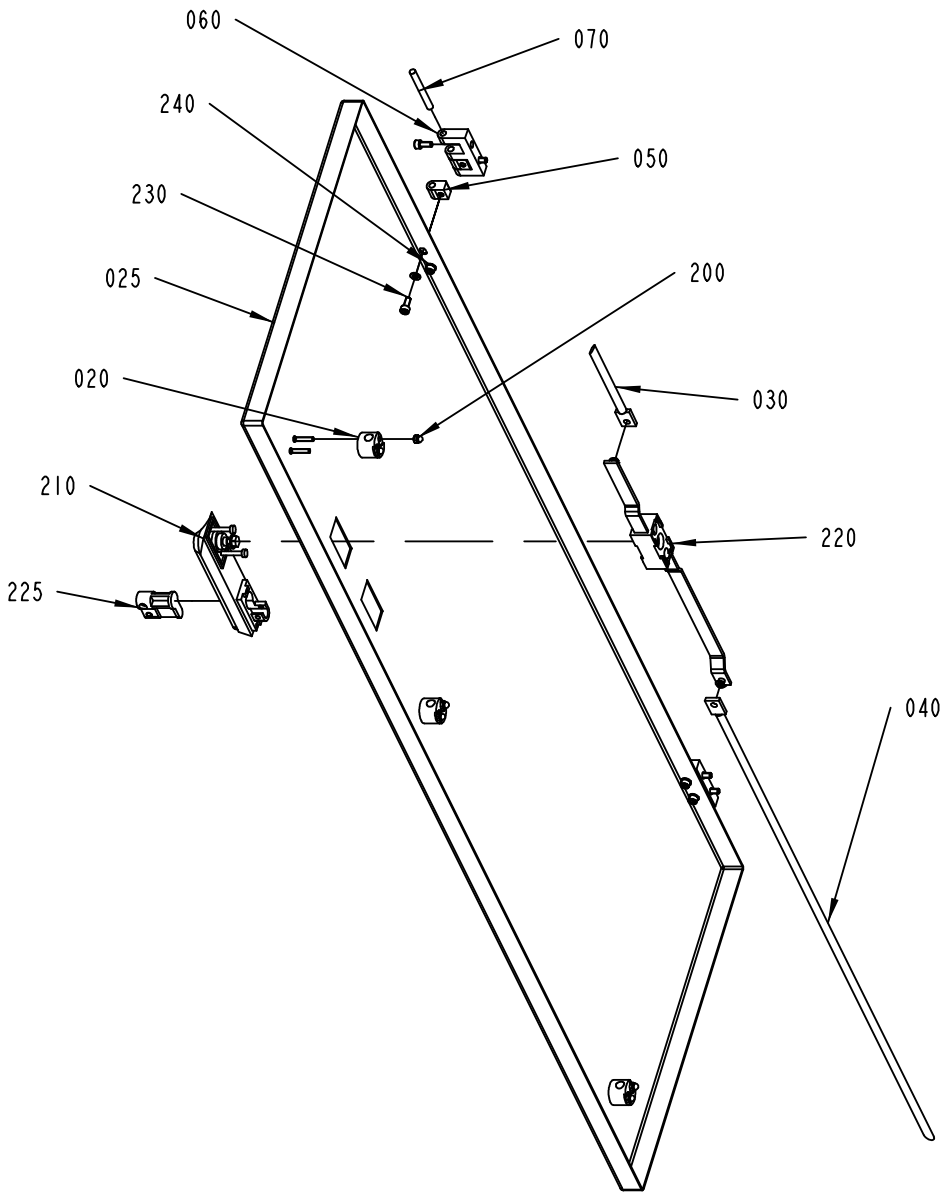

1484889-1
ECM 153027

ECM: 154958 - 20031117
Group number: 1484889-0100
Assembly Drawing: 1484889-1_1_AB

Pos	Part No	SP	UN	Qty	Description	Page No
-						
020	1129274-0000	-		3	GUIDE LUG	
025	1484890-0000	-		1	DOOR	
030	2665132-0000	-		1	LOCKING ARM	
040	2665131-0000	-		1	LOCKING ARM	
050	1035794-0000	-		4	BLOCKING PIECE	
060	1035792-0000	-		2	E-HINGE	
070	988685-0000	-		2	PIN	
200	312705-0312	-		6	NUT HEX. DOMED CAP MHM-6 M4 A280	
210	90237-0126	B		1	TURNING HANDLE "REPBY 90237-175"	
220	90237-0153	-		1	LOCK HOUSING, 1121-U26-0B	
225	90237-0128	-		1	LOCK CYLINDER, 1109-U3	
230	312115-0327	-		8	SCREW ISO4762 M5X12 A4	
240	315105-0146	-		4	WASHER BRB5,3X10RFR	

Pos	Part No	SP	UN	Qty	Description	Page No

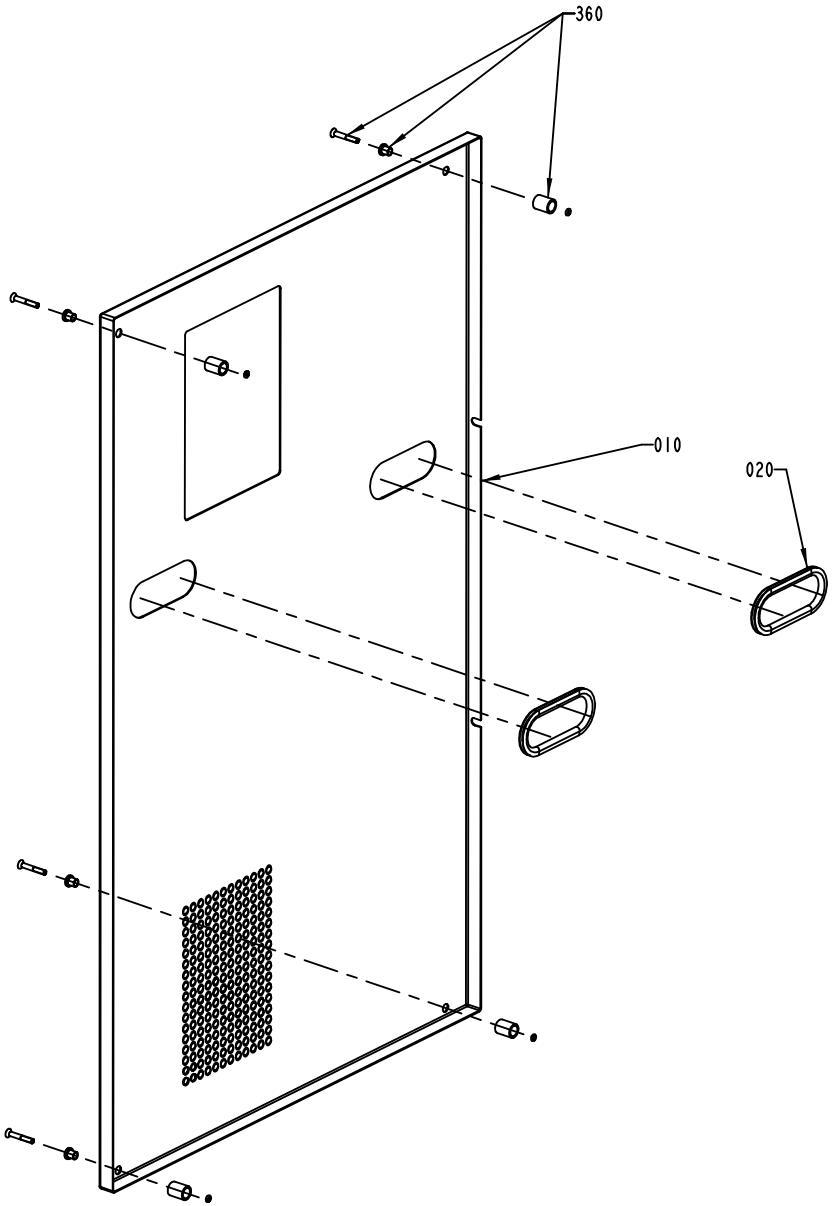
360
010
020

ECM: 70357 - 19970613
Group number: 1095888-0200
Assembly Drawing: 1095888-2_1_AB

Pos	Part No	SP	UN	Qty	Description	Page No
-						
010	1255633-0000	-		1	HATCH	
020	90143-0060	-	M	1	EDGE STRIP 9,5X6,3MM BLACK PVC	
360	90226-0458	-		4	MOUNTING SCREW	

Pos	Part No	SP	UN	Qty	Description	Page No

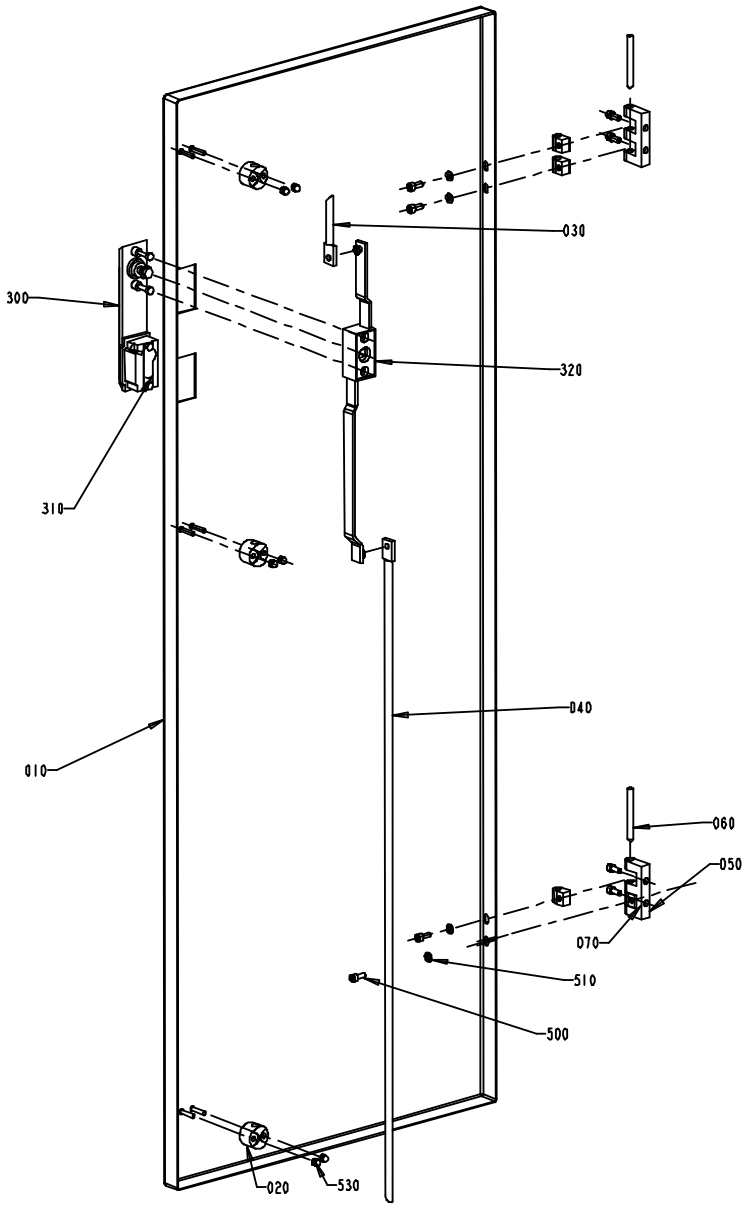
030
300
320
310
040
010
060
050
070
510
500
020
530

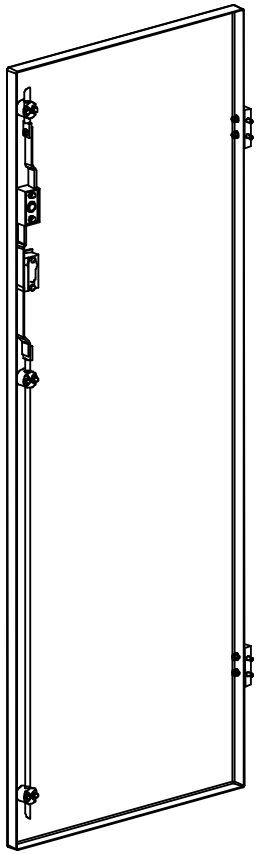

ECM: 116234 - 20030403
Group number: 1095889-0100
Assembly Drawing: 1095889-1_1_AA

Pos	Part No	SP	UN	Qty	Description	Page No
-						
010	1041970-0000	-		1	DOOR	
020	1129274-0000	-		1	GUIDE LUG	
030	1036304-0001	-		1	LOCKING ARM	
040	1036304-0014	-		1	LOCKING ARM	
050	1035792-0000	-		2	E-HINGE	
060	988685-0000	-		2	PIN	
070	1035794-0000	-		4	BLOCKING PIECE	
300	90237-0126	B		1	TURNING HANDLE "REPBY 90237-175"	
310	90237-0128	-		1	LOCK CYLINDER, 1109-U3	
320	90237-0153	-		1	LOCK HOUSING, 1121-U26-0B	
500	312115-0327	-		8	SCREW ISO4762 M5X12 A4	
510	315105-0146	-		4	WASHER BRB5,3X10RFR	
530	312705-0312	-		6	NUT HEX. DOMED CAP MHM-6 M4 A280	

Pos	Part No	SP	UN	Qty	Description	Page No

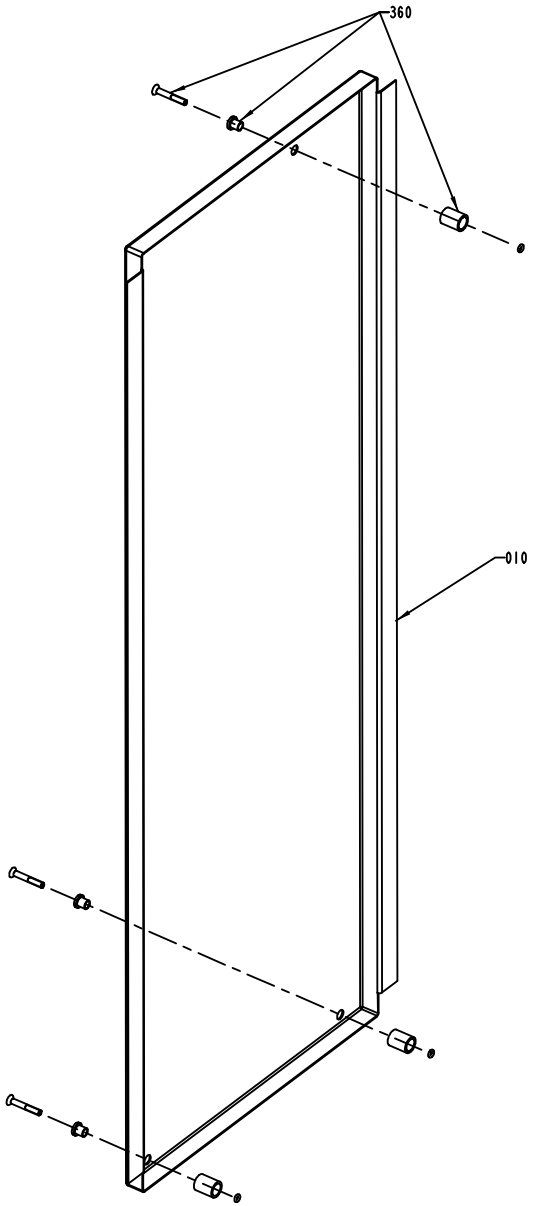
360
010

ECM: 70233 - 19960523
Group number: 1095890-0200
Assembly Drawing: 1095890-2_1_AA

Pos	Part No	SP	UN	Qty	Description	Page No
-						
010	1255635-0000	-		1	HATCH	
360	90226-0458	-		3	MOUNTING SCREW	

Pos	Part No	SP	UN	Qty	Description	Page No

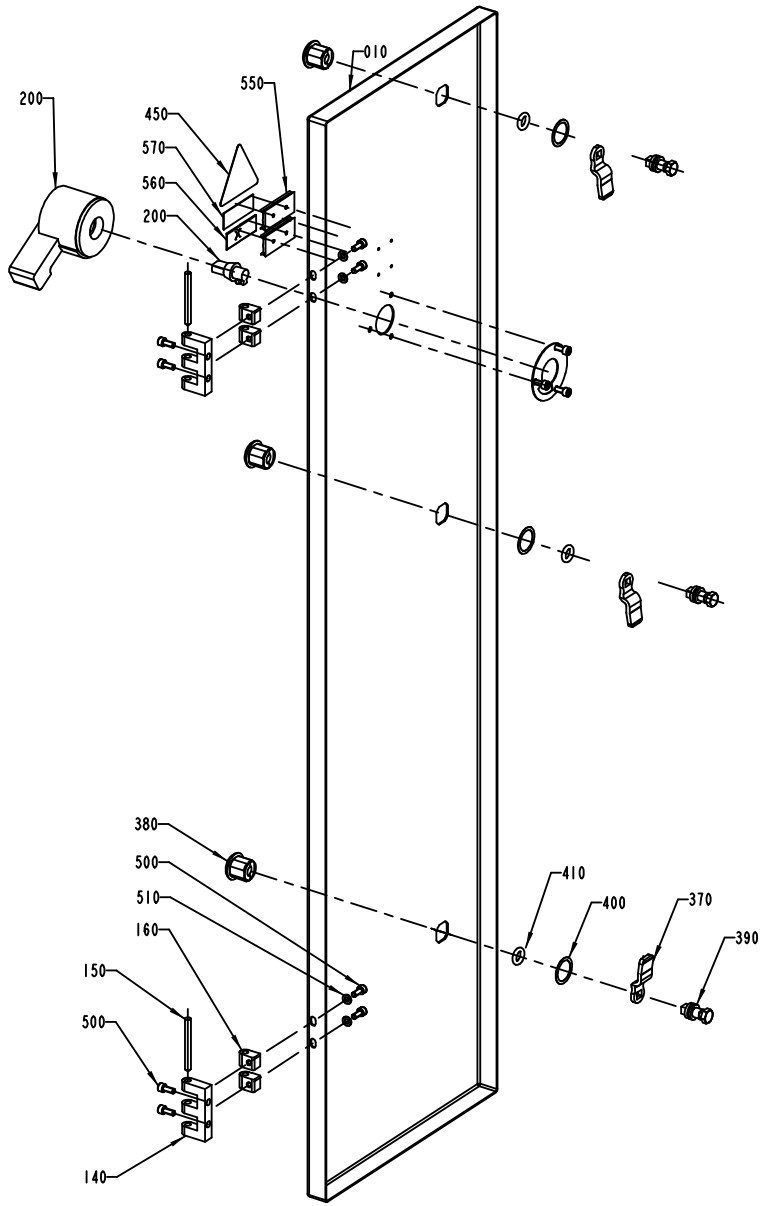
010
550
200
450
570
560
200
380
500
510
160
150
500
140
410
400
370
390

ECM: 116233 - 20030403
Group number: 1095891-0200
Assembly Drawing: 1095891-1_1_AB

Pos	Part No	SP	UN	Qty	Description	Page No
50HZ						
570	359243-0917	A		1	SIGN"400V, 50HZ, 100A"	
60HZ						
570	359243-0918	A		1	SIGN"400V, 60HZ, 100A"	
Common Parts						
010	1041972-0000	-		1	DOOR	
140	1035792-0000	-		2	E-HINGE	
150	988685-0000	-		2	PIN	
160	1035794-0000	-		4	BLOCKING PIECE	
200	90051-0106	B		1	COCK HANDLE, NO. H6	
370	90237-0157	-		3	LOCK BOLT, 1000-230	
380	90237-0319	-		3	LOCK HOUSING, 1000-U134	
390	90237-0320	-		3	LOCK HOUSING, 1000-U136	
400	90237-0322	-		3	LOCK GASKET, 1000-U137	
410	90237-0323	A		3	LOCK O-RING, 1000-24	
450	90194-0016	A		1	WARNING SIGN, RISK OF ELECTRIC SHOCK	
490	311520-0329	-		4	RIVET, BLANK 2,4X8	
500	312115-0327	-		8	SCREW ISO4762 M5X12 A4	
510	315105-0146	-		4	WASHER BRB5,3X10RFR	
550	359240-0100	-		2	SIGN HOLDER FOR 359240-0001	
560	359241-0431	A		1	SIGN "MAIN SWITCH"	

Pos	Part No	SP	UN	Qty	Description	Page No

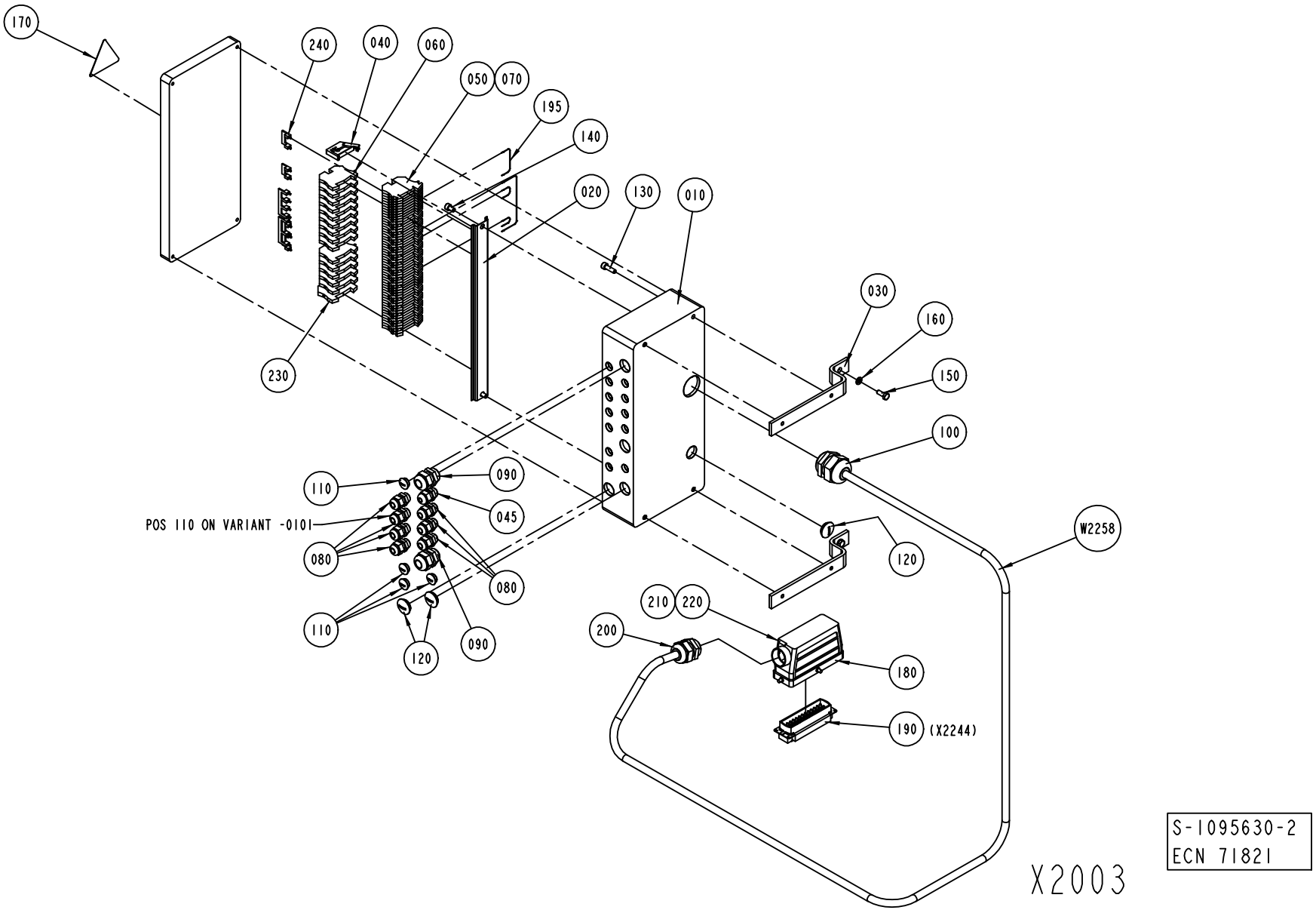
170
240
040
060
050
070
195
140
020
130
010
030
160
150
100
W2258
120
230
110
090
045
080
POS 110 ON VARIANT -0101
080
110
120
090
210
220
200
180
190
(X2244)
X2003
S-1095630-2
ECN 71821

ECM: 148827 - 20031208
Group number: 1095630-0200
Assembly Drawing: 1095630-2_1_AC

Pos	Part No	SP	UN	Qty	Description	Page No
TBA/22						
080	352103-0101	-		7	CABLE GLAND, ST 9, PR15,2/PG9	
110	90002-0013	-		4	BLANK-OFF PLUG, PR 15,2 SKINDICHT-BLK9	
W2258	351150-0425	-	MM	2300	CABLE OLFLEX 25X0,75 MM2 LIGHT/GREY	
Common Parts						
010	1129202-0000	-		1	CONNECTION BOX	
020	1129209-0000	-		1	MOUNTING RAIL	
030	1129182-0000	-		2	BRACKET	
040	353031-0201	-		1	END BRACKET EW35	
045	352103-0100	-		1	CABLE GLAND, STR 9, PR15,2/PG9	
050	353021-0216	-		40	FEED THROUGH TERMINAL, 10200.8	
060	353024-0204	-		14	EARTH TERMINAL WPE 2,5	
070	359011-0809	-		2	MARKING PLATES 5-FW 101-150	
090	352103-0110	-		2	CABLE GLAND, STR 16, PR22,5/PG16	
100	352103-0120	-		1	CABLE GLAND, STR 29, PR37,0/PG29	
120	90002-0004	-		3	BLANK-OFF PLUG, PR 22,5 SKINDICHT-BLK16	
130	312115-0370	-		4	SCREW ISO4762 M6X20 A4	
140	312115-0364	-		2	SCREW ISO4762 M6X10 A4	
150	312105-0368	-		2	SCREW M6S ISO 4017 M6X16 A480	
160	315105-0153	-		2	WASHER BRB6,4X12RFR	
170	90194-0016	A		1	WARNING SIGN, RISK OF ELECTRIC SHOCK	
180	90110-0228	A		1	CABLE HOOD 24-POL 71.350.2428.0	
190	90110-0150	A		1	MALE INSERT 121110 0000	
195	351172-0102	-	M	1	CABLE AWM 1X 0,75 MM2 DARK-BLUE	
200	352103-0116	-		1	CABLE GLAND, ST 21, PR28,3/PG21	
210	359005-0050	-		1	MARKING LABEL KIT X, 04.841.4550.0	
220	359005-0010	-		1	MARKING LABEL KIT 0 - 9, 04.841.2150.0	
230	353024-0205	-		1	EARTH TERMINAL, 1010.1	
240	353034-0030	-		4	BRIDGE CONNECTOR WQV 2,5/10, 10544.6	

Pos	Part No	SP	UN	Qty	Description	Page No

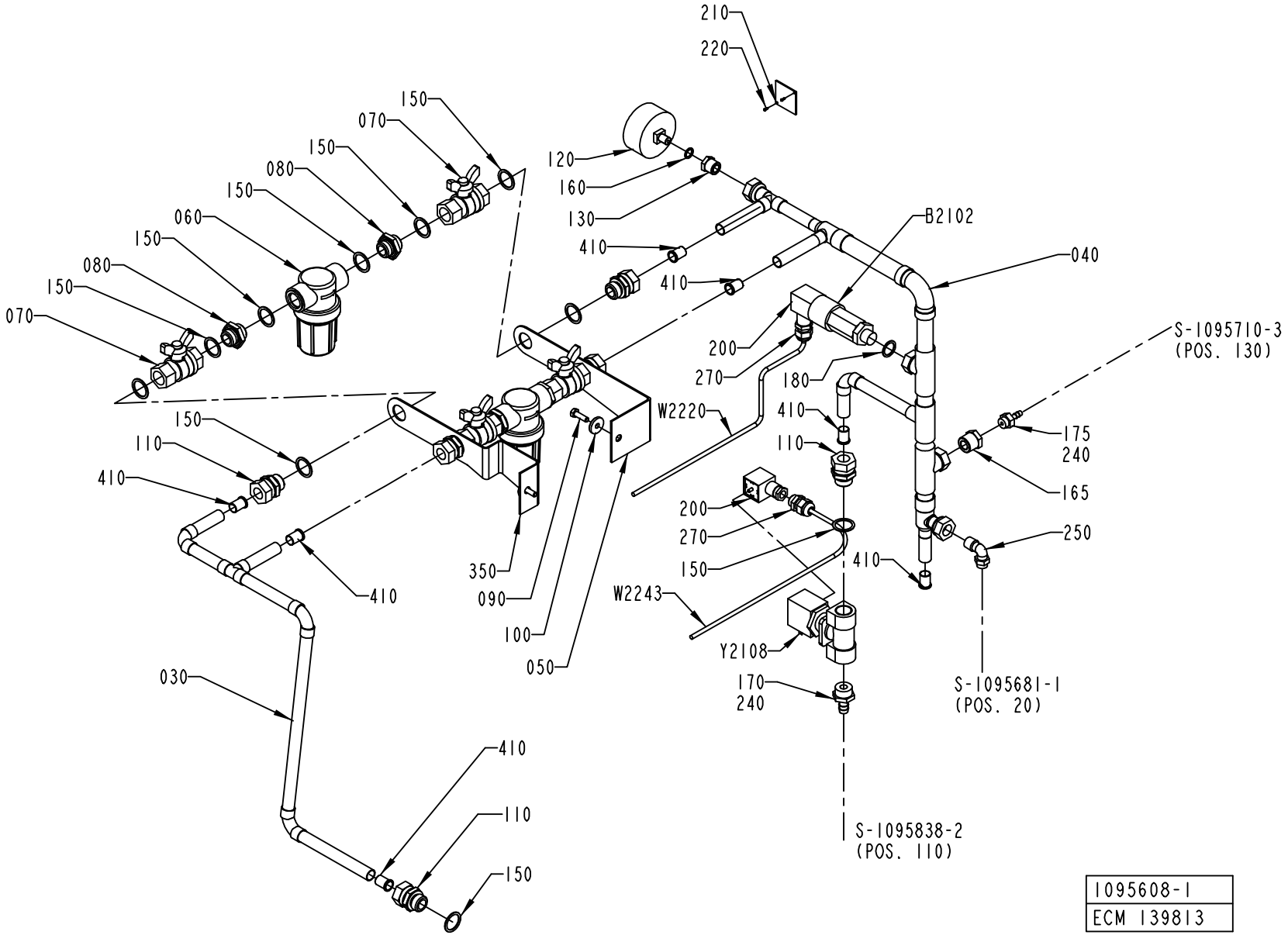
210
220
150
070
150
080
150
060
150
080
150
070
120
160
130
410
410
B2102
040
200
270
180
S-1095710-3
(POS. 130)
W2220
410
110
175
240
165
250
150
110
410
200
270
150
410
350
090
100
050
410
W2243
Y2108
170
240
S-1095681-1
(POS. 20)
030
410
110
150
S-1095838-2
(POS. 110)
1095608-1
ECM 139813

ECM: 148672 - 20031208
Group number: 1095608-0100
Assembly Drawing: 1095608-1_1_AH

Pos	Part No	SP	UN	Qty	Description	Page No
TBA/22 COMPRESSOR						
165	342901-0102	-		1	HOSE NIPPLE, EXT.THR. R1/4-7 MM	
175	90330-0085	-		1	BUSHING, INT/EXT. THR. R1/2-RP1/4	
180	315239-0111	-		1	NYLON WASHER G3/8	
330	1484511-0000	-		1	WATER DIAGRAM	
Common Parts						
030	1041932-0000	-		1	PIPE	
040	1041933-0000	-		1	PIPE	
050	1037583-0000	-		1	HOLDER	
060	90458-0921	B		2	FILTER SP 122-200	
	90458-2541	*-*		*1*	*FILTER, CP23174-7-304SS*	
070	90187-0029	B		4	BALL VALVE G1/2, NPBR	
080	479261-0000	-		4	NIPPLE	
090	312105-0370	-		2	SCREW M6S ISO 4017 M6X20 A480	
100	315125-0153	-		2	WASHER TBRSB 6,4X22X4 A4	
110	342720-0114	-		6	CONN. STR. GA-15-G1/2	
120	90043-0006	B		1	PRESSURE GAUGE, 2041 D=63 MM	
130	342701-0202	-		1	BUSHING,INT./EXT.G-THREAD G3/8"-G1/8"	
150	315239-0113	-		18	NYLON WASHER G1/2	
160	315239-0109	-		1	NYLON WASHER G1/8	
170	342901-0105	-		1	HOSE NIPPLE, EXT.THR. R1/2-12 MM	
200	90110-0095	A		1	CONNECTOR 3 POLE + EARTH	
210	273455-0000	-		1	LABEL (COLD WATER)	
220	312502-0120	-		2	DRIVE SCREW ROUND HEAD KDS 0X5	
240	90157-0016	-		1	LOCKING FLUID	
250	342930-0133	-		1	ELBOW 90 COUPL.,EXT.THREAD 10/8-R3/8"	
270	352103-0101	-		2	CABLE GLAND, ST 9, PR15,2/PG9	
350	2547061-0000	-		1	HOLDER	
410	342708-0109	-		7	REINFORCING RING VSH 15X1 MM	
B 2102	90274-0042	A		1	PRESSURE GUARD, 200 KPA	
W 2220	351150-0403	-	MM	2000	CABLE OLFLEX 3X0,75 MM2 LIGHT/GREY	
W 2243	351150-0403	-	MM	2000	CABLE OLFLEX 3X0,75 MM2 LIGHT/GREY	
Y 2108	90042-0249	A		1	SOLENOID VALVE OFFICINE DI ENSINO	

Pos	Part No	SP	UN	Qty	Description	Page No

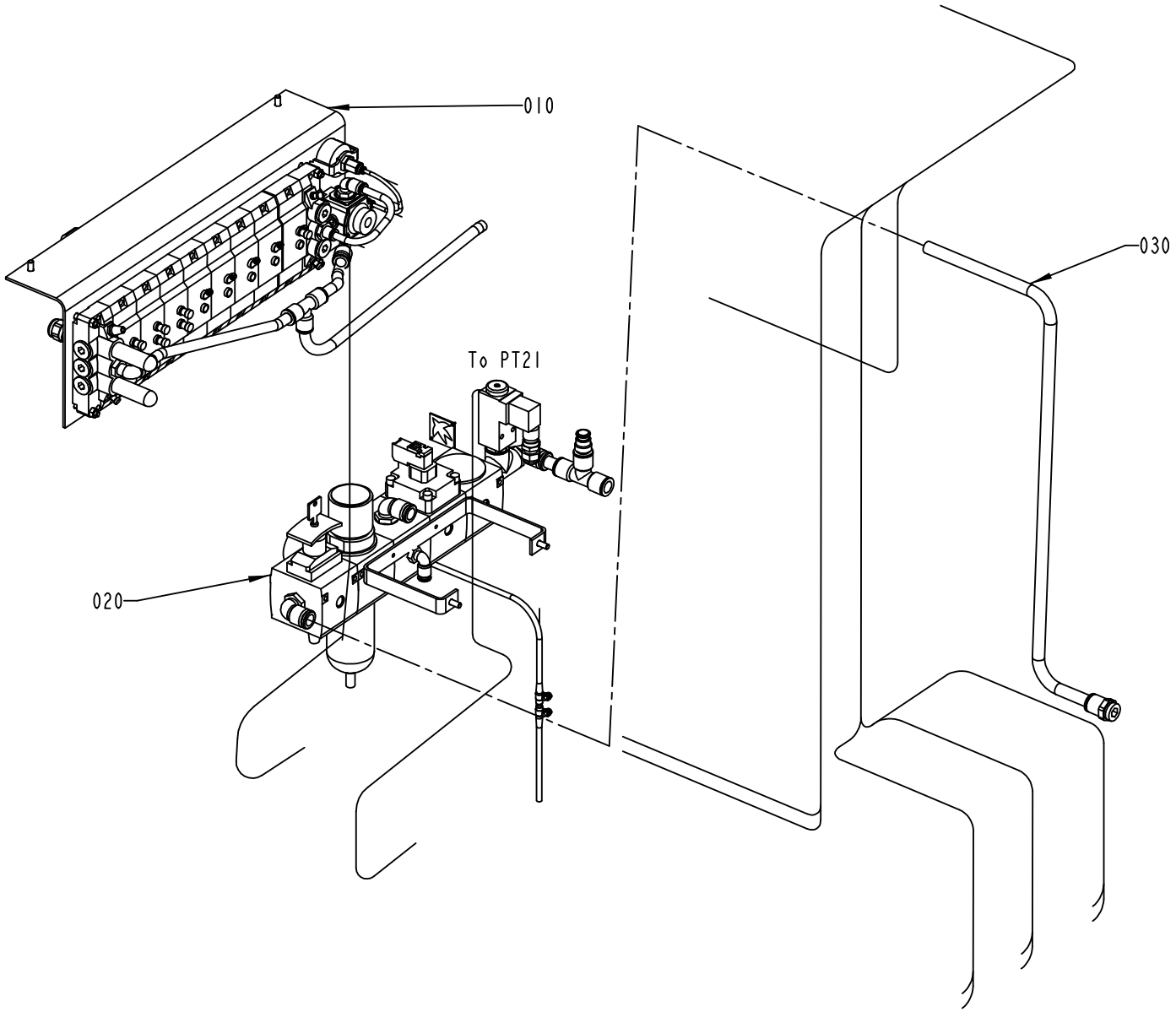

1095714-2
ECM 115191

ECM: 139561 - 20030711
Group number: 1095714-0300
Assembly Drawing: 1095714-2_1_AD

Pos	Part No	SP	UN	Qty	Description	Page No
-						
010	1095611-0300	-		1	VALVE PANEL	**6-55**
020	1095609-0200	-		1	PNEUMATIC UNIT	**6-57**
030	1095716-0100	-		1	PIPE WORK-AIR	**6-59**

Pos	Part No	SP	UN	Qty	Description	Page No

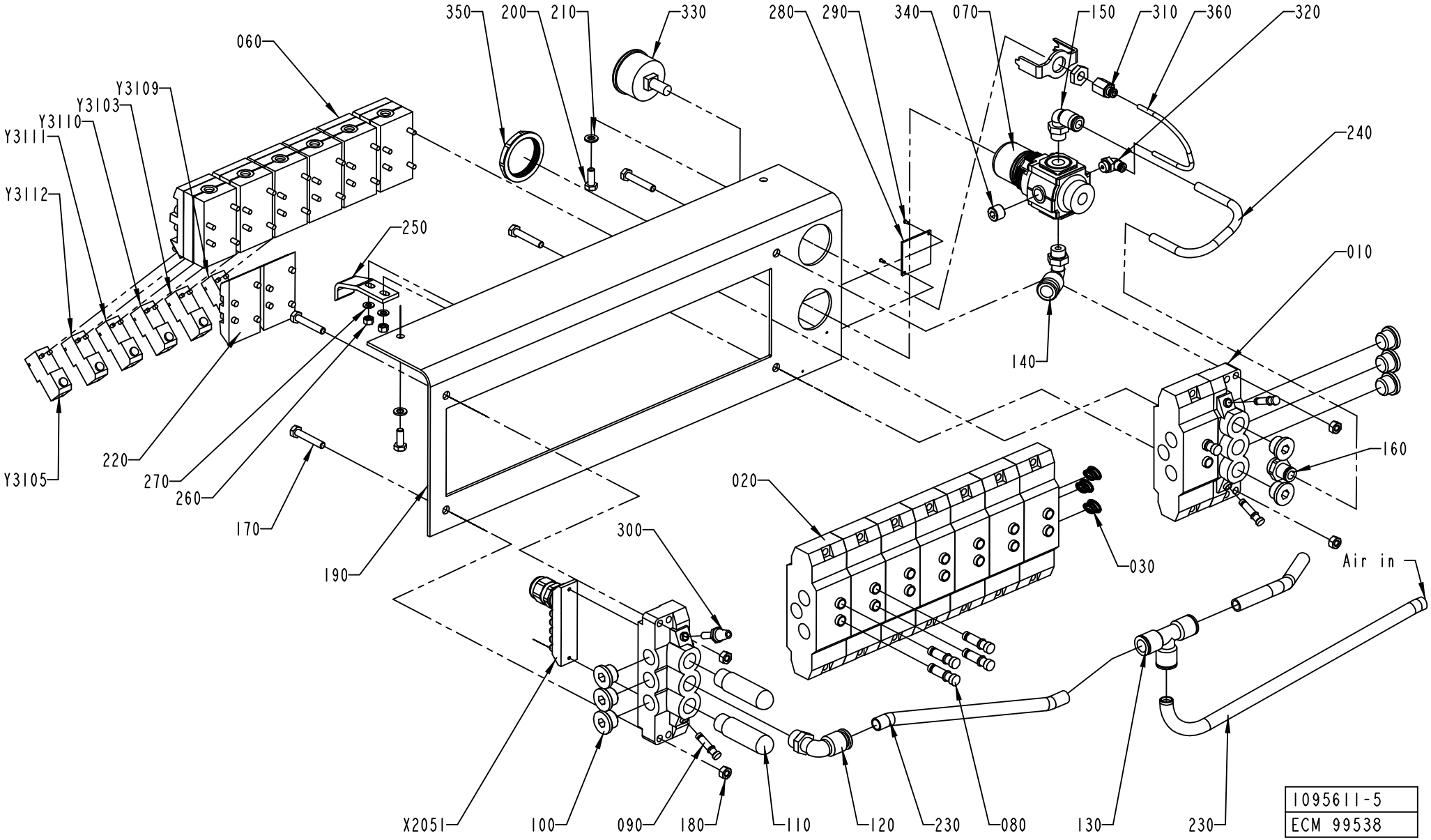
350
200
210
330
280
290
340
070
150
310
360
320
060
Y3109
Y3103
Y3110
Y3111
240
Y3112
250
010
140
160
220
270
260
170
190
Y3105
020
030
300
Air in
X2051
100
090
180
110
120
230
080
130
230
1095611-5
ECM 99538

ECM: 148673 - 20031208
Group number: 1095611-0300
Assembly Drawing: 1095611-5_1_AA

Pos	Part No	SP	UN	Qty	Description	Page No
TBA/22						
005	1484892-0000	-		1	PNEUMATIC DIAGRAM	
060	90042-0215	-		6	VALVE BODY 5/2 UNISTABLE	
080	342715-0103	-		7	BLIND PLUG 8 MM	
220	90042-0519	-		2	BLANK PLATE ISO SIZE 1	
250	1036227-0000	-		1	BRACKET	
Y3105	90042-0538	A		1	PILOT VALVE L=500MM	
Y3110	90042-0538	A		1	PILOT VALVE L=500MM	
Common Parts						
010	90042-0522	A		2	PORTED END PIECE ISO SIZE 1	
020	90042-0532	A		8	BASE PLATE ISO SIZE 1	
030	90042-0528	A		1	BLANKING KIT SEALS ISO SIZE 1	
050	90042-0526	-		5	PROTECTIVE SLEEVE MECMAN	
070	90113-0470	A		1	MANIFOLD REGULATOR 10 BAR	
090	342715-0102	-		3	BLIND PLUG 6 MM	
100	342713-0211	-		8	PLUG, EXT THREAD HEX SOCKET 8638-00-380	
110	90328-0024	B		2	SILENCER G3/8	
120	342732-0110	-		1	ELBOW PIPE JOINT, EXT.THREAD,D=12MM-G3/8	
130	342748-0109	-		1	T-CONNECTION 12MM	
140	342732-0109	-		1	ELBOW PIPE JOINT, EXT.THREAD, D=1MM-G1/4	
150	342732-0104	-		1	ELBOW PIPE JOINT, EXT.THREAD, D=8MM-G1/4	
160	342722-0206	-		1	STRAIGHT COUPLING D=8-G3/8"	
170	312105-0376	-		4	SCREW M6S ISO 4014 M6X35 A480	
180	312605-0316	-		4	HEXAGON NUT, M6M M6 A280	
190	1517295-0000	-		1	SHEET	
200	312105-0368	-		2	SCREW M6S ISO 4017 M6X16 A480	
210	315105-0153	-		2	WASHER BRB6,4X12RFR	
230	90166-0068	-	MM	1000	TUBE 12 MM PA BLUE	
240	90166-0194	-	MM	400	TUBE 8 MM PUR BLUE	
260	312605-0314	-		2	HEXAGON NUT, M6M M5 A280	
270	315105-0146	-		2	WASHER BRB5,3X10RFR	
280	1041938-0000	-		1	SIGN	
290	312502-0120	-		2	DRIVE SCREW ROUND HEAD KDS 0X5	
300	90328-0017	-		1	SILENCER, D=6 MM	
310	342770-0101	-		1	STRAIGHT COUPLING INT, D=4 MM - G1/8	
320	342732-0100	-		1	ELBOW PIPE JOINT, EXT.THREAD, D=4MM-G1/8	
330	90043-0065	B		1	PRESSURE GAUGE, 2048 D=40 MM	
340	90087-0036	-		1	PLUG	
350	90457-0078	-		1	PANEL NUT	
360	90166-0095	-	MM	200	TUBE 4 MM PA BLUE	
X2051	90042-0535	A		1	TERMINAL BOARD 19 CORDS	
Y3103	90042-0538	A		1	PILOT VALVE L=500MM	
Y3109	90042-0538	A		1	PILOT VALVE L=500MM	
Y3111	90042-0538	A		1	PILOT VALVE L=500MM	
Y3112	90042-0538	A		1	PILOT VALVE L=500MM	

Machine Type Group Description Used-In Group Number Page No

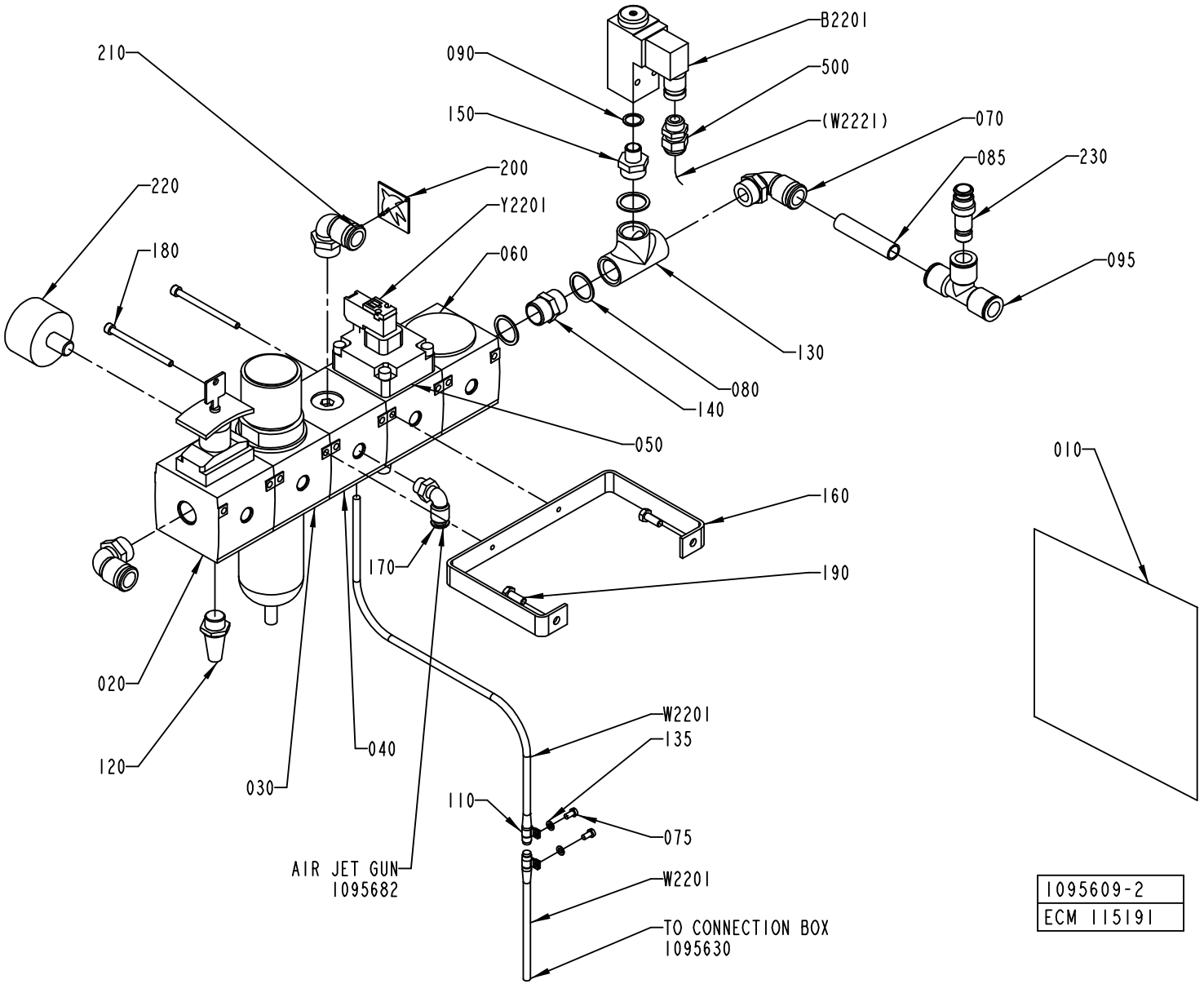
B2201
210
090
500
150
(W2221)
070
085
230
200
220
Y2201
060
180
095
130
080
140
050
010
160
170
190
020
040
W2201
135
120
030
110
075
AIR JET GUN
1095682
W2201
TO CONNECTION BOX
1095630
1095609-2
ECM 115191

ECM: 139562 - 20031208
Group number: 1095609-0200
Assembly Drawing: 1095609-2_1_AF

Pos	Part No	SP	UN	Qty	Description	Page No
TBA/22						
010	1129150-0000	-		1	PNEUMATIC DIAGRAM	
Common Parts						
020	90113-0377	A		1	SHUT-OFF VALVE	
030	90113-0072	A		1	PRESSURE REGULATOR	
	90113-0387	*A*		*1*	*FILTER ELEMENT 40æM FOR 90113-0094*	
	90113-0459	*A*		*1*	*O-RING*	
040	90113-0375	A		1	PRESSURE DISTRIBUTION	
050	90113-0423	A		1	HIGH SPEED VENTING VALVE	
060	90113-0374	A		1	SLOW STARTING VALVE	
070	342732-0161	-		3	ELBOW PIPE JOINT,EXT.THREAD,D=14 MM-G1/2	
075	312125-0287	-		2	SCREW ISO 1207 M4X8 A4	
080	315233-0113	-		3	WASHER CAPTIVE SEALING G1/2	
085	90166-0196	-	MM	70	TUBE 14MM PA BLUE	
090	315233-0110	-		1	WASHER CAPTIVE SEALING G1/4	
095	342748-0110	-		1	T-CONNECTION 14MM	
110	90074-0025	-		2	CLIPS, CABLE CLIPS DI=8 MM	
120	90328-0007	B		1	SILENCER	
130	90330-0049	-		1	T-PIPE, INT. THREAD, R-221R1/2	
135	315105-0136	-		2	WASHER BRB4,3XRFR	
140	342700-0113	-		1	NIPPLES,HEXAGON,EXT.G-THREAD G1/2"-G1/2"	
150	342700-0205	-		1	NIPPLES,HEXAGON,EXT.G-THREAD G1/2"-G1/4"	
160	1041921-0000	-		1	HOLDER	
170	342732-0104	-		1	ELBOW PIPE JOINT, EXT.THREAD, D=8MM-G1/4	
180	90287-0073	-		2	SCREW MC6S M5X70 129	
190	312105-0368	-		2	SCREW M6S ISO 4017 M6X16 A480	
200	273458-0000	-		1	LABEL (AIR)	
210	312502-0120	-		2	DRIVE SCREW ROUND HEAD KDS 0X5	
220	90043-0107	B		1	PRESSURE GAUGE	
230	342716-0211	-		1	REDUCER 12-14	
500	352103-0101	-		1	CABLE GLAND, ST 9, PR15,2/PG9	
B2201	90274-0074	A		1	PRESSURE GUARD, 530 KPA	
W2201	90042-0583	A		1	CABLE MECMAN 440-827 000-1	
Y2201	90042-0585	A		1	PILOT VALVE L=5M	

Pos	Part No	SP	UN	Qty	Description	Page No

Machine Type | Group Description | Used-In | Group Number | Page No

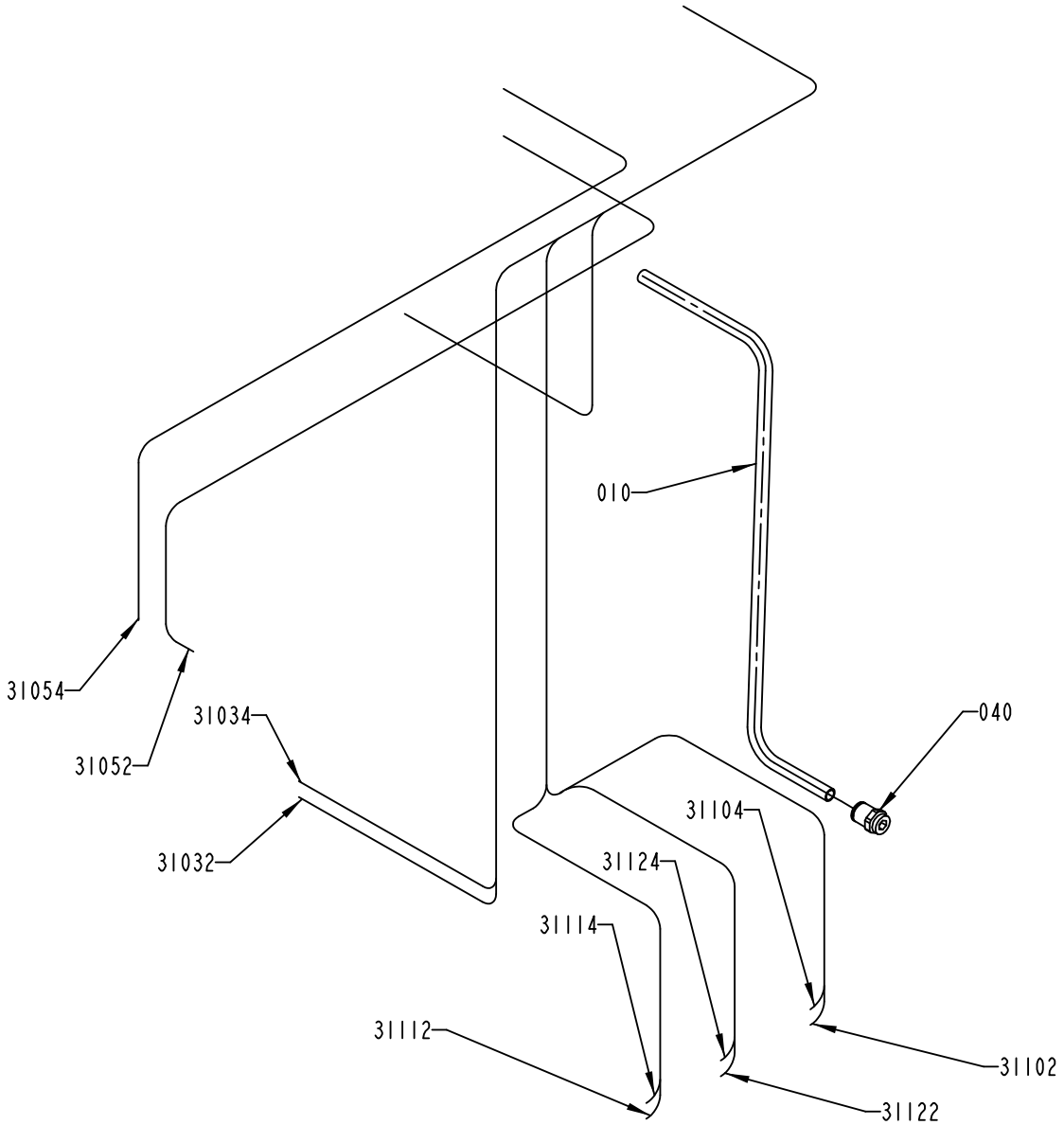

1095716-2
ECM 99538

ECM: 139563 - 20030711
Group number: 1095716-0100
Assembly Drawing: 1095716-2_1_AB

Pos	Part No	SP	UN	Qty	Description	Page No
TBA/22						
010	90166-0196	-	MM	770	TUBE 14MM PA BLUE	
040	90055-0097	-		1	STRAIGHT COUPLING	
31052	90166-0013	-	MM	1700	TUBE 8 MM PA BLUE	
31054	90166-0013	-	MM	1700	TUBE 8 MM PA BLUE	
31102	90166-0013	-	MM	1500	TUBE 8 MM PA BLUE	
31104	90166-0013	-	MM	1500	TUBE 8 MM PA BLUE	
Common Parts						
31032	90166-0013	-	MM	1400	TUBE 8 MM PA BLUE	
31034	90166-0013	-	MM	1400	TUBE 8 MM PA BLUE	
31094	90166-0013	-	MM	1400	TUBE 8 MM PA BLUE	
31112	90166-0013	-	MM	1500	TUBE 8 MM PA BLUE	
31114	90166-0013	-	MM	1500	TUBE 8 MM PA BLUE	
31122	90166-0013	-	MM	1500	TUBE 8 MM PA BLUE	
31124	90166-0013	-	MM	1500	TUBE 8 MM PA BLUE	

Pos	Part No	SP	UN	Qty	Description	Page No

Tetra Pak

SPC
Spare Parts Catalogue

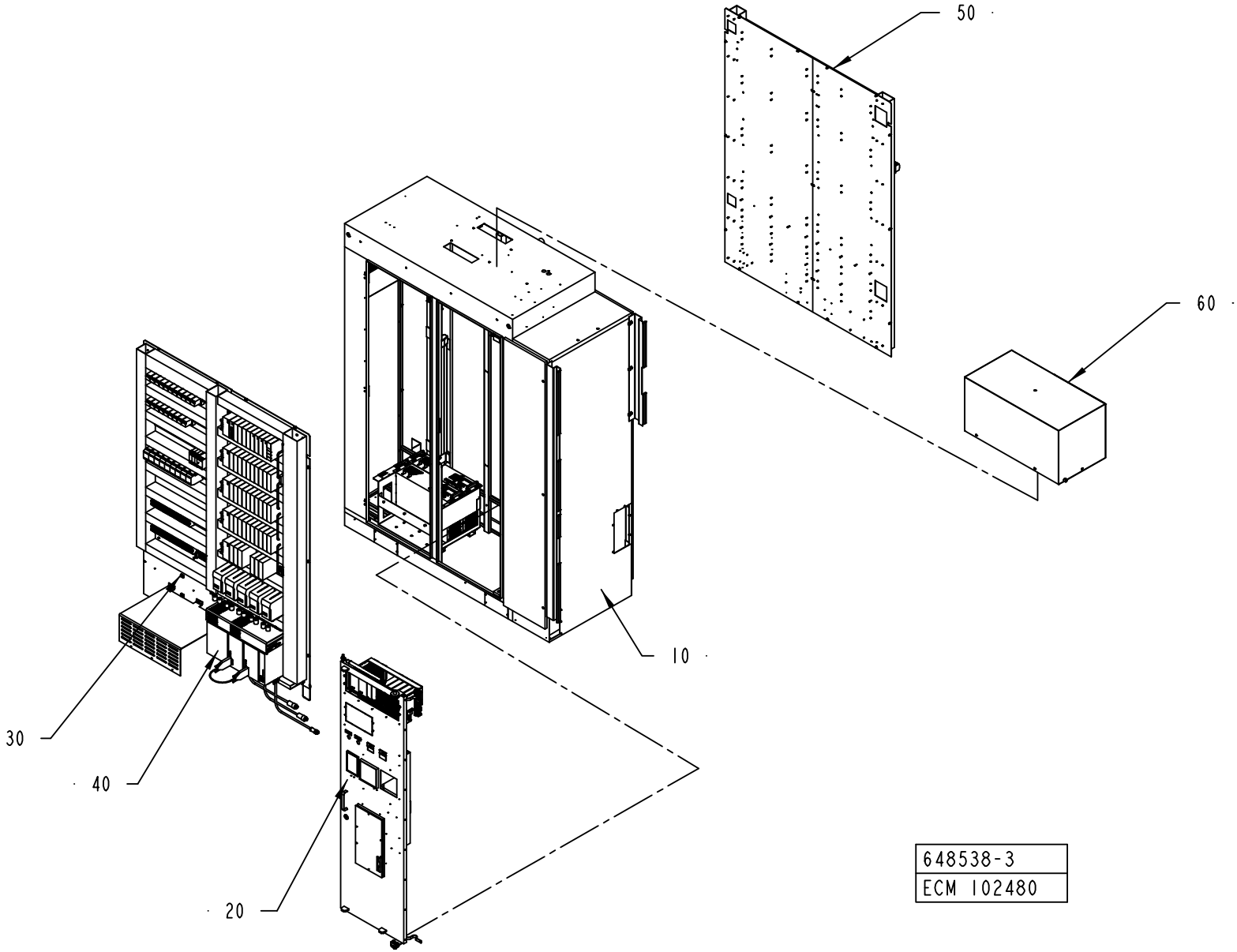
50
60
10
30
40
20
648538-3
ECM 102480

ECM: 102480 - 20010926
Group number: 648538-0300
Assembly Drawing: 648538-3_1_AA

Pos	Part No	SP	UN	Qty	Description	Page No
-						
010	1279809-0300	-		1	CABINET	**7-5, 7-7, 7-9**
020	1346314-0200	-		1	COMPONENT DOOR	**7-29, 7-31**
030	575235-0300	-		1	CONTROL PANEL	**7-41**
040	575236-0300	-		1	CONTROL PANEL	**7-47, 7-49, 7-51**
050	575237-0300	-		1	POWER SIDE	**7-53**
060	1095954-0300	-		1	COOLING SYSTEM	**7-65**

Pos	Part No	SP	UN	Qty	Description	Page No

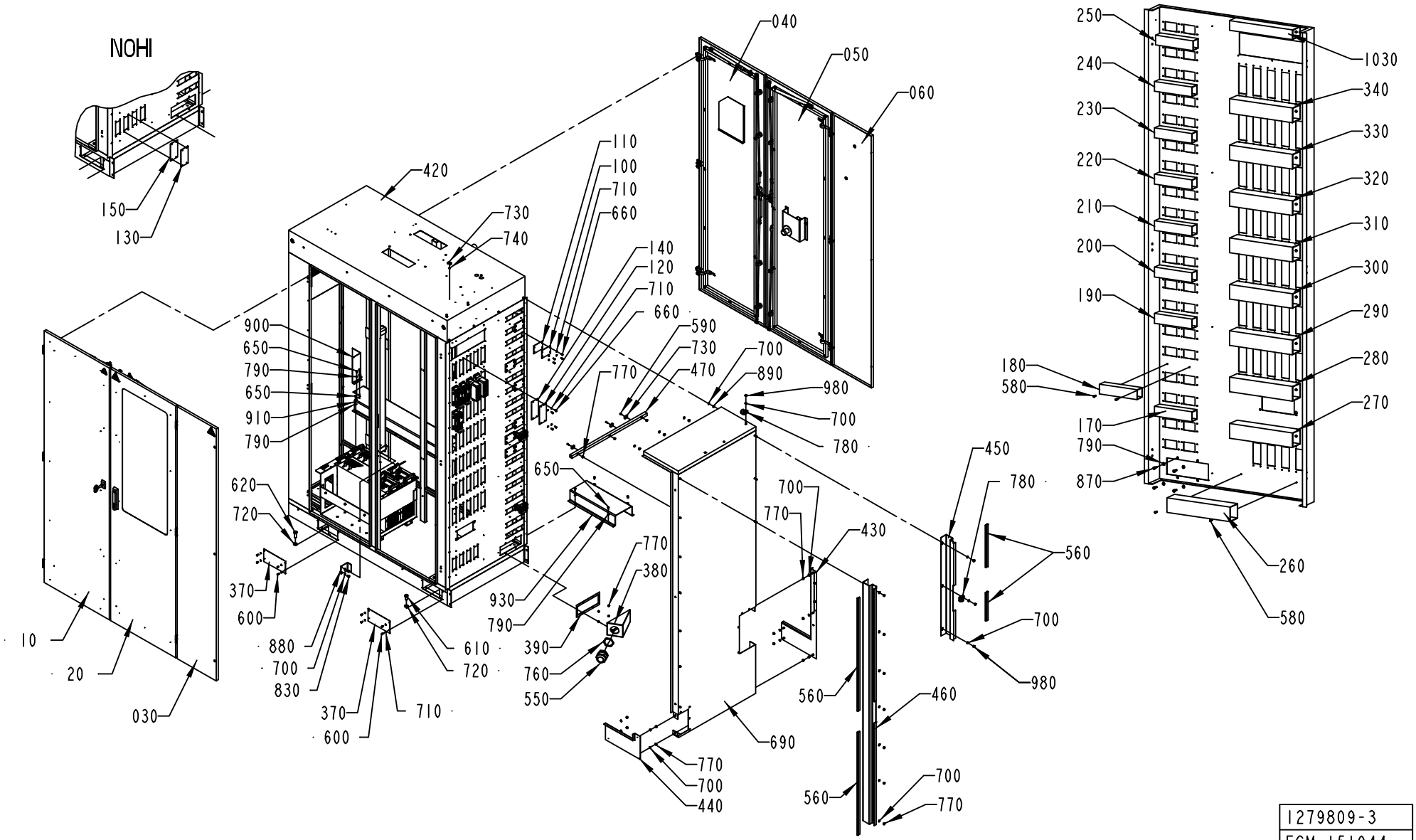

1279809-3
ECM 151944

ECM: 151944 - 20031112
Group number: 1279809-0300
Assembly Drawing: 1279809-3_1_AF

This list covers pages from 7-4 to 7-9

Pos	Part No	SP	UN	Qty	Description	Page No
HI						
120	1037574-0000	-		1	COVER PLATE	
140	1037575-0000	-		1	GASKET	
530	90110-0167	-		4	CHASSIS HOUSING 310133-33	
540	90110-0153	-		30	CHASSIS HOUSING 24-P CHI 24, 121240 0000	
X210	90110-0164	-		1	FEMALE INSERT 70 105 2453 3	
X502	90110-0165	-		1	FEMALE INSERT 70.005.0653.0	
NOHI						
120	1037574-0000	-		2	COVER PLATE	
130	1129481-0000	-		1	COVERING PLATE	
140	1037575-0000	-		2	GASKET	
150	1129478-0000	-		1	GASKET	
530	90110-0167	-		3	CHASSIS HOUSING 310133-33	
540	90110-0153	-		29	CHASSIS HOUSING 24-P CHI 24, 121240 0000	
Common Parts						
010	1282034-0200	-		1	DOOR	**7-11**
020	1282031-0200	-		1	DOOR	**7-13**
030	1095634-0100	-		1	DOOR	**7-15**
040	1282037-0200	-		1	DOOR	**7-17**
050	1282036-0200	-		1	DOOR	**7-19**
060	1095637-0100	-		1	DOOR	**7-21**
080	1095778-0100	-		1	PLINTH	**7-23**
090	2543221-0100	-		1	IH EQUIPMENT	**7-25**
100	1037572-0000	-		8	COVER PLATE	
1000	2511667-0000	-		1	COVER PLATE	
1010	352103-0111	-		2	CABLE GLAND, ST 16, PR22,5/PG16	
1020	352103-0116	-		1	CABLE GLAND, ST 21, PR28,3/PG21	
1030	90181-0045	-	MM	285	CABLE DUCT, 40X60MM	
110	1037573-0000	-		8	GASKET	
160	1037576-0000	-		1	GASKET	
170	90181-0038	-	MM	170	CABLE DUCT, 40X40MM	
180	90181-0038	-	MM	170	CABLE DUCT, 40X40MM	
190	90181-0038	-	MM	170	CABLE DUCT, 40X40MM	
200	90181-0038	-	MM	170	CABLE DUCT, 40X40MM	
210	90181-0038	-	MM	170	CABLE DUCT, 40X40MM	
220	90181-0038	-	MM	170	CABLE DUCT, 40X40MM	
230	90181-0038	-	MM	170	CABLE DUCT, 40X40MM	
240	90181-0038	-	MM	170	CABLE DUCT, 40X40MM	
250	90181-0038	-	MM	170	CABLE DUCT, 40X40MM	
260	90181-0046	-	MM	285	CABLE DUCT, 60X60MM	
270	90181-0046	-	MM	285	CABLE DUCT, 60X60MM	
280	90181-0046	-	MM	285	CABLE DUCT, 60X60MM	
290	90181-0046	-	MM	285	CABLE DUCT, 60X60MM	
300	90181-0046	-	MM	285	CABLE DUCT, 60X60MM	
310	90181-0046	-	MM	285	CABLE DUCT, 60X60MM	
320	90181-0046	-	MM	285	CABLE DUCT, 60X60MM	
330	90181-0046	-	MM	285	CABLE DUCT, 60X60MM	
340	90181-0046	-	MM	285	CABLE DUCT, 60X60MM	
350	1140519-0000	-		1	PROTECTION	
360	1129318-0000	-		1	BRACKET	
370	1038408-0000	-		4	COVERING PLATE	
380	1038518-0000	-		1	BRACKET	
390	1038519-0000	-		1	GASKET	
400	985842-0000	-		1	BRACKET	
410	1350704-0000	-		1	BRACKET	
420	2539502-0000	-		1	WELDED CABINET	
430	1129155-0000	-		1	COVERING PLATE	
440	1129156-0000	-		1	COVERING PLATE	
450	1129157-0000	-		1	PROFILE	
460	2555684-0000	-		1	PROFILE	
470	1129159-0000	-		6	BRACKET	
490	2547146-0000	-		1	PLATE	
500	1129322-0000	-		1	BRACKET	
510	353042-0003	-	MM	280	RAIL TS35/15/1,5	
520	90110-0166	-		30	CHASSIS HOUSING 310144-33	
550	352103-0123	-		1	CABLE GLAND, ST 42, PR54,0/PG42	
560	90143-0057	A	M	30	STRIP EMKA 1011-05 21X11MM	
570	312115-0325	-		2	SCREW ISO4762 M5X10 A4	
580	90287-0124	-		38	SCREW PAN HEAD MSCS M4X12 NYLON	
590	312125-0289	-		18	SLOTTED CHEESE HEAD SCREW MCS 4X10 SS	
600	312105-0287	-		16	SCREW M6S ISO4017 M4X8 A480	
610	312105-0534	-		2	SCREW M6S ISO 4017 M12X25 A480	
620	312105-0538	-		2	SCREW M6S ISO 4017 M12X35 A480	
630	312125-0222	-		38	SLOTTED CHEESE HEAD SCREW MCS 3X8 SS	
640	315105-0124	-		14	BRICKA BRB3,2X6RFR	
650	312115-0323	-		8	SCREW ISO4762 M5X8 A4	
660	312115-0289	-		312	SCREW ISO4762 M4X10 A4	
670	312115-0299	-		2	SCREW ISO4762 M4X30 A4	
680	90099-0110	-		2	NUT, PR 22,5 (PG16)	
690	1129973-0000	-		1	COVERING PANEL	
700	315105-0153	-		34	WASHER BRB6,4X12RFR	
710	315105-0136	-		328	WASHER BRB4,3XRFR	
720	315105-0178	-		4	WASHER BRB13X24RFR	
730	352113-0203	-		19	ANCHOR PLATES FOR STRIPS, TYPE TM3S8-M0	

Machine Type | Group Description | Used-In | Group Number | Page No

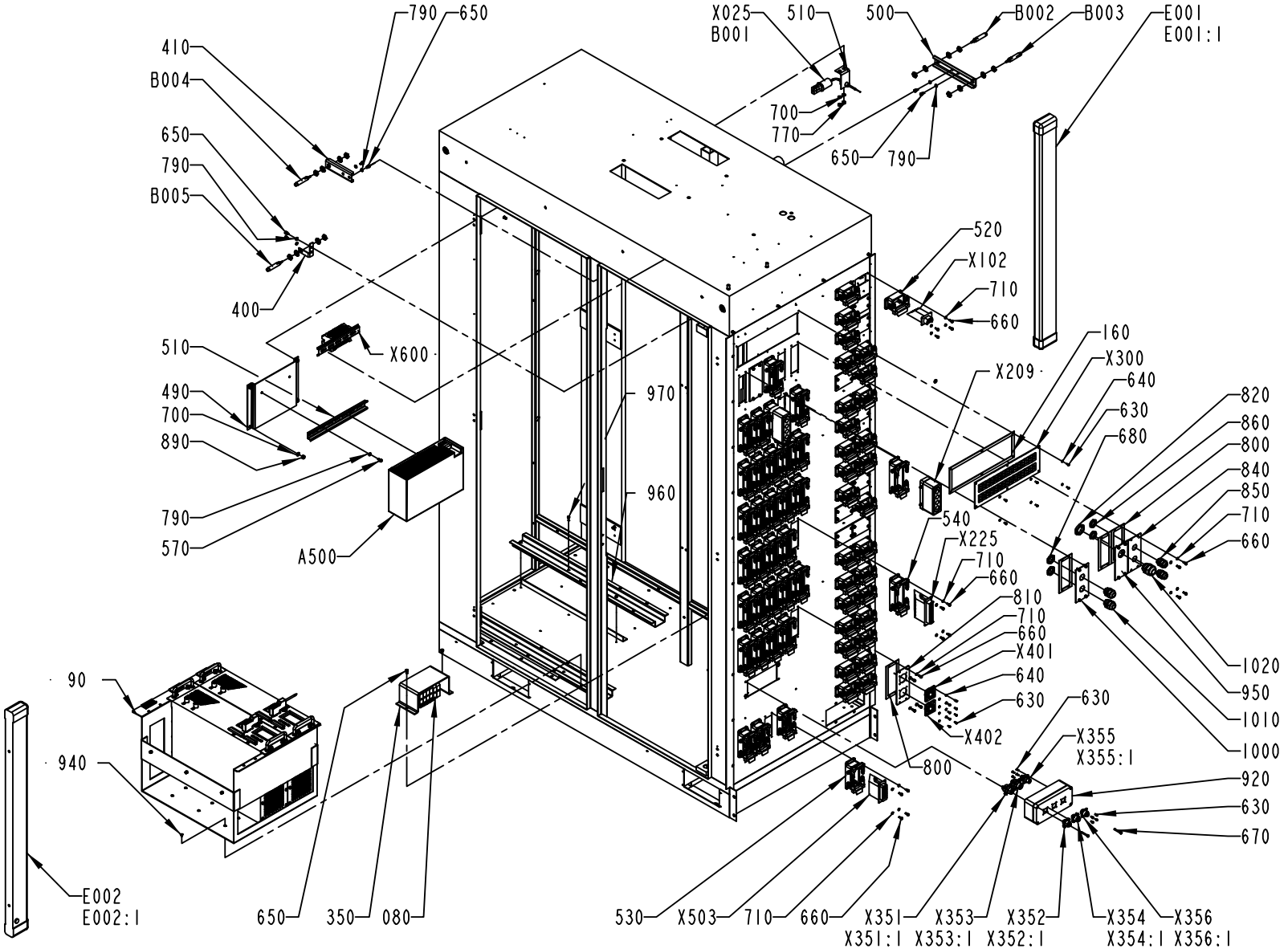

1279809-3
ECM 151944

Pos	Part No	SP	UN	Qty	Description	Page No
Common Parts (Cont'd)						
740	312605-0312	-		1	HEXAGON NUT, M6M M4 A280	
760	90099-0096	-		1	NUT	
770	312605-0316	-		36	HEXAGON NUT, M6M M6 A280	
780	90165-0159	-		2	PIPE CLAMP, RSGU 1 25/20-W4, D=25 MM	
790	315105-0146	-		28	BRICKA BRB5,3X10RFR	
800	1129550-0000	-		4	GASKET	
810	1129549-0000	-		1	SHEET	
820	90099-0119	-		1	NUT, PR 28,3 (PG21)	
830	312105-0364	-		4	SCREW M6S ISO 4017 M6X10 A480	
840	1038820-0000	-		1	COVER PLATE	
850	352103-0108	-		2	CABLE GLAND, ST 13,5 , PR20,4/PG13,5	
860	90099-0118	-		2	NUT, PR 20,4 (PG13,5)	
870	312115-0329	-		4	SCREW ISO4762 M5X16 A4	
880	1140769-0000	-		2	DOOR STOPPER	
890	312812-0316	-		11	HEXAGON NUT, NY-LOCK M6 A480	
900	1140529-0000	-		1	PROTECTION PLATE	
910	1140523-0000	-		1	PROTECTION PLATE	
920	1285523-0000	-		1	CONNECTION BOX	
930	1140527-0000	-		1	PROTECTION PLATE	
940	312141-0287	-		12	SCREW COUNTERS.SLOT.HD. MFS 4X8 FZB	
950	1038876-0000	-		1	COVERING PLATE	
960	2543220-0000	-		1	PROFILE	
970	312115-0291	-		6	SCREW ISO4762 M4X12 A4	
980	312810-0316	-		4	HEXAGON NUT, NY-LOCK M6 FZB	
A500	90458-0724	A		1	STABILIZED POWER SUPPLY, SITOP 40A 24VDC	
B001	90326-0053	A		1	THERMOCOUPLE, 12826-35	
B002	90458-0672	-		1	PROXIMITY SENSOR E2E2-X5MB1-5M	
B003	90458-0672	-		1	PROXIMITY SENSOR E2E2-X5MB1-5M	
B004	90458-0672	-		1	PROXIMITY SENSOR E2E2-X5MB1-5M	
B005	90458-0672	-		1	PROXIMITY SENSOR E2E2-X5MB1-5M	
E001	90459-2560	B		1	LIGHT FIXTURE, TMS121 1XTL-D30W/830 IP	
E001:1	90297-0011	A		1	FLUORESCENT TUBE, TDL 30W/840	
E002	90459-2560	B		1	LIGHT FIXTURE, TMS121 1XTL-D30W/830 IP	
E002:1	90297-0011	A		1	FLUORESCENT TUBE, TDL 30W/840	
X025	90326-0020	-		1	PLUG, FEMALE YELLOW CR-AL	
X101	90110-0161	A		1	FEMALE INSERT 70 105 0653 0	
X102	90110-0161	A		1	FEMALE INSERT 70 105 0653 0	
X103	90110-0161	A		1	FEMALE INSERT 70 105 0653 0	
X105	90110-0161	A		1	FEMALE INSERT 70 105 0653 0	
X107	90110-0161	A		1	FEMALE INSERT 70 105 0653 0	
X108	90110-0161	A		1	FEMALE INSERT 70 105 0653 0	
X110	90110-0161	A		1	FEMALE INSERT 70 105 0653 0	
X111	90110-0161	A		1	FEMALE INSERT 70 105 0653 0	
X112	90110-0161	A		1	FEMALE INSERT 70 105 0653 0	
X113	90110-0161	A		1	FEMALE INSERT 70 105 0653 0	
X115	90110-0161	A		1	FEMALE INSERT 70 105 0653 0	
X116	90110-0161	A		1	FEMALE INSERT 70 105 0653 0	
X117	90110-0161	A		1	FEMALE INSERT 70 105 0653 0	
X118	90110-0161	A		1	FEMALE INSERT 70 105 0653 0	
X119	90110-0161	A		1	FEMALE INSERT 70 105 0653 0	
X122	90110-0161	A		1	FEMALE INSERT 70 105 0653 0	
X125	90110-0161	A		1	FEMALE INSERT 70 105 0653 0	
X126	90110-0161	A		1	FEMALE INSERT 70 105 0653 0	
X127	90110-0161	A		1	FEMALE INSERT 70 105 0653 0	
X128	90110-0161	A		1	FEMALE INSERT 70 105 0653 0	
X129	90110-0161	A		1	FEMALE INSERT 70 105 0653 0	
X130	90110-0161	A		1	FEMALE INSERT 70 105 0653 0	
X131	90110-0161	A		1	FEMALE INSERT 70 105 0653 0	
X132	90110-0161	A		1	FEMALE INSERT 70 105 0653 0	
X133	90110-0161	A		1	FEMALE INSERT 70 105 0653 0	
X134	90110-0161	A		1	FEMALE INSERT 70 105 0653 0	
X135	90110-0161	A		1	FEMALE INSERT 70 105 0653 0	
X136	90110-0161	A		1	FEMALE INSERT 70 105 0653 0	
X137	90110-0161	A		1	FEMALE INSERT 70 105 0653 0	
X138	90110-0161	A		1	FEMALE INSERT 70 105 0653 0	
X203	90110-0164	A		1	FEMALE INSERT 70 105 2453 3	
X206	90110-0164	A		1	FEMALE INSERT 70 105 2453 3	
X207	90110-0164	A		1	FEMALE INSERT 70 105 2453 3	
X208	90110-0381	-		1	COVER	
X209	90110-0381	-		1	COVER	
X211	90110-0164	A		1	FEMALE INSERT 70 105 2453 3	
X212	90110-0164	A		1	FEMALE INSERT 70 105 2453 3	
X213	90110-0164	A		1	FEMALE INSERT 70 105 2453 3	
X214	90110-0164	A		1	FEMALE INSERT 70 105 2453 3	
X215	90110-0164	A		1	FEMALE INSERT 70 105 2453 3	
X216	90110-0164	A		1	FEMALE INSERT 70 105 2453 3	
X217	90110-0164	A		1	FEMALE INSERT 70 105 2453 3	
X218	90110-0164	A		1	FEMALE INSERT 70 105 2453 3	
X219	90110-0164	A		1	FEMALE INSERT 70 105 2453 3	
X220	90110-0164	A		1	FEMALE INSERT 70 105 2453 3	
X221	90110-0164	A		1	FEMALE INSERT 70 105 2453 3	
X222	90110-0164	A		1	FEMALE INSERT 70 105 2453 3	
X223	90110-0164	A		1	FEMALE INSERT 70 105 2453 3	

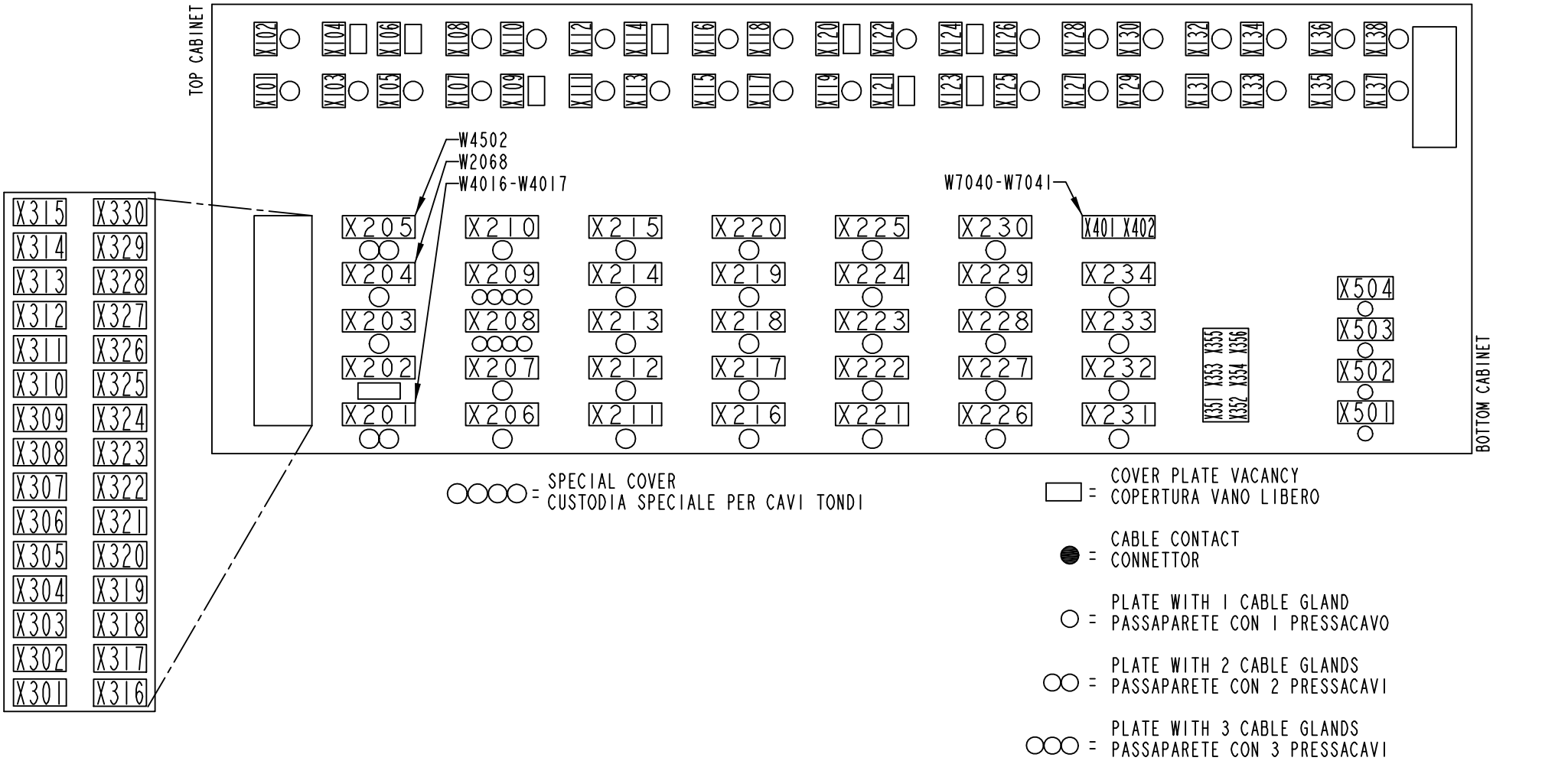

1279809-3
ECM 151944

Pos	Part No	SP	UN	Qty	Description	Page No
Common Parts (Cont'd)						
X224	90110-0164	A		1	FEMALE INSERT 70 105 2453 3	
X225	90110-0164	A		1	FEMALE INSERT 70 105 2453 3	
X226	90110-0164	A		1	FEMALE INSERT 70 105 2453 3	
X227	90110-0164	A		1	FEMALE INSERT 70 105 2453 3	
X228	90110-0164	A		1	FEMALE INSERT 70 105 2453 3	
X229	90110-0164	A		1	FEMALE INSERT 70 105 2453 3	
X230	90110-0164	A		1	FEMALE INSERT 70 105 2453 3	
X231	90110-0164	A		1	FEMALE INSERT 70 105 2453 3	
X232	90110-0164	A		1	FEMALE INSERT 70 105 2453 3	
X233	90110-0164	A		1	FEMALE INSERT 70 105 2453 3	
X234	90110-0164	A		1	FEMALE INSERT 70 105 2453 3	
X300	90326-0316	-		1	THERMO CONTACT PANEL	
X351	90110-0507	-		1	CHASSIES CONTACT	
X351:1	90110-0380	-		7	CONTACT PIN	
X352	90110-0505	-		1	CHASSIES CONTACT	
X352:1	90110-0209	-		7	CONTACT PIN, RC20M13K	
X353	90110-0507	-		1	CHASSIES CONTACT	
X353:1	90110-0380	-		11	CONTACT PIN	
X354	90110-0505	-		1	CHASSIES CONTACT	
X354:1	90110-0209	-		7	CONTACT PIN, RC20M13K	
X355	90110-0506	-		1	CHASSIES CONTACT	
X355:1	90110-0380	-		7	CONTACT PIN	
X356	90110-0505	-		1	CHASSIES CONTACT	
X356:1	90110-0209	-		7	CONTACT PIN, RC20M13K	
X401	90110-0236	-		1	CHASSIS CONTACT PX0767/S	
X402	90110-0236	-		1	CHASSIS CONTACT PX0767/S	
X501	90110-0165	A		1	FEMALE INSERT 70.005.0653.0	
X503	90110-0165	A		1	FEMALE INSERT 70.005.0653.0	
X504	90110-0165	-		1	FEMALE INSERT 70.005.0653.0	
X600	2541122-0100	-		1	DISTRIBUTION TERMINAL	**7-27**

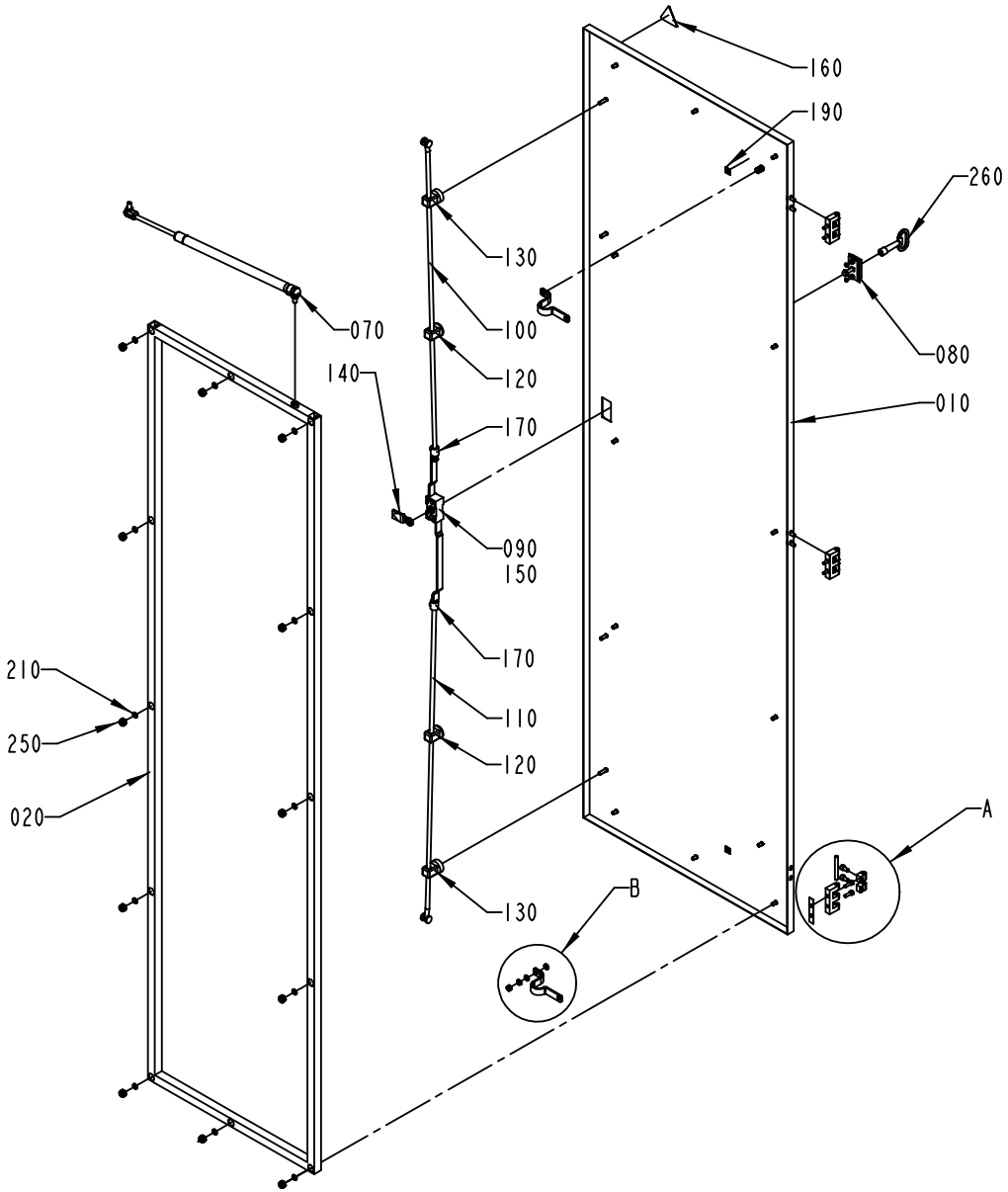

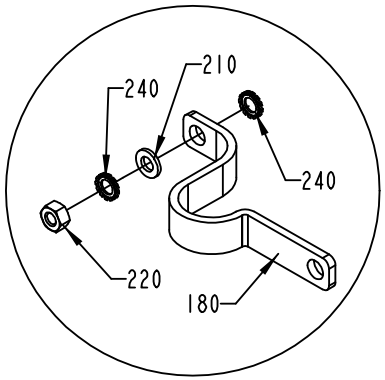

B
13:25

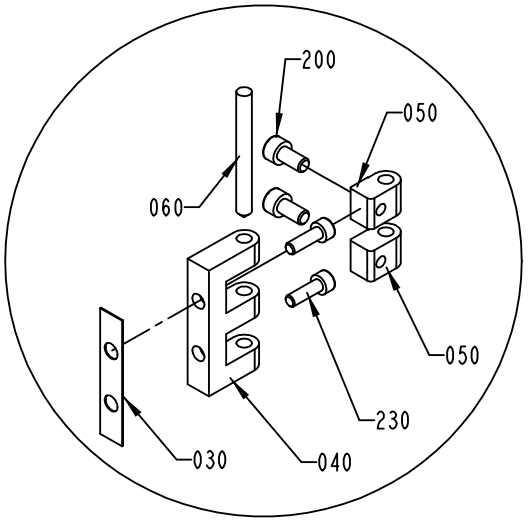

A
13:25

1282034-2
ECM 94660

ECM: 104178 - 20011123
Group number: 1282034-0200
Assembly Drawing: 1282034-2_1_AB

Pos	Part No	SP	UN	Qty	Description	Page No
-						
010	1346468-0000	-		1	DOOR	
020	2506829-0000	-		1	FRAME	
030	988666-0000	-		3	GASKET	
040	1035792-0000	-		3	E-HINGE	
050	1129770-0000	-		6	BLOCKING PIECE	
060	988685-0000	-		3	PIN	
070	90347-0163	-		1	GAS-DAMPER	
080	90237-0160	-		1	ESCUTCHEON WITH SQUARE, 1121-U23/U13	
090	90237-0153	-		1	LOCK HOUSING, 1121-U26-0B	
100	90237-0168	-		1	ROUND BAR WITH END WHEEL, 1049-U5	
110	1348846-0000	-		1	ROD	
120	90237-0151	-		2	GUIDE, 1001-U11	
130	90237-0152	-		2	GUIDE, 1001-U12	
140	90237-0156	-		1	LOCK BOLT, 1000-16	
150	90237-0155	-		1	LOCK ADAPTER, 1121-U40	
160	359705-0015	-		1	WARNING SIGN ISO, RISK OF ELECTRIC SHOCK	
170	90237-0169	-		2	LOCK ADAPTER, 1000-U49	
180	90135-0035	-		2	EARTH WIRE, L=250 MM 16 MM2	
190	90194-0152	-		2	SIGN, EARTH	
200	312115-0366	-		6	SCREW ISO4762 M6X12 A4	
210	315105-0153	-		14	WASHER BRB6,4X12RFR	
220	312605-0316	-		2	HEXAGON NUT, M6M M6 A280	
230	312115-0329	-		6	SCREW ISO4762 M5X16 A4	
240	90062-0015	-		4	LOCK WASHER SERRAT.EXT.GEAR,6,4/11 H=0,7	
250	312812-0318	-		12	HEXAGON NUT, NY-LOCK M8 A480	
260	90237-0324	-		1	KEY, 1104-02 FOR SQUARE 8 MM	

Pos	Part No	SP	UN	Qty	Description	Page No

Machine Type | Group Description | Used-In | Group Number | Page No

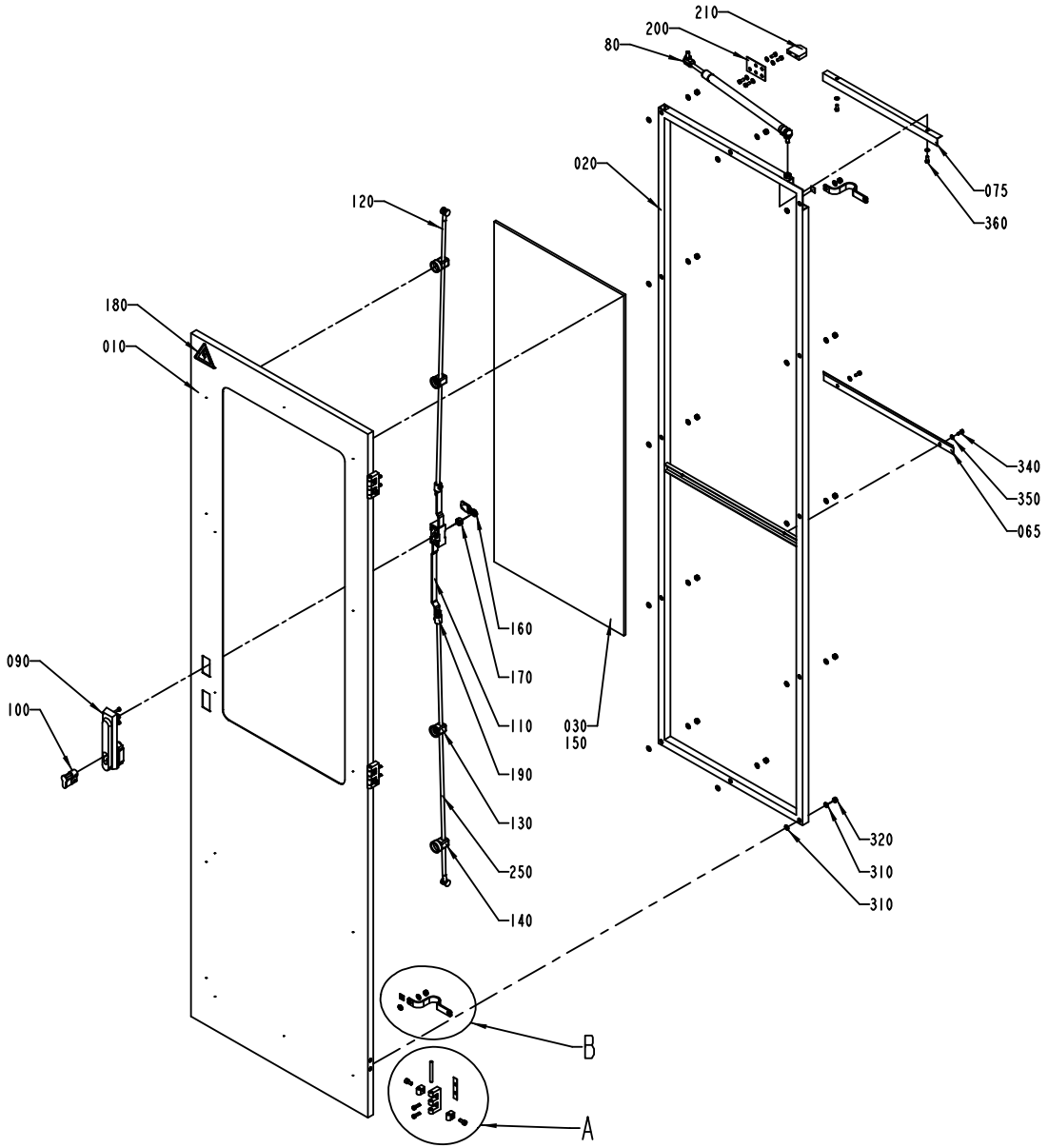

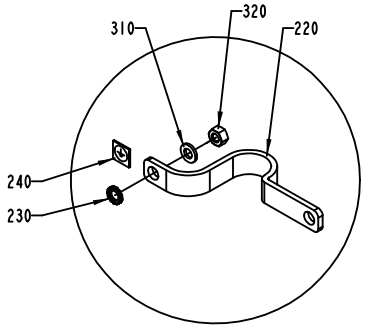

B
1:2

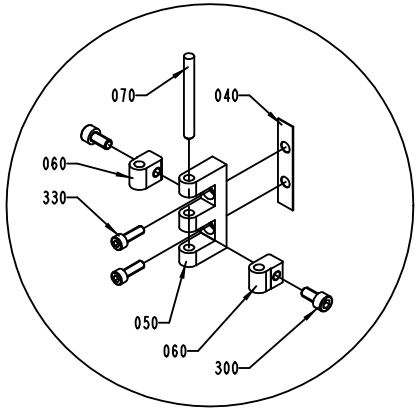

A
1:2

S-1282031-2
ECN 70798

ECM: 70798 - 19981211
Group number: 1282031-0200
Assembly Drawing: 1282031-2_1_AA

Pos	Part No	SP	UN	Qty	Description	Page No
-						
010	1041905-0000	-		1	DOOR	
020	1282030-0000	-		1	FRAME	
030	1129047-0000	-		1	GLASS PANE	
040	988666-0000	-		3	GASKET	
050	1035792-0000	-		3	E-HINGE	
060	1129770-0000	-		6	BLOCKING PIECE	
065	1282028-0000	-		1	BRACKET	
070	988685-0000	-		3	PIN	
075	1282029-0000	-		1	BRACKET	
080	90347-0163	-		1	GAS-DAMPER	
090	90237-0176	-		1	TURNING HANDLE	
100	90237-0128	-		1	LOCK CYLINDER, 1109-U3	
110	90237-0153	-		1	LOCK HOUSING, 1121-U26-0B	
120	90237-0168	-		1	ROUND BAR WITH END WHEEL, 1049-U5	
130	90237-0151	-		2	GUIDE, 1001-U11	
140	90237-0152	-		2	GUIDE, 1001-U12	
150	90157-0041	-		1	SEALING COMPOUND	
160	90237-0156	-		1	LOCK BOLT, 1000-16	
170	90237-0155	-		1	LOCK ADAPTER, 1121-U40	
180	90194-0016	-		1	WARNING SIGN, RISK OF ELECTRIC SHOCK	
190	90237-0169	-		2	LOCK ADAPTER, 1000-U49	
200	985851-0000	-		1	BRACKET	
210	970215-0000	-		1	STOP BLOCK	
220	90135-0035	-		2	EARTH WIRE, L=250 MM 16 MM2	
230	90062-0015	-		2	LOCK WASHER SERRAT.EXT.GEAR,6,4/11 H=0,7	
240	90194-0152	-		2	SIGN, EARTH	
250	1348846-0000	-		1	ROD	
300	312115-0366	-		6	SCREW ISO4762 M6X12 A4	
310	315105-0153	-		24	WASHER BRB6,4X12RFR	
320	312605-0316	-		12	HEXAGON NUT, M6M M6 A280	
330	312115-0329	-		6	SCREW ISO4762 M5X16 A4	
340	312125-0327	-		7	SLOTTED CHEESE HEAD SCREW MCS 5X12 SS	
350	315105-0146	-		9	BRICKA BRB5,3X10RFR	
360	312121-0327	-		2	SCREW SLOT.PAN HD. MCS 5X12 FZB	

Pos	Part No	SP	UN	Qty	Description	Page No

Machine Type | Group Description | Used-In | Group Number | Page No

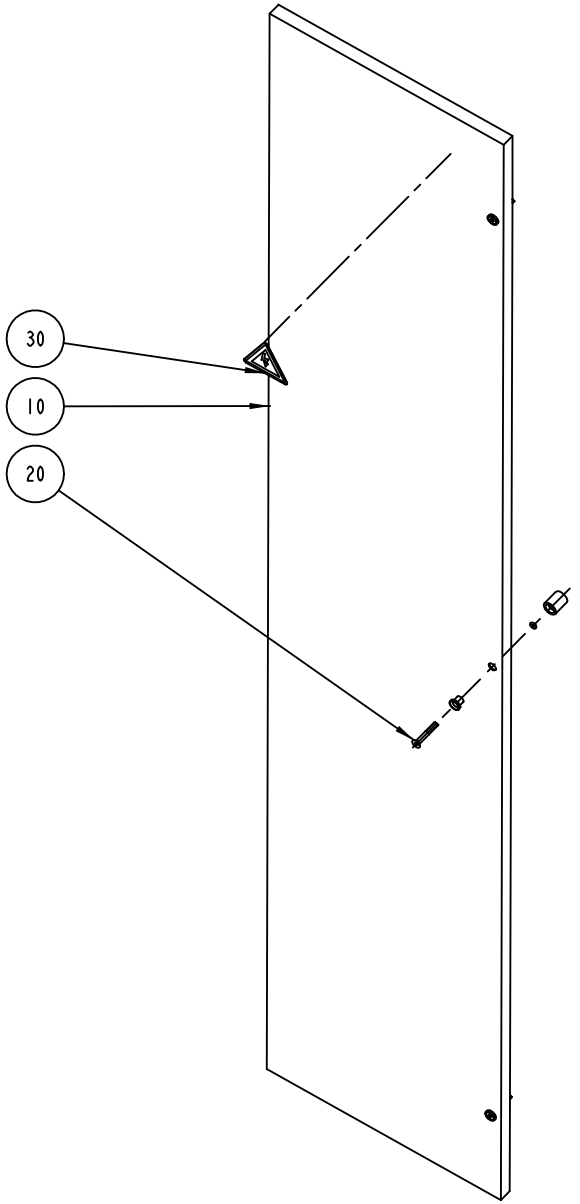
30
10
20

ECM: - -
Group number: 1095634-0100
Assembly Drawing: 1095634-1_1_AA

Pos	Part No	SP	UN	Qty	Description	Page No
-						
010	1041939-0000	-		1	DOOR	
020	90226-0458	-		3	MOUNTING SCREW	
030	90194-0016	-		1	WARNING SIGN, RISK OF ELECTRIC SHOCK	

Pos	Part No	SP	UN	Qty	Description	Page No

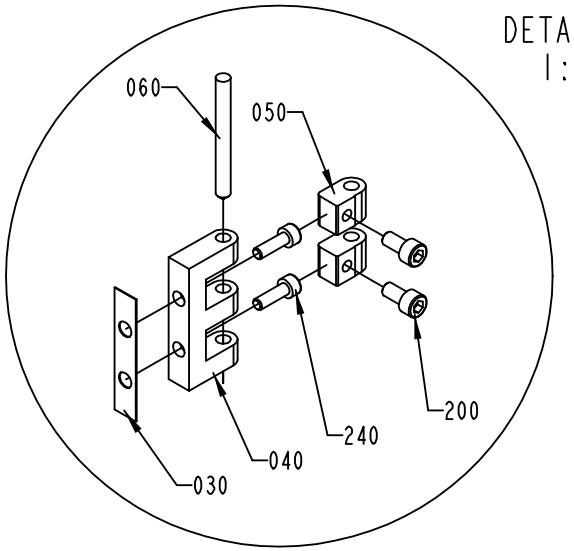
DETAIL A
1:2
060
050
200
240
040
030

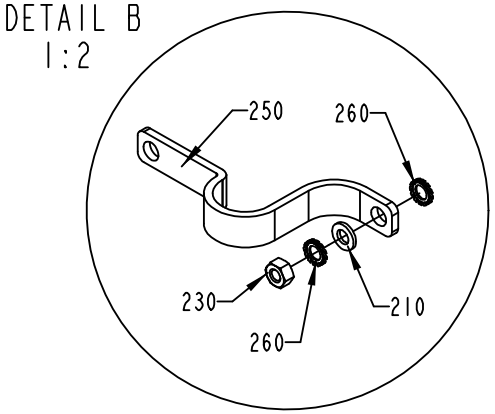
DETAIL B
1:2
250
260
230
210
260

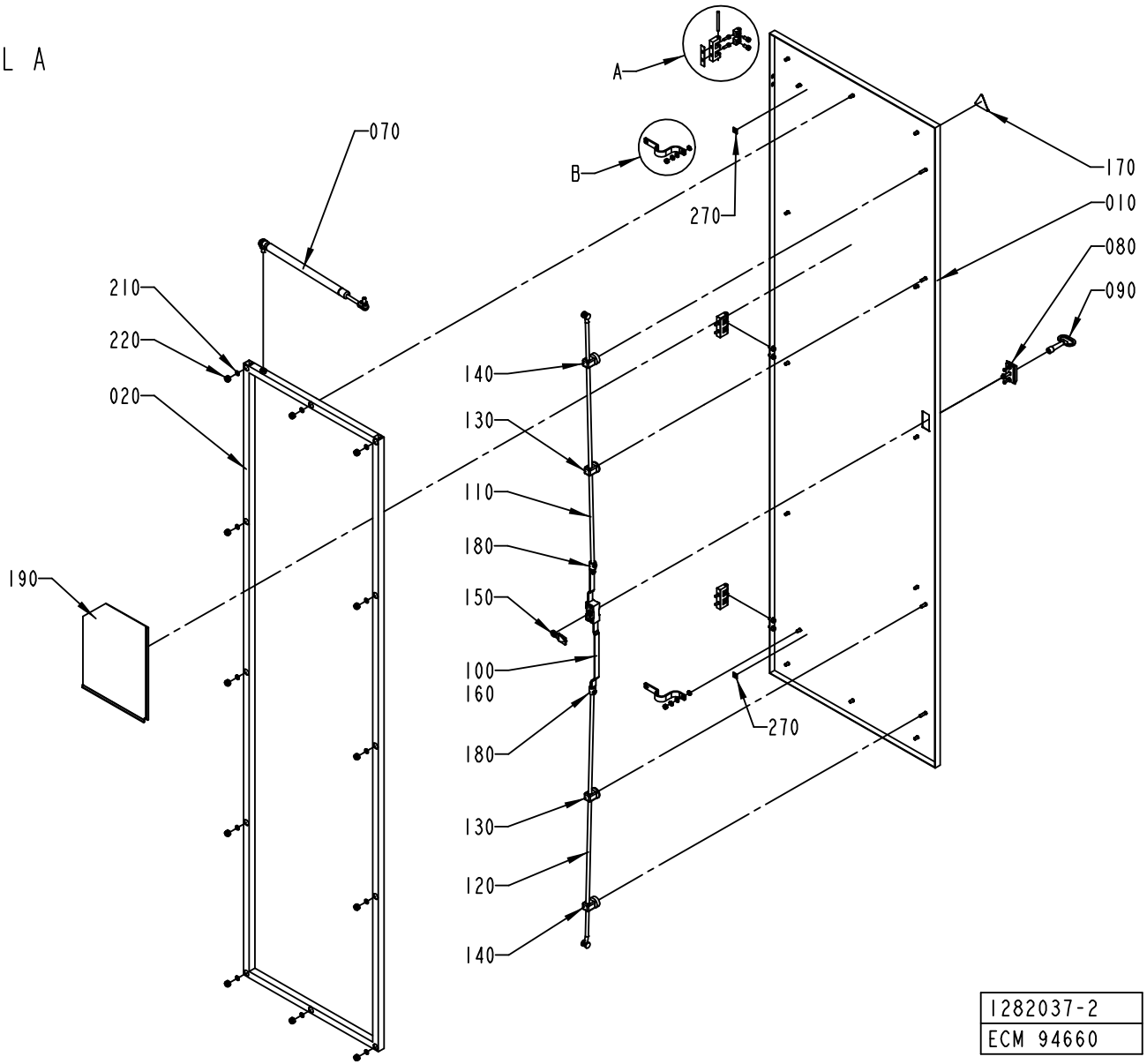
A
B
070
270
170
010
080
090
210
220
020
140
130
110
180
150
190
100
160
180
270
130
120
140
1282037-2
ECM 94660

ECM: 104177 - 20011123
Group number: 1282037-0200
Assembly Drawing: 1282037-2_1_AB

Pos	Part No	SP	UN	Qty	Description	Page No
-						
010	1041977-0000	-		1	DOOR	
020	1282350-0000	-		1	FRAME	
030	988666-0000	-		3	GASKET	
040	1035792-0000	-		3	E-HINGE	
050	1129770-0000	-		6	BLOCKING PIECE	
060	988685-0000	-		3	PIN	
070	90347-0163	-		1	GAS-DAMPER	
080	90237-0160	-		1	ESCUTCHEON WITH SQUARE, 1121-U23/U13	
090	90237-0324	-		1	KEY, 1104-02 FOR SQUARE 8 MM	
100	90237-0153	-		1	LOCK HOUSING, 1121-U26-0B	
110	90237-0168	-		1	ROUND BAR WITH END WHEEL, 1049-U5	
120	1348846-0000	-		1	ROD	
130	90237-0151	-		2	GUIDE, 1001-U11	
140	90237-0152	-		2	GUIDE, 1001-U12	
150	90237-0156	-		1	LOCK BOLT, 1000-16	
160	90237-0155	-		1	LOCK ADAPTER, 1121-U40	
170	359705-0015	-		1	WARNING SIGN ISO, RISK OF ELECTRIC SHOCK	
180	90237-0169	-		2	LOCK ADAPTER, 1000-U49	
190	1036977-0000	-		1	HOLDER	
200	312115-0366	-		6	SCREW ISO4762 M6X12 A4	
210	315105-0153	-		14	WASHER BRB6,4X12RFR	
220	312812-0318	-		12	HEXAGON NUT, NY-LOCK M8 A480	
230	312605-0316	-		2	HEXAGON NUT, M6M M6 A280	
240	312115-0329	-		6	SCREW ISO4762 M5X16 A4	
250	90135-0035	-		2	EARTH WIRE, L=250 MM 16 MM2	
260	90062-0015	-		4	LOCK WASHER SERRAT.EXT.GEAR,6,4/11 H=0,7	
270	90194-0152	-		2	SIGN, EARTH	

Pos	Part No	SP	UN	Qty	Description	Page No

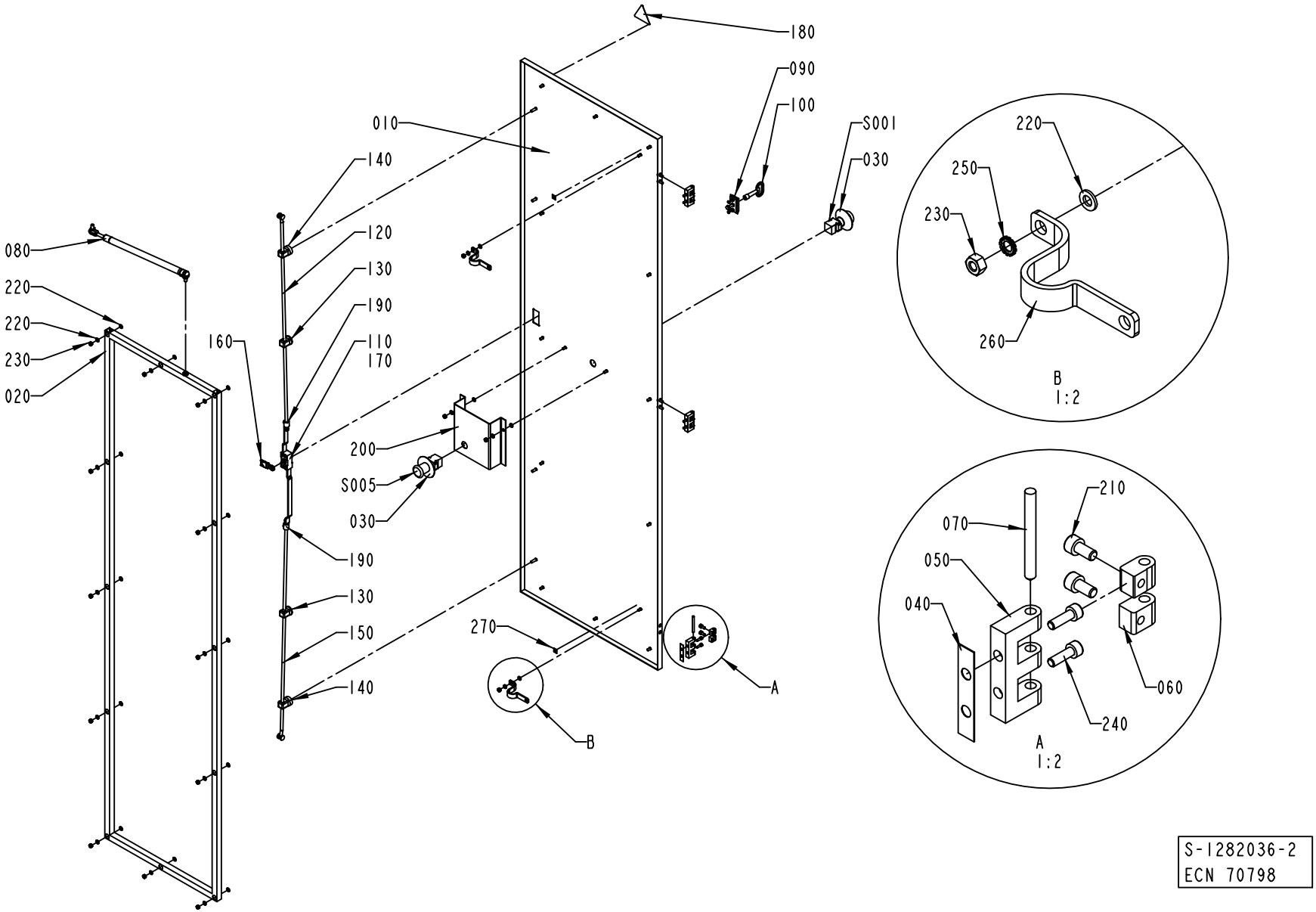

S-1282036-2
ECN 70798

ECM: 70798 - 19981211
Group number: 1282036-0200
Assembly Drawing: 1282036-2_1_AA

Pos	Part No	SP	UN	Qty	Description	Page No
-						
010	1041920-0000	-		1	DOOR	
020	1285521-0000	-		1	FRAME	
030	486826-0001	-		2	SIGN "EMERGENCY STOP"	
040	988666-0000	-		3	GASKET	
050	1035792-0000	-		3	E-HINGE	
060	1129770-0000	-		6	BLOCKING PIECE	
070	988685-0000	-		3	PIN	
080	90347-0163	-		1	GAS-DAMPER	
090	90237-0160	-		1	ESCUTCHEON WITH SQUARE, 1121-U23/U13	
100	90237-0324	-		1	KEY, 1104-02 FOR SQUARE 8 MM	
110	90237-0153	-		1	LOCK HOUSING, 1121-U26-0B	
120	90237-0168	-		2	ROUND BAR WITH END WHEEL, 1049-U5	
130	90237-0151	-		2	GUIDE, 1001-U11	
140	90237-0152	-		2	GUIDE, 1001-U12	
150	1348846-0000	-		1	ROD	
160	90237-0156	-		1	LOCK BOLT, 1000-16	
170	90237-0155	-		1	LOCK ADAPTER, 1121-U40	
180	90194-0016	-		1	WARNING SIGN, RISK OF ELECTRIC SHOCK	
190	90237-0169	-		2	LOCK ADAPTER, 1000-U49	
200	1140555-0000	-		1	BRACKET	
210	312115-0366	-		6	SCREW ISO4762 M6X12 A4	
220	315105-0153	-		30	WASHER BRB6,4X12RFR	
230	312605-0316	-		16	HEXAGON NUT, M6M M6 A280	
240	312115-0329	-		6	SCREW ISO4762 M5X16 A4	
250	90062-0015	-		2	LOCK WASHER SERRAT.EXT.GEAR,6,4/11 H=0,7	
260	90135-0035	-		2	EARTH WIRE, L=250 MM 16 MM2	
270	90194-0152	-		2	SIGN, EARTH	
S001	90064-0124	-		1	SWITCH, EM. STOP, ZB2-BS844+ZB2-BZ1045	
S005	90064-0124	-		1	SWITCH, EM. STOP, ZB2-BS844+ZB2-BZ1045	

Pos	Part No	SP	UN	Qty	Description	Page No

Machine Type	Group Description	Used-In	Group Number	Page No

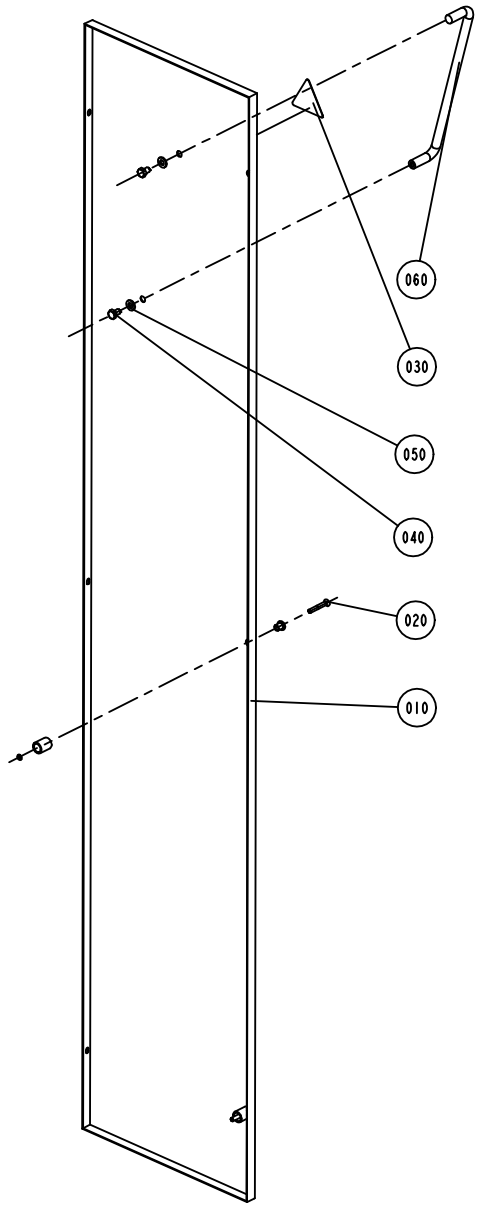
060
030
050
040
020
010

ECM: - -
Group number: 1095637-0100
Assembly Drawing: 1095637-1_1_AA

Pos	Part No	SP	UN	Qty	Description	Page No
-						
010	1041948-0000	-		1	DOOR	
020	90226-0458	-		3	MOUNTING SCREW	
030	90194-0016	-		1	WARNING SIGN, RISK OF ELECTRIC SHOCK	
040	312105-0447	-		2	SCREW M6S ISO 4017 M8X12 A480	
050	90005-0077	-		2	WASHER PL.RND.NYL.8,4/7, H=2	
060	90017-0015	-		1	HANDLE, NO. 14.4012.02.308	

Pos	Part No	SP	UN	Qty	Description	Page No

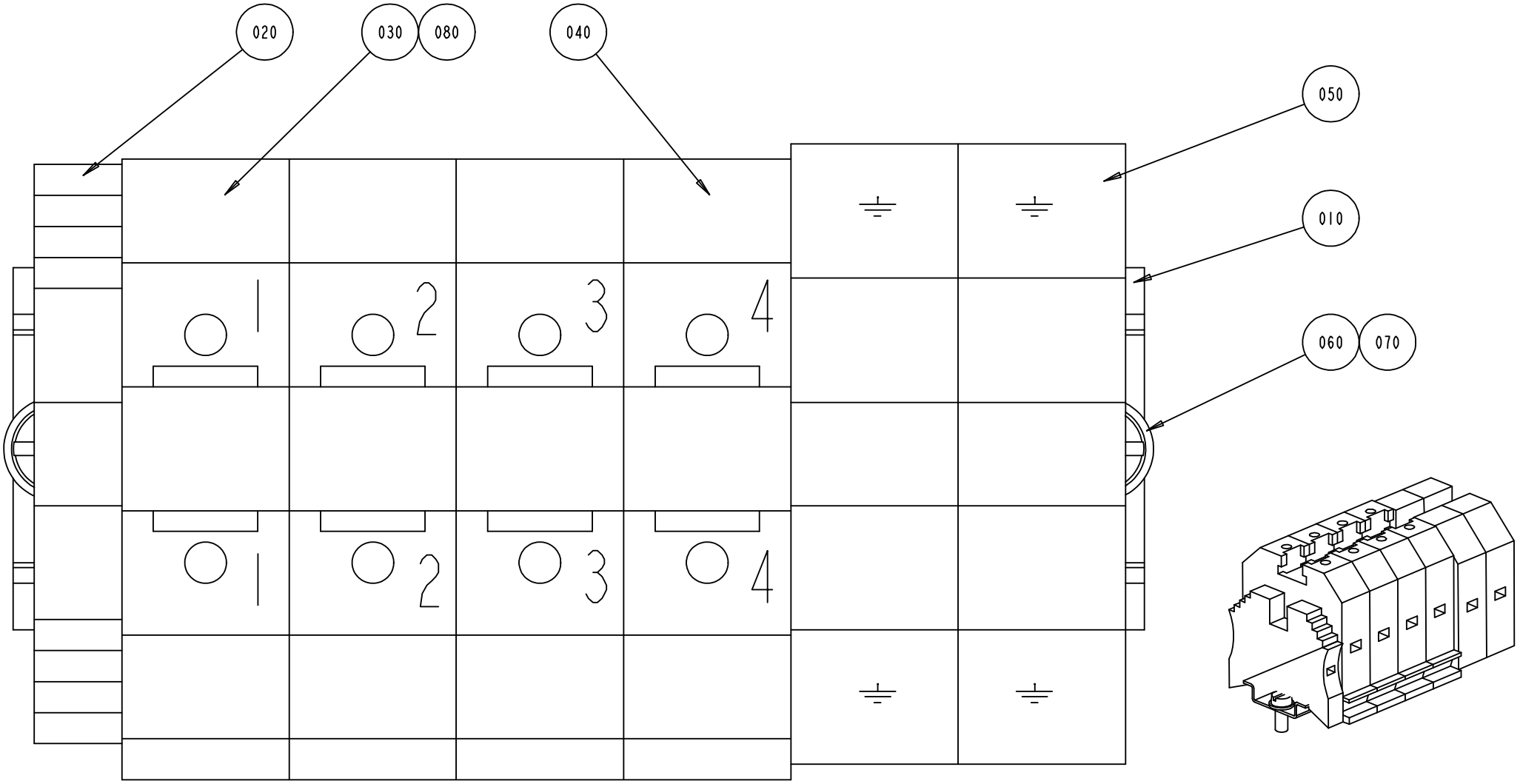
020
030
080
040
050
010
060
070
1
2
3
4
1
2
3
4

ECM: 71142 -
Group number: 1095778-0100
Assembly Drawing: 1095778-1_1_AA

Pos	Part No	SP	UN	Qty	Description	Page No
-						
010	353042-0005	-	MM	130	RAIL TS 35/7.5	
020	353031-0203	-		1	END SUPPORT, WEW 35/2	
030	353021-0219	-		3	FEED THROUGH TERMINAL, 10205.0	
040	353021-0226	-		1	BY-PASS TERMINAL WDU 35	
050	353024-0209	-		2	EARTH TERMINAL, 1010.5	
060	312125-0327	-		2	SLOTTED CHEESE HEAD SCREW MCS 5X12 SS	
070	315105-0146	-		2	BRICKA BRB5,3X10RFR	
080	359011-0807	-		2	MARKING PLATES 5-FW 1-50	

Pos	Part No	SP	UN	Qty	Description	Page No

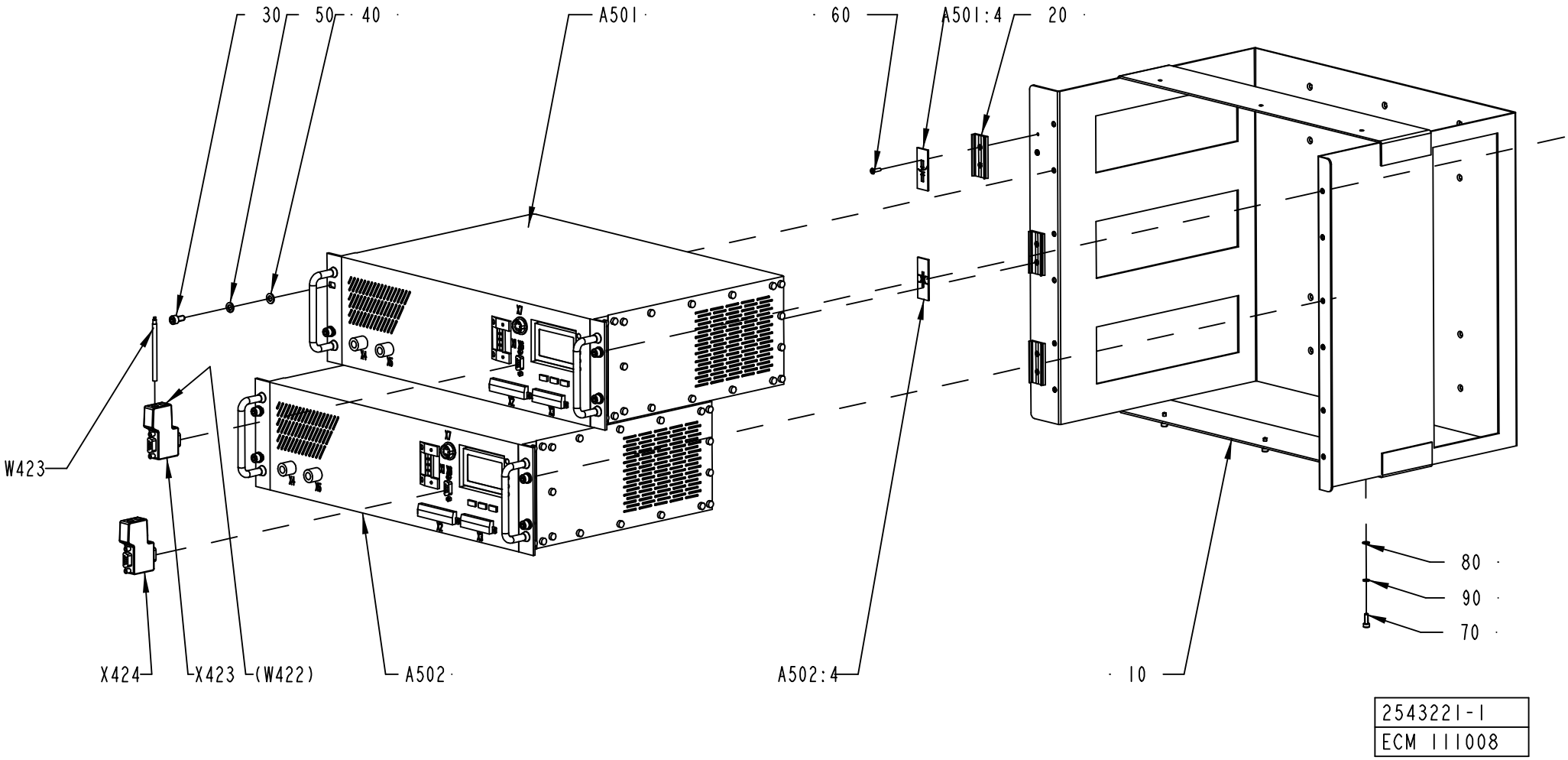
30
50
40
A501
60
A501:4
20
W423
80
90
70
X424
X423
(W422)
A502
A502:4
10
2543221-1
ECM 111008

ECM: 111620 - 20020916
Group number: 2543221-0100
Assembly Drawing: 2543221-1_1_AB

Pos	Part No	SP	UN	Qty	Description	Page No
-						
010	2542330-0000	-		1	SUPPORT	
020	359240-0100	-		3	SIGN HOLDER FOR 359240-0001	
030	312115-0366	-		8	SCREW ISO4762 M6X12 A4	
040	315105-0153	-		8	WASHER BRB6,4X12RFR	
050	315402-0156	-		8	LOCK WASHER FBB 6,5	
060	311521-0146	-		6	BLANK RIVET 3,2X12	
070	312115-0291	-		3	SCREW ISO4762 M4X12 A4	
080	315105-0136	-		3	WASHER BRB4,3XRFR	
090	315402-0136	-		3	LOCK WASHER FBB 4,1	
A501	1499642-0101	-		1	TPIH 2500 HORIZONTAL MOUNTING	
A501:4	359241-0131	-		1	SIGN, TEMP. LS HEATER	
A502	1499642-0101	-		1	TPIH 2500 HORIZONTAL MOUNTING	
A502:4	359241-0135	-		1	SIGN, TRANSVERSAL SEALING	
W423	90458-2894	-	MM	400	PAIR TWISTED CABLE 1X2X0,2MM2	
X423	90459-0184	-		1	INTERFACE CONNECTOR FOR TPIH 2500 GENER.	
X424	90459-0184	-		1	INTERFACE CONNECTOR FOR TPIH 2500 GENER.	

Pos	Part No	SP	UN	Qty	Description	Page No

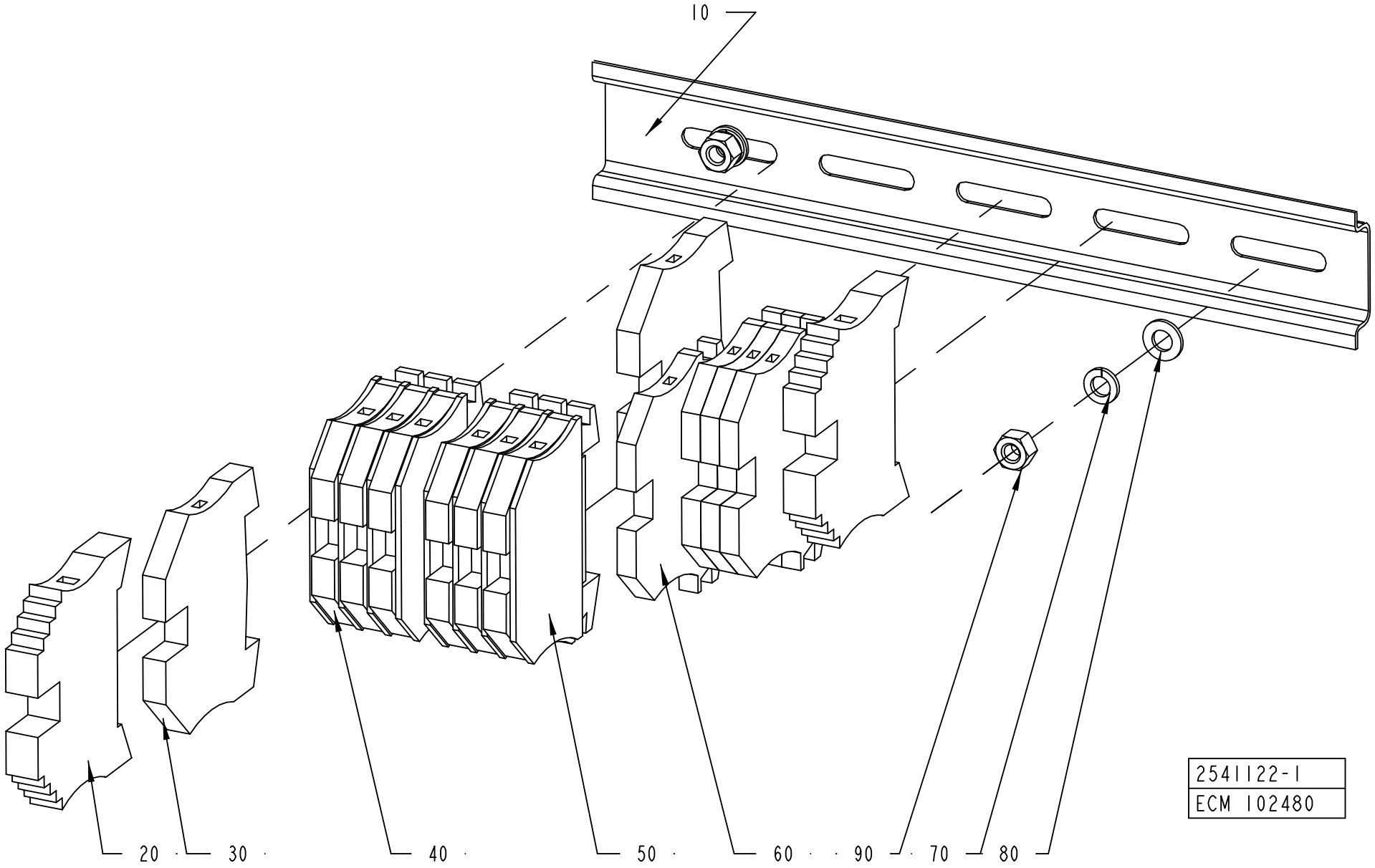
10
20
30
40
50
60
90
70
80
2541122-1
ECM 102480

ECM: 105174 - 20010926
Group number: 2541122-0100
Assembly Drawing: 2541122-1_1_AA

Pos	Part No	SP	UN	Qty	Description	Page No
-						
010	353042-0004	-	MM	200	RAIL TS 35/7,5	
020	353031-0203	-		2	END SUPPORT, WEW 35/2	
030	353024-0205	-		2	EARTH TERMINAL, 1010.1	
040	353021-0213	-		6	FEED THROUGH TERMINAL, 10201.0	
050	353032-0004	-		8	END PLATE WAP 2,5-10 BEIGE	
060	353021-0212	-		4	FEED THROUGH TERMINAL, 10200.0	
070	315402-0146	-		2	LOCK WASHER FBB 5,1	
080	315101-0146	-		2	WASHER PLAIN, BRB, 5,3/10 H=1	
090	312605-0314	-		2	HEXAGON NUT, M6M M5 A280	

Pos	Part No	SP	UN	Qty	Description	Page No

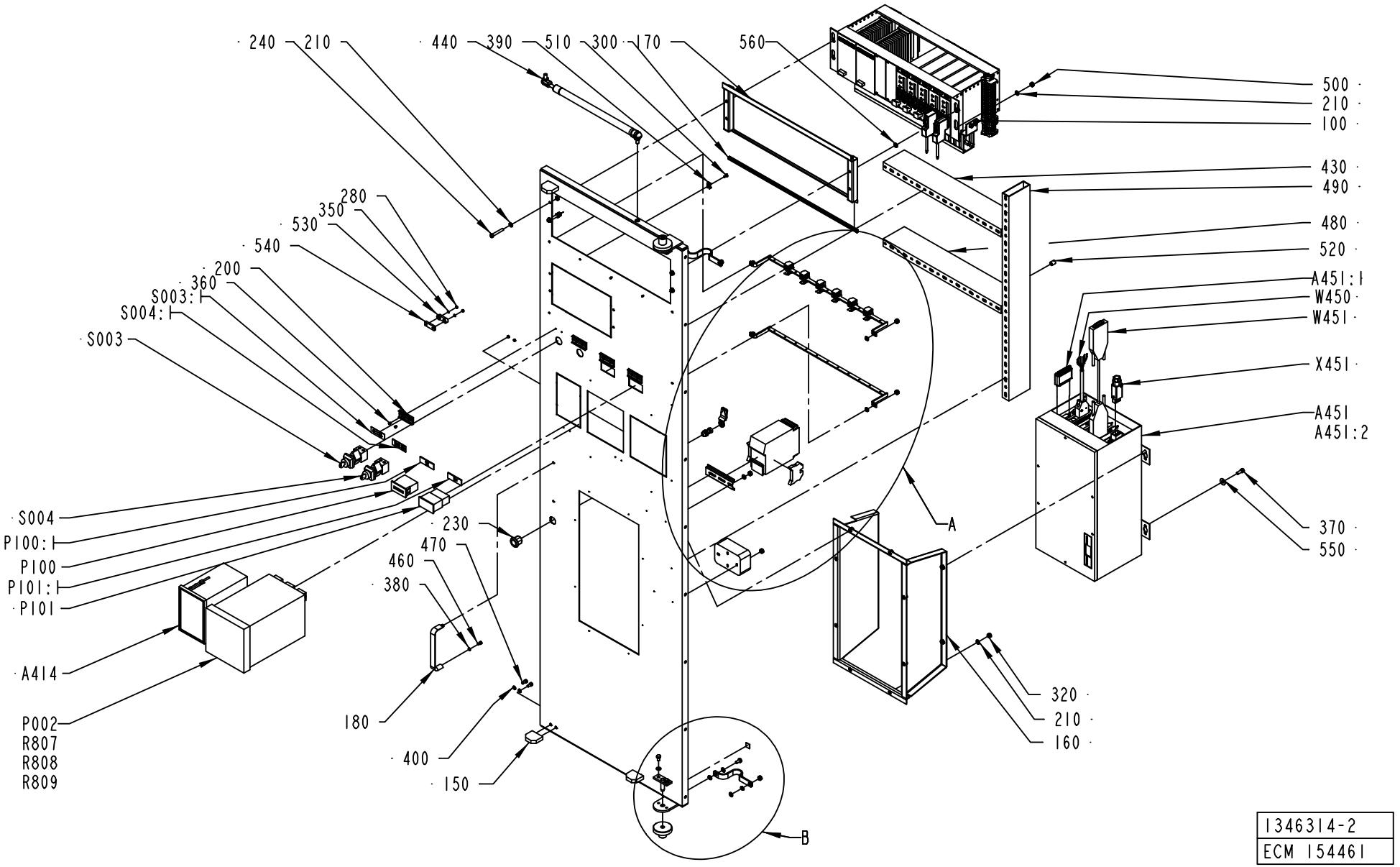
240
210
440
390
510
300
170
560
500
210
100
430
490
480
520
A451:1
W450
W451
X451
A451
A451:2
370
550
280
350
530
540
200
360
S003:1
S004:1
S003
S004
P100:1
P100
P101:1
P101
A414
P002
R807
R808
R809
230
470
460
380
180
400
150
A
B
320
210
160
1346314-2
ECM 154461

ECM: 154461 - 50001231
Group number: 1346314-0200
Assembly Drawing: 1346314-2_1_AB

This list covers pages from 7-28 to 7-31

Pos	Part No	SP	UN	Qty	Description	Page No
CIPSUPERV						
A414	90243-0214	A		1	CONDUCTIVITY METER	
A451	1363288-0301	-		1	FLEXBOX TETRA BRIK	
100	*90041-0092*	*A*		*1*	*FLEX BOX INNOSCAN E100006A*	
110	*90041-0083*	*A*		*1*	*HOST COMM. LINK BOARD LVDS, E000013A-02*	
120	*90458-0259*	*A*		*1*	*PROCESSOR BOARD PMMX E000032B*	
130	*90041-0087*	*A*		*1*	*SERIAL CARD 2 CHANNEL RS486/422 BOARD*	
140	*90041-0090*	*A*		*1*	*HARD DISC 2,5" , U036403A*	
150	*90041-0080*	*A*		*1*	*CABLE, CPU-LVDSCARD+DISPLAY-LVDSCARD*	
160	*90041-0086*	*A*		*1*	*CABLE, COM 2, 2223-0012-015*	
NOCIPSUPERV						
A451	1363288-0301	-		1	FLEXBOX TETRA BRIK	
100	*90041-0092*	*A*		*1*	*FLEX BOX INNOSCAN E100006A*	
110	*90041-0083*	*A*		*1*	*HOST COMM. LINK BOARD LVDS, E000013A-02*	
120	*90458-0259*	*A*		*1*	*PROCESSOR BOARD PMMX E000032B*	
130	*90041-0087*	*A*		*1*	*SERIAL CARD 2 CHANNEL RS486/422 BOARD*	
140	*90041-0090*	*A*		*1*	*HARD DISC 2,5" , U036403A*	
150	*90041-0080*	*A*		*1*	*CABLE, CPU-LVDSCARD+DISPLAY-LVDSCARD*	
160	*90041-0086*	*A*		*1*	*CABLE, COM 2, 2223-0012-015*	
Common Parts						
100	1285524-0300	-		1	RACK	**7-33, 7-35**
110	1484235-0000	-		1	SWING FRAME	
120	495377-0000	-		2	BUSH	
130	971346-0000	-		2	GUIDE PIN	
140	1116536-0000	-		2	BRACKET	
150	970215-0000	-		3	STOP BLOCK	
170	2544302-0000	-		1	FRAME	
180	90017-0017	-		1	HANDLE, NO. 547-128	
190	90237-0320	-		1	LOCK HOUSING, 1000-U136	
200	359240-0100	-		4	SIGN HOLDER FOR 359240-0001	
210	315105-0153	-		24	WASHER BRB6,4X12RFR	
220	90135-0035	-		2	EARTH WIRE, L=250 MM 16 MM2	
230	90237-0319	-		1	LOCK HOUSING, 1000-U134	
240	312125-0378	-		4	SLOTTED CHEESE HEAD SCREW MCS 6X40 SS	
250	90237-0157	-		1	LOCK BOLT, 1000-230	
260	90135-0039	-		6	SHIELD CLIP KLBU 4-13.5	
270	312105-0364	-		4	SCREW M6S ISO 4017 M6X10 A480	
280	312605-0310	-		4	HEXAGON NUT, M6M M3 A280	
290	312101-0366	-		2	SCREW M6S M6X12 FZB	
300	90143-0060	-	MM	485	EDGE STRIP 9,5X6,3MM BLACK PVC	
310	315101-0153	-		2	WASHER PLAIN, BRB, 6,4/12 H=1,5	
320	312812-0316	-		12	HEXAGON NUT, NY-LOCK M6 A480	
330	353042-0004	-	MM	100	RAIL TS 35/7,5	
340	353031-0203	-		2	END SUPPORT, WEW 35/2	
350	315105-0124	-		4	BRICKA BRB3,2X6RFR	
360	311520-0329	-		8	RIVET, BLANK 2,4X8	
370	312115-0368	-		4	SCREW ISO4762 M6X16 A4	
380	315105-0136	-		2	WASHER BRB4,3XRFR	
390	352113-0205	-		3	ANCHOR PLATES FOR STRIPS, TYPE TM2S8-C10	
400	315105-0146	-		6	BRICKA BRB5,3X10RFR	
410	312601-0316	-		2	NUT M6M 6-8 FZB	
420	90062-0022	-		8	LOCKING WASHER D=6,4/11	
430	90181-0052	-	MM	445	CABLE DUCT, 25X80MM	
440	90347-0163	-		1	GAS-DAMPER	
450	90194-0152	-		2	SIGN, EARTH	
460	312115-0287	-		2	SCREW ISO4762 M4X8 A4	
470	312115-0325	-		6	SCREW ISO4762 M5X10 A4	
480	90181-0052	-	MM	445	CABLE DUCT, 25X80MM	
490	90181-0052	-	MM	675	CABLE DUCT, 25X80MM	
500	312605-0316	-		8	HEXAGON NUT, M6M M6 A280	
510	312132-0287	-		3	SCREW SLOT. PAN HEAD MSCS M4X8	
520	1285109-0000	-		7	NUT	
530	90220-0302	-		2	CLAMP FOR SCR.CABLE, 16MM, 55-016-89	
540	90220-0304	-		2	CLAMP FOR SCR.CABLE, 24MM,	
550	90457-0192	-		4	WASHER PLAIN ROUND, 6,5/18, H=1,5	
560	90062-0015	-		4	LOCK WASHER SERRAT.EXT.GEAR,6,4/11 H=0,7	
A450	90453-0002	-		1	MODEM MD-12 DC	
A451:1	90456-0001	-		1	INTOUCH OEM 2000 V.5.6B/6.0B HW KEY	
A451:2	2505518-0200	-		1	SOFTWARE	**7-39**
P002	90459-0080	A		1	RECORDER 6-CHANNEL, LOGOPRINT 500	
P100	90053-0031	A		1	HOUR COUNTER, B 609.10 10-50VDC	
P100:1	359241-0201	-		1	SIGN "HOUR GLASS"	
P101	90053-0029	A		1	COUNTER, F524.800FA3C 24VDC	
P101:1	359241-0482	-		1	SIGN "PACKAGE COUNTER"	
R807	90121-0120	-		1	RESISTANCE FIXED, 0,25 KOHM, 0,125 W	
R808	90121-0120	-		1	RESISTANCE FIXED, 0,25 KOHM, 0,125 W	
R809	90121-0120	-		1	RESISTANCE FIXED, 0,25 KOHM, 0,125 W	
S003	90111-0122	A		1	KEY SWITCH, 2 NO CONTACTS	
S003:1	359241-0133	-		1	SIGN, SERVICE SWITCH	
S004	90111-0124	A		1	KEY SWITCH, 1NO,1NC CONTACT	
S004:1	359241-0122	-		1	SIGN, CIP OF STEAM BARRIER SPACE	
W450	1254442-0000	-		1	CABLE SERIAL	
W451	1317252-0000	-		1	CABLE SERIAL	
X011	90001-0033	-		1	WALL SOCKET OUTLET	

Machine Type | Group Description | Used-In | Group Number | Page No

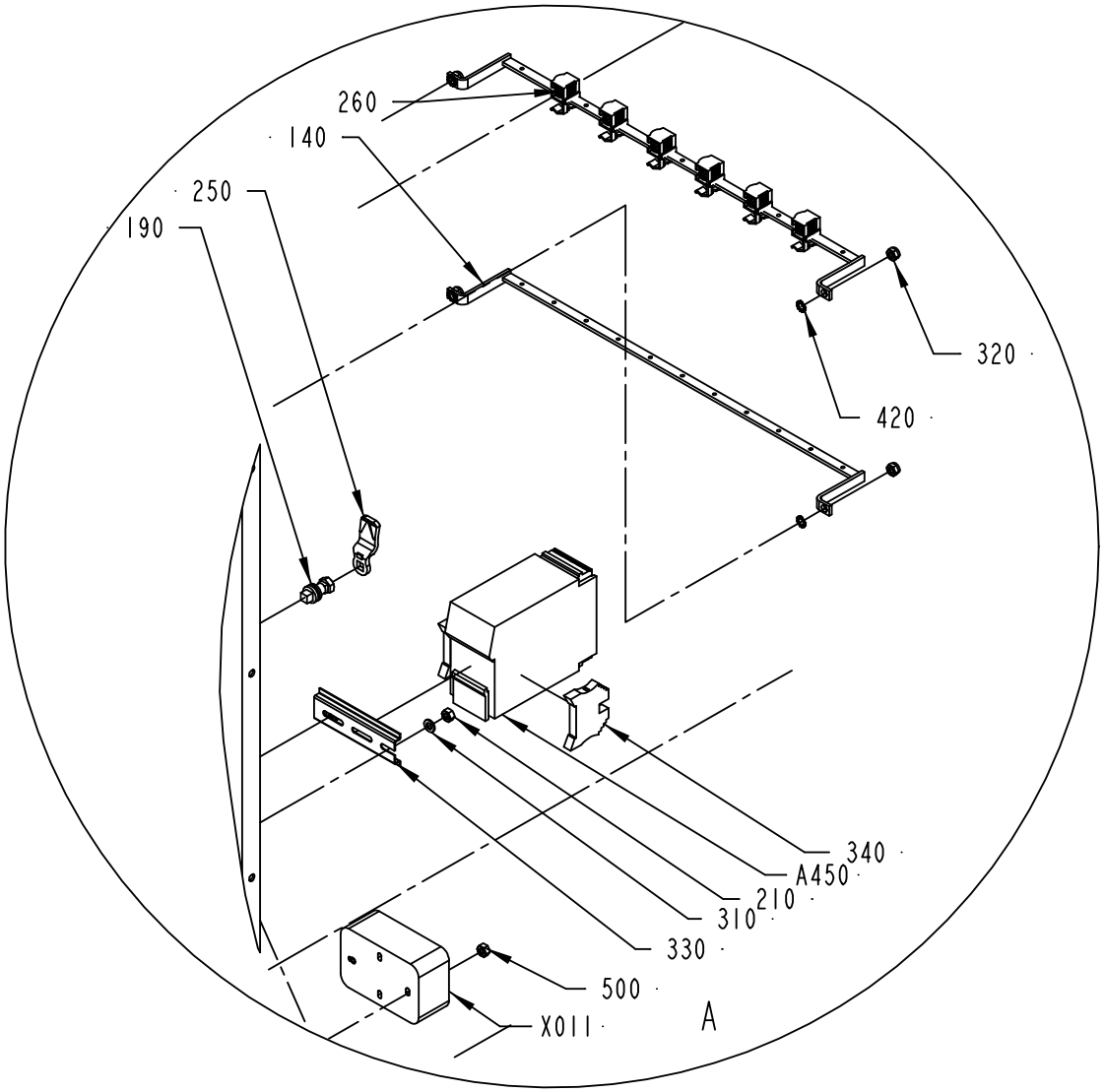

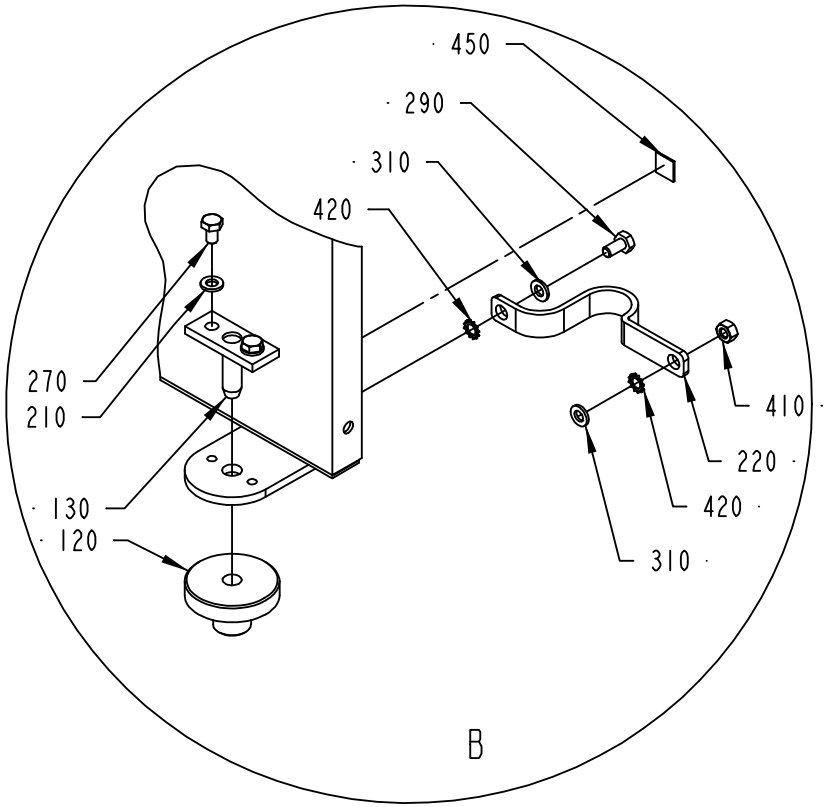

1346314-2
ECM 154461

Pos	Part No	SP	UN	Qty	Description	Page No
Common Parts (Cont'd)						
X451	90110-0028	-		1	CONTACT UNIT 4-POLE	

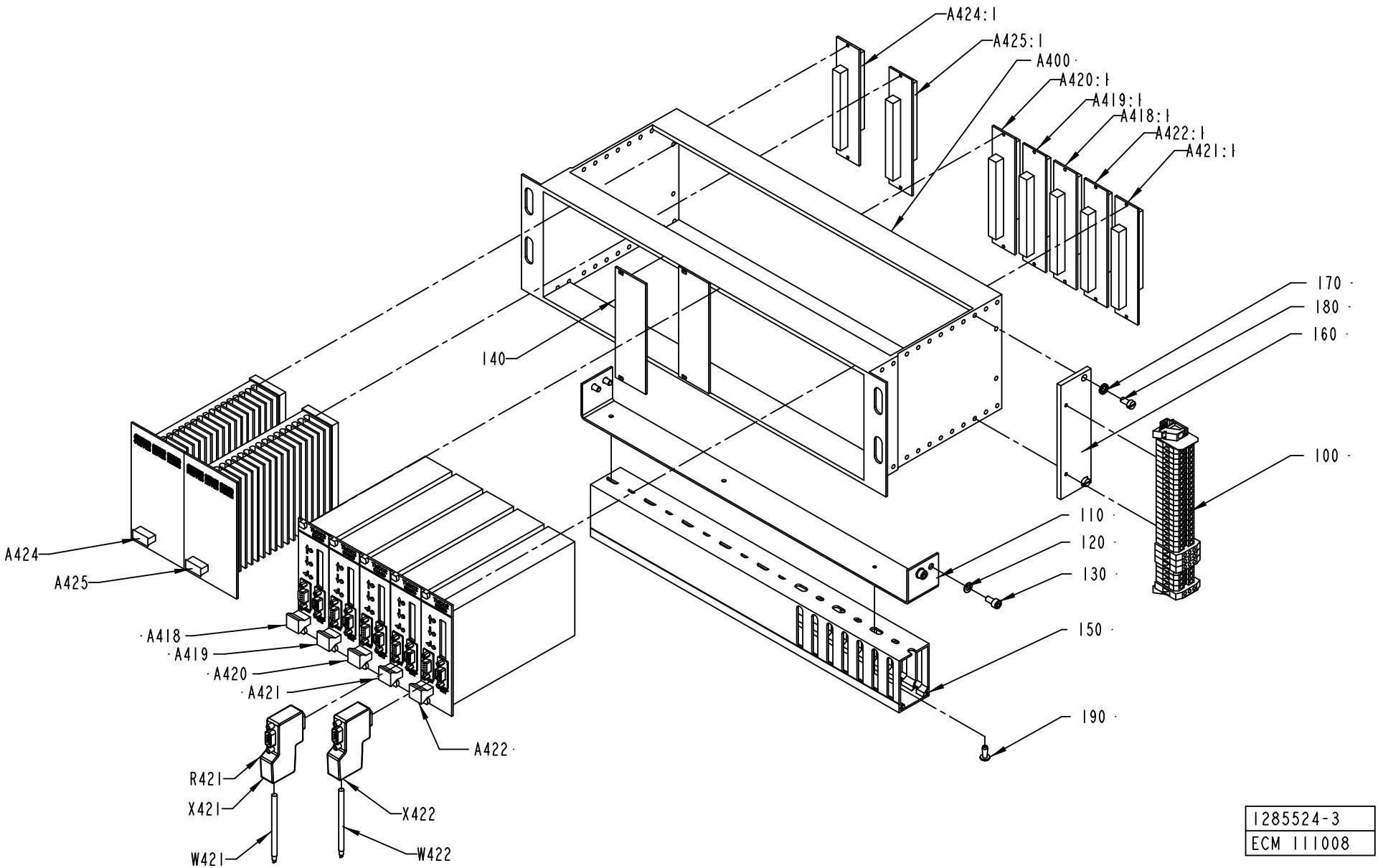

1285524-3
ECM 111008

ECM: 151674 - 20031112
Group number: 1285524-0300
Assembly Drawing: 1285524-3_1_AB

This list covers pages from 7-32 to 7-35

Pos	Part No	SP	UN	Qty	Description	Page No
-						
100	1484277-0100	-		1	PLINTH	7-37
110	1285525-0000	-		1	BRACKET	
120	315101-0146	-		4	WASHER PLAIN, BRB, 5,3/10 H=1	
130	312115-0325	-		4	SCREW ISO4762 M5X10 A4	
140	2545250-0000	-		2	COVER PLATE	
150	90181-0045	-	MM	410	CABLE DUCT, 40X60MM	
160	1129642-0000	-		1	CANTILEVER	
170	90062-0060	-		2	LOCK WASHER SERRAT.EXT.GEAR,5,3/10 H=0,6	
180	312121-0325	-		2	SLOTTED CHEESE HEAD SCREW MCS 5X10 FZB	
190	90181-0313	-		2	RIVET DUCTAFIX R4	
A400	67388-0102	-		1	RACK FRONTMOUNTED 84TE	
020 2	*542038-0002*	-		*1*	*COMPONENTS WITHOUT TP-NO*	
A418	559810-0101	-		1	TMCC2 CONTROLLER	
010	*559809-0101*	-		*1*	*CIRCUIT BOARD*	
020	*2524654-0000*	-		*1*	*PLATE*	
030	*2524660-0000*	-		*1*	*CASING*	
070	*2524662-0000*	-		*1*	*COOLING BLOCK*	
100	*2524658-0000*	-		*1*	*COVER*	
170	*2524659-0000*	-		*1*	*CABLE*	
A418:1	68262-0101	-		1	BACKPLANE FRONT RACK 8TE	
100	*543371-0000*	-		*1*	*CIRCUIT BOARD 8TE*	
110	*551927-0001*	-		*1*	*COMPONENTS WITHOUT TP-NO*	
120	*551928-0000*	-		*1*	*TERMINAL LABELS 8TE*	
A418:2	2552317-0002	-		1	TMCC PROGRAMME	
0010	*2552317-1002*	-		*1*	*PROGRAM OBJECT CODE*	
0020	*2552320-0000*	-		*1*	*LABEL DISKETTE*	
0030	*90458-2027*	-		*1*	*FLOPPY DISK, 3,5" 1,44MB FOR PC*	
A419	559810-0101	-		1	TMCC2 CONTROLLER	
010	*559809-0101*	-		*1*	*CIRCUIT BOARD*	
020	*2524654-0000*	-		*1*	*PLATE*	
030	*2524660-0000*	-		*1*	*CASING*	
070	*2524662-0000*	-		*1*	*COOLING BLOCK*	
100	*2524658-0000*	-		*1*	*COVER*	
170	*2524659-0000*	-		*1*	*CABLE*	
A419:1	68262-0101	-		1	BACKPLANE FRONT RACK 8TE	
100	*543371-0000*	-		*1*	*CIRCUIT BOARD 8TE*	
110	*551927-0001*	-		*1*	*COMPONENTS WITHOUT TP-NO*	
120	*551928-0000*	-		*1*	*TERMINAL LABELS 8TE*	
A419:2	2552321-0002	-		1	TMCC PROGRAMME	
0010	*2552321-1002*	-		*1*	*PROGRAM OBJECT CODE*	
0020	*2552324-0000*	-		*1*	*LABEL DISKETTE*	
0030	*90458-2027*	-		*1*	*FLOPPY DISK, 3,5" 1,44MB FOR PC*	
A420	559810-0101	-		1	TMCC2 CONTROLLER	
010	*559809-0101*	-		*1*	*CIRCUIT BOARD*	
020	*2524654-0000*	-		*1*	*PLATE*	
030	*2524660-0000*	-		*1*	*CASING*	
070	*2524662-0000*	-		*1*	*COOLING BLOCK*	
100	*2524658-0000*	-		*1*	*COVER*	
170	*2524659-0000*	-		*1*	*CABLE*	
A420:1	68262-0101	-		1	BACKPLANE FRONT RACK 8TE	
100	*543371-0000*	-		*1*	*CIRCUIT BOARD 8TE*	
110	*551927-0001*	-		*1*	*COMPONENTS WITHOUT TP-NO*	
120	*551928-0000*	-		*1*	*TERMINAL LABELS 8TE*	
A420:2	2552329-0001	-		1	TMCC PROGRAMME	
0010	*2552329-1001*	-		*1*	*PROGRAM OBJECT CODE*	
0020	*2552332-0000*	-		*1*	*LABEL DISKETTE*	
0030	*90458-2027*	-		*1*	*FLOPPY DISK, 3,5" 1,44MB FOR PC*	
A421	559810-0101	-		1	TMCC2 CONTROLLER	
010	*559809-0101*	-		*1*	*CIRCUIT BOARD*	
020	*2524654-0000*	-		*1*	*PLATE*	
030	*2524660-0000*	-		*1*	*CASING*	
070	*2524662-0000*	-		*1*	*COOLING BLOCK*	
100	*2524658-0000*	-		*1*	*COVER*	
170	*2524659-0000*	-		*1*	*CABLE*	
A421:1	68262-0101	-		1	BACKPLANE FRONT RACK 8TE	
100	*543371-0000*	-		*1*	*CIRCUIT BOARD 8TE*	
110	*551927-0001*	-		*1*	*COMPONENTS WITHOUT TP-NO*	
120	*551928-0000*	-		*1*	*TERMINAL LABELS 8TE*	
A421:2	2552325-0002	-		1	TMCC PROGRAMME	
0010	*2552325-1002*	-		*1*	*PROGRAM OBJECT CODE*	
0020	*2552328-0000*	-		*1*	*LABEL DISKETTE*	
0030	*90458-2027*	-		*1*	*FLOPPY DISK, 3,5" 1,44MB FOR PC*	
A422	559810-0101	-		1	TMCC2 CONTROLLER	
010	*559809-0101*	-		*1*	*CIRCUIT BOARD*	
020	*2524654-0000*	-		*1*	*PLATE*	
030	*2524660-0000*	-		*1*	*CASING*	
070	*2524662-0000*	-		*1*	*COOLING BLOCK*	
100	*2524658-0000*	-		*1*	*COVER*	
170	*2524659-0000*	-		*1*	*CABLE*	
A422:1	68262-0101	-		1	BACKPLANE FRONT RACK 8TE	
100	*543371-0000*	-		*1*	*CIRCUIT BOARD 8TE*	
110	*551927-0001*	-		*1*	*COMPONENTS WITHOUT TP-NO*	
120	*551928-0000*	-		*1*	*TERMINAL LABELS 8TE*	

Machine Type | Group Description | Used-In | Group Number | Page No

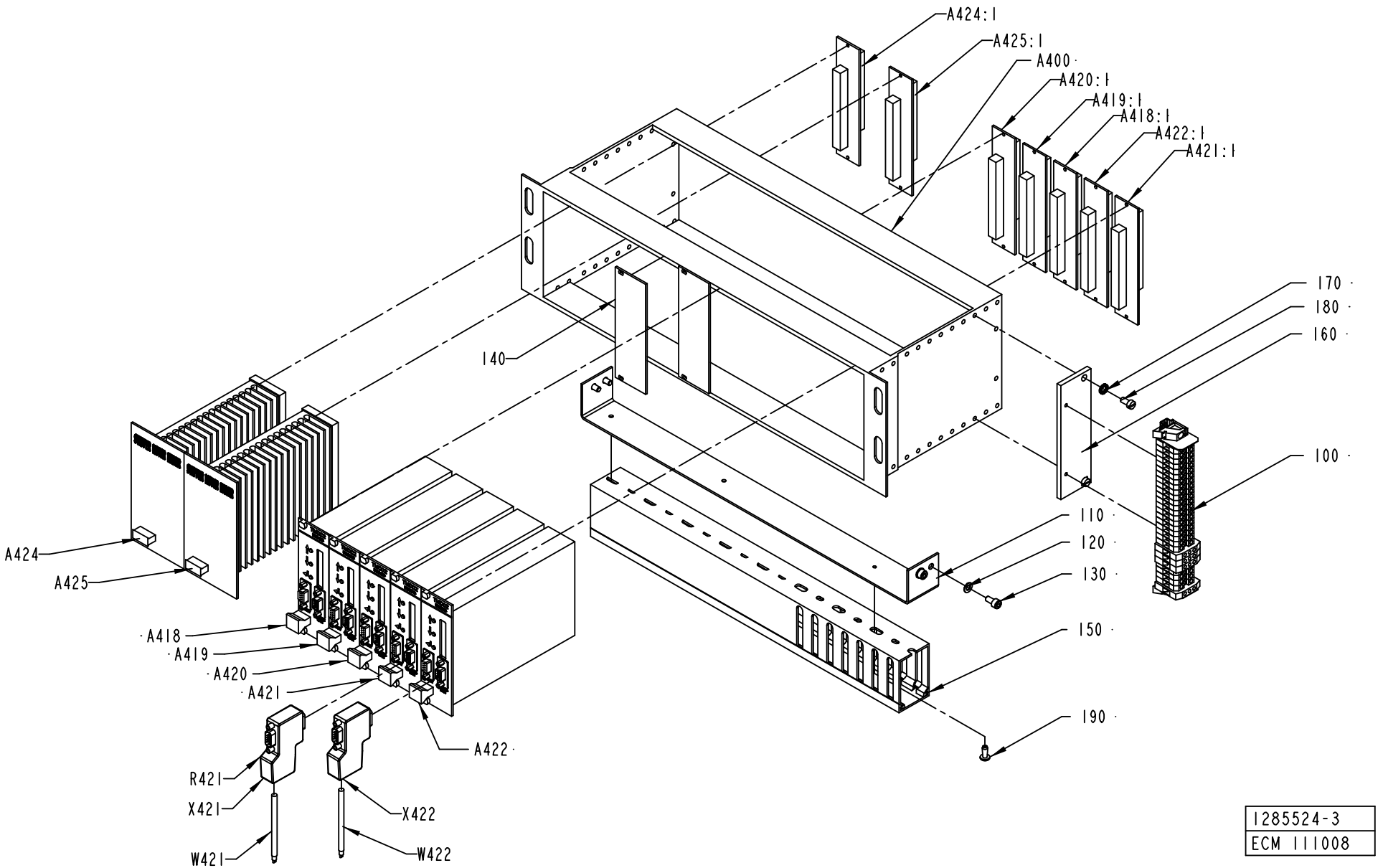

1285524-3
ECM 111008

Pos	Part No	SP	UN	Qty	Description	Page No
- (Cont'd)						
A422:2	2553136-0002	-		1	TMCC PROGRAMME	
0010	*2553136-1002*	-		*1*	*PROGRAM OBJECT CODE*	
0020	*2553139-0000*	-		*1*	*LABEL DISKETTE*	
0030	*90458-2027*	-		*1*	*FLOPPY DISK, 3,5" 1,44MB FOR PC*	
A424	68450-0101	-		1	STEPPER MOTOR DRIVER	
040	*543326-0000*	-		*1*	*COVERPLATE HANDLE 5TE*	
700	*543897-0001*	-		*1*	*COMPONENTS WITHOUT TP-NO*	
710	*543898-0000*	-		*1*	*FRONT PANEL 14TE*	
720	*543899-0000*	-		*1*	*COOLING FLANGE*	
730	*543900-0000*	-		*1*	*COOLING FLANGE DISTANCE*	
740	*543901-0000*	-		*1*	*COOLING BLOCK*	
750	*543902-0000*	-		*1*	*SIGN BOARD*	
760	*556502-0000*	-		*1*	*LAYOUTS FOR PLATES,LABLES*	
F100	*68451-0101*	-		*1*	*STEP. MOT. DR. MAIN CARD*	
F110	*68452-0101*	-		*1*	*STEP. MOT. DR. AUX. CARD*	
A424:1	68262-0101	-		1	BACKPLANE FRONT RACK 8TE	
100	*543371-0000*	-		*1*	*CIRCUIT BOARD 8TE*	
110	*551927-0001*	-		*1*	*COMPONENTS WITHOUT TP-NO*	
120	*551928-0000*	-		*1*	*TERMINAL LABELS 8TE*	
A425	68450-0101	-		1	STEPPER MOTOR DRIVER	
040	*543326-0000*	-		*1*	*COVERPLATE HANDLE 5TE*	
700	*543897-0001*	-		*1*	*COMPONENTS WITHOUT TP-NO*	
710	*543898-0000*	-		*1*	*FRONT PANEL 14TE*	
720	*543899-0000*	-		*1*	*COOLING FLANGE*	
730	*543900-0000*	-		*1*	*COOLING FLANGE DISTANCE*	
740	*543901-0000*	-		*1*	*COOLING BLOCK*	
750	*543902-0000*	-		*1*	*SIGN BOARD*	
760	*556502-0000*	-		*1*	*LAYOUTS FOR PLATES,LABLES*	
F100	*68451-0101*	-		*1*	*STEP. MOT. DR. MAIN CARD*	
F110	*68452-0101*	-		*1*	*STEP. MOT. DR. AUX. CARD*	
A425:1	68262-0101	-		1	BACKPLANE FRONT RACK 8TE	
100	*543371-0000*	-		*1*	*CIRCUIT BOARD 8TE*	
110	*551927-0001*	-		*1*	*COMPONENTS WITHOUT TP-NO*	
120	*551928-0000*	-		*1*	*TERMINAL LABELS 8TE*	
A504:1	68262-0101	-		1	BACKPLANE FRONT RACK 8TE	
100	*543371-0000*	-		*1*	*CIRCUIT BOARD 8TE*	
110	*551927-0001*	-		*1*	*COMPONENTS WITHOUT TP-NO*	
120	*551928-0000*	-		*1*	*TERMINAL LABELS 8TE*	
R421	90459-1250	-		1	RESISTANCE FIXED, 120 OHM, 0,5 W 1%	
W421	90458-2894	-	MM	250	PAIR TWISTED CABLE 1X2X0,2MM2	
W422	90458-2894	-	MM	4000	PAIR TWISTED CABLE 1X2X0,2MM2	
X421	90459-0182	-		1	INTERFACE CONNECTOR FOR TMCC2	
X422	90459-0182	-		1	INTERFACE CONNECTOR FOR TMCC2	

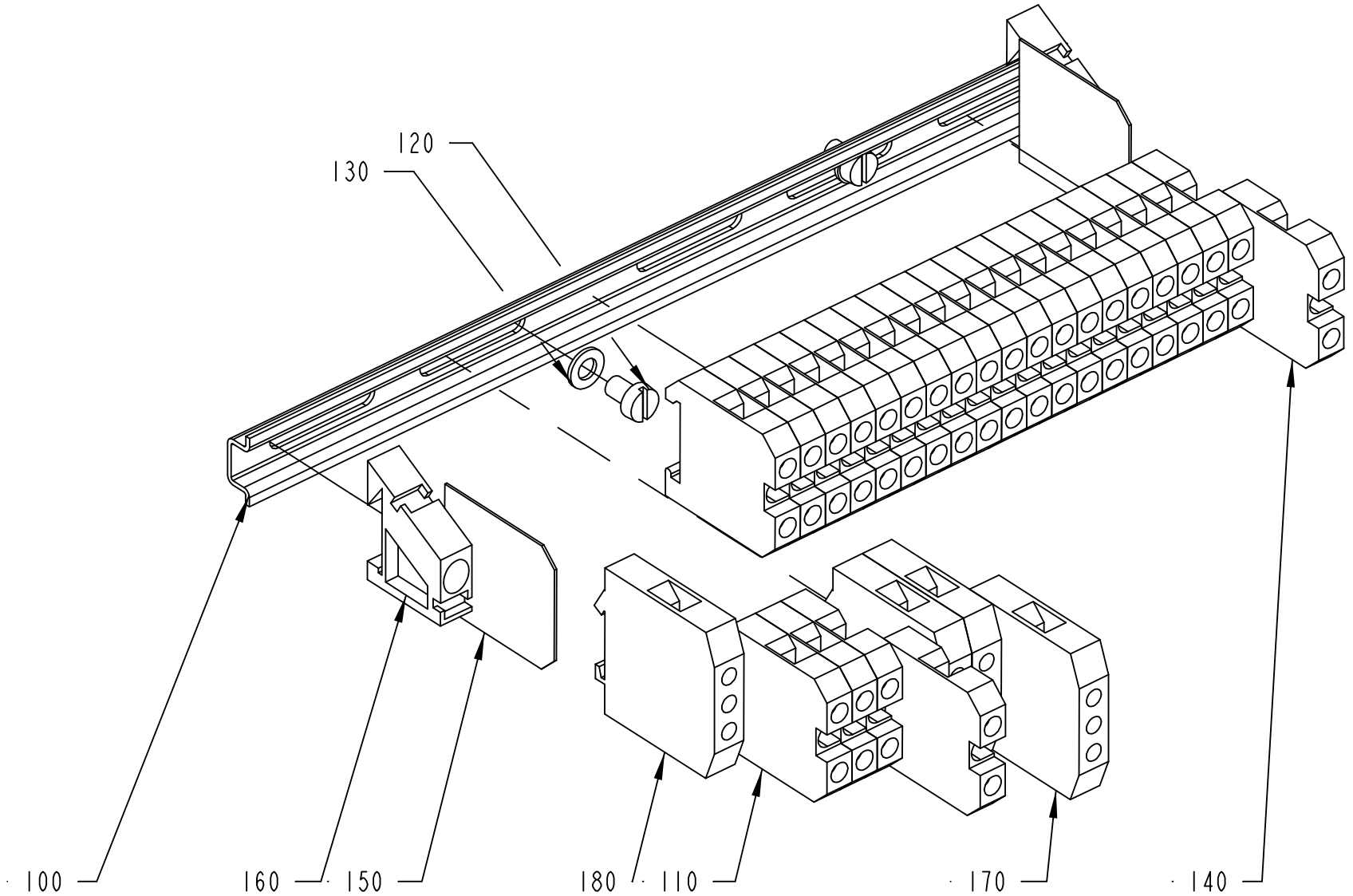

1484277-1
ECM 102480

ECM: 108678 - 20010926
Group number: 1484277-0100
Assembly Drawing: 1484277-1_1_AB

Pos	Part No	SP	UN	Qty	Description	Page No
-						
100	90077-0328	-	MM	195	RAIL TS15/5	
110	90077-0079	-		24	FEED THROUGH TERMINAL, 02943.6	
120	312121-0285	-		2	SLOTTED CHEESE HEAD SCREW MCS 4X6 FZB	
130	315101-0136	-		2	BRICKA BRB, 4,3/8 H=0,8	
140	359011-0807	-		2	MARKING PLATES 5-FW 1-50	
150	90077-0307	-		2	END PLATE	
160	90077-0308	-		2	END PLATE, 10-00038286-1	
170	90135-0026	-		4	EARTH TERMINAL, 3802.6	
180	359011-0819	-		1	MARKING PLATES 5-GW (EARTH)	

Pos	Part No	SP	UN	Qty	Description	Page No

This page is intentionally left blank.

ECM: 145231 - 20031111
Group number: 2505518-0200
Assembly Drawing:

Pos	Part No	SP	UN	Qty	Description	Page No
-						
0010	2553144-0004	-		1	TPOP HMI	
0010	*2553144-1004*	-		*1*	*PROGRAM OBJECT CODE*	
0020	*2553145-0000*	-		*1*	*LABEL DISKETTE*	
0030	*2553146-0000*	-		*1*	*LABEL FLEXBOX*	
0040	*90458-2027*	-		*2*	*FLOPPY DISK, 3,5" 1,44MB FOR PC*	
0020	2553147-0004	-		1	PLMS CONFIG	
0010	*2553147-1004*	-		*1*	*PROGRAM OBJECT CODE*	
0020	*2553148-0000*	-		*1*	*LABEL DISKETTE*	
0030	*2553149-0000*	-		*1*	*LABEL FLEXBOX*	
0040	*90458-2027*	-		*2*	*FLOPPY DISK, 3,5" 1,44MB FOR PC*	
0030	47932-0601	-		1	PLMS BASIC PROGRAM	
0020	*58283-0000*	-		*1*	*DOCUMENTATION DISKETT*	
0030	*1363455-0000*	-		*1*	*LABELS DISKETT*	
0040	*1363456-0000*	-		*1*	*LABELS FLEXBOX*	
0050	*58282-0000*	-		*1*	*SHORT FORM INSTRUCTION*	
0060	*58280-0000*	-		*1*	*MASTER DISKETT*	
0040	48621-0501	-		1	PLMS DDE	
0020	*2536014-0000*	-		*1*	*DOCUMENTATION DISKETTE*	
0030	*2536015-0000*	-		*1*	*LABEL DISKETTE*	
0040	*2536016-0000*	-		*1*	*LABEL FLEXBOX*	
0050	*2536013-0000*	-		*1*	*SHORT FORM INSTRUCTION*	
0060	*2536011-0000*	-		*1*	*MASTER DISKETTE*	
0050	47962-0401	-		1	PLMS DOS WINDOWS	
0020	*58291-0000*	-		*1*	*DOCUMENTATION DISKETT*	
0030	*1363460-0000*	-		*1*	*LABELS FLEXBOX*	
0040	*58290-0000*	-		*1*	*SHORT FORM INSTRUCTION*	
0060	47936-0201	-		1	PLMS INTOUCH RUNTIME PROGRAM	
0020	*57587-0000*	-		*1*	*DOCUMENTATION DISKETT*	
0030	*597779-0000*	-		*1*	*LABELS FLEXBOX*	
0040	*57588-0000*	-		*1*	*SHORT FORM INSTRUCTION*	
0070	1190006-0401	-		1	PLMS SEND	
0020	*2547106-0000*	-		*1*	*DOCUMENTATION DISKETTE*	
0030	*2547107-0000*	-		*1*	*LABEL DISKETTE*	
0040	*2547108-0000*	-		*1*	*LABEL FLEXBOX*	
0050	*2547109-0000*	-		*1*	*SHORT FORM INSTRUCTION*	
0060	*2547110-0000*	-		*1*	*MASTER DISKETTE*	

Pos	Part No	SP	UN	Qty	Description	Page No

Machine Type | Group Description | Used-In | Group Number | Page No

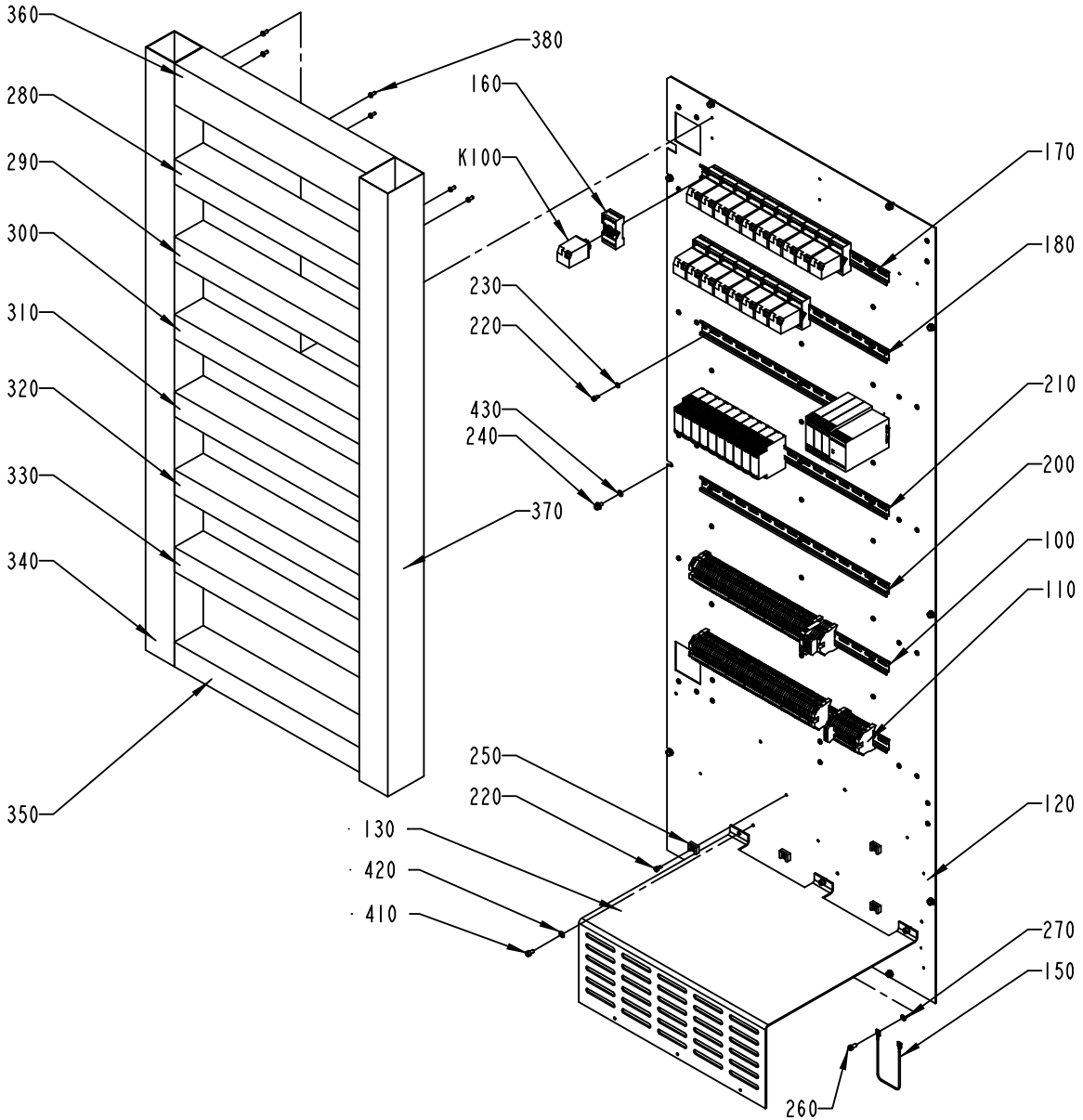

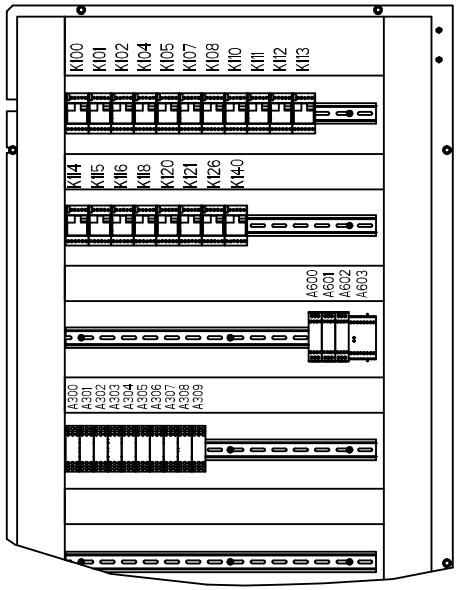

575235-3
ECM 126154

ECM: 142347 - 20031112
Group number: 575235-0300
Assembly Drawing: 575235-3_1_AD

Pos	Part No	SP	UN	Qty	Description	Page No
HI						
A309	90458-2580	-		1	LEVEL CONTROL RELAY RM4-LA32M	
Common Parts						
100	1285530-0100	-		1	DISTRIBUTION TERMINAL	**7-43**
110	1285532-0100	-		1	DISTRIBUTION TERMINAL	**7-45**
120	2543342-0000	-		1	MOUNTING PLATE	
130	2543222-0000	-		1	PROTECTION	
150	1038714-0000	-		1	CABLE	
	351175-0109	-	*MM*	*275*	*CABLE AWM 1X16 MM2 YELLOW-GREEN*	
	353104-0168	-		*2*	*CABLE SHO YAV 16 M6**	
160	90129-0006	-		19	BASE, S3-B	
170	353042-0004	-	MM	520	RAIL TS 35/7,5	
180	353042-0004	-	MM	520	RAIL TS 35/7,5	
190	353042-0004	-	MM	520	RAIL TS 35/7,5	
200	353042-0004	-	MM	520	RAIL TS 35/7,5	
210	353042-0004	-	MM	520	RAIL TS 35/7,5	
220	312115-0323	-		19	SCREW ISO4762 M5X8 A4	
230	315105-0146	-		15	BRICKA BRB5,3X10RFR	
240	90287-0157	-		10	SCREW M6SF FLAT HEAD M6X10 88	
250	352113-0204	-		4	ANCHOR PLATES FOR STRIPS, TYPE TM3S25-M	
260	312121-0366	-		1	SCREW SLOT.PAN HD. MCS 6X12 FZB	
270	90062-0022	-		1	LOCKING WASHER D=6,4/11	
280	90181-0054	-	MM	535	CABLE DUCT, 60X80MM	
290	90181-0054	-	MM	535	CABLE DUCT, 60X80MM	
300	90181-0054	-	MM	535	CABLE DUCT, 60X80MM	
310	90181-0054	-	MM	535	CABLE DUCT, 60X80MM	
320	90181-0054	-	MM	535	CABLE DUCT, 60X80MM	
330	90181-0054	-	MM	535	CABLE DUCT, 60X80MM	
340	90181-0055	-	MM	1470	CABLE DUCT, 80X80MM	
350	90181-0054	-	MM	535	CABLE DUCT, 60X80MM	
360	90181-0056	-	MM	535	CABLE DUCT, 100X80MM	
370	90181-0056	-	MM	1470	CABLE DUCT, 100X80MM	
380	90181-0313	-		52	RIVET DUCTAFIX R4	
400	359240-0100	-		1	SIGN HOLDER FOR 359240-0001	
410	312115-0364	-		3	SCREW ISO4762 M6X10 A4	
420	315105-0153	-		3	WASHER BRB6,4X12RFR	
430	315103-0153	-		10	BRICKA, BRB, 6,4/12,H=1,5 NIPL BR	
A300	90458-2580	A		1	LEVEL CONTROL RELAY RM4-LA32M	
A301	90458-2580	A		1	LEVEL CONTROL RELAY RM4-LA32M	
A302	90458-2580	A		1	LEVEL CONTROL RELAY RM4-LA32M	
A303	90458-2580	A		1	LEVEL CONTROL RELAY RM4-LA32M	
A304	90458-2580	A		1	LEVEL CONTROL RELAY RM4-LA32M	
A305	90458-2580	A		1	LEVEL CONTROL RELAY RM4-LA32M	
A306	90458-2580	A		1	LEVEL CONTROL RELAY RM4-LA32M	
A307	90458-2580	A		1	LEVEL CONTROL RELAY RM4-LA32M	
A308	90458-2580	A		1	LEVEL CONTROL RELAY RM4-LA32M	
A600	90457-0092	-		1	SAFETY RELAY RT9-24VDC	
A601	90457-0092	-		1	SAFETY RELAY RT9-24VDC	
A602	90457-0092	-		1	SAFETY RELAY RT9-24VDC	
A603	90119-0084	A		1	EXPANSION RELAY, JSR1T-500MS	
A605	90457-0092	-		1	SAFETY RELAY RT9-24VDC	
K100	90119-0056	A		1	RELAY, AUXILIARY MK3P5-S 24VDC	
K101	90119-0056	A		1	RELAY, AUXILIARY MK3P5-S 24VDC	
K102	90119-0056	A		1	RELAY, AUXILIARY MK3P5-S 24VDC	
K104	90119-0056	A		1	RELAY, AUXILIARY MK3P5-S 24VDC	
K105	90119-0056	A		1	RELAY, AUXILIARY MK3P5-S 24VDC	
K107	90119-0056	A		1	RELAY, AUXILIARY MK3P5-S 24VDC	
K108	90119-0056	A		1	RELAY, AUXILIARY MK3P5-S 24VDC	
K110	90119-0056	A		1	RELAY, AUXILIARY MK3P5-S 24VDC	
K111	90119-0056	A		1	RELAY, AUXILIARY MK3P5-S 24VDC	
K112	90119-0056	A		1	RELAY, AUXILIARY MK3P5-S 24VDC	
K113	90119-0056	A		1	RELAY, AUXILIARY MK3P5-S 24VDC	
K114	90119-0056	A		1	RELAY, AUXILIARY MK3P5-S 24VDC	
K115	90119-0056	A		1	RELAY, AUXILIARY MK3P5-S 24VDC	
K116	90119-0056	-		1	RELAY, AUXILIARY MK3P5-S 24VDC	
K118	90119-0056	A		1	RELAY, AUXILIARY MK3P5-S 24VDC	
K120	90119-0056	A		1	RELAY, AUXILIARY MK3P5-S 24VDC	
K121	90119-0056	A		1	RELAY, AUXILIARY MK3P5-S 24VDC	
K126	90119-0056	A		1	RELAY, AUXILIARY MK3P5-S 24VDC	
K140	90119-0056	-		1	RELAY, AUXILIARY MK3P5-S 24VDC	

Machine Type | Group Description | Used-In | Group Number | Page No

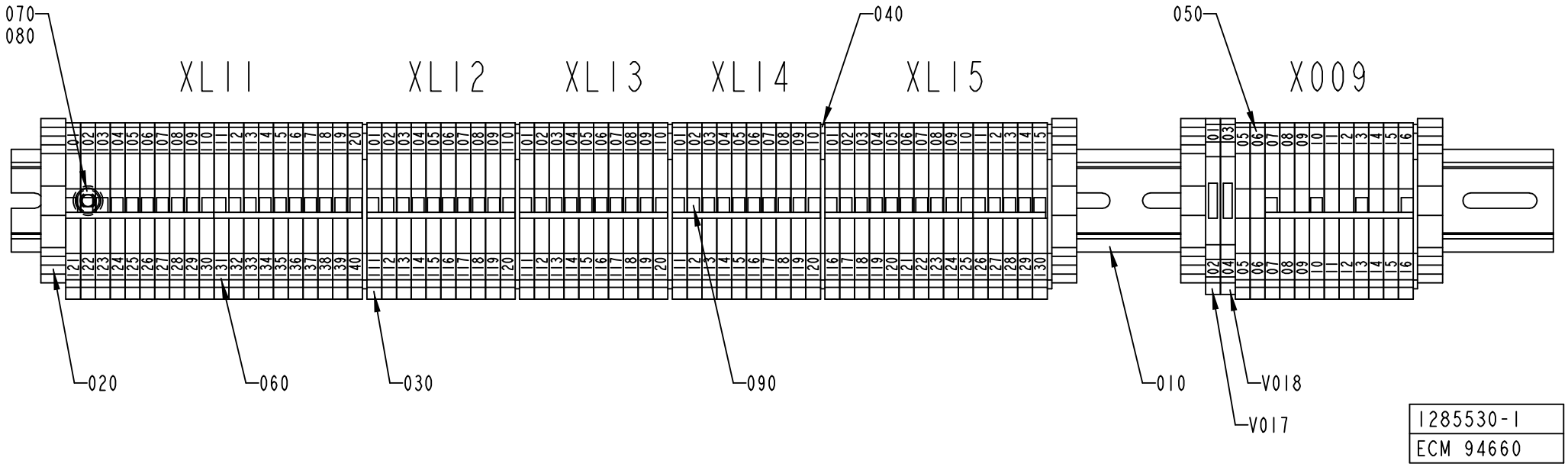
070
080
040
050
XL11
XL12
XL13
XL14
XL15
X009
020
060
030
090
010
V018
V017
1285530-1
ECM 94660

ECM: 104294 - 20011123
Group number: 1285530-0100
Assembly Drawing: 1285530-1_1_AB

Pos	Part No	SP	UN	Qty	Description	Page No
-						
010	353042-0005	-	MM	520	RAIL TS 35/7.5	
020	353031-0203	-		4	END SUPPORT, WEW 35/2	
030	353021-0216	-		77	FEED THROUGH TERMINAL, 10200.8	
040	353032-0005	-		6	END PLATE WAP 2,5-10 BLUE	
050	359011-0807	-		2	MARKING PLATES 5-FW 1-50	
060	359011-0809	-		5	MARKING PLATES 5-FW 101-150	
070	312115-0323	-		3	SCREW ISO4762 M5X8 A4	
080	315101-0146	-		3	WASHER PLAIN, BRB, 5,3/10 H=1	
090	353034-0030	-		8	BRIDGE CONNECTOR WQV 2,5/10, 10544.6	
V017	353021-0122	-		1	TERMINAL DISCONNECTBLE, WTR 2,5 D	
V018	353021-0122	-		1	TERMINAL DISCONNECTBLE, WTR 2,5 D	

Pos	Part No	SP	UN	Qty	Description	Page No

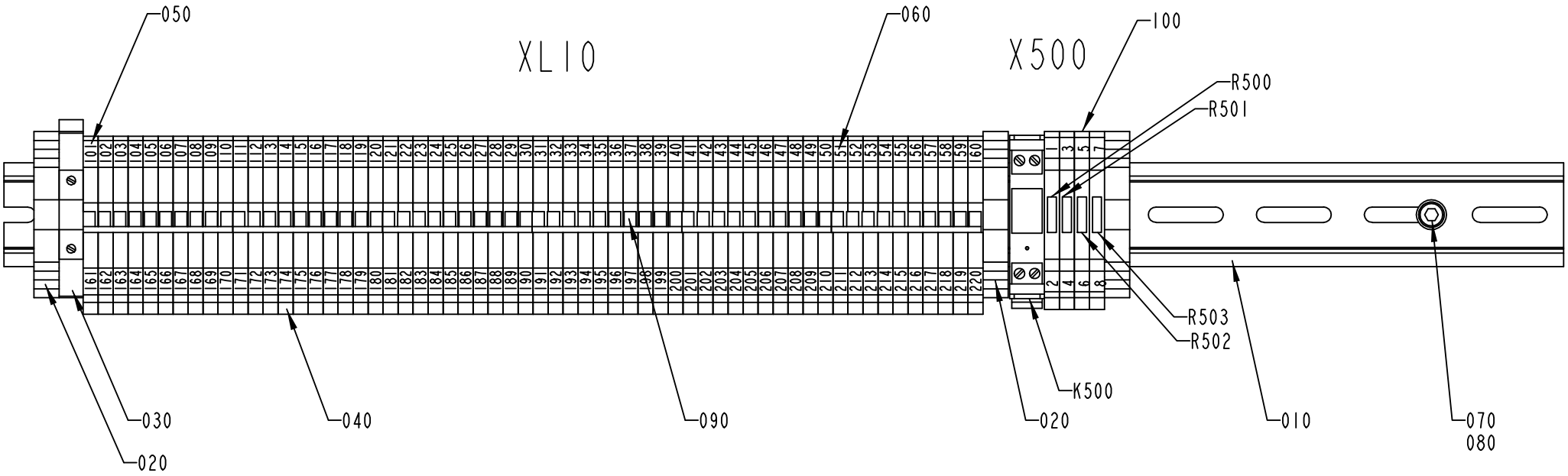

1285532-1
ECM 133279

ECM: 134701 - 20030529
Group number: 1285532-0100
Assembly Drawing: 1285532-1_1_AC

Pos	Part No	SP	UN	Qty	Description	Page No
-						
010	353042-0005	-	MM	520	RAIL TS 35/7.5	
020	353031-0203	-		3	END SUPPORT, WEW 35/2	
030	353021-0223	-		1	FEED THROUGH TERMINAL, 10202.8	
040	353021-0216	-		60	FEED THROUGH TERMINAL, 10200.8	
050	359011-0809	-		1	MARKING PLATES 5-FW 101-150	
060	359011-0810	-		1	MARKING PLATES 5-FW 151-200	
070	312115-0323	-		3	SCREW ISO4762 M5X8 A4	
080	315101-0146	-		3	WASHER PLAIN, BRB, 5,3/10 H=1	
090	353034-0030	-		6	BRIDGE CONNECTOR WQV 2,5/10, 10544.6	
100	353021-0127	-		4	TERMINAL DISCONNECTBLE, WTR 2,5+WSD 2,5	
K490	90119-0063	A		1	OPTO-RELAY, DC/DC AMMS-10-1/30VDC	
R490	6-4 900308 01	A		1	RESISTOR 1000 OHM 0.25W 1%	
R491	6-4 900308 01	A		1	RESISTOR 1000 OHM 0.25W 1%	
R492	6-4 900308 01	A		1	RESISTOR 1000 OHM 0.25W 1%	
R493	6-4 900308 01	A		1	RESISTOR 1000 OHM 0.25W 1%	

Pos	Part No	SP	UN	Qty	Description	Page No

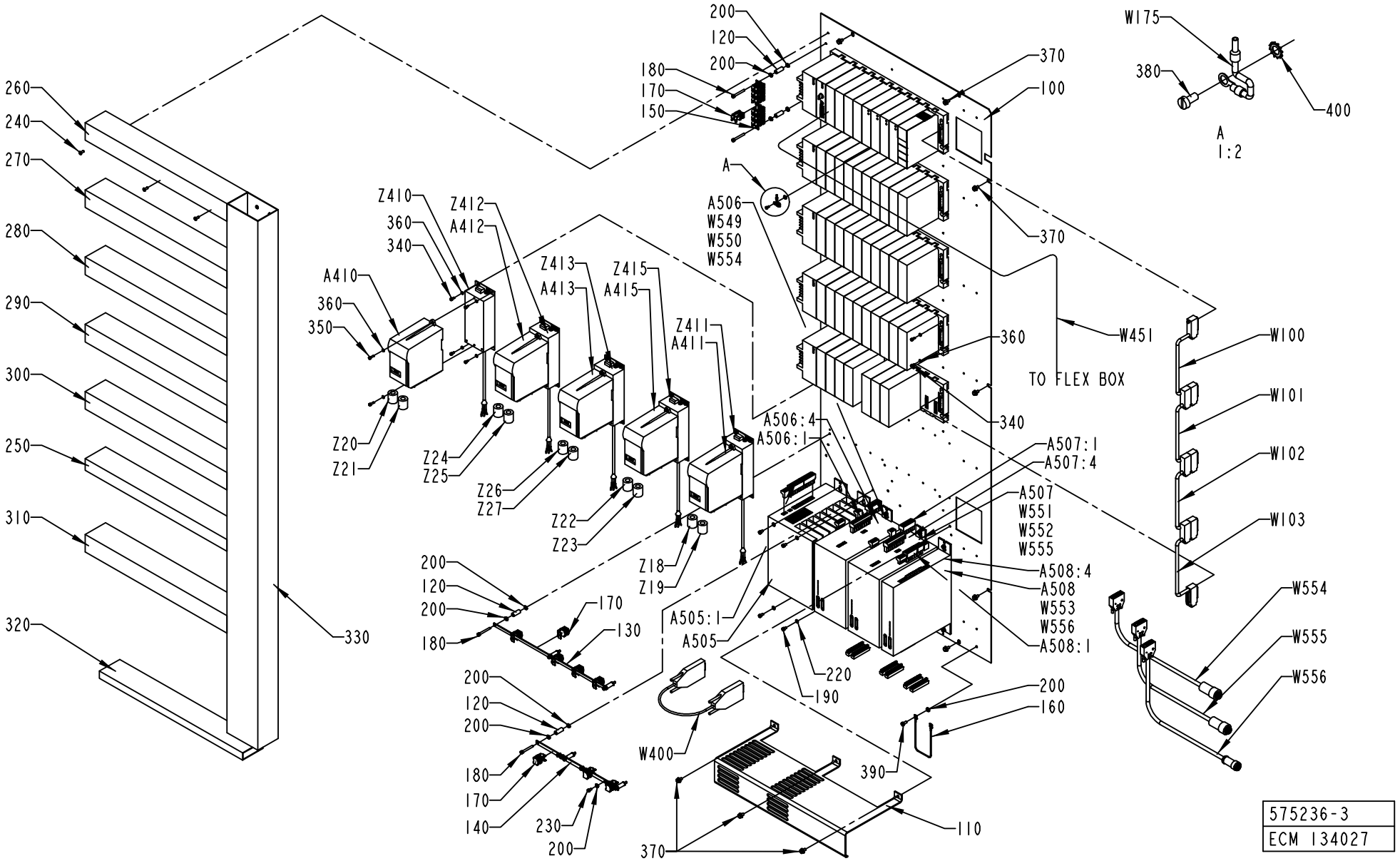
260
240
270
280
290
300
250
310
320
330
200
120
200
180
170
150
370
100
A
A506
W549
W550
W554
370
360
340
W451
TO FLEX BOX
A506:4
A506:1
A507:1
A507:4
A507
W551
W552
W555
A508:4
A508
W553
W556
A508:1
A505:1
A505
220
190
200
160
390
110
370
W400
Z410
360
340
A410
360
350
Z412
A412
Z413
A413
Z415
A415
Z411
A411
Z20
Z21
Z24
Z25
Z26
Z27
Z22
Z23
Z18
Z19
200
120
200
180
170
130
200
120
200
180
170
140
230
200
W175
380
400
A
1:2
W100
W101
W102
W103
W554
W555
W556
575236-3
ECM 134027

ECM: 149533 - 20031112
Group number: 575236-0300
Assembly Drawing: 575236-3_1_AC

This list covers pages from 7-46 to 7-51

Pos	Part No	SP	UN	Qty	Description	Page No
HI						
A143	90031-0065	-		1	PLC,TEMPERATUR CONTROL,INPUT MODULE 8 PT	
Common Parts						
100	1285535-0000	-		1	MOUNTING PLATE	
110	1350916-0000	-		1	PROTECTION	
120	1140053-0000	-		8	SPACER	
130	1484170-0000	-		1	EARTH BAR	
140	1538889-0000	-		1	EARTH BAR	
150	1490742-0000	-		1	EARTH BAR	
160	1038714-0000	-		1	CABLE	
	351175-0109	-	*MM*	*275*	*CABLE AWM 1X16 MM2 YELLOW-GREEN*	
	353104-0168	-		*2*	*CABLE SHO YAV 16 M6**	
170	90135-0039	-		15	SHIELD CLIP KLBU 4-13.5	
180	312115-0339	-		8	SCREW ISO4762 M5X40 A4	
190	312115-0323	-		10	SCREW ISO4762 M5X8 A4	
200	90062-0022	-		23	LOCKING WASHER D=6,4/11	
220	315105-0146	-		10	BRICKA BRB5,3X10RFR	
230	312121-0323	-		6	SCREW SLOT.PAN HD. MCS 5X8 FZB	
240	90181-0313	-		38	RIVET DUCTAFIX R4	
250	90181-0040	-	MM	555	CABLE DUCT, 80X40MM	
260	90181-0054	-	MM	555	CABLE DUCT, 60X80MM	
270	90181-0054	-	MM	555	CABLE DUCT, 60X80MM	
280	90181-0054	-	MM	555	CABLE DUCT, 60X80MM	
290	90181-0054	-	MM	555	CABLE DUCT, 60X80MM	
300	90181-0054	-	MM	555	CABLE DUCT, 60X80MM	
310	90181-0054	-	MM	555	CABLE DUCT, 60X80MM	
320	90181-0052	-	MM	560	CABLE DUCT, 25X80MM	
330	90181-0057	-	MM	1810	CABLE DUCT, 120X80MM	
340	312115-0287	-		42	SCREW ISO4762 M4X8 A4	
350	312115-0291	-		10	SCREW ISO4762 M4X12 A4	
360	315105-0136	-		52	WASHER BRB4,3XRFR	
370	90287-0157	-		13	SCREW M6SF FLAT HEAD M6X10 88	
380	312122-0287	-		6	SCREW ISO 1207 M4X8 NI PL BRASS	
390	312121-0366	-		1	SCREW SLOT.PAN HD. MCS 6X12 FZB	
400	90062-0021	-		6	LOCKING WASHER A 5,3	
A101	90031-0058	A		1	PLC, DIGITAL INPUT MODULE	
A102	90031-0059	A		1	PLC, DIGITAL OUTPUT MODULE	
A103	90031-0065	A		1	PLC,TEMPERATUR CONTROL,INPUT MODULE 8 PT	
A104	90031-0065	A		1	PLC,TEMPERATUR CONTROL,INPUT MODULE 8 PT	
A105	90031-0061	A		1	PLC,ANALOG INPUT MODULE 16 PT/CURRENT	
A106	90031-0060	A		1	PLC,ANALOG INPUT MODULE 16 PT/VOLTAGE	
A107	90031-0062	A		1	PLC, ANALOG OUTPUT MODULE 8PT/CURR/VOLT	
A108	90031-0062	A		1	PLC, ANALOG OUTPUT MODULE 8PT/CURR/VOLT	
A109	90031-0031	A		1	ENHANCED GENIUS COMMUNICATION MODULE	
A110	90031-0057	-		1	PLC, DIGITAL INPUT MODULE	
A111	90031-0057	-		1	PLC, DIGITAL INPUT MODULE	
A112	90031-0057	A		1	PLC, DIGITAL INPUT MODULE	
A113	90031-0057	A		1	PLC, DIGITAL INPUT MODULE	
A114	90031-0057	A		1	PLC, DIGITAL INPUT MODULE	
A115	90031-0057	A		1	PLC, DIGITAL INPUT MODULE	
A116	90031-0057	A		1	PLC, DIGITAL INPUT MODULE	
A117	90031-0057	A		1	PLC, DIGITAL INPUT MODULE	
A118	90031-0057	A		1	PLC, DIGITAL INPUT MODULE	
A119	90031-0057	A		1	PLC, DIGITAL INPUT MODULE	
A120	90031-0057	A		1	PLC, DIGITAL INPUT MODULE	
A121	90031-0057	A		1	PLC, DIGITAL INPUT MODULE	
A122	90031-0057	A		1	PLC, DIGITAL INPUT MODULE	
A123	90031-0057	A		1	PLC, DIGITAL INPUT MODULE	
A124	90031-0057	A		1	PLC, DIGITAL INPUT MODULE	
A125	90031-0057	A		1	PLC, DIGITAL INPUT MODULE	
A126	90031-0059	A		1	PLC, DIGITAL OUTPUT MODULE	
A127	90031-0059	A		1	PLC, DIGITAL OUTPUT MODULE	
A128	90031-0059	A		1	PLC, DIGITAL OUTPUT MODULE	
A129	90031-0059	A		1	PLC, DIGITAL OUTPUT MODULE	
A130	90031-0059	A		1	PLC, DIGITAL OUTPUT MODULE	
A131	90031-0059	A		1	PLC, DIGITAL OUTPUT MODULE	
A132	90031-0059	A		1	PLC, DIGITAL OUTPUT MODULE	
A133	90031-0059	A		1	PLC, DIGITAL OUTPUT MODULE	
A134	90031-0059	A		1	PLC, DIGITAL OUTPUT MODULE	
A135	90031-0059	A		1	PLC, DIGITAL OUTPUT MODULE	
A136	90031-0059	A		1	PLC, DIGITAL OUTPUT MODULE	
A137	90031-0059	A		1	PLC, DIGITAL OUTPUT MODULE	
A138	90031-0059	A		1	PLC, DIGITAL OUTPUT MODULE	
A139	90031-0059	-		1	PLC, DIGITAL OUTPUT MODULE	
A140	90031-0057	-		1	PLC, DIGITAL INPUT MODULE	
A141	90031-0057	-		1	PLC, DIGITAL INPUT MODULE	
A142	90031-0057	-		1	PLC, DIGITAL INPUT MODULE	
A145	90031-0059	-		1	PLC, DIGITAL OUTPUT MODULE	
A146	90031-0059	-		1	PLC, DIGITAL OUTPUT MODULE	
A147	90031-0059	-		1	PLC, DIGITAL OUTPUT MODULE	
A160	90031-0051	A		1	BASEPLATE, 10-SLOT	
A161	90031-0053	A		1	BASEPLATE,10-SLOT	
	90031-0302	-		*1*	*I/O BUS TERMINATION PLUG*	
A162	90031-0053	A		1	BASEPLATE,10-SLOT	

Machine Type | Group Description | Used-In | Group Number | Page No

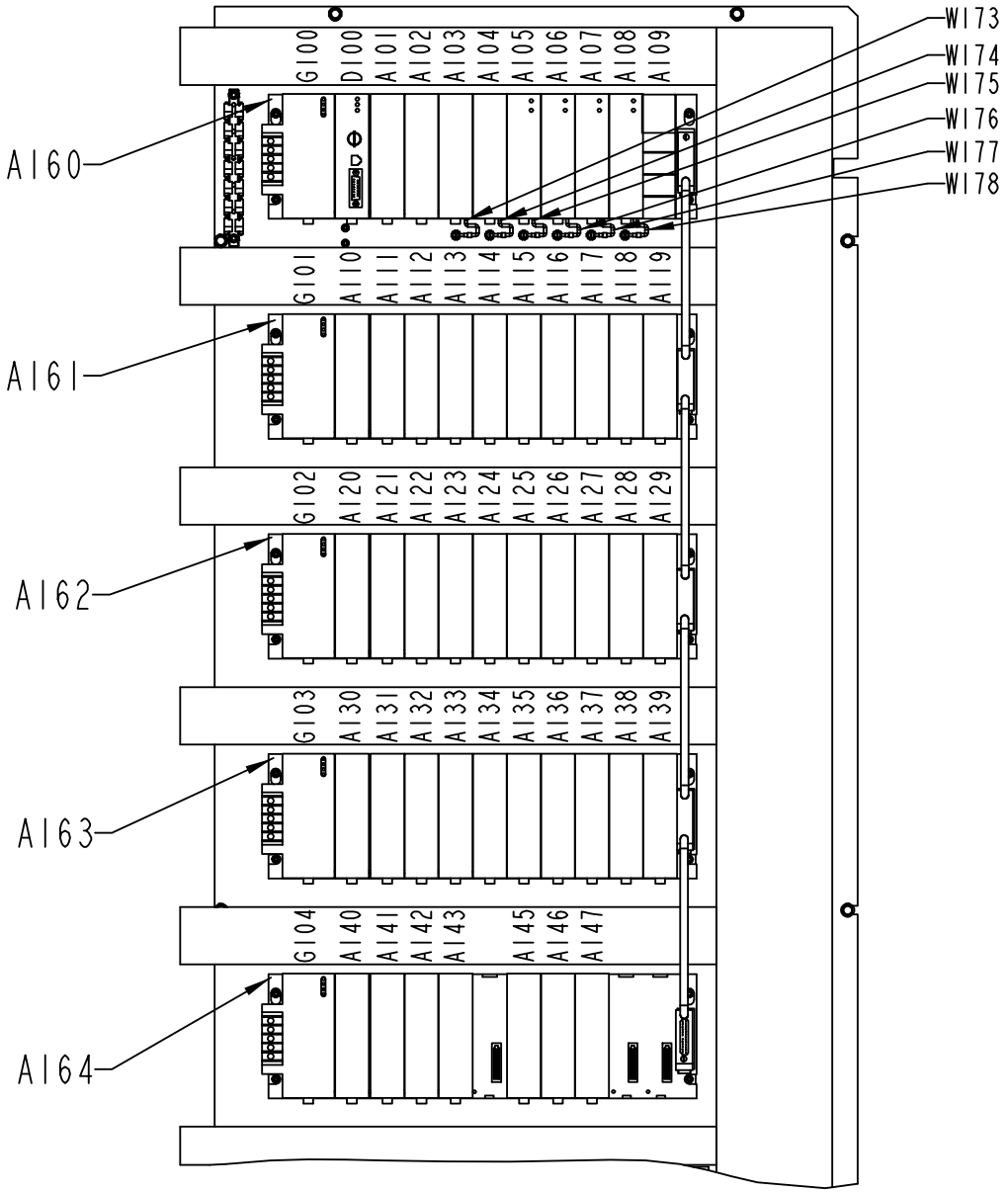

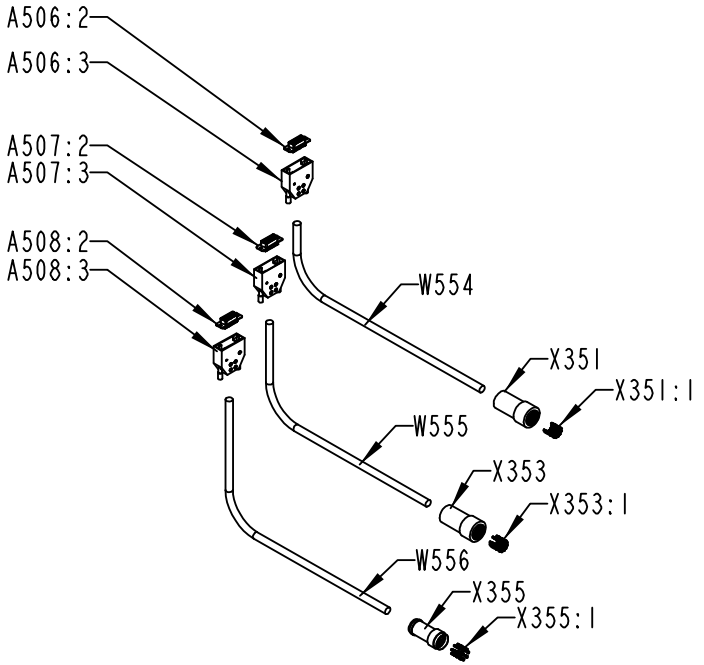

575236-3
ECM 134027

ECM: 149533 - 20031112
Group number: 575236-0300
Assembly Drawing: 575236-3_2_AC

This list covers pages from 7-46 to 7-51

Pos	Part No	SP	UN	Qty	Description	Page No
Common Parts (Cont'd)						
A163	90031-0053	A		1	BASEPLATE,10-SLOT	
	90031-0302	*-*		*1*	*I/O BUS TERMINATION PLUG*	
A164	90031-0053	-		1	BASEPLATE,10-SLOT	
	90031-0302	*-*		*1*	*I/O BUS TERMINATION PLUG*	
A410	90430-0070	A		1	FREQ.CONV. 6SE3213-6CA40	
A411	90430-0070	-		1	FREQ.CONV. 6SE3213-6CA40	
A412	90430-0070	A		1	FREQ.CONV. 6SE3213-6CA40	
A413	90430-0070	A		1	FREQ.CONV. 6SE3213-6CA40	
A415	90430-0070	A		1	FREQ.CONV. 6SE3213-6CA40	
A505	90045-0397	A		1	POWER SUPPLY 80 A	
A505:1	90458-0033	A		1	CONNECTOR KIT 9-032-010-851	
A506	90458-0399	A		1	SERVO DRIVE DMC2 51540	
A506:1	90458-0032	A		1	CONNECTOR KIT 9-032-010-496	
A506:2	90110-0142	A		1	PLUG DA15P064TX	
A506:3	90110-0145	A		1	COVER 8630-5169014-15-01	
A506:4	2510917-0001	-		1	DMC PROGRAMME	
0010	*2510917-1001*	*-*		*1*	*PROGRAM OBJECT CODE*	
0020	*2510918-0000*	*-*		*1*	*LABEL DISKETTE*	
0030	*90458-2027*	*-*		*1*	*FLOPPY DISK, 3,5" 1,44MB FOR PC*	
A507	90458-0399	A		1	SERVO DRIVE DMC2 51540	
A507:1	90458-0032	A		1	CONNECTOR KIT 9-032-010-496	
A507:2	90110-0142	A		1	PLUG DA15P064TX	
A507:3	90110-0145	A		1	COVER 8630-5169014-15-01	
A507:4	2510909-0001	-		1	DMC PROGRAMME	
0010	*2510909-1001*	*-*		*1*	*PROGRAM OBJECT CODE*	
0020	*2510910-0000*	*-*		*1*	*LABEL DISKETTE*	
0030	*90458-2027*	*-*		*1*	*FLOPPY DISK, 3,5" 1,44MB FOR PC*	
A508	90458-0396	A		1	SERVO DRIVE DMC2 50720	
A508:1	90458-0031	A		1	CONNECTOR KIT 9032 010 353	
A508:2	90110-0142	A		1	PLUG DA15P064TX	
A508:3	90110-0145	A		1	COVER 8630-5169014-15-01	
A508:4	2553140-0003	-		1	DMC PROGRAMME	
0010	*2553140-1003*	*-*		*1*	*PROGRAM OBJECT CODE*	
0020	*2553143-0000*	*-*		*1*	*LABEL DISKETTE*	
0030	*90458-2027*	*-*		*1*	*FLOPPY DISK, 3,5" 1,44MB FOR PC*	
D100	90031-0075	A		1	CPU363, SERIAL COMMUNICATION	
G100	90031-0068	A		1	PLC, POWER SUPPLY	
	90031-0301	*A*		*1*	*SPARE BATTERY CPU,PCM,2PCS*	
	352551-0134	*A*		*1*	*FINE-WIRE FUSE 2 A SLOW;5X20MM*	
G101	90031-0068	A		1	PLC, POWER SUPPLY	
	90031-0301	*A*		*1*	*SPARE BATTERY CPU,PCM,2PCS*	
	352551-0134	*A*		*1*	*FINE-WIRE FUSE 2 A SLOW;5X20MM*	
G102	90031-0068	A		1	PLC, POWER SUPPLY	
	90031-0301	*A*		*1*	*SPARE BATTERY CPU,PCM,2PCS*	
	352551-0134	*A*		*1*	*FINE-WIRE FUSE 2 A SLOW;5X20MM*	
G103	90031-0068	A		1	PLC, POWER SUPPLY	
	90031-0301	*A*		*1*	*SPARE BATTERY CPU,PCM,2PCS*	
	352551-0134	*A*		*1*	*FINE-WIRE FUSE 2 A SLOW;5X20MM*	
G104	90031-0068	-		1	PLC, POWER SUPPLY	
	90031-0301	*A*		*1*	*SPARE BATTERY CPU,PCM,2PCS*	
	352551-0134	*A*		*1*	*FINE-WIRE FUSE 2 A SLOW;5X20MM*	
W100	90031-0305	A		1	I/O EXPANSION CABLE	
W101	90031-0305	A		1	I/O EXPANSION CABLE	
W102	90031-0305	A		1	I/O EXPANSION CABLE	
W103	90031-0305	-		1	I/O EXPANSION CABLE	
W173	1512322-0000	-		1	COPPER BRAID	
W174	1512322-0000	-		1	COPPER BRAID	
W175	1512322-0000	-		1	COPPER BRAID	
W176	1512322-0000	-		1	COPPER BRAID	
W177	1512322-0000	-		1	COPPER BRAID	
W178	1512322-0000	-		1	COPPER BRAID	
W400	1348067-0000	-		1	CABLE	
W549	90220-0084	A	MM	3000	MOTOR CABLE 4X2,5+2(2X0.75)+SHIELD	
W550	90220-0084	A	MM	1300	MOTOR CABLE 4X2,5+2(2X0.75)+SHIELD	
W551	90220-0084	A	MM	3000	MOTOR CABLE 4X2,5+2(2X0.75)+SHIELD	
W552	90220-0084	A	MM	300	MOTOR CABLE 4X2,5+2(2X0.75)+SHIELD	
W553	90220-0116	A	MM	3000	MOTOR CABLE 4X1,0+2(2X0,5)+SHIELD	
W554	90220-0131	-	MM	700	PAIR TWISTED CABLE 3X2X0,25MM2	
W555	90220-0131	-	MM	600	PAIR TWISTED CABLE 3X2X0,25MM2	
W556	90220-0131	-	MM	600	PAIR TWISTED CABLE 3X2X0,25MM2	
X351	90110-0508	-		1	CABLE CONTACT	
X351:1	90110-0209	-		7	CONTACT PIN, RC20M13K	
X353	90110-0508	-		1	CABLE CONTACT	
X353:1	90110-0209	-		11	CONTACT PIN, RC20M13K	
X355	90110-0208	-		1	CABLE CONTACT	
X355:1	90110-0209	-		7	CONTACT PIN, RC20M13K	
Z18	90024-0047	-		1	EMI SUPPRESSION FERRITE	
Z19	90024-0047	-		1	EMI SUPPRESSION FERRITE	
Z20	90024-0047	-		1	EMI SUPPRESSION FERRITE	
Z21	90024-0047	-		1	EMI SUPPRESSION FERRITE	
Z22	90024-0047	-		1	EMI SUPPRESSION FERRITE	
Z23	90024-0047	-		1	EMI SUPPRESSION FERRITE	
Z24	90024-0047	-		1	EMI SUPPRESSION FERRITE	

Machine Type | Group Description | Used-In | Group Number | Page No

See previous drawings pages: 7-46, 7-48.

Pos	Part No	SP	UN	Qty	Description	Page No
Common Parts (Cont'd)						
Z25	90024-0047	-		1	EMI SUPPRESSION FERRITE	
Z26	90024-0047	-		1	EMI SUPPRESSION FERRITE	
Z27	90024-0047	-		1	EMI SUPPRESSION FERRITE	
Z410	90430-0326	-		1	FILTER 6SE3290-0BA87-0FB2	
Z411	90430-0326	-		1	FILTER 6SE3290-0BA87-0FB2	
Z412	90430-0326	-		1	FILTER 6SE3290-0BA87-0FB2	
Z413	90430-0326	-		1	FILTER 6SE3290-0BA87-0FB2	
Z415	90430-0326	-		1	FILTER 6SE3290-0BA87-0FB2	

Pos	Part No	SP	UN	Qty	Description	Page No

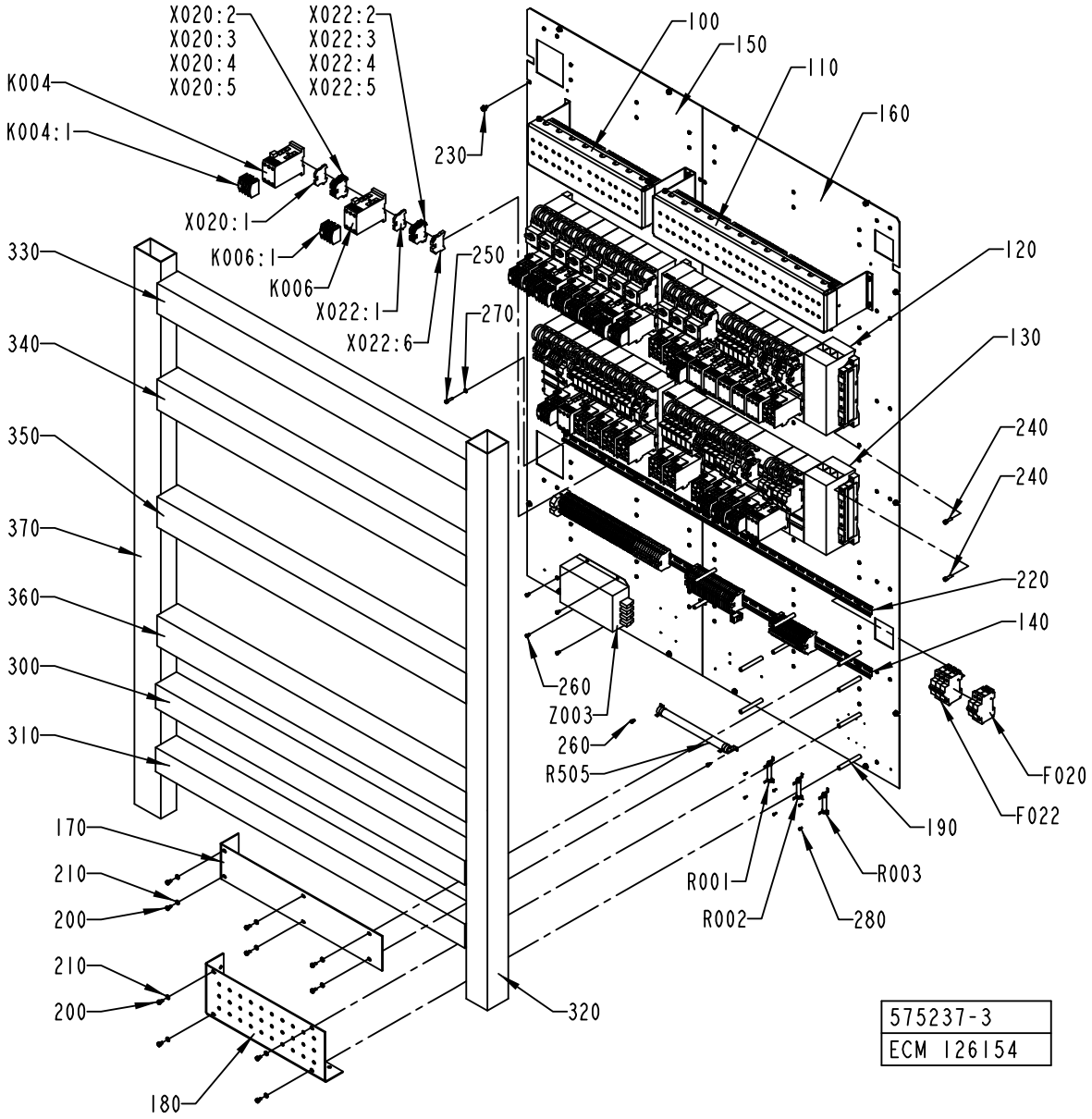
X020:2
X020:3
X020:4
X020:5
X022:2
X022:3
X022:4
X022:5
K004
K004:1
X020:1
K006:1
K006
X022:1
X022:6
230
250
270
100
150
110
160
120
130
240
240
220
140
330
340
350
370
360
300
310
260
Z003
260
R505
F020
F022
190
R001
R002
R003
280
170
210
200
210
200
180
320
575237-3
ECM 126154

ECM: 139613 - 20031110
Group number: 575237-0300
Assembly Drawing: 575237-3_1_AB

Pos	Part No	SP	UN	Qty	Description	Page No
-						
100	2524337-0200	-		1	RELAY UNIT 1	**7-55**
110	1285537-0300	-		1	RELAY UNIT 2	**7-57**
120	1285539-0300	-		1	FUSE BOARD 1	**7-59**
130	1285528-0300	-		1	FUSE BOARD 2	**7-61**
140	1285538-0100	-		1	PLINTH	**7-63**
150	1484466-0000	-		1	MOUNTING PLATE	
160	1484467-0000	-		1	MOUNTING PLATE	
170	1129341-0000	-		1	PROTECTION	
180	1254091-0000	-		1	PROTECTION	
190	1038275-0012	-		10	SPACER	
200	312101-0364	-		10	SCREW M6S M6X10 FZB	
210	315101-0153	-		10	WASHER PLAIN, BRB, 6,4/12 H=1,5	
220	353042-0005	-	MM	1170	RAIL TS 35/7.5	
230	90287-0157	-		14	SCREW M6SF FLAT HEAD M6X10 88	
240	312111-0370	-		12	SCREW HEX.SOCK.HD.MC6S-TT 6X20 88 FZB	
250	312115-0331	-		14	SCREW ISO4762 M5X20 A4	
260	312121-0323	-		6	SCREW SLOT.PAN HD. MCS 5X8 FZB	
270	315101-0146	-		14	WASHER PLAIN, BRB, 5,3/10 H=1	
280	312121-0222	-		6	SCREW SLOT.PAN HD. MCS 3X8 FZB	
290	90181-0313	-		102	RIVET DUCTAFIX R4	
300	90181-0055	-	MM	1175	CABLE DUCT, 80X80MM	
310	90181-0055	-	MM	1175	CABLE DUCT, 80X80MM	
320	90181-0055	-	MM	1850	CABLE DUCT, 80X80MM	
330	90181-0056	-	MM	1175	CABLE DUCT, 100X80MM	
340	90181-0056	-	MM	1175	CABLE DUCT, 100X80MM	
350	90181-0056	-	MM	1175	CABLE DUCT, 100X80MM	
360	90181-0056	-	MM	1175	CABLE DUCT, 100X80MM	
370	90181-0048	-	MM	1850	CABLE DUCT, 100X60MM	
F020	90007-0138	-		1	CIRCUIT BREAKER, 2P 10 A K	
F022	90007-0147	-		1	CIRCUIT BREAKER, 3P 10 A K	
K004	90075-0128	A		1	CONTACTOR, 7,5KW 24VDC	
K004:1	90075-0313	-		1	AUXILIARY CONTACT K&M 22 DILM.2NO;2NC	
K006	90075-0128	A		1	CONTACTOR, 7,5KW 24VDC	
K006:1	90075-0313	-		1	AUXILIARY CONTACT K&M 22 DILM.2NO;2NC	
R001	90121-0114	A		1	RESISTANCE FIXED, 0,22 KOHM, 25 W	
R002	90121-0114	A		1	RESISTANCE FIXED, 0,22 KOHM, 25 W	
R003	90121-0114	A		1	RESISTANCE FIXED, 0,22 KOHM, 25 W	
R505	90121-0115	A		1	RESISTANCE FIXED, 0,047 KOHM, 200 W	
X020:1	353024-0204	-		1	EARTH TERMINAL WPE 2,5	
X020:2	353021-0212	-		1	FEED THROUGH TERMINAL, 10200.0	
X020:3	353021-0212	-		1	FEED THROUGH TERMINAL, 10200.0	
X020:4	353021-0212	-		1	FEED THROUGH TERMINAL, 10200.0	
X020:5	353021-0212	-		1	FEED THROUGH TERMINAL, 10200.0	
X022:1	353024-0204	-		1	EARTH TERMINAL WPE 2,5	
X022:2	353021-0212	-		1	FEED THROUGH TERMINAL, 10200.0	
X022:3	353021-0212	-		1	FEED THROUGH TERMINAL, 10200.0	
X022:4	353021-0212	-		1	FEED THROUGH TERMINAL, 10200.0	
X022:5	353021-0212	-		1	FEED THROUGH TERMINAL, 10200.0	
X022:6	353031-0203	-		1	END SUPPORT, WEW 35/2	
Z003	90024-0039	A		1	INPUT FILTER, 50 A	

Machine Type Group Description Used-In Group Number Page No

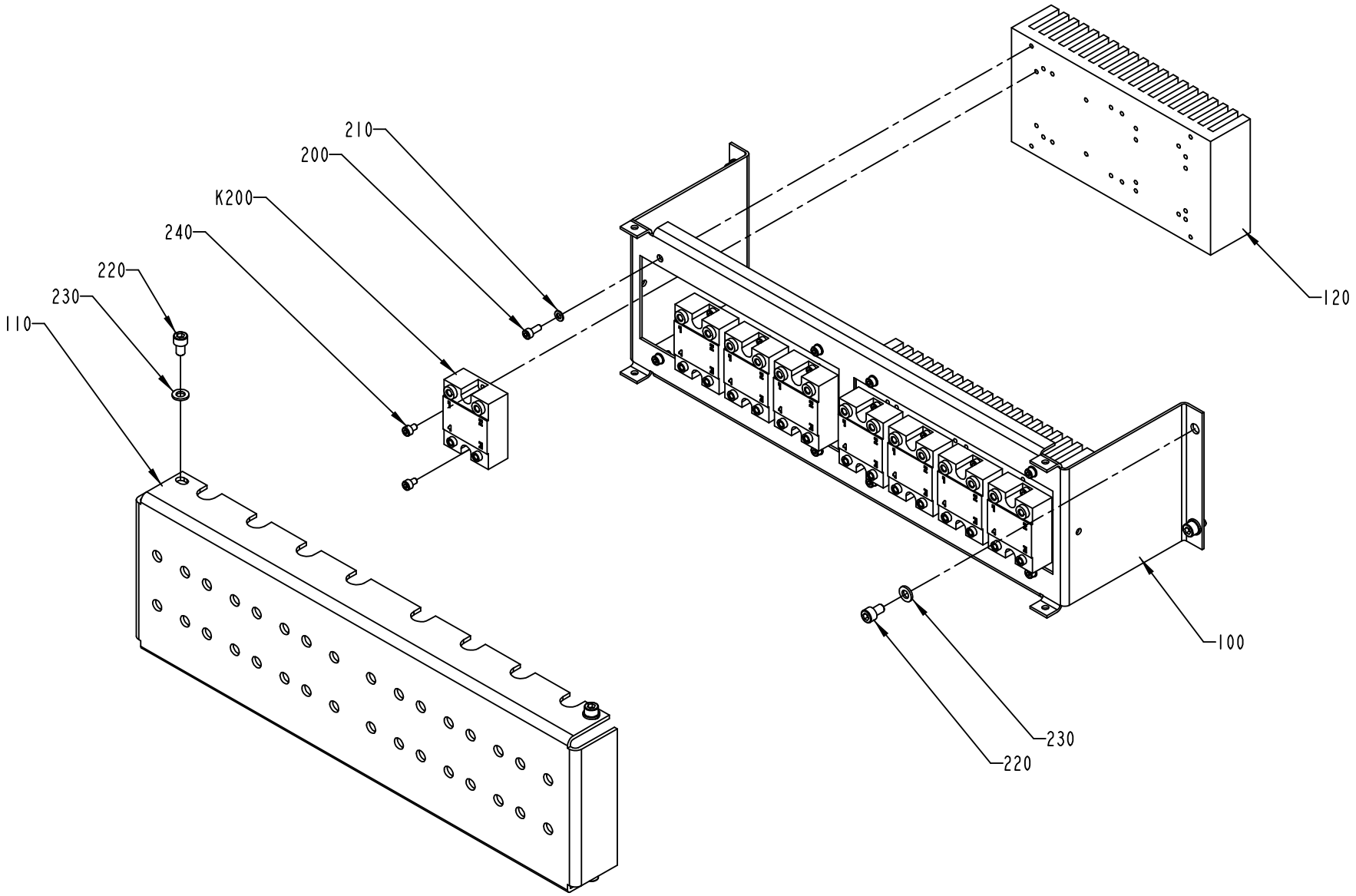

2524337-2
ECM 102480

ECM: 105168 - 20010926
Group number: 2524337-0200
Assembly Drawing: 2524337-2_1_AA

Pos	Part No	SP	UN	Qty	Description	Page No
-						
100	1347673-0000	-		1	BRACKET	
110	1129342-0000	-		1	PROTECTION	
120	495495-0000	-		2	COOLING ELEMENT SSR	
200	312115-0289	-		8	SCREW ISO4762 M4X10 A4	
210	315101-0136	-		8	BRICKA BRB, 4,3/8 H=0,8	
220	312115-0364	-		8	SCREW ISO4762 M6X10 A4	
230	315101-0153	-		8	WASHER PLAIN, BRB, 6,4/12 H=1,5	
240	312115-0285	-		16	SCREW ISO4762 M4X6 A4	
K200	90119-0067	-		1	SOLID-STATE RELAY, H12WD4850	
K201	90119-0067	-		1	SOLID-STATE RELAY, H12WD4850	
K202	90119-0067	-		1	SOLID-STATE RELAY, H12WD4850	
K203	90119-0067	-		1	SOLID-STATE RELAY, H12WD4850	
K204	90119-0067	-		1	SOLID-STATE RELAY, H12WD4850	
K205	90119-0067	-		1	SOLID-STATE RELAY, H12WD4850	
K206	90119-0067	-		1	SOLID-STATE RELAY, H12WD4850	
K207	90119-0067	-		1	SOLID-STATE RELAY, H12WD4850	

Pos	Part No	SP	UN	Qty	Description	Page No

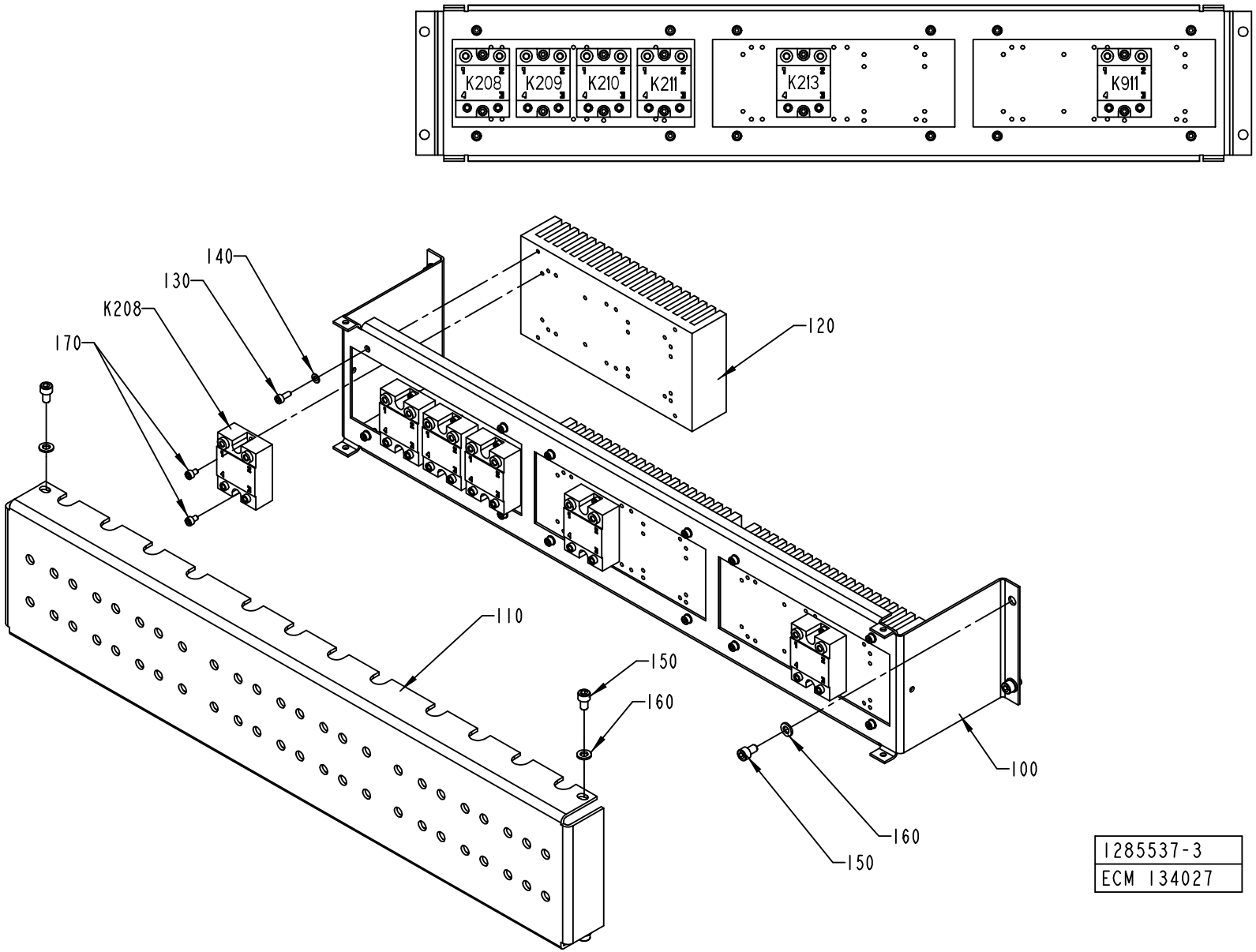

1285537-3
ECM 134027

ECM: 142342 - 20031112
Group number: 1285537-0300
Assembly Drawing: 1285537-3_1_AB

Pos	Part No	SP	UN	Qty	Description	Page No
HI						
170	312115-0285	-		12	SCREW ISO4762 M4X6 A4	
K911	90119-0067	-		1	SOLID-STATE RELAY, H12WD4850	
NOHI						
170	312115-0285	-		10	SCREW ISO4762 M4X6 A4	
Common Parts						
100	1129338-0000	-		1	BRACKET	
110	1129343-0000	-		1	PROTECTION	
120	495495-0000	-		3	COOLING ELEMENT SSR	
130	312115-0289	-		12	SCREW ISO4762 M4X10 A4	
140	315101-0136	-		12	BRICKA BRB, 4,3/8 H=0,8	
150	312115-0364	-		8	SCREW ISO4762 M6X10 A4	
160	315101-0153	-		8	WASHER PLAIN, BRB, 6,4/12 H=1,5	
K208	90119-0067	A		1	SOLID-STATE RELAY, H12WD4850	
K209	90119-0067	A		1	SOLID-STATE RELAY, H12WD4850	
K210	90119-0067	A		1	SOLID-STATE RELAY, H12WD4850	
K211	90119-0067	A		1	SOLID-STATE RELAY, H12WD4850	
K213	90119-0067	-		1	SOLID-STATE RELAY, H12WD4850	

Pos	Part No	SP	UN	Qty	Description	Page No

FUSE BOARD 1

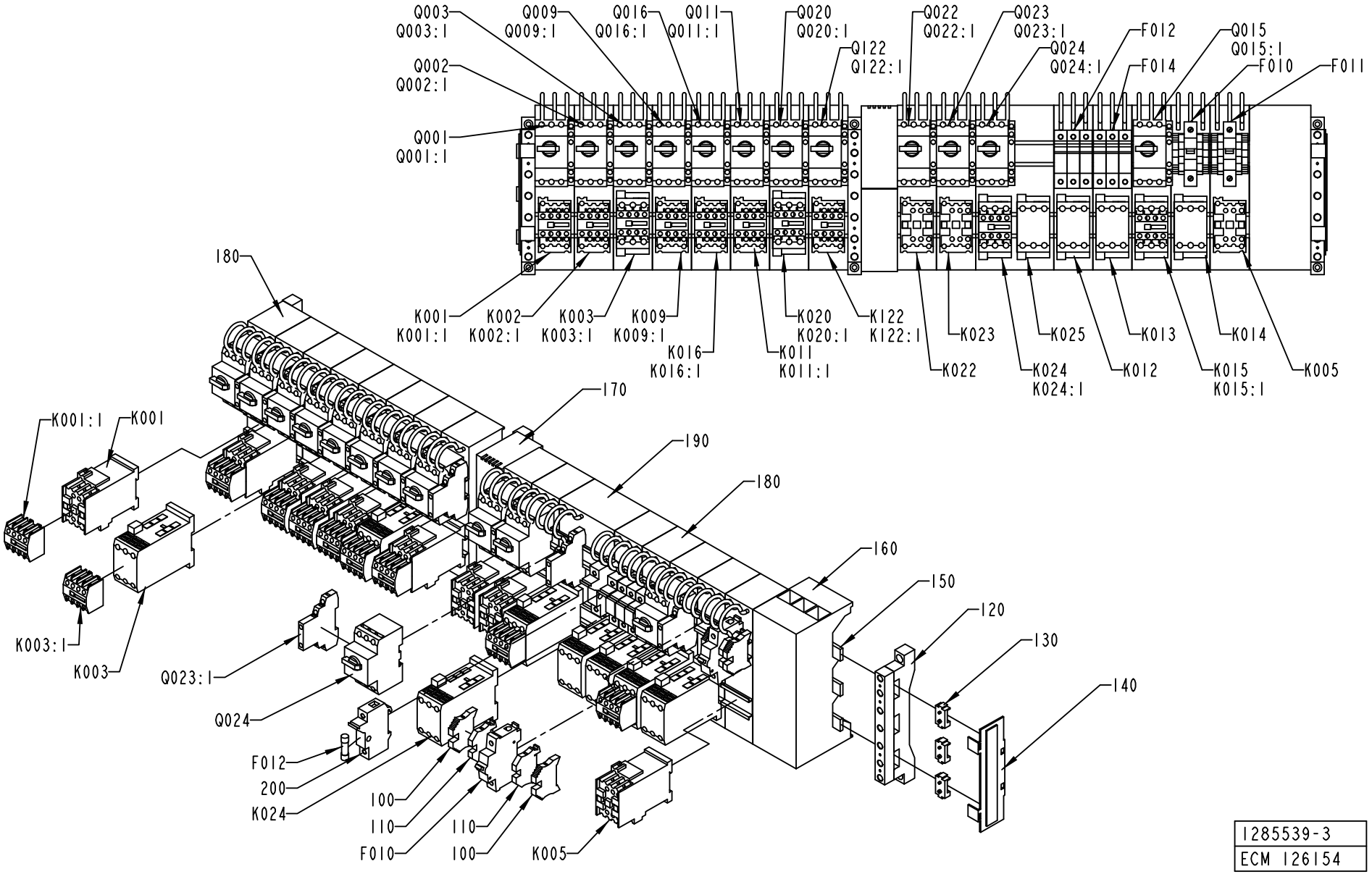

1285539-3
ECM 126154

ECM: 139614 - 20031110
Group number: 1285539-0300
Assembly Drawing: 1285539-3_1_AB

Pos	Part No	SP	UN	Qty	Description	Page No
-						
100	353031-0203	-		8	END SUPPORT, WEW 35/2	
110	353021-0214	-		14	FEED THROUGH TERMINAL, 10202.0	
120	1129925-0000	-		3	BUSBAR	
130	353042-0010	-		3	BUSBAR HÅLLARE	
140	353042-0012	-		9	ADJUSTMENTPLATTA	
150	353042-0019	-		2	SIDE GUARD	
160	353042-0016	-		1	CONNECTIONSADAPTER	
170	353042-0013	-		1	PROTECTIVE CASING	
180	353042-0014	-		15	BUSBAR ADA ADAPTER	
190	353042-0015	-		1	BUSBAR ADAPTER	
200	90233-0303	-		6	FUSE HOLDER, ST 10 1-POLE	
F010	90007-0133	-		1	CIRCUIT BREAKER, 1P 25 A K	
F011	90007-0129	-		1	CIRCUIT BREAKER, 1P 10 A K	
F012	90233-0028	-		3	TUBE FUSE, 10A	
F014	90233-0028	-		3	TUBE FUSE, 10A	
K001	90075-0127	A		1	CONTACTOR, 4KW 24VDC	
K001:1	90075-0313	A		1	AUXILIARY CONTACT K&M 22 DILM.2NO;2NC	
K002	90075-0127	A		1	CONTACTOR, 4KW 24VDC	
K002:1	90075-0313	A		1	AUXILIARY CONTACT K&M 22 DILM.2NO;2NC	
K003	90075-0128	A		1	CONTACTOR, 7,5KW 24VDC	
K003:1	90075-0313	A		1	AUXILIARY CONTACT K&M 22 DILM.2NO;2NC	
K005	90075-0127	-		1	CONTACTOR, 4KW 24VDC	
K009	90075-0127	A		1	CONTACTOR, 4KW 24VDC	
K009:1	90075-0313	A		1	AUXILIARY CONTACT K&M 22 DILM.2NO;2NC	
K011	90075-0127	A		1	CONTACTOR, 4KW 24VDC	
K011:1	90075-0313	A		1	AUXILIARY CONTACT K&M 22 DILM.2NO;2NC	
K012	90075-0128	-		1	CONTACTOR, 7,5KW 24VDC	
K013	90075-0128	-		1	CONTACTOR, 7,5KW 24VDC	
K014	90075-0128	-		1	CONTACTOR, 7,5KW 24VDC	
K015	90075-0128	-		1	CONTACTOR, 7,5KW 24VDC	
K015:1	90075-0313	-		1	AUXILIARY CONTACT K&M 22 DILM.2NO;2NC	
K016	90075-0127	-		1	CONTACTOR, 4KW 24VDC	
K016:1	90075-0313	-		1	AUXILIARY CONTACT K&M 22 DILM.2NO;2NC	
K020	90075-0128	A		1	CONTACTOR, 7,5KW 24VDC	
K020:1	90075-0313	A		1	AUXILIARY CONTACT K&M 22 DILM.2NO;2NC	
K022	90075-0127	A		1	CONTACTOR, 4KW 24VDC	
K023	90075-0127	A		1	CONTACTOR, 4KW 24VDC	
K024	90075-0128	A		1	CONTACTOR, 7,5KW 24VDC	
K024:1	90075-0313	A		1	AUXILIARY CONTACT K&M 22 DILM.2NO;2NC	
K025	90075-0128	A		1	CONTACTOR, 7,5KW 24VDC	
K122	90075-0127	-		1	CONTACTOR, 4KW 24VDC	
K122:1	90075-0313	-		1	AUXILIARY CONTACT K&M 22 DILM.2NO;2NC	
Q001	90095-0072	A		1	OVERLOAD PROTECTION, PKZM 1,0 A	
Q001:1	90259-0313	A		1	AUX. CONTACT K&M NHI21-PKZM0	
Q002	90095-0073	A		1	OVERLOAD PROTECTION, PKZM 1,6 A	
Q002:1	90259-0313	A		1	AUX. CONTACT K&M NHI21-PKZM0	
Q003	90095-0078	A		1	OVERLOAD PROTECTION, PKZM0-16	
Q003:1	90259-0313	A		1	AUX. CONTACT K&M NHI21-PKZM0	
Q009	90095-0070	A		1	OVERLOAD PROTECTION, PKZM 0,4 A	
Q009:1	90259-0313	A		1	AUX. CONTACT K&M NHI21-PKZM0	
Q011	90095-0074	A		1	OVERLOAD PROTECTION, PKZM 2,5 A	
Q011:1	90259-0313	A		1	AUX. CONTACT K&M NHI21-PKZM0	
Q015	90095-0072	-		1	OVERLOAD PROTECTION, PKZM 1,0 A	
Q015:1	90259-0313	-		1	AUX. CONTACT K&M NHI21-PKZM0	
Q016	90095-0073	-		1	OVERLOAD PROTECTION, PKZM 1,6 A	
Q016:1	90259-0313	-		1	AUX. CONTACT K&M NHI21-PKZM0	
Q020	90095-0077	A		1	OVERLOAD PROTECTION, PKZM 6-10 A	
Q020:1	90259-0313	A		1	AUX. CONTACT K&M NHI21-PKZM0	
Q022	90095-0074	A		1	OVERLOAD PROTECTION, PKZM 2,5 A	
Q022:1	90259-0313	A		1	AUX. CONTACT K&M NHI21-PKZM0	
Q023	90095-0074	A		1	OVERLOAD PROTECTION, PKZM 2,5 A	
Q023:1	90259-0313	A		1	AUX. CONTACT K&M NHI21-PKZM0	
Q024	90095-0080	A		1	OVERLOAD PROTECTION, PKZM 25 A	
Q024:1	90259-0313	A		1	AUX. CONTACT K&M NHI21-PKZM0	
Q122	90095-0072	-		1	OVERLOAD PROTECTION, PKZM 1,0 A	
Q122:1	90259-0313	-		1	AUX. CONTACT K&M NHI21-PKZM0	

Machine Type | Group Description | Used-In | Group Number | Page No

FUSE BOARD 2

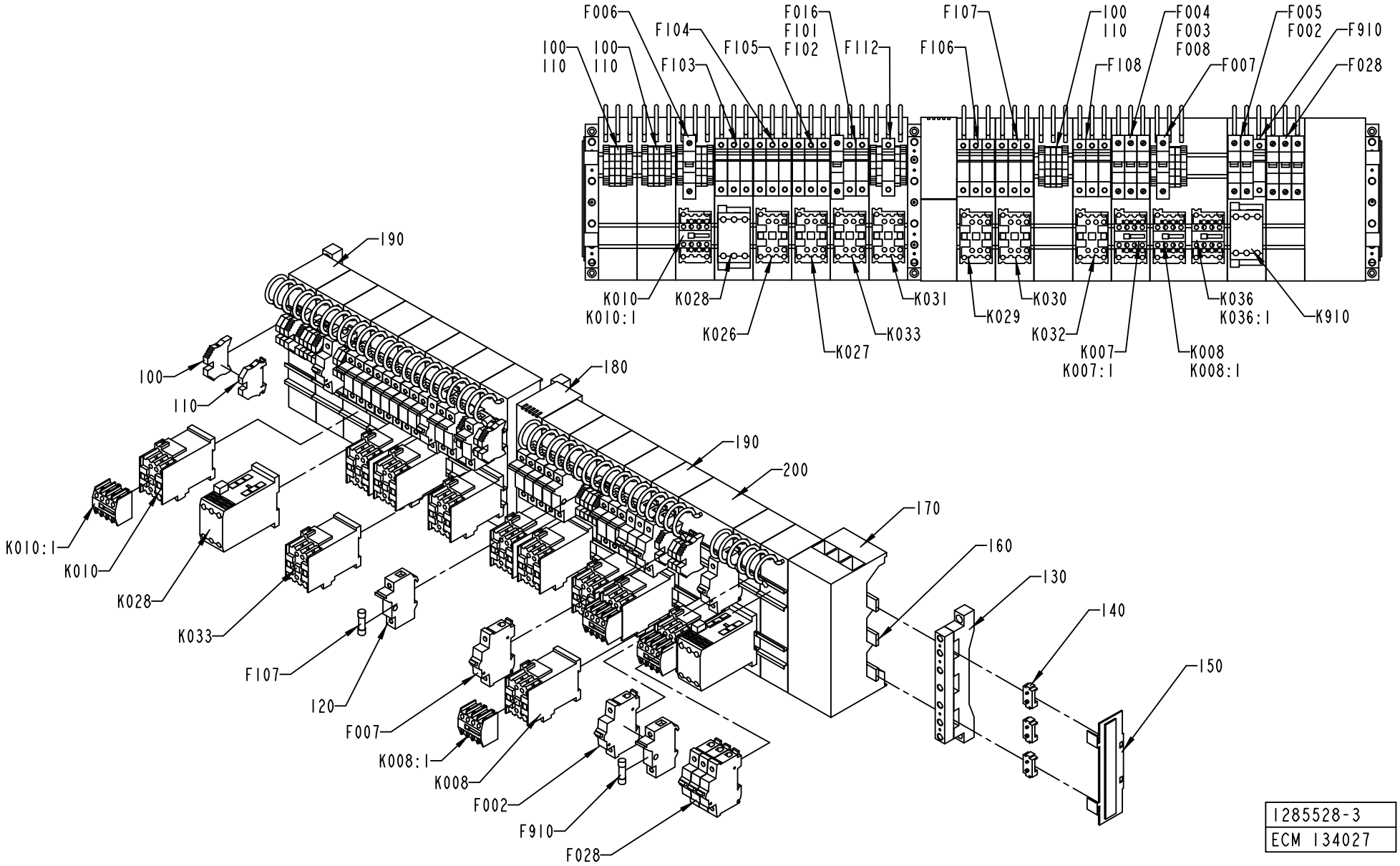
F006
F104
F016
F101
F102
F107
100
110
F004
F003
F008
F005
F002
F910
100
110
100
110
F103
F105
F112
F106
F108
F007
F028
K010
K010:1
K028
K026
K027
K033
K031
K029
K030
K032
K007
K007:1
K008
K008:1
K036
K036:1
K910
190
100
110
180
190
200
170
160
130
140
150
K010:1
K010
K028
K033
F107
120
F007
K008:1
K008
F002
F910
F028
1285528-3
ECM 134027

ECM: 142343 - 20031112
Group number: 1285528-0300
Assembly Drawing: 1285528-3_1_AC

Pos	Part No	SP	UN	Qty	Description	Page No
HI						
100	353031-0203	-		12	END SUPPORT, WEW 35/2	
120	90233-0303	-		22	FUSE HOLDER, ST 10 1-POLE	
F910	90233-0027	-		1	TUBE FUSE, 16A	
	90233-0305	*C*		*1*	*INDICATOR*	
K910	90075-0128	-		1	CONTACTOR, 7,5KW 24VDC	
NOHI						
100	353031-0203	-		14	END SUPPORT, WEW 35/2	
120	90233-0303	-		21	FUSE HOLDER, ST 10 1-POLE	
Common Parts						
110	353021-0214	-		15	FEED THROUGH TERMINAL, 10202.0	
130	353042-0010	-		3	BUSBAR HÅLLARE	
140	353042-0012	-		9	ADJUSTMENTPLATTA	
150	353042-0019	-		2	SIDE GUARD	
160	1129925-0000	-		3	BUSBAR	
170	353042-0016	-		1	CONNECTIONSADAPTER	
180	353042-0013	-		1	PROTECTIVE CASING	
190	353042-0014	-		15	BUSBAR ADA ADAPTER	
200	353042-0015	-		1	BUSBAR ADAPTER	
F002	90007-0128	-		1	CIRCUIT BREAKER, 1P 6 A K	
F003	90007-0129	-		1	CIRCUIT BREAKER, 1P 10 A K	
F004	90007-0129	-		1	CIRCUIT BREAKER, 1P 10 A K	
F005	90007-0129	-		1	CIRCUIT BREAKER, 1P 10 A K	
F006	90007-0129	-		1	CIRCUIT BREAKER, 1P 10 A K	
F007	90007-0129	-		1	CIRCUIT BREAKER, 1P 10 A K	
F008	90007-0128	-		1	CIRCUIT BREAKER, 1P 6 A K	
F016	90007-0128	-		1	CIRCUIT BREAKER, 1P 6 A K	
F028	90007-0146	-		1	CIRCUIT BREAKER, 3P 6 A K	
F101	90233-0029	-		1	TUBE FUSE, 25A	
F102	90233-0029	-		1	TUBE FUSE, 25A	
F103	90233-0029	-		3	TUBE FUSE, 25A	
F104	90233-0028	-		3	TUBE FUSE, 10A	
F105	90233-0028	-		3	TUBE FUSE, 10A	
F106	90233-0027	-		3	TUBE FUSE, 16A	
	90233-0305	*C*		*1*	*INDICATOR*	
F107	90233-0027	-		3	TUBE FUSE, 16A	
	90233-0305	*C*		*1*	*INDICATOR*	
F108	90233-0027	-		3	TUBE FUSE, 16A	
	90233-0305	*C*		*1*	*INDICATOR*	
F112	90233-0028	-		1	TUBE FUSE, 10A	
K007	90075-0127	A		1	CONTACTOR, 4KW 24VDC	
K007:1	90075-0313	A		1	AUXILIARY CONTACT K&M 22 DILM.2NO;2NC	
K008	90075-0127	A		1	CONTACTOR, 4KW 24VDC	
K008:1	90075-0313	A		1	AUXILIARY CONTACT K&M 22 DILM.2NO;2NC	
K010	90075-0127	A		1	CONTACTOR, 4KW 24VDC	
K010:1	90075-0313	A		1	AUXILIARY CONTACT K&M 22 DILM.2NO;2NC	
K026	90075-0127	A		1	CONTACTOR, 4KW 24VDC	
K027	90075-0127	A		1	CONTACTOR, 4KW 24VDC	
K028	90075-0128	A		1	CONTACTOR, 7,5KW 24VDC	
K029	90075-0127	A		1	CONTACTOR, 4KW 24VDC	
K030	90075-0127	A		1	CONTACTOR, 4KW 24VDC	
K031	90075-0127	A		1	CONTACTOR, 4KW 24VDC	
K032	90075-0127	A		1	CONTACTOR, 4KW 24VDC	
K033	90075-0127	A		1	CONTACTOR, 4KW 24VDC	
K036	90075-0127	A		1	CONTACTOR, 4KW 24VDC	
K036:1	90075-0313	A		1	AUXILIARY CONTACT K&M 22 DILM.2NO;2NC	

Machine Type | Group Description | Used-In | Group Number | Page No

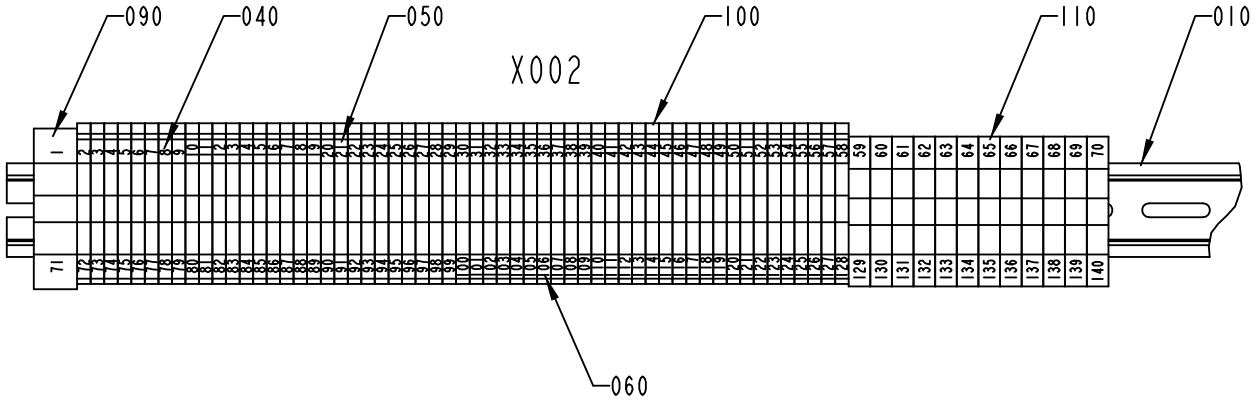

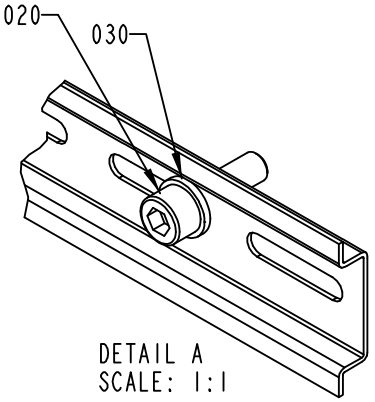

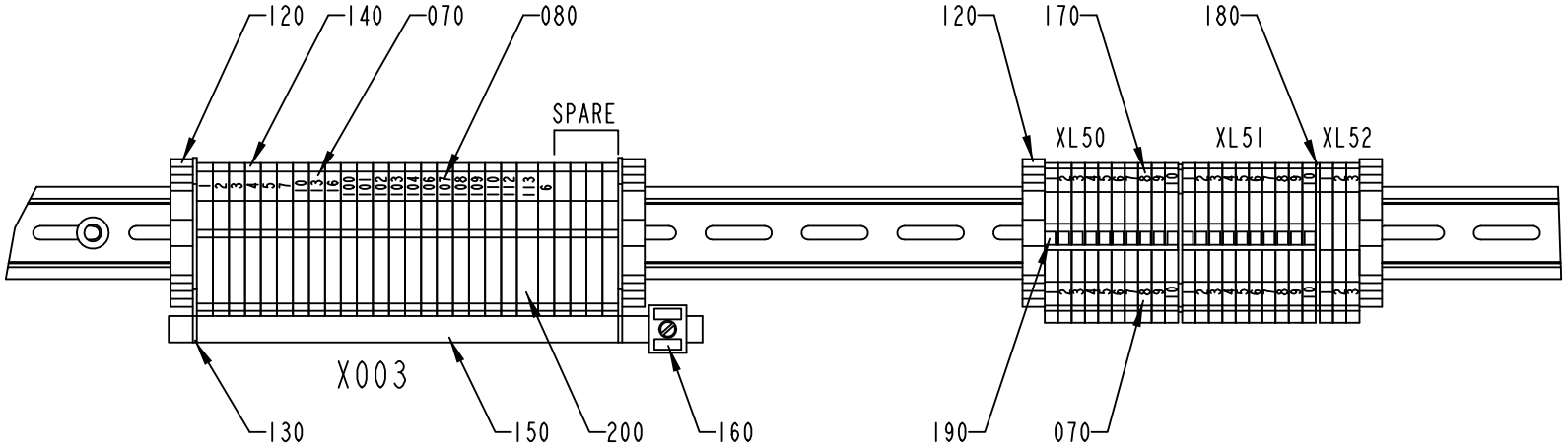

1285538-1
ECM 134027

ECM: 142345 - 20031112
Group number: 1285538-0100
Assembly Drawing: 1285538-1_1_AC

Pos	Part No	SP	UN	Qty	Description	Page No
HI						
200	353022-0003	-		1	NEUTRAL TERMINAL, 10108.8	
Common Parts						
010	353042-0005	-	MM	1170	RAIL TS 35/7.5	
020	312115-0370	-		6	SCREW ISO4762 M6X20 A4	
030	315101-0153	-		6	WASHER PLAIN, BRB, 6,4/12 H=1,5	
040	359011-0807	-		1	MARKING PLATES 5-FW 1-50	
050	359011-0808	-		1	MARKING PLATES 5-FW 51-100	
060	359011-0809	-		1	MARKING PLATES 5-FW 101-150	
070	359011-0821	-		1	SET OF SIGNS 6-FW 1-50	
080	359011-0823	-		1	SET OF SIGNS 6-FW 101-150	
090	353024-0209	-		1	EARTH TERMINAL, 1010.5	
100	353024-0204	-		57	EARTH TERMINAL WPE 2,5	
110	353024-0206	-		12	EARTH TERMINAL, 1010.2	
120	353031-0203	-		4	END SUPPORT, WEW 35/2	
130	353033-0104	-		2	END PLATE, 10502.8	
140	353022-0002	-		26	NEUTRAL TERMINAL, 10107.8	
150	353041-0001	-	MM	200	RAIL 10X3MM SSCH	
160	353041-0106	-		1	HOLDER ZB35 K 5026.8	
170	353021-0212	-		23	FEED THROUGH TERMINAL, 10200.0	
180	353032-0004	-		2	END PLATE WAP 2,5-10 BEIGE	
190	353034-0030	-		2	BRIDGE CONNECTOR WQV 2,5/10, 10544.6	

Pos	Part No	SP	UN	Qty	Description	Page No

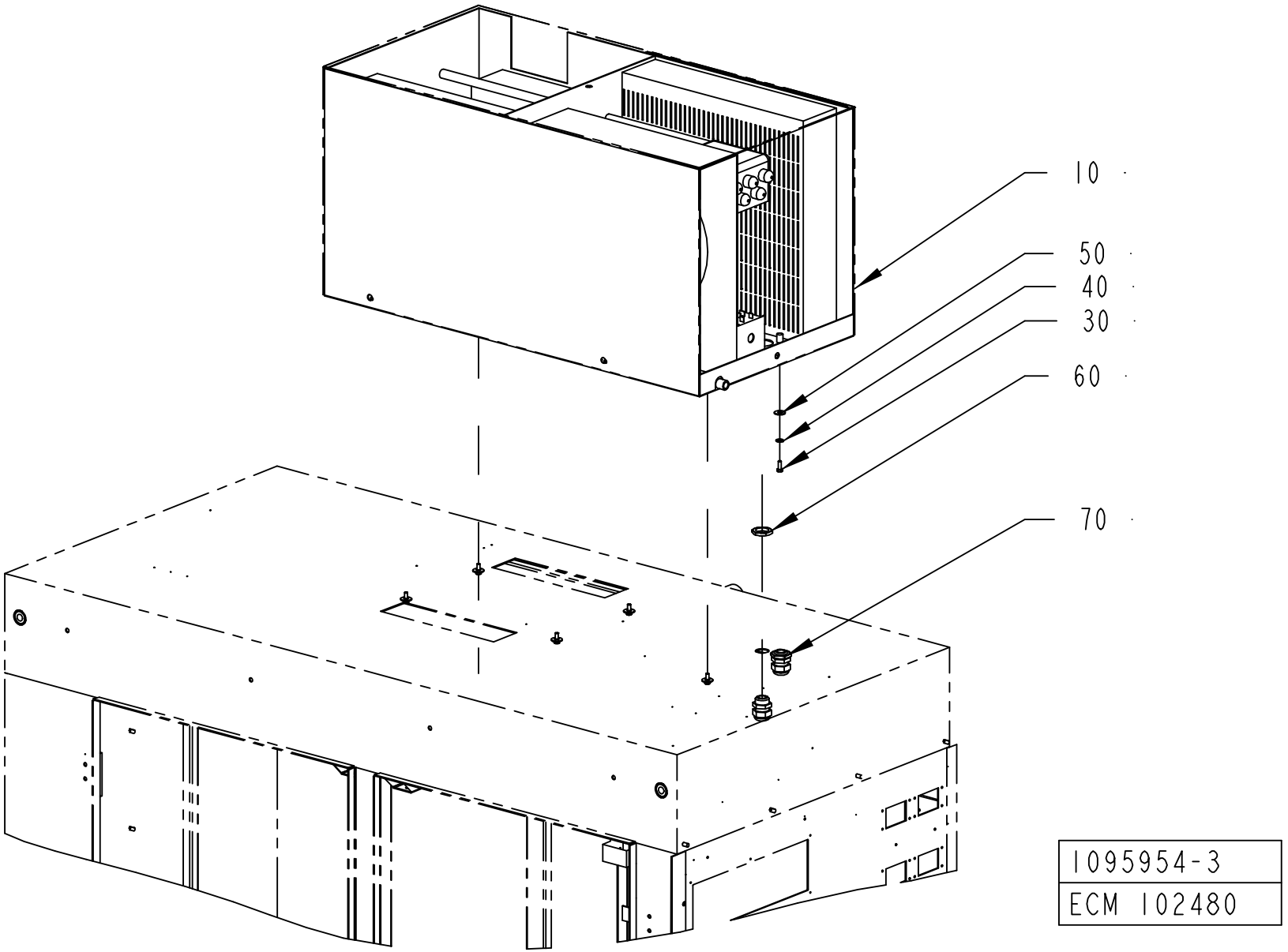
10
50
40
30
60
70
1095954-3
ECM 102480

ECM: 108192 - 20010926
Group number: 1095954-0300
Assembly Drawing: 1095954-3_1_AA

Pos	Part No	SP	UN	Qty	Description	Page No
-						
010	90459-0363	-		1	COOLING UNIT, KB40A0721.02	
	90459-0364	*B*		*1*	*FILTER KB20/30/40 POLYURETH. FILTER 2001*	
030	312105-0328	-		6	SCREW M6S ISO 4017 M5X14 A480	
040	315401-0153	-		6	WASHER FBH6,1FZB	
050	90457-0192	-		6	WASHER PLAIN ROUND, 6,5/18, H=1,5	
060	90099-0110	-		2	NUT, PR 22,5 (PG16)	
070	352103-0110	-		2	CABLE GLAND, STR 16, PR22,5/PG16	

Pos	Part No	SP	UN	Qty	Description	Page No

Tetra Pak

SPC
Spare Parts Catalogue

TBA/22 050V

648571-0500

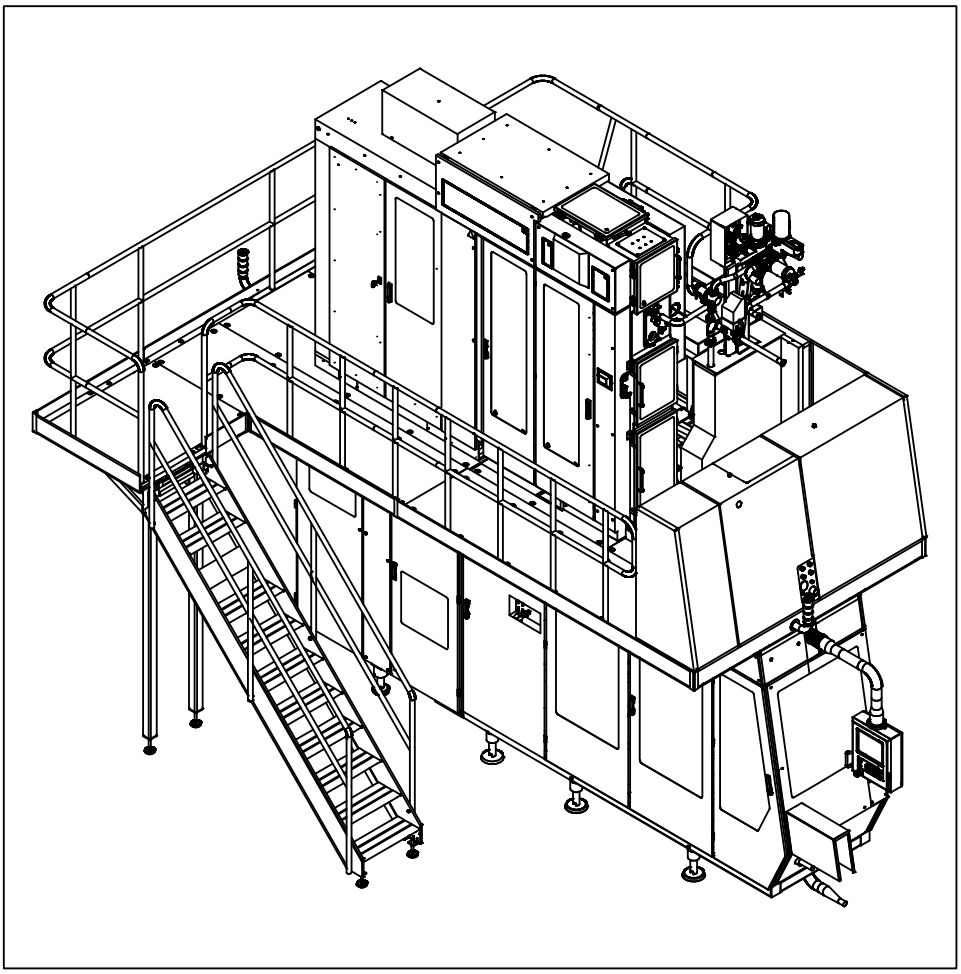

Tetra Pak

Doc. No: SPC-81765-0125

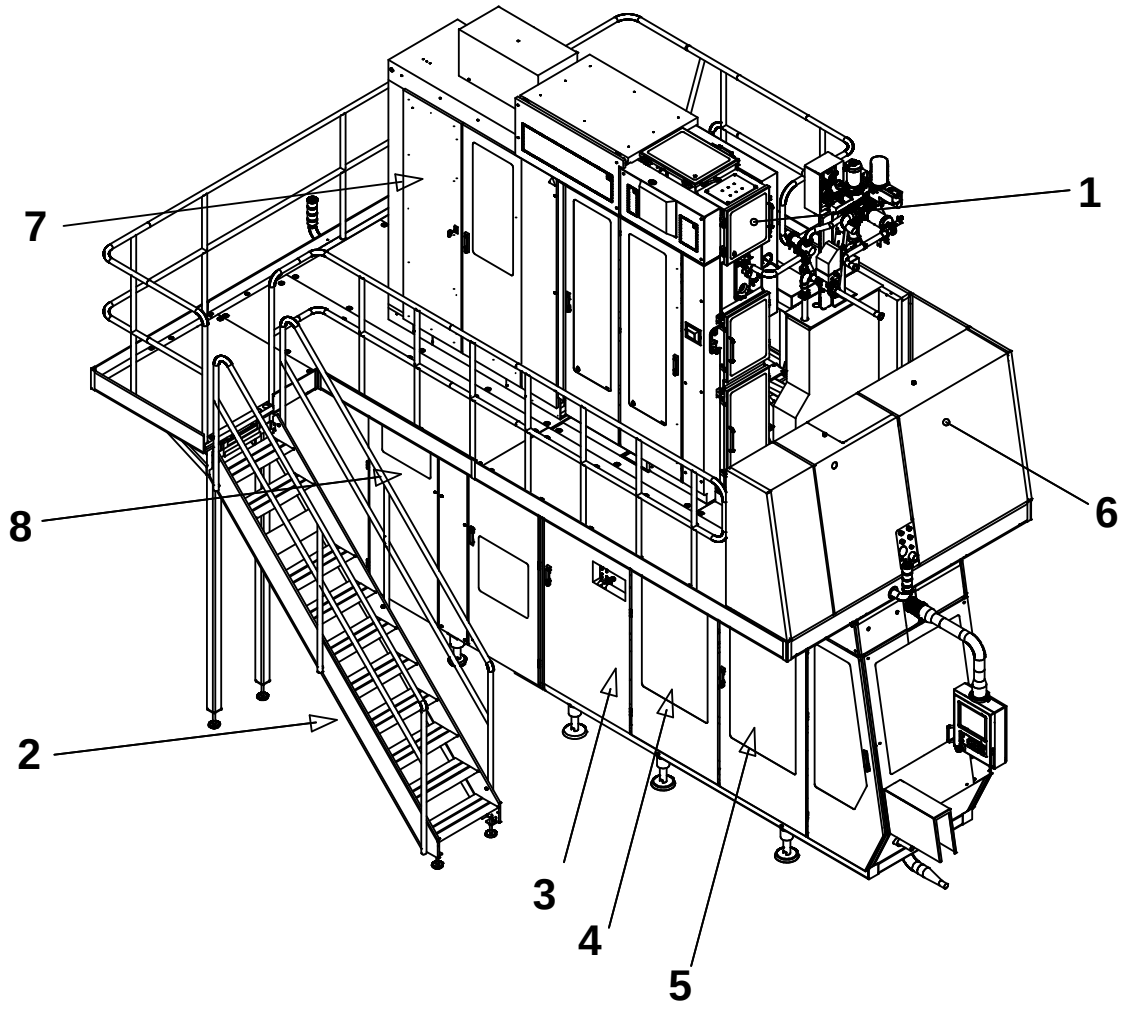

The position numbers in the illustration correspond with the chapter numbers listed on the next page.

Copyright © 2004 Tetra Pak Group

All rights reserved. No part of this document may be reproduced or copied in any form or by any means without written permission from Tetra Pak Carton Ambient AB.

Tetra Pak and all Tetra Pak products are trademarks belonging to the Tetra Pak Group.

The content of this manual is in accordance with the design and construction of the machine or equipment at the time of publishing. Tetra Pak reserves the right to introduce design modifications without prior notice.

This document was produced by:

Tetra Pak Carton Ambient S.p.A.
Technical Publications
Via Delfini 1
41100 Modena /Italy

This Tetra Pak equipment was manufactured by:

Tetra Pak Carton Ambient S.p.A.
Via Delfini 1
41100 Modena /Italy

Additional copies can be ordered from Tetra Pak Parts or the nearest Tetra Pak office. When ordering additional copies, always provide the document number. This can be found in the machine specification document. It is also printed on the front cover and in the footer on each page of the manual.

Doc. No. SPC-81765-0125

Issue 2004-05

This document is valid from:

21203/00101

Series No/Machine No Sign.

SPC

Spare Parts Catalogue

Tetra Brik Aseptic
TBA/22 050V
648571-0500

BINDER 1

i Introduction

1 Superstructure
B-648521-0400

2 Machine Body
B-648522-0600

3 Drive
B-648563-0100

4 Jaw System
B-648554-0100

5 Final Folder
B-648525-0500

6 Service Unit
B-648506-0400

7 Electrical Cabinet
B-648538-0300

BINDER 2

8 Automatic Splicing Unit
B-648528-0200

9 Regular Accessories
B-648547-0200

10 Optional Accessories
B-648546-0500

ii Part Number Index

iii Electrical Parts Index

A list of all optional equipment, optional kits, and rebuilding kits that this catalogue is valid for is found on the next page.

Doc. No: SPC-81765-0125

Issue 2004-05

Tetra Pak

Tetra Pak Carton Ambient S.p.A.

Valid for:

Adustable LS inductor
2611157-0100

ASU Venting Box
2660463-0100

Automatic greasing
2574340-0100

Constant heat
2635113-0100

Filling pipe with float
2540810-0100

Gearbox improvement
2581919-0100

Jumo recorders
2654346-0100

Movable tube support
2598520-0100

Rotating carbon brushes
2606212-0100

Titanium links
2581813-0100

SPC
Spare Parts Catalogue

AUTOMATIC SPLICING UNIT

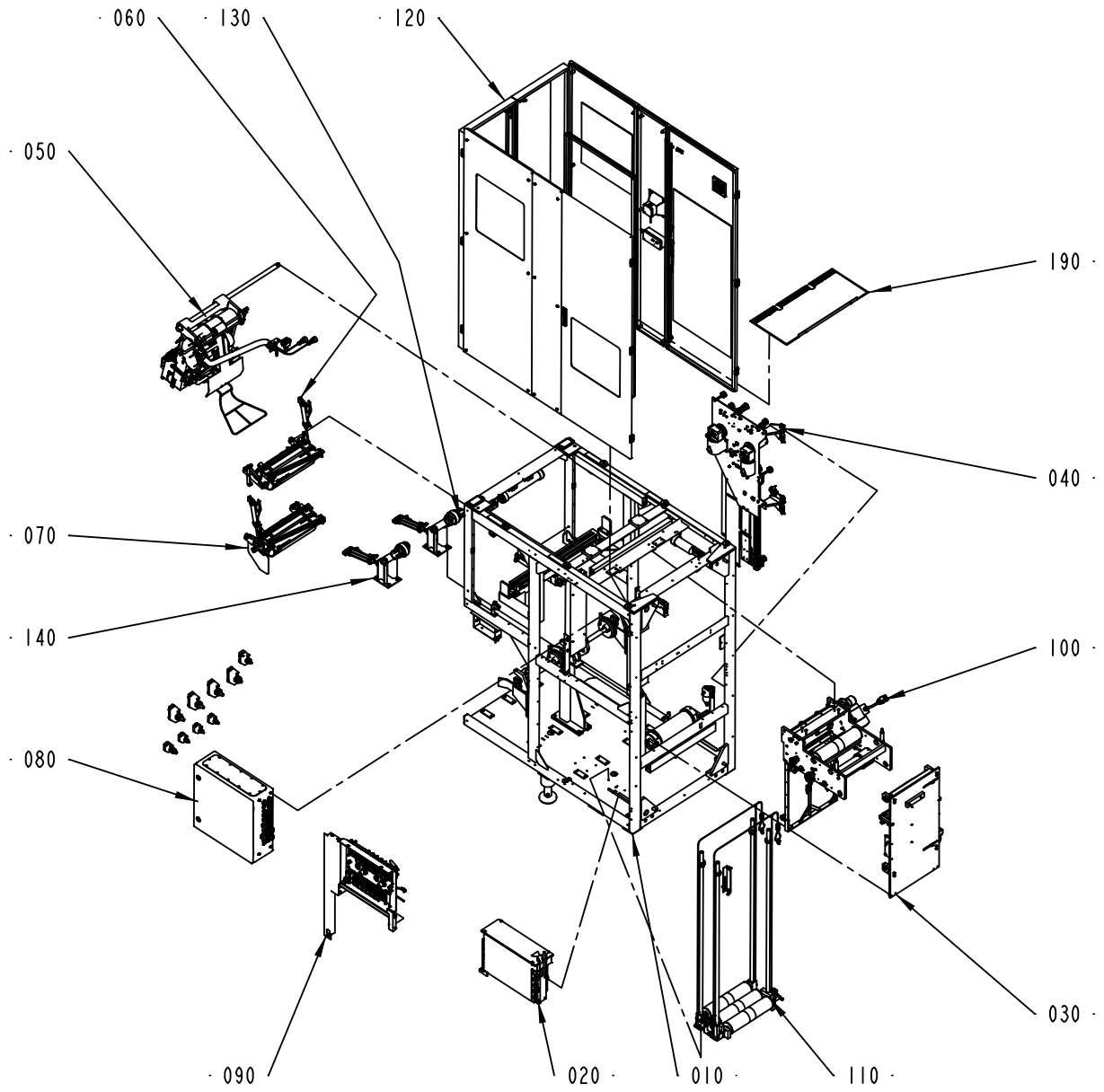

648528-5
ECM 126493

ECM: 143157 - 20040419
Group number: 648528-0200
Assembly Drawing: 648528-5_1_AC

This list covers pages from 8-2 to 8-5

Pos	Part No	SP	UN	Qty	Description	Page No
TBA/22 WITH ARL (See drawing on page: 8-4)						
020	2501222-0100	-		1	GENERATOR CABINET	**8-7**
030	2506668-0100	-		1	STRIP APPLICATOR	**8-9**
190	2613749-0100	-		1	COVER	**8-29**
210	2538072-0100	-		1	AUTOMATIC REEL LOADING	**8-31**
TBA/22 WITHOUT ARL (See drawing on page: 8-2)						
020	2501222-0100	-		1	GENERATOR CABINET	**8-7**
030	2506668-0100	-		1	STRIP APPLICATOR	**8-9**
130	2506614-0100	-		1	BOBBIN BRAKE	**8-39**
140	2506615-0100	-		1	BOBBIN BRAKE	**8-41**
190	2613749-0100	-		1	COVER	**8-29**
Common Parts						
010	1487560-0200	-		1	MACHINE BODY	**8-43, 8-45, 8-47, 8-49**
040	1484707-0200	-		1	STRIP MAGAZINE	**8-69**
050	2588946-0100	-		1	SPLICING DEVICE	**8-85**
060	2588422-0100	-		1	MATERIAL HOLDER L1	**8-107**
070	2588423-0100	-		1	MATERIAL HOLDER L2	**8-115**
080	1548491-0200	-		1	ELECTRICAL CABINET	**8-123, 8-125, 8-127, 8-129, 8-131**
090	2564633-0100	-		1	VALVE PANEL	**8-143**
100	1487808-0200	-		1	BRACKET	**8-153**
110	1490831-0200	-		1	MAGAZINE	**8-163**
120	1490215-0200	-		1	COVERING PANEL	**8-167, 8-169**

Pos	Part No	SP	UN	Qty	Description	Page No

AUTOMATIC SPLICING UNIT

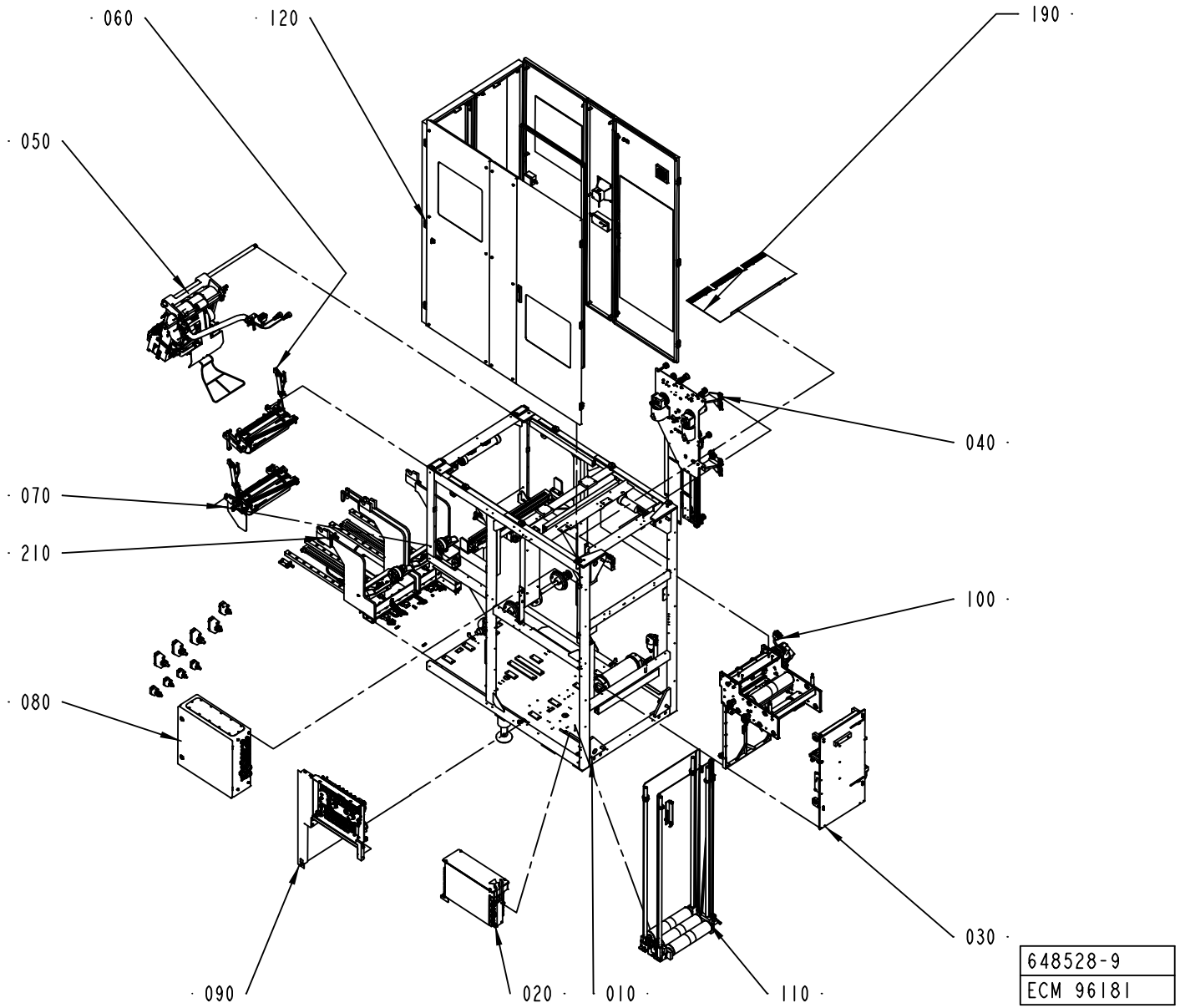

ECM: 143157 - 20040419
Group number: 648528-0200
Assembly Drawing: 648528-9_1_AA

This list covers pages from 8-2 to 8-5

Pos	Part No	SP	UN	Qty	Description	Page No
TBA/22 WITH ARL (See drawing on page: 8-4)						
020	2501222-0100	-		1	GENERATOR CABINET	**8-7**
030	2506668-0100	-		1	STRIP APPLICATOR	**8-9**
190	2613749-0100	-		1	COVER	**8-29**
210	2538072-0100	-		1	AUTOMATIC REEL LOADING	**8-31**
TBA/22 WITHOUT ARL (See drawing on page: 8-2)						
020	2501222-0100	-		1	GENERATOR CABINET	**8-7**
030	2506668-0100	-		1	STRIP APPLICATOR	**8-9**
130	2506614-0100	-		1	BOBBIN BRAKE	**8-39**
140	2506615-0100	-		1	BOBBIN BRAKE	**8-41**
190	2613749-0100	-		1	COVER	**8-29**
Common Parts						
010	1487560-0200	-		1	MACHINE BODY	**8-43, 8-45, 8-47, 8-49**
040	1484707-0200	-		1	STRIP MAGAZINE	**8-69**
050	2588946-0100	-		1	SPLICING DEVICE	**8-85**
060	2588422-0100	-		1	MATERIAL HOLDER L1	**8-107**
070	2588423-0100	-		1	MATERIAL HOLDER L2	**8-115**
080	1548491-0200	-		1	ELECTRICAL CABINET	**8-123, 8-125, 8-127, 8-129, 8-131**
090	2564633-0100	-		1	VALVE PANEL	**8-143**
100	1487808-0200	-		1	BRACKET	**8-153**
110	1490831-0200	-		1	MAGAZINE	**8-163**
120	1490215-0200	-		1	COVERING PANEL	**8-167, 8-169**

Pos	Part No	SP	UN	Qty	Description	Page No

GENERATOR CABINET

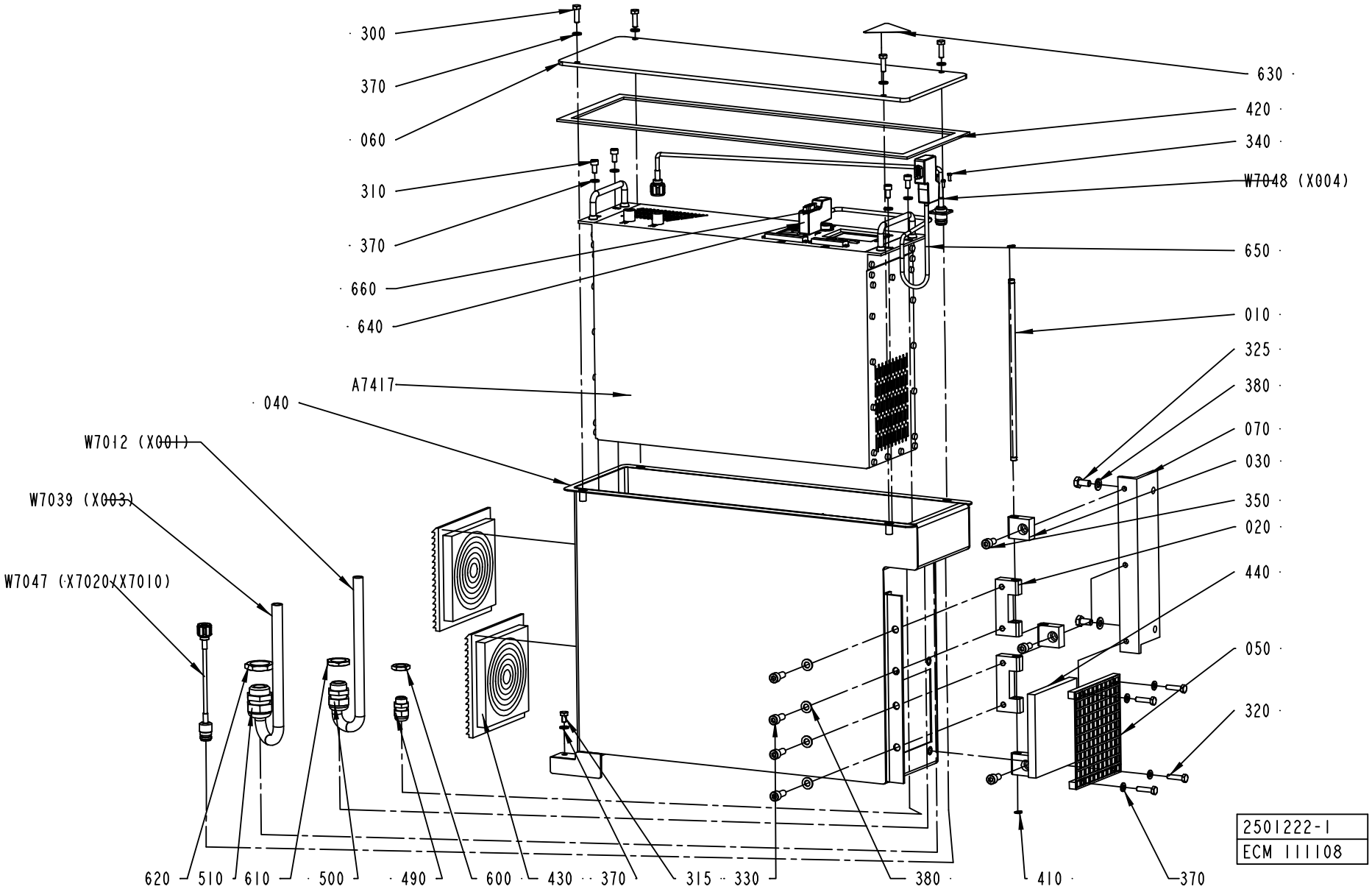

ECM: 111559 - 20021219
Group number: 2501222-0100
Assembly Drawing: 2501222-1_1_AB

Pos	Part No	SP	UN	Qty	Description	Page No
-						
010	1558485-0000	-		1	AXLE PIN	
020	1334189-0000	-		2	BLOCK	
030	1334190-0000	-		3	BLOCK	
040	1548587-0000	-		1	APPLIANCE BOX	
050	1548588-0000	-		1	GRID ELEMENT	
060	1548592-0000	-		1	LID	
070	2510393-0000	-		1	BRACKET	
300	312105-0370	-		4	SCREW M6S ISO 4017 M6X20 A480	
310	312115-0366	-		4	SCREW ISO4762 M6X12 A4	
315	312105-0364	-		1	SCREW M6S ISO 4017 M6X10 A480	
320	312105-0372	-		4	SCREW M6S ISO 4017 M6X25 A480	
325	312105-0449	-		2	SCREW M6S ISO 4017 M8X16 A480	
330	312115-0451	-		4	SCREW ISO4762 M8X20 A4	
340	312125-0222	-		4	SCREW ISO 1207 M3X8 A4	
350	312115-0449	-		3	SCREW ISO4762 M8X16 A4	
370	315105-0153	-		13	WASHER BRB6,4X12RFR	
380	315105-0165	-		6	WASHER BRB8,4X16RFR	
410	90141-0015	-		2	RETAINING RING FOR SHAFT DIN 471 8 A2	
420	90143-0073	-	MM	1600	RUBBER STRIP	
430	90277-0129	B		2	EXHAUST FILTER / SK 3322.200	
440	90458-2395	B		1	FILTER INSERT, SK 3171 100	
490	352103-0101	-		1	CABLE GLAND, ST 9, PR15,2/PG9	
500	352103-0111	-		1	CABLE GLAND, ST 16, PR22,5/PG16	
510	352103-0115	-		1	CABLE GLAND, STR 21, PR28,3/PG21	
600	90099-0104	-		1	NUT, PR 15,2 (PG9)	
610	90099-0110	-		1	NUT, PR 22,5 (PG16)	
620	90099-0119	-		1	NUT, PR 28,3 (PG21)	
630	90194-0016	A		1	WARNING SIGN, RISK OF ELECTRIC SHOCK	
640	90459-0184	-		2	INTERFACE CONNECTOR FOR TPIH 2500 GENER.	
650	90458-2894	-	MM	8000	PAIR TWISTED CABLE 1X2X0,2MM2	
660	90459-1297	-		1	RESISTANCE FIXED, 120 OHM, 0,25 W	
A7417	1499642-0101	A		1	TPIH 2500 HORIZONTAL MOUNTING	
W7012	90220-0105	-	MM	2200	SCR. CABLE 4X2,5MM2	
W7039	90220-0115	-	MM	2200	SCR. CABLE 12X0,75MM2	
W7047	2540595-0001	A		1	COAXIAL CABLE	
W7048	2540596-0001	A		1	COAXIAL CABLE	

Pos	Part No	SP	UN	Qty	Description	Page No

Machine Type | Group Description | Used-In | Group Number | Page No

STRIP APPLICATOR

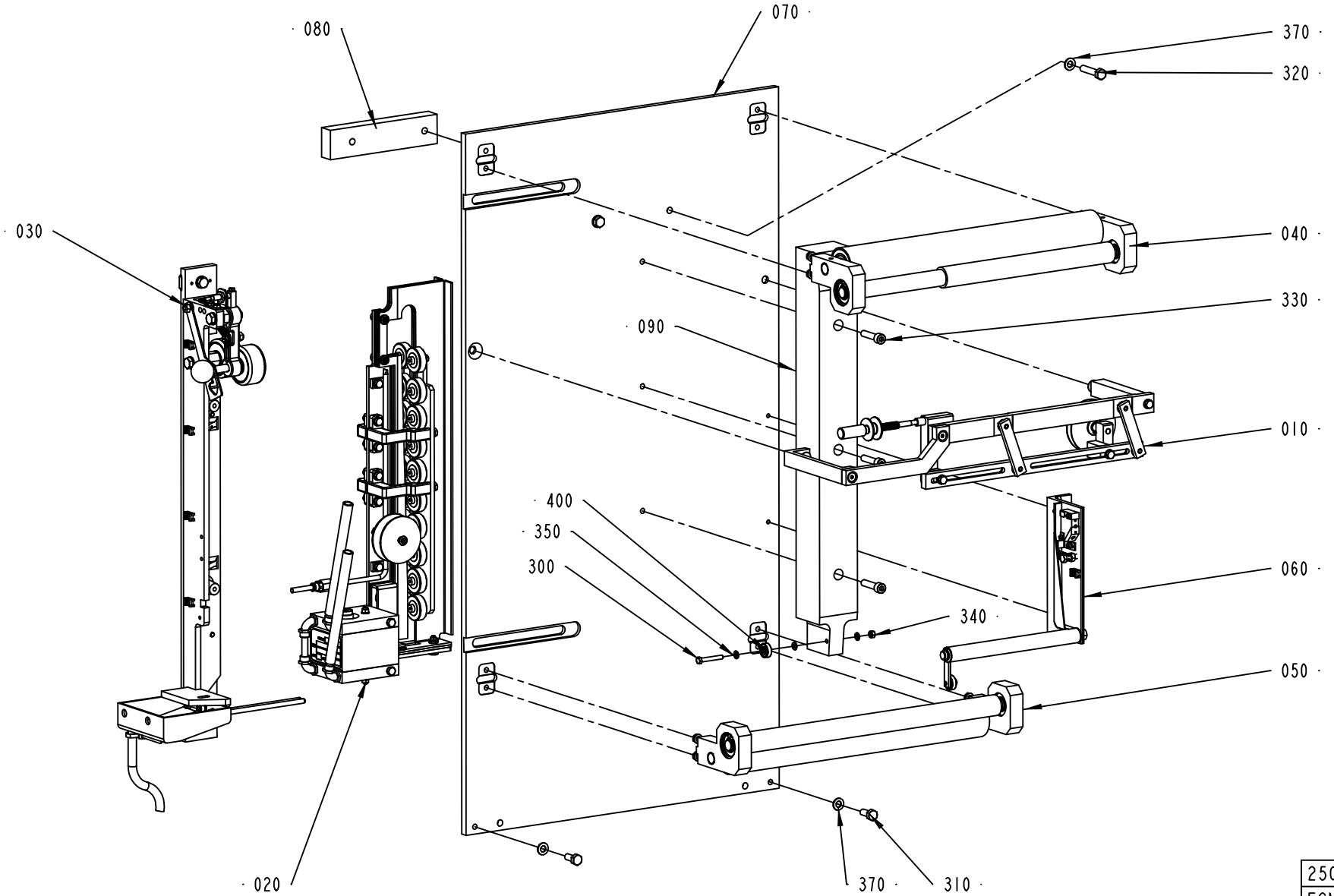

2506668-2
ECM 124683

ECM: 150633 - 20040109
Group number: 2506668-0100
Assembly Drawing: 2506668-2_1_AC

Pos	Part No	SP	UN	Qty	Description	Page No
-						
010	2530410-0100	-		1	STRIP GUIDE	**8-11**
020	2529569-0100	-		1	INDUCTOR	**8-13**
030	2529571-0100	-		1	PRESSURE ROLLER	**8-21**
040	2507019-0100	-		1	ROLLER	**8-23**
050	2507020-0100	-		1	ROLLER	**8-25**
060	2507022-0100	-		1	SPLICE DETECTOR	**8-27**
070	1498409-0000	-		1	SHEET	
080	2506660-0000	-		1	SPACER	
090	2506664-0000	-		1	STEERING	
300	312105-0337	-		1	SCREW M6S ISO 4014 M5X35 A480	
310	312105-0451	-		2	SCREW M6S ISO 4017 M8X20 A480	
320	312109-0459	-		2	SCREW M6S ISO 4017 M8X40 A480	
330	312115-0457	-		3	SCREW ISO4762 M8X35 A4	
340	312605-0314	-		1	HEXAGON NUT, M6M M5 A280	
350	315105-0146	-		3	WASHER BRB5,3X10RFR	
370	315105-0165	-		4	WASHER BRB8,4X16RFR	
400	90214-0138	A		1	BALL BEARING, 5X19X6 MM	

Pos	Part No	SP	UN	Qty	Description	Page No

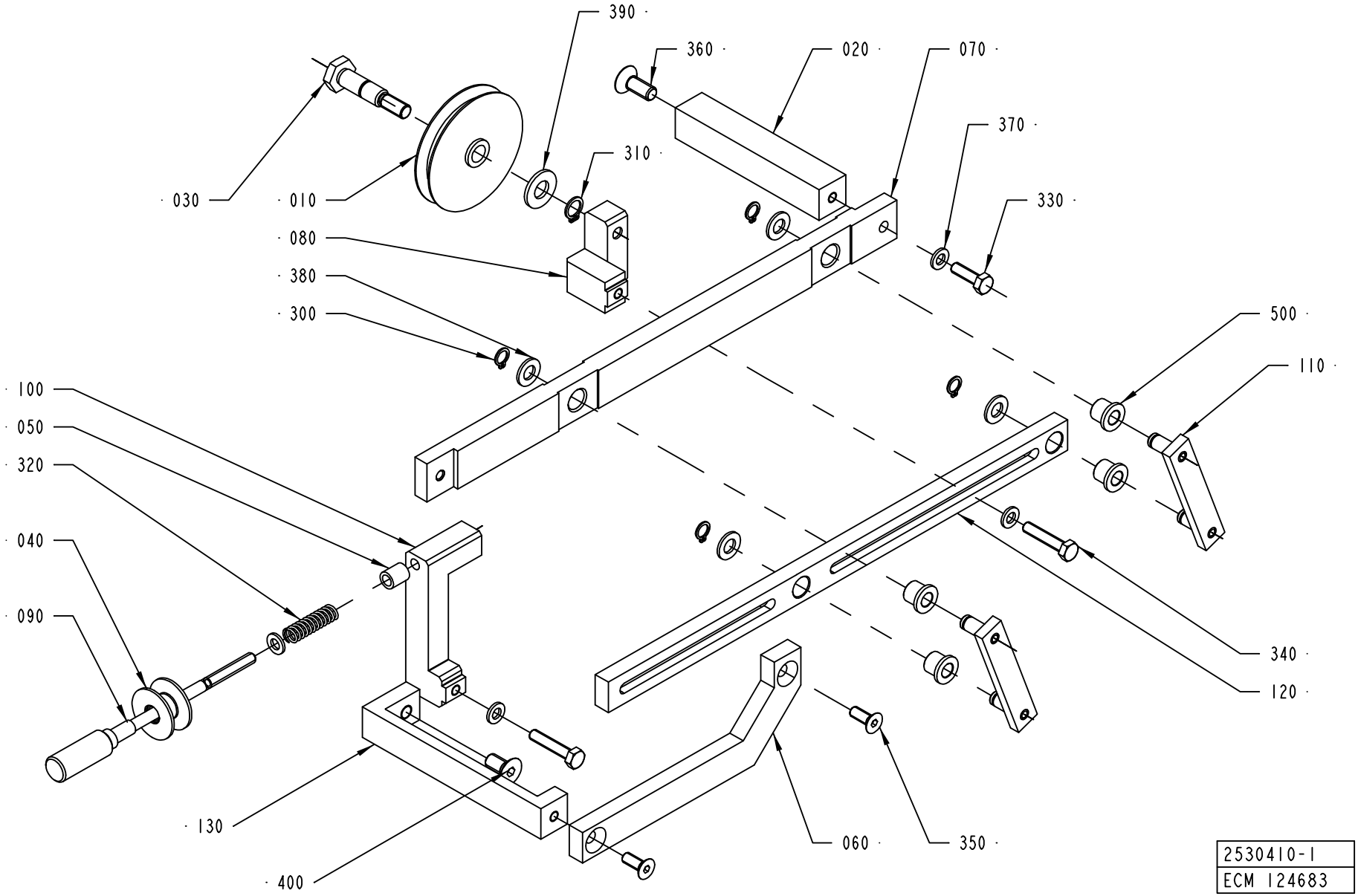
390
360
020
070
370
330
310
030
010
080
380
300
500
110
100
050
320
040
090
340
120
130
400
060
350
2530410-1
ECM 124683

ECM: 125794 - 20040109
Group number: 2530410-0100
Assembly Drawing: 2530410-1_1_AB

Pos	Part No	SP	UN	Qty	Description	Page No
-						
010	282635-0000	A		1	GUIDE WHEEL	
020	2504801-0000	-		1	BRACKET	
030	2504807-0000	-		1	AXLE PIN	
040	2504809-0000	A		1	ROLLER	
050	2527326-0000	-		1	SPACER	
060	2530399-0000	-		1	HANGER	
070	2530404-0000	-		1	ROD	
080	2530405-0000	-		1	BRACKET	
090	2530406-0000	-		1	ADJUSTING SCREW	
100	2530407-0000	-		1	BRACKET	
110	2530408-0000	-		2	LEVER	
120	2530409-0000	-		1	ROD	
130	2504808-0000	-		1	BRACKET	
300	90141-0015	-		4	RETAINING RING FOR SHAFT DIN 471 8 A2	
310	90141-0016	-		1	RETAINING RING FOR SHAFT DIN 471 10 A2	
320	90335-0027	A		1	COMP. SPRING 22170, 1,25X9,25X33	
330	312105-0370	-		1	SCREW M6S ISO 4017 M6X20 A480	
340	312109-0374	-		2	SCREW M6S ISO 4017 M6X30 A480	
350	312155-0368	-		2	SCREW EN 10642 MF6S M6X16 A480	
360	312155-0451	-		1	SCREW EN 10642 MF6S M8X20 A480	
370	315105-0153	-		4	WASHER BRB6,4X12RFR	
380	315105-0165	-		4	WASHER BRB8,4X16RFR	
390	315105-0173	-		1	WASHER BRB10,5X22RFR	
400	312155-0449	-		1	SCREW EN 10642 MF6S M8X16 A480	
500	321111-0097	A		4	FLANGE BUSHING, 8X12X12 MM	

Pos	Part No	SP	UN	Qty	Description	Page No

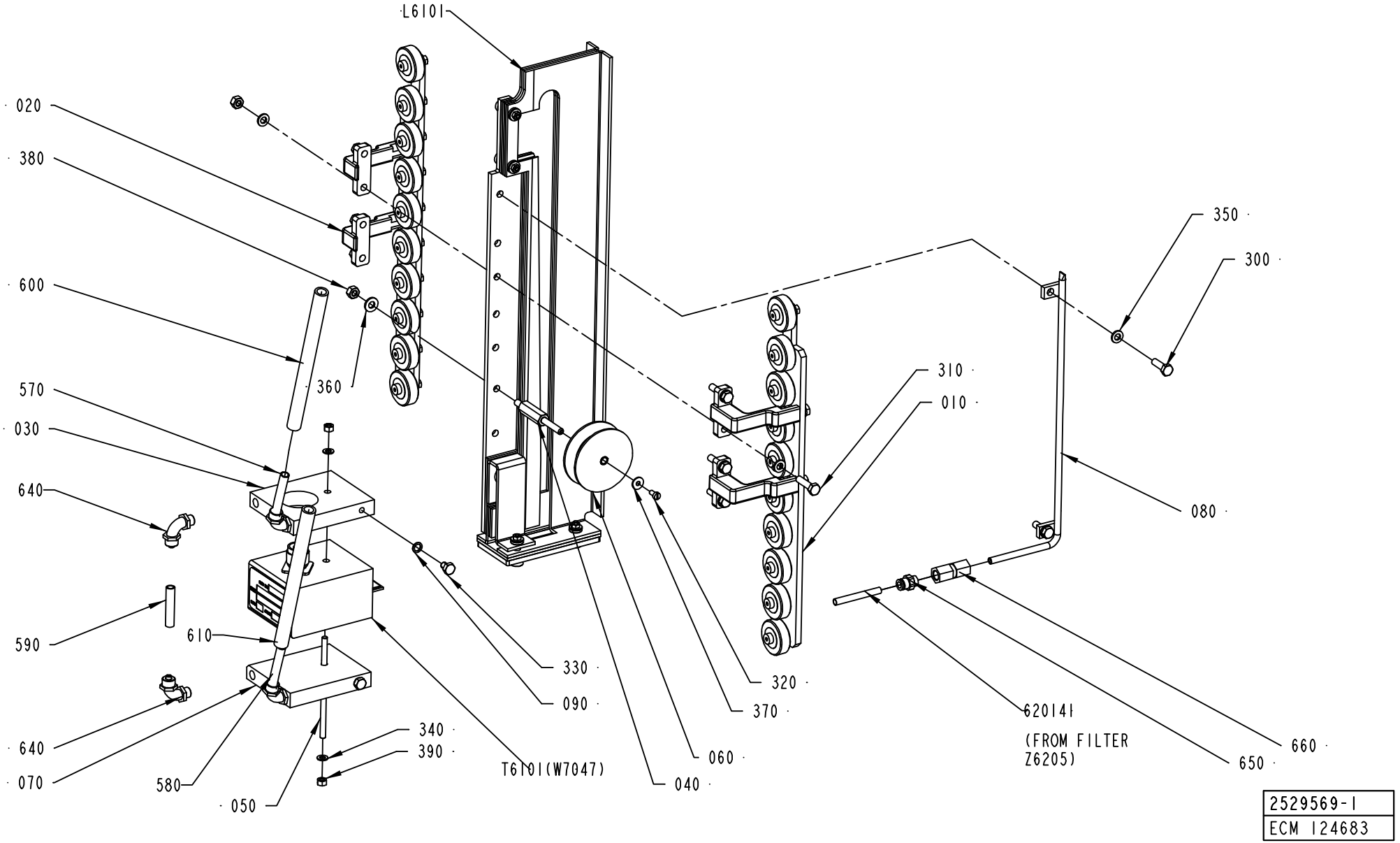
L6101
020
380
600
570
030
640
590
610
640
070
580
050
360
340
390
T6101(W7047)
040
060
090
330
370
320
310
010
350
300
080
620141
(FROM FILTER
Z6205)
650
660
2529569-1
ECM 124683

ECM: 170653 - 20040428
Group number: 2529569-0100
Assembly Drawing: 2529569-1_1_AC

Pos	Part No	SP	UN	Qty	Description	Page No
TBA/22 TBA 0200B, TBA/22 TBA 0250B, TBA/22 TBA 0200S, TBA/22 TBA 0250S, TBA/22 TBA 0200M						
T6101	67380-0207	A		1	TRANSFORMER	
T6101	67380-0207	A		1	TRANSFORMER	
Common Parts						
010	2506496-0100	-		1	PRESSURE ROLLER	**8-15**
020	2506497-0100	-		1	PRESSURE ROLLER	**8-17**
030	1129839-0000	-		1	COOLING PLATE	
040	2510366-0000	-		1	SHAFT	
050	1498430-0000	-		1	ROD	
060	2510365-0000	A		1	ROLLER	
070	1129869-0000	-		1	COOLING PLATE	
080	2529930-0000	-		1	AIR NOZZLE	
090	1140077-0000	-		2	RING	
300	312105-0370	-		2	SCREW M6S ISO 4017 M6X20 A480	
310	312105-0372	-		4	SCREW M6S ISO 4017 M6X25 A480	
320	312125-0287	-		1	SCREW ISO 1207 M4X8 A4	
330	312105-0362	-		2	SCREW M6S ISO 4017 M6X8 A480	
340	315105-0146	-		2	WASHER BRB5,3X10RFR	
350	315105-0153	-		10	WASHER BRB6,4X12RFR	
360	315105-0156	-		1	WASHER BRB 6.7X14 RFR	
370	90005-0082	-		1	WASHER PLAIN ROUND 4,3(M4)/12,H=1	
380	312605-0316	-		5	HEXAGON NUT, M6M M6 A280	
390	312605-0314	-		2	HEXAGON NUT, M6M M5 A280	
570	90166-0118	-	MM	1600	TUBE 8 MM PA BLACK	
580	90166-0118	-	MM	1600	TUBE 8 MM PA BLACK	
590	90166-0118	-	MM	70	TUBE 8 MM PA BLACK	
600	90458-2329	-	MM	1600	HOSE, SILICONE, 50 SHORE, 9/13 MM	
610	90458-2329	-	MM	1600	HOSE, SILICONE, 50 SHORE, 9/13 MM	
620141	90166-0193	-	MM	850	TUBE 6 MM PUR BLUE	
640	342931-0121	-		4	ELBOW 90 COUPL.,EXT.THREAD 8/6-G1/8"	
650	342722-0202	-		1	PIPE COUPLING 1/8" D=6MM	
660	342725-0102	-		1	CONN. STR. PIPE GI-6-G1/8	
L6101	2509617-0100	-		1	INDUCTOR	**8-19**

Pos	Part No	SP	UN	Qty	Description	Page No

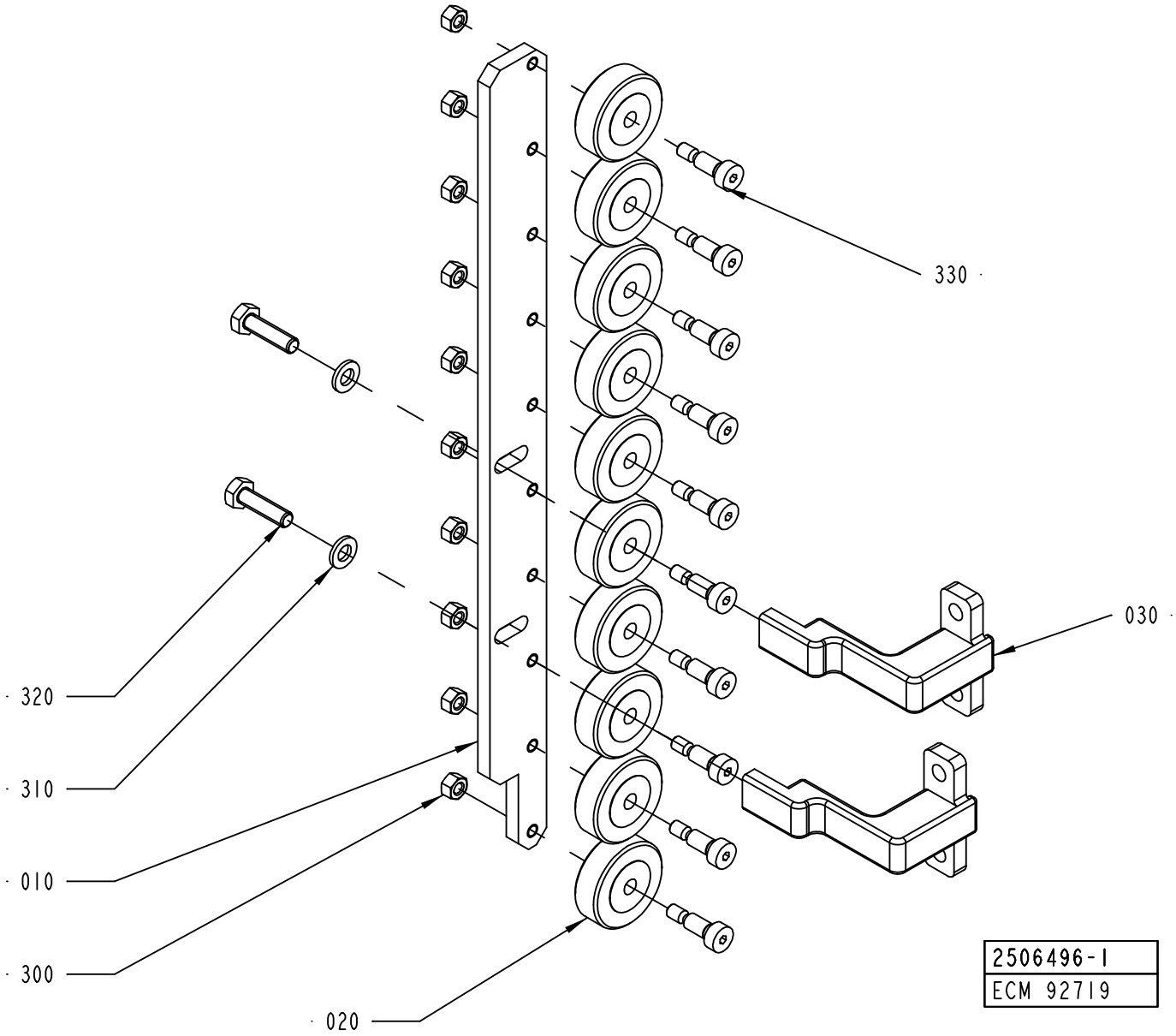
330
030
320
310
010
300
020
2506496-1
ECM 92719

ECM: 122815 - 20021218
Group number: 2506496-0100
Assembly Drawing: 2506496-1_1_AA

Pos	Part No	SP	UN	Qty	Description	Page No
-						
010	1558914-0000	-		1	ROLLER BRACKET	
020	1558911-0000	A		10	PRESSURE ROLLER	
030	2529573-0000	-		2	BRACKET	
300	312605-0314	-		10	HEXAGON NUT, M6M M5 A280	
310	315105-0153	-		2	WASHER BRB6,4X12RFR	
320	312105-0371	-		2	SCREW M6S ISO 4017 M6X22 A480	
330	312180-0366	-		10	SCREW ISO7379 H6X12	

Pos	Part No	SP	UN	Qty	Description	Page No

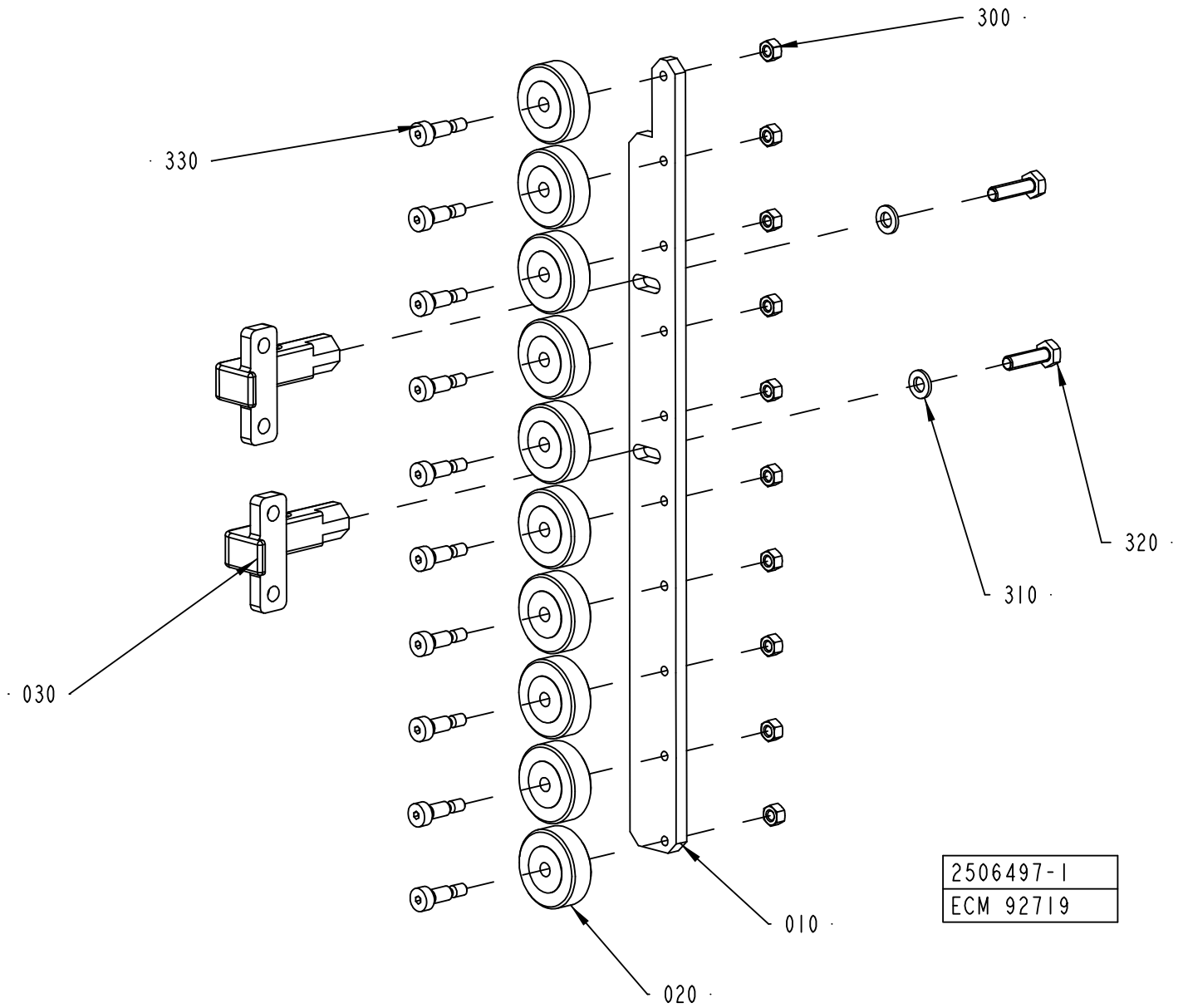
300
330
320
310
030
010
020
2506497-1
ECM 92719

ECM: 122816 - 20021218
Group number: 2506497-0100
Assembly Drawing: 2506497-1_1_AA

Pos	Part No	SP	UN	Qty	Description	Page No
-						
010	1558914-0000	-		1	ROLLER BRACKET	
020	1558911-0000	A		10	PRESSURE ROLLER	
030	2529572-0000	-		2	BRACKET	
300	312605-0314	-		10	HEXAGON NUT, M6M M5 A280	
310	315105-0153	-		2	WASHER BRB6,4X12RFR	
320	312105-0371	-		2	SCREW M6S ISO 4017 M6X22 A480	
330	312180-0366	-		10	SCREW ISO7379 H6X12	

Pos	Part No	SP	UN	Qty	Description	Page No

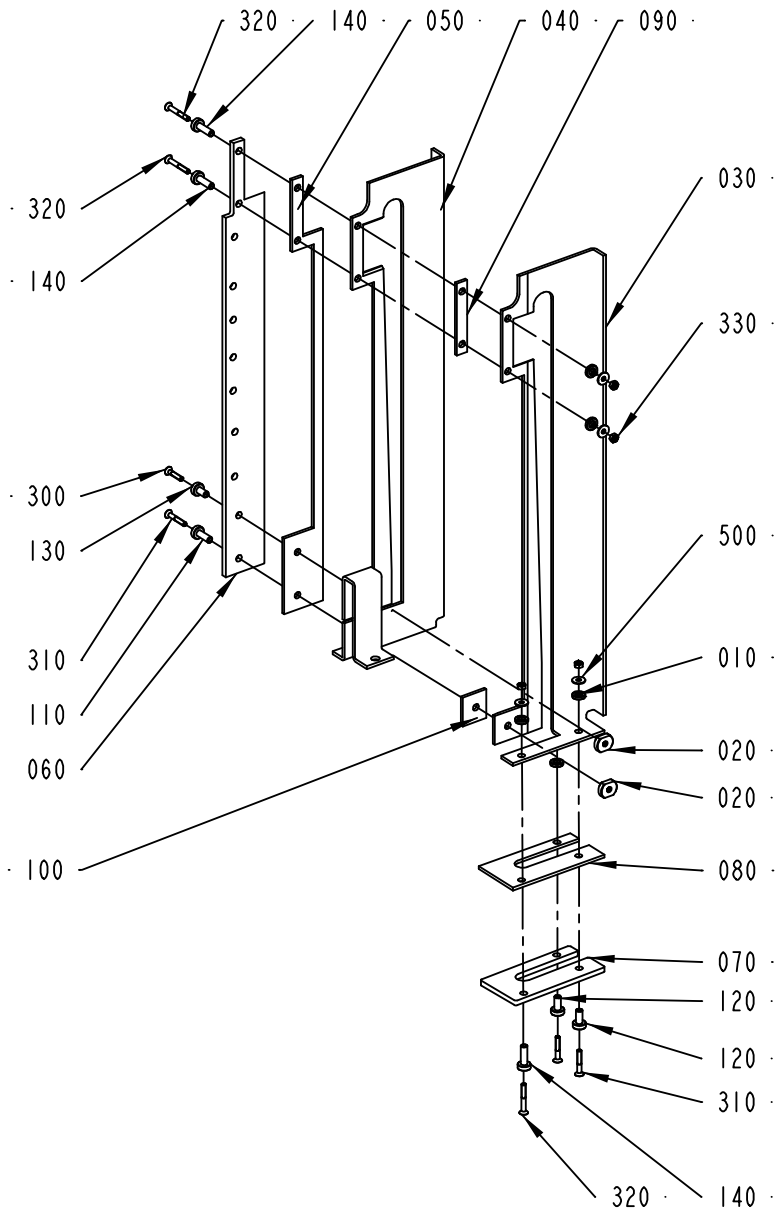

2509617-1
ECM 124683

ECM: 125420 - 20040109
Group number: 2509617-0100
Assembly Drawing: 2509617-1_1_AB

Pos	Part No	SP	UN	Qty	Description	Page No
-						
010	1558917-0000	-		5	SPACER DISC	
020	1558918-0000	-		2	TIGHTENING NUT	
030	2506498-0000	-		1	SEALING PLATE	
040	2506499-0000	-		1	SEALING PLATE	
050	2506500-0000	-		1	PLATE	
060	2506501-0000	-		1	PLATE	
070	2506502-0000	-		1	PLATE	
080	2506503-0000	-		1	PLATE	
090	2506504-0000	-		1	PLATE	
100	2506505-0000	-		1	PLATE	
110	2509613-0000	A		1	BUSHING	
120	2509614-0000	A		2	BUSHING	
130	2529578-0000	A		1	BUSHING	
140	2597600-0000	A		3	BUSHING	
300	312155-0295	-		1	SCREW EN 10642 MF6S M4X20 A480	
310	312155-0297	-		3	SCREW EN 10642 MF6S M4X25 A480	
320	312155-0299	-		3	SCREW EN 10642 MF6S M4X30 A480	
330	312605-0312	-		5	HEXAGON NUT, M6M M4 A280	
500	90005-0082	-		5	WASHER PLAIN ROUND 4,3(M4)/12,H=1	

Pos	Part No	SP	UN	Qty	Description	Page No

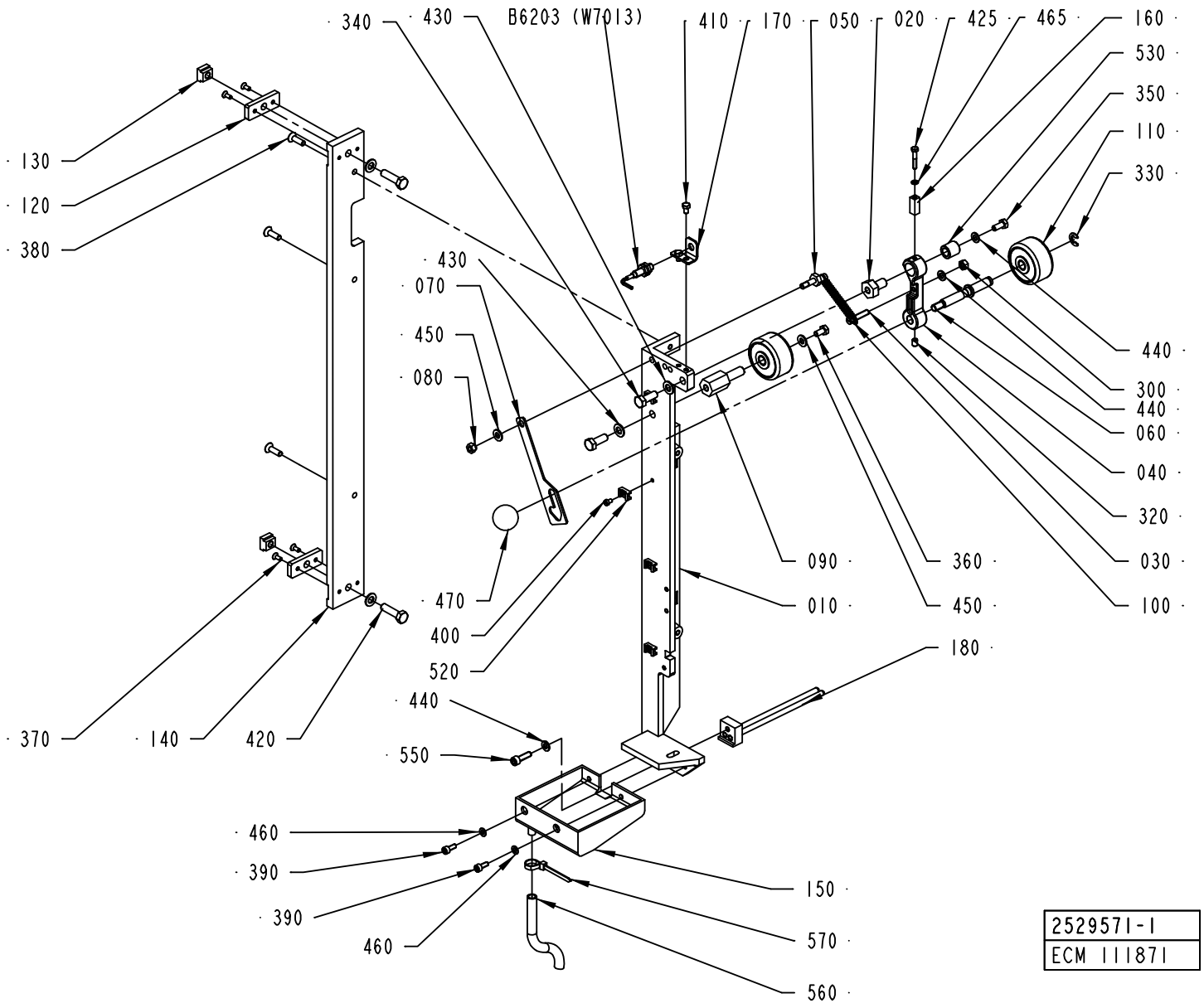
340
430
B6203 (W7013)
410
170
050
020
425
465
160
530
350
110
330
130
120
380
430
070
450
080
440
300
440
060
040
320
030
100
090
360
450
010
470
400
520
180
440
550
370
140
420
460
390
390
460
150
570
560
2529571-1
ECM 111871

ECM: 152038 - 20040109
Group number: 2529571-0100
Assembly Drawing: 2529571-1_1_AB

Pos	Part No	SP	UN	Qty	Description	Page No
-						
010	2510359-0000	-		1	FASTENING BRACKET	
020	2510360-0000	-		1	SHAFT	
030	2510362-0000	A		1	SHAFT	
040	2510361-0000	-		1	CONNECTING ROD	
050	2510363-0000	A		1	SHAFT	
060	2510364-0000	A		1	SHAFT	
070	1349432-0000	B		1	CATCH	
080	1349994-0000	-		1	NUT	
090	1035895-0000	-		1	SHAFT	
100	1478303-0000	A		1	TENSION SPRING	
110	1346988-0000	A		2	ROLL	
010	*90166-0056*	*-*	*MM*	*40*	*SHRINKABLE HOSE*	
020	*321120-0104*	*-*		*2*	*BEARBUSHING W/O FL,ANGE 10/12X10*	
120	2506656-0000	-		2	PLATE	
130	2506654-0000	-		2	BLOCK	
140	2506657-0000	-		1	SPACER	
150	2529550-0000	-		1	SUPPORT	
160	2535932-0000	-		1	CAM	
170	2564504-0000	-		1	SUPPORT	
180	1349672-0000	-		1	GUIDE	
300	312605-0316	-		1	HEXAGON NUT, M6M M6 A280	
320	312318-0362	-		1	SCREW ISO4029 M6X8 A4	
330	315755-0801	-		1	RETAINING RING SHAFT DIN 6799 8 A2	
340	312105-0452	-		2	SCREW M6S ISO 4017 M8X22 A4 80	
350	312105-0367	-		1	SCREW M6S ISO 4017 M6X14 A480	
360	312105-0366	-		1	SCREW M6S ISO 4017 M6X12 A480	
370	312155-0289	-		4	SCREW EN 10642 MF6S M4X10 A480	
380	312155-0370	-		3	SCREW EN 10642 MF6S M6X20 A480	
390	312115-0327	-		2	SCREW ISO4762 M5X12 A4	
400	312125-0285	-		4	SCREW ISO 1207 M4X6 A4	
410	312105-0323	-		2	SCREW M6S ISO 4017 M5X8 A480	
420	312105-0455	-		2	SCREW M6S ISO 4017 M8X30 A480	
425	312105-0297	-		1	SCREW M6S ISO 4017 M4X25 A470	
430	315105-0165	-		4	WASHER BRB8,4X16RFR	
440	315105-0153	-		3	WASHER BRB6,4X12RFR	
450	315105-0156	-		2	WASHER BRB 6.7X14 RFR	
460	315105-0146	-		2	WASHER BRB5,3X10RFR	
465	315105-0136	-		1	WASHER BRB4,3XRFR	
470	318800-0104	-		1	HANDLE,SPHERICAL KNOB,INT.THRE.,D.30-M8	
520	352113-0205	-		4	ANCHOR PLATES FOR STRIPS, TYPE TM2S8-C10	
530	321105-0164	A		1	BEAR. BUSH. WITHOUT FL, 10X16X16 MM	
550	312115-0370	-		1	SCREW ISO4762 M6X20 A4	
560	90459-1126	-	MM	3000	PLASTIC HOSE PVC TRANSPARENT, 8X11MM	
570	352113-0102	-		1	CLIP-STRIP, BLACK 188X4,8 MM	
B6203	90458-0138	A		1	PROX.SW. E2EG-X1R5B1-5M	

Machine Type | Group Description | Used-In | Group Number | Page No

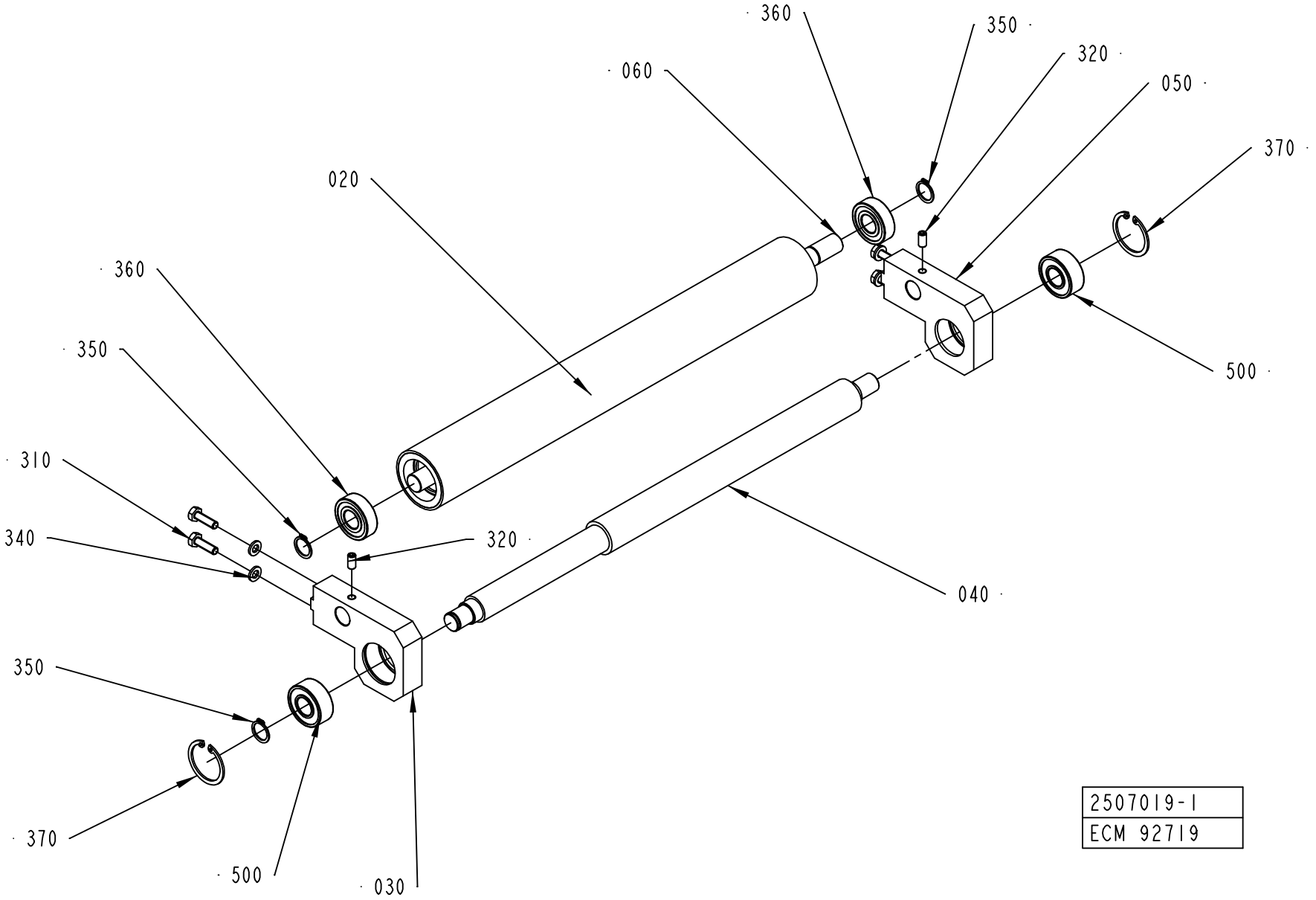
360
350
320
060
050
370
020
360
350
500
310
340
320
040
350
370
500
030
2507019-1
ECM 92719

ECM: 122818 - 20021218
Group number: 2507019-0100
Assembly Drawing: 2507019-1_1_AA

Pos	Part No	SP	UN	Qty	Description	Page No
-						
020	2506661-0000	-		1	ROLLER	
030	2510404-0000	-		1	SUPPORT	
040	2506663-0000	-		1	SUPPORT	
050	2510405-0000	-		1	SUPPORT	
060	2506666-0000	-		1	AXEL	
310	312105-0370	-		4	SCREW M6S ISO 4017 M6X20 A480	
320	312318-0366	-		2	SCREW ISO4029 M6X12 A4	
340	315105-0153	-		4	WASHER BRB6,4X12RFR	
350	315751-0112	-		3	RETAINING RING FOR SHAFT DIN 471 15 A2	
360	321313-0102	A		2	BALL BEARING, 15X35X11 MM	
370	315753-0124	-		2	RETAINING RING FOR BORE DIN 472 35 A2	
500	90458-2737	A		2	SPHERICAL BALL BEARING, 15X35X14 MM	

Pos	Part No	SP	UN	Qty	Description	Page No

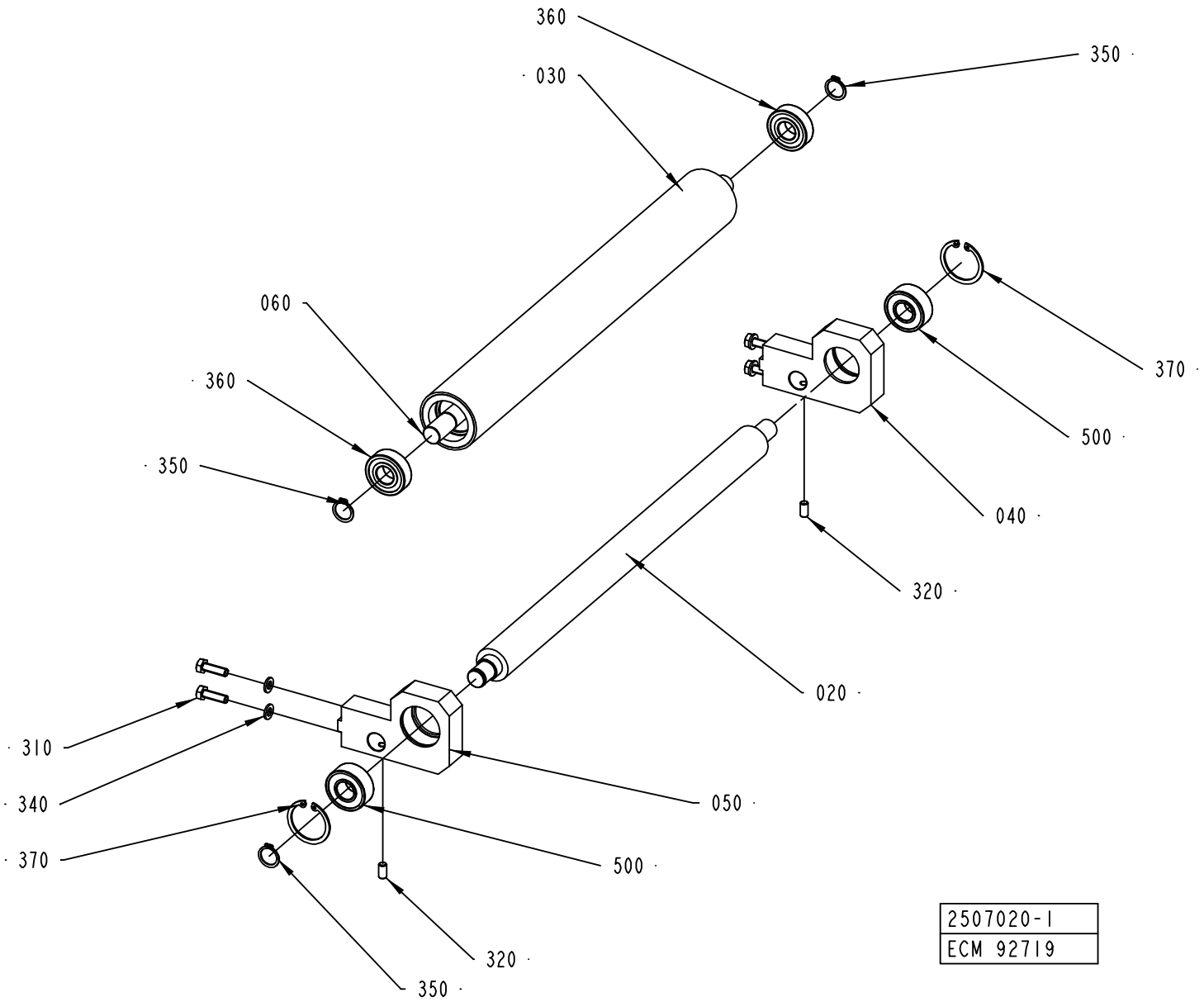
360
030
350
060
360
350
370
500
040
320
020
310
340
370
050
500
320
350
2507020-1
ECM 92719

ECM: 122819 - 20021218
Group number: 2507020-0100
Assembly Drawing: 2507020-1_1_AA

Pos	Part No	SP	UN	Qty	Description	Page No
-						
020	2506659-0000	-		1	ROLLER	
030	2506661-0000	-		1	ROLLER	
040	2510404-0000	-		1	SUPPORT	
050	2510405-0000	-		1	SUPPORT	
060	2506666-0000	-		1	AXEL	
310	312105-0370	-		4	SCREW M6S ISO 4017 M6X20 A480	
320	312318-0366	-		2	SCREW ISO4029 M6X12 A4	
340	315105-0153	-		4	WASHER BRB6,4X12RFR	
350	315751-0112	-		3	RETAINING RING FOR SHAFT DIN 471 15 A2	
360	321313-0102	A		2	BALL BEARING, 15X35X11 MM	
370	315753-0124	-		2	RETAINING RING FOR BORE DIN 472 35 A2	
500	90458-2737	A		2	SPHERICAL BALL BEARING, 15X35X14 MM	

Pos	Part No	SP	UN	Qty	Description	Page No

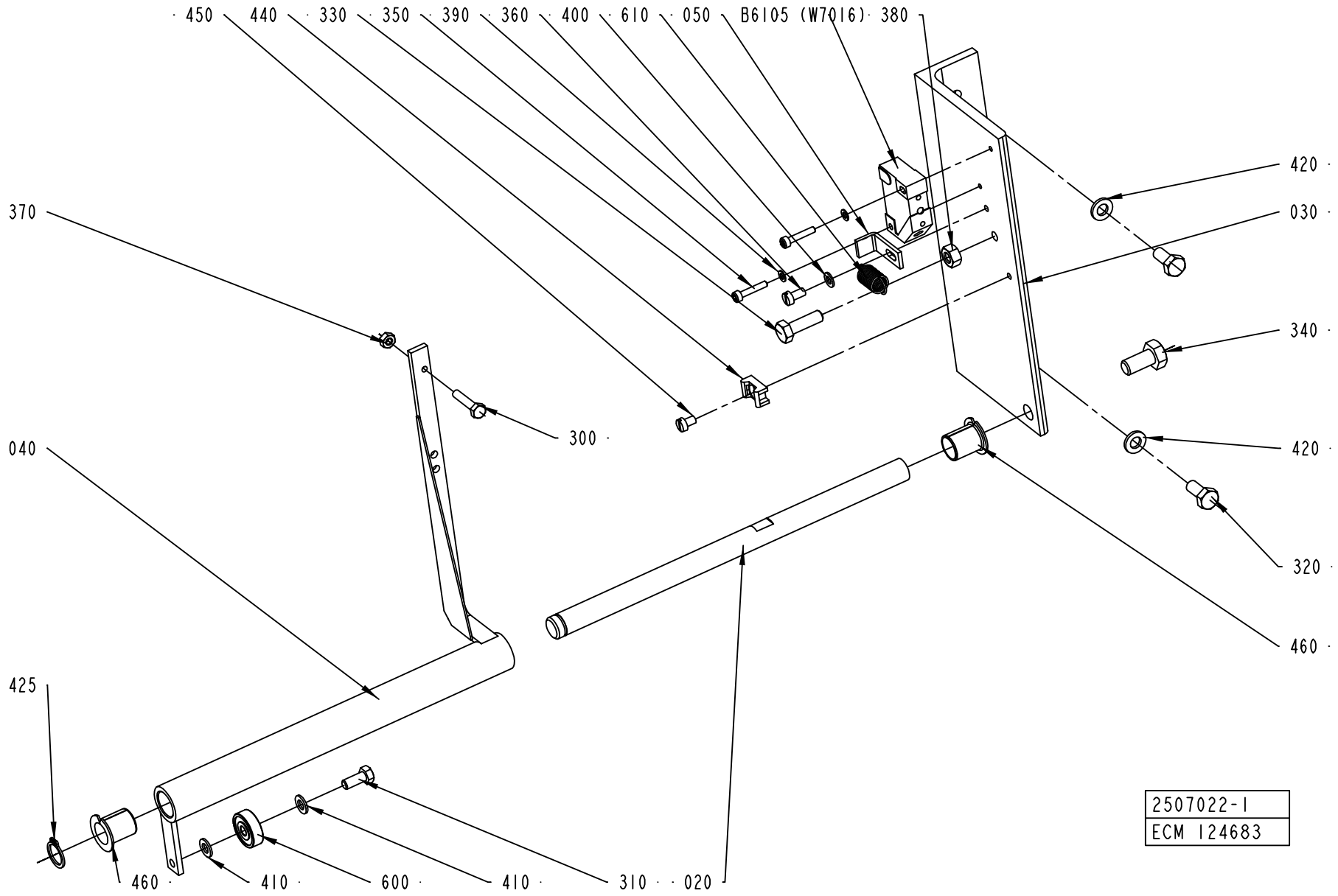
450
440
330
350
390
360
400
610
050
B6105 (W7016)
380
420
030
340
420
320
460
370
300
040
425
460
410
600
410
310
020
2507022-1
ECM 124683

ECM: 125795 - 20040109
Group number: 2507022-0100
Assembly Drawing: 2507022-1_1_AB

Pos	Part No	SP	UN	Qty	Description	Page No
-						
020	1498429-0000	-		1	AXLE	
030	2504810-0000	-		1	BRACKET	
040	2504811-0000	-		1	BRACKET	
050	2504812-0000	-		1	BLOCK	
300	312105-0295	-		1	SCREW M6S ISO4017 M4X20 A470	
310	312105-0327	-		1	SCREW M6S ISO 4017 M5X12 A480	
320	312105-0367	-		2	SCREW M6S ISO 4017 M6X14 A480	
330	312105-0370	-		1	SCREW M6S ISO 4017 M6X20 A480	
340	312105-0449	-		1	SCREW M6S ISO 4017 M8X16 A480	
350	312115-0228	-		2	SCREW ISO4762 M3X16 A4	
360	312125-0287	-		1	SCREW ISO 1207 M4X8 A4	
370	312605-0312	-		1	HEXAGON NUT, M6M M4 A280	
380	312605-0316	-		1	HEXAGON NUT, M6M M6 A280	
390	315105-0124	-		2	WASHER BRB3,2X6RFR	
400	315105-0136	-		1	WASHER BRB4,3XRFR	
410	315105-0146	-		2	WASHER BRB5,3X10RFR	
420	315105-0153	-		2	WASHER BRB6,4X12RFR	
425	315751-0109	-		1	RETAINING RING FOR SHAFT DIN 471 12 A2	
440	352113-0205	-		1	ANCHOR PLATES FOR STRIPS, TYPE TM2S8-C10	
450	312121-0285	-		1	SCREW ISO 1207 M4X6 4.8 - 5.8 Z.PL.	
460	321161-0185	-		2	FLANGE BUSHING, 12X14X17 MM	
600	90214-0138	A		1	BALL BEARING, 5X19X6 MM	
610	90335-0089	A		1	TENSION SPRING 41490, 0,9X10X23	
B6105	90044-0104	A		1	PROX.SWITCH IFM IN 3002	

Pos	Part No	SP	UN	Qty	Description	Page No

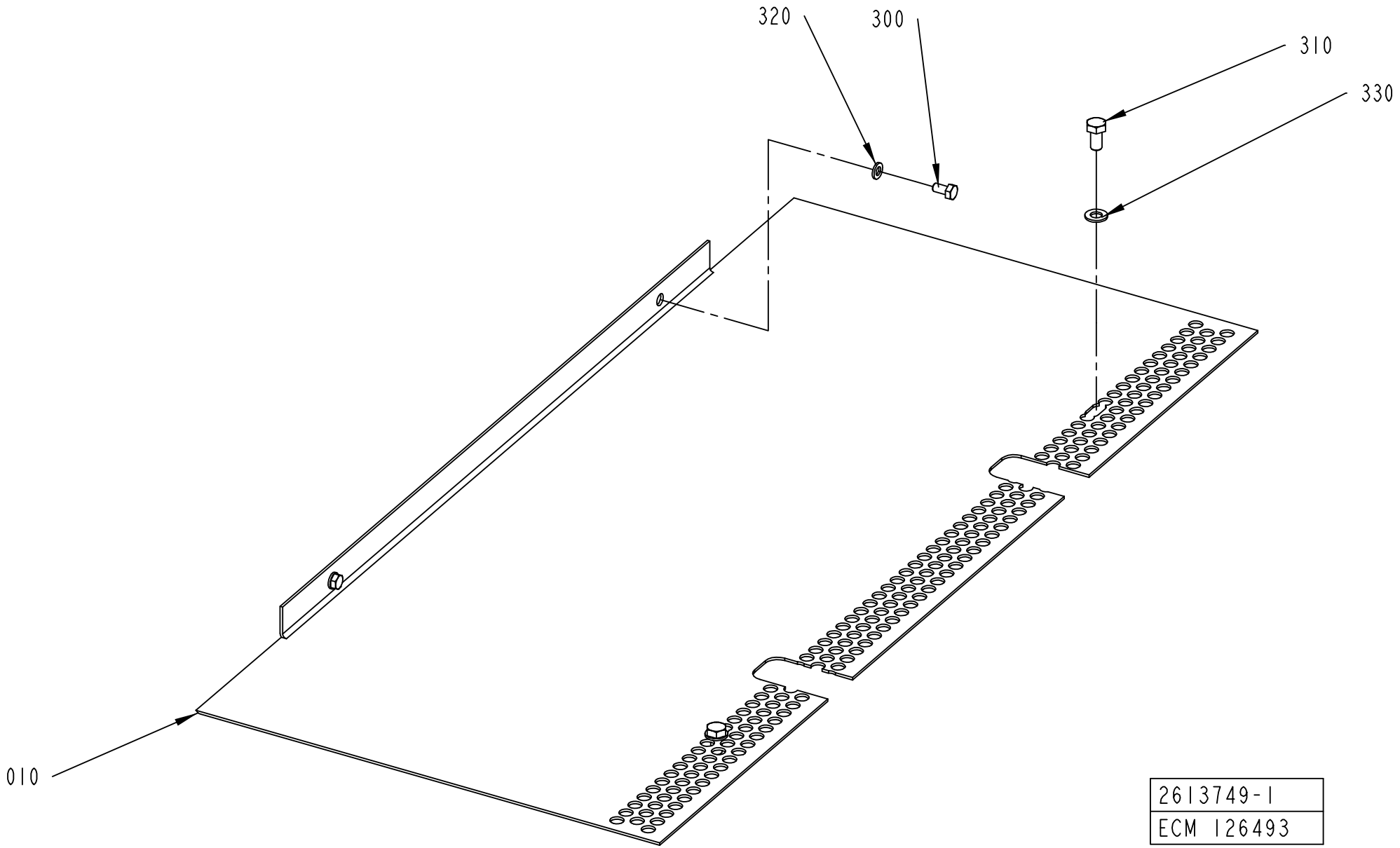
320
300
310
330
010
2613749-1
ECM 126493

ECM: 131598 - 20030908
Group number: 2613749-0100
Assembly Drawing: 2613749-1_1_AA

Pos	Part No	SP	UN	Qty	Description	Page No
-						
010	2579996-0000	-		1	PLATE	
300	312105-0366	-		2	SCREW M6S ISO 4017 M6X12 A480	
310	312105-0449	-		2	SCREW M6S ISO 4017 M8X16 A480	
320	315105-0153	-		2	WASHER BRB6,4X12RFR	
330	315105-0165	-		2	WASHER BRB8,4X16RFR	

Pos	Part No	SP	UN	Qty	Description	Page No

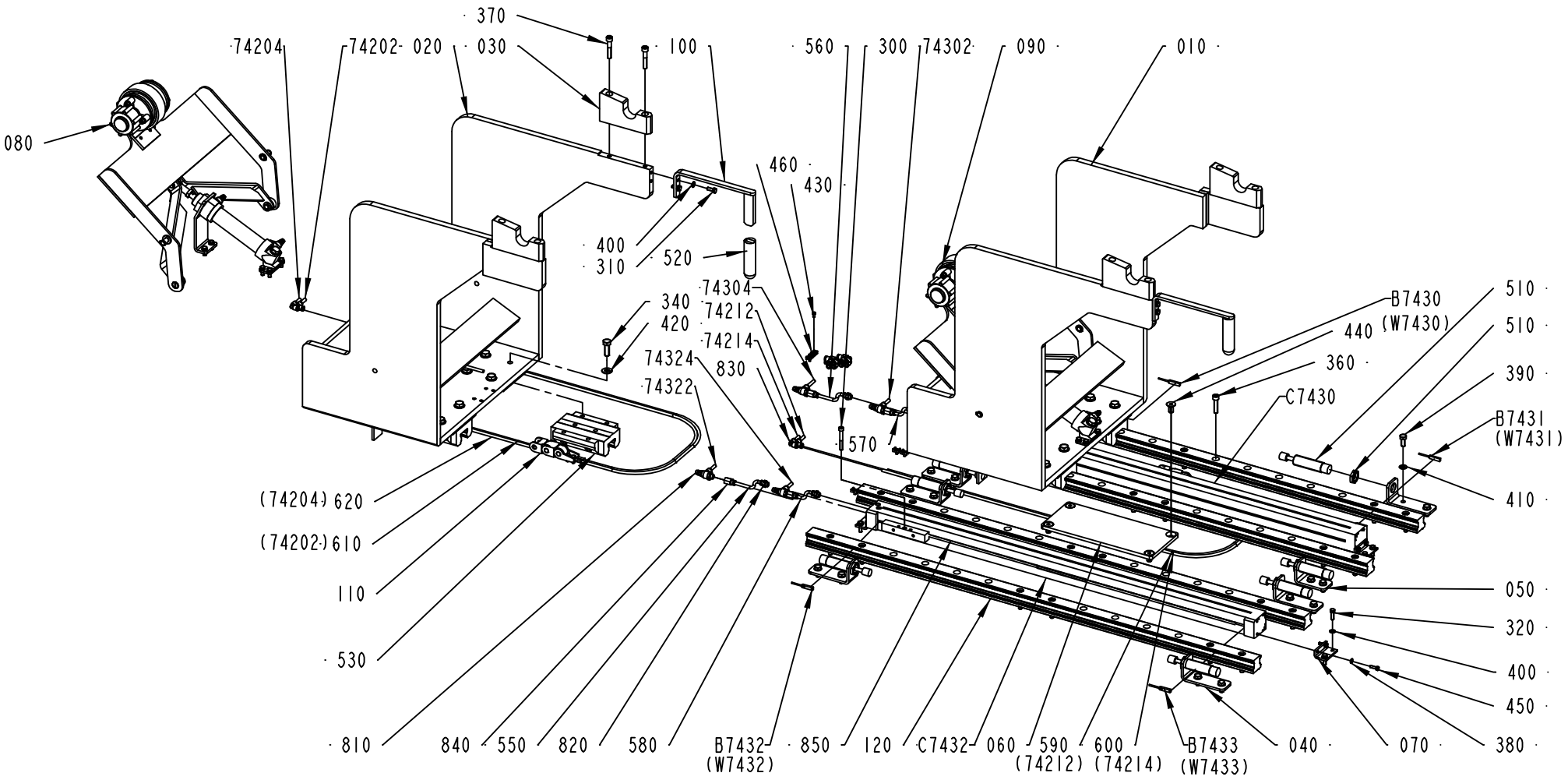

2538072-1
ECM 96181

ECM: 116211 - 20040115
Group number: 2538072-0100
Assembly Drawing: 2538072-1_1_AA

Pos	Part No	SP	UN	Qty	Description	Page No
-						
010	2556496-0000	-		1	CARRIAGE	
020	2556497-0000	-		1	CARRIAGE	
030	2556498-0000	A		4	BEARING BLOCK	
040	2556499-0000	-		7	BRACKET	
050	2623883-0000	-		1	BRACKET	
060	2623884-0000	-		1	PLATE	
070	2556512-0000	-		4	BRACKET	
080	2629315-0100	-		1	PAPER BRAKE	**8-33**
090	2556503-0100	-		1	PAPER BRAKE	**8-35**
100	2564623-0000	-		2	HANDLE	
110	2564630-0100	-		2	CABLE DRAG CHAIN	**8-37**
120	2629338-0000	A		4	GUIDE RAIL	
300	312115-0380	-		2	SCREW ISO4762 M6X50 A4	
310	312105-0368	-		4	SCREW M6S ISO 4017 M6X16 A480	
320	312105-0370	-		8	SCREW M6S ISO 4017 M6X20 A480	
340	312105-0495	-		32	SCREW M6S ISO 4017 M10X30 A480	
360	312115-0457	-		24	SCREW ISO4762 M8X35 A4	
370	312115-0460	-		8	SCREW ISO4762 M8X45 A4	
380	315105-0146	-		8	WASHER BRB5,3X10RFR	
390	312105-0451	-		16	SCREW M6S ISO 4017 M8X20 A480	
400	315105-0153	-		12	WASHER BRB6,4X12RFR	
410	315105-0165	-		16	WASHER BRB8,4X16RFR	
420	315105-0173	-		32	WASHER BRB10,5X22RFR	
430	312125-0287	-		11	SCREW ISO 1207 M4X8 A4	
440	312155-0491	-		4	SCREW EN 10642 MF6S M10X20 A480	
450	312105-0329	-		8	SCREW M6S ISO 4017 M5X16 A480	
460	352113-0205	-		11	ANCHOR PLATES FOR STRIPS, TYPE TM2S8-C10	
510	90347-0182	A		8	SHOCK ABSORBER, YSR-16-20-C	
520	90459-1544	-		2	HANDLE, GR/10	
530	90459-1545	A		8	CARRIAGE, 1653-314-20	
550	90166-0193	-	MM	500	TUBE 6 MM PUR BLUE	
560	90166-0193	-	MM	500	TUBE 6 MM PUR BLUE	
570	90166-0193	-	MM	500	TUBE 6 MM PUR BLUE	
580	90166-0193	-	MM	500	TUBE 6 MM PUR BLUE	
590	90166-0193	-	MM	1800	TUBE 6 MM PUR BLUE	
600	90166-0193	-	MM	1800	TUBE 6 MM PUR BLUE	
610	90166-0193	-	MM	1800	TUBE 6 MM PUR BLUE	
620	90166-0193	-	MM	1800	TUBE 6 MM PUR BLUE	
74202	90166-0193	-	MM	4000	TUBE 6 MM PUR BLUE	
74204	90166-0193	-	MM	4000	TUBE 6 MM PUR BLUE	
74212	90166-0193	-	MM	4000	TUBE 6 MM PUR BLUE	
74214	90166-0193	-	MM	4000	TUBE 6 MM PUR BLUE	
74302	90166-0193	-	MM	4000	TUBE 6 MM PUR BLUE	
74304	90166-0193	-	MM	4000	TUBE 6 MM PUR BLUE	
74322	90166-0193	-	MM	4000	TUBE 6 MM PUR BLUE	
74324	90166-0193	-	MM	4000	TUBE 6 MM PUR BLUE	
810	90235-0846	-		4	THROTTLE CHECK VALVE G1/8", MANUAL, 6	
820	342722-0202	-		4	PIPE COUPLING 1/8" D=6MM	
830	342735-0102	-		12	ELBOW PIPE JOINT	
840	342770-0105	-		4	STRAIGHT COUPLING INT, D=6 MM - G1/8	
850	90458-0273	-		4	COVER STRIP	
B7430	90044-0165	-		1	SENSOR, SME-8-K5-LED-24	
B7431	90044-0165	-		1	SENSOR, SME-8-K5-LED-24	
B7432	90044-0165	-		1	SENSOR, SME-8-K5-LED-24	
B7433	90044-0165	-		1	SENSOR, SME-8-K5-LED-24	
C7430	90459-2647	A		1	DOUBLE ACTING, SHUTTLE, CYL. 25-780	
C7432	90459-2647	A		1	DOUBLE ACTING, SHUTTLE, CYL. 25-780	

Machine Type | Group Description | Used-In | Group Number | Page No

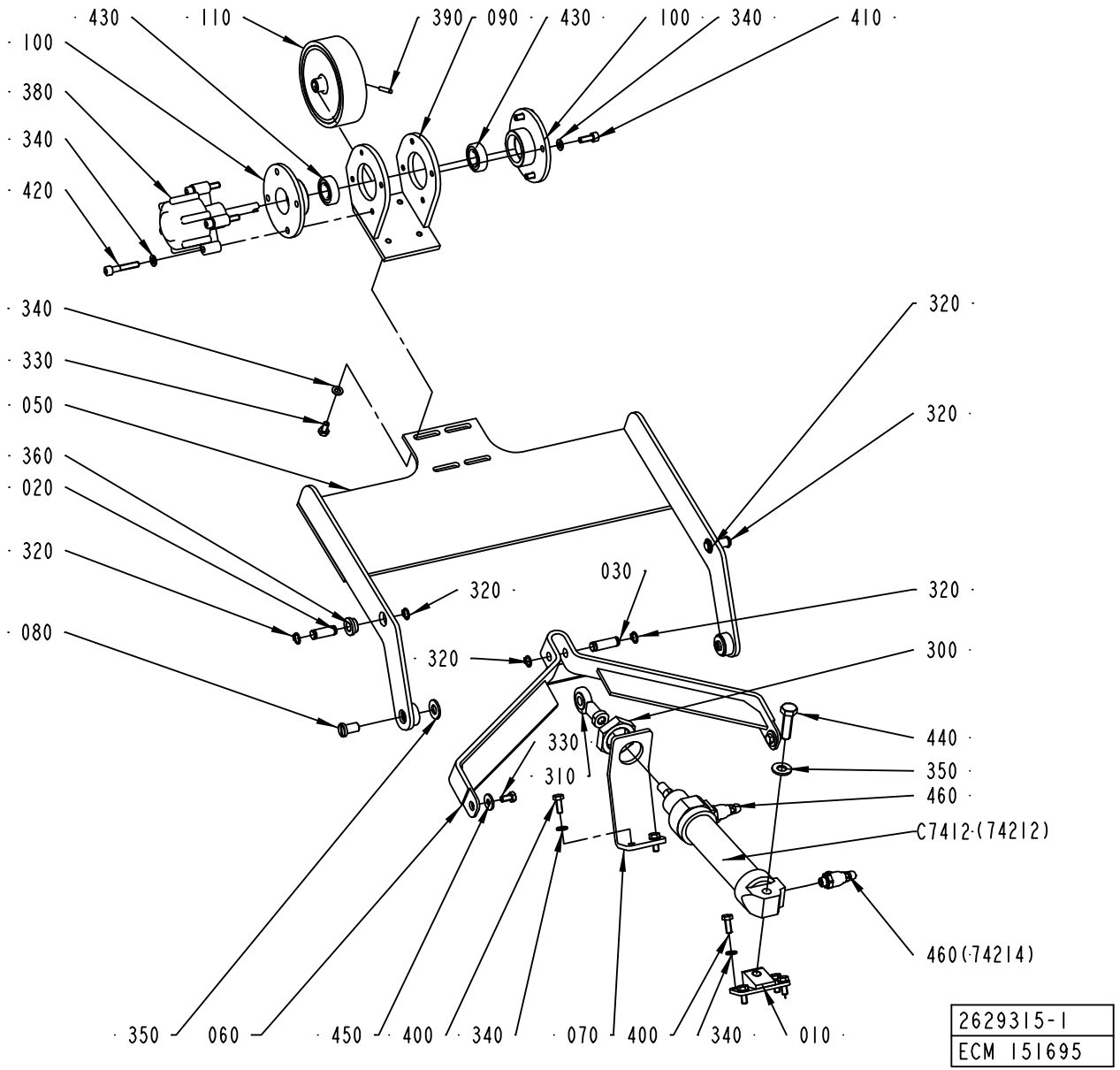
430
110
390
090
430
100
340
410
100
380
340
420
340
330
050
360
020
320
080
320
320
320
320
030
320
300
440
350
460
C7412-(74212)
460(74214)
330
310
350
060
450
400
340
070
400
340
010
2629315-1
ECM 151695

ECM: 151695 - 20040115
Group number: 2629315-0100
Assembly Drawing: 2629315-1_1_AA

Pos	Part No	SP	UN	Qty	Description	Page No
-						
010	2556504-0000	-		1	BRACKET	
020	2556505-0002	-		2	PIN	
030	2556505-0003	-		1	PIN	
050	2556507-0000	-		1	LEVER	
060	2556506-0000	-		1	LINK	
070	2556508-0000	-		1	BRACKET	
080	2556509-0000	-		2	SHAFT	
090	2556510-0000	-		1	BRACKET	
100	1512363-0000	-		2	BEARING HOUSING	
110	1523483-0000	B		1	ROLLER	
310	90239-0405	B		1	ROD END,BALL JOINT EYE M10X1,25	
320	90141-0016	-		6	RETAINING RING FOR SHAFT DIN 471 10 A2	
330	312105-0366	-		6	SCREW M6S ISO 4017 M6X12 A480	
340	315105-0153	-		18	WASHER BRB6,4X12RFR	
350	315105-0173	-		3	WASHER BRB10,5X22RFR	
360	321101-0162	B		2	FLANGE BUSHING, 10X16X8 MM	
380	90347-0054	B		1	DAMPER	
390	311103-1274	-		1	PARALLEL PIN ISO 2338 4M6X24 A1	
400	312105-0368	-		6	SCREW M6S ISO 4017 M6X16 A480	
410	312115-0368	-		4	SCREW ISO4762 M6X16 A4	
420	312115-0376	-		4	SCREW ISO4762 M6X35 A4	
430	321308-0202	B		2	BALL BEARING, 15X32X9 MM	
440	312105-0497	-		1	SCREW M6S ISO 4017 M10X35 A480	
450	6278-0000	-		2	WASHER	
460	90235-0846	B		2	THROTTLE CHECK VALVE G1/8", MANUAL, 6	
C7412	90239-0861	B		1	DOUBLE ACTING, MINI-ISO, CYL. 32-125	

Pos	Part No	SP	UN	Qty	Description	Page No

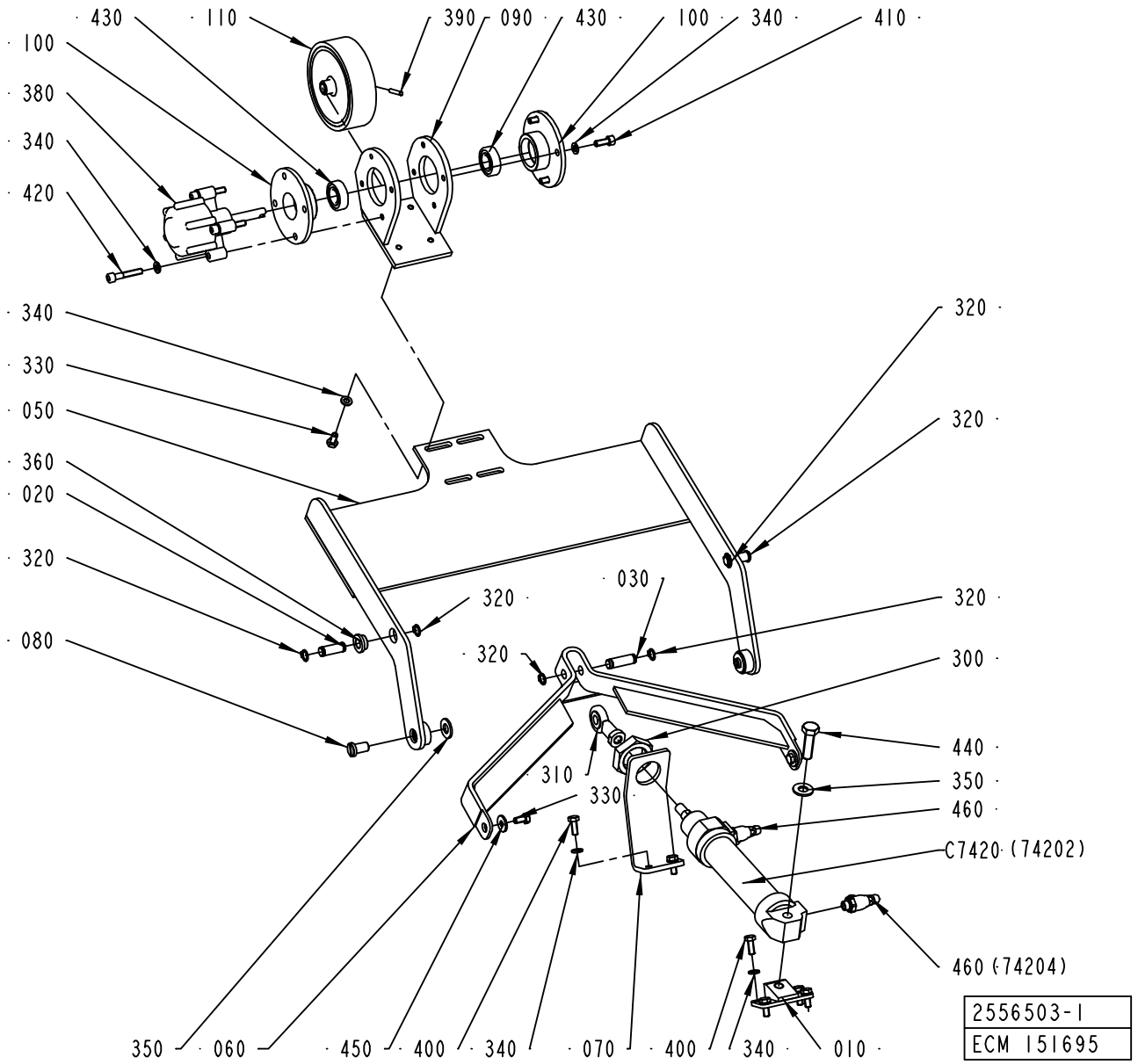
430
110
390
090
430
100
340
410
100
380
340
420
340
330
050
360
020
320
080
320
320
320
320
320
030
320
300
440
350
460
C7420 (74202)
460 (74204)
310
330
350
060
450
400
340
070
400
340
010
2556503-1
ECM 151695

ECM: 151695 - 20040115
Group number: 2556503-0100
Assembly Drawing: 2556503-1_1_AA

Pos	Part No	SP	UN	Qty	Description	Page No
-						
010	2556504-0000	-		1	BRACKET	
020	2556505-0002	-		2	PIN	
030	2556505-0003	-		1	PIN	
050	2556507-0000	-		1	LEVER	
060	2556506-0000	-		1	LINK	
070	2556508-0000	-		1	BRACKET	
080	2556509-0000	-		2	SHAFT	
090	2556510-0000	-		1	BRACKET	
100	1512363-0000	-		2	BEARING HOUSING	
110	1523483-0000	B		1	ROLLER	
310	90239-0405	B		1	ROD END,BALL JOINT EYE M10X1,25	
320	90141-0016	-		6	RETAINING RING FOR SHAFT DIN 471 10 A2	
330	312105-0366	-		6	SCREW M6S ISO 4017 M6X12 A480	
340	315105-0153	-		18	WASHER BRB6,4X12RFR	
350	315105-0173	-		3	WASHER BRB10,5X22RFR	
360	321101-0162	B		2	FLANGE BUSHING, 10X16X8 MM	
380	90347-0054	B		1	DAMPER	
390	311103-1274	-		4	PARALLEL PIN ISO 2338 4M6X24 A1	
400	312105-0368	-		6	SCREW M6S ISO 4017 M6X16 A480	
410	312115-0368	-		4	SCREW ISO4762 M6X16 A4	
420	312115-0376	-		4	SCREW ISO4762 M6X35 A4	
430	321308-0202	B		2	BALL BEARING, 15X32X9 MM	
440	312105-0497	-		1	SCREW M6S ISO 4017 M10X35 A480	
450	6278-0000	-		2	WASHER	
460	90235-0846	B		2	THROTTLE CHECK VALVE G1/8", MANUAL, 6	
C7420	90239-0861	B		1	DOUBLE ACTING, MINI-ISO, CYL. 32-125	

Pos	Part No	SP	UN	Qty	Description	Page No

This page is intentionally left blank.

ECM: 119801 - 20040115
Group number: 2564630-0100
Assembly Drawing:

Pos	Part No	SP	UN	Qty	Description	Page No
-						
300	312105-0366	-		4	SCREW M6S ISO 4017 M6X12 A480	
310	312115-0378	-		2	SCREW ISO4762 M6X40 A4 80	
320	315105-0153	-		4	WASHER BRB6,4X12RFR	
500	90181-0199	B		1	FLEXIBLE CHAIN, LINK 15	
510	90181-0202	B		1	FLEXIBLE CHAIN, BRACKET 1015. 1PZ	
520	90181-0203	B		1	FLEXIBLE CHAIN, BRACKET 1015. 2PZ	

Pos	Part No	SP	UN	Qty	Description	Page No

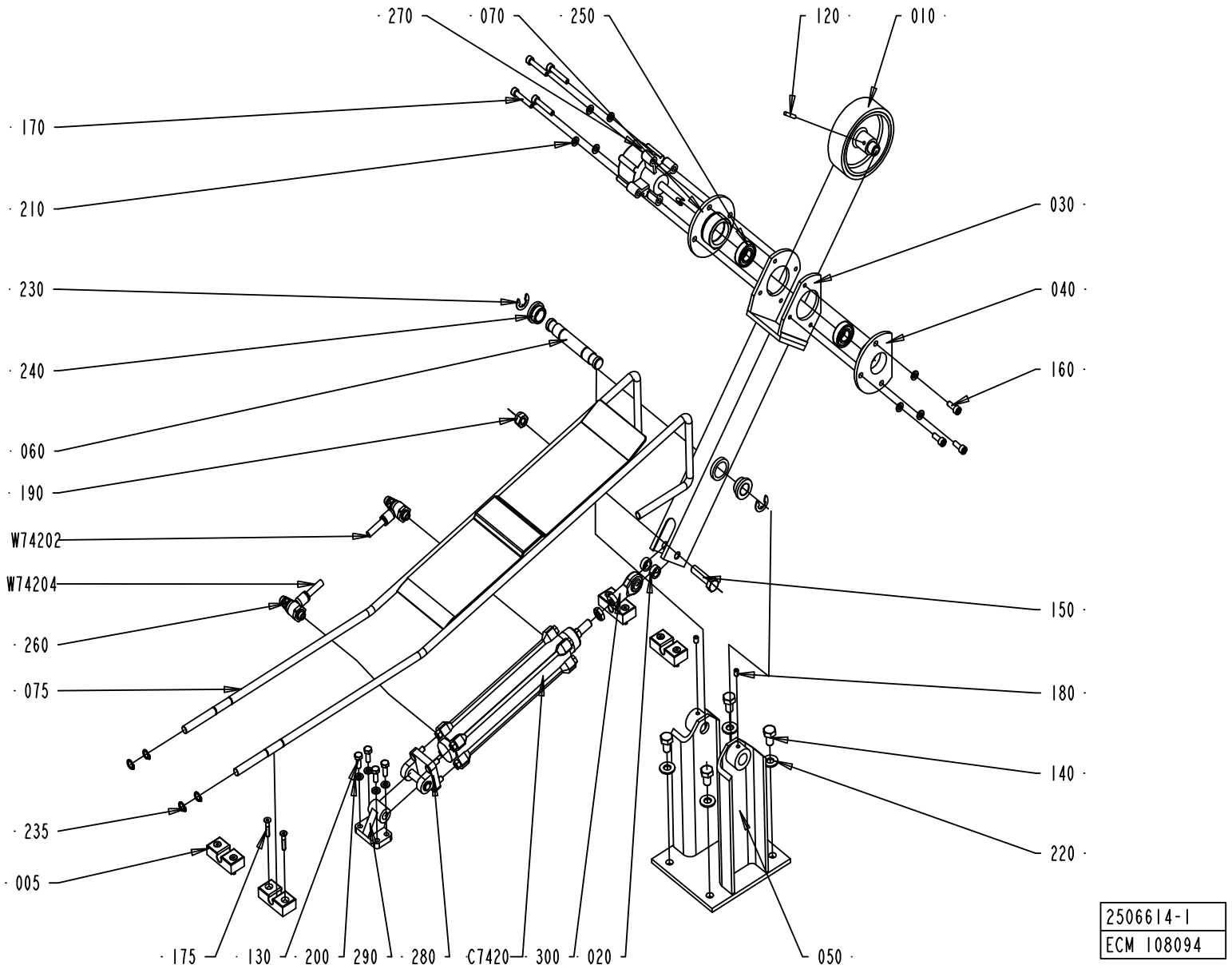
270
070
250
120
010
170
210
030
230
040
240
160
060
190
W74202
W74204
150
260
075
180
140
235
220
005
175
130
200
290
280
C7420
300
020
050
2506614-1
ECM 108094

ECM: 108365 - 20030908
Group number: 2506614-0100
Assembly Drawing: 2506614-1_1_AB

Pos	Part No	SP	UN	Qty	Description	Page No
-						
010	1523483-0000	B		1	ROLLER	
020	1523486-0000	-		2	SPACER	
030	2506647-0000	-		1	LEVER	
040	2506649-0000	-		1	BEARING FLANGE	
050	2506650-0000	-		1	FRAME	
060	2506652-0000	-		1	AXLE PIN	
070	2507103-0000	-		1	BEARING FLANGE	
120	311103-1274	-		1	PARALLEL PIN ISO 2338 4M6X24 A1	
130	312105-0370	-		4	SCREW M6S ISO 4017 M6X20 A480	
140	312105-0491	-		4	SCREW M6S ISO 4017 M10X20 A480	
150	312105-0499	-		1	SCREW M6S ISO 4014 M10X40 A480	
160	312115-0366	-		3	SCREW ISO4762 M6X12 A4	
165	312115-0374	-		4	SCREW ISO4762 M6X30 A4	
180	312318-0362	-		2	SCREW ISO4029 M6X8 A4	
190	312812-0320	-		1	HEXAGON NUT, NY-LOCK M10 A480	
210	315105-0153	-		11	WASHER BRB6,4X12RFR	
220	315105-0173	-		4	WASHER BRB10,5X22RFR	
230	315755-0112	-		2	RETAINING RING SHAFT DIN 6799 12 A2	
240	321101-0202	-		2	FLANGE BUSHING, 16X22X12 MM	
250	321308-0202	B		2	BALL BEARING, 15X32X9 MM	
260	90235-0848	-		2	THROTTLE CHECK VALVE, G1/8", MANUAL,8	
270	90347-0054	B		1	DAMPER	
280	90450-0654	-		1	BRACKET,REAR,EYE WITH AXLE 32	
290	90450-0655	-		1	BRACKET,REAR,CLEVIS FLANGE WITH FOOT 32	
300	90450-0723	B		1	ROD END,BALL JOINT EYE M10X1,25	
74202	90166-0194	-	MM	8000	TUBE 8 MM PUR BLUE	
74204	90166-0194	-	MM	8000	TUBE 8 MM PUR BLUE	
C7420	90459-3370	B		1	DOUBLE ACTING, PROFILE,CYL 32-140	

Pos	Part No	SP	UN	Qty	Description	Page No

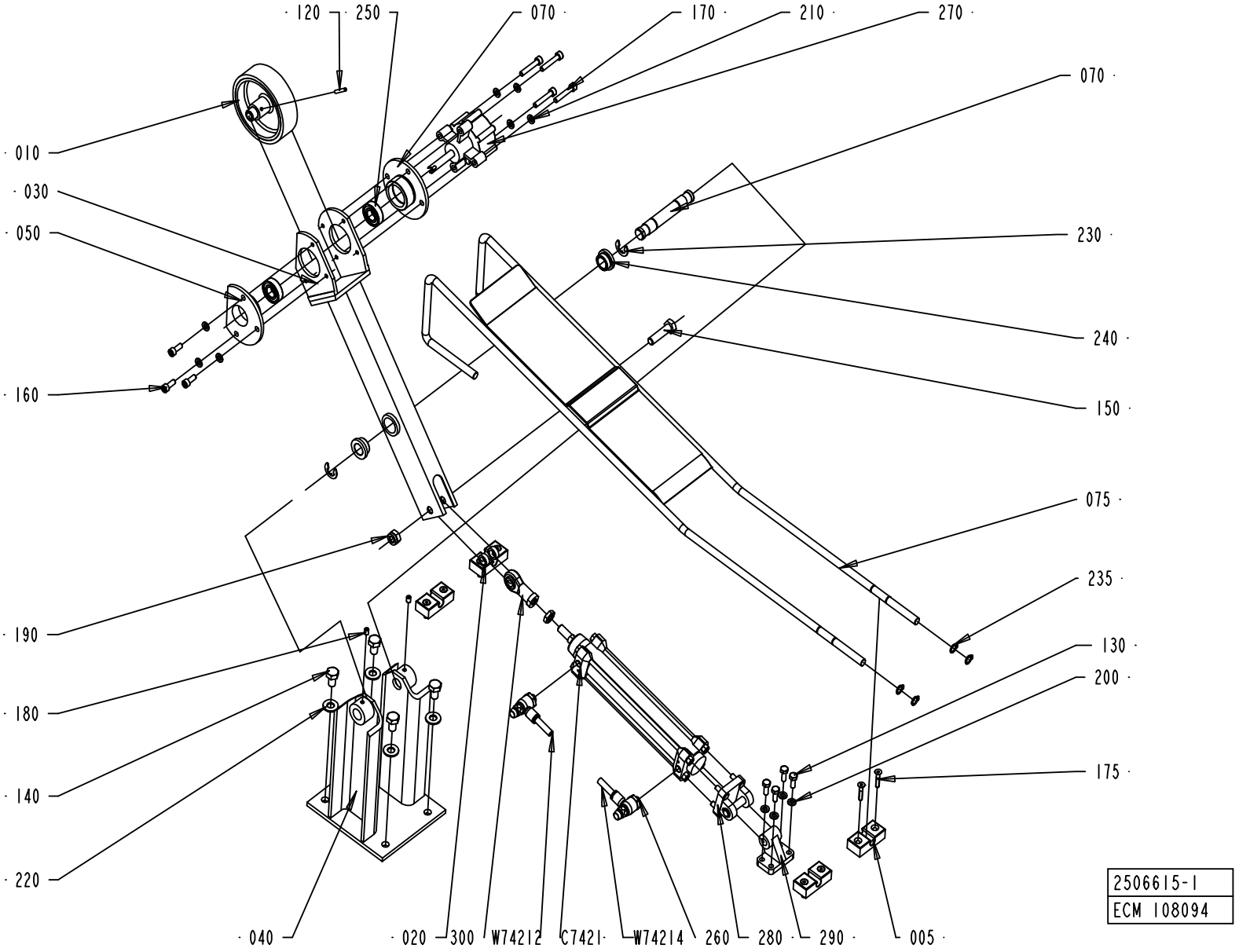
120
250
070
170
210
270
070
010
030
050
230
240
160
150
075
235
190
130
200
180
140
175
220
040
020
300
W74212
C7421
W74214
260
280
290
005
2506615-1
ECM 108094

ECM: 108366 - 20030908
Group number: 2506615-0100
Assembly Drawing: 2506615-1_1_AB

Pos	Part No	SP	UN	Qty	Description	Page No
-						
010	1523483-0000	B		1	ROLLER	
020	1523486-0000	-		2	SPACER	
030	2506648-0000	-		1	LEVER	
040	2506650-0000	-		1	FRAME	
050	2506651-0000	-		1	BEARING FLANGE	
060	2506652-0000	-		1	AXLE PIN	
070	2507103-0000	-		1	BEARING FLANGE	
120	311103-1274	-		1	PARALLEL PIN ISO 2338 4M6X24 A1	
130	312105-0370	-		4	SCREW M6S ISO 4017 M6X20 A480	
140	312105-0491	-		4	SCREW M6S ISO 4017 M10X20 A480	
150	312105-0499	-		1	SCREW M6S ISO 4014 M10X40 A480	
160	312115-0366	-		3	SCREW ISO4762 M6X12 A4	
165	312115-0374	-		4	SCREW ISO4762 M6X30 A4	
180	312318-0362	-		2	SCREW ISO4029 M6X8 A4	
190	312812-0320	-		1	HEXAGON NUT, NY-LOCK M10 A480	
210	315105-0153	-		11	WASHER BRB6,4X12RFR	
220	315105-0173	-		4	WASHER BRB10,5X22RFR	
230	315755-0112	-		2	RETAINING RING SHAFT DIN 6799 12 A2	
240	321101-0202	-		2	FLANGE BUSHING, 16X22X12 MM	
250	321308-0202	B		2	BALL BEARING, 15X32X9 MM	
260	90235-0848	-		2	THROTTLE CHECK VALVE, G1/8", MANUAL,8	
270	90347-0054	B		1	DAMPER	
280	90450-0654	-		1	BRACKET,REAR,EYE WITH AXLE 32	
290	90450-0655	-		1	BRACKET,REAR,CLEVIS FLANGE WITH FOOT 32	
300	90450-0723	B		1	ROD END,BALL JOINT EYE M10X1,25	
74212	90166-0194	-	MM	4500	TUBE 8 MM PUR BLUE	
74214	90166-0194	-	MM	4500	TUBE 8 MM PUR BLUE	
C7421	90459-3370	B		1	DOUBLE ACTING, PROFILE,CYL 32-140	

Pos	Part No	SP	UN	Qty	Description	Page No

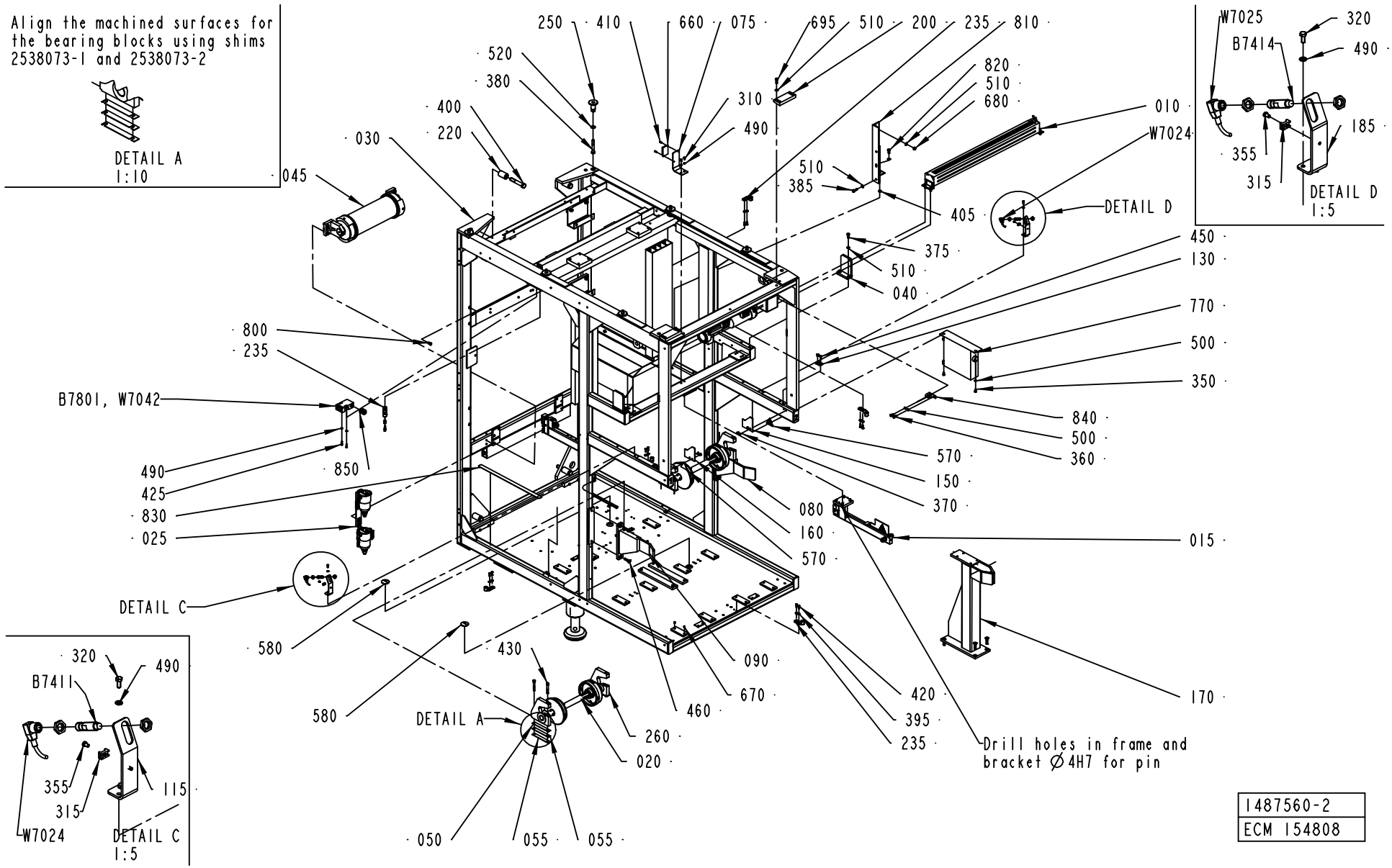

1487560-2
ECM 154808

ECM: 162930 - 20040419
Group number: 1487560-0200
Assembly Drawing: 1487560-2_1_AG

This list covers pages from 8-42 to 8-49

Pos	Part No	SP	UN	Qty	Description	Page No
TBA/22 WITH ARL (See drawing on pages: 8-46, 8-48)						
025	2541891-0100	-		1	FILTER	**8-51**
045	2541083-0100	-		1	BENDING ROLLER	**8-53**
200	985756-0000	-		2	KEY	
250	2599941-0000	-		4	SPACER	
380	312105-0506	-		4	SCREW M6S ISO 4014 M10X75 A480	
500	315105-0153	-		16	WASHER BRB6,4X12RFR	
510	315105-0165	-		14	WASHER BRB8,4X16RFR	
520	315105-0173	-		4	WASHER BRB10,5X22RFR	
695	312105-0452	-		2	SCREW M6S ISO 4017 M8X22 A4 80	
780	1558270-0100	-		2	LEG	**8-55**
790	90347-0175	-		2	MACHINE SHOE BRIK T 125	
TBA/22 WITHOUT ARL (See drawing on pages: 8-42, 8-44)						
025	2541891-0100	-		1	FILTER	**8-51**
045	2541083-0100	-		1	BENDING ROLLER	**8-53**
050	2538073-0001	-		4	SHIMS	
055	2538073-0002	-		8	SHIMS	
080	2553107-0000	-		1	HOLDER	
090	2553108-0000	-		1	HOLDER	
170	2553109-0000	-		1	HOLDER	
200	985756-0000	-		2	KEY	
250	2599941-0000	-		4	SPACER	
380	312105-0506	-		4	SCREW M6S ISO 4014 M10X75 A480	
460	312155-0499	-		8	SCREW EN 10642 MF6S M10X40 A480	
500	315105-0153	-		16	WASHER BRB6,4X12RFR	
510	315105-0165	-		14	WASHER BRB8,4X16RFR	
520	315105-0173	-		4	WASHER BRB10,5X22RFR	
695	312105-0452	-		2	SCREW M6S ISO 4017 M8X22 A4 80	
780	1558270-0100	-		2	LEG	**8-55**
790	90347-0175	-		2	MACHINE SHOE BRIK T 125	
Common Parts						
010	1487544-0200	-		1	SIDE FEEDER	**8-57**
015	2541890-0100	-		1	BRACKET	**8-59**
020	1499571-0100	-		2	PAPER REEL HOLDER	**8-61**
030	1512279-0200	-		1	MACHINE BODY	**8-63, 8-65, 8-67**
040	2552821-0000	-		2	BRACKET	
070	1558487-0000	-		2	SUPPORT	
075	1548200-0000	-		1	BRACKET	
100	1499570-0000	-		1	HOLDER	
115	2538076-0000	-		1	BRACKET	
130	1512420-0000	-		2	PLATE	
140	1517101-0000	-		1	PIPE	
150	1558484-0000	A		1	PROTECTION PLATE	
160	2529551-0000	A		1	PROTECTION PLATE	
185	2538075-0000	-		1	BRACKET	
190	1519588-0000	-		1	PROTECTION PLATE	
220	1038865-0000	-		4	SPACER DISC	
235	1538868-0000	-		6	BRACKET	
260	1488005-0000	A		4	BEARING BLOCK	
310	312105-0323	-		5	SCREW M6S ISO 4017 M5X8 A480	
315	352113-0205	-		2	ANCHOR PLATES FOR STRIPS, TYPE TM2S8-C10	
320	312105-0327	-		4	SCREW M6S ISO 4017 M5X12 A480	
350	312105-0366	-		4	SCREW M6S ISO 4017 M6X12 A480	
355	312125-0285	-		2	SCREW ISO 1207 M4X6 A4	
360	312105-0368	-		8	SCREW M6S ISO 4017 M6X16 A480	
370	312145-0327	-		4	SCREW ISO 2009 MFS M5X12 A4	
375	312105-0451	-		4	SCREW M6S ISO 4017 M8X20 A480	
385	312105-0453	-		1	SCREW M6S ISO 4017 M8X25 A480	
395	315115-0153	-		12	WASHER PLAIN, TBRB 6,4/12 H=3	
400	312105-0640	-		4	SCREW M6S ISO 4014 M16X100 A480	
405	90062-0016	-		5	LOCK WASHER SERRAT.EXT.GEAR,8,4/15 H=0,8	
410	312115-0222	-		2	SCREW ISO4762 M3X8 A4	
420	312105-0329	-		12	SCREW M6S ISO 4017 M5X16 A480	
425	312115-0329	-		10	SCREW ISO4762 M5X16 A4	
430	312115-0463	-		8	SCREW ISO4762 M8X60 A4	
450	312155-0366	-		4	SCREW EN 10642 MF6S M6X12 A480	
470	312318-0455	-		4	SCREW ISO4029 M8X30 A4	
490	315105-0146	-		19	WASHER BRB5,3X10RFR	
565	352103-0108	-		1	CABLE GLAND, ST 13,5 , PR20,4/PG13,5	
570	359705-0005	A		2	WARNING SIGN ISO, MOVING PART	
580	90002-0010	-		2	BLANK-OFF PLUG, PR 37 SKINDICHT-BLK29	
590	90099-0118	-		1	NUT, PR 20,4 (PG13,5)	
630	90164-0303	-		4	BRACKET SK2202 WALDMANN	
640	90165-0009	-		3	PIPE CLIP FOR TUBE D=12 MM	
660	90232-0333	A		1	REFLECTOR E39-R1	
670	90261-0016	-		24	PLUG, BLIND, PLASTIC GPN300V2	
680	312605-0318	-		6	HEXAGON NUT, M6M M8 A280	
770	90459-3832	B		1	VENTING BOX, P9852	
800	312927-0150	-		4	RIVET NUT M8, CLAMP. LENGTH 3,0 - 4,5	
810	1549324-0000	-		1	BRACKET	
820	312105-0449	-		1	SCREW M6S ISO 4017 M8X16 A480	
830	90459-1848	A		1	TAPE, SAFETY WALK R25MM X 18,3M	
840	1558798-0000	-		1	BRACKET	
850	90458-0315	-		4	CABLE GLAND, M20X1,5, NO.5311 1120	

Machine Type | Group Description | Used-In | Group Number | Page No

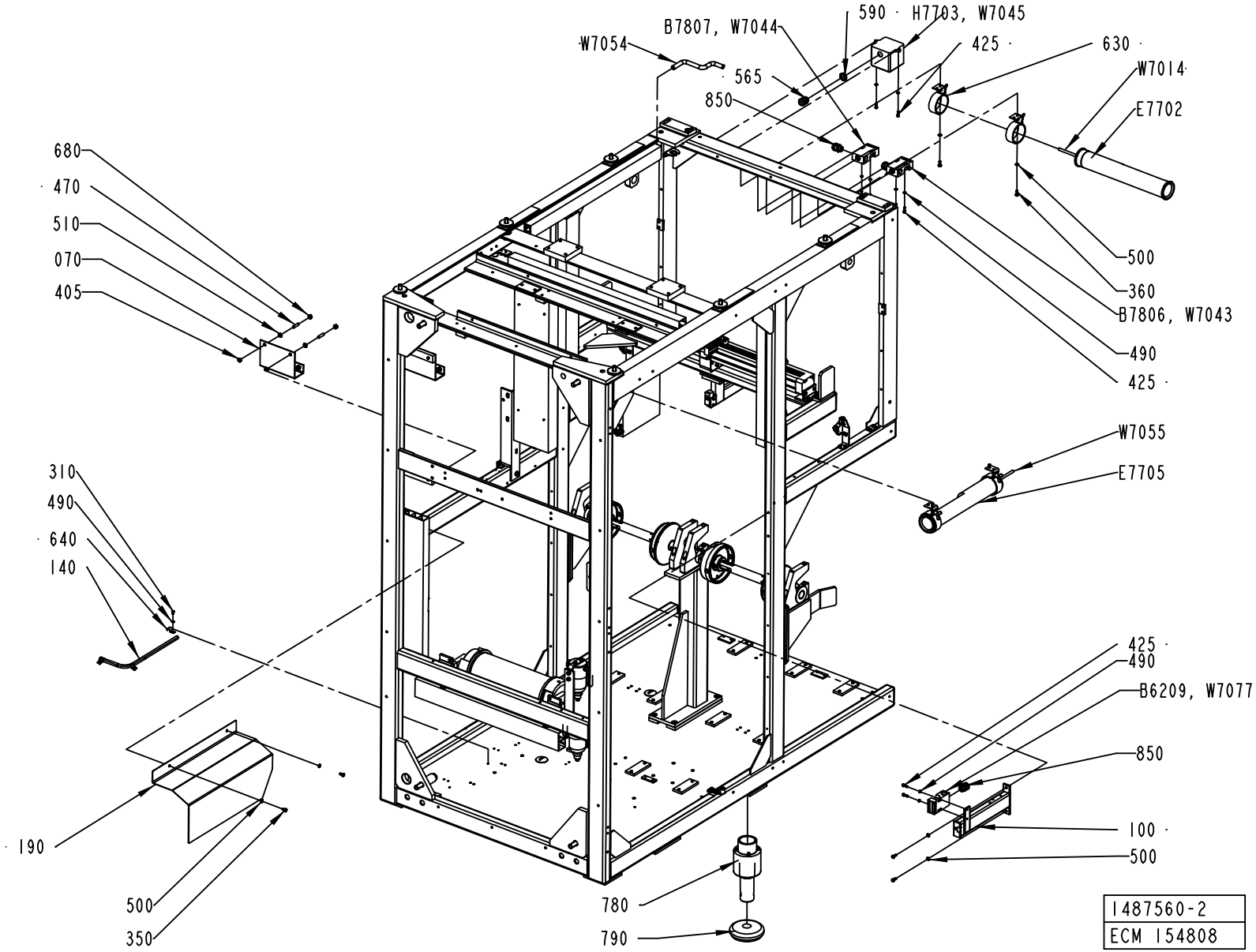
590 · H7703, W7045
B7807, W7044
W7054
425 ·
630 ·
565
W7014
850
E7702
680
470
510
070
405
500
360
B7806, W7043
490
425 ·
W7055
E7705
310
490
640
140
425 ·
490
B6209, W7077
850
100 ·
500
190
500
350
780
790
1487560-2
ECM 154808

Pos	Part No	SP	UN	Qty	Description	Page No
Common Parts (Cont'd)						
B6209	90459-0472	A		1	KEY SAF.SW. AZ 16 02ZVRK-M20-2152-2254	
B7411	90458-0677	A		1	PROXIMITY SWITCH, E2EG-X5MB1-M1	
B7414	90458-0677	A		1	PROXIMITY SWITCH, E2EG-X5MB1-M1	
B7801	90459-0472	A		1	KEY SAF.SW. AZ 16 02ZVRK-M20-2152-2254	
B7806	90459-0472	A		1	KEY SAF.SW. AZ 16 02ZVRK-M20-2152-2254	
B7807	90459-0472	A		1	KEY SAF.SW. AZ 16 02ZVRK-M20-2152-2254	
E7702	90164-0015	A		1	LIGHT FIXTURE, DWDCV111B/230V 50HZ	
	90297-0007	*B*		*1*	*FLUORESCENT TUBE, PLS 11*	
E7705	90164-0015	A		1	LIGHT FIXTURE, DWDCV111B/230V 50HZ	
	90297-0007	*B*		*1*	*FLUORESCENT TUBE, PLS 11*	
H7703	90052-0011	A		1	HORN HOOTERT 24:48VDC.PT NO.1YA030221	
W7014	351150-0412	-	MM	4000	CABLE OLFLEX 3X1,5 MM2 LIGHT/GREY	
W7024	90458-1076	A		1	L-SHAPED CONNECTOR CABLE 933 235-042	
W7025	90458-1076	A		1	L-SHAPED CONNECTOR CABLE 933 235-042	
W7042	351150-0405	-	MM	4000	CABLE OLFLEX 5X0,75 MM2 LIGHT/GREY	
W7043	351150-0405	-	MM	4000	CABLE OLFLEX 5X0,75 MM2 LIGHT/GREY	
W7044	351150-0405	-	MM	4000	CABLE OLFLEX 5X0,75 MM2 LIGHT/GREY	
W7045	351150-0431	-	MM	4000	CABLE OLFLEX 2X0,75 MM2 LIGHT/GREY	
W7054	351150-0406	-	MM	8000	CABLE OLFLEX 7X0,75 MM2 LIGHT/GREY	
W7055	351150-0412	-	MM	4000	CABLE OLFLEX 3X1,5 MM2 LIGHT/GREY	
W7077	351150-0405	-	MM	5000	CABLE OLFLEX 5X0,75 MM2 LIGHT/GREY	

Pos	Part No	SP	UN	Qty	Description	Page No

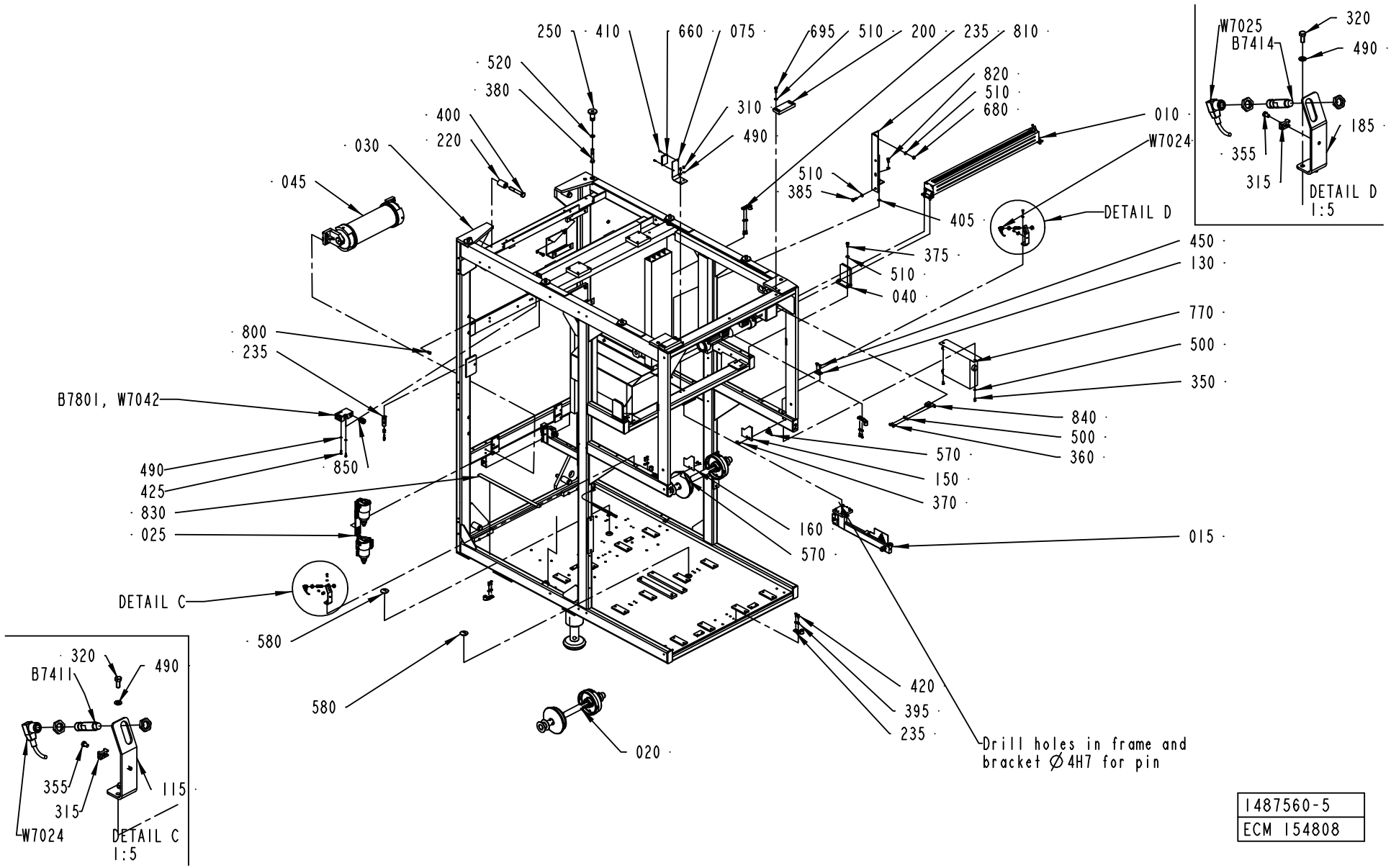

1487560-5
ECM 154808

Pos	Part No	SP	UN	Qty	Description	Page No
SEE PREVIOUS LISTS PAGES: 8-43, 8-45.						

Pos	Part No	SP	UN	Qty	Description	Page No

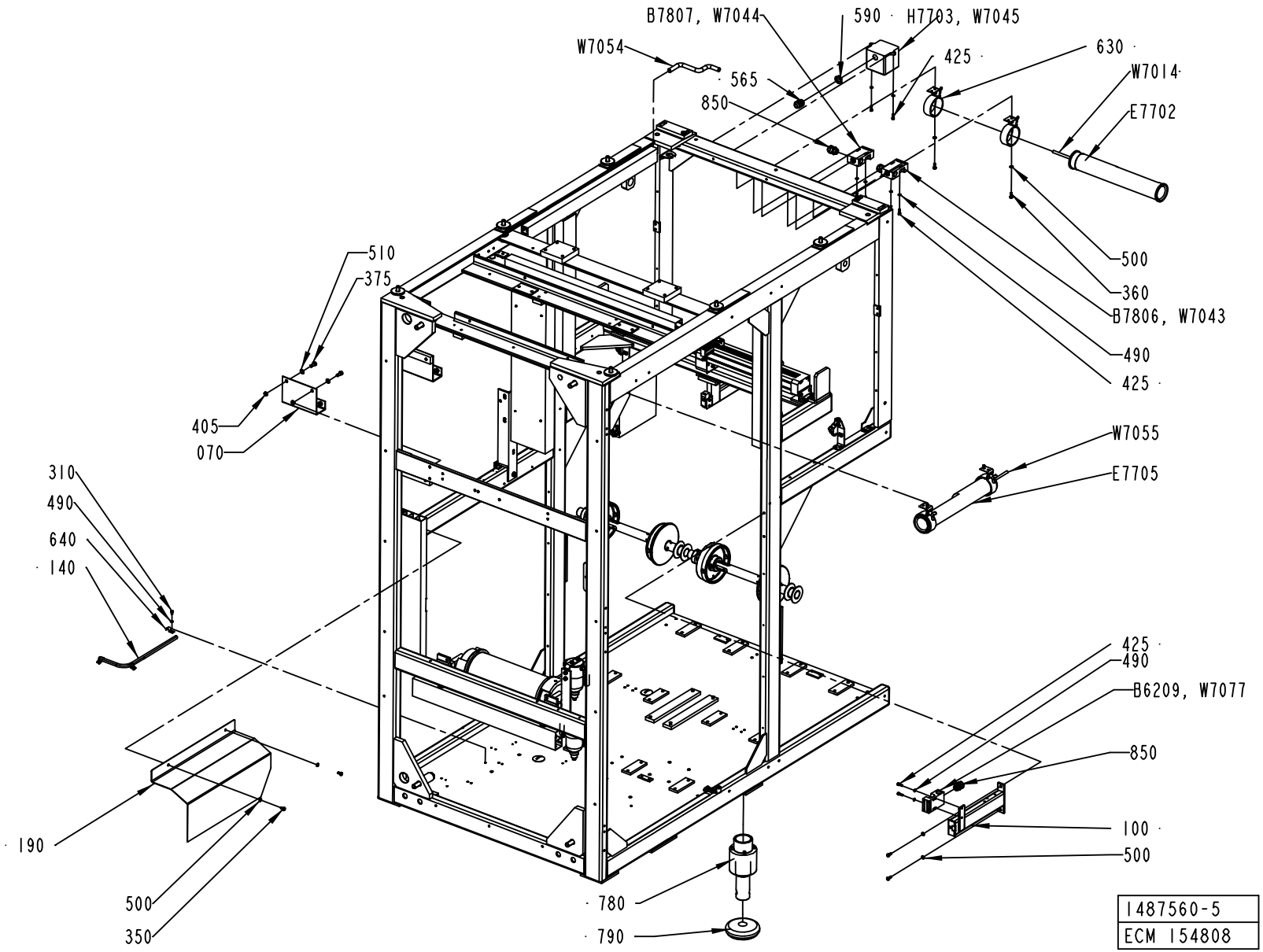
B7807, W7044
590
H7703, W7045
W7054
565
425
630
W7014
850
E7702
510
375
500
360
B7806, W7043
490
425
405
070
W7055
E7705
310
490
640
140
425
490
B6209, W7077
850
190
100
500
500
350
780
790
1487560-5
ECM 154808

ECM: 162930 - 20040419
Group number: 1487560-0200
Assembly Drawing: 1487560-5_2_AB

This list covers pages from 8-42 to 8-49

Pos	Part No	SP	UN	Qty	Description	Page No
SEE PREVIOUS LISTS PAGES: 8-43, 8-45.						

Pos	Part No	SP	UN	Qty	Description	Page No

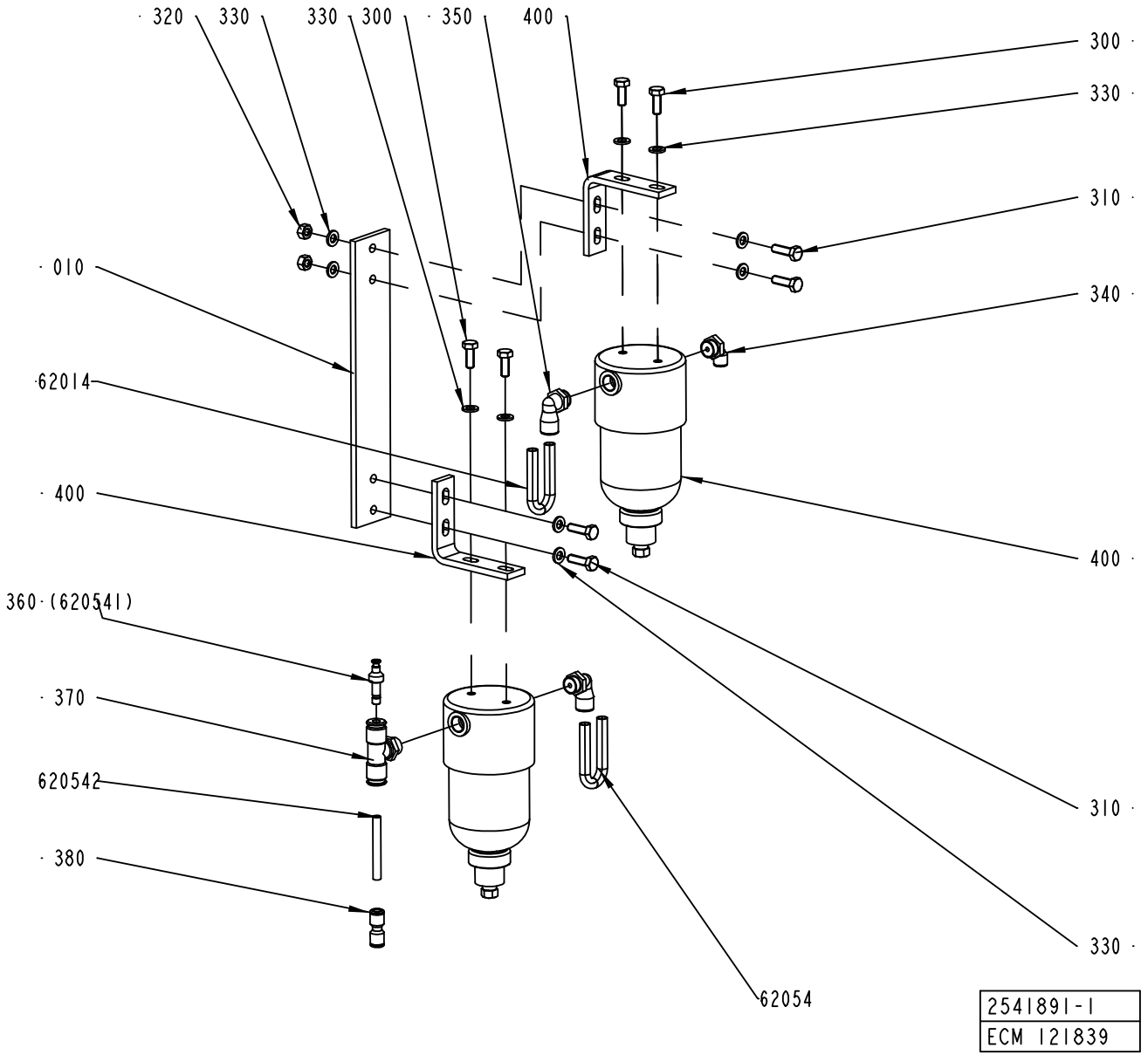
320
330
330
300
350
400
300
330
310
340
010
62014
400
400
360 (620541)
370
620542
380
310
330
62054
2541891-1
ECM 121839

ECM: 125133 - 20040112
Group number: 2541891-0100
Assembly Drawing: 2541891-1_1_AB

Pos	Part No	SP	UN	Qty	Description	Page No
-						
010	2518119-0000	-		1	PLATE	
300	312105-0368	-		4	SCREW M6S ISO 4017 M6X16 A480	
310	312105-0370	-		4	SCREW M6S ISO 4017 M6X20 A480	
320	312605-0316	-		2	HEXAGON NUT, M6M M6 A280	
330	315105-0153	-		10	WASHER BRB6,4X12RFR	
340	90458-2957	-		1	ELBOW PIPE JOINT, EXT.THREAD, D=6MM-G1/4	
350	90458-2958	-		2	ELBOW PIPE JOINT, EXT.THREAD, D=8MM-G1/4	
360	342716-0202	-		1	REDUCER 4-6	
370	342742-0103	-		1	T-COUPLING,ADJUST,F.PLASTIC TUBE 6-G1/4"	
380	342728-0102	-		1	PIPE COUPLING 6 MM	
400	90277-0116	-		2	FILTER HOUSING / ART.NO FILTER 58P-S5430	
	90277-0406	*-*		*1*	*CARTRIDGE 100-12-BX*	
62014	90166-0194	-	MM	3500	TUBE 8 MM PUR BLUE	
62054	90166-0194	-	MM	3500	TUBE 8 MM PUR BLUE	
620542	90166-0193	-	MM	2000	TUBE 6 MM PUR BLUE	

Pos	Part No	SP	UN	Qty	Description	Page No

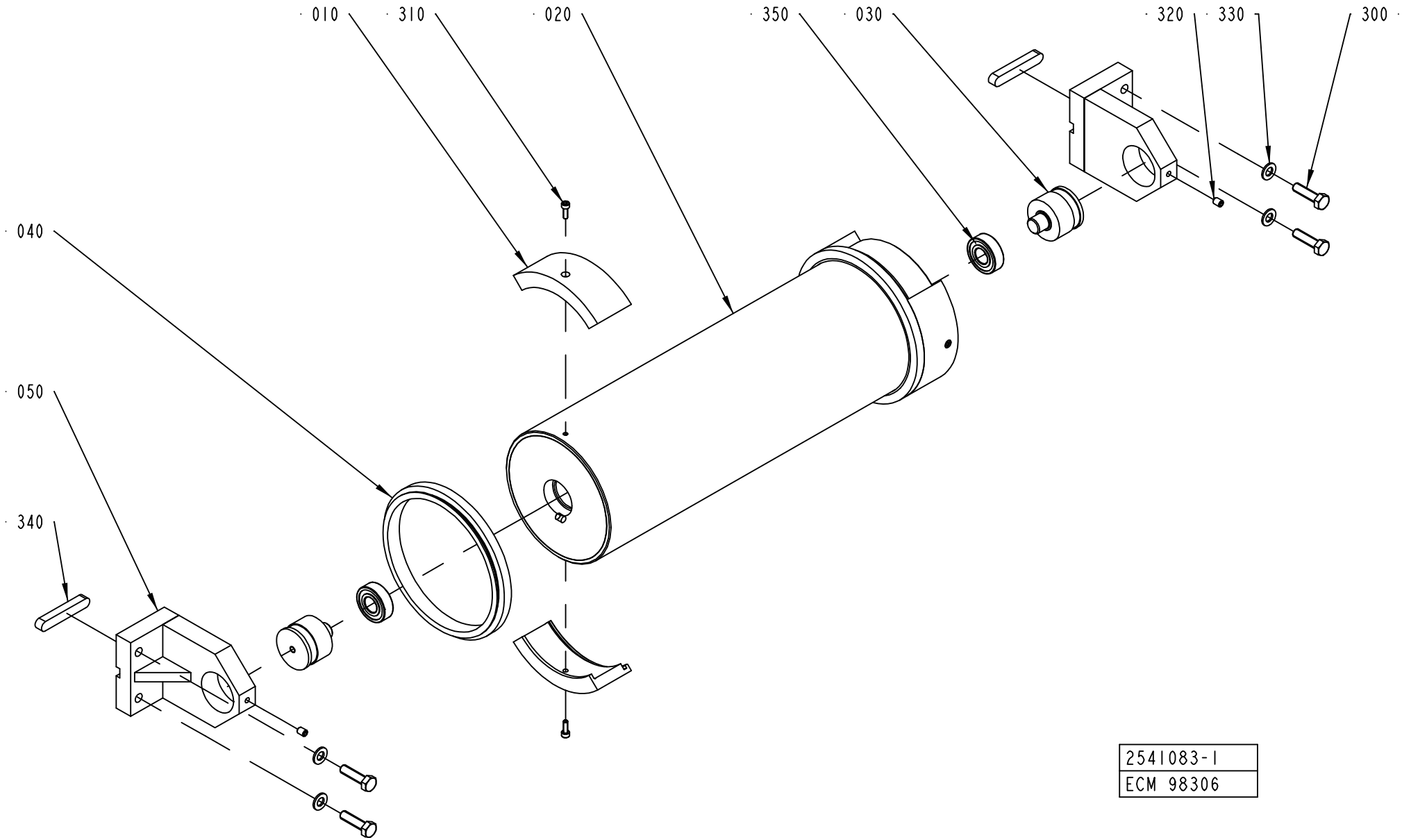
010
310
020
350
030
320
330
300
040
050
340
2541083-1
ECM 98306

ECM: 163509 - 20040309
Group number: 2541083-0100
Assembly Drawing: 2541083-1_1_AA

Pos	Part No	SP	UN	Qty	Description	Page No
TBA 0200S						
010	2523766-0010	-		4	BRACKET	
TBA 0250S, TBA 0200M						
010	2523766-0009	-		4	BRACKET	
TBA 0200B, TBA 0250B						
010	2523766-0007	-		4	BRACKET	
Common Parts						
020	2523765-0000	-		1	BENDING ROLLER	
030	1499584-0000	A		2	AXLE PIN	
040	2523767-0000	A		2	FLANGE	
050	2506328-0000	-		2	BRACKET	
300	312105-0455	-		4	SCREW M6S ISO 4017 M8X30 A480	
310	312115-0291	-		4	SCREW ISO4762 M4X12 A4	
320	312318-0362	-		2	SCREW ISO4029 M6X8 A4	
330	315105-0165	-		4	WASHER BRB8,4X16RFR	
340	315705-0305	A		2	PARALLEL KEY W. ROUND ENDS 10X8X60 MM	
350	321313-0102	A		2	BALL BEARING, 15X35X11 MM	

Pos	Part No	SP	UN	Qty	Description	Page No

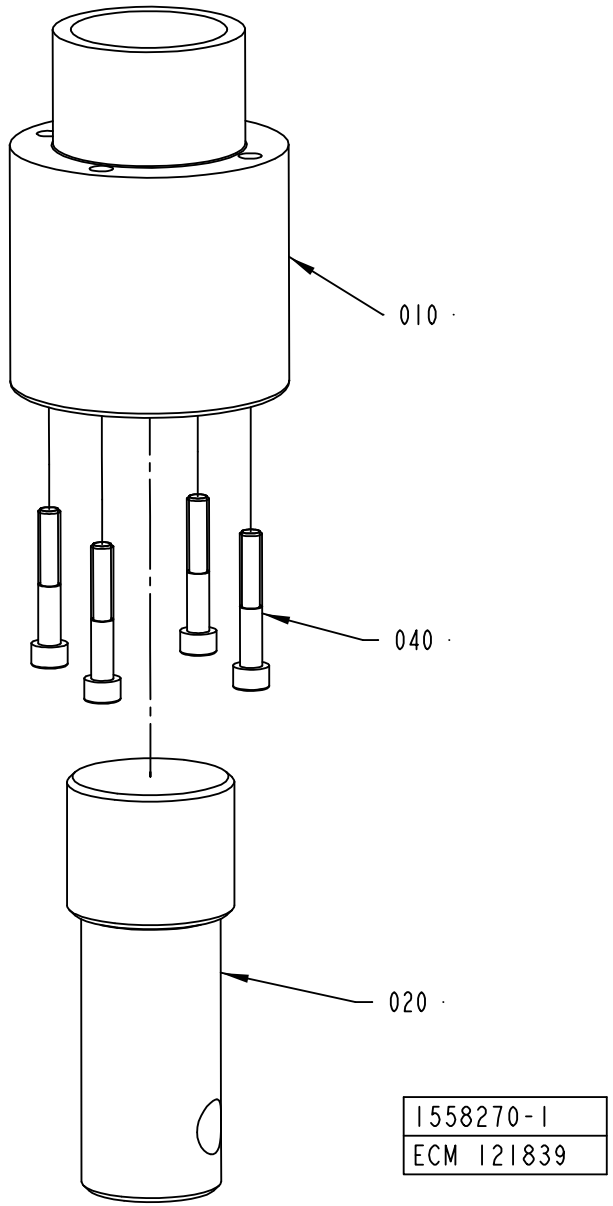
010
040
020
1558270-1
ECM 121839

ECM: 125743 - 20040112
Group number: 1558270-0100
Assembly Drawing: 1558270-1_1_AB

Pos	Part No	SP	UN	Qty	Description	Page No
-						
010	1558269-0000	-		1	SLEEVE	
020	1558268-0000	-		1	LEG	
040	312115-0461	-		4	SCREW ISO4762 M8X50 A4	

Pos	Part No	SP	UN	Qty	Description	Page No

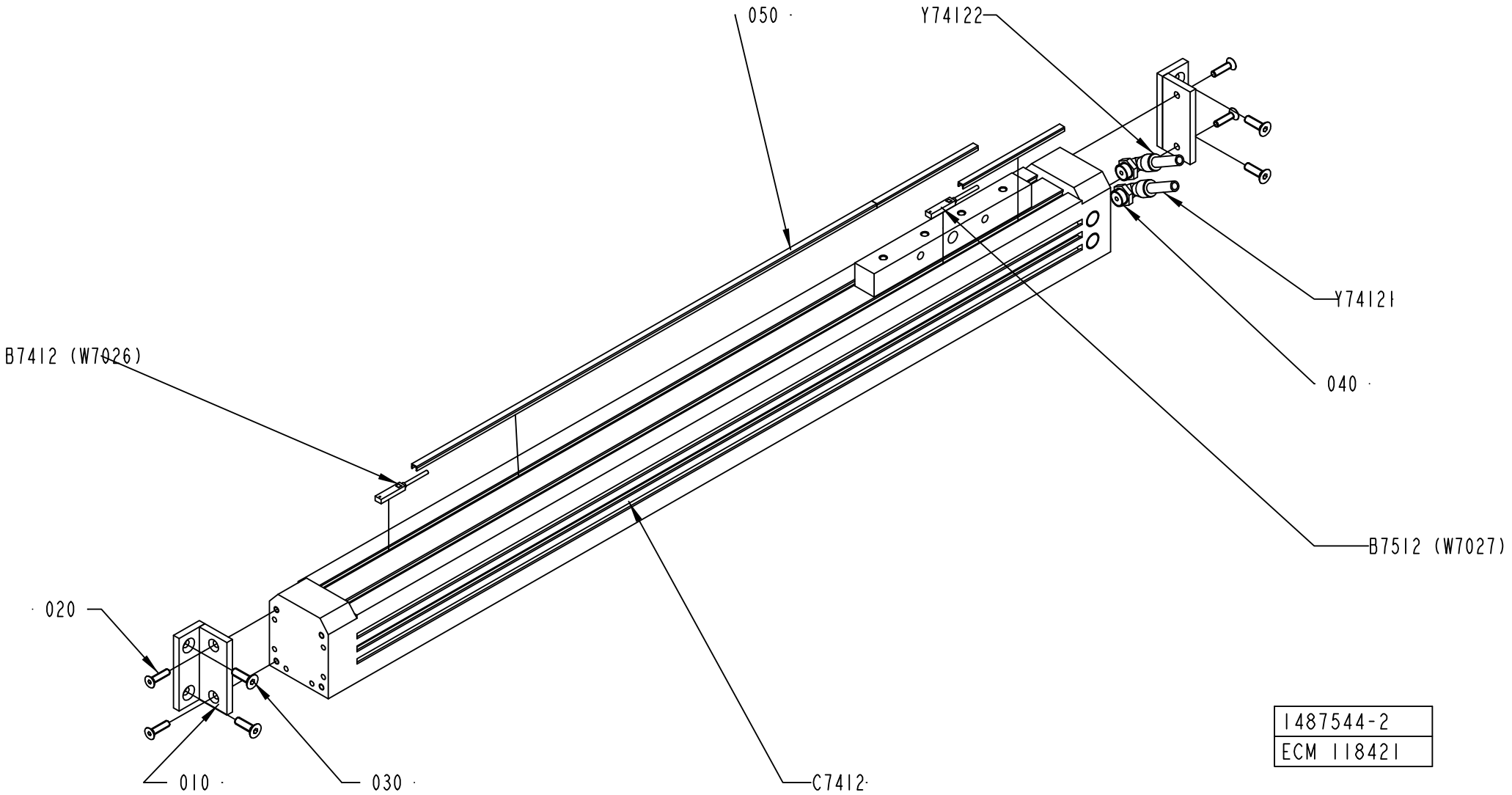

1487544-2
ECM 118421

ECM: 119263 - 20021216
Group number: 1487544-0200
Assembly Drawing: 1487544-2_1_AA

Pos	Part No	SP	UN	Qty	Description	Page No
-						
010	1498457-0000	-		2	BRACKET	
020	312155-0331	-		4	SCREW EN 10642 MF6S M5X20 A480	
030	312155-0370	-		4	SCREW EN 10642 MF6S M6X20 A480	
040	90458-2958	-		2	ELBOW PIPE JOINT, EXT.THREAD, D=8MM-G1/4	
050	90458-0273	-		1	COVER STRIP	
B7412	90044-0165	A		1	SENSOR, SME-8-K5-LED-24	
B7512	90044-0165	A		1	SENSOR, SME-8-K5-LED-24	
C7412	90459-1849	A		1	DOUBLE ACTING SHUTTLE CYL. 40-550 MM	
Y74121	90166-0194	-	MM	2500	TUBE 8 MM PUR BLUE	
Y74122	90166-0194	-	MM	2500	TUBE 8 MM PUR BLUE	

Pos	Part No	SP	UN	Qty	Description	Page No

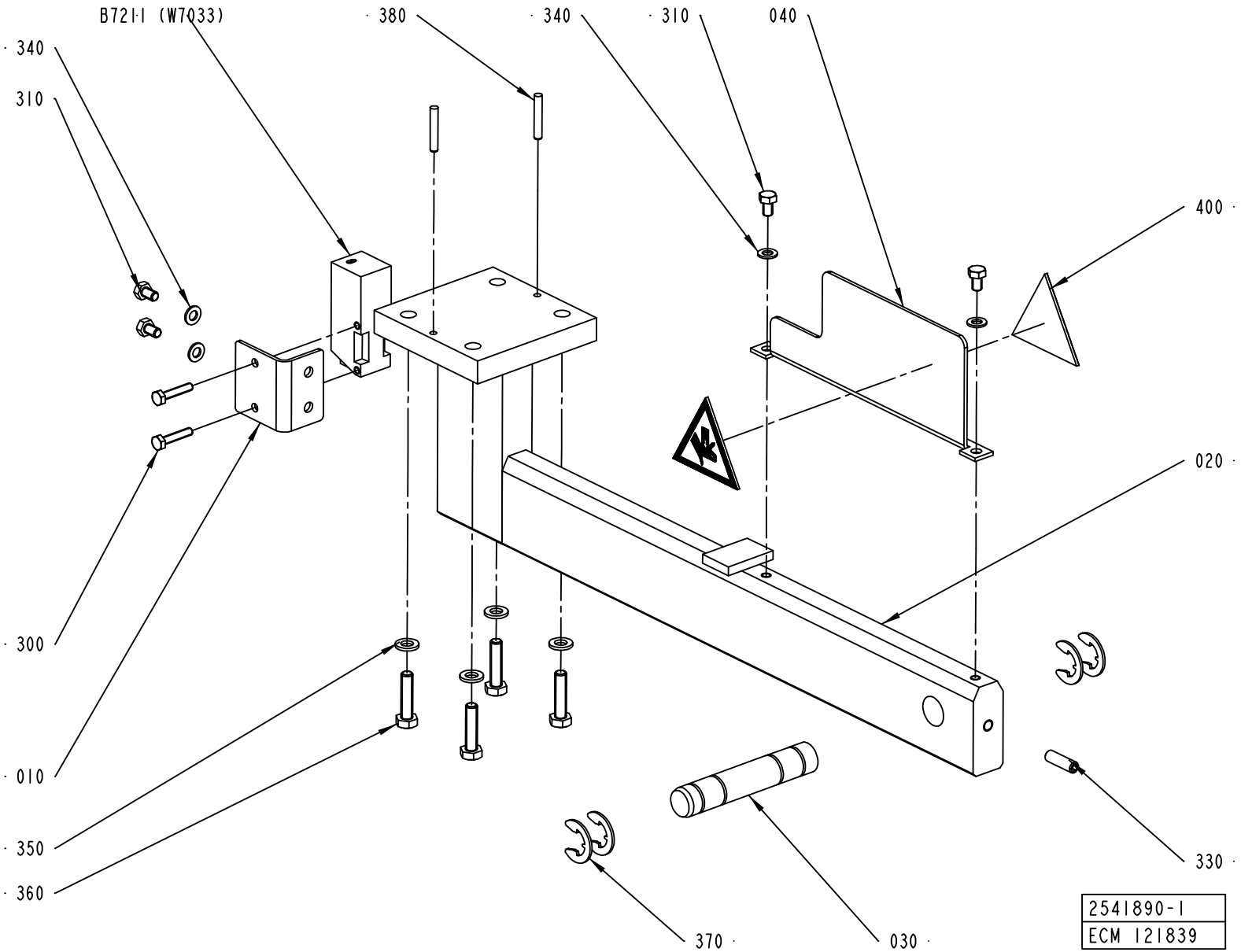
B721I (W7033)
380
340
310
040
340
310
400
020
300
010
350
360
330
370
030
2541890-1
ECM 121839

ECM: 125575 - 20040112
Group number: 2541890-0100
Assembly Drawing: 2541890-1_1_AB

Pos	Part No	SP	UN	Qty	Description	Page No
-						
010	1490210-0000	-		1	PLATE	
020	1490219-0000	-		1	BRACKET	
030	1499573-0000	-		1	PIN	
040	1512275-0000	-		1	PROTECTION PLATE	
300	312105-0295	-		2	SCREW M6S ISO4017 M4X20 A470	
310	312105-0323	-		4	SCREW M6S ISO 4017 M5X8 A480	
330	312318-0370	-		1	SCREW ISO4029 M6X20 A4	
340	315105-0146	-		4	WASHER BRB5,3X10RFR	
350	315105-0153	-		4	WASHER BRB6,4X12RFR	
360	312105-0372	-		4	SCREW M6S ISO 4017 M6X25 A480	
370	315755-0112	-		4	RETAINING RING SHAFT DIN 6799 12 A2	
380	311103-0274	-		2	PARALLELL PIN, M6, 4X25 MM	
400	359705-0005	A		2	WARNING SIGN ISO, MOVING PART	
B7211	90232-0129	A		1	PH.CELL E3S-CR61-5M	

Pos	Part No	SP	UN	Qty	Description	Page No

PAPER REEL HOLDER

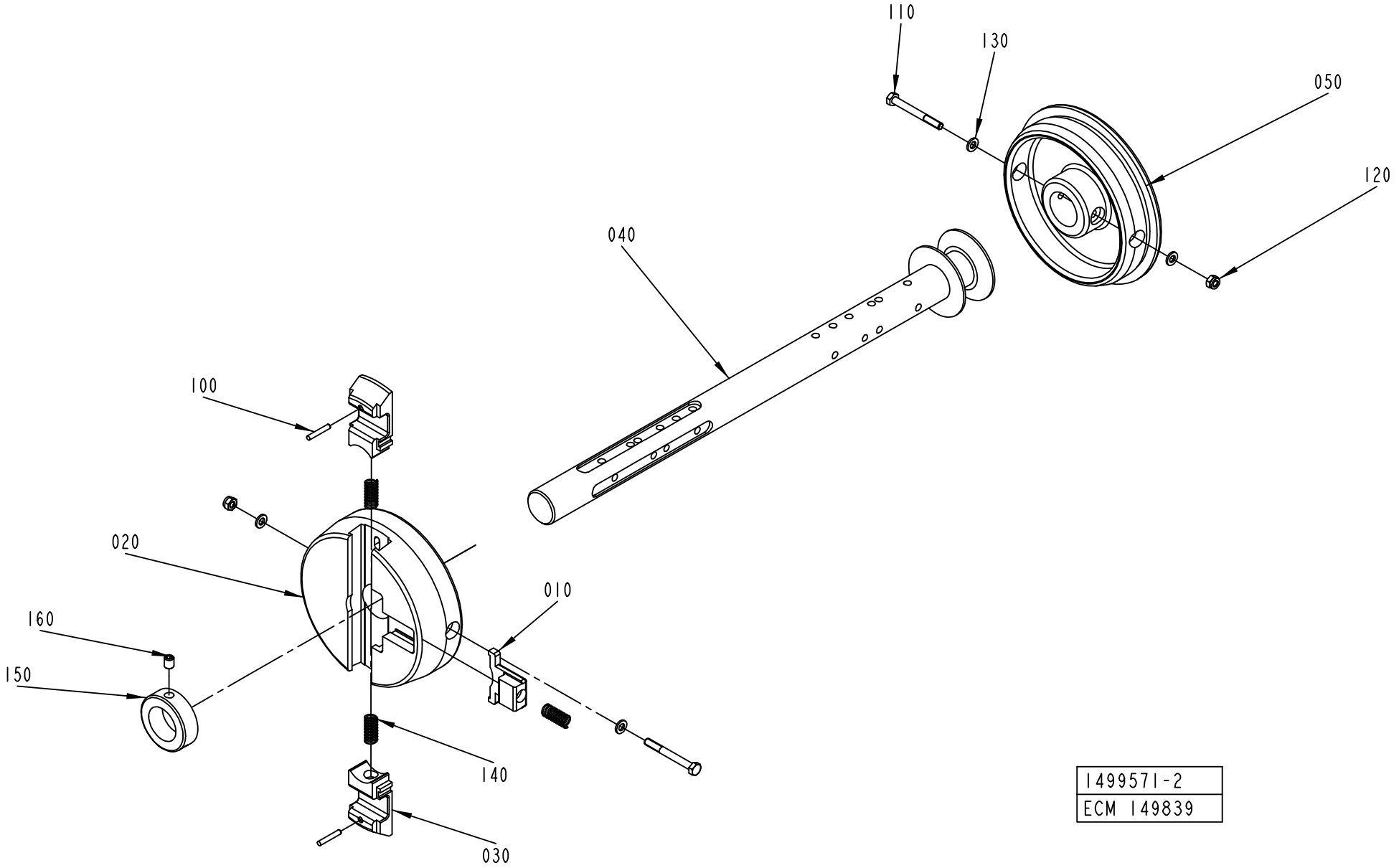

1499571-2
ECM 149839

ECM: 151708 - 20040112
Group number: 1499571-0100
Assembly Drawing: 1499571-2_1_AE

Pos	Part No	SP	UN	Qty	Description	Page No
TBA/22						
040	2656299-0000	-		1	SHAFT	
150	315742-0123	-		1	RETAINING RING 32 SMS 199	
160	312318-0445	-		1	SCREW ISO4029 M8X10 A4	
Common Parts						
010	272728-0000	A		1	BARRIER	
020	1512265-0000	A		1	SLEEVE	
030	575002-0000	A		2	PLUNGER	
050	1512266-0000	A		1	SLEEVE	
100	311103-0274	-		2	PARALLELL PIN, M6, 4X25 MM	
110	312105-0381	-		2	SCREW M6S ISO 4014 M6X55 A480	
120	312812-0316	-		2	HEXAGON NUT, NY-LOCK M6 A480	
130	315105-0153	-		4	WASHER BRB6,4X12RFR	
140	90335-0025	A		3	COMP. SPRING 22010, 1X11X26	

Pos	Part No	SP	UN	Qty	Description	Page No

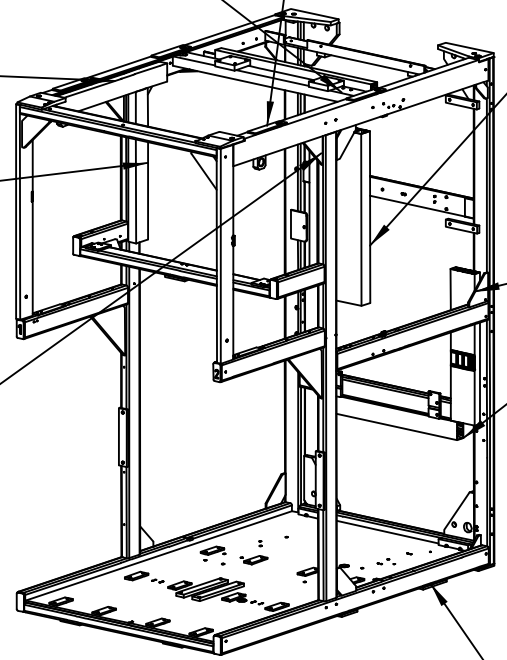

080
W7011
W7020
W7024
W7028
W7031
W7042
W7055
W7077
74202
74204
73032
73034
74142
74144

050
W7014
W7025
W7026
W7027
W7029
W7033
W7043
W7044
W7045
W7054
74154
74152
73154
73152

030

W7010	W7028	W7042	74204	74074
W7011	W7029	W7043	74202	74084
W7014	W7030	W7044	74154	74104
W7020	W7031	W7045	74152	74142
W7023	W7033	W7054	73034	74144
W7024	W7035	W7055	73032	620542
W7025	W7036	W7074	73154	
W7026	W7040	W7075	73152	
W7027	W7041	W7077		

040
W7024
W7028
W7031
W7077
73034
73032
74204
74202
74144
74142

060
W7024
W7028
W7031
W7077
74204
74202

100
W7046 62034
W7049 62032
W7013 62054
W7012 62014
W7015 MAIN AIR
W7017 620542
W7018
W7022
W7038
W7034
W7039
W7050
W7056
W7072
W7073
W7019
W7417

020
W7013
W7046
W7049
W7017
W7018
W7022
W7050
W7047
W7072
W7073
W7019
62034
62032
62054
62014
620542

060
W7025
W7026
W7027
W7033

010

INSIDE CABLE CONDUIT:

620542	W7010
74074	W7040
74104	W7041
74084	W7074
	W7075

1512279-2
ECM 126493

ECM: 144797 - 20040112
Group number: 1512279-0200
Assembly Drawing: 1512279-2_1_AC

This list covers pages from 8-62 to 8-67

Pos	Part No	SP	UN	Qty	Description	Page No
-						
010	2529990-0000	-		1	FRAME	
010	2529990-0000	-		1	FRAME	
020	1512421-0000	-		1	CABLE DUCT	
030	2524606-0000	-		1	CABLE DUCT	
040	1512423-0000	-		1	CABLE DUCT	
050	2524607-0000	-		1	CABLE DUCT	
060	1512425-0000	-		2	CABLE DUCT	
080	1512426-0000	-		1	CABLE DUCT	
100	2529544-0000	-		1	CABLE DUCT	
110	312105-0364	-		2	SCREW M6S ISO 4017 M6X10 A480	
120	312115-0364	-		16	SCREW ISO4762 M6X10 A4	
130	312503-0275	-		4	TAPPING SCREW ISO 7049-ST3,5X6,5-C-Z	
150	90143-0060	-	MM	2600	EDGE STRIP 9,5X6,3MM BLACK PVC	
160	315125-0153	-		2	WASHER TBRSB 6,4X22X4 A4	
170	352113-0205	-		25	ANCHOR PLATES FOR STRIPS, TYPE TM2S8-C10	
180	312125-0285	-		25	SCREW ISO 1207 M4X6 A4	
190	352113-0102	-		25	CLIP-STRIP, BLACK 188X4,8 MM	

Pos	Part No	SP	UN	Qty	Description	Page No

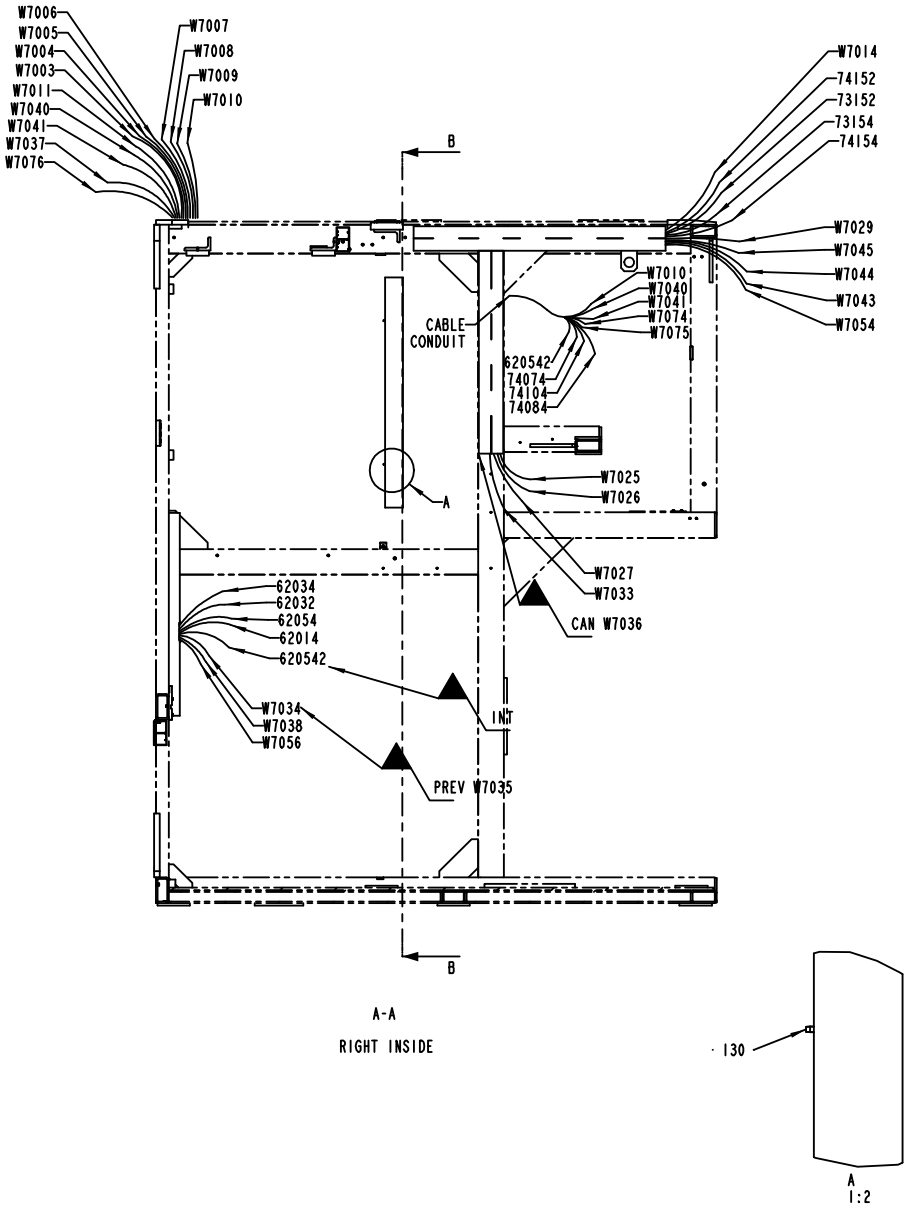
W7006
W7005
W7004
W7003
W7011
W7040
W7041
W7037
W7076
W7007
W7008
W7009
W7010
W7014
74152
73152
73154
74154
W7029
W7045
W7044
W7043
W7054
B
CABLE CONDUIT
W7010
W7040
W7041
W7074
W7075
620542
74074
74104
74084
A
W7025
W7026
W7027
W7033
CAN W7036
62034
62032
62054
62014
620542
INT
W7034
W7038
W7056
PREV W7035
B
A-A
RIGHT INSIDE
130
A
1:2

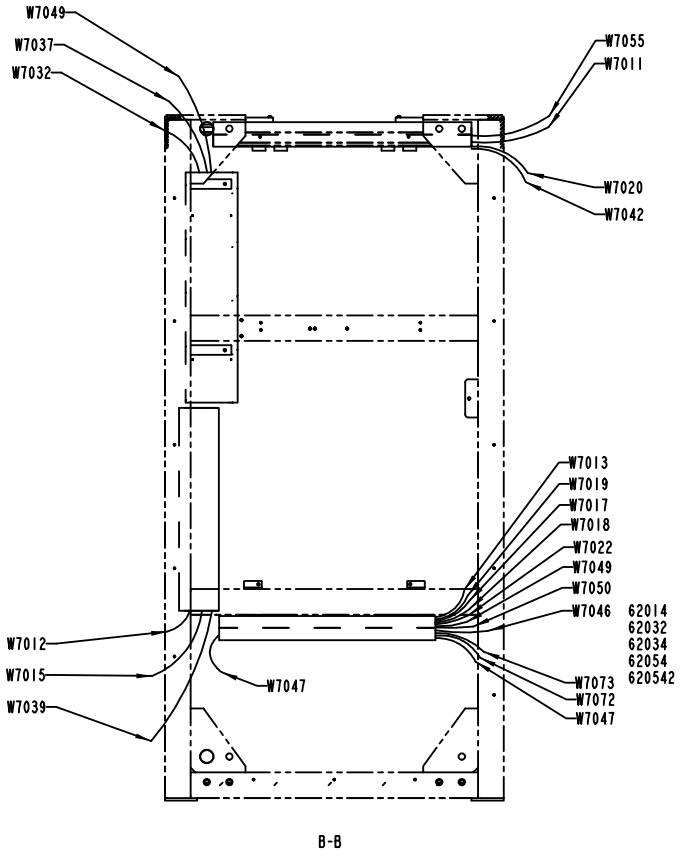
W7049
W7037
W7032
W7055
W7011
W7020
W7042
W7013
W7019
W7017
W7018
W7022
W7049
W7050
W7046
62014
62032
62034
62054
620542
W7012
W7015
W7039
W7047
W7073
W7072
W7047
B-B

ECM: 144797 - 20040112
Group number: 1512279-0200
Assembly Drawing: 1512279-2_2_AC

This list covers pages from 8-62 to 8-67

Pos	Part No	SP	UN	Qty	Description	Page No
-						
010	2529990-0000	-		1	FRAME	
010	2529990-0000	-		1	FRAME	
020	1512421-0000	-		1	CABLE DUCT	
030	2524606-0000	-		1	CABLE DUCT	
040	1512423-0000	-		1	CABLE DUCT	
050	2524607-0000	-		1	CABLE DUCT	
060	1512425-0000	-		2	CABLE DUCT	
080	1512426-0000	-		1	CABLE DUCT	
100	2529544-0000	-		1	CABLE DUCT	
110	312105-0364	-		2	SCREW M6S ISO 4017 M6X10 A480	
120	312115-0364	-		16	SCREW ISO4762 M6X10 A4	
130	312503-0275	-		4	TAPPING SCREW ISO 7049-ST3,5X6,5-C-Z	
150	90143-0060	-	MM	2600	EDGE STRIP 9,5X6,3MM BLACK PVC	
160	315125-0153	-		2	WASHER TBRSB 6,4X22X4 A4	
170	352113-0205	-		25	ANCHOR PLATES FOR STRIPS, TYPE TM2S8-C10	
180	312125-0285	-		25	SCREW ISO 1207 M4X6 A4	
190	352113-0102	-		25	CLIP-STRIP, BLACK 188X4,8 MM	

Pos	Part No	SP	UN	Qty	Description	Page No

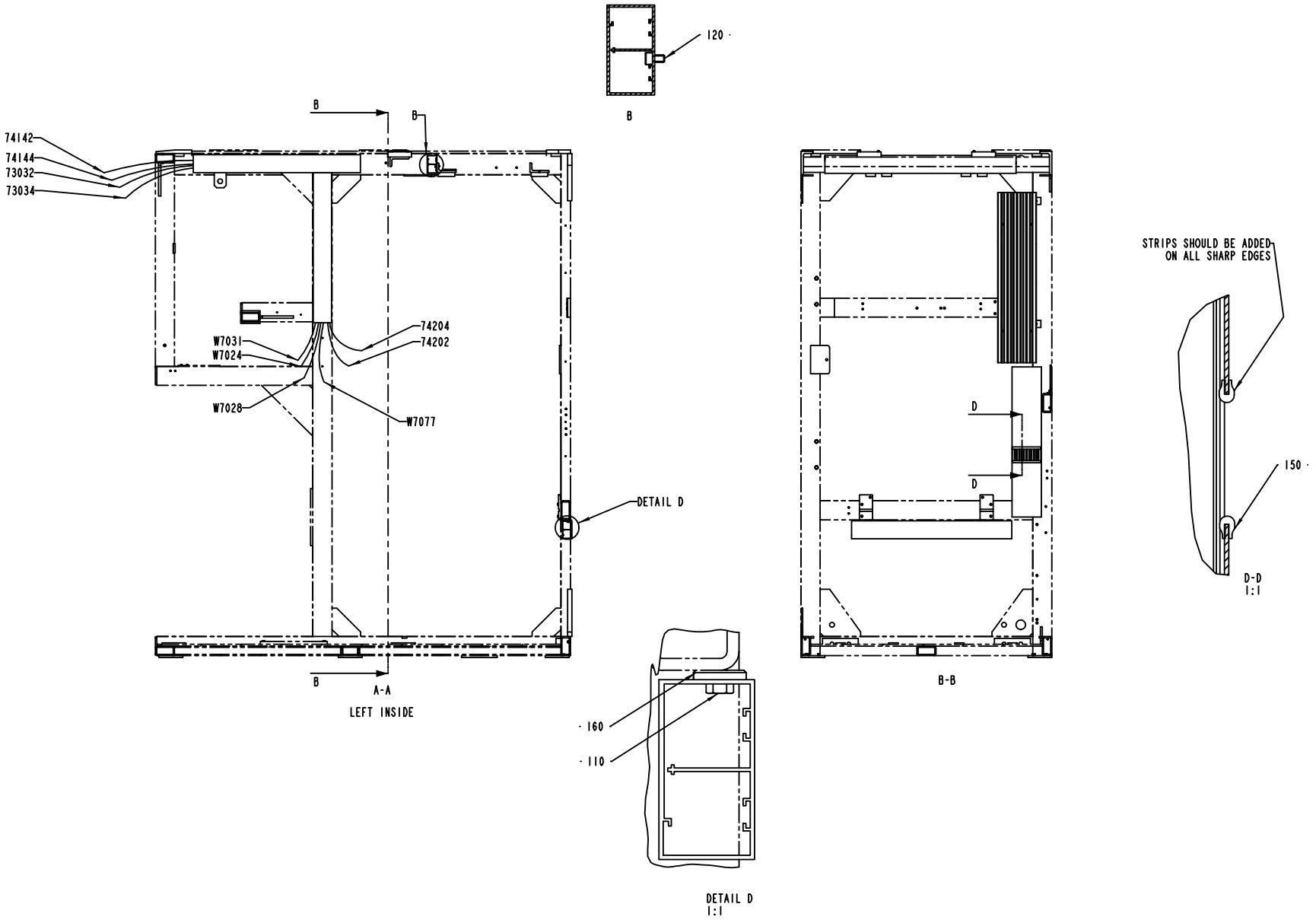
120
B
B
B
74142
74144
73032
73034
74204
74202
W7031
W7024
W7028
W7077
DETAIL D
B
A-A
LEFT INSIDE
D
D
B-B
STRIPS SHOULD BE ADDED ON ALL SHARP EDGES
150
D-D
1:1
160
110
DETAIL D
1:1

ECM: 144797 - 20040112
Group number: 1512279-0200
Assembly Drawing: 1512279-2_3_AC

This list covers pages from 8-62 to 8-67

Pos	Part No	SP	UN	Qty	Description	Page No
-						
010	2529990-0000	-		1	FRAME	
010	2529990-0000	-		1	FRAME	
020	1512421-0000	-		1	CABLE DUCT	
030	2524606-0000	-		1	CABLE DUCT	
040	1512423-0000	-		1	CABLE DUCT	
050	2524607-0000	-		1	CABLE DUCT	
060	1512425-0000	-		2	CABLE DUCT	
080	1512426-0000	-		1	CABLE DUCT	
100	2529544-0000	-		1	CABLE DUCT	
110	312105-0364	-		2	SCREW M6S ISO 4017 M6X10 A480	
120	312115-0364	-		16	SCREW ISO4762 M6X10 A4	
130	312503-0275	-		4	TAPPING SCREW ISO 7049-ST3,5X6,5-C-Z	
150	90143-0060	-	MM	2600	EDGE STRIP 9,5X6,3MM BLACK PVC	
160	315125-0153	-		2	WASHER TBRSB 6,4X22X4 A4	
170	352113-0205	-		25	ANCHOR PLATES FOR STRIPS, TYPE TM2S8-C10	
180	312125-0285	-		25	SCREW ISO 1207 M4X6 A4	
190	352113-0102	-		25	CLIP-STRIP, BLACK 188X4,8 MM	

Pos	Part No	SP	UN	Qty	Description	Page No

STRIP MAGAZINE

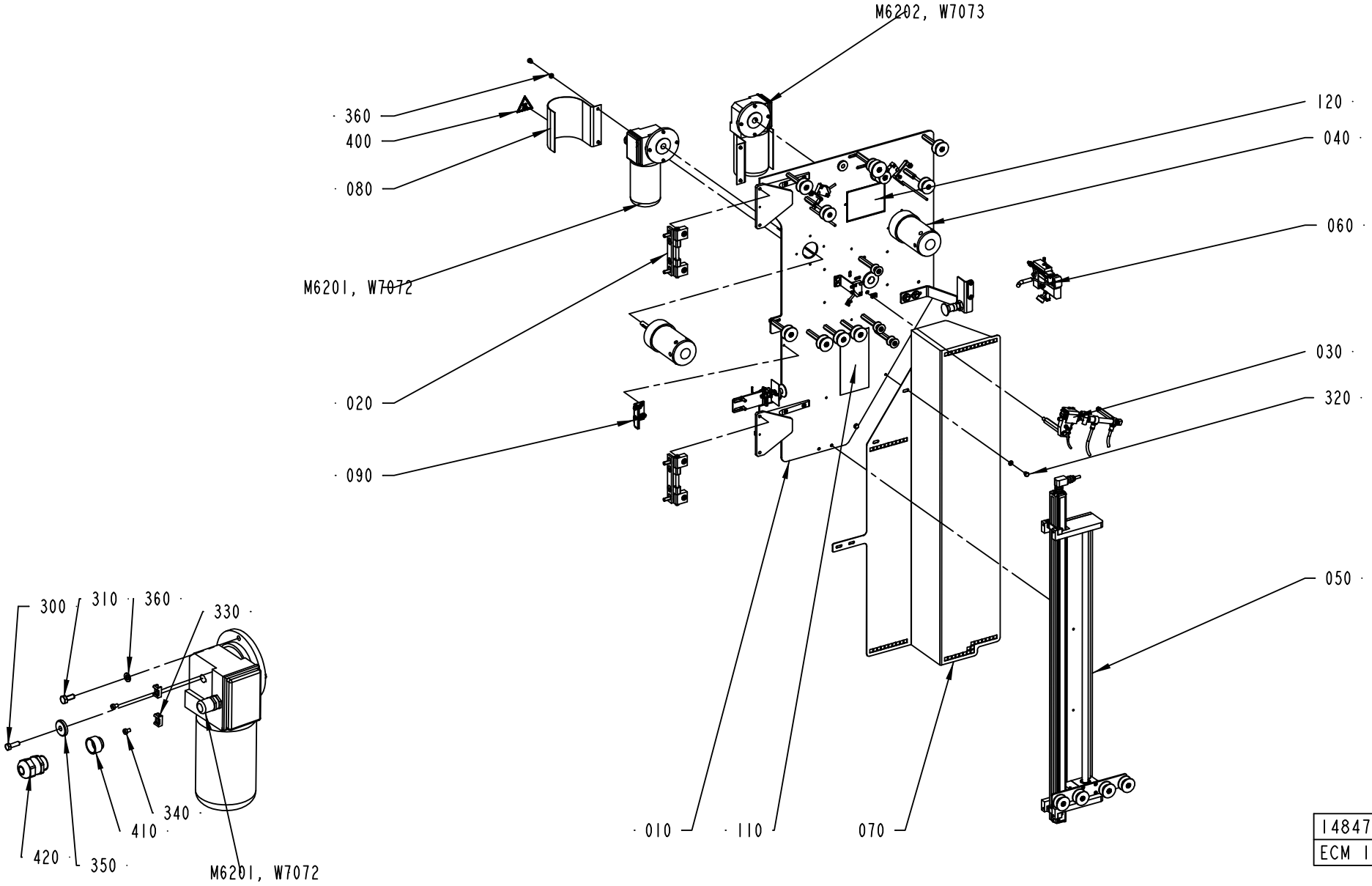

1484707-3
ECM 124222

ECM: 125863 - 20040109
Group number: 1484707-0200
Assembly Drawing: 1484707-3_1_AD

Pos	Part No	SP	UN	Qty	Description	Page No
-						
010	1512428-0200	-		1	MOUNTING SHEET	**8-71**
020	1484720-0100	-		2	HINGE	**8-73**
030	1490806-0200	-		1	HEATING DEVICE	**8-75**
040	1484725-0100	-		2	HUB	**8-77**
050	1511585-0200	-		1	STRIP GUIDE	**8-79**
060	1524477-0200	-		1	CUTTING TABLE	**8-81**
070	1517107-0000	-		1	PROTECTION	
080	1498445-0000	-		2	COVER	
090	2510401-0100	-		1	HOLDER	**8-83**
110	2558879-0000	-		1	SIGN	
120	2558878-0000	-		1	SIGN	
300	312105-0329	-		2	SCREW M6S ISO 4017 M5X16 A480	
310	312105-0367	-		8	SCREW M6S ISO 4017 M6X14 A480	
320	312105-0362	-		6	SCREW M6S ISO 4017 M6X8 A480	
330	352113-0205	-		4	ANCHOR PLATES FOR STRIPS, TYPE TM2S8-C10	
340	312125-0285	-		4	SCREW ISO 1207 M4X6 A4	
350	315125-0153	-		2	WASHER TBRSB 6,4X22X4 A4	
360	315105-0153	-		14	WASHER BRB6,4X12RFR	
400	359705-0007	A		2	WARNING SIGN ISO, HOT SURFACE	
410	90458-1155	-		2	ENLARGING SLEEVE, 7216220	
420	90458-0307	-		2	CABLE GLAND, M20X1,5, NO.5311 1020	
430	312125-0285	-		4	SCREW ISO 1207 M4X6 A4	
440	352113-0205	-		4	ANCHOR PLATES FOR STRIPS, TYPE TM2S8-C10	
M6201	90069-0614	A		1	GEARS, WORM MOTOR MC320P2T	
M6202	90457-0921	A		1	WORM GEAR MOTOR MC320P2TB5/D	
W7072	90220-0104	-	MM	4000	SCR. CABLE 4X1,5MM2	
W7073	90220-0104	-	MM	4000	SCR. CABLE 4X1,5MM2	

Pos	Part No	SP	UN	Qty	Description	Page No

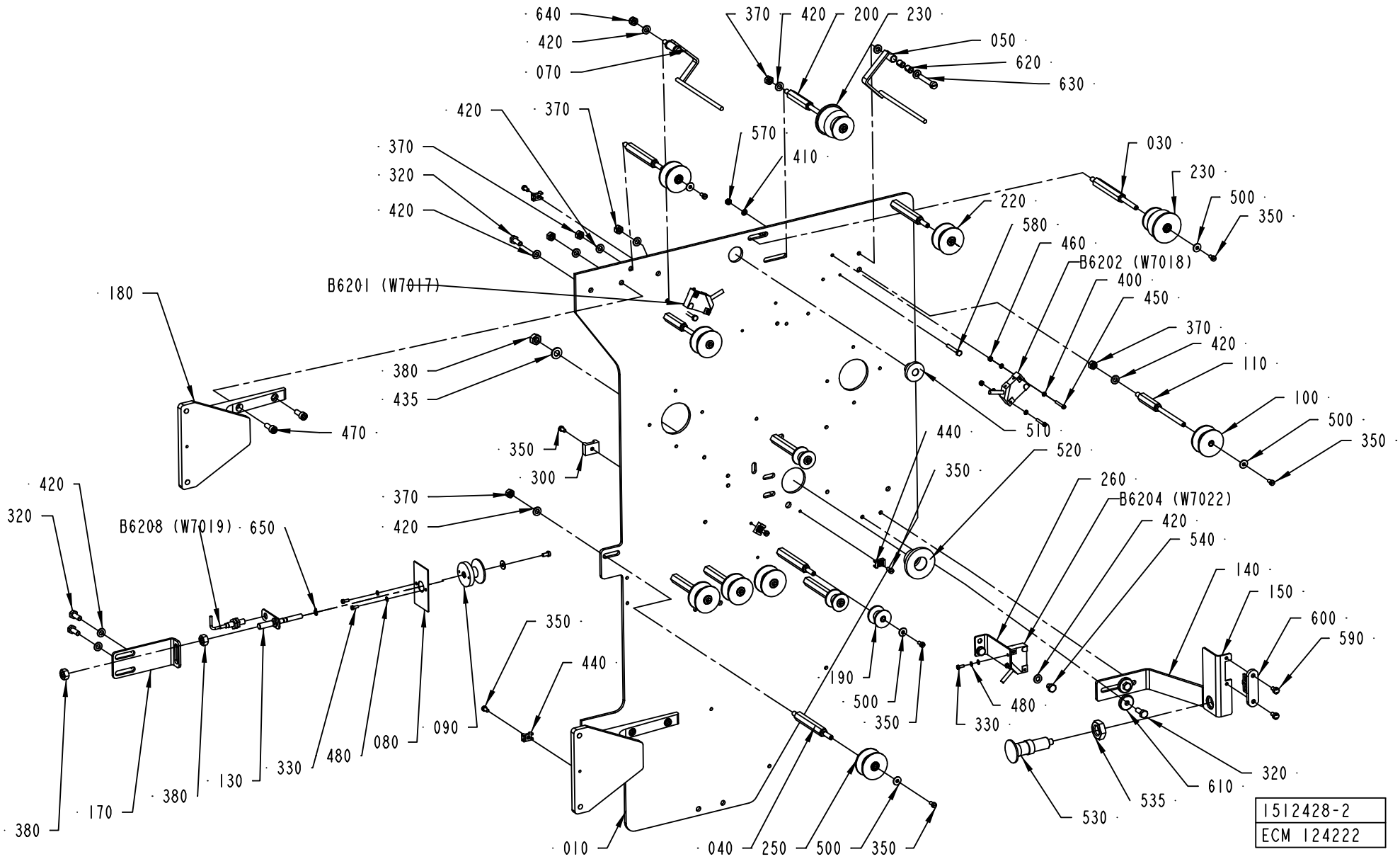
640
420
070
370
420
200
230
050
620
630
420
370
570
410
370
320
420
030
230
500
350
220
580
460
400
450
370
420
110
100
500
350
510
440
520
350
260
B6204 (W7022)
420
540
140
150
600
590
B6201 (W7017)
180
380
435
470
350
300
420
320
B6208 (W7019)
650
370
420
350
440
190
500
350
480
330
610
320
535
530
380
170
380
130
330
480
080
090
010
040
250
500
350
1512428-2
ECM 124222

ECM: 163297 - 20040419
Group number: 1512428-0200
Assembly Drawing: 1512428-2_1_AC

Pos	Part No	SP	UN	Qty	Description	Page No
TBA/22						
170	2525339-0000	-		1	BRACKET	
Common Parts						
010	1484708-0000	-		1	MOUNTING PLATE	
030	590402-0000	A		1	AXLE PIN	
040	536916-0000	A		9	AXLE PIN	
050	1490818-0000	-		1	ARM	
070	1490187-0000	-		1	ROCKER ARM	
080	1349581-0000	-		1	FLAG	
090	1349986-0000	A		1	ROLLER	
100	583986-0000	A		2	ROLL	
110	544725-0000	-		2	AXLE PIN	
130	1484718-0000	-		1	AXLE PIN	
140	1499569-0000	-		1	BRACKET	
150	1484740-0000	-		1	BRACKET	
180	1517087-0000	-		2	HINGE	
190	1548197-0000	A		3	ROLL	
200	1538202-0000	-		1	AXLE PIN	
220	1548195-0000	A		2	ROLL	
230	1548196-0000	A		2	ROLL	
250	1523487-0000	A		4	ROLL	
260	2515289-0000	-		1	BRACKET	
300	352113-0203	-		4	ANCHOR PLATES FOR STRIPS, TYPE TM3S8-M0	
320	312105-0366	-		6	SCREW M6S ISO 4017 M6X12 A480	
330	312125-0222	-		4	SCREW ISO 1207 M3X8 A4	
350	312125-0287	-		22	SCREW ISO 1207 M4X8 A4	
370	312605-0316	-		16	HEXAGON NUT, M6M M6 A280	
380	312605-0318	-		3	HEXAGON NUT, M6M M8 A280	
400	315103-0124	-		8	WASHER, BRB, 3,2/6,H=0,5 NI PL BR	
410	315105-0136	-		2	WASHER BRB4,3XRFR	
420	315105-0153	-		28	WASHER BRB6,4X12RFR	
435	315105-0165	-		1	WASHER BRB8,4X16RFR	
440	352113-0205	-		4	ANCHOR PLATES FOR STRIPS, TYPE TM2S8-C10	
450	312125-0230	-		4	SCREW ISO 1207 M3X20 A4	
460	312605-0310	-		4	HEXAGON NUT, M6M M3 A280	
470	312115-0368	-		4	SCREW ISO4762 M6X16 A4	
480	315105-0124	-		6	WASHER BRB3,2X6RFR	
500	90005-0082	-		14	WASHER PLAIN ROUND 4,3(M4)/12,H=1	
510	90015-0021	-		1	LEAD-IN, TET10-14, E-1458023	
520	90015-0024	-		1	LEAD-IN, TET20-26, E-1458035	
530	90051-0088	-		1	ADJUSTMENT SCREW	
535	90099-0131	-		1	NUT HEX. M16X2 SS	
540	312105-0362	-		2	SCREW M6S ISO 4017 M6X8 A480	
570	312605-0312	-		2	HEXAGON NUT, M6M M4 A280	
580	312105-0299	-		2	SCREW M6S ISO 4017 M4X30 A470	
590	1539387-0000	-		2	SCREW	
600	90044-0310	A		1	KEY FOR SAFETY SWITCH, AZ 15/16 B1	
610	315125-0153	-		2	WASHER TBRSB 6,4X22X4 A4	
620	321141-0064	-		4	BEARING BUSHING W/O FL, 6X8X10 MM	
630	312125-0376	-		2	SCREW ISO 1207 M6X35 A4	
640	312812-0316	-		2	HEXAGON NUT, NY-LOCK M6 A480	
650	315751-0103	-		1	RETAINING RING FOR SHAFT DIN 471 6 A2	
B6201	90044-0194	A		1	PROX.SW. IN5329/IN3002-BPKG	
B6202	90044-0194	A		1	PROX.SW. IN5329/IN3002-BPKG	
B6204	90044-0194	A		1	PROX.SW. IN5329/IN3002-BPKG	
B6208	90458-0138	A		1	PROX.SW. E2EG-X1R5B1-5M	

Machine Type | Group Description | Used-In | Group Number | Page No

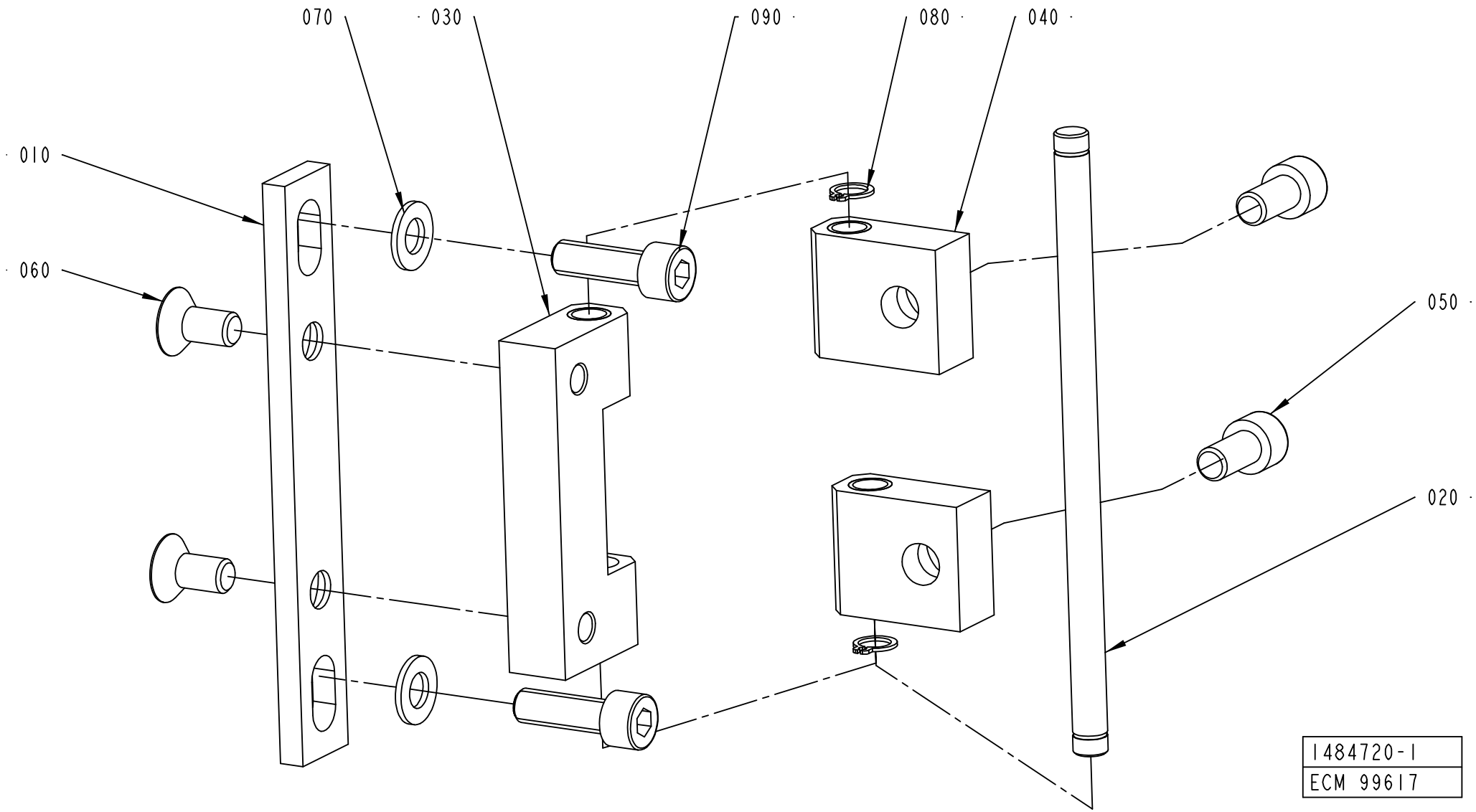
070
030
090
080
040
010
060
050
020
1484720-1
ECM 99617

ECM: 120512 - 20021218
Group number: 1484720-0100
Assembly Drawing: 1484720-1_1_AB

Pos	Part No	SP	UN	Qty	Description	Page No
-						
010	1334187-0000	-		1	PLATE	
020	1334188-0000	-		1	AXLE PIN	
030	1334189-0000	-		1	BLOCK	
040	1334190-0000	-		2	BLOCK	
050	312115-0449	-		2	SCREW ISO4762 M8X16 A4	
060	312155-0449	-		2	SCREW EN 10642 MF6S M8X16 A480	
070	315105-0165	-		2	WASHER BRB8,4X16RFR	
080	90141-0015	-		2	RETAINING RING FOR SHAFT DIN 471 8 A2	
090	312115-0453	-		2	SCREW ISO4762 M8X25 A4	

Pos	Part No	SP	UN	Qty	Description	Page No

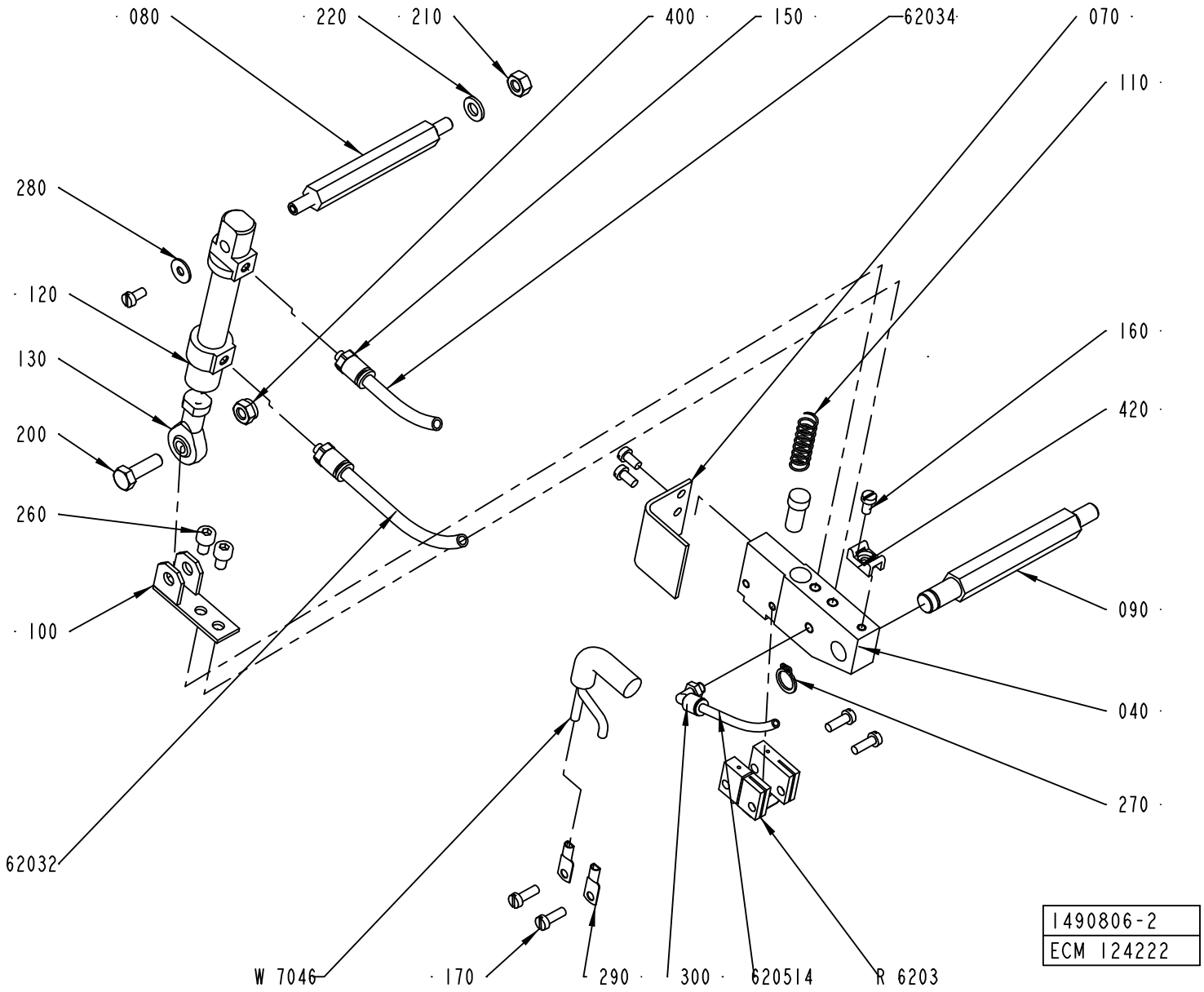
080
220
210
400
150
62034
070
110
280
120
130
200
260
100
160
420
090
040
270
62032
W 7046
170
290
300
620514
R 6203
1490806-2
ECM 124222

ECM: 152055 - 20040109
Group number: 1490806-0200
Assembly Drawing: 1490806-2_1_AB

Pos	Part No	SP	UN	Qty	Description	Page No
-						
040	1490804-0000	A		1	HOLDER	
050	400833-0000	A		1	PLUNGER	
070	1349181-0000	B		1	TOUCH GUARD	
080	1037121-0000	-		1	SHAFT	
090	1037120-0000	-		1	SHAFT	
100	1037124-0000	B		1	HOLDER	
110	400828-0000	A		1	SPRING	
120	90450-0306	A		1	DOUBLE ACTING, MINI-ISO, CYL. 12-25	
130	90239-0491	A		1	ROD END,BALL JOINT EYE,MINI-ISO M6	
150	342722-0197	-		2	STRAIGHT COUPLING	
160	312125-0287	-		4	SCREW ISO 1207 M4X8 A4	
170	312125-0291	-		4	SCREW ISO 1207 M4X12 A4	
200	312105-0370	-		1	SCREW M6S ISO 4017 M6X20 A480	
210	312605-0316	-		1	HEXAGON NUT, M6M M6 A280	
220	315105-0153	-		1	WASHER BRB6,4X12RFR	
260	312115-0323	-		2	SCREW ISO4762 M5X8 A4	
270	90141-0016	-		1	RETAINING RING FOR SHAFT DIN 471 10 A2	
280	90005-0082	-		1	WASHER PLAIN ROUND 4,3(M4)/12,H=1	
290	353104-0140	-		2	CABLE SHOE YAV 06 M 4*	
300	90458-2954	-		1	ELBOW PIPE JOINT, EXT.THREAD, D=4MM M5	
400	312812-0316	-		1	HEXAGON NUT, NY-LOCK M6 A480	
420	352113-0205	-		1	ANCHOR PLATES FOR STRIPS, TYPE TM2S8-C10	
6203:2	90166-0193	-	MM	4500	TUBE 6 MM PUR BLUE	
6203:4	90166-0193	-	MM	4500	TUBE 6 MM PUR BLUE	
62051:4	90166-0095	-	MM	1500	TUBE 4 MM PA BLUE	
R6203	1498047-0000	A		1	SEALING BLOCK	
W7046	351120-0126	-	MM	4000	CABLE SIHF 2X4MM2 GREEN/YELLOW	

Pos	Part No	SP	UN	Qty	Description	Page No

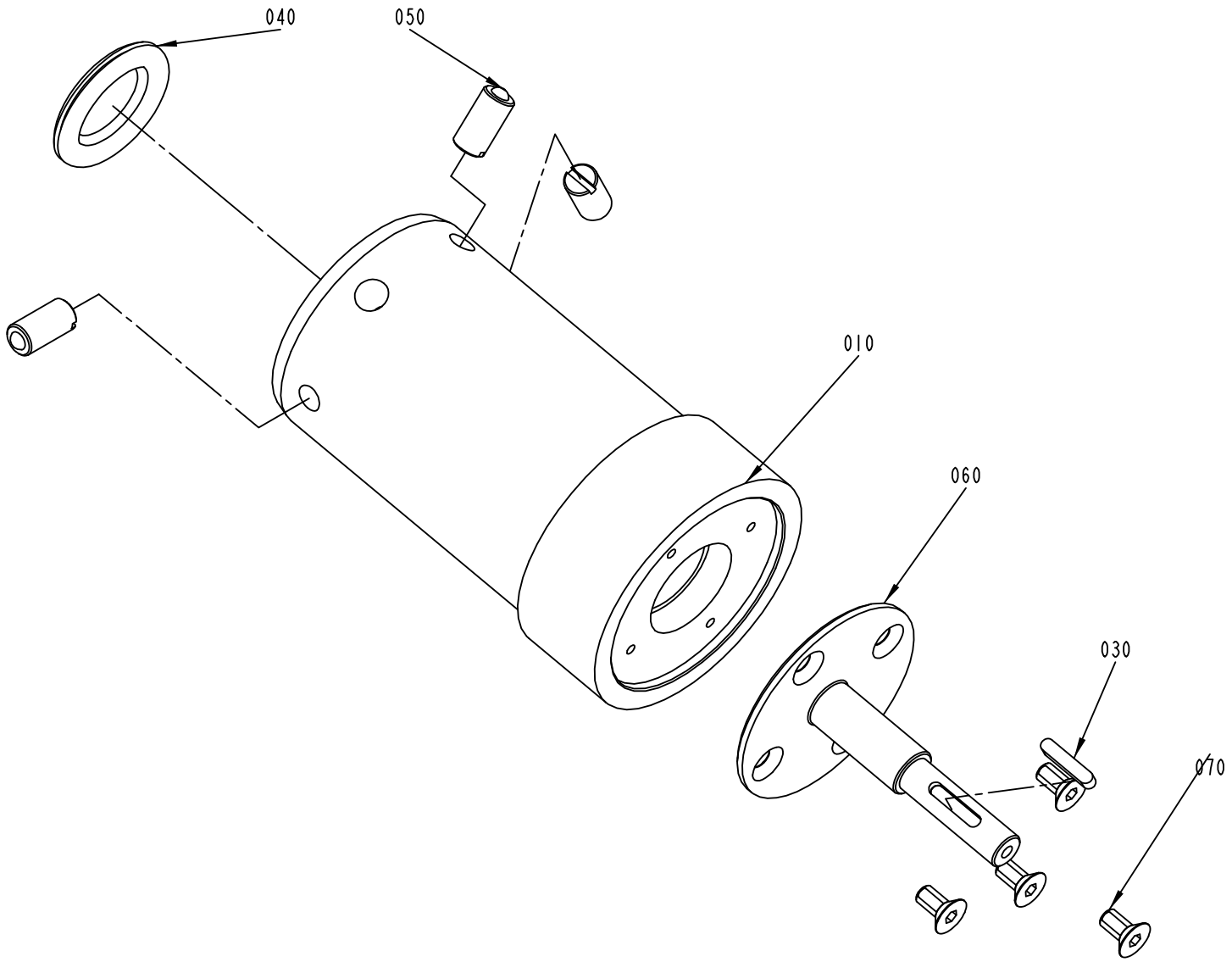

1484725-1
ECM 124222

ECM: 150573 - 20040109
Group number: 1484725-0100
Assembly Drawing: 1484725-1_1_AD

Pos	Part No	SP	UN	Qty	Description	Page No
-						
010	1484724-0000	-		1	HUB	
030	315701-0170	A		1	PARALLEL KEY W. ROUND ENDS 4X4X20 MM	
040	90261-0049	-		1	PLUG, BLIND, PLASTIC, NO. SR1750	
050	90287-0106	-		3	SCREW SPRINGLOAD. SLOTTED HEAD M10X21	
060	1484726-0000	-		1	SHAFT	
070	312155-0366	-		4	SCREW EN 10642 MF6S M6X12 A480	

Pos	Part No	SP	UN	Qty	Description	Page No

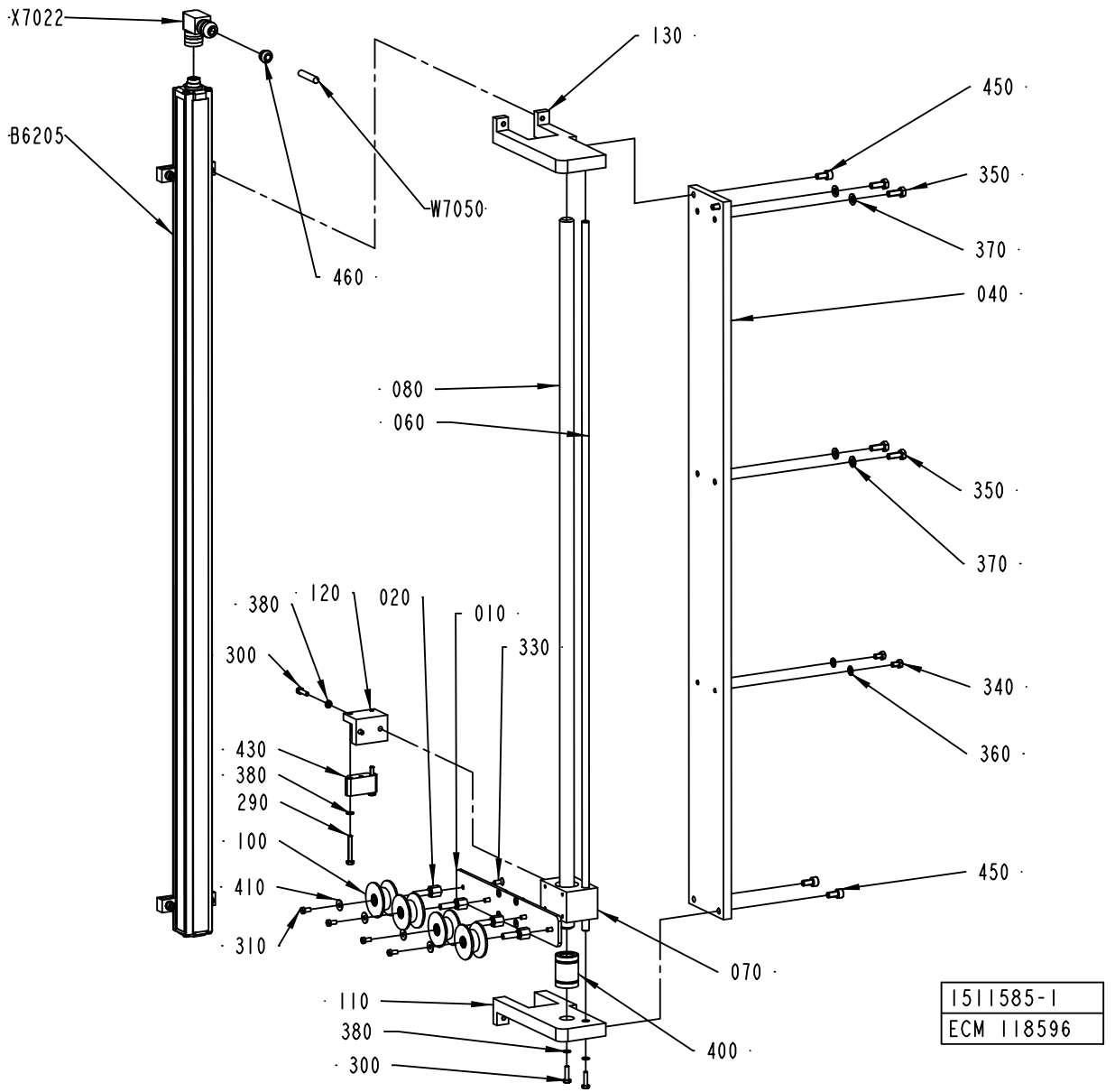
X7022
B6205
W7050
460
130
450
350
370
040
080
060
350
370
380
120
020
010
330
300
340
360
430
380
290
100
410
310
450
070
110
380
300
400
1511585-1
ECM 118596

ECM: 150574 - 20040109
Group number: 1511585-0200
Assembly Drawing: 1511585-1_1_AB

Pos	Part No	SP	UN	Qty	Description	Page No
-						
010	1484711-0000	-		1	BRACKET	
020	1484719-0000	A		4	AXLE PIN	
040	1498450-0001	-		1	PLATE	
060	1498451-0001	-		1	SHAFT	
070	1511587-0000	A		1	BUSHING BLOCK	
080	1511586-0001	-		1	BAR	
100	1523487-0000	A		4	ROLL	
110	2501220-0000	-		1	BRACKET	
120	2501221-0000	-		1	BRACKET	
130	2501219-0000	-		1	BRACKET	
290	312105-0299	-		2	SCREW M6S ISO 4017 M4X30 A470	
300	312105-0293	-		4	SCREW M6S ISO 4017 M4X16 A470	
310	312125-0287	-		4	SCREW ISO 1207 M4X8 A4	
330	312155-0289	-		8	SCREW EN 10642 MF6S M4X10 A480	
340	312105-0323	-		2	SCREW M6S ISO 4017 M5X8 A480	
350	312105-0368	-		4	SCREW M6S ISO 4017 M6X16 A480	
360	315105-0146	-		2	WASHER BRB5,3X10RFR	
370	315105-0153	-		4	WASHER BRB6,4X12RFR	
380	315105-0136	-		6	WASHER BRB4,3XRFR	
400	90189-0011	A		1	BALL BUSHING, 16X26X36 MM	
410	90005-0082	-		4	WASHER PLAIN ROUND 4,3(M4)/12,H=1	
430	90458-1592	-		1	FLOATING MAGNET, BTL5-P-3800-2	
450	312115-0366	-		4	SCREW ISO4762 M6X12 A4	
460	90459-1501	-		1	CABLE SEALING, 12023/I, ELFA. 44-625-78	
B6205	90458-1535	A		1	TRANSDUCER, BTL5-A11-M0850-P-S32	
W7050	90220-0092	-	MM	4000	PAIR TWISTED CABLE 3X2X0,25MM2	
X7022	90458-1595	A		1	CONNECTION, BKS-S 33M-00	

Pos	Part No	SP	UN	Qty	Description	Page No

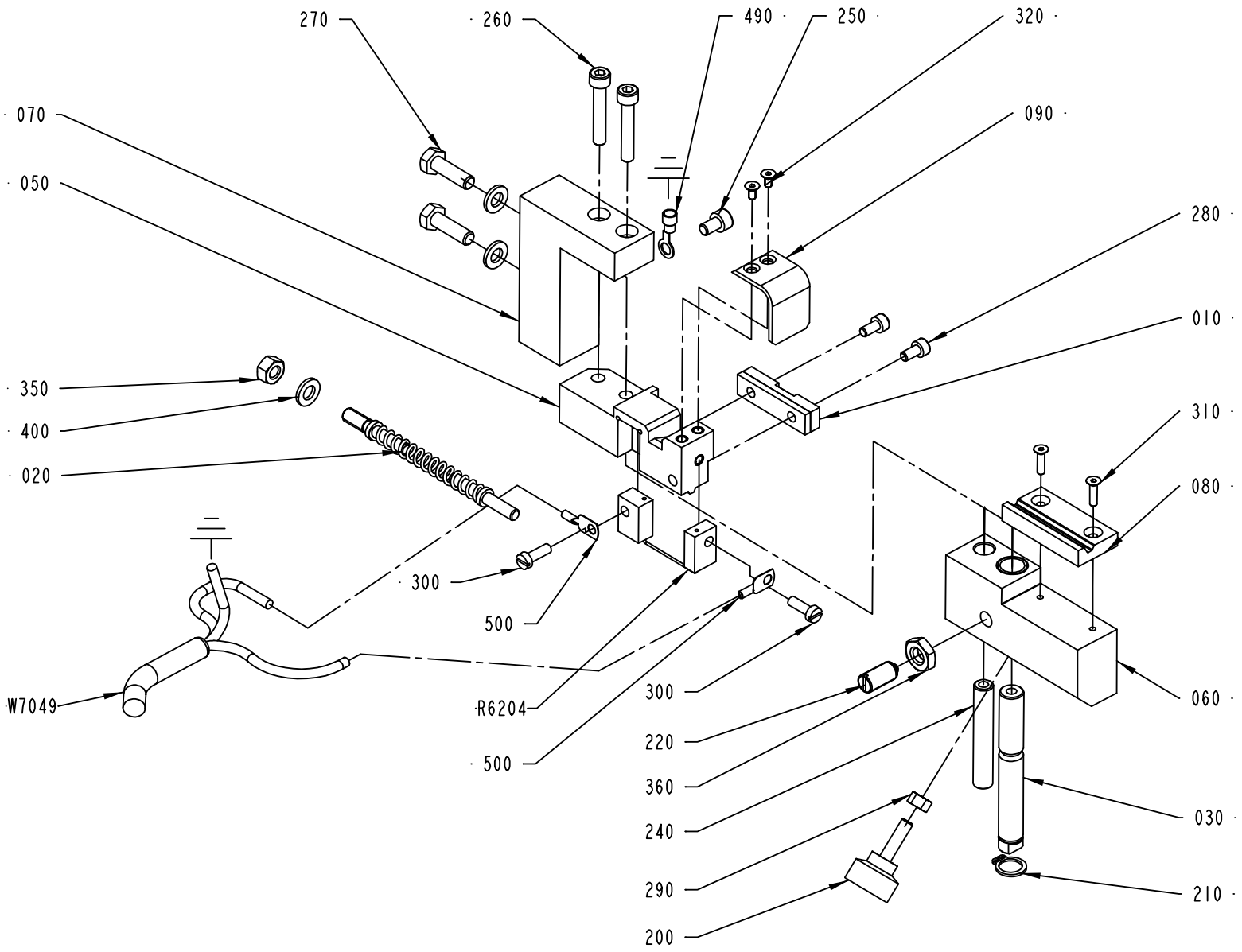

1524477-2
ECM 118596

ECM: 120696 - 20021218
Group number: 1524477-0200
Assembly Drawing: 1524477-2_1_AB

Pos	Part No	SP	UN	Qty	Description	Page No
-						
010	1349014-0000	A		1	PAD	
020	1538194-0000	A		1	FINGER	
030	1517751-0000	-		1	SHAFT	
050	2523598-0000	-		1	SPLICING TABLE	
060	2523597-0000	-		1	SLIDER	
070	2531493-0000	-		1	BRACKET	
080	2523601-0000	A		1	PAD	
090	2579838-0000	-		1	TOUCH GUARD	
200	90051-0035	-		1	KNOB, EXTERNAL THREAD. NO. 8308-1135	
210	90141-0016	-		1	RETAINING RING FOR SHAFT DIN 471 10 A2	
220	90287-0112	A		1	SCREW SPRINGLOAD. SLOTTED HEAD M8X16	
240	2523600-0000	-		1	PIN	
250	312115-0323	-		1	SCREW ISO4762 M5X8 A4	
260	312115-0335	-		2	SCREW ISO4762 M5X30 A4	
270	312105-0370	-		2	SCREW M6S ISO 4017 M6X20 A480	
280	312115-0287	-		2	SCREW ISO4762 M4X8 A4	
290	312605-0314	-		1	HEXAGON NUT, M6M M5 A280	
300	312125-0291	-		2	SCREW ISO 1207 M4X12 A4	
310	312155-0226	-		2	SCREW EN 10642 MF6S M3X12 A480	
320	312155-0220	-		2	SCREW EN 10642 MF6S M3X6 A480	
350	312605-0316	-		1	HEXAGON NUT, M6M M6 A280	
360	312625-0318	-		1	HEXAGON THIN NUT, EN 24035 ML6M M8 A4	
400	315105-0153	-		3	WASHER BRB6,4X12RFR	
490	353101-0132	-		1	CABLE SHOE 1,5-2,5MM2 M5 BLUE	
500	353104-0130	A		2	CABLE SHOE YAV 025 M 4*	
R6204	1524481-0000	A		1	SEALING BLOCK	
W7049	351120-0145	-	MM	4000	CABLE SIHF 3X2,5MM2 GREEN/YELLOW	

Pos	Part No	SP	UN	Qty	Description	Page No

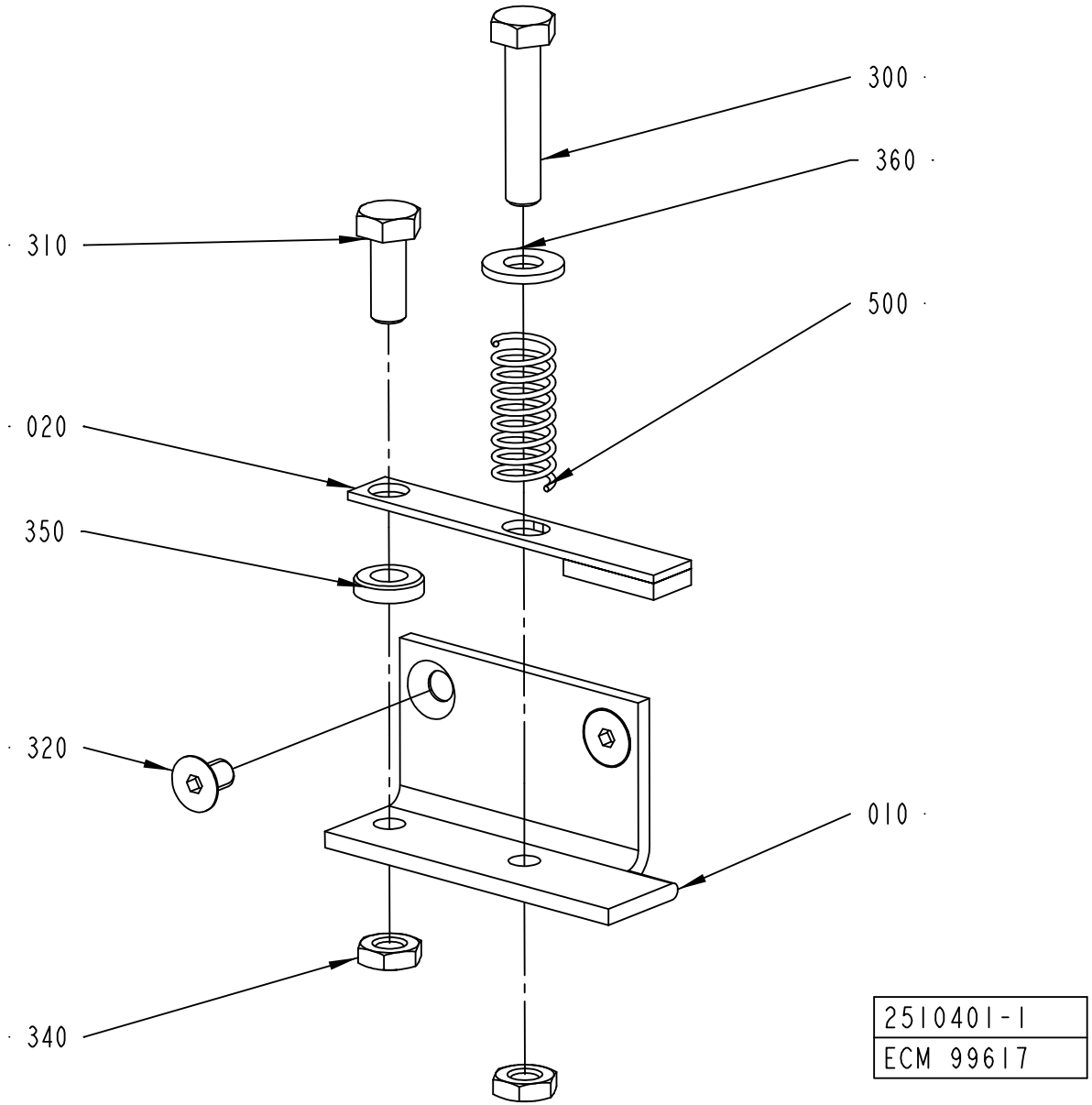
300
360
310
500
020
350
320
010
340
2510401-1
ECM 99617

ECM: 122822 - 20021218
Group number: 2510401-0100
Assembly Drawing: 2510401-1_1_AA

Pos	Part No	SP	UN	Qty	Description	Page No
-						
010	2510399-0000	-		1	BRACKET	
020	2510400-0000	-		1	HOLDER	
300	312109-0374	-		1	SCREW M6S ISO 4017 M6X30 A480	
310	312105-0368	-		1	SCREW M6S ISO 4017 M6X16 A480	
320	312155-0323	-		2	SCREW EN 10642 MF6S M5X8 A480	
340	312625-0316	-		2	HEXAGON THIN NUT, EN 24035 ML6M M6 A4	
350	315115-0153	-		1	WASHER PLAIN, TBRB 6,4/12 H=3	
360	315105-0156	-		1	WASHER BRB 6.7X14 RFR	
500	90335-0025	B		1	COMP. SPRING 22010, 1X11X26	

Pos	Part No	SP	UN	Qty	Description	Page No

SPLICING DEVICE

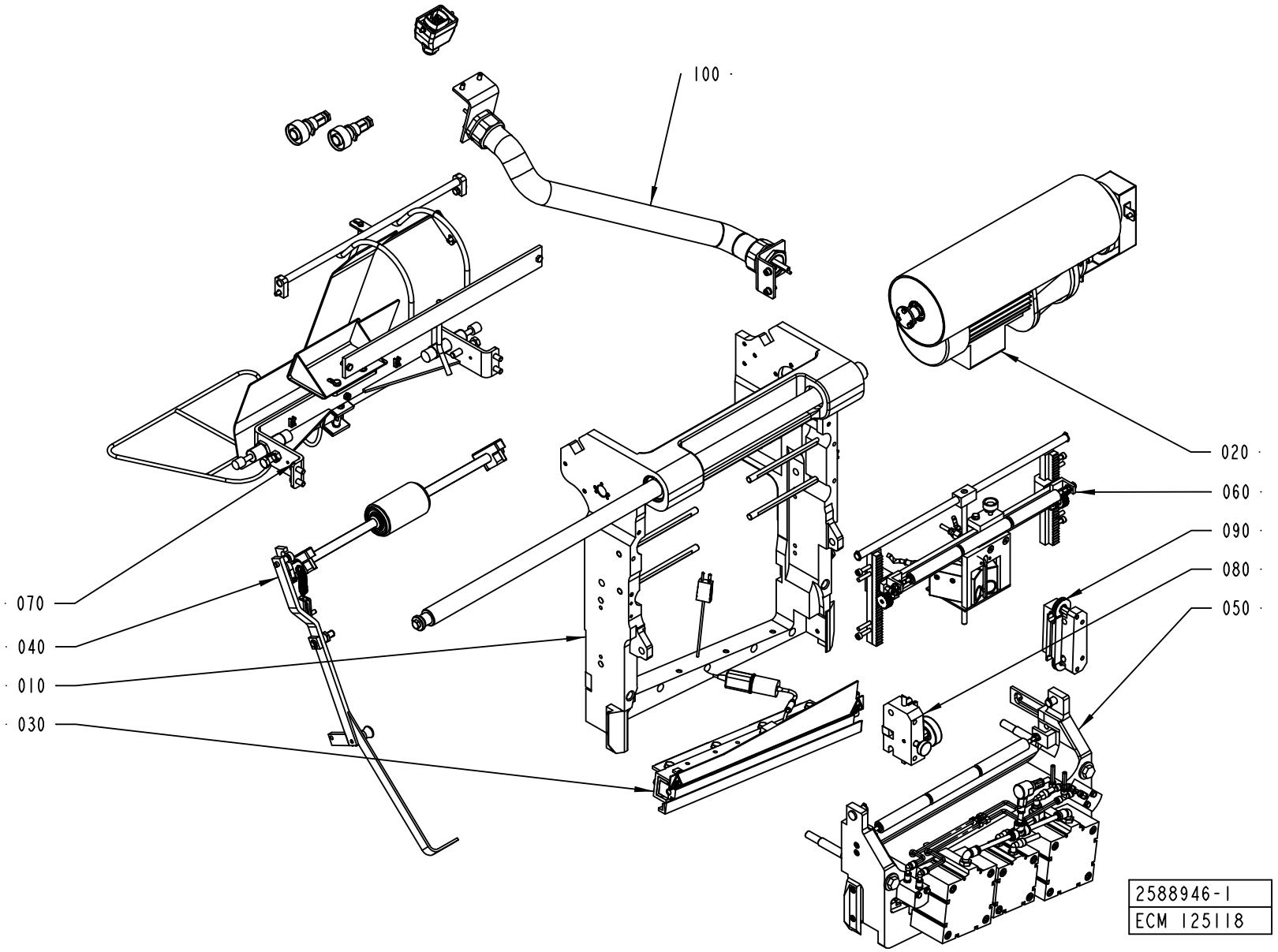

ECM: 142147 - 20030912
Group number: 2588946-0100
Assembly Drawing: 2588946-1_1_AB

Pos	Part No	SP	UN	Qty	Description	Page No
-						
010	2589104-0100	-		1	FRAME	**8-87**
020	2589105-0100	-		1	DRIVE UNIT	**8-89**
030	2589106-0100	-		1	HEATING UNIT	**8-91**
040	2524600-0100	-		1	PRESSURE ROLLER	**8-93**
050	2592567-0100	-		1	PRESSURE JAW	**8-95**
060	2592568-0100	-		1	BAR CODE READER	**8-97**
070	2582003-0100	-		1	GUIDE RAIL	**8-99**
080	1484745-0100	-		1	WEB GUIDE	**8-101**
090	2529547-0100	-		1	PAPER GUIDE	**8-103**
100	1499578-0300	-		1	CABLE CONDUIT	**8-105**

Pos	Part No	SP	UN	Qty	Description	Page No

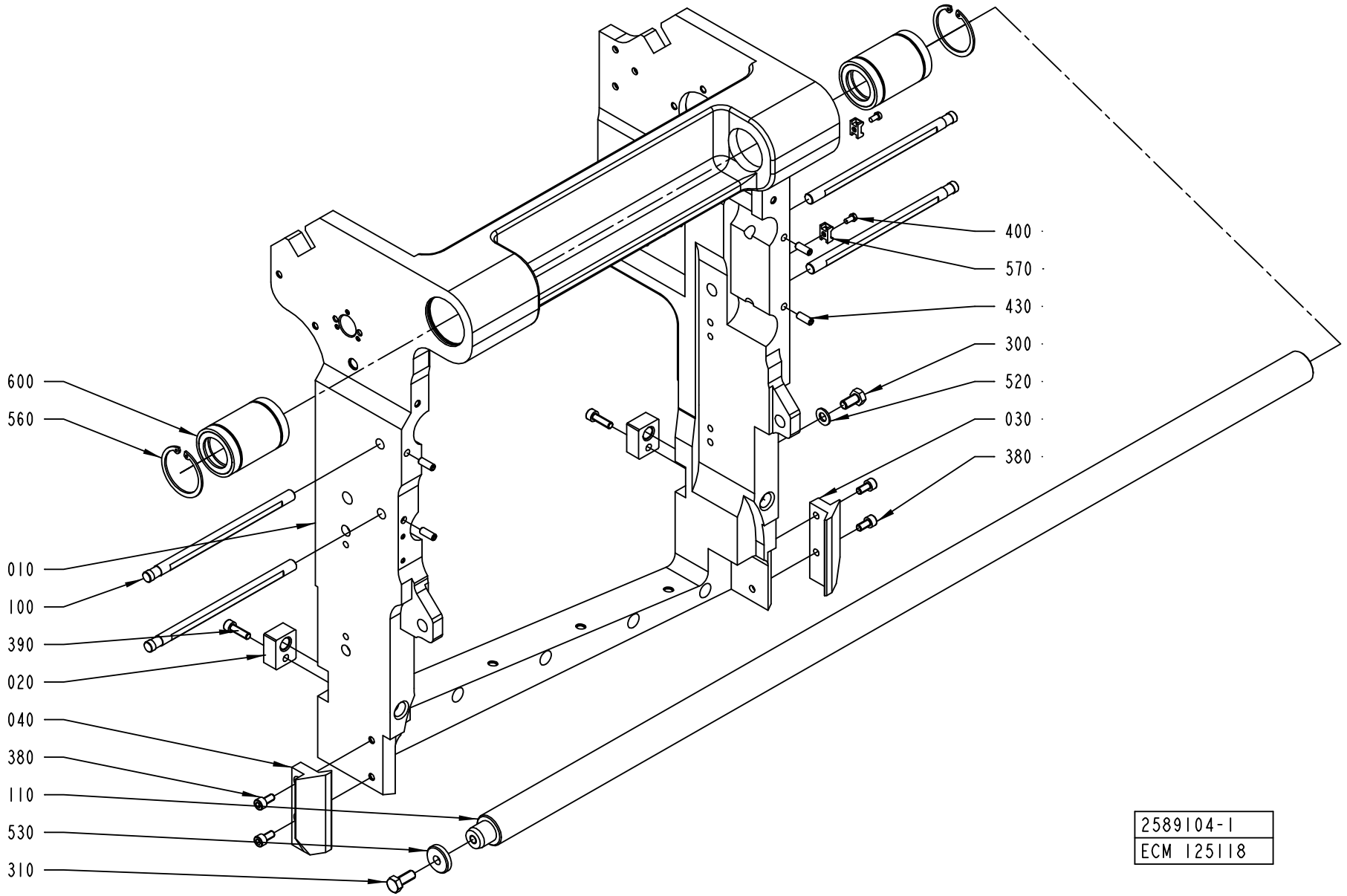
600
560
010
100
390
020
040
380
110
530
310
400
570
430
300
520
030
380
2589104-1
ECM 125118

ECM: 130849 - 20030519
Group number: 2589104-0100
Assembly Drawing: 2589104-1_1_AB

Pos	Part No	SP	UN	Qty	Description	Page No
-						
010	2574401-0000	-		1	FRAME	
020	2589119-0000	-		2	NUT	
030	2562551-0000	-		1	SLIDE PLANE	
040	2562552-0000	-		1	SLIDE PLANE	
100	1484704-0000	-		4	SHAFT	
110	1490820-0000	A		1	SHAFT	
300	312105-0449	-		1	SCREW M6S ISO 4017 M8X16 A480	
310	312105-0451	-		1	SCREW M6S ISO 4017 M8X20 A480	
380	312115-0366	-		4	SCREW ISO4762 M6X12 A4	
390	312115-0370	-		2	SCREW ISO4762 M6X20 A4	
400	312125-0287	-		2	SCREW ISO 1207 M4X8 A4	
430	312318-0368	-		4	SCREW ISO4029 M6X16 A4	
520	315105-0165	-		1	WASHER BRB8,4X16RFR	
530	315125-0165	-		1	WASHER TBRSB 8,4X26X5 A4	
560	315753-0130	-		2	RETAINING RING FOR BORE DIN 472 47 A2	
570	352113-0205	-		2	ANCHOR PLATES FOR STRIPS, TYPE TM2S8-C10	
600	90189-0005	A		2	BALL BUSHING, 30X47X68 MM	

Pos	Part No	SP	UN	Qty	Description	Page No

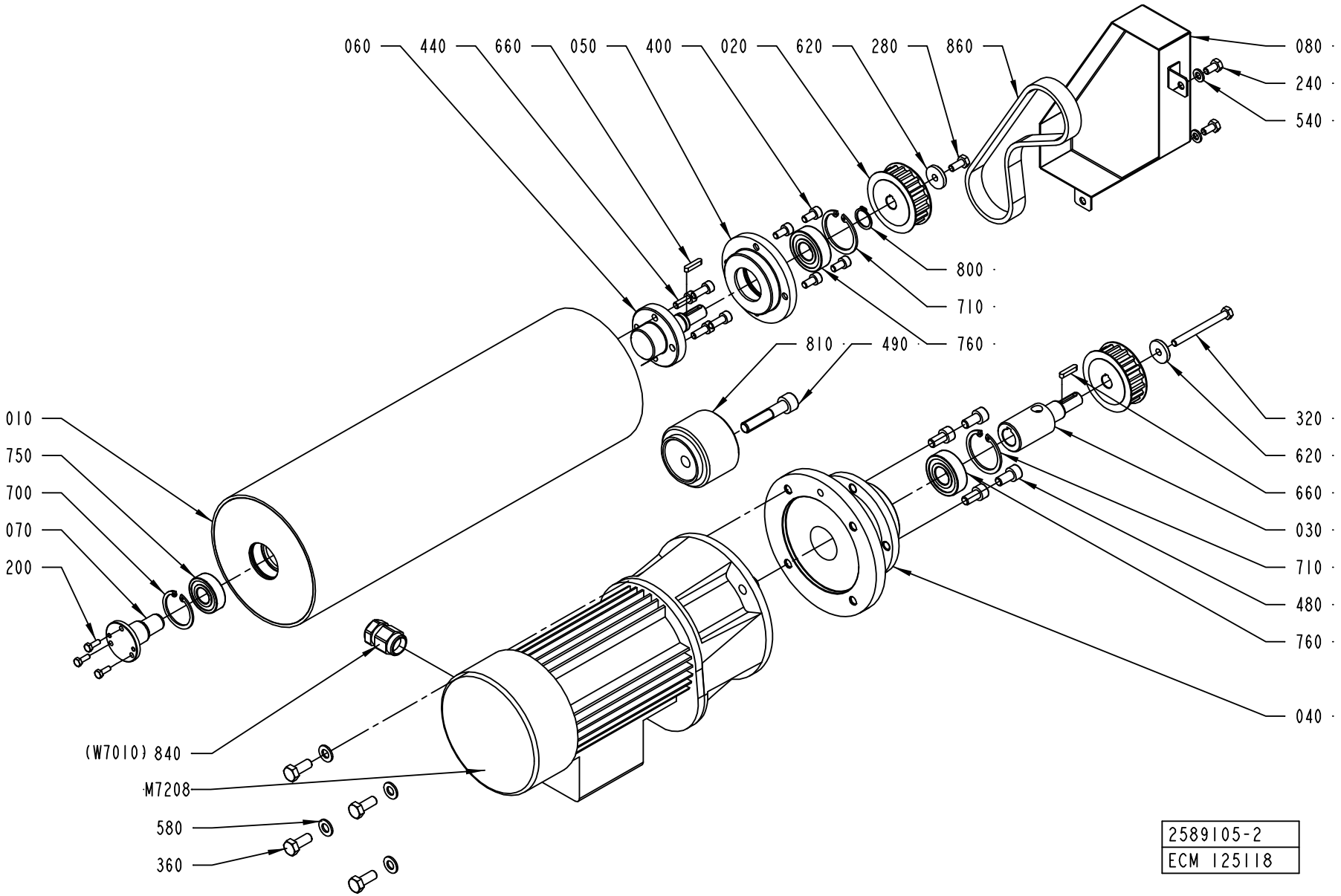
060
440
660
050
400
020
620
280
860
080
240
540
800
710
760
810
490
010
750
700
070
200
320
620
660
030
710
480
760
040
(W7010) 840
M7208
580
360
2589105-2
ECM 125118

ECM: 130850 - 20030519
Group number: 2589105-0100
Assembly Drawing: 2589105-2_1_AA

Pos	Part No	SP	UN	Qty	Description	Page No
-						
010	2589108-0000	A		1	BENDING ROLLER	
020	2589109-0000	A		2	TOOTHED PULLEY	
030	2589110-0000	-		1	SHAFT	
040	2589111-0000	-		1	FLANGE	
050	2589112-0000	-		1	FLANGE	
060	2589113-0000	-		1	SHAFT	
070	2589114-0000	-		1	SHAFT	
080	2589115-0000	-		1	COVER	
200	312105-0291	-		3	SCREW M6S ISO 4017 M4X12 A470	
240	312105-0366	-		2	SCREW M6S ISO 4017 M6X12 A480	
280	312105-0367	-		1	SCREW M6S ISO 4017 M6X14 A480	
320	312105-0383	-		1	SCREW M6S ISO 4014 M6X65 A480	
360	312105-0451	-		4	SCREW M6S ISO 4017 M8X20 A480	
400	312115-0366	-		4	SCREW ISO4762 M6X12 A4	
440	312115-0368	-		4	SCREW ISO4762 M6X16 A4	
480	312115-0449	-		4	SCREW ISO4762 M8X16 A4	
490	312115-0501	-		1	SCREW ISO4762 M10X50 A4	
540	315105-0153	-		2	WASHER BRB6,4X12RFR	
580	315105-0165	-		4	WASHER BRB8,4X16RFR	
620	315125-0153	-		2	WASHER TBRSB 6,4X22X4 A4	
660	315701-0170	A		2	PARALLEL KEY W. ROUND ENDS 4X4X20 MM	
700	315753-0124	-		1	RETAINING RING FOR BORE DIN 472 35 A2	
710	315753-0127	-		2	RETAINING RING FOR BORE DIN 472 40 A2	
750	321313-0102	A		1	BALL BEARING, 15X35X11 MM	
760	321313-0103	A		2	BALL BEARING, 17X40X12MM	
800	90141-0017	-		1	RETAINING RING FOR SHAFT DIN 471 17 A2	
810	90344-0078	A		1	PULLEY	
840	90458-0438	-		1	GLAND, EXTENDED WITH INSERT, M20X1,5	
860	90459-2198	A		1	TIMING BELT T10X480X16 POLYURETHANE	
M7208	90459-2826	A		1	GEARS, HELICAL MOTOR ME0102210012	

Pos	Part No	SP	UN	Qty	Description	Page No

Machine Type | Group Description | Used-In | Group Number | Page No

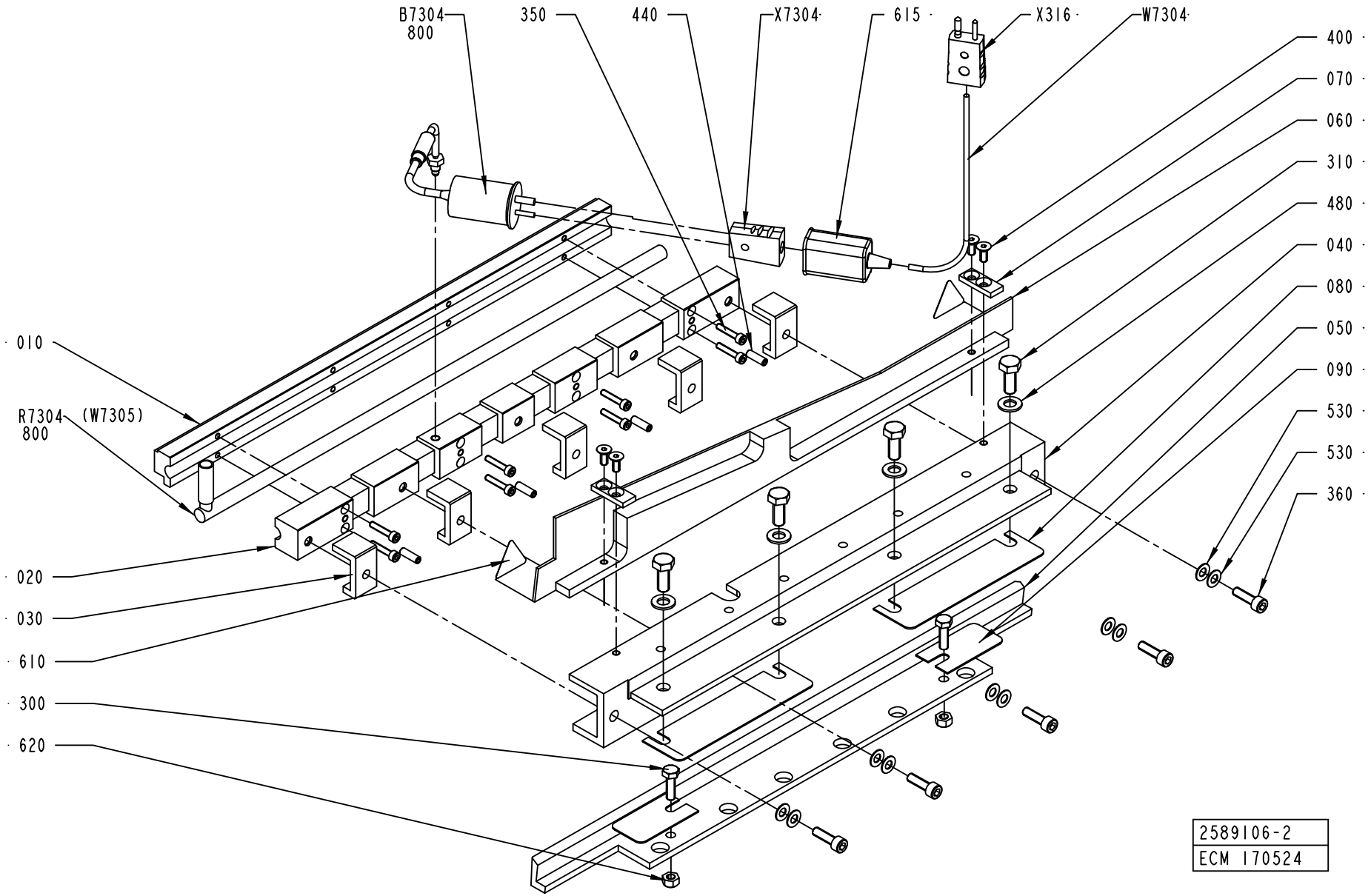
B7304
800
350
440
X7304
615
X316
W7304
400
070
060
310
480
040
080
050
090
530
530
360
010
R7304
800
(W7305)
020
030
610
300
620
2589106-2
ECM 170524

ECM: 170527 - 20040419
Group number: 2589106-0100
Assembly Drawing: 2589106-2_1_AA

Pos	Part No	SP	UN	Qty	Description	Page No
TBA/22						
X316	90326-0022	-		1	PLUG, MALE YELLOW CR-AL	
Common Parts						
010	2559986-0000	A		1	SEALING PLATE	
020	2559987-0000	-		1	SEALING PLATE	
030	2566127-0000	A		5	SPACER	
040	2566128-0000	-		1	HOUSING	
050	2566129-0000	-		1	ADJUSTMENT ANGLE	
060	2566130-0000	-		1	PLATE	
070	2576396-0000	-		2	PLATE	
080	2588947-0000	-		2	SHIMS	
090	2588948-0000	-		2	SHIMS	
300	312105-0370	-		2	SCREW M6S ISO 4017 M6X20 A480	
310	312105-0451	-		4	SCREW M6S ISO 4017 M8X20 A480	
350	312115-0295	-		8	SCREW ISO4762 M4X20 A4	
360	312115-0370	-		5	SCREW ISO4762 M6X20 A4	
400	312155-0327	-		4	SCREW EN 10642 MF6S M5X12 A480	
440	312318-0329	-		4	SCREW ISO4029 M5X16 A4	
480	315105-0165	-		4	WASHER BRB8,4X16RFR	
530	319030-0125	-		10	DISC SPRING, CONICAL 12,5X6,2X0,5 MM	
610	90194-0143	-		2	WARNING SIGN ISO, HOT SURFACE	
615	90326-0012	-		1	PROTECTIVE COVER, T31A4618	
620	90459-2635	-		2	NUT, HEX.LOCK "CONELOCK" M6 DIN 980V	
800	90296-0051	-	G	1	PASTE	
B7304	90326-0054	A		1	THERMOCOUPLE, CR-AL STD.GR, 12826-36	
R7304	90459-2843	A		1	HEATING CARTRIDGE, 800W 240V	
W7304	90220-0034	-	MM	9500	THERMOCABLE TEX/SITW-20F-KX 2X0,5MM2	
X7304	90326-0020	-		1	PLUG, FEMALE YELLOW CR-AL	

Pos	Part No	SP	UN	Qty	Description	Page No

PRESSURE ROLLER

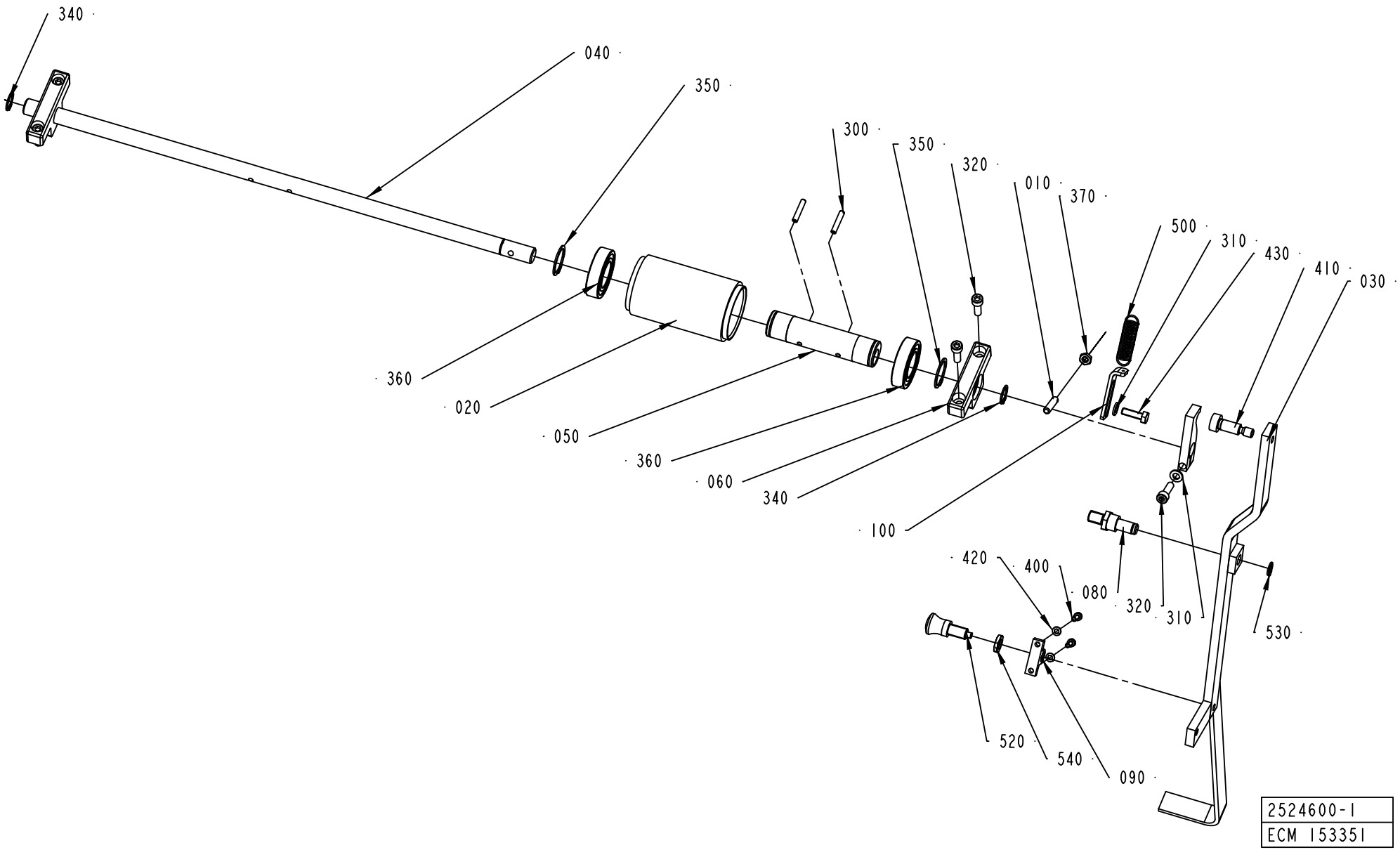

ECM: 153351 - 20040405
Group number: 2524600-0100
Assembly Drawing: 2524600-1_1_AB

Pos	Part No	SP	UN	Qty	Description	Page No
TBA/22						
030	2524602-0000	-		1	HANDLE	
070	2524604-0000	-		1	ROCKER ARM	
410	312180-0491	-		1	SCREW ISO7379 H10X20	
Common Parts						
010	578684-0000	-		1	SPRING BRACKET	
020	906254-0000	A		1	ROLLER	
040	1487763-0000	A		1	SHAFT	
050	1512267-0000	-		1	ECCENTRIC BUSHING	
060	1519583-0000	-		2	BRACKET	
080	2524601-0000	-		1	AXLE PIN	
090	2524603-0000	-		1	HOLDER	
100	2529549-0000	-		1	PLATE	
300	311112-0258	-		2	SPRING PIN, ISO 8752 4X24-C	
310	315105-0153	-		2	WASHER BRB6,4X12RFR	
320	312115-0370	-		5	SCREW ISO4762 M6X20 A4	
340	315751-0112	-		2	RETAINING RING FOR SHAFT DIN 471 15 A2	
350	315751-0119	-		2	RETAINING RING FOR SHAFT DIN 471 25 A2	
360	321308-0205	A		2	BALL BEARING, 25X47X12MM	
370	312625-0316	-		1	HEXAGON THIN NUT, EN 24035 ML6M M6 A4	
390	312318-0287	-		2	SCREW ISO4029 M4X8 A4	
400	312115-0291	-		2	SCREW ISO4762 M4X12 A4	
420	315105-0136	-		2	WASHER BRB4,3XRFR	
430	312105-0370	-		1	SCREW M6S ISO 4017 M6X20 A480	
500	90335-0091	B		1	TENSION SPRING 41890, 1,2X13X48,2	
520	90051-0087	-		1	LOCK KNOB, NO. GN 617 A5	
530	90141-0016	-		1	RETAINING RING FOR SHAFT DIN 471 10 A2	
540	90099-0007	-		1	HEXAGON NUT, M10X1, E 63 137 10	

Pos	Part No	SP	UN	Qty	Description	Page No

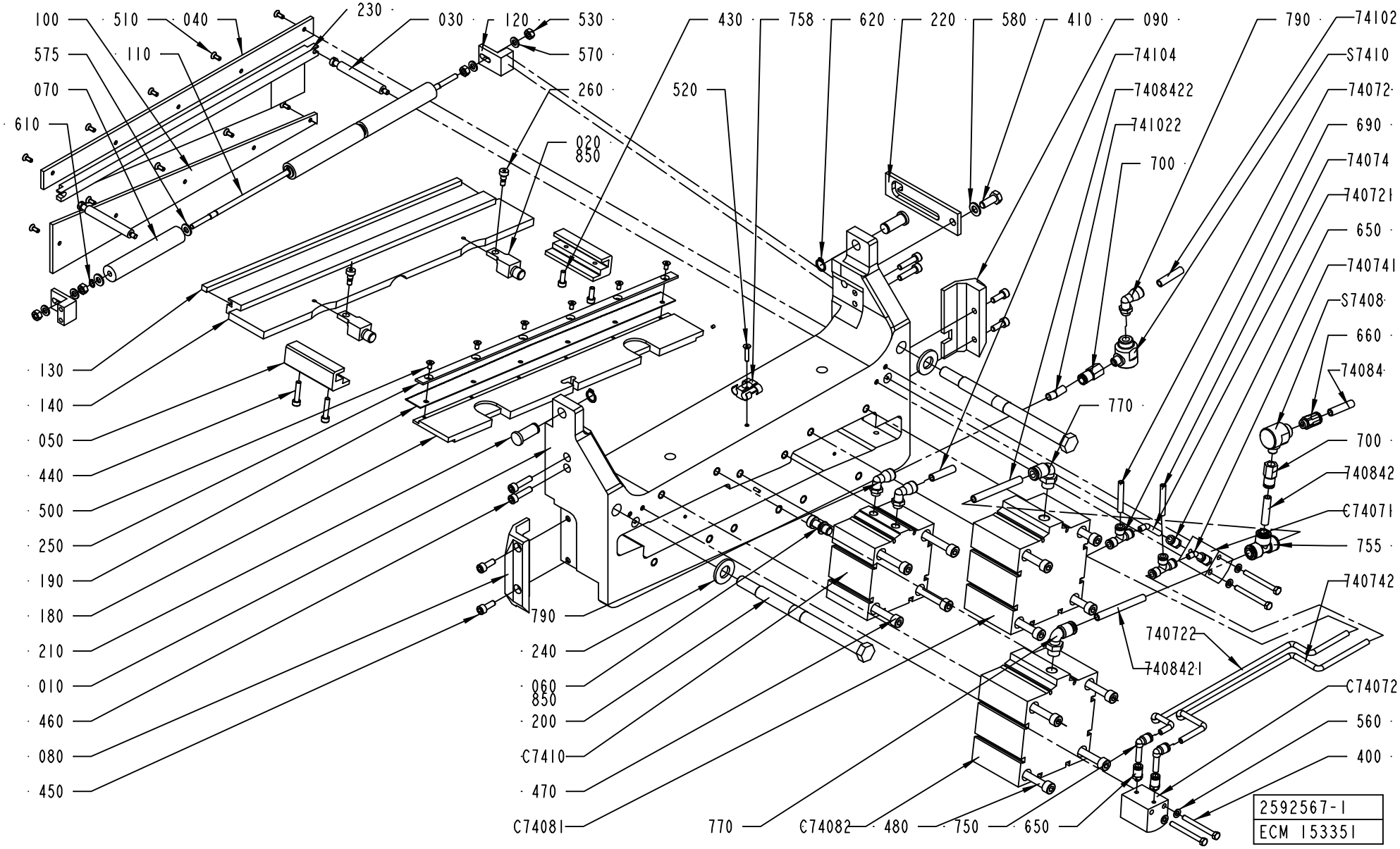
100
510
040
230
030
120
530
575
110
570
070
260
610
020
850
430
758
620
220
580
410
090
790
74102
520
74104
S7410
7408422
74072
741022
690
700
74074
740721
650
740741
S7408
660
74084
770
700
740842
C74071
755
740742
740722
740842I
C74072
560
400
130
140
050
440
500
250
190
180
210
010
460
080
450
790
240
060
850
200
C7410
470
C74081
770
C74082
480
750
650
2592567-1
ECM 153351

ECM: 153429 - 20040405
Group number: 2592567-0100
Assembly Drawing: 2592567-1_1_AD

Pos	Part No	SP	UN	Qty	Description	Page No
-						
010	2574402-0000	-		1	PRESSURE JAW	
020	2549829-0000	A		2	SPACER	
030	2552798-0000	A		2	COMPRESSION ROD	
040	2552802-0000	-		1	SLIDE PLATE	
050	2558148-0000	-		2	SLIDING STRIP	
060	2559439-0000	A		1	COUPLING BOLT	
070	2564562-0000	A		3	ROLLER	
080	2566123-0000	-		1	SLIDE PLANE	
090	2566124-0000	-		1	SLIDE PLANE	
100	2566125-0000	-		1	SLIDE PLATE	
110	2588046-0000	-		1	SHAFT	
120	2588290-0000	-		2	BRACKET	
130	2592780-0000	A		1	DOLLY	
140	2546463-0000	A		1	PRESSURE RAIL	
180	1484693-0000	A		1	KNIFE HOLDER	
190	1484695-0000	A		1	KNIFE	
200	1484703-0000	-		2	TIE ROD	
210	1484781-0000	-		2	PIN	
220	1487517-0000	-		1	CATCH	
230	2658058-0000	A		1	RAIL	
240	1519955-0000	-		2	WASHER	
250	1519967-0000	A		1	CLAMP	
260	1558801-0000	-		2	SHOULDER SCREW	
400	312105-0341	-		4	SCREW M6S ISO 4014 M5X50 A480	
410	312105-0451	-		1	SCREW M6S ISO 4017 M8X20 A480	
430	312115-0328	-		2	SCREW ISO4762 M5X14 A4	
440	312115-0333	-		2	SCREW ISO4762 M5X25 A4	
450	312115-0368	-		4	SCREW ISO4762 M6X16 A4	
460	312115-0372	-		4	SCREW ISO4762 M6X25 A4	
470	312115-0465	-		4	SCREW ISO4762 M8X70 A4	
480	312115-0467	-		8	SCREW ISO4762 M8X80 A4	
500	312155-0287	-		6	SCREW EN 10642 MF6S M4X8 A480	
510	312155-0289	-		10	SCREW EN 10642 MF6S M4X10 A480	
520	312155-0295	-		1	SCREW EN 10642 MF6S M4X20 A480	
530	312605-0316	-		4	HEXAGON NUT, M6M M6 A280	
560	315105-0146	-		4	WASHER BRB5,3X10RFR	
570	315105-0153	-		4	WASHER BRB6,4X12RFR	
575	315105-0156	-		6	WASHER BRB 6.7X14 RFR	
580	315105-0165	-		1	WASHER BRB8,4X16RFR	
610	315751-0103	-		4	RETAINING RING FOR SHAFT DIN 471 6 A2	
620	315751-0109	-		2	RETAINING RING FOR SHAFT DIN 471 12 A2	
650	342722-0197	-		4	STRAIGHT COUPLING	
660	342722-0204	-		1	PIPE COUPLING	
690	342748-0102	-		2	T-CONNECTION 6MM	
700	342770-0107	-		2	STRAIGHT COUPLING INT, D=8 MM - G1/8	
74072	90166-0193	-	MM	5500	TUBE 6 MM PUR BLUE	
740721	90166-0193	-	MM	60	TUBE 6 MM PUR BLUE	
740722	90166-0193	-	MM	400	TUBE 6 MM PUR BLUE	
74074	90166-0193	-	MM	5500	TUBE 6 MM PUR BLUE	
740741	90166-0193	-	MM	80	TUBE 6 MM PUR BLUE	
740742	90166-0193	-	MM	400	TUBE 6 MM PUR BLUE	
74084	90166-0194	-	MM	5500	TUBE 8 MM PUR BLUE	
740842	90166-0194	-	MM	40	TUBE 8 MM PUR BLUE	
7408421	90166-0194	-	MM	150	TUBE 8 MM PUR BLUE	
7408422	90166-0194	-	MM	150	TUBE 8 MM PUR BLUE	
74102	90166-0194	-	MM	5500	TUBE 8 MM PUR BLUE	
741022	90166-0194	-	MM	200	TUBE 8 MM PUR BLUE	
74104	90166-0194	-	MM	5500	TUBE 8 MM PUR BLUE	
750	90055-0217	-		2	ELBOW PIPE JOINT	
755	90055-0276	-		1	T-CONNECTION 8 MM	
758	90165-0076	-		1	T-CLIP T8 FOR TUBE D=8 - 9 MM	
770	90458-2448	-		2	ELBOW PIPE JOINT,EXT.THREAD,D=8 MM G1/4	
790	90458-2964	-		3	ELBOW PIPE JOINT, EXT.THREAD, D=8MM-G1/8	
800	90459-0205	-		1	QUICK EXHAUST VALVE, SE-1/4-B	
850	90157-0016	-	ML	1	LOCKING FLUID	
C74071	90459-1509	A		1	CYLINDER, ADVC-20-20-I-P	
C74072	90459-1509	A		1	CYLINDER, ADVC-20-20-I-P	
C74081	90459-2102	A		1	CYLINDER, AEVC 100-25-I-P	
C74082	90459-2102	A		1	CYLINDER, AEVC 100-25-I-P	
C7410	90459-2101	A		1	CYLINDER, ADVC-80-25-I-P	
S7408	90235-0206	-		1	QUICK EXHAUST VALVE, SEU-1/8	
S7410	90235-0206	-		1	QUICK EXHAUST VALVE, SEU-1/8	

Machine Type	Group Description	Used-In	Group Number	Page No

BAR CODE READER

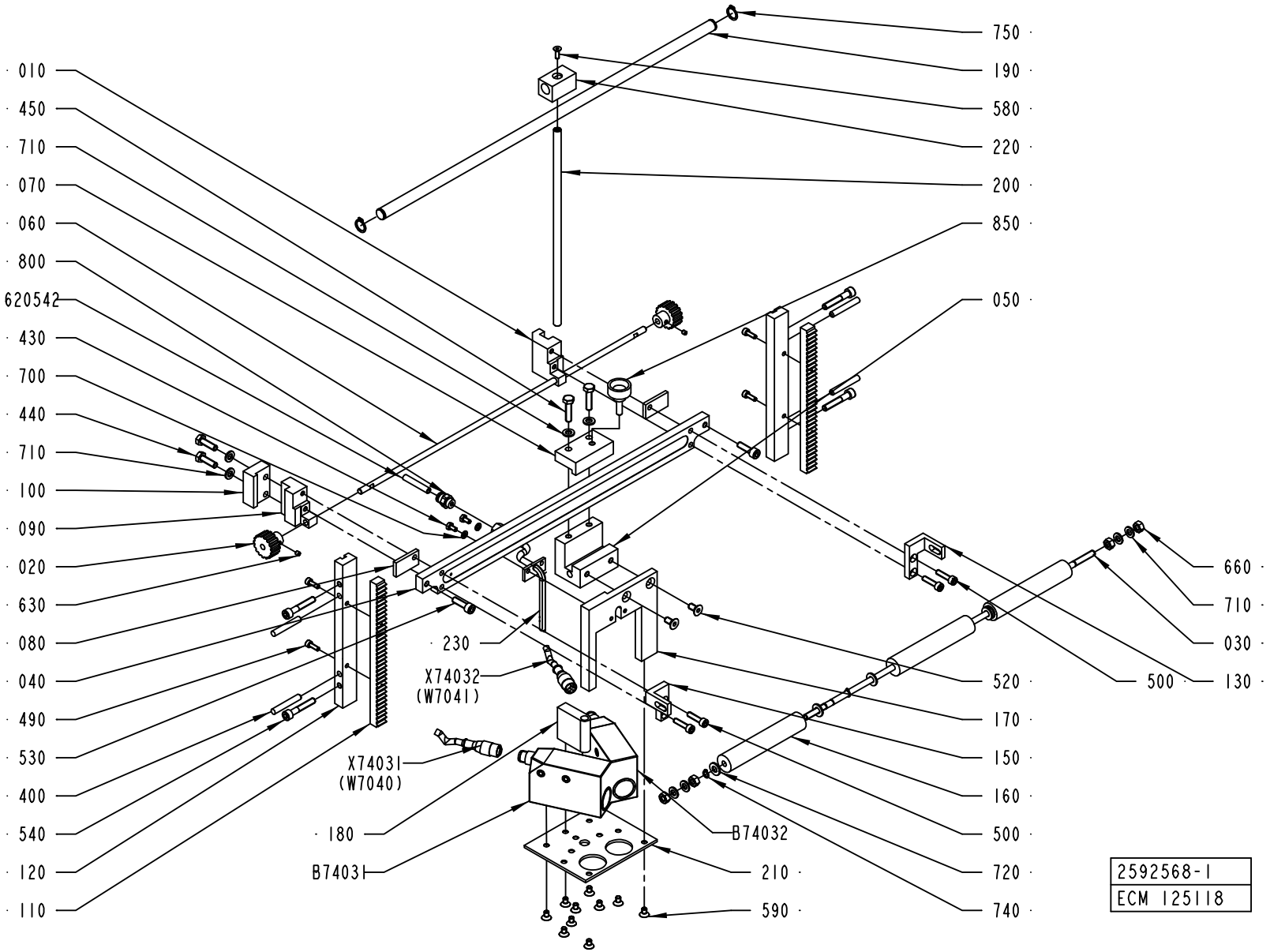

ECM: 156917 - 20040419
Group number: 2592568-0100
Assembly Drawing: 2592568-1_1_AB

Pos	Part No	SP	UN	Qty	Description	Page No
TBA/22						
X74031	90458-0603	A		1	CONNECTOR FEMALE 5 PINS	
X74032	90458-0603	A		1	CONNECTOR FEMALE 5 PINS	
Common Parts						
010	1484705-0000	-		1	SLIDER	
020	1484706-0000	A		2	GEAR WHEEL	
030	2588046-0000	A		1	SHAFT	
040	1484776-0000	-		1	RAIL	
050	1484777-0000	-		1	SLIDER	
060	1484779-0000	-		1	ROD	
070	1484782-0000	-		1	CLAMP BLOCK	
080	1484783-0000	-		2	CLAMPING ELEMENT	
090	1484784-0000	-		1	LOCATING PIECE	
100	1484785-0000	-		1	LOCATING PIECE	
110	1487510-0000	A		2	RACK GEAR	
120	1487511-0000	-		2	BRACKET	
130	2588044-0000	-		1	BRACKET	
150	2588045-0000	-		1	BRACKET	
160	2564562-0000	A		3	ROLLER	
170	1487554-0000	-		1	BRACKET	
180	1487555-0000	-		1	BUSHING	
190	1487556-0000	-		1	BAR	
200	1487557-0000	-		1	BAR	
210	1487558-0000	-		1	FASTENING PLATE	
220	1487559-0000	-		1	SLIDER	
230	1519580-0000	-		1	GUIDE FINGER	
400	311103-0361	-		4	PARALLEL PIN ISO 2338 6M6X40 A1	
430	312105-0287	-		2	SCREW M6S ISO4017 M4X8 A470	
440	312105-0370	-		2	SCREW M6S ISO 4017 M6X20 A480	
450	312105-0372	-		2	SCREW M6S ISO 4017 M6X25 A480	
490	312115-0291	-		4	SCREW ISO4762 M4X12 A4	
500	312115-0331	-		4	SCREW ISO4762 M5X20 A4	
520	312155-0366	-		2	SCREW EN 10642 MF6S M6X12 A480	
530	312115-0370	-		2	SCREW ISO4762 M6X20 A4	
540	312115-0376	-		4	SCREW ISO4762 M6X35 A4	
580	312155-0291	-		1	SCREW EN 10642 MF6S M4X12 A480	
590	312155-0323	-		10	SCREW EN 10642 MF6S M5X8 A480	
620542	90166-0193	-	MM	4500	TUBE 6 MM PUR BLUE	
630	312318-0283	-		2	SCREW ISO4029 M4X4 A4	
660	312605-0316	-		4	HEXAGON NUT, M6M M6 A280	
700	315105-0136	-		2	WASHER BRB4,3XRFR	
710	315105-0153	-		8	WASHER BRB6,4X12RFR	
720	315105-0156	-		6	WASHER BRB 6.7X14 RFR	
740	315751-0103	-		4	RETAINING RING FOR SHAFT DIN 471 6 A2	
750	315751-0109	-		2	RETAINING RING FOR SHAFT DIN 471 12 A2	
800	342722-0202	-		1	PIPE COUPLING 1/8" D=6MM	
850	90051-0083	-		1	KNOB, EXTERNAL THREAD. NO. 8308-1321	
B74031	90458-0602	A		1	PHOTOCELL,	
B74032	90458-0602	A		1	PHOTOCELL,	

Machine Type	Group Description	Used-In	Group Number	Page No

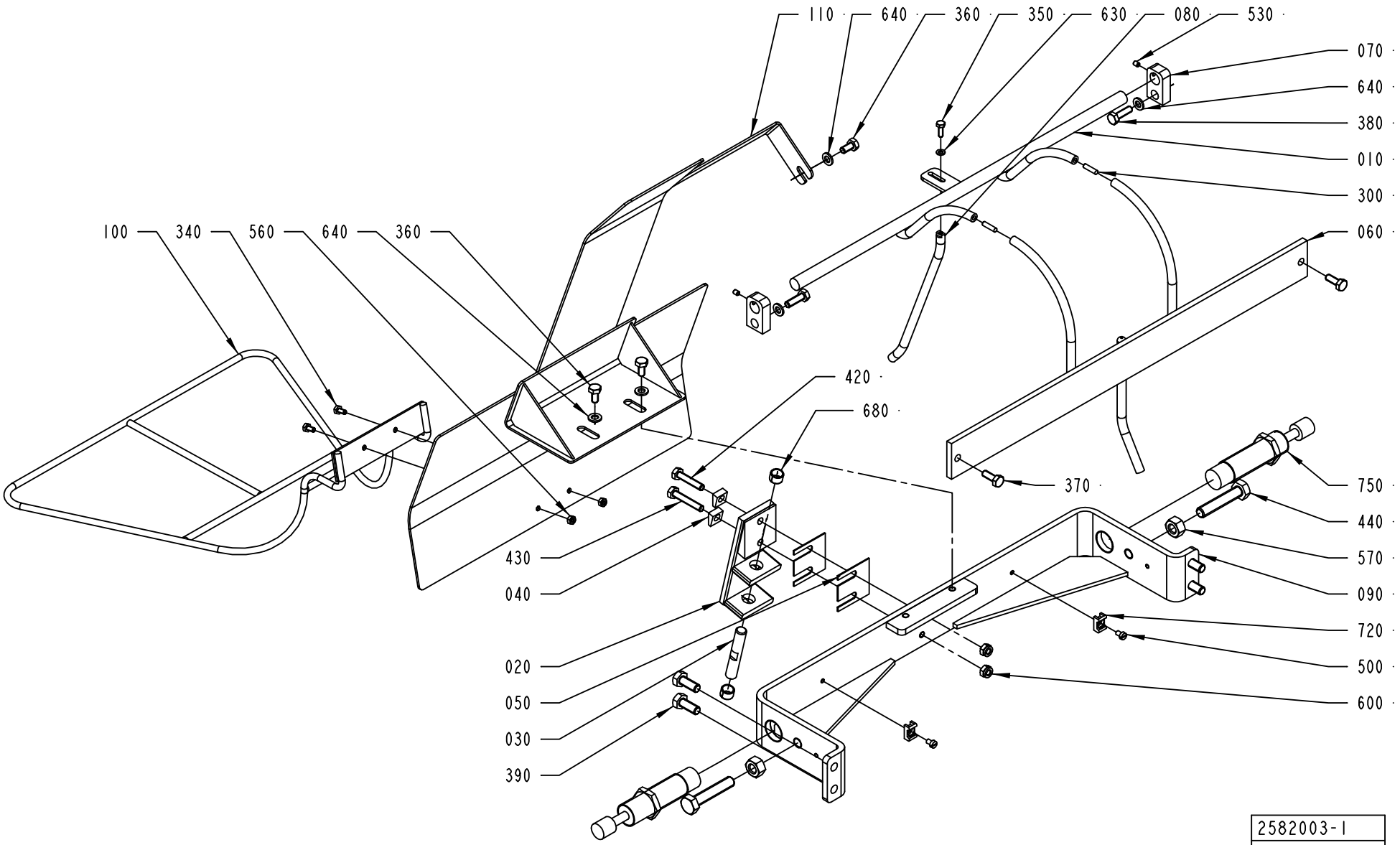
110
640
360
350
630
080
530
070
640
380
010
300
060
100
340
560
640
360
420
680
370
750
440
570
090
720
500
600
430
040
020
050
030
390
2582003-1
ECM 125118

ECM: 130854 - 20030519
Group number: 2582003-0100
Assembly Drawing: 2582003-1_1_AB

Pos	Part No	SP	UN	Qty	Description	Page No
-						
010	1484697-0000	B		1	RAIL	
020	1490220-0000	-		1	ANGLE BRACKET	
030	1494664-0000	-		1	AXLE LINK	
040	1499566-0000	-		2	WASHER	
050	1512430-0000	-		2	VOLUME SHIM	
060	1517113-0000	B		1	RAIL	
070	1519578-0000	B		2	MOUNTING BLOCK	
080	1519591-0000	B		1	RAIL PIN	
090	1519944-0000	-		1	BRACKET	
100	2563183-0000	-		1	GUIDE RAIL	
110	2582668-0000	-		1	PLATE	
300	311103-0270	-		2	PARALLEL PIN ISO 2338 4M6X16 A1	
340	312105-0287	-		2	SCREW M6S ISO4017 M4X8 A470	
350	312105-0291	-		1	SCREW M6S ISO 4017 M4X12 A470	
360	312105-0366	-		3	SCREW M6S ISO 4017 M6X12 A480	
370	312105-0368	-		2	SCREW M6S ISO 4017 M6X16 A480	
380	312105-0370	-		2	SCREW M6S ISO 4017 M6X20 A480	
390	312105-0451	-		4	SCREW M6S ISO 4017 M8X20 A480	
420	312109-0374	-		1	SCREW M6S ISO 4017 M6X30 A480	
430	312109-0376	-		1	SCREW M6S ISO 4017 M6X35 A480	
440	312109-0501	-		2	SCREW M6S ISO 4017 M10X50 A480	
500	312125-0285	-		2	SCREW ISO 1207 M4X6 A4	
530	312318-0284	-		2	SCREW ISO4029 M4X5 A4	
560	312605-0312	-		2	HEXAGON NUT, M6M M4 A280	
570	312605-0320	-		2	HEXAGON NUT, M6M M10 A280	
600	312812-0316	-		2	HEXAGON NUT, NY-LOCK M6 A480	
630	315105-0136	-		1	WASHER BRB4,3XRFR	
640	315105-0153	-		5	WASHER BRB6,4X12RFR	
680	321141-0138	-		2	BEARING BUSHING W/O FL, 10X12X8 MM	
720	352113-0205	-		2	ANCHOR PLATES FOR STRIPS, TYPE TM2S8-C10	
750	90347-0182	A		2	SHOCK ABSORBER, YSR-16-20-C	

Pos	Part No	SP	UN	Qty	Description	Page No

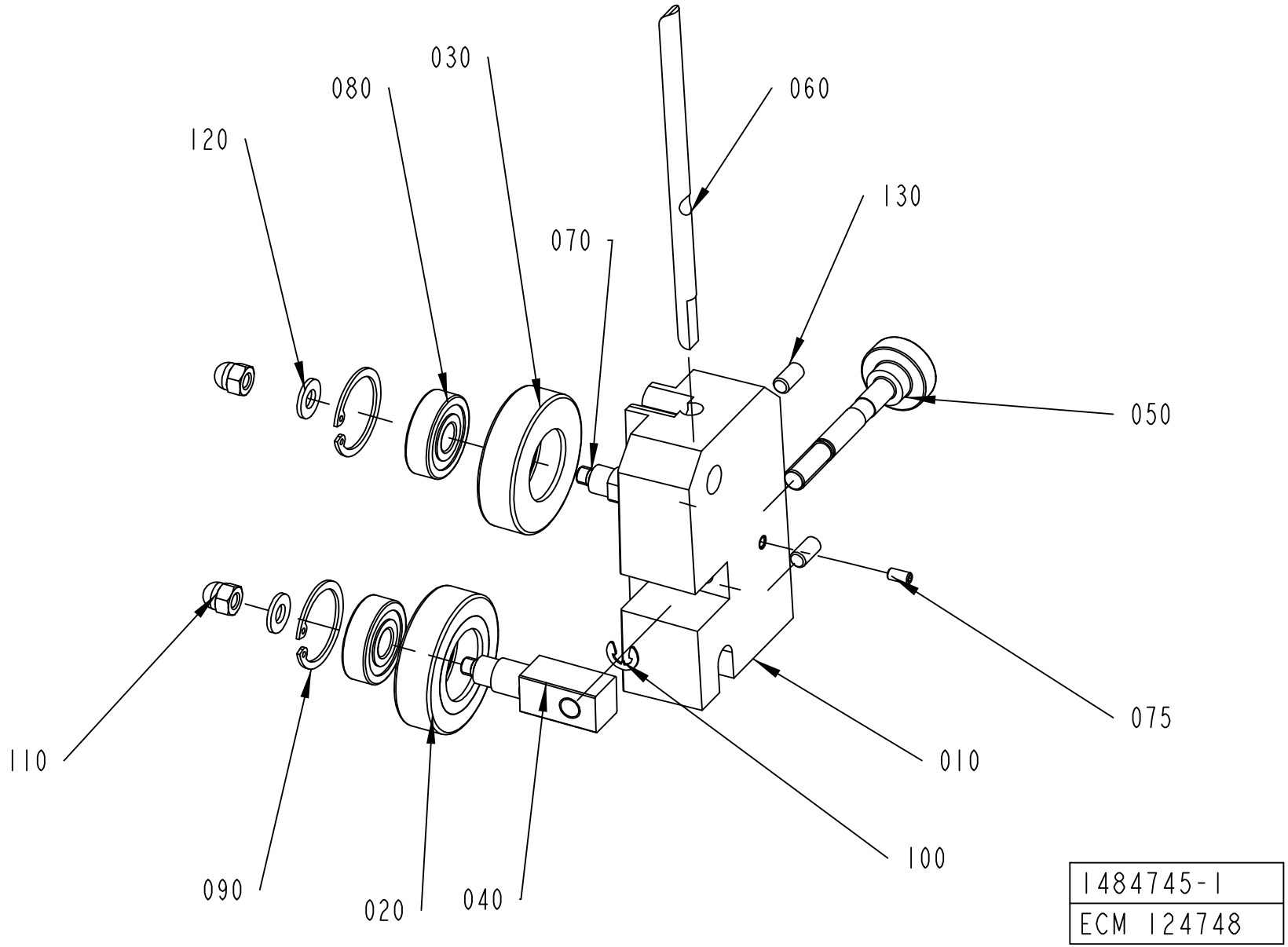
030
080
060
120
130
070
050
075
110
010
100
090
020
040
1484745-1
ECM 124748

ECM: 129621 - 20040109
Group number: 1484745-0100
Assembly Drawing: 1484745-1_1_AD

Pos	Part No	SP	UN	Qty	Description	Page No
-						
010	1484750-0000	A		1	BRACKET	
020	1036623-0000	A		1	GUIDE ROLLER	
030	1036622-0000	A		1	GUIDE ROLLER	
040	1317711-0000	A		1	SHAFT	
050	1317712-0000	A		1	SHAFT	
060	1512526-0000	A		1	STEERING	
070	583727-0000	-		1	SHAFT	
075	312318-0287	-		1	SCREW ISO4029 M4X8 A4	
080	321313-0100	A		2	BALL BEARING, 10X30X9 MM	
090	315753-0122	-		2	RETAINING RING FOR BORE DIN 472 30 A2	
100	315755-0108	-		1	RETAINING RING SHAFT DIN 6799 6 A2	
110	312705-0316	-		2	NUT HEX. DOMED CAP MHM-6 M6 A280	
120	315105-0156	-		2	WASHER BRB 6.7X14 RFR	
130	312318-0366	-		2	SCREW ISO4029 M6X12 A4	

Pos	Part No	SP	UN	Qty	Description	Page No

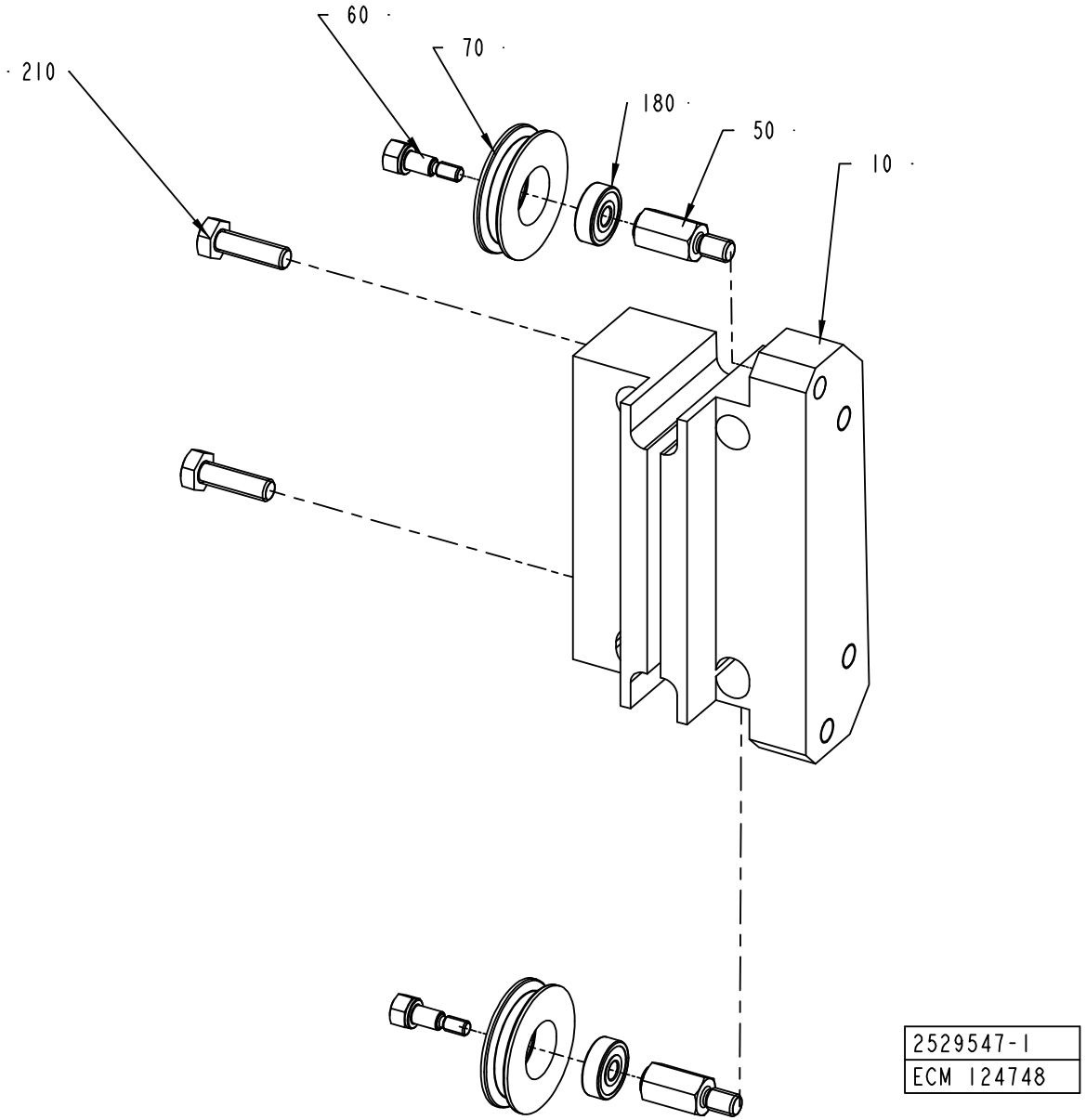
60
70
180
50
10
210
2529547-1
ECM 124748

ECM: 126414 - 20040109
Group number: 2529547-0100
Assembly Drawing: 2529547-1_1_AB

Pos	Part No	SP	UN	Qty	Description	Page No
-						
010	2529546-0000	-		1	SUPPORT	
050	1558251-0000	-		2	SHAFT	
060	1558252-0000	-		2	SCREW	
070	1558253-0000	A		2	ROLLER	
180	90458-2950	A		2	BALL BEARING, 5X16X5 MM	
210	312105-0370	-		2	SCREW M6S ISO 4017 M6X20 A480	

Pos	Part No	SP	UN	Qty	Description	Page No

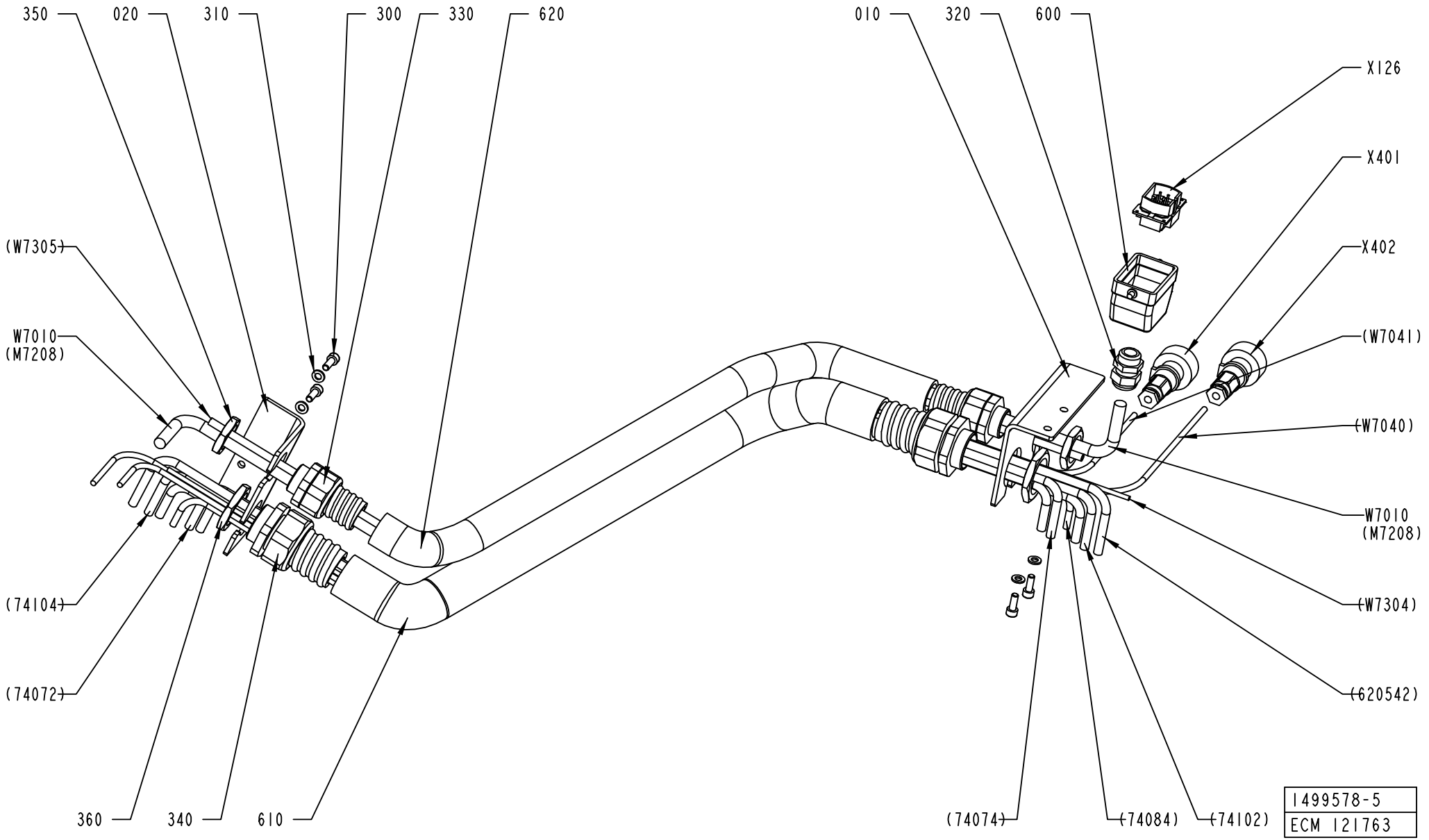
350
020
310
300
330
620
010
320
600
X126
X401
X402
(W7041)
(W7040)
W7010
(M7208)
(W7305)
W7010
(M7208)
(74104)
(74072)
(W7304)
(620542)
360
340
610
(74074)
(74084)
(74102)
1499578-5
ECM 121763

ECM: 156918 - 20040419
Group number: 1499578-0300
Assembly Drawing: 1499578-5_1_AA

Pos	Part No	SP	UN	Qty	Description	Page No
TBA/22						
W7010	90220-0104	-	M	8	SCR. CABLE 4X1,5MM2	
Common Parts						
010	2628989-0000	-		1	BRACKET	
020	2628990-0000	-		1	BRACKET	
300	312115-0368	-		4	SCREW ISO4762 M6X16 A4	
310	315105-0153	-		4	WASHER BRB6,4X12RFR	
320	352103-0108	-		1	CABLE GLAND, ST 13,5 , PR20,4/PG13,5	
330	353243-0007	-		2	EXTENDED WITHOUT INSERT, PG21	
340	353243-0008	-		2	EXTENDED WITHOUT INSERT, PG29	
350	90099-0119	-		2	NUT, PR 28,3 (PG21)	
360	90099-0120	-		2	NUT PR 37 (PG29)	
600	90110-0157	-		1	CABLE HOOD 6-POL 70.352.0628.1	
610	90152-0060	-	MM	850	SPIRAL CONDUIT, 42X35, UL3529	
620	90152-0070	-	MM	850	METAL HOSE, 32,5X26, UL 2621	
X126	90110-0159	-		1	MALE INSERT 70.310.0640.0	
X401	90110-0235	A		1	CABLE CONTACT, PX0739/S	
X402	90110-0235	A		1	CABLE CONTACT, PX0739/S	

Pos	Part No	SP	UN	Qty	Description	Page No

MATERIAL HOLDER L1

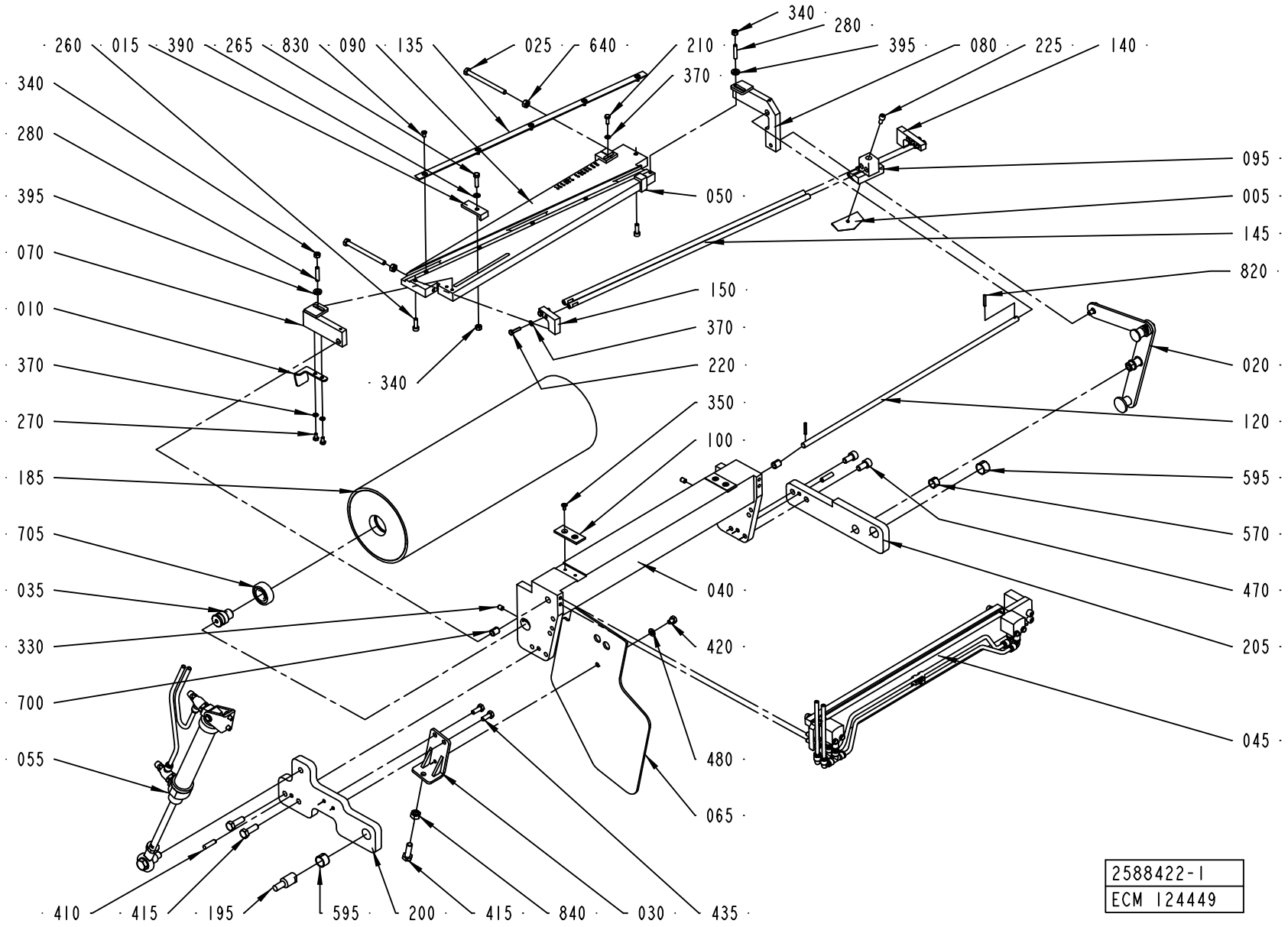

ECM: 136295 - 20031217
Group number: 2588422-0100
Assembly Drawing: 2588422-1_1_AC

Pos	Part No	SP	UN	Qty	Description	Page No
-						
005	596678-0000	A		1	.KNIFE	
010	2538065-0000	-		1	REFLECTOR	
015	1490821-0000	-		1	ANGLE PIECE	
020	1524398-0100	-		1	HANDLE	**8-109**
025	312109-0386	-		2	SCREW M6S ISO 4017 M6X80 A480	
030	1490199-0000	-		1	BRACKET	
035	1499582-0000	A		2	AXLE PIN	
040	1487770-0000	-		1	BRACKET	
045	2588383-0100	-		1	MATERIAL HOLDER	**8-111**
050	2587251-0000	-		1	ANGLE PIECE	
055	1524394-0100	-		1	CYLINDER	**8-113**
065	1512276-0000	-		1	PROTECTION PLATE	
070	2559438-0000	-		1	ROCKER ARM	
080	2559437-0000	-		1	ROCKER ARM	
090	2566117-0000	-		1	CUTTING TABLE	
095	2589791-0000	A		1	KNIFE HOLDER	
100	2553275-0000	-		2	SLIDE PLATE	
120	1487779-0000	-		1	SHAFT	
135	1487518-0000	A		1	RULER	
140	1487781-0000	-		1	BRACKET	
145	1487782-0000	A		2	SHAFT	
150	2566118-0000	-		1	BRACKET	
185	1499588-0000	A		1	BENDING ROLLER	
195	1511568-0000	-		1	PIN	
200	2587250-0000	-		1	ARM	
205	1511575-0000	-		1	ARM	
210	312105-0291	-		1	SCREW M6S ISO 4017 M4X12 A470	
220	312105-0293	-		4	SCREW M6S ISO 4017 M4X16 A470	
225	312115-0327	-		1	SCREW ISO4762 M5X12 A4	
260	312115-0329	-		2	SCREW ISO4762 M5X16 A4	
265	312105-0331	-		1	SCREW M6S ISO 4017 M5X20 A480	
270	312105-0287	-		2	SCREW M6S ISO4017 M4X8 A470	
280	312318-0333	-		2	SCREW ISO4029 M5X25 A4	
330	312318-0362	-		2	SCREW ISO4029 M6X8 A4	
340	312605-0314	-		3	HEXAGON NUT, M6M M5 A280	
350	312155-0287	-		4	SCREW EN 10642 MF6S M4X8 A480	
370	315105-0136	-		7	WASHER BRB4,3XRFR	
390	315105-0146	-		1	WASHER BRB5,3X10RFR	
395	315115-0153	-		2	WASHER PLAIN, TBRB 6,4/12 H=3	
410	311103-1355	-		2	PARALLEL PIN ISO 2338 6M6X24 A1	
415	312105-0453	-		3	SCREW M6S ISO 4017 M8X25 A480	
420	312105-0362	-		1	SCREW M6S ISO 4017 M6X8 A480	
435	312105-0368	-		2	SCREW M6S ISO 4017 M6X16 A480	
470	312115-0449	-		2	SCREW ISO4762 M8X16 A4	
480	315105-0153	-		1	WASHER BRB6,4X12RFR	
570	321141-0178	B		1	BEARING BUSHING W/O FL, 12X14X10 MM	
595	321141-0216	B		2	BEARING BUSHING W/O FL, 16X18X12 MM	
640	312605-0316	-		2	HEXAGON NUT, M6M M6 A280	
700	321141-0104	B		2	BEARING BUSHING W/O FL, 8X10X12 MM	
705	321313-0102	A		2	BALL BEARING, 15X35X11 MM	
820	90258-0031	-		2	PIN, STRAIGHT SLOTTED SPRING FRP 3X20	
830	312145-0287	-		5	SCREW ISO 2009 MFS M4X8 A4	
840	312605-0318	-		1	HEXAGON NUT, M6M M8 A280	

Machine Type | Group Description | Used-In | Group Number | Page No

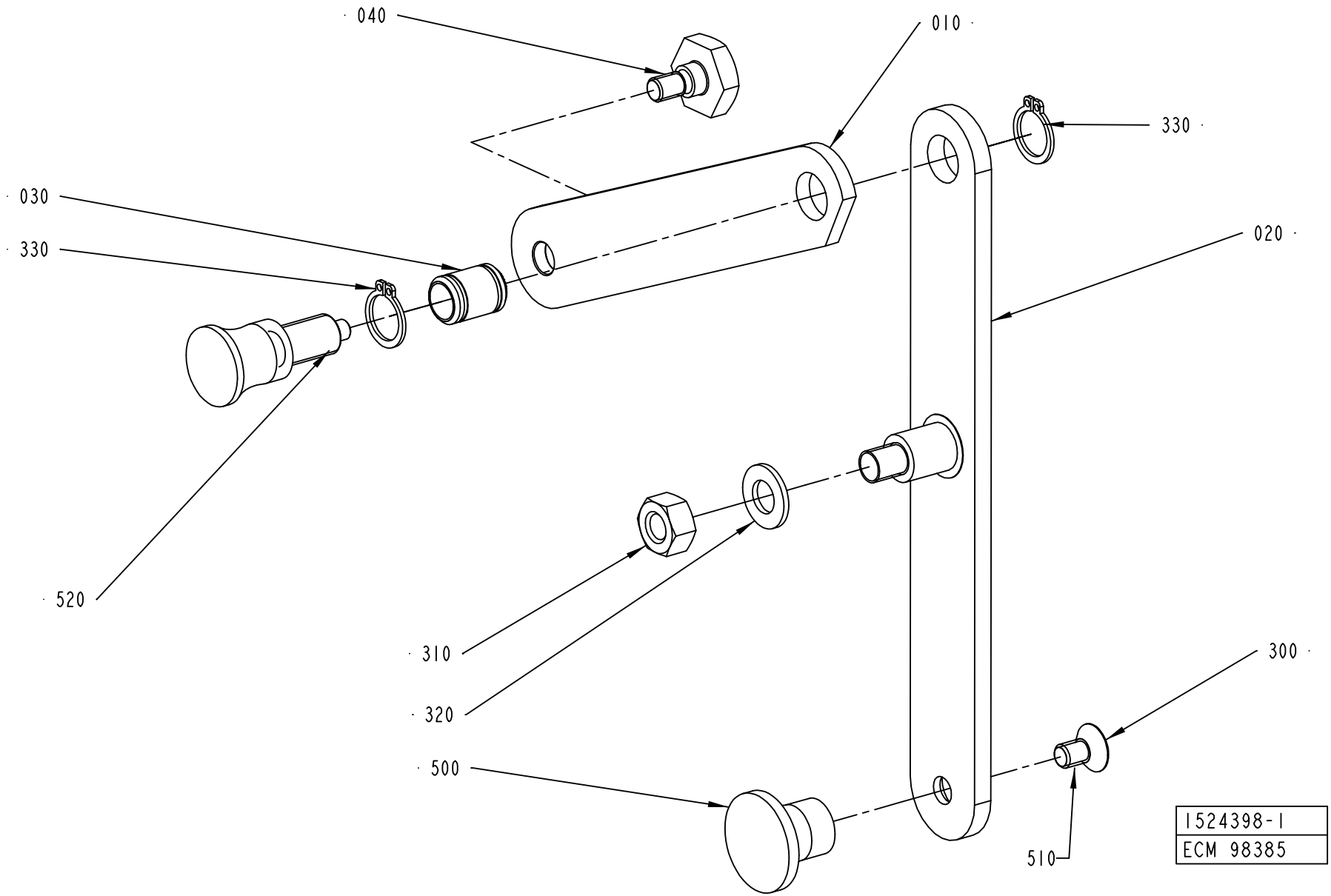
040
010
330
030
330
020
520
310
320
300
500
510
1524398-1
ECM 98385

ECM: 122844 - 20021218
Group number: 1524398-0100
Assembly Drawing: 1524398-1_1_AC

Pos	Part No	SP	UN	Qty	Description	Page No
-						
010	1490809-0000	-		1	ARM	
020	1490810-0000	-		1	ARM	
030	1490812-0000	A		1	AXLE	
040	1490813-0000	-		1	SCREW	
300	312155-0364	-		1	SCREW EN 10642 MF6S M6X10 A480	
310	312605-0318	-		1	HEXAGON NUT, M6M M8 A280	
320	315105-0165	-		1	WASHER BRB8,4X16RFR	
330	315751-0109	-		2	RETAINING RING FOR SHAFT DIN 471 12 A2	
500	90051-0082	-		1	KNOB, CIRCUL, THREADED BUSH, M6 25X21 MM	
510	90157-0016	-		1	LOCKING FLUID	
520	90051-0087	-		1	LOCK KNOB, NO. GN 617 A5	

Pos	Part No	SP	UN	Qty	Description	Page No

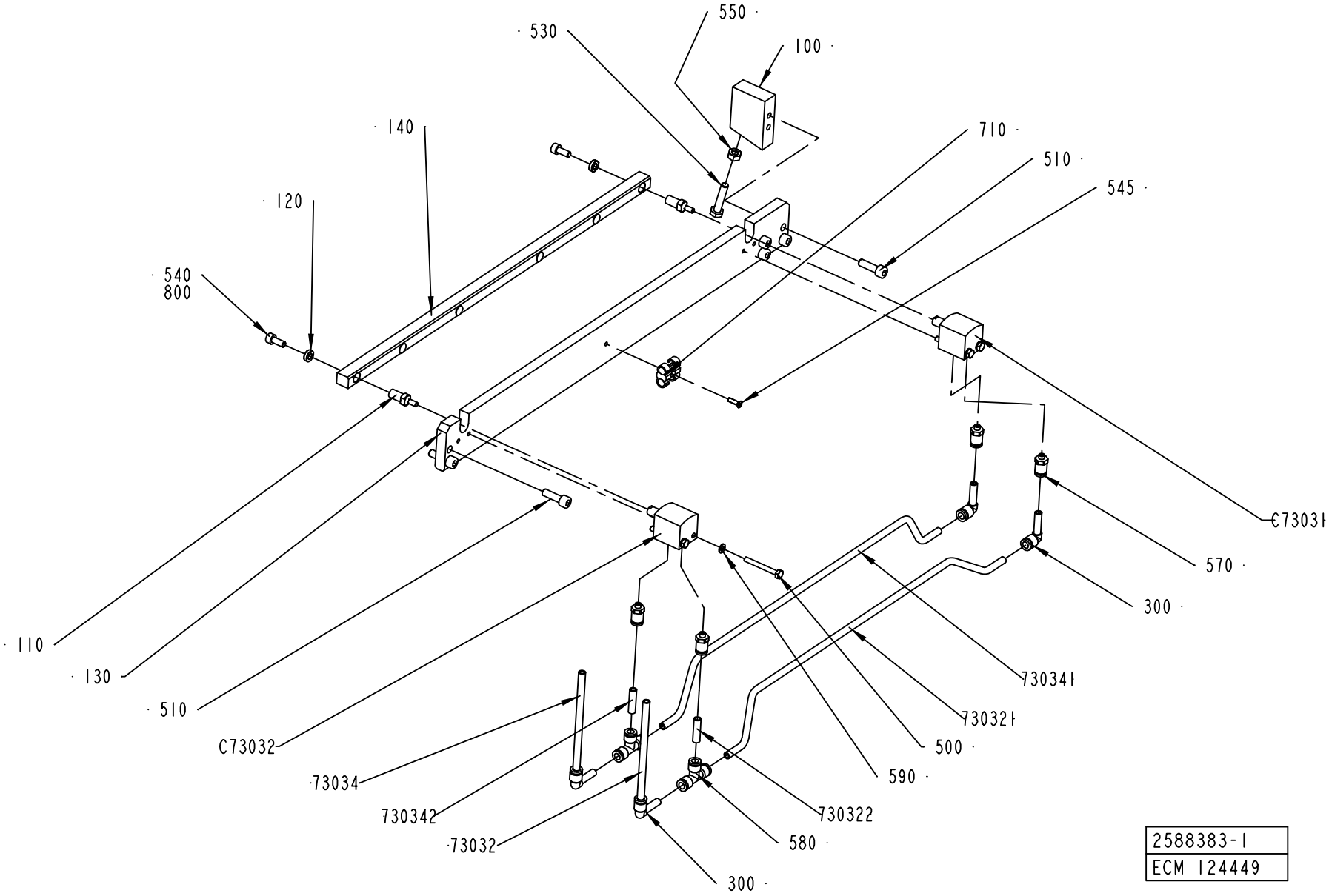

2588383-1
ECM 124449

ECM: 153338 - 20031217
Group number: 2588383-0100
Assembly Drawing: 2588383-1_1_AC

Pos	Part No	SP	UN	Qty	Description	Page No
-						
100	2553272-0000	A		1	SUPPORT BLOCK	
110	2553273-0000	A		2	AXLE PIN	
120	2553799-0000	-		2	WASHER	
130	2582558-0000	-		1	BASE PLATE	
140	2582559-0000	A		1	RAIL	
300	90055-0217	-		4	ELBOW PIPE JOINT	
500	312105-0301	-		4	SCREW M6S ISO 4017 M4X35 A470	
510	312115-0370	-		6	SCREW ISO4762 M6X20 A4	
530	312109-0374	-		1	SCREW M6S ISO 4017 M6X30 A480	
540	312115-0327	-		2	SCREW ISO4762 M5X12 A4	
545	312155-0226	-		1	SCREW EN 10642 MF6S M3X12 A480	
550	312605-0316	-		1	HEXAGON NUT, M6M M6 A280	
570	342722-0197	-		4	STRAIGHT COUPLING	
580	342748-0102	-		2	T-CONNECTION 6MM	
590	315105-0136	-		4	WASHER BRB4,3XRFR	
710	90165-0087	-		1	T-CLIP T6 FOR TUBE D=6 - 7 MM	
73032	90166-0193	-	MM	6500	TUBE 6 MM PUR BLUE	
730321	90166-0193	-	MM	400	TUBE 6 MM PUR BLUE	
730322	90166-0193	-	MM	30	TUBE 6 MM PUR BLUE	
73034	90166-0193	-	MM	6500	TUBE 6 MM PUR BLUE	
730341	90166-0193	-	MM	400	TUBE 6 MM PUR BLUE	
730342	90166-0193	-	MM	30	TUBE 6 MM PUR BLUE	
800	90157-0016	-	ML	1	LOCKING FLUID	
C73031	90459-0503	A		1	CYLINDER, ADVC-16-10-I-P	
C73032	90459-0503	A		1	CYLINDER, ADVC-16-10-I-P	

Pos	Part No	SP	UN	Qty	Description	Page No

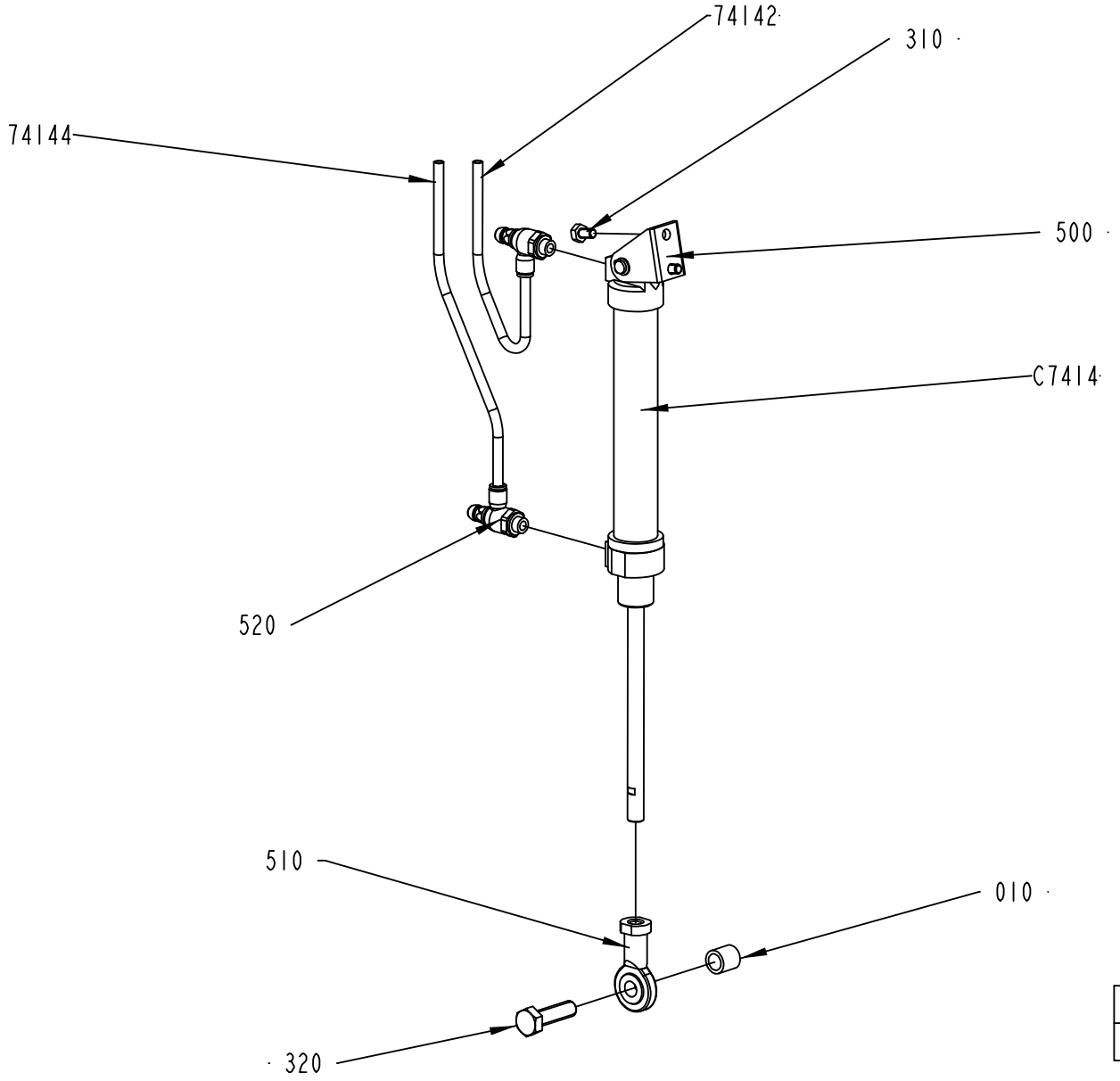

1524394-1
ECM 111238

ECM: 126110 - 20031217
Group number: 1524394-0100
Assembly Drawing: 1524394-1_1_AE

Pos	Part No	SP	UN	Qty	Description	Page No
TBA/22						
74142	90166-0193	-	MM	6000	TUBE 6 MM PUR BLUE	
74144	90166-0193	-	MM	6000	TUBE 6 MM PUR BLUE	
C7414	90239-0832	A		1	DOUBLE ACTING, MINI-ISO, CYL. 25-125	
Common Parts						
010	1511569-0000	-		1	SPACER	
310	312105-0364	-		2	SCREW M6S ISO 4017 M6X10 A480	
320	312105-0497	-		1	SCREW M6S ISO 4017 M10X35 A480	
500	90239-0487	-		1	REAR,CLEVIS,MINI-ISO 20-25	
510	90239-0405	A		1	ROD END,BALL JOINT EYE M10X1,25	
520	90235-0846	A		2	THROTTLE CHECK VALVE G1/8", MANUAL, 6	

Pos	Part No	SP	UN	Qty	Description	Page No

MATERIAL HOLDER L2

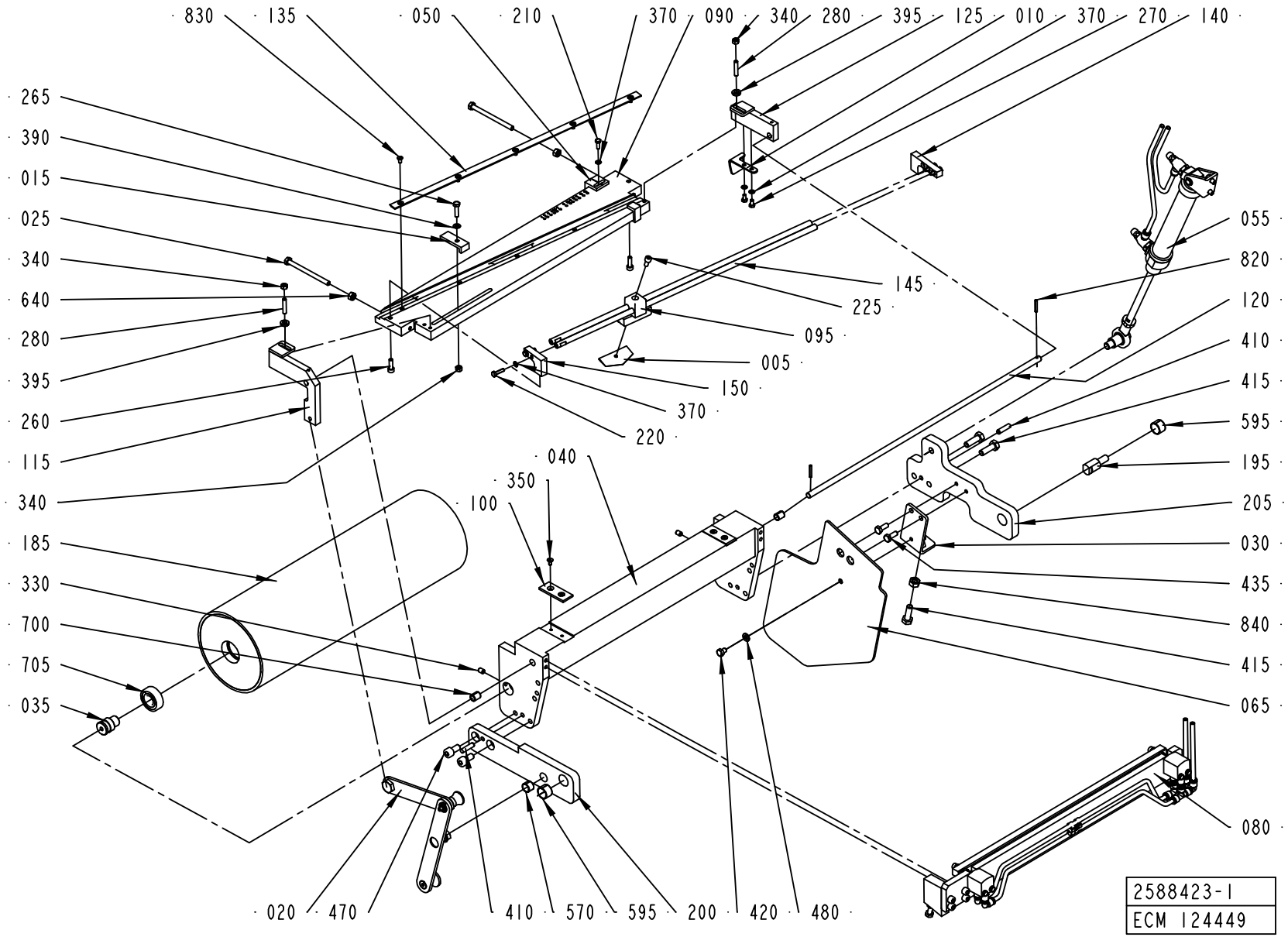

ECM: 136294 - 20031217
Group number: 2588423-0100
Assembly Drawing: 2588423-1_1_AC

Pos	Part No	SP	UN	Qty	Description	Page No
-						
005	596678-0000	A		1	.KNIFE	
010	2538064-0000	-		1	REFLECTOR	
015	1490821-0000	-		1	ANGLE PIECE	
020	1519589-0100	-		1	HANDLE	**8-117**
025	312109-0386	-		2	SCREW M6S ISO 4017 M6X80 A480	
030	1490199-0000	-		1	BRACKET	
035	1499582-0000	A		2	AXLE PIN	
040	1487770-0000	-		1	BRACKET	
050	2587251-0000	-		1	ANGLE PIECE	
055	1487528-0100	-		1	CYLINDER	**8-119**
065	1512276-0000	-		1	PROTECTION PLATE	
080	2588379-0100	-		1	MATERIAL HOLDER	**8-121**
090	2566117-0000	-		1	CUTTING TABLE	
095	2589791-0000	A		1	KNIFE HOLDER	
100	2553275-0000	-		2	SLIDE PLATE	
115	2553276-0000	-		1	ROCKER ARM	
120	1487779-0000	-		1	SHAFT	
125	2553277-0000	-		1	ROCKER ARM	
135	1487518-0000	A		1	RULER	
140	1487781-0000	-		1	BRACKET	
145	1487782-0000	A		2	SHAFT	
150	2566118-0000	-		1	BRACKET	
185	1499588-0000	A		1	BENDING ROLLER	
195	1511568-0000	-		1	PIN	
200	1499577-0000	-		1	ARM	
205	2587250-0000	-		1	ARM	
210	312105-0291	-		1	SCREW M6S ISO 4017 M4X12 A470	
220	312105-0293	-		4	SCREW M6S ISO 4017 M4X16 A470	
225	312115-0327	-		1	SCREW ISO4762 M5X12 A4	
260	312115-0329	-		2	SCREW ISO4762 M5X16 A4	
265	312105-0331	-		1	SCREW M6S ISO 4017 M5X20 A480	
270	312105-0287	-		2	SCREW M6S ISO4017 M4X8 A470	
280	312318-0333	-		2	SCREW ISO4029 M5X25 A4	
330	312318-0362	-		2	SCREW ISO4029 M6X8 A4	
340	312605-0314	-		3	HEXAGON NUT, M6M M5 A280	
350	312155-0287	-		4	SCREW EN 10642 MF6S M4X8 A480	
370	315105-0136	-		7	WASHER BRB4,3XRFR	
390	315105-0146	-		1	WASHER BRB5,3X10RFR	
395	315115-0153	-		2	WASHER PLAIN, TBRB 6,4/12 H=3	
410	311103-1355	-		2	PARALLEL PIN ISO 2338 6M6X24 A1	
415	312105-0453	-		3	SCREW M6S ISO 4017 M8X25 A480	
420	312105-0362	-		1	SCREW M6S ISO 4017 M6X8 A480	
435	312105-0368	-		2	SCREW M6S ISO 4017 M6X16 A480	
470	312115-0449	-		2	SCREW ISO4762 M8X16 A4	
480	315105-0153	-		1	WASHER BRB6,4X12RFR	
570	321141-0178	B		1	BEARING BUSHING W/O FL, 12X14X10 MM	
595	321141-0216	B		2	BEARING BUSHING W/O FL, 16X18X12 MM	
640	312605-0316	-		2	HEXAGON NUT, M6M M6 A280	
700	321141-0104	B		2	BEARING BUSHING W/O FL, 8X10X12 MM	
705	321313-0102	A		2	BALL BEARING, 15X35X11 MM	
820	90258-0031	-		2	PIN, STRAIGHT SLOTTED SPRING FRP 3X20	
830	312145-0287	-		5	SCREW ISO 2009 MFS M4X8 A4	
840	312605-0318	-		1	HEXAGON NUT, M6M M8 A280	

Machine Type | Group Description | Used-In | Group Number | Page No

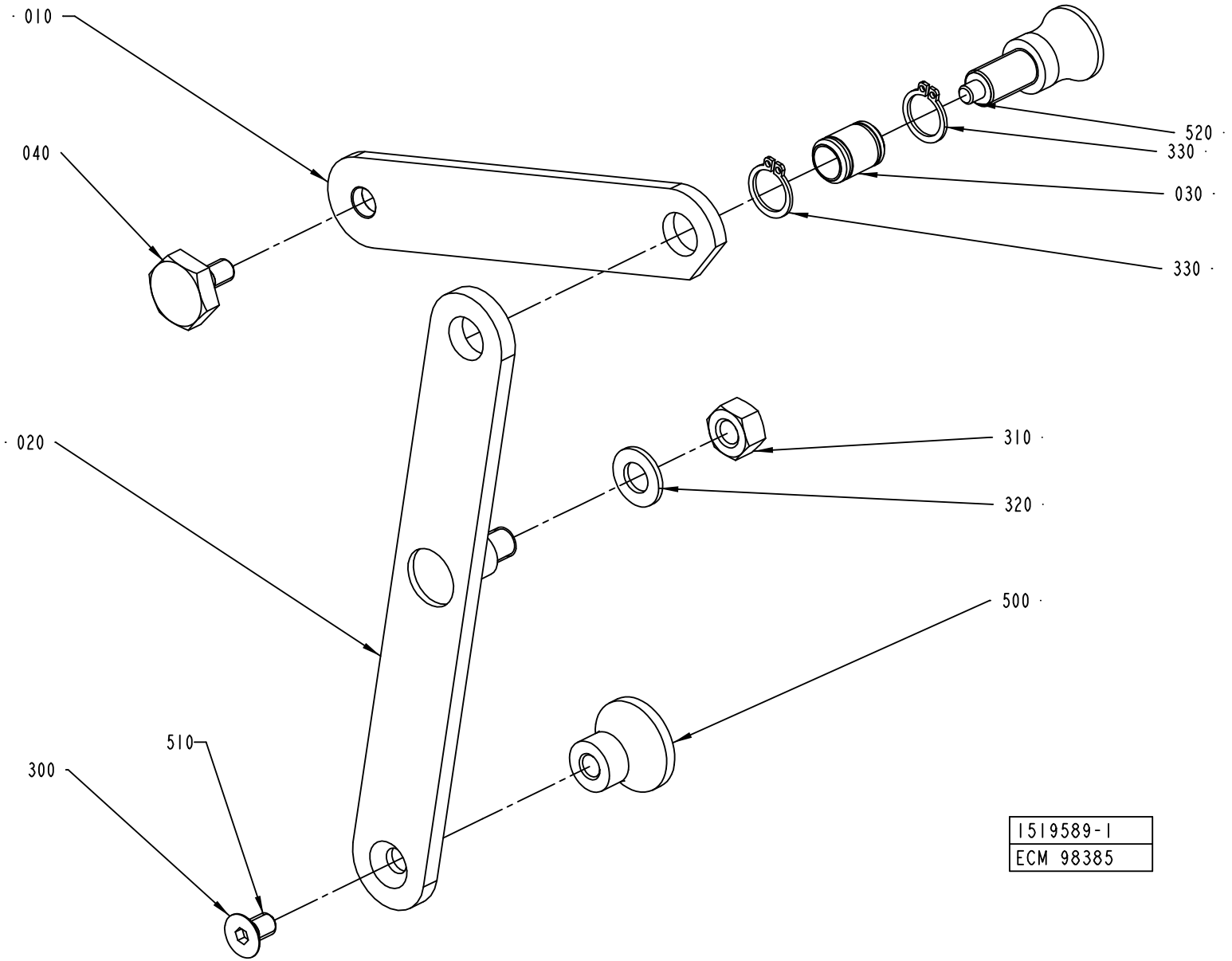
010
040
020
300
510
520
330
030
330
310
320
500
1519589-1
ECM 98385

ECM: 114210 - 20020926
Group number: 1519589-0100
Assembly Drawing: 1519589-1_1_AC

Pos	Part No	SP	UN	Qty	Description	Page No
-						
010	1490809-0000	-		1	ARM	
020	1490810-0000	-		1	ARM	
030	1490812-0000	B		1	AXLE	
040	1490813-0000	-		1	SCREW	
300	312155-0364	-		1	SCREW EN 10642 MF6S M6X10 A480	
310	312605-0318	-		1	HEXAGON NUT, M6M M8 A280	
320	315105-0165	-		1	WASHER BRB8,4X16RFR	
330	315751-0109	-		2	RETAINING RING FOR SHAFT DIN 471 12 A2	
500	90051-0082	-		1	KNOB, CIRCUL, THREADED BUSH, M6 25X21 MM	
510	90157-0016	-		1	LOCKING FLUID	
520	90051-0087	-		1	LOCK KNOB, NO. GN 617 A5	

Pos	Part No	SP	UN	Qty	Description	Page No

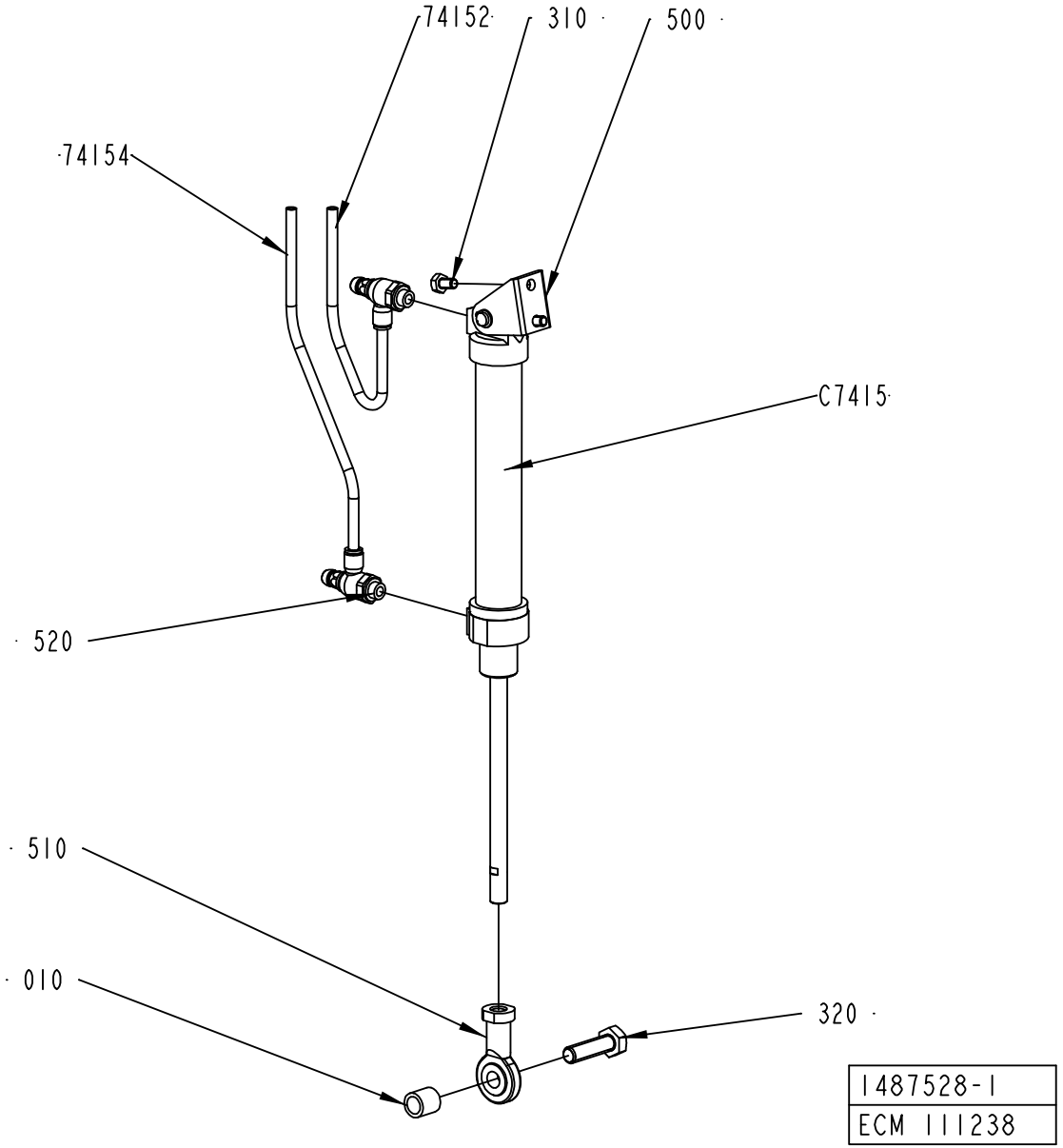
74152
310
500
74154
C7415
520
510
010
320
1487528-1
ECM 111238

ECM: 126111 - 20031217
Group number: 1487528-0100
Assembly Drawing: 1487528-1_1_AE

Pos	Part No	SP	UN	Qty	Description	Page No
TBA/22						
74152	90166-0193	-	MM	5000	TUBE 6 MM PUR BLUE	
74154	90166-0193	-	MM	5000	TUBE 6 MM PUR BLUE	
C7415	90239-0832	A		1	DOUBLE ACTING, MINI-ISO, CYL. 25-125	
Common Parts						
010	1511569-0000	-		1	SPACER	
310	312105-0364	-		2	SCREW M6S ISO 4017 M6X10 A480	
320	312105-0497	-		1	SCREW M6S ISO 4017 M10X35 A480	
500	90239-0487	-		1	REAR,CLEVIS,MINI-ISO 20-25	
510	90239-0405	A		1	ROD END,BALL JOINT EYE M10X1,25	
520	90235-0846	A		2	THROTTLE CHECK VALVE G1/8", MANUAL, 6	

Pos	Part No	SP	UN	Qty	Description	Page No

MATERIAL HOLDER

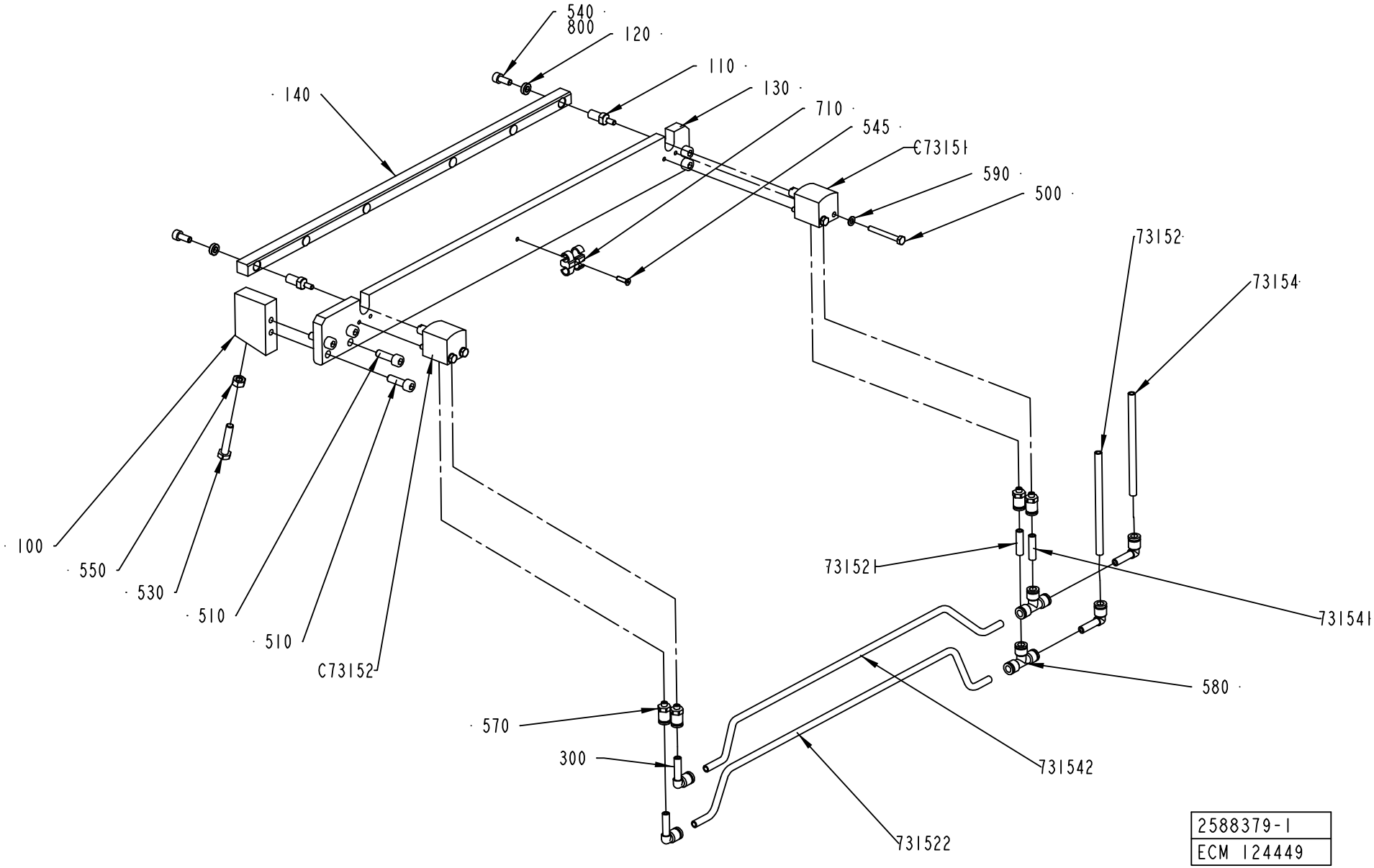

ECM: 153337 - 20031217
Group number: 2588379-0100
Assembly Drawing: 2588379-1_1_AC

Pos	Part No	SP	UN	Qty	Description	Page No
-						
100	2553272-0000	A		1	SUPPORT BLOCK	
110	2553273-0000	A		2	AXLE PIN	
120	2553799-0000	-		2	WASHER	
130	2582558-0000	-		1	BASE PLATE	
140	2582559-0000	A		1	RAIL	
300	90055-0217	-		4	ELBOW PIPE JOINT	
500	312105-0301	-		4	SCREW M6S ISO 4017 M4X35 A470	
510	312115-0370	-		6	SCREW ISO4762 M6X20 A4	
530	312109-0374	-		1	SCREW M6S ISO 4017 M6X30 A480	
540	312115-0327	-		2	SCREW ISO4762 M5X12 A4	
545	312155-0226	-		1	SCREW EN 10642 MF6S M3X12 A480	
550	312605-0316	-		1	HEXAGON NUT, M6M M6 A280	
570	342722-0197	-		4	STRAIGHT COUPLING	
580	342748-0102	-		2	T-CONNECTION 6MM	
590	315105-0136	-		4	WASHER BRB4,3XRFR	
710	90165-0087	-		1	T-CLIP T6 FOR TUBE D=6 - 7 MM	
73152	90166-0193	-	MM	5500	TUBE 6 MM PUR BLUE	
731521	90166-0193	-	MM	30	TUBE 6 MM PUR BLUE	
731522	90166-0193	-	MM	400	TUBE 6 MM PUR BLUE	
73154	90166-0193	-	MM	5500	TUBE 6 MM PUR BLUE	
731541	90166-0193	-	MM	30	TUBE 6 MM PUR BLUE	
731542	90166-0193	-	MM	400	TUBE 6 MM PUR BLUE	
800	90157-0016	-	ML	1	LOCKING FLUID	
C73151	90459-0503	A		1	CYLINDER, ADVC-16-10-I-P	
C73152	90459-0503	A		1	CYLINDER, ADVC-16-10-I-P	

Pos	Part No	SP	UN	Qty	Description	Page No

ELECTRICAL CABINET

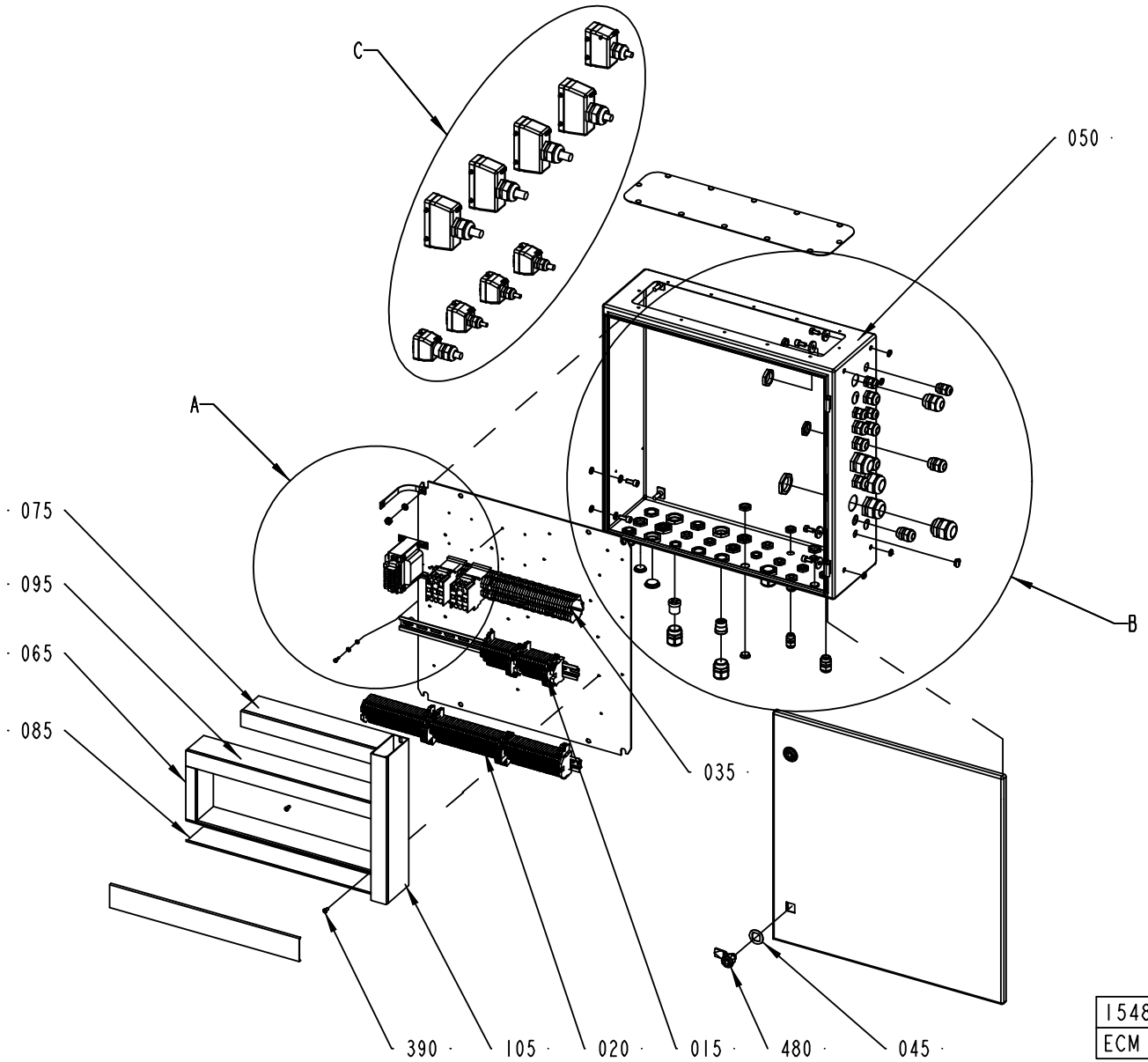

1548491-4
ECM 156809

ECM: 167456 - 20040420
Group number: 1548491-0200
Assembly Drawing: 1548491-4_1_AA

This list covers pages from 8-122 to 8-131

Pos	Part No	SP	UN	Qty	Description	Page No
TBA/22 (See drawing on pages: 8-122, 8-124, 8-126, 8-128, 8-130)						
180	352103-0101	-		3	CABLE GLAND, ST 9, PR15,2/PG9	
200	352103-0111	-		10	CABLE GLAND, ST 16, PR22,5/PG16	
215	352103-0116	-		1	CABLE GLAND, ST 21, PR28,3/PG21	
230	353240-0005	-		4	NORMAL WITHOUT INSERT, PG 21	
250	90002-0004	-		5	BLANK-OFF PLUG, PR 22,5 SKINDICHT-BLK16	
270	90002-0012	-		1	BLANK-OFF PLUG, PR 28,3 SKINDICHT-BLK21	
280	90002-0013	-		2	BLANK-OFF PLUG, PR 15,2 SKINDICHT-BLK9	
450	90110-0157	-		4	CABLE HOOD 6-POL 70.352.0628.1	
W7003	351150-0420	-	M	5	CABLE OLFLEX 7X2,5 MM2 LIGHT/GREY	
W7004	351150-0413	-	M	5	CABLE OLFLEX 4X1,5 MM2 LIGHT/GREY	
W7005	351150-0412	-	M	5	CABLE OLFLEX 3X1,5 MM2 LIGHT/GREY	
W7006	351150-0425	-	M	6	CABLE OLFLEX 25X0,75 MM2 LIGHT/GREY	
W7007	351150-0425	-	M	6500	CABLE OLFLEX 25X0,75 MM2 LIGHT/GREY	
W7008	351150-0425	-	M	6500	CABLE OLFLEX 25X0,75 MM2 LIGHT/GREY	
W7009	351150-0425	-	M	6	CABLE OLFLEX 25X0,75 MM2 LIGHT/GREY	
W7037	351150-0415	-	M	6	CABLE OLFLEX 7X1,5 MM2 LIGHT/GREY	
W7076	90220-0104	-	M	6	SCR. CABLE 4X1,5MM2	
X118	90110-0159	-		1	MALE INSERT 70.310.0640.0	
X128	90110-0159	-		1	MALE INSERT 70.310.0640.0	
X221	90110-0150	-		1	MALE INSERT 121110 0000	
X225	90110-0150	-		1	MALE INSERT 121110 0000	
X226	90110-0150	-		1	MALE INSERT 121110 0000	
X231	90110-0150	-		1	MALE INSERT 121110 0000	
Common Parts						
015	2611462-0100	-		1	TERMINAL BLOCK	**8-133, 8-135**
020	1548496-0100	-		1	TERMINAL	**8-137**
035	2611463-0100	-		1	TERMINAL BLOCK	**8-139, 8-141**
045	2503895-0000	-		2	WASHER	
050	1548492-0000	-		1	ELECTRICAL CABINET	
065	2611461-0000	-		1	CABLE DUCT	
075	2611458-0000	-		1	CABLE DUCT	
085	2611460-0000	-		1	CABLE DUCT	
095	2611459-0000	-		1	CABLE DUCT	
105	2611457-0000	-		1	CABLE DUCT	
115	312115-0449	-		2	SCREW ISO4762 M8X16 A4	
120	312115-0291	-		4	SCREW ISO4762 M4X12 A4	
135	312105-0449	-		2	SCREW M6S ISO 4017 M8X16 A480	
145	312115-0451	-		2	SCREW ISO4762 M8X20 A4	
150	312605-0318	-		2	HEXAGON NUT, M6M M8 A280	
160	315105-0136	-		4	WASHER BRB4,3XRFR	
170	315105-0165	-		2	WASHER BRB8,4X16RFR	
175	315125-0165	-		4	WASHER TBRSB 8,4X26X5 A4	
190	352103-0106	-		12	CABLE GLAND, ST 11, PR18,6/PG11	
195	352103-0108	-		4	CABLE GLAND, ST 13,5 , PR20,4/PG13,5	
210	352103-0115	-		2	CABLE GLAND, STR 21, PR28,3/PG21	
220	352103-0121	-		8	CABLE GLAND, ST 29, PR37,0/PG29	
240	353249-0051	-		1	INSERT, MULTI HOLE, E154M4X8	
260	90002-0009	-		4	BLANK-OFF PLUG, PR 18.6 SKINDICHT-BLK11	
290	90012-0125	-		2	GLAND FITTING	
310	90062-0016	-		8	LOCK WASHER SERRAT.EXT.GEAR,8,4/15 H=0,8	
320	90062-0059	-		4	LOCK WASHER SERRAT.EXT.GEAR,4,3/8 H=0,5	
330	90099-0104	-		5	NUT, PR 15,2 (PG9)	
340	90099-0110	-		18	NUT, PR 22,5 (PG16)	
350	90099-0117	-		12	NUT, PR 18,6 (PG11)	
355	90099-0118	-		2	NUT, PR 20,4 (PG13,5)	
360	90099-0119	-		6	NUT, PR 28,3 (PG21)	
370	90099-0120	-		4	NUT PR 37 (PG29)	
380	90135-0040	-		1	EARTH WIRE, L=150 MM 16 MM2	
390	90181-0313	-		12	RIVET DUCTAFIX R4	
400	359005-0010	-		9	MARKING LABEL KIT 0 - 9, 04.841.2150.0	
410	359005-0050	-		1	MARKING LABEL KIT X, 04.841.4550.0	
420	90089-0028	-		1	MUFF	
440	90110-0152	-		4	CABLE HOOD 24-POL 70.352.2428.1	
460	90110-0385	-		9	HOLDER	
470	90110-0160	-		1	CABLE HOOD 6-16-POL 70.352.1628.1	
480	90237-0206	-		2	LOCK, 1000-U45/U2/17/23/24/991	
T6203	90458-0258	-		1	TRANSFORMER, 220VAC/6-9-12VAC	
X132	90110-0159	-		1	MALE INSERT 70.310.0640.0	
X133	90110-0159	-		1	MALE INSERT 70.310.0640.0	
X220	90110-0150	-		1	MALE INSERT 121110 0000	
X504	90110-0156	-		1	MALE INSERT 70.210.0653.0	

Machine Type | Group Description | Used-In | Group Number | Page No

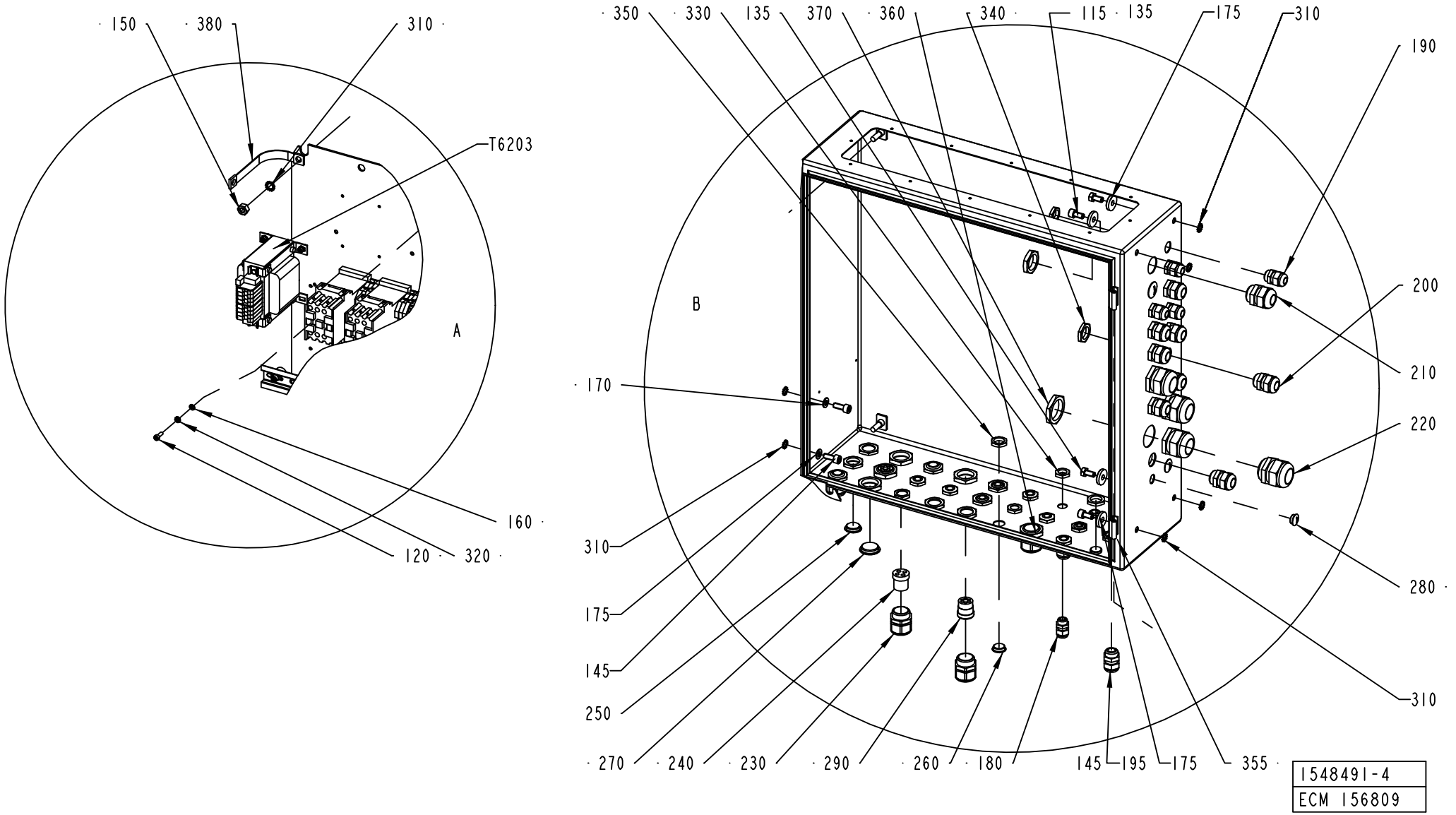
150
380
310
T6203
A
160
120
320
350
330
135
370
360
340
115
135
175
310
190
B
200
210
170
220
310
175
145
250
280
310
270
240
230
290
260
180
145
195
175
355
1548491-4
ECM 156809

ECM: 167456 - 20040420
Group number: 1548491-0200
Assembly Drawing: 1548491-4_2_AA

This list covers pages from 8-122 to 8-131

Pos	Part No	SP	UN	Qty	Description	Page No
TBA/22 (See drawing on pages: 8-122, 8-124, 8-126, 8-128, 8-130)						
180	352103-0101	-		3	CABLE GLAND, ST 9, PR15,2/PG9	
200	352103-0111	-		10	CABLE GLAND, ST 16, PR22,5/PG16	
215	352103-0116	-		1	CABLE GLAND, ST 21, PR28,3/PG21	
230	353240-0005	-		4	NORMAL WITHOUT INSERT, PG 21	
250	90002-0004	-		5	BLANK-OFF PLUG, PR 22,5 SKINDICHT-BLK16	
270	90002-0012	-		1	BLANK-OFF PLUG, PR 28,3 SKINDICHT-BLK21	
280	90002-0013	-		2	BLANK-OFF PLUG, PR 15,2 SKINDICHT-BLK9	
450	90110-0157	-		4	CABLE HOOD 6-POL 70.352.0628.1	
W7003	351150-0420	-	M	5	CABLE OLFLEX 7X2,5 MM2 LIGHT/GREY	
W7004	351150-0413	-	M	5	CABLE OLFLEX 4X1,5 MM2 LIGHT/GREY	
W7005	351150-0412	-	M	5	CABLE OLFLEX 3X1,5 MM2 LIGHT/GREY	
W7006	351150-0425	-	M	6	CABLE OLFLEX 25X0,75 MM2 LIGHT/GREY	
W7007	351150-0425	-	M	6500	CABLE OLFLEX 25X0,75 MM2 LIGHT/GREY	
W7008	351150-0425	-	M	6500	CABLE OLFLEX 25X0,75 MM2 LIGHT/GREY	
W7009	351150-0425	-	M	6	CABLE OLFLEX 25X0,75 MM2 LIGHT/GREY	
W7037	351150-0415	-	M	6	CABLE OLFLEX 7X1,5 MM2 LIGHT/GREY	
W7076	90220-0104	-	M	6	SCR. CABLE 4X1,5MM2	
X118	90110-0159	-		1	MALE INSERT 70.310.0640.0	
X128	90110-0159	-		1	MALE INSERT 70.310.0640.0	
X221	90110-0150	-		1	MALE INSERT 121110 0000	
X225	90110-0150	-		1	MALE INSERT 121110 0000	
X226	90110-0150	-		1	MALE INSERT 121110 0000	
X231	90110-0150	-		1	MALE INSERT 121110 0000	
Common Parts						
015	2611462-0100	-		1	TERMINAL BLOCK	**8-133, 8-135**
020	1548496-0100	-		1	TERMINAL	**8-137**
035	2611463-0100	-		1	TERMINAL BLOCK	**8-139, 8-141**
045	2503895-0000	-		2	WASHER	
050	1548492-0000	-		1	ELECTRICAL CABINET	
065	2611461-0000	-		1	CABLE DUCT	
075	2611458-0000	-		1	CABLE DUCT	
085	2611460-0000	-		1	CABLE DUCT	
095	2611459-0000	-		1	CABLE DUCT	
105	2611457-0000	-		1	CABLE DUCT	
115	312115-0449	-		2	SCREW ISO4762 M8X16 A4	
120	312115-0291	-		4	SCREW ISO4762 M4X12 A4	
135	312105-0449	-		2	SCREW M6S ISO 4017 M8X16 A480	
145	312115-0451	-		2	SCREW ISO4762 M8X20 A4	
150	312605-0318	-		2	HEXAGON NUT, M6M M8 A280	
160	315105-0136	-		4	WASHER BRB4,3XRFR	
170	315105-0165	-		2	WASHER BRB8,4X16RFR	
175	315125-0165	-		4	WASHER TBRSB 8,4X26X5 A4	
190	352103-0106	-		12	CABLE GLAND, ST 11, PR18,6/PG11	
195	352103-0108	-		4	CABLE GLAND, ST 13,5 , PR20,4/PG13,5	
210	352103-0115	-		2	CABLE GLAND, STR 21, PR28,3/PG21	
220	352103-0121	-		8	CABLE GLAND, ST 29, PR37,0/PG29	
240	353249-0051	-		1	INSERT, MULTI HOLE, E154M4X8	
260	90002-0009	-		4	BLANK-OFF PLUG, PR 18.6 SKINDICHT-BLK11	
290	90012-0125	-		2	GLAND FITTING	
310	90062-0016	-		8	LOCK WASHER SERRAT.EXT.GEAR,8,4/15 H=0,8	
320	90062-0059	-		4	LOCK WASHER SERRAT.EXT.GEAR,4,3/8 H=0,5	
330	90099-0104	-		5	NUT, PR 15,2 (PG9)	
340	90099-0110	-		18	NUT, PR 22,5 (PG16)	
350	90099-0117	-		12	NUT, PR 18,6 (PG11)	
355	90099-0118	-		2	NUT, PR 20,4 (PG13,5)	
360	90099-0119	-		6	NUT, PR 28,3 (PG21)	
370	90099-0120	-		4	NUT PR 37 (PG29)	
380	90135-0040	-		1	EARTH WIRE, L=150 MM 16 MM2	
390	90181-0313	-		12	RIVET DUCTAFIX R4	
400	359005-0010	-		9	MARKING LABEL KIT 0 - 9, 04.841.2150.0	
410	359005-0050	-		1	MARKING LABEL KIT X, 04.841.4550.0	
420	90089-0028	-		1	MUFF	
440	90110-0152	-		4	CABLE HOOD 24-POL 70.352.2428.1	
460	90110-0385	-		9	HOLDER	
470	90110-0160	-		1	CABLE HOOD 6-16-POL 70.352.1628.1	
480	90237-0206	-		2	LOCK, 1000-U45/U2/17/23/24/991	
T6203	90458-0258	-		1	TRANSFORMER, 220VAC/6-9-12VAC	
X132	90110-0159	-		1	MALE INSERT 70.310.0640.0	
X133	90110-0159	-		1	MALE INSERT 70.310.0640.0	
X220	90110-0150	-		1	MALE INSERT 121110 0000	
X504	90110-0156	-		1	MALE INSERT 70.210.0653.0	

Machine Type | Group Description | Used-In | Group Number | Page No

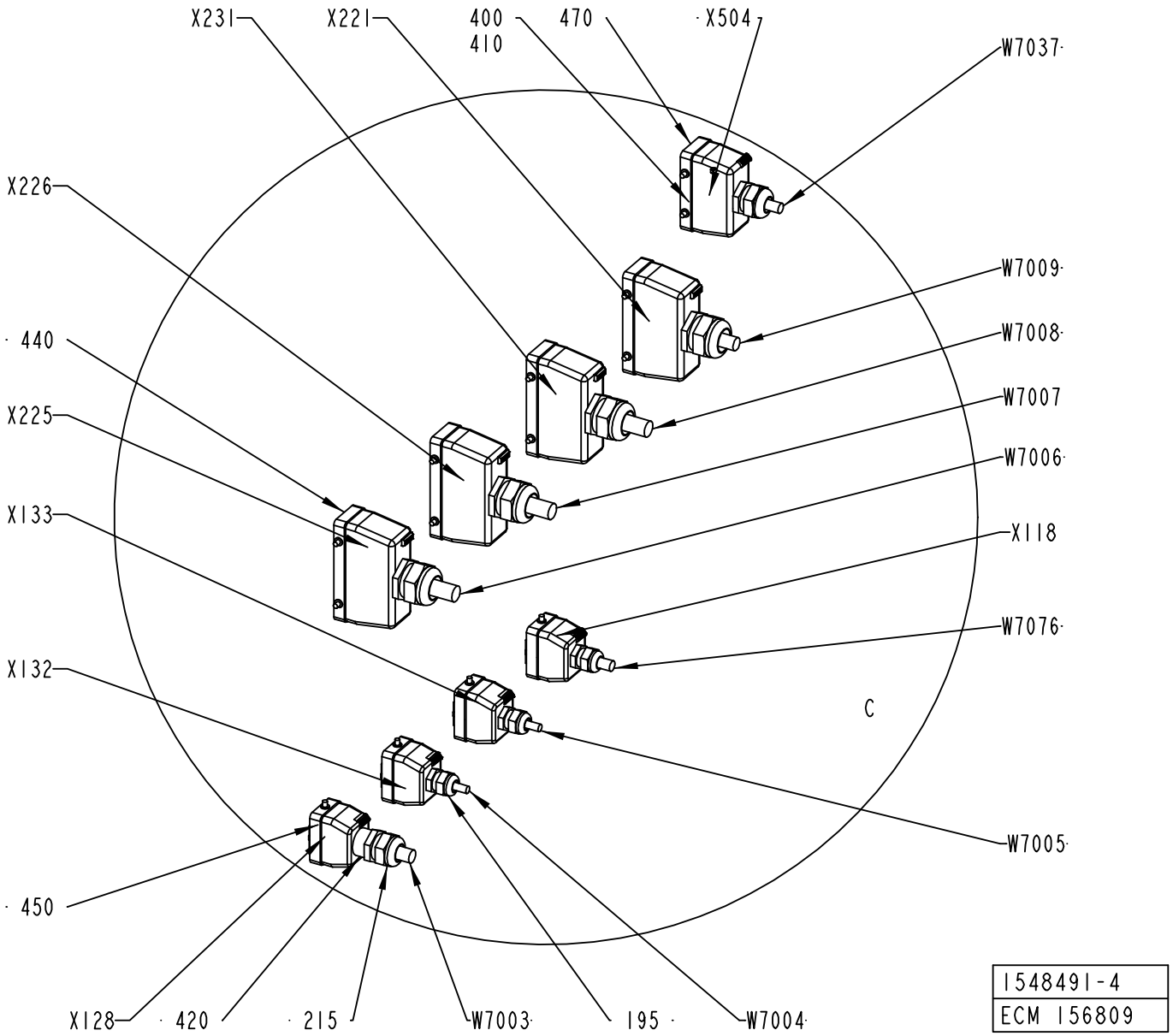
X231
X221
400
410
470
X504
W7037
X226
W7009
440
W7008
X225
W7007
X133
W7006
X118
W7076
X132
C
W7005
450
X128
420
215
W7003
195
W7004
1548491-4
ECM 156809

ECM: 167456 - 20040420
Group number: 1548491-0200
Assembly Drawing: 1548491-4_3_AA

This list covers pages from 8-122 to 8-131

Pos	Part No	SP	UN	Qty	Description	Page No
TBA/22 (See drawing on pages: 8-122, 8-124, 8-126, 8-128, 8-130)						
180	352103-0101	-		3	CABLE GLAND, ST 9, PR15,2/PG9	
200	352103-0111	-		10	CABLE GLAND, ST 16, PR22,5/PG16	
215	352103-0116	-		1	CABLE GLAND, ST 21, PR28,3/PG21	
230	353240-0005	-		4	NORMAL WITHOUT INSERT, PG 21	
250	90002-0004	-		5	BLANK-OFF PLUG, PR 22,5 SKINDICHT-BLK16	
270	90002-0012	-		1	BLANK-OFF PLUG, PR 28,3 SKINDICHT-BLK21	
280	90002-0013	-		2	BLANK-OFF PLUG, PR 15,2 SKINDICHT-BLK9	
450	90110-0157	-		4	CABLE HOOD 6-POL 70.352.0628.1	
W7003	351150-0420	-	M	5	CABLE OLFLEX 7X2,5 MM2 LIGHT/GREY	
W7004	351150-0413	-	M	5	CABLE OLFLEX 4X1,5 MM2 LIGHT/GREY	
W7005	351150-0412	-	M	5	CABLE OLFLEX 3X1,5 MM2 LIGHT/GREY	
W7006	351150-0425	-	M	6	CABLE OLFLEX 25X0,75 MM2 LIGHT/GREY	
W7007	351150-0425	-	M	6500	CABLE OLFLEX 25X0,75 MM2 LIGHT/GREY	
W7008	351150-0425	-	M	6500	CABLE OLFLEX 25X0,75 MM2 LIGHT/GREY	
W7009	351150-0425	-	M	6	CABLE OLFLEX 25X0,75 MM2 LIGHT/GREY	
W7037	351150-0415	-	M	6	CABLE OLFLEX 7X1,5 MM2 LIGHT/GREY	
W7076	90220-0104	-	M	6	SCR. CABLE 4X1,5MM2	
X118	90110-0159	-		1	MALE INSERT 70.310.0640.0	
X128	90110-0159	-		1	MALE INSERT 70.310.0640.0	
X221	90110-0150	-		1	MALE INSERT 121110 0000	
X225	90110-0150	-		1	MALE INSERT 121110 0000	
X226	90110-0150	-		1	MALE INSERT 121110 0000	
X231	90110-0150	-		1	MALE INSERT 121110 0000	
Common Parts						
015	2611462-0100	-		1	TERMINAL BLOCK	**8-133, 8-135**
020	1548496-0100	-		1	TERMINAL	**8-137**
035	2611463-0100	-		1	TERMINAL BLOCK	**8-139, 8-141**
045	2503895-0000	-		2	WASHER	
050	1548492-0000	-		1	ELECTRICAL CABINET	
065	2611461-0000	-		1	CABLE DUCT	
075	2611458-0000	-		1	CABLE DUCT	
085	2611460-0000	-		1	CABLE DUCT	
095	2611459-0000	-		1	CABLE DUCT	
105	2611457-0000	-		1	CABLE DUCT	
115	312115-0449	-		2	SCREW ISO4762 M8X16 A4	
120	312115-0291	-		4	SCREW ISO4762 M4X12 A4	
135	312105-0449	-		2	SCREW M6S ISO 4017 M8X16 A480	
145	312115-0451	-		2	SCREW ISO4762 M8X20 A4	
150	312605-0318	-		2	HEXAGON NUT, M6M M8 A280	
160	315105-0136	-		4	WASHER BRB4,3XRFR	
170	315105-0165	-		2	WASHER BRB8,4X16RFR	
175	315125-0165	-		4	WASHER TBRSB 8,4X26X5 A4	
190	352103-0106	-		12	CABLE GLAND, ST 11, PR18,6/PG11	
195	352103-0108	-		4	CABLE GLAND, ST 13,5 , PR20,4/PG13,5	
210	352103-0115	-		2	CABLE GLAND, STR 21, PR28,3/PG21	
220	352103-0121	-		8	CABLE GLAND, ST 29, PR37,0/PG29	
240	353249-0051	-		1	INSERT, MULTI HOLE, E154M4X8	
260	90002-0009	-		4	BLANK-OFF PLUG, PR 18.6 SKINDICHT-BLK11	
290	90012-0125	-		2	GLAND FITTING	
310	90062-0016	-		8	LOCK WASHER SERRAT.EXT.GEAR,8,4/15 H=0,8	
320	90062-0059	-		4	LOCK WASHER SERRAT.EXT.GEAR,4,3/8 H=0,5	
330	90099-0104	-		5	NUT, PR 15,2 (PG9)	
340	90099-0110	-		18	NUT, PR 22,5 (PG16)	
350	90099-0117	-		12	NUT, PR 18,6 (PG11)	
355	90099-0118	-		2	NUT, PR 20,4 (PG13,5)	
360	90099-0119	-		6	NUT, PR 28,3 (PG21)	
370	90099-0120	-		4	NUT PR 37 (PG29)	
380	90135-0040	-		1	EARTH WIRE, L=150 MM 16 MM2	
390	90181-0313	-		12	RIVET DUCTAFIX R4	
400	359005-0010	-		9	MARKING LABEL KIT 0 - 9, 04.841.2150.0	
410	359005-0050	-		1	MARKING LABEL KIT X, 04.841.4550.0	
420	90089-0028	-		1	MUFF	
440	90110-0152	-		4	CABLE HOOD 24-POL 70.352.2428.1	
460	90110-0385	-		9	HOLDER	
470	90110-0160	-		1	CABLE HOOD 6-16-POL 70.352.1628.1	
480	90237-0206	-		2	LOCK, 1000-U45/U2/17/23/24/991	
T6203	90458-0258	-		1	TRANSFORMER, 220VAC/6-9-12VAC	
X132	90110-0159	-		1	MALE INSERT 70.310.0640.0	
X133	90110-0159	-		1	MALE INSERT 70.310.0640.0	
X220	90110-0150	-		1	MALE INSERT 121110 0000	
X504	90110-0156	-		1	MALE INSERT 70.210.0653.0	

Machine Type | Group Description | Used-In | Group Number | Page No

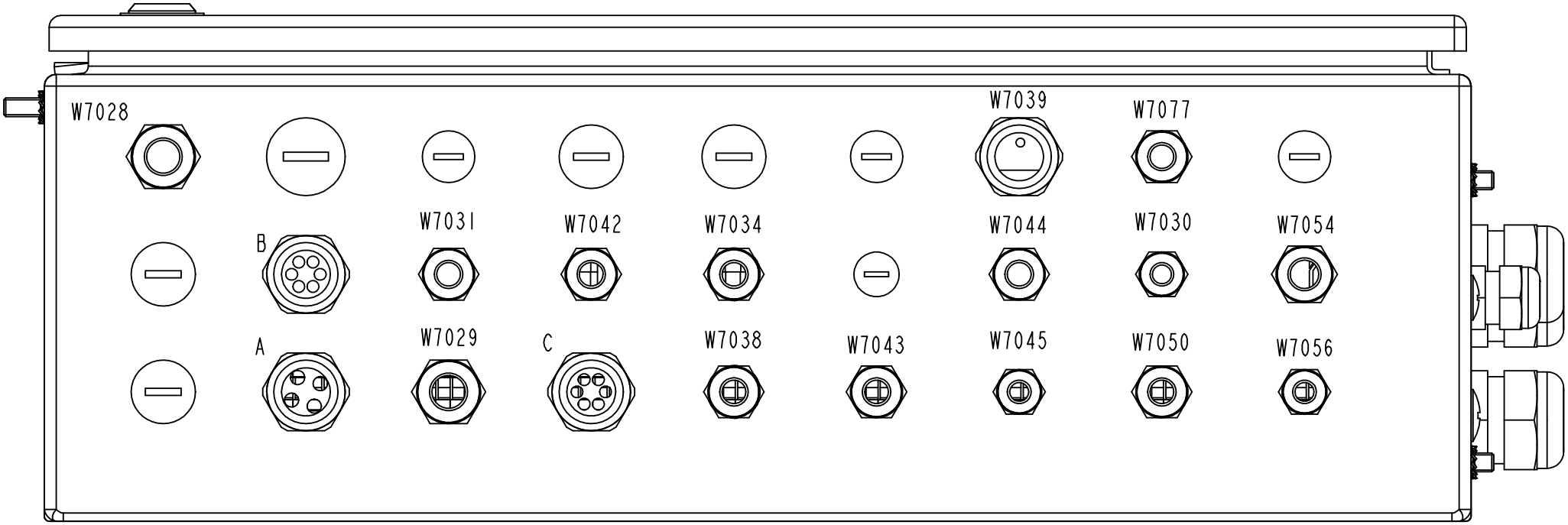

A*	B*	C*
W7016	W7020	W7015
W7017	W7023	W7019
W7018	W7024	W7013
W7022	W7025	W7033
	W7026	W7035
	W7027	W7036

1548491-4
ECM 156809

ECM: 167456 - 20040420
Group number: 1548491-0200
Assembly Drawing: 1548491-4_4_AA

This list covers pages from 8-122 to 8-131

Pos	Part No	SP	UN	Qty	Description	Page No
TBA/22 (See drawing on pages: 8-122, 8-124, 8-126, 8-128, 8-130)						
180	352103-0101	-		3	CABLE GLAND, ST 9, PR15,2/PG9	
200	352103-0111	-		10	CABLE GLAND, ST 16, PR22,5/PG16	
215	352103-0116	-		1	CABLE GLAND, ST 21, PR28,3/PG21	
230	353240-0005	-		4	NORMAL WITHOUT INSERT, PG 21	
250	90002-0004	-		5	BLANK-OFF PLUG, PR 22,5 SKINDICHT-BLK16	
270	90002-0012	-		1	BLANK-OFF PLUG, PR 28,3 SKINDICHT-BLK21	
280	90002-0013	-		2	BLANK-OFF PLUG, PR 15,2 SKINDICHT-BLK9	
450	90110-0157	-		4	CABLE HOOD 6-POL 70.352.0628.1	
W7003	351150-0420	-	M	5	CABLE OLFLEX 7X2,5 MM2 LIGHT/GREY	
W7004	351150-0413	-	M	5	CABLE OLFLEX 4X1,5 MM2 LIGHT/GREY	
W7005	351150-0412	-	M	5	CABLE OLFLEX 3X1,5 MM2 LIGHT/GREY	
W7006	351150-0425	-	M	6	CABLE OLFLEX 25X0,75 MM2 LIGHT/GREY	
W7007	351150-0425	-	M	6500	CABLE OLFLEX 25X0,75 MM2 LIGHT/GREY	
W7008	351150-0425	-	M	6500	CABLE OLFLEX 25X0,75 MM2 LIGHT/GREY	
W7009	351150-0425	-	M	6	CABLE OLFLEX 25X0,75 MM2 LIGHT/GREY	
W7037	351150-0415	-	M	6	CABLE OLFLEX 7X1,5 MM2 LIGHT/GREY	
W7076	90220-0104	-	M	6	SCR. CABLE 4X1,5MM2	
X118	90110-0159	-		1	MALE INSERT 70.310.0640.0	
X128	90110-0159	-		1	MALE INSERT 70.310.0640.0	
X221	90110-0150	-		1	MALE INSERT 121110 0000	
X225	90110-0150	-		1	MALE INSERT 121110 0000	
X226	90110-0150	-		1	MALE INSERT 121110 0000	
X231	90110-0150	-		1	MALE INSERT 121110 0000	
Common Parts						
015	2611462-0100	-		1	TERMINAL BLOCK	**8-133, 8-135**
020	1548496-0100	-		1	TERMINAL	**8-137**
035	2611463-0100	-		1	TERMINAL BLOCK	**8-139, 8-141**
045	2503895-0000	-		2	WASHER	
050	1548492-0000	-		1	ELECTRICAL CABINET	
065	2611461-0000	-		1	CABLE DUCT	
075	2611458-0000	-		1	CABLE DUCT	
085	2611460-0000	-		1	CABLE DUCT	
095	2611459-0000	-		1	CABLE DUCT	
105	2611457-0000	-		1	CABLE DUCT	
115	312115-0449	-		2	SCREW ISO4762 M8X16 A4	
120	312115-0291	-		4	SCREW ISO4762 M4X12 A4	
135	312105-0449	-		2	SCREW M6S ISO 4017 M8X16 A480	
145	312115-0451	-		2	SCREW ISO4762 M8X20 A4	
150	312605-0318	-		2	HEXAGON NUT, M6M M8 A280	
160	315105-0136	-		4	WASHER BRB4,3XRFR	
170	315105-0165	-		2	WASHER BRB8,4X16RFR	
175	315125-0165	-		4	WASHER TBRSB 8,4X26X5 A4	
190	352103-0106	-		12	CABLE GLAND, ST 11, PR18,6/PG11	
195	352103-0108	-		4	CABLE GLAND, ST 13,5 , PR20,4/PG13,5	
210	352103-0115	-		2	CABLE GLAND, STR 21, PR28,3/PG21	
220	352103-0121	-		8	CABLE GLAND, ST 29, PR37,0/PG29	
240	353249-0051	-		1	INSERT, MULTI HOLE, E154M4X8	
260	90002-0009	-		4	BLANK-OFF PLUG, PR 18.6 SKINDICHT-BLK11	
290	90012-0125	-		2	GLAND FITTING	
310	90062-0016	-		8	LOCK WASHER SERRAT.EXT.GEAR,8,4/15 H=0,8	
320	90062-0059	-		4	LOCK WASHER SERRAT.EXT.GEAR,4,3/8 H=0,5	
330	90099-0104	-		5	NUT, PR 15,2 (PG9)	
340	90099-0110	-		18	NUT, PR 22,5 (PG16)	
350	90099-0117	-		12	NUT, PR 18,6 (PG11)	
355	90099-0118	-		2	NUT, PR 20,4 (PG13,5)	
360	90099-0119	-		6	NUT, PR 28,3 (PG21)	
370	90099-0120	-		4	NUT PR 37 (PG29)	
380	90135-0040	-		1	EARTH WIRE, L=150 MM 16 MM2	
390	90181-0313	-		12	RIVET DUCTAFIX R4	
400	359005-0010	-		9	MARKING LABEL KIT 0 - 9, 04.841.2150.0	
410	359005-0050	-		1	MARKING LABEL KIT X, 04.841.4550.0	
420	90089-0028	-		1	MUFF	
440	90110-0152	-		4	CABLE HOOD 24-POL 70.352.2428.1	
460	90110-0385	-		9	HOLDER	
470	90110-0160	-		1	CABLE HOOD 6-16-POL 70.352.1628.1	
480	90237-0206	-		2	LOCK, 1000-U45/U2/17/23/24/991	
T6203	90458-0258	-		1	TRANSFORMER, 220VAC/6-9-12VAC	
X132	90110-0159	-		1	MALE INSERT 70.310.0640.0	
X133	90110-0159	-		1	MALE INSERT 70.310.0640.0	
X220	90110-0150	-		1	MALE INSERT 121110 0000	
X504	90110-0156	-		1	MALE INSERT 70.210.0653.0	

Machine Type | Group Description | Used-In | Group Number | Page No

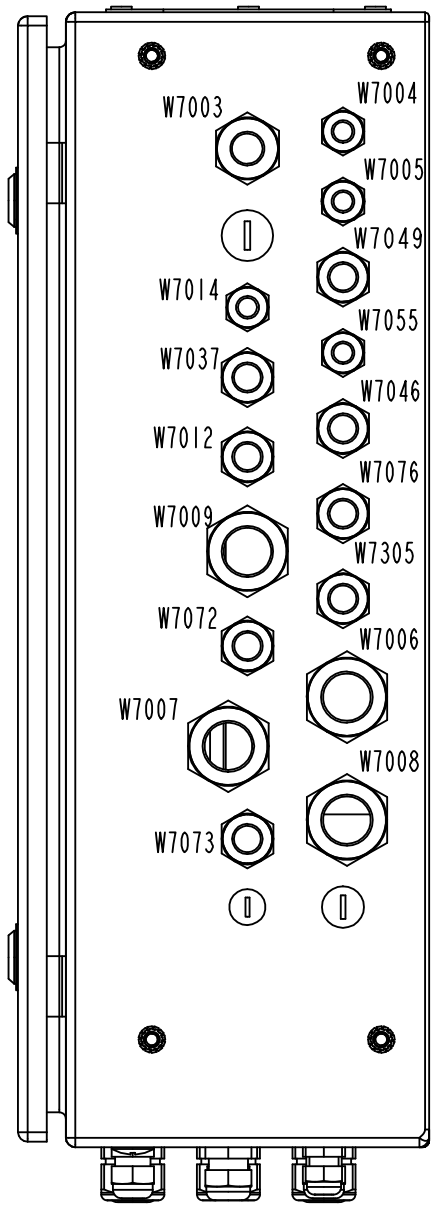

1548491-4
ECM 156809

ECM: 167456 - 20040420
Group number: 1548491-0200
Assembly Drawing: 1548491-4_5_AA

This list covers pages from 8-122 to 8-131

Pos	Part No	SP	UN	Qty	Description	Page No
TBA/22 (See drawing on pages: 8-122, 8-124, 8-126, 8-128, 8-130)						
180	352103-0101	-		3	CABLE GLAND, ST 9, PR15,2/PG9	
200	352103-0111	-		10	CABLE GLAND, ST 16, PR22,5/PG16	
215	352103-0116	-		1	CABLE GLAND, ST 21, PR28,3/PG21	
230	353240-0005	-		4	NORMAL WITHOUT INSERT, PG 21	
250	90002-0004	-		5	BLANK-OFF PLUG, PR 22,5 SKINDICHT-BLK16	
270	90002-0012	-		1	BLANK-OFF PLUG, PR 28,3 SKINDICHT-BLK21	
280	90002-0013	-		2	BLANK-OFF PLUG, PR 15,2 SKINDICHT-BLK9	
450	90110-0157	-		4	CABLE HOOD 6-POL 70.352.0628.1	
W7003	351150-0420	-	M	5	CABLE OLFLEX 7X2,5 MM2 LIGHT/GREY	
W7004	351150-0413	-	M	5	CABLE OLFLEX 4X1,5 MM2 LIGHT/GREY	
W7005	351150-0412	-	M	5	CABLE OLFLEX 3X1,5 MM2 LIGHT/GREY	
W7006	351150-0425	-	M	6	CABLE OLFLEX 25X0,75 MM2 LIGHT/GREY	
W7007	351150-0425	-	M	6500	CABLE OLFLEX 25X0,75 MM2 LIGHT/GREY	
W7008	351150-0425	-	M	6500	CABLE OLFLEX 25X0,75 MM2 LIGHT/GREY	
W7009	351150-0425	-	M	6	CABLE OLFLEX 25X0,75 MM2 LIGHT/GREY	
W7037	351150-0415	-	M	6	CABLE OLFLEX 7X1,5 MM2 LIGHT/GREY	
W7076	90220-0104	-	M	6	SCR. CABLE 4X1,5MM2	
X118	90110-0159	-		1	MALE INSERT 70.310.0640.0	
X128	90110-0159	-		1	MALE INSERT 70.310.0640.0	
X221	90110-0150	-		1	MALE INSERT 121110 0000	
X225	90110-0150	-		1	MALE INSERT 121110 0000	
X226	90110-0150	-		1	MALE INSERT 121110 0000	
X231	90110-0150	-		1	MALE INSERT 121110 0000	
Common Parts						
015	2611462-0100	-		1	TERMINAL BLOCK	**8-133, 8-135**
020	1548496-0100	-		1	TERMINAL	**8-137**
035	2611463-0100	-		1	TERMINAL BLOCK	**8-139, 8-141**
045	2503895-0000	-		2	WASHER	
050	1548492-0000	-		1	ELECTRICAL CABINET	
065	2611461-0000	-		1	CABLE DUCT	
075	2611458-0000	-		1	CABLE DUCT	
085	2611460-0000	-		1	CABLE DUCT	
095	2611459-0000	-		1	CABLE DUCT	
105	2611457-0000	-		1	CABLE DUCT	
115	312115-0449	-		2	SCREW ISO4762 M8X16 A4	
120	312115-0291	-		4	SCREW ISO4762 M4X12 A4	
135	312105-0449	-		2	SCREW M6S ISO 4017 M8X16 A480	
145	312115-0451	-		2	SCREW ISO4762 M8X20 A4	
150	312605-0318	-		2	HEXAGON NUT, M6M M8 A280	
160	315105-0136	-		4	WASHER BRB4,3XRFR	
170	315105-0165	-		2	WASHER BRB8,4X16RFR	
175	315125-0165	-		4	WASHER TBRSB 8,4X26X5 A4	
190	352103-0106	-		12	CABLE GLAND, ST 11, PR18,6/PG11	
195	352103-0108	-		4	CABLE GLAND, ST 13,5 , PR20,4/PG13,5	
210	352103-0115	-		2	CABLE GLAND, STR 21, PR28,3/PG21	
220	352103-0121	-		8	CABLE GLAND, ST 29, PR37,0/PG29	
240	353249-0051	-		1	INSERT, MULTI HOLE, E154M4X8	
260	90002-0009	-		4	BLANK-OFF PLUG, PR 18.6 SKINDICHT-BLK11	
290	90012-0125	-		2	GLAND FITTING	
310	90062-0016	-		8	LOCK WASHER SERRAT.EXT.GEAR,8,4/15 H=0,8	
320	90062-0059	-		4	LOCK WASHER SERRAT.EXT.GEAR,4,3/8 H=0,5	
330	90099-0104	-		5	NUT, PR 15,2 (PG9)	
340	90099-0110	-		18	NUT, PR 22,5 (PG16)	
350	90099-0117	-		12	NUT, PR 18,6 (PG11)	
355	90099-0118	-		2	NUT, PR 20,4 (PG13,5)	
360	90099-0119	-		6	NUT, PR 28,3 (PG21)	
370	90099-0120	-		4	NUT PR 37 (PG29)	
380	90135-0040	-		1	EARTH WIRE, L=150 MM 16 MM2	
390	90181-0313	-		12	RIVET DUCTAFIX R4	
400	359005-0010	-		9	MARKING LABEL KIT 0 - 9, 04.841.2150.0	
410	359005-0050	-		1	MARKING LABEL KIT X, 04.841.4550.0	
420	90089-0028	-		1	MUFF	
440	90110-0152	-		4	CABLE HOOD 24-POL 70.352.2428.1	
460	90110-0385	-		9	HOLDER	
470	90110-0160	-		1	CABLE HOOD 6-16-POL 70.352.1628.1	
480	90237-0206	-		2	LOCK, 1000-U45/U2/17/23/24/991	
T6203	90458-0258	-		1	TRANSFORMER, 220VAC/6-9-12VAC	
X132	90110-0159	-		1	MALE INSERT 70.310.0640.0	
X133	90110-0159	-		1	MALE INSERT 70.310.0640.0	
X220	90110-0150	-		1	MALE INSERT 121110 0000	
X504	90110-0156	-		1	MALE INSERT 70.210.0653.0	

Machine Type | Group Description | Used-In | Group Number | Page No

TERMINAL BLOCK

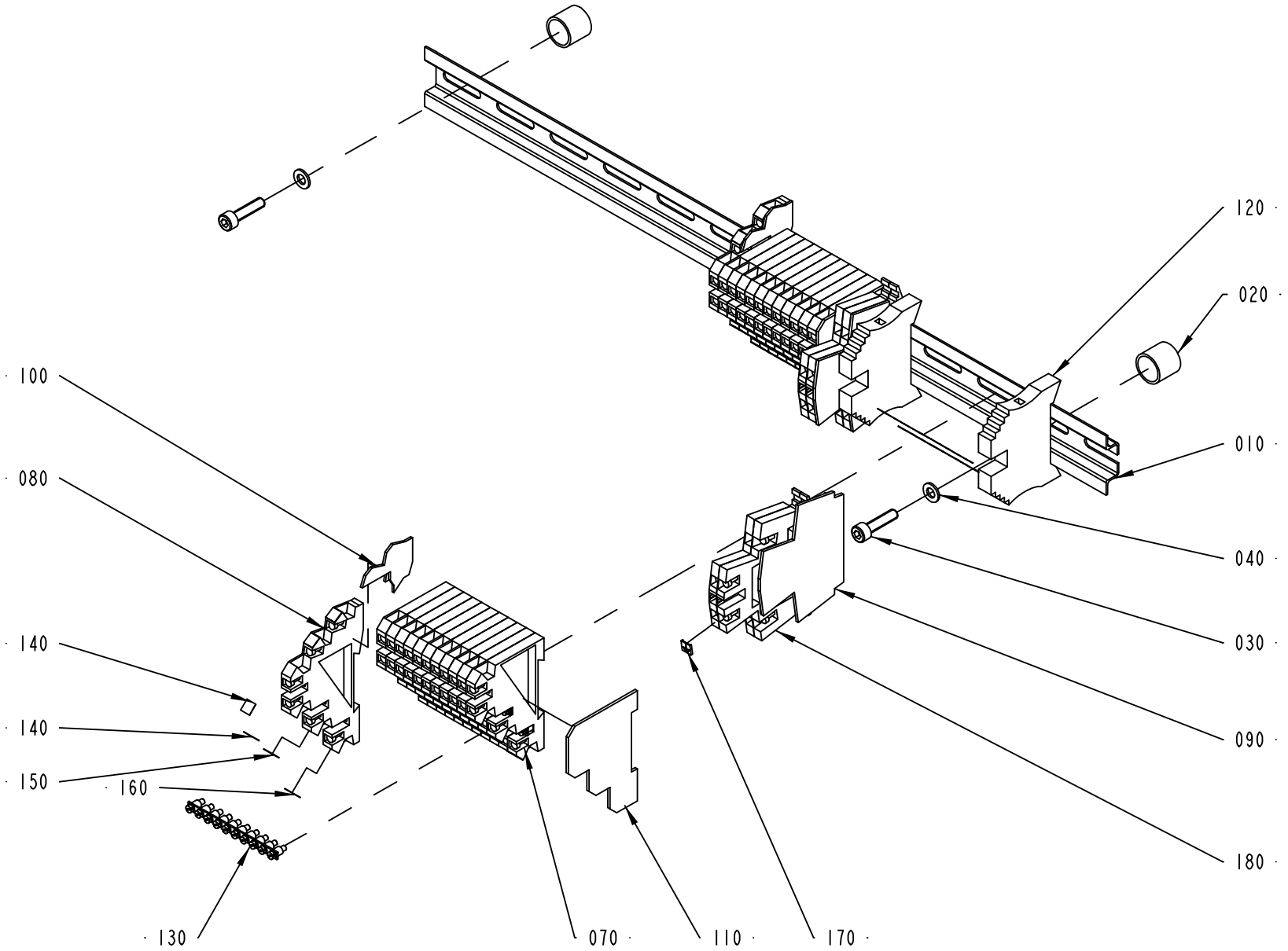

2611462-1
ECM 130325

ECM: 130640 - 20030519
Group number: 2611462-0100
Assembly Drawing: 2611462-1_1_AA

This list covers pages from 8-132 to 8-135

Pos	Part No	SP	UN	Qty	Description	Page No
-						
010	2611464-0000	-		1	RAIL	
020	495118-0014	-		2	DISTANCE PIPE L=14 MM	
030	312115-0331	-		2	SCREW ISO4762 M5X20 A4	
040	315105-0146	-		2	WASHER BRB5,3X10RFR	
070	353021-0301	-		22	TERMINALS,TRIPLE-LEVEL, DLI 2,5/35 PA	
080	353021-0302	-		2	TERMINALS,TRIPLE-LEVEL, DLD 2,5/35 PA	
090	353032-0009	-		2	END PLATE, WAP FOR WDK	
100	353032-0013	-		2	END PLATE, 13818.6	
110	353032-0301	-		2	END PLATE WAP	
120	353031-0203	-		2	END SUPPORT, WEW 35/2	
130	353034-0404	A		4	BRIDGE CONNECTOR Q10, 13131.0	
140	359011-0824	-		2	SET OF SIGNS 6-FW 151-200	
150	359011-0832	-		26	SET OF SIGNS 6-GW (+)	
160	359011-0833	-		26	SET OF SIGNS 6-GW (-)	
170	359011-0834	-		1	SET OF SIGNS 6-GW(EARTH)	
180	90458-1136	-		4	TERMINAL BLOCK, 103630	
190	359011-0825	-		2	SET OF SIGNS 6-FW 201-250	

Pos	Part No	SP	UN	Qty	Description	Page No

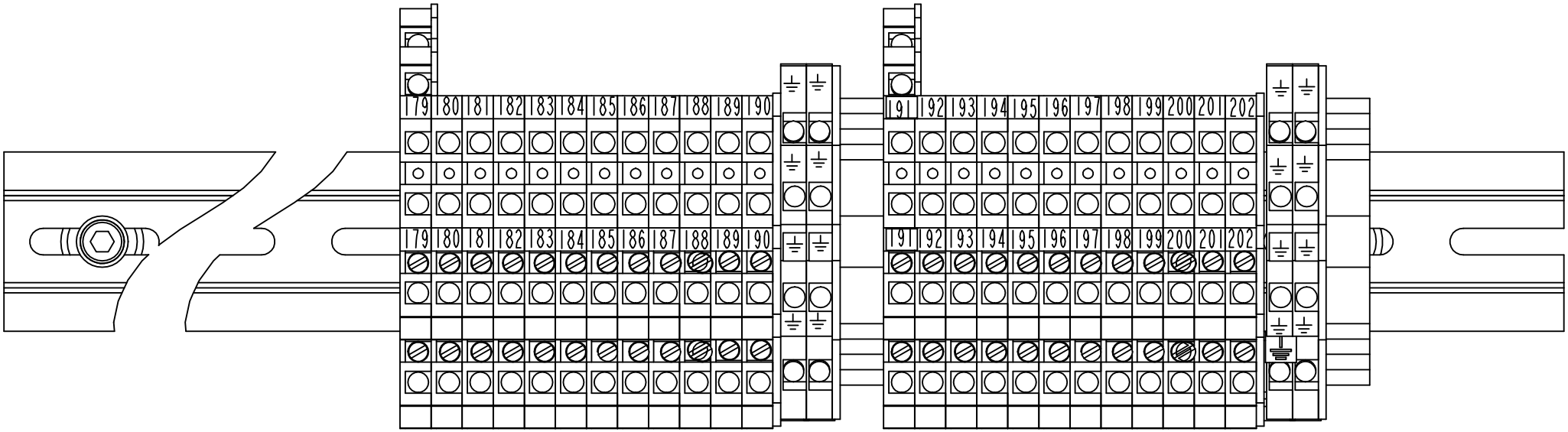

2611462-1
ECM 130325

ECM: 130640 - 20030519
Group number: 2611462-0100
Assembly Drawing: 2611462-1_2_AA

This list covers pages from 8-132 to 8-135

Pos	Part No	SP	UN	Qty	Description	Page No
-						
010	2611464-0000	-		1	RAIL	
020	495118-0014	-		2	DISTANCE PIPE L=14 MM	
030	312115-0331	-		2	SCREW ISO4762 M5X20 A4	
040	315105-0146	-		2	WASHER BRB5,3X10RFR	
070	353021-0301	-		22	TERMINALS,TRIPLE-LEVEL, DLI 2,5/35 PA	
080	353021-0302	-		2	TERMINALS,TRIPLE-LEVEL, DLD 2,5/35 PA	
090	353032-0009	-		2	END PLATE, WAP FOR WDK	
100	353032-0013	-		2	END PLATE, 13818.6	
110	353032-0301	-		2	END PLATE WAP	
120	353031-0203	-		2	END SUPPORT, WEW 35/2	
130	353034-0404	A		4	BRIDGE CONNECTOR Q10, 13131.0	
140	359011-0824	-		2	SET OF SIGNS 6-FW 151-200	
150	359011-0832	-		26	SET OF SIGNS 6-GW (+)	
160	359011-0833	-		26	SET OF SIGNS 6-GW (-)	
170	359011-0834	-		1	SET OF SIGNS 6-GW(EARTH)	
180	90458-1136	-		4	TERMINAL BLOCK, 103630	
190	359011-0825	-		2	SET OF SIGNS 6-FW 201-250	

Pos	Part No	SP	UN	Qty	Description	Page No

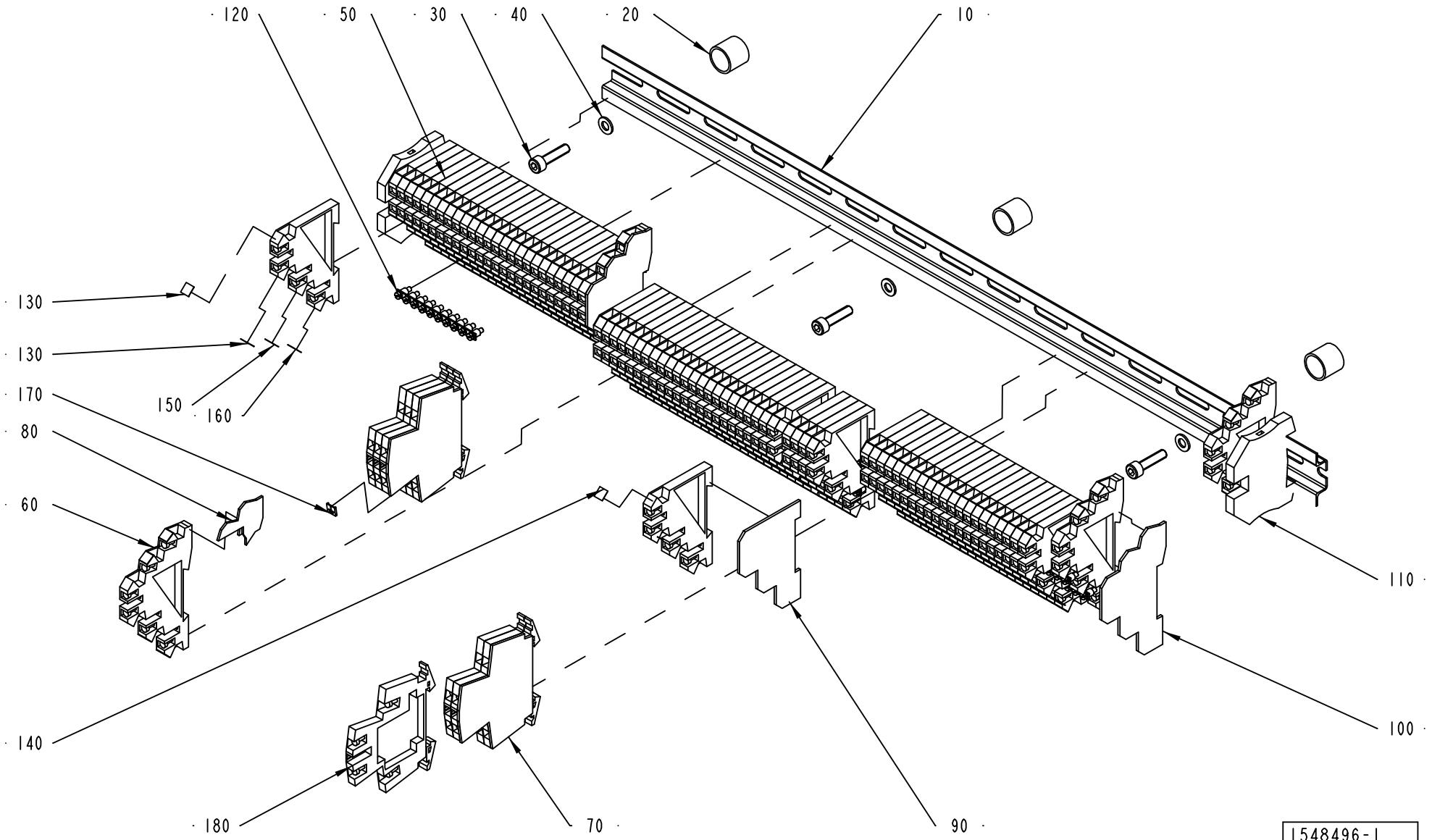
120
50
30
40
20
10
130
130
170
150
160
80
60
140
180
70
90
110
100
1548496-1
ECM 130325

ECM: 132198 - 20030519
Group number: 1548496-0100
Assembly Drawing: 1548496-1_1_AB

Pos	Part No	SP	UN	Qty	Description	Page No
-						
010	2503654-0000	-		1	RAIL	
020	495118-0014	-		3	DISTANCE PIPE L=14 MM	
030	312115-0331	-		3	SCREW ISO4762 M5X20 A4	
040	315105-0146	-		3	WASHER BRB5,3X10RFR	
050	353021-0301	-		74	TERMINALS,TRIPLE-LEVEL, DLI 2,5/35 PA	
060	353021-0302	-		4	TERMINALS,TRIPLE-LEVEL, DLD 2,5/35 PA	
070	353032-0009	-		2	END PLATE, WAP FOR WDK	
080	353032-0013	-		1	END PLATE, 13818.6	
090	353032-0301	-		1	END PLATE WAP	
100	353032-0302	-		2	END PLATE WAP	
110	353024-0205	-		2	EARTH TERMINAL, 1010.1	
120	353034-0404	A		17	BRIDGE CONNECTOR Q10, 13131.0	
130	359011-0823	-		2	SET OF SIGNS 6-FW 101-150	
140	359011-0824	-		2	SET OF SIGNS 6-FW 151-200	
150	359011-0832	-		2	SET OF SIGNS 6-GW (+)	
160	359011-0833	-		2	SET OF SIGNS 6-GW (-)	
170	359011-0834	-		1	SET OF SIGNS 6-GW(EARTH)	
180	90458-1136	A		6	TERMINAL BLOCK, 103630	

Pos	Part No	SP	UN	Qty	Description	Page No

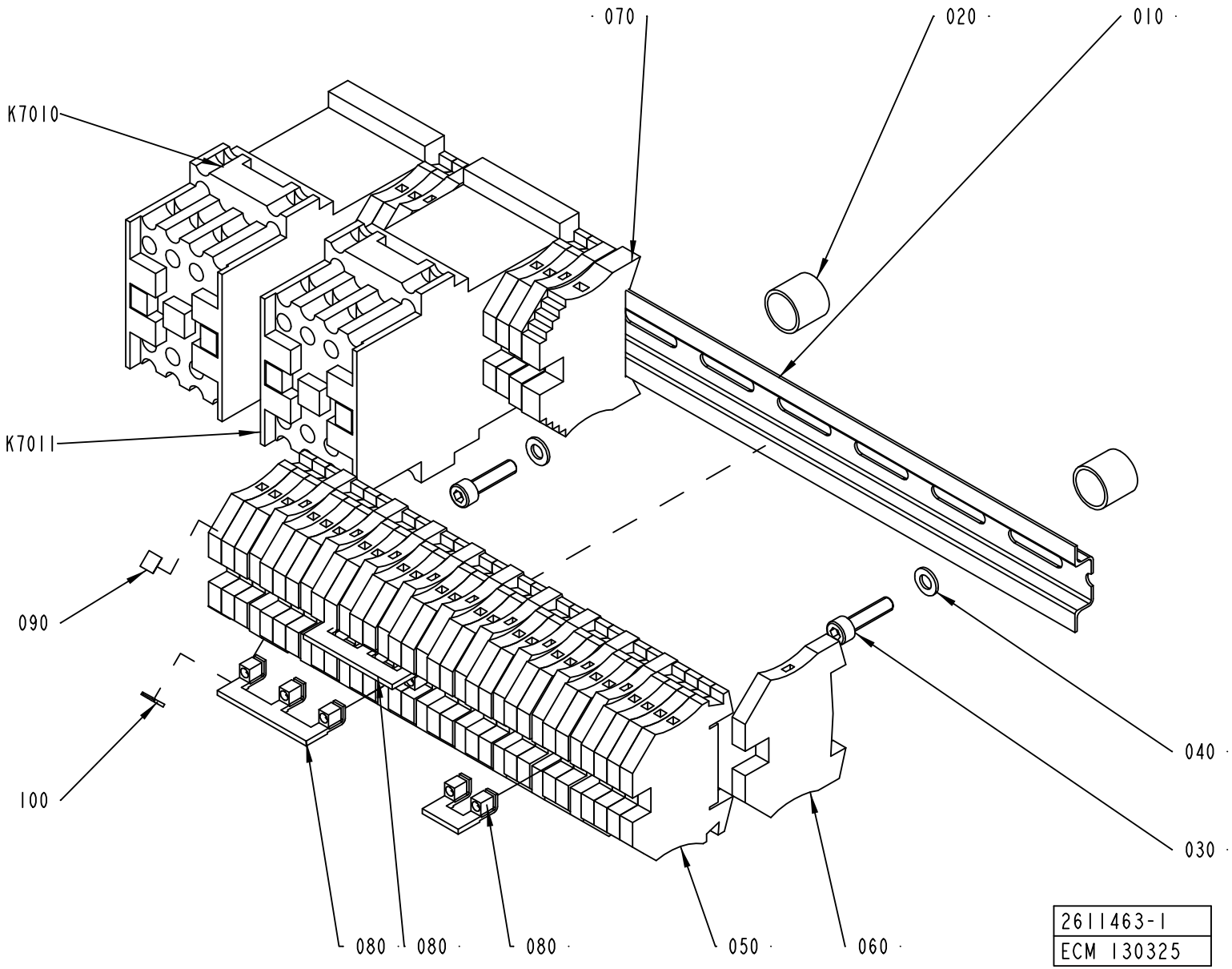
070
020
010
K7010
K7011
090
100
040
030
080
080
080
050
060
2611463-1
ECM 130325

ECM: 130639 - 20030519
Group number: 2611463-0100
Assembly Drawing: 2611463-1_1_AA

This list covers pages from 8-138 to 8-141

Pos	Part No	SP	UN	Qty	Description	Page No
-						
010	2611465-0000	-		1	RAIL	
020	495118-0014	-		2	DISTANCE PIPE L=14 MM	
030	312115-0331	-		2	SCREW ISO4762 M5X20 A4	
040	315105-0146	-		2	WASHER BRB5,3X10RFR	
050	353021-0213	-		28	FEED THROUGH TERMINAL, 10201.0	
060	353024-0205	-		12	EARTH TERMINAL, 1010.1	
070	353031-0203	-		1	END SUPPORT, WEW 35/2	
080	353034-0031	-		3	BRIDGE CONNECTOR, WQV 4/10, 10520.6	
090	359011-0821	-		2	SET OF SIGNS 6-FW 1-50	
100	359011-0834	-		1	SET OF SIGNS 6-GW(EARTH)	
K7010	90075-0127	A		1	CONTACTOR, 4KW 24VDC	
K7011	90075-0127	A		1	CONTACTOR, 4KW 24VDC	

Pos	Part No	SP	UN	Qty	Description	Page No

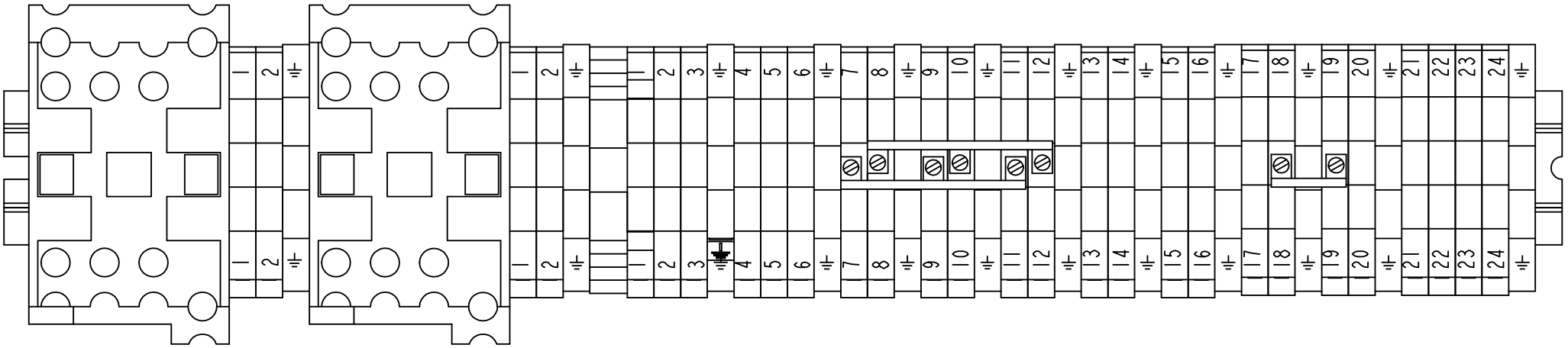

2611463-1
ECM 130325

ECM: 130639 - 20030519
Group number: 2611463-0100
Assembly Drawing: 2611463-1_2_AA

This list covers pages from 8-138 to 8-141

Pos	Part No	SP	UN	Qty	Description	Page No
-						
010	2611465-0000	-		1	RAIL	
020	495118-0014	-		2	DISTANCE PIPE L=14 MM	
030	312115-0331	-		2	SCREW ISO4762 M5X20 A4	
040	315105-0146	-		2	WASHER BRB5,3X10RFR	
050	353021-0213	-		28	FEED THROUGH TERMINAL, 10201.0	
060	353024-0205	-		12	EARTH TERMINAL, 1010.1	
070	353031-0203	-		1	END SUPPORT, WEW 35/2	
080	353034-0031	-		3	BRIDGE CONNECTOR, WQV 4/10, 10520.6	
090	359011-0821	-		2	SET OF SIGNS 6-FW 1-50	
100	359011-0834	-		1	SET OF SIGNS 6-GW(EARTH)	
K7010	90075-0127	A		1	CONTACTOR, 4KW 24VDC	
K7011	90075-0127	A		1	CONTACTOR, 4KW 24VDC	

Pos	Part No	SP	UN	Qty	Description	Page No

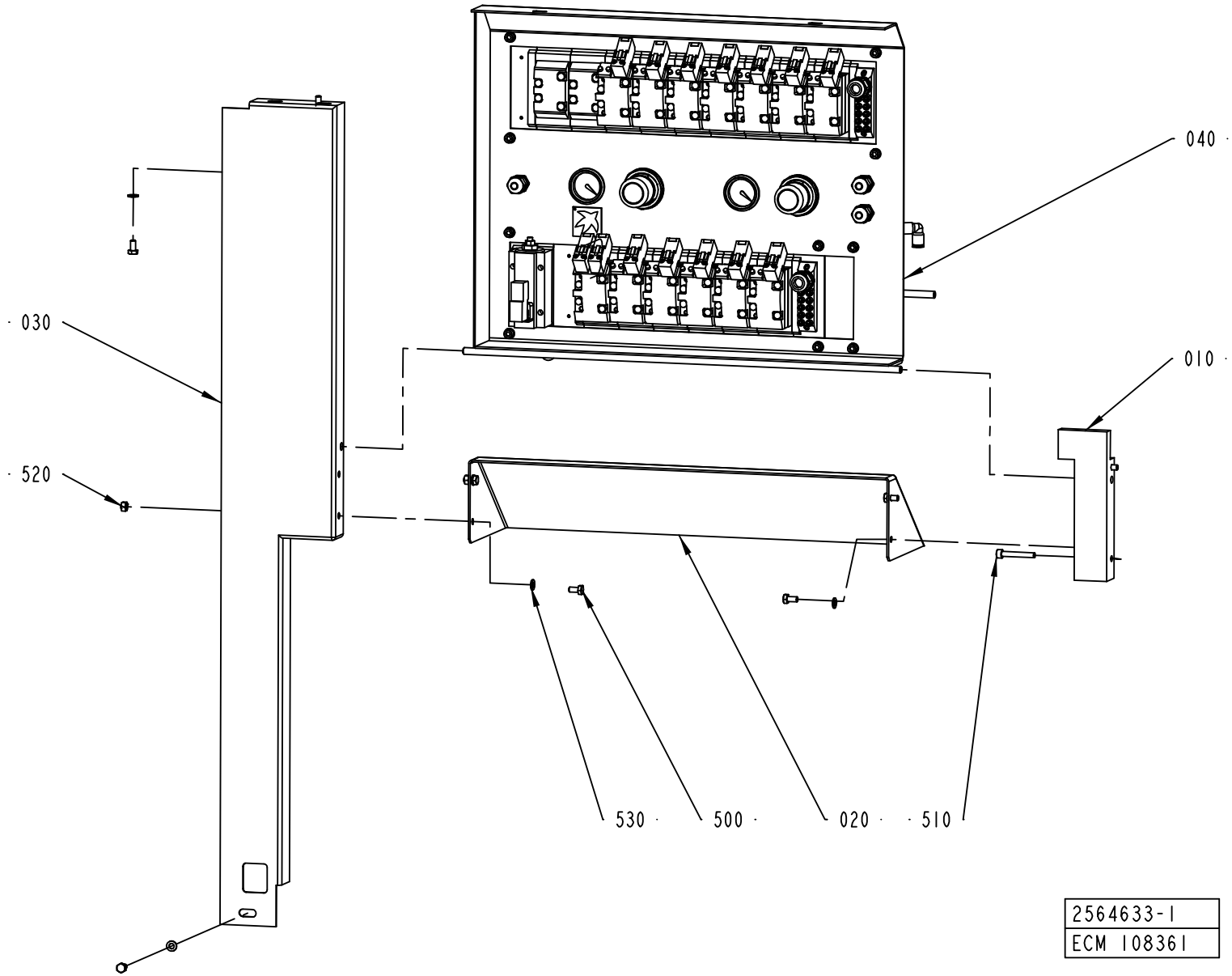
040
030
010
520
530
500
020
510
2564633-1
ECM 108361

ECM: 122171 - 20030908
Group number: 2564633-0100
Assembly Drawing: 2564633-1_1_AA

Pos	Part No	SP	UN	Qty	Description	Page No
-						
010	2564634-0000	-		1	BEARING BLOCK	
020	2570834-0000	-		1	PROTECTIVE CASING	
030	2570836-0000	-		1	PROTECTION PLATE	
040	2564632-0100	-		1	VALVE PANEL	**8-145, 8-147, 8-149, 8-151**
500	312105-0366	-		7	SCREW M6S ISO 4017 M6X12 A480	
510	312115-0378	-		2	SCREW ISO4762 M6X40 A4 80	
520	312605-0316	-		2	HEXAGON NUT, M6M M6 A280	
530	315105-0153	-		7	WASHER BRB6,4X12RFR	

Pos	Part No	SP	UN	Qty	Description	Page No

VALVE PANEL

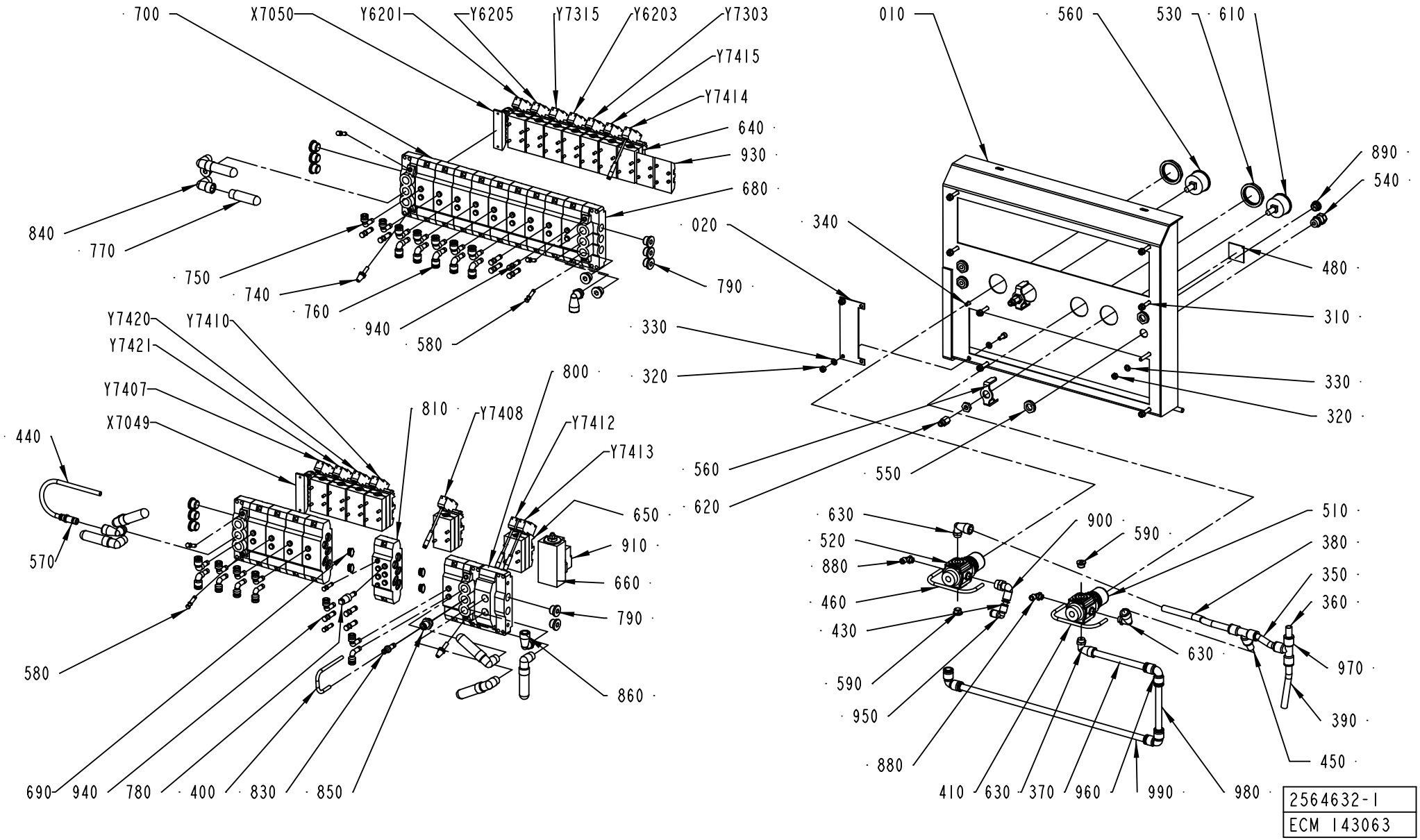
700
X7050
Y6201
Y6205
Y7315
Y6203
Y7303
Y7415
Y7414
640
930
680
840
770
750
740
760
940
580
790
020
010
560
530
610
890
540
340
480
310
330
320
550
Y7420
Y7410
Y7421
Y7407
X7049
440
570
580
800
810
Y7408
Y7412
Y7413
650
910
660
790
860
690
940
780
400
830
850
330
320
560
620
630
520
880
460
430
590
950
880
900
590
510
380
350
360
630
970
390
450
410
630
370
960
990
980
2564632-1
ECM 143063

ECM: 156920 - 20040419
Group number: 2564632-0100
Assembly Drawing: 2564632-1_1_AB

This list covers pages from 8-144 to 8-151

Pos	Part No	SP	UN	Qty	Description	Page No
TBA/22 WITH ARL (See drawing on pages: 8-148, 8-150)						
020	2616034-0000	-		1	COVER PLATE	
320	312605-0316	-		10	HEXAGON NUT, M6M M6 A280	
340	312115-0367	-		2	SCREW ISO4762 M6X14 A4	
540	90458-0306	-		4	CABLE GLAND, M16X1,5, NO.5311 1010	
570	342716-0209	-		1	REDUCER 8-12	
580	342715-0102	-		7	BLIND PLUG 6 MM	
640	90042-0215	A		12	VALVE BODY 5/2 UNISTABLE	
670	90042-0230	-		2	VALVE BODY 5/3 OPEN CENTRE	
690	90042-0528	A		4	BLANKING KIT SEALS ISO SIZE 1	
750	90055-0172	-		11	ELBOW WITH TAILPIECE 8/8 MM	
760	90055-0173	-		16	ELBOW WITH TAILPIECE 8/6 MM	
790	342713-0211	-		14	PLUG, EXT THREAD HEX SOCKET 8638-00-380	
810	90042-0520	-		1	BASE PLATE ISO SIZE 1	
860	90458-2960	-		3	ELBOW PIPE JOINT, EXT.THREAD,D=12MM-G3/8	
940	342715-0103	-		9	BLIND PLUG 8 MM	
X7051	90042-0535	-		1	TERMINAL BOARD 19 CORDS	
Y6201	90042-0591	-		1	PILOT VALVE L=200 MM	
Y7425	90042-0585	-		1	PILOT VALVE L=5M	
Y7430	90042-0538	-		1	PILOT VALVE L=500MM	
Y7431	90042-0538	-		1	PILOT VALVE L=500MM	
Y7432	90042-0538	-		1	PILOT VALVE L=500MM	
Y7433	90042-0538	-		1	PILOT VALVE L=500MM	
TBA/22 WITHOUT ARL (See drawing on pages: 8-144, 8-146)						
020	2616034-0000	-		1	COVER PLATE	
100	2594393-0000	-		1	PNEUMATIC DIAGRAM	
320	312605-0316	-		10	HEXAGON NUT, M6M M6 A280	
340	312115-0367	-		2	SCREW ISO4762 M6X14 A4	
540	90458-0306	-		3	CABLE GLAND, M16X1,5, NO.5311 1010	
570	342716-0209	-		1	REDUCER 8-12	
580	342715-0102	-		7	BLIND PLUG 6 MM	
640	90042-0215	A		12	VALVE BODY 5/2 UNISTABLE	
690	90042-0528	A		4	BLANKING KIT SEALS ISO SIZE 1	
750	90055-0172	-		11	ELBOW WITH TAILPIECE 8/8 MM	
760	90055-0173	-		12	ELBOW WITH TAILPIECE 8/6 MM	
790	342713-0211	-		14	PLUG, EXT THREAD HEX SOCKET 8638-00-380	
810	90042-0520	-		1	BASE PLATE ISO SIZE 1	
860	90458-2960	-		3	ELBOW PIPE JOINT, EXT.THREAD,D=12MM-G3/8	
890	90458-1307	-		1	BLIND PLUG CIRCULAR, M16X1,5 514GFK/216	
930	90042-0519	-		2	BLANK PLATE ISO SIZE 1	
940	342715-0103	-		9	BLIND PLUG 8 MM	
Y6201	90042-0591	-		1	PILOT VALVE L=200 MM	
Y7425	90042-0585	-		1	PILOT VALVE L=5M	
Common Parts						
010	2570821-0000	-		1	SHEET	
100	2633328-0000	-		1	PNEUMATIC DIAGRAM	
100	2618430-0000	-		1	PNEUMATIC DIAGRAM	
310	312115-0376	-		8	SCREW ISO4762 M6X35 A4	
330	315105-0153	-		20	WASHER BRB6,4X12RFR	
350	90166-0068	-	MM	100	TUBE 12 MM PA BLUE	
360	90166-0068	-	MM	30	TUBE 12 MM PA BLUE	
370	90166-0068	-	MM	200	TUBE 12 MM PA BLUE	
380	90166-0068	-	MM	250	TUBE 12 MM PA BLUE	
390	90166-0068	-	MM	160	TUBE 12 MM PA BLUE	
400	90166-0117	-	MM	200	HOSE 4/6 PVC BLUE	
410	90166-0117	-	MM	220	HOSE 4/6 PVC BLUE	
430	90166-0194	-	MM	30	TUBE 8 MM PUR BLUE	
440	90166-0194	-	MM	270	TUBE 8 MM PUR BLUE	
450	90166-0068	-	MM	30	TUBE 12 MM PA BLUE	
460	90166-0117	-	MM	220	HOSE 4/6 PVC BLUE	
480	273458-0000	-		1	LABEL (AIR)	
510	90113-0470	A		1	MANIFOLD REGULATOR 10 BAR	
520	90457-0144	A		1	REGULATOR 0,3-2 BAR	
530	90457-0078	-		2	PANEL NUT	
550	90458-0322	-		4	NUT, M16X1,5	
560	90043-0064	B		1	PRESSURE GAUGE, 2048 D=40 MM	
580	342715-0102	-		9	BLIND PLUG 6 MM	
590	342713-0209	-		2	PLUG, EXT THREAD HEX SOCKET 8638-00-180	
610	90043-0065	B		1	PRESSURE GAUGE, 2048 D=40 MM	
620	342770-0105	-		2	STRAIGHT COUPLING INT, D=6 MM - G1/8	
630	90458-2959	-		3	ELBOW PIPE JOINT, EXT.THREAD,D=12MM-G1/4	
650	90042-0221	A		1	VALVE BODY 5/2 BISTABLE	
660	90042-0265	-		1	HIGH SPEED VENTING VALVE 583-590-000-1	
680	90042-0522	A		4	PORTED END PIECE ISO SIZE 1	
700	90042-0532	-		14	BASE PLATE ISO SIZE 1	
740	90328-0017	B		2	SILENCER, D=6 MM	
770	90328-0024	B		7	SILENCER G3/8	
780	90328-0038	-		1	SILENCER, D=8 MM	
800	90042-0545	A		1	SUB-BASE SOFT START ISO 1 AND VDMA 01	
830	342716-0203	-		1	REDUCER 6-8	
840	90140-0020	-		7	ELBOW, 90, INT/EXT. THREAD, NO. 2020-3/8	
850	342722-0206	-		1	STRAIGHT COUPLING D=8-G3/8"	
880	90458-2956	-		2	ELBOW PIPE JOINT, EXT.THREAD, D=6MM-G1/8	
900	342732-0105	-		1	ELBOW PIPE D8-R3/8"	

Machine Type | Group Description | Used-In | Group Number | Page No

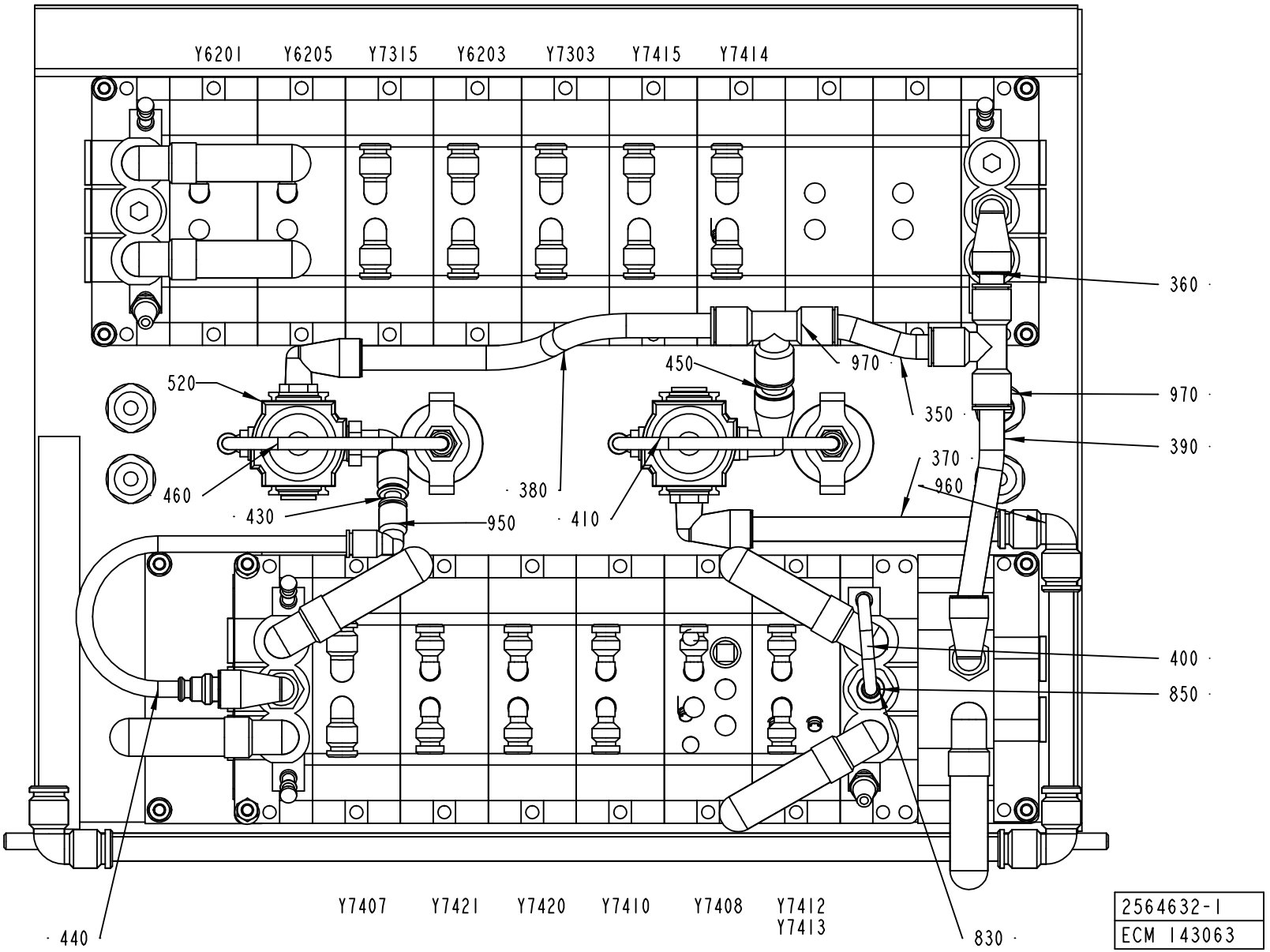
Y6201
Y6205
Y7315
Y6203
Y7303
Y7415
Y7414
360
970
450
520
970
350
390
370
460
380
960
430
950
410
400
850
Y7407
Y7421
Y7420
Y7410
Y7408
Y7412
Y7413
440
830
2564632-1
ECM 143063

Pos	Part No	SP	UN	Qty	Description	Page No
Common Parts (Cont'd)						
950	342735-0103	-		1	ELBOW PIPE JOINT	
960	342735-0109	-		3	ELBOW PIPE JOINT	
970	342748-0109	-		2	T-CONNECTION 12MM	
980	90166-0068	-	MM	200	TUBE 12 MM PA BLUE	
X7049	90042-0535	-		1	TERMINAL BOARD 19 CORDS	
X7050	90042-0535	-		1	TERMINAL BOARD 19 CORDS	
Y6203	90042-0539	-		1	PILOT VALVE L=350MM	
Y6205	90042-0591	-		1	PILOT VALVE L=200 MM	
Y7303	90042-0539	-		1	PILOT VALVE L=350MM	
Y7315	90042-0591	-		1	PILOT VALVE L=200 MM	
Y7407	90042-0591	-		1	PILOT VALVE L=200 MM	
Y7408	90042-0538	-		1	PILOT VALVE L=500MM	
Y7410	90042-0539	-		1	PILOT VALVE L=350MM	
Y7412	90042-0538	-		1	PILOT VALVE L=500MM	
Y7413	90042-0538	-		1	PILOT VALVE L=500MM	
Y7414	90042-0538	-		1	PILOT VALVE L=500MM	
Y7415	90042-0538	-		1	PILOT VALVE L=500MM	
Y7420	90042-0591	-		1	PILOT VALVE L=200 MM	
Y7421	90042-0591	-		1	PILOT VALVE L=200 MM	

Pos	Part No	SP	UN	Qty	Description	Page No

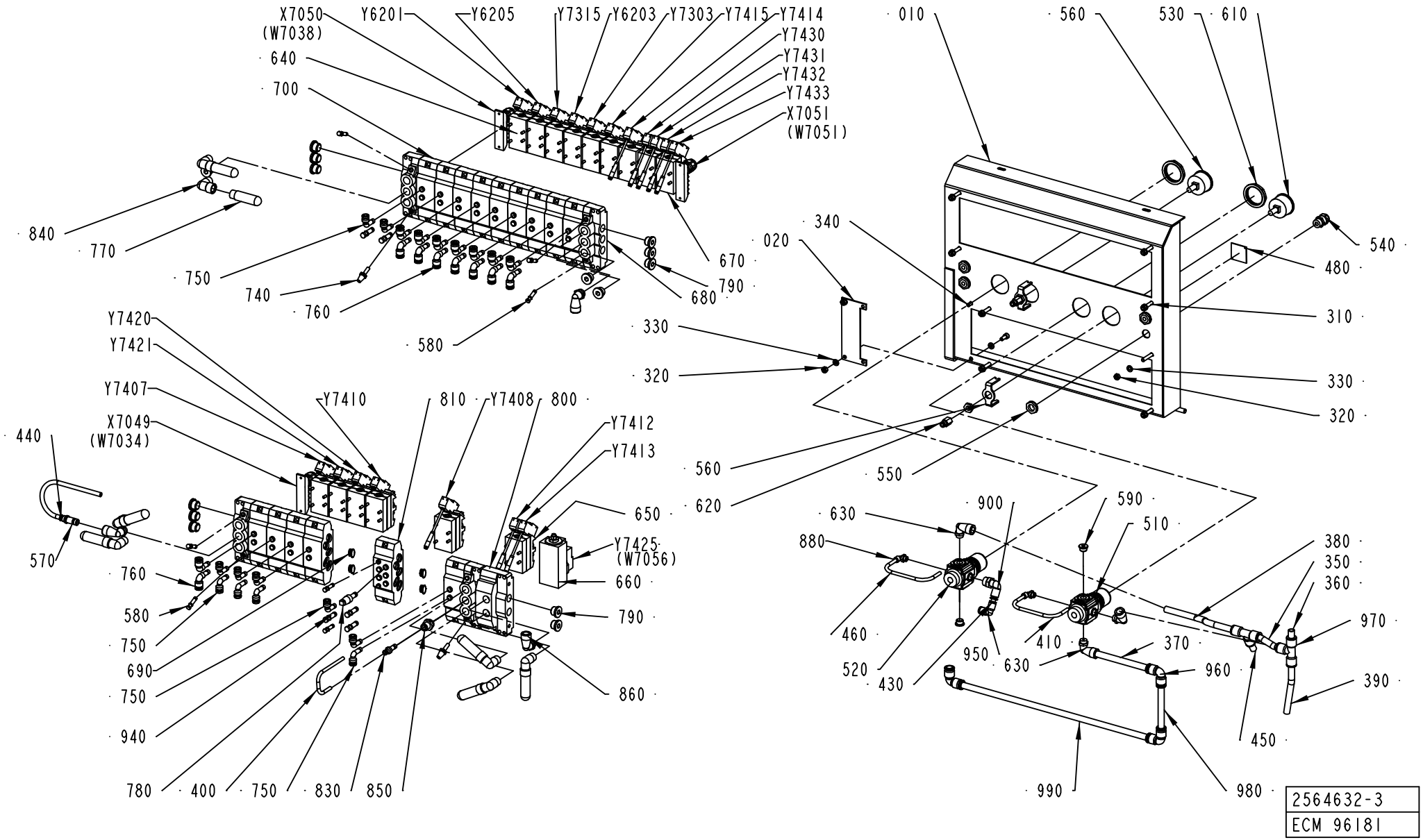

2564632-3
ECM 96181

Pos	Part No	SP	UN	Qty	Description	Page No
SEE PREVIOUS LISTS PAGES: 8-145, 8-147.						

Pos	Part No	SP	UN	Qty	Description	Page No

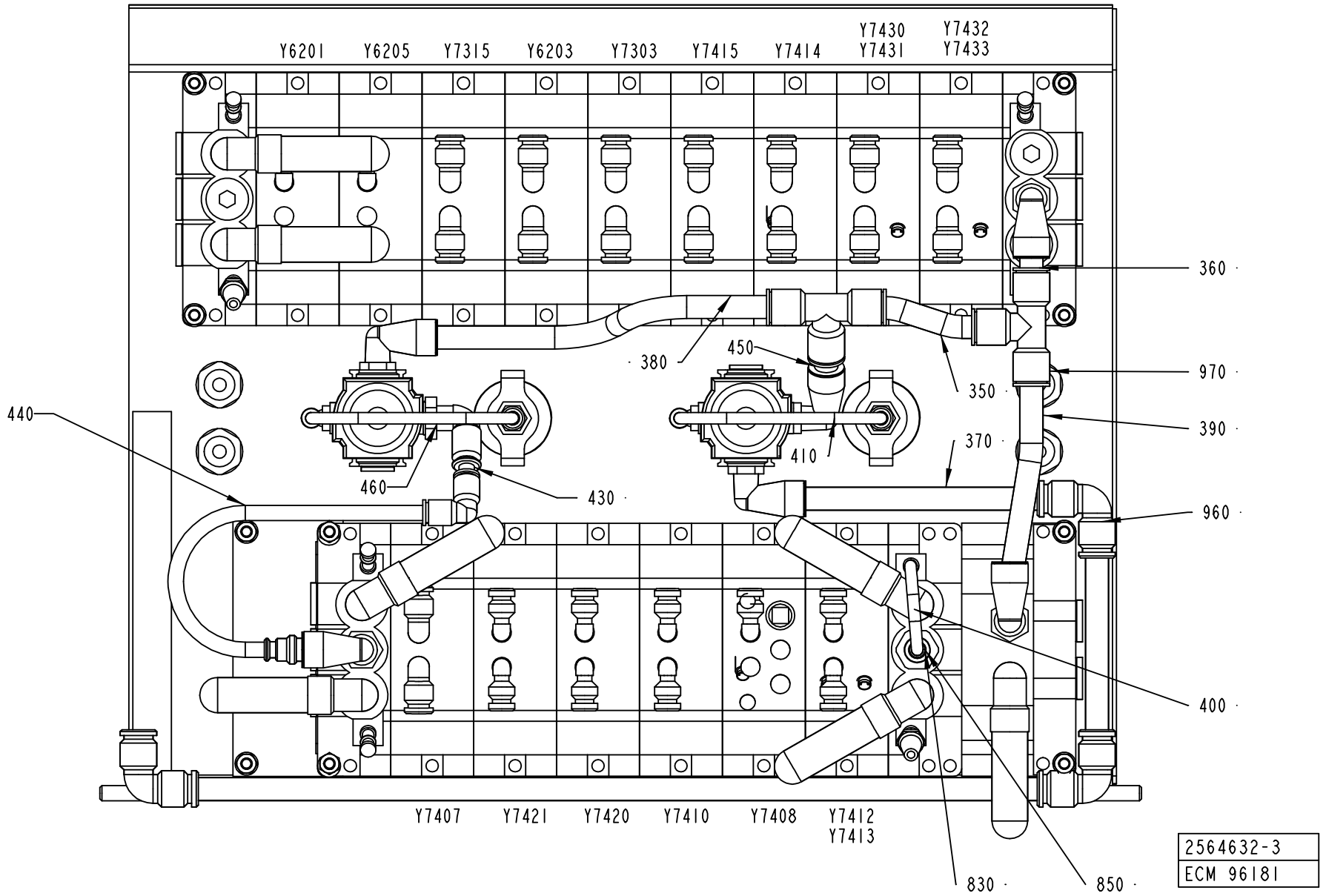
Y6201
Y6205
Y7315
Y6203
Y7303
Y7415
Y7414
Y7430
Y7431
Y7432
Y7433
360
380
450
350
970
390
440
410
370
460
430
960
400
Y7407
Y7421
Y7420
Y7410
Y7408
Y7412
Y7413
830
850
2564632-3
ECM 96181

Pos	Part No	SP	UN	Qty	Description	Page No
SEE PREVIOUS LISTS PAGES: 8-145, 8-147.						

Pos	Part No	SP	UN	Qty	Description	Page No

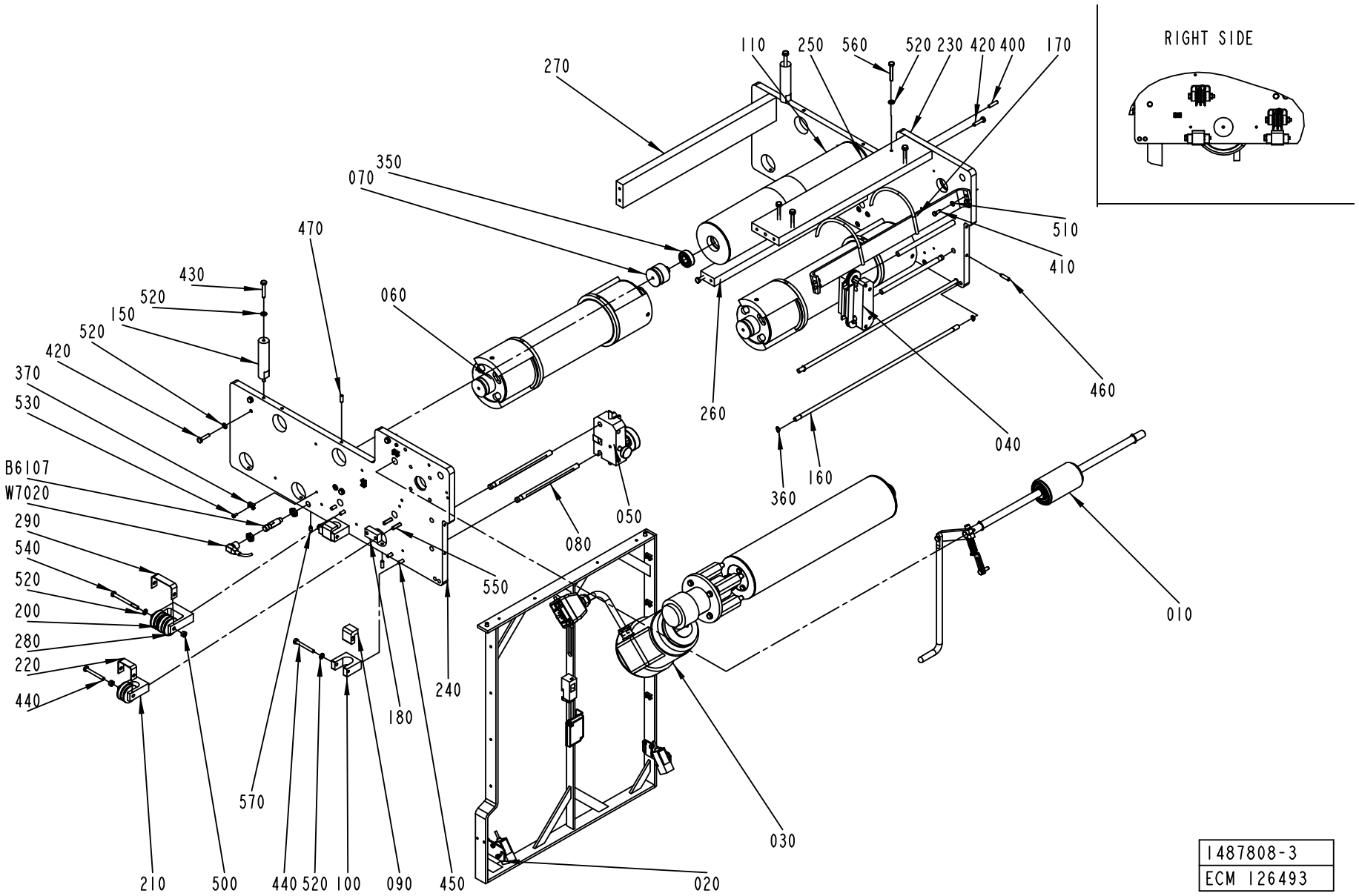

1487808-3
ECM 126493

ECM: 163295 - 20040419
Group number: 1487808-0200
Assembly Drawing: 1487808-3_1_AC

Pos	Part No	SP	UN	Qty	Description	Page No
TBA/22						
070	1499584-0000	A		2	AXLE PIN	
350	321313-0102	A		2	BALL BEARING, 15X35X11 MM	
Common Parts						
010	1512429-0100	-		1	PRESSURE ROLLER	**8-155**
020	1524731-0200	-		1	BRACKET	**8-157**
030	1524732-0200	-		1	DRIVE UNIT	**8-159**
040	2529547-0100	-		1	PAPER GUIDE	**8-103**
050	1484745-0100	-		1	WEB GUIDE	**8-101**
060	2605228-0100	-		2	BENDING ROLLER	**8-161**
080	1484704-0000	-		4	SHAFT	
090	1484728-0000	-		4	BRACKET	
100	1484738-0000	-		4	BRACKET	
110	1484766-0000	-		1	DANCE ROLLER	
150	1487802-0000	-		2	SPACER	
160	1490791-0000	-		2	GUIDE PIN	
170	2550896-0000	-		1	RAIL	
180	1519960-0000	-		1	SPACER	
200	1519581-0000	-		5	ROLLER BAR	
210	1519586-0000	-		3	BRACKET	
220	1519592-0000	-		4	BOW	
230	1490814-0000	-		1	PLATE	
240	1490815-0000	-		1	PLATE	
250	1487795-0000	-		1	PLATE	
260	1487796-0000	-		1	PLATE	
270	1487800-0000	-		1	PLATE	
280	1538192-0000	-		1	BRACKET	
290	1539396-0000	-		1	BOW CLAMP	
360	90141-0015	-		4	RETAINING RING FOR SHAFT DIN 471 8 A2	
370	352113-0205	-		6	ANCHOR PLATES FOR STRIPS, TYPE TM2S8-C10	
400	311103-0355	-		2	PARALLELL PIN, M6, 6X25 MM	
410	312105-0328	-		4	SCREW M6S ISO 4017 M5X14 A480	
420	312105-0372	-		11	SCREW M6S ISO 4017 M6X25 A480	
430	312105-0376	-		2	SCREW M6S ISO 4014 M6X35 A480	
440	312105-0380	-		8	SCREW M6S ISO 4014 M6X50 A480	
450	312115-0370	-		14	SCREW ISO4762 M6X20 A4	
460	312311-0372	-		4	SCREW ISO4028 M6X25 FZB	
470	312318-0368	-		5	SCREW ISO4029 M6X16 A4	
500	312605-0316	-		5	HEXAGON NUT, M6M M6 A280	
510	315105-0146	-		4	WASHER BRB5,3X10RFR	
520	315105-0153	-		25	WASHER BRB6,4X12RFR	
530	312125-0287	-		6	SCREW ISO 1207 M4X8 A4	
540	312105-0384	-		1	SCREW M6S ISO 4014 M6X70 A480	
550	312115-0374	-		2	SCREW ISO4762 M6X30 A4	
560	312109-0378	-		4	SCREW M6S ISO4017 M6X40 A480	
570	90287-0154	-		1	SCREW, SOCK.SET DOGPOINT M6X10	
B6107	90458-0677	A		1	PROXIMITY SWITCH, E2EG-X5MB1-M1	
W7020	90458-1076	A		1	L-SHAPED CONNECTOR CABLE 933 235-042	

Machine Type | Group Description | Used-In | Group Number | Page No

PRESSURE ROLLER

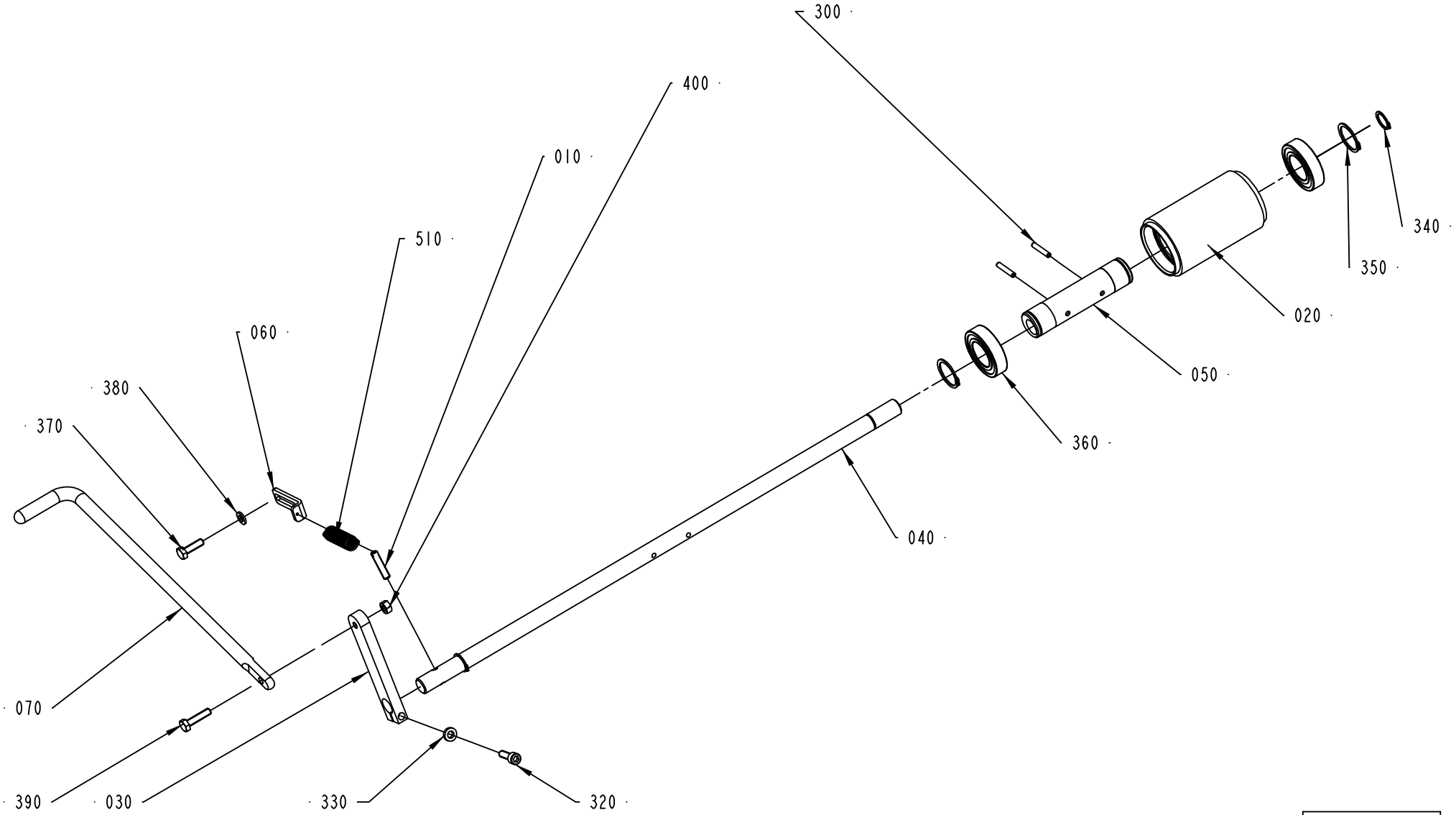

1512429-1
ECM 118625

ECM: 120907 - 20021219
Group number: 1512429-0100
Assembly Drawing: 1512429-1_1_AC

Pos	Part No	SP	UN	Qty	Description	Page No
-						
010	578684-0000	-		1	SPRING BRACKET	
020	906254-0000	A		1	ROLLER	
030	2576379-0000	-		1	ROCKER ARM	
040	1487521-0000	A		1	SHAFT	
050	1512267-0000	-		1	ECCENTRIC BUSHING	
060	2529549-0000	-		1	PLATE	
070	2578455-0000	-		1	LIFTING HANDLE	
300	311112-0258	-		2	SPRING PIN, ISO 8752 4X24-C	
310	312105-0368	-		1	SCREW M6S ISO 4017 M6X16 A480	
320	312115-0370	-		1	SCREW ISO4762 M6X20 A4	
330	315115-0153	-		1	WASHER PLAIN, TBRB 6,4/12 H=3	
340	315751-0112	-		2	RETAINING RING FOR SHAFT DIN 471 15 A2	
350	315751-0119	-		2	RETAINING RING FOR SHAFT DIN 471 25 A2	
360	321308-0205	A		2	BALL BEARING, 25X47X12MM	
370	312105-0370	-		1	SCREW M6S ISO 4017 M6X20 A480	
380	315105-0153	-		1	WASHER BRB6,4X12RFR	
390	312105-0372	-		1	SCREW M6S ISO 4017 M6X25 A480	
400	312605-0316	-		1	HEXAGON NUT, M6M M6 A280	
500	90051-0082	-		1	KNOB, CIRCUL, THREADED BUSH, M6 25X21 MM	
510	90335-0091	B		1	TENSION SPRING 41890, 1,2X13X48,2	

Pos	Part No	SP	UN	Qty	Description	Page No

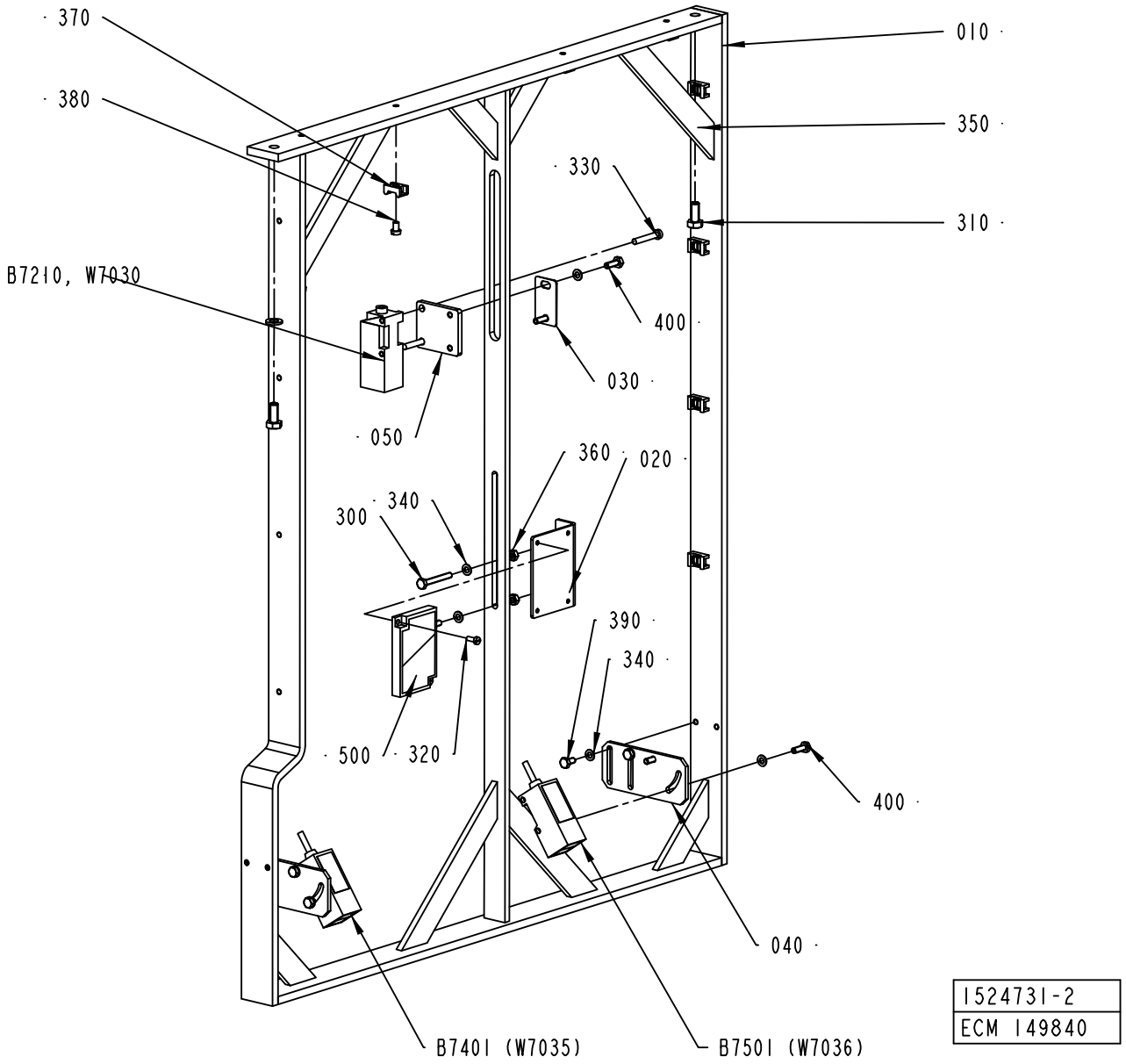

1524731-2
ECM 149840

ECM: 149840 - 20040112
Group number: 1524731-0200
Assembly Drawing: 1524731-2_1_AB

Pos	Part No	SP	UN	Qty	Description	Page No
-						
010	2541942-0000	-		1	BRACKET	
020	1487784-0000	-		1	BRACKET	
030	1517105-0000	-		1	PLATE	
040	2542496-0000	-		2	BRACKET	
050	2651925-0000	-		1	PLATE	
300	312105-0299	-		2	SCREW M6S ISO 4017 M4X30 A470	
310	312105-0367	-		2	SCREW M6S ISO 4017 M6X14 A480	
320	312125-0222	-		2	SCREW ISO 1207 M3X8 A4	
330	312125-0297	-		2	SCREW ISO 1207 M4X25 A4	
340	315105-0136	-		14	WASHER BRB4,3XRFR	
350	315105-0153	-		2	WASHER BRB6,4X12RFR	
360	312605-0312	-		4	HEXAGON NUT, M6M M4 A280	
370	352113-0205	-		12	ANCHOR PLATES FOR STRIPS, TYPE TM2S8-C10	
380	312125-0285	-		12	SCREW ISO 1207 M4X6 A4	
390	312105-0287	-		4	SCREW M6S ISO4017 M4X8 A470	
400	312105-0291	-		6	SCREW M6S ISO 4017 M4X12 A470	
500	90232-0333	A		1	REFLECTOR E39-R1	
B7210	90232-0129	A		1	PH.CELL E3S-CR61-5M	
B7401	90232-0106	A		1	PH.CELL E3S-CR11-5M	
B7501	90232-0106	A		1	PH.CELL E3S-CR11-5M	

Pos	Part No	SP	UN	Qty	Description	Page No

Machine Type | Group Description | Used-In | Group Number | Page No

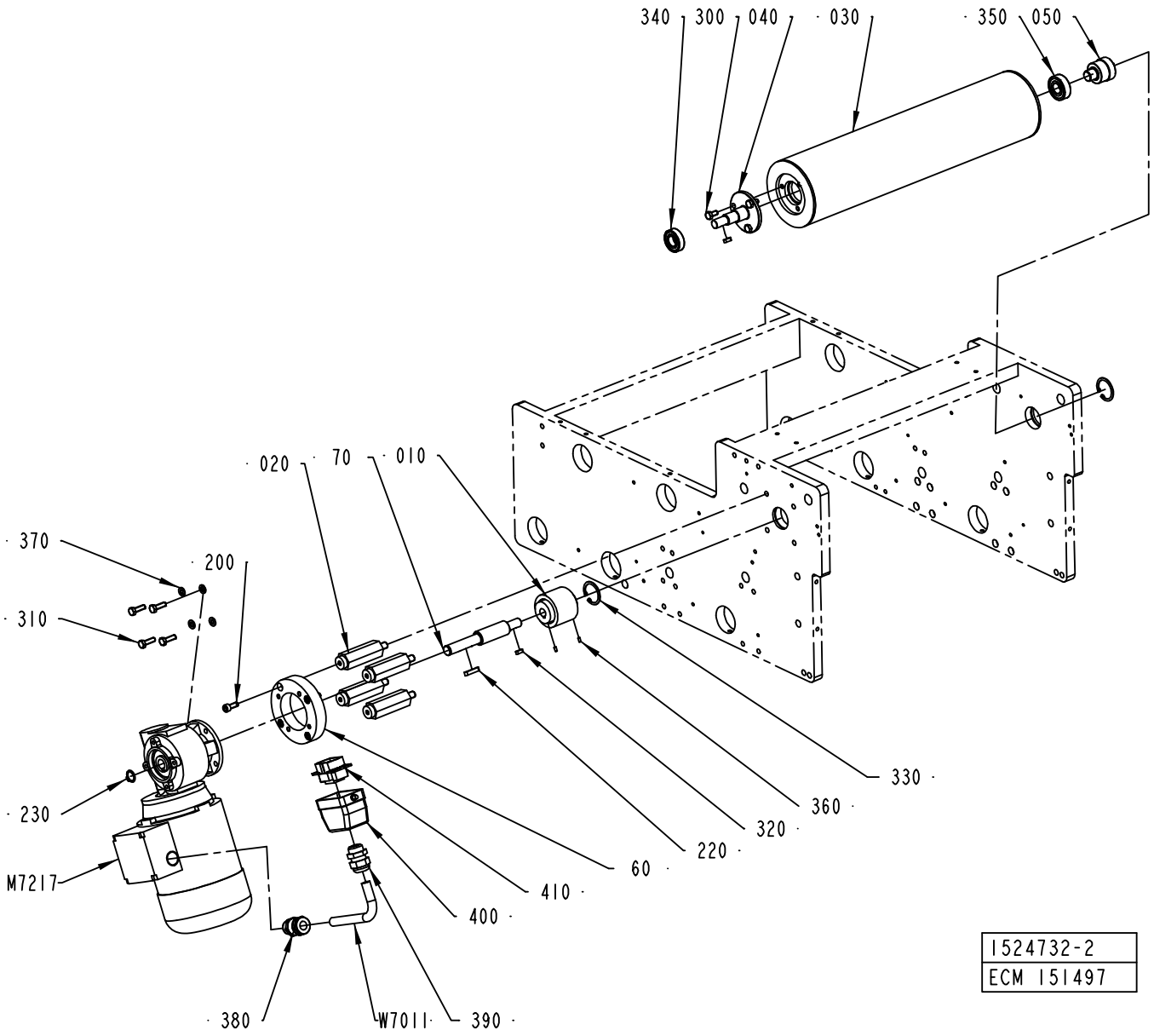
340
300
040
030
350
050
020
70
010
370
200
310
330
360
320
220
230
60
M7217
410
400
380
W7011
390
1524732-2
ECM 151497

ECM: 163296 - 20040419
Group number: 1524732-0200
Assembly Drawing: 1524732-2_1_AC

Pos	Part No	SP	UN	Qty	Description	Page No
TBA/22						
W7011	90220-0104	-	M	8	SCR. CABLE 4X1,5MM2	
Common Parts						
010	979847-0000	A		1	SHAFT COUPLING	
020	1487788-0000	-		4	SPACER	
030	2523497-0000	A		1	BENDING ROLLER	
040	2523499-0000	A		1	SHAFT	
050	2523500-0000	-		1	AXLE PIN	
060	2532561-0000	-		1	SPACER	
070	2588067-0000	-		1	SHAFT	
200	312115-0368	-		4	SCREW ISO4762 M6X16 A4	
220	315705-0202	-		1	PARALLEL KEY W ROUND ENDS 5X5X25MM	
230	315751-0111	-		1	RETAINING RING FOR SHAFT DIN 471 14 A2	
300	312105-0366	-		3	SCREW M6S ISO 4017 M6X12 A480	
310	312105-0370	-		4	SCREW M6S ISO 4017 M6X20 A480	
320	315701-0166	A		2	PARALLEL KEY W. ROUND ENDS 4X4X12 MM	
330	315753-0123	-		2	RETAINING RING FOR BORE DIN 472 32 A2	
340	321308-0202	A		1	BALL BEARING, 15X32X9 MM	
350	321313-0102	A		1	BALL BEARING, 15X35X11 MM	
360	312318-0220	-		2	SCREW ISO4029 M3X6 A4	
370	315105-0153	-		4	WASHER BRB6,4X12RFR	
380	90012-0137	-		1	GLAND, EXTENDED WITH INSERT, PG11	
390	352103-0108	-		1	CABLE GLAND, ST 13,5 , PR20,4/PG13,5	
400	90110-0157	-		1	CABLE HOOD 6-POL 70.352.0628.1	
410	90110-0159	-		1	MALE INSERT 70.310.0640.0	
M7217	90459-2096	A		1	GEARS, WORM MOTOR F2 15 P63 B14 B8 PV 75	

Pos	Part No	SP	UN	Qty	Description	Page No

BENDING ROLLER

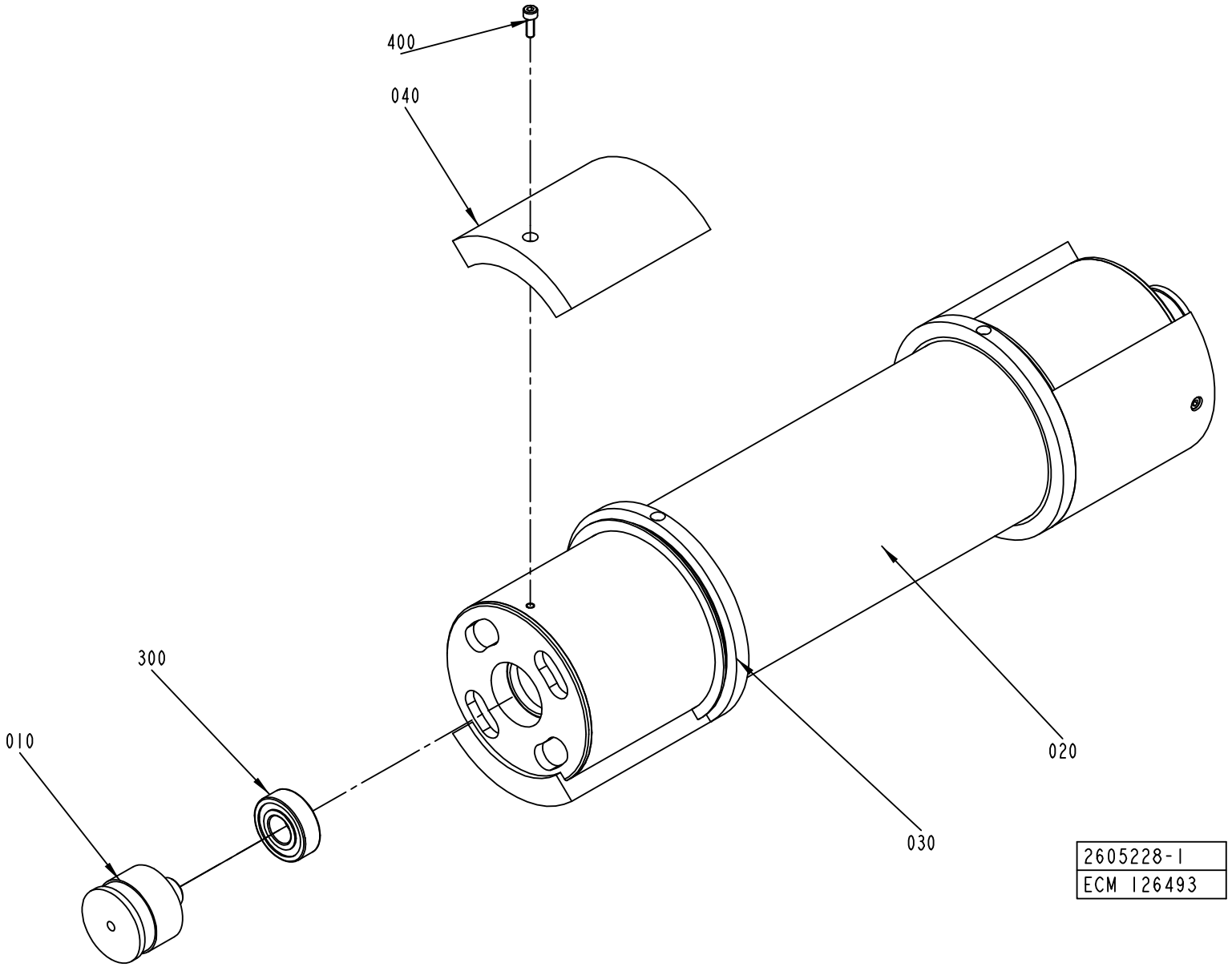

ECM: 163510 - 20040309
Group number: 2605228-0100
Assembly Drawing: 2605228-1_1_AA

Pos	Part No	SP	UN	Qty	Description	Page No
TBA 0200S						
040	2508205-0010	-		4	BRACKET	
TBA 0250S, TBA 0200M						
040	2508205-0009	-		4	BRACKET	
TBA 0200B, TBA 0250B						
040	2508205-0007	-		4	BRACKET	
Common Parts						
010	1499584-0000	A		2	AXLE PIN	
020	2508206-0000	-		1	BENDING ROLLER	
030	2508204-0000	B		2	FLANGE	
300	321313-0102	A		2	BALL BEARING, 15X35X11 MM	
400	312115-0291	-		4	SCREW ISO4762 M4X12 A4	

Pos	Part No	SP	UN	Qty	Description	Page No

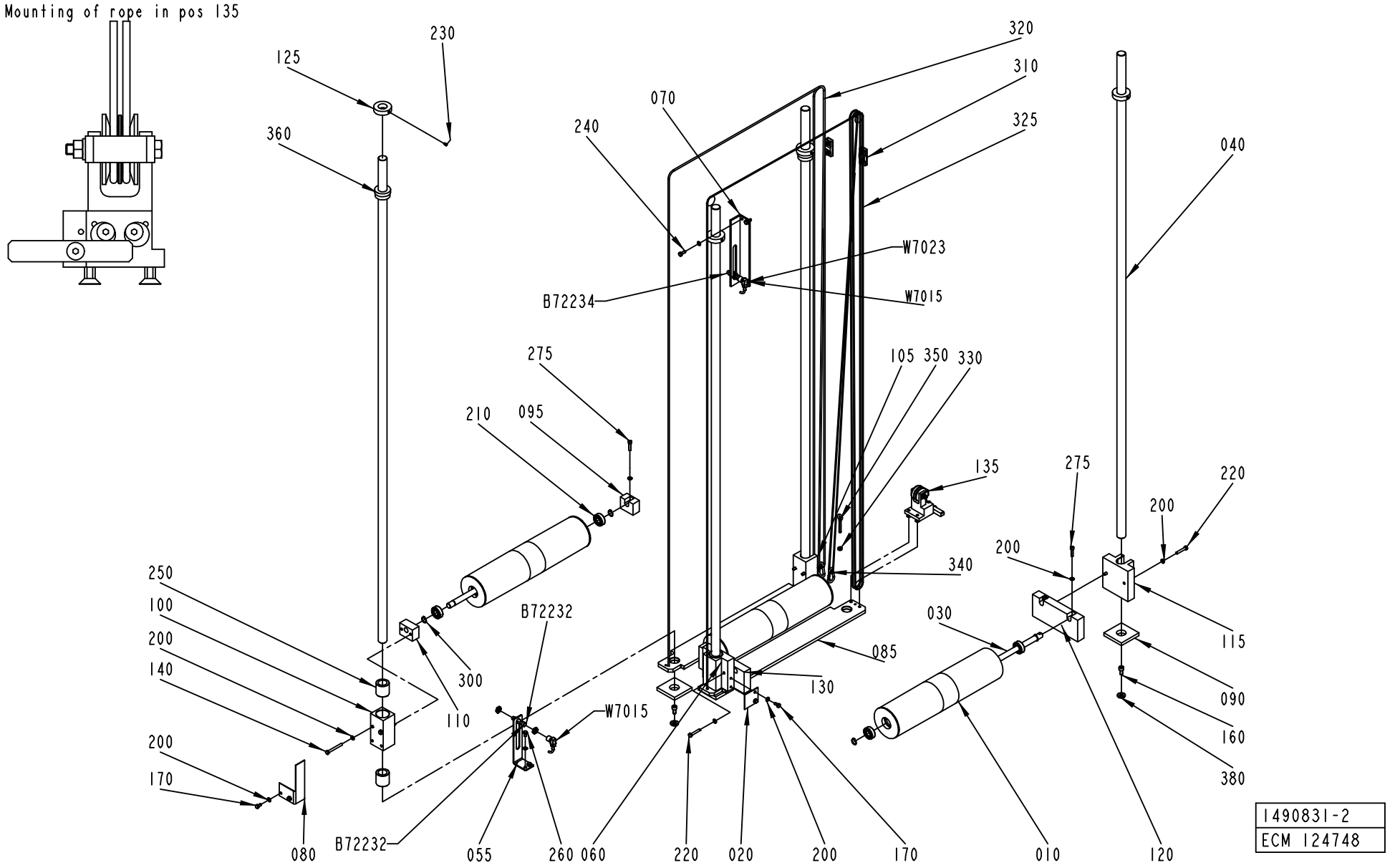
Mounting of rope in pos 135
125
230
360
320
310
325
070
240
040
W7023
B72234
W7015
275
105 350 330
210
095
135
275
220
200
200
340
250
100
200
140
B72232
030
085
300
130
115
110
W7015
090
160
380
200
170
080
B72232
055
260 060
220
020
200
170
010
120
1490831-2
ECM 124748

ECM: 126468 - 20040109
Group number: 1490831-0200
Assembly Drawing: 1490831-2_1_AC

Pos	Part No	SP	UN	Qty	Description	Page No
-						
010	1484766-0000	A		3	DANCE ROLLER	
020	1484778-0000	-		1	PLATE	
030	1487519-0000	A		3	SHAFT	
040	1487530-0001	-		4	GUIDE ROD	
055	1484761-0000	-		1	ANGLE BRACKET	
060	1487536-0000	A		1	GUIDE BRACKET	
070	1487550-0000	-		1	ANGLE BRACKET	
080	1487551-0000	-		1	PLATE	
085	1519942-0000	-		2	PLATE	
090	1487765-0000	-		4	SPACER	
095	1511579-0000	-		1	BRACKET	
100	1484752-0000	A		1	SLIDER	
105	1484760-0000	A		1	SLIDER	
110	1490183-0000	-		1	BRACKET	
115	1511564-0000	A		1	GUIDE BRACKET	
120	1487537-0000	-		1	BRACKET	
125	1487769-0000	-		4	SPACER	
130	1487538-0000	-		1	BRACKET	
135	1548210-0100	-		1	LOCKING DEVICE	**8-165**
140	312105-0381	-		4	SCREW M6S ISO 4014 M6X55 A480	
160	312115-0489	-		4	SCREW ISO4762 M10X16 A4	
170	312105-0366	-		4	SCREW M6S ISO 4017 M6X12 A480	
200	315105-0153	-		19	WASHER BRB6,4X12RFR	
210	321313-0102	A		6	BALL BEARING, 15X35X11 MM	
220	312105-0376	-		4	SCREW M6S ISO 4014 M6X35 A480	
230	90287-0154	-		4	SCREW, SOCK.SET DOGPOINT M6X10	
240	312105-0368	-		2	SCREW M6S ISO 4017 M6X16 A480	
250	90189-0025	A		4	BALL BUSHING, 25X37X37 MM	
260	312105-0364	-		2	SCREW M6S ISO 4017 M6X10 A480	
275	312115-0372	-		3	SCREW ISO4762 M6X25 A4	
300	315751-0112	-		6	RETAINING RING FOR SHAFT DIN 471 15 A2	
310	90211-0002	-		2	WIRE LOCK, 5 MM	
320	90319-0013	A	M	12	ROPE 4MM BLUE 3700N	
325	90319-0013	-	M	8	ROPE 4MM BLUE 3700N	
330	312605-0316	-		1	HEXAGON NUT, M6M M6 A280	
340	90459-2704	-		2	SNAP HOOK STAINLESS 50X5MM	
350	90459-2705	-		1	LIFTING EYE BOLT, M6X40MM	
360	353249-0054	-		2	INSERT, SINGEL HOLE, EK 156/25	
380	315115-0173	-		4	WASHER PLAIN, TBRB 10,5/22 H=4	
B72232	90458-0677	A		1	PROXIMITY SWITCH, E2EG-X5MB1-M1	
B72234	90458-0677	A		1	PROXIMITY SWITCH, E2EG-X5MB1-M1	
W7015	90458-1076	A		1	L-SHAPED CONNECTOR CABLE 933 235-042	
W7023	90458-1076	A		1	L-SHAPED CONNECTOR CABLE 933 235-042	

Machine Type | Group Description | Used-In | Group Number | Page No

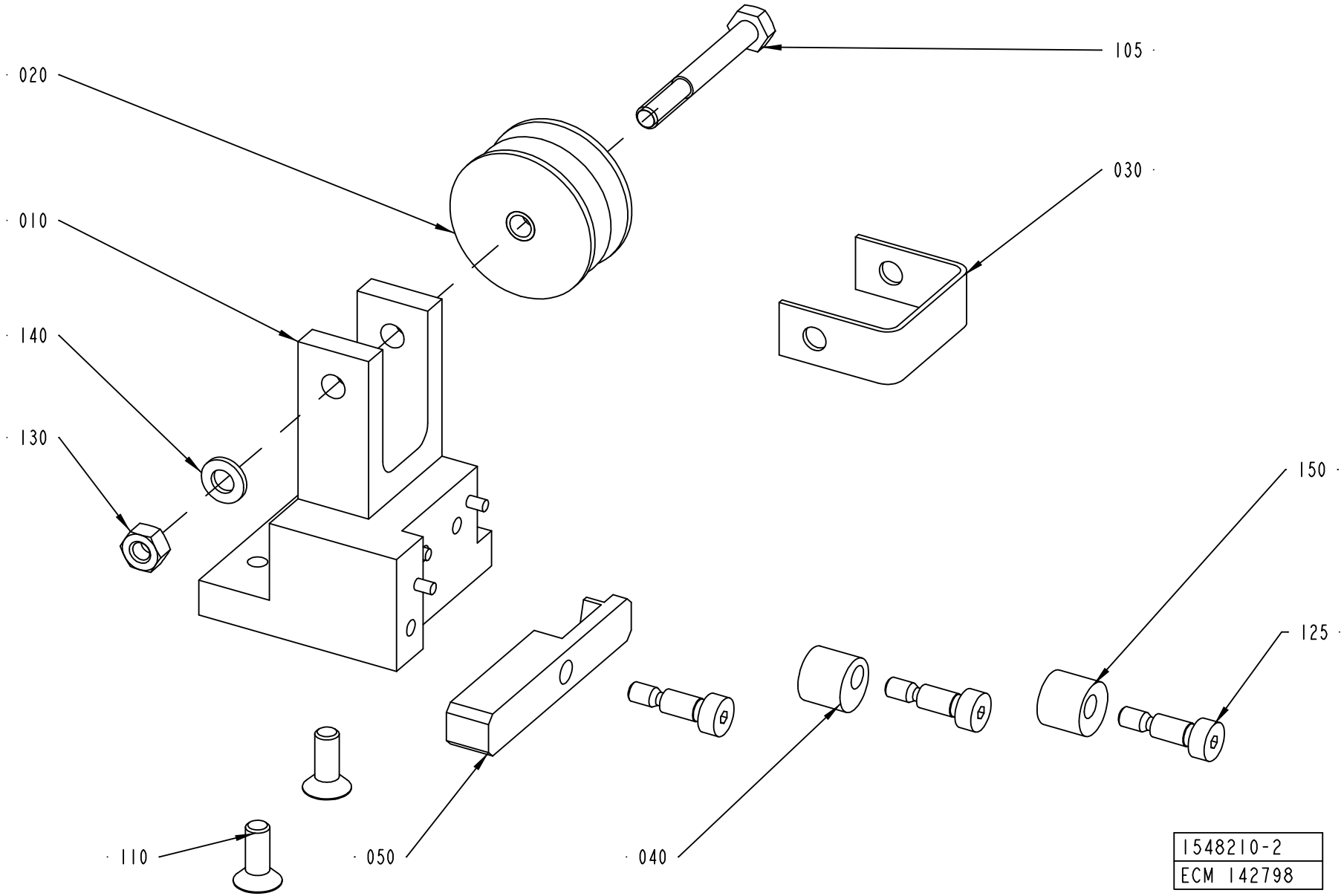
105
020
030
010
140
130
150
125
110
050
040
1548210-2
ECM 142798

ECM: 142798 - 20030908
Group number: 1548210-0100
Assembly Drawing: 1548210-2_1_AB

Pos	Part No	SP	UN	Qty	Description	Page No
-						
010	2576244-0000	-		1	BRACKET	
020	1519581-0000	A		1	ROLLER BAR	
030	1519592-0000	-		1	BOW	
040	1539397-0000	-		1	ROLLER	
050	2576245-0000	-		1	ARM	
105	312105-0380	-		1	SCREW M6S ISO 4014 M6X50 A480	
110	312155-0368	-		2	SCREW EN 10642 MF6S M6X16 A480	
125	312180-0366	-		3	SCREW ISO7379 H6X12	
130	312605-0316	-		1	HEXAGON NUT, M6M M6 A280	
140	315105-0153	-		1	WASHER BRB6,4X12RFR	
150	1549332-0000	-		1	ROLLER	

Pos	Part No	SP	UN	Qty	Description	Page No

COVERING PANEL

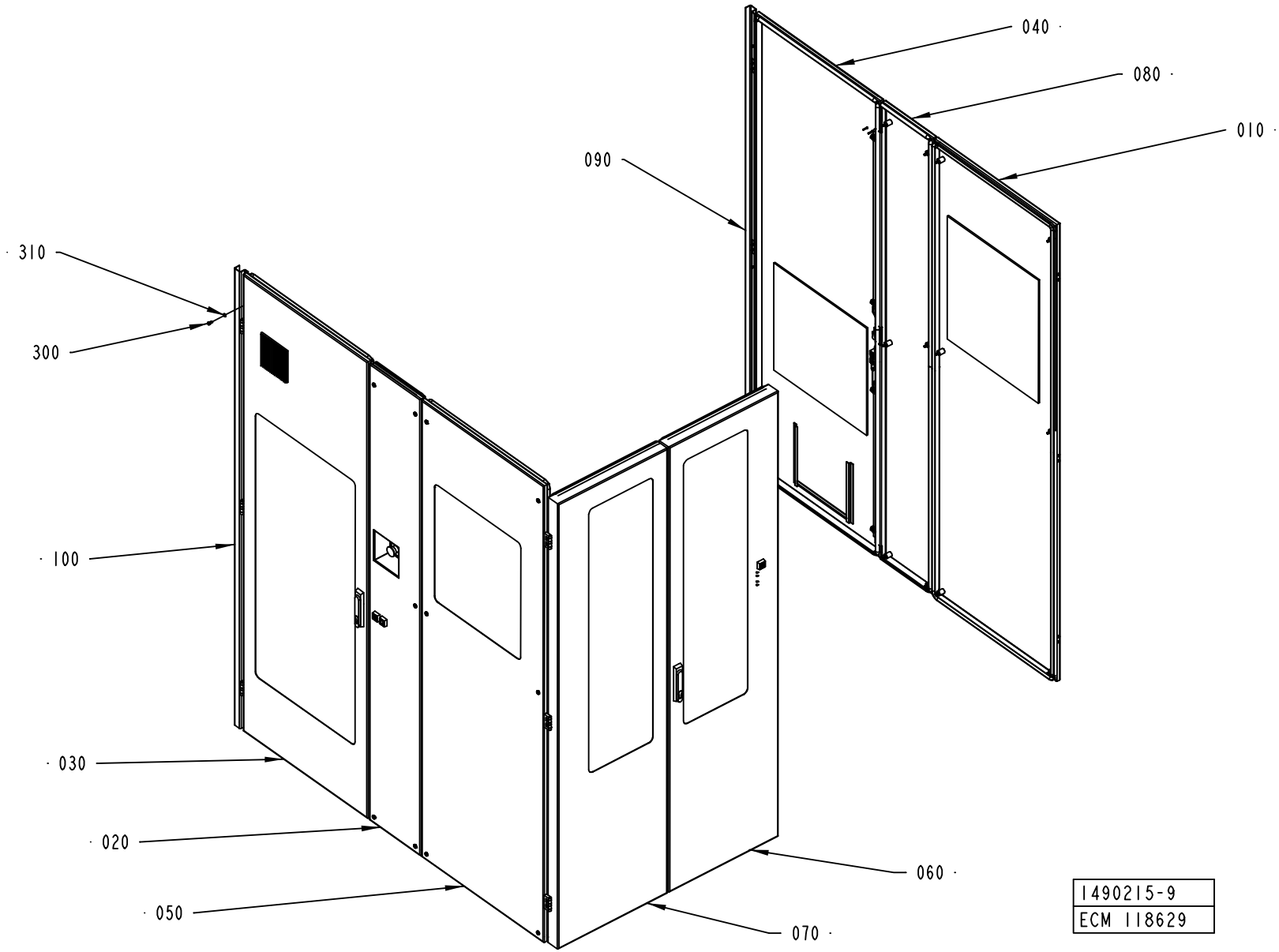

ECM: 162983 - 20040419
Group number: 1490215-0200
Assembly Drawing: 1490215-9_1_AA

This list covers pages from 8-166 to 8-169

Pos	Part No	SP	UN	Qty	Description	Page No
TBA/22 WITH ARL (See drawing on page: 8-168)						
085	2591680-0100	-		1	HOLDER	**8-171**
090	2636084-0000	-		1	COVER STRIP	
100	2636085-0000	-		1	COVER STRIP	
300	315105-0153	-		6	WASHER BRB6,4X12RFR	
310	312115-0364	-		6	SCREW ISO4762 M6X10 A4	
TBA/22 WITHOUT ARL (See drawing on page: 8-166)						
090	2636084-0000	-		1	COVER STRIP	
100	2636085-0000	-		1	COVER STRIP	
300	315105-0153	-		6	WASHER BRB6,4X12RFR	
310	312115-0364	-		6	SCREW ISO4762 M6X10 A4	
Common Parts						
010	1499564-0100	-		1	COVER	**8-173, 8-175**
020	1490190-0200	-		1	HATCH	**8-179**
030	1490191-0100	-		1	DOOR	**8-185**
040	1558988-0100	-		1	DOOR	**8-187**
050	1490193-0100	-		1	COVER	**8-189, 8-191**
060	1498453-0200	-		1	DOOR	**8-195**
070	1498454-0200	-		1	DOOR	**8-199**
080	1490188-0100	-		1	COVER	**8-201**
110	1524404-0100	-		2	COVER	**8-203**

Pos	Part No	SP	UN	Qty	Description	Page No

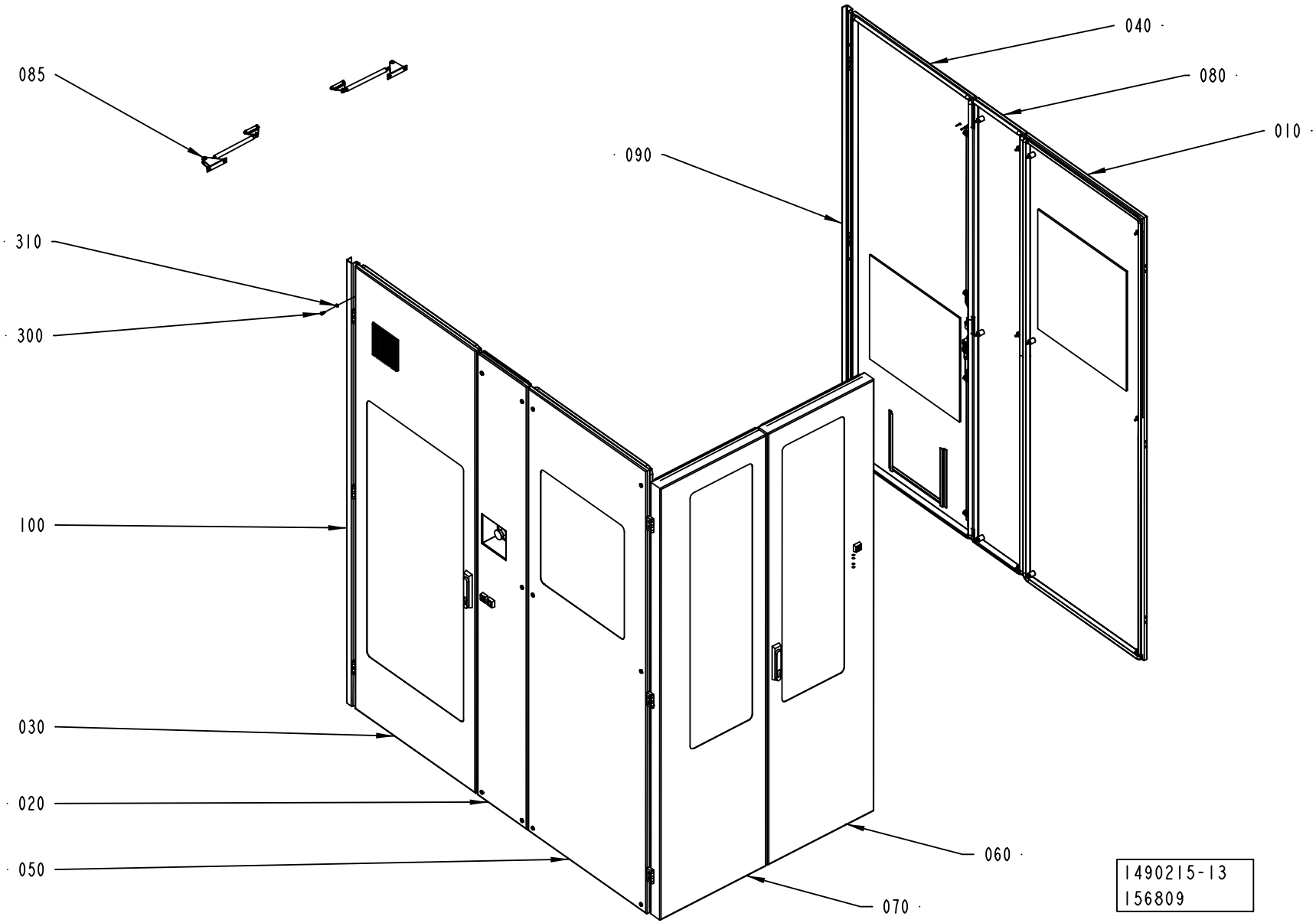
085
040
080
010
090
310
300
100
030
020
050
060
070
1490215-13
156809

ECM: 162983 - 20040419
Group number: 1490215-0200
Assembly Drawing: 1490215-13_1_AA

This list covers pages from 8-166 to 8-169

Pos	Part No	SP	UN	Qty	Description	Page No
TBA/22 WITH ARL (See drawing on page: 8-168)						
085	2591680-0100	-		1	HOLDER	**8-171**
090	2636084-0000	-		1	COVER STRIP	
100	2636085-0000	-		1	COVER STRIP	
300	315105-0153	-		6	WASHER BRB6,4X12RFR	
310	312115-0364	-		6	SCREW ISO4762 M6X10 A4	
TBA/22 WITHOUT ARL (See drawing on page: 8-166)						
090	2636084-0000	-		1	COVER STRIP	
100	2636085-0000	-		1	COVER STRIP	
300	315105-0153	-		6	WASHER BRB6,4X12RFR	
310	312115-0364	-		6	SCREW ISO4762 M6X10 A4	
Common Parts						
010	1499564-0100	-		1	COVER	**8-173, 8-175**
020	1490190-0200	-		1	HATCH	**8-179**
030	1490191-0100	-		1	DOOR	**8-185**
040	1558988-0100	-		1	DOOR	**8-187**
050	1490193-0100	-		1	COVER	**8-189, 8-191**
060	1498453-0200	-		1	DOOR	**8-195**
070	1498454-0200	-		1	DOOR	**8-199**
080	1490188-0100	-		1	COVER	**8-201**
110	1524404-0100	-		2	COVER	**8-203**

Pos	Part No	SP	UN	Qty	Description	Page No

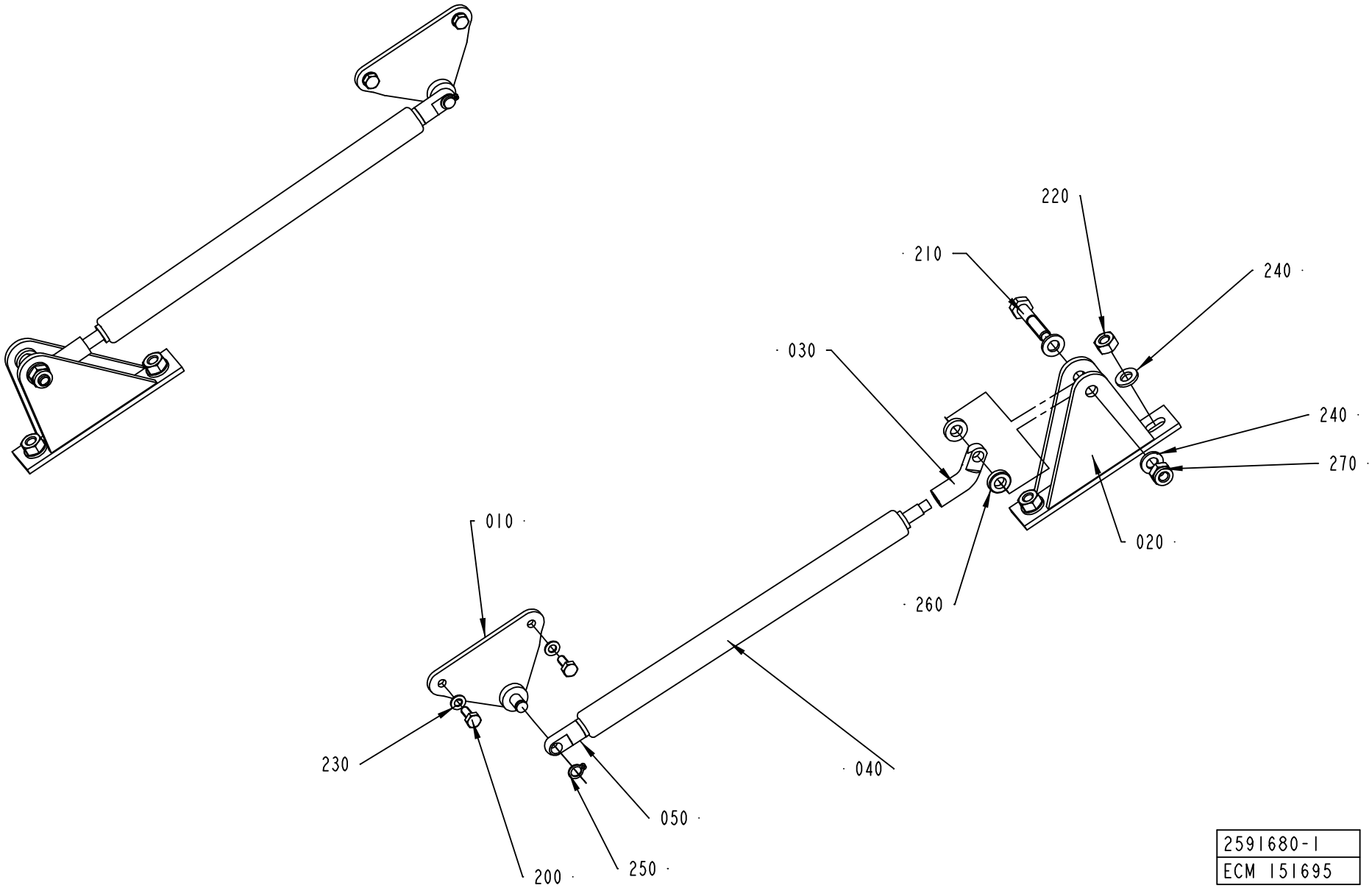

2591680-1
ECM 151695

ECM: 151695 - 20040115
Group number: 2591680-0100
Assembly Drawing: 2591680-1_1_AA

Pos	Part No	SP	UN	Qty	Description	Page No
-						
010	90459-3179	-		2	GAS SPRING BRACKET, BES/AUG/06/001	
020	2589786-0000	-		2	BRACKET	
030	2589787-0000	-		2	FITTING	
040	90459-3181	B		2	GAS SPRING, G15-150-50N STAINLESS STEEL	
050	90459-3182	-		2	GAS SPRING FITTNG, AU16 STAINLESS STEEL	
200	312105-0289	-		4	SCREW M6S ISO 4017 M4X10 A470	
210	312105-0374	-		2	SCREW M6S ISO 4014 M6X30 A480	
220	312605-0316	-		4	HEXAGON NUT, M6M M6 A280	
230	315105-0136	-		4	WASHER BRB4,3XRFR	
240	315105-0153	-		8	WASHER BRB6,4X12RFR	
250	315751-0103	-		2	RETAINING RING FOR SHAFT DIN 471 6 A2	
260	315115-0153	-		4	WASHER PLAIN, TBRB 6,4/12 H=3	
270	312812-0316	-		2	HEXAGON NUT, NY-LOCK M6 A480	

Pos	Part No	SP	UN	Qty	Description	Page No

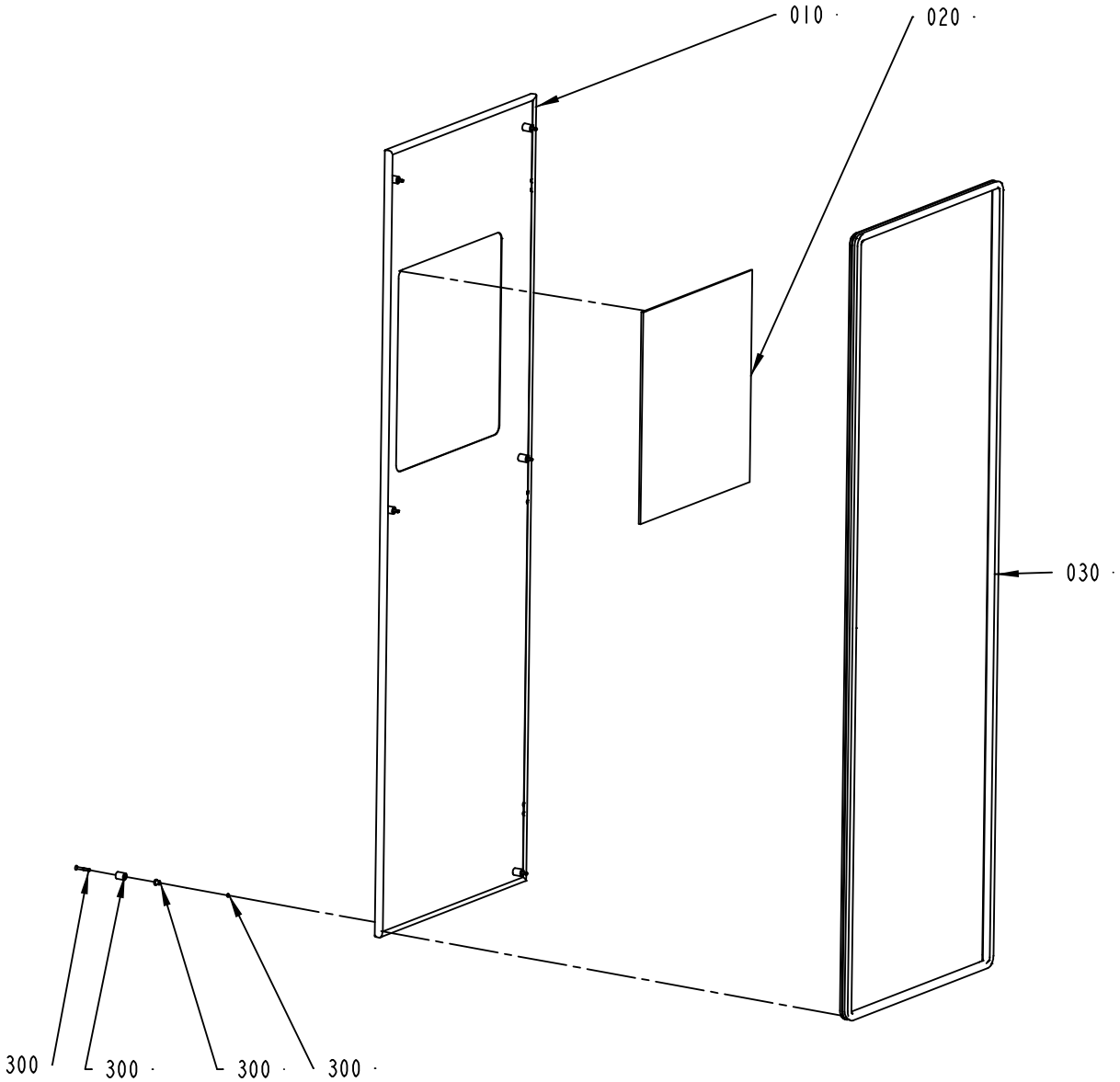

1499564-1
ECN 80701

ECM: 152418 - 20040115
Group number: 1499564-0100
Assembly Drawing: 1499564-1_1_AB

This list covers pages from 8-172 to 8-175

Pos	Part No	SP	UN	Qty	Description	Page No
With ARL (See drawing on page: 8-174)						
010	2632542-0000	-		1	HATCH	
040	2632543-0100	-		1	CONTROL PANEL	**8-177**
Without ARL (See drawing on page: 8-172)						
010	1487995-0000	-		1	HATCH	
Common Parts						
020	1498459-0003	-		1	GLASS PANE	
030	1498461-0002	-		1	SEALING STRIP	
300	90226-0458	-		6	MOUNTING SCREW	

Pos	Part No	SP	UN	Qty	Description	Page No

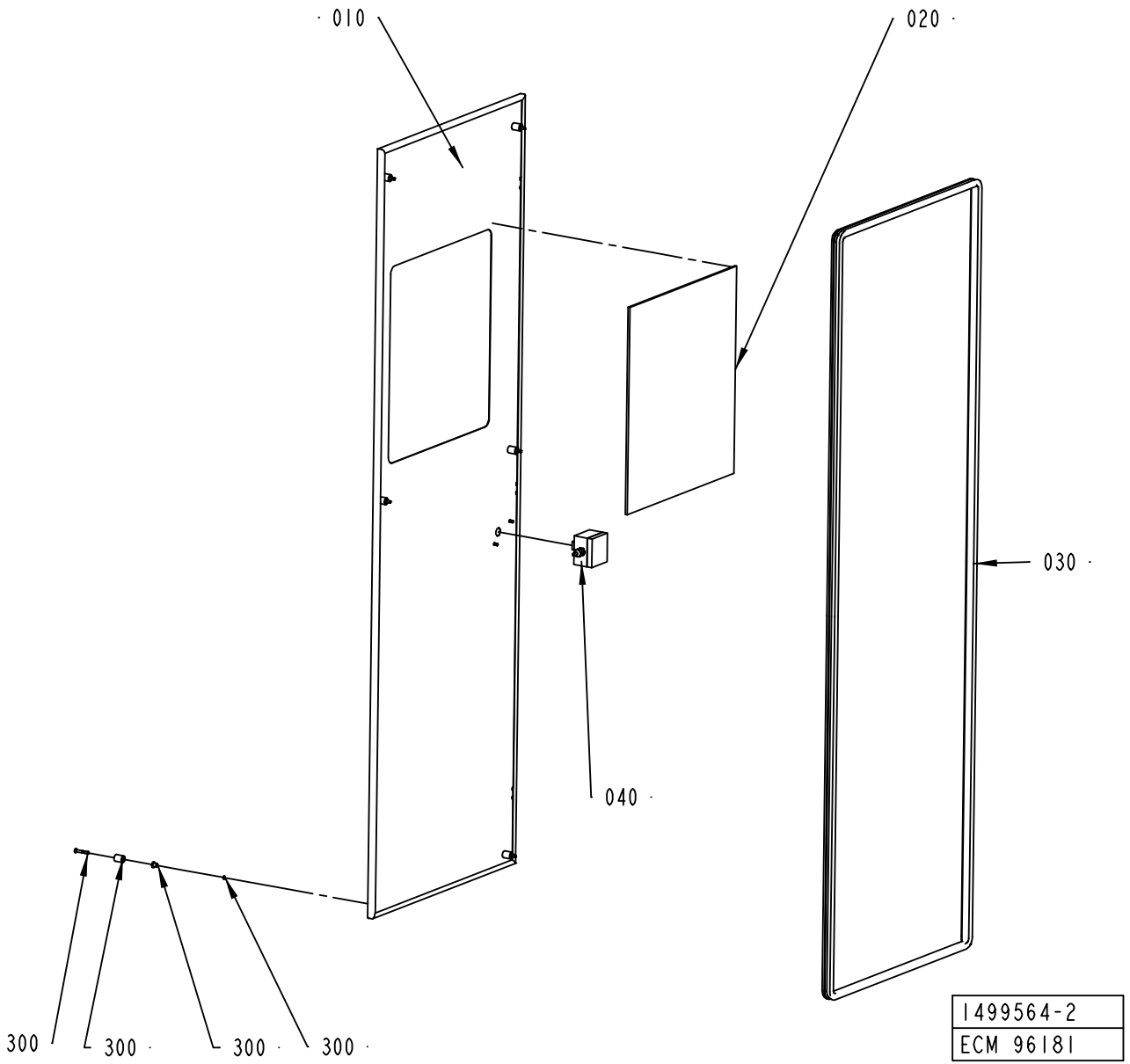
010
020
030
040
300
300
300
300
1499564-2
ECM 96181

Pos	Part No	SP	UN	Qty	Description	Page No
With ARL (See drawing on page: 8-174)						
010	2632542-0000	-		1	HATCH	
040	2632543-0100	-		1	CONTROL PANEL	**8-177**
Without ARL (See drawing on page: 8-172)						
010	1487995-0000	-		1	HATCH	
Common Parts						
020	1498459-0003	-		1	GLASS PANE	
030	1498461-0002	-		1	SEALING STRIP	
300	90226-0458	-		6	MOUNTING SCREW	

Pos	Part No	SP	UN	Qty	Description	Page No

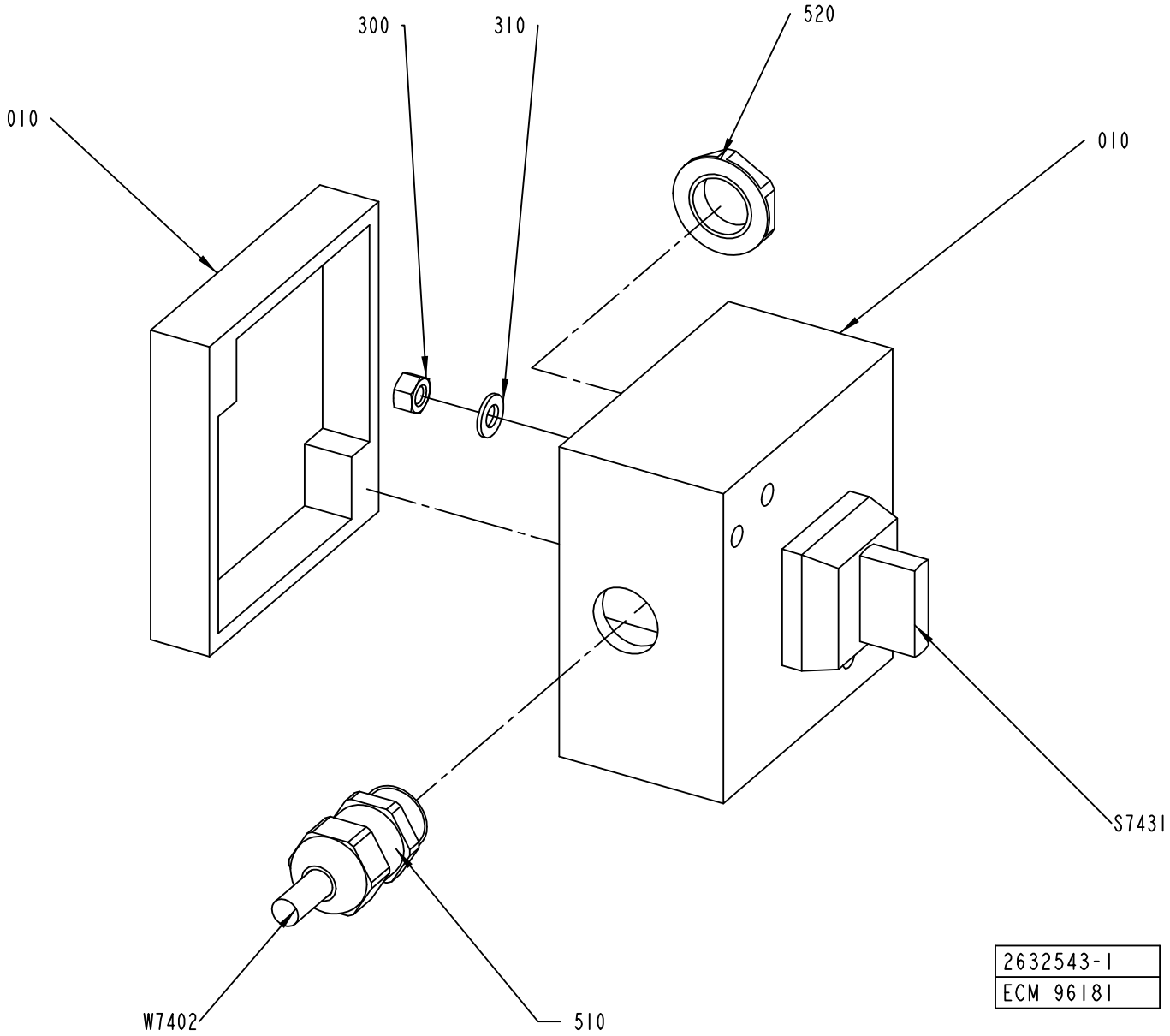
300
310
520
010
010
S7431
W7402
510
2632543-1
ECM 96181

ECM: 135496 - 20040115
Group number: 2632543-0100
Assembly Drawing: 2632543-1_1_AA

Pos	Part No	SP	UN	Qty	Description	Page No
-						
010	2632535-0000	-		1	CONNECTION BOX	
300	312605-0314	-		2	HEXAGON NUT, M6M M5 A280	
310	315105-0146	-		2	WASHER BRB5,3X10RFR	
510	90458-0306	-		1	CABLE GLAND, M16X1,5, NO.5311 1010	
520	90458-0322	-		1	NUT, M16X1,5	
S7431	90111-0120	-		1	SWITCH, 2 POS.704.510 .0A+704.901.5/A	
W7402	351150-0403	-	MM	8000	CABLE OLFLEX 3X0,75 MM2 LIGHT/GREY	

Pos	Part No	SP	UN	Qty	Description	Page No

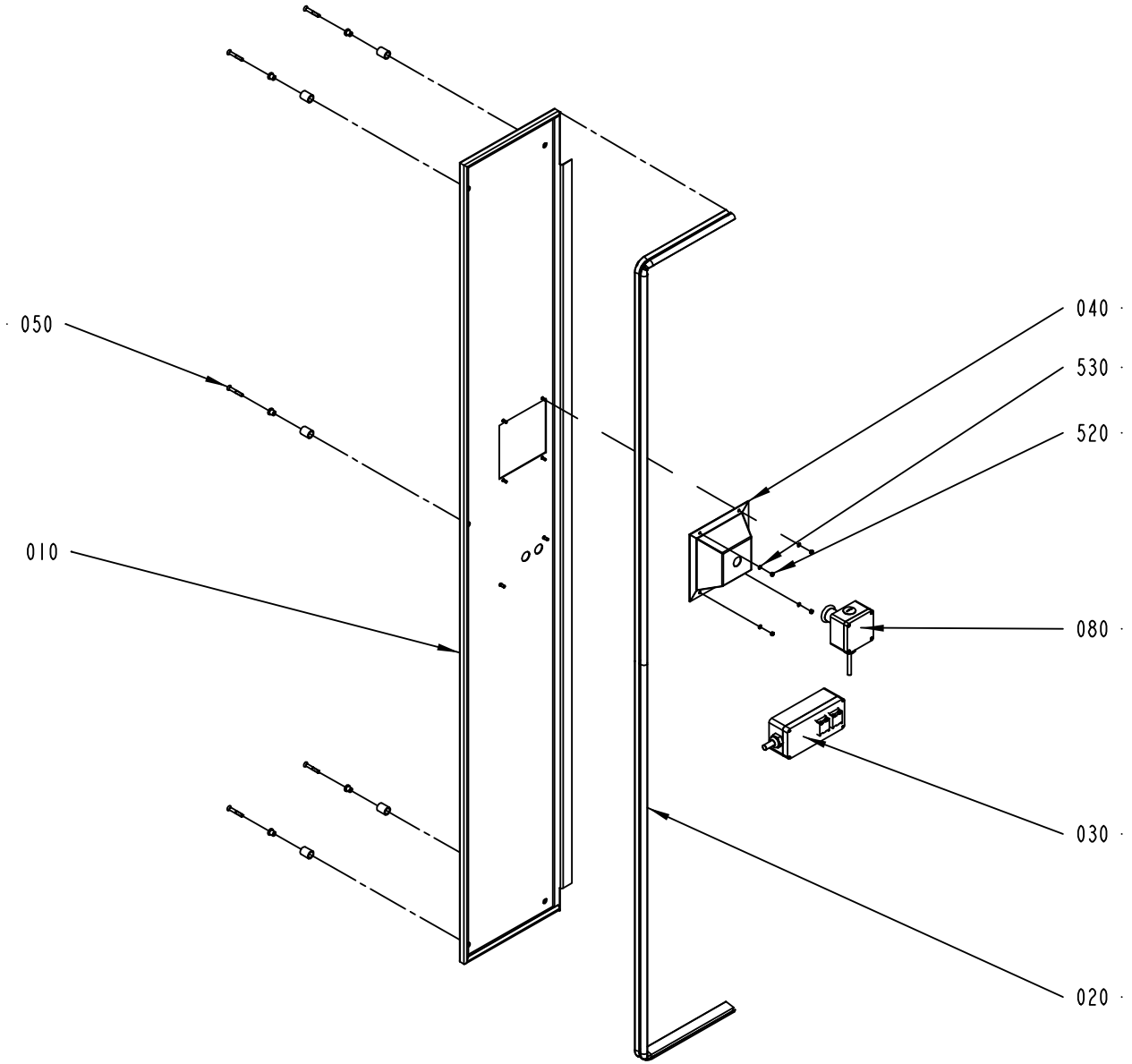

1490190-5
ECM 115190

ECM: 163293 - 20040419
Group number: 1490190-0200
Assembly Drawing: 1490190-5_1_AB

Pos	Part No	SP	UN	Qty	Description	Page No
TBA/22						
010	2532535-0000	-		1	HATCH	
Common Parts						
020	1512414-0000	-		1	SEALING STRIP	
030	1512413-0200	-		1	CONTROL PANEL	**8-181**
040	1484363-0000	-		1	COVER	
050	90226-0458	-		5	MOUNTING SCREW	
080	2508187-0100	-		1	EMERGENCY STOP	**8-183**
520	312605-0312	-		4	HEXAGON NUT, M6M M4 A280	
530	315105-0136	-		4	WASHER BRB4,3XRFR	

Pos	Part No	SP	UN	Qty	Description	Page No

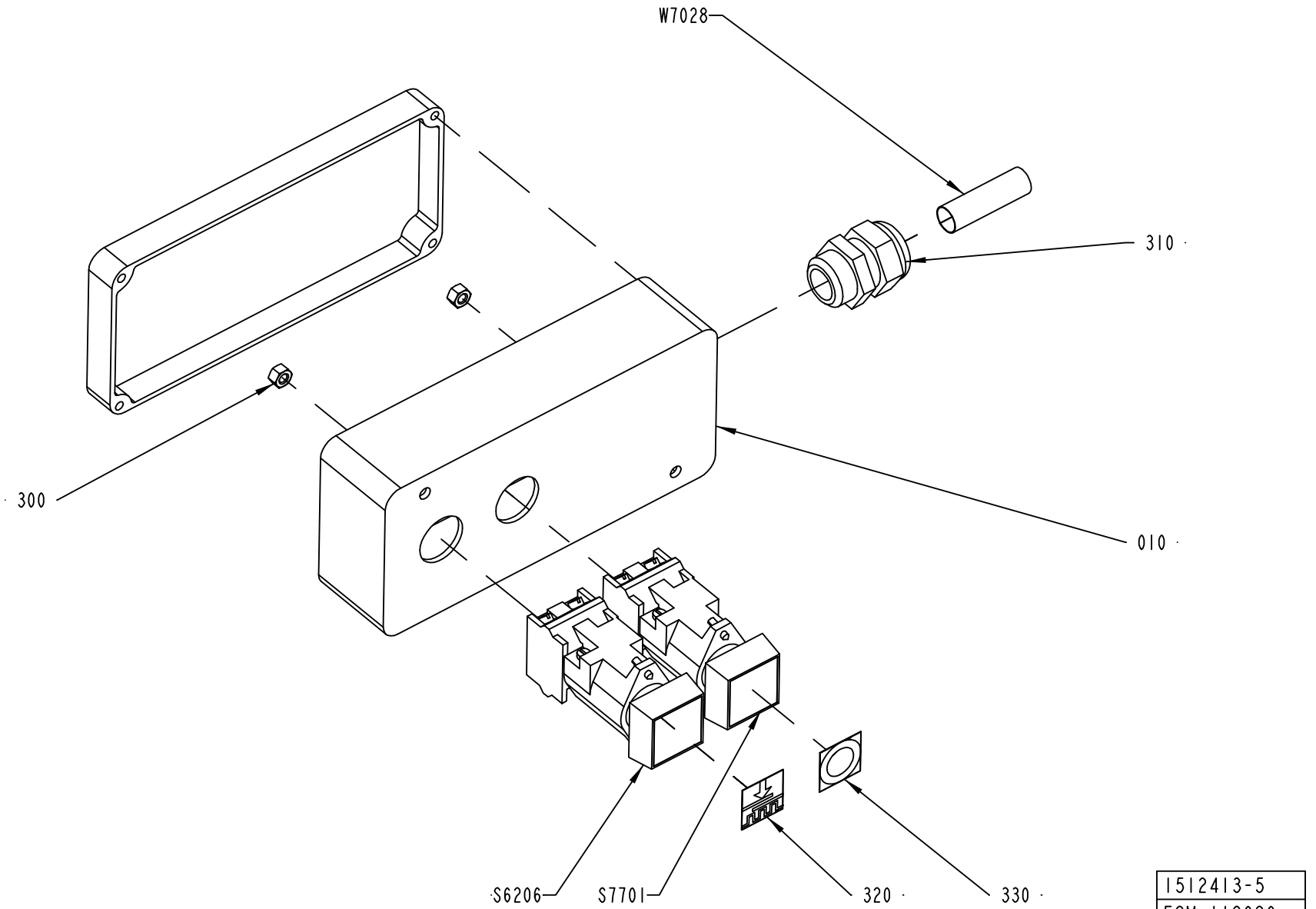

1512413-5
ECM 118629

ECM: 163294 - 20040419
Group number: 1512413-0200
Assembly Drawing: 1512413-5_1_AA

Pos	Part No	SP	UN	Qty	Description	Page No
TBA/22						
010	2578785-0000	-		1	PUSH BUTTON BOX	
Common Parts						
300	312605-0314	-		2	HEXAGON NUT, M6M M5 A280	
310	352103-0111	-		1	CABLE GLAND, ST 16, PR22,5/PG16	
320	359301-0101	-		1	SIGN	
330	359301-0110	-		1	SIGN "SHORT STOP"	
S6206	90064-0082	A		1	PUSH BUTTON, WHITE	
	90036-0057	*B*		*1*	*LIGHT BULB, BA9S 28V*	
S7701	90064-0084	A		1	PUSH BUTTON, YELLOW	
W7028	351150-0407	-	MM	5000	CABLE OLFLEX 12X0,75 MM2 LIGHT/GREY	

Pos	Part No	SP	UN	Qty	Description	Page No

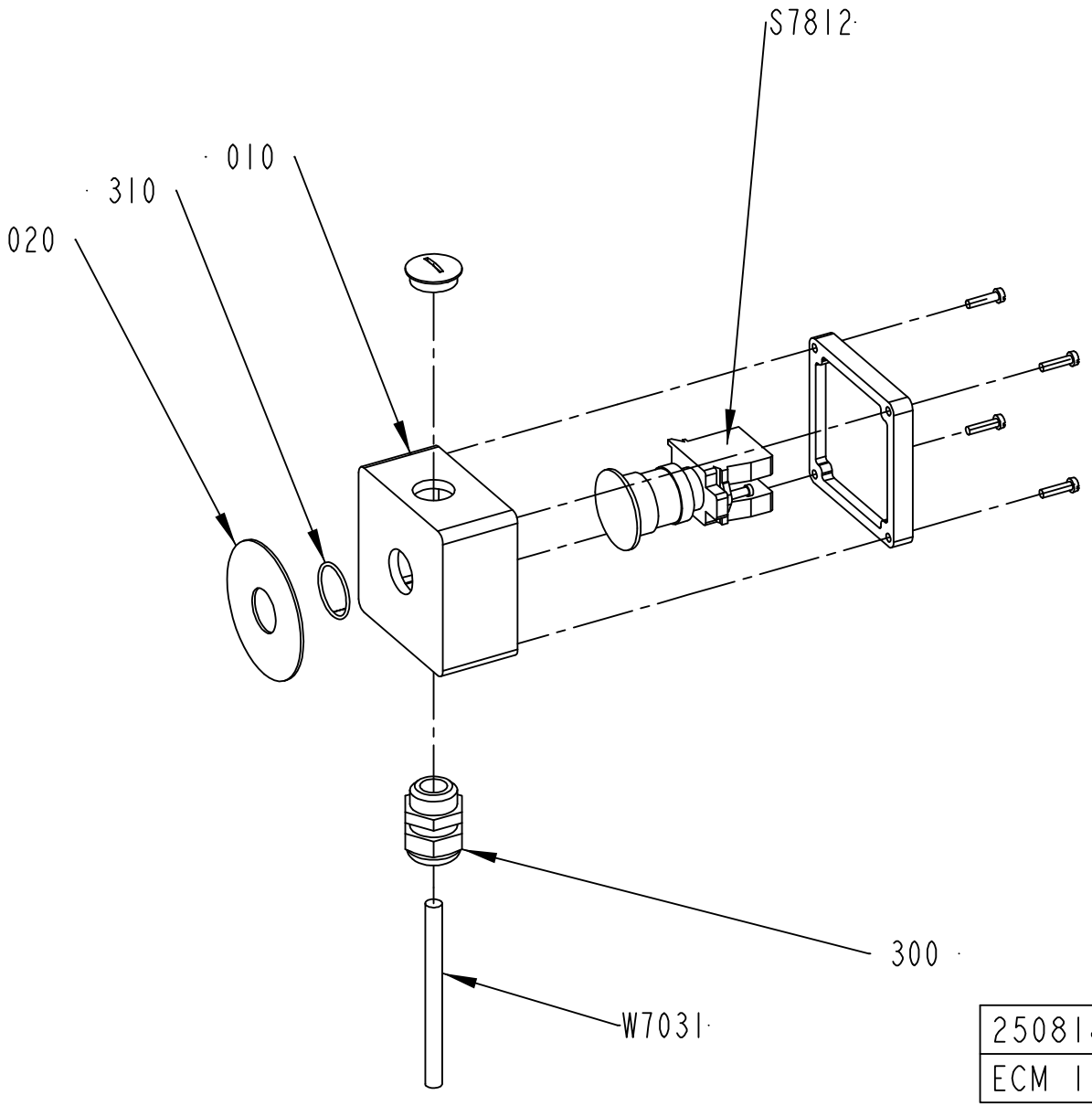

2508187-2
ECM 115190

ECM: 120687 - 20021217
Group number: 2508187-0100
Assembly Drawing: 2508187-2_1_AB

Pos	Part No	SP	UN	Qty	Description	Page No
-						
010	1037130-0000	-		1	CONNECTION BOX	
020	486826-0001	A		1	SIGN "EMERGENCY STOP"	
300	352103-0110	-		1	CABLE GLAND, STR 16, PR22,5/PG16	
310	315202-0119	-		1	O-RING 25,1X1,6 MM	
S7812	90458-1651	A		1	EMERGENCY STOP, ZB4-BS-844 ZB4-BZ-104	
W7031	351150-0405	-	MM	5000	CABLE OLFLEX 5X0,75 MM2 LIGHT/GREY	

Pos	Part No	SP	UN	Qty	Description	Page No

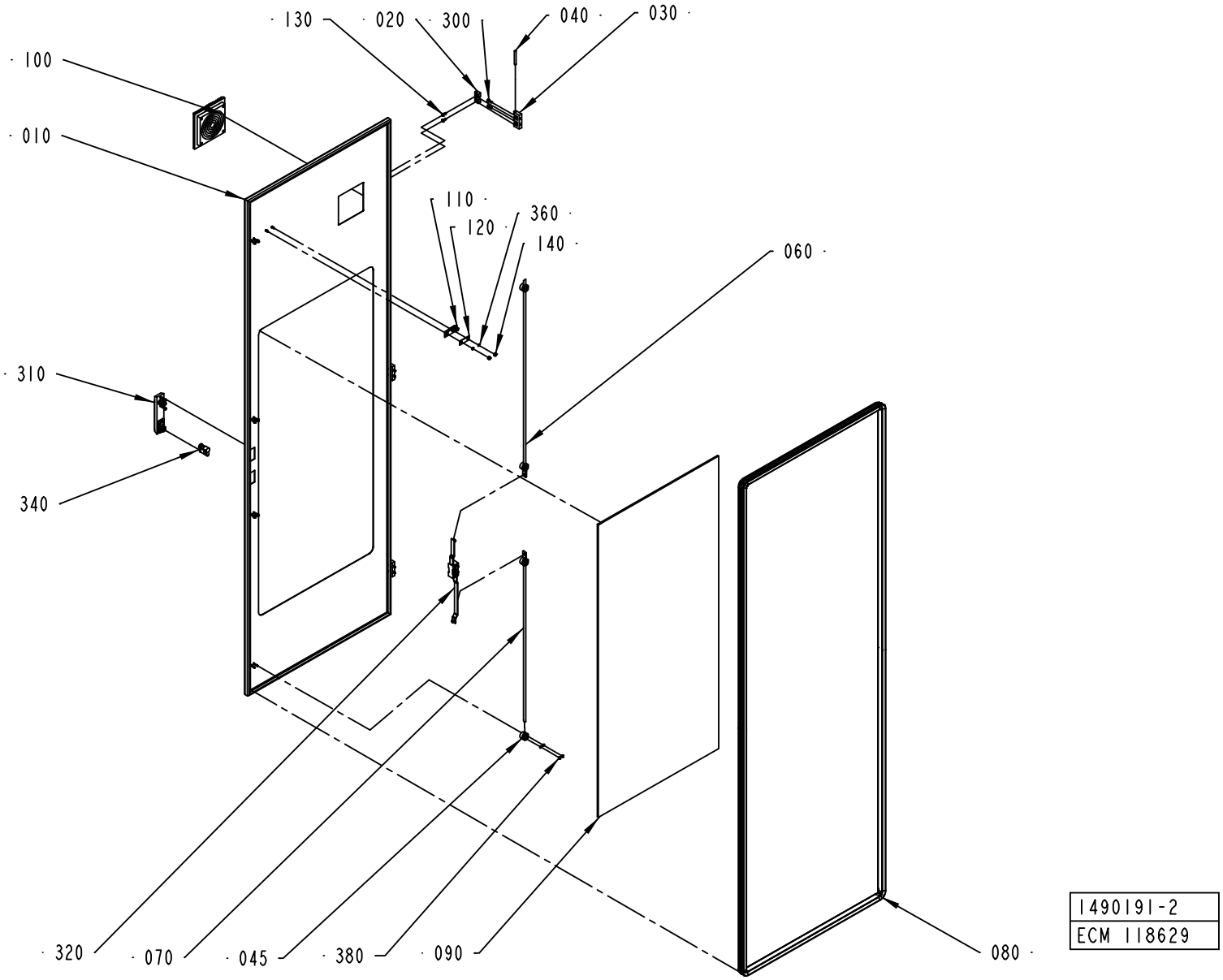
130
020
300
040
030
100
010
110
120
360
140
060
310
340
320
070
045
380
090
080
1490191-2
ECM 118629

ECM: 119369 - 20030929
Group number: 1490191-0100
Assembly Drawing: 1490191-2_1_AF

Pos	Part No	SP	UN	Qty	Description	Page No
-						
010	1488000-0000	-		1	DOOR	
020	1129770-0000	-		6	BLOCKING PIECE	
030	1035792-0000	-		3	E-HINGE	
040	988685-0000	-		3	PIN	
045	2550333-0000	-		4	GUIDE LUG	
060	1499562-0003	-		1	LOCKING ARM	
070	1499562-0004	-		1	LOCKING ARM	
080	1498461-0005	-		1	SEALING STRIP	
090	1498459-0002	-		1	GLASS PANE	
100	1490226-0000	A		1	FILTER	
110	975917-0000	A		1	KEY FOR SAFETY SWITCH 90044-103	
120	1036563-0000	-		1	WASHER	
130	1129767-0000	-		6	SCREW	
140	1539391-0000	-		2	ROUND NUT	
300	312115-0327	-		6	SCREW ISO4762 M5X12 A4	
310	90237-0175	-		1	TURNING HANDLE	
320	90237-0153	-		1	LOCK HOUSING, 1121-U26-0B	
340	90237-0128	-		1	LOCK CYLINDER, 1109-U3	
360	315105-0136	-		10	WASHER BRB4,3XRFR	
380	312705-0312	-		8	NUT HEX. DOMED CAP MHM-6 M4 A280	

Pos	Part No	SP	UN	Qty	Description	Page No

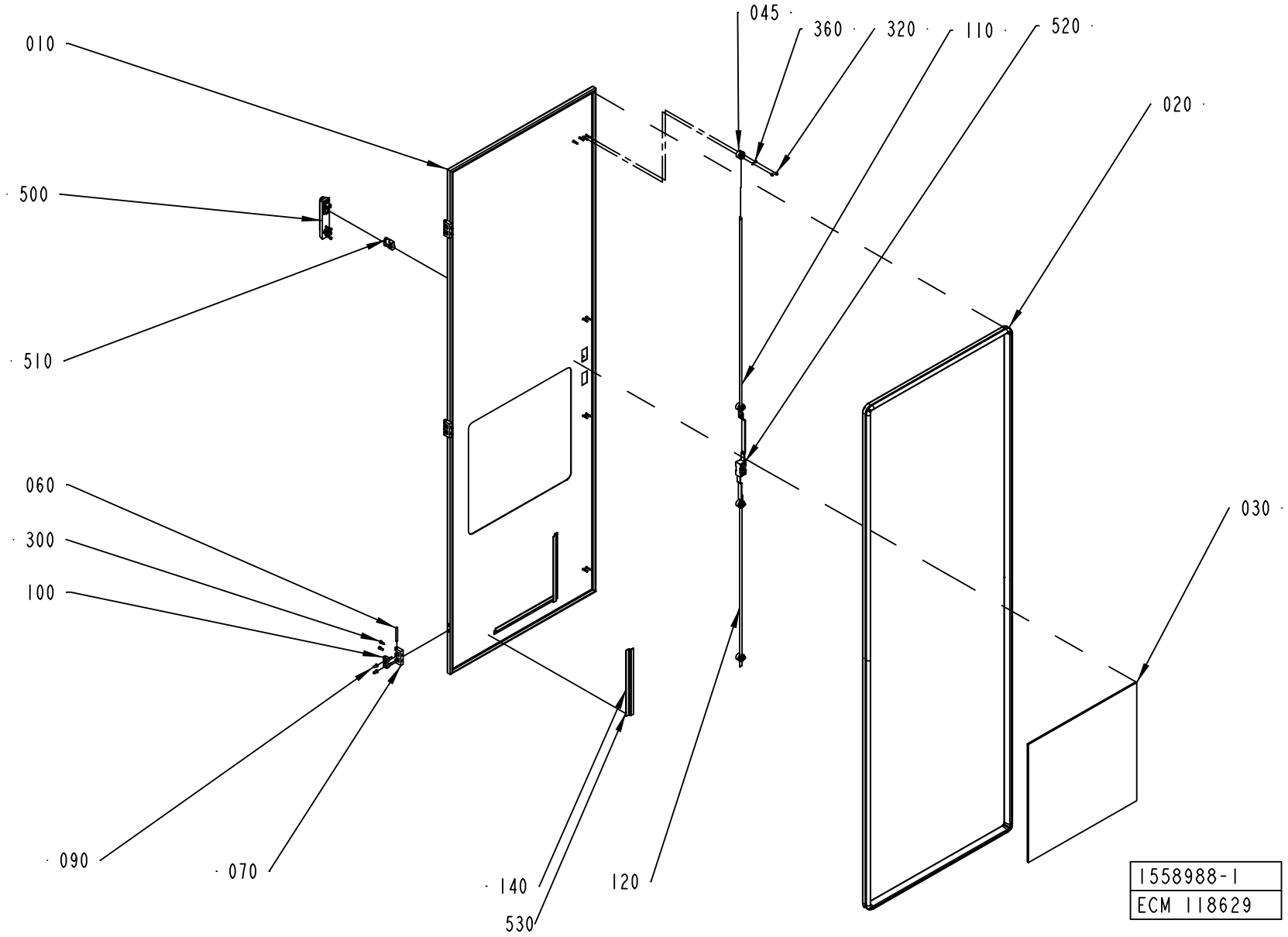
010
500
510
060
300
100
090
070
140
530
120
045
360
320
110
520
020
030
1558988-1
ECM 118629

ECM: 136218 - 20030929
Group number: 1558988-0100
Assembly Drawing: 1558988-1_1_AD

Pos	Part No	SP	UN	Qty	Description	Page No
-						
010	1558983-0000	-		1	DOOR	
020	1498461-0005	-		1	SEALING STRIP	
030	1498459-0004	-		1	GLASS PANE	
045	2550333-0000	-		4	GUIDE LUG	
060	988685-0000	-		3	PIN	
070	1035792-0000	-		3	E-HINGE	
090	1129767-0000	-		6	SCREW	
100	1129770-0000	-		6	BLOCKING PIECE	
110	1499562-0003	-		1	LOCKING ARM	
120	1499562-0004	-		1	LOCKING ARM	
140	988690-0000	-		3	RIM	
300	312115-0327	-		6	SCREW ISO4762 M5X12 A4	
320	312705-0312	-		8	NUT HEX. DOMED CAP MHM-6 M4 A280	
360	315105-0136	-		8	WASHER BRB4,3XRFR	
500	90237-0175	-		1	TURNING HANDLE	
510	90237-0128	-		1	LOCK CYLINDER, 1109-U3	
520	90237-0153	-		1	LOCK HOUSING, 1121-U26-0B	
530	90144-0072	-	MM	840	TAPE SCOTCH VHBS 4945 W=12,7MM	

Pos	Part No	SP	UN	Qty	Description	Page No

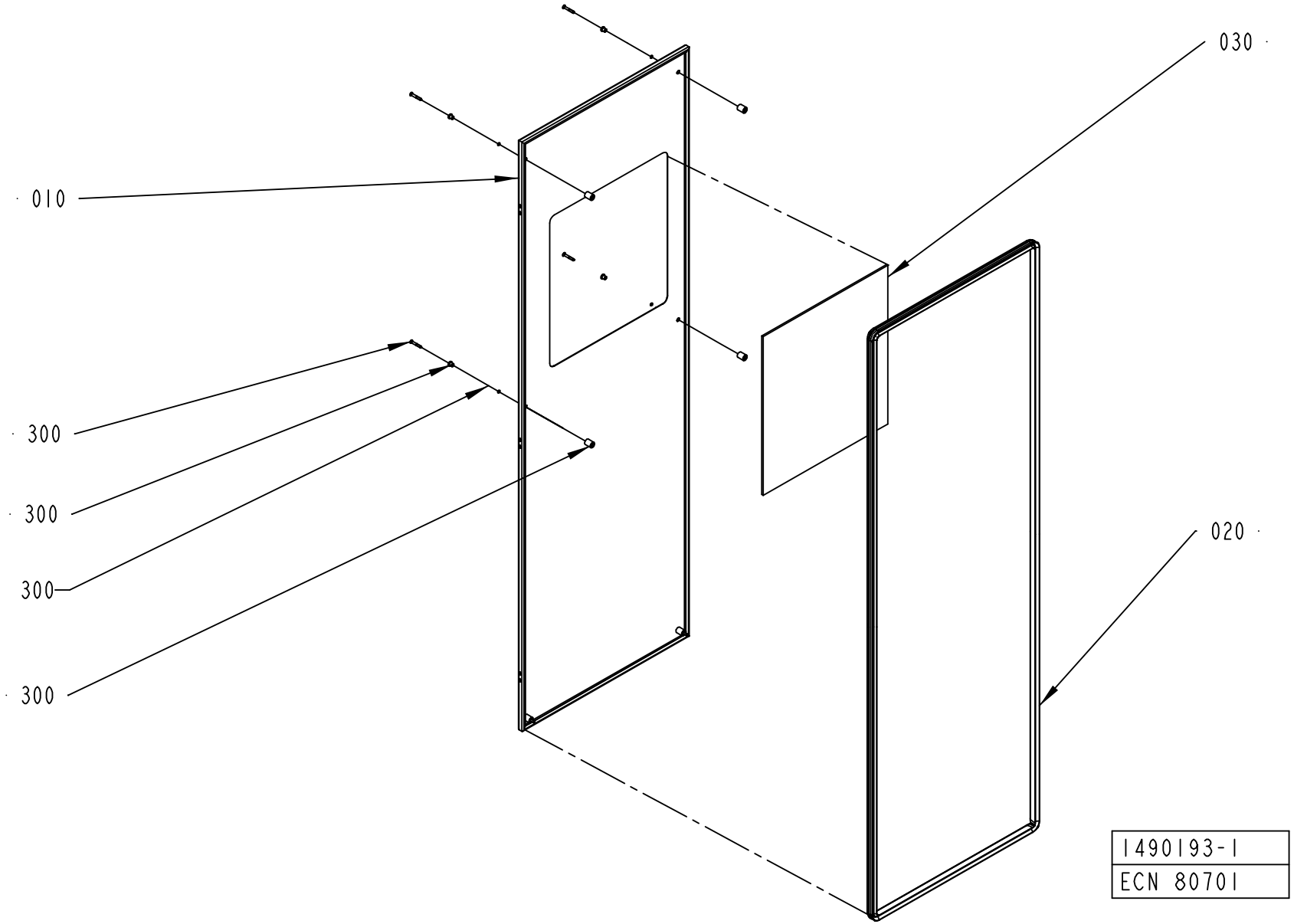
030
010
300
300
300
300
020
1490193-1
ECN 80701

ECM: 152417 - 20040115
Group number: 1490193-0100
Assembly Drawing: 1490193-1_1_AB

This list covers pages from 8-188 to 8-191

Pos	Part No	SP	UN	Qty	Description	Page No
With ARL (See drawing on page: 8-190)						
010	2632534-0000	-		1	HATCH	
040	2632536-0100	-		1	CONTROL PANEL	**8-193**
Without ARL (See drawing on page: 8-188)						
010	1498460-0000	-		1	HATCH	
Common Parts						
020	1498461-0002	-		1	SEALING STRIP	
030	1498459-0003	-		1	GLASS PANE	
300	90226-0458	-		6	MOUNTING SCREW	

Pos	Part No	SP	UN	Qty	Description	Page No

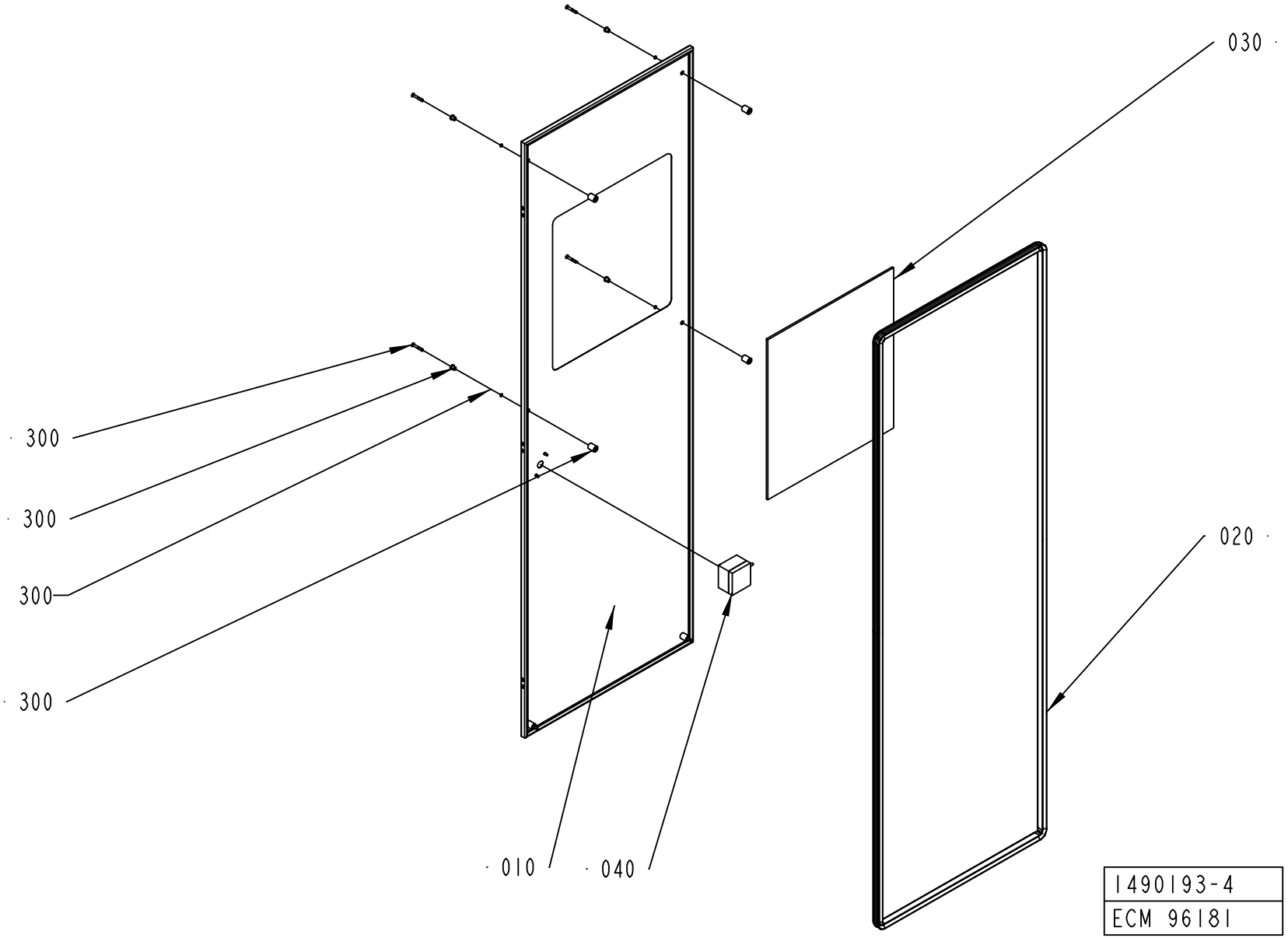
030
020
300
300
300
300
010
040
1490193-4
ECM 96181

ECM: 152417 - 20040115
Group number: 1490193-0100
Assembly Drawing: 1490193-4_1_AA

This list covers pages from 8-188 to 8-191

Pos	Part No	SP	UN	Qty	Description	Page No
With ARL (See drawing on page: 8-190)						
010	2632534-0000	-		1	HATCH	
040	2632536-0100	-		1	CONTROL PANEL	**8-193**
Without ARL (See drawing on page: 8-188)						
010	1498460-0000	-		1	HATCH	
Common Parts						
020	1498461-0002	-		1	SEALING STRIP	
030	1498459-0003	-		1	GLASS PANE	
300	90226-0458	-		6	MOUNTING SCREW	

Pos	Part No	SP	UN	Qty	Description	Page No

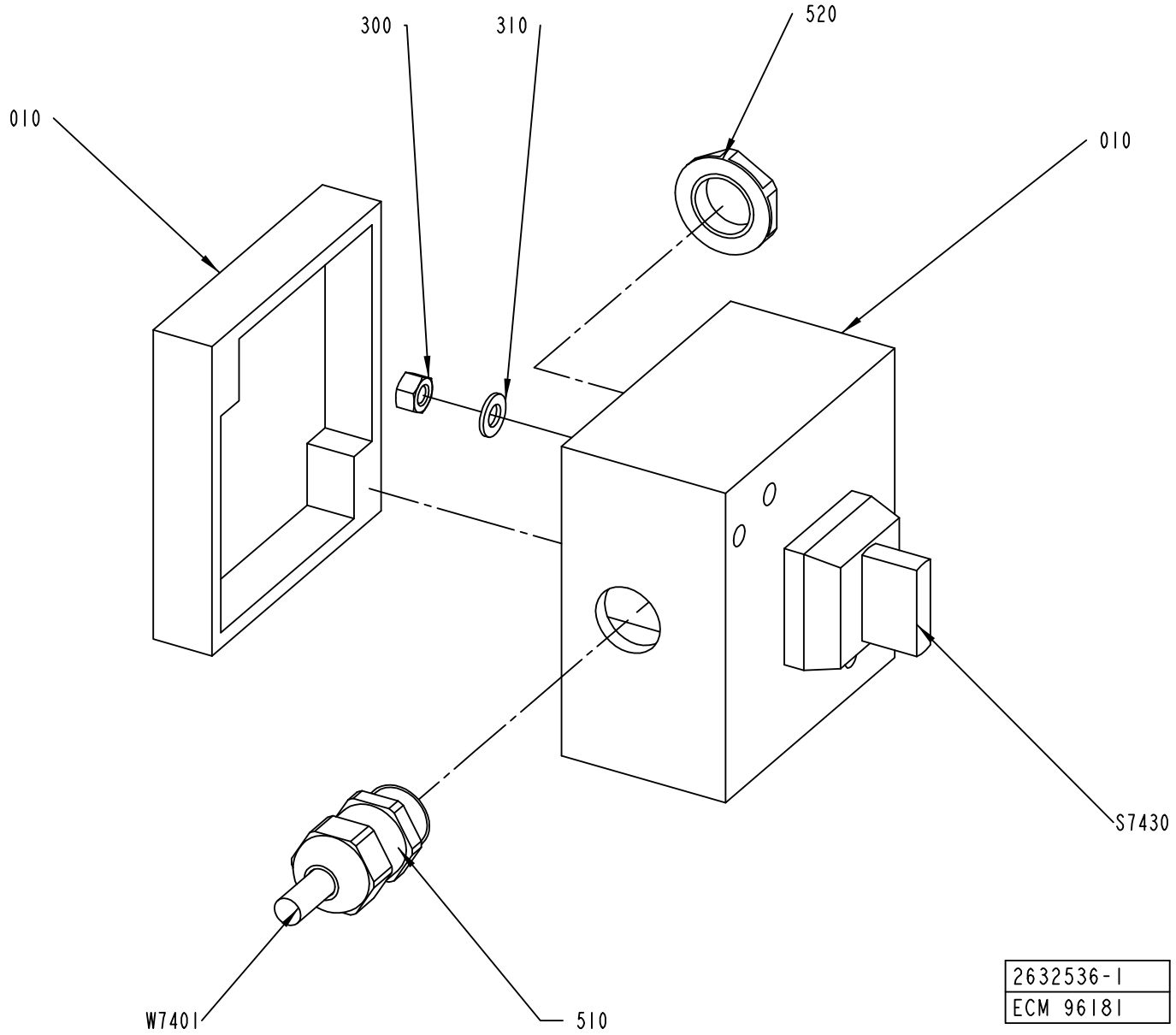
300
310
520
010
010
S7430
W7401
510
2632536-1
ECM 96181

ECM: 135495 - 20040115
Group number: 2632536-0100
Assembly Drawing: 2632536-1_1_AA

Pos	Part No	SP	UN	Qty	Description	Page No
-						
010	2632535-0000	-		1	CONNECTION BOX	
300	312605-0314	-		2	HEXAGON NUT, M6M M5 A280	
310	315105-0146	-		2	WASHER BRB5,3X10RFR	
510	90458-0306	-		1	CABLE GLAND, M16X1,5, NO.5311 1010	
520	90458-0322	-		1	NUT, M16X1,5	
S7430	90111-0120	-		1	SWITCH, 2 POS.704.510 .0A+704.901.5/A	
W7401	351150-0403	-	MM	8000	CABLE OLFLEX 3X0,75 MM2 LIGHT/GREY	

Pos	Part No	SP	UN	Qty	Description	Page No

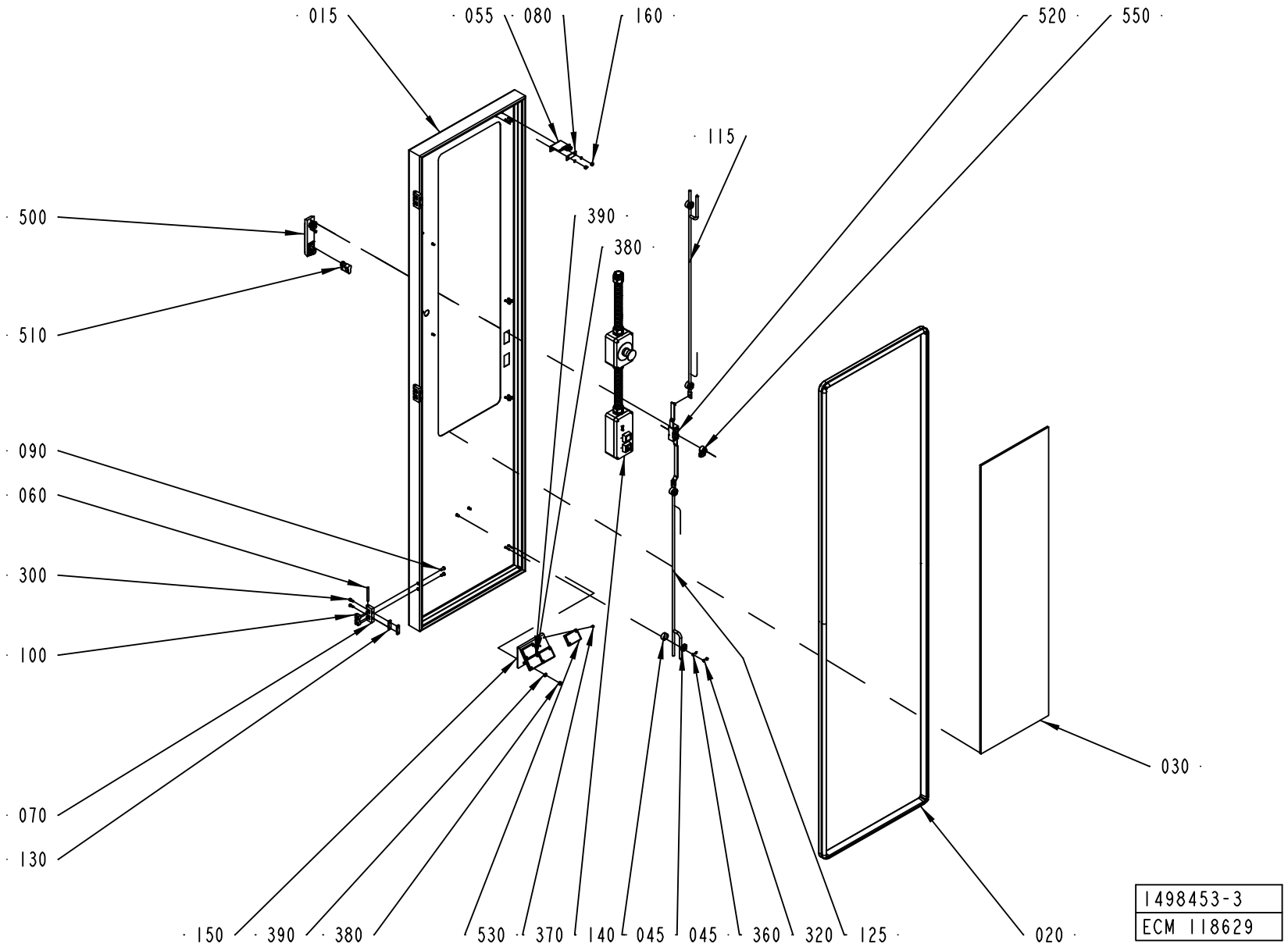
015
055
080
160
520
550
115
500
390
380
510
090
060
300
100
070
130
030
150
390
380
530
370
140
045
045
360
320
125
020
1498453-3
ECM 118629

ECM: 135878 - 20030929
Group number: 1498453-0200
Assembly Drawing: 1498453-3_1_AD

Pos	Part No	SP	UN	Qty	Description	Page No
-						
015	2547666-0000	-		1	DOOR	
020	1498461-0001	-		1	SEALING STRIP	
030	1498459-0001	-		1	GLASS PANE	
045	2550333-0000	-		4	GUIDE LUG	
055	2553072-0000	A		1	KEY FOR SAFETY SWITCH	
060	988685-0000	-		3	PIN	
070	1035792-0000	-		3	E-HINGE	
080	1036563-0000	-		1	WASHER	
090	1129767-0000	-		6	SCREW	
100	1129770-0000	-		6	BLOCKING PIECE	
115	2550269-0001	-		1	LOCKING ARM	
125	2550269-0002	-		1	LOCKING ARM	
130	1147253-0000	-		3	NUT	
140	1517088-0200	-		1	CONTROL PANEL	**8-197**
150	2541943-0000	-		1	BRACKET	
160	1539391-0000	-		2	ROUND NUT	
300	312115-0327	-		6	SCREW ISO4762 M5X12 A4	
320	312705-0312	-		8	NUT HEX. DOMED CAP MHM-6 M4 A280	
360	315105-0136	-		10	WASHER BRB4,3XRFR	
370	312125-0222	-		8	SCREW ISO 1207 M3X8 A4	
380	312605-0316	-		2	HEXAGON NUT, M6M M6 A280	
390	315105-0153	-		2	WASHER BRB6,4X12RFR	
500	90237-0175	-		1	TURNING HANDLE	
510	90237-0128	-		1	LOCK CYLINDER, 1109-U3	
520	90237-0153	-		1	LOCK HOUSING, 1121-U26-0B	
530	90232-0333	A		4	REFLECTOR E39-R1	
550	90237-0165	-		1	LATCH	

Pos	Part No	SP	UN	Qty	Description	Page No

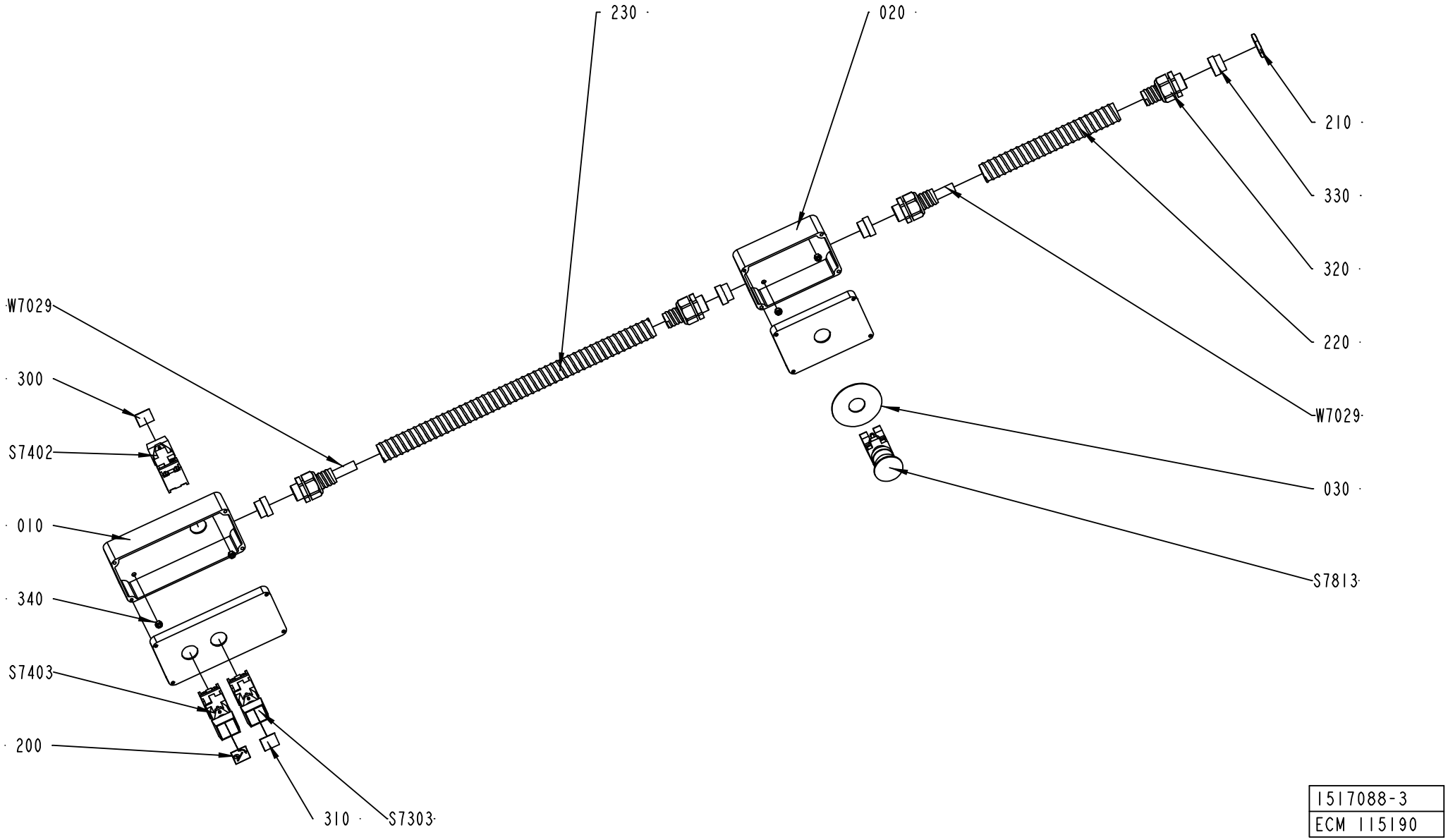

1517088-3
ECM 115190

ECM: 135885 - 20030929
Group number: 1517088-0200
Assembly Drawing: 1517088-3_1_AC

Pos	Part No	SP	UN	Qty	Description	Page No
-						
010	2523482-0000	-		1	PUSH BUTTON BOX	
020	2523483-0000	-		1	PUSH BUTTON BOX	
030	486826-0001	A		1	SIGN "EMERGENCY STOP"	
200	90457-0920	-		1	BUTTON SIGN, ROTATION OF MATERIAL HOLDER	
210	90099-0110	-		1	NUT, PR 22,5 (PG16)	
220	90152-0051	-	MM	500	SPIRAL CONDUIT, 25X18, UL 1816	
230	90152-0051	-	MM	170	SPIRAL CONDUIT, 25X18, UL 1816	
300	359301-0100	-		1	SIGN "SPLICING"	
310	359301-0488	-		1	BUTTON SIGN, MATERIAL LOCKING	
320	353243-0005	-		4	EXTENDED WITHOUT INSERT, PG16	
330	353249-0014	-		4	INSERT, SINGEL HOLE, EK 154/16	
340	312605-0314	-		4	HEXAGON NUT, M6M M5 A280	
S7303	90064-0082	A		1	PUSH BUTTON, WHITE	
	90036-0057	*B*		*1*	*LIGHT BULB, BA9S 28V*	
S7402	90064-0082	A		1	PUSH BUTTON, WHITE	
	90036-0057	*B*		*1*	*LIGHT BULB, BA9S 28V*	
S7403	90064-0082	A		1	PUSH BUTTON, WHITE	
	90036-0057	*B*		*1*	*LIGHT BULB, BA9S 28V*	
S7813	90458-1651	A		1	EMERGENCY STOP, ZB4-BS-844 ZB4-BZ-104	
W7029	351150-0407	-	MM	5000	CABLE OLFLEX 12X0,75 MM2 LIGHT/GREY	

Pos	Part No	SP	UN	Qty	Description	Page No

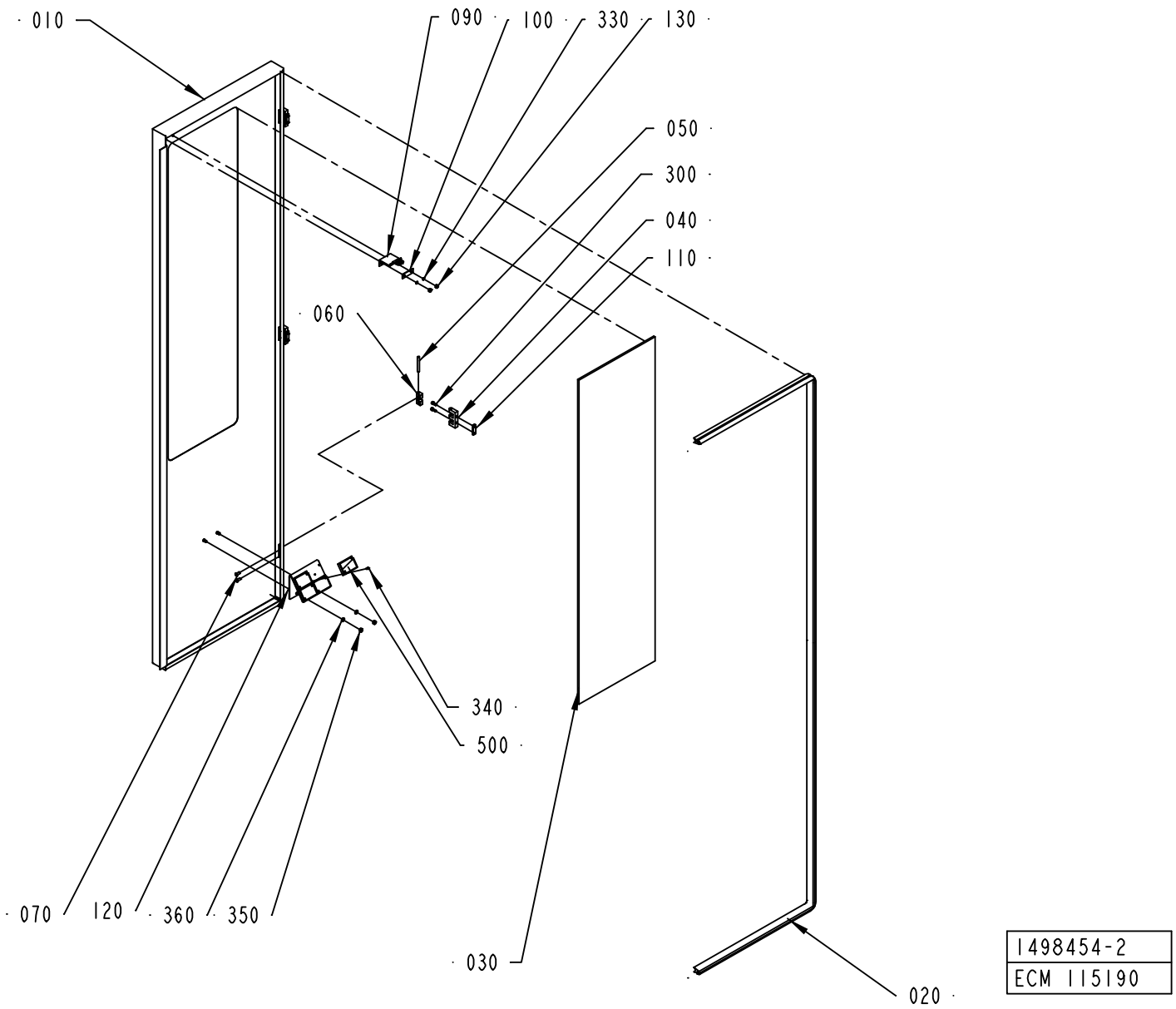
010
090
100
330
130
050
300
040
110
060
340
500
070
120
360
350
030
020
1498454-2
ECM 115190

ECM: 129713 - 20030929
Group number: 1498454-0200
Assembly Drawing: 1498454-2_1_AB

Pos	Part No	SP	UN	Qty	Description	Page No
-						
010	2547667-0000	-		1	DOOR	
020	1499579-0000	-		1	SEALING STRIP	
030	1498459-0001	-		1	GLASS PANE	
040	1035792-0000	-		3	E-HINGE	
050	988685-0000	-		3	PIN	
060	1129770-0000	-		6	BLOCKING PIECE	
070	1129767-0000	-		6	SCREW	
090	2553072-0000	A		1	KEY FOR SAFETY SWITCH	
100	1036563-0000	-		1	WASHER	
110	1147253-0000	-		3	NUT	
120	2541943-0000	-		1	BRACKET	
130	1539391-0000	-		2	ROUND NUT	
300	312115-0327	-		6	SCREW ISO4762 M5X12 A4	
330	315105-0136	-		2	WASHER BRB4,3XRFR	
340	312125-0222	-		8	SCREW ISO 1207 M3X8 A4	
350	312605-0316	-		2	HEXAGON NUT, M6M M6 A280	
360	315105-0153	-		2	WASHER BRB6,4X12RFR	
500	90232-0333	A		4	REFLECTOR E39-R1	

Pos	Part No	SP	UN	Qty	Description	Page No

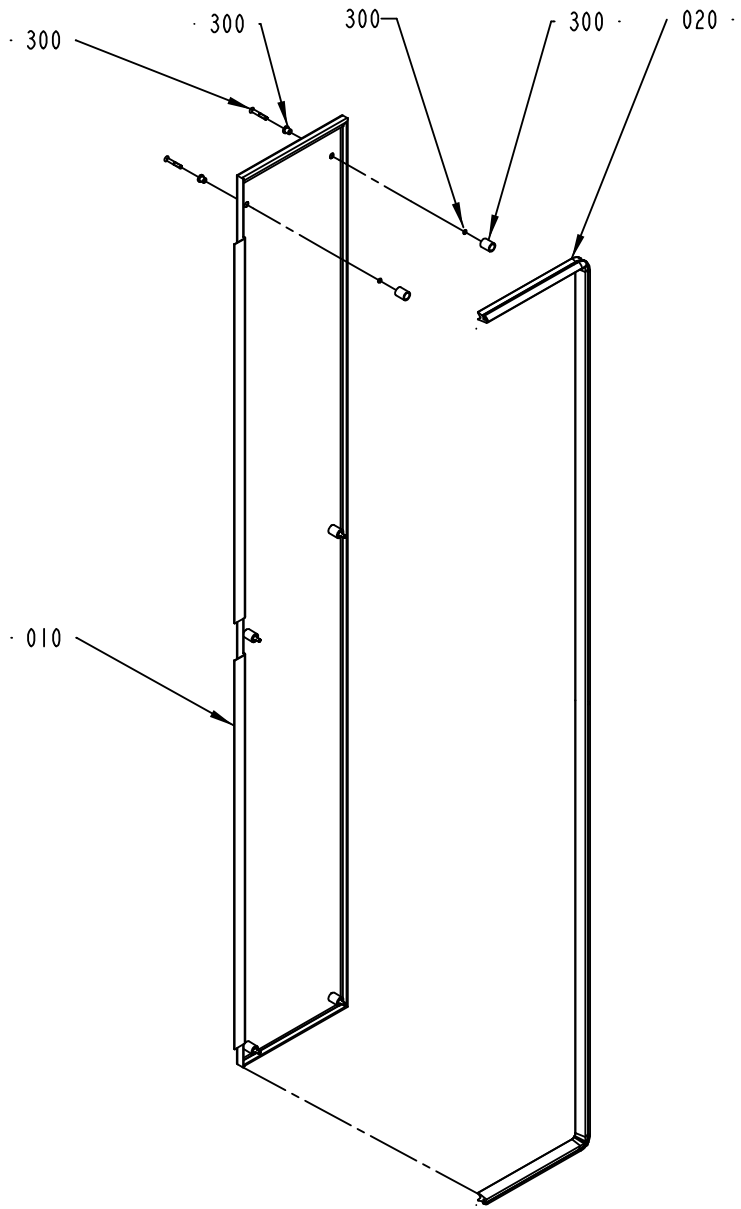

1490188-1
ECN 80701

ECM: 85420 - 20010306
Group number: 1490188-0100
Assembly Drawing: 1490188-1_1_AB

Pos	Part No	SP	UN	Qty	Description	Page No
-						
010	1499568-0000	-		1	HATCH	
020	1512278-0000	-		1	SEALING STRIP	
300	90226-0458	-		6	MOUNTING SCREW	

Pos	Part No	SP	UN	Qty	Description	Page No

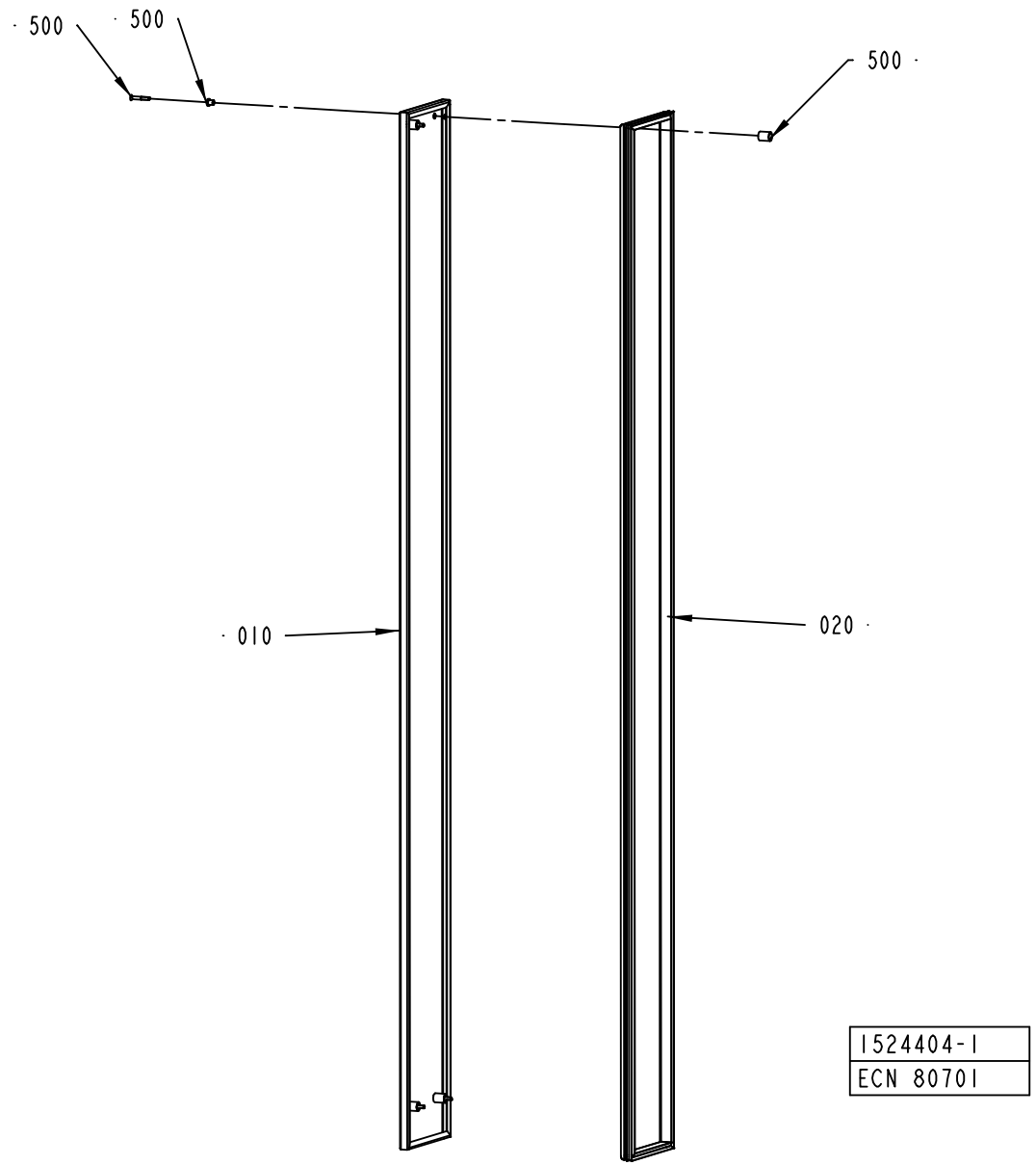

1524404-1
ECN 80701

ECM: 85423 - 20010306
Group number: 1524404-0100
Assembly Drawing: 1524404-1_1_AA

Pos	Part No	SP	UN	Qty	Description	Page No
-						
010	1524405-0000	-		1	COVER PLATE	
020	1524406-0000	-		1	SEALING STRIP	
500	90226-0458	-		4	MOUNTING SCREW	

Pos	Part No	SP	UN	Qty	Description	Page No

Tetra Pak

SPC
Spare Parts Catalogue

This page is intentionally left blank.

ECM: 141073 - 20031002
Group number: 648547-0200
Assembly Drawing:

Pos	Part No	SP	UN	Qty	Description	Page No
HI						
	979813-0000	-		1	PLUG	
	1498699-0000	-		1	PIPE	
	342850-0304	-		1	GASKET 35,4X49,1X5,2 1"1/2 FDA	
Common Parts						
	531345-0200	-		1	PERSONAL PROTECT. EQ H2O2	**9-5**
	1519819-0200	-		1	START-UP KIT	**9-7**
	1498691-0200	-		1	TOOLS AND TEMPLATES	**9-27**
	2552551-0100	-		1	TPOP DATA COLLECTION	**9-45**
	2555087-0100	-		1	SUPPORT	**9-47**
	2555088-0100	-		1	SUPPORT	**9-49**
	90220-0091	-	M	200	PAIR TWISTED CABLE 2X2X0,25MM2	
	90459-0246	-	KG	25	GREASE, KLüBERSYNTH UH1 14-1600	
	311521-0142	-		4	BLANK RIVET 3,2X6	
	351150-0407	-	M	50	CABLE OLFLEX 12X0,75 MM2 LIGHT/GREY	
	598878-0000	-		1	MACHINE SIGN 2 ADR. EEA	

Pos	Part No	SP	UN	Qty	Description	Page No

This page is intentionally left blank.

ECM: 72190 - 19990628
Group number: 531345-0200
Assembly Drawing:

Pos	Part No	SP	UN	Qty	Description	Page No	Pos	Part No	SP	UN	Qty	Description	Page No
-													
	90303-0013	-		1	APRON								
	90303-0012	-		1	PROTECTIVE GLOVES								
	90303-0011	-		1	PROTECTIVE GOGGLES								

This page is intentionally left blank.

ECM: 99253 - 20020715
Group number: 1519819-0200
Assembly Drawing:

Pos	Part No	SP	UN	Qty	Description	Page No
-						
010	2524610-0100	-		1	SUPERSTRUCTURE	**9-9**
020	2524611-0100	-		1	JAW SYSTEM	**9-17**
030	2524612-0100	-		1	FINAL FOLDER	**9-19**
040	2524613-0100	-		1	AUTOMATIC SPLICING UNIT	**9-21**
050	2524614-0100	-		1	ELECTRICAL CABINET	**9-23**
060	2524615-0100	-		1	MACHINE BODY	**9-25**

This page is intentionally left blank.

ECM: 120880 - 20030523
Group number: 2524610-0100
Assembly Drawing:

Pos	Part No	SP	UN	Qty	Description	Page No
TBA 0200B FLOATER, TBA 0250B FLOATER						
010	295376-0000	-		1	SHAFT	
020	257330-0000	-		2	PRESSURE ROLLER	
170	90459-0328	-		2	O-RING 20,29X2,62 MM	
180	1487378-0000	-		1	LOCKING PIN	
210	1490895-0000	-		3	TRIMMING ROLLER MINUS	
220	1490894-0000	-		3	TRIMMING ROLLER PLUS	
270	315229-0107	-		4	GASKETS, 73,9X80,9X3,7 MM 2"1/2 FD	
TBA 0200B LEVELPROBE, TBA 0250B LEVELPROBE						
010	1334051-0000	-		1	SHAFT	
020	257330-0000	-		2	PRESSURE ROLLER	
030	1347511-0000	-		1	FITTING	
040	1349913-0000	-		1	BUSHING	
050	1348639-0000	-		1	SEALING GASKET	
060	1348555-0000	-		1	SEALING RING	
210	1490895-0000	-		3	TRIMMING ROLLER MINUS	
220	1490894-0000	-		3	TRIMMING ROLLER PLUS	
270	315229-0107	-		4	GASKETS, 73,9X80,9X3,7 MM 2"1/2 FD	
TBA 0200M LEVELPROBE, TBA 0250S LEVELPROBE						
010	255977-0000	-		1	SHAFT	
020	272479-0000	-		2	PRESSURE ROLLER	
030	1347511-0000	-		1	FITTING	
040	1349913-0000	-		1	BUSHING	
050	1348639-0000	-		1	SEALING GASKET	
060	1348555-0000	-		1	SEALING RING	
210	2551110-0000	-		3	TRIMMING ROLLER MINUS	
220	2551109-0000	-		3	TRIMMING ROLLER PLUS	
260	315229-0106	-		4	GASKETS, 61,2X68,2X3,7 MM 2"1/2 FD	
TBA 0200S LEVELPROBE						
010	255977-0000	-		1	SHAFT	
020	272479-0000	-		2	PRESSURE ROLLER	
030	1347511-0000	-		1	FITTING	
040	1349913-0000	-		1	BUSHING	
050	1348639-0000	-		1	SEALING GASKET	
060	1348555-0000	-		1	SEALING RING	
210	1558187-0000	-		3	TRIMMING ROLLER MINUS	
220	1558188-0000	-		3	TRIMMING ROLLER PLUS	
260	315229-0106	-		4	GASKETS, 61,2X68,2X3,7 MM 2"1/2 FD	
Common Parts						
070	925998-0000	-		2	DIAPHRAGM	
080	1348475-0000	-		2	GASKET	
090	342850-0304	-		4	GASKET 35,4X49,1X5,2 1"1/2 FDA	
100	90217-0347	-		4	GASKET 32X22,6X3,6 MM	
110	90217-0348	-		4	GASKET 35,4X46,8X4 MM	
120	90217-0307	-		4	GASKET 35,8X50,5X5,5 MM	
130	315204-0214	-		4	O-RING 17,3X2,4 MM	
140	90206-0070	-		1	HEATING ELEMENT 6000W 380/220V	
	90269-0308	*-*		*1*	*GASKET 59X68X3 MM*	
	90206-0326	*-*		*1*	*JUNCTION BOX FOR 90206-56*	
150	315229-0105	-		5	GASKETS, 48,5X55,5X3,7 MM 2" FDA	
160	315229-0104	-		4	GASKETS, 35,8X42,8X3,7 MM 1"1/2 FD	
190	1538794-0000	-		2	O-RING	
200	1348474-0000	-		2	GASKET	
230	752156-0000	-		4	FLANGE BUSHING	
240	90296-0091	-		1	LUBRICATION GREASE	
250	38535-0001	-		1	LOCKING FINGER	
280	736514-0000	-		2	SHOCK ABSORBER	
290	1296877-0100	-		1	SEAL KIT	**9-11**
300	1296878-0100	-		1	SEAL KIT	**9-13**
310	1296879-0100	-		1	SEAL KIT	**9-15**

Machine Type Group Description Used-In Group Number Page No

This page is intentionally left blank.

ECM: 70850 - 19970729
Group number: 1296877-0100
Assembly Drawing:

Pos	Part No	SP	UN	Qty	Description	Page No
-						
010	530589-0000	-		4	SEAL RING	
020	530588-0000	-		1	SEAL RING	
030	533169-0000	-		1	DIAPHRAGM	
040	539212-0000	-		1	GASKET	
050	90091-0266	-		2	SEAL RING 10,4X16,3X2,5 MM	
060	90207-0363	-		1	GASKET	
070	90207-0365	-		1	GASKET	
100	315204-0215	-		1	O-RING 19,2X3 MM	
110	315204-0301	-		1	O-RING 49,5X3 MM	

Pos	Part No	SP	UN	Qty	Description	Page No

This page is intentionally left blank.

ECM: 70850 - 19970729
Group number: 1296878-0100
Assembly Drawing:

Pos	Part No	SP	UN	Qty	Description	Page No
-						
080	90030-0336	-		2	CONN. STRAIGHT, 316L-12M-BVCO-3	
090	90091-0237	-		5	ROD SEAL, GLIDORING 20X27,5X3 MM	
100	315204-0215	-		2	O-RING 19,2X3 MM	
120	90091-0238	-		4	WEAR RING 20X22X10 MM	
140	315204-0308	-		2	O-RING 84,5X3 MM	

Pos	Part No	SP	UN	Qty	Description	Page No

This page is intentionally left blank.

ECM: 70850 - 19970729
Group number: 1296879-0100
Assembly Drawing:

Pos	Part No	SP	UN	Qty	Description	Page No
-						
090	90091-0237	-		3	ROD SEAL, GLIDORING 20X27,5X3 MM	
100	315204-0215	-		1	O-RING 19,2X3 MM	
120	90091-0238	-		2	WEAR RING 20X22X10 MM	
130	90091-0335	-		1	PISTON SEAL,GLIDORING 62,5X70X3 MM	
150	90091-0304	-		1	RADIAL SEAL 45X65X8 MM DUST LIP	

Pos	Part No	SP	UN	Qty	Description	Page No

This page is intentionally left blank.

ECM: 127329 - 20030523
Group number: 2524611-0100
Assembly Drawing:

Pos	Part No	SP	UN	Qty	Description	Page No
TBA 0200B						
050	1533002-0000	-		2	INDUCTOR	
080	1498609-0000	-		40	VOLUME SHIM	
TBA 0200M						
050	1520166-0000	-		2	INDUCTOR	
080	1498604-0000	-		40	VOLUME SHIM	
TBA 0200S						
050	1533000-0000	-		2	INDUCTOR	
080	272991-0000	-		40	VOLUME SHIM	
TBA 0250B						
050	1533002-0000	-		2	INDUCTOR	
080	1348257-0000	-		40	VOLUME SHIM	
TBA 0250S						
050	1520166-0000	-		2	INDUCTOR	
080	574366-0000	-		40	VOLUME SHIM	
Common Parts						
010	1539348-0000	-		8	HOLDER	
020	1538148-0000	-		8	SPRING	
030	1538149-0000	-		8	SPRING	
040	1520564-0000	-		60	DOLLY	
060	1517289-0000	-		10	KNIFE	
100	2523607-0000	-		4	CARBON BRUSH	
110	32544-0000	-		10	INSULATION NUT	

Pos	Part No	SP	UN	Qty	Description	Page No

This page is intentionally left blank.

ECM: 129919 - 20030707
Group number: 2524612-0100
Assembly Drawing:

Pos	Part No	SP	UN	Qty	Description	Page No
TBA 0200B						
010	1523100-0000	-		1	BELT	
030	2523581-0000	-		2	CARRIER	
040	1519203-0000	-		2	BELT	
TBA 0200M						
010	1523101-0000	-		1	BELT	
030	1498101-0000	-		2	CARRIER	
040	1499919-0000	-		2	BELT	
TBA 0200S						
010	2525662-0000	-		1	BELT	
030	1498997-0000	-		2	CARRIER	
040	1499919-0000	-		2	BELT	
TBA 0250B						
010	1523101-0000	-		1	BELT	
030	1260067-0000	-		2	CARRIER	
040	1519203-0000	-		2	BELT	
TBA 0250S						
010	1549858-0000	-		1	BELT	
030	1498101-0000	-		2	CARRIER	
040	1499919-0000	-		2	BELT	
Common Parts						
050	90206-0132	-		1	HOT AIR ELEMENT	
060	1348242-0000	-		1	SPROCKET	

Pos	Part No	SP	UN	Qty	Description	Page No

Machine Type | Group Description | Used-In | Group Number | Page No

This page is intentionally left blank.

ECM: 106050 - 20020715
Group number: 2524613-0100
Assembly Drawing:

Pos	Part No	SP	UN	Qty	Description	Page No
-						
010	90458-0672	-		1	PROXIMITY SENSOR E2E2-X5MB1-5M	
020	1346988-0000	-		2	ROLL	
010	*90166-0056*	*-*	*MM*	*40*	*SHRINKABLE HOSE*	
020	*321120-0104*	*-*		*2*	*BEARBUSHING W/O FL,ANGE 10/12X10*	

Pos	Part No	SP	UN	Qty	Description	Page No

This page is intentionally left blank.

ECM: 106051 - 20020715
Group number: 2524614-0100
Assembly Drawing:

Pos	Part No	SP	UN	Qty	Description	Page No
-						
010	90233-0029	-		3	TUBE FUSE, 25A	
020	90233-0028	-		7	TUBE FUSE, 10A	

Pos	Part No	SP	UN	Qty	Description	Page No

This page is intentionally left blank.

ECM: 106052 - 20020715
Group number: 2524615-0100
Assembly Drawing:

Pos	Part No	SP	UN	Qty	Description	Page No
-						
010	315229-0104	-		2	GASKETS, 35,8X42,8X3,7 MM 1"1/2 FD	

Pos	Part No	SP	UN	Qty	Description	Page No

This page is intentionally left blank.

ECM: 116564 - 20021015
Group number: 1498691-0200
Assembly Drawing:

Pos	Part No	SP	UN	Qty	Description	Page No
-						
010	1498692-0200	-		1	TOOLS AND TEMPLATE,JAW SYSTEM	**9-29**
020	1498693-0100	-		1	TOOLS AND TEMPLATES, FINAL FOLDER	**9-33**
030	1498694-0100	-		1	TOOLS AND TEMPLATES, FILLING TUBE	**9-35**

Pos	Part No	SP	UN	Qty	Description	Page No

This page is intentionally left blank.

ECM: 140942 - 20031110
Group number: 1498692-0200
Assembly Drawing:

Pos	Part No	SP	UN	Qty	Description	Page No
-						
010	1487215-0100	-		1	TOOL	**9-31**
020	1512559-0000	-		1	SPRAY GUN	
040	2640362-0000	-		1	TOOL	

Pos	Part No	SP	UN	Qty	Description	Page No

Machine Type | Group Description | Used-In | Group Number | Page No

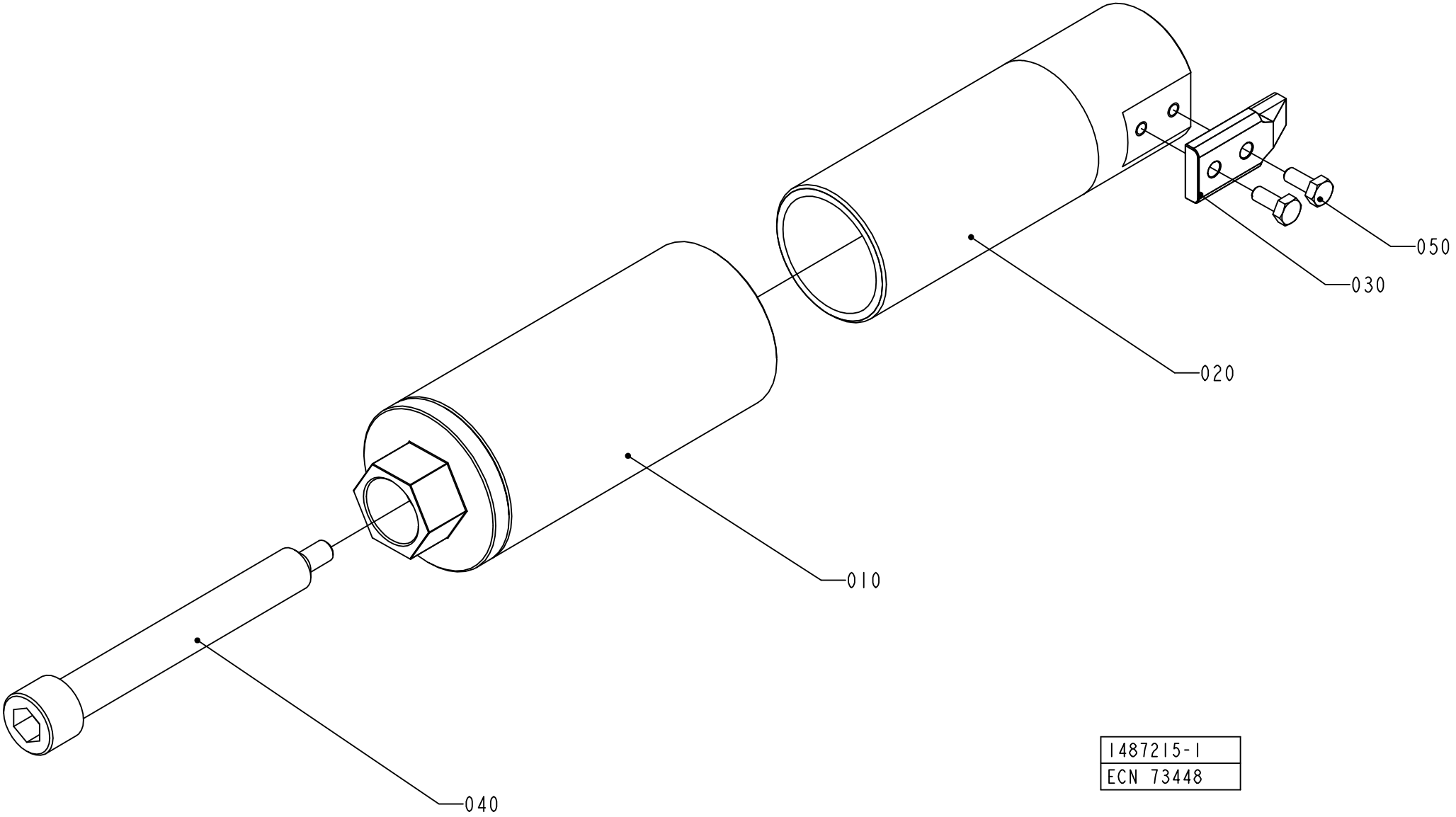
050
030
020
010
040
1487215-1
ECN 73448

ECM: 73448 - 20000302
Group number: 1487215-0100
Assembly Drawing: 1487215-1_1_AA

Pos	Part No	SP	UN	Qty	Description	Page No
-						
010	1519725-0000	-		1	SHAFT	
010	*1487211-0000*	*-*		*1*	*SHAFT*	
020	*1487210-0000*	*-*		*1*	*PLUG*	
020	1487213-0000	-		1	SHAFT	
030	1499186-0000	-		1	HOLDER	
030	1499129-0000	-		1	HOLDER	
040	1487214-0000	-		1	SCREW	
050	312105-0289	-		2	SCREW M6S ISO 4017 M4X10 A480	

Pos	Part No	SP	UN	Qty	Description	Page No

This page is intentionally left blank.

ECM: 132229 - 20030120
Group number: 1498693-0100
Assembly Drawing:

Pos	Part No	SP	UN	Qty	Description	Page No
TBA 0200B						
010	2508395-0000	-		1	TEMPLATE	
TBA 0200M						
010	2501229-0000	-		1	TEMPLATE	
TBA 0200S						
010	2501225-0000	-		1	TEMPLATE	
TBA 0250B						
010	2508396-0000	-		1	TEMPLATE	
TBA 0250S						
010	2501230-0000	-		1	TEMPLATE	
Common Parts						
020	1350716-0000	-		1	SHAFT	

Pos	Part No	SP	UN	Qty	Description	Page No

Machine Type | Group Description | Used-In | Group Number | Page No

This page is intentionally left blank.

ECM: 132269 - 20030120
Group number: 1498694-0100
Assembly Drawing:

Pos	Part No	SP	UN	Qty	Description	Page No
TBA 0200B, TBA 0250S, TBA 0200M, TBA 0250B						
030	1498687-0000	-		1	ADJUSTMENT BRACKET	
TBA 0200S						
030	2500588-0000	-		1	ADJUSTMENT BRACKET	
Common Parts						
010	1498674-0100	-		1	TOOLS	**9-37, 9-39, 9-41**
020	1498676-0100	-		1	TOOLS	**9-43**

Pos	Part No	SP	UN	Qty	Description	Page No

Machine Type | Group Description | Used-In | Group Number | Page No

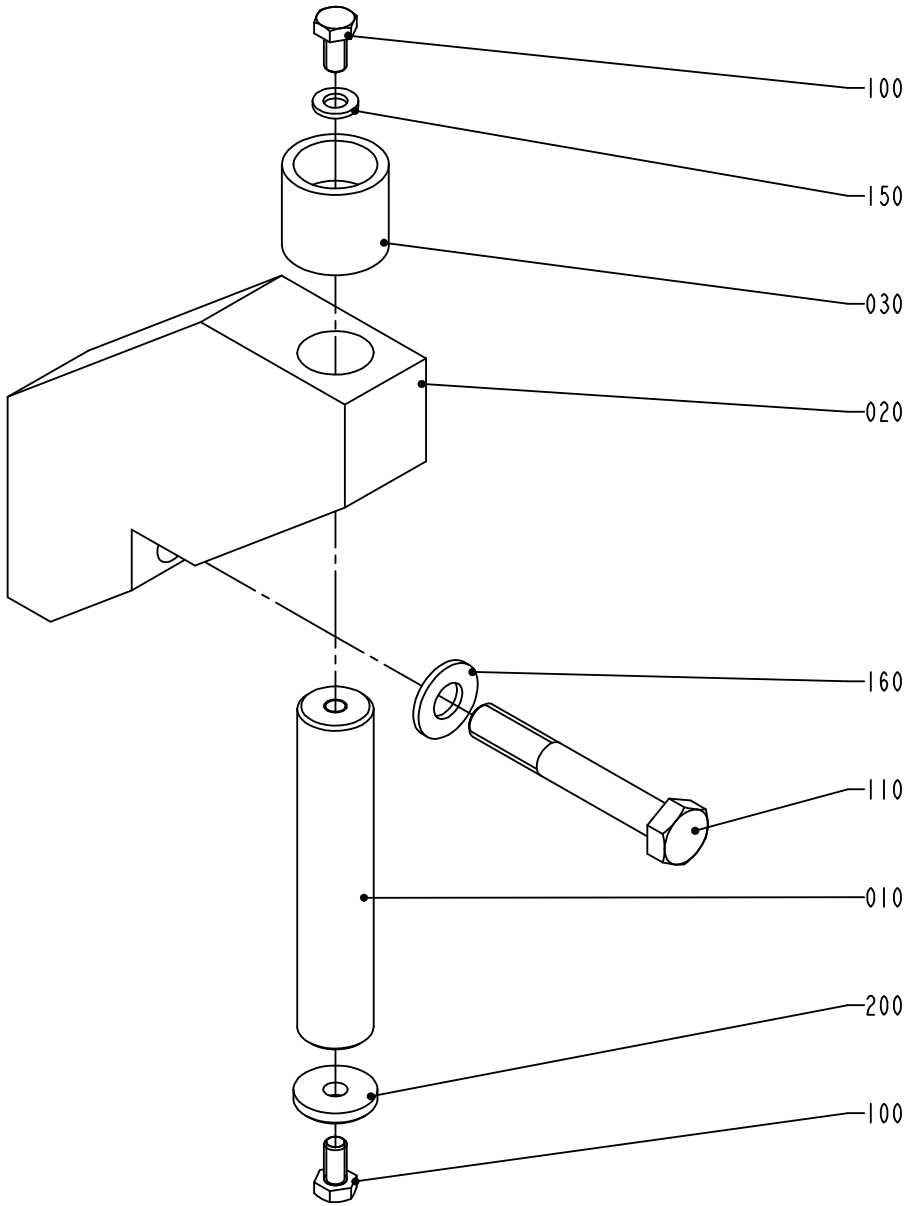

S-1498674-1
ECN 73448

ECM: 128341 - 20030922
Group number: 1498674-0100
Assembly Drawing: 1498674-1_1_AA

This list covers pages from 9-36 to 9-41

Pos	Part No	SP	UN	Qty	Description	Page No
TBA 0200B FLOATER, TBA 0250B FLOATER (See drawing on page: 9-38)						
010	1548238-0000	-		1	SHAFT	
020	2525542-0000	-		1	SUPPORT	
030	1548240-0000	-		1	BUSHING	
TBA 0200B LEVELPROBE, TBA 0250B LEVELPROBE, TBA 0200M LEVELPROBE, TBA 0250S LEVELPROBE, TBA 0200S LEVELPROBE (See drawing on page: 9-36)						
010	1487482-0000	-		1	SHAFT	
020	1487483-0000	-		1	SUPPORT	
030	1498675-0000	-		1	BUSHING	
TBA 0200S FLOATER (See drawing on page: 9-40)						
010	1548238-0000	-		1	SHAFT	
020	2525542-0000	-		1	SUPPORT	
030	2555086-0000	-		1	BUSHING	
Common Parts						
100	312105-0366	-		2	SCREW M6S M6X12 A280	
110	312105-0505	-		1	SCREW M6S ISO 4014 M10X70 A480	
150	315105-0153	-		1	WASHER BRB6,4X12RFR	
160	315105-0173	-		1	WASHER BRB10,5X22RFR	
200	315125-0153	-		1	WASHER TBRSB 6,4X22X4 A4	

Pos	Part No	SP	UN	Qty	Description	Page No

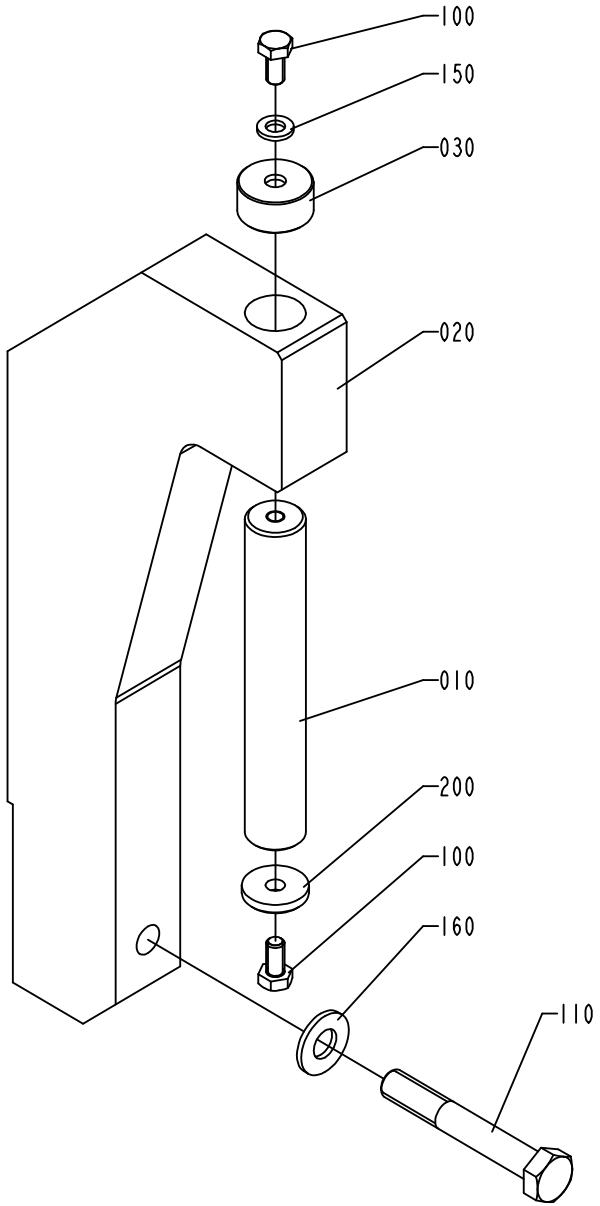

1498674-2
ECM 99258

ECM: 128341 - 20030922
Group number: 1498674-0100
Assembly Drawing: 1498674-2_1_AA

This list covers pages from 9-36 to 9-41

Pos	Part No	SP	UN	Qty	Description	Page No
TBA 0200B FLOATER, TBA 0250B FLOATER (See drawing on page: 9-38)						
010	1548238-0000	-		1	SHAFT	
020	2525542-0000	-		1	SUPPORT	
030	1548240-0000	-		1	BUSHING	
TBA 0200B LEVELPROBE, TBA 0250B LEVELPROBE, TBA 0200M LEVELPROBE, TBA 0250S LEVELPROBE, TBA 0200S LEVELPROBE (See drawing on page: 9-36)						
010	1487482-0000	-		1	SHAFT	
020	1487483-0000	-		1	SUPPORT	
030	1498675-0000	-		1	BUSHING	
TBA 0200S FLOATER (See drawing on page: 9-40)						
010	1548238-0000	-		1	SHAFT	
020	2525542-0000	-		1	SUPPORT	
030	2555086-0000	-		1	BUSHING	
Common Parts						
100	312105-0366	-		2	SCREW M6S M6X12 A280	
110	312105-0505	-		1	SCREW M6S ISO 4014 M10X70 A480	
150	315105-0153	-		1	WASHER BRB6,4X12RFR	
160	315105-0173	-		1	WASHER BRB10,5X22RFR	
200	315125-0153	-		1	WASHER TBRSB 6,4X22X4 A4	

Pos	Part No	SP	UN	Qty	Description	Page No

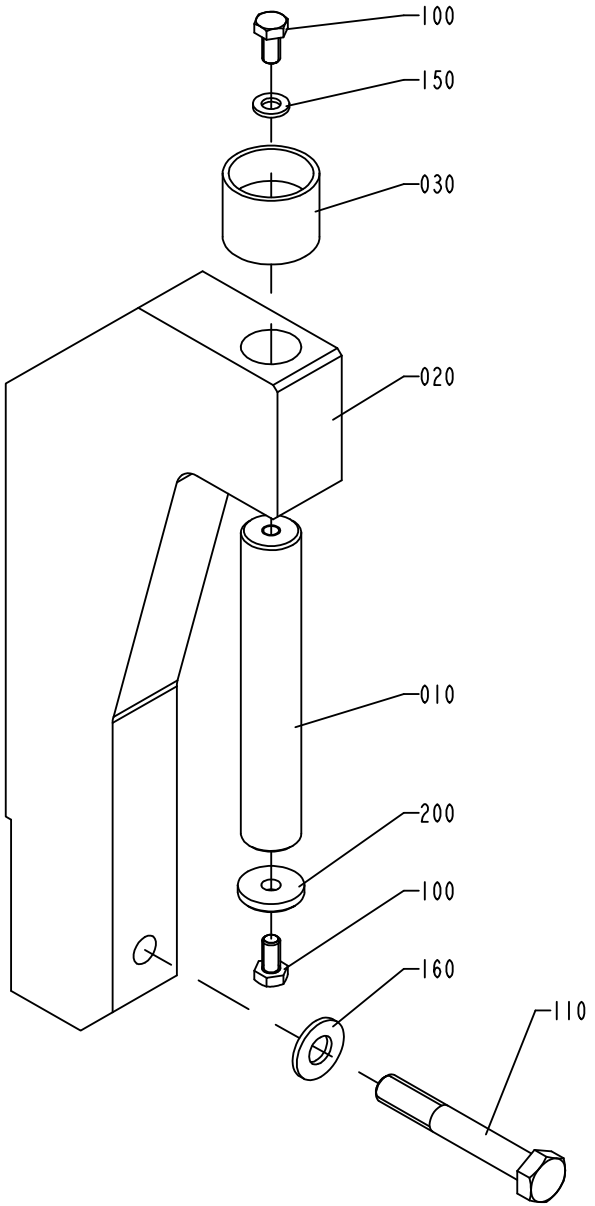

1498674-3
ECM 128280

Pos	Part No	SP	UN	Qty	Description	Page No
TBA 0200B FLOATER, TBA 0250B FLOATER (See drawing on page: 9-38)						
010	1548238-0000	-		1	SHAFT	
020	2525542-0000	-		1	SUPPORT	
030	1548240-0000	-		1	BUSHING	
TBA 0200B LEVELPROBE, TBA 0250B LEVELPROBE, TBA 0200M LEVELPROBE, TBA 0250S LEVELPROBE, TBA 0200S LEVELPROBE (See drawing on page: 9-36)						
010	1487482-0000	-		1	SHAFT	
020	1487483-0000	-		1	SUPPORT	
030	1498675-0000	-		1	BUSHING	
TBA 0200S FLOATER (See drawing on page: 9-40)						
010	1548238-0000	-		1	SHAFT	
020	2525542-0000	-		1	SUPPORT	
030	2555086-0000	-		1	BUSHING	
Common Parts						
100	312105-0366	-		2	SCREW M6S M6X12 A280	
110	312105-0505	-		1	SCREW M6S ISO 4014 M10X70 A480	
150	315105-0153	-		1	WASHER BRB6,4X12RFR	
160	315105-0173	-		1	WASHER BRB10,5X22RFR	
200	315125-0153	-		1	WASHER TBRSB 6,4X22X4 A4	

Pos	Part No	SP	UN	Qty	Description	Page No

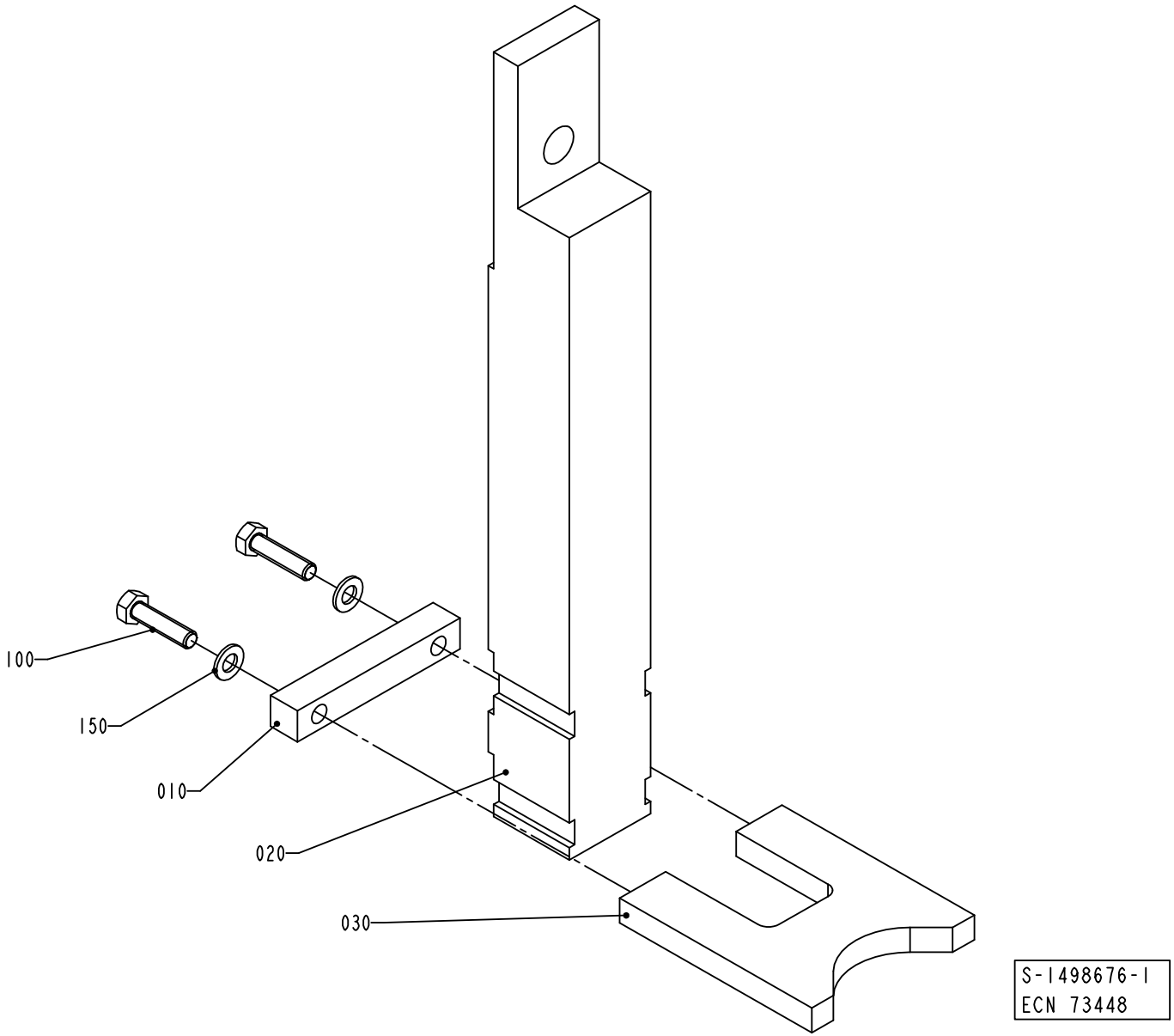
100
150
010
020
030
S-1498676-1
ECN 73448

ECM: 73448 - 20000302
Group number: 1498676-0100
Assembly Drawing: 1498676-1_1_AA

Pos	Part No	SP	UN	Qty	Description	Page No
-						
010	1487494-0000	-		1	BAR	
020	1498677-0000	-		1	BAR	
030	1499407-0000	-		1	FORK	
100	312105-0331	-		2	SCREW M6S ISO 4017 M5X20 A480	
150	315105-0146	-		2	BRICKA BRB5,3X10RFR	

Pos	Part No	SP	UN	Qty	Description	Page No

This page is intentionally left blank.

ECM: 147749 - 20031110
Group number: 2552551-0100
Assembly Drawing:

Pos	Part No	SP	UN	Qty	Description	Page No
-						
010	90453-0001	-		1	MODEM MA-12	
020	90041-0068	-		1	DATACABLE MODEM PC	
030	90220-0091	-	M	200	PAIR TWISTED CABLE 2X2X0,25MM2	
040	1190007-0401	-		1	PLMS RECEIVE	
0020	*2547112-0000*	-		*1*	*DOCUMENTATION DISKETTE*	
0030	*2547113-0000*	-		*1*	*LABEL DISKETTE*	
0040	*2547114-0000*	-		*1*	*SHORT FORM INSTRUCTION*	
0050	*2547115-0000*	-		*1*	*MASTER DISKETTE*	
050	82197-0103	-		1	UM DOCUMENT SERIAL COMUNICATION ONLY EN	
060	1254471-0404	-		1	PLMS OFF-LINE	
0010	*47937-0404*	-		*1*	*PLMS OFF-LINE PROGRAM*	
0020	*2603218-0000*	-		*1*	*DOCUMENTATION DISKETTE*	
0030	*2603219-0000*	-		*1*	*LABELS, DISKETTE*	
0040	*2603220-0000*	-		*1*	*LABELS, CD*	
0050	*2603221-0000*	-		*1*	*SHORT FORM INSTRUCTIONS*	
0060	*2603222-0000*	-		*1*	*MASTER DISKETTE*	
0020	*82351-0105*	-		*1*	*USER MANUAL PLMS OFF-LINE*	

Pos	Part No	SP	UN	Qty	Description	Page No

Machine Type | Group Description | Used-In | Group Number | Page No

This page is intentionally left blank.

ECM: 112424 - 20020715
Group number: 2555087-0100
Assembly Drawing:

Pos	Part No	SP	UN	Qty	Description	Page No
-						
	1558942-0000	-		1	BRACKET	
	315105-0173	-		2	WASHER BRB10,5X22RFR	
	312105-0502	-		2	SCREW M6S ISO 4014 M10X55 A480	

Pos	Part No	SP	UN	Qty	Description	Page No

This page is intentionally left blank.

ECM: 112425 - 20020715
Group number: 2555088-0100
Assembly Drawing:

Pos	Part No	SP	UN	Qty	Description	Page No
-						
	1558933-0000	-		1	FRAME	
	315105-0178	-		4	WASHER BRB13X24RFR	
	312605-0322	-		4	HEXAGON NUT, M6M M12 A280	
	90458-2138	-		2	SCREW M6S M12X120 A280	

Pos	Part No	SP	UN	Qty	Description	Page No

Tetra Pak

SPC
Spare Parts Catalogue

This page is intentionally left blank.

ECM: 107480 - 20020715
Group number: 648546-0500
Assembly Drawing:

Pos	Part No	SP	UN	Qty	Description	Page No
-						
010	1498695-0200	-		1	ACCESSORIES	**10-5**

Pos	Part No	SP	UN	Qty	Description	Page No

Machine Type | Group Description | Used-In | Group Number | Page No

This page is intentionally left blank.

ECM: 109427 - 20020715
Group number: 1498695-0200
Assembly Drawing:

Pos	Part No	SP	UN	Qty	Description	Page No
-						
010	527898-0100	-		1	CONTAINER H2O2	**2-95, 10-7**
020	529345-0100	-		1	FILLING STATION H2O2	**10-9**
030	532210-0100	-		1	PEROXIDE CONTAINER TROLLEY	**10-11**
040	2514392-0100	-		1	MACHINE CARRIAGE	**10-13**
060	1538186-0100	-		1	PAPER TROLLEY	**10-17**
070	1185025-0100	-		1	LIFTING EQUIPMENT	**10-27**
090	90457-0048	-		1	INK JET PRINTER A300 HS	
100	1369439-0102	-		1	PLMS ON-LINE	
0010	*48633-0102*	-		*1*	*PLMS ON-LINE CLIENT PROGRAM*	
0020	*58789-0000*	-		*1*	*DOCUMENTATION DISKETT*	
0030	*1369432-0000*	-		*1*	*LABELS, DISKETT*	
0040	*58787-0000*	-		*1*	*SHORT FORM INSTRUCTIONS*	
0050	*58788-0000*	-		*1*	*MASTER DISKETT*	
0020	*48635-0102*	-		*1*	*PLMS ON-LINE SERVER PROGRAM*	
0020	*58801-0000*	-		*1*	*DOCUMENTATION DISKETT*	
0030	*1369437-0000*	-		*1*	*LABELS, DISKETT*	
0040	*58799-0000*	-		*1*	*SHORT FORM INSTRUCTIONS*	
0050	*58800-0000*	-		*1*	*MASTER DISKETT*	
0030	*81595-0101*	-		*1*	*USER MANUAL PLMS ON-LINE*	
0040	*81596-0101*	-		*1*	*INSTALLATION MANUAL PLMS ON-LINE*	
110	90459-0333	-		1	PORTABLE GREASE PUMP, 55:1 ART.NO 12215	
	90459-0332	*B*		*1*	*GREASE FILTER, 100µM ART.NO 14527*	

Pos	Part No	SP	UN	Qty	Description	Page No

Machine Type | Group Description | Used-In | Group Number | Page No

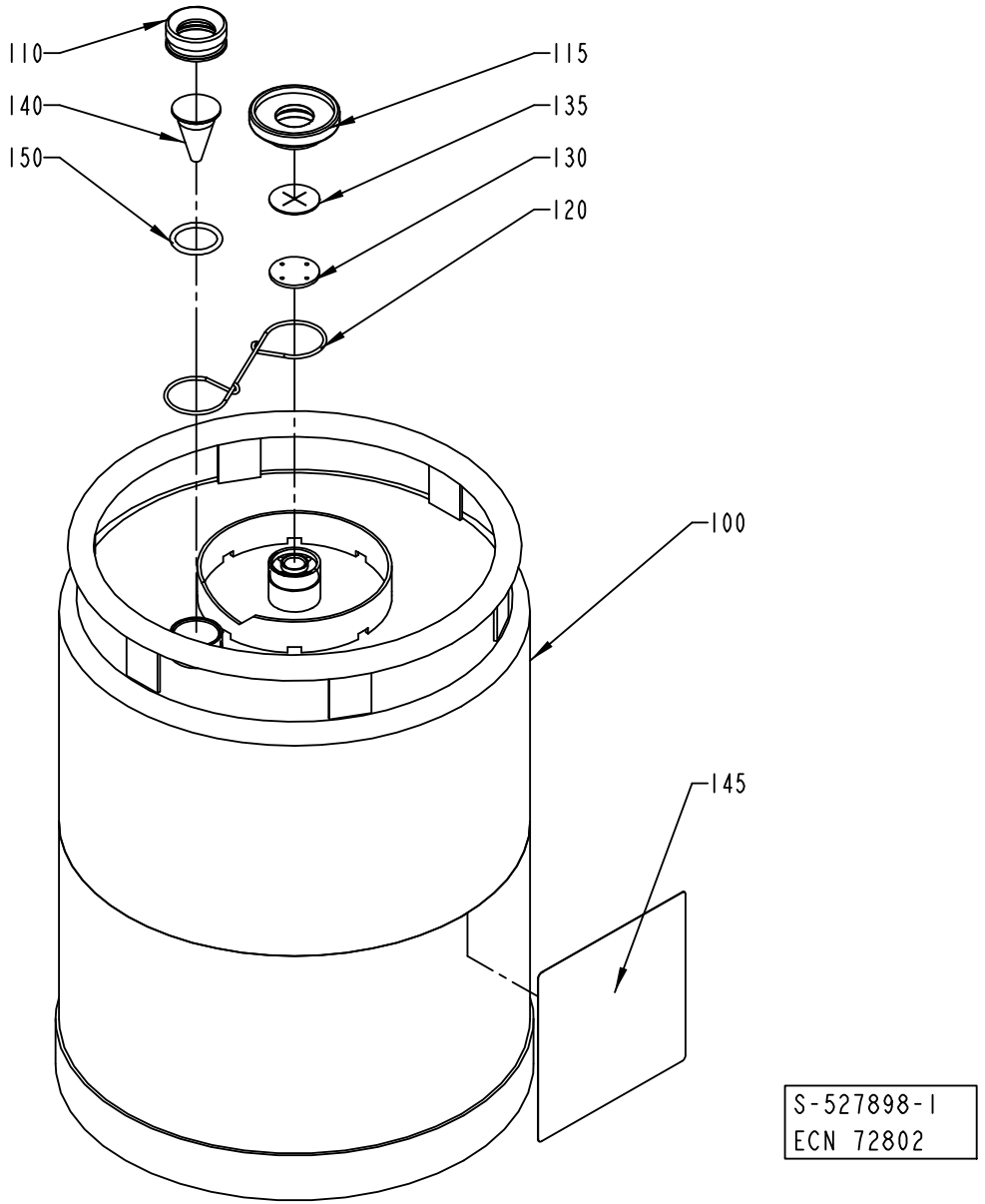
110
140
150
115
135
130
120
100
145
S-527898-1
ECN 72802

ECM: 115873 - 20020930
Group number: 527898-0100
Assembly Drawing: 527898-1_1_AB

Pos	Part No	SP	UN	Qty	Description	Page No
-						
100	561427-0000	-		1	CONTAINER	
110	273977-0000	-		1	NUT	
115	273996-0000	-		1	NUT	
120	273980-0000	-		1	SPRING	
130	565250-0000	B		1	WASHER	
135	565251-0000	B		1	VALVE	
140	273978-0000	-		1	LEVEL GLASS	
145	532655-0000	A		1	CAUTION SIGN	
150	927422-0003	B		1	O.RING 24.2X3 SILICON	

Pos	Part No	SP	UN	Qty	Description	Page No

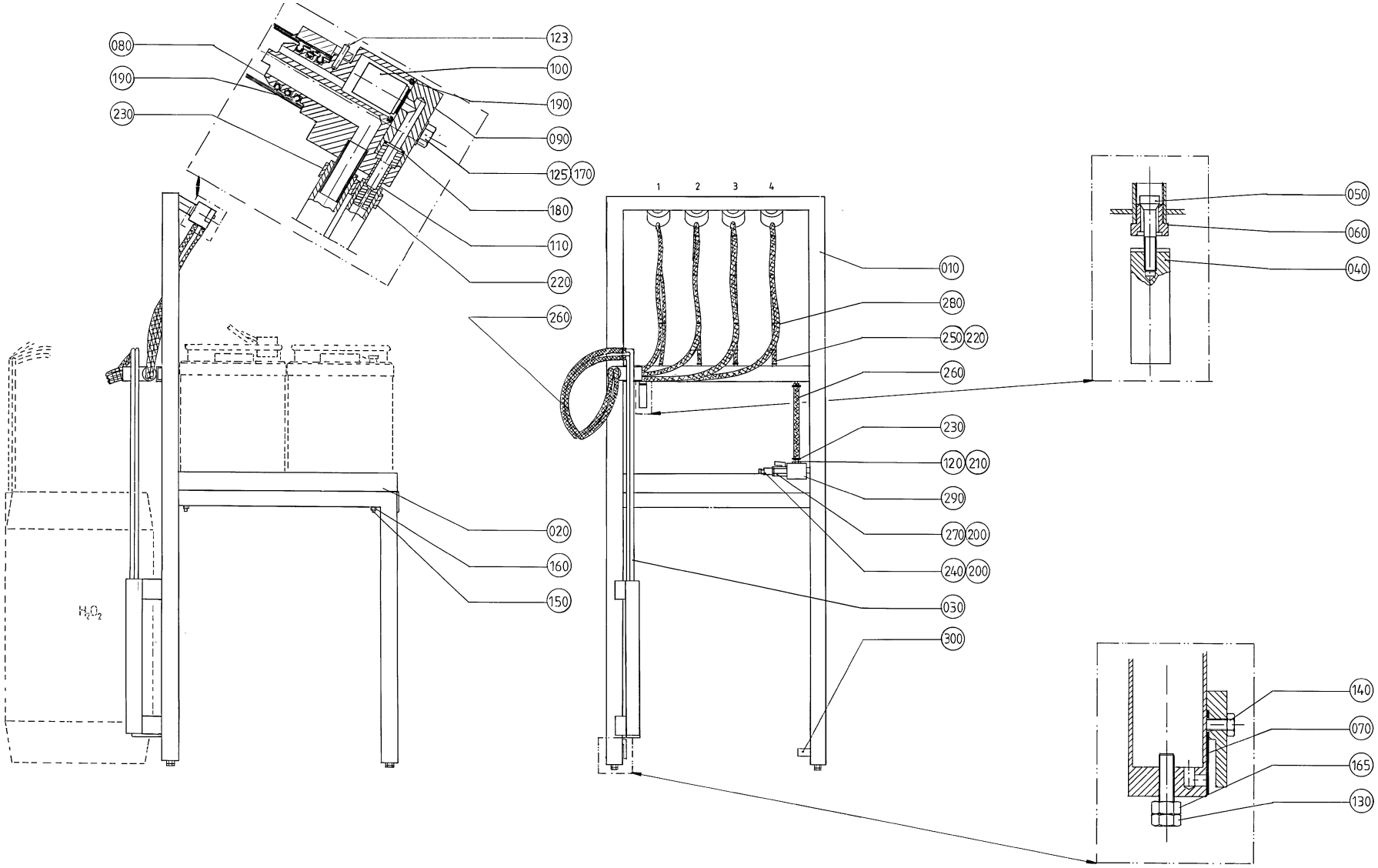
080
190
230
123
100
190
090
125
170
180
110
220
260
010
280
250
220
260
230
120
210
290
270
200
240
200
030
300
020
160
150
050
060
040
140
070
165
130
1
2
3
4
H2O2

ECM: - -
Group number: 529345-0100
Assembly Drawing: 529345-1_1_AA

Pos	Part No	SP	UN	Qty	Description	Page No
-						
010	534692-0000	-		1	FRAME SECTION	
020	534693-0000	-		1	PLATE	
030	534694-0000	-		1	SUCTIONPIPE	
040	534695-0000	-		1	WEIGHT	
050	534696-0000	-		1	VALVE	
060	534697-0000	-		1	VALVE HOUSING	
070	534691-0000	-		1	DIAPHRAGM	
080	534637-0000	-		4	ATTACHMENT	
090	534636-0000	-		4	LEVEL GLASS	
100	534635-0000	-		4	VALVE	
110	534634-0000	-		4	PIPE	
120	534698-0000	-		1	NIPPLE	
123	311103-0235	-		1	PARALLELL PIN ISO2338 3X14	
125	312105-0374	-		8	SCREW M6S ISO 4014 M6X30 A480	
130	312105-0455	-		4	SCREW M6S ISO 4017 M8X30 A480	
140	312125-0327	-		1	SCREW PAN HEAD MCS M5X12 SS	
150	312145-0380	-		4	SCREW COUNTERS.SLOT.HD. MFS 6X50 SS	
160	312812-0316	-		4	HEXAGON NUT, NY-LOCK M6 A480	
165	312605-0318	-		4	HEXAGON NUT, M6M M8 A280	
170	315105-0153	-		8	WASHER BRB6,4X12RFR	
180	927421-0005	-		4	O-RING 7.3X2.4 SILICON	
190	927422-0001	-		16	O-RING 19.2X3 SILICON	
200	315233-0110	-		2	WASHER CAPTIVE SEALING G1/4	
210	315233-0113	-		2	WASHER CAPTIVE SEALING G1/2	
220	342991-0100	-		8	HOSE CLIP,WORM DRIVE TYPE 10-13	
230	342991-0101	-		10	HOSE CLIP,WORM DRIVE TYPE (13)-16	
240	90163-0007	-		1	CONNECTION	
250	90166-0045	-	MM	3500	HOSE PVC TRANSP. 6/12	
260	90166-0113	-	MM	7500	HOSE	
270	90187-0045	-		1	BALL VALVE G1/4 CR PL	
280	352113-0102	-		30	CLIP-STRIP, BLACK 188X4,8 MM	
290	90425-0016	-		1	MECMAN TYPE E120 735-120-000	
300	90328-0025	-		1	SILENCER G1/2	

Pos	Part No	SP	UN	Qty	Description	Page No

Machine Type | Group Description | Used-In | Group Number | Page No

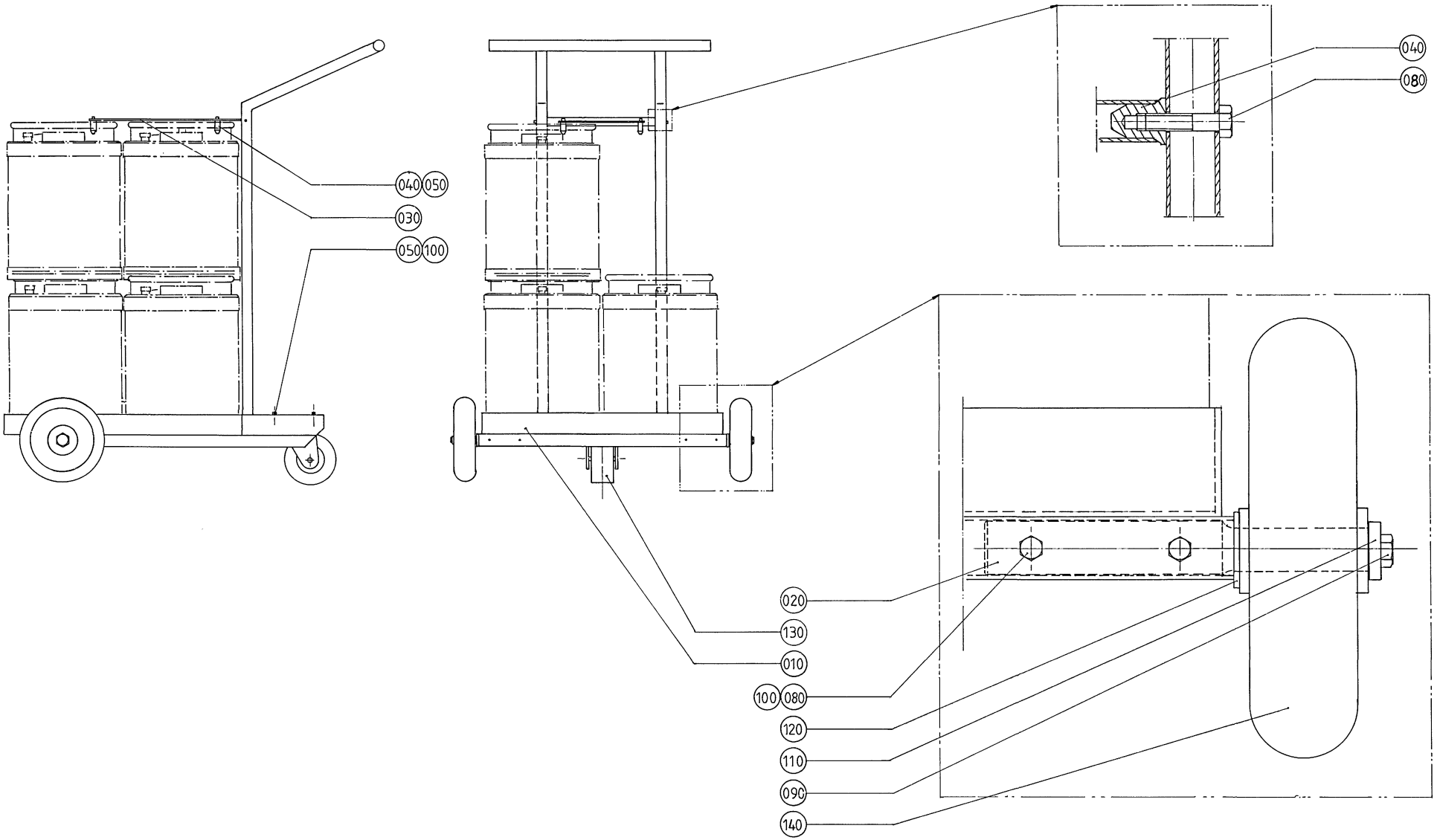
040
050
030
050
100
040
080
020
130
010
100
080
120
110
090
140

ECM: - -
Group number: 532210-0100
Assembly Drawing: 532210-1_1_AA

Pos	Part No	SP	UN	Qty	Description	Page No
-						
010	273985-0000	-		1	CARRIAGE	
020	532208-0000	-		2	SHAFT	
030	532209-0000	-		1	SHEET	
040	532211-0000	-		6	DOWEL	
050	312105-0449	-		8	SCREW M6S ISO 4017 M8X16 A480	
080	312105-0459	-		6	SCREW M6S ISO 4014 M8X40 A480	
090	312105-0491	-		2	SCREW M6S ISO 4017 M10X20 A480	
100	312605-0318	-		4	HEXAGON NUT, M6M M8 A280	
110	315115-0173	-		2	WASHER PLAIN, TBRB 10,5/22 H=4	
120	315105-0192	-		2	WASHER BRB21X36RFR	
130	90191-0060	-		1	CASTOR WHEEL, NO. 1599PRT	
140	90191-0047	-		2	WHEEL, NO. 442-200-113	

Pos	Part No	SP	UN	Qty	Description	Page No

Machine Type | Group Description | Used-In | Group Number | Page No

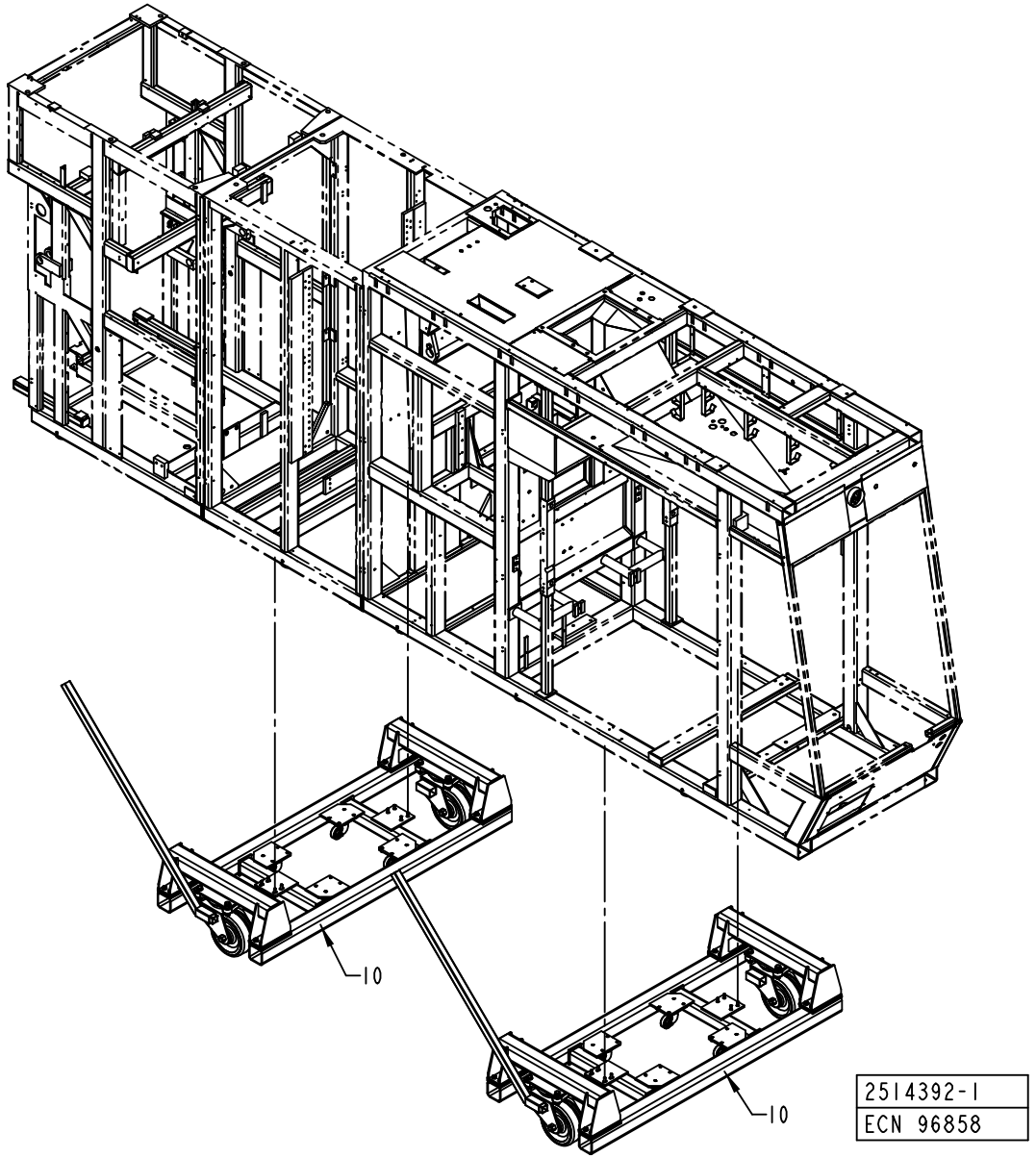
10
10
2514392-1
ECN 96858

ECM: 96863 - 20010830
Group number: 2514392-0100
Assembly Drawing: 2514392-1_1_AA

Pos	Part No	SP	UN	Qty	Description	Page No
-						
0010	582526-0100	-		2	CARRIAGE	**10-15**

Pos	Part No	SP	UN	Qty	Description	Page No

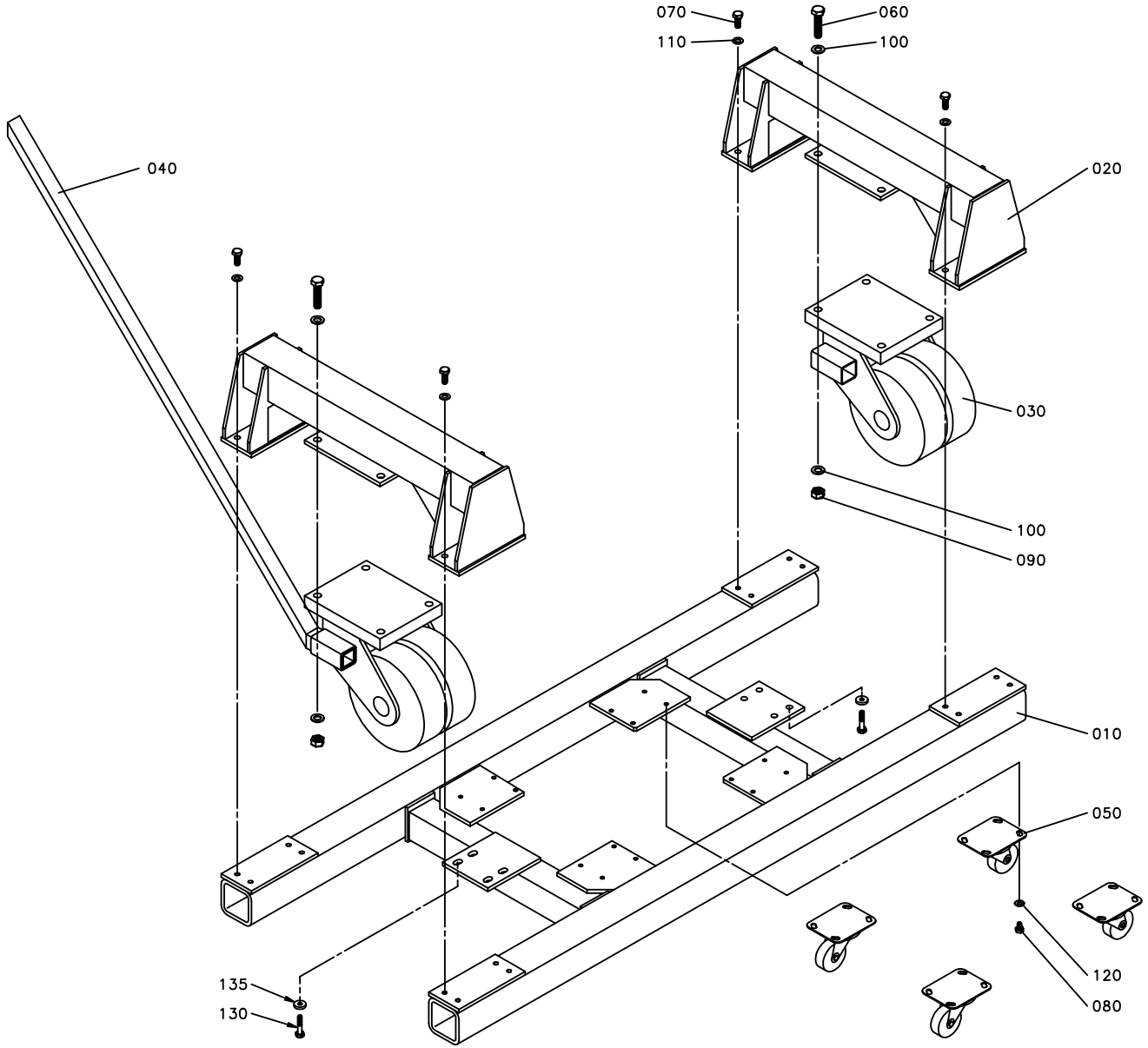
070
060
110
100
040
020
030
100
090
010
050
120
080
135
130

ECM: 96864 - 20010830
Group number: 582526-0100
Assembly Drawing: 582526-1_1_AA

Pos	Part No	SP	UN	Qty	Description	Page No
-						
0010	1140039-0000	-		1	CONVEYOR FRAME	
0020	1140040-0000	-		2	BRACKET	
0030	1140840-0000	-		2	WHEEL	
0040	582527-0000	-		1	ROD	
0050	90191-0077	-		4	WHEEL	
0060	312105-0634	-		8	SCREW M6S ISO 4014 M16X70 A480	
0070	312105-0538	-		16	SCREW M6S ISO 4017 M12X35 A480	
0080	312105-0489	-		16	SCREW M6S ISO 4017 M10X16 A480	
0090	312605-0324	-		8	HEXAGON NUT, M6M M16 A280	
0100	315105-0186	-		16	WASHER BRB17X30RFR	
0110	315105-0178	-		16	WASHER BRB13X24RFR	
0120	315105-0173	-		16	WASHER BRB10,5X22RFR	
0130	312109-0499	-		8	SCREW M6S ISO 4017 M10X40 A480	
0135	315125-0173	-		8	WASHER TBRSB 10,5X28X6 A4	

Pos	Part No	SP	UN	Qty	Description	Page No

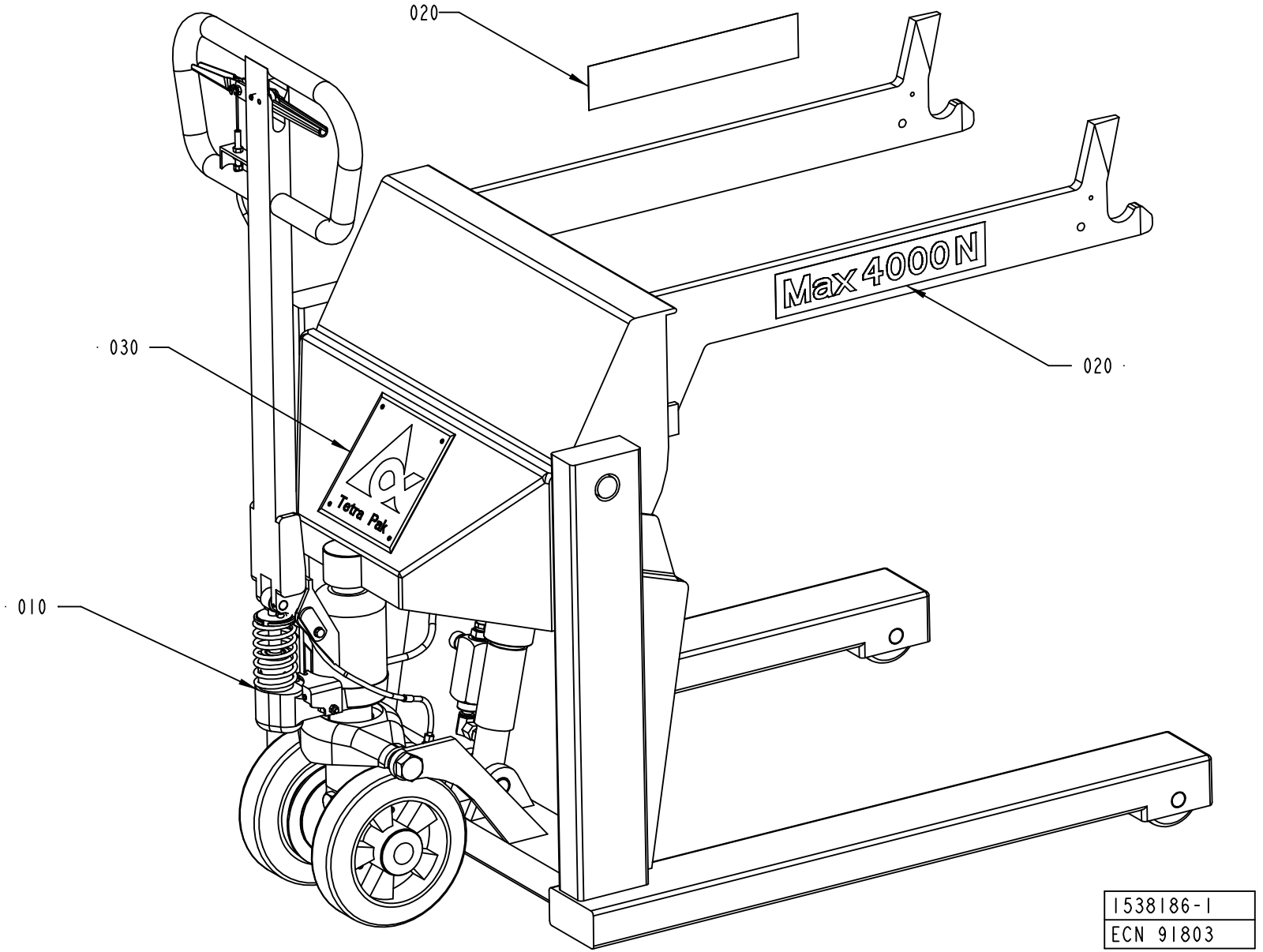
020
Max 4000N
020
030
Tetra Pak
010
1538186-1
ECN 91803

ECM: 133714 - 20030513
Group number: 1538186-0100
Assembly Drawing: 1538186-1_1_AA

Pos	Part No	SP	UN	Qty	Description	Page No
-						
010	90458-1474	-		1	PAPER TROLLEY, 32 04 192 3	**10-19**
020	522308-0000	-		2	SIGN	
030	574658-0000	-		1	LOGOTYPE TP	

Pos	Part No	SP	UN	Qty	Description	Page No

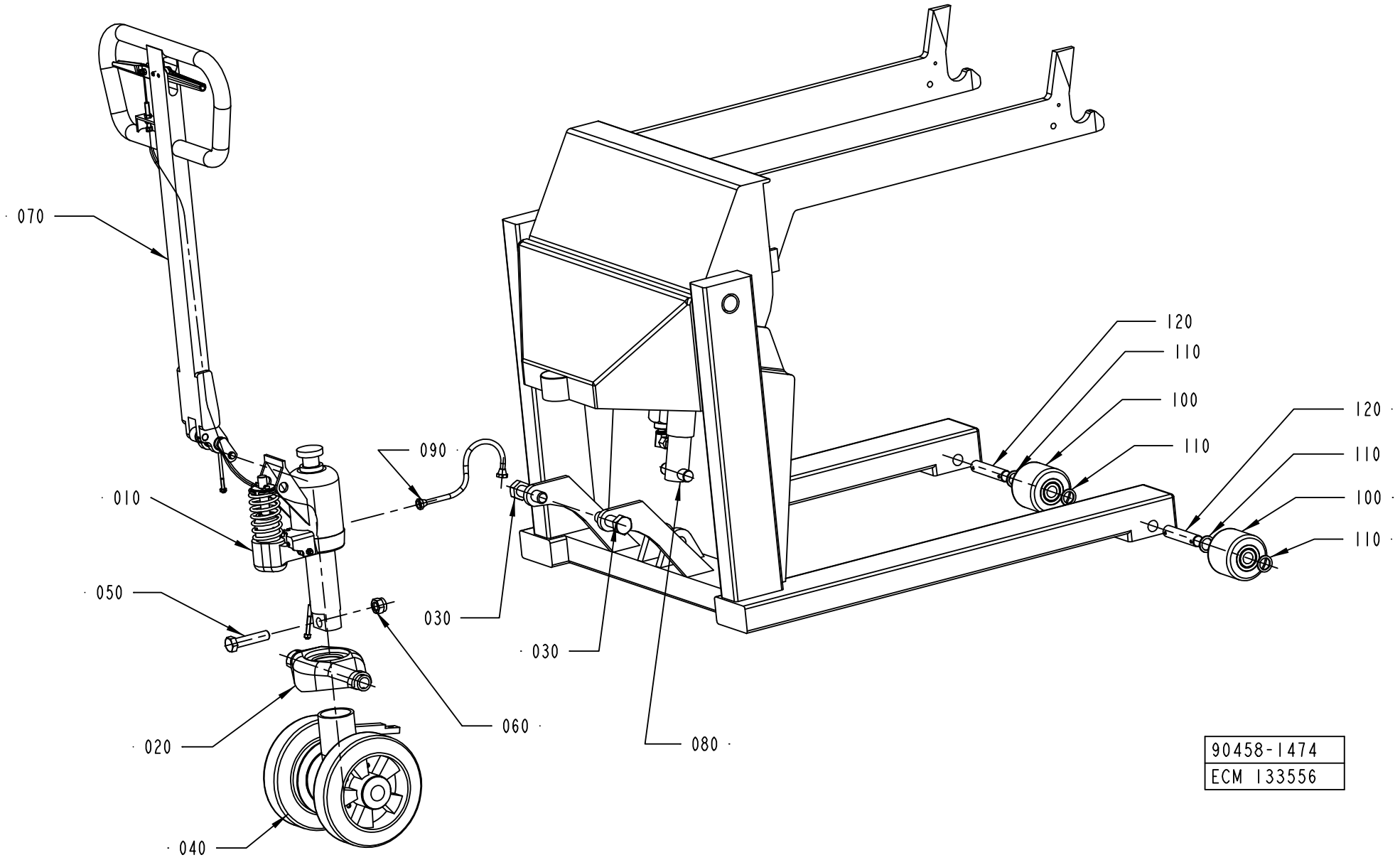
070
010
050
020
040
090
030
030
060
080
120
110
100
110
120
110
100
110
90458-1474
ECM 133556

ECM: 133556 - 20030513
Group number: 90458-1474
Assembly Drawing: 90458-1474_1_AB

Pos	Part No	SP	UN	Qty	Description	Page No
-						
010	90458-1473	-		1	PUMP, 34 73 521 7	
010	*90458-1468*	*A*		*1*	*SPLIT PIN, 43 71 234 8*	
020	*90067-0351*	*A*		*1*	*SEAL KIT*	
030	*90067-0354*	*A*		*1*	*PUMP PISTON*	
040	*90067-0355*	*A*		*1*	*COMPRESSION SPRING*	
050	*90067-0356*	*A*		*1*	*TOP WASHER*	
060	*90067-0357*	*-*		*1*	*REPAIR KIT*	
070	*90067-0369*	*A*		*1*	*VALVE ARM*	
080	*90458-1470*	*A*		*1*	*SINK VALVE COMPL, 34 73 094 5*	
090	*90458-1469*	*A*		*1*	*PUMP HOUSING, 34 73 517 5*	
100	*90458-1393*	*A*		*1*	*PUMP CYLINDER, 34 73 522 5*	
020	90067-0368	A		1	YOKE	
030	312101-0678	-		2	SCREW M6S M20X70 FZB	
040	1558477-0100	-		1	WHEEL	**10-21**
050	312105-0634	-		1	SCREW M6S ISO 4014 M16X70 A480	
060	312812-0324	-		1	HEXAGON NUT, NY-LOCK M16 A480	
070	1558479-0100	-		1	HANDLE	**10-23**
080	1558480-0100	-		1	LIFTING CYLINDER	**10-25**
090	90067-0365	A		1	HYDRAULIC HOSE	
100	90067-0370	A		2	WHEEL	
110	90067-0371	A		4	WASHER PLAIN, BRB, 21/29 H=2,5	
120	90067-0372	A		2	SHAFT	

Pos	Part No	SP	UN	Qty	Description	Page No

Machine Type | Group Description | Used-In | Group Number | Page No

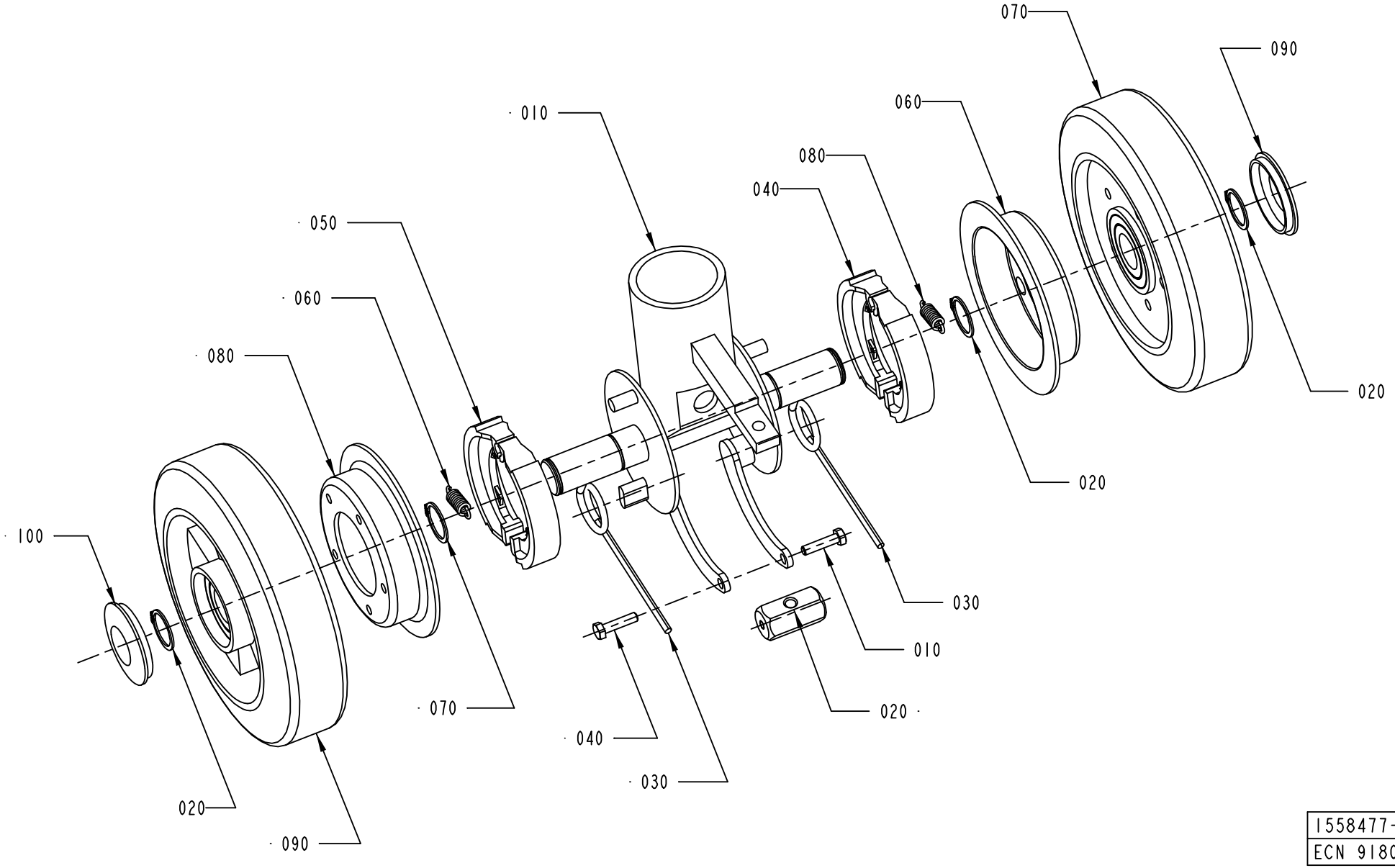

1558477-1
ECN 91803

ECM: 91832 - 20010504
Group number: 1558477-0100
Assembly Drawing: 1558477-1_1_AA

Pos	Part No	SP	UN	Qty	Description	Page No
-						
010	90067-0336	A		1	GUIDE SHAFT UNIT	
030	90067-0302	A		2	TORSION SPRING	
040	312105-0372	-		2	SCREW M6S ISO 4017 M6X25 A480	
050	90067-0317	A		2	BRAKE LINING	
060	90067-0342	A		2	TENSION SPRING	
070	315750-0119	-		4	RETAIN. RING, 25	
080	90067-0337	A		2	BRAKE DRUM	
090	90067-0338	A		2	GUIDE ROLLER 32 44 117 2	
100	90458-1467	B		2	CAP, 32 44 129 7	

Pos	Part No	SP	UN	Qty	Description	Page No

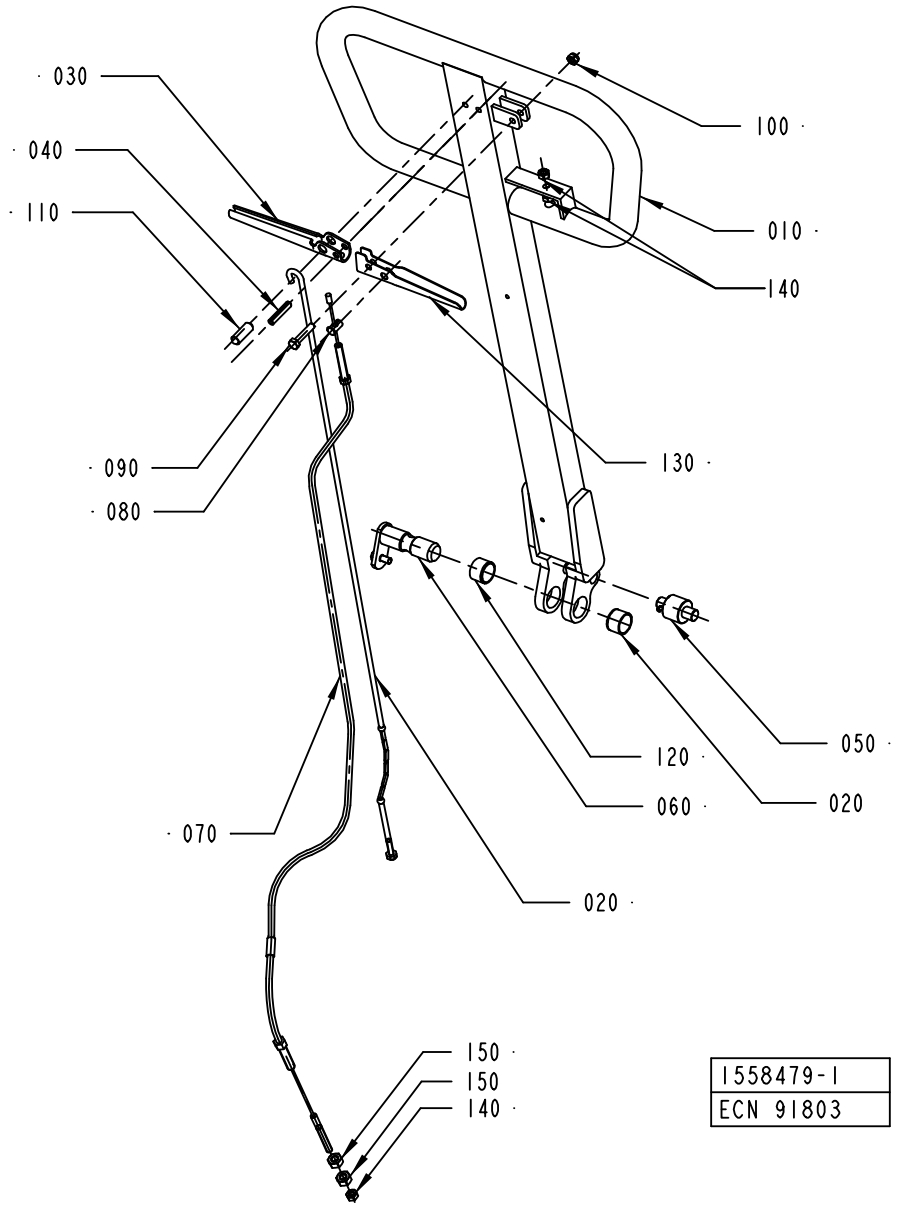
030
040
110
100
010
140
090
080
130
050
120
060
020
070
020
150
150
140
1558479-1
ECN 91803

ECM: 91830 - 20010504
Group number: 1558479-0100
Assembly Drawing: 1558479-1_1_AA

Pos	Part No	SP	UN	Qty	Description	Page No
-						
010	90067-0361	-		1	TIE ROD	
020	90067-0359	A		1	SINK ROD	
030	90067-0358	A		1	SINK HANDLE	
040	311111-0345	-		1	SPRING PIN ISO 8752 6X32-ST	
050	90067-0349	A		1	ROLL	
060	90067-0350	A		1	AXLE PIN	
070	90067-0301	A		1	BRAKE WIRE	
080	90067-0320	A		1	COTTER FOR 90067-301	
090	312109-0374	-		1	SCREW M6S ISO 4017 M6X30 A480	
100	312812-0316	-		1	HEXAGON NUT, NY-LOCK M6 A480	
110	90067-0360	A		1	POSITIONING DEVICE	
120	321120-0137	-		2	BEARING BUSHING W/O FLANGE,20/23X15	
130	90067-0364	A		1	BRAKE HANDLE	
140	312602-0316	-		3	MUTTER, EN 24032 M6M M6 NIPLBR	
150	312602-0318	-		2	HEXAGON NUT, EN 24032 M6M M8 NIPLBR	

Pos	Part No	SP	UN	Qty	Description	Page No

LIFTING CYLINDER

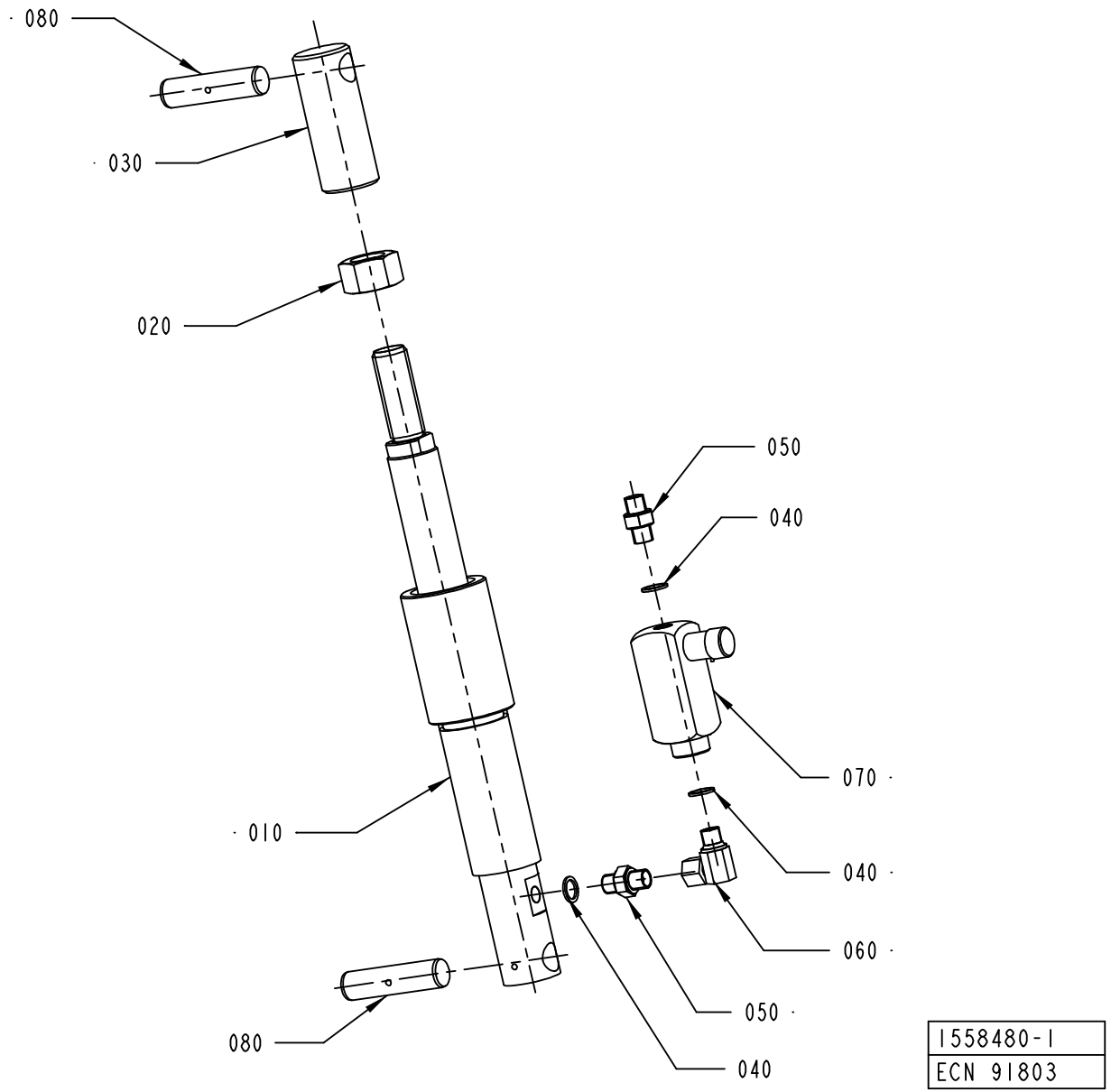

ECM: 91831 - 20010504
Group number: 1558480-0100
Assembly Drawing: 1558480-1_1_AA

Pos	Part No	SP	UN	Qty	Description	Page No
-						
020	312605-0328	-		1	HEXAGON NUT, M6M M24 A280	
040	315234-0110	-		3	WASHER,PL.RND.CU.13,5/18 H=1,5	
050	90055-0042	A		2	NIPPLES, EXT. THREAD, HEXAGON, NO. 6835-	
060	90055-0145	A		1	ELBOW ADAPTOR-R1/4	
070	90201-0098	A		1	ADJ. FLOW CON. VALVE, NO. 32 04 149 4	

Pos	Part No	SP	UN	Qty	Description	Page No

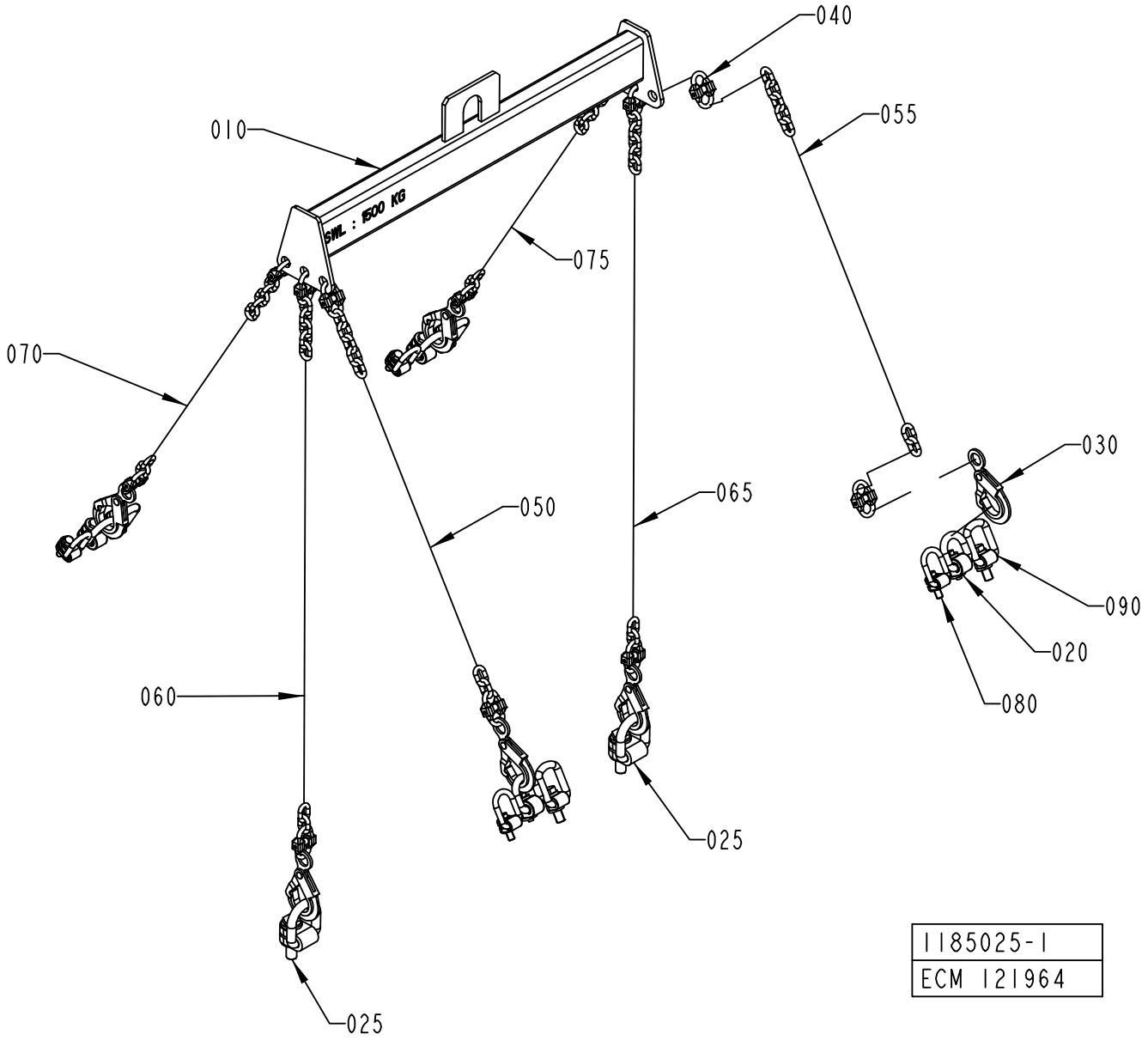

1185025-1
ECM 121964

ECM: 121978 - 20030403
Group number: 1185025-0100
Assembly Drawing: 1185025-1_1_AC

Pos	Part No	SP	UN	Qty	Description	Page No
-						
010	985818-0000	-		1	LIFTING UNIT	
020	90040-0010	-		4	LIFTING EYE BOLT, NO. R 58 698	
025	90040-0011	-		2	LIFTING EYE BOLT, VLBG(4)2.5T M20	
030	90155-0309	-		6	SECURITY HOOK	
040	90155-0308	-		12	CONNECTION LINK	
050	90155-0033	-	MM	780	CHAIN	
055	90155-0033	-	MM	780	CHAIN	
060	90155-0033	-	MM	1200	CHAIN	
065	90155-0033	-	MM	1200	CHAIN	
070	90155-0033	-	MM	680	CHAIN	
075	90155-0033	-	MM	680	CHAIN	
080	90459-1898	-		4	LIFTING EYE BOLT, VLBG(1)1.0T M12 TURN.	
090	90459-2298	-		4	LIFTING EYE BOLT, VLBG 1.5T-M16	

Pos	Part No	SP	UN	Qty	Description	Page No

Tetra Pak

SPC
Spare Parts Catalogue

Part No	Description	Page No
6-4 900308 01	RESISTOR 1000 OHM 0.25W 1%	7-45
2033-0007	WASHER	1-17, 1-19, 1-25, 1-27
2033-0011	WASHER	1-17, 1-19, 1-21, 1-25, 1-27, 1-29
6278-0000	WASHER	8-33, 8-35
12242-0001	GASKET 32X25X5,5	1-149
12242-0003	GASKET 48X38X5,5	1-15
29876-0000	COVER	1-155
30298-0000	INSULATION	1-155
32544-0000	INSULATION NUT	4-27, 4-29, 4-35, 4-37, 9-17
38535-0001	LOCKING FINGER	1-97, 9-9
42063-0100	LEVEL DETECTOR	1-91
42067-0100	SENSOR BOARD	1-93
42068-0100	CONVERTER BOARD	1-93
47932-0601	PLMS BASIC PROGRAM	7-39
47936-0201	PLMS INTOUCH RUNTIME PROGRAM	7-39
47962-0401	PLMS DOS WINDOWS	7-39
48621-0501	PLMS DDE	7-39
67379-0106	TRANSFORMER	4-19
67379-0248	TRANSFORMER	4-19
67379-0249	TRANSFORMER	4-19
67379-0408	TRANSFORMER	1-39
67379-0415	TRANSFORMER	1-39
67379-0416	TRANSFORMER	1-39
67380-0207	TRANSFORMER	8-13
67388-0102	RACK FRONTMOUNTED 84TE	7-33, 7-35
68262-0101	BACKPLANE FRONT RACK 8TE	7-33, 7-35
68450-0101	STEPPER MOTOR DRIVER	7-33, 7-35
68917-0100	ANGLE INDICATOR	3-17
82197-0103	UM DOCUMENT SERIAL COMUNICATION ONLY EN	9-45
90001-0033	WALL SOCKET OUTLET	7-29, 7-31
90002-0004	BLANK-OFF PLUG, PR 22,5 SKINDICHT-BLK16	1-163, 1-165, 1-167, 1-239, 1-241, 6-49, 8-123, 8-125, 8-127, 8-129, 8-131
90002-0009	BLANK-OFF PLUG, PR 18.6 SKINDICHT-BLK11	1-103, 1-163, 1-165, 1-167, 1-237, 1-239, 1-241, 2-9, 2-11, 2-101, 2-129, 8-123, 8-125, 8-127, 8-129, 8-131
90002-0010	BLANK-OFF PLUG, PR 37 SKINDICHT-BLK29	8-43, 8-45
90002-0012	BLANK-OFF PLUG, PR 28,3 SKINDICHT-BLK21	2-9, 8-123, 8-125, 8-127, 8-129, 8-131
90002-0013	BLANK-OFF PLUG, PR 15,2 SKINDICHT-BLK9	1-163, 1-165, 1-167, 1-209, 1-237, 1-239, 1-241, 2-7, 2-9, 2-129, 6-13, 6-49, 8-123, 8-125, 8-127, 8-129, 8-131
90002-0016	BLANK-OFF PLUG PR 20.4 SKINDICHT-BLK13,5	1-239, 1-241
90005-0077	WASHER PL.RND.NYL.8,4/7, H=2	2-31, 7-21
90005-0082	WASHER PLAIN ROUND 4,3(M4)/12,H=1	4-23, 4-25, 4-27, 4-29, 4-31, 4-33, 4-35, 4-37, 4-39, 4-41, 8-13, 8-19, 8-71, 8-75, 8-79
90005-0094	GASKET C 19438-EPR	5-31, 5-33
90005-0114	WASHER PLAIN ROUND 5,3(M5)/15, H=1	2-107, 2-109, 2-119, 2-121
90005-0116	WASHER PLAIN ROUND 8,4(M8)/24, H=2	1-199
90005-0143	SPACER 3,3/7, H=3	1-93
90007-0128	CIRCUIT BREAKER, 1P 6 A K	7-61
90007-0129	CIRCUIT BREAKER, 1P 10 A K	7-59, 7-61
90007-0133	CIRCUIT BREAKER, 1P 25 A K	7-59
90007-0138	CIRCUIT BREAKER, 2P 10 A K	7-53
90007-0146	CIRCUIT BREAKER, 3P 6 A K	7-61
90007-0147	CIRCUIT BREAKER, 3P 10 A K	7-53
90012-0071	GLAND FITTING	1-13
90012-0117	GLAND, EXTENDED WITH INSERT, PG11	2-13, 2-15
90012-0119	GLAND, EXTENDED WITH INSERT, PG9	1-91
90012-0125	GLAND FITTING	8-123, 8-125, 8-127, 8-129, 8-131
90012-0126	NORMAL WITHOUT INSERT, PG29	1-155
90012-0131	NORMAL WITHOUT INSERT, PG21	1-189
90012-0137	GLAND, EXTENDED WITH INSERT, PG11	1-33, 8-159
90012-0138	GLAND, EXTENDED WITH INSERT, PG13,5	1-163, 1-165, 1-167
90015-0020	LEAD-IN, TET5-7, E-1458016	1-107, 2-19, 2-21, 2-23, 5-37
90015-0021	LEAD-IN, TET10-14, E-1458023	2-19, 2-21, 2-23, 8-71
90015-0022	LEAD-IN, TET14-20, E-1458029	2-19, 2-21, 2-23
90015-0023	LEAD-IN, TET7-10, E-1458019	2-11, 2-19, 2-21, 2-23, 2-39
90015-0024	LEAD-IN, TET20-26, E-1458035	2-19, 2-21, 2-23, 8-71
90015-0025	LEAD-IN, TET26-35, E-1458041	6-5
90015-0027	RUBBER BUSHING DI=6MM	4-11, 4-13
90015-0037	RUBBER BUSHING	6-9
90016-0024	DISC SPRING, CONICAL 20X8,2X0,8 MM	4-27, 4-29, 4-35, 4-37
90017-0015	HANDLE, NO. 14.4012.02.308	7-21
90017-0016	HANDLE, NO. 14.4012.02.120	1-233, 2-31
90017-0017	HANDLE, NO. 547-128	7-29, 7-31
90024-0036	FILTERED TERMINAL BLOCK	6-5
90024-0039	INPUT FILTER, 50 A	7-53
90024-0047	EMI SUPPRESSION FERRITE	7-47, 7-49, 7-51
90024-0060	POWER LINE FILTER, 80 A 250/440 VAC	6-5
90030-0058	CONN. T-PIPE T-12	1-105
90030-0062	CONN. STR. GE 6-1/4-18 NPTF	1-149
90030-0066	CONN. BULKHEAD SV 6-L/SY	4-11, 4-13
90030-0075	PIPE CONNECTION G-6	1-141, 1-187, 1-221, 1-223
90030-0076	CONN. T-PIPE T-6	1-59, 1-61, 1-95, 1-221, 1-223
90030-0096	CONN. ELBOW W-12	1-105
90030-0106	CONN. PIPE G-12	1-183
90030-0136	ADJUSTABLE ELBOW CONNECTION,EXT 12-G3/8	1-105, 1-183

Part No	Description	Page No
90030-0171	ADJUSTABLE ELBOW CONNECTION,EXT 6-G1/8	1-221, 1-223, 2-93, 4-45, 4-47
90030-0180	CONN. STR. GE 12-1/2-14 NPTF	1-105
90030-0184	CONN. STR. GA-6-G1/8	1-59, 1-61, 1-95, 1-147, 1-221, 1-223, 1-239, 1-241, 2-19, 2-21, 2-23, 2-89, 3-13, 3-15, 4-11, 4-13, 4-45, 4-47
90030-0185	CONN. STR. GA-8-G1/4	1-105, 6-23, 6-25
90030-0187	CONN. STR. GA-12-G3/8	1-105, 1-183
90030-0188	CONN. STR. GA-15-G1/2	1-105, 1-153
90030-0208	CONN. STR. GE 6-1/8-27 NPTF	5-13, 5-15
90030-0212	NIPPLES, REDUSING, INT. THR. NO. 2521	1-121, 1-123
90030-0336	CONN. STRAIGHT, 316L-12M-BVCO-3	1-109, 9-13
90030-0338	NUT, PIPE & CONNECTORS, SS-8-BVCO-4	1-109
90030-0465	STRAIGHT CONNECTION, MAD DN 15	6-19
90030-0549	CONN. STRAIGHT, BULKHEAD, SS-4-VCO-61	1-95
90030-0599	CONN. CROSS, 12	1-183
90031-0031	ENHANCED GENIUS COMMUNICATION MODULE	7-47, 7-49, 7-51
90031-0051	BASEPLATE, 10-SLOT	7-47, 7-49, 7-51
90031-0053	BASEPLATE,10-SLOT	7-47, 7-49, 7-51
90031-0057	PLC, DIGITAL INPUT MODULE	7-47, 7-49, 7-51
90031-0058	PLC, DIGITAL INPUT MODULE	7-47, 7-49, 7-51
90031-0059	PLC, DIGITAL OUTPUT MODULE	7-47, 7-49, 7-51
90031-0060	PLC,ANALOG INPUT MODULE 16 PT/VOLTAGE	7-47, 7-49, 7-51
90031-0061	PLC,ANALOG INPUT MODULE 16 PT/CURRENT	7-47, 7-49, 7-51
90031-0062	PLC, ANALOG OUTPUT MODULE 8PT/CURR/VOLT	7-47, 7-49, 7-51
90031-0065	PLC,TEMPERATUR CONTROL,INPUT MODULE 8 PT	7-47, 7-49, 7-51
90031-0068	PLC, POWER SUPPLY	7-47, 7-49, 7-51
90031-0075	CPU363, SERIAL COMMUNICATION	7-47, 7-49, 7-51
90031-0305	I/O EXPANSION CABLE	7-47, 7-49, 7-51
90036-0068	BULB 6.5W 24V	2-65
90040-0010	LIFTING EYE BOLT, NO. R 58 698	10-27
90040-0011	LIFTING EYE BOLT, VLBG(4)2.5T M20	10-27
90041-0068	DATACABLE MODEM PC	9-45
90041-0078	REMOTE COMMUNIKATION LINK BOARD,E000014B	2-35
90041-0079	ADAPTER BACKLIGHT, 50000007	2-35
90041-0082	CABLE, DISPLAY POWER, 2223-0022-018	2-35
90041-0093	DISPLAY, TOSHIBA 12,1"	2-35
90041-0095	FRAME 12" , 12I1-V2.0	2-31
90041-0099	IR TOUCH PCB, 12.1" , IRT 12I1-V2.1	2-35
90041-0103	DATA CABLE DISPLAY, E000018B	2-35
90041-0104	CHASSIS FOR TOUCH, 12,1" , M0089A39	2-35
90042-0171	SOLENOID VALVE BUERKERT	1-207
90042-0172	SOLENOID VALVE 4023/1005/1032 24VDC	1-153
90042-0203	SOLENOID VALVE BURKERT	1-59, 1-61
90042-0206	SOLENOID VALVE 444-111-000-1	2-87
90042-0215	VALVE BODY 5/2 UNISTABLE	1-215, 1-217, 1-219, 2-39, 2-127, 6-55, 8-145, 8-147
90042-0221	VALVE BODY 5/2 BISTABLE	8-145, 8-147
90042-0230	VALVE BODY 5/3 OPEN CENTRE	1-215, 1-217, 8-145, 8-147
90042-0248	SOLENOID VALVE OFFICIENE DI ENSINO	2-45
90042-0249	SOLENOID VALVE OFFICINE DI ENSINO	6-51
90042-0254	SOLENOID VALVE, R1 1/2	6-17
90042-0265	HIGH SPEED VENTING VALVE 583-590-000-1	8-145, 8-147
90042-0398	CONTACT 3 POLE+EARTH	2-87
90042-0487	COIL 24 VDC MECMAN	2-87
90042-0519	BLANK PLATE ISO SIZE 1	6-55, 8-145, 8-147
90042-0520	BASE PLATE ISO SIZE 1	1-215, 1-217, 2-39, 2-127, 8-145, 8-147
90042-0522	PORTED END PIECE ISO SIZE 1	1-215, 1-217, 1-219, 2-39, 2-127, 6-55, 8-145, 8-147
90042-0526	PROTECTIVE SLEEVE MECMAN	6-55
90042-0528	BLANKING KIT SEALS ISO SIZE 1	1-215, 1-217, 2-39, 6-55, 8-145, 8-147
90042-0532	BASE PLATE ISO SIZE 1	1-215, 1-217, 1-219, 2-39, 6-55, 8-145, 8-147
90042-0535	TERMINAL BOARD 19 CORDS	1-215, 1-217, 1-219, 2-39, 2-127, 6-55, 8-145, 8-147
90042-0538	PILOT VALVE L=500MM	1-215, 1-217, 1-219, 2-39, 2-127, 6-55, 8-145, 8-147
90042-0539	PILOT VALVE L=350MM	8-145, 8-147
90042-0545	SUB-BASE SOFT START ISO 1 AND VDMA 01	8-145, 8-147
90042-0583	CABLE MECMAN 440-827 000-1	6-57
90042-0585	PILOT VALVE L=5M	6-57, 8-145, 8-147
90042-0591	PILOT VALVE L=200 MM	8-145, 8-147
90043-0002	PRESSURE GAUGE, 2040 D=63 MM	1-183
90043-0006	PRESSURE GAUGE, 2041 D=63 MM	6-51
90043-0021	PRESSURE GAUGE WIEGAND 0-1 BAR 1/8"	2-87
90043-0043	PRESSURE GAUGE WIEGAND 0-10 BAR 1/8"	6-19
90043-0064	PRESSURE GAUGE, 2048 D=40 MM	8-145, 8-147
90043-0065	PRESSURE GAUGE, 2048 D=40 MM	6-55, 8-145, 8-147
90043-0082	PRESSURE GAUGE, 2740, D=63 MM	1-105
90043-0095	PRESSURE GAUGE, 2740, D=63 MM, GLYC.	1-147
90043-0107	PRESSURE GAUGE	6-57
90044-0084	LIMIT SW. 14 CE1-4	1-85, 1-87, 1-99, 1-101, 1-185
90044-0104	PROX.SWITCH IFM IN 3002	1-107, 1-199, 8-27
90044-0145	PROX.SW. 922 AAIY-A9P-050-LZ876	1-125
90044-0165	SENSOR, SME-8-K5-LED-24	8-31, 8-57
90044-0191	PROX.SW. E2EG-X2B1	1-49
90044-0193	SENSOR, 322-31-0310	1-151
90044-0194	PROX.SW. IN5329/IN3002-BPKG	5-5, 5-7, 8-71
90044-0310	KEY FOR SAFETY SWITCH, AZ 15/16 B1	1-45, 1-47, 1-55, 1-63, 1-233, 8-71
90045-0164	SERVO MOTOR EP 075-112-44T3B	3-5
90045-0189	STEP MOTOR E22NSLT-LNN-NS-02	1-17, 1-19, 3-11

Part No	Description	Page No
90045-0197	SERVO MOTOR EP 165-090-66T3B	3-13, 3-15
90045-0397	POWER SUPPLY 80 A	7-47, 7-49, 7-51
90051-0026	KNOB, CIRKUL, THREADED BUSH, M5 17X14 MM	1-211, 1-213
90051-0035	KNOB, EXTERNAL THREAD. NO. 8308-1135	8-81
90051-0045	STELLAR KNOB, NO. 8323-2575	1-23
90051-0082	KNOB, CIRCUL, THREADED BUSH, M6 25X21 MM	8-109, 8-117, 8-155
90051-0083	KNOB, EXTERNAL THREAD. NO. 8308-1321	8-97
90051-0087	LOCK KNOB, NO. GN 617 A5	8-93, 8-109, 8-117
90051-0088	ADJUSTMENT SCREW	8-71
90051-0106	COCK HANDLE, NO. H6	6-47
90051-0112	LOCK KNOB, NO. GN 617 NIK5	2-39
90051-0127	HANDLE, NO. .601/90+X-M10-INOX	4-5, 5-17, 5-19
90052-0011	HORN HOOTERT 24:48VDC.PT NO.1YA030221	8-43, 8-45
90053-0029	COUNTER, F524.800FA3C 24VDC	7-29, 7-31
90053-0031	HOUR COUNTER, B 609.10 10-50VDC	7-29, 7-31
90055-0042	NIPPLES, EXT. THREAD, HEXAGON, NO. 6835-	10-25
90055-0051	HOSE NIPPLE, EXT.THR. R3/8X13 MM	2-83
90055-0097	STRAIGHT COUPLING	1-153, 2-45, 6-59
90055-0100	Y-CONNECTION, 6-6	2-45, 3-7, 3-9
90055-0116	REDUCER 6-14	2-37, 2-45
90055-0118	ELBOW PIPE JOINT -8MM	1-211, 1-213, 1-215, 1-217, 5-21, 5-23
90055-0145	ELBOW ADAPTOR-R1/4	10-25
90055-0147	HOSE,Y-CONNECTION,PARALLEL,FPT, 12X12MM	1-211, 1-213
90055-0166	HOSE NIPPLE, EXT.THR. R11/2X38 MM	6-17
90055-0172	ELBOW WITH TAILPIECE 8/8 MM	8-145, 8-147
90055-0173	ELBOW WITH TAILPIECE 8/6 MM	1-211, 1-213, 1-215, 1-217, 1-219, 2-39, 8-145, 8-147
90055-0204	ELBOW WITH TAILPIECE 8/8 MM LONG	2-39, 2-127
90055-0217	ELBOW PIPE JOINT	2-19, 2-21, 2-23, 2-45, 8-95, 8-111, 8-121
90055-0227	Y-CONNECTION, 6-8	2-39
90055-0276	T-CONNECTION 8 MM	8-95
90056-0164	WORM GEAR BS 71-F-TT	5-13, 5-15
90056-0170	WORM GEAR BS 40 AL-TT ENV RH	5-5, 5-7
90056-0171	WORM GEAR BS71 F ENV RH	5-31, 5-33
90061-0027	ANGLE ENCODER 670900035	4-7, 4-9
90062-0015	LOCK WASHER SERRAT.EXT.GEAR,6,4/11 H=0,7	6-5, 7-11, 7-13, 7-17, 7-19, 7-29, 7-31
90062-0016	LOCK WASHER SERRAT.EXT.GEAR,8,4/15 H=0,8	8-43, 8-45, 8-123, 8-125, 8-127, 8-129, 8-131
90062-0021	LOCKING WASHER A 5,3	7-47, 7-49, 7-51
90062-0022	LOCKING WASHER D=6,4/11	7-29, 7-31, 7-41, 7-47, 7-49, 7-51
90062-0059	LOCK WASHER SERRAT.EXT.GEAR,4,3/8 H=0,5	8-123, 8-125, 8-127, 8-129, 8-131
90062-0060	LOCK WASHER SERRAT.EXT.GEAR,5,3/10 H=0,6	7-33, 7-35
90064-0082	PUSH BUTTON, WHITE	2-31, 8-181, 8-197
90064-0084	PUSH BUTTON, YELLOW	2-31, 8-181
90064-0085	PUSH BUTTON, RED	1-239, 1-241
90064-0093	PUSH BUTTON, GREEN	2-31
90064-0098	PUSH BUTTON, CLEAR	2-31
90064-0124	SWITCH, EM. STOP, ZB2-BS844+ZB2-BZ1045	1-13, 1-239, 1-241, 2-31, 2-109, 7-19
90066-0021	PUSH BUTTON BOX XAP-M1501	1-13
90067-0301	BRAKE WIRE	10-23
90067-0302	TORSION SPRING	10-21
90067-0317	BRAKE LINING	10-21
90067-0320	COTTER FOR 90067-301	10-23
90067-0336	GUIDE SHAFT UNIT	10-21
90067-0337	BRAKE DRUM	10-21
90067-0338	GUIDE ROLLER 32 44 117 2	10-21
90067-0342	TENSION SPRING	10-21
90067-0349	ROLL	10-23
90067-0350	AXLE PIN	10-23
90067-0358	SINK HANDLE	10-23
90067-0359	SINK ROD	10-23
90067-0360	POSITIONING DEVICE	10-23
90067-0361	TIE ROD	10-23
90067-0364	BRAKE HANDLE	10-23
90067-0365	HYDRAULIC HOSE	10-19
90067-0368	YOKE	10-19
90067-0370	WHEEL	10-19
90067-0371	WASHER PLAIN, BRB, 21/29 H=2,5	10-19
90067-0372	SHAFT	10-19
90069-0257	GEARS, WORM MOTOR WKM/DM90-60WE2A	2-101
90069-0608	GEARS, WORM MOTOR ODM120-60KE3	1-33
90069-0614	GEARS, WORM MOTOR MC320P2T	8-69
90074-0025	CLIPS, CABLE CLIPS DI=8 MM	6-57
90075-0127	CONTACTOR, 4KW 24VDC	7-59, 7-61, 8-139, 8-141
90075-0128	CONTACTOR, 7,5KW 24VDC	7-53, 7-59, 7-61
90075-0313	AUXILIARY CONTACT K&M 22 DILM.2NO;2NC	7-53, 7-59, 7-61
90077-0079	FEED THROUGH TERMINAL, 02943.6	2-33, 7-37
90077-0307	END PLATE	7-37
90077-0308	END PLATE, 10-00038286-1	7-37
90077-0328	RAIL TS15/5	2-33, 7-37
90082-0013	OVERVOLTAGE PROTECTOR	6-5
90083-0055	BEARING ROLLER, 15X35X19 MM	4-11, 4-13, 4-23, 4-25, 4-27, 4-29, 4-31, 4-33, 4-35, 4-37, 4-39, 4-41
90087-0010	PLUG, EXT. THREAD, HEX. SOCKET NR. M10-	4-11, 4-13
90087-0036	PLUG	6-55
90089-0015	REDUCING SLEEVE, PR37M/PR28,3F	1-163, 1-165, 1-167

Part No	Description	Page No
90089-0017	REDUCING SLEEVE, PR18,6/PR22,5	2-101
90089-0021	REDUCTION SLEEVE,PLASTIC GREY	1-13
90089-0028	MUFF	8-123, 8-125, 8-127, 8-129, 8-131
90089-0029	ENLARGING SLEEVE	1-163, 1-165, 1-167, 2-13, 2-15
90091-0143	RADIAL SEAL 47X62X6 MM	1-41
90091-0237	ROD SEAL, GLIDORING 20X27,5X3 MM	1-111, 1-113, 1-115, 9-13, 9-15
90091-0238	WEAR RING 20X22X10 MM	1-111, 1-113, 1-115, 9-13, 9-15
90091-0263	RADIAL SEAL 24X47X7 MM DUST LIP	5-25, 5-27
90091-0266	SEAL RING 10,4X16,3X2,5 MM	1-109, 9-11
90091-0297	RADIAL SEAL 35X47X7 MM DUST LIP	1-33
90091-0298	RADIAL SEAL 45X65X8 MM DUST LIP	4-7, 4-9
90091-0303	RADIAL SEAL 20X35X7 MM DUST LIP	1-49
90091-0304	RADIAL SEAL 45X65X8 MM DUST LIP	9-15
90091-0305	RADIAL SEAL 40X55X7 MM DUST LIP	5-31, 5-33
90091-0320	RADIAL SEAL 20X30X7 MM DUST LIP	1-33
90091-0322	RADIAL SEAL 25X42X7 MM DUST LIP	1-17, 1-19, 5-13, 5-15
90091-0335	PISTON SEAL,GLIDORING 62,5X70X3 MM	1-113, 9-15
90091-0336	PISTON SEAL, GLIDORING 79X90X4 MM	1-111, 1-115
90091-0357	VARISEAL ROTO 15X23X4 MM	1-35
90091-0406	RADIAL SEAL 25X40X7 MM DUST LIP	5-13, 5-15
90091-0412	SEAL RING	2-93
90091-0430	RADIAL SEAL 15X35X7 MM DUST LIP	4-17
90091-0431	RADIAL SEAL 8X22X7 MM	4-17
90091-0436	RADIAL SEAL 20X40X7 MM DUST LIP	5-5, 5-7
90091-0437	RADIAL SEAL 17X40X7 MM DUST LIP	5-5, 5-7
90091-0438	RADIAL SEAL 25X52X10 MM DUST LIP	5-5, 5-7
90091-0439	RADIAL SEAL 35X62X7 MM DUST LIP	5-13, 5-15
90091-0441	RADIAL SEAL 50X72X8 MM DUST LIP	5-13, 5-15
90091-0449	VARILIP 40X52X7 MM	3-13, 3-15
90095-0070	OVERLOAD PROTECTION, PKZM 0,4 A	7-59
90095-0072	OVERLOAD PROTECTION, PKZM 1,0 A	7-59
90095-0073	OVERLOAD PROTECTION, PKZM 1,6 A	7-59
90095-0074	OVERLOAD PROTECTION, PKZM 2,5 A	7-59
90095-0077	OVERLOAD PROTECTION, PKZM 6-10 A	7-59
90095-0078	OVERLOAD PROTECTION, PKZM0-16	7-59
90095-0080	OVERLOAD PROTECTION, PKZM 25 A	7-59
90099-0003	NUT	1-181
90099-0004	NUT	2-13, 2-15
90099-0007	HEXAGON NUT, M10X1, E 63 137 10	8-93
90099-0051	NUT HEX. M10X1,25, FE FZB	1-145, 1-151
90099-0085	NUT	6-5
90099-0096	NUT	6-5, 7-5, 7-7, 7-9
90099-0103	NUT, PR 47 (PG36)	4-21, 5-37
90099-0104	NUT, PR 15,2 (PG9)	1-23, 1-59, 1-61, 1-65, 1-67, 1-95, 1-107, 1-121, 1-123, 1-133, 1-141 1-147, 1-149, 1-151, 1-155, 1-163, 1-165, 1-167, 1-185, 1-189, 1-191, 1-199, 5-5, 5-7, 5-35, 5-37 8-7, 8-123, 8-125, 8-127, 8-129, 8-131
90099-0110	NUT, PR 22,5 (PG16)	1-95, 1-143, 1-163, 1-165, 1-167, 3-17, 7-5, 7-7, 7-9, 7-65, 8-7, 8-123 8-125, 8-127, 8-129, 8-131, 8-197
90099-0117	NUT, PR 18,6 (PG11)	1-129, 1-131, 1-135, 1-137, 1-161, 1-163, 1-165, 1-167, 1-189, 1-211 1-213, 6-5, 8-123, 8-125, 8-127, 8-129, 8-131
90099-0118	NUT, PR 20,4 (PG13,5)	1-141, 1-163, 1-165, 1-167, 7-5, 7-7, 7-9, 8-43, 8-45, 8-123, 8-125 8-127, 8-129, 8-131
90099-0119	NUT, PR 28,3 (PG16)	1-163, 1-165, 1-167, 7-5, 7-7, 7-9, 8-7, 8-105, 8-123, 8-125, 8-127, 8-129, 8-131
90099-0120	MUTTER PR 37 (PG29)	1-107, 5-21, 5-23, 5-37, 8-105, 8-123, 8-125, 8-127, 8-129, 8-131
90099-0131	NUT HEX. M16X2 SS	1-41, 5-31, 5-33, 8-71
90110-0028	CONTACT UNIT 4-POLE	7-29, 7-31
90110-0095	CONNECTOR 3 POLE + EARTH	6-51
90110-0142	PLUG DA15P064TX	7-47, 7-49, 7-51
90110-0145	COVER 8630-5169014-15-01	7-47, 7-49, 7-51
90110-0150	MALE INSERT 121110 0000	1-163, 1-165, 1-167, 2-13, 2-15, 2-129, 4-21, 5-37, 6-49, 8-123 8-125, 8-127, 8-129, 8-131
90110-0151	FEMALE INSERT 24-POL 121130 0000	2-13, 2-15
90110-0152	CABLE HOOD 24-POL 70.352.2428.1	1-163, 1-165, 1-167, 2-13, 2-15, 2-129, 8-123, 8-125 8-127, 8-129, 8-131
90110-0153	CHASSIS HOUSING 24-P CHI 24, 121240 0000	7-5, 7-7, 7-9
90110-0156	MALE INSERT 70.210.0653.0	1-163, 1-165, 1-167, 2-13, 2-15, 6-23, 6-25, 8-123, 8-125, 8-127 8-129, 8-131
90110-0157	CABLE HOOD 6-POL 70.352.0628.1	1-163, 1-165, 1-167, 2-13, 2-15, 2-129, 8-105, 8-123 8-125, 8-127, 8-129, 8-131, 8-159
90110-0159	MALE INSERT 70.310.0640.0	1-163, 1-165, 1-167, 2-13, 2-15, 2-129, 6-9, 6-13, 8-105, 8-123 8-125, 8-127, 8-129, 8-131, 8-159
90110-0160	CABLE HOOD 6-16-POL 70.352.1628.1	1-163, 1-165, 1-167, 2-13, 2-15, 8-123, 8-125, 8-127 8-129, 8-131
90110-0161	FEMALE INSERT 70 105 0653 0	7-5, 7-7, 7-9
90110-0163	FEMALE INSERT 70 300 0640 0	2-13, 2-15
90110-0164	FEMALE INSERT 70 105 2453 3	7-5, 7-7, 7-9
90110-0165	FEMALE INSERT 70.005.0653.0	7-5, 7-7, 7-9
90110-0166	CHASSIS HOUSING 310144-33	7-5, 7-7, 7-9
90110-0167	CHASSIS HOUSING 310133-33	7-5, 7-7, 7-9
90110-0208	CABLE CONTACT	2-13, 2-15, 7-47, 7-49, 7-51
90110-0209	CONTACT PIN, RC20M13K	2-13, 2-15, 7-5, 7-7, 7-9, 7-47, 7-49, 7-51
90110-0221	CHASSIS HOUSING 310162-33	2-13, 2-15
90110-0222	SOCKET FEMALE, MS 3102 E 16S-1S	1-97
90110-0223	CONTACT MALE, MS 3106 E 16S-1P	1-239, 1-241

Part No	Description	Page No
90110-0224	CHASSIS HOUSING 310166-33	2-13, 2-15
90110-0225	CHASSIS HOUSING 310168-33	2-13, 2-15
90110-0226	CABLE HOOD 6-POL 70.350.0628.0	6-9, 6-13
90110-0227	CABLE HOOD 6-16-POL 71.350.1628.0	6-23, 6-25
90110-0228	CABLE HOOD 24-POL 71.350.2428.0	4-21, 5-37, 6-49
90110-0235	CABLE CONTACT, PX0739/S	3-7, 3-9, 8-105
90110-0236	CHASSIS CONTACT PX0767/S	2-13, 2-15, 7-5, 7-7, 7-9
90110-0247	FEMALE INSERT 70.200.0653.0	2-13, 2-15
90110-0380	CONTACT PIN	2-13, 2-15, 7-5, 7-7, 7-9
90110-0381	COVER	7-5, 7-7, 7-9
90110-0385	HOLDER	1-163, 1-165, 1-167, 8-123, 8-125, 8-127, 8-129, 8-131
90110-0504	CABLE CONTACT	2-13, 2-15
90110-0505	CHASSIES CONTACT	7-5, 7-7, 7-9
90110-0506	CHASSIES CONTACT	7-5, 7-7, 7-9
90110-0507	CHASSIES CONTACT	7-5, 7-7, 7-9
90110-0508	CABLE CONTACT	7-47, 7-49, 7-51
90110-0513	CHASSIS CONTACT	2-13, 2-15
90111-0120	SWITCH, 2 POS.704.510 .0A+704.901.5/A	2-31, 8-177, 8-193
90111-0122	KEY SWITCH, 2 NO CONTACTS	7-29, 7-31
90111-0124	KEY SWITCH, 1NO,1NC CONTACT	7-29, 7-31
90111-0173	MAIN SW.NZM64-100/ZM64-100-760+AS4-NZM64	6-5
90113-0056	REGULATOR	2-87
90113-0072	PRESSURE REGULATOR	6-57
90113-0095	PRESSURE REGULATOR	1-211, 1-213, 2-39
90113-0096	PRESSURE REGULATOR	1-211, 1-213, 2-39
90113-0097	PRESSURE REGULATOR	1-211, 1-213, 2-39
90113-0098	PRESSURE REGULATOR	6-19
90113-0374	SLOW STARTING VALVE	6-57
90113-0375	PRESSURE DISTRIBUTION	6-57
90113-0377	SHUT-OFF VALVE	6-57
90113-0423	HIGH SPEED VENTING VALVE	6-57
90113-0470	MANIFOLD REGULATOR 10 BAR	6-55, 8-145, 8-147
90115-0173	ROD END, ID=6 MM, M6X1	2-101
90119-0056	RELAY, AUXILIARY MK3P5-S 24VDC	7-41
90119-0063	OPTO-RELAY, DC/DC AMMS-10-1/30VDC	1-237, 2-7, 7-45
90119-0067	SOLID-STATE RELAY, H12WD4850	7-55, 7-57
90119-0084	EXPANSION RELAY, JSR1T-500MS	7-41
90121-0114	RESISTANCE FIXED, 0,22 KOHM, 25 W	7-53
90121-0115	RESISTANCE FIXED, 0,047 KOHM, 200 W	7-53
90121-0120	RESISTANCE FIXED, 0,25 KOHM, 0,125 W	7-29, 7-31
90129-0006	BASE, S3-B	7-41
90132-0021	HOSE CLIP 6-10MM	2-87
90132-0030	HOLDER MV 87177 KS 580T	1-147, 1-153
90135-0026	EARTH TERMINAL, 3802.6	2-33, 7-37
90135-0035	EARTH WIRE, L=250 MM 16 MM2	7-11, 7-13, 7-17, 7-19, 7-29, 7-31
90135-0039	SHIELD CLIP KLBU 4-13.5	7-29, 7-31, 7-47, 7-49, 7-51
90135-0040	EARTH WIRE, L=150 MM 16 MM2	8-123, 8-125, 8-127, 8-129, 8-131
90140-0012	ELBOW, 90 INT/EXT, 2020-1/2-1/2	2-19, 2-21, 2-23
90140-0020	ELBOW, 90, INT/EXT. THREAD, NO. 2020-3/8	8-145, 8-147
90141-0015	RETAINING RING FOR SHAFT DIN 471 8 A2	1-161, 8-7, 8-11, 8-73, 8-153
90141-0016	RETAINING RING FOR SHAFT DIN 471 10 A2	1-11, 8-11, 8-33, 8-35, 8-75, 8-81, 8-93
90141-0017	RETAINING RING FOR SHAFT DIN 471 17 A2	1-95, 5-5, 5-7, 8-89
90141-0020	RETAIN. RING, 42	3-5, 5-13, 5-15, 5-25, 5-27
90141-0022	SNAP RING B 16	1-145, 1-151
90143-0020	STRIP	2-91
90143-0057	STRIP EMKA 1011-05 21X11MM	1-233, 2-31, 6-5, 7-5, 7-7, 7-9
90143-0059	SEAL STRIP 4610069	1-221, 1-223, 2-19, 2-21, 2-23
90143-0060	EDGE STRIP 9,5X6,3MM BLACK PVC	1-233, 6-5, 6-37, 6-41, 7-29, 7-31, 8-63, 8-65, 8-67
90143-0073	RUBBER STRIP	8-7
90143-0098	RUBBER STRIP, CLAMPING, NO. 1038-02	4-19
90144-0007	TAPE	1-185, 6-17, 6-19, 6-21, 6-27
90144-0072	TAPE SCOTCH VHBS 4945 W=12,7MM	8-187
90144-0073	TREBOFLON-TAPE W=13MM	1-147, 1-149, 1-153, 1-181, 1-183
90144-0074	SHIELDING SEAL STRIP EMC, 3,17X3,17 MM	2-35
90144-0075	SHIELDING SEAL STRIP EMC, 1,02X3,18 MM	2-31
90152-0016	HOSE (SPIRAL)	2-41
90152-0017	HOSE (SPIRAL)	2-49
90152-0050	SPIRAL CONDUIT, 20X13, UL 1313	1-89, 1-163, 1-165, 1-167, 1-189, 1-239, 1-241
90152-0051	SPIRAL CONDUIT, 25X18, UL 1816	1-95, 1-141, 1-163, 1-165, 1-167, 1-189, 1-209, 8-197
90152-0059	SPIRAL CONDUIT, 18X12, UL 1211	1-59, 1-61, 1-95, 1-239, 1-241, 5-5, 5-7, 5-35
90152-0060	SPIRAL CONDUIT, 42X35, UL3529	4-21, 5-21, 5-23, 5-37, 8-105
90152-0070	METAL HOSE, 32,5X26, UL 2621	1-163, 1-165, 1-167, 8-105
90153-0016	ADHESIVE,TUBE 100G RHODORSIL CAF 3	1-129, 1-131, 2-19, 2-21, 2-23, 3-13, 3-15
90153-0020	ADHESIVE, BOSTIK 1782 125ML	1-155
90153-0023	ADHESIVE, SILICON 251470 TUB 90CC	1-23, 1-45, 1-47, 1-55, 1-63, 1-69, 1-191, 2-91
90153-0049	ADHESIVE, LOCTITE 409 20G	2-107, 2-109, 2-119, 2-121
90153-0060	ADHESIVE, 3M DP-190 B/A	2-31
90155-0008	HANGER CHAIN, 18	1-95, 1-133
90155-0033	CHAIN	10-27
90155-0308	CONNECTION LINK	10-27
90155-0309	SECURITY HOOK	10-27
90157-0016	LOCKING FLUID	4-23, 4-25, 4-27, 4-29, 4-31, 4-33, 4-35, 4-37, 4-39, 4-41, 5-11, 5-25, 5-27, 6-51, 8-95, 8-109, 8-111, 8-117, 8-121
90157-0021	LOCKING FLUID	2-77, 2-79

Part No	Description	Page No
90157-0034	SEALING COMPOUND LOCTITE 572 50 ML	1-185, 1-189
90157-0037	SEALING COMPOUND	1-147, 1-153, 1-181, 1-183
90157-0041	SEALING COMPOUND	1-233, 2-107, 2-109, 2-113, 2-119, 2-121, 7-13
90157-0044	SEALING COMPOUND	1-97
90163-0007	CONNECTION	10-9
90163-0039	HOSE NIPPLE EXT.THR. R1/2 2601-17 MM	2-19, 2-21, 2-23
90163-0052	HOSE NIPPLE, EXT.THR. 1/4-12 MM	1-153
90163-0057	NIPPLE 1/8" BRASS	1-221, 1-223
90163-0062	QUICK COUPLING, (F) 5053-1/8	1-221, 1-223
90164-0015	LIGHT FIXTURE, DWDCV111B/230V 50HZ	8-43, 8-45
90164-0303	BRACKET SK2202 WALDMANN	8-43, 8-45
90165-0009	PIPE CLIP FOR TUBE D=12 MM	8-43, 8-45
90165-0019	TOOL CLIP, 81/3, OPEN, 20 - 30 MM	2-39
90165-0039	PIPE CLAMP, RSGU 1.15/12, D=15 MM	1-153
90165-0076	T-CLIP T8 FOR TUBE D=8 - 9 MM	8-95
90165-0087	T-CLIP T6 FOR TUBE D=6 - 7 MM	8-111, 8-121
90165-0159	PIPE CLAMP, RSGU 1 25/20-W4, D=25 MM	7-5, 7-7, 7-9
90166-0008	HOSE 7/10 PVC TRANSP.	2-31
90166-0013	TUBE 8 MM PA BLUE	1-207, 1-211, 1-213, 1-221, 1-223, 2-37, 2-39, 2-41, 3-7, 3-9, 5-37, 6-59
90166-0045	HOSE PVC TRANSP. 6/12	10-9
90166-0068	TUBE 12 MM PA BLUE	1-221, 1-223, 6-55, 8-145, 8-147
90166-0081	TUBE 6 MM PA BLUE	1-211, 1-213, 1-221, 1-223, 2-37, 2-87, 2-93, 2-127, 4-45, 4-47
90166-0087	HOSE 15/23 REINF.PVC TRANSP.	1-181, 2-89
90166-0089	HOSE 4/6.2 PE BLUE	4-43
90166-0095	TUBE 4 MM PA BLUE	6-55, 8-75
90166-0101	HOSE, SILICONE, 60 SHORE, 6/10 MM	2-87
90166-0113	HOSE	10-9
90166-0117	HOSE 4/6 PVC BLUE	8-145, 8-147
90166-0118	TUBE 8 MM PA BLACK	1-39, 2-47, 4-19, 4-21, 5-13, 5-15, 5-17, 5-19, 5-37, 6-11, 8-13
90166-0119	HOSE PUR 4/6 BLACK	5-5, 5-7
90166-0121	HOSE	1-153, 2-19, 2-21, 2-23, 2-53, 6-7, 6-19
90166-0129	HOSE 16/22 REINFORCED PVC	2-19, 2-21, 2-23
90166-0132	TUBE 6 MM PA,TRANSP.	2-45, 2-101, 3-7, 3-9
90166-0138	HOSE	2-83
90166-0141	TUBE 10 MM PA,TRANSP.	2-49
90166-0151	HOSE	2-19, 2-21, 2-23, 2-83
90166-0153	TUBE 12 MM PA BLACK	1-211, 1-213
90166-0158	HOSE	2-89
90166-0161	HOSE	2-87
90166-0176	RUBBER HOSE	1-239, 1-241
90166-0193	TUBE 6 MM PUR BLUE	1-95, 8-13, 8-31, 8-51, 8-75, 8-95, 8-97, 8-111, 8-113, 8-119, 8-121
90166-0194	TUBE 8 MM PUR BLUE	6-55, 8-39, 8-41, 8-51, 8-57, 8-95, 8-145, 8-147
90166-0195	TUBE 12 MM PA BLUE	2-37, 2-127
90166-0196	TUBE 14MM PA BLUE	2-37, 2-45, 6-57, 6-59
90166-0199	RUBBER HOSE	1-143, 1-221, 1-223
90166-0232	SHRINKABLE HOSE	6-5
90166-0233	HOSE	1-15, 1-85, 1-87, 1-99, 1-101, 2-45, 2-53, 2-55, 2-57, 6-29
90166-0236	HOSE, 38/51 REINFORCED RUBBER	6-17
90166-0260	HOSE	2-45
90166-0266	TUBE, 6 MM PA BLACK	4-21
90181-0038	CABLE DUCT, 40X40MM	7-5, 7-7, 7-9
90181-0040	CABLE DUCT, 80X40MM	7-47, 7-49, 7-51
90181-0045	CABLE DUCT, 40X60MM	7-5, 7-7, 7-9, 7-33, 7-35
90181-0046	CABLE DUCT, 60X60MM	7-5, 7-7, 7-9
90181-0048	CABLE DUCT, 100X60MM	7-53
90181-0052	CABLE DUCT, 25X80MM	7-29, 7-31, 7-47, 7-49, 7-51
90181-0054	CABLE DUCT, 60X80MM	7-41, 7-47, 7-49, 7-51
90181-0055	CABLE DUCT, 80X80MM	7-41, 7-53
90181-0056	CABLE DUCT, 100X80MM	7-41, 7-53
90181-0057	CABLE DUCT, 120X80MM	7-47, 7-49, 7-51
90181-0199	FLEXIBLE CHAIN, LINK 15	8-37
90181-0202	FLEXIBLE CHAIN, BRACKET 1015. 1PZ	8-37
90181-0203	FLEXIBLE CHAIN, BRACKET 1015. 2PZ	8-37
90181-0313	RIVET DUCTAFIX R4	7-33, 7-35, 7-41, 7-47, 7-49, 7-51, 7-53, 8-123, 8-125, 8-127, 8-129, 8-131
90187-0029	BALL VALVE G1/2, NPBR	6-51
90187-0045	BALL VALVE G1/4 CR PL	6-9, 10-9
90187-0059	BALL VALVE FOR HYDR.PER. G1/2 3MM HOLE	2-83, 2-89
90187-0062	BALL VALVE G1/2, NPBR	1-183
90187-0082	BALL VALVE G1/2	1-105
90187-0105	PURGING VALVE, G3/8 FOR WATER	1-189
90187-0110	DIAPHRAGM VALVE DN15, N.C. WELD CONN.	1-105
90187-0112	COCK VALVE, G1/4, 4-WAY, VITON	1-105
90187-0133	SAFETY VALVE, 10 BARS, R1/2, R1/2	6-19
90187-0147	BALL VALVE G11/2	6-17
90187-0148	BALL VALVE G1	6-29
90187-0158	THROTTLE BALL VALVE G1/4, R1/4	1-189, 2-19, 2-21, 2-23, 3-13, 3-15, 5-31, 5-33
90187-0176	ACTUATOR ECC 008 FOR DIAPHR. VALVE	1-95
90187-0325	DIAPHRAGM, 214/300 AO08 4-B -20-150§C	1-95
90189-0005	BALL BUSHING, 30X47X68 MM	8-87
90189-0011	BALL BUSHING, 16X26X36 MM	8-79
90189-0025	BALL BUSHING, 25X37X37 MM	8-163
90191-0047	WHEEL, NO. 442-200-113	10-11
90191-0060	CASTOR WHEEL, NO. 1599PRT	10-11
90191-0077	WHEEL	10-15

Part No	Description	Page No
90194-0016	WARNING SIGN, RISK OF ELECTRIC SHOCK	2-9, 6-13, 6-47, 6-49, 7-13, 7-15, 7-19, 7-21, 8-7
90194-0075	WARNING SIGN ISO, HOT SURFACE	1-155, 1-189
90194-0133	SIGN "DELIVERED DESIGN"	2-31
90194-0143	WARNING SIGN ISO, HOT SURFACE	8-91
90194-0152	SIGN, EARTH	7-11, 7-13, 7-17, 7-19, 7-29, 7-31
90195-0028	TERM.BLOCK 6-POLE STEATIT	1-155
90195-0029	CONN. LINK NO324 FOR -28	1-155
90201-0098	ADJ. FLOW CON. VALVE, NO. 32 04 149 4	10-25
90201-0450	PLUG	3-13, 3-15, 4-45, 4-47
90206-0070	HEATING ELEMENT 6000W 380/220V	1-185, 1-189, 9-9
90206-0132	HOT AIR ELEMENT	5-21, 5-23, 9-19
90206-0326	JUNCTION BOX FOR 90206-56	1-185, 1-189
90207-0363	GASKET	1-109, 9-11
90207-0365	GASKET	1-109, 9-11
90211-0002	WIRE LOCK, 5 MM	8-163
90214-0036	BALL BEARING, 10X22X6 MM	1-57, 3-7, 3-9
90214-0096	BALL BEARING, 25X52X15 MM	5-5, 5-7
90214-0138	BALL BEARING, 5X19X6 MM	1-199, 8-9, 8-27
90214-0165	BALL BEARING, 25X47X12 MM	5-13, 5-15
90214-0189	BALL BEARING, 17X40X12 MM	5-5, 5-7
90214-0225	BALL BEARING SOLID OIL 20X42X12 MM	1-33, 5-13, 5-15, 5-25, 5-27
90214-0232	BALL BEARING, 20X47X14 MM	5-31, 5-33
90214-0236	BALL BEARING, 40X80X18 MM	4-7, 4-9, 5-31, 5-33
90217-0206	UNION NUT, 1 1/2 APV, 07-01-376/17	1-133
90217-0307	GASKET 35,8X50,5X5,5 MM	1-85, 1-87, 1-99, 1-101, 9-9
90217-0347	GASKET 32X22,6X3,6 MM	1-121, 1-123, 9-9
90217-0348	GASKET 35,4X46,8X4 MM	1-121, 1-123, 1-133, 9-9
90220-0034	THERMOCOUPLE CABLE K/ 2X0,5MM2	1-163, 1-165, 1-167, 1-189, 2-13, 2-15, 5-37, 8-91
90220-0072	SCR. CABLE 4X0,34MM2	1-209
90220-0084	MOTOR CABLE 4X2,5+2(2X0.75)+SHIELD	2-13, 2-15, 7-47, 7-49, 7-51
90220-0085	CABLES, MULTI-CONDUCTOR SCREENED	1-91
90220-0091	PAIR TWISTED CABLE 2X2X0,25MM2	2-13, 2-15, 9-3, 9-45
90220-0092	PAIR TWISTED CABLE 3X2X0,25MM2	1-163, 1-165, 1-167, 1-239, 1-241, 8-79
90220-0095	SCR. CABLE 3X0,75MM2	6-5
90220-0104	SCR. CABLE 4X1,5MM2	1-163, 1-165, 1-167, 8-69, 8-105, 8-123, 8-125, 8-127, 8-129, 8-131, 8-159
90220-0105	SCR. CABLE 4X2,5MM2	2-13, 2-15, 8-7
90220-0107	SCR. CABLE 5X0,75MM2	1-239, 1-241, 2-13, 2-15
90220-0115	SCR. CABLE 12X0,75MM2	8-7
90220-0116	MOTOR CABLE 4X1,0+2(2X0,5)+SHIELD	2-13, 2-15, 7-47, 7-49, 7-51
90220-0131	PAIR TWISTED CABLE 3X2X0,25MM2	2-13, 2-15, 7-47, 7-49, 7-51
90220-0162	SCR. CABLE 10X0,25MM2	1-239, 1-241
90220-0183	SCR. CABLE 2X0,34MM2	1-209
90220-0302	CLAMP FOR SCR.CABLE, 16MM, 55-016-89	2-35, 7-29, 7-31
90220-0303	CLAMP FOR SCR.CABLE, 10MM, 55-016-22	6-5
90220-0304	CLAMP FOR SCR.CABLE, 24MM,	2-35, 7-29, 7-31
90220-0305	CLAMP FOR SCR.CABLE, 16MM,	6-5
90224-0308	CONN. BANJO, ART. NO. 2023-1/8-1/8	1-221, 1-223
90224-0345	Y-CONNECTION	4-21
90224-0349	BULKHEAD LEAD-IN	1-141, 1-221, 1-223
90226-0458	MOUNTING SCREW	1-233, 1-235, 2-105, 2-113, 6-35, 6-41, 6-45, 7-15, 7-21, 8-173, 8-175, 8-179, 8-189, 8-191, 8-201, 8-203
90230-0025	NON-RETURN VALVE, 12MM, L=85	1-105
90230-0027	NON-RETURN VALVE QJ 8355-1/4"	5-31, 5-33
90230-0041	OVERPRESSURE VALVE SS-4 CPA2-RTDG-3	6-9
90230-0042	NON-RETURN VALVE 1/2"	2-53, 6-19, 6-27
90230-0044	NON-RETURN VALVE 1"	2-53, 6-21
90230-0064	CHECK VALVE, 6 MM HIGH TEMP.	1-141, 2-93
90232-0103	PH.CELL E3S-CT61-L-5M	5-35
90232-0104	PH.CELL E3S-CT61-D-5M	5-35
90232-0106	PH.CELL E3S-CR11-5M	8-157
90232-0129	PH.CELL E3S-CR61-5M	8-59, 8-157
90232-0333	REFLECTOR E39-R1	8-43, 8-45, 8-157, 8-195, 8-199
90233-0027	TUBE FUSE, 16A	7-61
90233-0028	TUBE FUSE, 10A	7-59, 7-61, 9-23
90233-0029	TUBE FUSE, 25A	7-61, 9-23
90233-0303	FUSE HOLDER, ST 10 1-POLE	7-59, 7-61
90235-0151	NON-RETURN VALVE	2-45, 6-27
90235-0206	QUICK EXHAUST VALVE, SEU-1/8	8-95
90235-0261	ANGLE SEAT VALVE G1/2, N.C. DN13	1-105
90235-0274	THROTTLE CHECK VALVES,G1/8"	1-221, 1-223
90235-0282	THROTTLE CHECK VALVES,G1/8	1-221, 1-223
90235-0288	THROTTLE CHECK VALVE G1/8" MANUAL, 6	1-107
90235-0290	THROTTLE CHECK VALVES M5	2-101
90235-0846	THROTTLE CHECK VALVE G1/8", MANUAL, 6	8-31, 8-33, 8-35, 8-113, 8-119
90235-0848	THROTTLE CHECK VALVE, G1/8", MANUAL,8	8-39, 8-41
90236-0041	BRACKET	1-207
90236-0045	SUPPORT	5-5, 5-7
90237-0126	TURNING HANDLE "REPBY 90237-175"	6-39, 6-43
90237-0128	LOCK CYLINDER, 1109-U3	1-233, 2-107, 2-109, 2-119, 2-121, 6-39, 6-43, 7-13, 8-185, 8-187, 8-195
90237-0151	GUIDE, 1001-U11	1-233, 7-11, 7-13, 7-17, 7-19
90237-0152	GUIDE, 1001-U12	1-233, 7-11, 7-13, 7-17, 7-19
90237-0153	LOCK HOUSING, 1121-U26-0B	1-233, 2-107, 2-109, 2-119, 2-121, 6-39, 6-43, 7-11, 7-13, 7-17, 7-19, 8-185, 8-187, 8-195
90237-0154	LOCK HOUSING, 1121-U60-0C	1-233

Part No	Description	Page No
90237-0155	LOCK ADAPTER, 1121-U40	1-233, 7-11, 7-13, 7-17, 7-19
90237-0156	LOCK BOLT, 1000-16	1-233, 7-11, 7-13, 7-17, 7-19
90237-0157	LOCK BOLT, 1000-230	2-31, 6-47, 7-29, 7-31
90237-0160	ESCUTCHEON WITH SQUARE, 1121-U23/U13	7-11, 7-17, 7-19
90237-0165	LATCH	1-233, 2-107, 8-195
90237-0168	ROUND BAR WITH END WHEEL, 1049-U5	7-11, 7-13, 7-17, 7-19
90237-0169	LOCK ADAPTER, 1000-U49	1-233, 7-11, 7-13, 7-17, 7-19
90237-0175	TURNING HANDLE	1-233, 2-119, 2-121, 8-185, 8-187, 8-195
90237-0176	TURNING HANDLE	1-233, 2-107, 2-109, 7-13
90237-0206	LOCK, 1000-U45/U2/17/23/24/991	8-123, 8-125, 8-127, 8-129, 8-131
90237-0319	LOCK HOUSING, 1000-U134	2-31, 6-47, 7-29, 7-31
90237-0320	LOCK HOUSING, 1000-U136	2-31, 6-47, 7-29, 7-31
90237-0322	LOCK GASKET, 1000-U137	6-47
90237-0323	LOCK O-RING, 1000-24	6-47
90237-0324	KEY, 1104-02 FOR SQUARE 8 MM	7-11, 7-17, 7-19
90239-0405	ROD END,BALL JOINT EYE M10X1,25	8-33, 8-35, 8-113, 8-119
90239-0487	REAR,CLEVIS,MINI-ISO 20-25	1-15, 8-113, 8-119
90239-0489	ROD END, CLEVIS WITH AXLE M6X1,25	1-35, 1-65, 1-67
90239-0490	ROD END, CLEVIS WITH AXLE M8X1,25	1-15
90239-0491	ROD END,BALL JOINT EYE,MINI-ISO M6	8-75
90239-0516	ROD END, CLEVIS WITH AXLE M10X1,25	1-11
90239-0532	ROD END, CLEVIS WITH AXLE M8X1,25	1-161, 4-43
90239-0579	SENSOR,BRACKET,FOR CYL 16	1-65, 1-67
90239-0582	SENSOR,BRACKET,FOR CYL 32	1-11
90239-0816	DOUBLE ACTING, MINI-ISO, CYL.16-25	1-65, 1-67
90239-0817	DOUBLE ACTING, MINI-ISO, CYL.16-50	1-35
90239-0822	DOUBLE ACTING, MINI-ISO, CYL.20-50	1-161, 4-43
90239-0832	DOUBLE ACTING, MINI-ISO, CYL. 25-125	8-113, 8-119
90239-0837	DOUBLE ACTING, MINI-ISO, CYL. 32-100	1-11
90239-0842	DOUBLE ACTING, MINI-ISO, CYL.16-50	2-101
90239-0847	DOUBLE ACTING, MINI-ISO, CYL.20-50	1-15
90239-0861	DOUBLE ACTING, MINI-ISO, CYL. 32-125	8-33, 8-35
90240-0146	FLANGE BUSHING,15X21X20 MM	1-185
90240-0172	FLANGE BUSHING, 8X12X10 MM	1-17, 1-19, 1-21, 1-25, 1-27, 1-29
90240-0260	FLANGE BUSHING, 8X10X9 MM	4-23, 4-25, 4-27, 4-29, 4-31, 4-33, 4-35, 4-37, 4-39, 4-41
90240-0261	FLANGE BUSHING, 12X14X9 MM	1-11, 4-23, 4-25, 4-27, 4-29, 4-31, 4-33, 4-35, 4-37, 4-39, 4-41
90240-0263	FLANGE BUSHING, 15X17X12 MM	1-11, 1-35
90240-0264	FLANGE BUSHING, 15X17X17 MM	1-17, 1-19, 1-41
90240-0265	FLANGE BUSHING, 20X23X21 MM	4-15, 5-17, 5-19
90240-0287	BUSHING, 10X12X10 MM	1-197
90240-0302	BUSHING	1-65, 1-67
90240-0321	BUSHING, 25X28X25 MM	1-17, 1-19
90240-0322	BUSHING, 25X28X30 MM	1-17, 1-19
90240-0325	FLANGE BUSHING, 16X18X12 MM	4-15
90240-0332	FLANGE BUSHING, 16X18X12 MM	5-31, 5-33
90242-0264	O-RING 16,1X1,6 MM	1-185
90242-0265	O-RING 32,2X3 MM	1-185
90243-0061	AIR GUN, CEJN SERIE 204 ED: 90459-0173	2-41
90243-0112	FLOW METER	2-45
90243-0214	CONDUCTIVITY METER	7-29, 7-31
90243-0245	MEASURING INSTRUMENT	6-19
90243-0321	CONDUCTIVITY SENSOR, TP5EL. 00343-10803	1-135, 1-137
90243-0430	FLOW METER, MAG 1100 FOOD PFA	1-135, 1-137
90245-0043	TRANSFORMER, Z-8782	1-97
90248-0047	HINGE, 1150-U50	2-31
90252-0047	TIMING BELT AT5 450X16 MM	3-5
90258-0031	PIN, STRAIGHT SLOTTED SPRING FRP 3X20	1-23, 8-107, 8-115
90259-0313	AUX. CONTACT K&M NHI21-PKZM0	7-59
90261-0016	PLUG, BLIND, PLASTIC GPN300V2	8-43, 8-45
90261-0033	PLUG, BLIND, PLASTIC GPN300F182	2-67, 2-69, 2-71, 2-73
90261-0038	HOOD GPN 1000/893	5-35
90261-0049	PLUG, BLIND, PLASTIC, NO. SR1750	8-77
90261-0069	PLUG, BLIND, PLASTIC, NO. 055-0615	6-31
90261-0071	PLUG, BLIND, PLASTIC, NO. GPN500B58	4-17
90266-0154	PIPE	5-31, 5-33
90267-0027	CONVEYOR WHEEL, 12T	2-101
90269-0308	GASKET 59X68X3 MM	1-185, 1-189
90270-0017	COMPRESSOR NASH/ELMO 112 MB/4-2083	1-143
90270-0349	CONSTANT FLOW VALVE, 1/2"X1/2" 2GPM	1-153
90274-0042	PRESSURE GUARD, 200 KPA	6-51
90274-0045	PRESSURE GUARD, 14 KPA	1-147
90274-0056	PRESSURE SWITCH, 100 - 1200 KPA	6-9
90274-0074	PRESSURE GUARD, 530 KPA	6-57
90274-0082	FLOW SWITCH, 2 - 3 L/MIN	6-17
90274-0088	PRESSURE GUARD, 1,5 KPA	1-239, 1-241
90274-0096	LEVEL PROBE, Z8778/1	1-97
90274-0099	IP-TRANSDUCER	1-121, 1-123
90274-0110	PRESSURE SWITCH, 50 - 1000 KPA	1-207
90277-0039	FILTER TYP LF -1/4-S-5M-B	2-87
90277-0045	FILTER / 9900-05-BK	1-211, 1-213, 2-39
90277-0046	FILTER / 9933-05-101	1-211, 1-213, 2-39
90277-0104	FILTER F64B-2GN-ARO	1-207
90277-0116	FILTER HOUSING / ART.NO FILTER 58P-S5430	8-51
90277-0129	EXHAUST FILTER / SK 3322.200	8-7

Part No	Description	Page No
90277-0323	FILTER HOUSING / ART.NO 95S6-1/4 S 5430	1-207
90286-0013	GREASE NIPPLE STRAIGHT M63-7, 3-9, 4-23, 4-25, 4-27, 4-29, 4-31, 4-33, 4-35, 4-37, 4-39, 4-41	
90287-0073	SCREW MC6S M5X70 129	6-57
90287-0106	SCREW SPRINGLOAD. SLOTTED HEAD M10X21	8-77
90287-0112	SCREW SPRINGLOAD. SLOTTED HEAD M8X16	1-99, 1-101, 3-7, 3-9, 8-81
90287-0124	SCREW PAN HEAD MSCS M4X12 NYLON	7-5, 7-7, 7-9
90287-0130	SCREW HEX.SOCK.SET FLATPT. MP6SS M20X30	2-25
90287-0154	SCREW, SOCK.SET DOGPOINT M6X10	8-153, 8-163
90287-0157	SCREW M6SF FLAT HEAD M6X10 88	7-41, 7-47, 7-49, 7-51, 7-53
90287-0334	SCREW SPRINGLOAD. SLOTTED HEAD M8X16	1-57
90287-0349	SCREW	1-191
90296-0051	PASTE	8-91
90296-0068	GREASE UNIWAY LI62 CARTRID.400GR	5-5, 5-7, 5-31, 5-33
90296-0070	GREASE	3-7, 3-9, 4-17
90296-0091	LUBRICATION GREASE	1-33, 1-65, 1-67, 1-97, 9-9
90297-0011	FLUORESCENT TUBE, TDL 30W/840	7-5, 7-7, 7-9
90303-0011	PROTECTIVE GOGGLES	9-5
90303-0012	PROTECTIVE GLOVES	9-5
90303-0013	APRON	9-5
90304-0020	LIQUID CONTAINER	1-183, 6-11
90304-0307	ATTACHMENT PIPE	1-183
90314-0044	SIGNAL CONVERTER	1-239, 1-241
90316-0022	SPACER NUT DSNF M3060X20	2-35
90316-0023	SPACER NUT DSM M3055X8	2-35
90316-0029	SPACER NUT, M3X16	2-35
90316-0030	ELASTIC SCREW, 15060002	2-35
90319-0013	ROPE 4MM BLUE 3700N	8-163
90321-0100	PUMP PBK 16/A 220/380V 50 HZ 3 PH.	1-181
90321-0116	PUMP GRUNDFOSS CHI 2-60	6-9
90321-0117	PUMP LOWARA SV8-14 F75T	6-23, 6-25
90321-0120	PUMP SV8-09 F756T, 380V60HZ	6-23, 6-25
90321-0127	CENTRIFUGAL PUMP LOWARA	1-181
90321-0134	CIRC. PUMP TMB 40/2 230V50HZ	1-189
90321-0135	CIRC. PUMP TMB 40/2 230V60HZ	1-189
90326-0012	PROTECTIVE COVER, T31A4618	1-23, 1-105, 1-141, 1-149, 1-155, 1-185, 1-189, 8-91
90326-0020	PLUG, FEMALE YELLOW CR-AL	1-23, 1-105, 1-141, 1-149, 1-155, 1-185, 1-189, 2-13, 2-15, 7-5, 7-7, 7-9, 8-91
90326-0022	PLUG, MALE YELLOW CR-AL	1-141, 1-163, 1-165, 1-167, 2-13, 2-15, 5-21, 5-23, 5-37, 8-91
90326-0038	THERMOCOUPLE, CR-AL	1-185
90326-0051	THERMOCOUPLE, 12826-33	1-141, 1-149, 1-155
90326-0053	THERMOCOUPLE, 12826-35	1-185, 7-5, 7-7, 7-9
90326-0054	THERMOCOUPLE, CR-AL STD.GR, 12826-36	8-91
90326-0057	THERMOCOUPLE, CR-AL	1-189
90326-0060	THERMOCOUPLE, CR-AL	1-95
90326-0077	CONTACT	5-21, 5-23
90326-0089	THERMOCOUPLE, 5110-089-000	1-105
90326-0306	GLAND FITTING 9041-45-KS-KR.1/8" D=4,5MM	1-185
90326-0316	THERMO CONTACT PANEL	7-5, 7-7, 7-9
90328-0003	SILENCER	1-95
90328-0007	SILENCER	6-57
90328-0017	SILENCER, D=6 MM	1-215, 1-217, 1-219, 2-39, 2-127, 6-55, 8-145, 8-147
90328-0024	SILENCER G3/8	1-215, 1-217, 1-219, 2-39, 2-127, 6-55, 8-145, 8-147
90328-0025	SILENCER G1/2	10-9
90328-0026	SILENCER G1/4	1-125
90328-0038	SILENCER, D=8 MM	8-145, 8-147
90330-0012	SLEEVE, REDUCTION, INT, R-2021/4X1/8	1-147
90330-0014	ELBOW, 90 INT. THREAD, R-222R1	6-21
90330-0021	NIPPLES, EXT. THREAD. R-207R1/2	1-153, 2-89, 6-19
90330-0026	PLUG, EXT. G-THREAD, G1/4	2-19, 2-21, 2-23, 6-9
90330-0036	BUSHING, INT/EXT. THR. RP1/8-RP1/2	6-19
90330-0043	NIPPLES, EXT. THREAD. R-207R1/4	1-189, 6-9, 6-27
90330-0045	NIPPLES, EXT. THREAD. R-209 KR11/2- KR1	6-21
90330-0048	BUSHING, INT/EXT. THR. R1/2-RP3/8	1-183
90330-0049	T-PIPE, INT. THREAD, R-221R1/2	1-153, 6-19, 6-57
90330-0054	SLEEVE, INT. THREAD, NO. R-201R1/2	2-89
90330-0056	NIPPLES, EXT. THREAD. R-207 KR11/2	6-17
90330-0057	ELBOW, 90 INT. THREAD, R-222R11/2	6-17
90330-0066	PLUG, EXT. G-THREAD, G1/8	1-23, 5-13, 5-15
90330-0080	NIPPLES, EXT. THREAD. R3/4-R1/2	6-9, 6-19
90330-0085	BUSHING, INT/EXT. THR. R1/2-RP1/4	6-51
90335-0012	SPRING	1-195
90335-0025	COMP. SPRING 22010, 1X11X26	8-61, 8-83
90335-0027	COMP. SPRING 22170, 1,25X9,25X33	8-11
90335-0089	TENSION SPRING 41490, 0,9X10X23	1-199, 8-27
90335-0091	TENSION SPRING 41890, 1,2X13X48,2	8-93, 8-155
90337-0315	FILTERINSERT / MCS 4463	1-105
90342-0022	BELLOWS	1-145
90342-0024	RUBBER BELLOWS, 100X100 MM	2-77
90344-0078	PULLEY	8-89
90347-0004	VIBRATION DAMPER D=30 TH=M8 H=17 H2=21MM	1-181, 1-193
90347-0007	VIBRATION DAMPER	2-27
90347-0009	FLOOR PLATE, NO 1256730	2-71, 2-73, 2-75
90347-0029	DAMPER	2-25
90347-0034	VIBRATION DAMPER	1-233

Part No	Description	Page No
90347-0039	DAMPER	1-63
90347-0054	DAMPER	1-195, 8-33, 8-35, 8-39, 8-41
90347-0127	DAMPER	1-233
90347-0144	VIBRATION DAMPER, NO. RA 40EM-A	1-143
90347-0163	GAS-DAMPER	7-11, 7-13, 7-17, 7-19, 7-29, 7-31
90347-0175	MACHINE SHOE BRIK T 125	8-43, 8-45
90347-0182	SHOCK ABSORBER, YSR-16-20-C	8-31, 8-99
90347-0183	GAS SPRING NO. A1 A1N-52-060-205/800N	5-17, 5-19
90355-0369	COVER PLUG, 22X19X7 MM	4-17
90360-0020	STEAM TRAP / MK36/51 3/8"	1-105
90360-0305	FLOAT, ART NO 10739920	1-147
90411-0001	INSULATING MAT	1-141
90411-0005	INSULATOR	1-155
90411-0020	INSULATING TUBE	2-45
90415-0032	FILTER / 3-02-00-1 1/2"	6-17
90424-0054	SPRAY NOZZLE 120 DEG	1-153
90425-0016	MECMAN TYPE E120 735-120-000	10-9
90426-0003	HAND SHOWER	2-49
90430-0070	FREQ.CONV. 6SE3213-6CA40	7-47, 7-49, 7-51
90430-0326	FILTER 6SE3290-0BA87-0FB2	7-47, 7-49, 7-51
90450-0306	DOUBLE ACTING, MINI-ISO, CYL. 12-25	8-75
90450-0509	CYLINDER	1-41
90450-0654	BRACKET,REAR,EYE WITH AXLE 32	8-39, 8-41
90450-0655	BRACKET,REAR,CLEVIS FLANGE WITH FOOT 32	8-39, 8-41
90450-0723	ROD END,BALL JOINT EYE M10X1,25	8-39, 8-41
90450-0816	SENSOR, BRACKET,SERIES 2700/2702	1-151
90453-0001	MODEM MA-12	9-45
90453-0002	MODEM MD-12 DC	7-29, 7-31
90456-0001	INTOUCH OEM 2000 V.5.6B/6.0B HW KEY	7-29, 7-31
90457-0047	SENSOR 2750-1-5111-1 W.ADAPTER PNP	1-11, 1-65, 1-67
90457-0048	INK JET PRINTER A300 HS	10-5
90457-0078	PANEL NUT	6-55, 8-145, 8-147
90457-0090	FLEXIBLE COUPLING, 10X10 MM	2-101
90457-0092	SAFETY RELAY RT9-24VDC	7-41
90457-0144	REGULATOR 0,3-2 BAR	8-145, 8-147
90457-0149	LIGHT FIXTURE, RL 70V-118D	2-11
90457-0192	WASHER PLAIN ROUND, 6,5/18, H=1,5	7-29, 7-31, 7-65
90457-0920	BUTTON SIGN, ROTATION OF MATERIAL HOLDER	8-197
90457-0921	WORM GEAR MOTOR MC320P2TB5/D	8-69
90458-0031	CONNECTOR KIT 9032 010 353	7-47, 7-49, 7-51
90458-0032	CONNECTOR KIT 9-032-010-496	7-47, 7-49, 7-51
90458-0033	CONNECTOR KIT 9-032-010-851	7-47, 7-49, 7-51
90458-0048	RETAINING RING FOR HOLE, 62X2 MM	5-13, 5-15
90458-0060	FLANGE BUSHING, 12X14X15 MM	4-23, 4-25, 4-31, 4-33, 4-39, 4-41
90458-0061	TUBE, 4 MM PA BLACK	4-21
90458-0068	BALL BEARING, STAINLESS 35X62X14 MM	5-13, 5-15
90458-0072	SCREW ISO 7380 S M6X12 A2	2-71, 2-73
90458-0138	PROX.SW. E2EG-X1R5B1-5M	8-21, 8-71
90458-0181	RETAINING RING FOR BORE DIN 472 80 A2	4-7, 4-9
90458-0200	PEROX. SAFETY VALVE, NO. 527-430 1/2X3/4	1-183
90458-0201	FLUID AUT. FEEDER, ALINOX 1/2 46.04.00	1-183
90458-0258	TRANSFORMER, 220VAC/6-9-12VAC	8-123, 8-125, 8-127, 8-129, 8-131
90458-0270	VENTING DEVICETCDF 1/8G ELESA 58669	5-13, 5-15
90458-0273	COVER STRIP	8-31, 8-57
90458-0274	DISC FOR COUPLING, HUCO 236.50T	2-93, 4-15
90458-0289	PLUG,GPN 340-SW-5 MM	4-23, 4-25, 4-27, 4-29, 4-31, 4-33, 4-35, 4-37
90458-0292	BASE, KT70-1001	2-65
90458-0293	LIGHT ELEMENT, RED, KL70-401R	2-65
90458-0294	LIGHT ELEMENT, YELLOW, KL70-401Y	2-65
90458-0295	LIGHT ELEMENT, BLUE, KL70-401L	2-65
90458-0306	CABLE GLAND, M16X1,5, NO.5311 1010	8-145, 8-147, 8-177, 8-193
90458-0307	CABLE GLAND, M20X1,5, NO.5311 1020	2-129, 8-69
90458-0315	CABLE GLAND, M20X1,5, NO.5311 1120	1-233, 2-117, 8-43, 8-45
90458-0322	NUT, M16X1,5	8-145, 8-147, 8-177, 8-193
90458-0341	THERMOCOUPLE, 5130050-001	1-23
90458-0353	BUSHING, 8X10X8 MM	4-23, 4-25, 4-27, 4-29, 4-31, 4-33, 4-35, 4-37, 4-39, 4-41
90458-0396	SERVO DRIVE DMC2 50720	7-47, 7-49, 7-51
90458-0399	SERVO DRIVE DMC2 51540	7-47, 7-49, 7-51
90458-0429	EXTENDED WITHOUT INSERT, M20X1,5	1-45, 1-47, 1-55, 1-63
90458-0438	GLAND, EXTENDED WITH INSERT, M20X1,5	8-89
90458-0548	PARALLEL KEY W. ROUND ENDS 5X5X16 MM	4-15
90458-0601	PHOTOCELL, SICK PHOTOCELL 1	3-7, 3-9
90458-0602	PHOTOCELL,	8-97
90458-0603	CONNECTOR FEMALE 5 PINS	8-97
90458-0672	PROXIMITY SENSOR E2E2-X5MB1-5M .	1-23, 1-95, 1-161, 4-5, 4-15, 4-21, 7-5, 7-7, 7-9, 9-21
90458-0675	PROXIMITY SENSOR, E2EG-X5MB1-5M	1-35, 1-95
90458-0676	PROXIMITY SWITCH,E2EG-X5B1-6M	1-133
90458-0677	PROXIMITY SWITCH, E2EG-X5MB1-M1	8-43, 8-45, 8-153, 8-163
90458-0685	COUPLING DISC 25/57 COD.236.57-F25	4-7, 4-9
90458-0724	STABILIZED POWER SUPPLY, SITOP 40A 24VDC	7-5, 7-7, 7-9
90458-0751	BUSHING,INT./EXT.G-THREAD G3/4"-G1/2"	1-183
90458-0921	FILTER SP 122-200	6-51
90458-1076	L-SHAPED CONNECTOR CABLE 933 235-042	8-43, 8-45, 8-153, 8-163
90458-1136	TERMINAL BLOCK, 103630	8-133, 8-135, 8-137

Machine Type Group Description Page No

Part No	Description	Page No
90458-1155	ENLARGING SLEEVE, 7216220	8-69
90458-1159	PH.CELL WS4-2D135	4-43
90458-1160	PH.CELL WE4-2P135	4-43
90458-1307	BLIND PLUG CIRCULAR, M16X1,5 514GFK/216	8-145, 8-147
90458-1382	PLUG, M5X3.5 SMC - MS-5P	5-13, 5-15
90458-1385	TIMING BELT T5X620X16 POLYURETHANE	5-13, 5-15
90458-1386	TIMING BELT T5X660X16 POLYURETHANE	5-13, 5-15
90458-1387	RADIAL SEAL 38X62X7 MM DUST LIP	5-13, 5-15
90458-1404	FLANGE BUSHING, 12X16X16 MM	5-11
90458-1467	CAP, 32 44 129 7	10-21
90458-1473	PUMP, 34 73 521 7	10-19
90458-1474	PAPER TROLLEY, 32 04 192 3	10-17
90458-1477	CONNECTOR 6-1/8 NPT, EXT. TAPERED	2-97
90458-1478	BALL VALVE SS-43T6MM-SH-10147	2-97
90458-1535	TRANSDUCER, BTL5-A11-M0850-P-S32	8-79
90458-1592	FLOATING MAGNET, BTL5-P-3800-2	8-79
90458-1595	CONNECTION, BKS-S 33M-00	8-79
90458-1651	EMERGENCY STOP, ZB4-BS-844 ZB4-BZ-104	8-183, 8-197
90458-1704	BALL BEARING, 15X35X11 MM	1-11, 1-31, 1-35, 1-43, 1-49, 1-51
90458-1792	FREE-WHEEL COUPLING, 14X14 MM	1-49
90458-1849	CONN. STR., 6-R1/8, EXT. THREAD	1-221, 1-223
90458-1888	GEARS, BEVEL Z10-CY-1.25-ILT-1-N	5-31, 5-33
90458-1977	REFRACTOMETER SET DA15FC15A DFTP A	2-97
90458-2138	SCREW M6S M12X120 A280	9-49
90458-2290	ROTARY ACTUATOR DSM-16-270-P	1-49
90458-2329	HOSE, SILICONE, 50 SHORE, 9/13 MM	8-13
90458-2395	FILTER INSERT, SK 3171 100	8-7
90458-2419	PLUG GPN 300 V 233	4-11, 4-13
90458-2448	ELBOW PIPE JOINT,EXT.THREAD,D=8 MM G1/4	8-95
90458-2466	MOTOR 3GVA071002-CSB	2-93
90458-2518	TIMING BELT T5X690X16 POLYURETHANE	5-13, 5-15
90458-2557	CABLE OLFLEX 25X1 MM2	2-13, 2-15
90458-2580	LEVEL CONTROL RELAY RM4-LA32M	7-41
90458-2602	BULKHEAD CONNECTOR, 12 MM	2-19, 2-21, 2-23
90458-2619	FLOW METER, D-6230-HGB-BB-AV-99-0-N2	1-207
90458-2737	SPHERICAL BALL BEARING, 15X35X14 MM	8-23, 8-25
90458-2845	SCREW,HEXAGON HEAD M6S ISO 4017 M10X45	2-63, 2-67, 2-69
90458-2850	HOSE CLIP , 51 MM	6-17
90458-2890	CONNECTOR, 21N-50N12N133NE	1-163, 1-165, 1-167, 4-21
90458-2892	CONNECTOR, 11 N-50-3-31/133 NE	1-163, 1-165, 1-167, 4-21
90458-2893	SLEEVE, 78 Z-0-3-4	1-163, 1-165, 1-167, 4-21
90458-2894	PAIR TWISTED CABLE 1X2X0,2MM2	7-25, 7-33, 7-35, 8-7
90458-2895	COAXIAL CABLE RG 400/U BROWN	1-163, 1-165, 1-167, 4-21
90458-2950	BALL BEARING, 5X16X5 MM	8-103
90458-2954	ELBOW PIPE JOINT, EXT.THREAD, D=4MM M5	8-75
90458-2956	ELBOW PIPE JOINT, EXT.THREAD, D=6MM-G1/8	1-11, 1-95, 1-105, 1-121, 1-123, 1-145, 1-161, 3-7, 3-9, 8-145, 8-147
90458-2957	ELBOW PIPE JOINT, EXT.THREAD, D=6MM-G1/4	1-11, 1-121, 1-123, 1-211, 1-213, 2-45, 5-31, 5-33, 8-51
90458-2958	ELBOW PIPE JOINT, EXT.THREAD, D=8MM-G1/4	1-211, 1-213, 5-21, 5-23, 8-51, 8-57
90458-2959	ELBOW PIPE JOINT, EXT.THREAD,D=12MM-G1/4	1-121, 1-123, 8-145, 8-147
90458-2960	ELBOW PIPE JOINT, EXT.THREAD,D=12MM-G3/8	1-215, 1-217, 1-219, 2-127, 8-145, 8-147
90458-2964	ELBOW PIPE JOINT, EXT.THREAD, D=8MM-G1/8	3-13, 3-15, 4-43, 6-29, 8-95
90459-0080	RECORDER 6-CHANNEL, LOGOPRINT 500	7-29, 7-31
90459-0182	INTERFACE CONNECTOR FOR TMCC2	7-33, 7-35
90459-0184	INTERFACE CONNECTOR FOR TPIH 2500 GENER.	7-25, 8-7
90459-0205	QUICK EXHAUST VALVE, SE-1/4-B	8-95
90459-0246	GREASE, KLüBERSYNTH UH1 14-1600	4-11, 4-13, 4-23, 4-25, 4-27, 4-29, 4-31, 4-33, 4-35, 4-37, 4-39, 4-41, 9-3
90459-0250	HOSE , SILICONE, 53,8/62 MM	2-19, 2-21, 2-23
90459-0252	PROXIMITY SWITCH	1-85, 1-87, 1-99, 1-101
90459-0253	CONNECTOR W. CABLE S12-3FVW-050	1-85, 1-87, 1-99, 1-101
90459-0328	O-RING 20,29X2,62 MM	1-81, 1-83, 9-9
90459-0333	PORTABLE GREASE PUMP, 55:1 ART.NO 12215	10-5
90459-0355	WORM GEAR 10.756.232	4-7, 4-9
90459-0356	WORM GEAR 10.756.233	4-7, 4-9
90459-0363	COOLING UNIT, KB40A0721.02	7-65
90459-0472	KEY SAF.SW. AZ 16 02ZVRK-M20-2152-2254	1-45, 1-47, 1-55, 1-63, 1-233, 2-117, 8-43, 8-45
90459-0503	CYLINDER, ADVC-16-10-I-P	8-111, 8-121
90459-0843	CONN. BANJO, 6-G1/8	2-19, 2-21, 2-23, 3-13, 3-15, 4-45, 4-47
90459-1004	ROUND BAR W. END WHEEL, 1049-U18-L820	1-233
90459-1126	PLASTIC HOSE PVC TRANSPARENT, 8X11MM	8-21
90459-1186	FLANGE BUSHING, 20X23X11 MM	4-15
90459-1250	RESISTANCE FIXED, 120 OHM, 0,5 W 1%	7-33, 7-35
90459-1255	PUMP CYLINDER, 4415 000 00	4-45, 4-47
90459-1297	RESISTANCE FIXED, 120 OHM, 0,25 W	8-7
90459-1395	SCREW HEX.SOCK.SET CONEPT.MS6SS M4X4 A2	4-7, 4-9
90459-1420	PROPORTIONAL VALVE 0 - 10V/0-6 BAR	1-207
90459-1450	FLANGE BUSHING, 32X36X15 MM	1-11
90459-1501	CABLE SEALING, 12023/I, ELFA. 44-625-78	8-79
90459-1509	CYLINDER, ADVC-20-20-I-P	8-95
90459-1535	FLEXIBLE COUPLING DISC, 16 MM	2-93
90459-1536	FLEXIBLE COUPLING DISC, 14 MM	2-93
90459-1544	HANDLE, GR/10	8-31
90459-1545	CARRIAGE, 1653-314-20	8-31

Part No	Description	Page No
90459-1736	PURGE VALVE, 2RM-PG4L-SS	1-185, 6-9
90459-1794	WORM GEAR 10.756.235	4-7, 4-9
90459-1795	LUBRICATION PUMP UNIT 10KG, BK 03173001	2-131
90459-1848	TAPE, SAFETY WALK R25MM X 18,3M	8-43, 8-45
90459-1849	DOUBLE ACTING SHUTTLE CYL. 40-550 MM	8-57
90459-1898	LIFTING EYE BOLT, VLBG(1)1.0T M12 TURN.	10-27
90459-1914	WORM GEAR 10.756.234	4-7, 4-9
90459-2068	GREASE FILTER 100µ, EL 03530304	2-133
90459-2096	GEARS, WORM MOTOR F2 15 P63 B14 B8 PV 75	8-159
90459-2101	CYLINDER, ADVC-80-25-I-P	8-95
90459-2102	CYLINDER, AEVC 100-25-I-P	8-95
90459-2122	THERMOCOUPLE, EN-5130060-0001	1-141
90459-2147	PUMP PISTON, COD 2152 99 06 50 103	2-133
90459-2150	DISTRIBUTION BLOCK, BK 06011304	2-133
90459-2152	SOLENOID VALVE, COD. GR2-0-A24	2-133
90459-2177	GEARED MOTOR, SK 15 40 VF-63 L/4	2-133
90459-2186	CAPACITIVE SENSOR, KCN-T18PU/007-K1.5V	2-133
90459-2198	TIMING BELT T10X480X16 POLYURETHANE	8-89
90459-2284	TELESCOPIC GUIDE, DE-V-35-690-878	2-125
90459-2298	LIFTING EYE BOLT, VLBG 1.5T-M16	10-27
90459-2341	HOSE ASSEMBLY, EL 03600101	2-131
90459-2342	HOSE ASSEMBLY, EL 03600102	2-131
90459-2343	HOSE ASSEMBLY, EL 03600103	2-131
90459-2366	HOSE CLIP, (32)-35	1-15, 1-85, 1-87, 1-99, 1-101, 2-45, 2-53, 2-55, 2-57, 6-29
90459-2560	LIGHT FIXTURE, TMS121 1XTL-D30W/830 IP	7-5, 7-7, 7-9
90459-2626	PROXIMITY SWITCH, KIB-M08PS/1.5-KL6	2-133
90459-2635	NUT, HEX.LOCK "CONELOCK" M6 DIN 980V	8-91
90459-2647	DOUBLE ACTING, SHUTTLE, CYL. 25-780	8-31
90459-2704	SNAP HOOK STAINLESS 50X5MM	8-163
90459-2705	LIFTING EYE BOLT, M6X40MM	8-163
90459-2735	ROT.SPRAY NOZZLE, 5MC.049.17.AF.00.02	1-23, 2-53, 2-55
90459-2826	GEARS, HELICAL MOTOR ME0102210012	8-89
90459-2843	HEATING CARTRIDGE, 800W 240V	8-91
90459-3154	CABLE ÖLFLON PTFE 1X4,72MM² YELLOW-GREEN	1-141
90459-3165	CABLE ÖLFLON PTFE 1X4,72MM² BLACK	1-141
90459-3179	GAS SPRING BRACKET, BES/AUG/06/001	8-171
90459-3181	GAS SPRING, G15-150-50N STAINLESS STEEL	8-171
90459-3182	GAS SPRING FITTNG, AU16 STAINLESS STEEL	8-171
90459-3370	DOUBLE ACTING, PROFILE,CYL 32-140	8-39, 8-41
90459-3832	VENTING BOX, P9852	8-43, 8-45
209183-0000	RING	1-95, 1-133
230551-0000	GASKET	1-143
243989-0000	TENSION SPRING	4-19
247355-0000	LOCK WASHER	1-9
247358-0000	SHIFTER HANDLE	1-9
255977-0000	SHAFT	1-81, 1-83, 1-97, 9-9
255978-0000	FORK	1-81, 1-83, 1-97
257050-0000	SHAFT	1-21
257330-0000	PRESSURE ROLLER	9-9
266737-0000	WASHER	1-199
269859-0000	BRACKET	1-143
271860-0000	CLAMP BLOCK	1-45, 1-47, 1-55, 1-63
272479-0000	PRESSURE ROLLER	1-81, 1-83, 1-97, 9-9
272728-0000	BARRIER	8-61
272990-0000	VOLUME BULGE	4-23, 4-25, 4-27, 4-29, 4-31, 4-33, 4-35, 4-37, 4-39, 4-41
272991-0000	VOLUME SHIM	4-23, 4-25, 4-27, 4-29, 4-31, 4-33, 4-35, 4-37, 4-39, 4-41, 9-17
273429-0000	WASHER	1-149, 1-155
273450-0000	SIGN	1-211, 1-213
273452-0000	SIGN	1-211, 1-213
273455-0000	LABEL (COLD WATER)	6-51
273458-0000	LABEL (AIR)	6-57, 8-145, 8-147
273953-0000	SEAL	1-53
273961-0000	SEAL	1-23
273977-0000	NUT	2-95, 10-7
273978-0000	LEVEL GLASS	2-95, 10-7
273980-0000	SPRING	2-95, 10-7
273981-0000	GASKET	2-87
273985-0000	CARRIAGE	10-11
273996-0000	NUT	2-95, 10-7
282635-0000	GUIDE WHEEL	8-11
295376-0000	SHAFT	9-9
295377-0001	HOOD	1-81, 1-83, 1-97
311103-0232	PARALLEL PIN ISO 2338 3M6X8 A1	1-37
311103-0235	PARALLEL PIN ISO 2338 3M6X14	4-19, 10-9
311103-0268	PARALLEL PIN ISO 2338 4M6X12 A1	4-23, 4-25, 4-27, 4-29, 4-31, 4-33, 4-35, 4-37, 4-39, 4-41
311103-0269	PARALLEL PIN ISO 2338 4M6X14 A1	1-37
311103-0270	PARALLEL PIN ISO 2338 4M6X16 A1	2-93, 8-99
311103-0272	PARALLEL PIN ISO 2338 4M6X20 A1	3-7, 3-9, 5-31, 5-33
311103-0274	PARALLELL PIN, M6, 4X25 MM	8-59, 8-61
311103-0276	PARALLEL PIN ISO 2338 4M6X30 A1	1-37
311103-0306	PARALLELL PIN ISO2338 5X12 A1	5-31, 5-33
311103-0308	PARALLEL PIN ISO 2338 5M6X16 A1	4-45, 4-47, 5-25, 5-27
311103-0310	PARALLELL PIN ISO2338 5X20 A1	5-31, 5-33
311103-0351	PARALLEL PIN ISO 2338 6M6X16 A1	1-53, 4-7, 4-9, 4-43, 4-45, 4-47, 5-13, 5-15

Part No	Description	Page No
311103-0353 ..	PARALLEL PIN ISO 2338 6M6X20 A1	3-7, 3-9
311103-0355 ..	PARALLELL PIN, M6, 6X25 MM	1-17, 1-19, 8-153
311103-0357 ..	PARALLEL PIN ISO 2338 6M6X30 A1	4-7, 4-9
311103-0358 ..	PARALLEL PIN ISO 2338 6M6X32 A1	4-17
311103-0361 ..	PARALLEL PIN ISO 2338 6M6X40 A1	8-97
311103-0401 ..	PARALLEL PIN ISO 2338 8M6X20 A1	1-185, 2-19, 2-21, 2-23, 3-7, 3-9
311103-0403 ..	PARALLELL PIN, M6, 8X25 MM	5-13, 5-15, 5-37
311103-0405 ..	PARALLEL PIN ISO 2338 8M6X30 A1	1-85, 1-87
311103-0413 ..	PARALLEL PIN ISO 2338 8M6X50 A1	1-45, 1-47, 1-55, 1-63
311103-0454 ..	PARALLEL PIN ISO 2338 10M6X20 A1	4-7, 4-9
311103-0466 ..	PARALLEL PIN ISO 2338 10M6X50 A1	4-11, 4-13
311103-1274 ..	PARALLEL PIN ISO 2338 4M6X24 A1	8-33, 8-35, 8-39, 8-41
311103-1355 ..	PARALLEL PIN ISO 2338 6M6X24 A1	8-107, 8-115
311111-0209 ..	SPRING PIN ISO 8752 3X18-ST	1-91
311111-0345 ..	SPRING PIN ISO 8752 6X32-ST	10-23
311112-0258 ..	SPRING PIN, ISO 8752 4X24-C	8-93, 8-155
311112-0262 ..	SPRING PIN, ISO 8752 4X32-C	1-9
311112-0306 ..	SPRING PIN, ISO 8752 5X16-C	4-27, 4-29, 4-35, 4-37
311112-0308 ..	SPRING PIN, ISO 8752 5X20-C	4-27, 4-29, 4-35, 4-37
311411-0169 ..	SPLIT PIN SP2,5X25RFR	2-93
311520-0329 ..	RIVET, BLANK 2,4X8	2-39, 6-47, 7-29, 7-31
311521-0142 ..	BLANK RIVET 3,2X6	1-105, 9-3
311521-0146 ..	BLANK RIVET 3,2X12	7-25
312101-0344 ..	SCREW M6S M5X65 FZB	5-21, 5-23
312101-0364 ..	SCREW M6S M6X10 FZB	7-53
312101-0366 ..	SCREW M6S M6X12 FZB	7-29, 7-31
312101-0630 ..	SCREW M6S M16X50 FZB	2-71, 2-73
312101-0678 ..	SCREW M6S M20X70 FZB	10-19
312104-0461 ..	SCREW M6S M8X50H FZB	1-193, 2-75
312105-0287 ..	SCREW M6S ISO4017 M4X8 A480	1-11, 1-105, 1-107, 1-125, 1-147, 1-149, 1-155, 2-45, 4-23 4-25, 4-27, 4-29, 4-31, 4-33, 4-35, 4-37, 4-39, 4-41, 5-17, 5-19, 7-5, 7-7, 7-9, 8-97, 8-99, 8-107 8-115, 8-157
312105-0289 ..	SCREW M6S ISO 4017 M4X10 A480	5-21, 5-23, 8-171, 9-31
312105-0291 ..	SCREW M6S ISO 4017 M4X12 A480	1-105, 1-207, 5-35, 8-89, 8-99, 8-107, 8-115, 8-157
312105-0293 ..	SCREW M6S ISO 4017 M4X16 A480	1-65, 1-67, 8-79, 8-107, 8-115
312105-0295 ..	SCREW M6S ISO4017 M4X20 A480	1-199, 4-27, 4-29, 4-35, 4-37, 8-27, 8-59
312105-0297 ..	SCREW M6S ISO 4017 M4X25 A480	5-21, 5-23, 8-21
312105-0299 ..	SCREW M6S ISO 4017 M4X30 A480	1-39, 1-105, 8-71, 8-79, 8-157
312105-0301 ..	SCREW M6S ISO 4017 M4X35 A470	8-111, 8-121
312105-0303 ..	SCREW M6S ISO 4017 M4X40 A480	1-207
312105-0323 ..	SCREW M6S ISO 4017 M5X8 A480	1-105, 1-121, 1-123, 8-21, 8-43, 8-45, 8-59, 8-79
312105-0325 ..	SCREW M6S ISO 4017 M5X10 A480	1-9
312105-0327 ..	SCREW M6S ISO 4017 M5X12 A480	1-23, 1-37, 1-211, 1-213, 2-125, 3-5, 4-19, 4-23, 4-25 4-27, 4-29, 4-31, 4-33, 4-35, 4-37, 4-39, 4-41, 5-31, 5-33, 5-35, 8-27, 8-43, 8-45
312105-0328 ..	SCREW M6S ISO 4017 M5X14 A480	7-65, 8-153
312105-0329 ..	SCREW M6S ISO 4017 M5X16 A480	1-17, 1-19, 1-23, 1-105, 1-221, 1-223, 3-7, 3-9, 8-31, 8-43 8-45, 8-69
312105-0331 ..	SCREW M6S ISO 4017 M5X20 A480	8-107, 8-115, 9-43
312105-0332 ..	SCREW M6S ISO 4017 M5X22 A480	1-161, 2-101
312105-0333 ..	SCREW M6S ISO 4017 M5X25 A480	1-59, 1-61, 1-105, 1-199, 2-77, 3-5
312105-0335 ..	SCREW M6S ISO 4014 M5X30 A480	1-49
312105-0337 ..	SCREW M6S ISO 4014 M5X35 A480	8-9
312105-0340 ..	SCREW M6S ISO 4014 M5X45 A480	1-207
312105-0341 ..	SCREW M6S ISO 4014 M5X50 A480	8-95
312105-0362 ..	SCREW M6S ISO 4017 M6X8 A480	1-143, 1-191, 1-207, 1-233, 2-31, 2-101, 8-13, 8-69, 8-71 8-107, 8-115
312105-0364 ..	SCREW M6S ISO 4017 M6X10 A480	1-11, 1-37, 1-65, 1-67, 1-105, 1-163, 1-165, 1-167, 3-7 3-9, 4-7, 4-9, 4-23, 4-25, 4-27, 4-29, 4-31, 4-33, 4-35, 4-37, 4-39, 4-41, 7-5, 7-7, 7-9, 7-29, 7-31 8-7, 8-63, 8-65, 8-67, 8-113, 8-119, 8-163
312105-0366 ..	SCREW M6S M6X12 A280	1-21, 1-57, 1-65, 1-67, 1-95, 1-125, 1-133, 1-143, 1-155, 1-187 1-195, 1-197, 1-207, 1-211, 1-213, 1-221, 1-223, 1-235, 1-237, 2-7, 2-11, 2-13, 2-15, 2-19, 2-21 2-23, 2-39, 2-67, 2-69, 2-87, 2-97, 2-99, 2-101, 2-127, 3-7, 3-9, 4-11, 4-13, 4-15, 4-17, 5-13, 5-15 5-31, 5-33, 5-37, 6-11, 8-21, 8-29, 8-33, 8-35, 8-37, 8-43, 8-45, 8-71, 8-89, 8-99, 8-143, 8-159 8-163, 9-37, 9-39, 9-41
312105-0367 ..	SCREW M6S M6X14 A280	1-45, 1-47, 1-55, 1-63, 1-163, 1-165, 1-167, 2-13, 2-15, 4-7, 4-9 4-21, 5-17, 5-19, 5-25, 5-27, 8-21, 8-27, 8-69, 8-89, 8-157
312105-0368 ..	SCREW M6S M6X16 A280	1-23, 1-37, 1-53, 1-59, 1-61, 1-89, 1-95, 1-143, 1-183, 1-185, 1-187 1-207, 1-211, 1-213, 1-221, 1-223, 2-11, 2-39, 2-45, 2-53, 2-101, 2-125, 4-21, 4-23, 4-25, 4-31 4-33, 4-39, 4-41, 4-43, 4-45, 4-47, 5-5, 5-7, 5-13, 5-15, 5-21, 5-23, 5-25, 5-27, 5-31, 5-33, 5-35 6-5, 6-31, 6-33, 6-37, 6-49, 6-55, 6-57, 8-31, 8-33, 8-35, 8-43, 8-45, 8-51, 8-79, 8-83, 8-99, 8-107 8-115, 8-155, 8-163
312105-0370 ..	SCREW M6S ISO 4017 M6X20 A480	1-11, 1-15, 1-23, 1-31, 1-33, 1-35, 1-43, 1-49, 1-51, 1-65 1-67, 1-85, 1-87, 1-95, 1-99, 1-101, 1-125, 1-141, 1-163, 1-165, 1-167, 1-195, 1-197, 1-199, 1-221 1-223, 2-53, 2-93, 2-101, 4-17, 4-43, 4-45, 4-47, 5-13, 5-15, 5-21, 5-23, 5-31, 5-33, 5-35, 6-51, 8-7 8-11, 8-13, 8-23, 8-25, 8-27, 8-31, 8-39, 8-41, 8-51, 8-75, 8-81, 8-91, 8-93, 8-97, 8-99, 8-103 8-155, 8-159
312105-0371 ..	SCREW M6S ISO 4017 M6X22 A480	1-17, 1-19, 1-25, 1-27, 1-185, 4-23, 4-25, 4-27, 4-29, 4-31 4-33, 4-35, 4-37, 4-39, 4-41, 8-15, 8-17
312105-0372 ..	SCREW M6S ISO 4017 M6X25 A480	1-11, 1-21, 1-29, 1-33, 1-35, 1-41, 1-65, 1-67, 1-85, 1-87 1-99, 1-101, 1-185, 1-187, 1-197, 1-233, 1-235, 1-239, 1-241, 2-19, 2-21, 2-23, 2-93, 3-7, 3-9 4-19, 4-43, 5-13, 5-15, 5-31, 5-33, 5-35, 8-7, 8-13, 8-59, 8-97, 8-153, 8-155, 10-21
312105-0374 ..	SCREW M6S ISO 4014 M6X30 A480	4-43, 5-13, 5-15, 8-171, 10-9
312105-0376 ..	SCREW M6S ISO 4014 M6X35 A480	5-17, 5-19, 6-5, 6-55, 8-153, 8-163
312105-0378 ..	SCREW M6S ISO 4014 M6X40 A480	1-105, 2-87

Part No	Description	Page No
312105-0379 ..	SCREW M6S ISO 4014 M6X45 A480	5-13, 5-15, 5-21, 5-23
312105-0380 ..	SCREW M6S ISO 4014 M6X50 A480	8-153, 8-165
312105-0381 ..	SCREW M6S ISO 4014 M6X55 A480	1-147, 1-153, 1-183, 1-197, 8-61, 8-163
312105-0383 ..	SCREW M6S ISO 4014 M6X65 A480	1-191, 8-89
312105-0384 ..	SCREW M6S ISO 4014 M6X70 A480	4-17, 8-153
312105-0386 ..	SCREW M6S ISO 4014 M6X80 A480	1-105, 4-17
312105-0388 ..	SCREW M6S ISO 4014 M6X90 A480	5-31, 5-33
312105-0447 ..	SCREW M6S ISO 4017 M8X12 A480	1-65, 1-67, 1-161, 1-189, 2-31, 2-71, 2-73, 2-89, 5-35, 7-21
312105-0449 ..	SCREW M6S ISO 4017 M8X16 A480	1-63, 1-85, 1-87, 1-143, 1-145, 1-151, 1-185, 1-233, 2-55 2-75, 2-83, 2-85, 2-97, 2-101, 2-115, 5-17, 5-19, 5-25, 5-27, 5-31, 5-33, 6-31, 8-7, 8-27, 8-29, 8-43 8-45, 8-87, 8-123, 8-125, 8-127, 8-129, 8-131, 10-11
312105-0451 ..	SCREW M6S ISO 4017 M8X20 A480	1-23, 1-35, 1-45, 1-47, 1-55, 1-63, 1-65, 1-67, 1-71, 1-95 1-103, 1-141, 1-143, 1-155, 1-185, 1-187, 1-189, 1-191, 1-193, 1-199, 2-53, 2-55, 2-57, 2-75, 2-85 2-89, 2-101, 2-125, 3-5, 3-7, 3-9, 5-17, 5-19, 6-11, 6-31, 8-9, 8-31, 8-43, 8-45, 8-87, 8-89, 8-91 8-95, 8-99
312105-0452 ..	SCREW M6S ISO 4017 M8X22 A4 80	1-11, 8-21, 8-43, 8-45
312105-0453 ..	SCREW M6S ISO 4017 M8X25 A480	1-15, 1-23, 1-37, 1-85, 1-87, 1-99, 1-101, 1-107, 1-145 1-147, 1-149, 1-151, 1-153, 1-155, 1-157, 1-159, 1-181, 1-187, 1-191, 2-83, 2-85, 3-7, 3-9, 3-13 3-15, 4-7, 4-9, 4-19, 5-5, 5-7, 5-13, 5-15, 5-17, 5-19, 5-31, 5-33, 6-9, 6-23, 6-25, 8-43, 8-45, 8-107, 8-115
312105-0455 ..	SCREW M6S ISO 4017 M8X30 A480	1-9, 1-35, 1-41, 1-105, 1-149, 1-185, 1-189, 1-191, 2-53 2-55, 4-5, 4-11, 4-13, 4-15, 5-13, 5-15, 5-17, 5-19, 5-31, 5-33, 8-21, 8-53, 10-9
312105-0457 ..	SCREW M6S ISO 4014 M8X35 A480	1-89, 4-11, 4-13, 5-13, 5-15
312105-0459 ..	SCREW M6S ISO 4014 M8X40 A480	5-37, 10-11
312105-0460 ..	SCREW M6S ISO 4014 M8X45 A480	3-13, 3-15, 4-7, 4-9, 4-19
312105-0461 ..	SCREW M6S ISO 4014 M8X50 A480	4-27, 4-29, 4-35, 4-37, 5-17, 5-19
312105-0462 ..	SCREW M6S ISO 4014 M8X55 A480	1-189, 1-191, 4-11, 4-13, 4-15
312105-0463 ..	SCREW M6S ISO 4014 M8X60 A480	3-13, 3-15
312105-0464 ..	SCREW M6S ISO 4014 M8X65 A480	1-37, 3-7, 3-9
312105-0465 ..	SCREW M6S ISO 4014 M8X70 A480	4-11, 4-13
312105-0466 ..	SCREW M6S ISO 4014 M8X75 A480	2-91, 4-11, 4-13, 4-15, 4-17
312105-0467 ..	SCREW M6S ISO 4014 M8X80 A480	4-11, 4-13, 4-15
312105-0471 ..	SCREW M6S ISO 4014 M8X100 A480	1-233, 4-15, 4-19, 5-5, 5-7
312105-0475 ..	SCREW M6S ISO 4014 M8X120 A480	4-15
312105-0477 ..	SCREW M6S ISO 4014 M8X130 A480	5-31, 5-33
312105-0489 ..	SCREW M6S ISO 4017 M10X16 A480	10-15
312105-0491 ..	SCREW M6S ISO 4017 M10X20 A480	1-143, 2-67, 2-69, 3-13, 3-15, 5-37, 8-39, 8-41, 10-11
312105-0493 ..	SCREW M6S ISO 4017 M10X25 A480	1-25, 1-27, 1-41, 1-143, 5-5, 5-7, 5-13, 5-15, 5-35
312105-0495 ..	SCREW M6S ISO 4017 M10X30 A480	1-17, 1-19, 1-29, 1-41, 1-57, 1-143, 1-155, 1-195, 2-71 2-73, 2-75, 5-25, 5-27, 6-31, 8-31
312105-0497 ..	SCREW M6S ISO 4017 M10X35 A480	1-23, 1-129, 1-131, 8-33, 8-35, 8-113, 8-119
312105-0499 ..	SCREW M6S ISO 4014 M10X40 A480	5-13, 5-15, 6-23, 6-25, 8-39, 8-41
312105-0500 ..	SCREW M6S ISO 4014 M10X45 A480	3-13, 3-15, 4-11, 4-13
312105-0502 ..	SCREW M6S ISO 4014 M10X55 A480	9-47
312105-0503 ..	SCREW M6S ISO 4014 M10X60 A480	5-13, 5-15
312105-0505 ..	SCREW M6S ISO 4014 M10X70 A480	2-67, 2-69, 9-37, 9-39, 9-41
312105-0506 ..	SCREW M6S ISO 4014 M10X75 A480	8-43, 8-45
312105-0513 ..	SCREW M6S ISO 4014 M10X110 A480	1-191
312105-0532 ..	SCREW M6S ISO 4017 M12X20 A480	4-11, 4-13
312105-0534 ..	SCREW M6S ISO 4017 M12X25 A480	7-5, 7-7, 7-9
312105-0536 ..	SCREW M6S ISO 4017 M12X30 A480	1-191, 2-71, 2-73
312105-0538 ..	SCREW M6S ISO 4017 M12X35 A480	4-7, 4-9, 4-43, 7-5, 7-7, 7-9, 10-15
312105-0541 ..	SCREW M6S ISO 4014 M12X45 A480	4-7, 4-9
312105-0542 ..	SCREW M6S ISO 4014 M12X50 A480	4-11, 4-13, 6-23, 6-25
312105-0548 ..	SCREW M6S ISO 4014 M12X80 A480	1-191
312105-0622 ..	SCREW M6S ISO 4017 M16X25 A480	2-71, 2-73
312105-0634 ..	SCREW M6S ISO 4014 M16X70 A480	10-15, 10-19
312105-0640 ..	SCREW M6S ISO 4014 M16X100 A480	8-43, 8-45
312109-0335 ..	SCREW M6S ISO 4017 M5X30 A480	1-45, 1-47, 1-55, 1-63
312109-0374 ..	SCREW M6S ISO 4017 M6X30 A480	1-21, 1-59, 1-61, 2-83, 2-127, 4-27, 4-29, 4-35, 4-37, 5-31 5-33, 8-11, 8-83, 8-99, 8-111, 8-121, 10-23
312109-0376 ..	SCREW M6S ISO 4017 M6X35 A480	1-39, 1-211, 1-213, 2-39, 4-15, 4-27, 4-29, 4-35, 4-37, 8-99
312109-0378 ..	SCREW M6S ISO4017 M6X40 A480	1-37, 2-67, 2-69, 8-153
312109-0380 ..	SCREW M6S ISO 4017 M6X50 A480	2-93, 2-101, 6-11
312109-0386 ..	SCREW M6S ISO 4017 M6X80 A480	8-107, 8-115
312109-0457 ..	SCREW M6S ISO 4017 M8X35 A480	1-129, 1-131, 1-141, 1-161, 3-7, 3-9, 4-11, 4-13, 5-5, 5-7 5-25, 5-27, 6-31
312109-0459 ..	SCREW M6S ISO 4017 M8X40 A480	4-15, 5-31, 5-33, 8-9
312109-0499 ..	SCREW M6S ISO 4017 M10X40 A480	10-15
312109-0501 ..	SCREW M6S ISO 4017 M10X50 A480	8-99
312109-0544 ..	SCREW M6S ISO 4017 M12X60 A480	2-83
312111-0370 ..	SCREW HEX.SOCK.HD.MC6S-TT 6X20 88 FZB	7-53
312115-0222 ..	SCREW ISO4762 M3X8 A4	2-35, 8-43, 8-45
312115-0226 ..	SCREW ISO4762 M3X12 A4	1-49
312115-0228 ..	SCREW ISO4762 M3X16 A4	1-199, 5-5, 5-7, 8-27
312115-0230 ..	SCREW ISO4762 M3X20 A4	1-141
312115-0285 ..	SCREW ISO4762 M4X6 A4	7-55, 7-57
312115-0287 ..	SCREW ISO4762 M4X8 A4	1-17, 1-19, 1-125, 1-141, 1-207, 7-29, 7-31, 7-47, 7-49, 7-51, 8-81
312115-0289 ..	SCREW ISO4762 M4X10 A4	7-5, 7-7, 7-9, 7-55, 7-57
312115-0291 ..	SCREW ISO4762 M4X12 A4	1-115, 2-93, 7-5, 7-7, 7-9, 7-25, 7-47, 7-49, 7-51, 8-53, 8-93, 8-97 8-123, 8-125, 8-127, 8-129, 8-131, 8-161
312115-0293 ..	SCREW ISO4762 M4X16 A4	1-147
312115-0295 ..	SCREW ISO4762 M4X20 A4	1-95, 8-91
312115-0299 ..	SCREW ISO4762 M4X30 A4	7-5, 7-7, 7-9
312115-0305 ..	SCREW ISO4762 M4X50 A4	1-207

Part No	Description	Page No
312115-0323 ..	SCREW ISO4762 M5X8 A4 ..	2-109, 7-5, 7-7, 7-9, 7-41, 7-43, 7-45, 7-47, 7-49, 7-51, 8-75, 8-81
312115-0325 ..	SCREW ISO4762 M5X10 A4	4-17, 7-5, 7-7, 7-9, 7-29, 7-31, 7-33, 7-35
312115-0327 ..	SCREW ISO4762 M5X12 A4	1-17, 1-19, 1-207, 1-211, 1-213, 1-233, 2-39, 2-75, 2-107, 2-109 2-119, 2-121, 4-23, 4-25, 4-27, 4-29, 4-31, 4-33, 4-35, 4-37, 4-39, 4-41, 6-31, 6-39, 6-43, 6-47 ..... 8-21, 8-107, 8-111, 8-115, 8-121, 8-185, 8-187, 8-195, 8-199
312115-0328 ..	SCREW ISO4762 M5X14 A4	8-95
312115-0329 ..	SCREW ISO4762 M5X16 A4	1-17, 1-19, 1-185, 2-63, 2-67, 2-69, 7-5, 7-7, 7-9, 7-11, 7-13, 7-17 ..... 7-19, 8-43, 8-45, 8-107, 8-115
312115-0331 ..	SCREW ISO4762 M5X20 A4	1-85, 1-87, 1-99, 1-101, 2-93, 7-53, 8-97, 8-133, 8-135, 8-137 ..... 8-139, 8-141
312115-0333 ..	SCREW ISO4762 M5X25 A4	1-13, 4-15, 8-95
312115-0335 ..	SCREW ISO4762 M5X30 A4	8-81
312115-0337 ..	SCREW ISO4762 M5X35 A4	1-105
312115-0339 ..	SCREW ISO4762 M5X40 A4	3-11, 7-47, 7-49, 7-51
312115-0364 ..	SCREW ISO4762 M6X10 A4 ..	2-93, 6-13, 6-49, 7-41, 7-55, 7-57, 8-63, 8-65, 8-67, 8-167, 8-169
312115-0366 ..	SCREW ISO4762 M6X12 A4	1-85, 1-87, 1-99, 1-101, 1-185, 3-11, 4-11, 4-13, 4-17, 5-5, 5-7 ..... 7-11, 7-13, 7-17, 7-19, 7-25, 8-7, 8-39, 8-41, 8-79, 8-87, 8-89
312115-0367 ..	SCREW ISO4762 M6X14 A4	8-145, 8-147
312115-0368 ..	SCREW ISO4762 M6X16 A4	6-7, 7-29, 7-31, 8-33, 8-35, 8-71, 8-89, 8-95, 8-105, 8-159
312115-0370 ..	SCREW ISO4762 M6X20 A4	4-23, 4-25, 4-27, 4-29, 4-31, 4-33, 4-35, 4-37, 4-39, 4-41, 5-35 ..... 6-49, 7-63, 8-21, 8-87, 8-91, 8-93, 8-97, 8-111, 8-121, 8-153, 8-155
312115-0372 ..	SCREW ISO4762 M6X25 A4	1-237, 2-7, 2-9, 2-53, 2-129, 3-5, 4-7, 4-9, 8-95, 8-163
312115-0374 ..	SCREW ISO4762 M6X30 A4	1-195, 1-239, 1-241, 6-13, 8-39, 8-41, 8-153
312115-0376 ..	SCREW ISO4762 M6X35 A4	4-15, 8-33, 8-35, 8-97, 8-145, 8-147
312115-0378 ..	SCREW ISO4762 M6X40 A4 80	8-37, 8-143
312115-0380 ..	SCREW ISO4762 M6X50 A4	8-31
312115-0382 ..	SCREW ISO4762 M6X60 A4	3-7, 3-9
312115-0449 ..	SCREW ISO4762 M8X16 A4	5-31, 5-33, 8-7, 8-73, 8-89, 8-107, 8-115, 8-123, 8-125, 8-127 ..... 8-129, 8-131
312115-0451 ..	SCREW ISO4762 M8X20 A4	1-23, 3-13, 3-15, 8-7, 8-123, 8-125, 8-127, 8-129, 8-131
312115-0453 ..	SCREW ISO4762 M8X25 A4	4-5, 5-31, 5-33, 6-27, 8-73
312115-0455 ..	SCREW ISO4762 M8X30 A4	5-31, 5-33
312115-0457 ..	SCREW ISO4762 M8X35 A4	8-9, 8-31
312115-0459 ..	SCREW ISO4762 M8X40 A4	4-11, 4-13
312115-0460 ..	SCREW ISO4762 M8X45 A4	8-31
312115-0461 ..	SCREW ISO4762 M8X50 A4	8-55
312115-0463 ..	SCREW ISO4762 M8X60 A4	8-43, 8-45
312115-0465 ..	SCREW ISO4762 M8X70 A4	8-95
312115-0467 ..	SCREW ISO4762 M8X80 A4	5-17, 5-19, 8-95
312115-0489 ..	SCREW ISO4762 M10X16 A4	8-163
312115-0491 ..	SCREW ISO4762 M10X20 A4	2-79
312115-0495 ..	SCREW ISO4762 M10X30 A4	3-13, 3-15
312115-0497 ..	SCREW ISO4762 M10X35 A4	1-201
312115-0499 ..	SCREW ISO4762 M10X40 A4	2-77
312115-0501 ..	SCREW ISO4762 M10X50 A4	2-19, 2-21, 2-23, 3-13, 3-15, 8-89
312115-0630 ..	SCREW ISO4762 M16X50 A4	1-201, 2-63, 2-67, 2-69
312115-0634 ..	SCREW ISO4762 M16X70 A4	2-67, 2-69
312121-0222 ..	SCREW SLOT.PAN HD. MCS 3X8 FZB	7-53
312121-0285 ..	SLOTTED CHEESE HEAD SCREW MCS 4X6 FZB	7-37, 8-27
312121-0323 ..	SCREW SLOT.PAN HD. MCS 5X8 FZB	7-47, 7-49, 7-51, 7-53
312121-0325 ..	SLOTTED CHEESE HEAD SCREW MCS 5X10 FZB	7-33, 7-35
312121-0327 ..	SCREW SLOT.PAN HD. MCS 5X12 FZB	7-13
312121-0364 ..	SCREW ISO 1207 M6X10 4.8 - 5.8 Z.PL.	2-7
312121-0366 ..	SCREW SLOT.PAN HD. MCS 6X12 FZB	7-41, 7-47, 7-49, 7-51
312122-0287 ..	SCREW ISO 1207 M4X8 NI PL BRASS	7-47, 7-49, 7-51
312125-0220 ..	SCREW ISO 1207 M3X6 A4	2-35, 2-39
312125-0222 ..	SCREW ISO 1207 M3X8 A4	1-97, 1-239, 1-241, 2-129, 7-5, 7-7, 7-9, 8-7, 8-71, 8-157, 8-195, 8-199
312125-0224 ..	SCREW ISO 1207 M3X10 A4	4-43
312125-0226 ..	SCREW ISO 1207 M3X12 A4	2-13, 2-15, 4-19
312125-0228 ..	SCREW ISO 1207 M3X16 A4	1-93
312125-0230 ..	SCREW ISO 1207 M3X20 A4	1-15, 1-107, 2-13, 2-15, 8-71
312125-0285 ..	SCREW ISO 1207 M4X6 A4	1-59, 1-61, 1-97, 1-129, 1-131, 1-147, 2-83, 2-101, 4-19, 8-21, 8-43 ..... 8-45, 8-63, 8-65, 8-67, 8-69, 8-99, 8-157
312125-0287 ..	SCREW ISO 1207 M4X8 A4	1-37, 1-107, 1-195, 2-13, 2-15, 6-5, 6-31, 6-57, 8-13, 8-27, 8-31 ..... 8-71, 8-75, 8-79, 8-87, 8-153
312125-0289 ..	SCREW ISO 1207 M4X10 A4	6-7, 7-5, 7-7, 7-9
312125-0291 ..	SLOTTED CHEESE HEAD SCREW MCS 4X12 SS	3-17, 8-75, 8-81
312125-0297 ..	SCREW ISO 1207 M4X25 A4	8-157
312125-0299 ..	SCREW ISO 1207 M4X30 A4	2-35
312125-0323 ..	SCREW ISO 1207 M5X8 A4	1-111, 1-113, 1-115, 1-153, 1-155, 4-7, 4-9, 4-11, 4-13, 4-45, 4-47
312125-0325 ..	SCREW ISO 1207 M5X10 A4	1-239, 1-241
312125-0327 ..	SCREW ISO 1207 M5X12 A4	2-19, 2-21, 2-23, 7-13, 7-23, 10-9
312125-0329 ..	SCREW ISO 1207 M5X16 A4	1-233
312125-0331 ..	SCREW ISO 1207 M5X20 A4	1-155, 2-117
312125-0341 ..	SCREW ISO 1207 M5X50 A4	2-87
312125-0364 ..	SCREW ISO 1207 M6X10 A4	1-239, 1-241, 2-9, 2-129
312125-0366 ..	SCREW ISO 1207 M6X12 A4	1-191, 1-237, 2-53, 2-67, 2-69
312125-0370 ..	SCREW ISO 1207 M6X20 A4	2-87
312125-0374 ..	SCREW ISO 1207 M6X30 A4	1-209
312125-0376 ..	SCREW ISO 1207 M6X35 A4	8-71
312125-0378 ..	SLOTTED CHEESE HEAD SCREW MCS 6X40 SS	7-29, 7-31
312132-0284 ..	SCREW SLOT. PAN HEAD MSCS M4X5	1-185
312132-0287 ..	SCREW SLOT. PAN HEAD MSCS M4X8	7-29, 7-31
312141-0287 ..	SCREW COUNTERS.SLOT.HD. MFS 4X8 FZB	7-5, 7-7, 7-9

Part No	Description	Page No
312145-0224 ..	SCREW ISO 2009 MFS M3X10 A4	4-23, 4-25, 4-31, 4-33, 4-39, 4-41
312145-0287 ..	SCREW ISO 2009 MFS M4X8 A4	1-97, 4-23, 4-25, 4-27, 4-29, 4-31, 4-33, 4-35, 4-37, 4-39, 4-41 8-107, 8-115
312145-0327 ..	SCREW ISO 2009 MFS M5X12 A4	8-43, 8-45
312145-0380 ..	SCREW COUNTERS.SLOT.HD. MFS 6X50 SS	10-9
312155-0220 ..	SCREW EN 10642 MF6S M3X6 A480	8-81
312155-0226 ..	SCREW EN 10642 MF6S M3X12 A480	8-81, 8-111, 8-121
312155-0287 ..	SCREW EN 10642 MF6S M4X8 A480	8-95, 8-107, 8-115
312155-0289 ..	SCREW EN 10642 MF6S M4X10 A480	8-21, 8-79, 8-95
312155-0291 ..	SCREW EN 10642 MF6S M4X12 A480	5-5, 5-7, 8-97
312155-0295 ..	SCREW EN 10642 MF6S M4X20 A480	1-105, 8-19, 8-95
312155-0297 ..	SCREW EN 10642 MF6S M4X25 A480	8-19
312155-0299 ..	SCREW EN 10642 MF6S M4X30 A480	8-19
312155-0323 ..	SCREW EN 10642 MF6S M5X8 A480	1-209, 8-83, 8-97
312155-0327 ..	SCREW EN 10642 MF6S M5X12 A480	1-233, 4-19, 4-21, 8-91
312155-0329 ..	SCREW EN 10642 MF6S M5X16 A480	1-41, 1-45, 1-47, 1-55, 1-63, 1-233, 2-125, 4-17
312155-0331 ..	SCREW EN 10642 MF6S M5X20 A480	8-57
312155-0364 ..	SCREW EN 10642 MF6S M6X10 A480	8-109, 8-117
312155-0366 ..	SCREW EN 10642 MF6S M6X12 A480	2-63, 2-67, 2-69, 4-15, 5-5, 5-7, 5-25, 5-27, 8-43, 8-45 8-77, 8-97
312155-0368 ..	SCREW EN 10642 MF6S M6X16 A480	2-101, 8-11, 8-165
312155-0370 ..	SCREW EN 10642 MF6S M6X20 A480	1-191, 2-71, 2-73, 2-125, 5-31, 5-33, 8-21, 8-57
312155-0372 ..	SCREW EN 10642 MF6S M6X25 A480	4-19
312155-0449 ..	SCREW EN 10642 MF6S M8X16 A480	5-5, 5-7, 8-11, 8-73
312155-0451 ..	SCREW EN 10642 MF6S M8X20 A480	8-11
312155-0453 ..	SCREW EN 10642 MF6S M8X25 A480	2-27
312155-0491 ..	SCREW EN 10642 MF6S M10X20 A480	8-31
312155-0495 ..	SCREW EN 10642 MF6S M10X30 A480	2-67, 2-69
312155-0499 ..	SCREW EN 10642 MF6S M10X40 A480	8-43, 8-45
312180-0366 ..	SCREW ISO7379 H6X12	8-15, 8-17, 8-165
312180-0491 ..	SCREW ISO7379 H10X20	8-93
312180-0534 ..	SCREW ISO7379 H12X25	1-191
312309-0536 ..	SCREW ISO4026 M12X30 A4	2-19, 2-21, 2-23
312311-0327 ..	SCREW ISO4028 M5X12 FZB	2-77
312311-0368 ..	SCREW ISO4028 M6X16 FZB	2-93
312311-0372 ..	SCREW ISO4028 M6X25 FZB	8-153
312311-0374 ..	SCREW ISO4028 M6X30 FZB	1-85, 1-87, 1-99, 1-101
312311-0624 ..	SCREW ISO4028 M16X30 FZB	2-25
312318-0220 ..	SCREW ISO4029 M3X6 A4	8-159
312318-0283 ..	SCREW ISO4029 M4X4 A4	8-97
312318-0284 ..	SCREW ISO4029 M4X5 A4	8-99
312318-0287 ..	SCREW ISO4029 M4X8 A4	8-93, 8-101
312318-0321 ..	SCREW ISO4029 M5X6 A4	4-17
312318-0323 ..	SCREW ISO4029 M5X8 A4	1-33
312318-0327 ..	SCREW ISO4029 M5X12 A4	1-17, 1-19
312318-0329 ..	SCREW ISO4029 M5X16 A4	8-91
312318-0333 ..	SCREW ISO4029 M5X25 A4	8-107, 8-115
312318-0360 ..	SCREW ISO4029 M6X6 A4	1-49
312318-0362 ..	SCREW ISO4029 M6X8 A4	1-9, 8-21, 8-39, 8-41, 8-53, 8-107, 8-115
312318-0364 ..	SCREW ISO4029 M6X10 A4	2-27
312318-0366 ..	SCREW ISO4029 M6X12 A4	1-197, 4-19, 8-23, 8-25, 8-101
312318-0368 ..	SCREW ISO4029 M6X16 A4	8-87, 8-153
312318-0370 ..	SCREW ISO4029 M6X20 A4	8-59
312318-0372 ..	SCREW ISO4029 M6X25 A4	2-79
312318-0445 ..	SCREW ISO4029 M8X10 A4	8-61
312318-0447 ..	SCREW ISO4029 M8X12 A4	4-11, 4-13
312318-0453 ..	SCREW ISO4029 M8X25 A4	1-201, 2-63, 2-67, 2-69, 2-71, 2-73
312318-0455 ..	SCREW ISO4029 M8X30 A4	8-43, 8-45
312502-0120 ..	DRIVE SCREW ROUND HEAD KDS 0X5	1-211, 1-213, 2-39, 2-109, 6-51, 6-55, 6-57
312503-0275 ..	TAPPING SCREW ISO 7049-ST3,5X6,5-C-Z	8-63, 8-65, 8-67
312601-0316 ..	NUT M6M 6-8 FZB	7-29, 7-31
312602-0316 ..	MUTTER, EN 24032 M6M M6 NIPLBR	10-23
312602-0318 ..	HEXAGON NUT, EN 24032 M6M M8 NIPLBR	10-23
312605-0310 ..	HEXAGON NUT, M6M M3 A280	1-21, 1-107, 2-35, 6-5, 7-29, 7-31, 8-71
312605-0312 ..	HEXAGON NUT, M6M M4 A280	1-39, 1-59, 1-61, 1-147, 1-185, 1-199, 1-207, 2-35, 2-83, 7-5 7-7, 7-9, 8-19, 8-27, 8-71, 8-99, 8-157, 8-179
312605-0314 ..	HEXAGON NUT, M6M M5 A280	1-39, 1-45, 1-47, 1-55, 1-59, 1-61, 1-63, 1-145, 1-151, 1-153 1-163, 1-165, 1-167, 1-207, 2-19, 2-21, 2-23, 2-87, 2-101, 3-17, 5-35, 6-55, 7-27, 8-9, 8-13, 8-15 8-17, 8-81, 8-107, 8-115, 8-177, 8-181, 8-193, 8-197
312605-0316 ..	HEXAGON NUT, M6M M6 A280	1-11, 1-15, 1-23, 1-31, 1-33, 1-35, 1-39, 1-43, 1-49, 1-51, 1-65 1-67, 1-85, 1-87, 1-99, 1-101, 1-105, 1-143, 1-163, 1-165, 1-167, 1-185, 1-187, 1-199, 1-207 1-209, 1-211, 1-213, 1-221, 1-223, 1-235, 2-11, 2-13, 2-15, 2-27, 2-31, 2-39, 2-53, 2-63, 2-79 2-87, 2-89, 2-93, 2-101, 2-109, 2-113, 2-127, 3-7, 3-9, 4-21, 5-31, 5-33, 6-5, 6-11, 6-55, 7-5, 7-7 7-9, 7-11, 7-13, 7-17, 7-19, 7-29, 7-31, 8-13, 8-21, 8-27, 8-51, 8-71, 8-75, 8-81, 8-95, 8-97, 8-107 8-111, 8-115, 8-121, 8-143, 8-145, 8-147, 8-153, 8-155, 8-163, 8-165, 8-171, 8-195, 8-199
312605-0318 ..	HEXAGON NUT, M6M M8 A280	1-9, 1-15, 1-23, 1-33, 1-57, 1-71, 1-85, 1-87, 1-89, 1-99, 1-101 1-103, 1-129, 1-131, 1-141, 1-145, 1-147, 1-149, 1-151, 1-153, 1-155, 1-157, 1-159, 1-161, 1-181 1-185, 1-187, 1-189, 1-191, 1-193, 1-233, 2-53, 2-55, 2-75, 2-85, 2-91, 2-101, 2-115, 3-7, 3-9 4-43, 6-23, 6-25, 6-27, 6-31, 8-43, 8-45, 8-71, 8-107, 8-109, 8-115, 8-117, 8-123, 8-125, 8-127 8-129, 8-131, 10-9, 10-11
312605-0320 ..	HEXAGON NUT, M6M M10 A280	1-129, 1-131, 1-155, 1-195, 2-93, 5-17, 5-19, 8-99
312605-0322 ..	HEXAGON NUT, M6M M12 A280	2-83, 3-7, 3-9, 9-49
312605-0324 ..	HEXAGON NUT, M6M M16 A280	2-25, 2-71, 2-73, 2-75, 10-15
312605-0326 ..	HEXAGON NUT, M6M M20 A280	5-5, 5-7

Part No	Description	Page No
312605-0328 ..	HEXAGON NUT, M6M M24 A280	10-25
312607-0310 ..	HEXAGON NUT, EN 24032 M6M M3 A480	1-141
312607-0312 ..	HEXAGON NUT, EN 24032 M6M M4 A480	1-141
312625-0316 ..	HEXAGON THIN NUT, EN 24035 ML6M M6 A4	8-83, 8-93
312625-0318 ..	HEXAGON THIN NUT, EN 24035 ML6M M8 A4	1-99, 1-101, 1-193, 8-81
312625-0320 ..	HEXAGON THIN NUT, EN 24035 ML6M M10 A4	1-17, 1-19, 4-5
312705-0312 ..	NUT HEX. DOMED CAP MHM-6 M4 A280	2-107, 2-109, 2-119, 2-121, 6-39, 6-43, 8-185, 8-187, 8-195
312705-0314 ..	NUT HEX. DOMED CAP MHM-6 M5 A280	1-21, 1-163, 1-165, 1-167
312705-0316 ..	NUT HEX. DOMED CAP MHM-6 M6 A280	1-17, 1-19, 1-21, 1-25, 1-27, 1-29, 1-197, 2-99, 2-113, 8-101
312705-0320 ..	NUT HEX. DOMED CAP MHM-6 M10 A280	1-37, 1-41
312805-0100 ..	NUT ROUND WITH SLOTS M10X0,75 FE	4-17
312810-0316 ..	HEXAGON NUT, NY-LOCK M6 FZB	7-5, 7-7, 7-9
312812-0310 ..	HEXAGON NUT, NY-LOCK M3 A480	1-93, 4-19
312812-0312 ..	HEXAGON NUT, NY-LOCK M4 A480	2-107, 2-119, 2-121
312812-0314 ..	HEXAGON NUT, NY-LOCK M5 A480	1-95, 2-117
312812-0316 ..	HEXAGON NUT, NY-LOCK M6 A480	1-23, 1-183, 1-207, 1-211, 1-213, 1-233, 2-125, 5-13, 5-15, 5-17, 5-19, 5-31, 5-33, 7-5, 7-7, 7-9, 7-29, 7-31, 8-61, 8-71, 8-75, 8-99, 8-171, 10-9, 10-23
312812-0318 ..	HEXAGON NUT, NY-LOCK M8 A480	2-63, 2-67, 2-69, 7-11, 7-17
312812-0320 ..	HEXAGON NUT, NY-LOCK M10 A480	8-39, 8-41
312812-0324 ..	HEXAGON NUT, NY-LOCK M16 A480	10-19
312927-0150 ..	RIVET NUT M8, CLAMP. LENGTH 3,0 - 4,5	8-43, 8-45
315101-0136 ..	BRICKA BRB, 4,3/8 H=0,8	7-37, 7-55, 7-57
315101-0146 ..	WASHER PLAIN, BRB, 5,3/10 H=1	7-27, 7-33, 7-35, 7-43, 7-45, 7-53
315101-0153 ..	WASHER PLAIN, BRB, 6,4/12 H=1,5	7-29, 7-31, 7-53, 7-55, 7-57, 7-63
315101-0165 ..	WASHER PLAIN, BRB, 8,4/16 H=1,5	1-193
315103-0124 ..	WASHER, BRB, 3,2/6,H=0,5 NI PL BR	8-71
315103-0153 ..	BRICKA, BRB, 6,4/12,H=1,5 NIPL BR	7-41
315105-0124 ..	BRICKA BRB3,2X6RFR	1-15, 1-93, 1-107, 1-199, 2-13, 2-15, 2-35, 4-43, 5-5, 5-7, 6-5, 7-5, 7-7, 7-9, 7-29, 7-31, 8-27, 8-71
315105-0136 ..	WASHER BRB4,3XRFR	1-59, 1-61, 1-105, 1-107, 1-125, 1-141, 1-147, 1-185, 1-207, 2-35, 2-45, 2-83, 2-107, 2-109, 2-119, 2-121, 5-17, 5-19, 5-21, 5-23, 6-57, 7-5, 7-7, 7-9, 7-25, 7-29, 7-31, 7-47, 7-49, 7-51, 8-21, 8-27, 8-71, 8-79, 8-93, 8-97, 8-99, 8-107, 8-111, 8-115, 8-121, 8-123, 8-125, 8-127, 8-129, 8-131, 8-157, 8-171, 8-179, 8-185, 8-187, 8-195, 8-199
315105-0146 ..	BRICKA BRB5,3X10RFR	1-9, 1-23, 1-39, 1-45, 1-47, 1-55, 1-59, 1-61, 1-63, 1-95, 1-105, 1-153, 1-155, 1-163, 1-165, 1-167, 1-199, 1-207, 1-211, 1-213, 1-233, 1-239, 1-241, 2-63, 2-67, 2-69, 2-75, 2-101, 2-117, 2-125, 3-5, 3-7, 3-9, 3-11, 3-17, 4-19, 4-23, 4-25, 4-27, 4-29, 4-31, 4-33, 4-35, 4-37, 4-39, 4-41, 5-21, 5-23, 5-35, 6-31, 6-39, 6-43, 6-47, 6-55, 7-5, 7-7, 7-9, 7-13, 7-23, 7-29, 7-31, 7-41, 7-47, 7-49, 7-51, 8-9, 8-13, 8-21, 8-27, 8-31, 8-43, 8-45, 8-59, 8-79, 8-95, 8-107, 8-115, 8-133, 8-135, 8-137, 8-139, 8-141, 8-153, 8-177, 8-193, 9-43
315105-0153 ..	WASHER BRB6,4X12RFR	1-15, 1-21, 1-37, 1-39, 1-57, 1-59, 1-61, 1-65, 1-67, 1-89, 1-95, 1-105, 1-125, 1-133, 1-141, 1-195, 1-197, 1-207, 1-211, 1-213, 1-221, 1-223, 1-233, 1-235, 1-237, 2-11, 2-13, 2-15, 2-45, 2-53, 2-67, 2-69, 2-71, 2-73, 2-87, 2-93, 2-97, 2-99, 2-101, 2-109, 2-113, 2-125, 2-127, 3-5, 3-7, 3-9, 4-11, 4-13, 4-15, 4-17, 4-19, 4-21, 4-43, 4-45, 4-47, 5-13, 5-15, 5-17, 5-19, 5-21, 5-23, 5-25, 5-27, 5-31, 5-33, 5-35, 5-37, 6-5, 6-11, 6-31, 6-33, 6-37, 6-49, 6-55, 7-5, 7-7, 7-9, 7-11, 7-13, 7-17, 7-19, 7-25, 7-29, 7-31, 7-41, 8-7, 8-11, 8-13, 8-15, 8-17, 8-21, 8-23, 8-25, 8-27, 8-29, 8-31, 8-33, 8-35, 8-37, 8-39, 8-41, 8-43, 8-45, 8-51, 8-59, 8-61, 8-69, 8-71, 8-75, 8-79, 8-81, 8-89, 8-93, 8-95, 8-97, 8-99, 8-105, 8-107, 8-115, 8-143, 8-145, 8-147, 8-153, 8-155, 8-157, 8-159, 8-163, 8-165, 8-167, 8-169, 8-171, 8-195, 8-199, 9-37, 9-39, 9-41, 10-9
315105-0156 ..	WASHER BRB 6.7X14 RFR	1-197, 2-19, 2-21, 2-23, 4-43, 5-13, 5-15, 8-13, 8-21, 8-83, 8-95, 8-97, 8-101
315105-0165 ..	WASHER BRB8,4X16RFR	1-23, 1-33, 1-37, 1-57, 1-89, 1-141, 1-155, 1-185, 1-189, 1-191, 1-233, 2-55, 2-67, 2-69, 2-71, 2-73, 2-75, 2-83, 2-97, 2-101, 2-115, 2-125, 3-5, 3-7, 3-9, 3-13, 3-15, 4-5, 4-11, 4-13, 4-15, 4-17, 4-19, 5-5, 5-7, 5-13, 5-15, 5-17, 5-19, 5-25, 5-27, 5-31, 5-33, 5-35, 5-37, 6-9, 6-31, 8-7, 8-9, 8-11, 8-21, 8-29, 8-31, 8-43, 8-45, 8-53, 8-71, 8-73, 8-87, 8-89, 8-91, 8-95, 8-109, 8-117, 8-123, 8-125, 8-127, 8-129, 8-131
315105-0171 ..	WASHER BRB10X18	1-91, 5-25, 5-27, 5-37
315105-0173 ..	WASHER BRB10,5X22RFR	1-11, 1-37, 1-129, 1-131, 1-143, 1-195, 2-63, 2-67, 2-69, 2-71, 2-73, 2-75, 2-79, 2-93, 3-13, 3-15, 4-11, 4-13, 5-5, 5-7, 5-13, 5-15, 5-35, 6-23, 6-25, 6-31, 8-11, 8-31, 8-33, 8-35, 8-39, 8-41, 8-43, 8-45, 9-37, 9-39, 9-41, 9-47, 10-15
315105-0178 ..	WASHER BRB13X24RFR	1-191, 2-71, 2-73, 2-83, 2-87, 4-7, 4-9, 4-11, 4-13, 7-5, 7-7, 7-9, 9-49, 10-15
315105-0186 ..	WASHER BRB17X30RFR	2-71, 2-73, 5-5, 5-7, 10-15
315105-0191 ..	WASHER PLAIN, BRB, 20/36 H=3	5-5, 5-7, 5-35
315105-0192 ..	WASHER BRB21X36RFR	10-11
315105-0195 ..	WASHER PLAIN ROUND 23/40, H=3	5-13, 5-15
315111-0186 ..	WASHER PLAIN, TBRB 17/30 H=6	2-63, 2-67, 2-69, 2-71, 2-73
315115-0153 ..	WASHER PLAIN, TBRB 6,4/12 H=3	1-221, 1-223, 8-43, 8-45, 8-83, 8-107, 8-115, 8-155, 8-171
315115-0165 ..	WASHER PLAIN, TBRB 8,4/16 H=3	1-9, 1-95, 1-185, 1-191, 2-101
315115-0173 ..	WASHER PLAIN, TBRB 10,5/22 H=4	1-23, 1-191, 1-201, 6-31, 8-163, 10-11
315125-0153 ..	WASHER TBRSB 6,4X22X4 A4	1-53, 1-85, 1-87, 1-95, 1-99, 1-101, 1-163, 1-165, 1-167, 1-187, 1-191, 1-195, 2-53, 2-63, 3-17, 4-15, 5-13, 5-15, 5-17, 5-19, 5-35, 6-33, 6-37, 6-51, 8-63, 8-65, 8-67, 8-69, 8-71, 8-89, 9-37, 9-39, 9-41
315125-0165 ..	WASHER TBRSB 8,4X26X5 A4	1-37, 1-41, 1-107, 1-145, 1-151, 2-83, 5-5, 5-7, 5-13, 5-15, 5-25, 5-27, 6-11, 8-87, 8-123, 8-125, 8-127, 8-129, 8-131
315125-0173 ..	WASHER TBRSB 10,5X28X6 A4	10-15
315202-0119 ..	O-RING 25,1X1,6 MM	1-157, 1-159, 2-109, 8-183
315202-0120 ..	O-RING 27,1X1,6 MM	1-91
315202-0204 ..	O-RING 5,3X2,4 MM	1-15
315202-0213 ..	O-RING 15,3X2,4 MM	5-31, 5-33
315202-0220 ..	O-RING 32,2X3 MM	5-25, 5-27
315202-0221 ..	O-RING 34,2X3 MM	1-49
315202-0223 ..	O-RING 39,2X3 MM	4-17
315202-0224 ..	O-RING 42,2X3 MM	1-59, 1-61
315202-0301 ..	O-RING 49,5X3 MM	5-25, 5-27
315202-0303 ..	O-RING 59,5X3 MM	1-49

Part No	Description	Page No
315202-0304 ..	O-RING 64,5X3 MM	1-113, 5-25, 5-27
315202-0307 ..	O-RING 79,5X3 MM	2-79
315202-0308 ..	O-RING 84,5X3 MM	1-15, 1-111, 1-115
315202-0335 ..	O-RING 239,3X5,7 MM	1-53
315202-0604 ..	O-RING 50,40X3,53 MM	4-7, 4-9
315202-0621 ..	O-RING 104,37X3,53 MM	4-7, 4-9
315202-0713 ..	O-RING 29,87X1,78 MM	2-133
315202-0803 ..	O-RING 44,17X1,78 MM	5-17, 5-19
315204-0103 ..	O-RING 5,1X1,6 MM	2-87
315204-0109 ..	O-RING 11,1X1,6 MM	1-9
315204-0119 ..	O-RING 25,1X1,6 MM	1-97
315204-0208 ..	O-RING 9,3X2,4 MM	1-65, 1-67, 1-95
315204-0213 ..	O-RING 15,2X2,4 MM	1-147
315204-0214 ..	O-RING 17,3X2,4 MM	1-95, 1-97, 9-9
315204-0215 ..	O-RING 19,2X3 MM	1-111, 1-113, 1-115, 9-11, 9-13, 9-15
315204-0221 ..	O-RING 34,2X3 MM	1-9
315204-0222 ..	O-RING 36,2X3 MM	2-93
315204-0301 ..	O-RING 49,5X3 MM	1-113, 9-11
315204-0306 ..	O-RING 74,5X3 MM	5-13, 5-15
315204-0308 ..	O-RING 84,5X3 MM	9-13
315204-0317 ..	O-RING 129,5X3 MM	1-147, 1-153
315205-0505 ..	O-RING 6,07X1,78 MM	1-95
315205-0508 ..	O-RING 9,19X2,62 MM	4-19
315205-0729 ..	O-RING 39,34X2,62 MM	4-7, 4-9
315207-0719 ..	O-RING 23,47X2,62 MM	1-81, 1-83
315220-0167 ..	V-RINGS 27X35X10,5 MM V-30S	3-7, 3-9
315220-0198 ..	V-RINGS 45X55X13 MM V-50S	1-81, 1-83, 1-97, 2-101
315221-0147 ..	RADIAL SEAL 20X47X7 MM	3-5, 3-11
315221-0156 ..	RADIAL SEAL 25X35X7 MM	5-17, 5-19
315221-0175 ..	RADIAL SEAL 35X47X7 MM	5-31, 5-33
315229-0101 ..	GASKETS, 10,4X17,4X3,7 MM 1/2" FDA	1-187
315229-0102 ..	GASKETS, 16,8X23,8X3,7 MM 3/4" FDA	1-85, 1-87, 1-99, 1-101
315229-0103 ..	GASKETS, 23,1X30,1X3,7 MM 1" FDA	1-15, 1-181, 1-187, 1-189, 2-53, 2-55, 2-57, 2-85, 6-23, 6-25, 6-29
315229-0104 ..	GASKETS, 35,8X42,8X3,7 MM 1"1/2 FD	1-85, 1-87, 1-99, 1-101, 1-189, 2-85, 9-9, 9-25
315229-0105 ..	GASKETS, 48,5X55,5X3,7 MM 2" FDA	1-187, 2-85, 2-89, 9-9
315229-0106 ..	GASKETS, 61,2X68,2X3,7 MM 2"1/2 FD	1-85, 1-87, 1-99, 1-101, 9-9
315229-0107 ..	GASKETS, 73,9X80,9X3,7 MM 2"1/2 FD	1-85, 1-87, 1-99, 1-101, 2-85, 9-9
315229-0203 ..	GASKET 22,1X31,1X3,7 MM 1"	1-147, 1-157, 1-159
315229-0204 ..	GASKET 34,8X42,8X3,7 MM 1"1/2	1-153, 1-161
315229-0205 ..	GASKET 47,5X55,5X3,7 MM 2"	1-145, 1-151, 1-153, 1-161
315229-0206 ..	GASKET 60,2X68,2X3,7 MM 2"1/2	1-145, 1-149, 1-151, 1-155
315229-0208 ..	GASKET 97,4X105,4X3,7 MM 4"	1-141
315233-0101 ..	WASHER CAPTIVE SEALING M5	1-111, 1-113, 1-115
315233-0110 ..	WASHER CAPTIVE SEALING G1/4	6-57, 10-9
315233-0113 ..	WASHER CAPTIVE SEALING G1/2	2-53, 6-57, 10-9
315234-0109 ..	WASHER,PL.RND.CU.10,3/13,5 H=1,0	1-185
315234-0110 ..	WASHER,PL.RND.CU.13,5/18 H=1,5	10-25
315234-0113 ..	WASHER PL.RND.CU.21,3//26 H=1,5	1-143
315237-0109 ..	WASHER,PL.RND.AL.10/14,H=1,5	1-181, 1-221, 1-223
315237-0110 ..	WASHER,PL.RND.AL.13,5/18,H=1,5	1-185, 2-19, 2-21, 2-23
315239-0109 ..	NYLON WASHER G1/8	6-51
315239-0111 ..	NYLON WASHER G3/8	6-51
315239-0113 ..	NYLON WASHER G1/2	6-51
315400-0004 ..	TUBE PUN-H-8X1,25-BL	4-43
315401-0153 ..	WASHER FBH6,1FZB	7-65
315402-0136 ..	LOCK WASHER FBB 4,1	1-115, 7-25
315402-0146 ..	LOCK WASHER FBB 5,1	7-27
315402-0156 ..	LOCK WASHER FBB 6,5	7-25
315402-0173 ..	LOCK WASHER FBB 10,2	2-77
315410-0100 ..	LOCK WASHER MB 0 D=10 H=1	4-17
315701-0166 ..	PARALLEL KEY W. ROUND ENDS 4X4X12 MM	8-159
315701-0168 ..	PARALLEL KEY W. ROUND ENDS 4X4X16 MM	1-33, 4-17
315701-0170 ..	PARALLEL KEY W. ROUND ENDS 4X4X20 MM	8-77, 8-89
315701-0197 ..	PARALLEL KEY W. ROUND ENDS 5X5X12 MM	3-5
315701-0199 ..	PARALLEL KEY W. ROUND ENDS 5X5X16 MM	3-5, 5-13, 5-15
315705-0196 ..	PARALLEL KEY W.ROUND ENDS 5X5X10	2-93
315705-0201 ..	PARALLEL KEY W. ROUND ENDS 5X5X20 MM	1-11
315705-0202 ..	PARALLEL KEY W ROUND ENDS 5X5X25MM	5-13, 5-15, 8-159
315705-0230 ..	PARALLEL KEY W. ROUND ENDS 6X6X16 MM	3-11, 4-17
315705-0232 ..	PARALLEL KEY W. ROUND ENDS 6X6X20 MM	1-35
315705-0236 ..	PARALLEL KEY W. ROUND ENDS 6X6X30 MM	5-5, 5-7
315705-0238 ..	PARALLEL KEY W. ROUND ENDS 6X6X36 MM	5-13, 5-15
315705-0240 ..	PARALLEL KEY W. ROUND ENDS 6X6X45 MM	5-5, 5-7
315705-0265 ..	PARALLEL KEY W. ROUND ENDS 8X7X25 MM	5-13, 5-15
315705-0267 ..	PARALLEL KEY W. ROUND ENDS 8X7X30 MM	2-101
315705-0269 ..	PARALLEL KEY W. ROUND ENDS 8X7X35 MM	5-31, 5-33
315705-0271 ..	PARALLEL KEY W. ROUND ENDS 8X7X45 MM	5-31, 5-33
315705-0301 ..	PARALLEL KEY W. ROUND ENDS 10X8X40 MM	5-31, 5-33
315705-0305 ..	PARALLEL KEY W. ROUND ENDS 10X8X60 MM	8-53
315705-0307 ..	PARALLEL KEY W. ROUND ENDS 10X8X70 MM	5-13, 5-15
315705-0330 ..	PARALLEL KEY W. ROUND ENDS 12X8X32 MM	5-13, 5-15
315742-0122 ..	RETAINING RING 30 SMS 199	2-101
315742-0123 ..	RETAINING RING 32 SMS 199	8-61

Part No	Description	Page No
315750-0119 ..	RETAIN. RING, 25	10-21
315751-0103 ..	RETAINING RING FOR SHAFT DIN 471 6 A2	1-35, 1-65, 1-67, 2-101, 2-119, 2-121, 8-71, 8-95, 8-97, 8-171
315751-0109 ..	RETAINING RING FOR SHAFT DIN 471 12 A2	1-199, 4-27, 4-29, 4-35, 4-37, 8-27, 8-95, 8-97, 8-109, 8-117
315751-0111 ..	RETAINING RING FOR SHAFT DIN 471 14 A2	8-159
315751-0112 ..	RETAINING RING FOR SHAFT DIN 471 15 A2	1-195, 3-13, 3-15, 4-11, 4-13, 4-23, 4-25, 4-27, 4-29, 4-31, 4-33, 4-35, 4-37, 4-39, 4-41, 8-23, 8-25, 8-93, 8-155, 8-163
315751-0113 ..	RETAINING RING FOR SHAFT DIN 471 16 A2	2-77, 2-93, 4-15
315751-0116 ..	RETAIN. RING, 20	3-5, 3-11, 5-13, 5-15, 5-25, 5-27
315751-0119 ..	RETAIN. RING, 25	5-5, 5-7, 5-13, 5-15, 5-17, 5-19, 8-93, 8-155
315753-0117 ..	RETAINING RING FOR BORE DIN 472 22 A2	4-17
315753-0122 ..	RETAINING RING FOR BORE DIN 472 30 A2	1-197, 8-101
315753-0123 ..	RETAINING RING FOR BORE DIN 472 32 A2	4-17, 8-159
315753-0124 ..	RETAINING RING FOR BORE DIN 472 35 A2	1-31, 1-35, 1-49, 1-51, 8-23, 8-25, 8-89
315753-0127 ..	RETAINING RING FOR BORE DIN 472 40 A2	8-89
315753-0130 ..	RETAINING RING FOR HOLE, 47X1,75 MM	3-11, 5-13, 5-15, 8-87
315753-0132 ..	RETAINING RING FOR HOLE, 52X2 MM	5-5, 5-7
315754-0113 ..	LOCKING WAE 15	1-111, 1-113, 1-115
315755-0105 ..	RETAINING RING SHAFT DIN 6799 3,2 A2	1-71
315755-0106 ..	RETAINING RING SHAFT DIN 6799 4 A2	1-233, 4-23, 4-25, 4-31, 4-33, 4-39, 4-41
315755-0108 ..	RETAINING RING SHAFT DIN 6799 6 A2	8-101
315755-0112 ..	RETAINING RING 12	4-11, 4-13, 8-39, 8-41, 8-59
315755-0113 ..	LOCKING WASHER 15	3-7, 3-9
315755-0801 ..	RETAINING RING SHAFT DIN 6799 8 A2	2-27, 3-7, 3-9, 8-21
316810-0106 ..	PIPE CLIP FOR TUBE D=8 MM	5-17, 5-19
318800-0104 ..	HANDLE,SPHERICAL KNOB,INT.THRE.,D.30-M8	8-21
318860-0106 ..	KNOB, ADJUST.HI.EXT.THREAD, NO 8324-3674	2-77
319030-0125 ..	DISC SPRING, CONICAL 12,5X6,2X0,5 MM	8-91
321101-0162 ..	FLANGE BUSHING, 10X16X8 MM	8-33, 8-35
321101-0202 ..	FLANGE BUSHING, 16X22X12 MM	8-39, 8-41
321101-0273 ..	FLANGE BUSHING, 30X40X30 MM	3-13, 3-15, 4-11, 4-13
321105-0164 ..	BEAR. BUSH. WITHOUT FL, 10X16X16 MM	8-21
321111-0049 ..	FLANGE BUSHING, 5X9X8 MM	4-43
321111-0097 ..	FLANGE BUSHING, 8X12X12 MM	8-11
321111-0188 ..	FLANGE BUSHING, 14X20X20 MM	4-43
321120-0104 ..	BEARBUSHING W/O FL,ANGE 10/12X10	1-15
321120-0111 ..	BEARING BUSHING W/O FLANGE,12/14X15	1-199
321120-0137 ..	BEARING BUSHING W/O FLANGE,20/23X15	10-23
321136-0183 ..	BUSHING, 12X14X15 MM	3-7, 3-9
321136-0260 ..	BUSHING, 20X23X20 MM	3-7, 3-9
321141-0064 ..	BEARING BUSHING W/O FL, 6X8X10 MM	8-71
321141-0104 ..	BEARING BUSHING W/O FL, 8X10X12 MM	8-107, 8-115
321141-0138 ..	BEARING BUSHING W/O FL, 10X12X8 MM	8-99
321141-0178 ..	BEARING BUSHING W/O FL, 12X14X10 MM	8-107, 8-115
321141-0216 ..	BEARING BUSHING W/O FL, 16X18X12 MM	8-107, 8-115
321153-0296 ..	FLANGE BUSHING, 25X28X21,5 MM	5-17, 5-19
321155-0221 ..	FLANGE BUSHING, 16X18X17 MM	4-15
321156-0145 ..	FLANGE BUSHING, 10X12X15 MM	5-31, 5-33
321156-0270 ..	FLANGE BUSHING, 20X23X30 MM	3-7, 3-9
321156-0420 ..	FLANGE BUSHING, 40X44X40 MM	3-7, 3-9
321161-0185 ..	FLANGE BUSHING, 12X14X17 MM	8-27
321161-0221 ..	FLANGE BUSHING, 16X18X17 MM	2-77
321302-0298 ..	BALL BEARING, 8X22X7 MM	4-17
321308-0202 ..	BALL BEARING, 15X32X9 MM	8-33, 8-35, 8-39, 8-41, 8-159
321308-0204 ..	BALL BEARING, 20X42X12 MM	3-5
321308-0205 ..	BALL BEARING, 25X47X12MM	8-93, 8-155
321313-0100 ..	BALL BEARING, 10X30X9 MM	1-197, 8-101
321313-0101 ..	BALL BEARING, 12X32X10 MM	4-17
321313-0102 ..	BALL BEARING, 15X35X11 MM	1-195, 2-27, 8-23, 8-25, 8-53, 8-89, 8-107, 8-115, 8-153, 8-159, 8-161, 8-163
321313-0103 ..	BALL BEARING, 17X40X12MM	2-93, 8-89
321313-0104 ..	BALL BEARING, 20X47X14 MM	3-11
321330-0108 ..	ANG. BALL BEAR, 40X80X30,2 MM	5-13, 5-15
342203-0120 ..	NIPPLES, EXT. THREAD, HEXAGON,ÿNO. 209	6-21
342206-0109 ..	BUSHING, TAPERED, INT/EXT. THRÿNO. R211	1-147
342245-0102 ..	T-PIPE, INT. THREAD, R1/4XKR1/4	2-87
342700-0113 ..	NIPPLES,HEXAGON,EXT.G-THREAD G1/2"-G1/2"	1-183, 6-57
342700-0205 ..	NIPPLES,HEXAGON,EXT.G-THREAD G1/2"-G1/4"	6-57
342701-0201 ..	BUSHING,INT./EXT.G-THREAD G1/4"-G1/8"	2-87
342701-0202 ..	BUSHING,INT./EXT.G-THREAD G3/8"-G1/8"	6-9, 6-51
342701-0203 ..	BUSHING, INT/EXT. G-THREAD NO. 3/8-1/4	1-183
342701-0205 ..	BUSHING,INT./EXT.G-THREAD G1/2"-G1/4"	2-49
342701-0209 ..	BUSHING,INT./EXT.G-THREAD G3/4"-G3/8"	1-183
342706-0130 ..	ACCESSORIES, INSERT SLEEVE 6 MM	1-141, 1-221, 1-223, 2-93, 4-21
342708-0109 ..	REINFORCING RING VSH 15X1 MM	6-51
342713-0209 ..	PLUG, EXT THREAD HEX SOCKET 8638-00-180	1-181, 1-185, 4-19, 8-145, 8-147
342713-0210 ..	PLUG, EXT THREAD HEX SOCKET 8638-00-140	1-207, 1-211, 1-213, 2-39
342713-0211 ..	PLUG, EXT THREAD HEX SOCKET 8638-00-380	1-183, 1-215, 1-217, 1-219, 2-39, 2-127, 6-55, 8-145, 8-147
342713-0213 ..	PLUG, EXT THREAD HEX SOCKET 8638-00-120	1-143, 6-31
342715-0100 ..	BLIND PLUG 4 MM	1-215, 1-217
342715-0102 ..	BLIND PLUG 6 MM	1-215, 1-217, 1-219, 2-39, 2-127, 6-55, 8-145, 8-147
342715-0103 ..	BLIND PLUG 8 MM	1-215, 1-217, 1-219, 2-39, 2-127, 6-55, 8-145, 8-147

Part No	Description	Page No
342716-0202 ..	REDUCER 4-6	8-51
342716-0203 ..	REDUCER 6-8	2-39, 2-127, 8-145, 8-147
342716-0209 ..	REDUCER 8-12	1-207, 2-37, 8-145, 8-147
342716-0210 ..	REDUCER 6-12	2-127
342716-0211 ..	REDUCER 12-14	2-37, 6-57
342720-0103 ..	CONN. STR. GA-8-G1/8	3-7, 3-9
342720-0114 ..	CONN. STR. GA-15-G1/2	6-51
342722-0197 ..	STRAIGHT COUPLING	1-35, 1-49, 1-65, 1-67, 8-75, 8-95, 8-111, 8-121
342722-0198 ..	STRAIGHT COUPLING	4-19
342722-0202 ..	PIPE COUPLING 1/8" D=6MM	1-107, 1-151, 2-127, 4-43, 4-45, 4-47, 5-5, 5-7, 8-13, 8-31, 8-97
342722-0203 ..	STRAIGHT COUPLING	1-85, 1-87, 1-99, 1-101, 1-211, 1-213, 2-45, 2-85, 2-87, 3-13, 3-15
342722-0204 ..	PIPE COUPLING	8-95
342722-0205 ..	STRAIGHT COUPLING D=8-G1/4"	3-13, 3-15, 6-27
342722-0206 ..	STRAIGHT COUPLING D=8-G3/8"	2-19, 2-21, 2-23, 6-55, 8-145, 8-147
342722-0209 ..	STRAIGHT COUPLING D=12-G1/4"	1-211, 1-213
342722-0210 ..	STRAIGHT COUPLING, D=12 MM - G3/8"	2-19, 2-21, 2-23
342724-0102 ..	CONN. STR. PIPE GI 6-G1/8	1-221, 1-223
342725-0102 ..	CONN. STR. PIPE GI-6-G1/8	8-13
342725-0103 ..	CONN. STR. PIPE GI-8-G1/4	1-105
342725-0114 ..	CONN. STR. PIPE GI-15-G1/2	2-45
342728-0102 ..	PIPE COUPLING 6 MM	8-51
342732-0100 ..	ELBOW PIPE JOINT, EXT.THREAD, D=4MM-G1/8	6-55
342732-0102 ..	ELBOW PIPE JOINT, EXT.THREAD, D=6MM-G1/8	1-15, 1-107, 2-87
342732-0103 ..	ELBOW PIPE JOINT, EXT.THREAD, D=6MM-G1/4	2-87
342732-0104 ..	ELBOW PIPE JOINT, EXT.THREAD, D=8MM-G1/4	2-39, 6-55, 6-57
342732-0105 ..	ELBOW PIPE D8-R3/8"	1-215, 1-217, 8-145, 8-147
342732-0109 ..	ELBOW PIPE JOINT, EXT.THREAD, D=1MM-G1/4	2-39, 6-55
342732-0110 ..	ELBOW PIPE JOINT, EXT.THREAD,D=12MM-G3/8	2-39, 6-55
342732-0161 ..	ELBOW PIPE JOINT,EXT.THREAD,D=14 MM-G1/2	6-57
342733-0114 ..	CONN. ELBOW WI-15-G1/2	1-153
342735-0102 ..	ELBOW PIPE JOINT	8-31
342735-0103 ..	ELBOW PIPE JOINT	8-145, 8-147
342735-0109 ..	ELBOW PIPE JOINT	2-37, 8-145, 8-147
342735-0110 ..	ELBOW PIPE	2-37, 2-45
342737-0204 ..	CONN. ELBOW W-6 LRFR	4-45, 4-47
342737-0221 ..	CONN. ELBOW W-15 LRFR	1-153, 1-181
342738-0221 ..	ADJUSTABLE ELBOW CONNECTION,EXT 15-G1/2	1-147
342742-0103 ..	T-COUPLING,ADJUST,F.PLASTIC TUBE 6-G1/4"	2-45, 8-51
342748-0102 ..	T-CONNECTION 6MM	1-221, 1-223, 2-37, 2-45, 8-95, 8-111, 8-121
342748-0109 ..	T-CONNECTION 12MM	1-207, 1-211, 1-213, 2-37, 2-127, 6-55, 8-145, 8-147
342748-0110 ..	T-CONNECTION 14MM	2-37, 2-45, 6-57
342751-0215 ..	CONN. L-PIPE, EXT. LE-12-R3/8	1-183
342759-0102 ..	CONN. L-PIPE ADJ.,EVL,EXT,T-6-G1/8	1-221, 1-223
342767-0100 ..	CONN. BULKHEAD G1/8	1-239, 1-241
342767-0104 ..	CONN. BULKHEAD G1/4	2-19, 2-21, 2-23, 2-41, 2-49
342768-0102 ..	BULKHEAD CONNECTOR, 6 MM	2-19, 2-21, 2-23, 2-45, 4-21
342768-0103 ..	BULKHEAD CONNECTOR, 8 MM	1-211, 1-213, 2-19, 2-21, 2-23
342770-0101 ..	STRAIGHT COUPLING INT, D=4 MM - G1/8	6-55
342770-0105 ..	STRAIGHT COUPLING INT, D=6 MM - G1/8	8-31, 8-145, 8-147
342770-0107 ..	STRAIGHT COUPLING INT, D=8 MM - G1/8	8-95
342772-0113 ..	ELBOW FITTING, 6 - G1/8	4-45, 4-47
342772-0122 ..	ELBOW FITTING, 8 - G1/4	2-39
342797-0121 ..	CONN. BANJO, RINGPIECE 6-1/8	1-59, 1-61, 1-221, 1-223
342797-0122 ..	CONN. BANJO, RINGPIECE 6-1/4	1-147, 1-221, 1-223
342840-0103 ..	CLAMPING PIECE	1-85, 1-87, 1-95, 1-99, 1-101, 1-121, 1-123, 1-127, 1-133, 1-135, 1-137, 1-149, 2-55
342840-0105 ..	CLAMPING PIECE	1-107, 1-147, 1-153
342840-0107 ..	CLAMPING PIECE	2-19, 2-21, 2-23
342840-0108 ..	CLAMP, 101,6 MM 3-A PCS+PMCS	1-147
342850-0103 ..	GASKET 22,7X49,1X5,2 MM 1" FDA	2-55
342850-0107 ..	GASKET, FDA, 3-A, 3	2-19, 2-21, 2-23
342850-0304 ..	GASKET 35,4X49,1X5,2 1"1/2 FDA	1-121, 1-123, 1-127, 1-133, 1-135, 1-137, 1-149, 9-3, 9-9
342850-0305 ..	GASKET 47,8X62,6X5,2 MM 2" FDA	1-107
342850-0405 ..	GASKET 47,8X62,6X5,2 MM 2" FDA	1-147, 1-153
342850-0408 ..	GASKET 97X117,7X5,2 MM 4" FDA	1-147
342901-0101 ..	HOSE NIPPLE, EXT.THR. R1/8-7 MM	2-87
342901-0102 ..	HOSE NIPPLE, EXT.THR. R1/4-7 MM	6-51
342901-0105 ..	HOSE NIPPLE, EXT.THR. R1/2-12 MM	1-153, 2-19, 2-21, 2-23, 2-53, 6-19, 6-51
342920-0122 ..	STRAIGHT COUPLING,EXT.THREADED 8/6-R1/4"	1-207, 2-41
342920-0132 ..	STRAIGHT COUPL.,EXT.THREADED 10/8-R1/4"	2-49
342921-0113 ..	STRAIGHT COUPLING,EXT.THREADED 6/4-G1/8"	1-239, 1-241
342921-0114 ..	STRAIGHT COUPLING,EXT.THREADED 6/4-G1/4"	2-19, 2-21, 2-23
342921-0121 ..	STRAIGHT COUPLING,EXT.THREADED 8/6-G1/8"	4-19
342921-0122 ..	STRAIGHT COUPLING,EXT.THREADED 8/6-G1/4"	1-207, 2-19, 2-21, 2-23, 3-13, 3-15, 5-13, 5-15, 5-17, 5-19
342922-0122 ..	STRAIG.COUPL.,ADJUST.,EXT.THRE.8/6-R1/4"	6-9
342923-0121 ..	STRAIGHT COUPL.,INT.THREADED 8/6-G1/8"	1-221, 1-223
342930-0122 ..	ELBOW 90 COUPL.,EXT.THREAD 8/6-R1/4"	1-207
342930-0133 ..	ELBOW 90 COUPL.,EXT.THREAD 10/8-R3/8"	6-51
342931-0121 ..	ELBOW 90 COUPL.,EXT.THREAD 8/6-G1/8"	1-39, 4-19, 8-13
342931-0122 ..	ELBOW 90 COUPL.,EXT.THREAD 8/6-G1/4"	5-13, 5-15, 5-31, 5-33
342940-0122 ..	T-COUPLING,EXT.THREAD 8/6-R1/4"	1-207, 6-11
342960-0122 ..	BULKHEAD COUPLING 8/6	1-207
342980-0112 ..	BANJO-CONNECTION,RING 6/4-M6	2-101

Part No	Description	Page No
342980-0303 ..	BANJO-HOLLOW BOLT COUPL,EXT.THR.01-G1/8"	1-59, 1-61, 1-221, 1-223
342980-0304 ..	BANJO-HOLLOW BOLT COUPL,EXT.THR.01-G1/4"	1-147, 1-221, 1-223
342980-0314 ..	BANJO-HOLLOW BOLT COUPL,EXT.THR.02-G1/4"	1-147, 2-19, 2-21, 2-23, 3-13, 3-15
342981-0114 ..	BANJO CONNEC,RING,FOR PLAST.TUBE 6-G1/4"	2-19, 2-21, 2-23, 3-13, 3-15
342991-0100 ..	HOSE CLIP,WORM DRIVE TYPE 10-13	6-19, 10-9
342991-0101 ..	HOSE CLIP,WORM DRIVE TYPE (13)-16	1-153, 2-19, 2-21, 2-23, 2-83, 2-87, 6-7, 10-9
342991-0102 ..	HOSE CLIP,WORM DRIVE TYPE (16)-19	2-53, 6-31
342991-0103 ..	HOSE CLIP,WORM DRIVE TYPE (19)-23	1-181, 2-19, 2-21, 2-23, 2-89
342991-0104 ..	HOSE CLIP,WORM DRIVE TYPE (23)-27	2-45, 2-83
342991-0105 ..	HOSE CLIP,WORM DRIVE TYPE (27)-30	2-19, 2-21, 2-23
342991-0106 ..	HOSE CLIP,WORM DRIVE TYPE (30)-36	2-89
342991-0109 ..	HOSE CLIP,WORM DRIVE TYPE (48)-50	1-145
342991-0110 ..	HOSE CLIP,WORM DRIVE TYPE (54)-63	2-19, 2-21, 2-23, 2-83, 2-89
342991-0111 ..	HOSE CLIP,WORM DRIVE TYPE (63)-73	1-143
342991-0114 ..	HOSE CLIP,WORM DRIVE TYPE (93)-110	2-77
346800-0110 ..	SILENCER FILTER R1/4"	1-121, 1-123, 1-207
351120-0126 ..	CABLE SIHF 2X4MM2 GREEN/YELLOW	8-75
351120-0145 ..	CABLE SIHF 3X2,5MM2 GREEN/YELLOW	8-81
351120-0164 ..	CABLE SIHF 4X1,5MM2 GREEN/YELLOW	1-189
351120-0165 ..	CABLE SIHF 4X2,5MM2 GREEN/YELLOW	1-163, 1-165, 1-167
351120-0168 ..	CABLE SIHF 4X10MM2 GREEN/YELLOW	1-163, 1-165, 1-167
351150-0166 ..	CABLE OLFLEX 4X4 MM2 LIGHT/GREY	2-13, 2-15, 6-23, 6-25
351150-0403 ..	CABLE OLFLEX 3X0,75 MM2 LIGHT/GREY	1-59, 1-61, 1-163, 1-165, 1-167, 1-209, 1-237, 1-239, 1-241, 2-45, 2-87, 6-17, 6-51, 8-177, 8-193
351150-0404 ..	CABLE OLFLEX 4X0,75 MM2 LIGHT/GREY	1-59, 1-61, 1-239, 1-241
351150-0405 ..	CABLE OLFLEX 5X0,75 MM2 LIGHT/GREY	1-163, 1-165, 1-167, 1-239, 1-241, 2-13, 2-15, 2-109, 2-117, 8-43, 8-45, 8-183
351150-0406 ..	CABLE OLFLEX 7X0,75 MM2 LIGHT/GREY	2-13, 2-15, 6-13, 8-43, 8-45
351150-0407 ..	CABLE OLFLEX 12X0,75 MM2 LIGHT/GREY	1-209, 1-239, 1-241, 2-13, 2-15, 8-181, 8-197, 9-3
351150-0412 ..	CABLE OLFLEX 3X1,5 MM2 LIGHT/GREY	1-163, 1-165, 1-167, 1-189, 2-11, 2-13, 2-15, 8-43, 8-45, 8-123, 8-125, 8-127, 8-129, 8-131
351150-0413 ..	CABLE OLFLEX 4X1,5 MM2 LIGHT/GREY	8-123, 8-125, 8-127, 8-129, 8-131
351150-0415 ..	CABLE OLFLEX 7X1,5 MM2 LIGHT/GREY	8-123, 8-125, 8-127, 8-129, 8-131
351150-0418 ..	CABLE OLFLEX 4X2,5 MM2 LIGHT/GREY	1-163, 1-165, 1-167, 2-13, 2-15, 2-93, 2-101, 2-129, 6-9
351150-0419 ..	CABLE OLFLEX 5X2,5 MM2 LIGHT/GREY	2-13, 2-15, 5-37
351150-0420 ..	CABLE OLFLEX 7X2,5 MM2 LIGHT/GREY	8-123, 8-125, 8-127, 8-129, 8-131
351150-0425 ..	CABLE OLFLEX 25X0,75 MM2 LIGHT/GREY	1-237, 1-239, 1-241, 2-13, 2-15, 2-129, 6-49, 8-123, 8-125, 8-127, 8-129, 8-131
351150-0426 ..	CABLE OLFLEX 5X25 MM2 LIGHT/GREY	2-13, 2-15
351150-0431 ..	CABLE OLFLEX 2X0,75 MM2 LIGHT/GREY	6-9, 8-43, 8-45
351160-0102 ..	CABLE AWM 1X0,75 MM2 DARKBLUE	1-239, 1-241
351161-0110 ..	CABLE AWM 1X25 MM2 LIGHTBLUE	6-5
351161-0111 ..	CABLE AWM 1X35 MM2 LIGHTBLUE	6-5
351162-0109 ..	CABLE AWM 1X16 MM2 YELLOW-GREEN	6-5
351164-0110 ..	CABLE AWM 1X25 MM2 BLACK	6-5
351164-0111 ..	CABLE AWM 1X35 MM2 BLACK	6-5
351172-0102 ..	CABLE AWM 1X 0,75 MM2 DARK-BLUE	6-49
352103-0100 ..	CABLE GLAND, STR 9, PR15,2/PG9	1-163, 1-165, 1-167, 1-239, 1-241, 6-49
352103-0101 ..	CABLE GLAND, ST 9, PR15,2/PG9	1-107, 1-121, 1-123, 1-133, 1-147, 1-153, 1-163, 1-165 1-167, 1-185, 1-207, 1-209, 1-237, 1-239, 1-241, 2-7, 2-9, 2-129, 6-13, 6-17, 6-49, 6-51, 6-57, 8-7 8-123, 8-125, 8-127, 8-129, 8-131
352103-0106 ..	CABLE GLAND, ST 11, PR18,6/PG11	1-91, 1-163, 1-165, 1-167, 1-207, 1-239, 1-241, 2-7, 2-9 2-11, 2-129, 6-5, 8-123, 8-125, 8-127, 8-129, 8-131
352103-0108 ..	CABLE GLAND, ST 13,5 , PR20,4/PG13,5	1-163, 1-165, 1-167, 2-7, 2-13, 2-15, 6-9, 6-13, 7-5 7-7, 7-9, 8-43, 8-45, 8-105, 8-123, 8-125, 8-127, 8-129, 8-131, 8-159
352103-0110 ..	CABLE GLAND, STR 16, PR22,5/PG16	1-163, 1-165, 1-167, 2-93, 2-109, 6-9, 6-13, 6-49, 7-65, 8-183
352103-0111 ..	CABLE GLAND, ST 16, PR22,5/PG16	1-143, 1-163, 1-165, 1-167, 1-181, 1-237, 1-239, 1-241 2-13, 2-15, 2-101, 3-17, 6-23, 6-25, 7-5, 7-7, 7-9, 8-7, 8-123, 8-125, 8-127, 8-129, 8-131, 8-181
352103-0115 ..	CABLE GLAND, STR 21, PR28,3/PG21	2-13, 2-15, 2-31, 2-79, 2-129, 6-23, 6-25, 8-7, 8-123 8-125, 8-127, 8-129, 8-131
352103-0116 ..	CABLE GLAND, ST 21, PR28,3/PG21	1-163, 1-165, 1-167, 1-237, 1-239, 1-241, 2-7, 2-9, 2-13 2-15, 2-129, 6-49, 7-5, 7-7, 7-9, 8-123, 8-125, 8-127, 8-129, 8-131
352103-0120 ..	CABLE GLAND, STR 29, PR37,0/PG29	1-163, 1-165, 1-167, 2-13, 2-15, 2-129, 6-49
352103-0121 ..	CABLE GLAND, ST 29, PR37,0/PG29	1-163, 1-165, 1-167, 2-13, 2-15, 8-123, 8-125, 8-127 8-129, 8-131
352103-0123 ..	CABLE GLAND, ST 42, PR54,0/PG42	6-5, 7-5, 7-7, 7-9
352113-0101 ..	CLIP STRIP, 92X2,5 MM	2-31
352113-0102 ..	CLIP-STRIP, BLACK 188X4,8 MM	8-21, 8-63, 8-65, 8-67, 10-9
352113-0203 ..	ANCHOR PLATES FOR STRIPS, TYPE TM3S8-M0	2-101, 6-7, 7-5, 7-7, 7-9, 8-71
352113-0204 ..	ANCHOR PLATES FOR STRIPS, TYPE TM3S25-M	1-191, 2-19, 2-21, 2-23, 2-53, 2-67, 2-69 4-7, 4-9, 4-11, 4-13, 4-45, 4-47, 7-41
352113-0205 ..	ANCHOR PLATES FOR STRIPS, TYPE TM2S8-C10	1-195, 6-31, 7-29, 7-31, 8-21, 8-27, 8-31 8-43, 8-45, 8-63, 8-65, 8-67, 8-69, 8-71, 8-75, 8-87, 8-99, 8-153, 8-157
352113-0206 ..	ANCHOR PLATES FOR STRIPS, TYPE ABM100-AT	2-31
353021-0120 ..	FEED THROUGH TERMINAL, 10215.8	2-9
353021-0122 ..	TERMINAL DISCONNECTBLE, WTR 2,5 D	7-43
353021-0127 ..	TERMINAL DISCONNECTBLE, WTR 2,5+WSD 2,5	7-45
353021-0212 ..	FEED THROUGH TERMINAL, 10200.0	7-27, 7-53, 7-63
353021-0213 ..	FEED THROUGH TERMINAL, 10201.0	2-7, 2-9, 2-129, 7-27, 8-139, 8-141
353021-0214 ..	FEED THROUGH TERMINAL, 10202.0	7-59, 7-61
353021-0216 ..	FEED THROUGH TERMINAL, 10200.8	1-209, 1-239, 1-241, 6-13, 6-49, 7-43, 7-45
353021-0219 ..	FEED THROUGH TERMINAL, 10205.0	7-23
353021-0223 ..	FEED THROUGH TERMINAL, 10202.8	7-45
353021-0226 ..	BY-PASS TERMINAL WDU 35	7-23

Part No	Description	Page No
353021-0301 ..	TERMINALS,TRIPLE-LEVEL, DLI 2,5/35 PA	8-133, 8-135, 8-137
353021-0302 ..	TERMINALS,TRIPLE-LEVEL, DLD 2,5/35 PA	1-237, 1-239, 1-241, 2-7, 2-129, 8-133, 8-135, 8-137
353022-0002 ..	NEUTRAL TERMINAL, 10107.8	7-63
353022-0003 ..	NEUTRAL TERMINAL, 10108.8	7-63
353024-0204 ..	EARTH TERMINAL WPE 2,5	1-209, 2-7, 2-9, 2-129, 6-49, 7-53, 7-63
353024-0205 ..	EARTH TERMINAL, 1010.1	1-209, 1-237, 1-239, 1-241, 2-7, 2-9, 2-129, 6-13, 6-49, 7-27, 8-137 8-139, 8-141
353024-0206 ..	EARTH TERMINAL, 1010.2	7-63
353024-0209 ..	EARTH TERMINAL, 1010.5	6-5, 7-23, 7-63
353031-0201 ..	END BRACKET EW35	6-49
353031-0203 ..	END SUPPORT, WEW 35/2	1-209, 2-7, 2-9, 6-13, 7-23, 7-27, 7-29, 7-31, 7-43, 7-45, 7-53, 7-59 7-61, 7-63, 8-133, 8-135, 8-139, 8-141
353032-0004 ..	END PLATE WAP 2,5-10 BEIGE	7-27, 7-63
353032-0005 ..	END PLATE WAP 2,5-10 BLUE	1-209, 7-43
353032-0009 ..	END PLATE, WAP FOR WDK	8-133, 8-135, 8-137
353032-0010 ..	END PLATE WAP	2-9
353032-0013 ..	END PLATE, 13818.6	8-133, 8-135, 8-137
353032-0301 ..	END PLATE WAP	8-133, 8-135, 8-137
353032-0302 ..	END PLATE WAP	1-237, 1-239, 1-241, 2-7, 8-137
353033-0104 ..	END PLATE, 10502.8	7-63
353033-0106 ..	PARTITITION, 10501.8	1-239, 1-241
353034-0030 ..	BRIDGE CONNECTOR WQV 2,5/10, 10544.6	2-9, 6-13, 6-49, 7-43, 7-45, 7-63
353034-0031 ..	BRIDGE CONNECTOR, WQV 4/10, 10520.6	2-9, 8-139, 8-141
353034-0039 ..	BRIDGE CONNECTOR WQV 4/4, 10546.6	2-9
353034-0402 ..	BRIDGE CONNECTOR Q3, 13126.0	2-7
353034-0404 ..	BRIDGE CONNECTOR Q10, 13131.0	1-237, 1-239, 1-241, 2-7, 8-133, 8-135, 8-137
353041-0001 ..	RAIL 10X3MM SSCH	7-63
353041-0106 ..	HOLDER ZB35 K 5026.8	7-63
353042-0003 ..	RAIL TS35/15/1,5	7-5, 7-7, 7-9
353042-0004 ..	RAIL TS 35/7,5	7-27, 7-29, 7-31, 7-41
353042-0005 ..	RAIL TS 35/7.5	6-5, 7-23, 7-43, 7-45, 7-53, 7-63
353042-0010 ..	BUSBAR HÅLLARE	7-59, 7-61
353042-0012 ..	ADJUSTMENTPLATTA	7-59, 7-61
353042-0013 ..	PROTECTIVE CASING	7-59, 7-61
353042-0014 ..	BUSBAR ADA ADAPTER	7-59, 7-61
353042-0015 ..	BUSBAR ADAPTER	7-59, 7-61
353042-0016 ..	CONNECTIONSADAPTER	7-59, 7-61
353042-0019 ..	SIDE GUARD	7-59, 7-61
353101-0132 ..	CABLE SHOE 1,5-2,5MM2 M5 BLUE	8-81
353104-0130 ..	CABLE SHOE YAV 025 M 4*	8-81
353104-0140 ..	CABLE SHOE YAV 06 M 4*	8-75
353104-0168 ..	CABLE SHOE YAV 16 M6*	6-5
353105-0200 ..	PIN CABLE SKO A4630SR	6-5
353240-0002 ..	NORMAL WITHOUT INSERT, PG 11	5-21, 5-23
353240-0004 ..	NORMAL WITHOUT INSERT, PG 16	1-163, 1-165, 1-167
353240-0005 ..	NORMAL WITHOUT INSERT, PG 21	8-123, 8-125, 8-127, 8-129, 8-131
353240-0006 ..	FöRSKRUVNING PG 29	1-107, 1-163, 1-165, 1-167
353240-0007 ..	NORMAL WITHOUT INSERT, PG 36	4-21
353241-0003 ..	EXTENDED WITHOUT INSERT, PG 21	4-21, 5-37
353242-0002 ..	NORMAL WITHOUT INSERT, PG16	1-95
353242-0004 ..	NORMAL WITHOUT INSERT, PG36	4-21, 5-37
353243-0001 ..	EXTENDED WITHOUT INSERT, PG9	1-23, 1-59, 1-61, 1-65, 1-67, 1-95, 1-141, 1-149, 1-151 1-155, 1-163, 1-165, 1-167, 1-185, 1-189, 1-191, 1-199, 1-239, 1-241, 5-5, 5-7, 5-35, 5-37
353243-0002 ..	EXTENDED WITHOUT INSERT, PG11	1-59, 1-61, 1-129, 1-131, 1-161, 1-163, 1-165, 1-167 1-239, 1-241
353243-0003 ..	EXTENDED WITHOUT INSERT, PG11	1-89, 1-135, 1-137, 1-163, 1-165, 1-167, 1-189, 1-211 1-213, 1-239, 1-241
353243-0004 ..	EXTENDED WITHOUT INSERT, PG13,5	1-141, 1-163, 1-165, 1-167, 1-209
353243-0005 ..	EXTENDED WITHOUT INSERT, PG16	1-239, 1-241, 8-197
353243-0007 ..	EXTENDED WITHOUT INSERT, PG21	1-163, 1-165, 1-167, 1-185, 8-105
353243-0008 ..	EXTENDED WITHOUT INSERT, PG29	5-21, 5-23, 5-37, 8-105
353244-0002 ..	EXTENDED WITHOUT INSERT, HIGH TEMP, PG13	1-135, 1-137
353244-0003 ..	EXTENDED WITHOUT INSERT, HIGH TEMP, PG13	1-141
353245-0004 ..	GLAND, EXTENDED WITH INSERT, PG16/PR 22,	2-13, 2-15
353245-0005 ..	GLAND, EXTENDED WITH INSERT, PG16/PR 22,	2-13, 2-15
353249-0008 ..	INSERT, SINGEL HOLE, EK 152/7	1-23, 1-65, 1-67, 1-95, 1-141, 1-149, 1-155, 1-163, 1-165 1-167, 1-185, 1-189, 1-191, 1-199, 1-239, 1-241, 5-35, 5-37
353249-0009 ..	INSERT, SINGEL HOLE, EK 152/9	1-59, 1-61, 1-129, 1-131, 1-163, 1-165, 1-167, 1-239, 1-241 5-5, 5-7
353249-0011 ..	INSERT, SINGEL HOLE, EK 153/11	1-45, 1-47, 1-55, 1-63, 1-89, 1-135, 1-137, 1-163, 1-165 1-167, 1-189, 1-211, 1-213, 1-239, 1-241
353249-0013 ..	INSERT, SINGEL HOLE, EK 154/13	1-163, 1-165, 1-167, 1-185, 1-189
353249-0014 ..	INSERT, SINGEL HOLE, EK 154/16	1-163, 1-165, 1-167, 1-209, 8-197
353249-0018 ..	INSERT, SINGEL HOLE, HI.TEMP, EK152I9	1-135, 1-137
353249-0026 ..	INSERT, MULTI HOLE, E153M6X4	1-95, 1-239, 1-241
353249-0028 ..	INSERT, MULTI HOLE, E153M2X8	1-163, 1-165, 1-167
353249-0036 ..	INSERT, MULTI HOLE, EK152 M 2X4	1-151, 1-161, 1-163, 1-165, 1-167
353249-0041 ..	INSERT, SOLID, E151G	5-21, 5-23
353249-0051 ..	INSERT, MULTI HOLE, E154M4X8	8-123, 8-125, 8-127, 8-129, 8-131
353249-0054 ..	INSERT, SINGEL HOLE, EK 156/25	8-163
353249-0060 ..	INSERT, MULTI HOLE, E155M2X13	1-163, 1-165, 1-167
353249-0061 ..	INSERT, SINGEL HOLE, EK 155/20	1-163, 1-165, 1-167
353249-0071 ..	INSERT, SINGEL HOLE, E155/18	1-163, 1-165, 1-167
353249-0079 ..	INSERT, MULTI HOLE, E155M8X5,5	1-107

Part No	Description	Page No
359000-0024 ..	MARKING CO2/4 "-"	2-37, 2-39
359000-0025 ..	MARKING CO3/6 "-"	2-37
359000-0400 ..	MARKING CO2/4"0"	2-37, 2-39, 2-47, 2-101
359000-0401 ..	MARKING COLLAR 2/4 "1" YELLOW	2-37, 2-39, 2-47, 2-101
359000-0402 ..	MARKING COLLAR 2/4 "2" YELLOW	2-37, 2-39, 2-47, 2-101
359000-0403 ..	MARKING COLLAR PA2/4 "3" YELLOW	2-37, 2-39, 2-47
359000-0404 ..	MARKING COLLAR PA2/4 "4" YELLOW	2-37, 2-39, 2-47, 2-101
359000-0405 ..	MARKING CO2/4"5"	2-37, 2-39, 2-47, 2-101
359000-0406 ..	MARKING COLLAR PA2/4 "6" YELLOW	2-37, 2-39
359000-0408 ..	MARKING COLLAR PA2/4 "8" YELLOW	2-47
359000-0409 ..	MARKING COLLAR PA2/4 "9" YELLOW	2-47
359000-0500 ..	MARKING COLLAR 3/6 "0" YELLOW	2-37, 2-45
359000-0501 ..	MARKING COLLAR 3/6 "1" YELLOW	2-37
359000-0502 ..	MARKING CO3/6"2"	2-37
359000-0503 ..	MARKING CO3/6"3"	2-37
359000-0765 ..	MARKING CO2/4"P"	2-37
359000-0800 ..	MARKING CO3/6"A"	2-37
359000-0815 ..	MARKING CO3/6"P"	2-37, 2-45
359000-0818 ..	MARKING CO3/6"S"	2-37
359000-0820 ..	MARKING CO3/6"U"	2-37
359005-0010 ..	MARKING LABEL KIT 0 - 9, 04.841.2150.0	1-163, 1-165, 1-167, 1-209, 6-9, 6-13, 6-23, 6-25, 6-49, 8-123, 8-125, 8-127, 8-129, 8-131
359005-0050 ..	MARKING LABEL KIT X, 04.841.4550.0	1-163, 1-165, 1-167, 1-209, 6-9, 6-13, 6-23, 6-25, 6-49, 8-123, 8-125, 8-127, 8-129, 8-131
359011-0807 ..	MARKING PLATES 5-FW 1-50	7-23, 7-37, 7-43, 7-63
359011-0808 ..	MARKING PLATES 5-FW 51-100	7-63
359011-0809 ..	MARKING PLATES 5-FW 101-150	1-209, 2-9, 6-13, 6-49, 7-43, 7-45, 7-63
359011-0810 ..	MARKING PLATES 5-FW 151-200	1-239, 1-241, 2-9, 7-45
359011-0819 ..	MARKING PLATES 5-GW (EARTH)	1-209, 2-7, 2-9, 2-33, 7-37
359011-0821 ..	SET OF SIGNS 6-FW 1-50	2-7, 2-9, 2-33, 7-63, 8-139, 8-141
359011-0823 ..	SET OF SIGNS 6-FW 101-150	1-237, 1-239, 1-241, 2-7, 7-63, 8-137
359011-0824 ..	SET OF SIGNS 6-FW 151-200	1-239, 1-241, 2-7, 8-133, 8-135, 8-137
359011-0825 ..	SET OF SIGNS 6-FW 201-250	8-133, 8-135
359011-0832 ..	SET OF SIGNS 6-GW (+)	1-237, 1-239, 1-241, 2-7, 8-133, 8-135, 8-137
359011-0833 ..	SET OF SIGNS 6-GW (-)	1-237, 1-239, 1-241, 2-7, 8-133, 8-135, 8-137
359011-0834 ..	SET OF SIGNS 6-GW(EARTH)	1-237, 1-239, 1-241, 2-7, 2-9, 8-133, 8-135, 8-137, 8-139, 8-141
359240-0100 ..	SIGN HOLDER FOR 359240-0001	2-39, 6-47, 7-25, 7-29, 7-31, 7-41
359241-0122 ..	SIGN, CIP OF STEAM BARRIER SPACE	7-29, 7-31
359241-0131 ..	SIGN, TEMP. LS HEATER	7-25
359241-0133 ..	SIGN, SERVICE SWITCH	7-29, 7-31
359241-0135 ..	SIGN, TRANSVERSAL SEALING	7-25
359241-0201 ..	SIGN "HOUR GLASS"	7-29, 7-31
359241-0431 ..	SIGN "MAIN SWITCH"	6-47
359241-0482 ..	SIGN "PACKAGE COUNTER"	7-29, 7-31
359243-0917 ..	SIGN"400V, 50HZ, 100A"	6-47
359243-0918 ..	SIGN"400V, 60HZ, 100A"	6-47
359301-0001 ..	SIGN "UP"	2-31
359301-0005 ..	SIGN "DOWN"	2-31
359301-0050 ..	SIGN "DROP CHUTE"	2-31
359301-0090 ..	SIGN "INCHING"	2-31
359301-0091 ..	SIGN "INCHING FFU"	2-31
359301-0100 ..	SIGN "SPLICING"	8-197
359301-0101 ..	SIGN	8-181
359301-0110 ..	SIGN "SHORT STOP"	1-239, 1-241, 2-31, 8-181
359301-0130 ..	SIGN "LAMPTEST"	2-31
359301-0170 ..	SIGN "MANUAL FLUSHING FFU"	2-31
359301-0488 ..	BUTTON SIGN, MATERIAL LOCKING	8-197
359301-0519 ..	SIGN "TPOP RESET"	2-31
359705-0003 ..	WARNING SIGN ISO, DANGEROUS CHEMICALS	1-85, 1-87, 1-99, 1-101
359705-0004 ..	WARNING SIGN ISO, DANGEROUS CHEMICALS	1-185, 2-83
359705-0005 ..	WARNING SIGN ISO, MOVING PART	8-43, 8-45, 8-59
359705-0007 ..	WARNING SIGN ISO, HOT SURFACE	1-85, 1-87, 1-99, 1-101, 1-105, 1-141, 1-153, 4-7, 4-9, 5-17, 5-19, 8-69
359705-0015 ..	WARNING SIGN ISO, RISK OF ELECTRIC SHOCK	1-185, 1-189, 1-209, 1-237, 1-239, 1-241, 2-7, 2-31, 2-129, 5-21, 5-23, 7-11, 7-17
400828-0000 ..	SPRING	8-75
400833-0000 ..	PLUNGER	8-75
440650-0000 ..	WASHER	1-115
440655-0000 ..	RING	1-111
440659-0000 ..	CYLINDRICAL PIN	1-115
440660-0000 ..	COMPRESSION SPRING	1-115
440661-0000 ..	COMPRESSION SPRING	1-115
440662-0000 ..	COMPRESSION SPRING	1-113
440663-0000 ..	COMPRESSION SPRING	1-111, 1-115
441737-0000 ..	WASHER	1-45, 1-47, 1-55, 1-63
441739-0000 ..	WASHER	1-45, 1-47, 1-55, 1-63
441871-0000 ..	PENDULUM SUSPENSION	1-145, 1-151
442237-0000 ..	NUT	1-157, 1-159
449939-0001 ..	HEATING ELEMENT 15KW	1-155
450833-0000 ..	FILTER	1-59, 1-61
451423-0000 ..	CIRCUIT BOARD	3-17
451430-0000 ..	CONNECTION HOUS.(MINOR)	1-155
456123-0000 ..	SUPPORT	1-155
456139-0000 ..	LOCK PLATE	1-17, 1-19

Part No	Description	Page No
457696-0001 ..	JOINT PIECE	5-35
466074-0002 ..	SLIDER	5-35
476087-0000 ..	LID	1-23
476185-0000 ..	VALVE CONE	1-113
476243-0000 ..	BOTTOM PLATE	5-35
476975-0000 ..	WHEEL	5-31, 5-33
476978-0000 ..	SHAFT	5-35
476979-0000 ..	WASHER	5-35
479234-0000 ..	WASHER	1-147
479261-0000 ..	NIPPLE	1-153, 6-51
484701-0000 ..	SHUTTER	5-31, 5-33, 5-35
486826-0001 ..	SIGN "EMERGENCY STOP"	1-13, 1-239, 1-241, 2-109, 7-19, 8-183, 8-197
490901-0000 ..	SEAL	1-53
490998-0000 ..	THROTTLE SCREW	1-157, 1-159
491230-0000 ..	GRUB SCREW	4-23, 4-25, 4-27, 4-29, 4-31, 4-33, 4-35, 4-37, 4-39, 4-41
491305-0000 ..	CONN.DIAGRAM AIR SUPERH.	1-155
491880-0000 ..	FASTENING PLATE	3-7, 3-9
491929-0000 ..	IMPELLER WHEEL	2-93
495118-0014 ..	DISTANCE PIPE L=14 MM	8-133, 8-135, 8-137, 8-139, 8-141
495377-0000 ..	BUSH	7-29, 7-31
495495-0000 ..	COOLING ELEMENT SSR	7-55, 7-57
497748-0000 ..	PIN	1-117, 1-119
522308-0000 ..	SIGN	10-17
526767-0000 ..	SCREW	5-35
527898-0100 ..	CONTAINER H2O2	2-81, 10-5
527912-0000 ..	NON-RETURN VALVE	2-87
529345-0100 ..	FILLING STATION H2O2	10-5
530551-0000 ..	WASHER	2-87
530587-0000 ..	WASHER	1-113
530588-0000 ..	SEAL RING	1-113, 9-11
530589-0000 ..	SEAL RING	1-111, 1-115, 1-145, 1-151, 9-11
530590-0000 ..	VALVE CONE	1-111, 1-115, 1-145, 1-151
530591-0000 ..	HOLDER	1-115
530592-0000 ..	SEAL RING HOLDER	1-111
530595-0000 ..	SEAL RING HOLDER	1-111
530597-0000 ..	WASHER	1-115
530598-0000 ..	WASHER	1-115
530599-0000 ..	RING	1-115, 1-145, 1-151
531191-0000 ..	BUSHING	1-9
531345-0200 ..	PERSONAL PROTECT. EQ H2O2	9-3
531503-0000 ..	SLIDE RAIL	5-31, 5-33
531616-0000 ..	HOLDER	2-113
531731-0000 ..	GASKET	1-155
532117-0000 ..	CLAMP RING	1-117
532118-0000 ..	CLAMP RING	1-119
532208-0000 ..	SHAFT	10-11
532209-0000 ..	SHEET	10-11
532210-0100 ..	PEROXIDE CONTAINER TROLLEY	10-5
532211-0000 ..	DOWEL	10-11
532349-0000 ..	PLAIN BEARING	1-145, 1-151
532655-0000 ..	CAUTION SIGN	2-95, 10-7
533169-0000 ..	DIAPHRAGM	1-111, 9-11
534310-0001 ..	NOZZLE	5-31, 5-33
534634-0000 ..	PIPE	10-9
534635-0000 ..	VALVE	10-9
534636-0000 ..	LEVEL GLASS	10-9
534637-0000 ..	ATTACHMENT	10-9
534691-0000 ..	DIAPHRAGM	10-9
534692-0000 ..	FRAME SECTION	10-9
534693-0000 ..	PLATE	10-9
534694-0000 ..	SUCTIONPIPE	10-9
534695-0000 ..	WEIGHT	10-9
534696-0000 ..	VALVE	10-9
534697-0000 ..	VALVE HOUSING	10-9
534698-0000 ..	NIPPLE	10-9
536916-0000 ..	AXLE PIN	8-71
539212-0000 ..	GASKET	1-109, 9-11
540306-0001 ..	COMPONENTS WITHOUT TP-NO	3-19
540307-0000 ..	PRINTED CIRCUIT BOARD	3-19
541163-0200 ..	CLAMP RING	1-109
541164-0200 ..	CLAMP RING	1-109
541165-0000 ..	WASHER	1-117, 1-119
541166-0000 ..	WASHER	1-111
541177-0000 ..	BENDING ROLLER	1-185
544725-0000 ..	AXLE PIN	8-71
546929-0000 ..	FILTER	1-147, 1-153
549267-0000 ..	LID	1-59, 1-61
553607-0000 ..	SLEEVE	1-111, 1-113, 1-115
554141-0000 ..	FILTER	1-59, 1-61
554142-0000 ..	FILTER HOUSING	1-59, 1-61
554162-0000 ..	SCREW	1-117, 1-119
554585-0000 ..	STUD SCREW	1-59, 1-61
555458-0000 ..	SEALING WASHER	1-115
556133-0000 ..	SEALING WASHER	1-113

Part No	Description	Page No
556702-0000 ..	AP-VALVE-BODY (51-38)	1-109
559810-0101 ..	TMCC2 CONTROLLER	7-33, 7-35
560931-0000 ..	BRACKET	1-147
560932-0000 ..	INTERMEDIATE PART	1-59, 1-61
561427-0000 ..	CONTAINER	2-95, 10-7
561650-0102 ..	CURVE WHEEL	5-35
563285-0000 ..	BLIND PLUG	2-87
565250-0000 ..	WASHER	2-95, 10-7
565251-0000 ..	VALVE	2-95, 10-7
566171-0000 ..	CUP SPRING	2-91
566194-0000 ..	WEIGHT	2-91
566195-0000 ..	LID	2-91
566196-0100 ..	LID WITH WEIGHT	2-89
567018-0000 ..	STEAM HOUSE	1-109
567070-0011 ..	ELECTRODE	1-185
568583-0000 ..	FORK	1-81, 1-83
574336-0000 ..	SEAL	1-53
574366-0000 ..	VOLUME SHIM	4-23, 4-25, 4-27, 4-29, 4-31, 4-33, 4-35, 4-37, 4-39, 4-41, 9-17
574367-0000 ..	VOLUME BULGE	4-23, 4-25, 4-27, 4-29, 4-31, 4-33, 4-35, 4-37, 4-39, 4-41
574397-0000 ..	ROLL	1-29
574417-0000 ..	ROLL	1-25, 1-27
574418-0000 ..	ROLL	1-25, 1-27
574479-0000 ..	ROLL	1-17, 1-19
574480-0000 ..	ROLL	1-17, 1-19
574481-0000 ..	ROLL	1-17, 1-19
574658-0000 ..	LOGOTYPE TP	10-17
575002-0000 ..	PLUNGER	8-61
575034-0000 ..	ROUND NUT	1-45, 1-47, 1-55, 1-63
575235-0300 ..	CONTROL PANEL	7-3
575236-0300 ..	CONTROL PANEL	7-3
575237-0300 ..	POWER SIDE	7-3
576434-0100 ..	AP-VALVE 51-38	1-107
576436-0100 ..	A-CYLINDER	1-109
576436-0101 ..	===CAD MODEL===	1-111
576436-0102 ..	===CAD MODEL===	1-111
576437-0100 ..	C-CYLINDER	1-109
576438-0100 ..	B-CYLINDER	1-109
576439-0000 ..	CYLINDER HOUSING	1-111, 1-115
576440-0000 ..	END SECTION	1-111, 1-115
576441-0000 ..	PISTON	1-111, 1-115
576442-0000 ..	PISTON ROD	1-115
576443-0000 ..	CYLINDER HOUSING	1-113
576444-0000 ..	END SECTION	1-113
576445-0000 ..	PISTON	1-113
576446-0000 ..	PISTON ROD	1-111
576447-0000 ..	PISTON ROD	1-113
576448-0000 ..	SPACER	1-111
576449-0000 ..	SPACER	1-111
576450-0000 ..	SPACER	1-115
576451-0000 ..	SPACER	1-113
577102-0400 ..	ASEPTIC CHAMBER	1-3, 1-5
577103-0300 ..	FILLING SYSTEM	1-3, 1-5
577104-0300 ..	STERILE AIR SYSTEM	1-3, 1-5
577111-0400 ..	CONVEYOR	5-3
577112-0400 ..	FINAL FOLDER	5-3
577113-0300 ..	DISCHARGE DEVICE	5-3
577114-0300 ..	WASTE CONVEYOR	2-3
577115-0300 ..	FRAME	5-3
577117-0400 ..	ELECTRICAL SYSTEM	2-3
577118-0600 ..	MACHINE BODY	2-3
577119-0400 ..	PNEUMATIC SYSTEM	2-3
577120-0400 ..	DOORS AND COVERS	2-3
577121-0400 ..	PIPE WORK	2-3
577122-0300 ..	EXTERNAL CLEANING SYSTEM	2-3
578640-0000 ..	CLAMPING RING	1-201
578684-0000 ..	SPRING BRACKET	8-93, 8-155
582526-0100 ..	CARRIAGE	10-13
582527-0000 ..	ROD	10-15
583727-0000 ..	SHAFT	8-101
583859-0000 ..	WASHER	1-39
583860-0000 ..	WASHER	1-39
583986-0000 ..	ROLL	8-71
590402-0000 ..	AXLE PIN	8-71
591341-0000 ..	PIN	2-19, 2-21, 2-23
596678-0000 ..	.KNIFE	8-107, 8-115
598878-0000 ..	MACHINE SIGN 2 ADR. EEA	9-3
736514-0000 ..	SHOCK ABSORBER	1-91, 1-125, 9-9
751009-0000 ..	INSULATION	1-155
751284-0000 ..	ROLL	1-25, 1-27
751395-0000 ..	FLANGE	2-93
751457-0000 ..	CANTILEVER	3-7, 3-9
751485-0000 ..	SCREW	1-201
751491-0000 ..	ROLL	1-17, 1-19
751492-0000 ..	ROLL	1-17, 1-19

Part No	Description	Page No
751493-0000 ..	ROLL	1-17, 1-19
751499-0000 ..	ROLL	1-29
751604-0000 ..	SPRING	1-81, 1-83
752126-0000 ..	FORMING ROLLER	1-17, 1-19
752127-0000 ..	FORMING ROLLER	1-17, 1-19
752128-0000 ..	FORMING ROLLER	1-17, 1-19
752129-0000 ..	FORMING ROLLER	1-25, 1-27
752130-0000 ..	FORMING ROLLER	1-25, 1-27
752132-0000 ..	FORMING ROLLER	1-29
752156-0000 ..	FLANGE BUSHING	1-17, 1-19, 9-9
752186-0002 ..	SHAFT	1-17, 1-19
752186-0003 ..	SHAFT	1-25, 1-27, 1-29
752186-0004 ..	SHAFT	1-25, 1-27, 1-29
752186-0005 ..	SHAFT	1-17, 1-19, 1-29
752186-0006 ..	SHAFT	1-17, 1-19, 1-21, 1-29
752186-0007 ..	SHAFT	1-29
752186-0008 ..	SHAFT	1-17, 1-19
752186-0009 ..	SHAFT	1-17, 1-19
752186-0010 ..	SHAFT	1-25, 1-27
752186-0012 ..	SHAFT	1-25, 1-27
752186-0014 ..	SHAFT	1-29
752186-0016 ..	SHAFT	1-21
752186-0017 ..	SHAFT	1-25, 1-27
906254-0000 ..	ROLLER	8-93, 8-155
925877-0000 ..	SUPPORT	1-91
925998-0000 ..	DIAPHRAGM	1-125, 9-9
925999-0000 ..	PROTECTION PIPE	1-91
926820-0000 ..	PLUG	1-91
926906-0000 ..	SPACER	1-125
926907-0000 ..	SCREW	1-125
926909-0000 ..	COMPRESSION SPRING	1-125
926934-0000 ..	SUPPORT	1-125
927044-0000 ..	SPACER	1-125
927194-0000 ..	BODY	1-125
927203-0000 ..	COVER	1-125
927420-0001 ..	O-RING 5.1X1.6 SILICON	1-59, 1-61
927421-0002 ..	O-RING 12.3X2.4 SILICON	1-59, 1-61
927421-0003 ..	O-RING 13.3X2.4 SILICON	1-187
927421-0004 ..	O-RING 15.3X2.4 SILICON	1-59, 1-61, 1-185
927421-0005 ..	O-RING 7.3X2.4 SILICON	10-9
927422-0001 ..	O-RING 19.2X3 SILICON	1-59, 1-61, 10-9
927422-0003 ..	O.RING 24.2X3 SILICON	2-95, 10-7
927422-0005 ..	O-RING 36.2X3 SILICON	2-93
927422-0006 ..	O-RING 42.2X3 SILICON	2-93
927422-0007 ..	O-RING 44.2X3 SILICON	1-59, 1-61
927422-0009 ..	O-RING 54.5X3 SILICON	1-59, 1-61
927422-0016 ..	O-RING 79.5X3 SILICON	2-83
970215-0000 ..	STOP BLOCK	7-13, 7-29, 7-31
971346-0000 ..	GUIDE PIN	7-29, 7-31
975917-0000 ..	KEY FOR SAFETY SWITCH 90044-103	8-185
978380-0000 ..	BLIND PLUG	1-95
978381-0000 ..	WASHER 56X2MM	1-95
978440-0000 ..	CRAMP	1-95
978603-0000 ..	SIGN	2-39
978735-0000 ..	FASTENING PLATE	3-7, 3-9
978999-0000 ..	VALVE	2-85
979256-0000 ..	CLEANING PIPE	1-85, 1-87, 1-99, 1-101
979326-0000 ..	FLOAT	1-81, 1-83
979434-0000 ..	FERRULE	1-125
979500-0003 ..	ELECTRODE	1-147
979813-0000 ..	PLUG	9-3
979847-0000 ..	SHAFT COUPLING	8-159
985328-0000 ..	CONNECTION	2-63, 2-67, 2-69, 2-71, 2-73
985756-0000 ..	KEY	8-43, 8-45
985818-0000 ..	LIFTING UNIT	10-27
985842-0000 ..	BRACKET	7-5, 7-7, 7-9
985851-0000 ..	BRACKET	7-13
988666-0000 ..	GASKET	7-11, 7-13, 7-17, 7-19
988685-0000 ..	PIN	1-207, 1-211, 1-213, 1-233, 2-39, 2-107, 6-39, 6-43, 6-47, 7-11, 7-13, 7-17, 7-19, 8-185, 8-187, 8-195, 8-199
988690-0000 ..	RIM	8-187
996388-0500 ..	PEROXIDE PUMP	2-81
996451-0100 ..	CRANK	1-7
996475-0200 ..	COMPRESSOR UNIT	1-139
1010822-0000 .	RAILING	1-201, 2-67, 2-69, 2-71, 2-73
1010947-0000 .	GASKET	5-21, 5-23
1020146-0000 .	LOCKING BLOCK REPL BY 1020290-101	5-35
1020635-0001 .	HOLDER	5-35
1020637-0000 .	HOLDER	5-35
1035008-0400 .	BATH	1-179
1035076-0100 .	LEG	2-19, 2-21, 2-23
1035259-0200 .	INTERMEDIATE PART	1-73, 1-75, 1-77, 1-79
1035382-0100 .	EMERGENCY STOP	1-7
1035654-0000 .	CONNECTION	1-201

Part No	Description	Page No
1035792-0000	.E-HINGE	1-207, 1-211, 1-213, 1-233, 2-39, 2-107, 6-39, 6-43, 6-47, 7-11, 7-13, 7-17, 7-19, 8-185, 8-187, 8-195, 8-199
1035794-0000	.BLOCKING PIECE	6-39, 6-43, 6-47
1035882-0000	.BENDING ROLLER	2-27
1035895-0000	.SHAFT	8-21
1035897-0000	.SHAFT	1-199
1035898-0000	.BRACKET	1-199
1035942-0000	.HEATING PIPE	1-155
1036119-0000	.LEG	2-25
1036120-0000	.SLEEVE	2-25
1036174-0000	.BEARING COVER	1-35
1036178-0000	.SHAFT	1-35, 1-65, 1-67
1036187-0000	.T-PIPE	1-145
1036188-0000	.SHAFT	1-145, 1-151
1036189-0000	.SPINDLE GUIDE	1-145, 1-151
1036191-0000	.SEAL HOLDER	1-145, 1-151
1036194-0000	.T-PIPE	1-145, 1-151
1036227-0000	.BRACKET	6-55
1036241-0000	.WASHER	1-191, 2-63, 2-67, 2-69, 2-71, 2-73
1036293-0000	.HOLDER	1-149, 1-151
1036294-0000	.GASKET	1-161
1036304-0001	.LOCKING ARM	6-43
1036304-0006	.LOCKING ARM	2-107, 2-109
1036304-0007	.LOCKING ARM	2-109
1036304-0013	.LOCKING ARM	2-107
1036304-0014	.LOCKING ARM	6-43
1036304-0018	.LOCKING ARM	2-119, 2-121
1036314-0000	.BOTTOM PANEL	1-143
1036315-0000	.FRONT PLATE	1-143
1036318-0000	.PIPE	1-143
1036319-0000	.BRACKET	1-143
1036328-0000	.LID	1-35
1036329-0000	.PIN	1-233
1036372-0000	.PIPE	1-155
1036373-0000	.HOLDER	1-23, 1-155
1036465-0000	.LID	1-23
1036475-0000	.PIN	1-23
1036478-0000	.GASKET	1-23
1036496-0000	.WHEEL	1-43
1036516-0000	.CANTILEVER	2-27
1036553-0000	.WHEEL	1-185
1036563-0000	.WASHER	2-107, 2-119, 2-121, 8-185, 8-195, 8-199
1036587-0000	.PIPE	1-145
1036610-0000	.BRACKET	1-199
1036622-0000	.GUIDE ROLLER	1-197, 8-101
1036623-0000	.GUIDE ROLLER	1-197, 8-101
1036753-0000	.UPPER SECTION	1-147
1036777-0000	.GASKET	1-129, 1-131
1036778-0000	.GASKET	1-129, 1-131
1036782-0000	.HOLDER	1-129, 1-131
1036794-0000	.PIPE	6-21
1036810-0000	.HOLDER	1-147
1036811-0000	.CLAMP	1-147, 1-153
1036826-0000	.PIPE	6-19
1036827-0000	.PIPE	6-19, 6-27
1036828-0000	.TANK	6-23, 6-25
1036832-0000	.WHEEL	1-9
1036833-0000	.SCREW	1-9
1036841-0000	.SHAFT	1-9
1036868-0000	.CHAIN	1-9
1036910-0000	.UPPER SECTION	1-153
1036911-0000	.CONTAINER	1-153
1036939-0000	.SIDE PIECE	1-193
1036940-0000	.SIDE PIECE	1-193
1036963-0000	.HOOK HOLDER	1-193
1036965-0000	.HOOK HOLDER	1-193
1036977-0000	.HOLDER	7-17
1037011-0000	.PIPE	1-153
1037012-0000	.AXLE PIN	2-27
1037041-0000	.HOLDER	1-153
1037044-0000	.RAILING	1-201
1037048-0000	.PLATE	1-45, 1-47, 1-55, 1-63
1037080-0000	.GLASS PANE	1-63
1037081-0000	.GASKET	1-63
1037089-0000	.SPACER	1-63
1037093-0000	.SENSOR BRACKET	1-107
1037102-0000	.SPACER PIPE	2-83
1037120-0000	.SHAFT	8-75
1037121-0000	.SHAFT	8-75
1037124-0000	.HOLDER	8-75
1037129-0000	.LID	1-157, 1-159
1037130-0000	.CONNECTION BOX	2-109, 8-183
1037184-0000	.SPACER SCREW	6-5
1037199-0000	.BRACKET	1-65, 1-67

Part No	Description	Page No
1037267-0000	.PIPE	1-157, 1-159
1037268-0000	.LID	1-157, 1-159
1037314-0000	.PIPE CONNECTION	1-181
1037391-0000	.CANTILEVER	2-75
1037423-0000	.SEAT RING	1-15
1037424-0000	.SEAT RING	1-15
1037425-0000	.LEVER	1-15
1037443-0000	.GASKET	2-53, 2-55
1037456-0000	.BRACKET	1-23
1037461-0000	.CONDUCTIVITY PIPE	1-135, 1-137
1037502-0000	.COVERING PLATE	1-235
1037508-0000	.COVERING PLATE	1-235
1037528-0000	.COVERING PLATE	1-235
1037531-0000	.SPACER PLATE	6-5
1037552-0000	.SPACER	1-235
1037562-0000	.SHAFT	2-101
1037565-0000	.BEARING UNIT	2-101
1037571-0000	.GUIDE BUSHING	2-67, 2-69
1037572-0000	.COVER PLATE	7-5, 7-7, 7-9
1037573-0000	.GASKET	7-5, 7-7, 7-9
1037574-0000	.COVER PLATE	7-5, 7-7, 7-9
1037575-0000	.GASKET	7-5, 7-7, 7-9
1037576-0000	.GASKET	7-5, 7-7, 7-9
1037583-0000	.HOLDER	6-51
1037673-0000	.SLEEVE	2-13, 2-15
1037761-0000	.PIN	2-19, 2-21, 2-23
1037762-0000	.PIN	2-19, 2-21, 2-23
1038249-0000	.BUSHING	1-65, 1-67
1038275-0012	.SPACER	7-53
1038334-0000	.PIPE	1-135, 1-137
1038358-0000	.PIPE	1-239, 1-241
1038408-0000	.COVERING PLATE	7-5, 7-7, 7-9
1038409-0000	.WASHER	1-15
1038428-0000	.LOCK PLATE	1-25, 1-27
1038464-0000	.SPROCKET	1-9
1038518-0000	.BRACKET	7-5, 7-7, 7-9
1038519-0000	.GASKET	7-5, 7-7, 7-9
1038634-0000	.DRAINING	1-147
1038659-0000	.STRAIGHT PIPE UNION	1-153
1038688-0000	.HOLDER	1-187
1038714-0000	.CABLE	7-41, 7-47, 7-49, 7-51
1038820-0000	.COVER PLATE	7-5, 7-7, 7-9
1038850-0000	.ANGLE BRACKET	1-191
1038857-0000	.FLANGE	1-185
1038858-0000	.FLANGE	1-185
1038860-0000	.BRACKET	1-185
1038861-0000	.BRACKET	1-185
1038865-0000	.SPACER DISC	8-43, 8-45
1038866-0000	.INTERMEDIARY SECTION	1-147
1038876-0000	.COVERING PLATE	2-13, 2-15, 7-5, 7-7, 7-9
1038879-0000	.PIPE	1-187
1038905-0000	.VALVE	1-85, 1-87, 1-99, 1-101
1038964-0000	.INTERMEDIATE PART	1-127
1038965-0000	.HOLDER	1-127
1040777-0000	.CARRIER	1-9
1040796-0000	.PIPE	2-93
1040807-0000	.LID	2-89
1040808-0000	.GASKET	2-89
1040840-0000	.FLANGE	2-83
1040841-0000	.FLANGE	2-83
1040852-0000	.SEALING RING	2-83
1040853-0000	.SEALING RING	2-83
1040856-0000	.SPACER	1-191
1040859-0000	.COVER	1-143
1040874-0000	.COVER	1-143
1040875-0000	.COVER	1-143
1040876-0000	.COVER	1-143
1040877-0000	.PLATE	1-143
1040878-0000	.PLATE	1-143
1040970-0000	.BRACKET	1-59, 1-61, 1-185, 1-189
1041215-0000	.BLOCKING PIECE	4-11, 4-13
1041216-0000	.SHAFT	3-13, 3-15
1041549-0000	.WASHER	4-15
1041603-0000	.BRACKET	2-27
1041606-0000	.SHAFT	2-27
1041609-0000	.NUT	2-31
1041688-0000	.FITTING BOLT	1-35
1041905-0000	.DOOR	7-13
1041920-0000	.DOOR	7-19
1041921-0000	.HOLDER	6-57
1041925-0000	.PIPE	6-17
1041926-0000	.PIPE	6-17
1041932-0000	.PIPE	6-51
1041933-0000	.PIPE	6-51

Part No	Description	Page No
1041934-0000	.PIPE	6-27
1041937-0000	.SIGN	1-211, 1-213
1041938-0000	.SIGN	6-55
1041939-0000	.DOOR	7-15
1041943-0000	.CONNECTION BOX	6-13
1041946-0000	.PIPE	6-23, 6-25
1041948-0000	.DOOR	7-21
1041949-0000	.CHECKER PLATE	2-63
1041963-0000	.WASTE BOX	6-31
1041967-0000	.COVERING PANEL	6-37
1041970-0000	.DOOR	6-43
1041972-0000	.DOOR	6-47
1041977-0000	.DOOR	7-17
1041978-0000	.HINGE FLANGE	1-45, 1-47, 1-55, 1-63
1041979-0000	.HINGE FLANGE	1-45, 1-47, 1-55, 1-63
1082974-0000	.CRANK	4-5
1086625-0000	.SLIDE RAIL	5-35
1086626-0000	.SLIDE RAIL	5-35
1095597-0100	.TERMINAL	2-31
1095607-0200	.COVERING PANEL	6-3
1095608-0100	.WATER PANEL	6-3
1095609-0200	.PNEUMATIC UNIT	6-53
1095610-0300	.MAIN SWITCH	6-3
1095611-0300	.VALVE PANEL	6-53
1095612-0300	.COOLING WATER SYSTEM	6-3
1095627-0300	.FOAM CLEANING UNIT	6-3
1095630-0200	.CONNECTION BOX	6-3
1095634-0100	.DOOR	7-5, 7-7, 7-9
1095637-0100	.DOOR	7-5, 7-7, 7-9
1095672-0100	.PIPE	6-15
1095673-0100	.SIDE	6-15
1095675-0100	.PIPE	6-15
1095676-0100	.PUMP	6-15
1095677-0100	.BRANCHING PIPE	6-15
1095678-0300	.BALL VALVE	6-15
1095681-0100	.SPRAY GUN	2-43
1095682-0100	.AIR JET GUN	2-37
1095706-0300	.COOLING WATER PUMP	6-7
1095709-0200	.CONNECTION BOX	6-7
1095714-0300	.SUPPLY SYSTEM	6-3
1095716-0100	.PIPE WORK-AIR	6-53
1095778-0100	.PLINTH	7-5, 7-7, 7-9
1095790-0200	.COVERING PLATE	1-7
1095803-0100	.BENDING ROLLER	2-19, 2-21, 2-23
1095853-0300	.CLEANING PIPE	2-51
1095861-0100	.LIGHT FIXTURE	2-5
1095862-0100	.LADDER	1-191
1095863-0200	.PIVOT ARM	2-3
1095883-0200	.GABLE PLATE	6-33
1095886-0200	.COVERING PANEL	6-33
1095888-0200	.HATCH	6-33
1095889-0100	.DOOR	6-33
1095890-0200	.HATCH	6-33
1095891-0200	.DOOR	6-33
1095954-0300	.COOLING SYSTEM	7-3
1103300-0000	.NON-SKID	2-19, 2-21, 2-23
1103391-0000	.PIPE	1-181
1116048-0000	.SPACER	2-67, 2-69
1116536-0000	.BRACKET	7-29, 7-31
1129042-0000	.KEY	2-107, 2-119, 2-121
1129047-0000	.GLASS PANE	7-13
1129066-0000	.RETURN PIPE	6-9
1129101-0000	.BRACKET	1-183
1129141-0000	.MACHINE BODY	6-7
1129150-0000	.PNEUMATIC DIAGRAM	6-57
1129155-0000	.COVERING PLATE	7-5, 7-7, 7-9
1129156-0000	.COVERING PLATE	7-5, 7-7, 7-9
1129157-0000	.PROFILE	7-5, 7-7, 7-9
1129159-0000	.BRACKET	7-5, 7-7, 7-9
1129182-0000	.BRACKET	6-49
1129194-0000	.FRAME	1-233
1129195-0000	.OPENING	1-233
1129196-0000	.FRAME	1-233
1129197-0000	.OPENING	1-233
1129199-0000	.DOOR	1-233
1129202-0000	.CONNECTION BOX	6-49
1129209-0000	.MOUNTING RAIL	6-49
1129210-0000	.MOUNTING RAIL	6-13
1129247-0000	.FRAME	2-101
1129248-0001	.GUARD PLATE	2-101
1129253-0000	.FASTENING PLATE	2-101
1129274-0000	.GUIDE LUG	2-107, 2-109, 2-119, 2-121, 6-39, 6-43
1129275-0000	.BOX FOR DIAGRAM	2-109
1129298-0000	.SHAFT COUPLING	1-33

Part No	Description	Page No
1129318-0000	.BRACKET	7-5, 7-7, 7-9
1129321-0000	.SHUTTER	1-125
1129322-0000	.BRACKET	7-5, 7-7, 7-9
1129324-0000	.WASHER	2-107
1129325-0000	.SEALING FLANGE	2-107
1129328-0000	.ATTACHMENT	2-87
1129338-0000	.BRACKET	7-57
1129341-0000	.PROTECTION	7-53
1129342-0000	.PROTECTION	7-55
1129343-0000	.PROTECTION	7-57
1129378-0000	.BRACKET	2-53
1129379-0000	.PIPE	2-53
1129383-0000	.PIPE	1-23, 2-53
1129387-0000	.CONNECTION TABLE	6-31
1129402-0000	.SPACER SCREW	6-5
1129441-0001	.ELECTRODE	2-83
1129441-0002	.ELECTRODE	2-83
1129441-0003	.ELECTRODE	2-83
1129441-0004	.ELECTRODE	2-83
1129444-0000	.LID	2-99
1129475-0000	.HOLDER	1-239, 1-241
1129478-0000	.GASKET	7-5, 7-7, 7-9
1129480-0000	.CABLE DUCT	1-239, 1-241
1129481-0000	.COVERING PLATE	7-5, 7-7, 7-9
1129504-0000	.MOUNTING RAIL	2-9
1129549-0000	.SHEET	7-5, 7-7, 7-9
1129550-0000	.GASKET	2-13, 2-15, 7-5, 7-7, 7-9
1129570-0000	.LDS, LVDS TERMINAL 1	2-35
1129594-0000	.BRACKET	2-101
1129600-0000	.BRAID	2-13, 2-15
1129637-0000	.COVER PLATE	1-191
1129638-0000	.WASHER	1-191
1129641-0000	.SILICON RUBBER PROFILE	1-191
1129642-0000	.CANTILEVER	7-33, 7-35
1129643-0000	.STAIR	1-193
1129644-0000	.BRACKET	1-193
1129710-0000	.CANTILEVER	2-13, 2-15
1129741-0000	.RAILING	1-201
1129767-0000	.SCREW	1-233, 2-107, 2-109, 2-119, 2-121, 8-185, 8-187, 8-195, 8-199
1129770-0000	.BLOCKING PIECE	1-207, 1-211, 1-213, 1-233, 2-39, 2-107, 2-109, 2-119, 2-121, 7-11, 7-13, 7-17, 7-19, 8-185, 8-187, 8-195, 8-199
1129801-0000	.PIPE	1-107
1129837-0000	.BALL	1-15
1129839-0000	.COOLING PLATE	8-13
1129855-0000	.HOUSE	1-15
1129869-0000	.COOLING PLATE	8-13
1129871-0000	.SPINDLE	1-15
1129925-0000	.BUSBAR	7-59, 7-61
1129973-0000	.COVERING PANEL	7-5, 7-7, 7-9
1140039-0000	.CONVEYOR FRAME	10-15
1140040-0000	.BRACKET	10-15
1140053-0000	.SPACER	7-47, 7-49, 7-51
1140077-0000	.RING	8-13
1140129-0000	.HOLDER	2-11
1140208-0000	.BRACKET	2-101
1140221-0000	.STUD	1-59, 1-61
1140233-0000	.WASHER	4-23, 4-25, 4-31, 4-33, 4-39, 4-41
1140287-0000	.CAM	4-11, 4-13
1140288-0000	.CAM	4-11, 4-13
1140312-0000	.SHAFT	4-23, 4-25, 4-27, 4-29, 4-31, 4-33, 4-35, 4-37, 4-39, 4-41
1140313-0000	.SHAFT	4-23, 4-25, 4-27, 4-29, 4-31, 4-33, 4-35, 4-37, 4-39, 4-41
1140437-0000	.BUSHING	4-17, 4-27, 4-29, 4-35, 4-37
1140479-0000	.ROLLER	4-23, 4-25, 4-27, 4-29, 4-31, 4-33, 4-35, 4-37, 4-39, 4-41
1140485-0000	.SPRING	4-27, 4-29, 4-35, 4-37
1140488-0000	.SHAFT	4-27, 4-29, 4-35, 4-37
1140492-0000	.PIN	4-27, 4-29, 4-35, 4-37
1140515-0000	.SCREW	1-39
1140519-0000	.PROTECTION	7-5, 7-7, 7-9
1140523-0000	.PROTECTION PLATE	7-5, 7-7, 7-9
1140527-0000	.PROTECTION PLATE	7-5, 7-7, 7-9
1140529-0000	.PROTECTION PLATE	7-5, 7-7, 7-9
1140555-0000	.BRACKET	7-19
1140641-0000	.ARM	2-101
1140645-0000	.BRACKET	1-183
1140670-0000	.BRACKET	6-23, 6-25
1140716-0000	.PIN	4-19
1140717-0000	.PIN	4-19
1140769-0000	.DOOR STOPPER	7-5, 7-7, 7-9
1140837-0000	.PULLEY	3-5
1140839-0000	.PULLEY	3-5
1140840-0000	.WHEEL	10-15
1140844-0000	.CURVE	4-15
1140845-0000	.ROLLER	4-15
1140846-0000	.ECCENTRIC SHAFT	4-15

Machine Type Group Description Page No

Part No	Description	Page No
1140851-0000	.WASHER	3-5
1140856-0000	.PROTECTION	4-11, 4-13
1140865-0000	.ROLL	3-13, 3-15
1140866-0000	.BRACKET	3-13, 3-15
1140872-0000	.BRACKET	4-11, 4-13
1147253-0000	.NUT	8-195, 8-199
1185025-0100	.LIFTING EQUIPMENT	10-5
1190006-0401	.PLMS SEND	7-39
1190007-0401	.PLMS RECEIVE	9-45
1195161-0300	.MOVABLE FORMING RING	1-7
1195162-0200	.LOWER FORMING RING	1-7
1195163-0300	.PILLAR	1-7
1195164-0200	.UPPER FORMING RING	1-7
1195165-0300	.FORMING RING	1-7
1195166-0200	.PAPER GUIDE	1-7
1195173-0300	.PENDULUM ROLLER	1-7
1195174-0400	.LONGITUDINAL SEALING	1-7
1195175-0200	.SHORT STOP	1-7
1195180-0100	.BENDING ROLLER	1-7
1195181-0100	.DOOR	1-7
1195182-0100	.DOOR	1-7
1195191-0000	.MOVABLE FORMING RING	1-17, 1-19
1195208-0000	.LINK	4-23, 4-25, 4-27, 4-29, 4-31, 4-33, 4-35, 4-37, 4-39, 4-41
1195209-0200	.BENDING ROLLER	1-7
1195214-0100	.SEAL	1-7
1195266-0000	.BRACKET	2-101
1195269-0100	.DOOR	1-7
1195270-0000	.FRAME	1-45
1195271-0000	.GLASS PANE	1-45
1195272-0000	.GASKET	1-45
1195273-0000	.FRAME	1-47
1195274-0000	.GLASS PANE	1-47
1195275-0000	.GASKET	1-47
1195276-0000	.FRAME	1-55
1195277-0000	.GLASS PANE	1-55
1195278-0000	.GASKET	1-55
1195284-0300	.PIPE-LINE	1-139
1195285-0300	.PRE-HEATING VALVE	1-139
1195293-0000	.SHAFT	4-23, 4-25, 4-31, 4-33, 4-39, 4-41
1195294-0000	.SLEEVE	4-23, 4-25, 4-31, 4-33, 4-39, 4-41
1195317-0000	.SEALING RING	4-23, 4-25, 4-31, 4-33, 4-39, 4-41
1195318-0000	.PLATE	1-29
1195319-0000	.FITTING BOLT	1-21, 1-29
1195322-0000	.BRACKET	1-23
1195460-0000	.BRACKET	1-185
1195466-0000	.PIPE	2-53, 2-55, 2-57, 6-29
1254025-0000	.STRIP	2-63
1254027-0000	.CORNER STRIP	2-63
1254028-0000	.FASTENING PLATE	2-63
1254030-0000	.CHECKER PLATE	2-63
1254091-0000	.PROTECTION	7-53
1254118-0000	.CHECKER PLATE	2-63
1254442-0000	.CABLE SERIAL	7-29, 7-31
1254471-0404	.PLMS OFF-LINE	9-45
1254475-0000	.VALVE BODY	1-95
1254481-0000	.HOLDER	1-207
1254494-0000	.SPACER	2-77
1255293-0000	.CROSS BAR	6-31
1255493-0000	.PIPE	2-53
1255504-0000	.PIPE	1-15
1255551-0000	.SEAL CLOTH	1-187
1255557-0000	.GASKET	2-93
1255559-0000	.PEROXIDE TANK	2-83
1255633-0000	.HATCH	6-41
1255635-0000	.HATCH	6-45
1255636-0000	.COVERING PANEL	6-33
1255637-0000	.COVER	6-33
1255638-0000	.COVERING PANEL	6-33
1255671-0000	.GABLE PLATE	6-35
1255839-0000	.SHAFT	1-185
1255866-0000	.PROTECTION	6-5
1255924-0000	.LABEL	1-105
1255970-0000	.WASHER	1-41
1255975-0000	.SEAL HOLDER	1-53
1255976-0000	.SEAL HOLDER	1-53
1255979-0300	.SCRUBBER	1-139
1255980-0200	.PRODUCT VALVE GROUP	1-73, 1-75, 1-77, 1-79
1255984-0300	.CLEANING PIPE	1-73, 1-75, 1-77, 1-79
1255986-0000	.VALVE BRACKET	1-107
1255987-0000	.COVER	1-107
1260050-0000	.SHAFT	4-17
1260051-0000	.HOUSING	4-17
1260052-0000	.FRAME	5-37
1260061-0000	.HOUSING	5-31, 5-33

Part No	Description	Page No
1260064-0000	.DRUM	5-31, 5-33
1260065-0000	.BRACKET	5-31, 5-33
1260066-0000	.WASHER	5-31, 5-33, 5-35
1260067-0000	.CARRIER	5-31, 5-33, 9-19
1260068-0000	.SHAFT	5-31, 5-33
1260070-0000	.SHAFT	5-31, 5-33
1260097-0300	.CLEANING PIPEWORK UPPER	2-51
1260098-0300	.CLEANING PIPEWORK	2-51
1260101-0000	.PIPE	2-53
1260120-0100	.VOLUME ADJUSTER	3-3
1260128-0000	.SHAFT	5-5, 5-7
1260129-0000	.PULLEY	5-5, 5-7
1260139-0000	.BOLT	5-5, 5-7
1260142-0200	.CURVE WHEEL	5-29
1260148-0000	.ECCENTRIC SHAFT	4-17
1260149-0000	.WORM SCREW	4-17
1260151-0000	.BRACKET	4-17
1260152-0000	.WORM WHEEL	4-17
1260153-0000	.SPACER	4-17
1260154-0000	.WORM SCREW	4-17
1260167-0000	.WASHER	5-5, 5-7
1260168-0000	.BELT	5-5, 5-7
1260169-0000	.WORM WHEEL	4-17
1260170-0000	.SHAFT	4-17
1260171-0000	.SHAFT	3-11
1260172-0000	.BUSHING	3-11
1260174-0000	.BOLT	5-5, 5-7
1260177-0000	.COVER	4-17
1260185-0000	.PIPE	2-55
1260187-0000	.SPACER	3-11
1260303-0000	.WASHER	1-235
1260749-0000	.HOLDER	4-21
1260750-0000	.HINGE	3-13, 3-15
1260751-0000	.HINGE	4-11, 4-13
1260752-0000	.SHAFT	4-11, 4-13
1260753-0000	.PIN	2-19, 2-21, 2-23, 3-13, 3-15
1260863-0000	.PLATE	3-5
1260865-0000	.SPACER	3-5
1260950-0000	.CURVE	4-15
1279075-0000	.SEALING STRIP	2-121
1279076-0000	.SEALING STRIP	2-119
1279088-0000	.LOCKING PLATE	1-25, 1-27
1279089-0000	.LOCKING PLATE	1-25, 1-27
1279091-0000	.LOCKING PLATE	1-17, 1-19
1279456-0000	.LABEL	1-105
1279603-0000	.SHAFT	1-195
1279802-0200	.FRAME	1-3, 1-5
1279803-0200	.BENDING ROLLER	1-191
1279809-0300	.CABINET	7-3
1282028-0000	.BRACKET	7-13
1282029-0000	.BRACKET	7-13
1282030-0000	.FRAME	7-13
1282031-0200	.DOOR	7-5, 7-7, 7-9
1282034-0200	.DOOR	7-5, 7-7, 7-9
1282036-0200	.DOOR	7-5, 7-7, 7-9
1282037-0200	.DOOR	7-5, 7-7, 7-9
1282350-0000	.FRAME	7-17
1282796-0000	.WASHER	5-17, 5-19
1282876-0000	.PIPE	2-85
1282879-0000	.CONNECTING PIPE	2-85
1282889-0000	.PIPE	1-187
1282891-0000	.PIPE	2-83
1282892-0000	.TANK	2-89
1282893-0000	.PIPE	2-89
1282894-0100	.PEROXIDE TANK	2-81
1282895-0200	.PEROXIDE PIPE	2-81
1282896-0100	.TANK	2-81
1282898-0000	.HOSE	2-89
1282899-0000	.HOSE	2-83
1282901-0000	.PIPE	2-85
1282902-0000	.HEAT EXCHANGER	1-181
1282903-0000	.FLANGE	2-83
1282904-0000	.LID	2-83
1282906-0000	.NIPPLE	2-83
1282995-0000	.SCREW	4-11, 4-13
1285109-0000	.NUT	7-29, 7-31
1285329-0000	.PIPE	1-85, 1-87, 1-99, 1-101
1285400-0300	.COVERING PANEL	1-3, 1-5
1285403-0000	.COVERING	1-233
1285521-0000	.FRAME	7-19
1285523-0000	.CONNECTION BOX	7-5, 7-7, 7-9
1285524-0300	.RACK	7-29, 7-31
1285525-0000	.BRACKET	7-33, 7-35
1285528-0300	.FUSE BOARD 2	7-53

Part No	Description	Page No
1285530-0100	.DISTRIBUTION TERMINAL	7-41
1285532-0100	.DISTRIBUTION TERMINAL	7-41
1285535-0000	.MOUNTING PLATE	7-47, 7-49, 7-51
1285537-0300	.RELAY UNIT 2	7-53
1285538-0100	.PLINTH	7-53
1285539-0300	.FUSE BOARD 1	7-53
1285844-0000	.LOCKING ARM	2-119
1285845-0000	.BRACKET	2-119, 2-121
1285846-0000	.LINK	2-119, 2-121
1285847-0000	.SHAFT	2-119, 2-121
1285848-0000	.SHAFT	2-119, 2-121
1296109-0000	.BRACKET	1-21
1296219-0000	.SEALING STRIP	2-113
1296754-0000	.SHAFT	1-17, 1-19
1296755-0000	.SHAFT	1-17, 1-19
1296756-0000	.SHAFT	1-41
1296757-0000	.SHAFT	1-41
1296758-0000	.ROLL	1-17, 1-19
1296759-0000	.ROLL	1-41
1296760-0000	.NUT	1-17, 1-19, 1-41
1296764-0000	.RAIL	1-41
1296847-0300	.CONNECTION BOX	1-3, 1-5
1296877-0100	.SEAL KIT	9-9
1296878-0100	.SEAL KIT	9-9
1296879-0100	.SEAL KIT	9-9
1296997-0000	.WASHER	1-37
1317102-0100	.HYDROGEN PEROXIDE	2-3
1317103-0100	.PUMP	2-81
1317104-0000	.BRACKETS, FASTENING PLATES, - BRACKETS	2-87
1317105-0000	.BRACKET	2-87
1317226-0000	.WEIGHT	2-87
1317252-0000	.CABLE SERIAL	7-29, 7-31
1317268-0100	.COVERS	2-103
1317271-0000	.DOOR	2-107
1317272-0000	.DOOR	2-107
1317273-0200	.DOOR	2-103
1317274-0000	.SEALING STRIP	2-107
1317275-0000	.SEALING STRIP	2-107
1317386-0000	.DOOR	2-109
1317387-0000	.DOOR	2-109
1317388-0100	.DOORS	2-103
1317389-0000	.COVER	2-109
1317390-0000	.COVER	2-109
1317391-0000	.SEALING STRIP	2-109
1317392-0000	.COVER	2-109
1317438-0000	.FORK	1-97
1317447-0000	.PIPE	2-55
1317450-0000	.BRACKET	2-55
1317451-0000	.BRACKET	2-55
1317453-0000	.BRACKET	2-53
1317486-0000	.BRACKET	2-53
1317711-0000	.SHAFT	8-101
1317712-0000	.SHAFT	8-101
1317784-0000	.BRACKET	2-87
1317998-0000	.BRACKET	1-11
1317999-0000	.BLOCK	1-11
1334000-0000	.STOP	1-11
1334003-0000	.FLANGE	1-11
1334004-0000	.ARM	1-11
1334006-0000	.SHAFT	1-11
1334008-0300	.CALENDER ROLLER	1-7
1334051-0000	.SHAFT	9-9
1334056-0000	.COMPRESSION GLAND	1-97
1334187-0000	.PLATE	8-73
1334188-0000	.AXLE PIN	8-73
1334189-0000	.BLOCK	8-7, 8-73
1334190-0000	.BLOCK	8-7, 8-73
1334506-0200	.HEATING UNIT	1-179
1334507-0000	.TUBE	1-189
1334510-0000	.PIPE	1-187
1334511-0000	.PIPE	1-187
1334512-0000	.PIPE	1-187
1334513-0000	.PIPE	1-187
1334514-0000	.PIPE	1-187
1334516-0000	.PIPE	1-189
1334810-0200	.PIPE WORK	2-43
1334812-0100	.COOLING HOSES	2-43
1334989-0100	.LEVEL PROBE	1-89
1346314-0200	.COMPONENT DOOR	7-3
1346353-0000	.LOCK PIN	1-99, 1-101
1346468-0000	.DOOR	7-11
1346523-0000	.CHUTE	2-101
1346524-0000	.HATCH	2-101
1346525-0000	.COVER	2-101

Part No	Description	Page No
1346541-0000	.CONVEYOR CHAIN	2-101
1346557-0000	.GASKET	1-185
1346558-0000	.COVER	1-185
1346565-0000	.VALVE	2-85
1346568-0000	.HEAT EXCHANGER	1-189
1346571-0000	.BATH	1-185
1346574-0000	.PROTECTION	1-189
1346613-0200	.VALVE PANEL	2-37
1346656-0000	.ROD	1-145, 1-151
1346657-0000	.CYLINDER BRACKET	1-145, 1-151
1346658-0000	.BRACKET	1-145, 1-151
1346659-0000	.SCREW	1-145, 1-151
1346665-0000	.PIPE	2-53
1346677-0000	.CYLINDER	1-145, 1-151
1346756-0000	.COVER	2-105
1346757-0000	.GASKET	2-105
1346758-0000	.COVER	2-105
1346759-0000	.GASKET	2-105
1346819-0000	.COVER	2-113
1346822-0000	.SHAFT	2-101
1346823-0200	.FRONT COVER	2-103
1346957-0000	.TUNNEL	2-115
1346958-0000	.PLATE	2-115
1346959-0100	.LID	2-113
1346988-0000	.ROLL	8-21, 9-21
1347069-0100	.SAFETY SWITCH	2-103
1347073-0000	.PULLEY	5-17, 5-19
1347077-0000	.BRUSH	5-5, 5-7
1347090-0000	.CHUTE	5-35
1347113-0000	.PIPE	1-145
1347116-0000	.PIPE	1-149
1347124-0000	.PIPE	1-183
1347126-0000	.PIPE	1-181
1347129-0000	.PIPE	1-153
1347130-0000	.PIPE	1-183
1347131-0000	.PIPE	1-183
1347134-0000	.PIPE	1-149
1347135-0000	.PIPE	1-147
1347136-0000	.PIPE	1-147
1347140-0200	.CABLE TRENCH	1-3, 1-5
1347141-0100	.VALVE HEAT EXCHANGER	1-139
1347142-0200	.SEPARATOR	1-139
1347171-0200	.HYDROGEN PEROXIDE	1-3, 1-5
1347172-0200	.PEROXIDE PIPE	1-179
1347174-0200	.WATER CIRCULATION	1-179
1347191-0200	.CONNECTION BOX	1-3, 1-5
1347192-0000	.LID	1-163, 1-165, 1-167
1347193-0000	.LID	1-163, 1-165, 1-167
1347195-0000	.LID	1-163, 1-165, 1-167
1347223-0000	.PIPE	1-161
1347245-0000	.HEAT EXCHANGER	1-155
1347246-0100	.AIR SUPER-HEATER	1-139
1347484-0000	.SPACER	1-33
1347485-0100	.DRIVEN CALENDER ROLLER	1-7
1347493-0100	.DOOR	1-7
1347494-0000	.FRAME	1-63
1347499-0000	.BEARING BUSHING	1-11
1347500-0000	.SHAFT	1-11
1347511-0000	.FITTING	1-97, 9-9
1347513-0000	.SHEET	1-23
1347521-0000	.ROLLER	1-57, 3-7, 3-9
1347522-0000	.NOZZLE	3-7, 3-9
1347547-0200	.PNEUMATIC SYSTEM	1-3, 1-5
1347548-0300	.VALVE PANEL	1-203, 1-205
1347549-0300	.VALVE RAMP	1-211, 1-213
1347550-0300	.VALVE RAMP	1-211, 1-213
1347551-0200	.HOSE INSTALLATION	1-203, 1-205
1347556-0000	.ECCENTRIC	1-17, 1-19
1347557-0000	.MOVABLE FORMING RING	1-17, 1-19
1347558-0000	.SUPPORT	1-17, 1-19
1347559-0000	.SHAFT	1-17, 1-19
1347615-0100	.COVERING PANEL	1-3, 1-5
1347616-0000	.COVERING PLATE	1-235
1347617-0000	.COVERING PLATE	1-235
1347638-0000	.PIPE	2-19, 2-21, 2-23
1347639-0100	.RAILING	1-191
1347640-0000	.RAILING	1-201
1347641-0000	.RAILING	1-201
1347671-0000	.GASKET	1-185
1347673-0000	.BRACKET	7-55
1347691-0000	.CABLE DUCT	1-207
1347695-0000	.FRAME	1-191
1347696-0000	.FRAME	1-191
1347697-0000	.FRAME	1-191

Part No	Description	Page No
1347703-0000	.SIGN BOARD	1-207
1347704-0000	.THERMOCOUPLE	2-83
1347766-0000	.SIGN	2-109
1347767-0000	.SIGN	2-109
1347867-0000	.CHECKER PLATE	1-191
1347868-0000	.CHECKER PLATE	1-191
1347869-0000	.BRACKET	1-191
1347870-0000	.BRACKET	1-191
1347872-0000	.LID	1-163, 1-165, 1-167
1347873-0000	.CABLE DUCT	1-163, 1-165, 1-167
1347874-0000	.LID	1-163, 1-165, 1-167
1347875-0100	.BALL	1-7
1347877-0000	.HOLDER	1-237
1347878-0000	.RAIL	2-7
1347880-0000	.INSERT	1-163, 1-165, 1-167
1347900-0000	.SPACER	5-35
1347902-0000	.SUPPORT	5-35
1347905-0000	.HOLDER	5-35
1347907-0000	.HOLDER	5-35
1347910-0000	.SHAFT	5-31, 5-33
1347938-0000	.PENDULUM ARM	1-35
1347940-0000	.SHAFT	1-35
1347941-0000	.LID	1-35
1348063-0000	.LEVER	1-35
1348067-0000	.CABLE	7-47, 7-49, 7-51
1348090-0200	.CABLE HARNESS	2-5
1348099-0000	.PIPE	1-99, 1-101
1348197-0000	.HOLDER	2-39
1348232-0000	.FRAME	2-109
1348241-0000	.HOSE CLAMP	5-31, 5-33
1348242-0000	.SPROCKET	9-19
1348243-0000	.SPACER	5-31, 5-33
1348244-0000	.BRACKET	5-31, 5-33
1348256-0000	.VOLUME BULGE	4-23, 4-25, 4-27, 4-29, 4-31, 4-33, 4-35, 4-37, 4-39, 4-41
1348257-0000	.VOLUME SHIM	4-23, 4-25, 4-27, 4-29, 4-31, 4-33, 4-35, 4-37, 4-39, 4-41, 9-17
1348287-0000	.GUIDE	4-17
1348474-0000	.GASKET	1-85, 1-87, 1-99, 1-101, 9-9
1348475-0000	.GASKET	1-85, 1-87, 1-99, 1-101, 9-9
1348496-0100	.CONNECTION BOX	2-5
1348497-0100	.CONNECTION BOX	2-5
1348498-0000	.HOLDER	2-7
1348499-0000	.CONNECTION BOX	2-9
1348500-0000	.CONNECTION BOX	2-7
1348510-0000	.PLATE	4-21, 5-37
1348529-0000	.STRAINER	2-85
1348530-0000	.LID	2-85
1348555-0000	.SEALING RING	1-97, 9-9
1348622-0000	.O-RING	1-23
1348639-0000	.SEALING GASKET	1-97, 9-9
1348707-0101	.DISPLAY UNIT 12"	2-29
1348708-0000	.COVER PLATE	2-35
1348709-0000	.COVER PLATE	2-35
1348744-0000	.CAM	5-31, 5-33
1348746-0000	.GUIDE	5-31, 5-33
1348750-0000	.BRACKET	5-35
1348751-0200	.OUTFEED UNIT	5-29
1348752-0000	.BOX	5-37
1348846-0000	.ROD	7-11, 7-13, 7-17, 7-19
1348938-0000	.LOCK PLATE	1-29
1348940-0000	.PIPE	1-221, 1-223
1348941-0000	.PIPE	1-15
1349014-0000	.PAD	8-81
1349181-0000	.TOUCH GUARD	8-75
1349360-0000	.LINK	4-23, 4-25, 4-27, 4-29, 4-31, 4-33, 4-35, 4-37, 4-39, 4-41
1349367-0000	.BRACKET	4-11, 4-13
1349375-0000	.CURVE	4-15
1349377-0000	.CURVE	4-15
1349379-0000	.CURVE	4-15
1349380-0000	.CURVE	4-15
1349381-0000	.ECCENTRIC SHAFT	4-15
1349386-0000	.SHAFT	4-17
1349387-0000	.SHAFT	4-17
1349397-0000	.SHIM	1-41
1349398-0000	.NUT	1-145, 1-151
1349399-0000	.WASHER	4-27, 4-29, 4-35, 4-37
1349432-0000	.CATCH	8-21
1349464-0300	.CONNECTION BOX	3-3
1349465-0000	.CONNECTION BOX	3-17
1349505-0000	.FRAME	1-189
1349581-0000	.FLAG	8-71
1349608-0000	.HOLDER	1-189
1349672-0000	.GUIDE	8-21
1349762-0000	.SHAFT	1-161
1349777-0000	.DOOR	2-31

Part No	Description	Page No
1349872-0000	.MOUNTING PLATE	1-239, 1-241
1349913-0000	.BUSHING	1-97, 9-9
1349915-0000	.SHAFT	1-41
1349986-0000	.ROLLER	8-71
1349994-0000	.NUT	8-21
1350289-0000	.ROLL	1-29
1350704-0000	.BRACKET	7-5, 7-7, 7-9
1350705-0000	.PIPE	1-181
1350708-0000	.LOCKING ARM	2-119, 2-121
1350716-0000	.SHAFT	9-33
1350718-0000	.CURVE	4-15
1350902-0000	.GLASS PANE	2-19, 2-21, 2-23, 3-13, 3-15
1350904-0000	.ROLL	1-25, 1-27
1350905-0000	.LOCKING PLATE	1-25, 1-27
1350906-0000	.LOCKING PLATE	1-25, 1-27
1350907-0000	.UPPER FORMING RING	1-25, 1-27
1350916-0000	.PROTECTION	7-47, 7-49, 7-51
1363288-0301	.FLEXBOX TETRA BRIK	7-29, 7-31
1363297-0000	.CABLE LVDS 10M	2-13, 2-15
1364345-0300	.TPOP PANEL 12"	2-3
1364346-0304	.PANEL UNIT 12"	2-29
1369439-0102	.PLMS ON-LINE	10-5
1478005-0000	.LOCKING ARM	2-121
1478170-0000	.CONTAINER	1-59, 1-61
1478182-0000	.SPACER	1-17, 1-19
1478236-0000	.COVERING	1-233
1478267-0000	.ROLL	1-21
1478303-0000	.TENSION SPRING	8-21
1478570-0000	.AXLE PIN	1-17, 1-19
1478616-0000	.HEATING PIPE	5-21, 5-23
1478617-0000	.HEATING PIPE	5-21, 5-23
1478618-0000	.SHIM	5-25, 5-27
1478619-0000	.CAP	5-21, 5-23
1478620-0000	.BRACKET	5-21, 5-23
1478621-0000	.CLAMP	5-21, 5-23
1478623-0000	.SPACER	5-21, 5-23
1478625-0000	.COVER HOUSING	5-21, 5-23
1478626-0000	.GASKET	5-21, 5-23
1478627-0000	.SPACER	5-21, 5-23
1478629-0000	.CAP	5-21, 5-23
1478630-0100	.HEATING CHAMBER	5-9
1478631-0000	.SUPPORT	5-5, 5-7
1478634-0000	.SUPPORT	5-35
1478635-0000	.PLATE	5-25, 5-27
1478636-0000	.PLATE	5-25, 5-27
1478637-0000	.SHAFT	5-25, 5-27
1478638-0000	.PULLEY	5-25, 5-27
1478639-0000	.FLANGE	5-25, 5-27
1478640-0000	.SPACER	5-25, 5-27
1478765-0100	.PRESSURE REGULATOR	1-139
1478766-0000	.PIPE	1-157, 1-159
1478813-0000	.SPACER	1-125
1478814-0000	.SENSOR	1-125
1478959-0000	.ARM	4-27, 4-29, 4-35, 4-37
1478960-0000	.LINK ARM	4-27, 4-29, 4-35, 4-37
1484081-0000	.BRACKET	6-11
1484170-0000	.EARTH BAR	7-47, 7-49, 7-51
1484234-0000	.FORMING RING	1-25, 1-27
1484235-0000	.SWING FRAME	7-29, 7-31
1484277-0100	.PLINTH	7-33, 7-35
1484285-0000	.SCREW	1-129, 1-131
1484335-0000	.VOLUME CAM	4-17
1484336-0000	.CURVE	4-15
1484337-0000	.CURVE	4-15
1484363-0000	.COVER	8-179
1484425-0000	.PIPE	1-221, 1-223
1484428-0000	.PLASTIC PLUG	1-185
1484466-0000	.MOUNTING PLATE	7-53
1484467-0000	.MOUNTING PLATE	7-53
1484470-0000	.CABLE	1-151
1484479-0000	.SUPPORT	4-15
1484480-0000	.ADJUSTER	4-15
1484511-0000	.WATER DIAGRAM	2-111, 6-51
1484514-0000	.HOUSING	1-33
1484515-0000	.LID	1-97
1484516-0000	.GASKET	1-97
1484550-0000	.FORK	1-97
1484693-0000	.KNIFE HOLDER	8-95
1484695-0000	.KNIFE	8-95
1484697-0000	.RAIL	8-99
1484703-0000	.TIE ROD	8-95
1484704-0000	.SHAFT	8-87, 8-153
1484705-0000	.SLIDER	8-97
1484706-0000	.GEAR WHEEL	8-97

Part No	Description	Page No
1484707-0200	.STRIP MAGAZINE	8-3, 8-5
1484708-0000	.MOUNTING PLATE	8-71
1484711-0000	.BRACKET	8-79
1484718-0000	.AXLE PIN	8-71
1484719-0000	.AXLE PIN	8-79
1484720-0100	.HINGE	8-69
1484724-0000	.HUB	8-77
1484725-0100	.HUB	8-69
1484726-0000	.SHAFT	8-77
1484728-0000	.BRACKET	8-153
1484738-0000	.BRACKET	8-153
1484740-0000	.BRACKET	8-71
1484745-0100	.WEB GUIDE	8-85, 8-153
1484750-0000	.BRACKET	8-101
1484752-0000	.SLIDER	8-163
1484760-0000	.SLIDER	8-163
1484761-0000	.ANGLE BRACKET	8-163
1484766-0000	.DANCE ROLLER	8-153, 8-163
1484776-0000	.RAIL	8-97
1484777-0000	.SLIDER	8-97
1484778-0000	.PLATE	8-163
1484779-0000	.ROD	8-97
1484781-0000	.PIN	8-95
1484782-0000	.CLAMP BLOCK	8-97
1484783-0000	.CLAMPING ELEMENT	8-97
1484784-0000	.LOCATING PIECE	8-97
1484785-0000	.LOCATING PIECE	8-97
1484793-0000	.ROLLER	1-57, 3-7, 3-9
1484823-0000	.PLATE	1-9
1484826-0000	.CURVE	4-15
1484859-0000	.ROLLER	1-21
1484860-0000	.LOCK PLATE	1-21
1484861-0000	.LOCK PLATE	1-21
1484862-0000	.FORMING RING	1-21
1484863-0000	.FORMING RING	1-21
1484889-0100	.DOOR	6-37
1484890-0000	.DOOR	6-39
1484892-0000	.PNEUMATIC DIAGRAM	2-111, 6-55
1484893-0000	.EXTERNAL CLEANING DIAGRAM	2-111, 6-15
1487023-0000	.PIPE	6-29
1487037-0000	.FLANGE	1-99, 1-101
1487048-0000	.FRAME	5-37
1487051-0000	.SPACER	5-25, 5-27
1487052-0000	.FLANGE	5-25, 5-27
1487053-0000	.ROLLER	5-25, 5-27
1487054-0000	.SHAFT	5-25, 5-27
1487055-0000	.SLIDER	5-25, 5-27
1487075-0000	.GASKET	5-21, 5-23
1487076-0000	.GASKET	5-21, 5-23
1487099-0000	.COVER	3-5
1487114-0000	.BLOCK	1-59, 1-61
1487127-0000	.SPACER SCREW	3-5
1487164-0000	.PLATE	1-41
1487165-0000	.SCREW	1-41
1487166-0000	.SCREW	1-41
1487167-0000	.AXLE PIN	1-41
1487168-0000	.PLATE	1-41
1487198-0000	.PIPE	1-85, 1-87, 1-99, 1-101
1487200-0000	.CLAMP	1-105
1487203-0000	.NOZZLE	3-7, 3-9
1487204-0000	.CANTILEVER	3-7, 3-9
1487205-0000	.SPRING	4-11, 4-13
1487209-0000	.ROLLER	1-57, 3-7, 3-9
1487213-0000	.SHAFT	9-31
1487214-0000	.SCREW	9-31
1487215-0100	.TOOL	9-29
1487219-0000	.CURVE	4-11, 4-13
1487249-0000	.WASHER	4-19
1487263-0000	.BRACKET	1-161
1487332-0000	.SHAFT	4-19
1487373-0000	.WASHER	4-19
1487378-0000	.LOCKING PIN	1-81, 1-83, 9-9
1487482-0000	.SHAFT	9-37, 9-39, 9-41
1487483-0000	.SUPPORT	9-37, 9-39, 9-41
1487494-0000	.BAR	9-43
1487510-0000	.RACK GEAR	8-97
1487511-0000	.BRACKET	8-97
1487517-0000	.CATCH	8-95
1487518-0000	.RULER	8-107, 8-115
1487519-0000	.SHAFT	8-163
1487521-0000	.SHAFT	8-155
1487528-0100	.CYLINDER	8-115
1487530-0001	.GUIDE ROD	8-163
1487536-0000	.GUIDE BRACKET	8-163

Part No	Description	Page No
1487537-0000	.BRACKET	8-163
1487538-0000	.BRACKET	8-163
1487544-0200	.SIDE FEEDER	8-43, 8-45
1487550-0000	.ANGLE BRACKET	8-163
1487551-0000	.PLATE	8-163
1487554-0000	.BRACKET	8-97
1487555-0000	.BUSHING	8-97
1487556-0000	.BAR	8-97
1487557-0000	.BAR	8-97
1487558-0000	.FASTENING PLATE	8-97
1487559-0000	.SLIDER	8-97
1487560-0200	.MACHINE BODY	8-3, 8-5
1487599-0000	.FOLDING FLAP	4-27, 4-29, 4-35, 4-37
1487600-0000	.FOLDING FLAP	4-27, 4-29, 4-35, 4-37
1487687-0000	.LOCK PLATE	1-17, 1-19
1487688-0000	.MOVABLE FORMING RING	1-17, 1-19
1487689-0000	.LOCK PLATE	1-17, 1-19
1487691-0000	.ROLL	1-29
1487693-0000	.SEAL HOLDER	1-53
1487694-0000	.SEAL HOLDER	1-53
1487700-0000	.SHAFT	1-17, 1-19
1487763-0000	.SHAFT	8-93
1487765-0000	.SPACER	8-163
1487769-0000	.SPACER	8-163
1487770-0000	.BRACKET	8-107, 8-115
1487779-0000	.SHAFT	8-107, 8-115
1487781-0000	.BRACKET	8-107, 8-115
1487782-0000	.SHAFT	8-107, 8-115
1487784-0000	.BRACKET	8-157
1487788-0000	.SPACER	8-159
1487795-0000	.PLATE	8-153
1487796-0000	.PLATE	8-153
1487800-0000	.PLATE	8-153
1487802-0000	.SPACER	8-153
1487808-0200	.BRACKET	8-3, 8-5
1487830-0000	.MOVABLE FORMING RING	1-17, 1-19
1487837-0000	.CLAMP	1-105
1487838-0000	.CLAMP	1-105
1487839-0000	.CLAMP	1-105
1487840-0000	.CLAMP	1-105
1487848-0000	.PIPE	1-183
1487874-0000	.SHIM	5-25, 5-27
1487881-0000	.SUPPORT	5-25, 5-27
1487995-0000	.HATCH	8-173, 8-175
1488000-0000	.DOOR	8-185
1488005-0000	.BEARING BLOCK	8-43, 8-45
1490183-0000	.BRACKET	8-163
1490187-0000	.ROCKER ARM	8-71
1490188-0100	.COVER	8-167, 8-169
1490190-0200	.HATCH	8-167, 8-169
1490191-0100	.DOOR	8-167, 8-169
1490193-0100	.COVER	8-167, 8-169
1490199-0000	.BRACKET	8-107, 8-115
1490210-0000	.PLATE	8-59
1490215-0200	.COVERING PANEL	8-3, 8-5
1490219-0000	.BRACKET	8-59
1490220-0000	.ANGLE BRACKET	8-99
1490226-0000	.FILTER	8-185
1490265-0100	.WATER CIRCULATION	1-179
1490279-0000	.SCREW	1-69
1490405-0000	.ROLLER	1-31, 1-51
1490406-0000	.WASHER	1-31, 1-35, 1-49, 1-51
1490407-0000	.WASHER	1-31, 1-35, 1-43, 1-49, 1-51
1490408-0000	.SHAFT	1-31, 1-49
1490409-0000	.ROLLER	1-35
1490410-0000	.SHAFT	1-35
1490411-0000	.ROLLER	1-43
1490412-0000	.SHAFT	1-43
1490413-0000	.SHAFT	1-43
1490415-0000	.SHAFT	1-51
1490742-0000	.EARTH BAR	7-47, 7-49, 7-51
1490791-0000	.GUIDE PIN	8-153
1490804-0000	.HOLDER	8-75
1490806-0200	.HEATING DEVICE	8-69
1490809-0000	.ARM	8-109, 8-117
1490810-0000	.ARM	8-109, 8-117
1490812-0000	.AXLE	8-109, 8-117
1490813-0000	.SCREW	8-109, 8-117
1490814-0000	.PLATE	8-153
1490815-0000	.PLATE	8-153
1490818-0000	.ARM	8-71
1490820-0000	.SHAFT	8-87
1490821-0000	.ANGLE PIECE	8-107, 8-115
1490831-0200	.MAGAZINE	8-3, 8-5

Part No	Description	Page No
1490886-0000	.SHAFT	1-49
1490887-0000	.WASHER	1-49
1490893-0000	.BRACKET	1-191
1490894-0000	.TRIMMING ROLLER PLUS	9-9
1490895-0000	.TRIMMING ROLLER MINUS	9-9
1490902-0000	.BRACKET	1-23
1494664-0000	.AXLE LINK	8-99
1498047-0000	.SEALING BLOCK	8-75
1498078-0000	.PLATE	5-13, 5-15
1498101-0000	.CARRIER	5-31, 5-33, 9-19
1498278-0000	.CAM	4-11, 4-13
1498279-0000	.SHAFT	4-11, 4-13
1498409-0000	.SHEET	8-9
1498429-0000	.AXLE	8-27
1498430-0000	.ROD	8-13
1498445-0000	.COVER	8-69
1498450-0001	.PLATE	8-79
1498451-0001	.SHAFT	8-79
1498453-0200	.DOOR	8-167, 8-169
1498454-0200	.DOOR	8-167, 8-169
1498457-0000	.BRACKET	8-57
1498459-0001	.GLASS PANE	8-195, 8-199
1498459-0002	.GLASS PANE	8-185
1498459-0003	.GLASS PANE	8-173, 8-175, 8-189, 8-191
1498459-0004	.GLASS PANE	8-187
1498460-0000	.HATCH	8-189, 8-191
1498461-0001	.SEALING STRIP	8-195
1498461-0002	.SEALING STRIP	8-173, 8-175, 8-189, 8-191
1498461-0005	.SEALING STRIP	8-185, 8-187
1498479-0000	.GUIDE	4-27, 4-29, 4-35, 4-37
1498502-0000	.BRACKET	2-19, 2-21, 2-23
1498524-0000	.PIPE	1-153
1498526-0000	.REGULATOR BODY	1-125
1498527-0000	.MOUNTING PLATE	1-129, 1-131
1498550-0000	.FRAME	5-37
1498551-0000	.PULLEY	5-5, 5-7
1498552-0000	.FLANGE	5-5, 5-7
1498553-0000	.BELT	5-5, 5-7
1498554-0000	.PULLEY	5-5, 5-7
1498578-0000	.CURVE	4-11, 4-13
1498579-0000	.CURVE	4-11, 4-13
1498583-0000	.LINK	4-23, 4-25, 4-27, 4-29, 4-31, 4-33, 4-35, 4-37, 4-39, 4-41
1498587-0000	.PLATE	4-11, 4-13
1498588-0000	.PLATE	4-11, 4-13
1498589-0000	.PLATE	4-11, 4-13
1498590-0000	.PLATE	4-11, 4-13
1498591-0000	.PROTECTION	4-11, 4-13
1498592-0000	.BRACKET	4-11, 4-13
1498593-0000	.CURVE	4-11, 4-13
1498601-0000	.SHAFT	4-17
1498602-0000	.SHAFT	4-17
1498603-0000	.VOLUME BULGE	4-23, 4-25, 4-27, 4-29, 4-31, 4-33, 4-35, 4-37, 4-39, 4-41
1498604-0000	.VOLUME SHIM	4-23, 4-25, 4-27, 4-29, 4-31, 4-33, 4-35, 4-37, 4-39, 4-41, 9-17
1498608-0000	.VOLUME BULGE	4-23, 4-25, 4-27, 4-29, 4-31, 4-33, 4-35, 4-37, 4-39, 4-41
1498609-0000	.VOLUME SHIM	4-23, 4-25, 4-27, 4-29, 4-31, 4-33, 4-35, 4-37, 4-39, 4-41, 9-17
1498614-0000	.SENSOR	1-41
1498615-0000	.BUSHING	1-41
1498616-0000	.BUSHING	1-41
1498624-0100	.WEB GUIDE	1-195
1498629-0000	.SHAFT	1-11
1498667-0100	.FASTENING PLATE	1-73, 1-75, 1-77, 1-79
1498668-0300	.FILLING PIPE	1-73, 1-75, 1-77, 1-79
1498669-0100	.REGULATING VALVE	1-121, 1-123
1498670-0000	.LID	1-23
1498671-0000	.PAPER GUIDE	1-23
1498673-0200	.CLEANING SLEEVE	1-73, 1-75, 1-77, 1-79
1498674-0100	.TOOLS	9-35
1498675-0000	.BUSHING	9-37, 9-39, 9-41
1498676-0100	.TOOLS	9-35
1498677-0000	.BAR	9-43
1498687-0000	.ADJUSTMENT BRACKET	9-35
1498691-0200	.TOOLS AND TEMPLATES	9-3
1498692-0200	.TOOLS AND TEMPLATE,JAW SYSTEM	9-27
1498693-0100	.TOOLS AND TEMPLATES, FINAL FOLDER	9-27
1498694-0100	.TOOLS AND TEMPLATES, FILLING TUBE	9-27
1498695-0200	.ACCESSORIES	10-3
1498697-0000	.FILLING PIPE	1-97
1498698-0000	.PIPE	1-121, 1-123
1498699-0000	.PIPE	1-121, 1-123, 9-3
1498700-0200	.FLOW REGULATOR	1-73, 1-75, 1-77, 1-79
1498953-0000	.FRAME	5-37
1498969-0000	.SPACER	5-21, 5-23
1498972-0000	.GUIDE	5-31, 5-33
1498973-0000	.BRACKET	5-31, 5-33

Part No	Description	Page No
1498977-0000	.GUIDE	5-31, 5-33
1498980-0000	.INSERT	5-21, 5-23, 5-37
1498997-0000	.CARRIER	5-31, 5-33, 9-19
1499001-0000	.SUPPORT	5-25, 5-27
1499002-0000	.SHAFT	5-25, 5-27
1499003-0000	.ROLLER	5-25, 5-27
1499004-0000	.SLIDER	5-25, 5-27
1499005-0000	.SPACER	5-25, 5-27
1499007-0000	.SUPPORT	5-25, 5-27
1499008-0000	.SHAFT	5-25, 5-27
1499009-0000	.ROLLER	5-25, 5-27
1499010-0000	.SLIDER	5-25, 5-27
1499011-0000	.SPACER	5-25, 5-27
1499013-0000	.SUPPORT	5-25, 5-27
1499016-0000	.PULLEY	5-25, 5-27
1499024-0000	.BAR	1-197
1499025-0000	.ROLLER	1-197
1499026-0000	.SHAFT	1-197
1499027-0000	.BRACKET	1-197
1499089-0000	.INSERT	5-37
1499125-0000	.SEAL	1-99, 1-101
1499126-0000	.SEAL	1-99, 1-101
1499127-0000	.FLANGE	1-85, 1-87, 1-99, 1-101
1499129-0000	.HOLDER	9-31
1499186-0000	.HOLDER	9-31
1499397-0000	.CAM	4-23, 4-25, 4-31, 4-33, 4-39, 4-41
1499407-0000	.FORK	9-43
1499562-0003	.LOCKING ARM	8-185, 8-187
1499562-0004	.LOCKING ARM	8-185, 8-187
1499564-0100	.COVER	8-167, 8-169
1499566-0000	.WASHER	8-99
1499568-0000	.HATCH	8-201
1499569-0000	.BRACKET	8-71
1499570-0000	.HOLDER	8-43, 8-45
1499571-0100	.PAPER REEL HOLDER	8-43, 8-45
1499573-0000	.PIN	8-59
1499577-0000	.ARM	8-115
1499578-0300	.CABLE CONDUIT	8-85
1499579-0000	.SEALING STRIP	8-199
1499582-0000	.AXLE PIN	8-107, 8-115
1499584-0000	.AXLE PIN	8-53, 8-153, 8-161
1499588-0000	.BENDING ROLLER	8-107, 8-115
1499602-0000	.CAM	4-11, 4-13
1499603-0000	.CAM	4-11, 4-13
1499604-0000	.CAM	4-11, 4-13
1499634-0000	.INTERNAL PIPE	1-149
1499642-0101	.TPIH 2500 HORIZONTAL MOUNTING	7-25, 8-7
1499686-0000	.SHAFT	5-25, 5-27
1499687-0000	.ROLLER	5-25, 5-27
1499688-0000	.SLIDER	5-25, 5-27
1499689-0000	.SPACER	5-25, 5-27
1499690-0200	.SQUEEZER	5-9
1499786-0000	.BRACKET	6-23, 6-25
1499908-0000	.PULLEY	5-5, 5-7
1499909-0000	.FLANGE	5-5, 5-7
1499919-0000	.BELT	5-25, 5-27, 9-19
1499935-0000	.SLIDER	5-25, 5-27
1511000-0000	.PLATE	1-197
1511001-0000	.SHAFT	1-197
1511002-0000	.HOLDER	1-197
1511003-0000	.WEIGHT	1-197
1511242-0000	.WASHER	4-15
1511305-0000	.LINK	4-23, 4-25, 4-27, 4-29, 4-31, 4-33, 4-35, 4-37, 4-39, 4-41
1511396-0000	.CAM	4-11, 4-13
1511397-0000	.CAM	4-11, 4-13
1511399-0000	.FOLDING FLAP	4-27, 4-29, 4-35, 4-37
1511400-0000	.FOLDING FLAP	4-27, 4-29, 4-35, 4-37
1511503-0000	.PIPE	1-149
1511521-0000	.LABEL	2-39
1511522-0000	.LABEL	2-39
1511525-0000	.LABEL	2-39
1511526-0000	.LABEL	2-39
1511564-0000	.GUIDE BRACKET	8-163
1511568-0000	.PIN	8-107, 8-115
1511569-0000	.SPACER	8-113, 8-119
1511575-0000	.ARM	8-107
1511579-0000	.BRACKET	8-163
1511585-0200	.STRIP GUIDE	8-69
1511586-0001	.BAR	8-79
1511587-0000	.BUSHING BLOCK	8-79
1511600-0000	.SPACER	1-125
1511651-0000	.SUPPORT	5-35
1511652-0000	.PLATE	5-25, 5-27
1511673-0000	.BRACKET	3-17

Part No	Description	Page No
1512265-0000	.SLEEVE	8-61
1512266-0000	.SLEEVE	8-61
1512267-0000	.ECCENTRIC BUSHING	8-93, 8-155
1512275-0000	.PROTECTION PLATE	8-59
1512276-0000	.PROTECTION PLATE	8-107, 8-115
1512278-0000	.SEALING STRIP	8-201
1512279-0200	.MACHINE BODY	8-43, 8-45
1512299-0000	.SPRAY NOZZLE DOME	1-149
1512300-0000	.SPRAY NOZZLE NUT	1-149
1512301-0000	.SPACER	1-149
1512302-0000	.SPRAY NOZZLE GASKET	1-149
1512319-0000	.SPRAY NOZZLE BODY	1-149
1512321-0000	.PLATE	2-39
1512322-0000	.COPPER BRAID	7-47, 7-49, 7-51
1512346-0000	.CURVE	4-15
1512363-0000	.BEARING HOUSING	8-33, 8-35
1512365-0000	.BRACKET	4-11, 4-13
1512366-0000	.CURVE	4-15
1512367-0000	.CURVE	4-15
1512368-0000	.ECCENTRIC SHAFT	4-15
1512376-0000	.PNEUMATIC DIAGRAM	2-39, 2-111
1512398-0100	.DIAGRAM	2-109
1512405-0000	.NUT	1-149
1512409-0000	.SPRAY NOZZLE INJECTOR	1-149
1512410-0000	.SPRAY NOZZLE PLUG	1-149
1512413-0200	.CONTROL PANEL	8-179
1512414-0000	.SEALING STRIP	8-179
1512420-0000	.PLATE	8-43, 8-45
1512421-0000	.CABLE DUCT	8-63, 8-65, 8-67
1512423-0000	.CABLE DUCT	8-63, 8-65, 8-67
1512425-0000	.CABLE DUCT	8-63, 8-65, 8-67
1512426-0000	.CABLE DUCT	8-63, 8-65, 8-67
1512428-0200	.MOUNTING SHEET	8-69
1512429-0100	.PRESSURE ROLLER	8-153
1512430-0000	.VOLUME SHIM	8-99
1512463-0000	.THERMOCOUPLE	5-21, 5-23
1512526-0000	.STEERING	8-101
1512559-0000	.SPRAY GUN	9-29
1512584-0000	.DRIVE SHAFT	2-101
1512590-0000	.RUBBER BUSHING	4-23, 4-25, 4-31, 4-33, 4-39, 4-41
1512598-0000	.GUIDE	4-17
1512599-0000	.VOLUME CAM	4-17
1512600-0000	.PIPE	4-11, 4-13
1512601-0000	.PIPE	4-11, 4-13
1512604-0000	.SHAFT	4-23, 4-25, 4-27, 4-29, 4-31, 4-33, 4-35, 4-37, 4-39, 4-41
1512605-0000	.BRACKET	4-23, 4-25, 4-27, 4-29, 4-31, 4-33, 4-35, 4-37, 4-39, 4-41
1512606-0000	.VOLUME FLAP	4-23, 4-25, 4-27, 4-29, 4-31, 4-33, 4-35, 4-37, 4-39, 4-41
1512607-0000	.BRACKET	4-23, 4-25, 4-27, 4-29, 4-31, 4-33, 4-35, 4-37, 4-39, 4-41
1512608-0000	.SHAFT	4-23, 4-25, 4-27, 4-29, 4-31, 4-33, 4-35, 4-37, 4-39, 4-41
1512609-0000	.FOLDING FLAP	4-27, 4-29, 4-35, 4-37
1512610-0000	.FOLDING FLAP	4-27, 4-29, 4-35, 4-37
1512616-0000	.PIPE	4-11, 4-13
1512617-0000	.PIPE	4-11, 4-13
1512626-0000	.FOLDING FLAP	4-27, 4-29, 4-35, 4-37
1512627-0000	.FOLDING FLAP	4-27, 4-29, 4-35, 4-37
1512628-0000	.CURVE	4-11, 4-13
1512629-0000	.CURVE	4-11, 4-13
1512644-0000	.ROUND NUT	2-107
1512649-0000	.SHAFT	3-5
1512650-0000	.BEARING HOUSING	3-5
1512651-0000	.CURVE	4-15
1512652-0000	.SHAFT	4-17
1512653-0000	.SHAFT	4-17
1512658-0000	.NOZZLE	3-7, 3-9
1512823-0000	.NUT	5-13, 5-15
1512835-0000	.EXTERNAL PIPE	1-149
1512836-0000	.LID	1-149
1517055-0000	.MOTOR COVER	2-101
1517087-0000	.HINGE	8-71
1517088-0200	.CONTROL PANEL	8-195
1517101-0000	.PIPE	8-43, 8-45
1517105-0000	.PLATE	8-157
1517107-0000	.PROTECTION	8-69
1517113-0000	.RAIL	8-99
1517277-0000	.SPACER	3-7, 3-9
1517278-0000	.SPACER	3-7, 3-9
1517289-0000	.KNIFE	4-23, 4-25, 4-31, 4-33, 4-39, 4-41, 9-17
1517290-0000	.HOLDER	4-23, 4-25, 4-31, 4-33, 4-39, 4-41
1517291-0000	.SHAFT	4-23, 4-25, 4-31, 4-33, 4-39, 4-41
1517295-0000	.SHEET	6-55
1517316-0000	.ROLL	1-29
1517318-0000	.MOVABLE FORMING RING	1-17, 1-19
1517483-0000	.NET	1-149
1517707-0000	.BRACKET	1-189

Part No	Description	Page No
1517714-0000	.SPROCKET	5-13, 5-15
1517715-0100	.STATION CHAIN	5-9
1517717-0000	.SHAFT	5-11
1517718-0000	.SCREW	5-11
1517719-0000	.SLIDER	5-11
1517720-0000	.FRAME	5-13, 5-15
1517721-0000	.FLANGE	5-13, 5-15
1517722-0000	.FLANGE	5-13, 5-15
1517723-0000	.SPACER	5-13, 5-15
1517724-0000	.SPACER	5-13, 5-15
1517727-0000	.FLANGE	5-13, 5-15
1517731-0000	.PIN	5-17, 5-19
1517732-0000	.SPACER	5-13, 5-15
1517733-0000	.GUIDE	5-13, 5-15
1517734-0000	.GUIDE	5-13, 5-15
1517735-0100	.CHAIN SUPPORT	5-9
1517736-0000	.GUIDE	5-13, 5-15
1517737-0000	.GUIDE	5-13, 5-15
1517738-0000	.GUIDE	5-13, 5-15
1517740-0100	.SWING FRAME	5-9
1517751-0000	.SHAFT	8-81
1517968-0000	.SLIDER	5-25, 5-27
1519178-0000	.SPACER	3-7, 3-9
1519184-0000	.FLANGE	1-65, 1-67
1519185-0000	.FLANGE	1-65, 1-67
1519186-0000	.SHAFT	1-65, 1-67
1519187-0000	.SPACER	1-65, 1-67
1519188-0000	.ARM	1-65, 1-67
1519189-0000	.LEVER	1-65, 1-67
1519190-0000	.LID	1-65, 1-67
1519203-0000	.BELT	5-25, 5-27, 9-19
1519303-0000	.GASKET	1-23
1519304-0000	.TUNNEL	1-23
1519428-0000	.GUIDE	5-17, 5-19
1519429-0000	.GUIDE	5-17, 5-19
1519430-0000	.SWING FRAME	5-17, 5-19
1519432-0000	.BRACKET	5-17, 5-19
1519433-0000	.SLIDER	5-17, 5-19
1519434-0000	.GUIDE	5-17, 5-19
1519435-0000	.PLATE	5-17, 5-19
1519438-0000	.SPACER	5-17, 5-19
1519442-0000	.TOUCH GUARD	5-17, 5-19
1519443-0000	.PLATE	5-13, 5-15
1519444-0000	.PLATE	5-13, 5-15
1519450-0000	.SPACER	5-17, 5-19
1519486-0000	.FILTER HOUSE	1-59, 1-61
1519491-0000	.LOCK PLATE	1-29
1519492-0000	.LOCK PLATE	1-29
1519501-0000	.FILLING PIPE	1-97
1519502-0000	.SEAL HOLDER	1-53
1519503-0000	.SEAL HOLDER	1-53
1519510-0000	.AXLE PIN	1-17, 1-19
1519521-0000	.SPACER	1-191
1519578-0000	.MOUNTING BLOCK	8-99
1519580-0000	.GUIDE FINGER	8-97
1519581-0000	.ROLLER BAR	8-153, 8-165
1519583-0000	.BRACKET	8-93
1519586-0000	.BRACKET	8-153
1519588-0000	.PROTECTION PLATE	8-43, 8-45
1519589-0100	.HANDLE	8-115
1519591-0000	.RAIL PIN	8-99
1519592-0000	.BOW	8-153, 8-165
1519725-0000	.SHAFT	9-31
1519811-0000	.SHAFT	4-23, 4-25, 4-27, 4-29, 4-31, 4-33, 4-35, 4-37, 4-39, 4-41
1519813-0000	.SHAFT	4-15
1519814-0000	.ECCENTRIC SHAFT	4-15
1519819-0200	.START-UP KIT	9-3
1519942-0000	.PLATE	8-163
1519944-0000	.BRACKET	8-99
1519955-0000	.WASHER	8-95
1519960-0000	.SPACER	8-153
1519967-0000	.CLAMP	8-95
1519975-0100	.LEVEL CONTROL DEVICE	1-73, 1-75, 1-77, 1-79
1520166-0000	.INDUCTOR	4-27, 4-29, 4-35, 4-37, 9-17
1520564-0000	.DOLLY	9-17
1520564-0003	.DOLLY	4-23, 4-25, 4-31, 4-33, 4-39, 4-41
1520726-0000	.BUSBAR	1-37
1523100-0000	.BELT	5-25, 5-27, 9-19
1523101-0000	.BELT	5-25, 5-27, 9-19
1523154-0003	.SPRAY NOZZLE	1-95
1523154-0004	.SPRAY NOZZLE	1-95
1523154-0005	.SPRAY NOZZLE	1-95
1523154-0006	.SPRAY NOZZLE	1-95
1523368-0000	.VOLUME CAM	4-17

Part No	Description	Page No
1523483-0000	.ROLLER	8-33, 8-35, 8-39, 8-41
1523486-0000	.SPACER	8-39, 8-41
1523487-0000	.ROLL	8-71, 8-79
1523777-0100	.STAIR CASE	2-59, 2-61
1523780-0000	.SHAFT	2-63, 2-67, 2-69
1523781-0000	.CHECKER PLATE	2-63
1523782-0000	.CHECKER PLATE	2-63
1523783-0000	.TOE PLATE	2-63
1523784-0000	.TOE PLATE	2-63
1523793-0000	.TOE PLATE	2-67, 2-69
1523980-0000	.MOUNTING BLOCK	4-23, 4-25, 4-31, 4-33, 4-39, 4-41
1523981-0000	.GUIDE	4-27, 4-29, 4-35, 4-37
1524167-0000	.CORNER STRIP	2-67, 2-69, 2-71, 2-73
1524168-0000	.CORNER STRIP	2-67, 2-69
1524171-0000	.FRAME	2-71, 2-73
1524172-0000	.CHECKER PLATE	2-71, 2-73
1524173-0000	.CHECKER PLATE	2-71, 2-73
1524174-0000	.HOOK	2-71, 2-73
1524175-0000	.LEG	2-71, 2-73
1524176-0000	.CLAMP	2-71, 2-73
1524177-0000	.TOE PLATE	2-71, 2-73
1524178-0000	.TOE PLATE	2-71, 2-73
1524179-0000	.TOE PLATE	2-71, 2-73
1524180-0000	.TOE PLATE	2-71, 2-73
1524181-0000	.PIN	2-71, 2-73
1524182-0000	.RAILING	2-71, 2-73
1524185-0000	.EXTENSION PIECE	2-71, 2-73, 2-75
1524186-0000	.PROFILE	2-75
1524187-0000	.PROFILE	2-75
1524188-0000	.STAIR	2-75
1524190-0000	.BRACKET	2-75
1524191-0000	.RIM	2-75
1524192-0000	.RAILING	2-75
1524193-0000	.RAILING	2-75
1524260-0000	.SHAFT	4-11, 4-13
1524267-0000	.HOLDER	4-11, 4-13
1524394-0100	.CYLINDER	8-107
1524398-0100	.HANDLE	8-107
1524404-0100	.COVER	8-167, 8-169
1524405-0000	.COVER PLATE	8-203
1524406-0000	.SEALING STRIP	8-203
1524431-0000	.HUB	5-31, 5-33
1524438-0000	.HUB	4-7, 4-9
1524474-0000	.PIPE	1-105
1524477-0200	.CUTTING TABLE	8-69
1524481-0000	.SEALING BLOCK	8-81
1524517-0000	.SUPPORT	5-25, 5-27
1524518-0000	.SHAFT	5-13, 5-15
1524519-0000	.PLATE	5-13, 5-15
1524520-0000	.PIN	5-13, 5-15, 5-17, 5-19
1524521-0000	.FLANGE	5-17, 5-19
1524525-0000	.SHAFT	5-13, 5-15
1524526-0000	.FLANGE	5-13, 5-15
1524528-0000	.BRACKET	5-17, 5-19
1524529-0000	.WASHER	5-13, 5-15
1524531-0000	.TOP SECTION	5-17, 5-19
1524532-0000	.SPACER	5-13, 5-15
1524539-0000	.PROTECTION	5-17, 5-19
1524731-0200	.BRACKET	8-153
1524732-0200	.DRIVE UNIT	8-153
1524752-0000	.BRACKET	4-11, 4-13
1524763-0000	.PIPE	4-11, 4-13
1524764-0000	.PIPE	4-11, 4-13
1524845-0100	.BACK PLATFORM	2-59, 2-61
1524847-0000	.PLATFORM	2-67, 2-69
1524848-0000	.PLATFORM	2-67, 2-69
1524850-0000	.CHECKER PLATE	2-67, 2-69
1524851-0000	.CHECKER PLATE	2-67, 2-69
1524854-0000	.BEAM	2-67, 2-69
1524855-0000	.TOE PLATE	2-67, 2-69
1524856-0000	.TOE PLATE	2-67, 2-69
1524857-0000	.TOE PLATE	2-67, 2-69
1524858-0000	.TOE PLATE	2-67, 2-69
1524859-0000	.RAILING	2-67, 2-69
1524860-0000	.RAILING	2-67, 2-69
1524861-0000	.RAILING	2-67, 2-69
1524862-0000	.RAILING	2-67, 2-69
1524864-0000	.RAILING	2-71, 2-73
1524866-0100	.FRONT PLATFORM	2-59, 2-61
1524867-0000	.PLATFORM	2-63
1524868-0000	.PLATFORM	2-63
1524869-0000	.TOE PLATE	2-63
1524870-0000	.RAILING	2-63
1524871-0100	.PLATFORM	2-3

Part No	Description	Page No
1532490-0000	.BELT	5-25, 5-27
1532492-0000	.COOLING PLATE	4-19
1532493-0000	.COOLING PLATE	4-19
1532495-0000	.SCREW	4-19
1532496-0000	.COVER	4-19
1532946-0000	.FLAG	4-39, 4-41
1532949-0000	.FLAG	4-39, 4-41
1533000-0000	.INDUCTOR	4-27, 4-29, 4-35, 4-37, 9-17
1533002-0000	.INDUCTOR	4-27, 4-29, 4-35, 4-37, 9-17
1533428-0000	.BUSBAR	4-19
1535036-0000	.PLATE	2-67, 2-69
1535038-0000	.CHECKER PLATE	2-67, 2-69
1535042-0000	.WASHER	2-67, 2-69
1535043-0000	.PLATFORM	2-67, 2-69
1538011-0000	.FLANGE	1-195
1538012-0000	.ROLLER	1-195
1538013-0000	.BRACKET	1-195
1538014-0000	.ROLLER	1-195
1538015-0000	.SHAFT	1-195
1538016-0000	.SHAFT	1-195
1538017-0000	.SPACER	1-195
1538040-0000	.PLATE	1-195
1538041-0000	.PLATE	1-199
1538048-0000	.PIPE	1-189
1538049-0000	.PIPE	1-189
1538134-0000	.BRACKET	4-23, 4-25, 4-27, 4-29, 4-31, 4-33, 4-35, 4-37, 4-39, 4-41
1538135-0000	.SHAFT	4-23, 4-25, 4-27, 4-29, 4-31, 4-33, 4-35, 4-37, 4-39, 4-41
1538138-0000	.SPACER	3-7, 3-9
1538139-0000	.HOLDER	3-7, 3-9
1538141-0000	.DAMPER	4-23, 4-25, 4-27, 4-29, 4-31, 4-33, 4-35, 4-37, 4-39, 4-41
1538148-0000	.SPRING	4-23, 4-25, 4-27, 4-29, 4-31, 4-33, 4-35, 4-37, 4-39, 4-41, 9-17
1538149-0000	.SPRING	4-23, 4-25, 4-27, 4-29, 4-31, 4-33, 4-35, 4-37, 4-39, 4-41, 9-17
1538186-0100	.PAPER TROLLEY	10-5
1538192-0000	.BRACKET	8-153
1538194-0000	.FINGER	8-81
1538202-0000	.AXLE PIN	8-71
1538302-0000	.HUB	4-15
1538306-0000	.ROLLER	5-31, 5-33
1538494-0000	.LID	1-71
1538521-0000	.BUSHING	4-23, 4-25, 4-27, 4-29, 4-31, 4-33, 4-35, 4-37, 4-39, 4-41
1538567-0000	.CARTON STATION	5-11
1538568-0000	.GUIDE	5-13, 5-15
1538569-0000	.GUIDE	5-13, 5-15
1538570-0000	.FRAME	5-13, 5-15
1538571-0000	.SWING FRAME	5-17, 5-19
1538572-0000	.GUIDE	5-17, 5-19
1538573-0000	.SLIDER	5-17, 5-19
1538574-0000	.BRACKET	5-17, 5-19
1538575-0000	.GUIDE	5-17, 5-19
1538576-0000	.GUIDE	5-17, 5-19
1538577-0000	.PLATE	5-17, 5-19
1538578-0000	.PULLEY	5-17, 5-19
1538579-0000	.TOP SECTION	5-17, 5-19
1538787-0000	.SUPPORT	1-85, 1-87, 1-99, 1-101
1538794-0000	.O-RING	1-85, 1-87, 1-99, 1-101, 9-9
1538800-0000	.PIPE	1-221, 1-223
1538809-0100	.SPLICE DETECTOR	1-195
1538826-0000	.PIPE	1-221, 1-223
1538827-0000	.PIPE	1-221, 1-223
1538828-0000	.PIPE	1-221, 1-223
1538829-0000	.PIPE	1-221, 1-223
1538830-0000	.PIPE	1-221, 1-223
1538831-0000	.PIPE	1-221, 1-223
1538846-0000	.SEAL	1-85, 1-87
1538847-0000	.CABLE DUCT	1-163, 1-165, 1-167
1538868-0000	.BRACKET	2-107, 2-109, 2-119, 2-121, 6-31, 8-43, 8-45
1538870-0100	.PLATFORM	2-59, 2-61
1538889-0000	.EARTH BAR	7-47, 7-49, 7-51
1538960-0000	.PIPE	2-55
1538961-0000	.PIPE	2-57
1538962-0000	.PIPE	2-53
1539348-0000	.HOLDER	4-23, 4-25, 4-27, 4-29, 4-31, 4-33, 4-35, 4-37, 4-39, 4-41, 9-17
1539354-0000	.COOLING PLATE	1-39
1539355-0000	.COOLING PLATE	1-39
1539376-0000	.PULLEY	4-15
1539387-0000	.SCREW	8-71
1539391-0000	.ROUND NUT	8-185, 8-195, 8-199
1539396-0000	.BOW CLAMP	8-153
1539397-0000	.ROLLER	8-165
1539579-0000	.FORMING RING	1-21
1539580-0000	.FORMING RING	1-21
1539924-0000	.VOLUME FLAP	4-23, 4-25, 4-27, 4-29, 4-31, 4-33, 4-35, 4-37, 4-39, 4-41
1539992-0000	.VOLUME FLAP	4-23, 4-25, 4-27, 4-29, 4-31, 4-33, 4-35, 4-37, 4-39, 4-41
1539993-0000	.VOLUME FLAP	4-23, 4-25, 4-27, 4-29, 4-31, 4-33, 4-35, 4-37, 4-39, 4-41

Part No	Description	Page No
1548001-0000	.SIGN	1-211, 1-213
1548011-0000	.GUIDE	5-13, 5-15
1548012-0000	.GUIDE	5-13, 5-15
1548013-0000	.PIPE	5-13, 5-15
1548015-0000	.SWING FRAME	5-17, 5-19
1548016-0000	.GUIDE	5-17, 5-19
1548017-0000	.GUIDE	5-17, 5-19
1548018-0000	.TOP SECTION	5-17, 5-19
1548019-0000	.FRAME	5-13, 5-15
1548020-0000	.CARTON STATION	5-11
1548021-0000	.SHAFT	5-13, 5-15
1548022-0000	.SHAFT	5-13, 5-15
1548024-0000	.CARTON STATION	5-11
1548025-0000	.GUIDE	5-13, 5-15
1548026-0000	.GUIDE	5-13, 5-15
1548027-0000	.SLIDER	5-17, 5-19
1548028-0000	.GUIDE	5-17, 5-19
1548029-0000	.GUIDE	5-17, 5-19
1548030-0000	.PLATE	5-17, 5-19
1548031-0000	.GUIDE	5-17, 5-19
1548032-0000	.PULLEY	5-17, 5-19
1548033-0000	.FRAME	5-13, 5-15
1548034-0000	.SWING FRAME	5-17, 5-19
1548035-0000	.TOP SECTION	5-17, 5-19
1548036-0000	.CARTON STATION	5-11
1548037-0000	.GUIDE	5-17, 5-19
1548038-0000	.GUIDE	5-17, 5-19
1548039-0000	.FRAME	5-13, 5-15
1548040-0000	.NOZZLE	5-21, 5-23
1548041-0000	.NOZZLE	5-21, 5-23
1548042-0000	.NOZZLE	5-21, 5-23
1548043-0000	.NOZZLE	5-21, 5-23
1548044-0000	.SCREW	5-31, 5-33
1548186-0000	.WASHER	5-13, 5-15, 5-31, 5-33
1548195-0000	.ROLL	8-71
1548196-0000	.ROLL	8-71
1548197-0000	.ROLL	8-71
1548200-0000	.BRACKET	8-43, 8-45
1548210-0100	.LOCKING DEVICE	8-163
1548211-0000	.RAILING	2-67, 2-69
1548215-0000	.SHAFT	4-23, 4-25, 4-27, 4-29, 4-31, 4-33, 4-35, 4-37, 4-39, 4-41
1548238-0000	.SHAFT	9-37, 9-39, 9-41
1548240-0000	.BUSHING	9-37, 9-39, 9-41
1548241-0005	.WASHER	1-161
1548245-0000	.PIPE	1-221, 1-223
1548249-0000	.PIPE	1-161
1548253-0000	.PLATE	1-233
1548432-0000	.SPACER	5-13, 5-15
1548433-0000	.ROUND NUT	5-13, 5-15
1548491-0200	.ELECTRICAL CABINET	8-3, 8-5
1548492-0000	.ELECTRICAL CABINET	8-123, 8-125, 8-127, 8-129, 8-131
1548496-0100	.TERMINAL	8-123, 8-125, 8-127, 8-129, 8-131
1548539-0000	.CANTILEVER	2-45
1548565-0000	.VOLUME FLAP	4-23, 4-25, 4-27, 4-29, 4-31, 4-33, 4-35, 4-37, 4-39, 4-41
1548587-0000	.APPLIANCE BOX	8-7
1548588-0000	.GRID ELEMENT	8-7
1548592-0000	.LID	8-7
1548598-0000	.FORMING RING	1-25, 1-27
1548760-0000	.SPACER ROD	1-145, 1-151
1548766-0000	.SHAFT	4-23, 4-25, 4-27, 4-29, 4-31, 4-33, 4-35, 4-37, 4-39, 4-41
1548767-0000	.SHAFT	4-15
1548768-0000	.ECCENTRIC SHAFT	4-15
1548769-0000	.PULLEY	4-15
1548789-0000	.MOTOR PLATE	2-101
1548798-0000	.TIMING BELT	4-15
1548804-0000	.CURVE	4-15
1548805-0000	.CURVE	4-15
1548806-0000	.ECCENTRIC SHAFT	4-15
1548807-0000	.CURVE	4-15
1548808-0000	.CURVE	4-15
1548810-0000	.PIVOT PIN	4-17
1548813-0000	.LINK ARM	4-19
1548817-0000	.WASHER	4-23, 4-25, 4-27, 4-29, 4-31, 4-33, 4-35, 4-37, 4-39, 4-41
1548818-0000	.BRACKET	4-19
1548854-0000	.CAM	5-5, 5-7
1548861-0000	.MOUNTING PLATE	1-129, 1-131
1549122-0000	.FLANGE BEARING	4-27, 4-29, 4-35, 4-37
1549123-0000	.PIVOT PIN	4-27, 4-29, 4-35, 4-37
1549324-0000	.BRACKET	8-43, 8-45
1549332-0000	.ROLLER	8-165
1549412-0000	.SCREW	4-23, 4-25, 4-31, 4-33, 4-39, 4-41
1549601-0000	.WASHER	4-23, 4-25, 4-31, 4-33, 4-39, 4-41
1549858-0000	.BELT	5-25, 5-27, 9-19
1549865-0000	.SPACER	5-35

Part No	Description	Page No
1549969-0000	.SLIDE PLATE	5-31, 5-33
1549970-0000	.SLIDER	5-31, 5-33
1549971-0000	.FASTENING PLATE	5-31, 5-33
1549972-0000	.FOOT	5-31, 5-33
1550605-0000	.SPROCKET	5-31, 5-33
1558062-0000	.PRESSURE RAIL	4-23, 4-25, 4-31, 4-33, 4-39, 4-41
1558162-0000	.ROLLER	1-21
1558186-0000	.ROLLER	1-21
1558187-0000	.TRIMMING ROLLER MINUS	9-9
1558188-0000	.TRIMMING ROLLER PLUS	9-9
1558251-0000	.SHAFT	8-103
1558252-0000	.SCREW	8-103
1558253-0000	.ROLLER	8-103
1558268-0000	.LEG	8-55
1558269-0000	.SLEEVE	8-55
1558270-0100	.LEG	8-43, 8-45
1558418-0000	.SHAFT	1-71
1558477-0100	.WHEEL	10-19
1558479-0100	.HANDLE	10-19
1558480-0100	.LIFTING CYLINDER	10-19
1558484-0000	.PROTECTION PLATE	8-43, 8-45
1558485-0000	.AXLE PIN	8-7
1558487-0000	.SUPPORT	8-43, 8-45
1558771-0000	.FLANGE	1-147
1558795-0000	.RAILING	2-67, 2-69
1558798-0000	.BRACKET	8-43, 8-45
1558801-0000	.SHOULDER SCREW	8-95
1558911-0000	.PRESSURE ROLLER	8-15, 8-17
1558914-0000	.ROLLER BRACKET	8-15, 8-17
1558917-0000	.SPACER DISC	8-19
1558918-0000	.TIGHTENING NUT	8-19
1558933-0000	.FRAME	9-49
1558942-0000	.BRACKET	9-47
1558945-0000	.PIVOT PIN	2-77
1558946-0000	.PLUG	2-75
1558947-0000	.STRIP	2-67, 2-69
1558948-0000	.PLATE	2-79
1558949-0000	.PLATE	2-77
1558974-0000	.PIPE BRACKET	2-77
1558975-0000	.BLOCKING PIECE	2-77
1558983-0000	.DOOR	8-187
1558988-0100	.DOOR	8-167, 8-169
2500015-0000	.PIPE	1-99, 1-101
2500016-0000	.PIPE	1-85, 1-87, 1-99, 1-101
2500017-0000	.PIPE	1-85, 1-87, 1-99, 1-101
2500363-0000	.INSERT	4-21
2500364-0000	.SPACER	3-7, 3-9
2500366-0000	.PLATE	3-13, 3-15
2500367-0000	.PLATE	3-13, 3-15
2500368-0000	.FILLING PIPE	1-97
2500369-0000	.SHAFT	3-13, 3-15
2500376-0000	.ARM	4-27, 4-29, 4-35, 4-37
2500377-0000	.LINK ARM	4-27, 4-29, 4-35, 4-37
2500424-0000	.PIPE	1-221, 1-223
2500425-0000	.PIPE	1-221, 1-223
2500426-0000	.PIPE	1-221, 1-223
2500427-0000	.PIPE	1-221, 1-223
2500428-0000	.PIPE	1-221, 1-223
2500432-0000	.PIPE	1-221, 1-223
2500433-0000	.PIPE	1-221, 1-223
2500434-0000	.PIPE	1-221, 1-223
2500435-0000	.BRACKET	1-221, 1-223
2500436-0000	.PLATE	1-221, 1-223
2500437-0000	.BRACKET	1-221, 1-223
2500588-0000	.ADJUSTMENT BRACKET	9-35
2501219-0000	.BRACKET	8-79
2501220-0000	.BRACKET	8-79
2501221-0000	.BRACKET	8-79
2501222-0100	.GENERATOR CABINET	8-3, 8-5
2501223-0000	.RAIL	5-31, 5-33
2501225-0000	.TEMPLATE	9-33
2501229-0000	.TEMPLATE	9-33
2501230-0000	.TEMPLATE	9-33
2501231-0000	.BRUSH	5-13, 5-15
2501378-0000	.PIPE	2-97
2501513-0000	.PIPE	1-221, 1-223
2501515-0000	.PIPE	1-149
2501516-0000	.CONTAINER	1-149
2501518-0000	.PIPE	1-149
2501519-0000	.PIPE	1-149
2501520-0000	.PIPE	1-183
2501521-0000	.PIPE	1-183
2501522-0000	.PIPE	1-187
2501523-0000	.PIPE	1-187

Part No	Description	Page No
2501524-0000	.PIPE	1-187
2501526-0000	.INDUCTOR	1-37
2501527-0000	.CLAMP	1-85, 1-87
2502402-0000	.PLATE	4-11, 4-13
2502403-0000	.PLATE	4-11, 4-13
2502404-0000	.PLATE	4-11, 4-13
2502405-0000	.PLATE	4-11, 4-13
2502406-0000	.PROTECTION	4-11, 4-13
2502408-0000	.SHAFT	4-23, 4-25, 4-31, 4-33, 4-39, 4-41
2502413-0000	.SPRING	4-23, 4-25, 4-31, 4-33, 4-39, 4-41
2502415-0000	.PIPE	4-11, 4-13
2502969-0000	.FLANGE	5-25, 5-27
2503209-0000	.GASKET	2-13, 2-15
2503573-0000	.GUIDE	5-35
2503654-0000	.RAIL	8-137
2503895-0000	.WASHER	8-123, 8-125, 8-127, 8-129, 8-131
2504426-0000	.SHAFT	3-7, 3-9
2504427-0000	.ROUND NUT	3-7, 3-9
2504428-0000	.SUPPORT	3-7, 3-9
2504429-0000	.GUIDE HOLDER	3-7, 3-9
2504430-0000	.GUIDE ROD	3-7, 3-9
2504431-0000	.SHAFT	3-7, 3-9
2504433-0000	.BEARING HOUSING	3-7, 3-9
2504434-0000	.KNOB	3-7, 3-9
2504625-0000	.RAIL	1-209
2504641-0000	.GEAR WHEEL	4-7, 4-9
2504711-0000	.SUPPORT	5-13, 5-15
2504712-0000	.PLATE	5-13, 5-15
2504722-0000	.PLATE	5-5, 5-7
2504723-0000	.HOLDER	5-5, 5-7
2504724-0000	.SHAFT	5-5, 5-7
2504725-0000	.SUPPORT	5-5, 5-7
2504726-0000	.PLATE	5-31, 5-33
2504727-0000	.GEAR	5-13, 5-15
2504736-0000	.SLIDER	5-31, 5-33
2504801-0000	.BRACKET	8-11
2504807-0000	.AXLE PIN	8-11
2504808-0000	.BRACKET	8-11
2504809-0000	.ROLLER	8-11
2504810-0000	.BRACKET	8-27
2504811-0000	.BRACKET	8-27
2504812-0000	.BLOCK	8-27
2505518-0200	.SOFTWARE	7-29, 7-31
2506263-0000	.WASHER	3-7, 3-9
2506264-0000	.GASKET	3-7, 3-9
2506317-0000	.SHAFT	3-7, 3-9
2506328-0000	.BRACKET	8-53
2506496-0100	.PRESSURE ROLLER	8-13
2506497-0100	.PRESSURE ROLLER	8-13
2506498-0000	.SEALING PLATE	8-19
2506499-0000	.SEALING PLATE	8-19
2506500-0000	.PLATE	8-19
2506501-0000	.PLATE	8-19
2506502-0000	.PLATE	8-19
2506503-0000	.PLATE	8-19
2506504-0000	.PLATE	8-19
2506505-0000	.PLATE	8-19
2506614-0100	.BOBBIN BRAKE	8-3, 8-5
2506615-0100	.BOBBIN BRAKE	8-3, 8-5
2506647-0000	.LEVER	8-39
2506648-0000	.LEVER	8-41
2506649-0000	.BEARING FLANGE	8-39
2506650-0000	.FRAME	8-39, 8-41
2506651-0000	.BEARING FLANGE	8-41
2506652-0000	.AXLE PIN	8-39, 8-41
2506654-0000	.BLOCK	8-21
2506656-0000	.PLATE	8-21
2506657-0000	.SPACER	8-21
2506659-0000	.ROLLER	8-25
2506660-0000	.SPACER	8-9
2506661-0000	.ROLLER	8-23, 8-25
2506663-0000	.SUPPORT	8-23
2506664-0000	.STEERING	8-9
2506666-0000	.AXEL	8-23, 8-25
2506668-0100	.STRIP APPLICATOR	8-3, 8-5
2506686-0000	.SHAFT	5-31, 5-33
2506697-0000	.PLATE	4-43
2506698-0000	.PLATE	4-43
2506706-0000	.FRAME	5-5, 5-7
2506707-0000	.FRAME	5-5, 5-7
2506711-0000	.GUIDE	5-31, 5-33
2506714-0000	.WASHER	5-5, 5-7
2506828-0000	.PIPE	1-147
2506829-0000	.FRAME	7-11

Part No	Description	Page No
2506832-0000	.PLUG	1-85, 1-87
2506836-0000	.PIN	1-81, 1-83
2506837-0000	.FILLING PIPE	1-81, 1-83
2506839-0000	.COLUMN	1-23
2506840-0000	.FLANGE	1-49
2506841-0000	.ROLLER	1-49
2506842-0100	.BENDING ROLLER	1-7
2506843-0000	.CLEANING SLEEVE	1-85, 1-87
2506844-0000	.PLATE	1-211, 1-213
2506845-0000	.DIAGRAM	1-211, 1-213, 2-111
2506846-0000	.PIPE	1-153
2507019-0100	.ROLLER	8-9
2507020-0100	.ROLLER	8-9
2507022-0100	.SPLICE DETECTOR	8-9
2507103-0000	.BEARING FLANGE	8-39, 8-41
2508187-0100	.EMERGENCY STOP	8-179
2508204-0000	.FLANGE	8-161
2508205-0007	.BRACKET	8-161
2508205-0009	.BRACKET	8-161
2508205-0010	.BRACKET	8-161
2508206-0000	.BENDING ROLLER	8-161
2508263-0000	.NOZZLE	5-21, 5-23
2508265-0000	.NOZZLE	5-21, 5-23
2508395-0000	.TEMPLATE	9-33
2508396-0000	.TEMPLATE	9-33
2508408-0000	.PIPE	4-11, 4-13
2508420-0000	.PIPE	4-11, 4-13
2508421-0000	.PIPE	4-11, 4-13
2509551-0000	.LINK ARM	4-27, 4-29, 4-35, 4-37
2509613-0000	.BUSHING	8-19
2509614-0000	.BUSHING	8-19
2509617-0100	.INDUCTOR	8-13
2510243-0000	.GEAR WHEEL	3-7, 3-9
2510359-0000	.FASTENING BRACKET	8-21
2510360-0000	.SHAFT	8-21
2510361-0000	.CONNECTING ROD	8-21
2510362-0000	.SHAFT	8-21
2510363-0000	.SHAFT	8-21
2510364-0000	.SHAFT	8-21
2510365-0000	.ROLLER	8-13
2510366-0000	.SHAFT	8-13
2510372-0000	.BUSHING	2-93
2510393-0000	.BRACKET	8-7
2510399-0000	.BRACKET	8-83
2510400-0000	.HOLDER	8-83
2510401-0100	.HOLDER	8-69
2510404-0000	.SUPPORT	8-23, 8-25
2510405-0000	.SUPPORT	8-23, 8-25
2510416-0000	.TUBE	5-13, 5-15
2510417-0000	.TUBE	5-13, 5-15
2510418-0000	.TUBE	5-13, 5-15
2510419-0000	.TUBE	5-13, 5-15
2510909-0001	.DMC PROGRAMME	7-47, 7-49, 7-51
2510917-0001	.DMC PROGRAMME	7-47, 7-49, 7-51
2511239-0000	.PLATE	4-11, 4-13
2511242-0000	.PROTECTION	4-27, 4-29, 4-35, 4-37
2511243-0000	.PLATE	3-13, 3-15
2511245-0000	.PROTECTION	4-11, 4-13
2511246-0000	.BUSHING	4-27, 4-29, 4-35, 4-37
2511247-0100	.DESIGN CORRECTION DEVICE	3-3
2511248-0200	.PLATE	3-3
2511249-0100	.PHOTOCELL UNIT	3-3
2511255-0100	.FRAME	4-3
2511256-0200	.DRIVE UNIT	4-3
2511257-0100	.DESIGN CORRECTION	4-3
2511258-0100	.VOLUME ADJUSTER	4-3
2511260-0200	.CABLE HARNESS	4-3
2511263-0000	.WASHER	4-27, 4-29, 4-35, 4-37
2511330-0000	.SPACER	1-207
2511339-0000	.SLIDER	5-31, 5-33
2511352-0000	.FRAME	5-5, 5-7
2511353-0000	.FRAME	5-5, 5-7
2511361-0000	.FRAME	5-5, 5-7
2511362-0000	.FRAME	5-5, 5-7
2511410-0000	.TOUCH GUARD	1-105
2511417-0000	.PIPE	1-221, 1-223
2511418-0000	.BRACKET	1-105
2511419-0000	.DISTRIBUTOR BLOCK	1-105
2511420-0000	.DISTRIBUTOR BLOCK	1-105
2511421-0000	.PIPE	1-105
2511422-0000	.PIPE	1-105
2511423-0000	.PIPE	1-105
2511424-0000	.PIPE	1-105
2511426-0000	.PIPE	1-105

Part No	Description	Page No
2511665-0000	.BRACKET	1-89
2511666-0000	.HOLDER	1-89
2511667-0000	.COVER PLATE	7-5, 7-7, 7-9
2512802-0000	.TRANSITION PIPE	1-95
2512806-0000	.PIPE	1-121, 1-123
2512991-0000	.PULLEY	5-13, 5-15
2512992-0000	.PULLEY	5-13, 5-15
2514077-0100	.EXPANSION VESSEL	6-7
2514083-0000	.REDUCTION NIPPLE	6-11
2514087-0000	.PLATE	6-11
2514123-0000	.FRAME	5-5, 5-7
2514124-0000	.FRAME	5-5, 5-7
2514127-0000	.SUPPORT	4-43
2514128-0000	.GUIDE	5-31, 5-33
2514131-0000	.BRACKET	5-17, 5-19
2514132-0000	.PIN	5-17, 5-19
2514133-0000	.BRACKET	5-31, 5-33
2514134-0000	.GUIDE	5-35
2514136-0000	.CHUTE	5-35
2514139-0000	.SUPPORT	5-31, 5-33
2514140-0000	.GUIDE	5-31, 5-33
2514141-0000	.INTERMEDIARY SHAFT	5-31, 5-33
2514142-0000	.INTERMEDIARY SHAFT	5-13, 5-15
2514213-0000	.PIPE	1-85, 1-87, 1-99, 1-101
2514216-0100	.PNEUMATIC PANEL	1-203, 1-205
2514217-0000	.PIPE	1-59, 1-61
2514258-0000	.TUBE HOLDER	5-13, 5-15
2514281-0000	.COUNTER	1-49
2514285-0000	.PLATE	1-23
2514316-0000	.NOZZLE	1-95
2514374-0000	.VOLUME CAM	4-17
2514392-0100	.MACHINE CARRIAGE	10-5
2514449-0100	.CONNECTION BOX	1-207
2515213-0100	.SPRAY SYSTEM	1-7
2515238-0000	.SPACER	1-199
2515289-0000	.BRACKET	8-71
2517064-0000	.ROLLER	1-49
2517065-0000	.ROLLER	1-49
2517171-0000	.CABLE	4-19
2517363-0000	.PIPE	1-221, 1-223
2517364-0000	.CONNECTION BOX	1-237
2517365-0000	.RAIL	1-237
2517368-0000	.STRAIGHT CONNECTION	1-105
2517369-0000	.CONNECTION	1-105
2517370-0000	.CLAMP	1-105
2517371-0000	.CLAMP	1-105
2517372-0100	.LID	1-7
2517373-0000	.FLANGE	1-71
2517375-0000	.COVER	1-105
2517376-0000	.RAIL	1-239, 1-241
2518119-0000	.PLATE	8-51
2519471-0000	.PIPE	1-221, 1-223
2519472-0000	.BRACKET	1-121, 1-123
2519554-0000	.PIPE	2-85
2519555-0000	.PIPE	2-85
2519556-0000	.BRACKET	2-97
2519574-0100	.HYDROGEN PEROXIDE CONCENTRATION METER	2-81
2520199-0000	.GEAR	5-13, 5-15
2520225-0000	.TUBE	5-13, 5-15
2520226-0000	.TUBE	5-13, 5-15
2520227-0000	.TUBE	5-13, 5-15
2520228-0000	.TUBE	5-13, 5-15
2520475-0000	.PIPE	1-221, 1-223
2520476-0000	.PIPE	1-221, 1-223
2520562-0000	.PIPE	1-221, 1-223
2520563-0000	.PIPE	1-221, 1-223
2521084-0000	.FRAME	5-5, 5-7
2521085-0000	.FRAME	5-5, 5-7
2522094-0100	.ELECTRICAL CONNECTION	4-3
2522125-0000	.CLAMP	1-221, 1-223
2522126-0000	.CLAMP	1-221, 1-223
2522148-0000	.PIPE	6-29
2522150-0000	.PLATE	1-69
2522151-0000	.GASKET	1-69
2522161-0100	.LID	1-7
2522184-0000	.PIPE	6-29
2522188-0000	.GASKET	1-37
2522189-0000	.PLATE	1-37
2522190-0000	.PLATE	1-37
2522195-0000	.CONNECTION	1-105
2522261-0000	.PLATE	1-39
2523266-0000	.PUMP SHAFT	2-93
2523319-0000	.PLATE	3-13, 3-15
2523482-0000	.PUSH BUTTON BOX	8-197

Part No	Description	Page No
2523483-0000	.PUSH BUTTON BOX	8-197
2523494-0000	.PLATE	3-13, 3-15
2523497-0000	.BENDING ROLLER	8-159
2523499-0000	.SHAFT	8-159
2523500-0000	.AXLE PIN	8-159
2523581-0000	.CARRIER	5-31, 5-33, 9-19
2523597-0000	.SLIDER	8-81
2523598-0000	.SPLICING TABLE	8-81
2523600-0000	.PIN	8-81
2523601-0000	.PAD	8-81
2523607-0000	.CARBON BRUSH	9-17
2523609-0000	.VOLUME CAM	4-17
2523610-0000	.PLATE	4-11, 4-13
2523611-0000	.PLATE	4-11, 4-13
2523612-0000	.PLATE	4-11, 4-13
2523613-0000	.PLATE	4-11, 4-13
2523614-0000	.PLATE	4-11, 4-13
2523615-0000	.PLATE	4-11, 4-13
2523616-0000	.PLATE	4-11, 4-13
2523617-0000	.PLATE	4-11, 4-13
2523618-0000	.PROTECTION	4-11, 4-13
2523621-0000	.PLATE	4-11, 4-13
2523622-0000	.PIPE	4-11, 4-13
2523642-0000	.PIPE	1-105
2523644-0100	.STEAM SYSTEM	1-73, 1-75, 1-77, 1-79
2523645-0000	.FILTER	1-105
2523647-0000	.PIPE	1-85, 1-87
2523648-0000	.PIPE	1-85, 1-87
2523649-0000	.COUNTER ROLLER	1-21
2523655-0000	.ROLLER	1-21
2523660-0000	.RAIL	1-239, 1-241
2523661-0000	.CONNECTION BOX	1-239, 1-241
2523663-0000	.PIPE	1-105
2523664-0100	.BUTTERFLY VALVE	1-139
2523665-0000	.ARM	1-161
2523670-0300	.FILLING PIPE	1-73, 1-75, 1-77, 1-79
2523679-0000	.CONNECTION	5-31, 5-33
2523693-0000	.INTERMEDIARY SHAFT	5-13, 5-15
2523694-0000	.INTERMEDIARY SHAFT	5-13, 5-15
2523695-0000	.INTERMEDIARY SHAFT	5-5, 5-7
2523696-0000	.INTERMEDIARY SHAFT	5-31, 5-33
2523724-0000	.PLATE	1-37
2523765-0000	.BENDING ROLLER	8-53
2523766-0007	.BRACKET	8-53
2523766-0009	.BRACKET	8-53
2523766-0010	.BRACKET	8-53
2523767-0000	.FLANGE	8-53
2524337-0200	.RELAY UNIT 1	7-53
2524349-0000	.CONNECTING PIPE	1-133
2524351-0000	.PIPE SUPPORT	1-133
2524363-0000	.HANGER	6-31
2524403-0000	.PIPE	1-221, 1-223
2524404-0000	.PIPE	1-221, 1-223
2524453-0000	.CABLE DUCT	1-163, 1-165, 1-167
2524454-0000	.CABLE DUCT	1-163, 1-165, 1-167
2524515-0000	.CABINET	6-5
2524600-0100	.PRESSURE ROLLER	8-85
2524601-0000	.AXLE PIN	8-93
2524602-0000	.HANDLE	8-93
2524603-0000	.HOLDER	8-93
2524604-0000	.ROCKER ARM	8-93
2524606-0000	.CABLE DUCT	8-63, 8-65, 8-67
2524607-0000	.CABLE DUCT	8-63, 8-65, 8-67
2524610-0100	.SUPERSTRUCTURE	9-7
2524611-0100	.JAW SYSTEM	9-7
2524612-0100	.FINAL FOLDER	9-7
2524613-0100	.AUTOMATIC SPLICING UNIT	9-7
2524614-0100	.ELECTRICAL CABINET	9-7
2524615-0100	.MACHINE BODY	9-7
2525338-0000	.PLUG	1-133
2525339-0000	.BRACKET	8-71
2525518-0100	.CLEANING PIPE	1-73, 1-75, 1-77, 1-79
2525531-0000	.PIPE	1-105
2525532-0000	.STEAM PIPE	1-105
2525533-0000	.STEAM PIPE	1-105
2525537-0000	.LOCKING RING	1-81, 1-83
2525540-0000	.SHAFT	1-57
2525541-0200	.TUBE SUPPORT	1-7
2525542-0000	.SUPPORT	9-37, 9-39, 9-41
2525660-0000	.SHAFT	3-5
2525661-0000	.SHAFT	3-5
2525662-0000	.BELT	9-19
2525675-0000	.INTERMEDIARY SHAFT	5-5, 5-7
2525676-0000	.INTERMEDIARY SHAFT	5-13, 5-15

Part No	Description	Page No
2525677-0000	.INTERMEDIARY SHAFT	5-31, 5-33
2525678-0000	.CURVE	4-15
2526930-0000	.CONTACT RAIL	4-19
2526931-0000	.BRACKET	4-19
2526932-0000	.SPACER	4-19
2527133-0000	.GUIDE ROD	3-7, 3-9
2527141-0000	.BRACKET	4-19
2527290-0000	.PLATE	4-19
2527326-0000	.SPACER	8-11
2527401-0000	.DISTRIBUTOR BLOCK	2-19, 2-21, 2-23, 3-13, 3-15
2527413-0000	.HOUSING	4-21
2527726-0000	.CONTACT RAIL	4-19
2527727-0000	.BRACKET	4-19
2527728-0000	.SPACER	4-19
2527729-0000	.PLATE	4-19
2527740-0000	.CLEANING PIPE	1-85, 1-87, 1-99, 1-101
2527741-0000	.CLEANING PIPE	1-85, 1-87, 1-99, 1-101
2528454-0000	.SHAFT	5-31, 5-33
2528968-0000	.PNEUMATIC DIAGRAM	2-111
2529022-0000	.PIPE	4-45, 4-47
2529042-0000	.BRACKET	4-45, 4-47
2529043-0000	.PIPE	4-45, 4-47
2529127-0000	.PIPE	5-13, 5-15
2529128-0000	.PIPE	5-13, 5-15
2529129-0000	.PIPE	5-13, 5-15
2529130-0000	.PIPE	5-13, 5-15
2529412-0000	.PUMP HOUSING	2-93
2529413-0000	.EXTENSION PIPE	2-93
2529417-0000	.SHAFT	1-81, 1-83
2529418-0000	.SHAFT	1-97
2529495-0000	.CONTACT RAIL	4-19
2529496-0000	.BRACKET	4-19
2529544-0000	.CABLE DUCT	8-63, 8-65, 8-67
2529546-0000	.SUPPORT	8-103
2529547-0100	.PAPER GUIDE	8-85, 8-153
2529549-0000	.PLATE	8-93, 8-155
2529550-0000	.SUPPORT	8-21
2529551-0000	.PROTECTION PLATE	8-43, 8-45
2529569-0100	.INDUCTOR	8-9
2529571-0100	.PRESSURE ROLLER	8-9
2529572-0000	.BRACKET	8-17
2529573-0000	.BRACKET	8-15
2529578-0000	.BUSHING	8-19
2529626-0000	.PIPE	4-45, 4-47
2529677-0000	.SPACER	4-19
2529735-0000	.BRACKET	4-19
2529791-0200	.PRESSURE JAW	4-3
2529792-0200	.PRESSURE JAW	4-3
2529793-0200	.PRESSURE JAW	4-3
2529794-0200	.SEALING JAW	4-3
2529795-0200	.SEALING JAW	4-3
2529930-0000	.AIR NOZZLE	8-13
2529990-0000	.FRAME	8-63, 8-65, 8-67
2530121-0000	.CARTON STATION	5-11
2530190-0000	.LOCKING DEVICE	1-81, 1-83
2530399-0000	.HANGER	8-11
2530404-0000	.ROD	8-11
2530405-0000	.BRACKET	8-11
2530406-0000	.ADJUSTING SCREW	8-11
2530407-0000	.BRACKET	8-11
2530408-0000	.LEVER	8-11
2530409-0000	.ROD	8-11
2530410-0100	.STRIP GUIDE	8-9
2531269-0000	.DOOR	1-233
2531270-0000	.DOOR	1-233
2531271-0000	.COVERING	1-233
2531272-0000	.TOP COVER	1-233
2531273-0000	.BRACKET	1-23
2531413-0000	.INSERT	4-21
2531417-0000	.RAIL	2-129
2531428-0000	.CLEANING PIPE	1-99, 1-101
2531429-0000	.CONTAINER	1-85, 1-87, 1-99, 1-101
2531430-0000	.CLEANING PIPE	1-85, 1-87, 1-99, 1-101
2531434-0000	.BRACKET	1-161
2531435-0000	.PLUG	1-161
2531474-0000	.STEERING	4-5
2531489-0000	.SLEEVE	4-5
2531493-0000	.BRACKET	8-81
2531500-0000	.PIPE	2-97
2531501-0000	.PIPE	2-97
2531502-0000	.SPACER	1-233
2531710-0000	.TUBE	5-13, 5-15
2531711-0000	.TUBE	5-13, 5-15
2531712-0000	.TUBE	5-13, 5-15

Part No	Description	Page No
2531713-0000	.TUBE	5-13, 5-15
2531955-0000	.GUIDE ROD	3-7, 3-9
2532535-0000	.HATCH	8-179
2532561-0000	.SPACER	8-159
2532806-0000	.ATTACHMENT PIPE	6-9
2532808-0000	.HOLDER	5-35
2533624-0000	.GLASS PANE	2-119
2533625-0000	.GLASS PANE	2-113
2533626-0000	.GLASS PANE	2-107
2533724-0000	.GLASS PANE	2-121
2533725-0100	.DOOR	2-103
2533726-0100	.DOOR	2-103
2535468-0000	.DISTRIBUTOR BLOCK	1-59, 1-61
2535472-0000	.CONNECTION BOX	1-209
2535665-0000	.PIPE	4-45, 4-47
2535745-0000	.INSERT	5-37
2535932-0000	.CAM	8-21
2536017-0000	.PANEL	2-31
2536019-0000	.FOIL BRIK ASEPTIC	2-31
2537835-0000	.PLUG	1-85, 1-87
2538064-0000	.REFLECTOR	8-115
2538065-0000	.REFLECTOR	8-107
2538072-0100	.AUTOMATIC REEL LOADING	8-3, 8-5
2538073-0001	.SHIMS	8-43, 8-45
2538073-0002	.SHIMS	8-43, 8-45
2538075-0000	.BRACKET	8-43, 8-45
2538076-0000	.BRACKET	8-43, 8-45
2539463-0000	.BRACKET	1-23
2539502-0000	.WELDED CABINET	7-5, 7-7, 7-9
2540595-0001	.COAXIAL CABLE	8-7
2540596-0001	.COAXIAL CABLE	8-7
2540716-0100	.SIGNAL LAMP	2-63, 2-67, 2-69
2540767-0000	.PIPE	2-65
2540801-0000	.PLUG	1-147
2540802-0100	.CLEANING SLEEVE	1-73, 1-75, 1-77, 1-79
2540803-0000	.CLEANING SLEEVE	1-99, 1-101
2540806-0000	.GASKET	1-37
2541083-0100	.BENDING ROLLER	8-43, 8-45
2541122-0100	.DISTRIBUTION TERMINAL	7-5, 7-7, 7-9
2541129-0000	.DOOR	2-121
2541130-0000	.DOOR	2-119
2541890-0100	.BRACKET	8-43, 8-45
2541891-0100	.FILTER	8-43, 8-45
2541942-0000	.BRACKET	8-157
2541943-0000	.BRACKET	8-195, 8-199
2541983-0000	.PIPE	4-45, 4-47
2542330-0000	.SUPPORT	7-25
2542343-0000	.BRACKET	2-45
2542496-0000	.BRACKET	8-157
2543220-0000	.PROFILE	7-5, 7-7, 7-9
2543221-0100	.IH EQUIPMENT	7-5, 7-7, 7-9
2543222-0000	.PROTECTION	7-41
2543342-0000	.MOUNTING PLATE	7-41
2544302-0000	.FRAME	7-29, 7-31
2544899-0000	.BRACKET	4-19
2544900-0000	.SPACER	4-19
2544901-0000	.CONTACT RAIL	4-19
2544913-0000	.PIPE	4-45, 4-47
2544915-0000	.PIPE	4-45, 4-47
2544916-0000	.PIPE	4-45, 4-47
2544918-0000	.PIPE	4-45, 4-47
2544919-0000	.PIPE	4-45, 4-47
2544926-0000	.PIPE	4-45, 4-47
2545016-0000	.SUPPORT	1-85, 1-87, 1-99, 1-101
2545250-0000	.COVER PLATE	7-33, 7-35
2545262-0000	.PIPE	4-45, 4-47
2545308-0000	.CARBON BRUSH	4-27, 4-29, 4-35, 4-37
2546189-0000	.GUIDE	5-35
2546203-0000	.HOLDER	5-35
2546211-0000	.COVER	1-105
2546212-0000	.COVER	1-105
2546213-0000	.COVER	1-105
2546214-0000	.COVER	1-105
2546215-0000	.COVER	1-105
2546227-0000	.HOLDER	5-35
2546322-0000	.ARCH	5-35
2546451-0000	.GLASS PANE	1-233
2546463-0000	.PRESSURE RAIL	8-95
2547013-0000	.CAP	1-233
2547061-0000	.HOLDER	6-51
2547143-0000	.INSERT	5-37
2547146-0000	.PLATE	7-5, 7-7, 7-9
2547150-0100	.PLUG	1-73, 1-75, 1-77, 1-79
2547153-0000	.CONTAINER	1-85, 1-87, 1-99, 1-101

Part No	Description	Page No
2547154-0000	.CLEANING PIPE	1-85, 1-87, 1-99, 1-101
2547155-0000	.CLEANING PIPE	1-99, 1-101
2547233-0000	.SPRING	4-23, 4-25, 4-31, 4-33, 4-39, 4-41
2547666-0000	.DOOR	8-195
2547667-0000	.DOOR	8-199
2549829-0000	.SPACER	8-95
2550269-0001	.LOCKING ARM	8-195
2550269-0002	.LOCKING ARM	8-195
2550333-0000	.GUIDE LUG	8-185, 8-187, 8-195
2550896-0000	.RAIL	8-153
2551062-0000	.PIPE	1-85, 1-87, 1-99, 1-101
2551063-0000	.PIPE	1-95
2551064-0000	.BRACKET	1-95
2551066-0000	.PIPE	1-95
2551067-0000	.PLATE	1-207
2551068-0000	.BRACKET	1-207
2551069-0000	.BRACKET	1-95
2551070-0000	.VALVE	1-95
2551109-0000	.TRIMMING ROLLER PLUS	9-9
2551110-0000	.TRIMMING ROLLER MINUS	9-9
2551115-0000	.PIPE	1-127
2551116-0000	.FLOAT	1-81, 1-83
2552246-0000	.CATCH HANDLE	1-207, 1-211, 1-213
2552317-0002	.TMCC PROGRAMME	7-33, 7-35
2552321-0002	.TMCC PROGRAMME	7-33, 7-35
2552325-0002	.TMCC PROGRAMME	7-33, 7-35
2552329-0001	.TMCC PROGRAMME	7-33, 7-35
2552551-0100	.TPOP DATA COLLECTION	9-3
2552798-0000	.COMPRESSION ROD	8-95
2552802-0000	.SLIDE PLATE	8-95
2552821-0000	.BRACKET	8-43, 8-45
2552978-0000	.FILLING PIPE	1-81, 1-83
2552979-0000	.FILLING PIPE	1-81, 1-83
2552980-0000	.LOCKING RING	1-81, 1-83
2553072-0000	.KEY FOR SAFETY SWITCH	8-195, 8-199
2553107-0000	.HOLDER	8-43, 8-45
2553108-0000	.HOLDER	8-43, 8-45
2553109-0000	.HOLDER	8-43, 8-45
2553136-0002	.TMCC PROGRAMME	7-33, 7-35
2553140-0003	.DMC PROGRAMME	7-47, 7-49, 7-51
2553144-0004	.TPOP HMI	7-39
2553147-0004	.PLMS CONFIG	7-39
2553167-0000	.LID	1-59, 1-61
2553272-0000	.SUPPORT BLOCK	8-111, 8-121
2553273-0000	.AXLE PIN	8-111, 8-121
2553275-0000	.SLIDE PLATE	8-107, 8-115
2553276-0000	.ROCKER ARM	8-115
2553277-0000	.ROCKER ARM	8-115
2553799-0000	.WASHER	8-111, 8-121
2554309-0000	.COVER	1-141
2555083-0000	.FILLING PIPE	1-81, 1-83
2555086-0000	.BUSHING	9-37, 9-39, 9-41
2555087-0100	.SUPPORT	9-3
2555088-0100	.SUPPORT	9-3
2555089-0000	.FLOAT	1-81, 1-83
2555091-0000	.LOCKING RING	1-81, 1-83
2555092-0000	.FILLING PIPE	1-81, 1-83
2555094-0000	.CLEANING PIPE	1-85, 1-87
2555684-0000	.PROFILE	7-5, 7-7, 7-9
2556248-0000	.STOPPER	5-25, 5-27
2556496-0000	.CARRIAGE	8-31
2556497-0000	.CARRIAGE	8-31
2556498-0000	.BEARING BLOCK	8-31
2556499-0000	.BRACKET	8-31
2556503-0100	.PAPER BRAKE	8-31
2556504-0000	.BRACKET	8-33, 8-35
2556505-0002	.PIN	8-33, 8-35
2556505-0003	.PIN	8-33, 8-35
2556506-0000	.LINK	8-33, 8-35
2556507-0000	.LEVER	8-33, 8-35
2556508-0000	.BRACKET	8-33, 8-35
2556509-0000	.SHAFT	8-33, 8-35
2556510-0000	.BRACKET	8-33, 8-35
2556512-0000	.BRACKET	8-31
2556606-0000	.INSERT	4-21
2558133-0000	.PRESSURE REGULATOR	1-105
2558134-0000	.PRESSURE REGULATOR	1-105
2558136-0000	.LINK	1-11
2558137-0000	.HEATING ELEMENT	1-141
2558138-0000	.SUPPORT	1-141
2558143-0000	.COIL	1-141
2558148-0000	.SLIDING STRIP	8-95
2558848-0000	.SCREW	1-85, 1-87, 1-99, 1-101
2558850-0100	.CABLE DUCT	2-3

Part No	Description	Page No
2558851-0000	.CABLE DUCT	2-99
2558853-0200	.WASTE BOX	4-3
2558854-0000	.FILLING PIPE	1-97
2558855-0000	.FILLING PIPE	1-97
2558878-0000	.SIGN	8-69
2558879-0000	.SIGN	8-69
2559045-0001	.ELECTRODE	1-59, 1-61
2559045-0002	.ELECTRODE	1-59, 1-61
2559045-0003	.ELECTRODE	1-59, 1-61
2559045-0004	.ELECTRODE	1-59, 1-61
2559437-0000	.ROCKER ARM	8-107
2559438-0000	.ROCKER ARM	8-107
2559439-0000	.COUPLING BOLT	8-95
2559986-0000	.SEALING PLATE	8-91
2559987-0000	.SEALING PLATE	8-91
2562306-0000	.PIPE	1-141
2562307-0000	.PIPE	1-141
2562308-0000	.INSERT	1-163, 1-165, 1-167, 1-209
2562310-0000	.BRACKET	1-59, 1-61
2562315-0000	.PLUG	1-141
2562551-0000	.SLIDE PLANE	8-87
2562552-0000	.SLIDE PLANE	8-87
2563183-0000	.GUIDE RAIL	8-99
2564030-0000	.INTERMEDIARY SHAFT	5-5, 5-7
2564225-0000	.BUSHING	2-93
2564342-0000	.SPACER	2-93
2564504-0000	.SUPPORT	8-21
2564561-0000	.PIPE	2-93
2564562-0000	.ROLLER	8-95, 8-97
2564589-0000	.EXTENSION PIPE	4-45, 4-47
2564623-0000	.HANDLE	8-31
2564630-0100	.CABLE DRAG CHAIN	8-31
2564632-0100	.VALVE PANEL	8-143
2564633-0100	.VALVE PANEL	8-3, 8-5
2564634-0000	.BEARING BLOCK	8-143
2564898-0000	.BRACKET	4-45, 4-47
2564899-0100	.LUBRICATION UNIT	4-3
2564953-0000	.GRUB SCREW	5-11
2564978-0000	.PIPE	2-93
2565291-0000	.BRACKET	4-45, 4-47
2565549-0000	.PIPE	4-45, 4-47
2565550-0000	.PIPE	4-45, 4-47
2565551-0000	.PIPE	4-45, 4-47
2565552-0000	.PIPE	4-45, 4-47
2565553-0000	.PIPE	4-45, 4-47
2566117-0000	.CUTTING TABLE	8-107, 8-115
2566118-0000	.BRACKET	8-107, 8-115
2566123-0000	.SLIDE PLANE	8-95
2566124-0000	.SLIDE PLANE	8-95
2566125-0000	.SLIDE PLATE	8-95
2566127-0000	.SPACER	8-91
2566128-0000	.HOUSING	8-91
2566129-0000	.ADJUSTMENT ANGLE	8-91
2566130-0000	.PLATE	8-91
2566204-0100	.SUPPORT	2-123
2566205-0000	.FRAME	2-125
2566206-0000	.SUPPORT	2-125
2566207-0000	.HOLDER	2-125
2566415-0000	.PIPE	4-45, 4-47
2569799-0000	.FILLING PIPE	1-97
2569800-0000	.FILLING PIPE	1-81, 1-83
2569801-0000	.FILLING PIPE	1-81, 1-83
2569802-0000	.CLEANING PIPE	1-99, 1-101
2569803-0000	.CLEANING PIPE	1-99, 1-101
2569804-0000	.CLEANING PIPE	1-99, 1-101
2569805-0000	.CLEANING PIPE	1-85, 1-87
2569806-0000	.CLEANING PIPE	1-85, 1-87
2569972-0000	.CABLE PROTECTION	4-11, 4-13
2570132-0000	.CALENDER ROLLER	1-33
2570379-0000	.PNEUMATIC DIAGRAM	2-111
2570605-0000	.SHAFT	3-13, 3-15
2570616-0100	.FASTENING PLATE	2-77
2570649-0000	.SHAFT	3-13, 3-15
2570671-0000	.BRACKET	1-37
2570674-0000	.PIN	1-37
2570676-0000	.HOLDER	1-37
2570821-0000	.SHEET	8-145, 8-147
2570834-0000	.PROTECTIVE CASING	8-143
2570836-0000	.PROTECTION PLATE	8-143
2571846-0000	.HUB	4-7, 4-9
2572069-0000	.MOTOR BRACKET	3-13, 3-15
2573687-0000	.SHAFT	3-13, 3-15
2574072-0000	.BRACKET	4-45, 4-47
2574382-0100	.VALVE PANEL	2-123

Part No	Description	Page No
2574383-0100	.ELECTRIC EQUIPMENT	2-123
2574401-0000	.FRAME	8-87
2574402-0000	.PRESSURE JAW	8-95
2574421-0000	.PIPE	2-89
2575105-0000	.BRACKET	4-45, 4-47
2575419-0000	.BRACKET	4-45, 4-47
2575521-0000	.PIPE	4-45, 4-47
2575522-0000	.PIPE	4-45, 4-47
2575629-0000	.PIPE	4-45, 4-47
2576244-0000	.BRACKET	8-165
2576245-0000	.ARM	8-165
2576379-0000	.ROCKER ARM	8-155
2576396-0000	.PLATE	8-91
2578455-0000	.LIFTING HANDLE	8-155
2578482-0000	.BRACKET	4-45, 4-47
2578483-0000	.BRACKET	4-45, 4-47
2578486-0000	.BRACKET	1-59, 1-61
2578772-0000	.PIPE	4-45, 4-47
2578773-0000	.PIPE	4-45, 4-47
2578782-0000	.PIPE	4-45, 4-47
2578785-0000	.PUSH BUTTON BOX	8-181
2579689-0000	.BRACKET	4-45, 4-47
2579707-0000	.PIPE	4-45, 4-47
2579743-0000	.SUPPORT	1-141
2579744-0100	.HEATER	1-139
2579745-0000	.INSERT	1-141, 1-163, 1-165, 1-167
2579746-0000	.COVER	1-141
2579747-0000	.COVER	1-141
2579748-0000	.PIPE	1-141
2579749-0000	.PIPE	1-141
2579810-0000	.CARBON BRUSH HOLDER	4-27, 4-29, 4-35, 4-37
2579811-0000	.WASHER	4-27, 4-29, 4-35, 4-37
2579829-0000	.PIPE	4-45, 4-47
2579838-0000	.TOUCH GUARD	8-81
2579901-0000	.PIPE	4-45, 4-47
2579906-0000	.PIPE	4-45, 4-47
2579908-0000	.PIPE	4-45, 4-47
2579909-0000	.PIPE	4-45, 4-47
2579910-0000	.PIPE	4-45, 4-47
2579921-0000	.PIPE	4-45, 4-47
2579985-0000	.PIPE	4-45, 4-47
2579996-0000	.PLATE	8-29
2580000-0000	.BRACKET	4-45, 4-47
2580001-0000	.BRACKET	4-45, 4-47
2580102-0000	.BRACKET	4-45, 4-47
2580103-0000	.PIPE	4-45, 4-47
2580104-0000	.BRACKET	4-45, 4-47
2581995-0000	.PIPE	4-45, 4-47
2582003-0100	.GUIDE RAIL	8-85
2582019-0000	.SHAFT COUPLING	4-17
2582558-0000	.BASE PLATE	8-111, 8-121
2582559-0000	.RAIL	8-111, 8-121
2582668-0000	.PLATE	8-99
2582671-0000	.HYDRAULIC DIAGRAM	2-111
2582672-0000	.PNEUMATIC DIAGRAM	2-111
2587250-0000	.ARM	8-107, 8-115
2587251-0000	.ANGLE PIECE	8-107, 8-115
2588044-0000	.BRACKET	8-97
2588045-0000	.BRACKET	8-97
2588046-0000	.SHAFT	8-95, 8-97
2588067-0000	.SHAFT	8-159
2588290-0000	.BRACKET	8-95
2588379-0100	.MATERIAL HOLDER	8-115
2588383-0100	.MATERIAL HOLDER	8-107
2588388-0000	.PIPE	1-221, 1-223
2588389-0000	.PIPE	1-221, 1-223
2588422-0100	.MATERIAL HOLDER L1	8-3, 8-5
2588423-0100	.MATERIAL HOLDER L2	8-3, 8-5
2588946-0100	.SPLICING DEVICE	8-3, 8-5
2588947-0000	.SHIMS	8-91
2588948-0000	.SHIMS	8-91
2589104-0100	.FRAME	8-85
2589105-0100	.DRIVE UNIT	8-85
2589106-0100	.HEATING UNIT	8-85
2589108-0000	.BENDING ROLLER	8-89
2589109-0000	.TOOTHED PULLEY	8-89
2589110-0000	.SHAFT	8-89
2589111-0000	.FLANGE	8-89
2589112-0000	.FLANGE	8-89
2589113-0000	.SHAFT	8-89
2589114-0000	.SHAFT	8-89
2589115-0000	.COVER	8-89
2589119-0000	.NUT	8-87
2589786-0000	.BRACKET	8-171

Part No	Description	Page No
2589787-0000	.FITTING	8-171
2589791-0000	.KNIFE HOLDER	8-107, 8-115
2591680-0100	.HOLDER	8-167, 8-169
2592567-0100	.PRESSURE JAW	8-85
2592568-0100	.BAR CODE READER	8-85
2592780-0000	.DOLLY	8-95
2594227-0000	.PLATE	1-233
2594228-0000	.PLATE	1-233
2594229-0000	.PLATE	1-233
2594230-0000	.PLATE	1-233
2594393-0000	.PNEUMATIC DIAGRAM	8-145, 8-147
2594415-0000	.CONNECTION BOX	2-129
2594544-0000	.SIGN	2-39
2594979-0000	.INSERT	4-21
2595005-0000	.INSERT	4-21
2595642-0000	.PRESSURE JAW	4-23, 4-25, 4-31, 4-33, 4-39, 4-41
2595643-0000	.PRESSURE JAW	4-23, 4-25, 4-31, 4-33, 4-39, 4-41
2595644-0000	.PRESSURE JAW	4-23, 4-25, 4-31, 4-33, 4-39, 4-41
2595645-0000	.SEALING JAW	4-27, 4-29, 4-35, 4-37
2595646-0000	.SEALING JAW	4-27, 4-29, 4-35, 4-37
2595647-0000	.SEALING JAW	4-27, 4-29, 4-35, 4-37
2595648-0000	.PRESSURE JAW	4-23, 4-25, 4-31, 4-33, 4-39, 4-41
2595649-0000	.PRESSURE JAW	4-23, 4-25, 4-31, 4-33, 4-39, 4-41
2595650-0000	.SEALING JAW	4-27, 4-29, 4-35, 4-37
2595651-0000	.SEALING JAW	4-27, 4-29, 4-35, 4-37
2597526-0100	.IH EQUIPMENT	1-37
2597527-0000	.PLUG	1-85, 1-87
2597600-0000	.BUSHING	8-19
2598084-0000	.PLATE	1-141
2598085-0000	.SPACER	1-141
2598086-0000	.INSERT	1-163, 1-165, 1-167
2598203-0100	.PUMP UNIT	2-3
2598215-0100	.HAND CRANK	4-3
2598528-0000	.PLATE	2-13, 2-15
2598530-0000	.FRAME	2-19, 2-21, 2-23
2598533-0000	.HINGE	4-11, 4-13
2598689-0000	.HOSE	2-85
2599941-0000	.SPACER	8-43, 8-45
2603493-0000	.SHAFT	1-57
2603494-0000	.SCREW	1-57
2603495-0000	.BRACKET	1-57
2603496-0000	.BRACKET	1-57
2603497-0000	.BRACKET	1-57
2603500-0000	.SPRING	1-81, 1-83, 1-97
2603957-0000	.SUPPORT	2-127
2605199-0100	.PUMP UNIT	2-123
2605228-0100	.BENDING ROLLER	8-153
2605704-0000	.PLATE	4-7, 4-9
2605705-0000	.SHAFT	4-7, 4-9
2605706-0000	.BRACKET	4-7, 4-9
2605707-0000	.GEAR WHEEL	4-7, 4-9
2605709-0000	.DISC	4-7, 4-9
2605710-0000	.DISC	4-7, 4-9
2606897-0000	.INDUCTOR	1-37
2607080-0000	.PLATE	1-207
2607089-0000	.PRESSURE ROLLER	1-81, 1-83, 1-97
2607090-0000	.BRACKET	1-37
2607091-0000	.BRACKET	1-37
2607092-0000	.BLOCK	1-37
2607093-0000	.PLATE	1-37
2607094-0000	.PLATE	1-37
2607095-0000	.BRACKET	1-37
2607096-0000	.BRACKET	1-37
2607100-0000	.PLATE	1-39
2607101-0000	.INSULATOR	1-39
2608195-0000	.BRACKET	4-45, 4-47
2609885-0001	.PLATE	4-43
2609885-0002	.PLATE	4-43
2609885-0003	.PLATE	4-43
2609886-0001	.PLATE	4-43
2609886-0002	.PLATE	4-43
2609886-0003	.PLATE	4-43
2609887-0000	.PLATE	4-43
2609888-0000	.PLATE	4-43
2609889-0000	.PLATE	4-43
2609890-0000	.PLATE	4-43
2609891-0001	.PLATE	4-43
2609891-0002	.PLATE	4-43
2609891-0003	.PLATE	4-43
2609892-0000	.GUIDE	4-43
2609893-0000	.AIR GUIDE	4-43
2609894-0000	.PLATE	4-43
2609895-0000	.LOCK COMPONENT	4-43
2609896-0000	.SPACER	4-43

Part No	Description	Page No
2610631-0000	.BRACKET	1-11
2610633-0000	.ROLLER	1-11
2610634-0000	.PLUG	1-11
2611155-0000	.BRACKET	1-37
2611156-0000	.ROLLER	1-21
2611161-0000	.INDUCTOR	1-37
2611162-0000	.SUPPORT	1-21
2611163-0000	.SPRING	1-97
2611166-0000	.ROLLER	1-29
2611167-0000	.ROLLER	1-29
2611168-0000	.FORMING RING	1-29
2611169-0000	.FORMING RING	1-29
2611457-0000	.CABLE DUCT	8-123, 8-125, 8-127, 8-129, 8-131
2611458-0000	.CABLE DUCT	8-123, 8-125, 8-127, 8-129, 8-131
2611459-0000	.CABLE DUCT	8-123, 8-125, 8-127, 8-129, 8-131
2611460-0000	.CABLE DUCT	8-123, 8-125, 8-127, 8-129, 8-131
2611461-0000	.CABLE DUCT	8-123, 8-125, 8-127, 8-129, 8-131
2611462-0100	.TERMINAL BLOCK	8-123, 8-125, 8-127, 8-129, 8-131
2611463-0100	.TERMINAL BLOCK	8-123, 8-125, 8-127, 8-129, 8-131
2611464-0000	.RAIL	8-133, 8-135
2611465-0000	.RAIL	8-139, 8-141
2613033-0000	.MACHINE BODY	6-31
2613034-0100	.MACHINE BODY	6-3
2613749-0100	.COVER	8-3, 8-5
2616034-0000	.COVER PLATE	8-145, 8-147
2618430-0000	.PNEUMATIC DIAGRAM	8-145, 8-147
2618700-0000	.SUPPORT	1-21
2618701-0000	.FORMING RING	1-29
2618702-0000	.SUPPORT	1-21
2618703-0000	.FORMING RING	1-29
2618704-0000	.ROLLER	1-29
2618705-0000	.ROLLER	1-29
2618706-0000	.FORMING RING	1-29
2618707-0000	.FORMING RING	1-29
2618708-0000	.ROLLER	1-29
2623797-0000	.PIPE	2-101
2623883-0000	.BRACKET	8-31
2623884-0000	.PLATE	8-31
2628989-0000	.BRACKET	8-105
2628990-0000	.BRACKET	8-105
2629310-0000	.ARM	4-27, 4-29, 4-35, 4-37
2629311-0000	.ARM	4-27, 4-29, 4-35, 4-37
2629312-0000	.ARM	4-27, 4-29, 4-35, 4-37
2629313-0000	.SHAFT	4-27, 4-29, 4-35, 4-37
2629315-0100	.PAPER BRAKE	8-31
2629317-0100	.INJECTION SYSTEM	1-73, 1-75, 1-77, 1-79
2629320-0000	.PNEUMATIC DIAGRAM	1-211, 1-213
2629338-0000	.GUIDE RAIL	8-31
2632534-0000	.HATCH	8-189, 8-191
2632535-0000	.CONNECTION BOX	8-177, 8-193
2632536-0100	.CONTROL PANEL	8-189, 8-191
2632542-0000	.HATCH	8-173, 8-175
2632543-0100	.CONTROL PANEL	8-173, 8-175
2632629-0000	.ROLLER	1-29
2632631-0000	.SCREW	1-37
2633328-0000	.PNEUMATIC DIAGRAM	8-145, 8-147
2633447-0000	.BUSHING	4-7, 4-9
2636084-0000	.COVER STRIP	8-167, 8-169
2636085-0000	.COVER STRIP	8-167, 8-169
2639555-0000	.GASKET	2-101
2640362-0000	.TOOL	9-29
2641241-0000	.PIN	4-7, 4-9
2641243-0000	.FLANGE	4-7, 4-9
2641392-0000	.PIN	4-43
2641393-0000	.PLATE	4-43
2641394-0000	.SCREW	4-43
2641395-0000	.PLATE	4-43
2642679-0000	.BRACKET	4-45, 4-47
2644108-0000	.WHEEL	4-7, 4-9
2644109-0000	.WHEEL	4-7, 4-9
2644110-0000	.WHEEL	4-7, 4-9
2644111-0000	.WHEEL	4-7, 4-9
2644425-0000	.BUSBAR	4-27, 4-29, 4-35, 4-37
2651254-0000	.PIPE	4-45, 4-47
2651255-0000	.PIPE	4-45, 4-47
2651256-0000	.PIPE	4-45, 4-47
2651925-0000	.PLATE	8-157
2653662-0000	.PIPE	4-45, 4-47
2656299-0000	.SHAFT	8-61
2658058-0000	.RAIL	8-95
2665129-0000	.GABLE PLATE	6-37
2665131-0000	.LOCKING ARM	6-39
2665132-0000	.LOCKING ARM	6-39

Tetra Pak

SPC
Spare Parts Catalogue

Pos	Part No	Description	Page No
A			
A101	90031-0058	PLC, DIGITAL INPUT MODULE	7-47, 7-49, 7-51
A102	90031-0059	PLC, DIGITAL OUTPUT MODULE	7-47, 7-49, 7-51
A103	90031-0065	PLC,TEMPERATUR CONTROL,INPUT MODULE 8 PT	7-47, 7-49, 7-51
A104	90031-0065	PLC,TEMPERATUR CONTROL,INPUT MODULE 8 PT	7-47, 7-49, 7-51
A105	90031-0061	PLC,ANALOG INPUT MODULE 16 PT/CURRENT	7-47, 7-49, 7-51
A106	90031-0060	PLC,ANALOG INPUT MODULE 16 PT/VOLTAGE	7-47, 7-49, 7-51
A107	90031-0062	PLC, ANALOG OUTPUT MODULE 8PT/CURR/VOLT	7-47, 7-49, 7-51
A108	90031-0062	PLC, ANALOG OUTPUT MODULE 8PT/CURR/VOLT	7-47, 7-49, 7-51
A109	90031-0031	ENHANCED GENIUS COMMUNICATION MODULE	7-47, 7-49, 7-51
A110	90031-0057	PLC, DIGITAL INPUT MODULE	7-47, 7-49, 7-51
A111	90031-0057	PLC, DIGITAL INPUT MODULE	7-47, 7-49, 7-51
A112	90031-0057	PLC, DIGITAL INPUT MODULE	7-47, 7-49, 7-51
A113	90031-0057	PLC, DIGITAL INPUT MODULE	7-47, 7-49, 7-51
A114	90031-0057	PLC, DIGITAL INPUT MODULE	7-47, 7-49, 7-51
A115	90031-0057	PLC, DIGITAL INPUT MODULE	7-47, 7-49, 7-51
A116	90031-0057	PLC, DIGITAL INPUT MODULE	7-47, 7-49, 7-51
A117	90031-0057	PLC, DIGITAL INPUT MODULE	7-47, 7-49, 7-51
A118	90031-0057	PLC, DIGITAL INPUT MODULE	7-47, 7-49, 7-51
A119	90031-0057	PLC, DIGITAL INPUT MODULE	7-47, 7-49, 7-51
A120	90031-0057	PLC, DIGITAL INPUT MODULE	7-47, 7-49, 7-51
A121	90031-0057	PLC, DIGITAL INPUT MODULE	7-47, 7-49, 7-51
A122	90031-0057	PLC, DIGITAL INPUT MODULE	7-47, 7-49, 7-51
A123	90031-0057	PLC, DIGITAL INPUT MODULE	7-47, 7-49, 7-51
A124	90031-0057	PLC, DIGITAL INPUT MODULE	7-47, 7-49, 7-51
A125	90031-0057	PLC, DIGITAL INPUT MODULE	7-47, 7-49, 7-51
A126	90031-0059	PLC, DIGITAL OUTPUT MODULE	7-47, 7-49, 7-51
A127	90031-0059	PLC, DIGITAL OUTPUT MODULE	7-47, 7-49, 7-51
A128	90031-0059	PLC, DIGITAL OUTPUT MODULE	7-47, 7-49, 7-51
A129	90031-0059	PLC, DIGITAL OUTPUT MODULE	7-47, 7-49, 7-51
A130	90031-0059	PLC, DIGITAL OUTPUT MODULE	7-47, 7-49, 7-51
A131	90031-0059	PLC, DIGITAL OUTPUT MODULE	7-47, 7-49, 7-51
A132	90031-0059	PLC, DIGITAL OUTPUT MODULE	7-47, 7-49, 7-51
A133	90031-0059	PLC, DIGITAL OUTPUT MODULE	7-47, 7-49, 7-51
A134	90031-0059	PLC, DIGITAL OUTPUT MODULE	7-47, 7-49, 7-51
A135	90031-0059	PLC, DIGITAL OUTPUT MODULE	7-47, 7-49, 7-51
A136	90031-0059	PLC, DIGITAL OUTPUT MODULE	7-47, 7-49, 7-51
A137	90031-0059	PLC, DIGITAL OUTPUT MODULE	7-47, 7-49, 7-51
A138	90031-0059	PLC, DIGITAL OUTPUT MODULE	7-47, 7-49, 7-51
A139	90031-0059	PLC, DIGITAL OUTPUT MODULE	7-47, 7-49, 7-51
A140	90031-0057	PLC, DIGITAL INPUT MODULE	7-47, 7-49, 7-51
A141	90031-0057	PLC, DIGITAL INPUT MODULE	7-47, 7-49, 7-51
A142	90031-0057	PLC, DIGITAL INPUT MODULE	7-47, 7-49, 7-51
A143	90031-0065	PLC,TEMPERATUR CONTROL,INPUT MODULE 8 PT	7-47, 7-49, 7-51
A145	90031-0059	PLC, DIGITAL OUTPUT MODULE	7-47, 7-49, 7-51
A146	90031-0059	PLC, DIGITAL OUTPUT MODULE	7-47, 7-49, 7-51
A147	90031-0059	PLC, DIGITAL OUTPUT MODULE	7-47, 7-49, 7-51
A160	90031-0051	BASEPLATE, 10-SLOT	7-47, 7-49, 7-51
A161	90031-0053	BASEPLATE,10-SLOT	7-47, 7-49, 7-51
A162	90031-0053	BASEPLATE,10-SLOT	7-47, 7-49, 7-51
A163	90031-0053	BASEPLATE,10-SLOT	7-47, 7-49, 7-51
A164	90031-0053	BASEPLATE,10-SLOT	7-47, 7-49, 7-51
A300	90458-2580	LEVEL CONTROL RELAY RM4-LA32M	7-41
A301	90458-2580	LEVEL CONTROL RELAY RM4-LA32M	7-41
A302	90458-2580	LEVEL CONTROL RELAY RM4-LA32M	7-41
A303	90458-2580	LEVEL CONTROL RELAY RM4-LA32M	7-41
A304	90458-2580	LEVEL CONTROL RELAY RM4-LA32M	7-41
A305	90458-2580	LEVEL CONTROL RELAY RM4-LA32M	7-41
A306	90458-2580	LEVEL CONTROL RELAY RM4-LA32M	7-41
A307	90458-2580	LEVEL CONTROL RELAY RM4-LA32M	7-41
A308	90458-2580	LEVEL CONTROL RELAY RM4-LA32M	7-41
A309	90458-2580	LEVEL CONTROL RELAY RM4-LA32M	7-41
A400	67388-0102	RACK FRONTMOUNTED 84TE	7-33, 7-35
A410	90430-0070	FREQ.CONV. 6SE3213-6CA40	7-47, 7-49, 7-51
A411	90430-0070	FREQ.CONV. 6SE3213-6CA40	7-47, 7-49, 7-51
A412	90430-0070	FREQ.CONV. 6SE3213-6CA40	7-47, 7-49, 7-51
A413	90430-0070	FREQ.CONV. 6SE3213-6CA40	7-47, 7-49, 7-51
A414	90243-0214	CONDUCTIVITY METER	7-29, 7-31
A415	90430-0070	FREQ.CONV. 6SE3213-6CA40	7-47, 7-49, 7-51
A418	559810-0101	TMCC2 CONTROLLER	7-33, 7-35
A418:1	68262-0101	BACKPLANE FRONT RACK 8TE	7-33, 7-35
A418:2	2552317-0002	TMCC PROGRAMME	7-33, 7-35
A419	559810-0101	TMCC2 CONTROLLER	7-33, 7-35
A419:1	68262-0101	BACKPLANE FRONT RACK 8TE	7-33, 7-35
A419:2	2552321-0002	TMCC PROGRAMME	7-33, 7-35
A420	559810-0101	TMCC2 CONTROLLER	7-33, 7-35
A420:1	68262-0101	BACKPLANE FRONT RACK 8TE	7-33, 7-35
A420:2	2552329-0001	TMCC PROGRAMME	7-33, 7-35
A421	559810-0101	TMCC2 CONTROLLER	7-33, 7-35
A421:1	68262-0101	BACKPLANE FRONT RACK 8TE	7-33, 7-35
A421:2	2552325-0002	TMCC PROGRAMME	7-33, 7-35
A422	559810-0101	TMCC2 CONTROLLER	7-33, 7-35
A422:1	68262-0101	BACKPLANE FRONT RACK 8TE	7-33, 7-35

Pos	Part No	Description	Page No
A			
A422:2	2553136-0002	TMCC PROGRAMME	7-33, 7-35
A424	68450-0101	STEPPER MOTOR DRIVER	7-33, 7-35
A424:1	68262-0101	BACKPLANE FRONT RACK 8TE	7-33, 7-35
A425	68450-0101	STEPPER MOTOR DRIVER	7-33, 7-35
A425:1	68262-0101	BACKPLANE FRONT RACK 8TE	7-33, 7-35
A450	90453-0002	MODEM MD-12 DC	7-29, 7-31
A451	1363288-0301	FLEXBOX TETRA BRIK	7-29, 7-31
A451:1	90456-0001	INTOUCH OEM 2000 V.5.6B/6.0B HW KEY	7-29, 7-31
A451:2	2505518-0200	SOFTWARE	7-29, 7-31
A500	90458-0724	STABILIZED POWER SUPPLY, SITOP 40A 24VDC	7-5, 7-7, 7-9
A501	1499642-0101	TPIH 2500 HORIZONTAL MOUNTING	7-25
A501:4	359241-0131	SIGN, TEMP. LS HEATER	7-25
A502	1499642-0101	TPIH 2500 HORIZONTAL MOUNTING	7-25
A502:4	359241-0135	SIGN, TRANSVERSAL SEALING	7-25
A504:1	68262-0101	BACKPLANE FRONT RACK 8TE	7-33, 7-35
A505	90045-0397	POWER SUPPLY 80 A	7-47, 7-49, 7-51
A505:1	90458-0033	CONNECTOR KIT 9-032-010-851	7-47, 7-49, 7-51
A506	90458-0399	SERVO DRIVE DMC2 51540	7-47, 7-49, 7-51
A506:1	90458-0032	CONNECTOR KIT 9-032-010-496	7-47, 7-49, 7-51
A506:2	90110-0142	PLUG DA15P064TX	7-47, 7-49, 7-51
A506:3	90110-0145	COVER 8630-5169014-15-01	7-47, 7-49, 7-51
A506:4	2510917-0001	DMC PROGRAMME	7-47, 7-49, 7-51
A507	90458-0399	SERVO DRIVE DMC2 51540	7-47, 7-49, 7-51
A507:1	90458-0032	CONNECTOR KIT 9-032-010-496	7-47, 7-49, 7-51
A507:2	90110-0142	PLUG DA15P064TX	7-47, 7-49, 7-51
A507:3	90110-0145	COVER 8630-5169014-15-01	7-47, 7-49, 7-51
A507:4	2510909-0001	DMC PROGRAMME	7-47, 7-49, 7-51
A508	90458-0396	SERVO DRIVE DMC2 50720	7-47, 7-49, 7-51
A508:1	90458-0031	CONNECTOR KIT 9032 010 353	7-47, 7-49, 7-51
A508:2	90110-0142	PLUG DA15P064TX	7-47, 7-49, 7-51
A508:3	90110-0145	COVER 8630-5169014-15-01	7-47, 7-49, 7-51
A508:4	2553140-0003	DMC PROGRAMME	7-47, 7-49, 7-51
A600	90457-0092	SAFETY RELAY RT9-24VDC	7-41
A601	90457-0092	SAFETY RELAY RT9-24VDC	7-41
A602	90457-0092	SAFETY RELAY RT9-24VDC	7-41
A603	90119-0084	EXPANSION RELAY, JSR1T-500MS	7-41
A605	90457-0092	SAFETY RELAY RT9-24VDC	7-41
A1304	90314-0044	SIGNAL CONVERTER	1-239, 1-241
A7417	1499642-0101	TPIH 2500 HORIZONTAL MOUNTING	8-7
A9115	90459-1420	PROPORTIONAL VALVE 0 - 10V/0-6 BAR	1-207

Pos	Part No	Description	Page No
B			
B001	90326-0053	THERMOCOUPLE, 12826-35	7-5, 7-7, 7-9
B002	90458-0672	PROXIMITY SENSOR E2E2-X5MB1-5M	7-5, 7-7, 7-9
B003	90458-0672	PROXIMITY SENSOR E2E2-X5MB1-5M	7-5, 7-7, 7-9
B004	90458-0672	PROXIMITY SENSOR E2E2-X5MB1-5M	7-5, 7-7, 7-9
B005	90458-0672	PROXIMITY SENSOR E2E2-X5MB1-5M	7-5, 7-7, 7-9
B1102	90274-0045	PRESSURE GUARD, 14 KPA	1-147
B1103	90274-0088	PRESSURE GUARD, 1,5 KPA	1-239, 1-241
B1104	979500-0003	ELECTRODE	1-147
B1105	90326-0051	THERMOCOUPLE, 12826-33	1-155
B1106	90326-0051	THERMOCOUPLE, 12826-33	1-149
B1109	90458-0341	THERMOCOUPLE, 5130050-001	1-23
B1111	90044-0193	SENSOR, 322-31-0310	1-151
B1112	90044-0193	SENSOR, 322-31-0310	1-151
B1113	90458-0675	PROXIMITY SENSOR, E2EG-X5MB1-5M	1-35
B1201	567070-0011	ELECTRODE	1-185
B1208	90326-0038	THERMOCOUPLE, CR-AL	1-185
B1209	90326-0057	THERMOCOUPLE, CR-AL	1-189
B1220	567070-0011	ELECTRODE	1-185
B1222	90326-0053	THERMOCOUPLE, 12826-35	1-185
B1224	90044-0084	LIMIT SW. 14 CE1-4	1-185
B1225	90044-0084	LIMIT SW. 14 CE1-4	1-185
B1230:1	2559045-0004	ELECTRODE	1-59, 1-61
B1230:2	2559045-0003	ELECTRODE	1-59, 1-61
B1241	90458-0672	PROXIMITY SENSOR E2E2-X5MB1-5M	1-161
B1242	90458-0672	PROXIMITY SENSOR E2E2-X5MB1-5M	1-161
B1301	90044-0104	PROX.SWITCH IFM IN 3002	1-107
B1302	90044-0104	PROX.SWITCH IFM IN 3002	1-107
B1303	90044-0104	PROX.SWITCH IFM IN 3002	1-107
B1304	90274-0096	LEVEL PROBE, Z8778/1	1-97
B1306	90458-0676	PROXIMITY SWITCH,E2EG-X5B1-6M	1-133
B1307	90458-0676	PROXIMITY SWITCH,E2EG-X5B1-6M	1-133
B1310	90326-0089	THERMOCOUPLE, 5110-089-000	1-105
B1314	1334989-0100	LEVEL PROBE	1-89
B1315	90243-0321	CONDUCTIVITY SENSOR, TP5EL. 00343-10803	1-135, 1-137
B1316	90243-0430	FLOW METER, MAG 1100 FOOD PFA	1-135, 1-137
B1321	90044-0145	PROX.SW. 922 AAIY-A9P-050-LZ876	1-125
B1322	1478814-0000	SENSOR	1-125
B1330	90459-0252	PROXIMITY SWITCH	1-85, 1-87, 1-99, 1-101
B1350	90458-0672	PROXIMITY SENSOR E2E2-X5MB1-5M	1-23
B1403	90044-0104	PROX.SWITCH IFM IN 3002	1-199
B1405	90044-0191	PROX.SW. E2EG-X2B1	1-49

Pos	Part No	Description	Page No
B			
B1502	90457-0047	SENSOR 2750-1-5111-1 W.ADAPTER PNP	1-11
B1504	90459-0472	KEY SAF.SW. AZ 16 02ZVRK-M20-2152-2254	1-63
B1505	90459-0472	KEY SAF.SW. AZ 16 02ZVRK-M20-2152-2254	1-45
B1506	90459-0472	KEY SAF.SW. AZ 16 02ZVRK-M20-2152-2254	1-47
B1507	90459-0472	KEY SAF.SW. AZ 16 02ZVRK-M20-2152-2254	1-55
B1508	90459-0472	KEY SAF.SW. AZ 16 02ZVRK-M20-2152-2254	1-233
B 2102	90274-0042	PRESSURE GUARD, 200 KPA	6-51
B2115	1498614-0000	SENSOR	1-41
B2116	1498614-0000	SENSOR	1-41
B2201	90274-0074	PRESSURE GUARD, 530 KPA	6-57
B 2501	90274-0056	PRESSURE SWITCH, 100 - 1200 KPA	6-9
B2810	90459-0472	KEY SAF.SW. AZ 16 02ZVRK-M20-2152-2254	2-117
B2811	90459-0472	KEY SAF.SW. AZ 16 02ZVRK-M20-2152-2254	2-117
B2812	90459-0472	KEY SAF.SW. AZ 16 02ZVRK-M20-2152-2254	2-117
B2830	90459-0472	KEY SAF.SW. AZ 16 02ZVRK-M20-2152-2254	2-117
B2831	90459-0472	KEY SAF.SW. AZ 16 02ZVRK-M20-2152-2254	2-117
B2832	90459-0472	KEY SAF.SW. AZ 16 02ZVRK-M20-2152-2254	2-117
B3102	90274-0082	FLOW SWITCH, 2 - 3 L/MIN	6-17
B3105	90243-0245	MEASURING INSTRUMENT	6-19
B 4001	68917-0100	ANGLE INDICATOR	3-17
B4102	90458-0672	PROXIMITY SENSOR E2E2-X5MB1-5M	4-5
B4103	90061-0027	ANGLE ENCODER 670900035	4-7, 4-9
B4200	90458-0672	PROXIMITY SENSOR E2E2-X5MB1-5M	4-21
B4202	90458-0672	PROXIMITY SENSOR E2E2-X5MB1-5M	4-15
B5103	90044-0194	PROX.SW. IN5329/IN3002-BPKG	5-5, 5-7
B5307	1512463-0000	THERMOCOUPLE	5-21, 5-23
B5308	1512463-0000	THERMOCOUPLE	5-21, 5-23
B5309	1512463-0000	THERMOCOUPLE	5-21, 5-23
B5310	1512463-0000	THERMOCOUPLE	5-21, 5-23
B6105	90044-0104	PROX.SWITCH IFM IN 3002	8-27
B6107	90458-0677	PROXIMITY SWITCH, E2EG-X5MB1-M1	8-153
B6201	90044-0194	PROX.SW. IN5329/IN3002-BPKG	8-71
B6202	90044-0194	PROX.SW. IN5329/IN3002-BPKG	8-71
B6203	90458-0138	PROX.SW. E2EG-X1R5B1-5M	8-21
B6204	90044-0194	PROX.SW. IN5329/IN3002-BPKG	8-71
B6205	90458-1535	TRANSDUCER, BTL5-A11-M0850-P-S32	8-79
B6208	90458-0138	PROX.SW. E2EG-X1R5B1-5M	8-71
B6209	90459-0472	KEY SAF.SW. AZ 16 02ZVRK-M20-2152-2254	8-43, 8-45
B7210	90232-0129	PH.CELL E3S-CR61-5M	8-157
B7211	90232-0129	PH.CELL E3S-CR61-5M	8-59
B7304	90326-0054	THERMOCOUPLE, CR-AL STD.GR, 12826-36	8-91
B7401	90232-0106	PH.CELL E3S-CR11-5M	8-157
B7411	90458-0677	PROXIMITY SWITCH, E2EG-X5MB1-M1	8-43, 8-45
B7412	90044-0165	SENSOR, SME-8-K5-LED-24	8-57
B7414	90458-0677	PROXIMITY SWITCH, E2EG-X5MB1-M1	8-43, 8-45
B7430	90044-0165	SENSOR, SME-8-K5-LED-24	8-31
B7431	90044-0165	SENSOR, SME-8-K5-LED-24	8-31
B7432	90044-0165	SENSOR, SME-8-K5-LED-24	8-31
B7433	90044-0165	SENSOR, SME-8-K5-LED-24	8-31
B7501	90232-0106	PH.CELL E3S-CR11-5M	8-157
B7512	90044-0165	SENSOR, SME-8-K5-LED-24	8-57
B7801	90459-0472	KEY SAF.SW. AZ 16 02ZVRK-M20-2152-2254	8-43, 8-45
B7806	90459-0472	KEY SAF.SW. AZ 16 02ZVRK-M20-2152-2254	8-43, 8-45
B7807	90459-0472	KEY SAF.SW. AZ 16 02ZVRK-M20-2152-2254	8-43, 8-45
B9104	90274-0110	PRESSURE SWITCH, 50 - 1000 KPA	1-207
B9105	90458-2619	FLOW METER, D-6230-HGB-BB-AV-99-0-N2	1-207
B9106	90326-0060	THERMOCOUPLE, CR-AL	1-95
B9107	90458-0672	PROXIMITY SENSOR E2E2-X5MB1-5M	1-95
B9108	90458-0675	PROXIMITY SENSOR, E2EG-X5MB1-5M	1-95
B9109	90458-0672	PROXIMITY SENSOR E2E2-X5MB1-5M	1-95
B9110	90458-0672	PROXIMITY SENSOR E2E2-X5MB1-5M	1-95
B9111	90458-0675	PROXIMITY SENSOR, E2EG-X5MB1-5M	1-95
B9113:1	2559045-0001	ELECTRODE	1-59, 1-61
B9113:2	2559045-0002	ELECTRODE	1-59, 1-61
B9115	90326-0051	THERMOCOUPLE, 12826-33	1-141
B9116	90459-2122	THERMOCOUPLE, EN-5130060-0001	1-141
B43011	90458-0601	PHOTOCELL, SICK PHOTOCELL 1	3-7, 3-9
B43012	90458-0601	PHOTOCELL, SICK PHOTOCELL 1	3-7, 3-9
B54051	90458-1159	PH.CELL WS4-2D135	4-43
B54052	90458-1160	PH.CELL WE4-2P135	4-43
B54101	90232-0103	PH.CELL E3S-CT61-L-5M	5-35
B54102	90232-0104	PH.CELL E3S-CT61-D-5M	5-35
B54123	90232-0104	PH.CELL E3S-CT61-D-5M	5-35
B54124	90232-0103	PH.CELL E3S-CT61-L-5M	5-35
B72232	90458-0677	PROXIMITY SWITCH, E2EG-X5MB1-M1	8-163
B72234	90458-0677	PROXIMITY SWITCH, E2EG-X5MB1-M1	8-163
B74031	90458-0602	PHOTOCELL,	8-97
B74032	90458-0602	PHOTOCELL,	8-97
C			
C1314	90274-0099	IP-TRANSDUCER	1-121, 1-123
C7410	90459-2101	CYLINDER, ADVC-80-25-I-P	8-95
C7412	90239-0861	DOUBLE ACTING, MINI-ISO, CYL. 32-125	8-33

Pos	Part No	Description	Page No
C			
C7412	90459-1849	DOUBLE ACTING SHUTTLE CYL. 40-550 MM	8-57
C7414	90239-0832	DOUBLE ACTING, MINI-ISO, CYL. 25-125	8-113
C7415	90239-0832	DOUBLE ACTING, MINI-ISO, CYL. 25-125	8-119
C7420	90239-0861	DOUBLE ACTING, MINI-ISO, CYL. 32-125	8-35
C7420	90459-3370	DOUBLE ACTING, PROFILE,CYL 32-140	8-39
C7421	90459-3370	DOUBLE ACTING, PROFILE,CYL 32-140	8-41
C7430	90459-2647	DOUBLE ACTING, SHUTTLE, CYL. 25-780	8-31
C7432	90459-2647	DOUBLE ACTING, SHUTTLE, CYL. 25-780	8-31
C73031	90459-0503	CYLINDER, ADVC-16-10-I-P	8-111
C73032	90459-0503	CYLINDER, ADVC-16-10-I-P	8-111
C73151	90459-0503	CYLINDER, ADVC-16-10-I-P	8-121
C73152	90459-0503	CYLINDER, ADVC-16-10-I-P	8-121
C74071	90459-1509	CYLINDER, ADVC-20-20-I-P	8-95
C74072	90459-1509	CYLINDER, ADVC-20-20-I-P	8-95
C74081	90459-2102	CYLINDER, AEVC 100-25-I-P	8-95
C74082	90459-2102	CYLINDER, AEVC 100-25-I-P	8-95
D			
D100	90031-0075	CPU363, SERIAL COMMUNICATION	7-47, 7-49, 7-51
E			
E001	90459-2560	LIGHT FIXTURE, TMS121 1XTL-D30W/830 IP	7-5, 7-7, 7-9
E001:1	90297-0011	FLUORESCENT TUBE, TDL 30W/840	7-5, 7-7, 7-9
E002	90459-2560	LIGHT FIXTURE, TMS121 1XTL-D30W/830 IP	7-5, 7-7, 7-9
E002:1	90297-0011	FLUORESCENT TUBE, TDL 30W/840	7-5, 7-7, 7-9
E 2001	90457-0149	LIGHT FIXTURE, RL 70V-118D	2-11
E 2002	90457-0149	LIGHT FIXTURE, RL 70V-118D	2-11
E7702	90164-0015	LIGHT FIXTURE, DWDCV111B/230V 50HZ	8-43, 8-45
E7705	90164-0015	LIGHT FIXTURE, DWDCV111B/230V 50HZ	8-43, 8-45
F			
F002	90007-0128	CIRCUIT BREAKER, 1P 6 A K	7-61
F003	90007-0129	CIRCUIT BREAKER, 1P 10 A K	7-61
F004	90007-0129	CIRCUIT BREAKER, 1P 10 A K	7-61
F005	90007-0129	CIRCUIT BREAKER, 1P 10 A K	7-61
F006	90007-0129	CIRCUIT BREAKER, 1P 10 A K	7-61
F007	90007-0129	CIRCUIT BREAKER, 1P 10 A K	7-61
F008	90007-0128	CIRCUIT BREAKER, 1P 6 A K	7-61
F010	42063-0100	LEVEL DETECTOR	1-91
F010	90007-0133	CIRCUIT BREAKER, 1P 25 A K	7-59
F011	90007-0129	CIRCUIT BREAKER, 1P 10 A K	7-59
F012	90233-0028	TUBE FUSE, 10A	7-59
F014	90233-0028	TUBE FUSE, 10A	7-59
F016	90007-0128	CIRCUIT BREAKER, 1P 6 A K	7-61
F020	90007-0138	CIRCUIT BREAKER, 2P 10 A K	7-53
F022	90007-0147	CIRCUIT BREAKER, 3P 10 A K	7-53
F028	90007-0146	CIRCUIT BREAKER, 3P 6 A K	7-61
F101	90233-0029	TUBE FUSE, 25A	7-61
F102	90233-0029	TUBE FUSE, 25A	7-61
F103	90233-0029	TUBE FUSE, 25A	7-61
F104	90233-0028	TUBE FUSE, 10A	7-61
F105	90233-0028	TUBE FUSE, 10A	7-61
F106	90233-0027	TUBE FUSE, 16A	7-61
F107	90233-0027	TUBE FUSE, 16A	7-61
F108	90233-0027	TUBE FUSE, 16A	7-61
F112	90233-0028	TUBE FUSE, 10A	7-61
F910	90233-0027	TUBE FUSE, 16A	7-61
G			
G100	90031-0068	PLC, POWER SUPPLY	7-47, 7-49, 7-51
G101	90031-0068	PLC, POWER SUPPLY	7-47, 7-49, 7-51
G102	90031-0068	PLC, POWER SUPPLY	7-47, 7-49, 7-51
G103	90031-0068	PLC, POWER SUPPLY	7-47, 7-49, 7-51
G104	90031-0068	PLC, POWER SUPPLY	7-47, 7-49, 7-51
H			
H2801	2540716-0100	SIGNAL LAMP	2-63
H2802	2540716-0100	SIGNAL LAMP	2-67, 2-69
H7703	90052-0011	HORN HOOTERT 24:48VDC.PT NO.1YA030221	8-43, 8-45
K			
K001	90075-0127	CONTACTOR, 4KW 24VDC	7-59
K001:1	90075-0313	AUXILIARY CONTACT K&M 22 DILM.2NO;2NC	7-59
K002	90075-0127	CONTACTOR, 4KW 24VDC	7-59
K002:1	90075-0313	AUXILIARY CONTACT K&M 22 DILM.2NO;2NC	7-59
K003	90075-0128	CONTACTOR, 7,5KW 24VDC	7-59
K003:1	90075-0313	AUXILIARY CONTACT K&M 22 DILM.2NO;2NC	7-59
K004	90075-0128	CONTACTOR, 7,5KW 24VDC	7-53
K004:1	90075-0313	AUXILIARY CONTACT K&M 22 DILM.2NO;2NC	7-53
K005	90075-0127	CONTACTOR, 4KW 24VDC	7-59
K006	90075-0128	CONTACTOR, 7,5KW 24VDC	7-53
K006:1	90075-0313	AUXILIARY CONTACT K&M 22 DILM.2NO;2NC	7-53
K007	90075-0127	CONTACTOR, 4KW 24VDC	7-61
K007:1	90075-0313	AUXILIARY CONTACT K&M 22 DILM.2NO;2NC	7-61
K008	90075-0127	CONTACTOR, 4KW 24VDC	7-61
K008:1	90075-0313	AUXILIARY CONTACT K&M 22 DILM.2NO;2NC	7-61
K009	90075-0127	CONTACTOR, 4KW 24VDC	7-59
K009:1	90075-0313	AUXILIARY CONTACT K&M 22 DILM.2NO;2NC	7-59

Pos	Part No	Description	Page No
K			
K010	90075-0127	CONTACTOR, 4KW 24VDC	7-61
K010:1	90075-0313	AUXILIARY CONTACT K&M 22 DILM.2NO;2NC	7-61
K011	90075-0127	CONTACTOR, 4KW 24VDC	7-59
K011:1	90075-0313	AUXILIARY CONTACT K&M 22 DILM.2NO;2NC	7-59
K012	90075-0128	CONTACTOR, 7,5KW 24VDC	7-59
K013	90075-0128	CONTACTOR, 7,5KW 24VDC	7-59
K014	90075-0128	CONTACTOR, 7,5KW 24VDC	7-59
K015	90075-0128	CONTACTOR, 7,5KW 24VDC	7-59
K015:1	90075-0313	AUXILIARY CONTACT K&M 22 DILM.2NO;2NC	7-59
K016	90075-0127	CONTACTOR, 4KW 24VDC	7-59
K016:1	90075-0313	AUXILIARY CONTACT K&M 22 DILM.2NO;2NC	7-59
K020	90075-0128	CONTACTOR, 7,5KW 24VDC	7-59
K020:1	90075-0313	AUXILIARY CONTACT K&M 22 DILM.2NO;2NC	7-59
K022	90075-0127	CONTACTOR, 4KW 24VDC	7-59
K023	90075-0127	CONTACTOR, 4KW 24VDC	7-59
K024	90075-0128	CONTACTOR, 7,5KW 24VDC	7-59
K024:1	90075-0313	AUXILIARY CONTACT K&M 22 DILM.2NO;2NC	7-59
K025	90075-0128	CONTACTOR, 7,5KW 24VDC	7-59
K026	90075-0127	CONTACTOR, 4KW 24VDC	7-61
K027	90075-0127	CONTACTOR, 4KW 24VDC	7-61
K028	90075-0128	CONTACTOR, 7,5KW 24VDC	7-61
K029	90075-0127	CONTACTOR, 4KW 24VDC	7-61
K030	90075-0127	CONTACTOR, 4KW 24VDC	7-61
K031	90075-0127	CONTACTOR, 4KW 24VDC	7-61
K032	90075-0127	CONTACTOR, 4KW 24VDC	7-61
K033	90075-0127	CONTACTOR, 4KW 24VDC	7-61
K036	90075-0127	CONTACTOR, 4KW 24VDC	7-61
K036:1	90075-0313	AUXILIARY CONTACT K&M 22 DILM.2NO;2NC	7-61
K100	90119-0056	RELAY, AUXILIARY MK3P5-S 24VDC	7-41
K101	90119-0056	RELAY, AUXILIARY MK3P5-S 24VDC	7-41
K102	90119-0056	RELAY, AUXILIARY MK3P5-S 24VDC	7-41
K104	90119-0056	RELAY, AUXILIARY MK3P5-S 24VDC	7-41
K105	90119-0056	RELAY, AUXILIARY MK3P5-S 24VDC	7-41
K107	90119-0056	RELAY, AUXILIARY MK3P5-S 24VDC	7-41
K108	90119-0056	RELAY, AUXILIARY MK3P5-S 24VDC	7-41
K110	90119-0056	RELAY, AUXILIARY MK3P5-S 24VDC	7-41
K111	90119-0056	RELAY, AUXILIARY MK3P5-S 24VDC	7-41
K112	90119-0056	RELAY, AUXILIARY MK3P5-S 24VDC	7-41
K113	90119-0056	RELAY, AUXILIARY MK3P5-S 24VDC	7-41
K114	90119-0056	RELAY, AUXILIARY MK3P5-S 24VDC	7-41
K115	90119-0056	RELAY, AUXILIARY MK3P5-S 24VDC	7-41
K116	90119-0056	RELAY, AUXILIARY MK3P5-S 24VDC	7-41
K118	90119-0056	RELAY, AUXILIARY MK3P5-S 24VDC	7-41
K120	90119-0056	RELAY, AUXILIARY MK3P5-S 24VDC	7-41
K121	90119-0056	RELAY, AUXILIARY MK3P5-S 24VDC	7-41
K122	90075-0127	CONTACTOR, 4KW 24VDC	7-59
K122:1	90075-0313	AUXILIARY CONTACT K&M 22 DILM.2NO;2NC	7-59
K126	90119-0056	RELAY, AUXILIARY MK3P5-S 24VDC	7-41
K140	90119-0056	RELAY, AUXILIARY MK3P5-S 24VDC	7-41
K200	90119-0067	SOLID-STATE RELAY, H12WD4850	7-55
K201	90119-0067	SOLID-STATE RELAY, H12WD4850	7-55
K202	90119-0067	SOLID-STATE RELAY, H12WD4850	7-55
K203	90119-0067	SOLID-STATE RELAY, H12WD4850	7-55
K204	90119-0067	SOLID-STATE RELAY, H12WD4850	7-55
K205	90119-0067	SOLID-STATE RELAY, H12WD4850	7-55
K206	90119-0067	SOLID-STATE RELAY, H12WD4850	7-55
K207	90119-0067	SOLID-STATE RELAY, H12WD4850	7-55
K208	90119-0067	SOLID-STATE RELAY, H12WD4850	7-57
K209	90119-0067	SOLID-STATE RELAY, H12WD4850	7-57
K210	90119-0067	SOLID-STATE RELAY, H12WD4850	7-57
K211	90119-0067	SOLID-STATE RELAY, H12WD4850	7-57
K213	90119-0067	SOLID-STATE RELAY, H12WD4850	7-57
K490	90119-0063	OPTO-RELAY, DC/DC AMMS-10-1/30VDC	7-45
K910	90075-0128	CONTACTOR, 7,5KW 24VDC	7-61
K911	90119-0067	SOLID-STATE RELAY, H12WD4850	7-57
K7010	90075-0127	CONTACTOR, 4KW 24VDC	8-139, 8-141
K7011	90075-0127	CONTACTOR, 4KW 24VDC	8-139, 8-141
L			
L1402	2501526-0000	INDUCTOR	1-37
L1402	2606897-0000	INDUCTOR	1-37
L1402	2611161-0000	INDUCTOR	1-37
L6101	2509617-0100	INDUCTOR	8-13
M			
M1101	90270-0017	COMPRESSOR NASH/ELMO 112 MB/4-2083	1-143
M1205	90321-0100	PUMP PBK 16/A 220/380V 50 HZ 3 PH.	1-181
M1205	90321-0127	CENTRIFUGAL PUMP LOWARA	1-181
M1206	90321-0134	CIRC. PUMP TMB 40/2 230V50HZ	1-189
M1206	90321-0135	CIRC. PUMP TMB 40/2 230V60HZ	1-189
M 1213	90458-2466	MOTOR 3GVA071002-CSB	2-93
M1501	90069-0608	GEARS, WORM MOTOR ODM120-60KE3	1-33
M1503	90045-0189	STEP MOTOR E22NSLT-LNN-NS-02	3-11
M1504	90045-0189	STEP MOTOR E22NSLT-LNN-NS-02	1-17, 1-19

Pos	Part No	Description	Page No
M			
M 2501	90321-0116	PUMP GRUNDFOSS CHI 2-60	6-9
M3102	90321-0117	PUMP LOWARA SV8-14 F75T	6-23, 6-25
M3102	90321-0120	PUMP SV8-09 F756T, 380V60HZ	6-23, 6-25
M4105	90045-0197	SERVO MOTOR EP 165-090-66T3B	3-13, 3-15
M4302	90045-0164	SERVO MOTOR EP 075-112-44T3B	3-5
M4304	90045-0197	SERVO MOTOR EP 165-090-66T3B	3-13, 3-15
M5503	90069-0257	GEARS, WORM MOTOR WKM/DM90-60WE2A	2-101
M6201	90069-0614	GEARS, WORM MOTOR MC320P2T	8-69
M6202	90457-0921	WORM GEAR MOTOR MC320P2TB5/D	8-69
M7208	90459-2826	GEARS, HELICAL MOTOR ME0102210012	8-89
M7217	90459-2096	GEARS, WORM MOTOR F2 15 P63 B14 B8 PV 75	8-159
O			
O2530	90304-0020	LIQUID CONTAINER	6-11
P			
P1-06	90166-0013	TUBE 8 MM PA BLUE	2-37
P1-02	90166-0195	TUBE 12 MM PA BLUE	2-37
P1-03	90166-0195	TUBE 12 MM PA BLUE	2-37
P1-04	90166-0195	TUBE 12 MM PA BLUE	2-37
P1-05	90166-0195	TUBE 12 MM PA BLUE	2-37
P1	90166-0196	TUBE 14MM PA BLUE	2-37
P1-01	90166-0196	TUBE 14MM PA BLUE	2-37
P2	90166-0013	TUBE 8 MM PA BLUE	1-221, 1-223
P2-14	90166-0081	TUBE 6 MM PA BLUE	2-37
P2-03	90166-0195	TUBE 12 MM PA BLUE	2-37
P2	90166-0196	TUBE 14MM PA BLUE	2-37
P2-01	90166-0196	TUBE 14MM PA BLUE	2-37
P2-02	90166-0196	TUBE 14MM PA BLUE	2-37
P002	90459-0080	RECORDER 6-CHANNEL, LOGOPRINT 500	7-29, 7-31
P100	90053-0031	HOUR COUNTER, B 609.10 10-50VDC	7-29, 7-31
P100:1	359241-0201	SIGN "HOUR GLASS"	7-29, 7-31
P101	90053-0029	COUNTER, F524.800FA3C 24VDC	7-29, 7-31
P101:1	359241-0482	SIGN "PACKAGE COUNTER"	7-29, 7-31
Q			
Q001	90095-0072	OVERLOAD PROTECTION, PKZM 1,0 A	7-59
Q001:1	90259-0313	AUX. CONTACT K&M NHI21-PKZM0	7-59
Q002	90095-0073	OVERLOAD PROTECTION, PKZM 1,6 A	7-59
Q002:1	90259-0313	AUX. CONTACT K&M NHI21-PKZM0	7-59
Q003	90095-0078	OVERLOAD PROTECTION, PKZM0-16	7-59
Q003:1	90259-0313	AUX. CONTACT K&M NHI21-PKZM0	7-59
Q009	90095-0070	OVERLOAD PROTECTION, PKZM 0,4 A	7-59
Q009:1	90259-0313	AUX. CONTACT K&M NHI21-PKZM0	7-59
Q011	90095-0074	OVERLOAD PROTECTION, PKZM 2,5 A	7-59
Q011:1	90259-0313	AUX. CONTACT K&M NHI21-PKZM0	7-59
Q015	90095-0072	OVERLOAD PROTECTION, PKZM 1,0 A	7-59
Q015:1	90259-0313	AUX. CONTACT K&M NHI21-PKZM0	7-59
Q016	90095-0073	OVERLOAD PROTECTION, PKZM 1,6 A	7-59
Q016:1	90259-0313	AUX. CONTACT K&M NHI21-PKZM0	7-59
Q020	90095-0077	OVERLOAD PROTECTION, PKZM 6-10 A	7-59
Q020:1	90259-0313	AUX. CONTACT K&M NHI21-PKZM0	7-59
Q022	90095-0074	OVERLOAD PROTECTION, PKZM 2,5 A	7-59
Q022:1	90259-0313	AUX. CONTACT K&M NHI21-PKZM0	7-59
Q023	90095-0074	OVERLOAD PROTECTION, PKZM 2,5 A	7-59
Q023:1	90259-0313	AUX. CONTACT K&M NHI21-PKZM0	7-59
Q024	90095-0080	OVERLOAD PROTECTION, PKZM 25 A	7-59
Q024:1	90259-0313	AUX. CONTACT K&M NHI21-PKZM0	7-59
Q100	90111-0173	MAIN SW.NZM64-100/ZM64-100-760+AS4-NZM64	6-5
Q122	90095-0072	OVERLOAD PROTECTION, PKZM 1,0 A	7-59
Q122:1	90259-0313	AUX. CONTACT K&M NHI21-PKZM0	7-59
R			
R001	90121-0114	RESISTANCE FIXED, 0,22 KOHM, 25 W	7-53
R002	90121-0114	RESISTANCE FIXED, 0,22 KOHM, 25 W	7-53
R003	90121-0114	RESISTANCE FIXED, 0,22 KOHM, 25 W	7-53
R421	90459-1250	RESISTANCE FIXED, 120 OHM, 0,5 W 1%	7-33, 7-35
R490	6-4 900308 01	RESISTOR 1000 OHM 0.25W 1%	7-45
R491	6-4 900308 01	RESISTOR 1000 OHM 0.25W 1%	7-45
R492	6-4 900308 01	RESISTOR 1000 OHM 0.25W 1%	7-45
R493	6-4 900308 01	RESISTOR 1000 OHM 0.25W 1%	7-45
R505	90121-0115	RESISTANCE FIXED, 0,047 KOHM, 200 W	7-53
R807	90121-0120	RESISTANCE FIXED, 0,25 KOHM, 0,125 W	7-29, 7-31
R808	90121-0120	RESISTANCE FIXED, 0,25 KOHM, 0,125 W	7-29, 7-31
R809	90121-0120	RESISTANCE FIXED, 0,25 KOHM, 0,125 W	7-29, 7-31
R1105	449939-0001	HEATING ELEMENT 15KW	1-155
R1206	90206-0070	HEATING ELEMENT 6000W 380/220V	1-185
R1207	90206-0070	HEATING ELEMENT 6000W 380/220V	1-185
R1208	90206-0070	HEATING ELEMENT 6000W 380/220V	1-189
R1209	90206-0070	HEATING ELEMENT 6000W 380/220V	1-189
R5307	90206-0132	HOT AIR ELEMENT	5-21, 5-23
R5308	90206-0132	HOT AIR ELEMENT	5-21, 5-23
R5309	90206-0132	HOT AIR ELEMENT	5-21, 5-23
R5310	90206-0132	HOT AIR ELEMENT	5-21, 5-23
R6203	1498047-0000	SEALING BLOCK	8-75
R6204	1524481-0000	SEALING BLOCK	8-81

Pos	Part No	Description	Page No
R			
R7304	90459-2843	HEATING CARTRIDGE, 800W 240V	8-91
S			
S001	90064-0124	SWITCH, EM. STOP, ZB2-BS844+ZB2-BZ1045	7-19
S003	90111-0122	KEY SWITCH, 2 NO CONTACTS	7-29, 7-31
S003:1	359241-0133	SIGN, SERVICE SWITCH	7-29, 7-31
S004	90111-0124	KEY SWITCH, 1NO,1NC CONTACT	7-29, 7-31
S004:1	359241-0122	SIGN, CIP OF STEAM BARRIER SPACE	7-29, 7-31
S005	90064-0124	SWITCH, EM. STOP, ZB2-BS844+ZB2-BZ1045	7-19
S900	90064-0124	SWITCH, EM. STOP, ZB2-BS844+ZB2-BZ1045	2-31
S901	90064-0082	PUSH BUTTON, WHITE	2-31
S901:1	359301-0519	SIGN "TPOP RESET"	2-31
S902	90064-0082	PUSH BUTTON, WHITE	2-31
S902:1	359301-0130	SIGN "LAMPTEST"	2-31
S903	90111-0120	SWITCH, 2 POS.704.510 .0A+704.901.5/A	2-31
S904	90064-0082	PUSH BUTTON, WHITE	2-31
S904:1	359301-0170	SIGN "MANUAL FLUSHING FFU"	2-31
S905	90064-0098	PUSH BUTTON, CLEAR	2-31
S905:1	359301-0091	SIGN "INCHING FFU"	2-31
S906	90064-0082	PUSH BUTTON, WHITE	2-31
S906:1	359301-0050	SIGN "DROP CHUTE"	2-31
S907	90064-0098	PUSH BUTTON, CLEAR	2-31
S907:1	359301-0090	SIGN "INCHING"	2-31
S908	90064-0084	PUSH BUTTON, YELLOW	2-31
S908:1	359301-0110	SIGN "SHORT STOP"	2-31
S911	90064-0093	PUSH BUTTON, GREEN	2-31
S911:1	359301-0001	SIGN "UP"	2-31
S912	90064-0082	PUSH BUTTON, WHITE	2-31
S912:1	359301-0005	SIGN "DOWN"	2-31
S1003	90064-0085	PUSH BUTTON, RED	1-239, 1-241
S1802	90064-0124	SWITCH, EM. STOP, ZB2-BS844+ZB2-BZ1045	1-239, 1-241
S2803	90064-0124	SWITCH, EM. STOP, ZB2-BS844+ZB2-BZ1045	2-109
S2804	90064-0124	SWITCH, EM. STOP, ZB2-BS844+ZB2-BZ1045	2-109
S6206	90064-0082	PUSH BUTTON, WHITE	8-181
S7303	90064-0082	PUSH BUTTON, WHITE	8-197
S7402	90064-0082	PUSH BUTTON, WHITE	8-197
S7403	90064-0082	PUSH BUTTON, WHITE	8-197
S7408	90235-0206	QUICK EXHAUST VALVE, SEU-1/8	8-95
S7410	90235-0206	QUICK EXHAUST VALVE, SEU-1/8	8-95
S7430	90111-0120	SWITCH, 2 POS.704.510 .0A+704.901.5/A	8-193
S7431	90111-0120	SWITCH, 2 POS.704.510 .0A+704.901.5/A	8-177
S7701	90064-0084	PUSH BUTTON, YELLOW	8-181
S7812	90458-1651	EMERGENCY STOP, ZB4-BS-844 ZB4-BZ-104	8-183
S7813	90458-1651	EMERGENCY STOP, ZB4-BS-844 ZB4-BZ-104	8-197
S7814	90044-0084	LIMIT SW. 14 CE1-4	1-85, 1-87, 1-99, 1-101
T			
T1231	90113-0095	PRESSURE REGULATOR	1-211, 1-213
T1304	90245-0043	TRANSFORMER, Z-8782	1-97
T1326	90113-0097	PRESSURE REGULATOR	1-211, 1-213
T1402	67379-0408	TRANSFORMER	1-39
T1402	67379-0415	TRANSFORMER	1-39
T1402	67379-0416	TRANSFORMER	1-39
T1501	90113-0096	PRESSURE REGULATOR	1-211, 1-213
T1502	90113-0095	PRESSURE REGULATOR	1-211, 1-213
T6101	67380-0207	TRANSFORMER	8-13
T6203	90458-0258	TRANSFORMER, 220VAC/6-9-12VAC	8-123, 8-125, 8-127, 8-129, 8-131
T9114	90113-0095	PRESSURE REGULATOR	1-211, 1-213
V			
V017	353021-0122	TERMINAL DISCONNECTBLE, WTR 2,5 D	7-43
V018	353021-0122	TERMINAL DISCONNECTBLE, WTR 2,5 D	7-43
W			
W0001	351150-0426	CABLE OLFLEX 5X25 MM2 LIGHT/GREY	2-13, 2-15
W100	90031-0305	I/O EXPANSION CABLE	7-47, 7-49, 7-51
W101	90031-0305	I/O EXPANSION CABLE	7-47, 7-49, 7-51
W102	90031-0305	I/O EXPANSION CABLE	7-47, 7-49, 7-51
W103	90031-0305	I/O EXPANSION CABLE	7-47, 7-49, 7-51
W173	1512322-0000	COPPER BRAID	7-47, 7-49, 7-51
W174	1512322-0000	COPPER BRAID	7-47, 7-49, 7-51
W175	1512322-0000	COPPER BRAID	7-47, 7-49, 7-51
W176	1512322-0000	COPPER BRAID	7-47, 7-49, 7-51
W177	1512322-0000	COPPER BRAID	7-47, 7-49, 7-51
W178	1512322-0000	COPPER BRAID	7-47, 7-49, 7-51
W400	1348067-0000	CABLE	7-47, 7-49, 7-51
W421	90458-2894	PAIR TWISTED CABLE 1X2X0,2MM2	7-33, 7-35
W422	90458-2894	PAIR TWISTED CABLE 1X2X0,2MM2	7-33, 7-35
W423	90458-2894	PAIR TWISTED CABLE 1X2X0,2MM2	7-25
W450	1254442-0000	CABLE SERIAL	7-29, 7-31
W451	1317252-0000	CABLE SERIAL	7-29, 7-31
W501	90458-2895	COAXIAL CABLE RG 400/U BROWN	1-163, 1-165, 1-167
W503	90458-2895	COAXIAL CABLE RG 400/U BROWN	4-21
W504	90458-2895	COAXIAL CABLE RG 400/U BROWN	4-21
W549	90220-0084	MOTOR CABLE 4X2,5+2(2X0.75)+SHIELD	7-47, 7-49, 7-51
W550	90220-0084	MOTOR CABLE 4X2,5+2(2X0.75)+SHIELD	7-47, 7-49, 7-51

Pos	Part No	Description	Page No
W			
W551	90220-0084	MOTOR CABLE 4X2,5+2(2X0.75)+SHIELD	7-47, 7-49, 7-51
W552	90220-0084	MOTOR CABLE 4X2,5+2(2X0.75)+SHIELD	7-47, 7-49, 7-51
W553	90220-0116	MOTOR CABLE 4X1,0+2(2X0,5)+SHIELD	7-47, 7-49, 7-51
W554	90220-0131	PAIR TWISTED CABLE 3X2X0,25MM2	7-47, 7-49, 7-51
W555	90220-0131	PAIR TWISTED CABLE 3X2X0,25MM2	7-47, 7-49, 7-51
W556	90220-0131	PAIR TWISTED CABLE 3X2X0,25MM2	7-47, 7-49, 7-51
W1001	351150-0425	CABLE OLFLEX 25X0,75 MM2 LIGHT/GREY	1-237
W1002	351150-0425	CABLE OLFLEX 25X0,75 MM2 LIGHT/GREY	1-237
W1003	351150-0425	CABLE OLFLEX 25X0,75 MM2 LIGHT/GREY	1-239, 1-241
W1004	351150-0425	CABLE OLFLEX 25X0,75 MM2 LIGHT/GREY	1-239, 1-241
W1005	351150-0425	CABLE OLFLEX 25X0,75 MM2 LIGHT/GREY	1-237
W1006	351150-0407	CABLE OLFLEX 12X0,75 MM2 LIGHT/GREY	1-239, 1-241
W1007	351150-0425	CABLE OLFLEX 25X0,75 MM2 LIGHT/GREY	1-239, 1-241
W1011	351150-0405	CABLE OLFLEX 5X0,75 MM2 LIGHT/GREY	1-239, 1-241
W1015	351150-0403	CABLE OLFLEX 3X0,75 MM2 LIGHT/GREY	1-237
W1018	351150-0403	CABLE OLFLEX 3X0,75 MM2 LIGHT/GREY	1-237
W1019	351150-0403	CABLE OLFLEX 3X0,75 MM2 LIGHT/GREY	1-237
W1024	351150-0405	CABLE OLFLEX 5X0,75 MM2 LIGHT/GREY	1-239, 1-241
W1027	351150-0403	CABLE OLFLEX 3X0,75 MM2 LIGHT/GREY	1-239, 1-241
W1028	351150-0403	CABLE OLFLEX 3X0,75 MM2 LIGHT/GREY	1-239, 1-241
W1029	351150-0404	CABLE OLFLEX 4X0,75 MM2 LIGHT/GREY	1-239, 1-241
W1030	351150-0403	CABLE OLFLEX 3X0,75 MM2 LIGHT/GREY	1-239, 1-241
W1031	351150-0403	CABLE OLFLEX 3X0,75 MM2 LIGHT/GREY	1-239, 1-241
W1044	351150-0405	CABLE OLFLEX 5X0,75 MM2 LIGHT/GREY	1-239, 1-241
W1045	351150-0405	CABLE OLFLEX 5X0,75 MM2 LIGHT/GREY	1-239, 1-241
W1046	351150-0405	CABLE OLFLEX 5X0,75 MM2 LIGHT/GREY	1-239, 1-241
W1048	351150-0405	CABLE OLFLEX 5X0,75 MM2 LIGHT/GREY	1-239, 1-241
W1049	351150-0403	CABLE OLFLEX 3X0,75 MM2 LIGHT/GREY	1-163, 1-165, 1-167
W1051	90220-0092	PAIR TWISTED CABLE 3X2X0,25MM2	1-163, 1-165, 1-167
W1052	351150-0404	CABLE OLFLEX 4X0,75 MM2 LIGHT/GREY	1-239, 1-241
W1053	90220-0092	PAIR TWISTED CABLE 3X2X0,25MM2	1-239, 1-241
W1058	351150-0403	CABLE OLFLEX 3X0,75 MM2 LIGHT/GREY	1-239, 1-241
W1065	351150-0403	CABLE OLFLEX 3X0,75 MM2 LIGHT/GREY	1-239, 1-241
W1068	351150-0405	CABLE OLFLEX 5X0,75 MM2 LIGHT/GREY	1-163, 1-165, 1-167
W1084	90220-0107	SCR. CABLE 5X0,75MM2	1-239, 1-241
W1206	351150-0425	CABLE OLFLEX 25X0,75 MM2 LIGHT/GREY	2-129
W1207	351150-0407	CABLE OLFLEX 12X0,75 MM2 LIGHT/GREY	2-13, 2-15
W1300	90220-0034	THERMOCOUPLE CABLE K/ 2X0,5MM2	1-163, 1-165, 1-167
W1301	90220-0034	THERMOCOUPLE CABLE K/ 2X0,5MM2	1-163, 1-165, 1-167
W1302	90220-0034	THERMOCOUPLE CABLE K/ 2X0,5MM2	1-163, 1-165, 1-167
W1303	90220-0034	THERMOCOUPLE CABLE K/ 2X0,5MM2	1-189
W1304	90220-0034	THERMOCABLE TEX/SITW-20F-KX 2X0,5MM2	2-13, 2-15
W1305	90220-0034	THERMOCOUPLE CABLE K/ 2X0,5MM2	1-163, 1-165, 1-167
W1306	90220-0034	THERMOCOUPLE CABLE K/ 2X0,5MM2	1-163, 1-165, 1-167
W1307	90220-0034	THERMOCOUPLE CABLE K/ 2X0,5MM2	1-163, 1-165, 1-167
W1330	90459-0253	CONNECTOR W. CABLE S12-3FVW-050	1-85, 1-87, 1-99, 1-101
W1402	1520726-0000	BUSBAR	1-37
W1500	351150-0418	CABLE OLFLEX 4X2,5 MM2 LIGHT/GREY	1-163, 1-165, 1-167
W1501	351120-0168	CABLE SIHF 4X10MM2 GREEN/YELLOW	1-163, 1-165, 1-167
W1502	351120-0165	CABLE SIHF 4X2,5MM2 GREEN/YELLOW	1-163, 1-165, 1-167
W1503	351120-0165	CABLE SIHF 4X2,5MM2 GREEN/YELLOW	1-163, 1-165, 1-167
W2001	351150-0418	CABLE OLFLEX 4X2,5 MM2 LIGHT/GREY	1-163, 1-165, 1-167
W2002	351150-0418	CABLE OLFLEX 4X2,5 MM2 LIGHT/GREY	2-13, 2-15
W 2002	351150-0418	CABLE OLFLEX 4X2,5 MM2 LIGHT/GREY	2-93
W2003	351150-0166	CABLE OLFLEX 4X4 MM2 LIGHT/GREY	2-13, 2-15
W2004	90220-0107	SCR. CABLE 5X0,75MM2	2-13, 2-15
W2005	351150-0412	CABLE OLFLEX 3X1,5 MM2 LIGHT/GREY	2-13, 2-15
W2007	351150-0418	CABLE OLFLEX 4X2,5 MM2 LIGHT/GREY	2-13, 2-15
W2008	351150-0418	CABLE OLFLEX 4X2,5 MM2 LIGHT/GREY	2-13, 2-15
W2014	351150-0418	CABLE OLFLEX 4X2,5 MM2 LIGHT/GREY	2-13, 2-15, 2-101
W2015	90220-0105	SCR. CABLE 4X2,5MM2	2-13, 2-15
W2017	351150-0419	CABLE OLFLEX 5X2,5 MM2 LIGHT/GREY	5-37
W2018	351150-0419	CABLE OLFLEX 5X2,5 MM2 LIGHT/GREY	5-37
W2021	90220-0034	THERMOCOUPLE CABLE K/ 2X0,5MM2	5-37
W2022	90220-0034	THERMOCOUPLE CABLE K/ 2X0,5MM2	5-37
W2023	90220-0034	THERMOCOUPLE CABLE K/ 2X0,5MM2	5-37
W2024	90220-0034	THERMOCOUPLE CABLE K/ 2X0,5MM2	5-37
W2027	90220-0095	SCR. CABLE 3X0,75MM2	6-5
W2028	90220-0162	SCR. CABLE 10X0,25MM2	1-239, 1-241
W2029	90220-0104	SCR. CABLE 4X1,5MM2	1-163, 1-165, 1-167
W2031	351150-0412	CABLE OLFLEX 3X1,5 MM2 LIGHT/GREY	1-163, 1-165, 1-167
W2040	351150-0412	CABLE OLFLEX 3X1,5 MM2 LIGHT/GREY	1-189
W2041	351120-0164	CABLE SIHF 4X1,5MM2 GREEN/YELLOW	1-189
W2042	351120-0164	CABLE SIHF 4X1,5MM2 GREEN/YELLOW	1-189
W2050	351150-0425	CABLE OLFLEX 25X0,75 MM2 LIGHT/GREY	2-13, 2-15
W2054	351150-0425	CABLE OLFLEX 25X0,75 MM2 LIGHT/GREY	2-13, 2-15
W2055	90220-0034	THERMOCABLE TEX/SITW-20F-KX 2X0,5MM2	2-13, 2-15
W2056	351150-0425	CABLE OLFLEX 25X0,75 MM2 LIGHT/GREY	2-13, 2-15
W2057	351150-0425	CABLE OLFLEX 25X0,75 MM2 LIGHT/GREY	2-13, 2-15
W2060	351150-0407	CABLE OLFLEX 12X0,75 MM2 LIGHT/GREY	1-209
W2062	351150-0425	CABLE OLFLEX 25X0,75 MM2 LIGHT/GREY	2-13, 2-15
W2064	90220-0091	PAIR TWISTED CABLE 2X2X0,25MM2	2-13, 2-15

W

Pos	Part No	Description	Page No
W2066	90458-2557	CABLE OLFLEX 25X1 MM2	2-13, 2-15
W2067	90458-2557	CABLE OLFLEX 25X1 MM2	2-13, 2-15
W2068	1363297-0000	CABLE LVDS 10M	2-13, 2-15
W2201	90042-0583	CABLE MECMAN 440-827 000-1	6-57
W 2211	351150-0412	CABLE OLFLEX 3X1,5 MM2 LIGHT/GREY	2-11
W 2213	351150-0418	CABLE OLFLEX 4X2,5 MM2 LIGHT/GREY	6-9
W 2220	351150-0403	CABLE OLFLEX 3X0,75 MM2 LIGHT/GREY	6-51
W2222	351150-0403	CABLE OLFLEX 3X0,75 MM2 LIGHT/GREY	6-17
W2224	351150-0405	CABLE OLFLEX 5X0,75 MM2 LIGHT/GREY	2-117
W2225	351150-0405	CABLE OLFLEX 5X0,75 MM2 LIGHT/GREY	2-117
W2226	351150-0405	CABLE OLFLEX 5X0,75 MM2 LIGHT/GREY	2-117
W2228	351150-0405	CABLE OLFLEX 5X0,75 MM2 LIGHT/GREY	2-117
W2229	351150-0405	CABLE OLFLEX 5X0,75 MM2 LIGHT/GREY	2-117
W2230	351150-0405	CABLE OLFLEX 5X0,75 MM2 LIGHT/GREY	2-117
W2232	351150-0406	CABLE OLFLEX 7X0,75 MM2 LIGHT/GREY	2-13, 2-15
W2233	351150-0406	CABLE OLFLEX 7X0,75 MM2 LIGHT/GREY	2-13, 2-15
W2235	351150-0403	CABLE OLFLEX 3X0,75 MM2 LIGHT/GREY	2-45
W 2243	351150-0403	CABLE OLFLEX 3X0,75 MM2 LIGHT/GREY	6-51
W 2244	351150-0412	CABLE OLFLEX 3X1,5 MM2 LIGHT/GREY	2-11
W2250	351150-0406	CABLE OLFLEX 7X0,75 MM2 LIGHT/GREY	6-13
W 2251	351150-0431	CABLE OLFLEX 2X0,75 MM2 LIGHT/GREY	6-9
W2254	351150-0405	CABLE OLFLEX 5X0,75 MM2 LIGHT/GREY	2-109
W2255	351150-0405	CABLE OLFLEX 5X0,75 MM2 LIGHT/GREY	2-109
W2256	351150-0166	CABLE OLFLEX 4X4 MM2 LIGHT/GREY	6-23, 6-25
W2258	351150-0425	CABLE OLFLEX 25X0,75 MM2 LIGHT/GREY	6-49
W4000	90220-0084	MOTOR CABLE 4X2,5+2(2X0.75)+SHIELD	2-13, 2-15
W4001	90220-0116	MOTOR CABLE 4X1,0+2(2X0,5)+SHIELD	2-13, 2-15
W4002	90220-0084	MOTOR CABLE 4X2,5+2(2X0.75)+SHIELD	2-13, 2-15
W4003	351150-0407	CABLE OLFLEX 12X0,75 MM2 LIGHT/GREY	2-13, 2-15
W4004	351150-0425	CABLE OLFLEX 25X0,75 MM2 LIGHT/GREY	2-13, 2-15
W4005	351150-0419	CABLE OLFLEX 5X2,5 MM2 LIGHT/GREY	2-13, 2-15
W4006	351150-0419	CABLE OLFLEX 5X2,5 MM2 LIGHT/GREY	2-13, 2-15
W4010	90220-0131	PAIR TWISTED CABLE 3X2X0,25MM2	2-13, 2-15
W4011	90220-0131	PAIR TWISTED CABLE 3X2X0,25MM2	2-13, 2-15
W4012	90220-0034	THERMOCABLE TEX/SITW-20F-KX 2X0,5MM2	2-13, 2-15
W4013	90220-0034	THERMOCABLE TEX/SITW-20F-KX 2X0,5MM2	2-13, 2-15
W4014	90220-0034	THERMOCABLE TEX/SITW-20F-KX 2X0,5MM2	2-13, 2-15
W4015	90220-0034	THERMOCABLE TEX/SITW-20F-KX 2X0,5MM2	2-13, 2-15
W4016	90220-0107	SCR. CABLE 5X0,75MM2	2-13, 2-15
W4017	90220-0107	SCR. CABLE 5X0,75MM2	2-13, 2-15
W4018	351150-0407	CABLE OLFLEX 12X0,75 MM2 LIGHT/GREY	2-13, 2-15
W4021	351150-0407	CABLE OLFLEX 12X0,75 MM2 LIGHT/GREY	2-13, 2-15
W4022	351150-0403	CABLE OLFLEX 3X0,75 MM2 LIGHT/GREY	2-87
W4054	351150-0405	CABLE OLFLEX 5X0,75 MM2 LIGHT/GREY	2-13, 2-15
W4081	90220-0131	PAIR TWISTED CABLE 3X2X0,25MM2	2-13, 2-15
W4120	351150-0418	CABLE OLFLEX 4X2,5 MM2 LIGHT/GREY	2-129
W4240	351150-0403	CABLE OLFLEX 3X0,75 MM2 LIGHT/GREY	2-45
W4502	90220-0091	PAIR TWISTED CABLE 2X2X0,25MM2	2-13, 2-15
W7003	351150-0420	CABLE OLFLEX 7X2,5 MM2 LIGHT/GREY	8-123, 8-125, 8-127, 8-129, 8-131
W7004	351150-0413	CABLE OLFLEX 4X1,5 MM2 LIGHT/GREY	8-123, 8-125, 8-127, 8-129, 8-131
W7005	351150-0412	CABLE OLFLEX 3X1,5 MM2 LIGHT/GREY	8-123, 8-125, 8-127, 8-129, 8-131
W7006	351150-0425	CABLE OLFLEX 25X0,75 MM2 LIGHT/GREY	8-123, 8-125, 8-127, 8-129, 8-131
W7007	351150-0425	CABLE OLFLEX 25X0,75 MM2 LIGHT/GREY	8-123, 8-125, 8-127, 8-129, 8-131
W7008	351150-0425	CABLE OLFLEX 25X0,75 MM2 LIGHT/GREY	8-123, 8-125, 8-127, 8-129, 8-131
W7009	351150-0425	CABLE OLFLEX 25X0,75 MM2 LIGHT/GREY	8-123, 8-125, 8-127, 8-129, 8-131
W7010	90220-0104	SCR. CABLE 4X1,5MM2	8-105
W7011	90220-0104	SCR. CABLE 4X1,5MM2	8-159
W7012	90220-0105	SCR. CABLE 4X2,5MM2	8-7
W7014	351150-0412	CABLE OLFLEX 3X1,5 MM2 LIGHT/GREY	8-43, 8-45
W7015	90458-1076	L-SHAPED CONNECTOR CABLE 933 235-042	8-163
W7020	90458-1076	L-SHAPED CONNECTOR CABLE 933 235-042	8-153
W7023	90458-1076	L-SHAPED CONNECTOR CABLE 933 235-042	8-163
W7024	90458-1076	L-SHAPED CONNECTOR CABLE 933 235-042	8-43, 8-45
W7025	90458-1076	L-SHAPED CONNECTOR CABLE 933 235-042	8-43, 8-45
W7028	351150-0407	CABLE OLFLEX 12X0,75 MM2 LIGHT/GREY	8-181
W7029	351150-0407	CABLE OLFLEX 12X0,75 MM2 LIGHT/GREY	8-197
W7031	351150-0405	CABLE OLFLEX 5X0,75 MM2 LIGHT/GREY	8-183
W7037	351150-0415	CABLE OLFLEX 7X1,5 MM2 LIGHT/GREY	8-123, 8-125, 8-127, 8-129, 8-131
W7039	90220-0115	SCR. CABLE 12X0,75MM2	8-7
W7042	351150-0405	CABLE OLFLEX 5X0,75 MM2 LIGHT/GREY	8-43, 8-45
W7043	351150-0405	CABLE OLFLEX 5X0,75 MM2 LIGHT/GREY	8-43, 8-45
W7044	351150-0405	CABLE OLFLEX 5X0,75 MM2 LIGHT/GREY	8-43, 8-45
W7045	351150-0431	CABLE OLFLEX 2X0,75 MM2 LIGHT/GREY	8-43, 8-45
W7046	351120-0126	CABLE SIHF 2X4MM2 GREEN/YELLOW	8-75
W7047	2540595-0001	COAXIAL CABLE	8-7
W7048	2540596-0001	COAXIAL CABLE	8-7
W7049	351120-0145	CABLE SIHF 3X2,5MM2 GREEN/YELLOW	8-81
W7050	90220-0092	PAIR TWISTED CABLE 3X2X0,25MM2	8-79
W7054	351150-0406	CABLE OLFLEX 7X0,75 MM2 LIGHT/GREY	8-43, 8-45
W7055	351150-0412	CABLE OLFLEX 3X1,5 MM2 LIGHT/GREY	8-43, 8-45
W7072	90220-0104	SCR. CABLE 4X1,5MM2	8-69
W7073	90220-0104	SCR. CABLE 4X1,5MM2	8-69

Pos	Part No	Description	Page No
W			
W7076	90220-0104	SCR. CABLE 4X1,5MM2	8-123, 8-125, 8-127, 8-129, 8-131
W7077	351150-0405	CABLE OLFLEX 5X0,75 MM2 LIGHT/GREY	8-43, 8-45
W7304	90220-0034	THERMOCABLE TEX/SITW-20F-KX 2X0,5MM2	8-91
W7401	351150-0403	CABLE OLFLEX 3X0,75 MM2 LIGHT/GREY	8-193
W7402	351150-0403	CABLE OLFLEX 3X0,75 MM2 LIGHT/GREY	8-177
W9100:1	90459-3165	CABLE ÖLFLON PTFE 1X4,72MM² BLACK	1-141
W9100:2	90459-3165	CABLE ÖLFLON PTFE 1X4,72MM² BLACK	1-141
W9100:3	90459-3154	CABLE ÖLFLON PTFE 1X4,72MM² YELLOW-GREEN	1-141
W9101	351150-0403	CABLE OLFLEX 3X0,75 MM2 LIGHT/GREY	1-209
W9103	351150-0403	CABLE OLFLEX 3X0,75 MM2 LIGHT/GREY	1-209
W9104	351150-0403	CABLE OLFLEX 3X0,75 MM2 LIGHT/GREY	1-209
W9105	90220-0072	SCR. CABLE 4X0,34MM2	1-209
W9106	90220-0034	THERMOCOUPLE CABLE K/ 2X0,5MM2	1-163, 1-165, 1-167
W9112	351150-0403	CABLE OLFLEX 3X0,75 MM2 LIGHT/GREY	1-59, 1-61
W9113	351150-0404	CABLE OLFLEX 4X0,75 MM2 LIGHT/GREY	1-59, 1-61
W9114	351150-0403	CABLE OLFLEX 3X0,75 MM2 LIGHT/GREY	1-59, 1-61
W9115	90220-0034	THERMOCOUPLE CABLE K/ 2X0,5MM2	1-163, 1-165, 1-167
W9116	90220-0034	THERMOCOUPLE CABLE K/ 2X0,5MM2	1-163, 1-165, 1-167
W9117	90220-0072	SCR. CABLE 4X0,34MM2	1-209
W9118	90220-0183	SCR. CABLE 2X0,34MM2	1-209
W9119	90220-0183	SCR. CABLE 2X0,34MM2	1-209
X			
X011	90001-0033	WALL SOCKET OUTLET	7-29, 7-31
X020:1	353024-0204	EARTH TERMINAL WPE 2,5	7-53
X020:2	353021-0212	FEED THROUGH TERMINAL, 10200.0	7-53
X020:3	353021-0212	FEED THROUGH TERMINAL, 10200.0	7-53
X020:4	353021-0212	FEED THROUGH TERMINAL, 10200.0	7-53
X020:5	353021-0212	FEED THROUGH TERMINAL, 10200.0	7-53
X022:1	353024-0204	EARTH TERMINAL WPE 2,5	7-53
X022:2	353021-0212	FEED THROUGH TERMINAL, 10200.0	7-53
X022:3	353021-0212	FEED THROUGH TERMINAL, 10200.0	7-53
X022:4	353021-0212	FEED THROUGH TERMINAL, 10200.0	7-53
X022:5	353021-0212	FEED THROUGH TERMINAL, 10200.0	7-53
X022:6	353031-0203	END SUPPORT, WEW 35/2	7-53
X025	90326-0020	PLUG, FEMALE YELLOW CR-AL	7-5, 7-7, 7-9
X101	90110-0159	MALE INSERT 70.310.0640.0	2-13, 2-15
X101	90110-0161	FEMALE INSERT 70 105 0653 0	7-5, 7-7, 7-9
X102	90110-0159	MALE INSERT 70.310.0640.0	2-13, 2-15
X102	90110-0161	FEMALE INSERT 70 105 0653 0	7-5, 7-7, 7-9
X103	90110-0159	MALE INSERT 70.310.0640.0	2-13, 2-15
X103	90110-0161	FEMALE INSERT 70 105 0653 0	7-5, 7-7, 7-9
X105	90110-0159	MALE INSERT 70.310.0640.0	1-163, 1-165, 1-167
X105	90110-0161	FEMALE INSERT 70 105 0653 0	7-5, 7-7, 7-9
X107	90110-0159	MALE INSERT 70.310.0640.0	2-13, 2-15
X107	90110-0161	FEMALE INSERT 70 105 0653 0	7-5, 7-7, 7-9
X108	90110-0159	MALE INSERT 70.310.0640.0	2-13, 2-15
X108	90110-0161	FEMALE INSERT 70 105 0653 0	7-5, 7-7, 7-9
X110	90110-0159	MALE INSERT 70.310.0640.0	1-163, 1-165, 1-167
X110	90110-0161	FEMALE INSERT 70 105 0653 0	7-5, 7-7, 7-9
X111	90110-0159	MALE INSERT 70.310.0640.0	2-13, 2-15
X111	90110-0161	FEMALE INSERT 70 105 0653 0	7-5, 7-7, 7-9
X112	90110-0159	MALE INSERT 70.310.0640.0	2-13, 2-15
X112	90110-0161	FEMALE INSERT 70 105 0653 0	7-5, 7-7, 7-9
X113	90110-0159	MALE INSERT 70.310.0640.0	2-13, 2-15
X113	90110-0161	FEMALE INSERT 70 105 0653 0	7-5, 7-7, 7-9
X115	90110-0159	MALE INSERT 70.310.0640.0	2-13, 2-15
X115	90110-0161	FEMALE INSERT 70 105 0653 0	7-5, 7-7, 7-9
X116	90110-0159	MALE INSERT 70.310.0640.0	2-13, 2-15
X116	90110-0161	FEMALE INSERT 70 105 0653 0	7-5, 7-7, 7-9
X117	90110-0159	MALE INSERT 70.310.0640.0	2-13, 2-15
X117	90110-0161	FEMALE INSERT 70 105 0653 0	7-5, 7-7, 7-9
X118	90110-0159	MALE INSERT 70.310.0640.0	8-123, 8-125, 8-127, 8-129, 8-131
X118	90110-0161	FEMALE INSERT 70 105 0653 0	7-5, 7-7, 7-9
X119	90110-0159	MALE INSERT 70.310.0640.0	1-163, 1-165, 1-167
X119	90110-0161	FEMALE INSERT 70 105 0653 0	7-5, 7-7, 7-9
X122	90110-0161	FEMALE INSERT 70 105 0653 0	7-5, 7-7, 7-9
X122:1	90110-0159	MALE INSERT 70.310.0640.0	2-129
X125	90110-0159	MALE INSERT 70.310.0640.0	2-13, 2-15
X125	90110-0161	FEMALE INSERT 70 105 0653 0	7-5, 7-7, 7-9
X126	90110-0159	MALE INSERT 70.310.0640.0	8-105
X126	90110-0161	FEMALE INSERT 70 105 0653 0	7-5, 7-7, 7-9
X127	90110-0161	FEMALE INSERT 70 105 0653 0	7-5, 7-7, 7-9
X128	90110-0159	MALE INSERT 70.310.0640.0	8-123, 8-125, 8-127, 8-129, 8-131
X128	90110-0161	FEMALE INSERT 70 105 0653 0	7-5, 7-7, 7-9
X129	90110-0159	MALE INSERT 70.310.0640.0	1-163, 1-165, 1-167
X129	90110-0161	FEMALE INSERT 70 105 0653 0	7-5, 7-7, 7-9
X130	90110-0159	MALE INSERT 70.310.0640.0	1-163, 1-165, 1-167
X130	90110-0161	FEMALE INSERT 70 105 0653 0	7-5, 7-7, 7-9
X131	90110-0159	MALE INSERT 70.310.0640.0	1-163, 1-165, 1-167
X131	90110-0161	FEMALE INSERT 70 105 0653 0	7-5, 7-7, 7-9
X132	90110-0159	MALE INSERT 70.310.0640.0	8-123, 8-125, 8-127, 8-129, 8-131
X132	90110-0161	FEMALE INSERT 70 105 0653 0	7-5, 7-7, 7-9

Pos	Part No	Description	Page No
X			
X133	90110-0159	MALE INSERT 70.310.0640.0	8-123, 8-125, 8-127, 8-129, 8-131
X133	90110-0161	FEMALE INSERT 70 105 0653 0	7-5, 7-7, 7-9
X134	90110-0161	FEMALE INSERT 70 105 0653 0	7-5, 7-7, 7-9
X135	90110-0159	MALE INSERT 70.310.0640.0	1-163, 1-165, 1-167
X135	90110-0161	FEMALE INSERT 70 105 0653 0	7-5, 7-7, 7-9
X136	90110-0159	MALE INSERT 70.310.0640.0	1-163, 1-165, 1-167
X136	90110-0161	FEMALE INSERT 70 105 0653 0	7-5, 7-7, 7-9
X137	90110-0159	MALE INSERT 70.310.0640.0	1-163, 1-165, 1-167
X137	90110-0161	FEMALE INSERT 70 105 0653 0	7-5, 7-7, 7-9
X138	90110-0159	MALE INSERT 70.310.0640.0	1-163, 1-165, 1-167
X138	90110-0161	FEMALE INSERT 70 105 0653 0	7-5, 7-7, 7-9
X140	90458-2890	CONNECTOR, 21N-50N12N133NE	1-163, 1-165, 1-167
X203	90110-0164	FEMALE INSERT 70 105 2453 3	7-5, 7-7, 7-9
X206	90110-0164	FEMALE INSERT 70 105 2453 3	7-5, 7-7, 7-9
X206:1	90110-0150	MALE INSERT 121110 0000	2-129
X207	90110-0164	FEMALE INSERT 70 105 2453 3	7-5, 7-7, 7-9
X207:1	90110-0150	MALE INSERT 121110 0000	2-13, 2-15
X208	90110-0381	COVER	7-5, 7-7, 7-9
X209	90110-0381	COVER	7-5, 7-7, 7-9
X210	90110-0150	MALE INSERT 121110 0000	1-163, 1-165, 1-167
X210	90110-0164	FEMALE INSERT 70 105 2453 3	7-5, 7-7, 7-9
X211	90110-0164	FEMALE INSERT 70 105 2453 3	7-5, 7-7, 7-9
X212	90110-0150	MALE INSERT 121110 0000	1-163, 1-165, 1-167
X212	90110-0164	FEMALE INSERT 70 105 2453 3	7-5, 7-7, 7-9
X213	90110-0150	MALE INSERT 121110 0000	2-13, 2-15
X213	90110-0164	FEMALE INSERT 70 105 2453 3	7-5, 7-7, 7-9
X214	90110-0150	MALE INSERT 121110 0000	2-13, 2-15
X214	90110-0164	FEMALE INSERT 70 105 2453 3	7-5, 7-7, 7-9
X215	90110-0150	MALE INSERT 121110 0000	2-13, 2-15
X215	90110-0164	FEMALE INSERT 70 105 2453 3	7-5, 7-7, 7-9
X216	90110-0150	MALE INSERT 121110 0000	2-13, 2-15
X216	90110-0164	FEMALE INSERT 70 105 2453 3	7-5, 7-7, 7-9
X217	90110-0150	MALE INSERT 121110 0000	1-163, 1-165, 1-167
X217	90110-0164	FEMALE INSERT 70 105 2453 3	7-5, 7-7, 7-9
X218	90110-0150	MALE INSERT 121110 0000	1-163, 1-165, 1-167
X218	90110-0164	FEMALE INSERT 70 105 2453 3	7-5, 7-7, 7-9
X219	90110-0150	MALE INSERT 121110 0000	2-13, 2-15
X219	90110-0164	FEMALE INSERT 70 105 2453 3	7-5, 7-7, 7-9
X220	90110-0150	MALE INSERT 121110 0000	2-13, 2-15, 8-123, 8-125, 8-127, 8-129, 8-131
X220	90110-0164	FEMALE INSERT 70 105 2453 3	7-5, 7-7, 7-9
X221	90110-0150	MALE INSERT 121110 0000	8-123, 8-125, 8-127, 8-129, 8-131
X221	90110-0164	FEMALE INSERT 70 105 2453 3	7-5, 7-7, 7-9
X222	90110-0150	MALE INSERT 121110 0000	2-13, 2-15
X222	90110-0164	FEMALE INSERT 70 105 2453 3	7-5, 7-7, 7-9
X223	90110-0150	MALE INSERT 121110 0000	1-163, 1-165, 1-167
X223	90110-0164	FEMALE INSERT 70 105 2453 3	7-5, 7-7, 7-9
X224	90110-0150	MALE INSERT 121110 0000	1-163, 1-165, 1-167
X224	90110-0164	FEMALE INSERT 70 105 2453 3	7-5, 7-7, 7-9
X225	90110-0150	MALE INSERT 121110 0000	8-123, 8-125, 8-127, 8-129, 8-131
X225	90110-0164	FEMALE INSERT 70 105 2453 3	7-5, 7-7, 7-9
X226	90110-0150	MALE INSERT 121110 0000	8-123, 8-125, 8-127, 8-129, 8-131
X226	90110-0164	FEMALE INSERT 70 105 2453 3	7-5, 7-7, 7-9
X227	90110-0150	MALE INSERT 121110 0000	1-163, 1-165, 1-167
X227	90110-0164	FEMALE INSERT 70 105 2453 3	7-5, 7-7, 7-9
X228	90110-0164	FEMALE INSERT 70 105 2453 3	7-5, 7-7, 7-9
X229	90110-0150	MALE INSERT 121110 0000	1-163, 1-165, 1-167
X229	90110-0164	FEMALE INSERT 70 105 2453 3	7-5, 7-7, 7-9
X230	90110-0150	MALE INSERT 121110 0000	1-163, 1-165, 1-167
X230	90110-0164	FEMALE INSERT 70 105 2453 3	7-5, 7-7, 7-9
X231	90110-0150	MALE INSERT 121110 0000	8-123, 8-125, 8-127, 8-129, 8-131
X231	90110-0164	FEMALE INSERT 70 105 2453 3	7-5, 7-7, 7-9
X232	90110-0150	MALE INSERT 121110 0000	1-163, 1-165, 1-167
X232	90110-0164	FEMALE INSERT 70 105 2453 3	7-5, 7-7, 7-9
X233	90110-0164	FEMALE INSERT 70 105 2453 3	7-5, 7-7, 7-9
X234	90110-0150	MALE INSERT 121110 0000	2-13, 2-15
X234	90110-0164	FEMALE INSERT 70 105 2453 3	7-5, 7-7, 7-9
X300	90326-0316	THERMO CONTACT PANEL	7-5, 7-7, 7-9
X301	90326-0022	PLUG, MALE YELLOW CR-AL	2-13, 2-15
X302	90326-0022	PLUG, MALE YELLOW CR-AL	2-13, 2-15
X303	90326-0022	PLUG, MALE YELLOW CR-AL	2-13, 2-15
X304	90326-0022	PLUG, MALE YELLOW CR-AL	2-13, 2-15
X305	90326-0022	PLUG, MALE YELLOW CR-AL	2-13, 2-15
X306	90326-0022	PLUG, MALE YELLOW CR-AL	1-163, 1-165, 1-167
X307	90326-0022	PLUG, MALE YELLOW CR-AL	1-163, 1-165, 1-167
X308	90326-0022	PLUG, MALE YELLOW CR-AL	1-163, 1-165, 1-167
X309	90326-0022	PLUG, MALE YELLOW CR-AL	2-13, 2-15
X310	90326-0022	PLUG, MALE YELLOW CR-AL	1-163, 1-165, 1-167
X311	90326-0022	PLUG, MALE YELLOW CR-AL	1-163, 1-165, 1-167
X313	90326-0022	PLUG, MALE YELLOW CR-AL	1-163, 1-165, 1-167
X315	90326-0022	PLUG, MALE YELLOW CR-AL	1-163, 1-165, 1-167
X316	90326-0022	PLUG, MALE YELLOW CR-AL	8-91
X317	90326-0022	PLUG, MALE YELLOW CR-AL	1-163, 1-165, 1-167

Pos	Part No	Description	Page No
X			
X318	90326-0022	PLUG, MALE YELLOW CR-AL	1-163, 1-165, 1-167
X319	90326-0022	PLUG, MALE YELLOW CR-AL	1-163, 1-165, 1-167
X351	90110-0507	CHASSIES CONTACT	7-5, 7-7, 7-9
X351	90110-0508	CABLE CONTACT	7-47, 7-49, 7-51
X351:1	90110-0209	CONTACT PIN, RC20M13K	7-47, 7-49, 7-51
X351:1	90110-0380	CONTACT PIN	7-5, 7-7, 7-9
X352	90110-0504	CABLE CONTACT	2-13, 2-15
X352	90110-0505	CHASSIES CONTACT	7-5, 7-7, 7-9
X352:1	90110-0209	CONTACT PIN, RC20M13K	7-5, 7-7, 7-9
X353	90110-0507	CHASSIES CONTACT	7-5, 7-7, 7-9
X353	90110-0508	CABLE CONTACT	7-47, 7-49, 7-51
X353:1	90110-0209	CONTACT PIN, RC20M13K	7-47, 7-49, 7-51
X353:1	90110-0380	CONTACT PIN	7-5, 7-7, 7-9
X354	90110-0504	CABLE CONTACT	2-13, 2-15
X354	90110-0505	CHASSIES CONTACT	7-5, 7-7, 7-9
X354:1	90110-0209	CONTACT PIN, RC20M13K	7-5, 7-7, 7-9
X355	90110-0208	CABLE CONTACT	7-47, 7-49, 7-51
X355	90110-0506	CHASSIES CONTACT	7-5, 7-7, 7-9
X355:1	90110-0209	CONTACT PIN, RC20M13K	7-47, 7-49, 7-51
X355:1	90110-0380	CONTACT PIN	7-5, 7-7, 7-9
X356	90110-0504	CABLE CONTACT	2-13, 2-15
X356	90110-0505	CHASSIES CONTACT	7-5, 7-7, 7-9
X356:1	90110-0209	CONTACT PIN, RC20M13K	7-5, 7-7, 7-9
X401	90110-0235	CABLE CONTACT, PX0739/S	8-105
X401	90110-0236	CHASSIS CONTACT PX0767/S	7-5, 7-7, 7-9
X402	90110-0235	CABLE CONTACT, PX0739/S	8-105
X402	90110-0236	CHASSIS CONTACT PX0767/S	7-5, 7-7, 7-9
X421	90459-0182	INTERFACE CONNECTOR FOR TMCC2	7-33, 7-35
X422	90459-0182	INTERFACE CONNECTOR FOR TMCC2	7-33, 7-35
X423	90459-0184	INTERFACE CONNECTOR FOR TPIH 2500 GENER.	7-25
X424	90459-0184	INTERFACE CONNECTOR FOR TPIH 2500 GENER.	7-25
X451	90110-0028	CONTACT UNIT 4-POLE	7-29, 7-31
X501	90110-0156	MALE INSERT 70.210.0653.0	1-163, 1-165, 1-167
X501	90110-0165	FEMALE INSERT 70.005.0653.0	7-5, 7-7, 7-9
X502	90110-0156	MALE INSERT 70.210.0653.0	1-163, 1-165, 1-167
X502	90110-0165	FEMALE INSERT 70.005.0653.0	7-5, 7-7, 7-9
X503	90110-0156	MALE INSERT 70.210.0653.0	2-13, 2-15
X503	90110-0165	FEMALE INSERT 70.005.0653.0	7-5, 7-7, 7-9
X504	90110-0156	MALE INSERT 70.210.0653.0	8-123, 8-125, 8-127, 8-129, 8-131
X504	90110-0165	FEMALE INSERT 70.005.0653.0	7-5, 7-7, 7-9
X511	90458-2892	CONNECTOR, 11 N-50-3-31/133 NE	1-163, 1-165, 1-167
X513	90458-2892	CONNECTOR, 11 N-50-3-31/133 NE	4-21
X514	90458-2892	CONNECTOR, 11 N-50-3-31/133 NE	4-21
X600	2541122-0100	DISTRIBUTION TERMINAL	7-5, 7-7, 7-9
X901	1095597-0100	TERMINAL	2-31
X1001	1347191-0200	CONNECTION BOX	1-3, 1-5
X1003	1296847-0300	CONNECTION BOX	1-3, 1-5
X1053	90110-0223	CONTACT MALE, MS 3106 E 16S-1P	1-239, 1-241
X1250	90042-0535	TERMINAL BOARD 19 CORDS	1-219
X1251	90042-0535	TERMINAL BOARD 19 CORDS	1-215, 1-217
X1252	90042-0535	TERMINAL BOARD 19 CORDS	1-215, 1-217
X1253	90042-0535	TERMINAL BOARD 19 CORDS	1-219
X1300	90326-0020	PLUG, FEMALE YELLOW CR-AL	1-155
X1301	90326-0020	PLUG, FEMALE YELLOW CR-AL	1-149
X1302	90326-0020	PLUG, FEMALE YELLOW CR-AL	1-23
X1304	90326-0020	PLUG, FEMALE YELLOW CR-AL	2-13, 2-15
X1307	90326-0020	PLUG, FEMALE YELLOW CR-AL	1-105
X2038	90326-0020	PLUG, FEMALE YELLOW CR-AL	2-13, 2-15
X2051	90042-0535	TERMINAL BOARD 19 CORDS	6-55
X2062	90110-0163	FEMALE INSERT 70 300 0640 0	2-13, 2-15
X2241	90110-0163	FEMALE INSERT 70 300 0640 0	2-13, 2-15
X2242	90110-0163	FEMALE INSERT 70 300 0640 0	2-13, 2-15
X2243	90110-0247	FEMALE INSERT 70.200.0653.0	2-13, 2-15
X2244	90110-0151	FEMALE INSERT 24-POL 121130 0000	2-13, 2-15
X 4001	451423-0000	CIRCUIT BOARD	3-17
X4002	90110-0150	MALE INSERT 121110 0000	4-21
X4002	90110-0151	FEMALE INSERT 24-POL 121130 0000	2-13, 2-15
X4003	90110-0151	FEMALE INSERT 24-POL 121130 0000	2-13, 2-15
X4003	90110-0228	CABLE HOOD 24-POL 71.350.2428.0	5-37
X4004	90110-0151	FEMALE INSERT 24-POL 121130 0000	2-13, 2-15
X4004	90110-0228	CABLE HOOD 24-POL 71.350.2428.0	5-37
X4005	90110-0150	MALE INSERT 121110 0000	4-21
X4005	90110-0151	FEMALE INSERT 24-POL 121130 0000	2-13, 2-15
X4010	90326-0020	PLUG, FEMALE YELLOW CR-AL	2-13, 2-15
X4010	90326-0022	PLUG, MALE YELLOW CR-AL	5-37
X4011	90326-0020	PLUG, FEMALE YELLOW CR-AL	2-13, 2-15
X4011	90326-0022	PLUG, MALE YELLOW CR-AL	5-37
X4012	90326-0020	PLUG, FEMALE YELLOW CR-AL	2-13, 2-15
X4012	90326-0022	PLUG, MALE YELLOW CR-AL	5-37
X4013	90326-0020	PLUG, FEMALE YELLOW CR-AL	2-13, 2-15
X4013	90326-0022	PLUG, MALE YELLOW CR-AL	5-37
X4050	90110-0208	CABLE CONTACT	2-13, 2-15

Pos	Part No	Description	Page No
X			
X4051	90110-0208	CABLE CONTACT	2-13, 2-15
X4054	90110-0236	CHASSIS CONTACT PX0767/S	2-13, 2-15
X4055	90110-0236	CHASSIS CONTACT PX0767/S	2-13, 2-15
X4056	90110-0208	CABLE CONTACT	2-13, 2-15
X4058	90042-0535	TERMINAL BOARD 19 CORDS	2-39
X4059	90042-0535	TERMINAL BOARD 19 CORDS	2-39
X4071	90458-2890	CONNECTOR, 21N-50N12N133NE	4-21
X4073	90458-2890	CONNECTOR, 21N-50N12N133NE	4-21
X4121	90042-0535	TERMINAL BOARD 19 CORDS	2-127
X5006-1	90326-0022	PLUG, MALE YELLOW CR-AL	5-21, 5-23
X5006-2	90326-0077	CONTACT	5-21, 5-23
X5007-1	90326-0022	PLUG, MALE YELLOW CR-AL	5-21, 5-23
X5007-2	90326-0077	CONTACT	5-21, 5-23
X5008-1	90326-0022	PLUG, MALE YELLOW CR-AL	5-21, 5-23
X5008-2	90326-0077	CONTACT	5-21, 5-23
X5009-1	90326-0022	PLUG, MALE YELLOW CR-AL	5-21, 5-23
X5009-2	90326-0077	CONTACT	5-21, 5-23
X7022	90458-1595	CONNECTION, BKS-S 33M-00	8-79
X7049	90042-0535	TERMINAL BOARD 19 CORDS	8-145, 8-147
X7050	90042-0535	TERMINAL BOARD 19 CORDS	8-145, 8-147
X7051	90042-0535	TERMINAL BOARD 19 CORDS	8-145, 8-147
X7304	90326-0020	PLUG, FEMALE YELLOW CR-AL	8-91
X9106:1	90326-0020	PLUG, FEMALE YELLOW CR-AL	1-141
X9106:2	90326-0022	PLUG, MALE YELLOW CR-AL	1-141
X9115	90326-0020	PLUG, FEMALE YELLOW CR-AL	1-141
X9116	90326-0020	PLUG, FEMALE YELLOW CR-AL	1-141
X74031	90458-0603	CONNECTOR FEMALE 5 PINS	8-97
X74032	90458-0603	CONNECTOR FEMALE 5 PINS	8-97
Y			
Y1104	90042-0172	SOLENOID VALVE 4023/1005/1032 24VDC	1-153
Y1105	90042-0172	SOLENOID VALVE 4023/1005/1032 24VDC	1-153
Y1107	90042-0538	PILOT VALVE L=500MM	1-215, 1-217
Y1108	90042-0538	PILOT VALVE L=500MM	1-219
Y1111	90042-0538	PILOT VALVE L=500MM	1-219
Y1210	90042-0206	SOLENOID VALVE 444-111-000-1	2-87
Y1220	90042-0538	PILOT VALVE L=500MM	2-39
Y1221	90042-0538	PILOT VALVE L=500MM	2-39
Y1230	90042-0203	SOLENOID VALVE BURKERT	1-59, 1-61
Y1241	90042-0538	PILOT VALVE L=500MM	1-219
Y1280	90042-0538	PILOT VALVE L=500MM	1-219
Y1281	90042-0538	PILOT VALVE L=500MM	1-219
Y1301	90042-0538	PILOT VALVE L=500MM	1-215, 1-217
Y1302	90042-0538	PILOT VALVE L=500MM	1-215, 1-217
Y1303	90042-0538	PILOT VALVE L=500MM	1-219
Y1325	90042-0538	PILOT VALVE L=500MM	1-215, 1-217
Y1401	90042-0538	PILOT VALVE L=500MM	1-219
Y1405	90042-0538	PILOT VALVE L=500MM	1-219
Y1501	90042-0538	PILOT VALVE L=500MM	1-215, 1-217
Y1502	90042-0538	PILOT VALVE L=500MM	1-215, 1-217
Y2104	90042-0538	PILOT VALVE L=500MM	2-39
Y2106	90042-0248	SOLENOID VALVE OFFICIENE DI ENSINO	2-45
Y 2108	90042-0249	SOLENOID VALVE OFFICINE DI ENSINO	6-51
Y2109	90042-0248	SOLENOID VALVE OFFICIENE DI ENSINO	2-45
Y2201	90042-0585	PILOT VALVE L=5M	6-57
Y3101	90042-0254	SOLENOID VALVE, R1 1/2	6-17
Y3103	90042-0538	PILOT VALVE L=500MM	6-55
Y3105	90042-0538	PILOT VALVE L=500MM	6-55
Y3109	90042-0538	PILOT VALVE L=500MM	6-55
Y3110	90042-0538	PILOT VALVE L=500MM	6-55
Y3111	90042-0538	PILOT VALVE L=500MM	6-55
Y3112	90042-0538	PILOT VALVE L=500MM	6-55
Y3116	90042-0538	PILOT VALVE L=500MM	1-215, 1-217
Y4200	90042-0538	PILOT VALVE L=500MM	2-39
Y4210	90042-0538	PILOT VALVE L=500MM	2-39
Y4220	90042-0538	PILOT VALVE L=500MM	2-39
Y4230	90042-0538	PILOT VALVE L=500MM	2-39
Y4261	90042-0538	PILOT VALVE L=500MM	2-127
Y4262	90042-0538	PILOT VALVE L=500MM	2-127
Y5306	90042-0538	PILOT VALVE L=500MM	2-39
Y5501	90042-0538	PILOT VALVE L=500MM	2-39
Y5504	90042-0538	PILOT VALVE L=500MM	2-39
Y6201	90042-0591	PILOT VALVE L=200 MM	8-145, 8-147
Y6203	90042-0539	PILOT VALVE L=350MM	8-145, 8-147
Y6205	90042-0591	PILOT VALVE L=200 MM	8-145, 8-147
Y7303	90042-0539	PILOT VALVE L=350MM	8-145, 8-147
Y7315	90042-0591	PILOT VALVE L=200 MM	8-145, 8-147
Y7407	90042-0591	PILOT VALVE L=200 MM	8-145, 8-147
Y7408	90042-0538	PILOT VALVE L=500MM	8-145, 8-147
Y7410	90042-0539	PILOT VALVE L=350MM	8-145, 8-147
Y7412	90042-0538	PILOT VALVE L=500MM	8-145, 8-147
Y7413	90042-0538	PILOT VALVE L=500MM	8-145, 8-147
Y7414	90042-0538	PILOT VALVE L=500MM	8-145, 8-147

Pos	Part No	Description	Page No
Y			
Y7415	90042-0538	PILOT VALVE L=500MM	8-145, 8-147
Y7420	90042-0591	PILOT VALVE L=200 MM	8-145, 8-147
Y7421	90042-0591	PILOT VALVE L=200 MM	8-145, 8-147
Y7425	90042-0585	PILOT VALVE L=5M	8-145, 8-147
Y7430	90042-0538	PILOT VALVE L=500MM	8-145, 8-147
Y7431	90042-0538	PILOT VALVE L=500MM	8-145, 8-147
Y7432	90042-0538	PILOT VALVE L=500MM	8-145, 8-147
Y7433	90042-0538	PILOT VALVE L=500MM	8-145, 8-147
Y9101	90042-0171	SOLENOID VALVE BUERKERT	1-207
Y9105	90042-0538	PILOT VALVE L=500MM	1-215, 1-217
Y74121	90166-0194	TUBE 8 MM PUR BLUE	8-57
Y74122	90166-0194	TUBE 8 MM PUR BLUE	8-57
Z			
Z001	90024-0060	POWER LINE FILTER, 80 A 250/440 VAC	6-5
Z002	90082-0013	OVERVOLTAGE PROTECTOR	6-5
Z003	90024-0039	INPUT FILTER, 50 A	7-53
Z004	90024-0036	FILTERED TERMINAL BLOCK	6-5
Z18	90024-0047	EMI SUPPRESSION FERRITE	7-47, 7-49, 7-51
Z19	90024-0047	EMI SUPPRESSION FERRITE	7-49, 7-51
Z20	90024-0047	EMI SUPPRESSION FERRITE	7-49, 7-51
Z21	90024-0047	EMI SUPPRESSION FERRITE	7-49, 7-51
Z22	90024-0047	EMI SUPPRESSION FERRITE	7-49, 7-51
Z23	90024-0047	EMI SUPPRESSION FERRITE	7-49, 7-51
Z24	90024-0047	EMI SUPPRESSION FERRITE	7-49, 7-51
Z25	90024-0047	EMI SUPPRESSION FERRITE	7-49, 7-51
Z26	90024-0047	EMI SUPPRESSION FERRITE	7-49, 7-51
Z27	90024-0047	EMI SUPPRESSION FERRITE	7-49, 7-51
Z410	90430-0326	FILTER 6SE3290-0BA87-0FB2	7-47, 7-49, 7-51

Tetra Pak

SPC binder labels. 40 mm Full width *Note! This page is generated* **automatically.**
using the **variable definitions** *made in the* **front page** *file!!*

TBA/22 050V 1(2)
648571-0500
Issue: 2004-05 Doc No: SPC-81765-0125

TBA/22 050V 1(2)
648571-0500
Issue: 2004-05 Doc No: SPC-81765-0125

TBA/22 050V 2(2)
648571-0500
Issue: 2004-05 Doc No: SPC-81765-0125

TBA/22 050V 2(2)
648571-0500
Issue: 2004-05 Doc No: SPC-81765-0125

TBA/22 050V 1(2)
648571-0500
Issue: 2004-05 Doc No: SPC-81765-0125

TBA/22 050V 1(2)
648571-0500
Issue: 2004-05 Doc No: SPC-81765-0125

TBA/22 050V 2(2)
648571-0500
Issue: 2004-05 Doc No: SPC-81765-0125

TBA/22 050V 2(2)
648571-0500
Issue: 2004-05 Doc No: SPC-81765-0125

TBA/22 050V 1(2)
648571-0500
Issue: 2004-05 Doc No: SPC-81765-0125

TBA/22 050V 1(2)
648571-0500
Issue: 2004-05 Doc No: SPC-81765-0125

TBA/22 050V 2(2)
648571-0500
Issue: 2004-05 Doc No: SPC-81765-0125

TBA/22 050V 2(2)
648571-0500
Issue: 2004-05 Doc No: SPC-81765-0125