TBA/22 050V

Training Document

This Training Document is intended for Training purposes only, and must not be used for any other purpose.

The Training Document does not replace any instructions or procedures (e.g. OM, MM, TeM, IM, SPC) intended for specific equipment, and must not be used as such.

Note!

For safe and proper procedures, refer to the equipment specific documentation.

Name:

.....

.....

Tetra Pak

Technical Training Centre
Lund, Sweden
WB-135-01
Issue 5/0506

Course Introduction	1
TBA/22 Introduction	2
TPMS Service system	3
Packaging material/package integrity	4
Supply systems	5
Tube forming	6
Sterile system components	7
Sterile system	8
DMC	9
Jaw system	10
Design control system	11
Final folder	12
ASU	13
Sealing	14
Filling system	15
Line automation	16
Temperatures	17
Safety relays	18
Waste of packages, TPOP	19
Cleaning system	20
Headspace by Injection	21
	22
	23
	24
	25
	26
	27
	28
	29
	30
	31

1

Course Introduction

Information regarding Safety Regulations at the Technical Training Centre in Lund

This list summarizes a number of items which may concern you, as a participant in this training course. Read the list, and if anything remains less than clear, or if you have any questions, feel free to contact your instructor.

1. Study and follow the sections on Safety in the course literature, for instance the OM, MM and EM.
2. You are entitled to ask persons who have no business to be near the machine, to stay at distance, for safety reasons.
3. Never touch any other machines than those used in your own training course.
4. There may be cables which are still electrically live, although they have been disconnected from their terminals.
5. In some machines, safety switches may be bridged or disconnected, for training reasons.
6. Find out exactly where the emergency stop switches for the machine as well as the conveyor are located.
7. When starting a machine, the **person doing the starting** must make absolutely sure that this does not expose anyone else to danger.
8. Certain chemicals, used in your training course, may be hazardous to your health and constitute a danger of fire or explosion. Make sure you know how such chemicals are marked and how to handle them.
9. It is strictly prohibited to wear rings, watch, or necktie when working with the machine. This prohibition also applies to loose-fitting clothes or anything else that might get caught in the machinery.
10. A first aid kit and stretcher are kept in the machine hall.
11. Study the information on what to do in case of fire and which escape routes to follow. A diagram of escape and evacuation routes is posted in every classroom.
12. If you observe or discover anything that might jeopardize safety, immediately tell your instructor.

Information to Course Participants at the Technical Training Centre in Lund

Welcome to Technical Training Centre!

Here is some information which might be helpful to you as a course participant. If you need additional information or help, feel free to ask your instructor.

Start of course

Normally, the first day of your course begins at 08.30. Your instructor will meet and welcome you in the coffee room.

Daily time schedule

Classes	08.00 - 09.30
Breakfast	09.30 - 10.00
Classes	10.00 - 12.00
Lunch	12.00 - 13.00
Classes	13.00 - 16.00

Your instructor will tell you if there are any changes in the schedule.

Breakfast

Breakfast is free of charge and served in the restaurant, where a special area has been reserved for Technical Training Centre course participants. Breakfast consists of coffee or tea and bread rolls.
If you want anything in additional, for instance from the serving counters of the restaurant or cafeteria, you have to pay for it yourself. Your instructor will help you with the procedure.

Lunch

Lunch is served in the restaurant. You can choose among several dishes; menus are posted in the restaurant and in the coffee room.
If you are a customer course participant, your instructor will give you a cash card. For participants other than customers, cash cards are for sale in the cafeteria. Your instructor will help you with the procedure.

Coffee room

You are invited to use the coffee room and the vending machine during all breaks in classes.

Smoking

The entire Tetra Pak plant, outdoors as well as indoors, is a no smoking area. Smoking is allowed though in special smoking areas.

Telephones

If you need to call long-distance within Sweden or abroad, please use the phone in the telephone room. There is also a telephone in the coffee room for local or internal calls only. When using the phones, please be brief, as there may be others who wish to make calls.

Computers There are three computers for the use of course participants. Two computers in the machine hall and one in the coffee room. The computers accesses the Tetra Pak Intranet and the World Wide Web.

ID card On your first day you will receive an ID card. This card must be returned at the Tetra Pak Main reception at the end of the course. Anyone not handing the card back will be charged SEK 400.

Safety regulations At the start of the course, your instructor will go through the Safety Regulations (TM-00001). These regulations must be strictly observed. In case you are uncertain about anything in the regulations, you must clarify it with your instructor.

Course evaluation You are requested to write down your comments on the Course Evaluation form. At the end of the course your instructor will collect all the forms.

Working clothes It is necessary to wear safety shoes in the Technical Training Centre, while working at the machines. If you didn't bring your own, safety shoes are for sale in the Support Centre. Your instructor will take you there. For your use during the course, you may borrow a set of coveralls.

Each participant is given a locker in the changing-room. The instructor will hand you the locker key. You may then select a set of coveralls from the cabinet in the changing-room. Your instructor will help you if needed.

You may exchange your coveralls for clean ones every Monday morning. Tell your instructor if you need to change at any other time. Used and soiled coveralls are to be placed in the laundry basket in the changing-room.

At the end of the course you have to empty and lock your locker and return the key to the instructor. If you wish to retain your locker for a subsequent training course, tell your instructor.

Valuables You are responsible for your own valuables.

Money exchange To change currency or cash traveller's cheques, please go to the Exchange service at Support Centre, which is open 08.00 - 16.30.

Hotels In the coffee room, there is a list of the various hotels, with addresses, phone numbers, etc. If you want to change hotel during the course period, please contact the course co-ordinator at Technical Training Centre.

Transport Certain hotels provide free of charge transport to and from Tetra Pak. Ask the hotel receptionist about this. If you wish to use this service, you must tell the receptionist the day before.

Travel arrangements Go to the Resespecialisterna travel agency at Tetra Pak for reservations, reservation changes, or confirmation of reservations. The travel agency accept credit cards or invoicing but not cash. They are open 08.00 - 17.00.

Medical care For medical care, unless it is an emergency situation, go to Citykliniken, located in the centre of Lund. Information concerning this clinic is posted on the notice board in the coffee room.

Leisure time In the coffee room you will find information about the city of Lund and the surrounding region as well as on available facilities and activities.

Sport Centre Bookings for the Tetra Pak Sport Centre are free of charge and can be made at the Main Guard, located next to the Main Reception. If you visit the Sport Centre, you must enter and leave via the Main Guard.

Gifts and souvenirs Gifts, souvenirs, articles of clothing, etc. are for sale in the Support Centre, which is open 08.00 - 16.30.

Tetra Pak

Part of the plant at
Ruben Rausings gata
Lund

1. Main Reception
2. Main Guard
3. Technical Training Centre
4. Restaurant
5. Support Centre
6. Resespecialisterna Travel agency
7. Sport Centre

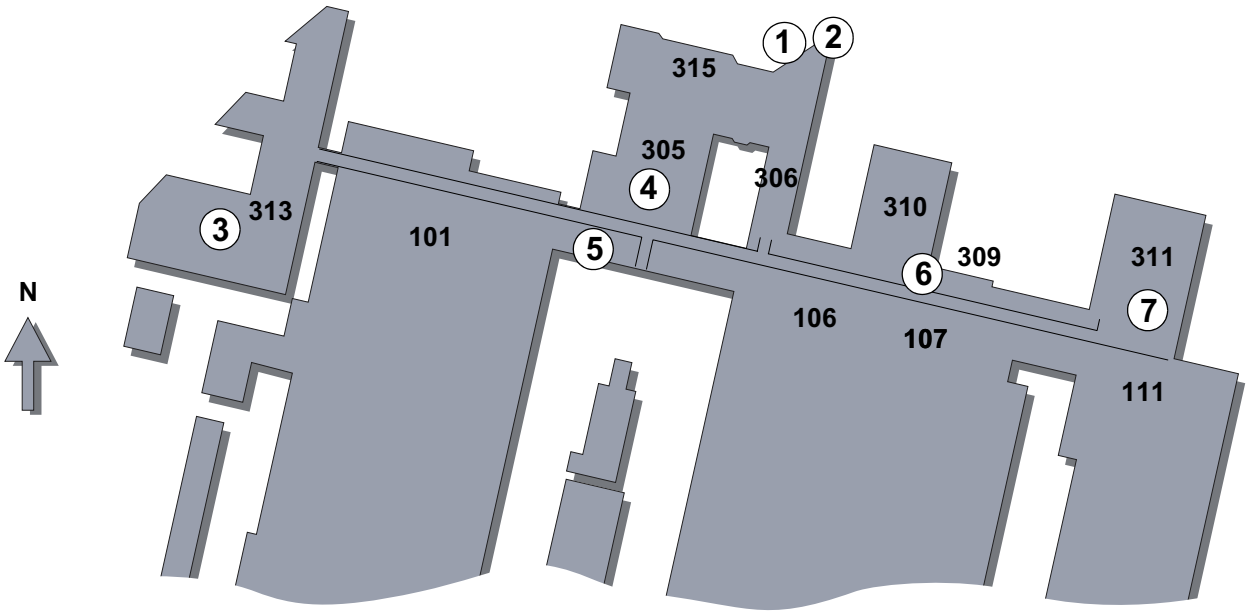

2

TBA/22 introduction

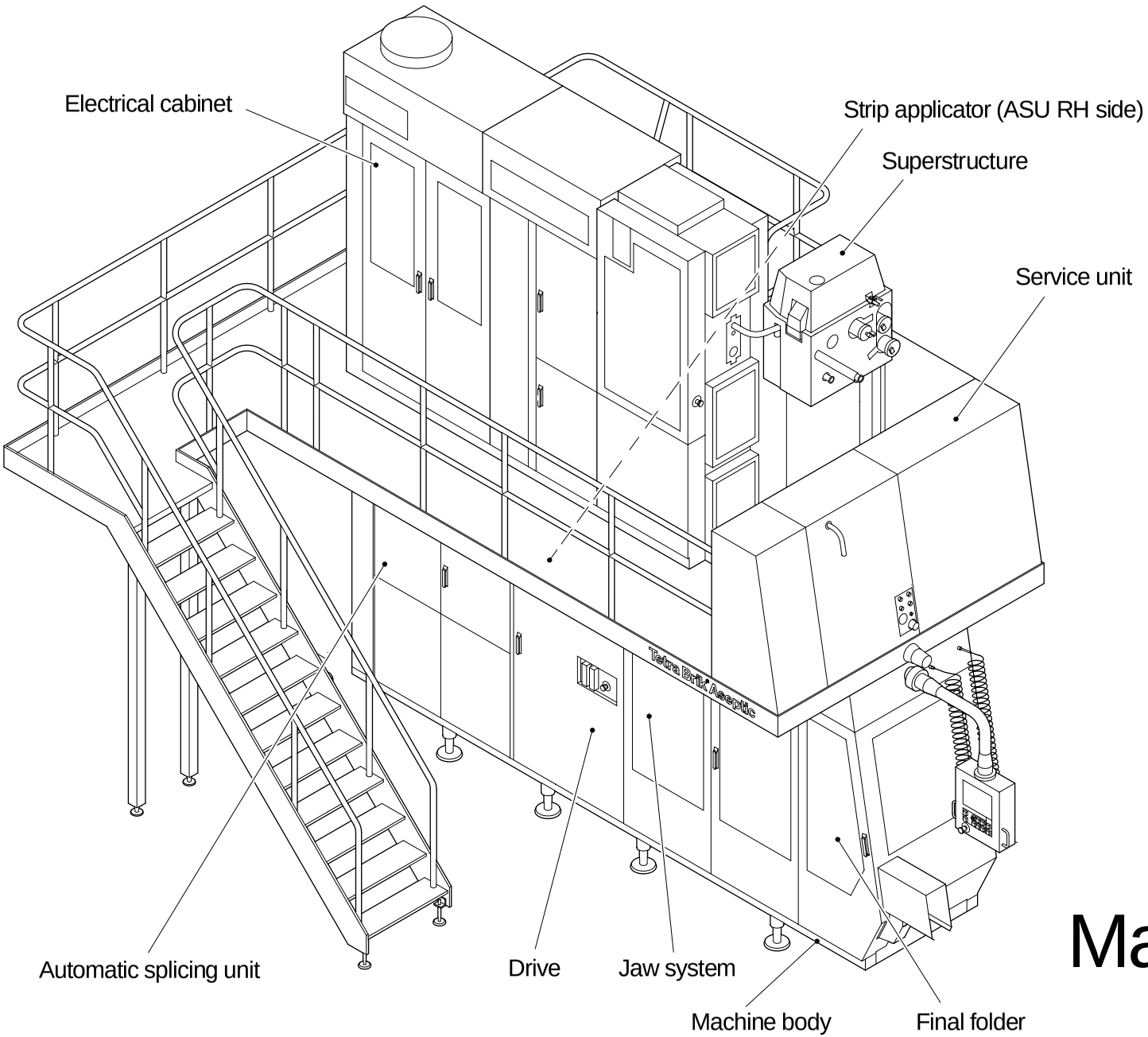
Electrical cabinet
Strip applicator (ASU RH side)
Superstructure
Service unit
Tetra Brik Aseptic
Automatic splicing unit
Drive
Jaw system
Machine body
Final folder

Main groups

Tetra Brik Aseptic filling machine TBA/22

High speed packaging system
for portion packages



Tetra Pak
More than the package™

TBA/22 High speed packaging system

High speed that adds value



TBA/22 creates an entirely new standard of capacity in the aseptic packaging of liquid food. It provides a highly competitive solution for achieving lower operating costs, higher productivity and greater space efficiency.

The capacity is remarkable; 20,000 packages per hour for the Tetra Brik® Aseptic 200 and 250 Baseline, 200 Midline and 200 Slimline with straw openings and secondary packaging solutions. The system offers a high speed straw applicator and a high speed cardboard packer.

The beauty of the system is that it is not only fast, it is simple too. The higher capacity has been achieved by increasing the speed of the filling machine and designing innovative solutions for the new jaw unit and the new final folder.



Cost-effective, productive and space-efficient

TBA/22 has been designed with the specific purpose of reducing costs and raising the productivity of producers.

Cost-effective

Savings on packaging operating costs are achieved through lower capital costs, lower utility consumption, lower operator costs, improved space utilisation and less waste on a per package basis.

High productivity and space efficiency

An unparalleled capacity of 20,000 packages per hour combined with a very compact footprint makes the machine extremely cost-effective. Producers can expand capacity in the space they already have available, without having to invest in major extensions or new plants.

User-friendly

Significant steps have been made to increase user-friendliness for operators and service technicians. TBA/22 provides:

* easy access,
* efficient handling of consumables such as packaging material and the LS-strip,
* an interactive operator interface.







TBA/22 machine functions

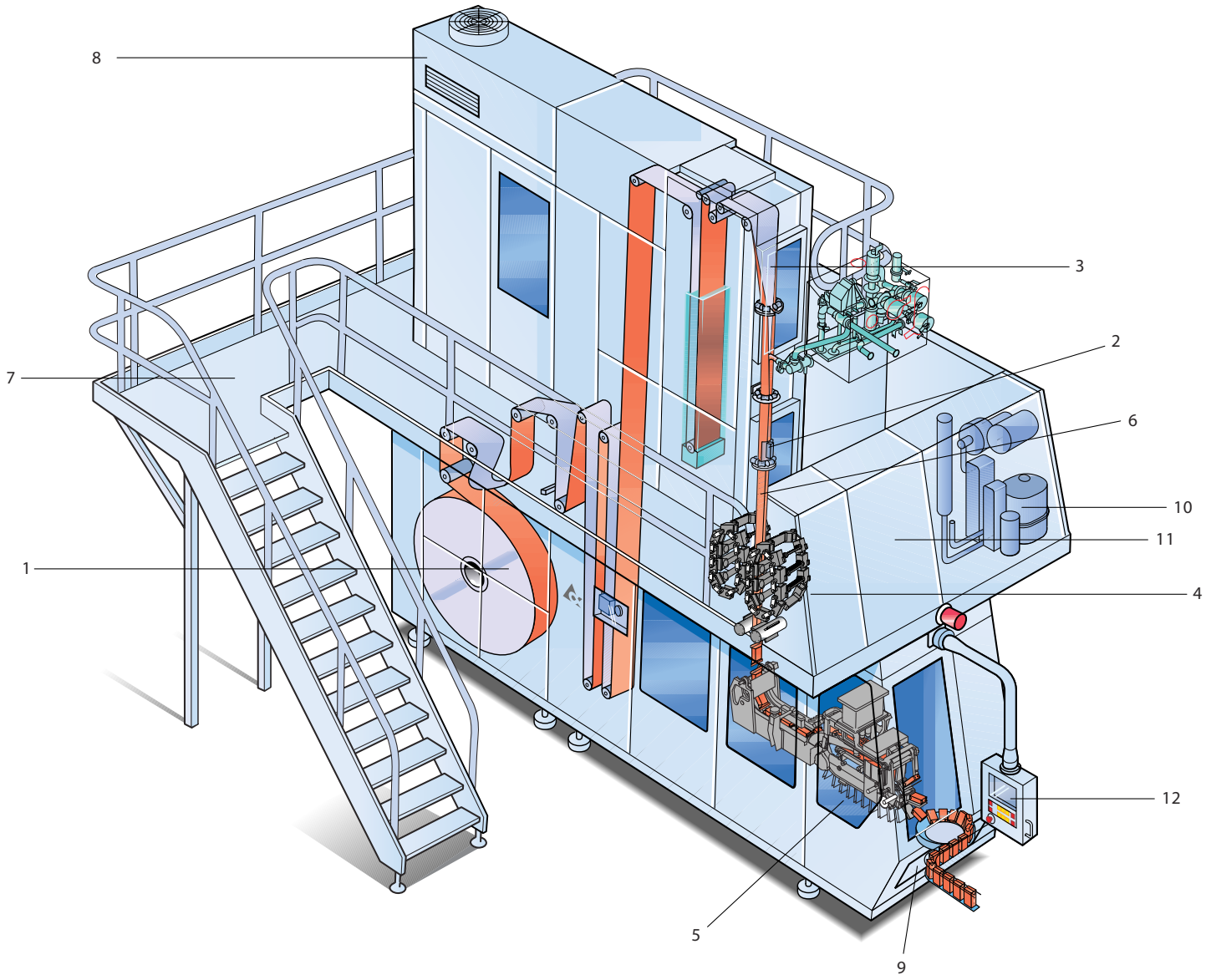

1. Packaging material supply

Two reels of packaging material are placed in an integrated section of the machine. The reels are spliced automatically by means of induction heat. The two-reel concept enables the next reel to be spliced before the one currently in use is finished ..an ideal feature for contract packing and short production runs of the same product with different designs.

2. Longitudinal sealing

Induction heat is used for sealing the longitudinal seam of the packages. Preheating is not needed, as the inductor applies the strip immediately.

3. Aseptic system

Sterilisation of the packaging material is achieved by letting the packaging material pass through a deep bath of heated hydrogen peroxide. Rollers remove the hydrogen peroxide from the packaging material and remaining residues of H_2O_2 are evaporated by hot sterile air. The temperature in the aseptic chamber is monitored so that it will not exceed 100°C. Problems caused by polyethylene sticking during short stops are thus avoided. The aseptic chamber has been designed with a minimum of slots and screws, and the surfaces are angled to enable efficient cleaning.

TBA/22 has a self-balanced sterile air overpressure that is automatically monitored thus permitting reliable operation.

4. Jaw unit

The jaw unit consists of 2 chains opposite each other and are driven at a constant speed by a servo-motor. Each chain is made of 10 links which move against fixed cams. No hydraulics are needed.

5. Single final folder

The final folder consists of a single chain driven at constant speed by a servo-motor. There are no hydraulics. Use of lubrication grease is minimal in order to avoid the risk of leakages on the packages. Individual temperature-regulated air nozzles for the flap sealing improve the sealing.

6. Product filling system

The product filling system has a level probe that measures the liquid level very precisely and controls it with an electronic system and a regulating valve.

7. Platforms

The spacious platforms and stairway make the machine very accessible and provide a safe working environment. The design complies with the directives for CE-marking.

8. Air cooling of the electrical cabinet

The electrical cabinet has a compressor-controlled air cooler so that the temperature will not exceed 40°C, even if the maximum number of options are built in.

9. Waste conveyor

Rejected packages are discharged at the front of the machine, which improves waste handling and does not affect the operator's working area.

10. Integrated closed water cooling system

TBA/22 has an integrated closed water cooling system to cool down IH transformers and final folder guides. About 10% of the water is continously purified through an ion exchange filter which means that lime deposits are eliminated in the cooling system.

11. Service unit

The service unit for the closed cooling system and foam cleaning is located at the front of the machine. Easy connection of all utilities simplifies installation.

12. Interactive operator's panel

TBA/22 has an interactive operator's panel at floor level with a touch sensitive display. It contains very extensive alarm functions and it is also possible to switch between different languages very quickly.

The operator guidance supports the operator with detailed instructions, such as what actions to take to reset the machine into the production position. This feature helps save labour and reduce downtime.

The operator can easily adjust the most important sealing parameters, centering of the longitudinal seal, package volume etc.

Peroxide container system

TBA/22 has a closed water system for heating the hydrogen peroxide. The tank is insulated. To avoid overfilling, the maximum level in the tank is supervised by a level probe.

Longitudinal seal strip application

The longitudinal seal strip applicator is located at floor level to allow easy access.
Sealing is done by induction heat. Two jumbo reels are spliced automaticaly. If 250 B packaging material is used then one jumbo strip lasts for about 1 hour.

Packaging Line Monitoring System (PLMS)

Automatic recording of line efficiency is made possible by the PLMS. The system records data about stoppages i.e. duration, frequency and waste. The data can be analysed off-line by transferring it to a PC via a modem or diskette.

Foam cleaning

Alkali foam cleaning is standard for external cleaning (cleaning of jaw system, final folder and aseptic chamber). Foam is dynamic and penetrates unseen surfaces to give a very hygenic environment.

CIP cleaning

The cleaning-in-place function (cleaning of product valves and product piping) is automatically switched between production and the cleaning configuration by a group of valves. This feature also records the CIP parameters, i.e. the concentration, temperature and flow of the cleaning media, which are presented on a chart diagram.

TBA/22 packaging line

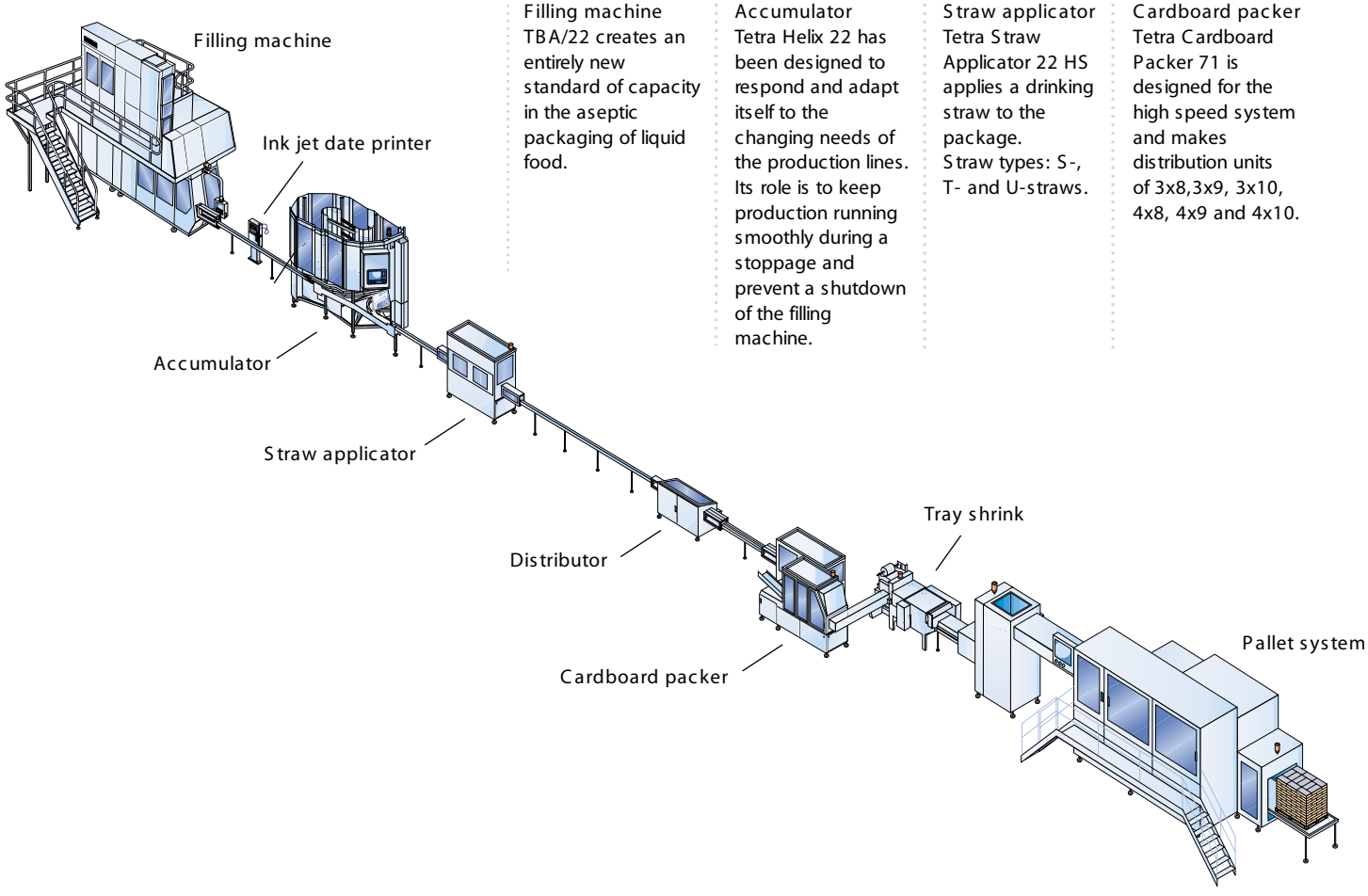

Filling machine
TBA/22 creates an entirely new standard of capacity in the aseptic packaging of liquid food.

Accumulator
Tetra Helix 22 has been designed to respond and adapt itself to the changing needs of the production lines. Its role is to keep production running smoothly during a stoppage and prevent a shutdown of the filling machine.

Straw applicator
Tetra Straw Applicator 22 HS applies a drinking straw to the package.
Straw types: S-, T- and U-straws.

Cardboard packer
Tetra Cardboard Packer 71 is designed for the high speed system and makes distribution units of 3x8,3x9, 3x10, 4x8, 4x9 and 4x10.



Tetra Helix 22

Tetra Helix 22 consists of two parallel conveyors, which operate at related speeds yet, are independent of one another. The one conveyor is for infeed, the other for outfeed, and at the hearth of the system, is a floating gear.



Tetra Straw Applicator 22 HS

The applicator is small and compact, making it easy to integrate the machine with the packaging lines.

The applicator works with the flow principle. To ensure a precise application of the straw, the packages are lifted up from the conveyor chain to a transport belt when passing through the application area.

The applicator head, containing the ladder band, is mechanically connected and driven by a servo-motor. The straw is applied with the help of pressure pads that move with the packages.



Tetra Cardboard Packer 71

Tetra Cardboard Packer 71 packs Tetra Brik¨ and Tetra Brik¨ Aseptic packages into cardboard trays in the 3x8, 3x9, 3x10, 4x8, 4x9 and 4x10 packing patterns. The machine is easy to adjust from one packing pattern to another.

The packages are fed through a distributor that separates the flow of packages into three parallel lines. The packages are then fed into the packer and grouped in the required packing pattern.

Technical Data: Tetra Brik® Aseptic filling machine TBA/22 - 0500

Capacity filling machine

Packages per hour: 20,000 for TBA 200 B, TBA 250 B
TBA 200 M and TBA 200 S

Filled product type

High and low acid product only
Non viscous product only

Product supply

Connection pressure, kPa (bar):	160±40 (1.6±0.4)

Steam

Connection pressure, kPa (bar):	170±30 (1.7±0.3)
Temperature, °C (°F):	130 (266)
Consumption, kg/h:	3.5

Electricity

Connection:	
Voltage, V:	400/230±10%
Frequency, Hz:	50/60±2%
Recommended main fuse, A (To obtain selectivity):	100
Consumption:	
Pre-heating, kW:	29
Sterilisation, spraying, kW:	34
Sterilisation, drying, kW:	20
Production, kW:	30.5
Cleaning, kW:	10

Hydrogen peroxide, (H_2O_2)

Concentration:	35%
Consumption, l/h:	4

Water supply (cold)

Connection pressure, kPa (bar):	300-450 (3-4.5)
Temperature, °C (°F):	Max. 20 (68)
Consumption, production:	
Sterile air compressor, l/min:	8
Sterile air compressor plus cooling system compressor, l/min:	14-16

Water supply (hot)

Connection pressure, kPa (bar):	300-450 (3-4.5)
Temperature, °C (°F):	55-60 (130-140)
Consumption production:	0
External cleaning, l/cycle:	120

Compressed air

Connection presssure, kPa (bar):	550Ð600 (5.5 Ð6)
Consumption, production, Nl/min:	420

Detergent (external cleaning)

Alkali, l/cycle:	1.2 (1.8*)

* If external cleaning superstructure is also running.

Cleaning in place (CIP)

Connection pressure, kPa (bar):	Max. 350 (3.5)
Flow, l/h:	Min. 8000

Noise level

Sound pressure level, Lp dB(A):	77

Installation drawing No.

2514257-3

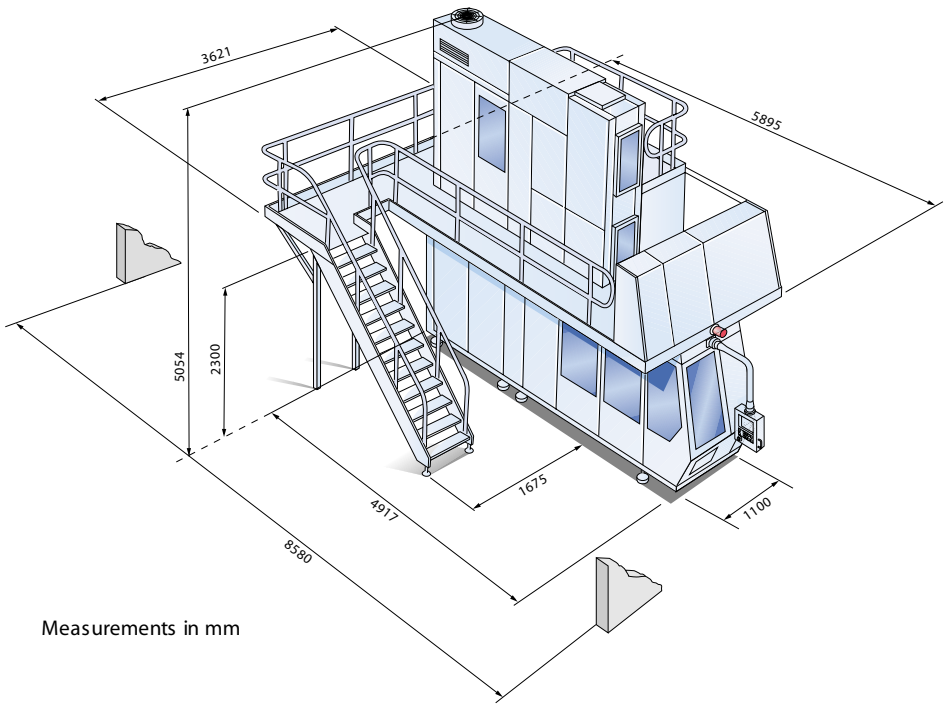

Measurements in mm

© 2002 Tetra Pak Carton Ambient S.p.A./ AD Ikos. Produced by Tetra Pak Marketing Services AB. Code 8201en. 2002-09

We reserve the right to introduce modifications without prior notice.Tetra Pak, More than the package and Tetra Brik are trademarks belonging to the Tetra Pak Group.

3

TPMS service system

Tetra Pak Maintenance System

The methodology of preventive maintenance

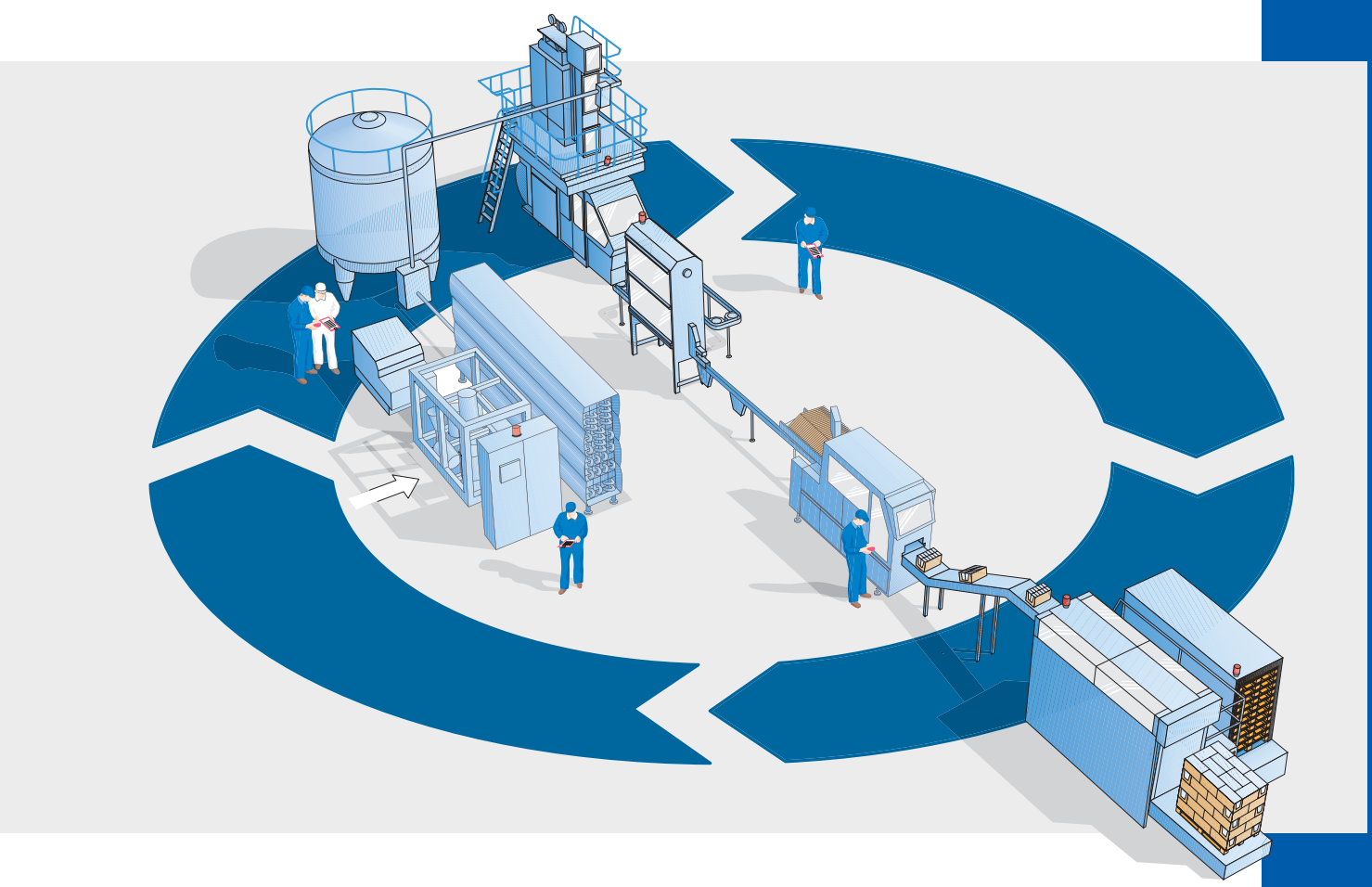

Tetra Pak

protects what's good™

Planned production requires planned maintenance

A modern facility for processing and packaging food, milk or fruit juice is a highly complex installation. Professional maintenance makes it possible to maintain the high standards of reliability, hygiene and consistent quality called for when working with sensitive products. Minimal downtime and high machine availability have an immediate, positive impact on the plant's profitability.

By systematically applying preventive maintenance routines, production downtime can be kept to a minimum. With the Tetra Pak Maintenance System (TPMS) we can share with you all the experience we have acquired. Together we can achieve our common goal – a reliable, profitable production plant.



A limited approach – or a limited attitude – to maintenance brings only limited results. To be truly effective, maintenance must include *all* the actions necessary to maximise plant efficiency.

That is why TPMS takes a holistic approach to maintenance – an approach that consists of the following essential areas: maintenance management, preventive maintenance, documentation, training, parts logistics and tools facilities.

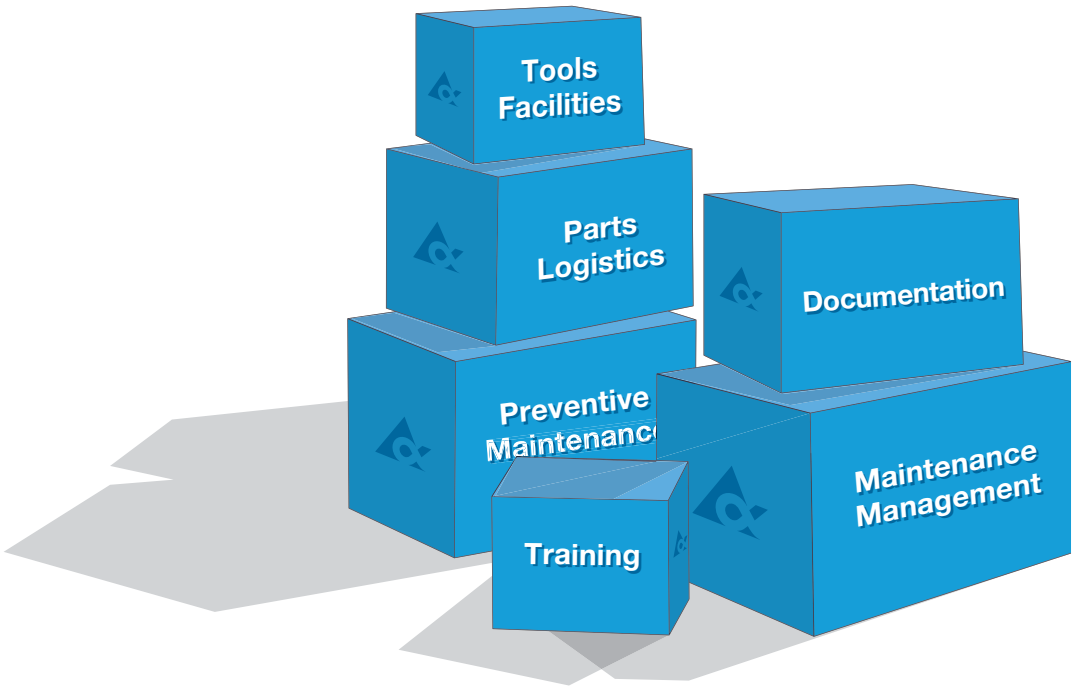



TPMS – integrating maintenance starts at the design phase

The best way of reducing maintenance costs is at the design stage. Tetra Pak machines/equipment are designed to be easily maintained. This is done by:

- involving service staff in the development work at the start of the design phase of a new machine/equipment model
- ensuring designers participate in customers' maintenance work, in order to gain experience

When a prototype machine is designed, the first maintenance checklists are complied by the designers in collaboration with maintenance engineers. TPMS includes engagement in the product development stage, applying unique tools to ensure minimised maintenance needs, and securing a high level of availability for our products.

Maintenance specialists work closely with design engineers. The maintenance aspect of each function is carefully evaluated.



The experience gained from maintaining Tetra Pak systems is incorporated into new development projects.



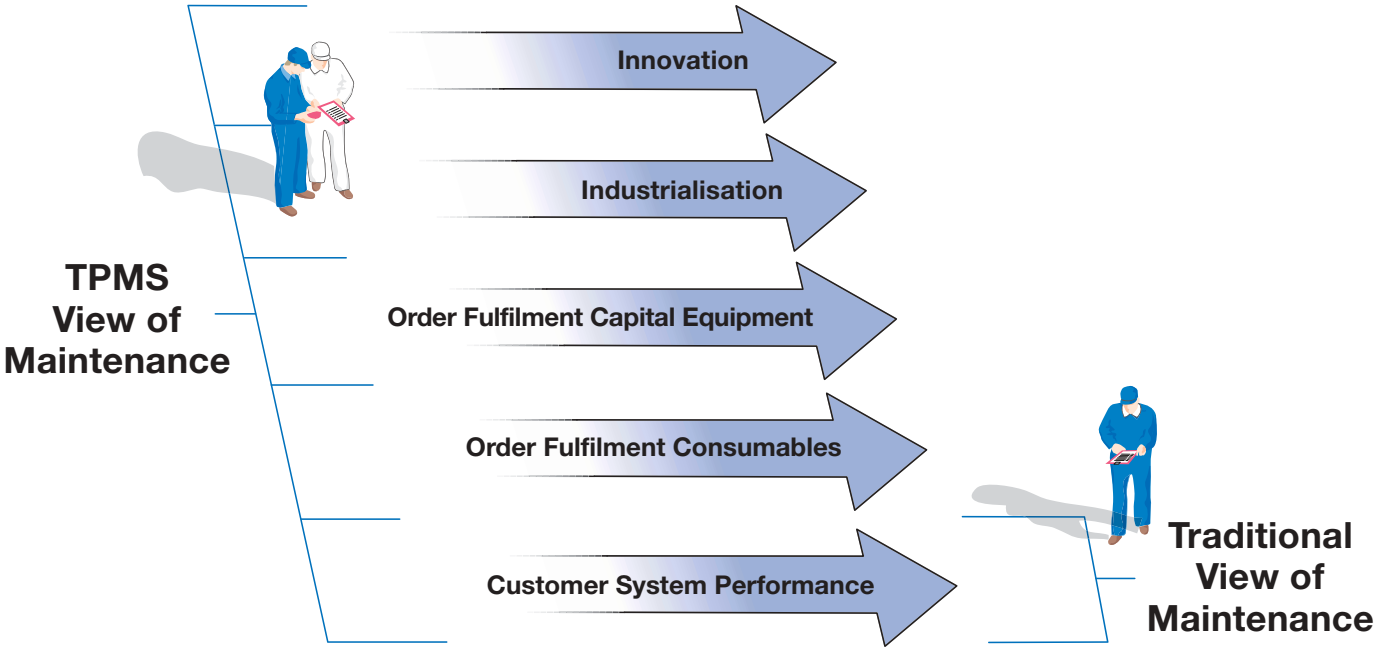

Many of the machine functions are assessed on test rigs to ensure compliance with maintenance specifications.

Each Tetra Pak equipment development project receives input from our design, testing, production and service personnel.





Constantly updated—by the people who actually use it

The Tetra Pak Maintenance System is constantly improved by input from hundreds of users worldwide. This input is based on users' real, hands-on experience. It helps make the system as effective and easy-to-use as possible. It also contributes to continuous equipment/machine innovation and improvement.

Maintain

A maintenance activity is performed when and where specified by the TPMS. The actual work is carried out either by your staff, Tetra Pak Technical Service staff, or a combination of both.

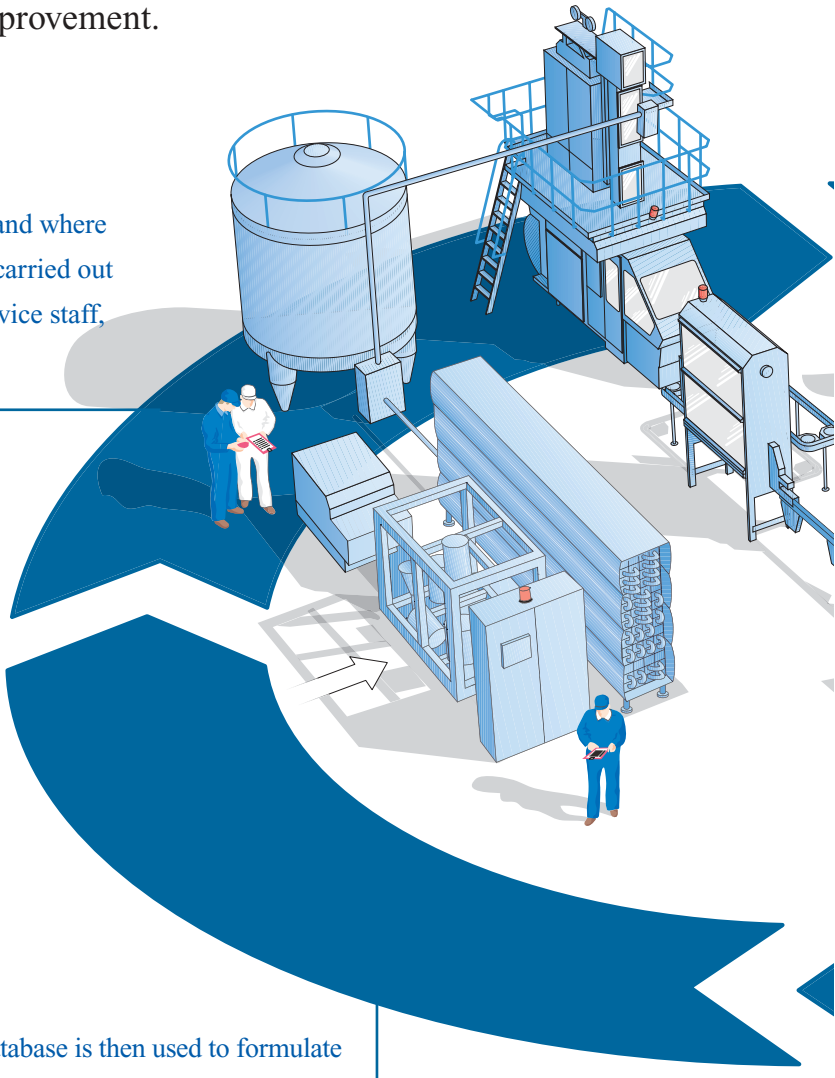

Improve

The updated TPMS database is then used to formulate new, more effective maintenance recommendations. These recommendations make up part of new maintenance checklists, incorporating the lessons learned from previous maintenance activities.

Report

Following the maintenance activity, a Maintenance Report is filled in. This report is then forwarded to Tetra Pak Technical Service.

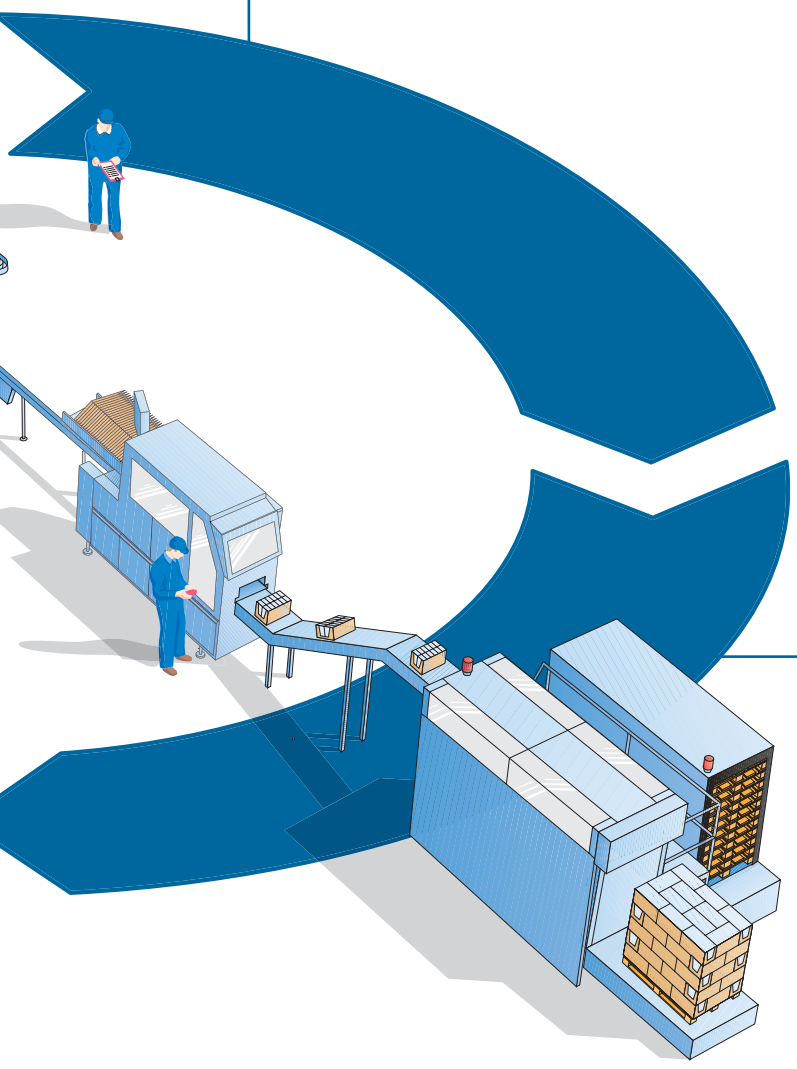

Evaluate

Each Maintenance Report is analysed and evaluated by TPMS experts within Tetra Pak Technical Service. The results of these evaluations are fed into the TPMS database as updates.

Documentation ensures consistency

Regularly updated documents support your work with TPMS. Detailed maintenance manuals help ensure the consistency of all maintenance work, whether carried out by your staff or Tetra Pak staff.

Checklists ensure the correct work is performed at the correct intervals. Maintenance reports give feedback and influence the ongoing development of TPMS.

Maintenance Manuals
Maintenance manuals give technicians information on the maintenance of each item of Tetra Pak equipment.

Spare Parts Catalogues
Spare parts catalogues inform when, how and where to order maintenance parts.



Operation Manuals
Operation manuals contain everything operators need to know about running a particular machine – before, during and after production.

Tetra Pak

Tetra Pak Technical Service / Code 9922 en. 2004-03

Maintenance Routines

Operator Maintenance

Care and maintenance of the machine is important in order to produce a good product and to avoid unintentional stops.

Recommended maintenance routines for the machine are fully described in the Operation Manual. Care and maintenance that is to be performed by the machine operator can be divided into two parts:

CIP = Cleaning In Place

- **Care after finished production** includes among other things cleaning of the machine; manual cleaning and CIP. Checking for possible damages due to normal wear and tear are further examples of the daily care.
- **Weekly care and maintenance** covers a more extensive cleaning and maintenance, than care after finished production.

Maintenance techniques

Maintenance includes a wide range of activities. We can divide them into three main categories: Corrective maintenance, Preventive maintenance and Designing out maintenance.

Corrective maintenance

Corrective maintenance is another word for reparation. The problem is corrected when it occurs. This technique is mainly used on components where the fault occurs suddenly, for example on electrical components. For most electrical components it is almost impossible to set intervals or detect faults with condition based maintenance.

Preventive maintenance

Preventive maintenance is used to prevent a breakdown or standstill. This technique can be used when intervals can be predetermined or faults can be detected by condition based maintenance.

- **Programmed maintenance**, or time scheduled maintenance, is used when the replacement of a component follows a time schedule. The lifetime of a component is often calculated upon experience. This technique can be used for most mechanical components, such as bearings, bushings, etc.
- **Condition based maintenance** is initiated by some kind of check. The check could be either subjective or objective.
  The checklists in TPMS contain mainly *subjective checks*. Human senses are used; observing, listening and touching.
  Objective checks are for example when measuring physical parameters, such as vibrations or pressure drops. Objective checks are often initiated by programmed maintenance, for example measuring of vibration level every week. Complicated equipment is sometimes supplied with measuring devices that perform continuous measurements.

TPMS = Tetra Pak Maintenance System

Designing out maintenance

Designing out maintenance is constantly improving the design.This is a way to reduce the maintenance cost for the equipment.

Tetra Pak Maintenance System

The principle of TPMS is to ensure maximum performance and to minimise the number of unpredicted stops. This is achieved by providing carefully prepared maintenance recommendations TPMS has been practised by Tetra Pak since 1989.

The major difference between TPMS and other maintenance systems is that TPMS is used as a tool and that the need of maintenance is estimated already in the development phase of the machine.

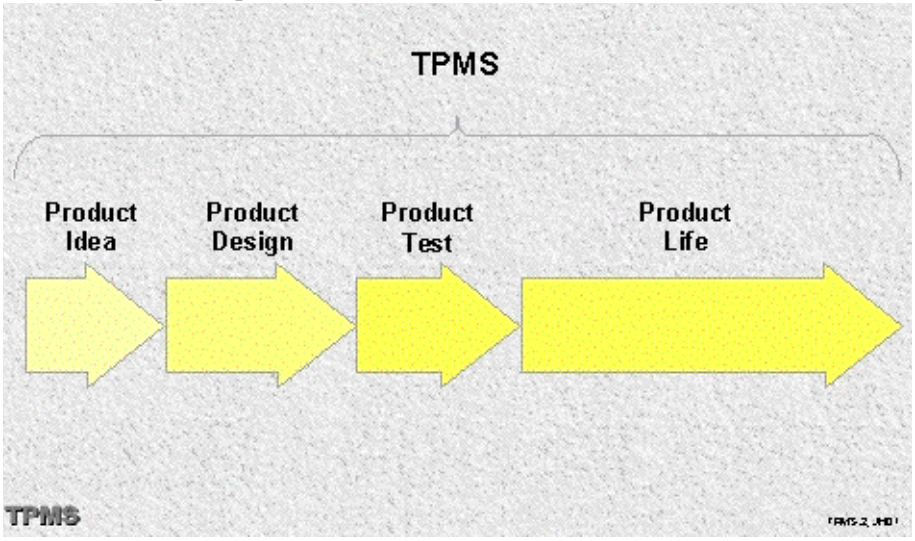

Care and maintenance are involved in the development phase of the machine. This way machine design that could cause service problems, can be avoided.

Availability

A streamlined production unit requires high availability. This is made possible by TPMS, which implies the following advantages:

- **Reduction of downtime** - TPMS is designed to reduce the downtime due to maintenance. TPMS will inform about the approximate point of time for the service, so that it can be scheduled together with the production management, in order to have the least interference possible on the production.
- **Avoiding breakdown** - A breakdown can have many different causes, for example incorrect handling or lack of maintenance. A breakdown will always lead to loss of production.
- **Predicting maintenance cost** - Since less breakdowns due to the lack of maintenance will occur, it is possible to calculate maintenance costs more exactly.
- **Optimizing spare parts handling** - Spare parts are expensive to stock. As a consequence of less breakdowns and the possibility to plan the use of maintenance spare parts, it will be possible to reduce the stock of spare parts. A safety stock is however always required.

The availability is depending upon Reliability, Maintainability and Supportability:

Reliability

Reliability describes how often the machine is stopped due to failures.To ensure a high reliability it is important to consider the maintenance need of the components selected and that they withstand the conditions in which the machine is operated.

Maintainability

Maintainability describes how long time it takes to correct the average failure. One way of improving the maintainability is to design a machine with easy access to parts that need to be replaced. A fault detection system can reduce the time consuming trouble shooting.

Supportability

Supportability is a measure of how long time it takes until repair is started. This is a measure of how well the maintenance organisation works. Maintenance staff knowledge, documentation, spare parts supply etc.are factors that affect the supportability of the equipment.

Service life

Overviews of the service life of different components are based on information from the suppliers, as well as from people with personal experience. The first step when creating maintenance recommendations is to collect this information.



The diagram shows the recommended maintenace intervals for various components.

Service cycles

TPMS is based on two different service cycles:

- **The short service cycle** is performed every 250 hours and is used for filling and distribution machines. Normally this service is performed by the customer.
- **The expanded service cycle** is performed every 1000 hours and is normally performed by Tetra Pak. But this is just a recommendation. Each customer decides together with Tetra Pak, how much of the service they want to perform themselves. The service is different from one time to another.

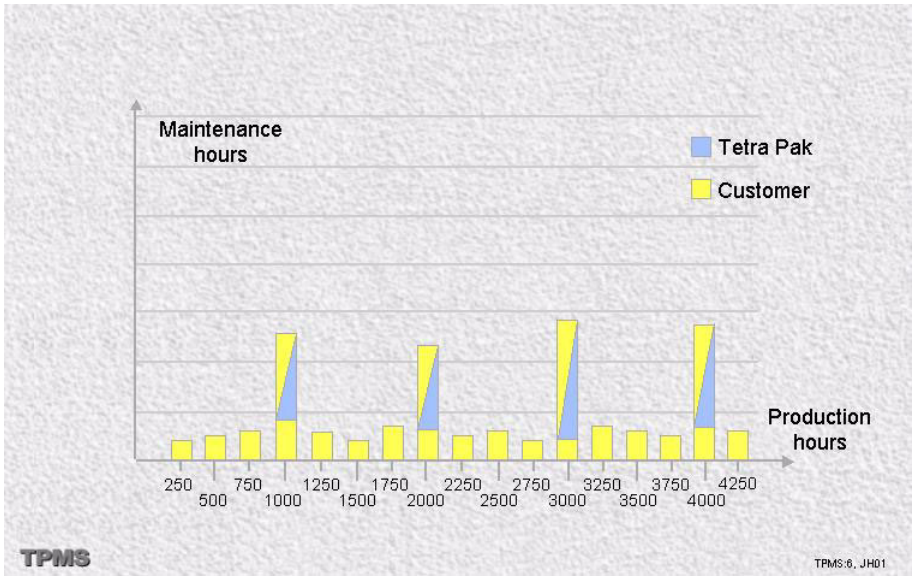

TPMS is based on two different service cycles: every 250 hours and every 1000 hours.

Service Maintenance Administration (SMA)

The central part in TPMS is the SMA. This is a database handled by the Business Areas. In the database information about the different maintenance activities on the machine, required spare parts, tools etc. is collected. SMA enables:

- Creating maintenance recommendations for a machine type
- Administrating when the machines should be serviced
- Generating checklists
- Reporting results of service
- Following-up on reported results

SMA = Service Maintenance Administration

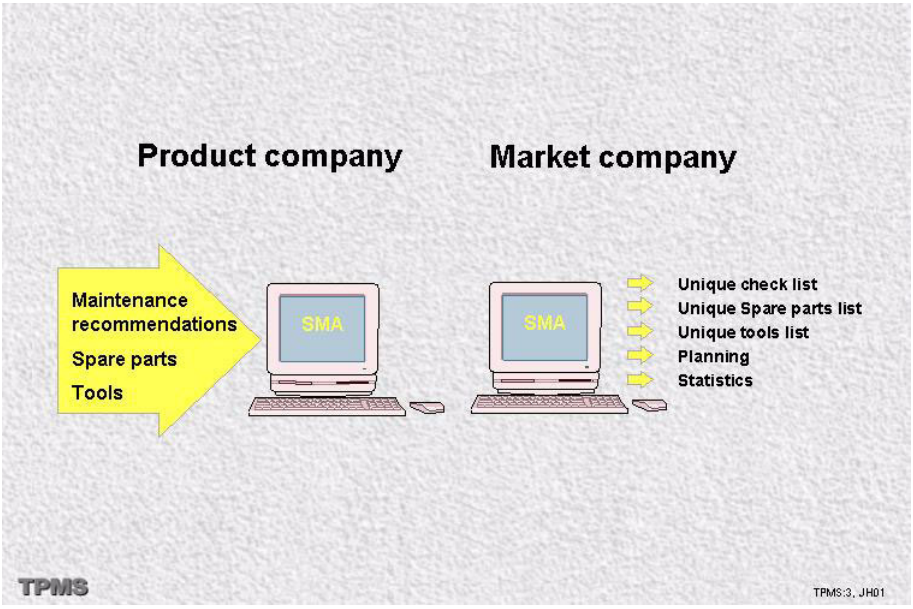

The central part in TPMS is the SMA database

TPMS cycle

Basically TPMS consists of three main parts:

- Maintenance
- Evaluation
- Improvement

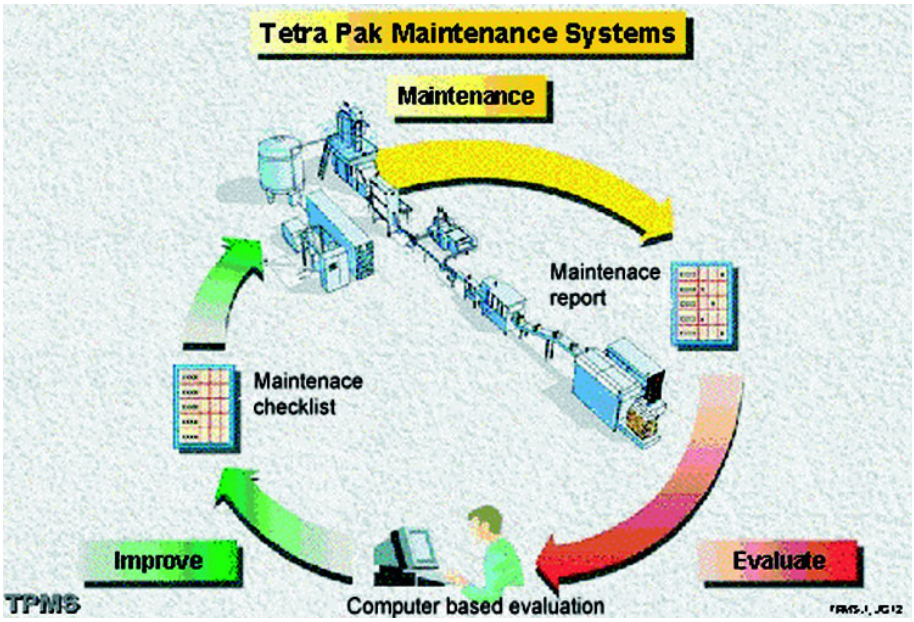

TPMS involves a continuous evaluation of the maintenance system itself, based on recurrent feed back from the customers.

Maintenance

Common for all maintenance performed according to TPMS is the use of checklists. The checklists are generated from SMA. Every maintenance occasion has its own checklist including what spare parts to be used. When the service engineer needs further information the checklists are linked to the mannschine documentation.The main reasons for using checklists are:

- It is a uniform way of performing the service.
- It offers good possibilities to plan the service. SMA will calculate the estimated time for the service and the cost for spare parts.
- It is a tool for distribution of experiences

Checklist overview

The checklist overview is a list containing all maintenance recommendations for the machine.

Checklist

A checklist is a list of all the work that should be performed during one maintenance occasion. The checklist refer to all technical documentation, for example the MM (Maintenance Manual) and the SPC (Spare Parts Catalogue).

Tailor made checklists

Tailor made checklists are checklists that are machine specific. Based on an agreement between the customer and Tetra Pak, more or less of the maintenance work will be put on the customers checklist.

Connected items lists

Rotation units, service boxes, tools and spare parts are important for a good maintenance program. In addition to the maintenance checklists, customers receive lists of the required items for each maintenance occasion. This ensures that everything is available on site when it is needed.

- **Rotation units** are isolated sub-assemblies that contain components or parts that require frequent maintenance actions. The units are, due to the complexity, overhauled in the local work shop and replaced as whole units in the field.
- A **service box** is a “container” with the spare parts that are to be used or might be needed at one maintenance occasion. The service box can be sent from a Tetra Pak store or be put together by the customer from his stock. The use of service boxes is not the same in all countries.
- Using special **tools** might speed up the work. These tools are listed, but ordinary hand tools like wrenches, screw drivers etc. are not included in the list.
- The **spare parts** required for each maintenance occasion are listed.

APM list

APM = After Production Maintenance

The APM list is a supplement to after production and weekly care procedures described in the OM. It contains all items that should be performed according to a shorter cycle, normally 250 hours. This list is static and all items are performed every time.

Line maintenance

TPMS covers all components that are crucial for the production line. Most of the components, from the milk intake to the palletisers, are made according to maintenance recommendations.

Reporting back

When a service has been performed, either by Tetra Pak or the customer, the service results are entered into SMA. Statistical reports are extracted from SMA and used as input for update meetings. The notes and comments, made by the service technicians, constitute valuable information for the next maintenance occasion. Thus, experience gained from using the maintenance recommendations is conveyed back to the business area, where it is used as input for further improvements.

Evaluation

Update meetings

Evaluation takes place on two different levels:

- The first one is on a national level, at a **local update meeting**. At these evaluation meeting, local service engineers and system specialists among others, discuss the performed services, how the services could be improved and different ways to involve the customers in improving the maintenance recommendations.
- The next level is international; On a regular basis the business areas arrange **central update meetings** where representatives from different countries get together and discuss machine performance and service results. Such meetings generally result in updated maintenance recommendations and influence over the machine development. The cycle is completed when the new recommendations are used during services, and later on, evaluated again during an update meeting.

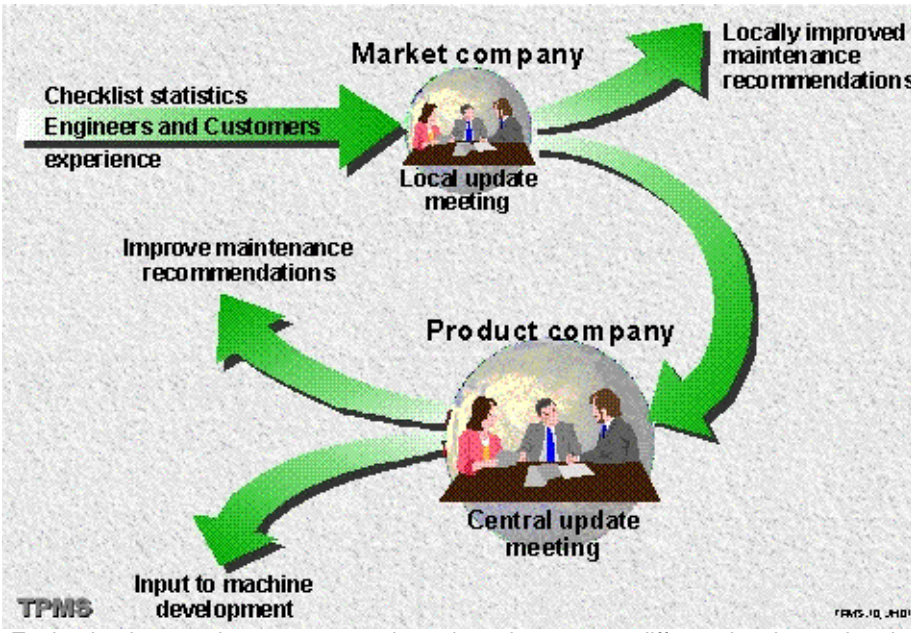

Evaluation is a continuous process that takes place on two different levels - national and international.

Improvement

Maintenance recommendations

The results of discussions at the update meetings are used to improve the maintenance recommendations.

Machine design

The statistical results of the TPMS system play a key role in the development of new machines. It is in the development phase that the maintenance needs are determined.

TPMS concept

The third feature that Tetra Pak constantly improves is of course the TPMS concept in itself. This is done in close cooperation with the TPMS users.

How to read the checklist

The checklists contains all the check items (position numbers) for an individual machine and a specific maintenance occasion.

All information about how to maintain the equipment, is originally created by the Tetra Pak business areas; Tetra Brik, Tetra Rex, etc. The checklist overviews are sometimes adjusted by the Tetra Pak market companies due to local needs and conditions.

The TPMS checklists are generated from SMA and are normally printed at the local service station. After the maintenance has been performed, the result of the work can be reported back into SMA. This information will be used when updating the maintenance recommendations as well as improving the machine equipment.

The last page of the checklist is a “Comments Page” where notes can be made about things that are not possible to include on the earlier pages. That could be remaining work, suggested rebuildings, etc.

Below are examples of different sections of the checklists. Each section is followed by a list where the marked fields are explained.

Checklist - Front page

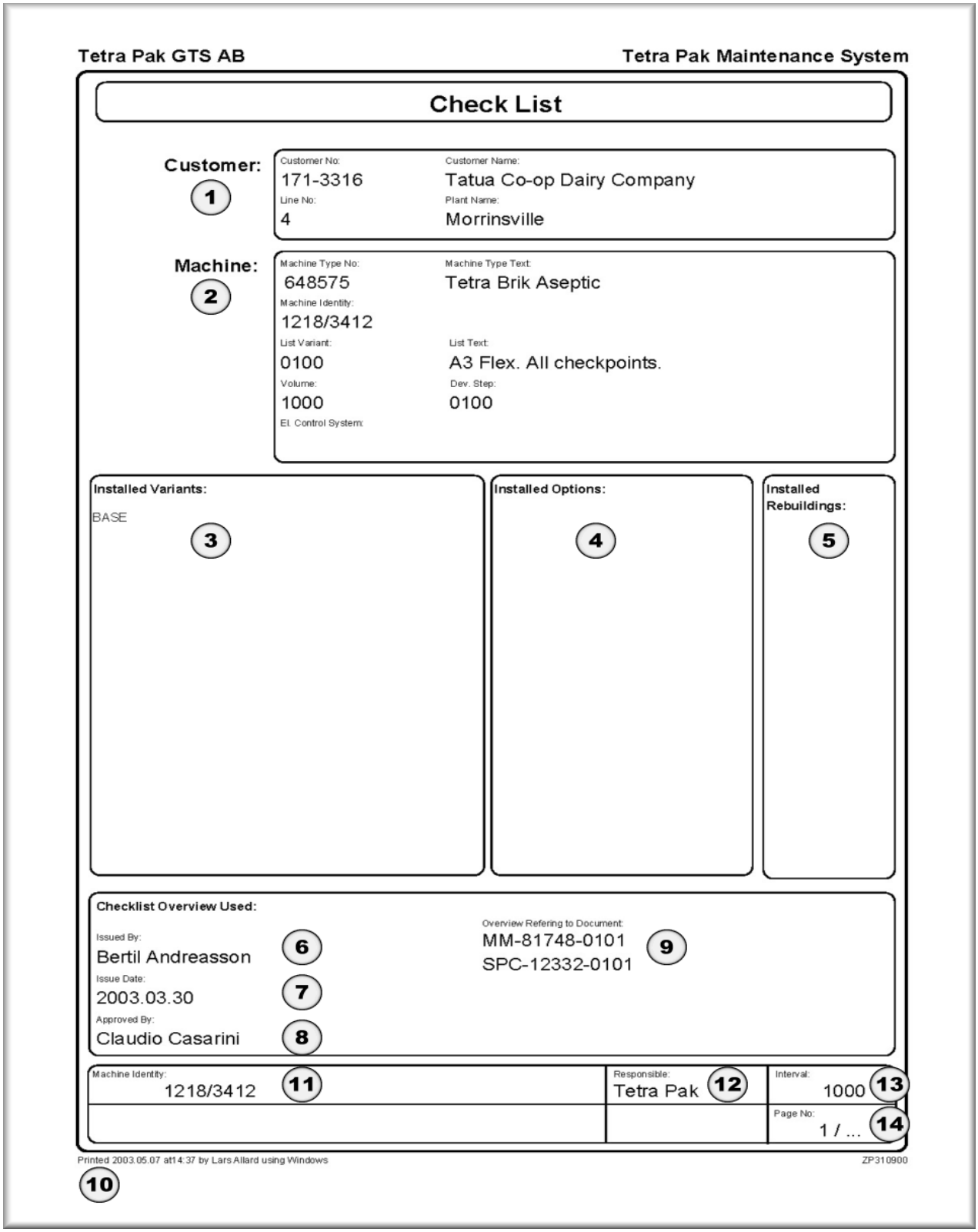

Tetra Pak GTS AB

Tetra Pak Maintenance System

Check List

Customer: (1)

Customer No:	Customer Name:
171-3316	Tatua Co-op Dairy Company
Line No:	Plant Name:
4	Morrinsville

Machine: (2)

Machine Type No:	Machine Type Text:
648575	Tetra Brik Aseptic
Machine Identity:	
1218/3412	
List Variant:	List Text:
0100	A3 Flex. All checkpoints.
Volume:	Dev. Step:
1000	0100
El. Control System:	

Installed Variants: (3)

BASE

Installed Options: (4)

Installed Rebuildings: (5)

Checklist Overview Used:

Issued By: (6)
Bertil Andreasson

Issue Date: (7)
2003.03.30

Approved By: (8)
Claudio Casarini

Overview Refering to Document: (9)
MM-81748-0101
SPC-12332-0101

Machine Identity: (11)	Responsible: (12)	Interval: (13)
1218/3412	Tetra Pak	1000
		Page No: 1 / ... (14)

Printed 2003.05.07 at14:37 by Lars Allard using Windows (10)

ZP310900

1	**Customer**	Customer specification	
2	**equipment/ machine**	equipment/machine specification	
3	**Installed variants**	Variants the current equipment/machine is equipped with	
4	**Installed options**	Options the current equipment/machine is equipped with	
5	**Installed rebuildings**	Rebuildings the current equipment/ machine is equipped with	
6	**Issued by**	Name of the person who created the maintenance recommendations.	
7	**Issue date**	Date when maintenance recommendations were created	
8	**Approved by**	The name of the person who is Product Responsible	
9	**Overview referring to document**	Showing documents the checklist refers to	
10	**Printing information**	When and by whom the list is printed	Same on all pages
11	**equipment/ machine identity**	E.g 1234/1234	Same on all pages
12	**Responsible**	Customer, Tetra Pak or all (both)	Same on all pages
13	**Interval**	The interval the checklist is valid for e.g. 5000 h	Same on all pages
14	**Page no**	1/ if more pages will follow 2. if last page	Same on all pages

Checklist - Check items

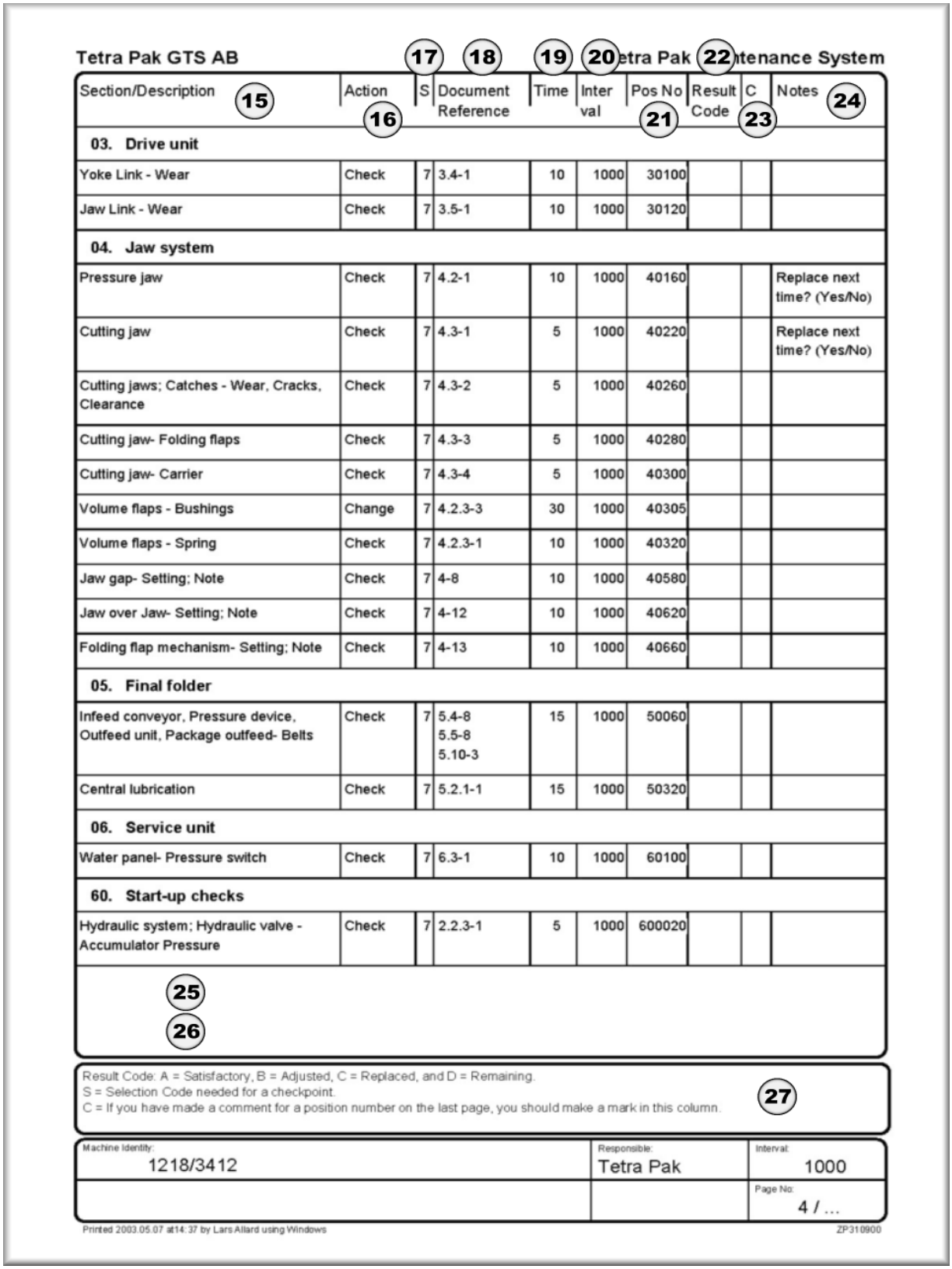

Tetra Pak GTS AB — Tetra Pak Maintenance System

Section/Description (15)	Action (16)	S (17)	Document Reference (18)	Time (19)	Interval (20)	Pos No (21)	Result Code (22)	C (23)	Notes (24)
03. Drive unit									
Yoke Link - Wear	Check	7	3.4-1	10	1000	30100			
Jaw Link - Wear	Check	7	3.5-1	10	1000	30120			
04. Jaw system									
Pressure jaw	Check	7	4.2-1	10	1000	40160			Replace next time? (Yes/No)
Cutting jaw	Check	7	4.3-1	5	1000	40220			Replace next time? (Yes/No)
Cutting jaws; Catches - Wear, Cracks, Clearance	Check	7	4.3-2	5	1000	40260			
Cutting jaw- Folding flaps	Check	7	4.3-3	5	1000	40280			
Cutting jaw- Carrier	Check	7	4.3-4	5	1000	40300			
Volume flaps - Bushings	Change	7	4.2.3-3	30	1000	40305			
Volume flaps - Spring	Check	7	4.2.3-1	10	1000	40320			
Jaw gap- Setting; Note	Check	7	4-8	10	1000	40580			
Jaw over Jaw- Setting; Note	Check	7	4-12	10	1000	40620			
Folding flap mechanism- Setting; Note	Check	7	4-13	10	1000	40660			
05. Final folder									
Infeed conveyor, Pressure device, Outfeed unit, Package outfeed- Belts	Check	7	5.4-8 5.5-8 5.10-3	15	1000	50060			
Central lubrication	Check	7	5.2.1-1	15	1000	50320			
06. Service unit									
Water panel- Pressure switch	Check	7	6.3-1	10	1000	60100			
60. Start-up checks									
Hydraulic system; Hydraulic valve - Accumulator Pressure	Check	7	2.2.3-1	5	1000	600020			

(25)
(26)

Result Code: A = Satisfactory, B = Adjusted, C = Replaced, and D = Remaining.
S = Selection Code needed for a checkpoint.
C = If you have made a comment for a position number on the last page, you should make a mark in this column. (27)

Machine Identity:	Responsible:	Interval:
1218/3412	Tetra Pak	1000
		Page No: 4 / ...

Printed 2003.05.07 at14:37 by Lars Allard using Windows — ZP310900

15	**Selection/Description**	Describes the location of the check item on the equipment. Name of details selected from the SMA 3 phrase library
16	**Action**	Defines what to do with the check item. Check, change, clean, etc. 22 pre defined action codes to select. The Document Reference below (pos 26) refers to the correct page in the Maintenance Manual for further information
17	**S (selection code)**	Possibility to define the amount of work selected for customer and Tetra Pak. 3 = Customer and 7 = Tetra Pak.
18	**Document Reference**	Where to find further information in Maintenance Manual (MM) or equivalent
19	**Time**	The expected time, in minutes, it will take a trained technician to perform the check item. This time is used when planning the work- and down time for the maintenance
20	**Interval**	At what interval the check item should be performed.
21	**Pos No**	Position number is the check item's identity. Used when evaluating statistical results and to identify the check items when lists are printed in different languages
22	**Result Code**	Here is where the technician fills in the result of the maintenance. A=Satisfactory, B=Adjusted, C=Replaced, D=Remaining It is mandatory to set a C if the action code is set to "Change". If D, there has to be a comment on the last page regarding the reason
23	**C (notes on the last page)**	If the performer has made a comment for a position number on the last page, he should make a mark in this column
24	**Notes**	Here the measurements should be noted, e.g. 62 volts, 34 mm., etc. If the check item is connected to a "Rotator on request" the question "Replace next time? (Yes/No)" appears here.
25	**Total Expected Worktime**	The expected time it is supposed to take to perform this maintenance
26	**Total Expected Downtime**	This time is set to either the same time as Total Expected Worktime or to zero. The later means that it is possible to perform the check item while the equipment/machine is in operation
27	**Info - Result Code**	This is information about the possible result codes that is mandatory to fill in.

Checklist - Comments page

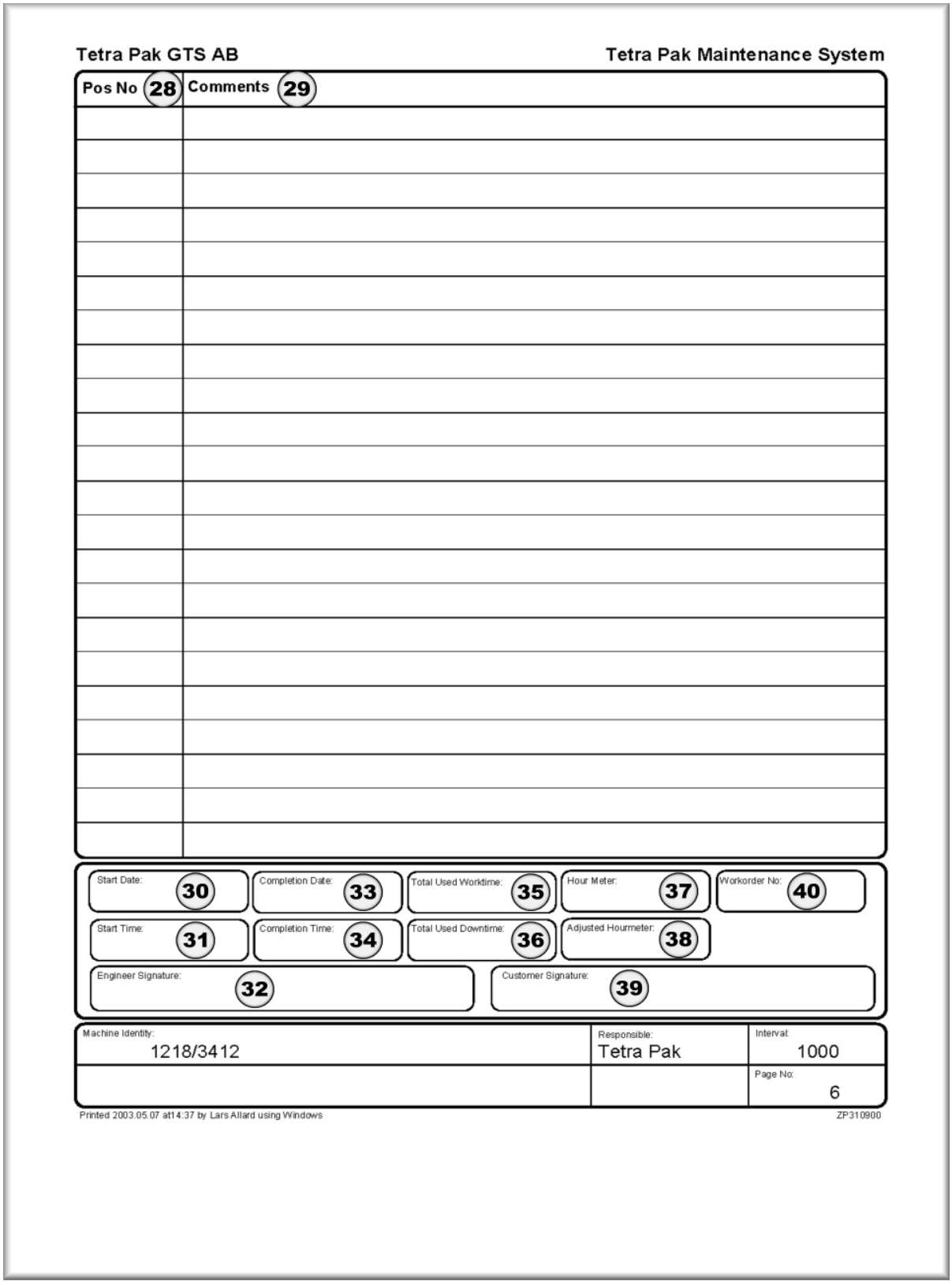

Tetra Pak GTS AB — Tetra Pak Maintenance System

Pos No 28	Comments 29

Start Date: 30	Completion Date: 33	Total Used Worktime: 35	Hour Meter: 37	Workorder No: 40
Start Time: 31	Completion Time: 34	Total Used Downtime: 36	Adjusted Hourmeter: 38	
Engineer Signature: 32		Customer Signature: 39		

Machine Identity:	Responsible:	Interval:
1218/3412	Tetra Pak	1000
		Page No: 6

Printed 2003.05.07 at14:37 by Lars Allard using Windows — ZP310900

28	**Pos no**	The position number that the comment is valid for. Note! It is also possible to make general comments about the equipment, or parts of it.
29	**Comment**	E.g. notes about recommended rebuildings, problems on the equipment, etc.
30	**Start date**	The date the maintenance was started
31	**Start time**	The time the maintenance was started
32	**Engineer signature**	The signature from the one who performed the maintenance (Tetra Pak or Customer) If more than one person, name the responsible for the work.
33	**Comple-tion date**	The date the maintenance was completed
34	**Comple-tion time**	The time the maintenance was completed
35	**Total used worktime**	The man hours it took to perform the maintenance excluding lunch breaks and other activities etc.
36	**Total used downtime**	Total downtime used to perform the service.
37	**Hour meter**	The value of the hour meter on the filling equipment/ machine when the maintenance was started
38	**Adjusted hour meter**	Running hours when the hour meter was replaced
39	**Cus-tomer signature**	Signature form the person responsible for the maintenance at the plant
40	**Worko-rder no**	Field use manually

Checklist - Connected items list

Tetra Pak GTS AB — **Tetra Pak Maintenance System**

Report Name: **Connected items by Customer Line 1218/3412** | Country No: **171** | Page No: **4**

Machine Type No: **648575** | List Variant: **0100** | Machine Type: **Tetra Brik Aseptic**

Pos No	Item Identity	Description	Qty	Variant Specification
Sp 41 Parts	43	42	44	
30120	1334653	Joint	2	
30160	90458-2307	Linear unit	4	
30180	90459-562	Servo motor	4	
40021	1035954	Bushing	4	
40025	1035954	Bushing	4	
40040	90091-358	Stripper	4	
40060	246513	Bearing	8	
40080	31838	Plunger	4	
	1037104	Locating piece	2	
40100	1036156	Tooth part	4	
40120	1036615	Axle	2	
	1036618	Roller	2	
40140	321101-222	Flange bushing	4	
	321101-223	Flange bushing	12	
	1037849	Sleeve	8	
40180	90091-359	Seal	8	
	90091-360	Seal	8	
	90091-362	Seal	4	
	90091-364	Seal	4	
	90091-366	Seal	4	
	90091-368	Seal	4	Volume: 500 -> 1000 VAR: BASE
	90091-428	Seal	4	Volume: 500 -> 1000 VAR: BASE
	315202-101	O-ring	4	
	315202-105	O-ring	16	
	1038240	Spacer	4	
40240	90091-365	Seal	4	Volume: 500 -> 1000 VAR: BASE
	90091-367	Seal	8	Volume: 500 -> 1000 VAR: BASE
	315202-118	O-ring	4	Volume: 500 -> 1000 VAR: BASE
	1255390	Bushing	4	
40260	1538348	Catch	4	
	1538349	Catch	4	
40265	1129473	Spring	4	
	1129552	Knob	4	
40280	1511697	Folding flap	2	Volume: 500 -> 1000 VAR: BASE
	1511698	Folding flap	2	Volume: 500 -> 1000 VAR: BASE
40305	1255541	Bushing	8	VAR: BASE
40320	1348483	Spring	2	Volume: 1000 -> 1000 VAR: BASE
	1348484	Spring	2	Volume: 1000 -> 1000 VAR: BASE

Printed 2003.05.07 at14:36 by Lars Allard using Windows — ZREPORT

41	**Pos no**	The position number of the check item, where the spare part or tool is connected.
42	**Description**	The description of the spare part or tool
43	**Item Identity**	The part number of the spare part or tool
44	**Used Quantity**	The amount of spare parts or tools needed for this check item

4

Packaging material/ package integrity

Packaging Material

Introduction

Besides constituting a container, giving the steadiness needed to shape and maintain the shape of the package, the packaging material protects the product from being affected by the environment.

Furthermore, the packaging material gives information about the contents of the package, and makes it easy to transport and handle.

Construction

The packaging material is a laminate, which means that it is built by several layers. The structure of the packaging material varies depending on the product being packed. Further information is given in section Different material for different products, page 15-5.

TBA = Tetra Brik Aseptic

A typical TBA material is built, from outside and inwards, as shown in the picture and description below.



Construction of the packaging material.

1. **Outer coating** protects the package against external humidity.
2. **Printing**
3. **Paper board,** bleached or claycoated, offers a good printing surface.
4. **Paper board,** brown and middle layers, strengthens the package.
5. **Lamination,** a plastic layer which enables the paper board to stick to the aluminium layer.
6. **Aluminium** protects against oxygen and light.
7. **Internal coating 1** offers adhesion against the aluminium layer.
8. **Internal coating 2** offers tightening against the product and enables package sealing.

The picture below describes what type of effects the different layers in the material protects against.

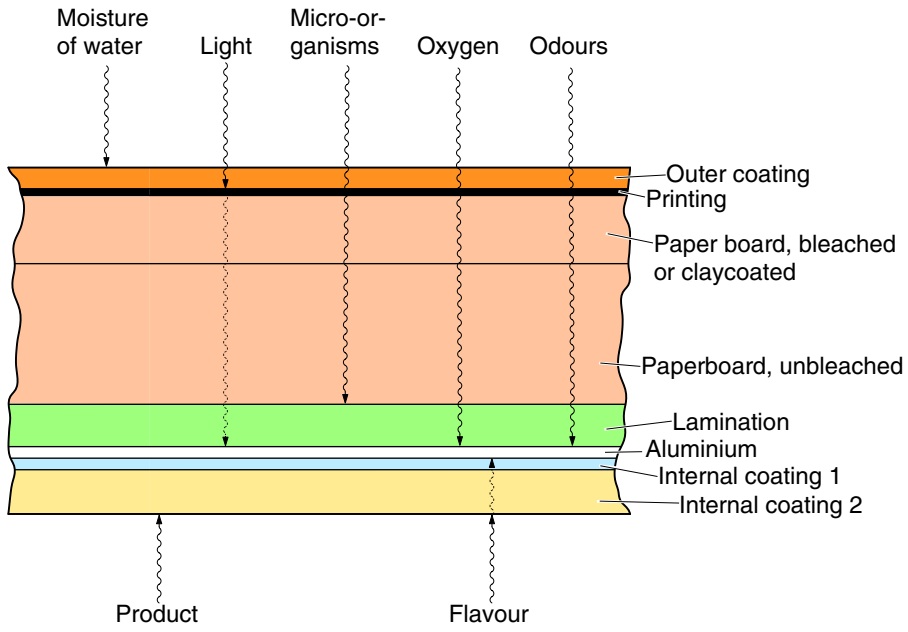

The converting process

The converting process is what takes place when the paper board is transformed into packaging material, ready to use. The process can be divided into three phases:

- **Printing** and **creasing**.
  The design is printed on the paperboard which continues through the creasing tools. The creasing tools create creases, which means the folding instructions on the package, as well as opening perforations and holes for straws.

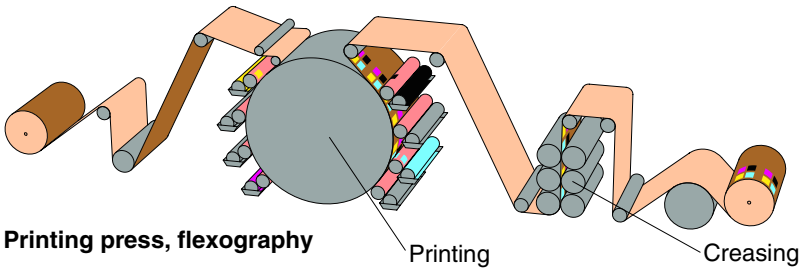

Printing press, flexography

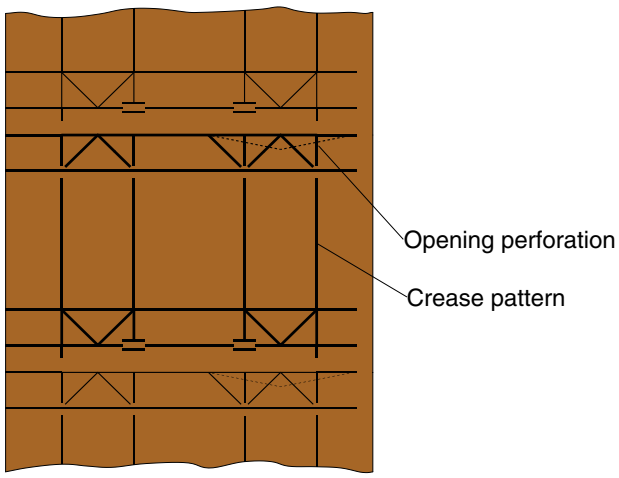

Crease pattern and opening perforation on the packaging material

Roll = Roll of packaging material several packages wide.

- **Lamination**
  The roll will be transported to the laminator. In the laminator different layers will be added to the printed paperboard. First the paperboard passes through a flame treating unit in order to burn off dust and to make it easier for the plastic layer to stick. When all layers have been applied on the paperboard, the thickness of the different plastic layers, and the surface of the packaging material, will be checked according to specifications.

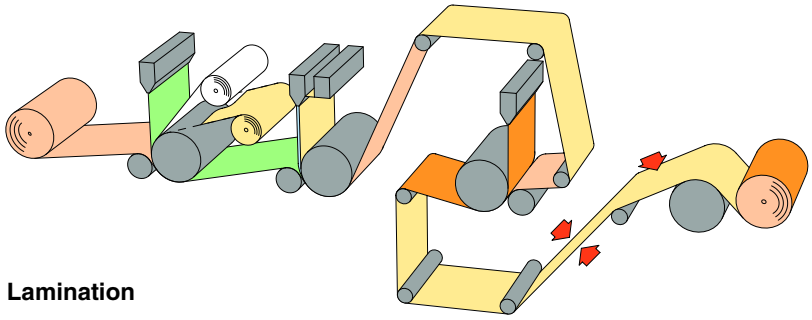

Lamination

- **Slitting**
  After lamination, the roll is transferred to the slitter where it is slit into reels. The slitting process is almost fully automatic. If any defect on the packaging material is detected, the reel will be sent to rewinding; the faulty part will be cut off, and the reel will be spliced. Each approved reel is wrapped in shrinking film and stacked on a pallet.

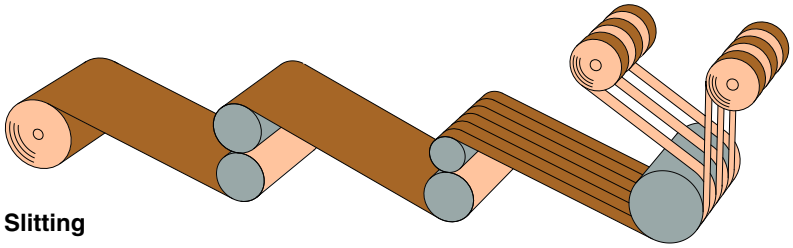

Slitting

Plastic

The plastic used in the packaging material is a PolyEthylene. PolyEthylene is thermoplastic, which means that it can be melted and shaped more than once. There are different kinds of PolyEthylene. The most common ones are

- **HDPE** High Density PolyEthylene
- **LDPE** Low Density PolyEthylene
- **LLDPE** Linear Low Density PolyEthylene

Tetra Pak mainly uses LDPE.

PolyEthylene possesses positive as well as negative properties.
Positive properties are:

- It is water proof.
- It enables sealing of the package.
- It is possible to apply in thin layers.
- It is transparent and thus does not affect the printed design.
- It is neutral, meaning that it does not affect the product.
- It is chemically resistant, meaning that it does not react with other substances.

Negative properties are:

- It does not resist much heat or cold.
- It is fat-soluble.
- It does not protect the product against oxygen.

Adhesion plastic

In all j-materials, for example TBA/j, the packaging material contains a type of adhesive plastic as internal coating 1, see page 15-1, that offers a strong and durable adhesion to the aluminium. This prevents the product from penetrating the plastic and the plastic will not become unstuck from the aluminium layer.

Paperboard

Paperboard is used as main support, to allow the package to stand up, to maintain its shape, also with product inside, and to sustain a certain amount of physical exposure.

All types of paperboard can be claycoated. This means that the board is coated with a layer of white clay offering an even and white surface with excellent printing properties.

The type of paperboard used varies due to type and size of the package and printing technique involved. The most common types of paperboard are duplex, duplex claycoated and bleached:

- **Duplex** consists of two layers of paperboard; one thin bleached (white) layer, to print on, and one unbleached (brown) layer, which strengthens the material. Duplex is the most common material and a standard for TBA packages. The picture on page 15-1 shows a duplex material.
- **Duplex claycoated** consists of two layers of paperboard; one thin bleached (white) layer, and one unbleached (brown) layer. The paperboard is coated with a layer of white clay, offering excellent printing properties.
- **Bleached** material merely consists of bleached (white) paperboard.

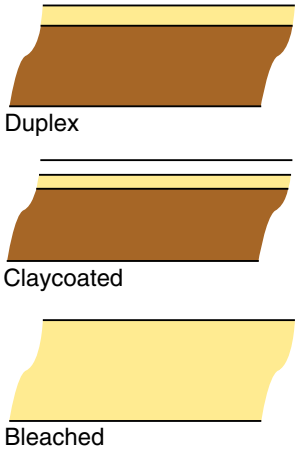

Aluminium

Aluminium offers good barrier qualities. It protects the product against light, oxygen, odour, and external humidity. It can be laminated into very thin layers and only a small amount is used for each package. The thickness of the aluminium layer is less than 7 µm.

Furthermore, aluminium possesses good conductivity, which enables sealing by so called induction heating. Packaging material without an aluminium layer cannot be sealed by this method.

K-film

Packaging material containing K-film in the innermost layer, is used when packing aggressive products and products that are sensitive to residual flavours. Examples of aggressive products are: tomato products, alcohol, oil, and feta cheese. Water, and other small-tasting products, are sensitive to residual flavours.

K-film is manufactured through film blowing techniques. This method means that the plastic is stretched and oriented in length as well as transversal direction. K-film is applied to the material as ready-made film, unlike other plastic coatings which are applied by extruding a thin layer of melted plastic onto the packaging material.

K-film decreases the possibility for residual flavours to affect the product. It is also tighter than extruded film, which makes it more difficult for aggressive products to penetrate the plastic and cause microscopic cracks. When using K-film, there is no risk of corrosion in the aluminium layer.

Wide coating

Wide coating is a new coating concept; the industrialisation is planned to be finalised in 2005. In wide coating a blend of LDPE and LLDPE (linear low density polyethylene) is used as the innermost layer.

The main advantages are: A wider sealing window, improved integrity and the fact that this material can replace a number of packaging material types, that way reducing the total number of packaging material types used.

Pre-laminated hole (PLH)

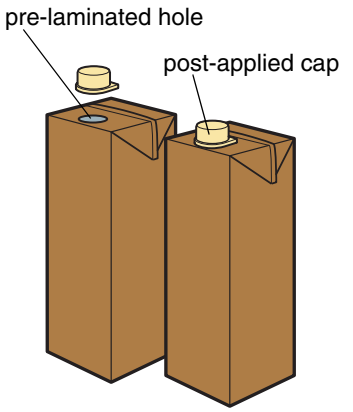

PLH packaging material is a packaging material where a hole is punched in the paperboard during the converting process. When laminating the paperboard the hole will be covered with aluminium foil and plastic.This kind of packaging material will be laminated with thicker aluminium foil and plastic layers.

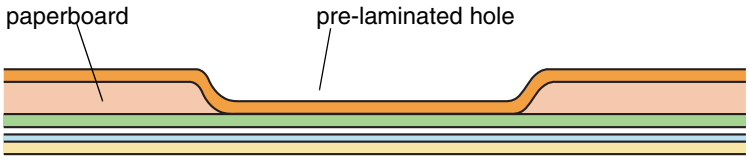

PLH packaging material

PLH packaging material is used for packages with post-applied caps, which means caps that are applied by a cap applicator after filling operation

Different materials for different products

The type of packaging material chosen depends on what product is to be packaged. The most common types of packaging material provided by Tetra Pak are:

- **TBA/m** Used for UHT milk products, sweet and condensed milk, flavoured milk products, and soya bean products.
- **TBA/j** Used for juice and drinks, flavoured milk products, soya bean drinks, coconut drinks, tea, coffee, and vinegar products with maximum 1% acetic acid.

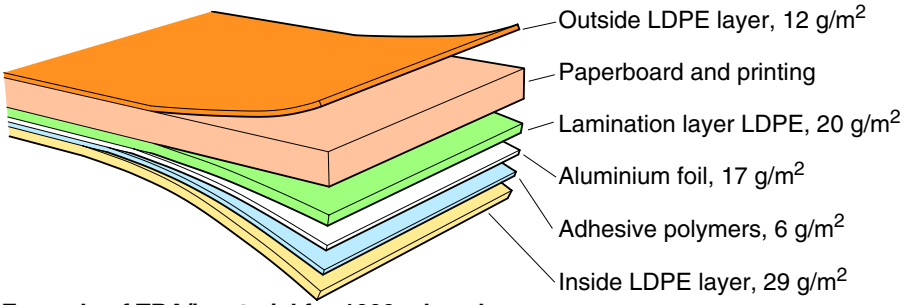

Example of TBA/j material for 1000 ml packages

- **TBA/w** Used for wine and alcoholic drinks with less than 20% alcohol.

k = the innermost layer consists of k-film

- **TBA/jk** Used for products that will be heated in their package.
- **TBA/wk** Used for alcoholic drinks with more than 20% alcohol.
- **TBA/ok** Used for oil products.
- **TBA/tk** Used for tomato products, dressings, soups, and sauces.
- **TBA/aqk** Used for water.
- **TBA/lk** Can be used instead of any TBA material with k-film.

MF= a layer of metallised film added on the outside

- **TBA/m MF** Used for the same products as TBA/m.
- **TBA/j MF** Used for the same products as TBA/j.
- **TBA/w MF** Used for the same products as TBA/w.
- **TBA/ml** TBA Wide packaging material (replaces TBA/m)
- **TBA/jl** TBA Wide packaging material (replaces TBA/j and TBA/w)

TWA = Tetra Wedge Aseptic

- **TWA/j** Used for juice products in Tetra Wedge Aseptic machines.

TFA = Tetra Fino Aseptic

- **TFA/j** Used for juice products in Tetra Fino Aseptic machines.

Strips

Two types of strips are used in Tetra Brik packages: Longitudinal seal strip, generally called LS-strip, and PullTab strip.

LS-strip

The longitudinal seal strip is applied on the inside of the packaging material, covering the edge of the longitudinal seal. It prevents the product from soaking into the packaging material, so called edge suction. The strip also ensures protection against oxygen and contributes to the sealing of the tube.

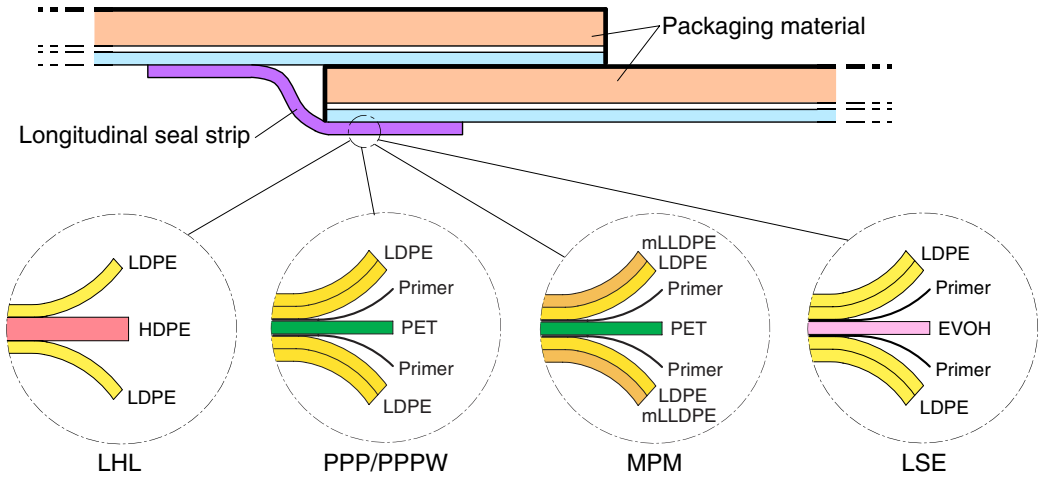

Longitudinal seal and different types of LS strips.

Tetra Pak uses three different strip core polymers, depending on the oxygen permeability desired:

- **HDPE** High Density PolyEthylene
- **PET** PolyEthylene Terephtalate
- **EVOH** Ethylene Vinyl Acetate with Alcohol groups

From these polymers four basic types of LS strips have been developed:

- **LHL** has a core of HDPE, coated on both sides by LDPE. This strip is suitable for products that do not require a dense oxygen barrier, for example pasteurised milk.
- **PPP/PPPW** has a core of PET, coated with primed layers of LDPE. This strip is suitable for products that require a dense oxygen barrier, and has been developed to resist alcoholic products.This is the standard strip for all TBA materials.
- **MPM** has a core of PET, coated with primed layers of LDPE. The outermost layers consist of mLLDPE. This strip has to be used together with Tetra Wide packaging material but is also suitable for standard materials. MPM is suitable for aggressive products. It also constitutes a tougher seal.
- **LSE** has a core of EVOH, coated with primed layers of LDPE. This strip is suitable for products that require a massive oxygen barrier.

PullTab strip

When producing packages with PullTab openings, a hole is punched into the packaging material before it enters the filling machine. A patch is applied on the inside of the packaging material, covering the hole. Then the PullTab strip is applied on the outside of the packaging material, covering the hole and the part of the patch left uncovered by the hole.

To enable this, the patch and the PullTab strip must consist of different materials. The patch is made of a multi layer blown film, composed with a core of

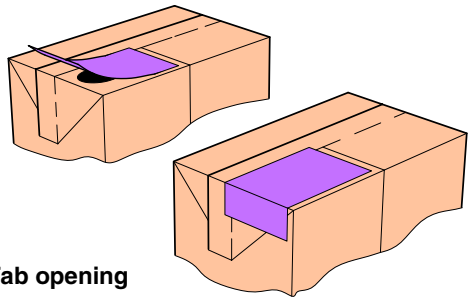

PullTab opening

EVOH, coated with primed layers of LDPE. This gives a dense barrier against oxygen and a thin enough patch to make the PullTab easy to tear off. The PullTab is made of a laminated foil, composed of printed aluminium, which provides mechanical strength and aesthetics, and LDPE which enables sealing to the patch and the packaging material.

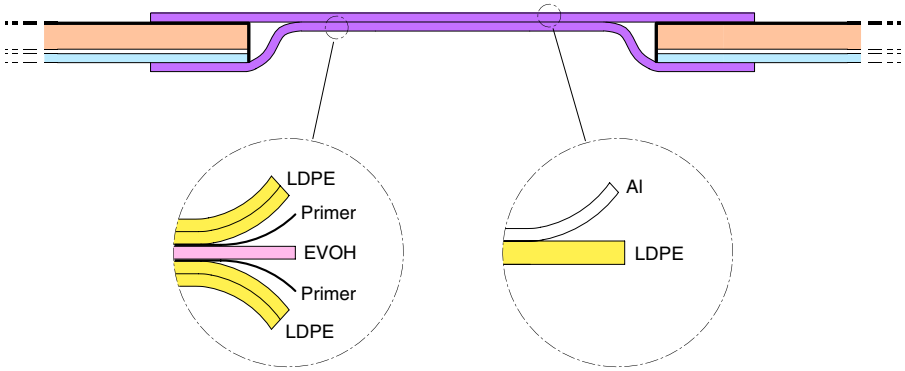

TBA patch and PullTab strip

Different printing methods

Printing is the process of applying ink to create colours, words and designs. Tetra Pak uses two different printing methods: Flexo and Offset.

Flexo

Flexo has become the most common printing method and it is today used for all types of designs.

Relief printing = Printing method where the cliche' sections, which transfer the colour, are raised.



Flexo is a relief printing method. One roller collects the colour, transfers it to the colour transfer roller (anilox roller), which applies the colour onto the cliché. The cliché applies the design directly onto the packaging material.

The plates used for flexo printing are flexible and could be made of mouldable natural or synthetic rubber compounds or of photo polymer materials.

Anilox roller = A laser engraved roller that has a specific pattern of holes or “cups”.

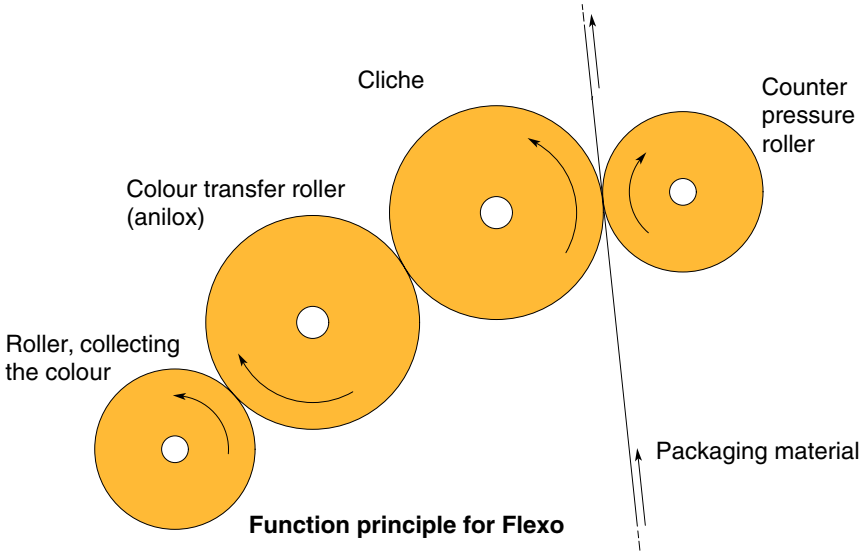

Function principle for Flexo

There are two types of flexo printing:

- **Lineflexo** Used for more simple designs without any photos.
- **Flexo process** Used for photographic designs (CT).

CT = Continuous Tone. Like in a photograph or an illustration.

The main difference between lineflexo and flexo process is that process is a four-colour print method. The design is built by screen patterns. Using the four process colours; yellow, magenta, cyan and black, applied one after another in balanced amounts, makes it possible to represent any tint. As for line printing, the desired tint is first prepared in a bucket and then poured into the printing machine.

Screen pattern = small dots

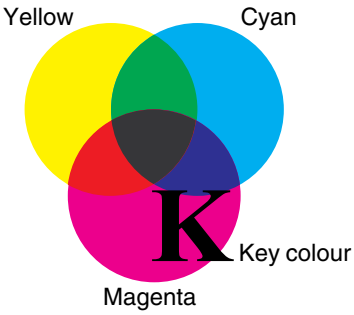

The pictures below show examples of a typical line design and a typical process design.



Line design



Process design

Offset

Offset is used for designs with photographic pictures. Compared to flexo process, offset yields a somewhat better quality of the picture.

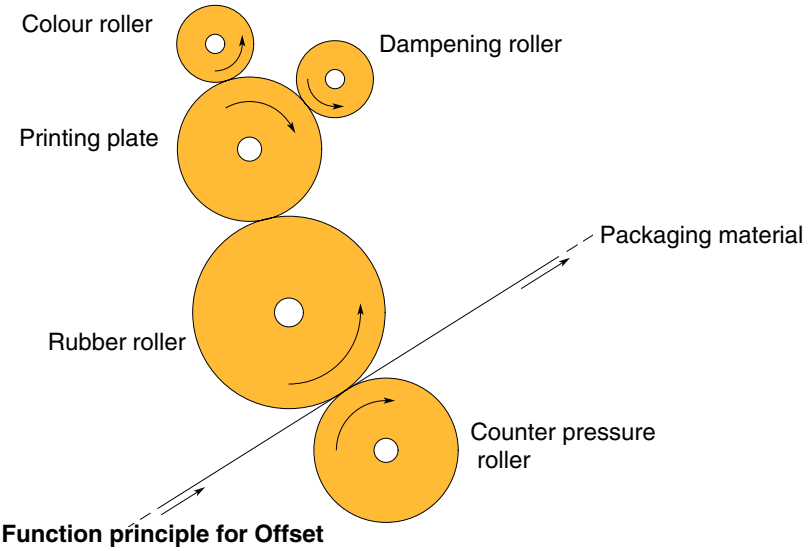

Function principle for Offset

Offset is a flat printing method. A colour roller applies the colour on the printing plate. The colour is then transferred to a rubber roller, which applies the design onto the packaging material.

Flat printing = Printing method, where the sections which transfer the colour are in level with the plate.

The principle of offset printing is that certain parts of the printing plate are water-repelling while other parts absorb the water. Damp is continuously transferred to the printing plate from the dampening roller. As the printing colour contains a certain amount of grease, it will not stick to the wet surfaces. The colour will only stick to the water-repelling surfaces.

The offset printing plate is made from a sheet of aluminium.

Offset, like flexo process, is a four-colour print method. The design is built by screen patterns. Using the four process colours; yellow, magenta, cyan and black, applied one after another in balanced amounts, makes it possible to represent any tint.

Production Order Label and Pallet Label

Production order label and Pallet label are labels on the packaging material reel and on the pallet containing reels.These labels contain information about the content and are used, as an example, for claims.

Production order label

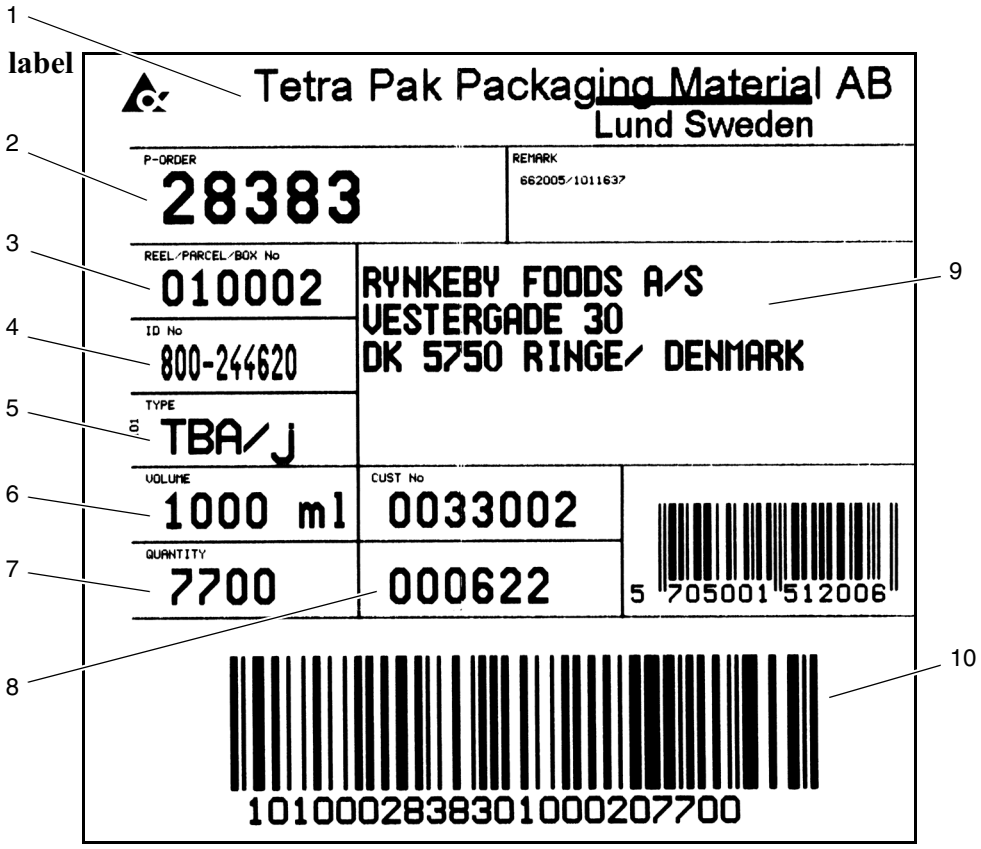

Production order label

The Production order label contains the following information:

1. Place of production
2. Production order number
3. Web position number (reel number)
4. Identification number
5. Type of packaging material
6. Volume of package
7. Quantity of packages on the reel
8. Date of production
9. Customer address
10. Bar-code containing parts of above information

The Pallet label contains the following information:

1. Production order number
2. Pallet number
3. Reel number
4. Quantity of packages on the reel
5. Quantity of packages on the pallet

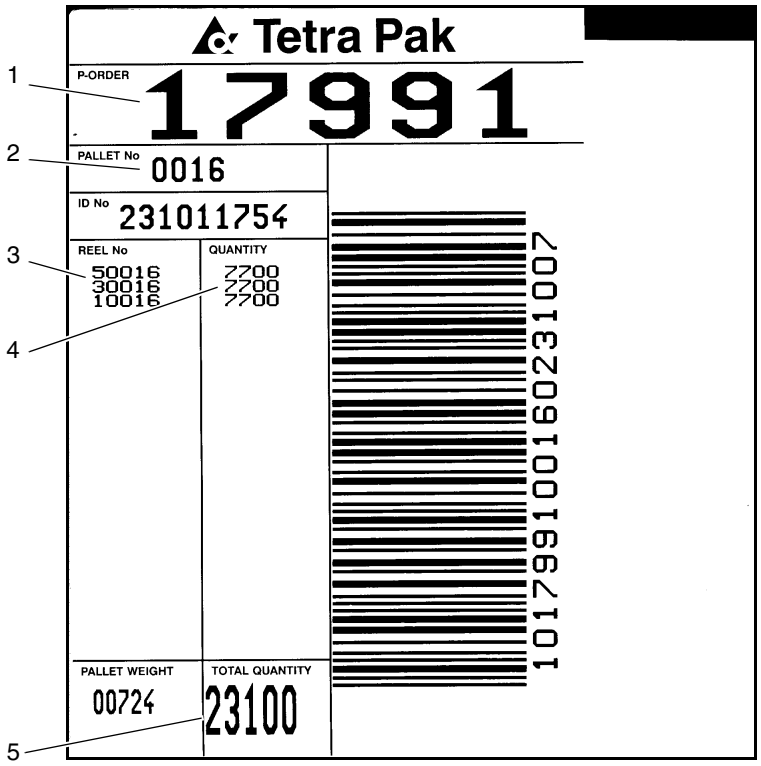

Pallet label

Pallet label

Packaging Material Claims

Packaging material claims, usually cost a lot of money.Therefore, every effort must be made to use the packaging material produced and delivered. As a rule, a claim will not be accepted by Tetra Pak if the packaging material was produced and delivered within specification.
One condition for accepting a packaging material claim, is that the filling machine is upgraded to recommended standard and adequately maintained. Packaging material claims will not be accepted if the material has not been stored in accordance with local recommendations or recommended storage conditions in the Installation Manual.

Below follows a description of how a packaging material claim is handled:

1. The customer makes his complaint to the Area Technical Service Manager, on a packaging material report form, or in accordance with the local producer.
2. The Area Technical Service Manager confirms the complaint by returning a copy of the packaging material report form to the customer.
3. As a first step, the Technical Service Department sends a service engineer to the customer to investigate the nature of the complaint.
4. The packaging material on hold is moved to a separate location and clearly marked. When the complaints are involving suspicious packaging material, the producer is contacted and the responsible market is informed.
5. A detailed description of the fault in accordance with the Fault Code List Packaging Material, the disturbances occurred on the packaging machine and the name of the person who inspected the goods, are given on the claim report form. The original of the completed claim report form is sent to the receiver at the producing plant together with representative samples of the faulty packaging material, two meters from each reel.

Fault Code List Packaging Material L009

The Fault Code List consists of seven head groups. Within these groups there are ten sub groups, each sub group consists of ten detailed fault denominations. The head group, 900 Filling machine, is intended to be used by Technical Service as an indication to the producer of how the packaging material behaves in the filling machine. The codes 100-800 are used to give a more precise direction of where the fault occurs on the packaging material. This to enable faster handling of the claim.

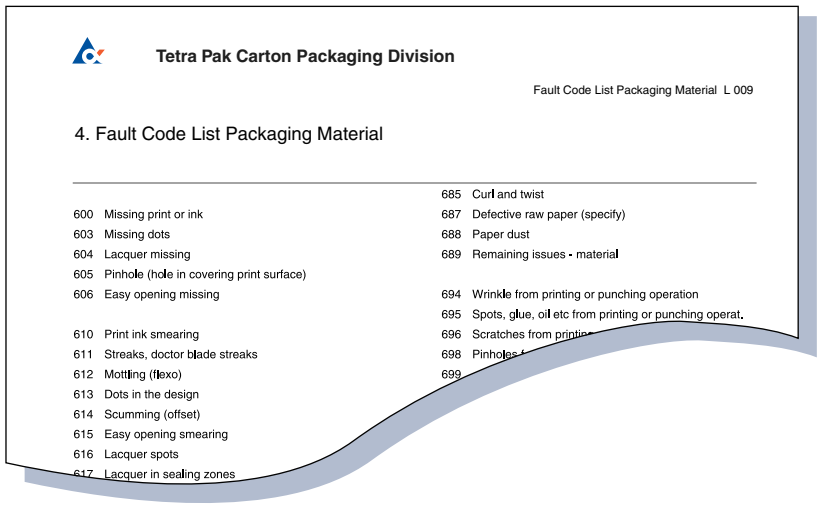

Tetra Pak Carton Packaging Division

Fault Code List Packaging Material L 009

4. Fault Code List Packaging Material

600 Missing print or ink
603 Missing dots
604 Lacquer missing
605 Pinhole (hole in covering print surface)
606 Easy opening missing
610 Print ink smearing
611 Streaks, doctor blade streaks
612 Mottling (flexo)
613 Dots in the design
614 Scumming (offset)
615 Easy opening smearing
616 Lacquer spots
617 Lacquer in sealing zones
685 Curl and twist
687 Defective raw paper (specify)
688 Paper dust
689 Remaining issues - material
694 Wrinkle from printing or punching operation
695 Spots, glue, oil etc from printing or punching operat.
696 Scratches from printi
698 Pinholes
699

ORBIS
Tetra Pak Global Information Network

More detailed information are available on the Tetra Pak intranet, Orbis, in the following documents:

General Rules For Packaging Material Claims, G007
Packaging Material Claims and Complaints, I011
Fault Code List Packaging Material, L009

Recommendations

Storage

Tetra Brik packaging material is supplied in protected and palletised reels, which are sufficiently resistant to any damage it might be exposed to in the course of normal handling and storage.

Below follows some advice to ensure maximum utilisation of the packaging material:

1. Keep the storage premises clean and use them exclusively for the packaging material.
2. The optimal temperature range for storing the packaging material is between 10 and 30 °C. Do not allow the temperature to fall below 0 °C.
3. Maintain a relative humidity between 30 and 70%. Do not store the packaging material in excessively damp or moist areas. No pipes etc. which may produce condensation should run through the storage premises.
4. It is important that the packaging material attains a temperature close to that of the packaging room. Therefore it is advisable to withdraw it from the storage premises one day before use and keep it in a suitable place inside the packaging room.
5. Under normal circumstances, reels of packaging material are double-wrapped. Each reel is tightly shrink-wrapped and each pallet is enclosed in shrink material. Do not remove this until shortly before the reel is placed in the machine.

6. Always store the reels on pallets and not directly on the floor. Position the pallets at a sufficient distance from the walls to ensure efficient handling of the pallets.
7. Pallets can be stacked three high provided a rigid divider board is placed on top of the lower pallets. The transportation pallet is only a one-way unit and its strength has limitations, therefore avoid excessive scuffing and chafing.

Handling

Always take the greatest care when handling the packaging material. Below follows some advice:

1. Before touching the packaging material, disinfect your hands.
2. The packaging material must never touch the floor.
3. Do not remove the shrink wrapping from the reel until you have placed it in the trolley.
4. Unwind one revolution of the packaging material from the reel and check for damages. If damages are found on the packaging material, be sure to remove enough packaging material to avoid this to enter the filling machine.
5. Keep the Production order label.

Tetra Brik Aseptic Transversal Sealing Evaluation



Tetra Pak

Issue 2 English
Doc. No. TM-00433

Preparations

This spread shows how to prepare samples for transversal sealing Stretch-Test and evaluation. The ”Strech-Test” can be done either by hand or with Stretch-Pliers.

The everyday term for Transversal Sealing is TS.



1 Commence preparations with removing two consecutive packages from the packaging machine conveyor line.



2 Empty both packages.



3 Cut off both TS from both packages to a width of 25 mm to accommodate the Stretch-Pliers.

Cut wider when stretching by hand.



4 Trim a narrow strip, no more than 1 mm from the ends of each sample.



5 Rinse samples and dry.



6 Preparations concluded, four samples from two consecutive packages are now ready.

Good light conditions are essential for evaluation.

Stretch-Test

Stretch-Test can be done either with Stretch-Pliers or by hand. Evaluation method of seal quality is the same. Evaluation is carried out while stretching.



7 When using Stretch-Pliers, insert sample into the gripping jaws and squeeze handles to stretch the seal.

When stretching by hand, apply force and stretch perpendicular to the seal.







8 Gently tension the seal by stretching it.

9 Observe how the seal area stretches and breaks. Stretching slowly, makes evaluation easier.

On the following two spreads examples of ”Good” seals and ”Bad” seals are shown.

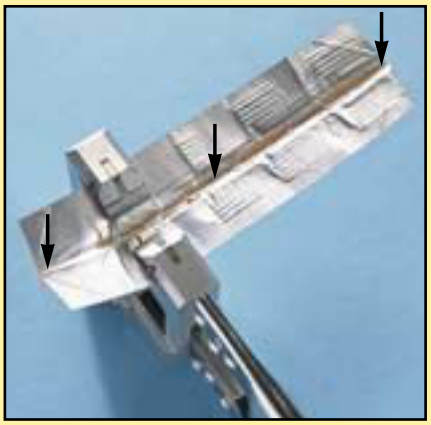

12 All four samples have to be stretched and evaluated along the entire seal. Pay special attention to the TS ends and where the TS meets the longitudinal sealing (TS/LS cross).



10 Continue stretching. In this case there is stretched plastic film visible in the seal area.



11 Continue stretching until the sample has opened completely.

Good Seal

The first sign of a good seal when testing, is a stretched film of plastic.

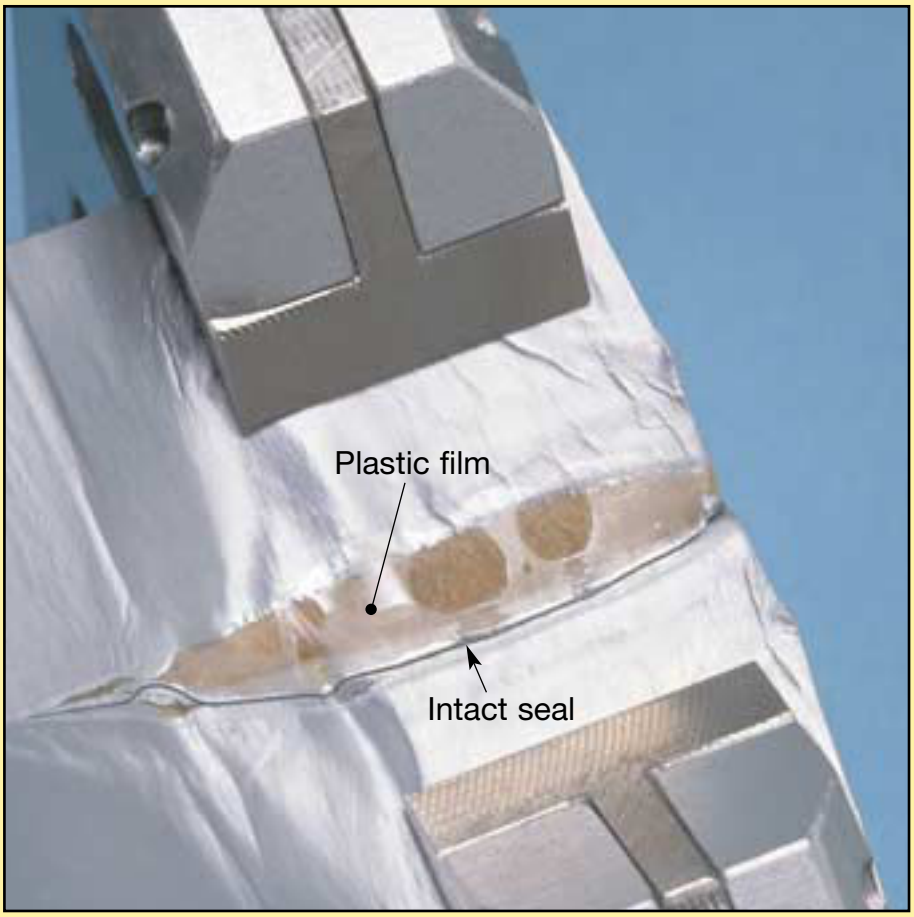

On this sample the plastic film has been stretched to the point where it starts to break (two holes). Since the plastic film has stretched along the whole seal it is consequently a good seal.

Stretched plastic film or breakage in packaging material indicate that the **seal is stronger than the packaging material.** The seal is good.

These four samples are also good, although the stretched plastic film was broken at an earlier stage and did not become clearly visible. Other indications on these samples will tell that the seals are good.

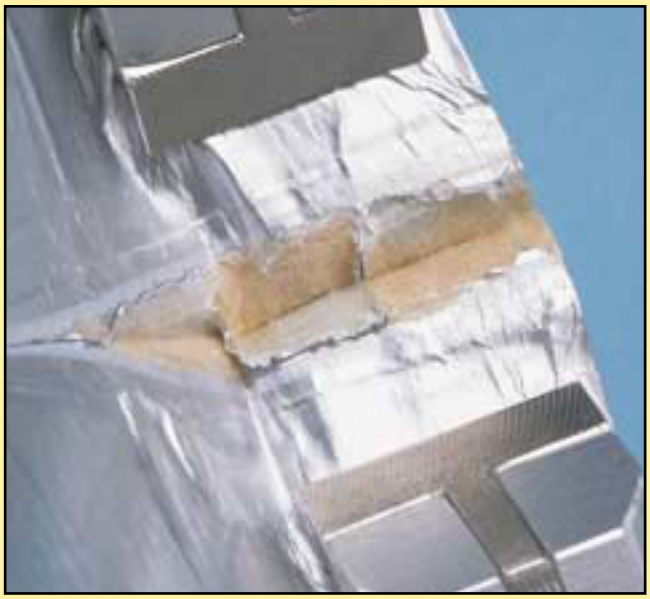

Sample 1, broke in the packaging material during testing. Notice the paper fibres along the whole seal.



Sample 2, shows a breakage in the plastic part of the packaging material, since uncovered shiny aluminiumfoil (1), can be observed. Notice also the remnants of stretched and broken plastic film (2).



Sample 3, has a clear indication of the packaging material breaking along the seal. It is a combination of samples 1 and 2.

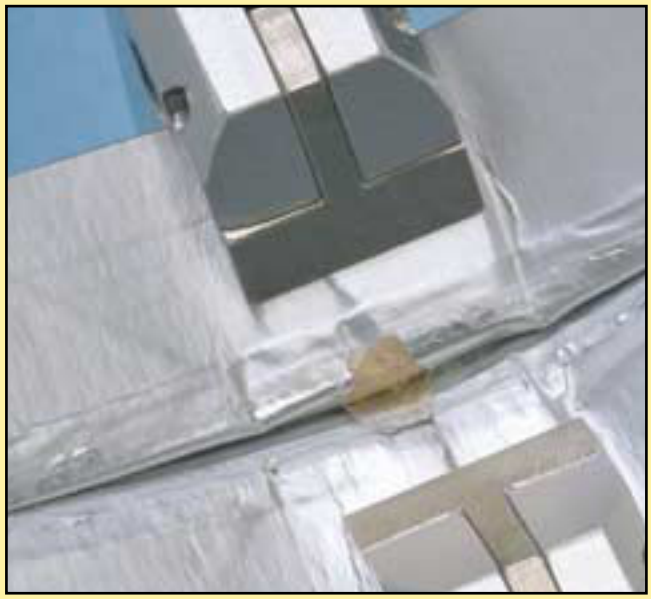

Sample 4. This TS/LS cross is also broken in the packaking material. Like sample 3, it is a combination of shiny aluminium foil and breakage in paper fibres.

Bad Seal

Separation in the seal

When testing this sample, the seal separated at the marked area, without the plastic film stretching and without breaking the packaging material. This is a bad seal.

A commonly used term for this type of fault is a ”Blocked Seal”.

In a Blocked area the **seal is weaker than the packaging material.**

If a seal is Blocked somewhere along its length, it is a bad seal. Independent of how small the Blocking is, it is still a bad seal.





This is also a Blocked seal, but the Blocked area (marked) is small.

A Blocked seal can only be detected with a Stretch-Test.

A Blocked seal seldom leaks product.

A Blocked seal is usually caused by either insufficient heat or insufficient pressure during sealing.

Bad Seal

Plastic lumps

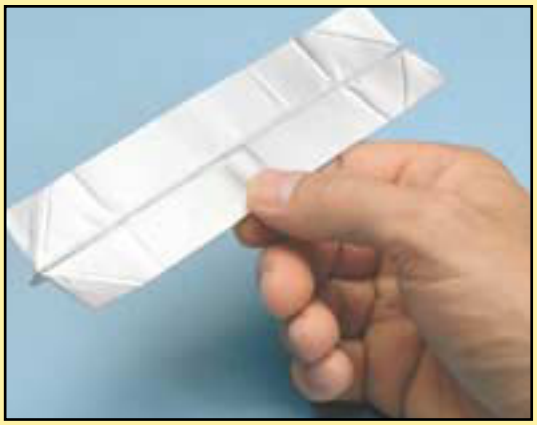

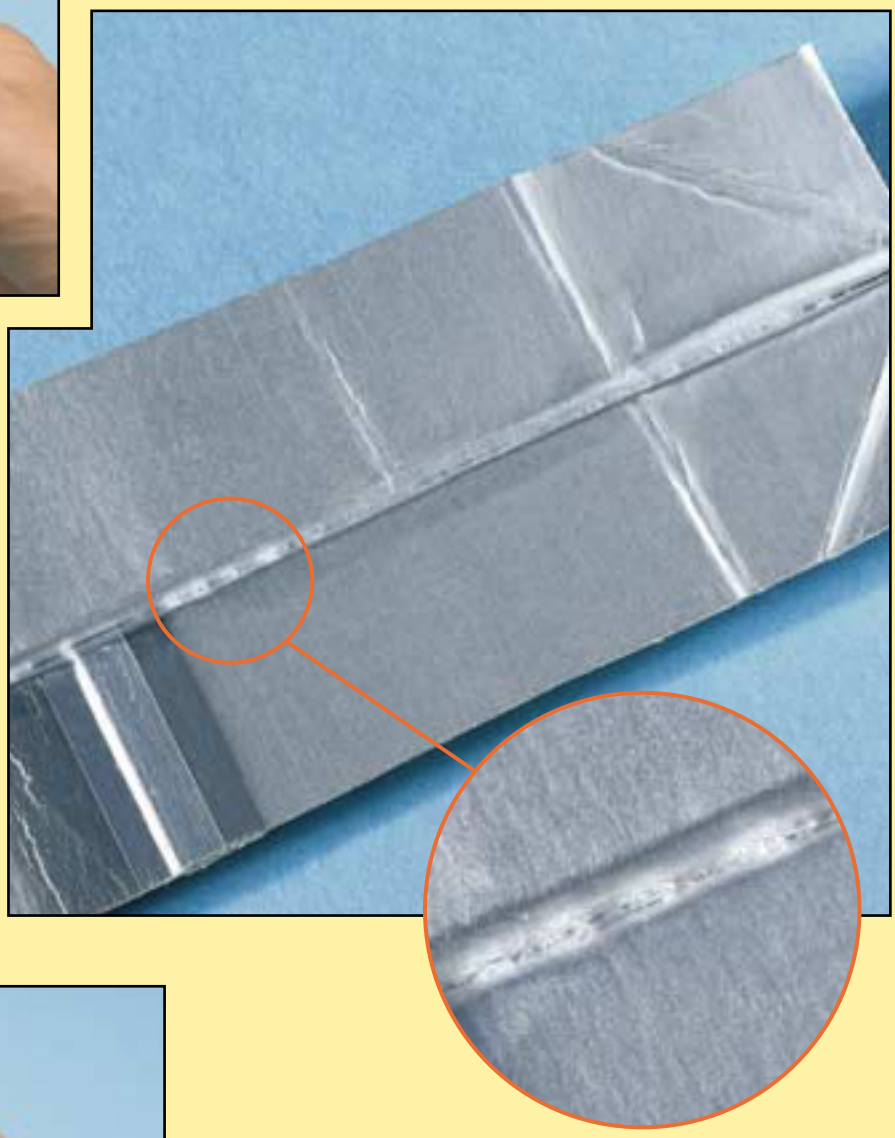

This is a different type of bad seal. The sample has hard lumps of plastic squeezed out during sealing.



Plastic lumps can puncture the package from inside during handling.

Plastic lumps are usually caused by too much heat or too high pressure during sealing.

Check for lumps by running a finger along the seal **before** Stretch-Testing the sample.

Exercise

Mark the box that applies, and fill in reason for choice. Point with arrow where needed. Other observations can be treated as a supplementary study.



❑ Good Seal ❑ Bad seal

Reason:

Other observations:



❑ Good Seal ❑ Bad seal

Reason:

Other observations:



❑ Good Seal ❑ Bad seal

Reason:

Other observations:



❑ Good Seal ❑ Bad seal

Reason:

Other observations:

Answer key

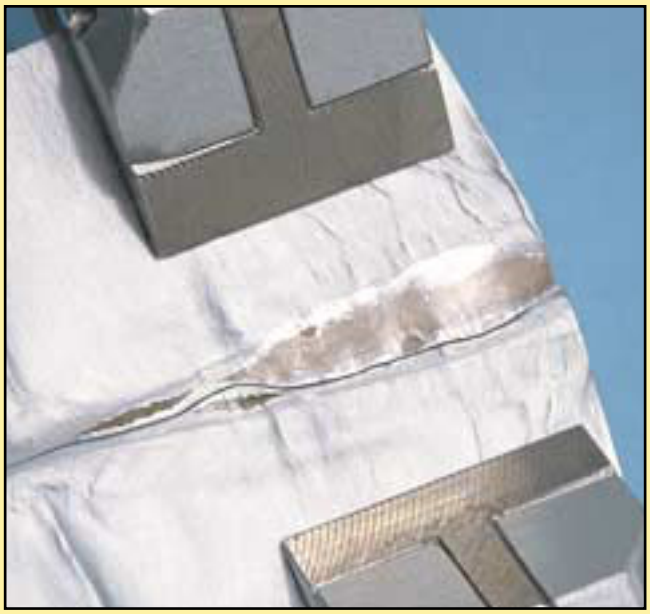

❑ Good Seal ❑ Bad seal

Reason:

Other observations:



❑ Good Seal ❑ Bad seal

Reason:

Other observations:



❑ Good Seal ❑ Bad seal

Reason:

Other observations:



❑ Good Seal ❑ Bad seal

Reason:

Other observations:

Answer key

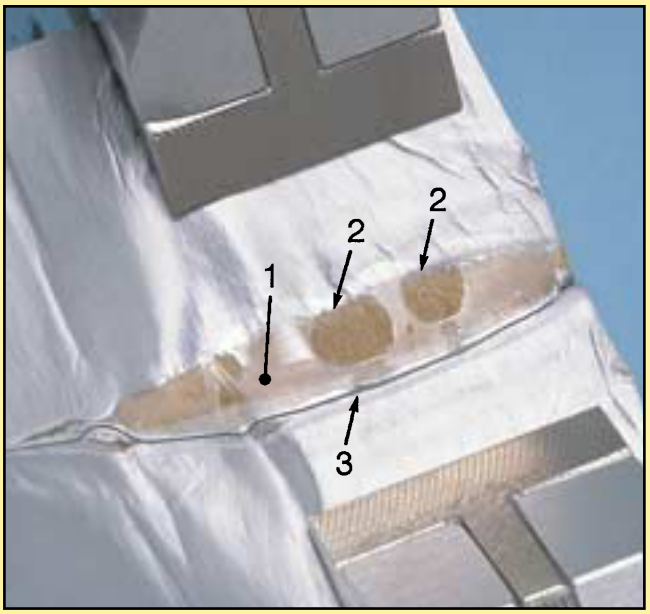

☒ Good Seal ☐ Bad seal

Reason: ***Stretched plastic film*** *(1).*
Other observations: ***Plastic film starts to break*** *(2).* ***Seal*** *(3).*

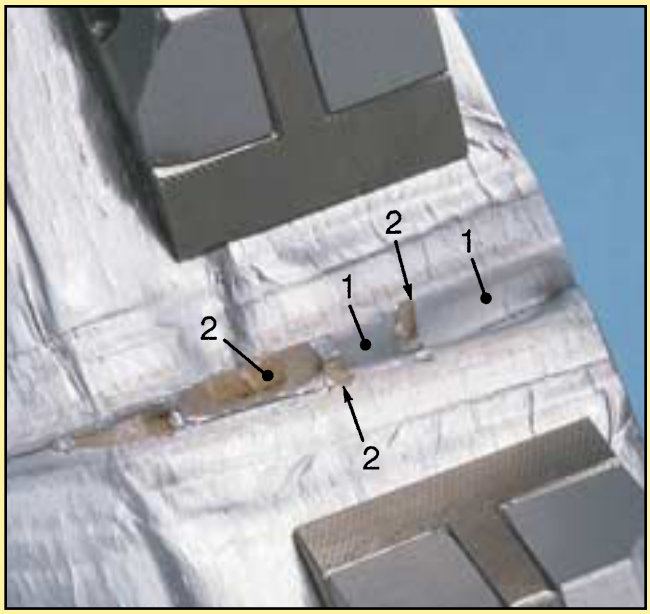

☐ Good Seal ☒ Bad seal

Reason: ***Blocking*** *(1).*
Other observations: ***Breakage in paper fibres*** *(2).*

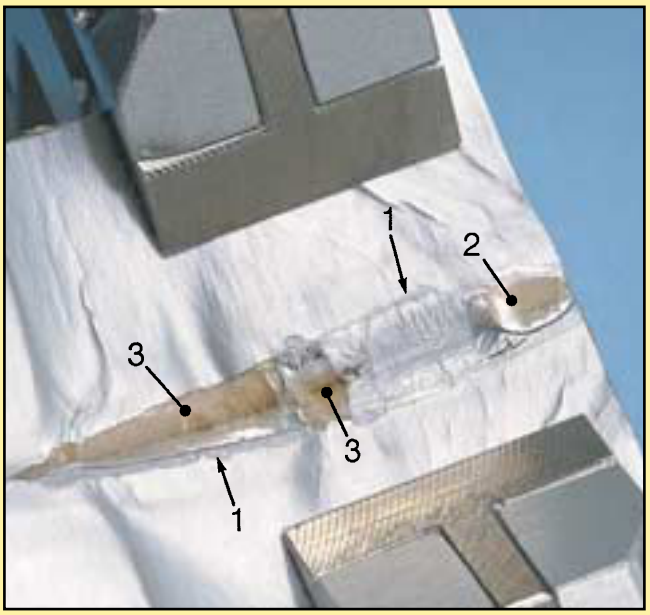

☐ Good Seal ☒ Bad seal

Reason: ***Plastic lumps*** *(1).*
Other observations: ***Stretched plastic film*** *(2).* ***Breakage in paper fibres*** *(3).*



☒ Good Seal ☐ Bad seal

Reason: ***Shiny aluminium foil*** *(1).*
Other observations: ***Remnants of stretched and broken plastic film*** *(2).*

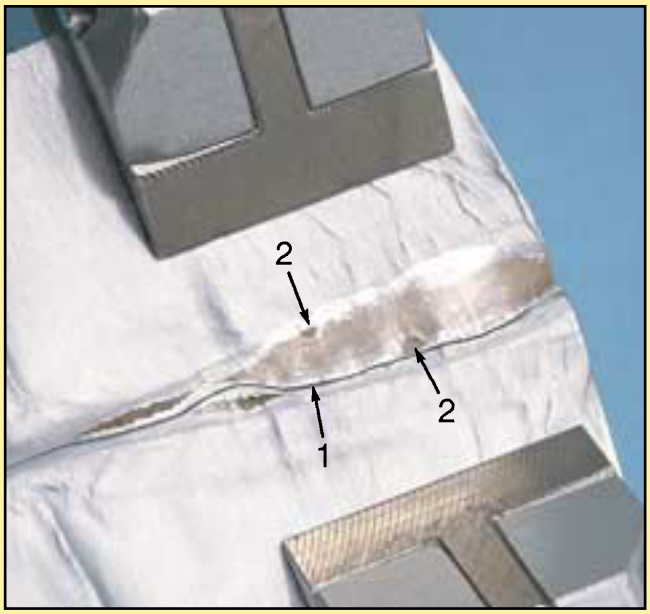

☒ Good Seal ☐ Bad seal

Reason: ***Stretched plastic film along seal.***
Other observations: ***Seal*** *(1)*. ***Holes where plastic film starts to break*** *(2)*.



☐ Good Seal ☒ Bad seal

Reason: ***Blocking*** *(1)*.
Other observations: ***Stretched plastic film*** *(2)*.

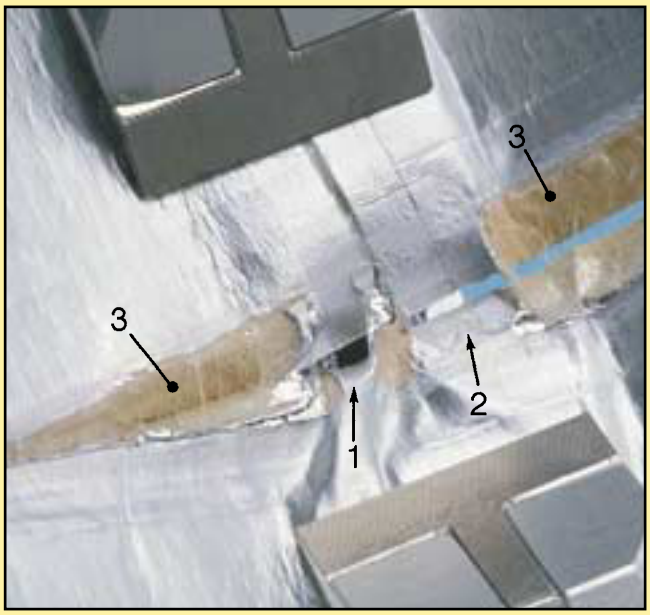

☐ Good Seal ☒ Bad seal

Reason: ***Blocking*** *(1)*.
Other observations: ***Remnants of stretched and broken plastic film*** *(2)*. ***Breakage in paper fibres*** *(3)*.

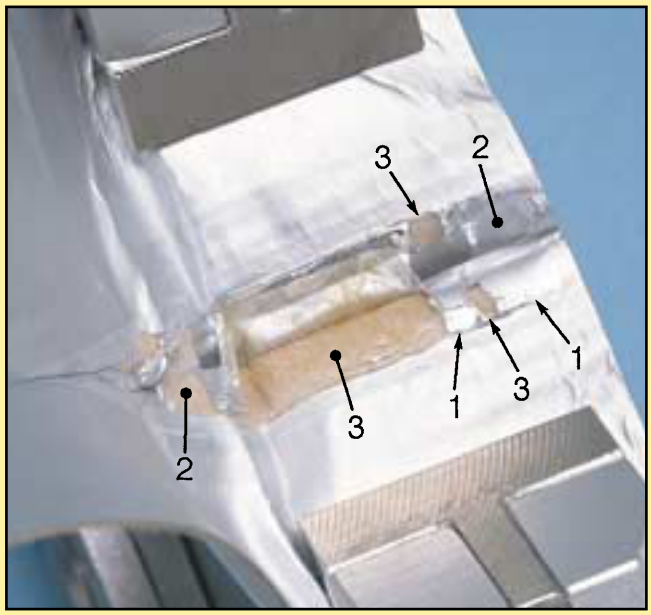

☒ Good Seal ☐ Bad seal

Reason: ***Packaging material broken along seal.***
Other observations: ***Shiny aluminiumfoil*** *(1)*. ***Plastic film*** *(2)*. ***Breakage in paper fibres*** *(3)*.

Suggested tools for Transversal Sealing evaluation

Stretch-pliers; makes the stretching easier to control. It also ensures that stretching is perpendicular to the seal.

Spare part No. 78073-101



Circular fluorescent lamp 220 V, * with built in magnifying lens. Magnification x1.75. Delivered with table clamp. Extra accessories; table plate, clip on lens for magnification x3.5.



Scissors, right hand.

Spare part No. 90243-129

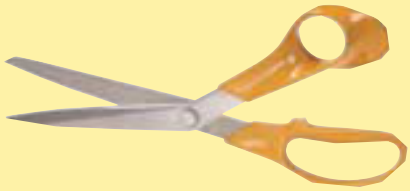

Scissors, left hand. *

Paper knife.

Spare part No. 777502-101



Pocket size magnifyer, * foldable. Magnification x6.



* When ordering these items contact your local Tetra Pak office.

Notes

Issue 2/0206

© 1991, 2002 Tetra Pak Global Technical Support AB, Technical Training Centre

All rights reserved. No part of this publication may be reproduced, stored in a retrieval system or transmitted in any form or by any means: electronic, electrostatic, magnetic tape, mechanical photocopying, recording or otherwise, without permission in writing from Technical Training Centre.

Technical Training Centre

5

Supply systems

Pneumatic panel

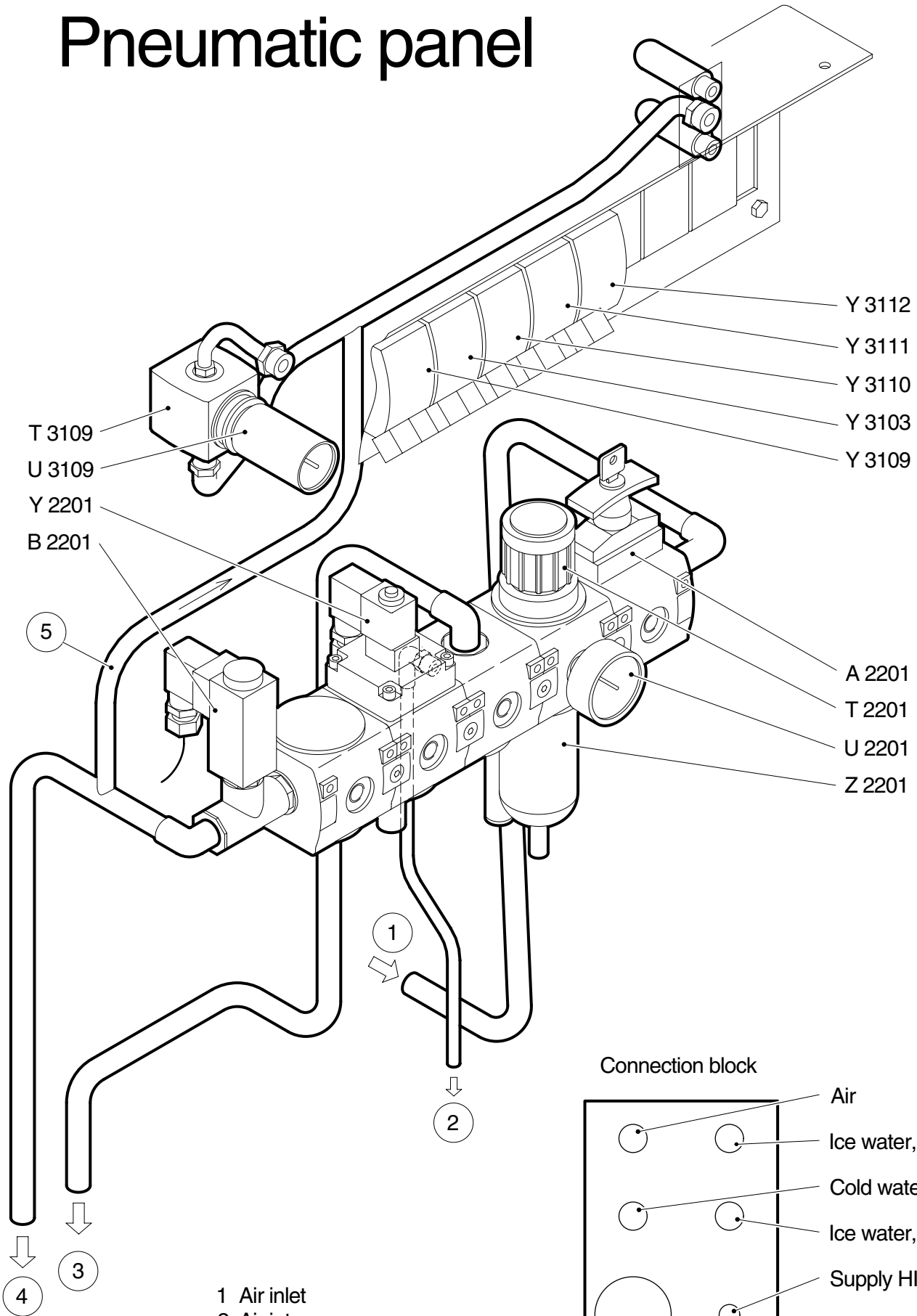

1 Air inlet
2 Air jet gun
3 FFU, A and B valves
4 ASU, superstructure and machine body
5 Service unit

Connection block

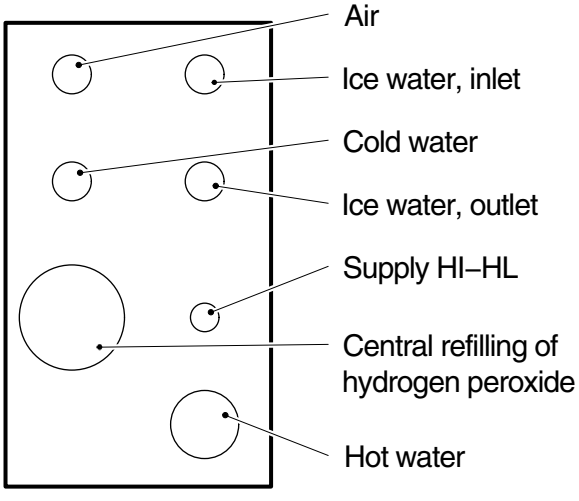

Valve panels

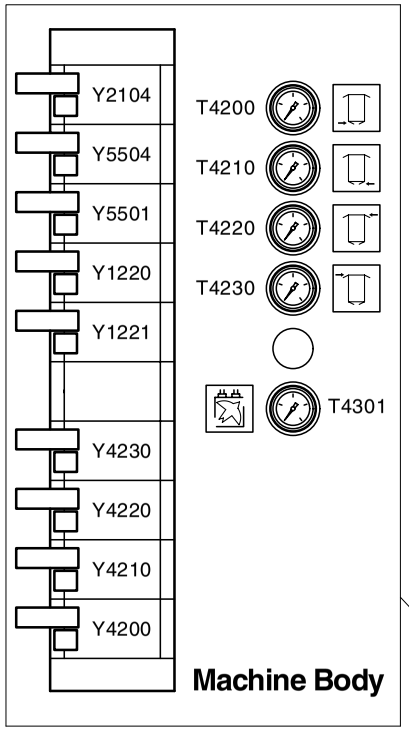

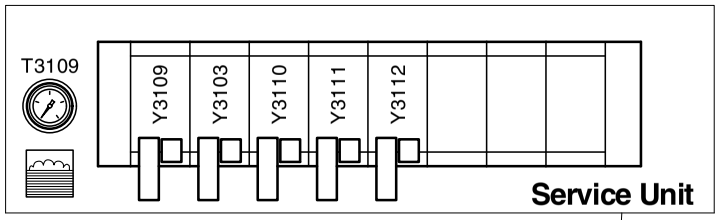

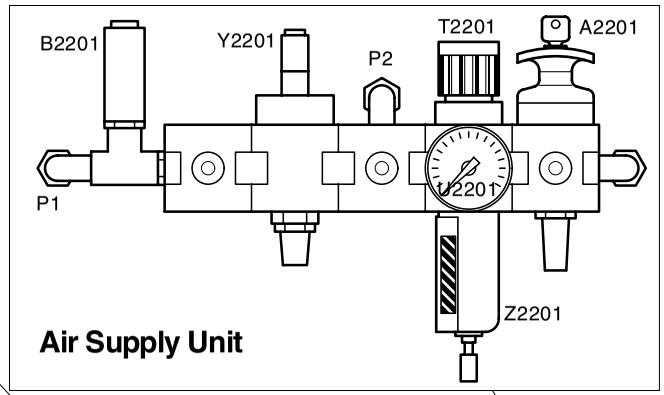

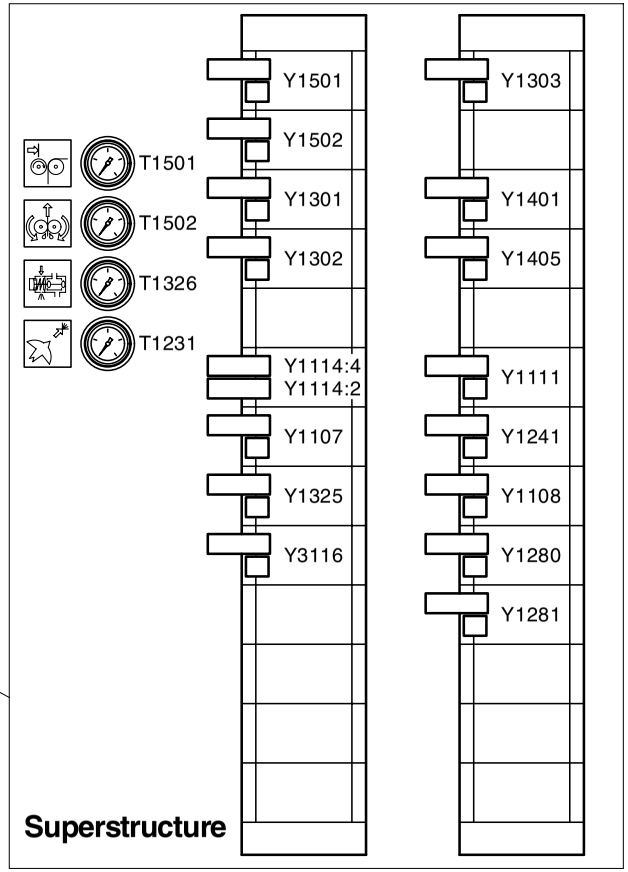

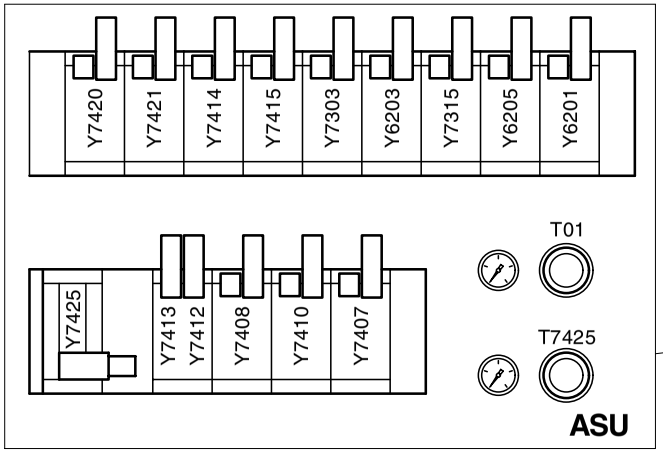

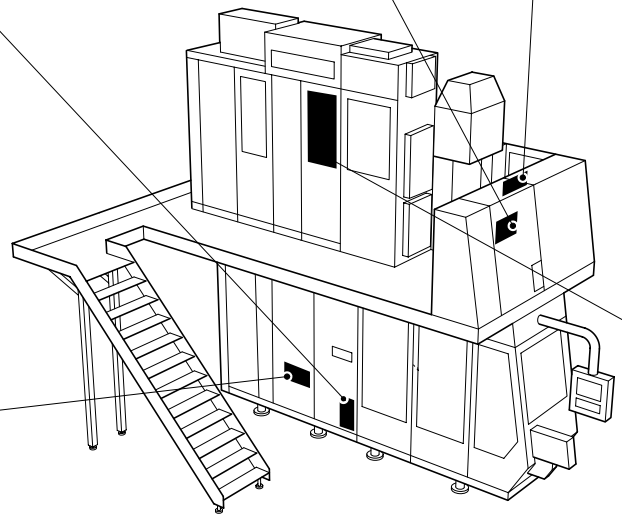

Technical Training Centre
Lund, Sweden

Machine type
TBA/22 050V

Issue
1/0303

OH 1215

Pneumatic system

Overview

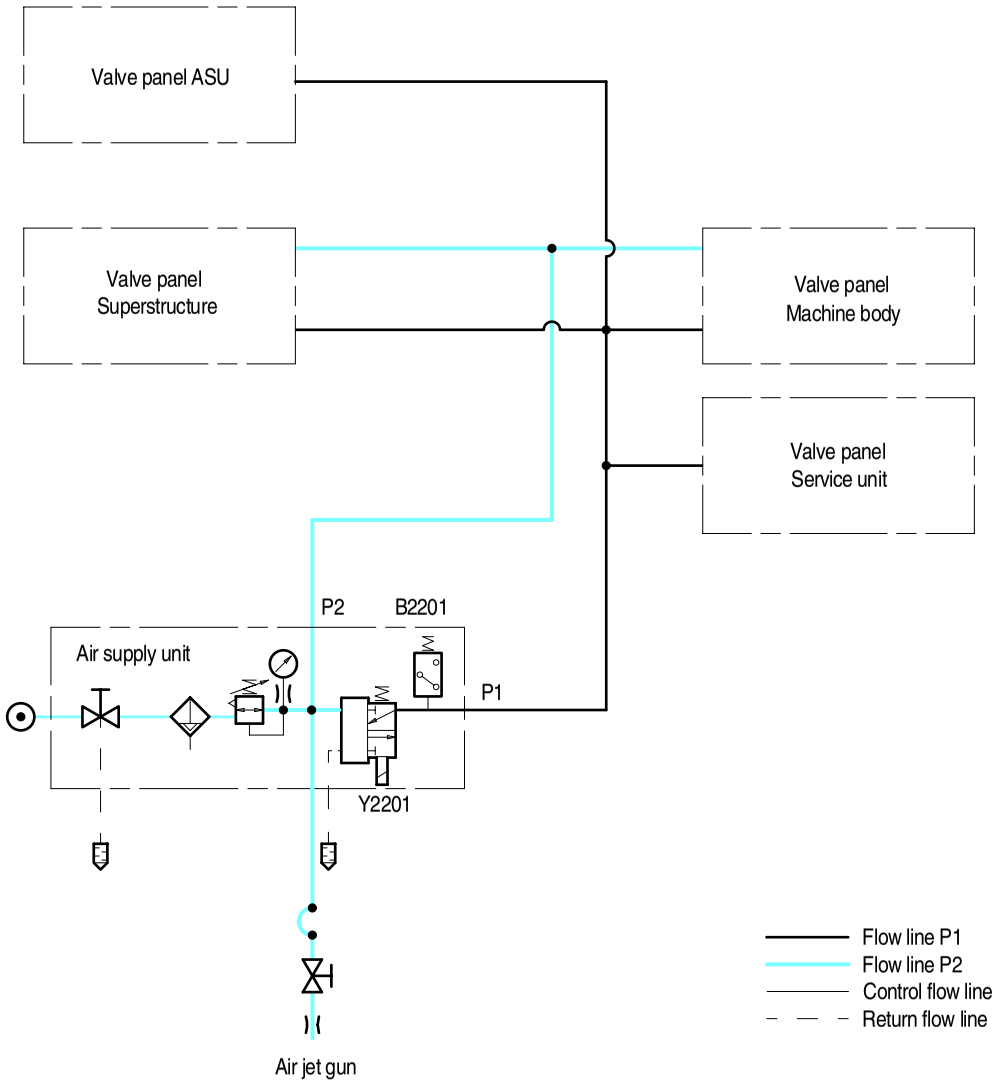

Pneumatic system

Service unit

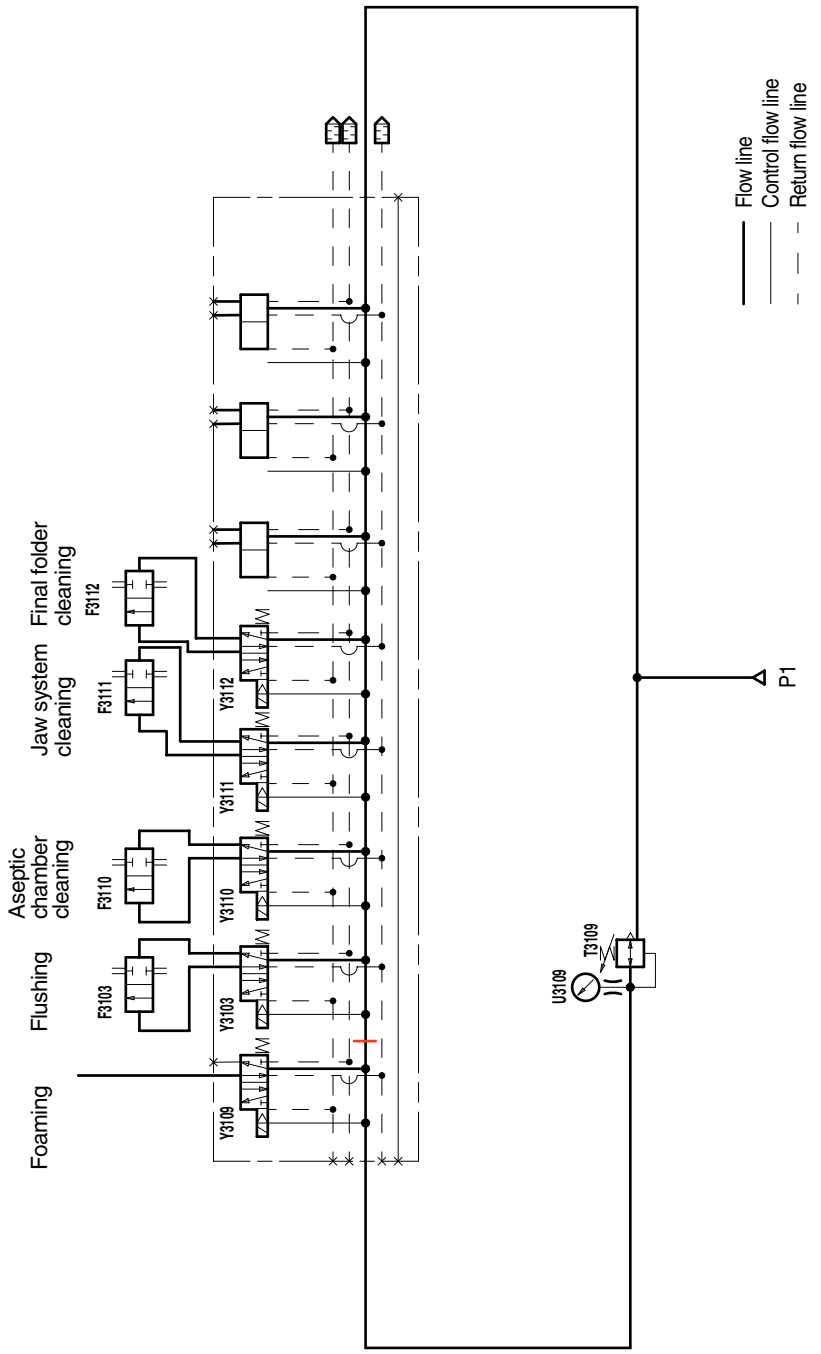

Pneumatic system

Machine body

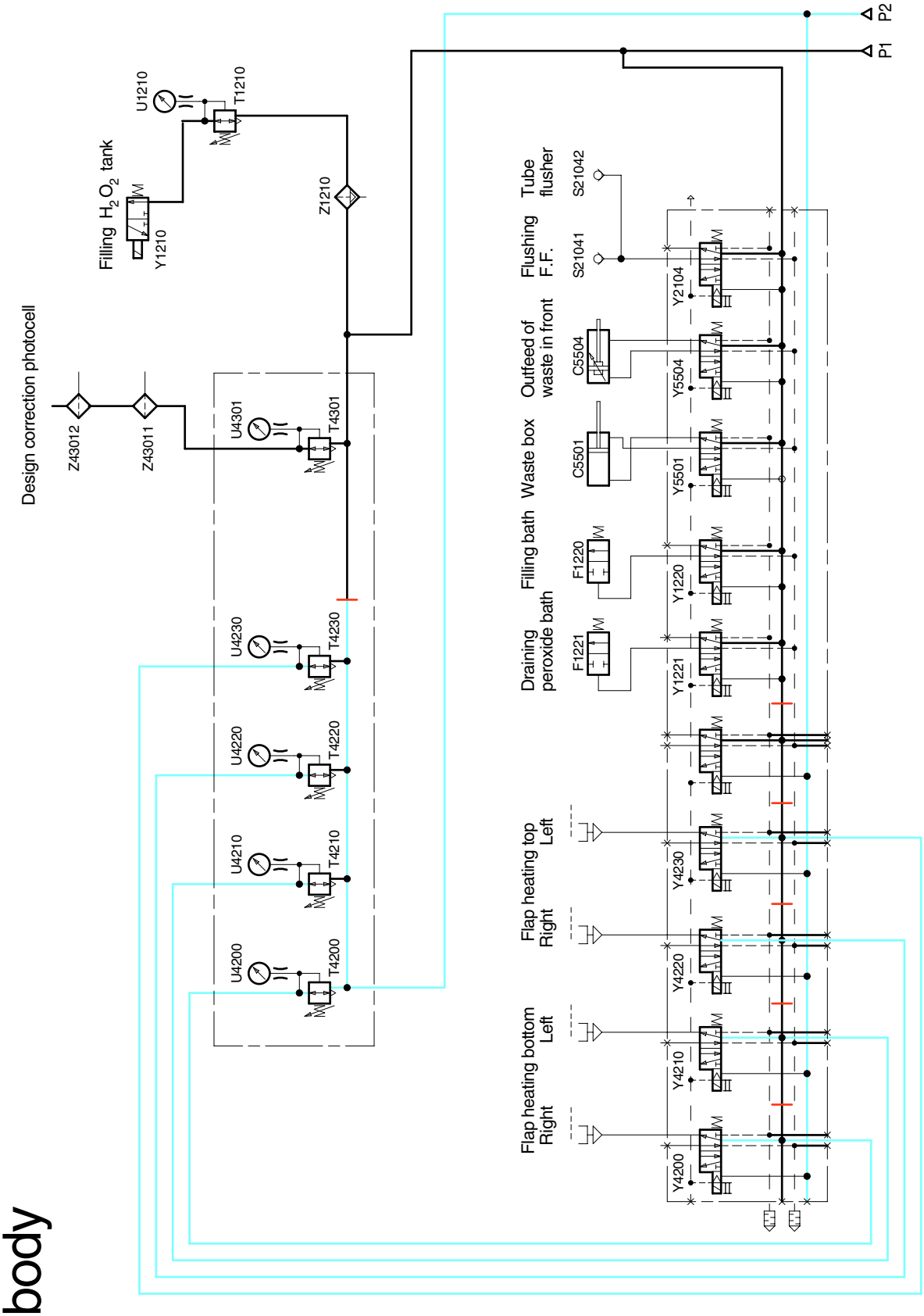

Technical Training Centre Lund, Sweden	Machine type TBA/22 050V	Issue 1/0303	OH 1216:3

Pneumatic system

Superstructure

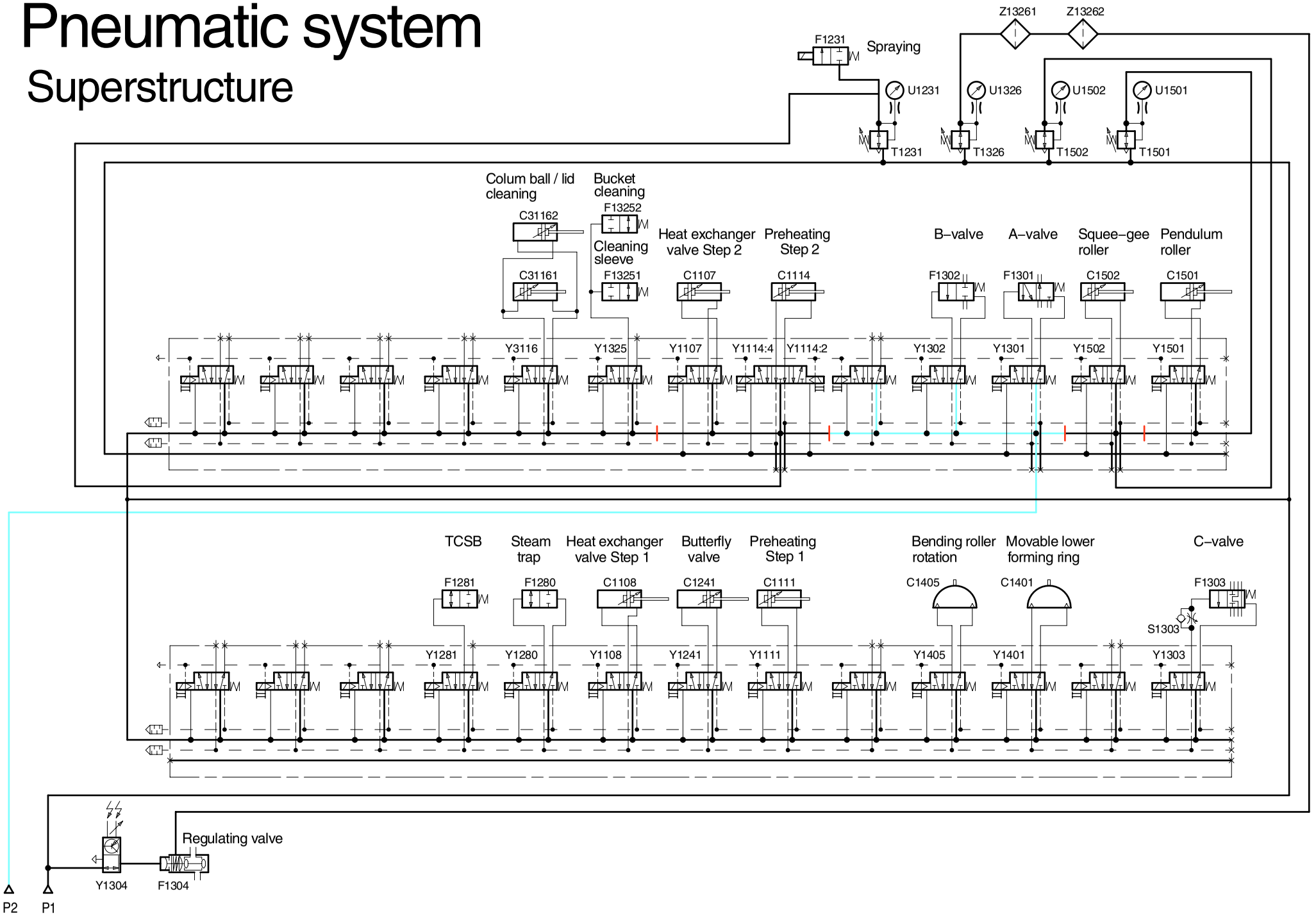

Technical Training Centre
Lund, Sweden

Machine type
TBA/22 050V

Issue
1/0303

OH 1216:2

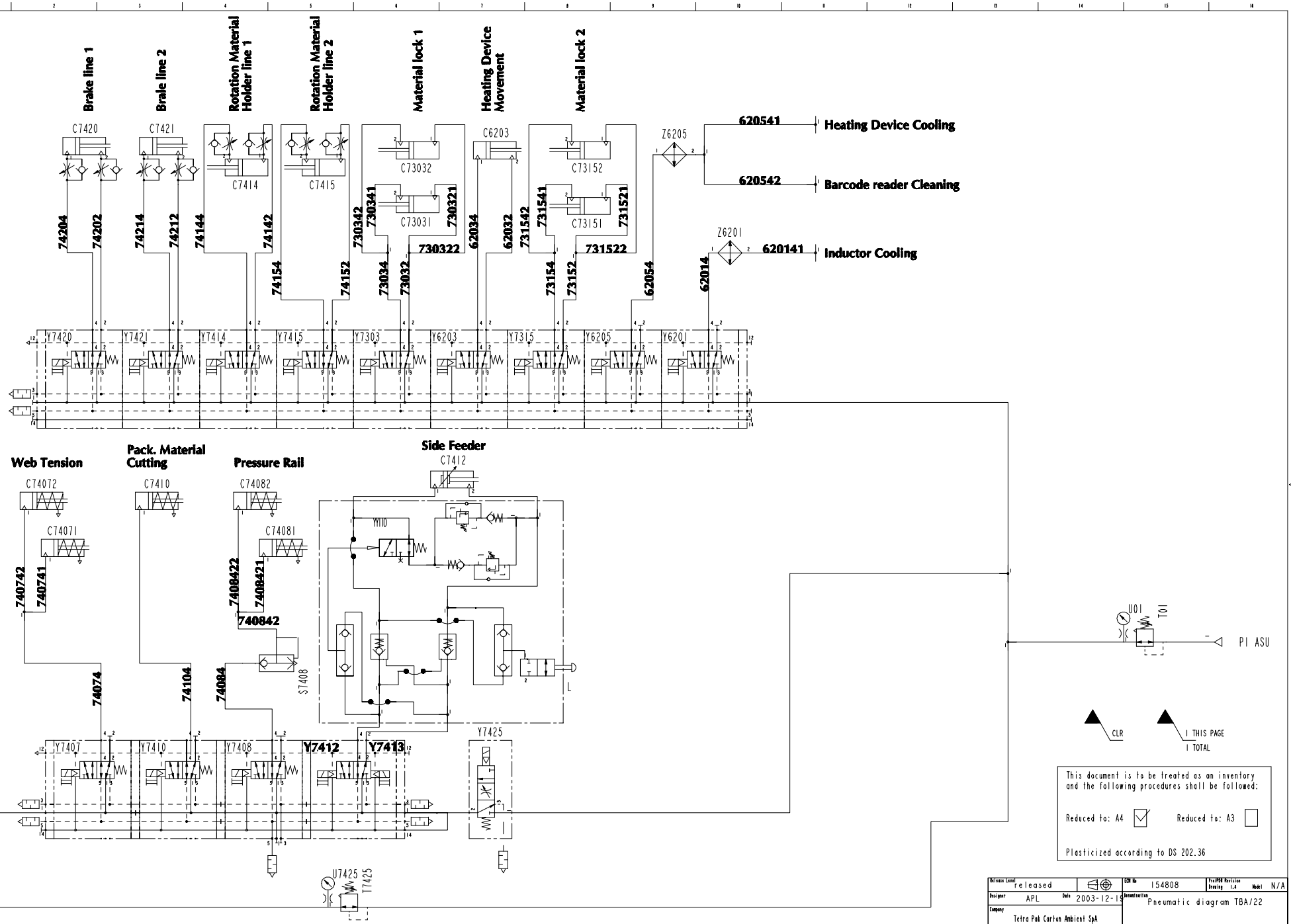
Brake line 1
Brale line 2
Rotation Material Holder line 1
Rotation Material Holder line 2
Material lock 1
Heating Device Movement
Material lock 2
C7420
C7421
C7414
C7415
C73032
C73031
C6203
C73152
C73151
Z6205
620541
Heating Device Cooling
620542
Barcode reader Cleaning
Z6201
620141
Inductor Cooling
74204
74202
74214
74212
74144
74142
74154
74152
730342
730341
730321
730322
73034
73032
62034
62032
731542
731541
731521
731522
73154
73152
62054
62014
Y7420
Y7421
Y7414
Y7415
Y7303
Y6203
Y7315
Y6205
Y6201
Web Tension
Pack. Material Cutting
Pressure Rail
Side Feeder
C74072
C7410
C74082
C7412
C74071
C74081
Y110
740742
740741
7408422
7408421
740842
S7408
74074
74104
74084
L
Y7407
Y7410
Y7408
Y7412
Y7413
Y7425
U7425
T7425
U01
T01
PI ASU
CLR
1 THIS PAGE
1 TOTAL
This document is to be treated as an inventory and the following procedures shall be followed:
Reduced to: A4
Reduced to: A3
Plasticized according to DS 202.36
Released
ECR No 154808
Pro/PDB Revision Drawing 1.4
Model N/A
Designer APL
Date 2003-12-18
Company Tetra Pak Carton Ambient SpA
Denomination Pneumatic diagram TBA/22
Tetra Pak
Drawing No 2528968
Document Type DRA
Version AC
Page 1 (1)
Pro/ENGINEER - DAI
This drawing must not without the consent of Tetra Pak be copied, transmitted or disclosed to any third party.

Textbook

Pneumatic system

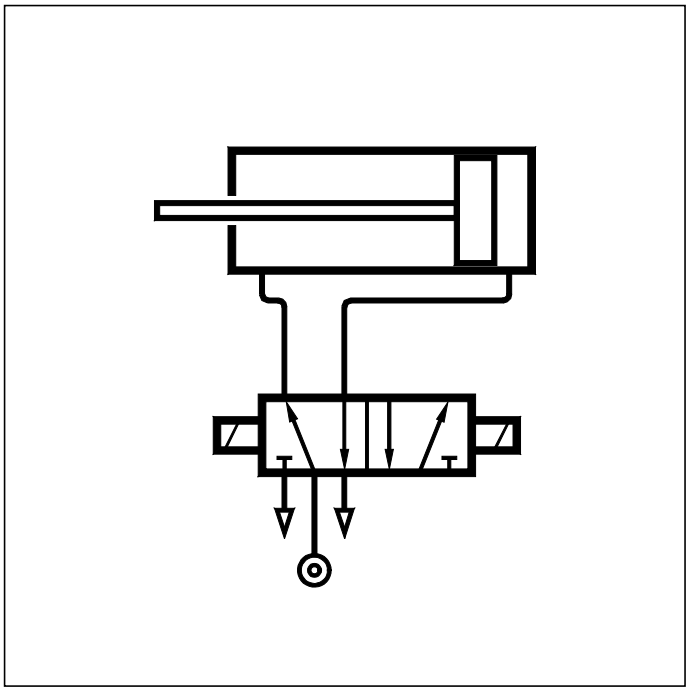

MT-83015-2

Technical Training Centre
Lund, Sweden

This textbook has been compiled by the Technical Training Centre in Lund.

Some of the pictures in the book are also available as OH pictures.

For further information on training material, please contact the Technical Training Centre.

Issue 1/9411

© 1994, Technical Training Centre

No part of this publication may be reproduced, stored in a retrieval system or transmitted in any form or by any means: electronic, electrostatic, magnetic tape, mechanical photocopying, recording or otherwise, without permission in writing from Technical Training Centre.

Pneumatic system

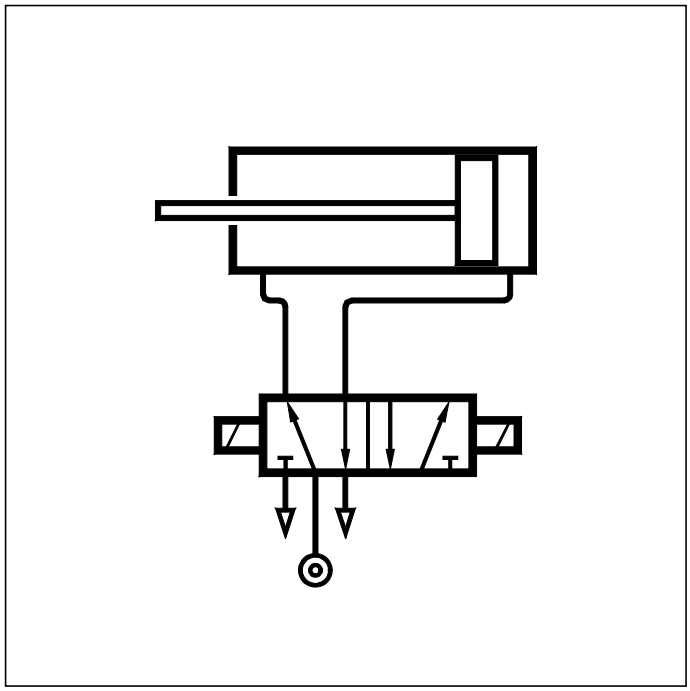

Training Document

This Training Document is intended for Training purpose only, and must not be used for other purpose.

The Training Document is not replacing any instructions or procedures (e.g. OM, MM, TeM, IM, SPC) intended for specific equipment, and must not be used as such.

Note!

For safe and proper procedures, refer to the equipment specific documentation.

Technical Training Centre

Contents

General **3**

Components **4**

Air conditioning units 4

Valves 5

Cylinders 14

Main air supply line 19

Function principle **20**

Symbols **22**

General

The technology of using compressed air to create movement is termed Pneumatics. In the Tetra Pak packaging machines and distribution equipment, compressed air is used to:make components move, operated by pneumatic cylinders

- make components move, operated by pneumatic cylinders
- control and operate valves
- create vacuum and supply air nozzles with air

The pneumatic system consists of two parts. One part is located external to the machine; in it, the required pressure is generated. The external pneumatics include compressor, air conditioning unit, main air supply line, etc. The other part is inside the machine and includes regulators, valves, cylinders, etc.

The air used in the pneumatic components must be clean and dry; pressure and flow rate must also be as required. The recommended values are specified in the installation manual (IM) for the machine concerned. In some systems, the components are factory prelubricated once and for all, requiring no further oil or grease; air for these components must be as free from oil as possible. However, if such a component is once mist lubricated, it must always be mist lubricated from then on.

The pneumatic system of each machine is documented in the form of a diagram. In order to simplify its construction and make the diagram easier to read, the various components are shown as symbols.

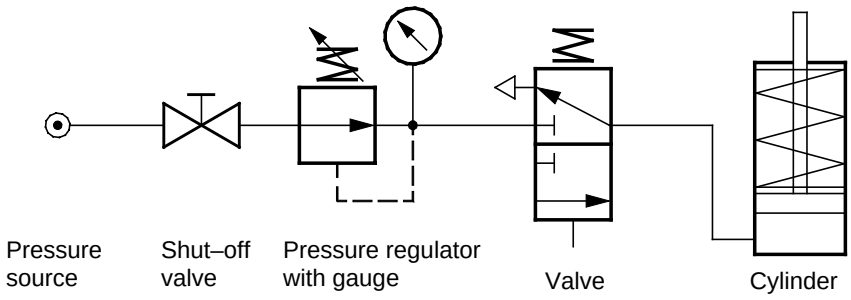

As there are many models and versions of machines, and some of them have been rebuilt or modified to differ from their original design, it is very important that the correct, up–dated, and currently valid pneumatic diagram is used when working with a particular machine.

Components

Air conditioning units

The first unit the air passes through on its way to the machine is the air conditioning unit. It consists of a separator, pressure regulator with pressure gauge, and, on some machines, lubricator. Normally, a shut–off valve is built into the conditioning unit.

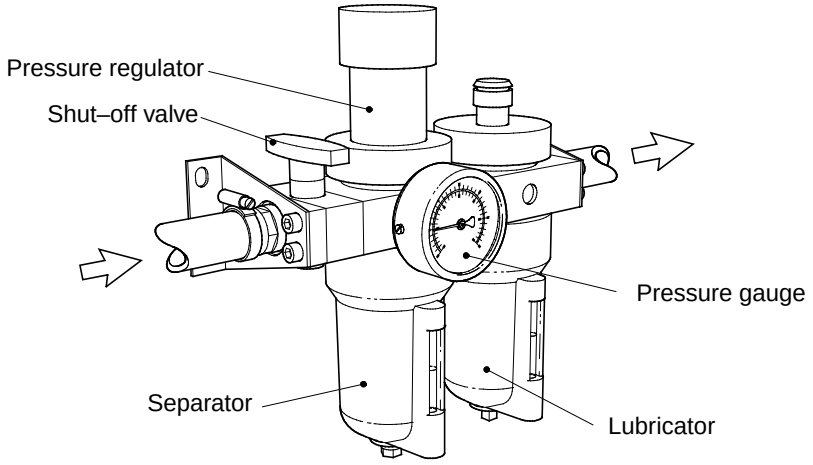

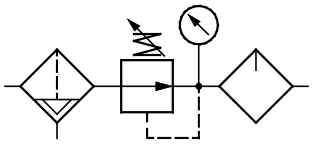

Air conditioning unit symbol

The purpose of the separator is to remove water and other pollutants that might be present in the compressed air. The separator consists of a filter element and a reservoir with a drain valve. The filter element may be made of sintered bronze. The input air is made to rotate, so that water drops and the larger solid particles are flung outwards against the inner surface of the reservoir. Condensated liquid runs down to to bottom of the reservoir, where it is removed through the drain valve when the input air is turned off.

Separator

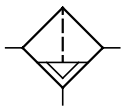

The purpose of the pressure regulator is to provide air at a constant pressure, independent of the load on the system. It is a form of pressure reduction valve, and its function will be explained under the heading of Valves.

Pressure regulator

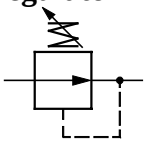

The pressure gauge indicates the pressure setting.

Pressure gauge



The lubricator (mist lubricator) provides the compressed air with oil. The injected amount of oil is proportional to the flow rate of the air and can be preset. In systems whose components are factory prelubricated, no oil must be added to the compressed air, as oil would wash out the grease in the prelubricated components.

Lubricator

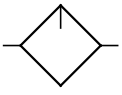

Valves

The purpose of valves is to regulate the flow rate and pressure of the compressed air and control its flow direction. The valves are controlled and operated either manually, by means of electrical signals from the PLC, or pneumatically by other valves.

Valves are subdivided into two groups – **seat valves** and **slide valves**. These groups differ in their design.

Seat valve

The seat valve controls the flow of air by means of its valve head and seat. The valve head only has to move a short distance to change over but needs considerable change–over force.

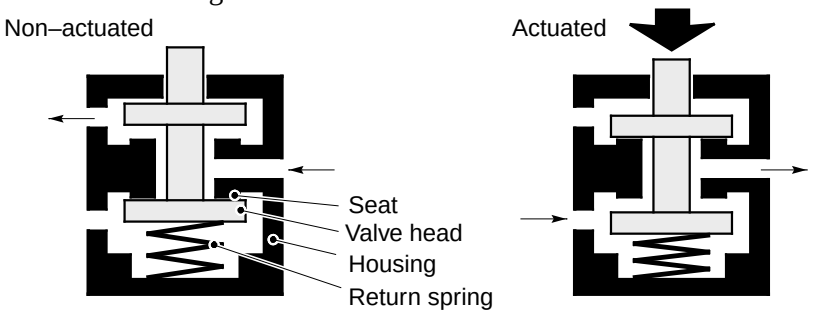

Slide valve

The slide valve controls the air flow by means of a movable slide. To change over, the slide has to move a relatively long distance, but the force needed for it is small.

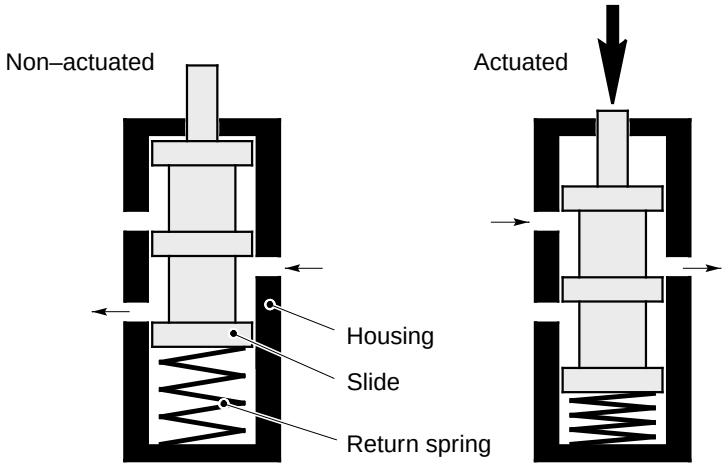

In respect of their purpose, valves are grouped as follows:

- **directional valves**, controlling the flow direction of the compressed air, for instance to operate the reciprocating movement of the piston in a pneumatic cylinder.
- **flow rate regulating valves**, controlling the amount of air per time unit, for instance to control the speed of the piston in a pneumatic cylinder.
- **pressure regulating valves**, controlling the pressure in the pneumatic system.

Before proceeding, we shall take a look at the symbols for the valves, and how they are constructed and function.

Valve symbols

The valve symbols denote the function of the valves but not their design. This means that valves that look differently, due to the way they are designed and constructed but function in the same manner, are shown with the same symbol.

The illustration shows the working principle of a slide valve, which may be in either of two positions.

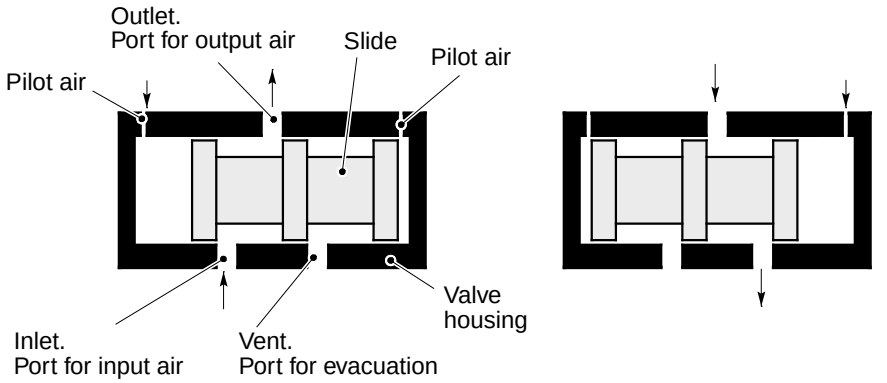

Position 1
The valve has received pilot air on the lefthand side. The passage between inlet and outlet is open, and the vent is closed

Position 2
The valve has received pilot air on the righthand side. The inlet is closed, and the passage between outlet and vent is open.

This valve can be shown simplified as a symbol.

The symbol consists of a square, with the ducts through which the air is able to pass shown as arrows. To the left and right of the square, the manner in which the valve is controlled is symbolised, for instance with a horizontal line for pneumatic control. The lines above and underneath the square represent the ports connected to the input and output air lines.

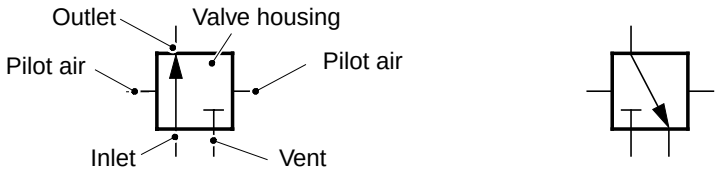

Position 1
The valve symbol is shown with open passage between inlet and outlet, and closed vent.

Position 2
The valve symbol is shown with open passage between outlet and vent, and closed inlet.

The function of the valve is illustrated by means of symbols. Each position the slide may be in is shown as a symbol, and the symbols are drawn after one another. The ports are only shown on the symbol in active position in the pneumatic diagram, which is the starting position of the valve.

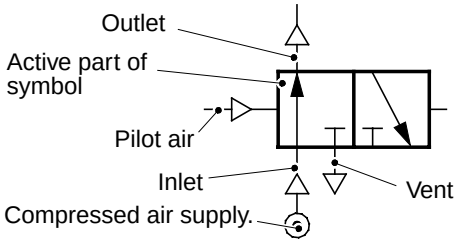

Position 1
The pilot air is received on the lefthand side of the symbol, which means that the lefthand side of the symbol is active. Compressed air passes through the valve and can actuate a cylinder

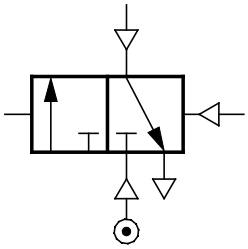

Position 2
The pilot air is received on the right-hand side of the symbol, which means that the righthand side of the symbol is active. The air in the cylinder can be evacuated.

To make it easier to identify them, the ports are numbered: input air port – No 1; output air port – No 2; vent port – No 3. The pneumatic signal ports take their numbers from the ports they provide passage between; for instance, port No 12 connects input and output air.

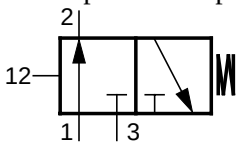

As the valve in the example has three ports and a slide which may be in two positions, it is termed a ”3/2 valve”. Similarly, a five–port valve with a three–position slide becomes a ”5/3 valve”.

The valve may be operated in several ways. Other than pneumatically, it can be operated manually, by a spring, or electrically. The different ways are shown as symbols. In the following example, an electrically operated 5/2 valve with spring return operates a double-action pneumatic cylinder.

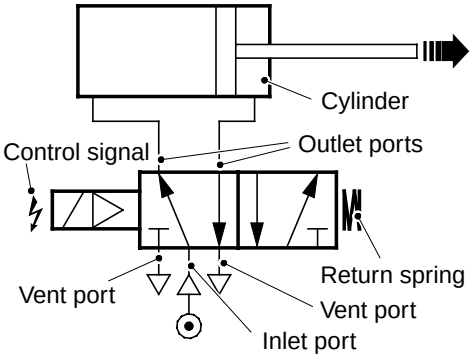

The control signal is received on the lefthand side of the symbol. Compressed air passes through the valve and into the plus compartment of the cylinder, while its minus compartment is vented.

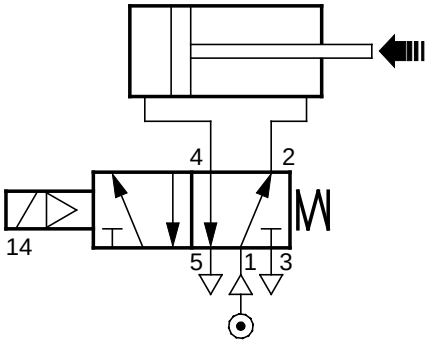

The control signal is discontinued, and the return spring moves the slide. The compressed air is now directed to the minus compartment of the cylinder, while its plus compartment is vented.

The various forms of valve symbols used in our pneumatic diagrams are explained in greater detail in the section of this text where the function of the valves is described.

Monostable directional valve

The monostable valve features spring return, i e in idle position, the slide is always in the same position. One advantage of this type of valve is that it is possible to operate a cylinder in both direction with only one control signal output from the PLC.

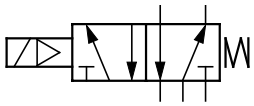

Electrically controlled, monostable directional valve.

Electrically controlled, monostable directional valve is used extensively in Tetra Pak machines. The pilot air is controlled by means of an solenoid, powered by 24 or 48 V DC from a PLC output. The pilot air system is an integral part of the directional valve.

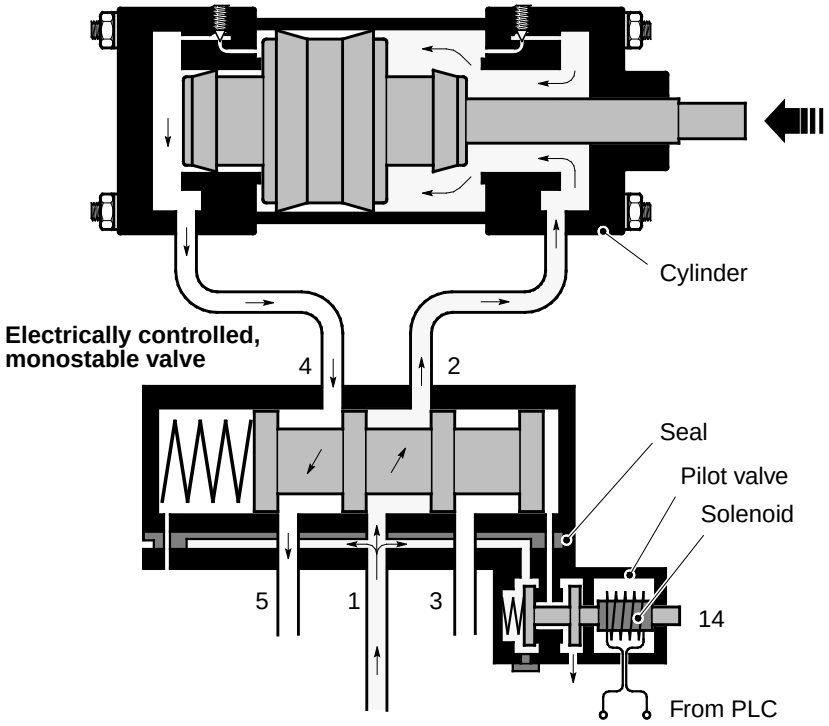

In those cases where the valve receives air with a reduced pressure, which is lower than the change–over pressure of the valve, the pilot valve can be supplied separately with air from the pneumatic system. On some valves, for instance Mecman Series 581, change–over is effected by turning the seal between the valve proper section and the control section upside down. Then control port No 14 in the connection plate is connected directly to the compressed air system.

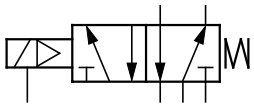

Electrically controlled, monostable directional valve with separate air supply to pilot valve.

Electrically controlled, monostable valve with separately supplied solenoid valve

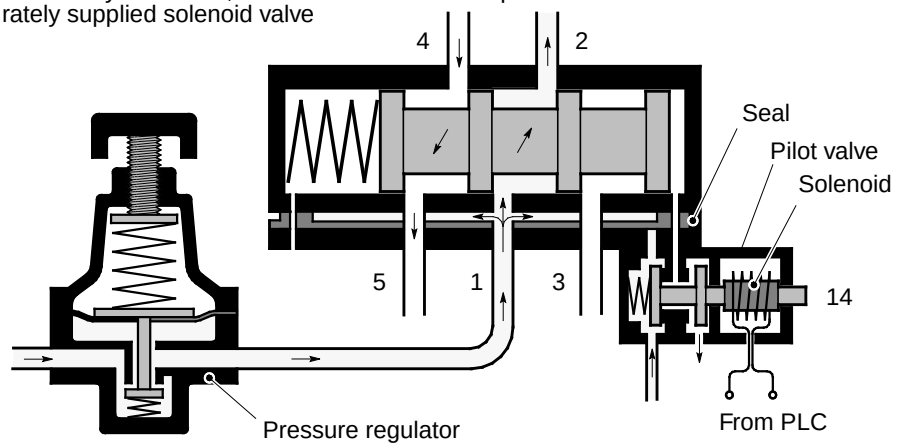

Bistable directinal valve

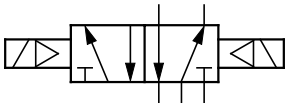

Electrically controlled,
bistable directional valve

The valve has no spring return, and thus the slide can be in either of two idle positions, depending on which one of the two solenoids was most recently activated. Consequently, two outputs from the PLC are always required to control a bistable valve.

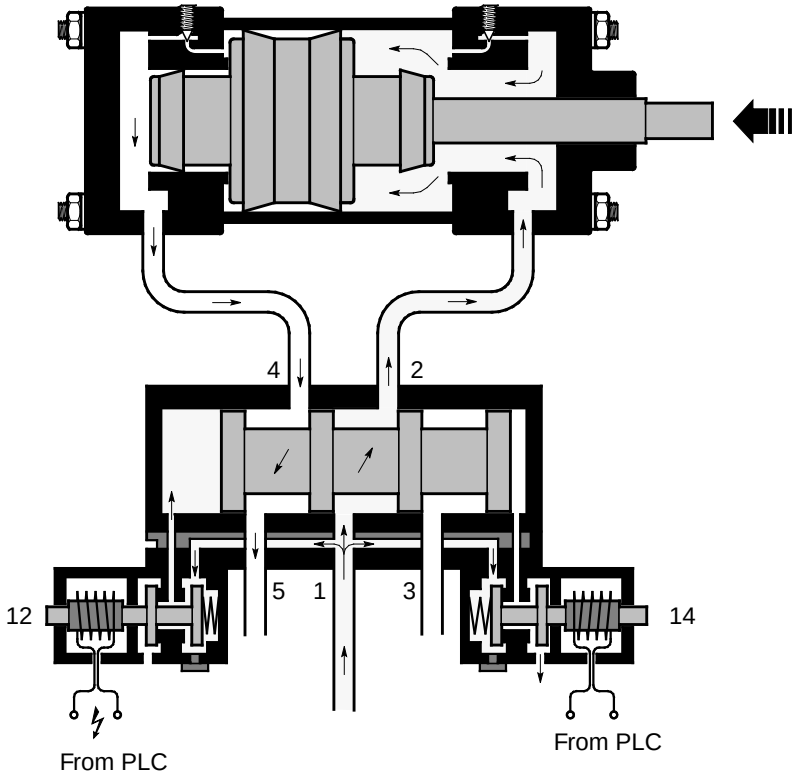

Valves of the bistable type are used if, for instance, it is desirable that the cylinder is to remain in the position it moved to as a result of the most recent valve operation, even if the the output signal is discontinued. The same standard principle for numbering the ports applies to this kind of valve. Pilot air at port No 12 connects ports No 1 and No 2, pilot air at port No 14 connects ports No 1 and No 4, in both cases admitting passage of input air.

This valve type is used, for instance when a cylinder is to remain in position at an emergency stop. Below, an electrically controlled 5/3 valve is illustrated.

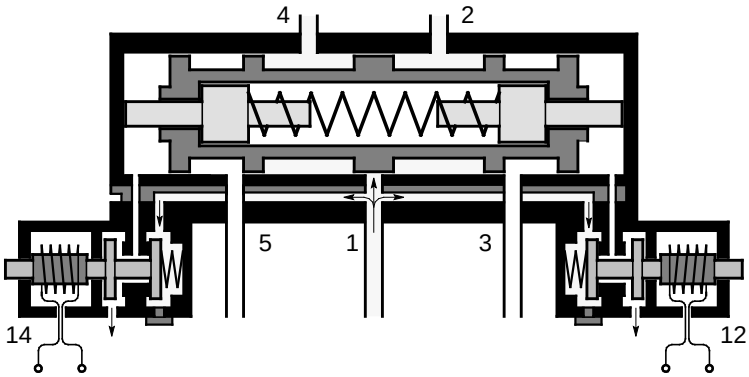

No control signal to ports No 12 and No 14 means that the return spring positions the slide in the middle; all ports closed.

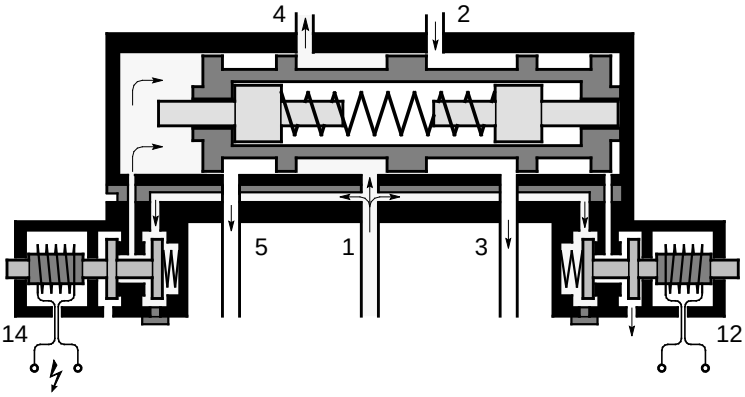

On port No 14 receiving a control signal, the slide moves to the right in the picture. This means that port No 1 is connected to port No 4, and port No 2 to port No 3.

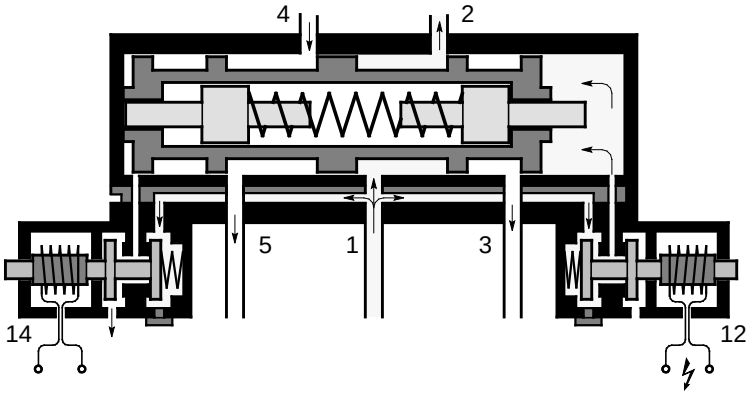

On port No 12 receiving a control signal, the slide moves to the left in the picture. This means that port No 1 is connected to port No 2, and port No 4 to port No 5.

The valve can be in three positions. In addition to the two positions of a 2–position valve, the 3–position valve has a middle position with all ports closed(as exemplified above) or open for venting. Two PLC outputs are required to control the valve. If there is no signal when the system is depressurised, the return spring puts the valve in its middle position.

3-positioned directional valve

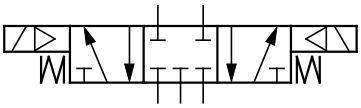

Electrically controlled, 3–positions directional valve with closed middle position.

Soft-start valve

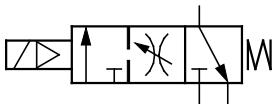

This type of valve is used in order to make pressurisation of the pneumatic system soft and smooth.

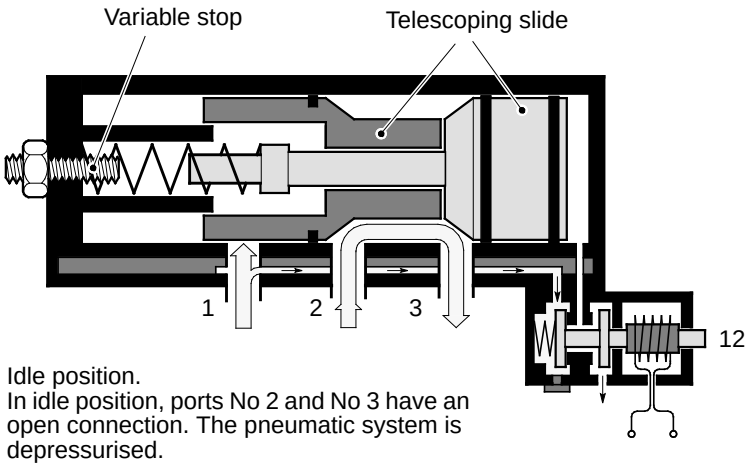

Idle position.
In idle position, ports No 2 and No 3 have an open connection. The pneumatic system is depressurised.

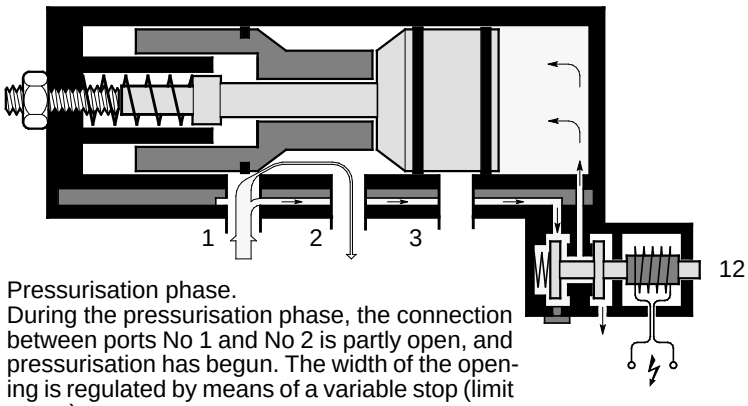

Pressurisation phase.
During the pressurisation phase, the connection between ports No 1 and No 2 is partly open, and pressurisation has begun. The width of the opening is regulated by means of a variable stop (limit screw).

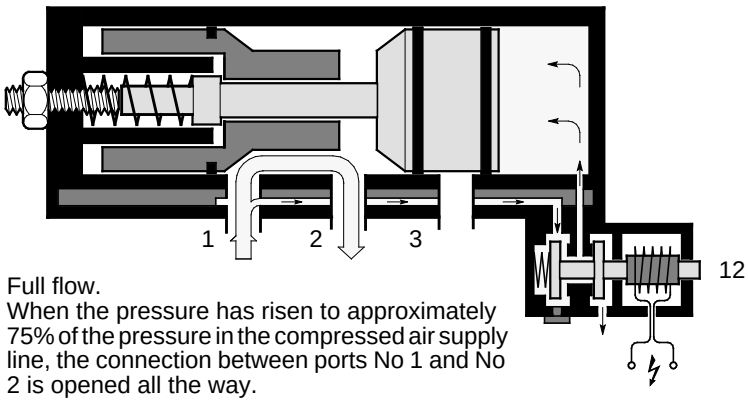

Full flow.
When the pressure has risen to approximately 75% of the pressure in the compressed air supply line, the connection between ports No 1 and No 2 is opened all the way.

The three positions of the telescoping slide are illustrated, somewhat simplified. When the control signal is received, the slide moves up against the variable stop, opening a narrow connection between ports No 1 and No 2 (pressurisation phase). When the pressure has risen to approximately 75% of the pressure in the compressed air supply line, the valve opens all the way. On depressurisation or at an emergency stop, the valve provides full flow directly between ports No 2 and No 3 (depressurisation).

Throttle valve

This kind of valve is used to regulate the flow of air, which is restricted equally much in both directions.



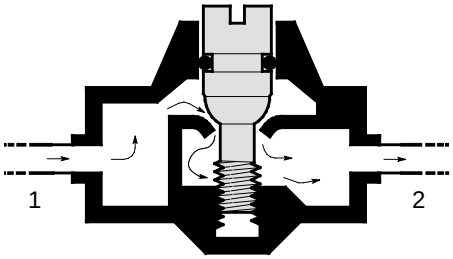

Throttle valve

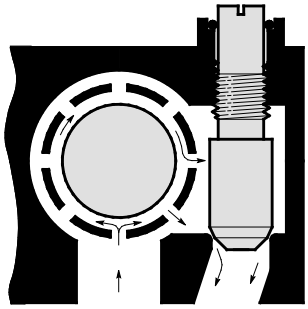

Throttle fitted in directional valve

If throttles are incorporated in a directional valve, they are fitted in the outlet ports and consist of brass screws. Normally, such throttles are factory fitted in most of our directional valves. Normally, they provide adequate speed regulation accuracy.

Throttle check valve

This kind of valve is used when the air is to be regulated in one flow direction only.

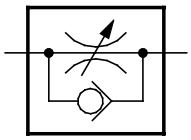

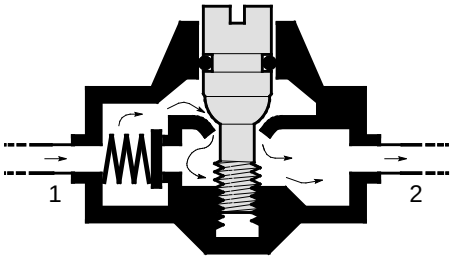

When the air flows from port No 1 to port No 2, it must pass through the throttle and can thus be regulated.

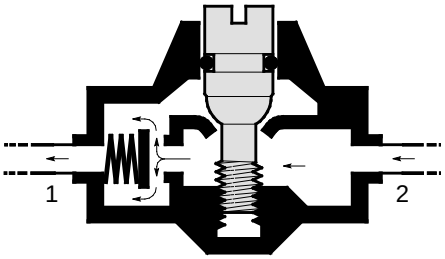

If, on the other hand, the air flows from port No 2 to port No 1, it passes through the check valve without being regulated.

In order to achieve better accuracy in speed regulation, throttle check valves can be used, for instance fitted in the end sections of the cylinders. This is done when the cylinder is located remote from the directional valve. If throttle check valves are being used, the throttles integral with the directional valves must be fully open; adjustment must only be made by means of the throttle check valves.

Shut-off valve

This is a manually operated ball valve, used to shut the supply of air to the entire pneumatic system. Normally, it is built into the air conditioning unit.



Pressure switch

The pressure switch triggers an alarm to the control system, if the pressure drops below a preset value. This value can be adjusted.

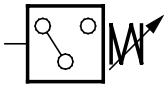

Pressure regulator

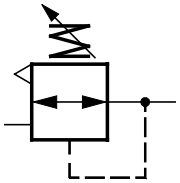

Correctly set pressure is a condition of correct speed control and correct force. For this reason, a pressure regulator is a always fitted in the air conditioning unit. To enable the pressure regulator to function well, there must be a pressure difference between input and output air of not less than 0.8 bar. Some machines have an extra pressure regulator within the pneumatic system for the purpose of allowing the reduction of the air pressure to some of the cylinders.

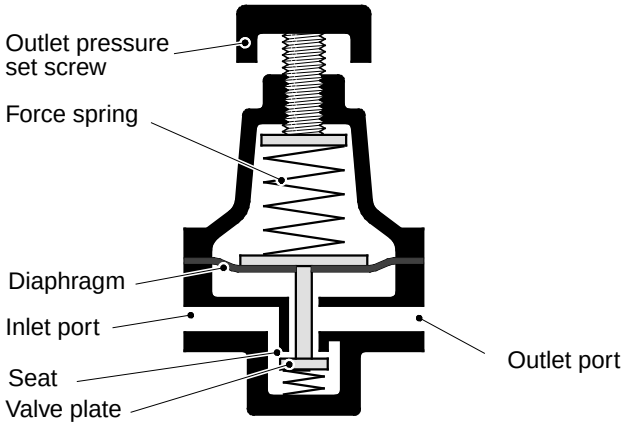

The valve plate of the seat valve is operated by the diaphragm, which in its turn is actuated by the outlet pressure of the pressure regulator. The force created by this pressure is balanced by the spring force on the other side of the diaphragm. By increasing the spring force by turning the set screw, the seat valve is opened and is kept open until the outlet pressure exceeds the spring force. Thus the diaphragm and the spring force together maintain a constant, preset outlet pressure. If the pressure on the outlet side drops, for instance due to air used in moving a cylinder, the seat valve opens again.

Vacuum ejector with valve

This valve generates underpressure through its ejector effect. It is used, as an example, to supply a vacuum to suction cups. There are two types of vacuum valves. One type which is electrically controlled and generates a release pulse when the direction of flow is reversed. The other type in entirely pneumatic and generates the release pulse by means of a built–in accumulator.

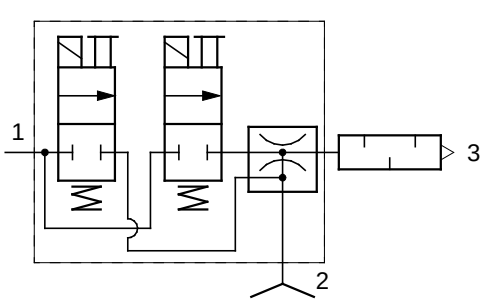

Electrically controlled vacuum ejector

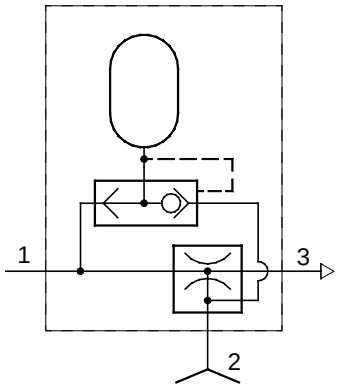

Pneumatically controlled vacuum ejector

Cylinders

The purpose of a pneumatic cylinder is to perform a movement, powered by compressed air.

In simple terms, the pneumatic cylinder consists of a cylinder housing with two end sections, a piston with piston rod, and two connections to the pneumatic system.

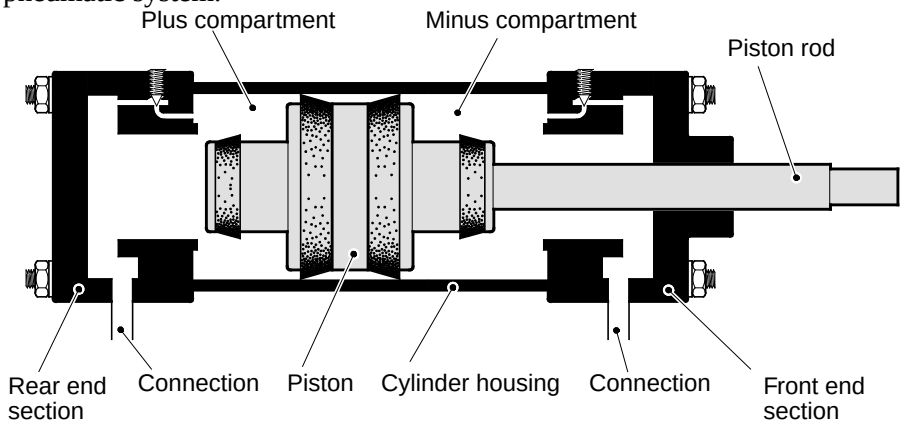

The piston is provided with seal–rings, separating the two compartments. The front end section has a piston rod guide and seal.

When compressed air is admitted into the plus compartment (pressurisation), and the air in the minus compartment is vented, or evacuated (depressurisation), the piston rod extends out of the cylinder – the piston performs a plus stroke. If the flows of air are reversed, the piston rod is withdrawn into the cylinder – the piston performs a minus stroke.

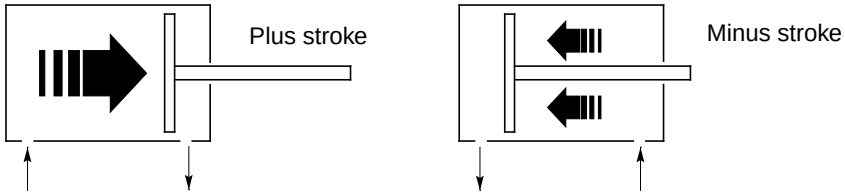

The cylinder described above is a double–action cylinder with single–side piston rod. This means that both the plus stroke and the minus stroke are performed powered by compressed air, and that there is a piston rod at one end only.

Double-action cylinder

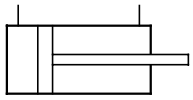

Single-action cylinder

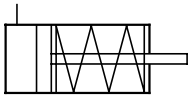

In the single–action cylinder, a spring effects the minus stroke.

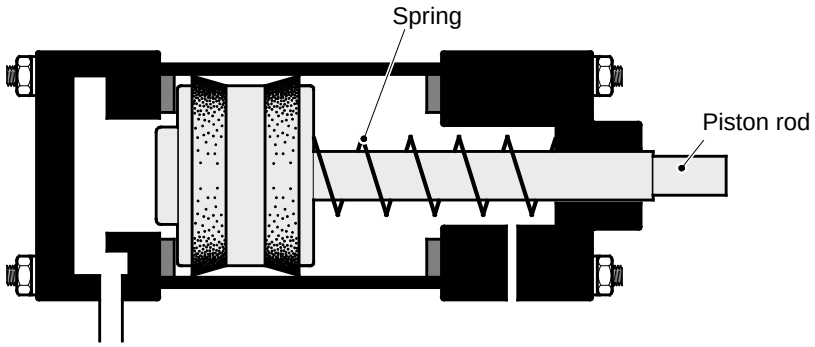

Rod-less cylinder

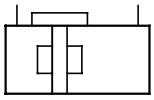

Such a cylinder is double–acting, but its piston rod has been replaced by an attachment sliding along the outside of the cylinder shell. The movement may be transferred to the attachment mechanically or by means of magnets.

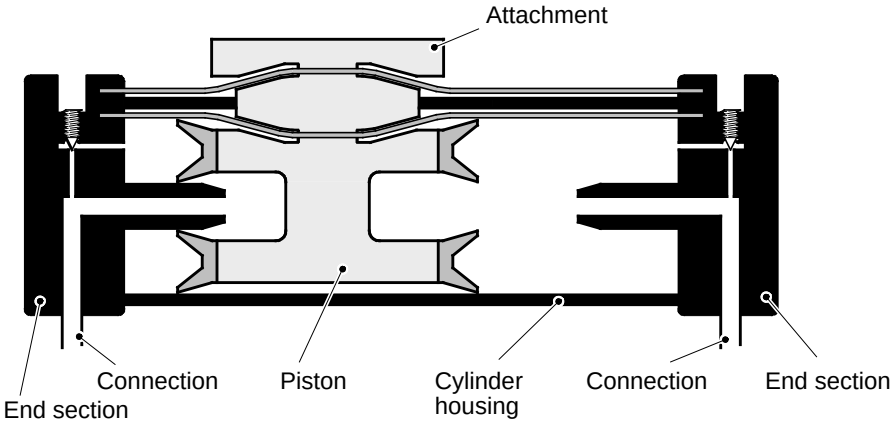

Magnetic piston sensor

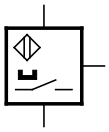

Fully electronic magnetic piston sensor; when the magnetic field of the piston alters the resistance in a semiconductor element inside the sensor, an output signal is transmitted to the PLC; the sensor has a switch–off delay of 20–30 ms.

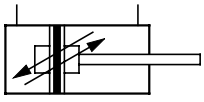

Double–action cylinder with magnetic piston

A magnetic piston sensor is fitted on the cylinder for the purpose of giving the PLC information on the current piston position. This information is then utilised by the PLC as a precondition of, for instance, the changing over a directional valve etc.

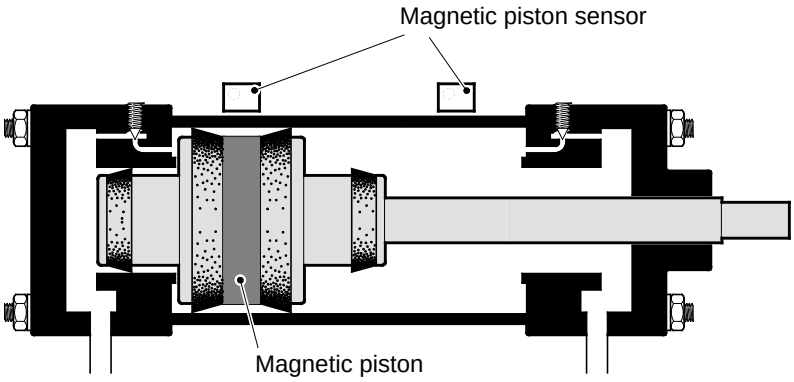

When replacing a cylinder with a magnetic piston, it is important that the replacement cylinder also has a magnetic piston. A cylinder with the correct length of stroke and diameter, but without magnetic piston, will not actuate the magnetic piston sensors.

The direction, **force**, and **speed** of movement of the **piston rod** can be controlled. To ensure that the piston rod stops moving softly and smoothly, there are also end position dampers. The various functions are explained in the following.

Direction of movement

The direction of movement is controlled by directional valves..

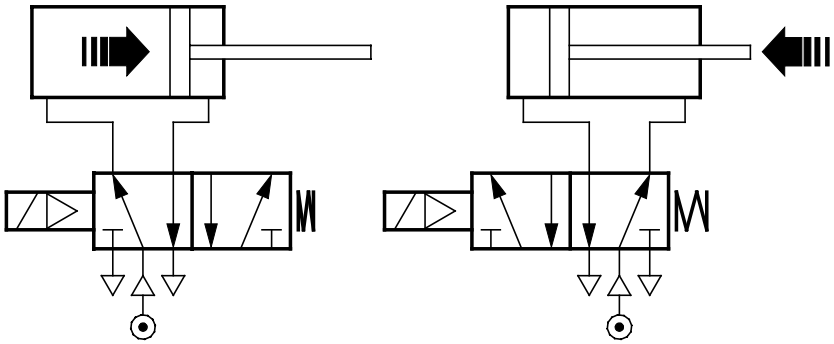

In order to control the movements of a double–action cylinder, a five–port valve is required. As the valve is actuated by a control signal, its slide changes over, and the compressed air is led to the plus compartment of the cylinder, while the minus compartment is vented. The piston performs a plus stroke. If the control signal is discontinued, the return spring of the valve moves the slide back again, and the flow of air reverses direction; the minus compartment is filled with air, the plus compartment is vented, and the piston makes a minus stroke.

Force

The force which the piston rod exerts on the load, is regulated by varying the pressure of the air – reducing the pressure decreases the force. The pressure is controlled by means of a pressure regulator.

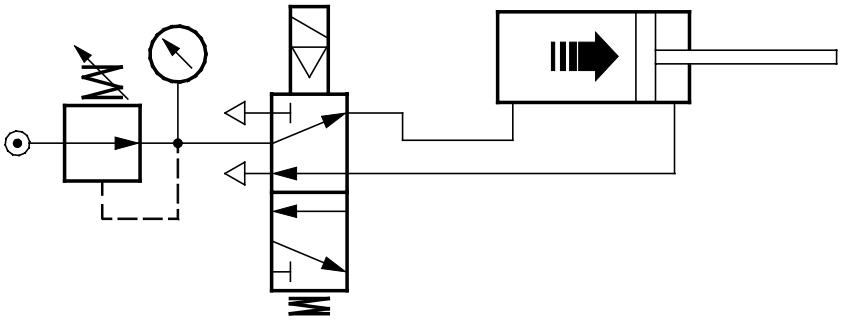

Speed The speed of the piston is regulated by varying the flow of air on the return side in the cylinder. This is done by means of the throttles in the valve, or with throttle check valves fitted in the line between the valve and cylinder.

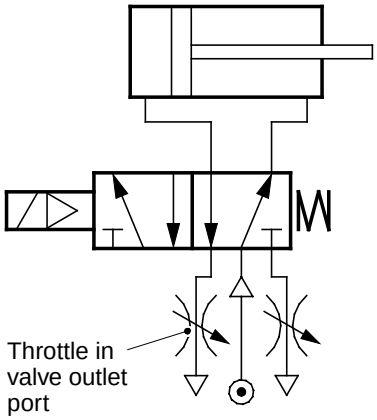

Speed regulation by means of throttles in valve

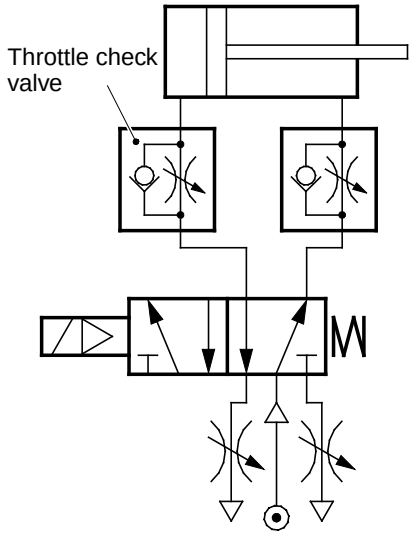

Speed regulation by means of throttle check valves; throttles in valve to be fully open

The reason why throttling is done on the return side of the cylinder is to make the movement smooth.

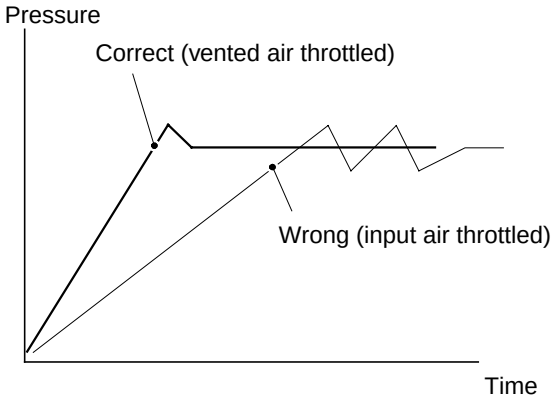

If the cylinders used are small, or the air lines between cylinder and valve are long, the alternative of employing throttle check valves offers better speed regulation accuracy; the valve throttles must in this case always be fully open.

Dampening

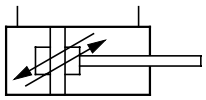

Double-action cylinder with variable end position dampening

The movement of the piston is dampened at both end positions by built–in dampers in the cylinder end sections. The dampening effect is regulated with adjustment screws. The purpose of the dampers is to decelerate, i e slow down and stop, the piston a smoothly. In this way, damage to the cylinders, caused by the piston striking the cylinder end section with some force, is eliminated. Dampening also reduces vibrations in the machine. If, on the other hand, the dampening effect is too great, the piston may bounce back and come to a stop with a jerk.

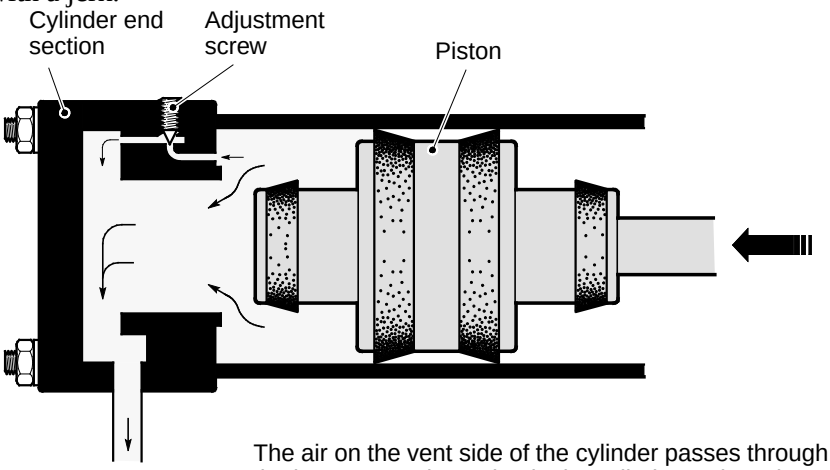

The air on the vent side of the cylinder passes through the large, central opening in the cylinder end section

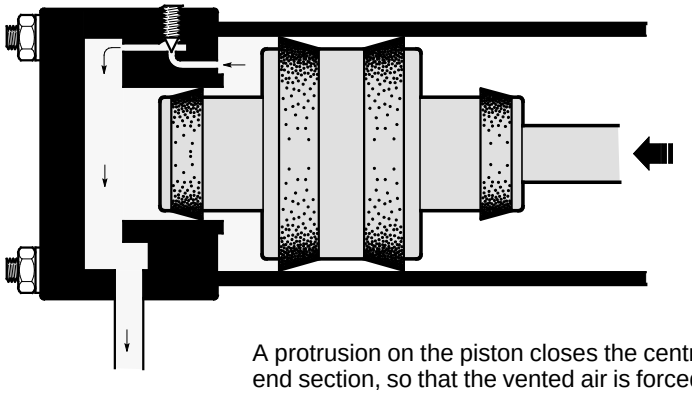

A protrusion on the piston closes the central opening in the end section, so that the vented air is forced through the narrow duct, in which the adjustment screw enables the flow, and thus dampening effect on the piston, to be regulated.

In order to successfully set both speed and dampening, it is important first to make sure that the pressure in the system is correct. Thereafter, the cylinder speed can be set, and lastly, the dampening effect.

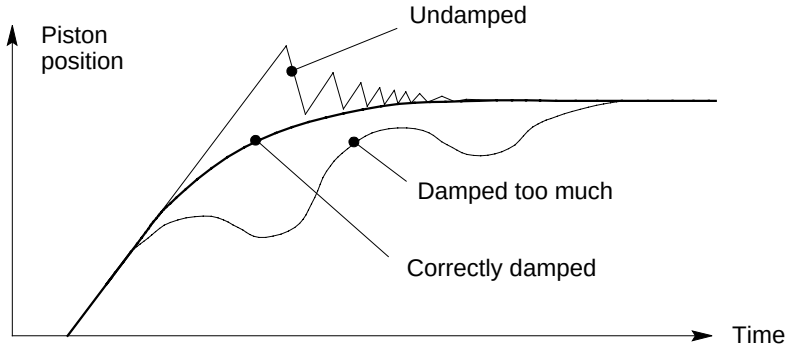

Main air supply line

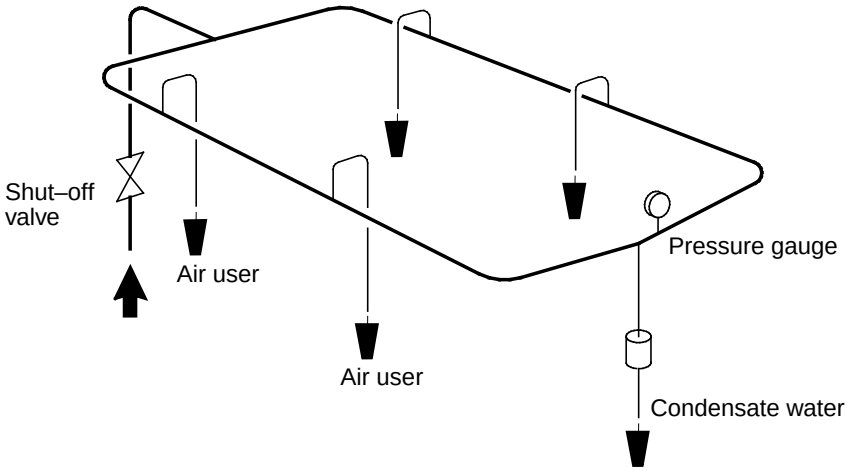

The main air supply line should form a ring main line through the premises; this will allow the users of air to receive it from two directions. There should be a drop of 5–10 mm per metre in the direction of flow. Underneath the lowest point in the ring line, a condensate drain cock is to be fitted. The output connections to the users should be fitted on the top side of the main line piping; this will keep condensate water and dirt from following the air into the user device. There should also be a pressure gauge to make it possible to check that correct air pressure is being maintained.

The diameter of the main line piping depends on its length as well as the number of pipe bends and elbows, connections, and valves in the line. The larger the number of such components that the air must pass, the bigger the pipe diameter must be to prevent excessive pressure drop up to the points where the air is used.

The pipe–lines should be be installed so that they are easily accessible for checking that they are tight.

Function principle

This is an example of a principle diagram of a pneumatic system:

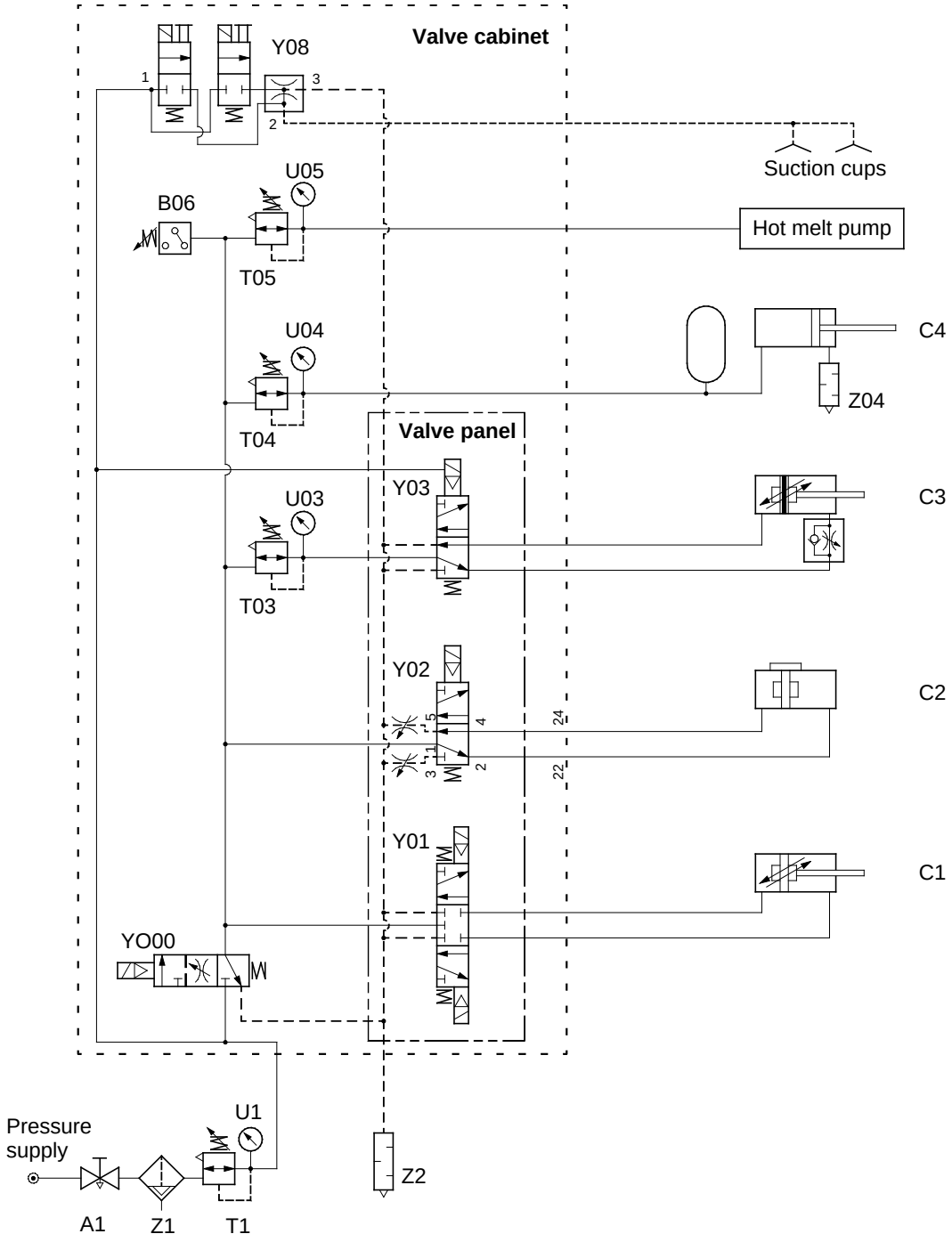

The input compressed air passes through manual valve A1, water separation filter Z1, and pressure regulator T1; pressure gauge U1 indicate the pressure. If the pressure drops below a preset value, pressure switch B06 indicates a warning by lighting a signal lamp on the control panel. The pressure switch should be connected as the last component in the system in order to sense the pressure drops created by the other components.

A	manual valve
B	cylinder
C	cylinder
T	pressure regulator
U	pressure gauge
Y	electrically controlled valve
YO	pressurisation valve
Z	filter

Pressurisation

Control line

Depressurisation

Vacuum line

Valve panel

Valve cabinet

Pressurisation valve YO00 is used to make pressurisation of the system slow in order to allow cylinders in wrong positions to return smoothly to their correct idle positions. The pressurisation time can be adjusted by means of an adjustment screw in this valve. Valve YO00 also has a safety function, for instance if an emergency stop requires the system to be instantly depressurised.

Valve Y01 is a 3–position valve with closed middle position. If, for instance, the machine is emergency stopped, the valve moves to the middle position, and cylinder C1 remains in the position it was in at the stop.

Valve Y02 is monostable and electrically controlled. It has throttles in its outlet ports for regulating the speed of cylinder C2.

Valve Y03 is also monostable and electrically controlled, but its pilot valve is supplied with air separately from a line, connected before soft–start valve YO00. This means that valve Y03 does not have to wait for the slow build–up of pressure via the soft–start valve but changes over instantly as soon as valve A1 opens. The separate supply of air also allows valve Y03 to be supplied with air at a reduced pressure, for instance to limit the force of cylinder C3.

Pressure regulator T04 regulates the pressure to cylinder C4. This cylinder acts as an air spring, and for this reason, an accumulator is connected to the air line.

Pressure regulator T05 regulates the pressure to the hot melt pump and thus controls the amount of hot melt adhesive to be extruded.

Y08 consists of a vacuum ejector and two valves. When the righthand valve is activated, compressed air flows from port 1 to port 3 and, due to the ejector effect, a vacuum is generated at port 2, to which the suction cups are connected. When the lefthand valve is activated, compressed air is supplied directly to the suction cups, which thus are receive a blast of air, releasing their suction and blowing their ducts clear.

Silencer Z2 is common to the whole pneumatic system.

The designations in the diagram follow a certain system, usually consisting of a letter and a number. The components which the compressed air comes to first are given the same number, in this case 1, but different letters to denote their functions: A for manual valve, Z for filter, and T for pressure regulator. The number of a valve, for instance Y02, determines the numbers of the following components. The output lines from the valve are given numbers beginning with 2, followed by the number of the outlet port, i e numbers 22 and 24. The cylinder is designated C2.

Whenever setting is done in the pneumatic system, it is important to do it i the right order:
1input pressure
2speed (throttle check valves or valve throttles)
3dampening (end position dampers in cylinders)

Symbols

The following table, which is an excerpt from the Tetra Pak Standards (DS 208.35), lists the symbols that are normally used in our pneumatic diagrams.

Symbol	Meaning
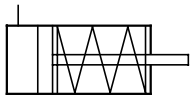	Single–action cylinder with return stroke by spring.
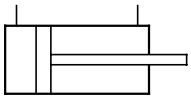	*Double–action cylinder with single–ended piston rod.*
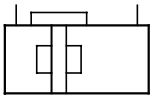	Double–action cylinder without piston rod.
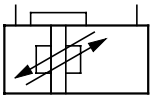	Double–action cylinder without piston rod, with variable dampening at both end positions.
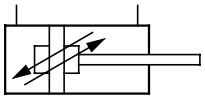	*Double–action cylinder with variable dampening at both end positions.*
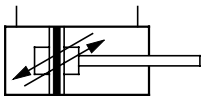	*Double–action cylinder with variable dampening at both end positions and magnetic piston.*
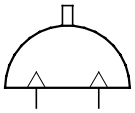	Torque cylinder.
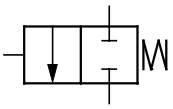	*2/2 directional control valve, controlled by pressure acting against return spring.*
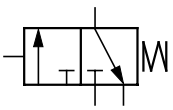	*3/2 directional control valve, controlled by pressure acting against return spring.*

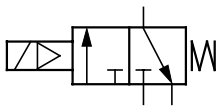	*3/2 directional control valve, controlled by solenoid with return spring.*
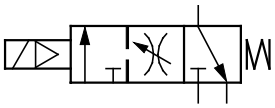	3/3 soft–start valve.
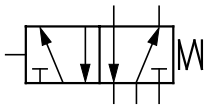	*5/2 directional control valve, controlled by pressure acting against return spring.*
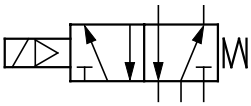	*5/2 directional control valve, controlled by solenoid with return spring.*
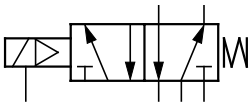	*5/2 directional control valve, controlled by solenoid valve with separate air supply.*
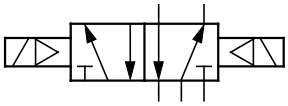	*5/2 directional control valve, controlled by solenoid in both directions.*
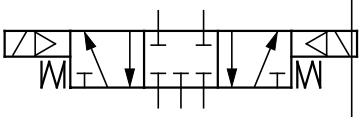	*5/3 directional control valve, closed in middle position, controlled by solenoid and return spring.*
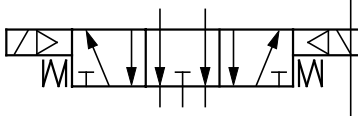	5/3 directional control valve, open in middle position, controlled by solenoid and return spring.
	*Variable throttle valve.*
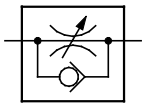	*Non–return valve with variable throttle check.*
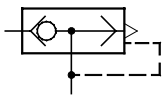	*Rapid–exhaust avlve.*

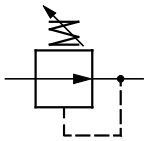	*Pressure regulator with relief port, spring controlled. Adjustable spring force.*
	*Shut–off valve with exhaust port.*
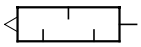	*Silencer*
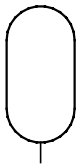	*Accumulator*
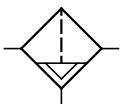	*Separator with water trap and automatic drain.*
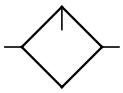	*Lubricator.*
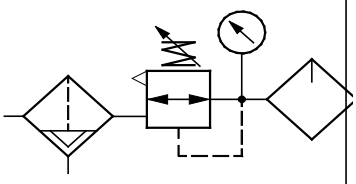	*Air conditioning unit, consisting of filter, pressure regulator, pressure gauge, and lubricator.*
	*Pressure gauge.*
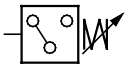	*Electric pressure switch with change–over contact and variable pressure setting.*
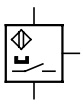	Magnetic piston sensor.
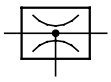	Ejector.

Tetra Pak

Water panel

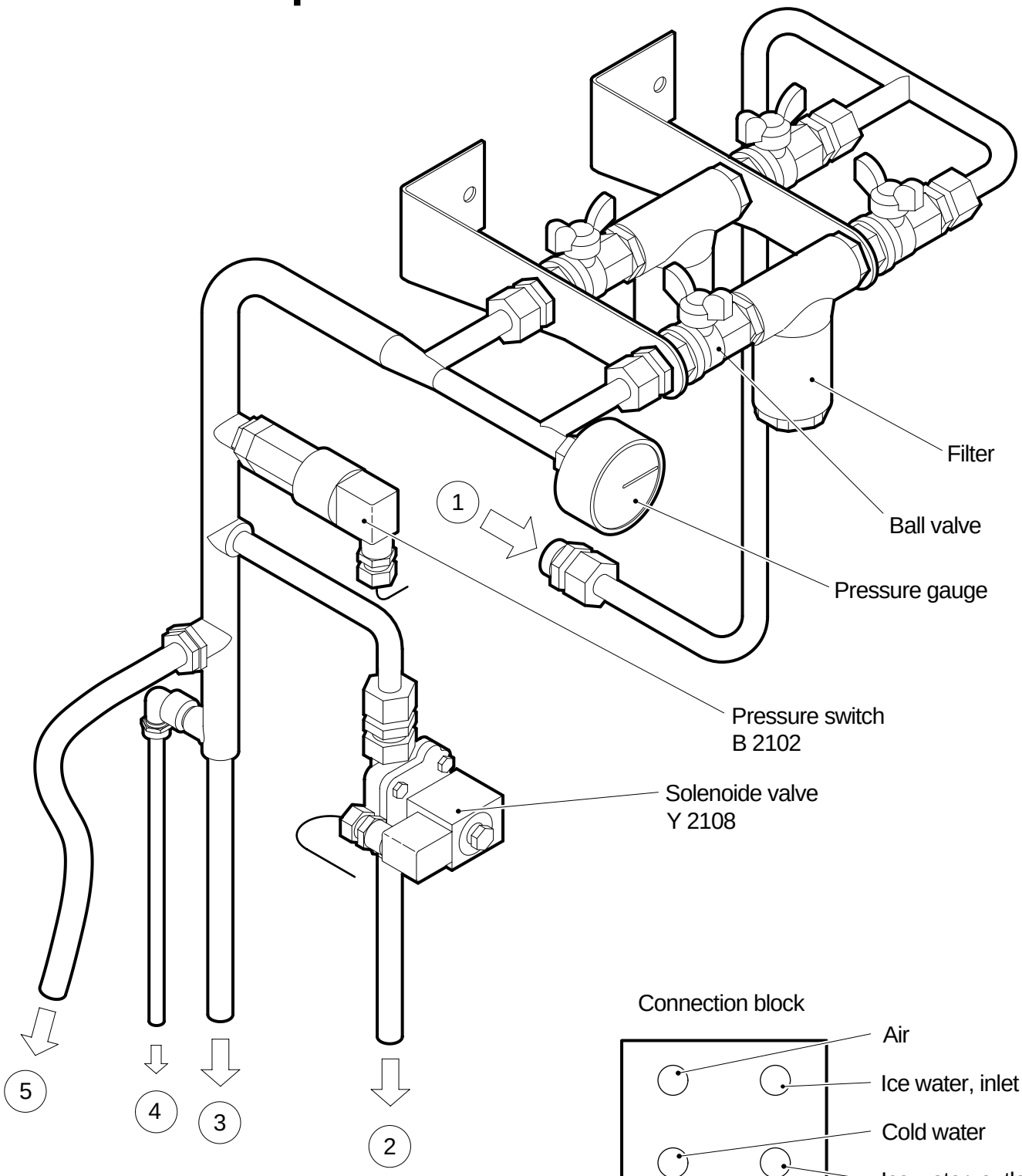

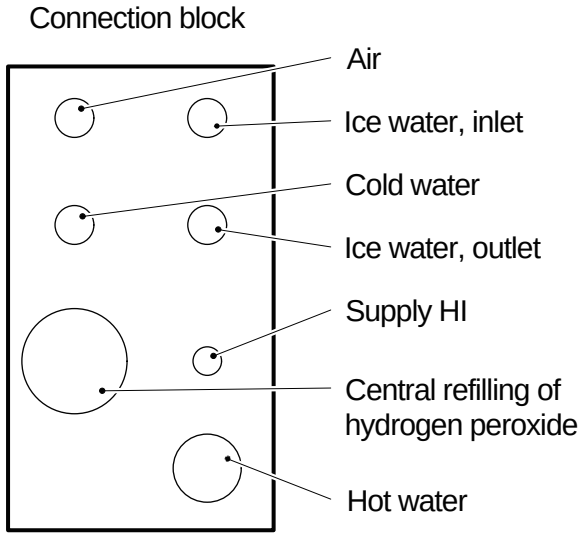

1 Cold water inlet
2 Flushing final folder
3 Superstructure
4 Spray gun
5 Cooling water system

Cooling water system

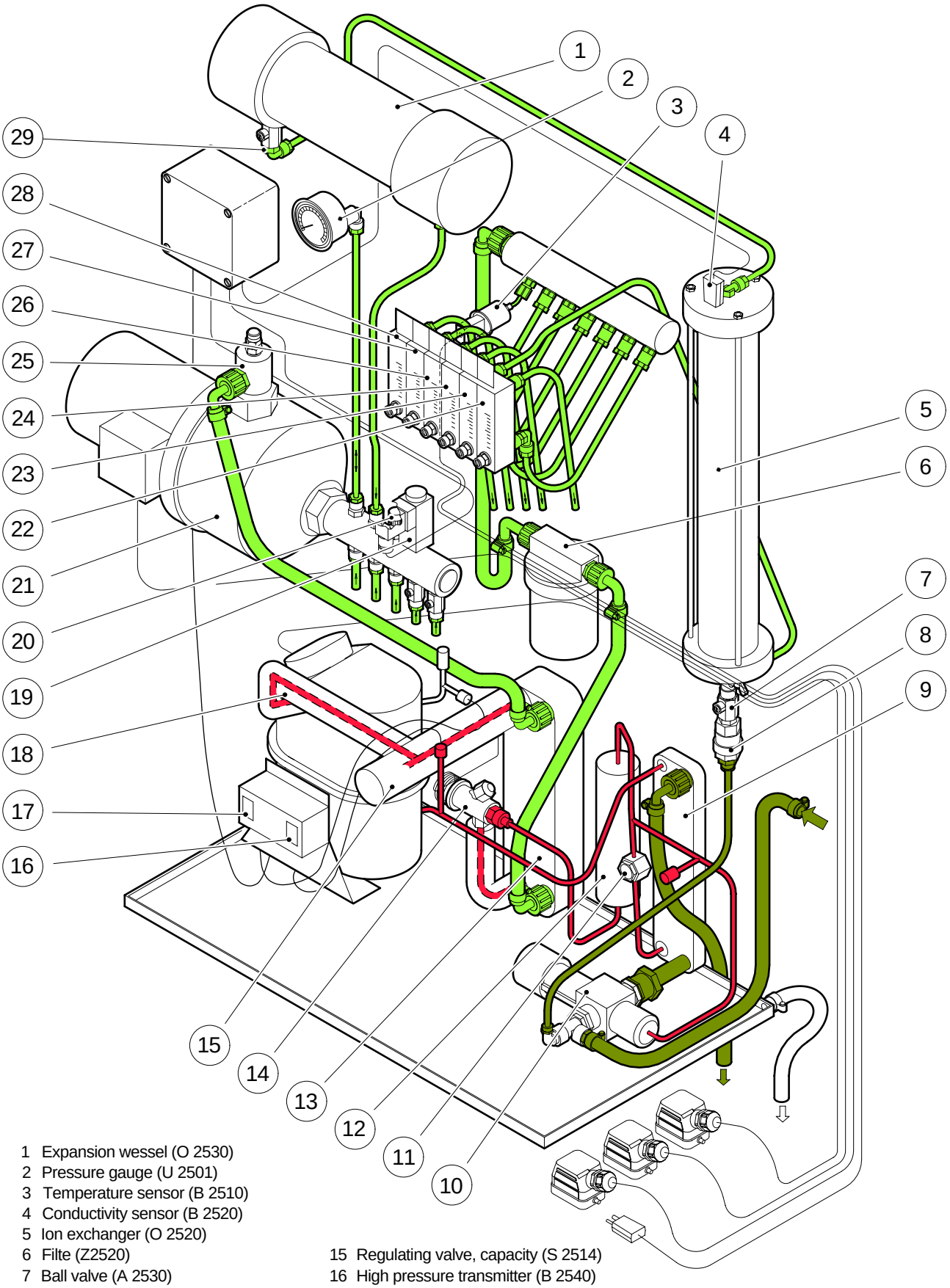

1 Expansion wessel (O 2530)
2 Pressure gauge (U 2501)
3 Temperature sensor (B 2510)
4 Conductivity sensor (B 2520)
5 Ion exchanger (O 2520)
6 Filte (Z2520)
7 Ball valve (A 2530)
8 Non−return valve (J 2530)
9 Heat exchanger (K 2550)
10 Water saving valve (S 2550)
11 Sight glass (U 2560)
12 Filter (O 2560)
13 Heat exchanger (K 2510)
14 Expansion valve (S 2513)
15 Regulating valve, capacity (S 2514)
16 High pressure transmitter (B 2540)
17 Low pressure transmitter (B 2541)
18 Cooling compressor (P 2540)
19 Pressure switch (B 2501)
20 Security valve (F 2530)
21 Cooling water pump (P 2501)
22 Flow meter, SA transformer (S 8404) (unused in TBA/21)
23 Flow meter, ion exchanger (S 2520)
24 Flow meter, LS transormer (S 2320)
25 Bleeding valve (A 2501)
26 Flow meter, final folder (S 5305)
27 Flow meter, TS transformer left (S 4309)
28 Flow meter, TS transformer right (S 4310)
29 Ball valve (A 2520)

Technical Training Centre
Lund, Sweden

Machine type
TBA/22 050V

Issue
1/0303

OH 1217:1

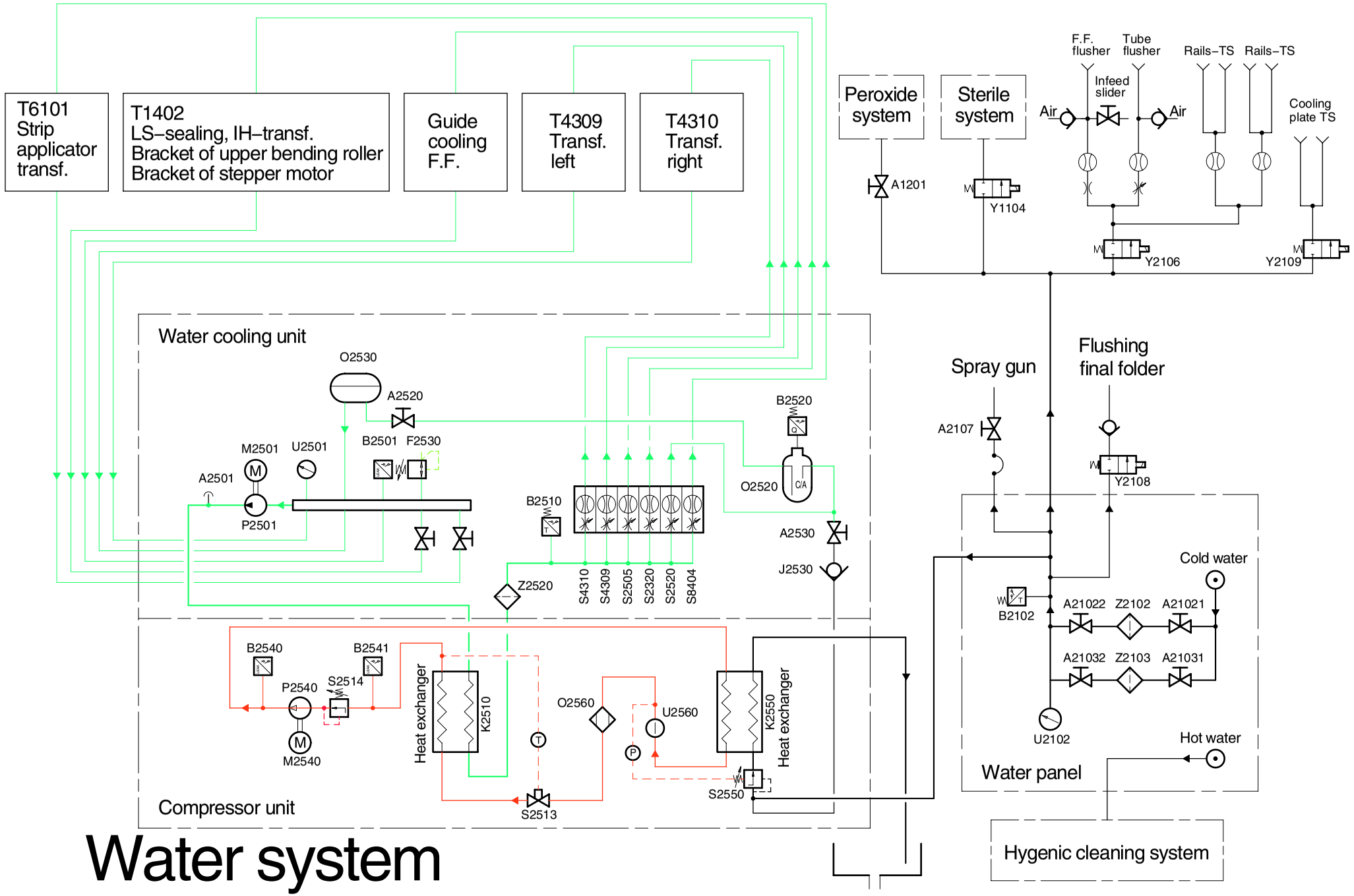

Water system

Alternative refrigeratory

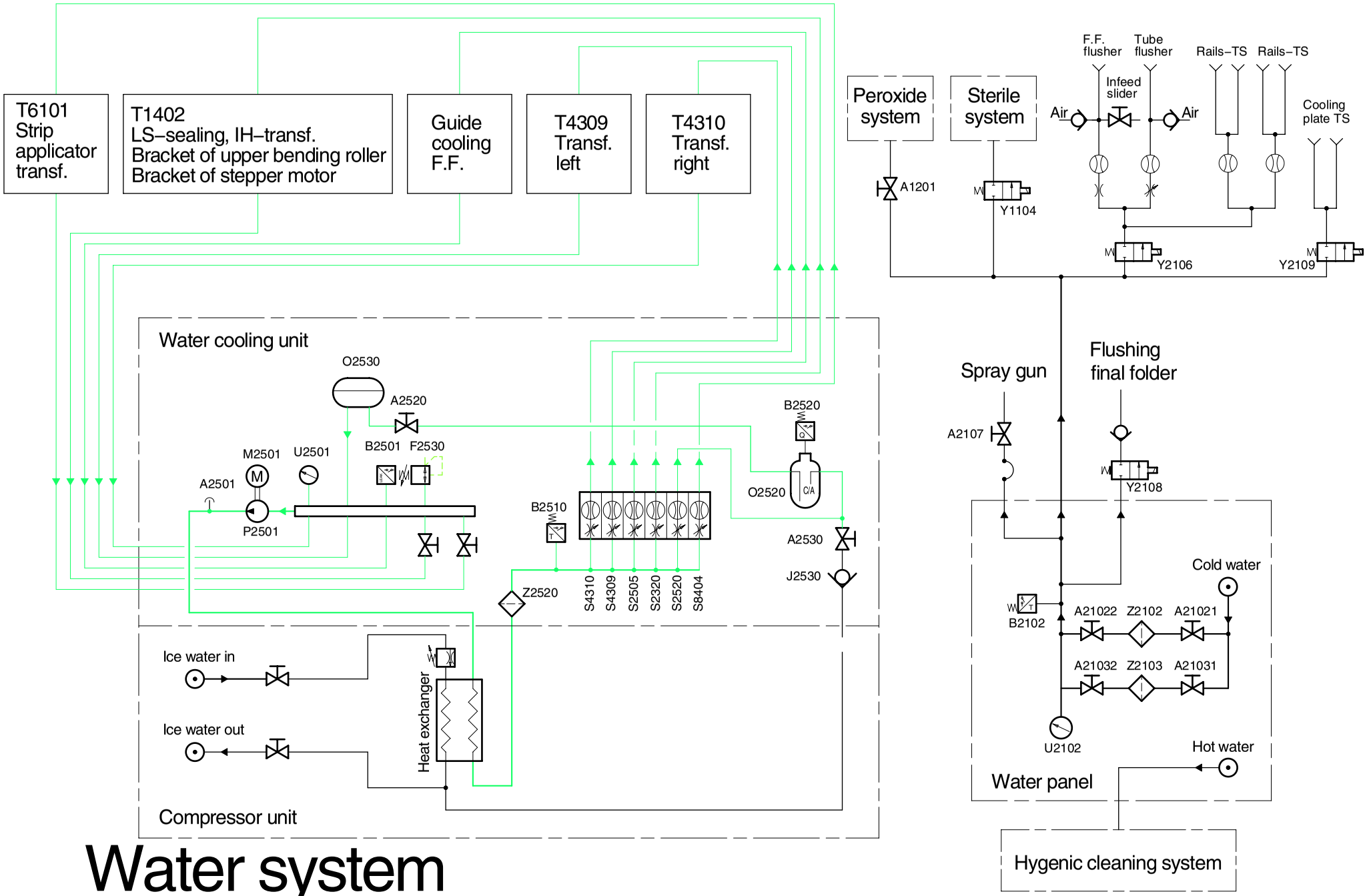

Water system

Alternative ice water

Cooling Water System

General

Tetra Brik filling machines use water to cool different components, like:

- inductors in the jaw system
- guide rails in the final folder
- oil in the hydraulic system
- air in the electrical cabinet

The cooling water system can either be open or circulating. Circulating cooling water is used when the temperature of the ordinary water supply is too high, over 20 ˚C. In an open system, the water is consumed, while a circulating system uses the same water over and over again.

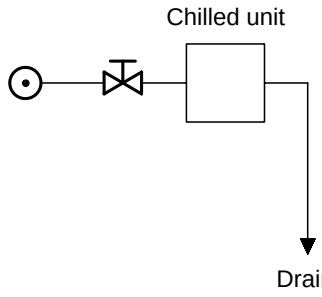

Open cooling water system

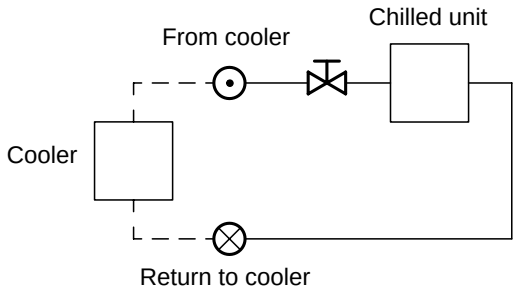

Circulating cooling water system

Many machines have a separate water cooling system. This means that there is some kind of heat exchanger between incoming water and water to be cooled. In an open separate water cooling system, the cooler is part of the machine.

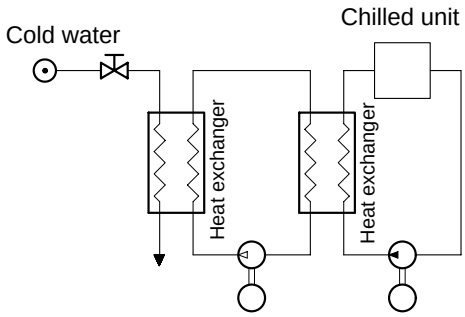

Open separate cooling water system

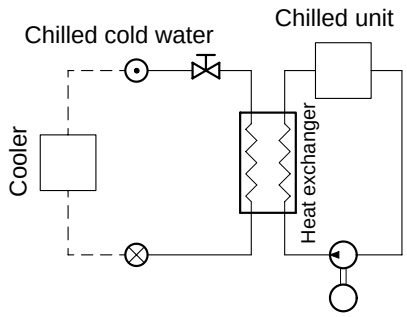

Circulating separate cooling water system

The cooling system of the machine is documented by means of a diagram. To simplify the construction and make it easier to understand, the diagram is made up of symbols for the different components. The design of the cooling water system varies depending on machine type, development step and rebuilds. Thus it is important to use the correct cooling water diagram when working on the machine.

Cooling water

In order to be able to cool efficiently, the water must be of adequate quality and temperature. Data on water quality to be used for the different machines can be found in the IM, MM or OM.

The kind and quality of the water differs. Below some examples:

- **Raw water** is a surface or ground water. Depending on where it is taken, it contains different ingredients and impurities.
- **Drinking water** is produced from raw water. Drinking water must not contain components that may cause illness.
- **Deionized water** is produced from drinking water. In deionized water you control the amount of hardening ions.
- **Totally desalinated water** is also produced from drinking water. All salt ions, both positively and negatively charged ions, are removed.

Components

A cooling water system is built up of many components. The most important and frequent ones, are described below.

Manual valve

Manual valves are opened and closed manually.

Electrically controlled valve

An electrically controlled valve receives a control signal from the machine control system when to open and close.

Pressure gauge

A pressure gauge displays the pressure in the cooling water system.

Over-pressure valve

In order to protect the cooling water system, there might be an over-pressure valve included in the system.

Overpressure valve

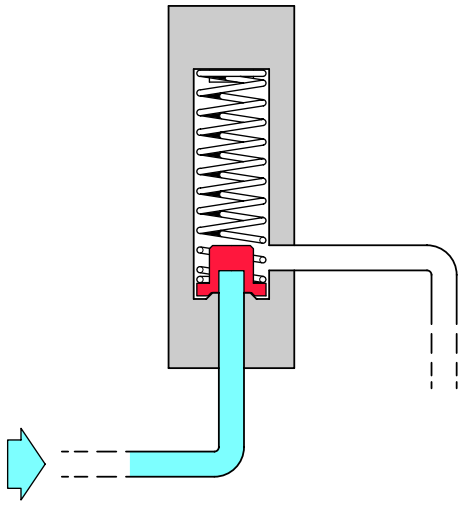

The overpressure valve opens up if the pressure in the cooling water system exceeds a preset pressure. Water is then released, causing the pressure to decrease in order to avoid damages to the cooling water system.

Filter

The filter is used to filter off solid particles and other impurities which may clog valves and narrow passages, or in any other way affect functions in the cooling water system.

Magnet device

The magnet device prevents forming of lime deposits in the cooling water system. It is built up of a mechanical filter and a magnet device.

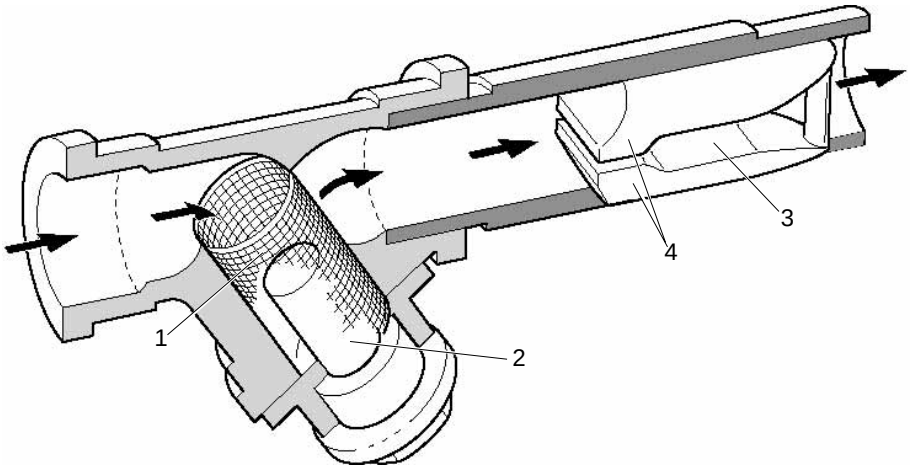

- Mechanical filter - The **filter basket** (1) collects any solid impurities in the water. Inserted in the filter basket there is a **magnet rod** (2), collecting any magnetic impurities like iron chips. The magnet has a plastic cover to prevent corrosion.
- Magnet separator - This consists of two **permanent magnets** (4) forming a **gap** (3), through which the water flows.

The function of the magnet separator can be described like this:
Between the **magnets** (4) there is a heavy magnet field. The magnet field affects the lime in the flowing water so that the lime deposit formed in the cooling water system does not adhere to the cooling water channels. Instead the lime deposit will follow the cooling water out to the return line. The function of the magnet device is temporary.

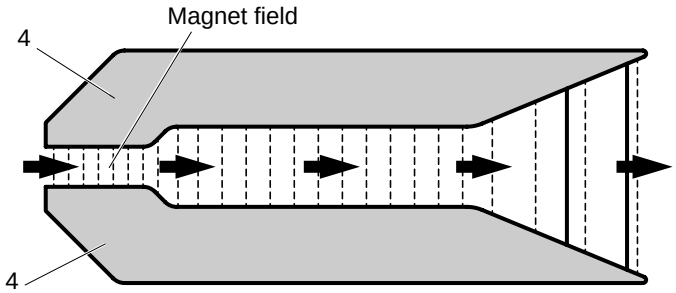

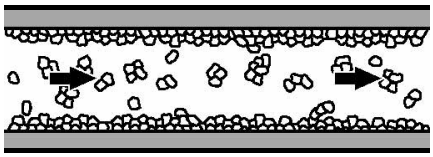

Untreated water. The crystals gather and stick easily on surfaces.

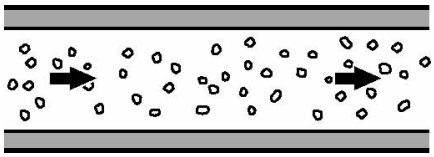

Magnetically treated water. The crystals do not gather and do not stick on surfaces.

Water tank

There is a water tank in some machines, and it works as a reservoir for the water.

Accumulator

The accumulator is a vessel containing air. The air can be compressed, to take up any pressure variations caused by temperature variations.

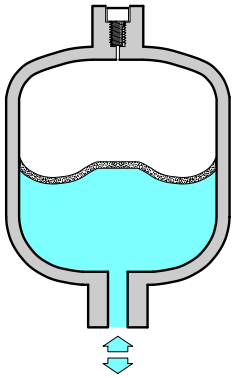

Temperature sensor

A temperature sensor monitors the temperature and signals the control system if the temperature raises above or falls under the preset values.

Thermostat

The thermostat is used to keep a constant temperature by regulating the flow and thus the supply of colling water to a component.

Pressure guard

A pressure guard monitors the pressure and signals the control system if the pressure raises above or falls under the preset values.

Heat exchanger

Heat exchangers are used in a cooling water system to transfer heat from one circuit to another, without any direct contact between the medias. The two main types used are tube heat exchanger and plate heat exchanger.

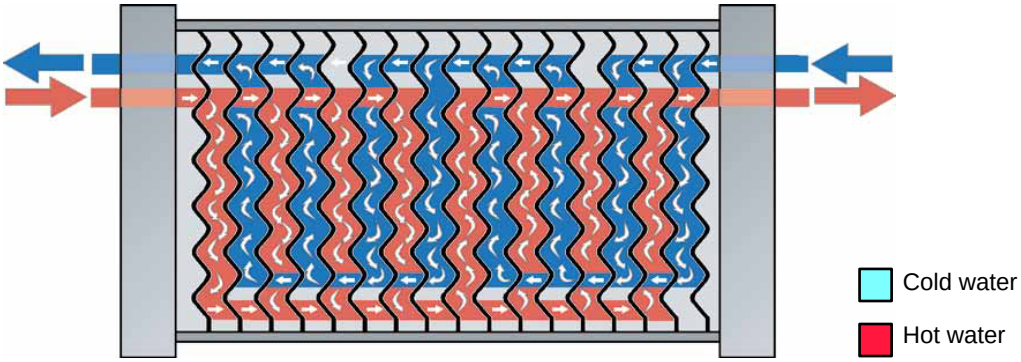

Plate heat exchanger

Water pump

The water pump circulates cooling water, used to cool various components.

Non-return valve

Non-return valves are used in the cooling water system to direct the flows.

Throttle

A throttle is used to set a desired flow through a component or a part of the cooling water system. The throttle can be fixed or adjustable.

Flow meter

The flow meter is a floating body meter used to measure small liquid flows with high accuracy.

In the valve housing of the flow meter, made of transparent plastic, there is a conical passage with its narrowest part turned downwards. In the passage there is a ball affected by the flow of the water.

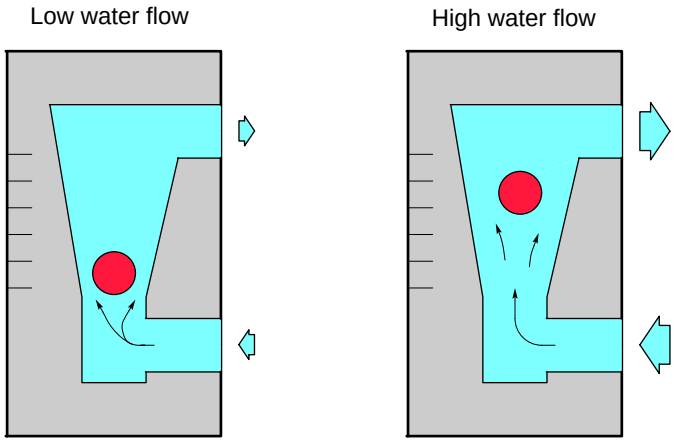

When the flow increases, the ball is lifted. Due to the fact that the passage is conical, the ball will stabilise in a specific position, and the flow can be read on the graduated scale.

Constant flow valve

In order to make the water flow to the water ring compressor independent of the pressure in the water line, there is a constant flow valve fitted just before the compressor.

The constant flow valve is designed for a fixed flow.

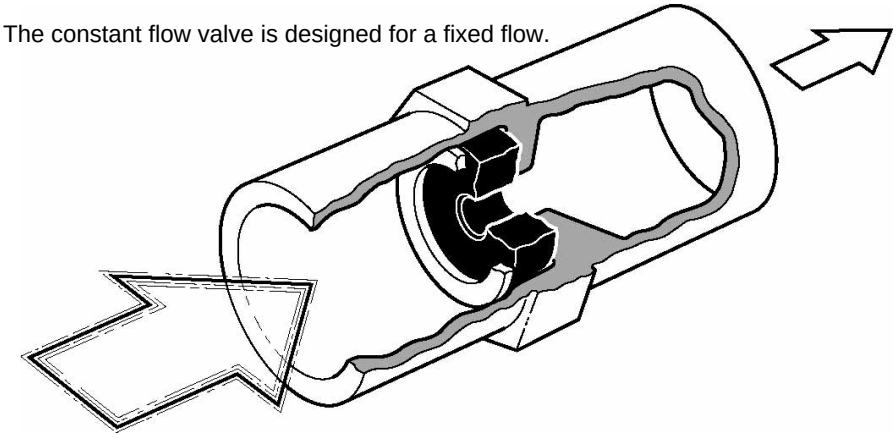

The acting part of the valve is a soft rubber washer. In the middle of the washer there is a hole, through which the water flows. The size of the hole varies depending on the water pressure, and thus keeps the water flow through the valve constant.

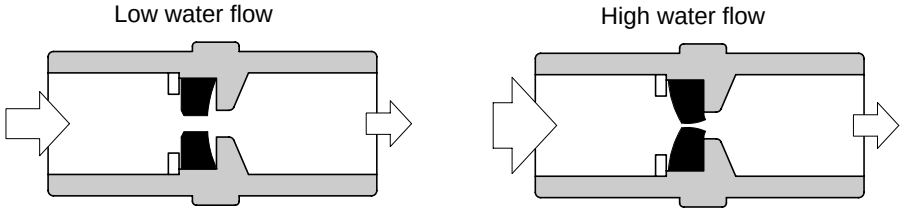

The shape of the rubber washer at low and high water pressure, respectively in a constant flow valve.

- **Low water pressure** - The shape of the rubber washer makes the hole in the middle relatively large, i e water with low pressure flows through a large hole.
- **High water pressure** - The rubber washer is deformed so the diameter of the hole is small. This will cause the rubber washer to reduce the water jet, but as the water pressure is high, the same amount of water will flow through the valve as when the pressure is low.

Conductivity sensor

The conductivity sensor monitors the electrical conductivity in the water, and signals the control system if the conductivity raises above or falls under the preset values.

Softening filter

A softening filter is a container with a bed material, often consisting of small polystyrene balls. When the water gets in contact with the bed material, there is an exchange of ions. Thus the amount of hardening ions in the water is reduced and you get a soft, so called dehardened water.

Function

The cooling water is used to cool the inductors, the guides in the final folder, the hydraulic oil and the sterile air. The diagram below describes a system that may be run both open and recirculated.

Simplified cooling water system for a TBA/19

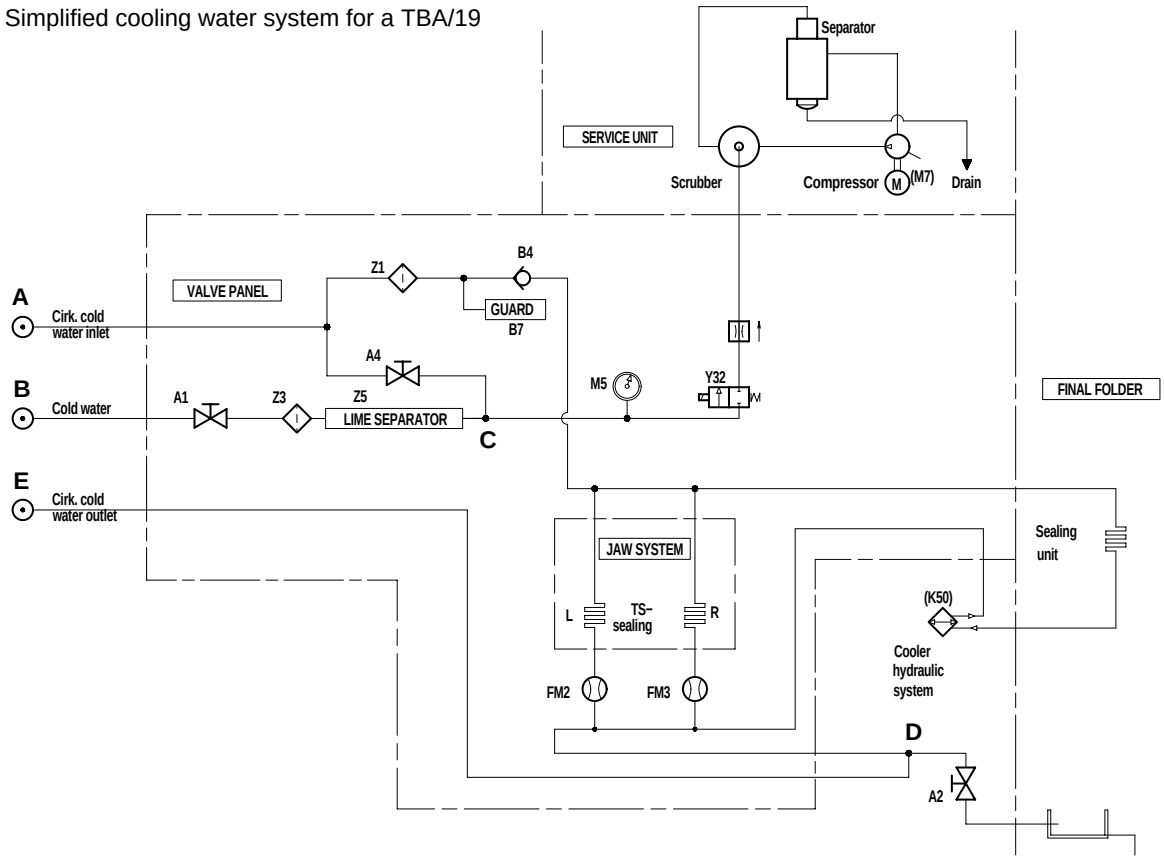

Water connection B shall always be connected and **valve A1** open, as there is always a need for consumption water to cool components in the service unit.

For **circulated cooling water**, the **water connections A** and **E** shall also be connected, and the **valves A2** and **A4** be closed.

The circulating water enters the system at **connection A**, is filtered in **filter Z1** and flows further on to the jaw system and final folder. The pressure is monitored by the **pressure guard B7**. The water flow through the inductors in the jaw system can be read on **flow meters FM2** and **FM3**. At **point D** the circulated cooling water turns back and flows out at **outlet E.**

For an **open cooling water system** only water **connection B** shall be connected and the **valves A1**, **A2** and **A4** be open. The cooling water enters at **connection B**, is filtered in **filter Z3** and flows through the **lime separator Z5**.

At **point C** the water flow is branched and the consumption water flows on to the service unit. The remaining water flows pass the open **valve A4** and into the system. The pressure is indicated on the **pressure gauge M5**. At branching point **D** the cooling water is drained through **valve A2**.

The following is a **separate closed** cooling system with three separate circuits

Simplified cooling water diagram for a TBA/21

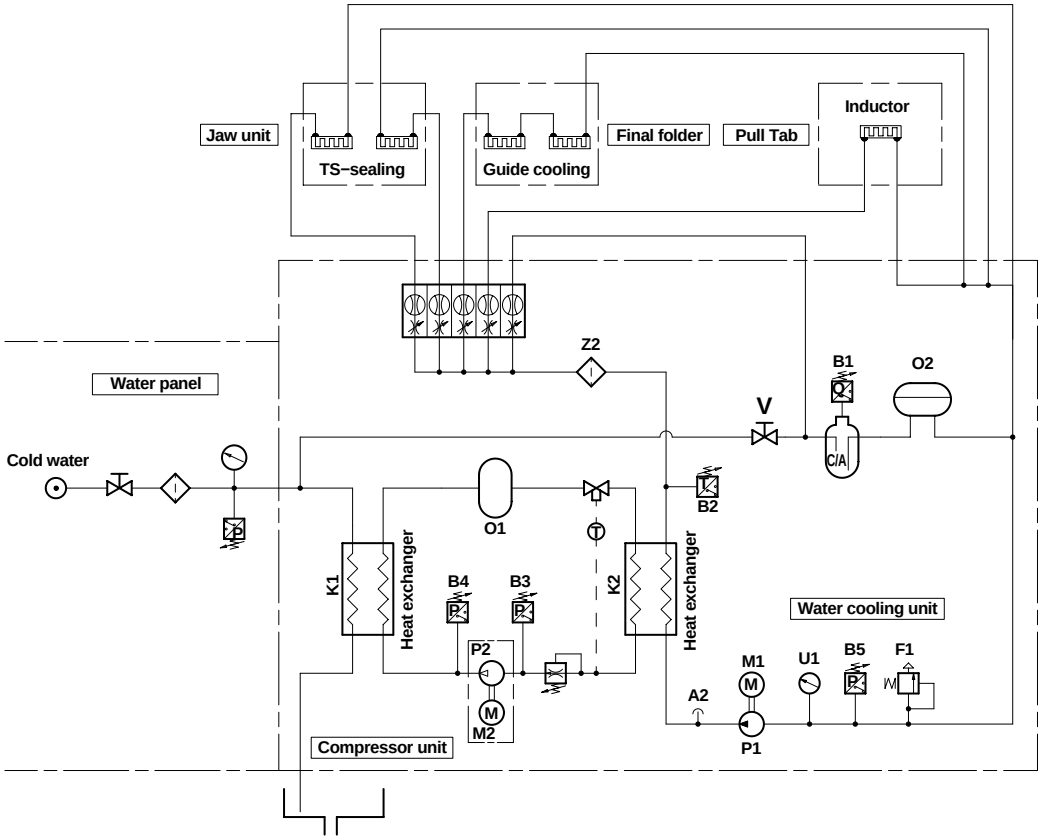

One circuit is cooling the heat sources on the machine and it is called the **water cooling unit**. It is a closed circuit. The water used in this circuit must be totally deionized in order to remove all particles that could clog the cooling pipes in the transversal sealing inductors. Approximately 10% of the total flow is circulated through a total **deionizing filter C/A**.

The second circuit is called **compressor unit**. It is a closed circuit and it is actually the cooler in the machine. In this system, which is identical to a refrigerator, gas is used as media.

The third circuit is an **open circuit**, meaning that the water is drained off after being used to cool the compressor unit.

When the **water cooling unit** is filled with water, **valve V** is open and the water flows through the **deionizing filter, C/A**. The temperature of the water in this circuit should be 12 ˚C. This is monitored by **sensor B2** after the **heat exchanger K2**. To maintain that temperature, the **compressor unit** takes up the heat energy needed from the **water cooling unit** in the **heat exchanger K2** (evaporator) in which the gas will be evaporated. This energy will then be transferred by the gas to another **heat exchanger K1** (condenser), where the energy will be transferred to the water in the open circuit. The gas will be condensed after the condenser.

Symbols

The table below contains the symbols that normally are used in Tetra Pak cooling water system diagrams.

Symbol	Meaning
	Accumulator
	Deionizing filter
	Non-return valve
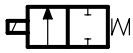	Electrically controlled valve
	Manual valve
	Filter
	Throttle, adjustable
	Constant flow valve
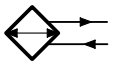	Cooler
	Water pump
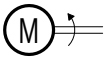	Motor
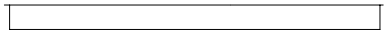	Water tank

Symbol	Meaning
	Heat exchanger
	Cooling coil
	Deaerator
	Flow meter
	Pressure gauge
	Conductivity sensor
	Temperature sensor
	Pressure guard
	Pressure regulator

Grease lubrication system

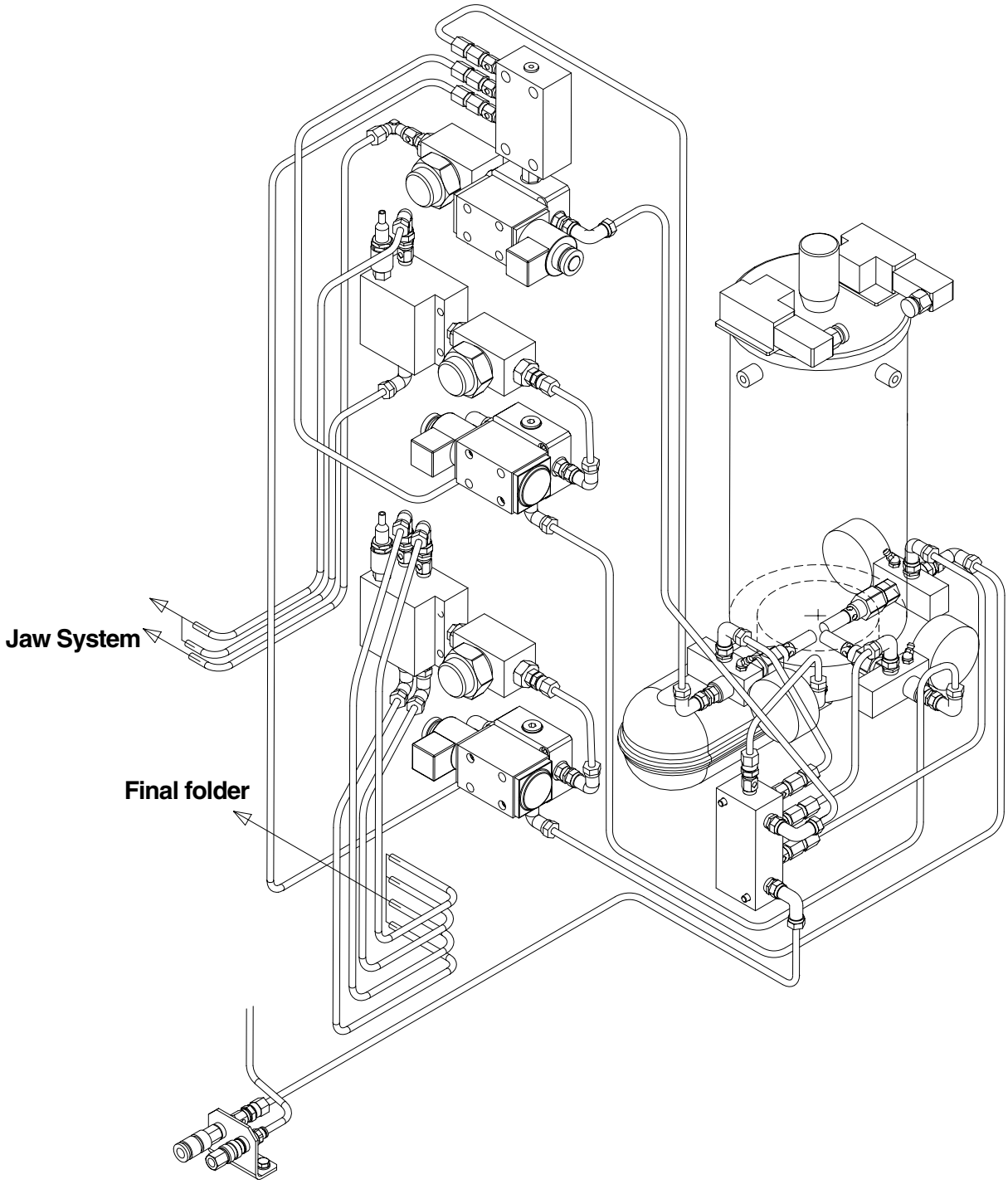

Grease lubrication

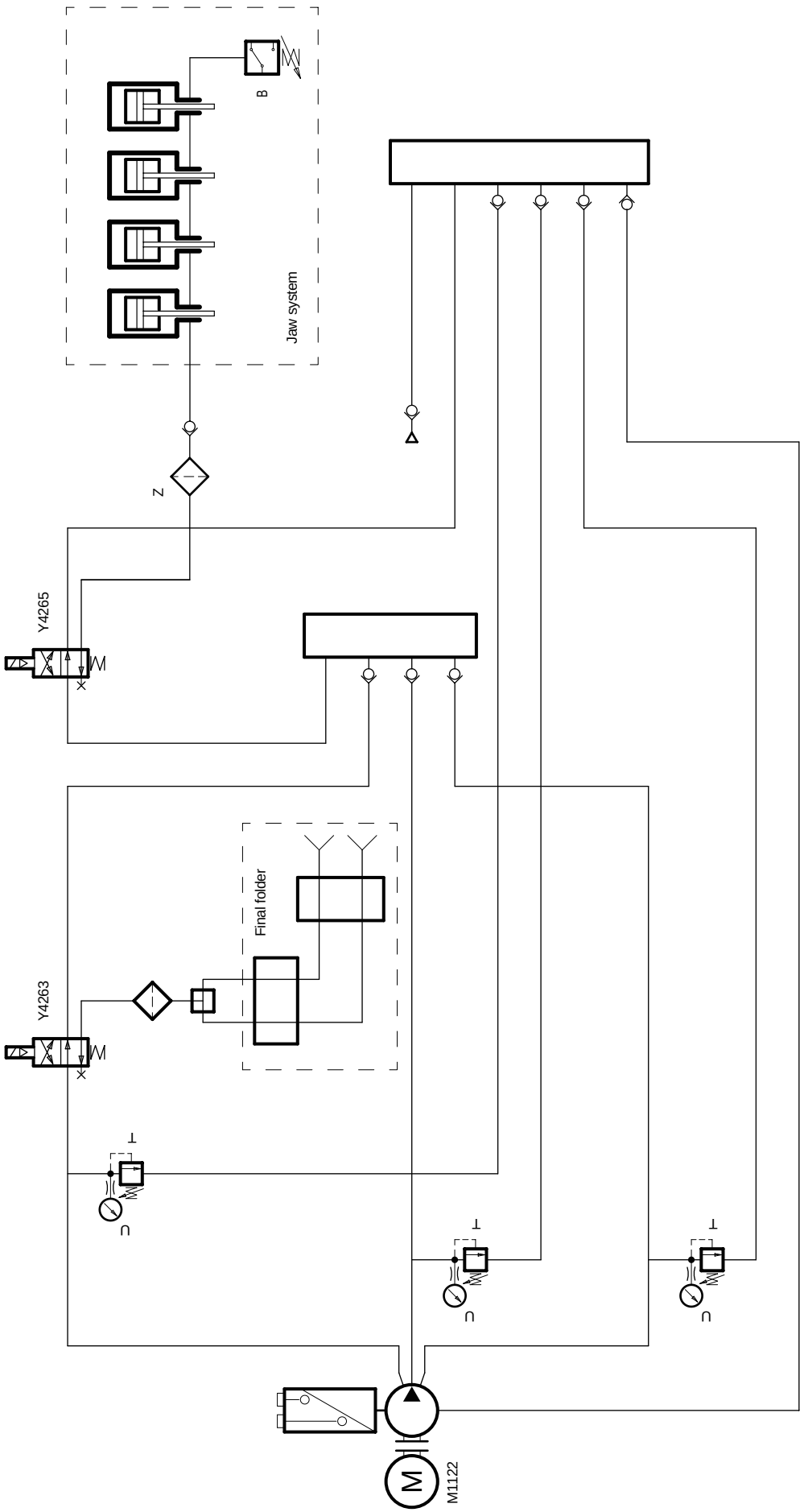

Technical Training Centre Lund, Sweden	Machine type TBA/22 050V	Issue 2/0502	OH 1254

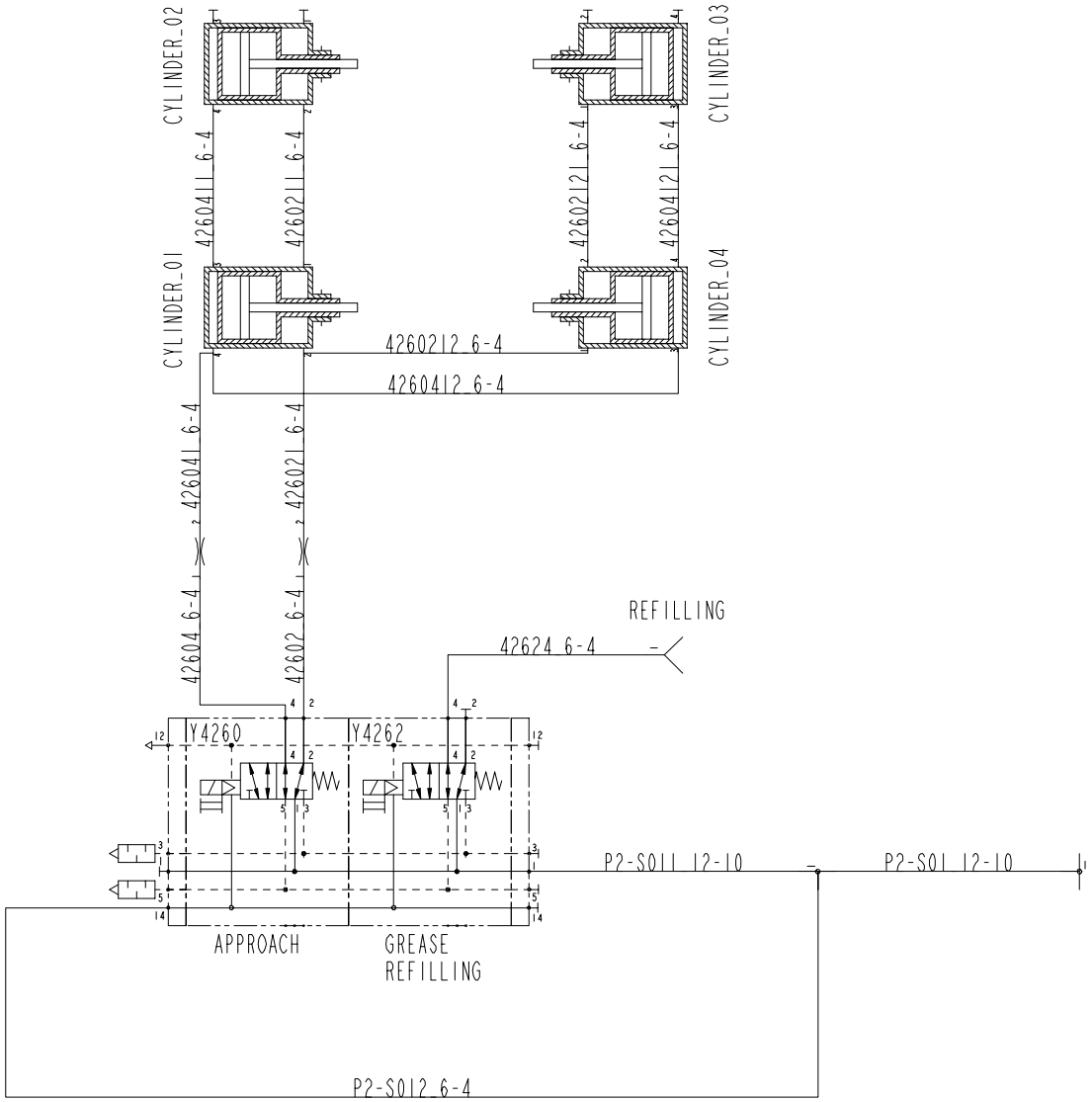

This document is to be treated as an inventory and the following procedures shall be followed:

Reduced to: A4 ☑ Reduced to: A3 ☐

Plasticized according to DS 202.36

Release Level: released		ECN No: 115290	Pro/PDM Revision Drawing: 1.5 Model: N/A
Designer: ICI	Date: 21-11-2002	Denomination: PNEUMATIC DIAGRAM DIAGRAMMA PNEUMATICO	
Company: Tetra Pak Carton Ambient SpA			
Tetra Pak	Drawing No: 2582672	Document Type: DRA	Version: AA / Page: 1 (1)

This drawing must not without the consent of Tetra Pak be copied, transmitted or disclosed to any third party.

Pro/ENGINEER - DA2

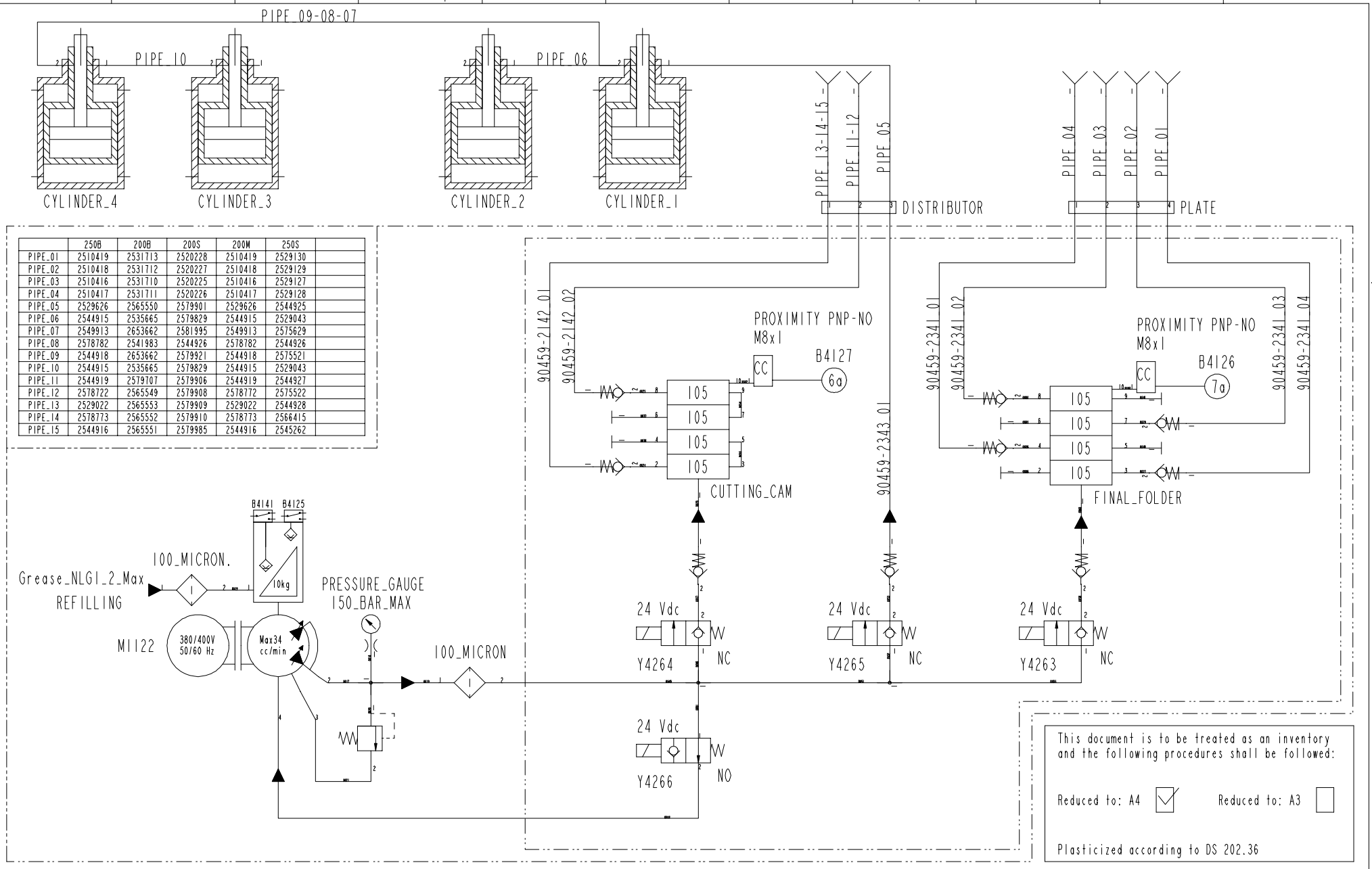

	250B	200B	200S	200M	250S	
PIPE_01	2510419	2531713	2520228	2510419	2529130	
PIPE_02	2510418	2531712	2520227	2510418	2529129	
PIPE_03	2510416	2531710	2520225	2510416	2529127	
PIPE_04	2510417	2531711	2520226	2510417	2529128	
PIPE_05	2529626	2565550	2579901	2529626	2544925	
PIPE_06	2544915	2535665	2579829	2544915	2529043	
PIPE_07	2549913	2653662	2581995	2549913	2575629	
PIPE_08	2578782	2541983	2544926	2578782	2544926	
PIPE_09	2544918	2653662	2579921	2544918	2575521	
PIPE_10	2544915	2535665	2579829	2544915	2529043	
PIPE_11	2544919	2579107	2579906	2544919	2544927	
PIPE_12	2578722	2565549	2579908	2578772	2575522	
PIPE_13	2529022	2565553	2579909	2529022	2544928	
PIPE_14	2578773	2565552	2579910	2578773	2566415	
PIPE_15	2544916	2565551	2579985	2544916	2545262	

This document is to be treated as an inventory and the following procedures shall be followed:

Reduced to: A4 ☑ Reduced to: A3 ☐

Plasticized according to DS 202.36

This drawing must not without the consent of Tetra Pak be copied, transmitted or disclosed to any third party.

Release Level: released		ECN No: 115290	Pro/PDN Revision Drawing: 1.2 Model: N/A
Designer: MCM	Date: 22-11-2002	Denomination: HIDRAULIC DIAGRAM DIAGRAMMA IDRAULICO	
Company: Tetra Pak Carton Ambient SpA			
Tetra Pak	Drawing No: 2582671	Document Type: DRA	Version: AA / Page: 1(1)

Pro/ENGINEER - DA2

6

Tube forming

Packaging material web

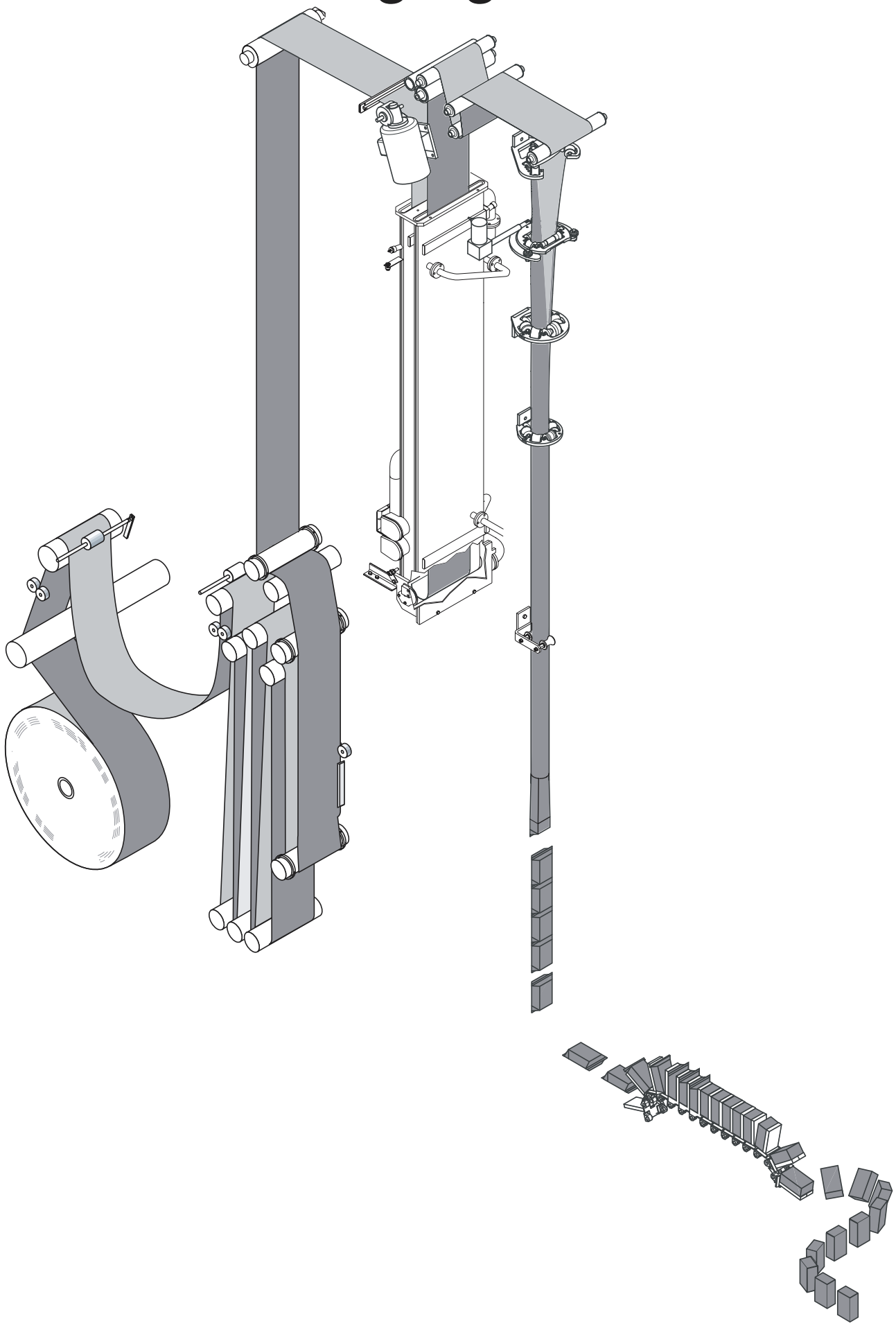

Constant web tension

Increase motor speed

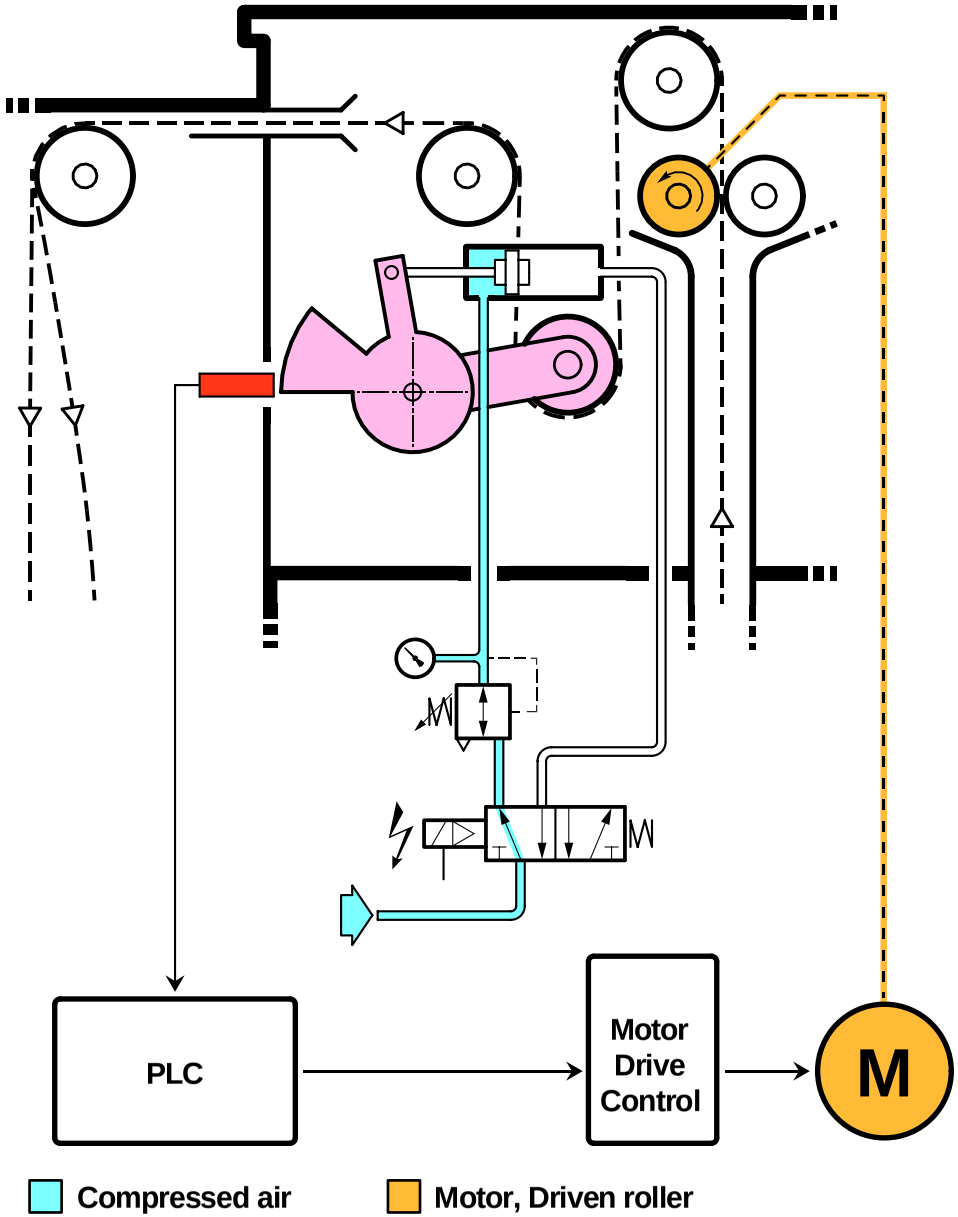

Decrease motor speed

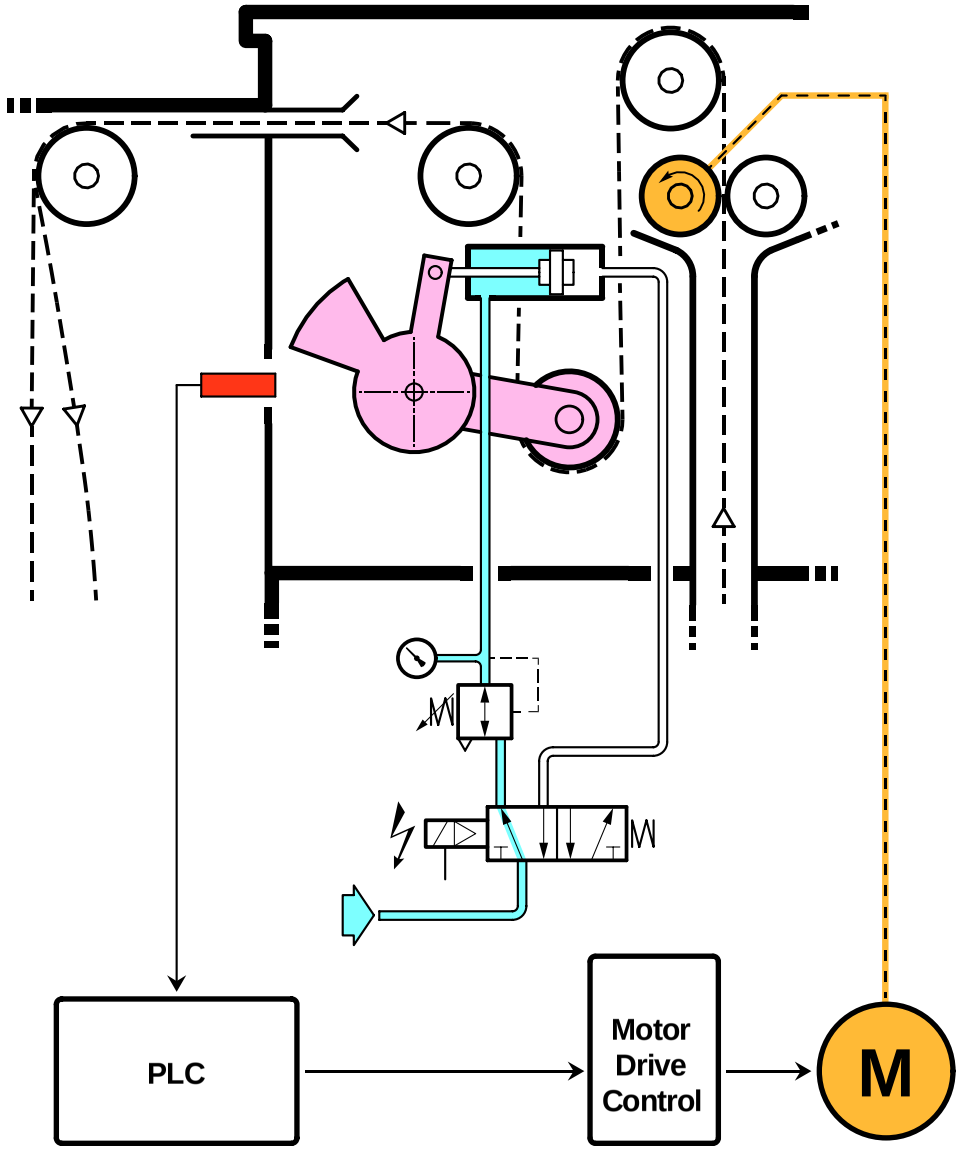

PENDULUM ROLLER : SPEED REGULATION

(exemple valid for 200 Slim)

The speed is controlled by the analog output AQ11.
If the sensor is activated more than 0,2 sec both high and low speeds are increased (the value of AQ11 is increased by 10)
If the sensor is de-activated more than 0,2 sec both high and low speeds are decreased (the value of AQ11 is decreased by 10)

Inching at high speed

- if the sensor is ON : AQ11 = 20900
- if the sensor is OFF : AQ11 = 18900

Production

- if the sensor is ON : AQ11 = 21700
- if the sensor is OFF : AQ11 = 19700

If the sensor if ON (higher position) more than 4 sec an alarm is triggered.

For the two cases below the speed is never adjusted and if the sensor if ON (higher position) more than 14 sec there is an alarm.

Main motor at low speed

- if the sensor is ON : AQ11 = 5400
- if the sensor is OFF : AQ11 = 4700

Threading the paper

- if the sensor is ON : AQ11 = 5250
- if the sensor is OFF : AQ11 = 0

Note : The values of the analog register AQ11 are default values which can be found in the program, but on the machine, they change all the time automatically.

Upper bending roller rotation

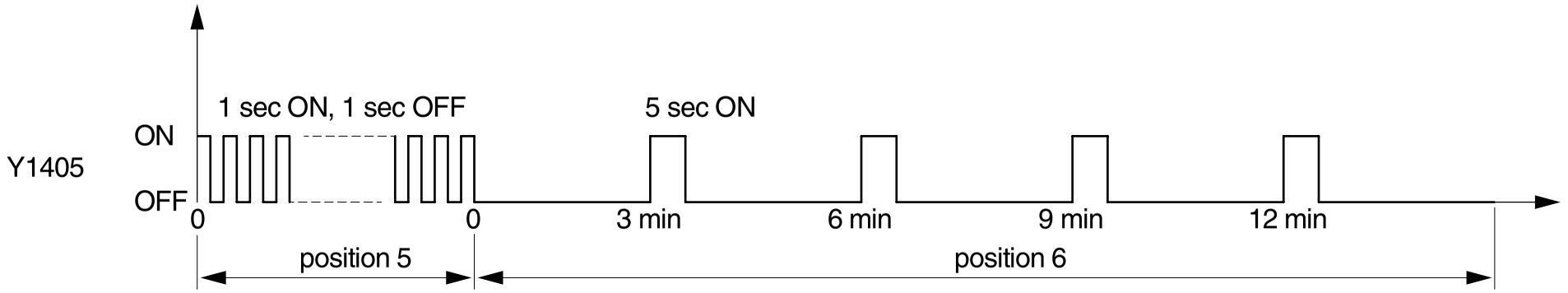

Alarm if:

– in position 5 there are more than 4 sec without a pulse from B1405
– in Low Speed there are more than 0.5 sec without a pulse from B1405
– in High Speed there are more than 0.2 sec without a pulse from B1405

7

Sterile system components

Aseptic food processing

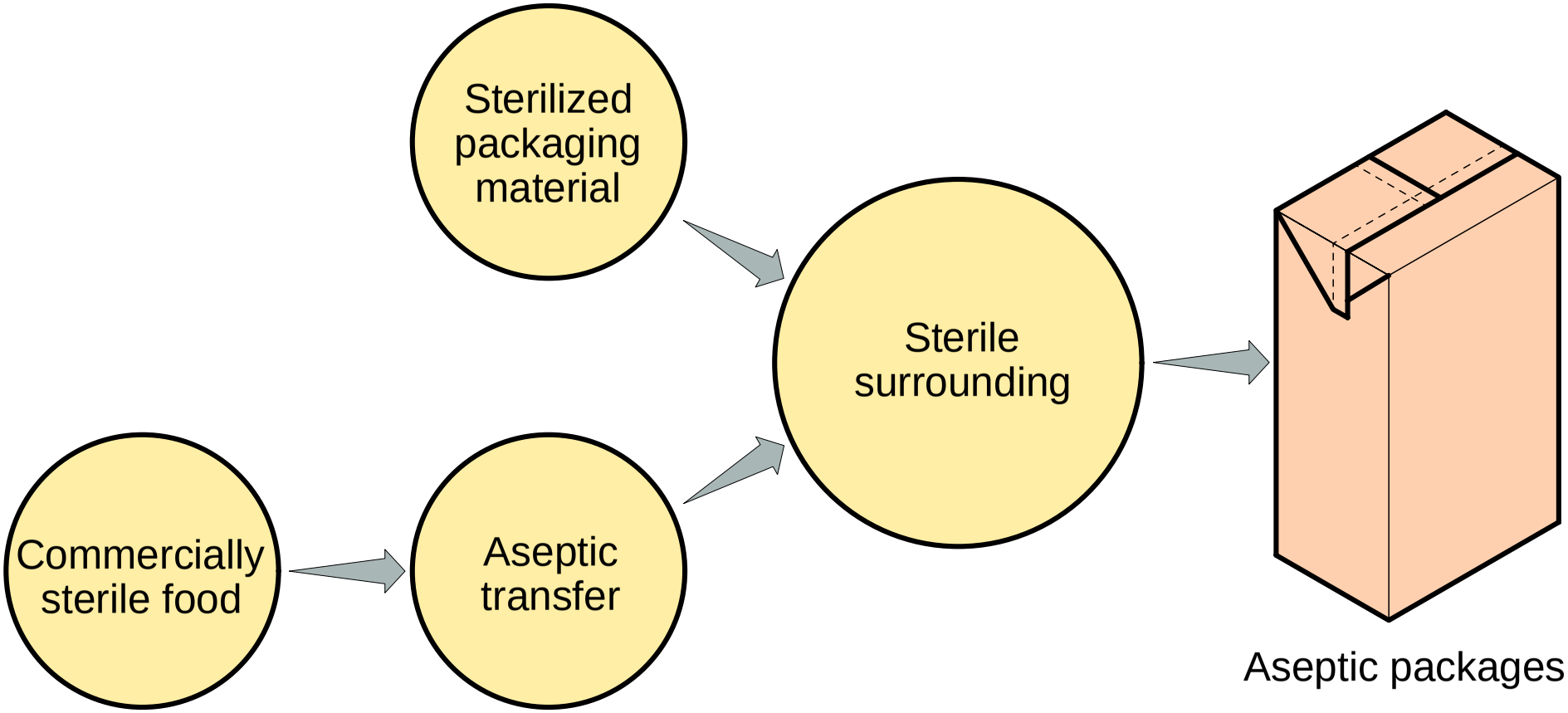

Sterile System

Water ring compressor

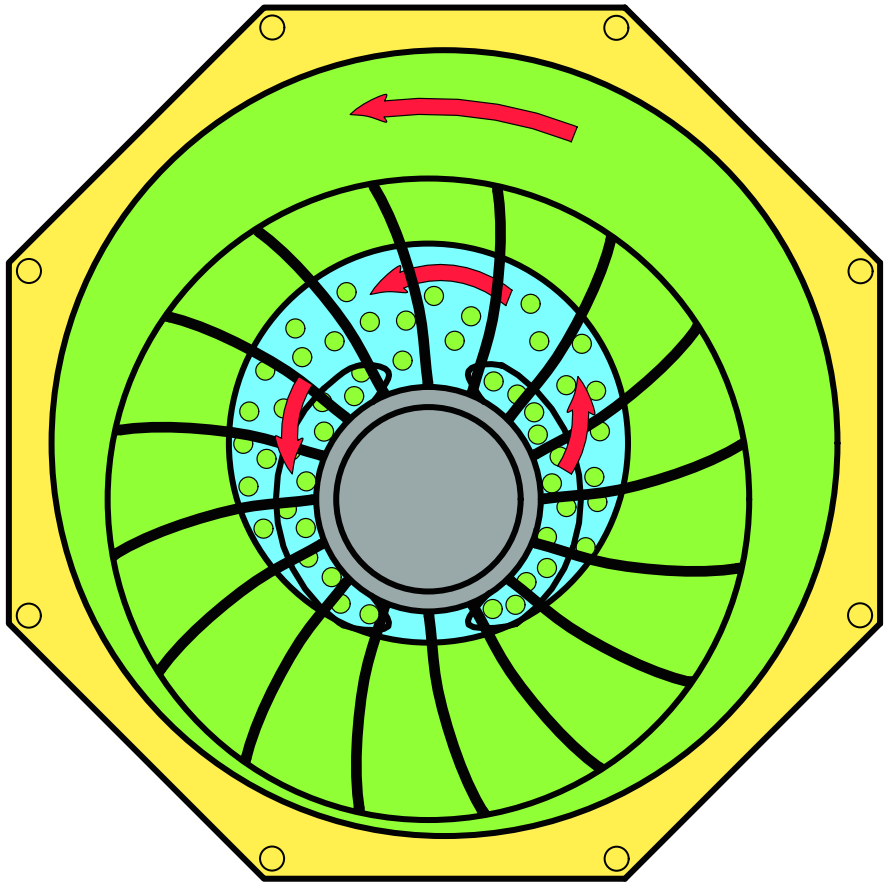

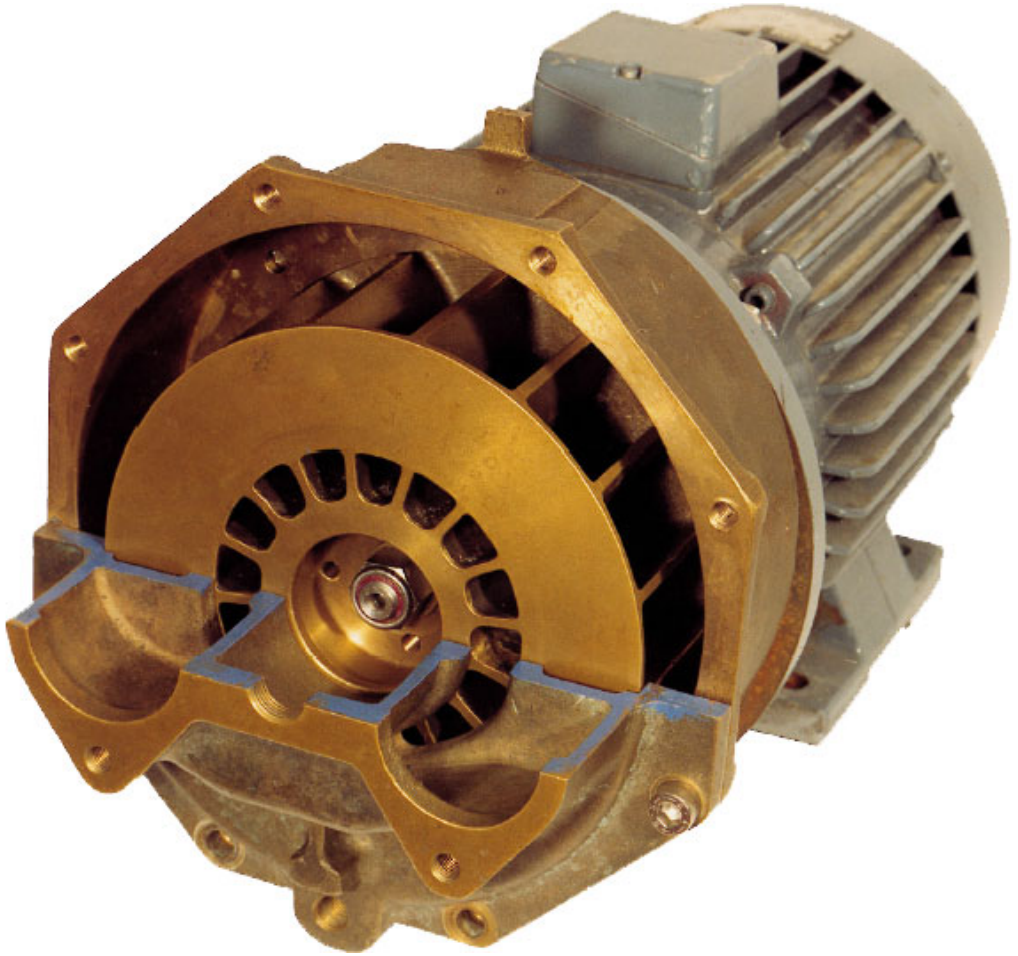

Rotating water ring

Air mixed with water

Principle of constant flow valve

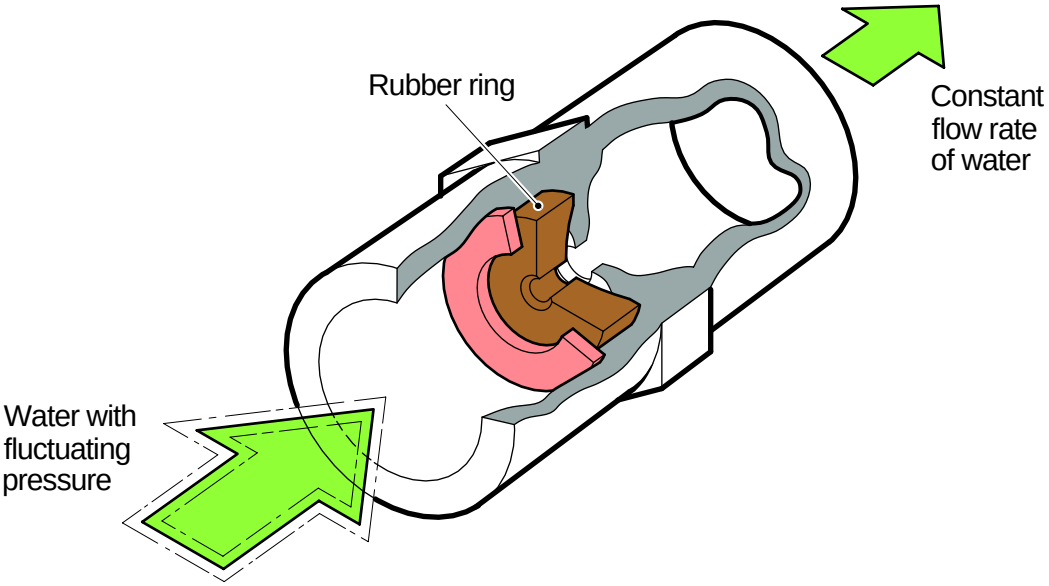

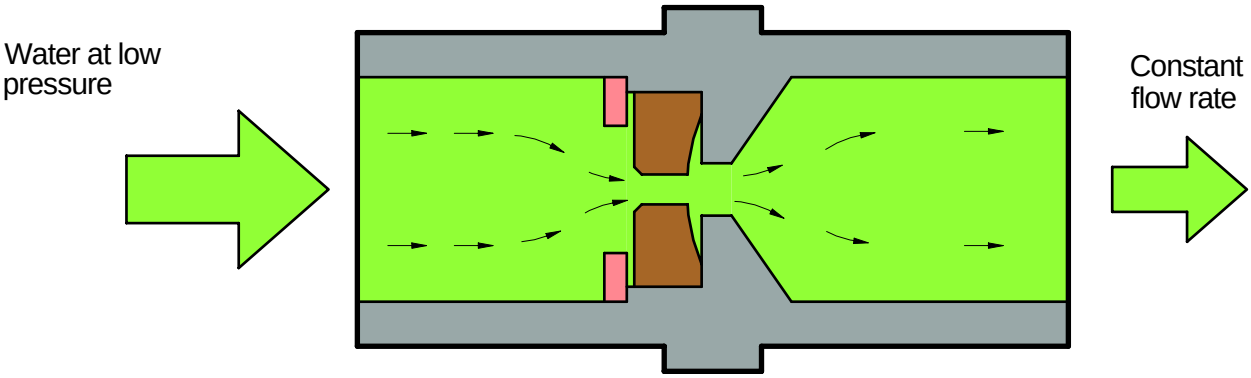

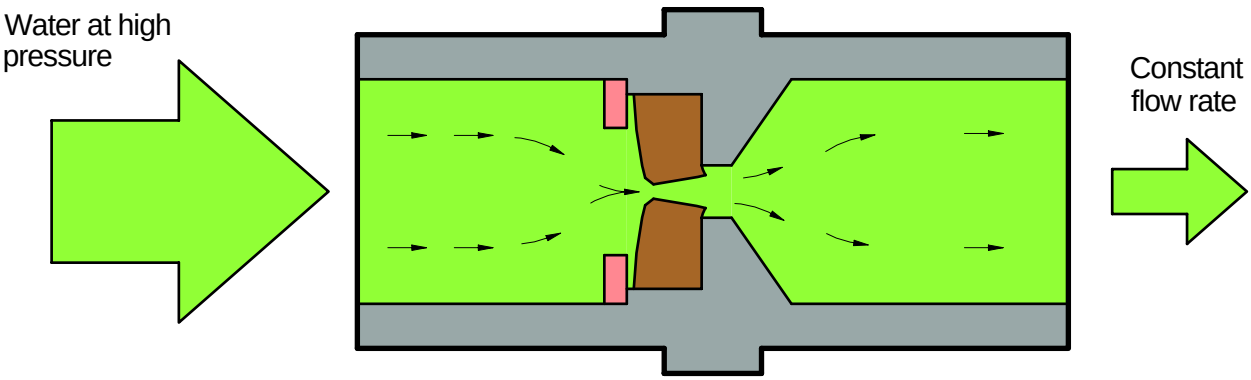

Scrubber

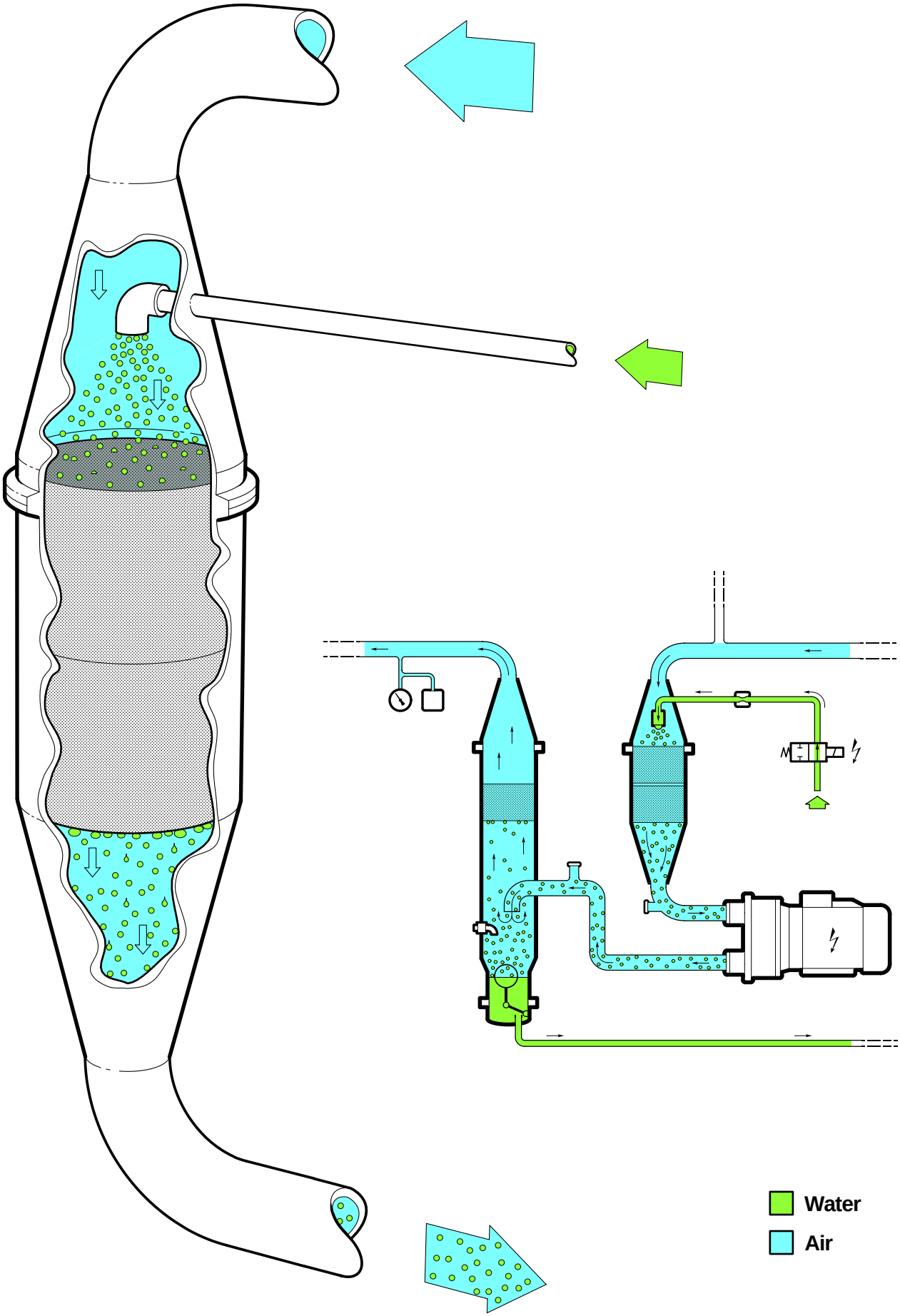

Water separator

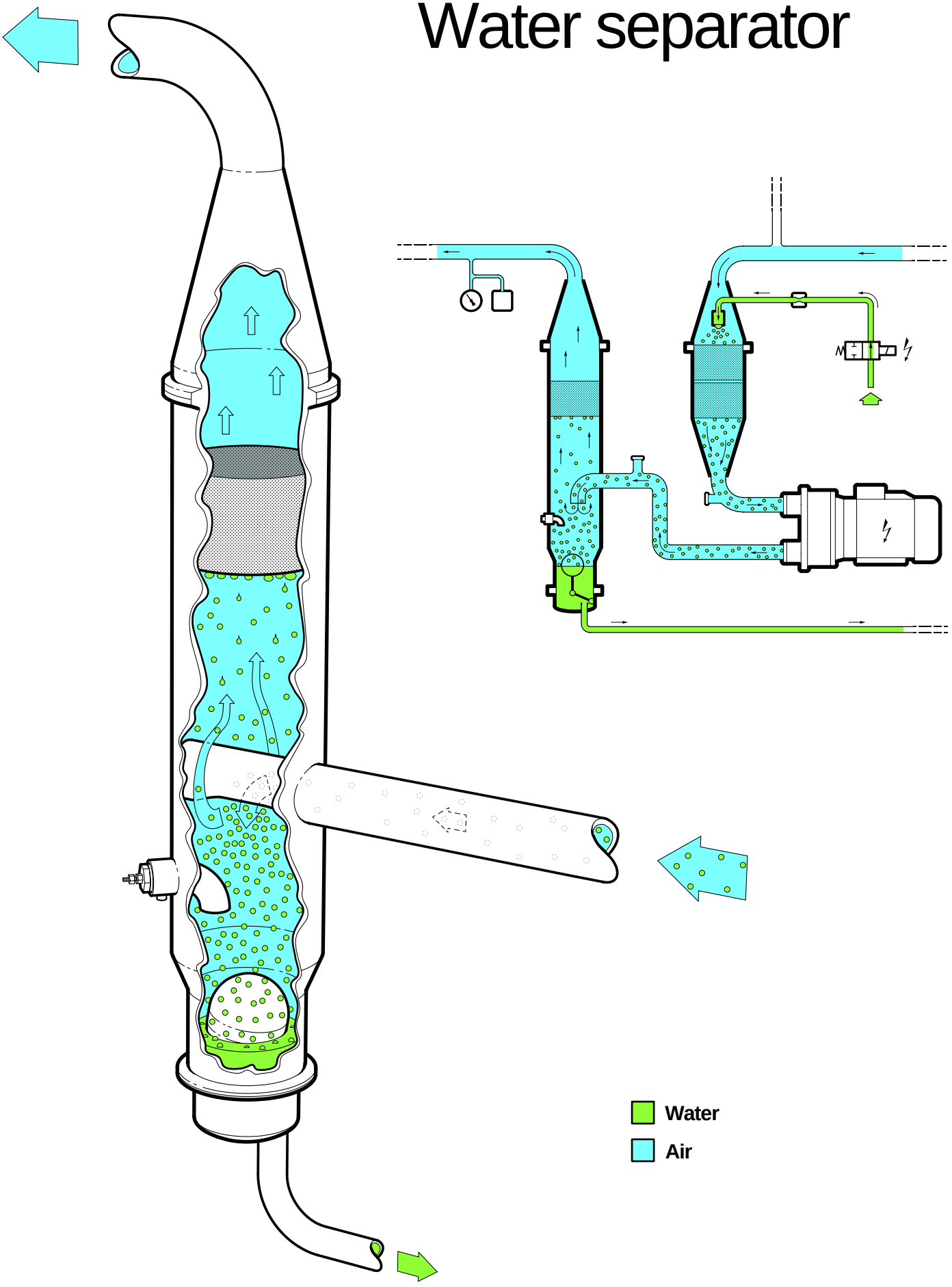

Air superheater

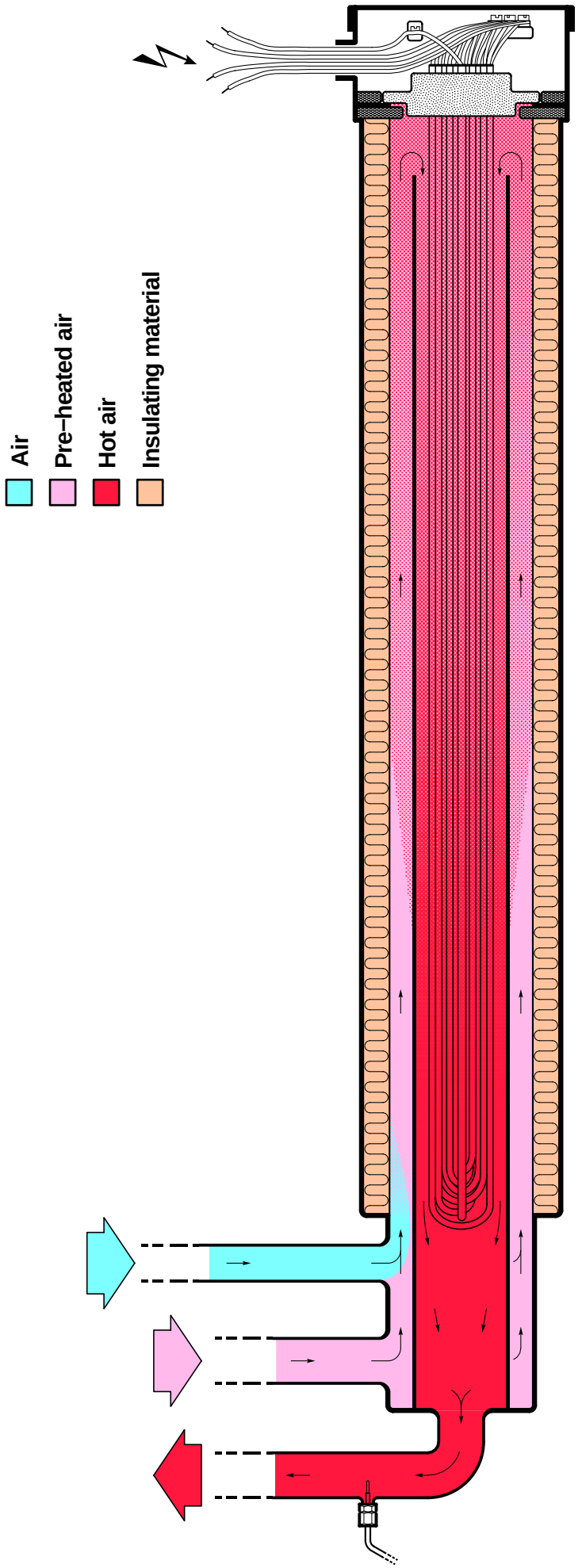

Technical Training Centre Lund, Sweden	Machine type TBA/19 TBA/21 TBA/22	Issue 3/9508	OH 107

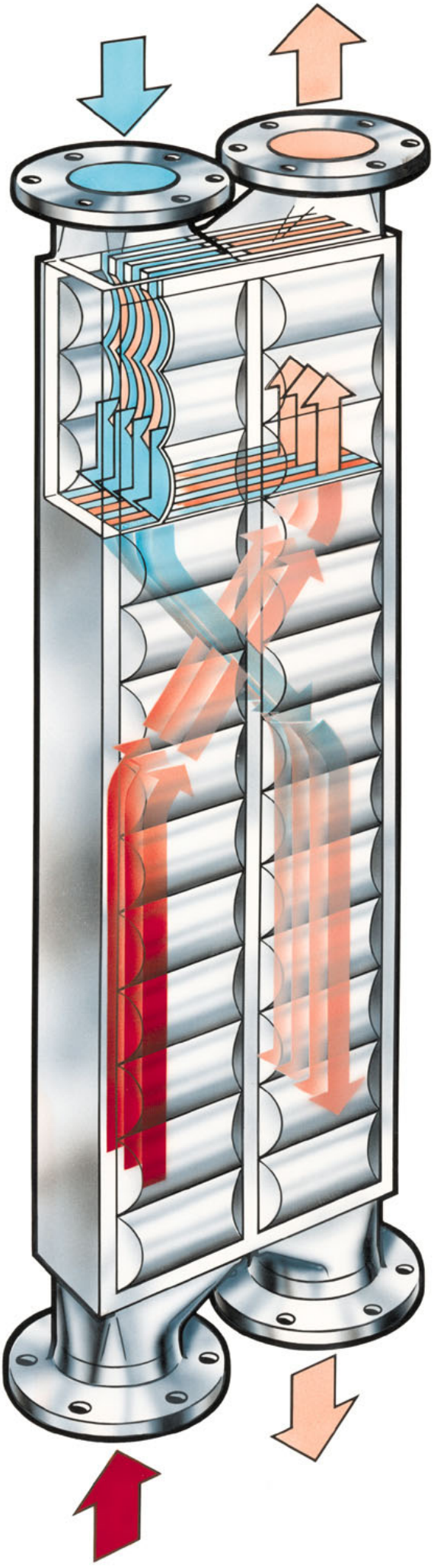

Sterile system

Principle function of heat exchanger

Air

Hot air

Pre-heated air alt. cooled air

Spray nozzle

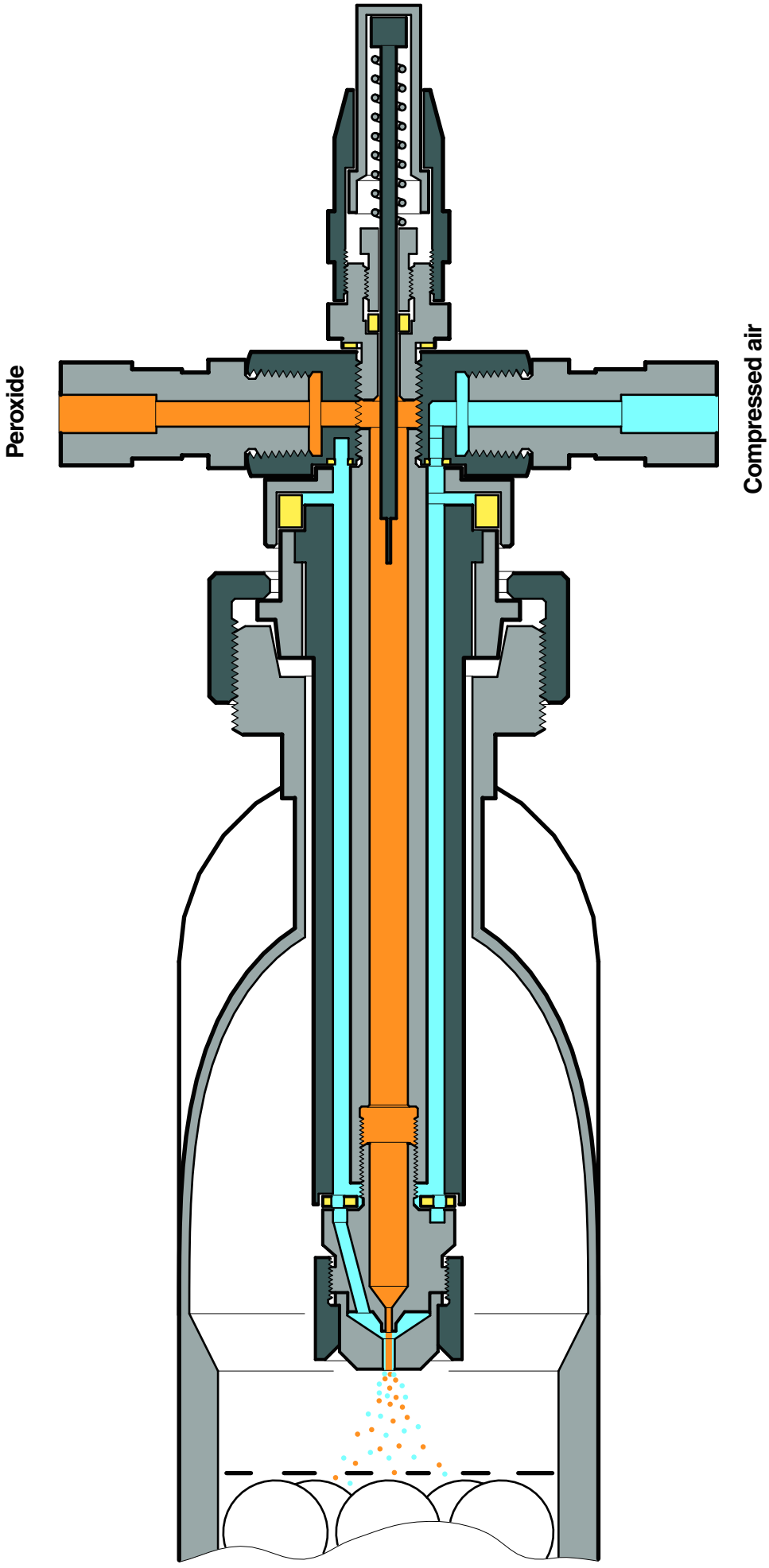

Technical Training Centre Lund, Sweden	Machine type TBA/21	Issue 1/0104	OH 1045

Heat exchanger valve

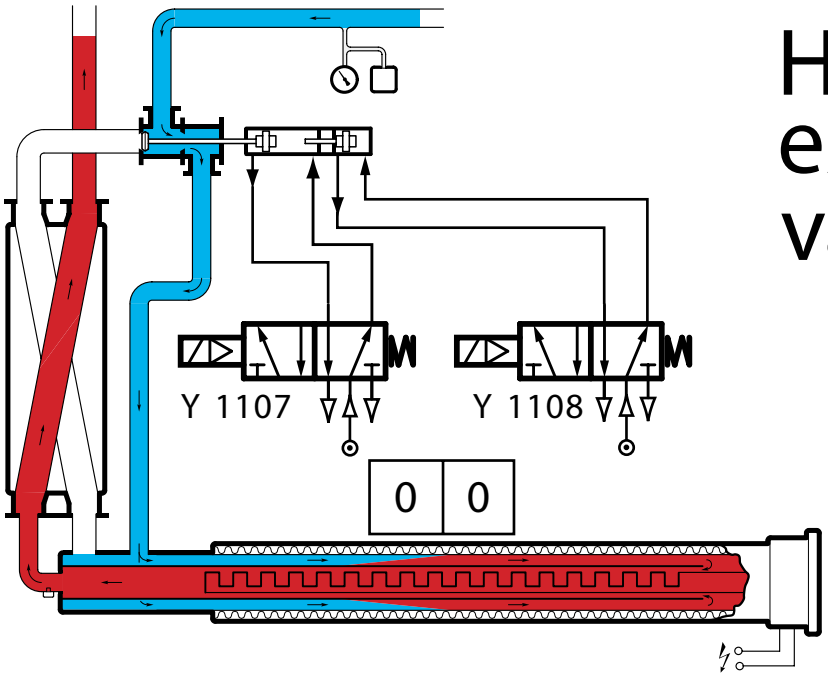

Y 1107 : 2 bar
Y 1108 : 6 bar

By pass

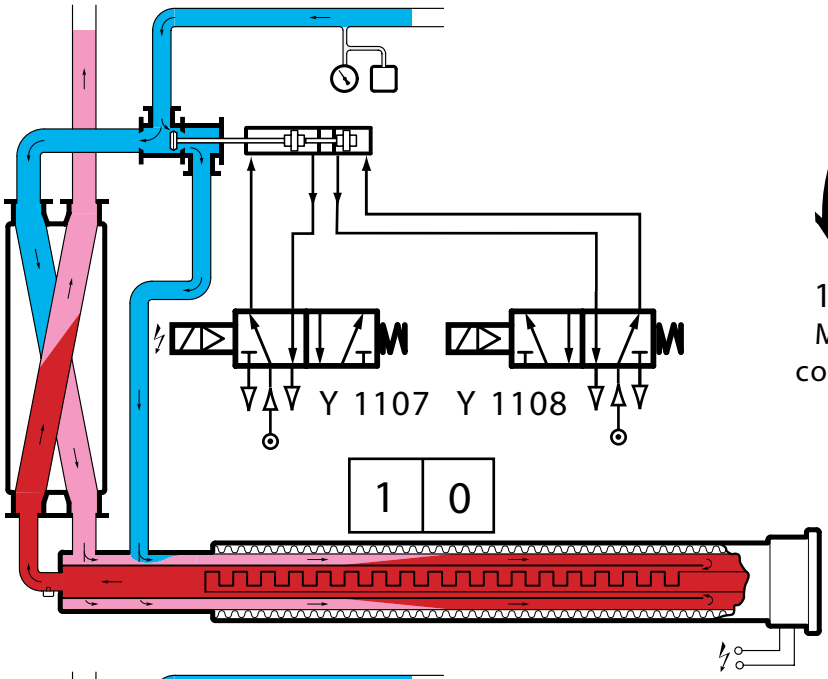

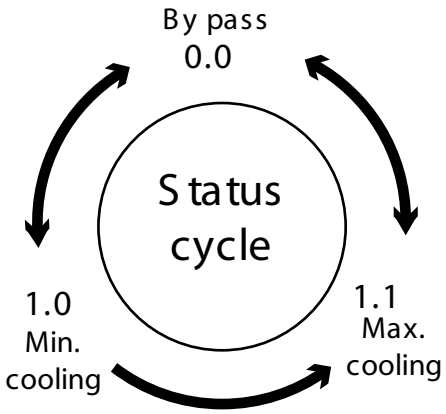

Min. cooling

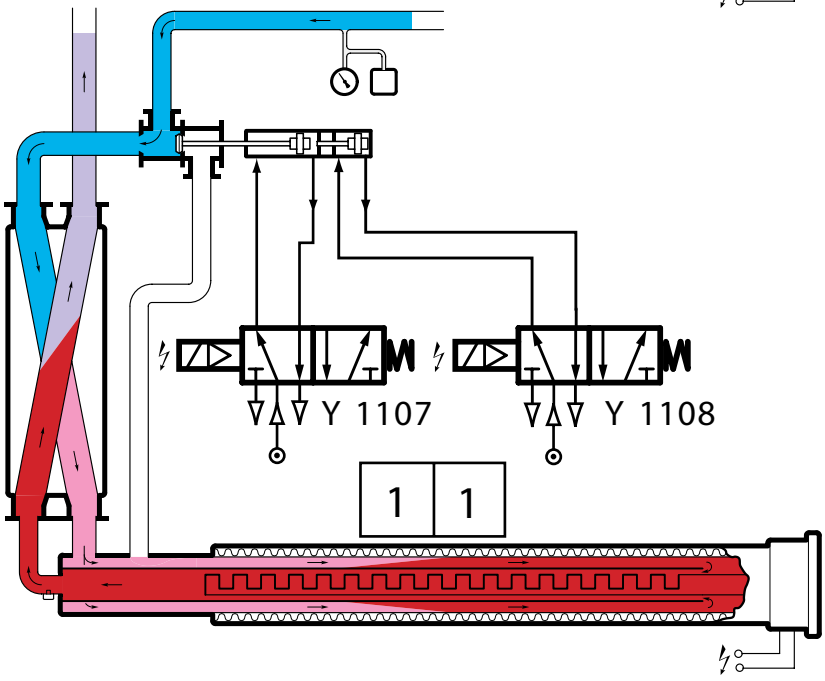

Max. cooling

Preheating valve

Y1111: 6 bar

Y1114: 2 bar

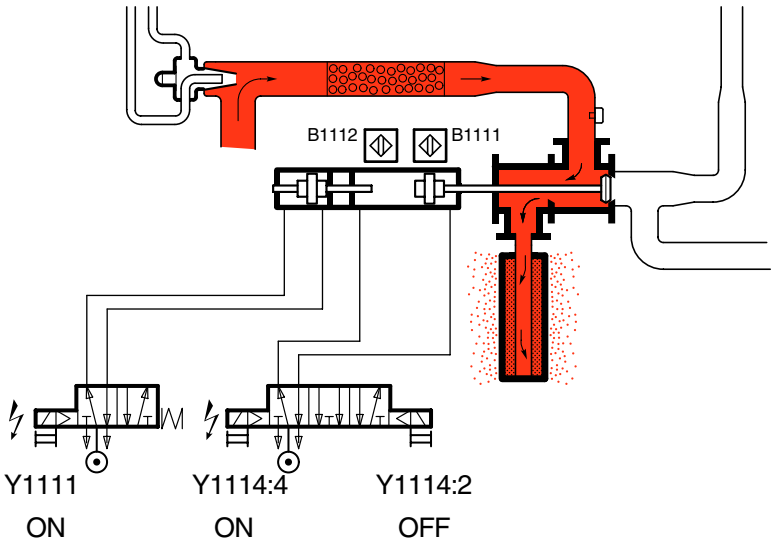

By pass

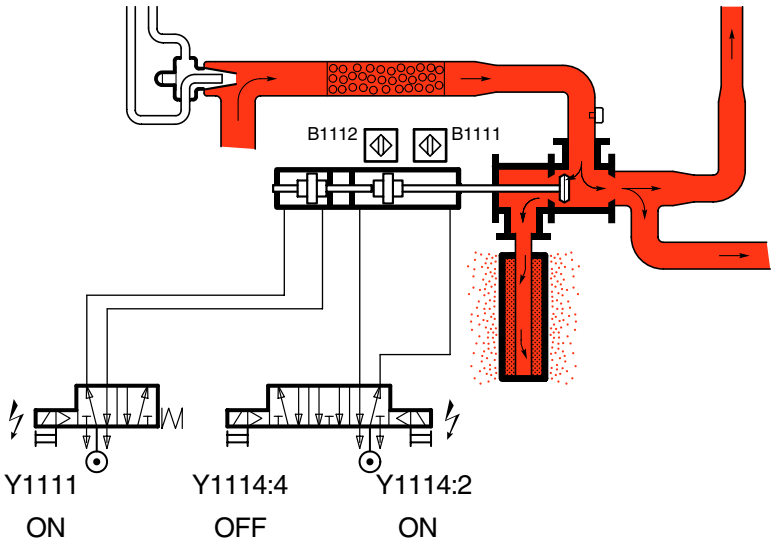

Min. heating

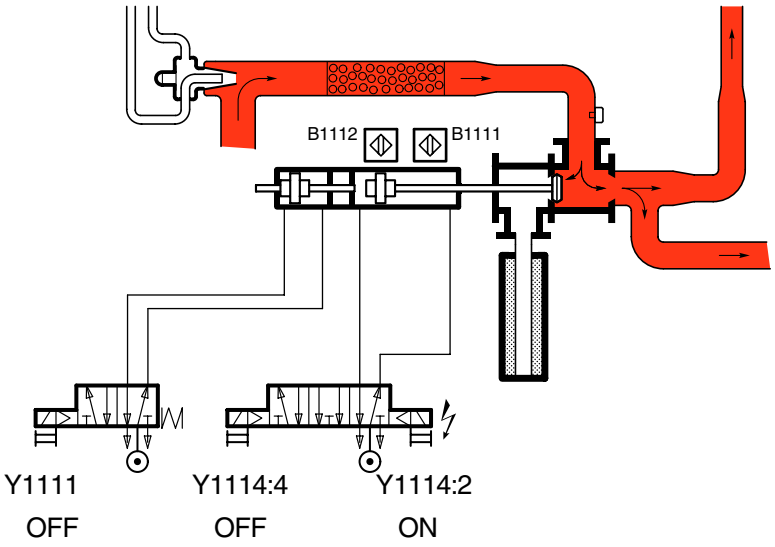

Max. heating

Steam pressure

Low pressure

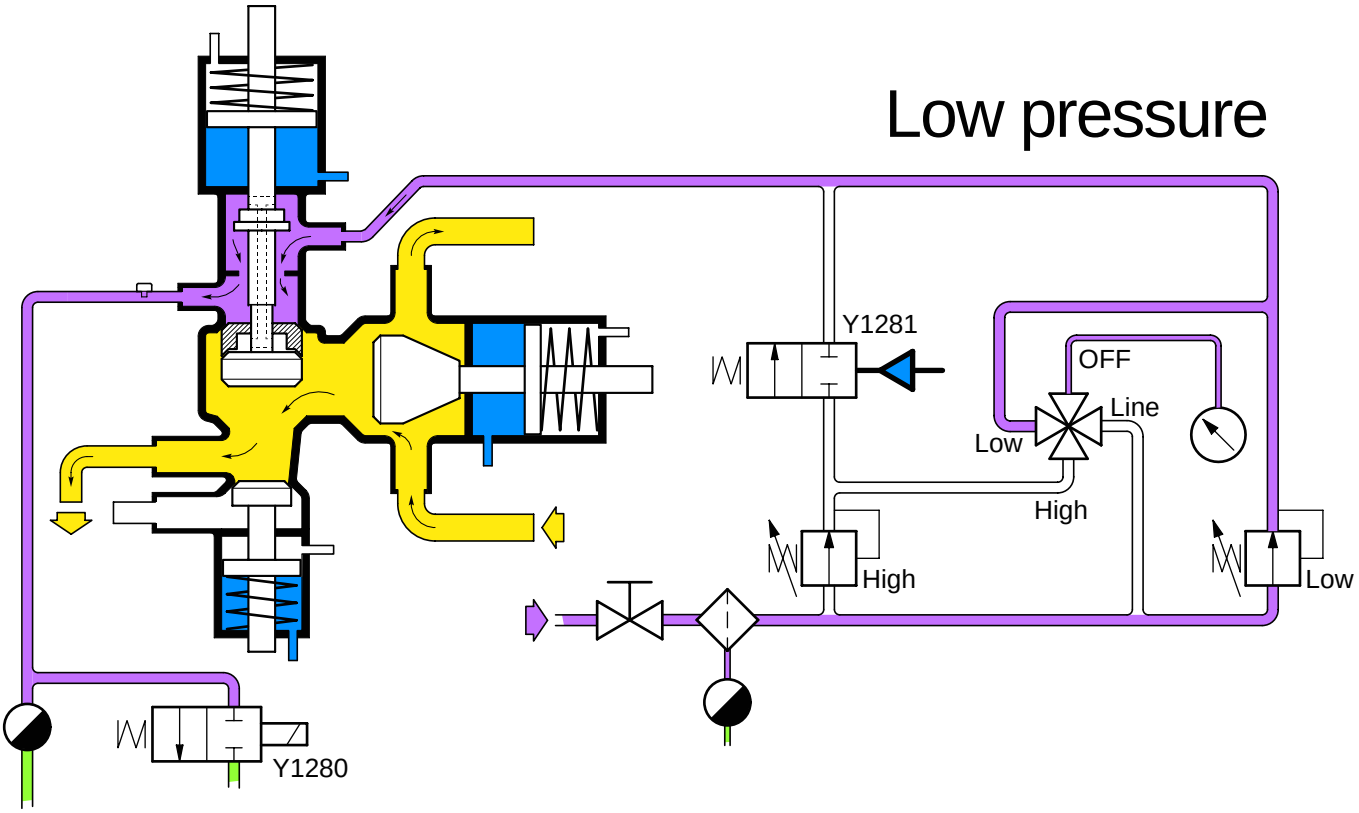

High pressure

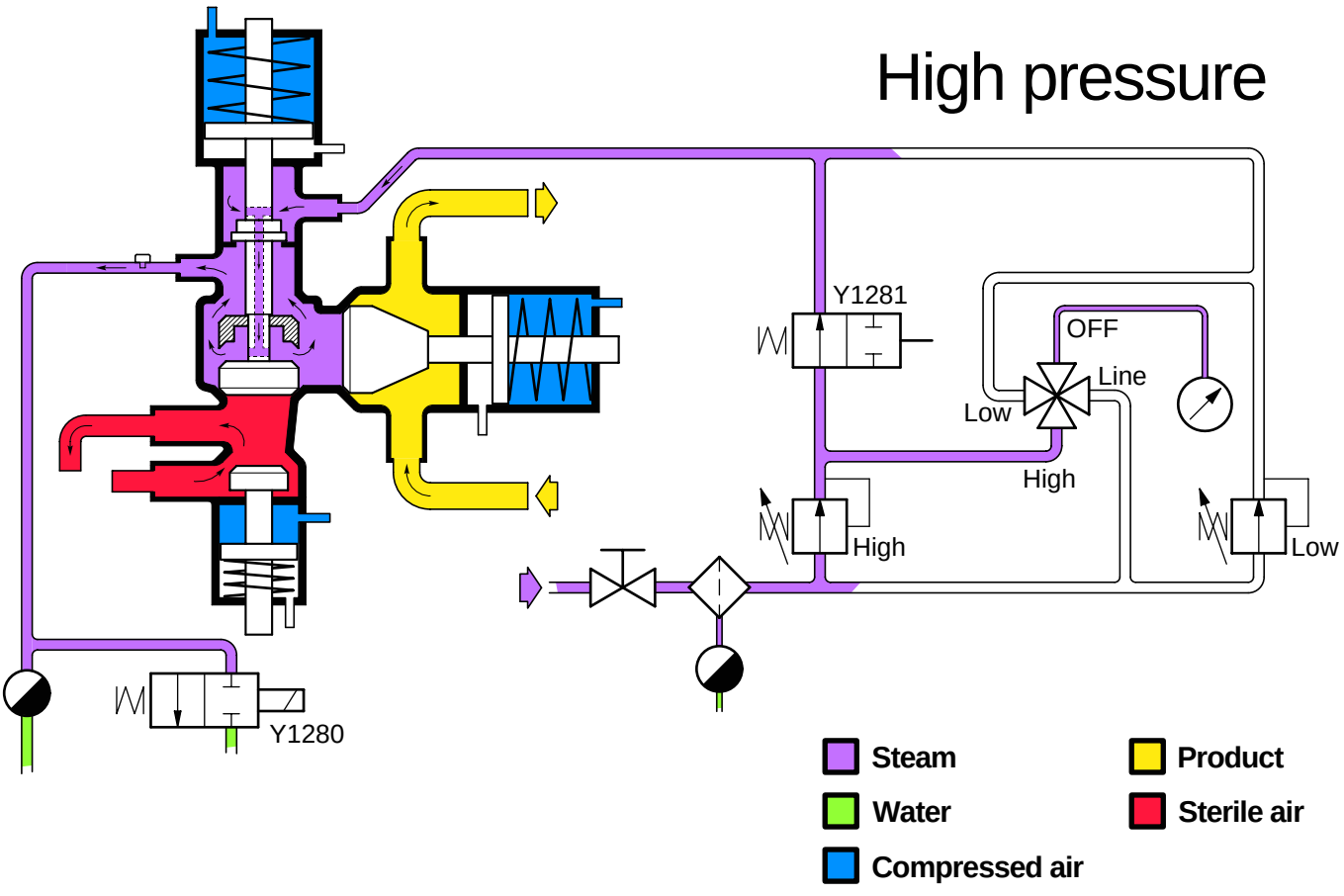

Steam **Product**

Water **Sterile air**

Compressed air

Technical Training Centre Lund, Sweden	Machine type TBA/22 050V	Issue 3/0501	OH 1236

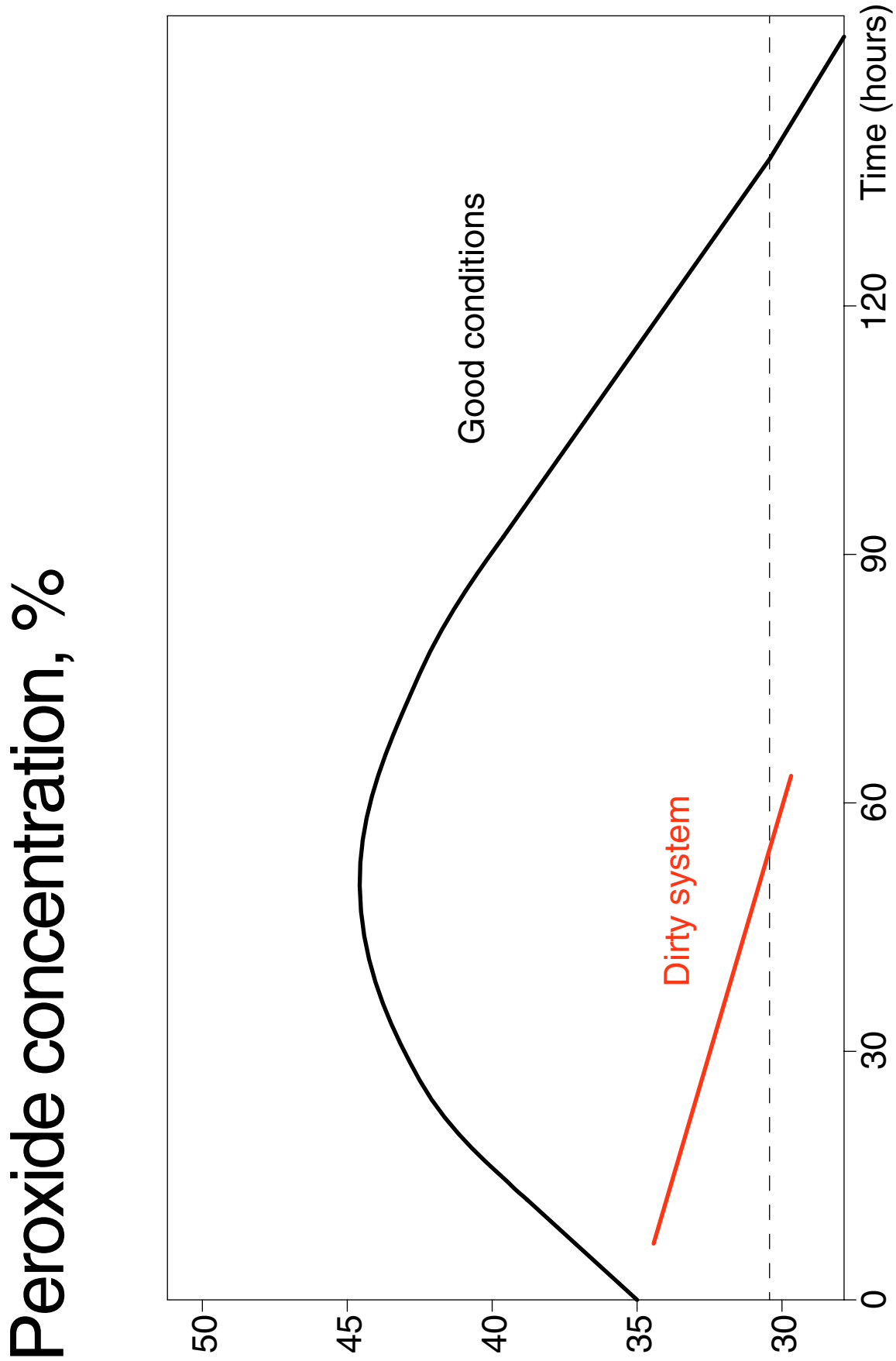
Peroxide concentration, %
50
45
40
35
30
0
30
60
90
120
Time (hours)
Good conditions
Dirty system

UR-20 Digital refractometer

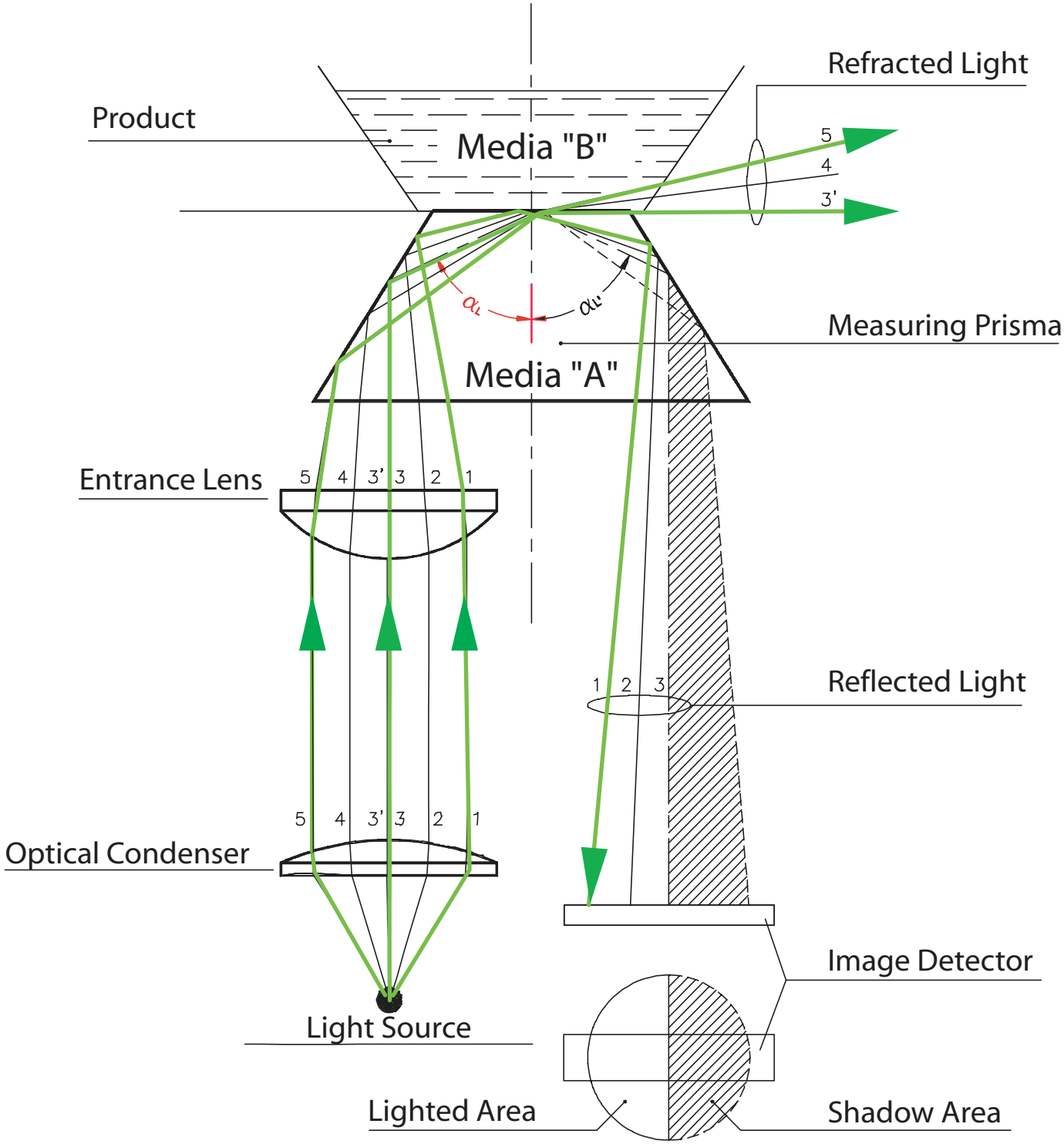

Technical Training Centre Lund, Sweden	Machine type TBA/22 050V	Issue 1/0303	OH 1358

PEROXIDE MONITOR

The concentration and the temperature can be displayed on the TPOP by means of an analogue input AI 7 and the relay K140. When it is activated, the temperature is checked. The signals are refreshed on the the TPOP every minute.

In PREPARATION, during 10 minutes, the pump runs and the concentration is checked. If it is not within the range, it is not possible to step up the programme.

Basically, there are 3 alarms :

MALFUNCTION PEROXYDE METER (M460)
PEROXIDE CONCENTRATION OUT OF LIMITS (M461)
PEROXIDE CONCENTRATION CLOSE TO LIMITS (M462)

During PRODUCTION, if the concentration is less than 32% but more than 30%, it will appear the blue alarm "**PEROXIDE CONCENTRATION CLOSE TO LIMITS**" but the machine will continue in PRODUCTION. If one of the two other alarms appear it will be yellow and the machine stops immediately in normal stop.

During PREPARATION and FLAP HEATERS, if one of the three alarms appear it will be yellow and the stepping up of the program will be impossible.
If this occurs during HEAT STERILISATION the program will be stepped down to step OFF after 5 minutes.

The concentration is correct during PREPARATION and HEAT STERILISATION if it is within 32% and 50%. During DRYING and above, it must be within 30% and 50%. If it is between 30% and 32% it is closed to limits.
The refractometer is faulty if the measure of the concentration is negative or if the difference between the temperature in the tank and in the refractometer is higher than 10°C.

In addition, if there is an internal fault in the refractometer, there is a blue alarm "**MALFUNCTION PEROXIDE METER WARNING**" (M 463 and Input 421)

Level relay

Peroxide spray quantity

Heat sterilisation

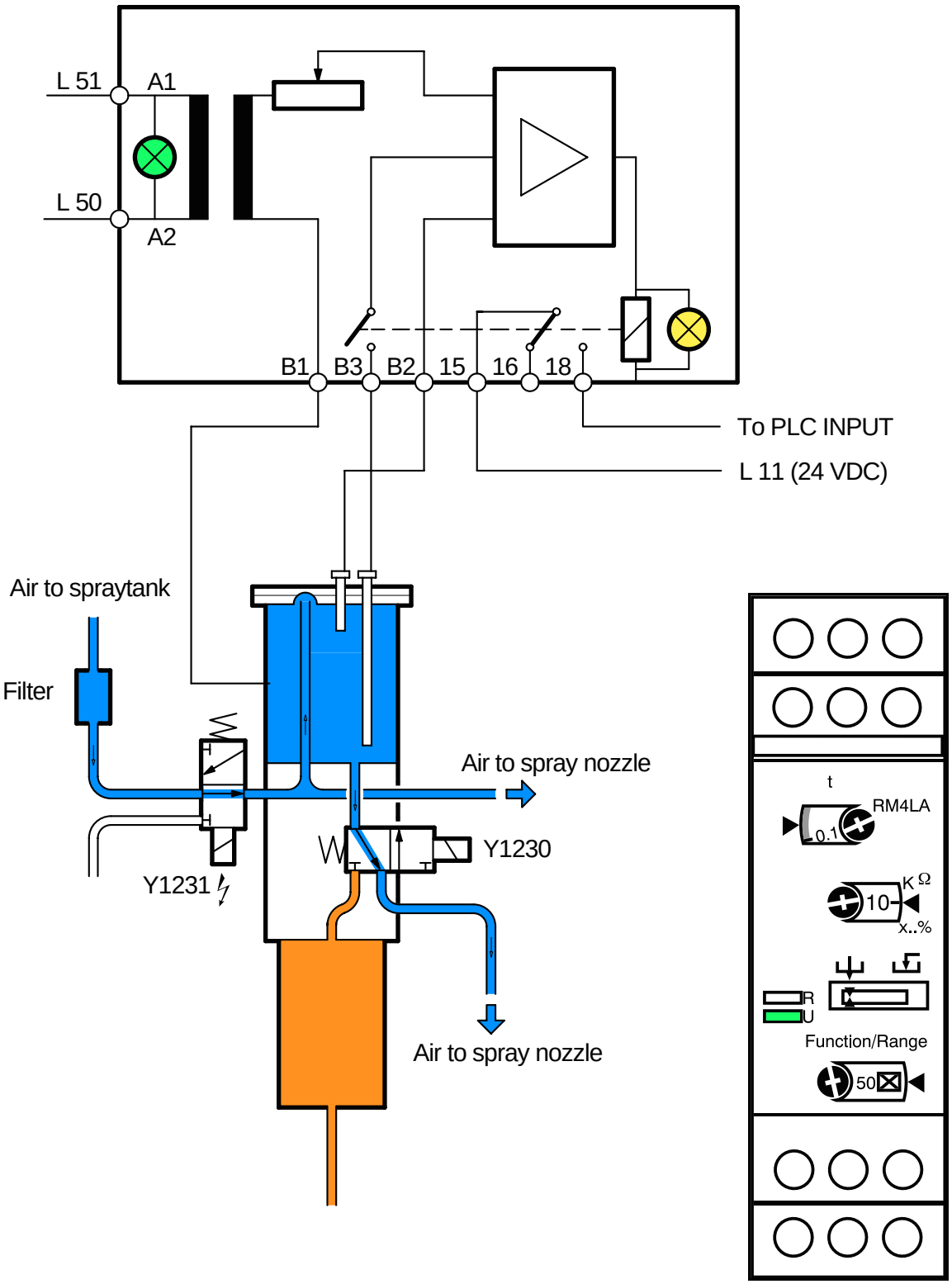

Level relay

Peroxide spray quantity

Filling tank

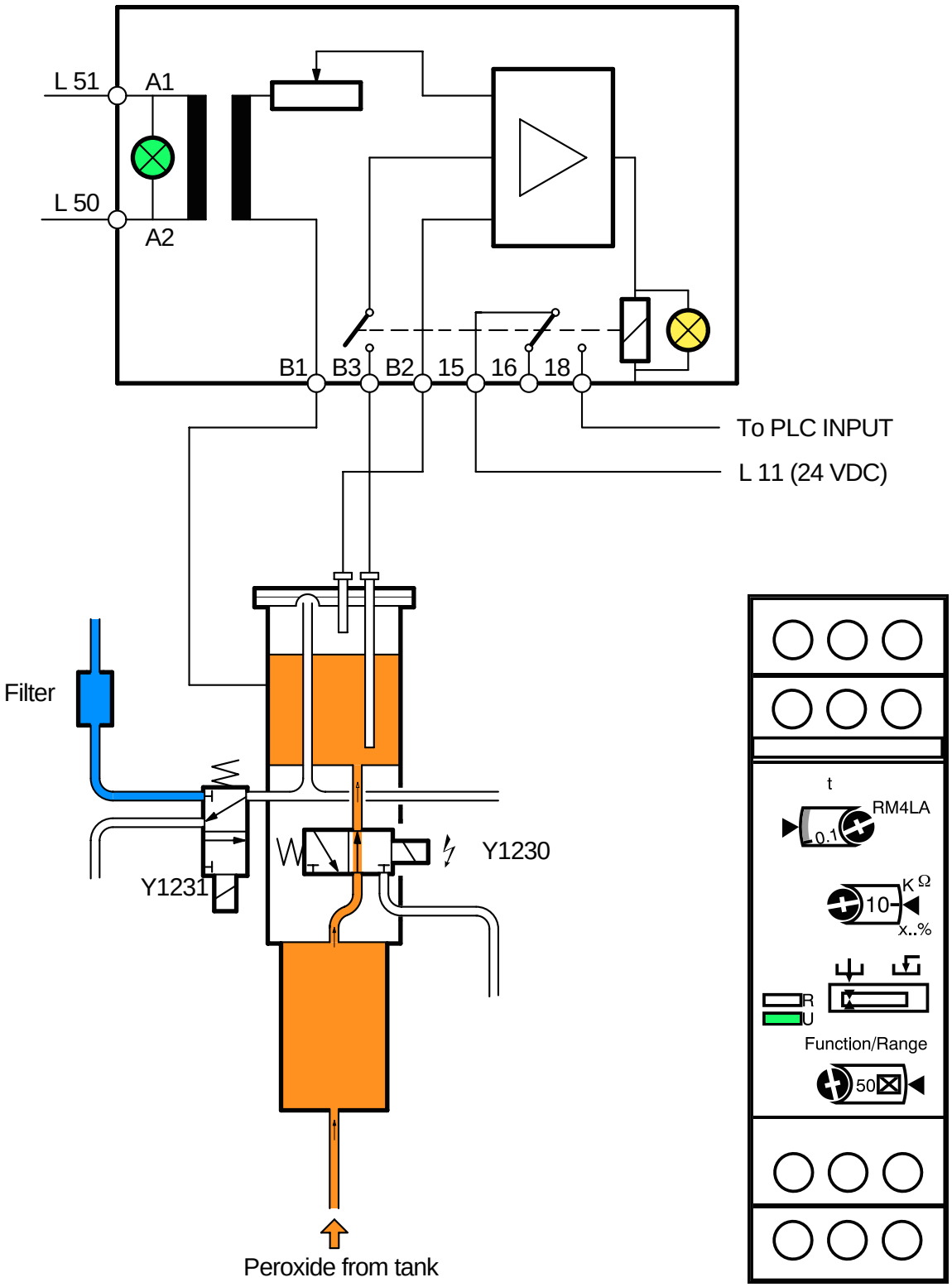

Level relay

Peroxide spray quantity

Spraying

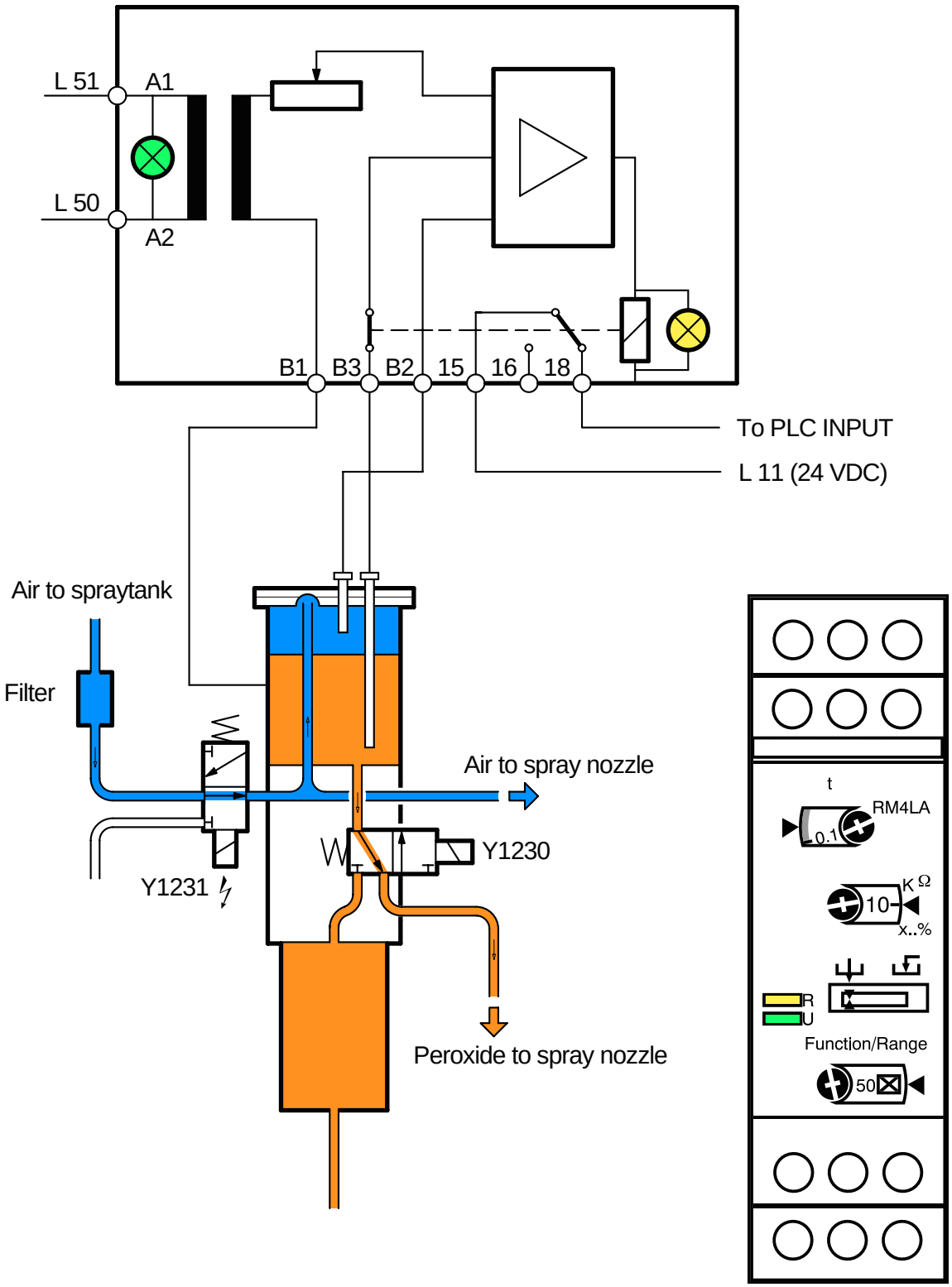

Level relay

Latch function

1.

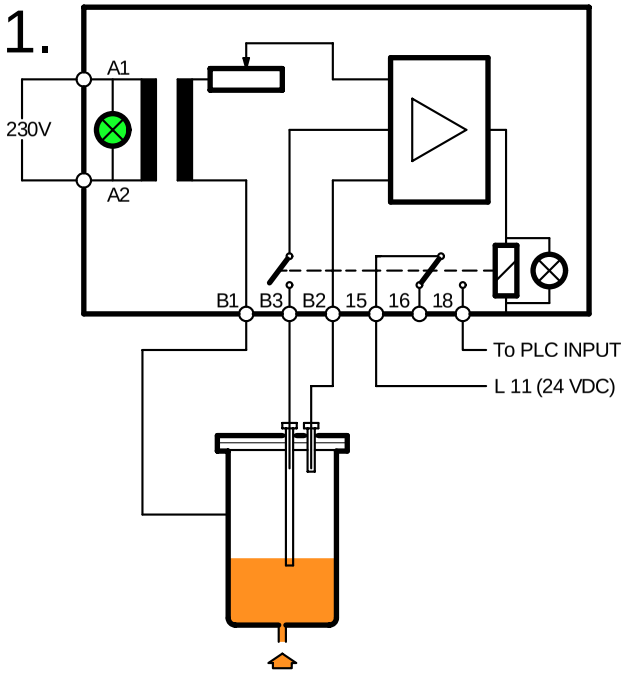

2.

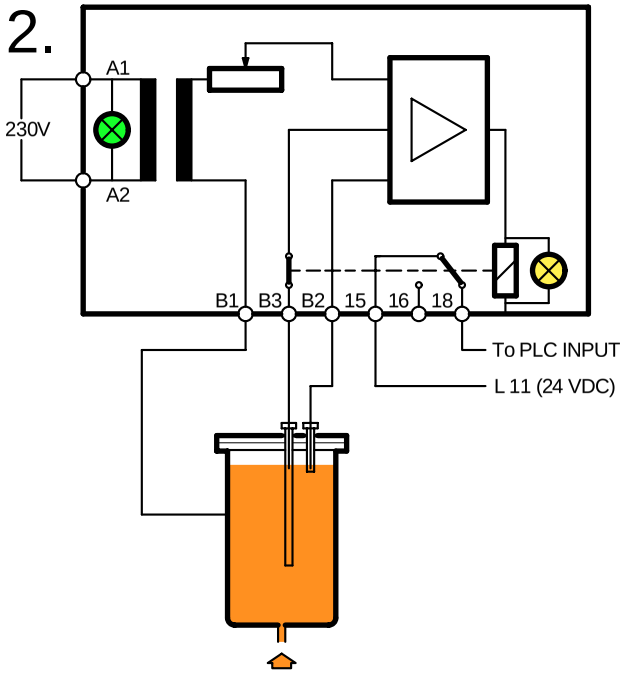

3.

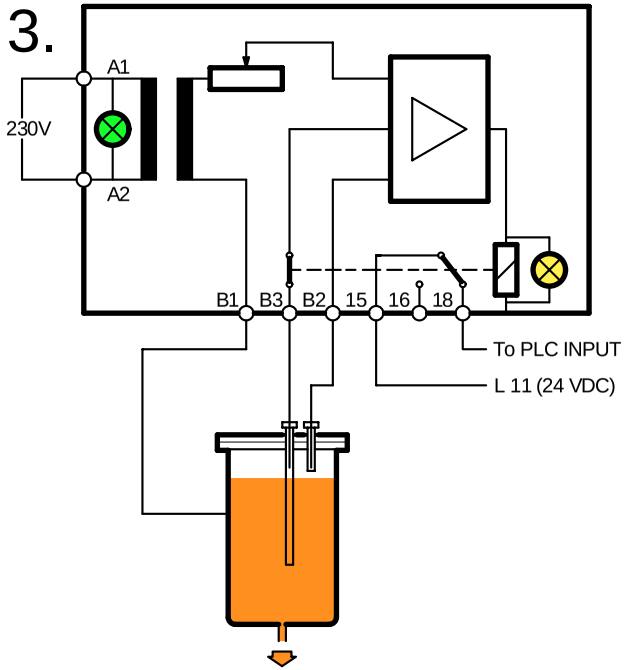

4.

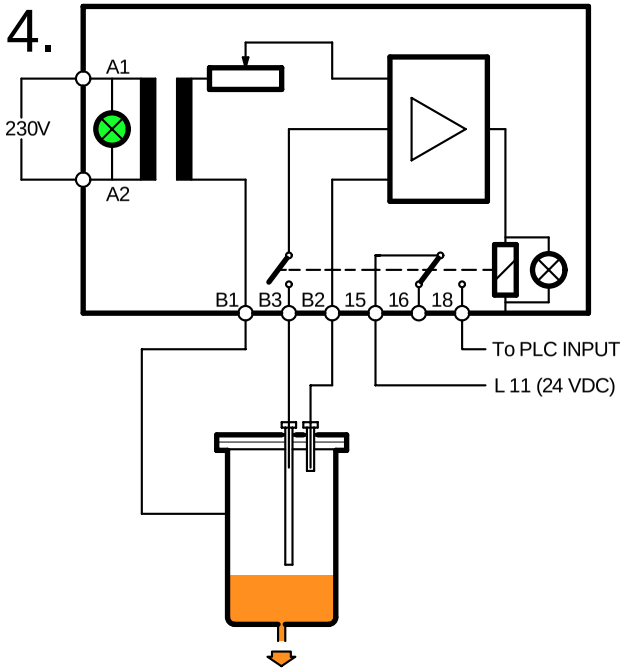

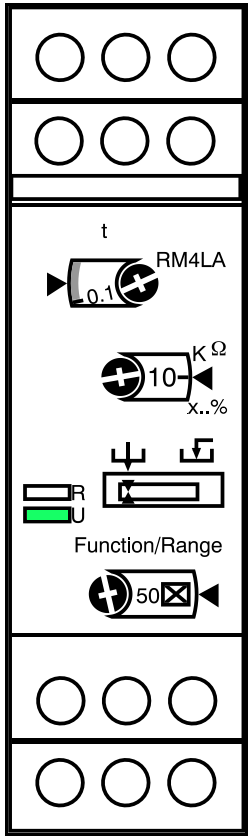

Technical Training Centre
Lund, Sweden

Machine type

Issue
2/0405

OH 1223

Tetra Brik TBA/21 TBA/22

Level control in peroxide tank

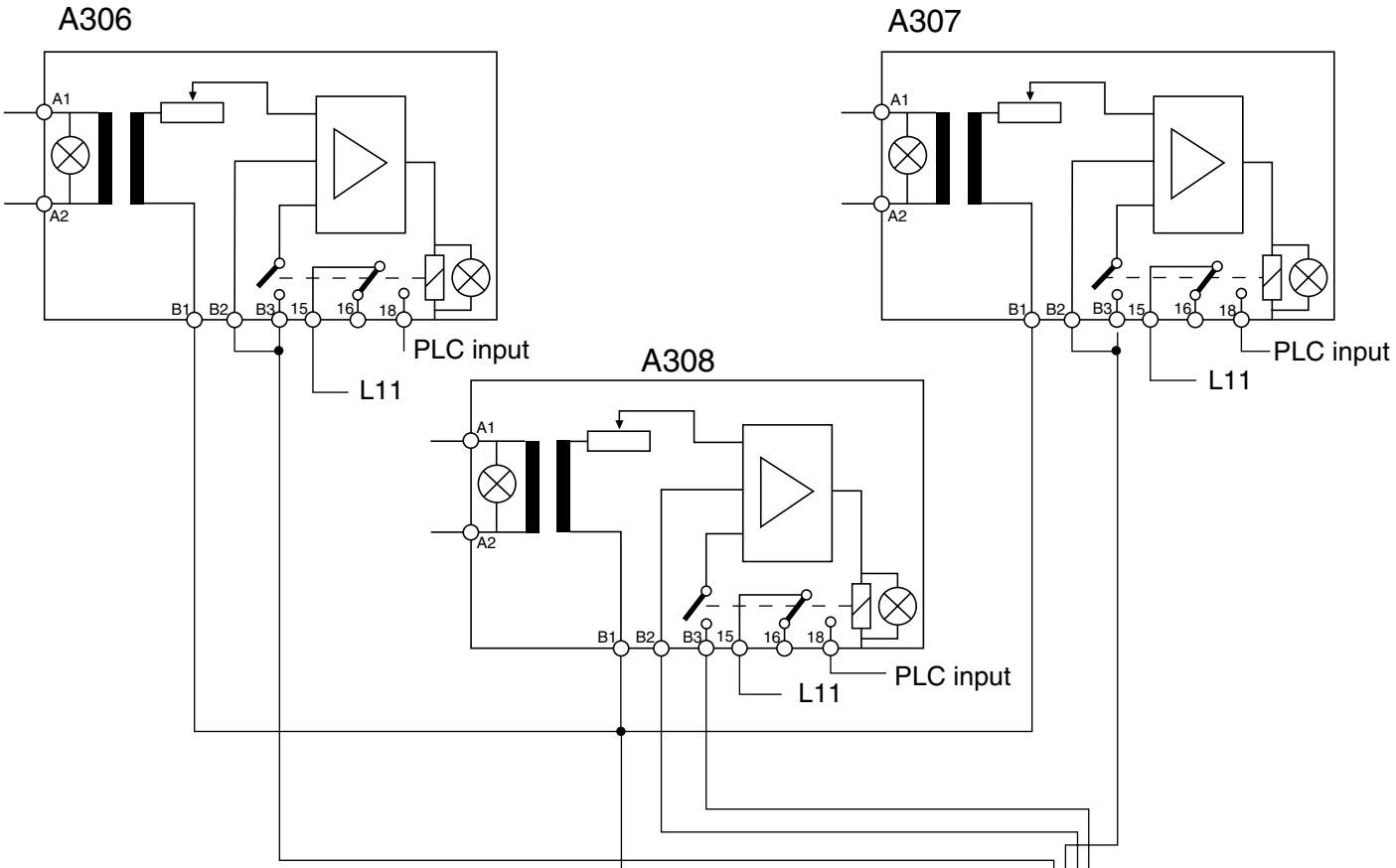

Level sonds

1. Maximum level when bath is empty and when service switch is on.
2. Maximum level when bath is filled
3. Start filling when bath is filled
4. Supervising if the level is to high. Stops filling. ALARM

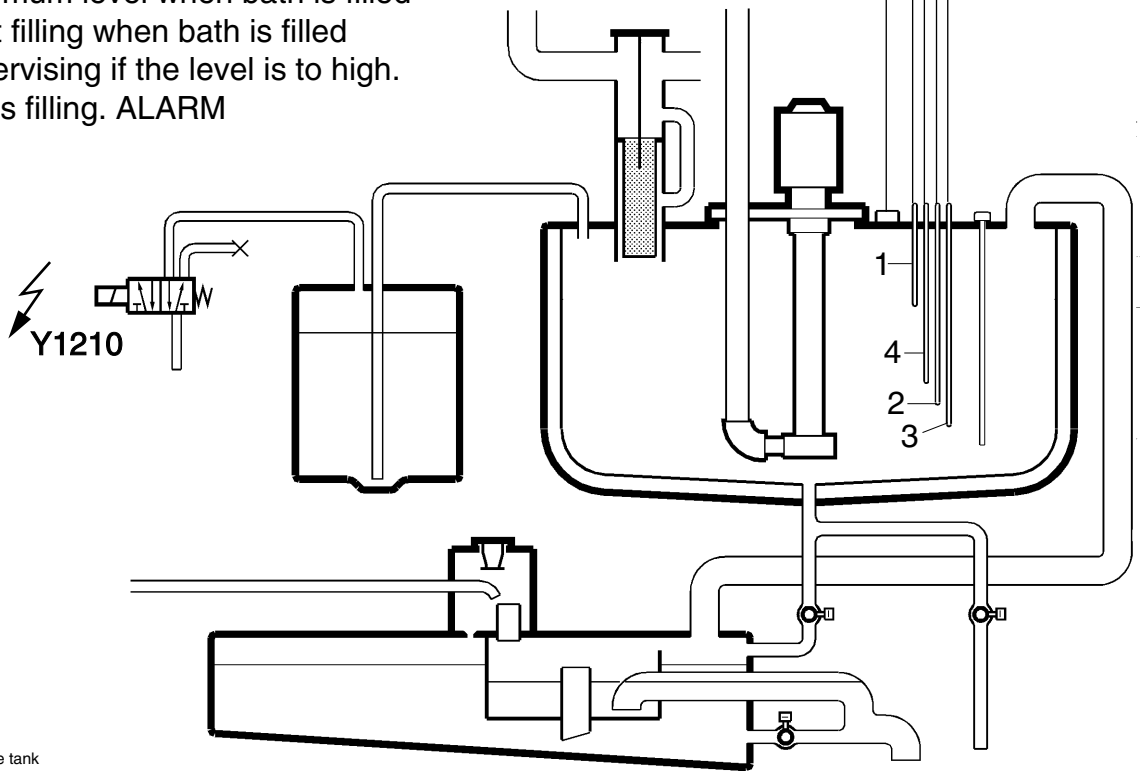

8

Sterile system

Ladder diagram TBA/22 TPOP

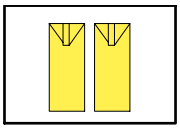

10:Production . . . . . .
Design OK.

Temperature in AC. is regulated at 95 °C.
Packages made from material that was in the H_2O_2 bath and AC are ejected.
After 2 sec A valve opens and design control starts.
After 12 sec motor start.
After 9.9 sec must H_2O_2 temp. and level be right.
After 3 sec starts peroxide bath filling.
After 1 sec synchronization FFU-JUM.
For first start, design pulse fall on filling sector, this enable the FCS.
Normal start; depending on the level in the tube, pre-filling will start.
Sound alarm for 10 sec.

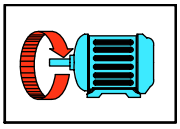

9:Motor start . . . . . .
Right temp on flap sealing element. Right temp in H_2O_2 tank. All doors closed.

If no start attempt within 90 sec steps down to 7.

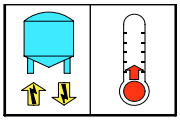

8:Flap heaters on . . . . . .
Product at A-valve.

7:Signals to Sterilizer . . . . . .
All. doors closed. Right temp in H_2O_2 tank. Drying time ended 15 min.
Sterile inching is possible.

After 14 min B-valve closes.
Sterile air pressure reads on both separator and aseptic chamber.
Preheating valve open. Heat exchanger valve in minimum cooling position.
Heat and circulation in water bath.
B valve is closed during the first minute (pause).

6:Drying . . . . . .

The filling spray tank has to be emptied after 30 sec and before 45 sec.
The filling spray tank has to be filled after 3 sec and before 10.

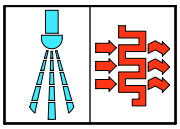

5:Spraying . . . . . .
Pre.ster.temp 280 °C. All doors chamber closed. Steam temperature.

When 280 °C is obtained, spraying starts automatically after 10 sec.
Heat exhanger in bypass.
Preheating valve in bypass until 280°C is obtained. However temporary opens to keep A.C. temp at 39-40 °C.
B-valve and reg. valve opens.
Circulation on H_2O_2.
Air superheater at 360 °C.
Compressor on, reads on separator pressure switch.

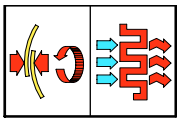

4:Heat sterilization . . . . . .
Water separator low level. Cleaning pipes disconnect. All doors closed.

Inching packaging material.

3:Tube sealing . . . . . .
Cooling. water pressure and cleanness. All doors closed. DMC ready.

Power to motors to help when threading packaging material.
Strip applicator on.
Possible to slow inch without LS, drying 3 min.
Concentration of peroxyde betwween 32 % and 50 %.

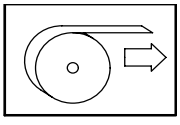

2:Preparation . . . . . .
Power. Air pressure. Water pressure. All doors closed.

1:Step 0

Ladder diagram TBA/22 TPOP

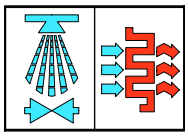

15 CIP Blowing

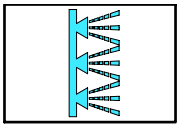

14:2 External cleaning

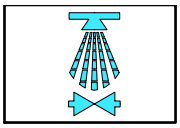

14:1 CIP cleaning

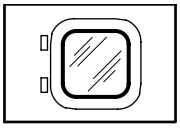

13 Doors, Aseptic chamber

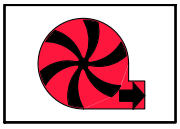

12 Venting Aseptic chamber

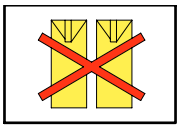

11 Production ended

Sterile system

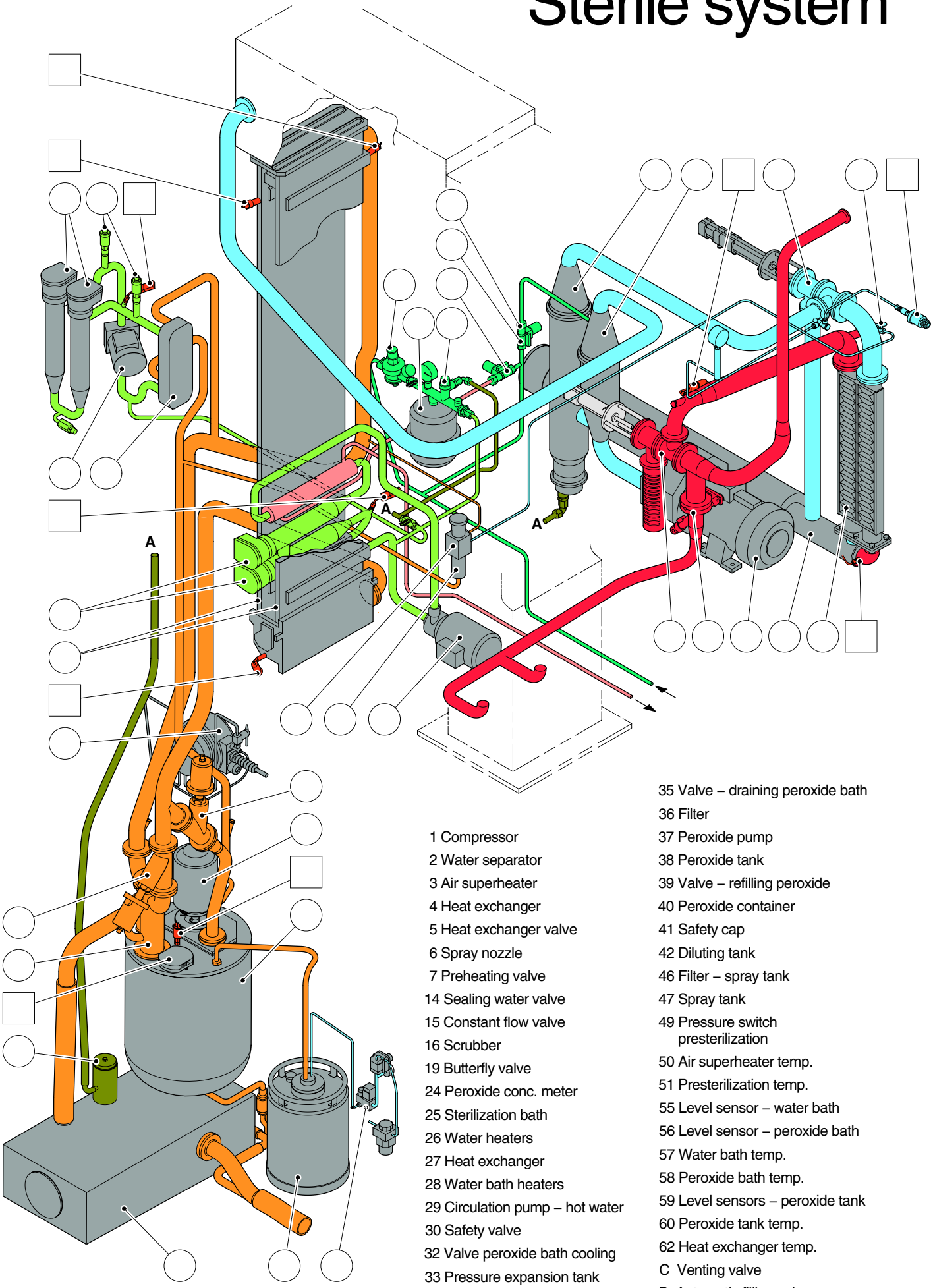

1 Compressor
2 Water separator
3 Air superheater
4 Heat exchanger
5 Heat exchanger valve
6 Spray nozzle
7 Preheating valve
14 Sealing water valve
15 Constant flow valve
16 Scrubber
19 Butterfly valve
24 Peroxide conc. meter
25 Sterilization bath
26 Water heaters
27 Heat exchanger
28 Water bath heaters
29 Circulation pump – hot water
30 Safety valve
32 Valve peroxide bath cooling
33 Pressure expansion tank
34 Valve – filling peroxide bath
35 Valve – draining peroxide bath
36 Filter
37 Peroxide pump
38 Peroxide tank
39 Valve – refilling peroxide
40 Peroxide container
41 Safety cap
42 Diluting tank
46 Filter – spray tank
47 Spray tank
49 Pressure switch presterilization
50 Air superheater temp.
51 Presterilization temp.
55 Level sensor – water bath
56 Level sensor – peroxide bath
57 Water bath temp.
58 Peroxide bath temp.
59 Level sensors – peroxide tank
60 Peroxide tank temp.
62 Heat exchanger temp.
C Venting valve
B Automatic filling valve

Sterile system TBA/22 050V

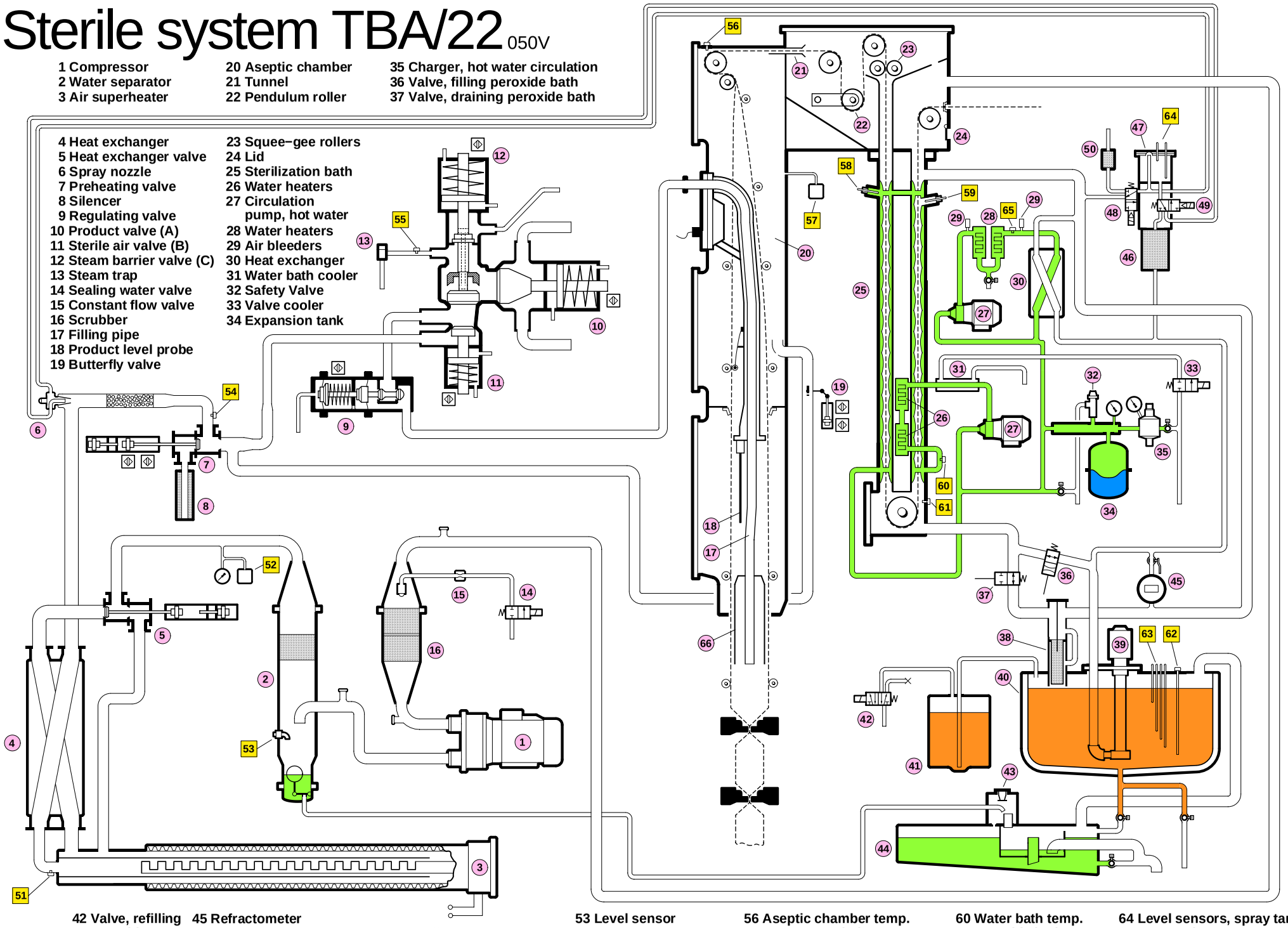

1 Compressor
2 Water separator
3 Air superheater
4 Heat exchanger
5 Heat exchanger valve
6 Spray nozzle
7 Preheating valve
8 Silencer
9 Regulating valve
10 Product valve (A)
11 Sterile air valve (B)
12 Steam barrier valve (C)
13 Steam trap
14 Sealing water valve
15 Constant flow valve
16 Scrubber
17 Filling pipe
18 Product level probe
19 Butterfly valve
20 Aseptic chamber
21 Tunnel
22 Pendulum roller
23 Squee−gee rollers
24 Lid
25 Sterilization bath
26 Water heaters
27 Circulation pump, hot water
28 Water heaters
29 Air bleeders
30 Heat exchanger
31 Water bath cooler
32 Safety Valve
33 Valve cooler
34 Expansion tank
35 Charger, hot water circulation
36 Valve, filling peroxide bath
37 Valve, draining peroxide bath
38 Filter
39 Peroxide pump
40 Peroxide tank
41 Peroxide container
42 Valve, refilling peroxide
43 Safety cap
44 Diluting tank
45 Refractometer
46 Filter
47 Spray tank
48 Spray valve
49 Filling spray tank valve
50 Filter
51 Air superheater temp.
52 Pressure switch
53 Level sensor water separator
54 Presterilisation temp.
55 Steam temp.
56 Aseptic chamber temp.
57 Pressure switch
58 Level sensor, water bath
59 Level sensor, peroxide bath
60 Water bath temp.
61 Peroxide bath temp.
62 Peroxide tank temp.
63 Level sensors, peroxide tank
64 Level sensors, spray tank
65 Heat exchanger temp.
66 Bucket

Technical Training Centre
Lund, Sweden

Machine type
TBA/22 050V

Issue
4/0310

OH 11981

Sterile system TBA/22 050V

Drying before tube sealing

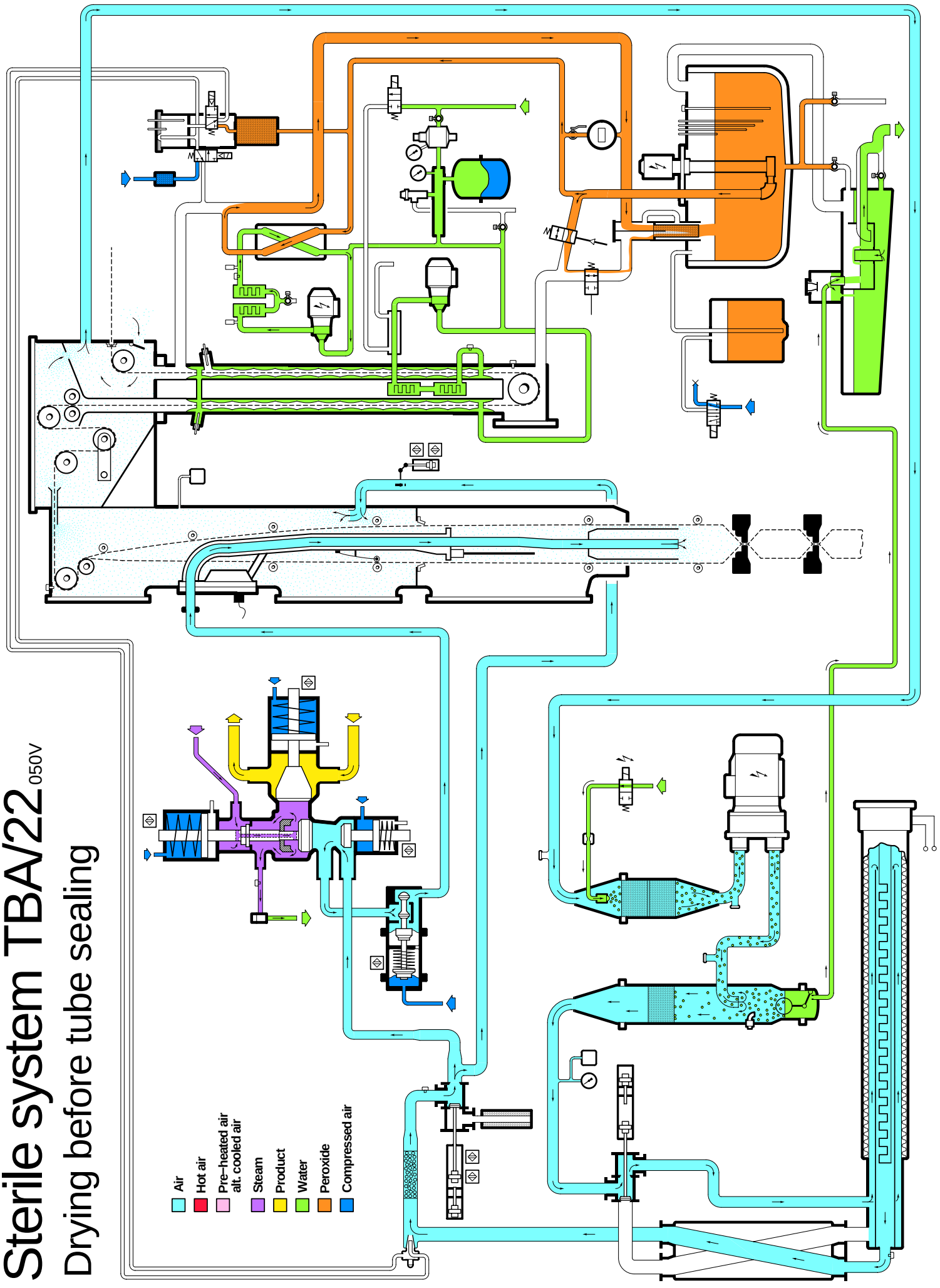

Technical Training Centre Lund, Sweden	Machine type TBA/22 050V	Issue 4/0310	OH 1198:2

Sterile system TBA/22 050V

Heat sterilisation 1

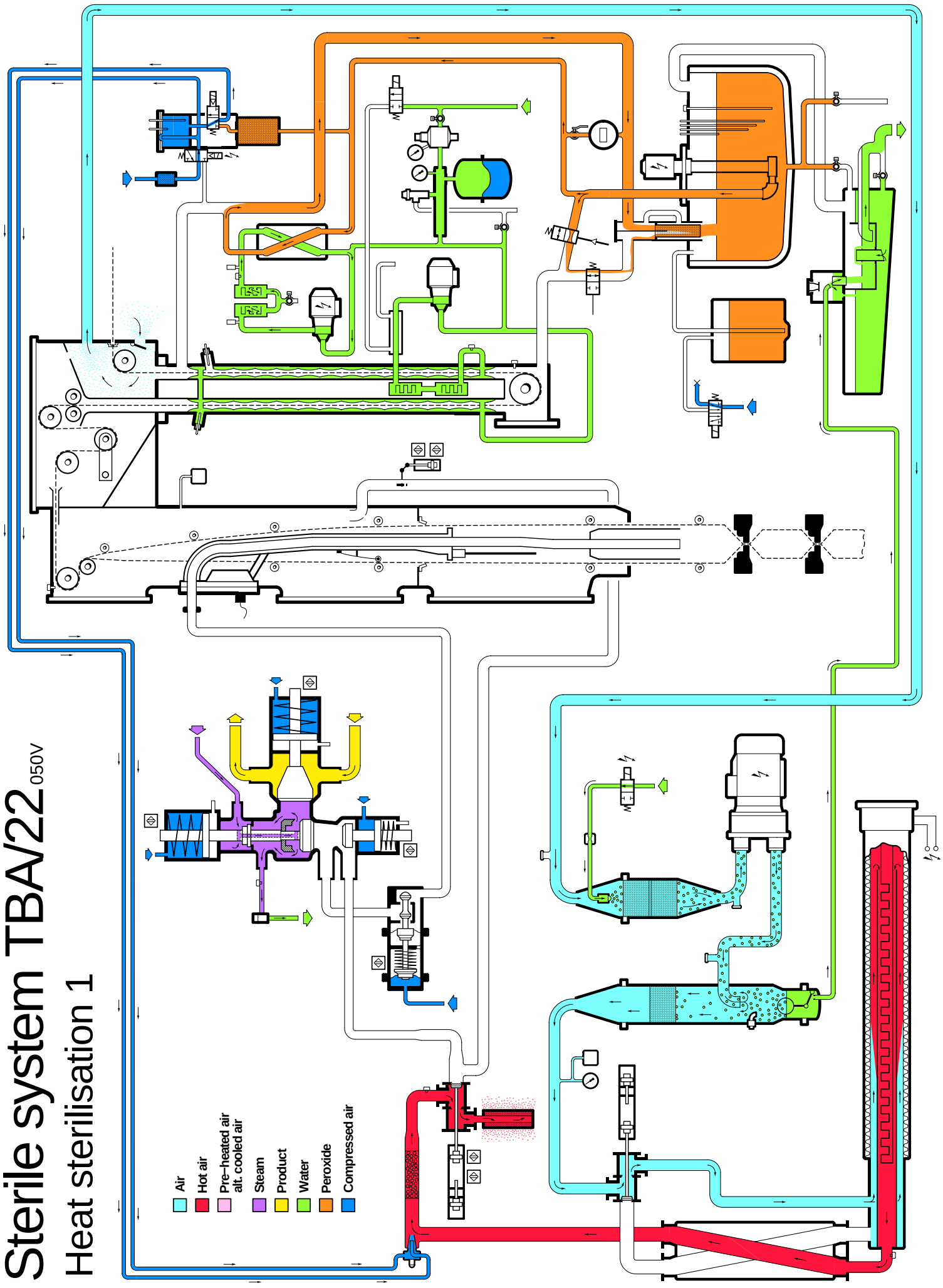

Technical Training Centre Lund, Sweden	Machine type TBA/22 050V	Issue 4/0310	OH 1198:3

Sterile system TBA/22 050V

Heat sterilisation 2

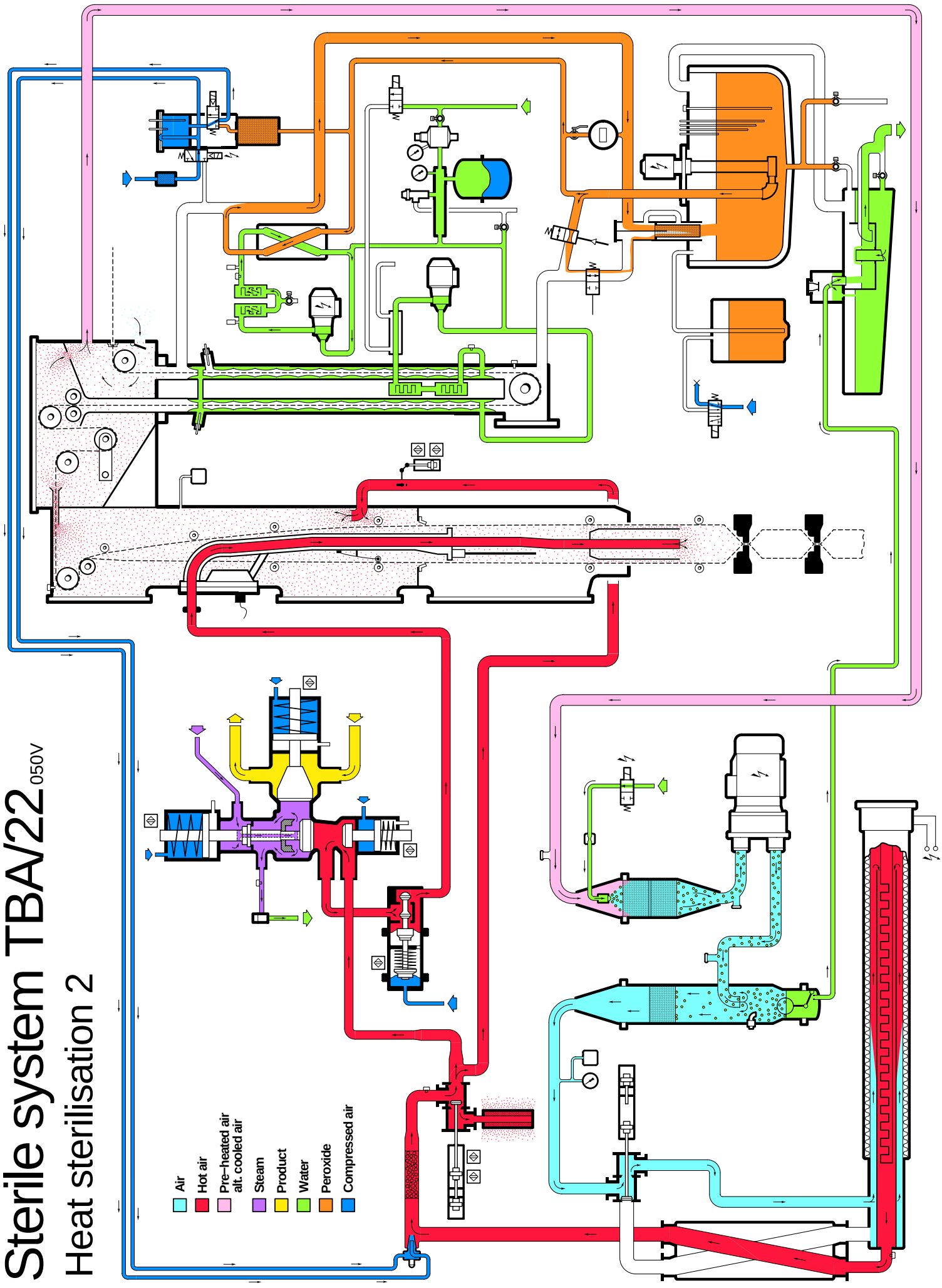

Technical Training Centre Lund, Sweden	Machine type TBA/22 050V	Issue 4/0310	OH 1198:4

Sterile system TBA/22 050V

Spraying

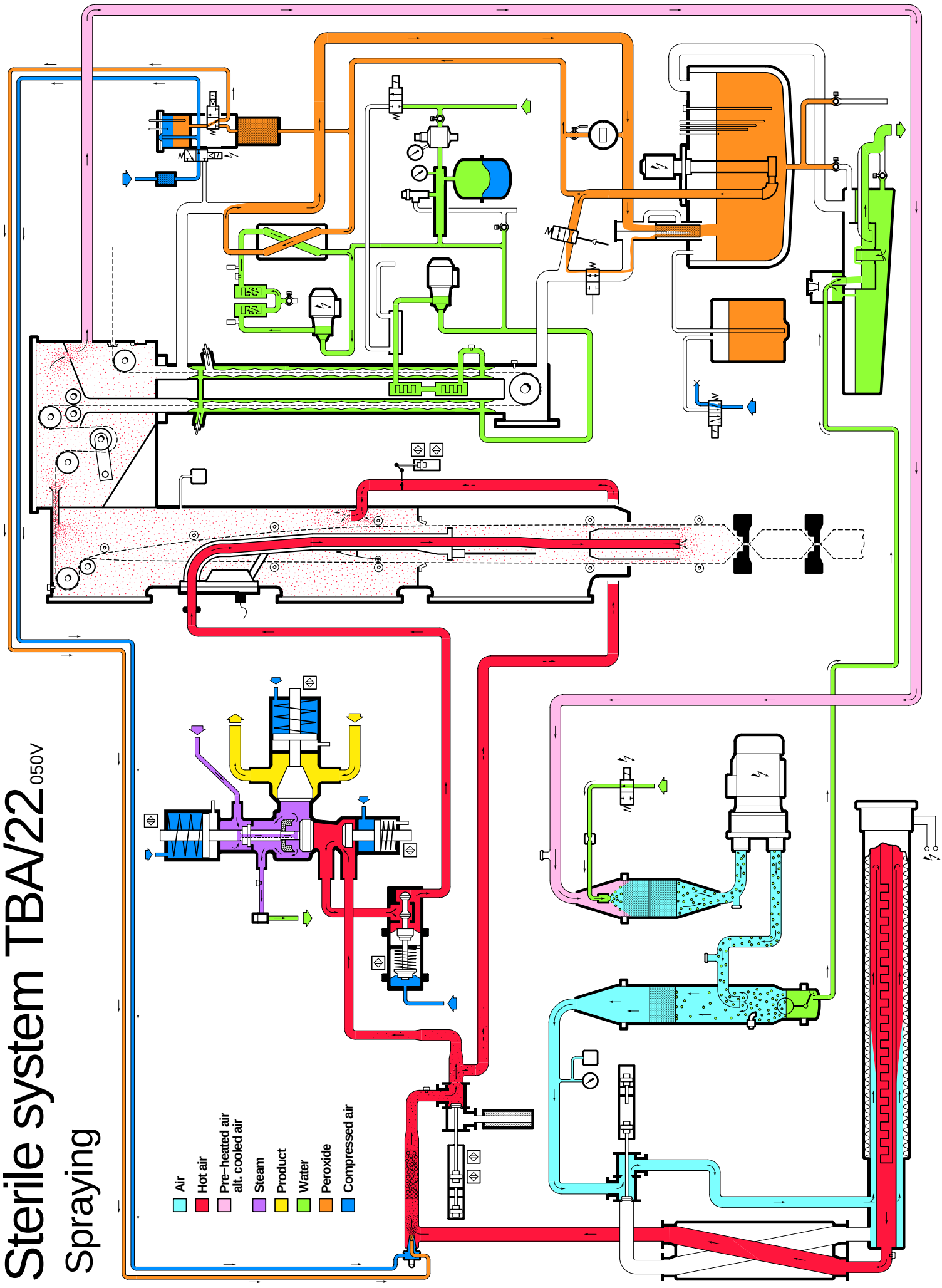

Technical Training Centre Lund, Sweden	Machine type TBA/22 050V	Issue 4/0310	OH 1198:5

Sterile system TBA/22 050V

Pause

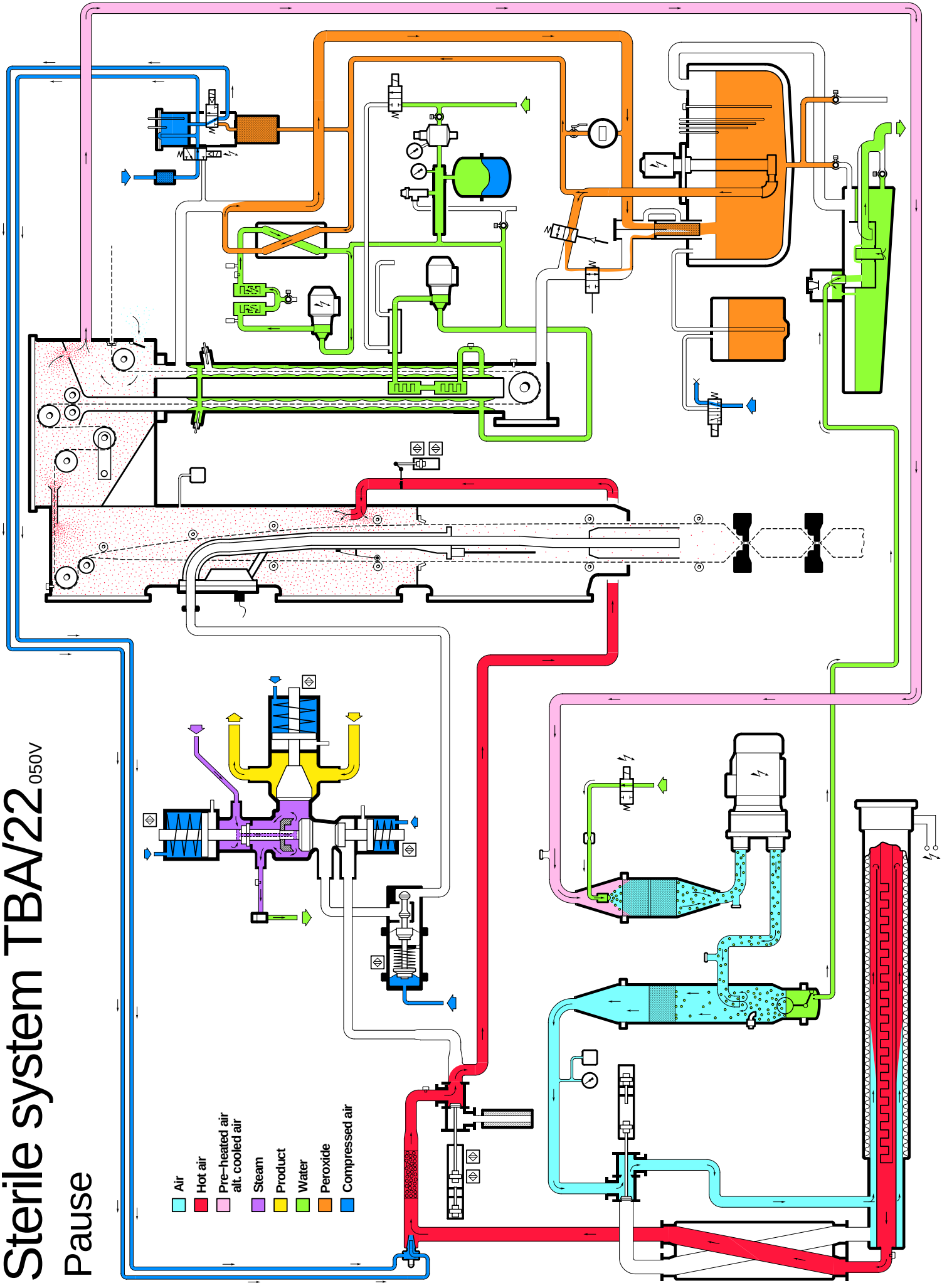

Technical Training Centre Lund, Sweden	Machine type TBA/22 050V	Issue 4/0310	OH 1198:6

Sterile system TBA/22 050V

Drying 1

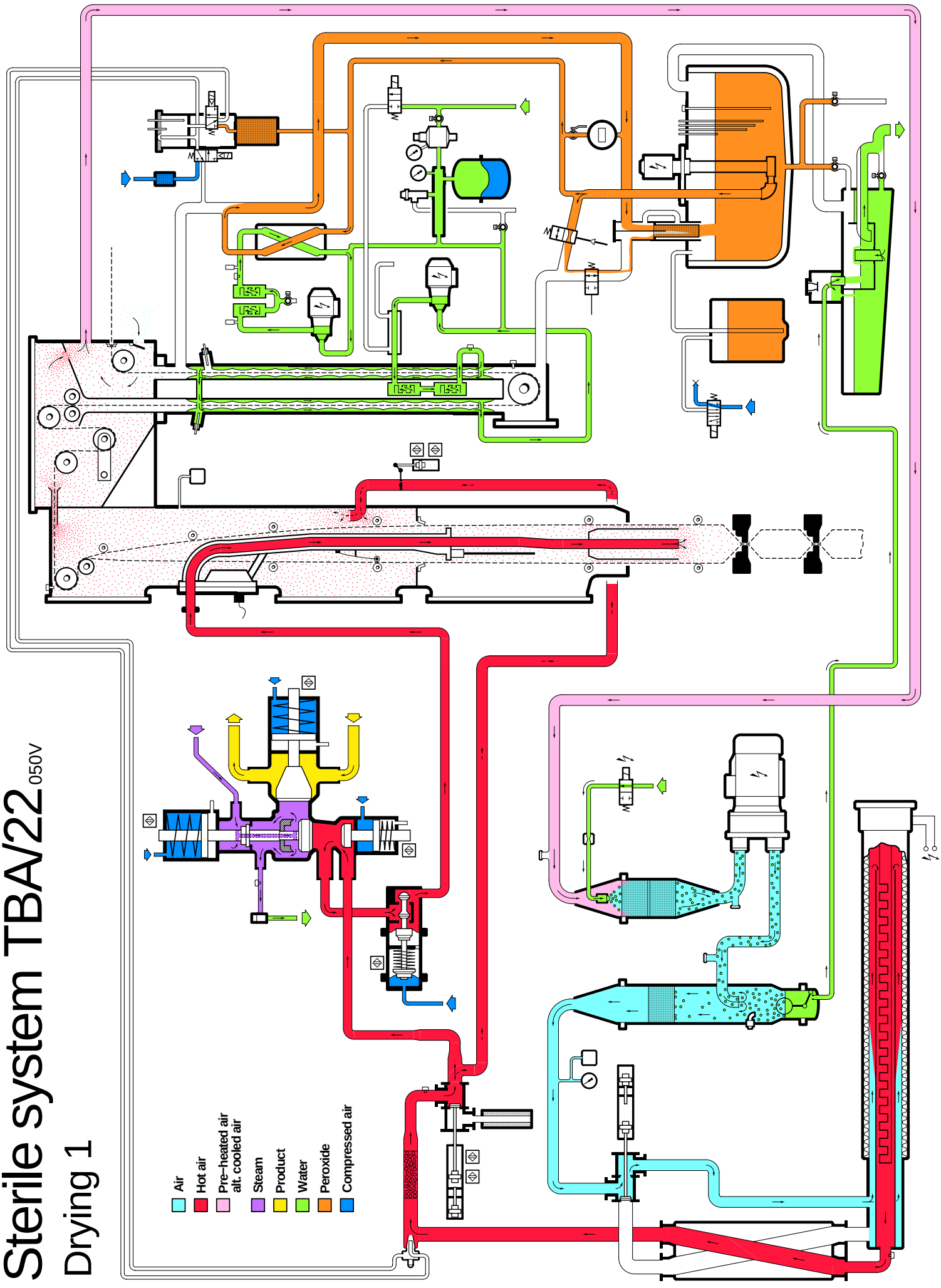

Technical Training Centre Lund, Sweden	Machine type TBA/22 050V	Issue 4/0310	OH 1198:7

Sterile system TBA/22 050V

Drying 2

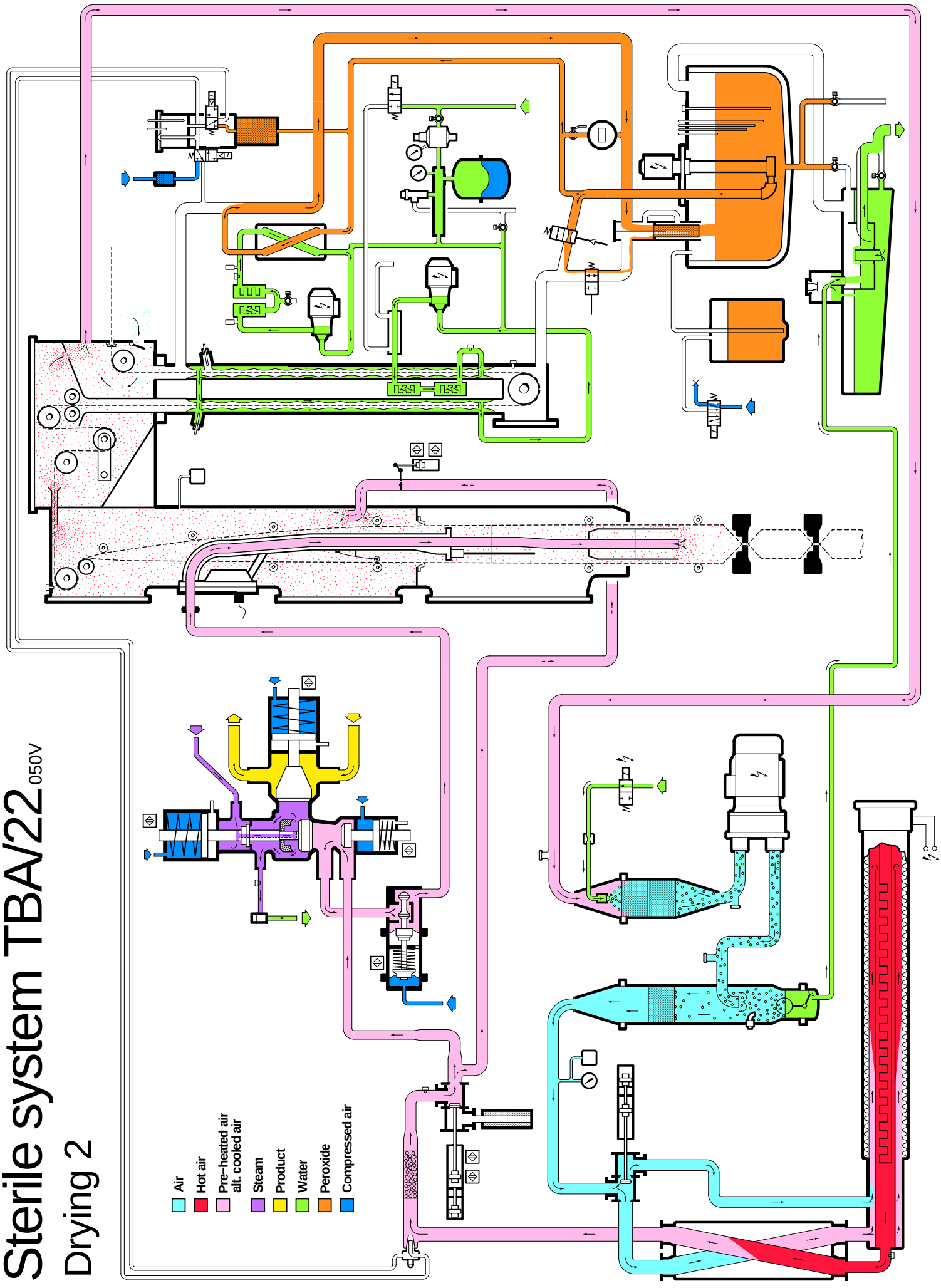

Technical Training Centre Lund, Sweden	Machine type TBA/22 050V	Issue 4/0310	OH 1198:8

Sterile system TBA/22 050V

Production

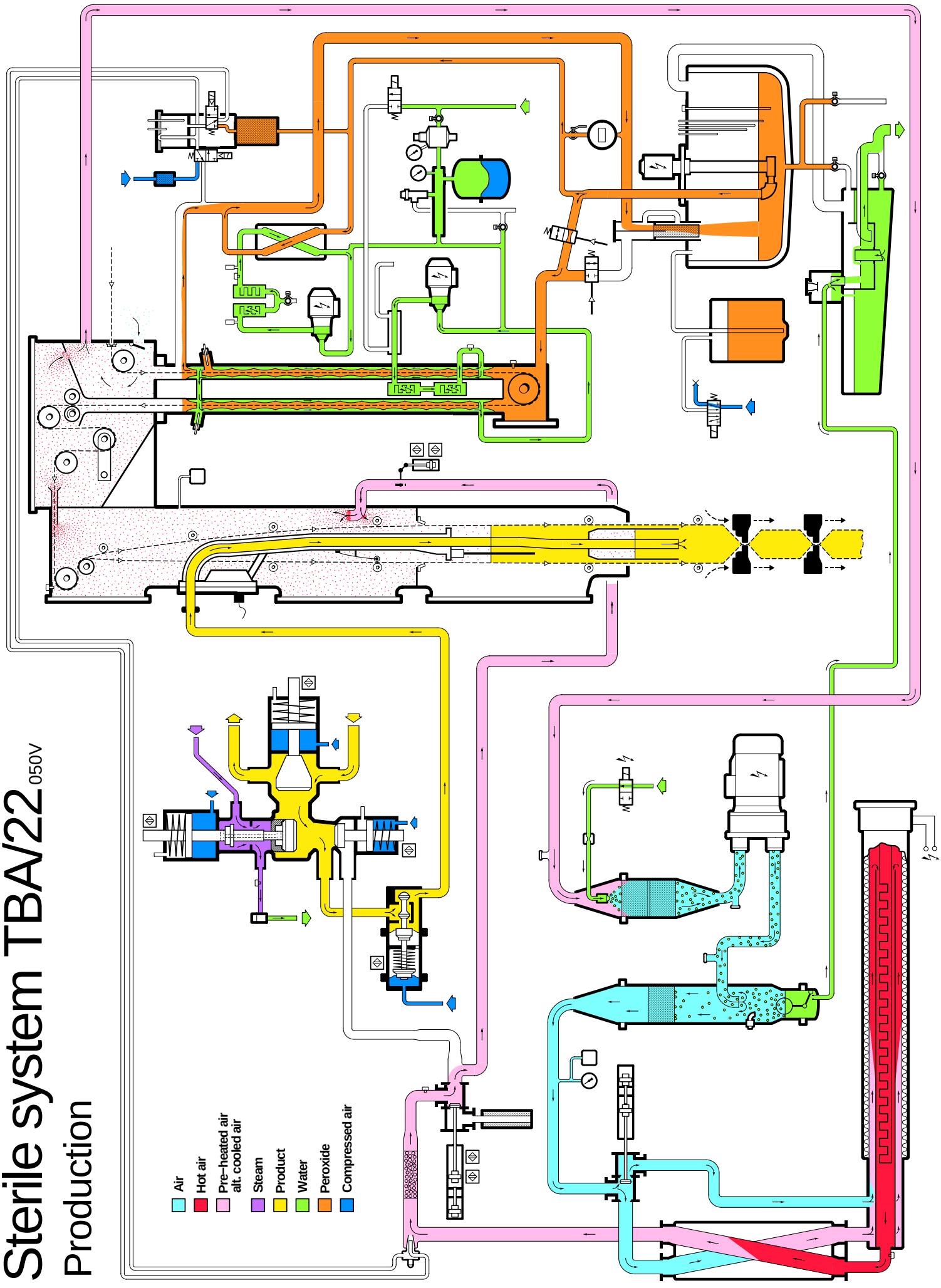

Technical Training Centre Lund, Sweden	Machine type TBA/22 050V	Issue 4/0310	OH 1198:9

Sterile system TBA/22 050V

Stop (0–20 s)

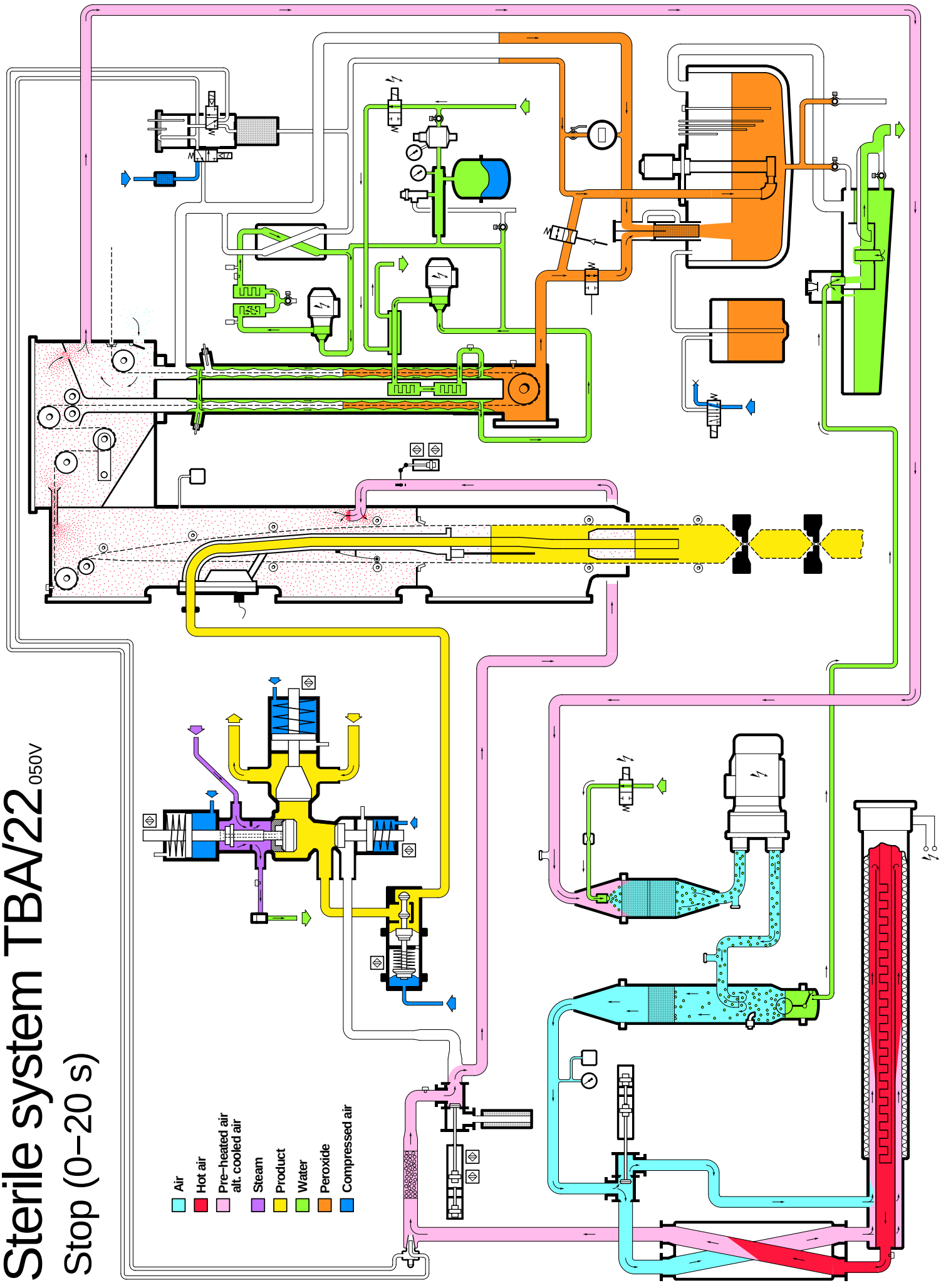

Technical Training Centre Lund, Sweden	Machine type TBA/22 050V	Issue 4/0310	OH 1198:10

Sterile system TBA/22 050V

Ventilation

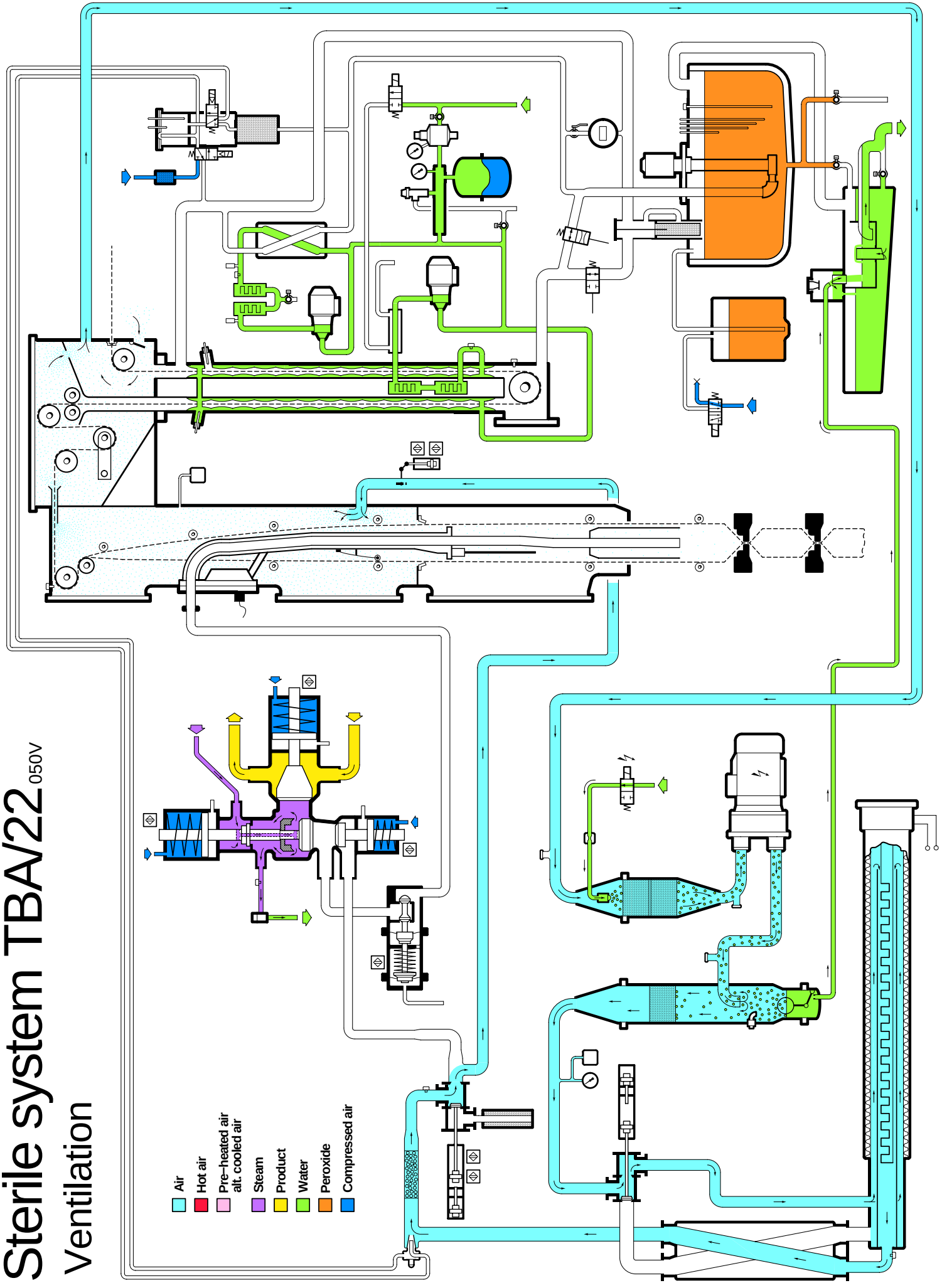

Technical Training Centre Lund, Sweden	Machine type TBA/22 050V	Issue 4/0310	OH 1198:11

Sterile system TBA/22 050V

1 Compressor
2 Water separator
3 Air superheater
4 Heat exchanger
5 Heat exchanger valve
6 Spray nozzle
7 Preheating valve
8 Silencer
9 Regulating valve
10 Product valve (A)
11 Sterile air valve (B)
12 Steam barrier valve (C)
13 Steam trap
14 Sealing water valve
15 Constant flow valve
16 Scrubber
17 Filling pipe
18 Product level probe
19 Butterfly valve
20 Aseptic chamber
21 Tunnel
22 Pendulum roller
23 Squee−gee rollers
24 Lid
25 Sterilization bath
26 Water heaters
27 Circulation pump, hot water
28 Water heaters
29 Air bleeders
30 Heat exchanger
31 Water bath cooler
32 Safety Valve
33 Valve cooler
34 Expansion tank
35 Charger, hot water circulation
36 Valve, filling peroxide bath
37 Valve, draining peroxide bath
38 Filter
39 Peroxide pump
40 Peroxide tank
41 Peroxide container
42 Valve, refilling peroxide
43 Safety cap
44 Diluting tank
45 Refractometer
46 Filter
47 Spray tank
48 Spray valve
49 Filling spray tank valve
50 Filter
51 Air superheater temp.
52 Pressure switch
53 Level sensor water separator
54 Presterilisation temp.
55 Steam temp.
56 Aseptic chamber temp.
57 Pressure switch
58 Level sensor, water bath
59 Level sensor, peroxide bath
60 Water bath temp.
61 Peroxide bath temp.
62 Peroxide tank temp.
63 Level sensors, peroxide tank
64 Level sensors, spray tank
65 Heat exchanger temp.
66 Bucket

Technical Training Centre
Lund, Sweden

Machine type
TBA/22 050V

Issue
4/0310

OH 1198:12

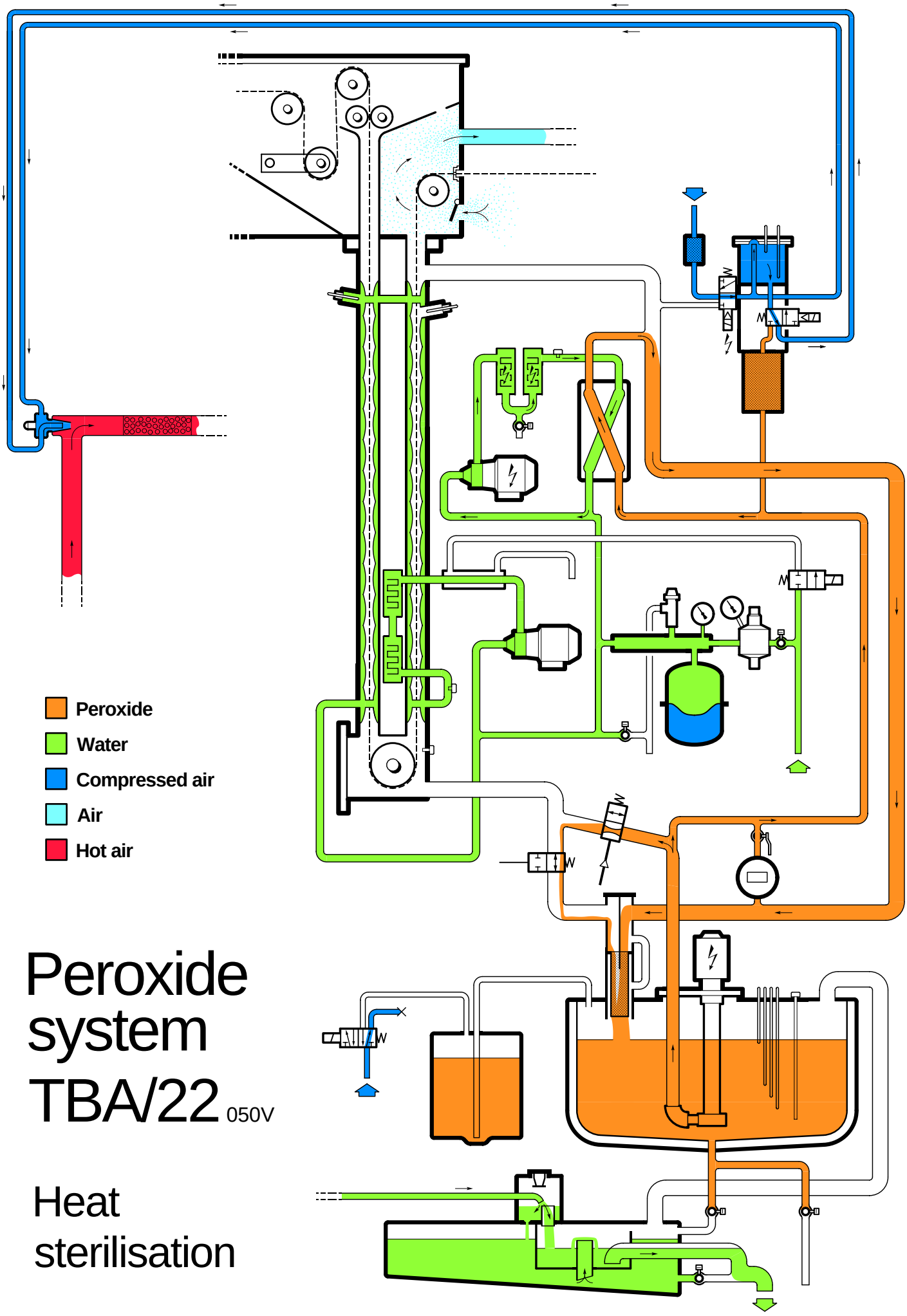

Peroxide system TBA/22 050V

Heat sterilisation

Technical Training Centre Lund, Sweden	Machine type TBA/22 050V	Issue 3/0305	OH 1250:1

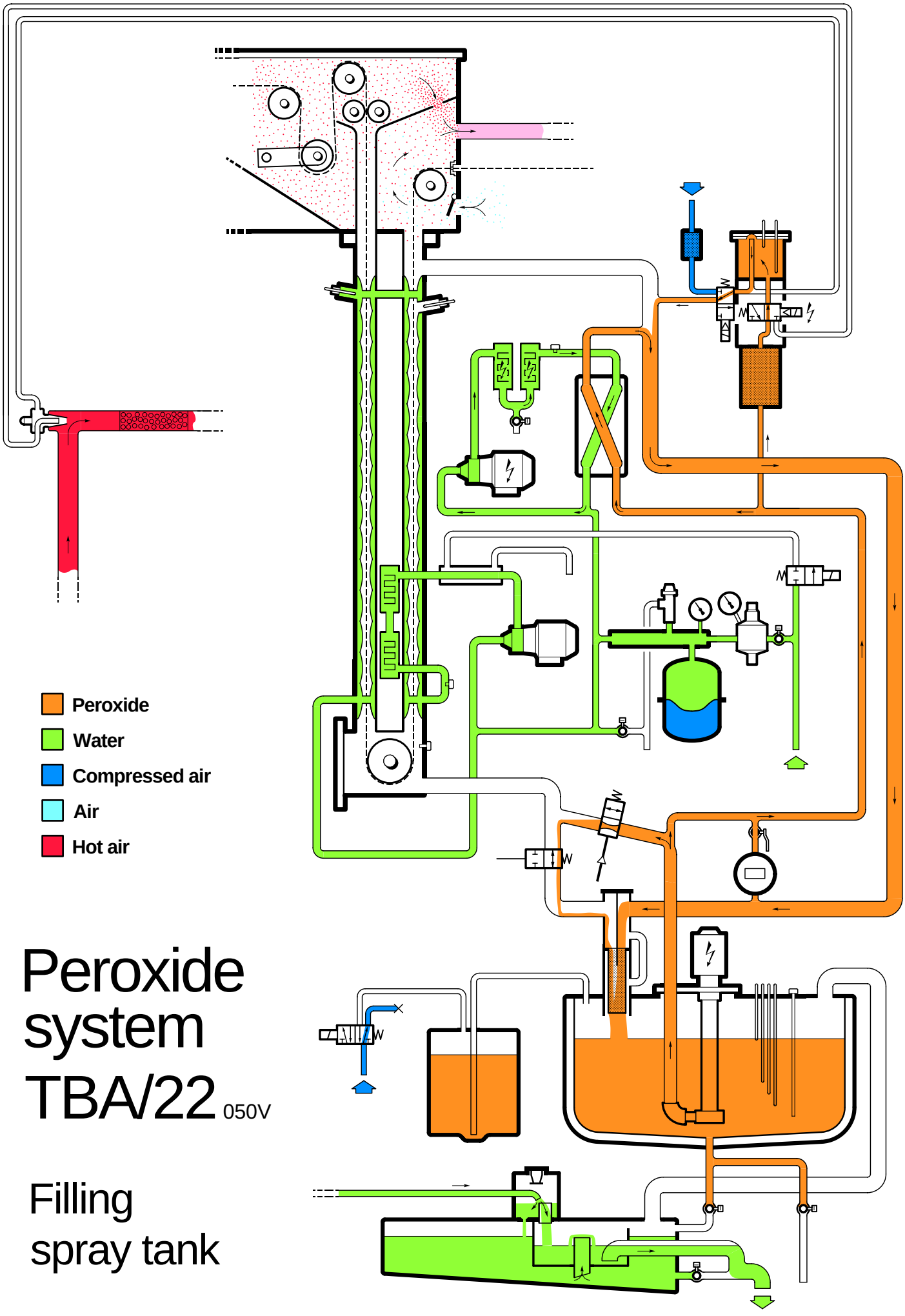

Peroxide system TBA/22 050V

Filling spray tank

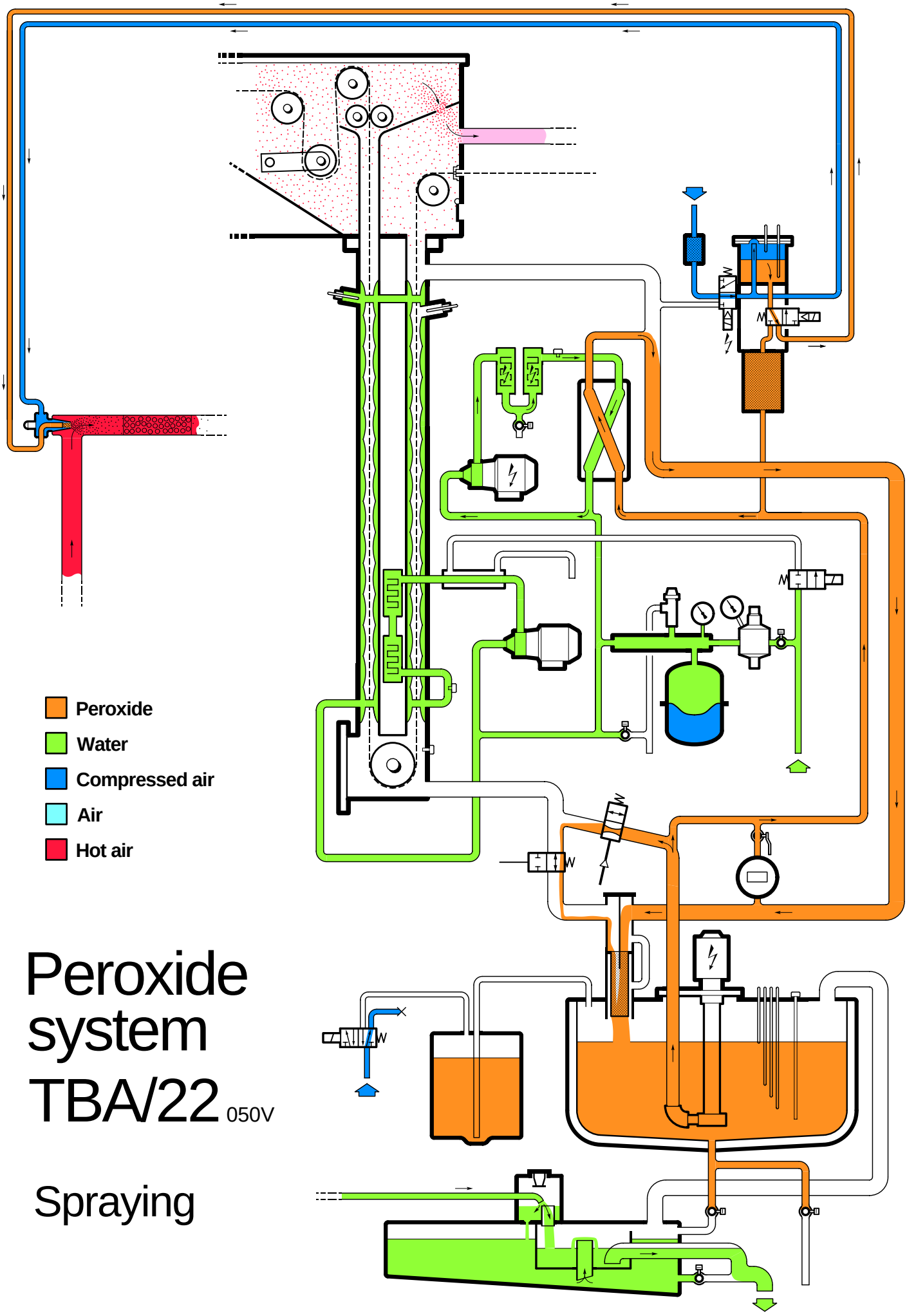

Peroxide system TBA/22 050V

Spraying

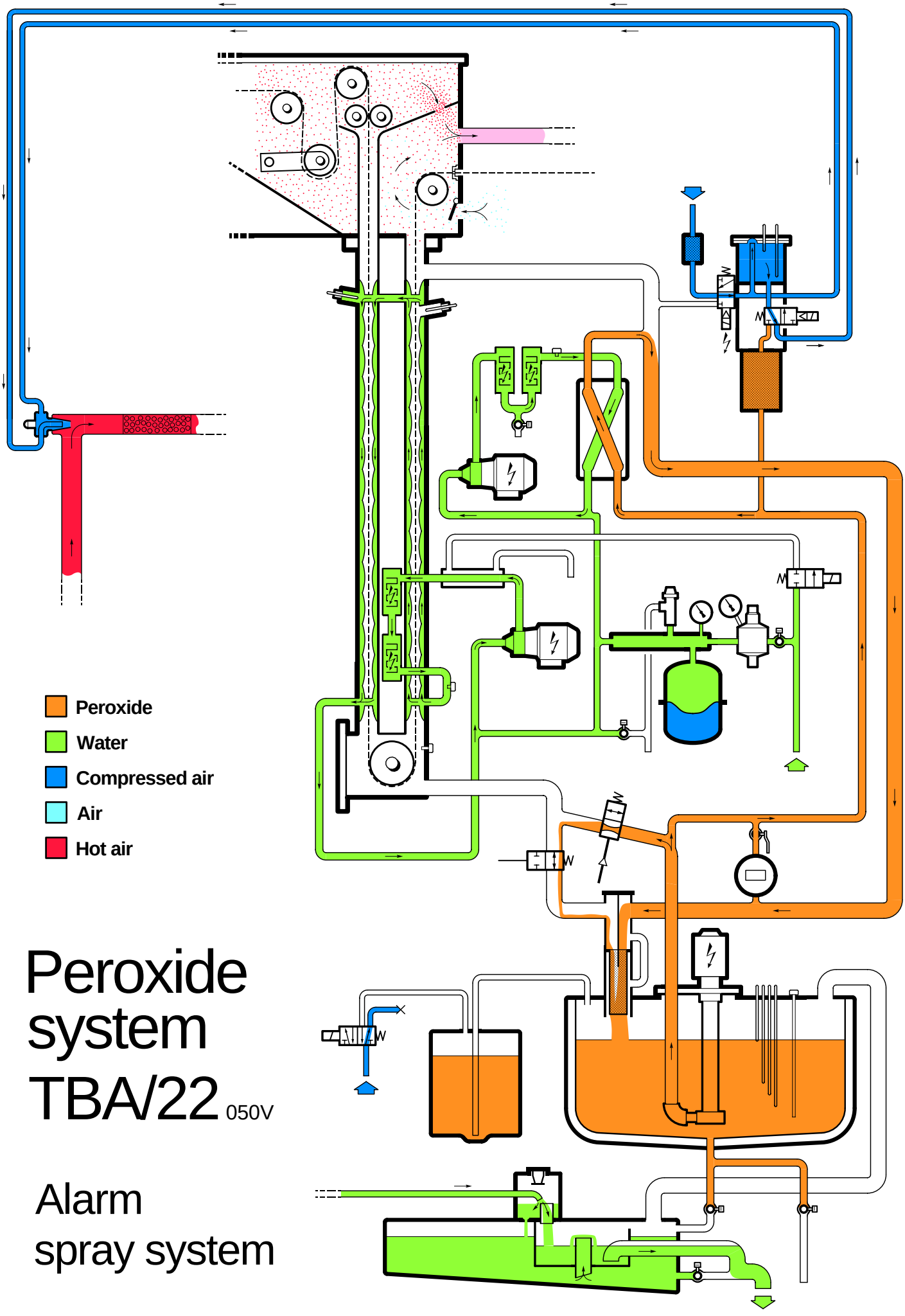

Peroxide system TBA/22 050V

Alarm spray system

Technical Training Centre Lund, Sweden	Machine type TBA/22 050V	Issue 3/0305	OH 1250:4

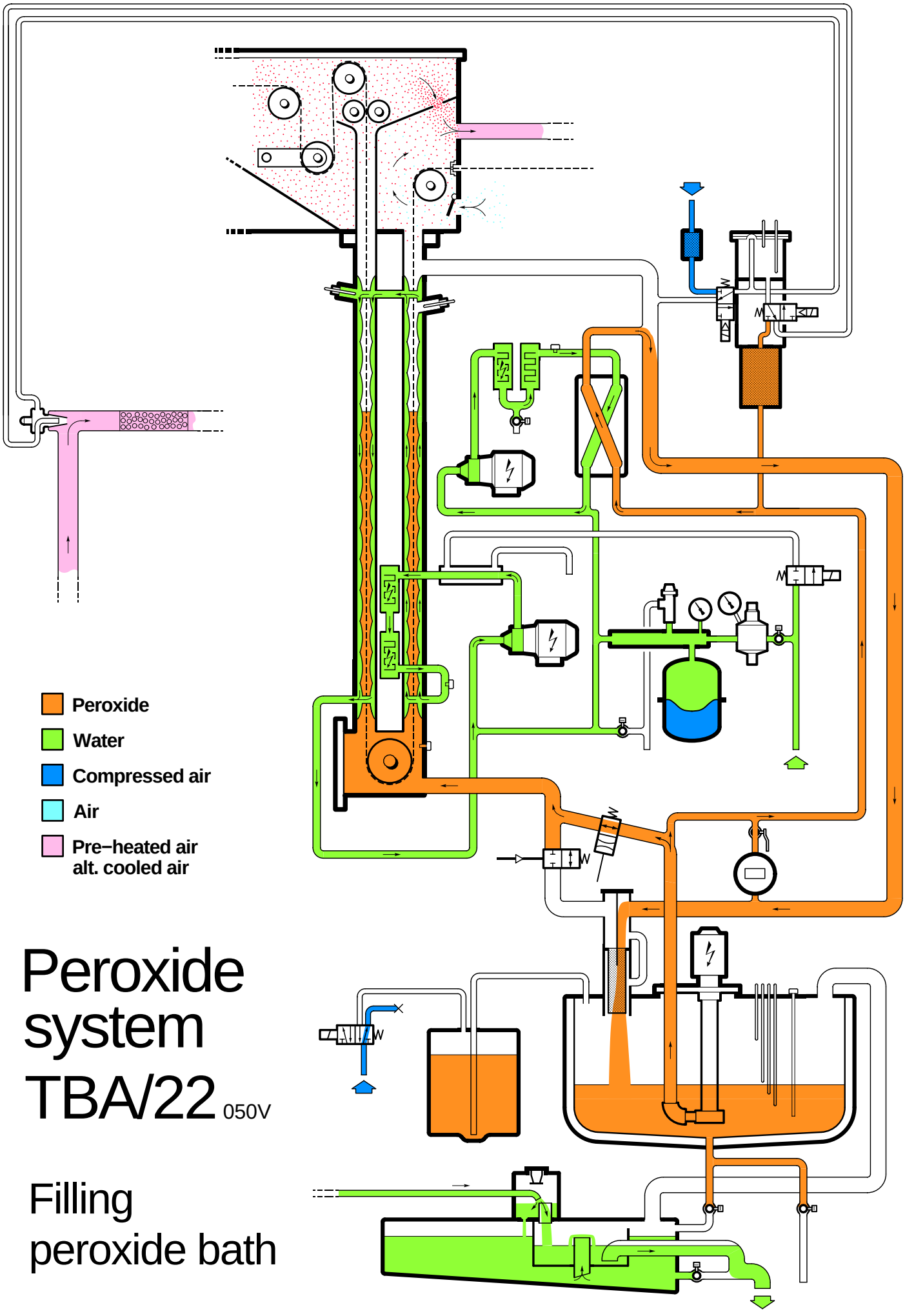

Peroxide system TBA/22 050V

Filling peroxide bath

Technical Training Centre Lund, Sweden	Machine type TBA/22 050V	Issue 3/0305	OH 1250:5

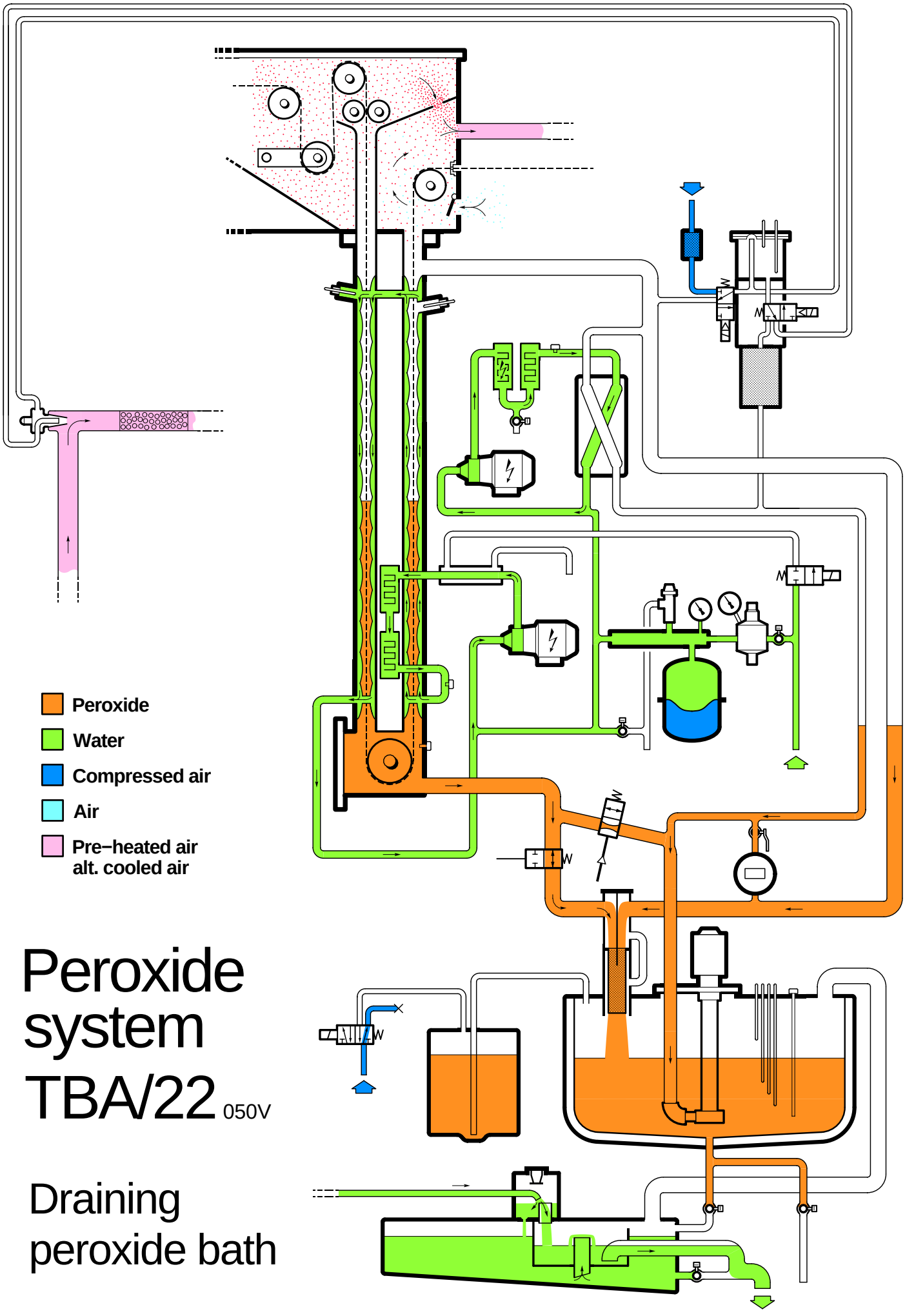

Peroxide system TBA/22 050V

Draining peroxide bath

Technical Training Centre Lund, Sweden	Machine type TBA/22 050V	Issue 3/0305	OH 1250:6

Peroxide handling

Emptying diluting tank

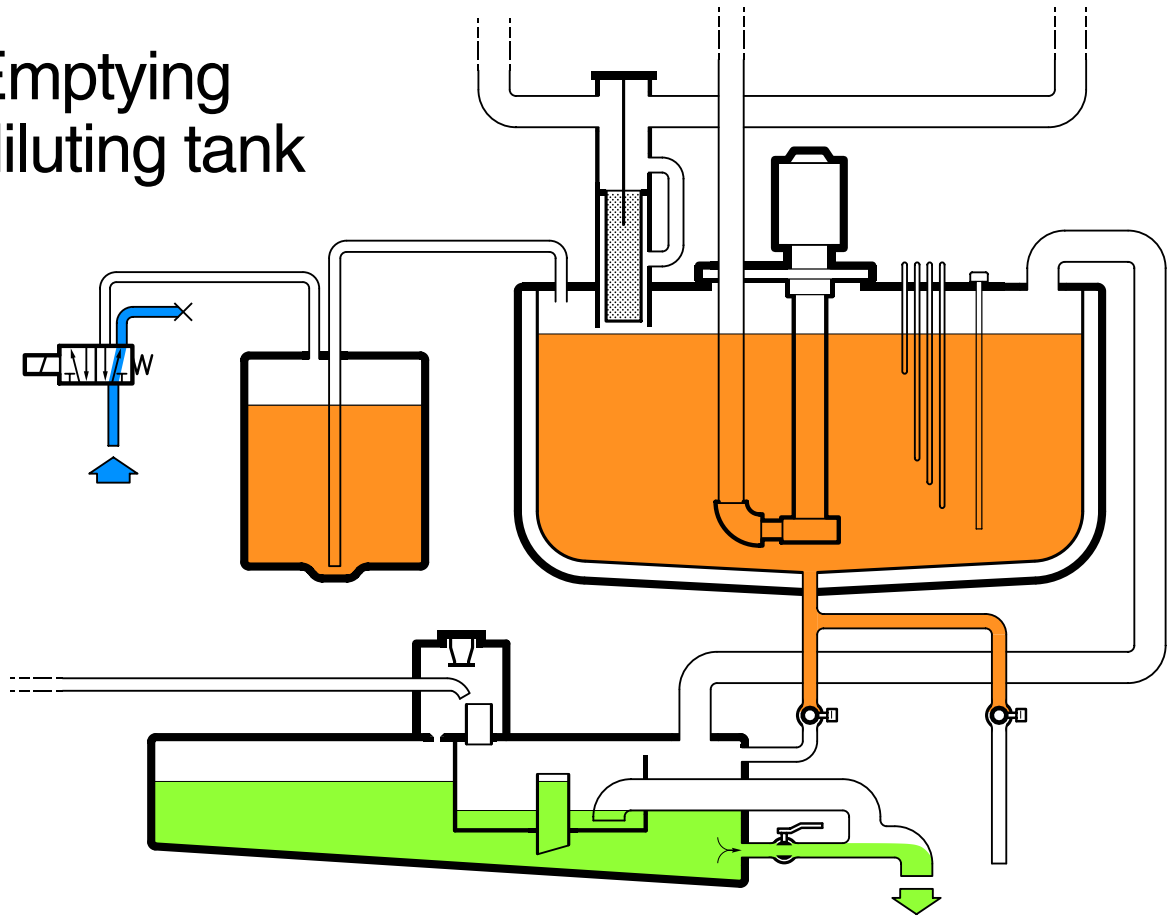

Emptying peroxide tank

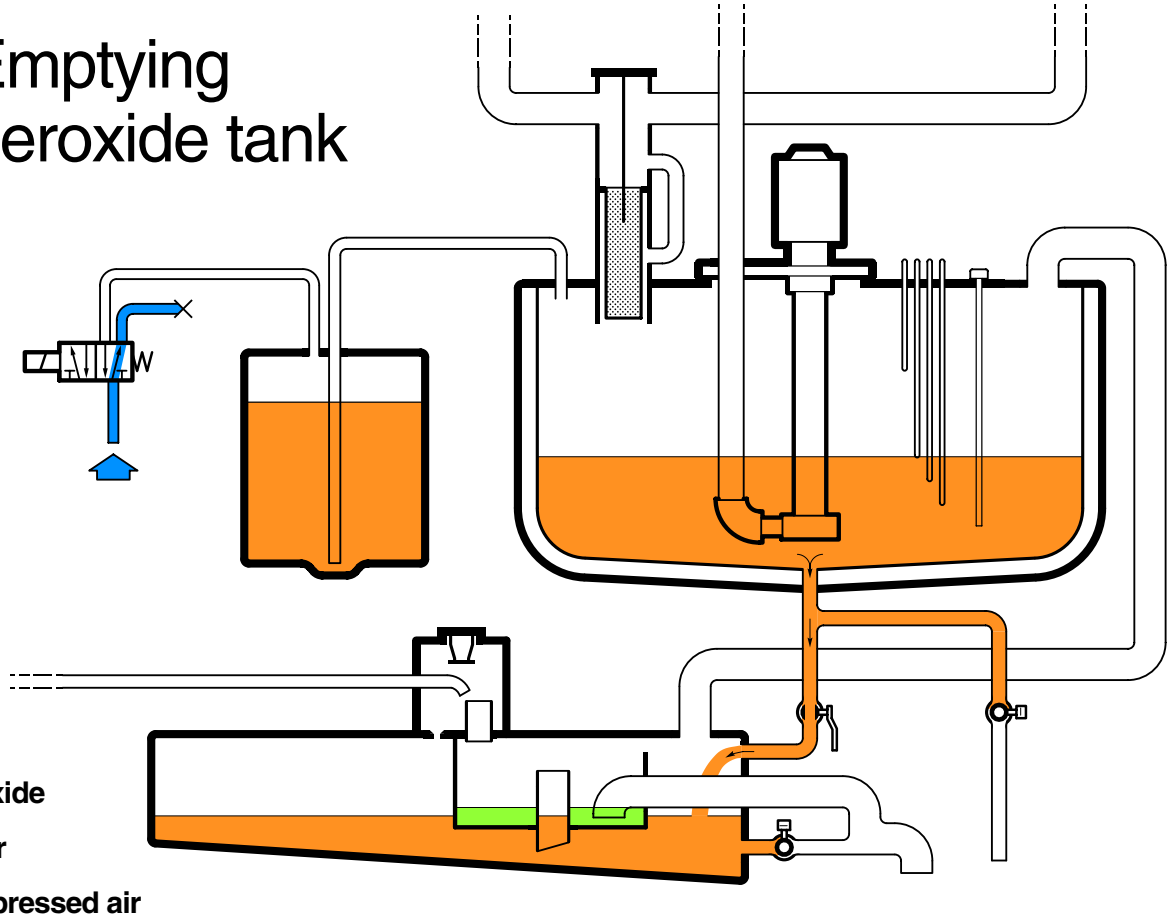

Peroxide

Water

Compressed air

Peroxide handling

Filling new peroxide

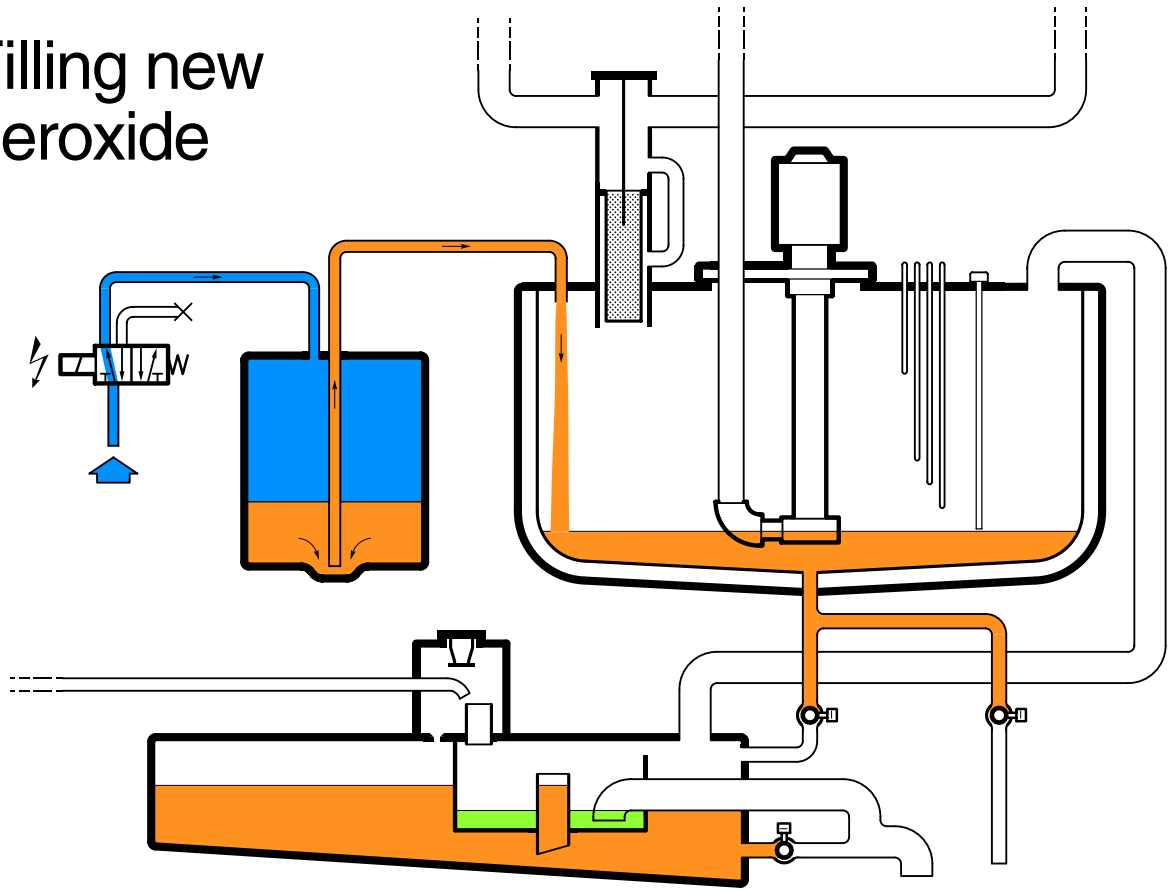

Diluting peroxide during compressor run

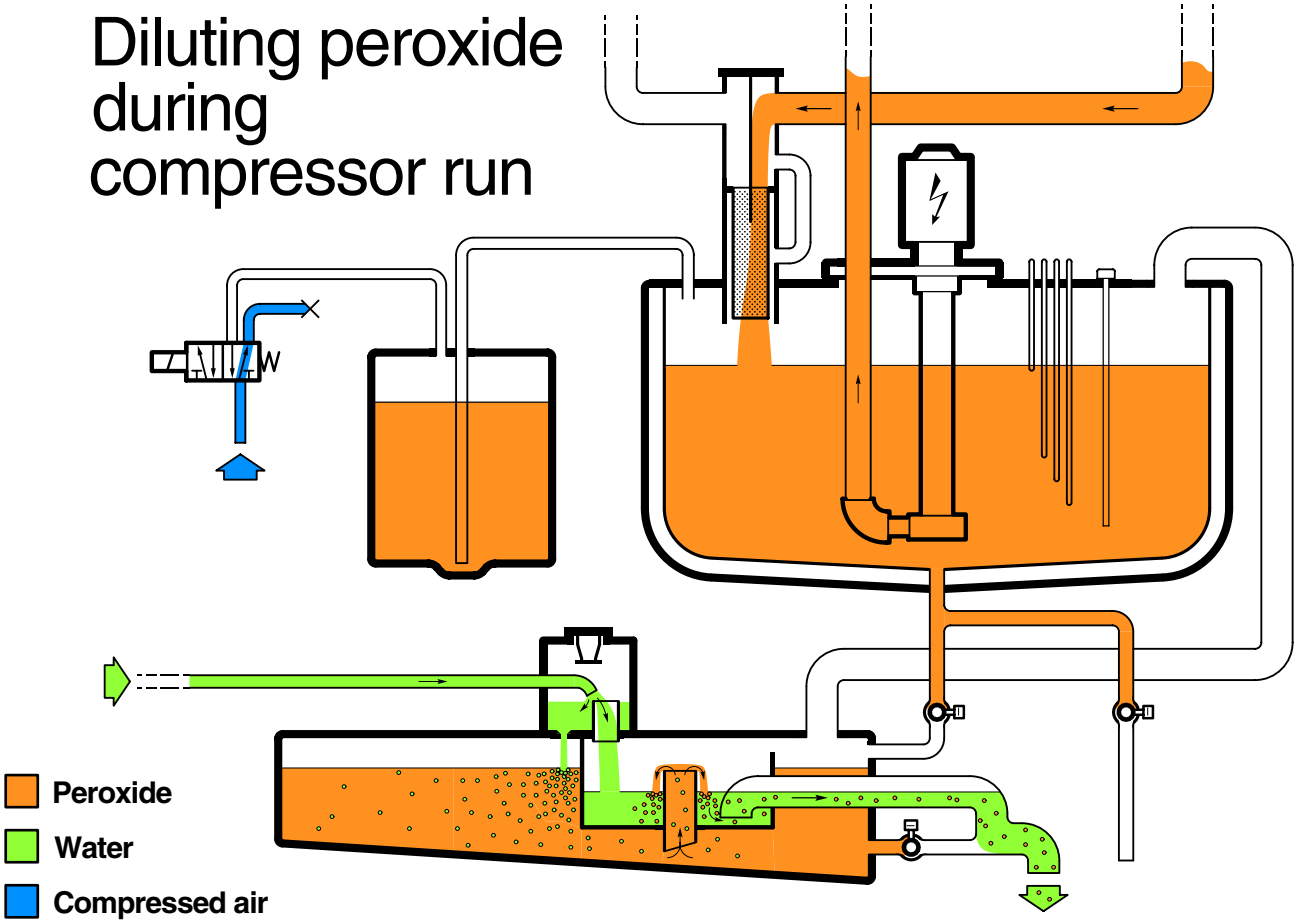

Peroxide filling station

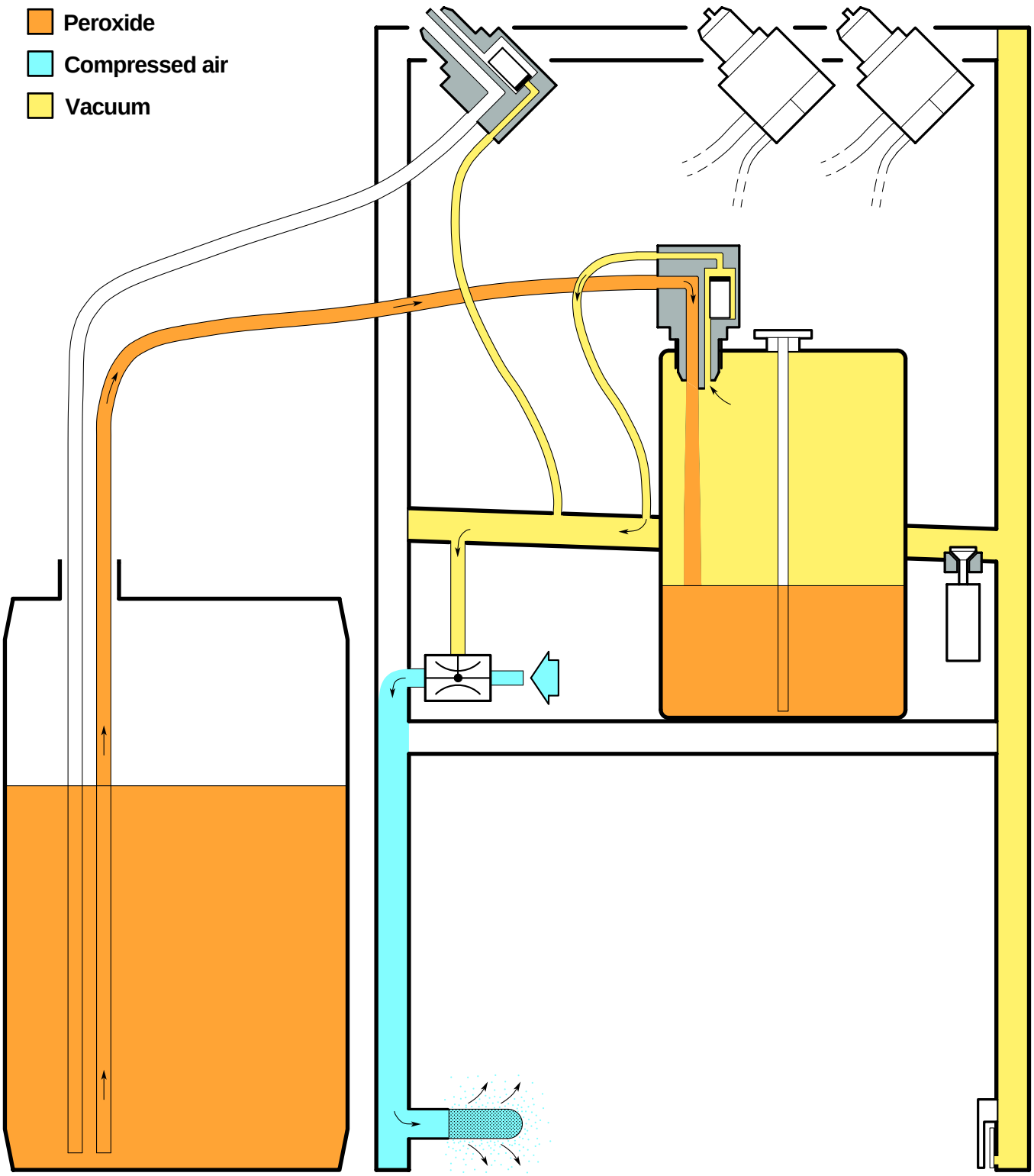

Technical Training Centre Lund, Sweden	Machine type Tetra Brik Aseptic	Issue 1/9609	OH 594

Temperatures overview

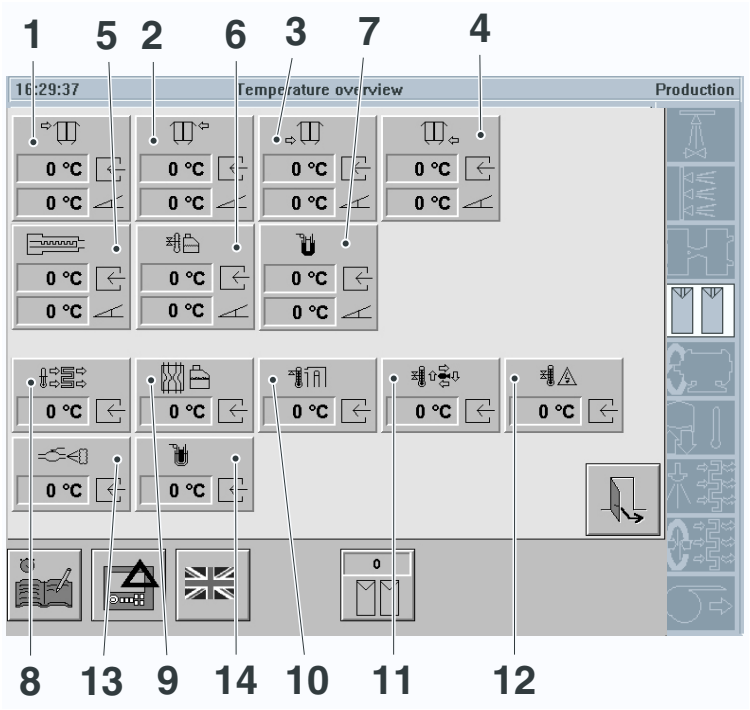

1	Flap Temperature		
2	Flap Temperature		
3	Flap Temperature		
4	Flap Temperature		
5	Air Superheater		
6	Peroxide Tank	B1212 :	82 °C
7	Peroxide Bath	B1222 :	80 °C
8	Heat Sterilization		
9	Water heating peroxide tank	B1209 :	93 °C
10	Top Aseptic Chamber	B1109 :	40 °C heat sterilization
			107 °C drying
			94.5 - 95.5 °C production
			87.5 - 88.5 °C stop > 5 mm
11	Cooling Water		
12	Electric Cabinet		
13	Steam		
14	Water Heating Peroxide bath	B1208 :	69 - 69.3 °C, water temperature during stop
			74 °C, water cooling valve closed
			90 °C, boiling guard

Sequence diagram
Spraying

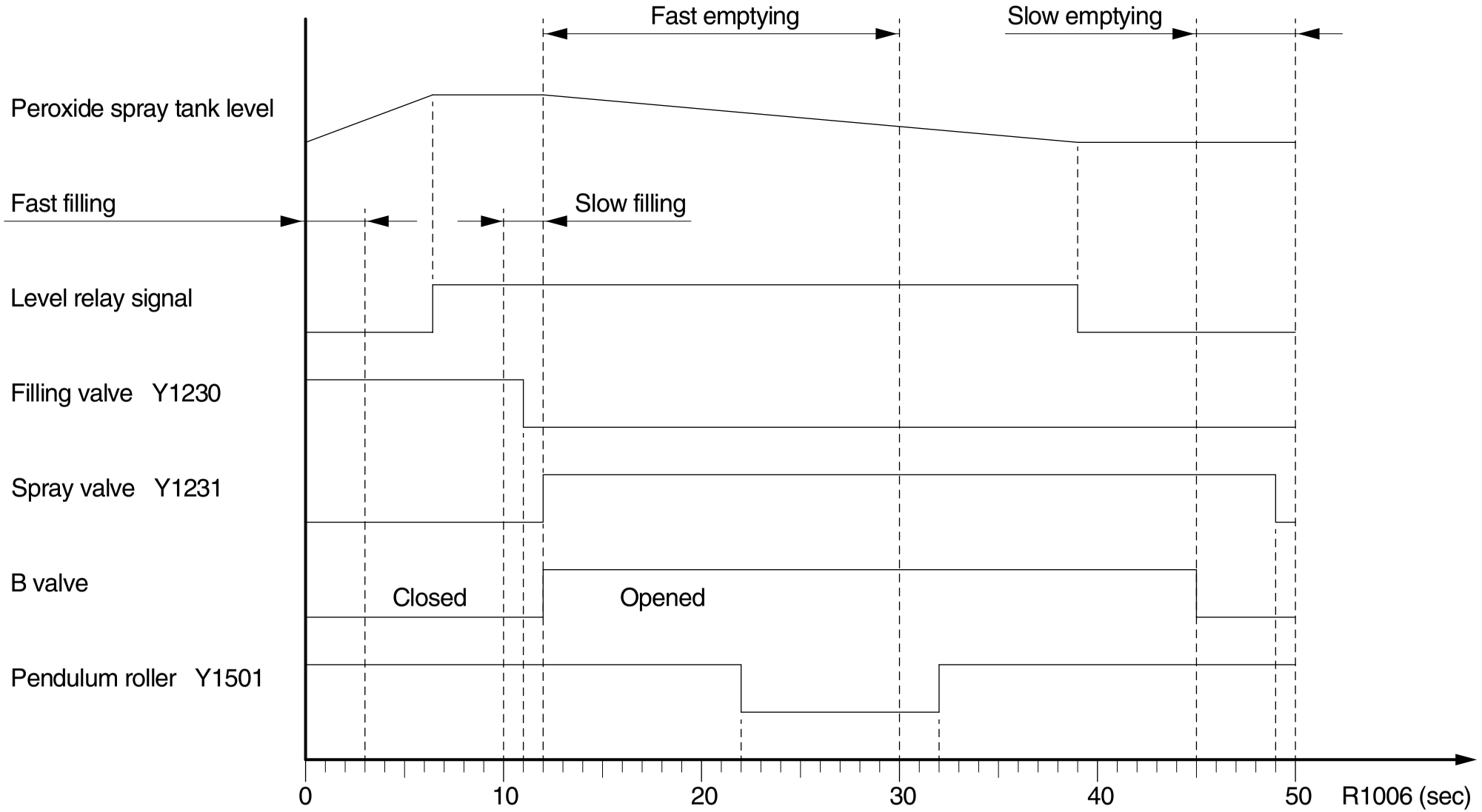

Filling alarm: step down to Tight Tube
Emptying alarm: Step up to Drying (15 min) and then Venting (20 min)

Sequence diagram

Temperature in aseptic chamber

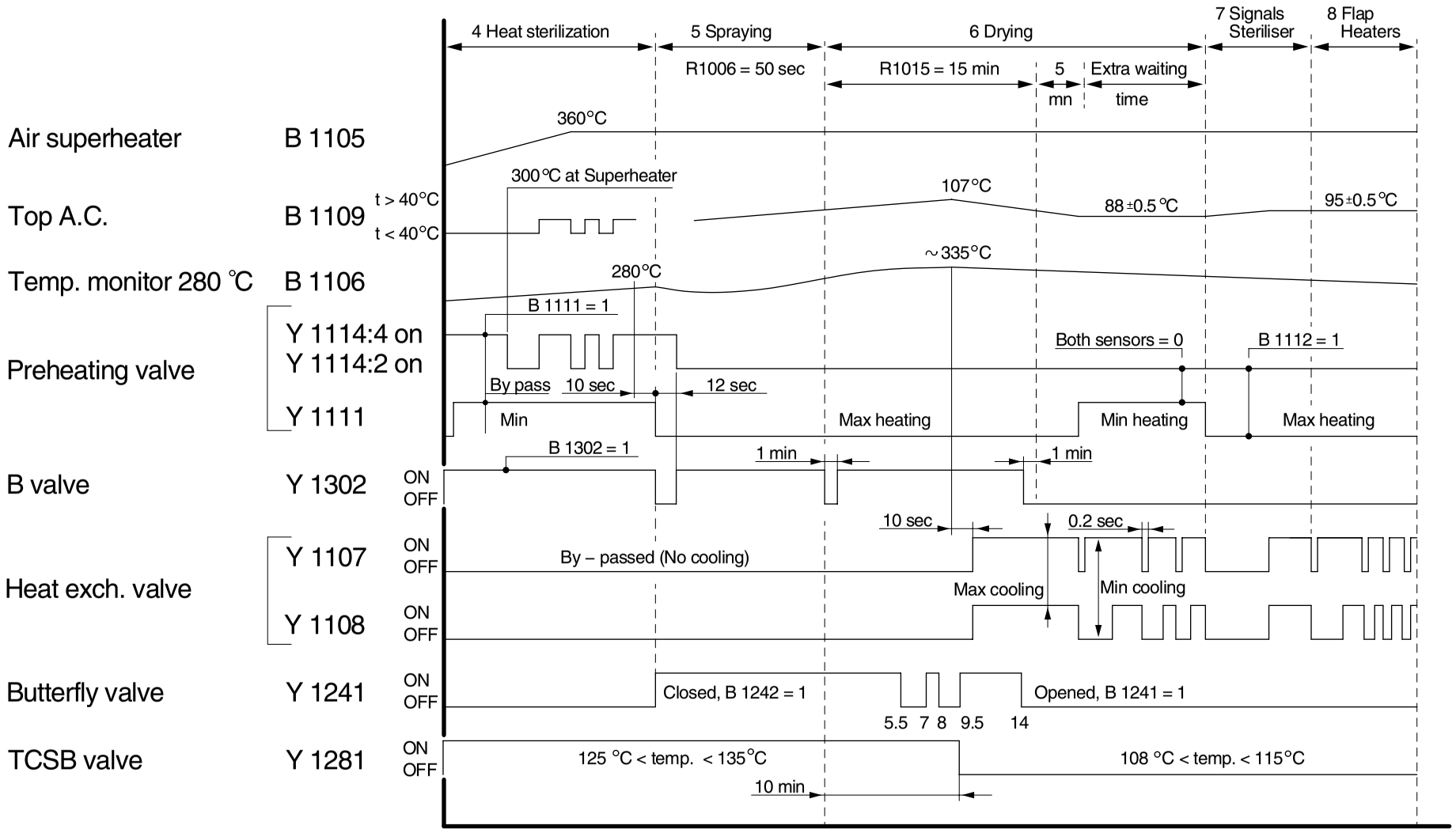

Sequence diagram
Peroxide system

Technical Training Centre
Lund, Sweden

Machine type
TBA/22 050V

Issue
1/0303

OH 1203

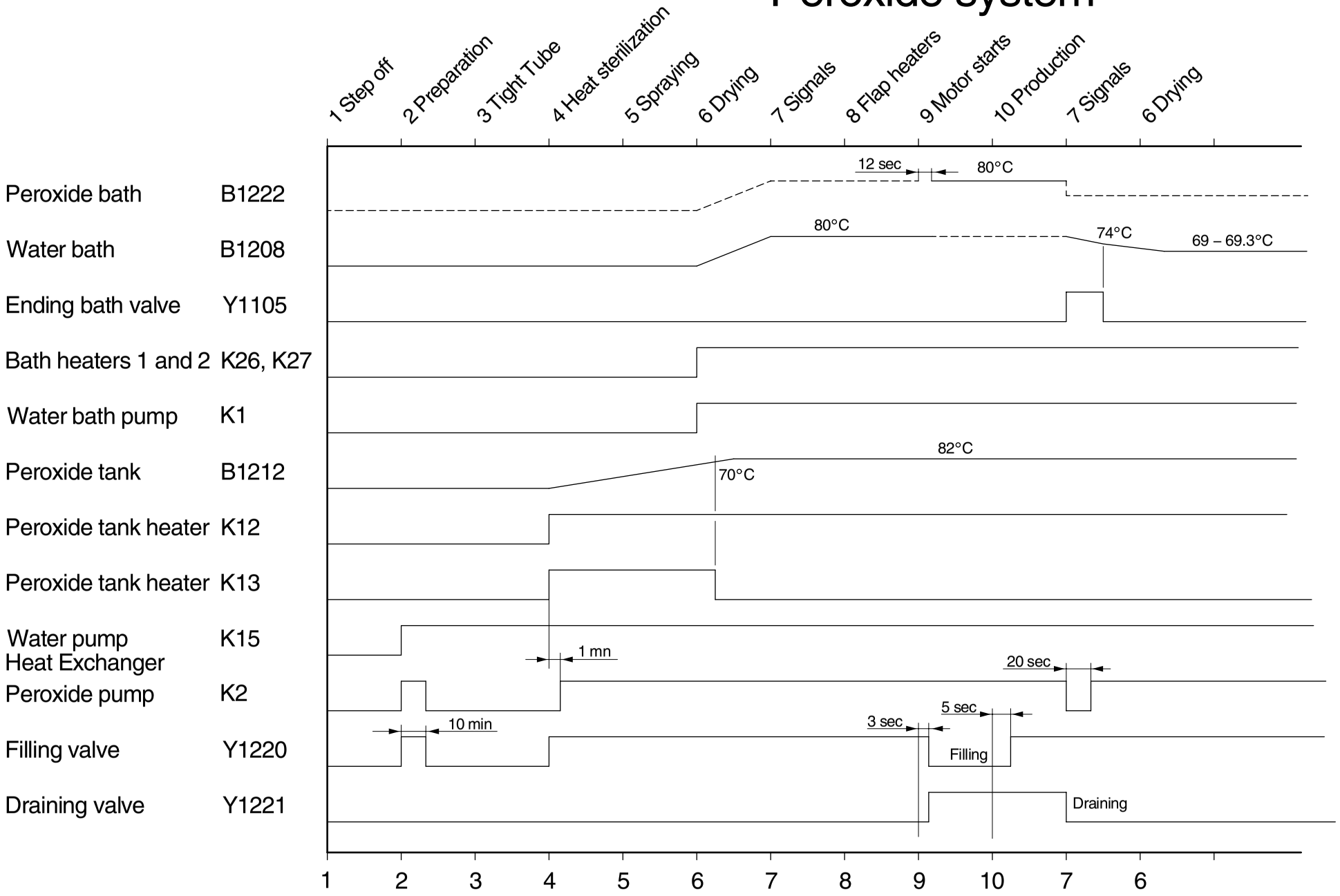

9

DMC

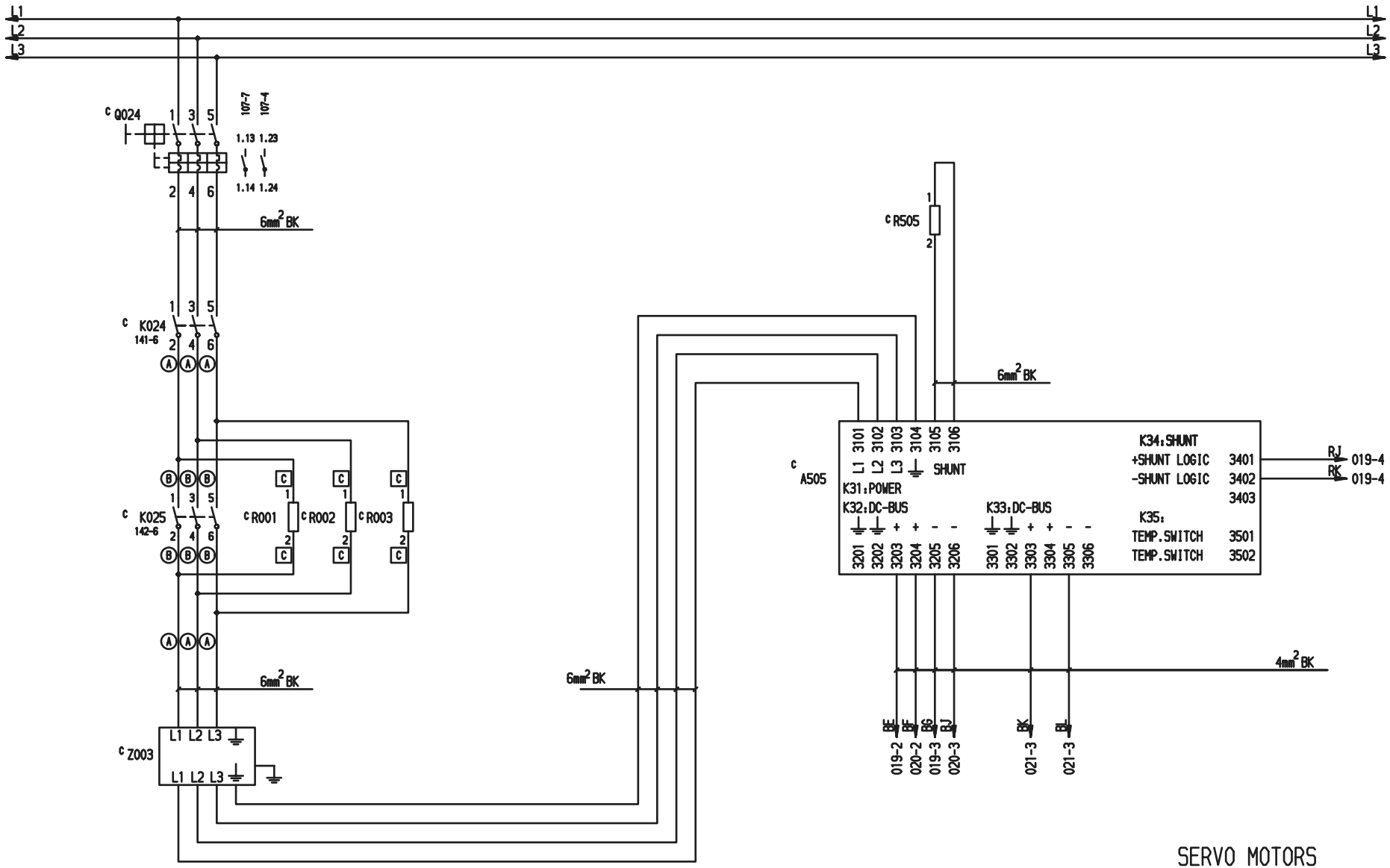

SERVO MOTORS

2552985-018:01

TBA/22
Function of DMC Status LEDs

Note that three green LEDs must be ON.
If LEDs CPU O.K and DMC initialised are off - application programme might be corrupted or not present.

Final Folder

LED	Colour	Function
Power ON	**GREEN**	Power is applied to DMC
CPU OK	**GREEN**	Indicates that the CPU is OK.
LED1	**GREEN**	*Ready:* Indicates that the DMC is initialised.
LED2	**YELLOW**	*Enable:* Indicates that both Hardware and software enable is high and that the power-stage is active
LED3	**YELLOW**	*Motor Home:* Indicates that the motor has found its home position
LED4	**YELLOW**	*Motor run:* Indicates that some of the motor run-signals for the motor are high.
LED5	**RED**	*FaultBit1;* See fault table
LED6	**RED**	*FaultBit2:* See fault table
LED7	**RED**	*FaultBit3;* See fault table
LED8	**RED**	*FaultBit4;* See fault table

Design Control

LED	Colour	Function
Power ON	**GREEN**	Power is applied to DMC
CPU OK	**GREEN**	Indicates that the CPU is OK.
LED1	**GREEN**	*Ready:* Indicates that the DMC is initialised.
LED2	**YELLOW**	*Enable:* Indicates that both Hardware and software enable is high and that the power-stage is active
LED3	**YELLOW**	*Home_pos:* Indicates that the motor is in home position.
LED4	**YELLOW**	
LED5	**RED**	*FaultBit1;* See fault table
LED6	**RED**	*FaultBit2:* See fault table
LED7	**RED**	*FaultBit3;* See fault table
LED8	**RED**	*FaultBit4;* See fault table

Main Motor

LED	Colour	Function
Power ON	**GREEN**	Power is applied to DMC
CPU OK	**GREEN**	Indicates that the CPU is OK.
LED1	**GREEN**	*Ready:* Indicates that the DMC is initialised.
LED2	**YELLOW**	*Enable:* Indicates that both Hardware and software enable is high and that the power-stage is active
LED3	**YELLOW**	*Shunt:* Indicates that one of the DMC units is feeding energy to the bleeder resistor.
LED4	**YELLOW**	*Motor run:* Motor is running at low or high speed
LED5	**RED**	*FaultBit1;* See fault table
LED6	**RED**	*FaultBit2:* See fault table
LED7	**RED**	*FaultBit3;* See fault table
LED8	**RED**	*FaultBit4;* See fault table

DMC fault table in TBA/22

What to do if faults occur ?

DMC alarms shown below have almost the same meaning in all three modules (Main motor, FFU motor and Design Corr. Motor).
If alarms occur, try to reset DMC first. To reset the DMC use Main Switch or type **Ctrl+C** than **RUN** commands from terminal.

After start up of DMC these messages should appear on terminal screen:

Main Motor:

ACC DMC / InMotion Technology AB, v05.06.00 Node#: 1 Baud: 9600 Mode: 0

- FPGA not available	
Motor.IcalR = -140	*Phase R current calibration offset. Used to adjust offsets in the drive electronics. Makes real current = 0 when commanded current = 0.*
Motor.IcalS = -60	*Phase S current calibration offset.*
SysIo.PWM0 = 214	*Initial resolver excitation voltage. Value 255 - 0 corresponds to 3 to 13 V of*
RD1.Ampl = 10112	*Initial combined amplitude of SIN and COS signals from resolver*
RD1.SHAdj = -7	*Compensates for phase shift in the resolver and cables.*
SysIo.PWM0 = 183	*Final excitation voltage*
RD1.Ampl = 15056	*Final combined amplitude*
RD1.SHAdj = -6	*Resolver phase shift*
VALUE = 1414	*Resolver is O.K*
VALUE = 1515	*Resolver and motor have the right commutation relation*
R255 = 7	*Program version*

FFU Motor:

ACC DMC / InMotion Technology AB, v05.06.00 Node#: 1 Baud: 9600 Mode: 0

- FPGA not available	
VALUE = 1111	*Set as a slave*
VALUE = 2222	*High-resolution mode selected (RD2.Mode=16). One revolution of a 2 pole resolver yields 65536 increments, this is eight times better than the low-resolution mode.*
Motor.IcalR = 36	
Motor.IcalS = 4	
SysIo.PWM0 = 205	
RD1.Ampl = 10090	
RD1.SHAdj = -8	
RD2.SHAdj = 0	
VALUE = 3333	*Resolver excitation amplitude has been adjusted*
SysIo.PWM0 = 169	
RD1.Ampl = 15117	
RD1.SHAdj = -6	
RD2.SHAdj = -130	
R255 = 8	*Program version*
VALUE = 89	*DMC has been initialised*

DCS Motor:

ACC DMC / InMotion Technology AB, v05.06.00 Node#: 1 Baud: 9600 Mode: 0
- FPGA not available
R255 = 4
Motor.IcalR = -60
Motor.IcalS = -28
SysIo.PWM0 = 205
RD1.Ampl = 10145
RD1.SHAdj = -22
SysIo.PWM0 = 170

RD1.Ampl = 15090
RD1.SHAdj = -19

When the motor stops check the **Value** in the terminal. Normally it is 7. If not - see alarm description below.

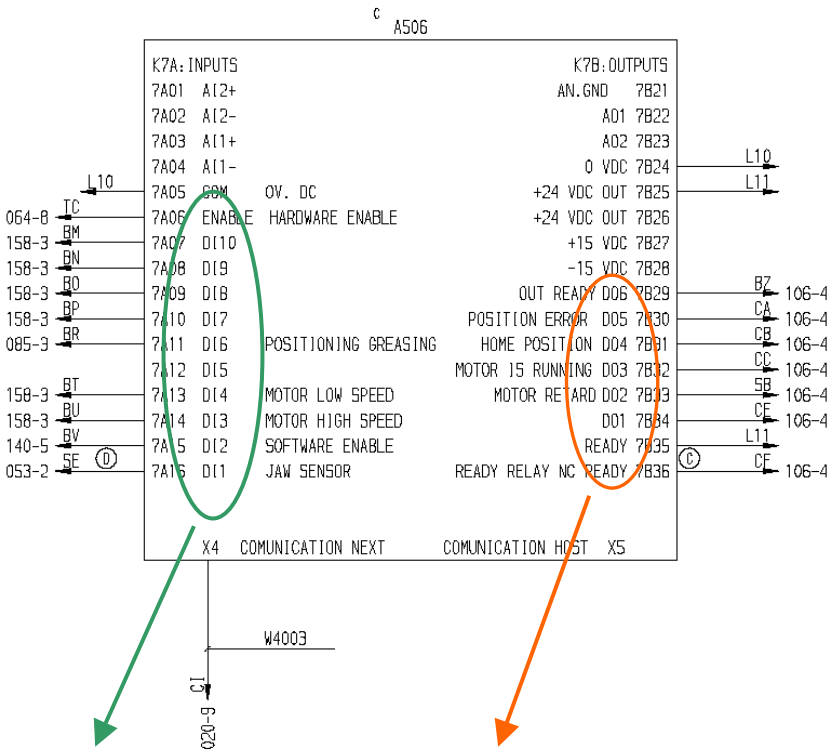

To check I/O Status type **gdisp xx.** in terminal window:

>gdisp in.

In.DI1 = 0
In.DI2 = 0
In.DI3 = 0
In.DI4 = 0
In.DI5 = 0
In.DI6 = 0
In.DI7 = 0
In.DI8 = 0
In.DI9 = 0
In.DI10 = 0
In.Enable = 1
In.PTC = 0
In.Fault = 1
In.13 = 0
In.14 = 0
In.15 = 0
In.Level = 0
In.PDI = 54272

>gdisp out.

Out.DO1 = 0
Out.DO2 = 0
Out.DO3 = 1
Out.DO4 = 0
Out.DO5 = 0
Out.DO6 = 1
Out.JamRS = 1
Out.Fault = 1
Out.Level = 255
Out.SyncMask = 0
Out.PDO = 228

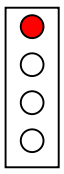

Hardware disabled - "VALUE 1"
(The values are shown on terminal after machine stop)
No signal on input 7A06 of control card.
Check status of safety modules. It could be open doors, Emergency Stop button pressed, A603 (0.5s) module malfunctioning or disabled. Check signal propagation from safety module to DMC card.

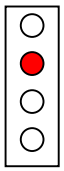

System Internal hardware fault – "VALUE 2"
Most possibly there is a problem with internal circuits in module or mains are missing. Check 570V.
For more information check value of 8-bit register **SysIo.Pin** (Disp SysIo.Pin)
Register value should be converted to binary format so the problem could be identified using the table below (See Atlas Copco software manual, p82)

Group.Member	Member No.
SysIo.PIn	0
	System parallel input port (c
Bit0 (1)	High voltage level
Bit1 (2)	Comp. current sign V
Bit2 (4)	Comp. current sign U
Bit3 (8)	Motor Temp. High
Bit4 (16)	Drive Temp. High
Bit5 (32)	Current Regulator fault
Bit6 (64)	Shunt regulator active (on/off) (Dynamic Brake)
Bit7 (128)	Short circuit, power stage

The module might need to be replaced. The 'old' EEPROMs should be kept and used in the new module.

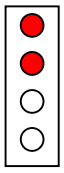

Position error exceeded / sensor fault– "VALUE 3"
Actual position of resolver does not correspond to the demanded position.
Position difference exceeds the limits (2000 for MM and 3000 for FF)
This alarm will cause the machine to stop.

Position (degrees) = (Reg.poserr * 360) / 24576

Most possible reason – mechanical overload, absence of grease in gearboxes, big play in the gears/clutches, especially in case of 'electrical gear' when the final folder motor is 'overshooting' trying to follow the main motor in case of substantial play in jaw system.
It also could be a problem with DMC card (DO 5) or servo motor.
SimPl software could be used to monitor register **Reg.poserr**

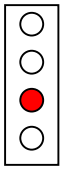

Control-C interrupt – "VALUE 4"
DMC programme is interrupted by the **Control-C** command from the computer connected to DMC card. The card should be initialised. (Main power Off/On or command **RUN** from terminal). While monitoring the DMC programme during production do not press accidentally **Control +C** or any

other functional keys. It may, for example, change PID coefficients and cause malfunctioning or damage of the driver.

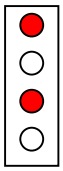

System error – "VALUE 5"
System interrupt vector for interpreter monitoring
Most possible problem - firmware EEPROM (BRAM) or incorrect instructions sent from terminal. EEPROM (BRAM) might need to be replaced/reprogrammed.

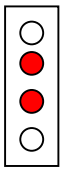

Temperature fault -"VALUE 6"
Too high temperature of the motor or thermistor is faulty.
Check connections and a resistance of thermistor that is about 50 Ohm.
Check the rotation of the motor. Note high friction or excessive load.

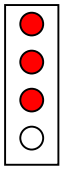

Software disabled – "VALUE 7"
(Normal machine status, not an alarm). Machine is stopped or signal from GE-Fanuc is missing. Check status of DI2 with terminal (**Gdisp IN.**)

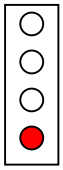

Current check – "VALUE 8"
Too high torque/current in motor windings. Short circuit in winding or motor is overloaded. Check greasing, play in system, etc. Crank manually, note the excessive load. It also could be a problem with DMC card or servo motor.
Check value of **reg.torque** register.
Torque limits are 5500 (12.3 Nm) for FF, 8000 (13.81 Nm) for MM

Torque(Nm) = (Reg.Torque / 4) * 0,009

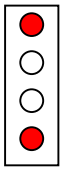

Cyclical timer interrupt – "VALUE 9"
In DMC card cyclical timer checking the content of 8-bit DMC internal alarm register. When most critical alarms occur **Cyclical timer interrupt** takes place. Most possible problems are:
High voltage (Dc_Bus),
Current Regulator Fault
Short Circuit in Power Stage
In the last two cases DMC module needs to be replaced. The 'old' EEPROMs (BRAM) should be kept and used in the new module.

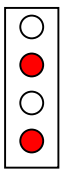

Motor running in wrong direction. - "VALUE 10"
if rd1.speed < -30000 then FLT_dir; rd1.speed - speed of FF resolver
if rd1.speed >30000 then FLT_dir; rd1.speed - speed of MM resolver
This alarm is to prevent the jaw crash during the DMC programme tests. If this alarm occurs during production, check **rd1.speed register.**

DMC module might need to be replaced.
FF might run in wrong direction when 'FF running' signal is missing.

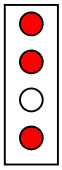

Resolver fault – "VALUE 11"
The alarm caused by mismatch between resolver excitation voltage (**SysIo.pwm0**) and combined amplitude of SIN and COS signals from resolver (RD1.Ampl1).
Excitation voltage has a range of 3 to 13 V that corresponds to **SysIo.pwm0** register value 255 - 0.
Check resolver connections first, open the rear lid in the motor and examine the resolver. Movable winding is locked on the shaft by grub screw. Check that it is fixed firmly to the shaft. Replace the servomotor as needed.

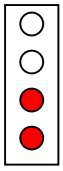

Stop position sensor fault – "VALUE 12"
In MM DMC check a signal from angle encoder (Bit 7, Di1-Jaw sensor).
If during stop sequence no signal arrives - alarm and **E_stop** after 1.6 sec for MM and 1.34 sec for FF.
(Register **Capture, tmr.t2**)

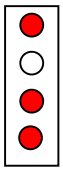

Shunt / bleeding resistor fault – "VALUE 13"
This alarm occurs when the switching transistor or shunt resistor are broken or when continuous bleeding time exceeds 0.5s (value **400** in **Int.BleedLim** register). In some applications (TBA/21) main motor speed profile constants in GE Fanuc PLC have to be verified. Set earlier deceleration phase.
In case of hardware fault, power supply module or shunt resistor may need to be replaced.

Evgeny Lavrentiev, TTC Modena 6/6/2003

DMC2
DOWNLOADING PROGRAM PROCEDURE

1 - Preparation

The SimPL software is required, it can be downloaded from the website :
http://151.183.8.67/products/pc_motordrivesystems/motioncontrol/index.htm

The programs have to be compiled to be downloaded (check for the extension .HEE)

The machine should be stopped and the DMC with power ON.

2 - Communication

Connect the PC with the proper DMC (connection Host)
In the Tools menu, choose Communication settings
In the dialog box, click on Node search
In the following dialog box, double-click on any node found, then click on close to close the window.

3 - Erase the previous program

From the Tools menu, choose Terminal : the number of the chosen node followed by > should appear in the window.
Type Control C twice to stop the program.
Type New and Enter to erase the flash memory.
(type List and Enter to check for any rungs left)
Close the window.

4 – Downloading the new program

In the Generate menu, choose Download to DMC
Look for the location of the proper software with the command Browse, select it and click on OK.
Click on Download.
A bar will appear showing the downloading is in progress.

When it is finished, close the window, click on OK on the following window.
In the Tools menu, choose Terminal.
Write Fstore and Enter to save the new program in the flash memory, then RUN and Enter.

Check whether the three green LED of the front panel of the DMC are ON.

Resistances of Servomotor's Stator / Resolver windings and Thermistors in TBA/21/22

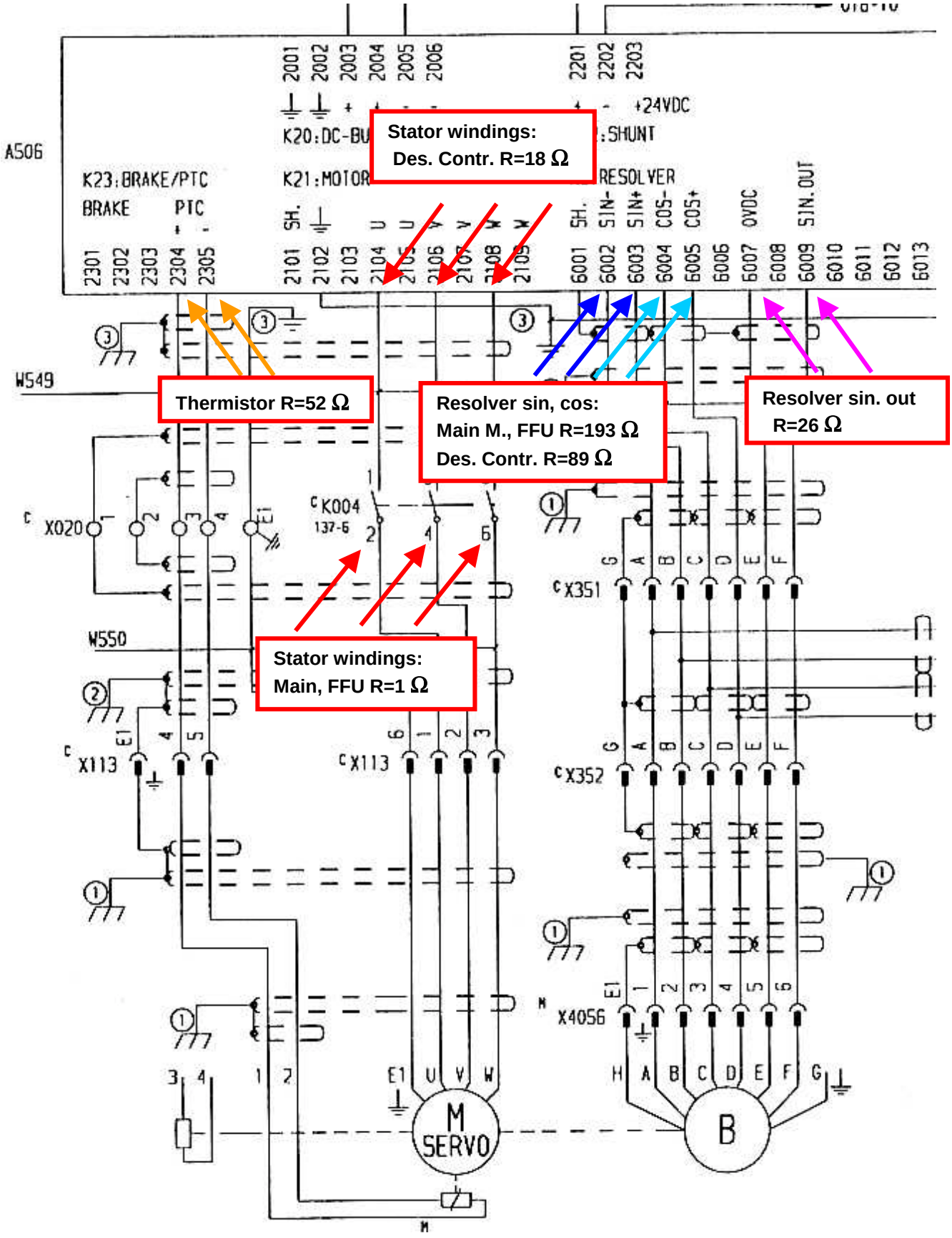

Textbook

Electric drive systems

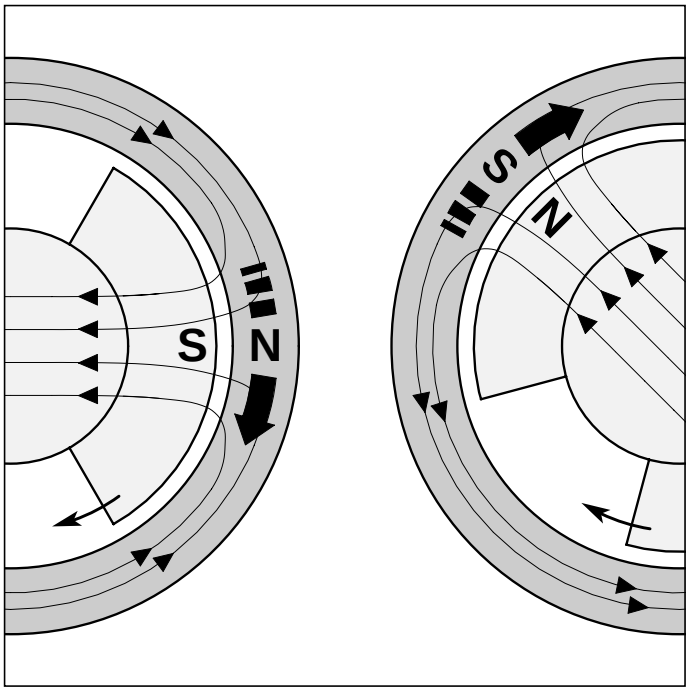

MT-83025-2

Technical Training Centre
Lund, Sweden

This textbook has been compiled by the Technical Training Centre in Lund.

Some of the pictures in the book are also available as OH pictures.

For further information on training material, please contact the Technical Training Centre.

Issue 1/9706

© 1997, Technical Training Centre

No part of this publication may be reproduced, stored in a retrieval system or transmitted in any form or by any means: electronic, electrostatic, magnetic tape, mechanical photocopying, recording or otherwise, without permission in writing from Technical Training Centre.

Electric drive systems

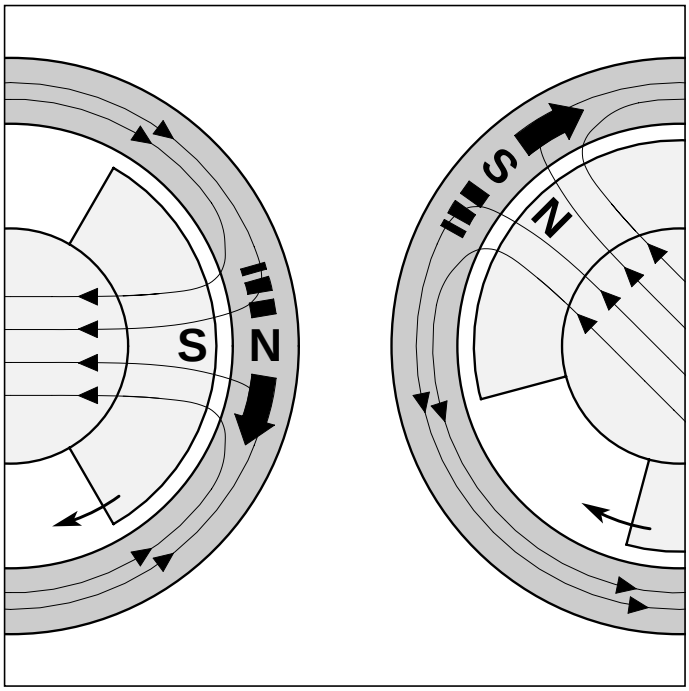

Training Document

This Training Document is intended for Training purpose only, and must not be used for other purpose.

The Training Document is not replacing any instructions or procedures (e.g. OM, MM, TeM, IM, SPC) intended for specific equipment, and must not be used as such.

Note!

For safe and proper procedures, refer to the equipment specific documentation.

Technical Training Centre

Contents

Introduction 3
Overview 4
General 4

Frequency-controlled asynchronous motor 5
The squirrel-cage asynchronous motor 5
Frequency converter 8
Fault-finding 10

Drive systems with DC motors 11
The DC motor 11
DC Converter 13
Fault-finding 14

Stepping motor systems 15
The stepping motor 15
Control unit 18
Fault-finding 19

Servosystems 20
The servomotor 20
Control unit, drive electronics 22
Fault-finding 23

Miscellaneous 24
Angle encoders 24
Temperature (safety) switches 26

Electric drive systems

Introduction

By electric drive systems we mean various types of electric motors which, together with some form of electronic controls, drive or perform mechanical movements.

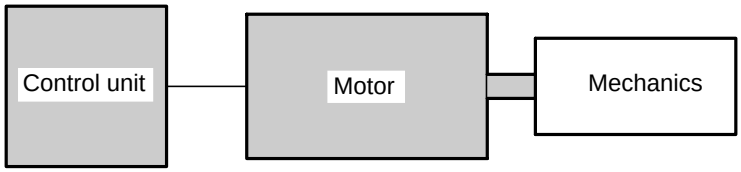

One type of electric drive system is a variable speed motor, which drives a main shaft. On this shaft, cams, belt pulleys, gears, sprockets, etc may be fitted, which in their turn provide the motive power for mechanical movements.

What, in this case, is considered the electric drive system are the **motor** and the **speed control device**.

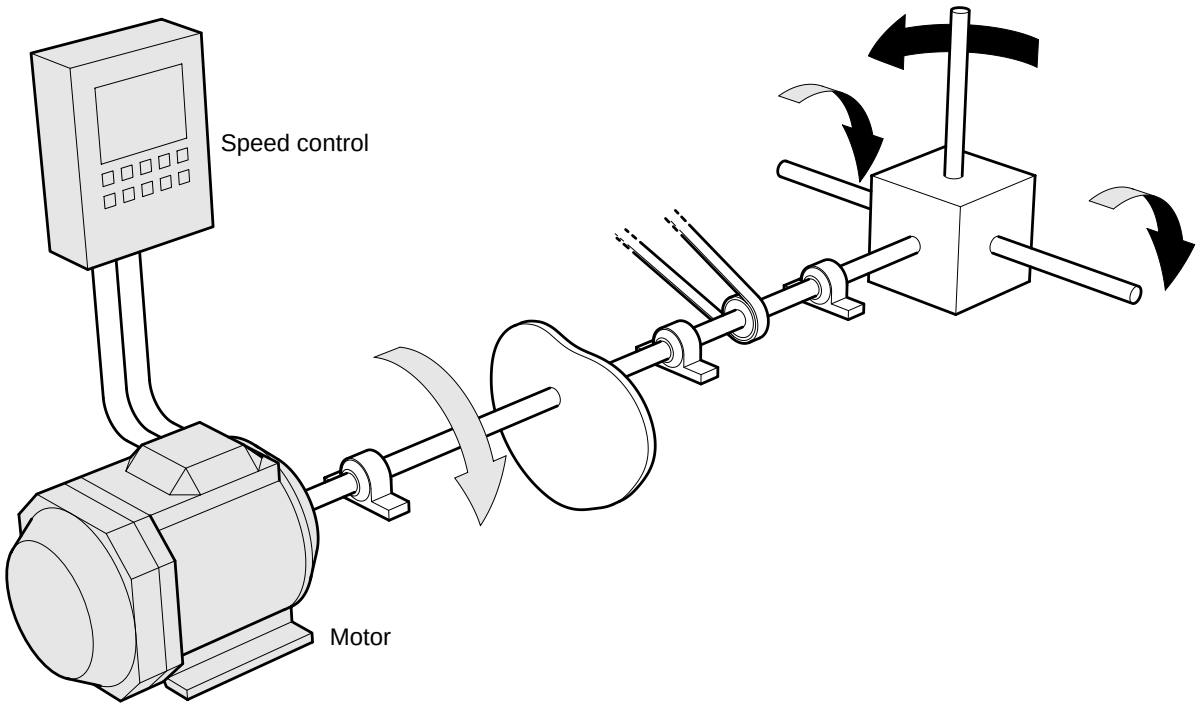

This textbook describes such electric drive systems as are employed in the Tetra Pak packaging machines and process equipment:

- **Frequency-controlled asynchronous motor.**
- **DC motor with variable speed control.**
- **Stepping motor systems.**
- **Servomotor systems.**

All drive systems are described in general terms; in other words, their function as employed in a specific machine is not being explained.

Overview

In the following, the various drive systems are described briefly and summarily. Later on, each system is presented in detail in separate chapters.

Frequency-controlled asynchronous motor

Frequency-controlled asynchronous motors are very common and cheap drive devices. The motor is an asynchronous squirrel-cage motor, whose speed is controlled by means of a frequency converter. The rotary speed depends on the frequency. Such drive systems are often used to drive a main shaft which, via cams, gears, etc, drives a number of mechanical movements.

Drive system with DC motor

Drive systems with DC motors can be used for a great variety of tasks, from simple speed control to advanced positioning. For instance, they are often used when the speed has to be varied over a wide range. A further advantage of the DC motor is that its speed is only slightly affected by load variations.

Stepping motor system

Stepping motors are mostly used in positioning, with small loads. It can be regarded as a digital motor which converts electric pulses into mechanical motion. Each pulse equals a defined angle of rotation by the motor shaft - one step.

Servosystem

Servosystems are capable of converting any mathematical function into a mechanical movement. It may be cam functions (electronic cams), speed functions, torque functions, etc.

General

As previously mentioned, electric drive systems consist of a motor and a control unit. The control unit may be anything from a simple speed controller to highly advance control electronics, which may make the motor perform virtually any function.

The motors may have either **open** or **feed-back** control. An induction motor usually has open control, while a servosystem in itself constitutes a system feed-back control.

Open control system

In an open control system, there is no feed-back between the motor or load and the control unit. This means that if any of the factors determining the function of the system changes, for instance voltage, amperage, or position, the function of the system will also change. There is no automatic correction or compensation; if correction is required, it has to be made manually.

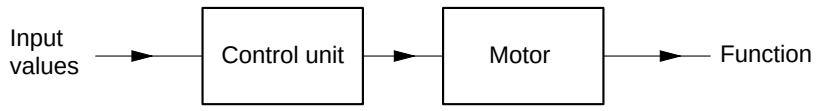

Feed-back control system

In a feed-back system, the control unit monitors the function of the motor or load. If the motor function deviates from the predetermined function, the control system will automatically correct this condition.

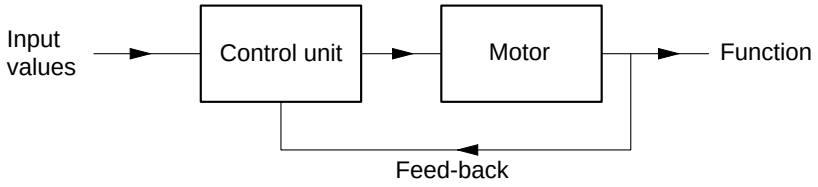

Frequency-controlled asynchronous motor

Frequency-controlled asychronous (induction) motors are mostly used for simple drive functions, without feed-back from the motor or load to the control unit. Such a drive can in principle be used to regulate the speed from stand-still upwards. The motor is a squirrel-cage asynchronous motor, and the control unit a frequency converter.

The squirrel-cage asynchronous motor

The squirrel-cage asynchronous motor is the absolutely most commonly used AC motor. There are many reasons for this; here follow the most important:

- it is **cheap**,
- it is **very reliable**,
- it is a **standard product** complying with the IEC standard.

IEC motor

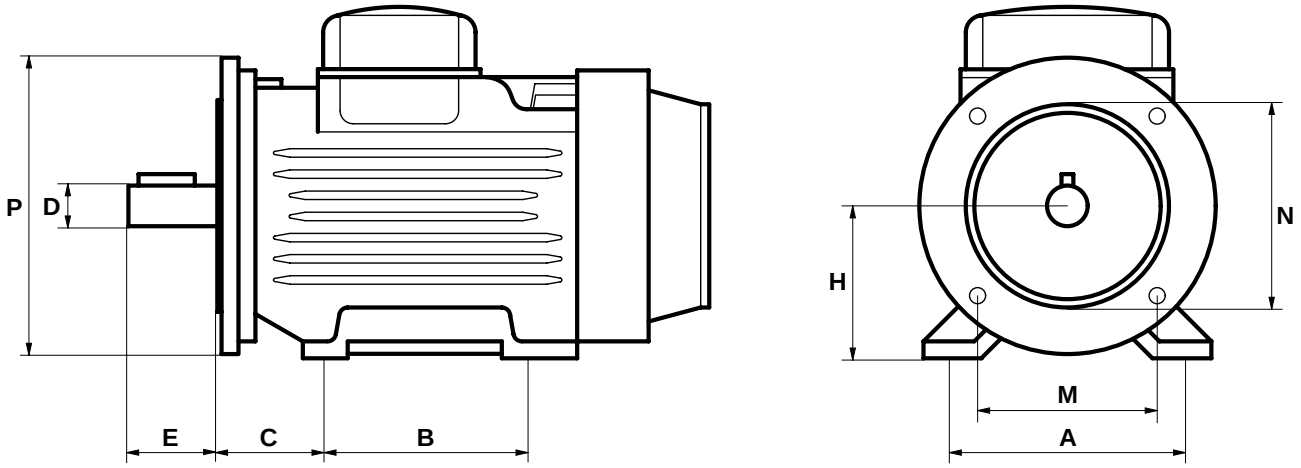

Amongst other things, IEC standardization means that the outside dimensions of the motor, its mounting holes, and its shaft dimensions are standardized for each motor power.

The diagram shows those dimensions which are subject to standardization. Thanks to this standard, the user is not tied to a certain manufacturer or supplier. A plentiful supply of standard motors of different makes is always available.

Construction

The rotor in the asynchronous motor has a cagelike winding (hence the term 'squirrel-cage'). It is not wired to any power source, which means that there is no need for sliding contacts or brushes for its power supply. Besides, the rings which short-circuit the conductors are often shaped like fan impeller vanes. Altogether, this makes this type of motor extremely simple and robust: no windings, no sliding contacts, no separate fan in the rotor.

In the stator are the **field windings**. They are designed to generate a rotating magnetic field when connected to a three-phase alternating voltage.

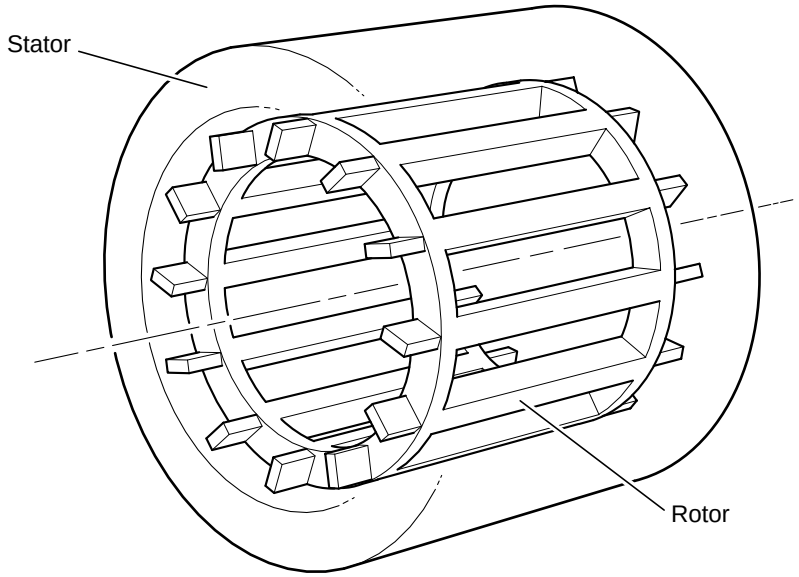

Usually, three-phase motors can be reconnected for two alternative supply voltages. The most common way is to either **D-connect** (delta connect) or **Y-connect** (star connect) the three phases of the field winding.

If the marker plate on a three-phase motor specifies voltage values for both D and Y-connection, the motor may be run on, for instance, either 3×230 V AC or 3×400 V AC.

The diagram below shows how to place the connection links for 3×230 V and 3×400 V. In both cases, the potential over the windings will be 230 V.

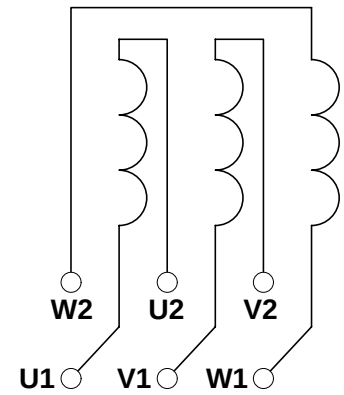

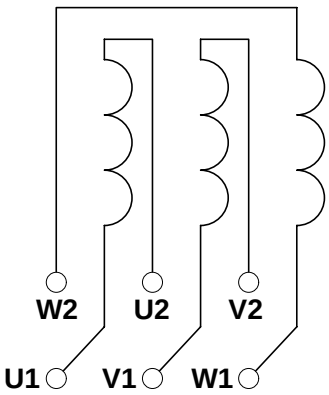

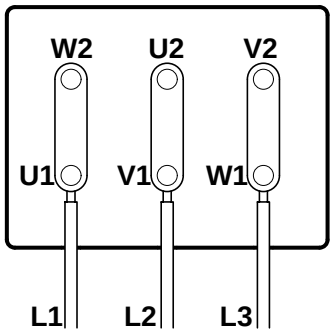

D-connection, 3×230V

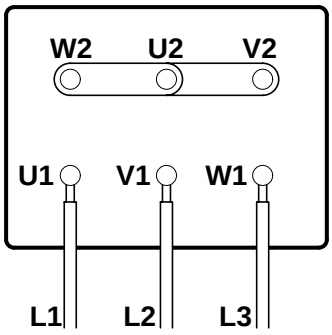

Y-connection, 3×400V

Function

When the field windings are connected to a three-phase alternating voltage, a rotating (**1**) magnetic field (**2**) is generated through the motor. The magnetic field induces currents in the conductors (**3**) of the cage winding; in this way, forces (**4**) are created, which cause the rotor to rotate with the magnetic field.

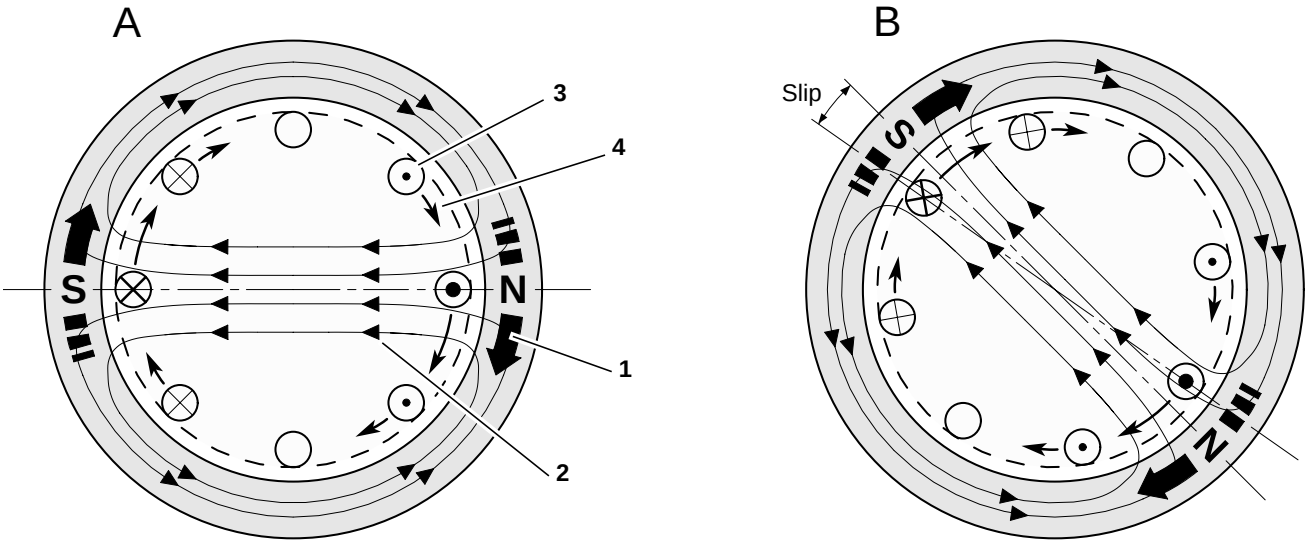

⊗ Current entering plane

⊙ Current exiting plane

The speed (rpm) of the asynchronous motor is determined by the frequency of the voltage supplied to the motor, calculated in accordance with this formula:

$$\text{Speed} = \frac{2 \times \text{frequency} \times 60}{\text{Number of motor poles}}$$

In principle, the speed can be regulated from stand-still upwards, with certain limitations in the upper and lower sections of the speed range.

The speed determined by the frequency, as per the formula above, is called the **synchronous speed**. The synchronous speed is the rotation speed of the magnetic field, generated in the field windings when supplied with a three-phase AC voltage.

The table below shows the synchronous speeds at various frequencies for motors with different number of poles.

Number of poles	Frequency (Hz)			
	10	**30**	**50**	**100**
2	600	1800	3000	6000
4	300	900	1500	3000
6	200	600	1000	2000
8	150	450	750	1500

The actual, true, speed of the motor is determined not only by its synchronous speed but also by how great a load the motor is driving. This speed is called the **asynchronous speed,** and the difference between the synchronous and asynchronous speeds is termed **slip**. The slip is directly proportional to the output motor shaft power. The illustrated sequences, **A** and **B** above, demonstrate how the rotor lags behind the rotating field. In a way, this can be compared to a hydraulic coupling.

Diagram A shows the motor in a random field position that may be referred to as F. Diagram B shows the motor when the field has rotated 45 degrees: F + 45 °. In diagram B, it can be seen that the rotor has not turned as far as the field, i e the rotor follows the field with a certain degree of slip.

Example: a four-pole 50 Hz motor has a rated speed of 1440 rpm. Thus the slip is 60 rpm at the rated load.

Although, as previously stated, the speed can be regulated from stand-still upwards, this should not be done.

At 85-90 Hz, losses in the motor will, for various reasons, be so great that the torque drops to approximately one third of the rated torque. Power consumption, however, remains as high as at the rated speed. A rule-of-thumb is never to regulate the speed beyond 87 Hz.

At low frequencies and unchanged load, the fan impellor fitted to the motor shaft will no longer be able to cool the motor adequately. Then the danger is considerable that the motor will overheat. As a counter-measure, a separately driven fan may be installed.

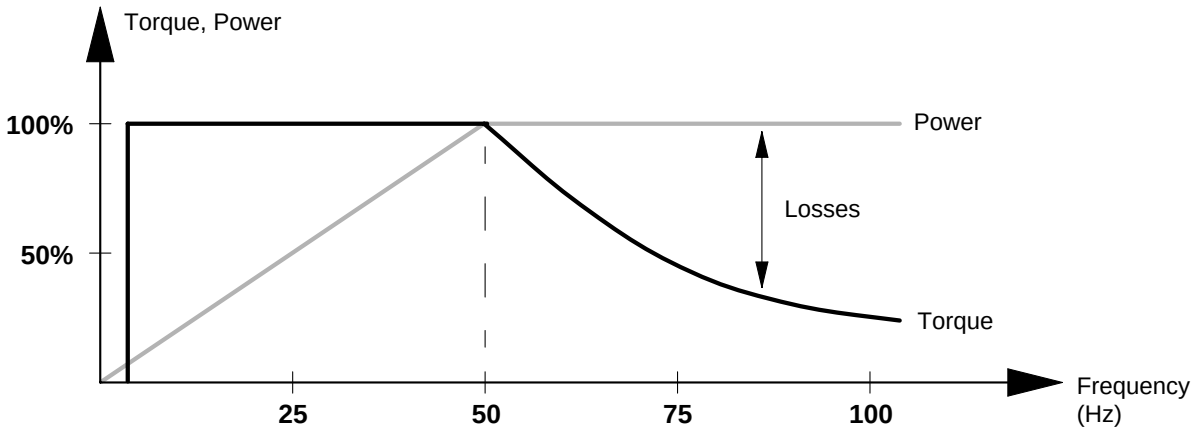

Frequency converter

A frequency converter converts the mains power frequency to whatever freqency is required for the motor. Usually, the mains power frequency is either 50 Hz or 60 Hz.

Function

A frequency converter consists of four main parts:

- The **rectifier**, which is fed with an AC voltage from the mains grid, produces a DC voltage.
- The **intermediary circuit**, in which the DC voltage is smoothed.
- The **inverter**, which reconverts the DC voltage into an square-waved AC voltage of the frequency required for the motor.
- The **regulation unit**, which controls and monitors the other parts.

Briefly, what happens in a frequency converter can be described as follows: Rectification, smoothing, inversion (reconversion), control.

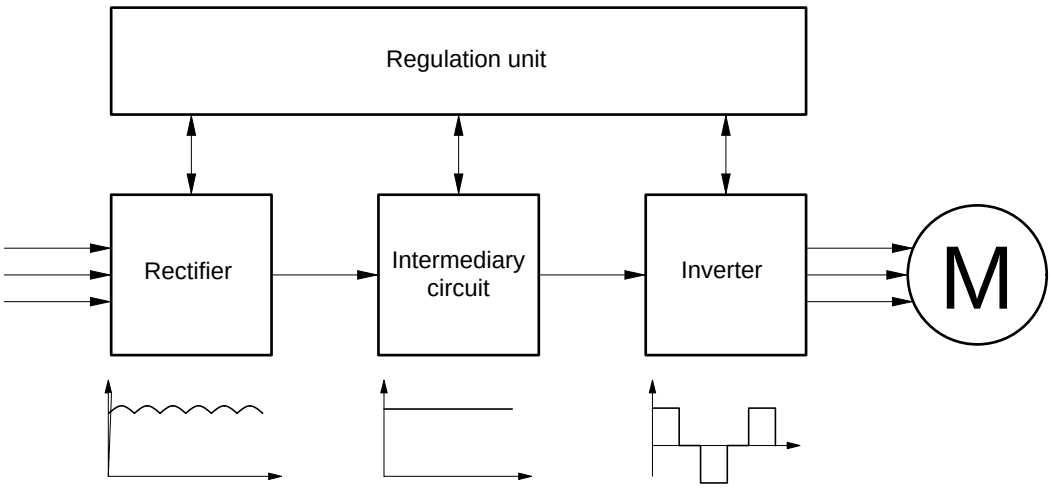

Pulse width modulation

The predominant type of frequency converter is the PWM converter (**P**ulse **W**idth **M**odulated). With this converter, voltage as well as frequency are regulated by controlling both the number of pulses and their energy. The reason for this is to make the virtual value of the voltage conform as closely to a sine curve as possible. Sine-shaped voltage reduces losses in the motor.

In the 50 Hz and beyond range, the motor is fed with one pulse per semi-period, alternatingly positive and negative. The virtual value of such a squared pulse equals the rated voltage of the motor, for instance 400 V.

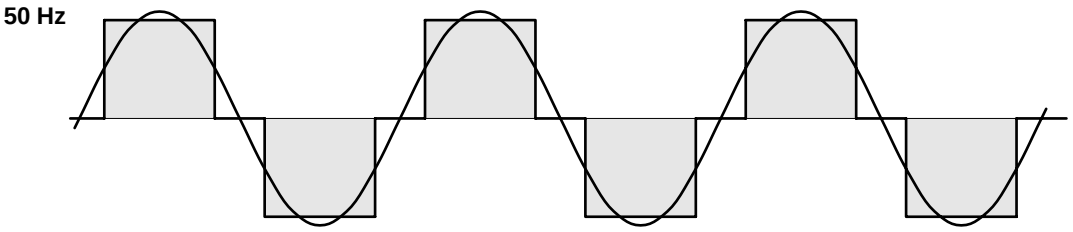

The virtual value of the voltage is as follows:

$$\frac{\text{Input frequency}}{\text{Rated frequency}} \times \text{Rated voltage} = \text{Output effective value}$$

In the example above:

$$\frac{50\,\text{Hz}}{50\,\text{Hz}} \times 400\,\text{V} = 400\,\text{V}$$

At 25 Hz, the motor is fed with a number of pulses per semi-period, and the virtual voltage value, which drops proportionally to the reducing frequency, will be:

$$\frac{25\,\text{Hz}}{50\,\text{Hz}} \times 400\,\text{V} = 200\,\text{V}$$

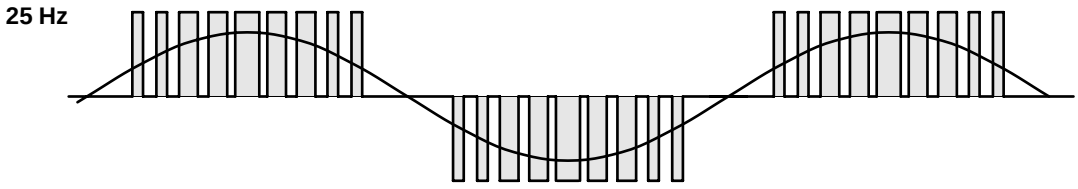

A PWM frequency converter thus regulates both the voltage and frequency to the motor.

Fault-finding

In the following, the most common faults and their causes that may appear in asynchronous motors are described.

When fault-finding in electric drive systems, you should use a type **TRMS** measuring instrument. TRMS measuring instruments give correct values for all types of signals.

TRMS stands for True Root Mean Square.

Fault; *The motor hums abnormally loudly while running, or hums without rotating:*

- Loss of voltage on one phase, possibly due to a blown or tripped fuse. Note that the overcurrent protection of small motors may not always trip when this kind of fault occurs.

Fault: *The motor does not start, or stops in mid-run:*

- The overcurrent protection has tripped.

Fault: *The motor runs hot:*

- Worn bearings.
- One or several field windings have short-circuited.
- Excessive load.

Fault: *The motor vibrates:*

- Unbalanced load, for instance a pulley, sprocket, or coupling.

Fault: *The motor will not start:*

- No voltage to the control unit.
- Fuse in or to the control unit blown or tripped.
- External starting conditions not met.
- No setpoint provided by the regulating unit.
- Short-circuited field windings.

Drive systems with DC motors

Drive systems with DC motors can be used for everything from simple speed regulation without feed-back to advanced positioning. Such a system can be used to drive and brake the motor in either direction with precisely controlled acceleration and deceleration. In this book, only simple speed-controlled systems are described. The motor used is either a separately or permanently magnetized DC motor, and the control unit a DC converter.

The DC motor

For speed control with DC motors, usually a **separately magnetized motor** is used. Permanently magnetized motors are more suitable for positioning duties.

The principal advantage of separately magnetized motors is their **speed stability**, i e the speed is only slightly affected by load variations. Besides, the speed can be varied within a wide range. These qualities make the separately magnetized motor ideal for speed regulation.

Construction

The component parts of the DC motor are:

- The **stator**, which carries the field windings.
- The **rotor**, which carries the rotor windings.
- The **commutator** with carbon brushes.

In permanently magnetized DC motors, permanent magnets have been substituted for the field windings.

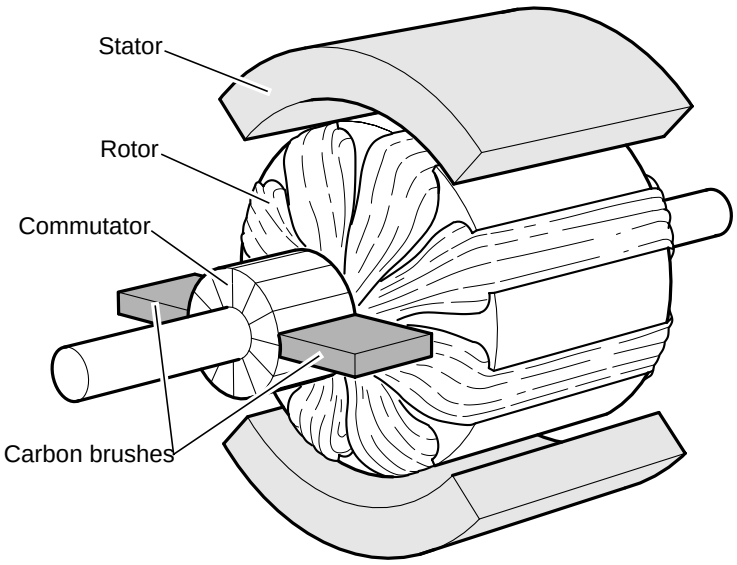

Function

The principle of the function of the DC motor is illustrated below.

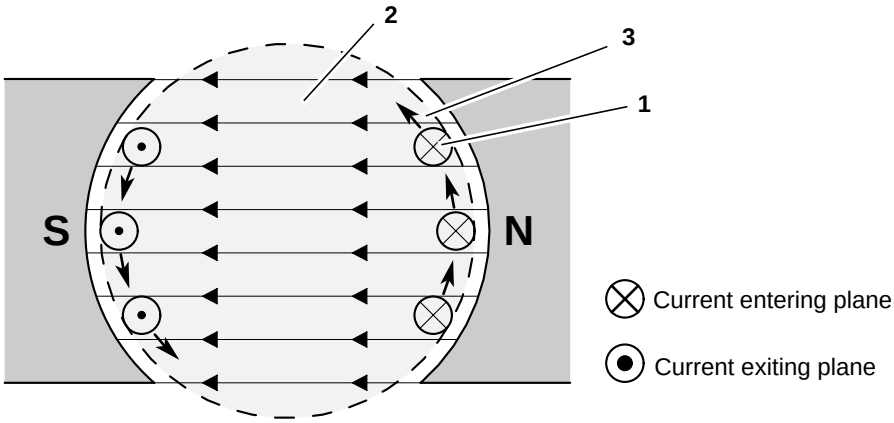

A conductor (**1**) carrying a current, which is positioned in a magnetic field (**2**), is affected by a force (**3**). The magnitude of the force is determined by the strength of the field and the amperage in the conductor. The field is generated by the field windings in the stator, and the current in the conductors is governed by the voltage of the power supplied.

The speed of a DC motor is determined by the **magnetic field strength** and the **rotor voltage**. In order to vary the speed, either the voltage to the field windings or to the rotor windings can be altered. Most common is to control the speed by regulating the rotor voltage. In principle, this can be done within the entire motor speed range while still retaining the same torque.

Commutation

In supplying direct current, constant magnetic and current flows are created through the motor. In order to achieve continuous rotation, the windings must be reconnected (pole reversing) as the rotor revolves. Such reconnection is termed commutation and may be either mechanical or electronic.

The diagrams below show how a loop or winding in a DC motor is commutated mechanically in order to make it rotate continuously.

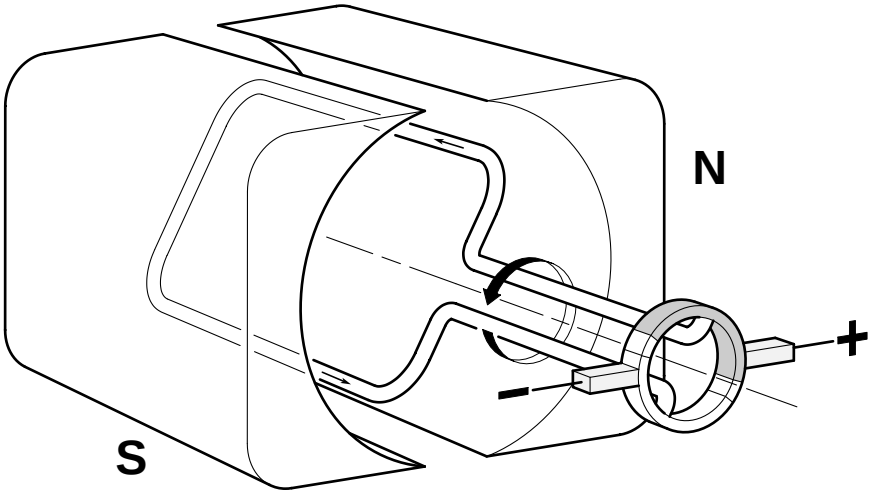

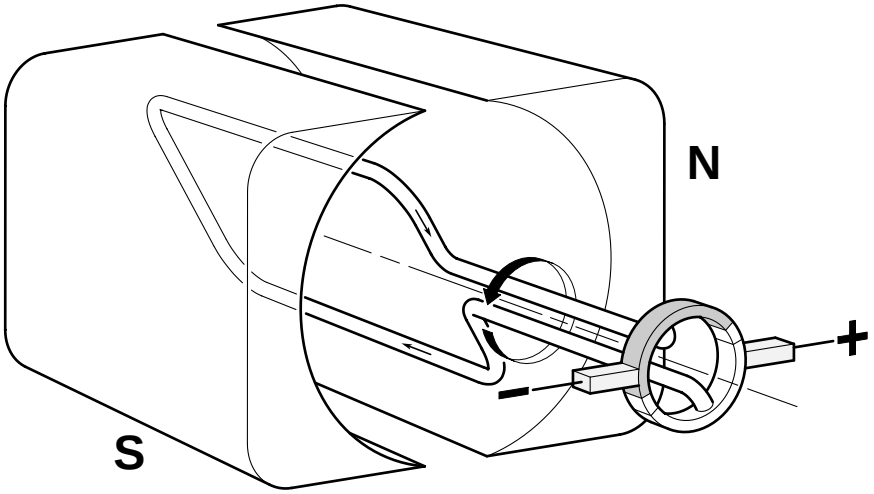

Miscellaneous

DC motors should always be connected with cables which are screened and whose conductors (strands) are twisted. The screen is to be grounded at each end. Screening is done in order to prevent electromagnetic interference (noise) to enter or emerge from the system.

DC Converter

In order to regulate the voltage, and thus the speed of the DC motor, a DC converter is used. It consists of three main parts:

- The **rectifier**, which turns the supply voltage into direct current.
- The **power unit**, which feeds the motor with direct current.
- The **regulating unit**, which controls and monitors the other parts.

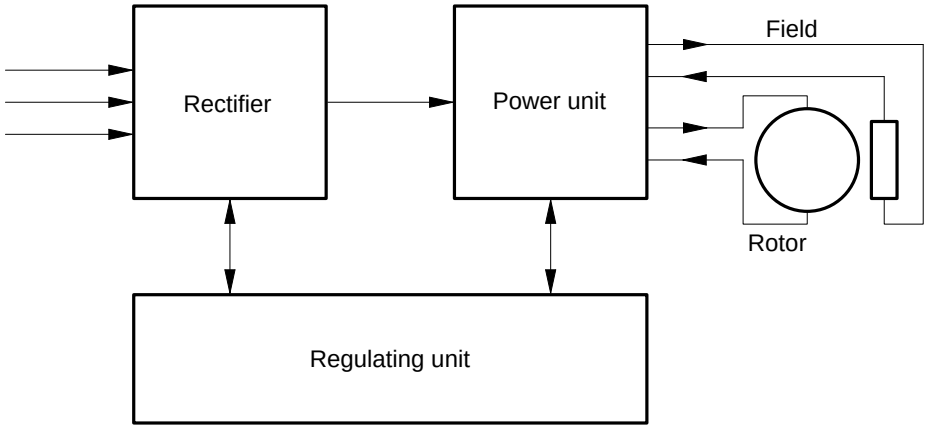

Fault-finding

In the following, the most common faults that may appear in DC motors and their possible causes are described.

When fault-finding in electric drive systems, you should use a type **TRMS** measuring instrument. TRMS measuring instruments give correct values for all types of signals.

TRMS stands for True Root Mean Square.

Fault: *The motor runs hot. Note that DC motors normally get fairly hot, 70-80 °C as measured on the motor casing.*

- Excessive load.
- Motor having exceeded maximum speed for a considerable length of time.
- High ambient temperature.
- Worn bearings.
- Short-circuit in field winding.

Fault: *High idling current.*

- Worn bearings.
- Worn or sticking carbon brushes.

Fault: *High starting current.*

- Worn bearings.
- Worn or sticking carbon brushes.
- Break or short-circuit in field winding.

Fault: *Fluctuating speed at constant setpoint.*

- Excessive load variation.
- Worn or sticking carbon brushes.

Fault: *Abnormal brush wear.*

- Incorrect spring force on carbon brushes.
- Dirt and/or uneven commutator.
- Short-circuit in rotor winding.

Stepping motor systems

Stepping motors are mainly used for the positioning of small loads. They may be regarded as digital motors, converting electric impulses into mechanical movements. Each pulse corresponds to a defined angle of movement by the motor shaft - one step. Normally, in stepping motors there is no feed-back of load and position.

The stepping motor

Construction

A stepping motor consists of two main parts:

- A **permanently magnetized rotor**.
- a **stator**, carrying the **windings**.

The permanently magnetized rotor may have a varying number of poles, or, as they are normally termed, rotor teeth. A common figure is 50. Most stepping motors have two phases, i e two field windings. There are, however, also five-phase motors.

The diagram below shows a two-phase motor with six rotor teeth.

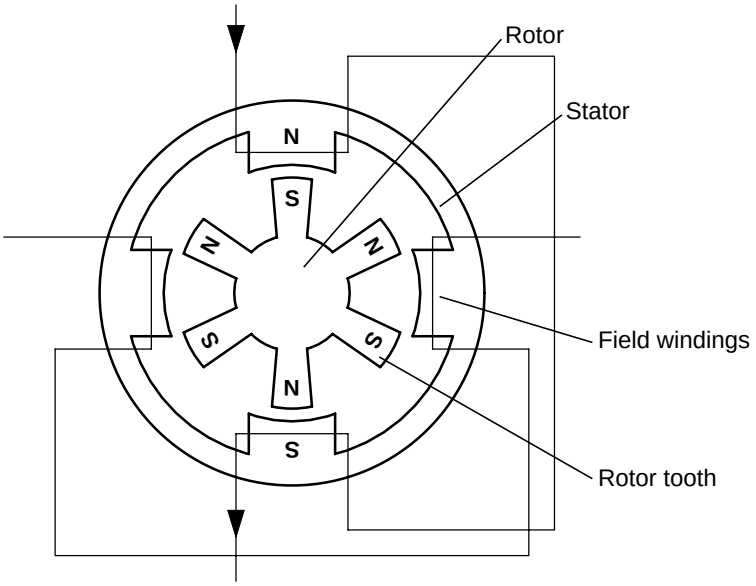

This diagram (below) shows a section through a 200-step motor. It is a two-phase motor with 50 rotor teeth. This is a very common type of motor.

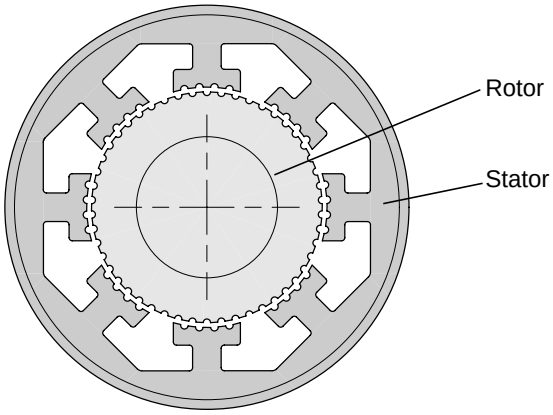

Function

The stepping motor converts electric pulses into rotation, and each pulse results in a defined angle of rotation - one step, according to the following formula:

$$\text{One step} = \frac{360°}{\text{Steps per revolution}}$$

In the following, the function is described:

When a current flows through a pair of field windings **(fig 1)**, the stator poles are magnetized and attract rotor teeth with opposite stator teeth polarity. By switching in the next pair of windings, **(fig 2)**, the next stator pair will also become magnetized; the change in magnetic flow will cause the rotor to turn 15 degrees. Then, as the first stator pair is disconnected **(fig 3)**, the rotor will turn another 15 degrees.

By connecting and disconneting the flows of current through the field windings according to this pattern, the rotor will revolve in steps of 15 degrees **(figs 1 - 6)**.

For a two-phase motor with six rotor teeth, the number of steps per revolution will equal 24:

2 × number of phases × number of rotor teeth = 2 × 2 × 6 = 24

Thus, the motor in the example will move through 24 steps per revolution, and in accordance with the previously given formula, one step is:

$$\frac{360°}{24} = 15°$$

The speed at which the motor rotates depends on how rapidly the field windings are being reconnected.

All stepping motors function as described in the above example. The only difference is that a standard motor has more numerous stator poles and rotor teeth. This gives smaller and more numerous steps per revolution.

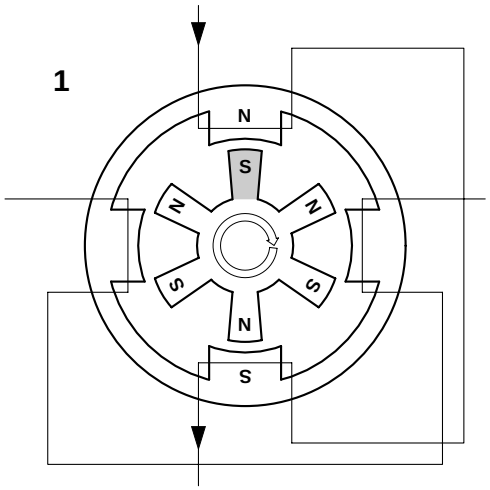
1
N
S
N
S
S
N
S

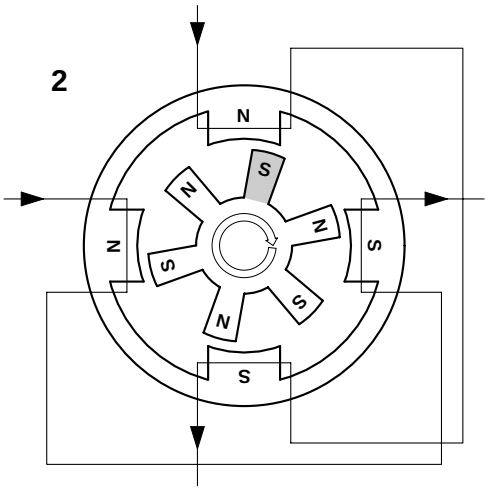
2
N
S
N
S
S
N
S
N
S

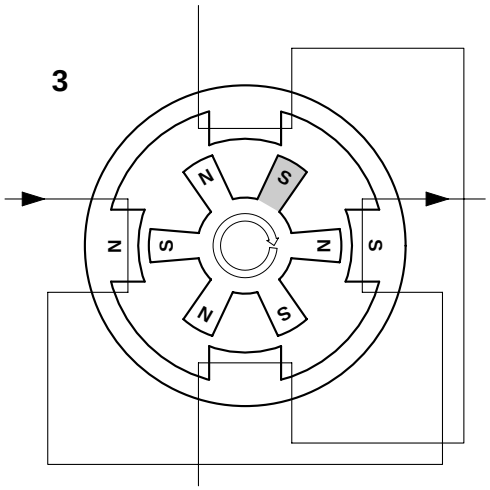
3
N
S
N
S
S
N
S

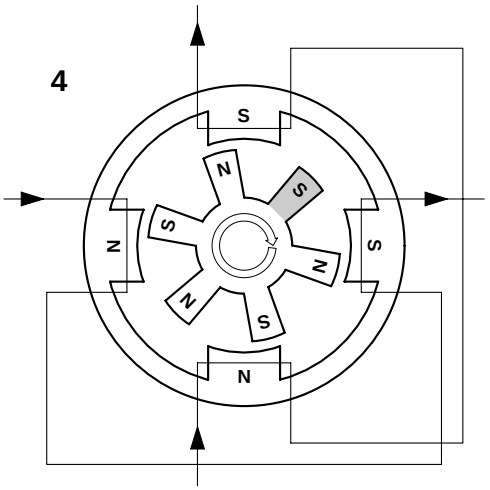
4
S
N
S
S
N
S
N
N

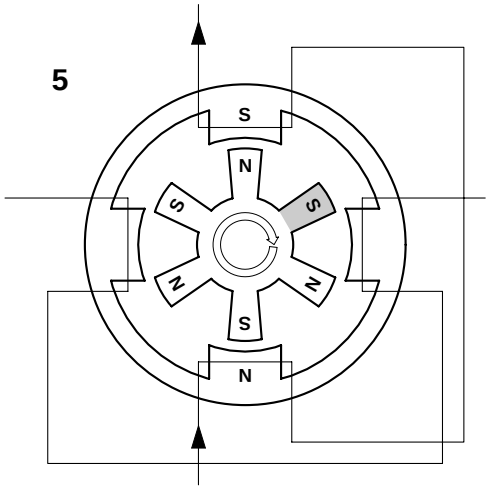
5
S
N
S
S
N
N
S
N

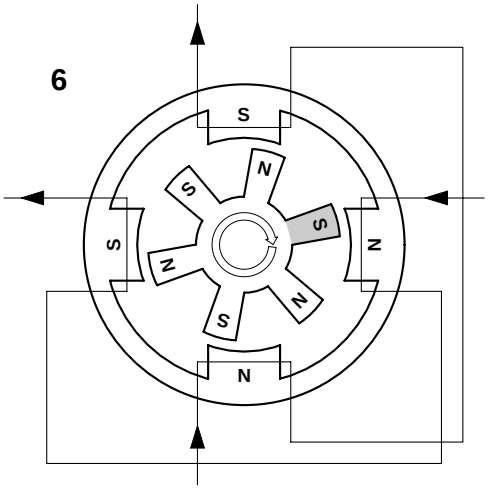
6
S
N
S
S
S
N
N
N

The design of the stepping motor is such that some of its features may be misinterpreted as defects in the motor, unless the causes are known.

Stepping motors often become hotter than motors of other types. The reason is that full motor current always flows through its windings, also at stand-still. This is termed holding torque. The reason for this is that the motor must remain in position, as it usually lacks feed-back. The torque imposed by the load must not shift the motor out of position. Normally, stepping motors have class B winding insulation, which means that the temperature of the windings may rise to 130 °C. An motor casing temperature of 90 °C does not cause any thermal damage to the motor.

A stepping motor cannot be operated without a load. It requires a load moment of inertia which is at least equal to its own internal moment of inertia in order to be able to accelerate normally. Unloaded, the motor will race.

A stepping motor may jerk, as power is switched on. The reason for this is that it has a number of fixed positions, for instance 200. If the rotor rests between two positions, it will jump to one of these fixed positions. The movement cannot exceed ±0.9 degrees in a 200-step motor.

Stepping motors should always be connected with cables which are screened and whose conductors (strands) are twisted. The screen is to be grounded at each end. Screening is done in order to prevent electromagnetic interference (noise) to enter or emerge from the system.

Control unit

The control unit generates the electric pulses which drive the motor. The change of angle made by the motor is entirely controlled by the number of pulses generated by the control unit. The control unit consists of:

- The **rectifier**, which converts the supply voltage into direct-current voltage.
- The **power unit**, which generates the pulse train to the motor.
- The **pulse control logic**, which determines how the power unit will generate the pulse train.

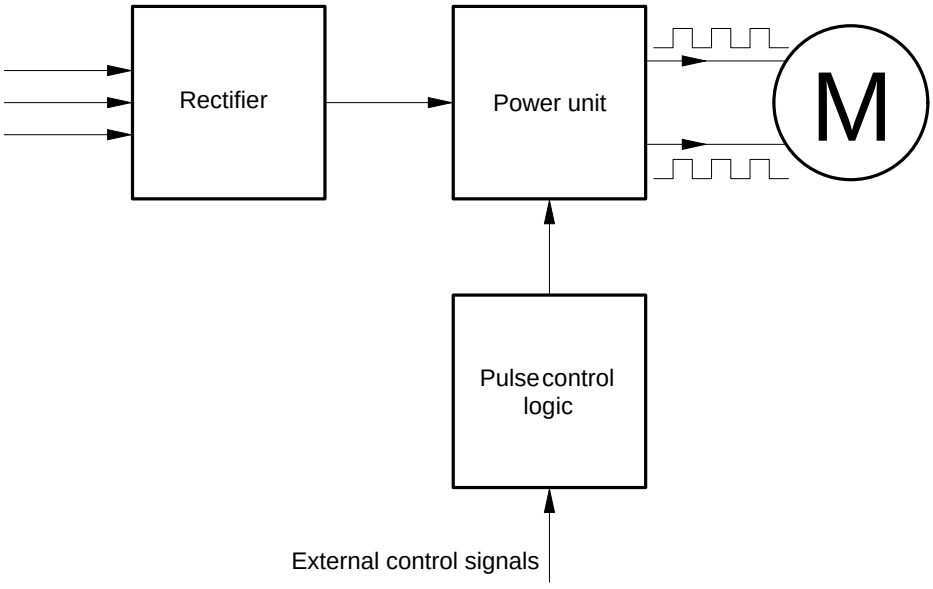

The pulse train, or rather pulse trains, is generated by the power unit, which is controlled by the pulse control logic. A pulse train must be generated for each motor phase. The pulse trains are fed into the field windings, offset in time. In

this way, the windings fitted around the stator are receiving power in succession. A revolving magnetic field is thus created, which turns the permanently magnetized rotor with the flow of magnetism.

The speed of rotation of the motor is proportional to the frequency of the pulse trains.

The position of the motor is based on the fact that it always turns one step per pulse. This, together with the lack of feed-back between the motor and the control unit, is the reason why, if a pulse is being missed, there will be no correction made by the control unit. The most common cause of missed pulses is that the motor is underdimensioned and has not the power to shift the load at the preset acceleration and speed parameters. A further cause of missed pulses is that there may appear resonant oscillations in couplings between motor and load.

Fault-finding

In the following, some faults that may appear in stepping motor systems are described.

Note
In order to be able to carry out fault-finding in a stepping motor system, it is necessary to fully understand in general terms how the entire system and its various components parts function. One should also know how the particular system concerned is supposed to work as well as knowing, or being in a position to find out, the normal or rated values (voltage, amperage, etc) of the control and communication signals.

TRMS stands for True Root Mean Square.

When fault-finding in electric drive systems, you should use a type **TRMS** measuring instrument. TRMS measuring instruments give correct values for all types of signals.

Fault: *The motor will not start:*

- No voltage to the control unit.
- Fuse in or to the control unit blown or tripped.
- External starting conditions not fulfilled.
- No setpoint from the pulse control logic.
- Motor windings short-circuited.

Fault: *Motor races:*

- Load too light or disconnected.

Servosystems

A servosystem is capable of transforming any mathematical function into a mechanical movement. This means that servosystems can replace mechanical elements, such as cams and cam shafts, indexing gears, differentials, etc. A servosystem consists of a servomotor with its control unit.

Servosystems can be used for the following kinds of control functions:

- **Speed control;** the motor speed follows a predetermined speed function.
- **Positioning;** the position, linear or angular, follows a predetermined function.
- **Torque control;** the torque of the motor follows a predetermined function.
- **Hybrid control;** the system alternates between different kinds of control functions, for instance motor speed control during one part of the working cycle and positioning during another part.

Motors and control units for servosystems cannot be combined in just any way. They comprise integrated systems, and the same supplier should be selected for both motor and control unit.

The servomotor

The servomotor, which is a permanently magnetized brushless AC motor, is a relatively new type of motor. It has been specially designed for use in servosystems. Characteristic of this motor is its high performance in every respect, but principally that it provides **much higher output power in relation to its size than other types of motors**.

Servomotors have **great overload capacities and can cope with rapid load fluctuations**. The overload capability also provides a torque reserve which is needed for quick acceleration and braking of a load. Sine-shaped motor current and electronic commutation give, in addition to a very wide speed range, also silent and smooth running and high efficiency rating.

As can be seen, servomotors possess excellent qualities; in addition to what has already been enumerated, they provide high torque and have a low internal moment of inertia. They are, however, expensive. In order to achieve all these good features, it is necessary to use very rare and costly magnetic materials in the permanently magnetized rotor. Samarium, cobalt, and neodymium are examples of typical rotor materials.

Construction

In principle, a servomotor consists of a **permanently magnetized rotor** and a **stator** of iron, which carries the windings.

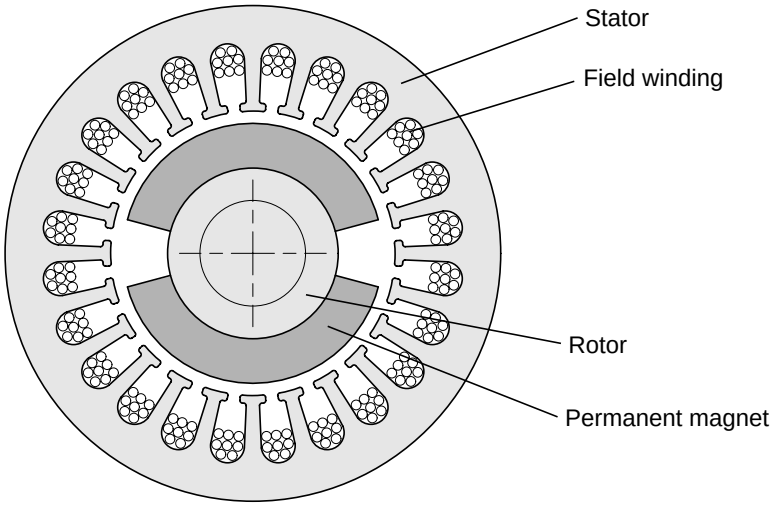

In a motor of this design and construction, nearly all motor losses take place in the stator. This means that the transfer of heat to the surrounding becomes short and quick. Electronic commutation and the absence of motor slip also contribute to the generation of less heat, which thus is easier to get rid of than in other motor types.

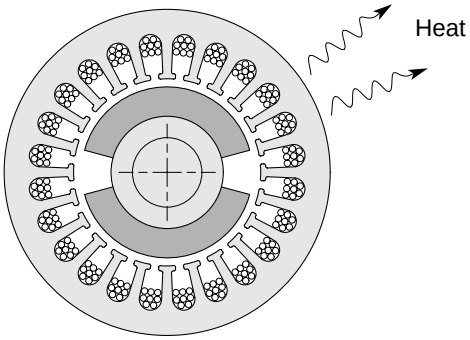

Function The windings in the stator generates a rotating **(1)** magnetic field **(2)** through the motor. The permanently magnetized rotor **(3)** is attracted by the poles of the field and will rotate **(4)** synchronously with it .

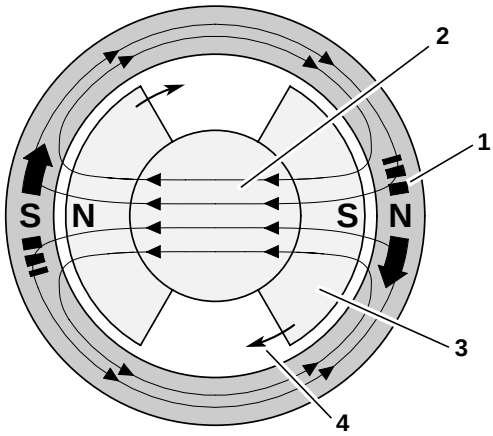

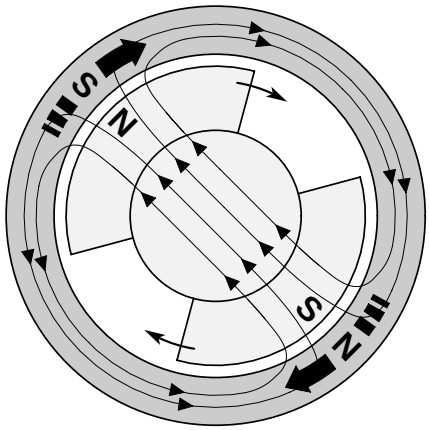

The rotating field is generated by the electronic commutation of the field windings. If the motor is to be at stand-still, for instance to maintain a torque or a position, the field windings are made to generate a static field.

Electronic commutation Electronic commutation means that the current to the motor windings is being switched electrically.

Resolver Beside the rotor and stator, the resolver forms a vital part of the servomotor. The resolver is an **angle encoder**, which all the time senses the angle position of the motor and feeds this information back to the control unit. The control unit uses the information to commutate the field windings so that the motor performs the required function. As an example, the field windings are to generate a rotating field of a defined strength for the motor to drive a load at a specific speed.

In principle, a resolver is a rotating circular transformer, supplied with a **carrier** (AC voltage) of 1 - 20 kHz. The carrier induces one **sine** and one **cosine signal** in the fixed windings. The sine and cosine signals are modulated on the carrier. These signals specify the absolut angle position of the rotor.

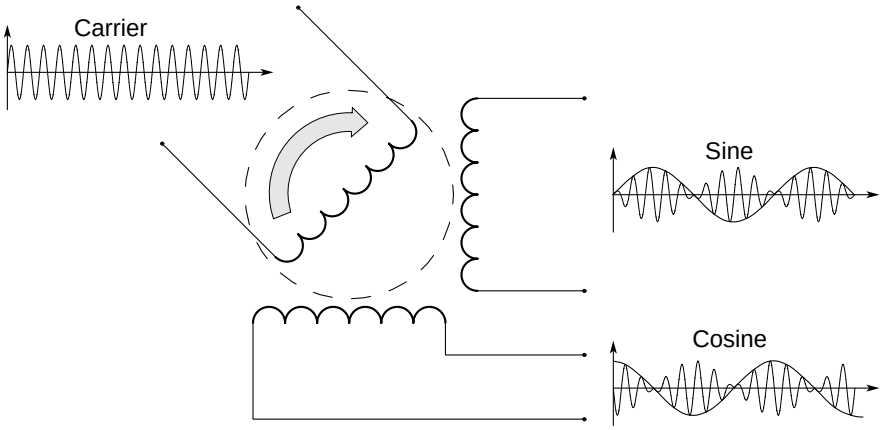

The sine and cosine signals are converted into a digital signal, and with this, get the resolver into a certain **resolution**. A two-pole resolver produces 8 192 pulses per revolution, and a four-pole resolver produces 16 384 pulses per revolution. In addition to the resolver specifying the absolute angle position, the control unit is capable to calculate, with the aid of the pulses:

- the **direction of rotation**, by determining whether the sine or cosine signal comes first.
- the **position** (change of angle), by counting the number of pulses,
- the **rotational speed** (rpm), by counting the number of pulses per second,
- the **acceleration**, by counting the number of pulses per second squared.

Miscellaneous

The servomotor and resolver should always be connected with cables which are screened and whose conductors (strands) are twisted. The screen is to be grounded at each end. Screening is done in order to prevent electromagnetic interference (noise) to enter or emerge from the system.

Control unit, drive electronics

The control system for a servomotor consists of three main parts:

- **Program**
- **Regulating unit**
- **Power unit**

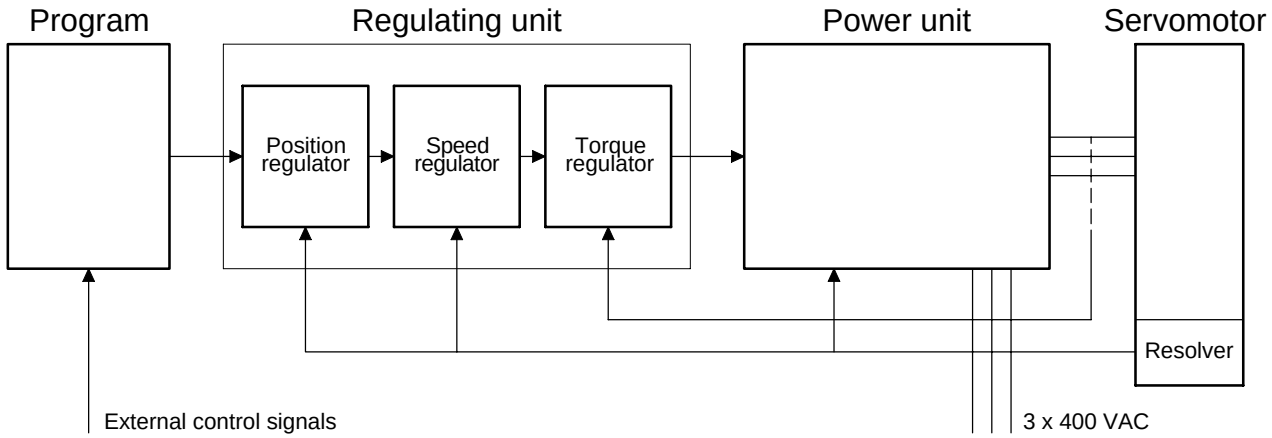

Program

The program contains information on the movement cycle of the motor. It can also be said to describe the functions which the motor is meant to perform. Often the program communicates with an external control system, for instance the PLC of a packaging machine.

The regulating unit

The regulating unit controls the movement cycle of the motor utilizing the information from the program and the resolver, as well as by measuring the current between the power unit and servomotor. The regulating unit usually contains three regulators, or as they may also be termed, regulating loops.

The **position regulator** counts the pulses from the resolver. The total number of pulses provides information on the position of the load, its angle position, and change of angle.

The **speed regulator** regulates the speed by counting the number of pulses per second. The speed regulator also regulates the acceleration.

The **torque regulator** measures the current from the power unit to the motor. The amperage of the current is directly proportional to the torque of the motor.

The power unit

The power unit supplies the motor with electric power (current). It is normally fed by three-phase AC from the mains. The supply voltage is rectified and connected to a transistor bridge with six transistors. By means of the transistor bridge, controlled by the control unit, the motor windings are commutated, so that the motor performs as required. The switching frequency is 3 - 20 kHz, depending on make and system selected.

The power unit supplies the motor with three sine-shaped currents, which are offset 120 electrical degrees relative one another. Sine-shaped current contributes towards smooth running and small losses.

The power unit also regulates the amperage of the currents. The size of the currents is proportional to the torque of the motor.

Fault-finding

In the following, some of the faults that may appear in servosystems are described.

Note
In order to be able to carry out fault-finding in a servomotor system, it is necessary to fully understand in general terms how the entire system and its various components parts function. One should also know how the particular system concerned is supposed to work as well as knowing, or being in a position to find out, the normal or rated values (voltage, amperage, etc) of the control and communication signals.

TRMS stands for True Root Mean Square.

When fault-finding in electric drive systems, you should use a type **TRMS** measuring instrument. TRMS measuring instruments give correct values for all types of signals.

Fault: *The motor will not start:*

- No voltage to the control unit.
- Fuse in or to the control unit blown or tripped.
- External starting conditions not fulfilled.
- No setpoint from the regulating unit.
- Motor short-circuited.

Miscellaneous

In this section are described certain components which are common in electric drive systems but which are not specific to a particular type of system.

Angle encoders

Angle encoders are used in many drive systems to record or monitor the angular and linear positions of the system, its direction of rotation, speed, etc.

Absolute encoder

An absolute encoder converts the angle position of a shaft into an electric signal. The electric signal is a digital code of some kind, for instance a binary code, BCD code, or gray code. The mostly used is **gray code** and the number of bits in the code determines how precisely the angle encoder can record the angle position. An eight-bit code has a resolution of 256 and can record the angle position within ±0.7 degrees.

The key component of the angle encoder is a **code disc**, fitted to a shaft. On the disc, there is a pattern of tranparent and opaque areas. These areas comprise the actual code. For each angle value, there is a unique combination of areas, which can be transscribed into logic ones and zeroes.



Code disc with gray code

One one side of the code disc, there are **light-emitting diodes** and on the other side **phototransistors**.

The light-emitting diodes shine their light on the code disc, and the phototransistors sense light or non-light, depending on which position the disc is in. The phototransistors give the position of the disc in the form of a binary signal.

As the disc rotates, a signal is continuously being registered, corresponding to the absolute angle position of the shaft on which the code disc is fitted or connected with.

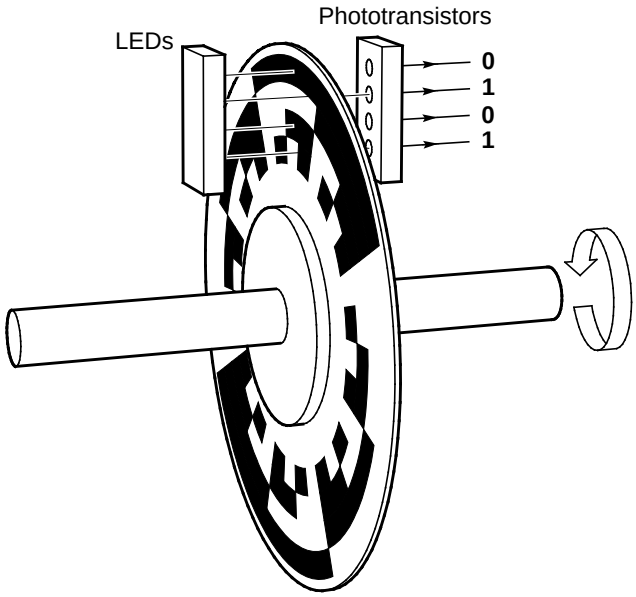

Incremental encoders

An incremental encoder converts a defined angle turn into an electric pulse. By counting the number of pulses, the encoder records how big the turn is. The number of pulses per revolution determines how precisely the angle encoder can record a change of angle. An encoder, giving 10 000 pulses per revolution, can record an angular change within ±0.036 degrees.

Just as absolute encoders, incremental encoders have a **code disc**. On the code disc, there is a pattern of bars with the same resolution as the encoder has. The bar pattern is often divided into two channels, offset half a pulse relative one another. By sensing which channel comes first, the direction of rotation can be determined. Often, there is a reference pulse, a so-called zero pulse, which generates one pulse per revolution.

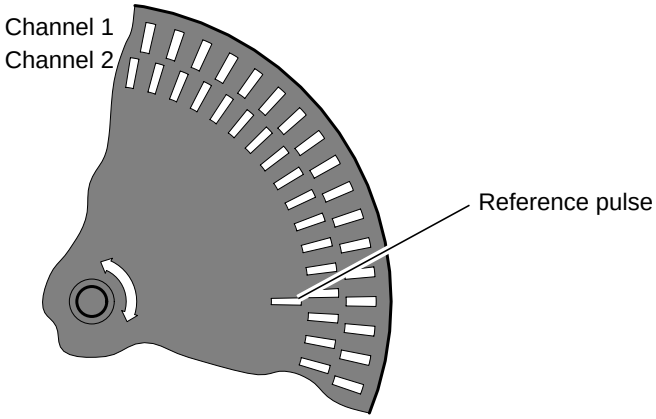

Just as in absolute encoders, the pulses are sensed by **light-emitting diodes** and **phototransistors**.

As the code disc rotates, a **pulse train** is created. The number of pulses indicates how big a change of angle the shaft has made.

Temperature (safety) switches

Under certain circumstances, it is suitable to supplement the regular motor protection with temperature safety switches. These switches protect the motors from overheating, caused by overloading, insufficient cooling, too high ambient temperature, high starting frequency, or similar faults.

The temperature switches are fitted in or on the windings in the stator and ensure that power to the motor is cut if a preset temperature is being exceeded.

There are several types of temperature safety switches; below, three of them are described:

- **Bimetal** types of temperature switches usually work on the principle of the bimetal element tripping and cutting power at a given temperature. Such a switch is wired into the control circuit of the motor, or, in the case of motors of low power, directly into the power circuit of the motor. No separate control unit is required.
- **Thermistors** are temperature-dependent semiconductors. Thermistors of PTC (Positive Temperature Coefficient) type are the most common ones. These offer the advantage of very slight increase of resistance on rising temperature right up till the reference has been reached. Then the resistance increases sharply, up to 1000 times. Thermistors must be connected to a separate control unit, which cuts the power supply to the motor.
- **Resistor elements** are temperature-dependent resistors. Resistor elements, for instance PT 100, are mainly used in large motors, where they are wired into the motor windings. PT 100 signifies that the element is made of platinum and has a resistance of 100 ohm at 0 °C. Resistor elements must also be connected to a separate control unit.

Tetra Pak

10

Jaw system

Jaw system
TBA/22 050V

Overview

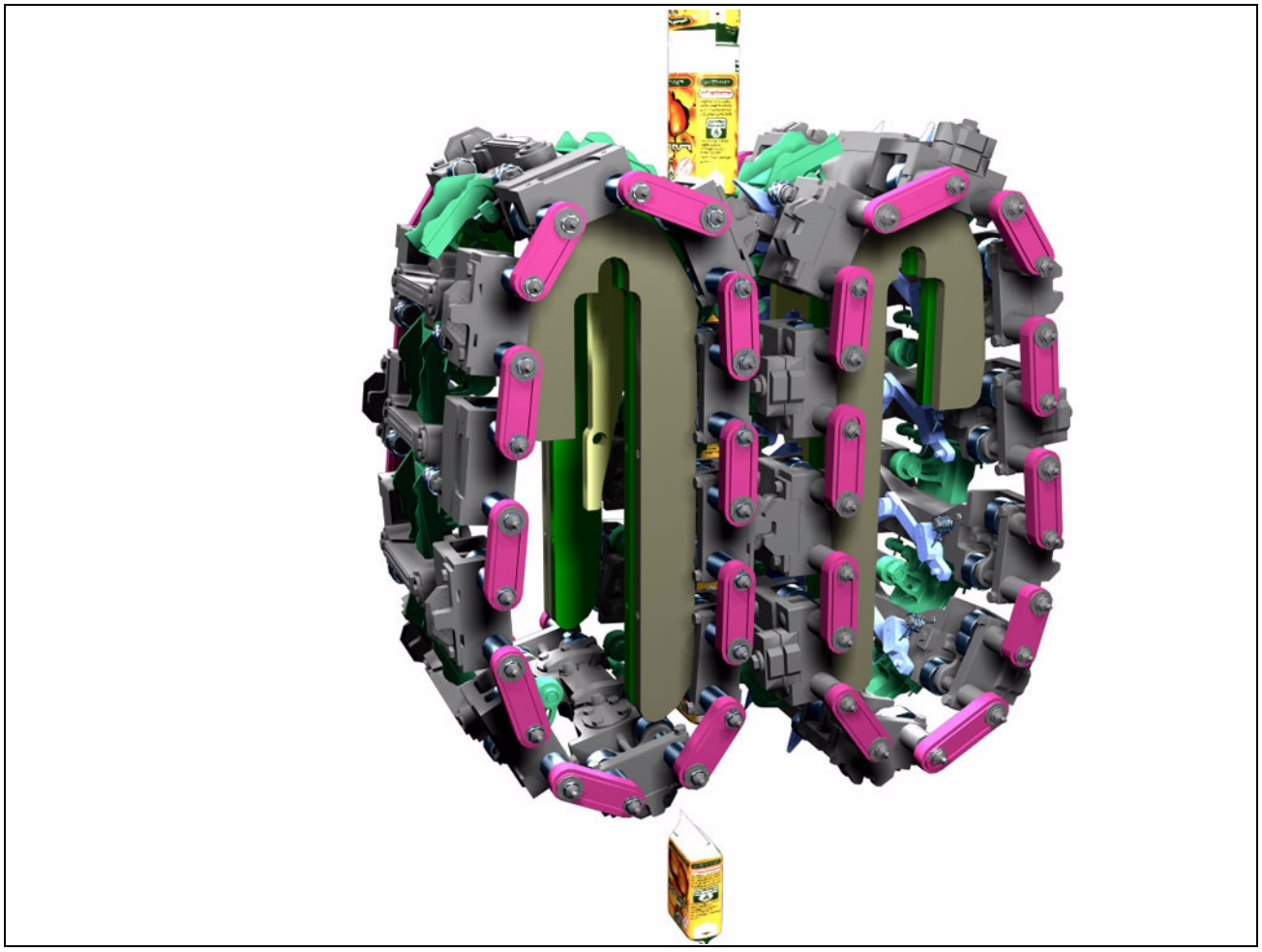

Forming, overview



The packages are formed at the **top** of the jaw system. The packages are formed by the jaws (grey) and the volume flaps (green).

Forming, pressureside

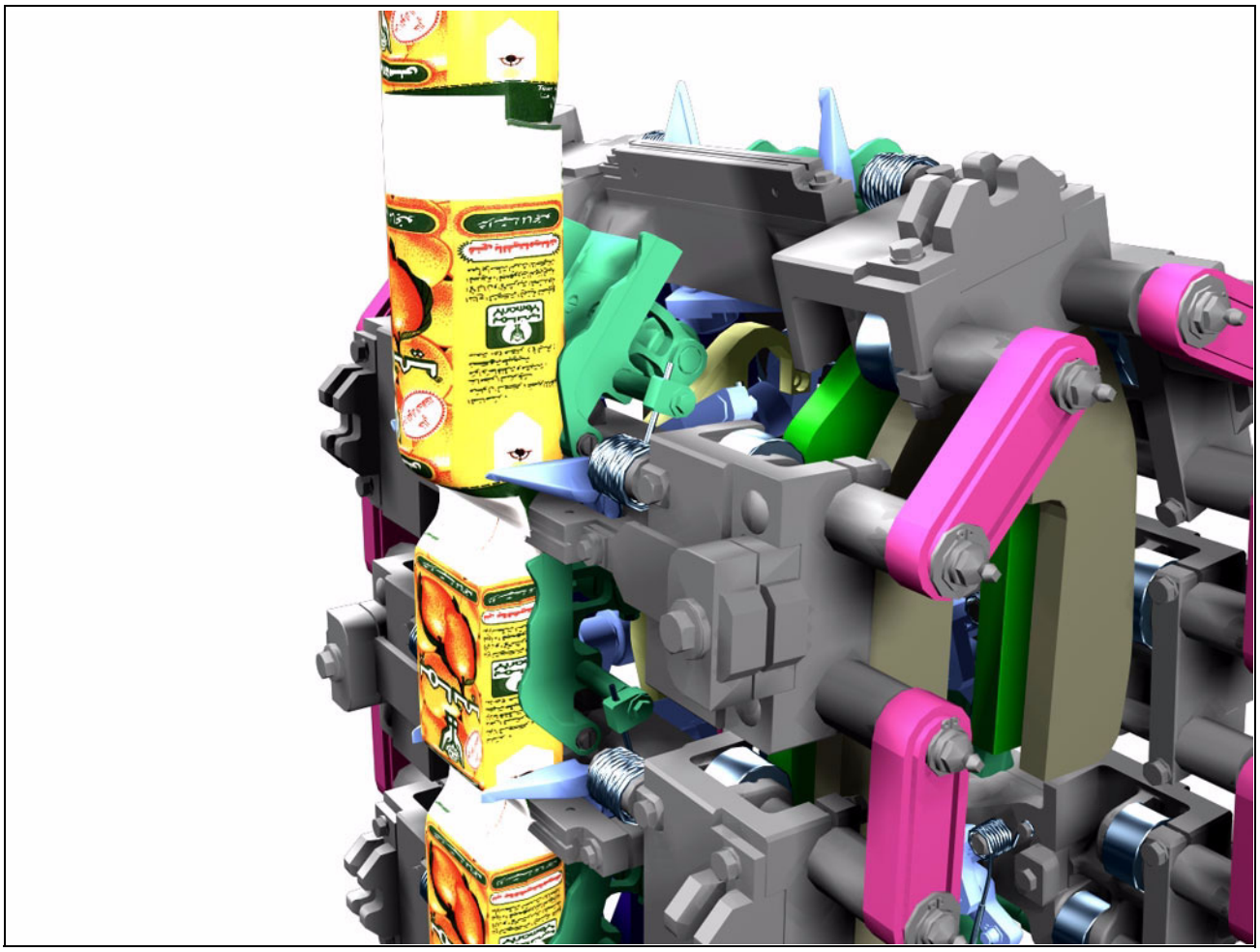

After the forming, the jaws must be closed while the **seals cool**.

Cut



When seals are made the package is **cut** by a knife (purple) affected by cams and stationary rollers.

Folding flaps, overview



The folding flaps (blue) perform the **design control** for the packages.

Folding flaps, function

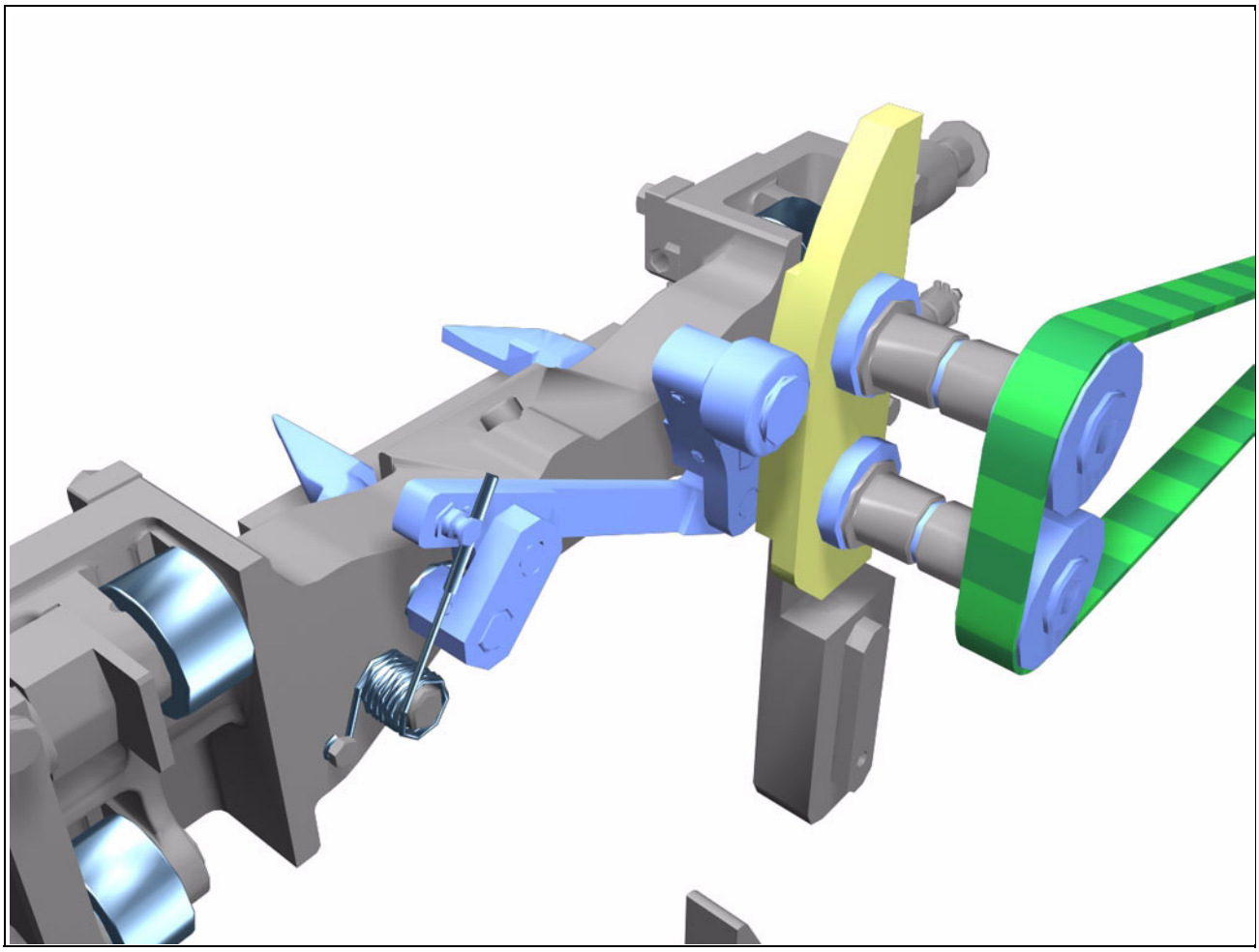

The folding flap **stroke is set by a cam** (yellow) which is controlled by a servomotor. The servomotor affects the cam via a belt (green) and two eccentric shafts (blue, grey).

Sealing pulse

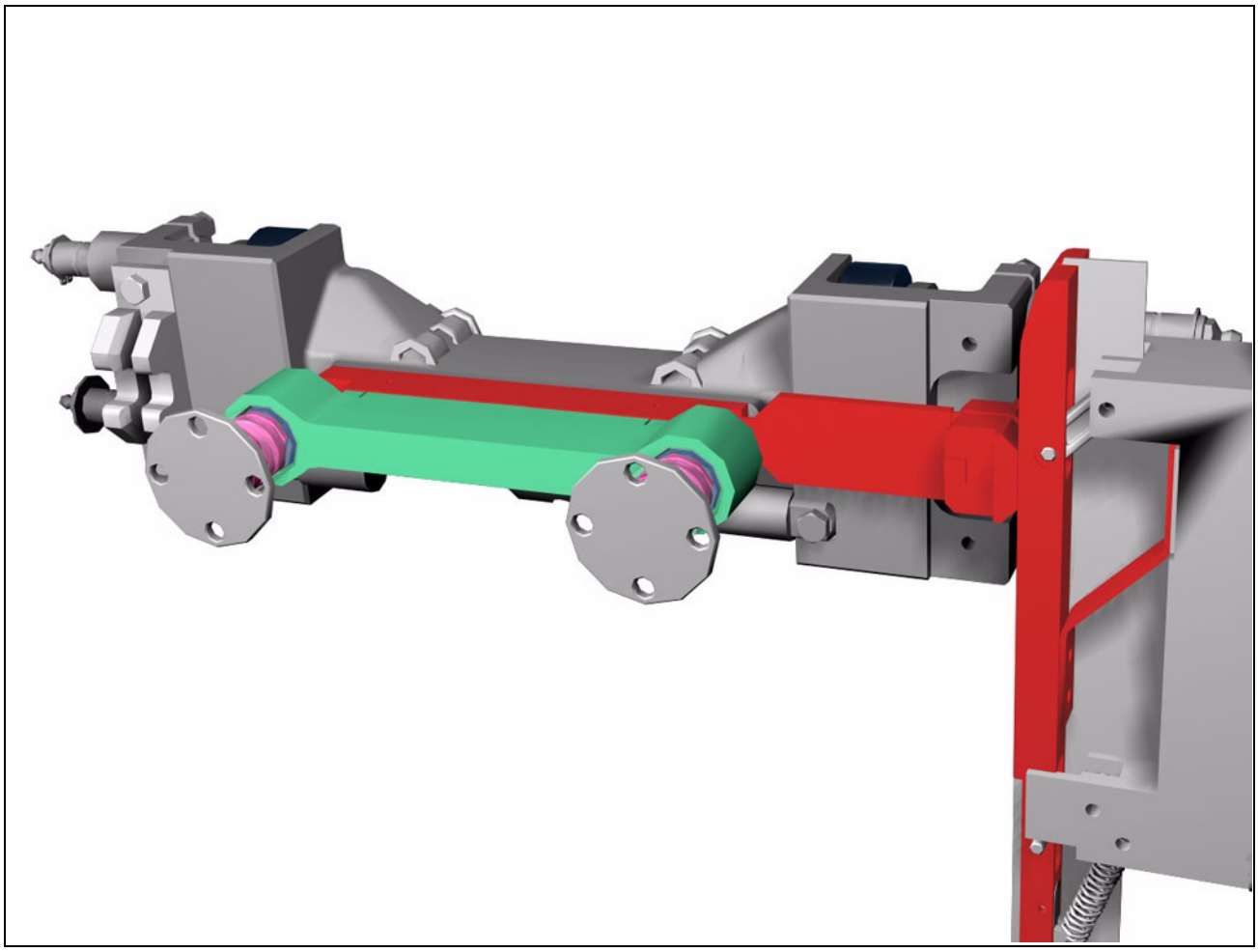

The sealing pulse (red) arrives immediately after the jaws are closed.

Jaw pressure

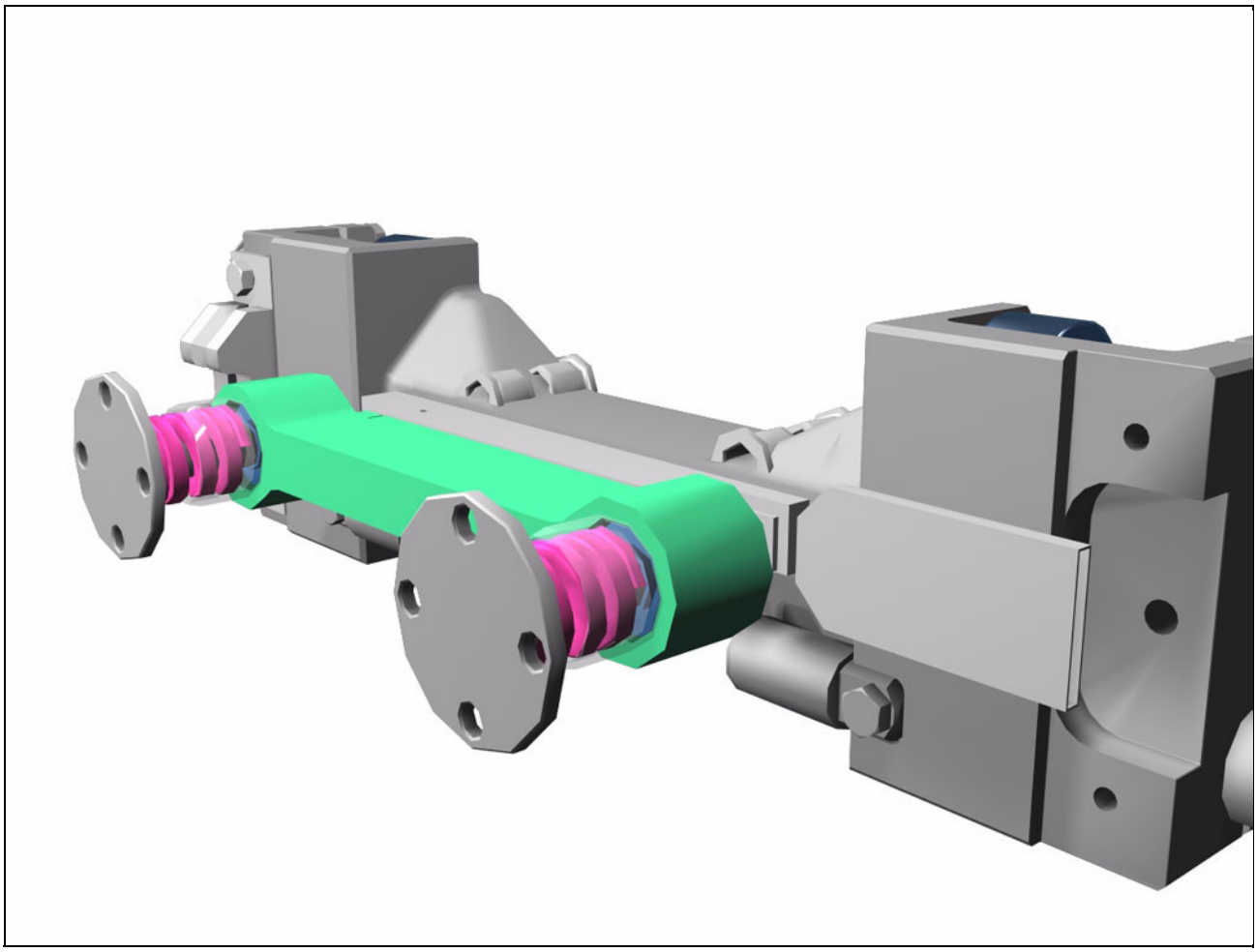

The jaw pressure comes up from **two springs** (violet) in each pressure jaw.

Volume adjustment, overview

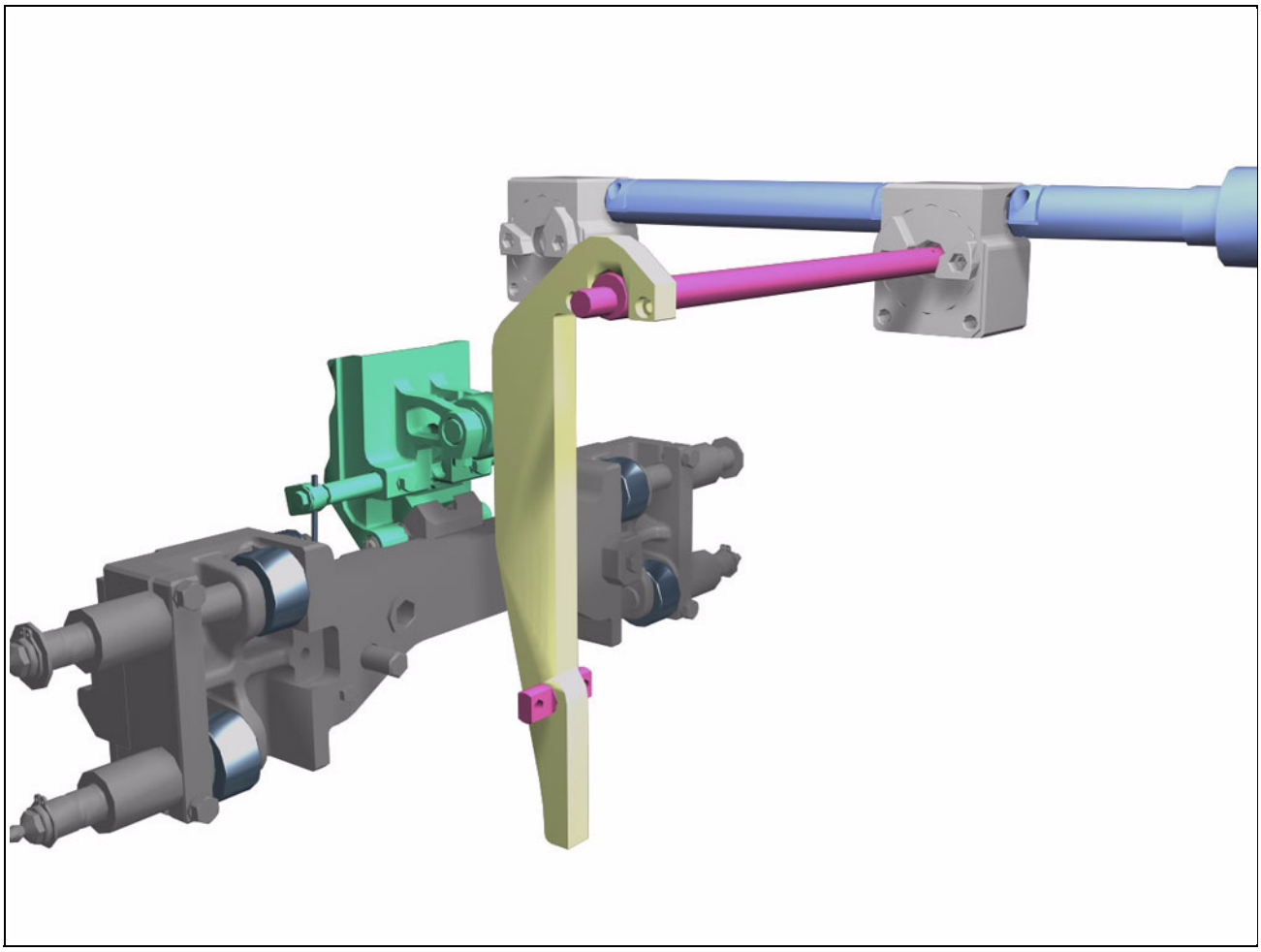

The position of a cam (yellow) afftects the volume flaps to close more or less. The cam position set the volume of the packages.

Volume adjustment, function

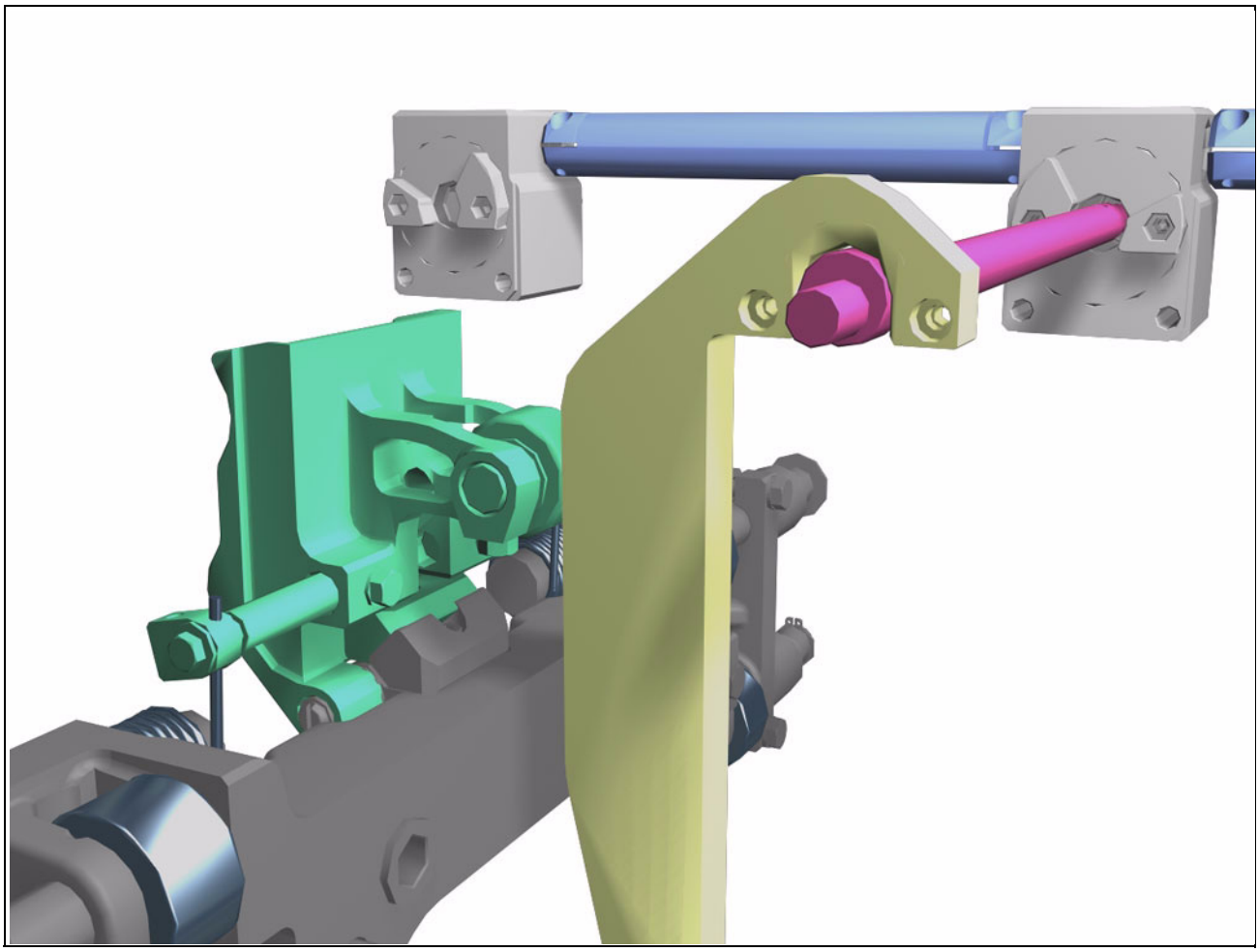

The cam position is controlled by a stepper motor via gears (grey) and and eccentric shafts (violet).

Technical Training Centre
Lund, Sweden

Machine type
TBA/22 050V

Issue
1/0303

OH 1256

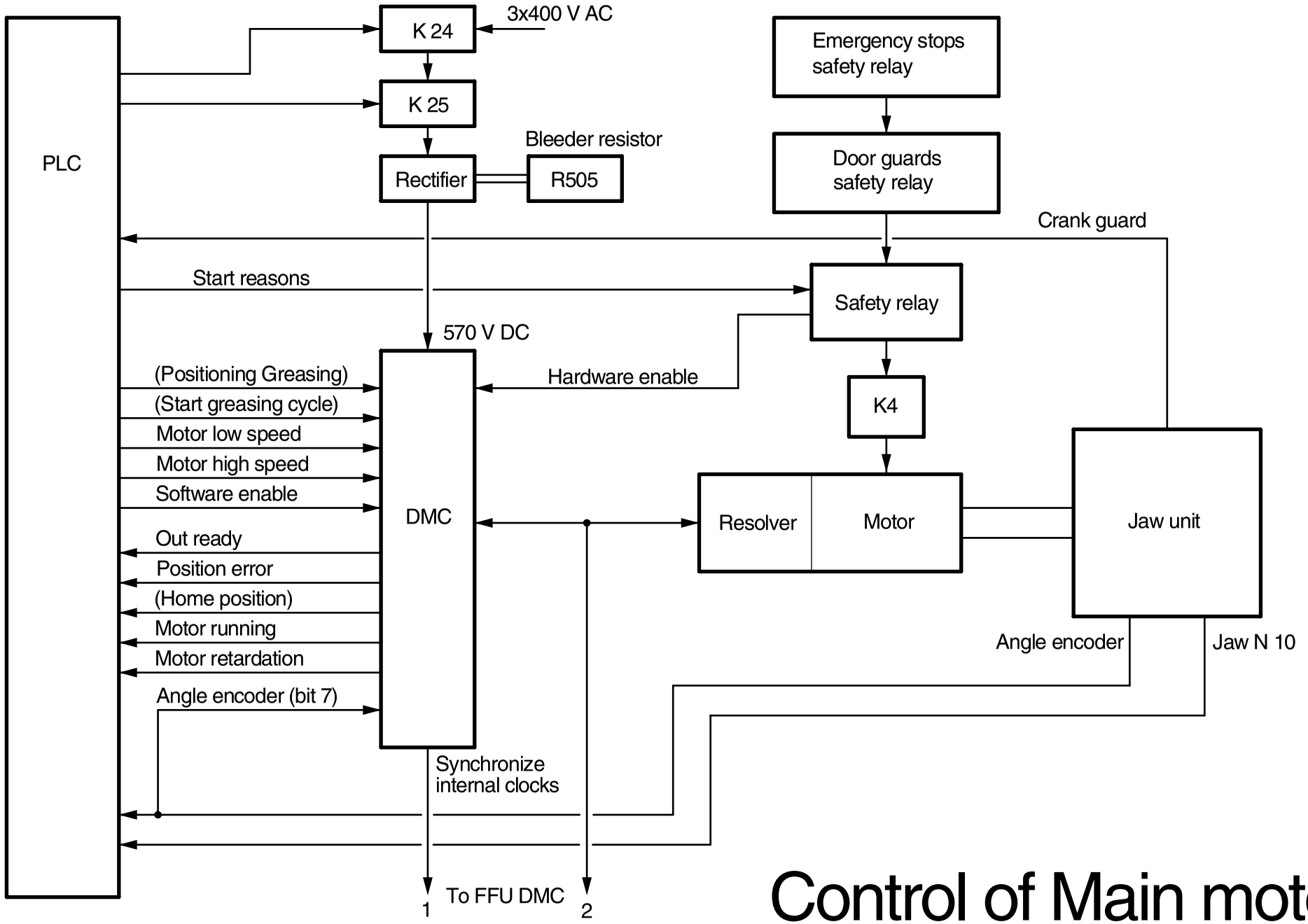

Control of Main motor

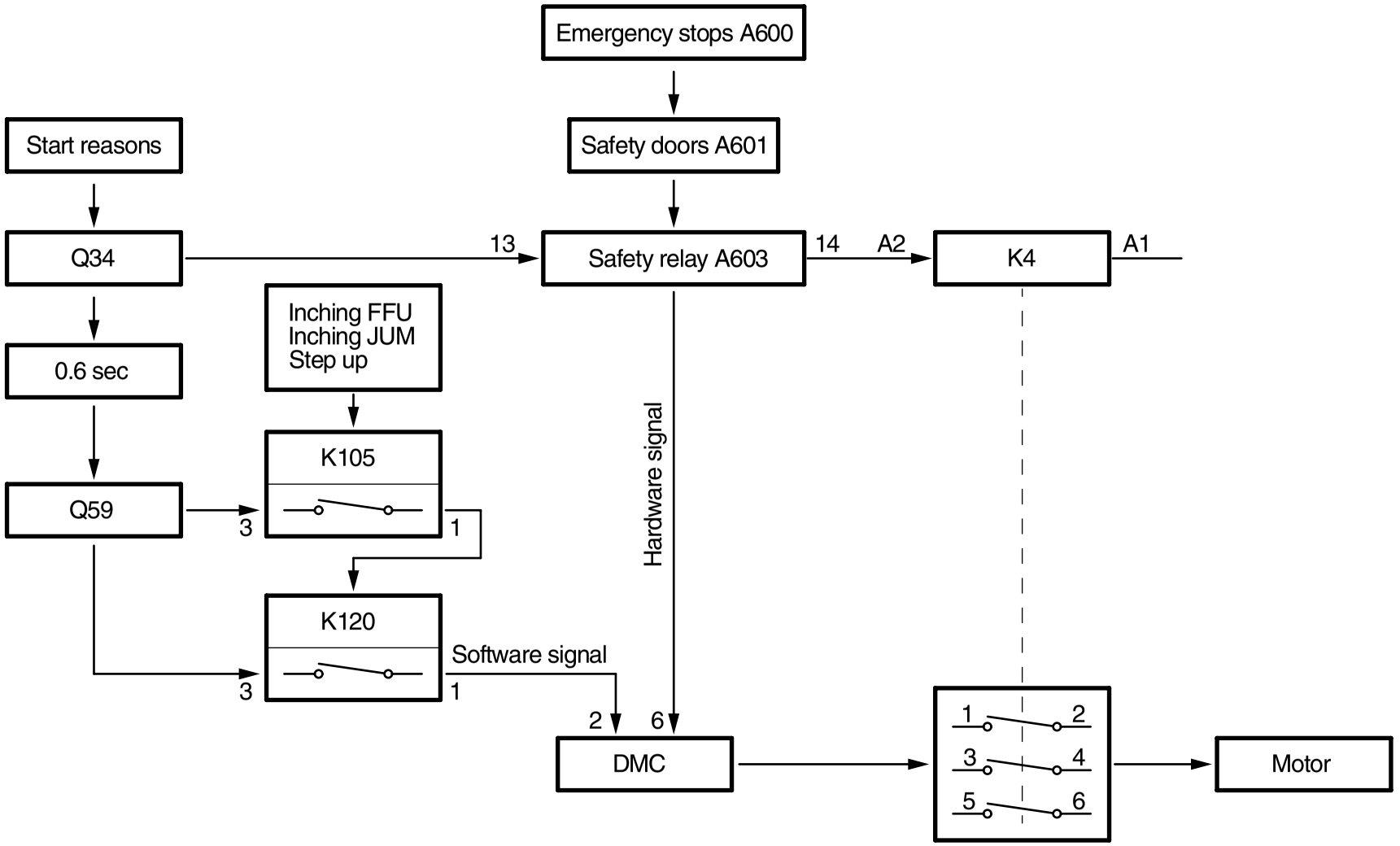

Control of main servo motor

Hardware / software signals

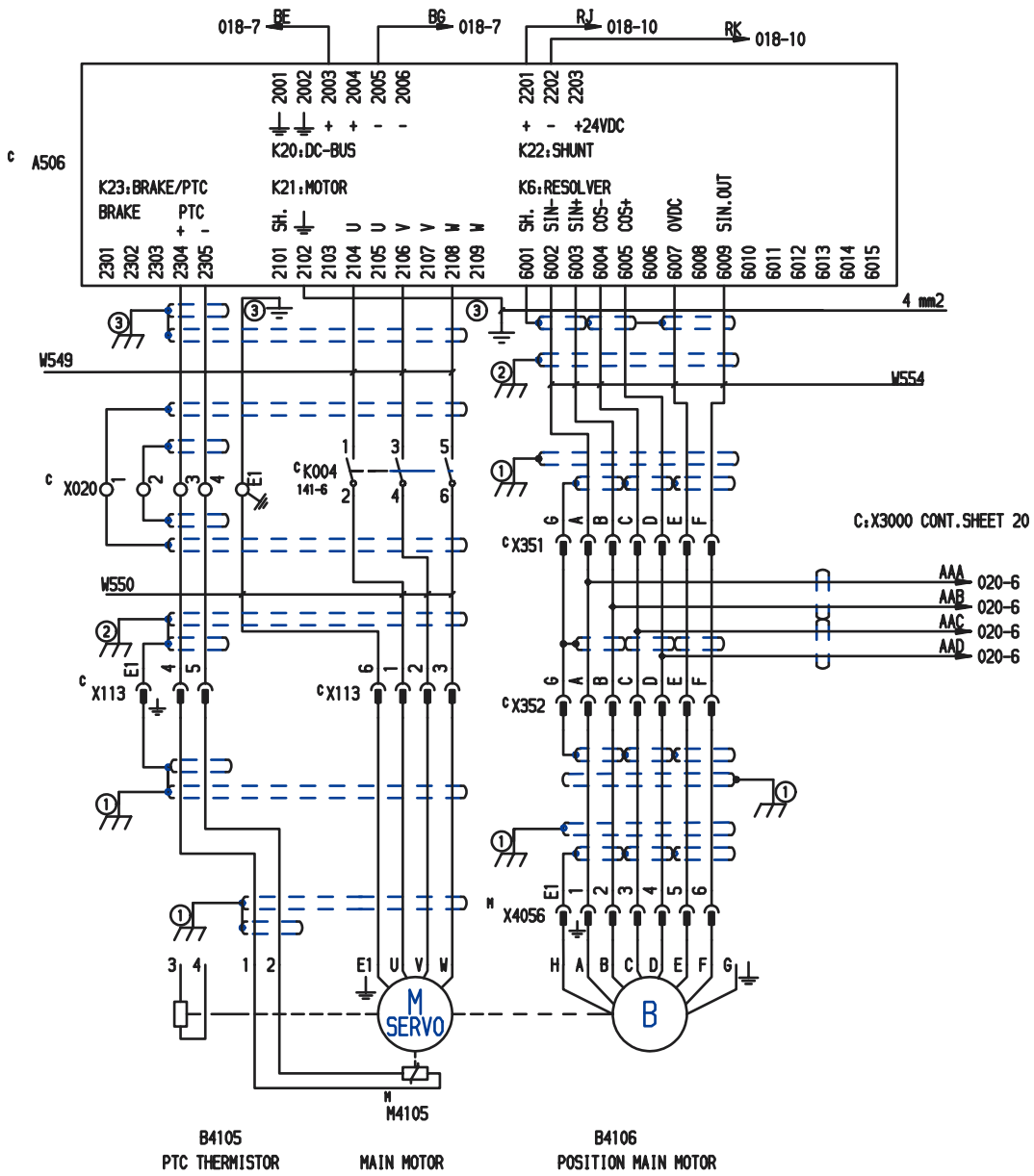

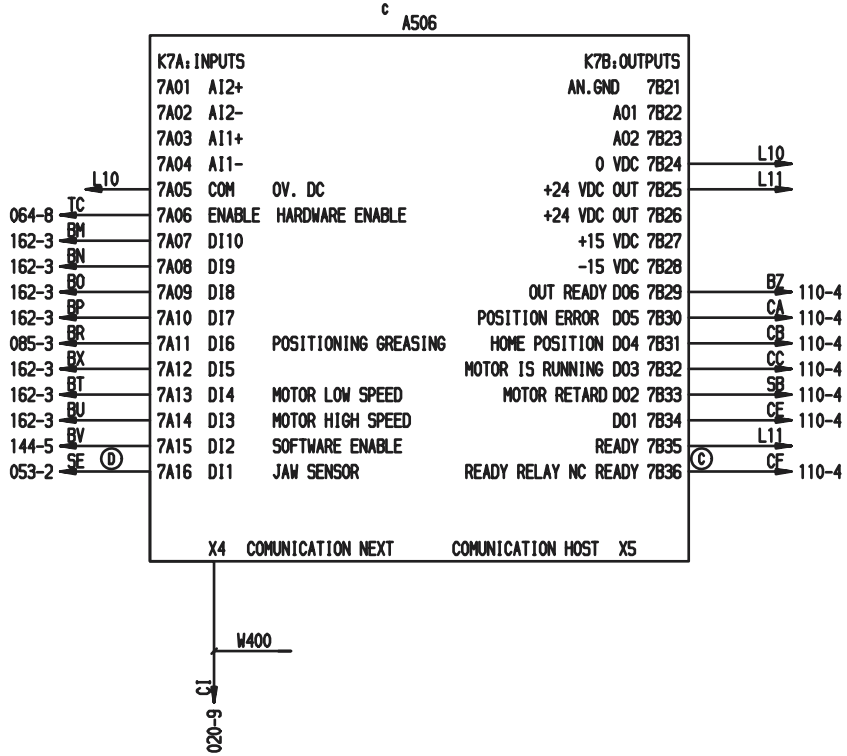

MAIN SERVO MOTOR

2552985-019:01

11

Design control system

Design Control Mechanism

Production
(regulation)

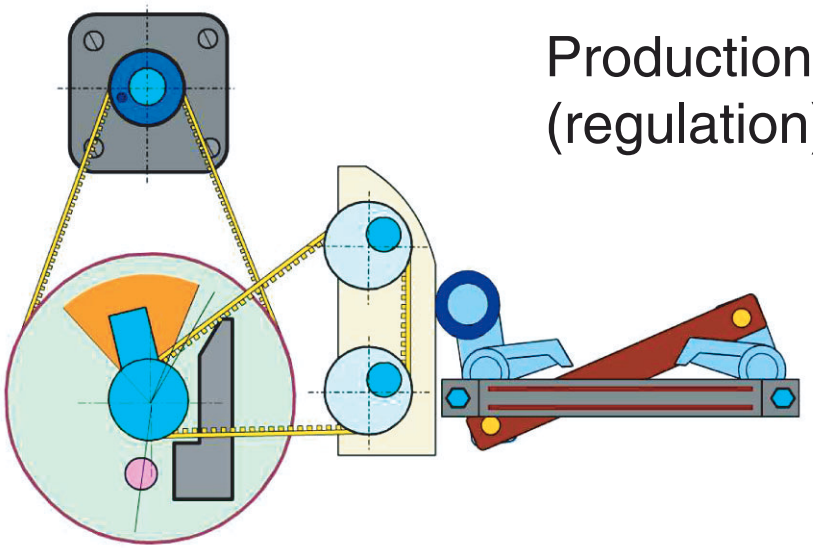

Home position

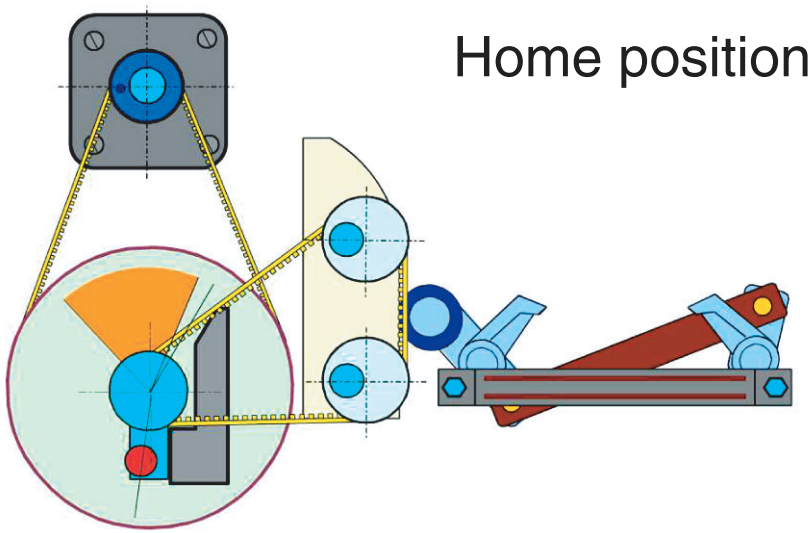

Gap setting

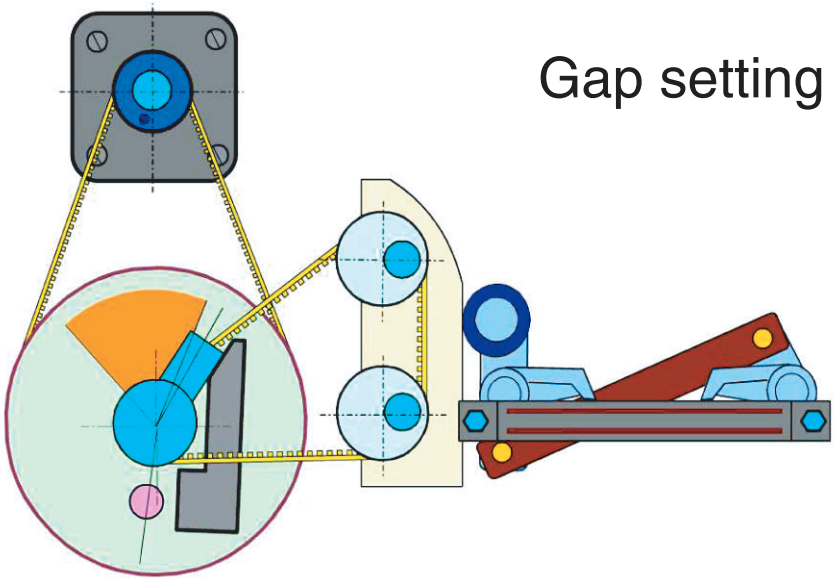

Precorrection

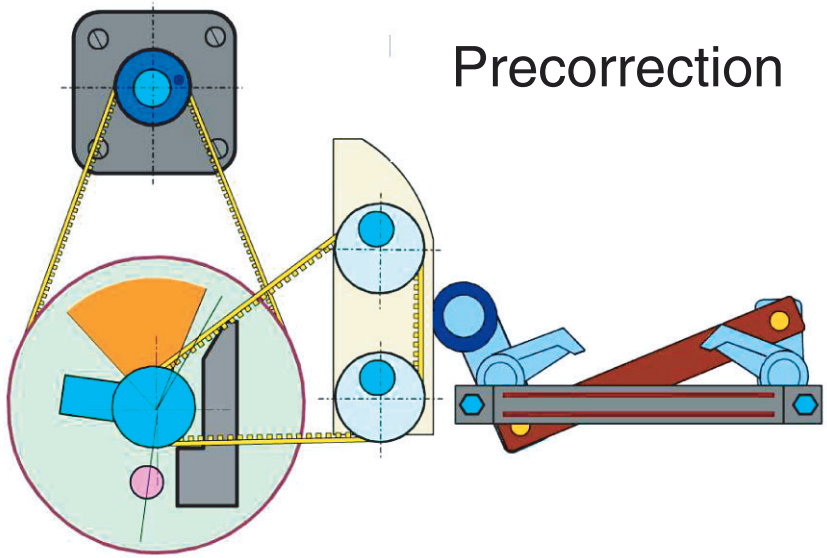

TMCC2

Design control system

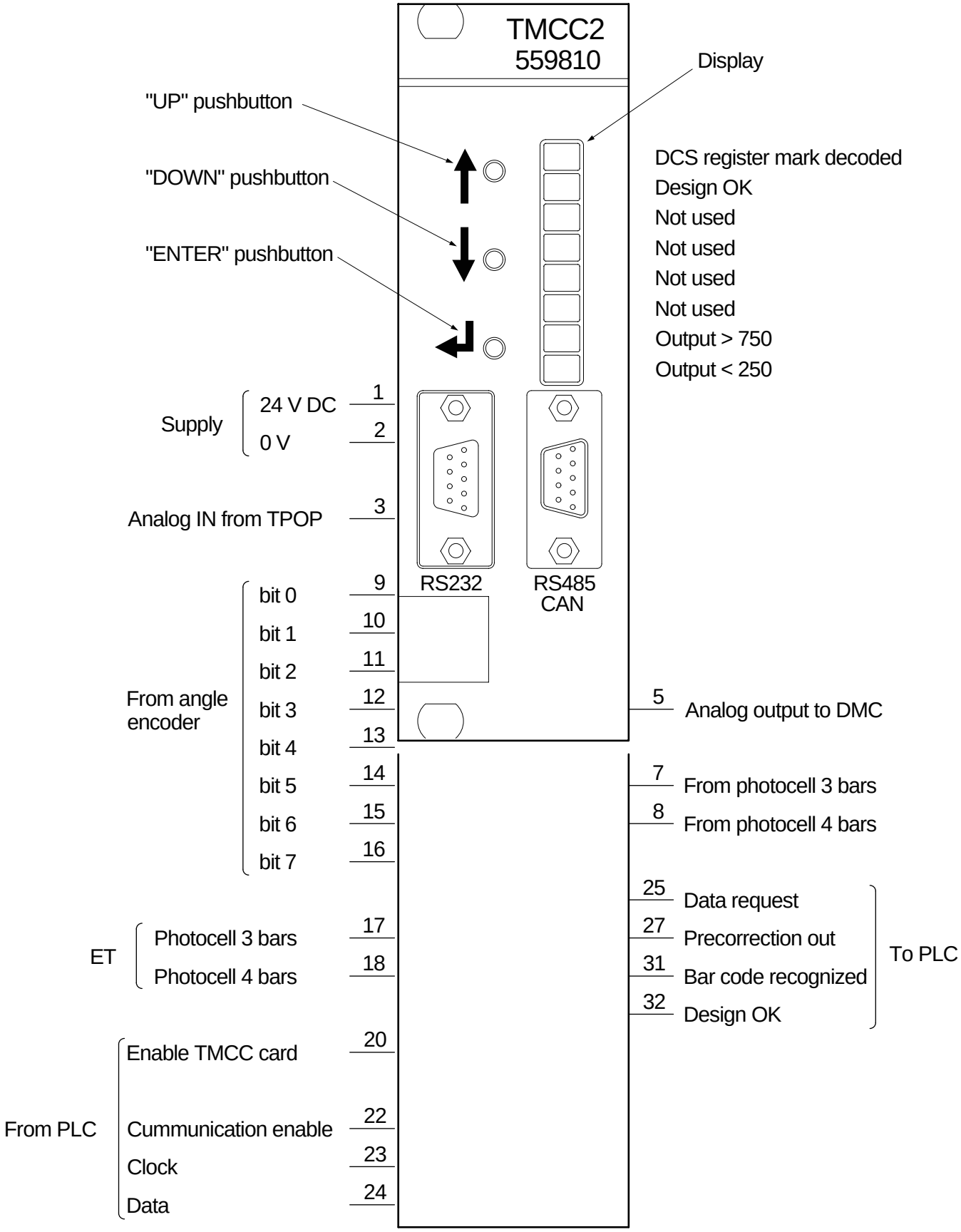

Technical Training Centre Lund, Sweden	Machine type TBA/22 050V	Issue 2/0502	OH 1258

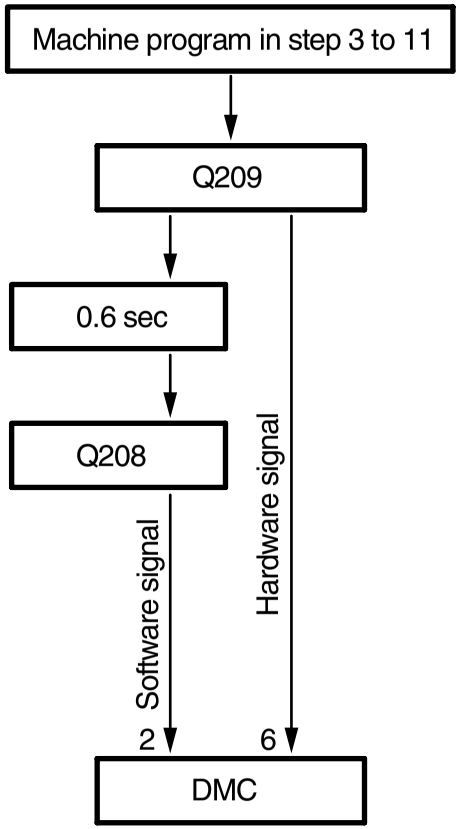

Control of DCS servo motor

Hardware / software signals

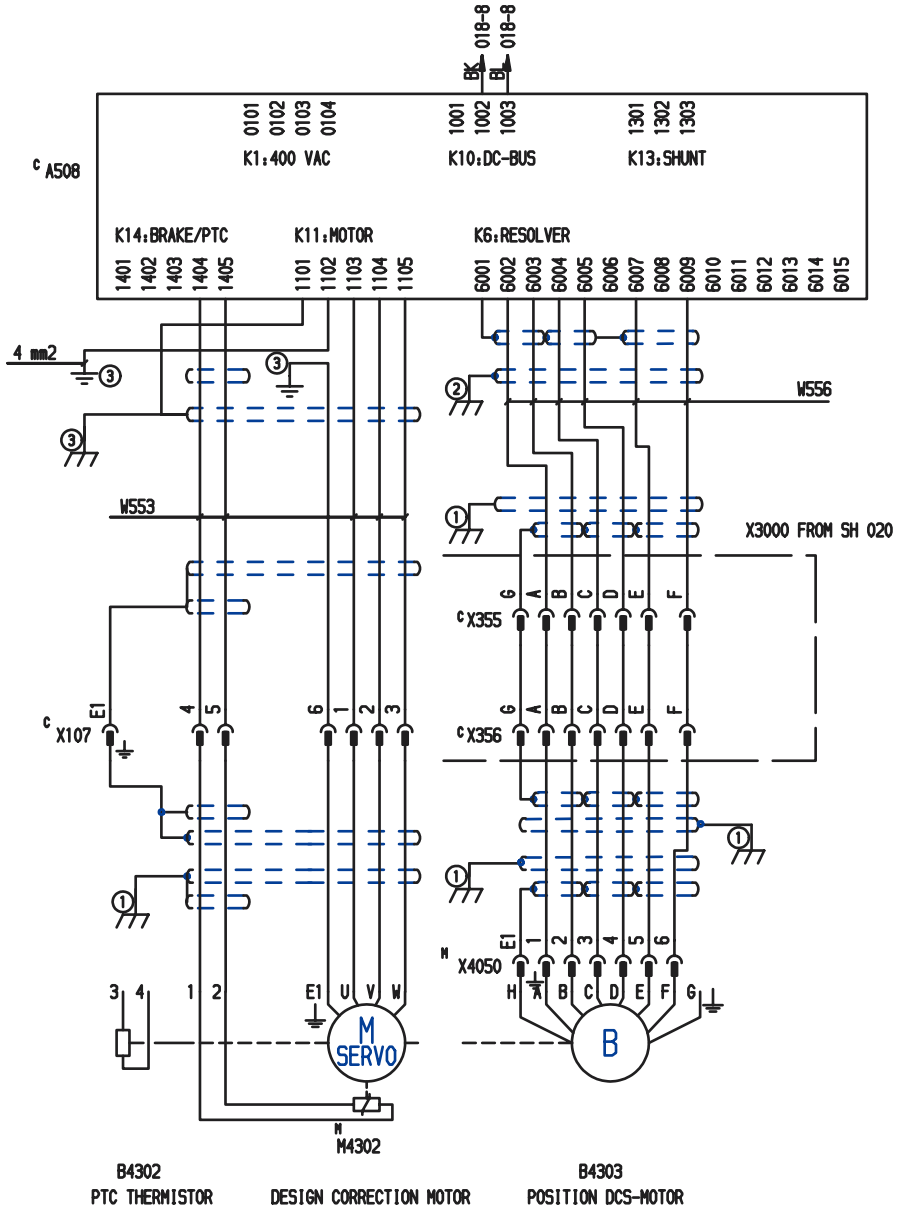

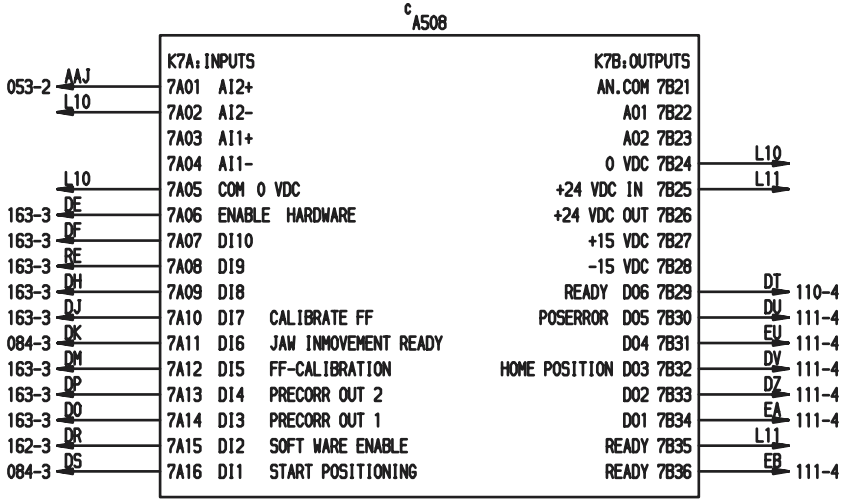

DCS SERVO MOTOR

2552985-021:01

Register code reading

26 bits

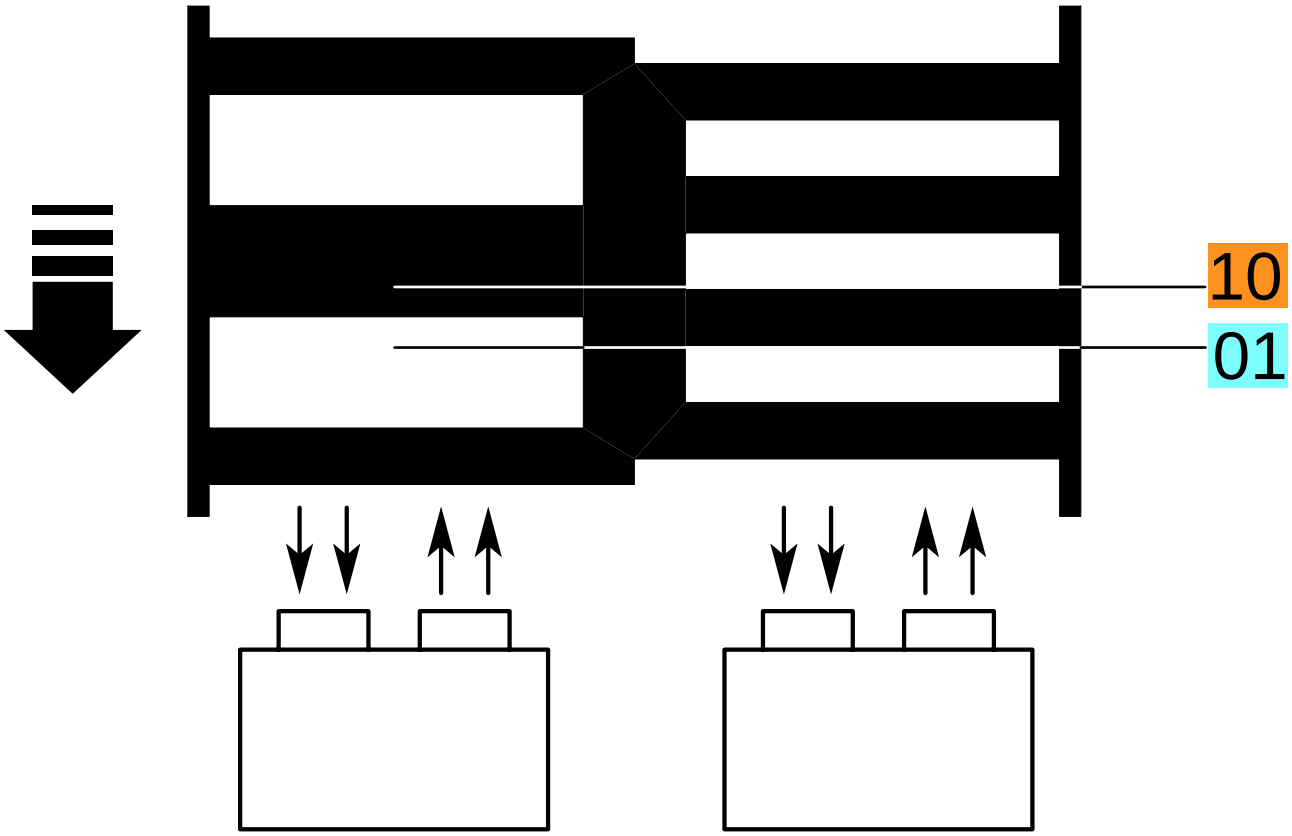

11010001111011010001111000

11010001111011010001111000

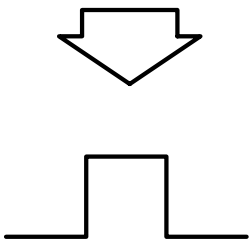

Textbook

Design Control

TBA/22 050V

Tetra Pak A3/Speed

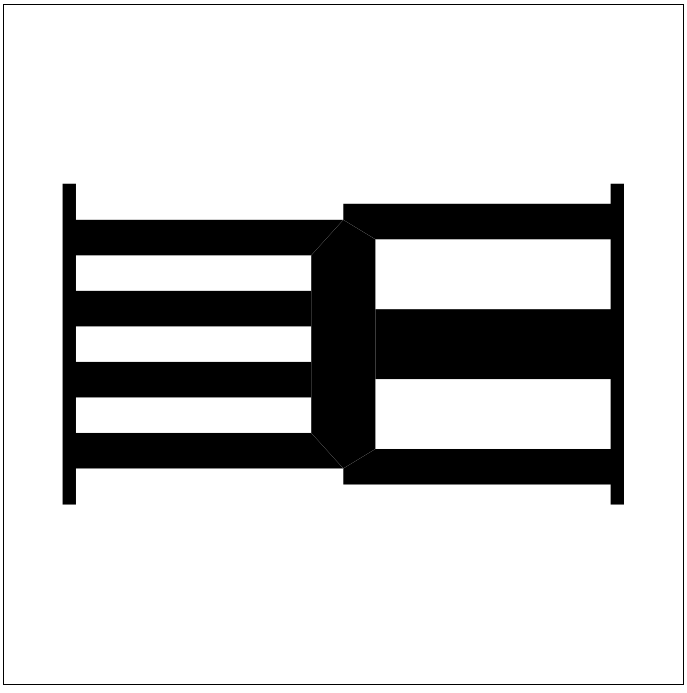

MT-83063-1

Technical Training Centre
Lund, Sweden

This textbook has been compiled by the Technical Training Centre in Lund.

Some of the pictures in the book are also available as OH pictures.

For further information on training material, please contact the Technical Training Centre.

Issue 2/0306

© 2000, Technical Training Centre

No part of this publication may be reproduced, stored in a retrieval system or transmitted in any form or by any means: electronic, electrostatic, magnetic tape, mechanical photocopying, recording or otherwise, without permission in writing from Technical Training Centre.

Design Control

TBA/22 050V

Tetra Pak A3/Speed

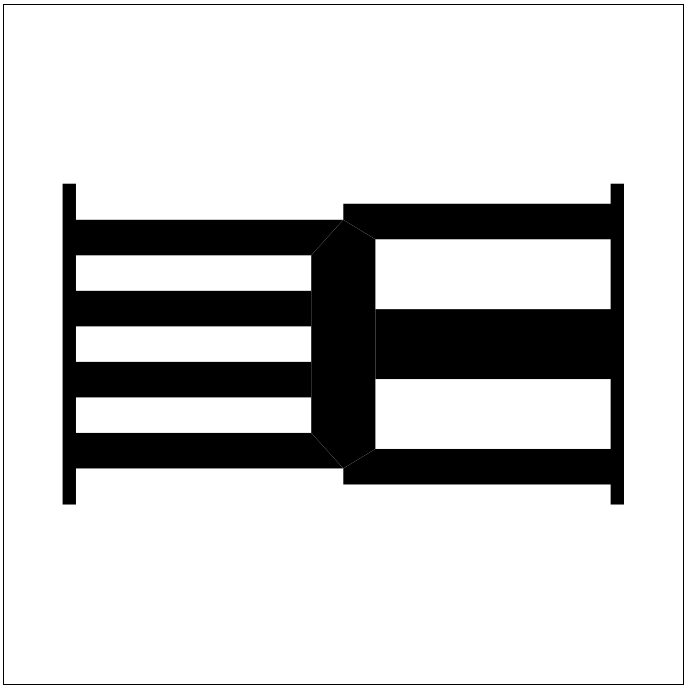

Training Document

This Training Document is intended for Training purpose only, and must not be used for other purpose.

The Training Document is not replacing any instructions or procedures (e.g. OM, MM, TeM, IM, SPC) intended for specific equipment, and must not be used as such.

Note!

For safe and proper procedures, refer to the equipment specific documentation.

Technical Training Centre

Contents

General 3
Construction 5
Function 7
TMCC 10
Design control offset adjustment 12
Start 16
Folding flaps and eccentric shafts 18
Reading a register code 20
Glossary 21

General

Most Tetra Brik packaging machines produce packages from **creased** packaging material. The creases are folding impressions to facilitate the forming of the package.

Creased packaging material

The shaded area shows the part of the packaging material used to make **one** package.

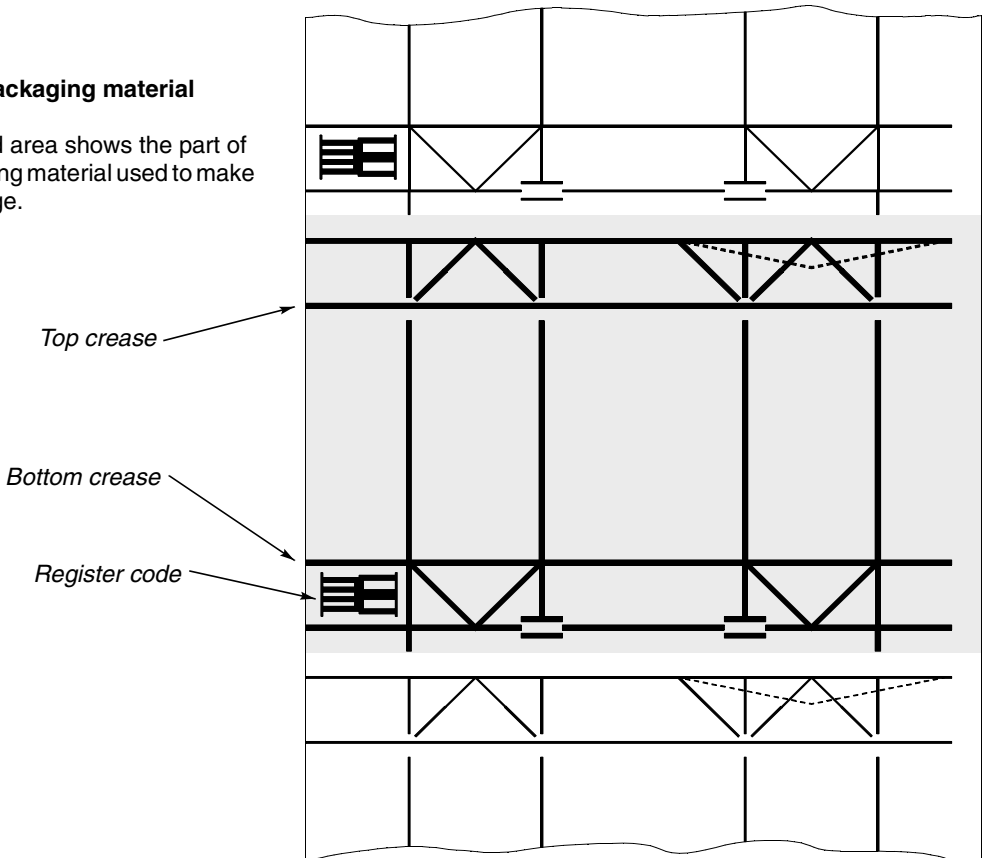

On a finished package, the creases coincide with the edges of the package. This means that the package must be made from a particular section of the packaging material web. In order to achieve this, the machine must:

1. synchronise the material web with the jaw system, so that the jaws seal and cut the package in the right places,
2. feed the material one package at a time in order to maintain synchronisation with the jaws.

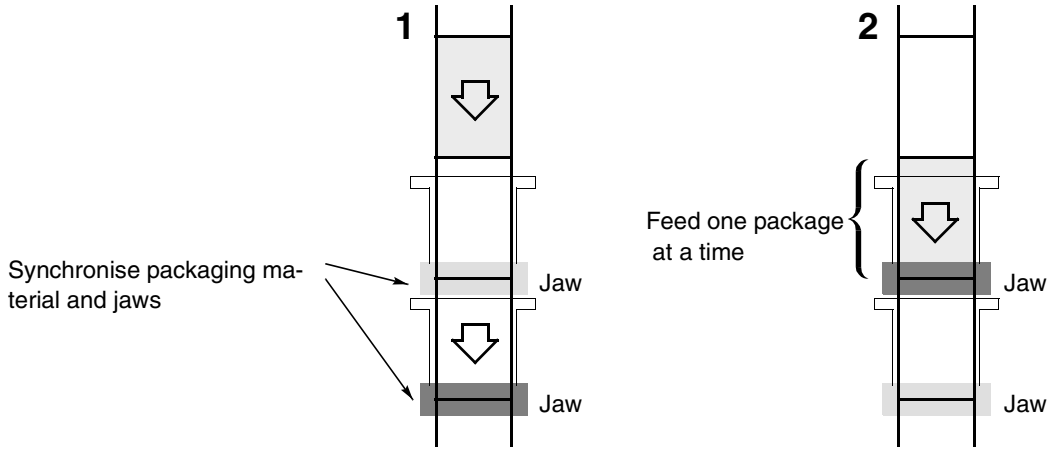

It is the **design control** which synchronises material and jaws and causes one package at a time to be fed forward. When this is done, the creases of the package are correctly placed as the jaws move against the tube, so that the machine produces packages of the **right shape**.

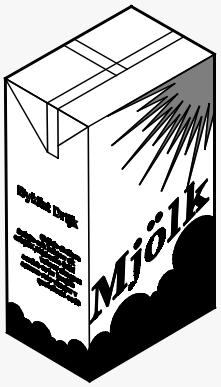

This package is well shapen and folded along the creases; it has been made from the appropriate section of the material web.

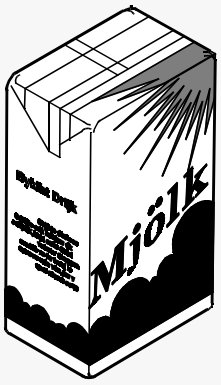

On this package, the creases in the web and the edges (folding) of the package do not coincide; it has been made from the wrong section of the web.

However, the jaws do not have to hit the tube at an exact spot for the packages to be correctly formed. The positions of the creases relative the jaws may fluctuate within a **small range** without affecting the shape of the packages. The design control device endeavours to place the creases in the **middle** of this range by continually **making slight adjustments of the tube feed**.

Construction

This picture shows the components that make up the design control.

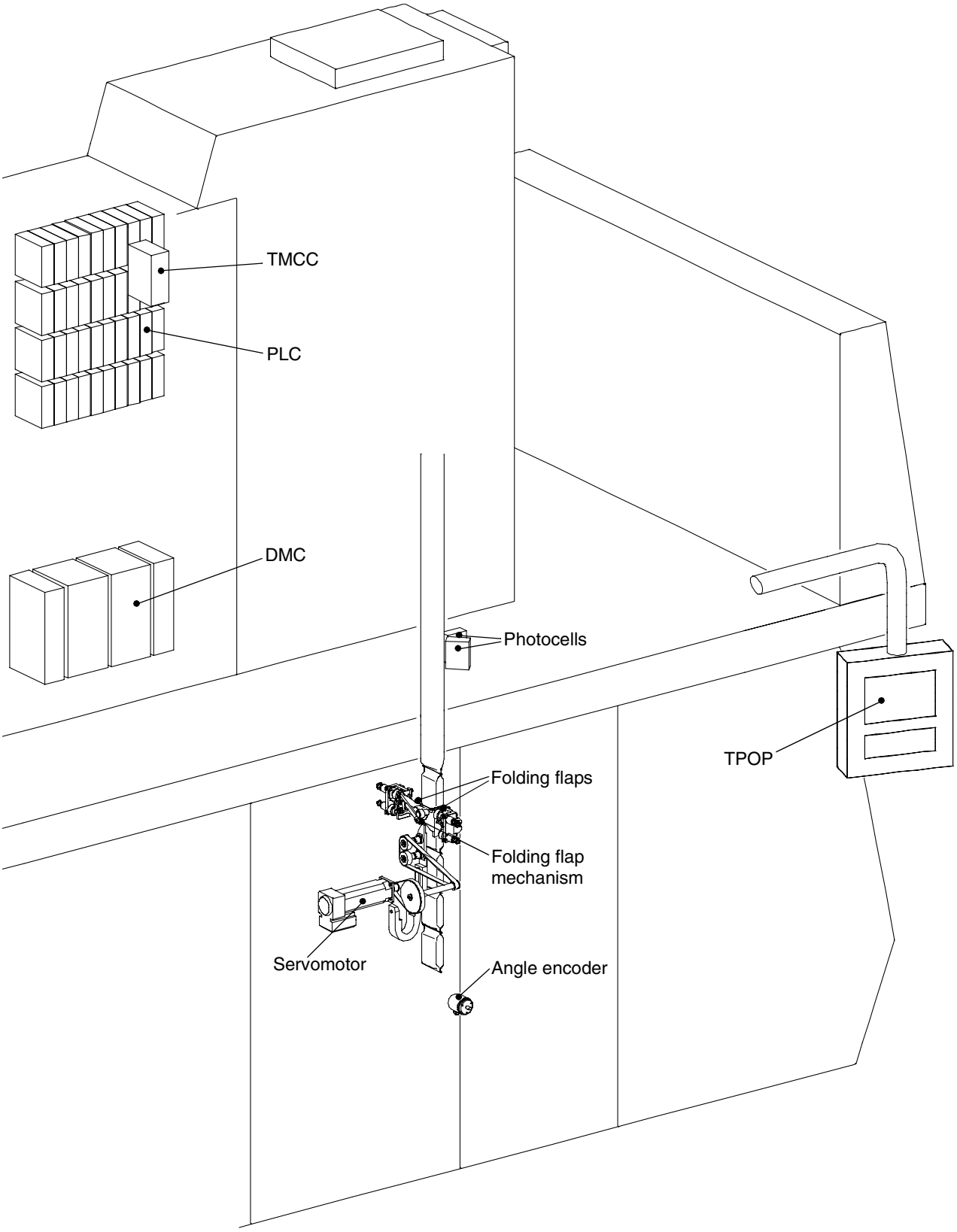

The **photocells** sense the register code, a mark printed on every package. When the register code moves past the photocells, signals are generated which are decoded by TMCC. The decoded signal is referred to as **design signal**.

The **design control offset**, on the TPOP, is used to regulate the crease position manually relative the jaws.

The **angle encoder** is connected to the drive of the machine and continually reads the machine position in the form of an electric signal. As the jaws are connected with the drive, this signal also defines the position of the jaws. The position of the machine (machine angle) can be read on the display of the angle encoder.

The **TMCC** (Tetra Pak Multi-Purpose Controller) incorporates the program for the design control. It receives the signals from the photocells and the angle encoder. The TMCC then determines, based on these signals, whether to increase or decrease the feed rate of the packaging material web (tube).

The **PLC** comprises the control system of the machine. For instance, it provides the TMCC with certain data, required for the design control function.

The **DMC** (Digital Motion Controller) converts information received from the TMCC to the required servomotor position.

The **servomotor** is a kind of motor capable of stopping in a defined position with great precision. It is mechanically connected to the folding flaps and thus determine how far they move, i e their stroke.

The **folding flaps** regulate the feed rate of the packaging material web. They can assume any one of 1000 positions (steps 0 - 999).

- **Steps 0 - 999** constitute the regulation range during production. At step 0, feed of packaging material is at a minimum, while step 999 gives the highest feed rate.
- **Precorrection**, a folding flap position utilised during start that affects the feed rate very little.

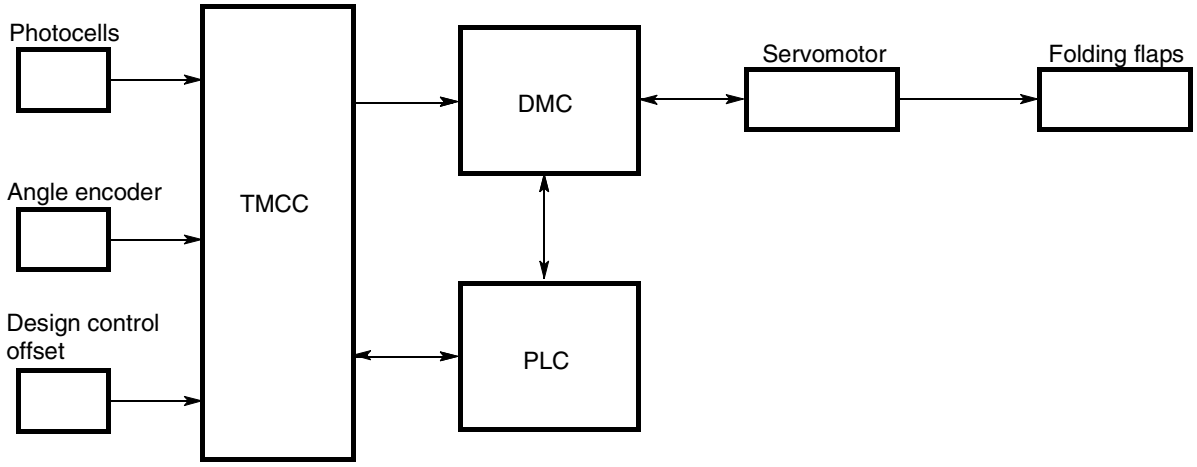

Function

What happens?

Through its in-movement, the jaws provides the fixed and major feed of packaging material. The design control then adds a small amount of web feed by means of the folding flaps.

If the crease position is high relative the jaws, the design control increases the feed of material, i e the additional feed is greater.

If the crease position is low, the design control reduces the feed of material, i e the additional feed is less.

The feed rate is regulated by **altering the stroke of the folding flaps**.

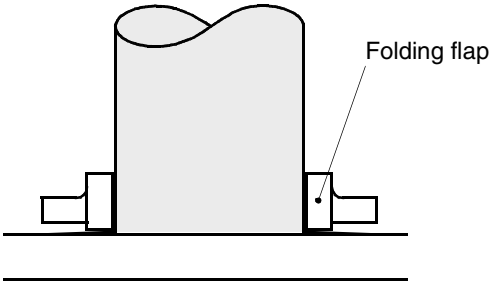

The folding flap stroke increases when the creases are positioned high (→ step 999).

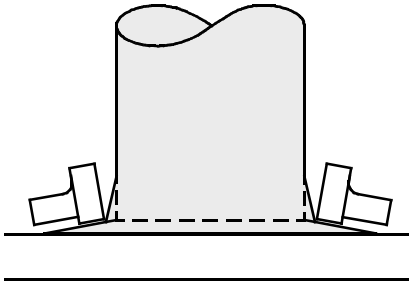

The folding flap stroke decreases when the creases are positioned low (→ step 0)

The design control device endeavours to regulate the speed (feed rate) of the tube, so that it is as close to the machine speed as possible. **Folding flap strokes 0 - 999** (regulation range) **provides virtually linear regulation of the feed rate**. How much the design control device is to add to the feed depends on where the creases are positioned relative the jaws.

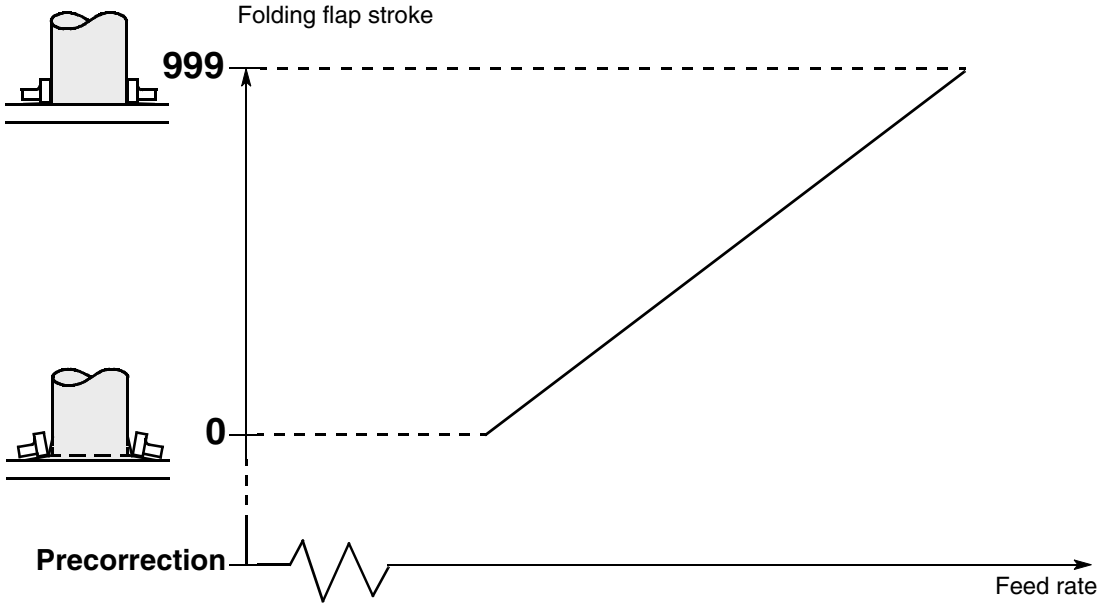

To determine whether to increase or decrease the feed rate, the machine must compare the crease position with the jaw position. The design signal is a pulse indicating the crease position, and the angle encoder indicates the jaw position.

The design signal is generated by the photocells sensing the register code, which is being decoded into a design signal in the TMCC. The register code is printed on the packaging material in a defined place relative the creases. Consequently, the register code defines the crease position as well. In order for the packages to be well–shapen, and thus acceptable, the signal must be received while the machine is positioned within a certain range. This range is called the **production sector**, or the range for acceptable packages.

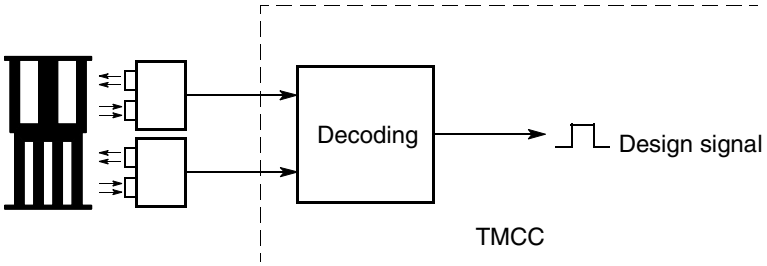

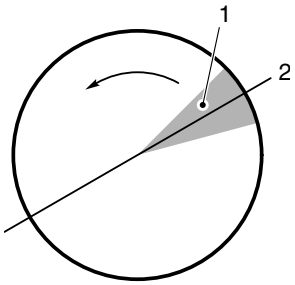

Production sector (1)
Production angle (2)

The production sector is symmetrically located around the **production angle***. The production angle is the value of the angle retrieved by the TMCC from the PLC. The design control endeavours to place the design signal at the production angle.

* see page 21 (terminology list)

Design deviation

Design deviation is a measure of how the creases are located relative the **correct position**. Correct position means that the design signal is received precisely at the production angle.

The design deviation is expressed as a length, and must during production not exceed ±1,5 mm. If the deviation is kept within ±1,5 mm, the packages are correctly formed, indicating the design signal has come within the production sector. This ±1,5 mm limits the production sector; there are no angle values received from the PLC.

The TMCC computes the design deviation value by measuring when, in relationship to the correct position, the design signal is received. 0 mm design deviation means that the design signal comes at the production angle (in the middle of the production sector).

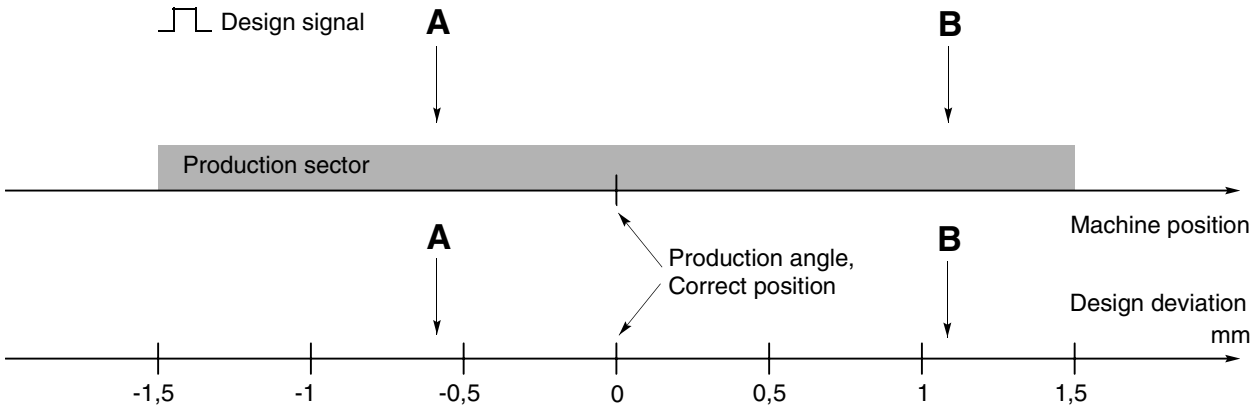

Design signal A is coming early, relative the production angle. The design deviation is -0.6 mm (low creases), and the folding flaps are to decrease the feed rate in order to raise the crease position.

Design signal B is coming late. The design deviation is 1.1 mm (high creases), and the folding flaps are to increase the feed rate in order to lower the crease position.

The orientation and magnitude of the design deviation determines how the stroke of the folding flaps is to be altered. Positive deviation, i e high crease position, increases the folding flap stroke; towards step 999. Negative deviation, i e low crease position, decreases the folding flap stroke; towards step 0. The stroke is altered by the number of steps which corresponds to the current design deviation. The design control endeavours to minimize the design deviation.

Example

Below, an example is illustrated of how the design is regulated, reaching a stable position; two cases are shown with different initial premises and preconditions (A and B)

The upper part of the diagram shows the feed provided by the folding flaps, and the lower part shows the fixed feed provided by the jaws. The jaws provide the major proportion of the total feed.

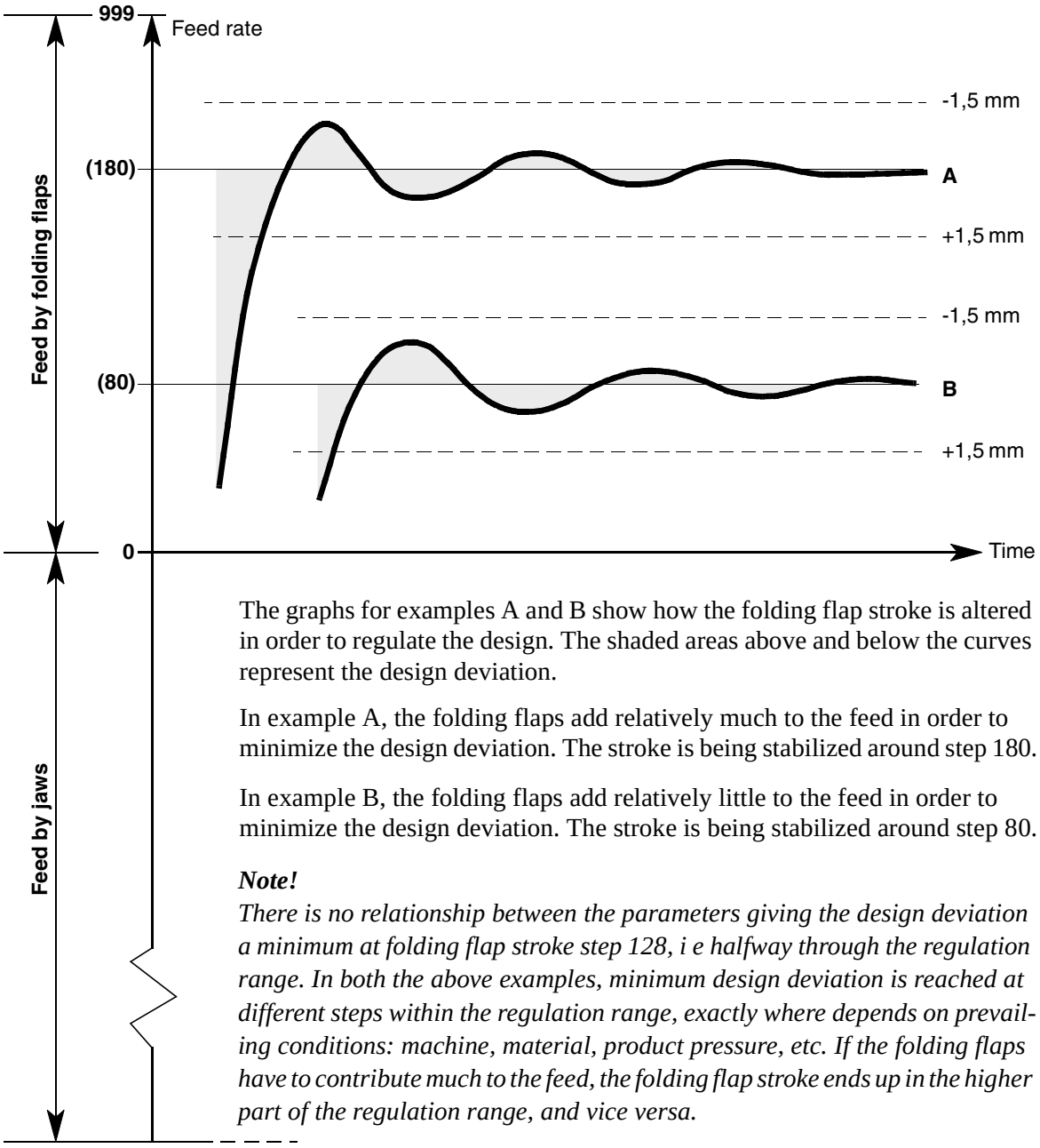

The graphs for examples A and B show how the folding flap stroke is altered in order to regulate the design. The shaded areas above and below the curves represent the design deviation.

In example A, the folding flaps add relatively much to the feed in order to minimize the design deviation. The stroke is being stabilized around step 180.

In example B, the folding flaps add relatively little to the feed in order to minimize the design deviation. The stroke is being stabilized around step 80.

Note!

There is no relationship between the parameters giving the design deviation a minimum at folding flap stroke step 128, i e halfway through the regulation range. In both the above examples, minimum design deviation is reached at different steps within the regulation range, exactly where depends on prevailing conditions: machine, material, product pressure, etc. If the folding flaps have to contribute much to the feed, the folding flap stroke ends up in the higher part of the regulation range, and vice versa.

TMCC

TMCC is a programmable control board used for a variety of functions in the Tetra Pak machines. The diagram below shows how TMCC works in the design control device for TBA/22. The front of the board is illustrated overleaf, where there are also explanations of the various LEDs, switches, etc. on the board.

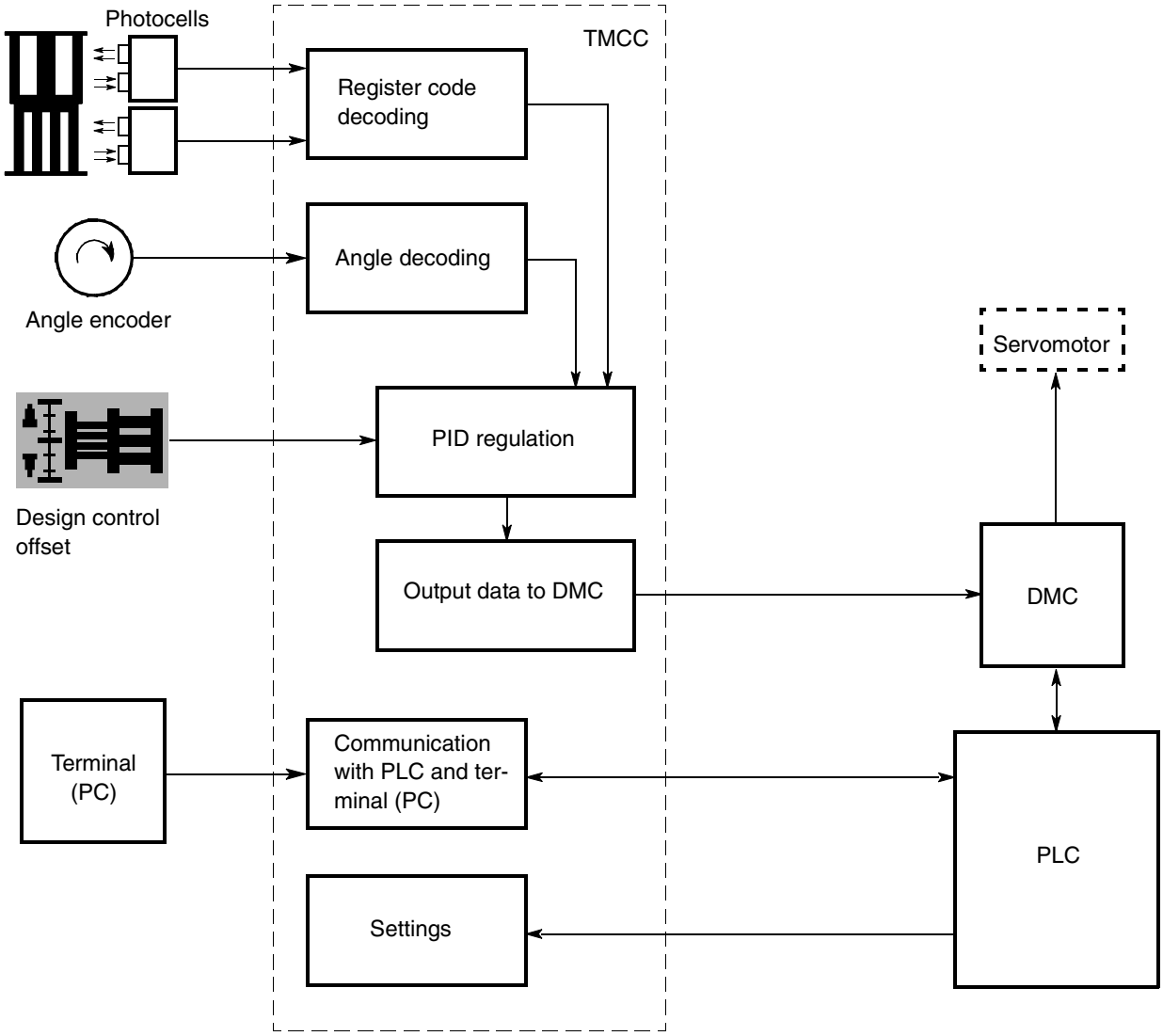

DCS22 Design Control System 22

The TMCC program (DCS22) consists of six principal functions:

- **Register code decoding**: This part of the program decodes the signals from the photocells, converting them into a design signal.
- **Angle decoding**: This part decodes the angle values utilized in the design control.
- **PID regulation**: Here the design deviation is computed and the stroke of the folding flaps determined. The computation consists of a PID algoritm.
- **Output data to DMC** (servomotor): This part of the program provides data for the DMC on the folding flap stroke.
- **Communication with PLC and terminal** (PC).
- **Settings**: Here are stored volume-dependent parameters (values) retrieved by the TMCC from the PLC.

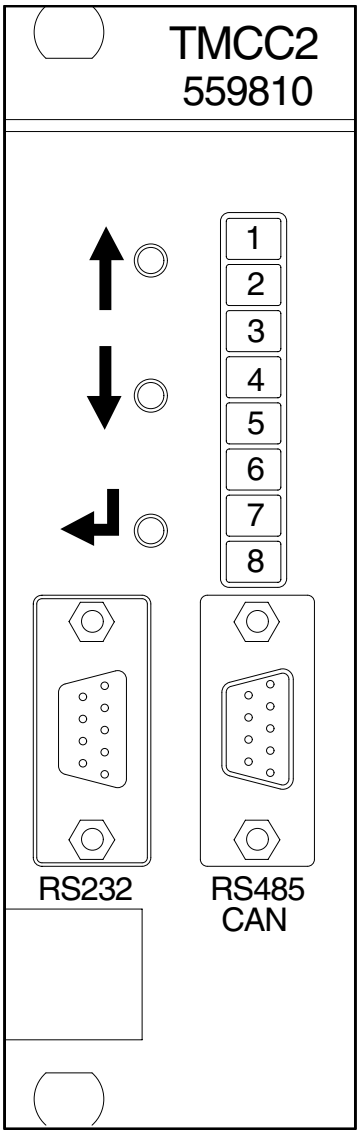

TMCC LEDs explained:

1 (yellow) flashes when the register code is being decoded.

2 (yellow) lights up when acceptable packages are being produced. (Design OK.)

3-6 (yellow) not used in this application.

7 (yellow) lights up when the design control works in the upper part of the regulation range, 75-100% of the range.

8 (yellow) lights up when the design control works in the lower part of the regulation range, 0-25% of the range.

An identical TMCC is used for all package volumes. Volume-dependent data, needed by the TMCC, are collected from the PLC.

It is possible to communicate with the TMCC via TIT (terminal, PC).

Upon the command **R1** (on-line), the following is displayed continuously:

- Design deviation for the current package
- Mean deviation for the ten latest packages produced
- Folding flap stroke, mean position for the ten latest packages produced

Upon the command **S** (status), further information on design control can be obtained, for instance volume-dependent parameters which the TMCC collects from the PLC:

- Machine speed, in terms of packages per hour
- Web cutting pitch, also called Repeat length, volume-dependent parameter collected from the PLC
- Production angle, volume-dependent parameter collected from the PLC
- Design control offset setting (±500 scale units, about ±5 mm)
- Control parameters P, I, and D

The TMCC also has an analogue output 0-10V, from which it is possible to transmit one of the parameters listed above, for instance to a recorder.

The TMCC also communicates with the TPOP via the PLC. These are the alarms available:

- **Malfunction photocells**: if the photocells fail to sense the register code, this alarm is triggered. The machine runs on with the same folding flap stroke for a short time*. If the photocells have not resumed sensing the register code, the machine will stop.
- **Printed design out of limit**: If the design deviation of 2** consecutive packages exceed ±1,5 mm, this alarm is triggered and the packages are discarded. If the design deviation continues to exceed ±1,5 mm the machine will stop after 100** such packages. All these packages are discarded.
- **Servo system fault**: in case of a servo system fault, an alarm indicates this fact on the TPOP.

*	Production	Tight Tube
TBA/22 050V	0.4 s (2 packages)	7 s
*	High speed	Slow speed
A3/Speed	1.1 s (3 packages)	10 s (11 packages)
**		
TBA/22 050V	2	100
A3/Speed	3	30

Design control offset adjustment

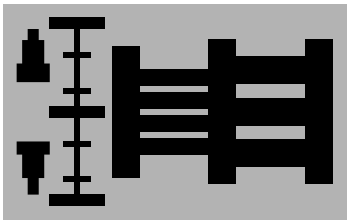

The position of the creases can be adjusted manually by means of the design control offset adjustment (on the TPOP). Everything described in the foregoing (pages 3 - 11) refers to the automatic part of the design control. In order to make it easier to understand the function of the design control offset adjustment, one should deal with this separately from the automatic control.

- The **automatic control** endeavours to achieve the correct position (design signal at the production angle).
- **Manual regulation**, by means of the design control offset adjustment, determines where this position is.

Together, this makes the packages obtain the correct shape, i e with the creases in the right places.

Correct shape

Then, what does a correctly formed package look like? Correctly formed, the package material is folded along the top and bottom creases, as illustrated below.

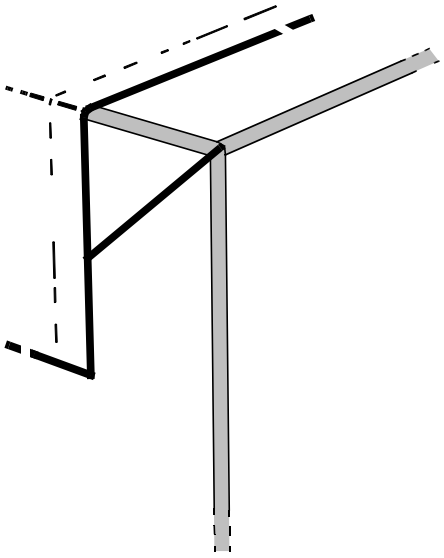

The crease is designed to fold in this precise manner. That is why the crease does not have to be in the exactly correct position in order to fold correctly.

In order to determine whether the package is correctly formed, one has to look at a **finished package**, i e one that has come out of the final folder. Such a check is part of the package checking procedure by the machine operator.

The automatic control is unable to determine how the creases are actually folded. All it is able to is to sense how the **design signal** relates to the jaws; thus is it only **indirectly 'aware' of how the creases are being folded**.

There are always variations in the packaging material, tolerances in the machine, etc, which cause packages sometimes to be incorrectly formed in spite of the fact that the design signal comes within the production sector.

Faults, like the one illustrated above, may occur, for instance if the register code location relative the creases is close to the limit of what the packaging material specification accepts. In the example below, the distance between the register code and the bottom crease is on the long side but still within the tolerance.

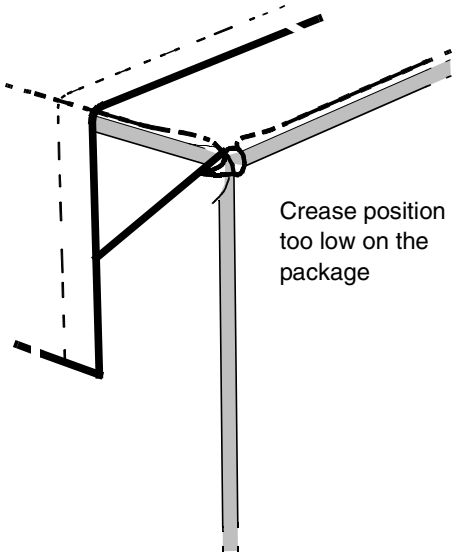

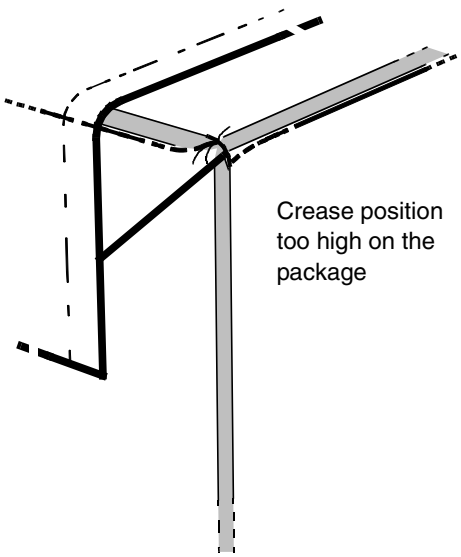

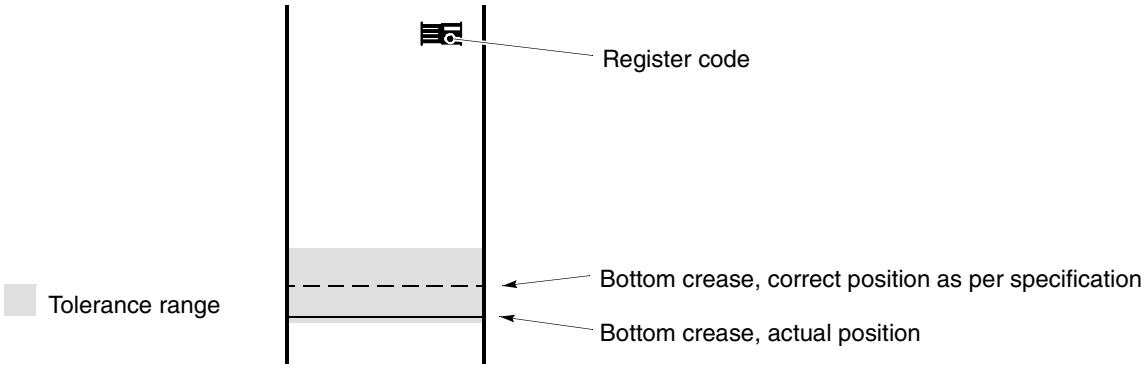

The automatic design control device will endeavour to fold the packaging material at the correct position, as specified, as that is where the TMCC assumes the crease to be. The design correction offset adjustment is now used to shift the correct position so that it coincides with the actual position, i e shift the position towards which the automatic design control aims.

Conclusion: If the crease position is not correct, in spite of design signal within the production sector, the crease position must be adjusted by means of the design control offset. It is possible to shift the crease position about ±5 mm. Increasing the value raises the crease position on the package, decreasing the value lowers it.

Note!
Changing the offset has the same effect as shifting the photocells vertically, i e altering the relationship between the design signal and the jaws.

Also note that the packages are made up-side-down in the jaw system. Low crease position on the package must not be confused with low crease position relative the volume flaps.

Example

In order to show what happens on changing the offset, we shall go through an example. It presumes that the creases are 1.5 mm too high on the finished packages, in spite of the design signal close to the production angle. The folding flap stroke fluctuates around step 160, and the offset value is set at 0.

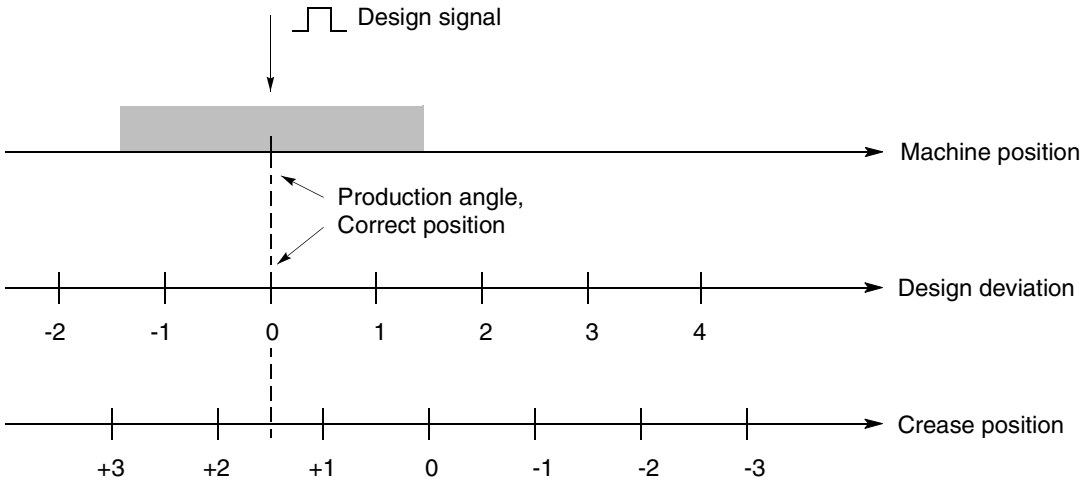

The design deviation is close to 0, but the crease position on the finished packages is offset by +1.5 mm, i e too high crease position on the finished packages.

In order to compensate this fault, the offset should be decreased by appr 150 scale units. This will shift the production angle so that a design deviation close to zero will place the creases correctly on the finished packages. The design deviation will now, temporarily, be -1.5 mm, but is quickly being regulated and closes in on zero again (1, 2, 3, and 4 in the diagram below).

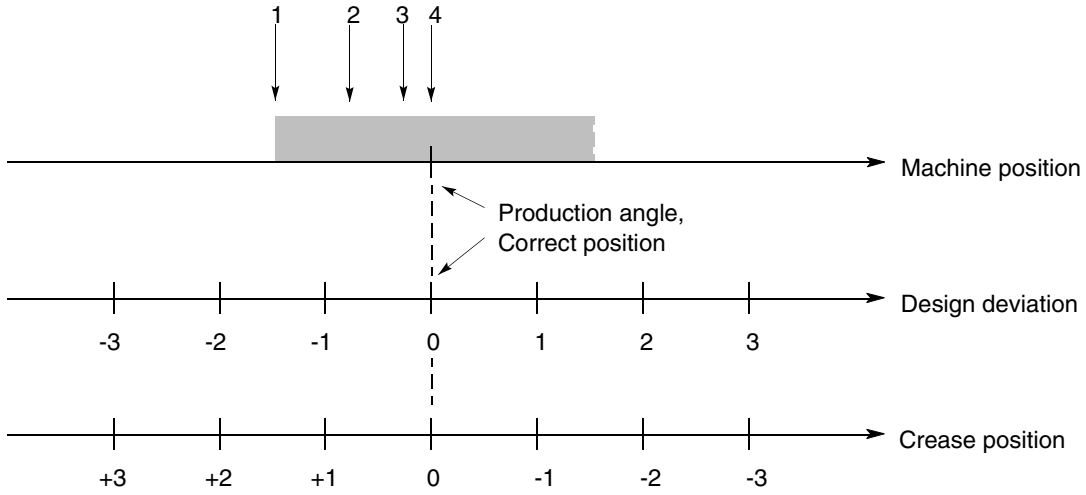

On changing the offset, the folding flap stroke is temporarily decreased in order to raise the crease position. After a while, the folding flap stroke will stabilize around step 160 once again.

The diagrams below illustrate **in principle** what happens when the offset is being changed, in accordance with the example on the previous page.

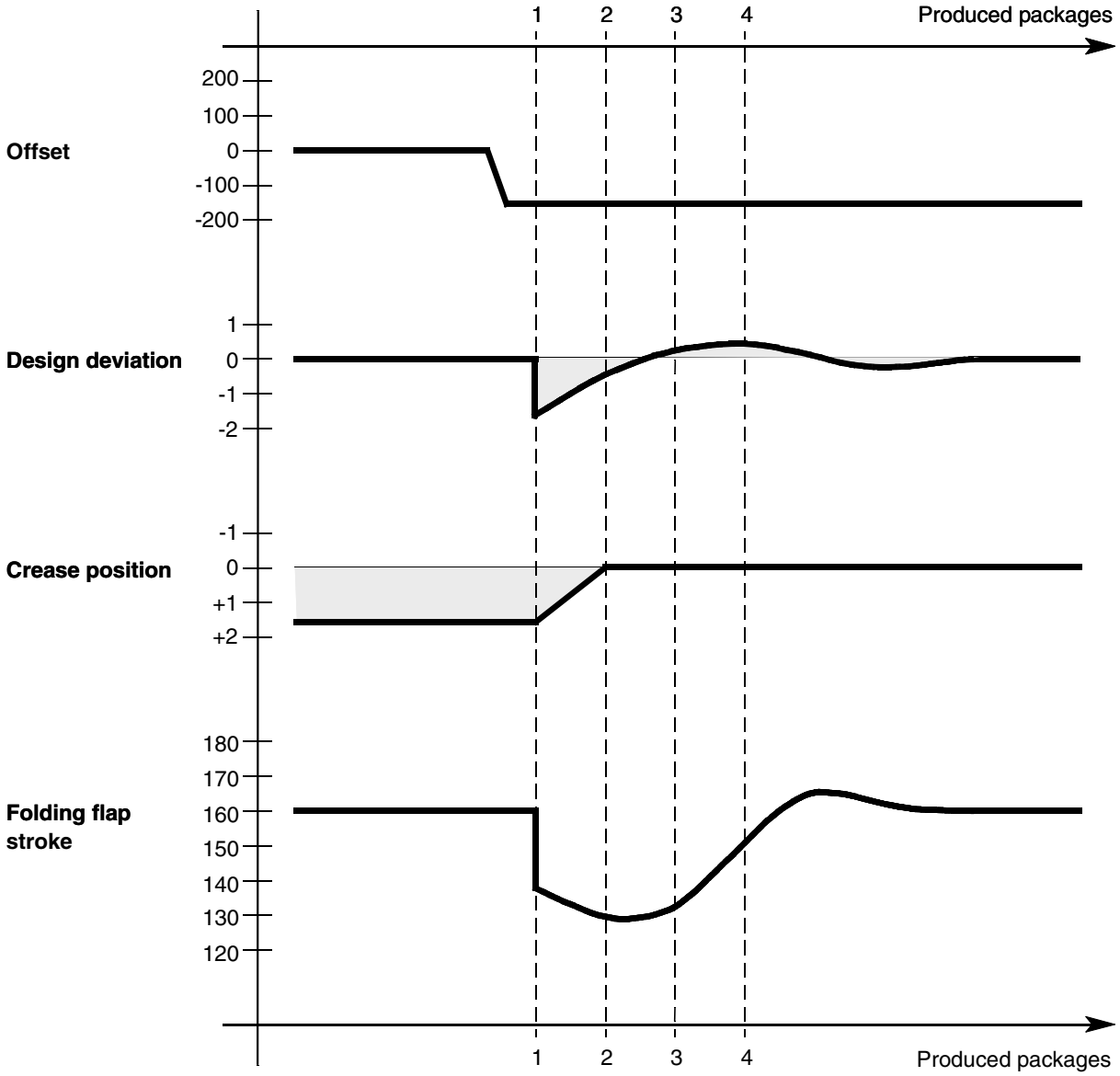

Start

The machine always start and stop with the design in correct position, except at the first start after **tight tube** and when **sterile inching** has been performed.

First start

After **tight tube** and **sterile inching** has been performed the folding flaps are in **precorrection**. When the machine is started the folding flaps consequently affect the feed very little, and the packaging material web is fed forward slowly relative the machine.

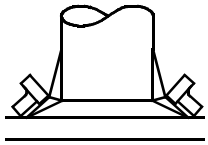

Precorrection

The folding flaps will remain in precorrection position until the design signal appears within the precorrection out sector. This will cause the flaps to assume a position within the normal regulating range, step 0-999.

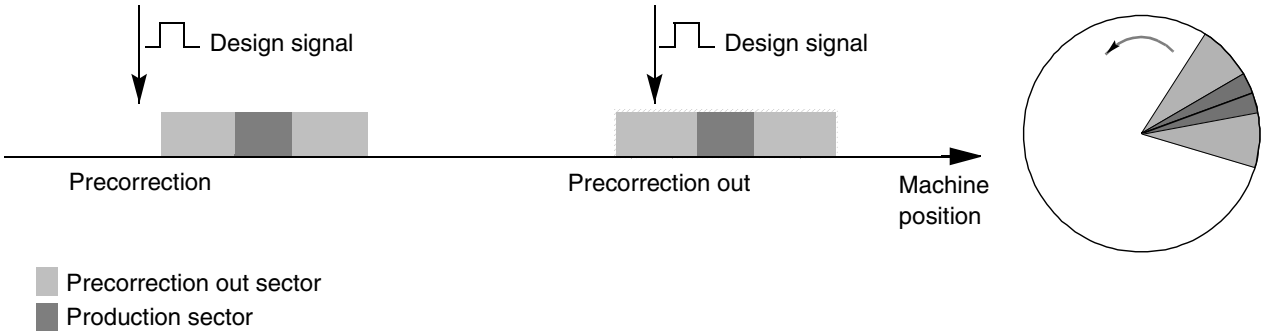

The precorrection out sector is made quite wide, corresponding to a design deviation of ±10 mm. When the design signal enters the sector the folding flaps will go to step 0 or step 999, depending on if the sector is entered when +10 mm or -10 mm of design deviation. The design control system will then quickly correct the deviation toward 0 mm.

Other starts

All other starts are performed when the correct design position is maintained from the preceding stop. The folding flaps are kept in a step between 0 and 999. This allow the machine to make correctly formed packages immediately after the start with the design in correct position.

The diagram illustrates an example of the starting sequence.

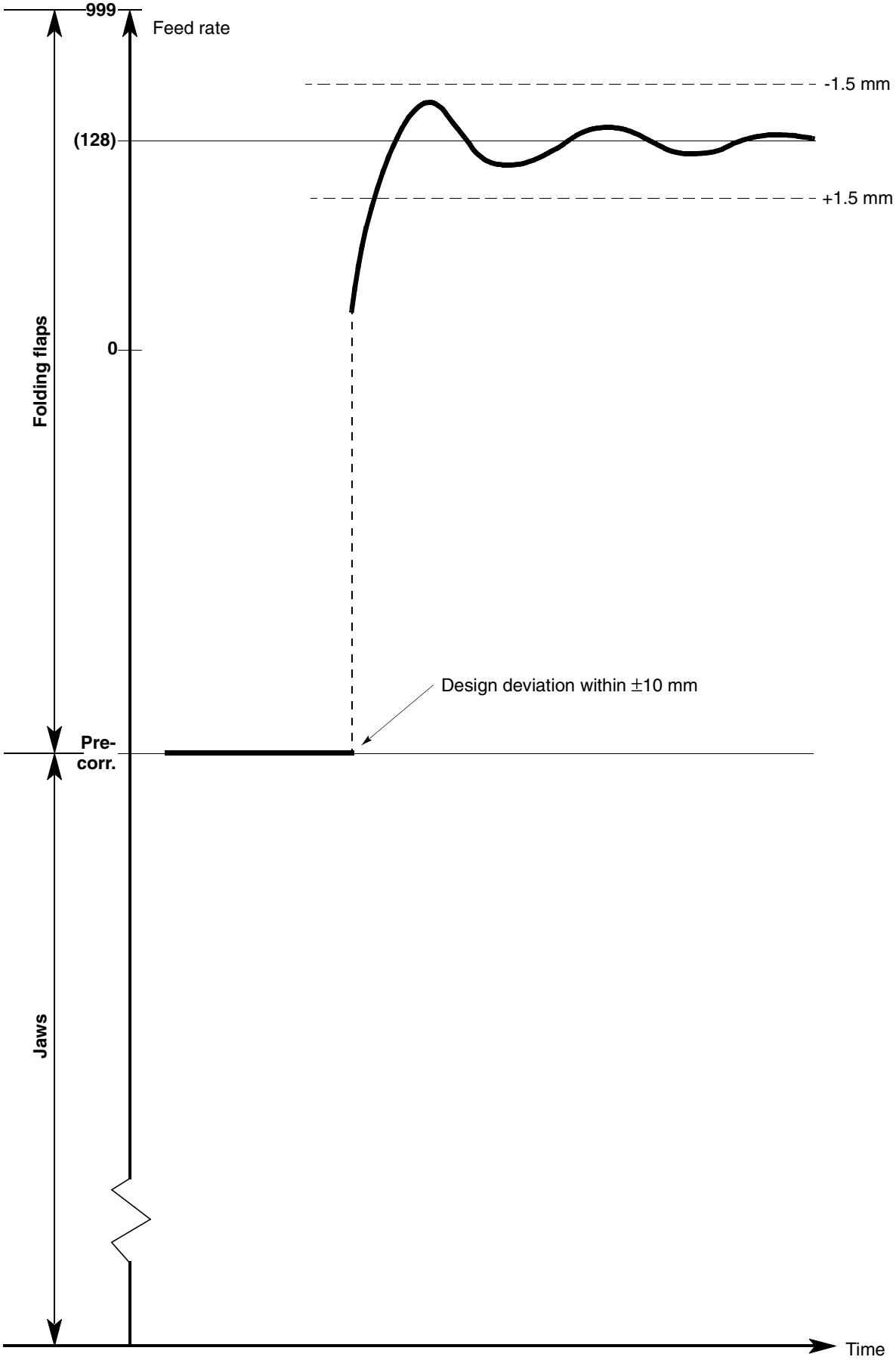

Folding flaps and eccentric shafts

The stroke of the folding flaps affect the feed rate of the packaging material web; consequently, it is the stroke that controls the design. How great the folding flap stroke becomes, depends on the position of the servomotor.

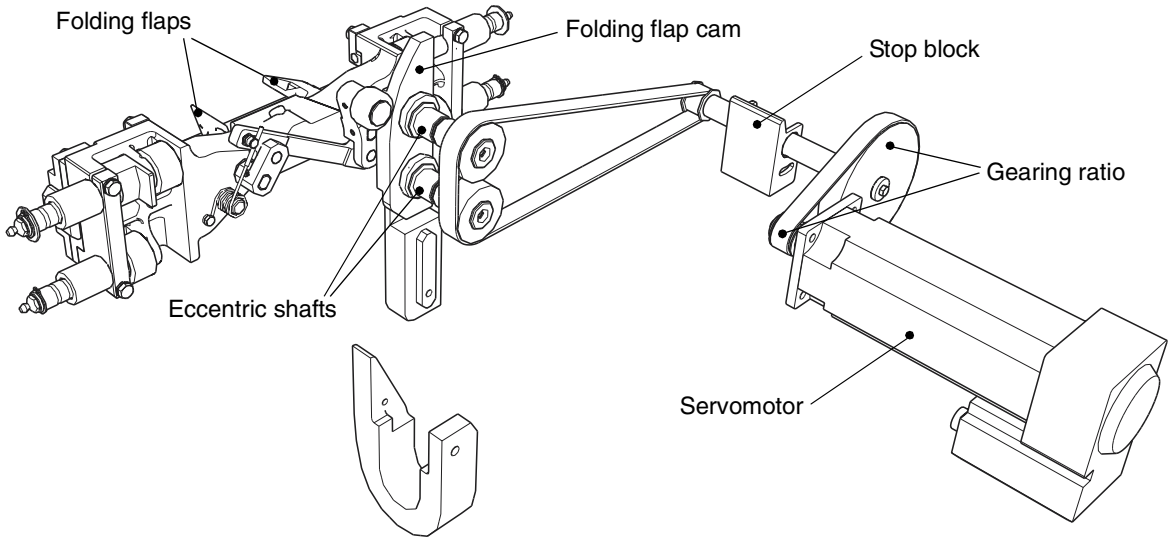

The position of the servomotor actuates, via a timing belt reduction gearing, the eccentric shafts, which in its turn shifts the folding flap cam sideways. The sideways, or lateral, position of this cam determines how far the mechanism is to pull the folding flaps and thus the magnitude of the folding flap stroke.

Eccentric shafts

In order to further explain how the design control device works, we shall take a closer look at the eccentric shaft. But before that, we shall briefly explain how the servomotor works, as the position of the eccentric shafts is proportional to the servomotor position.

The **rotation of the servomotor** is controlled by positions, and to turn it through one full revolution, 16 384 positions are required. Characteristic of the servomotor is that it has extremely exact positions.

When the TMCC says that the folding flaps are to go to, for instance, step 0, the following happens: The DMC converts step 0 into the value 25 000 and starts the servomotor. The motor then feeds back continuous information to the DMC in its current position, and when the motor position equals 25 000, it stops. It has now rotated one revolution + 8616 positions.

The diagram overleaf describes the different positions of the eccentric shafts.

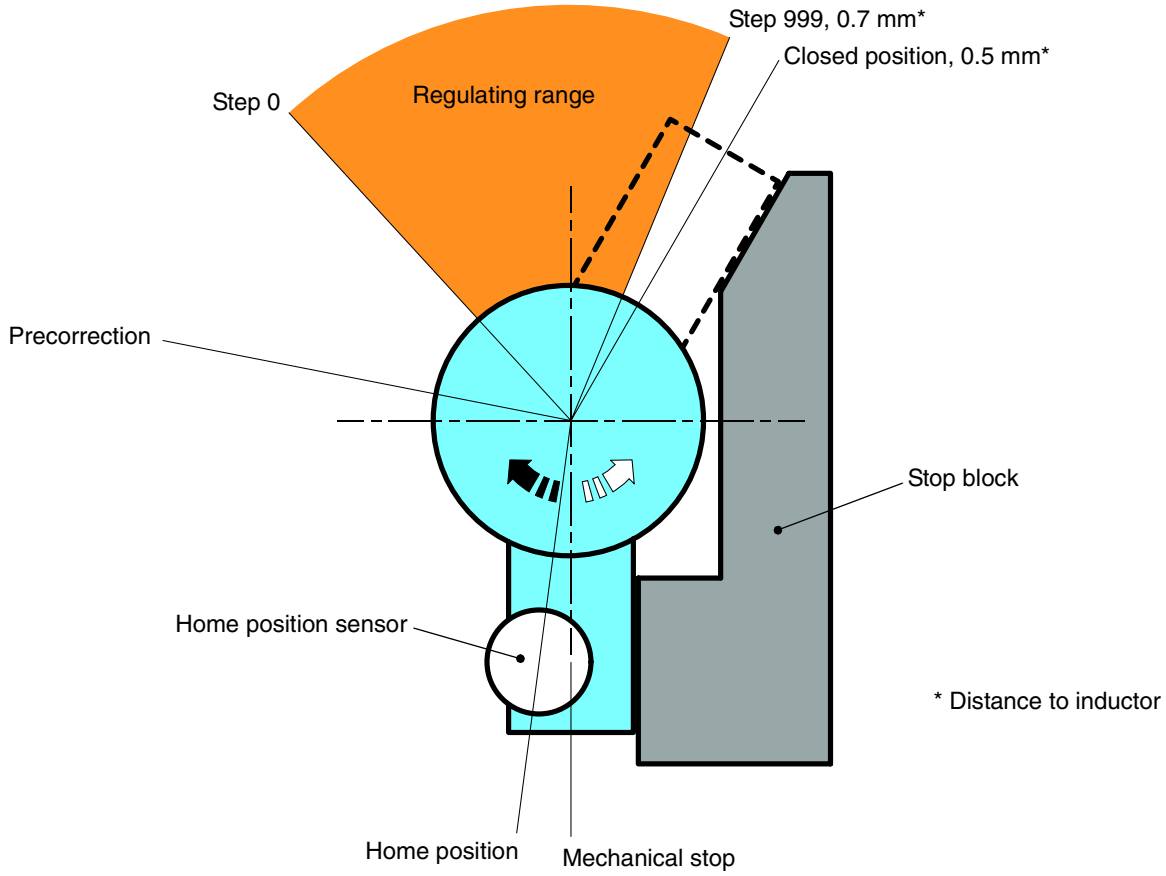

Mechanical stop
The mechanical stop prevents the eccentric shaft from rotating further in that direction. The stop also functions as calibration position for the servomotor. When the machine is started, the servomotor rotates until the eccentric shaft reaches the mechanical stop.

Home position (reference position)
The home position is located 400 positions from the stop.

Precorrection
Precorrection, 18875 positions from the stop.

Step 0
Step 0, 29000 positions, the position in the regulating range where the feed of material is increased the least.

Step 999
Step 999, 41750 positions, the position in the regulating range where the feed of material is increased the most.

Closed position
In this position, the folding flaps reach 0.5 mm from the inductor. This position is used for mechanical settings and is never reached during production.

Reading a register code

The register code is a printed mark on the packaging material. When it passes the photocells, the cells read the 26 digital information bits in a particular order. These bits are decoded into a pulse, the design signal, in the TMCC.

Note!
The photocells continuously read the pattern of the printed design on the packaging material, but the reading of the 26 register code bits in the right order is required to enable the decoding of a design signal.

What happens?

When one of the photocells reads a flank on the register code, both photocells register what they 'see': blank, white, positive flank, or negative flank. This is translated into a binary code (ones and zeroes) as follows:

Black	**1**	
White	**0**	
Positive flank	**1**	(white to black)
Negative flank	**0**	(black to white)

The binary code is stored in a shift register as it is read when the register code passes the photocells. The contents of the shift register are compared continuously with the contents of another register with fixed contents. When the lines of ones and zeroes are identical in both registers, the register code has been decoded, and a pulse, the **design signal**, is generated.

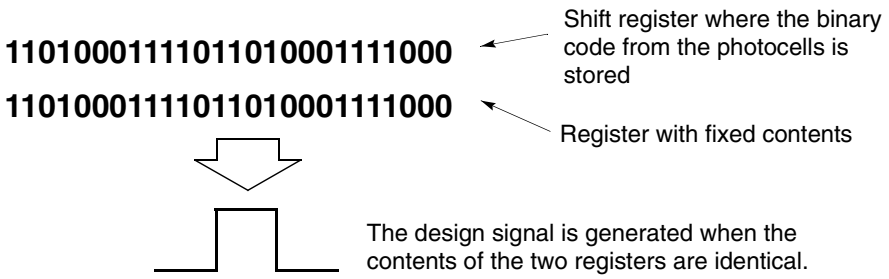

Below, an example is shown of how the photocells read the register code.

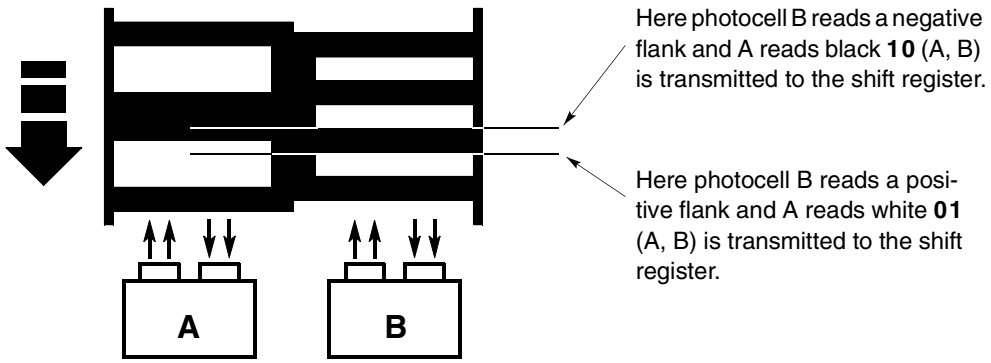

Glossary

Web cutting pitch	The length of the cut-off piece of packaging material required to make one package. Also called Repeat length.
Automatic regulation	The automatic regulation endeavours to reach the correct position, with the design signal within the production sector.
Crease position	The position of the creases on the finished package. Correct crease position results in correctly formed packages.
Design deviation	A measure of where the design signal is relative the production angle (correct position); must not exceed ±1.5 mm during production. In other contexts also termed design error.
Design signal	Pulse generated each time the register code passes the photocells. It indicates the crease position indirectly. In other contexts also termed photocell puls, photocell signal or register mark.
Precorrection	The folding flap position used during start and inching.
Correct position	No (0) design deviation, design signal exactly at the production angle.
Manual regulation	Manual regulation (design control offset) is used in order to adjust the crease position *when the design signal is within the production sector.*
Machine position	The angle position of the main shaft of the machine; indicates through mechanical connection the position of the jaws.
Negative flank	When a photocell reads the change from black to white, it registers a negative flank; a negative flank produces a logic zero (0).
Positive flank	When a photocell reads the change from white to black, it registers a positive flank; a positive flank produces a logic one (1).
Production sector	Corresponds to an angle sector in which the design deviation lies within ±1.5 mm; also termed range for acceptable packages.
Production angle	The positive flank of the angle value with which the design signal is compared in order to enable the TMCC to compute the design deviation. The production angle is a volume-dependent parameter collected by the TMCC from the PLC.
Register code	Mark on the packaging material which the photocells read. In other contexts also termed register mark, photocell mark, or bar code.
Regulation range	Step 0-999. Used to control the design during production.
Folding flap stroke	Folding flap steps 0 - 999; how much the folding flaps affect the feed of packaging material.

12

Final folder

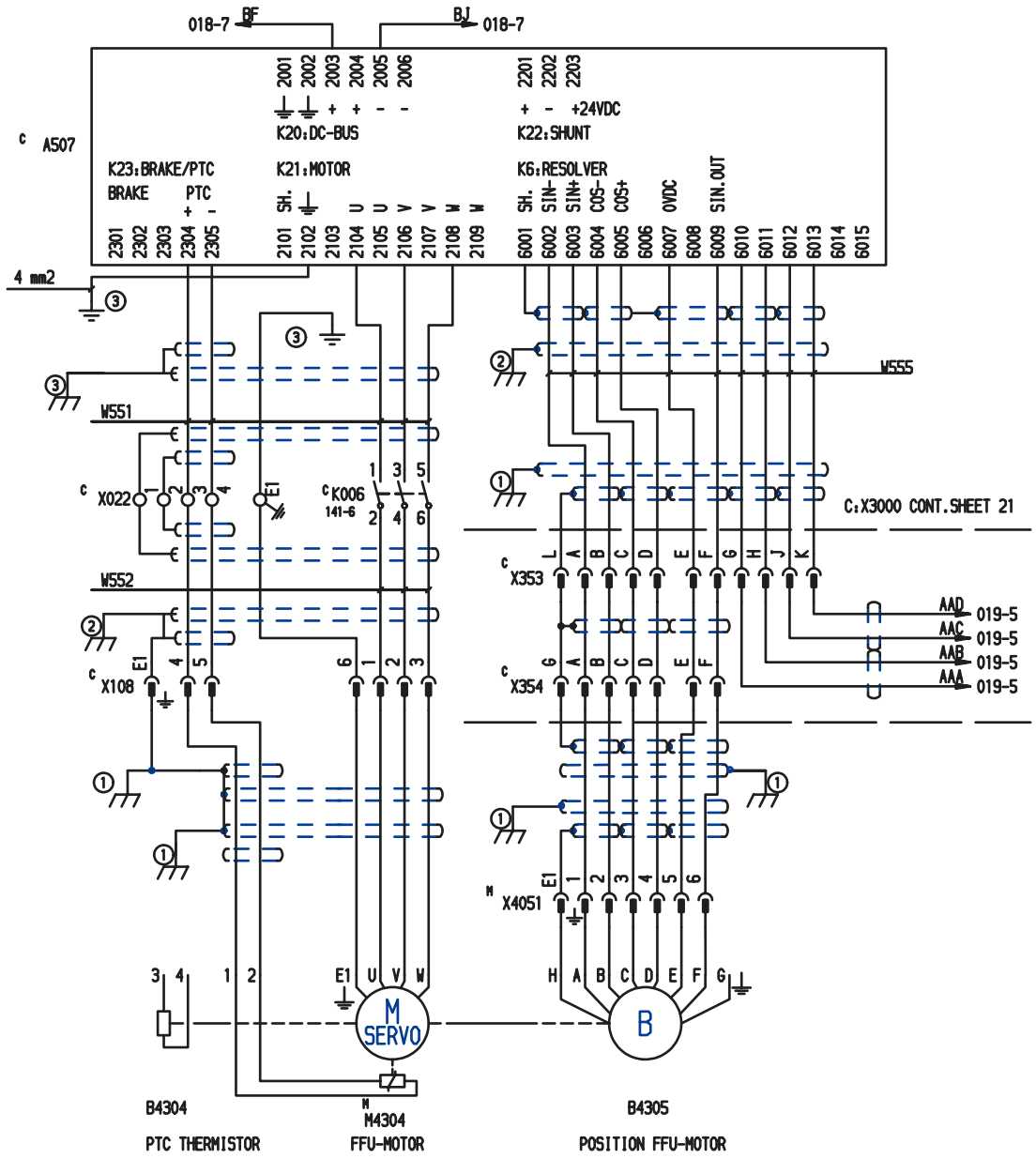

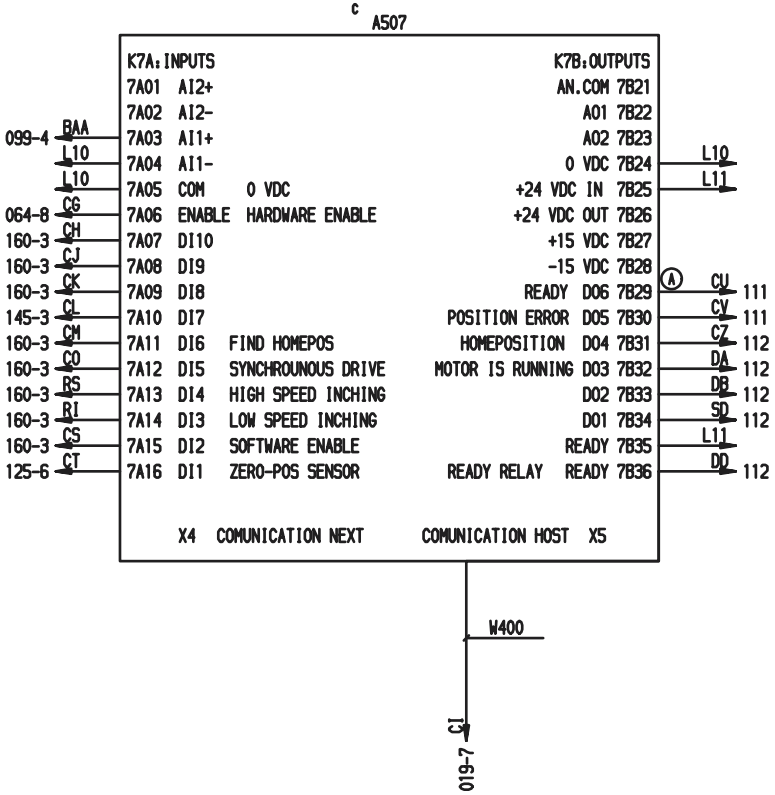

FFU SERVO MOTOR

2552985-020:01

Control of Final folder motor

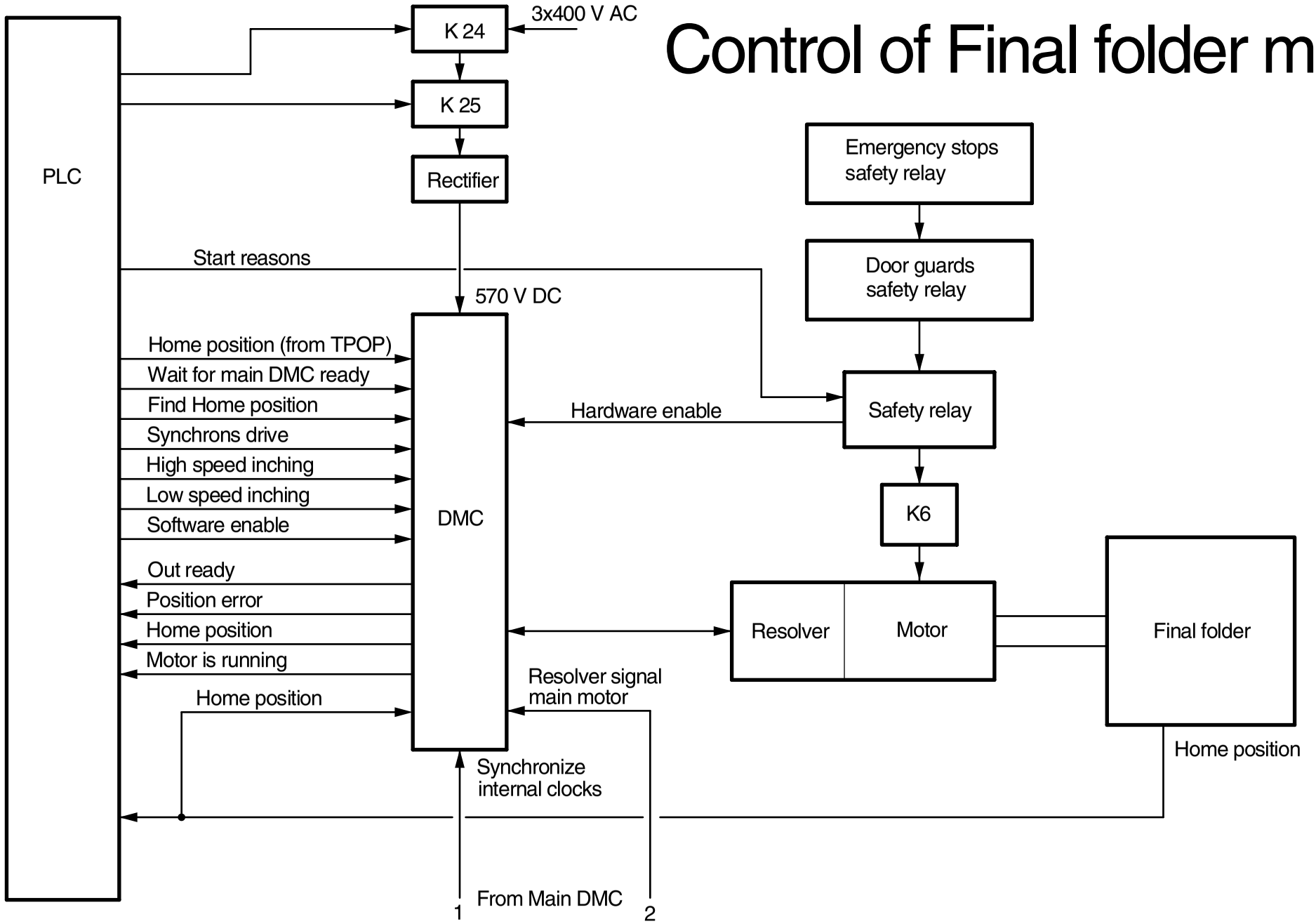

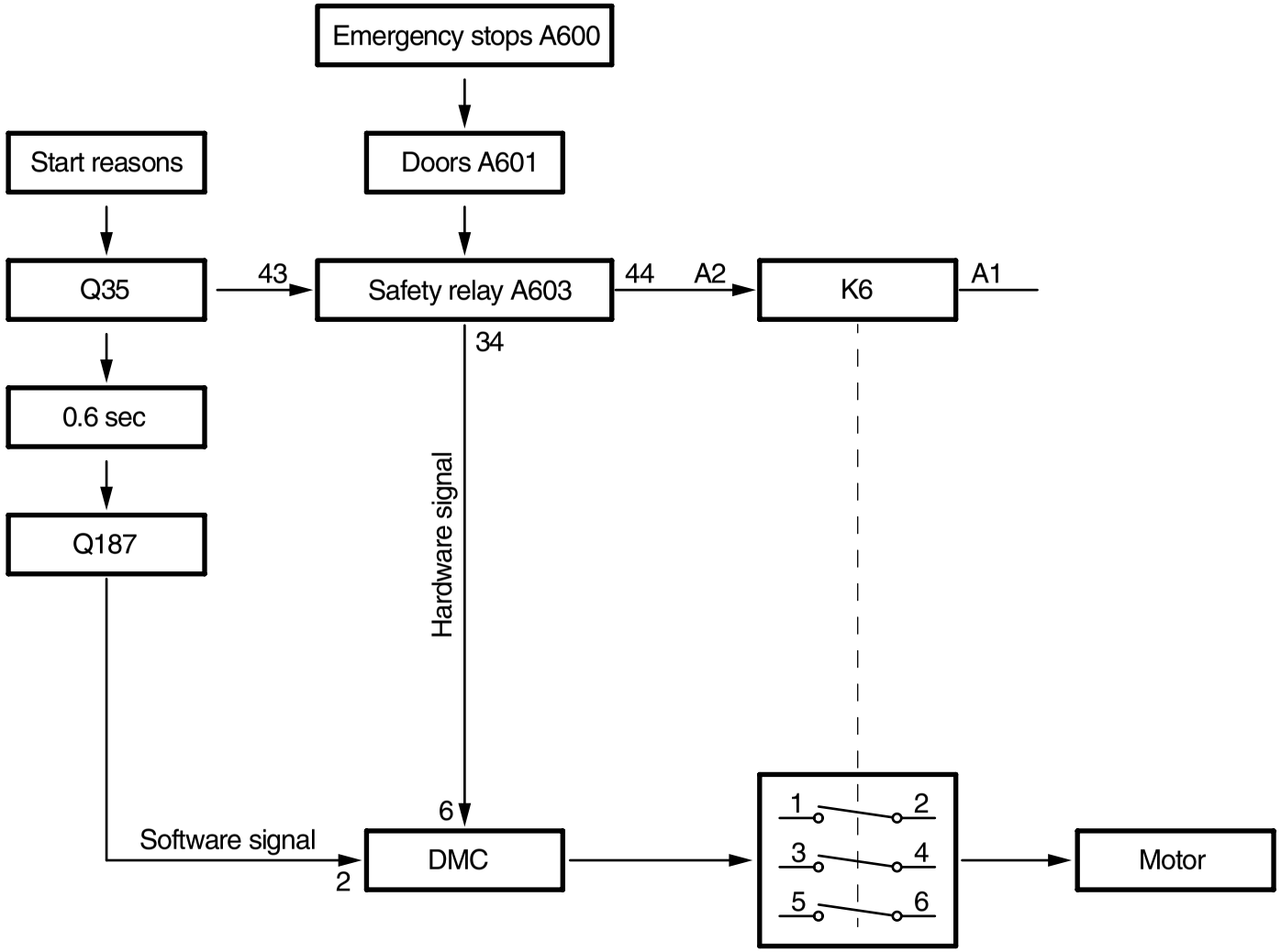

Control of FFU servo motor

Hardware / software signals

Final folder

Package

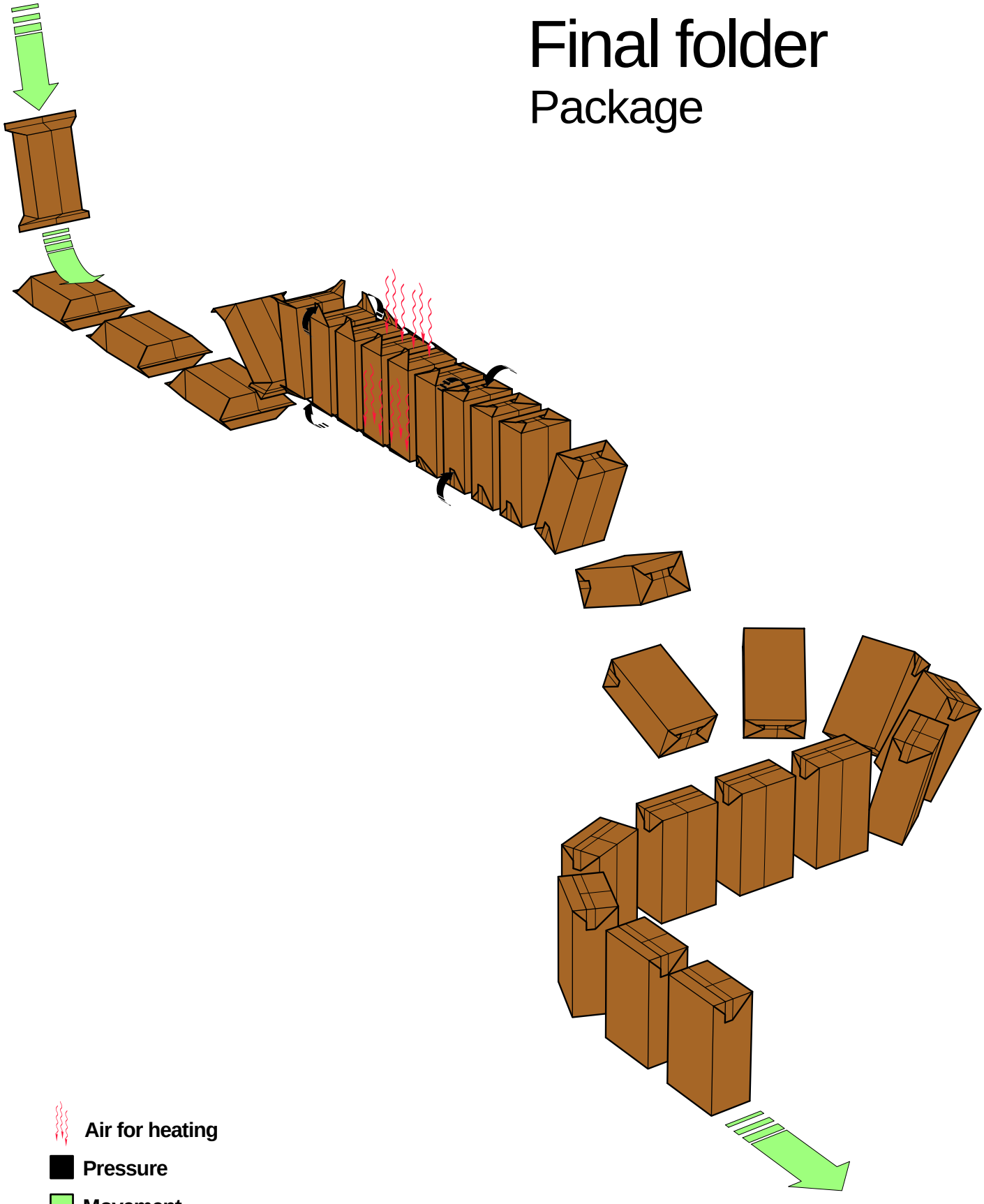

Air for heating

Pressure

Movement

Technical Training Centre
Lund, Sweden

Machine type
TBA/22 050V

Issue
1/0303

OH 1262

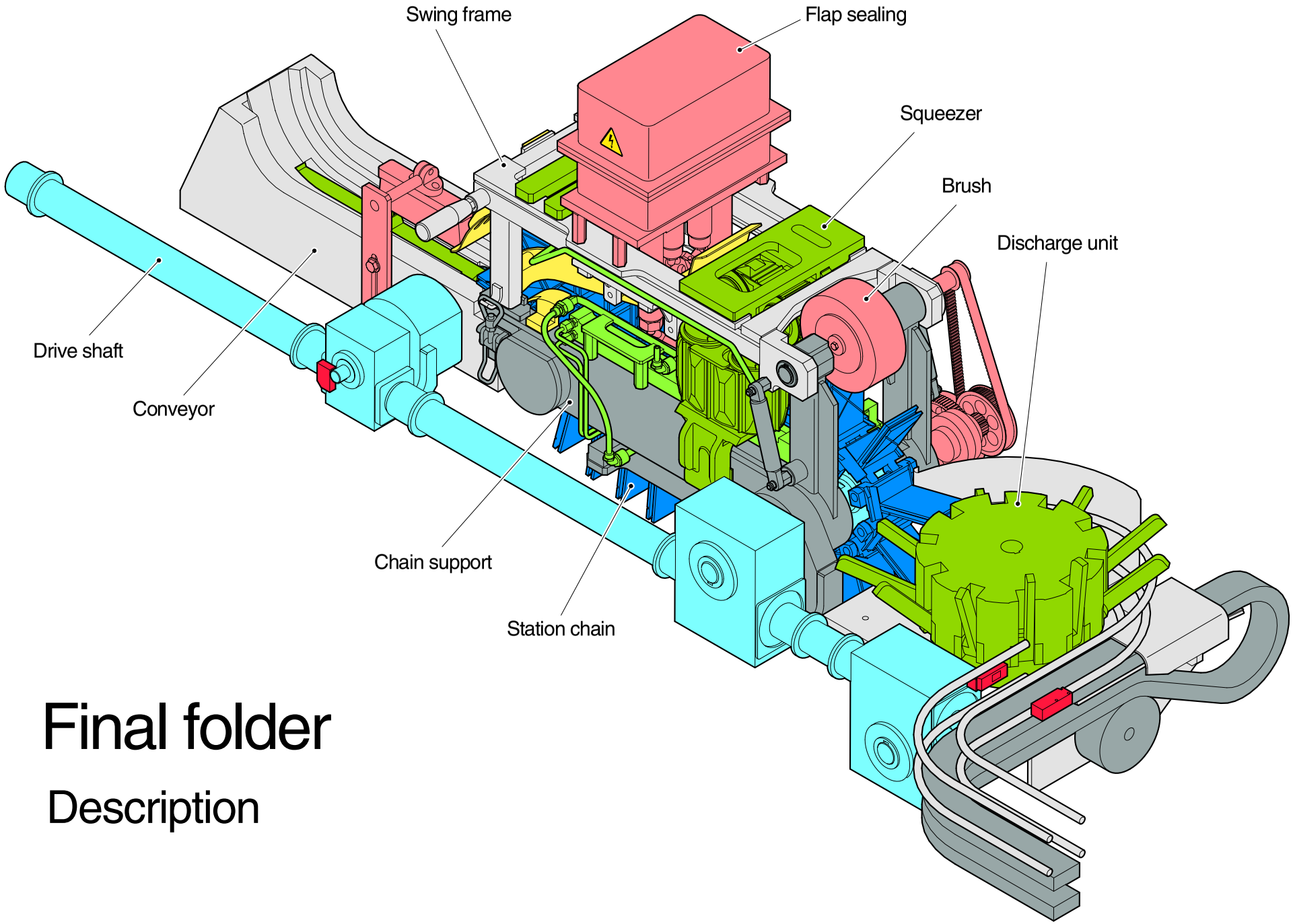

Final folder

Description

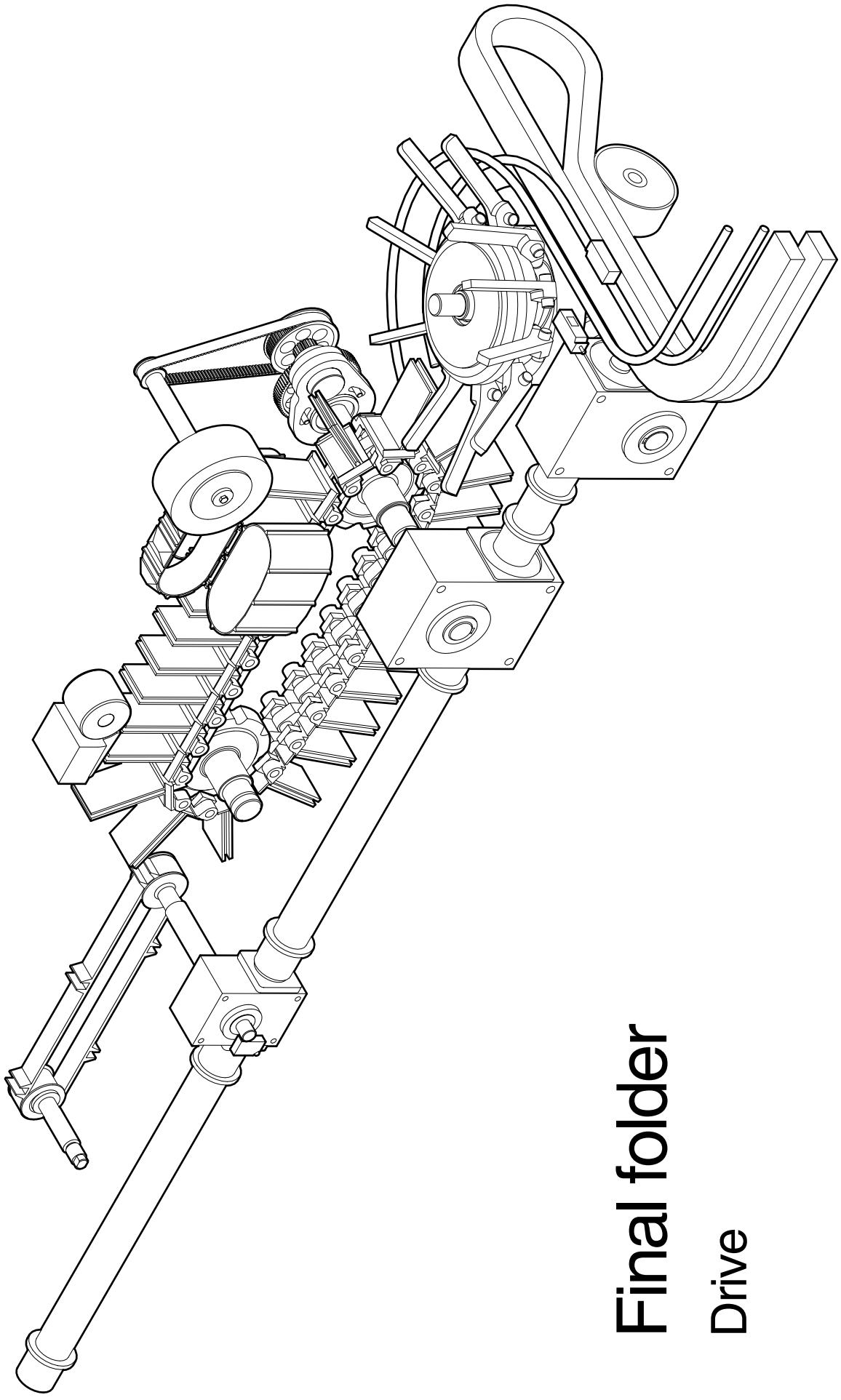

Final folder

Drive

Final folder
Synchronisation

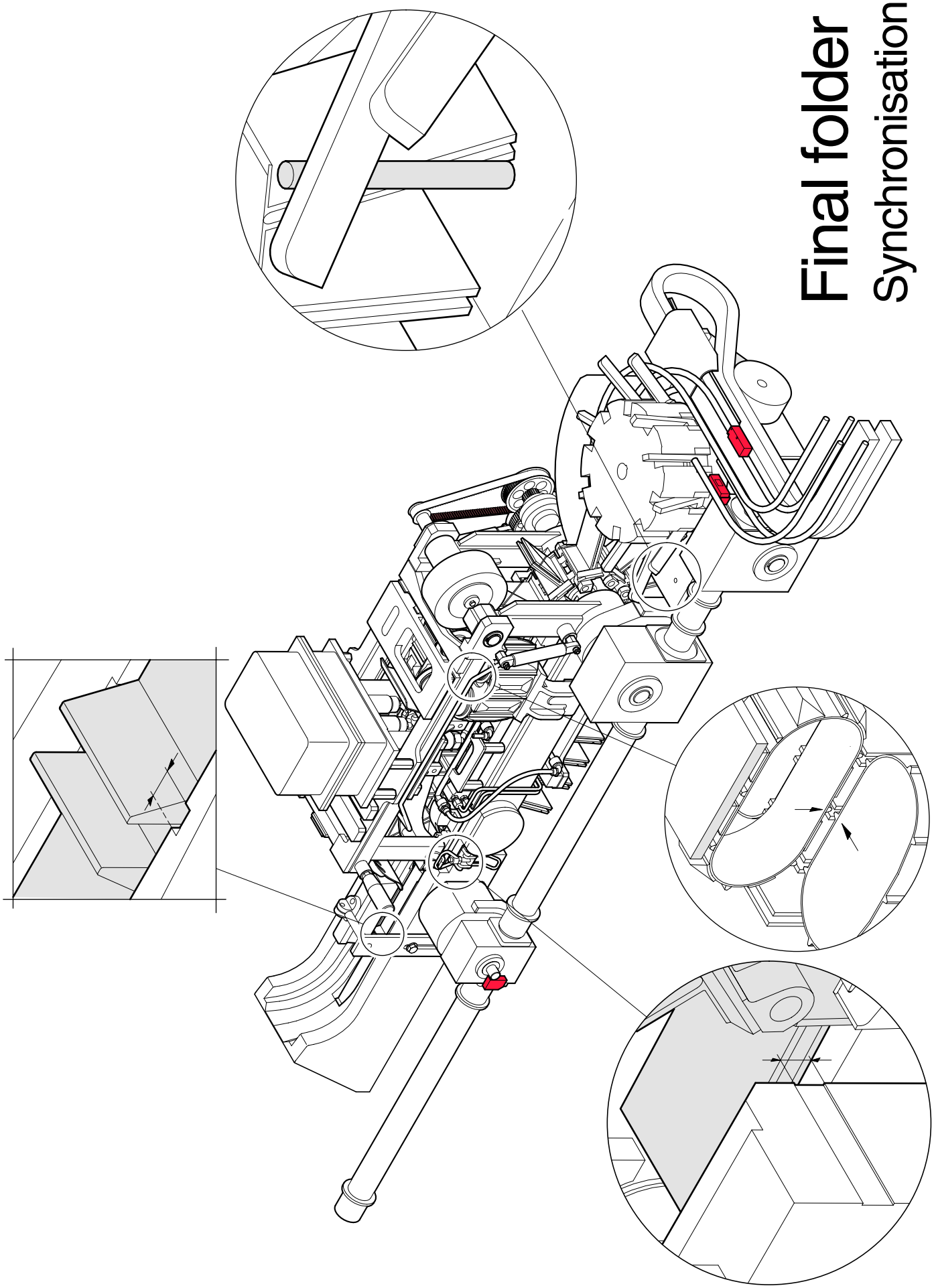

Technical Training Centre Lund, Sweden	Machine type TBA/22 050V	Issue 1/0303	OH 1264

Waste box

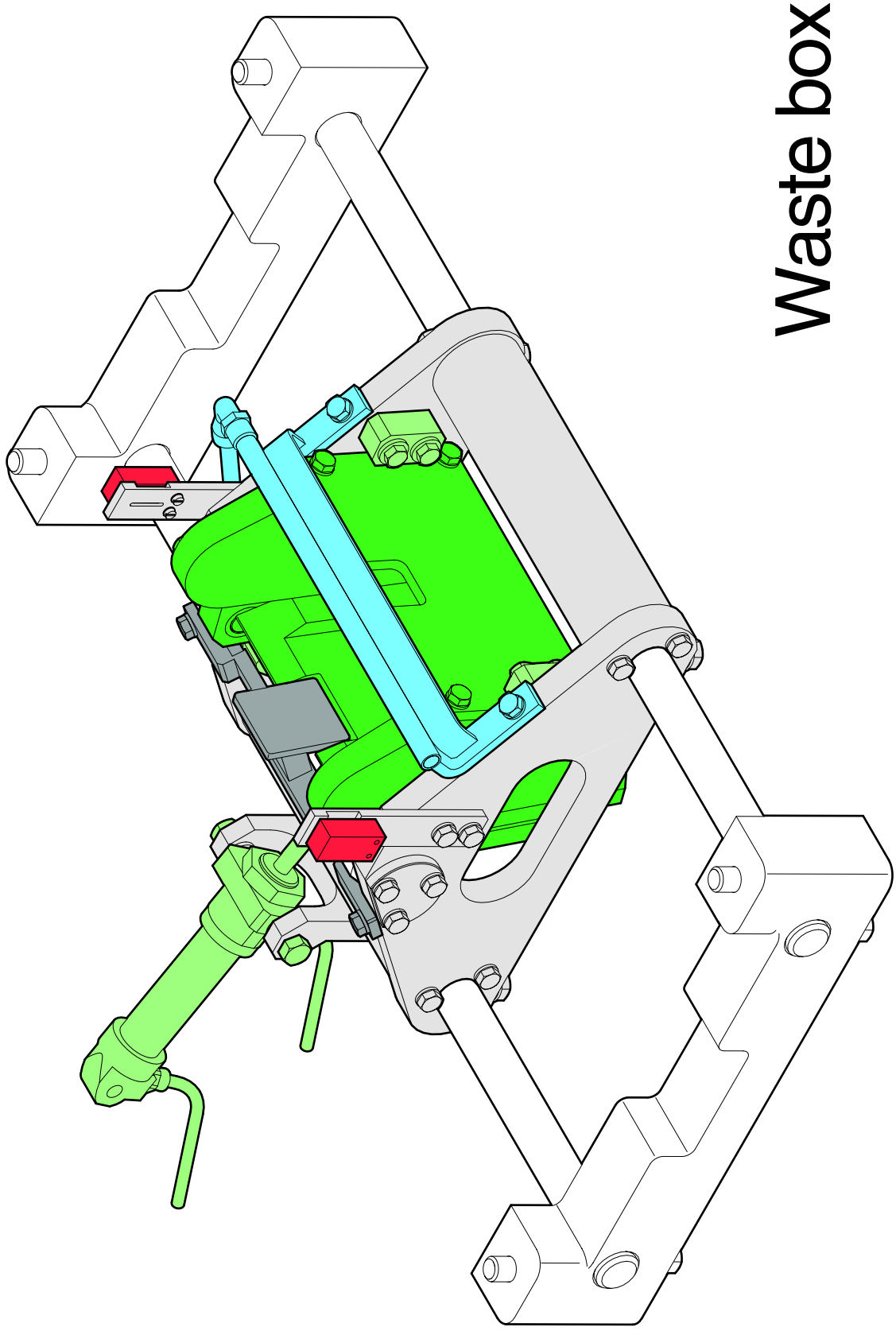

Final folder

Infeed

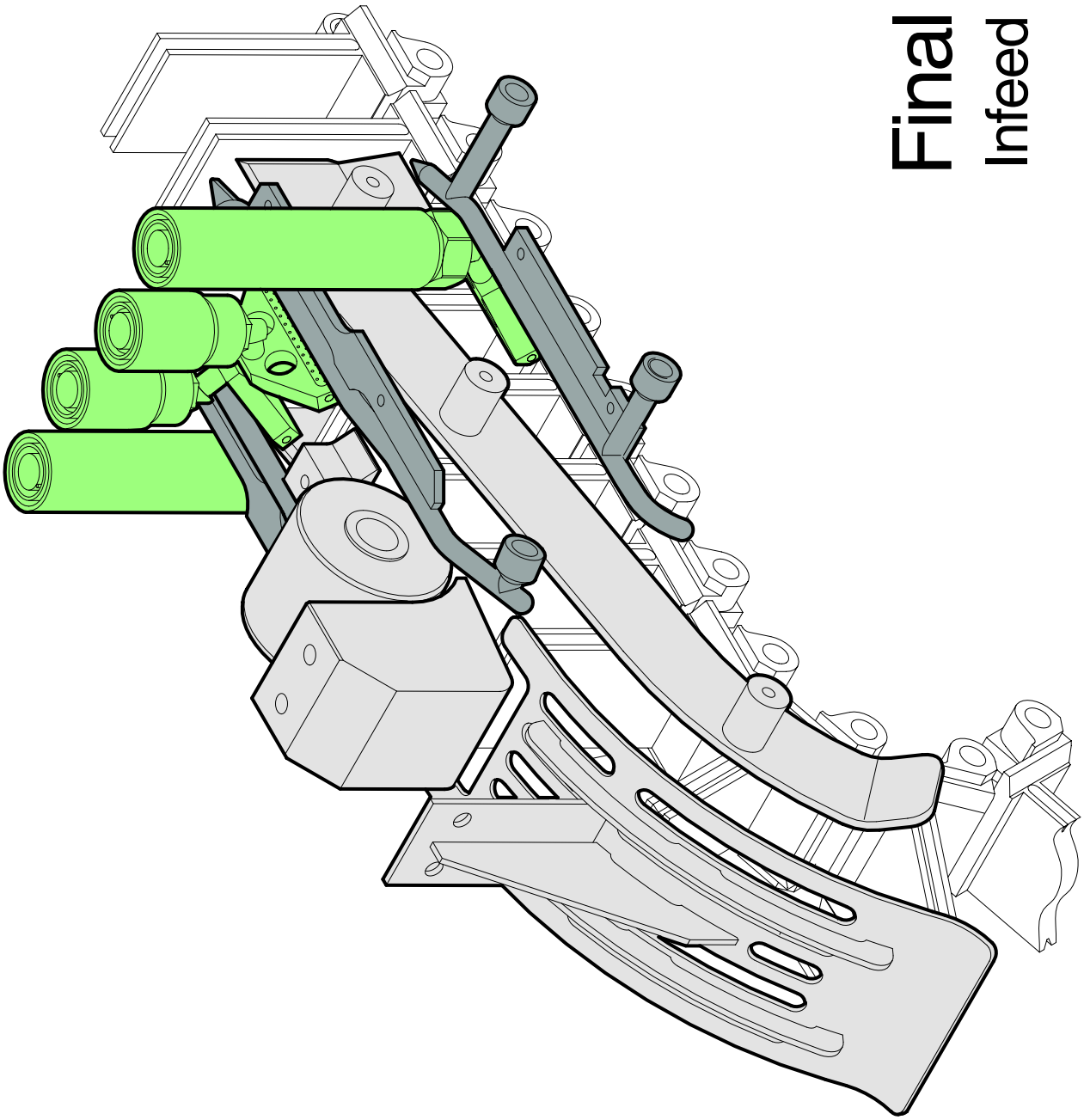

Final folder

Flap sealing element

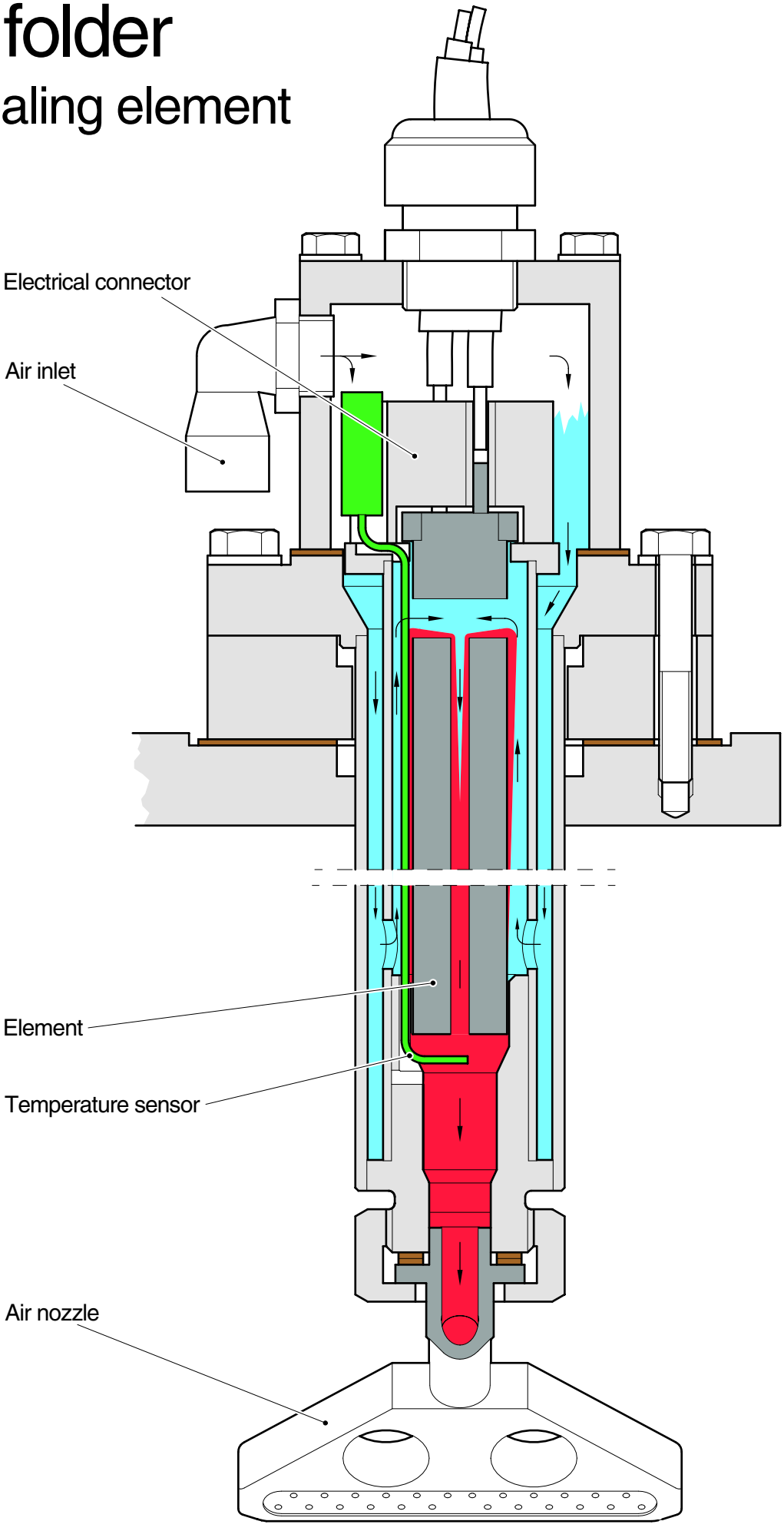

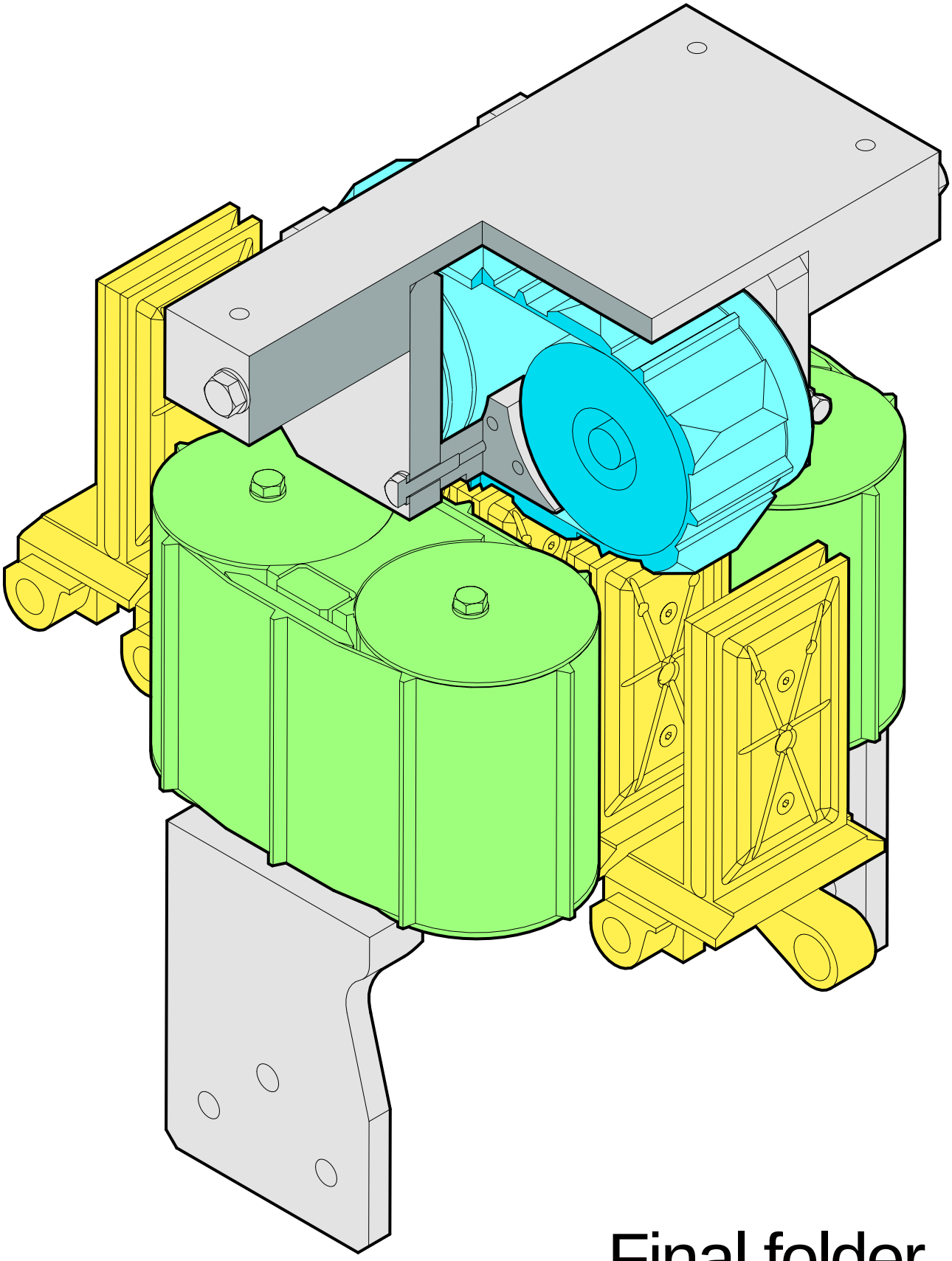

Final folder

Squeezer

X

x

Technical Training Centre Lund, Sweden	Machine type TBA/22	Issue 1/9905	OH 806:9

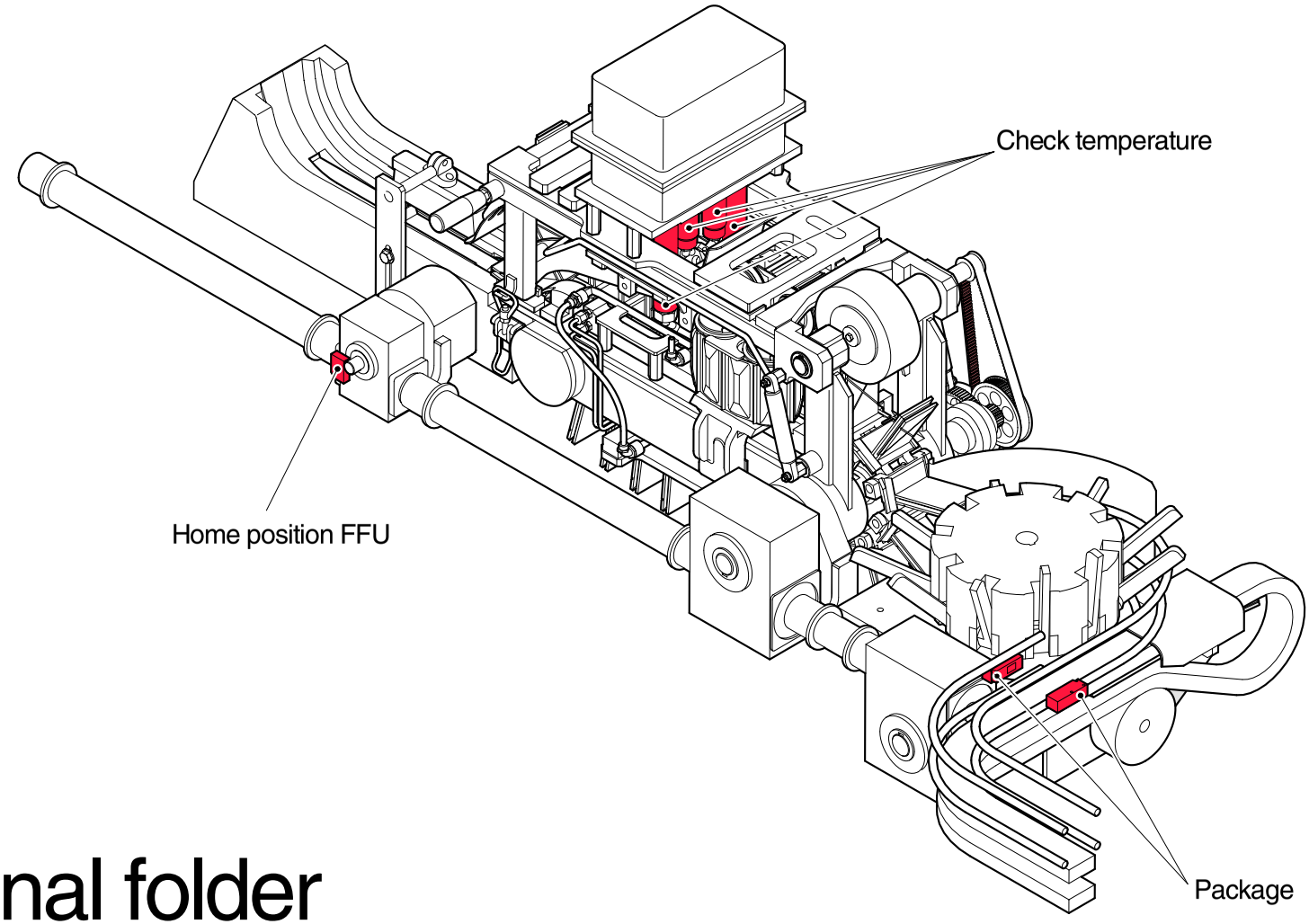

Final folder

Alarms

13

ASU

Overview

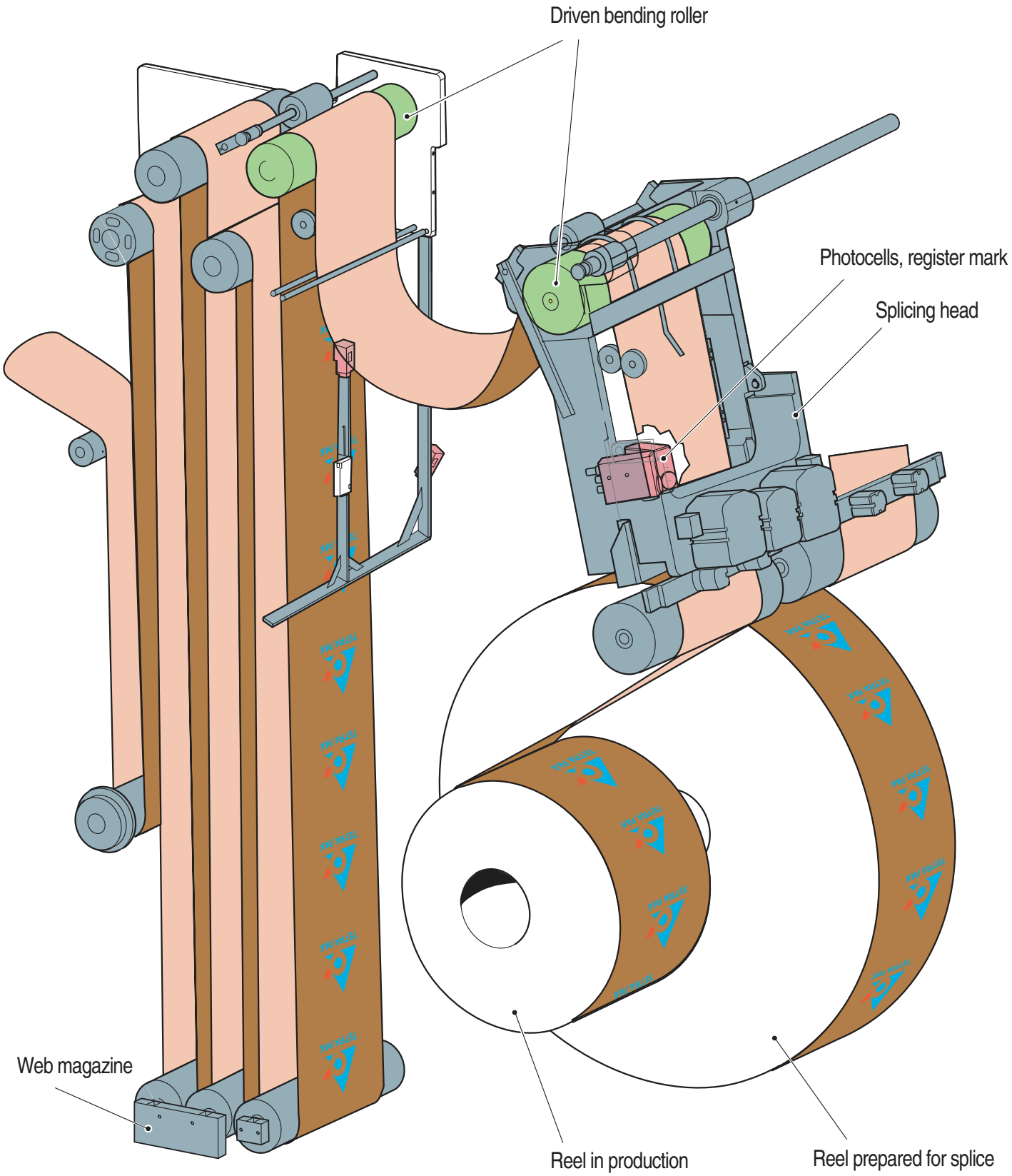
Driven bending roller
Photocells, register mark
Splicing head
Web magazine
Reel in production
Reel prepared for splice

SPEED REGULATION FOR ASU MOTORS

(Exemple valid for 200 Slim)

THE LOOP

The speed is controlled by the analog output AQ9.
If the loop is full more than 0,3 sec both high and low speeds are decreased (the value in AQ9 is decreased by 75), if the loop is empty more than 0,3 sec they are increased (the value in AQ9 is increased by 50)

Main motor at low speed

- if loop empty : AQ9 = 6100
- if loop full : AQ9 = 2700

Main motor at high speed

- if loop empty : AQ9 = 15400
- if loop full : AQ9 = 14200

After a PM splice at high speed (not auto-adjusted)

- if loop empty : AQ9 = 19500
- if loop full : AQ9 = 17000
- during the first 0,5 sec after the splice : 4875 (25% of the loop-empty value)

After a PM splice at low speed (not auto-adjusted)

- if the loop is empty : AQ9 = 4875
- if the loop is full : AQ9 = 3900

THE MAGAZINE

The speed is controlled by the analog output AQ10.
If the loop is full more than 0,3 sec both high and low speeds are decreased (the value in AQ10 is decreased by 75), if the loop is empty more than 0,3 sec they are increased (the value in AQ10 is increased by 75)

Main motor at low speed

- if magazine not full : AQ10 = 5900
- if magazine full : AQ10 = 4200

Main motor at high speed

- if magazine not full : AQ10 = 19600
- if magazine full : AQ10 = 18000

After a PM splice

AQ10 = 23000 till the magazine is full

During preparation

AQ10 = 5500

The actual speed of the motor can be calculated. The maximum value in the analog output is 32000 and corresponds to the maximum frequency of the motor (see MM book for the value of this parameter).

$F = \frac{\text{Maximum frequency x AQ value}}{32000}$, after $N = \frac{F}{p}$, where N = number of revolutions

a second and p = 2 (number of pairs of poles)

Note : All the values for the analog registers are default values which can be found in the program, but on the machine, they change all the time automatically

SIEMENS FREQUENCY CONVERTER – MICROMASTER

CALIBRATION PROCEDURE

This adjustment is used to set the stator resistance which is used in the inverter's internal current monitoring calculations. This can be done either manually with P89 or automatically with P88.

Automatic procedure

Remove the packaging material or release the counter roller.

To enable the keys on the front panel of the frequency converter, P7 has to be set to 1.

Then set P88 to 1 and press the RUN (green) button to perform the automatic calibration. An automatic measure of the stator resistance is done and stored in P89. When it is finished P88 is reset to 0.

To stop the motor, it is necessary to push the STOP button (red).

Reset P7 to 0.

Manual procedure

Measure the resistance between two phases of the motor. This must be done at the terminals of the inverter with power OFF and on a cold motor. Enter the value of the stator resistance in P88.

Textbook

Automatic Splicing Unit

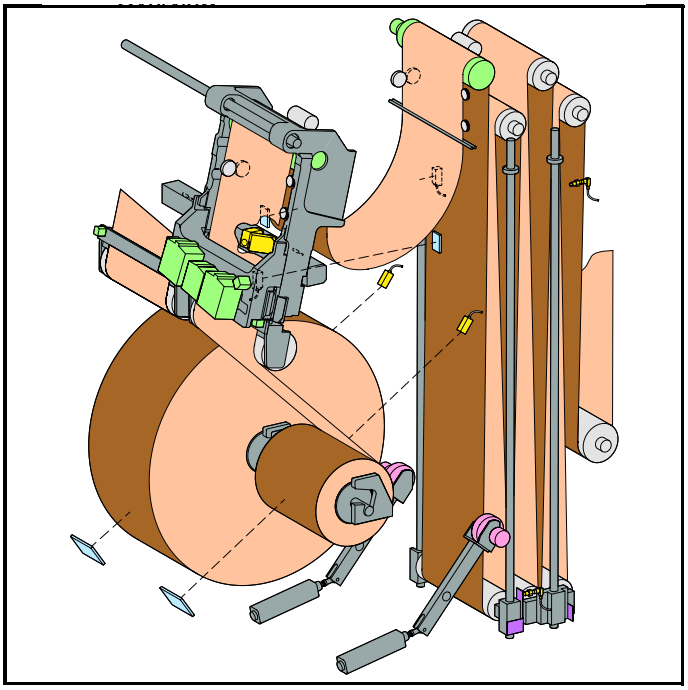

MT-83078-1

Technical Training Centre
Lund, Sweden

This textbook has been compiled by the Technical Training Centre in Lund.

Some of the pictures in the book are also available as OH pictures.

For further information on training material, please contact the Technical Training Centre.

Issue 1/0410

© 2004, Technical Training Centre

No part of this publication may be reproduced, stored in a retrieval system or transmitted in any form or by any means: electronic, electrostatic, magnetic tape, mechanical photo-copying, recording or otherwise, without permission in writing from Technical Training Centre.

Automatic Splicing Unit

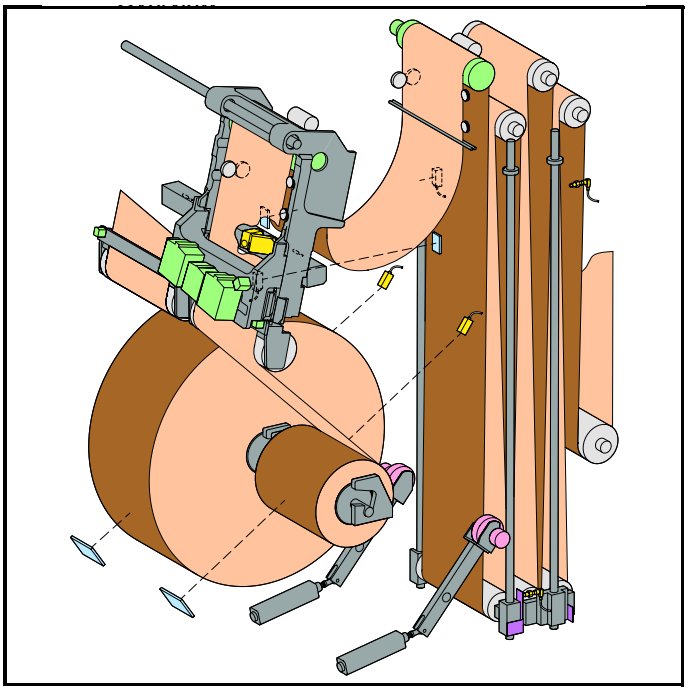

Training Document

This Training Document is intended for Training purposes only, and must not be used for any other purpose.

The Training Document does not replace any instructions or procedures (e.g. OM, MM, TeM, IM, SPC) intended for specific equipment, and must not be used as such.

Note!

For safe and proper procedures, refer to the equipment specific documentation.

Technical Training Centre

Contents

The ASU 4
General 5
Automatic Reel Loading 5
Basic function 5

The components of the ASU 6

The splice sequence 8
Finding stop position 8
Stop position found 9
Cutting packaging material 10
Cylinder retraction 11
Sideways movement 12
Sealing and cooling 13
Splice sequence completed 14

Web stop 15
Web stop 15

Automatic Strip Splicing Unit 17
General 17
Basic function 17
Strip magazine 17

ASSU splice sequence 18
Preparing for strip splice 18
Splicing 18
Cooling and unlocking 19
Splice sequence completed 19

Prepared strip and bobbin search sequence 20

Automatic Splicing Unit

A3/Flex, A3/Speed, TBA/22 050V, C3/Flex, TB/21 030V

This description of the Automatic Splicing Unit, from now on called the ASU, includes the following topics:

- A general description of the ASU
- An overview of the components of the ASU
- A description of the packaging material splice sequence
- A general description of the Automatic Strip Splicing Unit, the ASSU
- A description of the strip material splice sequence
- The prepared strip and bobbin search sequence diagram

The ASU

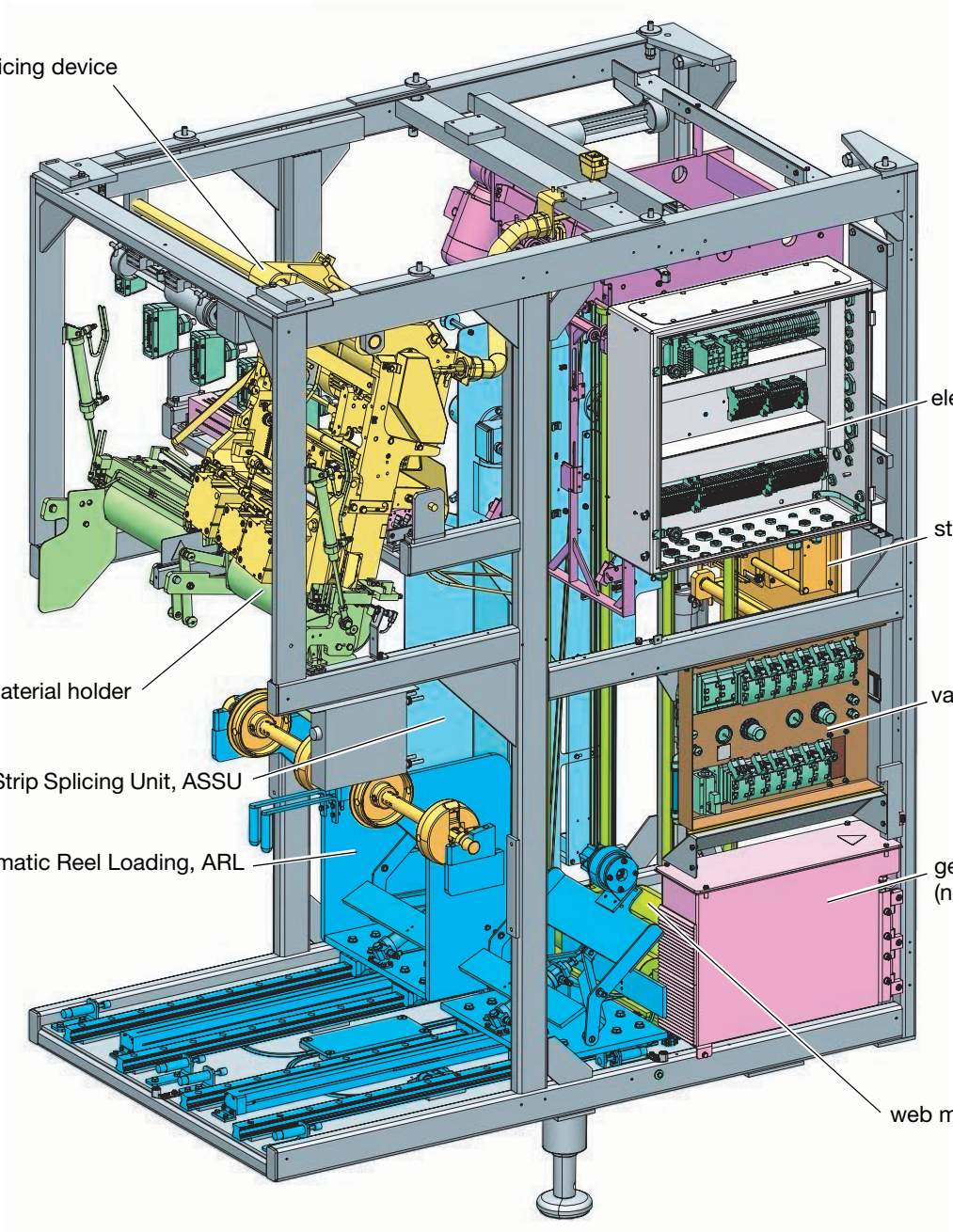
splicing device
electrical cabinet
strip applicator
material holder
valve panel
Automatic Strip Splicing Unit, ASSU
Automatic Reel Loading, ARL
generator cabinet
(not TB/21 and C3)
web magazine

General

The Automatic Splicing Unit, ASU, automatically splices the packaging material. It is mounted directly to the rear of the filling machine.

The ASU is connected to the filling machine PLC. The PLC controls all actions of the ASU.

The ASU is equipped with its own pneumatic system for controlling the cylinders, and frequency converters for the driven bending rollers.

Automatic Reel Loading

Automatic Reel Loading, ARL, is an option. ARL allows loading big size reels used when producing large volumes (1890/2000S). Pneumatic cylinders move the bobbin stands in and out to make loading easier.

Basic function

There are two reels of packaging material in the ASU. One reel is in production and one reel is prepared for splicing.

A splice is initiated either automatically, if the reel in production is consumed, or manually, if the manual splice button is pressed.

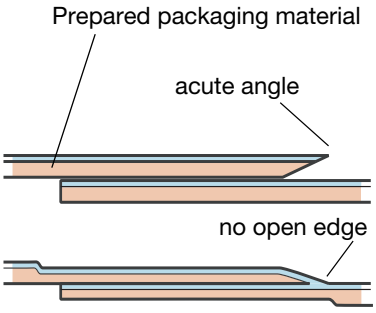

When a splice is required, feeding of packaging material must be stopped. Then a knife cuts the packaging material, and the splicing device moves sideways to the reel prepared for splicing.

The webs of the two reels overlap and are sealed together by the splicing device. A Constant heat device is used for sealing. As the end of the prepared packaging material is cut in acute angle, there will be no open edges on the inside of the sealed packaging material.

During splicing the filling machine continues running, consuming packaging material from the web magazine. When the splice is completed, the driven bending rollers start to feed the packaging material into the web magazine again.

An alarm will be displayed on the TPOP to indicate that a splice has been performed and that a new packaging material reel must be prepared for splicing

The components of the ASU

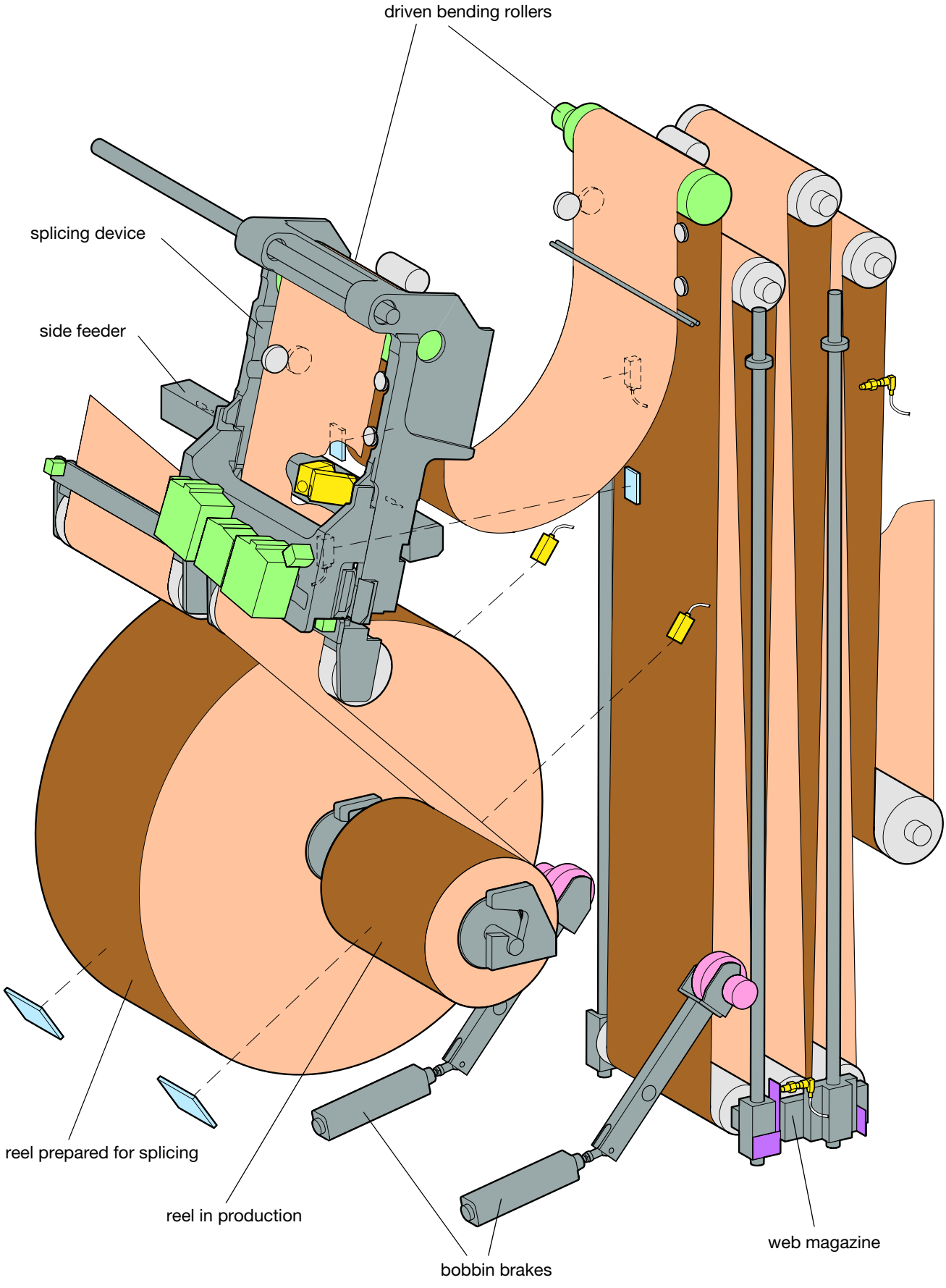

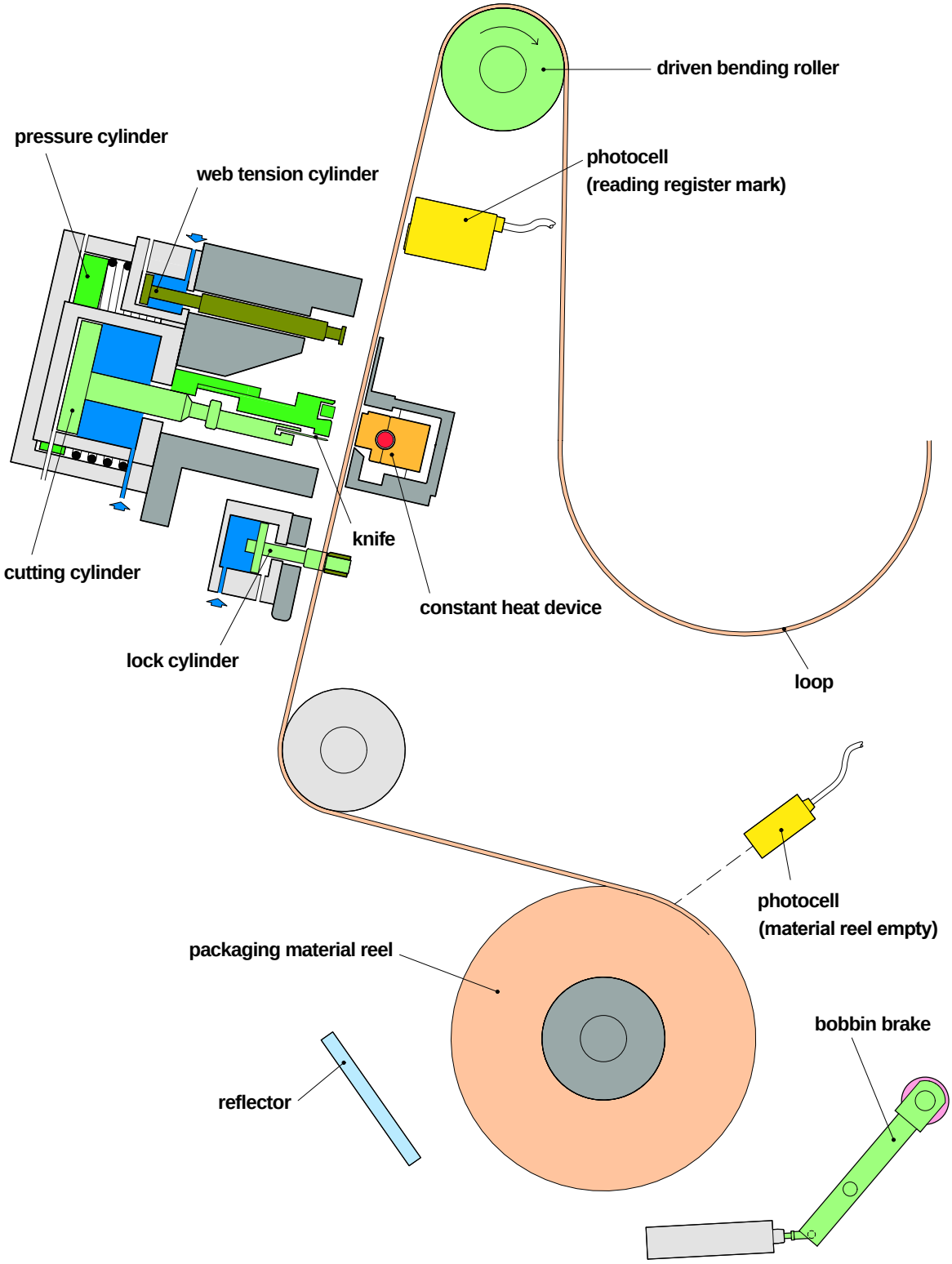
driven bending roller
pressure cylinder
web tension cylinder
photocell
(reading register mark)
knife
cutting cylinder
constant heat device
lock cylinder
loop
photocell
(material reel empty)
packaging material reel
bobbin brake
reflector

The splice sequence

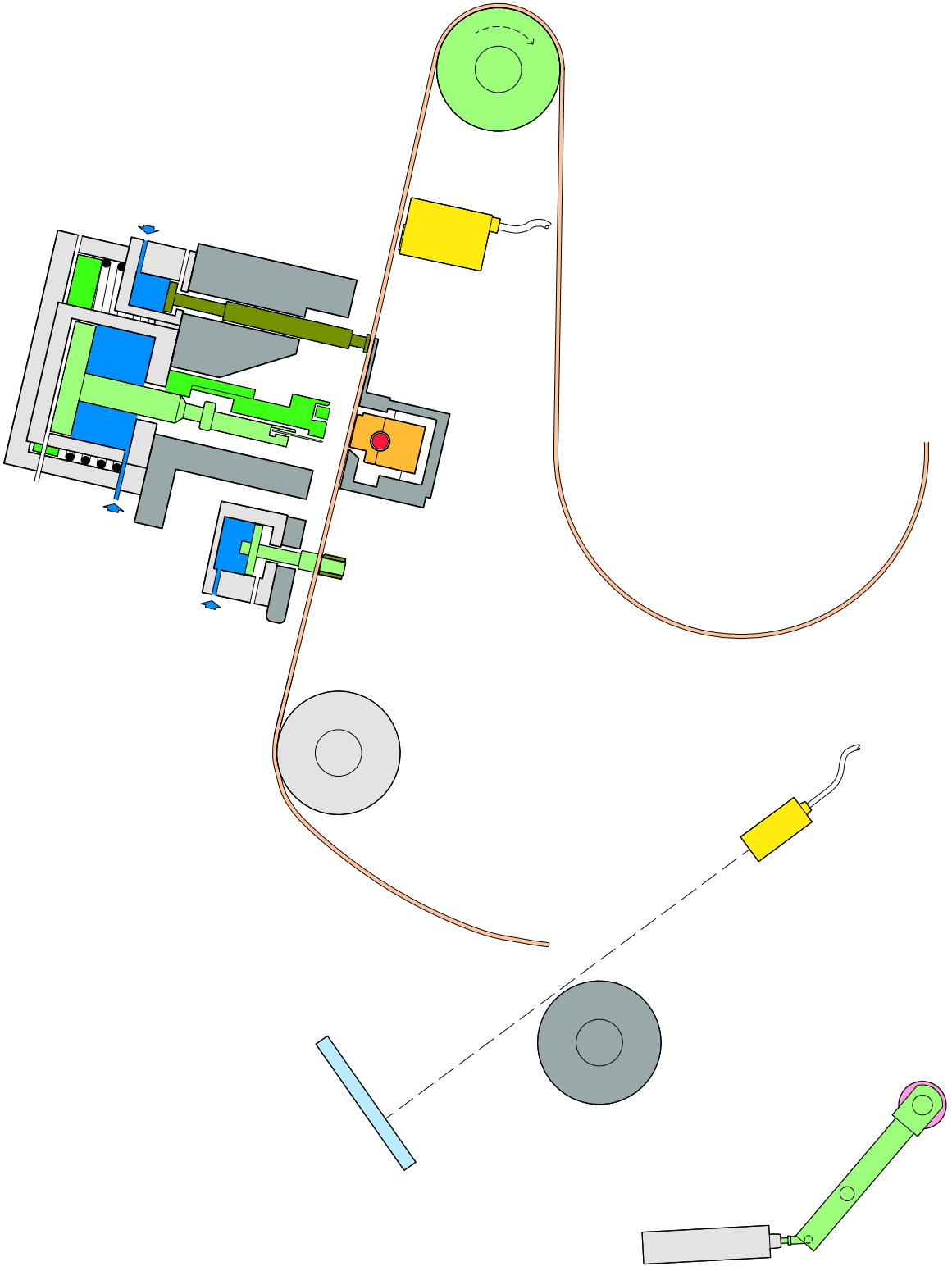

Finding stop position

The “material reel empty” photocell detects when the packaging material reel in production is consumed. The splice sequence starts.

A correct stop position must now be found. To make this possible, the packaging material web must be kept tense. The web tensioners are activated.

At the first register code detection the driven bending roller will start reducing the speed.

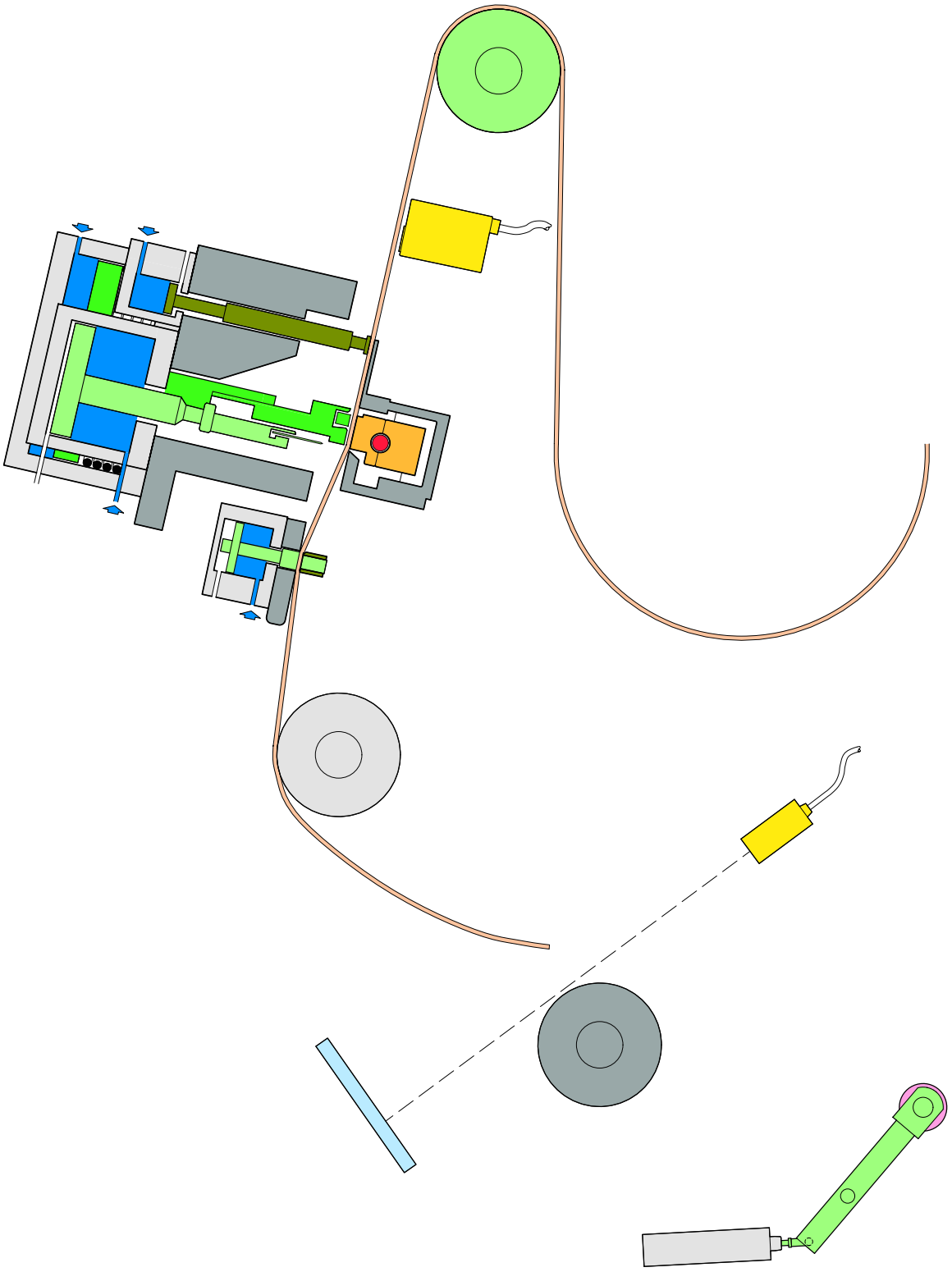

Stop position found After the second register code detection and after a time delay (adjustable from the TPOP) the driven bending roller will stop. The pressure rail is activated to hold the packaging material in correct position for splicing.

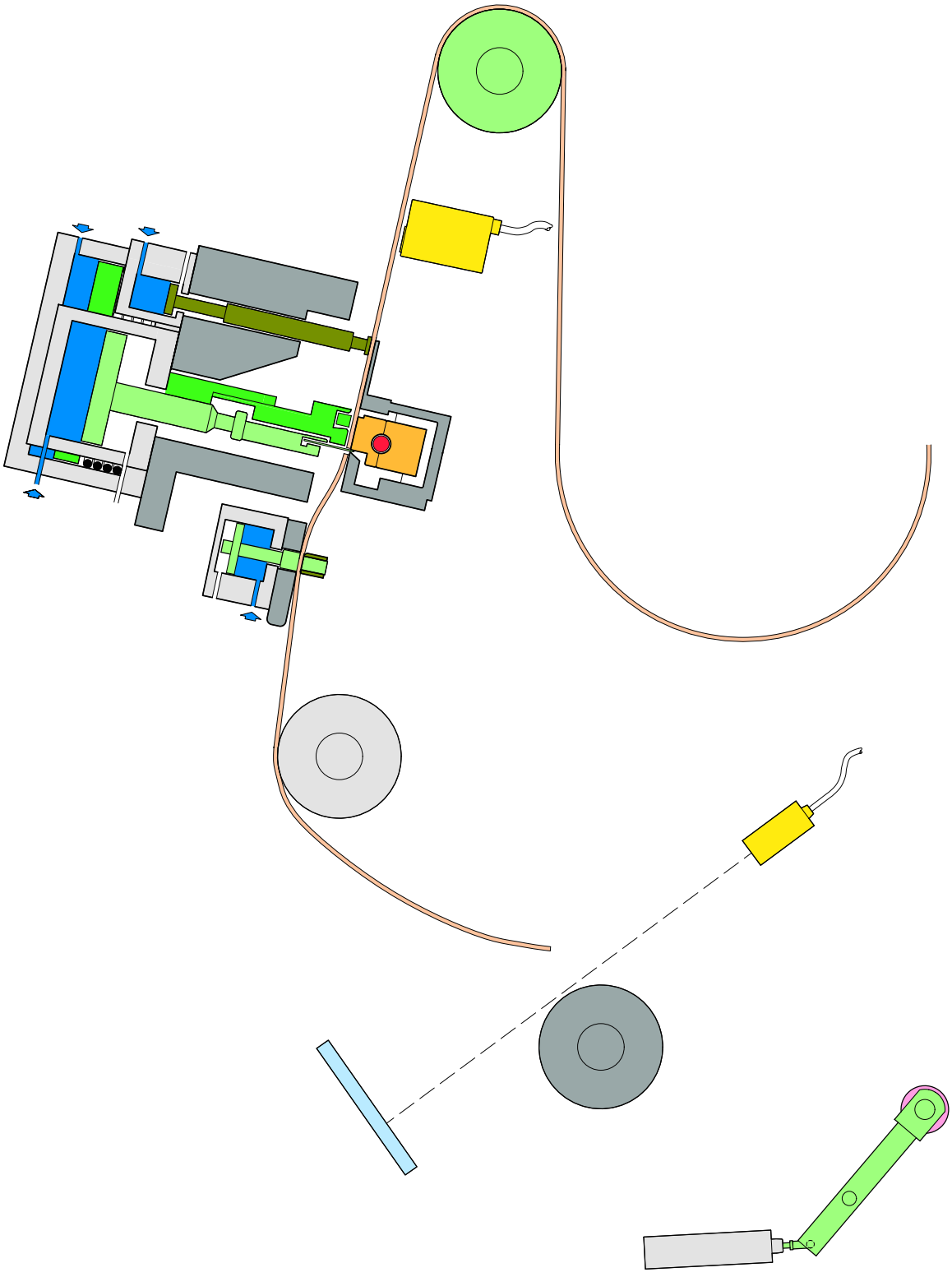

The pressure rail and the cutting cylinder are activated, and the knife cuts the packaging material.

Cutting packaging material

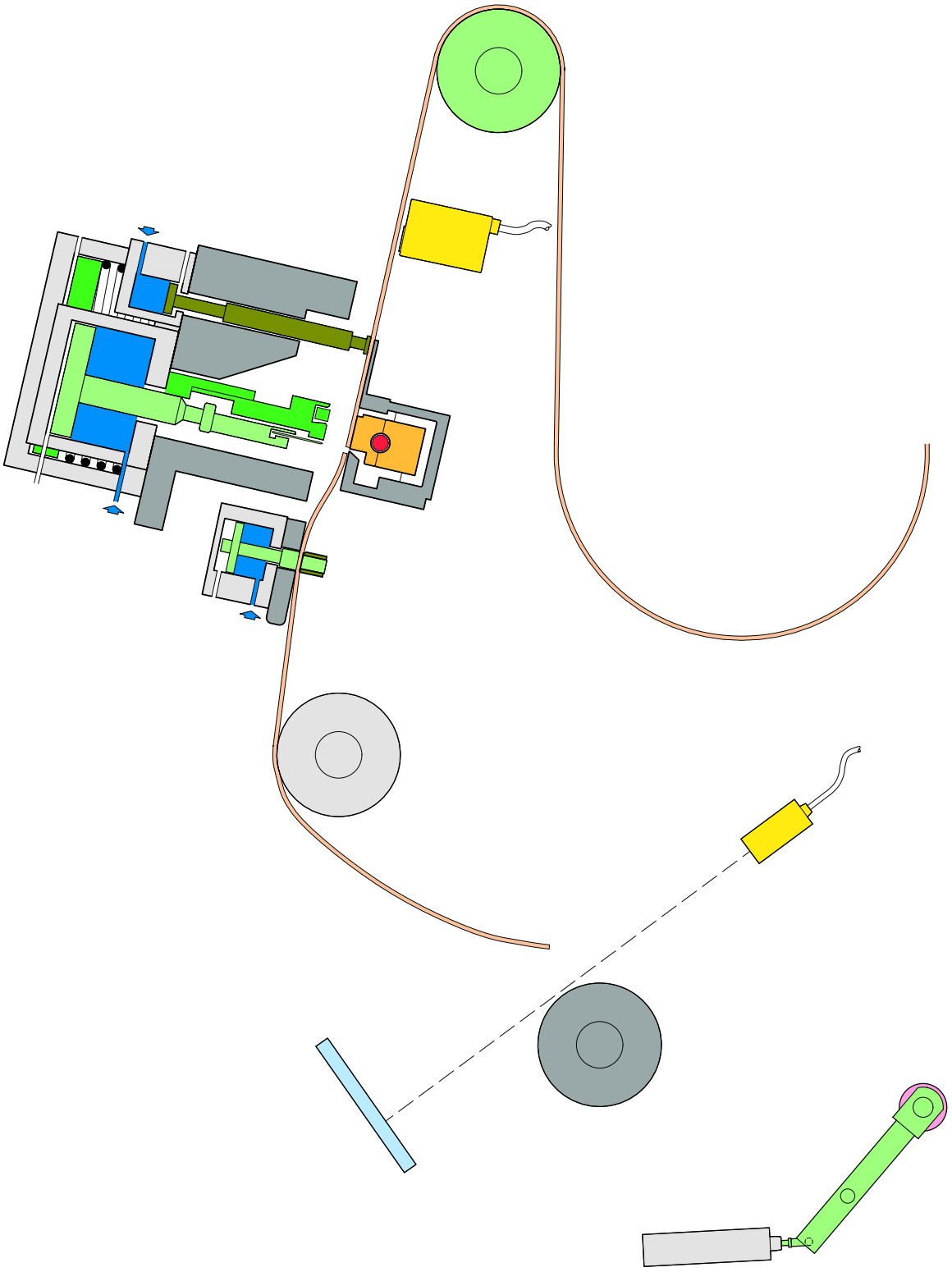

Cylinder retraction When the packaging material is cut the pressure rail and the knife are retracted.

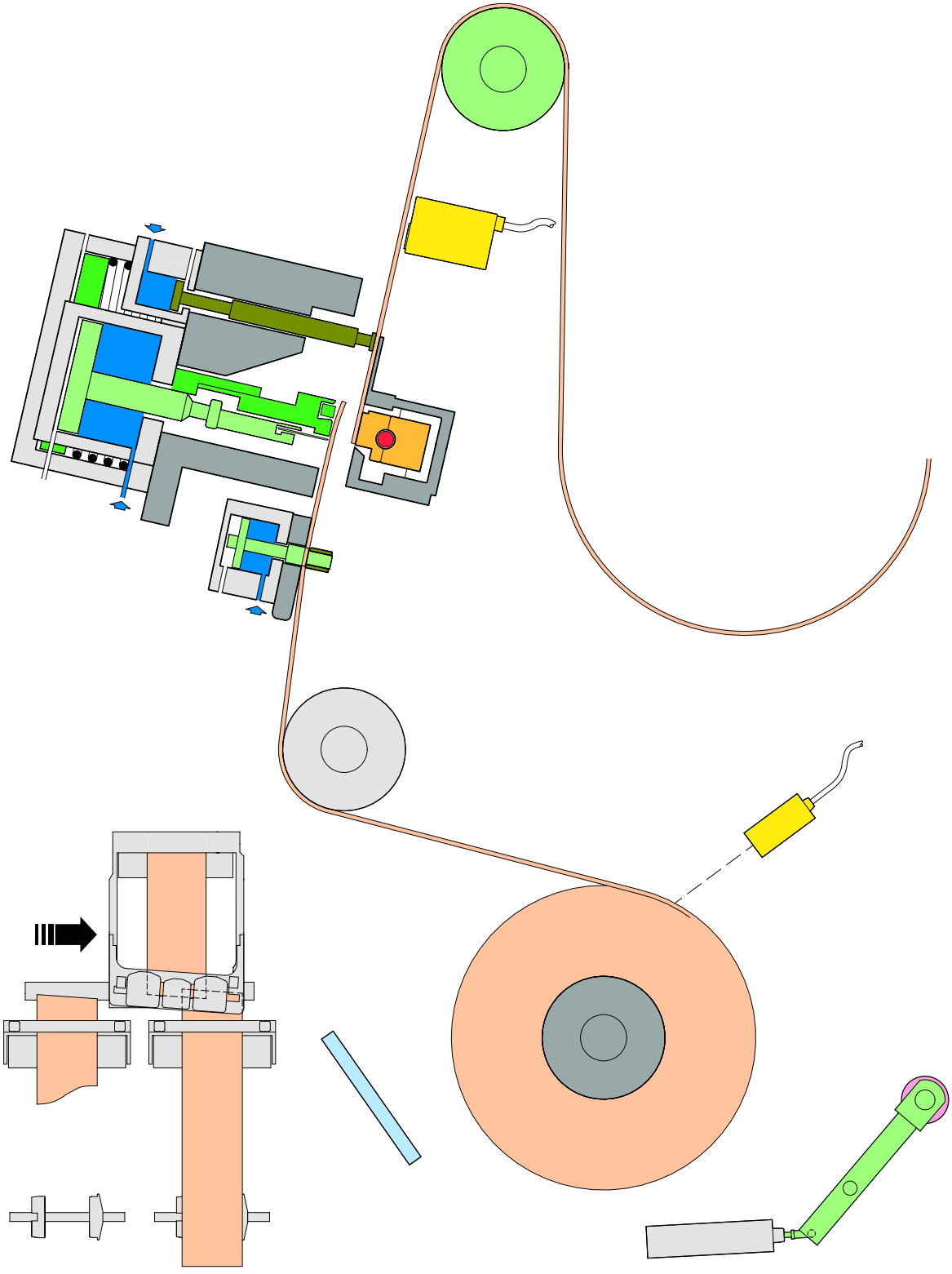

Sideways movement

The splicing device moves over to the packaging material reel prepared for splicing. The packaging material from this reel is overlapping the packaging material held in the splicing device. It is kept in place by the lock cylinders in the material holder until the splice is performed.

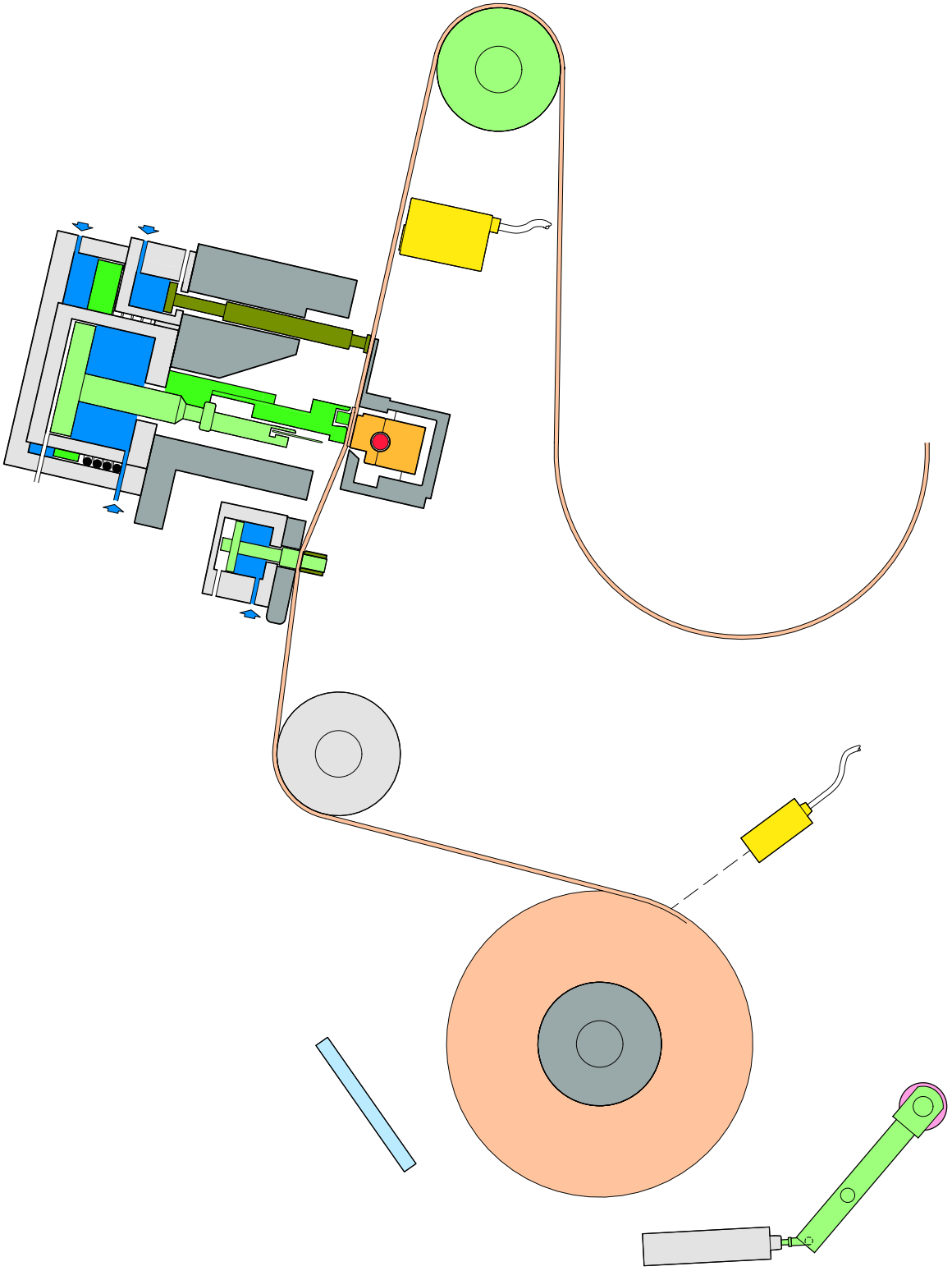

Sealing and cooling

The pressure rail is activated again and holds the two webs in place for sealing. The sealing time is fixed, but the temperature is adjustable.

The pressure rail will retract after the sealing is completed. As the driven bending roller doesn't start immediately, the seal will cool without any stress.

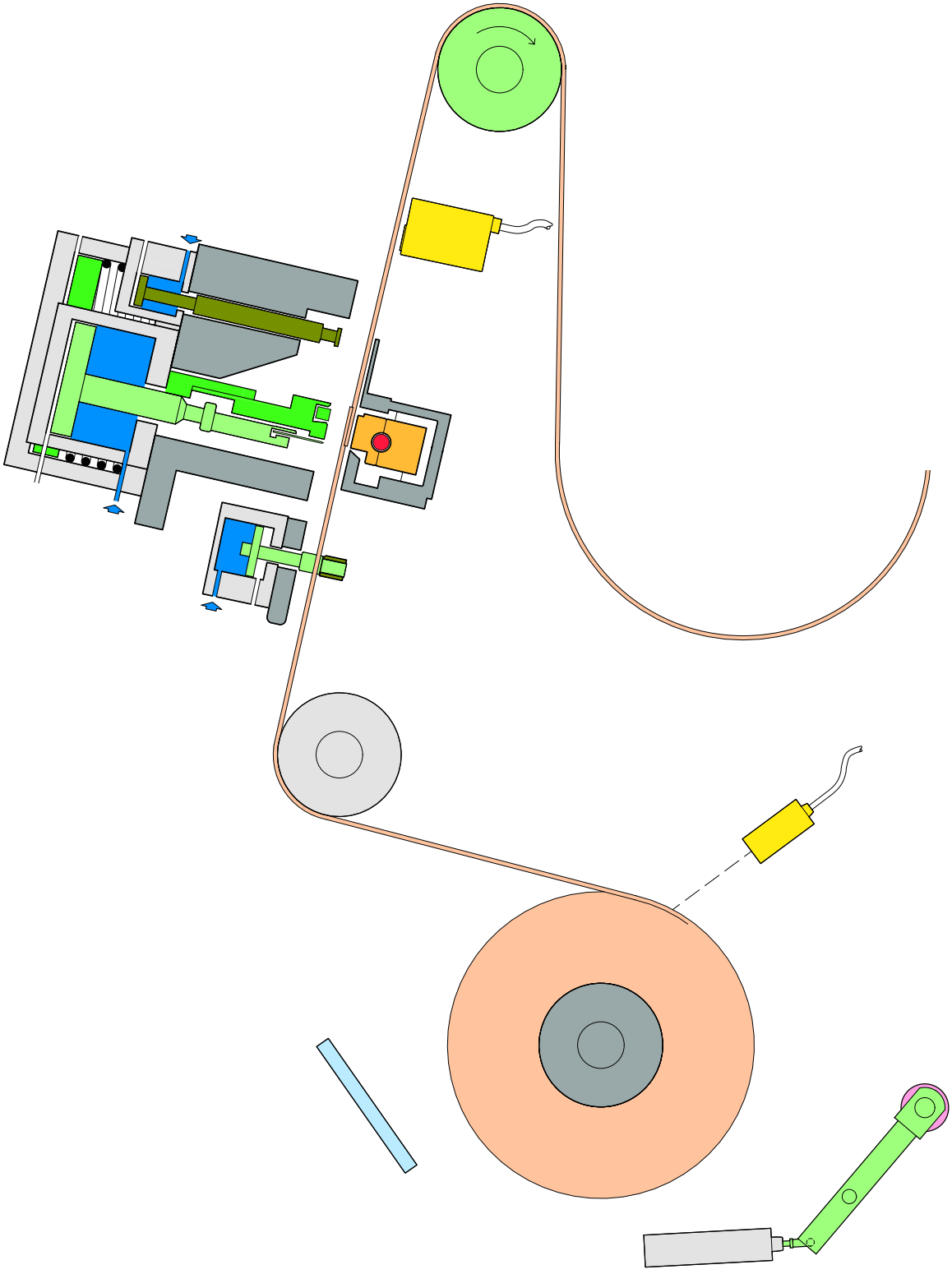

Splice sequence completed

At the end of the splice sequence the pressure rail, the web tensioners and the lock cylinders retract.

When the splice sequence is completed, the driven bending rollers start to run again, first at low speed to unstick the packaging material from the constant heat device, then at increased speed in order to fill the packaging material magazine.

Web stop

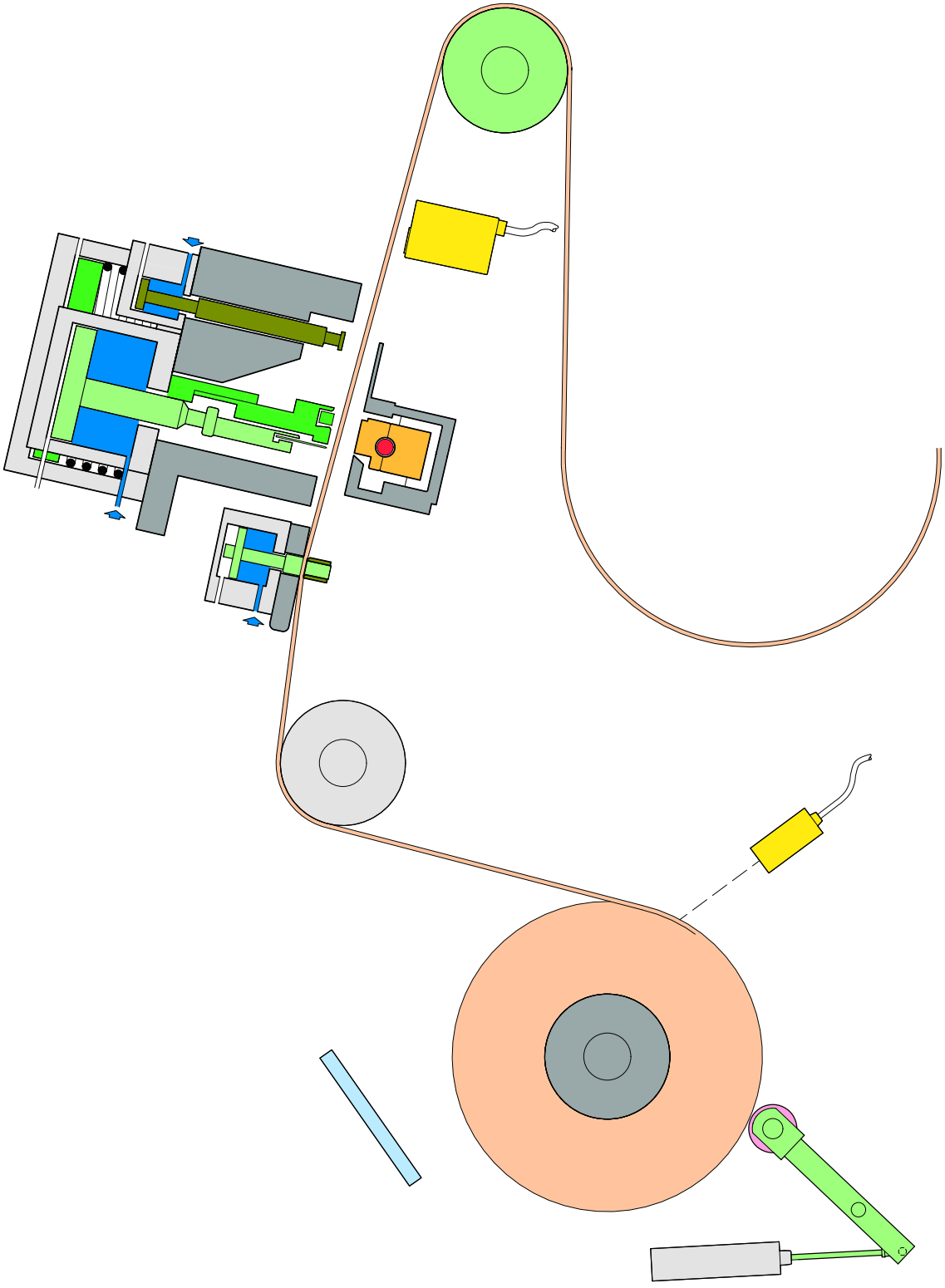

Web stop When the packaging material web stops, there is a risk of overheating the packaging material in front of the constant heat device. To prevent destroying the packaging material the lock cylinders pull the packaging material away from the constant heat bar if a stop occurs.

The bobbin brakes prevent the packaging material from unreeling.

Automatic Strip Splicing Unit

General

The Automatic Strip Splicing Unit, ASSU, automatically splices the LS strip. During splicing the filling machine continues running, consuming strip material from the strip magazine.

Basic function

There are two reels of strip material in the strip magazine. One reel is in production and one reel is prepared for splicing. The reels are driven by frequency controlled motors.

When the reel in production is consumed and a splice is required, feeding of strip material must be stopped. The splicing head then performs the splice between the old and the new strip material.

After a splice is performed, the new strip reel starts moving in reverse direction in order to release the end piece of the strip from the strip lock and to better cool the sealing. Then it changes direction to normal, and runs with increased speed until the strip magazine has reached production level.

The package with the strip splice will be automatically ejected.

Strip magazine

During production the PID regulation and the transducer makes sure that the strip magazine is at production level. An alarm is activated when the magazine is either full (lowest position) or empty (highest position).

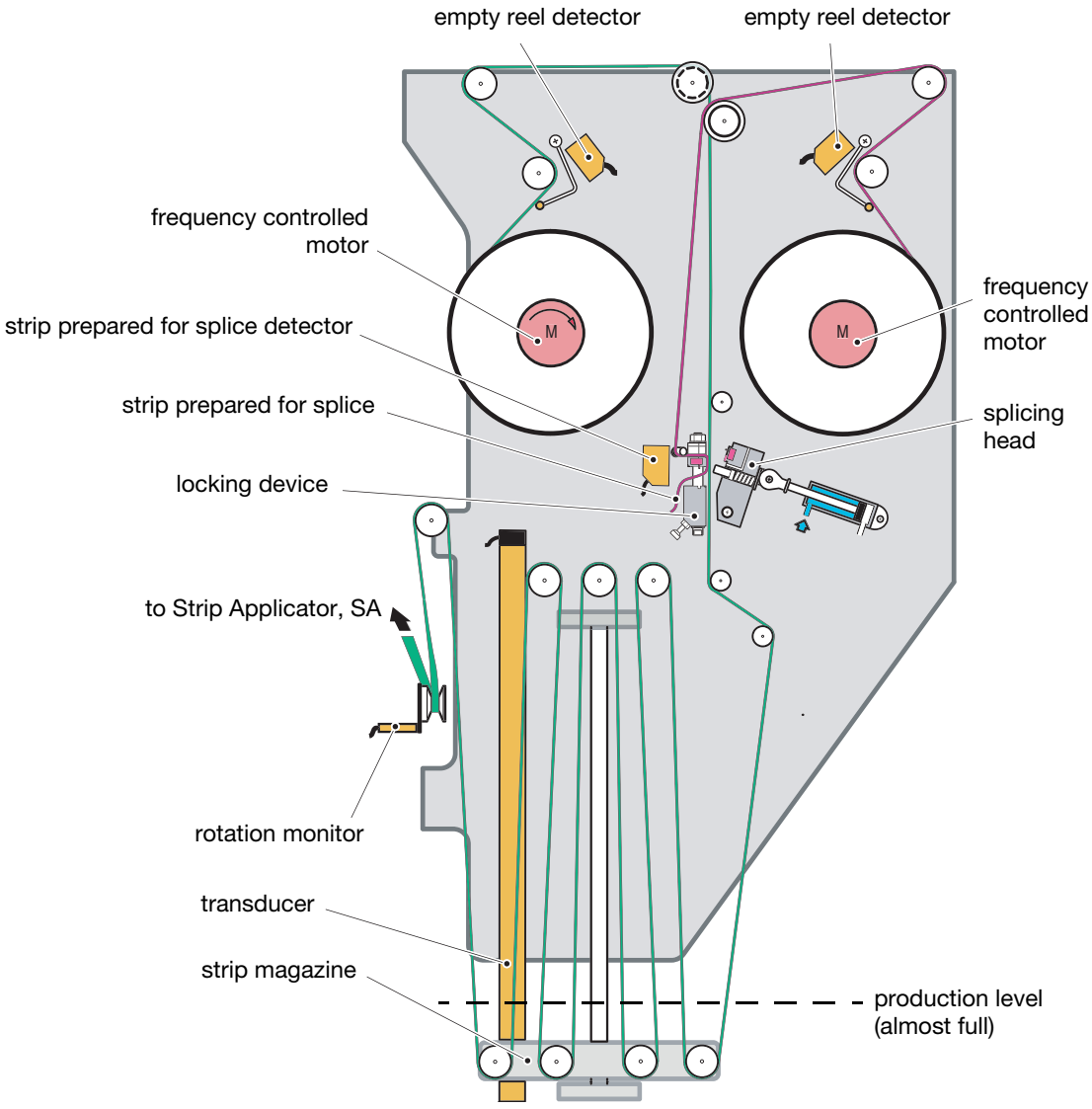

ASSU splice sequence

Strip splice prepared

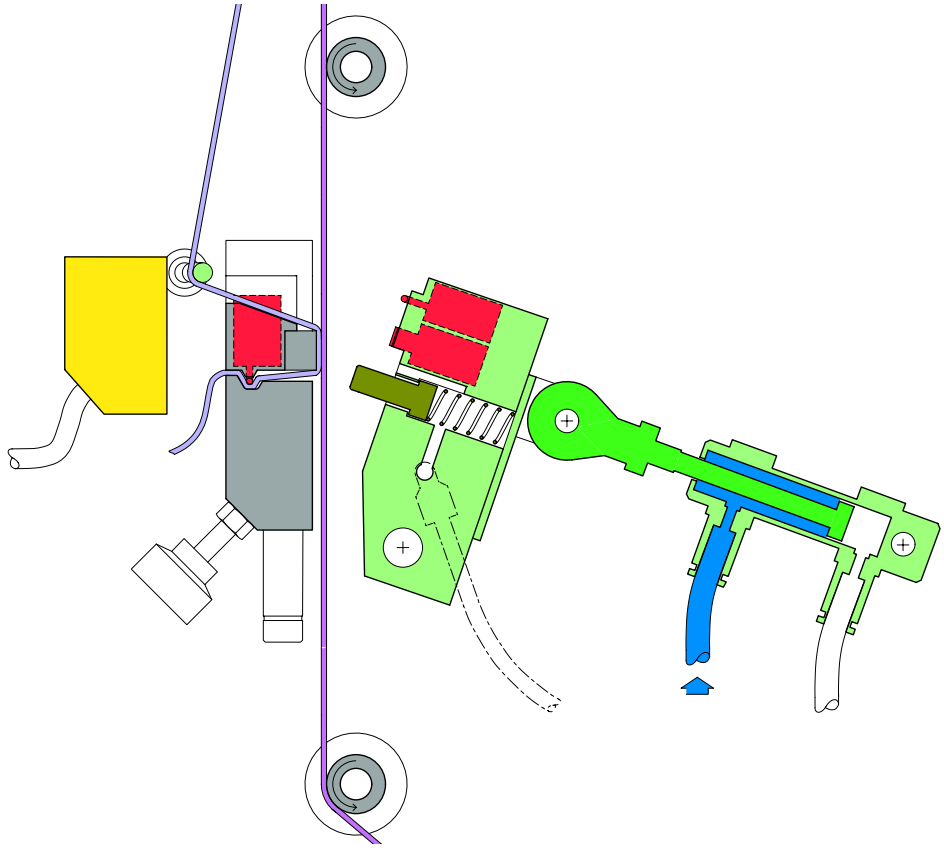

Splicing

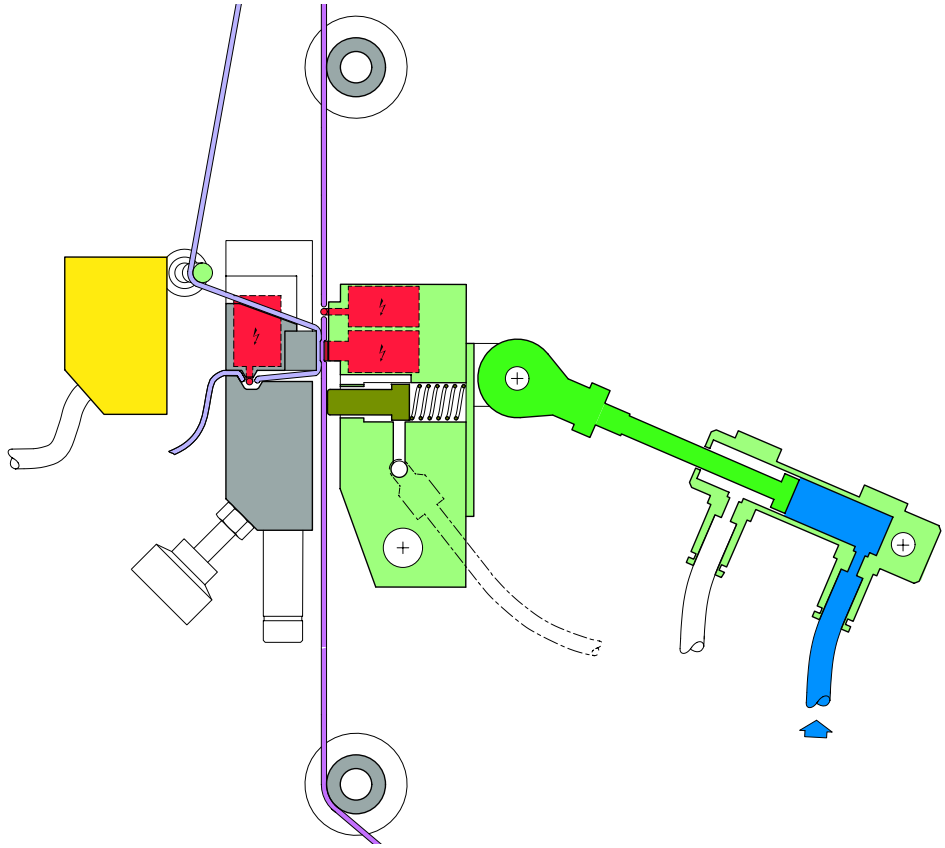

Cooling and unlocking

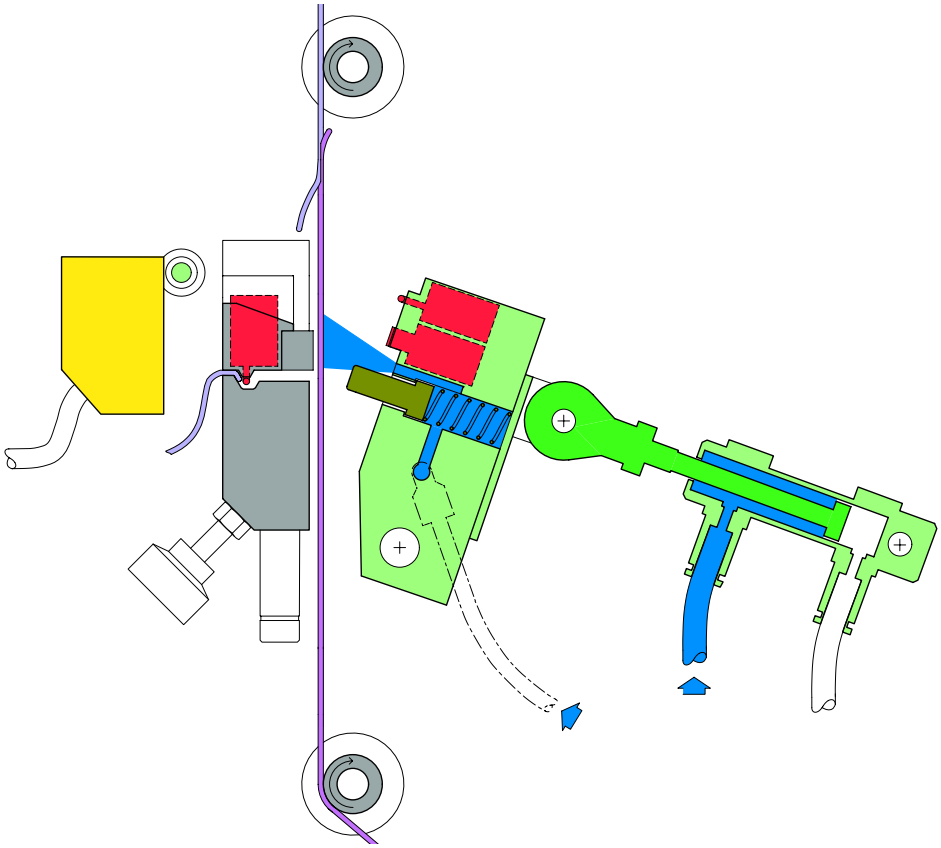

Splice sequence completed

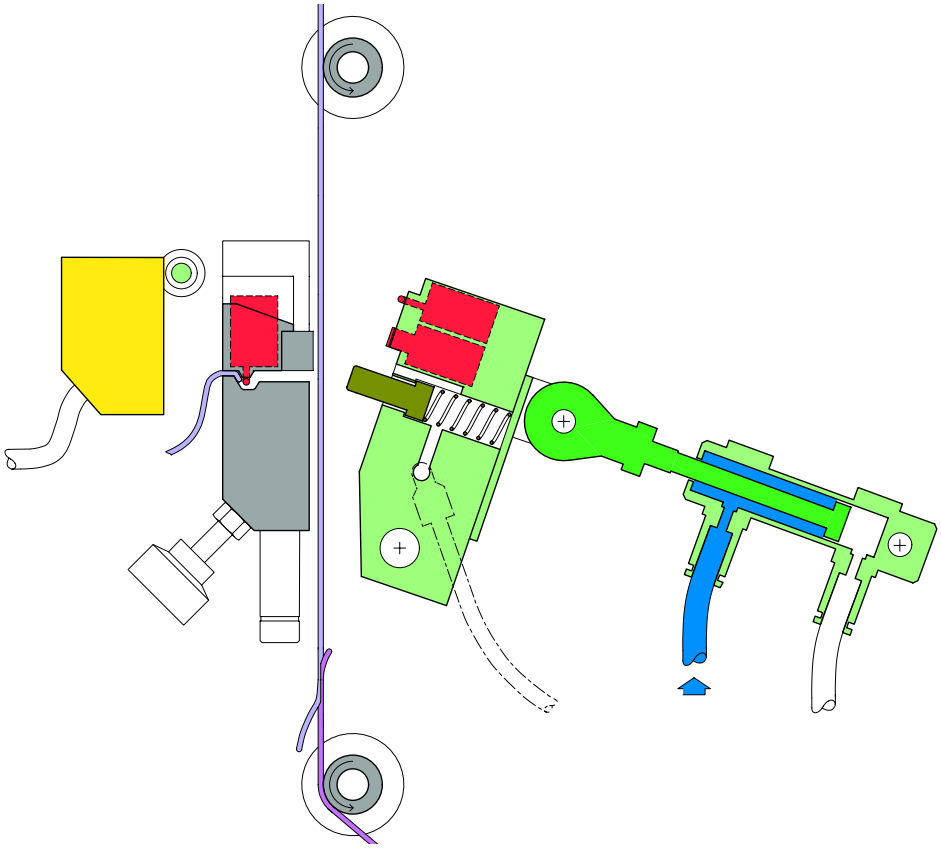

Prepared strip and bobbin search sequence

At machine start, or whenever the door of the ASSU has been opened, a prepared strip and bobbin search sequence is performed. The purpose is to make sure that a strip is prepared for splicing and to determine which bobbin to be driven.

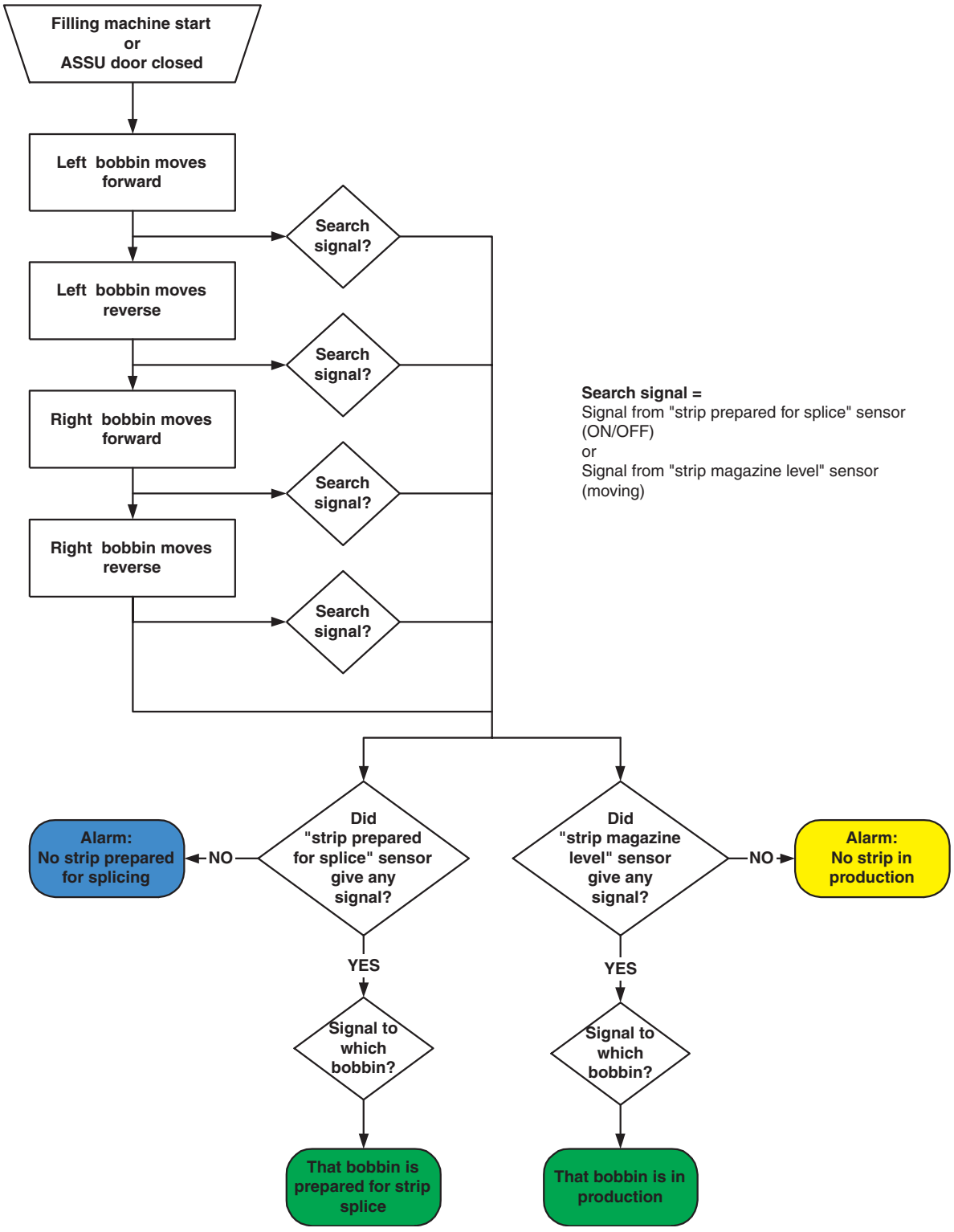

TMCC2

Automatic splicing unit

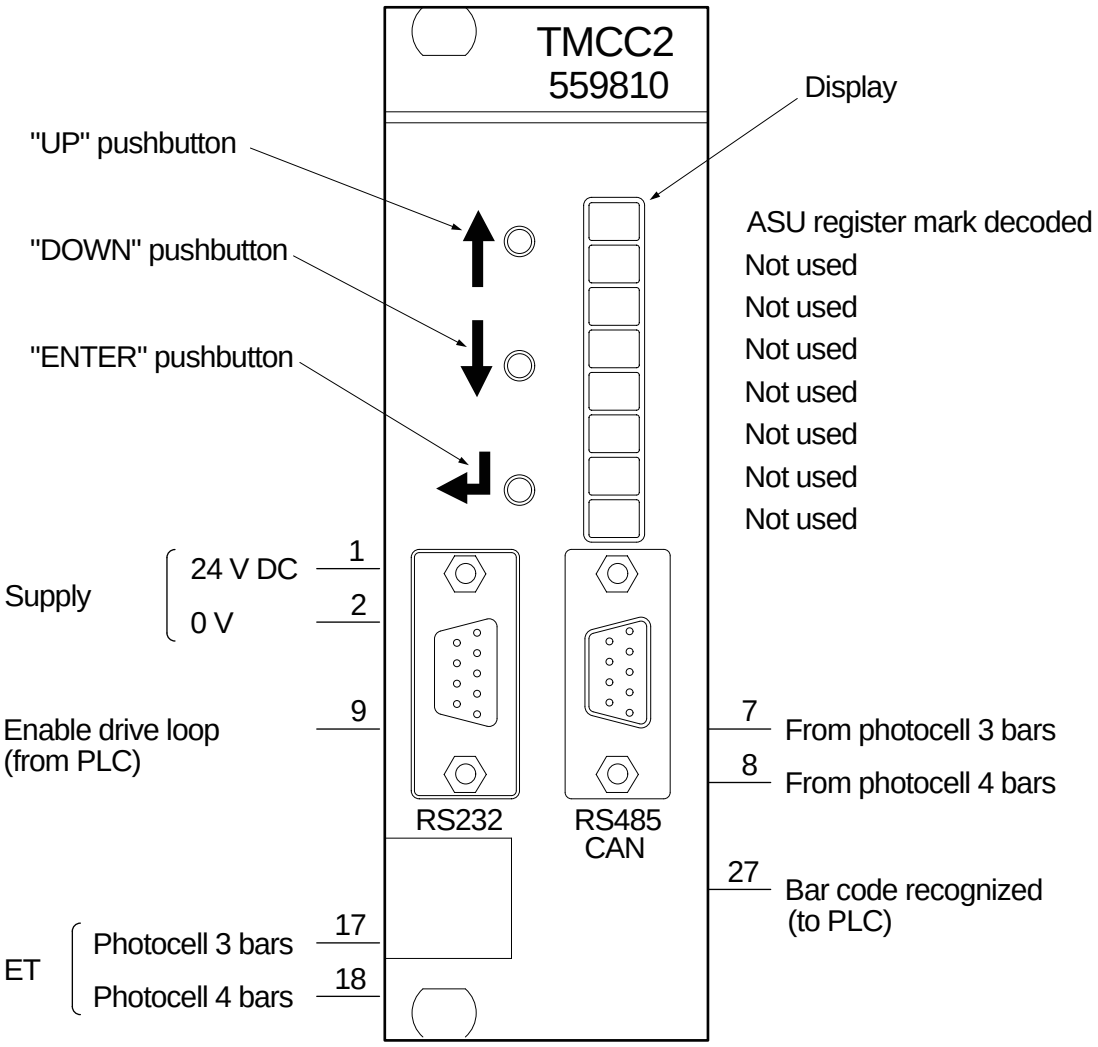

Sequence diagram ASU

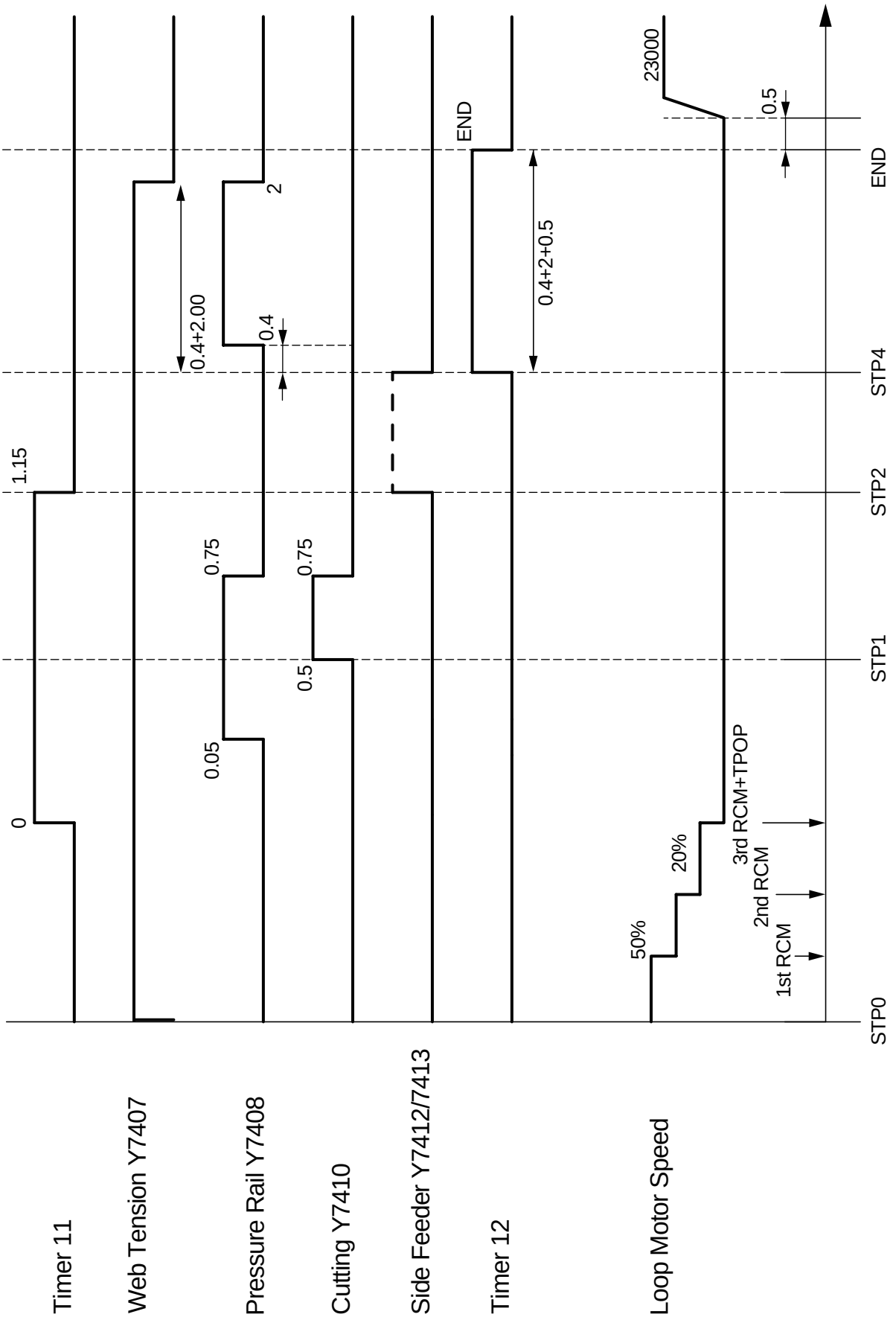

Technical Training Centre Lund, Sweden	Machine type TBA/22 050V	Issue 2/0506	OH 1218

Sequence diagram

Strip splice

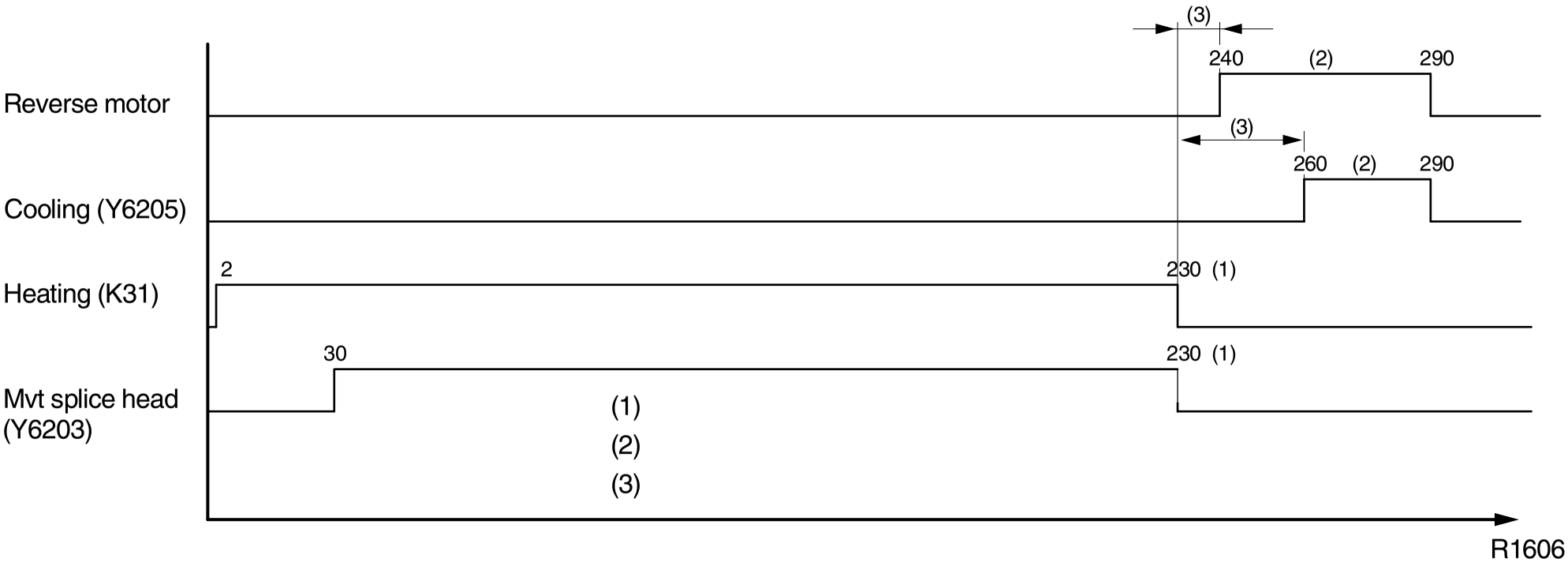

(1) Adjustable on TPOP (mini 170, maxi 300)

(2) Constant time

(3) Follows the adjustment done on TPOP

14

Sealing

Induction Heating

Used for Transversal Sealing TBA

To perform a transversal seal on a TBA machine is required:

- Pressure
- Heat
- Cooling

The heating application used is induction heating (IH). This is a clean form of heating. One of its advantages is that the heating takes place in the work space, the aluminium foil. This reduces the losses, normally associated with heating, to a minimum. The heat causes the plastic to melt and thus the packages can be sealed. The seal will be cooled before the pressure is released.

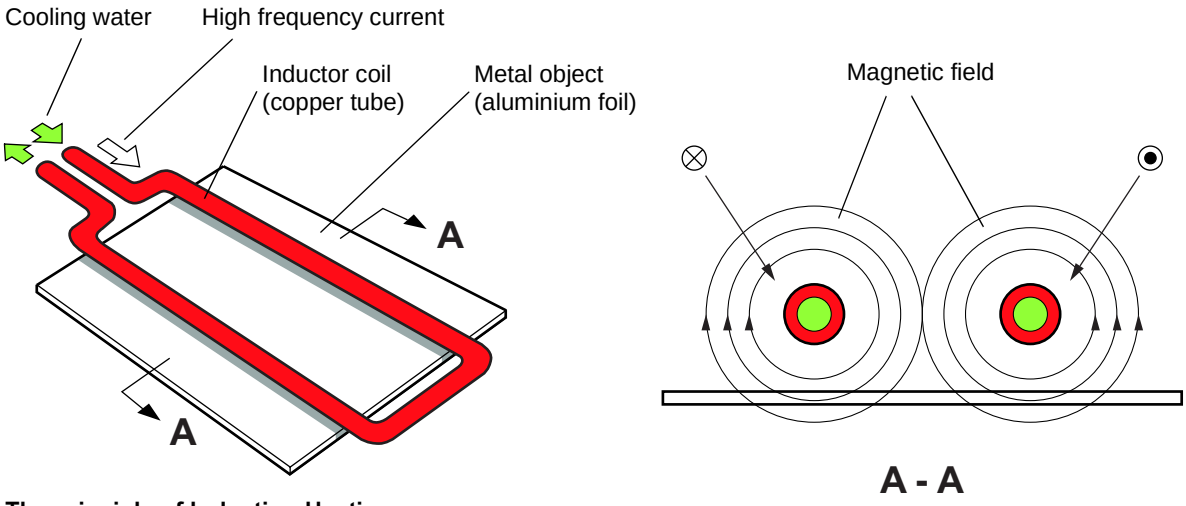

The principle of Induction Heating

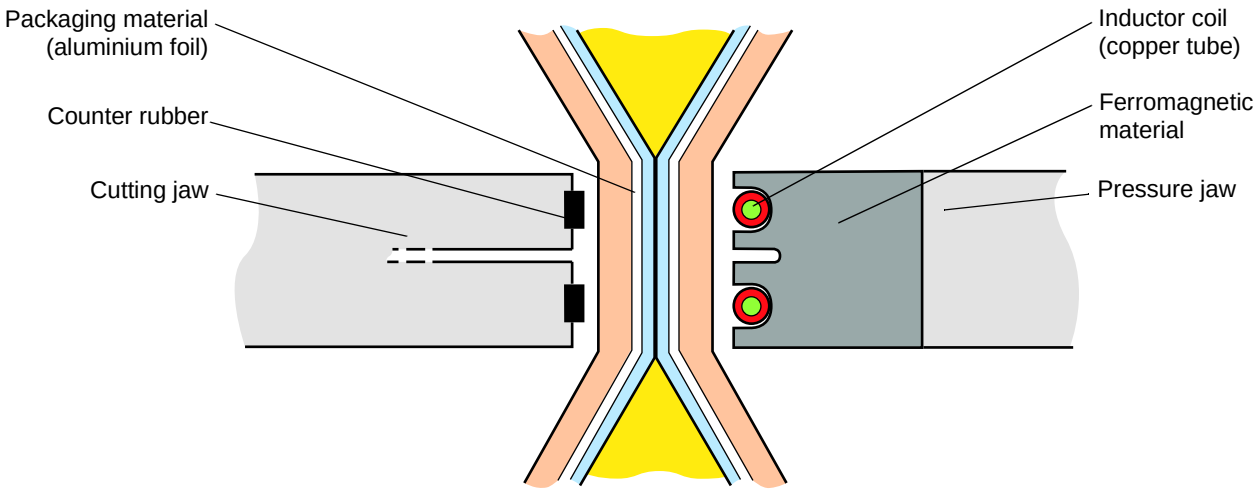

Transversal sealing TBA

Principle of ridge inductor sealing

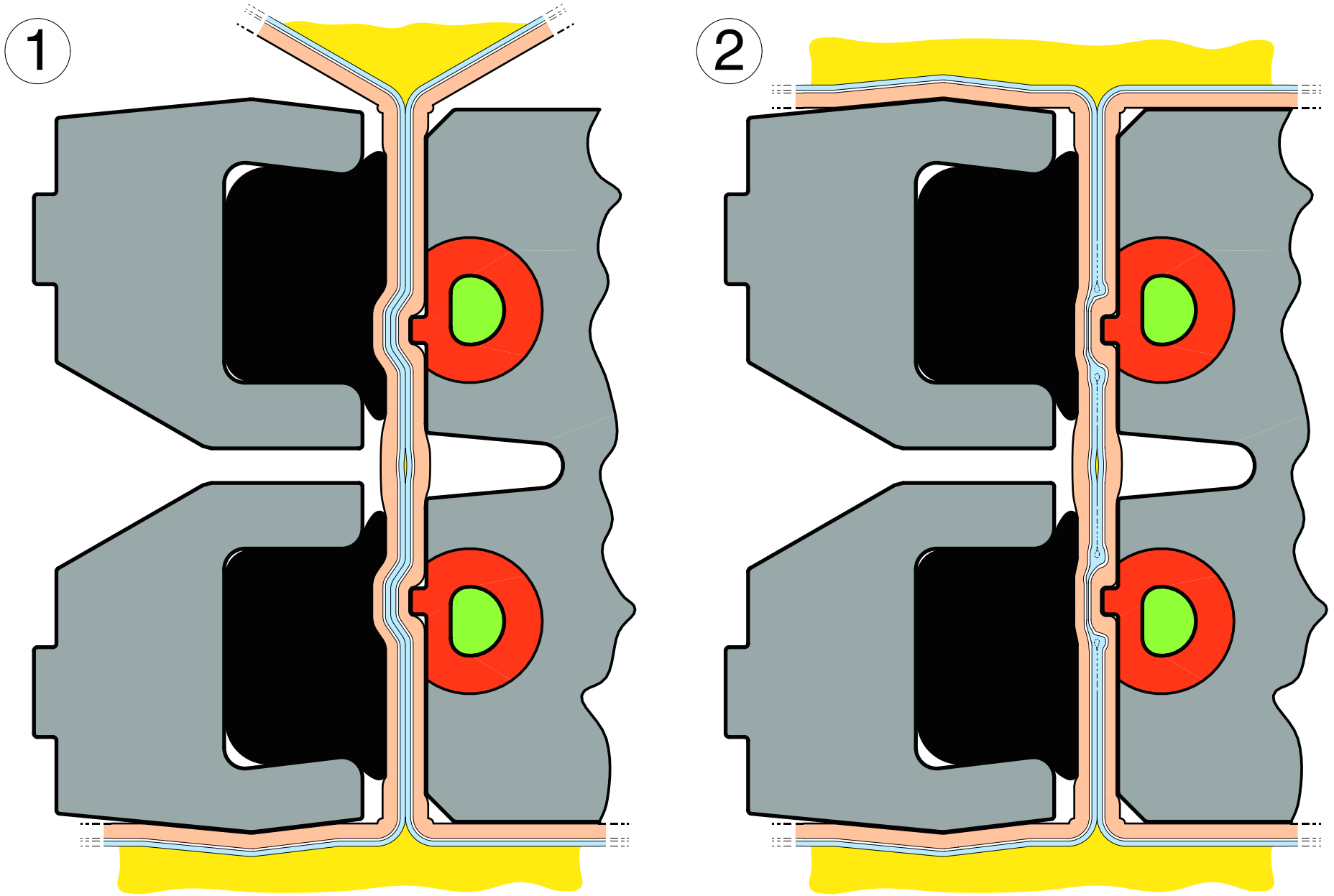

Tetra Pak Processing & Packaging Systems AB
Technical Training Centre, Lund, Sweden

Machine type

Issue
3/0008

OH 225

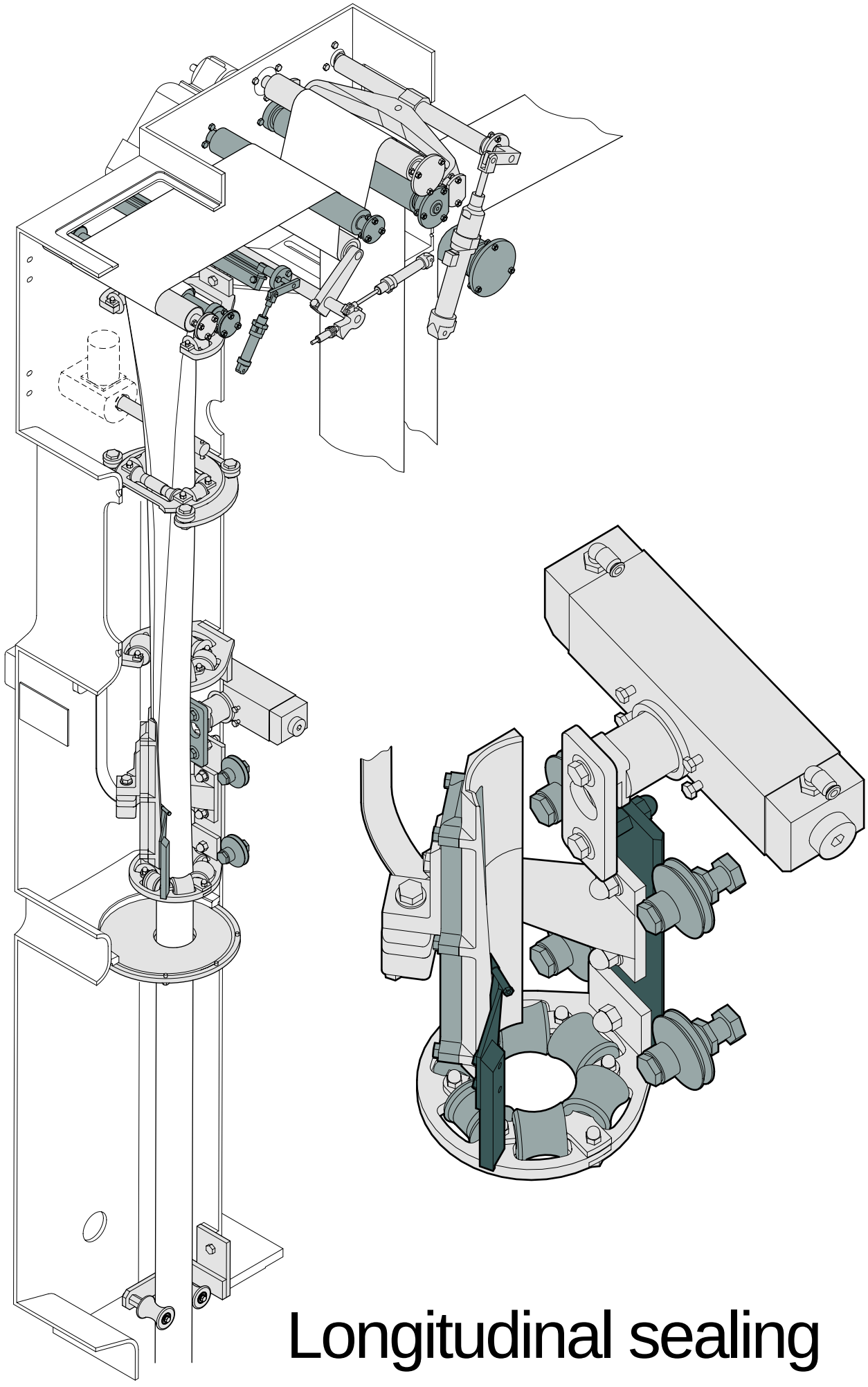

Longitudinal sealing

Technical Training Centre Lund, Sweden	Machine type TBA/22 050V	Issue Prel.	OH 1269

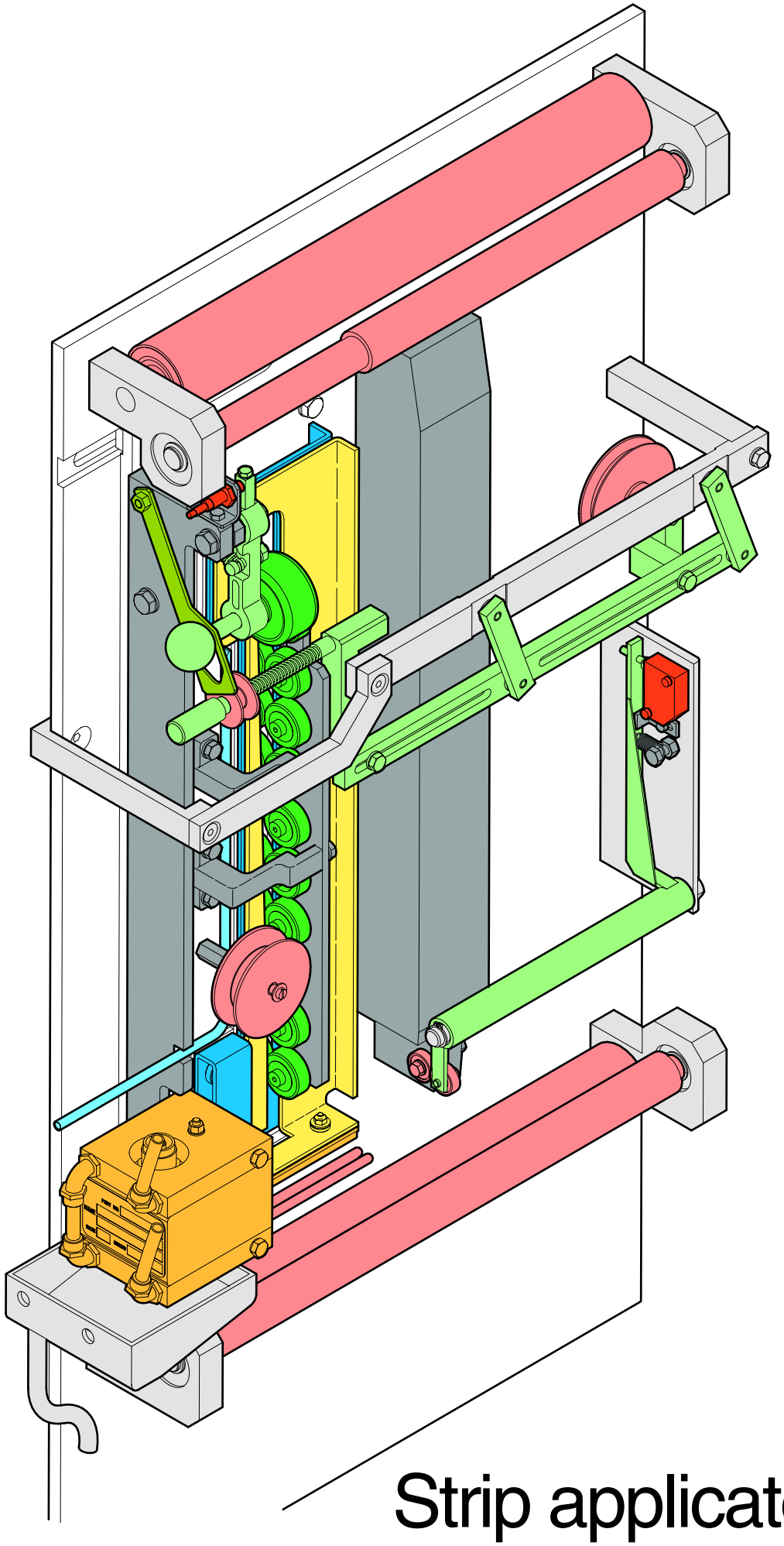

Strip applicator

Technical Training Centre Lund, Sweden	Machine type TBA/22 050V	Issue 1/0303	OH 1275

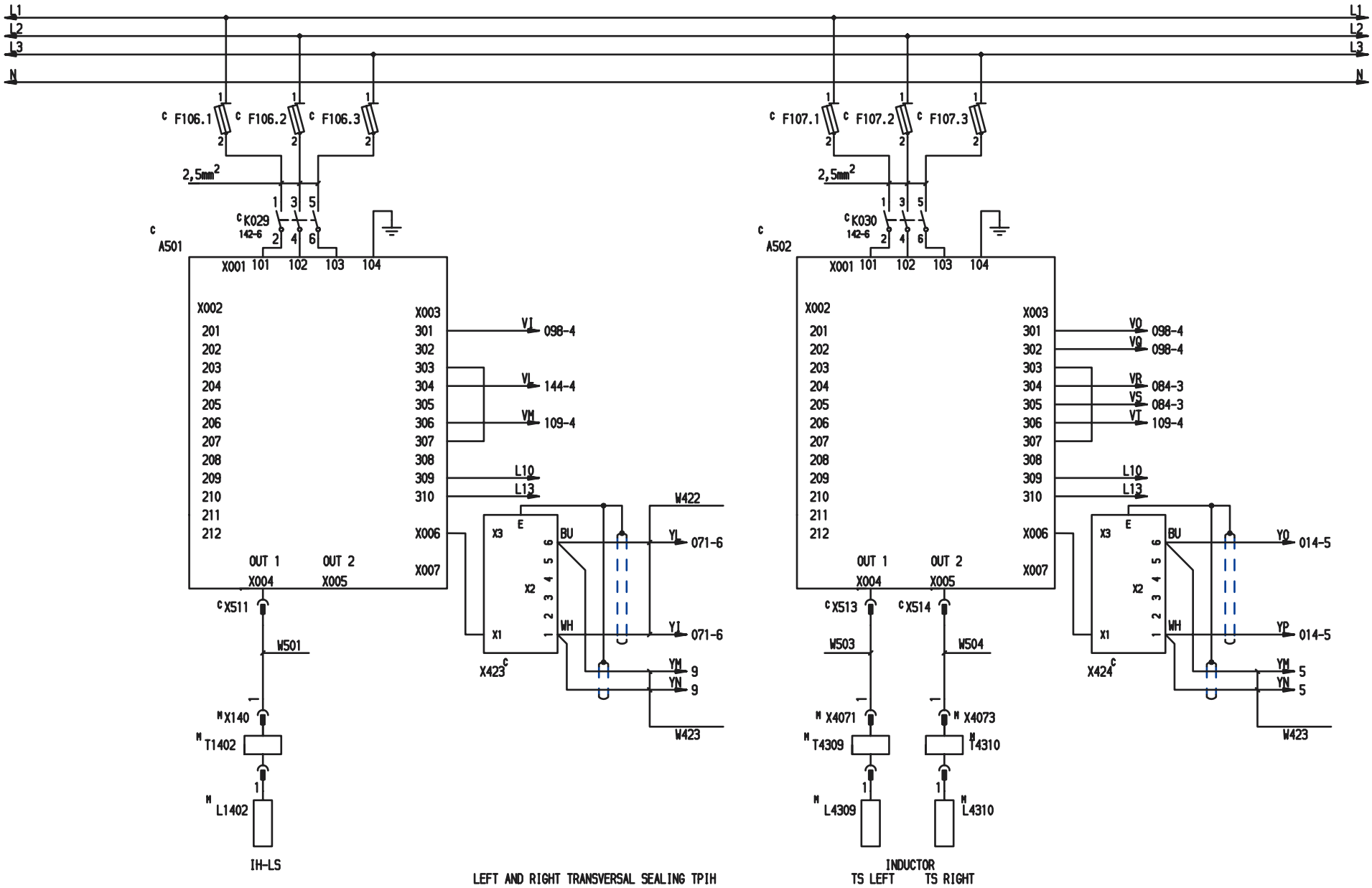

TPIH GENERATORS LS TS

2552985-012:01

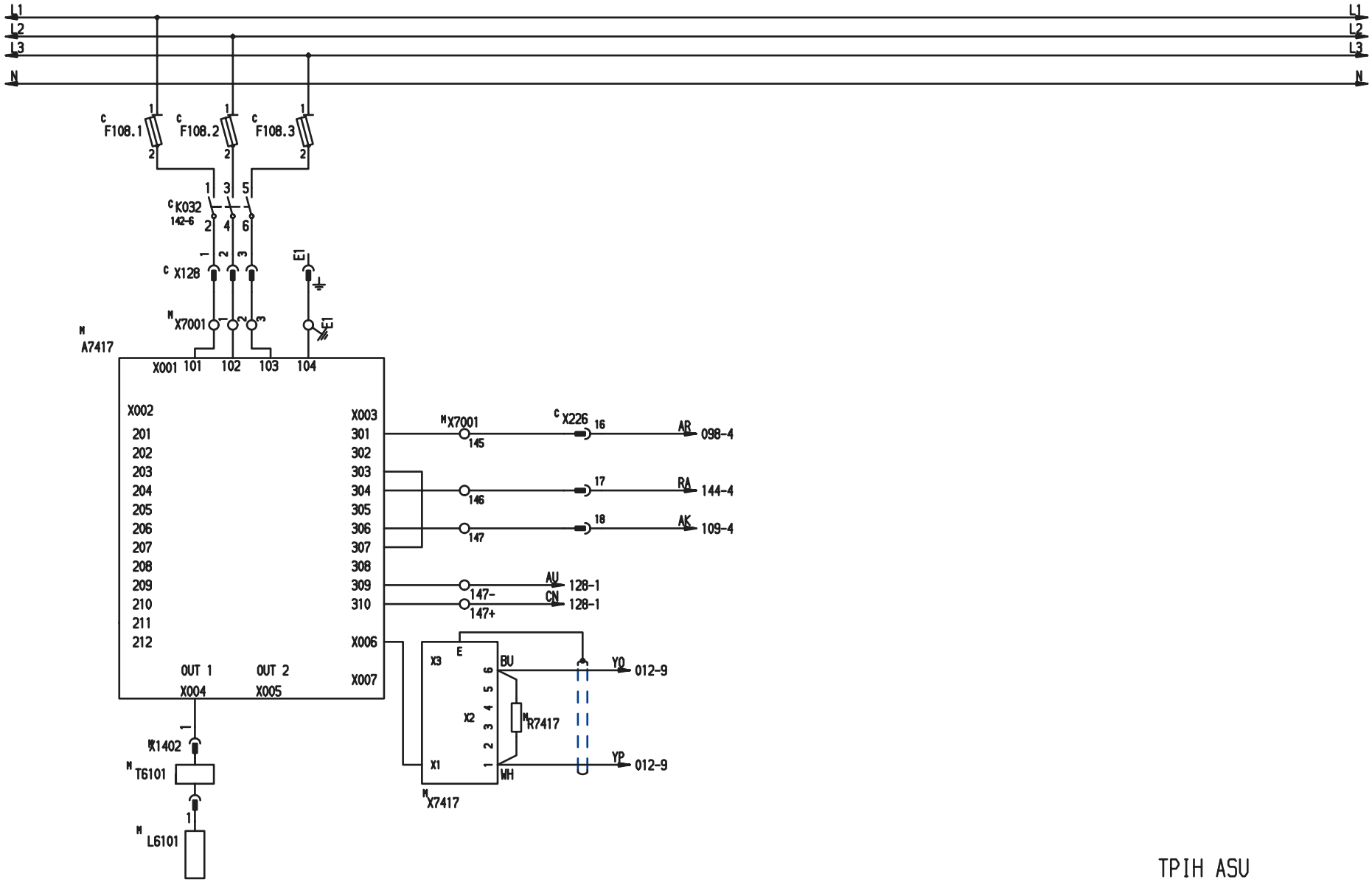

TPIH ASU

2552985-014:01

Longitudinal sealing for 200 Slim

It is controlled by the analog output AQ3. The setting is done from the TPOP. For safety reasons, high and low limits are programmed in the PLC to avoid any mistakes.

1. During "Tight tube" (slow speed)

There are no ramps in this case.

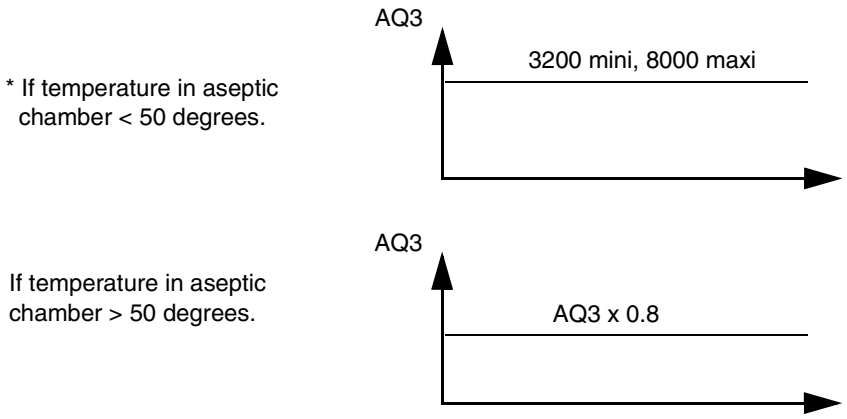

2. During "Production" at high speed or inching at high speed

For the ramps-up there are 25 steps, as the scan time is fixed at 40 ms, the power setting is reached within one second. There is a minimum value to start with to avoid an alarm on the TPIH.

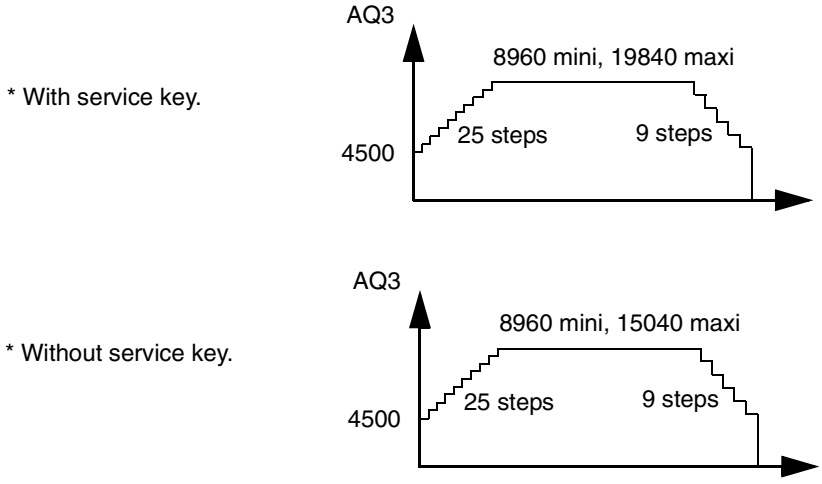

* Only these 3 settings are adjustable on the TPOP

3. During sterile inching

TPOP setting is multiplied by 1.1.

4. During PM splice

TPOP setting multiplied by 1.3 for the 45th, the 46th and the 47th package after the detection.

5. At start after a stop

These values are not adjustable. At 0 the start sequence is finished (SQ_END) and 0.60 after the machine starts.

With service key.

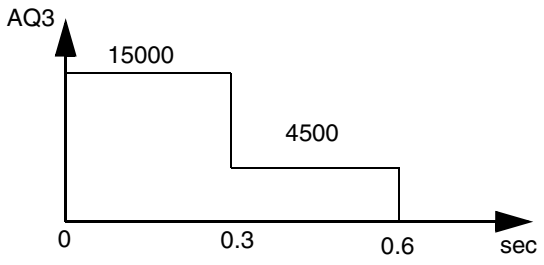

Without service key.

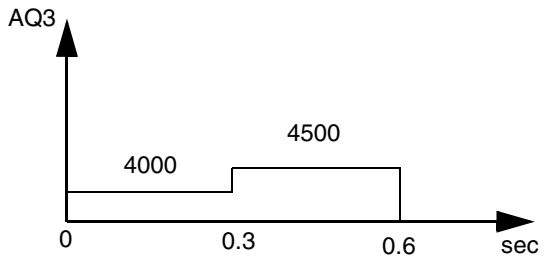

.

Strip sealing for 200 Slim

The strip sealing is controlled by an analog output AQ4. For safety reasons, high and low limits are programmed in the PLC to avoid any mistakes. There are two settings available from TPOP. There is a minimum value to start with to avoid an alarm on the TPIH.

1. Low speed (Tight tube, slow inching)

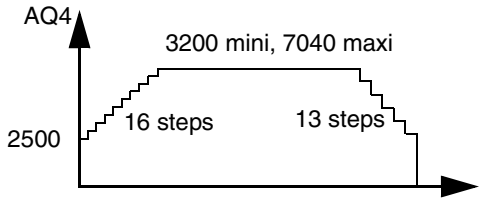

2. High speed (Production, fast inching)

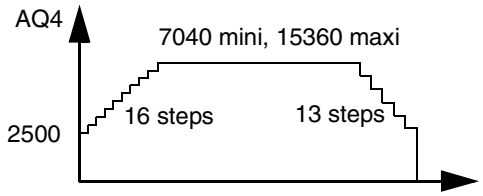

3. During PM splice

TPOP setting is multiplied by 1.35 from 10 ms after detection till 25 ms.

4. During cranking

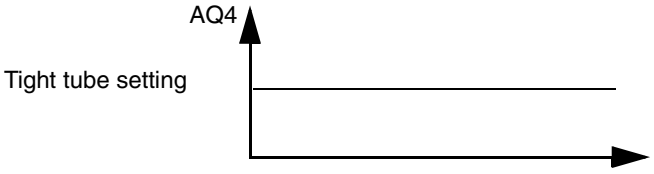

Textbook

TPIH 2500

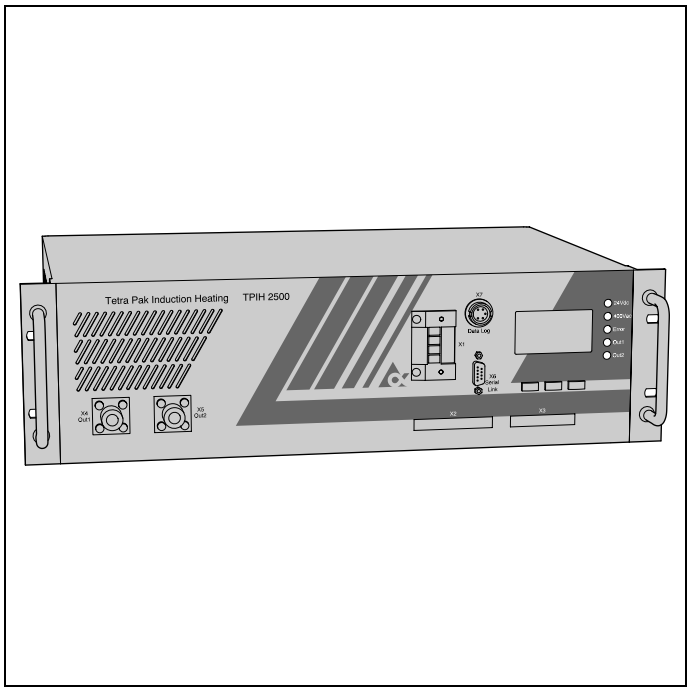

MT-83056-1

Technical Training Centre
Lund, Sweden

This textbook has been compiled by the Technical Training Centre in Lund.

Some of the pictures in the book are also available as OH pictures.

For further information on training material, please contact the Technical Training Centre.

Issue 2/0408

© 2002, Technical Training Centre

No part of this publication may be reproduced, stored in a retrieval system or transmitted in any form or by any means: electronic, electrostatic, magnetic tape, mechanical photocopying, recording or otherwise, without permission in writing from Technical Training Centre.

TPIH 2500

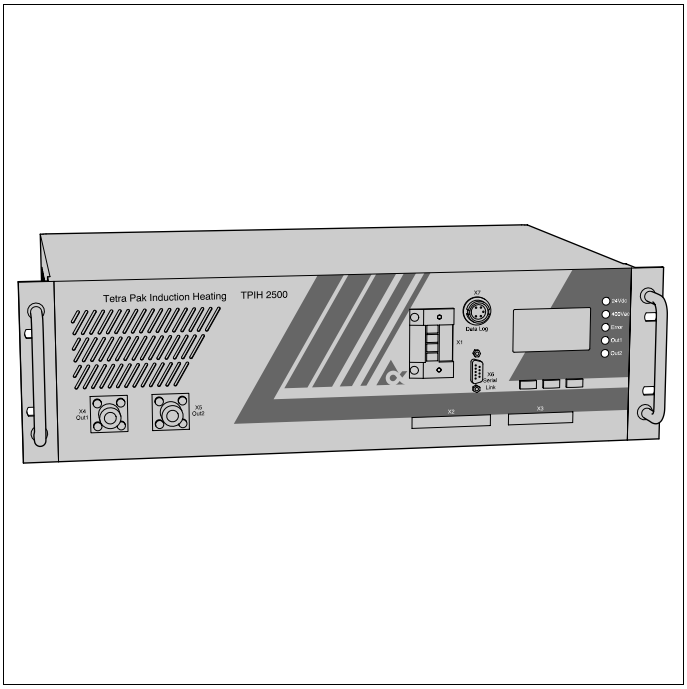

Training Document

This Training Document is intended for Training purpose only, and must not be used for other purpose.

The Training Document is not replacing any instructions or procedures (e.g. OM, MM, TeM, IM, SPC) intended for specific equipment, and must not be used as such.

Note!

For safe and proper procedures, refer to the equipment specific documentation.

Technical Training Centre

Contents

General information on IH 3
TPIH 2500 10
Comparison between TPIH 2500 and 2000 17

General information on IH

TPIH 2500 is a generator, which generates a high–frequency current. This current is utilized to induce heat in the packaging material, for instance in transversal sealing. TPIH stands for **T**etra **P**ak **I**nduction **H**eating.

IH = Induction Heating

The aseptic Tetra Pak filling machines are equipped with IH generators, and the high–frequency current induces heat in the aluminium foil layer of the packaging material. The heat causes the plastic (PE layers) to melt, and thus the packages can be sealed.

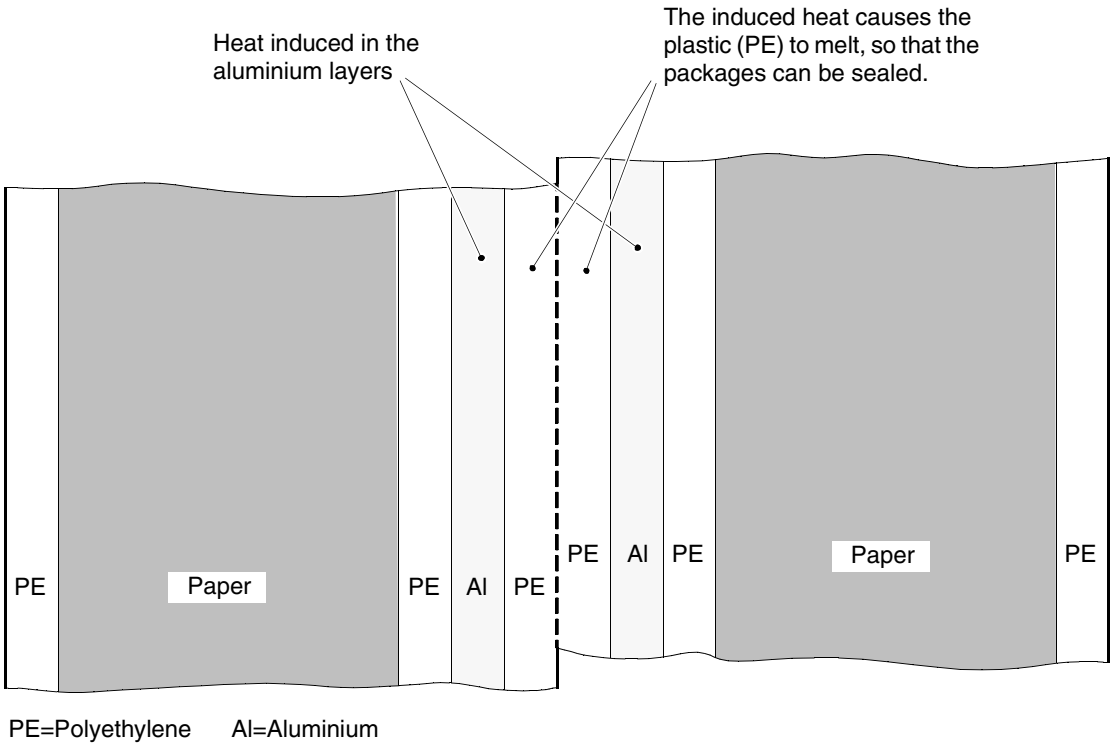

Induction heating is also employed to heat the PE layer at the opening arrangement of the package. The heat changes the structure of the PE layer, making the plastic more brittle. For this reason, the package becomes easier to open.

The method of heating a material without a direct source of heat, i. e. to produce heat in the material, is based on a current or voltage of high frequency. One could say that the high–frequency transfers energy to the material.

There are two ways of producing heat by means of high-frequency:

- **Induction heating** that utilizes current (for instance transversal sealing in filling machines)
- **Dielectric heating** that utilizes voltage (for instance in a microwave oven)

Induction heating

Induction heating is used to heat materials which are electrically conductive (metals). This is the method employed in the aseptic Tetra Pak filling machines for e.g. transversal sealing, zone heating at the opening arrangement of the package, longitudinal sealing, strip application, splicing of the packaging material, and pull-tab attachment.

The diagram below shows the principle of this method.

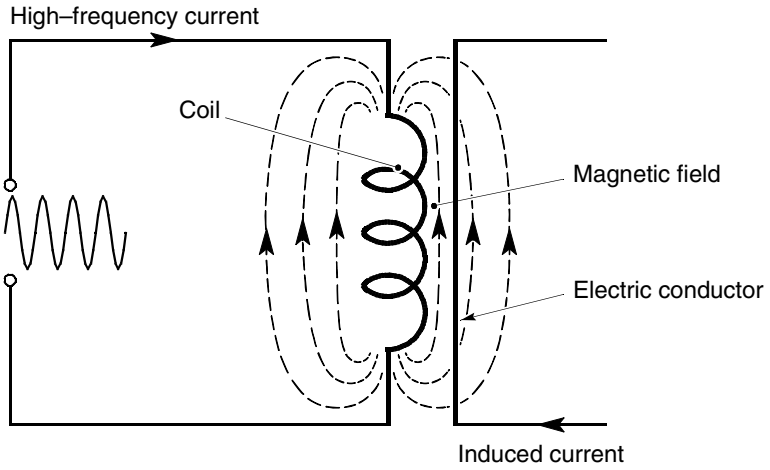

The high–frequency current creates a magnetic field around the coil. This magnetic field oscillates in time (at the same frequency) with the current, inducing a current in an electric conductor placed in the magnetic field. In its turn, the induced current oscillates in time with the magnetic field and produces the energy that heats the material.

Physical background

A metal consists of a three-dimensional lattice of atoms between which so-called conduction electrons can move quite freely.

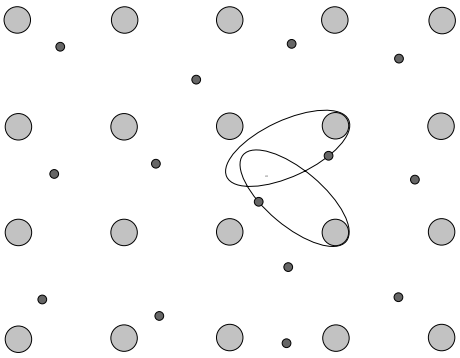

Lattice of atoms with quasi-free electrons

Under the influence of a magnetic alternating field these electrons are set in motion in time to the field frequency. The higher the frequency, the faster the electrons move. They collide with the atoms of the metal, generating heat. The temperature of the metal will thus increase, to the detriment of the energy of the magnetic field. A magnetic alternating field thus induces eddy currents in a metallic material, and these currents generates heat because of the resistance of the material. The energy is thus transferred to the material by induction, and this is the reason why the process is called induction heating.

How does it work?

Induction heating is a very efficient heating method for metal parts without any physical contact.

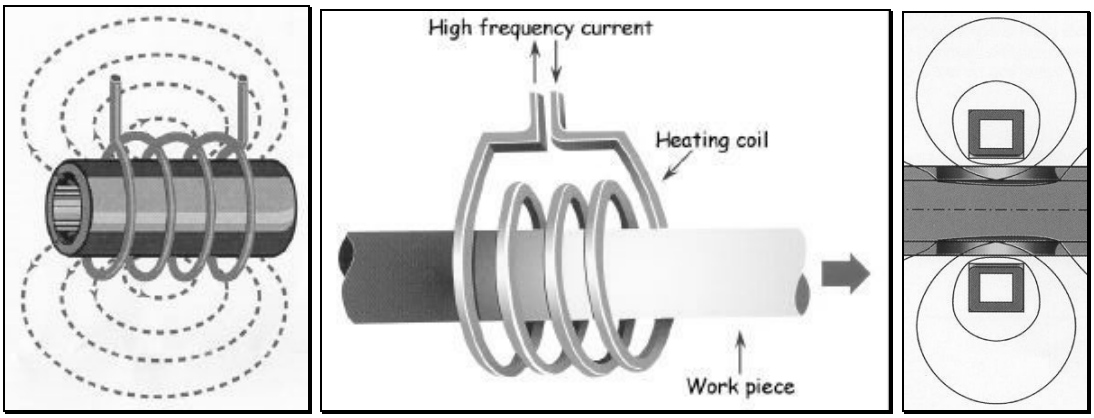

Working principle of induction heating

A high frequency current passes through the coil of the inductor (the "heating tool") which creates an alternating magnetic field. Any metal piece close to the inductor will be affected by the magnetic field, and an opposing current (eddy current) is induced in the metal parts. The induced current will create heat in the work piece due to resistive losses. With a proper design of the inductor and, if the work piece is close enough, the produced heat may be very high, high enough for hardening or even melting the metal. As the heat is produced inside the work piece in difference to e.g. gas heating or contact heating, induction heating may be a very fast and efficient heating method without any physical contact.

Working principle

The working principle is analogue to an ordinary transformer, see the figure below.

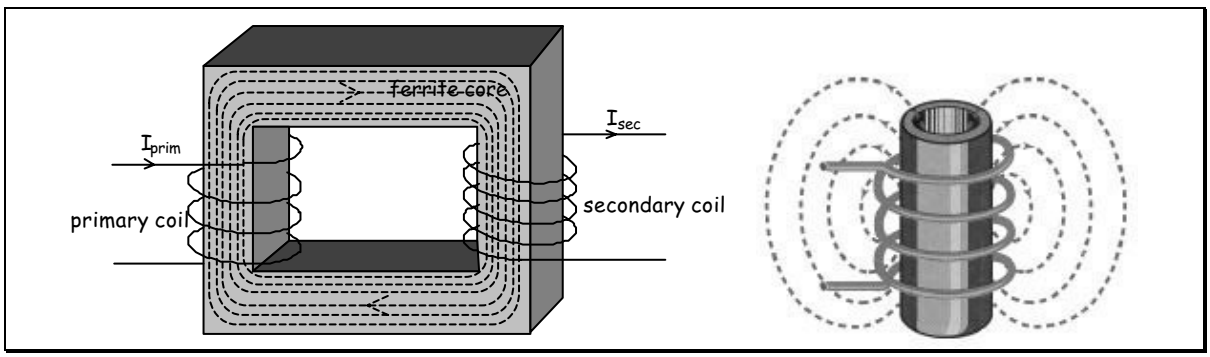

Comparing the IH system with a transformer

In the transformer, the current in the primary coil creates a magnetic field. The magnetic field flows in the ferrite core and induces a current in the secondary winding. The electric energy is transferred from the primary to the secondary coil even if the two windings are electrically insulated from each other. An induction heating system can be compared to a transformer. The inductor coil is the primary winding and the work piece of metal is the secondary winding. In the induction heating application there is normally no ferrite core that concentrates the magnetic field, but in some applications the inductor coil is surrounded with material containing ferrite powder in order to decrease magnetic losses.

Skin effect

One important phenomenon that occurs for high frequency current is called "skin effect". When a current of high frequency passes through a conductor, the current is concentrated to the surface of the conductor due to high frequency effects of the electromagnetic fields.

Single conductor

For example, if a high frequency current is led through a solid cylinder of metal, the current may be distributed as in the figure below.

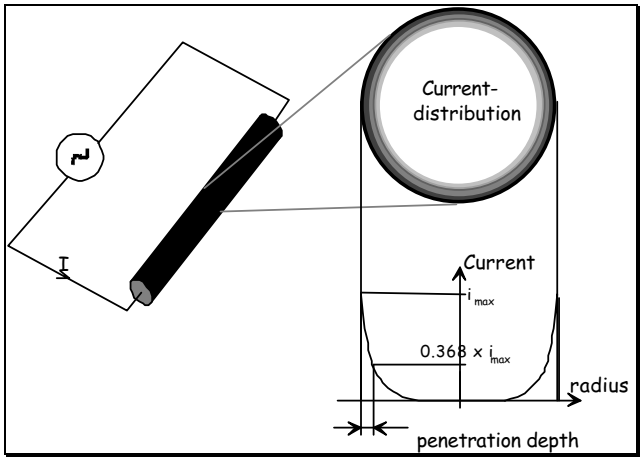

Skin effect in a conductor

The depth at which the current is reduced to 36.8 % of the surface current, is by definition called the penetration depth. The penetration depth is decreasing with increasing frequency.

For aluminium the penetration depth is 0.12 mm at 500 kHz. The consequence of the skin effect is that it is hard to heat large pieces of metal with induction heating as the current (power dissipation) keep to the surface.

Double conductor

The current path in a single conductor is evenly distributed in the surface as mentioned above. But when there are more than one conductor close to each other, the current paths are affected by each other and the current is not evenly distributed in the entire surface. For example, in a flat cable as in the figure below, the high frequency current is concentrated to the parts of the two conductors that are close to each other in order to keep a low impedance to the system.

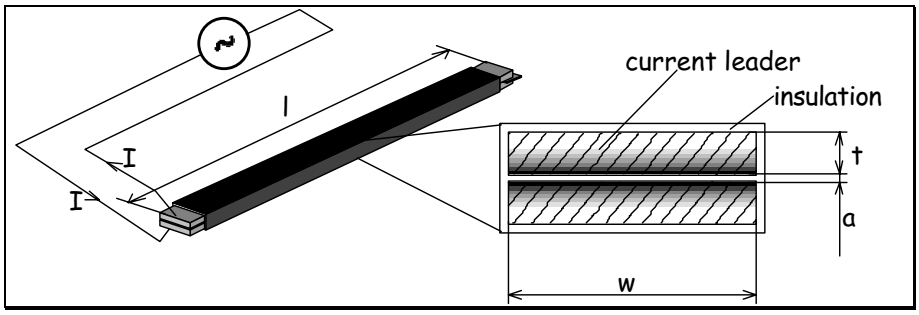

Skin effect in a flat cable

With direct current (DC, 0 Hz) the resistance only depends on material and geometrical parameters. When the frequency of the current is increased, the current gets concentrated as in the figure above. As the effective current depth is decreased, the resistance increases with the frequency.

Heating

It is not easy to describe the power dissipation in the work piece for a real induction heating application. Below, a simplified application is described.

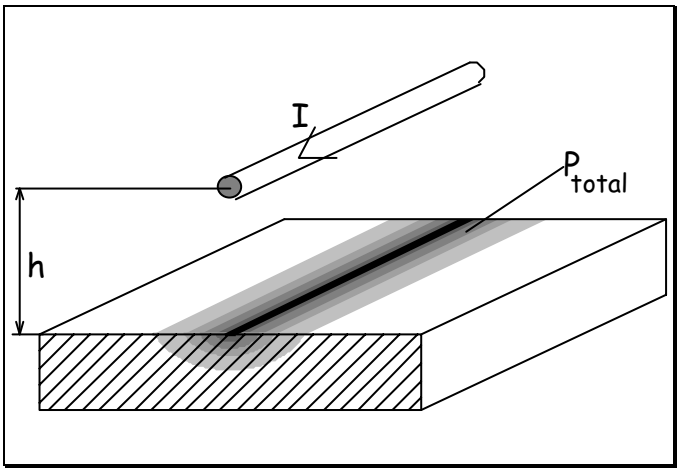

Total heating power in work piece per length:

$$P_{total\ /\ length} = \frac{I^2}{h} \cdot \mathbf{k}$$

A simple case of induction heating

The equation describes the total heating power in the work piece. Here, the total heating power depends on the inverse of the distance. In this simple case, the inductor coil is supposed to be a thin wire with fully distributed current.

Also, the resistivity of metals normally increases with the temperature. For aluminium the resistivity increases with approximately 35% if the temperature changes from 20 to 100°C. This temperature dependence of the resistivity makes that the heating power is accelerated as the temperature increases in the work piece.

Induction heating at Tetra Pak

The first Tetra Pak packaging machines used constant heating for the transversal sealing. Later this was replaced by impulse heating. During the 60´s the possibility to use induction heating as sealing method was discussed but never used as induction heating only could be used for packaging material with aluminium foil. But when the first aseptic Tetra Brik machines (TBA/1) where introduced in the early 70´s, serious problems arised with the transversal sealings that were made by impulse heating. The packaging material contained aluminium foil and when the heat from the impulse heating sealing bar was to transfer trough the packaging material very much of the heat was transferred away by the aluminium foil. This caused bad sealings that were hard to discover and could cause unsterile packages. A prototype induction heating system was introduced an tested in a TBA/1 machine and the system was found to work well.

The first IH generators were tube generators with a frequency of 1,2 - 1,8 MHz. During the 80´s a 2 kW transistorised generator (TPIH-2000) for 500 kHz was developed for sealing purposes at Tetra Pak, that drastically lowered the price and physical dimensions of the equipment.

But Tetra Pak is not the only packaging company using Induction Heating. IH-sealing is a common method to seal aluminium foil to packages with screw caps. A plastic/aluminium laminate is placed in the screw cap that is screwed on to the package. The sealing pressure is then achieved and by heating the aluminium foil, the laminate is sealed to the neck of the package. The sealing is often made when the package is moving on a conveyor band below a long inductor.

In the filling machines

In the filling machines, induction heating works as shown in the diagram below.

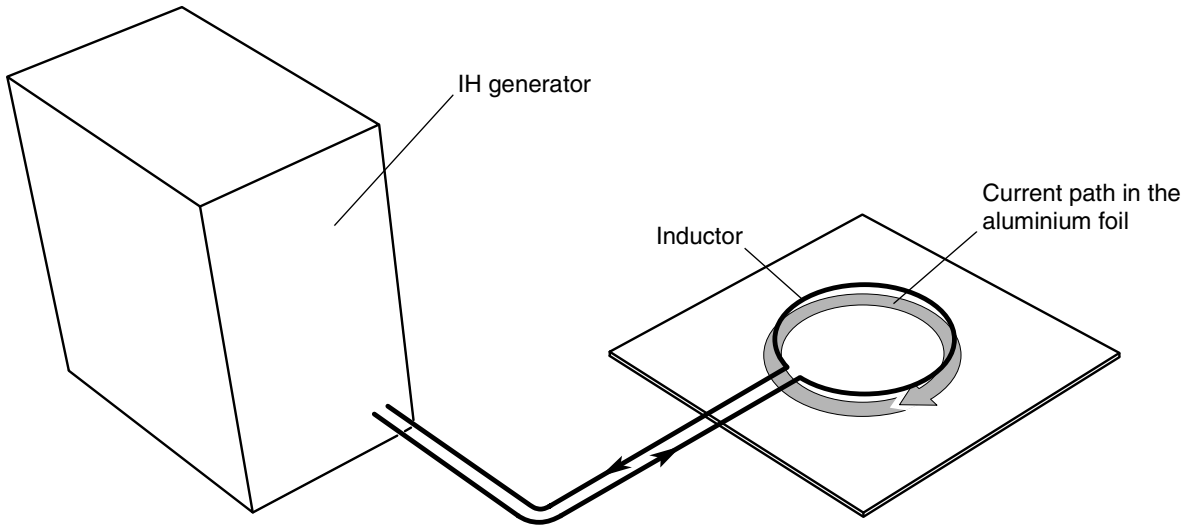

The IH generator generates a current of high frequency. The inductor functions as a coil and creates a magnetic field. Heat is induced in the packaging material as a result of a current being induced in the aluminium foil. This leads to the melting of the PE layers, so that they can be sealed.

Dielectric heating

Dielectric heating is used to heat non-conductive materials, such as wood. This method is also employed in microwave ovens.

The diagram below shows the principle of this method.

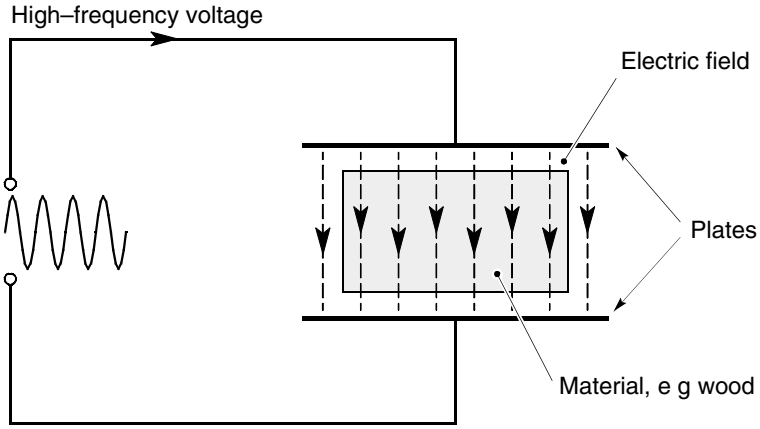

The high–frequency voltage produces an electric field between the plates. The field oscillates in time with the frequency, and the molecules of the material will in their turn also oscillate in time with the field. The oscillation produce energy, which heats the material.

Physical background

Many substances contain unsymmetrical so-called polar molecules having negative and positive poles. Other substances may be more or less dissociated into negative and positive ions. This is the case with water, for instance, which is often found in non-conductive materials, such as wood, into the form of moisture. If a substance having polar molecules or ions is placed in an electric alternating field, the polar molecules will rotate and the ions will oscillate backwards and forwards in time with the field frequency.

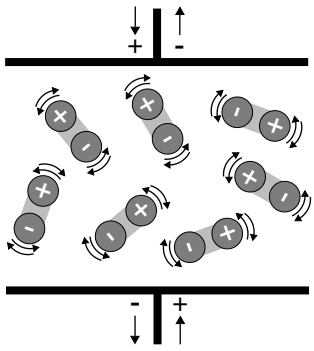

Polar molecules vibrate in a high frequency field

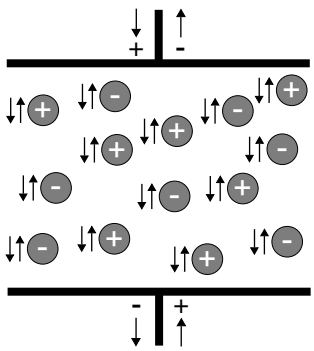

Negative and positive ions oscillate in a high frequency field

The substance thus behaves like an elastic material which is subjected to mechanical vibration. In certain materials this oscillation is damped by molecular friction and viscosity. The attenuation causes energy losses, and it is these losses which are utilized in dielectric heating.

TPIH 2500

An IH system incorporating a TPIH generator is designed as the diagram below shows.

IH system

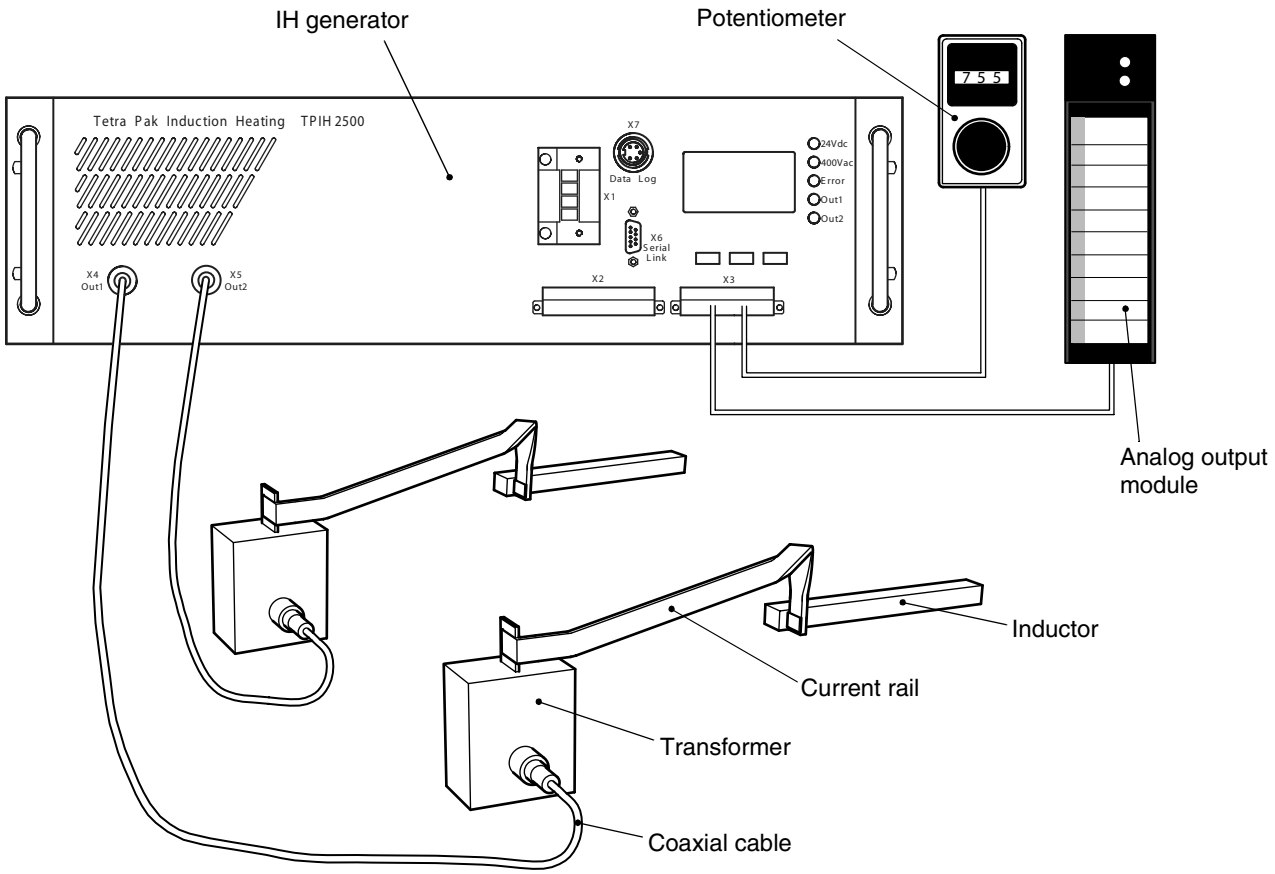

The generator converts the mains voltage to a high-frequency voltage. The magnitude of the high–frequency voltage is set by means of the potentiometer as a percentage of the maximum output power. For instance, 500 on the potentiometer scale translates to 50% of the maximum power, i.e. 1250 W. In some cases the magnitude of the high–frequency voltage is set by means of an analog output module of a PLC, instead of a potentiometer.

The coaxial cable conducts the high–frequency current to a transformer near the inductor. The transformer has a transformation ratio of 5:1, i e it reduces the voltage and increases the current by a factor of 5. Consequently, the power remains unchanged, but low voltage in the inductor reduces the risk of arcing and improves safety.

The last part of the passage of the current to the inductor goes through a current rail. In the current rail, power losses occur, and for this reason, the rail is made as short as possible.

The inductor functions as a coil and creates a magnetic field which induces current in the packaging material.

The TPIH 2500 is equipped with an integrated IH-switch, there for, the generator has two outputs and can drive two inductors, provided that they are never supposed to operate at the same time. This may be utilized for e.g. the left and right hand side packages on the TBA filling machines.

TPIH generators are used within various processes on the filling machines, e.g. transversal sealing, longitudinal sealing, and strip application. This means that several generators may be installed on one machine. The generators are rack mounted where the number of generators installed depends on the requirements on the individual machine types.

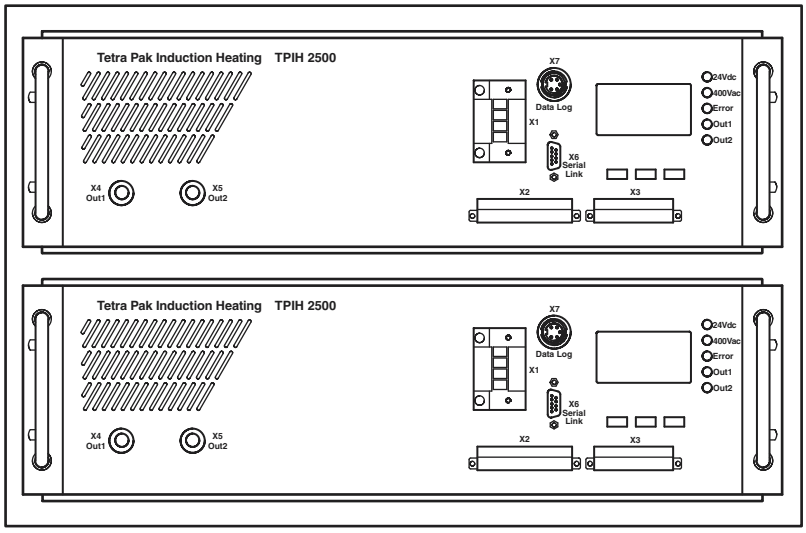

Rack mounted generators

Generator TPIH 2500

On the front of the generator there are connections for control signals and power inputs, and outputs for high-frequency current. Light-emitting diodes (LED's) indicate faults and errors etc, to facilitate fault-finding. A liquid crystal display (LCD) and push-buttons facilitates user's menus and settings.

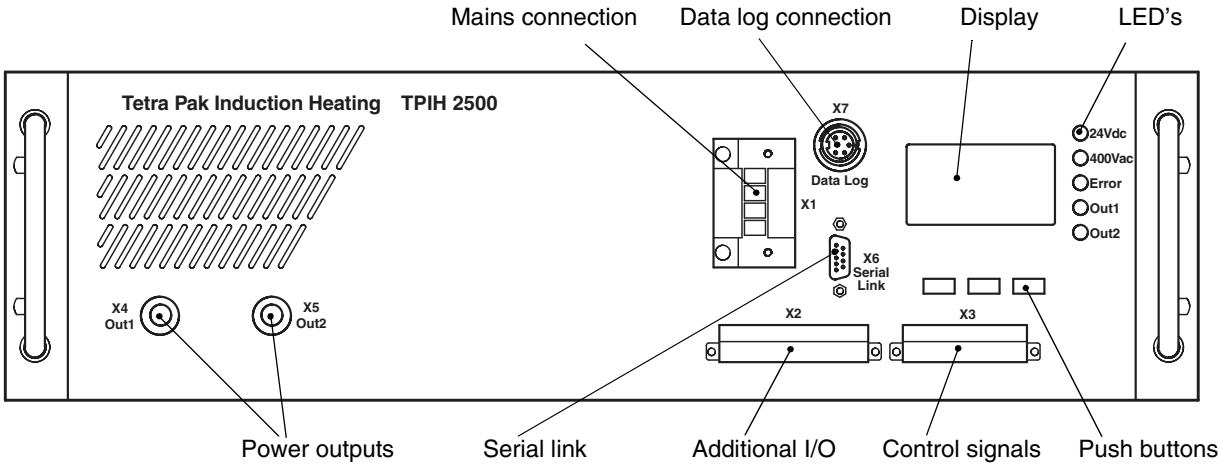

LED's

24 Vdc (green). This LED is monitoring the DC power supply to the generator. It is ON when the 24 V is present.

400 Vac (green). Monitors the three-phase mains supply to the TPIH 2500. The LED is ON when all three phases are present and OFF when at least one of the phases are missing.

WARNING: When this LED is OFF there can still be one or two phases present on the mains connector X1.

Error (red). This LED indicates error conditions on the generator. It is ON when one or more errors are present. Which error occurred is displayed on the LCD display.

Out 1 (green). This LED is indicating the status on Output 1. It is ON while the generator is sending power through the output.

Out 2 (green). This LED is indicating the status on Output 2. It is ON while the generator is sending power through the output.

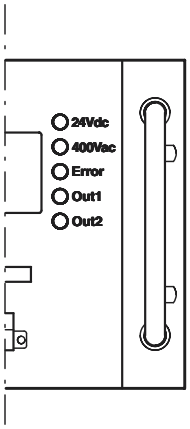

Connections

X1, Mains. The mains connection is powered with a supply of 400 VAC, ±10%. The supply is three-phases with protective earth, but no neutral. The frequency is 50 or 60 Hz.

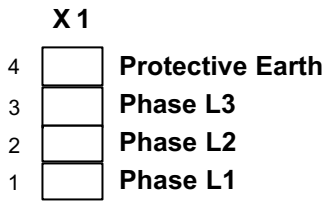

X2, Additional I/O. This connection is not used today.

X3, Control signals. This is the connection for the control of the TPIH 2500.

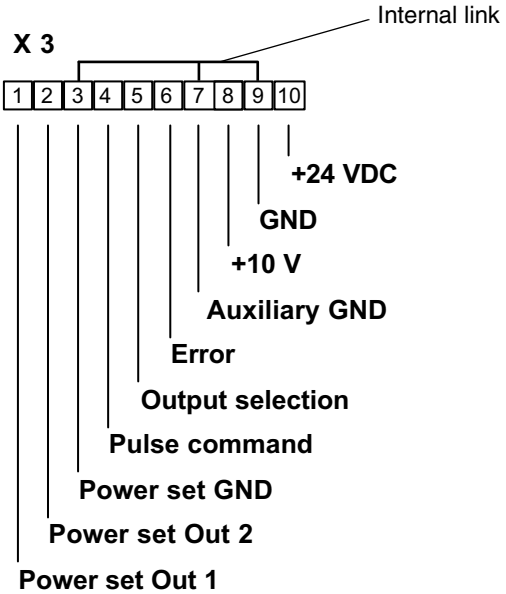

Potentiometers, or analog output PLC modules, are connected to the *Power set Out 1* and *Power set Out 2*, setting the power on the outputs respectively. The *Pulse command* is a signal from the PLC controlling the start and duration

of the sealing pulses. Alternatively, the *Pulse command* may trigger the start of the sealing pulse while the duration is controlled by the TPIH 2500.
The *Output selection* determines which power output is in operation. Output 1 is in operation when status 0, and output 2 is in operation when status 1.
The *Error* is signalling the PLC when any errors in the IH system.

X4 and X5, Power outputs. These are the high frequency power outputs, connected to the sealing inductors.

X6, Serial link. The TPIH 2500 can be connected to a PC through a serial port. The connection is RS232 and made as a 9-pin D-sub.
The serial link may be used

- to load new versions of the application software
- to interact with the generator (sending commands and receiving information)
- to connect to a CAN bus to include the generator in a network. (CAN, Controlled Area Network)

X7, Data log. This connection may be used for connecting a recorder to the generator. The parameters that may be recorded are the voltage, current, power, and the phase angle of the sealing pulses.

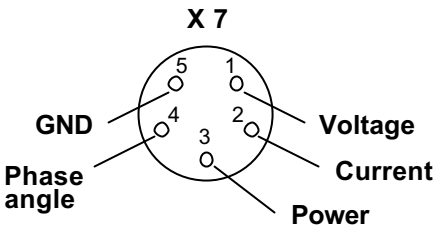

The parameters may also be sent to e.g. a TMCC for monitoring of the sealing pulses.

LCD display

The TPIH 2500 provides the user's menu on a LCD display. The push buttons below the display are used for navigation and actions. Various information and settings may be accessed through the user's menu.

A generic page is usually divided in three parts:

- the top row shows the page title
- the six following rows shows commands or information
- the bottom row shows the push button actions. A symbol or word above each button explains which action will be performed if that same button is pressed

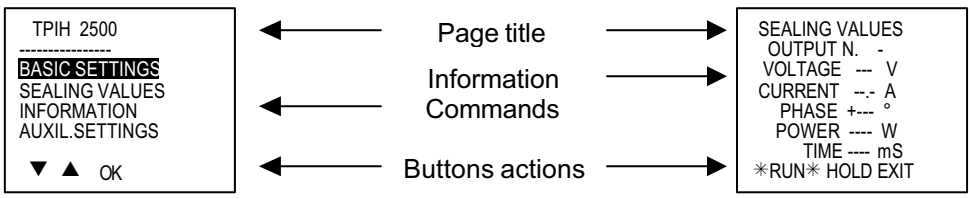

For detailed information on the user's menu, please refer to the TPIH 2500 User's manual.

The structure of the user's menu is shown below.

Menu structure

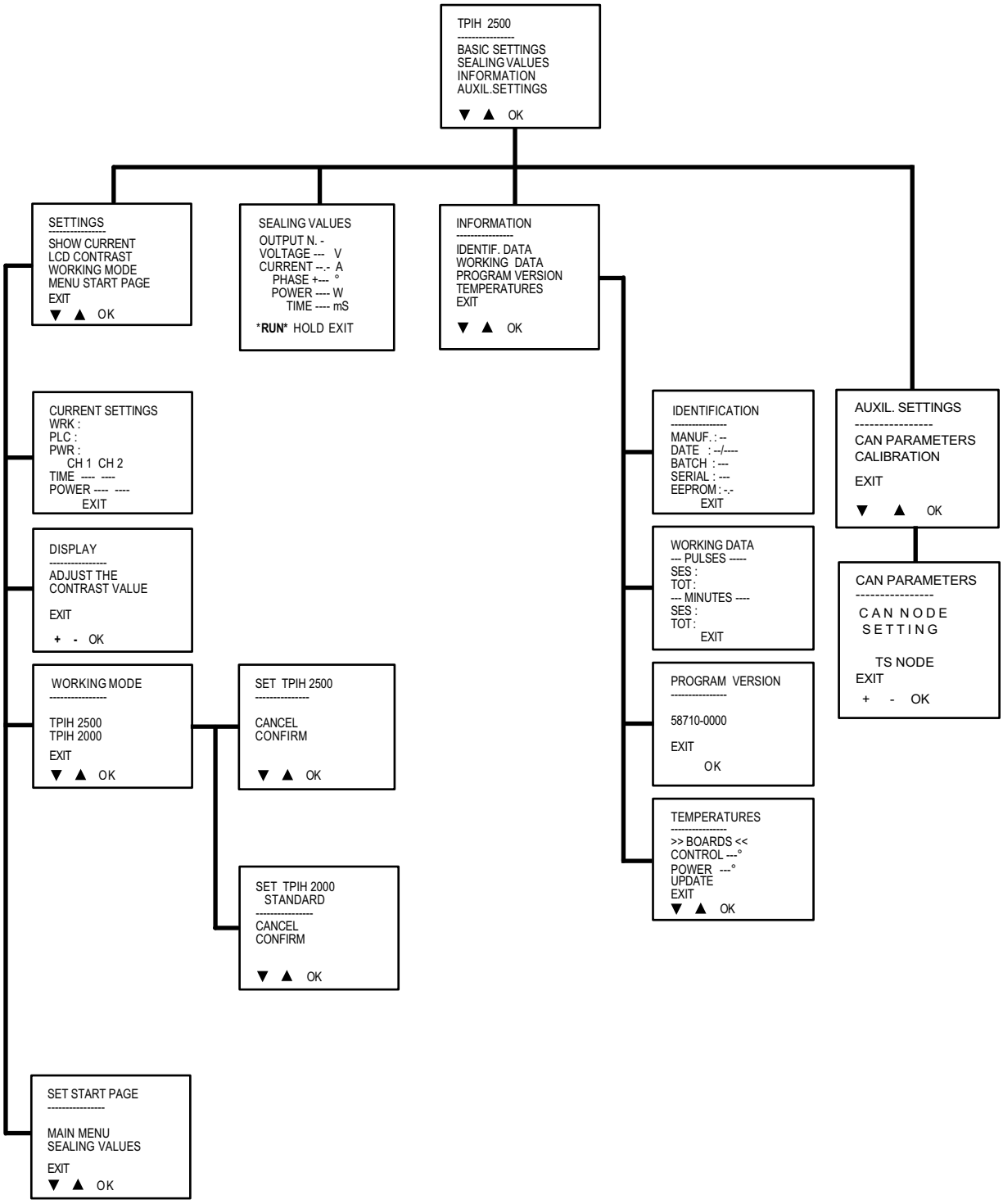

Function The TPIH 2500 generator works in accordance with the block diagram below. It comprises a power section and a control section.

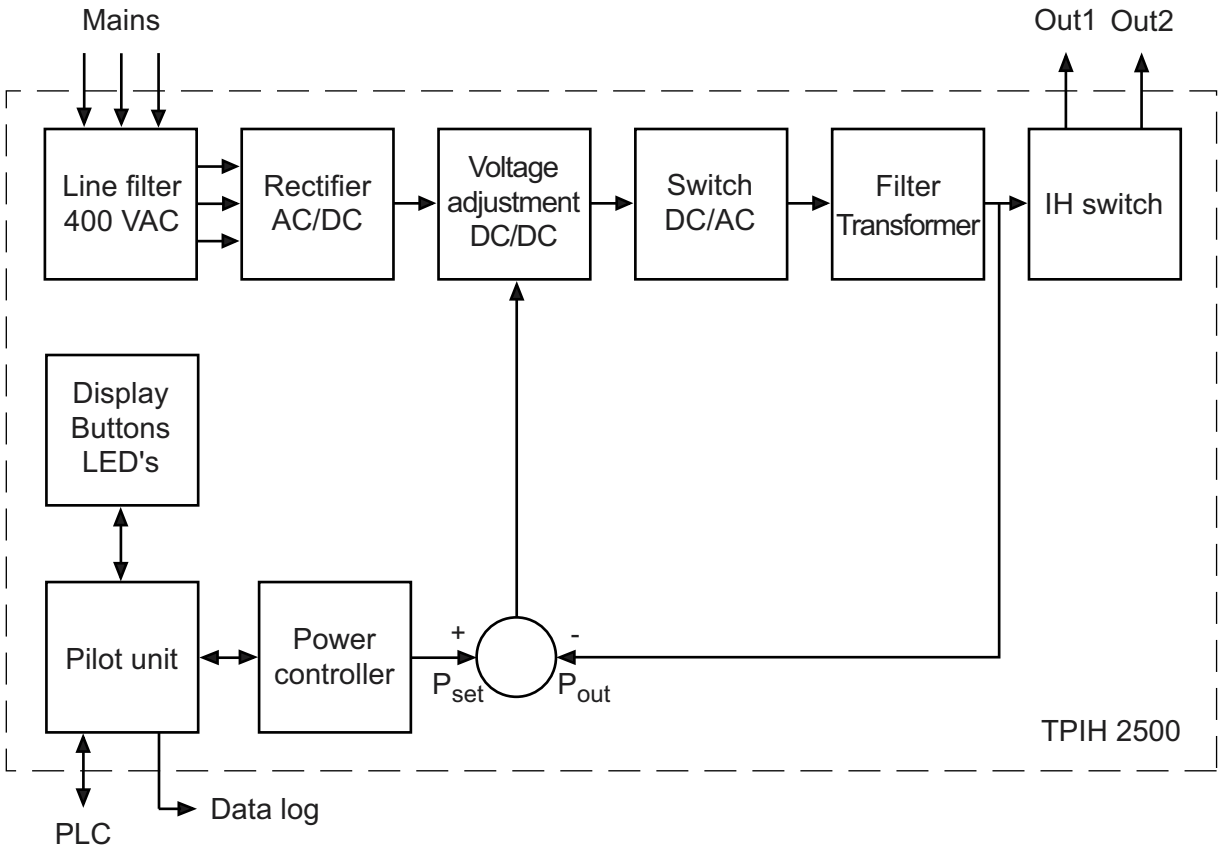

Power section

The power section is powered by 3x400 VAC and incorporates the following functions:

Line filter, which protects the generator against high-voltage transients from the power supply.

Rectifier, which converts the alternating current (AC) into a direct current (DC). The rectifier is a three-phase rectifier of six-pulse type.

Voltage adjustment, which reduces the ripple from the rectifier and stabilises the voltage.

Switch, which converts the voltage into a high–frequency square pulse. The frequency is around 530 kHz.

Filter and Transformer. The filter is of band-pass type and generates a sinus-shaped high-frequency voltage from the square pulses. The transformer galvanically isolates the load from the generator. The load comprises the coaxial cable, transformer, current rail, and inductor.

IH switch. The IH switch is an electronic switch which makes it possible for the generator to supply two loads. Which output is in operation is controlled from the control section.

The output voltage range is 70-400 VAC, sine wave.

Control section

The control section is powered by 24 VDC and incorporates the following functions:

Display, buttons and LED's. The display is of LCD type and provides a user's interface in conjunction with the buttons for navigation and actions. The LED's shows error and status indications. This user's interface is communicating with the pilot unit.

Pilot unit, which is the master microprocessor of the generator. The pilot unit is controlling the communication with the user's interface and external units, such as the PLC and data log devices. The unit handles and stores all settings of the generator and controls the power.

Power controller, which is a slave microprocessor of the generator. The controller communicates with the pilot unit and provides the set value for the generator power.

Power regulation

The power is adjusted by altering the output voltage of the generator. The voltage is altered by means of e.g. an external potentiometer, giving a voltage level of 0-10 VDC to the generator. The microprocessor of the generator creates a power set value (P_{set}), which is compared with the actual power output (P_{out}). The result of the comparison is sent to the generator voltage adjustment for continuous regulation of the output power.

The output power range of the TPIH 2500 is from 100 W to 2500 W at the frequency of 530 kHz. The output frequency is independent of the power setting, which means that the impedance of the load will not vary with an altered setting. This means that the TPIH 2500 provides for a linear output power.

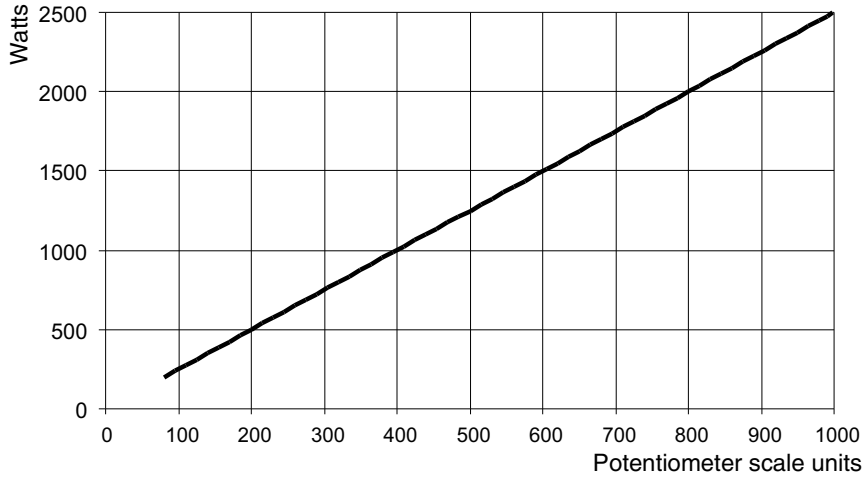

Output power of TPIH 2500

Comparison between TPIH 2500 and 2000

One important difference between the new TPIH 2500 generator and the predecessor TPIH-2000 is the stability in frequency when adjusting the output power.

The TPIH 2500 delivers a constant frequency independent of what output power is set on the generator. However, when altering the setting on the TPIH-2000, the frequency will change, and the output voltage accordingly.

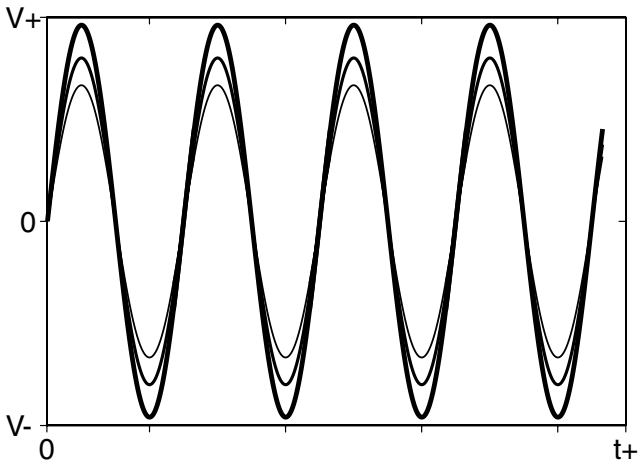

Output voltages on TPIH 2500

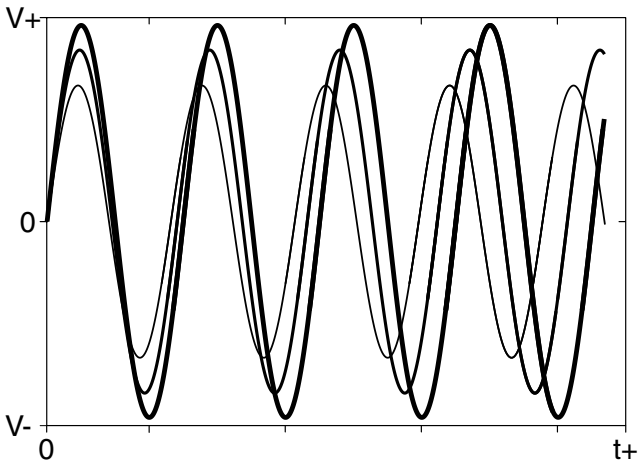

Output voltages on TPIH-2000

As the output frequency remain constant, the impedance in the load will be constant. This results in a linear output power on the TPIH 2500. The TPIH-2000, however, will give an un-linear output power due to the fact that the frequency varies when the output voltage is altered.

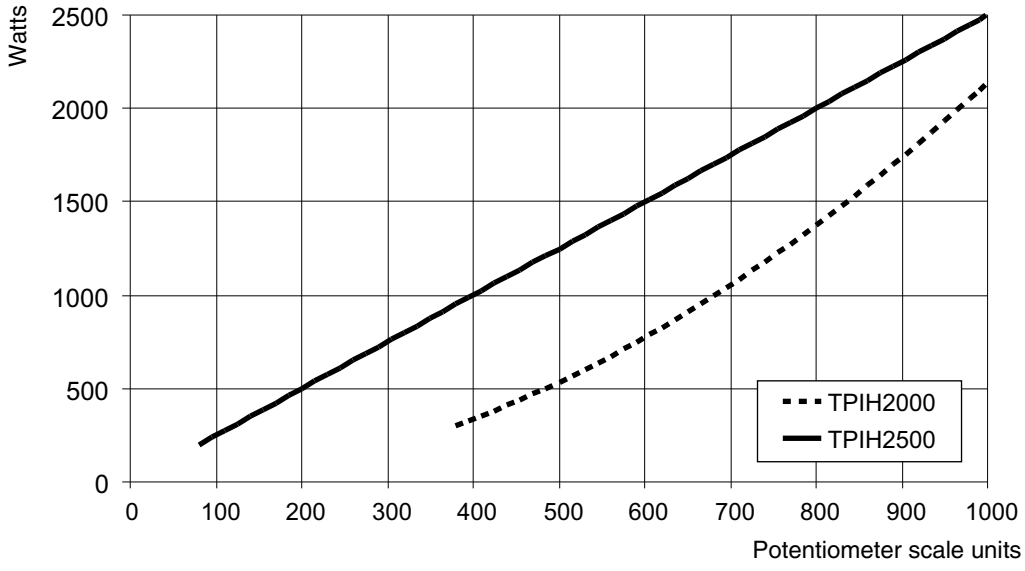

Output power on TPIH generators

TMCC2

Sealing monitoring LS/SA

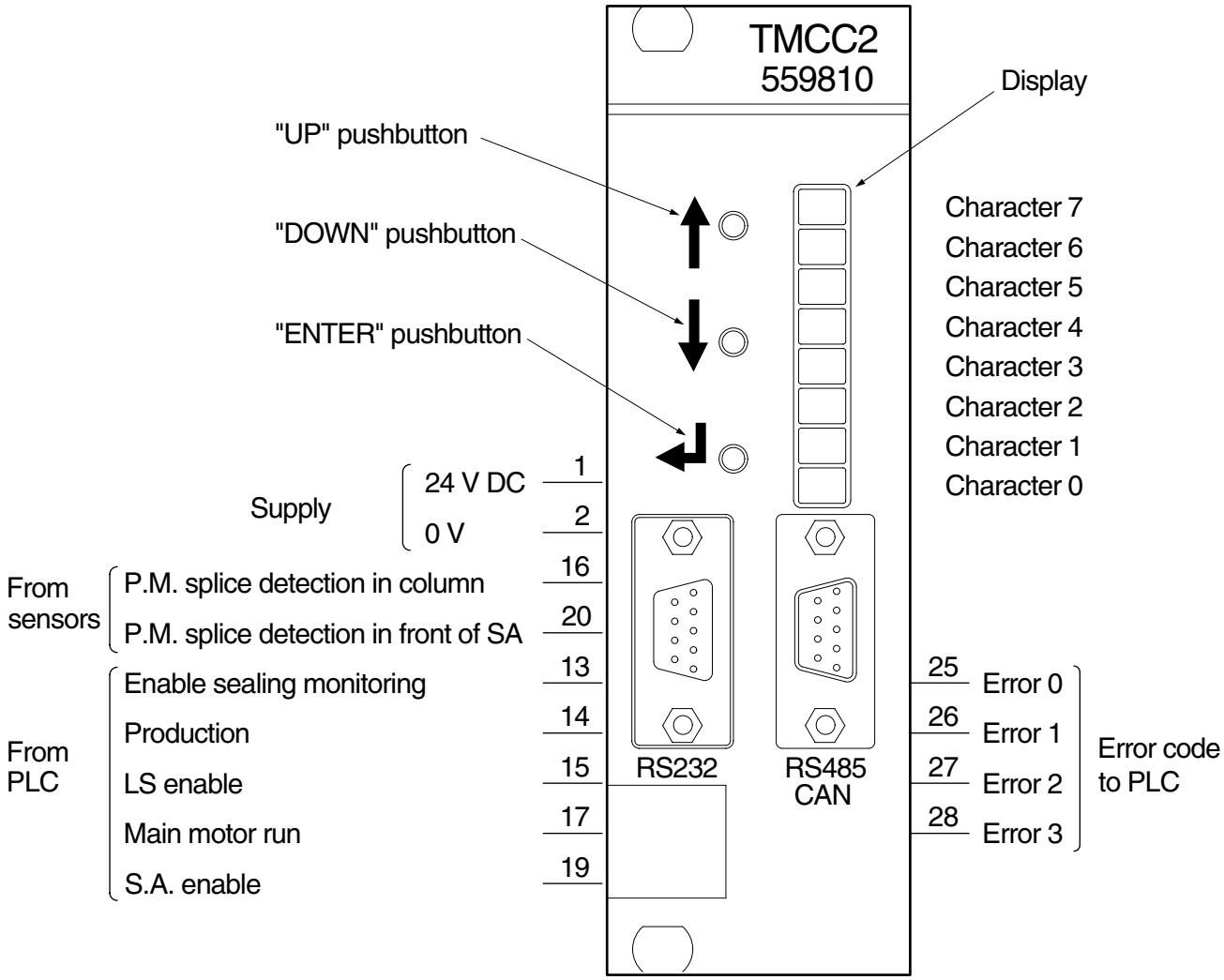

TMCC2
Sealing monitoring TS

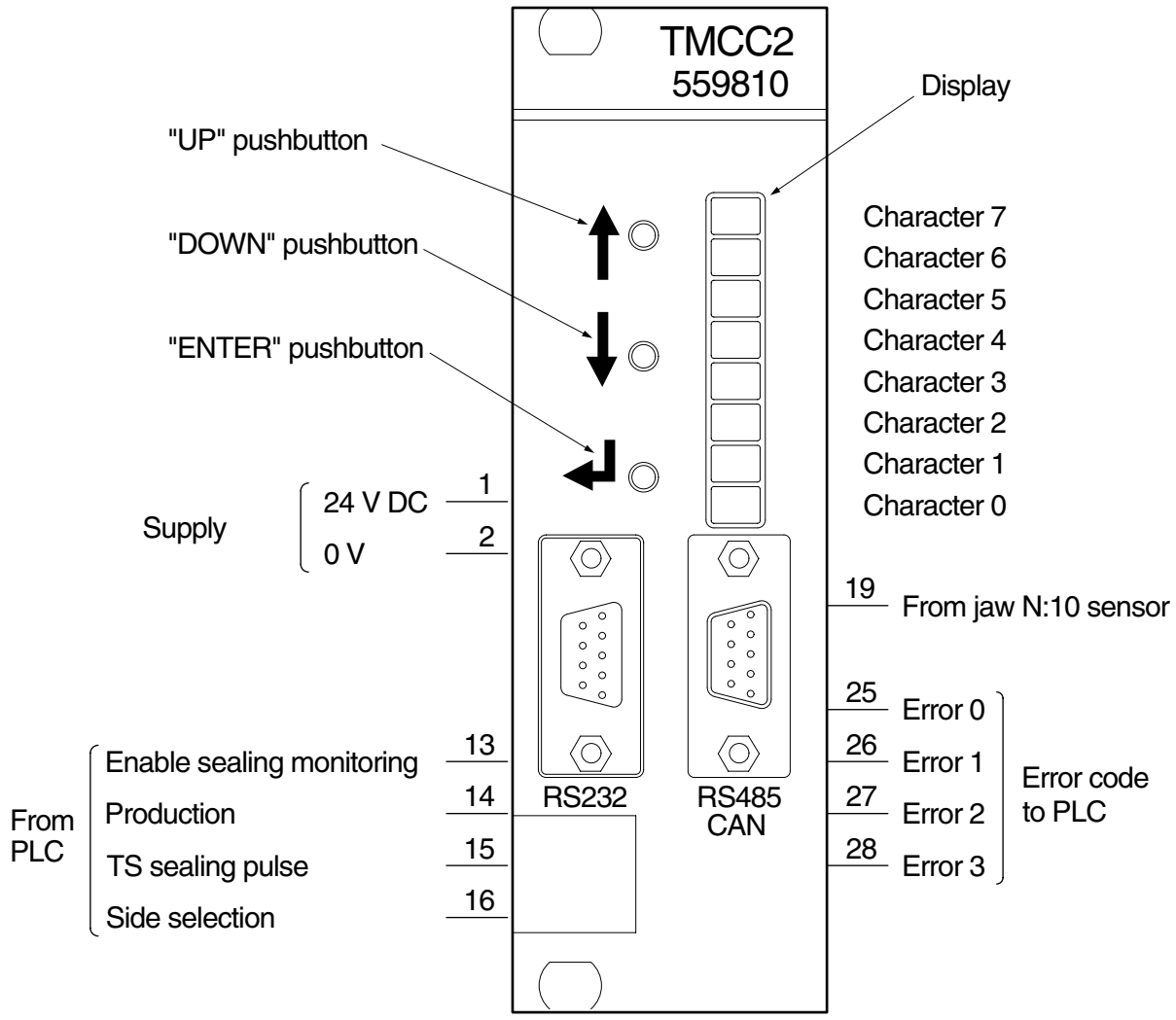

Technical Training Centre Lund, Sweden	Machine type TBA/22 050V	Issue 1/0303	OH 1271

15

Filling system

Principle of filling system

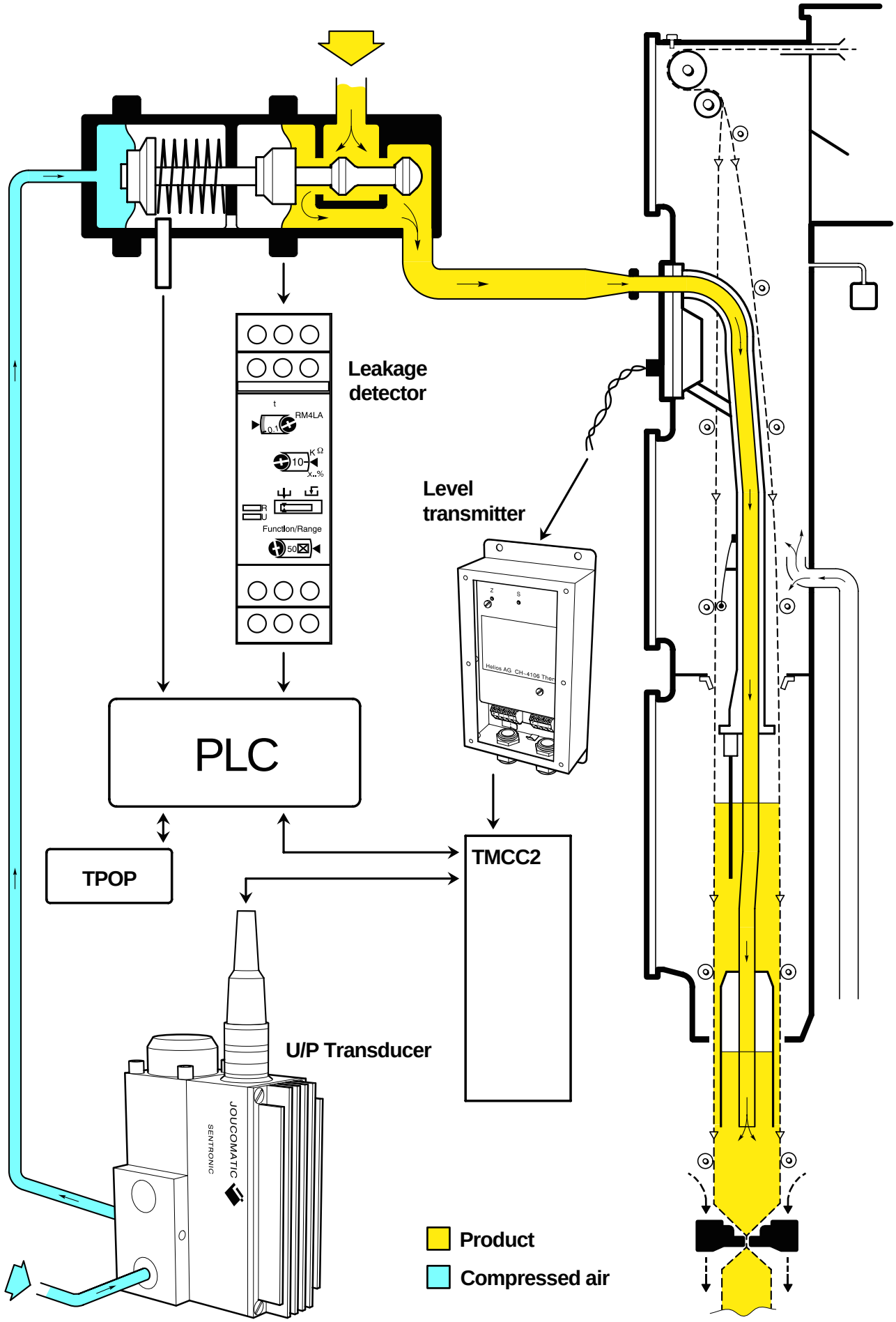

Technical Training Centre Lund, Sweden	Machine type TBA/22 050V	Issue 1/0209	OH 1220

Principle of filling system

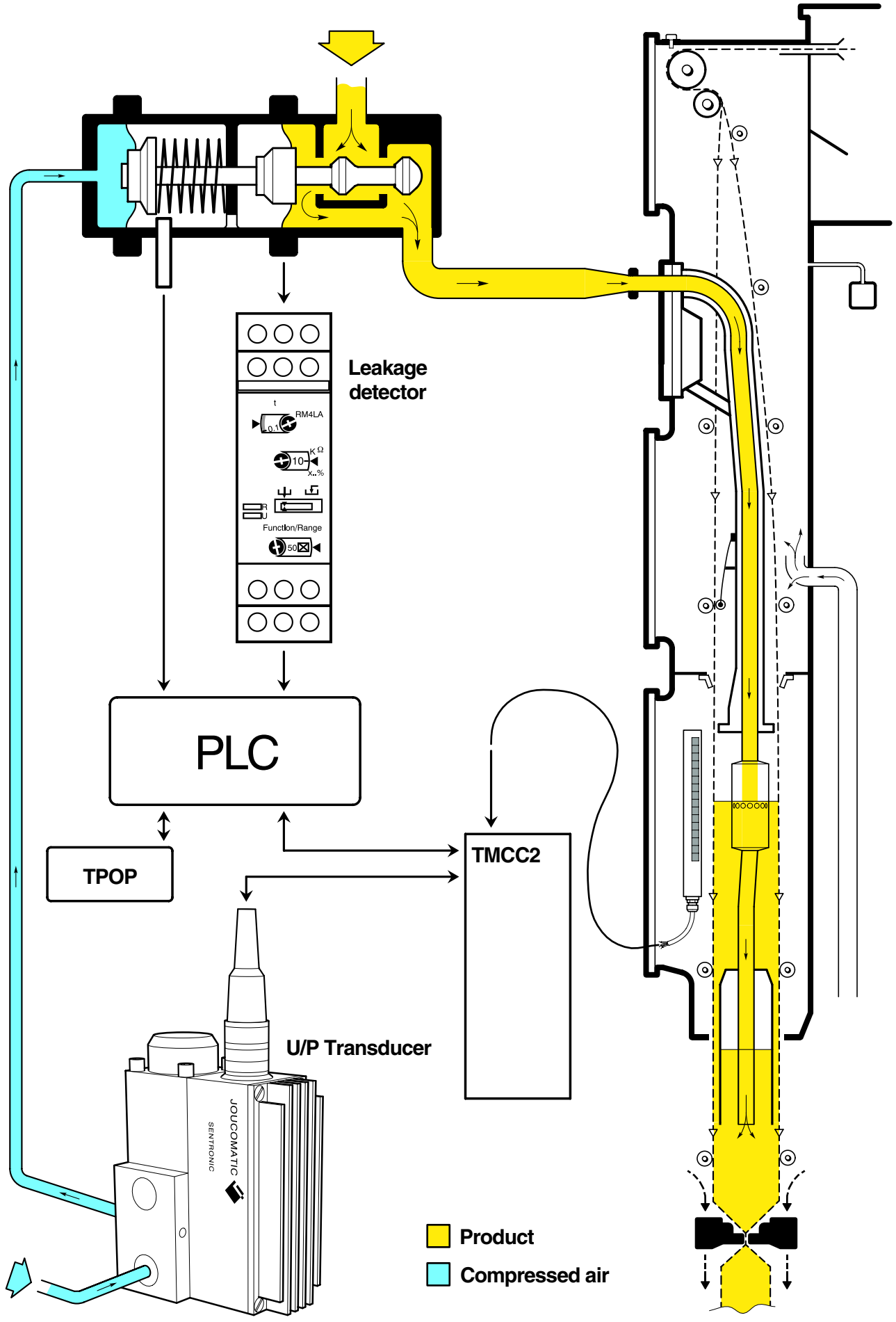

Technical Training Centre Lund, Sweden	Machine type TBA/22 050V	Issue 1/0303	OH 1365

Regulating valve

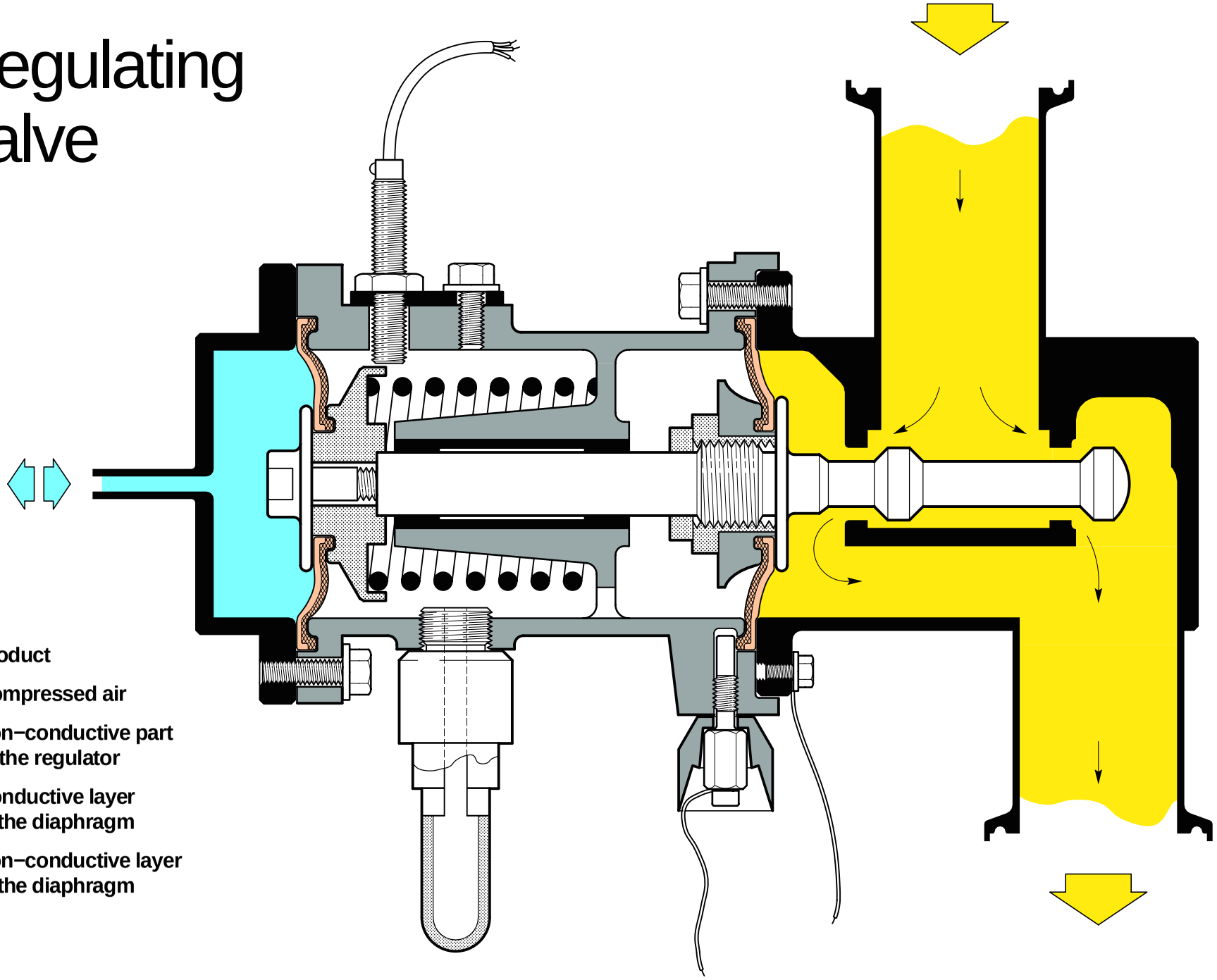

UP–Transducer

Principle

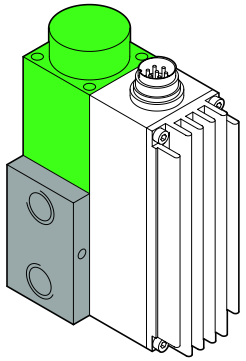

FM = Magnetic force

FR = Feedback force

1 = Supply pressure

2 = Outlet pressure

3 = Exhaust

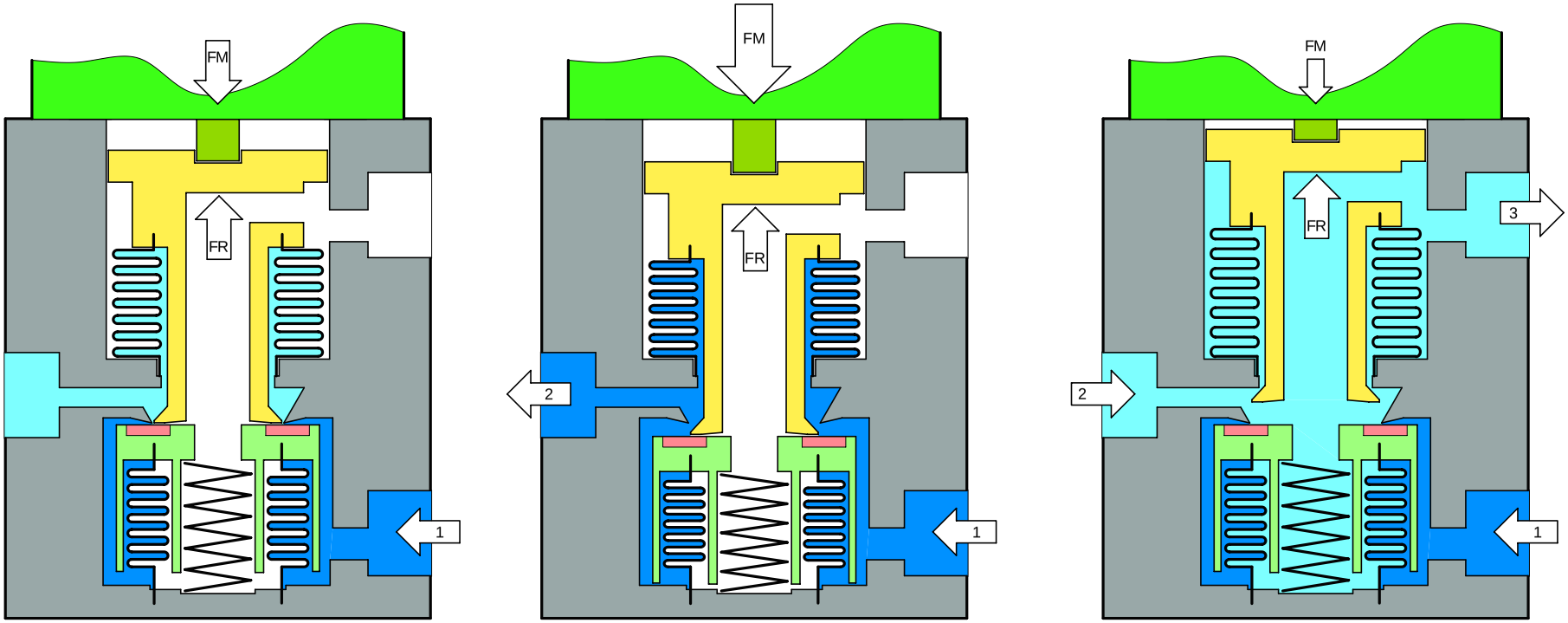

FM = FR

FM > FR

FM < FR

TMCC2

Filling control system

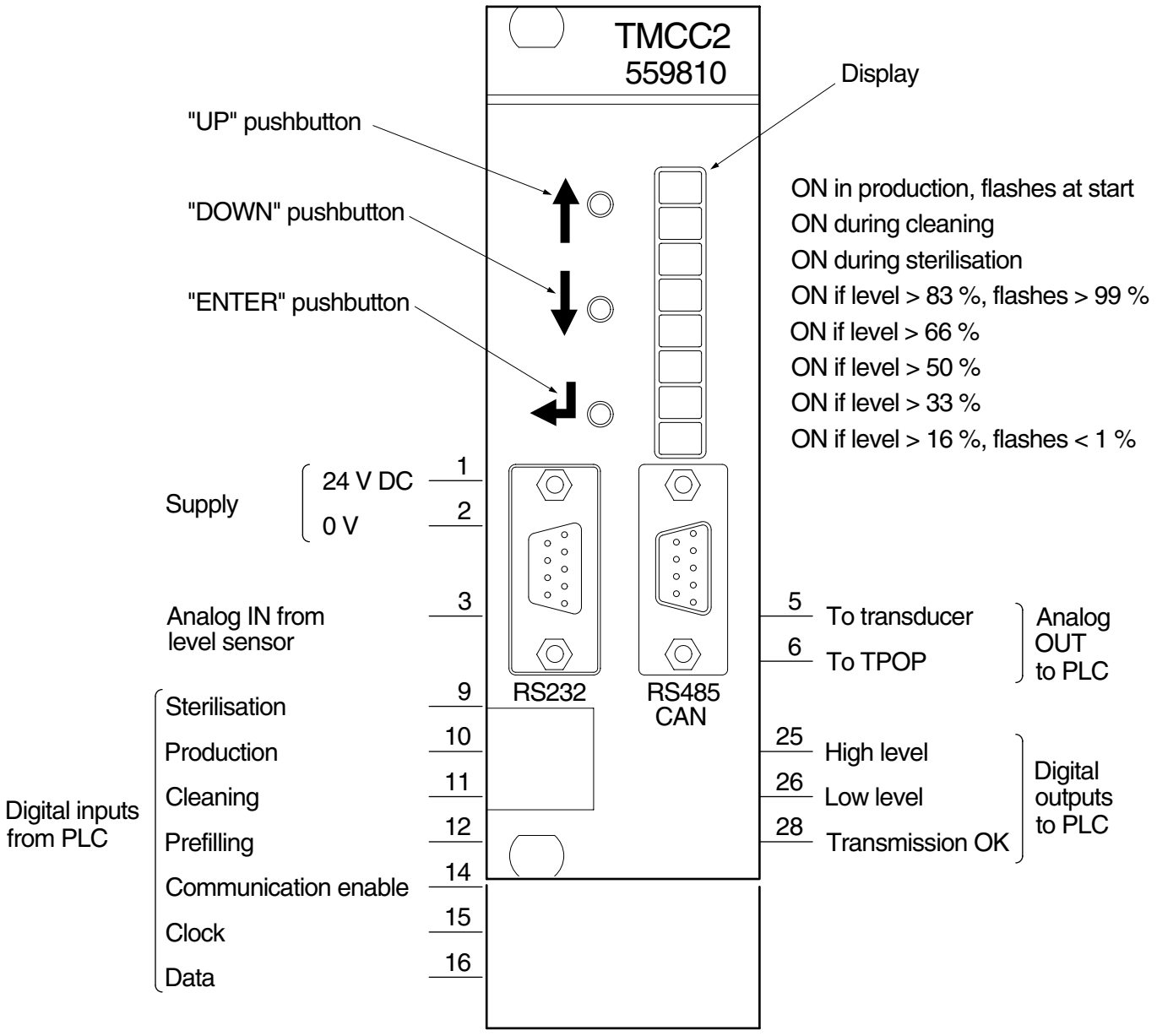

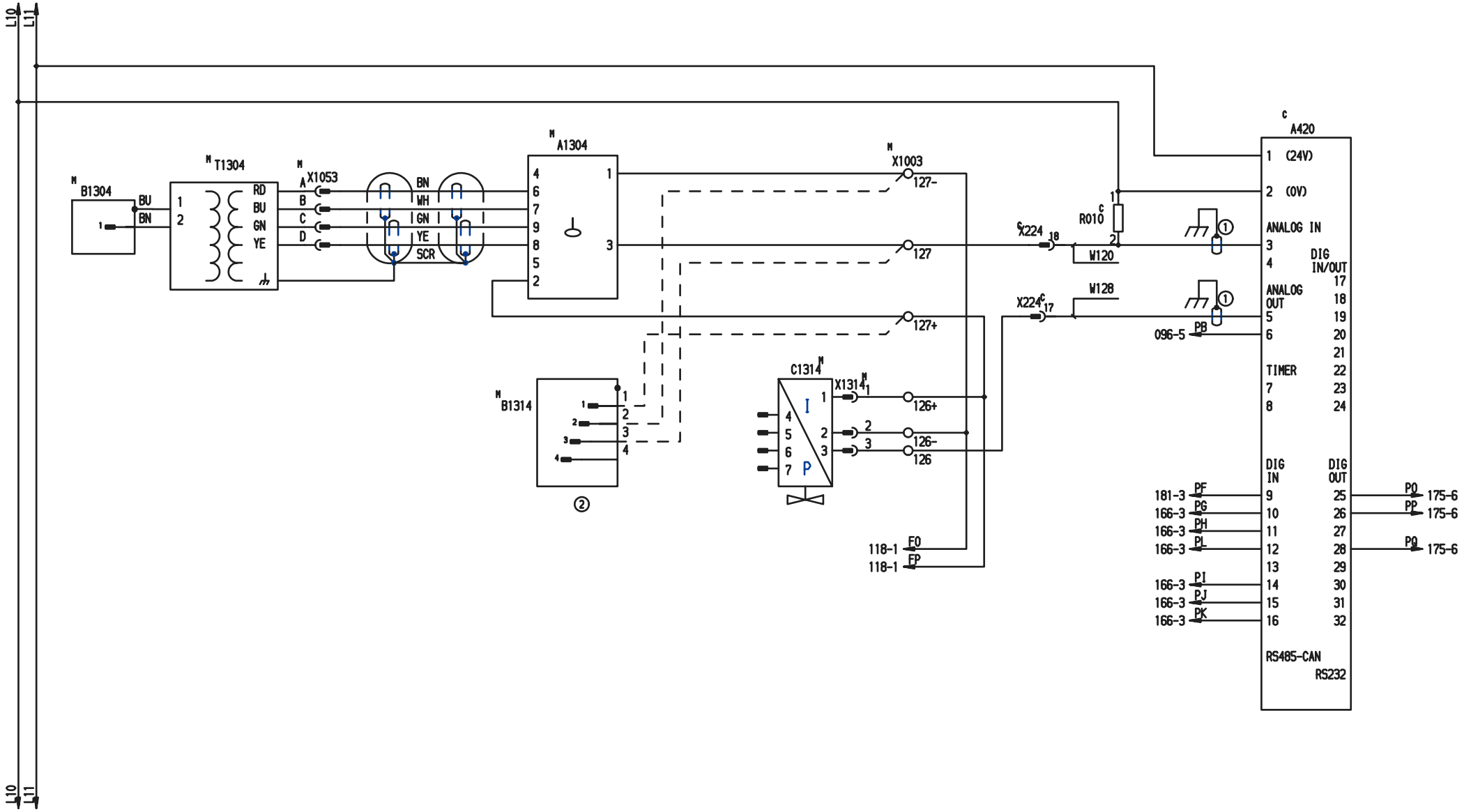

TMCC FCS

2552985-054:01

16

Line automation

Textbook

Standard Line Automation

TBA/22

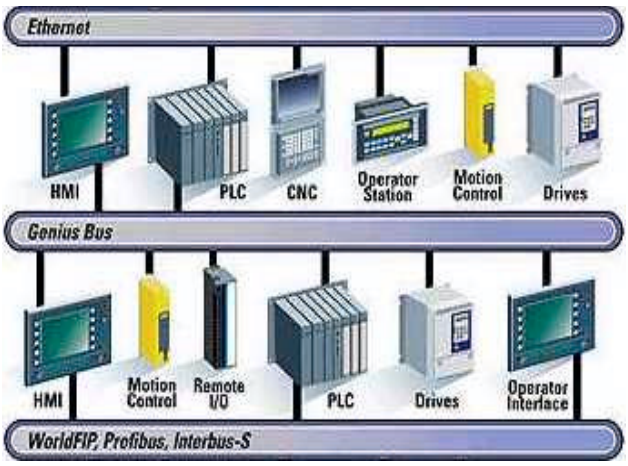

MT-83043-1

Technical Training Centre
Lund, Sweden

This textbook has been compiled by the Technical Training Centre in Lund.

For further information on training material, please contact the Technical Training Centre.

Issue 1/0105

© 2001, Technical Training Centre

No part of this publication may be reproduced, stored in a retrieval system or transmitted in any form or by any means: electronic, electrostatic, magnetic tape, mechanical photocopying, recording or otherwise, without permission in writing from Technical Training Centre.

Standard Line Automation

TBA/22

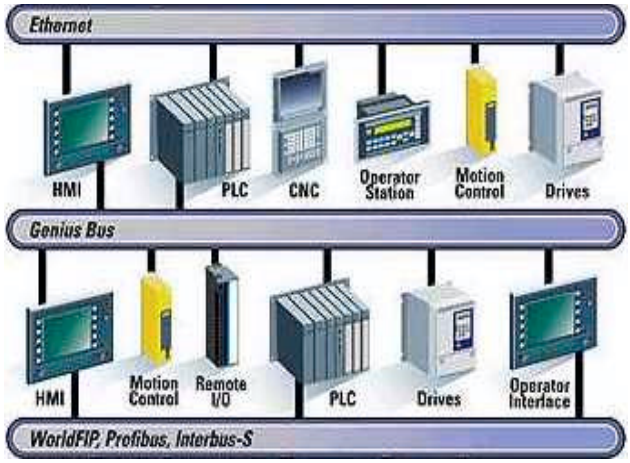

This Training Document is intended for Training purpose only, and must not be used for other purpose.

The Training Document is not replacing any instructions or procedures (e.g. OM, MM, TeM, IM, SPC) intended for specific equipment, and must not be used as such.

Note!

For safe and proper procedures, refer to the equipment specific documentation.

Technical Training Centre

Contents

Introduction 3
Definitions 3
Line Automation Concept 4
Line control function 4
PLMS and Line Control signals. 4
Genius communications. 6
Installation 7
Data flow 9
Data from TBA/22 10
Data from TSA22 HS. 11
Data from TCBP71 12
Data from THX22 13
Configuration of GBC 14
Module-specific Data. 14
Troubleshooting 16
Cable check 17
Bus and Bus Controller Troubleshooting 17

Introduction

This document is intended for technical training purposes only and does not substitute any part of the GE Fanuc Automation original documentation.

Definitions

PLMS — Tetra Pak Packaging Line Monitoring System. A data collection system, developed by Tetra Pak, used for measuring and analysing line performance on filling lines.

Line control signals — Communication signals between machines. In a TBA/22 standard line they perform actual control functions in the line in order to optimise overall line efficiency.

Line Automation (LA) — Concept of automation of the TBA/22 standard line which includes PLMS data collection from the complete line and the line control signals.

Genius — GE Fanuc field bus. Used in TBA/22 lines in order to transfer PLMS and controls signals between machines.

TBA/22 standard line equipment — In the end of the line automation, activity step 1, are machines that can be combined and which complete the LA interface.

- TBA/22 filling machine
- Domino inkjet date unit with belt brake
- Tetra Helix 22
- Tetra Straw Applicator 22
- Tetra Film Wrapper 22
- Tetra Cardboard Packer 71
- Tetra Cardboard Packer 22
- Tetra conveyer equipment
- Tetra Tray Shrink 51

EGCM — Enhanced Genius Communications Module (IC693CMM302).

GBC — Genius Bus Controller (IC693BEM331).

Line Automation Concept

The Line Automation concept originated when line control signals were combined with PLMS data signals to be transferred between DE and filling machines on the same bus.

The Genius bus is used as a fast link of communication between filling machine and Distribution equipment.

The concept allows for:

- the line to be controlled **as one uni**t in order to optimise its behaviour in the event of possible errors on the line,
- the PLMS data to be logged in a more detailed fashion, with explicit descriptions of DE stop events.

Practical example:
The line is stopped by a crash in the pusher of TCBP71. In PLMS, the stop reason will be automatically logged as "crash in pusher TCBP71". So far the TBA/22 line only includes this concept.

Line control function

Any machine of the line is designed to work independently. The machine starts when the operator presses the step-up button. Depending on how the machine is equipped, it will start and stop automatically when packages arrive or form a queue behind the machine. Some machines always keep their infeed conveyors running, in case packages arrive.

On a high-speed line this has various consequences, such as the following:

- Machines usually stop too late, and thus there will be too many packages in queue.
- Conveyors will continue to run even if a machine is stopped, and, if there are packages on the conveyor, they will be rapidly destroyed.

Line control signals are implemented in each machine in order to **start and stop the line as one unit** in the event of an error in any one machine.
All conveyors should be stopped as soon as possible in case a stop occurs in the line.

The line will restart in sequence without unnecessary delays when it is clear.

Conveyors should not run when the line is ready to produce, but idle.

PLMS and Line Control signals

PLMS

The interface for PLMS is implemented in each machine according to Tetra Pak standard. It transmits:

- Amount of packages (where possible, counts packages, coming in and out of the machine).
- Status of the machine (ladder step position).
- Stop reason (when the machine is stopped).
- Production time (in order to be able to calculate MME for a single machine).

Line control signals

Each machine sends out a few signals, which inform the others about its status:

- Ready/stop signal. If this signal is high it means that the machine is ready to receive packages. If it turns low when the machine is running, it means that the machines, located before this machine in the line, should stop.
- Machine running (packages through machine or in a queue behind).
- Alarms in the machine (used to put priority on alarms to PLMS from line. The first machine that goes into alarm should block the alarm signals of the others to PLMS.

By using these signals an interface is created in each machine which allows for additional control of the start/stop functions.

It is important to note that the interface in the machine works parallel to the normal functions, thus, if the machine is installed in a line without any line communication, it will work normally.

In each machine a matrix is built up in order to check which machines are present in the line and their status.

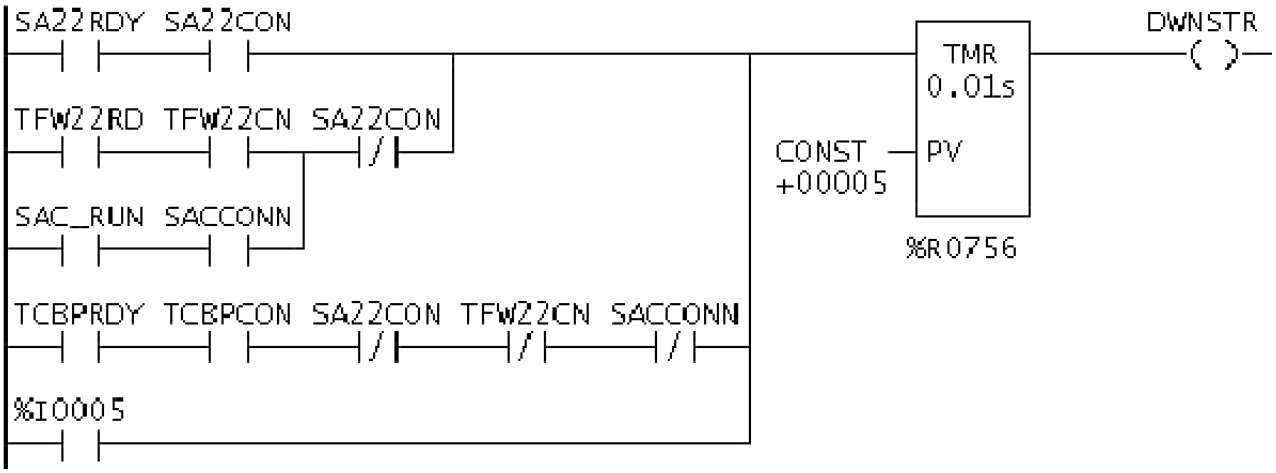

Check of Downstream equipment in THX22 PLC programme. In the first branch the programme checks if a TSA22 is connected to the line. If it is, the ready signal from the TSA22 will be used as control signal for the downstream equipment. Signals from TFW22, SACCO, and TCBP22 will in this case be ignored. If TSA22 is not connected it will continue to check the other machines until it finds one that is connected. If none are connected in case of THX22 there is a bridge to % I005 and this is bypassing all other conditions. THX22 is the only machine in which there is a bridge to an input to select that.

The example above shows how matrixes are built and above all, that they are **self-configuring**. Each time a machine is in ladder step **off**, all connections are reset and the next time the machine is stepped up it will make a new configuration.

Notice that no individual configuration has to be done when a TBA/22 standard line is installed. All standard machines will be automatically configured.

If external equipment is installed in between standard line DE machines the control interface has to be disabled or modified manually.

For example:
If a external accumulator is installed in between a filling machine and a TSA22, it will not function until the line control interface is active in both machines. In this case the filling machine will stop when the ready signal from the straw applicator is low. In this case it is possible to connect a ready signal from the accumulator to the filling machine and add that accumulator on level 1 in the filling machine line control matrix for downstream ready.

However, in step 2 of the line automation one objective is to develop a kit, which will make it possible to manage external machines as well.

Genius communications

Genius serial communications are an inherent part of Line Automation and PLMS data collection systems.

The TBA/22 filling machine communicates with DE equipment via Genius I/O serial bus. Genius Bus Controllers (GBC) or Enhanced Genius Communications Moduls are used as an interface between the serial bus and the series 90-30 PLC (GE Fanuc).

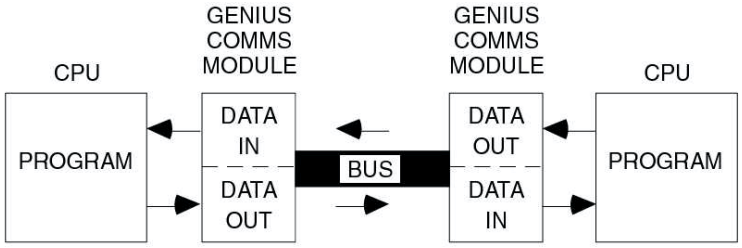

These modules provide automatic sharing of certain registers and other types of data (%I, %Q, %G, %R, %AI, %AQ), called global data, between PLCs of DE machines and a filling machine. TBA/22 and THX22 equipped with EGCM-Enhanced Genius Communications Module (IC693CMM302), TCBP71 and TSA22 HS GBC - Genius Bus Controller (IC693BEM331).

Installation

All modules are connected by shielded twisted pair cable (TP N 90220-91), daisy-chained from block to block and terminated by resistors at both ends. Terminating resistors prevent disruption of the bus when the faceplate is removed. The value of the resistors depends on characteristic impedance of the line type and length of cables used, and varies between 75 and 150 Ohm. In TBA/22 standard lines, 120 Ohm resistors are used.

Cable Types

Cable # & Make	Outer Diameter	Terminating Resistor* -10%to+20% 1/2 Watt	Number of Conductors/ AWG (mm^2)	Dielectric Voltage Rating	Ambient Temp Rating	Maximum Length Cable Run, feet/meters at baud rate			
						153.6 s	153.6 e	76.8	38.4
(A)9823 (B)9182 (C)4596 (M)M39240	.350 in 8.89 mm	150 ohms	2 / #22 (0.36)	30 V	60 C	2000 ft 606 m	3500ft 1061m	4500ft 1364m	7500ft 2283m
(B)89182	.322 in 8.18 mm	150 ohms	2 / #22 (0.36)	150 V	200 C	2000 ft 606 m	3500 ft 1061 m	4500 ft 1364 m	7500 ft 2283 m
(B)9841 (M)M3993	.270 in 6.86 mm	*120 ohms	2 / #24 (0.22)	30 V	80 C	1000 ft 303 m	1500 ft 455 m	2500 ft 758 m	3500 ft 1061 m
(A)9818C (B)9207 (M)M4270	.330 in 8.38 mm	100 ohms	2 / #20 (0.54)	300 V	80 C	1500 ft 758 m	2500 ft 758 m	3500 ft 1061 m	6000 ft 1818 m

The shield should be connected between the terminals **shield out** and **shield in** of the next device. For the first device on the bus, shield in is not connected. For the last device on the bus, shield out is not connected.

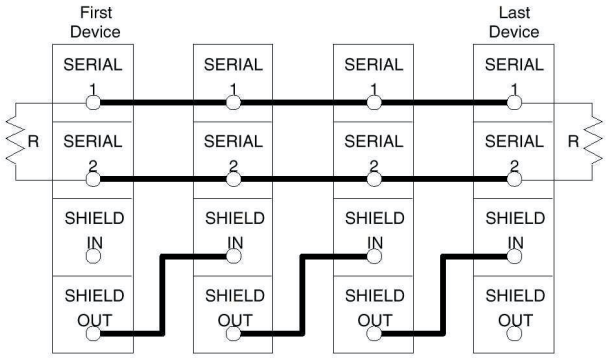

The serial 1 and serial 2 terminals are interconnected on the circuit board, not on the terminal strip. Incoming and outgoing signal wire pairs can be connected to either one or two serial 1 or serial 2 terminals. If two signal wires are connected to the same terminal, spade or lug-type connectors should be used to allow removing of the terminal assembly without disrupting other devices on the bus. When signal wires are connected to separate terminals, jumpers have to be installed between them:

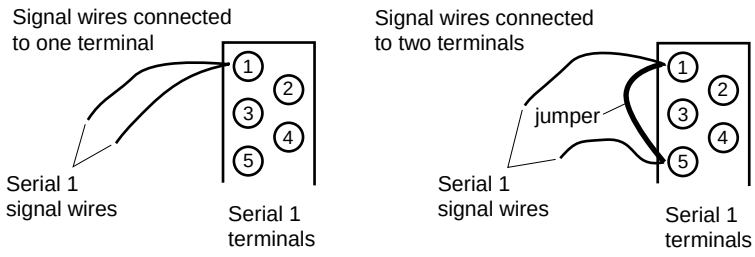

The **Genius Bus Control module** and the **Enhanced Genius Communication Module** perform the same tasks, with a certain difference in performance, and have similar terminal locations. All installation rules mentioned above are applicable for both modules.

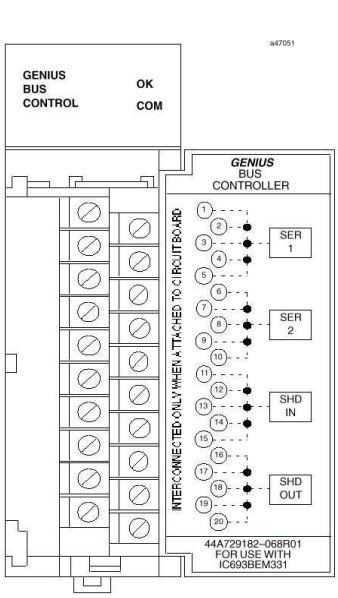

IC693BEM331 (On DE PLC)

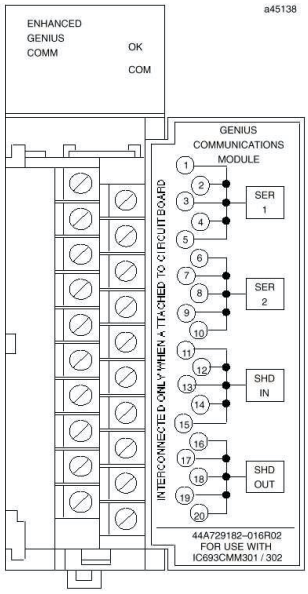

IC693CMM302 (On TBA/22 PLC)

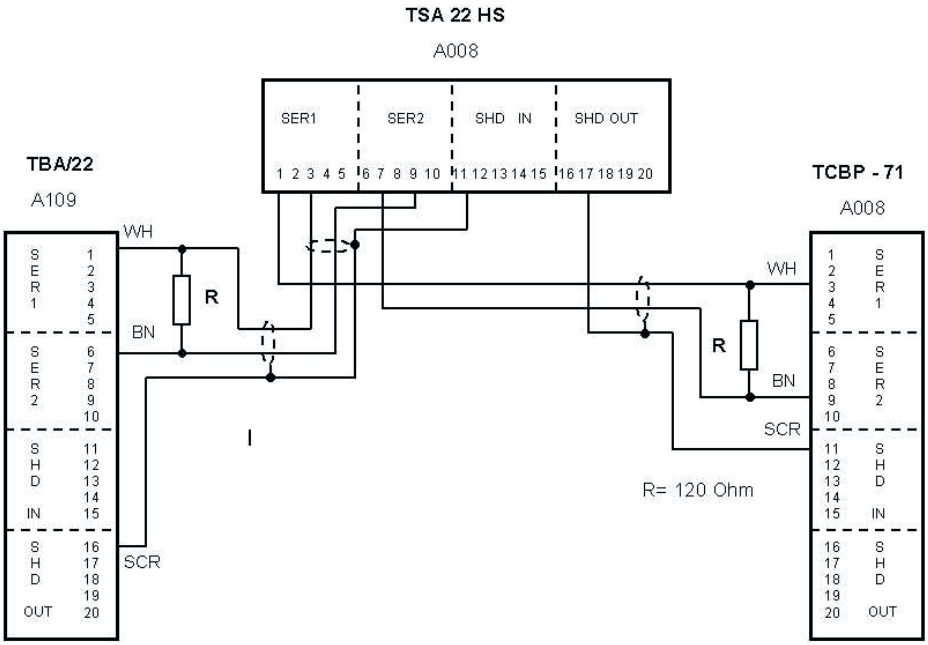

Example of a TBA/22 line serial Genius bus connection.

Data flow

TBA/22 and DE machines communicate by means of sharing global variables and registers (See picture below).

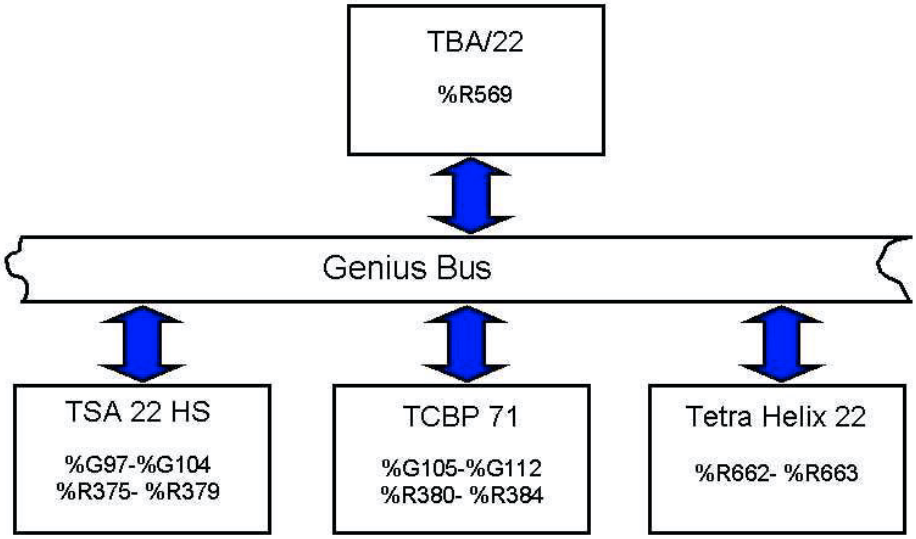

To set/clear a specific bit in a register, BIT_SET or BIT_CLR instructions are used in the PLC program:

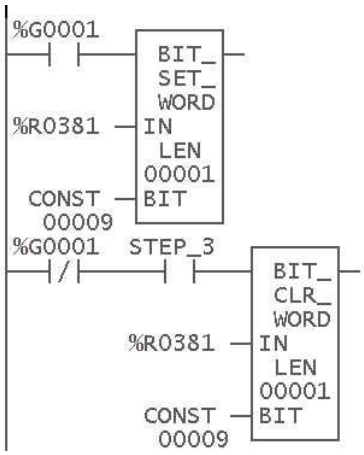

Data from TBA/22

The filling machine sends its status information, via register %**R569**, to the Distribution Equipment.

Only the two least significant bits are used in the register:

> **BIT 0** is set when the machine is on **step 1** (Idle) or **13** (Doors OK after ventilation). The bit is reset on **step 4** (Heat sterilisation).
>
> **BIT 1** is set on **Steps 9** and **10** (Motor start and Production) and is reset on other machine steps.

TBA/22 has hidden buttons on TPOP. One of them brings up an alarm and status information, sent by TSA22 HS and TCBP71.

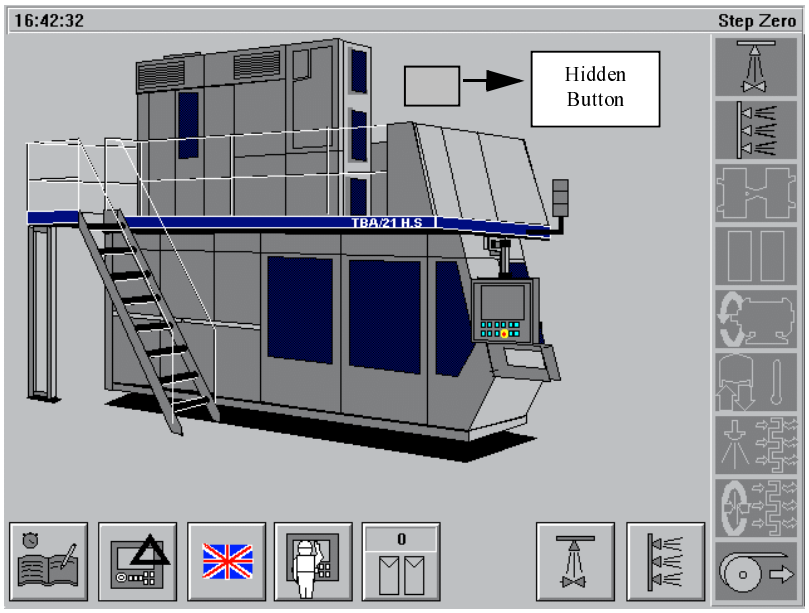

When the button is touched, the following picture appears:

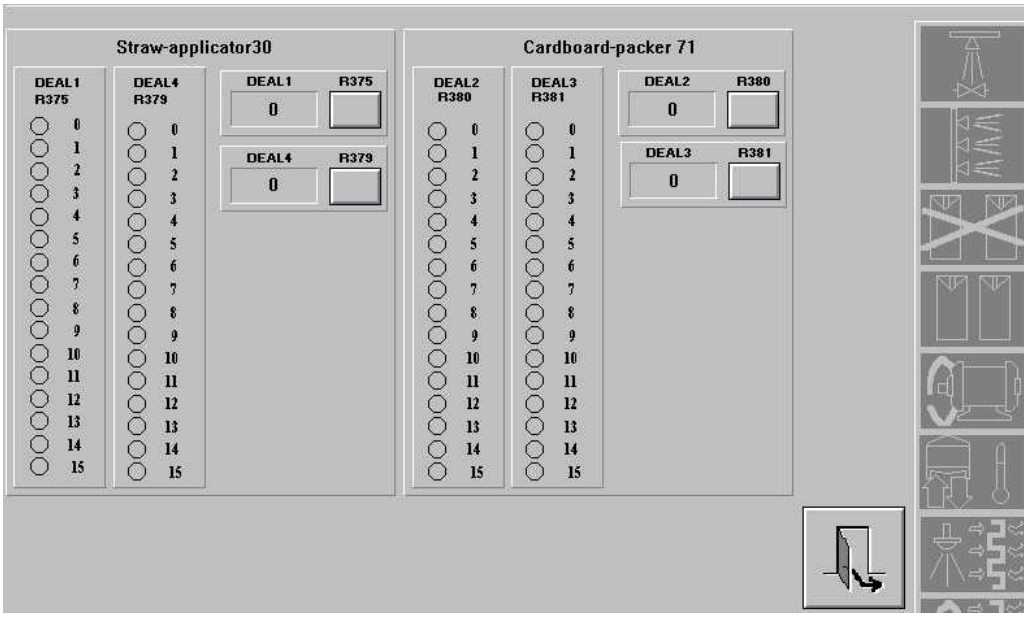

Data from TSA22 HS

In the straw applicator only two out of eight configured global variables are used for transmitting the status of the machine:

%G97 - Ready for production
%G99 - Queue after machine

Registers represent alarms, PLMS data and the machine status:

%R375 - Alarms (see picture below).
%R376 - Reserved for future use.
%R377 - Number of packages into the machine (signal from B104).
%R378 - Number of packages out of the machine (B907).
%R379 - Status register:
Bit 0 - Cooling ON
Bit 1 - Ready for Production
Bit 12 - DE production time
Bit 13 - Ladder step OFF
Bit 14 - Ladder step Preparation
Bit 15 - Ladder step Production

Other bits of the register are not used.

%R375 Alarms on TSA22 HS

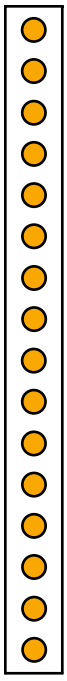

Bit 0 (0001h) H006 Emergency Stop
Bit 1 (0002h) H007 Doors
Bit 2 (0004h) H011 Servo System
Bit 3 (0008h) H008 Frequency converter
Bit 4 (0010h) H009 Air Pressure
Bit 5 (0020h) H022 Queue Outfeed
Bit 6 (0040h) H025 Hot Melt unit
Bit 7
Bit 8 (0100h) %M0115 Down from Step 3
Bit 9 (0200h) H026 Queue in Machine
Bit 10 (0400h) H027 Ladder Break
Bit 11 (0800h) H008 Motor Protection
Bit 12
Bit 13
Bit 14
Bit 15

Data from TCBP71

Global variables %G105-%G112 are configured but not used in the programme. Registers %R380-%R384 have the following meaning:

%R380 - Alarms (see picture below).
%R381 - Status info:
Bit 0 - Alarms in pusher section + step 0
Bit 1 - Step down from step 3
Bits 2 - 6 are not used
Bit 7 - Step 3 + Distributor start + No yellow alarms
Bit 8 - Alarms present
Bits 9 - 11 are not used
Bit 12 - DE production time
Bit 13 - Ladder step OFF
Bit 14 - Ladder step Preparation
Bit 15 - Ladder step Production

%R 382 - Number of packages in to distributor
%R 383 - Number of packages out of TCBP71
%R 384 - Package pattern X*8, const=24

Alarms on CBP-71 (%R380)

- **Bit 0** (0001h) H006 Emergency Stop
- **Bit 1** (0002h) H007 Doors
- **Bit 2** (0004h) H007, H021 Doors or Distributor
- **Bit 3** (0008h) H008 Motor Protection
- **Bit 4** (0010h) H009 Air Pressure
- **Bit 5** (0020h) H009, H021 Pressure or Distributor
- **Bit 6** (0040h) H11 Frequency Controllers
- **Bit 7** (0080h) H11, H21 Frequency Controllers or Distributor
- **Bit 8** (0100h) H17 Chain Overload
- **Bit 9** (0200h) H18 Chain out of Synchronisation
- **Bit 10** (0400h) H20 Crush in Distributor
- **Bit 11** (0800h) H27 Fallen Package
- **Bit 12** (1000h) H28 Grouping Section
- **Bit 13** (2000h) H031 No blanks in Pack position
- **Bit 14** (4000h) H033 Queue Outfeed
- **Bit 15** (8000h) H032 Hotmelt Unit

Data from THX22

Registers %R662 and %R663 are used for data transfer.

%R662 shows alarms on the machine:

%R662 Alarms on THX22

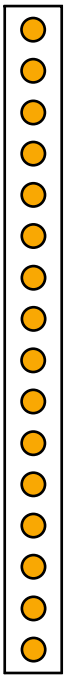

Bit 0 (0001h) Emergency Stop
Bit 1 (0002h) Doors Guards
Bit 2 (0004h) Conveyor Drive Fault
Bit 3 (0008h) Fallen Package
Bit 4 (0010h) Almost Full Sensor alarm
Bit 5 (0020h) Outfeed Jam
Bit 6 (0040h) Downstream Queue too long
Bit 7 (0080h) Not used
Bit 8 (0100h) Not used
Bit 9 (0200h) Not used
Bit 10 (0400h) Upper Prox Failure
Bit 11 (0800h) Lower Prox Failure
Bit 12 (1000h) TPOP Manual Step Down
Bit 13 (2000h) Maschine is Full or Almost Full
Bit 14 (4000h) Downstream Queue too long
Bit 15 (8000h) Not used

%R663 shows machine status information:

Bit 0 - THX22 accepts packages
Bit 1 - Output drive enable or bypass
Bits 2 - 11 - are not used
Bit 12 - DE production time
Bit 13 - Ladder step OFF
Bit 14 - Ladder step Preparation
Bit 15 - Ladder step Production

Configuration of GBC

The GBC must be configured as part of the Series 90-30 PLC system using the Logicmaster 90-30 software (release 5 or later). The configuration screen consists of two parts: module-specific data (BUS CONTROLLER MODULE DATA) and device-specific data (DEVICE DATA) shared between PLCs. The data can be seen on a reference view screen that can be accessed by pressing the REF VU softkey (shift F3) in the rack menu. More detailed information about configuring of GBC module can be found in GE Fanuc User's Manual, GFK-1034B.

Examples of MODULE DATA and DEVICE DATA configuration screens are shown on pictures below:

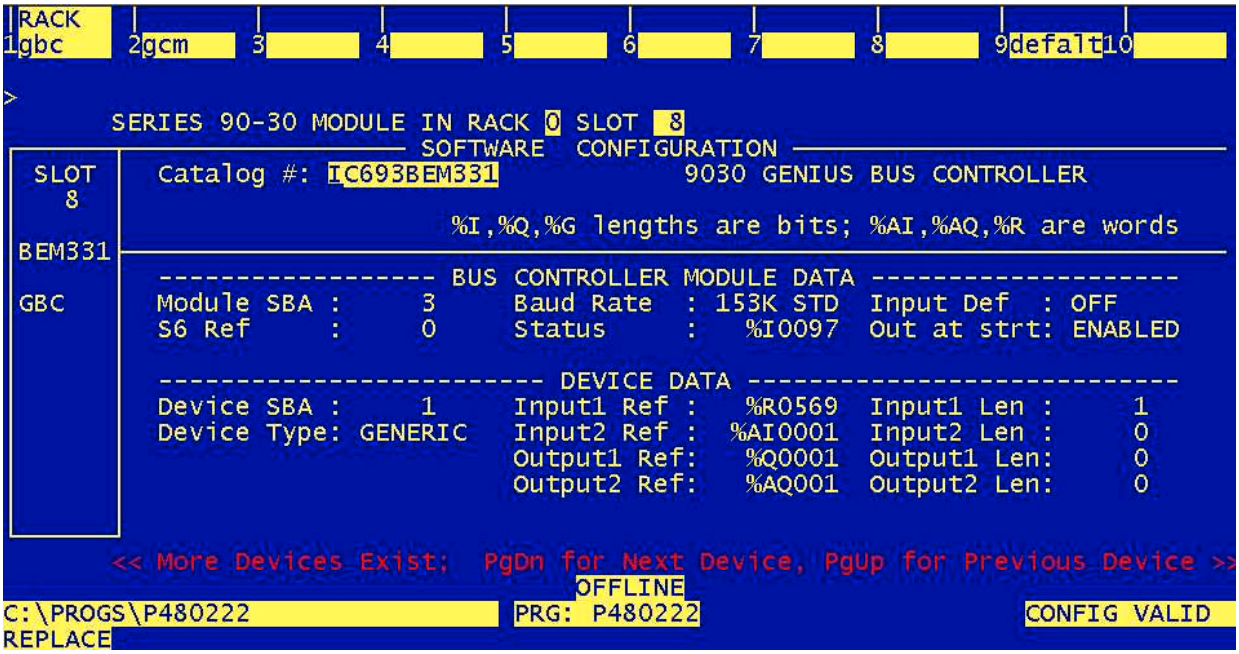

Module-specific Data

Module SBA (Serial Bus Address)

Any number from 0 to 31 can be used; however, each must be unique on the same bus. The default value is 31. In case of TBA/22 line SBA assigned as followed:

Type of machine	SBA
TBA/22	1
TSA22 HS	2
TCBP71	3
THX22	5

Baud Rate

The baud rate depends on the bus length and may be: 153.6 Kbaud standard, 153.6 Kbaud extended, 76.8 Kbaud or 38.4 Kbaud.
All devices must use the same baud rate. 153.6 Kbaud standard is default.

Series Six (S6) Reference
The S6 reference specifies the register location in a Series Six or a Series Five CPU that should be reserved for the global data which will be transmitted to it by the GBC. A value of zero indicates that no register location should be reserved. The allowed range for Module Series Six Reference is 0 to 16383 inclusive. Default value is 0.

Status
This field contains the starting reference for 32 bit status area maintained by GBC. Each bit of this area represents the online/offline status of a devise on the bus. Default: Next available %I0001 address.

Input Def
The input default state can be either set to HOLD or OFF. Default: OFF.

Out at strt
Device outputs can be initially ENABLED or DISABLED when the GBC is powered up. Default: ENABLED.

Device Type
Each device is associated with a device type. Two types are mostly used: **Generic** and **Control**.
Generic type means that the module receives the data from other PLCs.
Control means that the data is transmitted by PLC where the GBC is installed.
In TBA/22 configuration EGBC corresponds to Control type. It configured as SBA 1 and marked by asterisk (*) on the picture below (%R569).

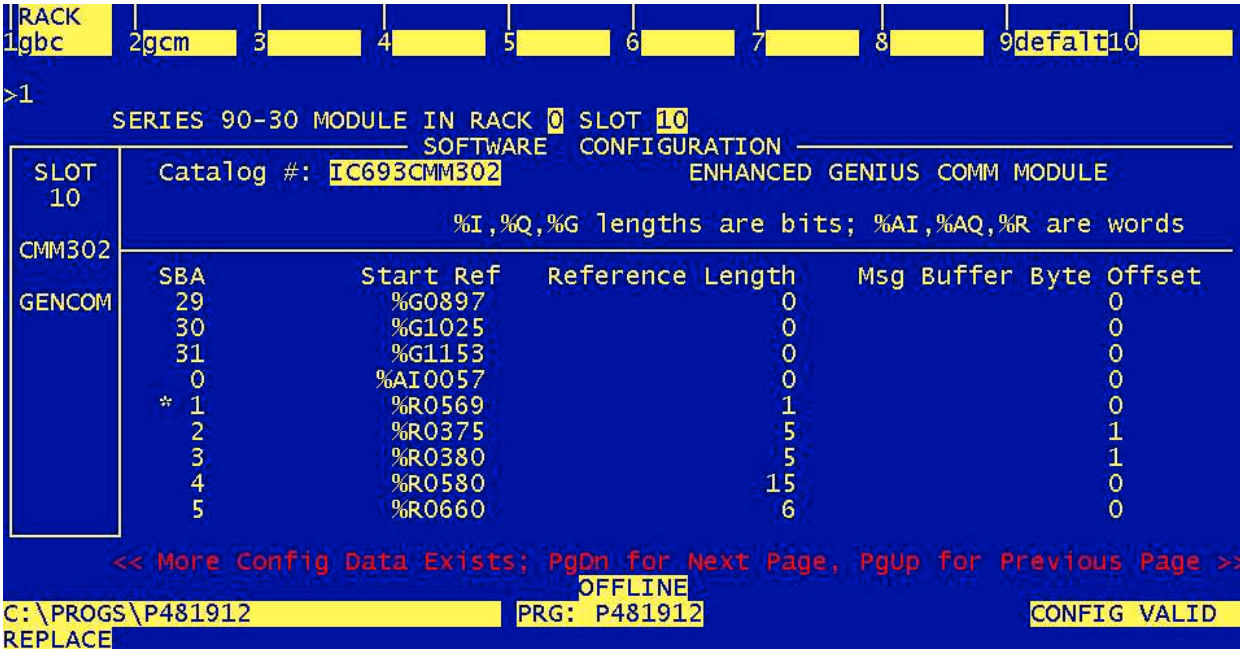

Troubleshooting

Genius I/O products seldom require troubleshooting during the proper operation of a system. Errors are most likely to occur when a new system is being started up, and are often caused by mistakes in cabling or field wiring, or by faulty logic in the CPU's application program.

Genius I/O diagnostics messages are an aid in locating faults in input and output circuits and in the I/O blocks. They will help you to locate I/O problems such as wiring errors, output loads that are too great or too small for proper operation, or short circuits or overloads on inputs. In many cases, an I/O block will shut down a circuit that has one of these faults. The fault must be located and corrected before the diagnostic message can be cleared and the circuit can be operated successfully.

Here are the basic rules to follow when troubleshooting:

- Check the operating mode of the CPU.
- Check the status LEDs on the CPU.
- If all the CPU status LEDs are not on, refer to the documentation on your CPU.
- Check the status LEDs on the bus controller.

LEDs on the front of the GCM module indicate its operating status, and the status of communications between the module and the Series 90-30 PLC.

OK -indicates that module has passed its power-up test and operating
COMM -indicates that the GCM+ is configured and is transmitting or receiving global data.

OK LED	COMM LED	Indicates
ON	ON	Normal operation
ON	Blinking	Intermittent bus operation
Synchronous blinking	Synchronous blinking	Genius Bus address conflict
ON	OFF	Module not configured, or no communications
OFF	ON	No power or fatal power-up error
OFF	OFF	No power enough from the rack

If either OK or COMM is off or blinking, look for the following causes:

- If all the CPU and bus controller status LEDs are on, check cabling then proceed to I/O blocks troubleshooting. Resistance between SER1 and SER2 terminals should be close to double bus impedance (See picture below).

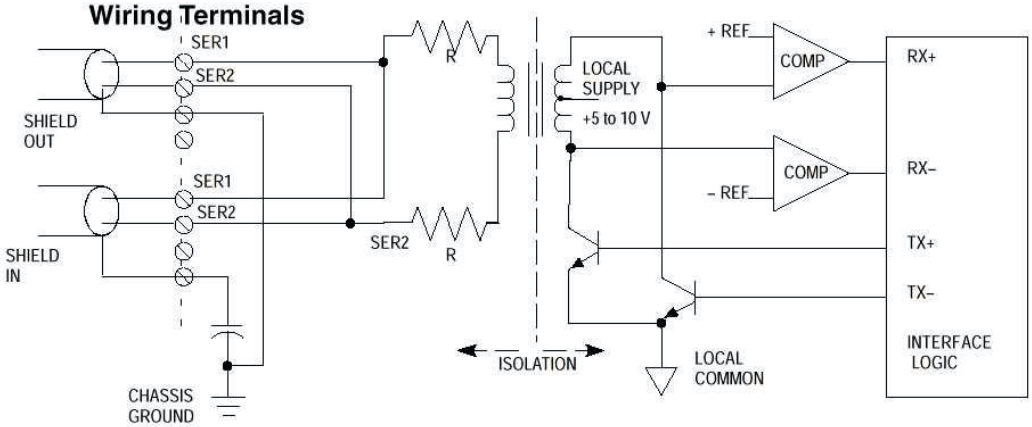

Cable check

During installation, it is important to make sure that all cables are connected to the proper terminals. Limitations of distance and use of proper cable types between system components should be followed. Otherwise, unpredictable problems may occur. If it is ever necessary to replace any of the communications cable, or to add cable to an existing bus (for example, to add another block), the cable must be the same type used for the rest of the bus. If cable is added to a bus, it must not exceed the maximum length permitted for that cable type. Correct termination must be reverified.

Bus and Bus Controller Troubleshooting

The following problems might occur with a bus controller, or in the basic operation of the bus:

1 **The bus controller LEDs are off.**
   - The bus controller is probably not receiving enough power from the rack or the computer power supply.

2 **The bus controller is not communicating with the CPU.**
   - This may indicate a programming or address assignment error. Also, check the CPU operating mode.

3 **The bus controller is not communicating on the bus.**
   - Two devices on the same bus may have been configured with the same Device No. Most devices will not communicate if their Device No is already used by another device. However, both the Unit On and the COMM OK LEDs will be flashing together.
   - Be sure wires to the serial 1/serial 2 terminals on the module are not crossed.
   - Check the baud rate.
   - Check the Device No (bus address) assigned to the bus controller against the intended device number from your records of system configuration. All new bus controllers are shipped from the factory already set up to use device number 31.

4 **The bus controller begins operating, but does not seem to be operating normally.**
   - Be sure bus wiring has been completed in a daisy chain fashion.
   - Make sure the bus cable is not close to high voltage or TPIH cables.
   - Look for a broken cable.
   - Ensure that cable shielding is properly installed and grounded.

5 **Communications on the bus are intermittent or lacking.**
   - This may be caused by mixed baud rates. Check module baud rate settings using LM90 or VersaPro configuration software. If you find different baud rates, they must be changed. All devices on the bus must use the same baud rate. Any change to baud rate in block will not take effect until block power is cycled.
   - The terminating resistors on the bus may be missing or incorrectly chosen or placed. Check terminators at ends of the bus for correct resistance value.
   - The cable may be too long. Shorten the cable or configure all devices on the bus to use a lower baud rate.
   - Wires may be open, shorted, or reversed. Check all bus electrical connections.

6 The COMM OK light on the bus controller flashes excessively, and/or there are propagation delays on the bus, and/or the bus is operating, but CPU repeatedly receives addition of block or loss of block diagnostics.

There is excessive ambient noise on the bus. This can be corrected by lowering the baud rate, re-routing the communications cable, or shielding the source of the electrical noise. The proper solutions to this problems may vary, depending on the application.

17

Temperatures

TEMPERATURE SETTINGS ON TBA/22 - 050V

Thermo couple	Description	C/M	Set value	Comment
B1106	Heat sterilisation	M	280° C	
B1222	Peroxide bath (production)	C	80° C (+ 10, - 2)	Stop at 76° C
B1208	Water bath (stops)	M	80° C (+ 10, - 2)	
			69° C (+ 0,3, - 0)	
			74° C	Controls Y 1105
			90° C	Boiling guard
B1212	Peroxide tank	C	82° C (+ 2, - 2)	
			86° C (+ 2, - 2)	At first start
B1109	Top aseptic chamber	M	60° C	Heat sterilisation
			107° C	Drying
			95° C ± 0,5	Prod. (stop at 92° C)
			88° C ± 0,5	Stop > 5 minutes
B2510	Closed water system	M	Cooling starts at 13° C and stops at 7° C High alarm at 50° C	
B001	Electrical cabinet	M	Cooling starts at 36° C and stops at 30° C High alarm at 38° C	
B5307	Flap heater top left	C	450° C (+30, - 15)	These are the only settings adjustable from the TPOP
B5308	Flap heater top right			
B5309	Flap heater bottom left			
B5310	Flap heater bottom right			
B1310	Steam	M	130° C ± 5	During sterilisation
			110° C (+ 5, - 2)	During production
B1105	Air super heater	C	360° C ± 30	
B1209	Water heat exchanger	M	93° C	Boiling guard

Temperature control in GE Fanuc PLC

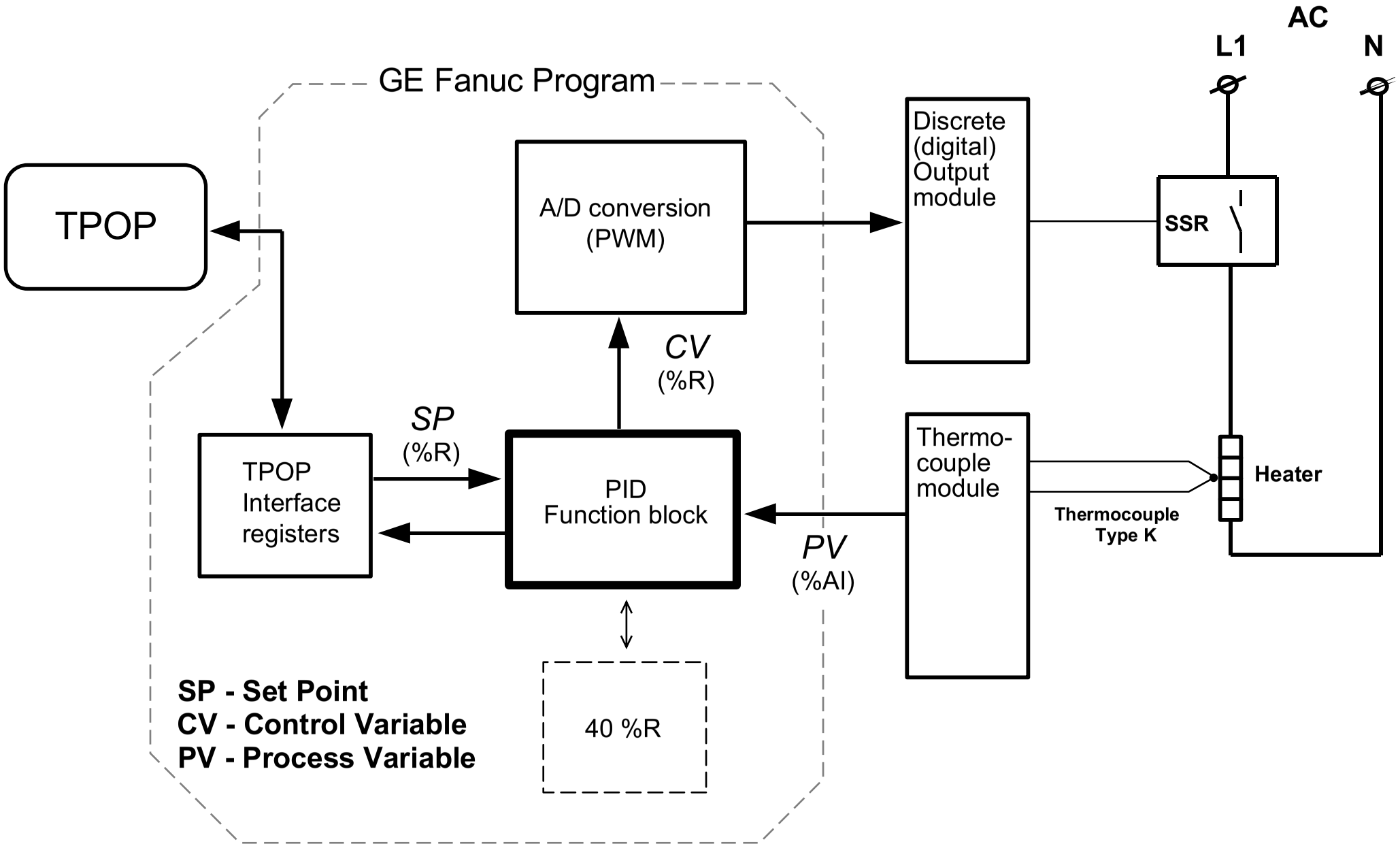

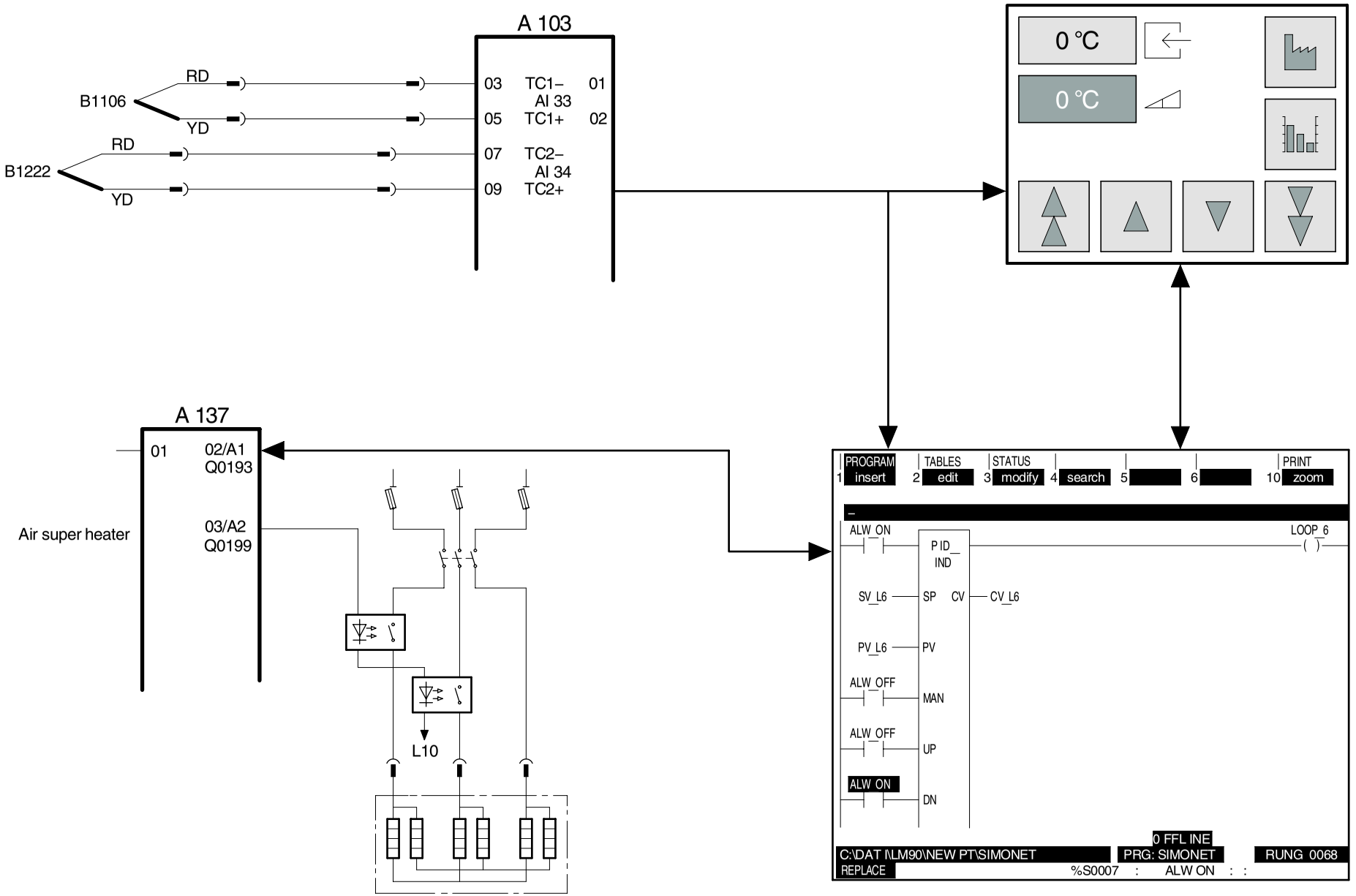

Temperature control overview

PWM Principle

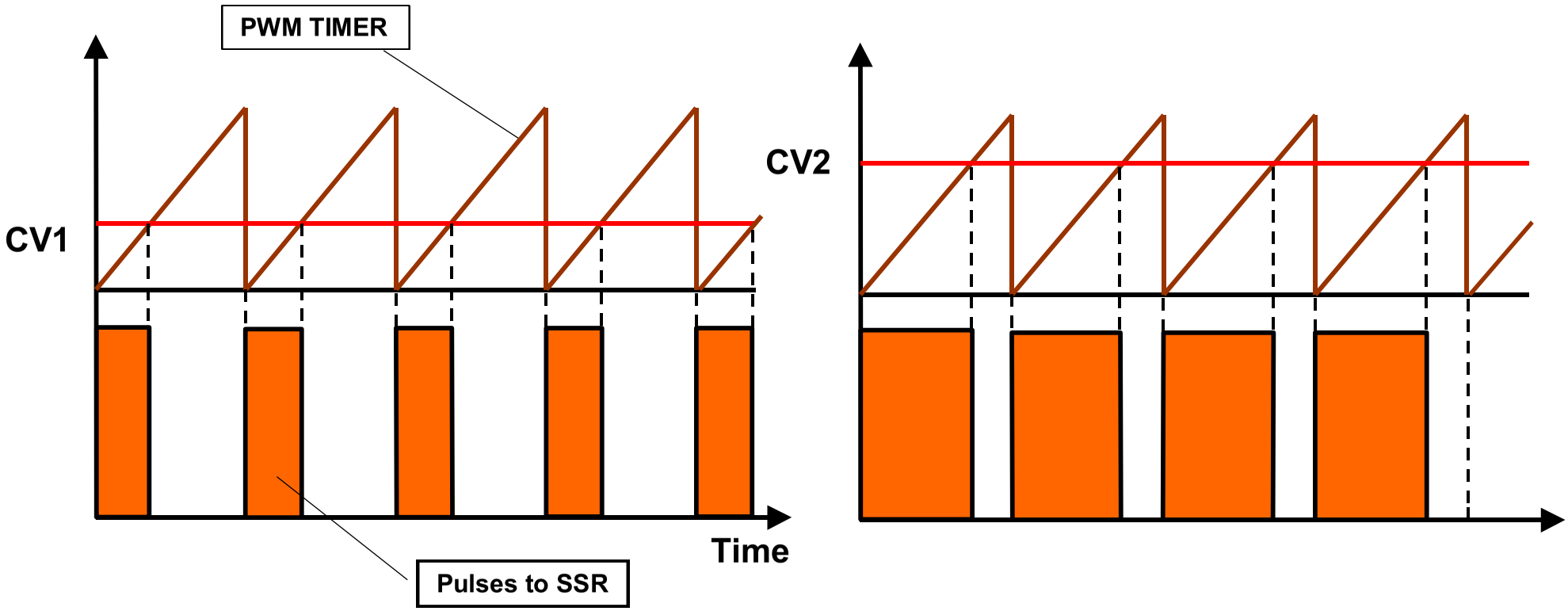

Thermocouple type K

Material: Nickel−Cromium v Nickel−Aluminium (NiCr − NiAl)

Voltage: DC 4mV / 100 ˚C

Colour: Overall — yellow

NiCr — yellow — positive

NiAl — red — negativ

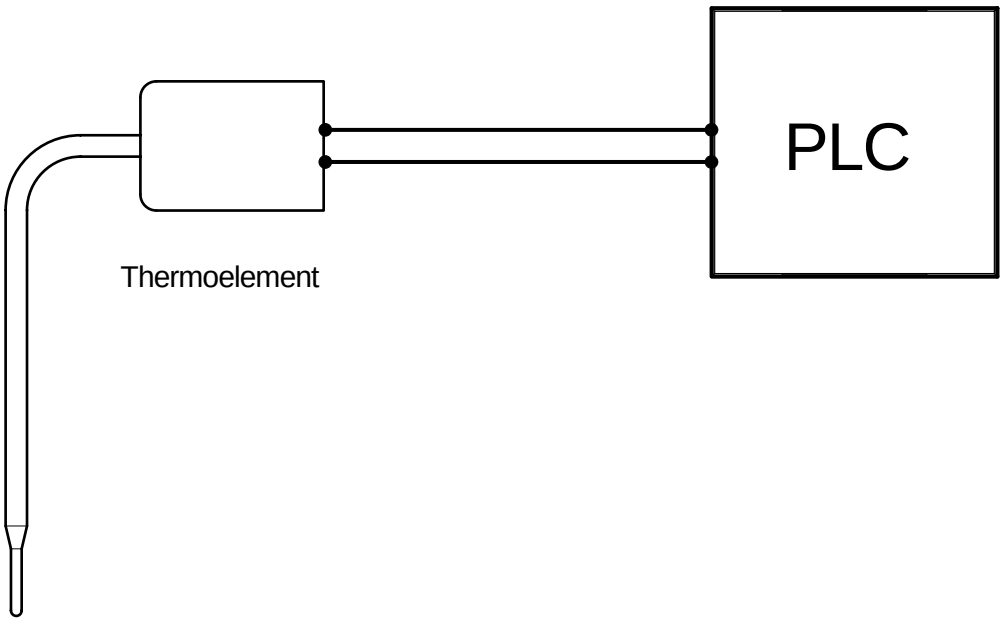

18

Safety relays

RT9 Safety relay

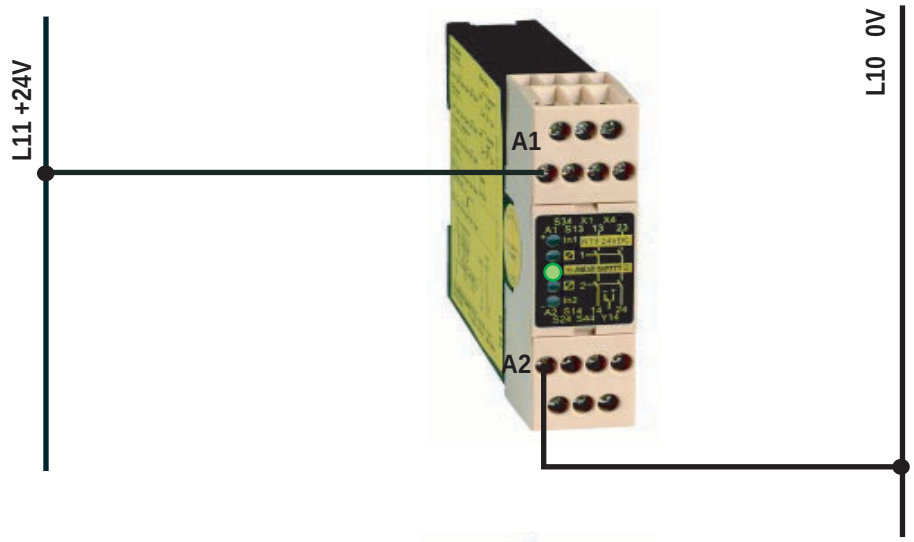

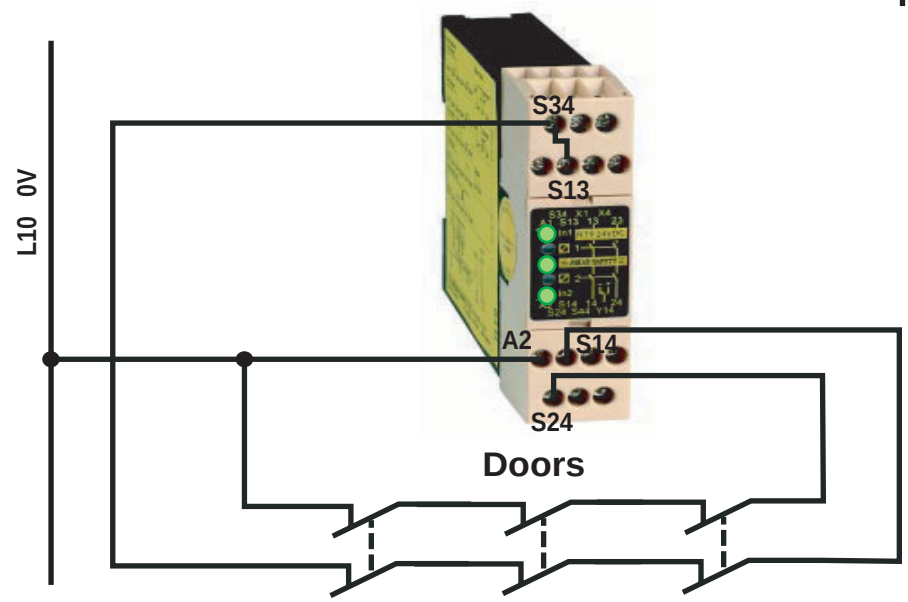

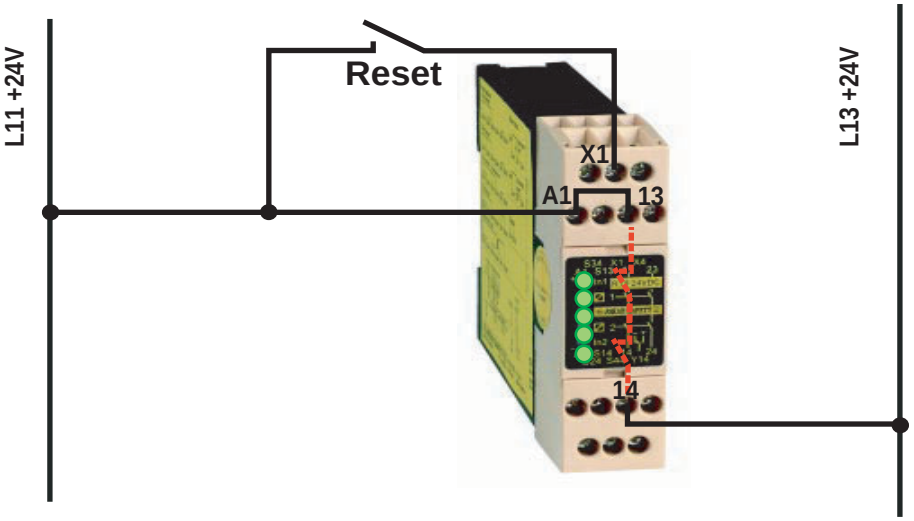

Safety relays
Schematics

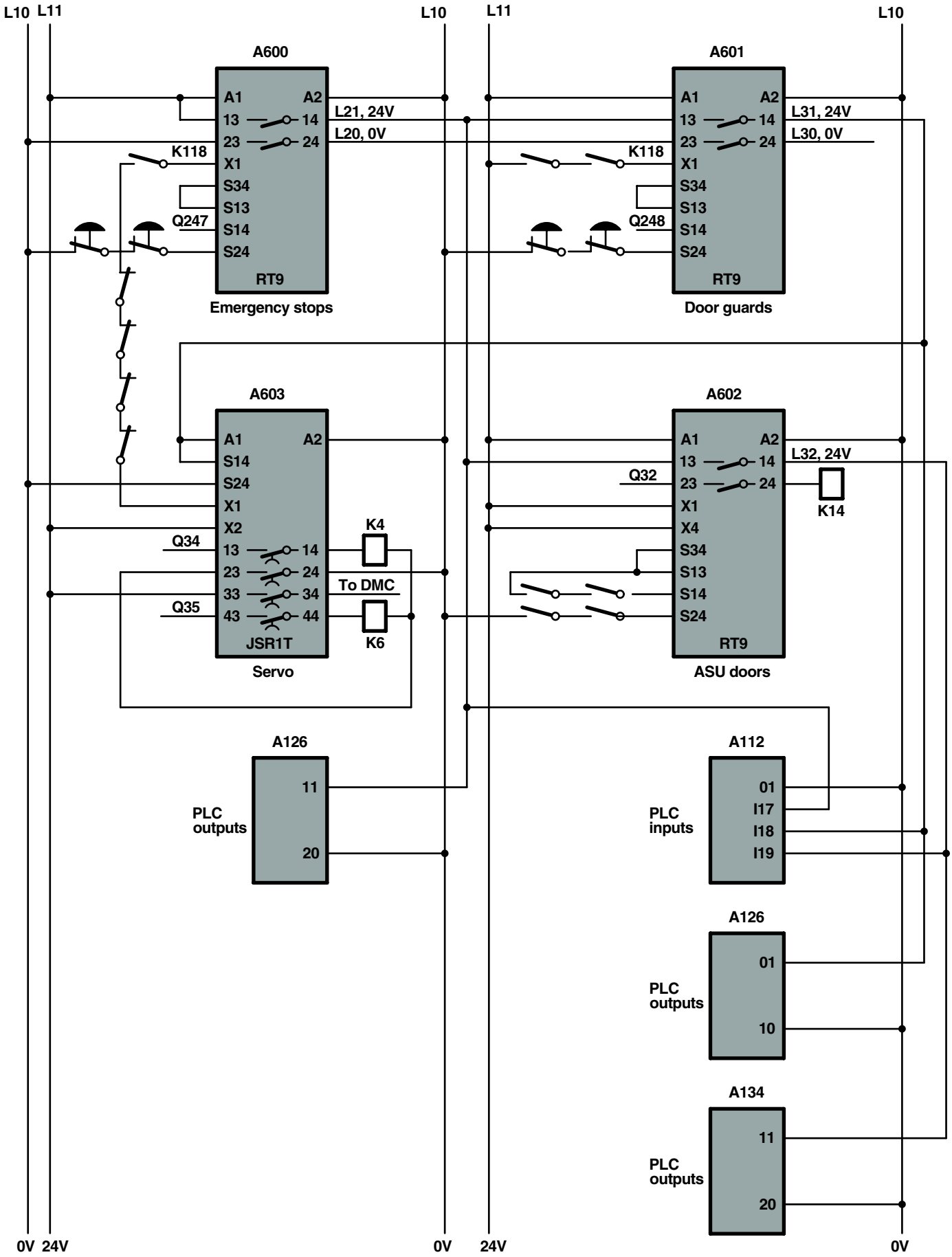

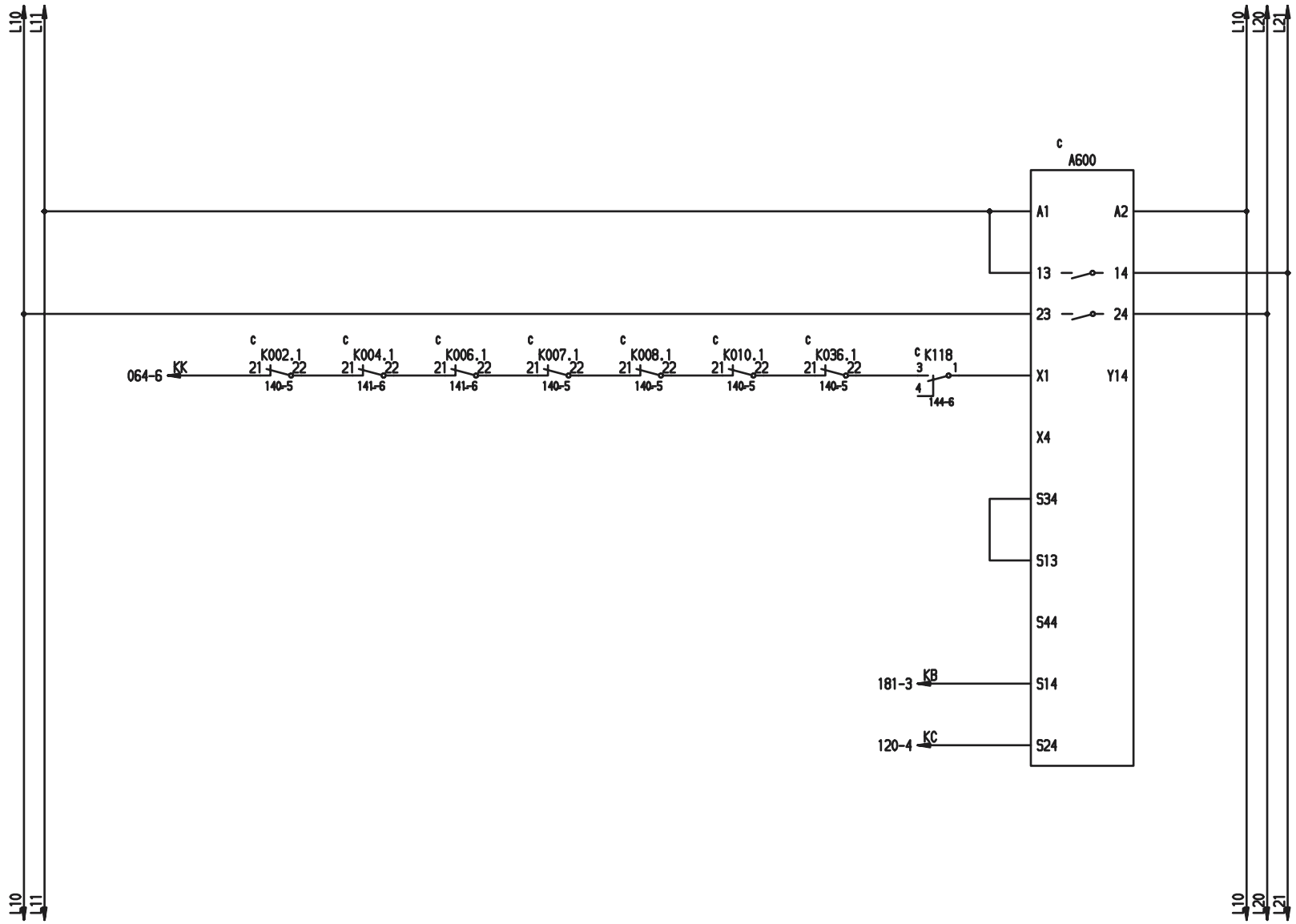

EMERGENCY STOP CHAIN

2552985-061:01

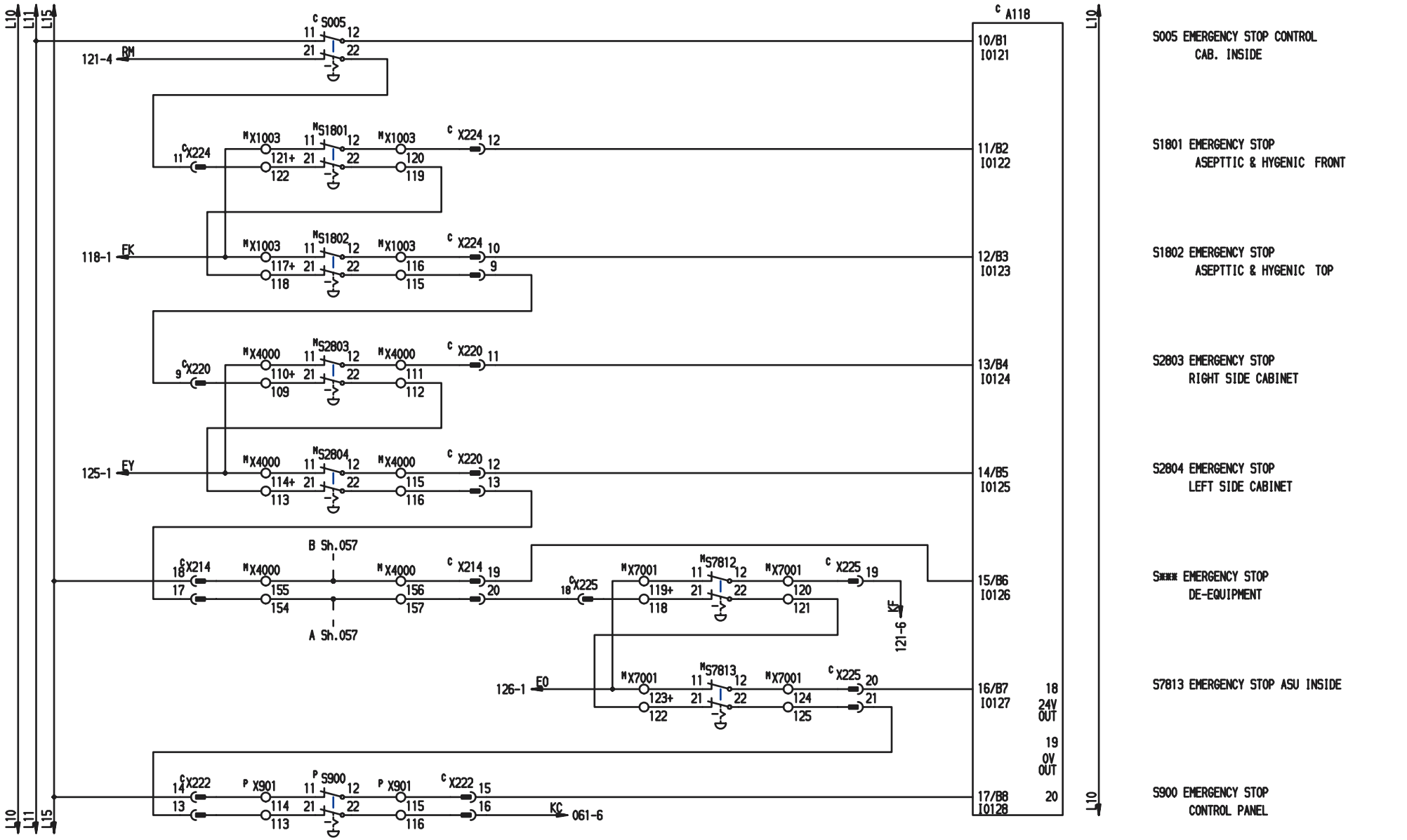

PLC INPUT
2552985-120:01

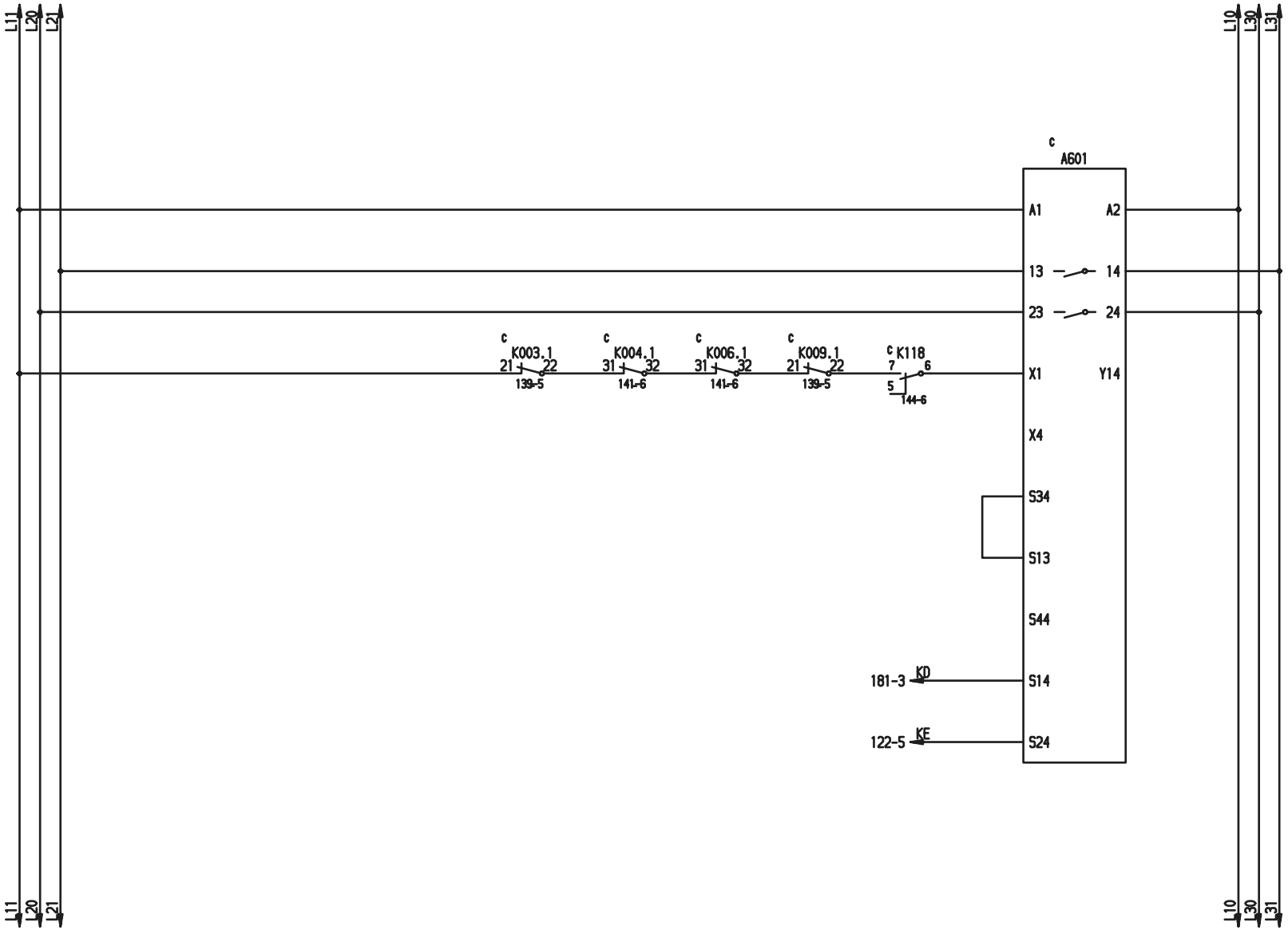

DOOR GUARDS CHAIN

2552985-062:01

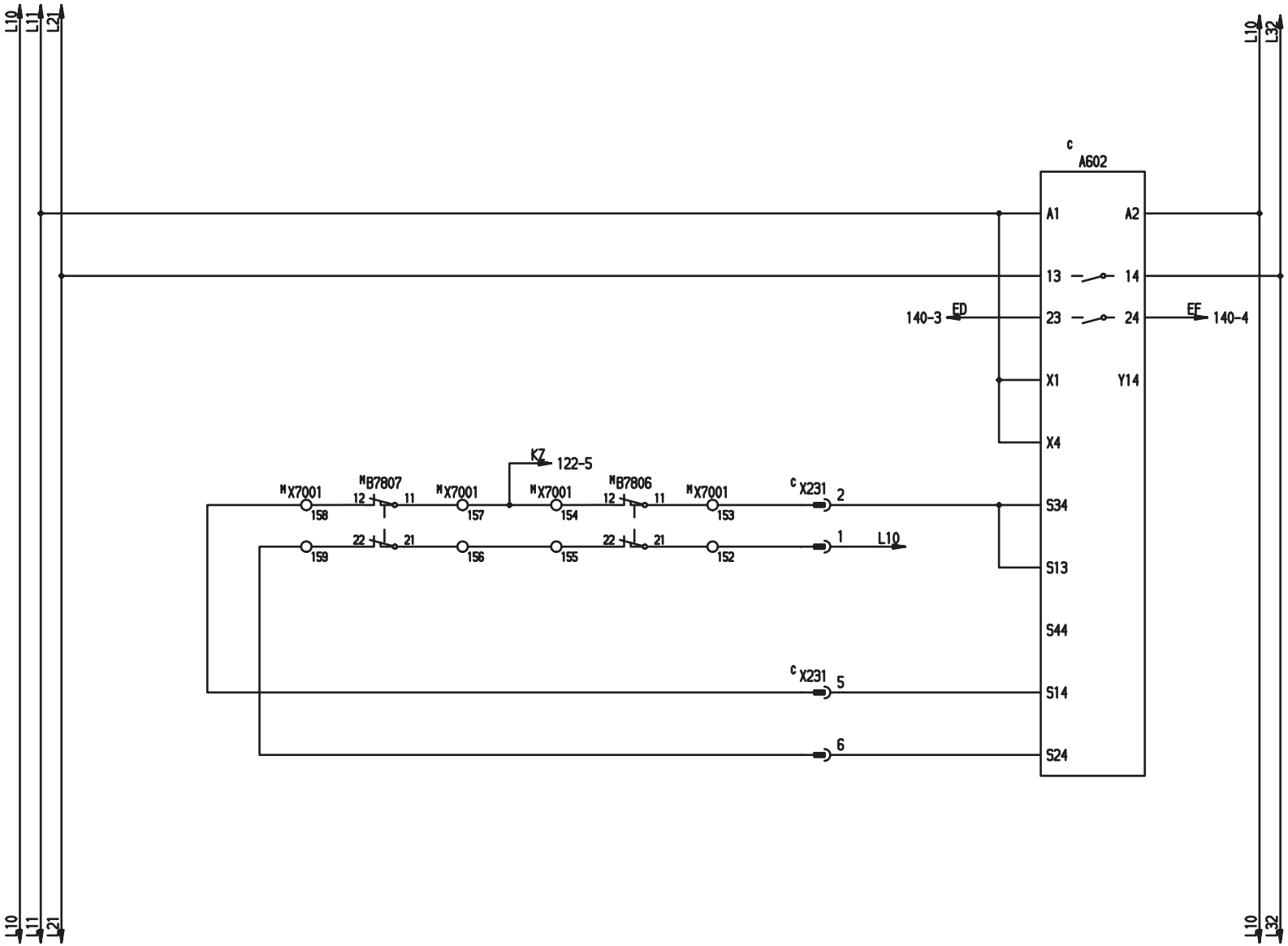

SAFETY MONITORS C

B7806 DOOR GUARD 22 ASU LINE 1

B7807 DOOR GUARD 23 ASU LINE 2

EMERGENCY STOP TIME RELAY

ASU DOOR GUARDS CHAIN

2552985-063:01

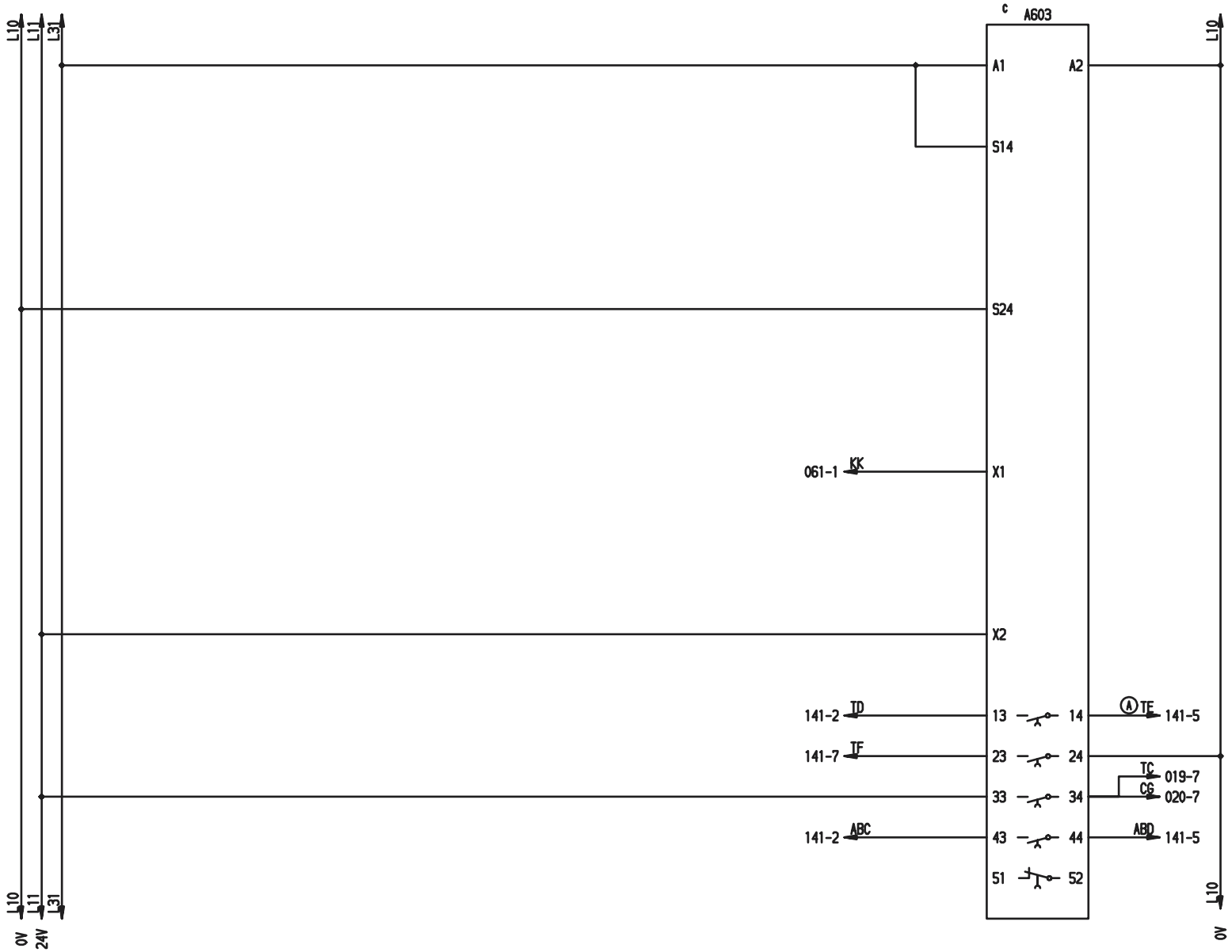

EMERGENCY STOP TIME RELAY

SAFETY RELAY SERVO

2552985-064:01

Step motor driver

Volume adjustment
Tube positioning

SW 1	F	SW 8	Right
SW 2	Right	SW 9	0
SW 3	Right	SW 10	0
SW 4	Open	SW 11	0
SW 5	Right	SW 12	0
SW 6	Open	SW 13	0
SW 7	Closed	SW 14	Open

Time constant	Off	On
Speed 1: SW6	Open	Close
Speed 2: SW7	Open	Close

Internal clock frequency
Sped 1: (22+SW9x22+SW10x320)Hz
Sped 2: (22+SW11x22+SW12x320)Hz

Current set			
SW:13	0:2.5A	3:1.9A	6:1.3A
	1:2.3A	4:1.5A	7:1.2A
	2:2.0A	5:1.4A	8:1.0A

Clock	Int	Ext
SW:8	Left	Right

Analog input		
	0−10V	0−20mA
SW14:	Open	Close

Analog control		
	On	Off
SW5:	Left	Right

Indirect	Direct	Gain
SW2:Left	Right	(12+6+SW1) x
SW3: Left	Right	
SW4: Close	Open	

Overvoltage Protection

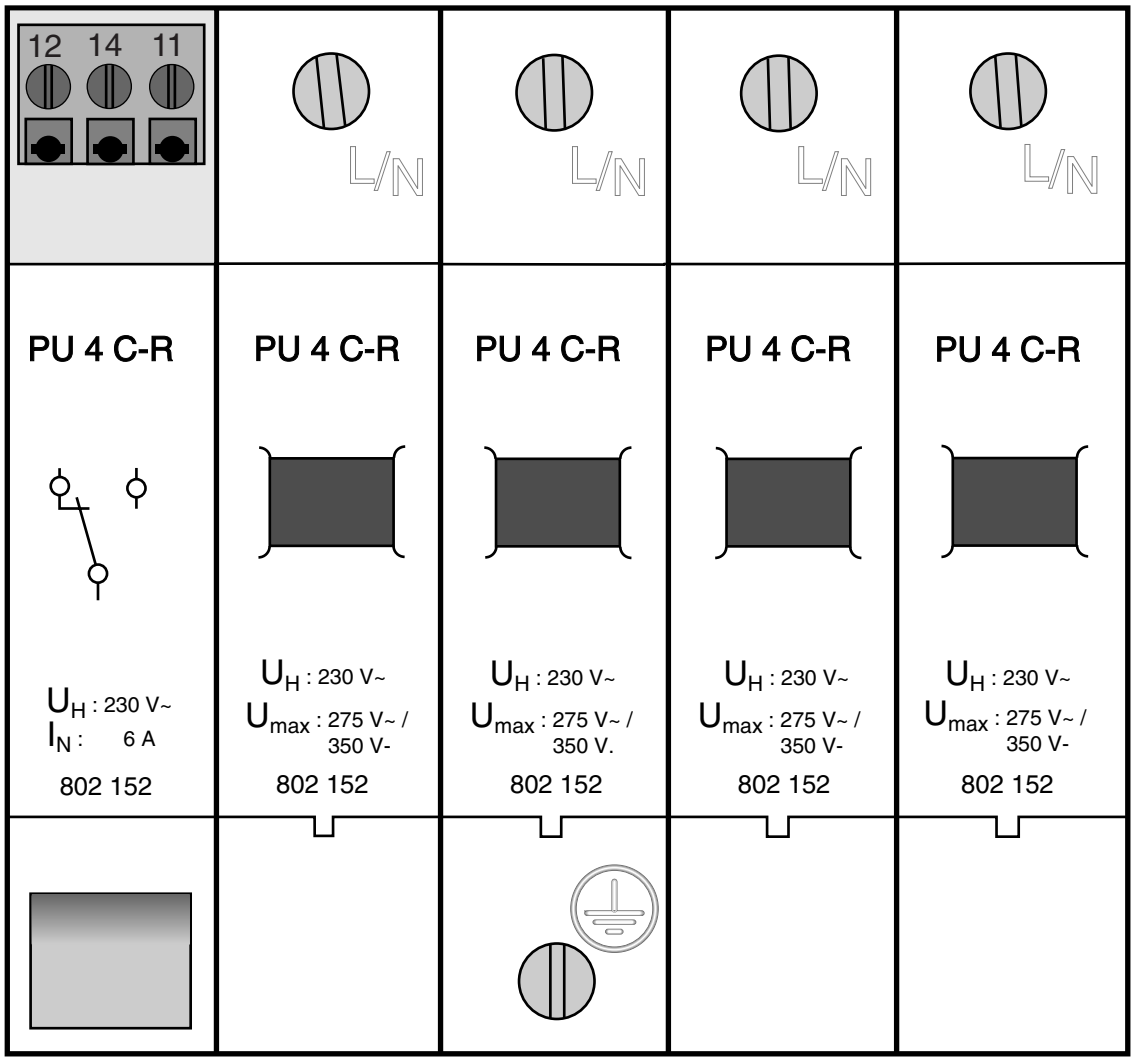

19

Waste of packages TPOP

WASTE OF PACKAGES TBA/22 - 050V

	200B	200M	200S	250B	250S	300S
Production start (Aseptic chamber + SA)	68 + 5	55 + 6	55 + 6	58 + 6	51 + 4	54 + 5
Normal stop	4	4	4	4	4	4
End of production	32	32	32	32	32	32
Paper splice	3	4	3	3	3	3
Strip splice	3	3	3	3	3	3
Strip break	56	54	54	48	54	54
TPIH failure S.A.	12	10	10	10	10	10
TPIH failure S.L.	5	4	4	4	4	4
TPIH failure T.S.	4	4	4	4	4	4
(Tight tube)	103	92	83	90	76	82
Machine out of design	2 minimum, if more than 100 the machine stops					

TPOP

Tetra Pak Operator Panel

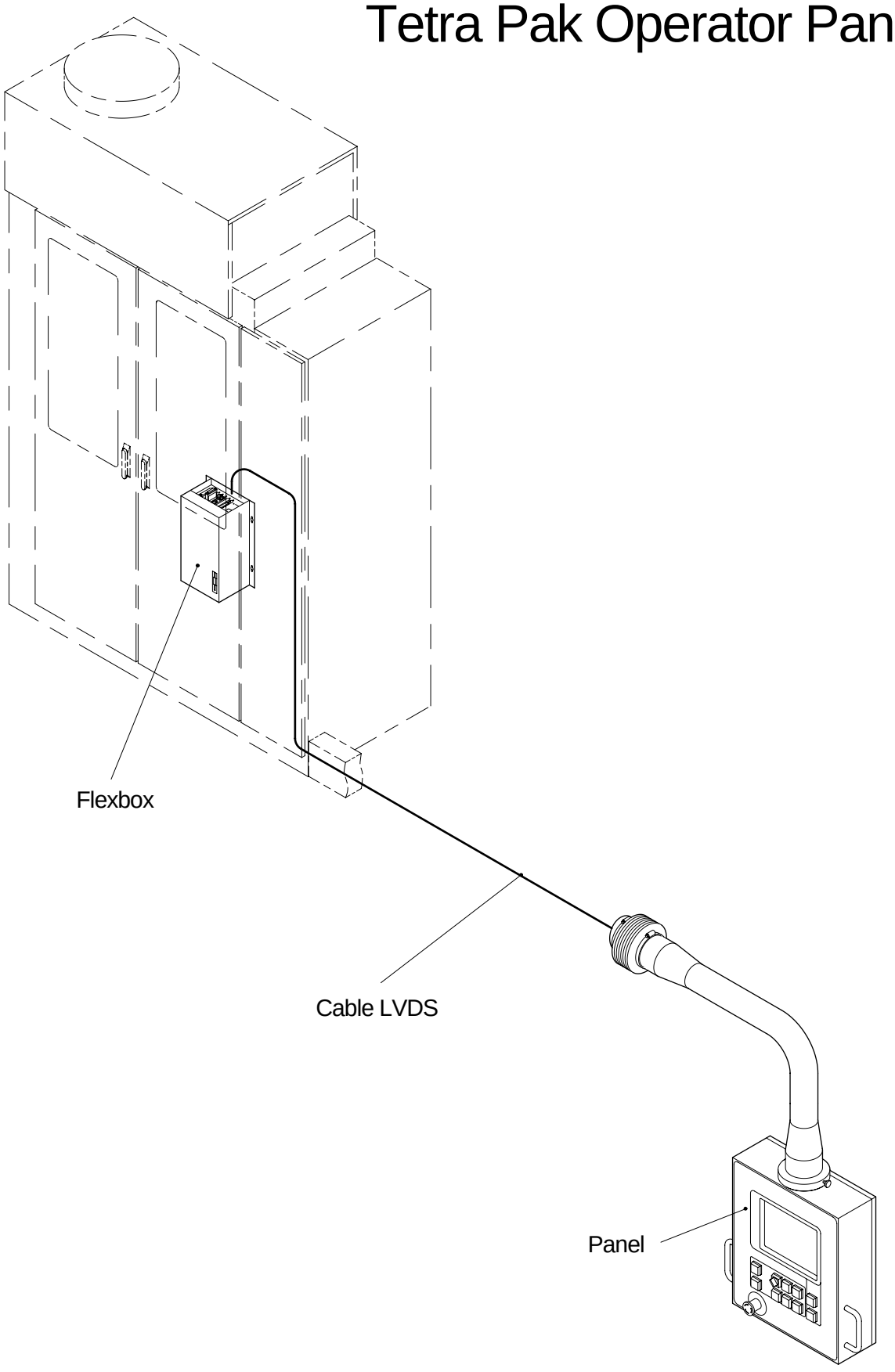

Panel

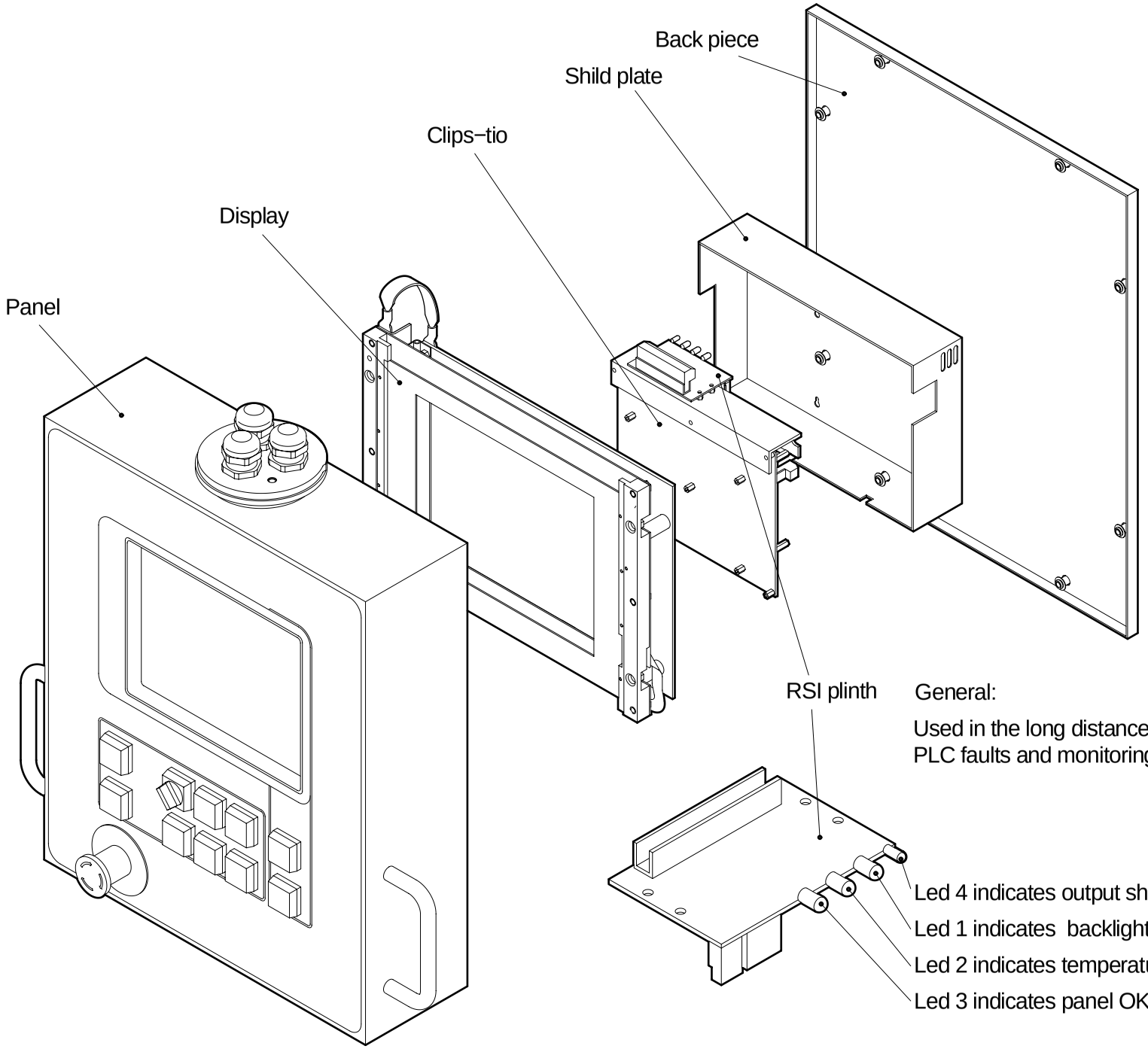

General:

Used in the long distance system to indicate
PLC faults and monitoring panel temperature

Led 4 indicates output short circuit (not used) (colour red)

Led 1 indicates backlight fault (colour red)

Led 2 indicates temperature OK (colour green)

Led 3 indicates panel OK (colour green)

Flexbox

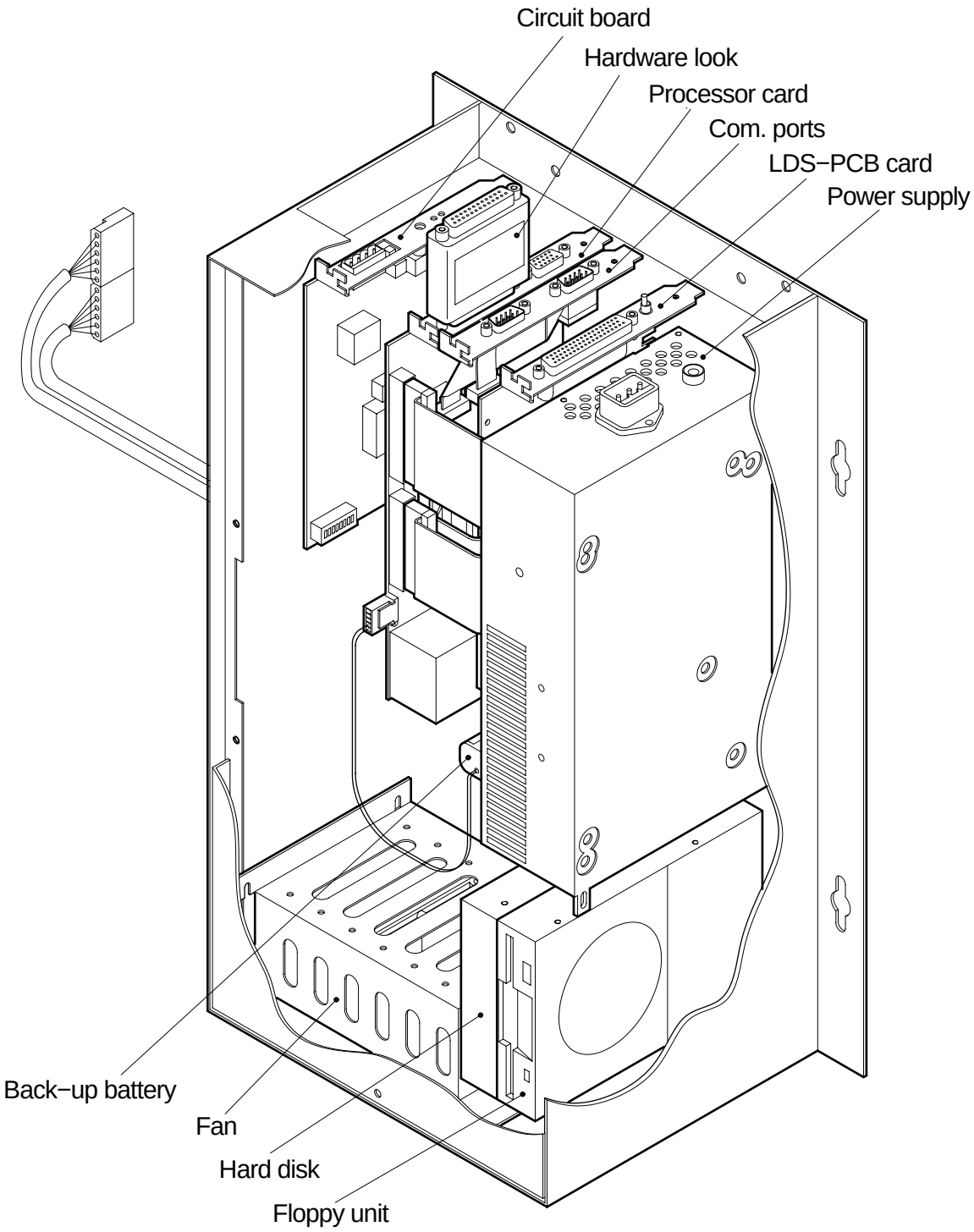
Circuit board
Hardware look
Processor card
Com. ports
LDS−PCB card
Power supply
Back−up battery
Fan
Hard disk
Floppy unit

20

Cleaning system

Cleaning In Place

Introduction

Cleaning In Place is usually shortened CIP. It is a method used for cleaning of filling machines and process equipment without having to disassemble them.

A production cycle is always completed with CIP. It is important to clean directly after the end of the production in order to prevent the product from getting dry and that the microbiological growth does not start.

What is cleaned with CIP?

On a Tetra Brik machine the following parts are cleaned without dismantling

AP = Aseptic product

- AP valve
- Control valve
- Upper filling pipe

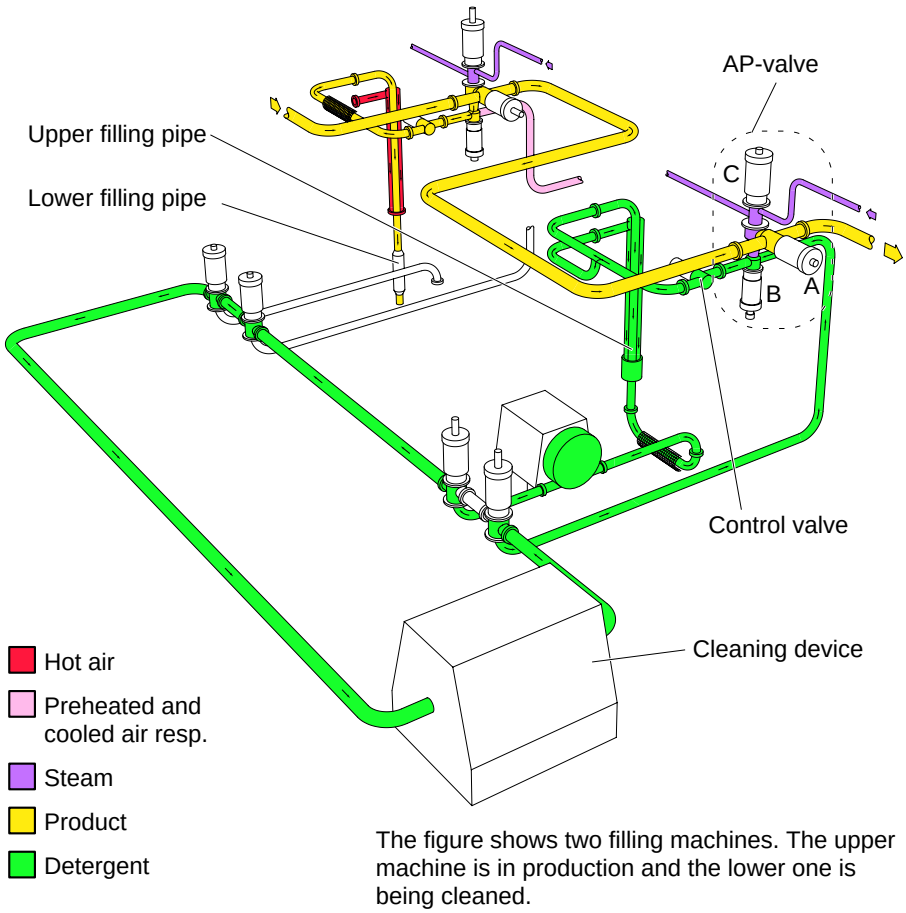

The figure shows two filling machines. The upper machine is in production and the lower one is being cleaned.

The filling machine is cleaned separately, in most cases with a separate cleaning device, intended only for cleaning of the filling machine.

On machines with a lower filling pipe, the lower filling pipe is cleaned manually. This method is called COP which is an abbreviation of Cleaning Out of Place.

What is required for cleaning?

There are four important cleaning factors

- **Flow**
  A turbulent flow of water is required to remove product remnants. This is achieved by the speed of the detergent which is 1.5-3.0 m/min. The flow must be at least 8000 l/h in order to reach this speed in the AP-valve.
- **Chemicals**
  Chemicals are used to dissolve the product remnants.
- **Temperature**
  Correct temperature of the detergent is important to dissolve the product remnants.
- **Time**
  It is essential that the detergent maintains contact with the product remnants long enough in order to be able to dissolve them.

The effects of the chemicals

The product remnants contain sugar, fat, protein, salt, and minerals. Warm water is sufficient to dissolve sugar. But to dissolve fat and protein a strong alkali is required. Salt and minerals are a very small part of the product and they usually disappear with the other dissolved components of the product remnants. In cases where salt and minerals do not disappear, acid has to be used. The quantity of salt and mineral deposits varies due to the degree of hardness of the rinsing water and the pH-value of the product.

Alkali = NaOH
NaOH = Caustic soda

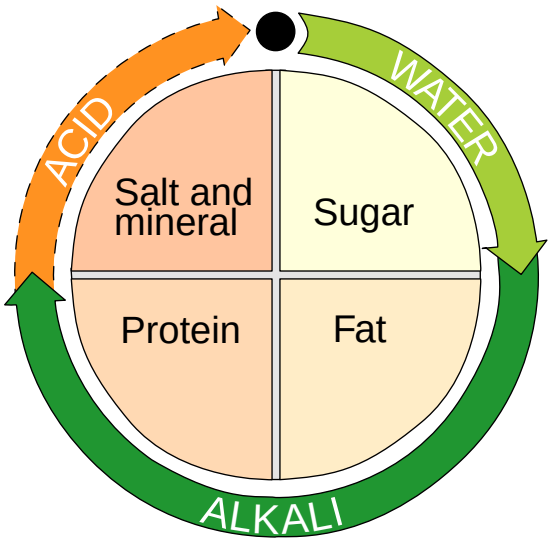

The figure shows applicable chemicals that dissolve the product remnants. Water is used to dissolve sugar. But to dissolve fat and protein alkali is needed. When salt and mineral deposits remain, acid is required.

The ladder in the cleaning programmes

The contents of a cleaning programme may vary. On the whole, however, two cleaning programmes are used, daily cleaning and weekly cleaning.

Daily cleaning

Daily cleaning is done once per day and includes the following steps:

1. **Cold rinsing**
   Cold water forces product remnants out of the pipes.
2. **Warm rinsing**
   Warm water dissolves sugar and heats the pipes before the alkali cleaning.
3. **Alcali cleaning**
   Alcali dissolves fat and proteins.
4. **Cold rinsing**
   Cold water forces alkali and product remnants out of the pipes.
5. **Final rinsing**
   Final rinsing takes place until the pH-value of the rinsing water, which comes out of the pipes, is equal to incoming water.

Weekly cleaning

If too many lime deposits have been built up in the pipes, a weekly cleaning is performed after the daily cleaning. This can be done as often as required.

Weekly cleaning includes the following steps:

6. **Acid cleaning**
   Acid cleaning dissolves salt and minerals.
7. **Cold rinsing**
   Cold water forces the acid out of the pipes.
8. **Final rinsing**
   Final rinsing takes place until the pH-value of the rinsing water, which comes out of the pipes, is equal to incoming water.

Final cleaning and intermediary cleaning

The worst that can happen in connection with the production of food is that toxic components enter the product. Since strong alkalis and acids are used for cleaning it is important to check that no detergent can leak into the product.

Final cleaning

Before final cleaning can start, make sure that there is no product in the product line. Then turn a key and choose final cleaning. This is one of the actions for the daily care. Tetra Pak recommends that final cleaning takes place once per day.

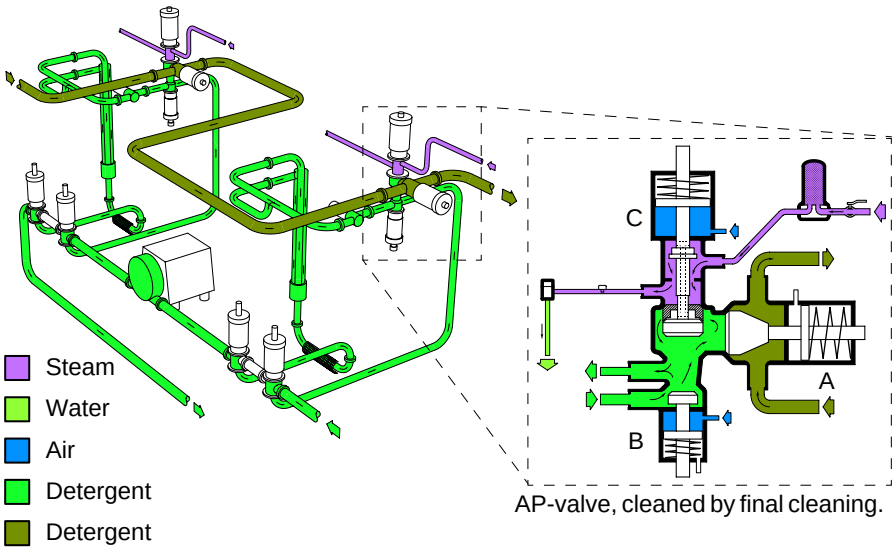

AP-valve, cleaned by final cleaning.

Intermediary cleaning

Intermediary cleaning is used only if you have to clean the filling machine while there is still product in the product line. The AP-valve has a steam barrier which prevents the detergent from leaking into the product. This also means, however, that the space in the steam barrier will not be cleaned. This space will be cleaned only at the final rinsing procedure.

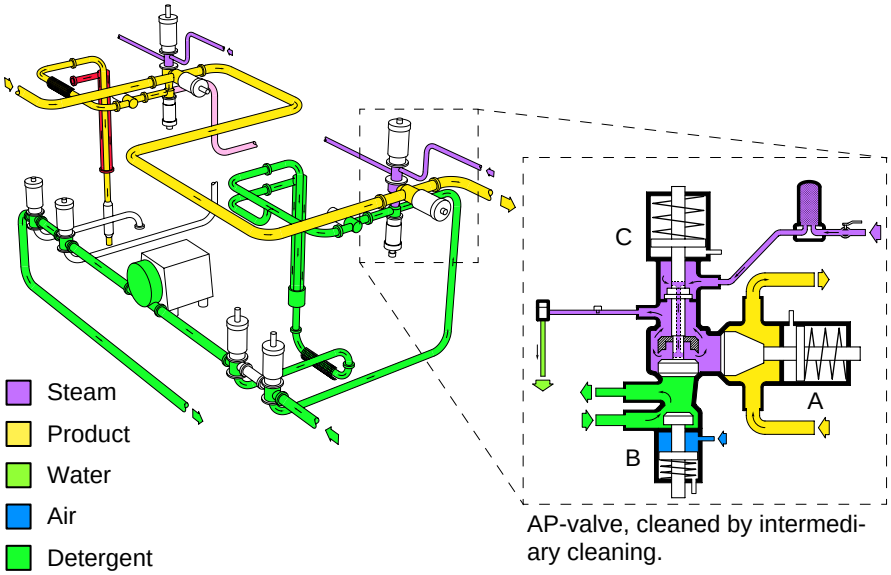

AP-valve, cleaned by intermediary cleaning.

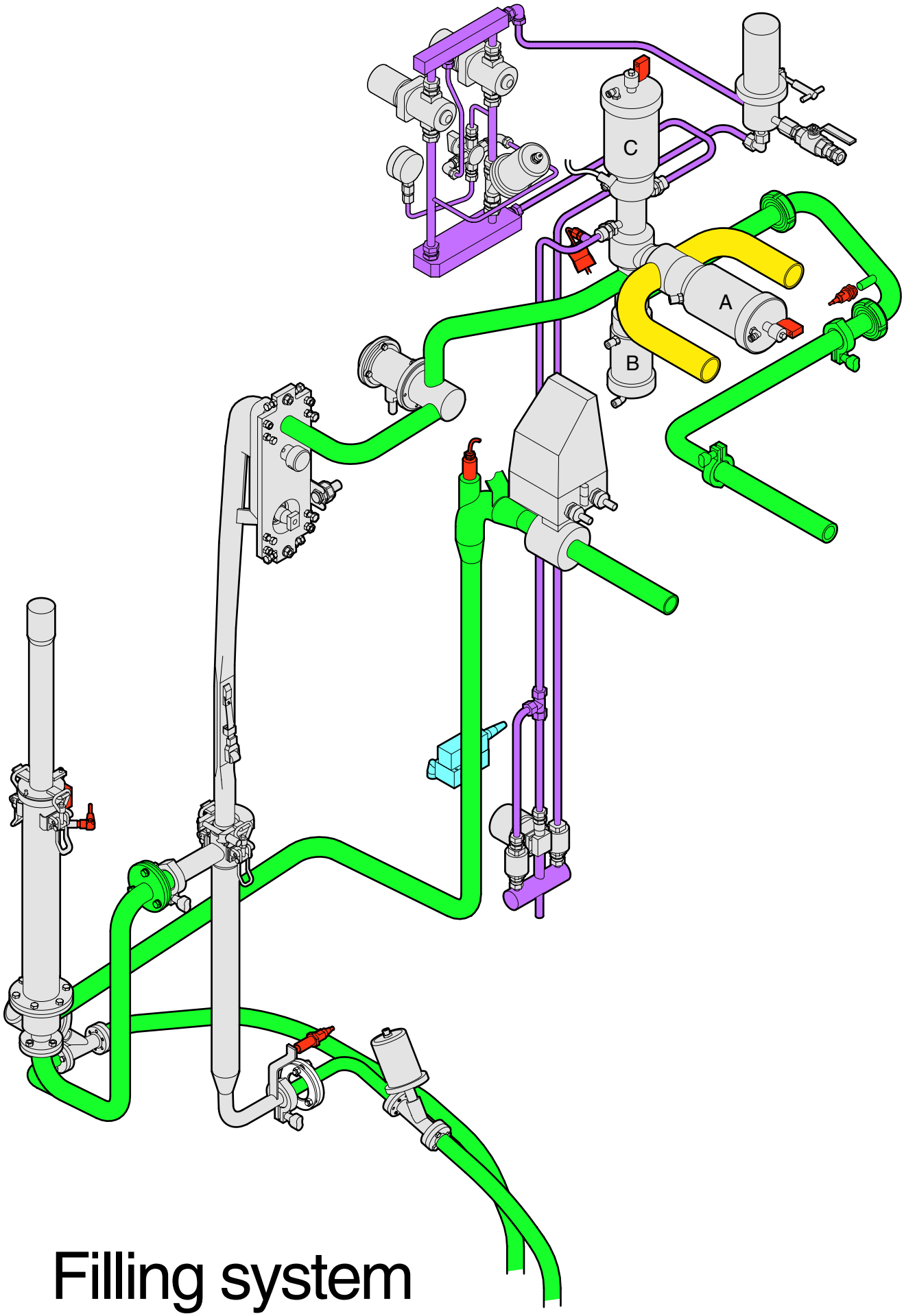

Filling system

CIP cleaning valve group with level probe

Technical Training Centre Lund, Sweden	Machine type TBA/22 050V	Issue 1/0306	OH 1273

Technical Training Centre
Lund, Sweden

Machine type
TBA/22 050V

Issue
1/0303

OH 1274:1

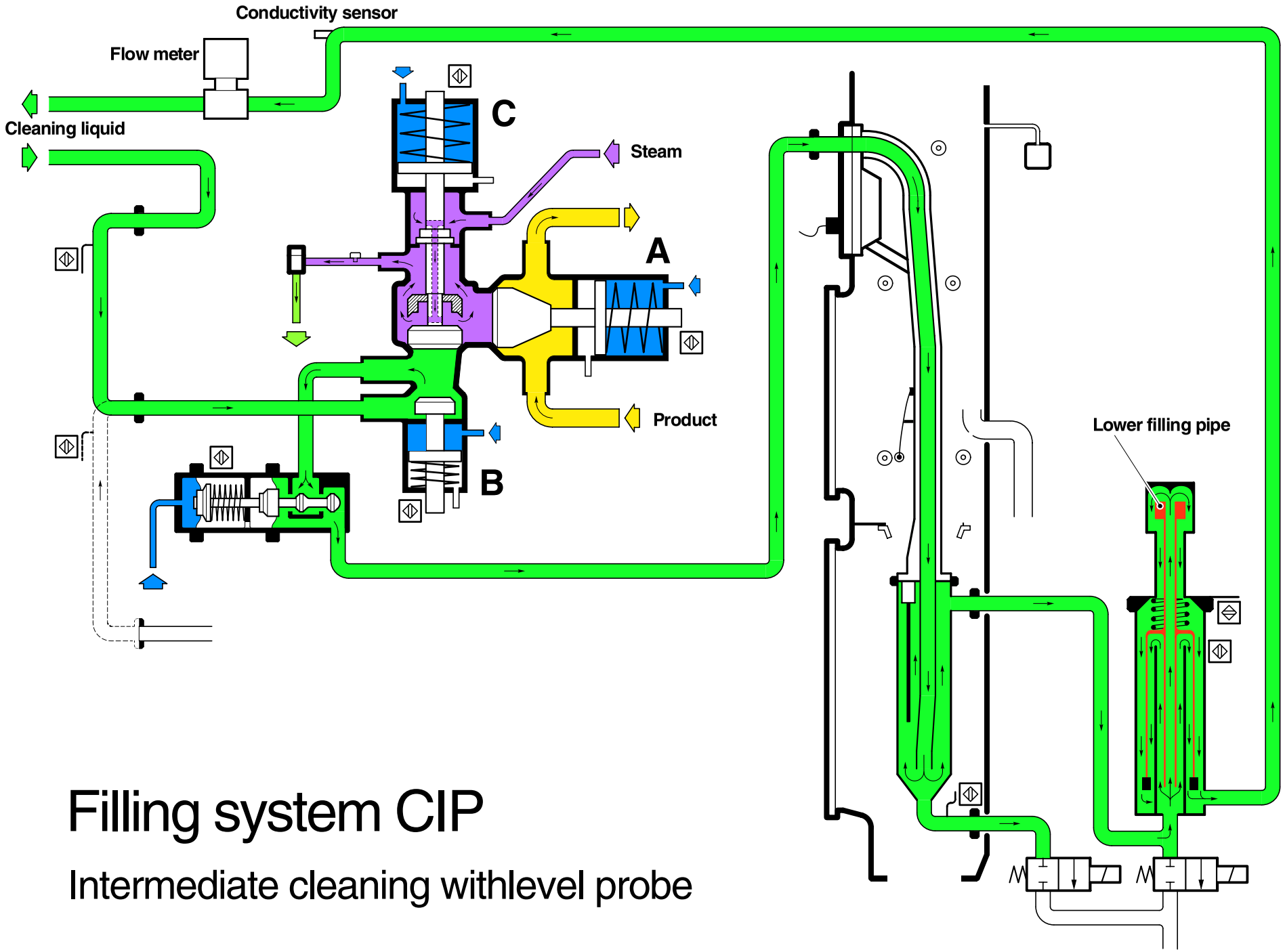

Filling system CIP

Intermediate cleaning withlevel probe

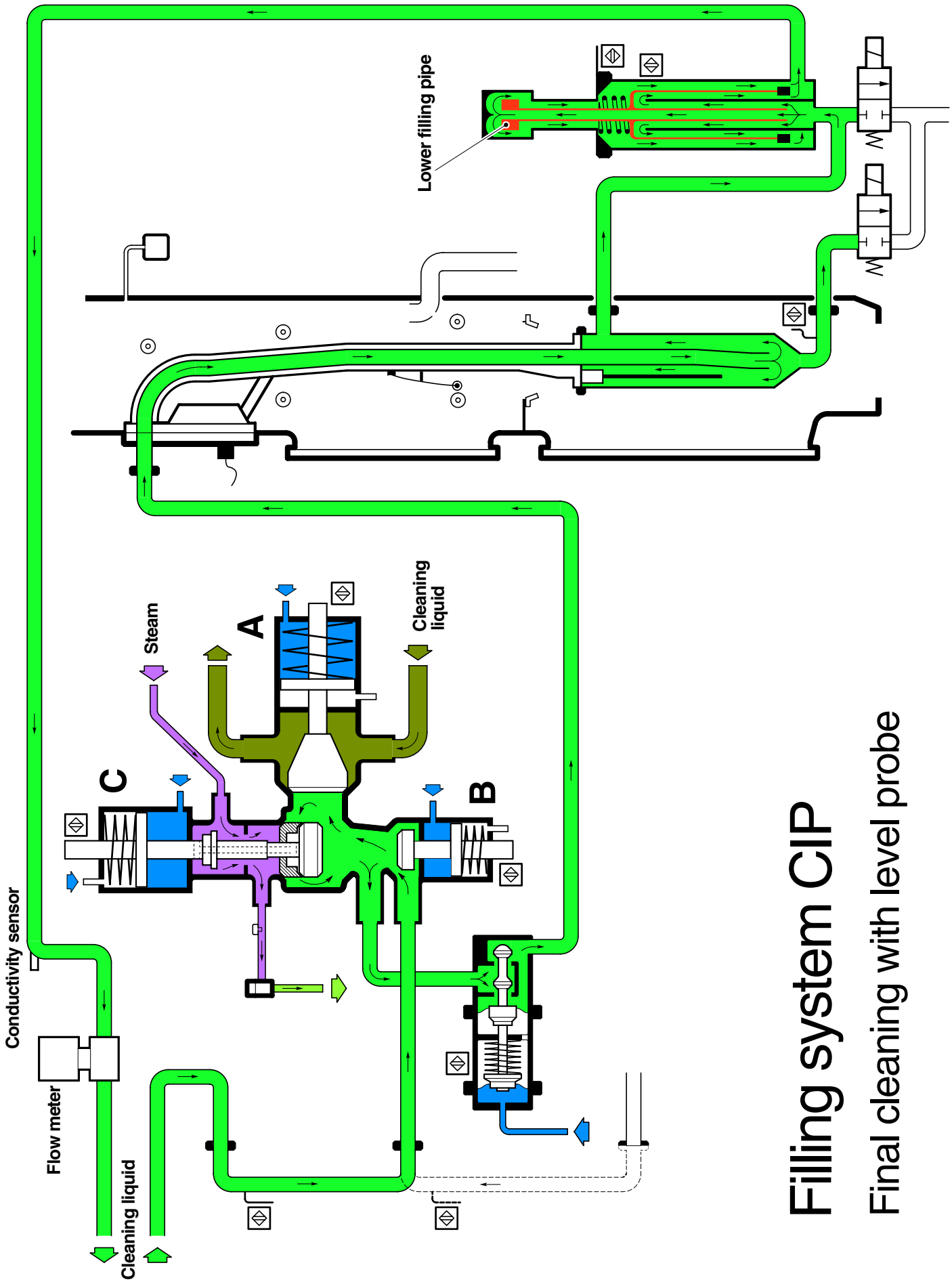

Filling system CIP

Final cleaning with level probe

Cleaning system TBA/22 050V

CIP Blowing 1 with level probe

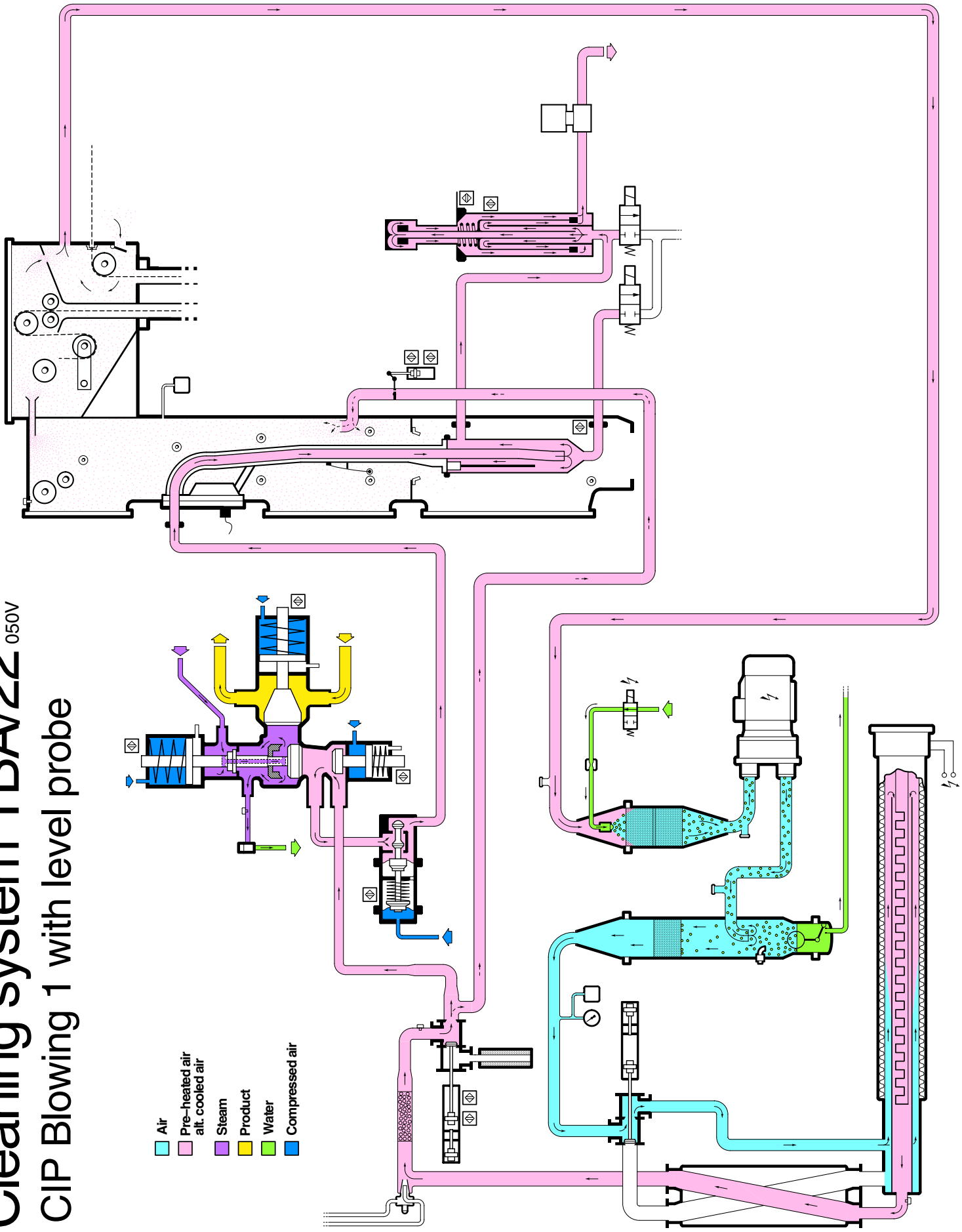

Technical Training Centre Lund, Sweden	Machine type TBA/22 050V	Issue 2/0306	OH 1408:1

Cleaning system TBA/22 050V

CIP Blowing 2 with level probe

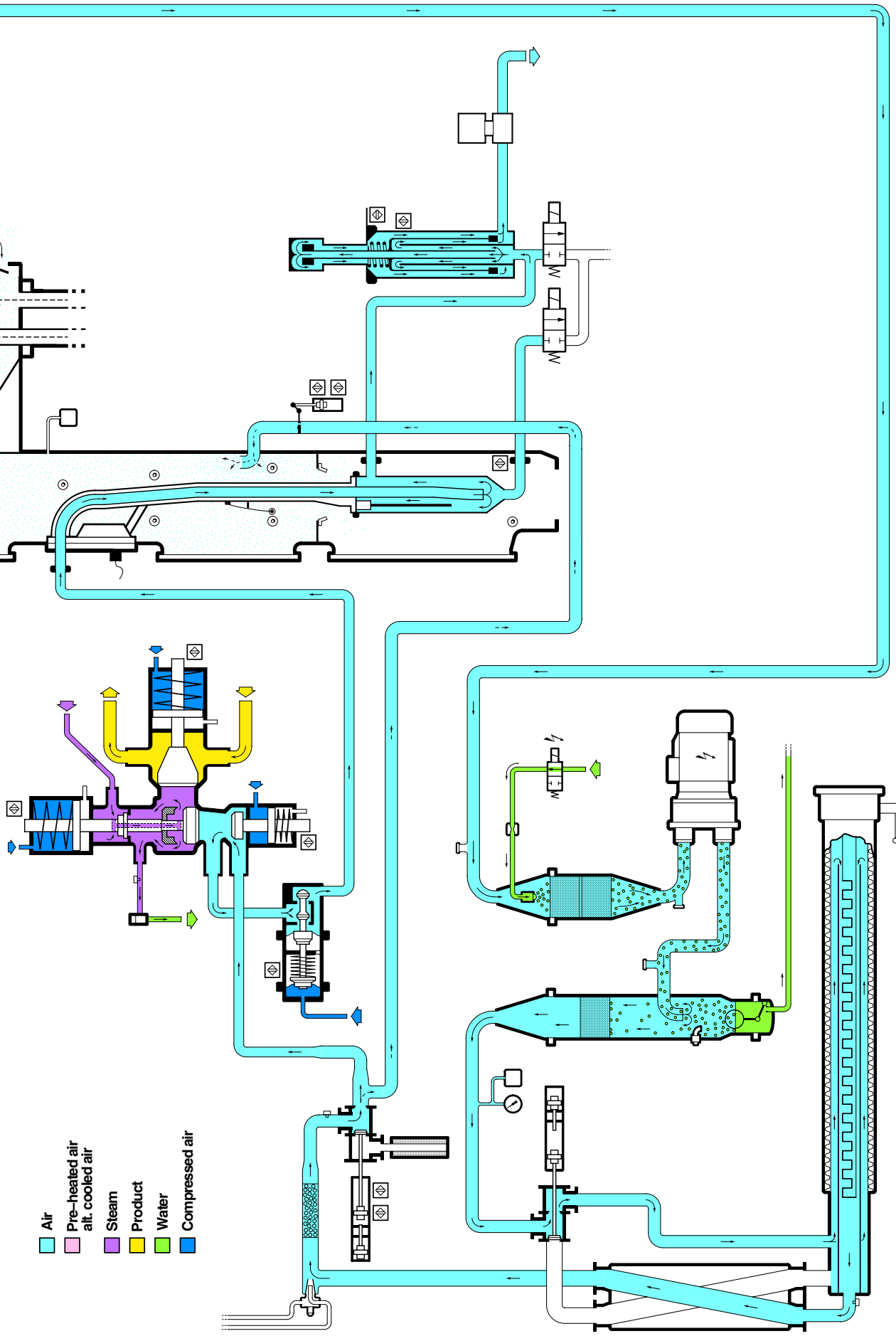

Technical Training Centre Lund, Sweden	Machine type TBA/22 050V	Issue 2/0306	OH 1408:2

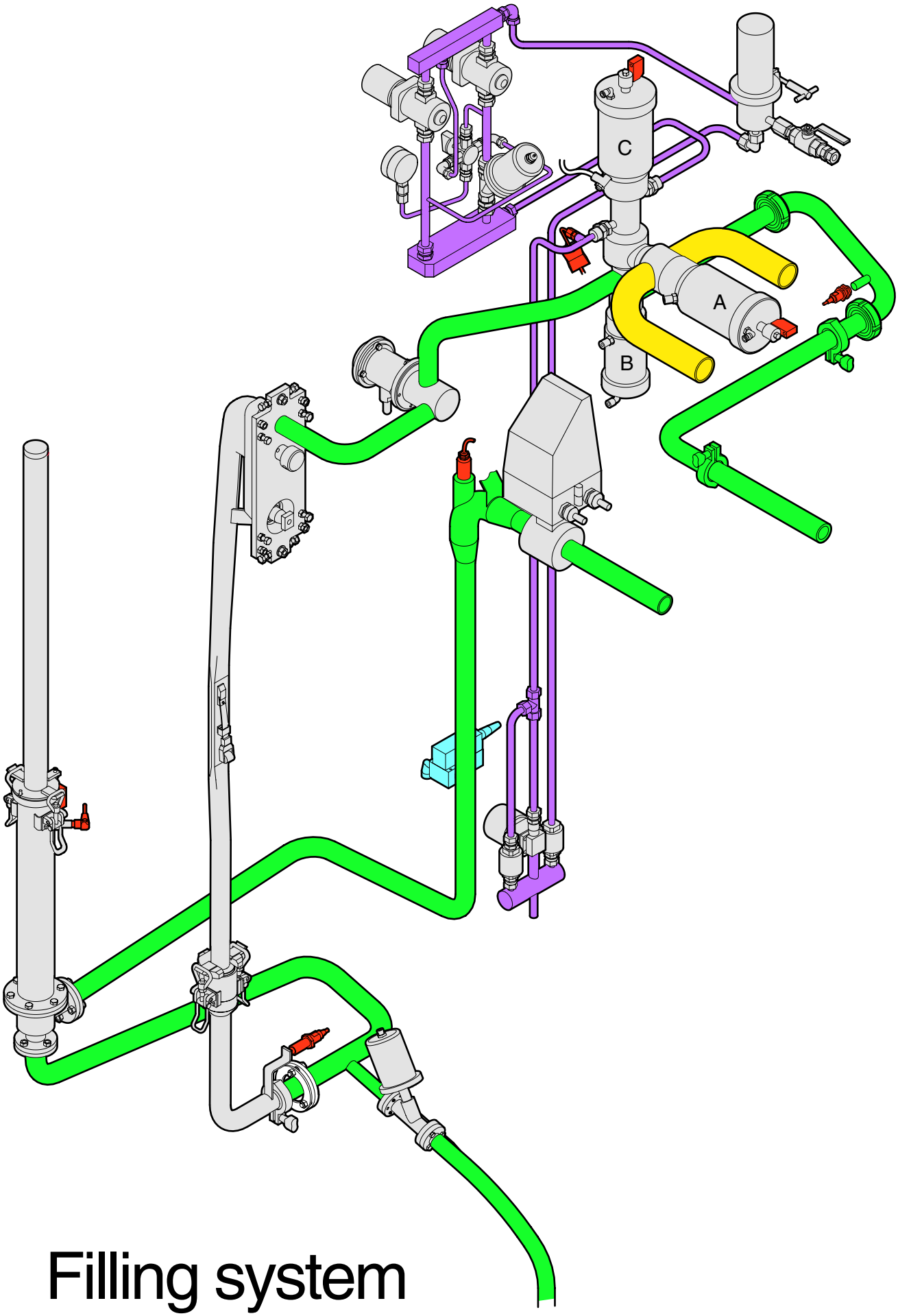

Filling system

CIP cleaning valve group with float

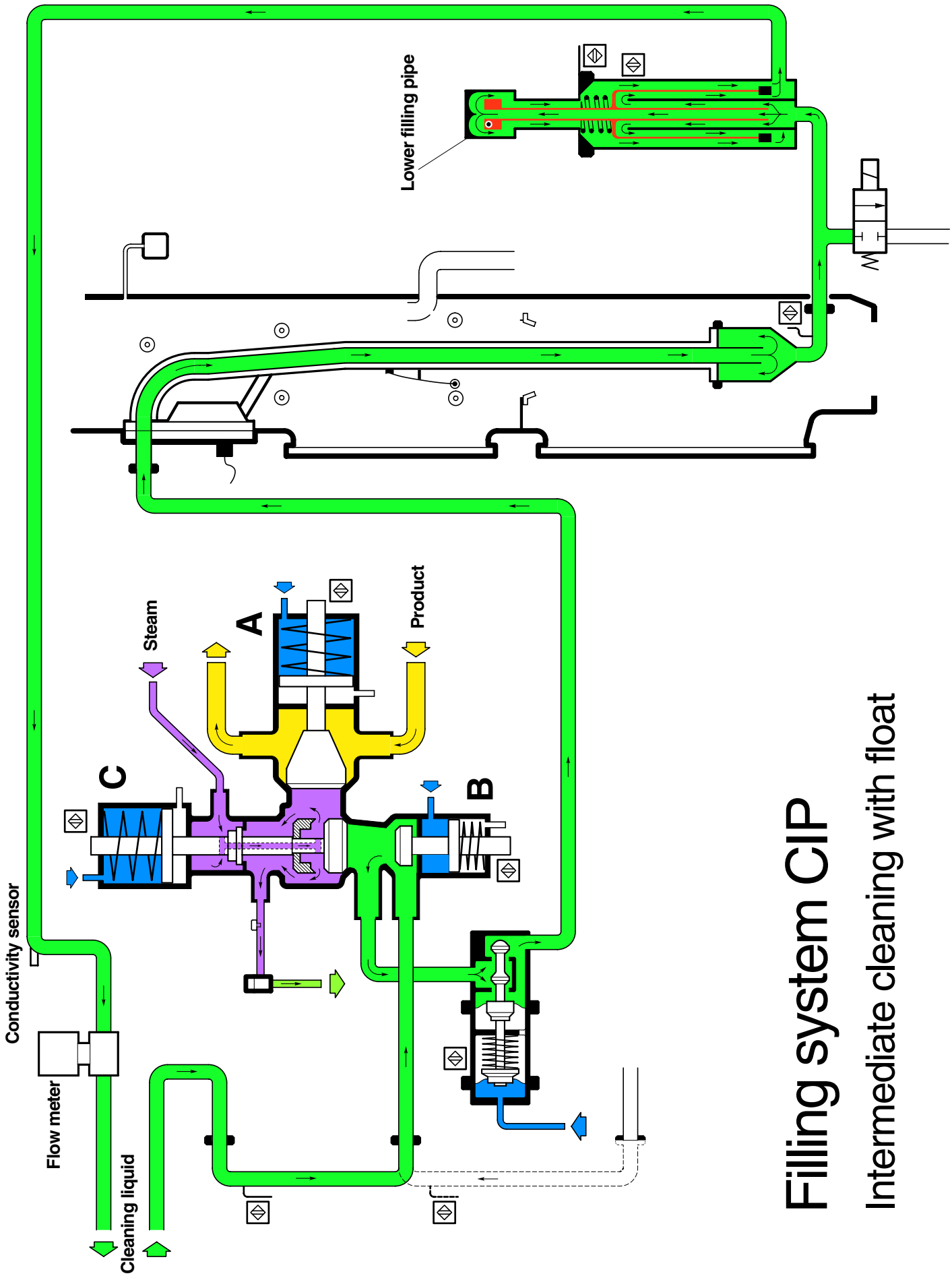

Filling system CIP

Intermediate cleaning with float

Technical Training Centre Lund, Sweden	Machine type TBA/22 050V	Issue 1/0305	OH 1403:1

Cleaning system TBA/22 050V

CIP Blowing 1, with float

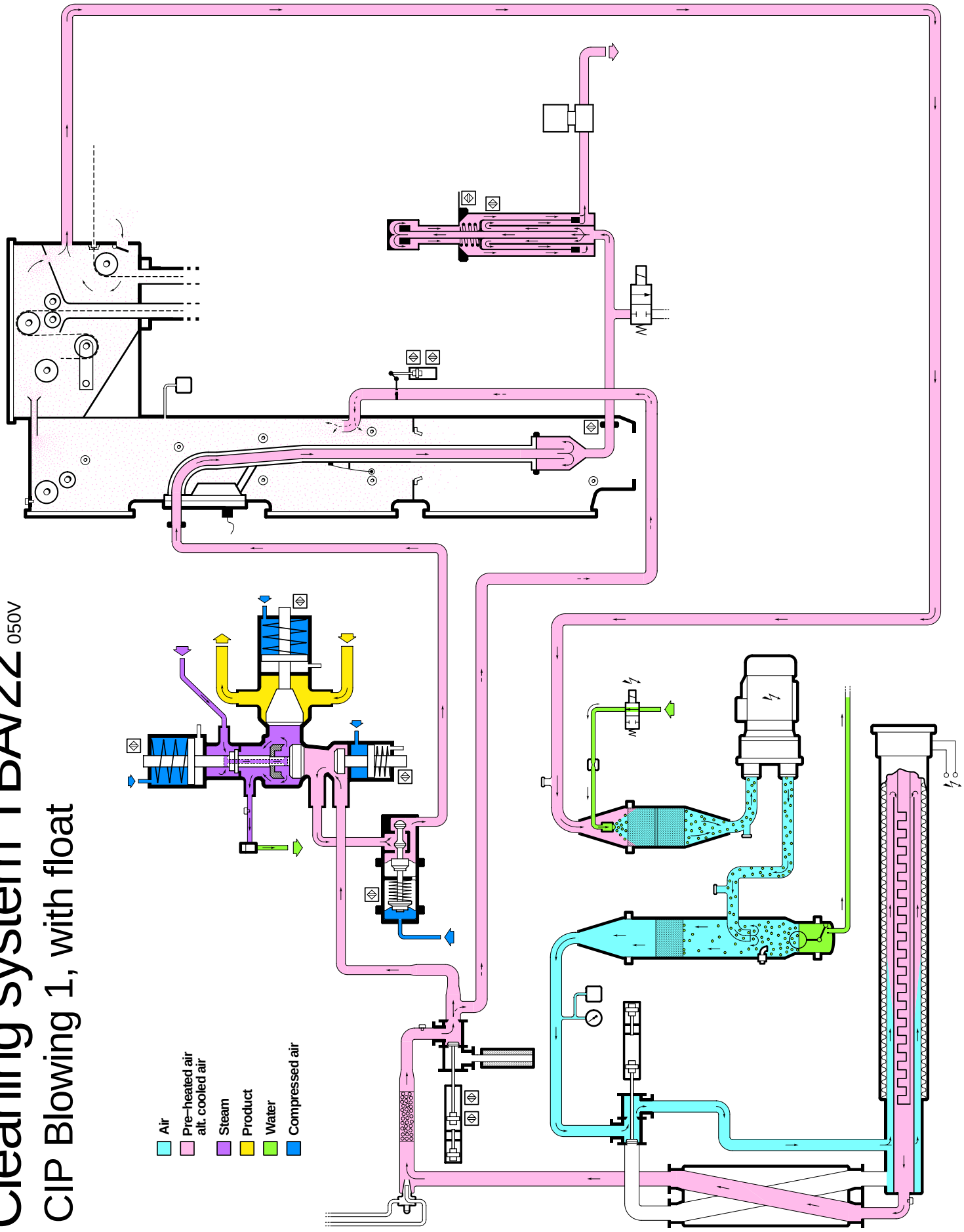

Technical Training Centre Lund, Sweden	Machine type TBA/22 050V	Issue 1/0306	OH 1411:1

Cleaning system TBA/22 050V

CIP Blowing 2, with float

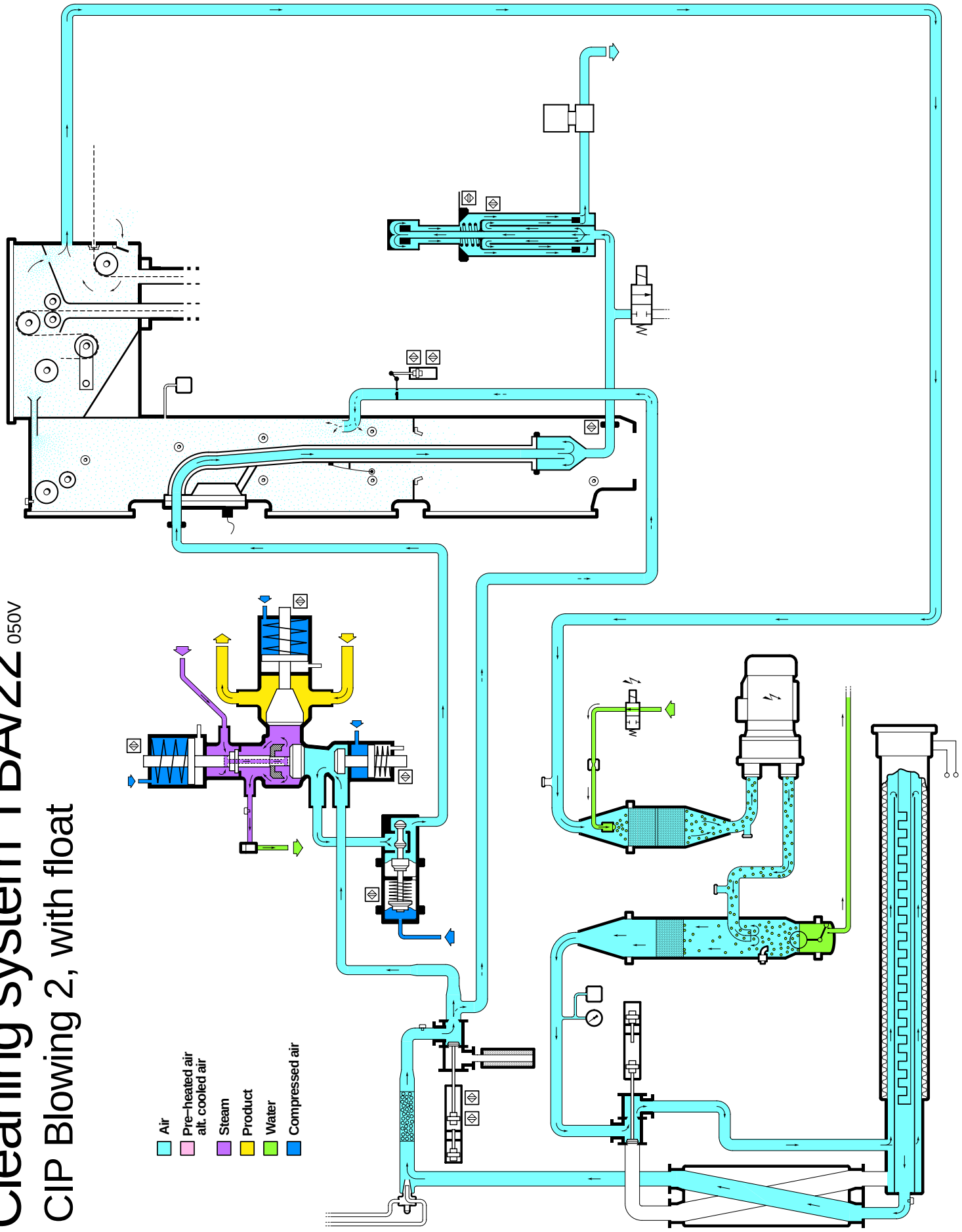

Technical Training Centre Lund, Sweden	Machine type TBA/22 050V	Issue 1/0306	OH 1411:2

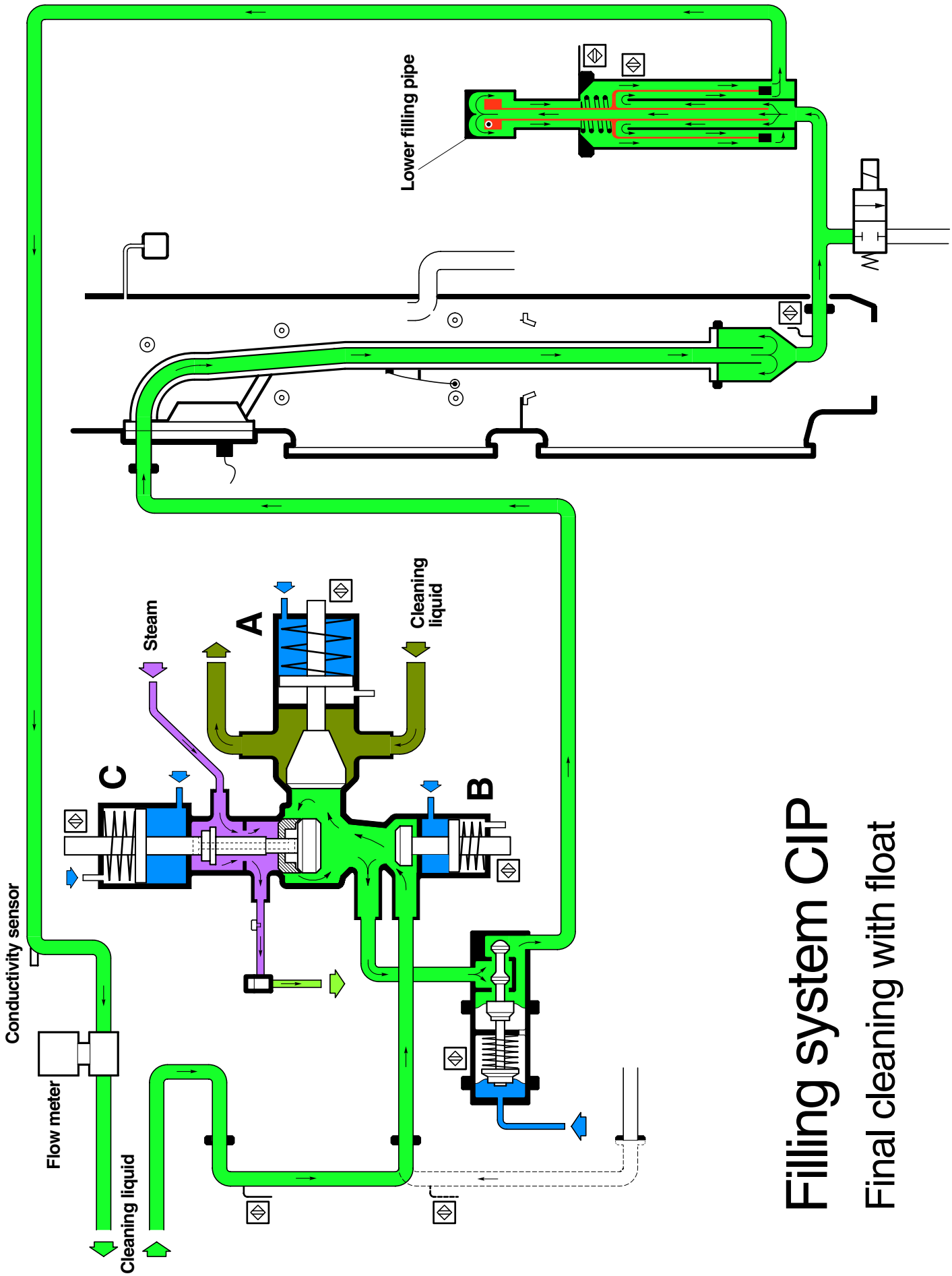

Filling system CIP

Final cleaning with float

Technical Training Centre Lund, Sweden	Machine type TBA/22 050V	Issue 1/0305	OH 1403:2

Technical Training Centre
Lund, Sweden

Machine type
TBA/22 050V

Issue
1/0212

OH 1214

Sequence diagram
CIP Blowing

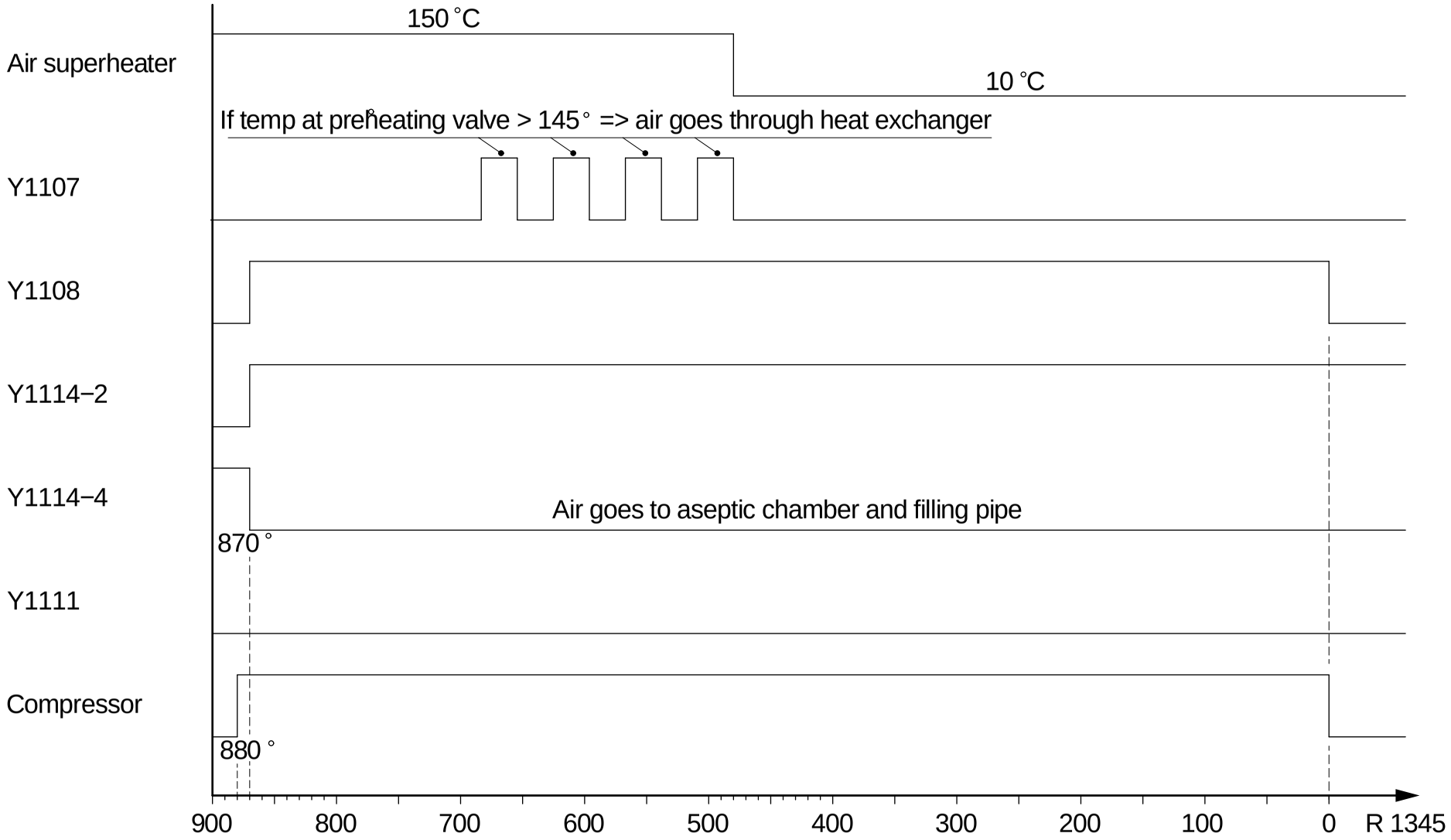

External cleaning system

1 Compressed air
2 Cold water
3 Warm water
4 Upper cleaning circuit
5 Superstructure circuit
6 Dosing pump
7 Chemical supply
8 Cleaning pump
9 Lower cleaning circuit

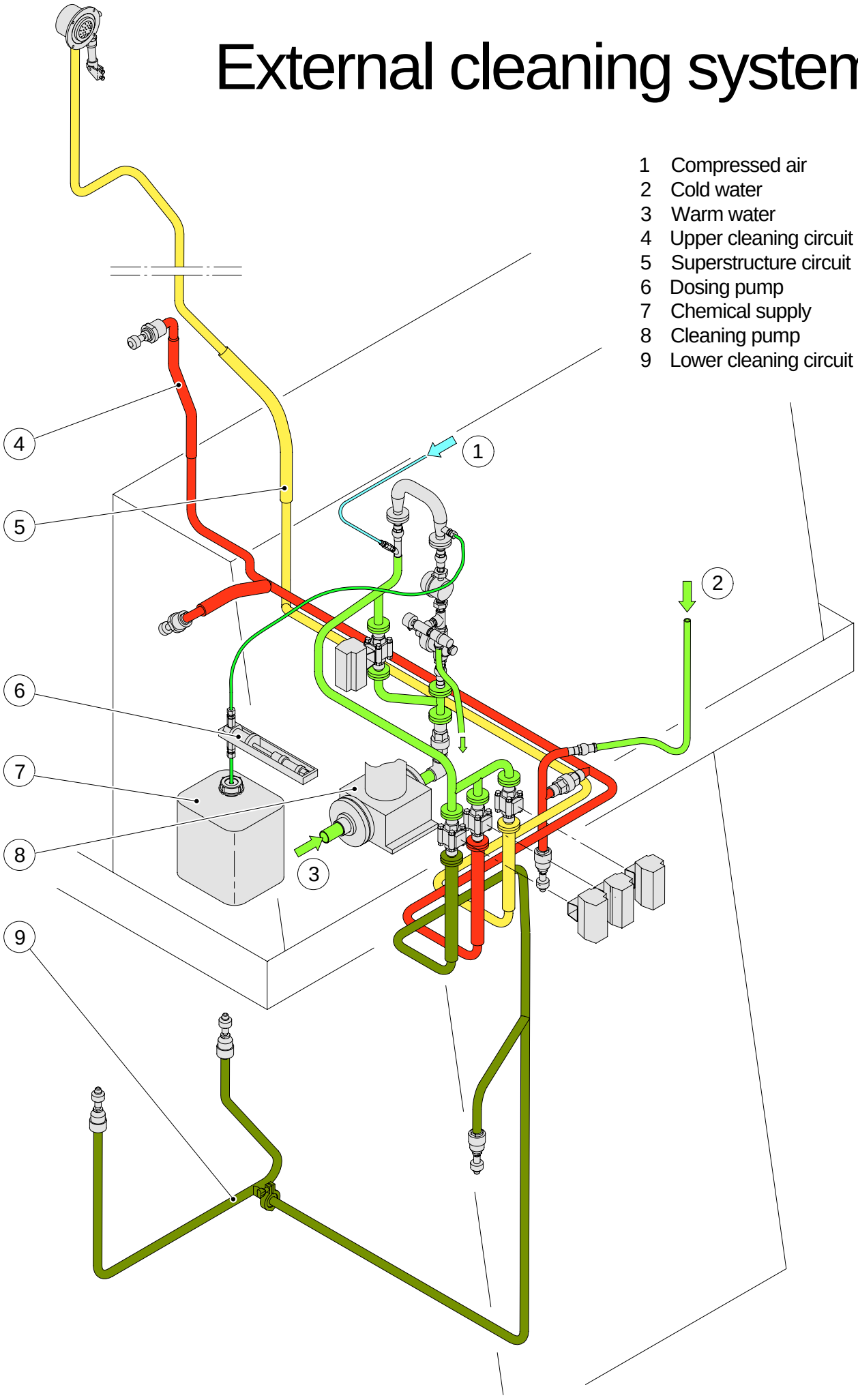

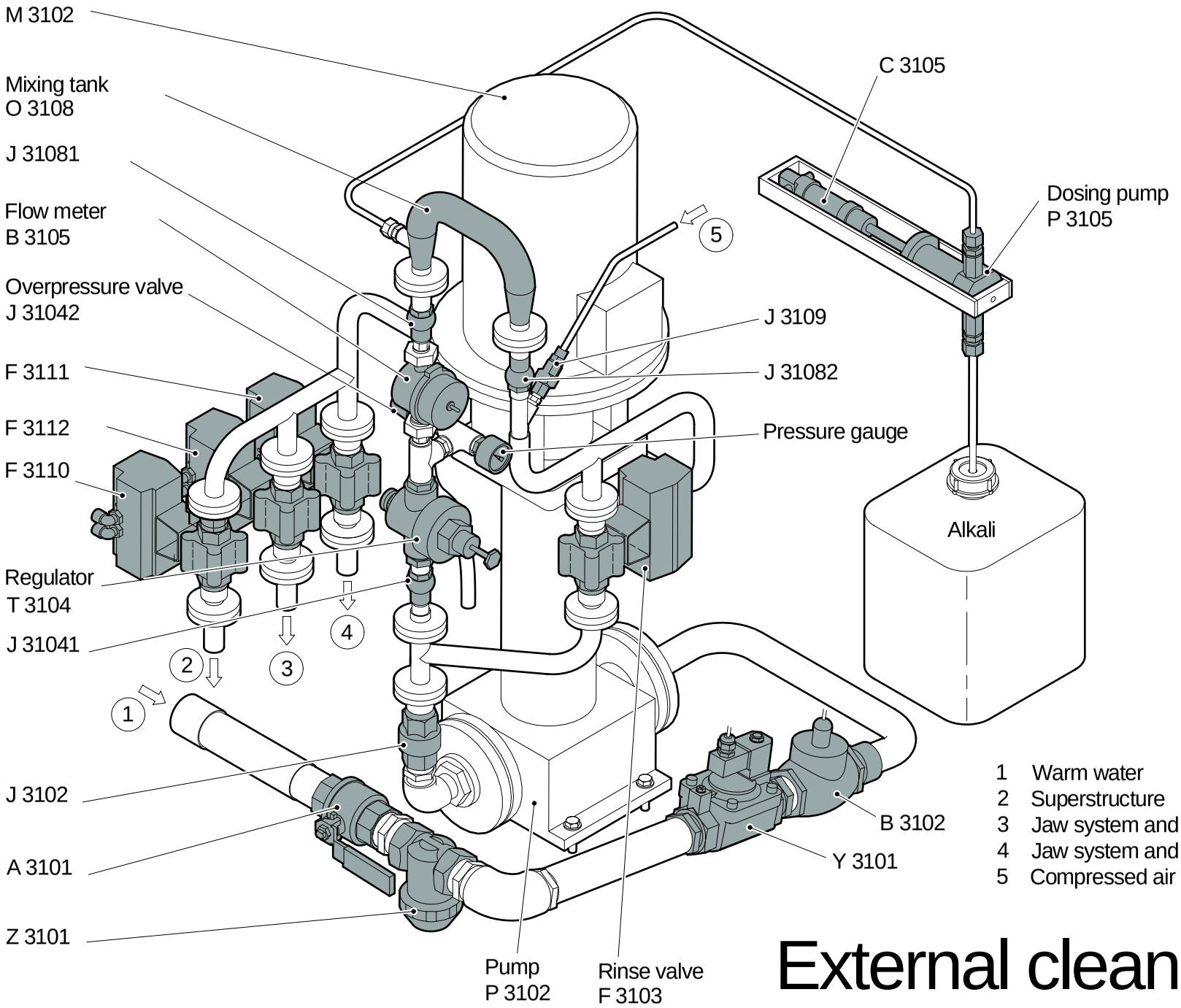

1 Warm water
2 Superstructure
3 Jaw system and final folder lower circuit
4 Jaw system and final folder upper circuit
5 Compressed air

External cleaning unit

External cleaning diagram

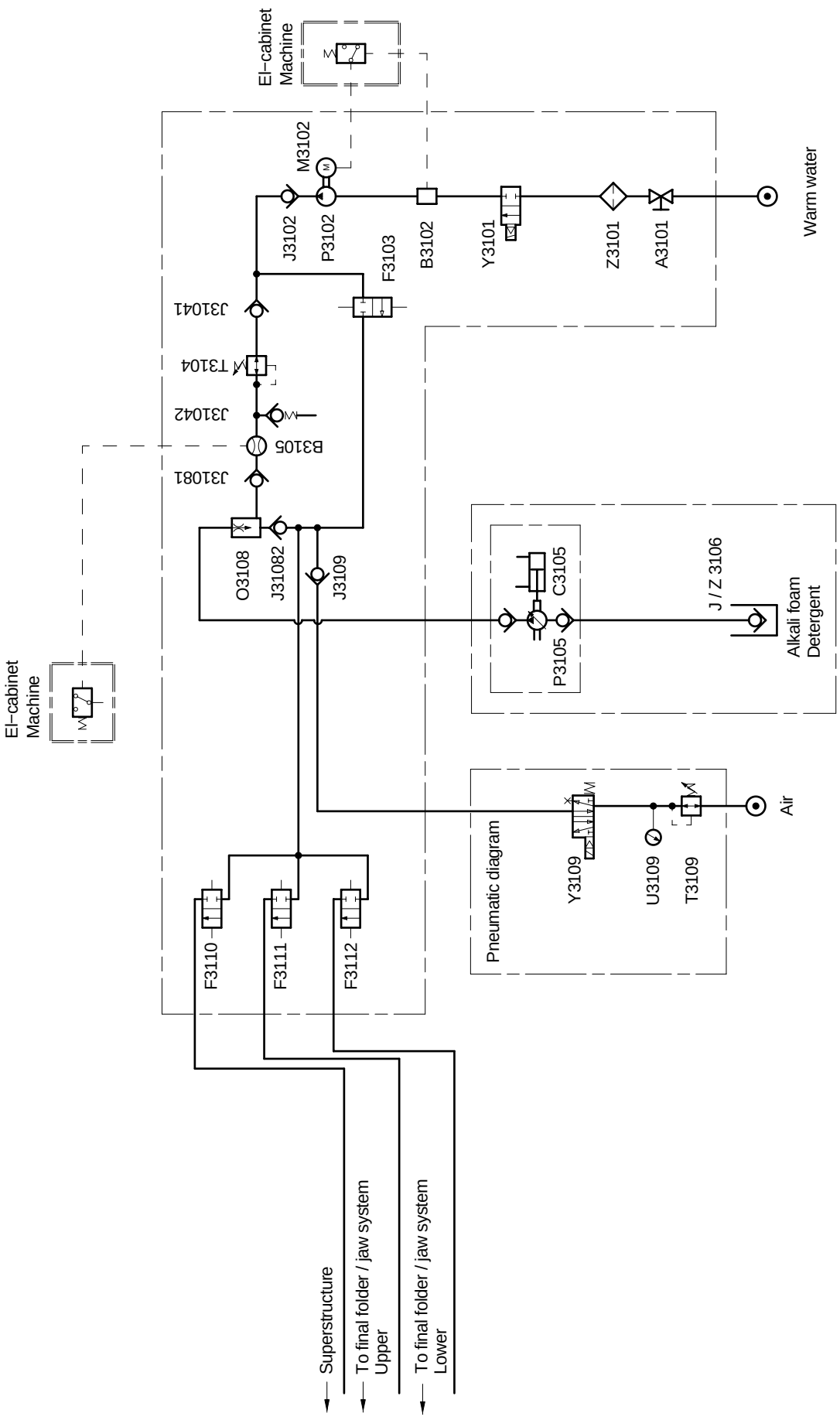

Technical Training Centre Lund, Sweden	Machine type TBA/22	Issue 2/0212	OH 845

External cleaning sequence

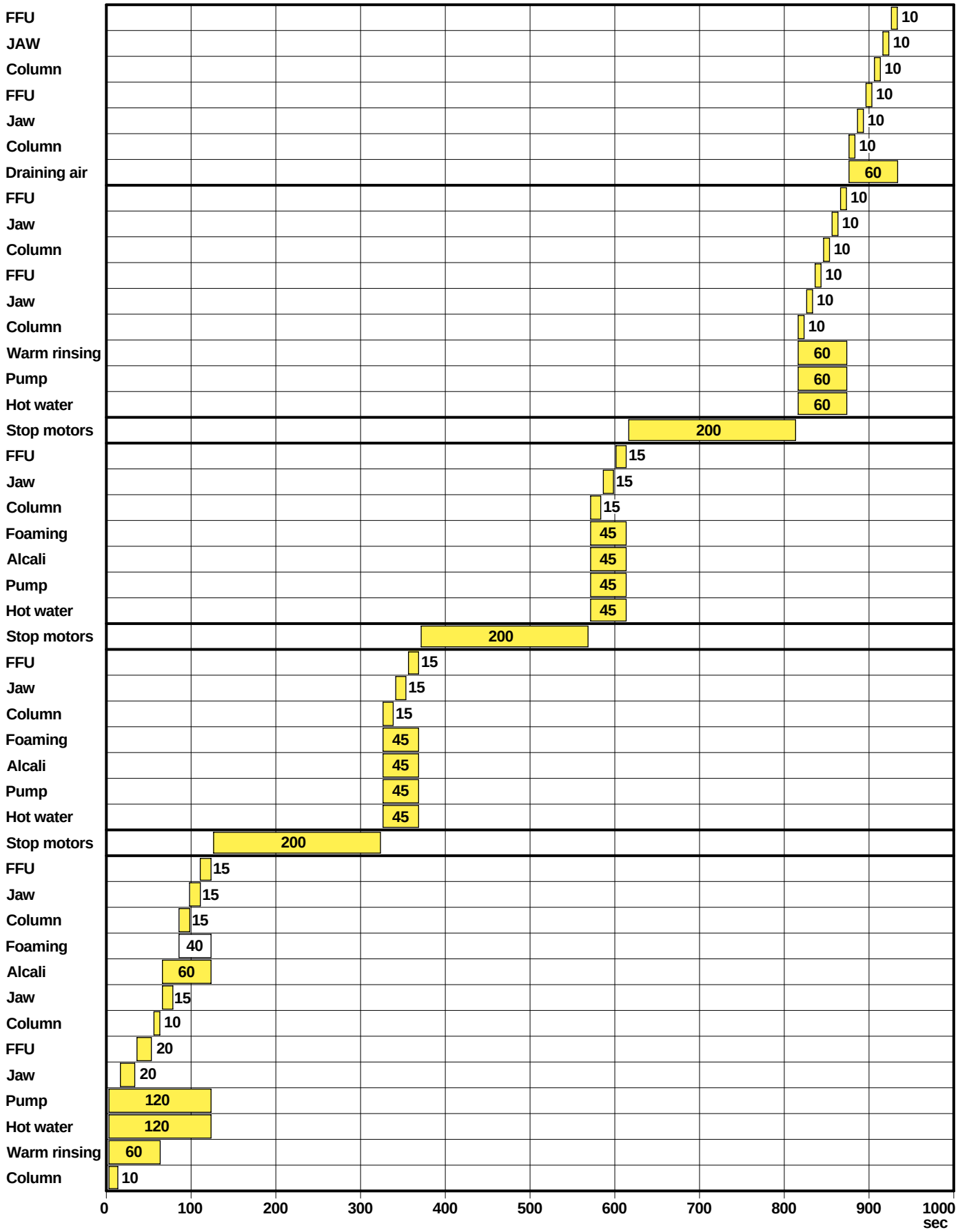

Technical Training Centre Lund, Sweden	Machine type TBA/22 050V	Issue Prel.	OH 1278

21

Headspace by Injection

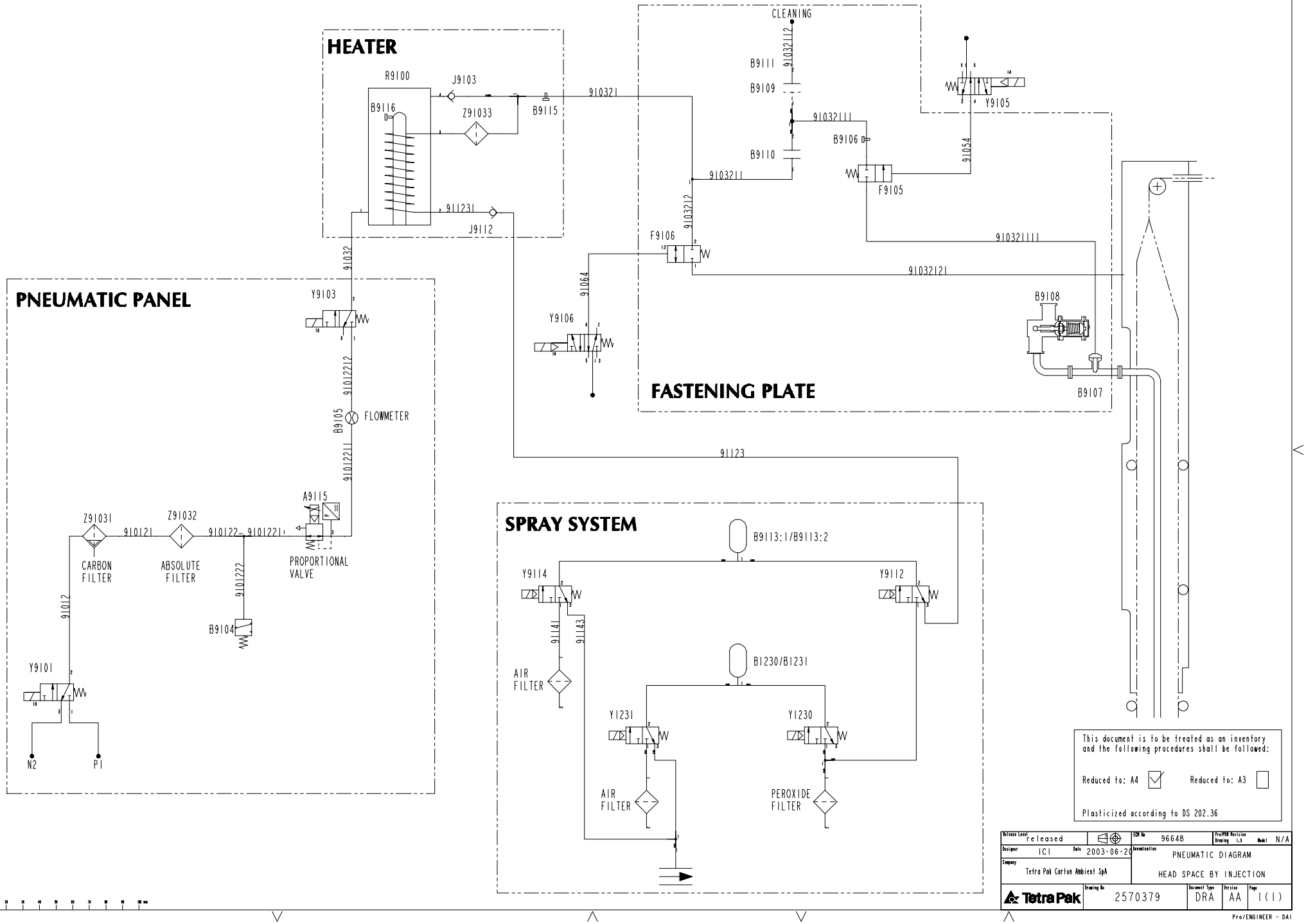

This document is to be treated as an inventory and the following procedures shall be followed:

Reduced to: A4 ☑ Reduced to: A3 ☐

Plasticized according to DS 202.36

Release Level: Released		ECR No: 96648	Pro/PDB Revision Drawing: 1.3 Model: N/A
Designer: ICI	Date: 2003-06-20	Denomination: PNEUMATIC DIAGRAM HEAD SPACE BY INJECTION	
Company: Tetra Pak Carton Ambient SpA			
Tetra Pak	Drawing No: 2570379	Document Type: DRA	Version: AA Page: 1 (1)

Pro/ENGINEER - DAI

This drawing must not without the consent of Tetra Pak be copied, transmitted or disclosed to any third party.

Headspace by injection

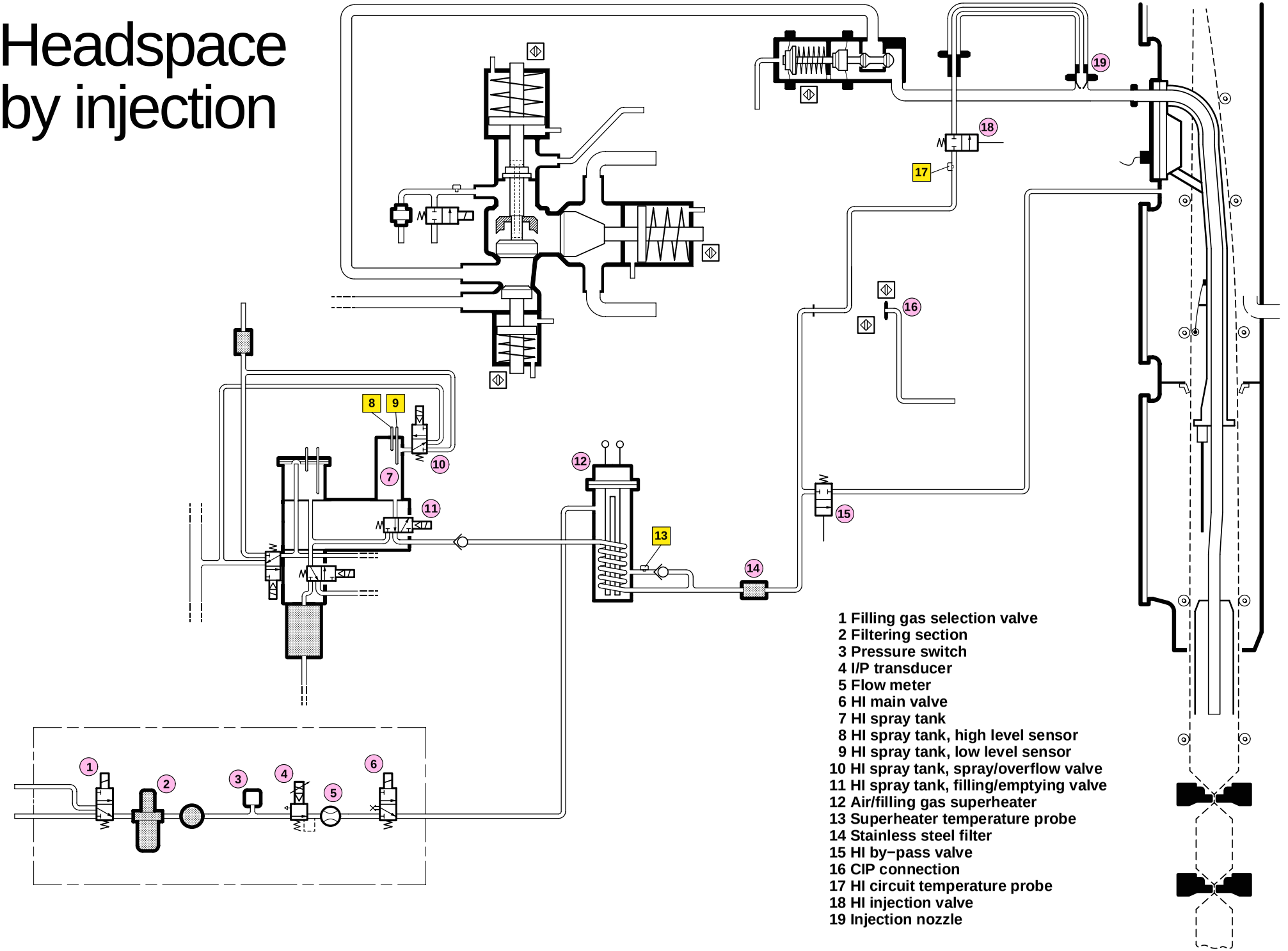

1 Filling gas selection valve
2 Filtering section
3 Pressure switch
4 I/P transducer
5 Flow meter
6 HI main valve
7 HI spray tank
8 HI spray tank, high level sensor
9 HI spray tank, low level sensor
10 HI spray tank, spray/overflow valve
11 HI spray tank, filling/emptying valve
12 Air/filling gas superheater
13 Superheater temperature probe
14 Stainless steel filter
15 HI by−pass valve
16 CIP connection
17 HI circuit temperature probe
18 HI injection valve
19 Injection nozzle

Technical Training Centre
Lund, Sweden

Machine type
HI – TBA/22 050V

Issue
1/0501

OH 1620:1

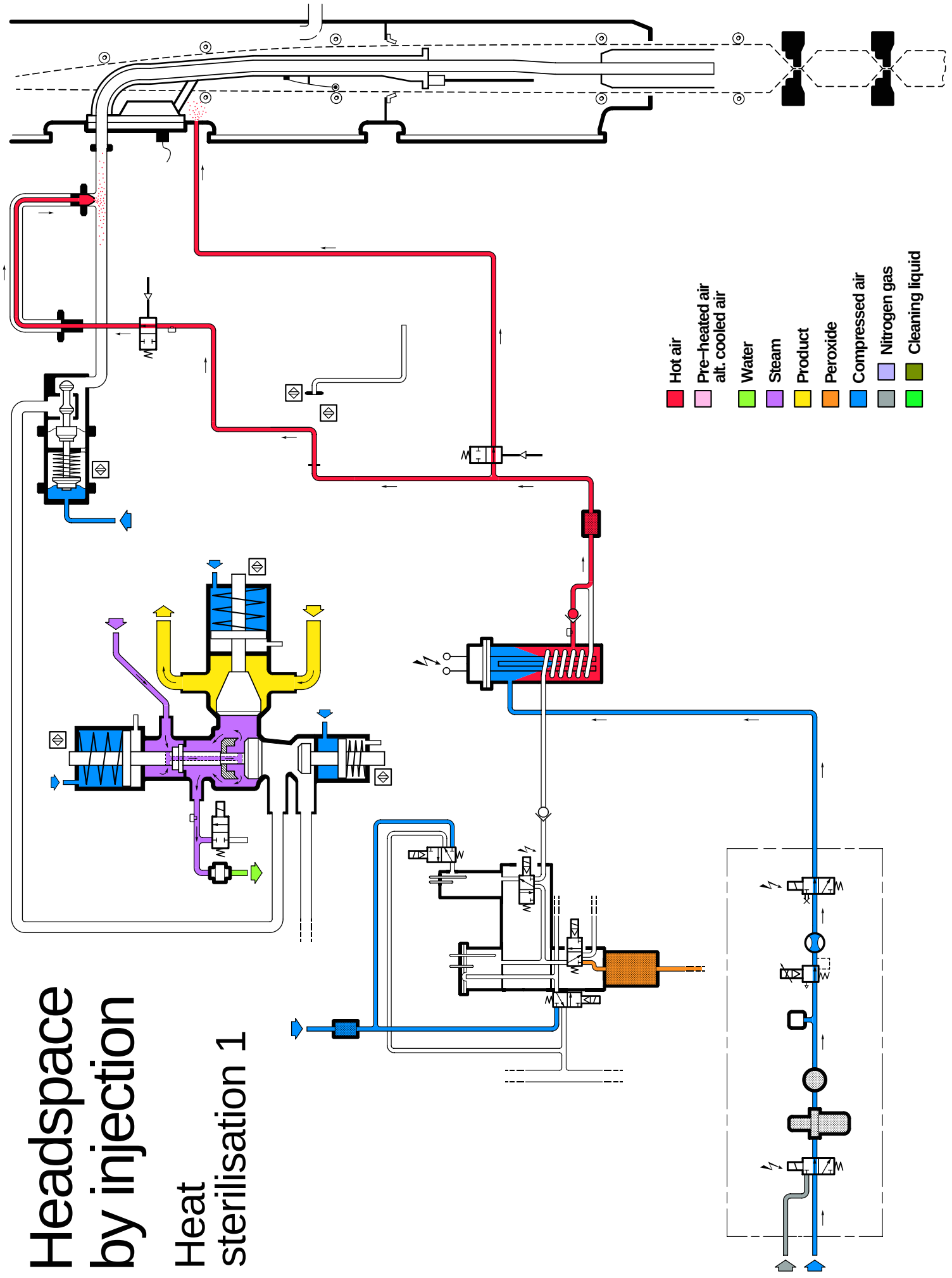

Headspace by injection

Heat sterilisation 1

Technical Training Centre Lund, Sweden	Machine type HI – TBA/22 050V	Issue 1/0501	OH 1620:2

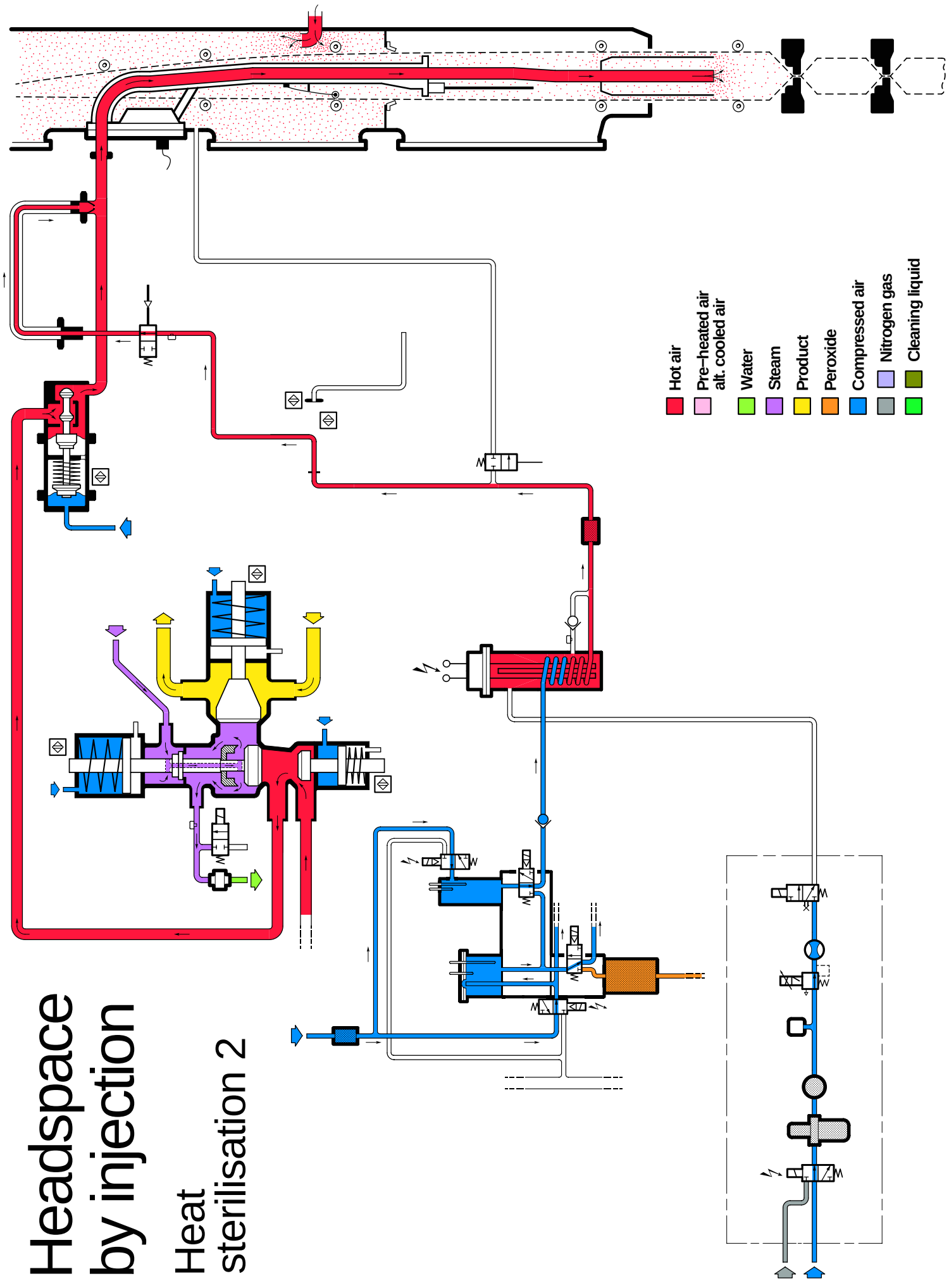

Headspace by injection

Heat sterilisation 2

Technical Training Centre Lund, Sweden	Machine type HI – TBA/22 050V	Issue 1/0501	OH 1620:3

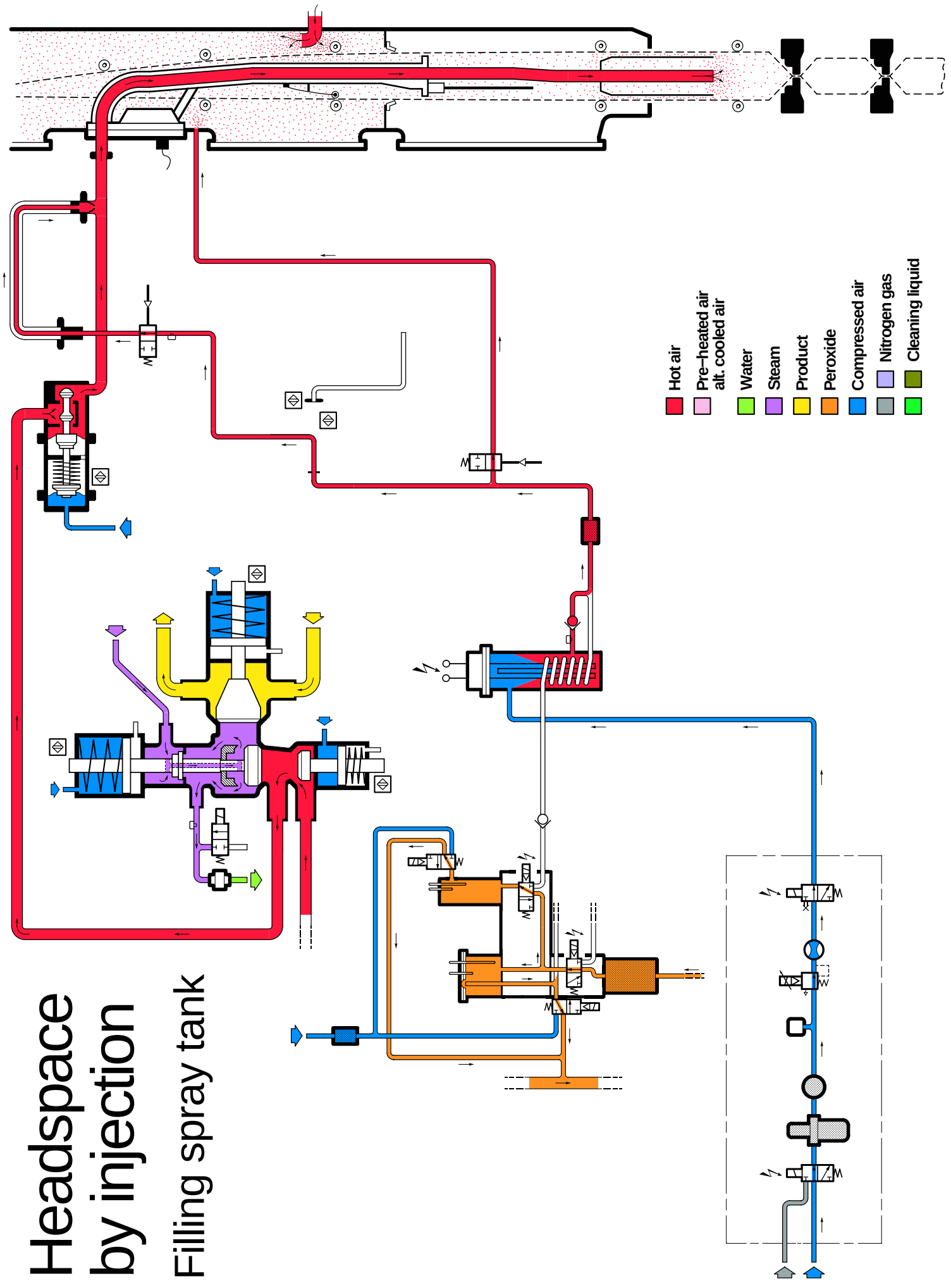

Headspace by injection

Filling spray tank

Technical Training Centre Lund, Sweden	Machine type HI – TBA/22 050V	Issue 1/0501	OH 1620:4

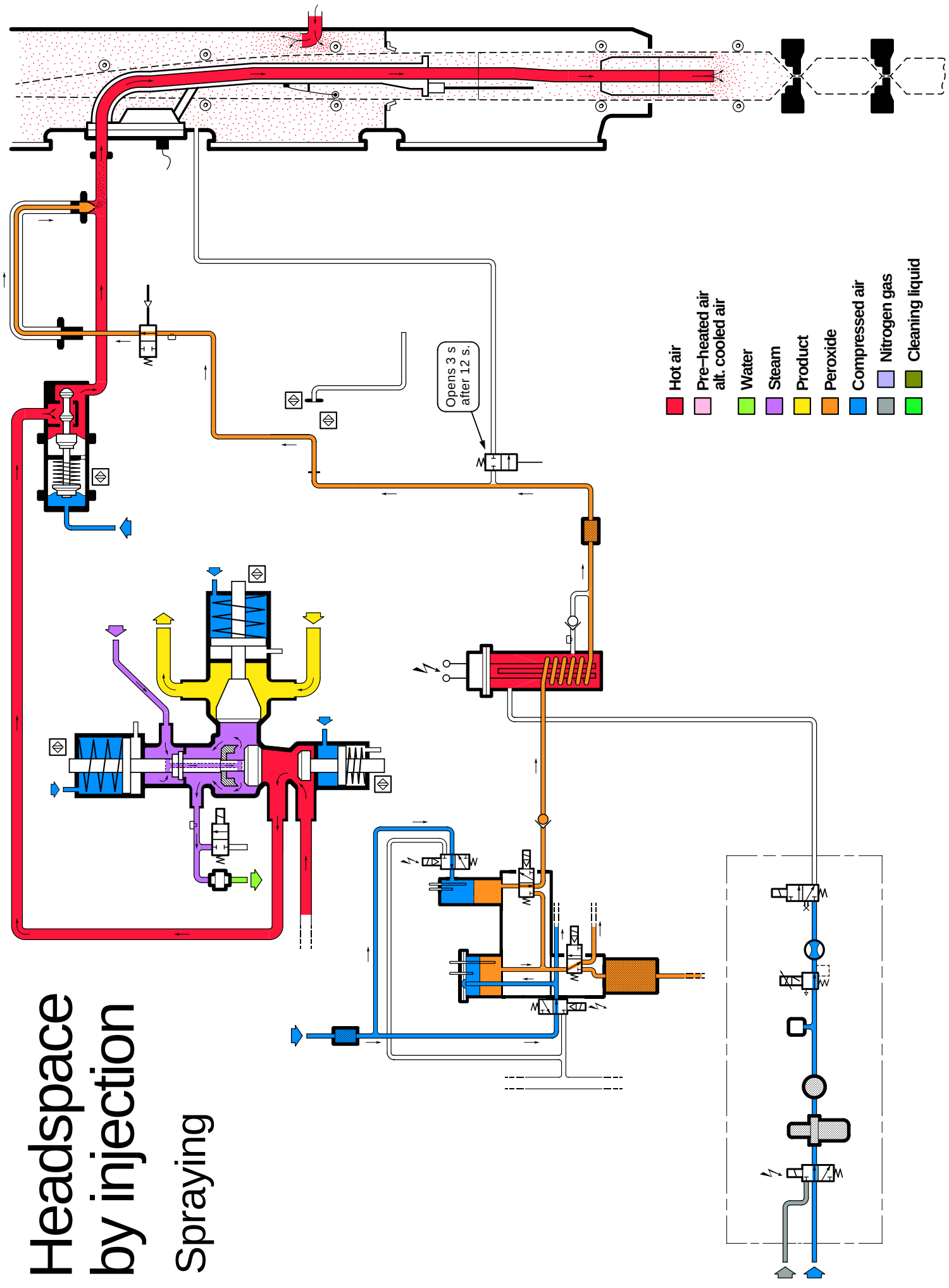

Headspace by injection

Spraying

Technical Training Centre Lund, Sweden	Machine type HI – TBA/22 050V	Issue 1/0501	OH 1620:5

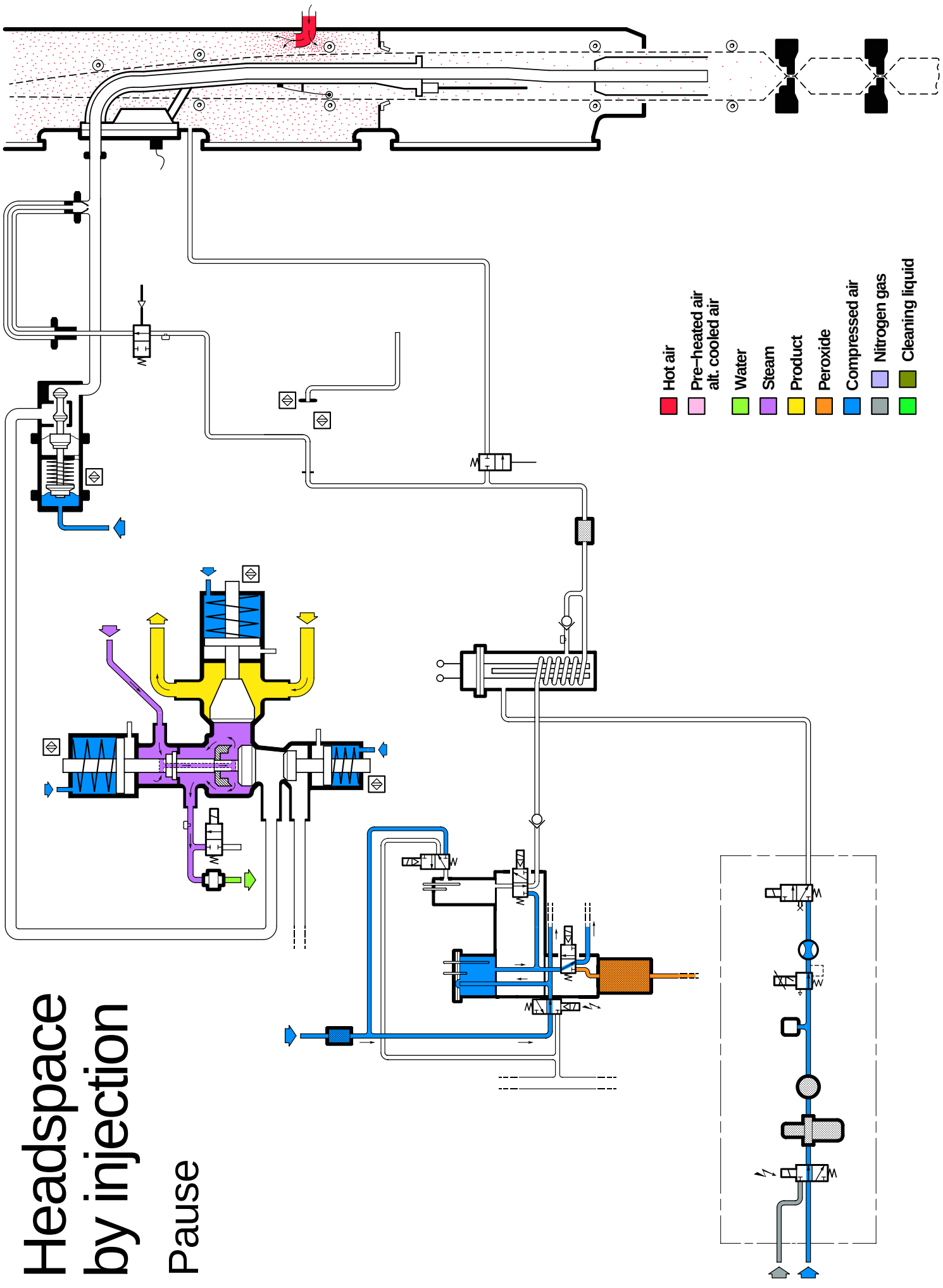

Headspace by injection

Pause

Technical Training Centre Lund, Sweden	Machine type HI – TBA/22 050V	Issue 1/0501	OH 1620:6

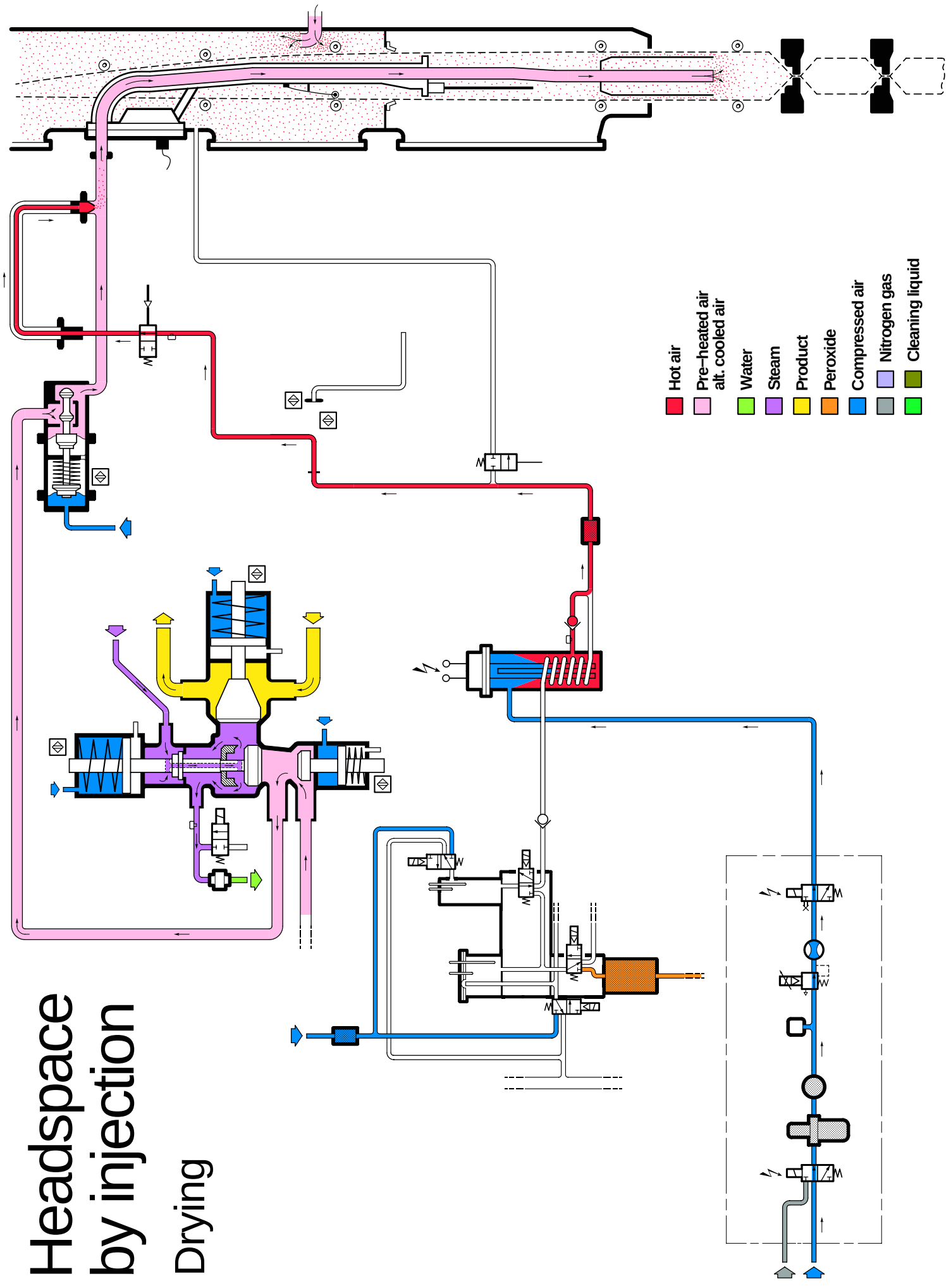

Headspace by injection

Drying

Technical Training Centre Lund, Sweden	Machine type HI – TBA/22 050V	Issue 1/0501	OH 1620:7

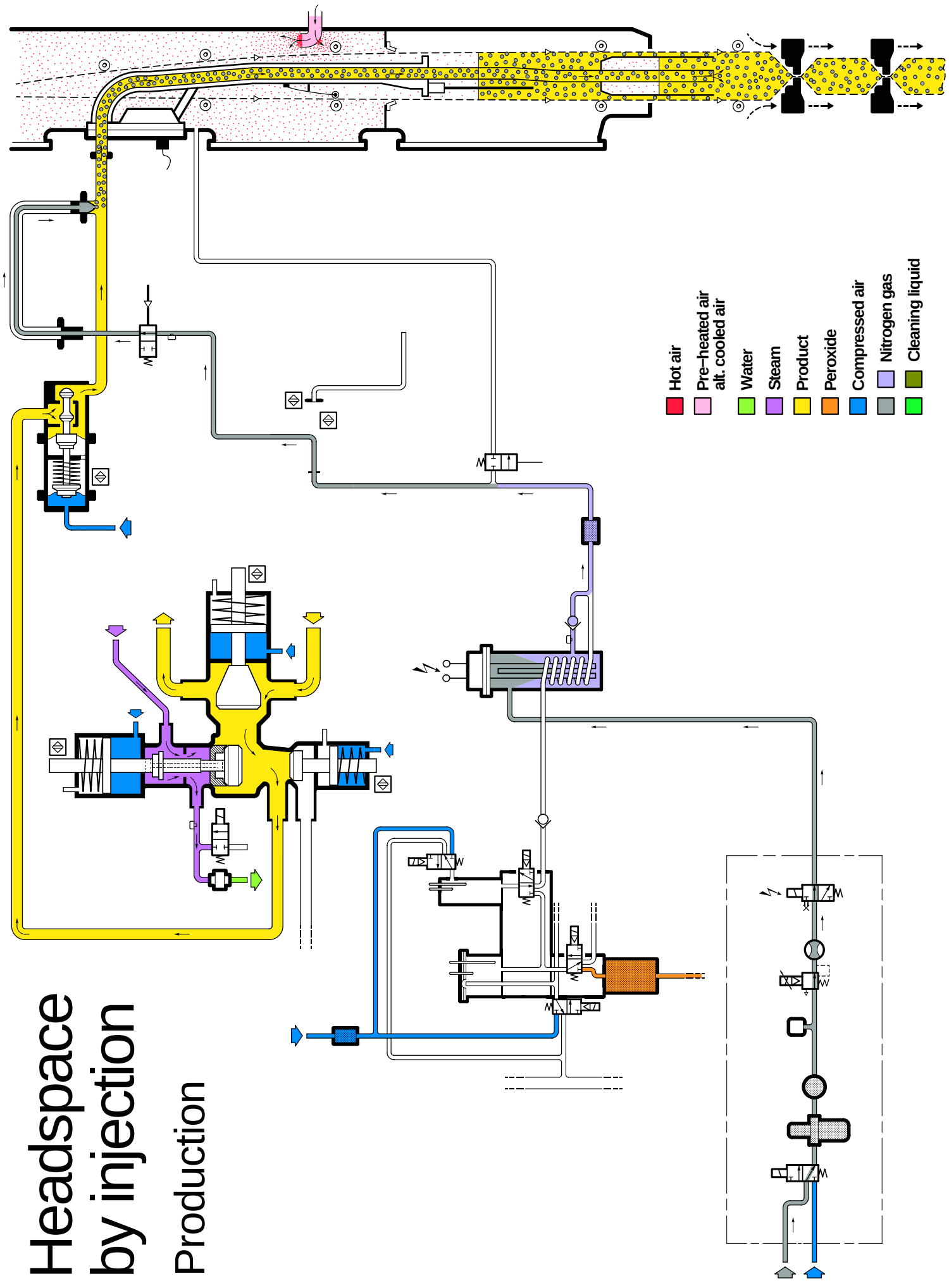

Headspace by injection

Production

Technical Training Centre Lund, Sweden	Machine type HI – TBA/22 050V	Issue 1/0501	OH 1620:8

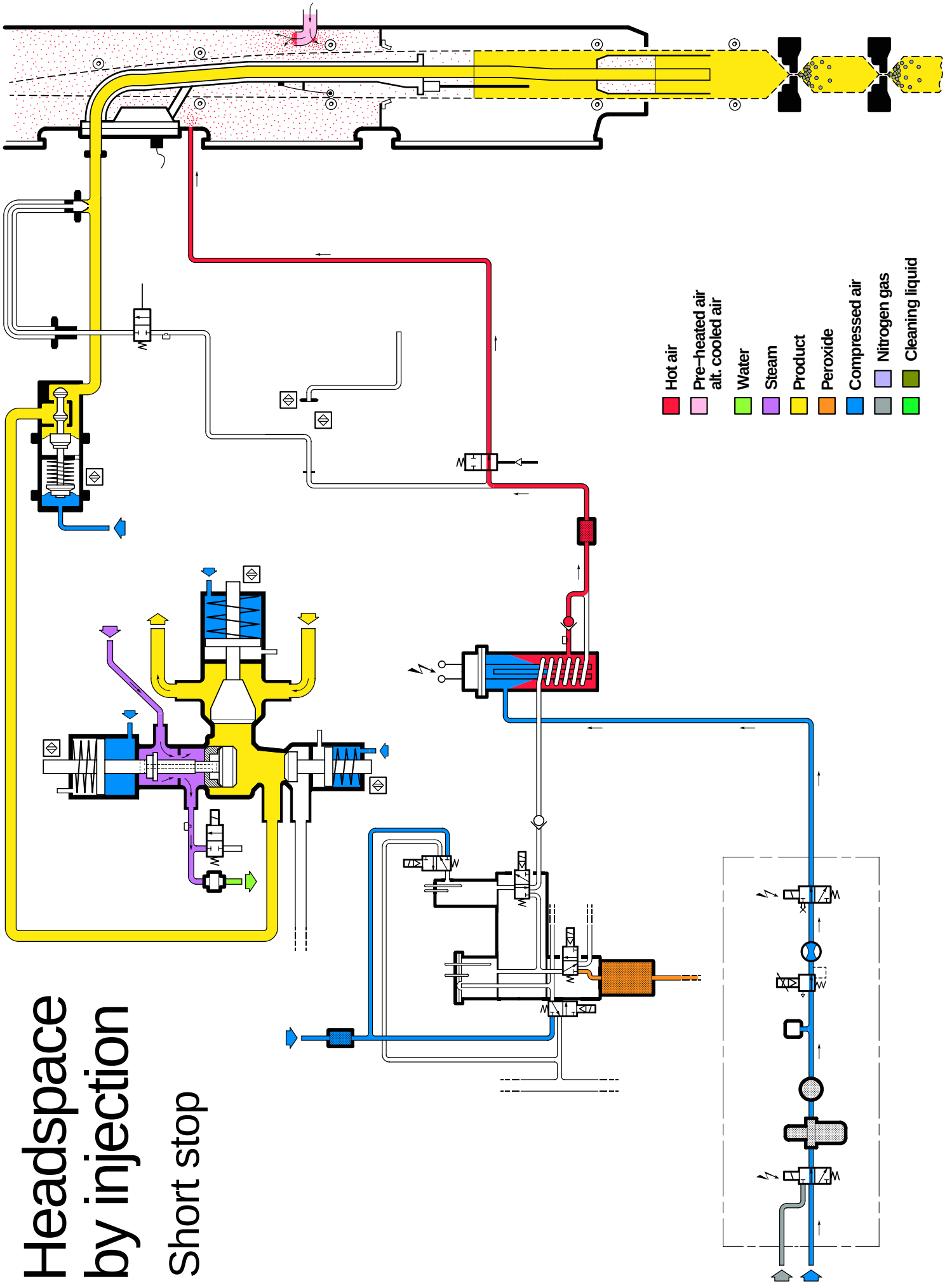

Headspace by injection

Short stop

Technical Training Centre Lund, Sweden	Machine type HI – TBA/22 050V	Issue 1/0501	OH 1620:9

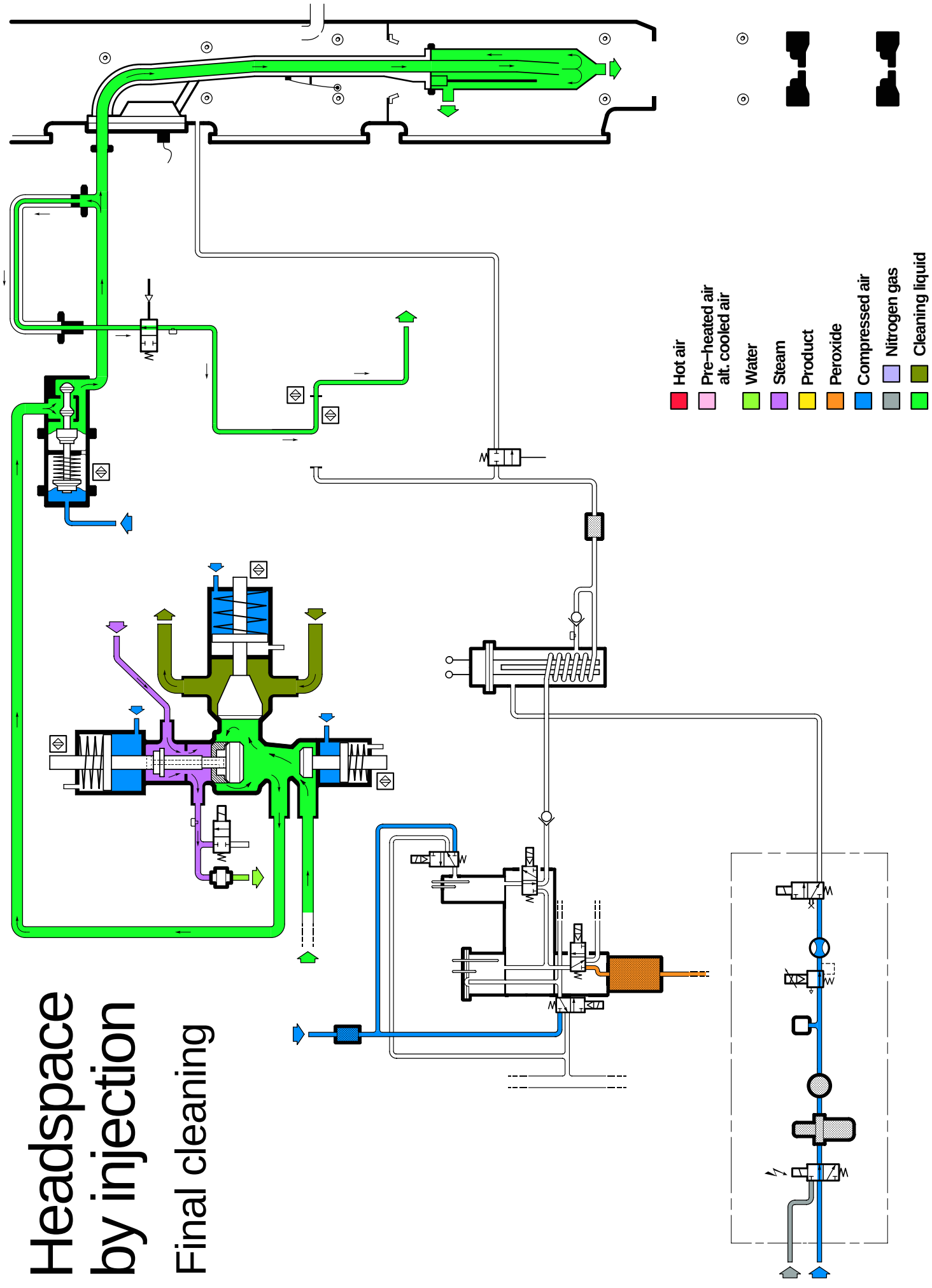

Headspace by injection

Final cleaning

Technical Training Centre Lund, Sweden	Machine type HI – TBA/22 050V	Issue 1/0501	OH 1620:10

Headspace by Injection

Overview

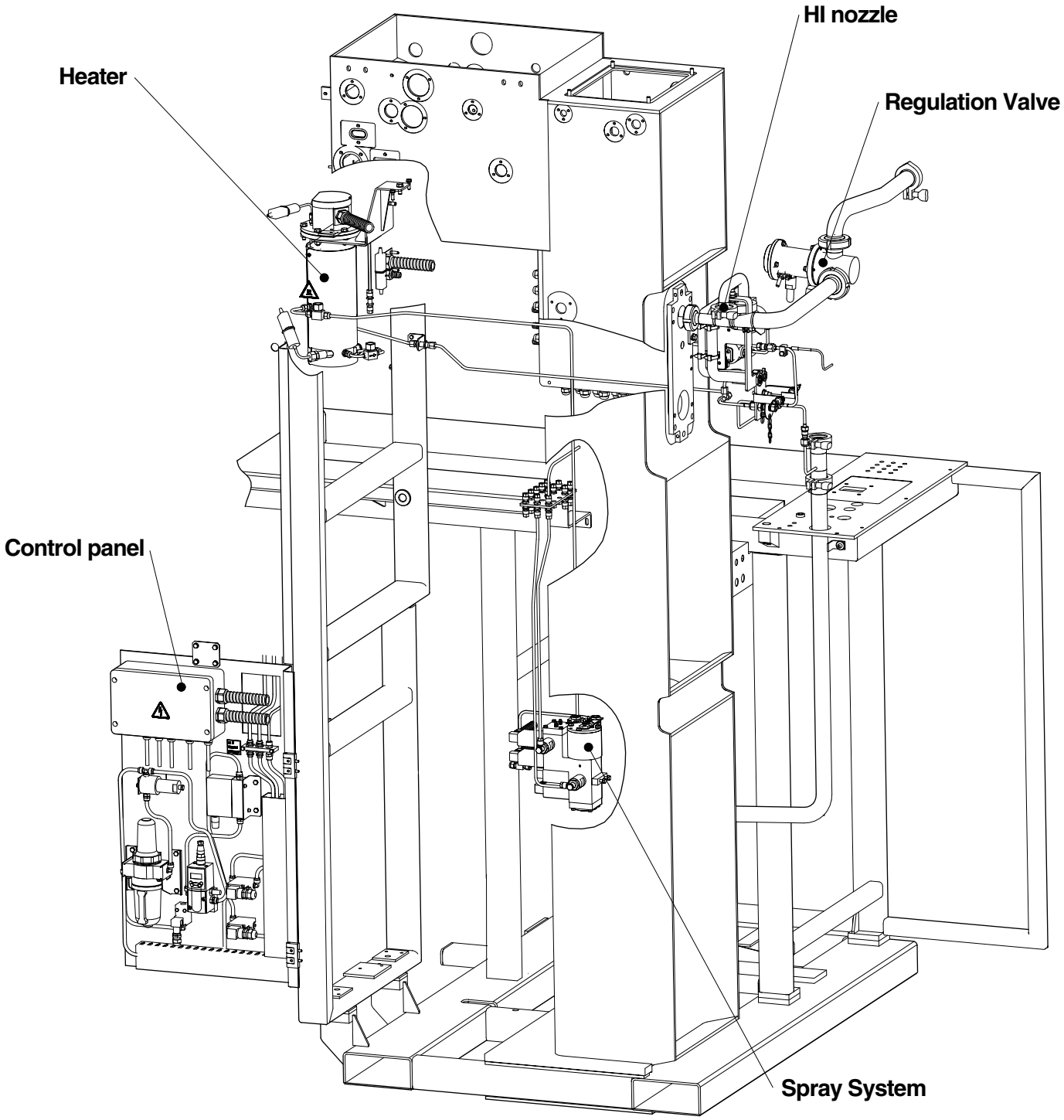

Headspace by Injection

Regulating valve assembly

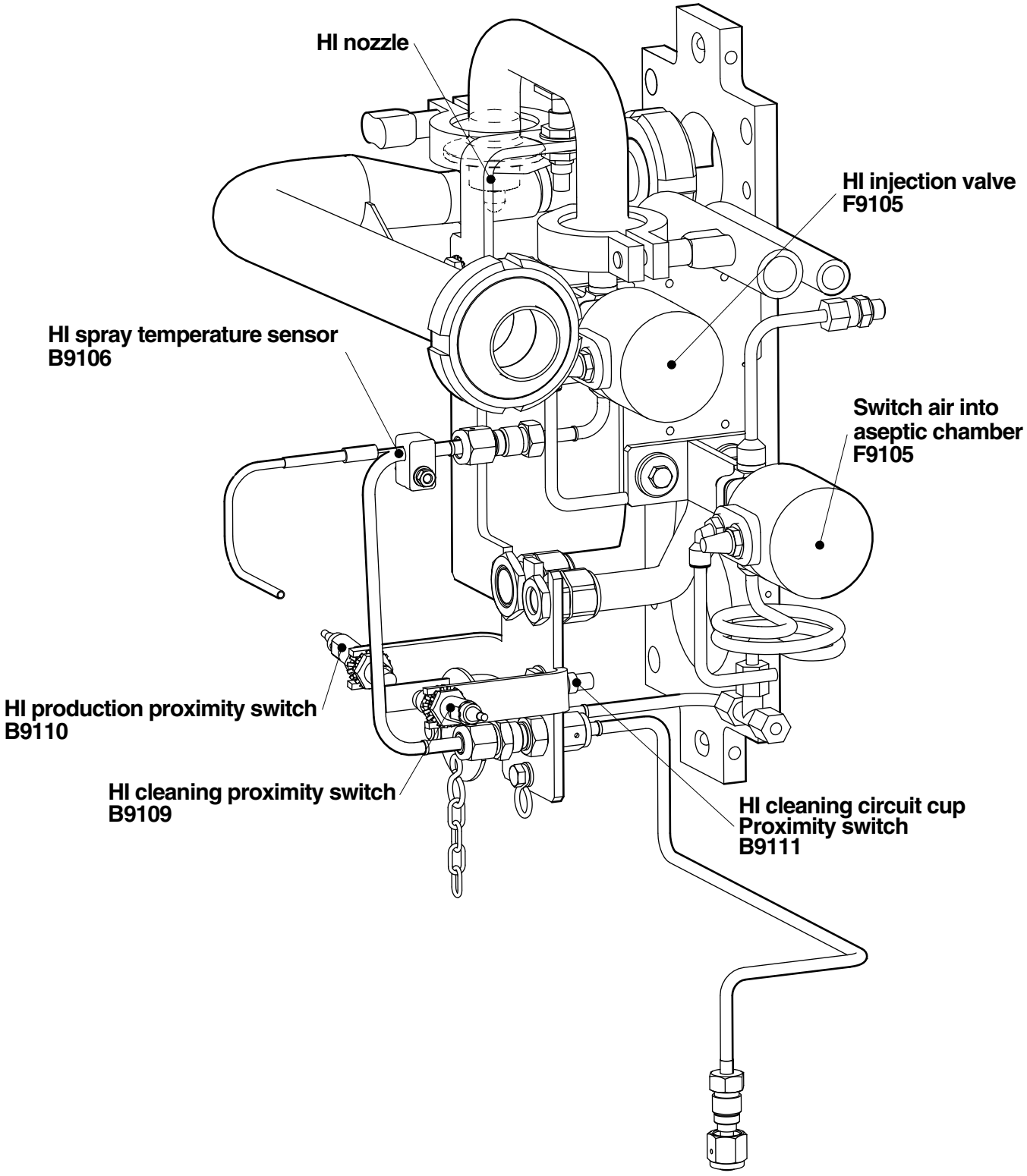

Headspace by Injection

Control panel

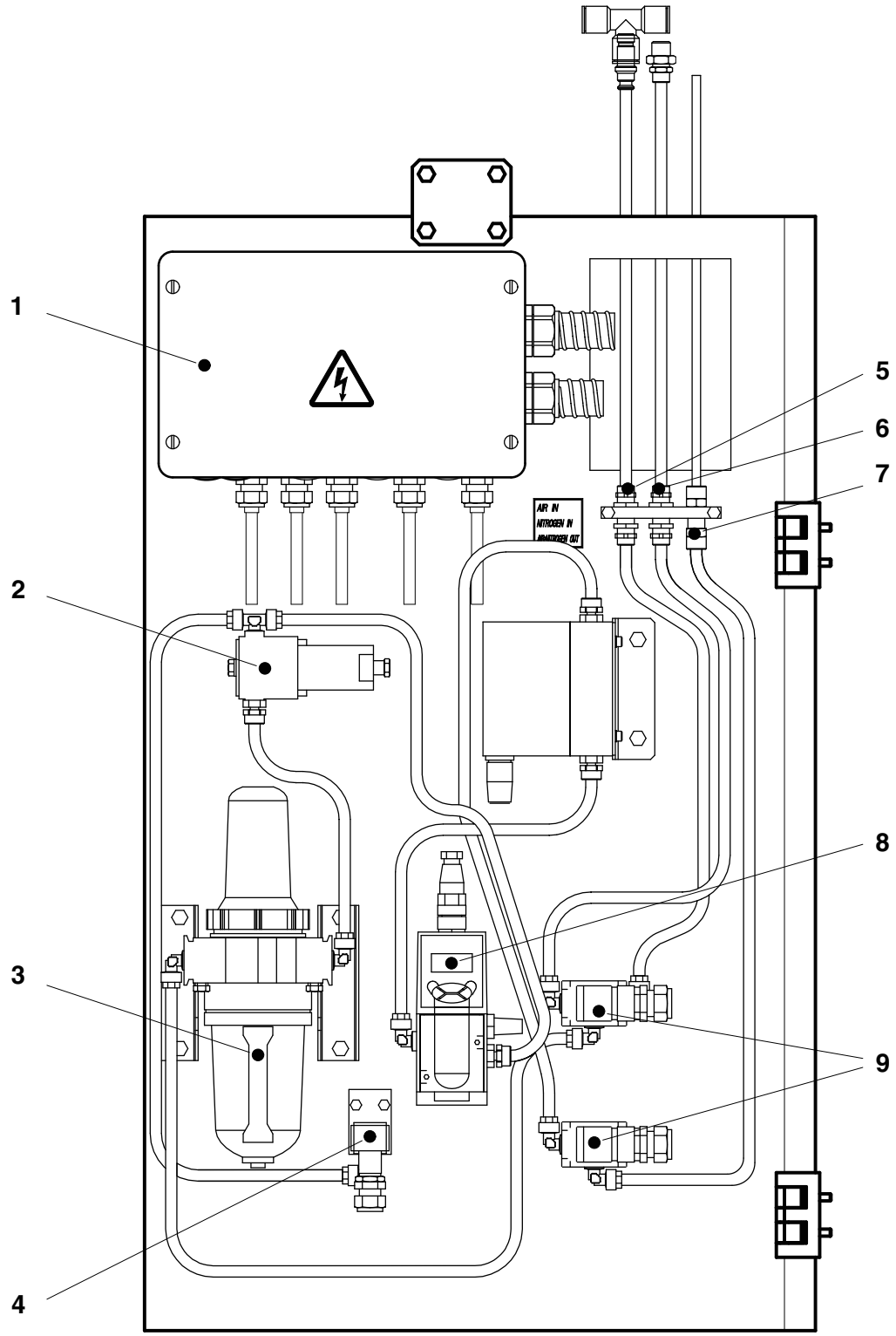

1 Connection box
2 Absolute filter
3 Carbon filter
4 Pressure switch
5 Air in coupling
6 Nitrogen in coupling
7 Air/nitrogen out coupling
8 Pressure regulator and dispaly
9 Solenoid valve