SPC
Spare Parts Catalogue

TBA/8 100V

648022-100V

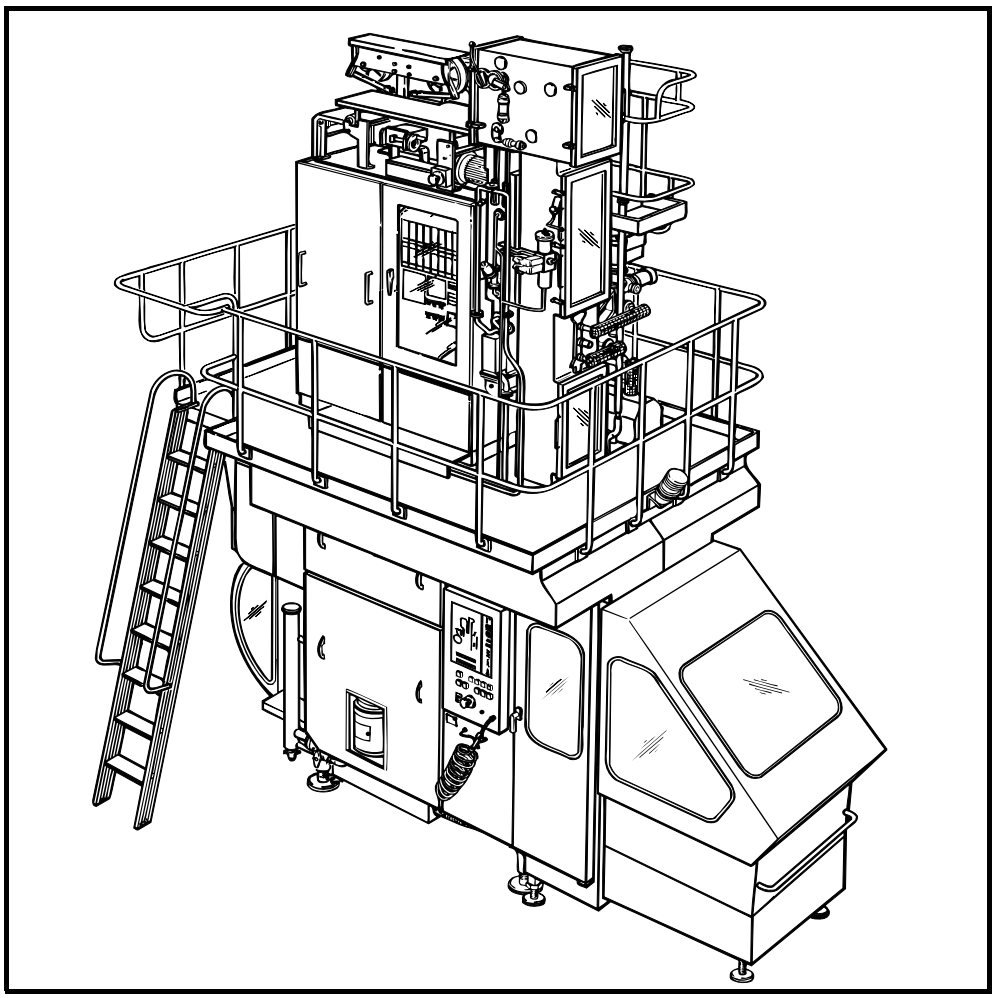

Tetra Pak

Doc No: SPC-80239-0105

Main Groups of the Machine

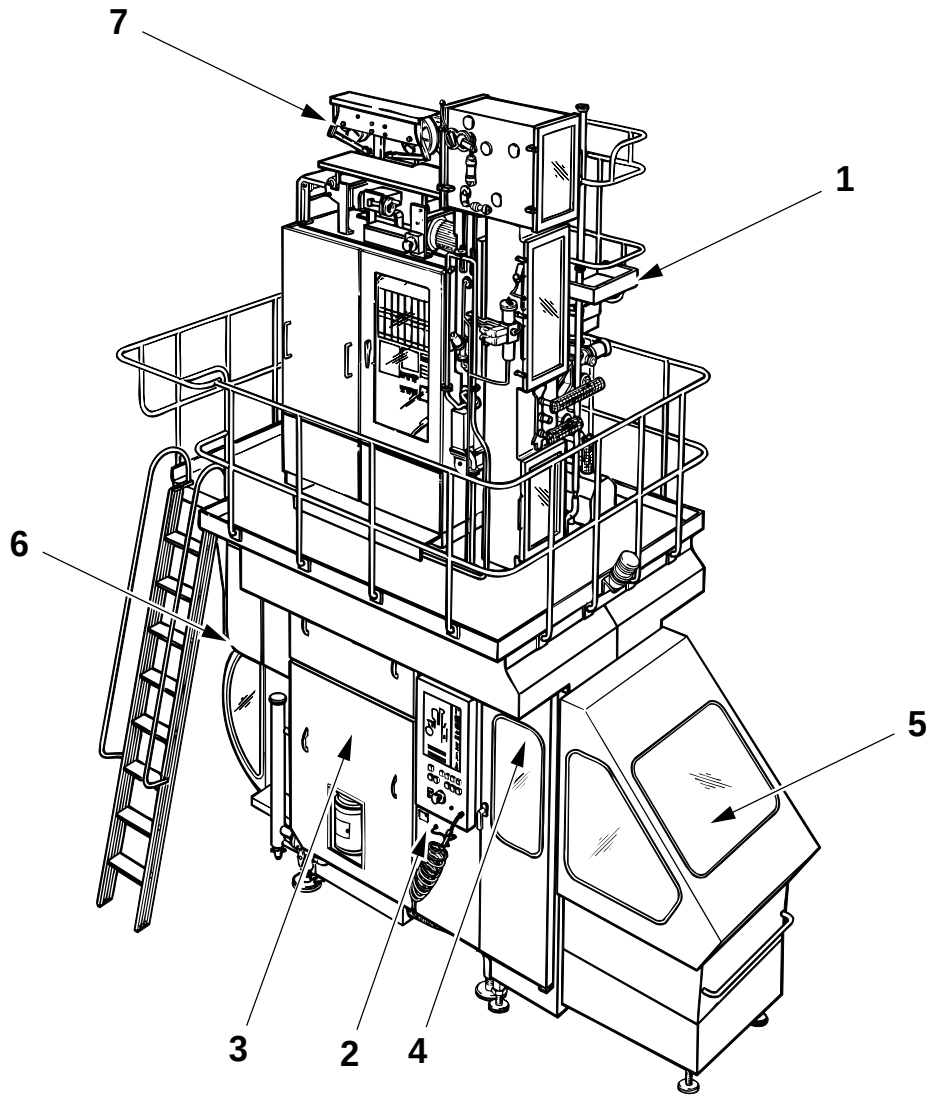

1 - Superstructure
2 - Machine Body
3 - Drive
4 - Jaw System
5 - Final Folder
6 - Automatic Splicing Unit
7 - Strip Applicator

For the correct machine data, check your machine specification, supplied with the machine!

This document is valid for:

Series No/ Machine No Sign.

SPC
Spare Parts Catalogue

Tetra Brik Aseptic
TBA/8
648022-100V

Table of Content:

Introduction **5**

Superstructure
B- 648011-0800 ..... , **9**

Machine Body
B- 648012-0800 ..... , **147**

Drive
B- 648003-1000 ..... , **293**

Jaw System
B- 648004-0900 ..... , **329**

Final Folder
B- 648035-0700 ..... , **435**

Regular Accessories
B- 648009-0900 ..... , **607**

Automatic Splicing Unit
B- 648013-0600 ..... , **629**

Strip Applicator
B- 648007-0400 ..... , **715**

Part number index
..... , **761**

Doc No: SPC-80239-0105

Issue 9904

Tetra Pak

Tetra Brik Packaging Systems S.p.A.

General information

Manufacturer

This machine is produced by:
Tetra Brik Packaging Systems S.p.A.
Via Delfini 1
41100 Modena /Italy

Document producer

This document has been produced by:
Tetra Brik Packaging Systems S.p.A.
Technical Publications
Via Delfini 1
41100 Modena /Italy

Number of pages

This document contains totally **830 pages,** including the first **8** introduction pages.

Copyright © 1999 Tetra Brik Packaging Systems S.p.A.

All rights reserved. No parts of this document may be reproduced or copied in any forms or by any means, without written permission from Tetra Brik Packaging Systems S.p.A..

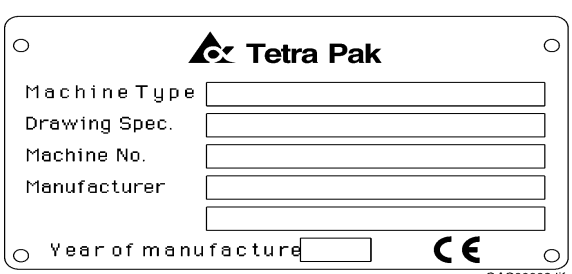

Figure 1

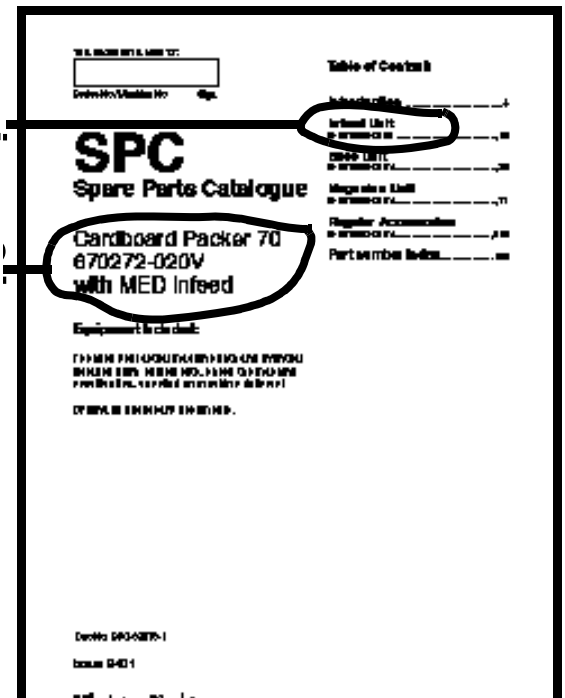

Figure 2

Figure 3



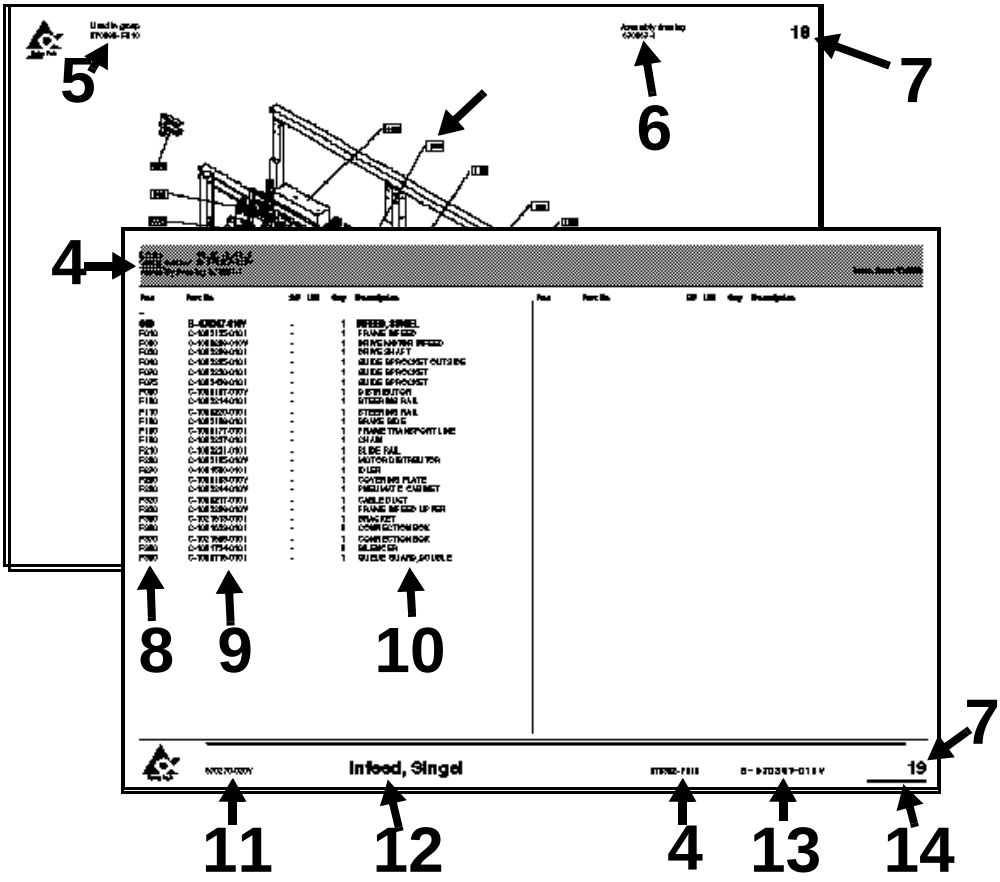

Figure 4

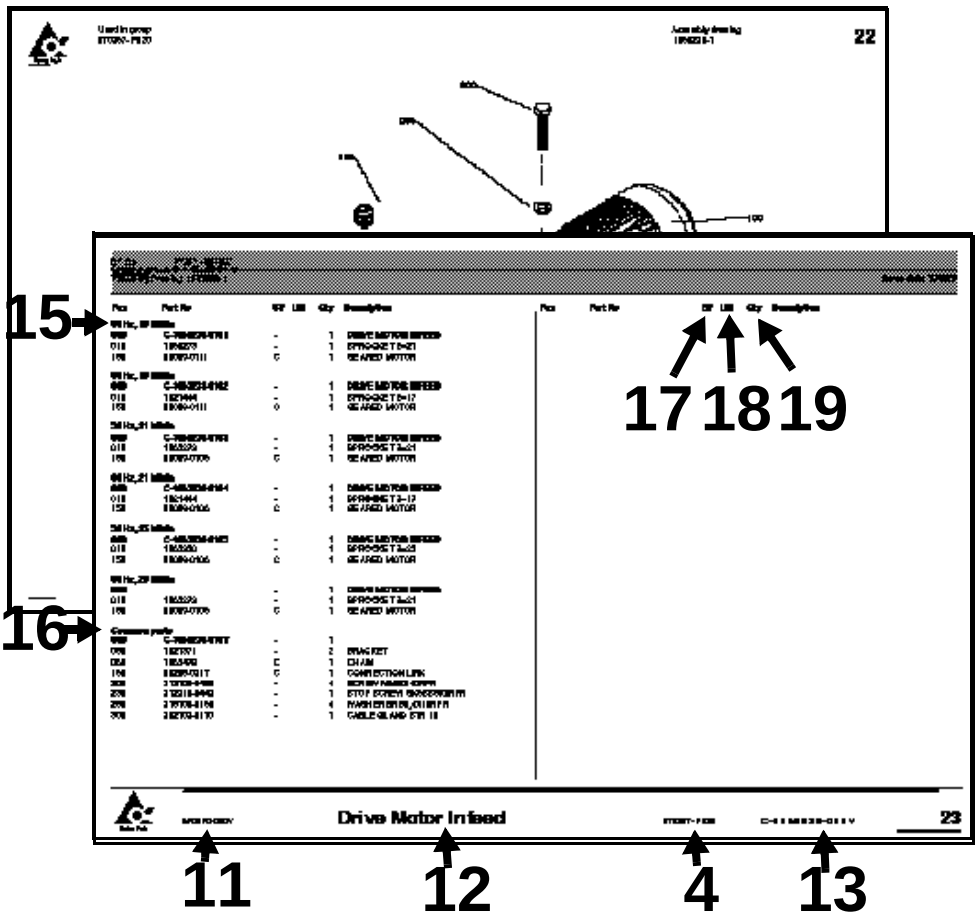

Figure 5

General information

Service

When ordering spare parts for your machine, contact the nearest Tetra Pak service station.

Machine identification

This machine plate is an example of the type of machine plate, attached to the machine frame. The plate carries data needed when contacting Tetra Pak concerning this particular machine.
The location of the different machine plates is shown on the page “Location of machine number plates”, **see page 2**

Purpose of the Spare Parts Catalogue.

The purpose of the Spare Parts Catalogue (SPC) is to provide the technicians and contact personnel with information on how to find and order spare parts for maintenance and service of the machine.
For instructions of how to replace parts and adjust machine setup, see the Maintenance Manual (MM).

Delivered documentation

The technical documentation delivered with this machine is stated in the Machine Specification.
Note! If any of these documents is missing, it must be reported in the document **Start Up Machine Quality Report.** For more information, see chapter 8 Preparation for Commissioning in the Installation Manual.
It is important that you keep these documents for the life of the equipment, and pass the documents on to any subsequent holder or user of the equipment.

Design modification

The content of this document is in accordance with the design and construction of the machine at the time it was delivered from the Tetra Pak machine production facility.

Copyright © 1999 Tetra Brik Packaging Systems S.p.A.

All rights reserved. No parts of this document may be reproduced or copied in any forms or by any means, without written permission from Tetra Brik Packaging Systems S.p.A..

Further copies

Additional copies can be ordered from the nearest Tetra Pak service station. When ordering technical publications, always quote the document number printed on the front cover of the document concerned.

Tetra Pak Part numbering system

The third and forth digits in the subnumber, specify one unique group which can be ordered. If the forth digit is replaced by a “V”, the number combination only points to a bill-of-material document.
The first and second digits in the sub-number, specify the development step (model) of the machine or group. **(see fig. 3)**
Main number of machine /group /article, depending on level.
Prefix, giving information about level, eg.
A = Machine
B = Main section (*****)
C = Groups and subgroups
***)** Customized distribution machines are registered as B-level as well.

How to find the correct Spare Part Number

A. Check that the data on your machine sign, and /or machine specification, corresponds with the catalogue. **(see fig.1)**

1) Main groups of the machine

B. The second catalogue sheet contains a table of content for the main groups, included in the catalogue. The information regarding machine and main group status MUST correspond with your machine specification.
Locate and choose the main groups page number (1), in which you want to search for spare parts.
(see fig. 2)

2) Main group
3) Machine type

C. Search in the main group illustration, the item number, which may hold your wanted spare part. Go to the text page below and find the page number for the actual group. **(see fig. 4)**

4) Internal information, such as latest Engineering Change, bill-of-material included in the catalogue page.
5) Used-In reference to next higher level in the machine structure
6) Assembly drawing number
7) Continuous page numbering through the document
8) Pos number corresponding to illustration
9) Group or article number.
10) Group or article description. The letter “B” in front of some article numbers indicates that this article contains other parts, shown in an additional page at the end the section. Letter “A” indicatates a subgroup number with an own page directly after the actual page.
11) Machine type including development staus
12) Group description
13) Group number (bill-of-material) including development status
14) Document number

D. Continue to the found page number, and search in the illustration for your spare part. Go to the text row for the found item number, and read the part number. Take eventual variant headings in consideration; if you are unsure, read your machine specification. **(see fig. 5)**

15) Variant heading, eg volume, left /right etc.
16) Heading for common parts
17) SP = Code for articles, which are included into various spare part kits.

A = Stop function, no rep/available/bypassed
B = Stop function, rep/available/bypassed
C = Don’t stop function, can bypassed
D = Seldom break, long time production
E = 100 operating hours
F = 250 operating hours
G = 500 operating hours
H = 750 operating hours
I = 1000 operating hours
J = 2000 operating hours
K = 3000 operating hours
L = 4000 operating hours
M = 5000 operating hours
N = 6000 operating hour
O = 7000 operating hour
P = 8000 operating hour
Q = 9000 operating hour
R = 10000 operating hour
S = 11000 operating hours
T = 12000 operating hours
U = 13000 operating hours
V = 14000 operating hours
W = 15000 operating hour
X = 20000 operating hour
Y = 25000 operating hour
Z = 30000 operating hour

18) UN = Short code for measure units, eg mm, kg etc.
19) Qty = Number of items needed in the complete assembly.

SPC

Spare Parts Catalogue

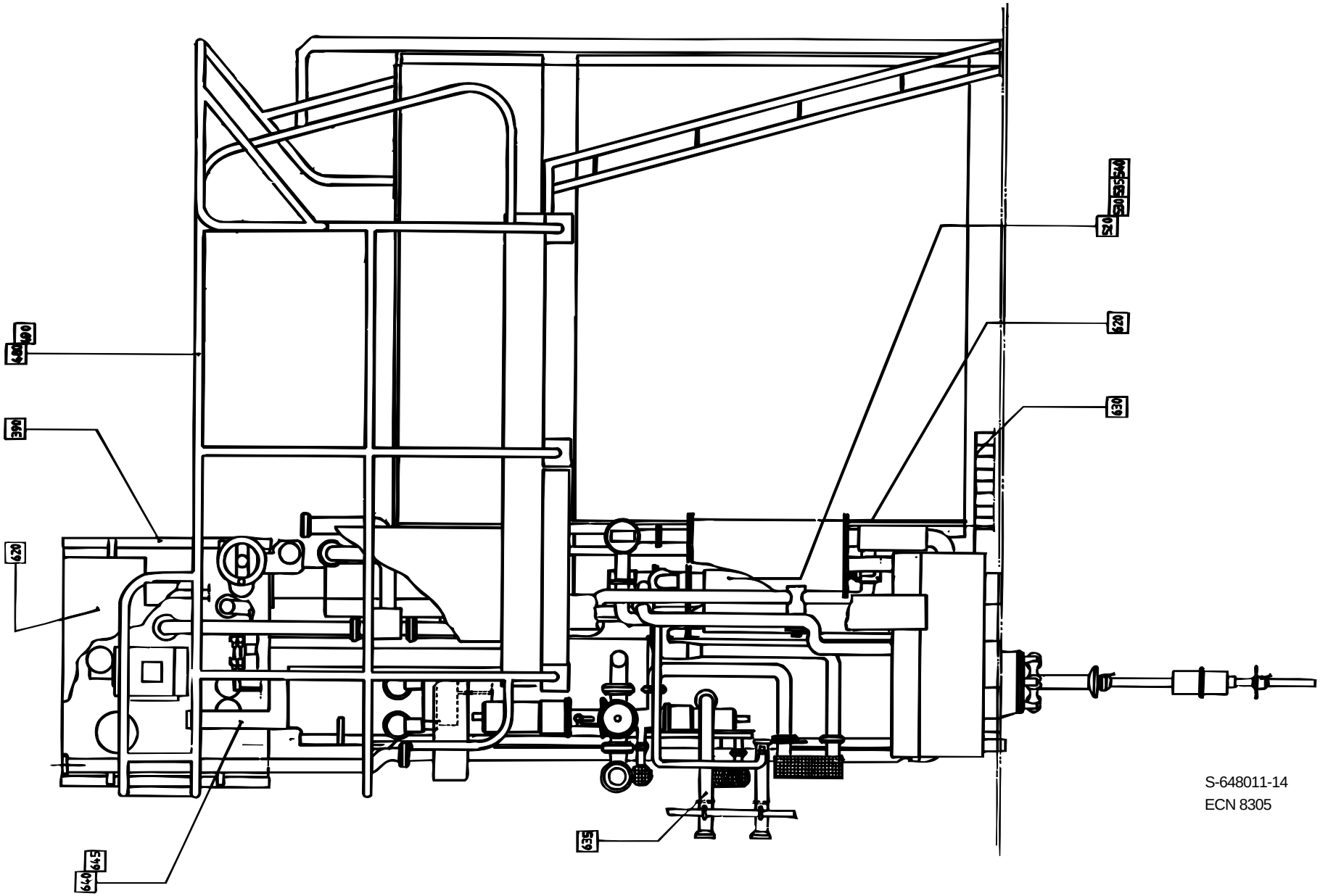
480
390
620
640
645
435
630
620
630
S-648011-14
ECN 8305

Pos	Part No	SP	UN	Qty	Description	Page No
Common parts						
175	A 263948-0300	-		1	CUP	**23**
180	A 265809-0300	-		1	PAPER GUARD	**25**
190	A 269113-0600	-		1	LOWER FORMING RING	**27**, **29**, **31**
200	A 269115-0500	-		1	UPPER FORMING RING	**33**, **35**, **37**
330	A 269136-0200	-		2	EDGE ROLLER	**39**
340	A 269158-0400	-		1	HOT AIR ELEMENT	**41**
350	A 560930-0100	-		1	CONTAINER	**43**
360	A 269715-0100	-		1	PIPE HOLDER	**45**
370	A 269720-0300	-		1	FILLER TUBE	**47**
380	A 573612-0100	-		1	DOOR	**49**
390	A 594617-0100	-		3	DOOR	**51**
410	A 269828-0500	K		1	FILLER TUBE	**53**, **55**
420	A 269915-0700	-		1	HOT AIR ELEMENT	**57**
440	A 575474-0100	-		1	COMPRESSOR	**61**
450	A 269941-0600	-		1	BATH	**69**, **71**
470	A 561268-0200	-		1	CONNECTION ASSEMBLY	**75**, **77**, **79**
480	A 269970-0500	-		1	PLATFORM	**93**
500	A 269988-0600	-		1	VENTILATION SYSTEM	**97**
520	A 273400-0700	-		1	STERILE AIR SYSTEM	**107**
550	A 276373-0700	-		1	DRIER	**115**
600	A 276480-0500	-		1	PIPE WORK	**123**
610	A 278956-0700	-		1	PILLAR	**125**
620	A 279651-0600	-		1	TOUCH GUARD	**129**
630	A 282805-0800	-		1	PIPE WORK-PNEUMATIC	**131**, **133**
635	A 451131-0100	-		1	CLEANING PIPE	**135**
640	A 451342-0500	-		1	CABLE DUCT	**137**
650	A 284163-0500	-		1	START-UP KIT	**141**
0355B or 0375S or 0400B or 0500S						
170	A 450490-0100	-		1	FORM CLAMP	**21**
0500B or 0500SQ or 0750B or 0750S or 1000B or 1000S or 1000SQ or 1055B						
170	A 263805-0200	-		1	FORM CLAMP	**17**, **19**

Pos	Part No	SP	UN	Qty	Description	Page No

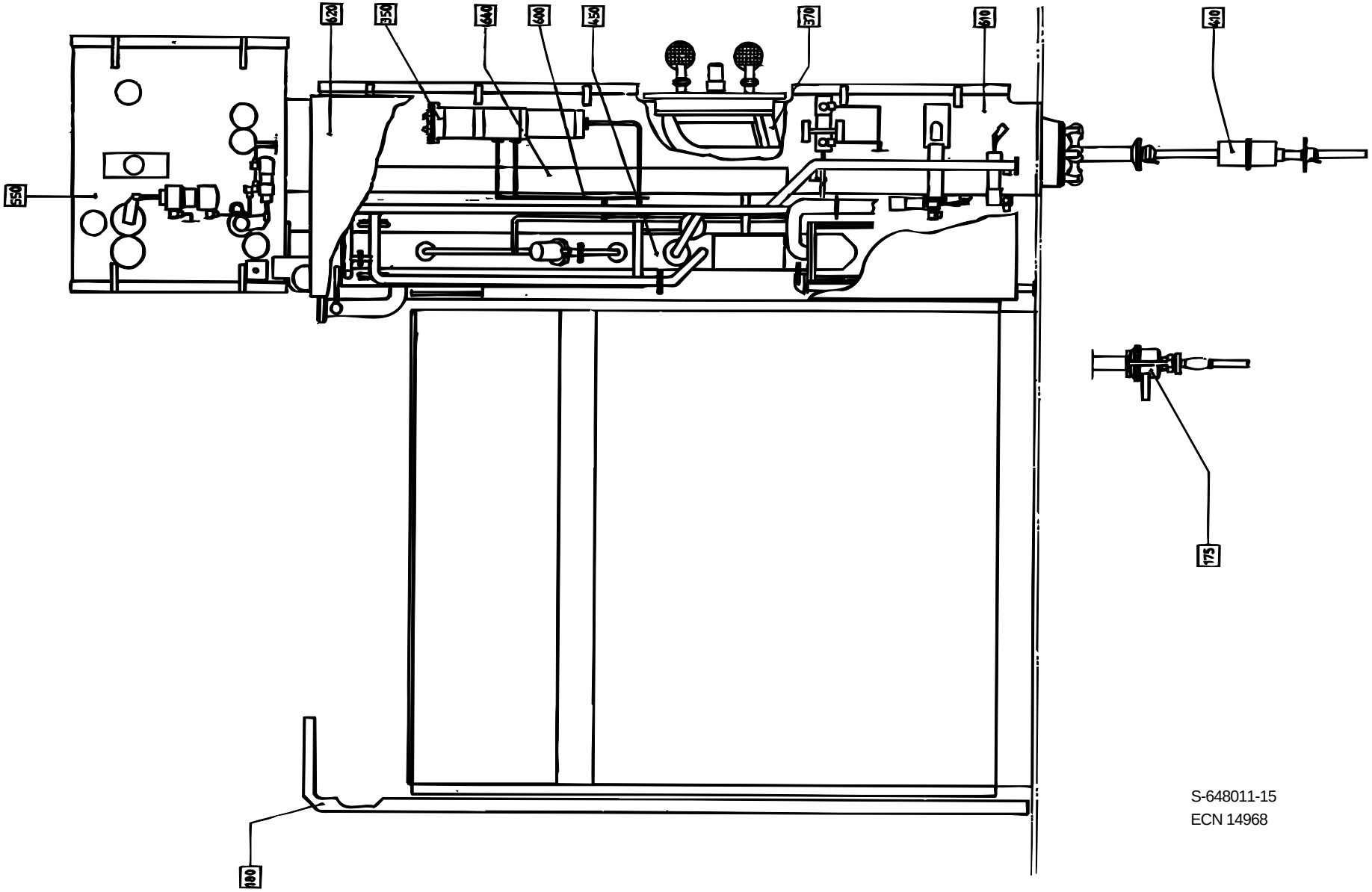

S-648011-15
ECN 14968

Pos	Part No	SP	UN	Qty	Description	Page No
Common parts						
175	A 263948-0300	-		1	CUP	**23**
180	A 265809-0300	-		1	PAPER GUARD	**25**
190	A 269113-0600	-		1	LOWER FORMING RING	**27**, **29**, **31**
200	A 269115-0500	-		1	UPPER FORMING RING	**33**, **35**, **37**
330	A 269136-0200	-		2	EDGE ROLLER	**39**
340	A 269158-0400	-		1	HOT AIR ELEMENT	**41**
350	A 560930-0100	-		1	CONTAINER	**43**
360	A 269715-0100	-		1	PIPE HOLDER	**45**
370	A 269720-0300	-		1	FILLER TUBE	**47**
380	A 573612-0100	-		1	DOOR	**49**
390	A 594617-0100	-		3	DOOR	**51**
410	A 269828-0500	K		1	FILLER TUBE	**53**, **55**
420	A 269915-0700	-		1	HOT AIR ELEMENT	**57**
440	A 575474-0100	-		1	COMPRESSOR	**61**
450	A 269941-0600	-		1	BATH	**69**, **71**
470	A 561268-0200	-		1	CONNECTION ASSEMBLY	**75**, **77**, **79**
480	A 269970-0500	-		1	PLATFORM	**93**
500	A 269988-0600	-		1	VENTILATION SYSTEM	**97**
520	A 273400-0700	-		1	STERILE AIR SYSTEM	**107**
550	A 276373-0700	-		1	DRIER	**115**
600	A 276480-0500	-		1	PIPE WORK	**123**
610	A 278956-0700	-		1	PILLAR	**125**
620	A 279651-0600	-		1	TOUCH GUARD	**129**
630	A 282805-0800	-		1	PIPE WORK-PNEUMATIC	**131**, **133**
635	A 451131-0100	-		1	CLEANING PIPE	**135**
640	A 451342-0500	-		1	CABLE DUCT	**137**
650	A 284163-0500	-		1	START-UP KIT	**141**
0355B or 0375S or 0400B or 0500S						
170	A 450490-0100	-		1	FORM CLAMP	**21**
0500B or 0500SQ or 0750B or 0750S or 1000B or 1000S or 1000SQ or 1055B						
170	A 263805-0200	-		1	FORM CLAMP	**17**, **19**

Pos	Part No	SP	UN	Qty	Description	Page No

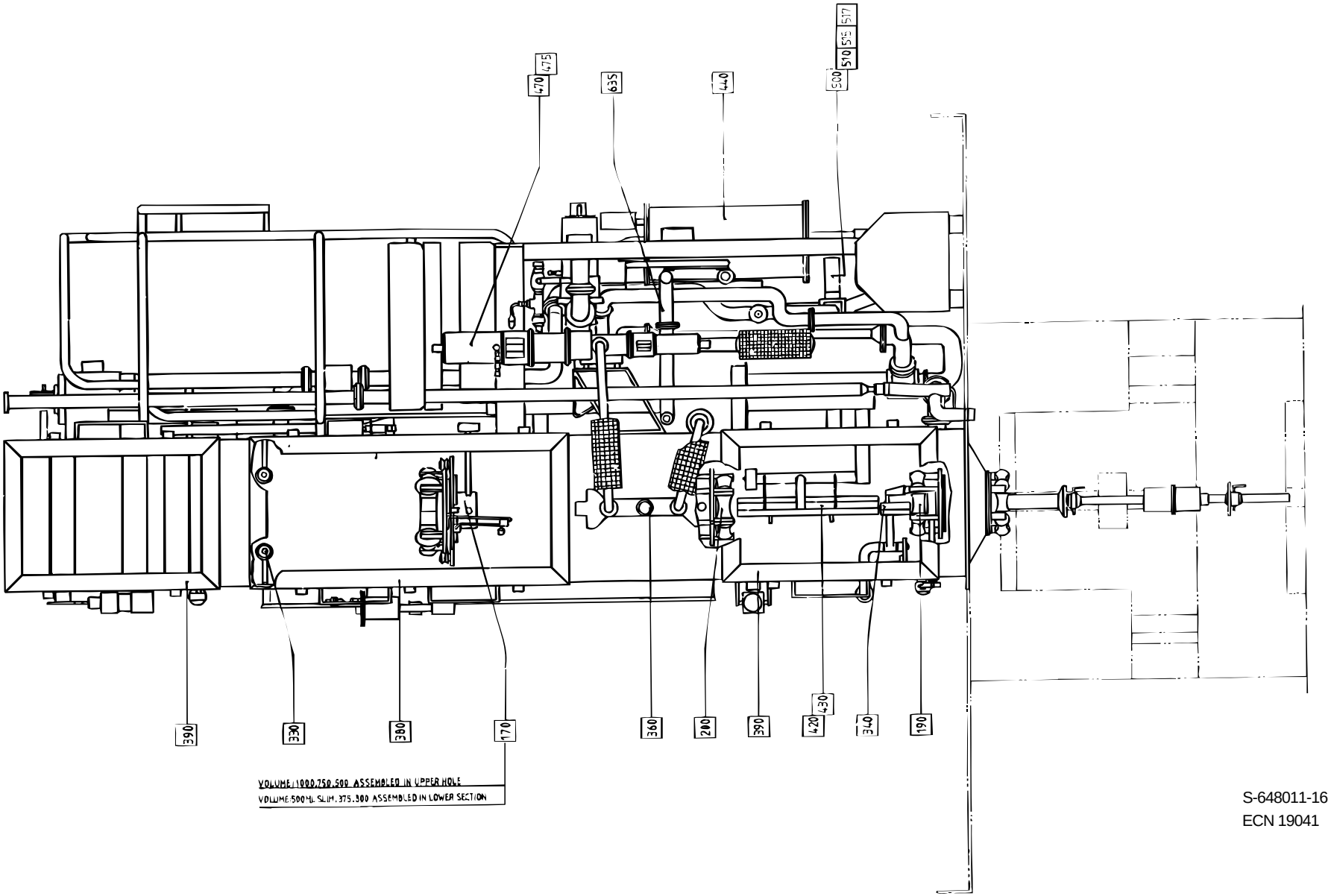

S-648011-16
ECN 19041

Pos	Part No	SP	UN	Qty	Description	Page No
Common parts						
175	A 263948-0300	-		1	CUP	**23**
180	A 265809-0300	-		1	PAPER GUARD	**25**
190	A 269113-0600	-		1	LOWER FORMING RING	**27**, **29**, **31**
200	A 269115-0500	-		1	UPPER FORMING RING	**33**, **35**, **37**
330	A 269136-0200	-		2	EDGE ROLLER	**39**
340	A 269158-0400	-		1	HOT AIR ELEMENT	**41**
350	A 560930-0100	-		1	CONTAINER	**43**
360	A 269715-0100	-		1	PIPE HOLDER	**45**
370	A 269720-0300	-		1	FILLER TUBE	**47**
380	A 573612-0100	-		1	DOOR	**49**
390	A 594617-0100	-		3	DOOR	**51**
410	A 269828-0500	K		1	FILLER TUBE	**53**, **55**
420	A 269915-0700	-		1	HOT AIR ELEMENT	**57**
440	A 575474-0100	-		1	COMPRESSOR	**61**
450	A 269941-0600	-		1	BATH	**69**, **71**
470	A 561268-0200	-		1	CONNECTION ASSEMBLY	**75**, **77**, **79**
480	A 269970-0500	-		1	PLATFORM	**93**
500	A 269988-0600	-		1	VENTILATION SYSTEM	**97**
520	A 273400-0700	-		1	STERILE AIR SYSTEM	**107**
550	A 276373-0700	-		1	DRIER	**115**
600	A 276480-0500	-		1	PIPE WORK	**123**
610	A 278956-0700	-		1	PILLAR	**125**
620	A 279651-0600	-		1	TOUCH GUARD	**129**
630	A 282805-0800	-		1	PIPE WORK-PNEUMATIC	**131**, **133**
635	A 451131-0100	-		1	CLEANING PIPE	**135**
640	A 451342-0500	-		1	CABLE DUCT	**137**
650	A 284163-0500	-		1	START-UP KIT	**141**
0355B or 0375S or 0400B or 0500S						
170	A 450490-0100	-		1	FORM CLAMP	**21**
0500B or 0500SQ or 0750B or 0750S or 1000B or 1000S or 1000SQ or 1055B						
170	A 263805-0200	-		1	FORM CLAMP	**17**, **19**

Pos	Part No	SP	UN	Qty	Description	Page No

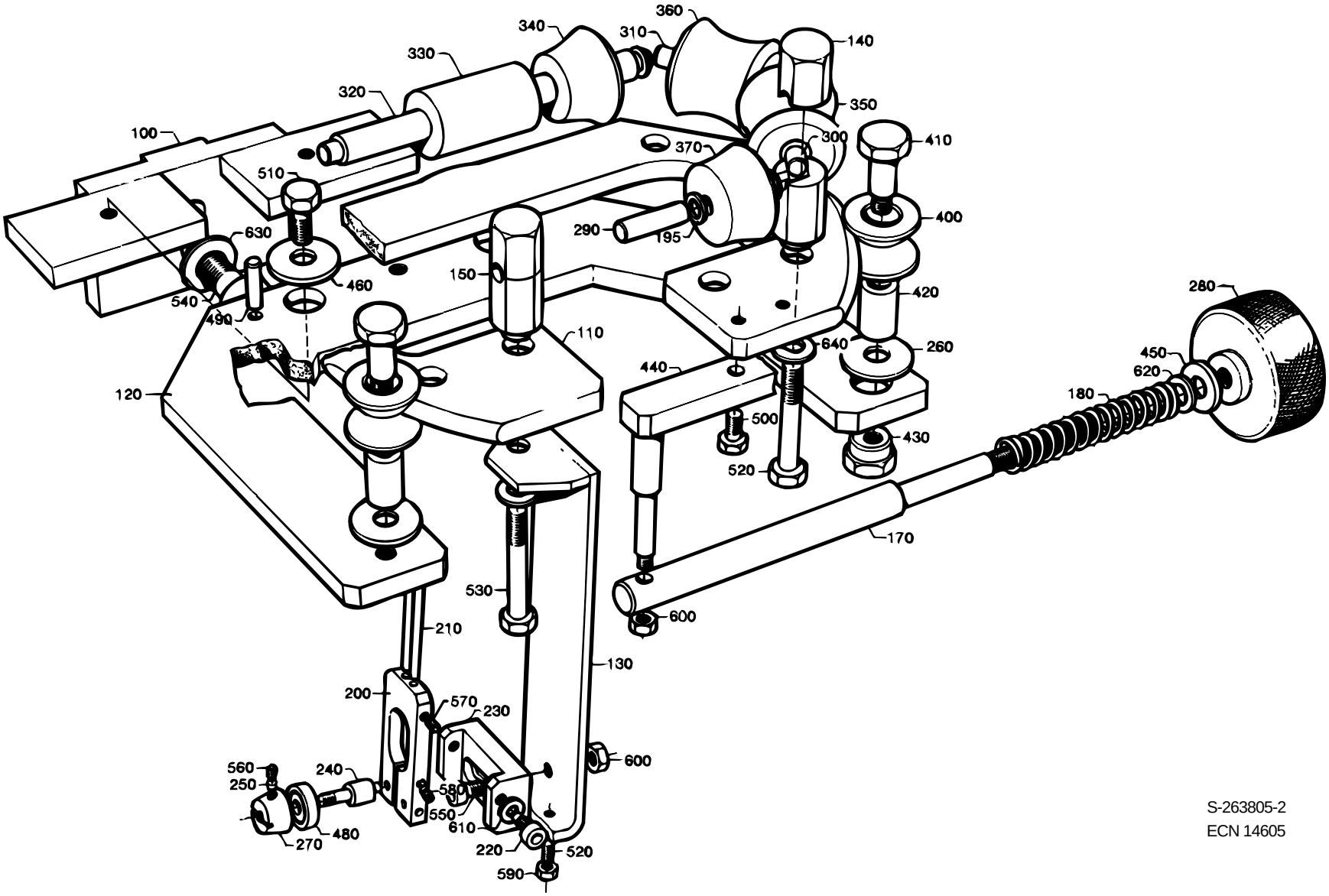

S-263805-2
ECN 14605

Pos	Part No	SP	UN	Qty	Description	Page No
TBA 0500B or TBA 0750B or TBA 1000B or TBA 1055B or TBA 1500S						
110	436404-0000	-		1	BOW CLAMP	
290	263655-0003	R		2	SHAFT	
300	263655-0004	R		2	SHAFT	
310	263655-0008	J		2	SHAFT	
320	263656-0002	D		1	SHAFT	
330	294474-0000	D		2	ROLL	
340	294475-0000	D		2	ROLL	
350	294476-0000	M		2	ROLL	
360	294477-0000	R		2	ROLL	
370	294480-0000	R		2	ROLL	
TBA 1000S						
110	569096-0000	-		1	BOW CLAMP	
290	263655-0002	R		2	SHAFT	
300	569091-0000	R		2	SHAFT	
310	263655-0012	J		2	SHAFT	
320	263655-0024	D		1	SHAFT	
340	569095-0000	D		1	ROLLER	
350	569093-0000	M		2	ROLL	
360	569094-0000	R		2	ROLLER	
370	569092-0000	R		2	ROLL	
380	90240-0172	K		10	BEARING BUSHING WITH FLANGE,8/12x10 NFB	
390	752156-0000	K		4	FLANGE BUSHING	
TBA 0750S or TPA 1000S						
110	544286-0000	-		1	BOW CLAMP	
290	263655-0021	R		2	SHAFT	
300	263655-0023	R		2	SHAFT	
310	263655-0012	J		2	SHAFT	
320	263655-0024	D		1	SHAFT	
340	752583-0000	D		1	ROLLER	
350	752585-0000	M		2	ROLL	
360	752584-0000	R		2	ROLLER	
370	752586-0000	R		2	ROLL	
380	90240-0172	K		10	BEARING BUSHING WITH FLANGE,8/12x10 NFB	
390	752156-0000	K		4	FLANGE BUSHING	
TBA 0500SQ or TBA 1000SQ						
110	569096-0000	-		1	BOW CLAMP	
290	263655-0002	R		2	SHAFT	
300	569091-0000	R		2	SHAFT	
310	263655-0012	J		2	SHAFT	
320	263655-0024	D		1	SHAFT	
340	579306-0000	D		1	ROLLER	
350	579307-0000	M		2	ROLL	
360	579308-0000	R		2	ROLLER	
370	579309-0000	R		2	ROLL	
380	90240-0172	K		10	BEARING BUSHING WITH FLANGE,8/12x10 NFB	
390	752156-0000	K		4	FLANGE BUSHING	
Common parts						
100	436395-0000	-		1	CANTILEVER	
120	436405-0000	-		1	FORK	
130	33648-0000	-		1	HOLDER	
140	257987-0000	R		6	AXLE SUPPORT	
150	257988-0000	R		2	AXLE SUPPORT	
170	436378-0000	R		1	SHAFT	
180	1881-0001	R		1	COMPRESSION SPRING	
190	2033-0008	-		14	WASHER	
200	23582-0000	D		1	HOLDER	
210	23583-0000	D		1	GUIDE FINGER	
220	23584-0000	D		2	SCREW	
230	24351-0000	D		1	BOW CLAMP	
240	24355-0000	R		2	DOWEL	
250	24356-0000	-		4	PIECE	
260	28037-0000	D		3	WASHER	
270	111543-0000	R		2	GUIDE CONE	
280	257090-0000	D		1	SHIFTER HANDLE	
400	436302-0000	D		3	ROLLER	
410	436355-0000	D		3	REAMED BOLT	
420	436356-0000	D		3	BUSHING	
430	436357-0000	D		1	NUT	
440	436377-0000	D		1	JOINT	
450	436403-0000	D		1	WASHER	
460	497720-0000	-		2	WASHER	
480	90214-0138	K		2	BEARINGS,BALL BEARING,STAINLESS	
490	311103-0236	-		2	PINS,STRAIGHT 3X16	
500	312105-0368	-		2	SCREW M6S ISO 4017 M6X16 A280	
510	312105-0451	-		2	SCREW M6S ISO 4017 8x20 A280	
520	312105-0462	-		7	SCREW M6S ISO 4014 M8x55 A280	
530	312105-0463	-		1	SCREW M6S ISO 4014 M8x60 A280	
540	312105-0540	-		1	SCREW M6S ISO 4017 M12X40 A280	
550	312115-0366	-		1	SCREW MC6S ISO 4762 M6X12 A280	
560	312318-0283	-		4	SET SCREW CUP POINT ISO 4029 M4X4 RFR	
570	312318-0285	-		2	SET SCREW CUP POINT ISO 4029 M4X6 RFR	
580	312318-0291	-		3	SET SCREW CUP POINT ISO 4029 M4X12 RFR	
590	312605-0312	-		3	NUT,HEXAGON,M4 RFR	
600	312605-0316	-		2	NUT,HEXAGON,A280 M6M6 Stainless	
610	315105-0146	-		2	WASHER,PLAIN ROUND 5,3x10 Stainless	

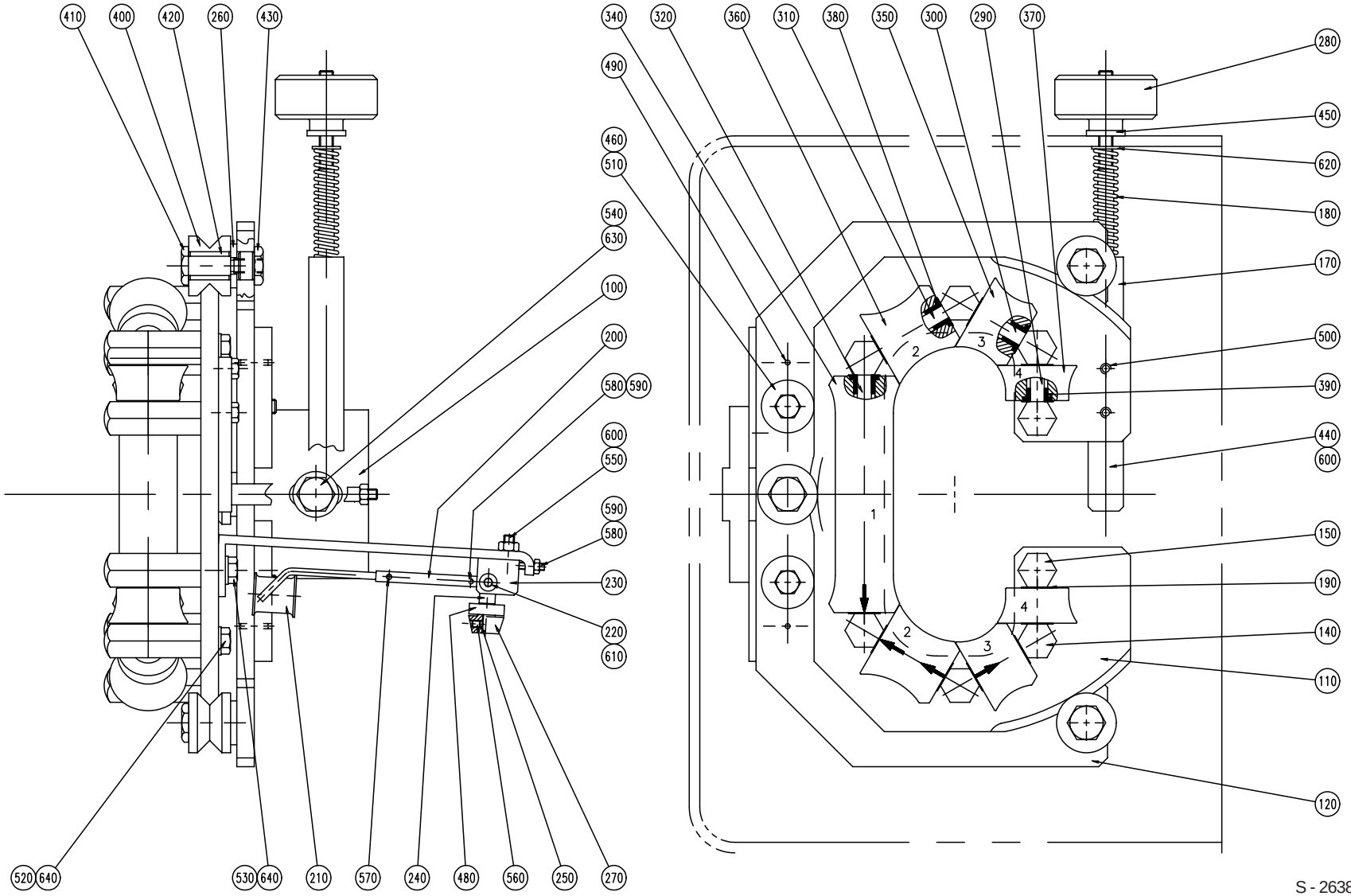

S - 263805-3
ECN 15017

Pos	Part No	SP	UN	Qty	Description	Page No
620	315105-0165	-		1	WASHER,PLAIN ROUND 8,4x16 Stainless	
630	315105-0178	-		1	WASHER,PLAIN ROUND 13x24	
640	315115-0165	-		8	WASHER TBRB 8,4x16 Stainless	

Pos	Part No	SP	UN	Qty	Description	Page No

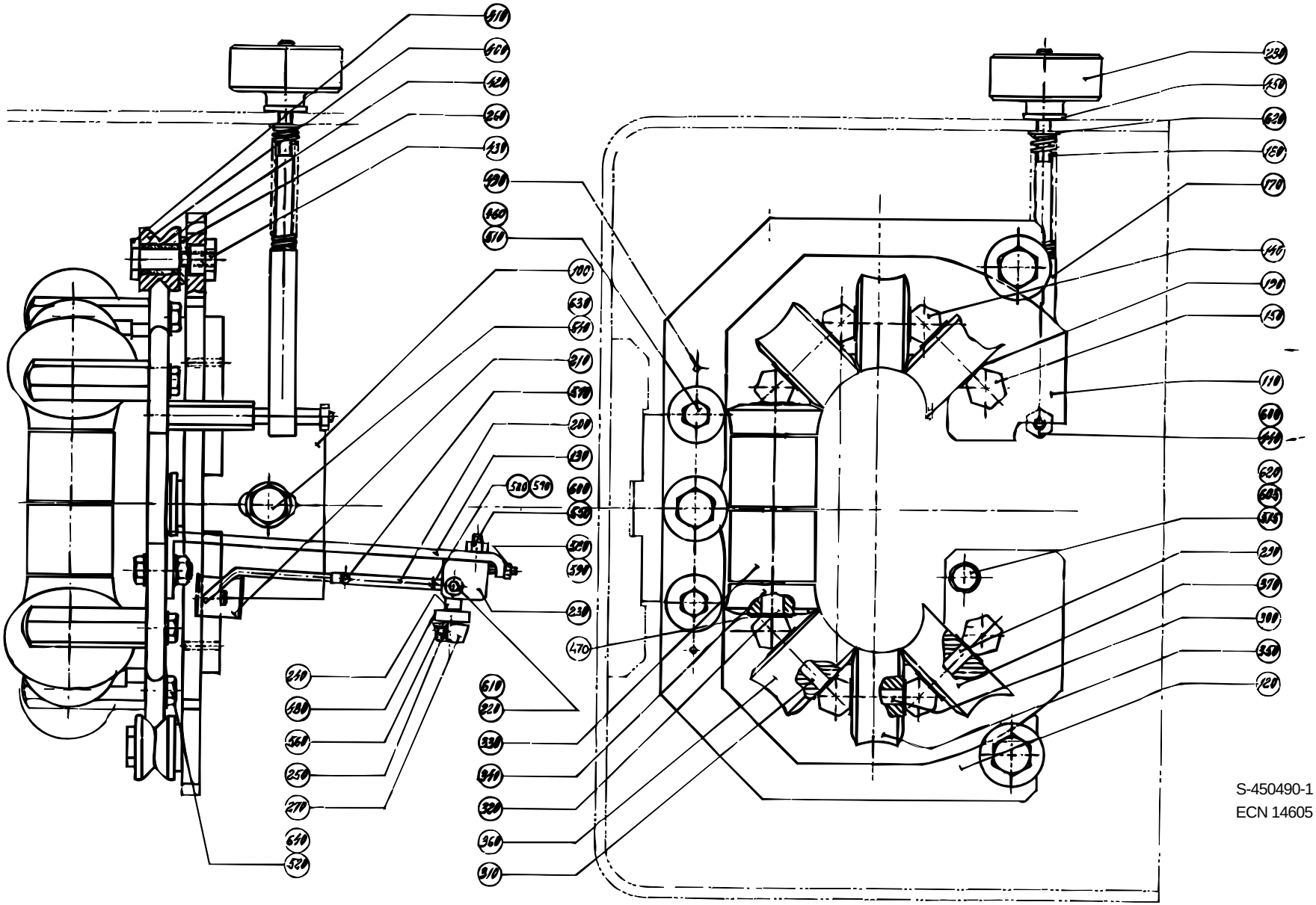

S-450490-1
ECN 14605

Pos	Part No	SP	UN	Qty	Description	Page No
Common parts						
100	436395-0000	-		1	CANTILEVER	
120	436405-0000	-		1	FORK	
130	33648-0000	-		1	HOLDER	
140	445790-0000	R		6	AXLE SUPPORT	
150	445791-0000	R		2	AXLE SUPPORT	
170	493886-0000	R		1	SHAFT	
180	1881-0001	R		1	COMPRESSION SPRING	
190	2033-0008	-		14	WASHER	
200	23582-0000	D		1	HOLDER	
210	23583-0000	D		1	GUIDE FINGER	
220	23584-0000	D		2	SCREW	
230	24351-0000	D		1	BOW CLAMP	
240	24355-0000	R		2	DOWEL	
250	24356-0000	-		4	PIECE	
260	28037-0000	D		3	WASHER	
270	111543-0000	R		2	GUIDE CONE	
280	257090-0000	D		1	SHIFTER HANDLE	
400	436302-0000	D		3	ROLLER	
410	436355-0000	D		3	REAMED BOLT	
420	436356-0000	D		3	BUSHING	
430	436357-0000	D		1	NUT	
440	493747-0000	D		1	GUIDE STUD	
450	436403-0000	D		1	WASHER	
460	497720-0000	-		2	WASHER	
470	536987-0000	-		x	WASHER	
480	90214-0138	K		2	BEARINGS,BALL BEARING,STAINLESS	
490	311103-0236	-		2	PINS,STRAIGHT 3X16	
510	312105-0451	-		2	SCREW M6S ISO 4017 8x20 A280	
515	312105-0453	-		1	SCREW M6S ISO 4017 M8x25 A280	
520	312105-0464	-		8	SCREW M6S ISO 4014 M8x65 A280	
540	312105-0540	-		1	SCREW M6S ISO 4017 M12X40 A280	
550	312115-0366	-		1	SCREW MC6S ISO 4762 M6X12 A280	
560	312318-0283	-		4	SET SCREW CUP POINT ISO 4029 M4X4 RFR	
570	312318-0285	-		2	SET SCREW CUP POINT ISO 4029 M4X6 RFR	
580	312318-0291	-		3	SET SCREW CUP POINT ISO 4029 M4X12 RFR	
590	312605-0312	-		3	NUT,HEXAGON,M4 RFR	
600	312605-0316	-		2	NUT,HEXAGON,A280 M6M6 Stainless	
605	312605-0318	-		1	NUT,HEXAGON,M8 RFR	
610	315105-0146	-		2	WASHER,PLAIN ROUND 5,3x10 Stainless	
620	315105-0165	-		3	WASHER,PLAIN ROUND 8,4x16 Stainless	
630	315105-0178	-		1	WASHER,PLAIN ROUND 13x24	
640	315115-0165	-		8	WASHER TBRB 8,4x16 Stainless	

Pos	Part No	SP	UN	Qty	Description	Page No
0375S						
110	450493-0000	-		1	BOW CLAMP	
290	445788-0005	R		2	SHAFT	
300	445788-0006	R		2	SHAFT	
310	445788-0005	J		2	SHAFT	
320	434490-0003	D		1	SHAFT	
330	445777-0000	R		2	ROLL	
340	445780-0000	R		2	ROLL	
350	445784-0000	M		2	ROLL	
360	445783-0000	R		2	ROLL	
370	445787-0000	R		2	ROLL	
0355B or 0400B or 0500S						
110	450492-0000	-		1	BOW CLAMP	
290	263655-0018	R		2	SHAFT	
300	445788-0005	R		2	SHAFT	
310	445788-0003	J		2	SHAFT	
320	434490-0002	D		1	SHAFT	
330	445777-0000	R		2	ROLL	
340	445779-0000	R		2	ROLL	
350	445783-0000	M		2	ROLL	
360	445782-0000	R		2	ROLL	
370	445786-0000	R		2	ROLL	
0500B or 0750B or 1000B or 1055B						
110	450491-0000	-		1	BOW CLAMP	
290	445788-0002	R		2	SHAFT	
300	445788-0003	R		2	SHAFT	
310	263655-0006	J		2	SHAFT	
320	434490-0001	D		1	SHAFT	
330	445776-0000	R		2	ROLL	
340	445778-0000	R		2	ROLL	
350	445782-0000	M		2	ROLL	
360	445781-0000	R		2	ROLL	
370	445785-0000	R		2	ROLL	

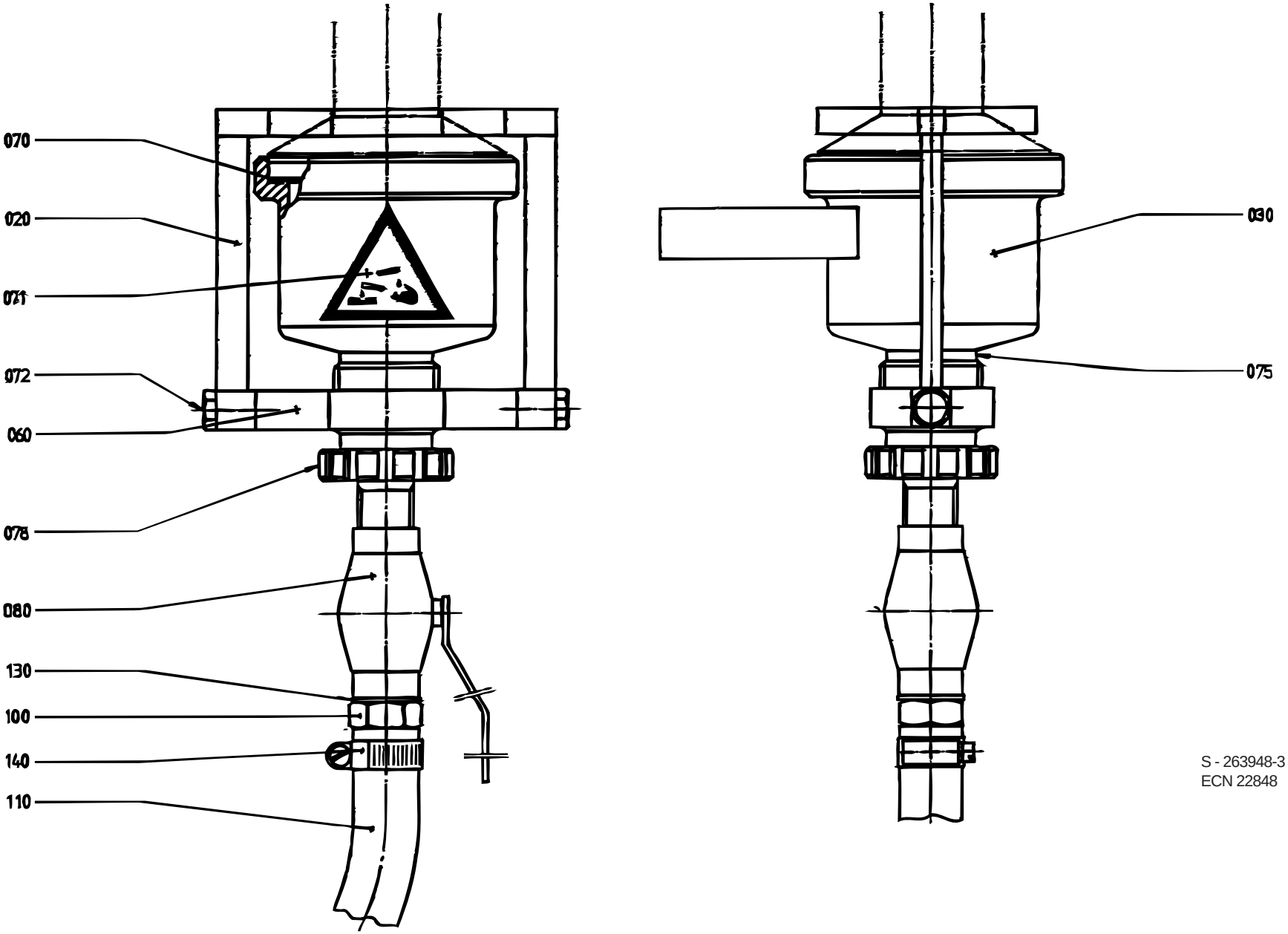

S - 263948-3
ECN 22848

Pos	Part No	SP	UN	Qty	Description	Page No
Common parts						
071	359705-0003	-		1	WARNING SIGN Dangerous Chemicals	
072	449190-0000	R		2	SHAFT	
075	458787-0000	D		1	BUSHING	
078	458788-0000	D		1	NUT	
080	90187-0082	D		1	BALL VALVE, Sealing PTFE	
100	90055-0071	-		1	HOSE NIPPLE	
110	90148-0021	-	MM	2500	HOSE	
130	315233-0113	-		1	PLAIN ROUND,NYLON R1/2"	
140	342991-0104	-		1	HOSE CLIP,WORM DRIVE TYPE (23)-27	
TBA 0500SQ or TBA 1000S or TBA 1000SQ						
020	579951-0000	-		1	BOW CLAMP	
030	569105-0000	-		1	CUP	
060	458785-0000	-		1	BRACKET	
070	569106-0000	F		1	GASKET	
TBA 0500B or TBA 0750B or TBA 1000B or TBA 1055B						
020	458783-0000	-		1	BOW CLAMP	
030	458784-0000	-		1	CUP	
060	458785-0000	-		1	BRACKET	
070	458786-0000	F		1	GASKET	
TBA 0750S						
020	449853-0000	-		1	BOW CLAMP	
030	544299-0000	-		1	CUP	
060	449991-0000	-		1	BRACKET	
070	544300-0000	F		1	GASKET	
TBA 0375S						
020	449853-0000	-		1	BOW CLAMP	
030	449855-0000	-		1	CUP	
060	449991-0000	-		1	BRACKET	
070	449993-0000	F		1	GASKET	
TBA 0355B or TBA 0400B or TBA 0500S						
020	449853-0000	-		1	BOW CLAMP	
030	449854-0000	-		1	CUP	
060	449991-0000	-		1	BRACKET	
070	449992-0000	F		1	GASKET	

Pos	Part No	SP	UN	Qty	Description	Page No

PAPER GUARD

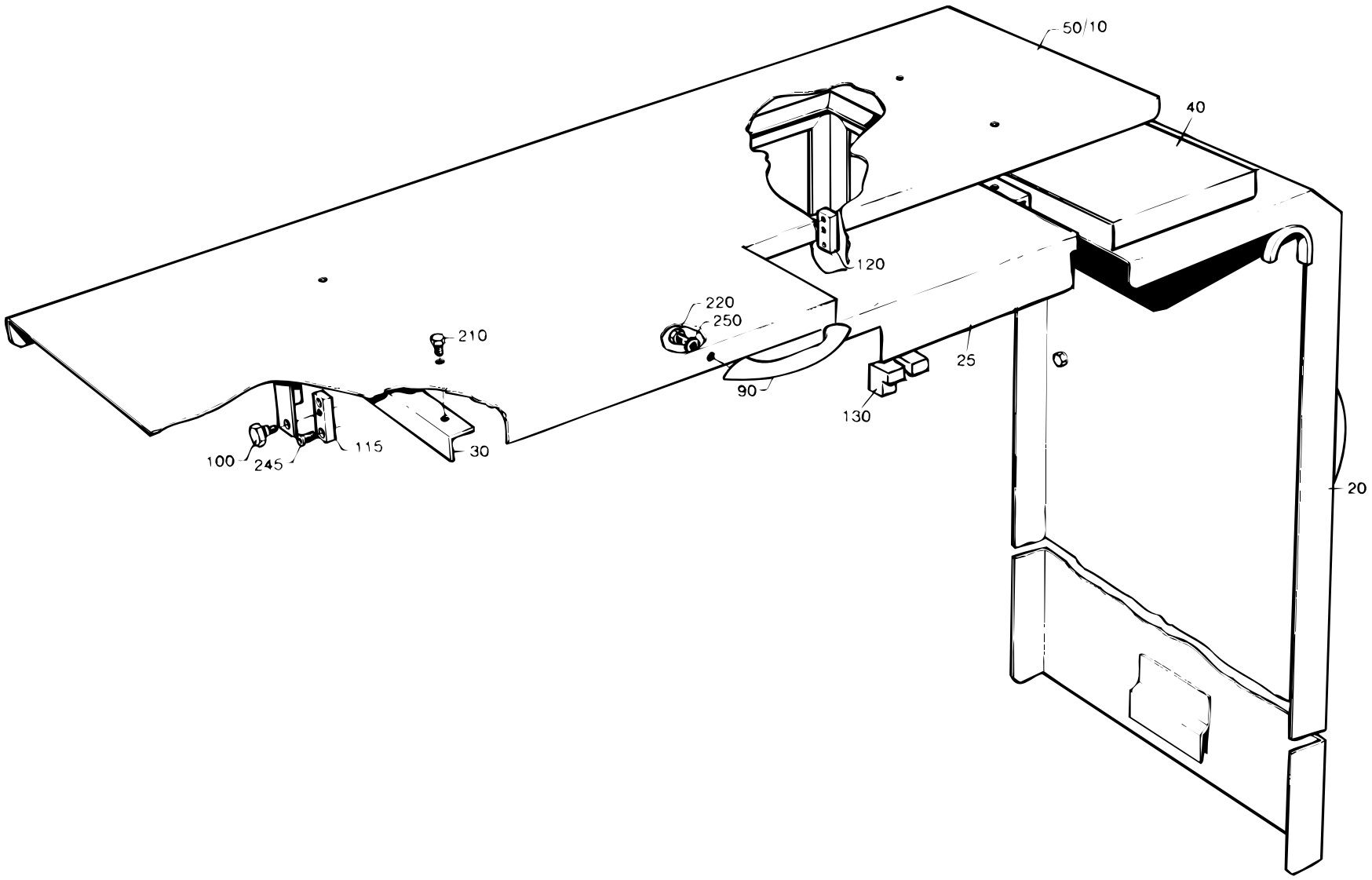

S - 265809-3
ECN 12311

Pos	Part No	SP	UN	Qty	Description	Page No
Common parts						
010	542847-0000	-		1	PAPER GUARD	
020	266797-0002	-		1	PAPER GUARD	
025	542848-0000	-		1	HATCH	
030	542849-0000	-		1	CANTILEVER	
040	542850-0000	-		1	COVERING PLATE	
090	7309-0000	-		4	HANDLE	
100	252972-0000	-		2	SHOULDER SCREW	
115	283271-0000	-		1	BRACKET	
120	449000-0000	-		1	BRACKET	
130	542851-0000	-		2	HINGE	
210	312105-0362	-		4	SCREW M6S ISO 4017 M6X8 A280	
220	312105-0366	-		10	SCREW M6S ISO 4017 M6X12 A280	
245	312155-0329	-		4	SCREW MF6S DIN 7991 M5x16 A280	
250	315105-0153	-		12	WASHER,PLAIN ROUND 6,4x12 Stainless	

Pos	Part No	SP	UN	Qty	Description	Page No

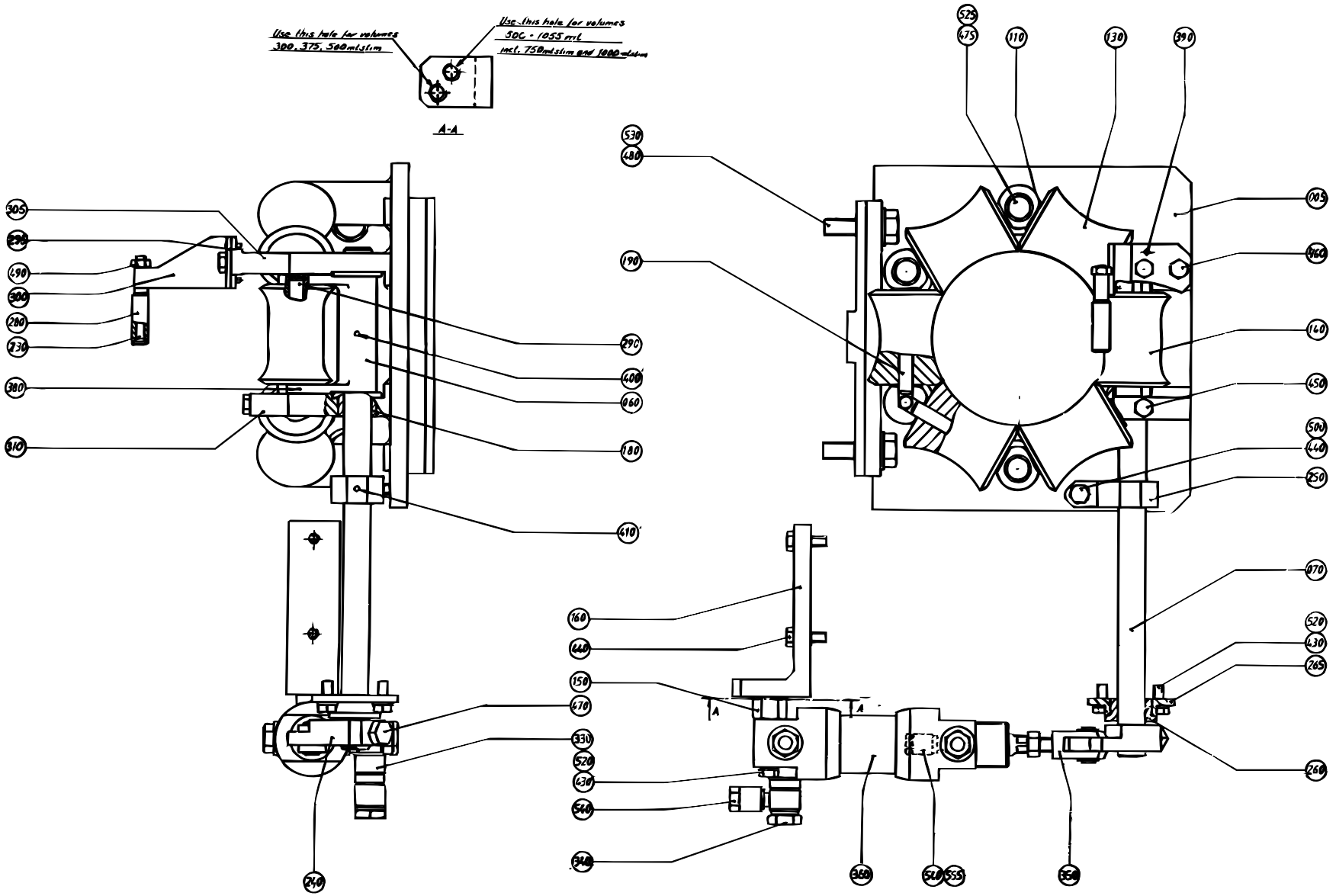

S-269113-3
ECN 18018

Pos	Part No	SP	UN	Qty	Description	Page No
0355B or 0400B or 0500S						
005	450459-0002	-		1	FORMING RING	
060	434499-0000	D		1	FORK	
070	434500-0000	D		1	SHAFT	
130	449840-0001	I		5	ROLLER, (STD.SIZE)	
140	533442-0000	I		1	COUNTER ROLLER	
190	434504-0000	J		5	SHAFT	
265	486803-0000	D		1	BEARING HOUSING	
290	434507-0000	K		1	SHAFT	
300	534177-0000	D		1	HOLDER	
0375S						
005	450459-0002	-		1	FORMING RING	
060	434499-0000	D		1	FORK	
070	434500-0000	D		1	SHAFT	
130	449589-0001	I		5	ROLLER, (STD.SIZE)	
140	529181-0000	I		1	COUNTER ROLLER	
190	434504-0000	J		5	SHAFT	
265	486803-0000	D		1	BEARING HOUSING	
290	434507-0000	K		1	SHAFT	
300	529184-0000	D		1	HOLDER	
0500SQ or 1000SQ						
005	567744-0000	-		1	FORMING RING	
060	567748-0000	D		1	FORK	
070	269147-0000	D		1	SHAFT	
130	579310-0001	I		5	ROLLER, (STD.SIZE)	
140	579311-0000	I		1	COUNTER ROLLER	
190	569100-0000	J		5	SHAFT	
200	90240-0172	J		12	BEARING BUSHING WITH FLANGE,8/12x10 NFB	
265	544306-0000	D		1	BEARING HOUSING	
290	569085-0000	K		1	SHAFT	
300	569099-0000	D		1	HOLDER	
0750S						
005	544333-0000	-		1	FORMING RING	
060	544335-0000	D		1	FORK	
070	269147-0000	D		1	SHAFT	
130	752578-0001	I		5	ROLLER, (STD.SIZE)	
140	556139-0000	I		1	ROLL	
190	263655-0022	J		5	SHAFT	
200	90240-0172	J		12	BEARING BUSHING WITH FLANGE,8/12x10 NFB	
265	544306-0000	D		1	BEARING HOUSING	
290	544336-0000	K		1	SHAFT	
300	534177-0000	D		1	HOLDER	

Pos	Part No	SP	UN	Qty	Description	Page No
1000S						
005	567744-0000	-		1	FORMING RING	
060	567748-0000	D		1	FORK	
070	269147-0000	D		1	SHAFT	
130	567746-0001	I		5	ROLLER, (STD.SIZE)	
140	567747-0000	I		1	ROLL	
190	569100-0000	J		5	SHAFT	
200	90240-0172	J		12	BEARING BUSHING WITH FLANGE,8/12x10 NFB	
265	544306-0000	D		1	BEARING HOUSING	
290	569085-0000	K		1	SHAFT	
300	569099-0000	D		1	HOLDER	
0500B or 0750B or 1000B or 1055B or 1500S						
005	450459-0001	-		1	FORMING RING	
060	269146-0000	D		1	FORK	
070	269147-0000	D		1	SHAFT	
130	36953-0001	I		5	ROLL	
140	38630-0001	I		1	COUNTER ROLLER	
190	263655-0009	J		5	SHAFT	
265	486803-0000	D		1	BEARING HOUSING	
290	284973-0000	K		1	SHAFT	
300	569099-0000	D		1	HOLDER	
Common parts						
110	2033-0008	-		10	WASHER	
150	263257-0000	D		1	CYLINDER BRACKET	
160	571945-0000	D		1	FASTENING BRACKET	
180	263262-0000	R		2	BUSHING	
230	469463-0000	M		1	SHAFT	
240	269152-0000	D		1	ROCKER ARM	
250	269153-0000	D		1	STOP	
260	269154-0000	R		1	BUSHING	
280	469464-0000	J		1	ROLL	
295	434101-0000	D		1	WASHER	
305	544445-0000	D		1	SPACER	
310	436342-0000	D		1	SPACER	
330	90224-0284	D		1	SWIVEL	
340	90235-0275	R		1	THROTTLE CHECK VALVES,G1/4"	
350	90239-0127	R		1	BRACKET	
360	B 90239-0166	R		1	CYLINDER	
380	311103-0212	-		1	CYLINDRICACP M6 2,5X20RFR	
390	311103-0233	-		2	PINS,STRAIGHT 3X10	
400	311103-0272	-		1	PINS,STRAIGHT 4X20	
410	311103-0276	-		1	PINS,STRAIGHT 4X30	
430	312105-0364	-		5	SCREW M6S6X10RFR	

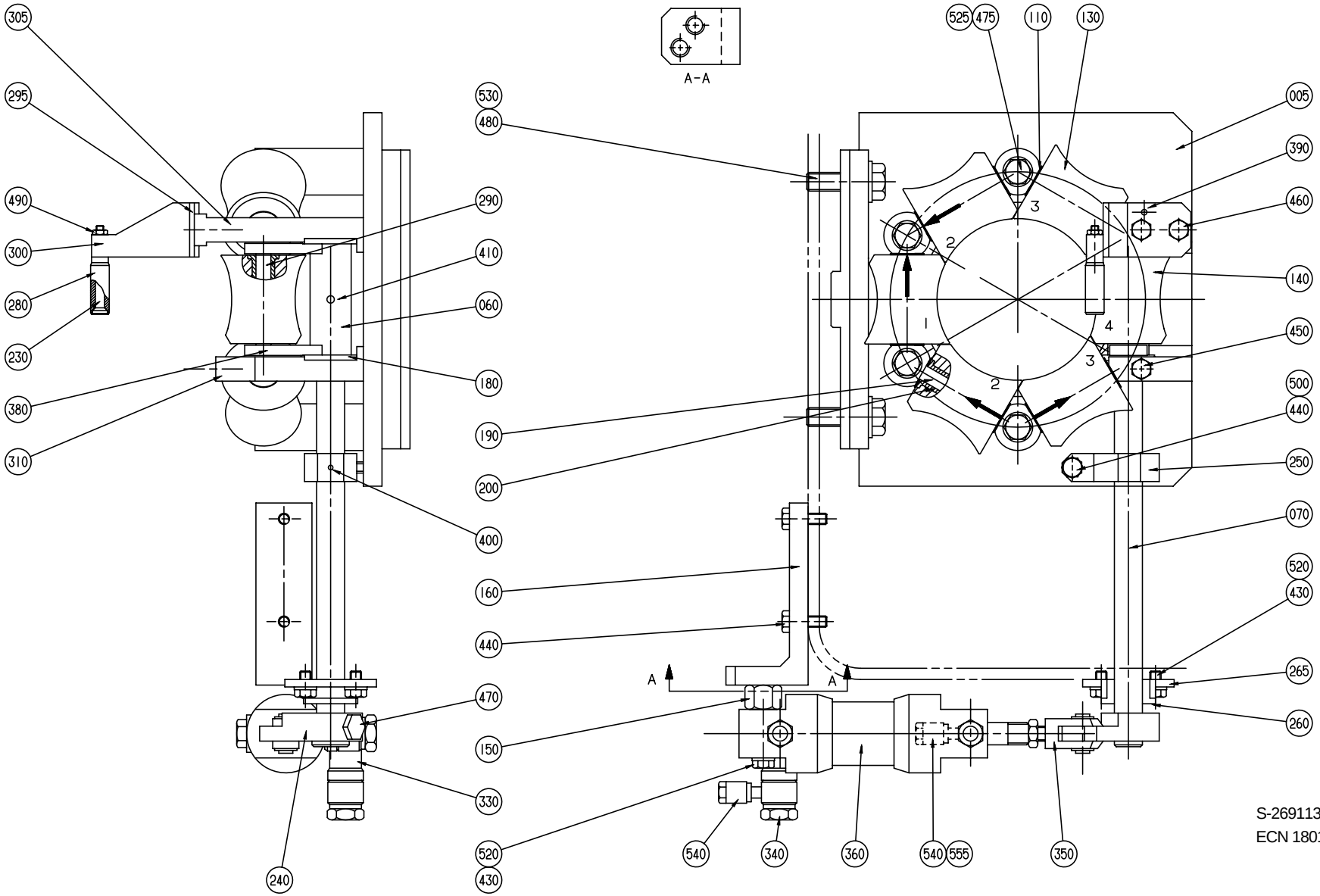
A-A
305
295
490
300
280
230
380
310
290
410
060
180
400
240
530
480
190
200
160
440
470
150
330
520
430
525
475
110
130
005
390
460
140
450
500
440
250
070
520
430
265
260
540
340
360
540
555
350
A
A
1
2
3
4
S-269113-4
ECN 18018

Pos	Part No	SP	UN	Qty	Description	Page No
440	312105-0370	-		3	SCREW M6S ISO 4017 M6X20 A280	
450	312105-0376	-		1	SCREW M6S ISO 4017 M6X35 A280	
460	312105-0380	-		2	SCREW M6S ISO 4014 M6X50 A280	
470	312105-0449	-		1	SCREW M6S ISO 4017 M8x16 A280	
475	312105-0451	-		4	SCREW M6S ISO 4017 8x20 A280	
480	312105-0497	-		2	SCREW M6S ISO 4017 M10X35 A280	
490	312605-0312	-		1	NUT,HEXAGON,M4 RFR	
500	312605-0316	-		1	NUT,HEXAGON,A280 M6M6 Stainless	
520	315105-0153	-		5	WASHER,PLAIN ROUND 6,4x12 Stainless	
525	315105-0165	-		4	WASHER,PLAIN ROUND 8,4x16 Stainless	
530	315105-0173	-		2	WASHER,PLAIN ROUND 10,5x22 STAINLESS	
540	342797-0122	-		2	BANJO CONNECTION,RINGPIECE 6-1/4"	
555	342980-0304	-		1	BANJO-HOLLOW BOLT COUPL,EXT.THR.01-G1/4"	

Pos	Part No	SP	UN	Qty	Description	Page No

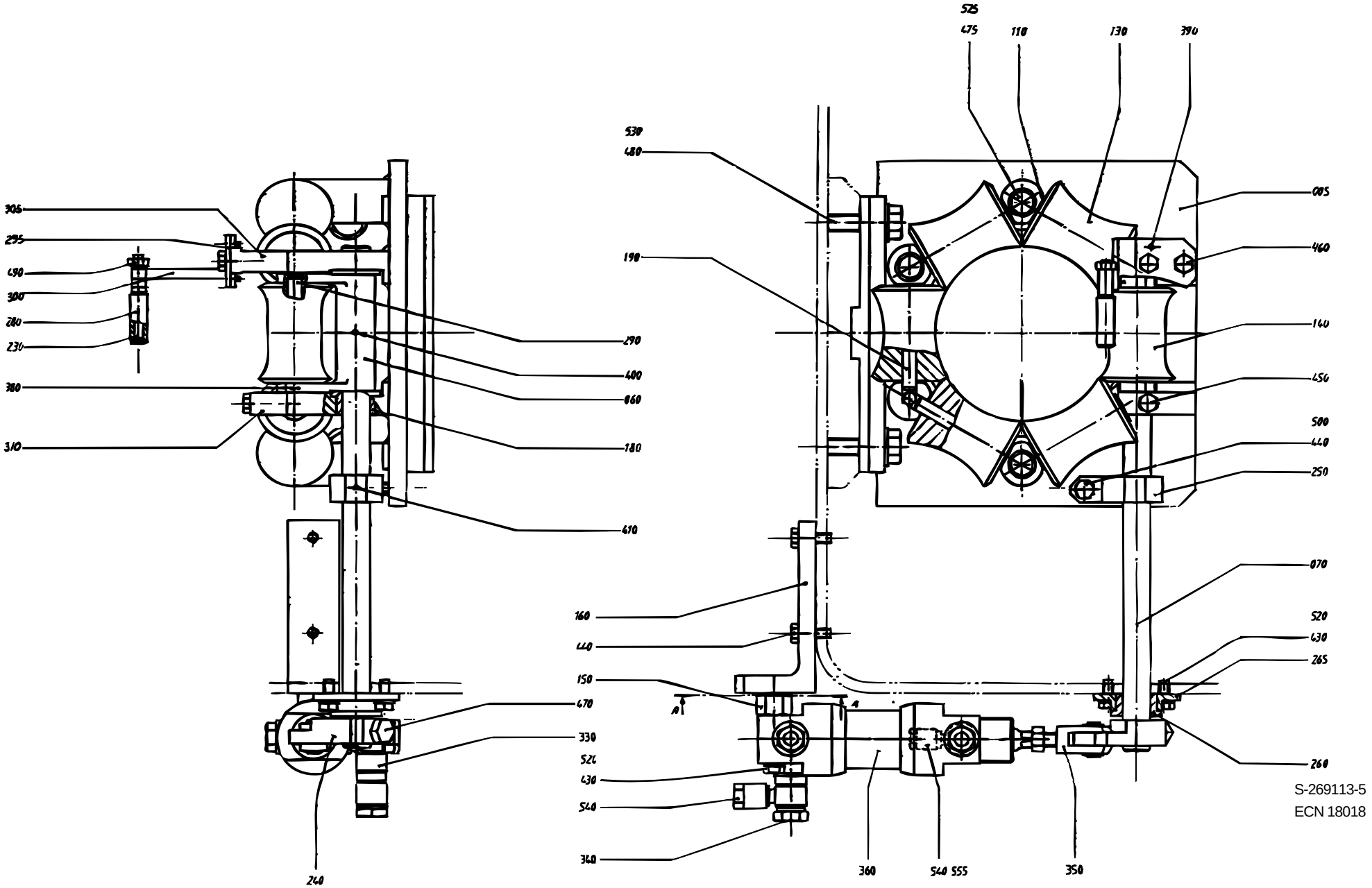

S-269113-5
ECN 18018

Pos	Part No	SP	UN	Qty	Description	Page No
SEE PREVIOUS PAGES.						

Pos	Part No	SP	UN	Qty	Description	Page No

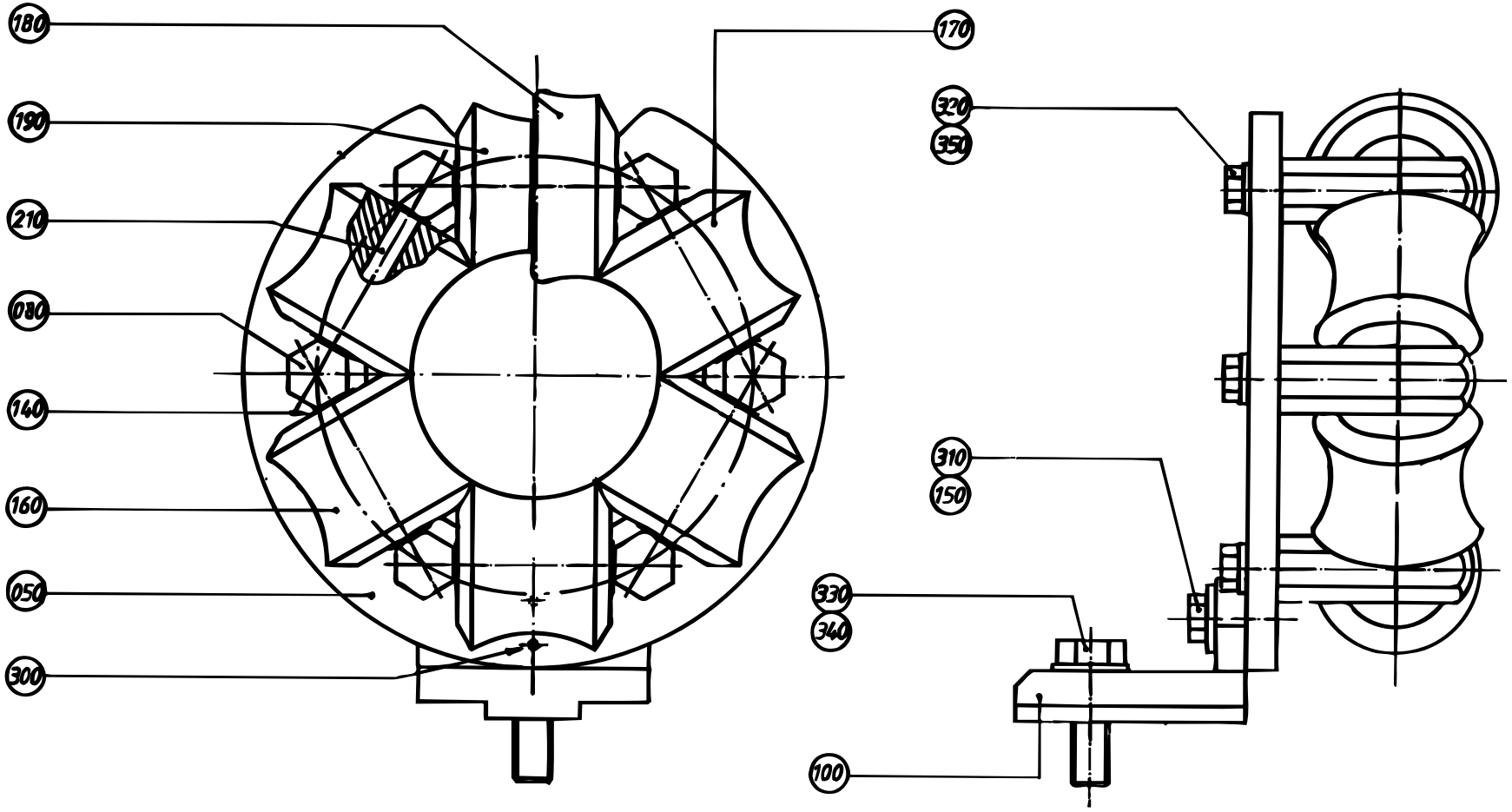

S-269115-3
ECN 9535

Pos	Part No	SP	UN	Qty	Description	Page No
TBA 0375S						
050	434493-0000	-		1	FORMING RING	
080	526958-0000	R		6	AXLE SUPPORT	
100	493948-0000	-		1	CANTILEVER	
140	2033-0008	-		13	WASHER	
160	449586-0000	M		4	ROLL	
170	529039-0000	M		1	EDGE ROLLER	
180	529040-0000	K		1	GUIDE ROLLER	
190	529041-0000	K		1	GUIDE ROLLER	
210	263655-0008	J		6	SHAFT	
320	312105-0464	-		6	SCREW M6S ISO 4014 M8x65 A280	
TBA 0355B or TBA 0400B or TBA 0500S						
050	434493-0000	-		1	FORMING RING	
080	257987-0000	R		6	AXLE SUPPORT	
100	493948-0000	-		1	CANTILEVER	
140	2033-0008	-		13	WASHER	
160	440068-0000	M		4	ROLL	
170	530566-0000	M		1	EDGE ROLLER	
180	530567-0000	K		1	GUIDE ROLLER	
190	530568-0000	K		1	GUIDE ROLLER	
210	263655-0008	J		6	SHAFT	
320	312105-0462	-		6	SCREW M6S ISO 4014 M8x55 A280	
TBA 0500SQ or TBA 1000S or TBA 1000SQ						
050	569090-0000	-		1	FORMING RING	
080	257987-0000	R		6	AXLE SUPPORT	
100	493948-0000	-		1	CANTILEVER	
130	90240-0172	J		14	BEARING BUSHING WITH FLANGE,8/12x10 NFB	
140	2033-0008	-		13	WASHER	
160	569087-0000	M		4	ROLL	
170	569086-0000	M		1	ROLL	
180	569089-0000	K		1	ROLL	
190	569088-0000	K		1	ROLL	
210	263655-0009	J		6	SHAFT	
320	312105-0462	-		6	SCREW M6S ISO 4014 M8x55 A280	
TBA 0750S or TPA 1000S						
050	544263-0000	-		1	FORMING RING	
080	257987-0000	R		6	AXLE SUPPORT	
100	493948-0000	-		1	CANTILEVER	
130	90240-0172	J		14	BEARING BUSHING WITH FLANGE,8/12x10 NFB	
140	2033-0008	-		12	WASHER	
160	752719-0000	M		4	ROLL	
170	752721-0000	M		1	ROLL	
180	752720-0000	K		1	ROLL	
190	752718-0000	K		1	ROLL	
210	263655-0009	J		6	SHAFT	
320	312105-0462	-		6	SCREW M6S ISO 4014 M8x55 A280	
TBA 0500B or TBA 0750B or TBA 1000B or TBA 1055B						
050	250594-0000	-		1	FORMING RING	
080	257987-0000	R		6	AXLE SUPPORT	
100	436648-0000	-		1	CANTILEVER	
140	2033-0008	-		13	WASHER	
160	543471-0000	M		4	ROLL	
170	567736-0000	M		1	EDGE ROLLER	
180	567737-0000	K		1	GUIDE ROLLER	
190	567738-0000	K		1	GUIDE ROLLER	
210	263655-0010	J		6	SHAFT	
320	312105-0462	-		6	SCREW M6S ISO 4014 M8x55 A280	
Common parts						
150	28036-0000	-		2	WASHER	
300	311103-0235	-		2	CYLINDRICACP M6 3X14 RFR	
310	312105-0453	-		2	SCREW M6S ISO 4017 M8x25 A280	
330	312105-0540	-		1	SCREW M6S ISO 4017 M12X40 A280	
340	315105-0178	-		1	WASHER,PLAIN ROUND 13x24	
350	315115-0165	-		6	WASHER TBRB 8,4x16 Stainless	

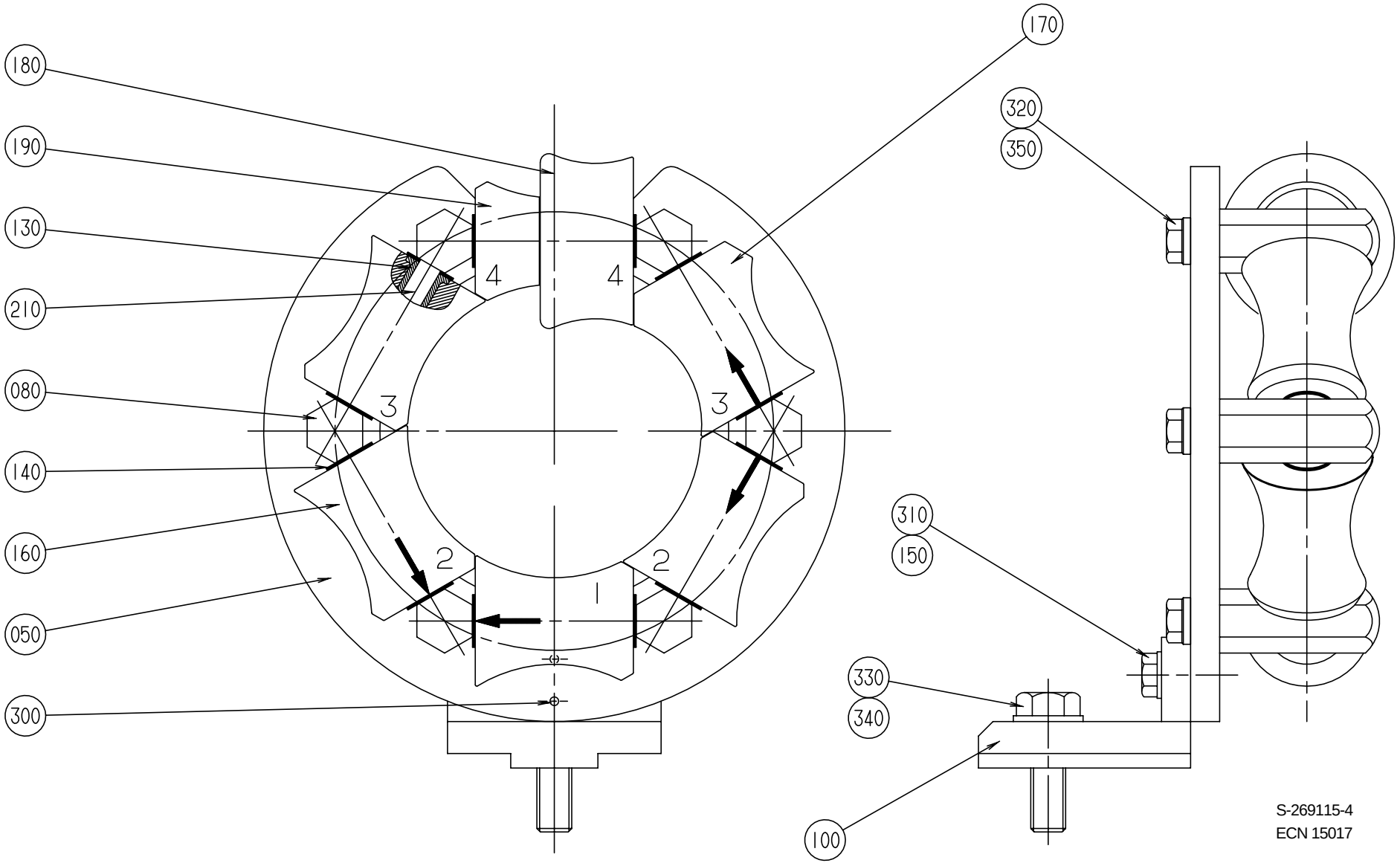
180
190
130
210
080
140
160
050
300
170
320
350
310
150
330
340
100
1
2
2
3
3
4
4
S-269115-4
ECN 15017

Pos	Part No	SP	UN	Qty	Description	Page No
TBA 0375S						
050	434493-0000	-		1	FORMING RING	
080	526958-0000	R		6	AXLE SUPPORT	
100	493948-0000	-		1	CANTILEVER	
140	2033-0008	-		13	WASHER	
160	449586-0000	M		4	ROLL	
170	529039-0000	M		1	EDGE ROLLER	
180	529040-0000	K		1	GUIDE ROLLER	
190	529041-0000	K		1	GUIDE ROLLER	
210	263655-0008	J		6	SHAFT	
320	312105-0464	-		6	SCREW M6S ISO 4014 M8x65 A280	
TBA 0355B or TBA 0400B or TBA 0500S						
050	434493-0000	-		1	FORMING RING	
080	257987-0000	R		6	AXLE SUPPORT	
100	493948-0000	-		1	CANTILEVER	
140	2033-0008	-		13	WASHER	
160	440068-0000	M		4	ROLL	
170	530566-0000	M		1	EDGE ROLLER	
180	530567-0000	K		1	GUIDE ROLLER	
190	530568-0000	K		1	GUIDE ROLLER	
210	263655-0008	J		6	SHAFT	
320	312105-0462	-		6	SCREW M6S ISO 4014 M8x55 A280	
TBA 0500SQ or TBA 1000S or TBA 1000SQ						
050	569090-0000	-		1	FORMING RING	
080	257987-0000	R		6	AXLE SUPPORT	
100	493948-0000	-		1	CANTILEVER	
130	90240-0172	J		14	BEARING BUSHING WITH FLANGE,8/12x10 NFB	
140	2033-0008	-		13	WASHER	
160	569087-0000	M		4	ROLL	
170	569086-0000	M		1	ROLL	
180	569089-0000	K		1	ROLL	
190	569088-0000	K		1	ROLL	
210	263655-0009	J		6	SHAFT	
320	312105-0462	-		6	SCREW M6S ISO 4014 M8x55 A280	
TBA 0750S						
050	544263-0000	-		1	FORMING RING	
080	257987-0000	R		6	AXLE SUPPORT	
100	493948-0000	-		1	CANTILEVER	
130	90240-0172	J		14	BEARING BUSHING WITH FLANGE,8/12x10 NFB	
140	2033-0008	-		12	WASHER	
160	752719-0000	M		4	ROLL	
170	752721-0000	M		1	ROLL	
180	752720-0000	K		1	ROLL	
190	752718-0000	K		1	ROLL	
210	263655-0009	J		6	SHAFT	
320	312105-0462	-		6	SCREW M6S ISO 4014 M8x55 A280	
TBA 0500B or TBA 0750B or TBA 1000B or TBA 1055B						
050	250594-0000	-		1	FORMING RING	
080	257987-0000	R		6	AXLE SUPPORT	
100	436648-0000	-		1	CANTILEVER	
140	2033-0008	-		13	WASHER	
160	543471-0000	M		4	ROLL	
170	567736-0000	M		1	EDGE ROLLER	
180	567737-0000	K		1	GUIDE ROLLER	
190	567738-0000	K		1	GUIDE ROLLER	
210	263655-0010	J		6	SHAFT	
320	312105-0462	-		6	SCREW M6S ISO 4014 M8x55 A280	
Common parts						
150	28036-0000	-		2	WASHER	
300	311103-0235	-		2	CYLINDRICACP M6 3X14 RFR	
310	312105-0453	-		2	SCREW M6S ISO 4017 M8x25 A280	
330	312105-0540	-		1	SCREW M6S ISO 4017 M12X40 A280	
340	315105-0178	-		1	WASHER,PLAIN ROUND 13x24	
350	315115-0165	-		6	WASHER TBRB 8,4x16 Stainless	

UPPER FORMING RING

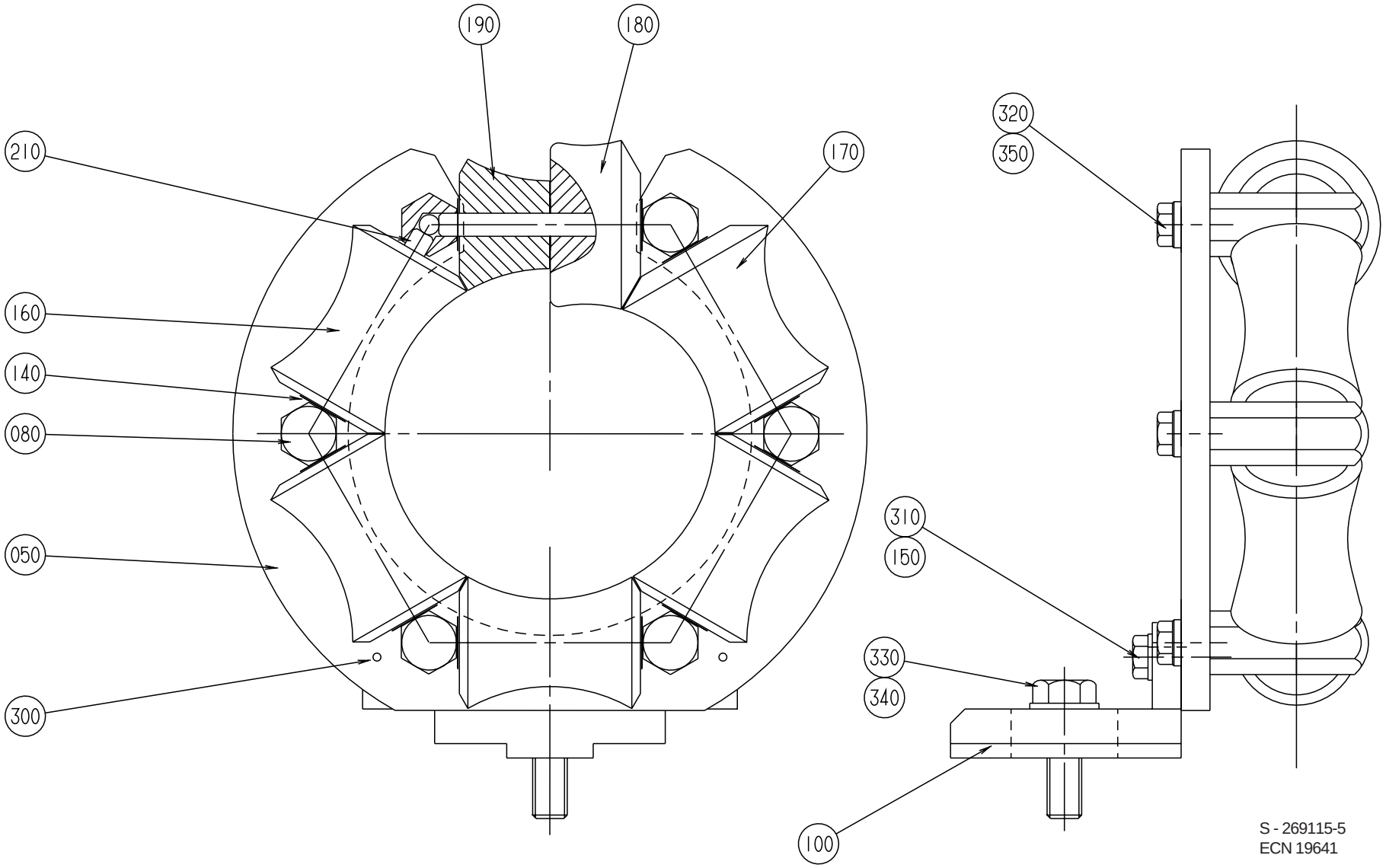

S - 269115-5
ECN 19641

Pos	Part No	SP	UN	Qty	Description	Page No
TBA 0375S						
050	434493-0000	-		1	FORMING RING	
080	526958-0000	R		6	AXLE SUPPORT	
100	493948-0000	-		1	CANTILEVER	
140	2033-0008	-		13	WASHER	
160	449586-0000	M		4	ROLL	
170	529039-0000	M		1	EDGE ROLLER	
180	529040-0000	K		1	GUIDE ROLLER	
190	529041-0000	K		1	GUIDE ROLLER	
210	263655-0008	J		6	SHAFT	
320	312105-0464	-		6	SCREW M6S ISO 4014 M8x65 A280	
TBA 0355B or TBA 0400B or TBA 0500S						
050	434493-0000	-		1	FORMING RING	
080	257987-0000	R		6	AXLE SUPPORT	
100	493948-0000	-		1	CANTILEVER	
140	2033-0008	-		13	WASHER	
160	440068-0000	M		4	ROLL	
170	530566-0000	M		1	EDGE ROLLER	
180	530567-0000	K		1	GUIDE ROLLER	
190	530568-0000	K		1	GUIDE ROLLER	
210	263655-0008	J		6	SHAFT	
320	312105-0462	-		6	SCREW M6S ISO 4014 M8x55 A280	
TBA 0500SQ or TBA 1000S or TBA 1000SQ						
050	569090-0000	-		1	FORMING RING	
080	257987-0000	R		6	AXLE SUPPORT	
100	493948-0000	-		1	CANTILEVER	
130	90240-0172	J		14	BEARING BUSHING WITH FLANGE,8/12x10 NFB	
140	2033-0008	-		13	WASHER	
160	569087-0000	M		4	ROLL	
170	569086-0000	M		1	ROLL	
180	569089-0000	K		1	ROLL	
190	569088-0000	K		1	ROLL	
210	263655-0009	J		6	SHAFT	
320	312105-0462	-		6	SCREW M6S ISO 4014 M8x55 A280	
TBA 0750S						
050	544263-0000	-		1	FORMING RING	
080	257987-0000	R		6	AXLE SUPPORT	
100	493948-0000	-		1	CANTILEVER	
130	90240-0172	J		14	BEARING BUSHING WITH FLANGE,8/12x10 NFB	
140	2033-0008	-		12	WASHER	
160	752719-0000	M		4	ROLL	
170	752721-0000	M		1	ROLL	
180	752720-0000	K		1	ROLL	
190	752718-0000	K		1	ROLL	
210	263655-0009	J		6	SHAFT	
320	312105-0462	-		6	SCREW M6S ISO 4014 M8x55 A280	
TBA 0500B or TBA 0750B or TBA 1000B or TBA 1055B						
050	250594-0000	-		1	FORMING RING	
080	257987-0000	R		6	AXLE SUPPORT	
100	436648-0000	-		1	CANTILEVER	
140	2033-0008	-		13	WASHER	
160	543471-0000	M		4	ROLL	
170	567736-0000	M		1	EDGE ROLLER	
180	567737-0000	K		1	GUIDE ROLLER	
190	567738-0000	K		1	GUIDE ROLLER	
210	263655-0010	J		6	SHAFT	
320	312105-0462	-		6	SCREW M6S ISO 4014 M8x55 A280	
Common parts						
150	28036-0000	-		2	WASHER	
300	311103-0235	-		2	CYLINDRICACP M6 3X14 RFR	
310	312105-0453	-		2	SCREW M6S ISO 4017 M8x25 A280	
330	312105-0540	-		1	SCREW M6S ISO 4017 M12X40 A280	
340	315105-0178	-		1	WASHER,PLAIN ROUND 13x24	
350	315115-0165	-		6	WASHER TBRB 8,4x16 Stainless	

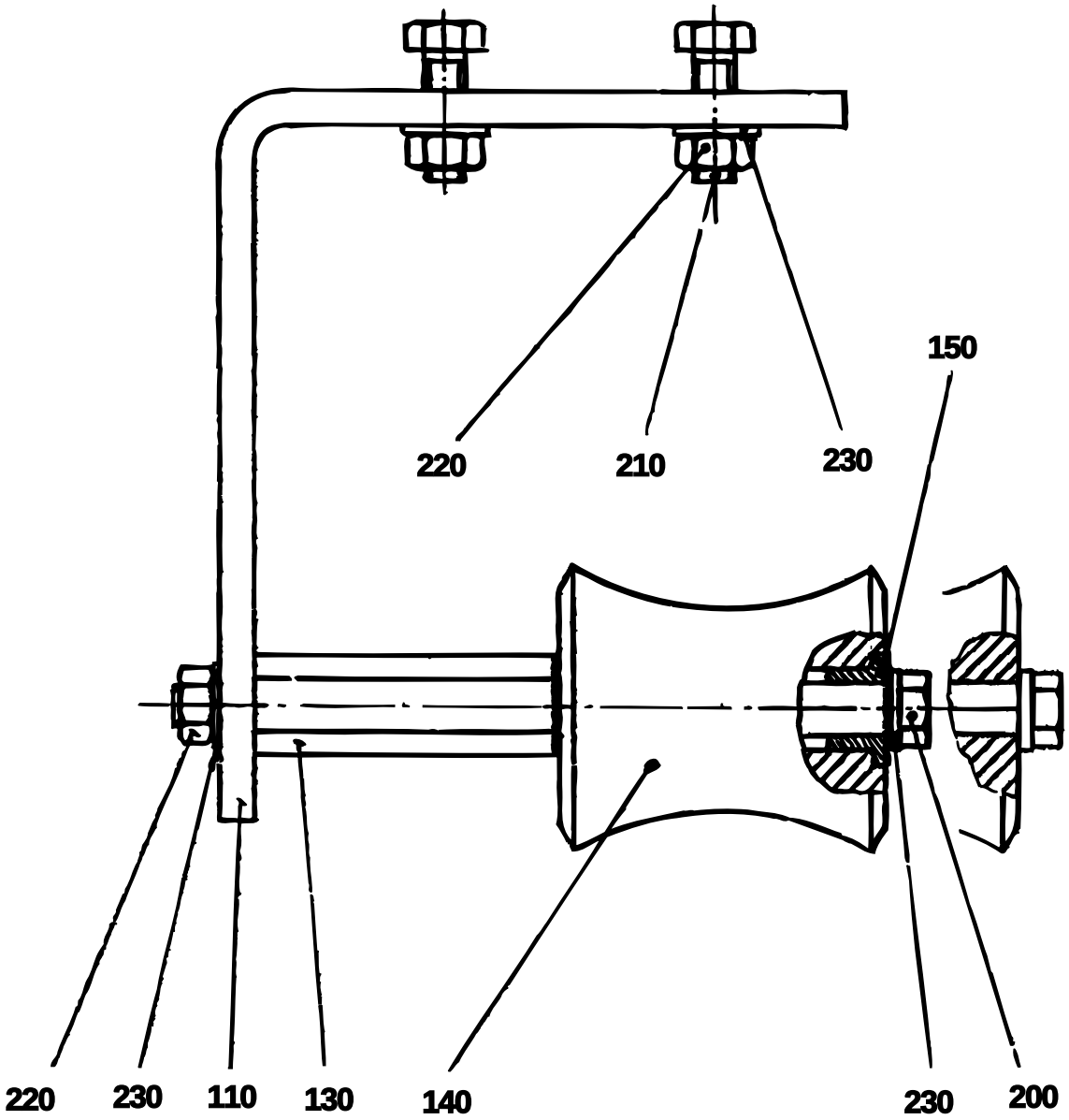

S-269136-1
ECN 13584

Pos	Part No	SP	UN	Qty	Description	Page No
Common parts						
110	208843-0000	-		1	ANGLE BRACKET	
130	458791-0000	M		1	SHAFT	
200	312105-0366	-		1	SCREW M6S ISO 4017 M6X12 A280	
210	312105-0370	-		2	SCREW M6S ISO 4017 M6X20 A280	
220	312605-0316	-		3	NUT,HEXAGON,A280 M6M6 Stainless	
230	315105-0153	-		4	WASHER,PLAIN ROUND 6,4x12 Stainless	
0355B or 0375S or 0400B or 0500B or 0500S or 0750B or 1000B or 1055B						
140	36953-0010	J		1	ROLL	
0500SQ or 0750S or 1000S or 1000SQ						
140	752740-0000	J		1	ROLLER	
150	90240-0172	J		2	BEARING BUSHING WITH FLANGE,8/12x10 NFB	

Pos	Part No	SP	UN	Qty	Description	Page No

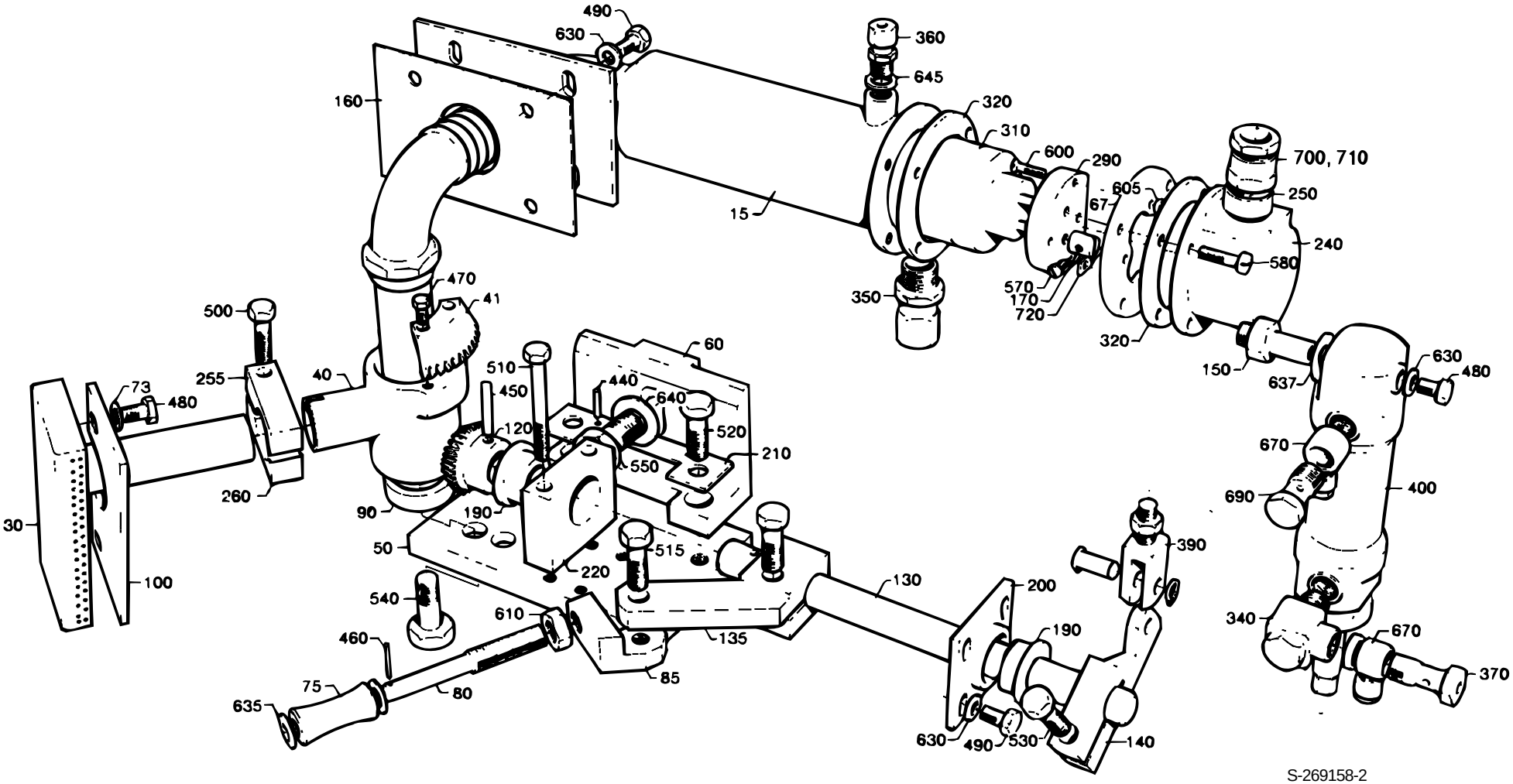

S-269158-2
ECN 17647

Pos	Part No	SP	UN	Qty	Description	Page No
Common parts						
015	297309-0000	D		1	PIPE-LINE	
040	263249-0000	D		1	PIVOT ARM	
041	263250-0000	D		1	TOOTH PART	
050	269313-0000	D		1	FASTENING PLATE	
060	269314-0000	D		1	CANTILEVER	
067	297310-0000	-		1	FLANGE	
073	6278-0000	-		2	WASHER	
075	33442-0000	K		1	ROLL	
080	239440-0000	M		1	SHAFT	
085	239441-0000	-		1	BRACKET	
090	250663-0000	R		2	BEARING	
120	263251-0000	D		1	GEAR WHEEL	
130	263252-0000	-		1	SHAFT	
135	263254-0000	-		1	BRACKET	
140	263256-0000	D		1	ROCKER ARM	
150	263257-0000	D		1	CYLINDER BRACKET	
160	531741-0000	D		1	GASKET	
170	266739-0000	M		3	CABLE GLAND	
190	269154-0000	R		2	BUSHING	
200	269242-0000	D		1	BEARING HOUSING	
210	269315-0000	D		1	WASHER	
220	269316-0000	D		1	BEARING HOUSING	
240	297311-0000	-		1	COVER	
250	458046-0000	-		1	PIPE	
255	497579-0000	D		1	CLAMP HALF	
260	497580-0000	D		1	CLAMP HALF	
290	B 90125-0020	-		1	PLATE	
310	90206-0085	M		1	HEATING CARTRIDGE 650W	
320	90206-0322	K		2	GASKET	
340	90224-0284	D		1	SWIVEL	
350	90224-0301	D		1	CONNECTION	
360	90224-0307	D		1	CONNECTION	
370	90235-0275	-		1	THROTTLE CHECK VALVES,G1/4"	
390	90239-0127	R		1	BRACKET	
400	B 90239-0166	R		1	CYLINDER	
440	311103-0209	-		2	CYLINDRICACP M6 2,5X14RFR	
450	311103-0274	-		1	PINS,STRAIGHT 4X25	
460	311411-0140	-		1	SPLIT PIN SP1,6X16RFR	
470	312105-0291	-		2	SCREW M6S ISO 4017 M4X12 A280	
480	312105-0364	-		3	SCREW M6S6X10RFR	
490	312105-0366	-		8	SCREW M6S ISO 4017 M6X12 A280	
500	312105-0374	-		2	SCREW M6S ISO 4017 M6X30 A280	
510	312105-0380	-		2	SCREW M6S ISO 4014 M6X50 A280	
515	312105-0451	-		1	SCREW M6S ISO 4017 8x20 A280	
520	312105-0453	-		3	SCREW M6S ISO 4017 M8x25 A280	
530	312105-0455	-		1	SCREW M6S ISO 4017 M8X30 A280	
540	312105-0493	-		1	SCREW M6S ISO 4017 M10X25 A280	
550	312105-0536	-		1	SCREW M6S ISO 4017 M12X30 A280	
570	312125-0220	-		3	SLOTTED HEMCS3X6RFR	
580	312125-0295	-		4	SLOTTED CHEESE HEAD ISO 1207 M4X20 RFR	
600	312145-0228	-		3	SLOTTED HEMFS3X16RFR	
605	312605-0310	-		3	NUT,HEXAGON,M6M3 RFR	
610	312605-0320	-		1	NUT,HEXAGON,M10 A280	
630	315105-0153	-		9	WASHER,PLAIN ROUND 6,4x12 Stainless	
635	315105-0165	-		2	WASHER,PLAIN ROUND 8,4x16 Stainless	
637	315105-0173	-		1	WASHER,PLAIN ROUND 10,5x22 STAINLESS	
640	315105-0178	-		1	WASHER,PLAIN ROUND 13x24	
645	315237-0109	-		1	PLAIN ROUND,ALUMINIUM R1/8"	
670	342797-0122	-		2	BANJO CONNECTION,RINGPIECE 6-1/4"	
690	342980-0304	-		1	BANJO-HOLLOW BOLT COUPL,EXT.THR.01-G1/4"	
700	352136-0127	-		1	GLAND FITTING PR 18,6	
710	352100-0106	-		1	CABLE GLANR.18,6-10,5	
720	353104-0129	-		1	CABLE SHOEYAV 025 M 35*	
0375S						
030	526696-0000	D		1	AIR NOZZLE	
100	526697-0000	R		1	HEAT GUARD	
0355B or 0400B or 0500S or 0750S						
030	534176-0000	D		1	AIR NOZZLE	
100	526697-0000	R		1	HEAT GUARD	
0500B or 0500SQ or 0750B or 1000B or 1000S or 1000SQ or 1055B						
030	257903-0000	D		1	AIR NOZZLE	
100	257904-0000	R		1	HEAT GUARD	

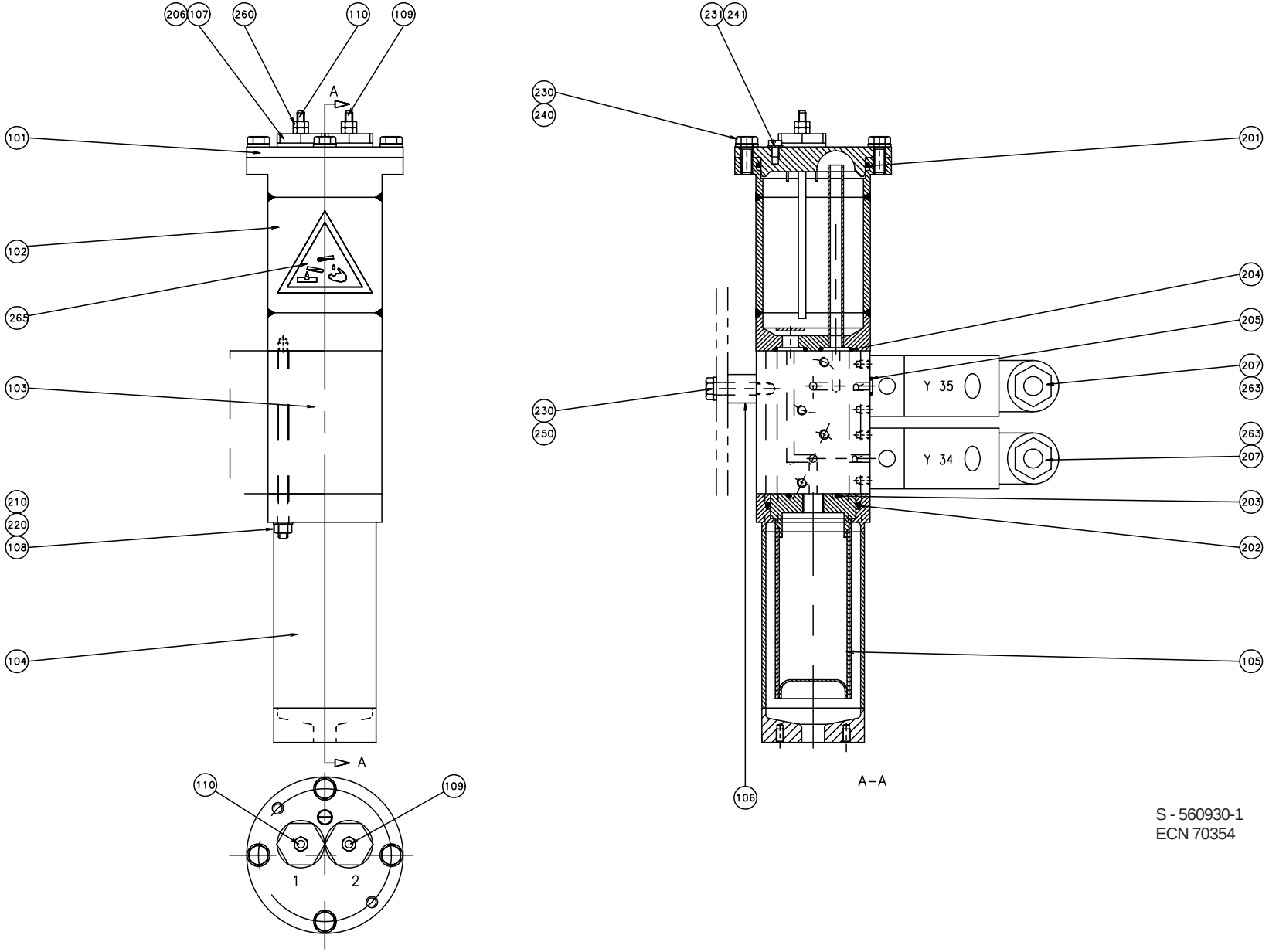

S - 560930-1
ECN 70354

Pos	Part No	SP	UN	Qty	Description	Page No
Common parts						
101	549267-0000	-		1	LID	
102	549264-0000	-		1	CONTAINER	
103	549263-0000	-		1	BLOCK	
104	554142-0000	-		1	FILTER HOUSING	
105	554141-0000	D		1	FILTER	
106	560932-0000	-		1	INTERMEDIATE PART	
107	560931-0000	D		2	BRACKET	
108	554585-0000	-		4	STUD SCREW	
109	560934-0000	D		1	ELECTRODE	
110	560933-0000	D		1	ELECTRODE	
201	927422-0009	J		1	O-RING 54.5X3 SILICON	
202	927422-0007	J		1	O-RING 44.2X3 SILICON	
203	927422-0001	J		1	O-RING 19.2X3 SILICON	
204	927421-0002	J		2	O-RING 12.3X2.4 SILICON	
205	927420-0001	J		6	O-RING 5.1X1.6 SILICON	
206	927421-0004	J		2	O-RING 15.3X2.4 SILICON	
207	90042-0203	R		2	SOLENOID VALVE	
210	315105-0146	-		4	WASHER,PLAIN ROUND 5,3x10 Stainless	
220	312605-0314	-		4	NUT,HEXAGON,M6M5 Stainless	
230	315105-0153	-		6	WASHER,PLAIN ROUND 6,4x12 Stainless	
231	315105-0136	-		3	WASHER,PLAIN ROUND 4,3x8 Stainless	
240	312105-0368	-		4	SCREW M6S ISO 4017 M6X16 A280	
241	312125-0285	-		1	SLOTTED HEMCS4X6RFR	
250	312109-0374	-		2	SCREW M6S ISO 4017 M6X30 A280	
260	312605-0312	-		4	NUT,HEXAGON,M4 RFR	
263	352136-0113	-		2	GLAND FITTING PR18,6/PG11 Di=12mm	
265	359705-0003	-		1	WARNING SIGN Dangerous Chemicals	

Pos	Part No	SP	UN	Qty	Description	Page No

PIPE HOLDER

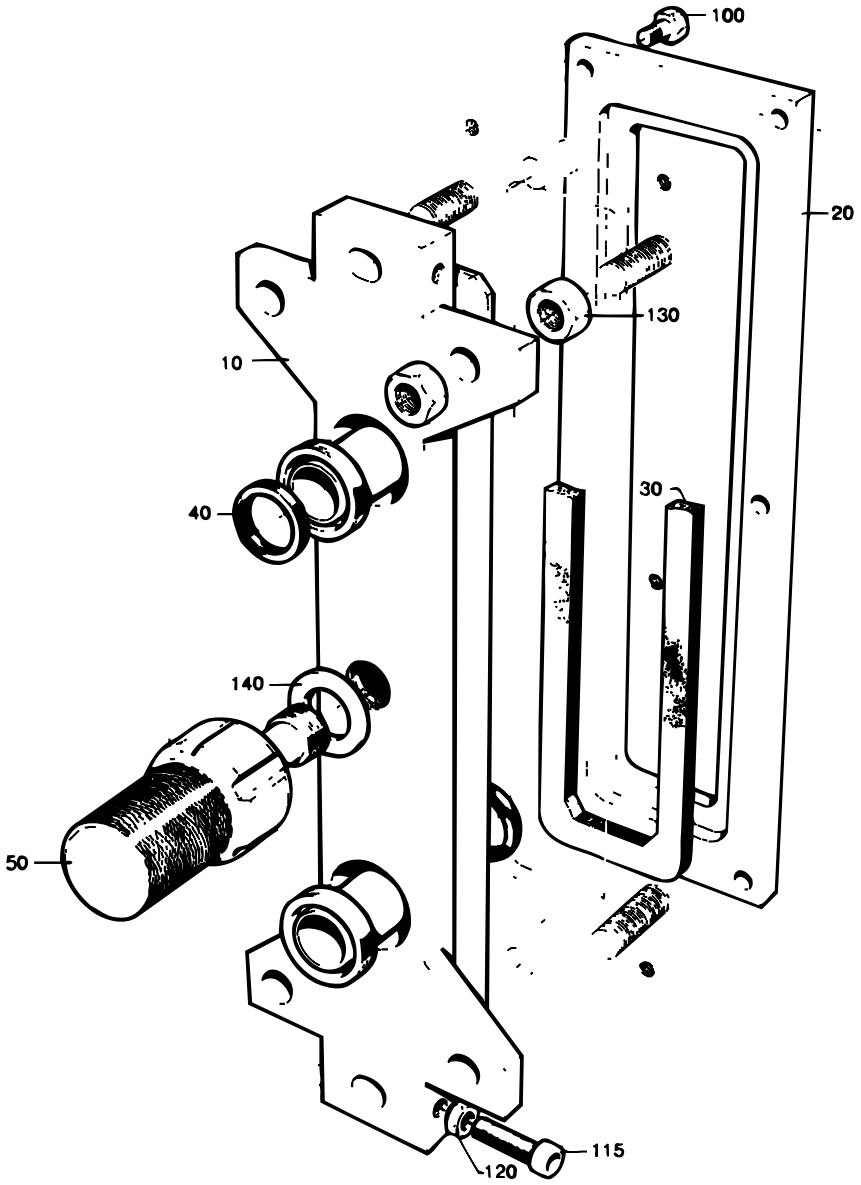

S-269715-1
ECN 5058

Pos	Part No	SP	UN	Qty	Description	Page No
Common parts						
010	269716-0000	D		1	FASTENING PLATE	
020	269717-0000	D		1	GASKET HOLDER	
030	269718-0000	M		1	GASKET	
040	12242-0001	J		4	GASKET	
050	269719-0000	D		1	SCREW	
100	312105-0368	-		6	SCREW M6S ISO 4017 M6X16 A280	
115	312115-0455	-		4	SCREW MC6S ISO 4762 M8X30 A280	
120	312605-0318	-		4	NUT,HEXAGON,M8 RFR	
130	312605-0322	-		8	NUT,HEXAGON,M12 RFR	
140	315105-0192	-		1	WASHER,PLAIN ROUND 21x36	

Pos	Part No	SP	UN	Qty	Description	Page No

FILLER TUBE

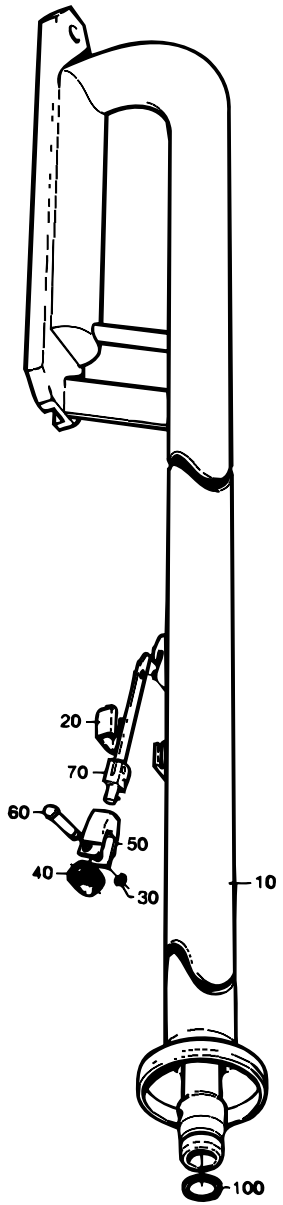

S-269720-2
ECN 21054

Pos	Part No	SP	UN	Qty	Description	Page No
Common parts						
030	24928-0000	F		1	LOCKING RUBBER	
100	315204-0217	F		1	O-RINGS 24,2X3	
TBA 1000S						
010	569097-0000	D		1	FILLER TUBE	
020	434665-0000	R		1	HOOD	
040	499387-0000	F		1	PRESSURE ROLLER	
050	499016-0000	R		1	FORK	
060	499011-0000	M		1	SHAFT	
070	574214-0000	M		1	SPRING	
TBA 0500B orTBA 0750B or TBA 1000B or TBA 1055B						
010	434222-0000	D		1	FILLER TUBE	
020	14600-0000	R		1	HOOD	
040	232979-0000	F		1	PRESSURE ROLLER	
050	267727-0000	R		1	FORK	
060	267728-0000	M		1	SHAFT	
070	544892-0000	M		1	SPRING	
TBA 0750S						
010	544287-0000	D		1	FILLER TUBE	
020	434665-0000	R		1	HOOD	
040	499387-0000	F		1	PRESSURE ROLLER	
050	499016-0000	R		1	FORK	
060	499011-0000	M		1	SHAFT	
070	544892-0000	M		1	SPRING	
TBA 0500SQ or TBA 1000SQ						
010	579316-0000	D		1	FILLER TUBE	
020	434665-0000	R		1	HOOD	
040	499387-0000	F		1	PRESSURE ROLLER	
050	499016-0000	R		1	FORK	
060	499011-0000	M		1	SHAFT	
070	544892-0000	M		1	SPRING	
TBA 0375S						
010	497131-0000	D		1	FILLER TUBE	
020	526682-0000	R		1	HOOD	
040	499387-0000	F		1	PRESSURE ROLLER	
050	529180-0000	R		1	FORK	
060	499011-0000	M		1	SHAFT	
070	544893-0000	M		1	SPRING	
TBA 0355B or TBA 0400B or TBA 0500S						
010	450010-0000	D		1	FILLER TUBE	
020	434665-0000	R		1	HOOD	
040	499387-0000	F		1	PRESSURE ROLLER	
050	499016-0000	R		1	FORK	
060	499011-0000	M		1	SHAFT	
070	544892-0000	M		1	SPRING	

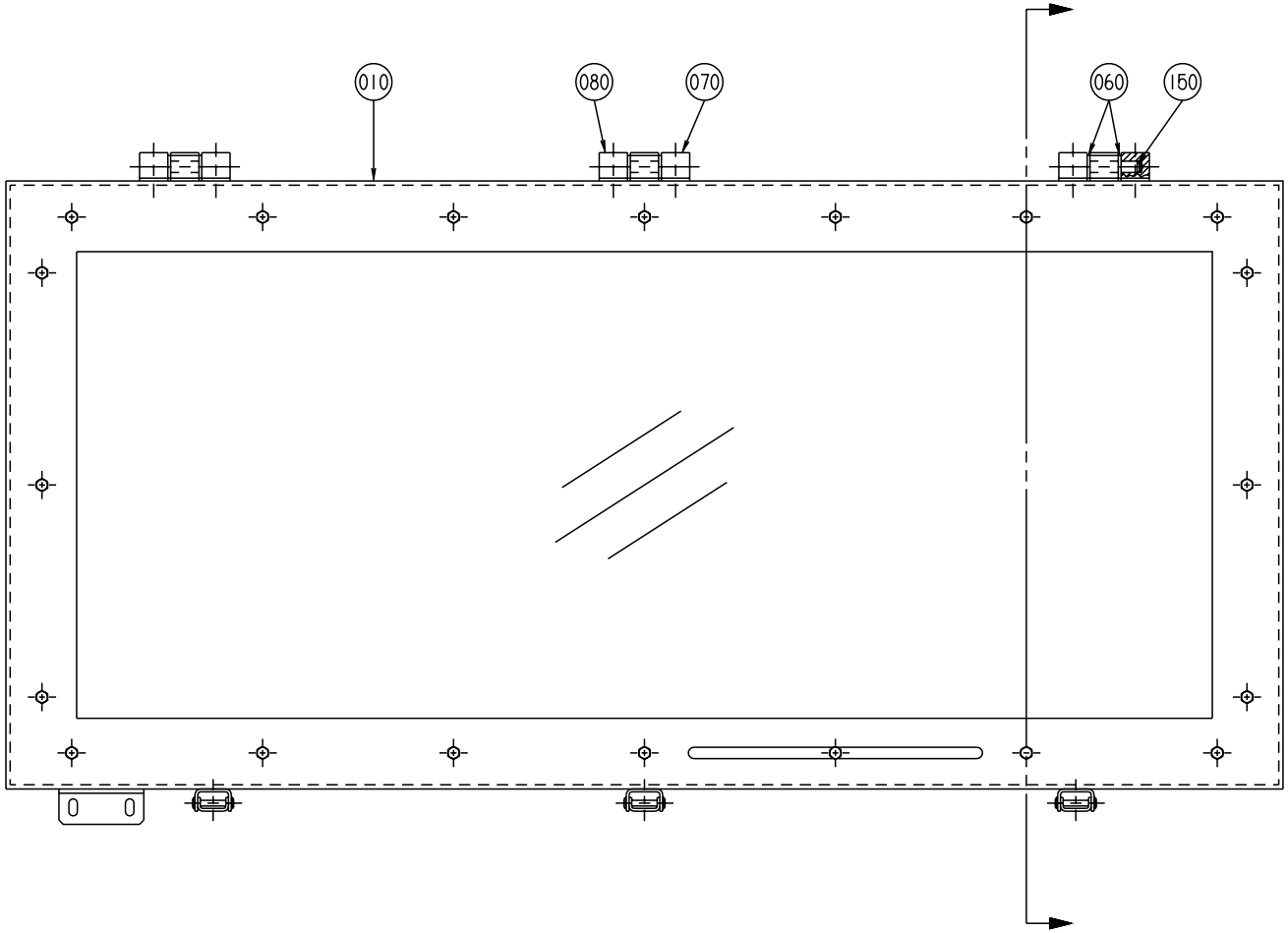

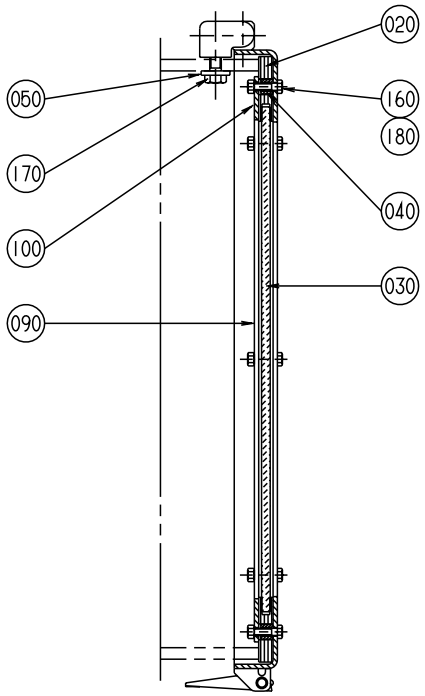

S-573612-1
ECN 19141

Pos	Part No	SP	UN	Qty	Description	Page No
Common parts						
010	573613-0000	-		1	DOOR	
020	252797-0000	-		1	RUBBER STRIP	
030	252732-0000	-		1	GLASS PANE	
040	441718-0000	-		20	SPACER	
050	441737-0000	-		3	WASHER	
060	441739-0000	-		6	WASHER	
070	441740-0000	-		3	HINGE FLANGE	
080	441741-0000	-		3	HINGE FLANGE	
090	573615-0000	-		2	COVER SLIP	
100	573616-0000	-		2	COVER SLIP	
150	311103-0413	-		3	PINS,STRAIGHT 8X50	
160	312105-0331	-		20	SCREW M6S ISO 4017 M5X20 A280	
170	312105-0451	-		6	SCREW M6S ISO 4017 8x20 A280	
180	312605-0314	-		20	NUT,HEXAGON,M6M5 Stainless	

Pos	Part No	SP	UN	Qty	Description	Page No

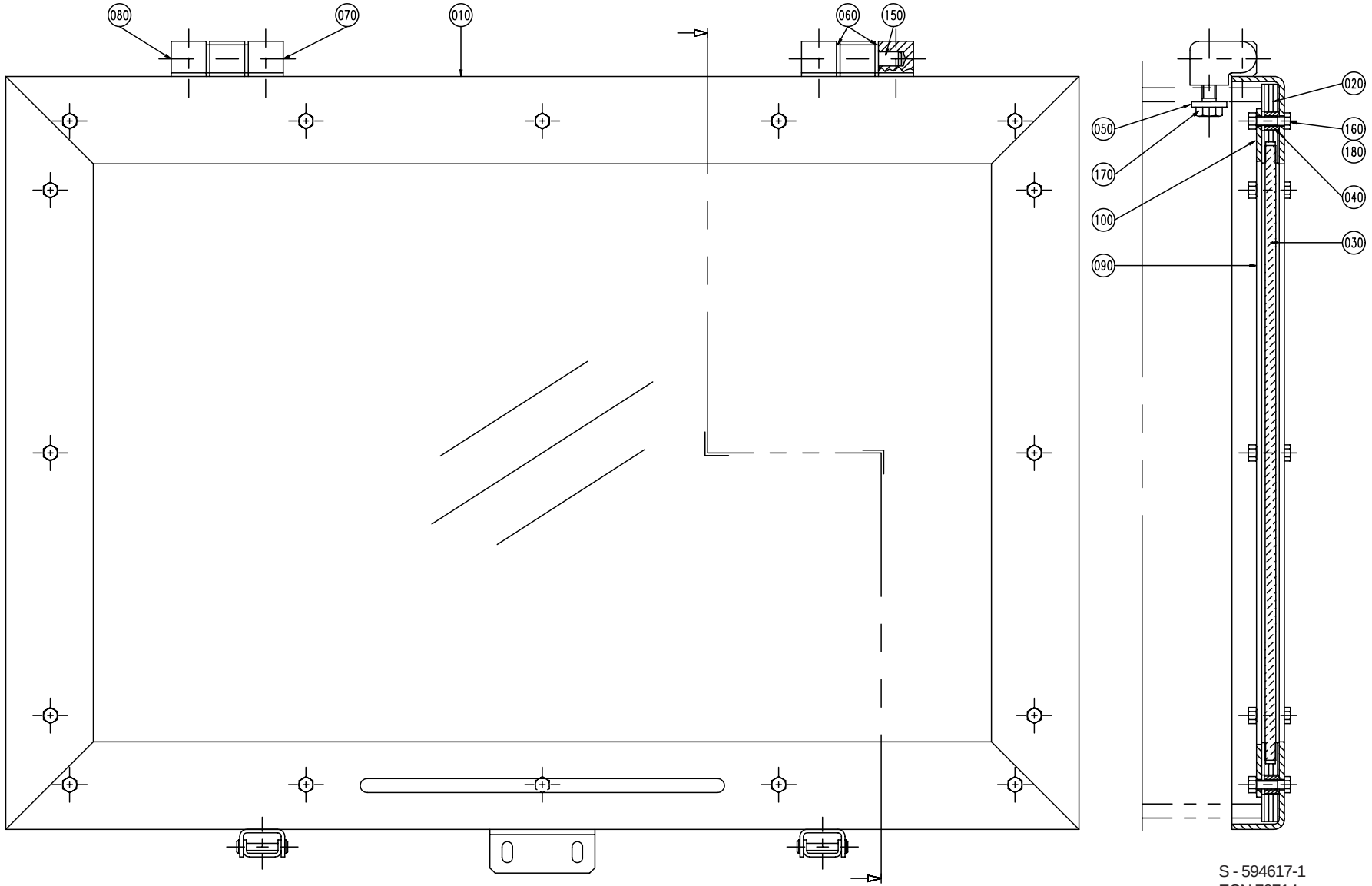

S - 594617-1
ECN 70714

Pos	Part No	SP	UN	Qty	Description	Page No
Common parts						
010	573614-0000	-		1	DOOR	
020	252798-0000	-		1	RUBBER STRIP	
030	252733-0000	-		1	GLASS PANE	
040	441718-0000	-		16	SPACER	
050	441737-0000	-		2	WASHER	
060	441739-0000	-		4	WASHER	
070	441740-0000	-		2	HINGE FLANGE	
080	441741-0000	-		2	HINGE FLANGE	
090	573615-0000	-		2	COVER SLIP	
100	573617-0000	-		2	COVER SLIP	
150	311103-0413	-		2	PINS,STRAIGHT 8X50	
160	312105-0331	-		16	SCREW M6S ISO 4017 M5X20 A280	
170	312105-0451	-		4	SCREW M6S ISO 4017 8x20 A280	
180	312605-0314	-		16	NUT,HEXAGON,M6M5 Stainless	

Pos	Part No	SP	UN	Qty	Description	Page No

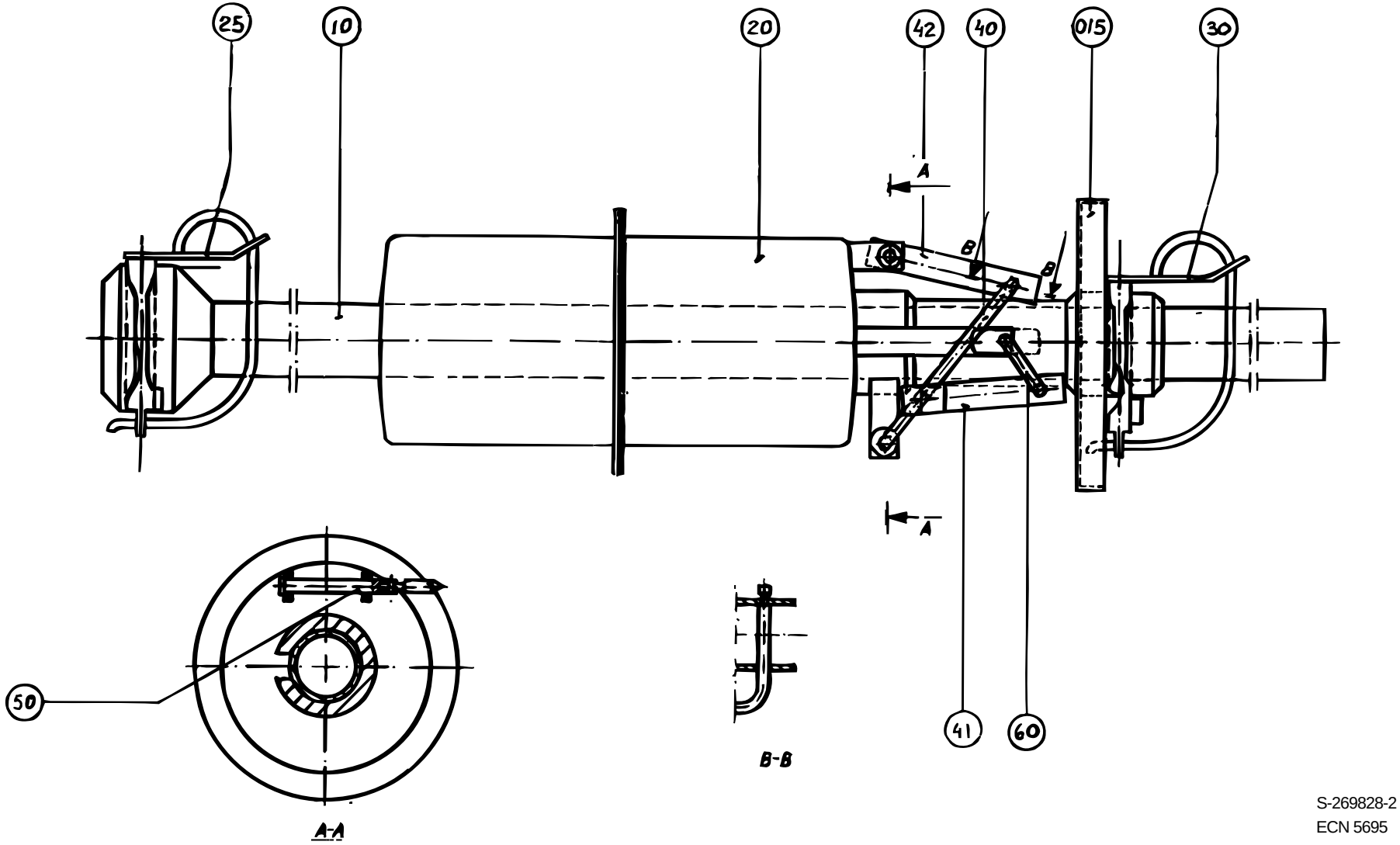

S-269828-2
ECN 5695

Pos	Part No	SP	UN	Qty	Description	Page No
0375S						
010	529033-0000	R		1	FILLING TUBE LOWER	
015	526960-0000	R		1	PRESSURE FLANGE	
020	259902-0000	R		1	FLOAT	
025	493733-0000	M		1	LOCKING PIN UPPER	
030	445503-0000	M		1	LOCKING PIN LOWER	
040	37296-0000	R		1	ARM	
041	36816-0000	R		1	LINK	
042	36817-0000	R		1	CLAMPING ELEMENT	
050	36821-0002	M		1	SHEAR PIN	
060	228943-0000	J		1	THROTTLE	
0355B						
010	530826-0000	R		1	FILLING TUBE LOWER	
015	434750-0000	R		1	PRESSURE FLANGE	
020	434749-0000	R		1	FLOAT	
025	493733-0000	M		1	LOCKING PIN UPPER	
030	493734-0000	M		1	LOCKING PIN LOWER	
040	434751-0000	R		1	ARM	
041	752587-0000	R		1	LINK	
042	36817-0000	R		1	CLAMPING ELEMENT	
050	36821-0002	M		1	SHEAR PIN	
060	37782-0000	J		1	THROTTLE	
0400B						
010	574013-0000	R		1	FILLING PIPE LOWER	
015	434750-0000	R		1	PRESSURE FLANGE	
020	434749-0000	R		1	FLOAT	
025	493733-0000	M		1	LOCKING PIN UPPER	
030	493734-0000	M		1	LOCKING PIN LOWER	
040	434751-0000	R		1	ARM	
041	434752-0000	R		1	LINK	
042	36817-0000	R		1	CLAMPING ELEMENT	
050	36821-0002	M		1	SHEAR PIN	
060	37782-0000	J		1	THROTTLE	
0500B						
010	476878-0000	R		1	FILLER TUBE	
015	476879-0000	R		1	PRESSURE FLANGE	
020	245190-0000	R		1	FLOAT	
025	445504-0000	M		1	LOCKING PIN UPPER	
030	445502-0000	M		1	LOCKING PIN LOWER	
040	36804-0000	R		1	ARM	
041	36805-0000	R		1	LINK	
042	36806-0000	R		1	CLAMPING ELEMENT	
050	36821-0001	M		1	SHEAR PIN	
060	37782-0000	J		1	THROTTLE	
0500S						
010	493875-0000	R		1	FILLING TUBE LOWER	
015	434750-0000	R		1	PRESSURE FLANGE	
020	434749-0000	R		1	FLOAT	
025	493733-0000	M		1	LOCKING PIN UPPER	
030	493734-0000	M		1	LOCKING PIN LOWER	
040	434751-0000	R		1	ARM	
041	434752-0000	R		1	LINK	
042	36817-0000	R		1	CLAMPING ELEMENT	
050	36821-0002	M		1	SHEAR PIN	
060	37782-0000	J		1	THROTTLE	
0500SQ						
010	1362921-0000	R		1	FILLER TUBE	
015	1362922-0000	R		1	PRESSURE FLANGE	
020	1362923-0000	R		1	FLOAT	
025	493733-0000	M		1	LOCKING PIN UPPER	
030	445503-0000	M		1	LOCKING PIN LOWER	
040	434751-0000	R		1	ARM	
041	434752-0000	R		1	LINK	
042	36817-0000	R		1	CLAMPING ELEMENT	
050	36821-0002	M		1	SHEAR PIN	
060	1362924-0000	J		1	THROTTLE	
0750B						
010	269827-0002	R		1	FILLER TUBE	
015	466463-0000	R		1	PRESSURE FLANGE	
020	245190-0000	R		1	FLOAT	
025	445504-0000	M		1	LOCKING PIN UPPER	
030	445502-0000	M		1	LOCKING PIN LOWER	
040	36804-0000	R		1	ARM	
041	36805-0000	R		1	LINK	
042	36806-0000	R		1	CLAMPING ELEMENT	
050	36821-0001	M		1	SHEAR PIN	
060	37782-0000	J		1	THROTTLE	
0750S						
010	544294-0000	R		1	FILLER TUBE	
015	752860-0000	R		1	PRESSURE FLANGE	
020	544295-0000	R		1	FLOAT	
025	493733-0000	M		1	LOCKING PIN UPPER	
030	493734-0000	M		1	LOCKING PIN LOWER	
040	434751-0000	R		1	ARM	
041	434752-0000	R		1	LINK	

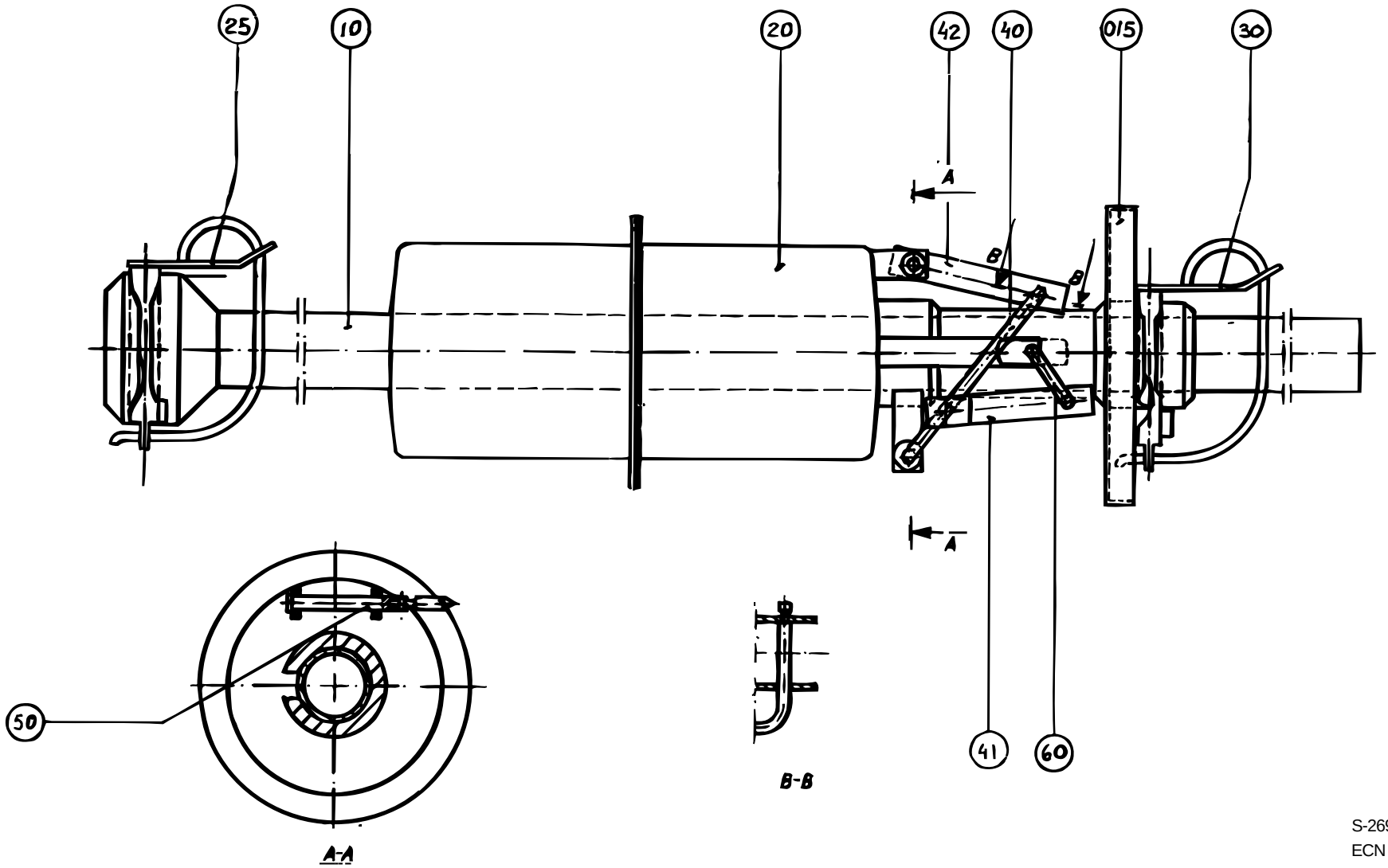

S-269828-2
ECN 5695

Pos	Part No	SP	UN	Qty	Description	Page No
042	36817-0000	R		1	CLAMPING ELEMENT	
050	36821-0002	M		1	SHEAR PIN	
060	752590-0000	J		1	THROTTLE	
1000B HIFIN or 1055B						
010	544294-0000	R		1	FILLER TUBE	
015	466463-0000	R		1	PRESSURE FLANGE	
020	245190-0000	R		1	FLOAT	
025	445504-0000	M		1	LOCKING PIN UPPER	
030	445502-0000	M		1	LOCKING PIN LOWER	
040	529376-0000	R		1	ARM	
041	529378-0000	R		1	LINK	
042	529377-0000	R		1	CLAMP	
050	36821-0001	M		1	SHEAR PIN	
060	37782-0000	J		1	THROTTLE	
1000S						
010	544294-0000	R		1	FILLER TUBE	
015	569098-0000	R		1	PRESSURE FLANGE	
020	544295-0000	R		1	FLOAT	
025	493733-0000	M		1	LOCKING PIN UPPER	
030	493734-0000	M		1	LOCKING PIN LOWER	
040	434751-0000	R		1	ARM	
041	434752-0000	R		1	LINK	
042	36817-0000	R		1	CLAMPING ELEMENT	
050	36821-0002	M		1	SHEAR PIN	
060	752590-0000	J		1	THROTTLE	
1000SQ						
010	544294-0000	R		1	FILLER TUBE	
015	574006-0000	R		1	PRESSURE FLANGE	
020	544295-0000	R		1	FLOAT	
025	493733-0000	M		1	LOCKING PIN UPPER	
030	493734-0000	M		1	LOCKING PIN LOWER	
040	434751-0000	R		1	ARM	
041	434752-0000	R		1	LINK	
042	36817-0000	R		1	CLAMPING ELEMENT	
050	36821-0002	M		1	SHEAR PIN	
060	752590-0000	J		1	THROTTLE	
1000B LOFIN						
010	269827-0001	R		1	FILLER TUBE	
015	466463-0000	R		1	PRESSURE FLANGE	
020	245190-0000	R		1	FLOAT	
025	445504-0000	M		1	LOCKING PIN UPPER	
030	445502-0000	M		1	LOCKING PIN LOWER	
040	36804-0000	R		1	ARM	
041	36805-0000	R		1	LINK	
042	36806-0000	R		1	CLAMPING ELEMENT	
050	36821-0001	M		1	SHEAR PIN	
060	37782-0000	J		1	THROTTLE	

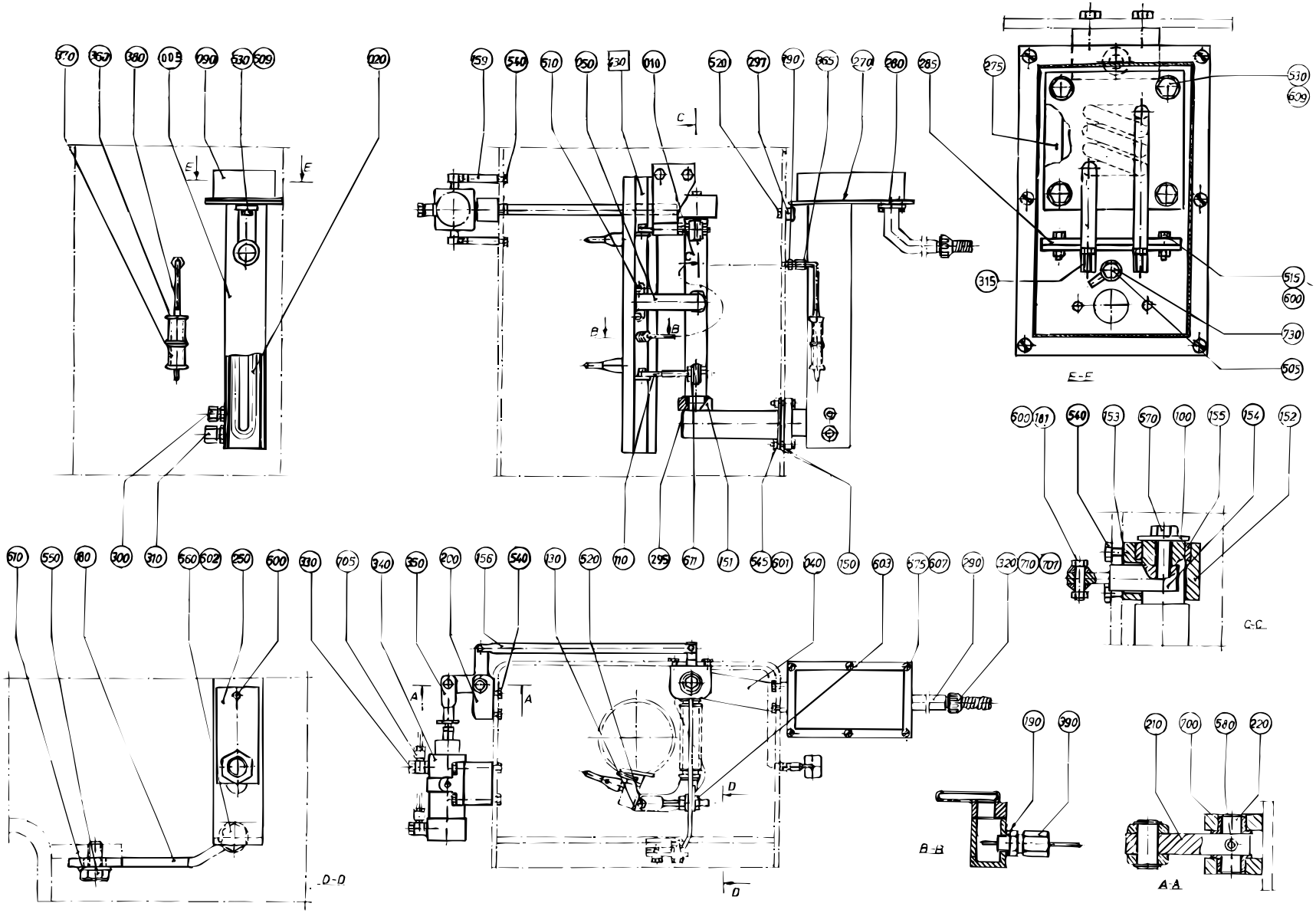

S-269915-5
ECN 17647

Common parts

Pos	Part No	SP	UN	Qty	Description	Page No
F430	A 283926-0300	-		1	AIR NOZZLE	**59**
005	533195-0000	-		1	MANTLE	
010	250654-0000	-		1	PIVOT ARM	
020	555545-0000	D		1	COIL HEATER	
040	250656-0000	-		1	ATTACHMENT PIPE	
050	434829-0000	-		1	LEAD	
090	476360-0000	-		1	LID	
100	28037-0000	-		1	WASHER	
110	32215-0000	D		2	HOLDER	
130	531734-0000	J		1	GASKET	
150	531738-0000	K		2	GASKET	
151	531739-0000	M		1	GASKET	
152	250660-0000	D		1	BEARING CONSOLE	
153	531740-0000	K		1	GASKET	
154	250662-0000	-		1	LEVER	
155	250663-0000	M		1	BEARING	
156	250664-0000	D		1	TIE ROD	
159	250668-0000	-		2	SPACER	
180	269913-0000	D		1	STOPPER	
181	269914-0000	D		2	SHOULDER SCREW	
190	273429-0000	D		2	WASHER	
200	279208-0000	D		1	BEARING HOUSING	
210	279209-0000	D		1	ROCKER ARM	
220	279213-0000	D		1	DOWEL	
250	297054-0000	-		2	WASHER	
270	531744-0000	M		1	GASKET	
275	531745-0000	M		1	GASKET	
280	531764-0000	M		1	GASKET	
285	555546-0000	D		1	INSULATING PLATE	
290	479176-0000	-		1	PIPE	
295	530622-0000	R		1	BUSHING	
297	533196-0000	D		1	FASTENING PLATE	
300	90030-0092	-		1	PIPE CONNECTION R 1/4" Stainless	
310	90030-0187	-		1	STRAIGHT CONNECTION GA-12-G3/8"	
315	90097-0017	-		2	FLAT PIN PLUG 6,3mm	
320	90152-0033	-	MM	500	Spiral Conduit for PR 15,2(PG 9)	
330	90235-0275	D		2	THROTTLE CHECK VALVES,G1/4"	
340	B 90239-0951	R		1	CYLINDER	
350	90239-0346	R		1	BRACKET	
360	90326-0012	R		1	PROTECTIVE COVER REPLY:6-3180118961)	
365	90326-0017	-		1	GLAND 1/8".REPL.BY 90326-306	
370	90326-0020	-		1	PLUG,FEMALE YELLOW CR-AL	
380	B 90326-0048	K		1	THERMOELEMENT	
390	90326-0304	M		1	LEAD IN	
500	311103-0233	-		2	PINS,STRAIGHT 3X10	
505	312105-0289	-		1	SCREW M6S4X10 A2 80	
510	312105-0325	-		2	SCREW M6S5X10 A2 80	
515	312105-0327	-		2	SCREW M6S ISO 4017 M5X12 A280	
520	312105-0364	-		4	SCREW M6S6X10RFR	
530	312105-0368	-		6	SCREW M6S ISO 4017 M6X16 A280	
540	312105-0370	-		16	SCREW M6S ISO 4017 M6X20 A280	
545	312105-0372	-		4	SCREW M6S ISO 4017 M6X25 A280	
550	312105-0449	-		2	SCREW M6S ISO 4017 M8x16 A280	
560	312105-0453	-		1	SCREW M6S ISO 4017 M8x25 A280	
570	312105-0455	-		1	SCREW M6S ISO 4017 M8X30 A280	
575	312125-0327	-		6	SLOTTED CHEESE HEAD ISO 1207 M5X12 RFR	
580	312318-0362	-		1	SET SCREW CUP POINT ISO 4029 M6X8 RFR	
600	312605-0314	-		4	NUT,HEXAGON,M6M5 Stainless	
601	312605-0316	-		4	NUT,HEXAGON,A280 M6M6 Stainless	
602	312605-0318	-		1	NUT,HEXAGON,M8 RFR	
603	312605-0320	-		4	NUT,HEXAGON,M10 A280	
607	315105-0146	-		6	WASHER,PLAIN ROUND 5,3x10 Stainless	
609	315105-0153	-		6	WASHER,PLAIN ROUND 6,4x12 Stainless	
610	315105-0165	-		2	WASHER,PLAIN ROUND 8,4x16 Stainless	
611	315105-0173	-		4	WASHER,PLAIN ROUND 10,5x22 STAINLESS	
700	321111-0159	-		2	FLANGE BUS 12E7X12	
705	342797-0122	-		2	BANJO CONNECTION,RINGPIECE 6-1/4"	
707	352100-0106	-		1	CABLE GLANR.18,6-10,5	
710	352136-0113	-		1	GLAND FITTING PR18,6/PG11 Di=12mm	
730	353104-0130	-		1	CABLE SHOEYAV 025 M 4*	

AIR NOZZLE

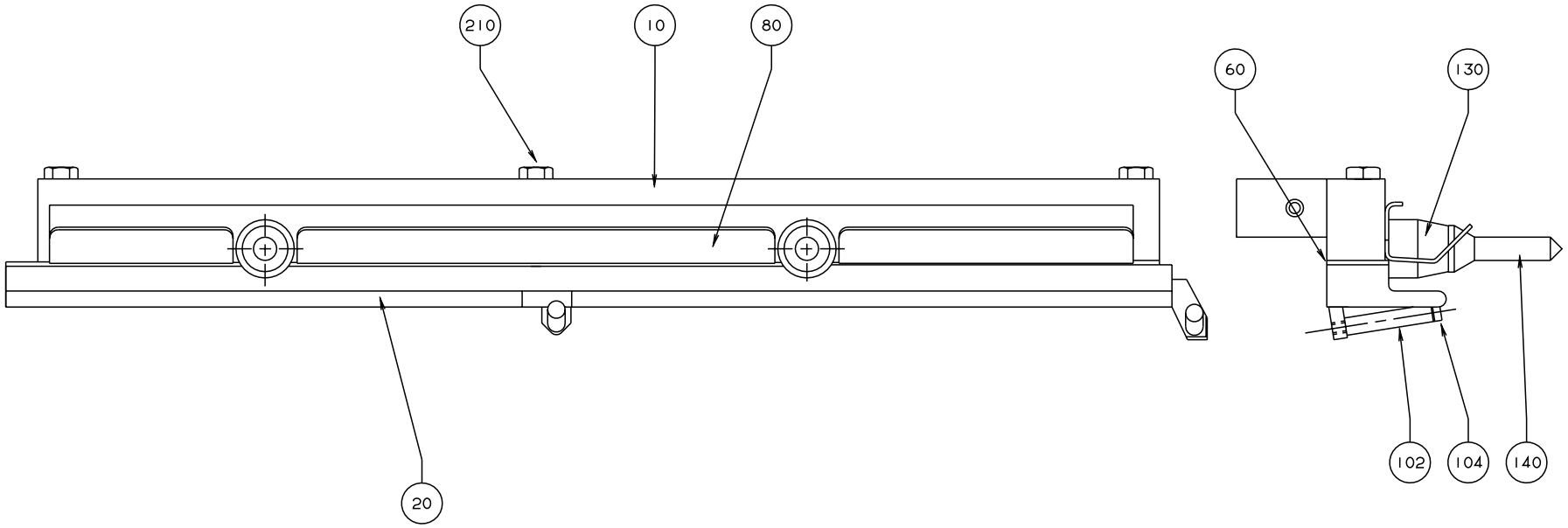

S-283926-3
ECN 16976

Pos	Part No	SP	UN	Qty	Description	Page No
Common parts						
102	526691-0000	J		2	ROLL	
104	526690-0000	K		2	SHAFT	
140	265957-0000	K		2	SHAFT	
210	312105-0376	-		3	SCREW M6S ISO 4017 M6X35 A280	
240	315105-0136	-		2	WASHER,PLAIN ROUND 4,3x8 Stainless	
0355B or 0375S or 0400B or 0500S or 0750S						
010	526687-0000	D		1	ATTACHMENT	
020	526587-0000	D		1	AIR NOZZLE	
060	526689-0000	D		1	DISTRIBUTOR WING	
080	526688-0000	D		1	HEAD PLATE	
130	526692-0000	F		2	ROLL	
0500B or 0750B or 1000B or 1055B						
010	243846-0000	D		1	ATTACHMENT	
020	567734-0000	D		1	AIR NOZZLE	
060	569104-0000	D		1	DISTRIBUTOR WING	
080	567735-0000	D		1	HEAD PLATE	
130	6161-0000	F		2	ROLL	
0500SQ or 1000S or 1000SQ						
010	243846-0000	D		1	ATTACHMENT	
020	573058-0000	D		1	AIR NOZZLE	
060	569104-0000	D		1	DISTRIBUTOR WING	
080	567735-0000	D		1	HEAD PLATE	
130	6161-0000	F		2	ROLL	

Pos	Part No	SP	UN	Qty	Description	Page No

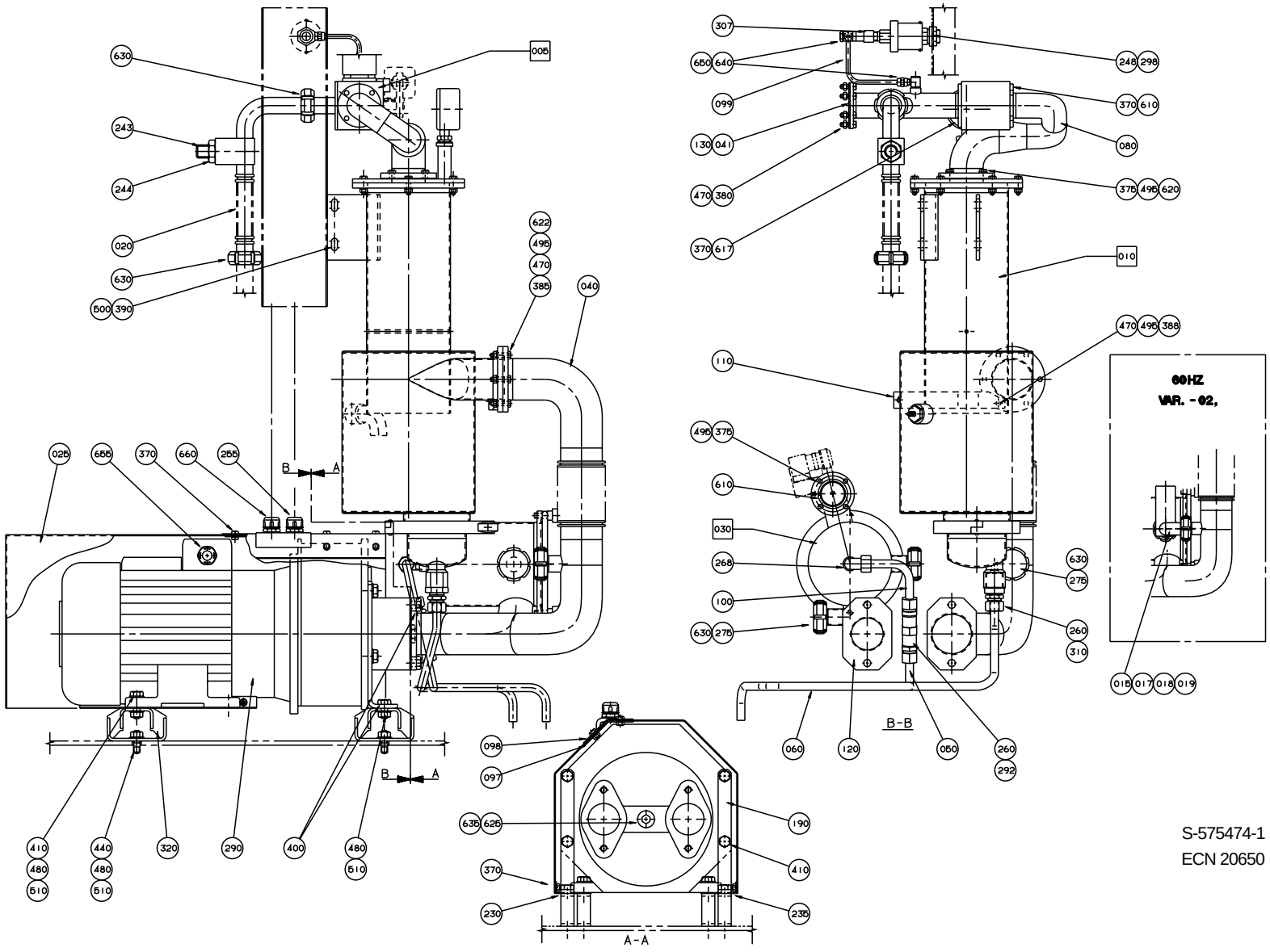

S-575474-1
ECN 20650

Pos	Part No	SP	UN	Qty	Description	Page No
Common parts						
F005	A 594619-0100	-		1	CHANGE-OVER VALVE	**63**
F010	A 569003-0100	-		1	SEPARATION INSERT	**65**
F030	A 575475-0100	-		1	SCRUBBER	**67**
020	449130-0000	D		1	CONNECTING PIPE	
025	451321-0000	-		1	COVER	
040	568804-0000	D		1	PIPE	
041	555544-0000	-		1	PIPE	
050	568807-0000	-		1	PIPE	
060	568808-0000	-		1	PIPE	
080	568809-0000	-		1	PIPE	
097	526782-0000	-		1	COVERING PLATE	
098	451323-0000	-		1	SHEET	
099	451324-0000	-		1	PIPE	
100	568810-0000	-		1	PIPE	
110	571086-0000	-		1	BRACKET	
120	230551-0000	J		2	GASKET	
130	531742-0000	J		1	GASKET	
190	269859-0000	-		2	BRACKET	
230	282682-0000	-		1	BRACKET	
235	282683-0000	-		1	BRACKET	
243	295878-0000	D		1	THROTTLE SCREW	
244	295879-0000	D		1	NUT	
248	479234-0000	D		1	WASHER	
255	90012-0063	-		1	Cable Gland PR 15,2	
260	90030-0187	-		3	STRAIGHT CONNECTION GA-12-G3/8"	
268	90030-0115	-		1	ELBOW CONNECTION WA 12-R3/8	
290	B 90270-0011	D		1	COMPRESSOR ELMO RA112"REPBY 90270-17"	
292	90270-0347	R		1	VALVE	
298	90274-0045	R		1	GUARD	
307	90330-0012	-		1	SLEEVE,REDUCTION Rp1/8"-Rp1/4"	
310	90330-0078	-		1	BUSHING,INT./EXT.R-THREAD R3/4"-Rp3/8"	
320	90347-0026	R		4	DAMPER	
370	312105-0366	-		18	SCREW M6S ISO 4017 M6X12 A280	
375	312105-0368	-		8	SCREW M6S ISO 4017 M6X16 A280	
380	312105-0370	-		6	SCREW M6S ISO 4017 M6X20 A280	
385	312105-0372	-		5	SCREW M6S ISO 4017 M6X25 A280	
388	312105-0374	-		1	SCREW M6S ISO 4017 M6X30 A280	
390	312105-0447	-		4	SCREW M6S ISO 4017 M8X12 A280	
400	312105-0491	-		6	SCREW M6S ISO 4017 M10X20 A280	
410	312105-0497	-		8	SCREW M6S ISO 4017 M10X35 A280	
440	312303-0497	-		4	STUD SCREWMPS 10X25 RFR	
470	312605-0316	-		12	NUT,HEXAGON,A280 M6M6 Stainless	
480	312605-0320	-		10	NUT,HEXAGON,M10 A280	
495	315105-0153	-		14	WASHER,PLAIN ROUND 6,4x12 Stainless	
500	315105-0165	-		4	WASHER,PLAIN ROUND 8,4x16 Stainless	
510	315105-0173	-		14	WASHER,PLAIN ROUND 10,5x22 STAINLESS	
610	315204-0222	M		2	O-RINGS 36,2X3	
617	315204-0223	M		2	O-RINGS 39,2X3	
620	315204-0302	M		1	O-RINGS 54,5X3	
622	315204-0304	M		1	O-RINGS 64,5X3	
625	315233-0113	-		1	PLAIN ROUND,NYLON R1/2"	
630	315250-0101	-		5	GASKET 32/25	
635	342713-0213	-		1	PLUG,EXT.G-THREAD,HEXAGON SOCKET G1/2"	
640	342797-0121	-		2	BANJO CONNECTION,RINGPIECE 6-1/8"	
650	342980-0303	-		2	BANJO-HOLLOW BOLT COUPL,EXT.THR.01-G1/8"	
655	352103-0111	-		1	CABLE GLAND ST 16	
660	352136-0127	-		1	GLAND FITTING PR 18,6	
50HZ						
275-02	90217-0026	-		3	NUT	
60HZ						
015	568805-0000	-		1	PIPE	
017	442236-0000	-		1	THROTTLE SCREW	
018	442237-0000	D		1	NUT	
019	315202-0119	K		1	O-RINGS 25,1X1,6	
275	90217-0026	-		1	NUT	

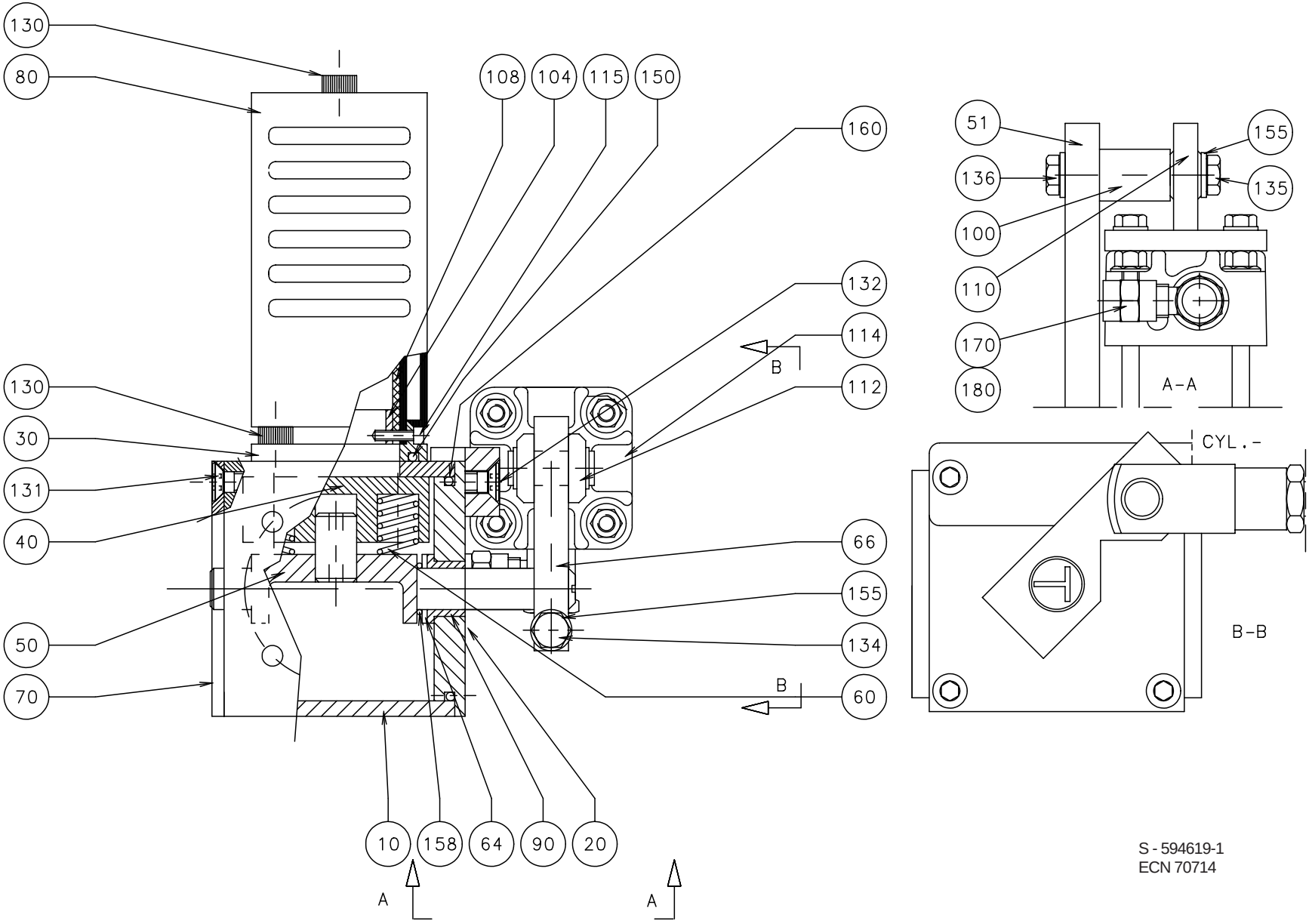

S - 594619-1
ECN 70714

Pos	Part No	SP	UN	Qty	Description	Page No
Common parts						
010	B 466474-0000	-		1	VALVE HOUSING	
020	441957-0000	-		1	BEARING COVER	
030	466477-0000	-		1	INNER PIPE	
040	466479-0000	D		1	PIECE	
050	555541-0000	D		1	BRACKET	
051	555542-0000	D		1	BRACKET	
060	21521-0000	R		2	COMPRESSION SPRING	
064	266737-0000	D		1	WASHER	
066	441483-0000	D		1	CYLINDER BRACKET	
070	255874-0000	-		1	BEARING COVER	
080	466478-0000	-		1	OUTER PIPE	
090	255875-0000	K		2	BUSHING	
100	555540-0000	D		1	SPACER	
104	466483-0000	-		1	CLAMPING PIECE	
108	466484-0000	-		1	NET	
110	90239-0453	D		1	BRACKET	
112	90239-0516	D		1	ROD END,CLEVIS WITH AXLE,M10X1,25	
114	B 90239-0779	R		1	CYLINDER	
115	312115-0224	-		2	SCREW S 3X10 A4 80	
130	312115-0364	-		5	SCREW 6X10 A4 80	
131	312155-0364	-		6	SCREW MF6S6X10RFR	
132	312155-0370	-		2	SCREW MF6S DIN 7991 M6X20 A280	
134	312105-0370	-		1	SCREW M6S ISO 4017 M6X20 A280	
135	312105-0364	-		2	SCREW M6S6X10RFR	
136	312105-0368	-		1	SCREW M6S ISO 4017 M6X16 A280	
150	315204-0222	M		1	O-RINGS 36,2X3	
155	315105-0153	-		3	WASHER,PLAIN ROUND 6,4x12 Stainless	
158	315204-0110	M		1	O-RINGS 12,1X1,6	
160	315204-0302	M		2	O-RINGS 54,5X3	
170	342797-0121	-		2	BANJO CONNECTION,RINGPIECE 6-1/8"	
180	342980-0303	-		2	BANJO-HOLLOW BOLT COUPL,EXT.THR.01-G1/8"	

Pos	Part No	SP	UN	Qty	Description	Page No

SEPARATION INSERT

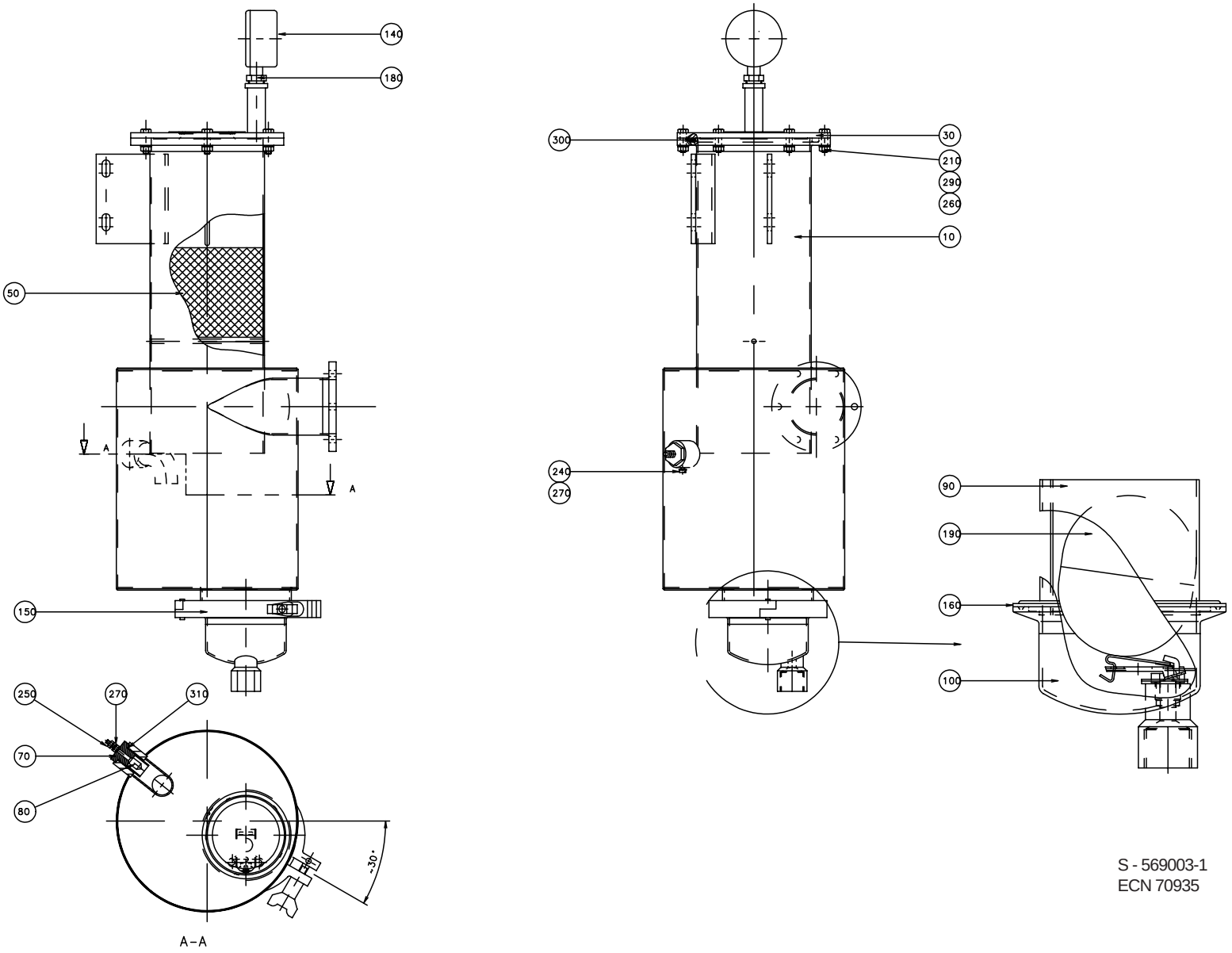

S - 569003-1
ECN 70935

Pos	Part No	SP	UN	Qty	Description	Page No
Common parts						
010	568802-0000	-		1	CONTAINER	
030	568827-0000	-		1	LID	
050	546929-0000	R		1	FILTER	
070	1279457-0000	D		1	BRACKET	
080	567070-0013	R		1	ELECTRODE	
090	568828-0000	D		1	FLOAT GUARD	
100	B 571088-0000	D		1	DRAINING	
140	90043-0095	D		1	PRESSURE GAUGE	
150	90217-0312	-		1	CRAMP	
160	90217-0313	R		1	SEAL "REPEY 6-9611990770"	
180	90330-0042	-		1	BUSHING,INT./EXT.R-THREAD R3/8"-Rp1/4"	
190	90360-0305	D		1	FLOAT	
210	312105-0372	-		6	SCREW M6S ISO 4017 M6X25 A280	
240	312125-0285	-		1	SLOTTED HEMCS4X6RFR	
250	312605-0312	-		2	NUT,HEXAGON,M4 RFR	
260	312605-0316	-		6	NUT,HEXAGON,A280 M6M6 Stainless	
270	315105-0136	-		5	WASHER,PLAIN ROUND 4,3x8 Stainless	
290	315105-0153	-		6	WASHER,PLAIN ROUND 6,4x12 Stainless	
300	315202-0244	M		1	O-RINGS 134,3X5,7	
310	315204-0213	M		1	O-RINGS 15,3X2,4	

Pos	Part No	SP	UN	Qty	Description	Page No

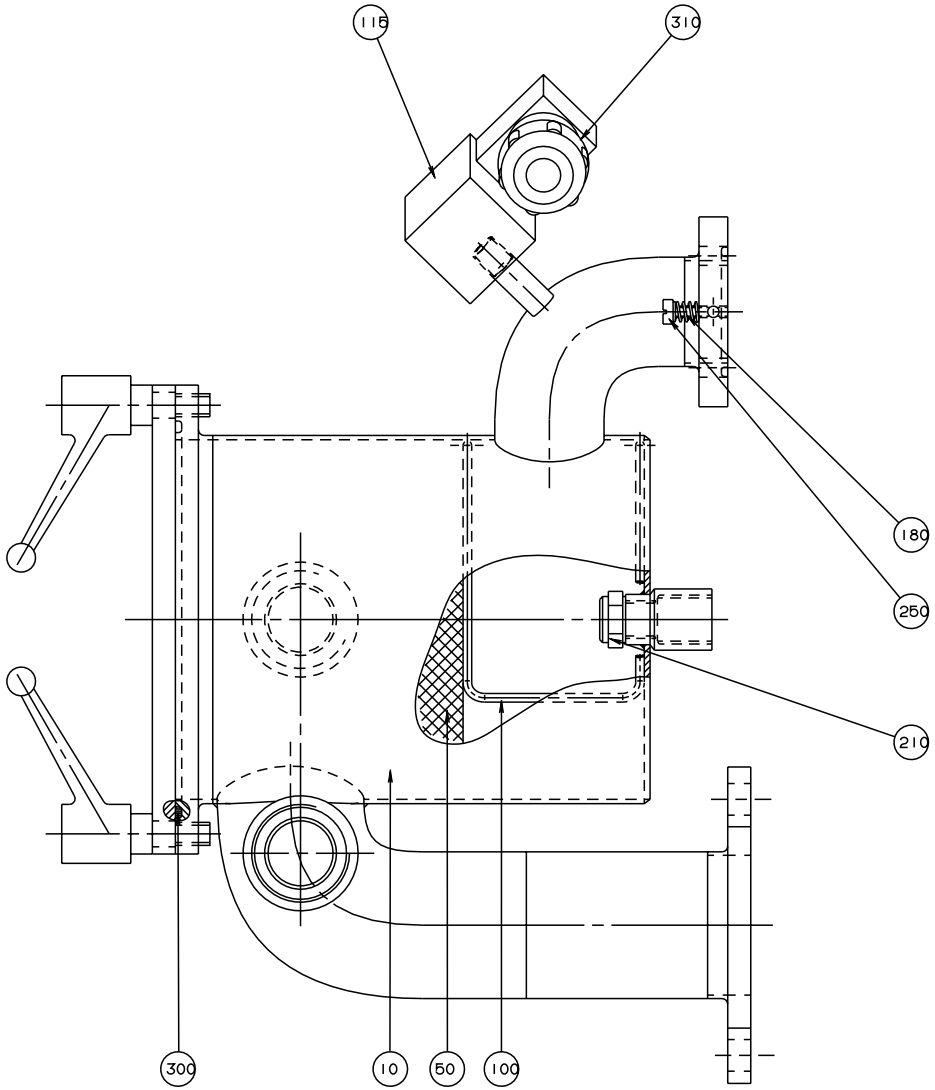

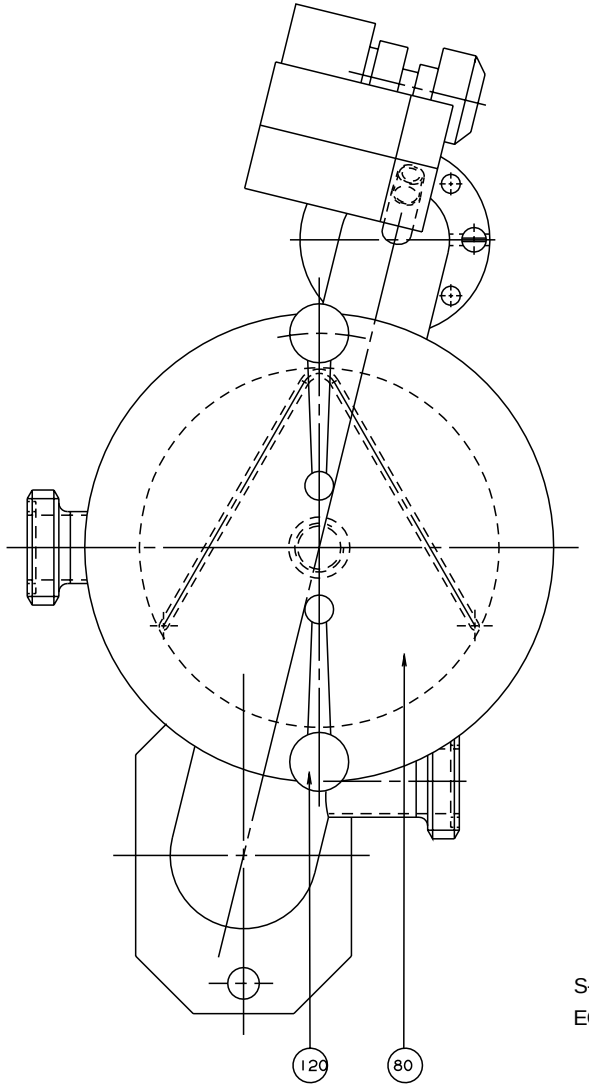

S-575475-1
ECN 19538

Pos	Part No	SP	UN	Qty	Description	Page No
Common parts						
010	568803-0000	-		1	CONTAINER	
050	546929-0000	R		1	FILTER	
080	568806-0000	-		1	LID	
100	571087-0000	-		1	RETAINING RING	
115	90042-0187	D		1	SOLENOID VALVE	
120	90117-0008	-		2	HANDLE	
180	90335-0034	D		1	SPRING	
210	90424-0054	D		1	NOZZLE	
250	312125-0327	-		1	SLOTTED CHEESE HEAD ISO 1207 M5X12 RFR	
300	315202-0317	M		1	O-RINGS 129,5X3	
310	352136-0113	-		1	GLAND FITTING PR18,6/PG11 Di=12mm	

Pos	Part No	SP	UN	Qty	Description	Page No

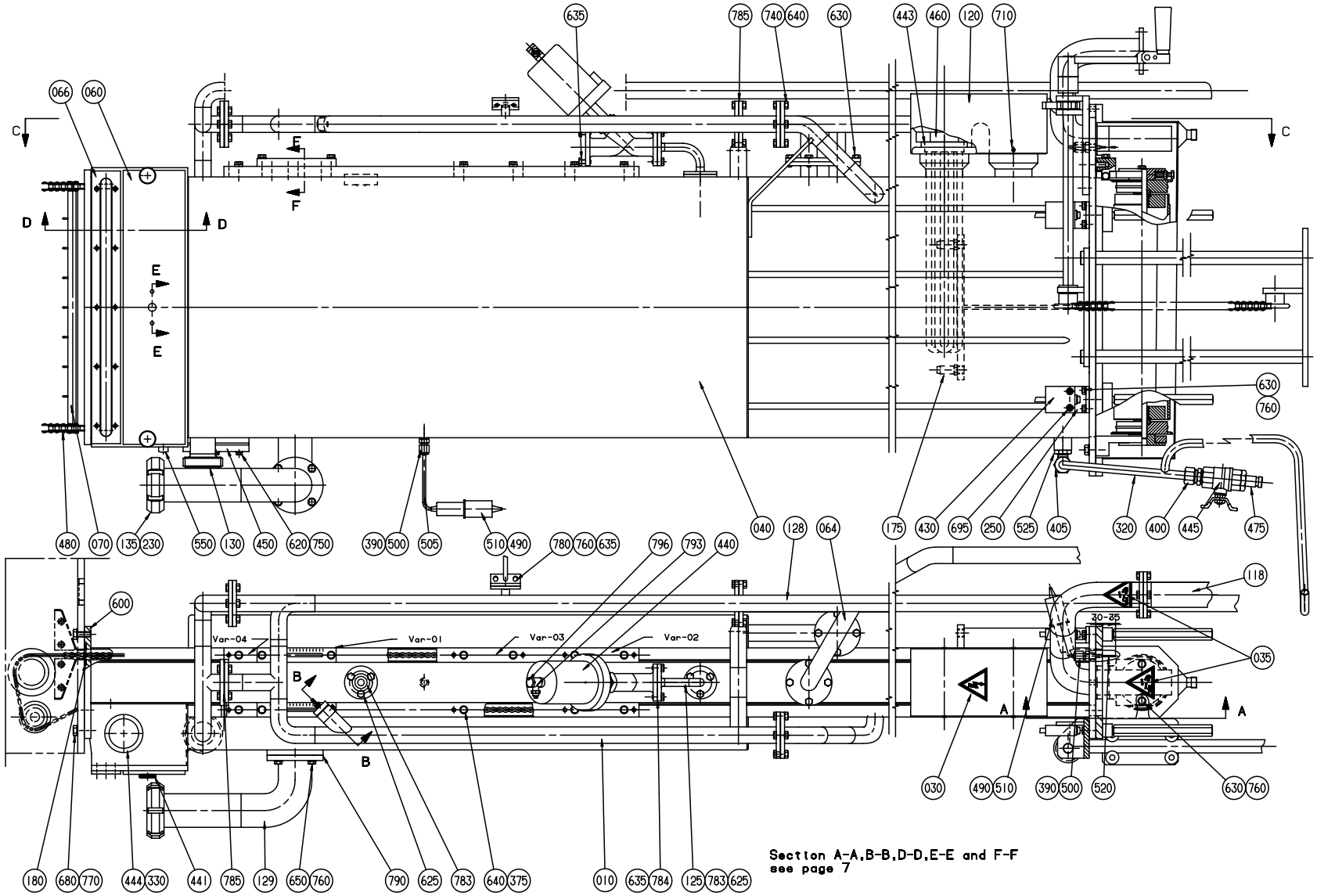

Section A-A,B-B,D-D,E-E and F-F
see page 7

Pos	Part No	SP	UN	Qty	Description	Page No
Common parts						
F460	A 269932-0500	-		1	BOTTOM COVER	**73**
030	90194-0016	-		1	SIGN "FLASH SIGN" 50X50MM	
035	359705-0003	-		2	WARNING SIGN Dangerous Chemicals	
040	560614-0000	D		1	BATH	
060	273934-0000	D		1	LID	
062	273961-0000	K		1	SEAL	
064	450509-0000	-		1	PIPE	
066	476087-0000	D		1	LID	
070	247236-0000	R		1	CARRIER	
075	541177-0000	D		1	BENDING ROLLER	
100	279471-0000	-		1	CANTILEVER	
118	560615-0000	-		1	PIPE	
120	450512-0000	-		1	COVER	
125	476400-0000	-		1	PIPE	
128	542075-0000	-		1	PIPE	
129	551340-0000	-		1	FILLER TUBE	
130	12242-0003	J		1	GASKET	
135	12242-0005	J		1	GASKET	
150	247160-0000	D		1	AXLE SUPPORT	
160	531167-0000	K		1	SHAFT	
165	531168-0000	M		2	WHEEL	
170	247241-0000	D		1	AXLE SUPPORT	
175	247248-0000	-		2	PIN	
180	247252-0000	D		1	GASKET	
185	531169-0000	D		2	WASHER	
215	267056-0000	D		1	BEARING CONSOLE	
230	90217-0047	D		1	NUT	
235	273937-0000	K		1	DIAPHRAGM	
240	273938-0000	D		1	WASHER	
250	279472-0000	-		4	FASTENING BRACKET	
280	279478-0000	-		1	BEARING PLATE	
320	560472-0000	-		1	PIPE	
330	293405-0000	R		2	GASKET	
350	567070-0012	R		1	ELECTRODE	
351	560931-0000	D		1	BRACKET	
355	543470-0000	R		2	LEVEL GLASS	
360	476398-0000	D		2	LID	
365	569016-0000	R		4	GASKET	
375	479025-0000	-		10	WASHER	
390	273429-0000	-		2	WASHER	
400	90030-0109	-		1	PIPE CONNECTION	
405	90030-0115	-		1	ELBOW CONNECTION WA 12-R3/8	
430	90044-0084	R		4	LIMITSW.14CE1-4	
440	544896-0000	D		1	VALVE	
441	491126-0000	D		2	SCREW	
442	90143-0020	-	MM	900	STRIP	
443	90144-0004	-	MM	x	TREBOFLON-TAPE W=13mm	
444	90153-0016	-	ML	x	ADHESIVE TUBE 100G RHODORSIL CAF 3	
445	90187-0081	-		1	BALL VALVE 7320-R 1/2"	
450	90199-0010	R		1	LEVEL GLASS	
460	B 90206-0070	J		2	HEATING ELEMENT	
470	90240-0146	J		2	BEARING BUSHING WITH FLANGE,15/21X20	
475	90224-0078	-		1	CONNECTION	
480	560617-0000	D		2	ROLLER CHAIN	
490	90326-0012	-		2	PROTECTIVE COVER REPLY:6-3180118961)	
500	90326-0017	-		2	GLAND 1/8".REPL.BY 90326-306	
505	90326-0019	R		1	THERMOELEMENT	
510	90326-0020	-		2	PLUG,FEMALE YELLOW CR-AL	
520	90326-0043	R		1	THERMOCOUPLE CR-ALPREM.G	
525	90330-0048	-		1	BUSHING,INT./EXT.R-THREAD R1/2"-Rp3/8"	
550	90330-0066	-		1	PLUG,EXTERNAL G-THREAD G1/8"	
600	311103-0310	-		2	PINS,STRAIGHT 5X20	
615	312105-0325	-		2	SCREW M6S5X10 A2 80	
620	312105-0332	-		6	SCREW M6S5X22RFR	
625	312105-0364	-		6	SCREW M6S6X10RFR	
630	312105-0366	-		20	SCREW M6S ISO 4017 M6X12 A280	
635	312105-0367	-		10	SCREW M6S6X14RFR	
640	312105-0368	-		40	SCREW M6S ISO 4017 M6X16 A280	
650	312105-0370	-		10	SCREW M6S ISO 4017 M6X20 A280	
660	312105-0371	-		2	SCREW M6S6X22RFR	
670	312105-0376	-		2	SCREW M6S ISO 4017 M6X35 A280	
680	312105-0451	-		6	SCREW M6S ISO 4017 8x20 A280	
690	312105-0452	-		4	SCREW M6S 8x22 Stainless	
695	312115-0329	-		8	SCREW MC6S ISO 4762 M5X16 A280	
710	312125-0220	-		4	SLOTTED HEMCS3X6RFR	
720	312125-0285	-		1	SLOTTED HEMCS4X6RFR	
730	312605-0312	-		2	NUT,HEXAGON,M4 RFR	
740	312605-0316	-		23	NUT,HEXAGON,A280 M6M6 Stainless	
750	315105-0146	-		6	WASHER,PLAIN ROUND 5,3x10 Stainless	
751	315105-0136	-		5	WASHER,PLAIN ROUND 4,3x8 Stainless	
760	315105-0153	-		22	WASHER,PLAIN ROUND 6,4x12 Stainless	
770	315105-0165	-		10	WASHER,PLAIN ROUND 8,4x16 Stainless	
780	927421-0001	K		5	O-RING 9.3X2.4 SILICON	
782	927421-0003	K		1	O-RING 13.3X2.4 SILICON	
783	927422-0001	K		1	O-RING 19.2X3 SILICON	

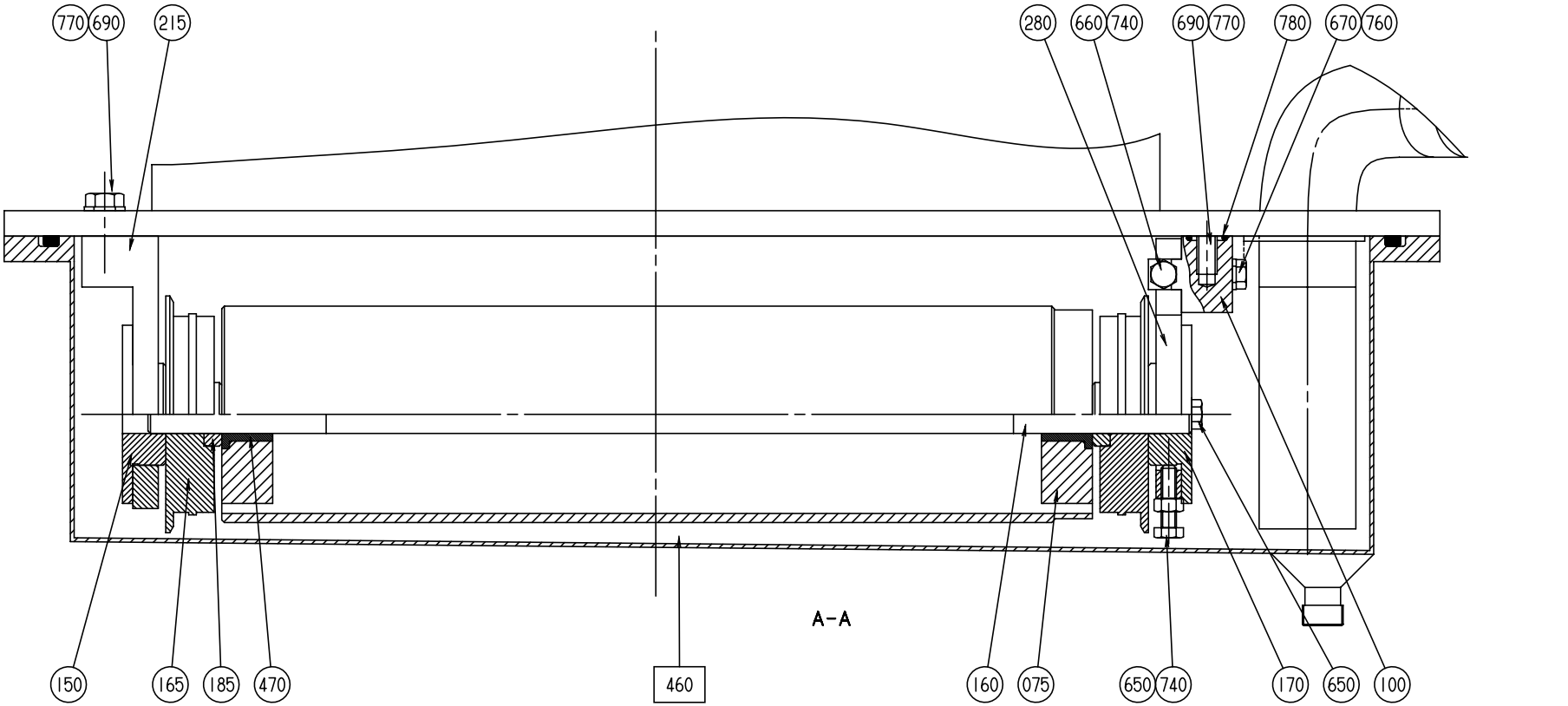

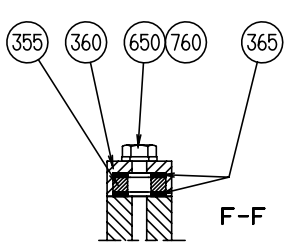

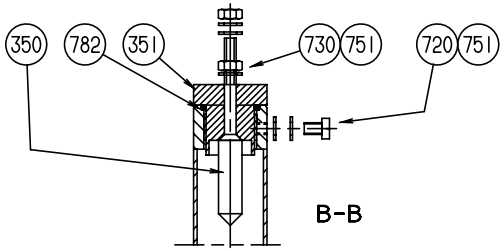

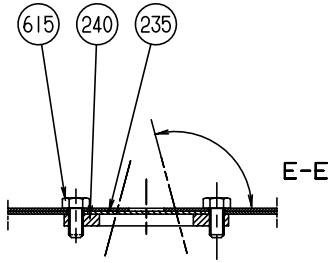

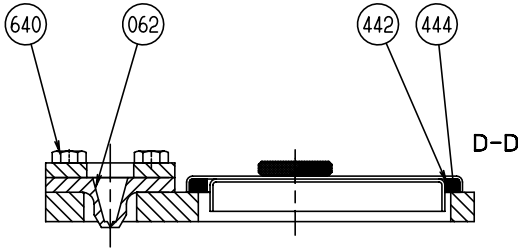

S-269941-7
ECN 18018

Pos	Part No	SP	UN	Qty	Description	Page No
784	927422-0004	K		1	O-RING 29.2X3 SILICON	
785	927422-0006	K		7	O-RING 42.2X3 SILICON	
790	927422-0009	K		1	O-RING 54.5X3 SILICON	
793	342797-0122	-		1	BANJO CONNECTION,RINGPIECE 6-1/4"	
796	342980-0304	-		1	BANJO-HOLLOW BOLT COUPL,EXT.THR.01-G1/4"	
0355B or 0400B or 0500B						
010	561421-0000	D		1	OVERFLOW TUBE	
0375S or 0500S or 0500SQ or 0750B						
010	561422-0000	D		1	OVERFLOW TUBE	
0750S or 1000B or 1055B						
010	561420-0000	D		1	OVERFLOW TUBE	
1000S or 1000SQ						
010	927085-0000	D		1	OVERFLOW TUBE	

Pos	Part No	SP	UN	Qty	Description	Page No

BOTTOM COVER

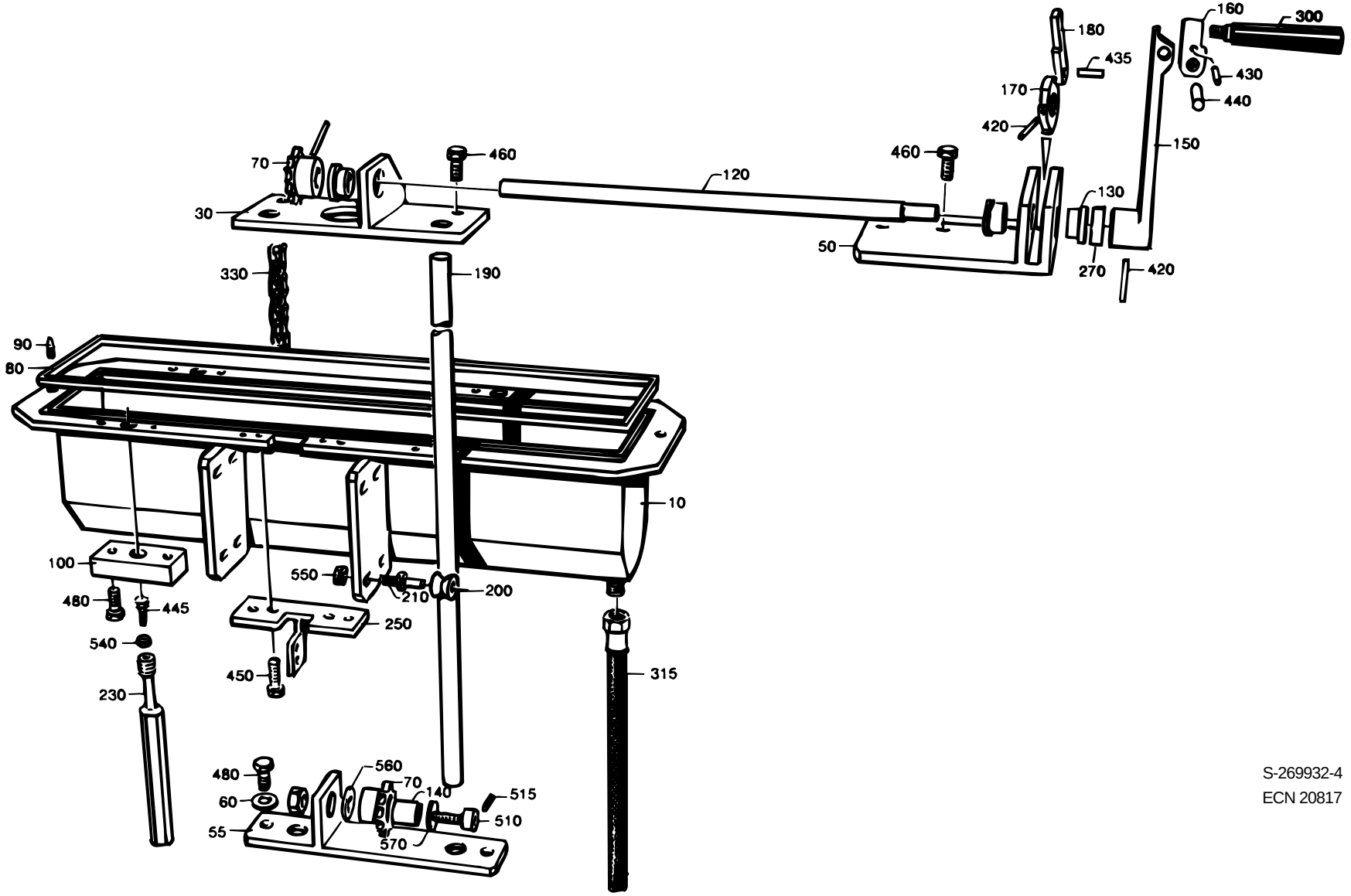

S-269932-4
ECN 20817

Pos	Part No	SP	UN	Qty	Description	Page No
Common parts						
010	269929-0000	-		1	COVER	
030	263572-0000	-		1	CANTILEVER	
050	263574-0000	-		1	BEARING CONSOLE	
055	450846-0000	-		1	CANTILEVER	
060	38087-0000	-		2	WASHER	
070	247357-0000	D		2	SPROCKET	
080	263575-0000	K		1	GASKET	
090	263576-0000	-		2	GUIDE STUD	
100	263579-0000	D		4	WASHER	
130	263585-0000	D		3	BUSHING	
140	263586-0000	D		1	BUSHING	
150	263587-0000	-		1	CRANK	
160	263588-0000	-		1	JOINT	
170	263589-0000	-		1	RATCHET	
180	263590-0000	-		1	BARRIER	
190	560616-0000	-		2	PILLAR	
200	263592-0000	R		8	WHEEL	
210	263593-0000	R		8	SHAFT	
230	269930-0000	D		4	SCREW	
250	297163-0000	-		1	CARRIER	
260	547567-0000	D		1	SHAFT	
270	547568-0000	-		1	SPACER	
300	90051-0065	-		1	HANDLE	
315	B 484189-0000	D		1	HIGH PRESSURE HOSE	
330	90288-0062	D		1	ROLLER CHAIN,SINGLE 3/8"-100	
420	311103-0276	-		3	PINS,STRAIGHT 4X30	
430	311103-0310	-		1	PINS,STRAIGHT 5X20	
435	311103-0357	-		1	PINS,STRAIGHT 6X30	
440	311103-0401	-		1	PINS,STRAIGHT 8X20	
445	312105-0329	-		4	SCREW M6S ISO 4017 M5X16 A280	
450	312105-0366	-		4	SCREW M6S ISO 4017 M6X12 A280	
460	312105-0368	-		4	SCREW M6S ISO 4017 M6X16 A280	
480	312105-0372	-		10	SCREW M6S ISO 4017 M6X25 A280	
510	312180-0493	-		1	HEX. SOCKET HEAD SHOULD. ISO 7379 M8X25	
515	312318-0325	-		2	STOP SCREW SK6SS5X10RFR	
540	312605-0314	-		4	NUT,HEXAGON,M6M5 Stainless	
550	312605-0318	-		9	NUT,HEXAGON,M8 RFR	
560	315105-0165	-		1	WASHER,PLAIN ROUND 8,4x16 Stainless	
570	315105-0173	-		1	WASHER,PLAIN ROUND 10,5x22 STAINLESS	

Pos	Part No	SP	UN	Qty	Description	Page No

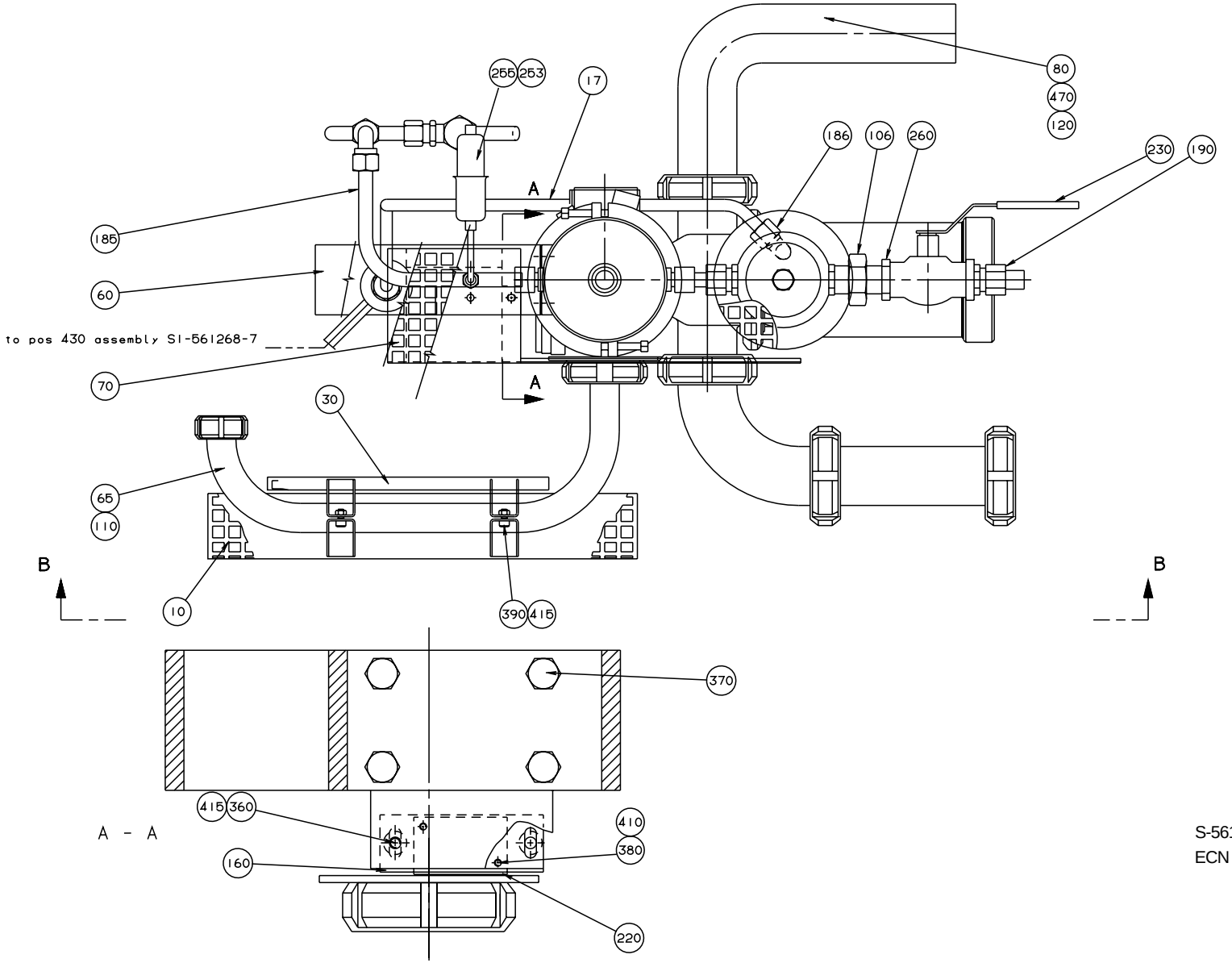

S-561268-5
ECN 20501

Pos	Part No	SP	UN	Qty	Description	Page No
Common parts						
F475	A 440630-0200	D		1	AP-VALVE	**81**
010	273547-0001	D		1	TOUCH GUARD	
015	927195-0000	-		1	PIPE	
016	927196-0000	-		1	PIPE	
017	927198-0000	-		1	PIPE	
030	273548-0001	D		1	TOUCH GUARD	
060	554582-0000	-		1	CANTILEVER	
065	484047-0000	D		1	PIPE	
070	560929-0000	D		1	TOUCH GUARD	
075	752176-0000	D		1	PROTECTIVE CASING	
082	927197-0000	-		1	PIPE	
084	927199-0000	-		2	CLAMP BRACKET	
086	927200-0000	-		1	PIPE	
095	927226-0000	-		1	PIPE	
100	927311-0000	-		1	PIPE	
106	90330-0106	-		1	PIPE COUPLING	
110	12242-0003	F		2	GASKET	
130	37768-0000	M		1	THERMOCOUPLE CR-AL	
160	297195-0000	D		1	SPACER	
170	440647-0000	D		1	SLEEVE	
175	752711-0000	D		1	PIPE	
180	440731-0000	D		1	PLATE	
185	560927-0000	-		1	PIPE	
186	90030-0070	-		1	ELBOW CONNECTION WA 10-R1/4"	
187	90030-0096	-		1	ELBOW CONNECTION W-12	
190	90030-0109	-		1	PIPE CONNECTION	
191	90030-0180	-		1	STRAIGHT CONNECTION GE 12-1/2"-14 NPTF	
194	90030-0119	-		2	PIPE CONNECTION	
195	90030-0187	-		2	STRAIGHT CONNECTION GA-12-G3/8"	
220	90044-0104	M		2	PROX.SWITCH IFM IN 3002	
223	90163-0057	-		4	NIPPLE 1/8" Brass	
225	90030-0088	-		2	PIPE CONNECTION	
226	90163-0062	-		4	SLEEVE 1/8"	
230	90187-0082	D		1	BALL VALVE, Sealing PTFE	
243	90224-0307	-		4	CONNECTION	
246	90224-0308	-		3	BANJO CONNECTION	
248	90235-0259	D		1	VALVE	
250	90235-0274	M		1	THROTTLE CHECK VALVES,G1/8"	
253	90326-0012	M		1	PROTECTIVE COVER REPLY:6-3180118961)	
255	90326-0020	M		1	PLUG,FEMALE YELLOW CR-AL	
258	90328-0003	-		1	SILENCER	
260	90330-0021	-		1	NIPPLES,HEXAGON,EXT.R-THREAD R1/2"-R1/2"	
270	90330-0032	-		1	PIPE PARTS,NIPPLES,ext tappered thread,	
335	B 90277-0055	D		1	FILTER	
340	90337-0315	R		1	FILTER	
341	90360-0020	R		1	STEAM TRAP	
345	90360-0009	R		1	STEAM TRAP	
350	315105-0136	-		2	WASHER,PLAIN ROUND 4,3x8 Stainless	
360	312105-0331	-		2	SCREW M6S ISO 4017 M5X20 A280	
365	312105-0364	-		2	SCREW M6S6X10RFR	
370	312105-0451	-		8	SCREW M6S ISO 4017 8x20 A280	
380	312115-0228	-		4	SCREW MC6S ISO 4762 M3X16 A280	
385	312115-0305	-		2	SCREW MC6S ISO 4762 M4X50 A280	
390	312115-0329	-		4	SCREW MC6S ISO 4762 M5X16 A280	
400	312155-0532	-		1	SCREW MF6S12X20RFR	
410	315105-0124	-		4	WASHER,PLAIN ROUND 3,2x6	
415	315105-0146	-		6	WASHER,PLAIN ROUND 5,3x10 Stainless	
418	342727-0208	-		1	PIPE CONNECTION G-10-L/SY	
420	342737-0212	-		1	ELBOW CONNECTION W-10 LRFR	
430	342739-0108	-		1	ELBOW BULKHEAD CONNECTOR WSV 10	
500	342980-0303	-		2	BANJO-HOLLOW BOLT COUPL,EXT.THR.01-G1/8"	
510	346800-0109	D		2	SILENCER FILTER R1/8"	
2"						
050	255368-0000	D		1	PRESSURE GAUGE TUBE	
080	440977-0000	D		1	ATTACHMENT PIPE	
090	440978-0000	D		1	PIPE BEND	
120	12242-0005	F		4	GASKET	
470	342803-0104	-		1	NUT 51	
3"						
050	436779-0000	D		1	PRESSURE GAUGE TUBE	
080	436778-0000	D		1	PIPE	
090	445515-0000	D		1	PIPE BEND	
120	436781-0000	F		4	GASKET	
470	342803-0106	-		1	NUT 76	

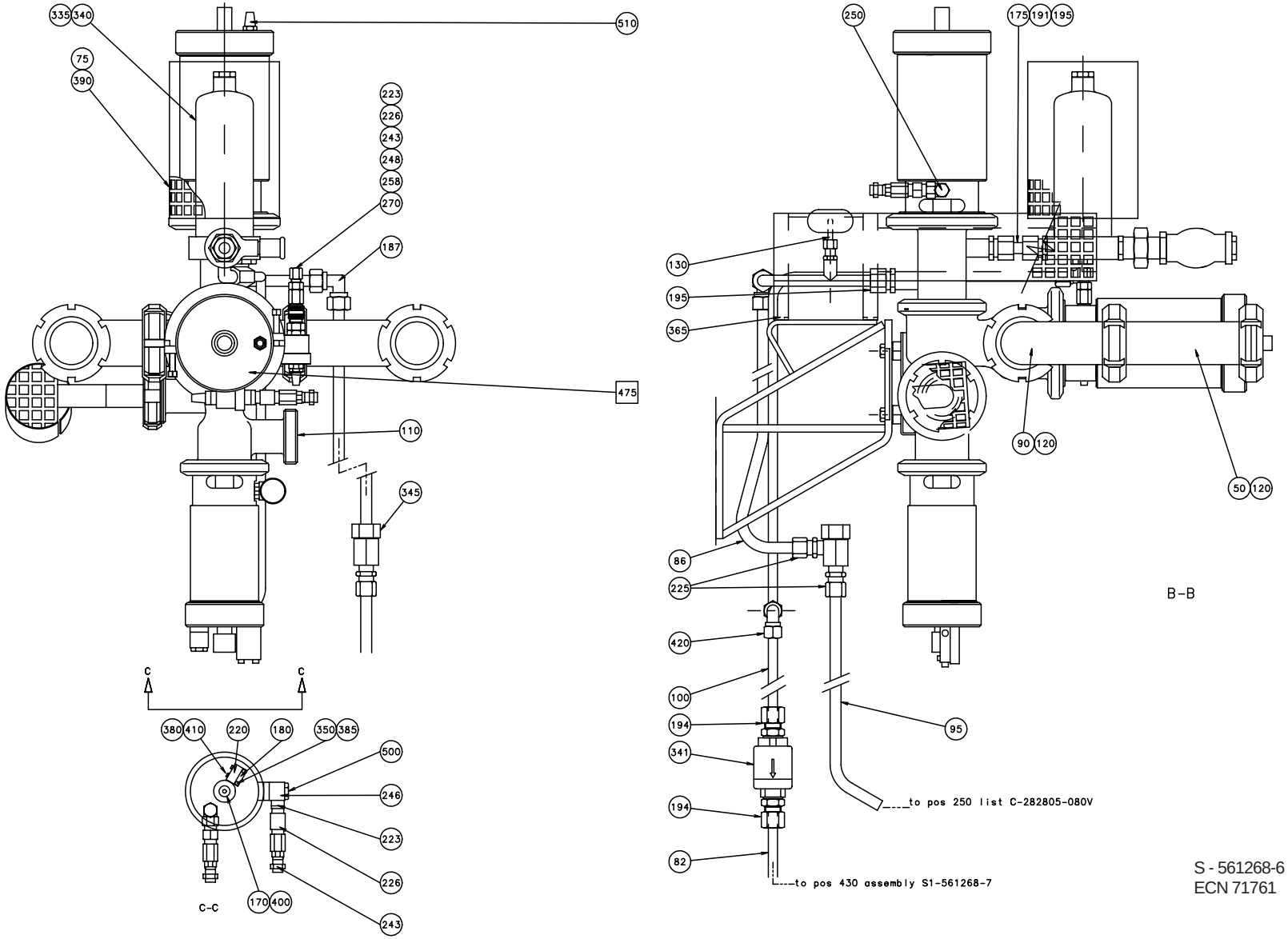

S - 561268-6
ECN 71761

Pos	Part No	SP	UN	Qty	Description	Page No
Common parts						
F475	A 440630-0200	D		1	AP-VALVE	**81**
010	273547-0001	D		1	TOUCH GUARD	
015	927195-0000	-		1	PIPE	
016	927196-0000	-		1	PIPE	
017	927198-0000	-		1	PIPE	
030	273548-0001	D		1	TOUCH GUARD	
060	554582-0000	-		1	CANTILEVER	
065	484047-0000	D		1	PIPE	
070	560929-0000	D		1	TOUCH GUARD	
075	752176-0000	D		1	PROTECTIVE CASING	
082	927197-0000	-		1	PIPE	
084	927199-0000	-		2	CLAMP BRACKET	
086	927200-0000	-		1	PIPE	
095	927226-0000	-		1	PIPE	
100	927311-0000	-		1	PIPE	
106	90330-0106	-		1	PIPE COUPLING	
110	12242-0003	F		2	GASKET	
130	37768-0000	M		1	THERMOCOUPLE CR-AL	
160	297195-0000	D		1	SPACER	
170	440647-0000	D		1	SLEEVE	
175	752711-0000	D		1	PIPE	
180	440731-0000	D		1	PLATE	
185	560927-0000	-		1	PIPE	
186	90030-0070	-		1	ELBOW CONNECTION WA 10-R1/4"	
187	90030-0096	-		1	ELBOW CONNECTION W-12	
190	90030-0109	-		1	PIPE CONNECTION	
191	90030-0180	-		1	STRAIGHT CONNECTION GE 12-1/2"-14 NPTF	
194	90030-0119	-		2	PIPE CONNECTION	
195	90030-0187	-		2	STRAIGHT CONNECTION GA-12-G3/8"	
220	90044-0104	M		2	PROX.SWITCH IFM IN 3002	
223	90163-0057	-		4	NIPPLE 1/8" Brass	
225	90030-0088	-		2	PIPE CONNECTION	
226	90163-0062	-		4	SLEEVE 1/8"	
230	90187-0082	D		1	BALL VALVE, Sealing PTFE	
243	90224-0307	-		4	CONNECTION	
246	90224-0308	-		3	BANJO CONNECTION	
248	90235-0259	D		1	VALVE	
250	90235-0274	M		1	THROTTLE CHECK VALVES,G1/8"	
253	90326-0012	M		1	PROTECTIVE COVER REPLY:6-3180118961)	
255	90326-0020	M		1	PLUG,FEMALE YELLOW CR-AL	
258	90328-0003	-		1	SILENCER	
260	90330-0021	-		1	NIPPLES,HEXAGON,EXT.R-THREAD R1/2"-R1/2"	
270	90330-0032	-		1	PIPE PARTS,NIPPLES,ext tappered thread,	
335	B 90277-0055	D		1	FILTER	
340	90337-0315	R		1	FILTER	
341	90360-0020	R		1	STEAM TRAP	
345	90360-0009	R		1	STEAM TRAP	
350	315105-0136	-		2	WASHER,PLAIN ROUND 4,3x8 Stainless	
360	312105-0331	-		2	SCREW M6S ISO 4017 M5X20 A280	
365	312105-0364	-		2	SCREW M6S6X10RFR	
370	312105-0451	-		8	SCREW M6S ISO 4017 8x20 A280	
380	312115-0228	-		4	SCREW MC6S ISO 4762 M3X16 A280	
385	312115-0305	-		2	SCREW MC6S ISO 4762 M4X50 A280	
390	312115-0329	-		4	SCREW MC6S ISO 4762 M5X16 A280	
400	312155-0532	-		1	SCREW MF6S12X20RFR	
410	315105-0124	-		4	WASHER,PLAIN ROUND 3,2x6	
415	315105-0146	-		6	WASHER,PLAIN ROUND 5,3x10 Stainless	
418	342727-0208	-		1	PIPE CONNECTION G-10-L/SY	
420	342737-0212	-		1	ELBOW CONNECTION W-10 LRFR	
430	342739-0108	-		1	ELBOW BULKHEAD CONNECTOR WSV 10	
500	342980-0303	-		2	BANJO-HOLLOW BOLT COUPL,EXT.THR.01-G1/8"	
510	346800-0109	D		2	SILENCER FILTER R1/8"	
2"						
050	255368-0000	D		1	PRESSURE GAUGE TUBE	
080	440977-0000	D		1	ATTACHMENT PIPE	
090	440978-0000	D		1	PIPE BEND	
120	12242-0005	F		4	GASKET	
470	342803-0104	-		1	NUT 51	
3"						
050	436779-0000	D		1	PRESSURE GAUGE TUBE	
080	436778-0000	D		1	PIPE	
090	445515-0000	D		1	PIPE BEND	
120	436781-0000	F		4	GASKET	
470	342803-0106	-		1	NUT 76	

CONNECTION ASSEMBLY

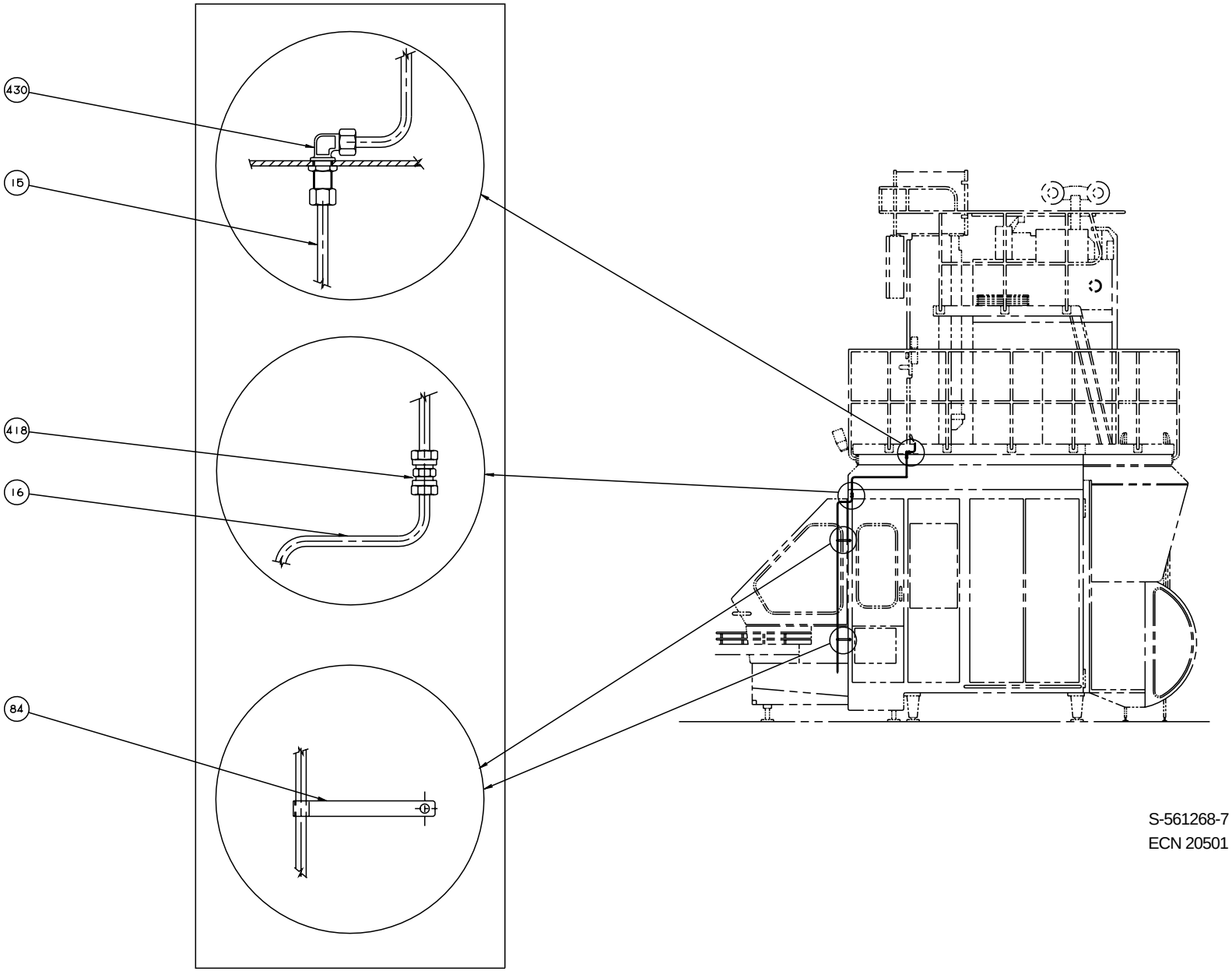

S-561268-7
ECN 20501

Pos	Part No	SP	UN	Qty	Description	Page No
Common parts						
F475	A 440630-0200	D		1	AP-VALVE	**81**
010	273547-0001	D		1	TOUCH GUARD	
015	927195-0000	-		1	PIPE	
016	927196-0000	-		1	PIPE	
017	927198-0000	-		1	PIPE	
030	273548-0001	D		1	TOUCH GUARD	
060	554582-0000	-		1	CANTILEVER	
065	484047-0000	D		1	PIPE	
070	560929-0000	D		1	TOUCH GUARD	
075	752176-0000	D		1	PROTECTIVE CASING	
082	927197-0000	-		1	PIPE	
084	927199-0000	-		2	CLAMP BRACKET	
086	927200-0000	-		1	PIPE	
095	927226-0000	-		1	PIPE	
100	927311-0000	-		1	PIPE	
106	90330-0106	-		1	PIPE COUPLING	
110	12242-0003	F		2	GASKET	
130	37768-0000	M		1	THERMOCOUPLE CR-AL	
160	297195-0000	D		1	SPACER	
170	440647-0000	D		1	SLEEVE	
175	752711-0000	D		1	PIPE	
180	440731-0000	D		1	PLATE	
185	560927-0000	-		1	PIPE	
186	90030-0070	-		1	ELBOW CONNECTION WA 10-R1/4"	
187	90030-0096	-		1	ELBOW CONNECTION W-12	
190	90030-0109	-		1	PIPE CONNECTION	
191	90030-0180	-		1	STRAIGHT CONNECTION GE 12-1/2"-14 NPTF	
194	90030-0119	-		2	PIPE CONNECTION	
195	90030-0187	-		2	STRAIGHT CONNECTION GA-12-G3/8"	
220	90044-0104	M		2	PROX.SWITCH IFM IN 3002	
223	90163-0057	-		4	NIPPLE 1/8" Brass	
225	90030-0088	-		2	PIPE CONNECTION	
226	90163-0062	-		4	SLEEVE 1/8"	
230	90187-0082	D		1	BALL VALVE, Sealing PTFE	
243	90224-0307	-		4	CONNECTION	
246	90224-0308	-		3	BANJO CONNECTION	
248	90235-0259	D		1	VALVE	
250	90235-0274	M		1	THROTTLE CHECK VALVES,G1/8"	
253	90326-0012	M		1	PROTECTIVE COVER REPLY:6-3180118961)	
255	90326-0020	M		1	PLUG,FEMALE YELLOW CR-AL	
258	90328-0003	-		1	SILENCER	
260	90330-0021	-		1	NIPPLES,HEXAGON,EXT.R-THREAD R1/2"-R1/2"	
270	90330-0032	-		1	PIPE PARTS,NIPPLES,ext tappered thread,	
335	B 90277-0055	D		1	FILTER	
340	90337-0315	R		1	FILTER	
341	90360-0020	R		1	STEAM TRAP	
345	90360-0009	R		1	STEAM TRAP	
350	315105-0136	-		2	WASHER,PLAIN ROUND 4,3x8 Stainless	
360	312105-0331	-		2	SCREW M6S ISO 4017 M5X20 A280	
365	312105-0364	-		2	SCREW M6S6X10RFR	
370	312105-0451	-		8	SCREW M6S ISO 4017 8x20 A280	
380	312115-0228	-		4	SCREW MC6S ISO 4762 M3X16 A280	
385	312115-0305	-		2	SCREW MC6S ISO 4762 M4X50 A280	
390	312115-0329	-		4	SCREW MC6S ISO 4762 M5X16 A280	
400	312155-0532	-		1	SCREW MF6S12X20RFR	
410	315105-0124	-		4	WASHER,PLAIN ROUND 3,2x6	
415	315105-0146	-		6	WASHER,PLAIN ROUND 5,3x10 Stainless	
418	342727-0208	-		1	PIPE CONNECTION G-10-L/SY	
420	342737-0212	-		1	ELBOW CONNECTION W-10 LRFR	
430	342739-0108	-		1	ELBOW BULKHEAD CONNECTOR WSV 10	
500	342980-0303	-		2	BANJO-HOLLOW BOLT COUPL,EXT.THR.01-G1/8"	
510	346800-0109	D		2	SILENCER FILTER R1/8"	
2"						
050	255368-0000	D		1	PRESSURE GAUGE TUBE	
080	440977-0000	D		1	ATTACHMENT PIPE	
090	440978-0000	D		1	PIPE BEND	
120	12242-0005	F		4	GASKET	
470	342803-0104	-		1	NUT 51	
3"						
050	436779-0000	D		1	PRESSURE GAUGE TUBE	
080	436778-0000	D		1	PIPE	
090	445515-0000	D		1	PIPE BEND	
120	436781-0000	F		4	GASKET	
470	342803-0106	-		1	NUT 76	

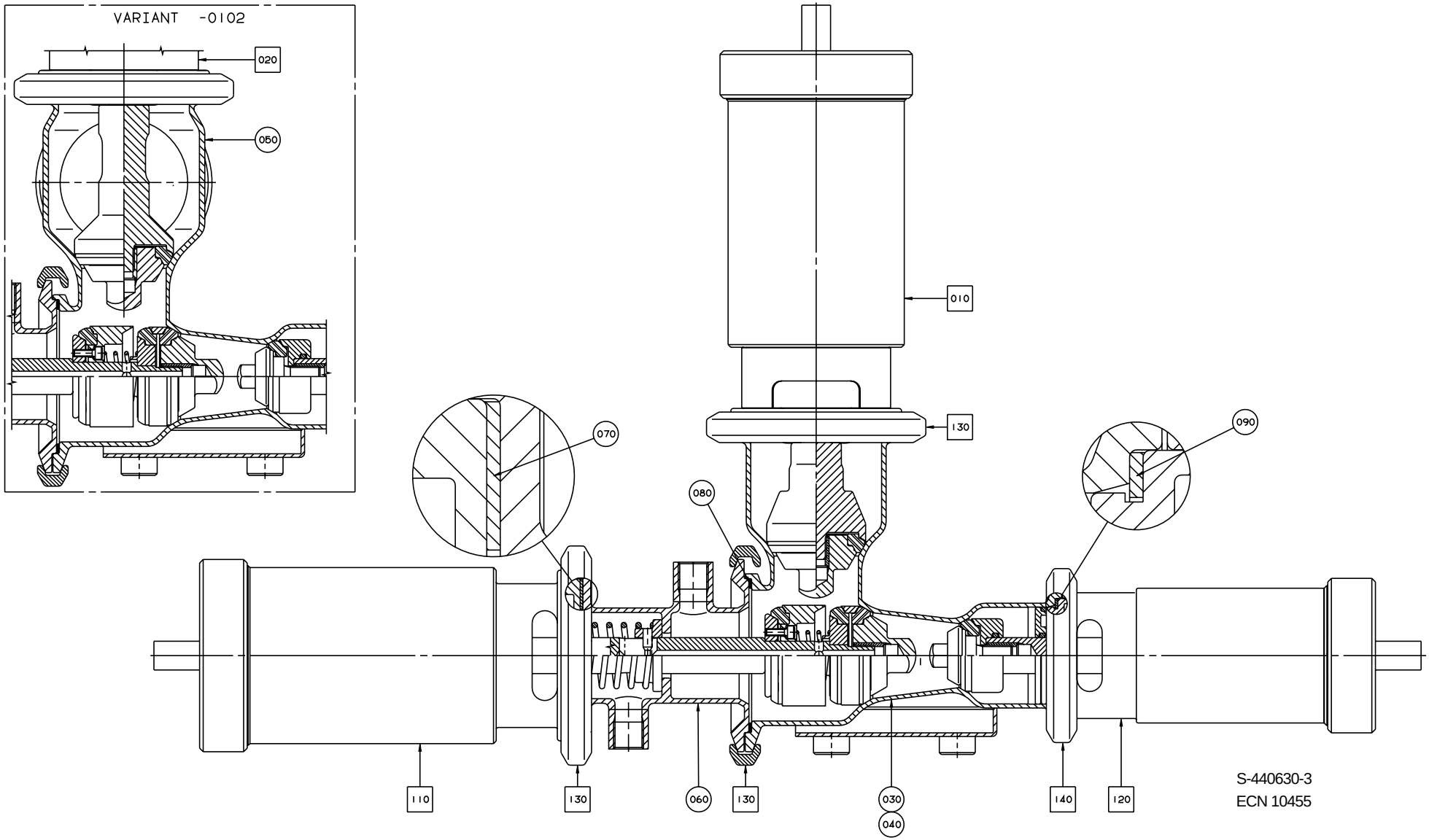
VARIANT -0102
020
050
010
130
070
080
090
110
130
060
130
030
040
140
120
S-440630-3
ECN 10455

Pos	Part No	SP	UN	Qty	Description	Page No
Common parts						
010	A 539209-0100	D		1	A-CYLINDER	**83**
110	A 539210-0100	D		1	C-CYLINDER	**85**
120	A 539211-0100	D		1	B-CYLINDER	**87**
130	A 541163-0100	D		3	CLAMP RING	**89**
140	A 541164-0100	D		1	CLAMP RING	**91**
060	440634-0000	D		1	HOUSE	
070	539212-0000	J		1	GASKET	
080	90207-0363	J		1	GASKET	
090	90207-0365	J		1	GASKET	
TBA/8 2"						
030	440631-0000	D		1	VALVE BODY 51	
TBA/8 3"						
050	449678-0000	D		1	VALVE BODY 76	

Pos	Part No	SP	UN	Qty	Description	Page No

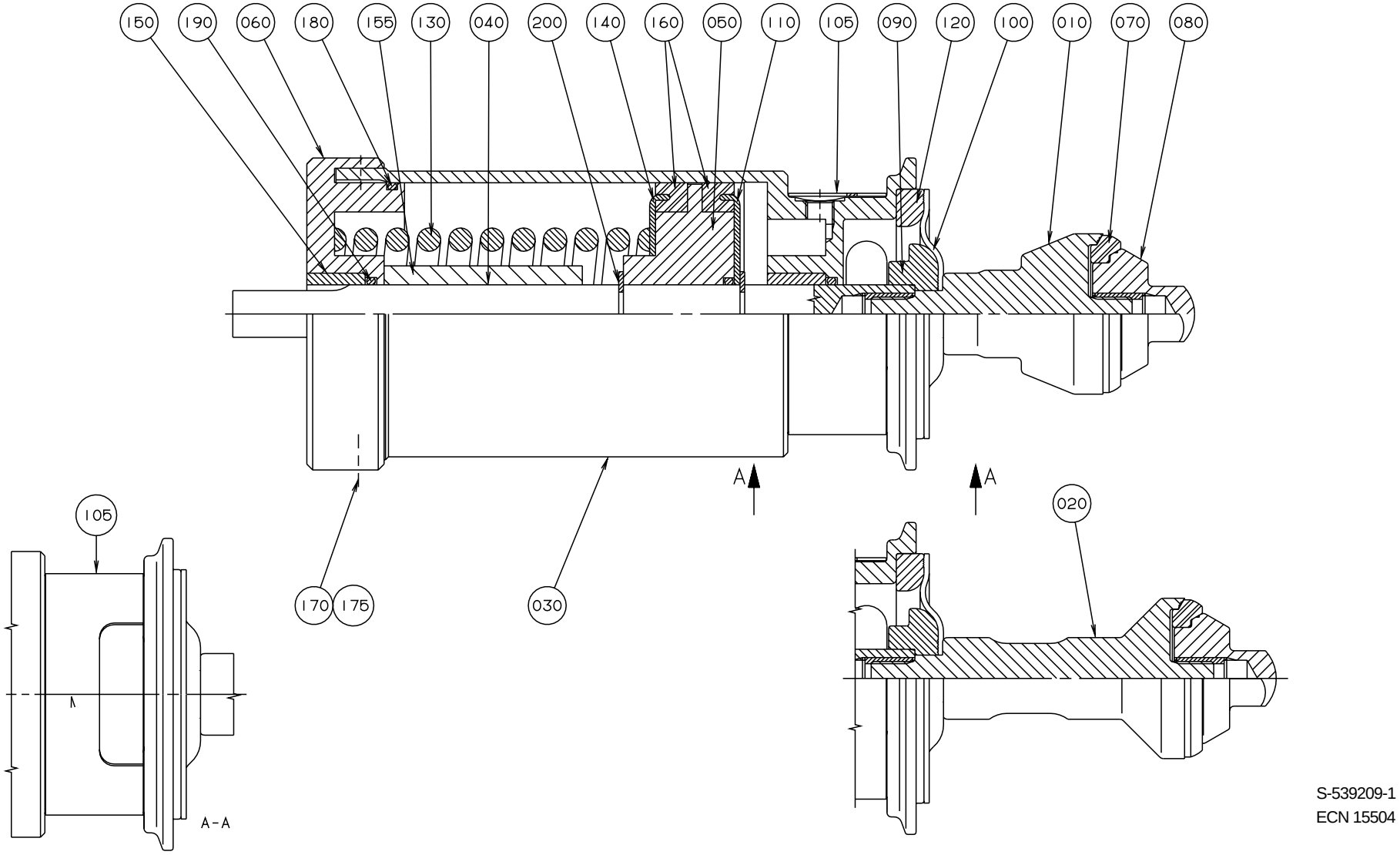

S-539209-1
ECN 15504

Pos	Part No	SP	UN	Qty	Description	Page No
Common parts						
030	440632-0000	D		1	CYLINDER HOUSING	
040	440637-0000	D		1	PISTON ROD	
050	440638-0000	D		1	PISTON	
060	484998-0000	D		1	END SECTION	
070	530589-0000	F		1	SEAL RING	
080	530590-0000	R		1	VALVE CONE	
090	541166-0000	D		1	WASHER	
100	533169-0000	J		1	DIAPHRAGM	
105	476203-0000	-		1	PROTECTION	
110	440651-0000	D		1	WASHER	
120	440655-0000	D		1	RING	
130	440663-0000	R		1	COMPRESSION SPRING	
140	484975-0000	D		1	WASHER	
150	497933-0000	R		2	BUSHING	
155	541167-0000	D		1	SPACER SLEEVE	
160	90020-0028	J		2	SLEEVE	
170	312125-0323	-		1	SLOTTED CHEESE HEAD ISO 1207 M5X8 RFR	
175	315233-0101	-		1	PLAIN ROUND,NYLON M5	
180	315202-0308	K		1	O-RINGS 84,5X3	
190	315204-0215	K		3	O-RINGS 19,2X3	
200	315754-0113	-		2	LOCKING WAE 15	
2"						
010	530592-0000	D		1	SEAL RING HOLDER	
3"						
020	530595-0000	D		1	SEAL RING HOLDER	

Pos	Part No	SP	UN	Qty	Description	Page No

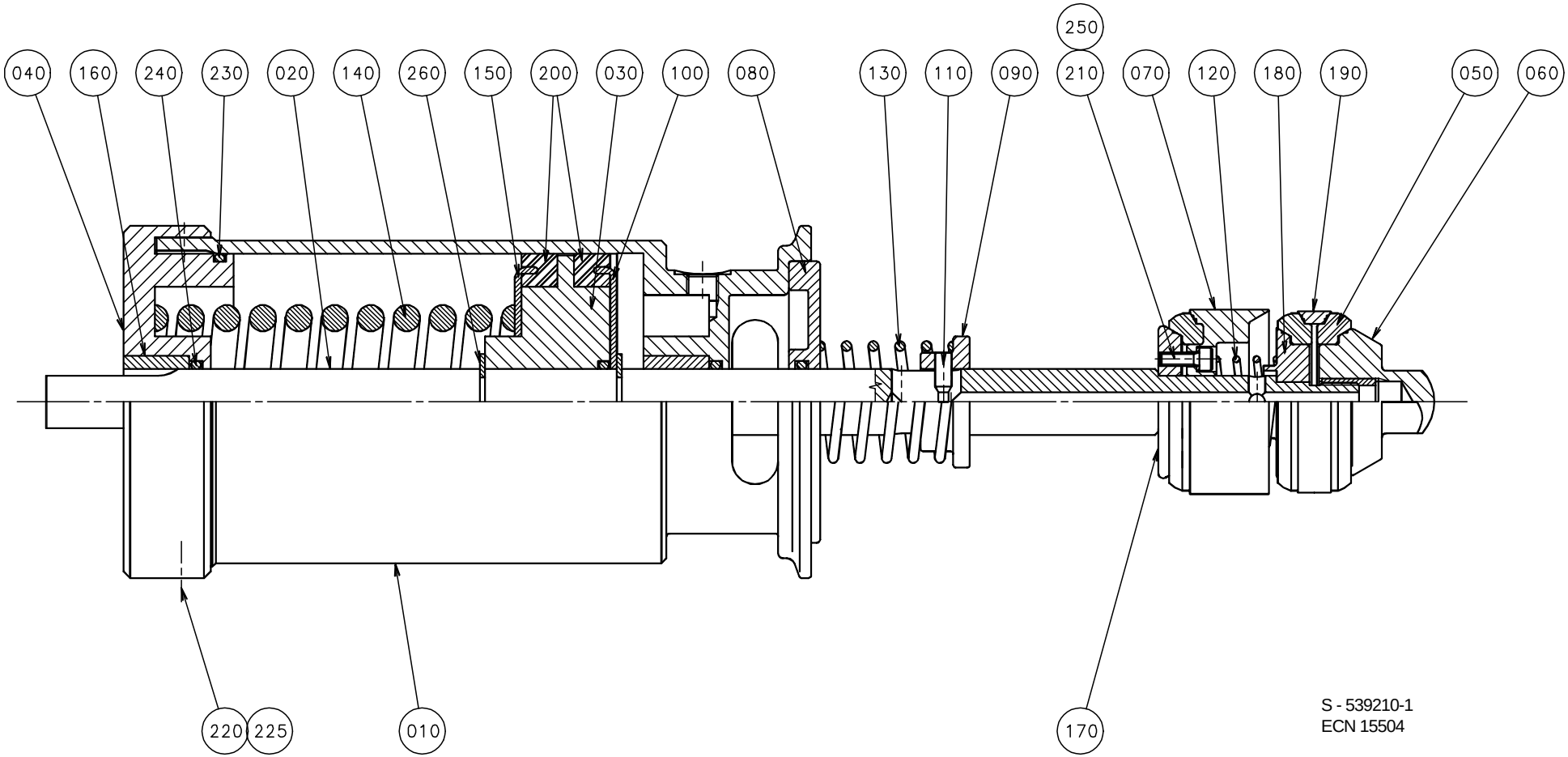
040
160
240
230
020
140
260
150
200
030
100
080
130
110
090
250
210
070
120
180
190
050
060
220
225
010
170
S - 539210-1
ECN 15504

Pos	Part No	SP	UN	Qty	Description	Page No
Common parts						
010	440632-0000	D		1	CYLINDER HOUSING	
020	440635-0000	D		1	PISTON ROD	
030	440638-0000	D		1	PISTON	
040	484998-0000	D		1	END SECTION	
050	530589-0000	F		3	SEAL RING	
060	530590-0000	R		1	VALVE CONE	
070	530591-0000	D		1	HOLDER	
080	440648-0000	D		1	SEALING WASHER	
090	440650-0000	D		1	WASHER	
100	440651-0000	D		1	WASHER	
110	440659-0000	-		1	CYLINDRICAL PIN	
120	440660-0000	R		1	COMPRESSION SPRING	
130	440661-0000	R		1	COMPRESSION SPRING	
140	440663-0000	R		1	COMPRESSION SPRING	
150	484975-0000	D		1	WASHER	
160	497933-0000	R		2	BUSHING	
170	530597-0000	D		1	WASHER	
180	530598-0000	D		1	WASHER	
190	530599-0000	R		1	RING	
200	90020-0028	J		2	SLEEVE	
210	312115-0291	-		4	SCREW MC6S ISO 4762 M4X12 A280	
220	312125-0323	-		1	SLOTTED CHEESE HEAD ISO 1207 M5X8 RFR	
225	315233-0101	-		1	PLAIN ROUND,NYLON M5	
230	315202-0308	K		1	O-RINGS 84,5X3	
240	315204-0215	K		4	O-RINGS 19,2X3	
250	315402-0136	-		4	WASHER FBB4,1RFR	
260	315754-0113	-		2	LOCKING WAE 15	

Pos	Part No	SP	UN	Qty	Description	Page No

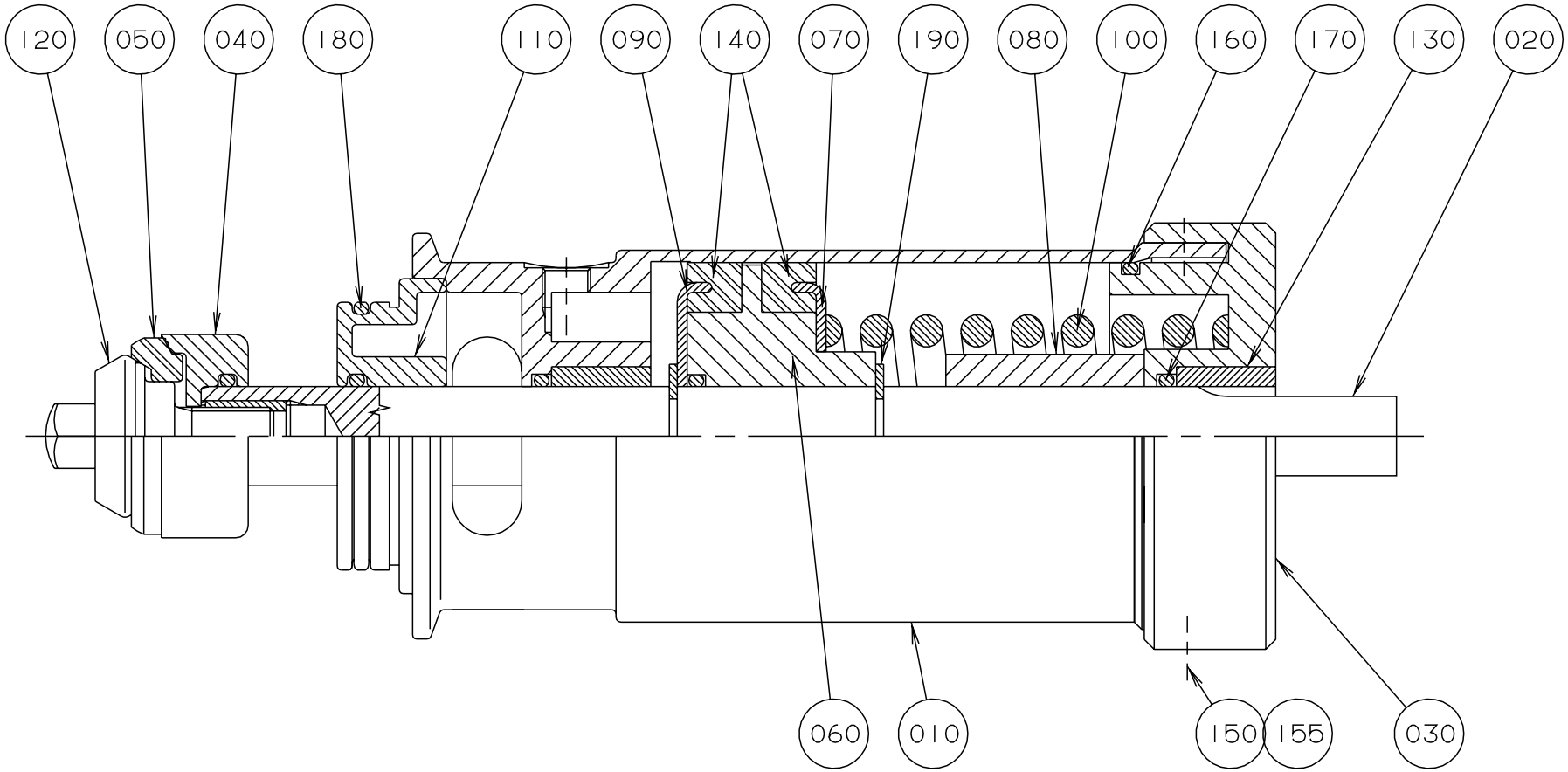

S-539211-1
ECN 15504

Pos	Part No	SP	UN	Qty	Description	Page No
Common parts						
010	440633-0000	D		1	CYLINDER HOUSING	
020	440636-0000	D		1	PISTON ROD	
030	440695-0000	D		1	END SECTION	
040	530587-0000	D		1	WASHER	
050	530588-0000	F		1	SEAL RING	
060	440646-0000	D		1	PISTON	
070	440652-0000	D		1	WASHER	
080	440654-0000	D		1	SPACER SLEEVE	
090	440656-0000	D		1	WASHER	
100	440662-0000	R		1	COMPRESSION SPRING	
110	440664-0000	D		1	SEALING WASHER	
120	476185-0000	R		1	VALVE CONE	
130	497933-0000	R		2	BUSHING	
140	90020-0027	J		2	SLEEVE	
150	312125-0323	-		1	SLOTTED CHEESE HEAD ISO 1207 M5X8 RFR	
155	315233-0101	-		1	PLAIN ROUND,NYLON M5	
160	315202-0304	K		1	O-RINGS 64,5X3	
170	315204-0215	K		5	O-RINGS 19,2X3	
180	315204-0301	K		1	O-RINGS 49,5X3	
190	315754-0113	-		2	LOCKING WAE 15	

Pos	Part No	SP	UN	Qty	Description	Page No

CLAMP RING

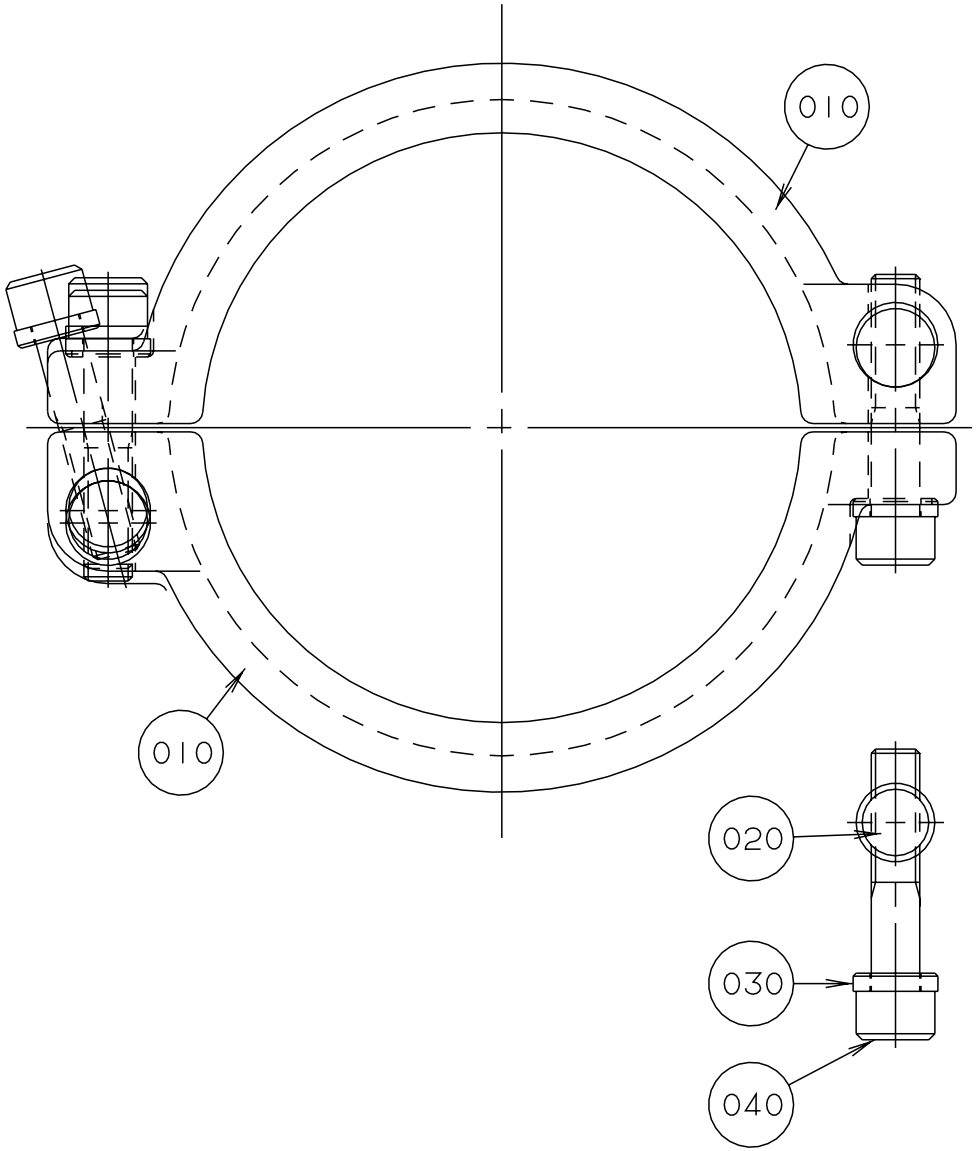

S-541163-1
ECN 10455

Pos	Part No	SP	UN	Qty	Description	Page No
Common parts						
010	532117-0000	D		2	CLAMP RING	
020	497748-0000	D		2	PIN	
030	541165-0000	D		2	WASHER	
040	312115-0459	-		2	SCREW MC6S ISO 4762 M8X40 A280	

Pos	Part No	SP	UN	Qty	Description	Page No

CLAMP RING

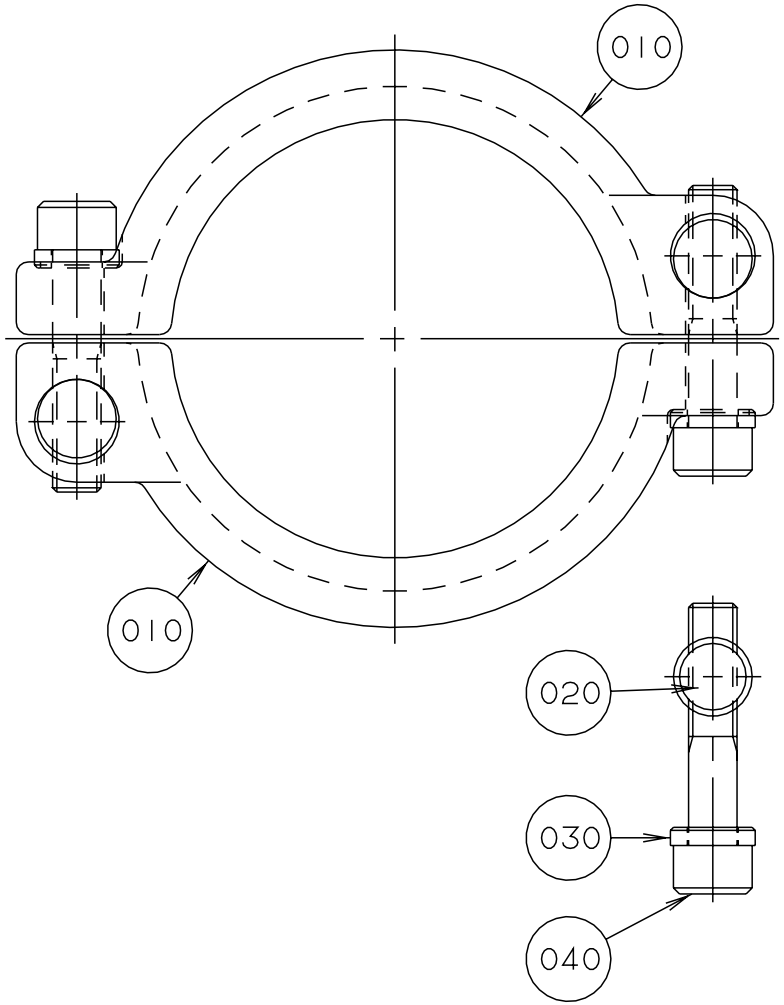

S-541164-1
ECN 10455

Pos	Part No	SP	UN	Qty	Description	Page No
Common parts						
010	532118-0000	D		2	CLAMP RING	
020	497748-0000	D		2	PIN	
030	541165-0000	D		2	WASHER	
040	312115-0459	-		2	SCREW MC6S ISO 4762 M8X40 A280	

Pos	Part No	SP	UN	Qty	Description	Page No

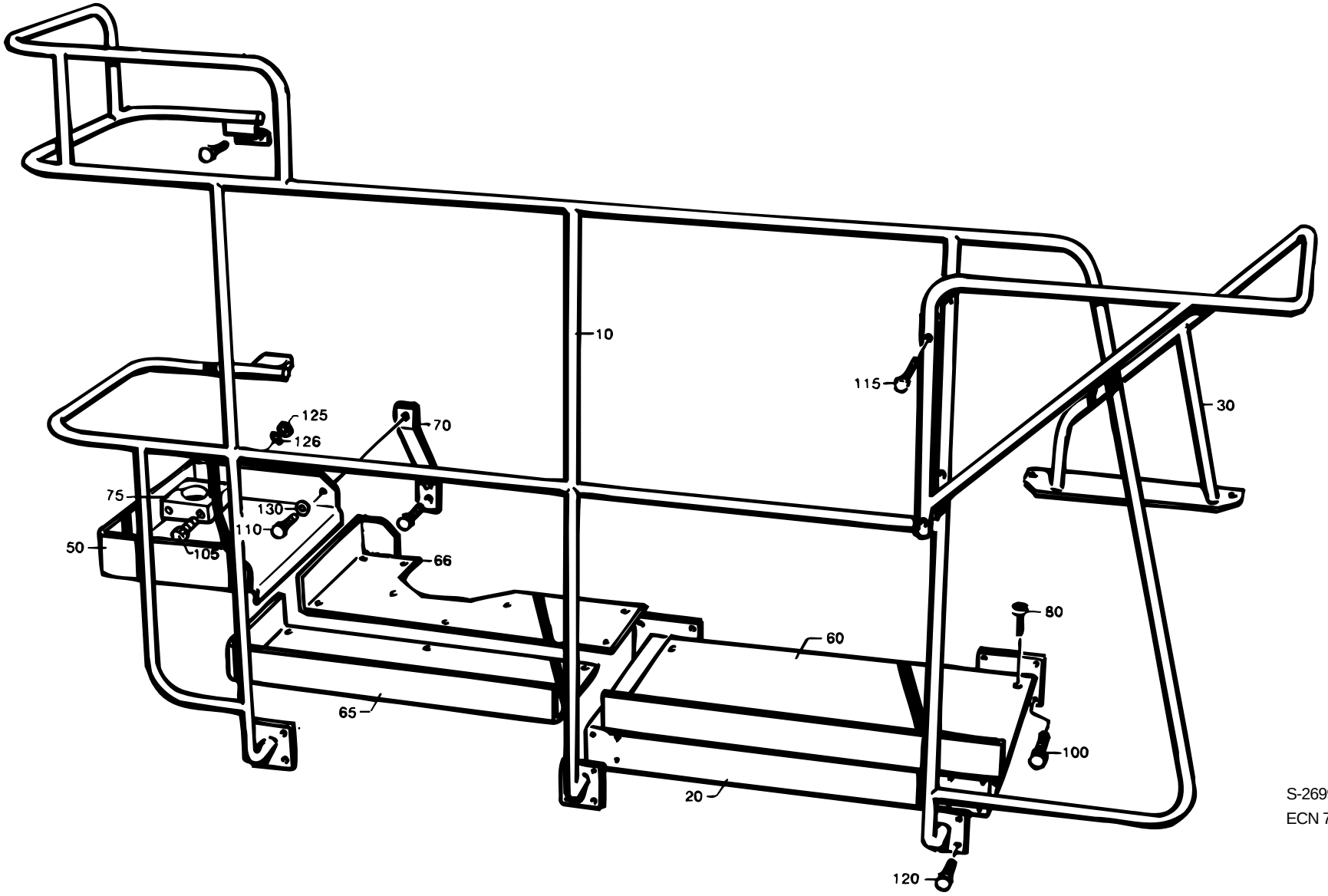

S-269970-4
ECN 7094

Pos	Part No	SP	UN	Qty	Description	Page No
Common parts						
F490	A 269971-0200	-		1	LADDER	**95**
010	434270-0000	-		1	RAILING	
020	542852-0000	-		1	CANTILEVER	
030	282893-0000	-		1	SAFETY GUARD	
050	476599-0000	-		1	PLATFORM	
060	451389-0000	-		1	PLATFORM	
065	451390-0000	-		1	PLATFORM	
066	451391-0000	-		1	PLATFORM	
070	434273-0000	-		2	STRUT	
075	476600-0000	-		2	PIPE HOLDER	
080	90287-0075	-		20	SCREW, PAN HEAD,LKCS ISO1580, M6x12	
100	312101-0493	-		8	SCREW M6S10X25FZB	
105	312105-0384	-		2	SCREW M6S ISO 4014 M6X70 A280	
110	312105-0449	-		12	SCREW M6S ISO 4017 M8x16 A280	
115	312105-0453	-		2	SCREW M6S ISO 4017 M8x25 A280	
120	312105-0491	-		12	SCREW M6S ISO 4017 M10X20 A280	
125	312605-0316	-		2	NUT,HEXAGON,A280 M6M6 Stainless	
126	315105-0156	-		4	WASHER BRB 6,7x14 RFR	
130	315105-0165	-		4	WASHER,PLAIN ROUND 8,4x16 Stainless	

Pos	Part No	SP	UN	Qty	Description	Page No

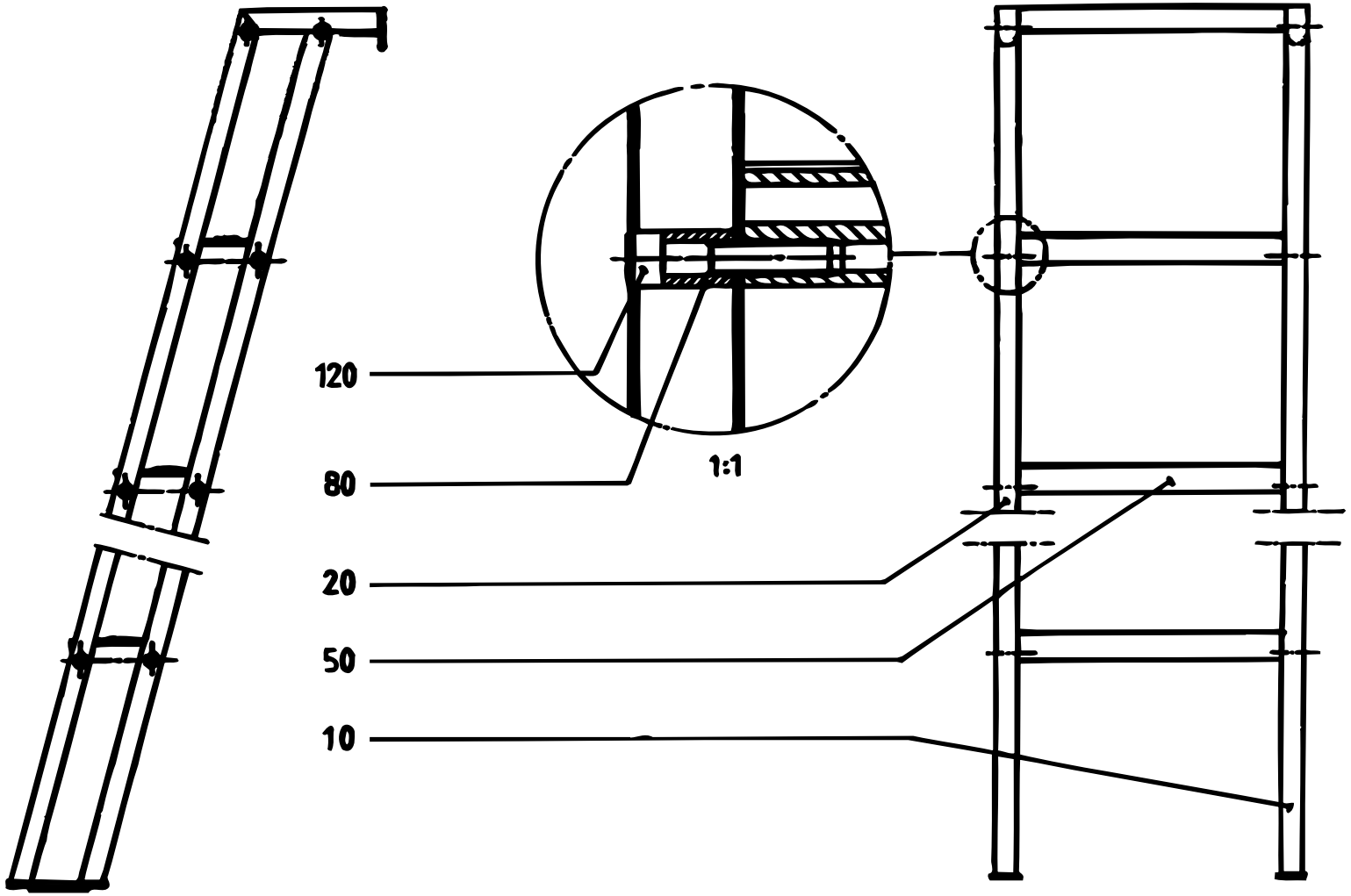
120
80
20
50
10
1:1

Pos	Part No	SP	UN	Qty	Description	Page No
Common parts						
010	247296-0001	-		1	SIDE PIECE	
020	247296-0002	-		1	SIDE PIECE	
050	208361-0002	-		5	STAIR	
080	208658-0001	-		20	SPACER	
120	90287-0056	-		20	SCREW, MC6S-TT M8x40	

Pos	Part No	SP	UN	Qty	Description	Page No

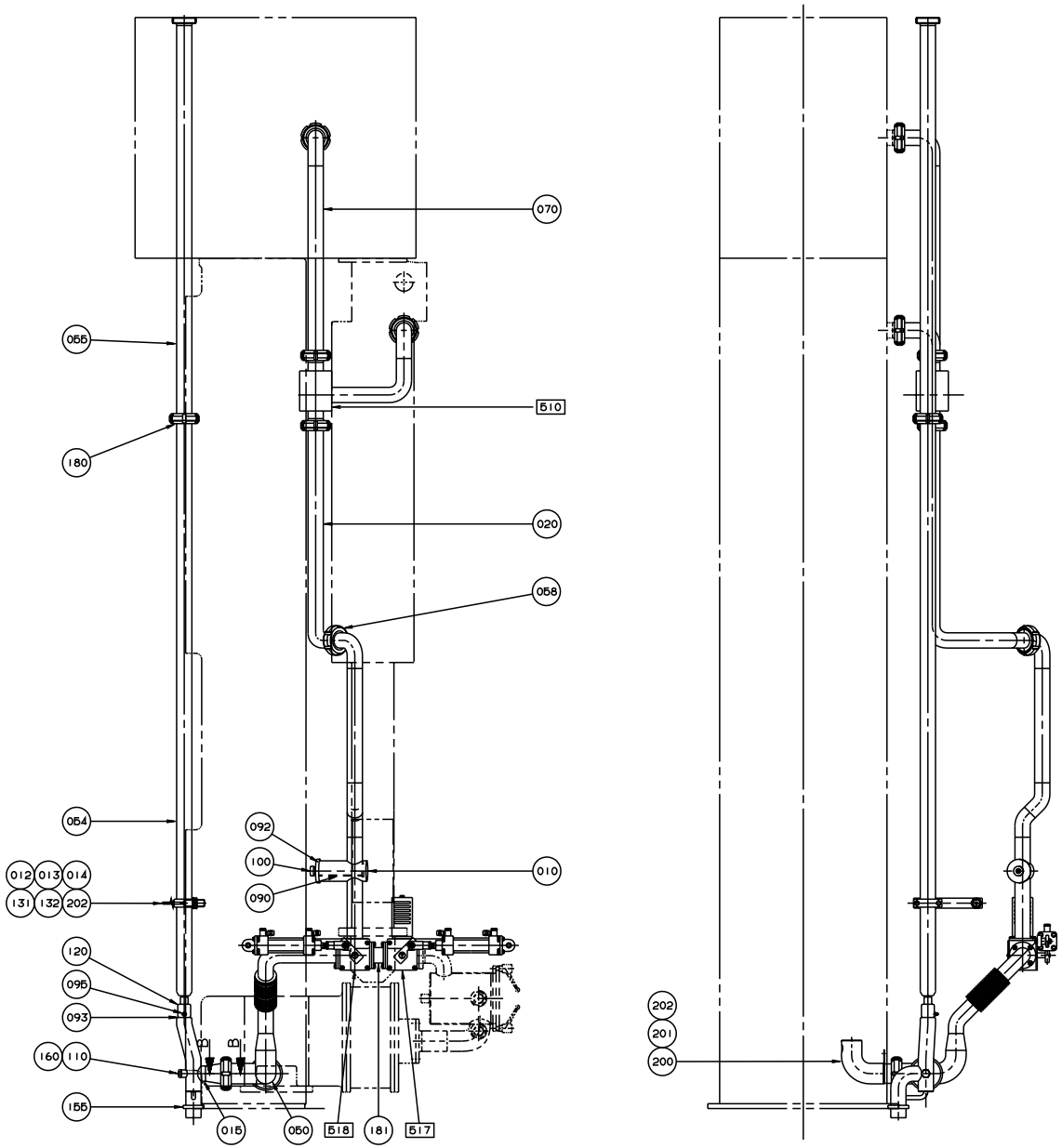

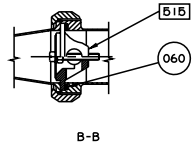

S-269988-5
ECN 19538

Pos	Part No	SP	UN	Qty	Description	Page No
Common parts						
F510	A 273401-0300	-		1	CHANGE-OVER VALVE	**99**
F515	A 476849-0100	-		1	VALVE	**101**
F517	A 476859-0200	-		1	CHANGE-OVER VALVE	**103**
F518	A 594618-0100	-		1	CHANGE-OVER VALVE	**105**
010	544436-0000	-		1	FILTER PIPE	
012	90044-0099	M		1	PROXIMITY SWITCH IG REPBY 0090044-0126	
013	566228-0000	-		1	BRACKET	
014	476600-0000	D		2	PIPE HOLDER	
015	476449-0000	-		1	PIPE	
020	466471-0000	-		1	PIPE	
050	544435-0000	-		1	PIPE	
054	B 499826-0000	-		1	PIPE	
055	574654-0000	-		1	PIPE	
058	12242-0003	L		1	GASKET	
060	12242-0005	I		1	GASKET	
070	269522-0000	-		1	PIPE	
090	273950-0000	D		1	FILTER	
092	493653-0000	R		1	GASKET	
093	499181-0000	-		4	WASHER	
095	90030-0207	-		1	NIPPLE	
100	90051-0053	-		1	HANDLES,KNOB,INTERNAL THREAD,M6 24X17	
110	90330-0026	-		1	PLUG,EXTERNAL G-THREAD G1/4"	
120	90425-0009	D		1	EJECTOR	
131	312105-0382	-		2	SCREW M6S ISO 4014 M6X60 A280	
132	312812-0316	-		2	NUT,HEXAGON,LOCK,WITH NYLON INSERT,M6	
140	312105-0364	-		16	SCREW M6S6X10RFR	
150	315204-0222	K		4	O-RINGS 36,2X3	
155	499825-0000	D		1	GASKET	
160	315233-0110	-		1	PLAIN ROUND,NYLON R1/4"	
180	315250-0103	K		1	GASKET 48/38	
181	544439-0000	-		1	INTERMEDIATE PIPE	
200	544506-0000	-		1	PIPE	
201	312105-0362	-		1	SCREW M6S ISO 4017 M6X8 A280	
202	315105-0153	-		5	WASHER,PLAIN ROUND 6,4x12 Stainless	

Pos	Part No	SP	UN	Qty	Description	Page No

CHANGE-OVER VALVE

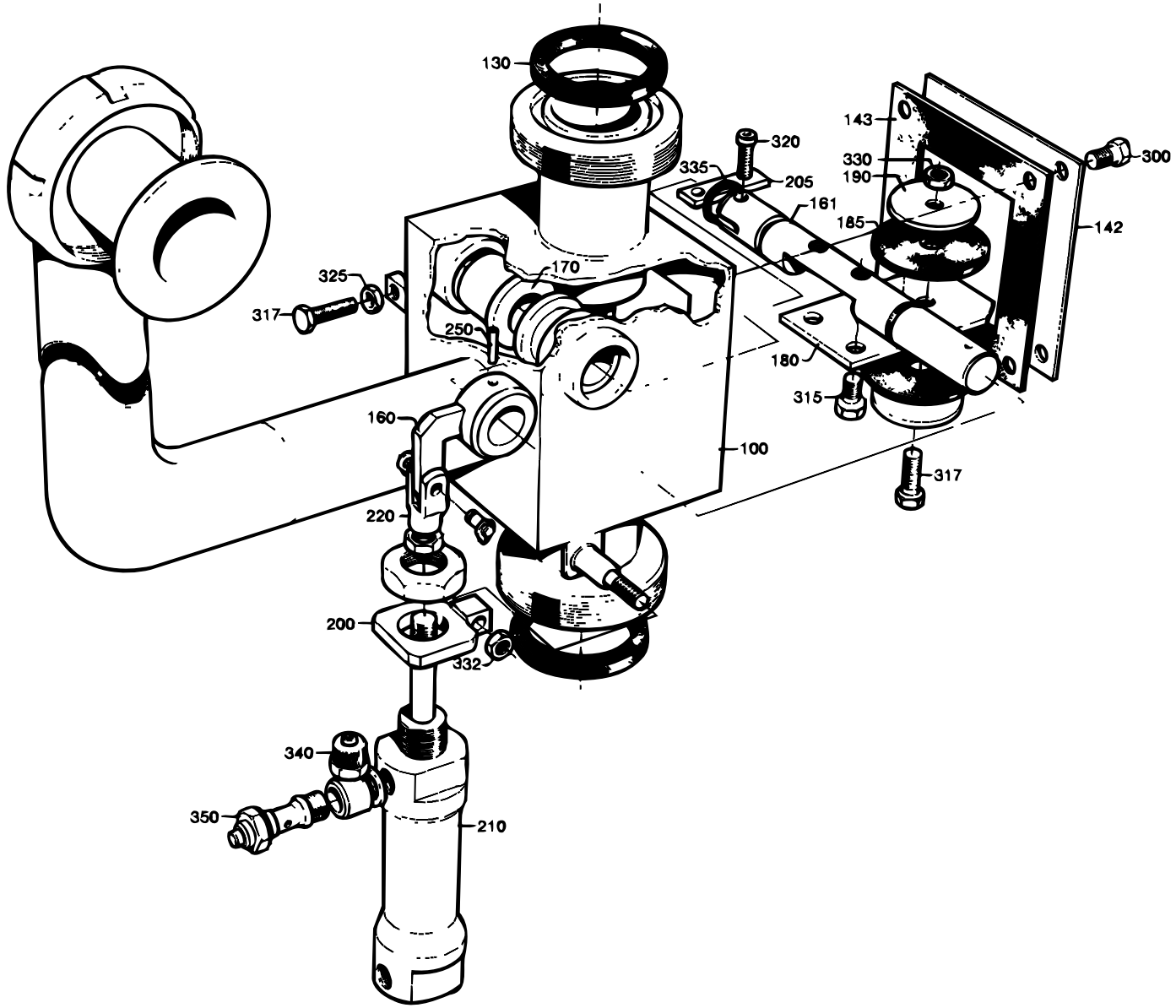

S-273401-3
ECN 8756

Pos	Part No	SP	UN	Qty	Description	Page No
Common parts						
100	B 531034-0000	-		1	VALVE HOUSING	
130	12242-0003	F		2	GASKET	
142	251454-0000	-		1	LID	
143	251455-0000	R		1	SEAL	
160	531035-0000	-		1	ARM	
161	531036-0000	D		1	SHAFT	
170	266182-0000	R		2	BUSHING	
180	531037-0000	-		1	FLAP	
185	531038-0000	M		2	GASKET	
190	531039-0000	D		2	WASHER	
200	531040-0000	-		1	BRACKET	
205	531041-0000	-		1	WEDGE	
210	90239-0822	R		1	DOUBLE ACTING,MINI-ISO,CYL.20-50	
220	90239-0490	D		1	ROD END,CLEVIS WITH AXLE,M8	
250	311103-0236	-		1	PINS,STRAIGHT 3X16	
300	312105-0325	-		4	SCREW M6S5X10 A2 80	
315	312105-0364	-		2	SCREW M6S6X10RFR	
317	312105-0370	-		2	SCREW M6S ISO 4017 M6X20 A280	
320	312115-0329	-		1	SCREW MC6S ISO 4762 M5X16 A280	
325	312605-0316	-		1	NUT,HEXAGON,A280 M6M6 Stainless	
330	312811-0316	-		1	LOCK NUT M6RFR	
332	312812-0316	-		1	NUT,HEXAGON,LOCK,WITH NYLON INSERT,M6	
335	315204-0111	M		2	O-RINGS 13,1X1,6	
340	342980-0113	-		2	BANJO-CONNECTION,RING 6/4-G1/8"	
350	90235-0274	-		2	THROTTLE CHECK VALVES,G1/8"	

Pos	Part No	SP	UN	Qty	Description	Page No

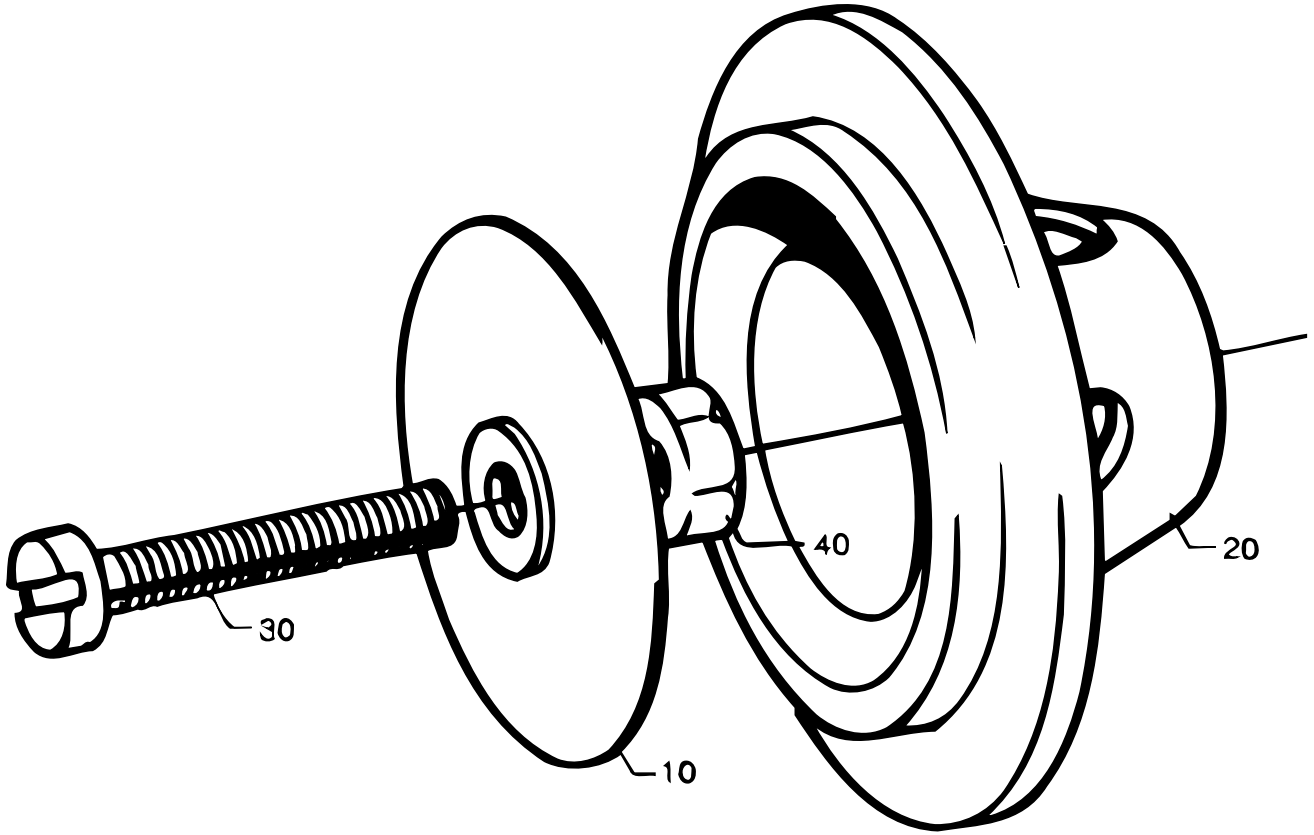

S-476849-1
ECN 7094

Pos	Part No	SP	UN	Qty	Description	Page No
Common parts						
010	273944-0000	J		1	DIAPHRAGM	
020	273951-0000	D		1	VALVE HOUSING	
025	90157-0016	-	ML	1	LOCKING FLUID	
030	312125-0378	-		1	SLOTTED CHEESE HEAD ISO 1207 M6X40 RFR	
040	312605-0316	-		1	NUT,HEXAGON,A280 M6M6 Stainless	

Pos	Part No	SP	UN	Qty	Description	Page No

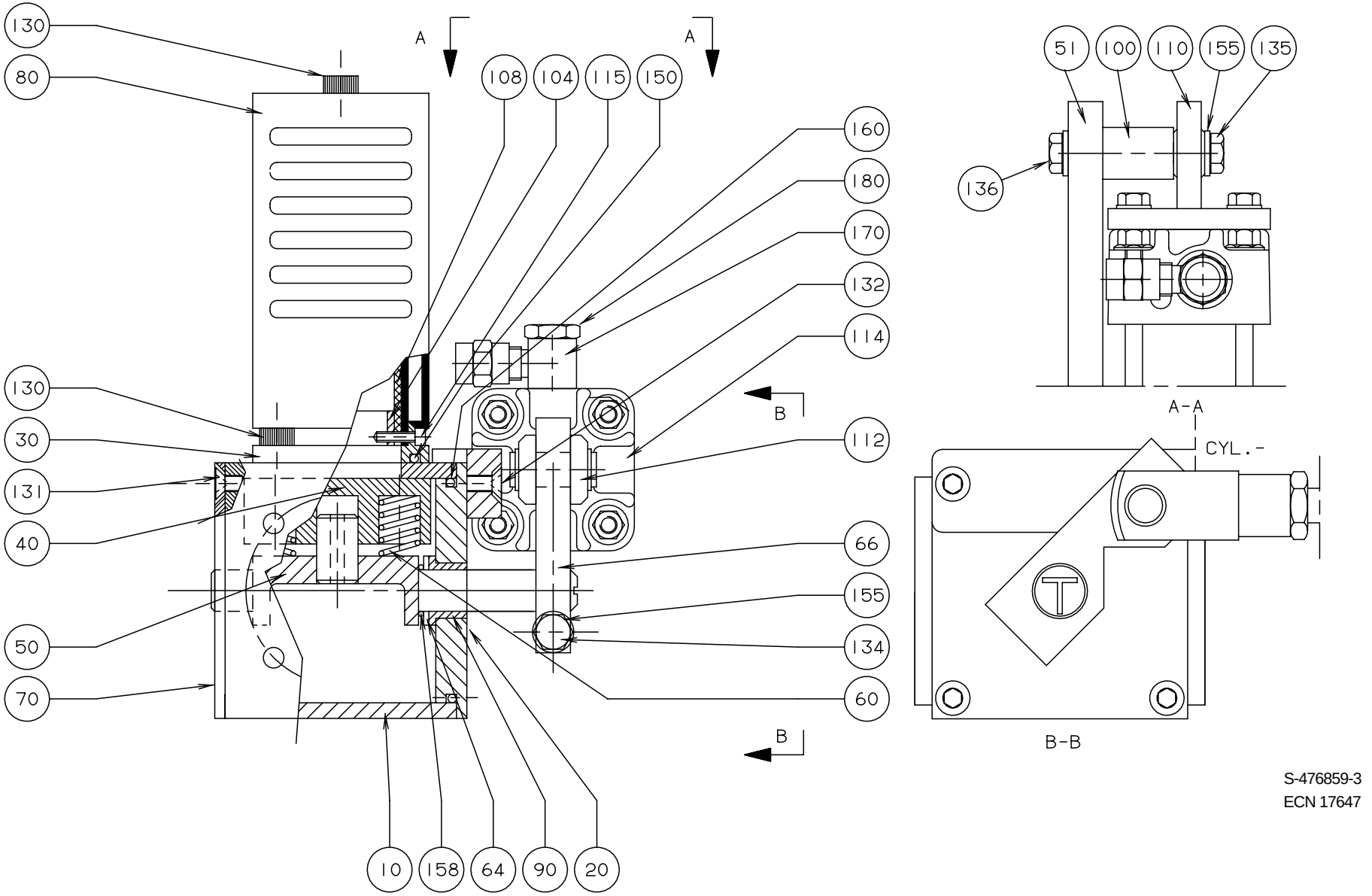

S-476859-3
ECN 17647

Pos	Part No	SP	UN	Qty	Description	Page No
Common parts						
010	B 466474-0000	-		1	VALVE HOUSING	
020	441957-0000	-		1	BEARING COVER	
030	466477-0000	-		1	INNER PIPE	
040	466479-0000	D		1	PIECE	
050	555541-0000	D		1	BRACKET	
051	555542-0000	D		1	BRACKET	
060	21521-0000	R		2	COMPRESSION SPRING	
064	266737-0000	D		1	WASHER	
066	441483-0000	D		1	CYLINDER BRACKET	
070	255874-0000	-		1	BEARING COVER	
080	466478-0000	-		1	OUTER PIPE	
090	255875-0000	K		2	BUSHING	
100	555540-0000	D		1	SPACER	
104	466483-0000	-		1	CLAMPING PIECE	
108	466484-0000	-		1	NET	
110	90239-0453	D		1	BRACKET	
112	90239-0516	D		1	ROD END,CLEVIS WITH AXLE,M10X1,25	
114	B 90239-0779	R		1	CYLINDER	
115	312115-0224	-		2	SCREW S 3X10 A4 80	
130	312115-0364	-		5	SCREW 6X10 A4 80	
131	312155-0364	-		6	SCREW MF6S6X10RFR	
132	312155-0370	-		2	SCREW MF6S DIN 7991 M6X20 A280	
134	312105-0370	-		1	SCREW M6S ISO 4017 M6X20 A280	
135	312105-0364	-		2	SCREW M6S6X10RFR	
136	312105-0368	-		1	SCREW M6S ISO 4017 M6X16 A280	
150	315204-0222	M		1	O-RINGS 36,2X3	
155	315105-0153	-		3	WASHER,PLAIN ROUND 6,4x12 Stainless	
158	315204-0110	M		1	O-RINGS 12,1X1,6	
160	315204-0302	M		2	O-RINGS 54,5X3	
170	342797-0121	-		2	BANJO CONNECTION,RINGPIECE 6-1/8"	
180	342980-0303	-		2	BANJO-HOLLOW BOLT COUPL,EXT.THR.01-G1/8"	

Pos	Part No	SP	UN	Qty	Description	Page No

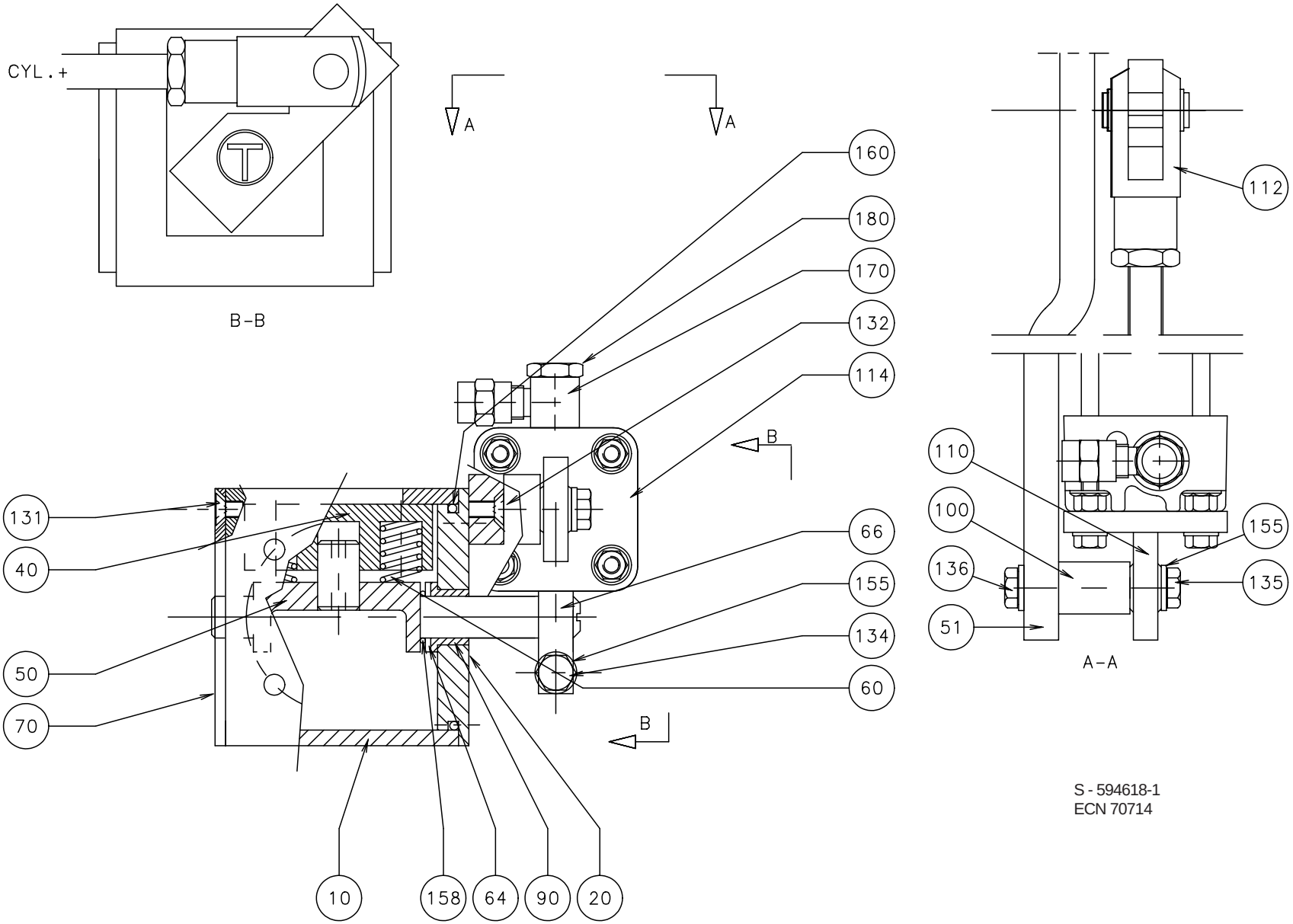

S - 594618-1
ECN 70714

Pos	Part No	SP	UN	Qty	Description	Page No
Common parts						
010	B 466474-0000	-		1	VALVE HOUSING	
020	441957-0000	-		1	BEARING COVER	
040	466479-0000	D		1	PIECE	
050	555541-0000	D		1	BRACKET	
051	555542-0000	D		1	BRACKET	
060	21521-0000	R		2	COMPRESSION SPRING	
064	266737-0000	D		1	WASHER	
066	441483-0000	D		1	CYLINDER BRACKET	
070	255874-0000	-		1	BEARING COVER	
090	255875-0000	K		2	BUSHING	
100	555540-0000	D		1	SPACER	
110	90239-0453	D		1	BRACKET	
112	90239-0516	D		1	ROD END,CLEVIS WITH AXLE,M10X1,25	
114	B 90239-0779	R		1	CYLINDER	
131	312155-0364	-		6	SCREW MF6S6X10RFR	
132	312155-0370	-		2	SCREW MF6S DIN 7991 M6X20 A280	
134	312105-0370	-		1	SCREW M6S ISO 4017 M6X20 A280	
135	312105-0364	-		2	SCREW M6S6X10RFR	
136	312105-0368	-		1	SCREW M6S ISO 4017 M6X16 A280	
155	315105-0153	-		3	WASHER,PLAIN ROUND 6,4x12 Stainless	
158	315204-0110	M		1	O-RINGS 12,1X1,6	
160	315204-0302	M		2	O-RINGS 54,5X3	
170	342797-0121	-		2	BANJO CONNECTION,RINGPIECE 6-1/8"	
180	342980-0303	-		2	BANJO-HOLLOW BOLT COUPL,EXT.THR.01-G1/8"	

Pos	Part No	SP	UN	Qty	Description	Page No

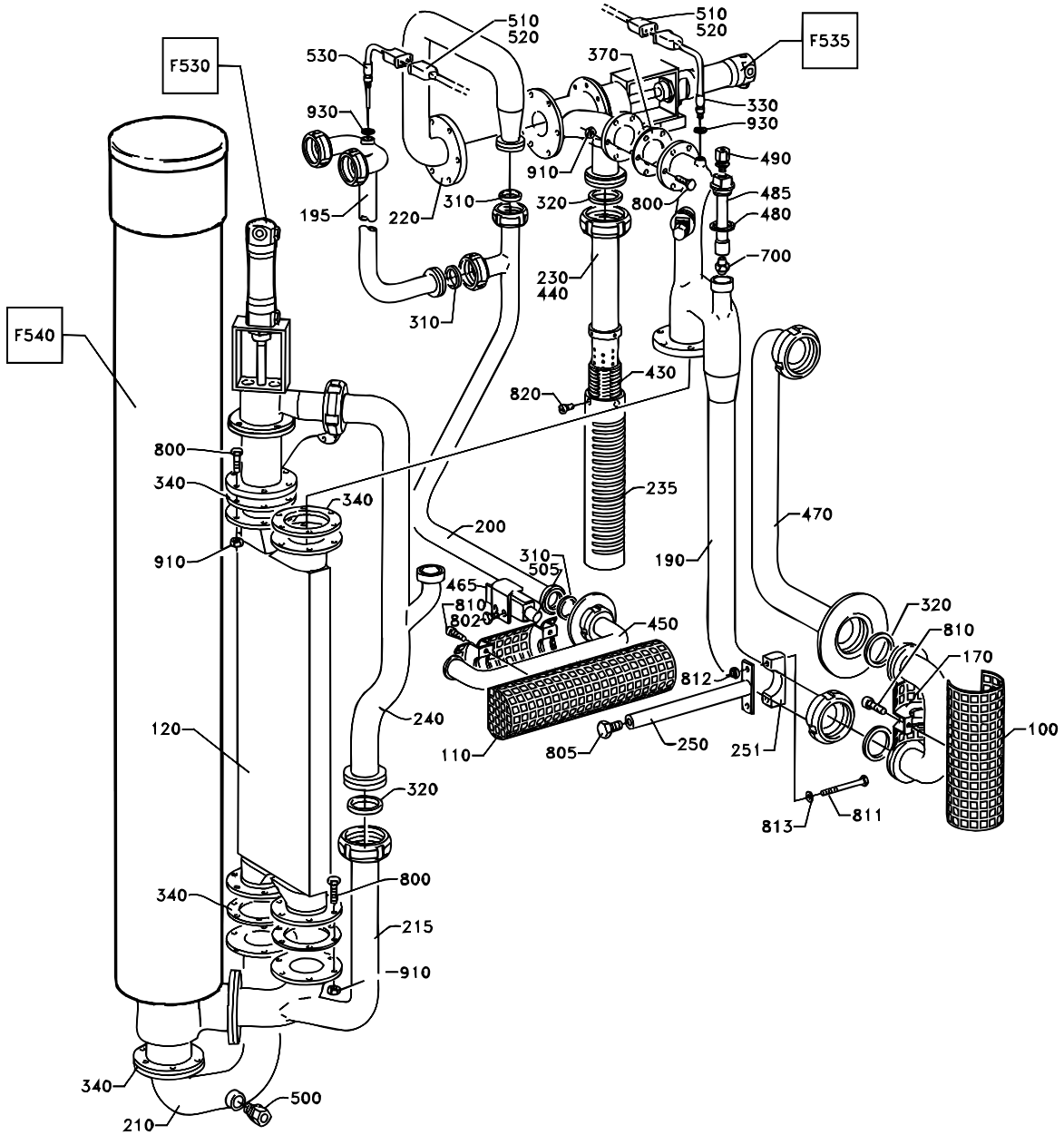

S-273400-5
ECN 17647

Pos	Part No	SP	UN	Qty	Description	Page No
Common parts						
F530	A 269989-0300	-		1	VALVE	**109**
F535	A 594616-0100	-		1	VALVE	**111**
F540	A 273402-0400	-		1	AIR SUPER-HEATER	**113**
100	273514-0000	D		1	TOUCH GUARD	
110	273547-0002	D		1	TOUCH GUARD	
120	522090-0000	X		1	HEAT EXCHANGER	
170	273515-0000	D		1	TOUCH GUARD	
180	273548-0002	D		1	TOUCH GUARD	
190	434274-0000	D		1	PIPE	
195	534426-0000	D		1	PIPE	
200	449818-0000	D		1	PIPE	
210	269405-0000	D		1	PIPE	
215	276166-0000	D		1	PIPE	
220	276167-0000	D		1	PIPE	
230	276304-0000	D		1	PIPE	
235	276305-0000	D		1	PIPE	
240	544437-0000	D		1	BRANCH PIPE	
250	566229-0000	-		1	BRACKET	
251	476600-0000	-		2	PIPE HOLDER	
310	12242-0001	I		3	GASKET	
320	12242-0003	I		3	GASKET	
330	90326-0052	R		1	THERMO ELEMENT	
340	531737-0000	I		5	GASKET	
370	531742-0000	I		1	GASKET	
430	278954-0000	D		1	NET	
440	278955-0000	D		1	NET	
450	449817-0000	D		1	U-TUBE	
460	561583-0000	D		1	U-TUBE	
465	449960-0000	-		1	BRACKET	
470	449963-0000	D		1	U-TUBE	
480	450022-0000	M		2	WASHER	
485	450023-0000	D		2	BRACKET	
490	90030-0051	-		2	STRIGHT PIPECONN.GE6-LR/SY ALT.GA6-LR/RO	
500	90030-0187	-		1	STRAIGHT CONNECTION GA-12-G3/8"	
505	90044-0126	-		1	PROX.SWITCH 922AA3XM-A9P-060-LZ876	
510	90326-0012	R		2	PROTECTIVE COVER REPLY:6-3180118961)	
520	90326-0020	R		2	PLUG,FEMALE YELLOW CR-AL	
530	90326-0053	R		1	THERMO ELEMENT	
700	90424-0031	M		2	NOZZLE	
800	312105-0370	-		30	SCREW M6S ISO 4017 M6X20 A280	
802	312105-0447	-		2	SCREW M6S ISO 4017 M8X12 A280	
805	312105-0489	-		1	SCREW M6S ISO 4017 M10X16 A280	
810	312115-0331	-		6	SCREW MC6S ISO 4762 M5X20 A280	
811	312105-0382	-		2	SCREW M6S ISO 4014 M6X60 A280	
812	312812-0316	-		2	NUT,HEXAGON,LOCK,WITH NYLON INSERT,M6	
813	315105-0153	-		2	WASHER,PLAIN ROUND 6,4x12 Stainless	
820	312125-0285	-		4	SLOTTED HEMCS4X6RFR	
910	312605-0316	-		30	NUT,HEXAGON,A280 M6M6 Stainless	
930	315234-0110	-		1	PLAIN ROUND,COPPER R1/4"	

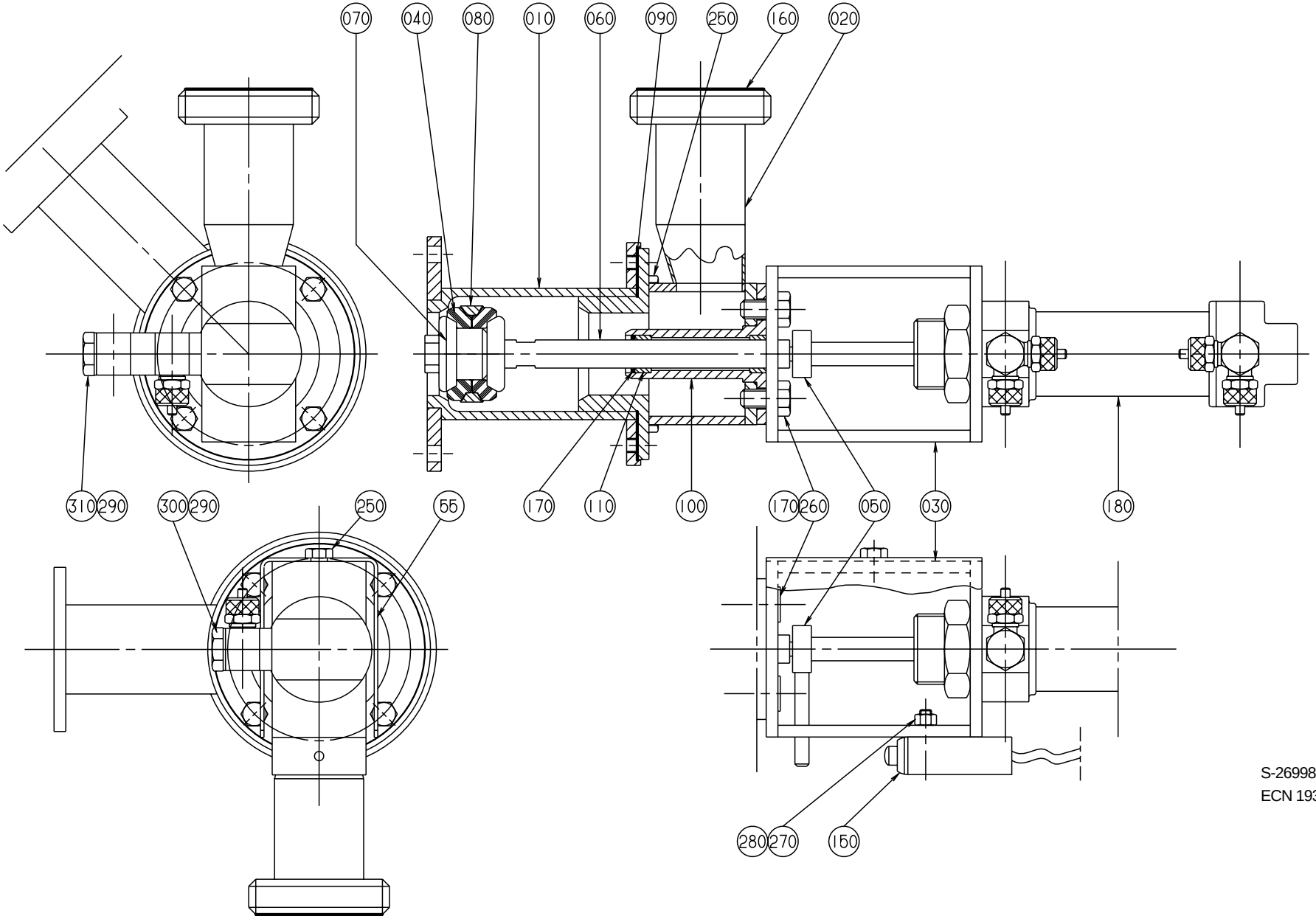

S-269989-3
ECN 19396

Pos	Part No	SP	UN	Qty	Description	Page No
Common parts						
010	276164-0000	D		1	VALVE HOUSING	
020	276165-0000	D		1	HOUSE	
030	266394-0000	-		1	BRACKET	
040	530588-0000	I		2	SEAL RING	
050	37638-0000	D		1	PENDULUM SUSPENSION	
060	266389-0000	R		1	PISTON ROD	
070	266390-0000	R		1	NUT	
080	266391-0000	R		1	RING	
090	531765-0000	M		1	GASKET	
100	532348-0000	R		1	SPINDLE GUIDE	
110	532349-0000	M		2	PLAIN BEARING	
160	90091-0182	F		1	GASKET	
170	90141-0022	M		1	RING	
180	B 90239-0166	R		1	CYLINDER	
250	312105-0366	-		6	SCREW M6S ISO 4017 M6X12 A280	
260	312105-0449	-		2	SCREW M6S ISO 4017 M8x16 A280	
290	342797-0122	-		4	BANJO CONNECTION,RINGPIECE 6-1/4"	
310	342980-0314	-		2	BANJO-HOLLOW BOLT COUPL,EXT.THR.02-G1/4"	

Pos	Part No	SP	UN	Qty	Description	Page No

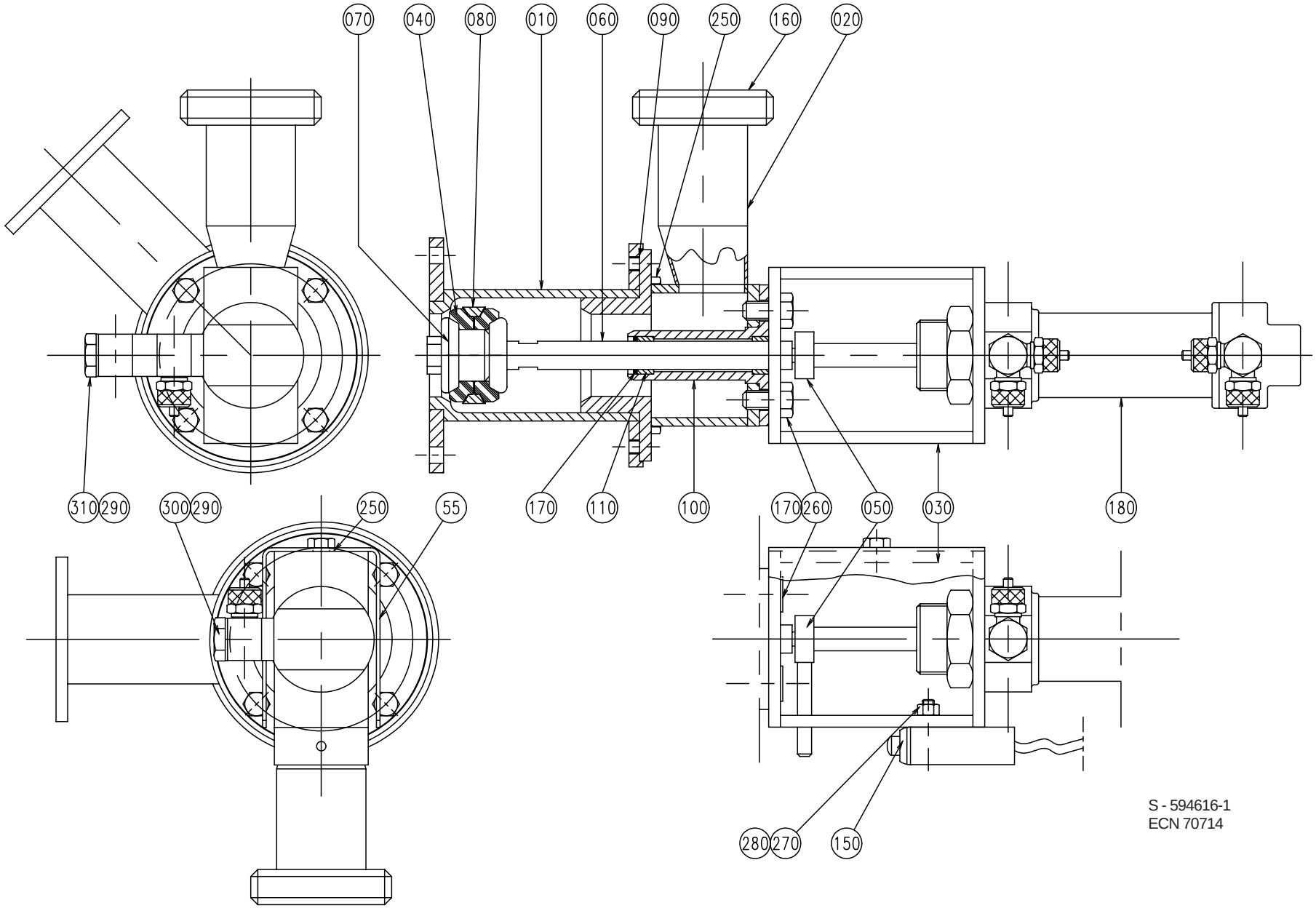
070
040
080
010
060
090
250
160
020
310
290
300
290
250
55
170
110
100
170
260
050
030
180
280
270
150
S - 594616-1
ECN 70714

Pos	Part No	SP	UN	Qty	Description	Page No
Common parts						
010	276164-0000	D		1	VALVE HOUSING	
020	276165-0000	D		1	HOUSE	
030	449414-0000	-		1	BRACKET	
040	530588-0000	I		2	SEAL RING	
050	449415-0000	D		1	PENDULUM SUSPENSION	
055	574653-0000	-		1	PROTECTION	
060	266389-0000	R		1	PISTON ROD	
070	266390-0000	R		1	NUT	
080	266391-0000	R		1	RING	
090	531765-0000	M		1	GASKET	
100	532348-0000	R		1	SPINDLE GUIDE	
110	532349-0000	M		2	PLAIN BEARING	
150	90044-0084	M		1	LIMITSW.14CE1-4	
160	90091-0182	F		1	GASKET	
170	90141-0022	M		1	RING	
180	B 90239-0166	R		1	CYLINDER	
250-02	312105-0366	-		7	SCREW M6S ISO 4017 M6X12 A280	
260	312155-0449	-		2	SCREW MF6S DIN 7991 M8X16 A280	
270	312115-0331	-		2	SCREW MC6S ISO 4762 M5X20 A280	
280	312605-0314	-		2	NUT,HEXAGON,M6M5 Stainless	
290	342797-0122	-		2	BANJO CONNECTION,RINGPIECE 6-1/4"	
300	342980-0304	-		2	BANJO-HOLLOW BOLT COUPL,EXT.THR.01-G1/4"	

Pos	Part No	SP	UN	Qty	Description	Page No

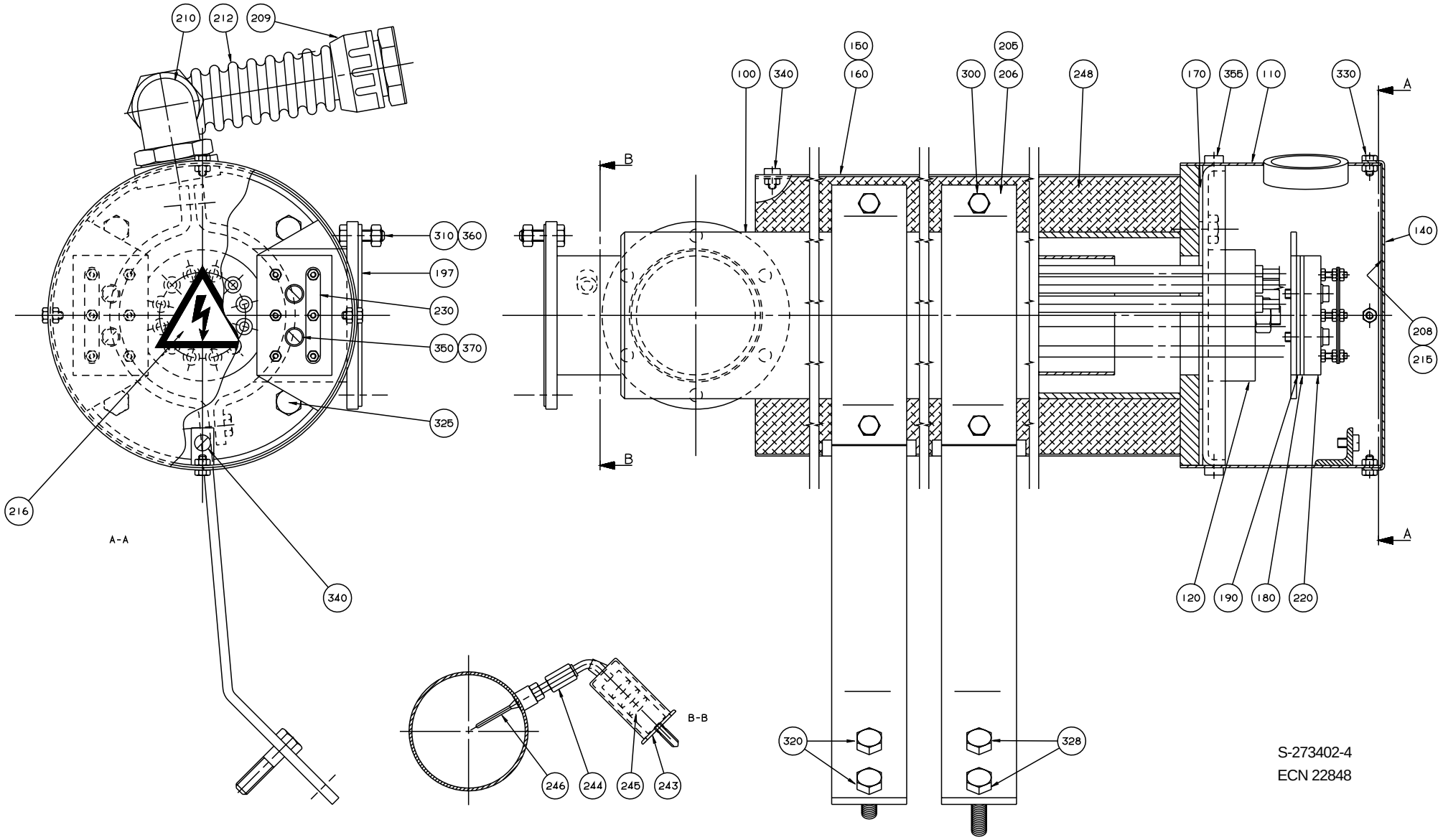

S-273402-4
ECN 22848

Pos	Part No	SP	UN	Qty	Description	Page No
Common parts						
100	434469-0000	-		1	HEATING PIPE	
110	B 451430-0000	-		1	CONNECTION HOUS.(MINOR)	
120	B 449939-0001	R		1	HEATING ELEMENT 15KW	
140	29876-0000	-		1	COVER	
150	269577-0000	-		1	DISCHARGE TRAY	
160	269578-0000	-		1	DISCHARGE TRAY	
170	531731-0000	K		1	GASKET	
180	751009-0000	M		2	INSULATION	
190	30298-0000	M		2	INSULATION	
197	531737-0000	I		2	GASKET	
205	269575-0000	-		2	HOLDER	
206	269576-0000	-		2	CAP	
208	545995-0000	-		1	WIRING DIAGRAM	
209	90012-0061	-		1	GLAND	
210	90012-0062	-		1	GLAND	
212	90152-0031	-	MM	500	HOSE	
215	90153-0020	-	ML	x	ADHESIVE BOSTIK 1782 125ml	
216	90194-0016	-		1	SIGN "FLASH SIGN" 50X50MM	
220	90195-0028	-		2	TERM.BLOCK 6-POLE STEATIT	
230	90195-0029	-		4	CONN. LINK NO324 FOR -28	
243	90326-0012	-		1	PROTECTIVE COVER REPLY:6-3180118961)	
244	90326-0017	-		1	GLAND 1/8".REPL.BY 90326-306	
245	90326-0020	R		1	PLUG,FEMALE YELLOW CR-AL	
246	90326-0043	K		1	THERMOCOUPLE CR-ALPREM.G	
248	90411-0005	D	MM	1232	INSULATOR	
300	312105-0366	-		4	SCREW M6S ISO 4017 M6X12 A280	
310	312105-0370	-		12	SCREW M6S ISO 4017 M6X20 A280	
320	312105-0447	-		2	SCREW M6S ISO 4017 M8X12 A280	
325	312105-0452	-		4	SCREW M6S 8x22 Stainless	
328	312105-0457	-		2	SCREW O4017 M8X35A280	
330	312105-0287	-		4	SCREW M6S ISO 4017 M4x8 A280	
340	312125-0323	-		17	SLOTTED CHEESE HEAD ISO 1207 M5X8 RFR	
350	312125-0331	-		4	SLOTTED CHEESE HEAD ISO 1207 M5X20 RFR	
355	312125-0364	-		4	SLOTTED HEMCS6X10RFR	
360	312605-0316	-		12	NUT,HEXAGON,A280 M6M6 Stainless	
370	315105-0146	-		4	WASHER,PLAIN ROUND 5,3x10 Stainless	

Pos	Part No	SP	UN	Qty	Description	Page No

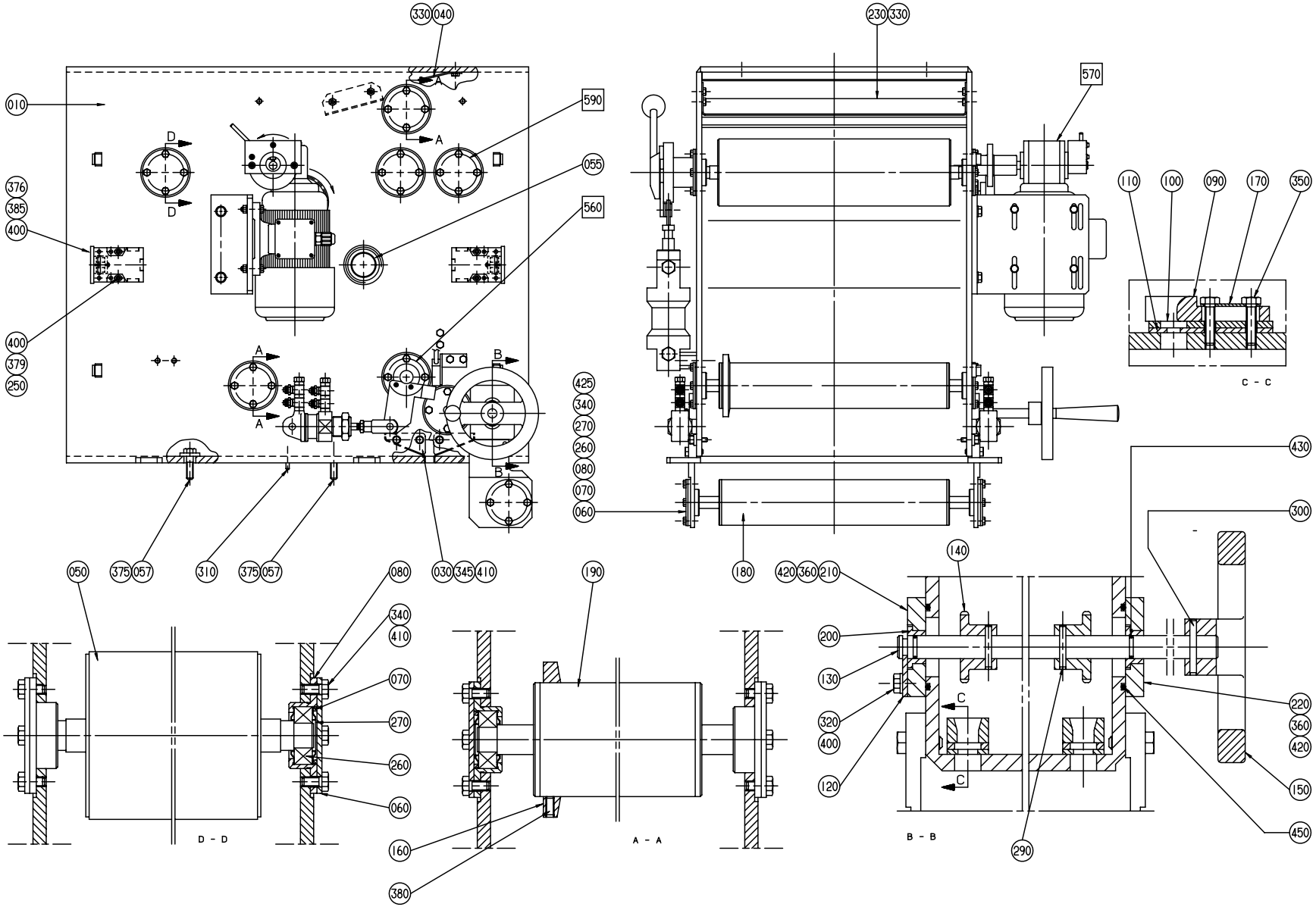

S-276373-7
ECN 20501

Pos	Part No	SP	UN	Qty	Description	Page No
Common parts						
F560	A 263391-0400	-		1	CALENDER ROLLER	**117**
F570	A 263394-0300	-		1	BENDING ROLLER	**119**
F590	A 276345-0300	-		1	AIR KNIFE	**121**
010	573430-0000	-		1	DRYING HOUSE	
030	247422-0000	-		2	DRIP PLATE	
040	251544-0000	-		1	SHEET	
050	543950-0000	D		1	BENDING ROLLER	
055	12242-0003	I		1	GASKET	
057	497719-0000	-		6	WASHER	
060	247171-0000	D		8	BEARING COVER	
070	247172-0000	M		8	SPACER RING	
080	247173-0000	M		8	BEARING SEAT	
090	247349-0000	R		2	STEERING	
100	491602-0000	D		2	GASKET HOLDER	
110	491128-0000	R		2	GASKET	
120	247355-0000	-		1	LOCK WASHER	
130	531190-0000	D		1	SHAFT	
140	247357-0000	D		2	SPROCKET	
150	247358-0000	D		1	SHIFTER HANDLE	
160	250588-0000	D		2	FLANGE	
170	267033-0000	D		2	WASHER	
180	279006-0000	D		1	BENDING ROLLER	
190	279007-0000	D		2	BENDING ROLLER	
200	531191-0000	D		2	BUSHING	
210	279009-0000	-		1	BEARING PLATE	
220	279010-0000	-		1	BEARING PLATE	
230	279011-0000	-		1	COVERING PLATE	
250	B 90044-0103	-		2	KEY SAFETY SWITCH AZ 15 ZVR	
260	90214-0098	J		8	BALL BEARING,STAINLESS	
270	90214-0303	J		16	SEALING RING 18,6X35X2	
290	311103-0275	-		2	CYLINDRICACP M6 4X28 RFR	
300	311103-0278	-		1	PINS,STRAIGHT 4X35	
310	311103-0310	-		2	PINS,STRAIGHT 5X20	
320	312105-0325	-		2	SCREW M6S5X10 A2 80	
330	312105-0364	-		7	SCREW M6S6X10RFR	
340	312105-0367	-		32	SCREW M6S6X14RFR	
345	312105-0368	-		8	SCREW M6S ISO 4017 M6X16 A280	
350	312105-0372	-		4	SCREW M6S ISO 4017 M6X25 A280	
360	312105-0451	-		4	SCREW M6S ISO 4017 8x20 A280	
375	312105-0493	-		6	SCREW M6S ISO 4017 M10X25 A280	
376	312155-0329	-		4	SCREW MF6S DIN 7991 M5x16 A280	
379	312115-0328	-		4	SCREW 5X14 A4 80	
380	312318-0327	-		4	SET SCREW CUP POINT ISO 4029 M5X12 RFR	
385	312812-0314	-		4	NUT,HEXAGON,LOCK,WITH NYLON,M5	
400	315105-0146	-		10	WASHER,PLAIN ROUND 5,3x10 Stainless	
410	315105-0153	-		32	WASHER,PLAIN ROUND 6,4x12 Stainless	
420	315105-0165	-		4	WASHER,PLAIN ROUND 8,4x16 Stainless	
425	315115-0153	-		8	WASHER TBRB 6,4x12 Stainless	
430	315204-0109	J		2	O-RINGS 11,1X1,6	
450	315204-0221	J		2	O-RINGS 34,2X3	

CALENDER ROLLER

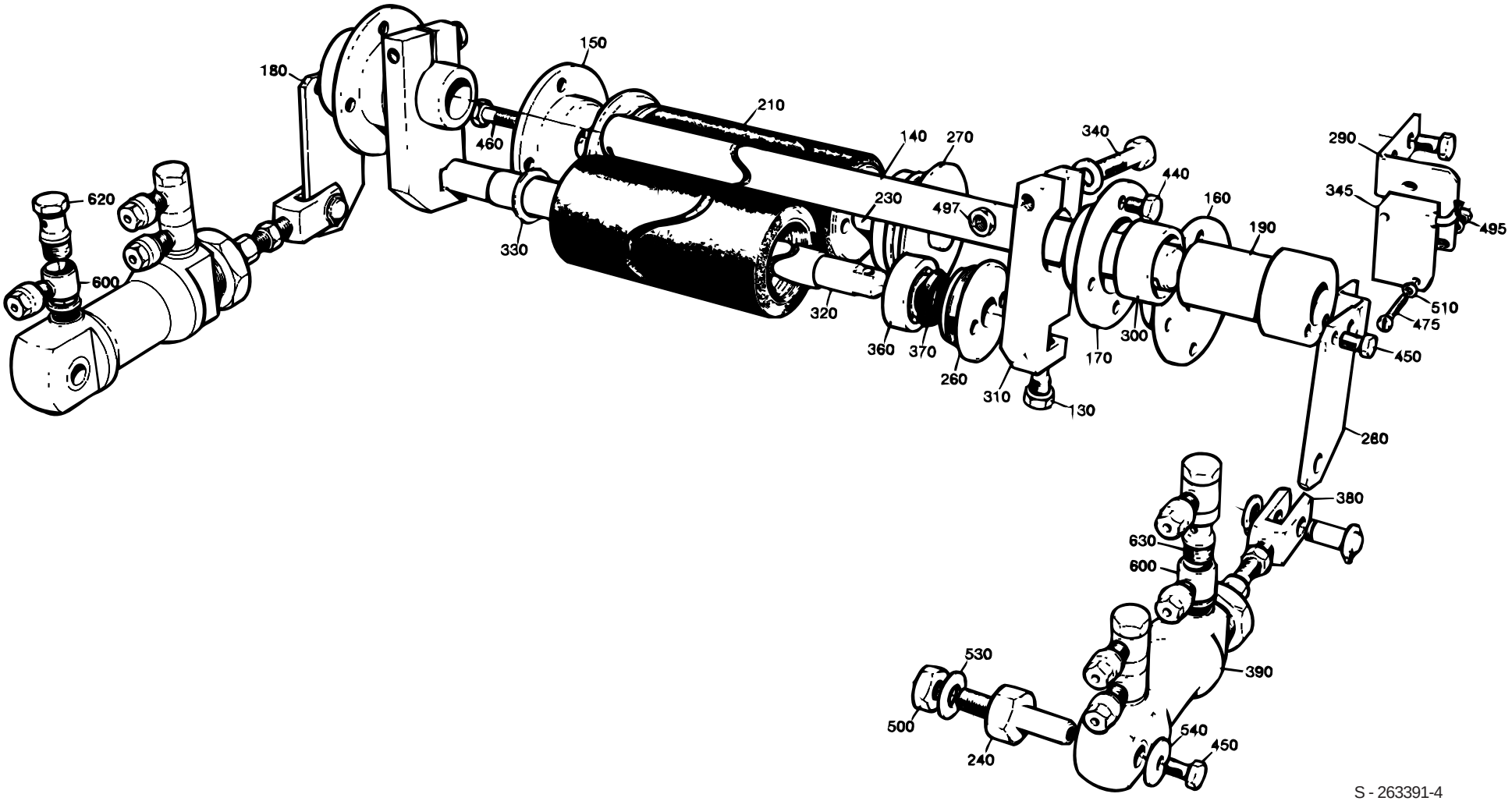

S - 263391-4
ECN 9647

Pos	Part No	SP	UN	Qty	Description	Page No
Common parts						
130	246966-0000	D		2	SCREW	
140	532145-0000	D		1	SHAFT	
150	247159-0000	D		1	AXLE SUPPORT	
160	247160-0000	D		1	AXLE SUPPORT	
170	247161-0000	D		2	AXLE SUPPORT	
180	247162-0000	-		1	BRACKET	
190	532261-0000	D		2	SLEEVE	
210	527750-0000	K		2	CALENDER ROLLER	
230	532144-0000	R		1	SHAFT	
240	247168-0000	D		2	CYLINDER BRACKET	
260	247170-0000	R		4	BEARING COVER	
270	247240-0000	R		2	WHEEL	
280	282766-0000	D		1	LINK	
290	282767-0000	-		1	BRACKET	
300	297142-0000	R		2	BUSHING	
310	532143-0000	D		2	ARM	
320	532146-0000	R		1	SHAFT	
330	532147-0000	R		2	WASHER	
340	532148-0000	-		2	SCREW	
345	90044-0104	M		1	PROX.SWITCH IFM IN 3002	
360	90214-0028	J		4	BALL BEARING REPBY 0090214-0098	
370	90214-0303	J		8	SEALING RING 18,6X35X2	
380	90239-0127	R		2	BRACKET	
390	B 90239-0189	R		2	CYLINDER	
440	312105-0364	-		16	SCREW M6S6X10RFR	
450	312105-0366	-		6	SCREW M6S ISO 4017 M6X12 A280	
460	312105-0370	-		1	SCREW M6S ISO 4017 M6X20 A280	
475	312125-0230	-		2	SLOTTED CHEESE HEAD ISO 1207 M3X20 RFR	
495	312605-0310	-		2	NUT,HEXAGON,M6M3 RFR	
497	312605-0318	-		2	NUT,HEXAGON,M8 RFR	
500	312605-0320	-		2	NUT,HEXAGON,M10 A280	
510	315105-0124	-		4	WASHER,PLAIN ROUND 3,2x6	
530	315105-0173	-		2	WASHER,PLAIN ROUND 10,5x22 STAINLESS	
540	315121-0153	-		2	WASHER TBRSB6,4X22FZB	
600	342797-0122	-		7	BANJO CONNECTION,RINGPIECE 6-1/4"	
620	342980-0304	-		1	BANJO-HOLLOW BOLT COUPL,EXT.THR.01-G1/4"	
630	342980-0314	-		3	BANJO-HOLLOW BOLT COUPL,EXT.THR.02-G1/4"	

Pos	Part No	SP	UN	Qty	Description	Page No

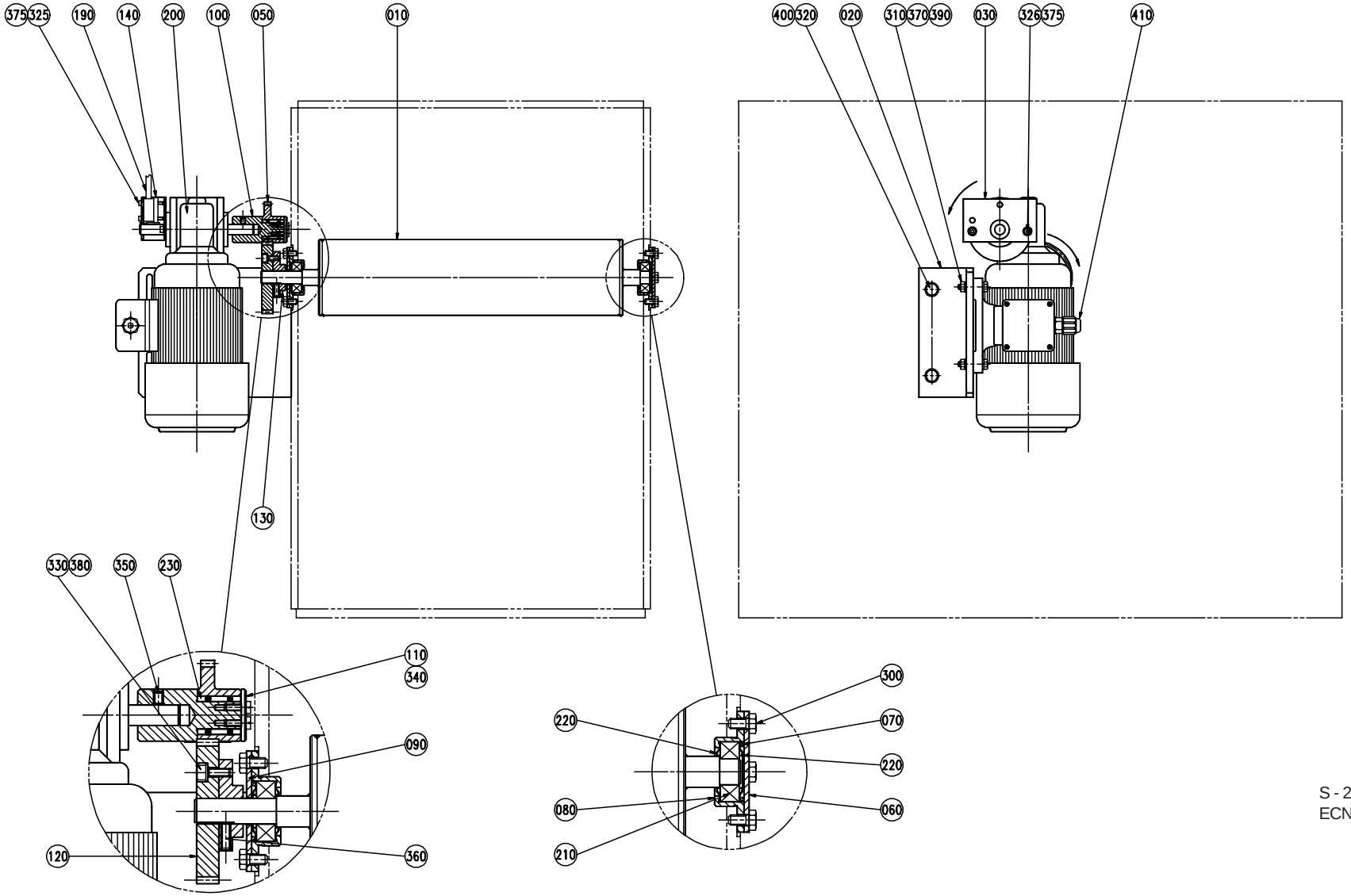

S - 263394-3
ECN 70354

Pos	Part No	SP	UN	Qty	Description	Page No
Common parts						
010	573428-0000	D		1	BENDING ROLLER	
020	573429-0000	-		1	MOTOR PLATE	
030	927258-0000	-		1	BRACKET	
060	247171-0000	D		1	BEARING COVER	
070	247172-0000	M		2	SPACER RING	
080	247173-0000	R		2	BEARING SEAT	
090	250590-0000	D		1	BEARING COVER	
100	250591-0000	D		1	SHAFT	
110	250592-0000	D		1	WASHER	
120	265872-0001	M		1	GEAR WHEEL	
130	284974-0000	-		1	HUB	
140	795581-0000	D		1	PLATE	
190	90044-0104	M		1	PROX.SWITCH IFM IN 3002	
200	B 90069-0116	M		1	WORM GEAR MOTOR REPL.BY 90069-281	
210	90214-0098	J		2	BALL BEARING,STAINLESS	
220	90214-0303	J		4	SEALING RING 18,6X35X2	
230	90348-0007	K		1	FREE WHEEL COUPLING	
300	312105-0366	-		8	SCREW M6S ISO 4017 M6X12 A280	
310	312105-0374	-		4	SCREW M6S ISO 4017 M6X30 A280	
320	312105-0451	-		2	SCREW M6S ISO 4017 8x20 A280	
325	312115-0232	-		2	SCREW 3X25 A4 80	
326	312115-0295	-		2	SCREW MC6S ISO 4762 M4X20 A280	
330	312115-0328	-		3	SCREW 5X14 A4 80	
340	312125-0291	-		2	SLOTTED CHEESE HEAD ISO 1207 M4X12 RFR	
350	312318-0362	-		1	SET SCREW CUP POINT ISO 4029 M6X8 RFR	
360	312318-0368	-		1	SET SCREW CUP POINT ISO 4029 M6X16 RFR	
370	312605-0316	-		4	NUT,HEXAGON,A280 M6M6 Stainless	
375	315105-0136	-		4	WASHER,PLAIN ROUND 4,3x8 Stainless	
380	315105-0146	-		3	WASHER,PLAIN ROUND 5,3x10 Stainless	
390	315105-0153	-		8	WASHER,PLAIN ROUND 6,4x12 Stainless	
400	315105-0165	-		2	WASHER,PLAIN ROUND 8,4x16 Stainless	
410	90012-0137	-		1	CABLE GLAND SCREENED PG11 SHVE-120111	
0355B or 0500B						
050	209331-0009	D		1	GEAR WHEEL	
0375S or 0500S or 0750B						
050	209331-0007	D		1	GEAR WHEEL	
0400B						
050	209331-0005	D		1	GEAR WHEEL	
0500SQ						
050	209331-0010	D		1	GEAR WHEEL	
0750S or 1000B or 1055B						
050	209331-0012	D		1	GEAR WHEEL	
1000S						
050	209331-0013	D		1	GEAR WHEEL	
1000SQ						
050	209331-0014	D		1	GEAR WHEEL	

AIR KNIFE

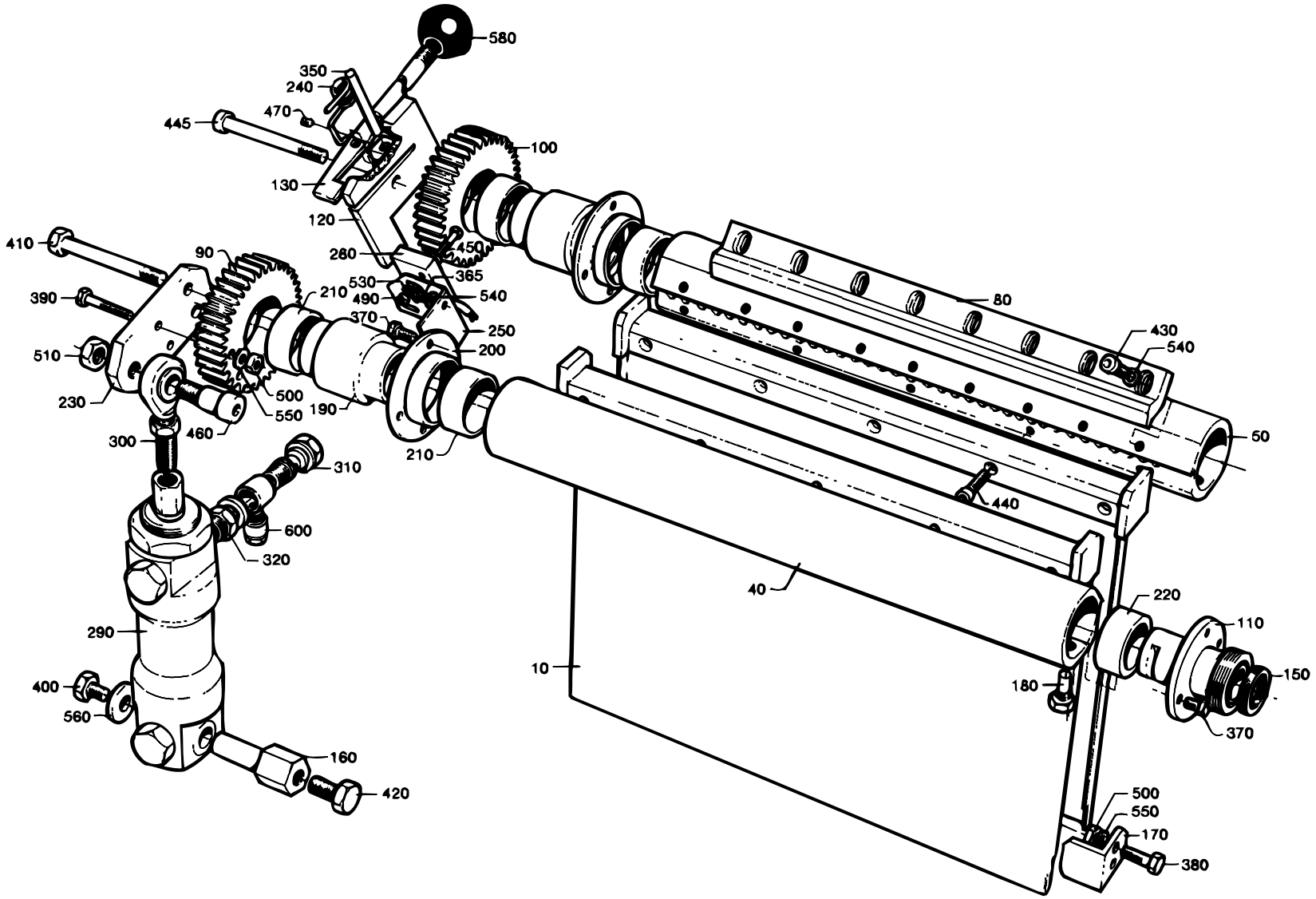

S-276345-2
ECN 5355

Pos	Part No	SP	UN	Qty	Description	Page No
Common parts						
060	292565-0000	-		1	PROTECTION	
090	276350-0000	D		1	GEAR WHEEL	
100	276351-0000	D		1	GEAR WHEEL	
110	276354-0000	D		2	ATTACHMENT	
120	297969-0000	-		1	FASTENING PLATE	
130	297970-0000	-		1	CATCH LEVER	
150	12242-0001	J		2	GASKET	
160	246964-0000	-		1	CYLINDER BRACKET	
180	246966-0000	D		2	SCREW	
190	276355-0000	D		2	SLEEVE	
200	276356-0000	D		2	BEARING HOUSING	
210	276357-0000	R		4	BUSHING	
220	276358-0000	R		2	BUSHING	
230	276359-0000	-		1	LEVER	
240	276360-0000	D		1	SPRING	
250	276361-0000	-		1	BRACKET	
280	90044-0104	M		1	PROX.SWITCH IFM IN 3002	
290	B 90239-0196	R		1	CYLINDER	
300	90239-0321	D		1	BRACKET	
310	90235-0275	R		2	THROTTLE CHECK VALVES,G1/4"	
320	90330-0042	D		2	BUSHING,INT./EXT.R-THREAD R3/8"-Rp1/4"	
350	311103-0367	-		1	CYLINDRICACP M6 6X55 RFR	
365	312105-0325	-		2	SCREW M6S5X10 A2 80	
370	312105-0364	-		14	SCREW M6S6X10RFR	
375	312105-0368	-		2	SCREW M6S ISO 4017 M6X16 A280	
380	312105-0370	-		4	SCREW M6S ISO 4017 M6X20 A280	
390	312105-0376	-		2	SCREW M6S ISO 4017 M6X35 A280	
400	312105-0447	-		1	SCREW M6S ISO 4017 M8X12 A280	
410	312105-0467	-		2	SCREW M6S ISO 4014 M8x80 A280	
420	312105-0491	-		1	SCREW M6S ISO 4017 M10X20 A280	
430	312115-0325	-		18	SCREW 5X10 A4 80	
440	312115-0332	-		10	SCREW 5X22 A4 80	
445	312115-0467	-		2	SCREW MC6S ISO 4762 M8X80 A280	
450	312125-0230	-		2	SLOTTED CHEESE HEAD ISO 1207 M3X20 RFR	
460	312180-0530	-		1	HEX. S0CKET HEAD SHOULD. ISO 7379 M10X16	
470	312316-0320	-		1	STOP SCREW SK6SS5X5FZB	
490	312605-0310	-		2	NUT,HEXAGON,M6M3 RFR	
500	312605-0316	-		6	NUT,HEXAGON,A280 M6M6 Stainless	
510	312605-0320	-		1	NUT,HEXAGON,M10 A280	
530	315105-0124	-		4	WASHER,PLAIN ROUND 3,2x6	
540	315105-0146	-		20	WASHER,PLAIN ROUND 5,3x10 Stainless	
550	315105-0153	-		8	WASHER,PLAIN ROUND 6,4x12 Stainless	
560	315121-0165	-		1	WASHER TBRSB8,4X26FZB	
580	318800-0105	-		1	HANDLE BALLA D.35-M10	
600	342797-0122	-		2	BANJO CONNECTION,RINGPIECE 6-1/4"	
TBA 0500SQ or TBA 1000S or TBA 1000SQ						
010	276346-0000	D		2	AIR GUIDE	
040	276347-0000	D		1	AIR DISTRIBUTOR	
050	276348-0000	D		1	AIR DISTRIBUTOR	
080	573841-0000	R		2	STEERING RAIL	
170	246965-0000	-		2	STOP	
TBA 0500B or TBA 0750B or TBA 1000B or TBA 1055B						
010	276346-0000	D		2	AIR GUIDE	
040	276347-0000	D		1	AIR DISTRIBUTOR	
050	276348-0000	D		1	AIR DISTRIBUTOR	
080	526502-0000	R		2	STEERING RAIL	
170	246965-0000	-		2	STOP	
TBA 0750S						
010	276346-0000	D		2	AIR GUIDE	
040	276347-0000	D		1	AIR DISTRIBUTOR	
050	276348-0000	D		1	AIR DISTRIBUTOR	
080	544301-0000	R		2	STEERING RAIL	
170	246965-0000	-		2	STOP	
TBA 0375S						
010	434972-0000	D		2	AIR GUIDE	
040	434973-0000	D		1	AIR DISTRIBUTOR	
050	434974-0000	D		1	AIR DISTRIBUTOR	
080	527647-0001	R		2	STEERING RAIL	
170	434976-0000	-		2	STOP	
TBA 0355B or TBA 0400B or TBA 0500S						
010	434972-0000	D		2	AIR GUIDE	
040	434973-0000	D		1	AIR DISTRIBUTOR	
050	434974-0000	D		1	AIR DISTRIBUTOR	
080	527647-0002	R		2	STEERING RAIL	
170	434976-0000	-		2	STOP	

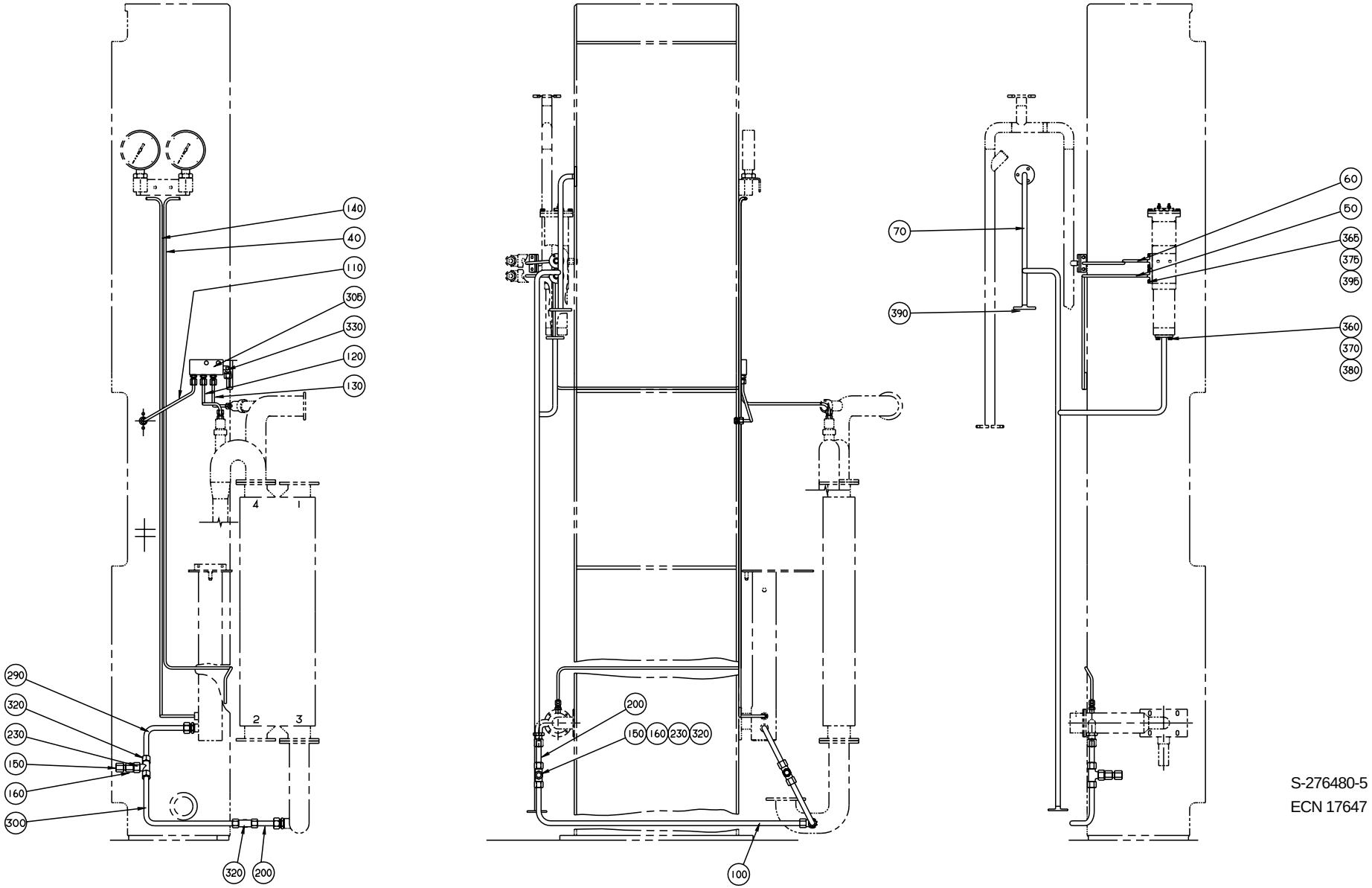

S-276480-5
ECN 17647

Pos	Part No	SP	UN	Qty	Description	Page No
Common parts						
040	451053-0000	-		1	PIPE	
050	554448-0000	-		1	PIPE	
060	554449-0000	-		1	PIPE	
070	554583-0000	-		1	PIPE	
100	297347-0000	-		1	PIPE	
110	464307-0000	-		1	PIPE BEND	
120	464308-0000	D		1	PIPE	
130	464309-0000	D		1	PIPE	
140	479230-0000	-		1	PIPE	
150	209145-0000	M		2	THROTTLE SCREW	
160	209146-0000	M		2	BARRIER NUT	
200	276490-0000	-		2	PIPE	
230	279589-0000	R		2	NUT	
290	479231-0000	-		1	PIPE	
300	479232-0000	-		1	PIPE	
305	464018-0000	-		1	JUNCTION BLOCK	
320	90030-0058	-		3	T-PIPE CONNECTION T-12	
330	90030-0137	-		1	ELBOW CONNECTION WA 6-R1/8"	
340	90030-0184	-		3	STRAIGHT CONNECTION GA-6-G1/8"	
360	312105-0366	-		2	SCREW M6S ISO 4017 M6X12 A280	
365	312105-0327	-		4	SCREW M6S ISO 4017 M5X12 A280	
370	315105-0153	-		2	WASHER,PLAIN ROUND 6,4x12 Stainless	
375	315105-0146	-		4	WASHER,PLAIN ROUND 5,3x10 Stainless	
380	927421-0003	J		1	O-RING 13.3X2.4 SILICON	
390	927422-0004	J		1	O-RING 29.2X3 SILICON	
395	927421-0001	J		2	O-RING 9.3X2.4 SILICON	

Pos	Part No	SP	UN	Qty	Description	Page No

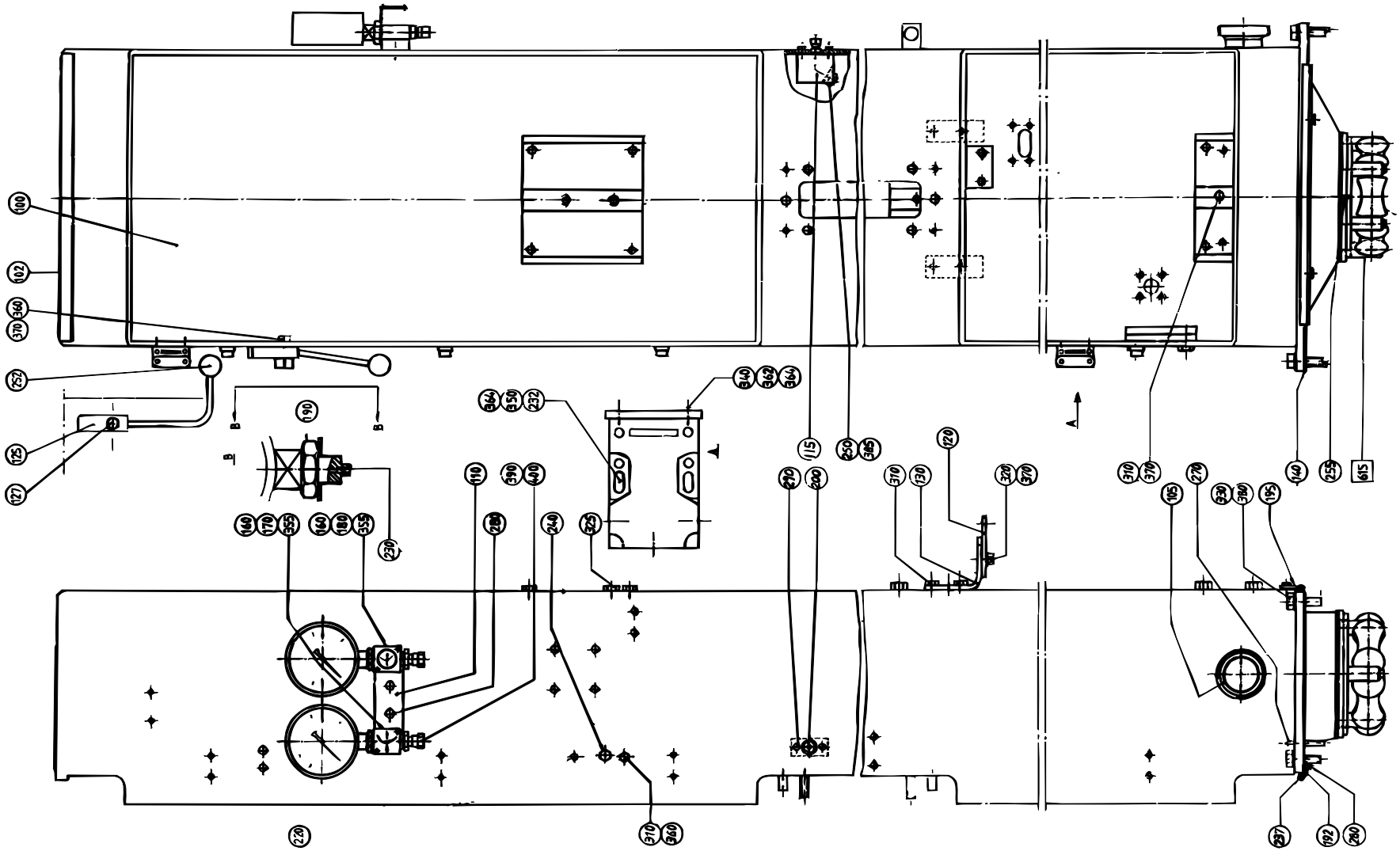

S-278956-8
ECN 19141

Pos	Part No	SP	UN	Qty	Description	Page No
Common parts						
F615	A 466399-0100	-		1	SEAL	**127**
100	573619-0000	-		1	PILLAR	
102	531309-0000	D		1	GASKET	
105	12242-0005	J		1	GASKET	
110	33577-0000	-		1	CANTILEVER	
115	267564-0000	-		1	BRACKET	
120	279860-0000	-		2	ADJUSTMENT PLATE	
125	551786-0000	-		1	LEVER	
127	551784-0000	-		1	FITTING BOLT	
130	282608-0000	-		2	ANGLE	
140	458481-0001	D		1	SHIM	
140	458481-0002	D		1	SHIM	
140	458481-0003	D		1	SHIM	
160	464173-0000	-		2	LABEL HOLDER	
170	464174-0000	-		1	SIGN	
180	464175-0000	-		1	SIGN	
190	90330-0105	-		2	PIPE PARTS,NUT,hexagon, R3/8,	
192	493091-0000	-		1	CLAMP RAIL	
195	530808-0000	-		1	CLAMP RAIL	
200	90030-0051	-		1	STRIGHT PIPECONN.GE6-LR/SY ALT.GA6-LR/RO	
220	90043-0034	R		2	PRESSURE GAUGE	
230	90043-0302	R		2	SCREW	
232	B 90044-0103	R		2	KEY SAFETY SWITCH AZ 15 ZVR	
237	90143-0018	-	MM	950	STRIP	
240	90330-0066	-		1	PLUG,EXTERNAL G-THREAD G1/8"	
250	90424-0031	R		1	NOZZLE	
252	318800-0104	-		1	HANDLES,SPHERICAL KNOB,INT.THRE.,D.30-M8	
255	311103-0238	-		2	PINS,STRAIGHT 3X20	
270	311211-0299	-		2	TAPER PIN GKP6X6X55	
280	312105-0364	-		6	SCREW M6S6X10RFR	
290	312105-0366	-		2	SCREW M6S ISO 4017 M6X12 A280	
310	312105-0447	-		6	SCREW M6S ISO 4017 M8X12 A280	
320	312105-0449	-		2	SCREW M6S ISO 4017 M8x16 A280	
325	312105-0532	-		1	SCREW M6S ISO 4017 M12X20 A280	
330	312105-0540	-		4	SCREW M6S ISO 4017 M12X40 A280	
340	312155-0329	-		4	SCREW MF6S DIN 7991 M5x16 A280	
350	312115-0328	-		4	SCREW 5X14 A4 80	
355	312502-0120	-		4	DRIVE SCREW ROUND HEAD SMS 1549 KDS 0X5	
360	312605-0318	-		2	NUT,HEXAGON,M8 RFR	
362	312812-0314	-		4	NUT,HEXAGON,LOCK,WITH NYLON,M5	
364	315105-0146	-		8	WASHER,PLAIN ROUND 5,3x10 Stainless	
370	315105-0165	-		4	WASHER,PLAIN ROUND 8,4x16 Stainless	
380	315115-0178	-		4	WASHER TBRB 13x24 Stainless	
385	315204-0209	K		1	O-RINGS 10,3X2,4	
390	342797-0122	-		2	BANJO CONNECTION,RINGPIECE 6-1/4"	
400	342980-0304	-		2	BANJO-HOLLOW BOLT COUPL,EXT.THR.01-G1/4"	

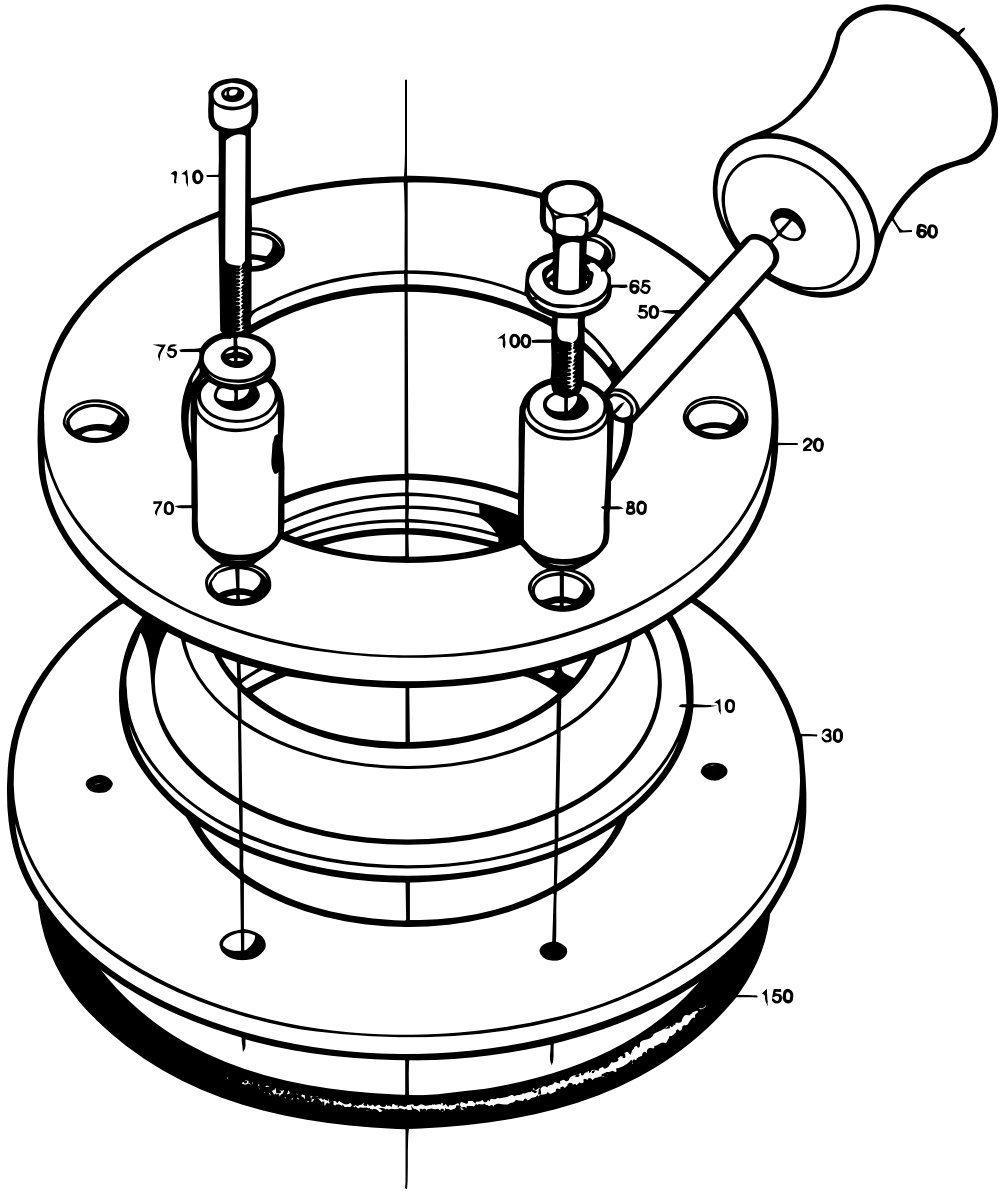

S-466399-1
ECN 20561

Pos	Part No	SP	UN	Qty	Description	Page No
Common parts						
065	6278-0000	D		4	WASHER	
075	466041-0000	-		2	WASHER	
100	312105-0379	-		4	SCREW M6S ISO 4014 M6X45 A280	
110	312115-0382	-		2	SCREW MC6S ISO 4762 M6X60 A280	
150	315204-0324	K		1	O-RINGS 164,3X5,7	
TBA 1000S						
010	567743-0000	K		1	SEAL	
020	466400-0000	-		1	RING	
030	466403-0000	-		1	RING	
050	263655-0009	K		6	SHAFT	
060	573504-0000	K		6	ROLLER	
070	466040-0000	D		2	AXLE SUPPORT	
080	493658-0000	D		4	AXLE SUPPORT	
TBA 0500B or TBA 0750B or TBA 1000B or TBA 1055B						
010	466042-0000	K		1	SEAL	
020	466400-0000	-		1	RING	
030	466403-0000	-		1	RING	
050	263655-0009	K		6	SHAFT	
060	466046-0000	K		6	ROLLER	
070	466040-0000	D		2	AXLE SUPPORT	
080	493658-0000	D		4	AXLE SUPPORT	
TBA 0750S						
010	544015-0000	K		1	SEAL	
020	544013-0000	-		1	RING	
030	544014-0000	-		1	RING	
050	263655-0008	K		6	SHAFT	
060	544012-0000	K		6	ROLLER	
070	466040-0000	D		2	AXLE SUPPORT	
080	493658-0000	D		4	AXLE SUPPORT	
TBA 0500SQ or TBA 1000SQ						
010	579318-0000	K		1	SEAL	
020	466400-0000	-		1	RING	
030	466403-0000	-		1	RING	
050	263655-0009	K		6	SHAFT	
060	579319-0000	K		6	ROLL	
070	580958-0000	D		2	AXLE SUPPORT	
080	580959-0000	D		4	AXLE SUPPORT	
TBA 0375S						
010	466099-0000	K		1	SEAL	
020	466402-0000	-		1	RING	
030	466405-0000	-		1	RING	
050	263655-0007	K		6	SHAFT	
060	466102-0000	K		6	ROLL	
070	466040-0000	D		2	AXLE SUPPORT	
080	493658-0000	D		4	AXLE SUPPORT	
TBA 0355B or TBA 0400B or TBA 0500S						
010	466089-0000	K		1	SEAL	
020	466401-0000	-		1	RING	
030	466404-0000	-		1	RING	
050	263655-0007	K		6	SHAFT	
060	466092-0000	K		6	ROLL	
070	466040-0000	D		2	AXLE SUPPORT	
080	493658-0000	D		4	AXLE SUPPORT	

TOUCH GUARD

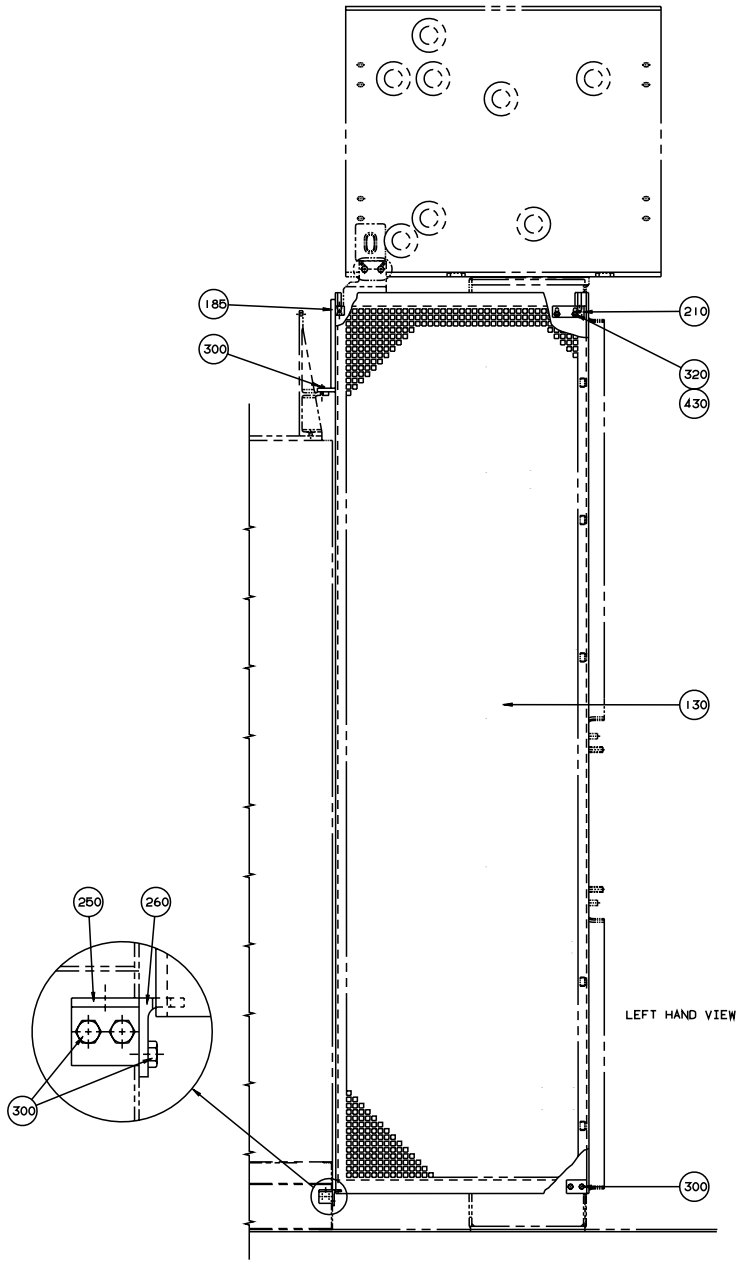

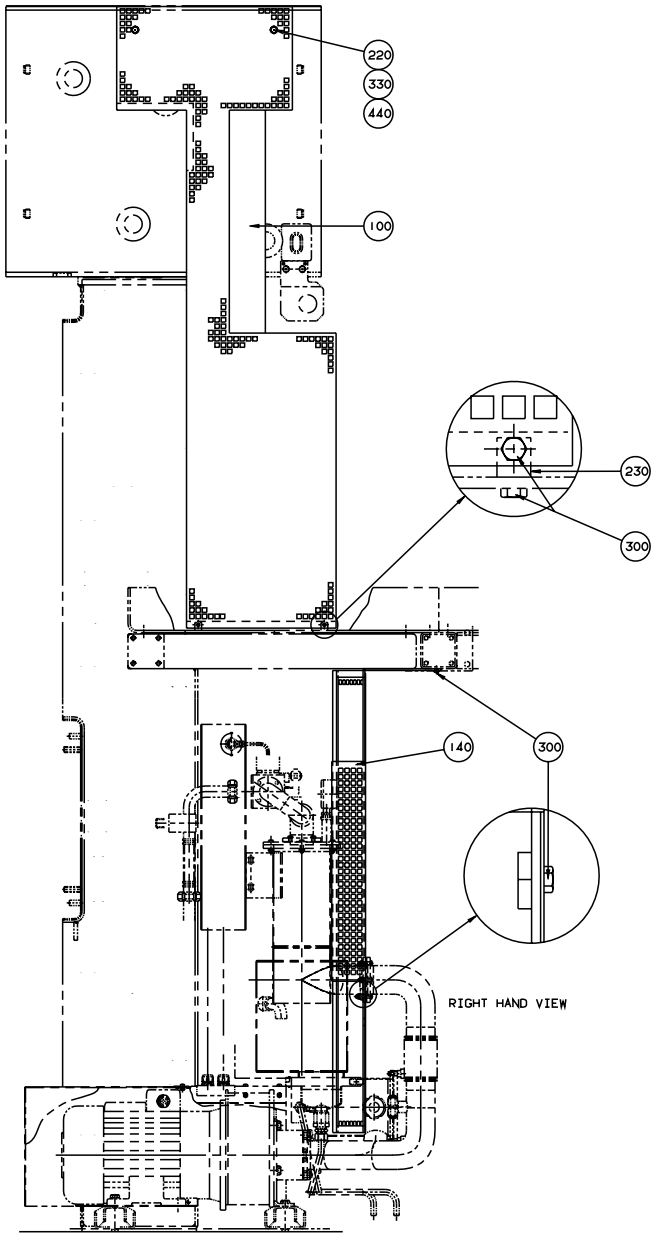

S-279651-5
ECN 19396

Pos	Part No	SP	UN	Qty	Description	Page No
Common parts						
100	752771-0000	-		1	TOUCH GUARD	
130	567023-0000	-		1	TOUCH GUARD	
140	576738-0000	-		1	TOUCH GUARD	
185	294472-0000	-		1	CANTILEVER	
210	267646-0000	-		1	BLOCKING PIECE	
220	267665-0000	-		2	BRACKET	
230	279619-0000	-		2	BRACKET	
250	457752-0000	-		1	CANTILEVER	
260	457753-0000	-		1	BRACKET	
300	312105-0366	-		15	SCREW M6S ISO 4017 M6X12 A280	
320	312105-0372	-		2	SCREW M6S ISO 4017 M6X25 A280	
330	312105-0447	-		2	SCREW M6S ISO 4017 M8X12 A280	
430	315105-0153	-		2	WASHER,PLAIN ROUND 6,4x12 Stainless	
440	315105-0165	-		2	WASHER,PLAIN ROUND 8,4x16 Stainless	

Pos	Part No	SP	UN	Qty	Description	Page No

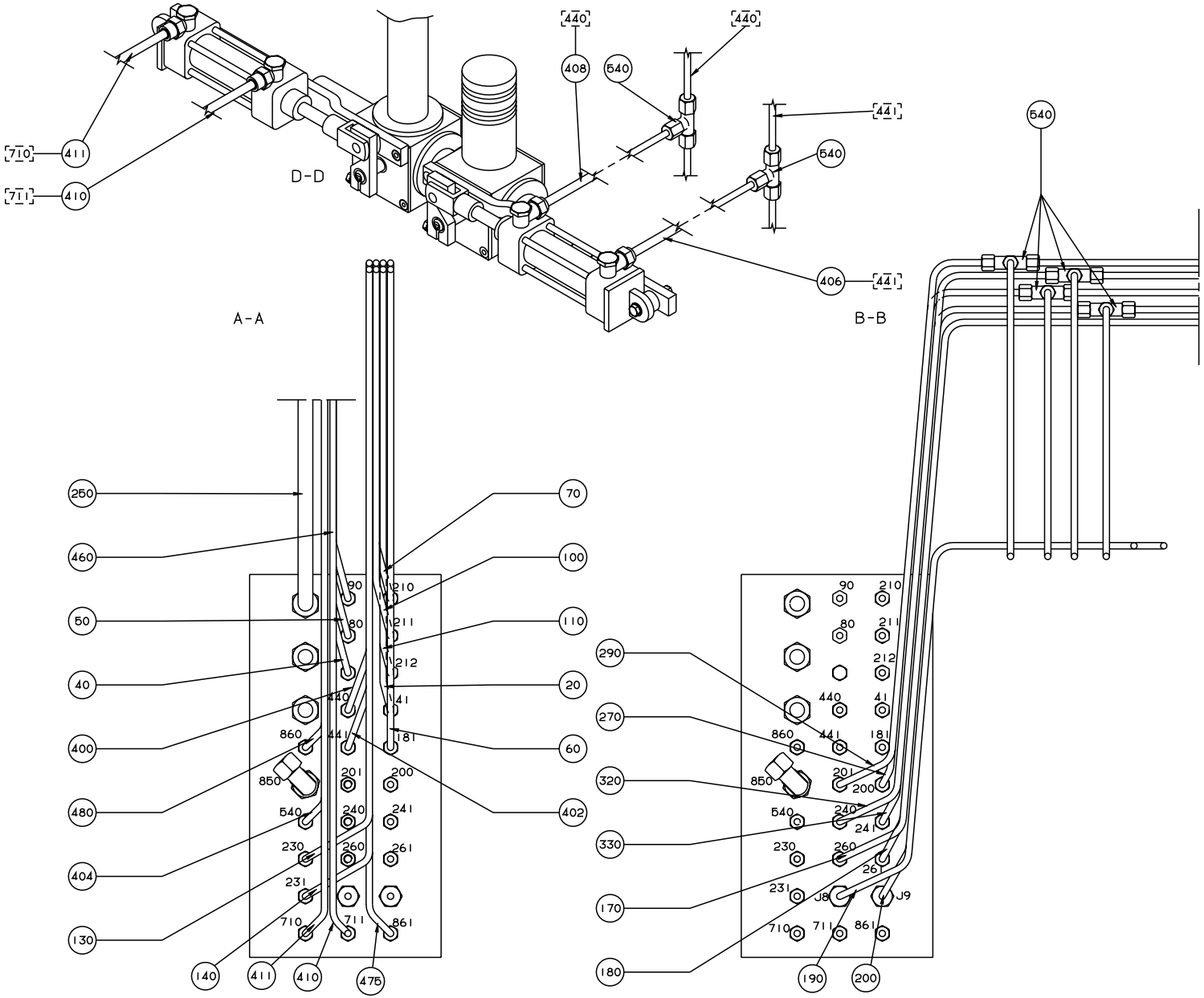

S-282805-13
ECN 17885

Pos	Part No	SP	UN	Qty	Description	Page No
Common parts						
020	532352-0000	-		1	PIPE	
040	554850-0000	-		1	PIPE	
050	451277-0000	-		1	PIPE	
060	544913-0000	-		1	PIPE	
070	532354-0000	-		1	PIPE	
080	451280-0000	-		1	PIPE	
090	451281-0000	-		1	PIPE	
100	532355-0000	-		1	PIPE	
110	532356-0000	-		1	PIPE	
120	451284-0000	-		1	PIPE	
130	451285-0000	-		1	PIPE	
140	451286-0000	-		1	PIPE	
150	451287-0000	-		1	PIPE	
160	451288-0000	-		1	PIPE	
170	451289-0000	-		1	PIPE	
180	451290-0000	-		1	PIPE	
190	451291-0000	-		1	PIPE	
200	451292-0000	-		1	PIPE	
230	564600-0000	-		1	PIPE	
250	549093-0000	-		1	PIPE	
260	560928-0000	-		1	PIPE	
270	451296-0000	-		1	PIPE	
280	451297-0000	-		1	PIPE	
290	451298-0000	-		1	PIPE	
300	451299-0000	-		1	PIPE	
310	451300-0000	-		1	PIPE	
320	451301-0000	-		1	PIPE	
330	451302-0000	-		1	PIPE	
340	451303-0001	-		1	PIPE	
350	451303-0002	-		1	PIPE	
360	451303-0003	-		1	PIPE	
370	451303-0004	-		1	PIPE	
380	451304-0000	-		1	PIPE	
390	451305-0000	-		1	PIPE	
396	479061-0000	-		1	PIPE	
398	479072-0000	-		1	PIPE	
400	479073-0000	-		1	PIPE	
402	479074-0000	-		1	PIPE	
404	532366-0000	-		1	PIPE	
406	555553-0000	-		1	PIPE	
408	555554-0000	-		1	PIPE	
410	555547-0000	-		1	PIPE	
411	555548-0000	-		1	PIPE	
420	450814-0000	-		1	HOLDER	
430	451306-0000	-		1	PIPE	
440	451307-0000	-		1	PIPE	
450	451326-0000	-		1	CLAMPING PLATE	
460	554139-0000	-		1	PIPE	
470	476796-0000	-		1	PIPE	
475	555551-0000	-		1	PIPE	
480	555552-0000	-		1	PIPE	
510	90030-0096	-		1	ELBOW CONNECTION W-12	
515	90140-0021	-		1	ELBOW 90,INT./EXT.THREAD R1/8"	
520	90166-0124	-	MM	520	HOSE 4,0/6 PA 11/12 Transp.	
530	90224-0309	-		12	CONNECTION	
540	90224-0310	-		7	CONNECTION	
550	90235-0048	D		1	VALVE	
553	311103-0361	-		2	PIN,STRAIGHT 6x40 Stainless	
555	312105-0327	-		2	SCREW M6S ISO 4017 M5X12 A280	
560	312105-0368	-		2	SCREW M6S ISO 4017 M6X16 A280	
562	315105-0146	-		2	WASHER,PLAIN ROUND 5,3x10 Stainless	
563	315204-0208	K		1	O-RINGS 9,3X2,4	
565	315233-0109	-		1	PLAIN ROUND,NYLON R1/8"	
570	342706-0130	-		2	ACCESSORIES,INSERT SLEEVE 6	
580	90224-0307	-		1	CONNECTION	
2"						
010	476794-0001	-		1	PIPE	
3"						
010	476794-0002	-		1	PIPE	

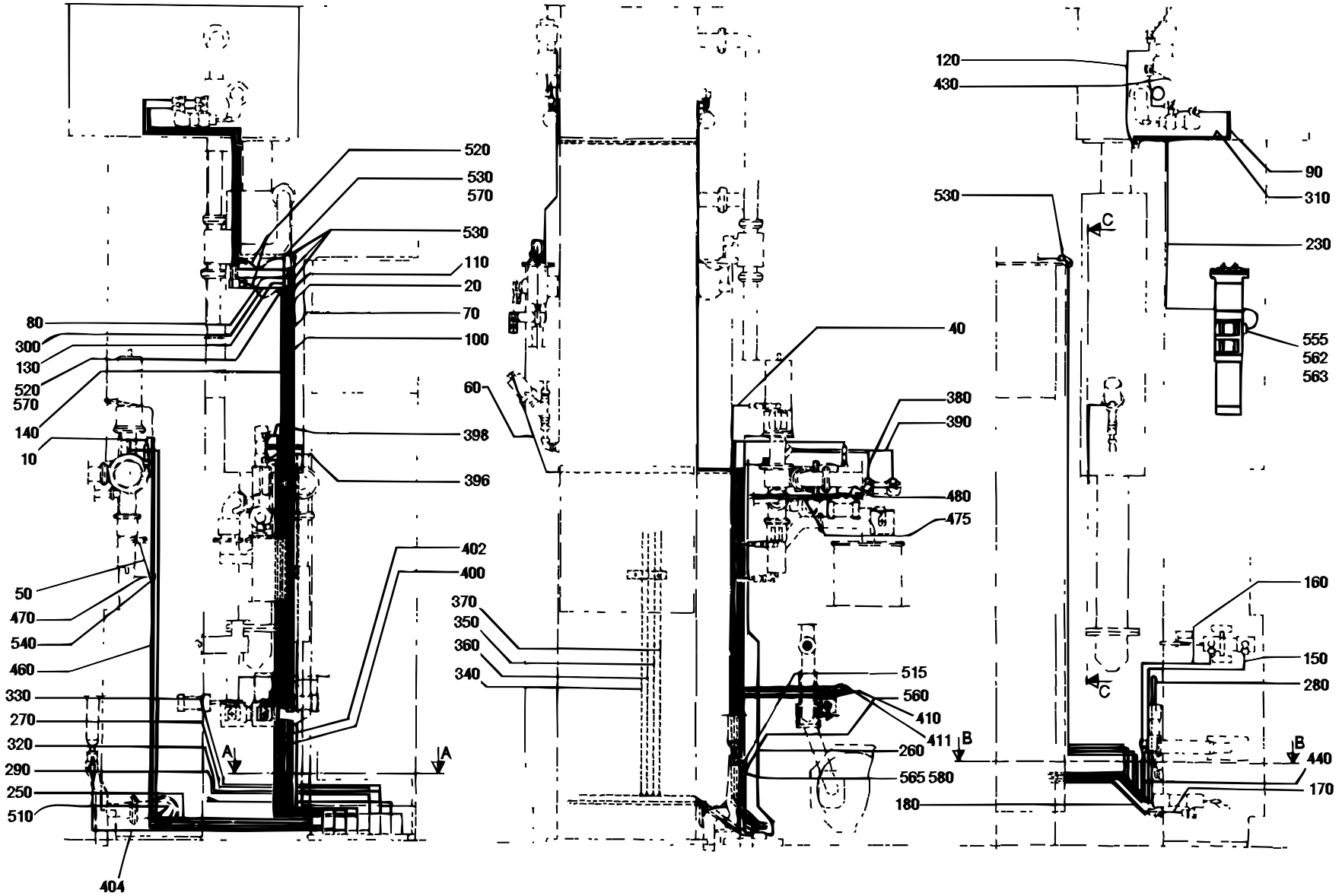

S-282805-14
ECN 20501

Pos	Part No	SP	UN	Qty	Description	Page No
Common parts						
020	532352-0000	-		1	PIPE	
040	554850-0000	-		1	PIPE	
050	451277-0000	-		1	PIPE	
060	544913-0000	-		1	PIPE	
070	532354-0000	-		1	PIPE	
080	451280-0000	-		1	PIPE	
090	451281-0000	-		1	PIPE	
100	532355-0000	-		1	PIPE	
110	532356-0000	-		1	PIPE	
120	451284-0000	-		1	PIPE	
130	451285-0000	-		1	PIPE	
140	451286-0000	-		1	PIPE	
150	451287-0000	-		1	PIPE	
160	451288-0000	-		1	PIPE	
170	451289-0000	-		1	PIPE	
180	451290-0000	-		1	PIPE	
190	451291-0000	-		1	PIPE	
200	451292-0000	-		1	PIPE	
230	564600-0000	-		1	PIPE	
250	549093-0000	-		1	PIPE	
260	560928-0000	-		1	PIPE	
270	451296-0000	-		1	PIPE	
280	451297-0000	-		1	PIPE	
290	451298-0000	-		1	PIPE	
300	451299-0000	-		1	PIPE	
310	451300-0000	-		1	PIPE	
320	451301-0000	-		1	PIPE	
330	451302-0000	-		1	PIPE	
340	451303-0001	-		1	PIPE	
350	451303-0002	-		1	PIPE	
360	451303-0003	-		1	PIPE	
370	451303-0004	-		1	PIPE	
380	451304-0000	-		1	PIPE	
390	451305-0000	-		1	PIPE	
396	479061-0000	-		1	PIPE	
398	479072-0000	-		1	PIPE	
400	479073-0000	-		1	PIPE	
402	479074-0000	-		1	PIPE	
404	532366-0000	-		1	PIPE	
406	555553-0000	-		1	PIPE	
408	555554-0000	-		1	PIPE	
410	555547-0000	-		1	PIPE	
411	555548-0000	-		1	PIPE	
420	450814-0000	-		1	HOLDER	
430	451306-0000	-		1	PIPE	
440	451307-0000	-		1	PIPE	
450	451326-0000	-		1	CLAMPING PLATE	
460	554139-0000	-		1	PIPE	
470	476796-0000	-		1	PIPE	
475	555551-0000	-		1	PIPE	
480	555552-0000	-		1	PIPE	
510	90030-0096	-		1	ELBOW CONNECTION W-12	
515	90140-0021	-		1	ELBOW 90,INT./EXT.THREAD R1/8"	
520	90166-0124	-	MM	520	HOSE 4,0/6 PA 11/12 Transp.	
530	90224-0309	-		12	CONNECTION	
540	90224-0310	-		7	CONNECTION	
550	90235-0048	D		1	VALVE	
553	311103-0361	-		2	PIN,STRAIGHT 6x40 Stainless	
555	312105-0327	-		2	SCREW M6S ISO 4017 M5X12 A280	
560	312105-0368	-		2	SCREW M6S ISO 4017 M6X16 A280	
562	315105-0146	-		2	WASHER,PLAIN ROUND 5,3x10 Stainless	
563	315204-0208	K		1	O-RINGS 9,3X2,4	
565	315233-0109	-		1	PLAIN ROUND,NYLON R1/8"	
570	342706-0130	-		2	ACCESSORIES,INSERT SLEEVE 6	
580	90224-0307	-		1	CONNECTION	
2"						
010	476794-0001	-		1	PIPE	
3"						
010	476794-0002	-		1	PIPE	

CLEANING PIPE

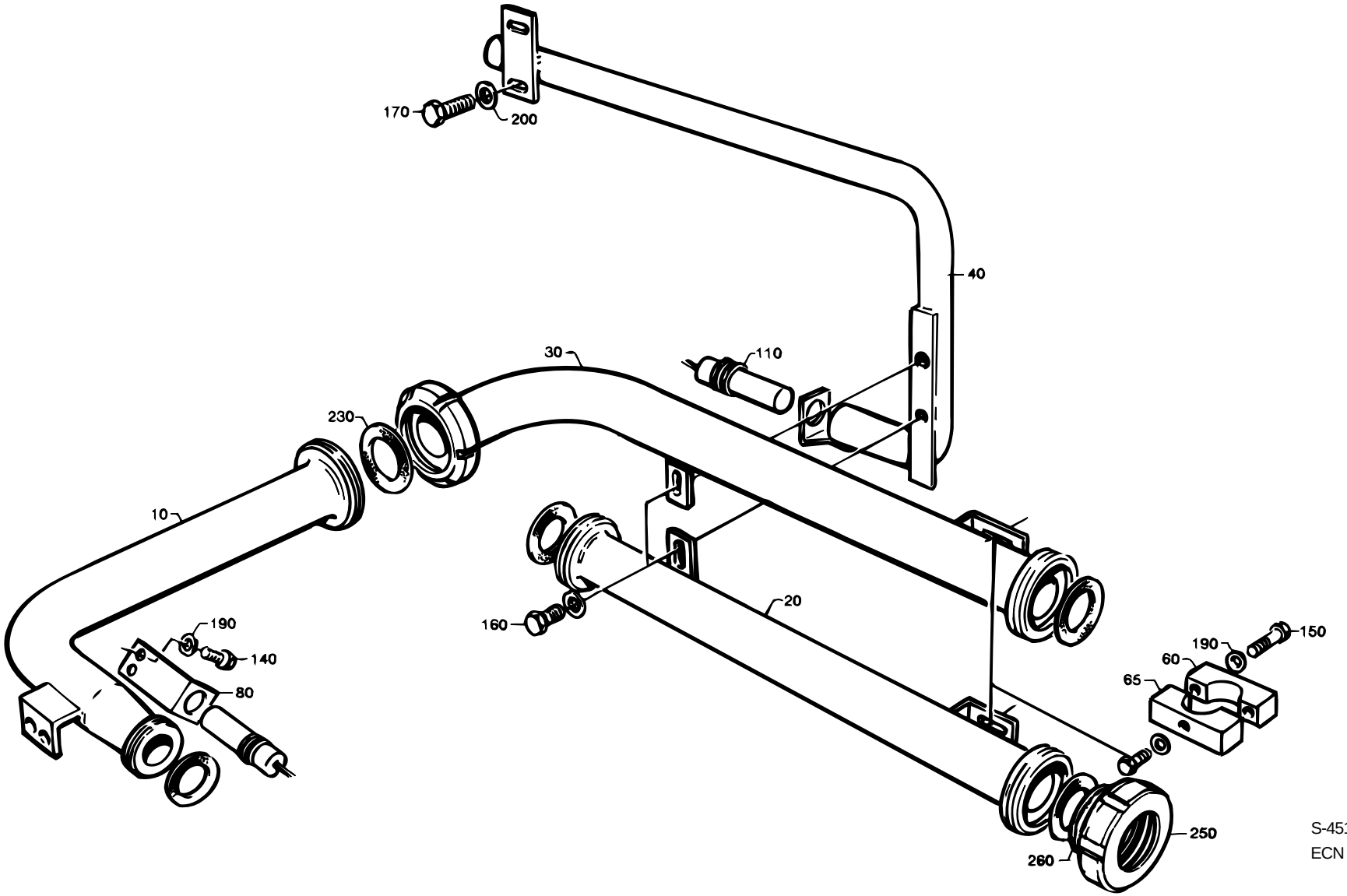

S-451131-1
ECN 14605

Pos	Part No	SP	UN	Qty	Description	Page No
Common parts						
010	449964-0000	D		1	PIPE	
020	449966-0000	D		1	PIPE	
030	449967-0000	D		1	PIPE	
040	450335-0000	D		1	PIPE	
060	457614-0001	D		2	CLAMPING PIECE	
065	457614-0002	D		2	CLAMPING PIECE	
080	449960-0000	-		1	BRACKET	
110	90044-0099	M		2	PROXIMITY SWITCH IG REPBY 0090044-0126	
140	312105-0364	-		4	SCREW M6S6X10RFR	
150	312105-0372	-		4	SCREW M6S ISO 4017 M6X25 A280	
160	312105-0447	-		2	SCREW M6S ISO 4017 M8X12 A280	
170	312105-0449	-		2	SCREW M6S ISO 4017 M8x16 A280	
190	315105-0153	-		6	WASHER,PLAIN ROUND 6,4x12 Stainless	
200	315105-0165	-		4	WASHER,PLAIN ROUND 8,4x16 Stainless	
220	315250-0101	I		1	GASKET 32/25	
230	315250-0103	I		3	GASKET 48/38	
250	342803-0103	-		2	NUT 38	
260	342812-0203	-		2	SLEEVE	

Pos	Part No	SP	UN	Qty	Description	Page No

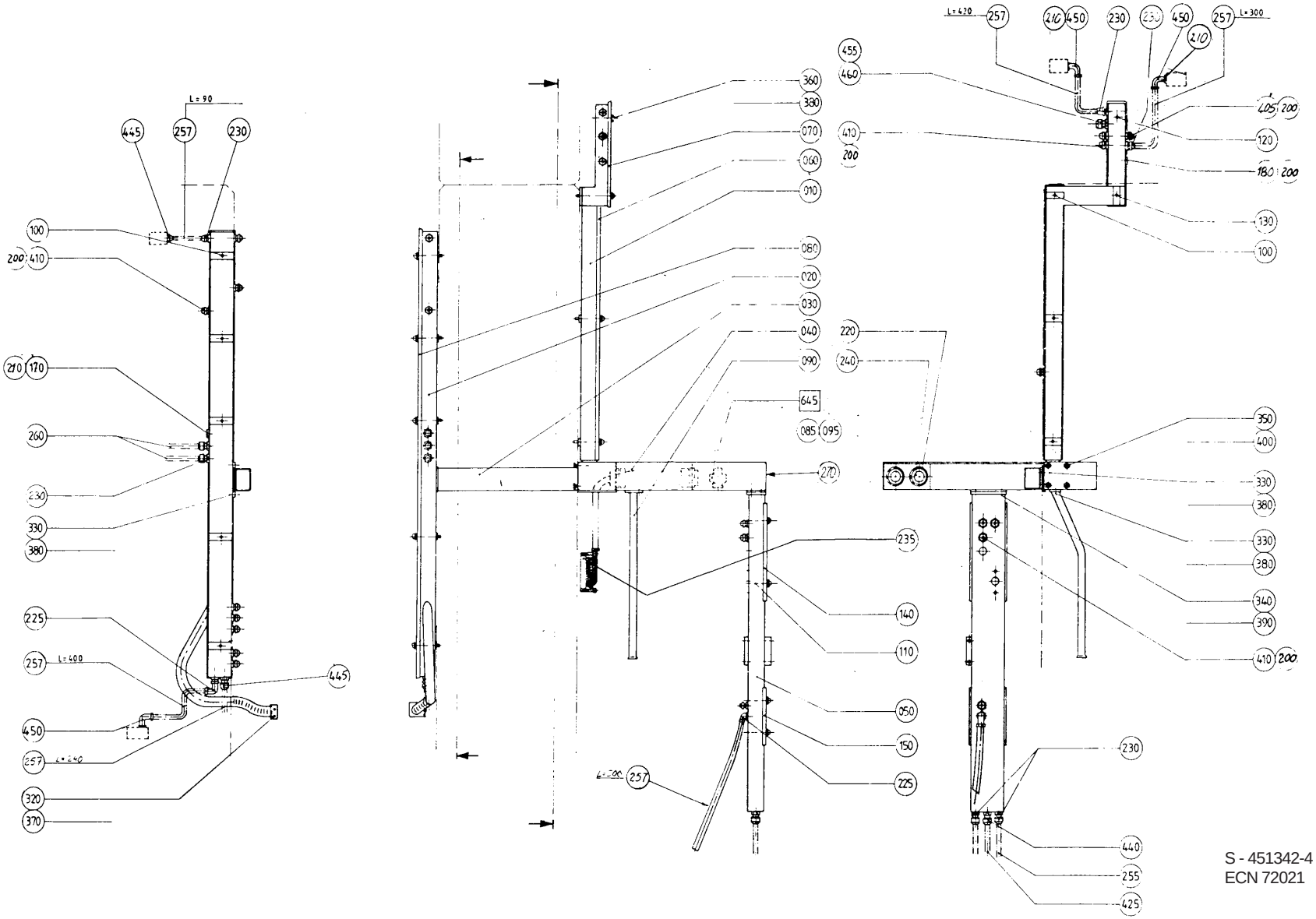

S - 451342-4
ECN 72021

Pos	Part No	SP	UN	Qty	Description	Page No
Common parts						
645	A 451365-0200	-		1	TERMINAL PLINTH	**139**
010	451099-0000	-		1	CABLE TRENCH	
020	561571-0000	-		1	CABLE TRENCH	
030	B 451101-0000	-		1	CABLE TRENCH	
040	B 451339-0000	-		1	BOXSTAINLESS	
050	451340-0000	-		1	CHANNELSTAINLESS	
060	B 451102-0000	-		1	COVER STAINLESS	
070	B 451103-0000	-		1	LID	
080	B 451104-0000	-		1	LID	
085	556682-0000	-		1	CABLE INLET PLATE 93x140mm	
090	451338-0000	-		1	PIPE	
095	556683-0000	-		1	RUBBERGASKET 90x140mm	
100	451085-0002	-		8	SPACER SCREW	
110	451085-0003	-		4	SPACER SCREW	
120	451085-0004	-		1	SPACER SCREW	
130	451085-0005	-		1	SPACER SCREW	
140	B 451341-0001	-		1	LID	
150	B 451341-0002	-		1	LID	
170	90002-0009	-		1	BLANK-OFF PLUG 18.6	
180	90002-0013	-		1	BLANK-OFF PLUG 15,2	
200	90099-0001	-		21	NUT PR 15,2 BRASS	
210	90099-0002	-		3	NUT Pr 18,6 Brass	
220	90012-0059	D		4	GLAND	
225	90012-0064	-		2	GLAND	
230	90012-0063	-		7	Cable Gland PR 15,2	
235	90110-0128	-		2	PLUG 24-POL Harting	
240	90152-0029	-	MM	500	HOSE 35/41	
255	90152-0033	-	MM	180	Spiral Conduit for PR 15,2(PG 9)	
257	90152-0033	-	MM	2300	Spiral Conduit for PR 15,2(PG 9)	
260	90152-0033	-	MM	600	Spiral Conduit for PR 15,2(PG 9)	
270	90194-0016	-		1	SIGN "FLASH SIGN" 50X50MM	
320	312105-0287	-		2	SCREW M6S ISO 4017 M4x8 A280	
330	312105-0364	-		6	SCREW M6S6X10RFR	
340	312115-0451	-		2	SCREW MC6S ISO 4762 M8X20 A280	
350	312105-0491	-		4	SCREW M6S ISO 4017 M10X20 A280	
360	312705-0316	-		14	NUTS,DOMED CAP,HEXAGON,M6	
370	315105-0136	-		2	WASHER,PLAIN ROUND 4,3x8 Stainless	
380	315105-0153	-		20	WASHER,PLAIN ROUND 6,4x12 Stainless	
390	315105-0165	-		2	WASHER,PLAIN ROUND 8,4x16 Stainless	
400	315105-0173	-		4	WASHER,PLAIN ROUND 10,5x22 STAINLESS	
405	352103-0100	-		1	CABLE GLAND STR 9;PR15,2	
410	352103-0101	-		15	CABLE GLAND ST 9	
425	352135-0106	-	MM	180	Spiral Conduit Di=16 mm	
440	352136-0127	-		2	GLAND FITTING PR 18,6	
445	352136-0113	-		2	GLAND FITTING PR18,6/PG11 Di=12mm	
450	352137-0113	-		3	COND.FITTING Pr 18,6 Di=12mm	
455	352103-0111	-		1	CABLE GLAND ST 16	
460	90099-0003	-		1	NUT	

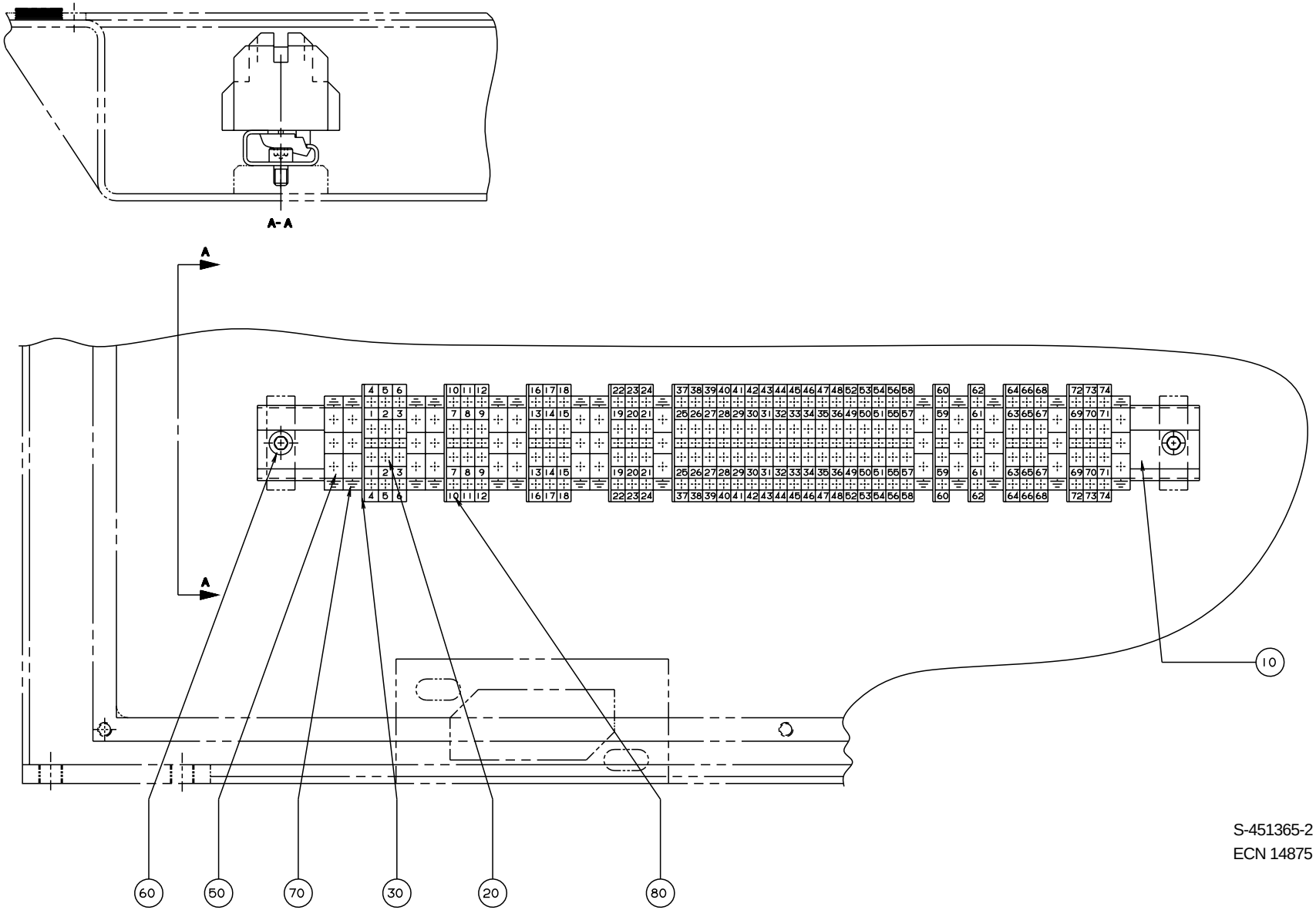

S-451365-2
ECN 14875

Pos	Part No	SP	UN	Qty	Description	Page No
Common parts						
010	10793-0036	-		1	MOUNTINGRAIL TS32 L=400MM	
020	90077-0090	-		37	FEED THROUGH TERMINAL DK4 for TS32	
030	90077-0309	-		9	END PLATE	
050	90135-0021	-		14	EARTHING CLAMP	
060	312115-0364	-		2	SCREW 6X10 A4 80	
070	359011-0202	-		18	SIGN BOARD(GROUND)	
080	359011-0800	-		2	MARKING PLates BSFW 51-100	

Pos	Part No	SP	UN	Qty	Description	Page No

This page is intentionally left blank

Pos	Part No	SP	UN	Qty	Description	Page No
0375S						
030	526689-0000	-		1	DISTRIBUTOR WING	
110	499387-0000	-		1	PRESSURE ROLLER	
115	466099-0000	-		1	SEAL	
0355B or 0400B or 0500S						
030	526689-0000	-		1	DISTRIBUTOR WING	
110	499387-0000	-		1	PRESSURE ROLLER	
115	466089-0000	-		1	SEAL	
0500B or 0750B or 1000B or 1055B						
030	243851-0000	-		1	GASKET	
110	232979-0000	-		1	PRESSURE ROLLER	
115	466042-0000	-		1	SEAL	
0500SQ or 1000SQ						
030	569104-0000	-		1	DISTRIBUTOR WING	
110	499387-0000	-		1	PRESSURE ROLLER	
115	579318-0000	-		1	SEAL	
0750S						
030	526689-0000	-		1	DISTRIBUTOR WING	
110	499387-0000	-		1	PRESSURE ROLLER	
115	544015-0000	-		1	SEAL	
1000S						
030	569104-0000	-		1	DISTRIBUTOR WING	
110	499387-0000	-		1	PRESSURE ROLLER	
115	567743-0000	-		1	SEAL	
Common parts						
F010	A 499255-0200	-		1	SEAL KIT	**143**
033	476358-0000	-		1	COIL HEATER	
040	12242-0003	-		1	GASKET	
050	12242-0005	-		1	GASKET	
100	230551-0000	-		1	GASKET	
120	531738-0000	-		2	GASKET	
130	531739-0000	-		1	GASKET	
140	531740-0000	-		1	GASKET	
160	531742-0000	-		1	GASKET	
190	531744-0000	-		1	GASKET	
195	531745-0000	-		1	GASKET	
200	531764-0000	-		1	GASKET	
205	531734-0000	-		1	GASKET	
210	90214-0138	-		2	BEARINGS,BALL BEARING,STAINLESS	
220	90242-0084	-		2	O-RING	
230	315204-0217	-		2	O-RINGS 24,2X3	

Pos	Part No	SP	UN	Qty	Description	Page No

This page is intentionally left blank

Pos	Part No	SP	UN	Qty	Description	Page No
Common parts						
010	530589-0000	-		4	SEAL RING	
020	530588-0000	-		1	SEAL RING	
030	533169-0000	-		1	DIAPHRAGM	
060	90207-0363	-		1	GASKET	
070	90207-0365	-		1	GASKET	
080	539212-0000	-		1	GASKET	
100	315204-0215	-		4	O-RINGS 19,2X3	
110	315202-0301	-		1	O-RINGS 49,5X3	

Pos	Part No	SP	UN	Qty	Description	Page No

This page is intentionally left blank

Pos	Part No	SP	UN	Qty	Description	Page No
90044-0103						
	90044-0310	-		1	KEY FOR SAFETY SWITCH -103	
90069-0116						
	90056-0096	K		1	WORM GEAR	
	90069-0364	K		1	CARBON BRUSH	
	90069-0365	K		1	CARBON BRUSH	
90125-0020						
	270926-0000	K		6	NUT	
	270927-0000	K		3	SCREW	
	294464-0000	K		1	BASE PLATE	
90206-0070						
	90206-0326	-		1	CONNECTION BOX	
90239-0166						
	90285-0094	K		1	SEAL KIT	
90239-0189						
	90285-0094	K		1	SEAL KIT	
90239-0196						
	90285-0119	K		1	SEAL AND WEAR-AND-TEAR PA	
90239-0779						
	90239-0442	K		1	SEAL KIT	
90239-0951						
	90239-0443	K		1	SEAL KIT	
90270-0011						
	90270-0338	K		1	SPARE PARTS KIT	
	90270-0345	K		1	SHIMS	
	90270-0346	K		1	GASKET	
	90270-0348	-		1	MOTOR ELMO RA112/MB42083	
90277-0055						
	90277-0339	-		1	O-RING	
90326-0048						
	90326-0304	-		1	LEAD IN	
451101-0000						
	90143-0014	D	M	1	STRIP	
	90153-0017	D	L	1	ADHESIVE 160 mL	
451102-0000						
	90143-0011	D	M	1	STRIP	
	90153-0017	D	L	1	ADHESIVE 160 mL	
451103-0000						
	90143-0011	D	M	1	STRIP	
	90153-0017	D	L	1	ADHESIVE 160 mL	
451104-0000						
	90143-0011	D	M	1	STRIP	
	90153-0017	D	L	1	ADHESIVE 160 mL	
451339-0000						
	90143-0011	D	M	1	STRIP	
	90153-0017	D	L	1	ADHESIVE 160 mL	
451430-0000						
	312605-0312	-		4	NUT,HEXAGON,M4 RFR	
466474-0000						
0010	1282023-0001	-		1	CAST WORKPIECE	
484189-0000						
	90148-0032	-		1	HOSE	
499826-0000						
	342811-0103	-		1	NIPPLE ANSL.38	
531034-0000						
	342803-0103	-		1	NUT 38	
	342808-0103	-		2	ELBOW PIPE38	
	342811-0103	-		2	NIPPLE ANSL.38	
	342812-0103	-		1	SLEEVE ANSL.38	
571088-0000						
	90360-0304	D		1	SPARE PART KIT	

SPC

Spare Parts Catalogue

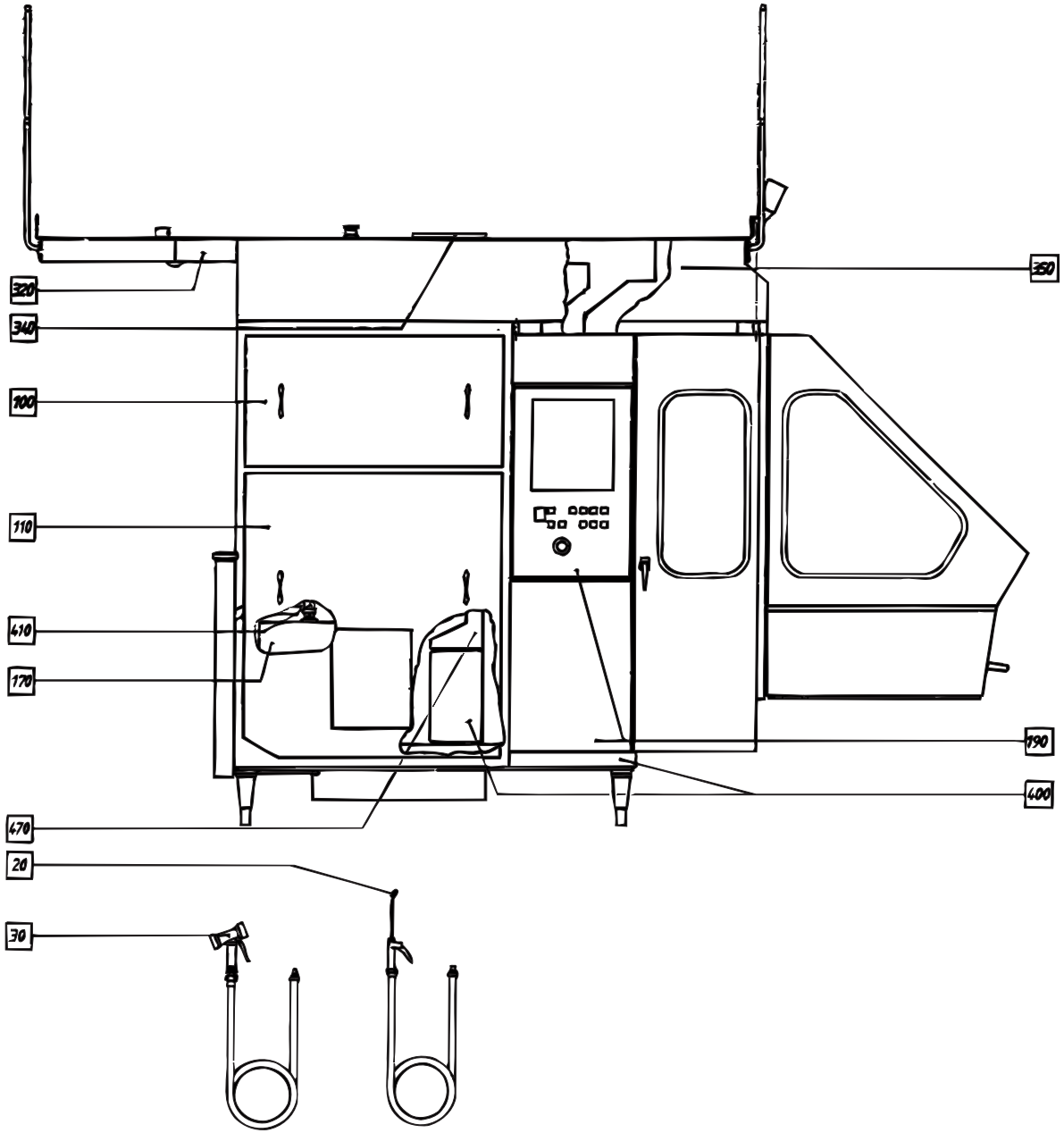

S-648012-11
ECN 15046

Pos	Part No	SP	UN	Qty	Description	Page No
TBA/8						
F050	A 265889-0300	-		1	SWITCH (MONITOR)	**157**
F065	A 268015-0100	-		1	BENDING ROLLER BRACKET	**159**
F170	A 561256-0300	-		1	PEROXIDE PIPE	**169**
F190	A 545099-0200	-		1	SIDE GUARD	**187**
F210	A 545100-0200	-		1	SIDE GUARD, RIGHT	**189**
F230	A 297808-0500	-		1	CLEANING EQUIPMENT	**191**
F260	A 297604-0400	-		1	HOOD	**197**, **199**
F330	A 440415-0200	-		1	TRANSFORMER	**217**
F400	A 440537-0500	-		1	MACHINE BODY	**227**, **229**, **231**
F410	A 442463-0400	-		1	PIPE WORK	**235**
F420	A 445537-0200	-		1	PIPE WORK-HYDRAULIC	**237**
F440	A 574601-0100	-		1	VALVE PANEL	**243**, **245**
F455	A 449168-0300	-		1	CLEANING SYSTEM	**249**
F470	A 450293-0500	-		1	CABLE DUCT	**259**
F490	A 575797-0100	-		1	FLOWMETER GROUP	**261**
F510	A 450788-0600	-		1	PIPE WORK-PNEUMATIC	**263**, **265**, **267**, **269**
F540	A 450840-0400	-		1	LIFTING UNIT	**275**
Common parts						
F020	A 230922-0100	-		1	AIR JET GUN	**153**
F030	A 493614-0100	-		1	SPRAY GUN	**155**
F070	A 269301-0500	-		1	SIDE BOX RIGHT	**161**
F100	A 269322-0300	-		1	COVER UPPER	**163**
F110	A 269324-0400	-		1	HATCH	**165**
F140	A 279979-0500	-		1	CENTRAL LUBRICATION	**167**
F280	A 434707-0300	-		1	HYDRAULIC SYSTEM	**205**
F310	A 440098-0300	-		1	CRANK BRACKET	**213**
F320	A 440384-0500	-		1	PLATFORM	**215**
F340	A 440422-0600	-		1	BOTTOM PLATE	**219**
F350	A 440437-0300	-		1	BOX LEFT	**221**
F390	A 440474-0100	-		1	TUBE FLUSHING DEVICE	**225**
F430	A 575392-0100	-		1	VALVE PANEL LOWER	**239**, **241**
F450	A 449930-0500	-		1	CONNECTION BOX	**247**
F460	A 449932-0500	-		1	PIPE WORK-WATER	**253**, **255**, **257**
F520	A 450792-0100	-		1	DETERGENT PUMP	**271**
F530	A 450824-0200	-		1	DOOR	**273**
F560	A 450883-0400	-		1	PROTECTION	**279**
F570	A 451348-0200	-		1	CONNECTION BOX	**283**

Pos	Part No	SP	UN	Qty	Description	Page No

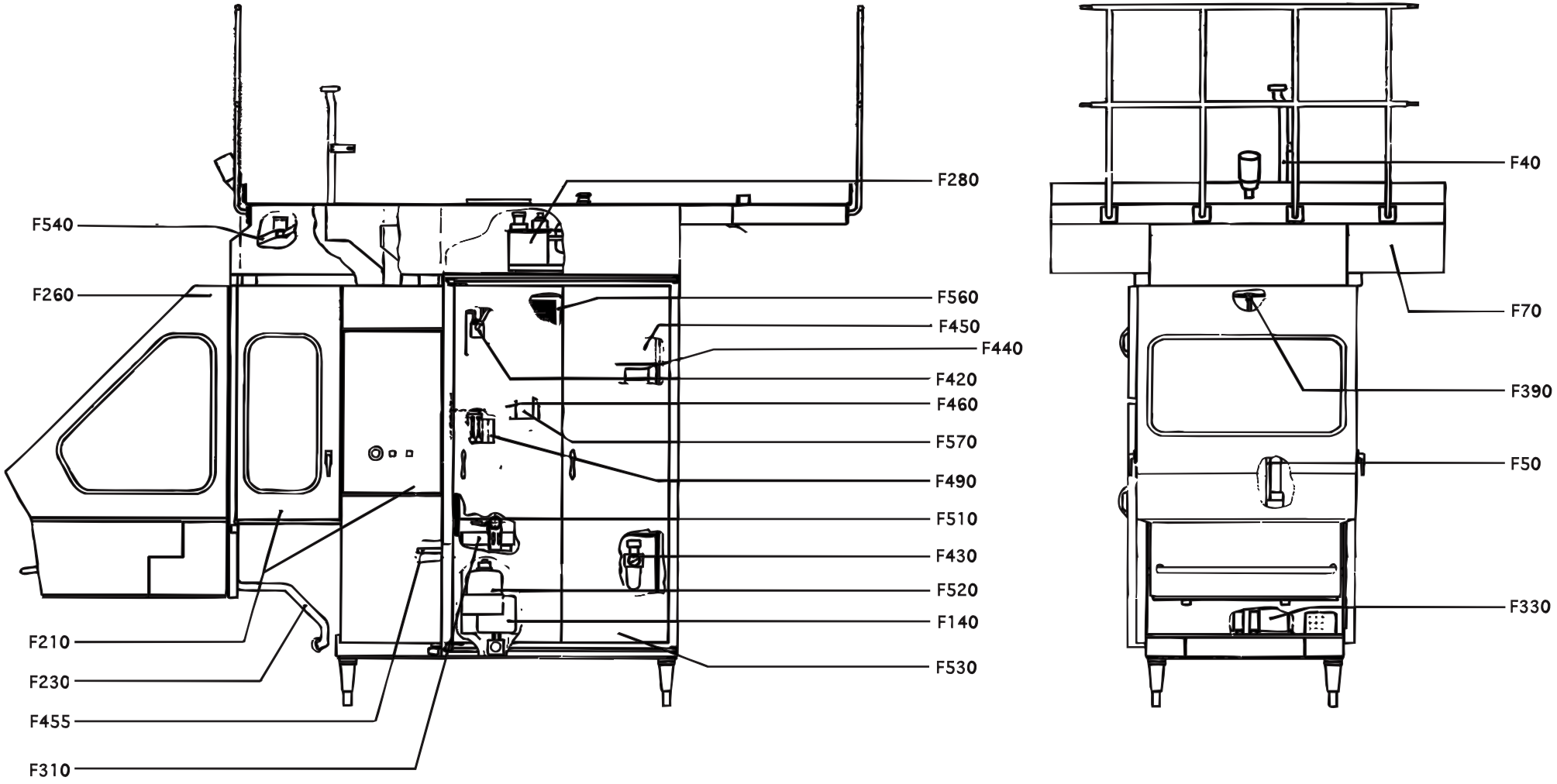

S-648012-12
ECN 22773

Pos	Part No	SP	UN	Qty	Description	Page No
TBA/8						
F050	A 265889-0300	-		1	SWITCH (MONITOR)	**157**
F065	A 268015-0100	-		1	BENDING ROLLER BRACKET	**159**
F170	A 561256-0300	-		1	PEROXIDE PIPE	**169**
F190	A 545099-0200	-		1	SIDE GUARD	**187**
F210	A 545100-0200	-		1	SIDE GUARD, RIGHT	**189**
F230	A 297808-0500	-		1	CLEANING EQUIPMENT	**191**
F260	A 297604-0400	-		1	HOOD	**197**, **199**
F330	A 440415-0200	-		1	TRANSFORMER	**217**
F400	A 440537-0500	-		1	MACHINE BODY	**227**, **229**, **231**
F410	A 442463-0400	-		1	PIPE WORK	**235**
F420	A 445537-0200	-		1	PIPE WORK-HYDRAULIC	**237**
F440	A 574601-0100	-		1	VALVE PANEL	**243**, **245**
F455	A 449168-0300	-		1	CLEANING SYSTEM	**249**
F470	A 450293-0500	-		1	CABLE DUCT	**259**
F490	A 575797-0100	-		1	FLOWMETER GROUP	**261**
F510	A 450788-0600	-		1	PIPE WORK-PNEUMATIC	**263**, **265**, **267**, **269**
F540	A 450840-0400	-		1	LIFTING UNIT	**275**
Common parts						
F020	A 230922-0100	-		1	AIR JET GUN	**153**
F030	A 493614-0100	-		1	SPRAY GUN	**155**
F070	A 269301-0500	-		1	SIDE BOX RIGHT	**161**
F100	A 269322-0300	-		1	COVER UPPER	**163**
F110	A 269324-0400	-		1	HATCH	**165**
F140	A 279979-0500	-		1	CENTRAL LUBRICATION	**167**
F280	A 434707-0300	-		1	HYDRAULIC SYSTEM	**205**
F310	A 440098-0300	-		1	CRANK BRACKET	**213**
F320	A 440384-0500	-		1	PLATFORM	**215**
F340	A 440422-0600	-		1	BOTTOM PLATE	**219**
F350	A 440437-0300	-		1	BOX LEFT	**221**
F390	A 440474-0100	-		1	TUBE FLUSHING DEVICE	**225**
F430	A 575392-0100	-		1	VALVE PANEL LOWER	**239**, **241**
F450	A 449930-0500	-		1	CONNECTION BOX	**247**
F460	A 449932-0500	-		1	PIPE WORK-WATER	**253**, **255**, **257**
F520	A 450792-0100	-		1	DETERGENT PUMP	**271**
F530	A 450824-0200	-		1	DOOR	**273**
F560	A 450883-0400	-		1	PROTECTION	**279**
F570	A 451348-0200	-		1	CONNECTION BOX	**283**

Pos	Part No	SP	UN	Qty	Description	Page No

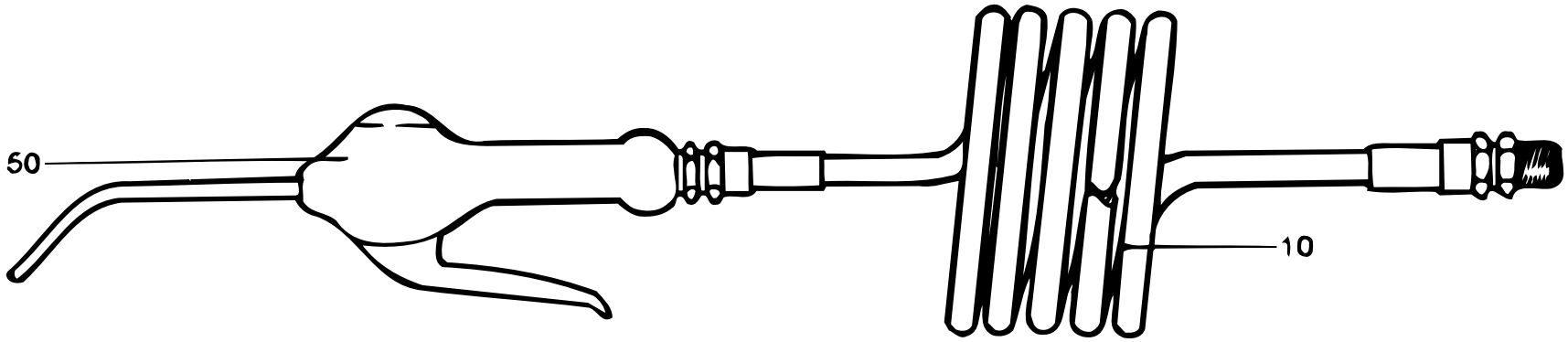

S-230922-1
ECN 5061

Pos	Part No	SP	UN	Qty	Description	Page No
Common parts						
010	90152-0016	K		1	HOSE	
050	90243-0061	R		1	FAN NOZZLE	

Pos	Part No	SP	UN	Qty	Description	Page No

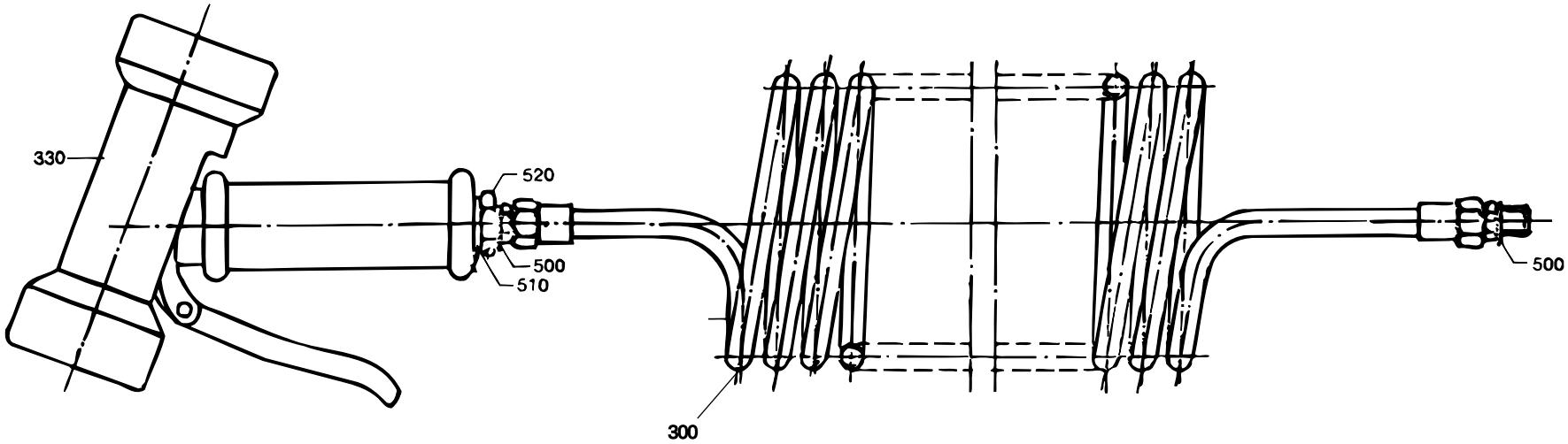

S-493614-1
ECN 14358

Pos	Part No	SP	UN	Qty	Description	Page No
Common parts						
300	90152-0017	K		1	HOSE	
330	90426-0003	K		1	HAND SHOWER	
500	315233-0110	-		2	PLAIN ROUND,NYLON R1/4"	
510	315233-0113	-		1	PLAIN ROUND,NYLON R1/2"	
520	342701-0205	-		1	BUSHING,INT./EXT.G-THREAD G1/2"-G1/4"	

Pos	Part No	SP	UN	Qty	Description	Page No

SWITCH (MONITOR)

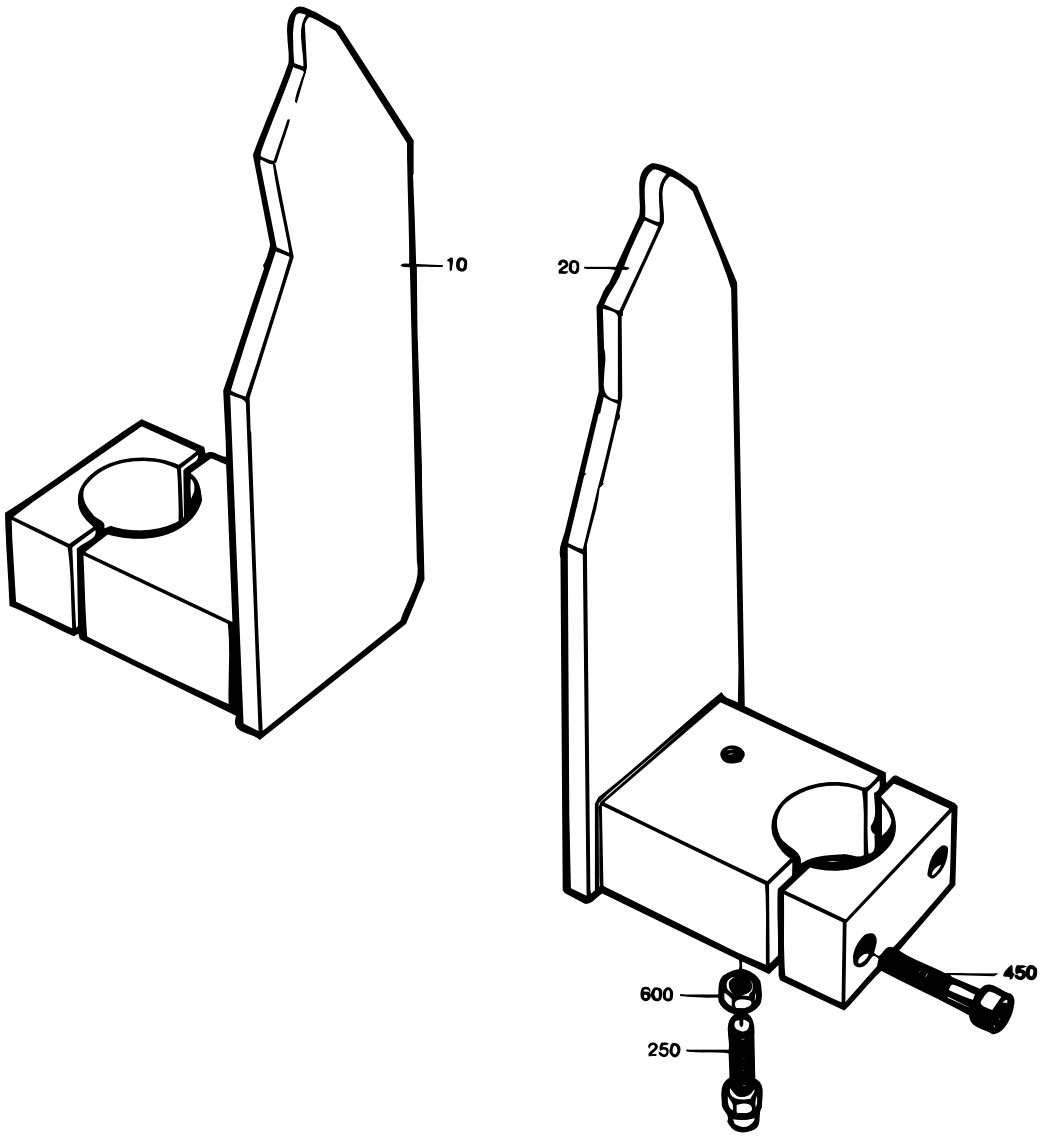

S-265889-3
ECN 12311

Pos	Part No	SP	UN	Qty	Description	Page No
Common parts						
010	532319-0000	-		1	CATCH GUARD LEFT	
020	532318-0000	-		1	CATCH GUARD RIGHT	
250	268746-0000	-		2	SCREW	
450	312111-0459	-		4	SCREW MC6S8X40FZB	
600	312605-0318	-		2	NUT,HEXAGON,M8 RFR	

Pos	Part No	SP	UN	Qty	Description	Page No

BENDING ROLLER BRACKET

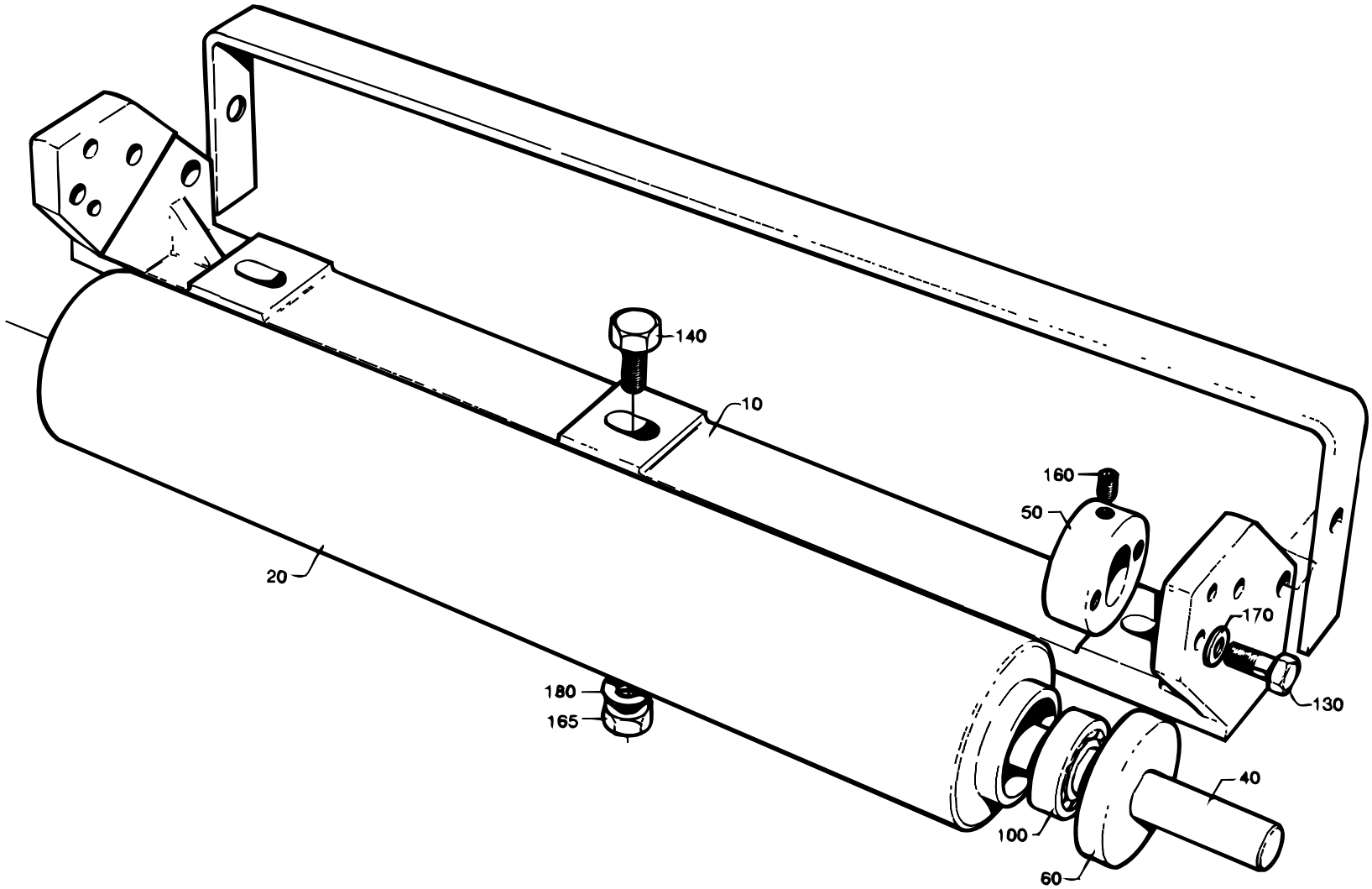

S-268015-1
ECN 20095

Pos	Part No	SP	UN	Qty	Description	Page No
Common parts						
010	259760-0000	-		1	BENDING ROLLER BRACKET	
020	265564-0000	R		1	BENDING ROLLER	
040	265566-0001	D		1	SHAFT	
050	265567-0000	D		2	BEARING UNIT	
060	265568-0000	R		2	DUST COVER	
100	90214-0098	N		2	BALL BEARING,STAINLESS	
120	311303-0310	-		2	SLOTTED PIRPB5X20FZB	
130	312101-0370	-		4	SCREW M6S6X20FZB	
140	312101-0453	-		3	SCREW M6S 8x25 FZB	
160	312318-0364	-		4	STOP SCREW SK6SS6X10RFR	
165	312601-0318	-		3	NUT M6M8FZB	
170	315101-0153	-		4	WASHER BRB 6,4x12 FZB	
180	315101-0165	-		6	WASHER BRB8,4X16FZB	

Pos	Part No	SP	UN	Qty	Description	Page No

SIDE BOX RIGHT

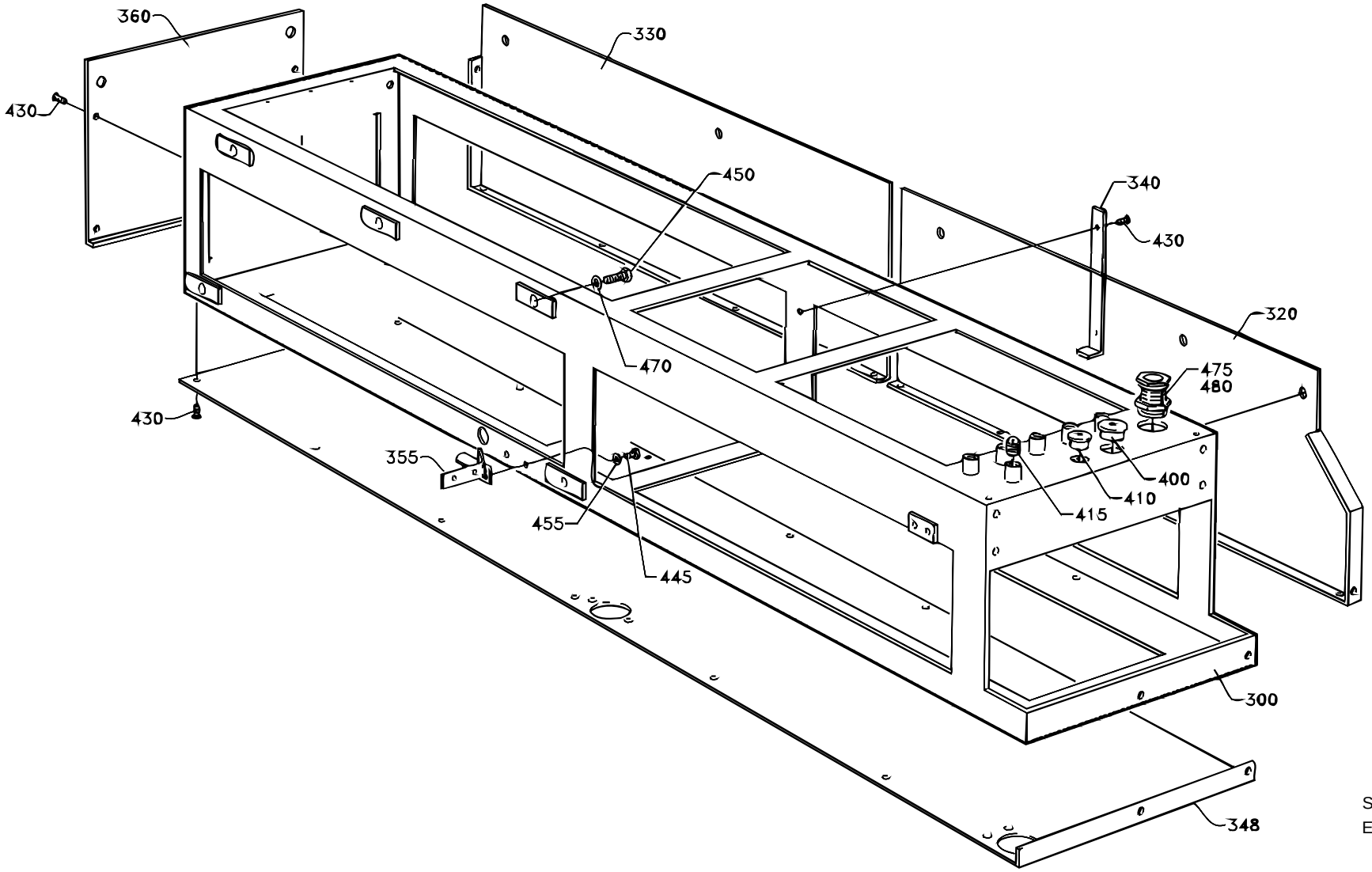

S-269301-5
ECN 16071

Pos	Part No	SP	UN	Qty	Description	Page No
Common parts						
300	560797-0000	-		1	SIDE PIECE	
320	564521-0000	-		1	SIDE PLATE	
330	564522-0000	-		1	SIDE PLATE	
340	564523-0000	-		1	RIM	
348	548343-0000	-		1	BOTTOM PANEL	
355	561423-0000	-		1	BRACKET	
360	542695-0000	-		1	COVERPLATE R	
400	90002-0010	-		1	BLANK-OFF PLUG 37	
410	90002-0012	-		1	BLANK-OFF PLUG 28,3	
415	90087-0002	-		3	PIPE PLUG	
430	90287-0075	-		33	SCREW, PAN HEAD,LKCS ISO1580, M6x12	
445	312105-0366	-		2	SCREW M6S ISO 4017 M6X12 A280	
450	312101-0540	-		5	SCREW M6S12X40FZB	
455	315101-0153	-		2	WASHER BRB 6,4x12 FZB	
470	315101-0178	-		5	WASHER BRB 13x24 FZB	
475	352100-0126	-		1	CABLE GLANR.47-32,5	
480	352100-0227	-		1	CABLE GLANR.31-34,5	

Pos	Part No	SP	UN	Qty	Description	Page No

COVER UPPER

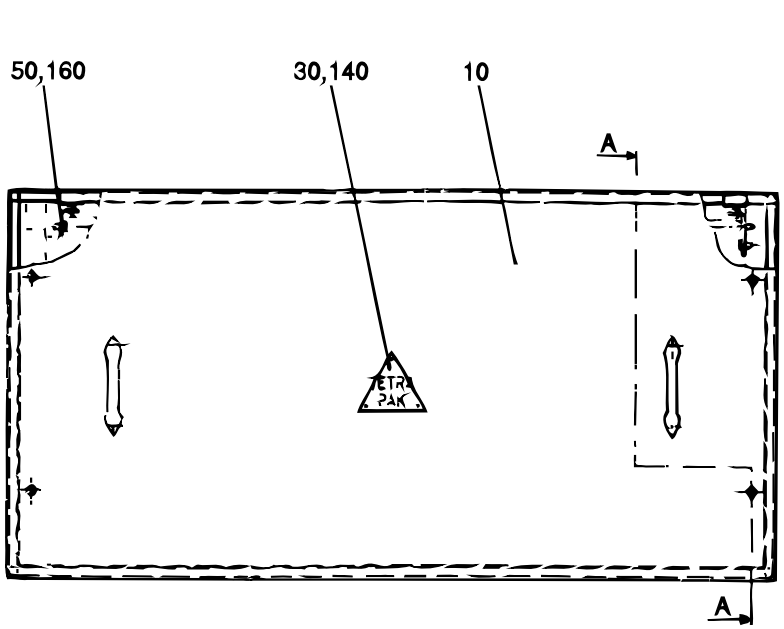

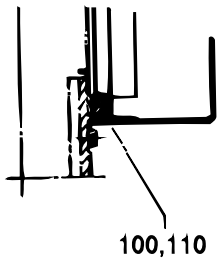

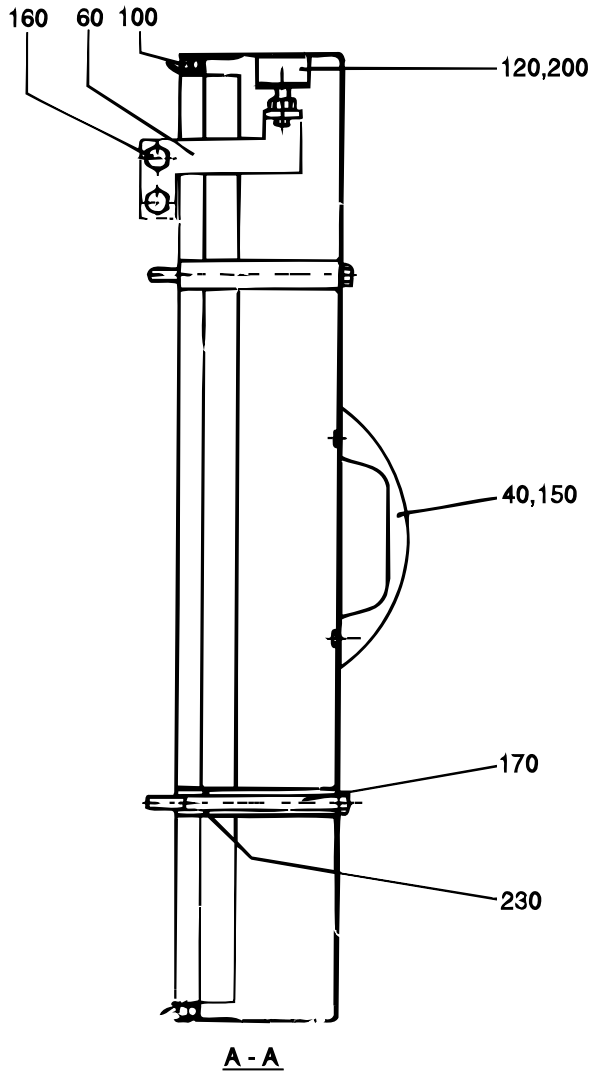

A - A

S-269322-3
ECN 12609

Pos	Part No	SP	UN	Qty	Description	Page No
Common parts						
010	549045-0000	-		1	HATCH	
030	544539-0000	D		1	HOUSEMARK REPBY 0574658-0000	
040	7309-0000	-		2	HANDLE	
050	282507-0000	-		1	BRACKET LEFT	
060	450869-0000	-		1	BRACKET RIGHT	
100	90143-0049	D	MM	4000	RUBBERSTRIP 11X21MM	
120	90347-0004	-		2	VIBRATION DAMPER	
140	311520-0420	-		4	BLANK RIVE3,2X4	
150	312101-0364	-		4	SCREW M6S6X10FZB	
160	312101-0449	-		4	SCREW M6S 8x16 FZB	
170	312101-0473	-		4	SCREW M6S8X110FZB	
200	312601-0318	-		2	NUT M6M8FZB	
230	315202-0206	-		4	O-RINGS 7,3X2,4	

Pos	Part No	SP	UN	Qty	Description	Page No

HATCH

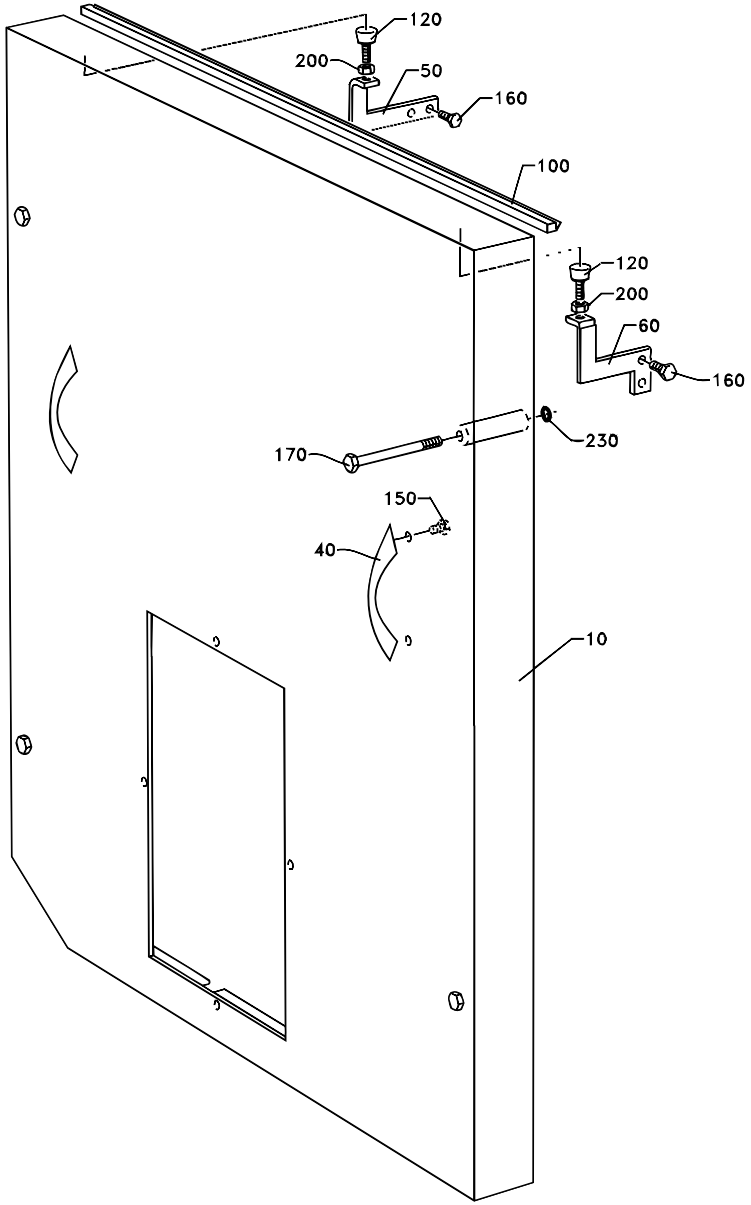

S-269324-4
ECN 15046

Pos	Part No	SP	UN	Qty	Description	Page No
TBA/8						
010	560880-0000	-		1	HATCH	
Common parts						
040	7309-0000	-		2	HANDLE	
050	282507-0000	-		1	BRACKET LEFT	
060	450869-0000	-		1	BRACKET RIGHT	
100	90143-0049	D	MM	5000	RUBBERSTRIP 11X21MM	
120	90347-0004	-		2	VIBRATION DAMPER	
150	312101-0364	-		4	SCREW M6S6X10FZB	
160	312101-0449	-		4	SCREW M6S 8x16 FZB	
170	312101-0473	-		4	SCREW M6S8X110FZB	
200	312601-0318	-		2	NUT M6M8FZB	
230	315202-0206	-		4	O-RINGS 7,3X2,4	

Pos	Part No	SP	UN	Qty	Description	Page No

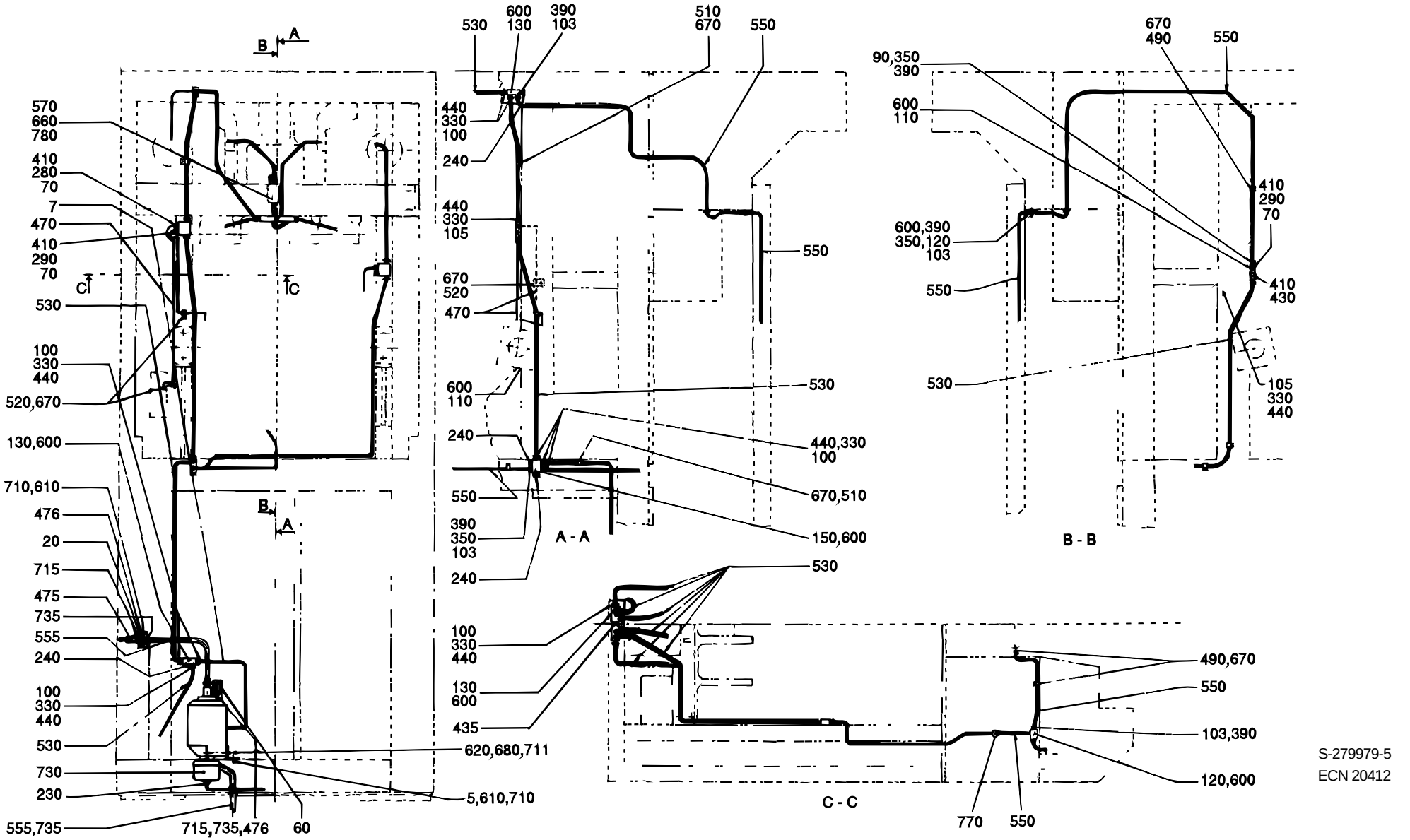

S-279979-5
ECN 20412

Pos	Part No	SP	UN	Qty	Description	Page No
Common parts						
005	547902-0000	-		1	BRACKET	
007	547904-0000	-		1	TUBE	
020	293198-0002	-		1	BRACKET	
060	90012-0063	-		1	Cable Gland PR 15,2	
070	90028-0020	I		3	CONE DT13700S-300 Di=2,5mm	
090	90028-0021	I		1	CONE DIN3862 Di=4mm	
100	90028-0022	I		14	CONE	
103	90028-0024	I		8	CONE	
105	90028-0025	I		3	CONE DT4.138811.2D	
110	90032-0038	-		2	BLOCK 2ways DT4.310792.1D	
120	90032-0043	-		2	JUNCTION BLOCK	
130	90032-0044	-		4	JUNCTION BLOCK	
150	90032-0046	-		1	JUNCTION BLOCK	
230	B 90048-0034	N		1	OIL PUMP	
240	90087-0019	-		4	PLUG M10x1 Stainless	
280	90092-0052	J		1	METERING VALVE 10mm3	
290	90092-0053	J		2	METERING VALVE 30mm3	
330	90134-0030	G		16	SLEEVE 6/3	
350	90134-0031	G		9	SLEEVE E 4/2	
390	90134-0038	G		9	BUSHING	
410	90134-0039	G		4	BUSHING DT4.018912.1D Stainless	
430	90134-0052	-		1	PLUG DT4.076817.2D	
435	90134-0054	-		1	CONNECTION DT4 M10x1,0 Stainless	
440	90134-0055	G		14	BUSHING 6 DIN 3871 Stainless	
470	90266-0019	-	MM	800	PIPE	
475	90163-0064	-		1	NIPPLE 3/8"	
476	90163-0050	-		2	NIPPLE 3/8"	
490	90165-0003	-		5	PIPE-CLIPS,FOR SINGLE PIPE,ONE SIDE 4	
510	90165-0005	-		13	PIPE-CLIPS,FOR SINGLE PIPE,ONE SIDE 6	
520	90165-0022	-		3	PIPE-CLIPS,FOR SINGLE PIPE,ONE SIDE 2,5	
530	90166-0108	-	M	6	HOSE 3/6 PA11/12 Transp.	
550	90166-0109	-	M	7	HOSE 2/4 PA11/12 Transp.	
555	90166-0113	-	MM	900	HOSE	
570	90274-0084	R		1	PRESSURE SWITCH	
600	312101-0295	-		18	SCREW M6S 4x20 FZB	
610	312101-0366	-		6	SCREW M6S6X12FZB	
620	312101-0467	-		2	SCREW M6S8X80FZB	
660	312111-0297	-		2	SCREW MC6S4X25FZB	
670	312121-0285	-		20	SLOTTED HEAD SCREW MCS 4x6 FZB	
680	312601-0318	-		2	NUT M6M8FZB	
710	315101-0153	-		6	WASHER BRB 6,4x12 FZB	
711	315101-0165	-		2	WASHER BRB8,4X16FZB	
715	315233-0111	-		2	PLAIN ROUND,NYLON R3/8"	
730	342931-0113	-		1	ELBOW 90 COUPL.,EXT.THREAD 6/4-G1/8"	
735	342991-0100	-		3	HOSE CLIP,WORM DRIVE TYPE 10-13	
770	352101-0103	-		2	LEAD IN PR 18,6	

PEROXIDE PIPE

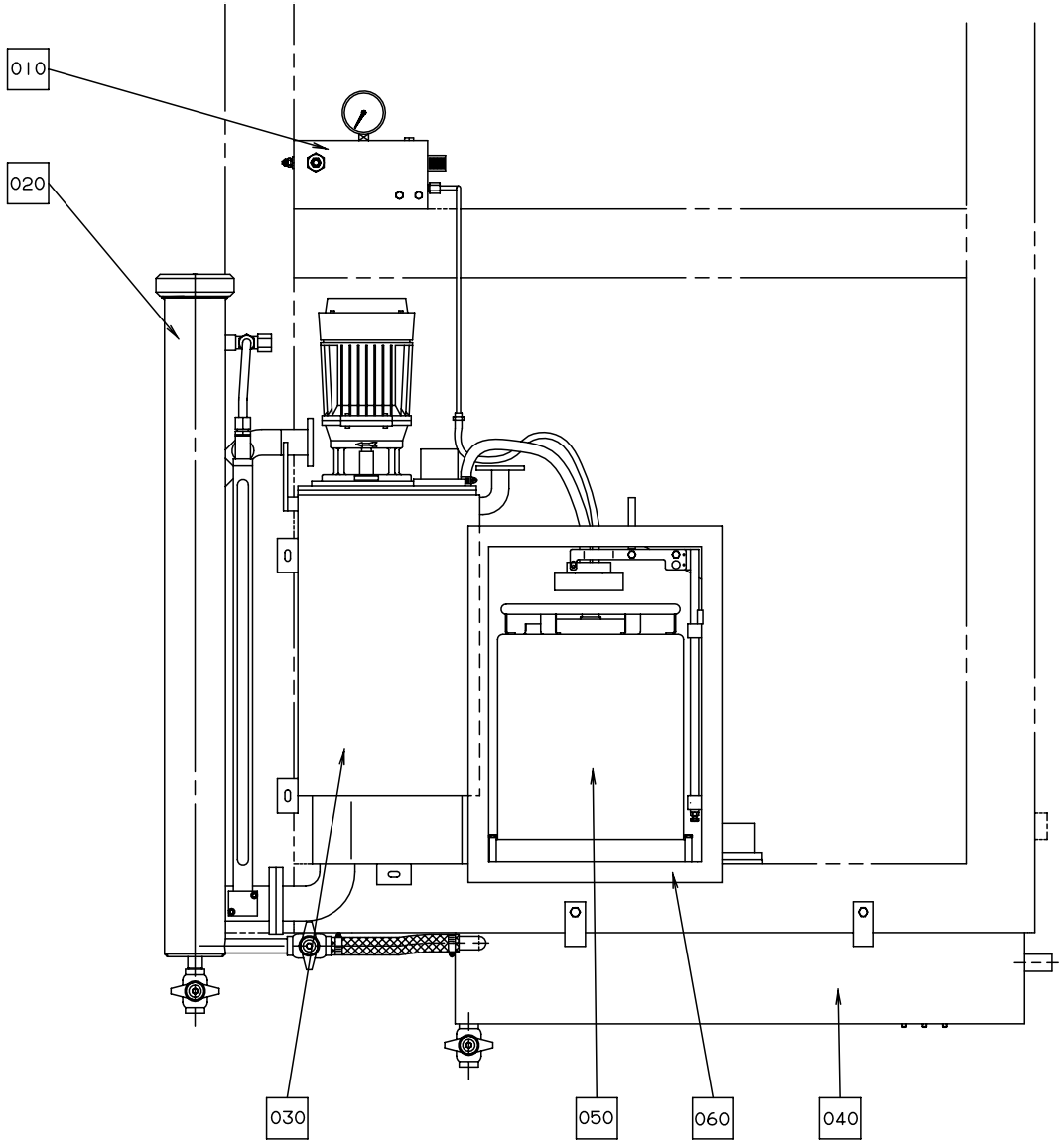

S-561256-1
ECN17024

Pos	Part No	SP	UN	Qty	Description	Page No
Common parts						
F010	A 560922-0100	-		1	VALVE PANEL	**171**
F020	A 266550-0400	-		1	FILTER HOUSING	**173**
F030	A 561257-0200	-		1	PEROXIDE TANK	**175**
F040	A 561258-0200	-		1	DRAINING PEROXIDE	**181**
F050	A 527898-0100	-		2	CONTAINER H2O2	**183**
F060	A 561259-0100	-		1	CONNECTION HOUSING	**185**

Pos	Part No	SP	UN	Qty	Description	Page No

VALVE PANEL

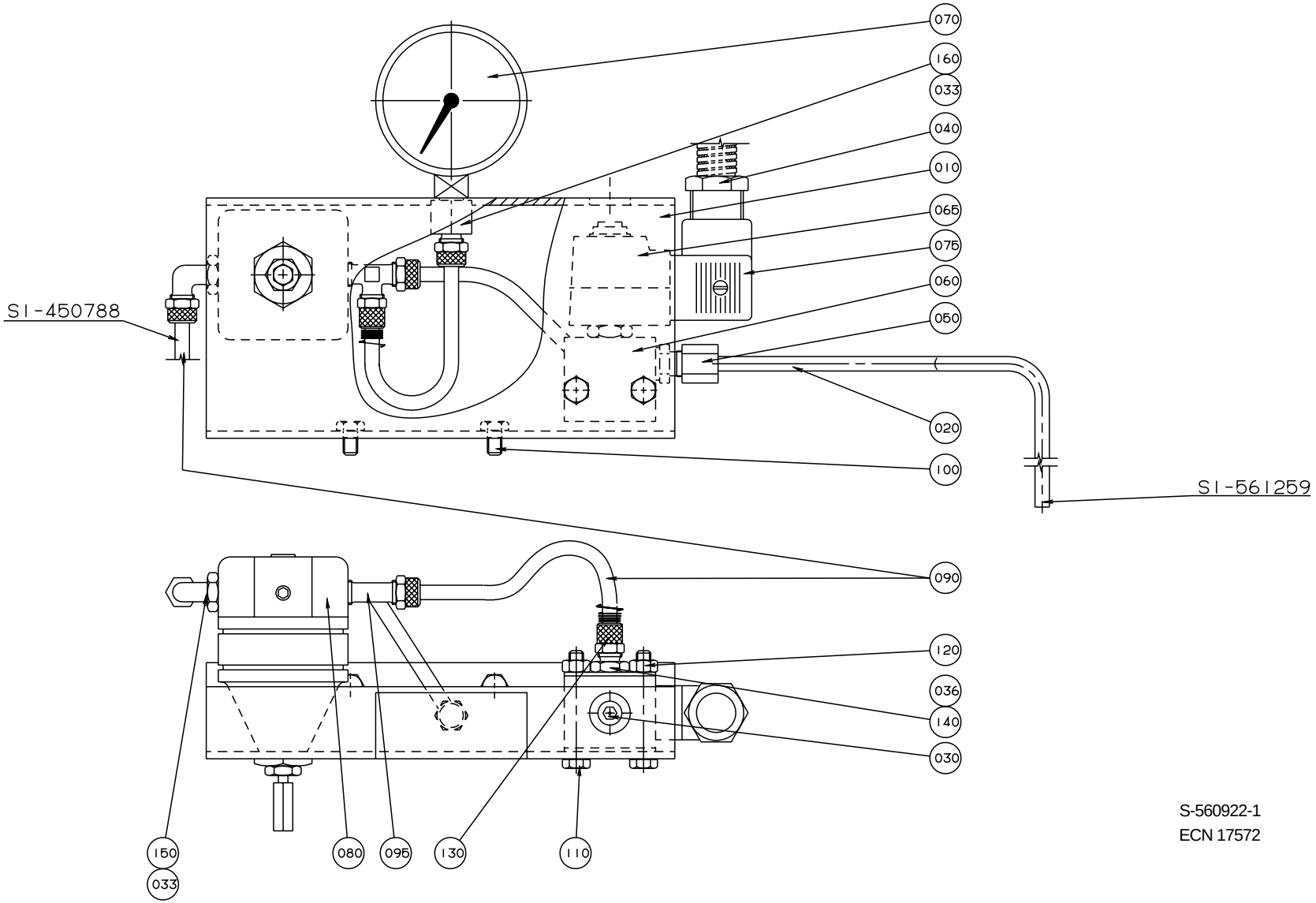

S-560922-1
ECN 17572

Pos	Part No	SP	UN	Qty	Description	Page No
Common parts						
010	527902-0000	-		1	SHEET	
020	530550-0000	-		1	PIPE	
030	563285-0000	-		1	BLIND PLUG	
033	90005-0005	-		2	WASHER,Bolt head 13,7x 20,6, H= 2,1, G	
036	90005-0009	-		1	WASHER,Bolt head 10,4x 15,9, H= 2,1, G	
040	90012-0063	-		2	Cable Gland PR 15,2	
050	90030-0184	-		1	STRAIGHT CONNECTION GA-6-G1/8"	
060	90042-0206	N		1	SOLENOID VALVE	
065	90042-0487	N		1	COIL	
070	90043-0004	R		1	PRESSURE GAUGE	
075	90110-0095	-		1	CONTACT 3 POLE+EARTH	
080	90113-0056	D		1	REGULATOR	
090	90166-0124	-	MM	3000	HOSE 4,0/6 PA 11/12 Transp.	
095	342950-0114	-		1	L-COUPLING,EXT.THREAD 6/4-R1/4"	
100	312105-0364	-		2	SCREW M6S6X10RFR	
110	312105-0378	-		2	SCREW O4017 M6X40A280	
120	312605-0316	-		2	NUT,HEXAGON,A280 M6M6 Stainless	
130	342903-0111	-		2	NUT WITH SPRING 6/4-M10X1	
140	342921-0113	-		1	STRAIGHT COUPLING,EXT.THREADED 6/4-G1/8"	
150	90224-0329	-		1	ELBOW 90 COUPL.,EXT.THREAD 6/4-G1/4"	
160	342923-0114	-		1	STRAIGHT COUPL.,INT.THREADED 6/4-G1/4"	

Pos	Part No	SP	UN	Qty	Description	Page No

FILTER HOUSING

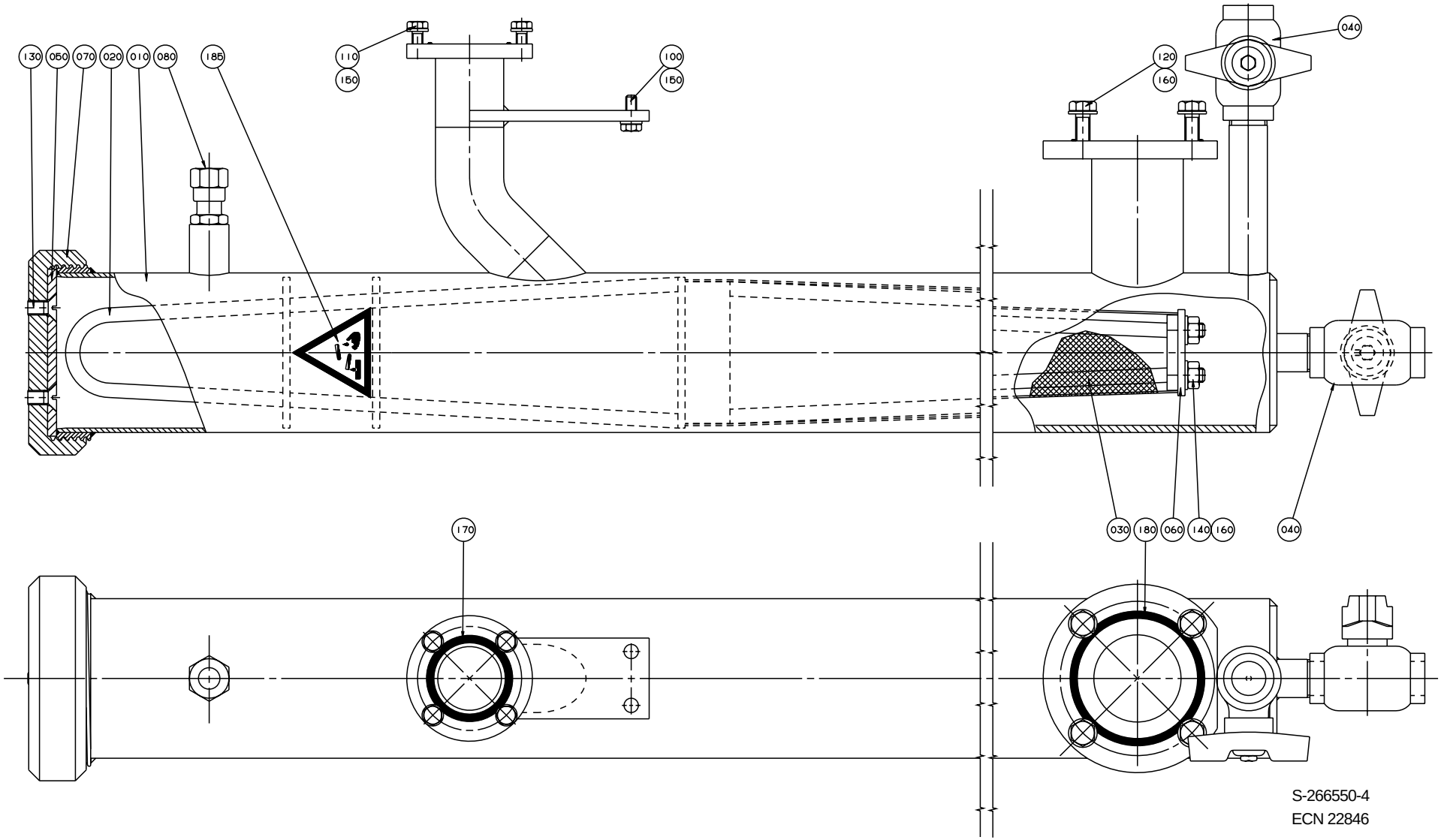

S-266550-4
ECN 22846

Pos	Part No	SP	UN	Qty	Description	Page No
Common parts						
010	573445-0000	D		1	FILTER HOUSING	
020	269903-0000	-		1	FILTER INSERT	
030	269904-0000	D		1	FILTER MESH	
040	B 484536-0000	D		2	VALVE	
050	266557-0000	R		1	GASKET	
060	269905-0000	-		1	WASHER	
070	284840-0000	-		1	NUT	
080	573446-0000	-		1	STRAIGHT CONNECTION	
100	312105-0368	-		2	SCREW M6S ISO 4017 M6X16 A280	
110	312105-0370	-		4	SCREW M6S ISO 4017 M6X20 A280	
120	312105-0452	-		4	SCREW M6S 8x22 Stainless	
130	312145-0449	-		2	SLOTTED HEMFS8X16RFR	
140	312605-0318	-		2	NUT,HEXAGON,M8 RFR	
150	315105-0153	-		6	WASHER,PLAIN ROUND 6,4x12 Stainless	
160	315105-0165	-		6	WASHER,PLAIN ROUND 8,4x16 Stainless	
170	927422-0006	J		1	O-RING 42.2X3 SILICON	
180	927422-0011	J		1	O-RING 69.5X3 SILICON	
185	359705-0003	-		1	WARNING SIGN Dangerous Chemicals	

Pos	Part No	SP	UN	Qty	Description	Page No

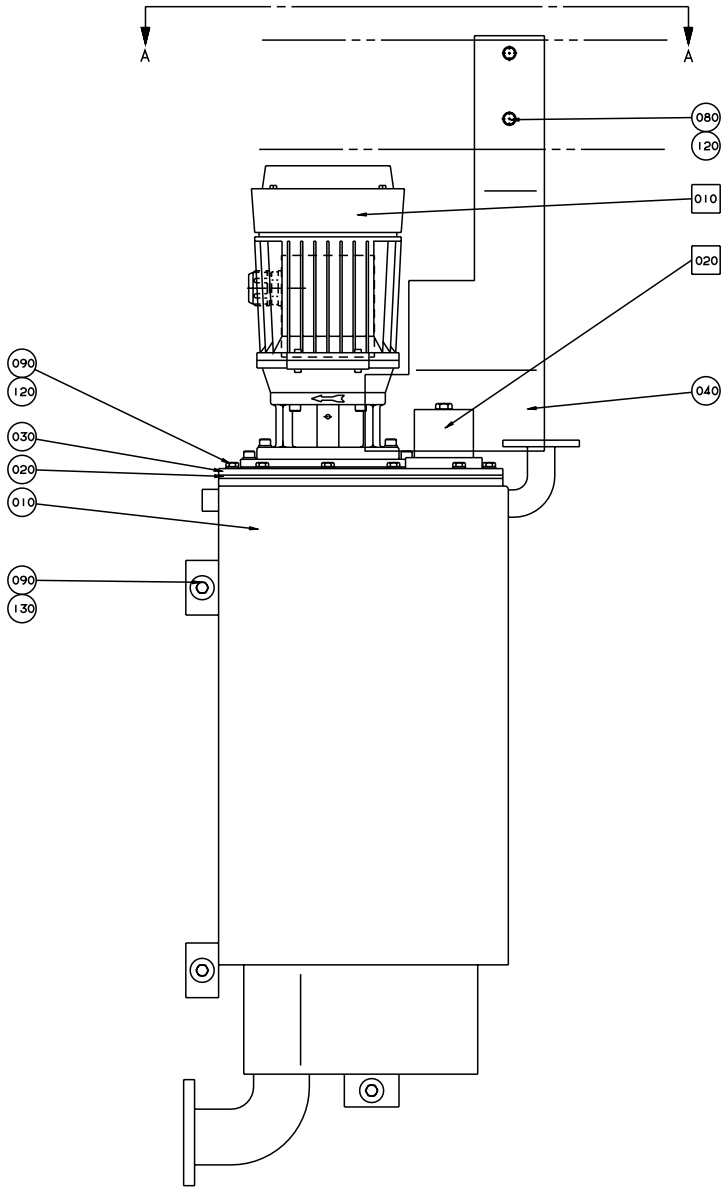

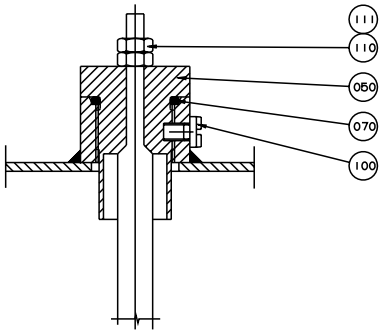

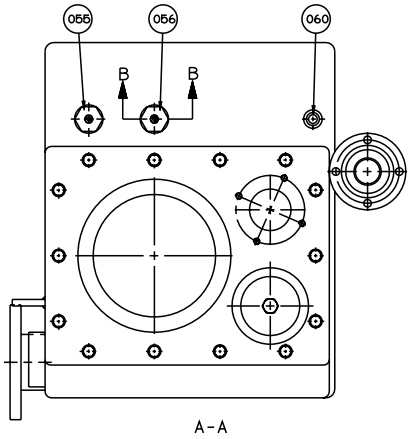

S-561257-1
ECN 16337

Pos	Part No	SP	UN	Qty	Description	Page No
Common parts						
010	A 292451-0500	-		1	PEROXIDE PUMP	**177**
020	A 566196-0100	-		1	LID WITH WEIGHT	**179**
010	540886-0000	-		1	TANK	
020	259835-0000	N		1	FLANGE SEAL	
030	479032-0000	D		1	HATCH	
040	497121-0000	-		1	SPLASH GUARD	
050	560931-0000	R		2	BRACKET	
060	527910-0000	-		1	PIPE	
070	927421-0004	J		2	O-RING 15.3X2.4 SILICON	
080	312105-0367	-		2	SCREW M6S6X14RFR	
090	312105-0370	-		17	SCREW M6S ISO 4017 M6X20 A280	
100	312125-0285	-		2	SLOTTED HEMCS4X6RFR	
110	312605-0312	-		4	NUT,HEXAGON,M4 RFR	
111	315105-0136	-		6	WASHER,PLAIN ROUND 4,3x8 Stainless	
120	315105-0153	-		16	WASHER,PLAIN ROUND 6,4x12 Stainless	
130	315125-0153	-		3	WASHERS,PLAIN ROUND,CHAMFERED 6,4X22X4	
0355B or 0400B or 0500B						
055	567070-0006	R		1	ELECTRODE	
056	567070-0002	R		1	ELECTRODE	
0375S or 0500S or 0500SQ or 0750B						
055	567070-0007	R		1	ELECTRODE	
056	567070-0002	R		1	ELECTRODE	
0750S or 1000B or 1055B						
055	567070-0011	R		1	ELECTRODE	
056	567070-0002	R		1	ELECTRODE	
1000S or 1000SQ						
055	567070-0011	R		1	ELECTRODE	
056	567070-0018	R		1	ELECTRODE	

Pos	Part No	SP	UN	Qty	Description	Page No

PEROXIDE PUMP

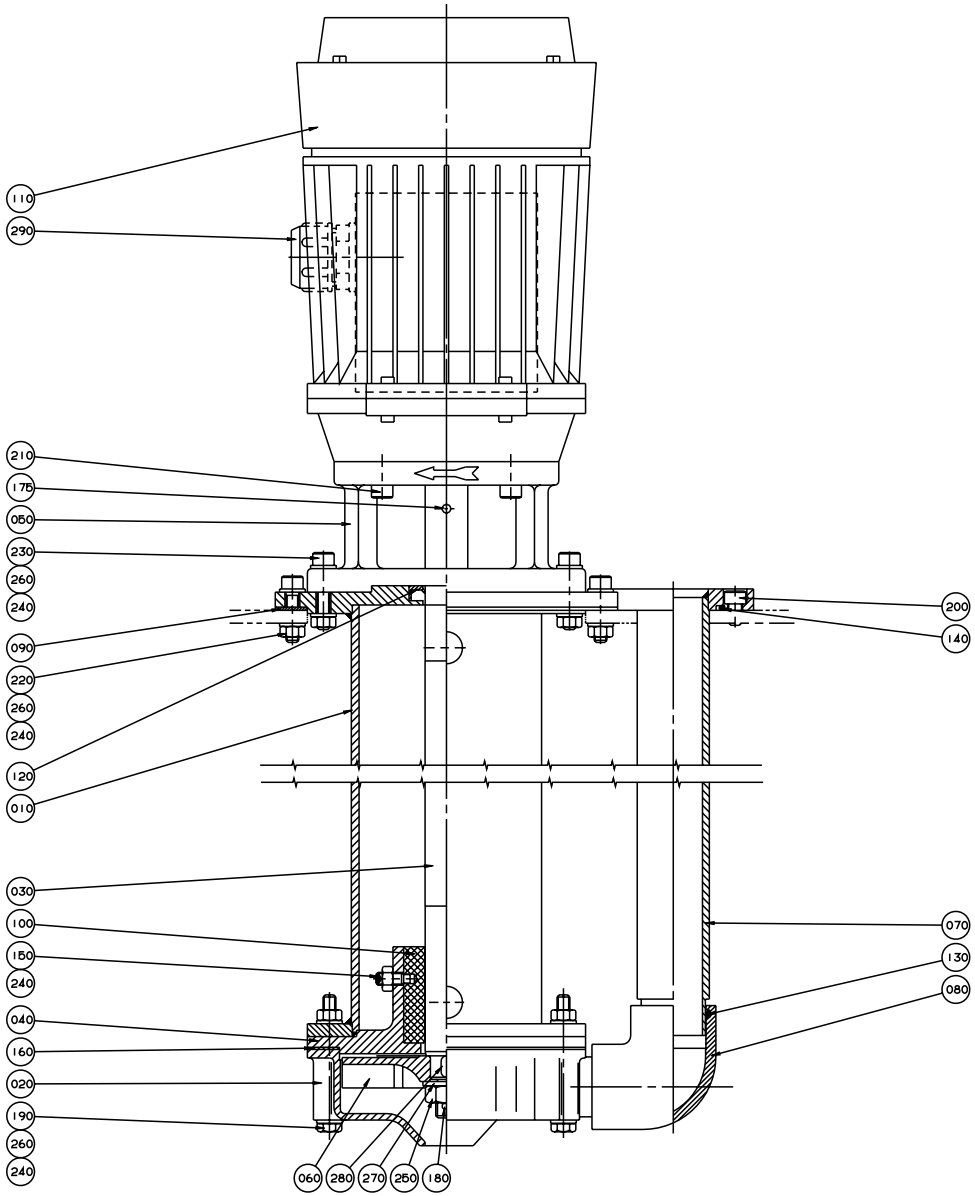

S-292451-5
ECN 14773

Pos	Part No	SP	UN	Qty	Description	Page No
Common parts						
010	292452-0000	D		1	EXTENSION PIPE	
030	547793-0000	N		1	SHAFT	
040	292456-0000	D		1	BEARING COVER	
050	292464-0000	D		1	FLANGE	
060	491929-0000	N		1	IMPELLER WHEEL	
070	560923-0000	R		1	PIPE	
080	751316-0000	R		1	ELBOW PIPE	
090	484791-0000	N		1	GASKET	
100	491770-0000	J		1	BUSHING	
110	90045-0087	N		1	PUMPMOTOR ABB 0,55KW;1,4A	
120	90091-0137	F		1	SEAL RING	
130	927422-0004	J		1	O-RING 29.2X3 SILICON	
140	927422-0006	J		1	O-RING 42.2X3 SILICON	
150	90287-0159	-		2	SCREW, SET,FULL DOG POINT,T6SS M6x16 A4	
160	90321-0411	N		1	GASKET	
175	311112-0256	-		1	PINS,SLOTTED TUBULAR SPRING PIN 4X20	
180	311411-0169	-		1	SPLIT PIN SP2,5X25RFR	
190	312105-0382	-		5	SCREW M6S ISO 4014 M6X60 A280	
200	312115-0364	-		4	SCREW 6X10 A4 80	
210	312115-0370	-		4	SCREW MC6S ISO 4762 M6X20 A280	
220	312105-0372	-		4	SCREW M6S ISO 4017 M6X25 A280	
230	312105-0374	-		5	SCREW M6S ISO 4017 M6X30 A280	
240	312605-0316	-		16	NUT,HEXAGON,A280 M6M6 Stainless	
250	312605-0320	-		1	NUT,HEXAGON,M10 A280	
260	315105-0153	-		28	WASHER,PLAIN ROUND 6,4x12 Stainless	
270	315105-0173	-		1	WASHER,PLAIN ROUND 10,5x22 STAINLESS	
280	315705-0196	-		1	KEYS,PARALLEL WITH ROUND ENDS 5X5X10	
290	352136-0129	-		1	GLAND FITTING PR22,5/PG16 Di=16mm	
50HZ						
020	B 571277-0000	R		1	PUMP HOUSING	
60HZ						
020	292449-0000	R		1	PUMP HOUSING	

Pos	Part No	SP	UN	Qty	Description	Page No

LID WITH WEIGHT

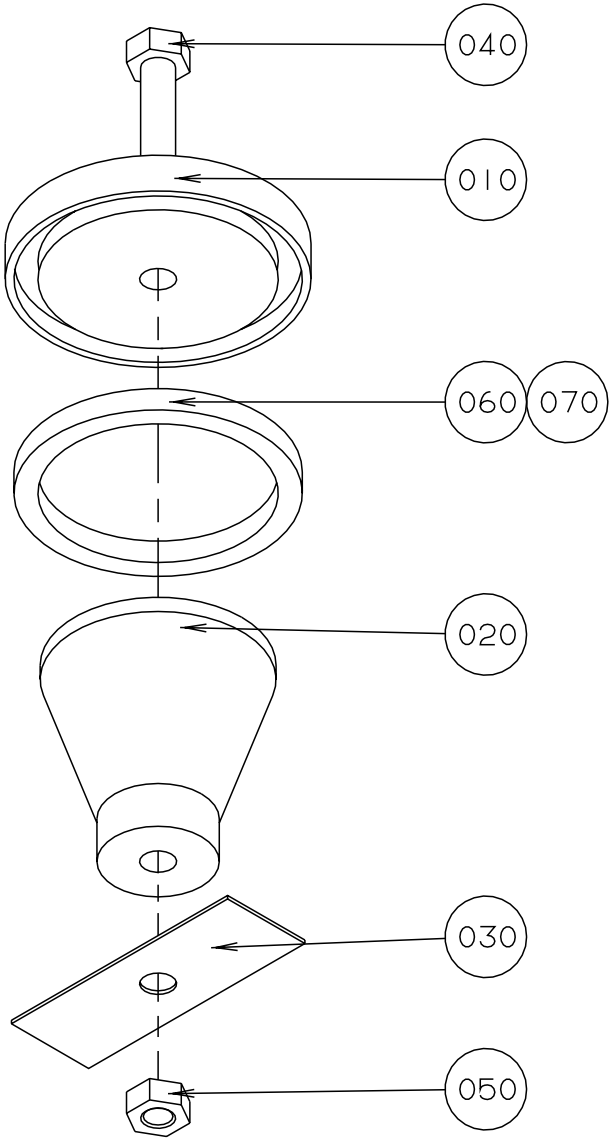

S-566196-1
ECN 16248

Pos	Part No	SP	UN	Qty	Description	Page No
Common parts						
010	566195-0000	-		1	LID	
020	566194-0000	-		1	WEIGHT	
030	566171-0000	-		1	CUP SPRING	
040	312105-0466	-		1	SCREW M6S ISO 4014 M8x75 A280	
050	312605-0318	-		1	NUT,HEXAGON,M8 RFR	
060	90143-0020	-	MM	190	STRIP	
070	90153-0023	-		1	ADHESIVE	

Pos	Part No	SP	UN	Qty	Description	Page No

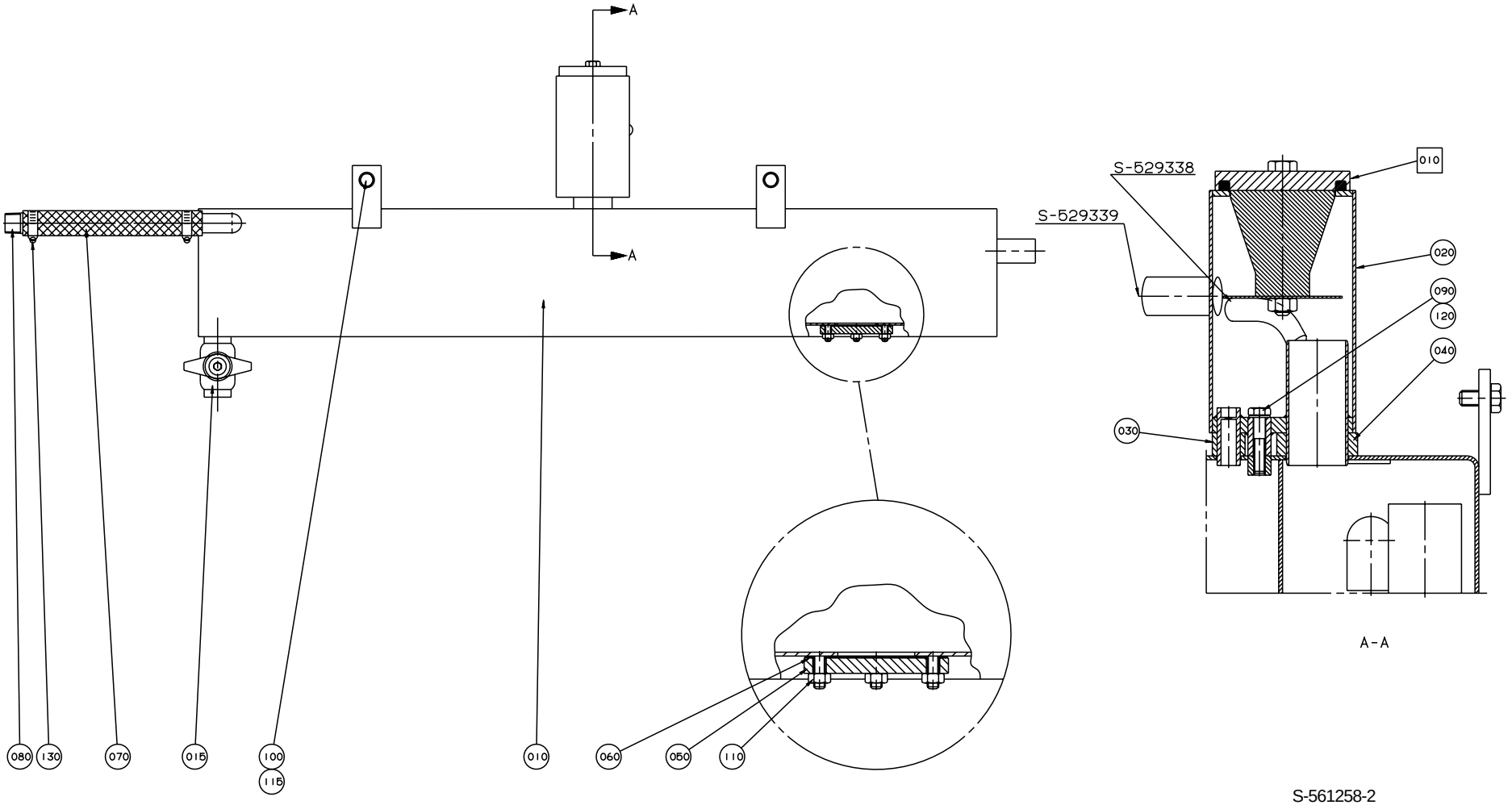

S-561258-2
ECN 19497

Pos	Part No	SP	UN	Qty	Description	Page No
Common parts						
F010	A 566196-0100	-		1	LID WITH WEIGHT	**179**
010	561549-0000	D		1	TANK	
015	B 484536-0000	R		1	VALVE	
020	566192-0000	-		1	METERING DEVICE	
030	527905-0000	D		1	GASKET	
040	527906-0000	D		1	GASKET	
050	532205-0000	-		1	LID	
060	532206-0000	D		1	GASKET	
070	90166-0060	-	MM	200	HOSE	
080	90330-0059	-		1	NIPPLE	
090	312105-0374	-		1	SCREW M6S ISO 4017 M6X30 A280	
100	312105-0451	-		4	SCREW M6S ISO 4017 8x20 A280	
110	312605-0316	-		4	NUT,HEXAGON,A280 M6M6 Stainless	
115	315115-0165	-		4	WASHER TBRB 8,4x16 Stainless	
120	315211-0103	-		1	GASKETS,BOLT HEAD M6	
130	342991-0104	-		2	HOSE CLIP,WORM DRIVE TYPE (23)-27	

Pos	Part No	SP	UN	Qty	Description	Page No

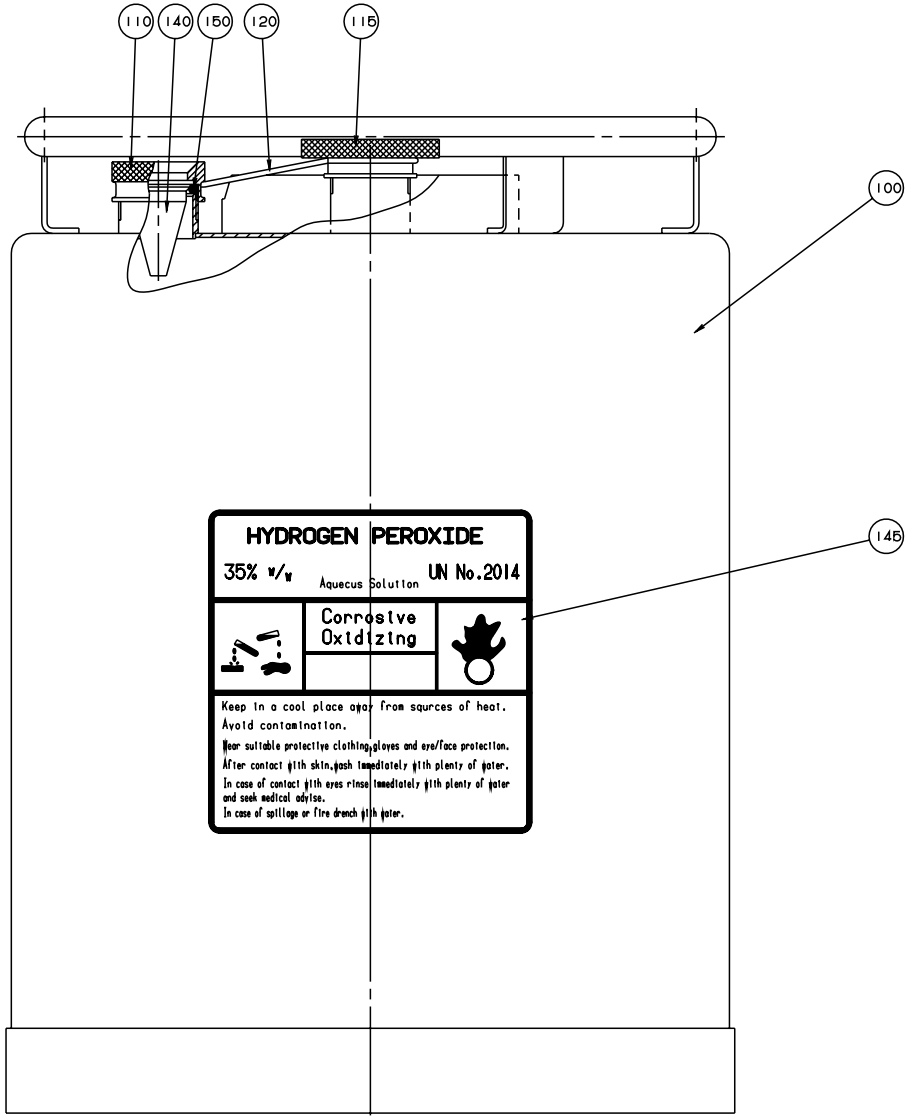

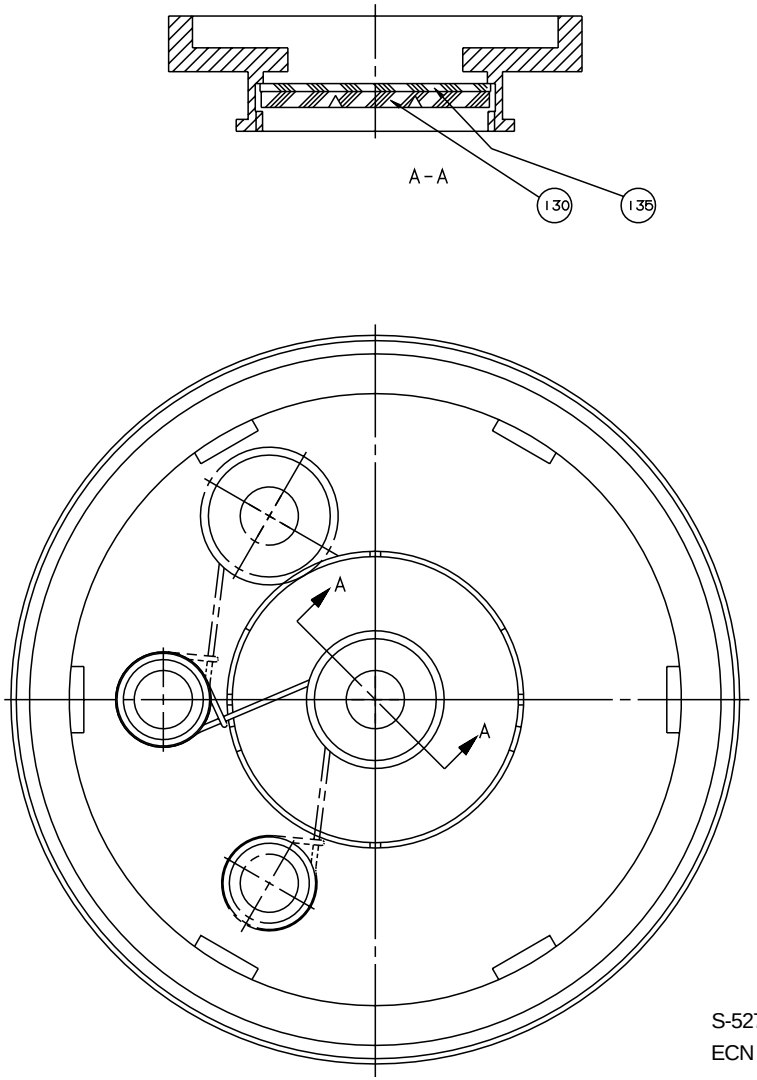

S-527898-1
ECN 15566

Pos	Part No	SP	UN	Qty	Description	Page No
Common parts						
100	561427-0000	-		1	CONTAINER	
110	273977-0000	R		1	NUT	
115	273996-0000	R		1	NUT	
120	273980-0000	R		1	SPRING	
130	565250-0000	R		1	WASHER	
135	565251-0000	N		1	VALVE	
140	273978-0000	R		1	LEVEL GLASS	
145	532655-0000	-		1	CAUTION SIGN	
150	927422-0003	J		1	O.RING 24.2X3 SILICON	

Pos	Part No	SP	UN	Qty	Description	Page No

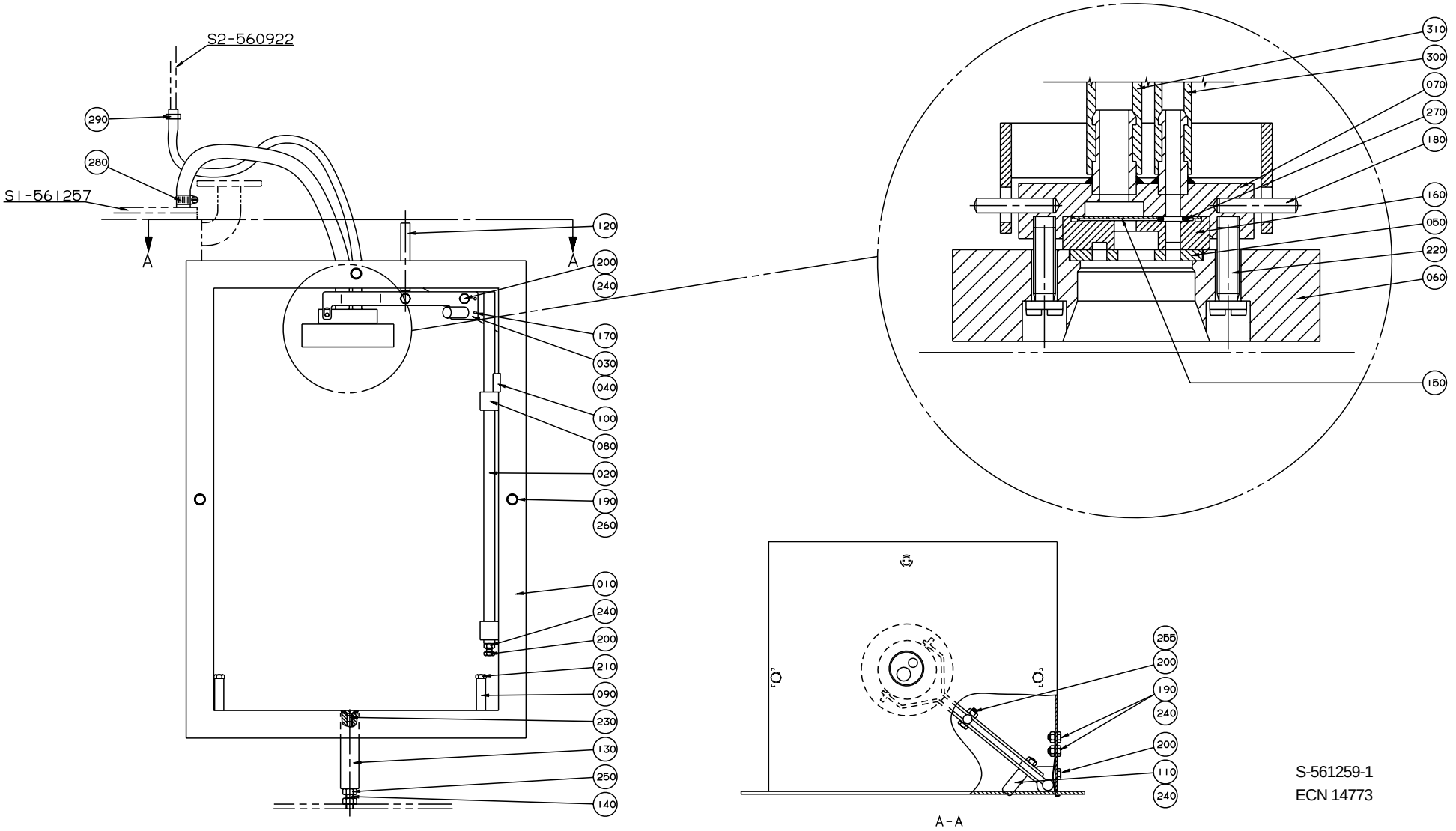

S-561259-1
ECN 14773

Pos	Part No	SP	UN	Qty	Description	Page No
Common parts						
010	565104-0000	-		1	SWEEP	
020	527120-0000	-		1	STEERING	
030	527121-0001	-		1	BOW CLAMP	
040	527121-0002	-		1	BOW CLAMP	
050	273981-0000	N		1	GASKET	
060	273982-0000	-		1	WEIGHT	
070	527122-0000	-		1	ATTACHMENT	
080	527124-0000	R		2	BEARING	
090	527125-0000	-		2	STEERING	
100	527126-0000	D		1	LEAF SPRING	
110	527127-0000	-		1	DOWEL	
120	527128-0000	-		1	GUIDE PIN	
130	527129-0000	-		1	BRACKET	
140	527130-0000	-		1	SCREW	
150	527912-0000	N		1	NON-RETURN VALVE	
160	530551-0000	D		1	WASHER	
170	311103-0234	-		2	PINS,STRAIGHT 3X12	
180	311103-0273	-		2	CYLINDRICAM6 4X22 RFR	
190	312105-0362	-		6	SCREW M6S ISO 4017 M6X8 A280	
200	312105-0370	-		5	SCREW M6S ISO 4017 M6X20 A280	
210	312105-0378	-		2	SCREW O4017 M6X40A280	
220	312125-0370	-		2	SLOTTED CHEESE HEAD ISO 1207 M6X20 RFR	
230	312155-0366	-		1	SCREW MF6S DIN 7991 M6X12 A280	
240	312605-0316	-		5	NUT,HEXAGON,A280 M6M6 Stainless	
250	312605-0318	-		2	NUT,HEXAGON,M8 RFR	
255	312812-0316	-		1	NUT,HEXAGON,LOCK,WITH NYLON INSERT,M6	
260	315105-0153	-		4	WASHER,PLAIN ROUND 6,4x12 Stainless	
270	90242-0163	N		1	O-RING REPBY 0315204-0103	
280	342991-0101	-		2	HOSE CLIP,WORM DRIVE TYPE (13)-16	
290	90132-0021	-		2	HOSE CLIP	
300	90166-0101	-	MM	350	HOSE	
310	90166-0138	-	MM	500	HOSE	

Pos	Part No	SP	UN	Qty	Description	Page No

SIDE GUARD

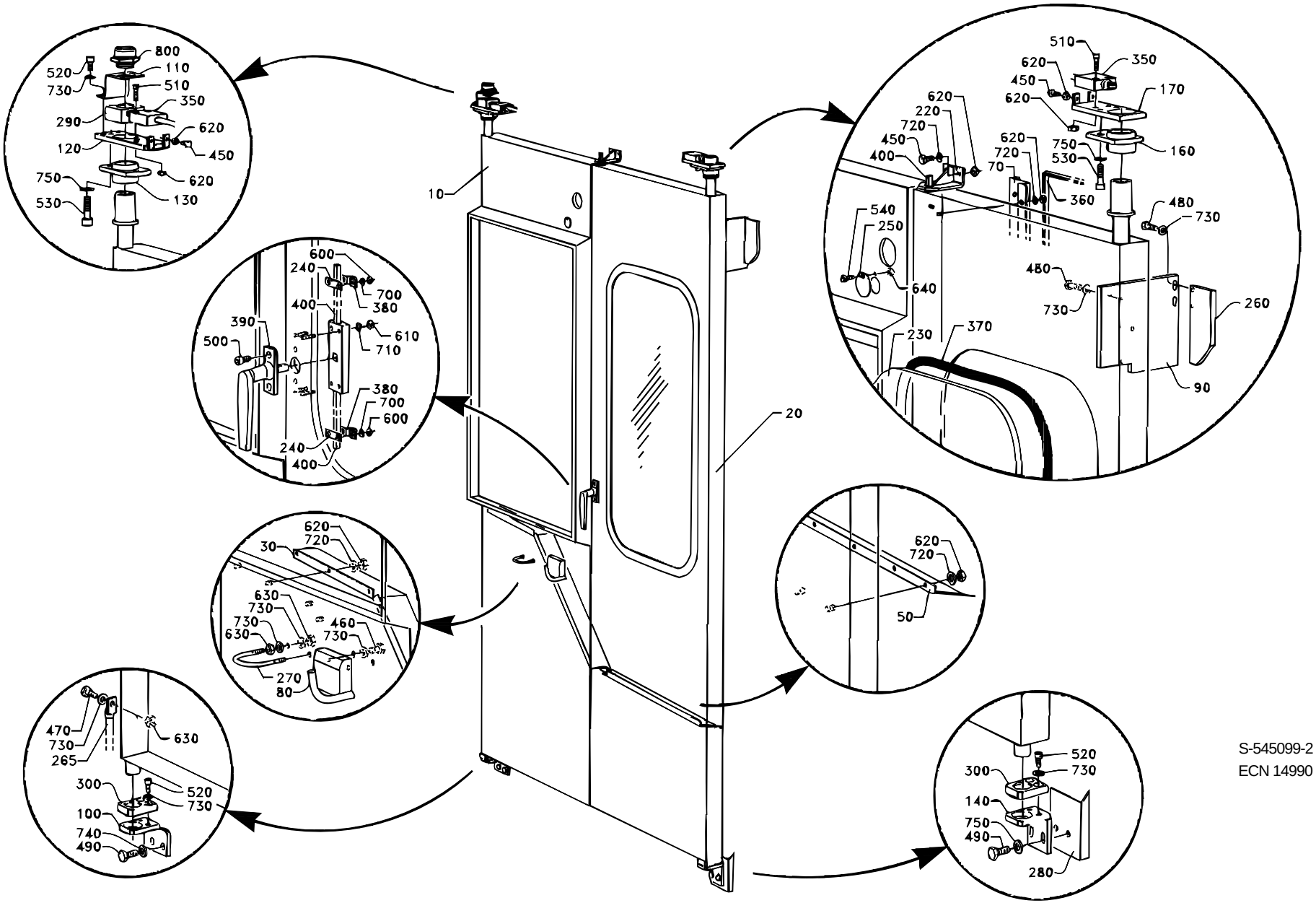

S-545099-2
ECN 14990

Pos	Part No	SP	UN	Qty	Description	Page No
Common parts						
010	544681-0000	-		1	SIDEGUARD L	
020	544899-0000	-		1	SIDECOVER LEFT FRONT	
030	545107-0000	-		1	CHUTE LEFT	
050	451127-0000	-		1	CHUTE, LEFT FRONT	
070	442193-0000	-		1	PROTECTIVE CASING	
080	B 469795-0000	-		1	HOLDER	
090	533426-0000	R		1	STOP PLATE	
100	544483-0000	-		1	BRACKET	
110	544484-0000	-		1	HOLDER	
120	560873-0000	-		1	PLATE	
130	544486-0000	-		1	BEARING UNIT	
140	544510-0000	-		1	BRACKET	
160	560800-0000	-		1	BEARING UNIT	
170	560872-0000	-		1	PLATE	
220	293566-0000	-		1	MOUNTINGS	
230	293598-0000	D		1	GLASS PANE	
240	434858-0000	D		2	CUSHION	
250	442195-0000	-		1	LID	
260	553162-0000	R		1	STOP PLATE	
265	553164-0000	-		1	LOW IMPEDANCELITZ L=150MM	
270	531616-0000	-		1	HOLDER	
280	542860-0000	-		1	COVER PLATE	
290	544480-0000	-		1	NUT	
300	544481-0000	D		2	PLATE	
350	90044-0094	R		2	LIMIT SWITCH	
360	90143-0035	D	MM	5450	STRIP	
370	90143-0039	D	MM	2400	STRIP	
380	90237-0011	-		2	BAR CLAMP	
390	90237-0061	-		1	HANDLE	
400	90237-0066	-		1	LOCKING DEVICE	
450	312105-0327	-		6	SCREW M6S ISO 4017 M5X12 A280	
460	312105-0364	-		2	SCREW M6S6X10RFR	
470	312105-0368	-		1	SCREW M6S ISO 4017 M6X16 A280	
480	312105-0370	-		3	SCREW M6S ISO 4017 M6X20 A280	
490	312105-0451	-		4	SCREW M6S ISO 4017 8x20 A280	
500	312115-0325	-		2	SCREW 5X10 A4 80	
510	312115-0329	-		4	SCREW MC6S ISO 4762 M5X16 A280	
520	312115-0366	-		6	SCREW MC6S ISO 4762 M6X12 A280	
530	312115-0455	-		4	SCREW MC6S ISO 4762 M8X30 A280	
540	312125-0222	-		1	SLOTTED CHEESE HEAD ISO 1207 M3X8 RFR	
600	312605-0310	-		4	NUT,HEXAGON,M6M3 RFR	
610	312605-0312	-		4	NUT,HEXAGON,M4 RFR	
620	312605-0314	-		38	NUT,HEXAGON,M6M5 Stainless	
630	312605-0316	-		3	NUT,HEXAGON,A280 M6M6 Stainless	
640	312810-0310	-		1	LOCK NUT 3FZB	
700	315105-0124	-		4	WASHER,PLAIN ROUND 3,2x6	
710	315105-0136	-		4	WASHER,PLAIN ROUND 4,3x8 Stainless	
720	315105-0146	-		33	WASHER,PLAIN ROUND 5,3x10 Stainless	
730	315105-0153	-		18	WASHER,PLAIN ROUND 6,4x12 Stainless	
740	315105-0165	-		2	WASHER,PLAIN ROUND 8,4x16 Stainless	
750	315115-0165	-		6	WASHER TBRB 8,4x16 Stainless	
800	352136-0152	-		1	GLAND FITTING	

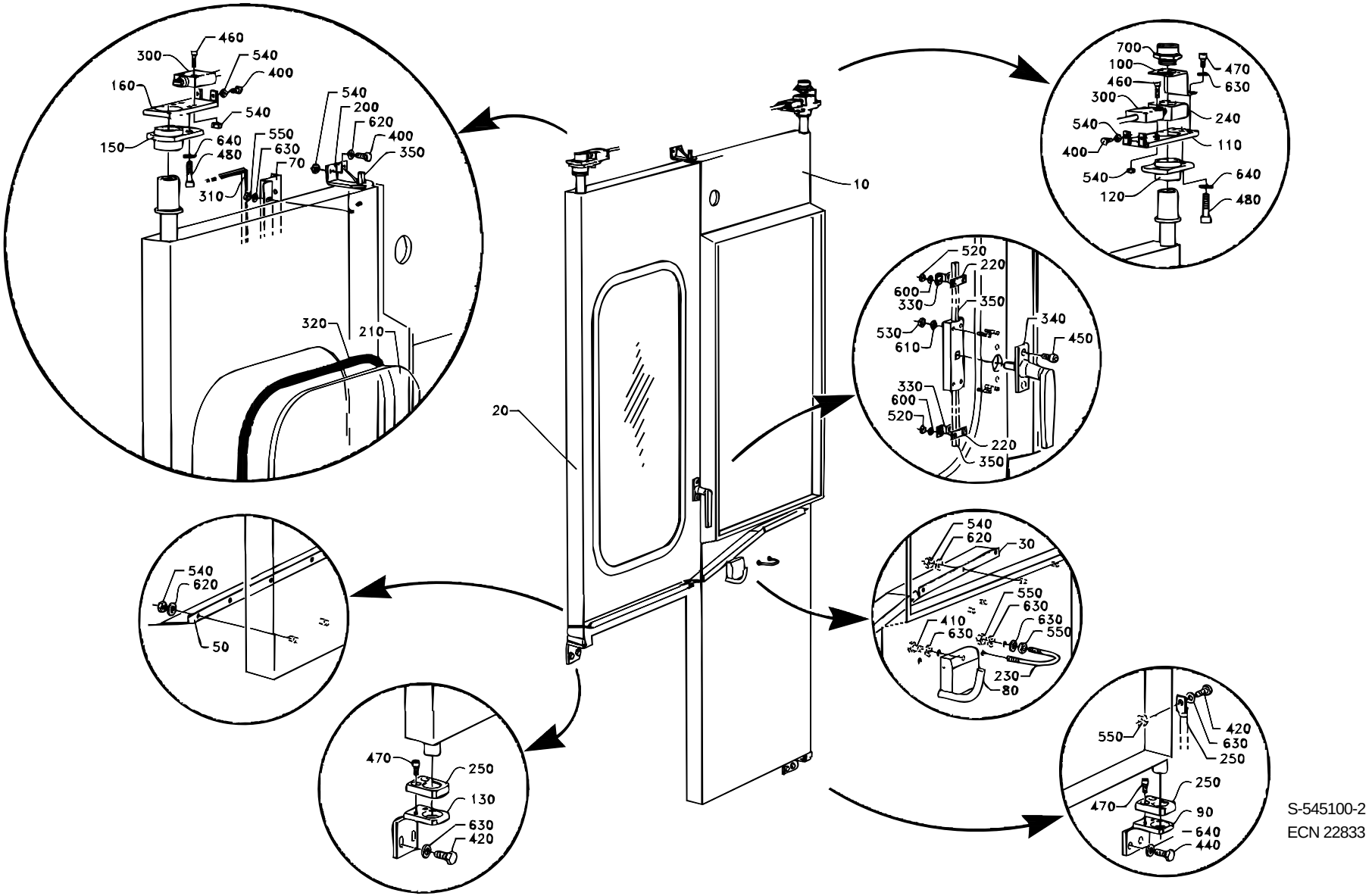

S-545100-2
ECN 22833

Pos	Part No	SP	UN	Qty	Description	Page No
Common parts						
010	544680-0000	-		1	SIDE GUARD R	
020	544900-0000	-		1	SIDECOVER RIGHT FRONT	
030	545108-0000	-		1	CHUTE	
050	451128-0000	-		1	CHUTE, RIGHT FRONT	
070	442194-0000	-		1	PROTECTIVE CASING	
080	B 531761-0000	-		1	HOLDER	
090	544482-0000	-		1	BRACKET	
100	544484-0000	-		1	HOLDER	
110	560873-0000	R		1	PLATE	
120	544486-0000	-		1	BEARING UNIT	
130	544508-0000	-		1	BRACKET	
150	560800-0000	-		1	BEARING UNIT	
160	560872-0000	-		1	PLATE	
200	293566-0000	-		1	MOUNTINGS	
210	293598-0000	D		1	GLASS PANE	
220	434858-0000	D		2	CUSHION	
230	531616-0000	-		1	HOLDER	
240	544480-0000	-		1	NUT	
250	544481-0000	D		2	PLATE	
260	1143628-0000	-		1	COVERING PLATE	
265	553164-0000	-		1	LOW IMPEDANCELITZ L=150MM	
300	90044-0094	R		2	LIMIT SWITCH	
310	90143-0035	D	MM	4550	STRIP	
320	90143-0039	D	MM	2400	STRIP	
330	90237-0011	-		2	BAR CLAMP	
340	90237-0061	-		1	HANDLE	
350	90237-0067	-		1	LOCKING DEVICE	
400	312105-0327	-		6	SCREW M6S ISO 4017 M5X12 A280	
410	312105-0364	-		2	SCREW M6S6X10RFR	
420	312105-0368	-		3	SCREW M6S ISO 4017 M6X16 A280	
440	312105-0451	-		2	SCREW M6S ISO 4017 8x20 A280	
450	312115-0325	-		2	SCREW 5X10 A4 80	
460	312115-0329	-		4	SCREW MC6S ISO 4762 M5X16 A280	
470	312115-0366	-		9	SCREW MC6S ISO 4762 M6X12 A280	
480	312115-0455	-		4	SCREW MC6S ISO 4762 M8X30 A280	
520	312605-0310	-		4	NUT,HEXAGON,M6M3 RFR	
530	312605-0312	-		4	NUT,HEXAGON,M4 RFR	
540	312605-0314	-		35	NUT,HEXAGON,M6M5 Stainless	
550	312605-0316	-		10	NUT,HEXAGON,A280 M6M6 Stainless	
600	315105-0124	-		4	WASHER,PLAIN ROUND 3,2x6	
610	315105-0136	-		4	WASHER,PLAIN ROUND 4,3x8 Stainless	
620	315105-0146	-		27	WASHER,PLAIN ROUND 5,3x10 Stainless	
630	315105-0153	-		15	WASHER,PLAIN ROUND 6,4x12 Stainless	
640	315105-0165	-		6	WASHER,PLAIN ROUND 8,4x16 Stainless	
700	352136-0152	-		1	GLAND FITTING	

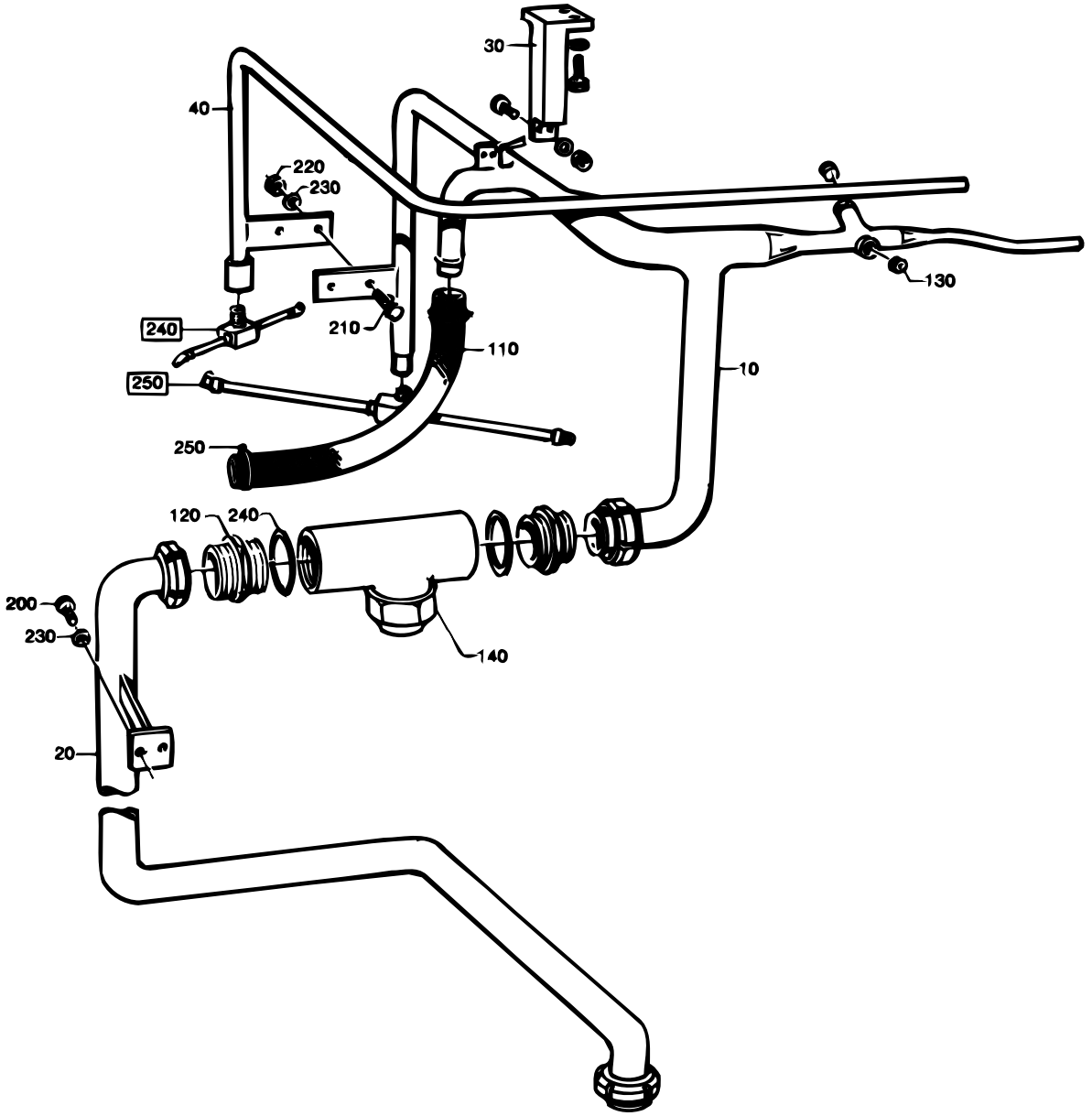

S-297808-3
ECN 8580

Pos	Part No	SP	UN	Qty	Description	Page No
Common parts						
F240	A 476887-0200	D		1	CLEANING HEAD	**193**
F250	A 476884-0200	D		1	CLEANING HEAD	**195**
010	542706-0000	-		1	PIPE	
020	297800-0000	-		1	PIPE	
030	297802-0000	-		1	BRACKET	
040	297805-0000	-		1	PIPE	
100	90157-0016	-	ML	x	LOCKING FLUID	
110	90166-0142	R	MM	750	HOSE	
120	90217-0053	-		2	NIPPLE	
130	90330-0026	R		2	PLUG,EXTERNAL G-THREAD G1/4"	
140	B 90415-0032	N		1	FILTER	
200	312105-0368	-		2	SCREW M6S ISO 4017 M6X16 A280	
210	312105-0370	-		6	SCREW M6S ISO 4017 M6X20 A280	
220	312605-0316	-		4	NUT,HEXAGON,A280 M6M6 Stainless	
230	315105-0153	-		10	WASHER,PLAIN ROUND 6,4x12 Stainless	
240	315250-0103	J		2	GASKET 48/38	
250	342991-0106	-		2	HOSE CLIP,WORM DRIVE TYPE (30)-36	

CLEANING HEAD

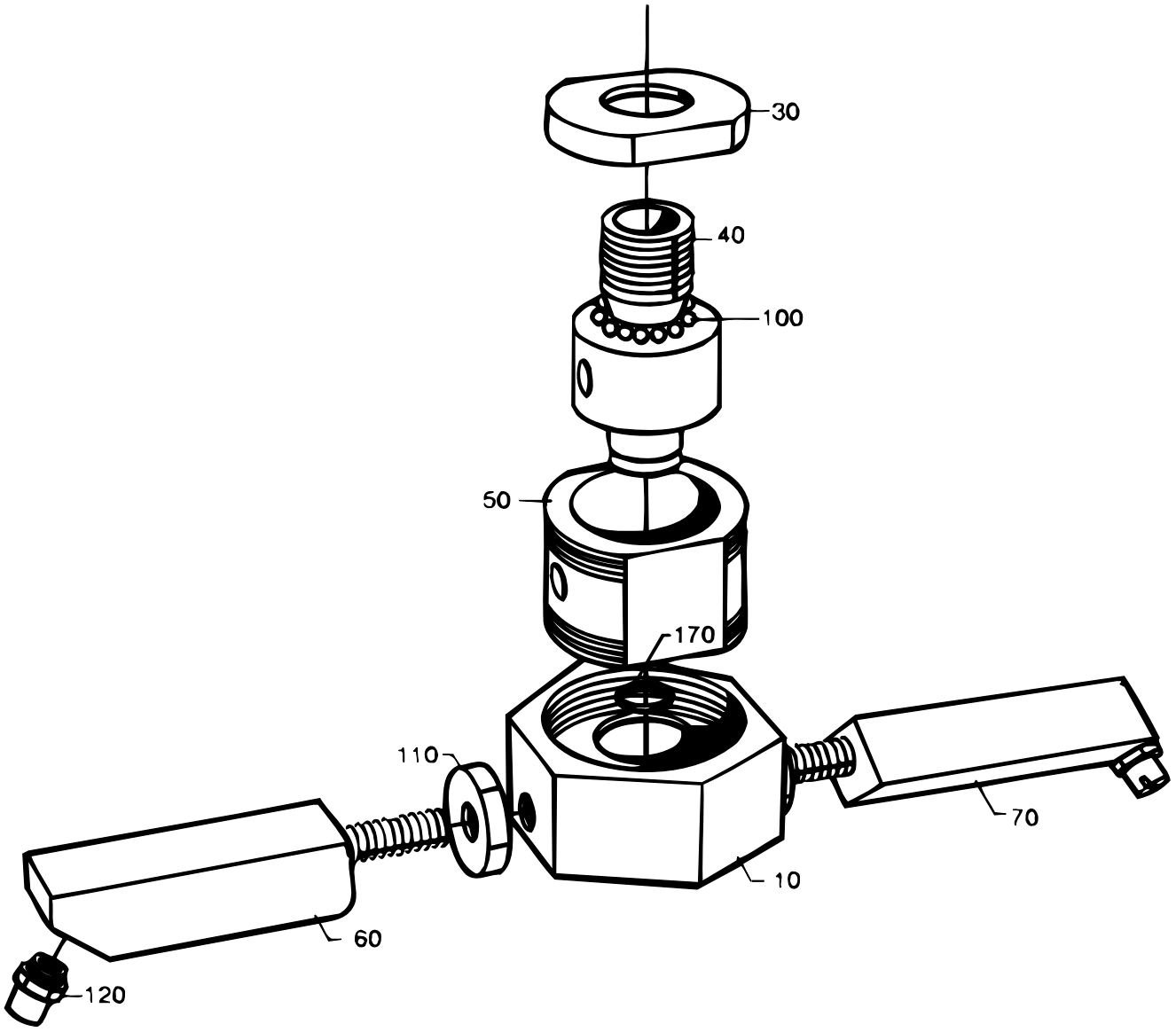

S-476887-1
ECN 14358

Pos	Part No	SP	UN	Qty	Description	Page No
Common parts						
010	440600-0000	R		1	ROTOR	
030	534880-0000	R		1	END SECTION	
040	534878-0000	R		1	SHAFT	
050	534879-0000	R		1	BEARING HOUSING	
060	440604-0001	R		1	PIPE	
070	440605-0001	R		1	PIPE	
100	90090-0020	J		24	BALLS 5	
110	90330-0034	-		2	NUT,HEXAGON G1/4"	
120	90424-0026	K		2	NOZZLE	
170	315202-0211	J		1	O-RINGS 13,3X2,4	

Pos	Part No	SP	UN	Qty	Description	Page No

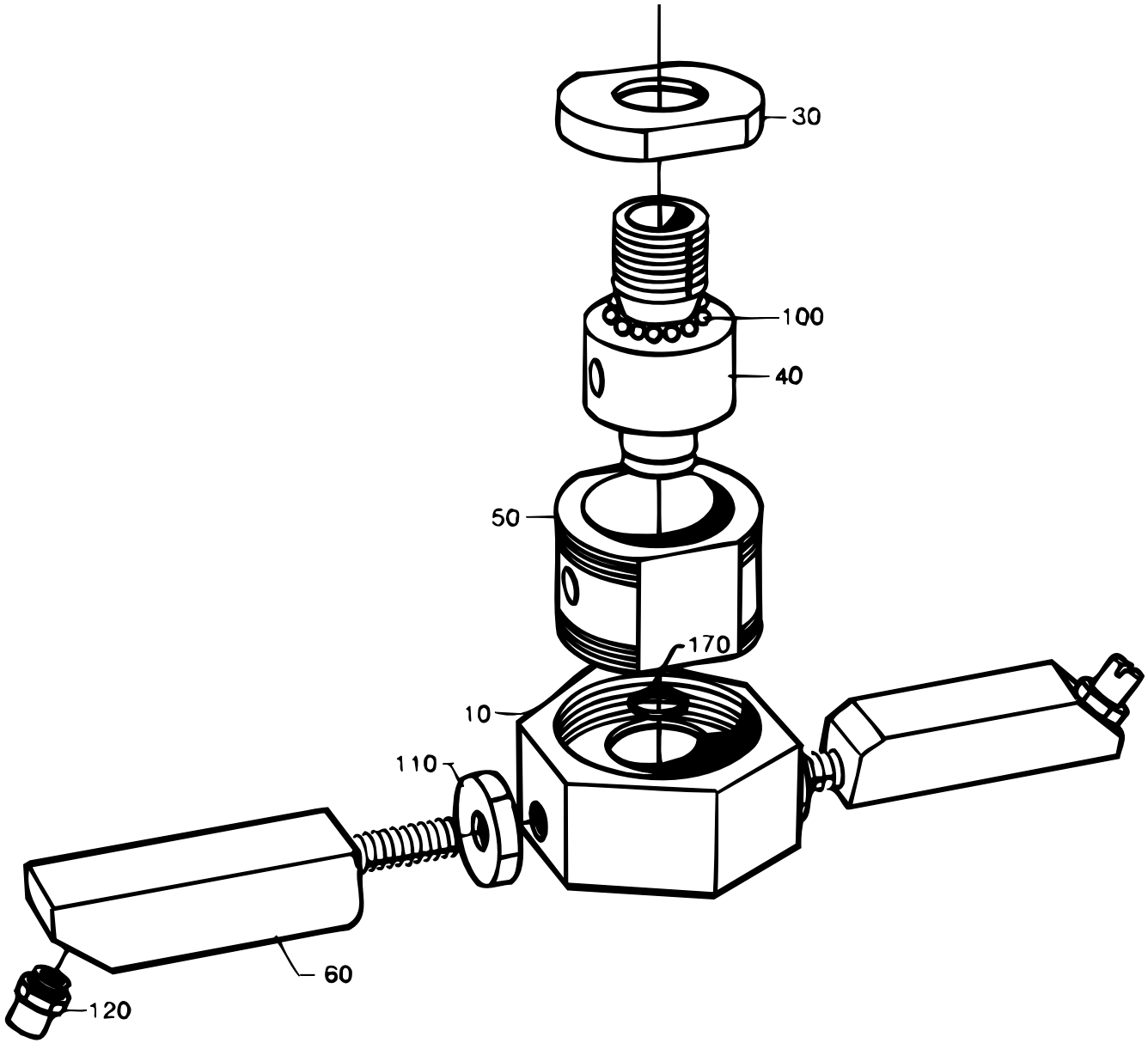

S-476884-1
ECN 8145

Pos	Part No	SP	UN	Qty	Description	Page No
Common parts						
010	440600-0000	R		1	ROTOR	
030	534880-0000	R		1	END SECTION	
040	534878-0000	R		1	SHAFT	
050	534879-0000	R		1	BEARING HOUSING	
060	440604-0001	R		2	PIPE	
100	90090-0020	J		24	BALLS 5	
110	90330-0034	-		2	NUT,HEXAGON G1/4"	
120	90424-0026	K		2	NOZZLE	
170	315202-0211	J		1	O-RINGS 13,3X2,4	

Pos	Part No	SP	UN	Qty	Description	Page No

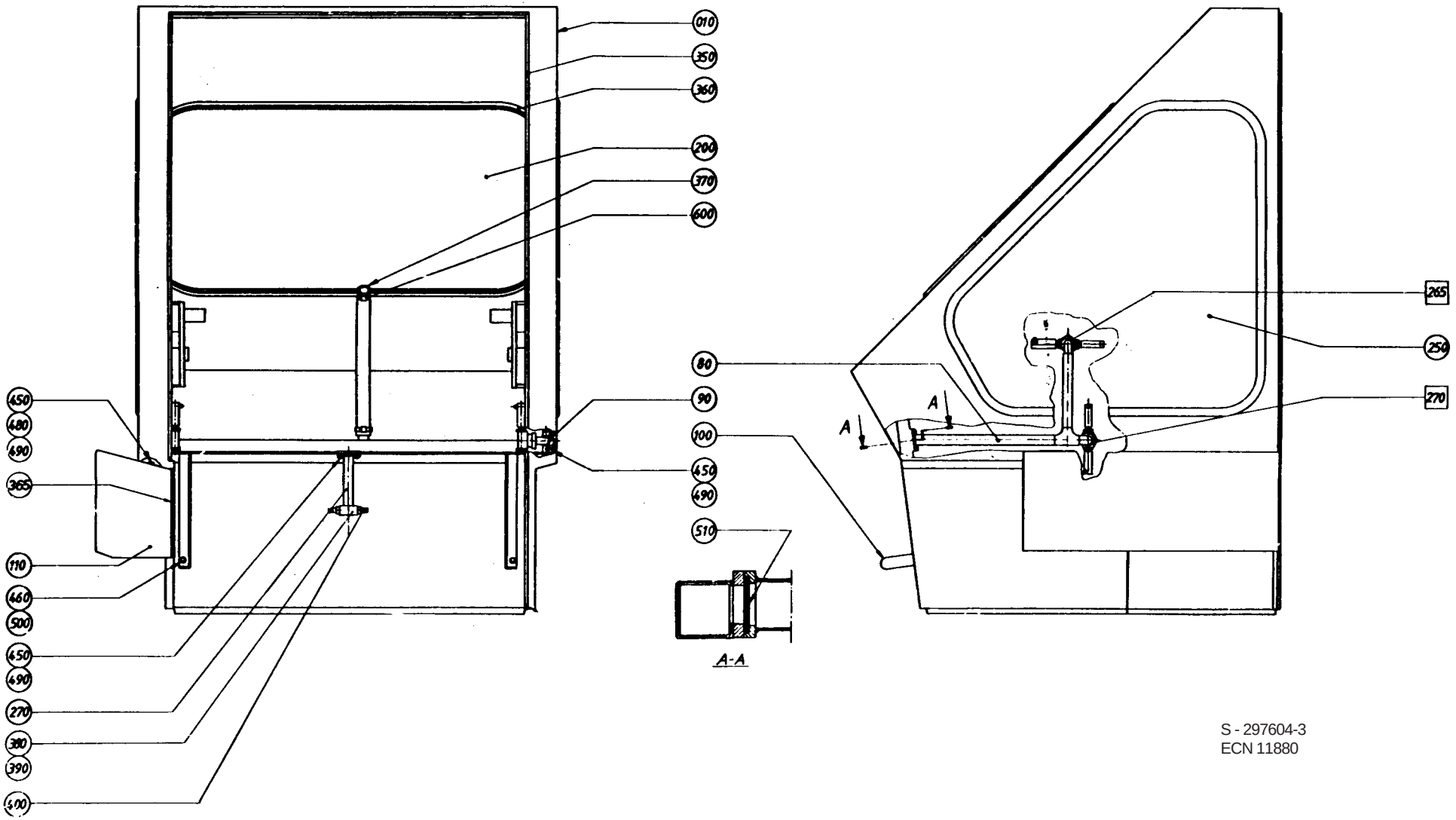

S - 297604-3
ECN 11880

Pos	Part No	SP	UN	Qty	Description	Page No
RIGHT OUT						
010	543148-0000	-		1	HOOD	
110	550503-0000	-		1	PROTECTION	
LEFT OUT						
010	594588-0000	-		1	HOOD	
110	595054-0000	-		1	PROTECTION	
Common parts						
F265	A 476885-0200	-		2	CLEANING HEAD	**201**
F270	A 476886-0200	-		2	CLEANING HEAD	**203**
080	499833-0000	-		1	PIPE RIGHT	
090	499834-0000	-		1	PIPE LEFT	
100	285956-0000	-		1	HANDLE	
200	262774-0009	D		1	GLASS PANE	
250	297488-0000	D		2	GLASS PANE	
270	297679-0000	-		1	PIPE	
350	90143-0035	D	MM	4500	STRIP	
360	90143-0039	D	MM	9500	STRIP	
365	90143-0068	D	MM	200	RUBBERSTRIP EMKA 1011-06	
370	90166-0142	-	MM	600	HOSE	
380	90330-0024	-		1	T-PIPE,INTERNAL THREAD Rp1/4"	
390	90330-0083	-		1	NIPPLES,HEXAGON,EXT.R-THREAD R3/8"-R1/4"	
400	90424-0025	K		2	NOZZLE	
450	312105-0368	-		11	SCREW M6S ISO 4017 M6X16 A280	
460	312105-0451	-		2	SCREW M6S ISO 4017 8x20 A280	
480	312605-0316	-		4	NUT,HEXAGON,A280 M6M6 Stainless	
490	315105-0153	-		10	WASHER,PLAIN ROUND 6,4x12 Stainless	
500	315105-0165	-		2	WASHER,PLAIN ROUND 8,4x16 Stainless	
510	315202-0216	D		3	O-RINGS 22,2X3	
600	342991-0106	-		2	HOSE CLIP,WORM DRIVE TYPE (30)-36	

Pos	Part No	SP	UN	Qty	Description	Page No

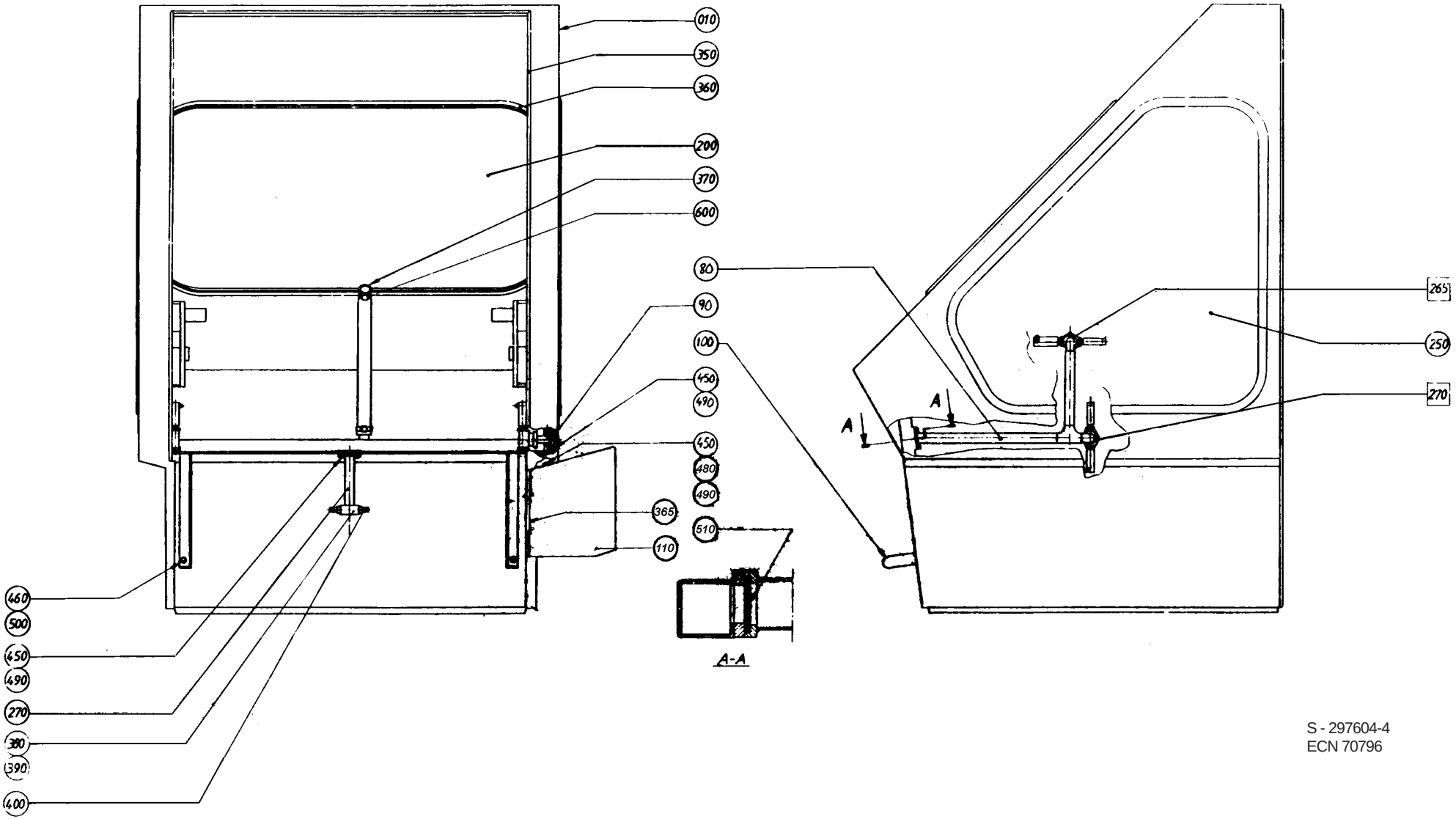

S - 297604-4
ECN 70796

Pos	Part No	SP	UN	Qty	Description	Page No
RIGHT OUT						
010	543148-0000	-		1	HOOD	
110	550503-0000	-		1	PROTECTION	
LEFT OUT						
010	594588-0000	-		1	HOOD	
110	595054-0000	-		1	PROTECTION	
Common parts						
F265	A 476885-0200	-		2	CLEANING HEAD	**201**
F270	A 476886-0200	-		2	CLEANING HEAD	**203**
080	499833-0000	-		1	PIPE RIGHT	
090	499834-0000	-		1	PIPE LEFT	
100	285956-0000	-		1	HANDLE	
200	262774-0009	D		1	GLASS PANE	
250	297488-0000	D		2	GLASS PANE	
270	297679-0000	-		1	PIPE	
350	90143-0035	D	MM	4500	STRIP	
360	90143-0039	D	MM	9500	STRIP	
365	90143-0068	D	MM	200	RUBBERSTRIP EMKA 1011-06	
370	90166-0142	-	MM	600	HOSE	
380	90330-0024	-		1	T-PIPE,INTERNAL THREAD Rp1/4"	
390	90330-0083	-		1	NIPPLES,HEXAGON,EXT.R-THREAD R3/8"-R1/4"	
400	90424-0025	K		2	NOZZLE	
450	312105-0368	-		11	SCREW M6S ISO 4017 M6X16 A280	
460	312105-0451	-		2	SCREW M6S ISO 4017 8x20 A280	
480	312605-0316	-		4	NUT,HEXAGON,A280 M6M6 Stainless	
490	315105-0153	-		10	WASHER,PLAIN ROUND 6,4x12 Stainless	
500	315105-0165	-		2	WASHER,PLAIN ROUND 8,4x16 Stainless	
510	315202-0216	D		3	O-RINGS 22,2X3	
600	342991-0106	-		2	HOSE CLIP,WORM DRIVE TYPE (30)-36	

Pos	Part No	SP	UN	Qty	Description	Page No

CLEANING HEAD

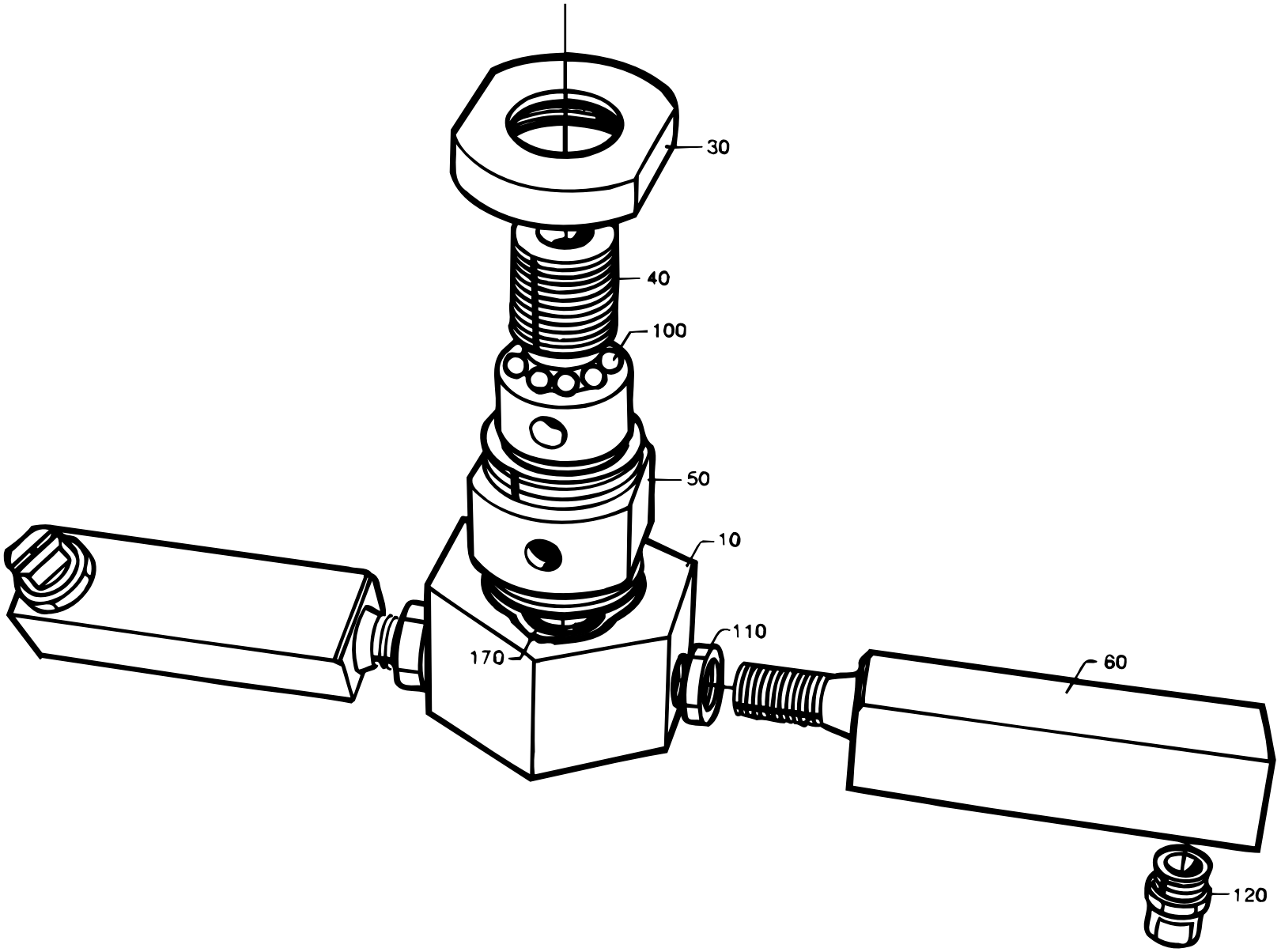

S-476885-1-2
ECN 14358

Pos	Part No	SP	UN	Qty	Description	Page No
Common parts						
010	440600-0000	R		1	ROTOR	
030	534880-0000	R		1	END SECTION	
040	534878-0000	R		1	SHAFT	
050	534879-0000	R		1	BEARING HOUSING	
060	440605-0001	R		2	PIPE	
100	90090-0020	J		24	BALLS 5	
110	90330-0034	-		2	NUT,HEXAGON G1/4"	
120	90424-0026	K		2	NOZZLE	
170	315202-0211	J		1	O-RINGS 13,3X2,4	

Pos	Part No	SP	UN	Qty	Description	Page No

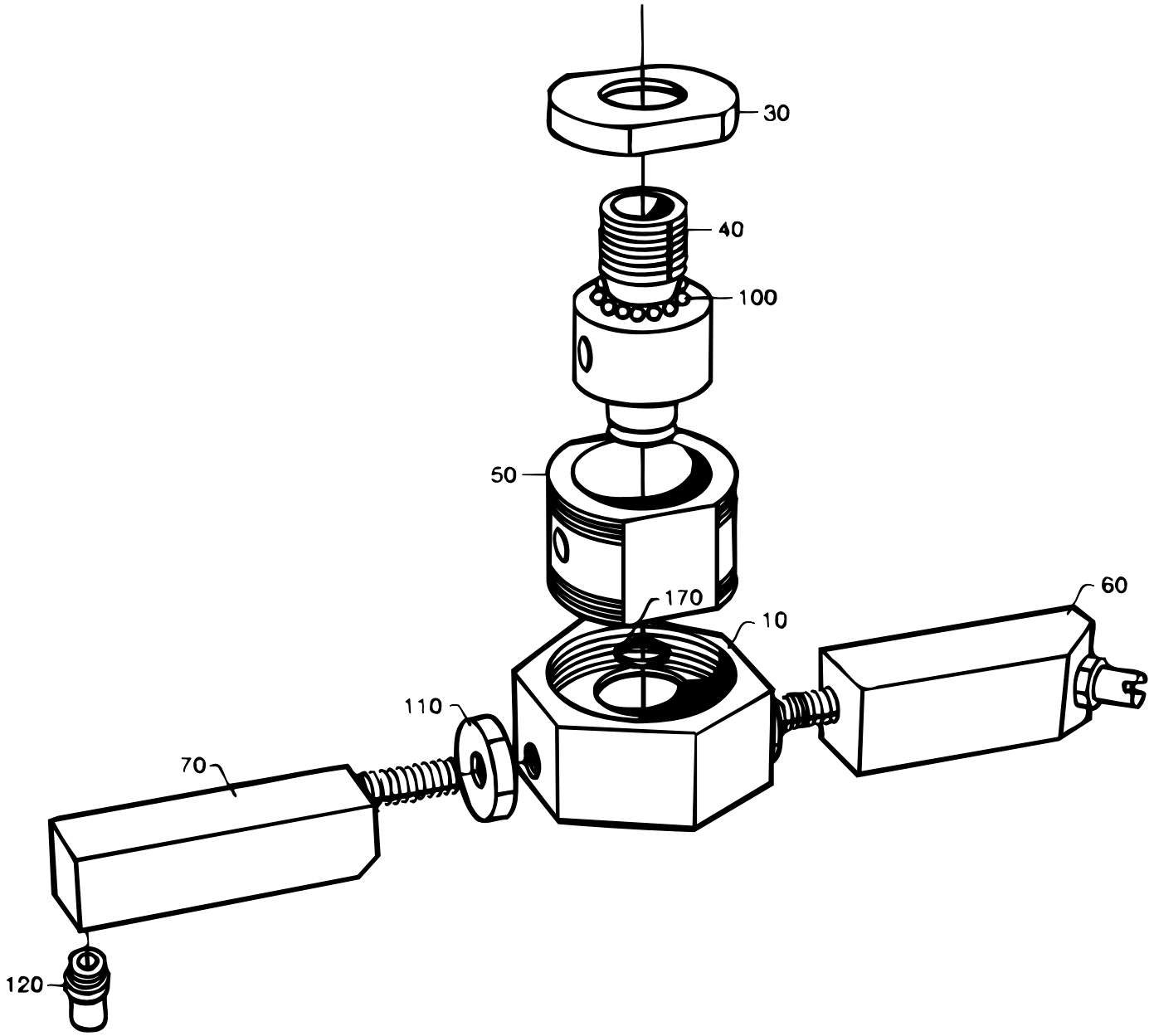

S-476886-1
ECN 14358

Pos	Part No	SP	UN	Qty	Description	Page No
Common parts						
010	440600-0000	R		1	ROTOR	
030	534880-0000	R		1	END SECTION	
040	534878-0000	R		1	SHAFT	
050	534879-0000	R		1	BEARING HOUSING	
060	440604-0001	R		1	PIPE	
070	440605-0001	R		1	PIPE	
100	90090-0020	J		24	BALLS 5	
110	90330-0034	-		2	NUT,HEXAGON G1/4"	
120	90424-0026	K		2	NOZZLE	
170	315202-0211	J		1	O-RINGS 13,3X2,4	

Pos	Part No	SP	UN	Qty	Description	Page No

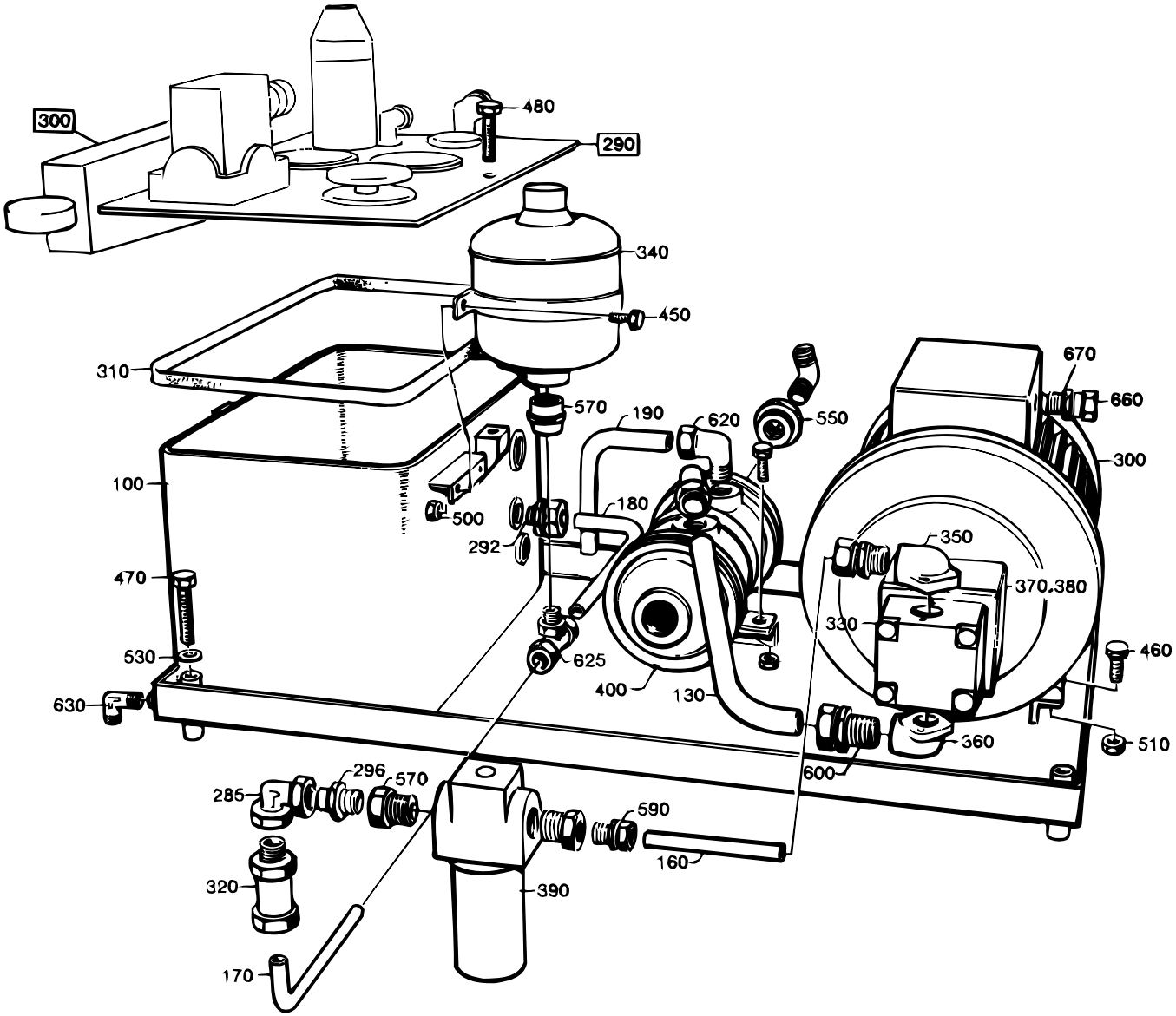

S-434707-1
ECN 15284

Pos	Part No	SP	UN	Qty	Description	Page No
Common parts						
100	252953-0000	-		1	TANK	
130	434710-0000	-		1	PIPE	
160	434714-0000	-		1	PIPE	
170	434717-0000	-		1	PIPE	
180	434718-0000	-		1	PIPE	
190	434719-0000	-		1	PIPE	
285	90030-0121	-		2	ELBOW CONNECTION EVW,INT 10	
292	90030-0157	-		3	CONNECTION	
296	90030-0178	-		1	STRIGHT NIPPLE EVGE 10-LR	
300	90045-0079	D		1	MOTOR	
310	90091-0159	R		1	GASKET	
320	90230-0017	N		1	NON RETURN VALVE	
330	90321-0018	M		1	GEAR PUMP MLPS/T124D	
340	90321-0381	D		1	ACCUMULATOR	
350	90321-0382	D		1	FLANGE	
360	90321-0383	D		1	FLANGE	
370	90321-0384	M		1	DISTANCE PIECE	
380	90321-0385	M		1	COUPLING	
390	B 90415-0029	D		1	FILTER	
400	B 90422-0008	D		1	COOLER	
450	312101-0368	-		2	SCREW M6S 6x16 Zink Plated	
460	312101-0453	-		4	SCREW M6S 8x25 FZB	
470	312101-0463	-		4	SCREW M6S8X60FZB	
480	312101-0495	-		2	SCREW M6S10X30FZB	
500	312601-0316	-		2	NUT M6M 6-8 FZB	
510	312601-0318	-		4	NUT M6M8FZB	
530	315111-0165	-		4	WASHER TBRB8,4X16FZB	
550	342701-0208	-		2	BUSHING RNI3/4"-1/4"	
570	342712-0205	-		3	REDUCER RI1/2"-1/4"	
590	342721-0108	-		1	PIPE COUPLGA10-LRFZB REPBY 0342752-0104	
600	342721-0114	-		1	PIPE COUPLGA15-LRFZB REPBY 0342752-0114	
620	342731-0114	-		3	ELBOW CONNECTION WE 15-LRFZB	
625	342741-0108	-		1	T-PIPE CONNECTION TA-10-R1/4"	
630	342930-0122	-		3	ELBOW 90 COUPL.,EXT.THREAD 8/6-R1/4"	
660	352136-0129	-		1	GLAND FITTING PR22,5/PG16 Di=16mm	
670	352100-0111	-		1	CABLE GLANR.22,5-13,5	
TBA/8						
F290	A 276343-0300	-		1	LID	**207**

Pos	Part No	SP	UN	Qty	Description	Page No

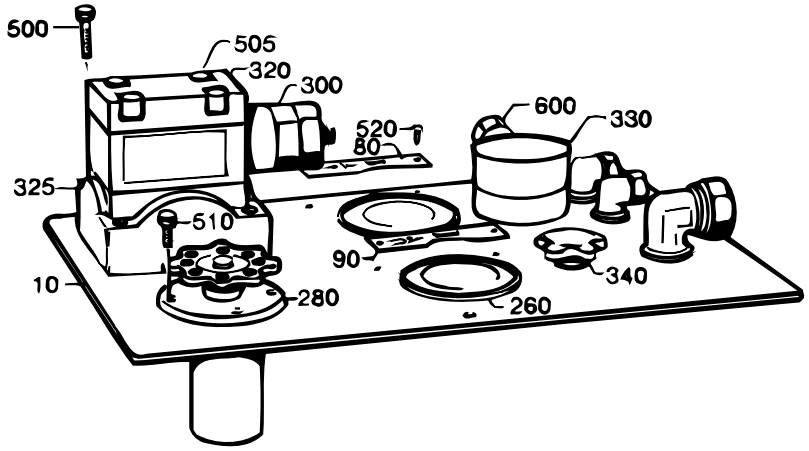

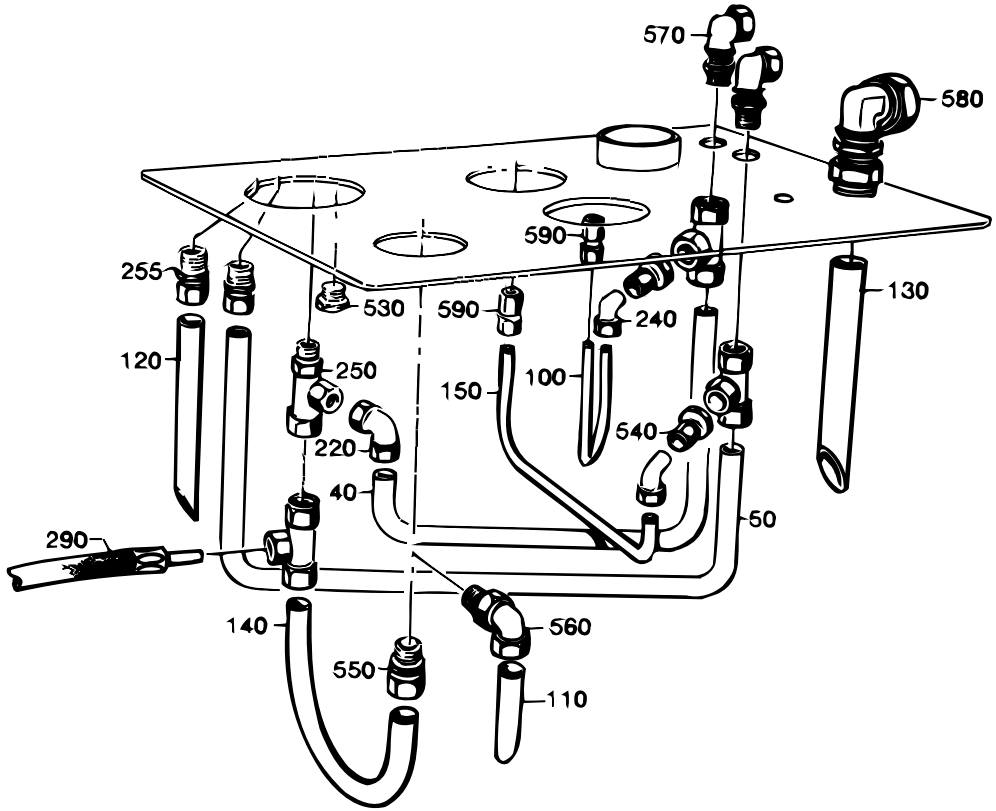

S-276343-2
ECN 8459

Pos	Part No	SP	UN	Qty	Description	Page No
Common parts						
010	442076-0000	-		1	LID	
040	434708-0000	-		1	PIPE	
050	434709-0000	-		1	PIPE	
080	247385-0000	-		1	SIGN	
090	247386-0000	-		1	SIGN	
100	434711-0000	-		1	PIPE	
110	434712-0001	-		1	PIPE	
120	434712-0002	-		1	PIPE	
130	434713-0000	-		1	PIPE	
140	434715-0000	-		1	PIPE	
150	434716-0000	-		1	PIPE	
220	90030-0121	-		1	ELBOW CONNECTION EVW,INT 10	
240	90030-0146	-		2	ELBOW CONNECTION EVW,EXT 6-G1/8"	
250	90030-0120	-		4	L-PIPE CONNECTION,EVL,INT.T-8	
255	90030-0157	-		3	CONNECTION	
260	90043-0062	R		2	MANOMETER	
280	90113-0044	N		1	PRESSURE REGULATOR	
290	90148-0036	-		1	HOSE	
300	90201-0014	N		1	VALVE	
320	90201-0307	-		1	PLATE	
325	90201-0308	-		1	PLATE	
330	90274-0053	D		1	LEVEL PROBE	
340	90277-0041	D		1	FILTER	
500	312111-0333	-		4	SCREW MC6S5X25FZB	
505	312111-0343	-		4	SCREW MC6S5X60FZB	
510	312111-0368	-		4	SCREW MC6S6X16FZB	
520	312502-0171	-		4	DRIVE SCREW ROUND HEAD SMS 1549 KDS 2X6	
530	342713-0311	-		1	BLIND PLUG BPS38	
540	342714-0202	-		2	REDUCTION KOR 10/6-LFZB	
550	342721-0108	-		1	PIPE COUPLGA10-LRFZB REPBY 0342752-0104	
560	342731-0108	-		1	ELBOW CONNECTION WE 10-LRFZB	
570	342764-0108	-		2	BULKHEAD LWSV10-LFZB	
580	342764-0114	-		1	BULKHEAD LWSV15-LFZB	
590	342790-0102	-		2	PRESSURE GAUGE CONNECTION MAV6-LRFZB	
600	352136-0113	-		1	GLAND FITTING PR18,6/PG11 Di=12mm	

Pos	Part No	SP	UN	Qty	Description	Page No

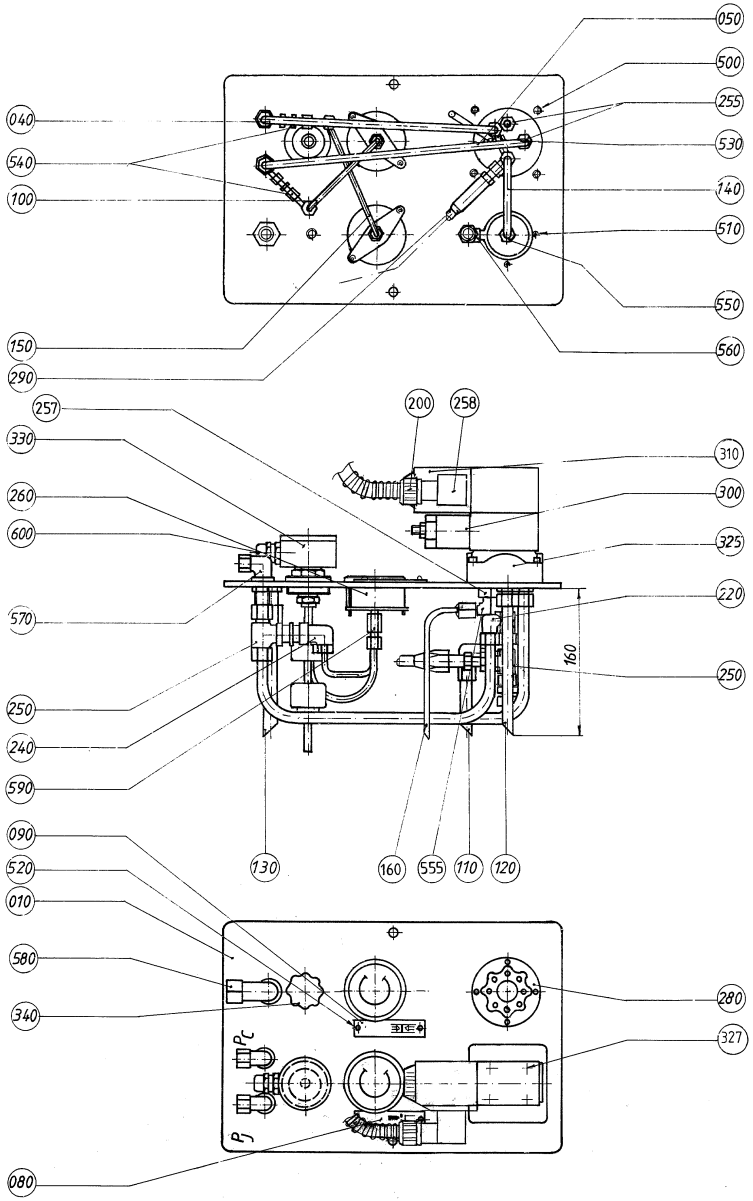

S - 592564-1
ECN 70455

Pos	Part No	SP	UN	Qty	Description	Page No
Common parts						
010	442076-0000	-		1	LID	
040	434708-0000	-		1	PIPE	
050	434709-0000	-		1	PIPE	
080	247385-0000	-		1	SIGN	
090	247386-0000	-		1	SIGN	
100	434711-0000	-		1	PIPE	
110	434712-0001	-		1	PIPE	
120	434712-0002	-		1	PIPE	
130	434713-0000	-		1	PIPE	
140	434715-0000	-		1	PIPE	
150	434716-0000	-		1	PIPE	
160	592558-0000	-		1	TUBE	
200	90012-0063	-		1	Cable Gland PR 15,2	
220	90030-0121	-		1	ELBOW CONNECTION EVW,INT 10	
240	90030-0146	-		2	ELBOW CONNECTION EVW,EXT 6-G1/8"	
250	90030-0120	-		4	L-PIPE CONNECTION,EVL,INT.T-8	
255	90030-0157	-		3	CONNECTION	
257	90030-0594	-		1	Reducing adapter	
258	90042-0398	-		1	CONTACT	
260	90043-0062	K		2	MANOMETER	
280	90113-0044	K		1	PRESSURE REGULATOR	
290	90148-0036	-		1	HOSE	
300	90201-0014	K		1	VALVE	
310	B 90201-0058	-		1	SOLENOID VALVE	
325	90201-0308	-		1	PLATE	
327	90201-0407	-		1	BOLT KIT	
330	90274-0053	-		1	LEVEL PROBE	
340	90277-0041	-		1	FILTER	
500	312111-0333	-		4	SCREW MC6S5X25FZB	
510	312111-0368	-		4	SCREW MC6S6X16FZB	
520	312502-0171	-		4	DRIVE SCREW ROUND HEAD SMS 1549 KDS 2X6	
530	342713-0311	-		1	BLIND PLUG BPS38	
540	342714-0202	-		2	REDUCTION KOR 10/6-LFZB	
550	342752-0104	-		1	STRAIGHT CONNECTION GA-10-G1/4"	
555	342731-0102	-		1	ELBOW CONNECTION WE 6-LRFZB	
560	342731-0108	-		1	ELBOW CONNECTION WE 10-LRFZB	
570	342764-0108	-		2	BULKHEAD LWSV10-LFZB	
580	342764-0114	-		1	BULKHEAD LWSV15-LFZB	
590	342790-0102	-		2	PRESSURE GAUGE CONNECTION MAV6-LRFZB	
600	352136-0113	-		1	GLAND FITTING PR18,6/PG11 Di=12mm	

Pos	Part No	SP	UN	Qty	Description	Page No

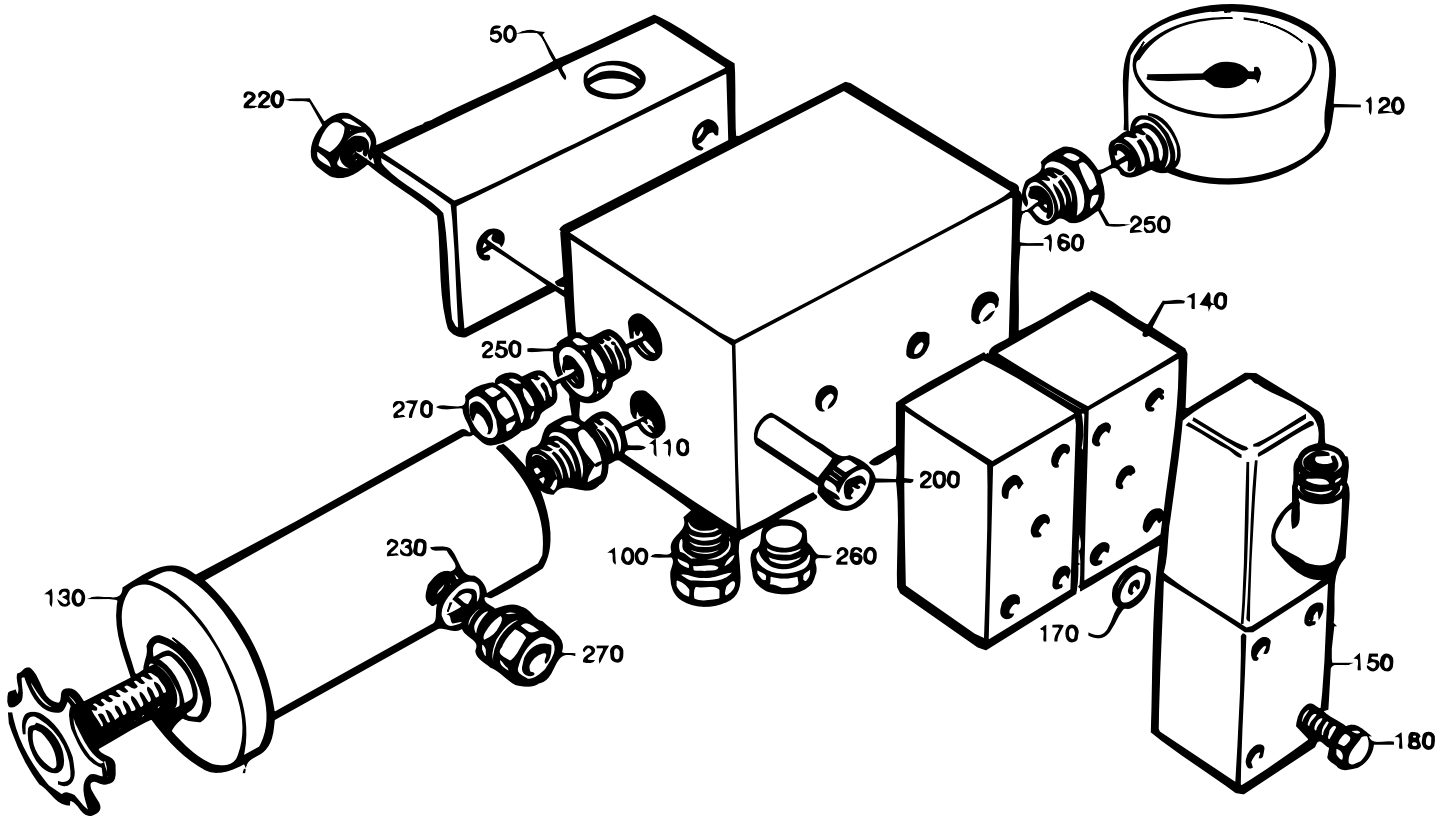

S-442077-1
ECN 7623

Pos	Part No	SP	UN	Qty	Description	Page No
Common parts						
050	442078-0000	-		1	CANTILEVER	
100	90030-0157	-		2	CONNECTION	
110	90030-0183	-		1	NIPPLE RA 1/2"x1/4"	
120	90043-0075	-		1	PRESSURE GAUGE	
130	90113-0044	-		1	PRESSURE REGULATOR	
140	B 90201-0010	-		2	VALVE	
150	B 90201-0058	-		2	SOLENOID VALVE	
160	90201-0309	-		1	BLOCK	
170	90201-0302	-		2	WASHER	
180	90201-0303	-		2	SPARE PARTS KIT	
200	312111-0345	-		2	SCREW MC6S5X70FZB	
220	312601-0314	-		2	NUT M6M5FZB	
230	315111-0179	-		1	WASHER	
250	342712-0205	-		2	REDUCER RI1/2"-1/4"	
260	342713-0311	-		2	BLIND PLUG BPS38	
270	342721-0108	-		2	PIPE COUPLGA10-LRFZB REPBY 0342752-0104	

Pos	Part No	SP	UN	Qty	Description	Page No

CRANK BRACKET

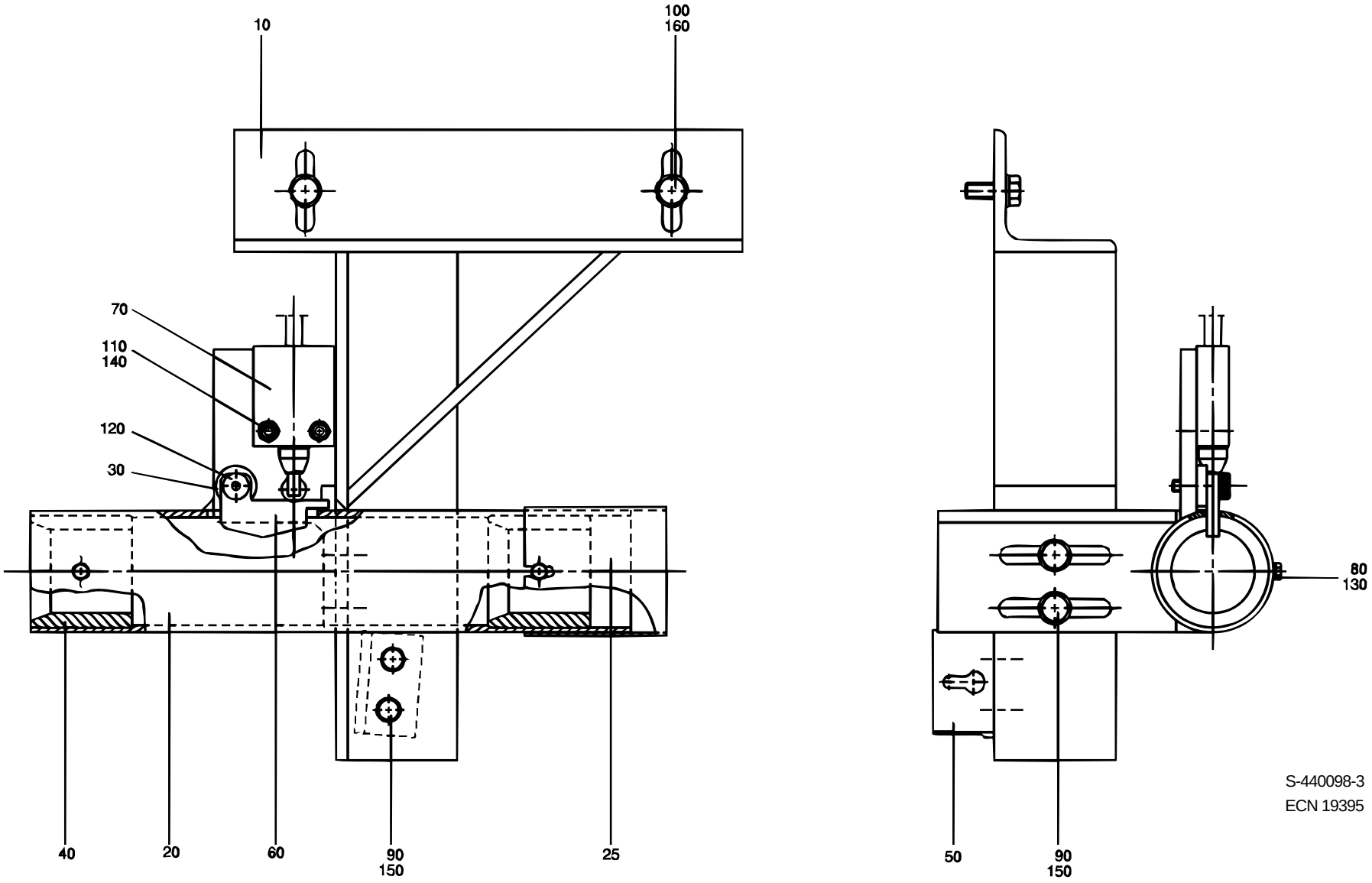

Pos	Part No	SP	UN	Qty	Description	Page No
Common parts						
010	434659-0000	-		1	CRANK BRACKET	
020	541009-0000	-		1	CRANK HOLDER	
025	574652-0000	-		1	PROTECTION	
030	20770-0000	-		1	WASHER	
040	434661-0000	D		2	BUSHING	
050	434664-0000	-		1	BRACKET	
060	569163-0000	D		1	ARM	
070	90044-0094	R		1	LIMIT SWITCH	
080	312101-0289	-		2	SCREW M6S4X10FZB	
090	312101-0368	-		2	SCREW M6S 6x16 Zink Plated	
100	312101-0451	-		4	SCREW M6S 8x20 FZB	
110	312111-0329	-		2	SCREW MC6S5X16FZB	
120	312180-0447	-		1	HEX. SOCKET HEAD SHOULD. ISO 7379 M6X12	
130	315101-0136	-		2	WASHER BRB4,3X8FZB	
140	315101-0146	-		2	WASHER BRB 5,3x10 FZB	
150	315101-0153	-		2	WASHER BRB 6,4x12 FZB	
160	315111-0165	-		4	WASHER TBRB8,4X16FZB	

Pos	Part No	SP	UN	Qty	Description	Page No

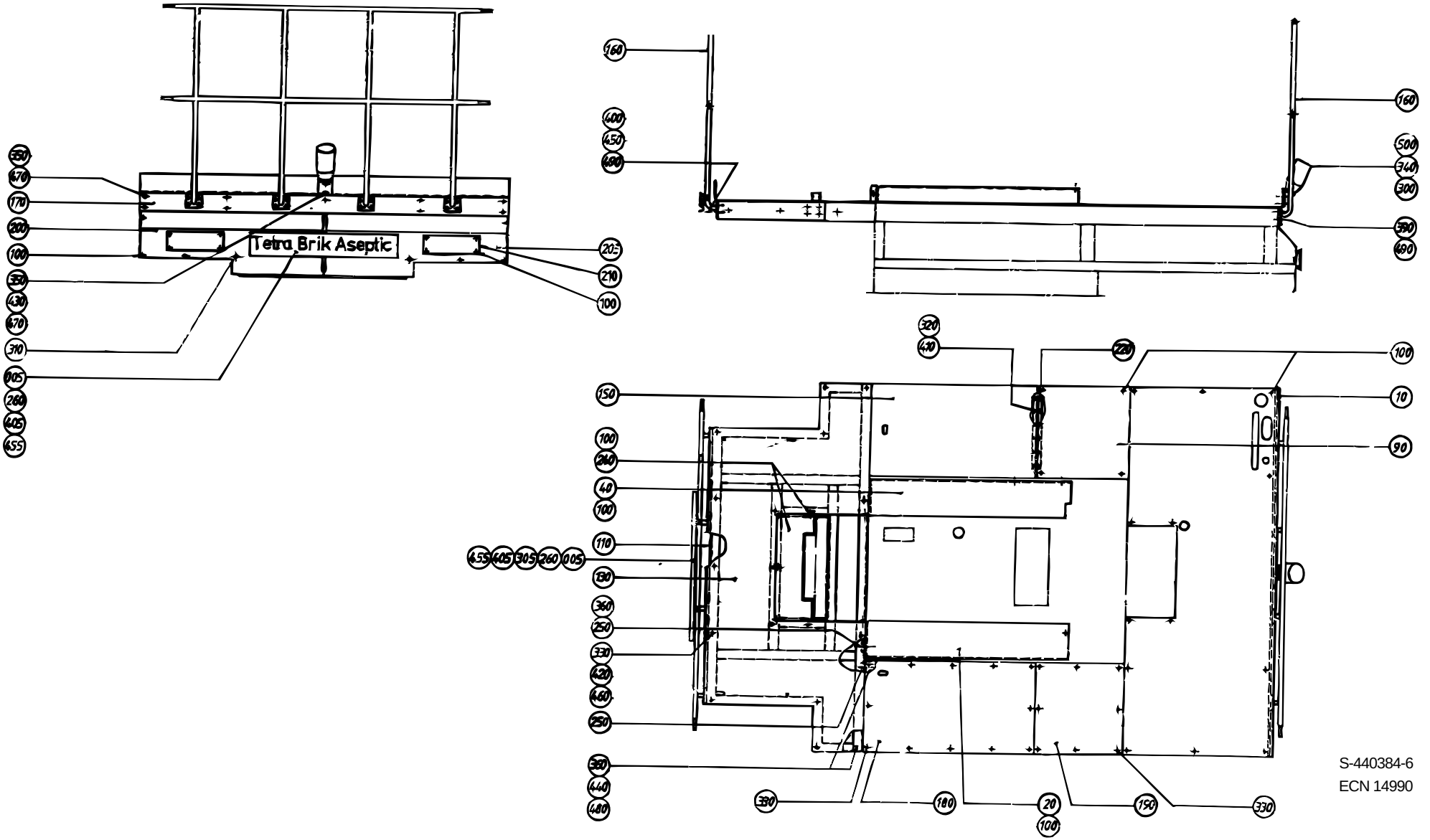
Tetra Brik Aseptic
S-440384-6
ECN 14990

Pos	Part No	SP	UN	Qty	Description	Page No
TBA/8						
005	544527-0000	-		2	MACHINE PLATE TBA	
010	B 927319-0000	-		1	PLATFORM	
020	279807-0000	-		1	COVER	
040	279885-0000	-		1	COVER	
090	576833-0000	-		1	PLATFORM	
100	90287-0075	-		40	SCREW, PAN HEAD,LKCS ISO1580, M6x12	
Common parts						
110	440385-0000	-		1	CANTILEVER	
130	440386-0000	-		1	PLATFORM REAR	
150	576835-0000	-		1	PLATFORM COVER	
160	263323-0000	-		2	RAILING	
170	263612-0000	-		1	RAIL	
180	269274-0000	-		1	PLATFORM COVER	
190	269275-0000	-		1	PLATFORM COVER	
200	548346-0000	-		1	FRONT GUARD	
205	560799-0000	-		1	FRONT GUARD	
210	548348-0000	-		2	HATCH	
220	239847-0000	-		1	HINGE	
240	440389-0000	-		1	HATCH	
250	445858-0000	-		4	WASHER	
260	544533-0000	-		4	PLASTIC PEHD 21172-10	
300	90036-0038	F		1	BULB 24V 25W E27	
305	90165-0086	-		2	CRAMP	
310	90287-0062	-		2	SCREW	
320	90287-0074	-		12	SCREW, PAN HEAD,LKCS ISO1580, M4x12	
330	90287-0076	-		38	SCREW, PAN HEAD,LKCS ISO1580, M6x20	
340	B 90419-0005	D		1	ALARM BEACON,RED24V	
350	312101-0453	-		10	SCREW M6S 8x25 FZB	
360	312101-0540	-		6	SCREW M6S12X40FZB	
390	312105-0491	-		16	SCREW M6S ISO 4017 M10X20 A280	
400	312105-0493	-		16	SCREW M6S ISO 4017 M10X25 A280	
405	312155-0370	-		4	SCREW MF6S DIN 7991 M6X20 A280	
410	312601-0312	-		12	NUT M6M4FZB	
420	312601-0316	-		19	NUT M6M 6-8 FZB	
430	312601-0318	-		2	NUT M6M8FZB	
440	312601-0322	-		4	NUT M6M 12-8 FZB	
450	312605-0320	-		32	NUT,HEXAGON,M10 A280	
455	312812-0316	-		4	NUT,HEXAGON,LOCK,WITH NYLON INSERT,M6	
460	315101-0153	-		19	WASHER BRB 6,4x12 FZB	
470	315101-0165	-		10	WASHER BRB8,4X16FZB	
480	315101-0178	-		6	WASHER BRB 13x24 FZB	
490	315105-0173	-		48	WASHER,PLAIN ROUND 10,5x22 STAINLESS	
500	352136-0113	-		1	GLAND FITTING PR18,6/PG11 Di=12mm	

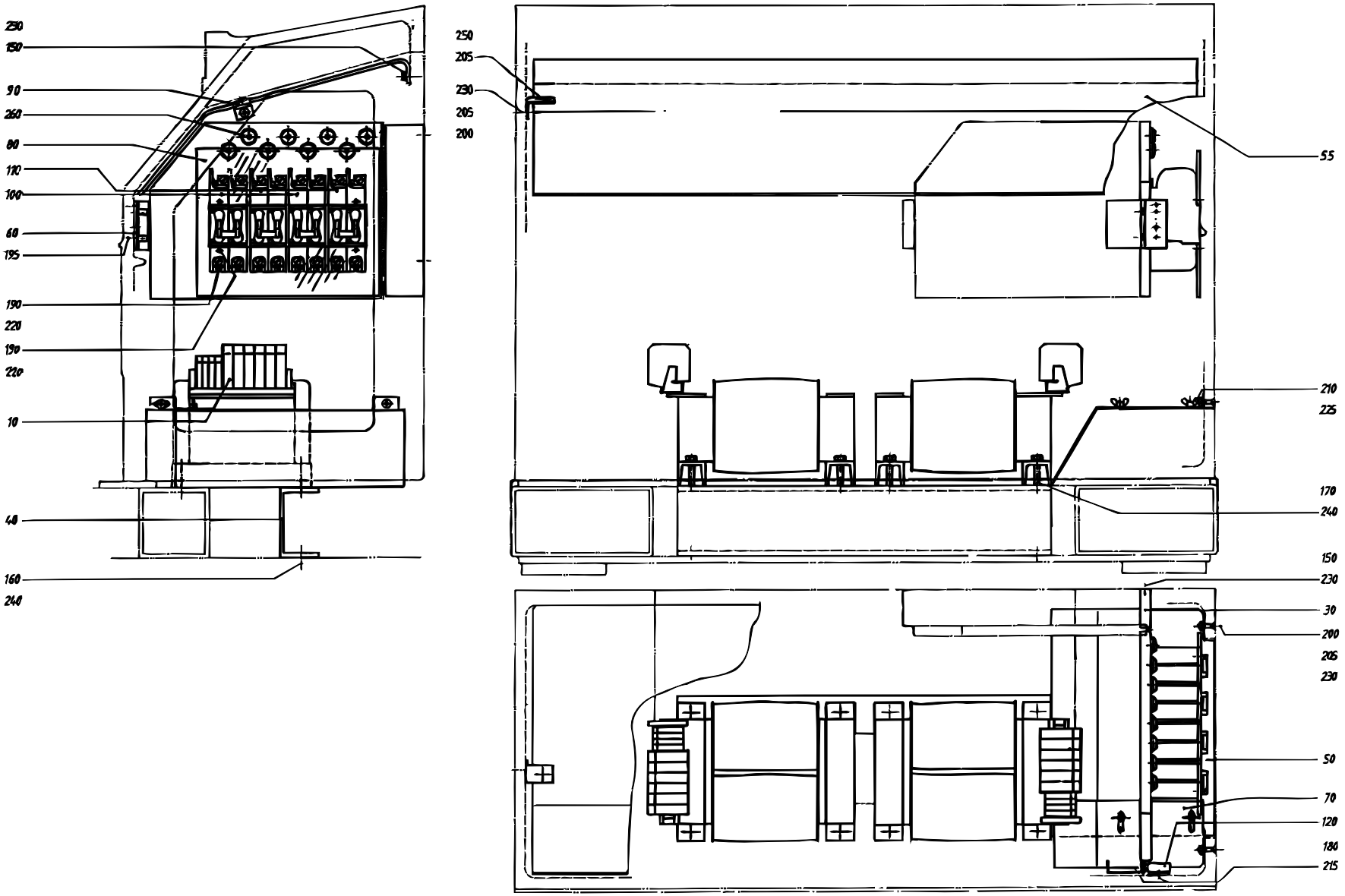

S-440415-3
ECN 20547

Pos	Part No	SP	UN	Qty	Description	Page No
Common parts						
010	23127-0101	D		2	TRANSFORMER	
030	450299-0000	-		1	SWIVEL PLATE	
040	450300-0000	-		1	BEAM	
050	450667-0000	-		1	SPLASH GUARD	
055	451088-0000	-		1	PROTECTION	
060	450301-0000	-		1	FASTENING PLATE	
070	450668-0000	-		1	SPLASH GUARD	
080	450669-0000	-		1	TOUCH GUARD	
090	451089-0000	-		2	BRACKET	
100	90007-0100	-		2	FUSE H.MANN 2P 60A 2	
110	90007-0101	-		2	FUSE H.MANN 2P 100A 2	
120	90237-0046	-		1	MAGNET LOCK	
150	312105-0366	-		4	SCREW M6S ISO 4017 M6X12 A280	
160	312101-0451	-		4	SCREW M6S 8x20 FZB	
170	312101-0461	-		8	SCREW M6S8X50FZB	
180	312125-0220	-		4	SLOTTED HEMCS3X6RFR	
190	312121-0291	-		20	SLOTTED HEMCS4X12FZB	
195	312145-0366	-		2	SLOTTED HEMFS6X12RFR	
200	312155-0372	-		4	SCREW MF6S DIN 7991 M6X25 A280	
205	312605-0316	-		6	NUT,HEXAGON,A280 M6M6 Stainless	
210	312715-0114	-		2	NUTS,WING M5	
215	315105-0124	-		4	WASHER,PLAIN ROUND 3,2x6	
220	315101-0136	-		12	WASHER BRB4,3X8FZB	
225	315105-0146	-		2	WASHER,PLAIN ROUND 5,3x10 Stainless	
230	315105-0153	-		8	WASHER,PLAIN ROUND 6,4x12 Stainless	
240	315101-0165	-		12	WASHER BRB8,4X16FZB	
250	315121-0153	-		2	WASHER TBRSB6,4X22FZB	
260	352101-0103	-		8	LEAD IN PR 18,6	

Pos	Part No	SP	UN	Qty	Description	Page No

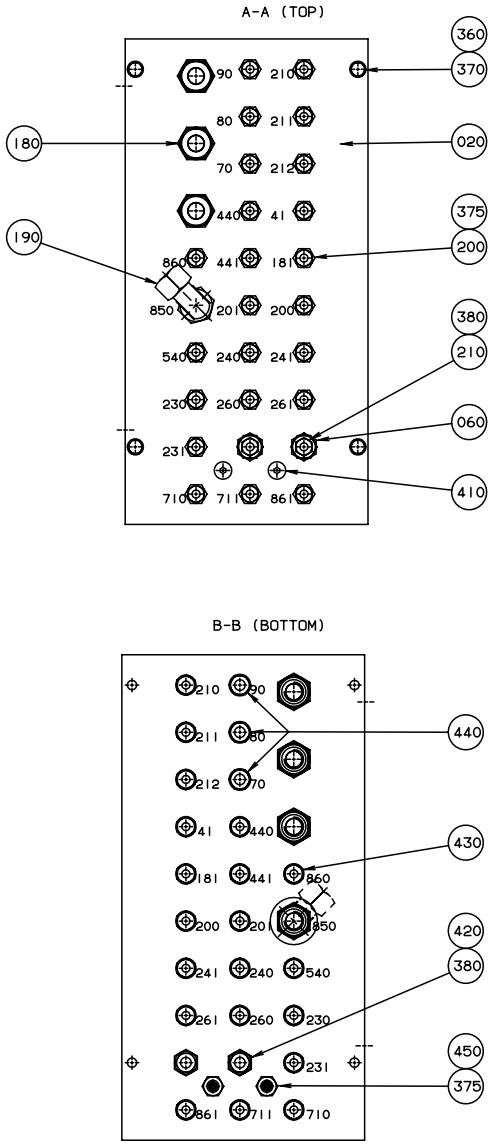

S-440422-11
ECN 19406

Pos	Part No	SP	UN	Qty	Description	Page No
TBA/8						
010	553842-0000	-		1	BOTTOM PLATE	
020	553841-0000	-		1	LEAD-IN PLATE	
060	279804-0000	-		2	BUSHING	
180	90030-0030	-		3	BULKHEAD CONNECTOR SV 12-L/SY	
190	90030-0221	-		1	ELBOW BULKHEAD CONNECTOR WSV 12	
200-02	90224-0307	-		23	CONNECTION	
210	90224-0331	-		2	CONNECTION	
330-02	90287-0075	-		9	SCREW, PAN HEAD,LKCS ISO1580, M6x12	
360	312101-0378	-		4	SCREW M6S6X40FZB	
370	315101-0153	-		4	WASHER BRB 6,4x12 FZB	
375-02	315233-0109	-		25	PLAIN ROUND,NYLON R1/8"	
380	315233-0110	-		4	PLAIN ROUND,NYLON R1/4"	
410	342713-0209	-		2	PLUG,EXT.G-THREAD,HEXAGON SOCKET G1/8"	
420	90224-0319	-		2	CONNECTION	
430-02	342722-0202	-		20	PIPE COUPLING	
440	342722-0204	-		3	PIPE COUPLING	
450	90163-0057	-		2	NIPPLE 1/8" Brass	
Common parts						
015	440424-0000	-		2	DRUM	
364	312121-0321	-		12	SLOTTED HEMCS5X6FZB	
600	90099-0085	-		1	NUT	
760	352100-0127	-		1	CABLE GLANR.47-34,5	

Pos	Part No	SP	UN	Qty	Description	Page No

BOX LEFT

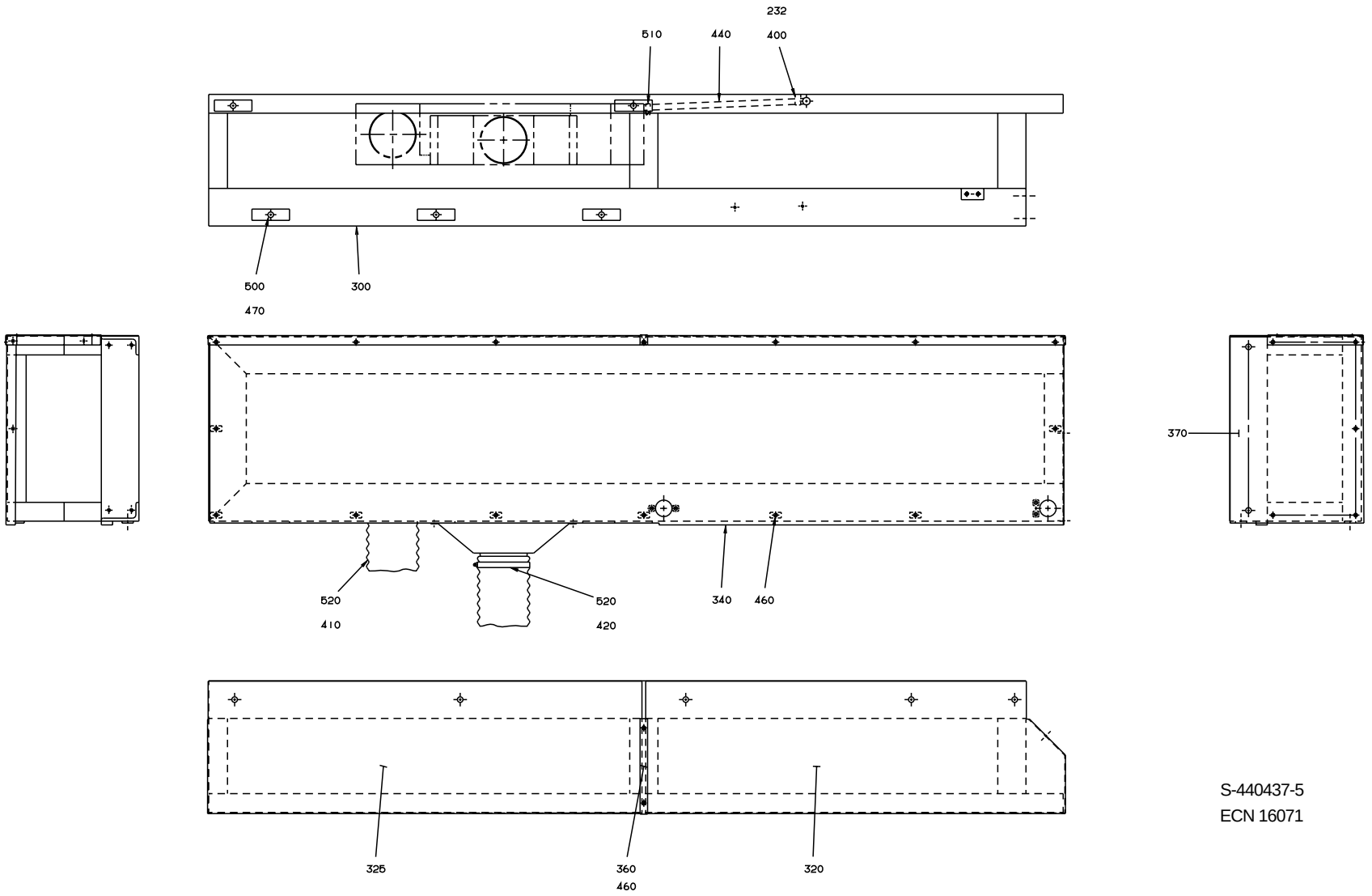

S-440437-5
ECN 16071

Pos	Part No	SP	UN	Qty	Description	Page No
TBA/8						
232	312121-0287	-		1	SLOTTED HEAD SCREW MCS 4x8 FZB	
Common parts						
F360	A 566683-0100	-		1	AIR COOLER	**223**
300	560798-0000	-		1	SIDE PIECE	
320	564519-0000	-		1	SIDE PLATE	
325	564520-0000	-		1	SIDE PLATE	
340	548344-0000	-		1	BOTTOM PANEL	
360	564523-0000	-		1	RIM	
370	542697-0000	-		1	COVER PLATE L	
400	90074-0004	-		1	PIPE-CLIP,single 16	
410	90152-0032	-	MM	1000	HOSE 5"=127mm	
420	90152-0032	-	MM	1300	HOSE 5"=127mm	
440	90166-0007	-	MM	1200	HOSE PVC 10/14 Transp.	
460	90287-0075	-		33	SCREW, PAN HEAD,LKCS ISO1580, M6x12	
470	312101-0540	-		5	SCREW M6S12X40FZB	
500	315101-0178	-		5	WASHER BRB 13x24 FZB	
510	342991-0101	-		1	HOSE CLIP,WORM DRIVE TYPE (13)-16	
520	342991-0115	-		4	HOSE CLIP,WORM DRIVE TYPE (110)-136	

Pos	Part No	SP	UN	Qty	Description	Page No

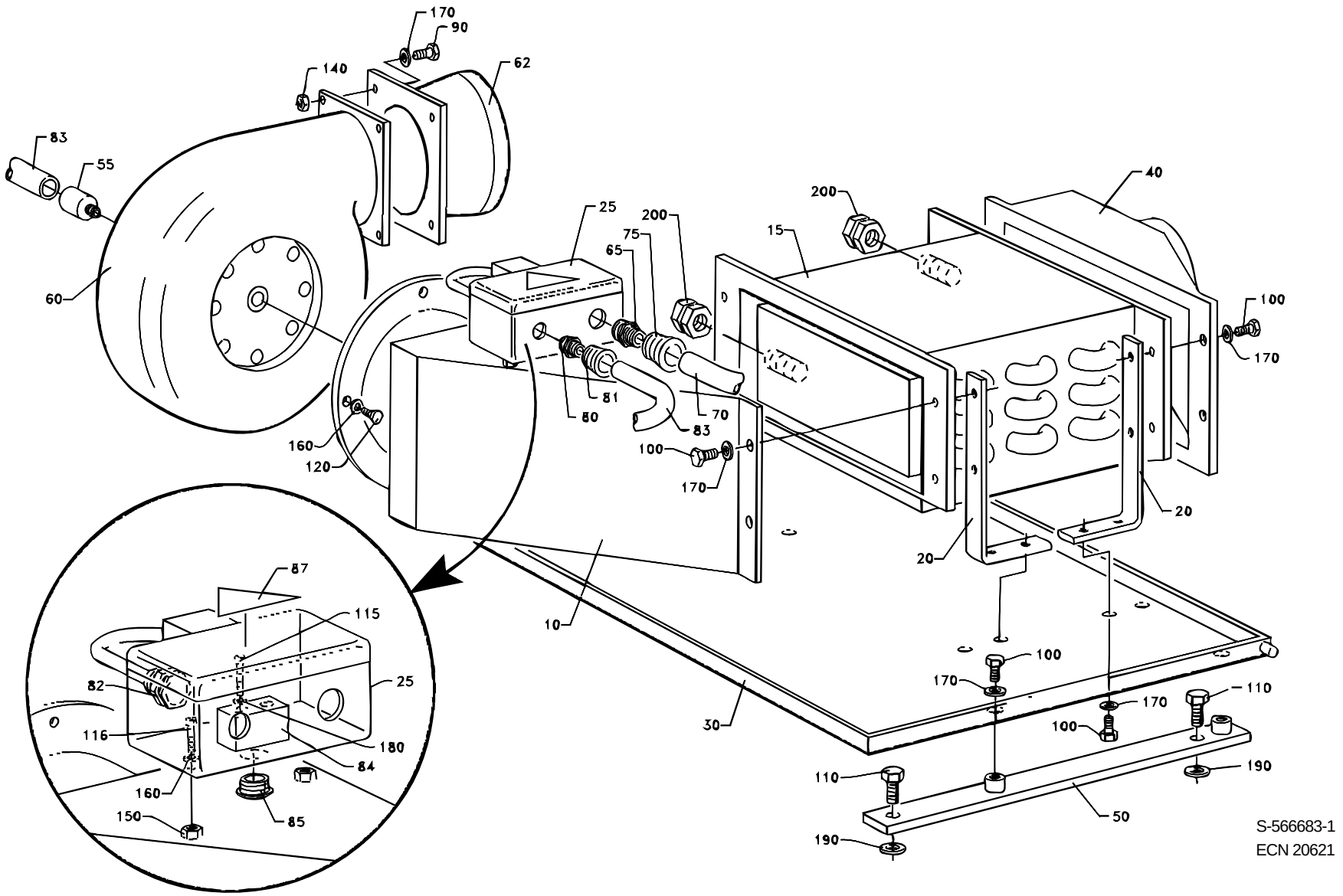

S-566683-1
ECN 20621

Pos	Part No	SP	UN	Qty	Description	Page No
Common parts						
010	928837-0000	D		1	AIR DISTRIBUTOR	
015	495201-0000	R		1	COOLING ELEMENT	
020	566685-0000	-		4	BRACKET	
025	450495-0000	-		1	CONNECTION BOX	
030	566686-0000	-		1	CONDENSATE TRAY	
040	566687-0000	-		1	NOZZLE	
050	440349-0000	-		2	FASTENING IRON	
055	456256-0000	-		1	PROTECTIVE COVER	
058	546929-0000	R		1	FILTER	
060	B 90264-0019	R		1	FAN ZIEHL 230V 250W 1,15A 595 M3/H	
062	90264-0344	-		1	FAN CASING	
065	352136-0127	-		1	GLAND FITTING PR 18,6	
070	352135-0106	-	MM	800	Spiral Conduit Di=16 mm	
075	352100-0106	-		1	CABLE GLANR.18,6-10,5	
080	90012-0063	-		1	Cable Gland PR 15,2	
081	352100-0100	-		1	CABLE GLANR.15,2-7,5	
082	352103-0101	-		1	CABLE GLAND ST 9	
083	90152-0033	-	MM	1000	Spiral Conduit for PR 15,2(PG 9)	
084	90077-0102	-		1	TERMINAL BK4 KRG 4-POLE	
085	90002-0013	-		1	BLANK-OFF PLUG 15,2	
087	90194-0016	-		1	SIGN "FLASH SIGN" 50X50MM	
090	312101-0366	-		4	SCREW M6S6X12FZB	
100	312101-0364	-		20	SCREW M6S6X10FZB	
110	312101-0449	-		2	SCREW M6S 8x16 FZB	
115	312121-0230	-		2	SLOTTED HEMCS3X20FZB	
116	312121-0293	-		2	SLOTTED HEMCS4X16FZB	
120	312101-0287	-		4	SCREW M6S4X8FZB	
140	312601-0316	-		4	NUT M6M 6-8 FZB	
150	312821-0102	-		2	HEXAGON WETSMUTTER M4 RFR	
160	315101-0136	-		6	WASHER BRB4,3X8FZB	
170	315101-0153	-		24	WASHER BRB 6,4x12 FZB	
180	315101-0124	-		2	WASHER BRB3,2X6FZB	
190	315101-0165	-		4	WASHER BRB8,4X16FZB	
200	342723-0114	-		2	STRAIGHT PIPE CONNECTION GAI-15-G1/2"	

Pos	Part No	SP	UN	Qty	Description	Page No

TUBE FLUSHING DEVICE

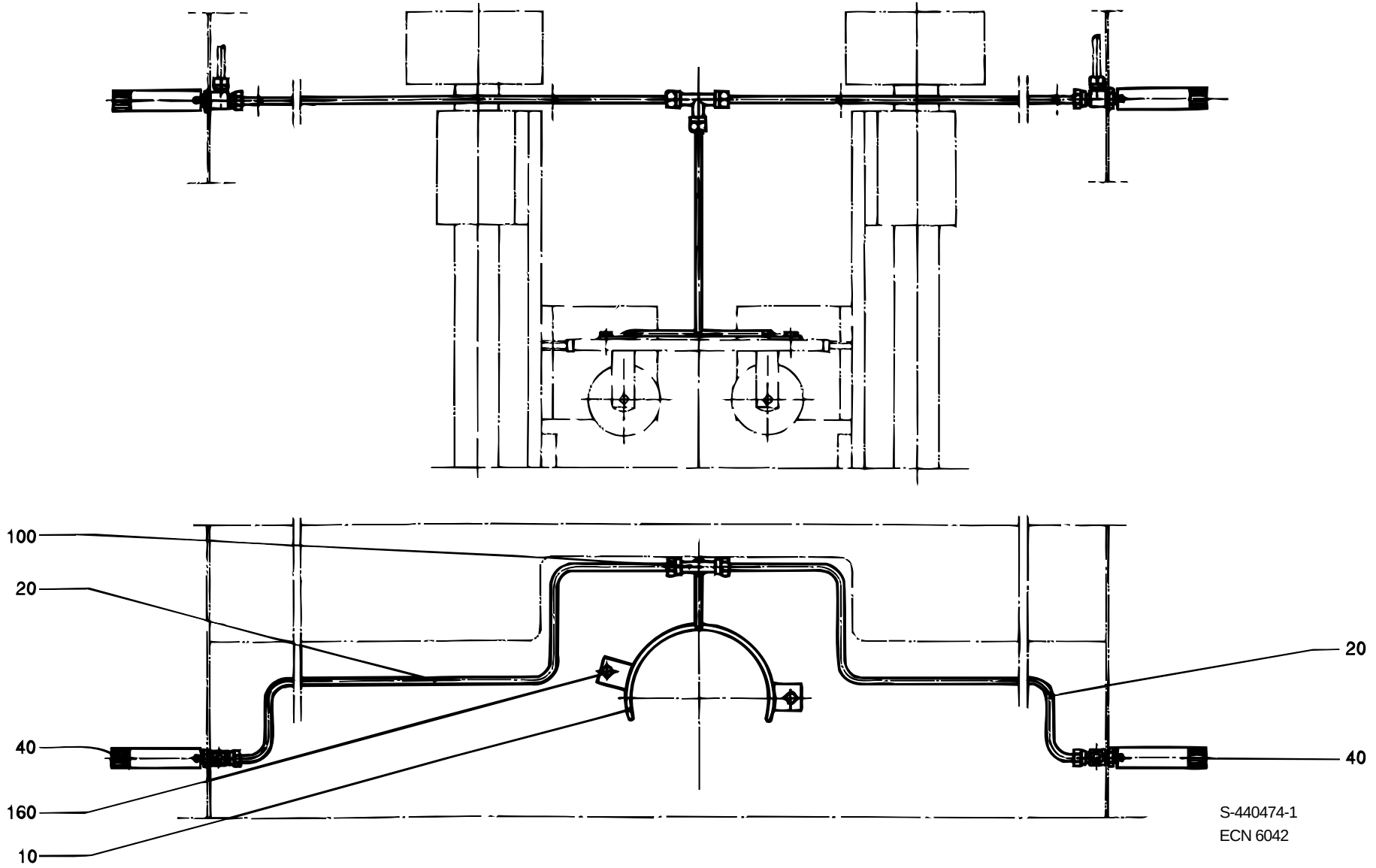

S-440474-1
ECN 6042

Pos	Part No	SP	UN	Qty	Description	Page No
Common parts						
020	450340-0000	-		2	PIPE	
040	B 445583-0000	K		2	VALVE	
100	90030-0076	-		1	T-PIPE CONNECTION T-6	
160	312105-0325	-		2	SCREW M6S5X10 A2 80	
0375S						
010	539613-0000	D		1	SPREADER	
0355B or 0400B or 0500B or 0500S or 0500SQ or 0750B or 0750S or 1000B or 1000S or 1000SQ or 1055B						
010	539612-0000	D		1	SPREADER	

Pos	Part No	SP	UN	Qty	Description	Page No

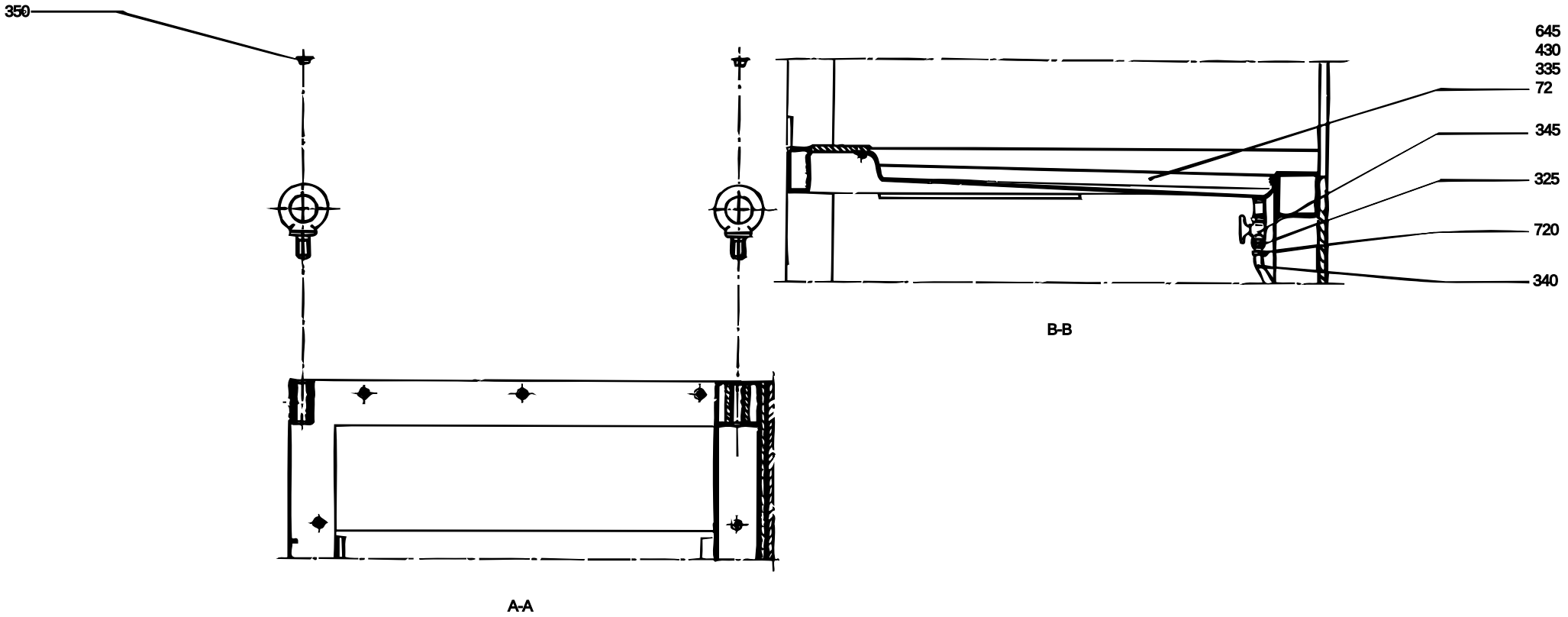

S-440537-3
ECN 6911

Pos	Part No	SP	UN	Qty	Description	Page No
Common parts						
F405	A 540723-0100	-		1	CONNECTION BOX	**233**
055	543151-0000	-		1	CANTILEVER	
060	531182-0000	-		1	CANTILEVER	
070	267835-0000	-		1	CANTILEVER	
072	283884-0000	-		1	OIL TROUGH	
075	436776-0000	-		1	MACHINE BODY	
078	269285-0000	-		1	PROTECTION PLATE	
080	273751-0000	-		1	FRONT PLATE	
085	273753-0000	-		1	PROTECTION PLATE	
090	285801-0000	-		1	BEAM	
095	293158-0000	-		1	HATCH	
097	293159-0000	-		1	HATCH	
100	297576-0000	-		1	BEAM	
103	297669-0000	-		1	POST	
105	297670-0000	-		1	POST	
108	B 434919-0000	-		1	COLUMN LEFT	
110	B 434920-0000	-		1	COLUMN RIGHT	
114	440023-0000	-		1	PROTECTION PLATE	
116	440024-0000	-		1	PROTECTION PLATE	
129	566646-0000	-		1	SIDE GUARD	
130	566645-0000	-		1	SIDE GUARD	
137	440702-0000	-		1	BEAM	
138	540725-0000	-		1	FRONT PLATE, LOWER	
140	283992-0000	D		2	RULER	
145	247080-0000	-		4	BRACKET	
150	269291-0000	-		1	RULER	
155	269294-0000	-		1	RULER	
160	269295-0000	-		1	PROTECTION PLATE	
165	476824-0000	-		1	COVERING PLATE	
170	279370-0000	R		2	STEERING	
190	440025-0000	-		1	PROTECTION PLATE	
192	440026-0000	-		1	CANTILEVER	
194	440027-0000	-		2	RIM	
196	440028-0000	-		2	RIM	
205	440077-0000	-		1	COVERING PLATE	
208	440203-0000	-		1	RULER	
210	440204-0000	-		1	RULER	
212	440205-0000	-		1	RULER	
214	440206-0000	-		1	RULER	
216	479374-0000	-		1	DRIP PLATE	
225	531365-0000	R		4	BRACKET	
275	243573-0000	-		2	LACE	

Pos	Part No	SP	UN	Qty	Description	Page No
278	538245-0000	-		2	SHIM	
280	247082-0000	-		4	LEG	
285	263828-0000	-		1	JUNCTION RAIL	
287	267462-0000	-		2	LOCK SHEET	
288	267463-0000	-		2	LOCK SHEET	
290	269296-0000	-		1	PROTECTION PLATE	
295	269297-0000	-		1	PROTECTION PLATE	
298	484212-0000	-		1	BRACKET	
299	484213-0000	-		1	BRACKET	
300	293160-0000	-		1	COVERING PLATE	
302	293161-0000	-		1	COVERING PLATE	
306	450298-0000	-		1	COVERING PLATE	
307	450342-0000	-		1	COVERING PLATE	
308	540726-0000	-		2	HOOK HOLDER	
309	543152-0000	-		1	HOSE ATTACHMENT	
310	457357-0000	-		2	BRACKET	
311	540727-0000	-		1	FASTENING BRACKET	
312	90015-0010	-		16	BUSHING	
313	90015-0011	-		1	BUSHING	
314	90015-0021	-		1	BUSHING	
316	90030-0066	-		1	BULKHEAD CONNECTOR SV 6-L/SY	
317	90030-0067	-		2	BULKHEAD CONNECTOR SV 8-L/SY	
318	90030-0159	-		2	BULKHEAD CONNECTOR SV 15-L/SY	
319	90030-0179	-		1	BULKHEAD CONNECTOR SV 22-L/SY	
325	90055-0033	-		1	HOSE NIPPLE,EXT. THREADED G1/2"-13	
326	90074-0001	-		1	PIPE-CLIP,single 10	
328	90090-0014	-		1	BEARINGS,BALL	
329	90099-0004	-		1	NUT	
330	90099-0011	-		1	NUT PR 37 BRASS	
331	90134-0004	-		2	PIPE CONNECTION	
332	90143-0049	-	MM	3400	RUBBERSTRIP 11X21MM	
333	90143-0054	-	MM	500	STRIP	
335	90157-0022	-	G	x	SEALING COMPOUND	
338	90194-0016	-		2	SIGN "FLASH SIGN" 50X50MM	
340	90166-0121	-	MM	1500	HOSE	
345	90187-0029	-		1	VALVE	
348	90242-0115	-	MM	3200	O-RING	
349	90261-0003	-		1	PLUG,BLIND PLASTIC	
350	90261-0011	-		4	PLUG,BLIND PLASTIC FOR M30/M28X1,5	
370	90287-0075	-		6	SCREW, PAN HEAD,LKCS ISO1580, M6x12	
385	311103-0314	-		4	PINS,STRAIGHT 5X30	
397	311103-0413	-		16	PINS,STRAIGHT 8X50	
400	311202-0320	-		2	PINS,TAPER PIN 8X35	

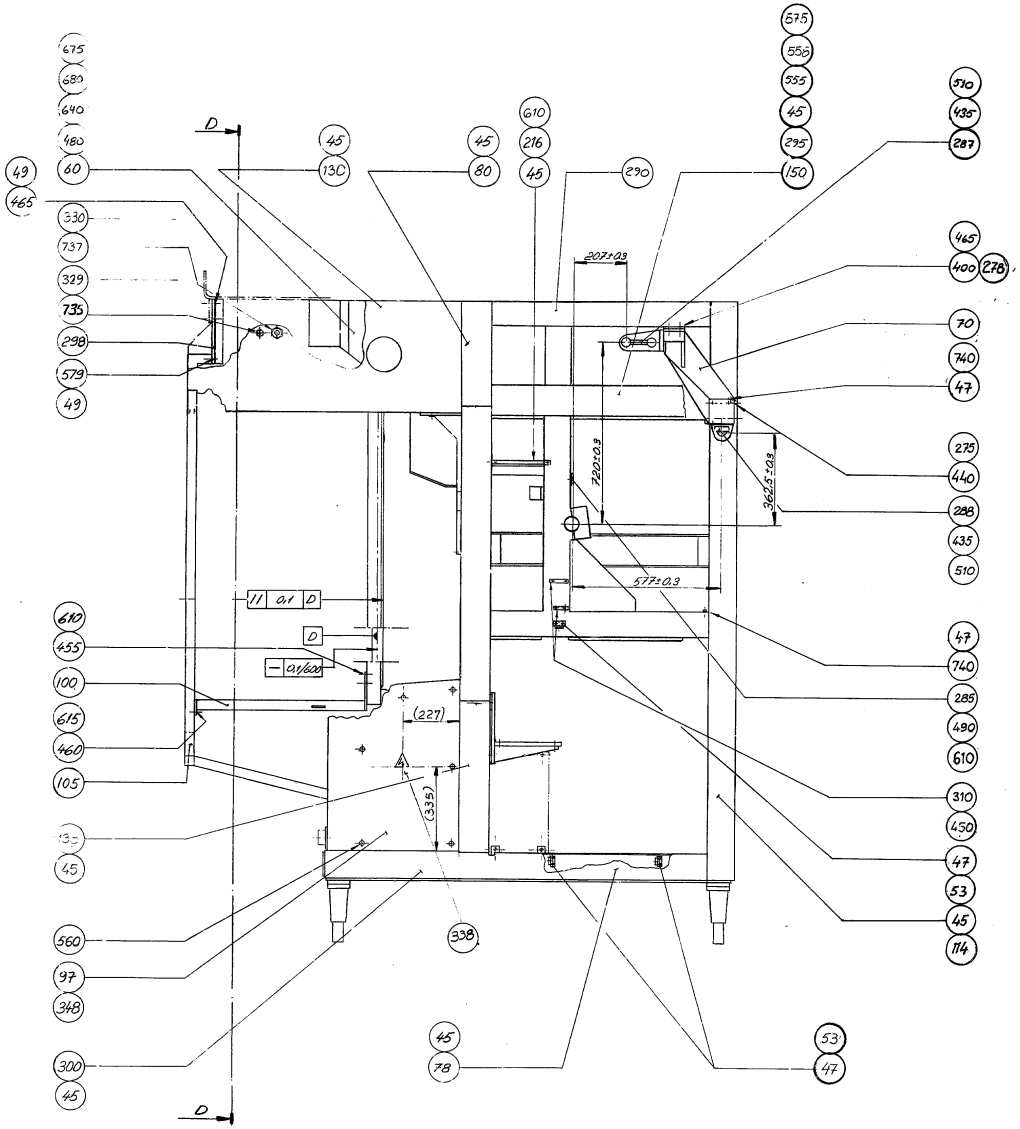

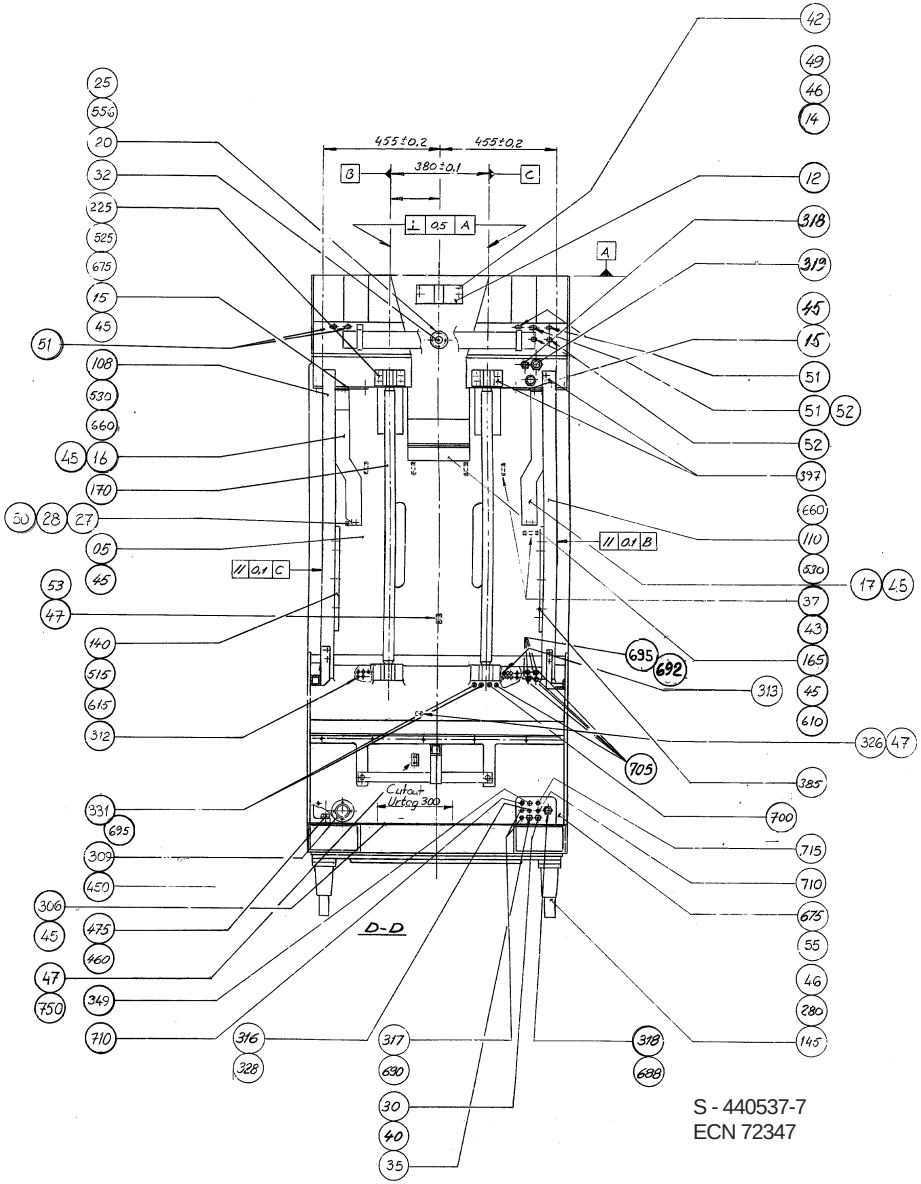

S - 440537-7
ECN 72347

Pos	Part No	SP	UN	Qty	Description	Page No
405	311211-0267	-		2	TAPER PIN GKP5X5X30	
425	312101-0366	-		8	SCREW M6S6X12FZB	
430	312101-0368	-		8	SCREW M6S 6x16 Zink Plated	
435	312101-0453	-		20	SCREW M6S 8x25 FZB	
437	312101-0499	-		2	SCREW M6S10X40FZB	
440	312101-0518	-		4	SCREW M6S10X140FZB	
442	312101-0538	-		4	SCREW M6S12X35FZB	
455	312105-0368	-		7	SCREW M6S ISO 4017 M6X16 A280	
460	312105-0449	-		6	SCREW M6S ISO 4017 M8x16 A280	
465	312105-0493	-		8	SCREW M6S ISO 4017 M10X25 A280	
475	312105-0540	-		10	SCREW M6S ISO 4017 M12X40 A280	
480	312105-0542	-		12	SCREW M6S ISO 4014 M12X50 A280	
490	312111-0364	-		2	SCREW MC6S6X10FZB	
510	312115-0378	-		6	SCREW MC6S ISO 4762 M6X40 A280	
515	312115-0451	-		8	SCREW MC6S ISO 4762 M8X20 A280	
525	312115-0501	-		7	SCREW MC6S ISO 4762 M10X50 A280	
530	312115-0503	-		8	SCREW MC6S ISO 4762 M10X60 A280	
555	312151-0366	-		4	SCREW MF6S6X12FZB	
556	312155-0327	-		4	SCREW MF6S DIN 7991 M5x12 A280	
557	312155-0366	-		5	SCREW MF6S DIN 7991 M6X12 A280	
558	312155-0370	-		4	SCREW MF6S DIN 7991 M6X20 A280	
559	312155-0368	-		15	SCREW MF6S DIN7991 M6X16 A280	
560	312155-0451	-		12	SCREW MF6S8X20RFR	
570	312601-0320	-		2	NUT M6M 10-8 FZB	
575	312605-0316	-		4	NUT,HEXAGON,A280 M6M6 Stainless	
576	312605-0314	-		2	NUT,HEXAGON,M6M5 Stainless	
579	312605-0320	-		2	NUT,HEXAGON,M10 A280	
600	315101-0173	-		2	WASHER BRB10,5X22FZB	
610	315105-0153	-		31	WASHER,PLAIN ROUND 6,4x12 Stainless	
615	315105-0165	-		14	WASHER,PLAIN ROUND 8,4x16 Stainless	
635	315111-0178	-		4	WASHER TBRB13X24FZB	
640	315115-0178	-		22	WASHER TBRB 13x24 Stainless	
645	315121-0153	-		8	WASHER TBRSB6,4X22FZB	
660	315402-0173	-		15	WASHER FBB 10,2 RFR	
675	315701-0330	-		2	KEYS,PARALLEL WITH ROUND ENDS 12X8X32	
680	315701-0336	-		3	KEYS,PARALLEL WITH ROUND ENDS 12X8X63	
688	341001-0228	-	MM	35	COPPER TUBE	
690	342929-0121	-		2	STRAIGHT COUPLING,SOLDER 8/6-8	
700	342920-0121	-		2	STRAIGHT COUPLING,EXT.THREADED 8/6-R1/8"	
710	342960-0112	-		2	BULKHEAD COUPLING 6/4	
715	342960-0122	-		1	BULKHEAD COUPLING 8/6	
720	342991-0103	-		1	HOSE CLIP,WORM DRIVE TYPE (19)-23	
735	352103-0116	-		1	CABLE GLAND ST 21	
737	352103-0121	-		1	CABLE GLAND ST 29	
740	352110-0101	-		2	CRAMP TK 7-10	
750	352135-0201	-		1	PLASTIC CRAMP Di=12 mm	
TBA/8 REVFIN						
005	530469-0000	-		1	FRONT PLATE	
015	544703-0000	-		2	MOUNTING SHEET	
016	542702-0000	-		1	COVER PLATE L	
017	542703-0000	-		1	COVER PLATE R	
020	450457-0000	-		1	FLANGE	
027	542398-0000	-		2	HOLDER	
028	542399-0000	-		2	HOLDER	
030	90030-0030	-		2	BULKHEAD CONNECTOR SV 12-L/SY	
032	90044-0095	R		1	PROX.SWITCH IFM 3010BPKG	
035	90261-0018	-		1	PLUG,BLIND PLASTIC	
040	90266-0010	-	MM	35	TUBE	
043	312101-0323	-		22	SCREW M6S5X8FZB	
045	312105-0364	-		110	SCREW M6S6X10RFR	
046	312105-0493	-		16	SCREW M6S ISO 4017 M10X25 A280	
047	312125-0287	-		13	SLOTTED CHEESE HEAD ISO 1207 M4X8 RFR	
049	315105-0173	-		12	WASHER,PLAIN ROUND 10,5x22 STAINLESS	
050	312115-0368	-		4	SCREW MC6S ISO 4762 M6X16 A280	
051	352101-0103	-		5	LEAD IN PR 18,6	
052	352103-0105	-		2	CABLE GLAND STR 11;PR 15,2	
053	352135-0202	-		4	CRAMP 16	
450	312105-0327	-		8	SCREW M6S ISO 4017 M5X12 A280	
692	342732-0102	-		4	ELBOW PIPE JOINT	
695	342920-0113	-		6	STRAIGHT COUPLING,EXT.THREADED 6/4-R1/8"	
705	90330-0066	-		1	PLUG,EXTERNAL G-THREAD G1/8"	
TBA/8 NORMFIN						
005	530469-0000	-		1	FRONT PLATE	
015	544703-0000	-		2	MOUNTING SHEET	
016	542702-0000	-		1	COVER PLATE L	
017	542703-0000	-		1	COVER PLATE R	
020	450457-0000	-		1	FLANGE	
027	542398-0000	-		2	HOLDER	
028	542399-0000	-		2	HOLDER	
030	90030-0030	-		2	BULKHEAD CONNECTOR SV 12-L/SY	
032	90044-0095	R		1	PROX.SWITCH IFM 3010BPKG	
035	90261-0018	-		1	PLUG,BLIND PLASTIC	
040	90266-0010	-	MM	35	TUBE	
043	312101-0323	-		22	SCREW M6S5X8FZB	
045	312105-0364	-		110	SCREW M6S6X10RFR	
046	312105-0493	-		16	SCREW M6S ISO 4017 M10X25 A280	

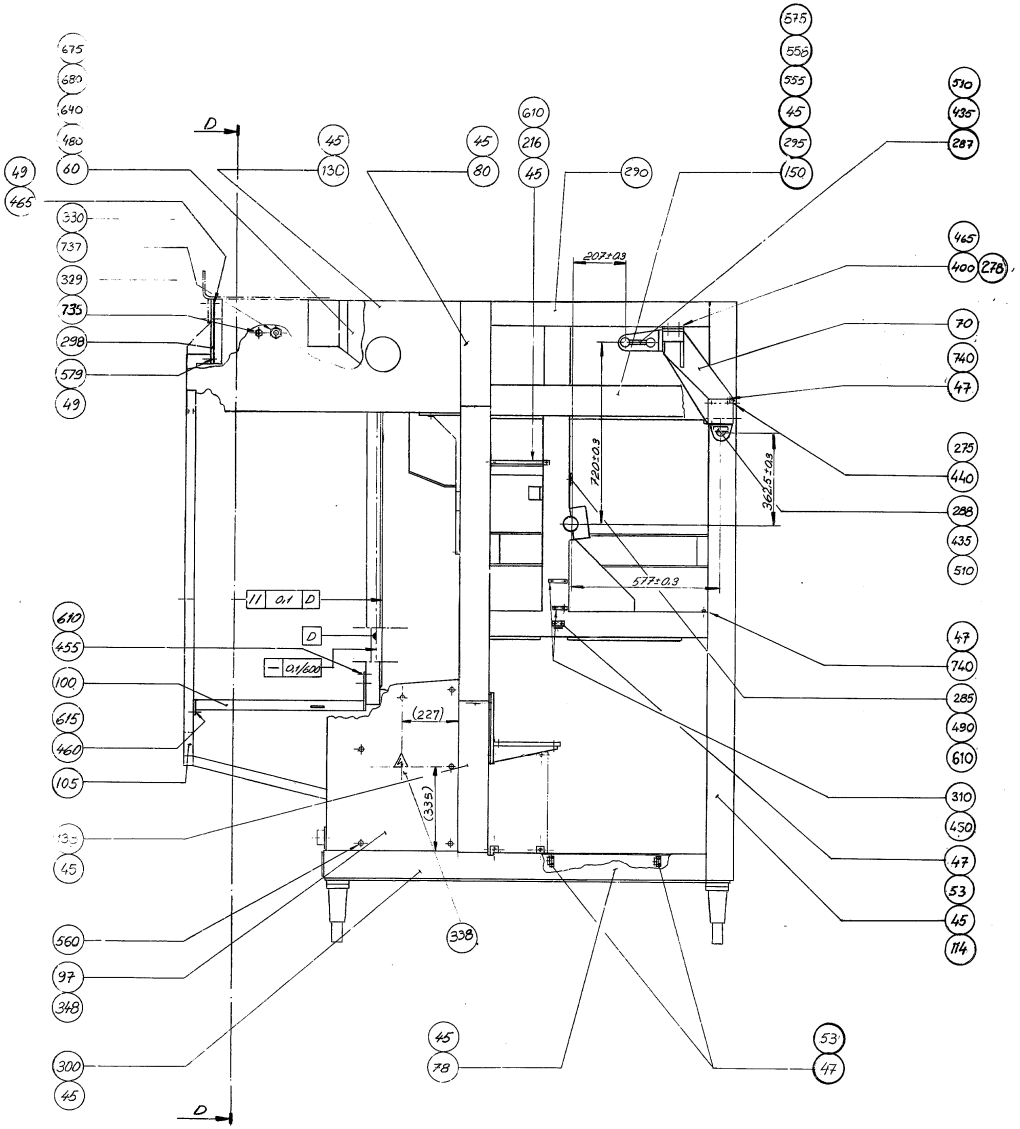

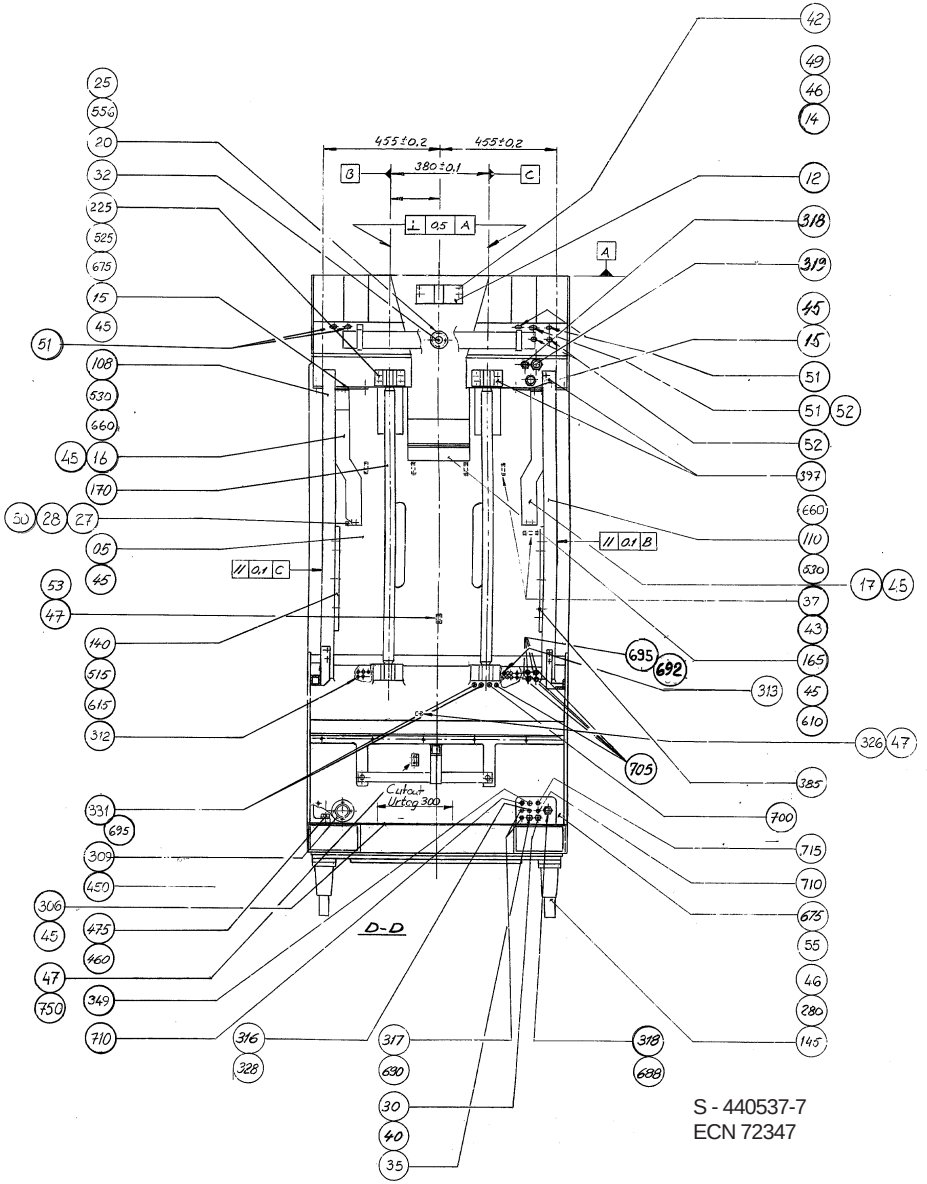

S - 440537-7
ECN 72347

Pos	Part No	SP	UN	Qty	Description	Page No
047	312125-0287	-		13	SLOTTED CHEESE HEAD ISO 1207 M4X8 RFR	
049	315105-0173	-		12	WASHER,PLAIN ROUND 10,5x22 STAINLESS	
050	312115-0368	-		4	SCREW MC6S ISO 4762 M6X16 A280	
051	352101-0103	-		5	LEAD IN PR 18,6	
052	352103-0105	-		2	CABLE GLAND STR 11;PR 15,2	
053	352135-0202	-		4	CRAMP 16	
450	312105-0327	-		8	SCREW M6S ISO 4017 M5X12 A280	
695	342920-0113	-		2	STRAIGHT COUPLING,EXT.THREADED 6/4-R1/8"	
705	90330-0066	-		5	PLUG,EXTERNAL G-THREAD G1/8"	

Pos	Part No	SP	UN	Qty	Description	Page No

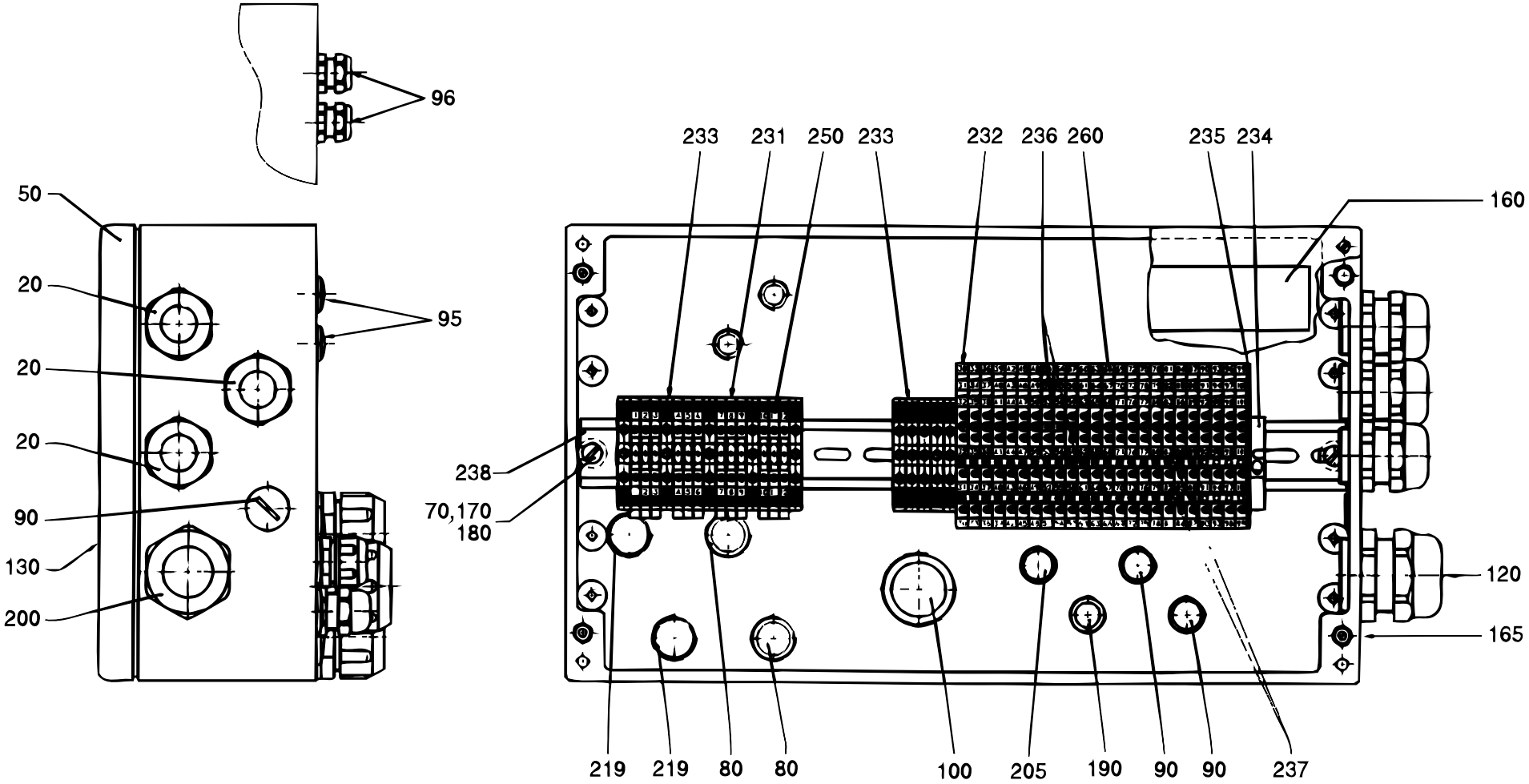

S-540723-1
ECN 22846

Pos	Part No	SP	UN	Qty	Description	Page No
Common parts						
020	352103-0116	-		3	CABLE GLAND ST 21	
050	540724-0000	-		1	CONNECTION BOX	
070	450899-0001	-		2	SPACER	
080	90002-0004	-		2	BLANK-OFF PLUG 22,5	
100	90012-0061	-		1	GLAND	
120	90110-0128	-		2	PLUG 24-POL Harting	
130	90194-0016	-		1	SIGN "FLASH SIGN" 50X50MM	
160	90298-0022	-		1	ZERUST CAPSULE	
165	312115-0372	-		3	SCREW MC6S ISO 4762 M6X25 A280	
170	312125-0376	-		2	SLOTTED CHEESE HEAD ISO 1207 M6X35 RFR	
180	315105-0153	-		2	WASHER,PLAIN ROUND 6,4x12 Stainless	
200	352103-0120	-		1	CABLE GLAND STR 29	
205	352136-0113	-		1	GLAND FITTING PR18,6/PG11 Di=12mm	
219	352136-0142	-		2	GLAND FITTING	
232	353021-0302	-		24	TERMINALS,TRIPLE-LEVEL, DLD 2,5/35 PA	
234	353031-0201	-		1	END BRACKET EW35	
235	353032-0302	-		1	END PLATE WAP	
237	353034-0404	-		4	BRIDGE CONLECK Q10	
238	353042-0004	-	MM	385	RAIL TS 35/7,5	
250	359011-0807	-		2	MARKING PLATES 5-FW 1-50	
260	359011-0808	-		2	MARKING PLATES 5-FW 51-100	
270	359011-0809	-		2	MARKING PLATES 5-FW 101-150	
TBA/8						
090	90002-0009	-		2	BLANK-OFF PLUG 18.6	
096	90012-0063	-		2	Cable Gland PR 15,2	
190	352103-0106	-		2	CABLE GLAND ST 11	
231	353021-0212	-		17	FEED THROUGH TERMINAL WDU 2,5 Beige	
233	353024-0205	D		11	EARTH TERMINAL WPE 4	
236	353034-0401	D		2	BRIDGE CONLECK Q2	
239	353032-0004	-		1	END PLATE WAP 2,5-10 Beige	

Pos	Part No	SP	UN	Qty	Description	Page No

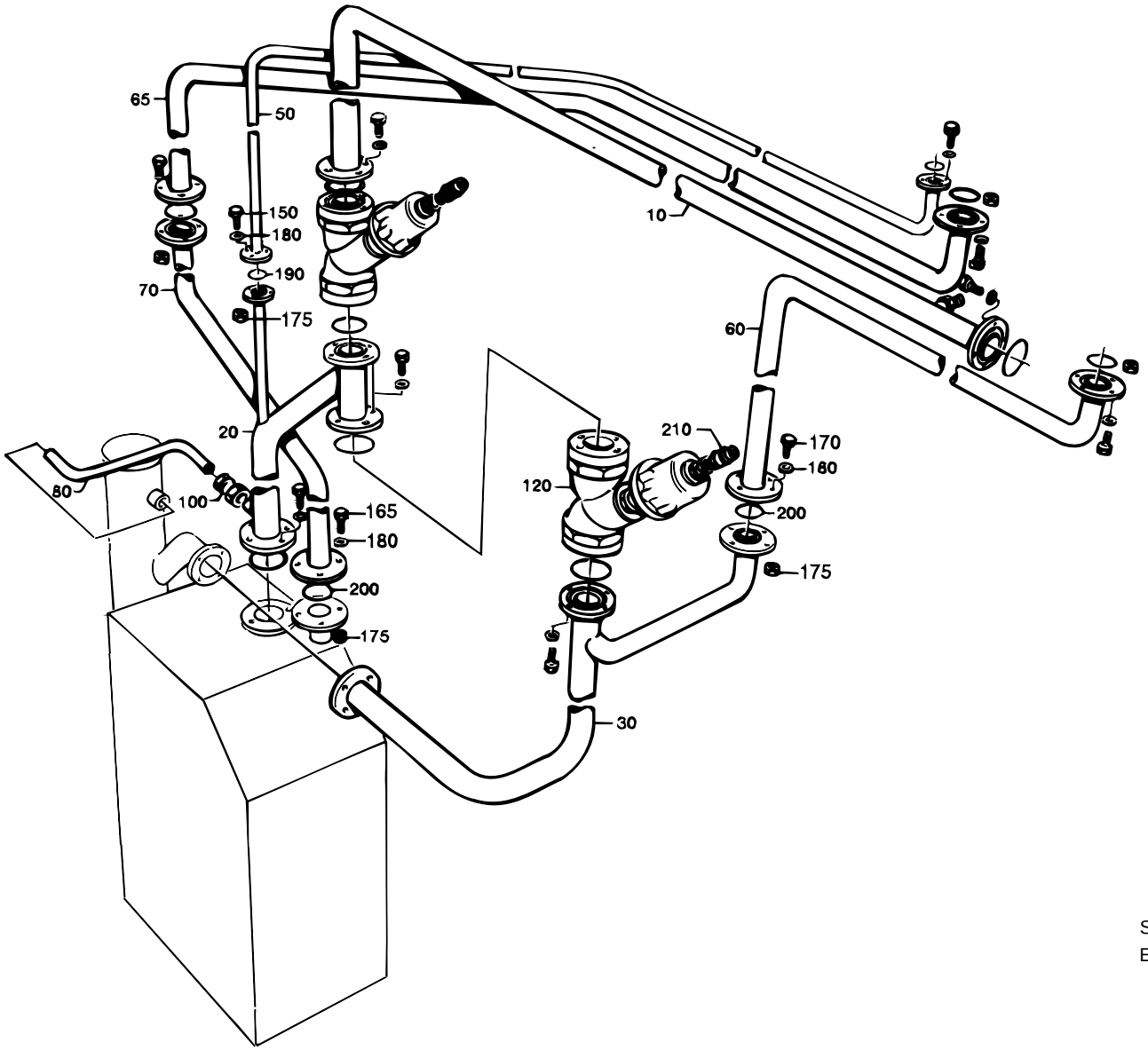

S-442463-3
ECN 20095

Pos	Part No	SP	UN	Qty	Description	Page No
Common parts						
010	442466-0000	-		1	PIPE CONNECTION	
020	479033-0000	-		1	PIPE CONNECTION	
030	479034-0000	-		1	PIPE CONNECTION	
050	479036-0000	-		1	PIPE CONNECTION	
060	479040-0000	-		1	PIPE CONNECTION	
065	B 542074-0000	-		1	PIPE	
070	B 531592-0000	-		1	PIPE	
080	531597-0000	-		1	PIPE	
100	531595-0000	-		1	STRAIGHT PIPE UNION	
120	B 484538-0000	R		2	VALVE	
150	312105-0366	-		6	SCREW M6S ISO 4017 M6X12 A280	
160	312105-0368	-		20	SCREW M6S ISO 4017 M6X16 A280	
165	312105-0370	-		20	SCREW M6S ISO 4017 M6X20 A280	
170	312105-0372	-		4	SCREW M6S ISO 4017 M6X25 A280	
175	312605-0316	-		24	NUT,HEXAGON,A280 M6M6 Stainless	
180	315105-0153	-		50	WASHER,PLAIN ROUND 6,4x12 Stainless	
190	927421-0003	J		2	O-RING 13.3X2.4 SILICON	
200	927422-0006	J		12	O-RING 42.2X3 SILICON	
210	342920-0114	-		2	STRAIGHT COUPLING,EXT.THREADED 6/4-R1/4"	

Pos	Part No	SP	UN	Qty	Description	Page No

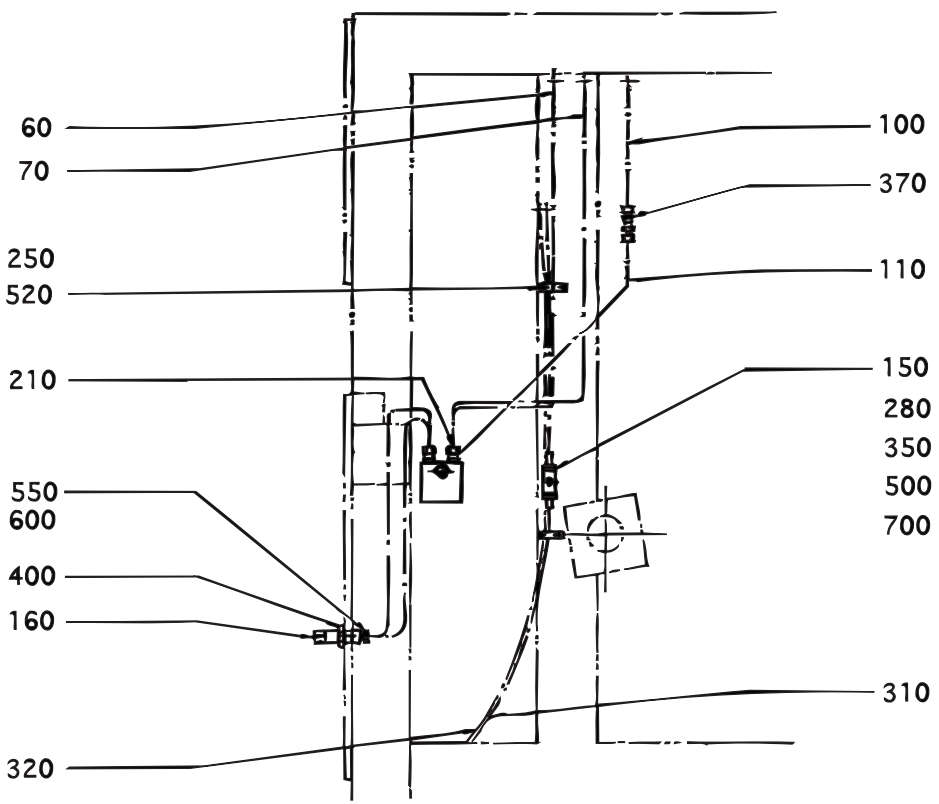

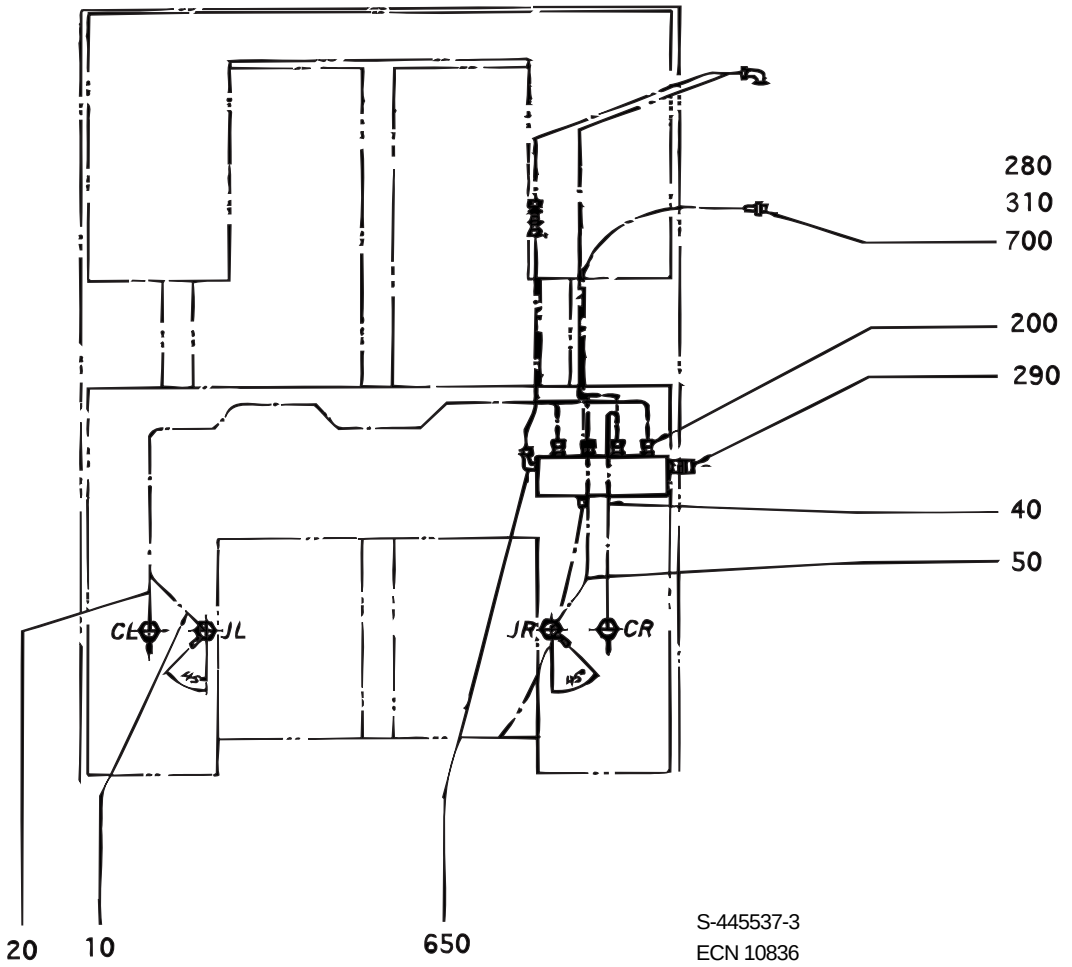

S-445537-3
ECN 10836

Pos	Part No	SP	UN	Qty	Description	Page No
TBA/8						
060	445538-0000	-		1	HYDRAULIC PIPE	
100	445540-0000	-		1	HYDRAULIC PIPE	
210	90030-0157	-		2	CONNECTION	
Common parts						
010	294493-0000	-		1	HYDRAULIC PIPE	
020	294494-0000	-		1	HYDRAULIC PIPE	
040	294495-0000	-		1	HYDRAULIC PIPE	
050	294496-0000	-		1	HYDRAULIC PIPE	
070	445539-0000	-		1	HYDRAULIC PIPE	
110	445541-0000	-		1	HYDRAULIC PIPE	
150	255017-0000	-		1	BRACKET	
160	540718-0000	-		4	ELBOW PIPE JOINT	
200	90030-0155	-		4	CONNECTION	
250	90074-0006	-		2	PIPE-CLIP,double 2X12	
280	90163-0041	-		3	HOSE NIPPLE,EXT. THREAD 3/8"-12	
290	90163-0076	-		1	SLEEVE LP-006-0-WR021	
310	90166-0007	-	MM	2000	HOSE PVC 10/14 Transp.	
320	90166-0122	-	MM	2000	HOSE 6/8 PA 11/12 Transparent	
350	90187-0054	K		1	VALVE	
370	90230-0011	K		1	NON RETURN VALVE	
400	90330-0093	-		4	NUT,HEXAGON G1/2"	
500	312101-0331	-		2	SCREW M6S5X20FZB	
520	312125-0323	-		4	SLOTTED CHEESE HEAD ISO 1207 M5X8 RFR	
550	342703-0103	-		4	ACCESSORIES,NUT M-8 LFZB	
600	342705-0103	-		4	ACCESSORIES,FERRULE 8-LFZB	
650	342731-0114	-		1	ELBOW CONNECTION WE 15-LRFZB	
700	342991-0101	-		3	HOSE CLIP,WORM DRIVE TYPE (13)-16	

Pos	Part No	SP	UN	Qty	Description	Page No

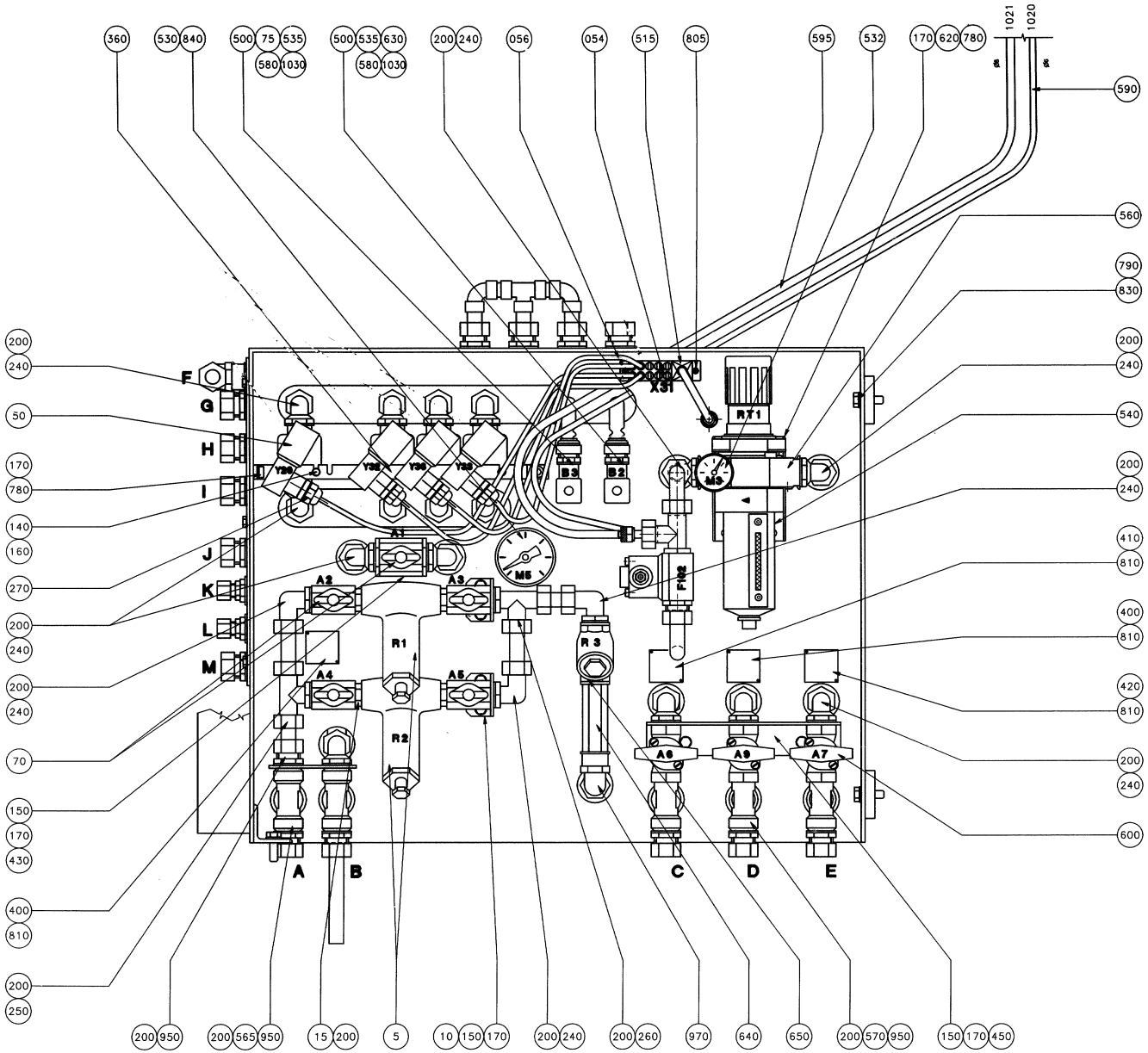

S - 575392-1
ECN 70351

Pos	Part No	SP	UN	Qty	Description	Page No
TBA/8						
005-02	B 271823-0000	R		2	FILTER	
010-02	543127-0000	-		2	BRACKET	
015-02	479261-0000	-		4	NIPPLE	
050-02	B 90042-0172	K		4	SOLENOID VALVE 24VDC	
056-02	90042-0536	R		4	CONTACT FOR SOL.VALVE	
070-03	90187-0062	K		5	VALVE	
075	90274-0042	N		1	PRESSURE SWITCH 2BAR Nacov	
090-02	90418-0053	-		25	ELBOW 90,INTERNAL CONNECTION 15	
100-03	90418-0054	-		7	ELBOW 45,INTERNAL CONNECTION 15	
110-03	90418-0063	-		13	ADAPTER,INTERNAL CONNECTION 15-G1/2"	
140-02	312115-0333	-		8	SCREW MC6S ISO 4762 M5X25 A280	
150-03	312105-0362	-		11	SCREW M6S ISO 4017 M6X8 A280	
160-02	312605-0314	-		16	NUT,HEXAGON,M6M5 Stainless	
170-03	315105-0153	-		29	WASHER,PLAIN ROUND 6,4x12 Stainless	
200-03	315233-0113	D		53	PLAIN ROUND,NYLON R1/2"	
240-03	342730-0114	-		19	ELBOW CONNECTION WA-15-1/2"	
250	342740-0114	-		1	T-PIPE CONNECTION TA-15-G1/2"	
260-02	342750-0114	-		2	L-PIPE CONNECTION LA-15-G1/2"	
270-02	352103-0100	-		4	CABLE GLAND STR 9;PR15,2	
410	273456-0000	-		1	SIGN	
430	543130-0000	-		1	BRACKET	
440	293201-0000	-		1	PIPE	
680-02	90418-0048	-		3	T-PIPE,INTERNAL CONNECTION 15	
920	342710-0115	-		1	REDUCTION RBM 16/8	
930	342711-0115	-		1	ACCESSORIES,PLUG PL-15 AND 16	
960-02	342720-0114	-		20	STRAIGHT CONNECTION GA-15-G1/2"	
070-02	90187-0062	K		3	VALVE	
080	90274-0043	N		1	PRESSURE SWITCH 3BAR Nacov	
090	90418-0053	-		24	ELBOW 90,INTERNAL CONNECTION 15	
100-02	90418-0054	-		6	ELBOW 45,INTERNAL CONNECTION 15	
110-02	90418-0063	-		12	ADAPTER,INTERNAL CONNECTION 15-G1/2"	
140	312115-0333	-		6	SCREW MC6S ISO 4762 M5X25 A280	
150-02	312105-0362	-		9	SCREW M6S ISO 4017 M6X8 A280	
160	312605-0314	-		12	NUT,HEXAGON,M6M5 Stainless	
170-02	315105-0153	-		27	WASHER,PLAIN ROUND 6,4x12 Stainless	
200-02	315233-0113	D		44	PLAIN ROUND,NYLON R1/2"	
240-02	342730-0114	-		16	ELBOW CONNECTION WA-15-1/2"	
260	342750-0114	-		1	L-PIPE CONNECTION LA-15-G1/2"	
270	352103-0100	-		3	CABLE GLAND STR 9;PR15,2	
410-02	273456-0000	-		2	SIGN	
430	543130-0000	-		1	BRACKET	
440	436512-0000	-		1	PIPE	
680-02	90418-0048	-		3	T-PIPE,INTERNAL CONNECTION 15	
920	342710-0115	-		1	REDUCTION RBM 16/8	
960-02	342720-0114	-		20	STRAIGHT CONNECTION GA-15-G1/2"	
Common parts						
054	90042-0550	-		1	VALVES,ACCESSORIES,PROTECTION PLUG	
300	542700-0000	-		1	VALVEPANEL LOWER	
330	543134-0000	-		1	PLATE	
360	543128-0000	-		1	VALVE BRACKET	
400	273455-0000	-		2	LABEL (COLD WATER)	
420	273458-0000	-		1	LABEL (AIR)	
450	543131-0000	-		1	BRACKET	
460	573277-0000	-		1	PIPE	
470	573278-0000	-		1	PIPE	
500	90012-0063	-		2	Cable Gland PR 15,2	
510	90042-0481	-		1	CONNECTION TABLE	
515	90042-0535	-		1	VALVES,ACCESSORIES,TERMINAL MODULE	
530	90043-0006	N		1	PRESSURE GAUGE	
532	90043-0043	N		1	PRESSURE GAUGE Wiegand 0-10 BAR 1/8"	
535	90110-0095	-		2	CONTACT 3 POLE+EARTH	
538	90110-0128	-		1	PLUG 24-POL Harting	
540	90113-0114	N		1	REGULATOR	
560	90113-0407	-		1	Single Yoke 1/2"	
565	90140-0010	-		2	T-PIPE,INTERNAL THREAD Rp1/2"	
570	90140-0011	-		3	T-PIECE	
575	90140-0012	-		5	ELBOW 90,INT./EXT.THREAD R1/2"	
580	90152-0033	-	M	6	Spiral Conduit for PR 15,2(PG 9)	
590	90166-0081	-	MM	1700	HOSE 6/4	
595	90166-0013	-	MM	1700	HOSE 8/6	
600	90187-0029	N		3	VALVE	
605	90224-0319	-		2	CONNECTION	
610	90235-0767	N		1	VALVE	
620	90236-0041	-		2	BRACKET	
630	90274-0044	N		1	PRESSURE SWITCH 4BAR Nacov	
635	90328-0001	K		1	SILENCER	
640	90415-0018	N		1	FILTER	
650	90415-0019	N		1	FILTER	
660	90418-0014	-		2	ELBOW PIPE	
670	90418-0039	-		3	ELBOW PIPE	
690	90418-0050	-		1	T-PIPE,REDUCTION INTERNAL CONNE.15X12X15	
700	90418-0055	-		2	ELBOW 45,INTERNAL AND EXTERNAL CONN.15	
710	90418-0056	-		1	T-PIPE,REDUCTION INTERNAL CONNE.15X15X12	
720	90418-0058	-		3	ELBOW 90,INTERNAL AND EXTERNAL CONNEC.15	
730	90418-0068	-		1	T-PIPE,REDUCTION INTERNAL CONNEC.15X8X15	

VALVE PANEL LOWER

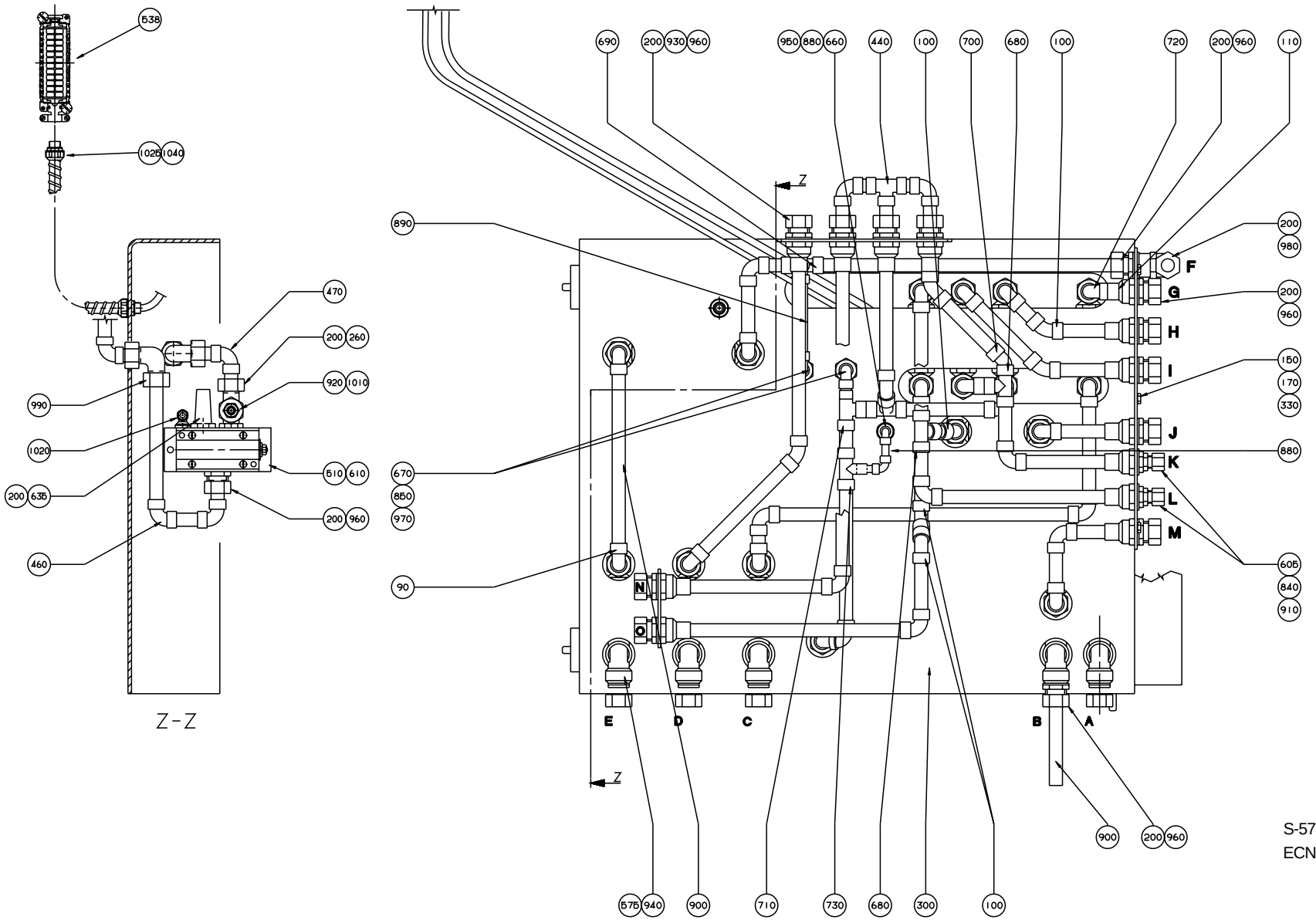

S-575392-2
ECN 19406

Pos	Part No	SP	UN	Qty	Description	Page No
780	312115-0366	-		8	SCREW MC6S ISO 4762 M6X12 A280	
790	312105-0453	-		3	SCREW M6S ISO 4017 M8x25 A280	
805	312125-0224	-		2	SLOTTED HEMCS3X10RFR	
810	312502-0120	-		8	DRIVE SCREW ROUND HEAD SMS 1549 KDS 0X5	
830	315105-0165	-		3	WASHER,PLAIN ROUND 8,4x16 Stainless	
840	315233-0110	-		1	PLAIN ROUND,NYLON R1/4"	
850	315233-0111	-		2	PLAIN ROUND,NYLON R3/8"	
880	341001-0148	-	MM	100	COPPER TUBE	
890	341001-0192	-	MM	300	COPPER TUBE	
900	341001-0228	-	MM	5000	COPPER TUBE	
910	342701-0205	-		2	BUSHING,INT./EXT.G-THREAD G1/2"-G1/4"	
940	342713-0213	-		4	PLUG,EXT.G-THREAD,HEXAGON SOCKET G1/2"	
950	342720-0103	-		1	STRAIGHT CONNECTION GA-8-G1/8"	
970	342723-0109	-		2	STRAIGHT PIPE CONNECTION GAI-12-G3/8"	
980	342733-0114	-		2	ELBOW CONNECTION WI-15-G1/2"	
990	342736-0114	-		1	ELBOW CONNECTION W-15	
1010	342929-0121	-		1	STRAIGHT COUPLING,SOLDER 8/6-8	
1020	342930-0113	-		1	ELBOW 90 COUPL.,EXT.THREAD 6/4-R1/8"	
1025	352135-0106	-	M	3	Spiral Conduit Di=16 mm	
1030	352136-0113	-		3	GLAND FITTING PR18,6/PG11 Di=12mm	
1040	352136-0127	-		2	GLAND FITTING PR 18,6	

Pos	Part No	SP	UN	Qty	Description	Page No

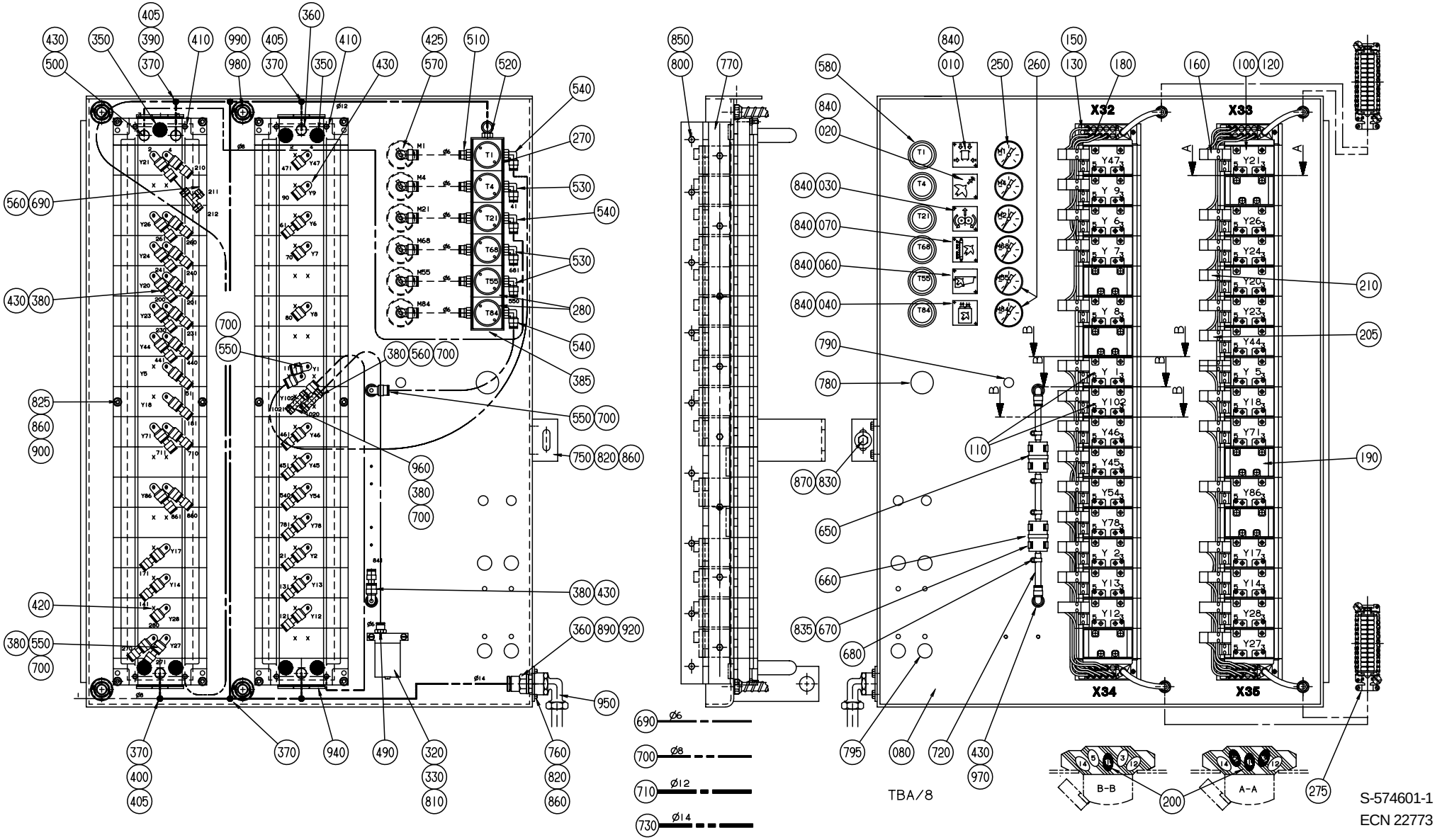
X32
X33
X34
X35
B-B
A-A
TBA/8
S-574601-1
ECN 22773

Pos	Part No	SP	UN	Qty	Description	Page No
TBA/8 NORMFIN						
020	273450-0000	-		1	SIGN	
030	273452-0000	-		1	SIGN	
100-04	90042-0215	N		28	PNEUMATICS,VALVES	
110	90042-0520	R		2	PNEUMATICS,VALVES,PLATES	
120-02	90042-0532	R		32	PNEUMATICS,VALVES,PLATES	
160-03	90042-0527	-		28	VALVES,ACCESSORIES,BLANKING KIT F.PILOT	
190	90042-0519	-		6	VALVES,ACCESSORIES,BLANKING PLATE	
200-03	90042-0528	-		6	VALVES,ACCESSORIES,BLANKING KIT	
205-03	90042-0538	K		8	PNEUMATICS,VALVES	
210-03	90042-0539	K		20	PNEUMATICS,VALVES	
250-02	90043-0043	D		4	PRESSURE GAUGE Wiegand 0-10 BAR 1/8"	
270-02	90113-0069	K		4	PRESSURE REGULATOR	
350-02	90328-0024	K		7	SILENCER	
360-02	90055-0096	-		5	STRAIGHT COUPLING	
370-02	342748-0110	-		6	T-CONNECTION	
380-04	342716-0203	-		33	REDUCER	
385	342713-0210	-		1	PLUG,EXT.THREAD,HEXAGON SOCKET 1/4"Brass	
400	342716-0209	-		1	REDUCER	
405	342716-0211	-		3	REDUCER	
410	342715-0102	-		2	PLUG	
420	342715-0103	-		35	BLIND PLUG	
425-02	90055-0117	-		6	ELBOW PIPE JOINT "REPBY 90055-217"	
430-03	90055-0118	-		39	ELBOW PIPE JOINT	
500	342722-0206	-		1	STRAIGHT COUPLING D=8-R3/8"	
510-02	342722-0203	-		6	STRAIGHT COUPLING	
530-02	342732-0103	-		3	ELBOW PIPE JOINT	
540	342732-0104	-		3	ELBOW PIPE JOINT	
560-02	342748-0102	-		2	T-CONNECTION	
570-02	342770-0105	-		6	HOSE COUPLING	
580-02	90113-0379	-		6	NUT	
690	90166-0081	-	M	3	HOSE 6/4	
700	90166-0013	-	M	2	HOSE 8/6	
780	90261-0008	-		1	PLUG,BLIND PLASTIC M35X1,5/M36X3	
790	90261-0013	-		3	PLUG	
795	90261-0033	-		4	PLUG,BLIND PLASTIC FOR M24X2	
900	312605-0316	-		12	NUT,HEXAGON,A280 M6M6 Stainless	
940	342713-0211	-		12	PLUG,EXT.G-THREAD,HEXAGON SOCKET G3/8"	
255	90043-0056	K		1	PRESSURE GAUGE	
265	90055-0101	-		1	Y-CONNECTION	
267	90055-0105	-		1	V-JUNCTION COUPLING14MM REPBY 342735-110	
270	90113-0069	K		3	PRESSURE REGULATOR	
273	90113-0071	D		1	PRESSURE REGULATOR	
285	90187-0149	K		2	VALVE	
290	90243-0427	K		2	Flow meter	
350-03	90328-0024	K		8	SILENCER	
360	90055-0096	-		4	STRAIGHT COUPLING	
365	90328-0026	K		2	SILENCER	
370	342748-0110	-		5	T-CONNECTION	
380	342716-0203	-		22	REDUCER	
385-02	342713-0210	-		2	PLUG,EXT.THREAD,HEXAGON SOCKET 1/4"Brass	
400	342716-0209	-		1	REDUCER	
405	342716-0211	-		3	REDUCER	
410	342715-0102	-		2	PLUG	
420-02	342715-0103	-		50	BLIND PLUG	
425-03	90055-0117	-		7	ELBOW PIPE JOINT "REPBY 90055-217"	
430	90055-0118	-		26	ELBOW PIPE JOINT	
495	342722-0205	-		2	STRAIGHT COUPLING D=8-R1/4"	
510-03	342722-0203	-		8	STRAIGHT COUPLING	
530	342732-0103	-		2	ELBOW PIPE JOINT	
540-02	342732-0104	-		7	ELBOW PIPE JOINT	
560	342748-0102	-		1	T-CONNECTION	
570-02	342770-0105	-		6	HOSE COUPLING	
580-02	90113-0379	-		6	NUT	
690-02	90166-0081	-	M	4	HOSE 6/4	
700-02	90166-0013	-	M	3	HOSE 8/6	
900	312605-0316	-		12	NUT,HEXAGON,A280 M6M6 Stainless	
940	342713-0211	-		12	PLUG,EXT.G-THREAD,HEXAGON SOCKET G3/8"	
TBA/8 REVFIN						
020	273450-0000	-		1	SIGN	
030	273452-0000	-		1	SIGN	
100-05	90042-0215	N		30	PNEUMATICS,VALVES	
110	90042-0520	R		2	PNEUMATICS,VALVES,PLATES	
120-02	90042-0532	R		32	PNEUMATICS,VALVES,PLATES	
160-03	90042-0527	-		28	VALVES,ACCESSORIES,BLANKING KIT F.PILOT	
190-05	90042-0519	-		4	VALVES,ACCESSORIES,BLANKING PLATE	
200-03	90042-0528	-		6	VALVES,ACCESSORIES,BLANKING KIT	
205-04	90042-0538	K		10	PNEUMATICS,VALVES	
210-03	90042-0539	K		20	PNEUMATICS,VALVES	
250-02	90043-0043	D		4	PRESSURE GAUGE Wiegand 0-10 BAR 1/8"	
270-02	90113-0069	K		4	PRESSURE REGULATOR	
350-02	90328-0024	K		7	SILENCER	
360-02	90055-0096	-		5	STRAIGHT COUPLING	
370-02	342748-0110	-		6	T-CONNECTION	
380-05	342716-0203	-		37	REDUCER	
385	342713-0210	-		1	PLUG,EXT.THREAD,HEXAGON SOCKET 1/4"Brass	

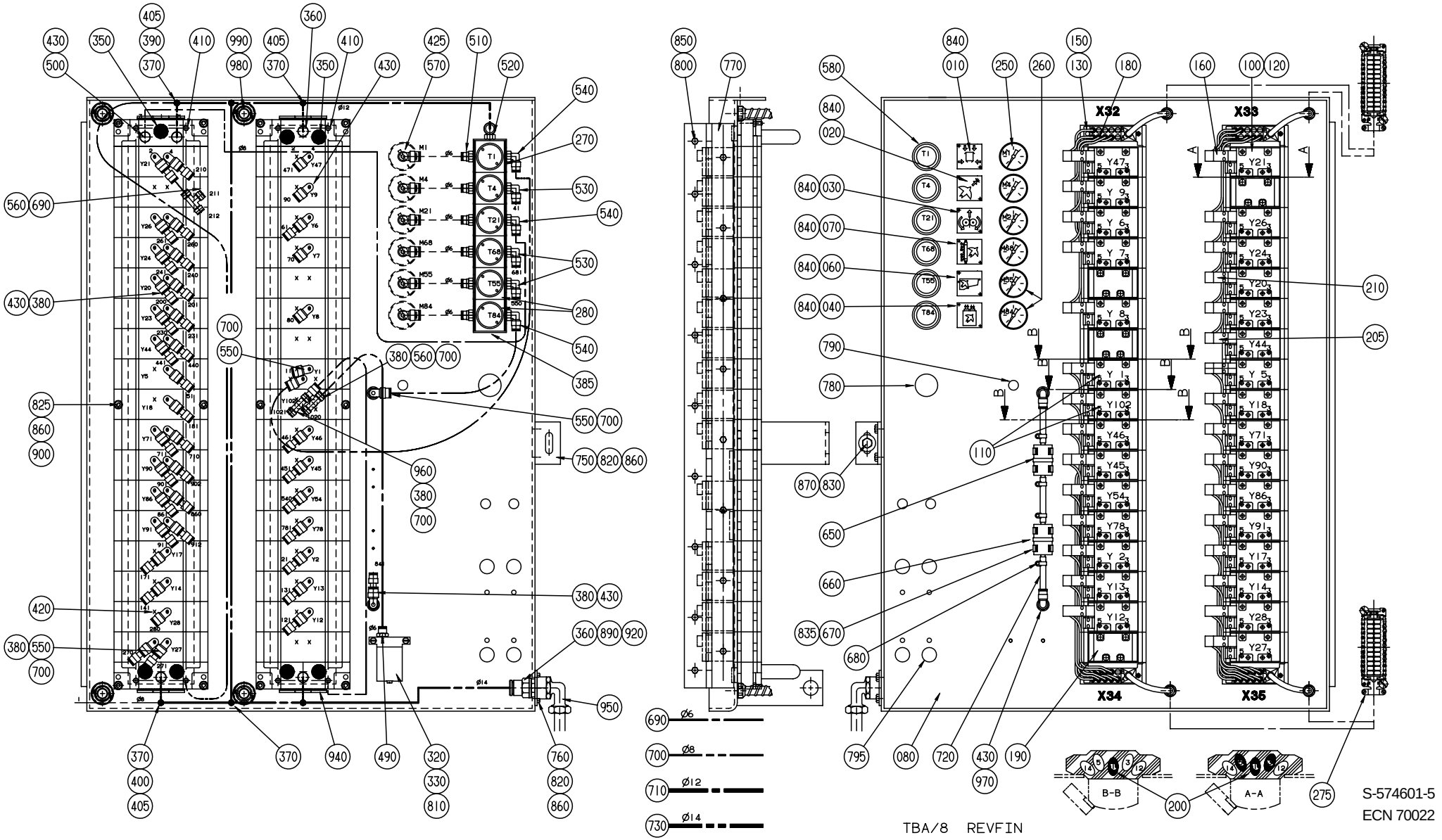
X32
X33
X34
X35
B-B
A-A
TBA/8 REVFIN
S-574601-5
ECN 70022

Pos	Part No	SP	UN	Qty	Description	Page No
400	342716-0209	-		1	REDUCER	
405	342716-0211	-		3	REDUCER	
410	342715-0102	-		2	PLUG	
420	342715-0103	-		35	BLIND PLUG	
425-02	90055-0117	-		6	ELBOW PIPE JOINT "REPBY 90055-217"	
430-04	90055-0118	-		43	ELBOW PIPE JOINT	
500	342722-0206	-		1	STRAIGHT COUPLING D=8-R3/8"	
510-02	342722-0203	-		6	STRAIGHT COUPLING	
530-02	342732-0103	-		3	ELBOW PIPE JOINT	
540	342732-0104	-		3	ELBOW PIPE JOINT	
560-02	342748-0102	-		2	T-CONNECTION	
570-02	342770-0105	-		6	HOSE COUPLING	
580-02	90113-0379	-		6	NUT	
690	90166-0081	-	M	3	HOSE 6/4	
700	90166-0013	-	M	2	HOSE 8/6	
780	90261-0008	-		1	PLUG,BLIND PLASTIC M35X1,5/M36X3	
790	90261-0013	-		3	PLUG	
795	90261-0033	-		4	PLUG,BLIND PLASTIC FOR M24X2	
900	312605-0316	-		12	NUT,HEXAGON,A280 M6M6 Stainless	
940	342713-0211	-		12	PLUG,EXT.G-THREAD,HEXAGON SOCKET G3/8"	
Common parts						
010	273449-0000	-		1	SIGN	
040	978603-0000	-		1	SIGN	
060	479964-0000	-		1	SIGN	
070	561595-0000	-		1	SIGN MULTISTEP 35x35mm	
080	574602-0000	-		1	VALVE PANEL UPPER	
130	90042-0522	R		4	PNEUMATICS,VALVES,PLATES	
150	90042-0535	-		4	VALVES,ACCESSORIES,TERMINAL MODULE	
180	90042-0550	-		2	VALVES,ACCESSORIES,PROTECTION PLUG	
260	90043-0021	D		2	PRESSURE GAUGE Wiegand 0-1 BAR 1/8"	
275	90110-0128	-		2	PLUG 24-POL Harting	
280	90113-0076	D		2	PRESSURE REGULATOR	
320	90235-0450	-		1	PLATE	
330	90235-0708	-		1	VALVE	
390	342716-0210	-		1	REDUCER	
490	342722-0202	-		8	PIPE COUPLING	
520	342732-0109	-		1	ELBOW PIPE JOINT	
550	342735-0103	-		4	ELBOW PIPE JOINT	
650	90277-0045	F		1	FILTER	
660	90277-0046	F		1	FILTER	
670	90074-0026	-		4	PIPE-CLIP,single 25-35	
680	90132-0021	-		4	HOSE CLIP	
710	90166-0068	-	MM	400	HOSE	
720	90166-0194	-	MM	500	PLASTIC HOSE	
730	90166-0206	-	M	2	PLASTIC HOSE	
750	574603-0000	-		1	BRACKET	
760	574604-0000	-		1	BRACKET	
770	445736-0000	-		1	HINGE	
800	312105-0323	-		17	SCREW M6S ISO 4017 M5X8 A280	
810	312105-0339	-		2	SCREW M6S ISO 4014 M5X40 A280	
820	312105-0364	-		4	SCREW M6S6X10RFR	
825	312105-0376	-		12	SCREW M6S ISO 4017 M6X35 A280	
830	312105-0449	-		1	SCREW M6S ISO 4017 M8x16 A280	
835	312125-0220	-		4	SLOTTED HEMCS3X6RFR	
840	312502-0120	-		12	DRIVE SCREW ROUND HEAD SMS 1549 KDS 0X5	
850	315105-0146	-		17	WASHER,PLAIN ROUND 5,3x10 Stainless	
860	315105-0153	-		16	WASHER,PLAIN ROUND 6,4x12 Stainless	
870	315125-0165	-		1	WASHERS,PLAIN ROUND,CHAMFERED 8,4X26X5	
890	315233-0113	-		1	PLAIN ROUND,NYLON R1/2"	
920	342701-0206	-		1	BUSHING,INT./EXT.G-THREAD G1/2"-G3/8"	
950	342733-0114	-		1	ELBOW CONNECTION WI-15-G1/2"	
960	342748-0103	-		1	T-CONNECTION	
970	342768-0103	-		2	BULKHEAD LEAD-IN	
980	352135-0106	-	M	8	Spiral Conduit Di=16 mm	
990	352136-0127	-		8	GLAND FITTING PR 18,6	

CONNECTION BOX

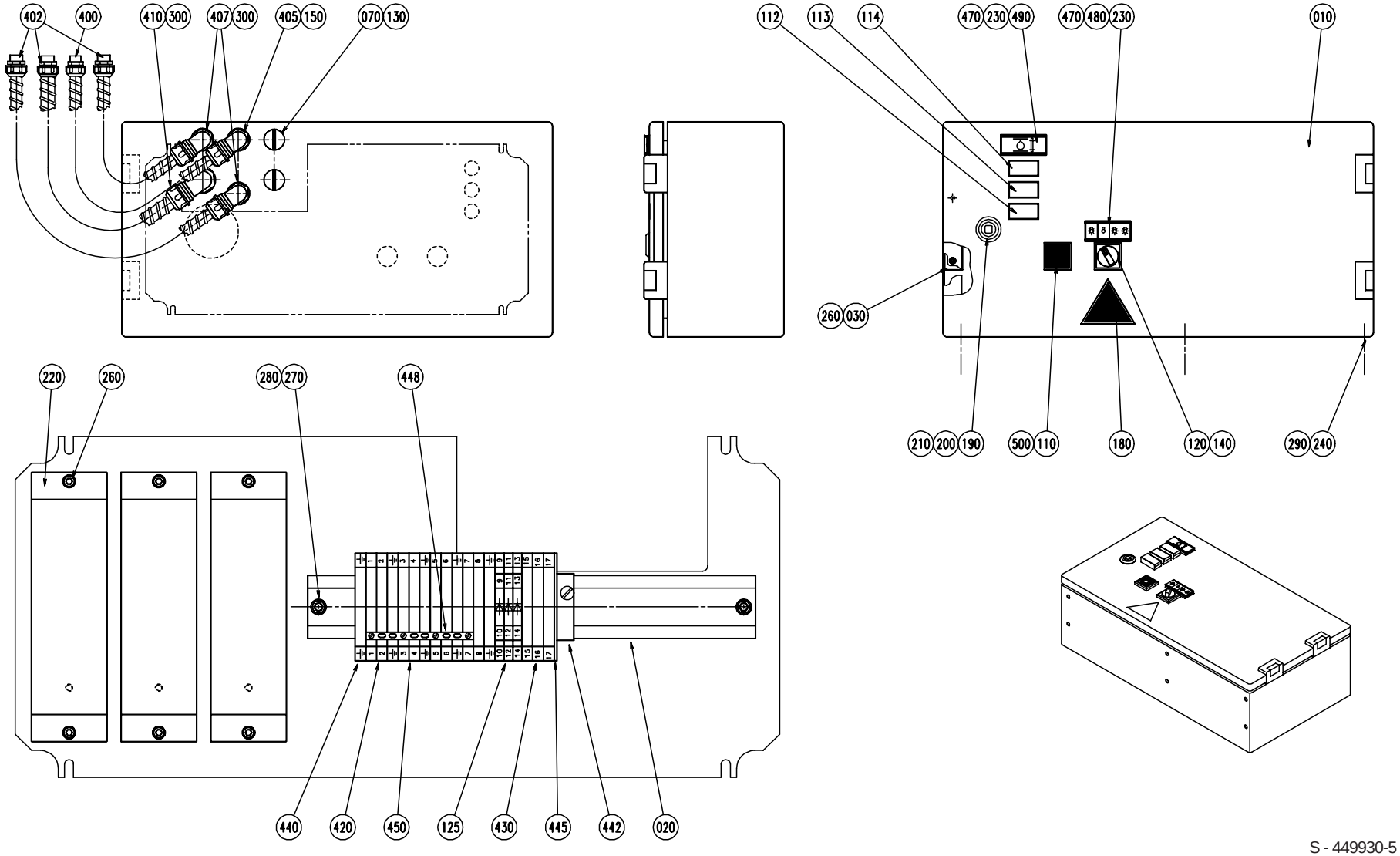

S - 449930-5
ECN 70346

Pos	Part No	SP	UN	Qty	Description	Page No
Common parts						
010	574605-0000	-		1	CONNECTION BOX	
020	90077-0302	-	MM	250	RAIL TS/35x7,5 REPL.BY 353042-5	
030	574606-0000	-		1	SHEET	
070	90002-0009	-		2	BLANK-OFF PLUG 18.6	
110	90064-0084	D		1	PUSH BUTTON YELLOW	
112	B 90064-0094	D		1	PUSH BUTTON RED	
113	B 90064-0095	D		1	PUSH BUTTON YELLOW	
114	B 90064-0096	D		1	PUSH BUTTON GREEN	
120	90064-0317	D		1	TOUCHGUARD Olten Pushb.REPL.BY 90064-335	
125	90077-0115	-		3	DIODETERMINAL WTR2,5 REPL.BY 353021-0122	
130	90099-0002	-		2	NUT Pr 18,6 Brass	
140	90111-0121	D		1	SWITCH 3 POS. EA OLTEN	
150	90152-0033	-	M	1	Spiral Conduit for PR 15,2(PG 9)	
180	90194-0016	-		1	SIGN "FLASH SIGN" 50X50MM	
190	90237-0319	-		1	LOCK HOUSING EMKA U134	
200	90237-0320	-		1	LOCK COMPONENT EMKA U136	
210	90237-0335	-		1	LOCKING CATCH	
220	90297-0300	D		3	LIGHT FIXTURES,BALLAST COIL 50HZ	
230	311520-0329	-		4	BLANK RIVET 2,4x8mm	
240	312105-0362	-		6	SCREW M6S ISO 4017 M6X8 A280	
260	312115-0287	-		10	SCREW MC6S ISO 4762 M4X8 A280	
270	312121-0323	-		2	SLOTTED HEMCS5X8FZB	
280	312601-0314	-		2	NUT M6M5FZB	
290	315105-0153	-		6	WASHER,PLAIN ROUND 6,4x12 Stainless	
300	352135-0106	-	M	3	Spiral Conduit Di=16 mm	
400	352136-0113	-		1	GLAND FITTING PR18,6/PG11 Di=12mm	
402	352136-0127	-		3	GLAND FITTING PR 18,6	
405	352137-0113	-		1	COND.FITTING Pr 18,6 Di=12mm	
407	352137-0127	-		2	COND.FITTING Pr 18,6 Di=16mm	
410	352137-0129	-		1	CABLE GLAND;PR22,5(PG16)	
420	353021-0213	-		8	FEED THROUGH TERMINAL WDU 4 BEGIE	
430	353021-0217	-		3	FEED TRHOUGH TERMINAL WDU4 BLUE	
440	353024-0205	-		5	EARTH TERMINAL WPE 4	
442	353031-0201	-		1	END BRACKET EW35	
445	353032-0005	-		1	END PLATE WAP 2,5-10 Blue	
448	353034-0031	-		1	BRIDGE CONNECTOR WQV 4/10	
450	359011-0807	-		2	MARKING PLATES 5-FW 1-50	
470	359240-0100	-		2	SIGN HOLDER	
480	359241-0127	-		1	SIGN "LIGH JAW SYSTEM & MACHINE"	
490	359241-0158	-		1	SIGN "LEVEL HYDR.OIL TANK"	
500	359301-0125	-		1	SIGN "LUBRICATION"	

Pos	Part No	SP	UN	Qty	Description	Page No

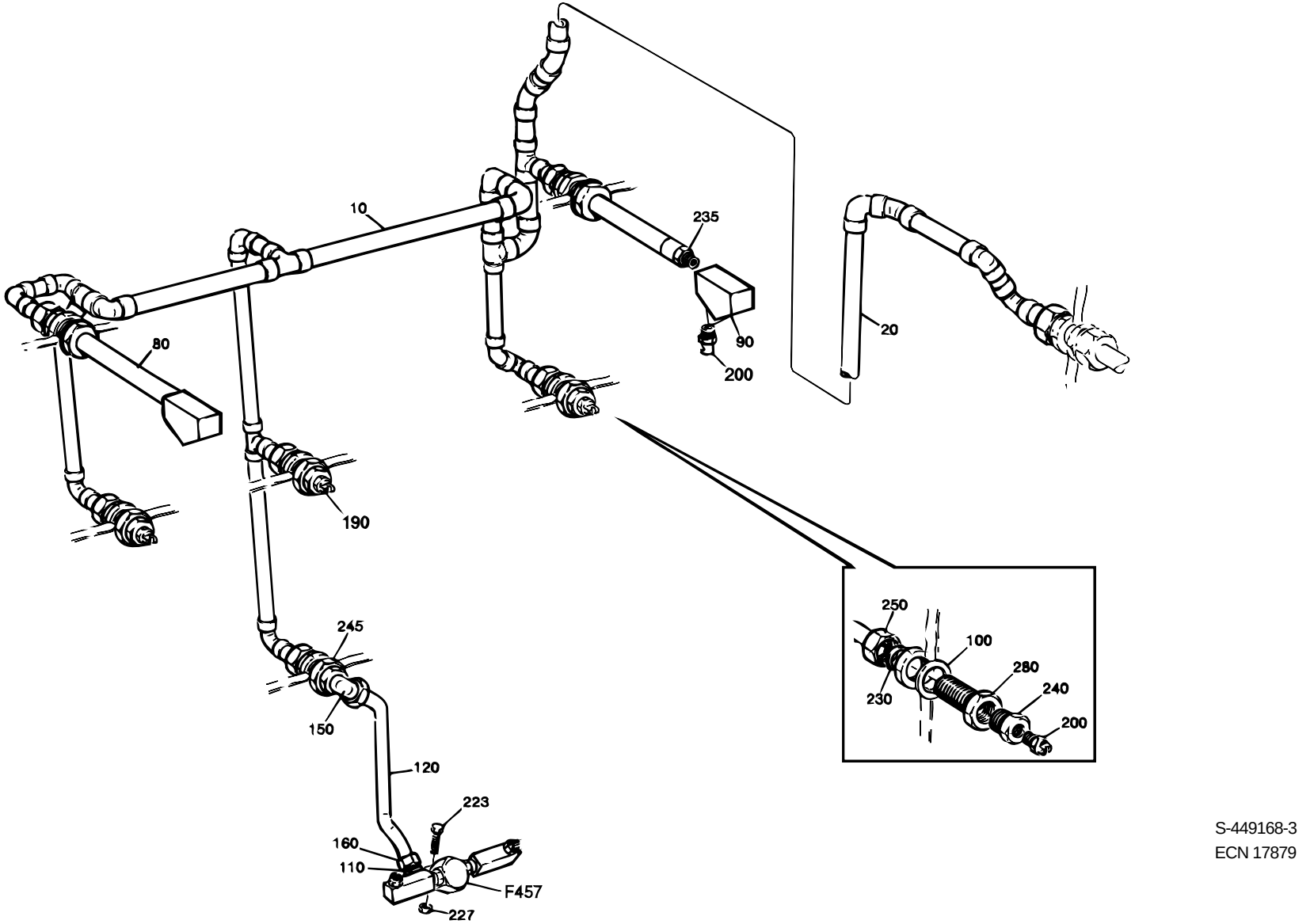

S-449168-3
ECN 17879

Pos	Part No	SP	UN	Qty	Description	Page No
Common parts						
457	A 594614-0100	-		1	CLEANING HEAD	**251**
010	530556-0000	-		1	JUNCTION PIPE UPPER	
020	449170-0000	-		1	CLEANING PIPE	
080	535016-0000	-		2	FORCE SPRING	
090	535017-0000	D		2	BRACKET	
100	246885-0000	-		6	WASHER	
110	537919-0000	-		1	PIPE HOLDER	
120	537918-0000	-		1	PIPE	
150	90030-0115	-		1	ELBOW CONNECTION WA 12-R3/8	
160	90030-0187	-		1	STRAIGHT CONNECTION GA-12-G3/8"	
223	312105-0372	-		1	SCREW M6S ISO 4017 M6X25 A280	
227	312605-0316	-		2	NUT,HEXAGON,A280 M6M6 Stainless	
230	315234-0113	-		6	PLAIN ROUND,COPPER R1/2",M20	
245	342701-0206	-		1	BUSHING,INT./EXT.G-THREAD G1/2"-G3/8"	
250	342720-0114	-		6	STRAIGHT CONNECTION GA-15-G1/2"	
280	342767-0114	-		6	BULKHEAD CONNECTOR G1/2"	
TBA/8 0355B or TBA/8 0375S or TBA/8 0400B or TBA/8 0500B or TBA/8 0500S or TBA/8 0500SQ or TBA/8 0750B or TBA/8 0750S or TBA/8 1000B or TBA/8 1055B						
200	90424-0035	N		7	NOZZLE	
240	342701-0205	-		3	BUSHING,INT./EXT.G-THREAD G1/2"-G1/4"	
TBA/8 1000S or TBA/8 1000SQ						
190	571654-0000	N		1	NOZZLE	
200	90424-0035	N		6	NOZZLE	
240	342701-0205	-		2	BUSHING,INT./EXT.G-THREAD G1/2"-G1/4"	

Pos	Part No	SP	UN	Qty	Description	Page No

CLEANING HEAD

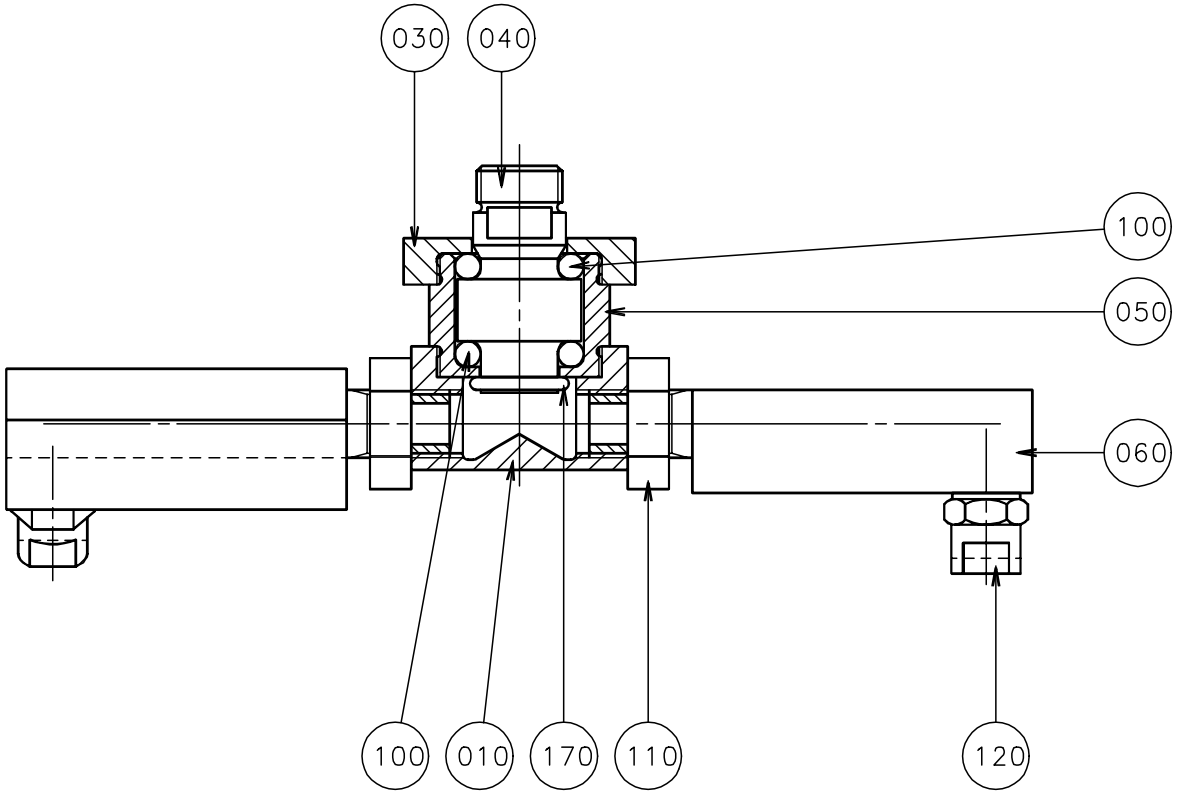

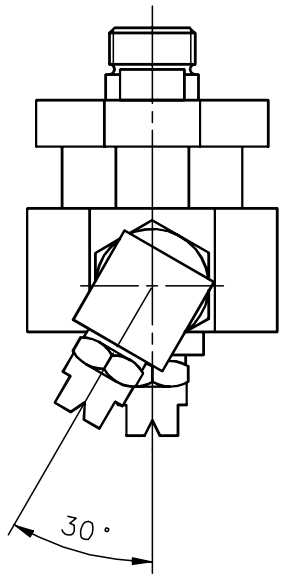

S - 594614-1
ECN 70695

Pos	Part No	SP	UN	Qty	Description	Page No
Common parts						
010	440600-0000	R		1	ROTOR	
030	534880-0000	R		1	END SECTION	
040	534878-0000	R		1	SHAFT	
050	534879-0000	R		1	BEARING HOUSING	
060	440605-0001	R		2	PIPE	
100	90090-0020	J		24	BALLS 5	
110	90330-0034	-		2	NUT,HEXAGON G1/4"	
120	90424-0026	K		2	NOZZLE	
170	315202-0211	J		1	O-RINGS 13,3X2,4	

Pos	Part No	SP	UN	Qty	Description	Page No

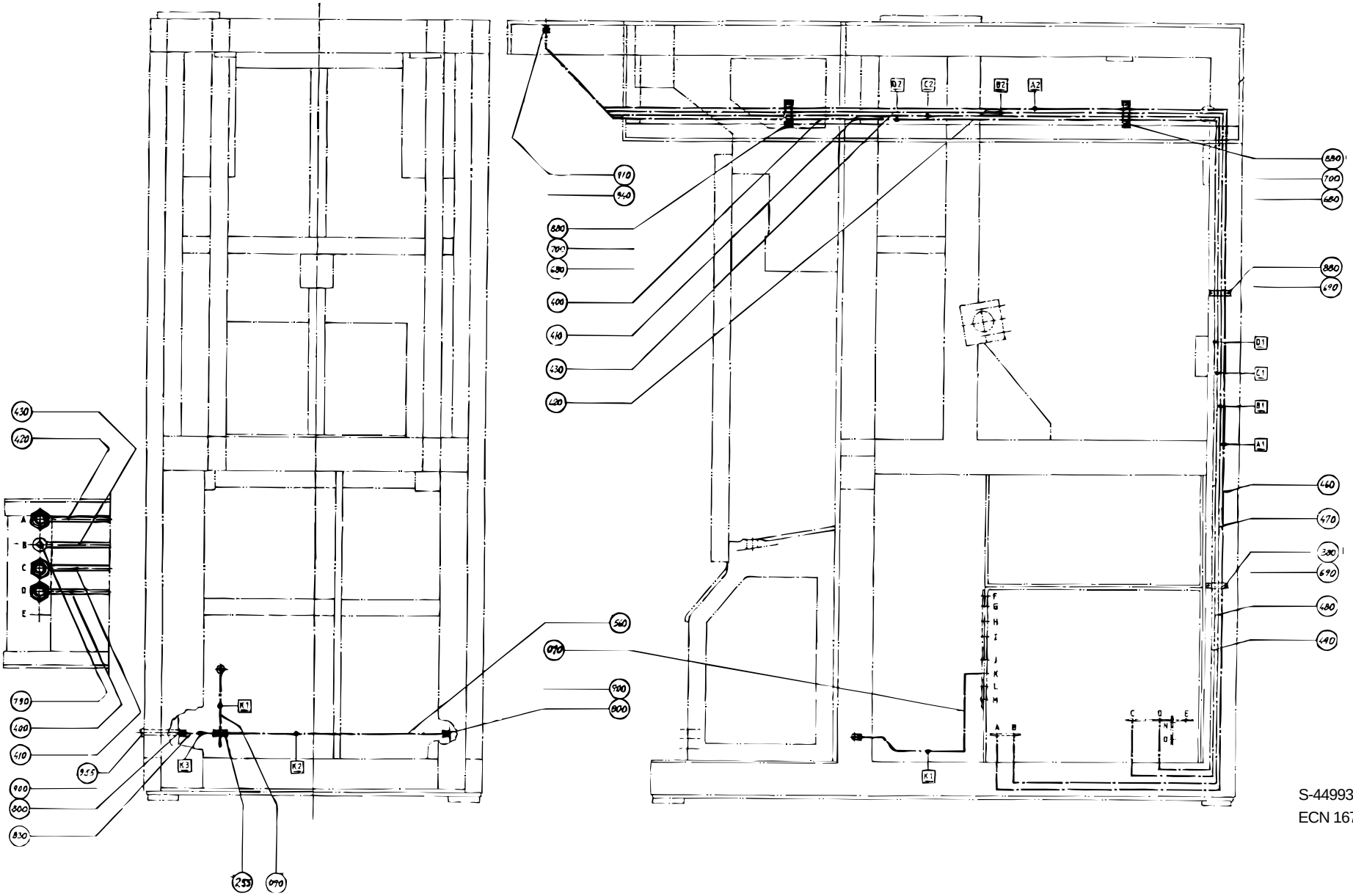

S-449932-3
ECN 16787

Pos	Part No	SP	UN	Qty	Description	Page No
TBA/8						
010	434168-0000	-		1	PIPE	
030	B 450716-0000	-		1	PIPE	
040	450717-0000	-		1	PIPE	
050	464520-0000	-		1	PIPE	
060	450719-0000	-		1	PIPE	
070	561592-0000	-		1	PIPE	
080	561591-0000	-		1	PIPE	
090	450735-0000	-		1	PIPE	
105	561424-0000	-		1	PIPE	
110	450722-0000	-		1	PIPE	
120	450723-0000	-		1	PIPE	
125	90166-0121	-	MM	1200	HOSE	
140	464719-0000	-		1	SIGN	
165	90030-0106	-		1	PIPE CONNECTION G-12	
175	342991-0102	-		2	HOSE CLIP,WORM DRIVE TYPE (16)-19	
190	90030-0253	-		1	PIPE COUPLING	
195	90089-0018	-		1	TRANSITIONAL NIPPLE	
210	90224-0317	-		1	CONNECTION	
230-02	90224-0320	-		2	CONNECTION	
240	90224-0321	-		1	CONNECTION	
250	90224-0322	-		1	CONNECTION	
255	90224-0323	-		1	CONNECTION	
258	90274-0065	D		1	PRESSURE SWITCH	
290	312105-0327	-		2	SCREW M6S ISO 4017 M5X12 A280	
300	315105-0124	-		2	WASHER,PLAIN ROUND 3,2x6	
310	315234-0113	-		1	PLAIN ROUND,COPPER R1/2",M20	
335-02	342923-0114	-		2	STRAIGHT COUPL.,INT.THREADED 6/4-G1/4"	
350	352136-0129	-		1	GLAND FITTING PR22,5/PG16 Di=16mm	
510	B 450731-0000	-		1	PIPE	
520	B 464431-0000	-		1	PIPE	
530	450733-0000	-		1	PIPE	
540	464432-0000	-		1	PIPE	
660	276398-0000	D		4	HEXAGON NIPPLE	
740	450747-0000	-		1	PIPE	
750	B 450748-0000	-		1	PIPE	
760	B 575795-0000	-		1	WATER PIPE	
770	341001-0228	-	MM	80	COPPER TUBE	
800-03	90224-0319	-		13	CONNECTION	
820	90230-0023	N		1	NON RETURN VALVE	
825-02	90235-0295	-		4	THROTTLE CHECK VALVES,G1/4"	
900-02	315233-0110	-		6	PLAIN ROUND,NYLON R1/4"	
955-03	342923-0122	-		6	STRAIGHT COUPL.,INT.THREADED 8/6-G1/4"	
960	342980-0122	-		4	BANJO-CONNECTION,RING 8/6-G1/4"	
Common parts						
220	90224-0318	-		2	CONNECTION	
400	B 544688-0000	-		1	PIPE	
410	B 544689-0000	-		1	PIPE	
420	B 544690-0000	-		1	PIPE	
430	B 544691-0000	-		1	PIPE	
440	434171-0000	-		1	PIPE	
450	450725-0000	-		1	ATTACHMENT PLATE	
460	B 544693-0000	-		1	PIPE	
470	B 544694-0000	-		1	PIPE	
480	B 544695-0000	-		1	PIPE	
490	B 544696-0000	-		1	PIPE	
500	B 450730-0000	-		1	PIPE	
560	450736-0000	-		1	PIPE	
570	450737-0000	-		1	PIPE	
580	450738-0000	-		1	PIPE	
590	450739-0000	-		1	PIPE	
600	B 450740-0000	-		1	PIPE	
610	567266-0000	-		1	TUBE	
620	B 450742-0000	-		1	PIPE	
630	567267-0000	-		1	TUBE	
670	279105-0000	-		2	WASHER	
680	279526-0000	-		2	BRACKET	
690	293351-0000	-		2	CRAMP	
700	293352-0000	-		2	CRAMP	
705	450724-0000	-		1	PIPE	
710	450744-0000	-		2	CRAMP	
720	450745-0000	-		2	SPACER	
730	450746-0000	-		1	HOLDER	
780	90030-0091	-		1	PIPE CONNECTION G-8	
785	90030-0159	-		2	BULKHEAD CONNECTOR SV 15-L/SY	
790	90087-0002	-		1	PIPE PLUG	
792	90165-0007	-		3	PIPE-CLIPS,FOR SINGLE,ONE SIDE PIPE 8	
794	90166-0122	-	M	2	HOSE 6/8 PA 11/12 Transparent	
796	90166-0124	-	M	2	HOSE 4,0/6 PA 11/12 Transp.	
830	90266-0007	-	MM	63	TUBE	
850	312101-0327	-		4	SCREW M6S5X12FZB	
860	312101-0364	-		2	SCREW M6S6X10FZB	
870	312101-0372	-		1	SCREW M6S 6x25 FZB	
872	312121-0287	-		3	SLOTTED HEAD SCREW MCS 4x8 FZB	
875	312125-0220	-		4	SLOTTED HEMCS3X6RFR	
880	312125-0323	-		8	SLOTTED CHEESE HEAD ISO 1207 M5X8 RFR	

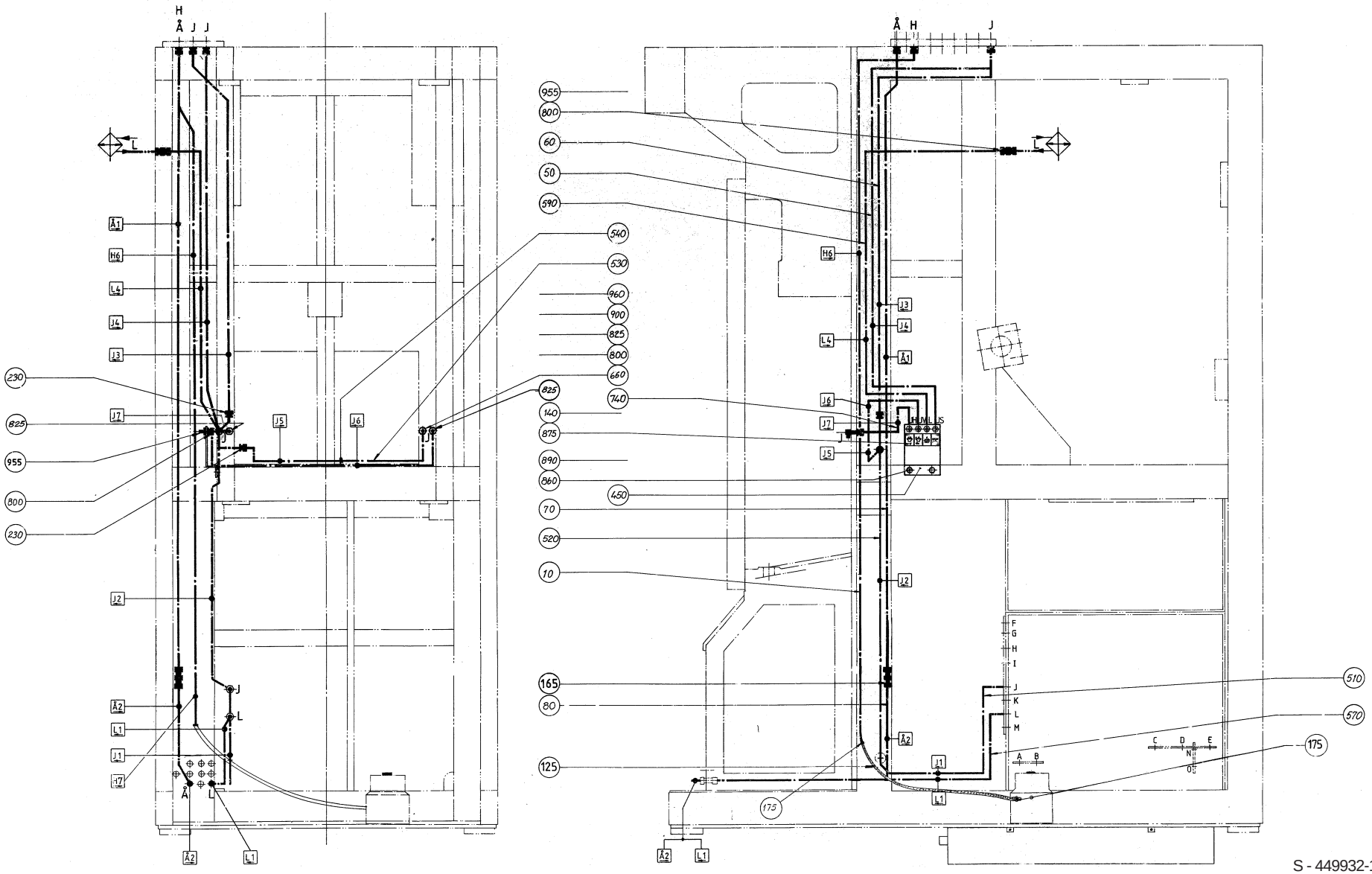

S - 449932-10
ECN 70351

Pos	Part No	SP	UN	Qty	Description	Page No
890	315101-0153	-		2	WASHER BRB 6,4x12 FZB	
910	315233-0113	D		4	PLAIN ROUND,NYLON R1/2"	
920	341001-0228	-	MM	300	COPPER TUBE	
930	341001-0228	-	MM	1792	COPPER TUBE	
935	342713-0210	-		1	PLUG,EXT.THREAD,HEXAGON SOCKET 1/4"Brass	
940	342720-0114	-		4	STRAIGHT CONNECTION GA-15-G1/2"	
950	342736-0114	-		1	ELBOW CONNECTION W-15	

Pos	Part No	SP	UN	Qty	Description	Page No

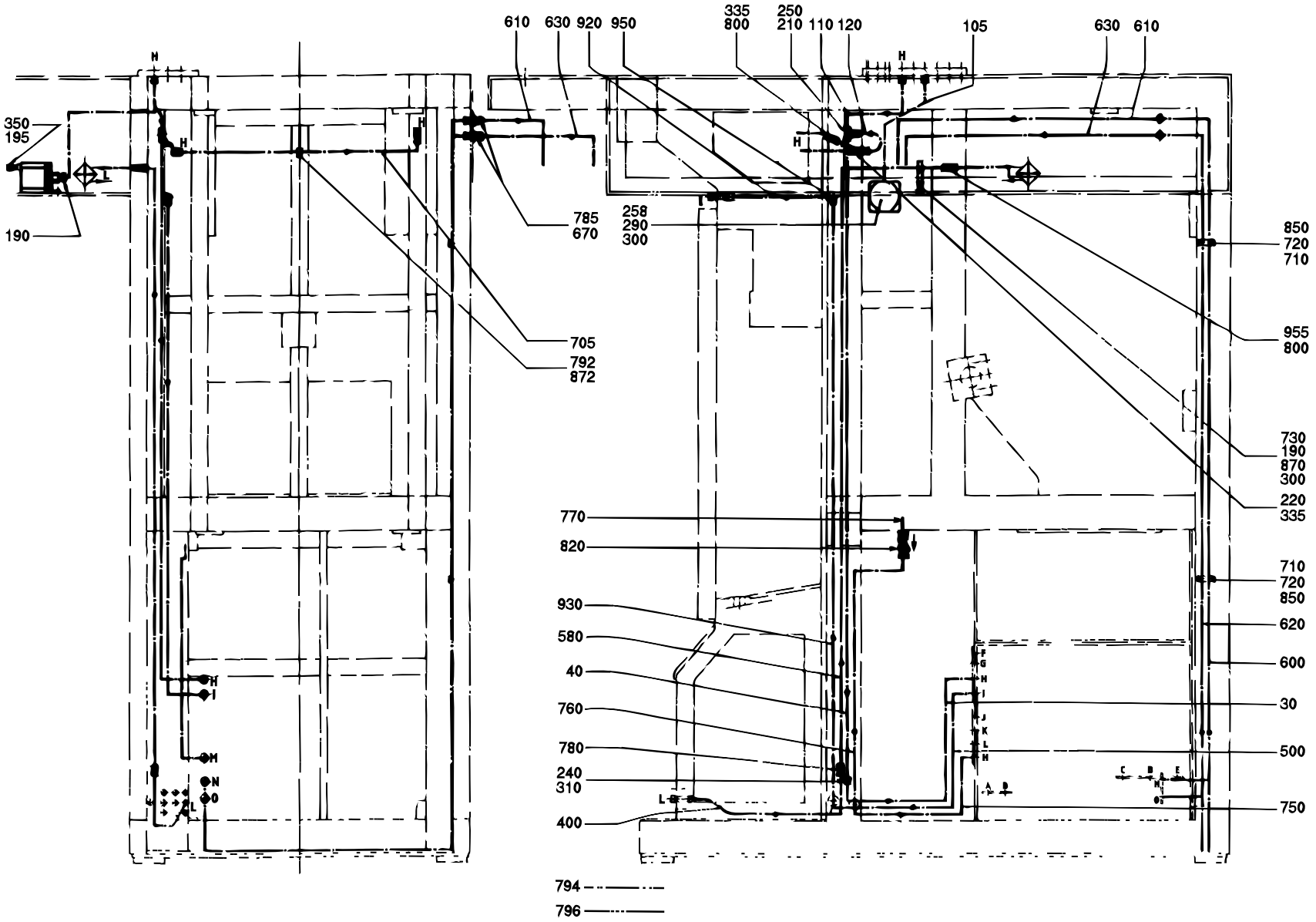

S-449932-12
ECN 19604

Pos	Part No	SP	UN	Qty	Description	Page No
SEE PREVIOUS PAGES.						

Pos	Part No	SP	UN	Qty	Description	Page No

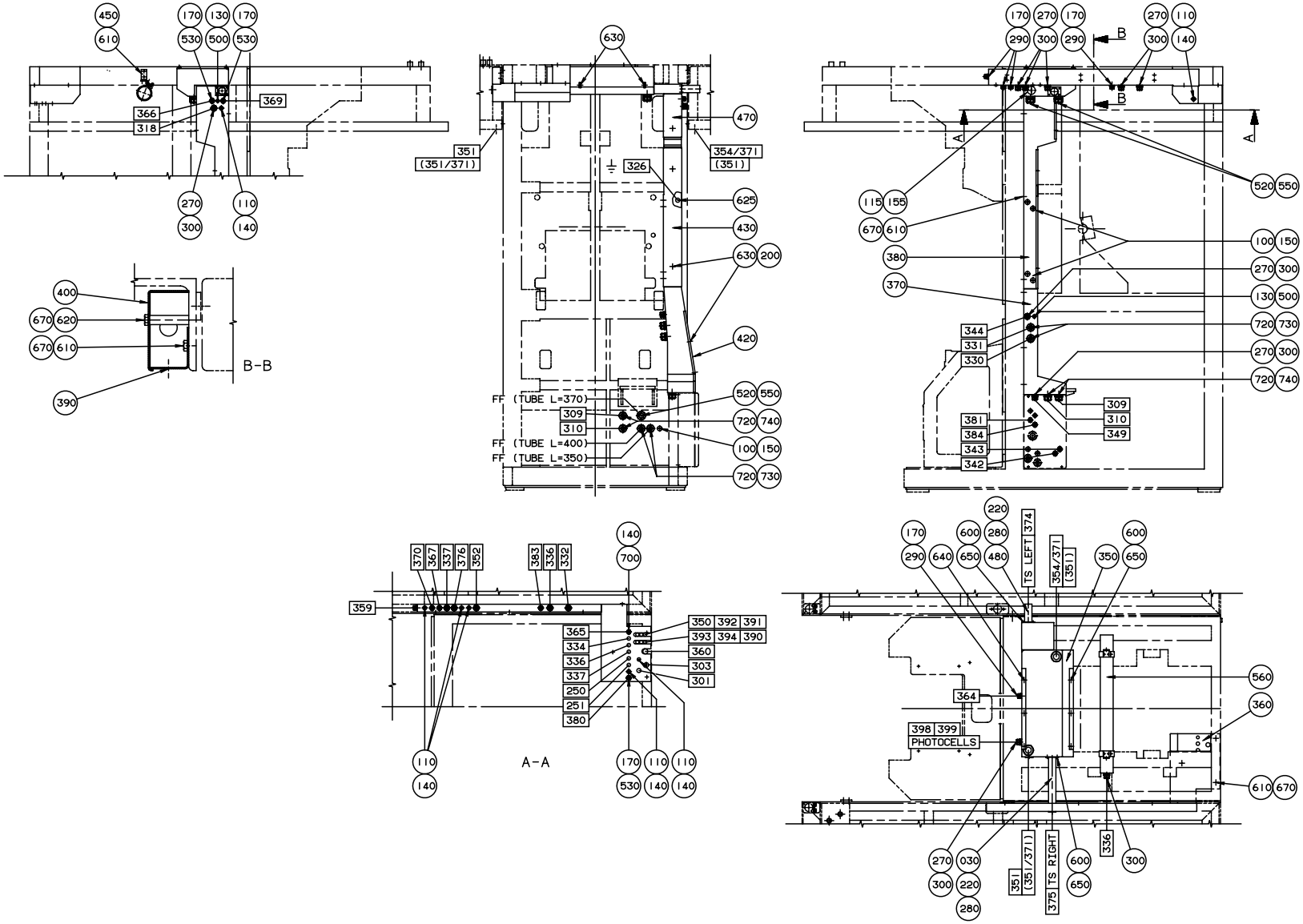

S-450293-5
ECN 20500

Pos	Part No	SP	UN	Qty	Description	Page No
TBA/8						
030	450292-0000	-		1	ATTACHMENT PIPE	
100-02	90002-0004	-		5	BLANK-OFF PLUG 22,5	
110	90002-0009	-		8	BLANK-OFF PLUG 18.6	
130	90099-0001	-		2	NUT PR 15,2 BRASS	
140	90099-0002	-		8	NUT Pr 18,6 Brass	
150-02	90099-0003	-		6	NUT	
170-02	90152-0033	-	MM	6800	Spiral Conduit for PR 15,2(PG 9)	
200	315101-0136	-		5	WASHER BRB4,3X8FZB	
220-02	342991-0108	-		2	HOSE CLIP 38-50MMRFR	
270-02	352135-0106	-	MM	6400	Spiral Conduit Di=16 mm	
280-02	352135-0116	-	MM	3800	FLEXIBLE CONDUIT DIA. 40	
290-02	352136-0113	-		4	GLAND FITTING PR18,6/PG11 Di=12mm	
300-02	352136-0127	-		11	GLAND FITTING PR 18,6	
350	547220-0000	-		1	CABLE DUCT	
Common parts						
115	90002-0010	-		1	BLANK-OFF PLUG 37	
155	90099-0011	-		1	NUT PR 37 BRASS	
360	575464-0000	-		1	CABLE DUCT	
370	540721-0000	-		1	CABLE DUCT	
380	450284-0000	-		1	CABLE DUCT	
390	450285-0000	-		1	CABLE DUCT	
400	450286-0000	-		1	LID	
420	540722-0000	-		1	LID	
430	450287-0000	-		1	LID	
450	246374-0000	-		2	BRACKET	
470	450290-0000	-		1	LID	
480	450291-0000	-		1	ATTACHMENT PIPE	
500	90002-0013	-		2	BLANK-OFF PLUG 15,2	
520	90012-0061	-		3	GLAND	
530	90012-0063	-		4	Cable Gland PR 15,2	
550	90152-0031	-	MM	2270	HOSE	
560	B 90164-0003	-		1	LIGHT FIXTURE 1X20W IP67	
600	312101-0325	-		11	SCREW M6S5X10FZB	
610	312101-0364	-		18	SCREW M6S6X10FZB	
620	312101-0380	-		3	SCREW M6S6X50FZB	
625	312101-0447	-		1	SCREW M6S8X12FZB	
630	312121-0287	-		7	SLOTTED HEAD SCREW MCS 4x8 FZB	
640	312141-0325	-		3	SLOTTED HEMFS5X10FZB	
650	315101-0146	-		11	WASHER BRB 5,3x10 FZB	
670	315101-0153	-		15	WASHER BRB 6,4x12 FZB	
700	352103-0106	-		1	CABLE GLAND ST 11	
720	352135-0109	-	MM	3700	HOSE .022	
730	352136-0142	-		4	GLAND FITTING	
740	352136-0143	-		4	GLAND FITTING	

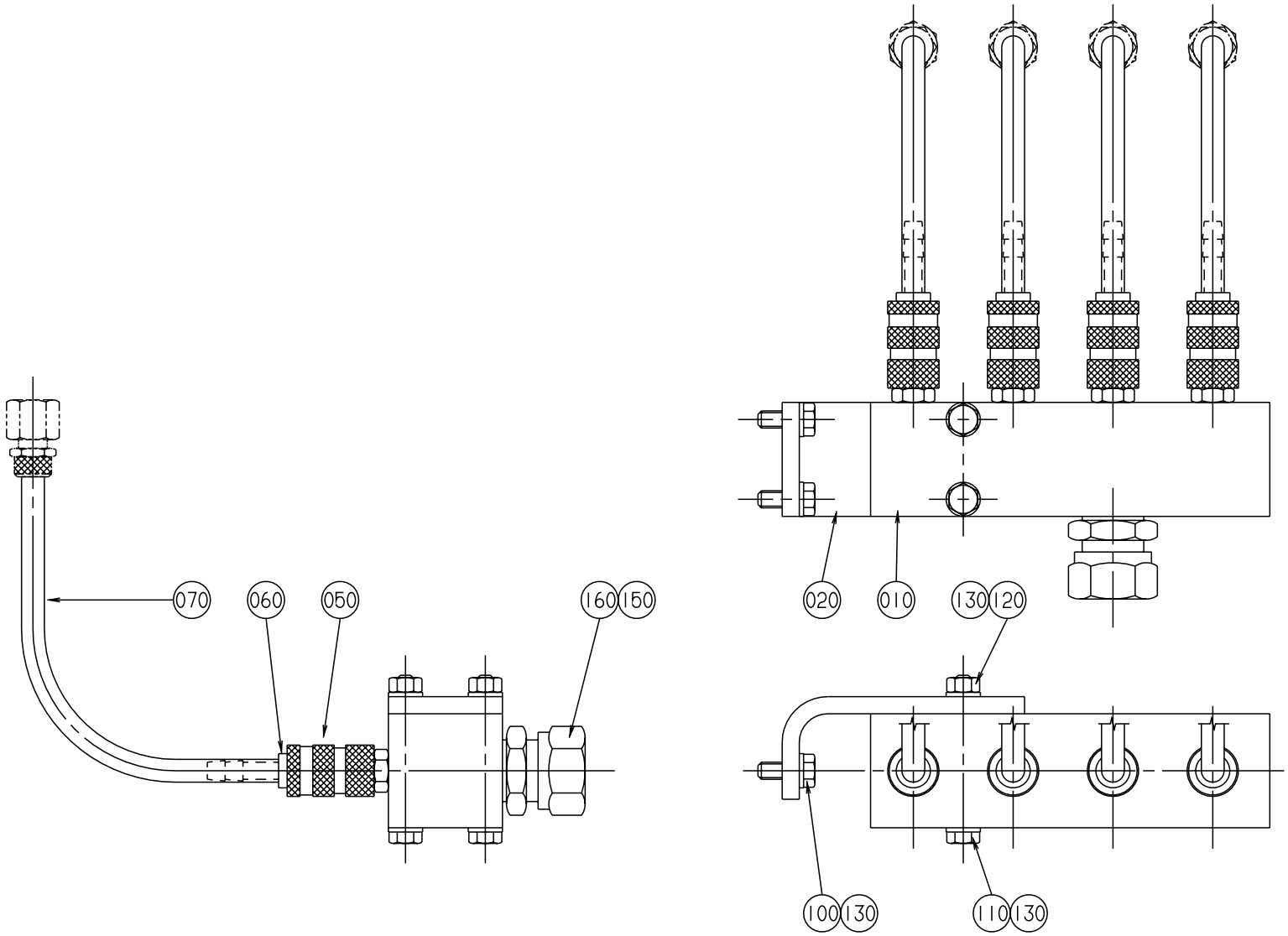

S-575797-1
ECN 20289-1

Pos	Part No	SP	UN	Qty	Description	Page No
TBA/8						
010	575791-0000	D		1	JUNCTION BLOCK	
050-02	90163-0133	D		4	QUICK-RELEASE COUPLING	
060-02	90163-0134	-		4	COUPLING NIPPLE	
070-02	90166-0133	-	MM	900	HOSE	
Common parts						
020	575792-0000	-		1	ANGLE STRUT	
100	312105-0368	-		2	SCREW M6S ISO 4017 M6X16 A280	
110	312105-0381	-		2	SCREW M6S ISO 4014 M6X55 A280	
120	312605-0316	-		2	NUT,HEXAGON,A280 M6M6 Stainless	
130	315105-0153	-		6	WASHER,PLAIN ROUND 6,4x12 Stainless	
150	315233-0113	-		1	PLAIN ROUND,NYLON R1/2"	
160	342720-0114	-		1	STRAIGHT CONNECTION GA-15-G1/2"	

Pos	Part No	SP	UN	Qty	Description	Page No

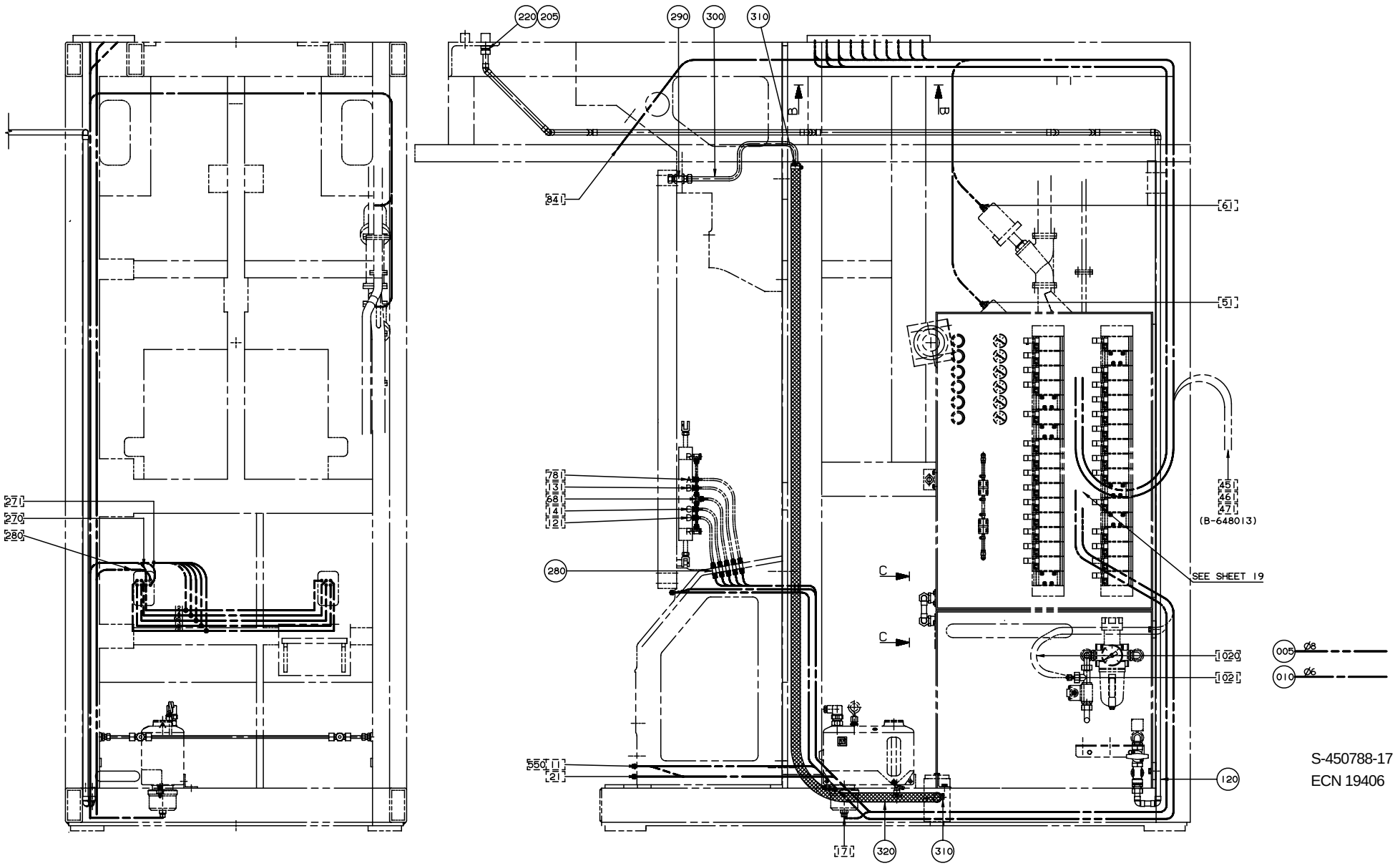

S-450788-17
ECN 19406

Pos	Part No	SP	UN	Qty	Description	Page No
TBA/8 NORMFIN						
005-02	90166-0013	-	M	19	HOSE 8/6	
010-04	90166-0081	-	M	105	HOSE 6/4	
115	560881-0000	-		1	PIPE	
170	90224-0319	-		2	CONNECTION	
190	90266-0007	-	MM	58	TUBE	
200	315233-0110	-		2	PLAIN ROUND,NYLON R1/4"	
265	342923-0114	-		1	STRAIGHT COUPL.,INT.THREADED 6/4-G1/4"	
275	90224-0316	-		1	CONNECTION	
290	90030-0030	-		1	BULKHEAD CONNECTOR SV 12-L/SY	
300	527907-0000	-		1	PIPE	
310	342991-0104	-		2	HOSE CLIP,WORM DRIVE TYPE (23)-27	
320	90166-0060	-	MM	3000	HOSE	
390	450747-0000	-		1	PIPE	
TBA/8 REVFIN						
005-02	90166-0013	-	M	19	HOSE 8/6	
010-04	90166-0081	-	M	105	HOSE 6/4	
115	560881-0000	-		1	PIPE	
170	90224-0319	-		2	CONNECTION	
190	90266-0007	-	MM	58	TUBE	
200	315233-0110	-		2	PLAIN ROUND,NYLON R1/4"	
265	342923-0114	-		1	STRAIGHT COUPL.,INT.THREADED 6/4-G1/4"	
275	90224-0316	-		1	CONNECTION	
290	90030-0030	-		1	BULKHEAD CONNECTOR SV 12-L/SY	
300	527907-0000	-		1	PIPE	
310	342991-0104	-		2	HOSE CLIP,WORM DRIVE TYPE (23)-27	
320	90166-0060	-	MM	3000	HOSE	
Common parts						
080	B 544692-0000	-		1	PIPE	
120	B 544697-0000	-		1	PIPE	
140	B 450791-0000	-		1	PIPE	
180	90224-0323	-		1	CONNECTION	
205	315233-0113	-		1	PLAIN ROUND,NYLON R1/2"	
210	342713-0210	-		1	PLUG,EXT.THREAD,HEXAGON SOCKET 1/4"Brass	
220	342720-0114	-		1	STRAIGHT CONNECTION GA-15-G1/2"	
240	342929-0121	-		1	STRAIGHT COUPLING,SOLDER 8/6-8	
260	90055-0100	-		5	Y-CONNECTION	
280	342960-0112	-		10	BULKHEAD COUPLING 6/4	

Pos	Part No	SP	UN	Qty	Description	Page No

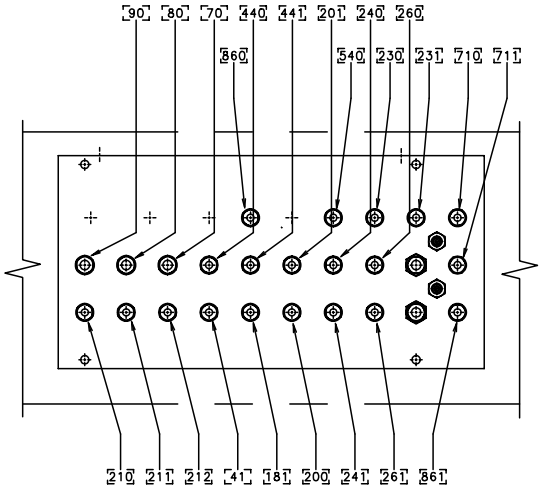

B–B

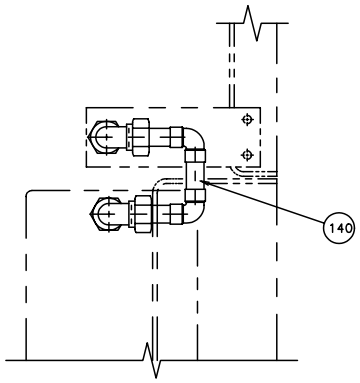

C–C

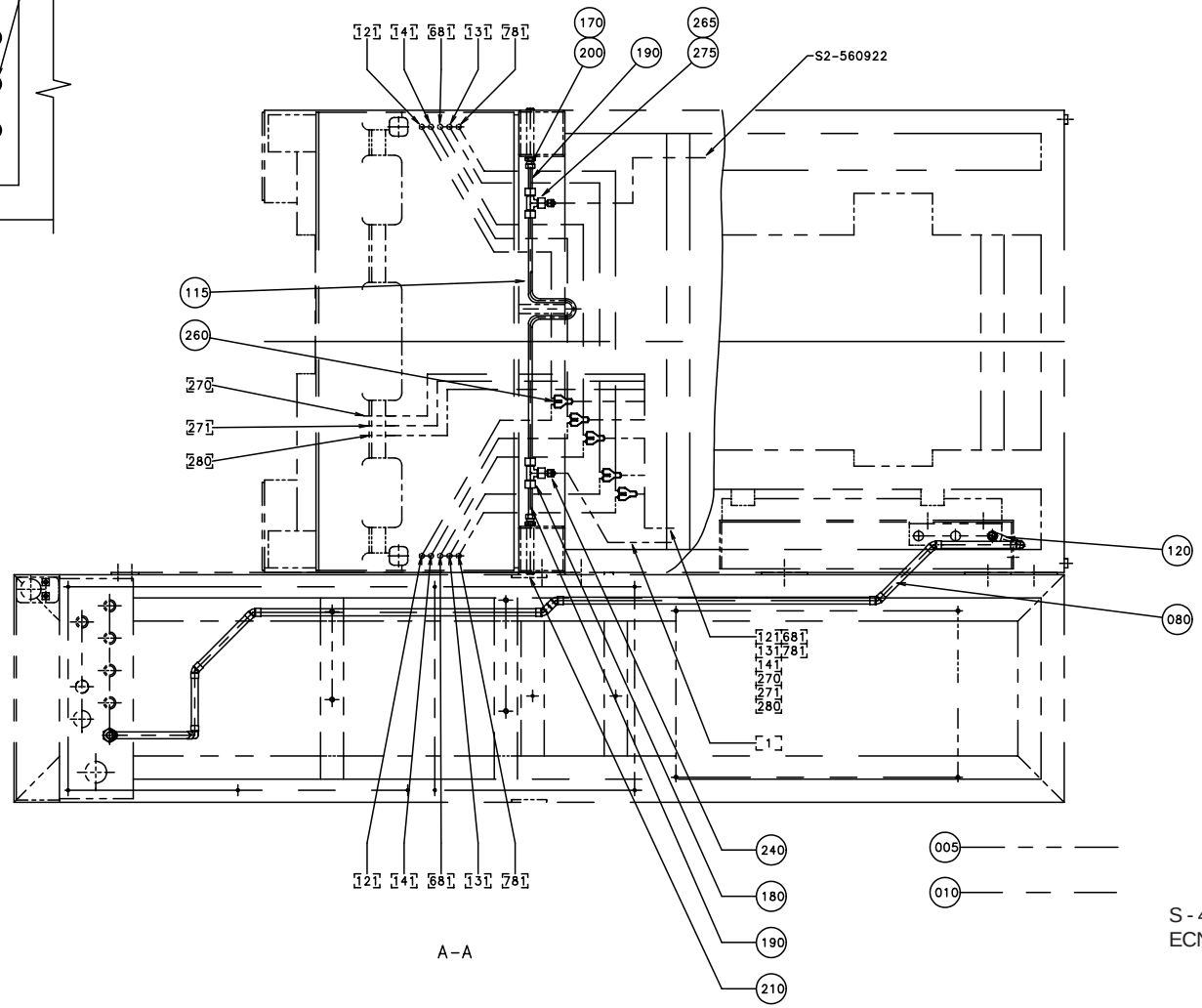

A–A

S - 450788-18
ECN 70351

Pos	Part No	SP	UN	Qty	Description	Page No
TBA/8 NORMFIN						
005-02	90166-0013	-	M	19	HOSE 8/6	
010-04	90166-0081	-	M	105	HOSE 6/4	
115	560881-0000	-		1	PIPE	
170	90224-0319	-		2	CONNECTION	
190	90266-0007	-	MM	58	TUBE	
200	315233-0110	-		2	PLAIN ROUND,NYLON R1/4"	
265	342923-0114	-		1	STRAIGHT COUPL.,INT.THREADED 6/4-G1/4"	
275	90224-0316	-		1	CONNECTION	
290	90030-0030	-		1	BULKHEAD CONNECTOR SV 12-L/SY	
300	527907-0000	-		1	PIPE	
310	342991-0104	-		2	HOSE CLIP,WORM DRIVE TYPE (23)-27	
320	90166-0060	-	MM	3000	HOSE	
390	450747-0000	-		1	PIPE	
TBA/8 REVFIN						
005-02	90166-0013	-	M	19	HOSE 8/6	
010-04	90166-0081	-	M	105	HOSE 6/4	
115	560881-0000	-		1	PIPE	
170	90224-0319	-		2	CONNECTION	
190	90266-0007	-	MM	58	TUBE	
200	315233-0110	-		2	PLAIN ROUND,NYLON R1/4"	
265	342923-0114	-		1	STRAIGHT COUPL.,INT.THREADED 6/4-G1/4"	
275	90224-0316	-		1	CONNECTION	
290	90030-0030	-		1	BULKHEAD CONNECTOR SV 12-L/SY	
300	527907-0000	-		1	PIPE	
310	342991-0104	-		2	HOSE CLIP,WORM DRIVE TYPE (23)-27	
320	90166-0060	-	MM	3000	HOSE	
Common parts						
080	B 544692-0000	-		1	PIPE	
120	B 544697-0000	-		1	PIPE	
140	B 450791-0000	-		1	PIPE	
180	90224-0323	-		1	CONNECTION	
205	315233-0113	-		1	PLAIN ROUND,NYLON R1/2"	
210	342713-0210	-		1	PLUG,EXT.THREAD,HEXAGON SOCKET 1/4"Brass	
220	342720-0114	-		1	STRAIGHT CONNECTION GA-15-G1/2"	
240	342929-0121	-		1	STRAIGHT COUPLING,SOLDER 8/6-8	
260	90055-0100	-		5	Y-CONNECTION	
280	342960-0112	-		10	BULKHEAD COUPLING 6/4	

Pos	Part No	SP	UN	Qty	Description	Page No

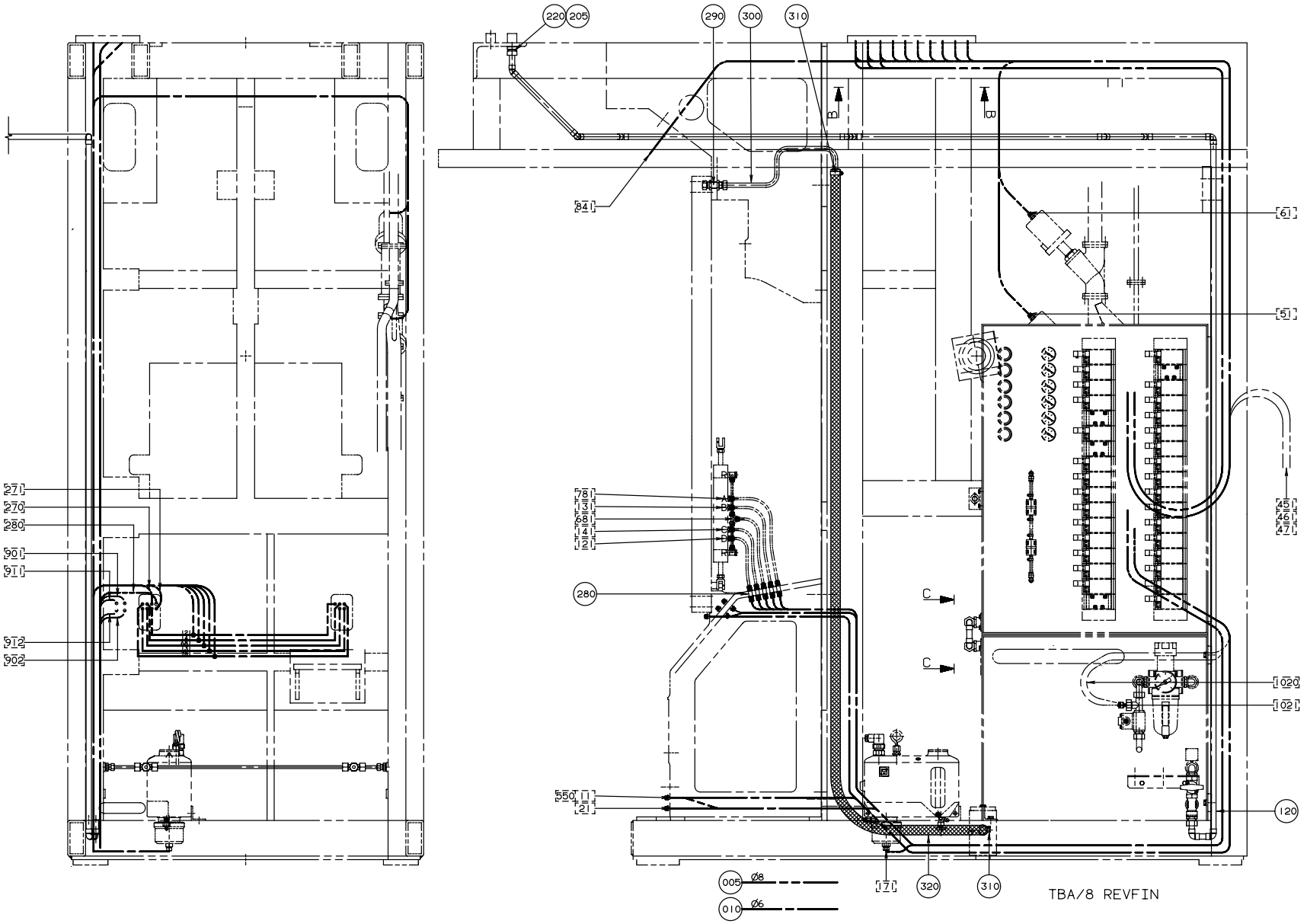

S-450788-29
ECN 70022

Pos	Part No	SP	UN	Qty	Description	Page No
TBA/8 NORMFIN						
005-02	90166-0013	-	M	19	HOSE 8/6	
010-04	90166-0081	-	M	105	HOSE 6/4	
115	560881-0000	-		1	PIPE	
170	90224-0319	-		2	CONNECTION	
190	90266-0007	-	MM	58	TUBE	
200	315233-0110	-		2	PLAIN ROUND,NYLON R1/4"	
265	342923-0114	-		1	STRAIGHT COUPL.,INT.THREADED 6/4-G1/4"	
275	90224-0316	-		1	CONNECTION	
290	90030-0030	-		1	BULKHEAD CONNECTOR SV 12-L/SY	
300	527907-0000	-		1	PIPE	
310	342991-0104	-		2	HOSE CLIP,WORM DRIVE TYPE (23)-27	
320	90166-0060	-	MM	3000	HOSE	
390	450747-0000	-		1	PIPE	
TBA/8 REVFIN						
005-02	90166-0013	-	M	19	HOSE 8/6	
010-04	90166-0081	-	M	105	HOSE 6/4	
115	560881-0000	-		1	PIPE	
170	90224-0319	-		2	CONNECTION	
190	90266-0007	-	MM	58	TUBE	
200	315233-0110	-		2	PLAIN ROUND,NYLON R1/4"	
265	342923-0114	-		1	STRAIGHT COUPL.,INT.THREADED 6/4-G1/4"	
275	90224-0316	-		1	CONNECTION	
290	90030-0030	-		1	BULKHEAD CONNECTOR SV 12-L/SY	
300	527907-0000	-		1	PIPE	
310	342991-0104	-		2	HOSE CLIP,WORM DRIVE TYPE (23)-27	
320	90166-0060	-	MM	3000	HOSE	
Common parts						
080	B 544692-0000	-		1	PIPE	
120	B 544697-0000	-		1	PIPE	
140	B 450791-0000	-		1	PIPE	
180	90224-0323	-		1	CONNECTION	
205	315233-0113	-		1	PLAIN ROUND,NYLON R1/2"	
210	342713-0210	-		1	PLUG,EXT.THREAD,HEXAGON SOCKET 1/4"Brass	
220	342720-0114	-		1	STRAIGHT CONNECTION GA-15-G1/2"	
240	342929-0121	-		1	STRAIGHT COUPLING,SOLDER 8/6-8	
260	90055-0100	-		5	Y-CONNECTION	
280	342960-0112	-		10	BULKHEAD COUPLING 6/4	

Pos	Part No	SP	UN	Qty	Description	Page No

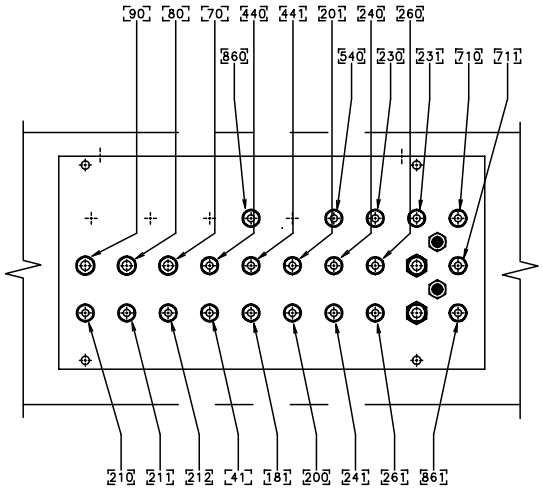

B-B

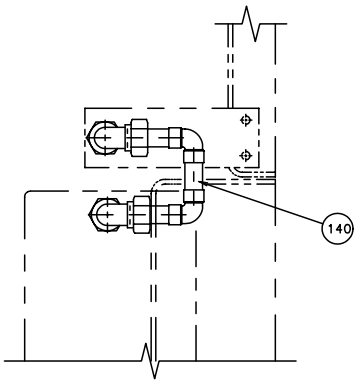

C-C

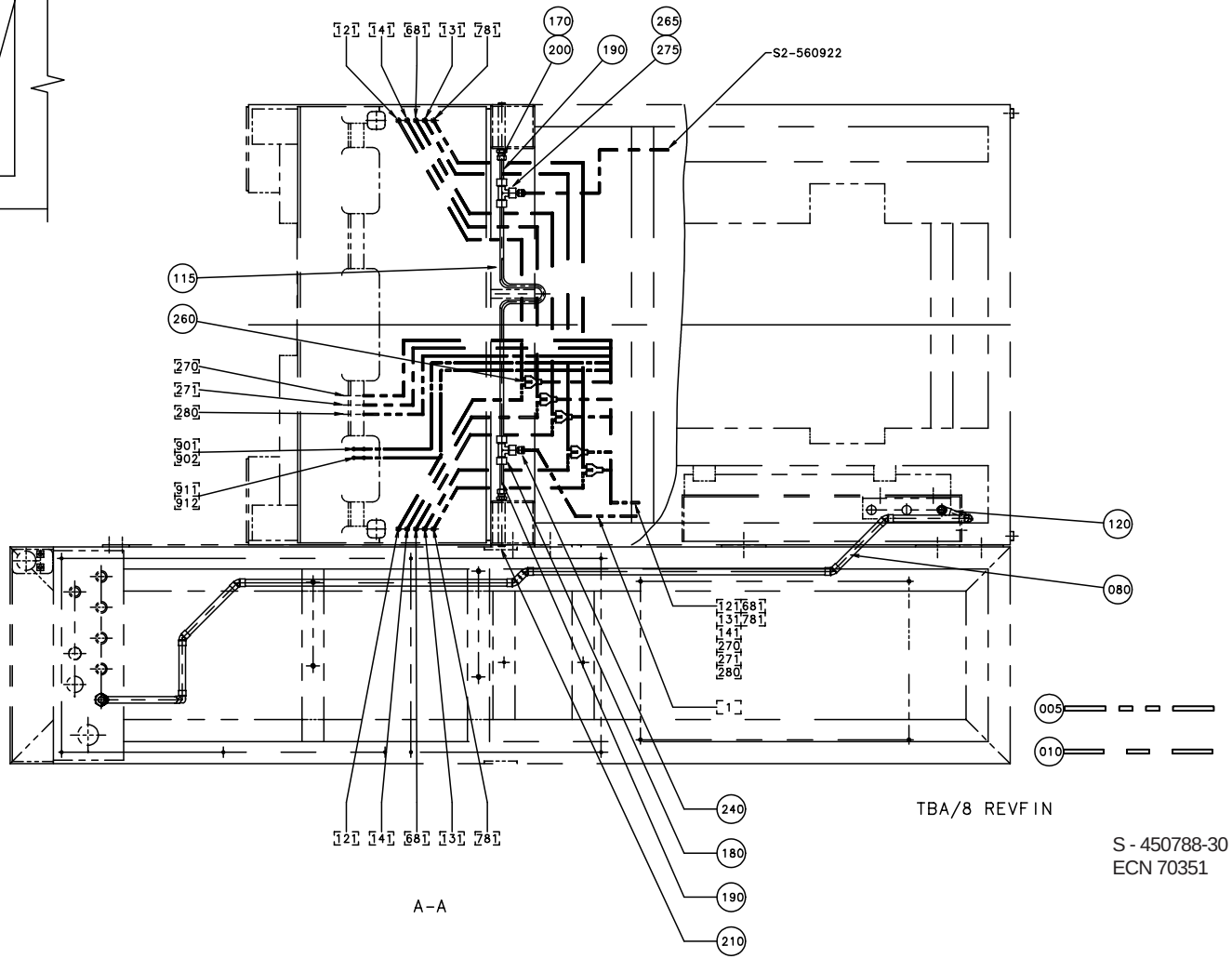

A-A

S - 450788-30
ECN 70351

Pos	Part No	SP	UN	Qty	Description	Page No
TBA/8 NORMFIN						
005-02	90166-0013	-	M	19	HOSE 8/6	
010-04	90166-0081	-	M	105	HOSE 6/4	
115	560881-0000	-		1	PIPE	
170	90224-0319	-		2	CONNECTION	
190	90266-0007	-	MM	58	TUBE	
200	315233-0110	-		2	PLAIN ROUND,NYLON R1/4"	
265	342923-0114	-		1	STRAIGHT COUPL.,INT.THREADED 6/4-G1/4"	
275	90224-0316	-		1	CONNECTION	
290	90030-0030	-		1	BULKHEAD CONNECTOR SV 12-L/SY	
300	527907-0000	-		1	PIPE	
310	342991-0104	-		2	HOSE CLIP,WORM DRIVE TYPE (23)-27	
320	90166-0060	-	MM	3000	HOSE	
390	450747-0000	-		1	PIPE	
TBA/8 REVFIN						
005-02	90166-0013	-	M	19	HOSE 8/6	
010-04	90166-0081	-	M	105	HOSE 6/4	
115	560881-0000	-		1	PIPE	
170	90224-0319	-		2	CONNECTION	
190	90266-0007	-	MM	58	TUBE	
200	315233-0110	-		2	PLAIN ROUND,NYLON R1/4"	
265	342923-0114	-		1	STRAIGHT COUPL.,INT.THREADED 6/4-G1/4"	
275	90224-0316	-		1	CONNECTION	
290	90030-0030	-		1	BULKHEAD CONNECTOR SV 12-L/SY	
300	527907-0000	-		1	PIPE	
310	342991-0104	-		2	HOSE CLIP,WORM DRIVE TYPE (23)-27	
320	90166-0060	-	MM	3000	HOSE	
Common parts						
080	B 544692-0000	-		1	PIPE	
120	B 544697-0000	-		1	PIPE	
140	B 450791-0000	-		1	PIPE	
180	90224-0323	-		1	CONNECTION	
205	315233-0113	-		1	PLAIN ROUND,NYLON R1/2"	
210	342713-0210	-		1	PLUG,EXT.THREAD,HEXAGON SOCKET 1/4"Brass	
220	342720-0114	-		1	STRAIGHT CONNECTION GA-15-G1/2"	
240	342929-0121	-		1	STRAIGHT COUPLING,SOLDER 8/6-8	
260	90055-0100	-		5	Y-CONNECTION	
280	342960-0112	-		10	BULKHEAD COUPLING 6/4	

Pos	Part No	SP	UN	Qty	Description	Page No

DETERGENT PUMP

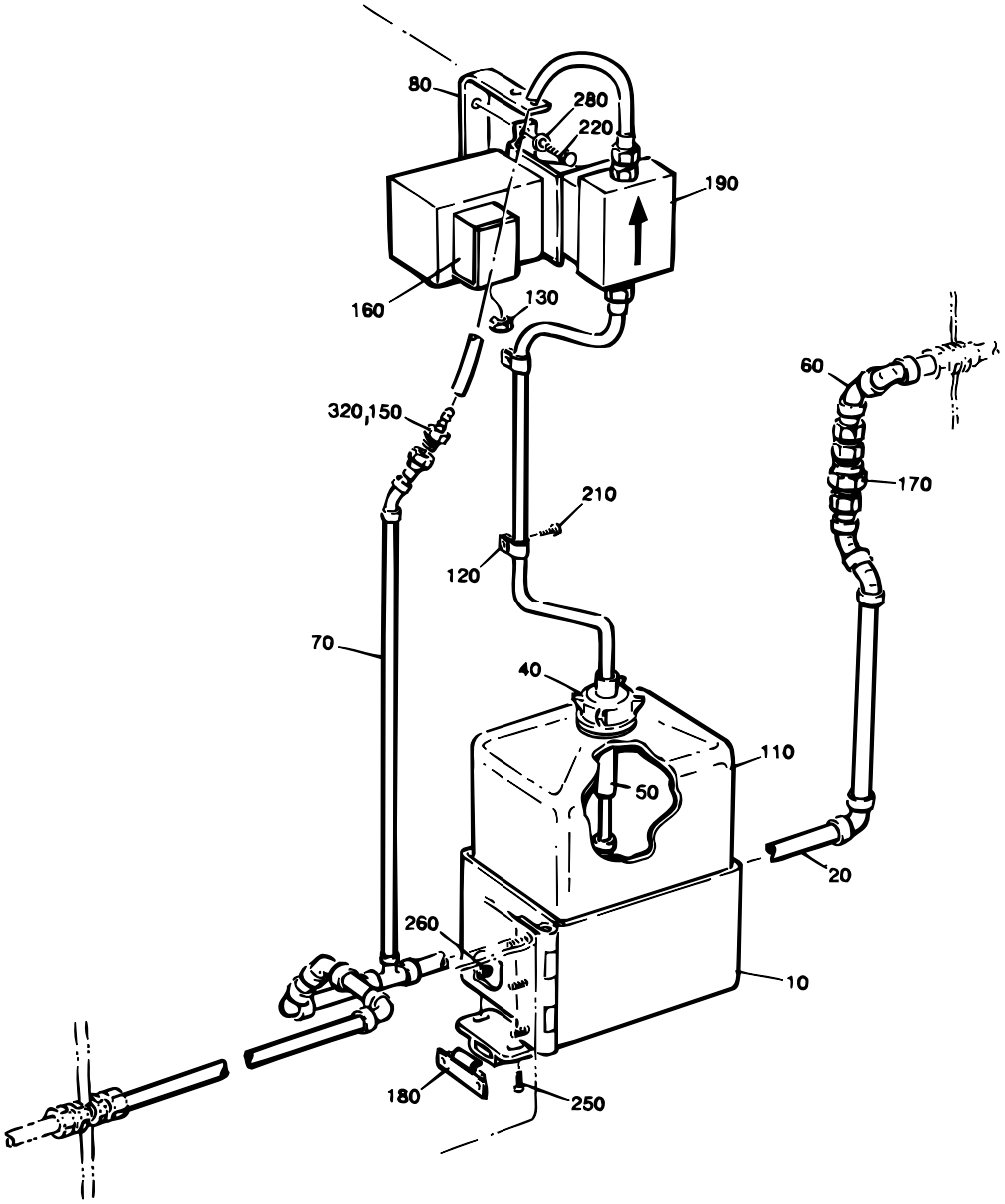

S-450792-1
ECN 6321

Pos	Part No	SP	UN	Qty	Description	Page No
Common parts						
010	547906-0000	-		1	SHELF	
020	B 450793-0000	-		1	PIPE	
040	35962-0000	K		1	LID	
050	259867-0000	D		1	HOSE CLAMP	
060	B 450794-0000	-		1	PIPE	
070	B 450795-0000	-		1	PIPE	
080	450796-0000	-		1	BRACKET	
110	90050-0011	-		1	BOTTLE	
120	90074-0002	-		2	PIPE-CLIP,single 11	
130	90099-0003	-		1	NUT	
150	90131-0004	-		1	HOSE COUPLING	
160	90195-0020	-		1	TERMINAL BK2 KRG 2-POLE	
170	90230-0021	N		1	NON-RETURN VALVE	
180	90237-0046	-		1	MAGNET LOCK	
190	B 90321-0037	N		1	PUMP C-6125P EP 220V;50Hz	
210	312105-0323	-		5	SCREW M6S ISO 4017 M5X8 A280	
220	312105-0368	-		4	SCREW M6S ISO 4017 M6X16 A280	
250	312125-0220	-		2	SLOTTED HEMCS3X6RFR	
260	312605-0310	-		2	NUT,HEXAGON,M6M3 RFR	
280	315105-0153	-		3	WASHER,PLAIN ROUND 6,4x12 Stainless	
320	352136-0127	-		1	GLAND FITTING PR 18,6	

Pos	Part No	SP	UN	Qty	Description	Page No

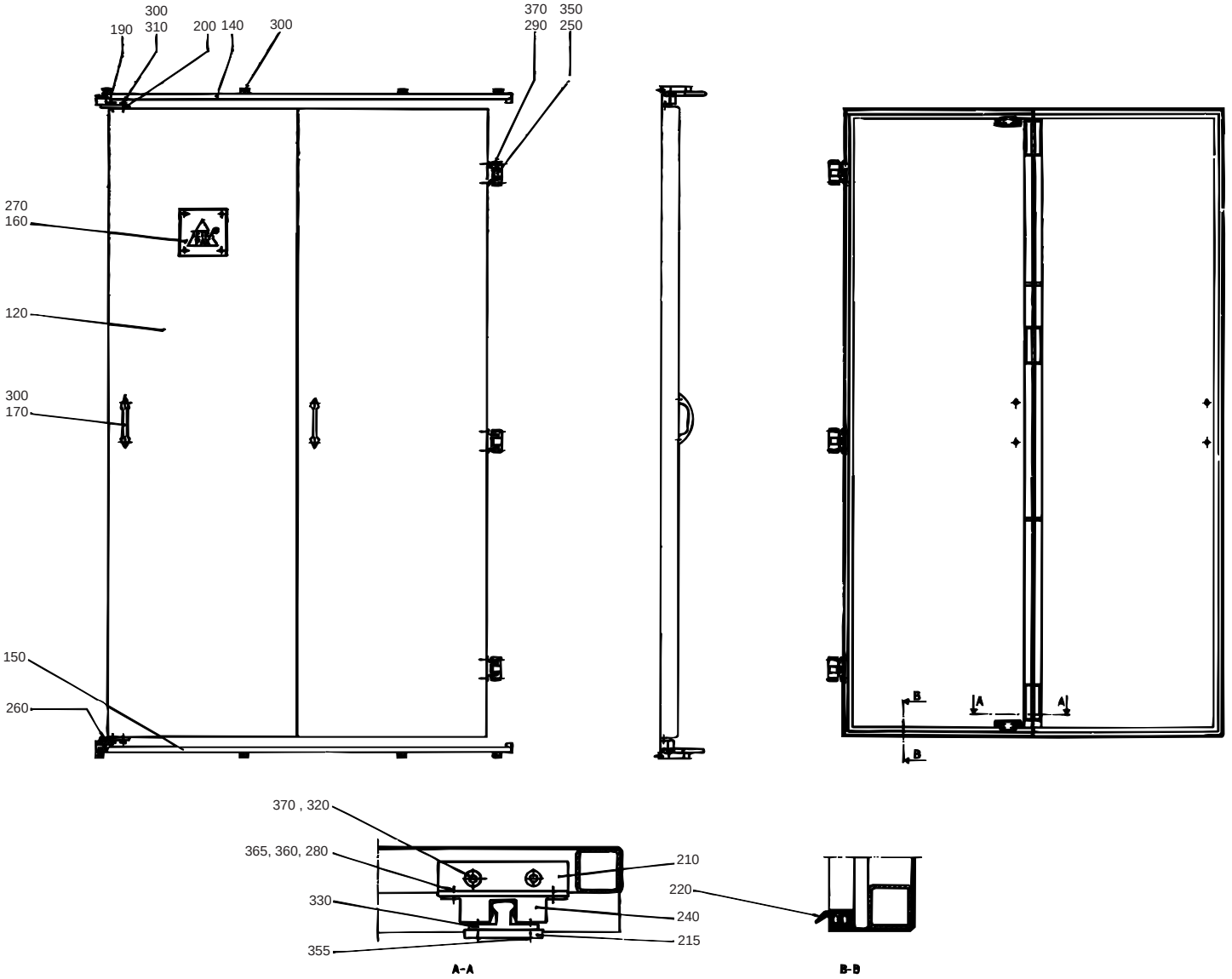

S-450824-2
ECN 12609

Pos	Part No	SP	UN	Qty	Description	Page No
Common parts						
120	549044-0000	-		1	DOOR	
140	269320-0000	-		1	RAIL	
150	269321-0000	-		1	RAIL	
160	544539-0000	-		1	HOUSEMARK REPBY 0574658-0000	
170	7309-0000	-		2	HANDLE	
190	230226-0000	N		2	BLOCKING PIECE	
200	246739-0000	D		2	BRACKET	
210	450826-0000	D		2	BRACKET	
215	450973-0000	D		2	BRACKET	
220	90143-0049	D	MM	6000	RUBBERSTRIP 11X21MM	
240	90237-0070	-		2	Snap-In-Lock	
250	90248-0013	-		3	HINGE 3562E STUV	
260	311103-0403	-		2	PINS,STRAIGHT 8X25	
270	311520-0420	-		4	BLANK RIVE3,2X4	
280	312105-0291	-		4	SCREW M6S ISO 4017 M4X12 A280	
290	312105-0327	-		12	SCREW M6S ISO 4017 M5X12 A280	
300	312105-0366	-		12	SCREW M6S ISO 4017 M6X12 A280	
310	312105-0368	-		4	SCREW M6S ISO 4017 M6X16 A280	
320	312115-0325	-		4	SCREW 5X10 A4 80	
330	312145-0285	-		4	SLOTTED HEMFS4X6RFR	
350	312145-0325	-		12	SLOTTED HEMFS5X10RFR	
355	312145-0327	-		4	SLOTTED HEMFS5X12RFR	
360	312605-0312	-		4	NUT,HEXAGON,M4 RFR	
365	315105-0136	-		4	WASHER,PLAIN ROUND 4,3x8 Stainless	
370	315105-0146	-		16	WASHER,PLAIN ROUND 5,3x10 Stainless	
380	315105-0153	-		4	WASHER,PLAIN ROUND 6,4x12 Stainless	

Pos	Part No	SP	UN	Qty	Description	Page No

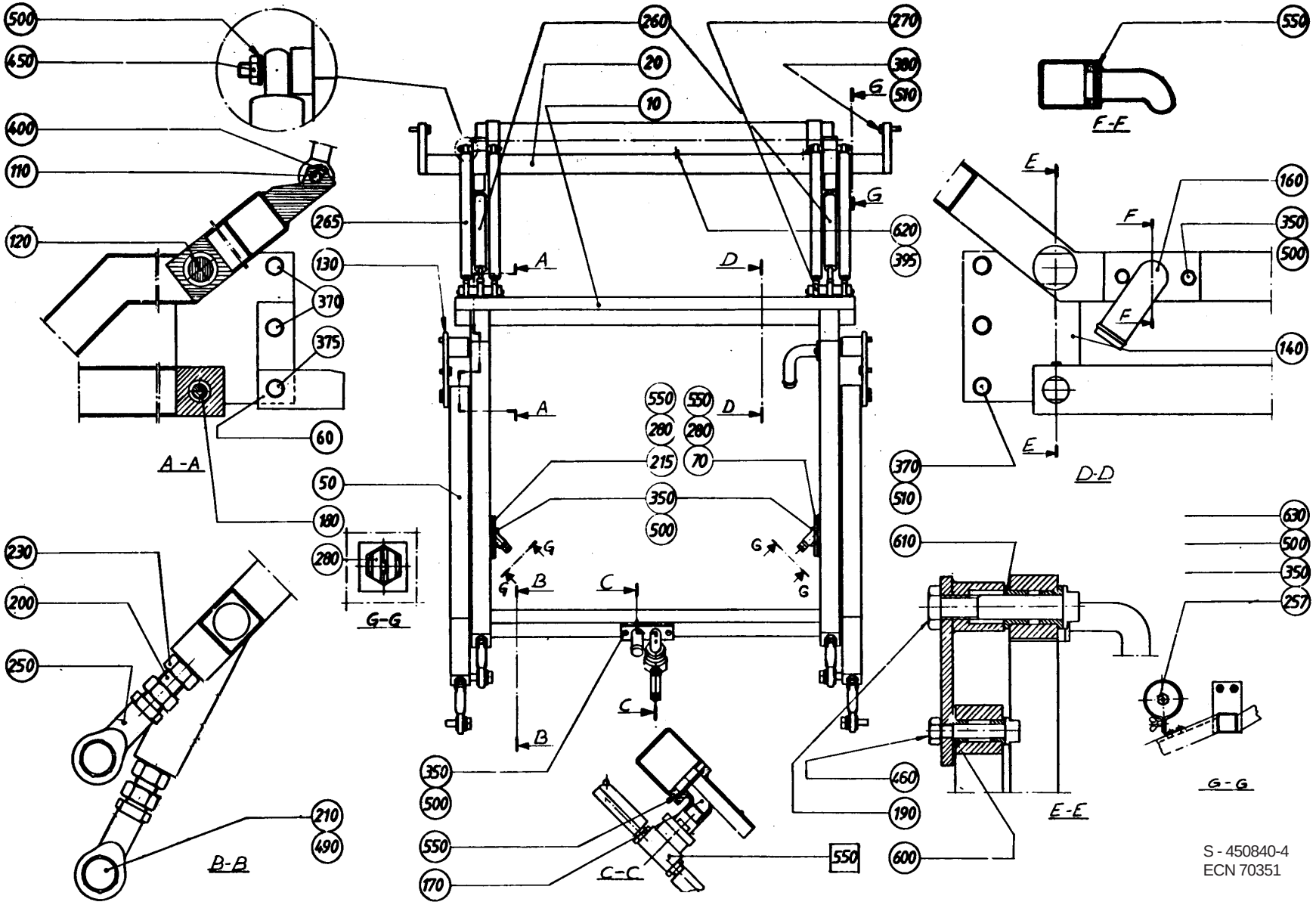

S - 450840-4
ECN 70351

Pos	Part No	SP	UN	Qty	Description	Page No
Common parts						
F550	A 594613-0100	D		1	CLEANING HEAD	**277**
010	493021-0000	-		1	ARM	
020	450841-0000	-		1	CANTILEVER	
050	493022-0000	-		2	ARM	
060	532371-0000	-		1	STOP LUG	
070	534486-0000	-		1	PIPE HOLDER	
110	285825-0000	D		2	SHAFT	
120	484219-0000	D		2	SHAFT	
130	484220-0000	D		1	BRACKET	
140	484221-0000	D		1	BRACKET	
160	285979-0000	-		1	PIPE	
170	B 476894-0000	-		1	PIPE HOLDER	
180	484222-0000	D		2	SHAFT	
190	484223-0000	D		2	NUT	
200	457354-0000	D		4	SCREW	
210	297770-0000	D		4	SCREW	
215	442566-0000	-		1	BRACKET	
230	457355-0000	-		4	NUT	
250	90115-0111	-		4	ROD ENDS,RE-LUBRICATEABLE,22-M22X1.5LH	
257	B 90164-0003	D		1	LIGHT FIXTURE 1X20W IP67	
260	90347-0036	K		2	DAMPER	
265	90347-0038	K		4	DAMPER	
270	90347-0300	-		6	BRACKET	
280	90424-0035	K		2	NOZZLE	
350	312105-0368	-		12	SCREW M6S ISO 4017 M6X16 A280	
370	312105-0493	-		5	SCREW M6S ISO 4017 M10X25 A280	
375	312105-0495	-		1	SCREW M6S ISO 4017 M10X30 A280	
380	312105-0497	-		2	SCREW M6S ISO 4017 M10X35 A280	
395	312125-0285	-		4	SLOTTED HEMCS4X6RFR	
400	312318-0362	-		2	SET SCREW CUP POINT ISO 4029 M6X8 RFR	
450	312605-0316	-		6	NUT,HEXAGON,A280 M6M6 Stainless	
460	312605-0322	-		2	NUT,HEXAGON,M12 RFR	
490	315103-0195	-		4	WASHERS,PLAIN ROUND 23X40	
500	315105-0153	-		18	WASHER,PLAIN ROUND 6,4x12 Stainless	
510	315105-0173	-		10	WASHER,PLAIN ROUND 10,5x22 STAINLESS	
550	315202-0216	K		5	O-RINGS 22,2X3	
600	321101-0173	-		4	FLANGE BUS 12F7X12	
610	321101-0233	D		4	FLANGE BUS 20F7x20	
620	352135-0201	-		4	PLASTIC CRAMP Di=12 mm	
630	352136-0127	-		1	GLAND FITTING PR 18,6	

Pos	Part No	SP	UN	Qty	Description	Page No

CLEANING HEAD

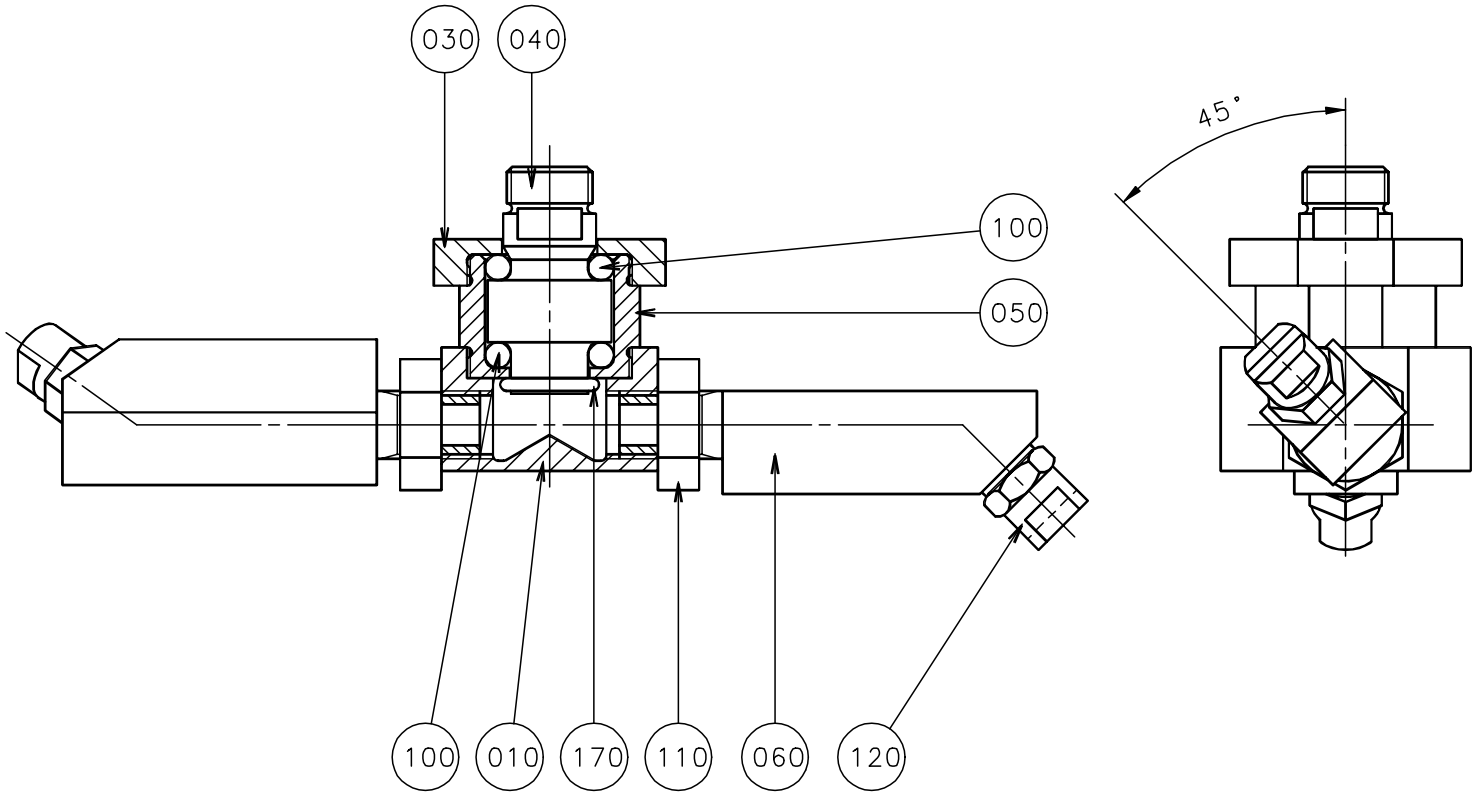

S - 59594613-1
ECN 70695

Pos	Part No	SP	UN	Qty	Description	Page No
Common parts						
010	440600-0000	R		1	ROTOR	
030	534880-0000	R		1	END SECTION	
040	534878-0000	R		1	SHAFT	
050	534879-0000	R		1	BEARING HOUSING	
060	440604-0001	R		2	PIPE	
100	90090-0020	J		24	BALLS 5	
110	90330-0034	-		2	NUT,HEXAGON G1/4"	
120	90424-0026	K		2	NOZZLE	
170	315202-0211	J		1	O-RINGS 13,3X2,4	

Pos	Part No	SP	UN	Qty	Description	Page No

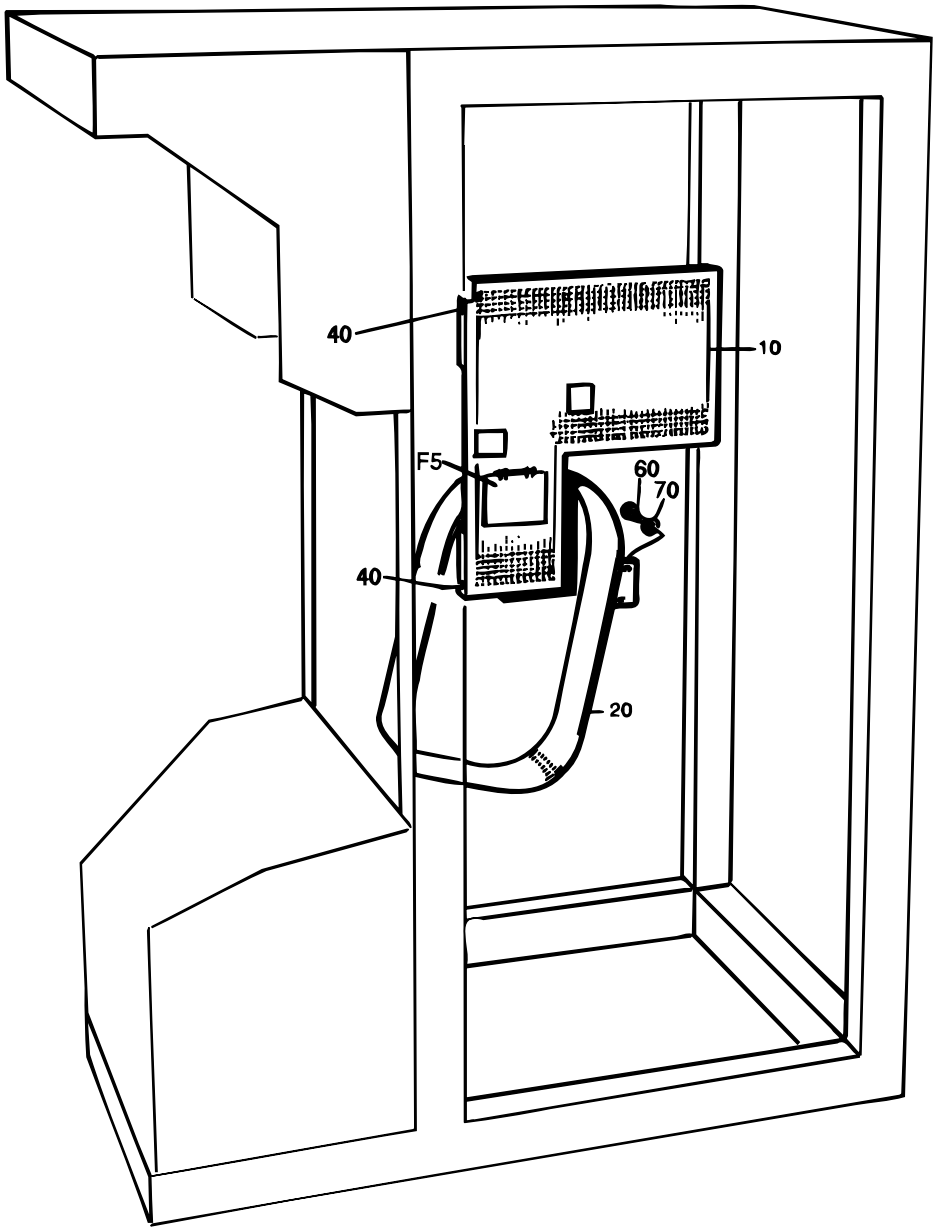

S-450883-2
ECN 14358

Pos	Part No	SP	UN	Qty	Description	Page No
Common parts						
F005	A 543157-0300	-		1	HOLDER	**281**
010	440482-0000	-		1	PROTECTION	
020	450884-0000	-		1	PROTECTION	
040	311211-0292	-		2	TAPER PIN GKP6X6X30	
060	312101-0366	-		6	SCREW M6S6X12FZB	
070	315101-0153	-		6	WASHER BRB 6,4x12 FZB	

Pos	Part No	SP	UN	Qty	Description	Page No

HOLDER

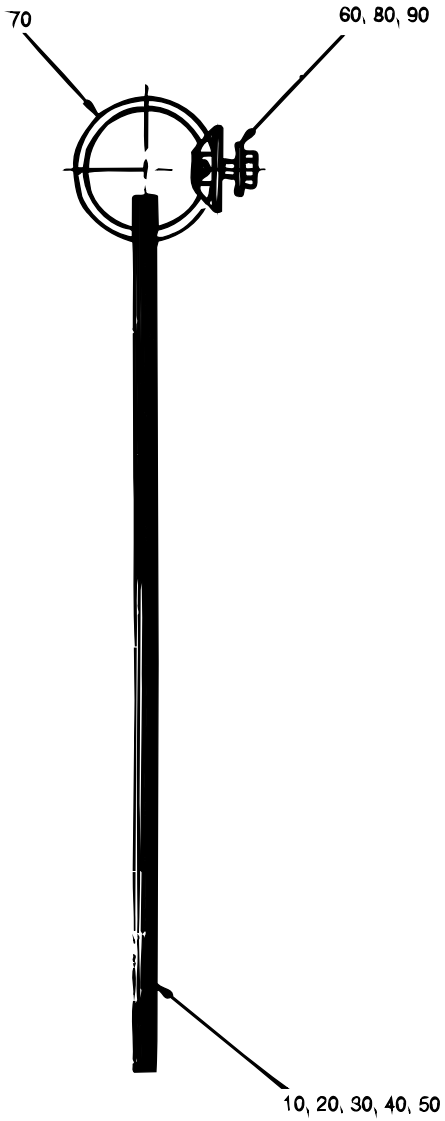

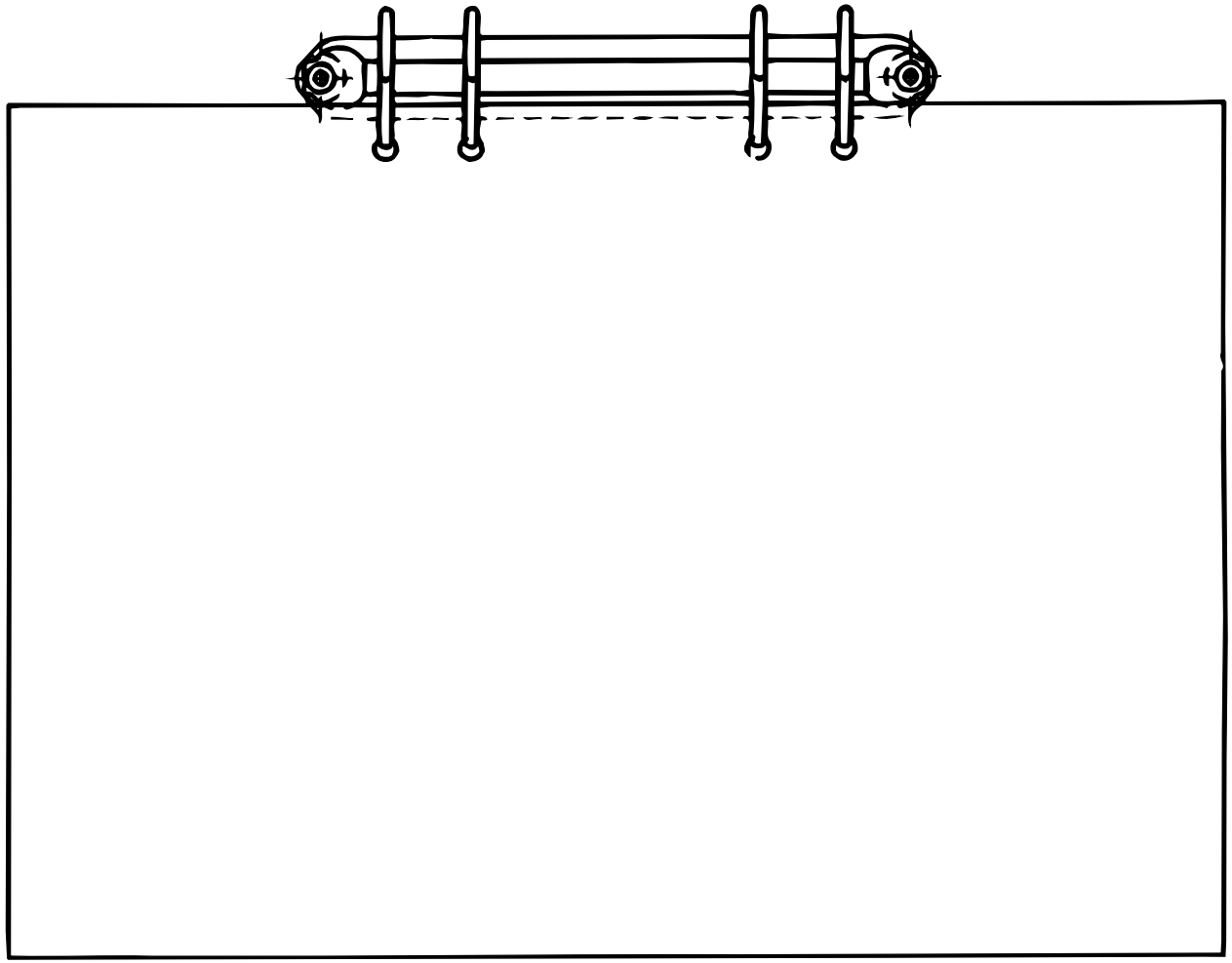

S-543457-2
ECN 15046

Pos	Part No	SP	UN	Qty	Description	Page No
Common parts						
060	38087-0000	-		2	WASHER	
070	90243-0169	-		1	PAPER HOLDER	
080	312115-0325	-		2	SCREW 5X10 A4 80	
090	312605-0314	-		2	NUT,HEXAGON,M6M5 Stainless	
TBA/8 REVFIN						
010	1195326-0000	-		1	VALVE PANEL	
020	1195327-0000	-		1	PNEUMATIC DIAGRAM	
030	479858-0000	-		1	HYDRAULIC DIAGRAM	
040	576730-0000	-		1	WATER DIAGRAM	
050	561590-0000	-		1	CENTRAL LUBRIC. DIAGRAM	
TBA/8 NORMFIN						
010	575448-0000	-		1	VALVE PANEL	
020	574600-0000	-		1	PNEUMATIC DIAGRAM	
030	479858-0000	-		1	HYDRAULIC DIAGRAM	
040	576730-0000	-		1	WATER DIAGRAM	
050	561590-0000	-		1	CENTRAL LUBRIC. DIAGRAM	

Pos	Part No	SP	UN	Qty	Description	Page No

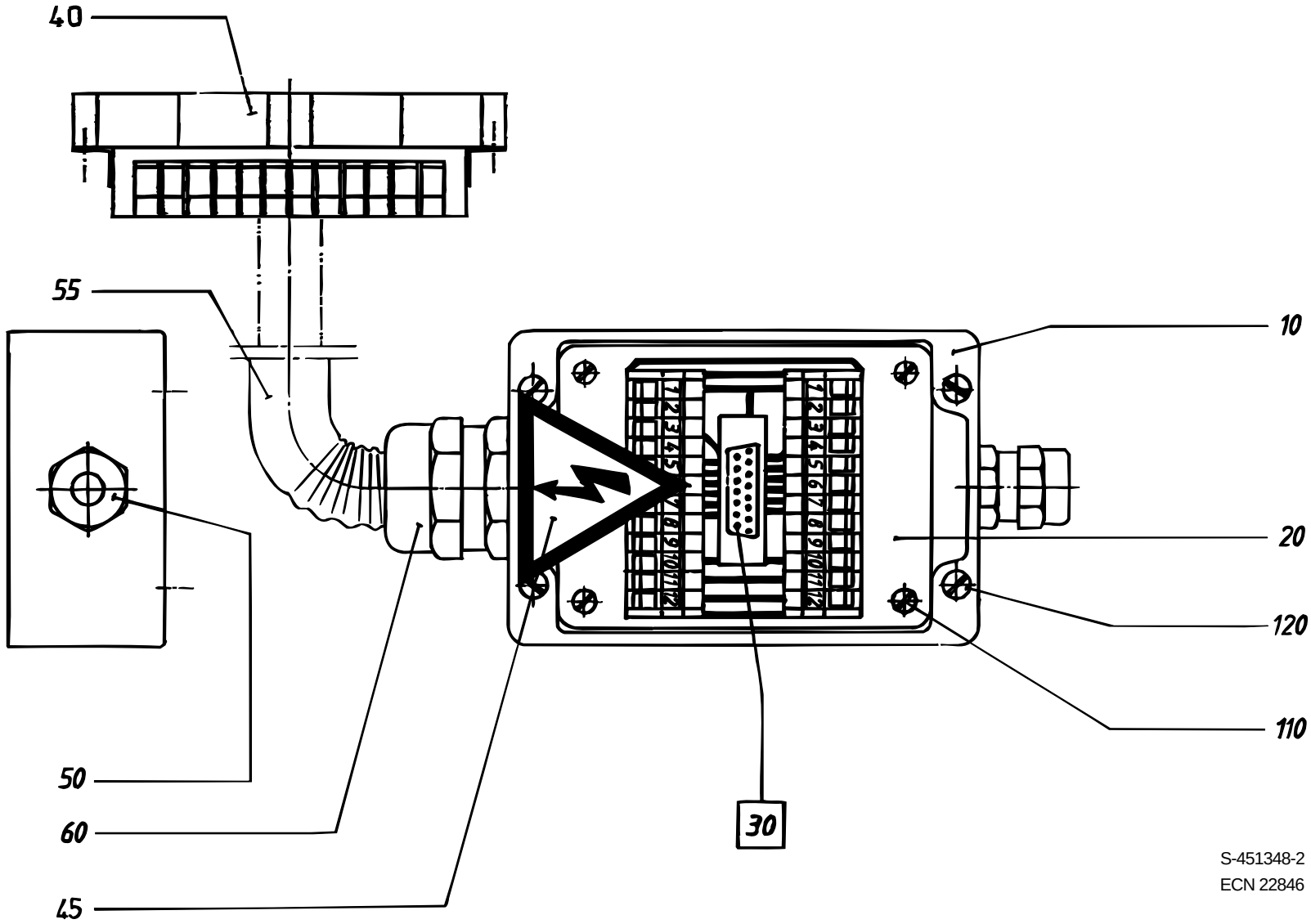
40
55
10
20
120
110
50
60
45
30
S-451348-2
ECN 22846

Pos	Part No	SP	UN	Qty	Description	Page No
TBA/8						
F030	A 68917-0100	D		1	ANGLE INDICATOR	**285**
010	464297-0000	D		1	CONNECTION BOX	
040	90110-0128	-		1	PLUG 24-POL Harting	
045	90194-0016	-		1	SIGN "FLASH SIGN" 50X50MM	
050	352103-0106	-		1	CABLE GLAND ST 11	
055	352135-0106	-	MM	1400	Spiral Conduit Di=16 mm	
060	352136-0127	-		1	GLAND FITTING PR 18,6	
Common parts						
020	451423-0000	N		1	CIRCUIT BOARD	
110	312125-0220	-		4	SLOTTED HEMCS3X6RFR	
120	312125-0291	-		4	SLOTTED CHEESE HEAD ISO 1207 M4X12 RFR	

Pos	Part No	SP	UN	Qty	Description	Page No

This page is intentionally left blank

Pos	Part No	SP	UN	Qty	Description	Page No
Common parts						
010	540306-0001	-		1	COMPONENTS WITHOUT TP-NO	
020	540307-0000	-		1	PRINTED CIRCUIT BOARD	

Pos	Part No	SP	UN	Qty	Description	Page No

This page is intentionally left blank

Pos	Part No	SP	UN	Qty	Description	Page No
90042-0172						
	90042-0467	F		1	COIL	
90048-0034						
	90048-0450	-		1	SPARE PARTS KIT	
	90274-0052	-		1	SWITCH (MONITOR)	
90064-0094						
	90064-0318	K		1	SIGNAL LAMP LED RED	
90064-0095						
	90064-0319	K		1	SIGNAL LAMP LED YELLOW	
90064-0096						
	90064-0320	K		1	SIGNAL LAMP LED GREEN	
90164-0003						
	90297-0002	F		1	FLUORESCENT TUBE 18W	
90201-0010						
	90201-0300	-		1	PLATE	
	90201-0301	-		1	SPRING	
	90201-0302	-		1	WASHER	
	90201-0303	-		1	SPARE PARTS KIT	
90201-0058						
	90201-0334	-		1	COIL	
90264-0019						
	90159-0061	-		1	CAPACITOR 6UF 400VAC	
90321-0037						
	90166-0157	K	MM	1500	HOSE	
	90321-0380	K		1	DIAPHRAGM	
	90321-0396	K		1	FILTER	
90415-0029						
	90415-0323	-		1	FILTERINSERT FOR -29	
90415-0032						
	90415-0328	K		1	FILTER INSERT	
90415-0063						
	90415-0356	D		1	DD service set	
90415-0064						
	90415-0355	D		1	DRYING AGENT	
90419-0005						
	90036-0038	-		1	BULB 24V 25W E27	
	90419-0302	K		1	LENS RED FOR -304	
90422-0008						
	315202-0612	F		1	O-RING 75,80X3,53	
271823-0000						
	90415-0314	F		1	FILTERINSERT 5594-36	
	90415-0325	F		1	GASKET	
434919-0000						
	311103-0413	-		1	PINS,STRAIGHT 8X50	
	312911-0119	-		4	THREADED INSERTS M6X2,0D	
	312911-0125	-		2	THREADED INSERTS M8X1,0D	
434920-0000						
	311103-0413	-		1	PINS,STRAIGHT 8X50	
	312911-0119	-		4	THREADED INSERTS M6X2,0D	
	312911-0125	-		2	THREADED INSERTS M8X1,0D	
445583-0000						
	315202-0500	K		1	O-RING ,42X1,53	
	315202-0501	K		1	O-RING 2,90X1,78	
450716-0000						
	90418-0053	-		1	ELBOW 90,INTERNAL CONNECTION 15	
	90418-0058	-		1	ELBOW 90,INTERNAL AND EXTERNAL CONNEC.15	
	90418-0063	-		1	ADAPTER,INTERNAL CONNECTION 15-G1/2"	
	341001-0228	-	M	1	COPPER TUBE	
450730-0000						
	90418-0053	-		1	ELBOW 90,INTERNAL CONNECTION 15	
	90418-0058	-		1	ELBOW 90,INTERNAL AND EXTERNAL CONNEC.15	
	341001-0228	-	M	1	COPPER TUBE	
450731-0000						
	90418-0053	-		1	ELBOW 90,INTERNAL CONNECTION 15	
	90418-0054	-		1	ELBOW 45,INTERNAL CONNECTION 15	
	90418-0055	-		1	ELBOW 45,INTERNAL AND EXTERNAL CONN.15	
	341001-0228	-	M	1	COPPER TUBE	
450740-0000						
	90418-0053	-		1	ELBOW 90,INTERNAL CONNECTION 15	
	341001-0228	-	M	1	COPPER TUBE	
450742-0000						
	90418-0053	-		1	ELBOW 90,INTERNAL CONNECTION 15	
	341001-0228	-	M	1	COPPER TUBE	
450748-0000						
	90418-0053	-		1	ELBOW 90,INTERNAL CONNECTION 15	
	341001-0228	-	M	1	COPPER TUBE	
450791-0000						
	90418-0053	-		1	ELBOW 90,INTERNAL CONNECTION 15	
	341001-0228	-	M	1	COPPER TUBE	
450793-0000						
	90418-0053	-		1	ELBOW 90,INTERNAL CONNECTION 15	

This page is intentionally left blank

Pos	Part No	SP	UN	Qty	Description	Page No
	90418-0054	-		1	ELBOW 45,INTERNAL CONNECTION 15	
	90418-0055	-		1	ELBOW 45,INTERNAL AND EXTERNAL CONN.15	
	90418-0068	-		1	T-PIPE,REDUCTION INTERNAL CONNEC.15X8X15	
	341001-0228	-	M	1	COPPER TUBE	
450794-0000						
	90418-0054	-		1	ELBOW 45,INTERNAL CONNECTION 15	
	90418-0058	-		1	ELBOW 90,INTERNAL AND EXTERNAL CONNEC.15	
	341001-0228	-	M	1	COPPER TUBE	
450795-0000						
	90418-0018	-		1	ELBOW 45,INTERNAL CONNECTION 8	
	90418-0035	-		1	ADAPTER,INTERNAL CONNECTION 8-G1/4"	
	341001-0148	-	M	1	COPPER TUBE	
464431-0000						
	90418-0003	-		1	SLEEVE,REDUCTION 12-8	
	90418-0016	-		2	ADAPTER	
	90418-0049	-		1	T-PIPE,REDUCTION INTERNAL CONNE.15X12X12	
	90418-0050	-		1	T-PIPE,REDUCTION INTERNAL CONNE.15X12X15	
	90418-0054	-		1	ELBOW 45,INTERNAL CONNECTION 15	
	90418-0055	-		1	ELBOW 45,INTERNAL AND EXTERNAL CONN.15	
	341001-0148	-	M	1	COPPER TUBE	
	341001-0228	-	M	1	COPPER TUBE	
469795-0000						
	312911-0118	-		2	THREADED I M6X1,5D	
476894-0000						
	90330-0065	-		1	ELBOW,90 int thread, R3/8	
484536-0000						
	90187-0059	-		1	BALLVALVE	
484538-0000						
	90235-0270	-		1	VALVE	
	90235-0460	K		1	WEAR & TEAR PARTS KIT	
531592-0000						
	90266-0021	-	M	1	DAIRY PIPE	
	342810-0101	-		4	ELBOW PIPE25	
531761-0000						
	312911-0118	-		2	THREADED I M6X1,5D	
542074-0000						
	90266-0021	-	M	1	DAIRY PIPE	
	342808-0101	-		2	ELBOW PIPE25	
	342810-0101	-		1	ELBOW PIPE25	
544688-0000						
	90418-0053	-		1	ELBOW 90,INTERNAL CONNECTION 15	
	90418-0054	-		1	ELBOW 45,INTERNAL CONNECTION 15	
	341001-0228	-	M	1	COPPER TUBE	
544689-0000						
	90418-0054	-		1	ELBOW 45,INTERNAL CONNECTION 15	
	90418-0055	-		1	ELBOW 45,INTERNAL AND EXTERNAL CONN.15	
	341001-0228	-	M	1	COPPER TUBE	
544690-0000						
	90418-0054	-		1	ELBOW 45,INTERNAL CONNECTION 15	
	341001-0228	-	M	1	COPPER TUBE	
544691-0000						
	90418-0054	-		1	ELBOW 45,INTERNAL CONNECTION 15	
	90418-0055	-		1	ELBOW 45,INTERNAL AND EXTERNAL CONN.15	
	341001-0228	-	M	1	COPPER TUBE	
544692-0000						
	90418-0053	-		1	ELBOW 90,INTERNAL CONNECTION 15	
	90418-0054	-		5	ELBOW 45,INTERNAL CONNECTION 15	
	341001-0228	-	M	1	COPPER TUBE	
544693-0000						
	90418-0053	-		1	ELBOW 90,INTERNAL CONNECTION 15	
	90418-0055	-		1	ELBOW 45,INTERNAL AND EXTERNAL CONN.15	
	341001-0228	-	M	1	COPPER TUBE	
544694-0000						
	90418-0053	-		1	ELBOW 90,INTERNAL CONNECTION 15	
	90418-0055	-		1	ELBOW 45,INTERNAL AND EXTERNAL CONN.15	
	341001-0228	-	M	1	COPPER TUBE	
544695-0000						
	90418-0053	-		1	ELBOW 90,INTERNAL CONNECTION 15	
	341001-0228	-	M	1	COPPER TUBE	
544696-0000						
	90418-0053	-		1	ELBOW 90,INTERNAL CONNECTION 15	
	341001-0228	-	M	1	COPPER TUBE	
544697-0000						
	90418-0053	-		3	ELBOW 90,INTERNAL CONNECTION 15	
	341001-0228	-	M	1	COPPER TUBE	
571277-0000						
	292449-0000	-		1	PUMP HOUSING	
575795-0000						
	90418-0053	-		2	ELBOW 90,INTERNAL CONNECTION 15	
	341001-0228	-	MM	900	COPPER TUBE	
927319-0000						
	312155-0366	-		4	SCREW MF6S DIN 7991 M6X12 A280	

This page is intentionally left blank

Pos	Part No	SP	UN	Qty	Description	Page No
	1362935-0000	-		1	BLANK-OFF FLANGE	
929717-0000						
	341001-0148	-	MM	770	COPPER TUBE	
	342406-0100	-		2	ELBOW	
929724-0000						
	311103-0413	-		1	PINS,STRAIGHT 8X50	
	312911-0119	-		4	THREADED INSERTS M6X2,0D	
	312911-0125	-		2	THREADED INSERTS M8X1,0D	
929725-0000						
	311103-0413	-		1	PINS,STRAIGHT 8X50	
	312911-0119	-		4	THREADED INSERTS M6X2,0D	
	312911-0125	-		2	THREADED INSERTS M8X1,0D	
929732-0000						
	341001-0148	-	MM	480	COPPER TUBE	
	342406-0100	-		3	ELBOW	

Pos	Part No	SP	UN	Qty	Description	Page No

SPC

Spare Parts Catalogue

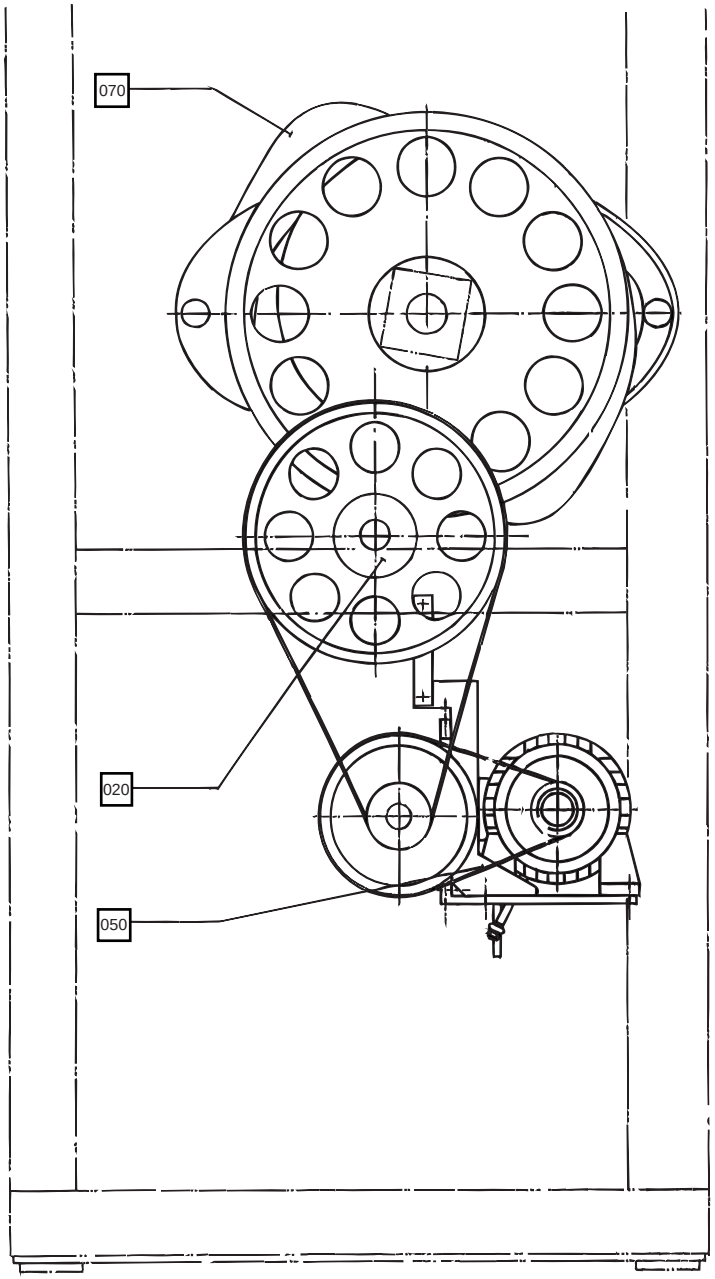

S-648003-1
ECN 6214

Pos	Part No	SP	UN	Qty	Description	Page No
Common parts						
F010	A 440588-0200	-		1	CRANK	**301**
F020	A 239890-0300	-		1	INTERMEDIARY SHAFT	**303**
F050	A 434668-0400	-		1	DRIVE UNIT	**305**
F080	A 243927-0700	-		2	ARM	**311**
F090	A 476177-0200	-		1	HOLD-DOWN DEVICE	**313**
F130	A 434670-0600	-		1	LINK SYSTEM	**323**, **325**
IH						
F070	A 266986-0500	-		1	CURVE SHAFT	**307**, **309**
F100	A 434669-0400	-		1	IMPULSE TRANSMITTER	**315**
F120	A 292071-0200	-		1	SPLASH PROTECTION	**321**

Pos	Part No	SP	UN	Qty	Description	Page No

DRIVE TB/TBA/8

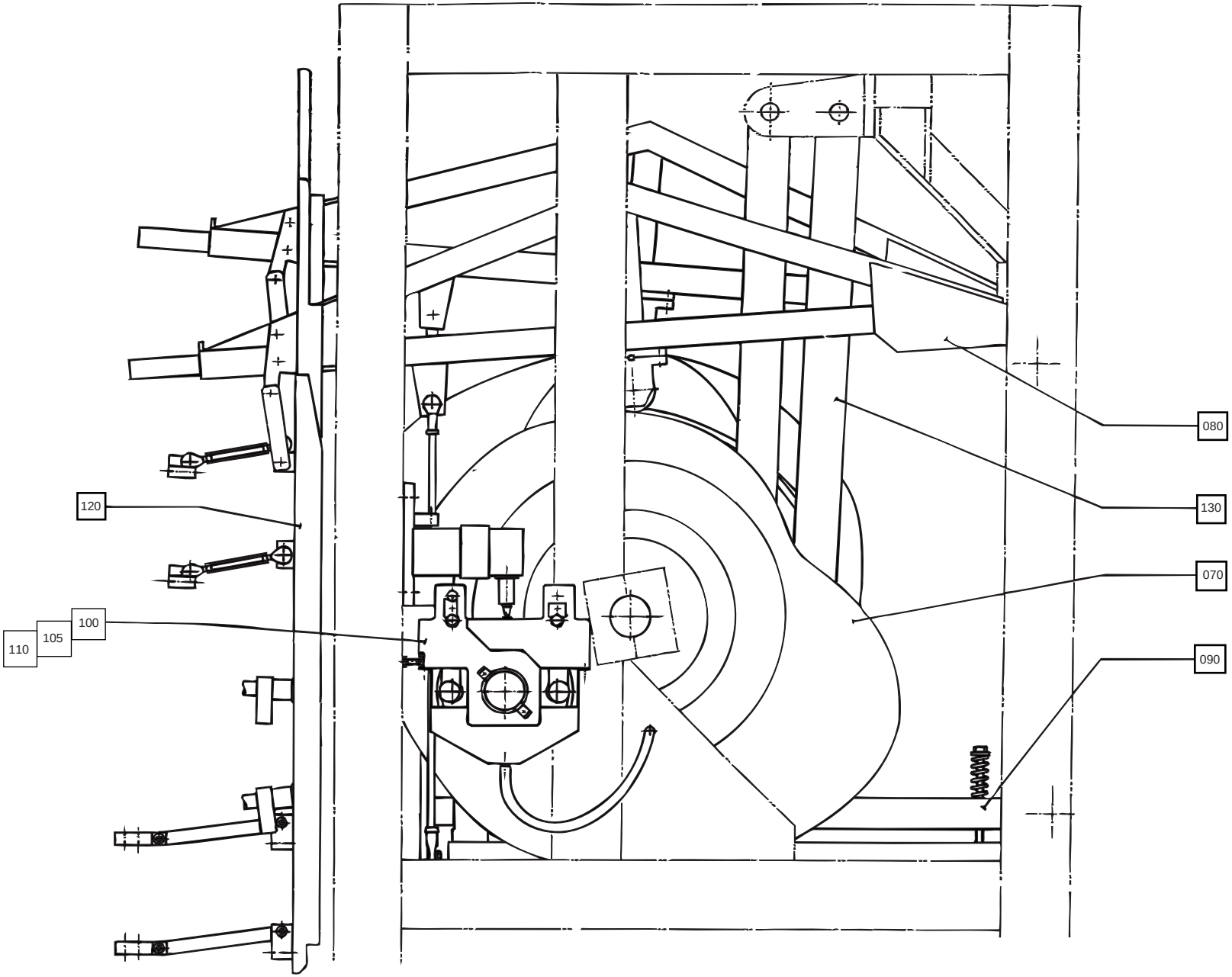

S-648003-2
ECN 5692

Pos	Part No	SP	UN	Qty	Description	Page No
Common parts						
F010	A 440588-0200	-		1	CRANK	**301**
F020	A 239890-0300	-		1	INTERMEDIARY SHAFT	**303**
F050	A 434668-0400	-		1	DRIVE UNIT	**305**
F080	A 243927-0700	-		2	ARM	**311**
F090	A 476177-0200	-		1	HOLD-DOWN DEVICE	**313**
F130	A 434670-0600	-		1	LINK SYSTEM	**323**, **325**
IH						
F070	A 266986-0500	-		1	CURVE SHAFT	**307**, **309**
F100	A 434669-0400	-		1	IMPULSE TRANSMITTER	**315**
F120	A 292071-0200	-		1	SPLASH PROTECTION	**321**

Pos	Part No	SP	UN	Qty	Description	Page No

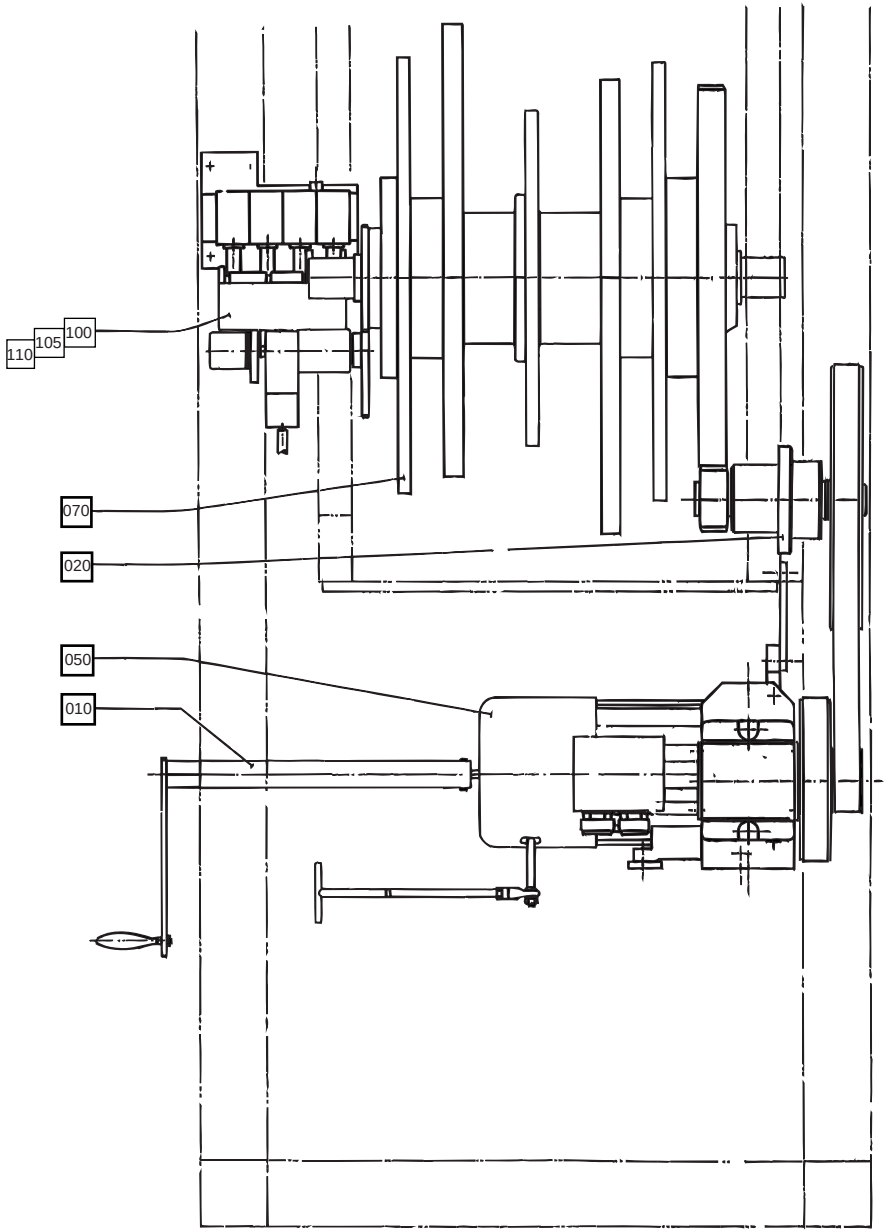

S-648003-3
ECN 6214

Pos	Part No	SP	UN	Qty	Description	Page No
Common parts						
F010	A 440588-0200	-		1	CRANK	**301**
F020	A 239890-0300	-		1	INTERMEDIARY SHAFT	**303**
F050	A 434668-0400	-		1	DRIVE UNIT	**305**
F080	A 243927-0700	-		2	ARM	**311**
F090	A 476177-0200	-		1	HOLD-DOWN DEVICE	**313**
F130	A 434670-0600	-		1	LINK SYSTEM	**323**, **325**
IH						
F070	A 266986-0500	-		1	CURVE SHAFT	**307**, **309**
F100	A 434669-0400	-		1	IMPULSE TRANSMITTER	**315**
F120	A 292071-0200	-		1	SPLASH PROTECTION	**321**

Pos	Part No	SP	UN	Qty	Description	Page No

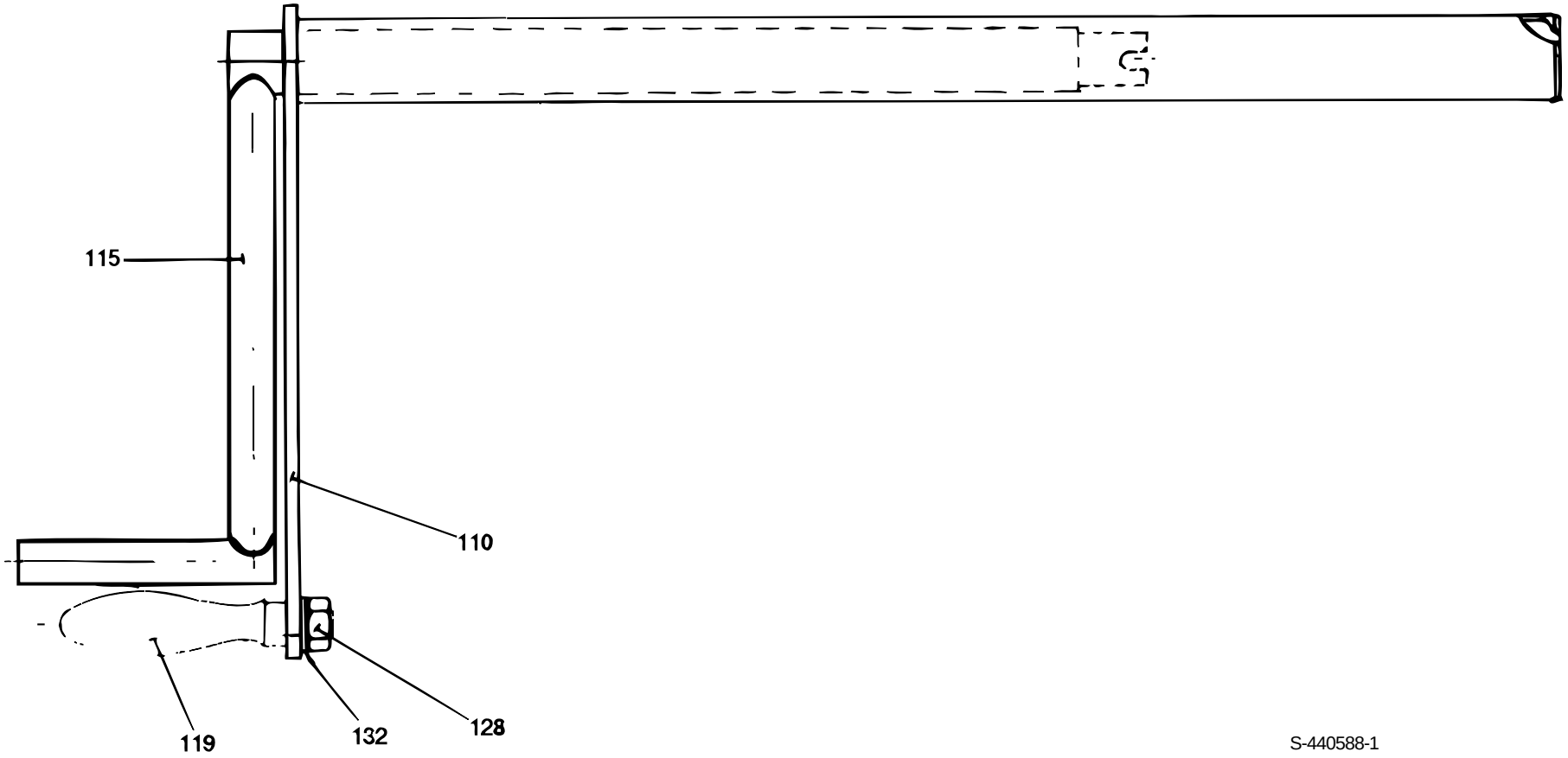

S-440588-1
ECN 5627

Pos	Part No	SP	UN	Qty	Description	Page No
Common parts						
110	36885-0000	-		1	CRANK ARM	
115	542262-0000	-		1	CRANK	
119	90017-0009	-		1	HANDLE M12	
128	312601-0322	-		1	NUT M6M 12-8 FZB	
132	315401-0178	-		1	WASHER FBH12,2FZB	

Pos	Part No	SP	UN	Qty	Description	Page No

INTERMEDIARY SHAFT

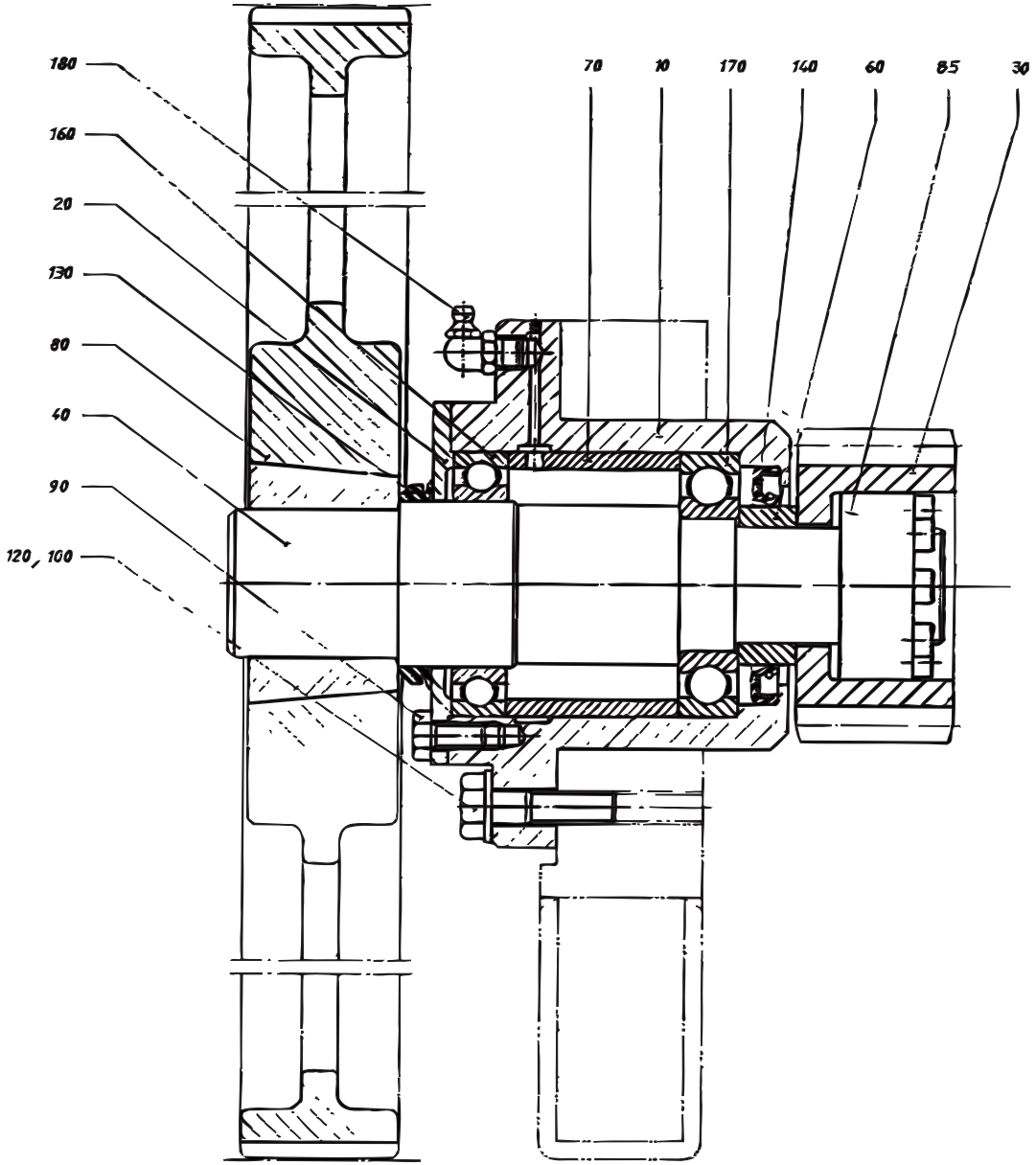

S-239890-2
ECN 8608

Pos	Part No	SP	UN	Qty	Description	Page No
Common parts						
010	237725-0000	-		1	BEARING HOUSING	
020	107095-0000	-		1	LID	
030	499473-0000	D		1	GEAR WHEEL	
040	499474-0000	D		1	SHAFT	
060	111017-0000	-		1	SPACER RING	
070	239870-0000	-		1	SPACER SLEEVE	
080	90196-0067	-		1	PULLEY	
085	90208-0067	-		1	CLAMPING ELEMENT	
090	312101-0449	-		6	SCREW M6S 8x16 FZB	
100	312101-0499	-		4	SCREW M6S10X40FZB	
120	315101-0173	-		4	WASHER BRB10,5X22FZB	
130	315220-0198	M		1	SEAL RING V-50S	
140	315221-0197	M		1	SEALING RINGS,TYPE A 48X72X8	
160	321306-0110	M		1	BALL BEARING 50X80X16	
170	321309-0108	M		1	BALL BEARING 40X80X18	
180	344502-0066	-		1	NIPPLE L CHKR1/8"	

Pos	Part No	SP	UN	Qty	Description	Page No

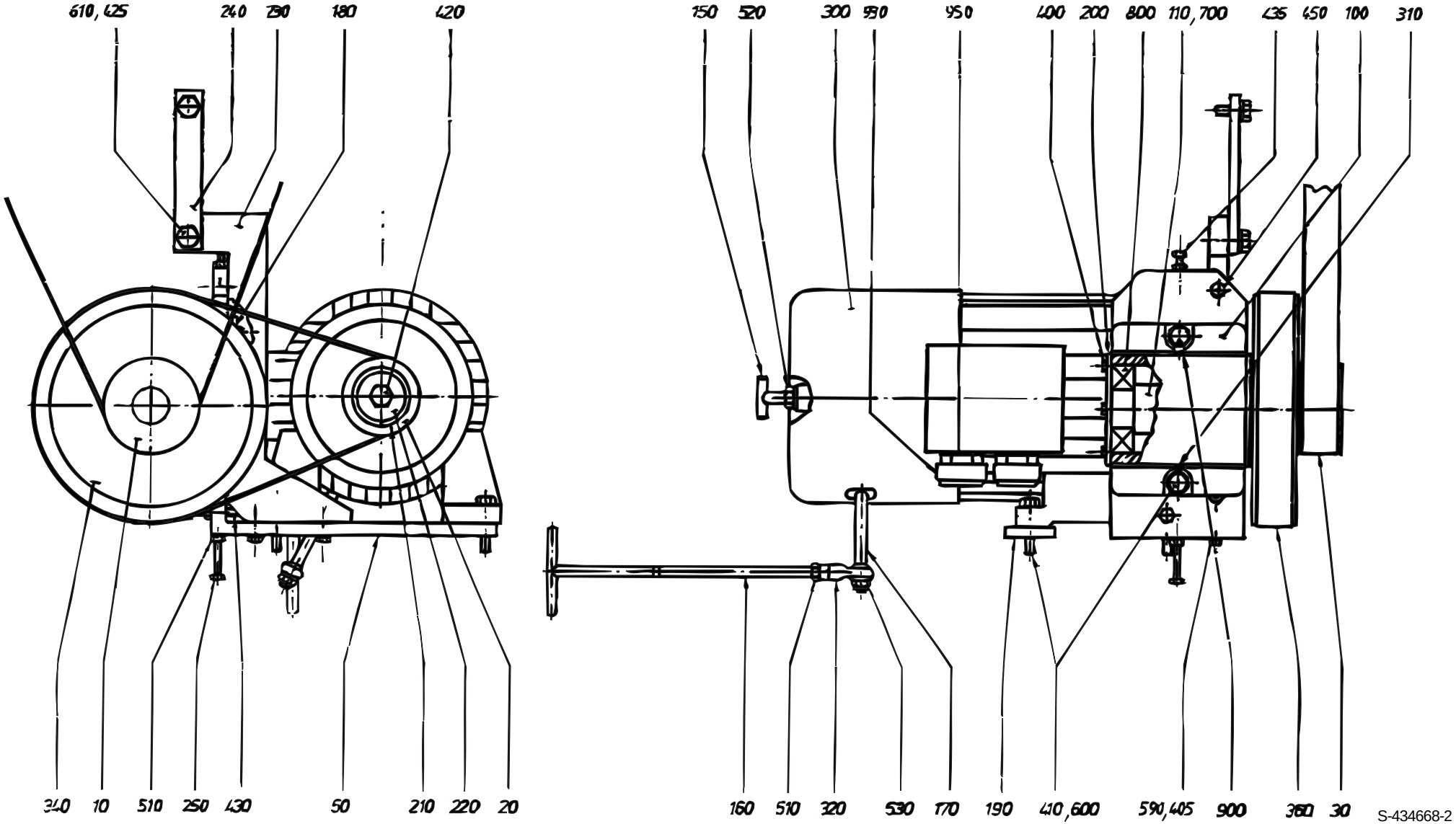

S-434668-2
ECN 10007

Pos	Part No	SP	UN	Qty	Description	Page No
Common parts						
030	90417-0134	J		1	TOOTHED BELT	
050	530754-0000	-		1	FASTENING BRACKET	
100	436482-0000	-		1	BEARING BRACKET	
110	436483-0000	D		1	SHAFT	
150	37097-0000	D		1	CARRIER	
160	434379-0000	D		1	TIE ROD	
170	434380-0000	D		1	SHAFT	
180	436484-0000	-		1	BRACKET	
190	436485-0000	-		1	LACE	
200	436486-0000	-		2	LID	
210	436487-0000	-		1	SPACER	
220	436488-0000	-		1	WASHER	
230	450145-0000	-		1	STRUT	
240	450146-0000	-		1	STRUT	
250	530755-0000	-		1	SCREW	
310	90087-0003	-		1	PIPE PLUG	
320	90115-0105	D		1	JOINT	
340	90196-0066	-		1	PULLEY	
360	90417-0133	J		1	TOOTHED BELT	
400	312101-0364	-		6	SCREW M6S 6x10-8,8 FZB	
405	312101-0455	-		2	SCREW M6S 8x30 FZB	
410	312101-0501	-		6	SCREW M6S10X50FZB	
420	312101-0540	-		1	SCREW M6S12X40FZB	
425	312101-0536	-		2	SCREW M6S12X30FZB	
430	312104-0465	-		1	SCREW M6S8X70H8.8 FZB	
435	312105-0382	-		1	SCREW M6S ISO 4014 M6X60 A280	
450	312111-0451	-		2	SCREW MC6S8X20FZB	
510	312601-0320	-		3	NUT M6M 10-8 FZB	
520	312601-0322	-		1	NUT M6M 12-8 FZB	
530	312812-0320	-		1	LOCK-NUT,HEXAGON,WITH NYLON INSERT,M10	
590	315101-0165	-		2	WASHER BRB8,4X16FZB	
600	315101-0173	-		6	WASHER BRB10,5X22FZB	
610	315101-0178	-		2	WASHER BRB 13x24 FZB	
700	315701-0307	-		1	KEYS,PARALLEL WITH ROUND ENDS 10X8X70	
800	321316-0108	M		2	BEARINGS,BALL BEARING SKF6308RS	
900	344502-0046	-		1	NIPPLE L BHKR1/8"	
930	352136-0143	-		2	GLAND FITTING	
950	352100-0115	-		2	CABLE GLANR.28,3-15,5	
0355B IH 50HZ or 0375S IH 50HZ or 0400B IH 50HZ or 0500B IH 50HZ or 0500S IH 50HZ or 0500SQ IH 50HZ or 0750B IH 50HZ or 0750S IH 50HZ or 1000B IH 50HZ or 1000S IH 50HZ or 1055B IH 50HZ						
010	90196-0055	-		1	PULLEY	
020	90196-0062	-		1	PULLEY	
300	B 90046-0015	R		1	DRIVE BRAKE MOTOR 50HZ	
0355B IH 60HZ or 0375S IH 60HZ or 0400B IH 60HZ or 0500B IH 60HZ or 0500S IH 60HZ or 0500SQ IH 60HZ or 0750B IH 60HZ or 0750S IH 60HZ or 1000B IH 60HZ or 1000S IH 60HZ or 1055B IH 60HZ						
010	90196-0065	-		1	PULLEY	
020	90196-0062	-		1	PULLEY	
300	B 90046-0016	R		1	BRAKE MOTOR	
1000SQ IH 50HZ						
010	90196-0079	-		1	TIMING BELT PULLEY	
020	90196-0062	-		1	PULLEY	
300	B 90046-0015	R		1	DRIVE BRAKE MOTOR 50HZ	
1000SQ IH 60HZ						
010	90196-0090	-		1	TIMING BELT PULLEY	
020	90196-0061	-		1	PULLEY	
300	B 90046-0016	R		1	BRAKE MOTOR	

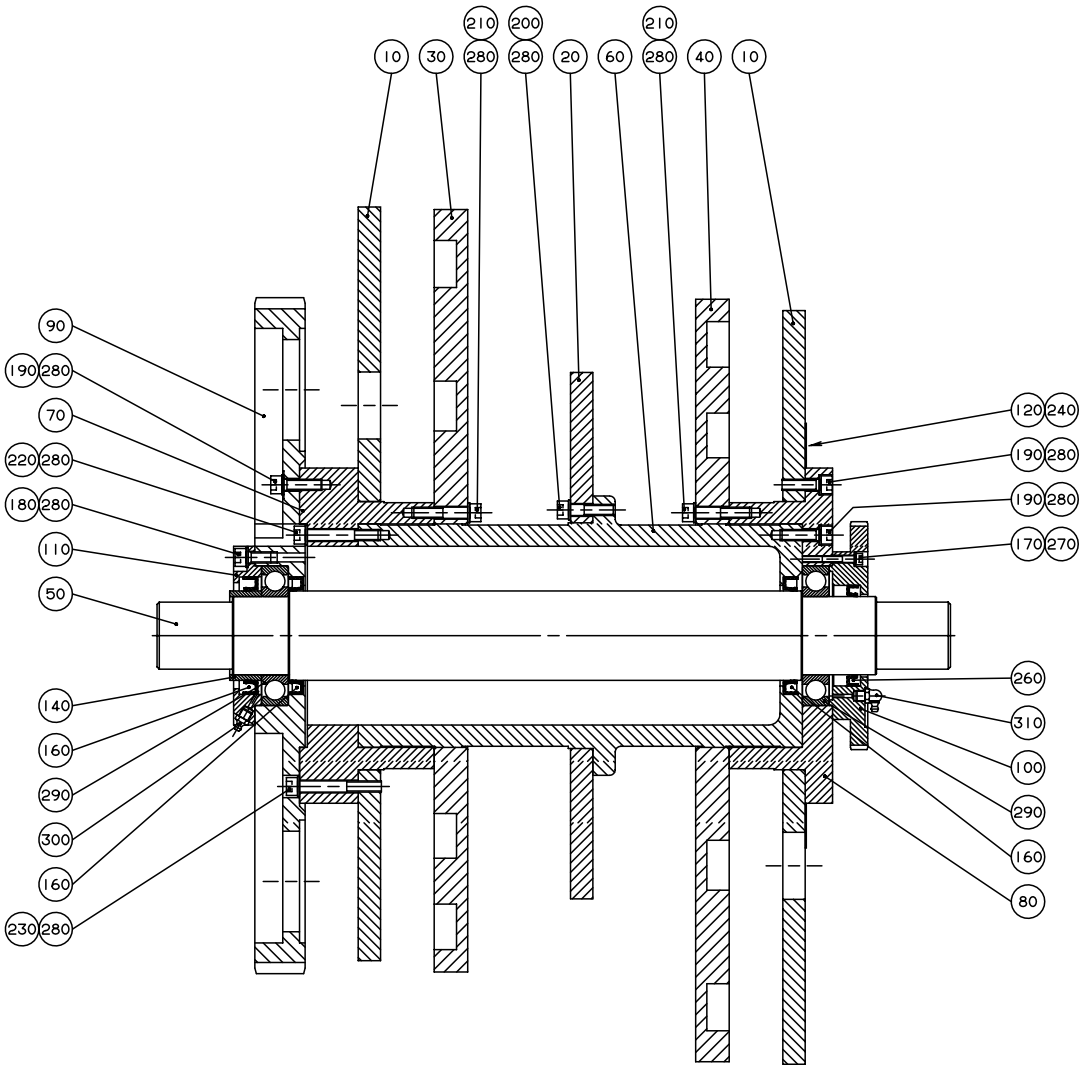

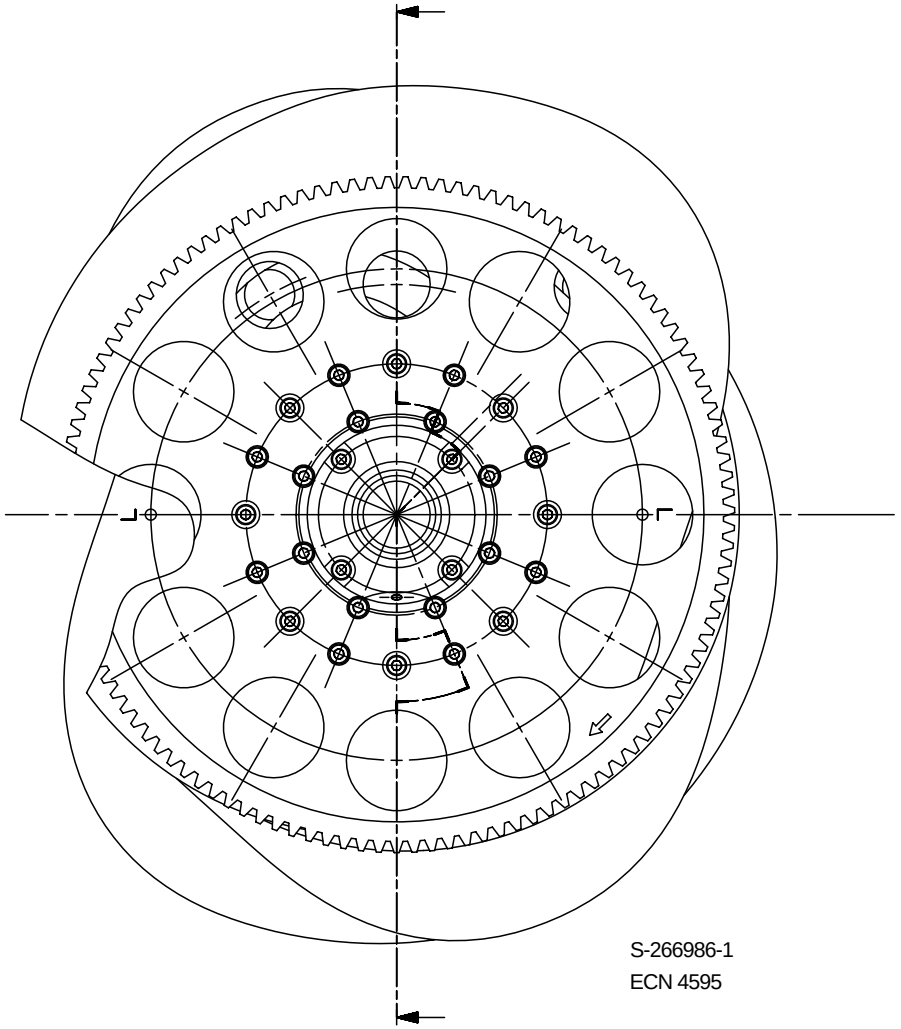

S-266986-1
ECN 4595

Pos	Part No	SP	UN	Qty	Description	Page No
Common parts						
050	23458-0000	D		1	SHAFT	
060	239533-0000	-		1	DRUM	
070	239534-0000	-		1	FLANGE	
080	239535-0000	-		1	FLANGE	
090	239536-0000	D		1	GEAR WHEEL	
100	243016-0000	D		1	GEARING	
110	107062-0000	-		1	LID	
120	246982-0000	-		1	PROTRACTOR	
140	23462-0000	D		1	SPACER RING	
160	90091-0029	K		3	SEAL RING	
170	312111-0374	-		8	SCREW MC6S6X30FZB	
180	312111-0492	-		4	SCREW MC6S10X22FZB	
190	312111-0497	-		24	SCREW MC6S10X35FZB	
200	312111-0499	-		8	SCREW MC6S10X40FZB	
210	312111-0501	-		16	SCREW MC6S10X50FZB	
220	312111-0504	-		8	SCREW MMC6S10X65FZB	
230	312111-0506	-		8	SCREW MC6S10X75FZB	
240	312121-0285	-		10	SLOTTED HEAD SCREW MCS 4x6 FZB	
260	315221-0221	K		1	SEALING RINGS,TYPE A 70X90X10	
270	315401-0153	-		8	WASHER FBH6,1FZB	
280	315401-0173	-		68	WASHER FBH10,2FZB	
290	321309-0114	K		2	BALL BEARING 70X125X24	
300	344502-0026	-		1	NIPPLE L AHKR1/8"	
310	344502-0066	-		1	NIPPLE L CHKR1/8"	
0355B						
010	551907-0000	D		2	MAIN CAM	
020	551910-0000	D		1	COUNTER CAM	
030	564623-0000	D		1	CAM LEFT	
040	564624-0000	D		1	CAM RIGHT	
0375S						
010	449716-0000	D		2	MAIN CAM	
020	449719-0000	D		1	COUNTER CAM	
030	564528-0000	D		1	CAM LEFT	
040	564529-0000	D		1	CAM RIGHT	
0400B						
010	575782-0000	D		2	MAIN CAM	
020	575783-0000	D		1	COUNTER CAM	
030	576836-0000	D		1	CAM LEFT	
040	576837-0000	D		1	CAM RIGHT	
0500B						
010	283157-0000	D		2	MAIN CAM	
020	283160-0000	D		1	COUNTER CAM	
030	563728-0000	D		1	CAM LEFT	
040	563729-0000	D		1	CAM RIGHT	
0500S						
010	532032-0000	D		2	MAIN CAM	
020	532033-0000	D		1	COUNTER CAM	
030	564621-0000	D		1	CAM LEFT	
040	564622-0000	D		1	CAM RIGHT	
0500SQ						
010	583821-0000	D		2	MAIN CAM	
020	583822-0000	D		1	COUNTER CAM	
030	1361913-0000	D		1	CAM LEFT	
040	1361914-0000	D		1	CAM RIGHT	
0750B						
010	565668-0000	D		2	MAIN CAM	
020	532097-0000	D		1	COUNTER CAM	
030	564526-0000	D		1	CAM LEFT	
040	564527-0000	D		1	CAM RIGHT	
0750S						
010	545101-0000	D		2	MAIN CAM	
020	551825-0000	D		1	COUNTER CAM	
030	564933-0000	D		1	CAM LEFT	
040	564934-0000	D		1	CAM RIGHT	
1000B HIFIN						
010	540270-0000	D		2	MAIN CAM	
020	549928-0000	D		1	COUNTER CAM	
030	564524-0000	D		1	CAM LEFT	
040	564525-0000	D		1	CAM RIGHT	
1000S						
010	569049-0000	D		2	MAIN CAM	
020	569050-0000	D		1	COUNTER CAM	
030	569051-0000	D		1	CAM LEFT	
040	569052-0000	D		1	CAM RIGHT	
1000SQ						
010	579641-0000	D		2	MAIN CAM	
020	579642-0000	D		1	COUNTER CAM	
030	579643-0000	D		1	CAM LEFT	
040	579644-0000	D		1	CAM RIGHT	
1055B						
010	533961-0000	D		2	MAIN CAM	
020	533962-0000	D		1	COUNTER CAM	

CURVE SHAFT

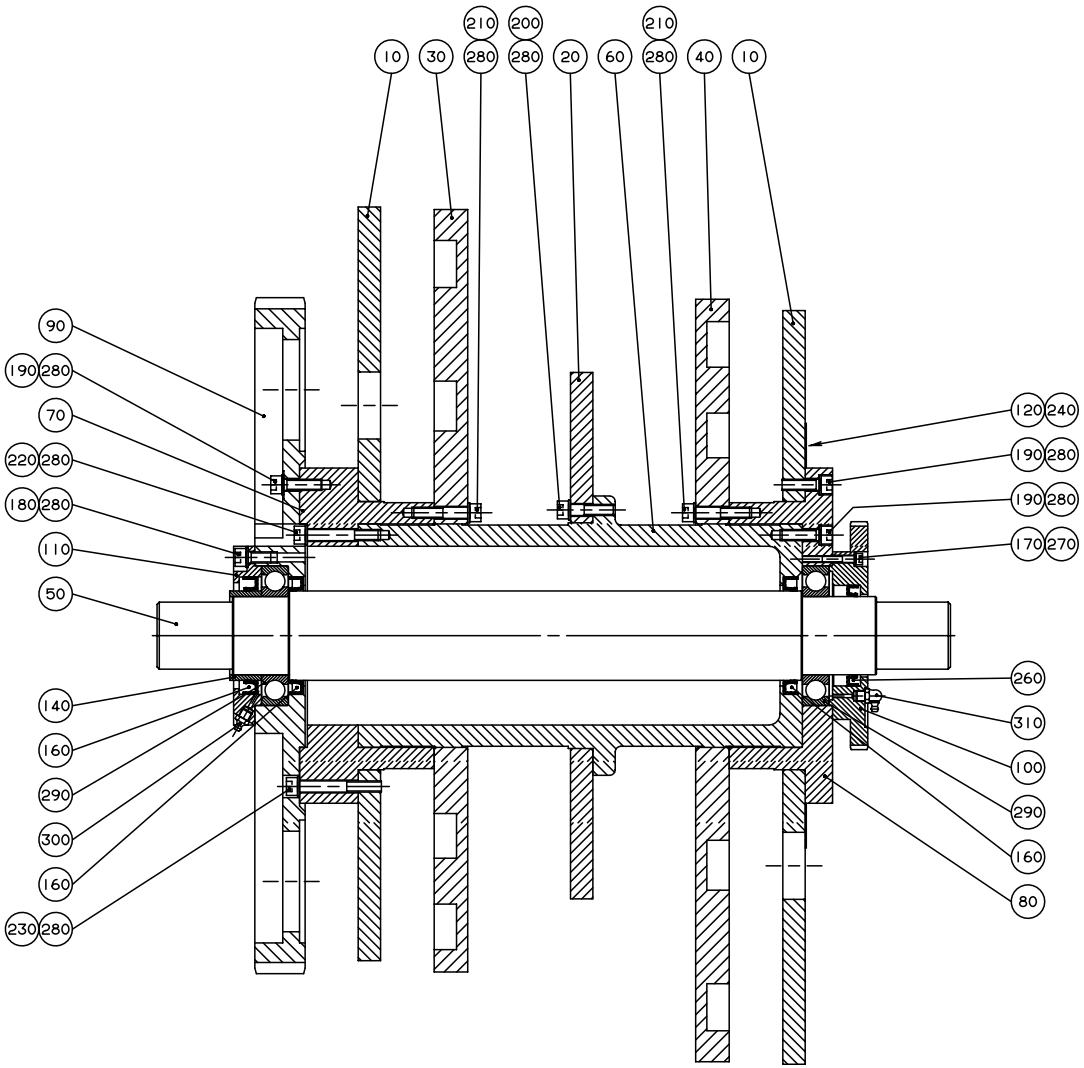

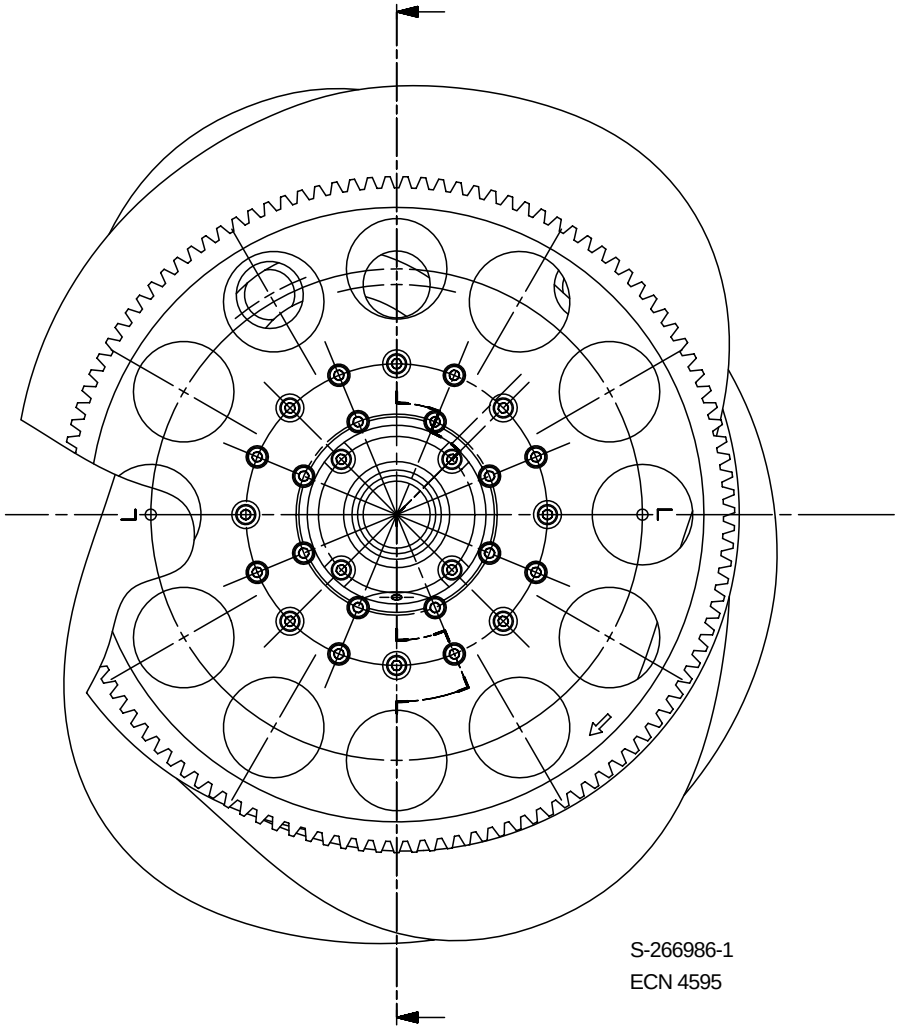

S-266986-1
ECN 4595

Pos	Part No	SP	UN	Qty	Description	Page No
030	564625-0000	D		1	CAM LEFT	
040	564626-0000	D		1	CAM RIGHT	
1000B LOFIN						
010	530529-0000	D		2	MAIN CAM	
020	530532-0000	D		1	COUNTER CAM	
030	560391-0000	D		1	CAM LEFT	
040	560392-0000	D		1	CAM RIGHT	

Pos	Part No	SP	UN	Qty	Description	Page No

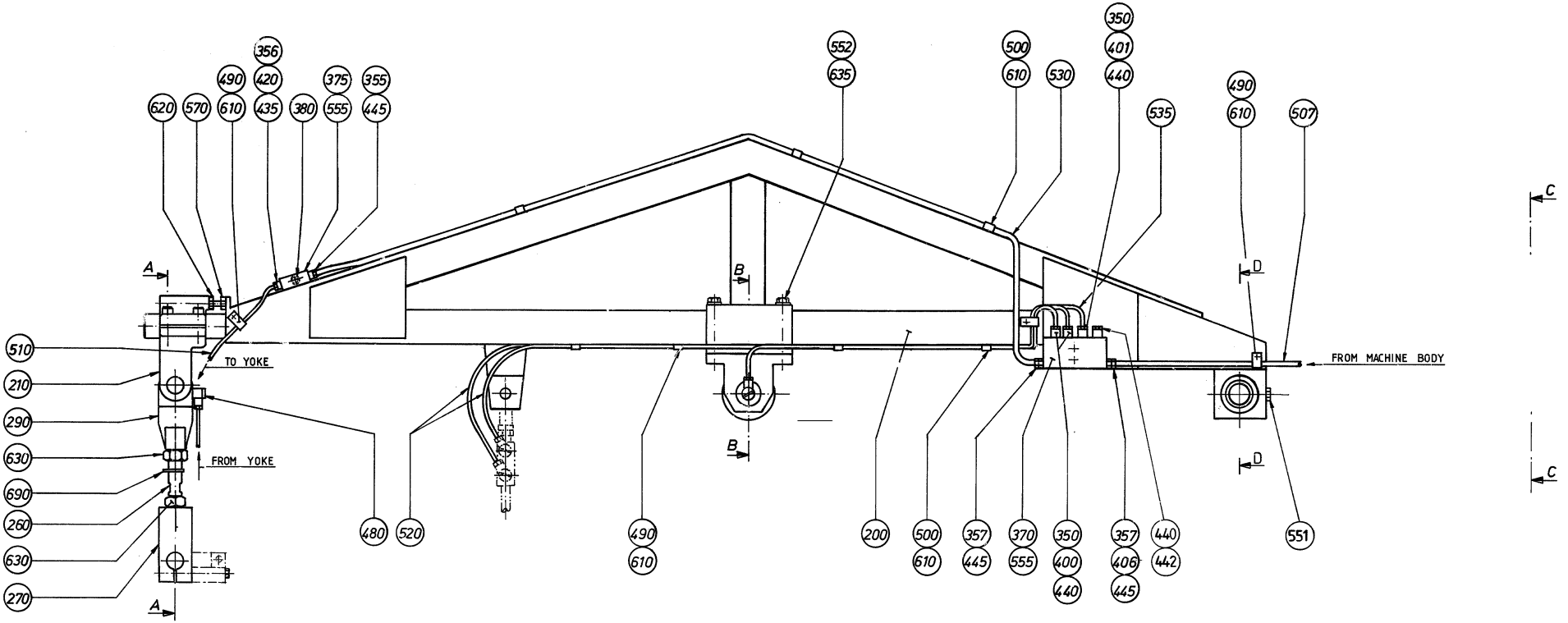

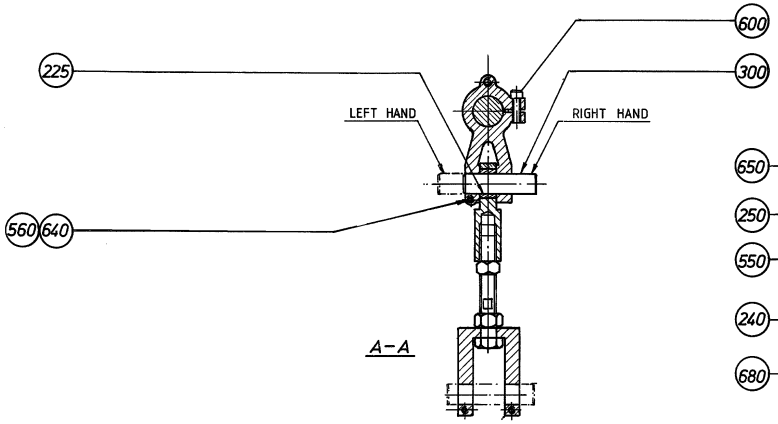

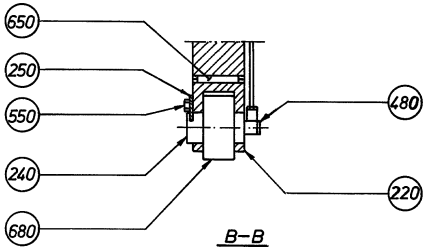

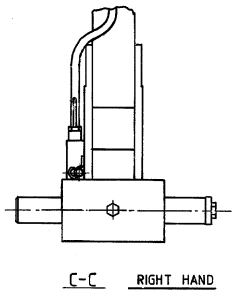

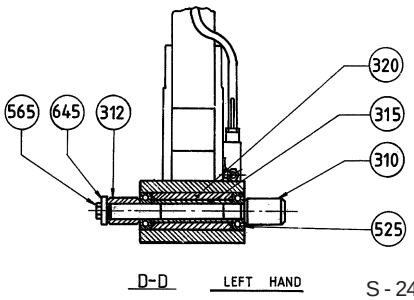

S - 243927-7
ECN 72174

Pos	Part No	SP	UN	Qty	Description	Page No
Common parts						
200	530708-0000	R		1	ARM	
210	35827-0000	R		1	BRACKET	
225	23270-0000	J		1	BUSHING	
240	243930-0000	K		1	SHAFT	
250	243931-0000	D		1	SECURING PLATE	
260	246787-0000	D		1	SCREW	
270	246790-0000	D		1	LINK	
290	251561-0000	D		1	LINK	
300	251562-0000	J		1	SHAFT	
310	570066-0000	J		1	SHAFT	
312	570067-0000	M		1	RING	
315	570125-0000	J		1	SLEEVE	
320	570126-0000	J		1	SLEEVE	
350	90028-0020	I		3	CONE DT13700S-300 Di=2,5mm	
355	90028-0022	I		1	CONE	
356	90028-0024	I		1	CONE	
357	90028-0025	I		2	CONE DT4.138811.2D	
370	90032-0039	-		1	DISTR.BLOCK	
375	90032-0043	-		1	JUNCTION BLOCK	
380	90087-0019	-		1	PLUG M10x1 Stainless	
400	90092-0053	J		2	METERING VALVE 30mm3	
401	90092-0054	J		1	METERING VALVE 50mm3	
406	90134-0030	I		1	SLEEVE 6/3	
420	90134-0031	I		1	SLEEVE E 4/2	
435	90134-0038	J		1	BUSHING	
440	90134-0039	I		4	BUSHING DT4.018912.1D Stainless	
442	90134-0052	-		1	PLUG DT4.076817.2D	
445	90134-0055	J		3	BUSHING 6 DIN 3871 Stainless	
480	90134-0058	-		2	BANJO CONNECTION DT4.310.437.1	
490	90165-0003	-		4	PIPE-CLIPS,FOR SINGLE PIPE,ONE SIDE 4	
500	90165-0005	-		6	PIPE-CLIPS,FOR SINGLE PIPE,ONE SIDE 6	
507	90166-0108	-	MM	2700	HOSE 3/6 PA11/12 Transp.	
510	90166-0109	-	MM	2700	HOSE 2/4 PA11/12 Transp.	
520	90166-0143	-	MM	2000	HOSE 1,6/2,5 PA 11/12	
525	90214-0169	G		2	BALL BEARING,STAINLESS 15X354X11	
530	90266-0006	-	MM	1500	TUBE	
535	90266-0019	-	MM	1000	PIPE	
550	312101-0362	-		2	SCREW M6S 6x8-8,8 FZB	
551	312101-0368	-		1	SCREW M6S 6x16 Zink Plated	
552	312101-0465	-		2	SCREW M6S8X70FZB	
555	312101-0295	-		4	SCREW M6S 4x20 FZB	
560	312105-0374	-		1	SCREW M6S ISO 4017 M6X30 A280	
565	312105-0449	-		1	SCREW M6S ISO 4017 M8x16 A280	
570	312109-0463	-		1	SCREW M6S 8x60H A4 80	
600	312115-0453	-		2	SCREW MC6S ISO 4762 M8X25 A280	
610	312121-0285	-		10	SLOTTED HEAD SCREW MCS 4x6 FZB	
620	312605-0318	-		1	NUT,HEXAGON,M8 RFR	
630	312811-0324	-		2	LOCK NUT M16RFR	
635	315101-0165	-		2	WASHER BRB8,4X16FZB	
640	315105-0153	-		1	WASHER,PLAIN ROUND 6,4x12 Stainless	
645	315121-0165	-		1	WASHER TBRSB8,4X26FZB	
650	315701-0270	-		1	KEYS,PARALLEL WITH ROUND ENDS 8X7X40	
680	321576-0360	J		1	BEARING ROLLER 30x62x29	
690	352113-0101	-		1	RIBBON CLAMP BLACK	
0355B or 0375S or 0400B or 0500B or 0500S or 0500SQ or 0750B or 0750S or 1000B LOFIN						
220	243928-0000	D		1	BRACKET	
1000B HIFIN or 1000S or 1000SQ or 1055B						
220	279466-0000	D		1	BRACKET	

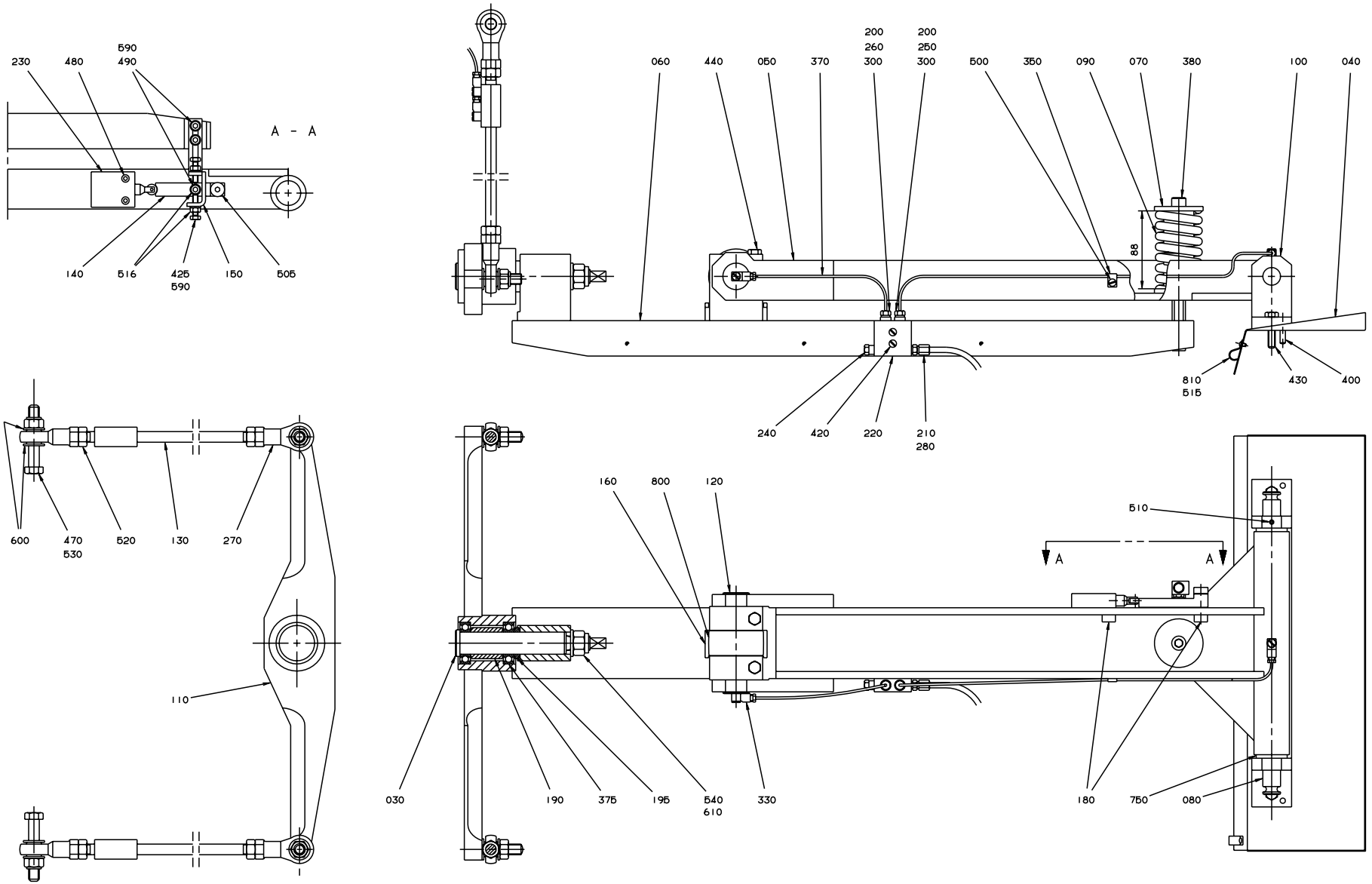

S-476177-2
ECN 20114

Pos	Part No	SP	UN	Qty	Description	Page No
0355B IH or 0375S IH or 0400B IH or 0500B IH or 0500S IH or 0500SQ IH or 0750B IH or 0750S IH or 1000B IH or 1000S IH or 1000SQ IH or 1055B IH						
040	279969-0000	-		1	DRIP PLATE	
050	450670-0000	D		1	ARM	
080	563212-0000	K		1	SHAFT	
110	560417-0000	R		1	ROCKER ARM	
180	527648-0000	-		2	WASHER	
195	568287-0000	R		1	RING	
200	90028-0020	I		2	CONE DT13700S-300 Di=2,5mm	
250	90092-0052	I		1	METERING VALVE 10mm3	
330	90134-0058	J		6	BANJO CONNECTION DT4.310.437.1	
350	90165-0022	-		1	PIPE-CLIPS,FOR SINGLE PIPE,ONE SIDE 2,5	
375	90214-0163	K		2	BALL BEARING,STAINLESS 25X47X12	
500	312121-0285	-		1	SLOTTED HEAD SCREW MCS 4x6 FZB	
510	312316-0327	-		1	STOP SCREW SK6SS 5x12 FZB	
515	312503-0275	-		2	DRIVE SCREW RXK POZ.B6x6,5 FZB	
750	321101-0233	M		2	FLANGE BUS 20F7x20	
810	352110-0101	-		2	CRAMP TK 7-10	
Common parts						
030	560418-0000	R		1	SHAFT	
060	567033-0000	R		1	ARM	
070	239383-0000	D		2	SLEEVE	
090	243971-0000	R		1	SPRING	
100	246948-0000	D		1	BRACKET	
120	434062-0000	M		1	SHAFT	
130	434098-0000	D		2	STRUT	
140	567702-0000	D		1	CURVE	
150	567703-0000	D		1	LINK	
160	576742-0000	R		1	OIL TROUGH	
190	568286-0000	R		1	SLEEVE	
210	90134-0038	J		1	BUSHING	
220	90032-0038	-		1	BLOCK 2ways DT4.310792.1D	
230	90044-0094	R		1	LIMIT SWITCH	
240	90087-0019	-		1	PLUG M10x1 Stainless	
260	90092-0053	J		1	METERING VALVE 30mm3	
270	90115-0133	K		4	ROD END 12 STEEL	
280	90134-0031	G		1	SLEEVE E 4/2	
300	90134-0039	J		2	BUSHING DT4.018912.1D Stainless	
370	90166-0143	-	MM	1000	HOSE 1,6/2,5 PA 11/12	
380	90287-0136	R		1	SCREW MC6S M10x150 12,9	
400	311303-0356	-		2	SLOTTED PIN RPB 6x30 ZINC COATED	
420	312101-0295	-		2	SCREW M6S 4x20 FZB	
425	312101-0372	-		2	SCREW M6S 6x25 FZB	
430	312101-0453	-		3	SCREW M6S 8x25 FZB	
440	312101-0459	-		2	SCREW M6S 8x40 FZB	
470	312101-0546	-		2	SCREW M6S 12x70 Zink Plated	
480	312111-0335	-		2	SCREW MC6S5X30FZB	
490	312111-0368	-		3	SCREW MC6S6X16FZB	
505	312180-0489	-		1	HEX.SOCKET HEAD SHOULD.ISO 7379 M8x16	
516	312601-0316	-		3	NUT M6M 6-8 FZB	
520	312601-0322	-		4	NUT M6M 12-8 FZB	
530	312810-0322	R		4	LOCK NUT 12-8. FZB	
540	312810-0324	R		1	LOCK NUT 16 FZB	
590	315101-0153	-		5	WASHER BRB 6,4x12 FZB	
600	315101-0178	-		8	WASHER BRB 13x24 FZB	
610	315101-0186	-		1	WASHER BRB 17x30 FZB	
800	321576-0360	J		1	BEARING ROLLER 30x62x29	

IMPULSE TRANSMITTER

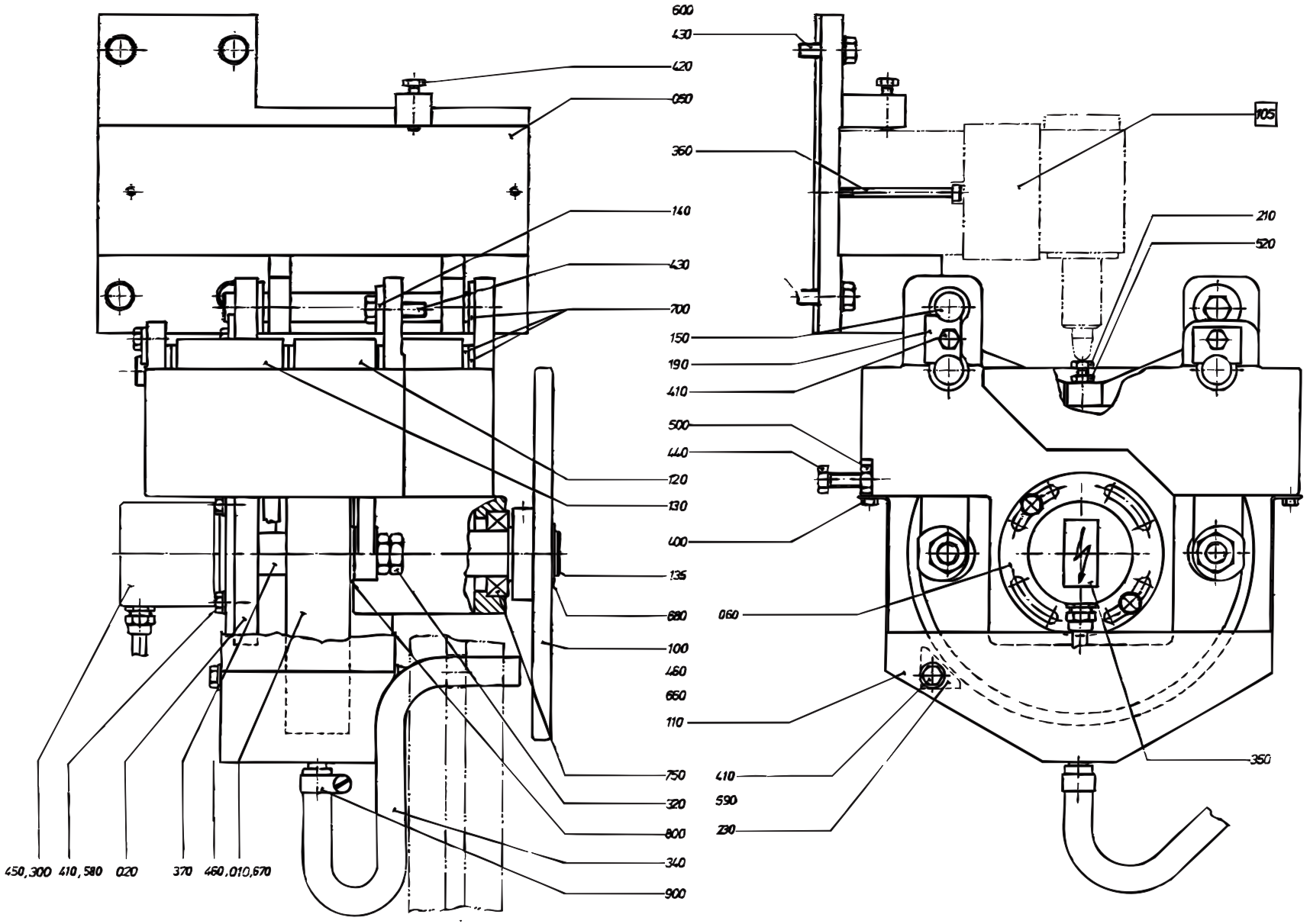

S-434669-2
ECN 11449

Pos	Part No	SP	UN	Qty	Description	Page No
Common parts						
F105	A 273728-0300	-		1	VALVE GROUP	**317**
020	292473-0000	-		1	CANTILEVER	
050	292472-0000	-		1	HOLDER	
060	542063-0000	D		1	FLANGE	
100	243017-0000	D		1	GEAR WHEEL	
110	543476-0000	-		1	TROUGH	
120	297091-0000	-		2	ARM	
130	297092-0000	-		2	ARM	
135	540949-0000	R		1	SHAFT	
140	28036-0000	M		1	WASHER	
150	292477-0000	M		3	SHAFT	
190	292482-0000	-		2	WASHER	
210	479354-0000	M		4	SCREW	
230	479753-0000	D		1	STRIPPER	
300	90061-0018	M		1	ANGLE ENCODER 8BIT GRAY	
320	90099-0015	-		8	NUTS,HEXAGON,ML6M, M12x1,5, DIN936	
340	90166-0113	-	MM	700	HOSE	
350	90194-0039	-		1	FLASH SIGN 18X37MM	
360	90287-0073	-		2	SCREW, MC6S ISO4762, M5x70 12.9	
370	90355-0031	M		1	FLEXIBLE COUPLING	
400	312101-0325	-		2	SCREW M6S5X10FZB	
410	312101-0366	-		6	SCREW M6S 6x12-8,8 FZB	
420	312101-0372	-		1	SCREW M6S 6x25 FZB	
430	312101-0453	-		5	SCREW M6S 8x25 FZB	
440	312104-0460	-		1	SCREW M6S8X45H8.8FZB	
450	312155-0289	-		3	SCREW MF6S4X10RFR	
460	312318-0360	-		2	STOP SCREW SK6SS6X6RFR	
500	312601-0318	-		1	NUT M6M8FZB	
520	312601-0316	-		4	NUT M6M 6-8 FZB	
580	315105-0153	-		2	WASHER,PLAIN ROUND 6,4x12 Stainless	
590	315105-0156	-		2	WASHER BRB 6,7x14 RFR	
600	315101-0165	-		4	WASHER BRB8,4X16FZB	
660	315701-0262	-		1	FLAT WEDGE8X7X18	
670	315701-0263	-		1	KEYS,PARALLEL WITH ROUND ENDS 8X7X20	
680	315750-0119	-		2	CIRCLIP SGA25	
700	321111-0240	M		14	FLANGE BUS 16E7X12	
750	321308-0205	K		2	BALL BEARING 25X47X12	
800	321580-0165	G		4	BEARINGS,CAM ROLLER KR30	
900	342991-0101	-		1	HOSE CLIP,WORM DRIVE TYPE (13)-16	
IH						
010	556579-0000	R		1	CURVE	
TPC						
010	573994-0000	R		1	CURVE	

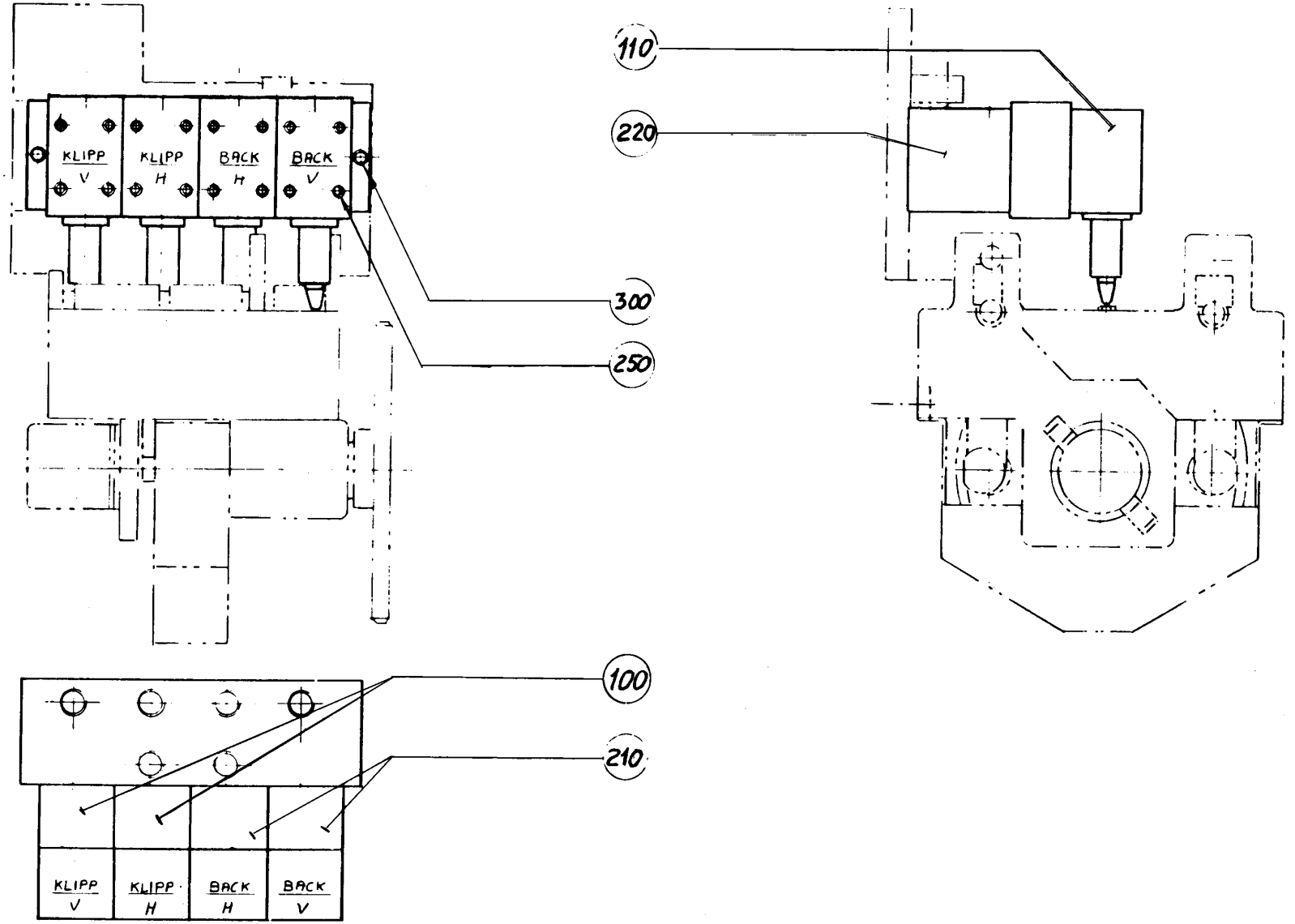

S - 273728-3
ECN 70499

Pos	Part No	SP	UN	Qty	Description	Page No
0355B or 0375S or 0400B or 0500B or 0500S or 0500SQ or 0750B or 0750S or 1000B or 1000S or 1000SQ or 1055B						
100	B 90201-0010	D		4	VALVE	
150	90201-0300	D		1	PLATE	
200	295391-0003	K		2	THROTTLE SCREW	
Common parts						
110	90201-0057	D		4	VALVE	
250	90201-0303	K		4	SPARE PARTS KIT	
300	90287-0073	-		2	SCREW, MC6S ISO4762, M5x70 12.9	

Pos	Part No	SP	UN	Qty	Description	Page No

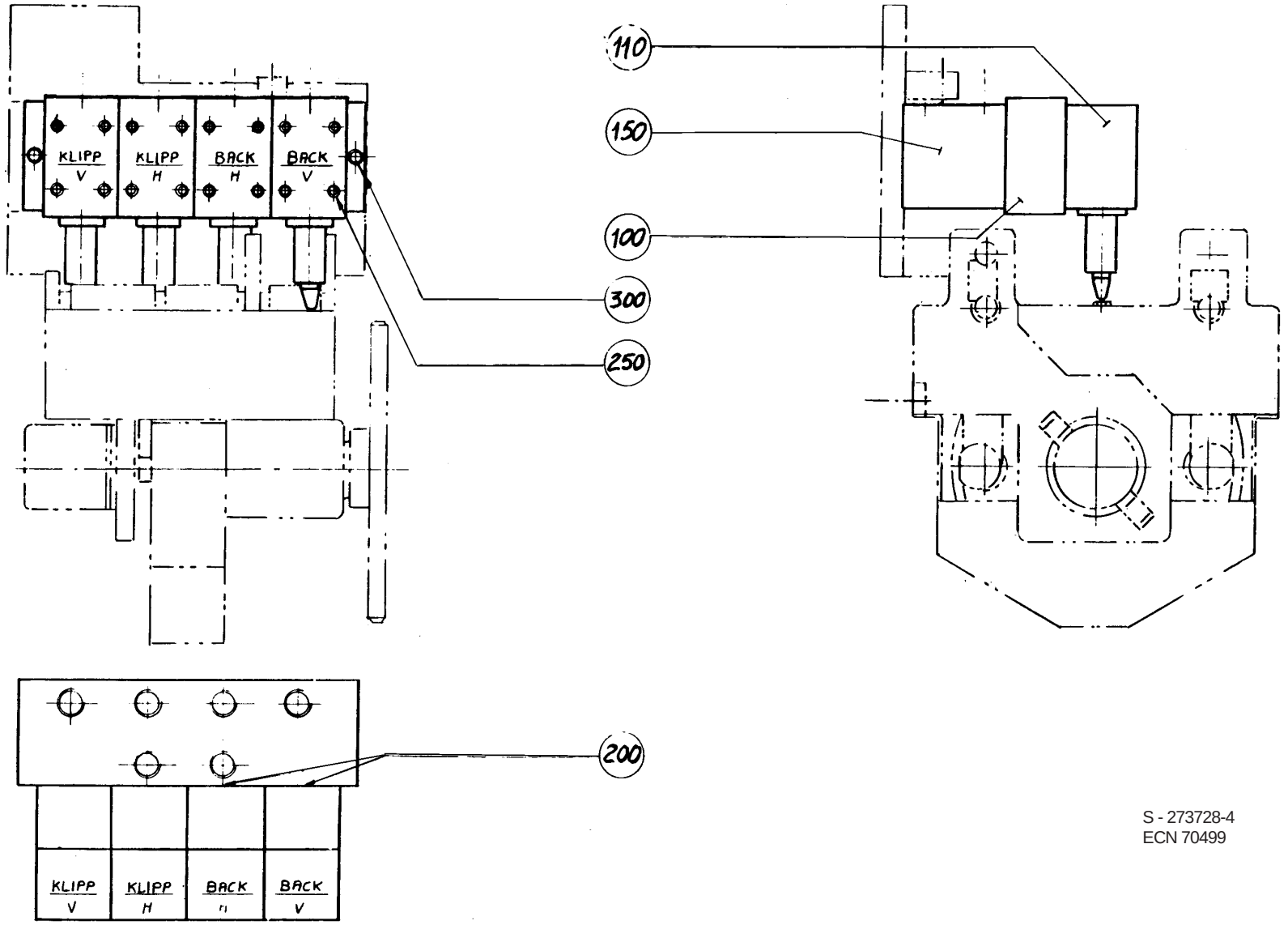

S - 273728-4
ECN 70499

Pos	Part No	SP	UN	Qty	Description	Page No
0355B or 0375S or 0400B or 0500B or 0500S or 0500SQ or 0750B or 0750S or 1000B or 1000S or 1000SQ or 1055B						
100	B 90201-0010	D		4	VALVE	
150	90201-0300	D		1	PLATE	
200	295391-0003	K		2	THROTTLE SCREW	
Common parts						
110	90201-0057	D		4	VALVE	
250	90201-0303	K		4	SPARE PARTS KIT	
300	90287-0073	-		2	SCREW, MC6S ISO4762, M5x70 12.9	

Pos	Part No	SP	UN	Qty	Description	Page No

SPLASH PROTECTION

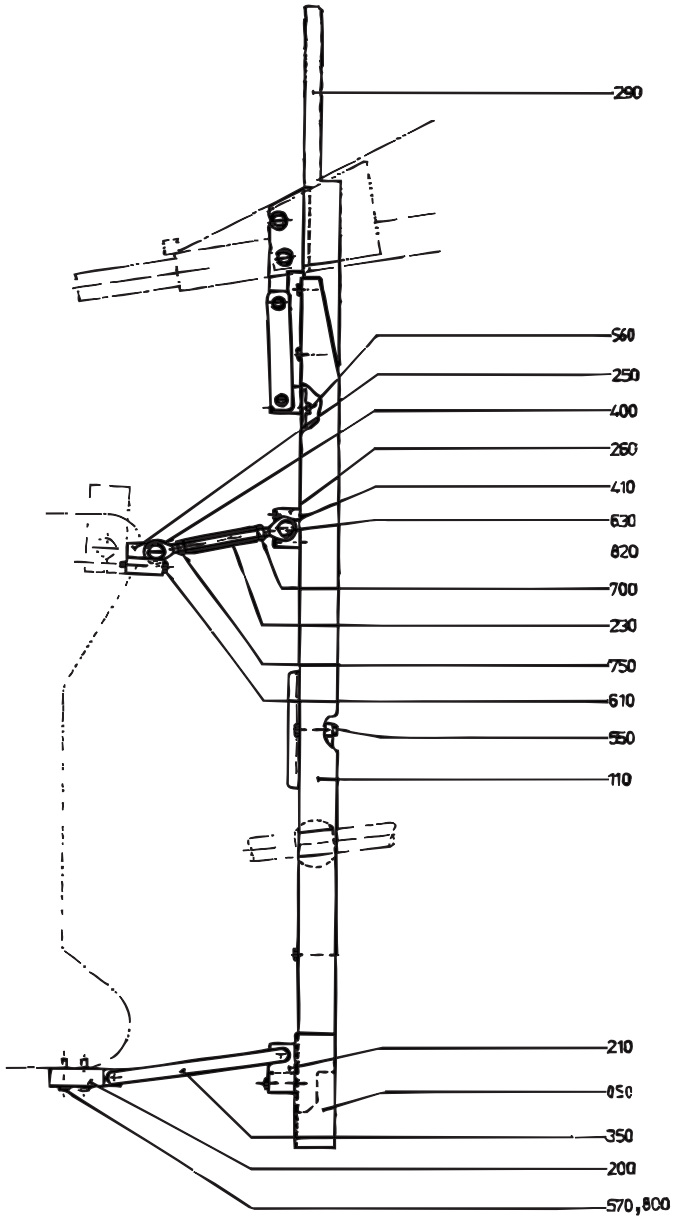

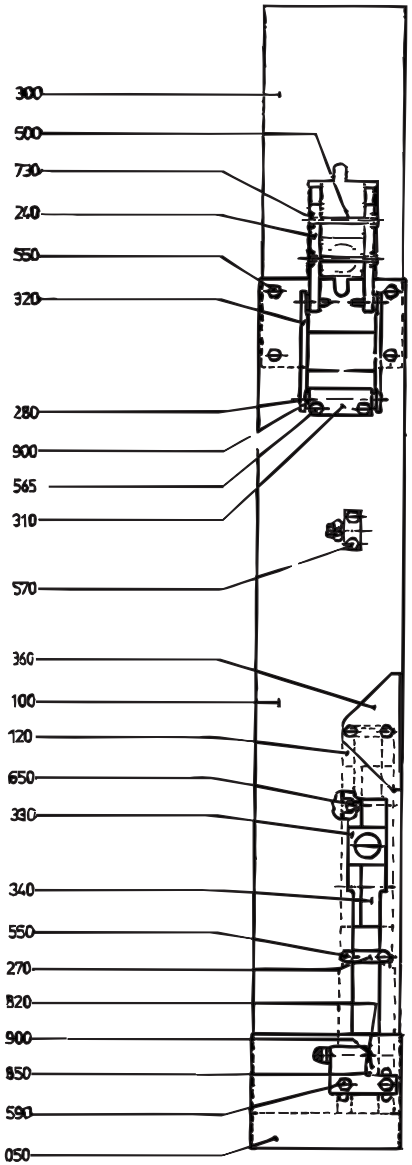

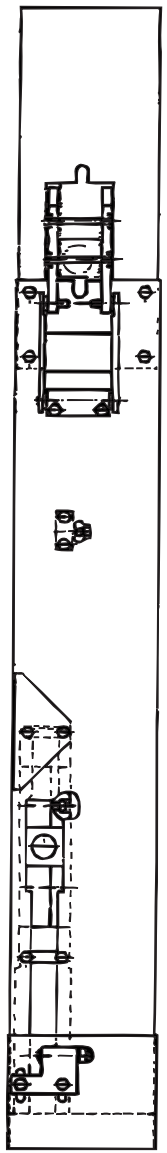

S-292071-2
ECN 21168

Pos	Part No	SP	UN	Qty	Description	Page No
Common parts						
100	279983-0000	D		1	SPLASH PROTECTION	
110	279984-0000	D		1	SPLASH PROTECTION	
120	279985-0000	D		2	BRACKET	
200	555888-0000	R		2	BRACKET	
210	279987-0000	D		2	BRACKET	
230	279989-0000	D		2	SPACER	
240	279991-0000	R		4	BRACKET	
250	279992-0000	-		2	BRACKET	
260	279993-0000	-		2	BRACKET	
270	279997-0000	-		4	BRACKET	
280	279998-0000	K		2	SHAFT	
290	279999-0000	D		1	COVERING PLATE	
300	282511-0000	D		1	COVERING PLATE	
310	282512-0000	-		2	BRACKET	
320	282513-0000	R		2	BRACKET	
340	283775-0000	D		4	SLIDE	
350	436672-0000	R		2	LINK	
360	574167-0000	-		2	LIMIT PLATE	
400	90115-0107	K		2	JOINT	
410	90115-0106	K		2	JOINT	
500	312101-0383	-		4	SCREW M6S6X65FZB	
550	312105-0364	-		24	SCREW M6S6X10RFR	
560	312105-0366	-		8	SCREW M6S ISO 4017 M6X12 A280	
565	312105-0370	-		4	SCREW M6S ISO 4017 M6X20 A280	
570	312105-0374	-		4	SCREW M6S ISO 4017 M6X30 A280	
590	312105-0376	-		4	SCREW M6S ISO 4017 M6X35 A280	
610	312105-0384	-		4	SCREW M6S ISO 4014 M6X70 A280	
630	312105-0453	-		4	SCREW M6S ISO 4017 M8x25 A280	
650	312115-0376	-		4	SCREW MC6S ISO 4762 M6X35 A280	
700	312605-0318	-		2	NUT,HEXAGON,M8 RFR	
730	312811-0316	-		4	LOCK NUT M6RFR	
750	312902-0318	-		2	NUTS,HEXAGON,LEFT HAND THREAD,M8	
800	315105-0153	-		4	WASHER,PLAIN ROUND 6,4x12 Stainless	
820	315105-0165	-		8	WASHER,PLAIN ROUND 8,4x16 Stainless	
850	315755-0109	-		4	RETAINING RINGS,RADIAL ASSEMBLY 7	
900	321111-0095	K		16	FLANGE BUS 8E7X6	
IH						
050	436580-0000	D		2	COVERING PLATE	
330	283774-0000	M		4	BEARING	

Pos	Part No	SP	UN	Qty	Description	Page No

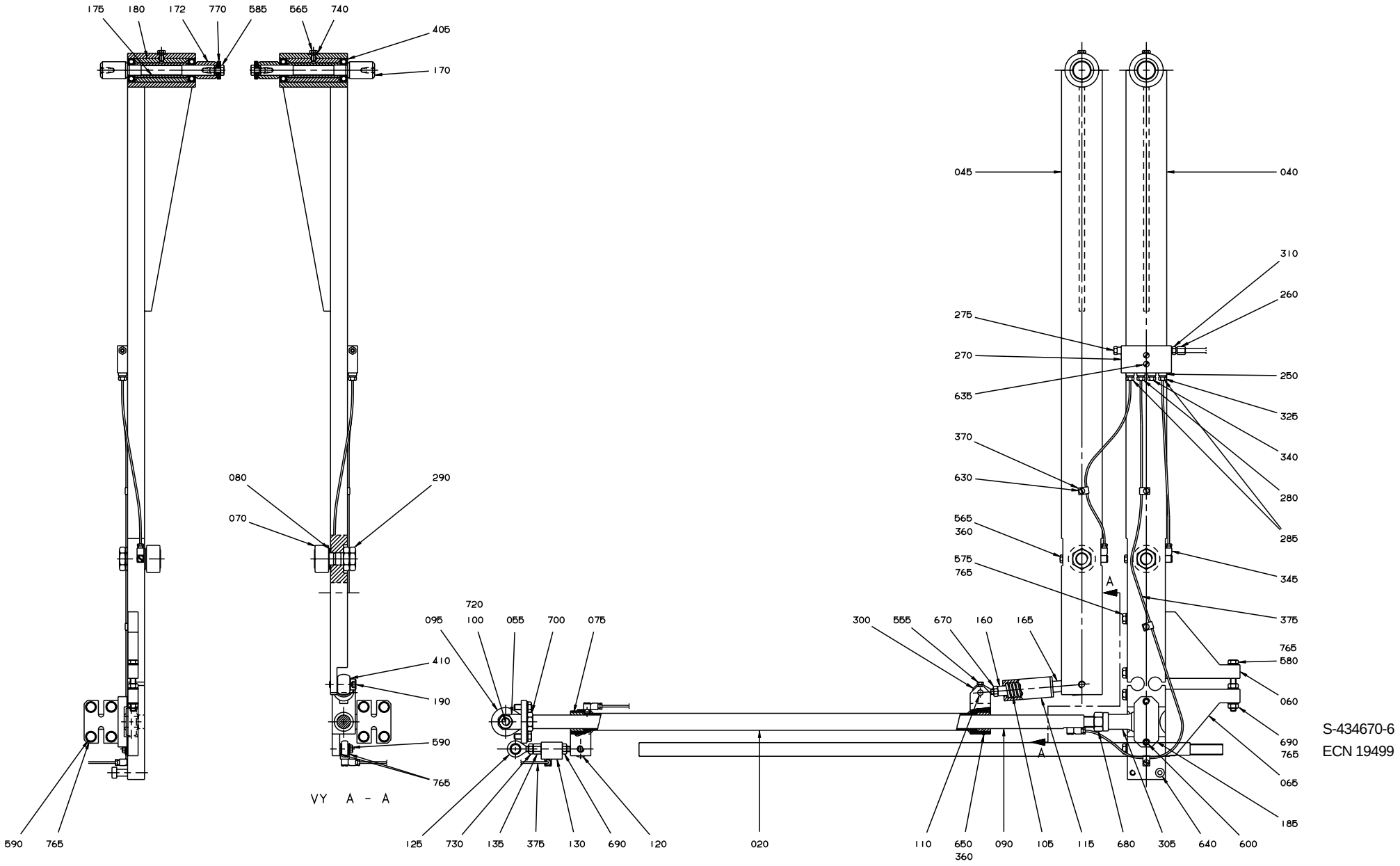

S-434670-6
ECN 19499

Pos	Part No	SP	UN	Qty	Description	Page No
IH						
020	540335-0000	N		2	LINK	
045	562747-0000	D		2	ARM	
070	28334-0000	I		4	CURVE ROLLER	
075	230462-0000	I		4	BUSHING	
080	239538-0000	R		4	WASHER	
105	252707-0000	M		2	SPRING	
110	255335-0000	M		2	SHAFT	
115	255398-0000	R		2	SLEEVE	
120	263313-0000	K		2	LINK HEAD	
125	263314-0000	K		2	LINK HEAD	
130	263328-0000	R		2	SPACER	
135	263329-0000	R		2	NUT	
160	434142-0000	R		2	PISTON	
165	434143-0000	R		2	END SECTION	
170	570066-0000	J		4	SHAFT	
172	570067-0000	M		4	RING	
175	570125-0000	J		4	SLEEVE	
180	570126-0000	J		4	SLEEVE	
190	563061-0000	R		2	REAMED BOLT	
250	90028-0020	I		6	CONE DT13700S-300 Di=2,5mm	
285	90092-0053	J		4	METERING VALVE 30mm3	
290	90099-0012	-		8	NUTS,HEXAGON, M18x1,5, ISO4035	
300	90115-0122	K		2	LINK HEAD	
340	90134-0052	-		2	PLUG DT4.076817.2D	
370	90165-0022	-		8	PIPE-CLIPS,FOR SINGLE PIPE,ONE SIDE 2,5	
405	90214-0169	K		8	BALL BEARING,STAINLESS 15X354X11	
410	90240-0097	K		4	RICTION BEARING	
555	312101-0323	-		4	SCREW M6S5X8FZB	
565	312101-0366	-		8	SCREW M6S 6x12-8,8 FZB	
585	312105-0449	-		4	SCREW M6S ISO 4017 M8x16 A280	
590	312105-0453	-		12	SCREW M6S ISO 4017 M8x25 A280	
630	312121-0287	-		8	SLOTTED HEAD SCREW MCS 4x8 FZB	
650	312316-0283	-		4	STOP SCREW SK6SS4X4FZB	
670	312621-0318	-		2	ROD END,NUT M8	
690	312605-0318	-		6	NUT,HEXAGON,M8 RFR	
730	312902-0318	-		2	NUTS,HEXAGON,LEFT HAND THREAD,M8	
740	315101-0153	-		4	WASHER BRB 6,4x12 FZB	
765	315105-0165	-		30	WASHER,PLAIN ROUND 8,4x16 Stainless	
770	315121-0165	-		4	WASHER TBRSB8,4X26FZB	
US						
070	28334-0000	I		2	CURVE ROLLER	
080	239538-0000	R		2	WASHER	
170	570066-0000	J		2	SHAFT	
172	570067-0000	M		2	RING	
175	570125-0000	J		2	SLEEVE	
180	570126-0000	J		2	SLEEVE	
250	90028-0020	I		4	CONE DT13700S-300 Di=2,5mm	
285	90092-0053	J		3	METERING VALVE 30mm3	
290	90099-0012	-		4	NUTS,HEXAGON, M18x1,5, ISO4035	
340	90134-0052	-		4	PLUG DT4.076817.2D	
370	90165-0022	-		6	PIPE-CLIPS,FOR SINGLE PIPE,ONE SIDE 2,5	
405	90214-0169	K		4	BALL BEARING,STAINLESS 15X354X11	
565	312101-0366	-		4	SCREW M6S 6x12-8,8 FZB	
585	312105-0449	-		2	SCREW M6S ISO 4017 M8x16 A280	
590	312105-0453	-		10	SCREW M6S ISO 4017 M8x25 A280	
630	312121-0287	-		6	SLOTTED HEAD SCREW MCS 4x8 FZB	
690	312605-0318	-		4	NUT,HEXAGON,M8 RFR	
740	315101-0153	-		2	WASHER BRB 6,4x12 FZB	
765	315105-0165	-		26	WASHER,PLAIN ROUND 8,4x16 Stainless	
770	315121-0165	-		2	WASHER TBRSB8,4X26FZB	
Common parts						
040	562746-0000	R		2	ARM	
055	464363-0000	D		2	HOLDER	
060	562748-0000	-		2	BRACKET	
065	562749-0000	-		2	BRACKET	
090	247119-0000	N		2	ROD	
095	526904-0000	K		2	LINK HEAD	
100	536703-0000	M		2	SHAFT	
185	562140-0000	-		2	CAP	
260	90030-0162	-		2	CONNECTION GE6LLM 10x1	
270	90032-0039	-		2	DISTR.BLOCK	
275	90087-0019	-		2	PLUG M10x1 Stainless	
280	90092-0052	J		2	METERING VALVE 10mm3	
305	90115-0067	K		2	ROD ENDS,RE-LUBRICATEABLE,16-M16X2RH	
310	90134-0030	G		2	SLEEVE 6/3	
325	90134-0039	G		8	BUSHING DT4.018912.1D Stainless	
345	90134-0058	G		10	BANJO CONNECTION DT4.310.437.1	
360	90157-0016	-	ML	x	LOCKING FLUID	
375	90166-0143	-	MM	2500	HOSE 1,6/2,5 PA 11/12	
575	312101-0465	-		8	SCREW M6S8X70FZB	
580	312104-0465	-		2	SCREW M6S8X70H8.8 FZB	
600	312111-0455	-		4	SCREW MC6S8X30FZB	
635	312141-0295	-		4	SLOTTED HEMFS4X20FZB	
640	312180-0489	-		2	HEX.SOCKET HEAD SHOULD.ISO 7379 M8x16	
680	312601-0324	K		2	NUT M6M 16-8 FZB	

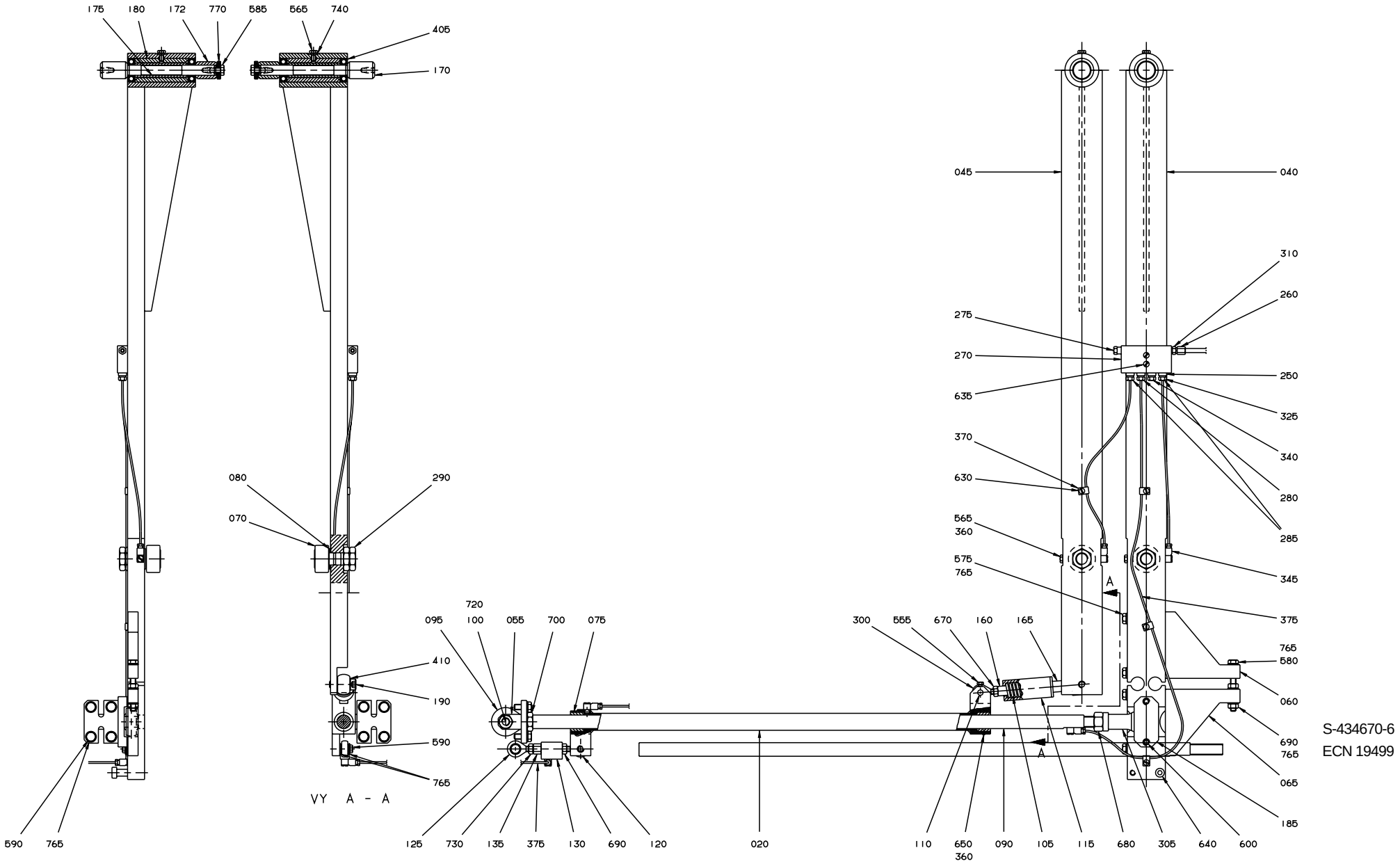

S-434670-6
ECN 19499

Pos	Part No	SP	UN	Qty	Description	Page No
700	312621-0324	-		2	NUT ML6M16FZB	
720	312811-0322	-		2	LOCK NUT M12RFR	

Pos	Part No	SP	UN	Qty	Description	Page No

This page is intentionally left blank

Pos	Part No	SP	UN	Qty	Description	Page No
90046-0015						
	90046-0304	K		1	STATOR	
	90046-0312	K		1	RECTIFIER	
	90046-0313	K		1	COIL	
	90046-0314	K		1	BRAKE DISC	
90046-0016						
	90046-0308	K		1	STATOR	
	90046-0312	K		1	RECTIFIER	
	90046-0313	K		1	COIL	
	90046-0314	K		1	BRAKE DISC	
90201-0010						
	90201-0300	-		1	PLATE	
	90201-0301	-		1	SPRING	
	90201-0302	-		1	WASHER	
	90201-0303	-		1	SPARE PARTS KIT	

Pos	Part No	SP	UN	Qty	Description	Page No

SPC

Spare Parts Catalogue

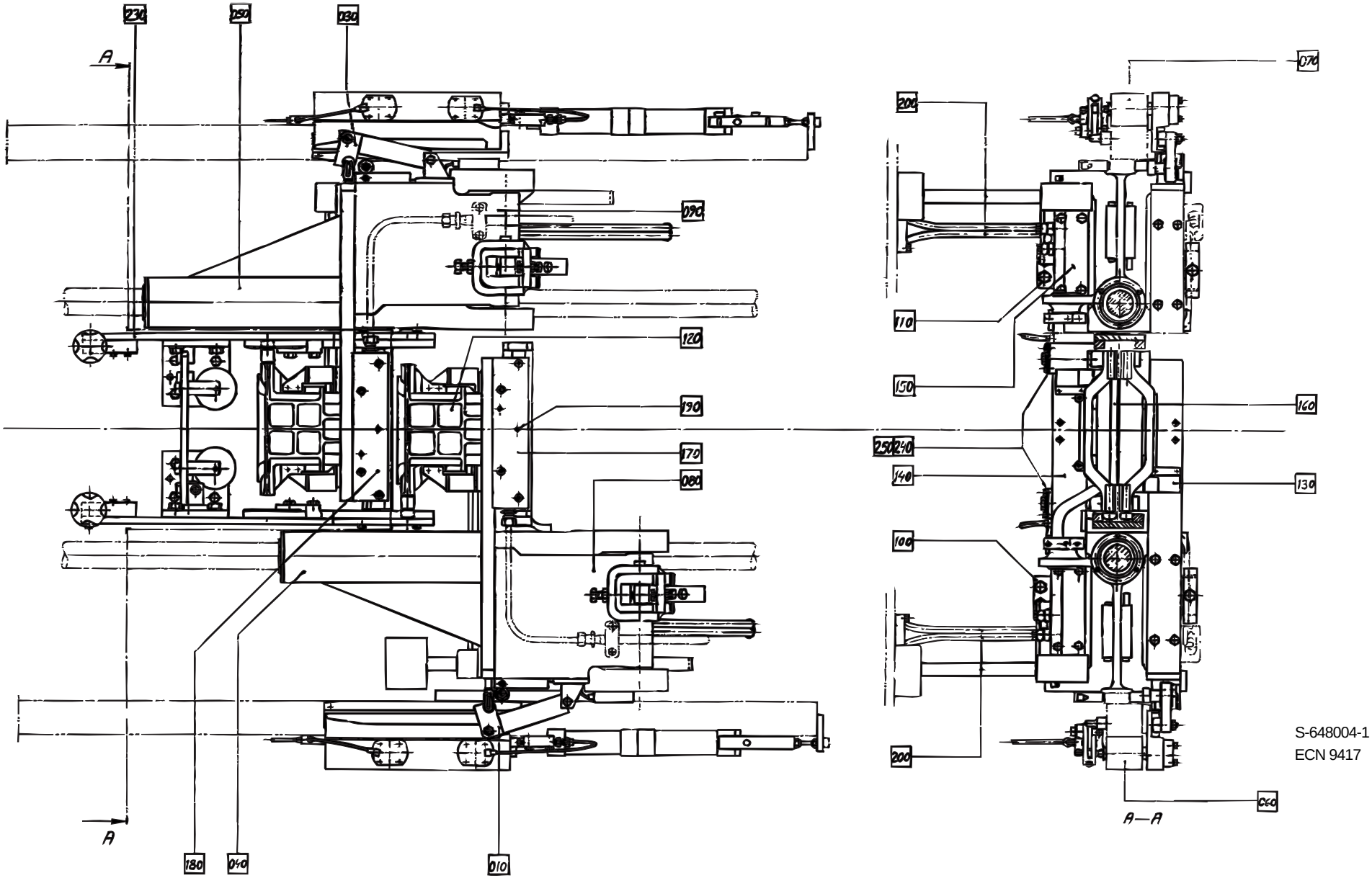

S-648004-1
ECN 9417

Pos	Part No	SP	UN	Qty	Description	Page No
IH						
F060	A 266446-0500	-		1	DESIGN CORRECTION DEVICE	**345**, **347**
F070	A 266447-0500	-		1	DESIGN CORRECTION DEVICE	**349**, **351**
F100	A 541052-0100	-		1	ARM WITH AXLE PRESSURE L	**357**
F110	A 541053-0100	-		1	ARM WITH AXLE PRESSURE R	**359**
F140	A 259414-0400	-		1	CARRIER PRESSURE L IH	**389**
F150	A 259415-0400	-		1	CARRIER	**391**
F170	A 257835-0300	-		1	CUTTING JAW	**393**, **395**
F180	A 257835-0350	-		1	CUTTING JAW	**397**, **399**
F190	A 32966-0400	-		2	KNIFE HOLDER	**401**
F200	A 279134-0500	-		1	TRANSMISSION	**403**
F240	A 259534-0700	-		1	PRESSURE JAW	**413**, **415**, **417**
F250	A 259534-0750	-		1	PRESSURE JAW	**419**, **421**, **423**
F270	A 268614-0500	-		1	START-UP KIT IH	**425**, **427**
Common parts						
F010	A 279564-0300	-		1	FOLDING DEVICE	**335**
F030	A 279565-0300	-		1	FOLDING DEVICE	**339**
F040	A 243942-0400	-		1	YOKE	**341**
F050	A 593749-0100	-		1	YOKE	**343**
F080	A 246499-0600	-		1	ARM	**353**
F090	A 593750-0100	-		1	ARM	**355**
F120	A 246468-0800	-		4	VOLUME FLAP	**361**, **363**, **365**, **367**
F130	A 246327-0400	-		1	SHOCK ABSOR. ..	**369**, **371**, **373**, **375**, **377**, **379**, **381**, **383**, **385**, **387**
F230	A 293605-0500	-		1	VOLUM CURVE PIECE	**405**, **407**, **409**, **411**
F280	A 541188-0200	-		1	BAR CODE	**429**

Pos	Part No	SP	UN	Qty	Description	Page No

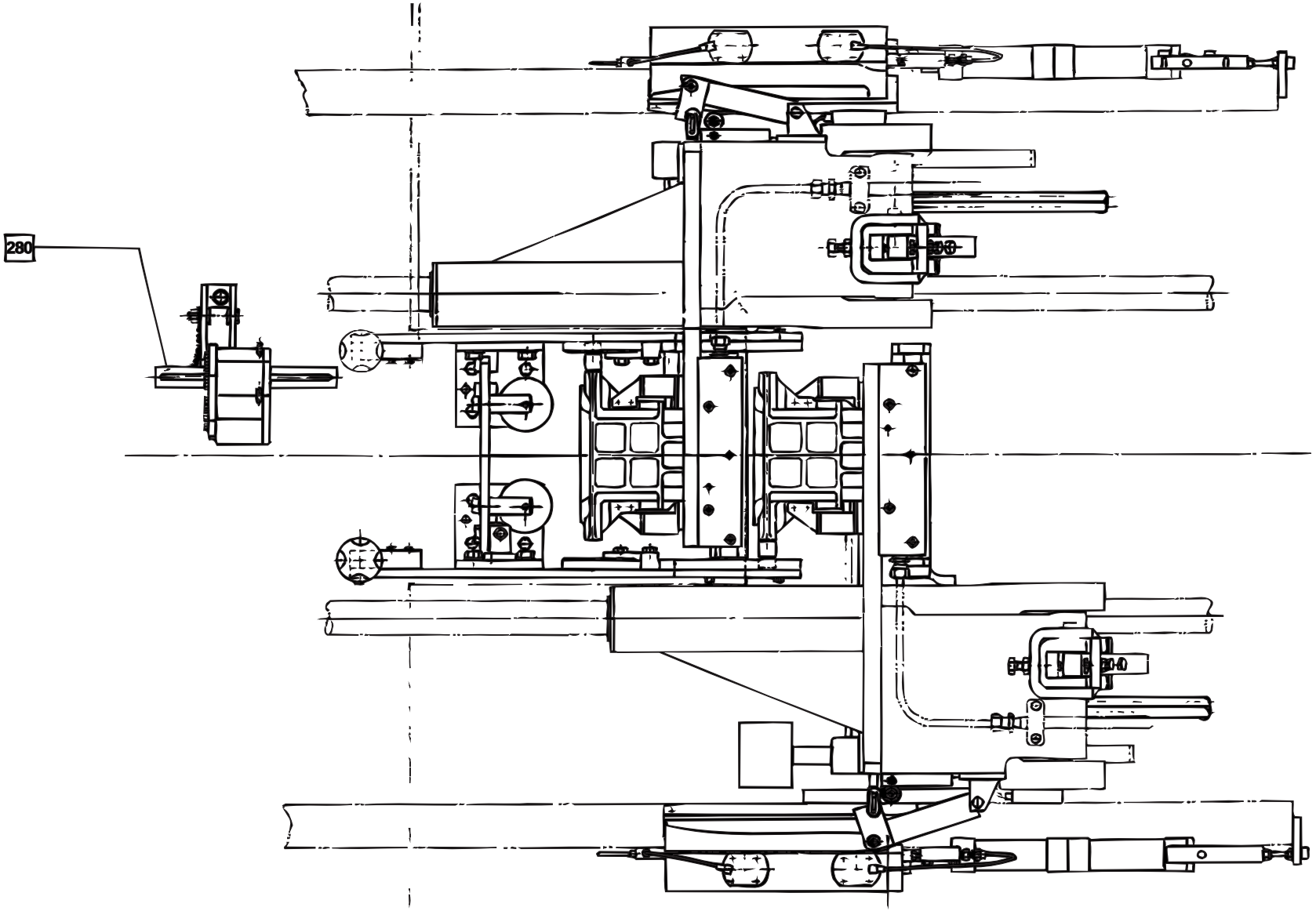

S-648004-3
ECN 9417

Pos	Part No	SP	UN	Qty	Description	Page No
IH						
F060	A 266446-0500	-		1	DESIGN CORRECTION DEVICE	**345**, **347**
F070	A 266447-0500	-		1	DESIGN CORRECTION DEVICE	**349**, **351**
F100	A 541052-0100	-		1	ARM WITH AXLE PRESSURE L	**357**
F110	A 541053-0100	-		1	ARM WITH AXLE PRESSURE R	**359**
F140	A 259414-0400	-		1	CARRIER PRESSURE L IH	**389**
F150	A 259415-0400	-		1	CARRIER	**391**
F170	A 257835-0300	-		1	CUTTING JAW	**393**, **395**
F180	A 257835-0350	-		1	CUTTING JAW	**393**, **395**
F190	A 32966-0400	-		2	KNIFE HOLDER	**401**
F200	A 279134-0500	-		1	TRANSMISSION	**403**
F240	A 259534-0700	-		1	PRESSURE JAW	**413**, **415**, **417**
F250	A 259534-0750	-		1	PRESSURE JAW	**413**, **415**, **417**
F270	A 268614-0500	-		1	START-UP KIT IH	**425**, **427**
Common parts						
F010	A 279564-0300	-		1	FOLDING DEVICE	**335**
F030	A 279565-0300	-		1	FOLDING DEVICE	**339**
F040	A 243942-0400	-		1	YOKE	**341**
F050	A 593749-0100	-		1	YOKE	**343**
F080	A 246499-0600	-		1	ARM	**353**
F090	A 593750-0100	-		1	ARM	**355**
F120	A 246468-0800	-		4	VOLUME FLAP	**361**, **363**, **365**, **367**
F130	A 246327-0400	-		1	SHOCK ABSOR. ..	**369**, **371**, **373**, **375**, **377**, **379**, **381**, **383**, **385**, **387**
F230	A 293605-0500	-		1	VOLUM CURVE PIECE	**405**, **407**, **409**, **411**
F280	A 541188-0200	-		1	BAR CODE	**429**

Pos	Part No	SP	UN	Qty	Description	Page No

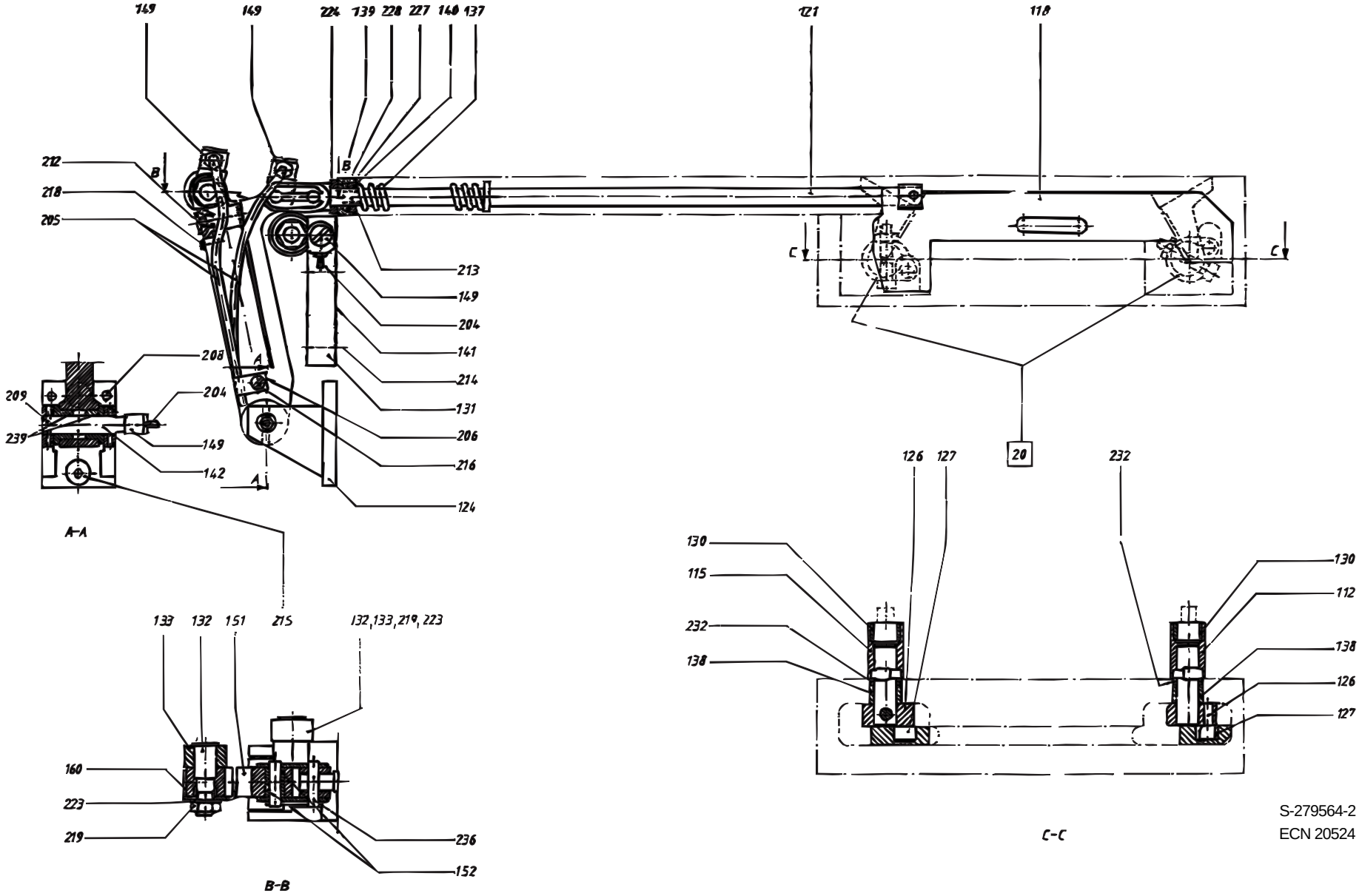

S-279564-2
ECN 20524

Pos	Part No	SP	UN	Qty	Description	Page No
Common parts						
F020	A 26642-0200	J		2	CARRIER	**337**
124	23229-0000	D		1	BRACKET	
126	22462-0000	J		2	SHAFT	
127	22463-0000	J		2	ROLL	
130	32463-0000	K		2	BEARING	
131	22473-0000	R		1	ROLLER BRACKET	
132	276172-0000	J		2	AXLE PIN	
133	276173-0000	J		2	CURVE ROLLER	
137	107000-0000	I		1	SPRING	
138	33408-0000	G		2	BEARING	
139	113653-0000	N		1	BEARING PLATE	
140	113654-0000	N		1	RING	
141	26423-0000	K		2	LACE	
142	269366-0000	K		1	DOWEL	
149	90134-0058	J		4	BANJO CONNECTION DT4.310.437.1	
151	927448-0000	D		1	LINK	
152	37258-0000	K		2	BUSHING	
160	927449-0000	D		1	SECURITY PLATE LEFT	
204	90266-0019	-	MM	400	PIPE	
205	90166-0143	-	MM	800	HOSE 1,6/2,5 PA 11/12	
206	90165-0056	-		1	PIPE-CLIPS,FOR SINGLE PIPE,ONE SIDE 4mm	
208	311103-0310	-		2	PINS,STRAIGHT 5X20	
209	90258-0001	-		1	PINS,Slotted Tubular, 2x 20, DIN1481	
212	312155-0374	-		1	SCREW MF6S6X30RFR	
213	312115-0366	-		2	SCREW MC6S ISO 4762 M6X12 A280	
214	312115-0368	-		2	SCREW MC6S ISO 4762 M6X16 A280	
215	312115-0449	-		2	SCREW MC6S ISO 4762 M8X16 A280	
216	312125-0287	-		1	SLOTTED CHEESE HEAD ISO 1207 M4X8 RFR	
218	312318-0370	-		1	SET SCREW CUP POINT ISO 4029 M6X20 RFR	
219	312605-0318	-		2	NUT,HEXAGON,M8 RFR	
223	315105-0165	-		2	WASHER,PLAIN ROUND 8,4x16 Stainless	
224	315115-0171	-		1	WASHER TBRB 10x18 Stainless	
227	315202-0114	F		1	O-RINGS 16,1X1,6	
228	315202-0208	F		1	O-RINGS 9,3X2,4	
232	315230-0157	-		2	SEAL RING	
236	90288-0305	G		1	CONNECTING LINK SINGLE 3/4",SS	
239	321101-0163	K		2	FLANGE BUS 10F7X10	
0375S						
112	493711-0000	M		1	FOLDING FLAP	
115	493710-0000	M		1	FOLDING FLAP	
118	458038-0000	K		1	CARRIER RULER	
121	32494-0000	L		1	OPERATING ROD	
0355B or 0400B or 0500S						
112	493711-0000	M		1	FOLDING FLAP	
115	493710-0000	M		1	FOLDING FLAP	
118	458030-0000	K		1	CARRIER RULER	
121	32494-0000	L		1	OPERATING ROD	
0500B or 0750B or 1000B or 1055B						
112	464311-0000	M		1	FOLDING FLAP	
115	464310-0000	M		1	FOLDING FLAP	
118	450505-0000	K		1	CARRIER RULER LEFT	
121	32468-0000	L		1	OPERATING ROD	
0500SQ or 1000SQ						
112	1317809-0000	M		1	FOLDING FLAP	
115	1317808-0000	M		1	FOLDING FLAP	
118	573979-0000	K		1	CARRIER RULER	
121	32468-0000	L		1	OPERATING ROD	
0750S						
112	544315-0000	M		1	FOLDING FLAP	
115	544314-0000	M		1	FOLDING FLAP	
118	544319-0000	K		1	CARRIER RULER	
121	32494-0000	L		1	OPERATING ROD	
1000S						
112	569061-0000	M		1	FOLDING FLAP	
115	569060-0000	M		1	FOLDING FLAP	
118	569062-0000	K		1	CARRIER RULER	
121	32468-0000	L		1	OPERATING ROD	

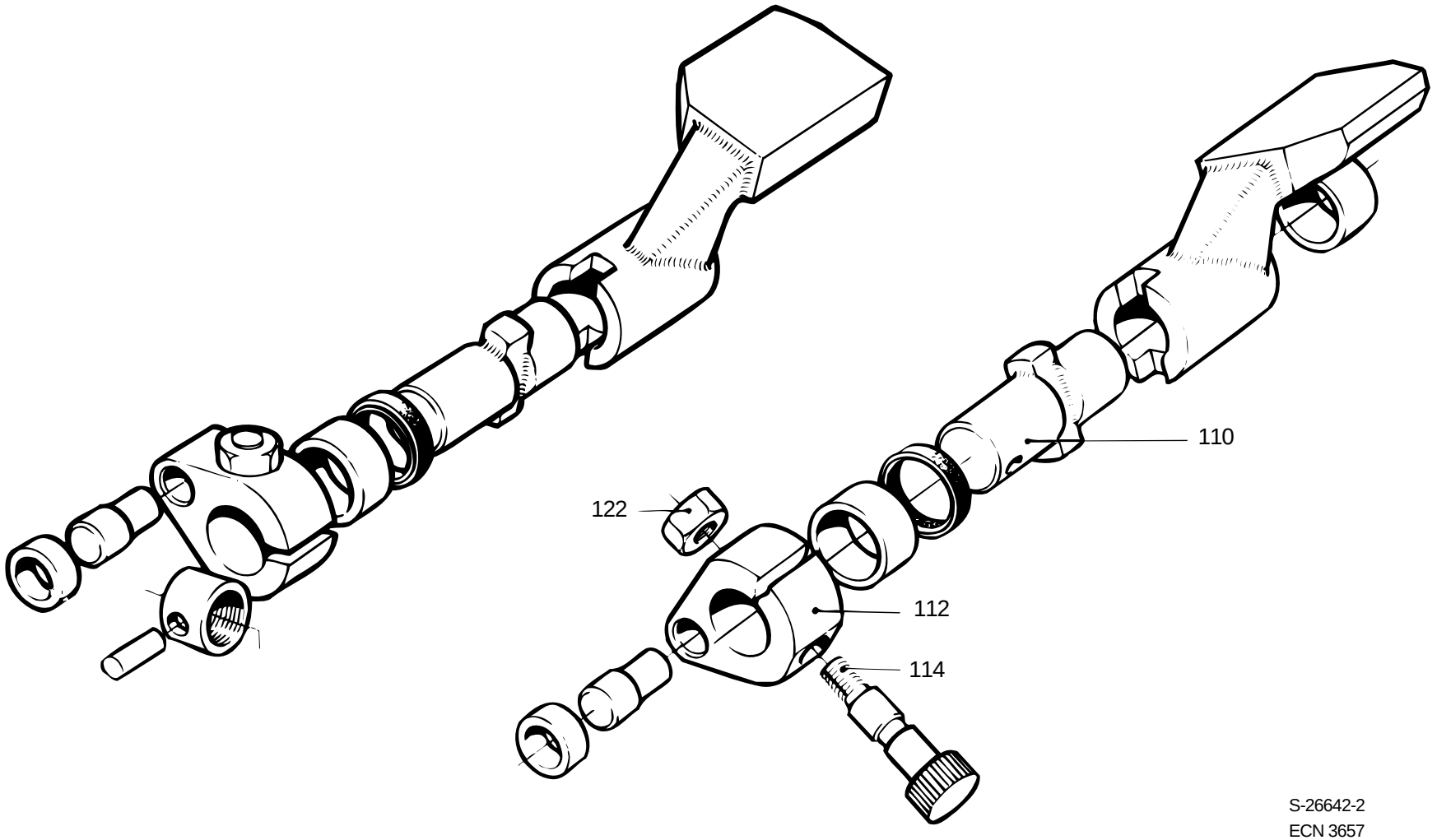

S-26642-2
ECN 3657

Pos	Part No	SP	UN	Qty	Description	Page No
Common parts						
110	32462-0000	-		1	SHAFT	
112	25640-0000	-		1	CARRIER	
114	25641-0000	K		1	REAMED BOLT	
122	312605-0314	K		1	NUT,HEXAGON,M6M5 Stainless	

Pos	Part No	SP	UN	Qty	Description	Page No

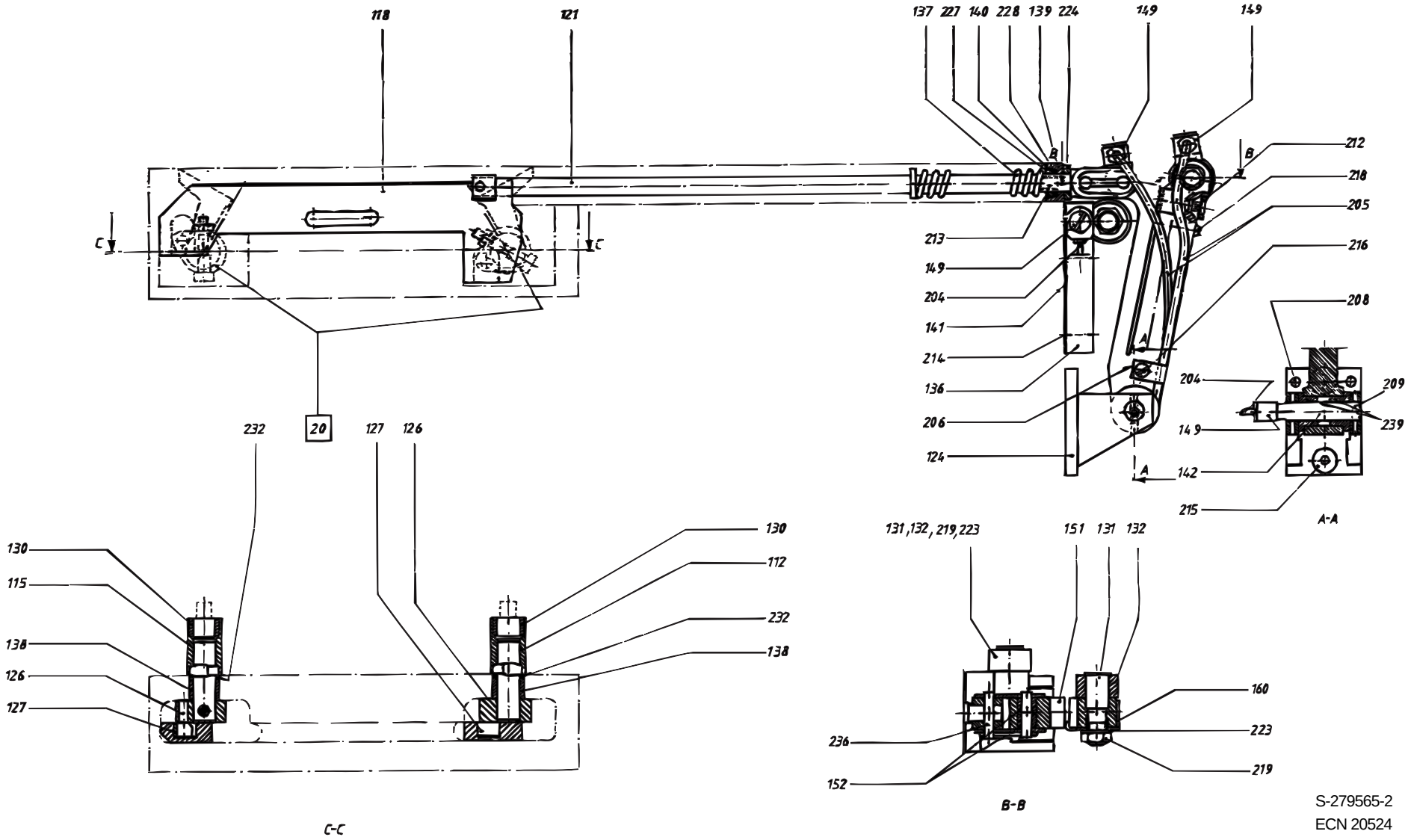

S-279565-2
ECN 20524

Pos	Part No	SP	UN	Qty	Description	Page No
Common parts						
F020	A 26642-0200	J		2	CARRIER	**337**
124	23229-0000	D		1	BRACKET	
126	22462-0000	J		2	SHAFT	
127	22463-0000	J		2	ROLL	
130	32463-0000	K		2	BEARING	
131	276172-0000	J		2	AXLE PIN	
132	276173-0000	J		2	CURVE ROLLER	
136	23361-0000	R		1	ROLLER BRACKET	
137	107000-0000	I		1	SPRING	
138	33408-0000	G		2	BEARING	
139	113653-0000	N		1	BEARING PLATE	
140	113654-0000	N		1	RING	
141	26423-0000	K		2	LACE	
142	269366-0000	K		1	DOWEL	
149	90134-0058	J		4	BANJO CONNECTION DT4.310.437.1	
151	927448-0000	D		1	LINK	
152	37258-0000	K		2	BUSHING	
160	927450-0000	D		1	SECURITY PLATE RIGHT	
204	90266-0019	-	MM	400	PIPE	
205	90166-0143	-	MM	800	HOSE 1,6/2,5 PA 11/12	
206	90165-0056	-		1	PIPE-CLIPS,FOR SINGLE PIPE,ONE SIDE 4mm	
208	311103-0310	-		2	PINS,STRAIGHT 5X20	
209	90258-0001	-		1	PINS,Slotted Tubular, 2x 20, DIN1481	
212	312155-0374	-		1	SCREW MF6S6X30RFR	
213	312115-0366	-		2	SCREW MC6S ISO 4762 M6X12 A280	
214	312115-0368	-		2	SCREW MC6S ISO 4762 M6X16 A280	
215	312115-0449	-		2	SCREW MC6S ISO 4762 M8X16 A280	
216	312125-0287	-		1	SLOTTED CHEESE HEAD ISO 1207 M4X8 RFR	
218	312318-0370	-		1	SET SCREW CUP POINT ISO 4029 M6X20 RFR	
219	312605-0318	-		2	NUT,HEXAGON,M8 RFR	
223	315105-0165	-		2	WASHER,PLAIN ROUND 8,4x16 Stainless	
224	315115-0171	-		1	WASHER TBRB 10x18 Stainless	
227	315202-0114	F		1	O-RINGS 16,1X1,6	
228	315202-0208	F		1	O-RINGS 9,3X2,4	
232	315230-0157	-		2	SEAL RING	
236	90288-0305	G		1	CONNECTING LINK SINGLE 3/4",SS	
239	321101-0163	K		2	FLANGE BUS 10F7X10	
0375S						
112	493711-0000	M		1	FOLDING FLAP	
115	493710-0000	M		1	FOLDING FLAP	
118	458039-0000	K		1	CARRIER RULER	
121	32494-0000	L		1	OPERATING ROD	
0355B or 0400B or 0500S						
112	493711-0000	M		1	FOLDING FLAP	
115	493710-0000	M		1	FOLDING FLAP	
118	458031-0000	K		1	CARRIER RULER	
121	32494-0000	L		1	OPERATING ROD	
0500B or 0750B or 1000B or 1055B						
112	464311-0000	M		1	FOLDING FLAP	
115	464310-0000	M		1	FOLDING FLAP	
118	450506-0000	K		1	CARRIER RULER	
121	32468-0000	L		1	OPERATING ROD	
0500SQ or 1000SQ						
112	1317809-0000	M		1	FOLDING FLAP	
115	1317808-0000	M		1	FOLDING FLAP	
118	573980-0000	K		1	CARRIER RULER	
121	32468-0000	L		1	OPERATING ROD	
0750S						
112	544315-0000	M		1	FOLDING FLAP	
115	544314-0000	M		1	FOLDING FLAP	
118	544320-0000	K		1	CARRIER RULER	
121	32494-0000	L		1	OPERATING ROD	
1000S						
112	569061-0000	M		1	FOLDING FLAP	
115	569060-0000	M		1	FOLDING FLAP	
118	569063-0000	K		1	CARRIER RULER	
121	32468-0000	L		1	OPERATING ROD	

YOKE

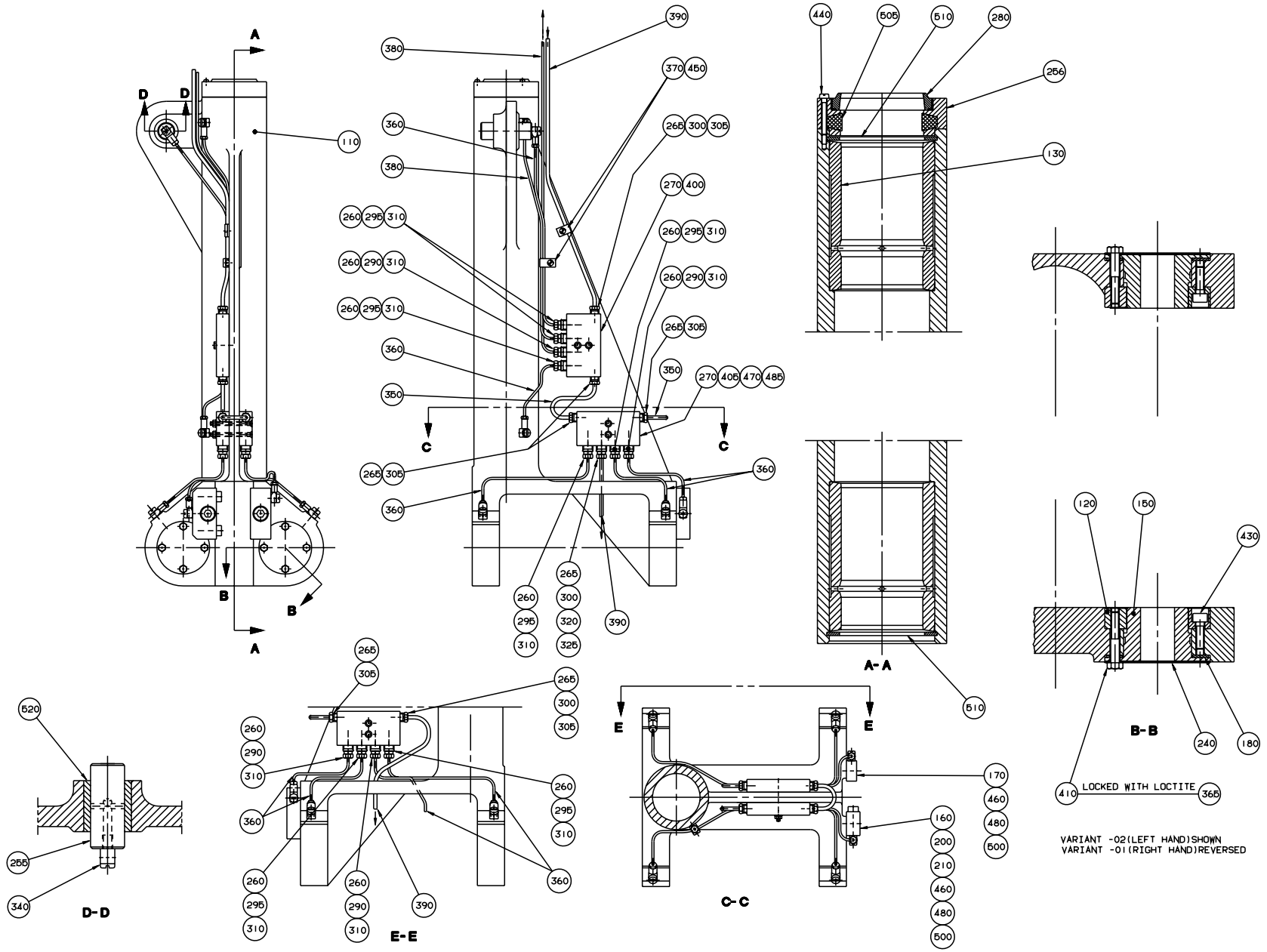

S-243942-2
ECN 16717

Pos	Part No	SP	UN	Qty	Description	Page No
Common parts						
110	243952-0000	D		1	YOKE	
120	36753-0000	R		4	RING	
130	243943-0000	R		2	BUSHING	
150	246513-0000	R		4	BEARING	
160	20494-0000	M		2	COMPRESSION SPRING	
170	26760-0000	M		1	LOCATING PIECE	
180	29886-0000	M		4	LACE	
200	31837-0000	N		1	SPRING HOUSING	
210	31838-0000	K		2	PLUNGER	
240	239874-0000	D		4	WASHER	
255	247112-0000	K		1	SHAFT	
256	263509-0000	R		1	LID	
260	90028-0020	I		11	CONE DT13700S-300 Di=2,5mm	
265	90028-0021	I		7	CONE DIN3862 Di=4mm	
270	90032-0039	-		3	DISTR.BLOCK	
280	90091-0080	R		1	SCRAPER	
290	90092-0052	J		4	METERING VALVE 10mm3	
295	90092-0053	J		7	METERING VALVE 30mm3	
300	90134-0031	I		3	SLEEVE E 4/2	
305	90134-0038	I		6	BUSHING	
310	90134-0039	I		11	BUSHING DT4.018912.1D Stainless	
320	90134-0040	I		1	BUSHING DT4.018914.1	
325	90134-0051	-		1	SPACER COLLAR	
340	90134-0058	G		9	BANJO CONNECTION DT4.310.437.1	
350	90151-0001	-	MM	200	BRASS PIPE DI=2,6 MM	
360	90266-0019	-	MM	1400	PIPE	
365	90157-0016	-	ML	x	LOCKING FLUID	
370	90165-0060	-		4	PIPE-CLIPS,FOR SINGLE PIPE,ONE SIDE 5	
380	90166-0143	-	MM	900	HOSE 1,6/2,5 PA 11/12	
390	90166-0109	-	MM	500	HOSE 2/4 PA11/12 Transp.	
395	312105-0287	-		2	SCREW M6S ISO 4017 M4x8 A280	
400	312105-0295	-		2	SCREW M6S ISO 4017 M4X20 A280	
405	312145-0305	-		2	SLOTTED HEMFS4X50RFR	
410	312105-0335	-		16	SCREW M6S ISO 4017 M5X30 A280	
430	312115-0329	-		4	SCREW MC6S ISO 4762 M5X16 A280	
440	312125-0232	-		3	SLOTTED CHEESE HEAD ISO 1207 M3X25 RFR	
450	312125-0285	-		2	SLOTTED HEMCS4X6RFR	
460	312180-0499	-		2	HEX. SOCKET HEAD SHOULD. ISO 7379 M8X40	
470	312605-0312	-		2	NUT,HEXAGON,M4 RFR	
480	312811-0318	-		2	LOCK NUT M8RFR	
485	315105-0136	-		4	WASHER,PLAIN ROUND 4,3x8 Stainless	
500	315115-0173	-		2	WASHER TBRB 10,5x22 Stainless	
505	315259-0103	R		1	SEALS,FELT STRIP 9X6,5X260	
510	315752-0136	-		4	CIRCLIP SGH62	
520	321105-0234	K		1	BUSHING 20F7X28X30	

YOKE

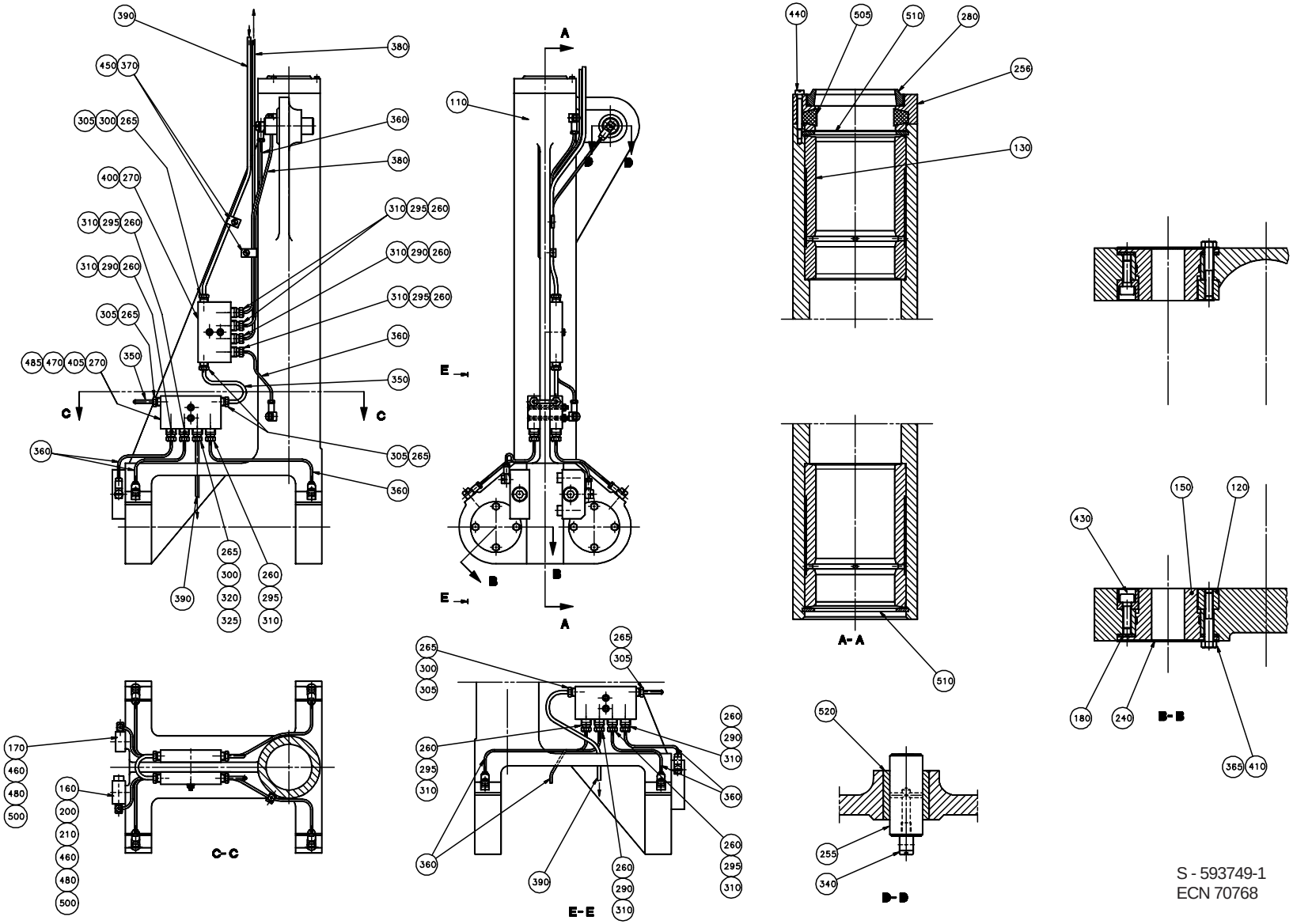

S - 593749-1
ECN 70768

Pos	Part No	SP	UN	Qty	Description	Page No
Common parts						
110	243951-0000	D		1	YOKE	
120	36753-0000	R		4	RING	
130	243943-0000	R		2	BUSHING	
150	246513-0000	R		4	BEARING	
160	20494-0000	M		2	COMPRESSION SPRING	
170	26760-0000	M		1	LOCATING PIECE	
180	29886-0000	M		4	LACE	
200	31837-0000	N		1	SPRING HOUSING	
210	31838-0000	K		2	PLUNGER	
240	239874-0000	D		4	WASHER	
255	247112-0000	K		1	SHAFT	
256	263509-0000	R		1	LID	
260	90028-0020	I		11	CONE DT13700S-300 Di=2,5mm	
265	90028-0021	I		7	CONE DIN3862 Di=4mm	
270	90032-0039	-		3	DISTR.BLOCK	
280	90091-0080	R		1	SCRAPER	
290	90092-0052	J		4	METERING VALVE 10mm3	
295	90092-0053	J		7	METERING VALVE 30mm3	
300	90134-0031	I		3	SLEEVE E 4/2	
305	90134-0038	I		6	BUSHING	
310	90134-0039	I		11	BUSHING DT4.018912.1D Stainless	
320	90134-0040	I		1	BUSHING DT4.018914.1	
325	90134-0051	-		1	SPACER COLLAR	
340	90134-0058	G		9	BANJO CONNECTION DT4.310.437.1	
350	90151-0001	-	MM	200	BRASS PIPE DI=2,6 MM	
360	90266-0019	-	MM	1400	PIPE	
365	90157-0016	-	ML	x	LOCKING FLUID	
370	90165-0060	-		4	PIPE-CLIPS,FOR SINGLE PIPE,ONE SIDE 5	
380	90166-0143	-	MM	900	HOSE 1,6/2,5 PA 11/12	
390	90166-0109	-	MM	500	HOSE 2/4 PA11/12 Transp.	
395	312105-0287	-		2	SCREW M6S ISO 4017 M4x8 A280	
400	312105-0295	-		2	SCREW M6S ISO 4017 M4X20 A280	
405	312145-0305	-		2	SLOTTED HEMFS4X50RFR	
410	312105-0335	-		16	SCREW M6S ISO 4017 M5X30 A280	
430	312115-0329	-		4	SCREW MC6S ISO 4762 M5X16 A280	
440	312125-0232	-		3	SLOTTED CHEESE HEAD ISO 1207 M3X25 RFR	
450	312125-0285	-		2	SLOTTED HEMCS4X6RFR	
460	312180-0499	-		2	HEX. SOCKET HEAD SHOULD. ISO 7379 M8X40	
470	312605-0312	-		2	NUT,HEXAGON,M4 RFR	
480	312811-0318	-		2	LOCK NUT M8RFR	
485	315105-0136	-		4	WASHER,PLAIN ROUND 4,3x8 Stainless	
500	315115-0173	-		2	WASHER TBRB 10,5x22 Stainless	
505	315259-0103	R		1	SEALS,FELT STRIP 9X6,5X260	
510	315752-0136	-		4	CIRCLIP SGH62	
520	321105-0234	K		1	BUSHING 20F7X28X30	

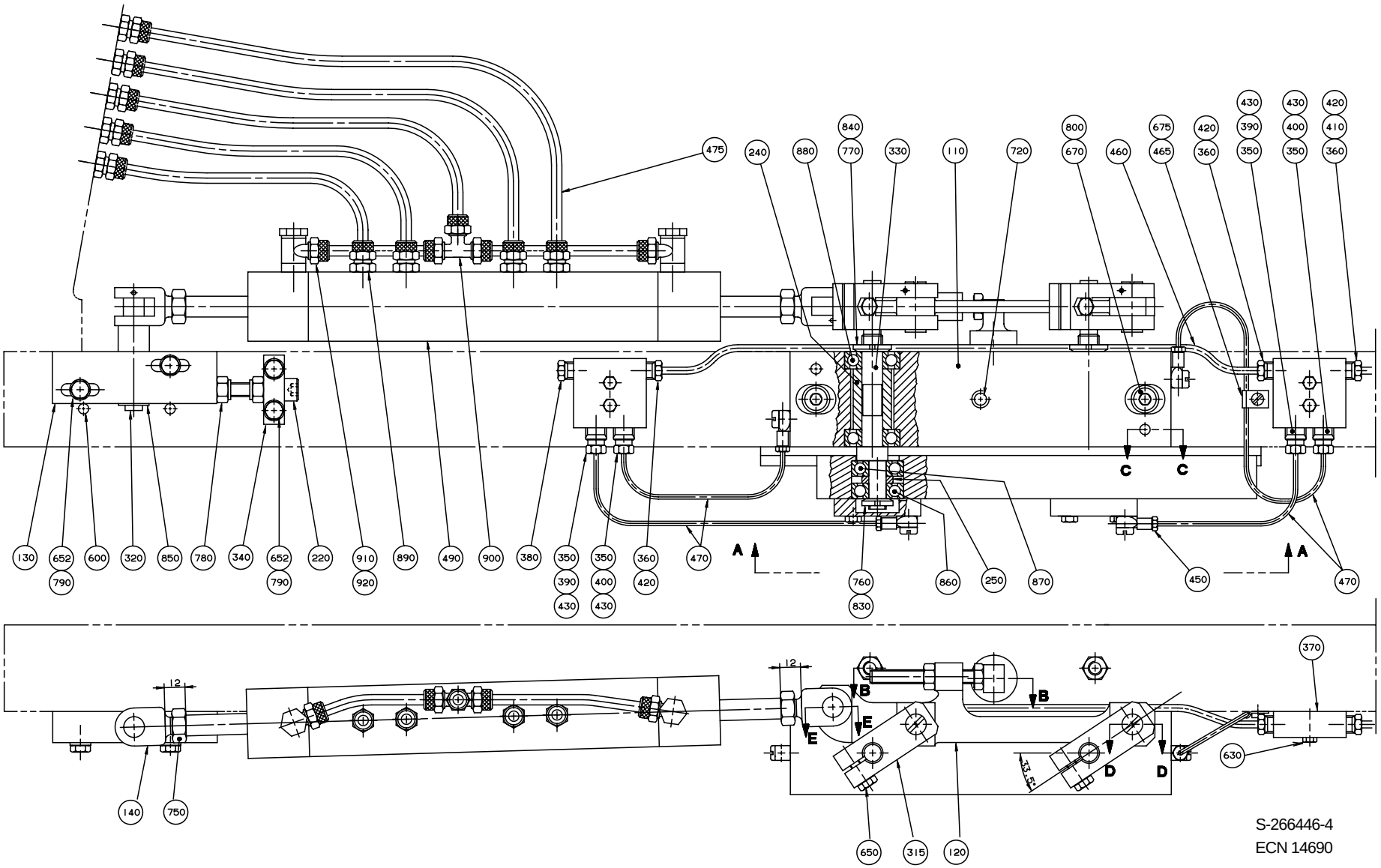
475
240
880
840
770
330
110
720
800
670
460
675
465
420
360
430
390
350
430
400
350
420
410
360
C
C
130
652
790
600
320
850
780
340
652
790
220
910
920
890
490
900
380
350
390
430
350
400
430
360
420
470
A
760
830
860
250
870
450
A
470
12
B
B
E
E
D
D
370
630
33.5°
140
750
650
315
120
S-266446-4
ECN 14690

Pos	Part No	SP	UN	Qty	Description	Page No
Common parts						
110	23292-0000	R		1	BEARING HOUSING	
120	436740-0000	R		1	LINK	
130	20718-0000	D		1	BEARING	
140	22483-0000	N		2	FORK	
150	22485-0000	N		1	DOWEL	
160	22486-0000	N		2	DOWEL	
170	22504-0000	R		1	STOP LUG	
180	23291-0000	R		2	BEARING COVER	
200	23312-0000	K		3	BUSHING	
210	26426-0000	N		5	LACE	
220	33409-0000	R		1	SCREW	
240	107334-0000	R		2	SPACER SLEEVE	
250	107335-0000	R		2	SPACER RING	
260	107339-0000	R		2	DOWEL	
315	434387-0000	N		2	BRACKET	
320	434388-0000	N		1	SHAFT	
330	436671-0000	N		2	ECCENTRIC SHAFT	
340	561416-0000	R		1	BRACKET	
350	90028-0020	I		4	CONE DT13700S-300 Di=2,5mm	
360	90028-0021	I		3	CONE DIN3862 Di=4mm	
370	90032-0038	-		2	BLOCK 2ways DT4.310792.1D	
380	90087-0019	-		1	PLUG M10x1 Stainless	
390	90092-0052	J		2	METERING VALVE 10mm3	
400	90092-0054	J		2	METERING VALVE 50mm3	
410	90134-0031	G		1	SLEEVE E 4/2	
420	90134-0038	G		3	BUSHING	
430	90134-0039	G		4	BUSHING DT4.018912.1D Stainless	
450	90134-0058	G		4	BANJO CONNECTION DT4.310.437.1	
460	90151-0001	-	MM	400	BRASS PIPE DI=2,6 MM	
465	90165-0058	-		1	PIPE-CLIPS,FOR SINGLE PIPE,ONE SIDE 2,5	
470	90166-0143	-	MM	700	HOSE 1,6/2,5 PA 11/12	
475	90166-0124	-	MM	1600	HOSE 4,0/6 PA 11/12 Transp.	
490	B 90450-0105	R		1	5 STEPS CYLINDER Mecman	
500	90261-0036	-		2	PIPE PLUG "REPL.BY 90261-71"	
600	311103-0357	-		4	PINS,STRAIGHT 6X30	
610	311103-0310	-		2	PINS,STRAIGHT 5X20	
620	311112-0192	K		4	SLOTTED TURP 2,5X24	
630	312105-0295	-		4	SCREW M6S ISO 4017 M4X20 A280	
640	312105-0329	-		8	SCREW M6S ISO 4017 M5X16 A280	
650	312105-0370	-		2	SCREW M6S ISO 4017 M6X20 A280	
652	312105-0372	-		4	SCREW M6S ISO 4017 M6X25 A280	
655	312109-0463	-		1	SCREW M6S 8x60H A4 80	
670	312115-0461	-		2	SCREW MC6S ISO 4762 M8X50 A280	
675	312125-0285	-		1	SLOTTED HEMCS4X6RFR	
690	312155-0382	-		4	SCREW MF6S6X60 A2 70	
700	312318-0459	-		2	SET SCREW CUP POINT ISO 4029 M8X40 RFR	
720	312318-0499	-		1	SET SCREW CUP POINT ISO 4029 M10X40 RFR	
740	312605-0318	-		2	NUT,HEXAGON,M8 RFR	
750	312635-0320	-		2	NUT M6M 10x1 Stainless A2 80	
760	312805-0100	N		2	NUTS,ROUND,WITH SLOTS,M10X0,75	
770	312805-0101	N		2	NUTS,ROUND,WITH SLOTS,M12X1	
780	312811-0318	-		3	LOCK NUT M8RFR	
790	315105-0153	-		4	WASHER,PLAIN ROUND 6,4x12 Stainless	
800	315105-0165	-		2	WASHER,PLAIN ROUND 8,4x16 Stainless	
830	315410-0100	N		2	WASHERS,LOCK 10X13,5	
840	315410-0101	N		2	WASHERS,LOCK 12X17	
850	315750-0107	-		1	CIRCLIP SGA10	
860	321309-0100	K		2	BALL BEARING 10X30X9	
870	321312-0100	K		2	BEARINGS,BALL BEARING SKF6200RS	
880	321312-0101	K		4	BEARINGS,BALL BEARING SKF6201RS	
890	342920-0113	-		4	STRAIGHT COUPLING,EXT.THREADED 6/4-R1/8"	
900	342946-0112	-		1	T-COUPLING,UNION 6/4	
910	342980-0113	-		2	BANJO-CONNECTION,RING 6/4-G1/8"	
920	342980-0303	-		2	BANJO-HOLLOW BOLT COUPL,EXT.THR.01-G1/8"	
0355B or 0400B						
010	537901-0000	R		1	FOLDING FLAP CAM L	
020	B 529137-0000	R		1	CURVE LEFT	
0375S or 0750B						
010	550337-0000	R		1	FOLDING FLAP CAM L	
020	440510-0000	R		1	COUNTER CAM	
0500B						
010	269108-0000	R		1	FOLDING FLAP CAM L	
020	269110-0000	R		1	COUNTER CAM	
0500S						
010	551285-0000	R		1	FOLDING FLAP CAM	
020	440930-0000	R		1	COUNTER CAM	
0500SQ						
010	583828-0000	R		1	FOLDING FLAP CAM	
020	252653-0002	R		1	COUNTER CAM	
0750S or 1000B LOFIN						
010	268954-0000	R		1	FOLDING FLAP CAM L	
020	269059-0000	R		1	COUNTER CAM	
1000B HIFIN						
010	284232-0000	R		1	FOLDING FLAP CAM L	

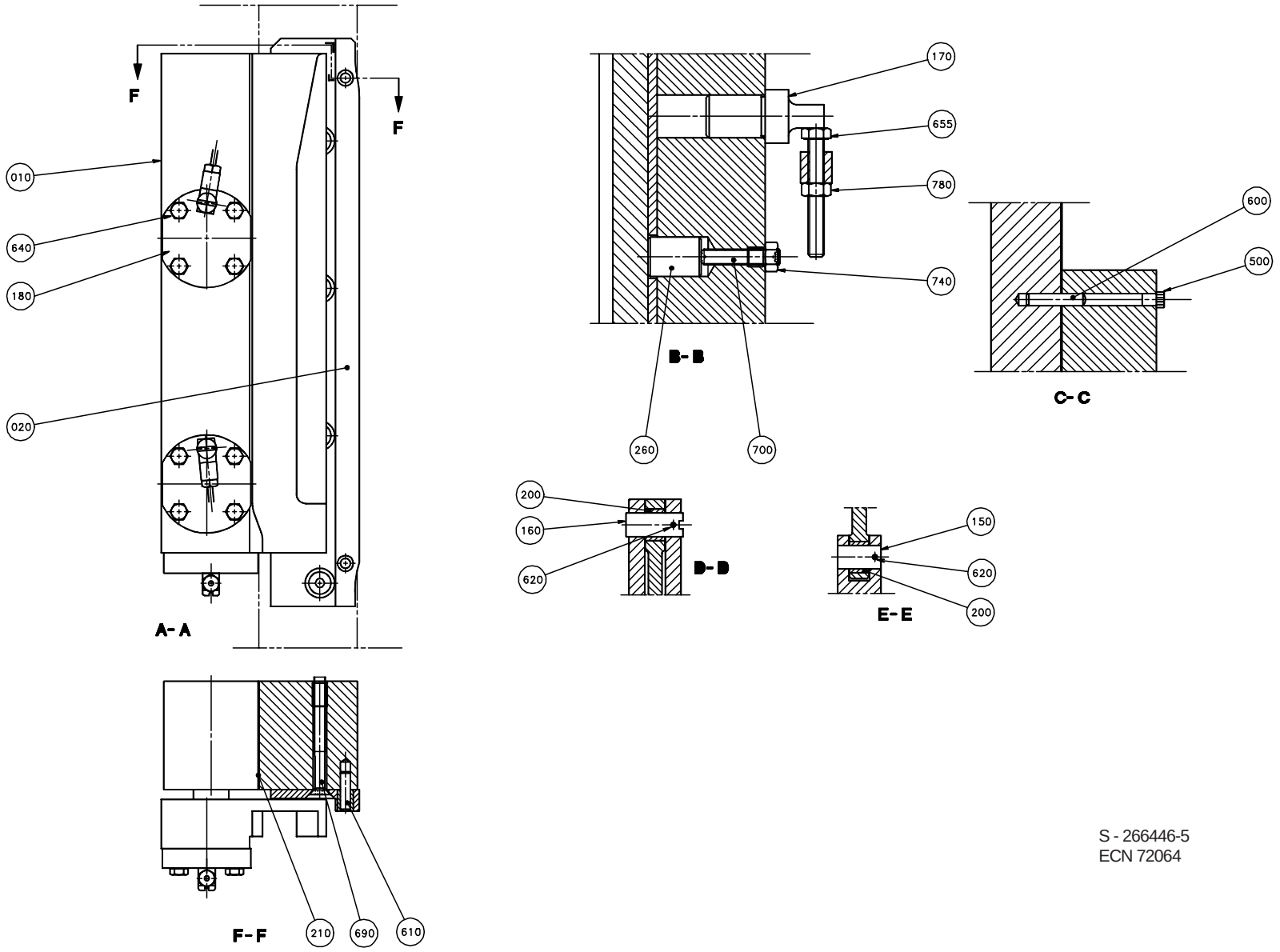

S - 266446-5
ECN 72064

Pos	Part No	SP	UN	Qty	Description	Page No
020	284234-0000	R		1	COUNTER CAM	
1000S or 1000SQ						
010	565188-0000	R		1	FOLDING FLAP CAM	
020	269059-0000	R		1	COUNTER CAM	
1055B						
010	533959-0000	R		1	FOLDING FLAP CAM L	
020	B 533957-0000	R		1	CURVE LEFT	

Pos	Part No	SP	UN	Qty	Description	Page No

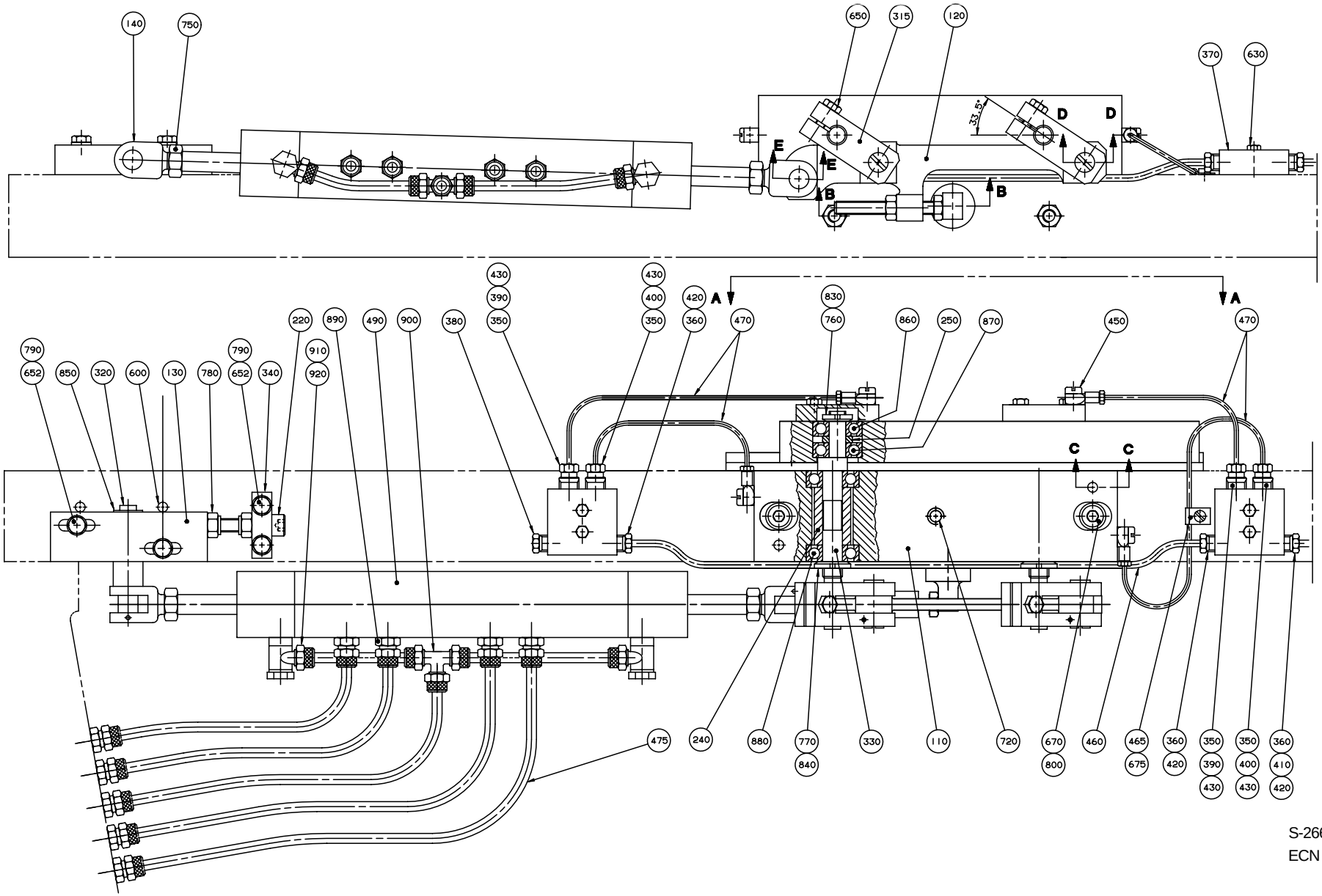

S-266447-4
ECN 14690

Pos	Part No	SP	UN	Qty	Description	Page No
Common parts						
110	23292-0000	R		1	BEARING HOUSING	
120	436740-0000	R		1	LINK	
130	20718-0000	D		1	BEARING	
140	22483-0000	N		2	FORK	
150	22485-0000	N		1	DOWEL	
160	22486-0000	N		2	DOWEL	
170	22504-0000	R		1	STOP LUG	
180	23291-0000	R		2	BEARING COVER	
200	23312-0000	K		3	BUSHING	
210	26426-0000	N		5	LACE	
220	33409-0000	R		1	SCREW	
240	107334-0000	R		2	SPACER SLEEVE	
250	107335-0000	R		2	SPACER RING	
260	107339-0000	R		2	DOWEL	
315	434387-0000	N		2	BRACKET	
320	434388-0000	N		1	SHAFT	
330	436671-0000	N		2	ECCENTRIC SHAFT	
340	561416-0000	R		1	BRACKET	
350	90028-0020	I		4	CONE DT13700S-300 Di=2,5mm	
360	90028-0021	I		3	CONE DIN3862 Di=4mm	
370	90032-0038	-		2	BLOCK 2ways DT4.310792.1D	
380	90087-0019	-		1	PLUG M10x1 Stainless	
390	90092-0052	J		2	METERING VALVE 10mm3	
400	90092-0054	J		2	METERING VALVE 50mm3	
410	90134-0031	G		1	SLEEVE E 4/2	
420	90134-0038	G		3	BUSHING	
430	90134-0039	G		4	BUSHING DT4.018912.1D Stainless	
450	90134-0058	G		4	BANJO CONNECTION DT4.310.437.1	
460	90151-0001	-	MM	400	BRASS PIPE DI=2,6 MM	
465	90165-0058	-		1	PIPE-CLIPS,FOR SINGLE PIPE,ONE SIDE 2,5	
470	90166-0143	-	MM	700	HOSE 1,6/2,5 PA 11/12	
475	90166-0124	-	MM	1600	HOSE 4,0/6 PA 11/12 Transp.	
490	B 90450-0105	R		1	5 STEPS CYLINDER Mecman	
500	90261-0036	-		2	PIPE PLUG "REPL.BY 90261-71"	
600	311103-0357	-		4	PINS,STRAIGHT 6X30	
610	311103-0310	-		2	PINS,STRAIGHT 5X20	
620	311112-0192	K		4	SLOTTED TURP 2,5X24	
630	312105-0295	-		4	SCREW M6S ISO 4017 M4X20 A280	
640	312105-0329	-		8	SCREW M6S ISO 4017 M5X16 A280	
650	312105-0370	-		2	SCREW M6S ISO 4017 M6X20 A280	
652	312105-0372	-		4	SCREW M6S ISO 4017 M6X25 A280	
655	312109-0463	-		1	SCREW M6S 8x60H A4 80	
670	312115-0461	-		2	SCREW MC6S ISO 4762 M8X50 A280	
675	312125-0285	-		1	SLOTTED HEMCS4X6RFR	
690	312155-0382	-		4	SCREW MF6S6X60 A2 70	
700	312318-0459	-		2	SET SCREW CUP POINT ISO 4029 M8X40 RFR	
720	312318-0499	-		1	SET SCREW CUP POINT ISO 4029 M10X40 RFR	
740	312605-0318	-		2	NUT,HEXAGON,M8 RFR	
750	312635-0320	-		2	NUT M6M 10x1 Stainless A2 80	
760	312805-0100	N		2	NUTS,ROUND,WITH SLOTS,M10X0,75	
770	312805-0101	N		2	NUTS,ROUND,WITH SLOTS,M12X1	
780	312811-0318	-		3	LOCK NUT M8RFR	
790	315105-0153	-		4	WASHER,PLAIN ROUND 6,4x12 Stainless	
800	315105-0165	-		2	WASHER,PLAIN ROUND 8,4x16 Stainless	
830	315410-0100	N		2	WASHERS,LOCK 10X13,5	
840	315410-0101	N		2	WASHERS,LOCK 12X17	
850	315750-0107	-		1	CIRCLIP SGA10	
860	321309-0100	K		2	BALL BEARING 10X30X9	
870	321312-0100	K		2	BEARINGS,BALL BEARING SKF6200RS	
880	321312-0101	K		4	BEARINGS,BALL BEARING SKF6201RS	
890	342920-0113	-		4	STRAIGHT COUPLING,EXT.THREADED 6/4-R1/8"	
900	342946-0112	-		1	T-COUPLING,UNION 6/4	
910	342980-0113	-		2	BANJO-CONNECTION,RING 6/4-G1/8"	
920	342980-0303	-		2	BANJO-HOLLOW BOLT COUPL,EXT.THR.01-G1/8"	
0355B or 0400B						
010	537902-0000	R		1	FOLDING FLAP CAM R	
020	B 529138-0000	R		1	CURVE RIGHT	
0375S or 0750B						
010	550338-0000	R		1	FOLDING FLAP CAM R	
020	440511-0000	R		1	COUNTER CAM	
0500B						
010	269109-0000	R		1	FOLDING FLAP CAM R	
020	269111-0000	R		1	COUNTER CAM	
0500S						
010	551286-0000	R		1	FOLDING FLAP CAM	
020	440931-0000	R		1	COUNTER CAM	
0500SQ						
010	583829-0000	R		1	FOLDING FLAP CAM	
020	252654-0002	R		1	COUNTER CAM	
0750S or 1000B LOFIN						
010	268955-0000	R		1	FOLDING FLAP CAM R	
020	269060-0000	R		1	COUNTER CAM	
1000B HIFIN						
010	284233-0000	R		1	FOLDING FLAP CAM R	

DESIGN CORRECTION DEVICE

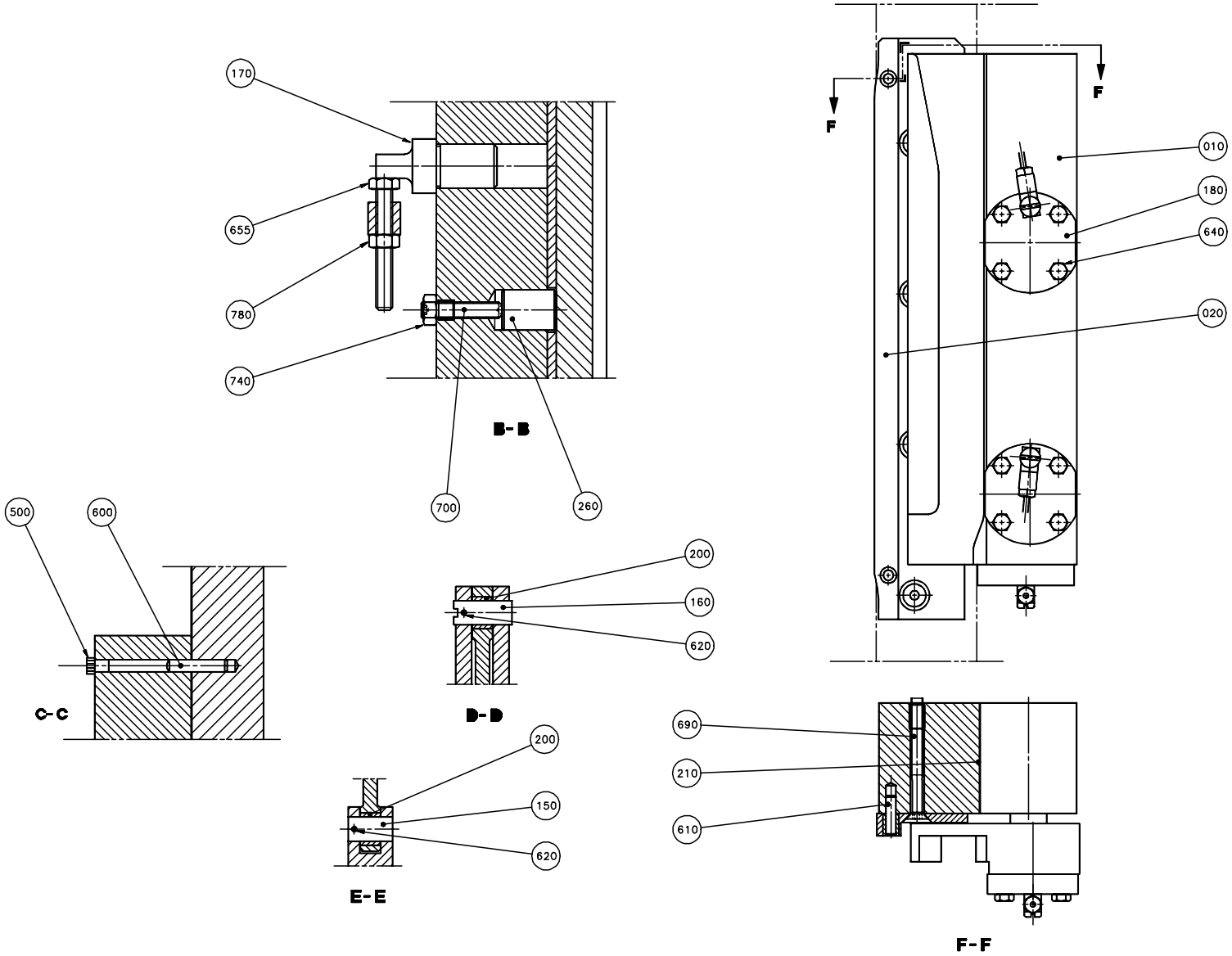

S - 266447-5
ECN 72064

Pos	Part No	SP	UN	Qty	Description	Page No
020	284235-0000	R		1	COUNTER CAM	
1000S or 1000SQ						
010	565189-0000	R		1	FOLDING FLAP CAM	
020	269060-0000	R		1	COUNTER CAM	
1055B						
010	533958-0000	R		1	FOLDING FLAP CAM R	
020	B 533956-0000	R		1	CURVE RIGHT	

Pos	Part No	SP	UN	Qty	Description	Page No

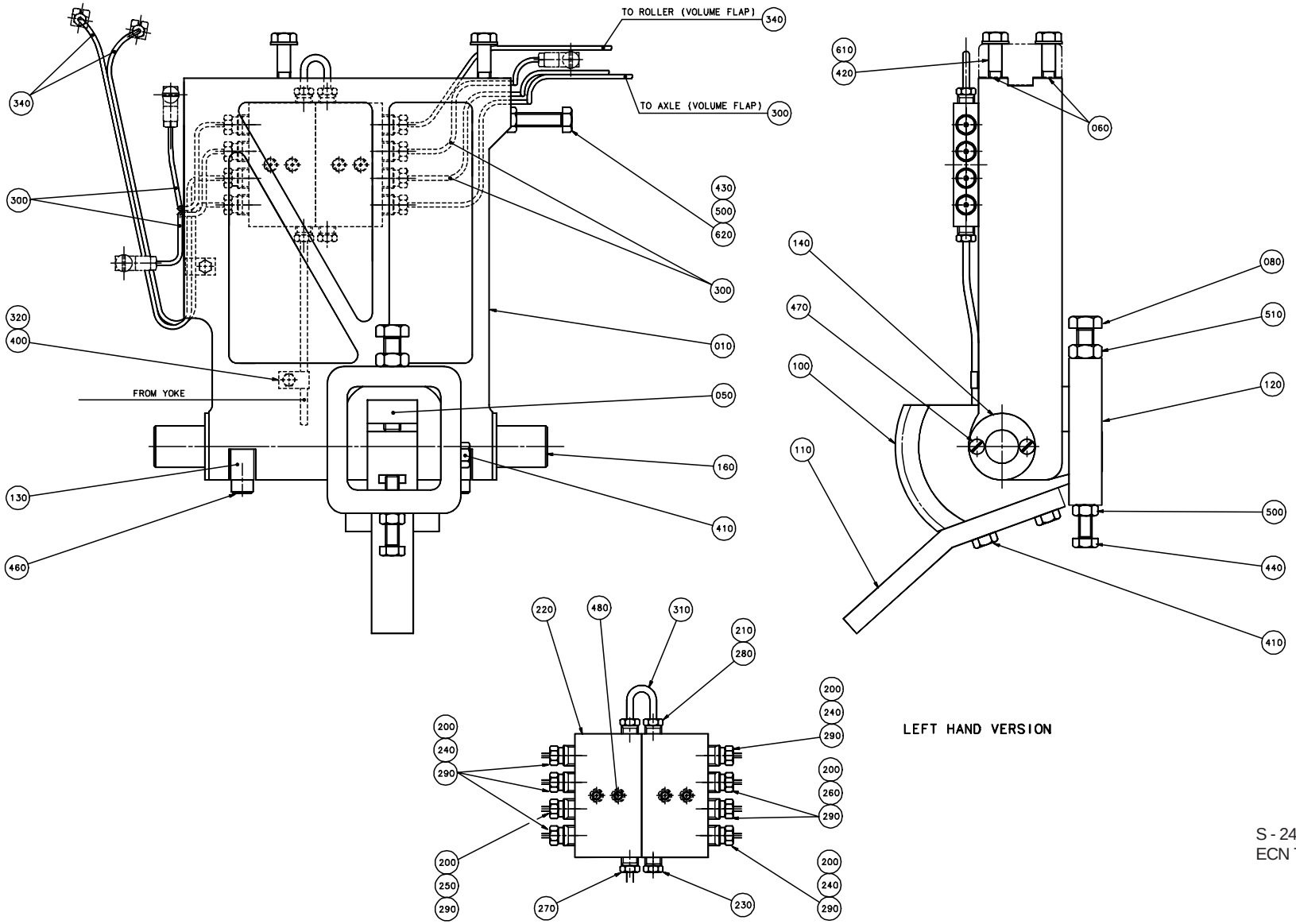

S - 246499-5
ECN 70768

Pos	Part No	SP	UN	Qty	Description	Page No
IH						
200	90028-0020	-		8	CONE DT13700S-300 Di=2,5mm	
220	90032-0039	-		2	DISTR.BLOCK	
240	90092-0052	K		5	METERING VALVE 10mm3	
290	90134-0039	-		8	BUSHING DT4.018912.1D Stainless	
Common parts						
010	538400-0000	R		1	ARM LEFT	
050	14729-0000	R		1	NUT	
060	26425-0000	M		6	LACE	
080	32957-0000	M		1	SCREW	
100	232238-0000	M		1	TOOTH PART	
110	239476-0000	R		1	ROD	
120	267754-0000	R		1	BOW CLAMP	
130	533818-0000	R		2	HOLDER	
140	536704-0000	M		2	WASHER	
160	538399-0000	M		1	SHAFT	
210	90028-0021	I		3	CONE DIN3862 Di=4mm	
230	90087-0019	-		1	PLUG M10x1 Stainless	
250	90092-0053	J		1	METERING VALVE 30mm3	
260	90092-0054	J		2	METERING VALVE 50mm3	
270	90134-0031	I		1	SLEEVE E 4/2	
280	90134-0038	I		3	BUSHING	
300	90266-0019	-	MM	1800	PIPE	
310	90266-0165	-	MM	100	BRASS PIPE	
320	90165-0056	-		2	PIPE-CLIPS,FOR SINGLE PIPE,ONE SIDE 4mm	
330	90166-0109	-	MM	400	HOSE 2/4 PA11/12 Transp.	
340	90166-0143	-	MM	1100	HOSE 1,6/2,5 PA 11/12	
400	312105-0287	-		2	SCREW M6S ISO 4017 M4x8 A280	
410	312105-0453	-		3	SCREW M6S ISO 4017 M8x25 A280	
420	312105-0457	-		1	SCREW O4017 M8X35A280	
430	312105-0466	-		1	SCREW M6S ISO 4014 M8x75 A280	
440	312109-0459	-		1	SCREW M6S ISO 4017 M8X40 A280	
450	312115-0289	-		2	SCREW S4X10 A4 80	
460	312115-0455	-		2	SCREW MC6S ISO 4762 M8X30 A280	
470	312145-0285	-		4	SLOTTED HEMFS4X6RFR	
480	312145-0297	-		4	SLOTTED HEMFS4X25RFR	
500	312605-0318	-		2	NUT,HEXAGON,M8 RFR	
510	312635-0320	-		1	NUT M6M 10x1 Stainless A2 80	
600	315105-0136	-		2	WASHER,PLAIN ROUND 4,3x8 Stainless	
610	315105-0165	-		4	WASHER,PLAIN ROUND 8,4x16 Stainless	
620	315115-0165	-		1	WASHER TBRB 8,4x16 Stainless	

Pos	Part No	SP	UN	Qty	Description	Page No

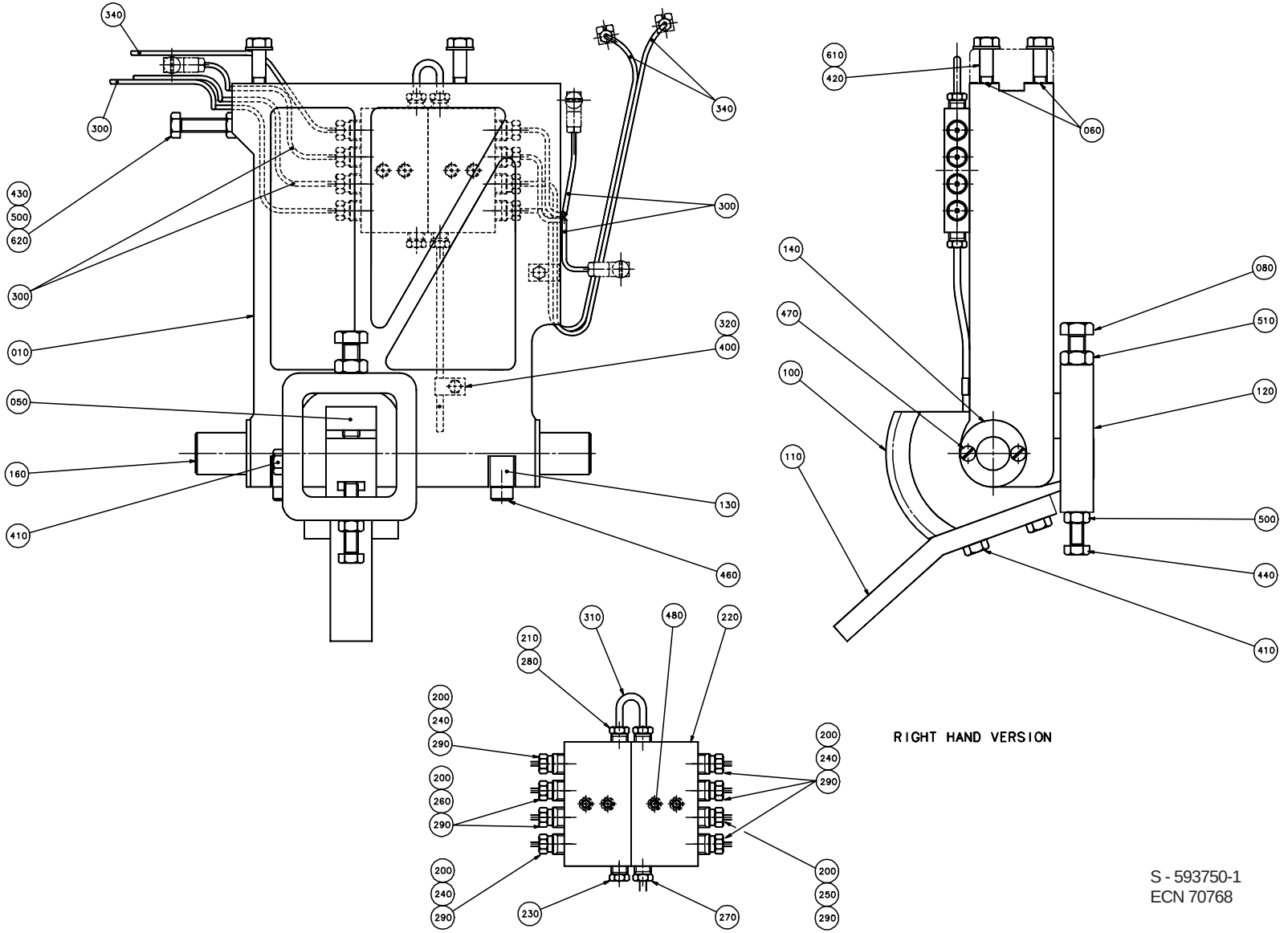

S - 593750-1
ECN 70768

Pos	Part No	SP	UN	Qty	Description	Page No
IH						
200	90028-0020	-		8	CONE DT13700S-300 Di=2,5mm	
220	90032-0039	-		2	DISTR.BLOCK	
240	90092-0052	K		5	METERING VALVE 10mm3	
290	90134-0039	-		8	BUSHING DT4.018912.1D Stainless	
Common parts						
010	538401-0000	R		1	ARM RIGHT	
050	14729-0000	R		1	NUT	
060	26425-0000	M		6	LACE	
080	32957-0000	M		1	SCREW	
100	232238-0000	M		1	TOOTH PART	
110	239476-0000	R		1	ROD	
120	267754-0000	R		1	BOW CLAMP	
130	533818-0000	R		2	HOLDER	
140	536704-0000	M		2	WASHER	
160	538399-0000	M		1	SHAFT	
210	90028-0021	I		3	CONE DIN3862 Di=4mm	
230	90087-0019	-		1	PLUG M10x1 Stainless	
250	90092-0053	J		1	METERING VALVE 30mm3	
260	90092-0054	J		2	METERING VALVE 50mm3	
270	90134-0031	I		1	SLEEVE E 4/2	
280	90134-0038	I		3	BUSHING	
300	90266-0019	-	MM	1800	PIPE	
310	90266-0165	-	MM	100	BRASS PIPE	
320	90165-0056	-		2	PIPE-CLIPS,FOR SINGLE PIPE,ONE SIDE 4mm	
330	90166-0109	-	MM	400	HOSE 2/4 PA11/12 Transp.	
340	90166-0143	-	MM	1100	HOSE 1,6/2,5 PA 11/12	
400	312105-0287	-		2	SCREW M6S ISO 4017 M4x8 A280	
410	312105-0453	-		3	SCREW M6S ISO 4017 M8x25 A280	
420	312105-0457	-		1	SCREW O4017 M8X35A280	
430	312105-0466	-		1	SCREW M6S ISO 4014 M8x75 A280	
440	312109-0459	-		1	SCREW M6S ISO 4017 M8X40 A280	
450	312115-0289	-		2	SCREW S4X10 A4 80	
460	312115-0455	-		2	SCREW MC6S ISO 4762 M8X30 A280	
470	312145-0285	-		4	SLOTTED HEMFS4X6RFR	
480	312145-0297	-		4	SLOTTED HEMFS4X25RFR	
500	312605-0318	-		2	NUT,HEXAGON,M8 RFR	
510	312635-0320	-		1	NUT M6M 10x1 Stainless A2 80	
600	315105-0136	-		2	WASHER,PLAIN ROUND 4,3x8 Stainless	
610	315105-0165	-		4	WASHER,PLAIN ROUND 8,4x16 Stainless	
620	315115-0165	-		1	WASHER TBRB 8,4x16 Stainless	

Pos	Part No	SP	UN	Qty	Description	Page No

ARM WITH AXLE PRESSURE L

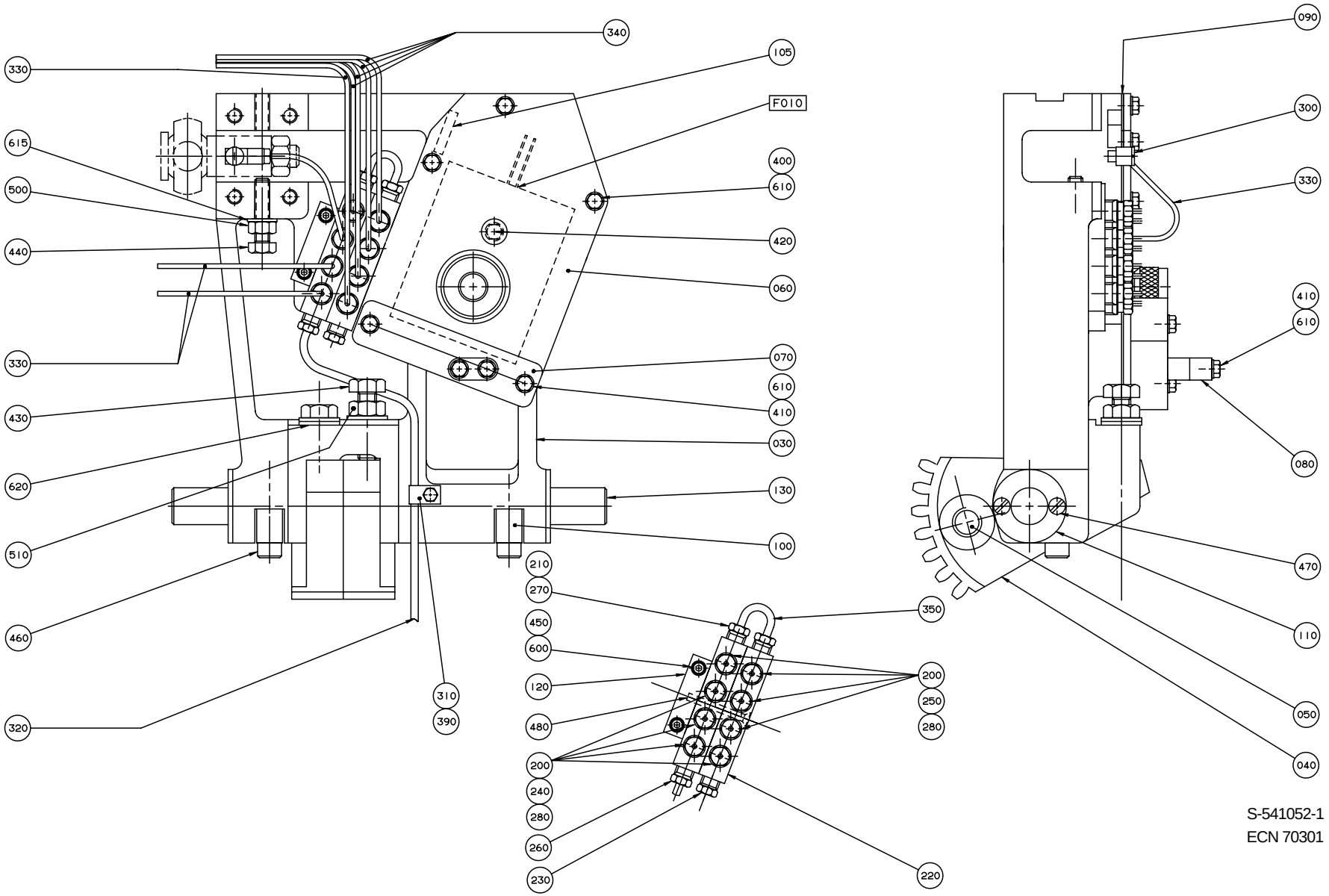

S-541052-1
ECN 70301

Pos	Part No	SP	UN	Qty	Description	Page No
Common parts						
030	545410-0000	R		1	ARM LEFT	
040	232236-0000	R		2	TOOTH PART	
050	232237-0000	R		1	SCREW	
060	464366-0000	D		1	LID	
070	464367-0000	R		1	CRAMP	
080	464368-0000	N		2	CRAMP	
090	484843-0000	N		1	GASKET	
100	533818-0000	R		2	HOLDER	
105	534237-0000	N		1	SEAL	
110	536704-0000	M		2	WASHER	
120	536705-0000	D		1	BRACKET	
130	538399-0000	R		1	SHAFT	
200	90028-0020	I		8	CONE DT13700S-300 Di=2,5mm	
210	90028-0021	I		3	CONE DIN3862 Di=4mm	
220	90032-0039	-		2	DISTR.BLOCK	
230	90087-0019	-		1	PLUG M10x1 Stainless	
240	90092-0052	J		4	METERING VALVE 10mm3	
250	90092-0053	J		4	METERING VALVE 30mm3	
260	90134-0031	G		1	SLEEVE E 4/2	
270	90134-0038	G		3	BUSHING	
280	90134-0039	G		8	BUSHING DT4.018912.1D Stainless	
300	90134-0058	G		1	BANJO CONNECTION DT4.310.437.1	
310	90165-0056	-		1	PIPE-CLIPS,FOR SINGLE PIPE,ONE SIDE 4mm	
320	90166-0109	-	MM	800	HOSE 2/4 PA11/12 Transp.	
330	90166-0143	-	MM	1200	HOSE 1,6/2,5 PA 11/12	
340	90266-0019	-	MM	2000	PIPE	
350	90266-0165	-	MM	100	BRASS PIPE	
390	312105-0287	-		1	SCREW M6S ISO 4017 M4x8 A280	
400	312105-0327	-		3	SCREW M6S ISO 4017 M5X12 A280	
410	312105-0335	-		4	SCREW M6S ISO 4017 M5X30 A280	
420	312105-0343	-		1	SCREW M6S5X60 A2 80	
430	312105-0497	-		2	SCREW M6S ISO 4017 M10X35 A280	
440	312109-0457	-		1	SCREW M6S ISO 4017 M8X35 A280	
450	312115-0303	-		2	SCREW MC6S ISO 4762 M4X40 A280	
460	312115-0455	-		2	SCREW MC6S ISO 4762 M8X30 A280	
470	312145-0285	-		4	SLOTTED HEMFS4X6RFR	
480	312155-0301	-		1	SCREW MF6S4X35RFR	
500	312605-0318	-		1	NUT,HEXAGON,M8 RFR	
510	312605-0320	-		1	NUT,HEXAGON,M10 A280	
600	315105-0136	-		2	WASHER,PLAIN ROUND 4,3x8 Stainless	
610	315105-0146	-		7	WASHER,PLAIN ROUND 5,3x10 Stainless	
615	315105-0165	-		1	WASHER,PLAIN ROUND 8,4x16 Stainless	
620	315105-0173	-		3	WASHER,PLAIN ROUND 10,5x22 STAINLESS	
TBA 0500B or TBA 0750B or TBA 0750S or TBA 1000B or TBA 1000S or TBA 1055B						
010	67379-0101	R		1	IH TRANSF.1.PRIM:5;21,6NF	
TBA 0355B or TBA 0375S or TBA 0400B or TBA 0500S or TBA 0500SQ or TBA 1000SQ						
010	67379-0102	R		1	IH TRANSF.1.PRIM:4;30,9NF	

ARM WITH AXLE PRESSURE R

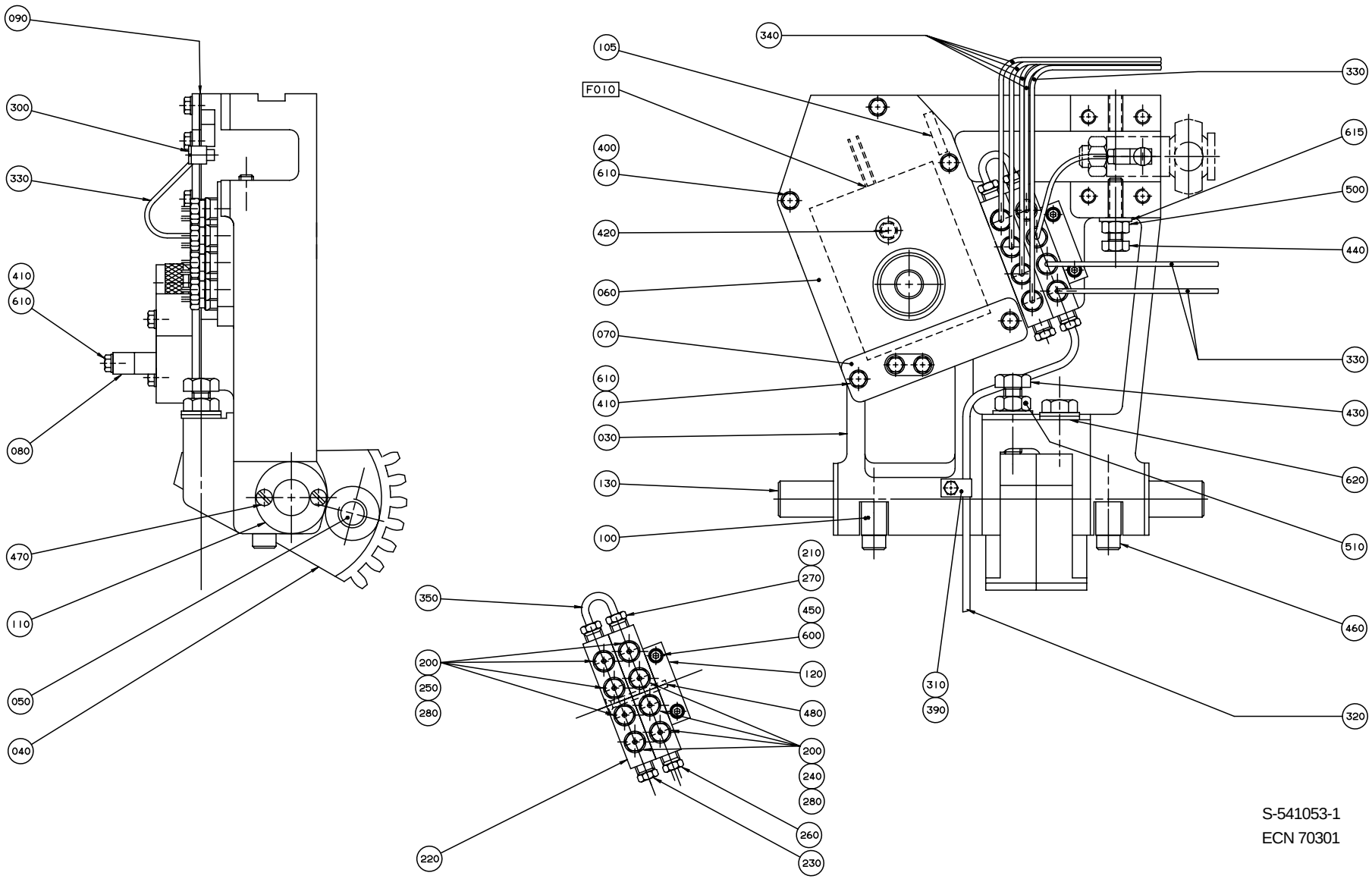

S-541053-1
ECN 70301

Pos	Part No	SP	UN	Qty	Description	Page No
Common parts						
030	545409-0000	R		1	ARM RIGHT	
040	232236-0000	R		2	TOOTH PART	
050	232237-0000	R		1	SCREW	
060	464366-0000	D		1	LID	
070	464367-0000	R		1	CRAMP	
080	464368-0000	N		2	CRAMP	
090	484843-0000	N		1	GASKET	
100	533818-0000	R		2	HOLDER	
105	534237-0000	N		1	SEAL	
110	536704-0000	M		2	WASHER	
120	536705-0000	D		1	BRACKET	
130	538399-0000	R		1	SHAFT	
200	90028-0020	I		8	CONE DT13700S-300 Di=2,5mm	
210	90028-0021	I		3	CONE DIN3862 Di=4mm	
220	90032-0039	-		2	DISTR.BLOCK	
230	90087-0019	-		1	PLUG M10x1 Stainless	
240	90092-0052	J		4	METERING VALVE 10mm3	
250	90092-0053	J		4	METERING VALVE 30mm3	
260	90134-0031	G		1	SLEEVE E 4/2	
270	90134-0038	G		3	BUSHING	
280	90134-0039	G		8	BUSHING DT4.018912.1D Stainless	
300	90134-0058	G		1	BANJO CONNECTION DT4.310.437.1	
310	90165-0056	-		1	PIPE-CLIPS,FOR SINGLE PIPE,ONE SIDE 4mm	
320	90166-0109	-	MM	800	HOSE 2/4 PA11/12 Transp.	
330	90166-0143	-	MM	1200	HOSE 1,6/2,5 PA 11/12	
340	90266-0019	-	MM	2000	PIPE	
350	90266-0165	-	MM	100	BRASS PIPE	
390	312105-0287	-		1	SCREW M6S ISO 4017 M4x8 A280	
400	312105-0327	-		3	SCREW M6S ISO 4017 M5X12 A280	
410	312105-0335	-		4	SCREW M6S ISO 4017 M5X30 A280	
420	312105-0343	-		1	SCREW M6S5X60 A2 80	
430	312105-0497	-		2	SCREW M6S ISO 4017 M10X35 A280	
440	312109-0457	-		1	SCREW M6S ISO 4017 M8X35 A280	
450	312115-0303	-		2	SCREW MC6S ISO 4762 M4X40 A280	
460	312115-0455	-		2	SCREW MC6S ISO 4762 M8X30 A280	
470	312145-0285	-		4	SLOTTED HEMFS4X6RFR	
480	312155-0301	-		1	SCREW MF6S4X35RFR	
500	312605-0318	-		1	NUT,HEXAGON,M8 RFR	
510	312605-0320	-		1	NUT,HEXAGON,M10 A280	
600	315105-0136	-		2	WASHER,PLAIN ROUND 4,3x8 Stainless	
610	315105-0146	-		7	WASHER,PLAIN ROUND 5,3x10 Stainless	
615	315105-0165	-		1	WASHER,PLAIN ROUND 8,4x16 Stainless	
620	315105-0173	-		3	WASHER,PLAIN ROUND 10,5x22 STAINLESS	
TBA 0500B or TBA 0750B or TBA 0750S or TBA 1000B or TBA 1000S or TBA 1055B						
010	67379-0101	R		1	IH TRANSF.1.PRIM:5;21,6NF	
TBA 0355B or TBA 0375S or TBA 0400B or TBA 0500S or TBA 0500SQ or TBA 1000SQ						
010	67379-0102	R		1	IH TRANSF.1.PRIM:4;30,9NF	

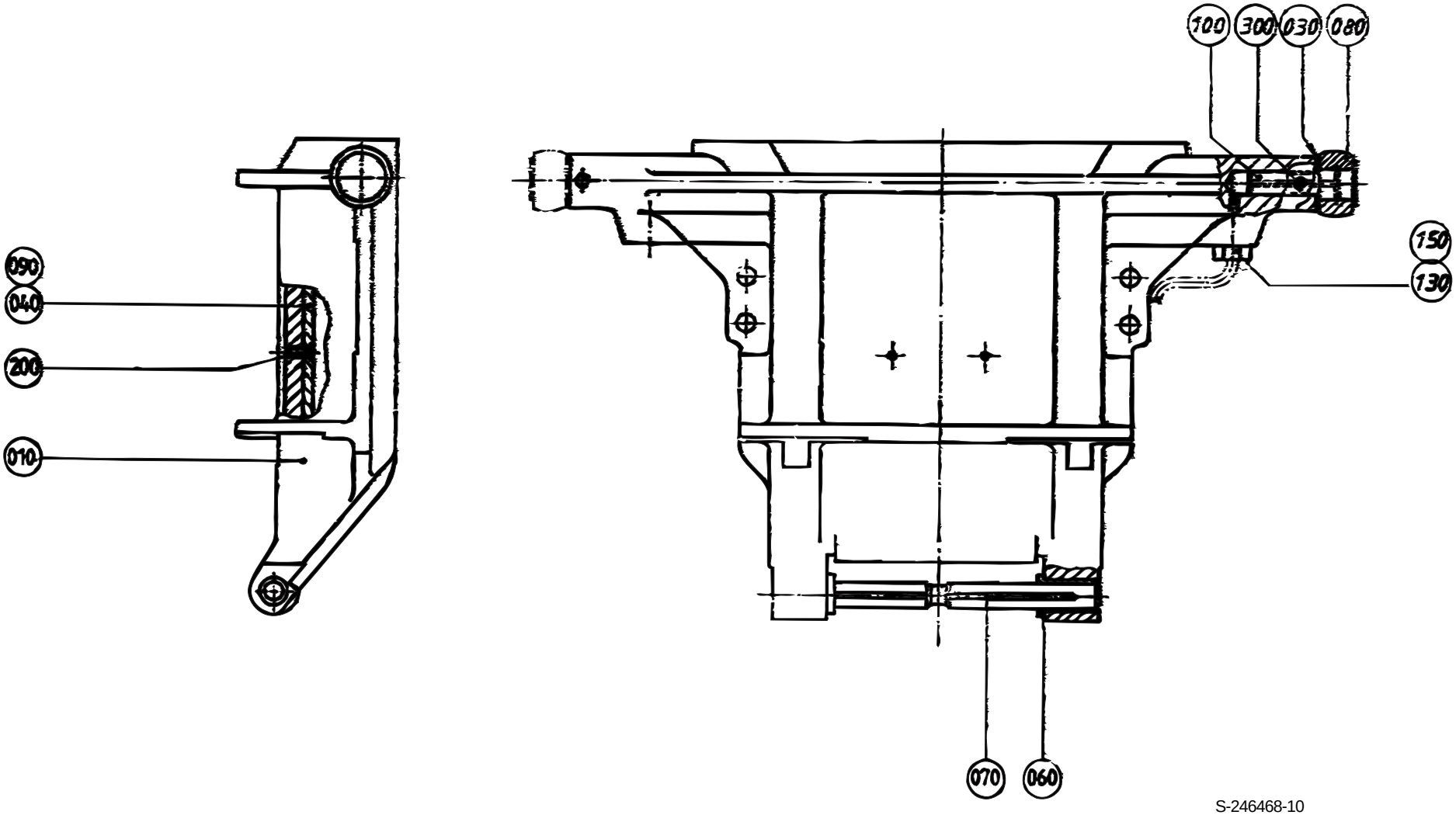

S-246468-10
ECN 6786

Pos	Part No	SP	UN	Qty	Description	Page No
TBA/8 1000B HIFIN IH or TBA/8 1000B LOFIN IH						
010	532718-0000	M		1	VOLUME FLAP	
030	19972-0000	I		1	WASHER	
040	26075-0000	J		1	VOLUME BULGE	
060	36133-0000	G		2	BUSHING	
070	458164-0000	I		1	SHAFT	
080	434321-0000	I		1	CURVE ROLLER	
090	208709-0000	J		3	VOLUME SHIM	
100	434320-0000	I		1	AXLE PIN	
130	90028-0020	I		1	CONE DT13700S-300 Di=2,5mm	
150	90134-0063	J		1	BUSHING DT4.011818.1D	
200	312145-0222	-		2	SLOTTED HEMFS3X8RFR	
300	312318-0285	-		1	SET SCREW CUP POINT ISO 4029 M4X6 RFR	
TBA/8 1000S IH						
010	1260781-0000	M		1	VOLUME FLAP	
030	19972-0000	I		1	WASHER	
040	569055-0000	J		1	VOLUME BULGE	
060	36133-0000	G		2	BUSHING	
070	458164-0000	I		1	SHAFT	
080	434321-0000	I		1	CURVE ROLLER	
090	569056-0000	J		3	VOLUME SHIM	
100	434320-0000	I		1	AXLE PIN	
130	90028-0020	I		1	CONE DT13700S-300 Di=2,5mm	
150	90134-0063	J		1	BUSHING DT4.011818.1D	
210	312145-0289	-		2	SLOTTED HEMFS4X10RFR	
300	312318-0285	-		1	SET SCREW CUP POINT ISO 4029 M4X6 RFR	
TBA/8 1000SQ IH						
010	1195070-0000	M		1	VOLUME FLAP	
030	19972-0000	I		1	WASHER	
040	1143049-0000	J		1	VOLUME BULGE	
060	36133-0000	G		2	BUSHING	
070	544292-0000	I		1	SHAFT	
080	434321-0000	I		1	CURVE ROLLER	
090	1143050-0000	J		3	VOLUME SHIM	
100	434320-0000	I		1	AXLE PIN	
130	90028-0020	I		1	CONE DT13700S-300 Di=2,5mm	
150	90134-0063	J		1	BUSHING DT4.011818.1D	
210	312145-0289	-		2	SLOTTED HEMFS4X10RFR	
300	312318-0285	-		1	SET SCREW CUP POINT ISO 4029 M4X6 RFR	
TBA/8 0750B IH						
010	544504-0000	M		1	VOLUME FLAP	
030	19972-0000	I		1	WASHER	
040	450781-0000	J		1	VOLUME BULGE	
060	36133-0000	G		2	BUSHING	
070	458164-0000	I		1	SHAFT	
080	436556-0000	I		1	CURVE ROLLER	
090	450782-0000	J		3	VOLUME SHIM	
100	434320-0000	I		1	AXLE PIN	
130	90028-0020	I		1	CONE DT13700S-300 Di=2,5mm	
150	90134-0063	J		1	BUSHING DT4.011818.1D	
200	312145-0222	-		2	SLOTTED HEMFS3X8RFR	
300	312318-0285	-		1	SET SCREW CUP POINT ISO 4029 M4X6 RFR	
TBA/8 0750S IH						
010	555926-0000	M		1	VOLUME FLAP	
030	19972-0000	I		1	WASHER	
040	555892-0000	J		1	VOLUME BULGE	
070	544292-0000	I		1	SHAFT	
080	434321-0000	I		1	CURVE ROLLER	
090	555928-0000	J		3	VOLUME SHIM	
100	434320-0000	I		1	AXLE PIN	
130	90028-0020	I		1	CONE DT13700S-300 Di=2,5mm	
150	90134-0063	J		1	BUSHING DT4.011818.1D	
210	312145-0289	-		2	SLOTTED HEMFS4X10RFR	
300	312318-0285	-		1	SET SCREW CUP POINT ISO 4029 M4X6 RFR	
TBA/8 1055B IH						
010	B 529002-0000	M		1	VOLUME FLAP	
030	19972-0000	I		1	WASHER	
040	532129-0000	J		1	VOLUME BULGE	
060	36133-0000	G		2	BUSHING	
070	458164-0000	I		1	SHAFT	
080	434321-0000	I		1	CURVE ROLLER	
090	531320-0000	J		3	VOLUME SHIM	
100	434320-0000	I		1	AXLE PIN	
130	90028-0020	I		1	CONE DT13700S-300 Di=2,5mm	
150	90134-0063	J		1	BUSHING DT4.011818.1D	
200	312145-0222	-		2	SLOTTED HEMFS3X8RFR	
300	312318-0285	-		1	SET SCREW CUP POINT ISO 4029 M4X6 RFR	
TBA/8 0500SQ IH						
010	1361917-0000	M		1	VOLUME FLAP	
030	19972-0000	I		1	WASHER	
040	589925-0000	J		1	VOLUME BULGE	
060	36133-0000	G		2	BUSHING	
070	544292-0000	I		1	SHAFT	
080	436556-0000	I		1	CURVE ROLLER	
090	589926-0000	J		3	VOLUME SHIM	

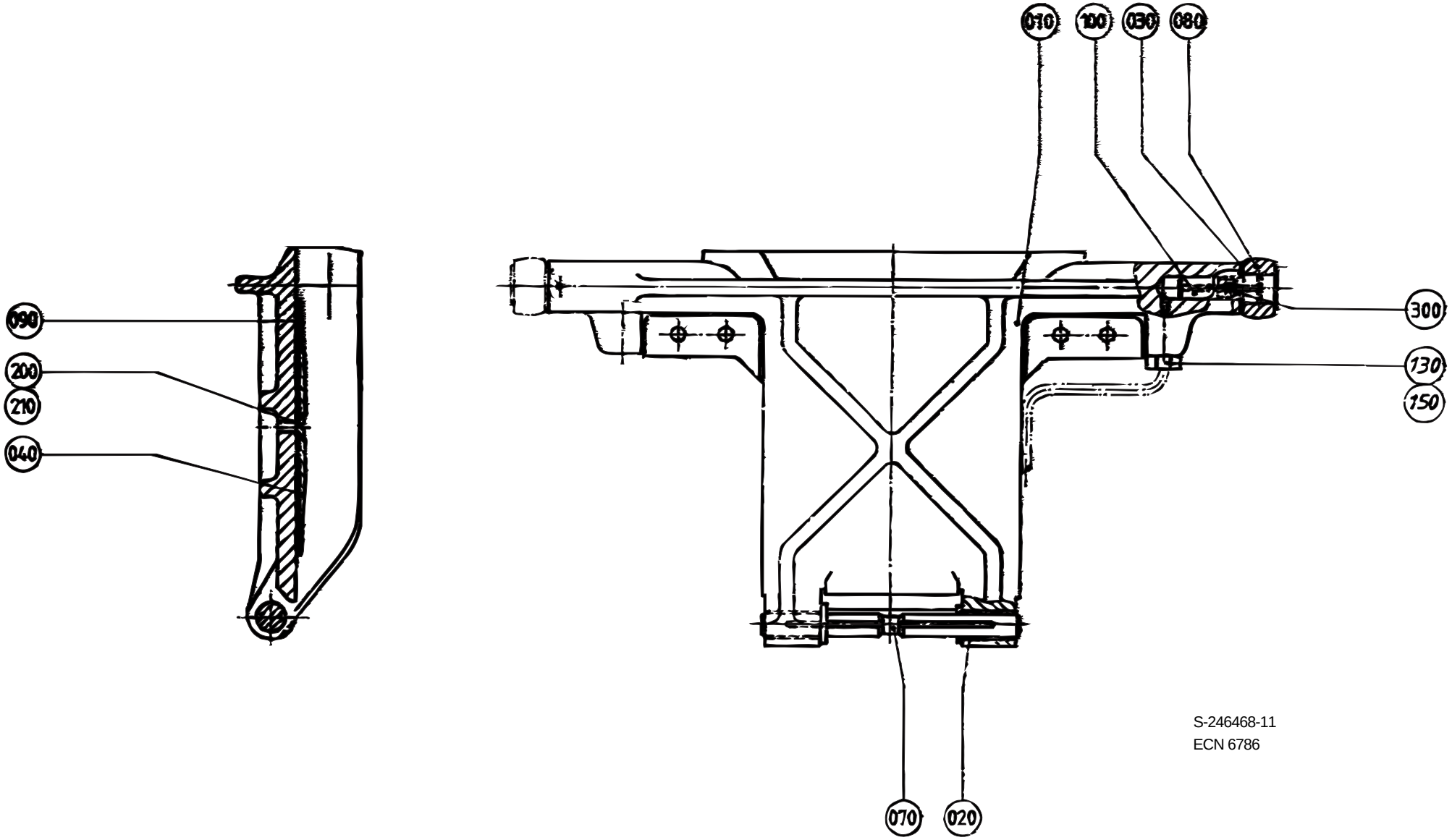

S-246468-11
ECN 6786

Pos	Part No	SP	UN	Qty	Description	Page No
100	434320-0000	I		1	AXLE PIN	
130	90028-0020	I		1	CONE DT13700S-300 Di=2,5mm	
150	90134-0063	J		1	BUSHING DT4.011818.1D	
210	312145-0289	-		2	SLOTTED HEMFS4X10RFR	
300	312318-0285	-		1	SET SCREW CUP POINT ISO 4029 M4X6 RFR	
TBA/8 0355B IH						
010	529000-0000	M		1	VOLUME FLAP	
020	449908-0000	G		2	BUSHING	
030	19972-0000	I		1	WASHER	
040	536686-0000	J		1	VOLUME BULGE	
070	458165-0000	I		1	SHAFT	
080	436556-0000	I		1	CURVE ROLLER	
090	536687-0000	J		3	VOLUME SHIM	
100	434320-0000	I		1	AXLE PIN	
130	90028-0020	I		1	CONE DT13700S-300 Di=2,5mm	
150	90134-0063	J		1	BUSHING DT4.011818.1D	
210	312145-0289	-		2	SLOTTED HEMFS4X10RFR	
300	312318-0285	-		1	SET SCREW CUP POINT ISO 4029 M4X6 RFR	
TBA/8 0400B IH						
010	575639-0000	M		1	VOLUME FLAP	
020	449908-0000	G		2	BUSHING	
030	19972-0000	I		1	WASHER	
040	575640-0000	J		1	VOLUME BULGE	
070	458165-0000	I		1	SHAFT	
080	436556-0000	I		1	CURVE ROLLER	
090	575641-0000	J		3	VOLUME SHIM	
100	434320-0000	I		1	AXLE PIN	
130	90028-0020	I		1	CONE DT13700S-300 Di=2,5mm	
150	90134-0063	J		1	BUSHING DT4.011818.1D	
200	312145-0222	-		2	SLOTTED HEMFS3X8RFR	
300	312318-0285	-		1	SET SCREW CUP POINT ISO 4029 M4X6 RFR	
TBA/8 0500S IH						
010	548601-0000	M		1	VOLUME FLAP	
020	449908-0000	G		2	BUSHING	
030	19972-0000	I		1	WASHER	
040	464314-0000	J		1	VOLUME BULGE	
070	458165-0000	I		1	SHAFT	
080	434321-0000	I		1	CURVE ROLLER	
090	464315-0000	J		3	VOLUME SHIM	
100	434320-0000	I		1	AXLE PIN	
130	90028-0020	I		1	CONE DT13700S-300 Di=2,5mm	
150	90134-0063	J		1	BUSHING DT4.011818.1D	
200	312145-0222	-		2	SLOTTED HEMFS3X8RFR	
300	312318-0285	-		1	SET SCREW CUP POINT ISO 4029 M4X6 RFR	
TBA/8 0500B IH						
010	476115-0000	M		1	VOLUME FLAP	
030	19972-0000	I		1	WASHER	
040	458467-0000	J		1	VOLUME BULGE	
060	36133-0000	G		2	BUSHING	
070	458164-0000	I		1	SHAFT	
080	436556-0000	I		1	CURVE ROLLER	
090	479245-0000	J		3	VOLUME SHIM	
100	434320-0000	I		1	AXLE PIN	
130	90028-0020	I		1	CONE DT13700S-300 Di=2,5mm	
150	90134-0063	J		1	BUSHING DT4.011818.1D	
210	312145-0289	-		2	SLOTTED HEMFS4X10RFR	
300	312318-0285	-		1	SET SCREW CUP POINT ISO 4029 M4X6 RFR	
TBA/8 0375S IH						
010	571486-0000	M		1	VOLUME FLAP	
020	449908-0000	G		2	BUSHING	
030	19972-0000	I		1	WASHER	
040	255227-0001	J		1	VOLUME BULGE	
070	458165-0000	I		1	SHAFT	
080	436556-0000	I		1	CURVE ROLLER	
090	255228-0001	J		3	VOLUME SHIM	
100	434320-0000	I		1	AXLE PIN	
130	90028-0020	I		1	CONE DT13700S-300 Di=2,5mm	
150	90134-0063	J		1	BUSHING DT4.011818.1D	
200	312145-0222	-		2	SLOTTED HEMFS3X8RFR	
300	312318-0285	-		1	SET SCREW CUP POINT ISO 4029 M4X6 RFR	

VOLUME FLAP

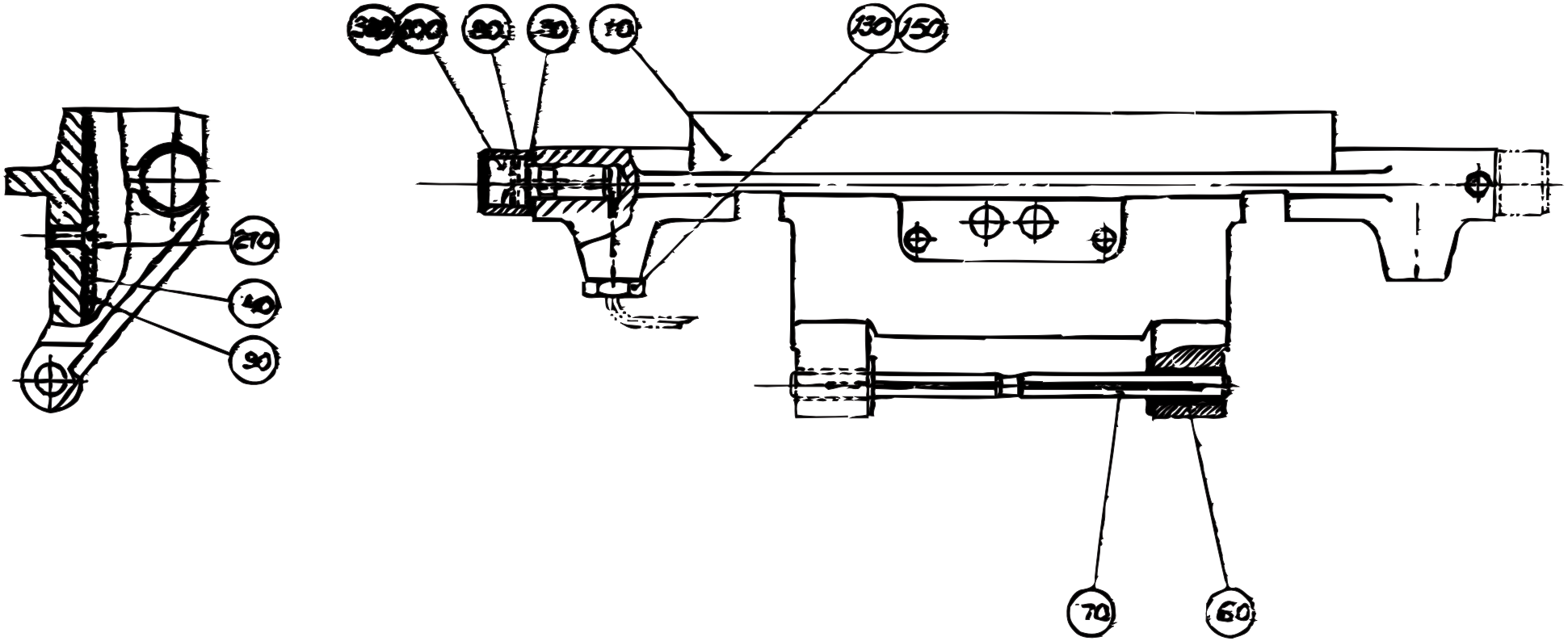

S-246468-12
ECN 6786

Pos	Part No	SP	UN	Qty	Description	Page No
TBA/8 1000B HIFIN IH or TBA/8 1000B LOFIN IH						
010	532718-0000	M		1	VOLUME FLAP	
030	19972-0000	I		1	WASHER	
040	26075-0000	J		1	VOLUME BULGE	
060	36133-0000	G		2	BUSHING	
070	458164-0000	I		1	SHAFT	
080	434321-0000	I		1	CURVE ROLLER	
090	208709-0000	J		3	VOLUME SHIM	
100	434320-0000	I		1	AXLE PIN	
130	90028-0020	I		1	CONE DT13700S-300 Di=2,5mm	
150	90134-0063	J		1	BUSHING DT4.011818.1D	
200	312145-0222	-		2	SLOTTED HEMFS3X8RFR	
300	312318-0285	-		1	SET SCREW CUP POINT ISO 4029 M4X6 RFR	
TBA/8 1000S IH						
010	1260781-0000	M		1	VOLUME FLAP	
030	19972-0000	I		1	WASHER	
040	569055-0000	J		1	VOLUME BULGE	
060	36133-0000	G		2	BUSHING	
070	458164-0000	I		1	SHAFT	
080	434321-0000	I		1	CURVE ROLLER	
090	569056-0000	J		3	VOLUME SHIM	
100	434320-0000	I		1	AXLE PIN	
130	90028-0020	I		1	CONE DT13700S-300 Di=2,5mm	
150	90134-0063	J		1	BUSHING DT4.011818.1D	
210	312145-0289	-		2	SLOTTED HEMFS4X10RFR	
300	312318-0285	-		1	SET SCREW CUP POINT ISO 4029 M4X6 RFR	
TBA/8 1000SQ IH						
010	1195070-0000	M		1	VOLUME FLAP	
030	19972-0000	I		1	WASHER	
040	1143049-0000	J		1	VOLUME BULGE	
060	36133-0000	G		2	BUSHING	
070	544292-0000	I		1	SHAFT	
080	434321-0000	I		1	CURVE ROLLER	
090	1143050-0000	J		3	VOLUME SHIM	
100	434320-0000	I		1	AXLE PIN	
130	90028-0020	I		1	CONE DT13700S-300 Di=2,5mm	
150	90134-0063	J		1	BUSHING DT4.011818.1D	
210	312145-0289	-		2	SLOTTED HEMFS4X10RFR	
300	312318-0285	-		1	SET SCREW CUP POINT ISO 4029 M4X6 RFR	
TBA/8 0750B IH						
010	544504-0000	M		1	VOLUME FLAP	
030	19972-0000	I		1	WASHER	
040	450781-0000	J		1	VOLUME BULGE	
060	36133-0000	G		2	BUSHING	
070	458164-0000	I		1	SHAFT	
080	436556-0000	I		1	CURVE ROLLER	
090	450782-0000	J		3	VOLUME SHIM	
100	434320-0000	I		1	AXLE PIN	
130	90028-0020	I		1	CONE DT13700S-300 Di=2,5mm	
150	90134-0063	J		1	BUSHING DT4.011818.1D	
200	312145-0222	-		2	SLOTTED HEMFS3X8RFR	
300	312318-0285	-		1	SET SCREW CUP POINT ISO 4029 M4X6 RFR	
TBA/8 0750S IH						
010	555926-0000	M		1	VOLUME FLAP	
030	19972-0000	I		1	WASHER	
040	555892-0000	J		1	VOLUME BULGE	
070	544292-0000	I		1	SHAFT	
080	434321-0000	I		1	CURVE ROLLER	
090	555928-0000	J		3	VOLUME SHIM	
100	434320-0000	I		1	AXLE PIN	
130	90028-0020	I		1	CONE DT13700S-300 Di=2,5mm	
150	90134-0063	J		1	BUSHING DT4.011818.1D	
210	312145-0289	-		2	SLOTTED HEMFS4X10RFR	
300	312318-0285	-		1	SET SCREW CUP POINT ISO 4029 M4X6 RFR	
TBA/8 1055B IH						
010	B 529002-0000	M		1	VOLUME FLAP	
030	19972-0000	I		1	WASHER	
040	532129-0000	J		1	VOLUME BULGE	
060	36133-0000	G		2	BUSHING	
070	458164-0000	I		1	SHAFT	
080	434321-0000	I		1	CURVE ROLLER	
090	531320-0000	J		3	VOLUME SHIM	
100	434320-0000	I		1	AXLE PIN	
130	90028-0020	I		1	CONE DT13700S-300 Di=2,5mm	
150	90134-0063	J		1	BUSHING DT4.011818.1D	
200	312145-0222	-		2	SLOTTED HEMFS3X8RFR	
300	312318-0285	-		1	SET SCREW CUP POINT ISO 4029 M4X6 RFR	
TBA/8 0500SQ IH						
010	1361917-0000	M		1	VOLUME FLAP	
030	19972-0000	I		1	WASHER	
040	589925-0000	J		1	VOLUME BULGE	
060	36133-0000	G		2	BUSHING	
070	544292-0000	I		1	SHAFT	
080	436556-0000	I		1	CURVE ROLLER	
090	589926-0000	J		3	VOLUME SHIM	

VOLUME FLAP

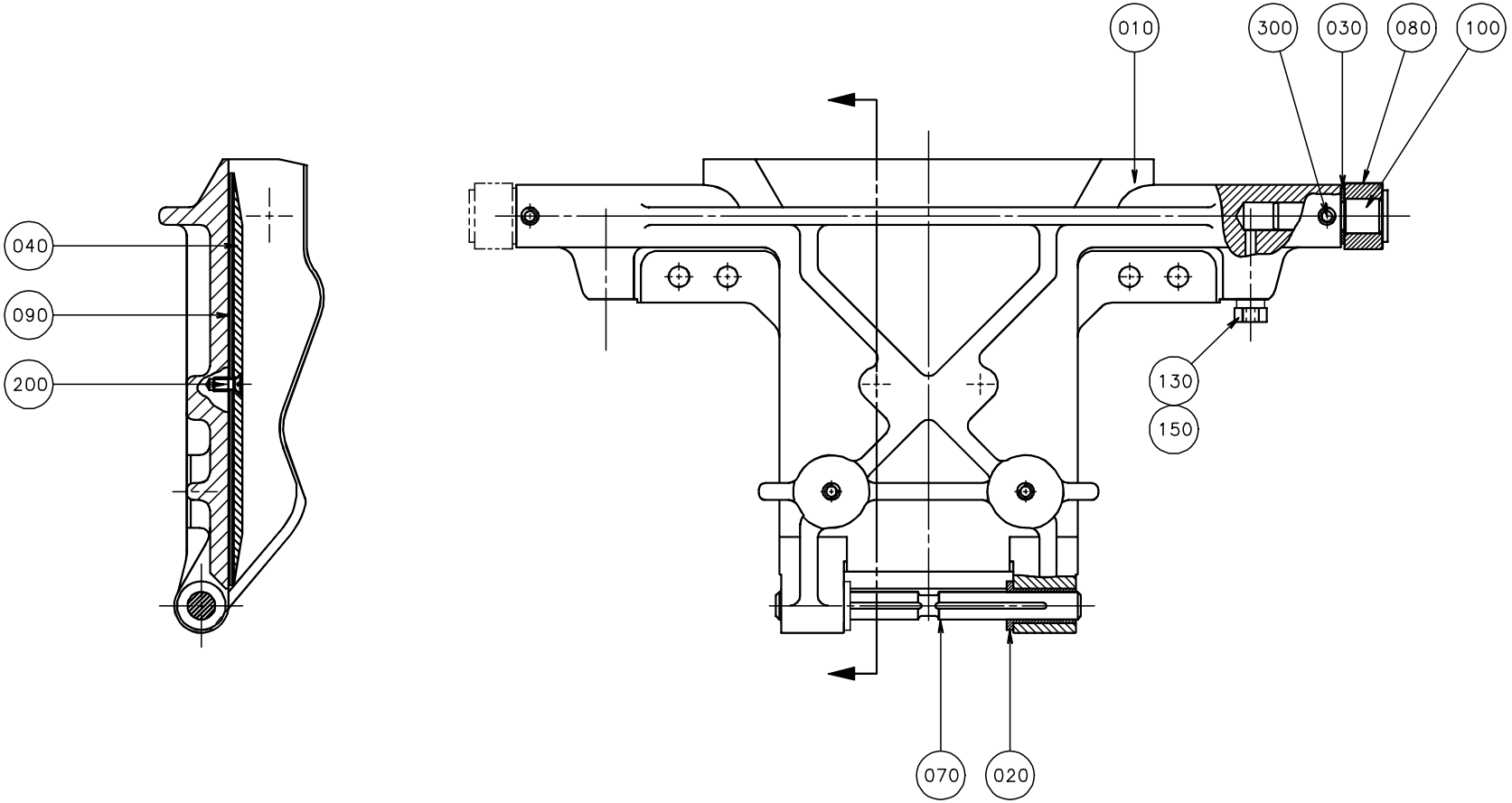

S - 246468-13
ECN 71224

Pos	Part No	SP	UN	Qty	Description	Page No
100	434320-0000	I		1	AXLE PIN	
130	90028-0020	I		1	CONE DT13700S-300 Di=2,5mm	
150	90134-0063	J		1	BUSHING DT4.011818.1D	
210	312145-0289	-		2	SLOTTED HEMFS4X10RFR	
300	312318-0285	-		1	SET SCREW CUP POINT ISO 4029 M4X6 RFR	
TBA/8 0355B IH						
010	529000-0000	M		1	VOLUME FLAP	
020	449908-0000	G		2	BUSHING	
030	19972-0000	I		1	WASHER	
040	536686-0000	J		1	VOLUME BULGE	
070	458165-0000	I		1	SHAFT	
080	436556-0000	I		1	CURVE ROLLER	
090	536687-0000	J		3	VOLUME SHIM	
100	434320-0000	I		1	AXLE PIN	
130	90028-0020	I		1	CONE DT13700S-300 Di=2,5mm	
150	90134-0063	J		1	BUSHING DT4.011818.1D	
210	312145-0289	-		2	SLOTTED HEMFS4X10RFR	
300	312318-0285	-		1	SET SCREW CUP POINT ISO 4029 M4X6 RFR	
TBA/8 0400B IH						
010	575639-0000	M		1	VOLUME FLAP	
020	449908-0000	G		2	BUSHING	
030	19972-0000	I		1	WASHER	
040	575640-0000	J		1	VOLUME BULGE	
070	458165-0000	I		1	SHAFT	
080	436556-0000	I		1	CURVE ROLLER	
090	575641-0000	J		3	VOLUME SHIM	
100	434320-0000	I		1	AXLE PIN	
130	90028-0020	I		1	CONE DT13700S-300 Di=2,5mm	
150	90134-0063	J		1	BUSHING DT4.011818.1D	
200	312145-0222	-		2	SLOTTED HEMFS3X8RFR	
300	312318-0285	-		1	SET SCREW CUP POINT ISO 4029 M4X6 RFR	
TBA/8 0500S IH						
010	548601-0000	M		1	VOLUME FLAP	
020	449908-0000	G		2	BUSHING	
030	19972-0000	I		1	WASHER	
040	464314-0000	J		1	VOLUME BULGE	
070	458165-0000	I		1	SHAFT	
080	434321-0000	I		1	CURVE ROLLER	
090	464315-0000	J		3	VOLUME SHIM	
100	434320-0000	I		1	AXLE PIN	
130	90028-0020	I		1	CONE DT13700S-300 Di=2,5mm	
150	90134-0063	J		1	BUSHING DT4.011818.1D	
200	312145-0222	-		2	SLOTTED HEMFS3X8RFR	
300	312318-0285	-		1	SET SCREW CUP POINT ISO 4029 M4X6 RFR	
TBA/8 0500B IH						
010	476115-0000	M		1	VOLUME FLAP	
030	19972-0000	I		1	WASHER	
040	458467-0000	J		1	VOLUME BULGE	
060	36133-0000	G		2	BUSHING	
070	458164-0000	I		1	SHAFT	
080	436556-0000	I		1	CURVE ROLLER	
090	479245-0000	J		3	VOLUME SHIM	
100	434320-0000	I		1	AXLE PIN	
130	90028-0020	I		1	CONE DT13700S-300 Di=2,5mm	
150	90134-0063	J		1	BUSHING DT4.011818.1D	
210	312145-0289	-		2	SLOTTED HEMFS4X10RFR	
300	312318-0285	-		1	SET SCREW CUP POINT ISO 4029 M4X6 RFR	
TBA/8 0375S IH						
010	571486-0000	M		1	VOLUME FLAP	
020	449908-0000	G		2	BUSHING	
030	19972-0000	I		1	WASHER	
040	255227-0001	J		1	VOLUME BULGE	
070	458165-0000	I		1	SHAFT	
080	436556-0000	I		1	CURVE ROLLER	
090	255228-0001	J		3	VOLUME SHIM	
100	434320-0000	I		1	AXLE PIN	
130	90028-0020	I		1	CONE DT13700S-300 Di=2,5mm	
150	90134-0063	J		1	BUSHING DT4.011818.1D	
200	312145-0222	-		2	SLOTTED HEMFS3X8RFR	
300	312318-0285	-		1	SET SCREW CUP POINT ISO 4029 M4X6 RFR	

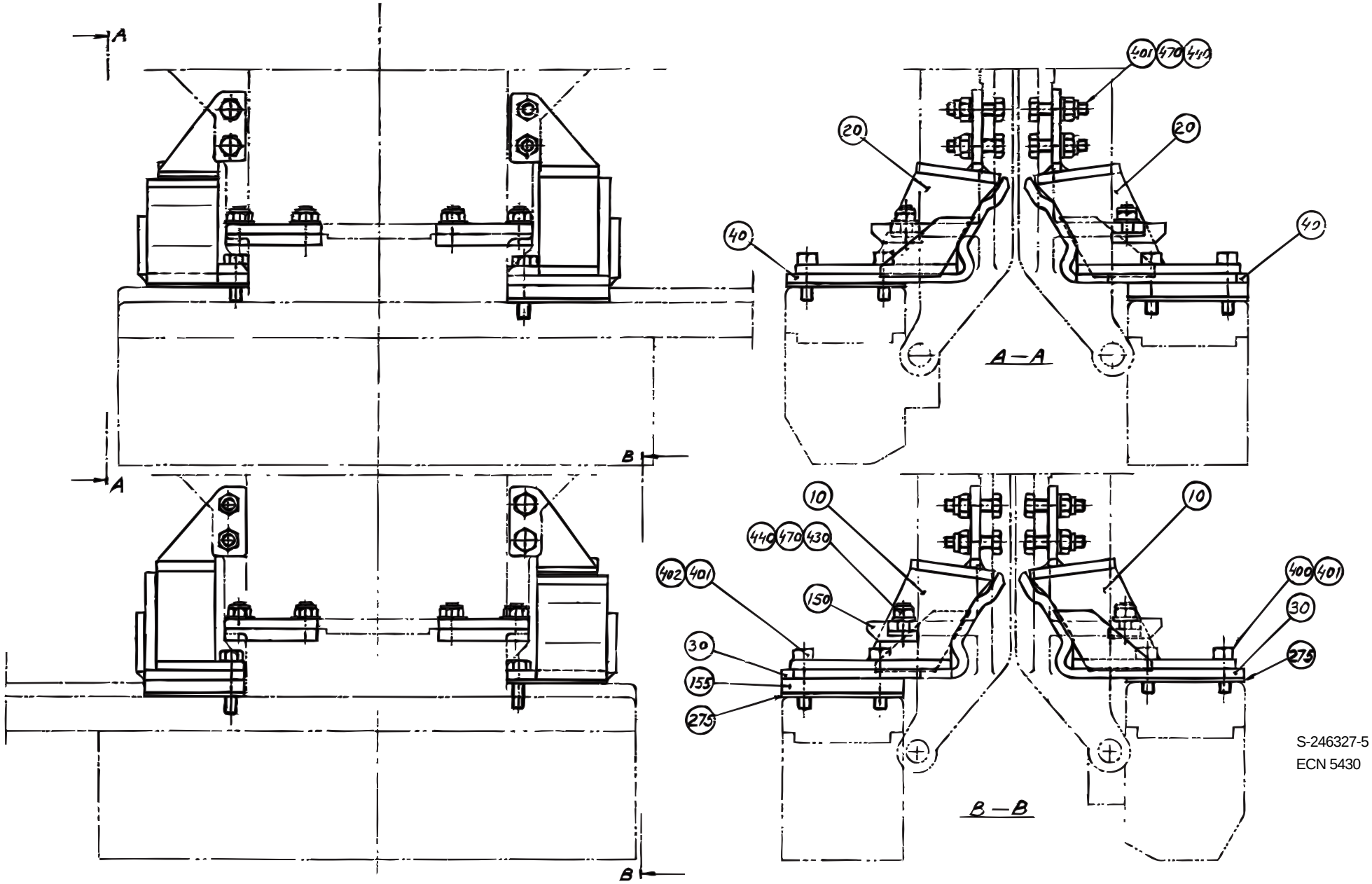

S-246327-5
ECN 5430

Pos	Part No	SP	UN	Qty	Description	Page No
TBA/8 0750S IH or TBA/8 1000B LOFIN IH or TBA/8 1055B IH						
010	B 252808-0000	G		2	DAMPER LEFT	
020	B 252809-0000	G		2	DAMPER RIGHT	
030	255473-0000	M		2	STOP	
040	255474-0000	M		2	STOP	
150	251598-0000	J		4	STOPPER	
155	251597-0000	J		2	LACE	
400	312105-0329	-		4	SCREW M6S ISO 4017 M5X16 A280	
401	312105-0331	-		12	SCREW M6S ISO 4017 M5X20 A280	
430	312155-0329	-		8	SCREW MF6S DIN 7991 M5x16 A280	
440	312812-0314	-		16	NUT,HEXAGON,LOCK,WITH NYLON,M5	
470	315105-0146	-		16	WASHER,PLAIN ROUND 5,3x10 Stainless	
TBA/8 1000B HIFIN IH						
010	B 252808-0000	G		2	DAMPER LEFT	
020	B 252809-0000	G		2	DAMPER RIGHT	
030	255473-0000	M		2	STOP	
040	255474-0000	M		2	STOP	
150	251598-0000	J		4	STOPPER	
155	251597-0000	J		2	LACE	
275	279623-0000	R		4	LACE	
401	312105-0331	-		12	SCREW M6S ISO 4017 M5X20 A280	
402	312105-0333	-		4	SCREW M6S ISO 4017 M5X25 A280	
430	312155-0329	-		8	SCREW MF6S DIN 7991 M5x16 A280	
440	312812-0314	-		16	NUT,HEXAGON,LOCK,WITH NYLON,M5	
470	315105-0146	-		16	WASHER,PLAIN ROUND 5,3x10 Stainless	

Pos	Part No	SP	UN	Qty	Description	Page No

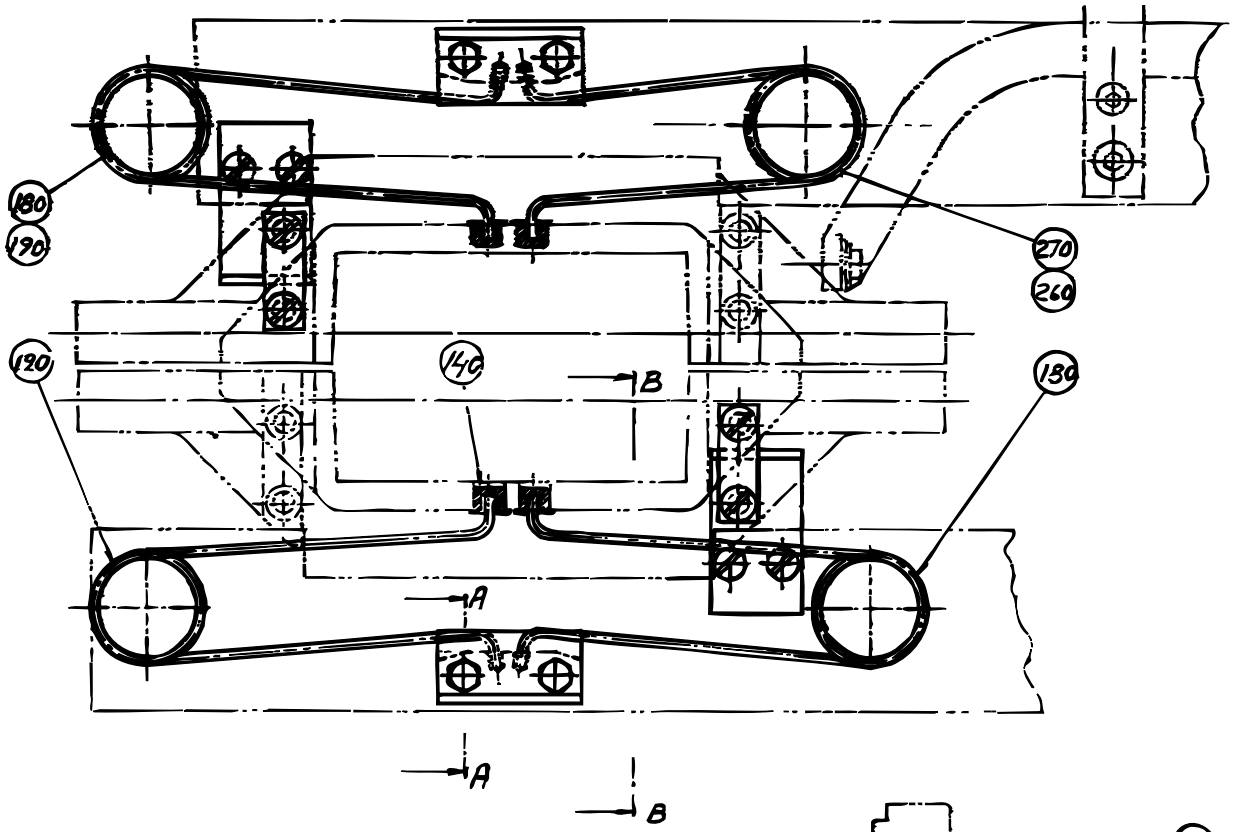

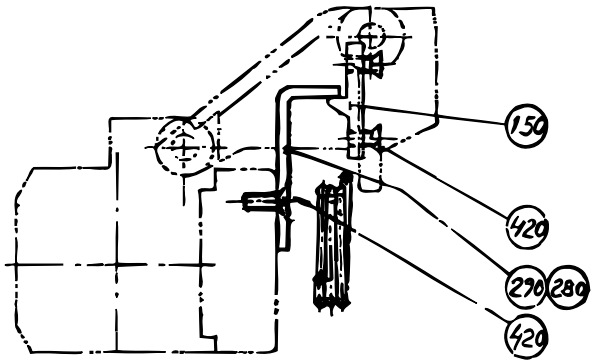

B—B

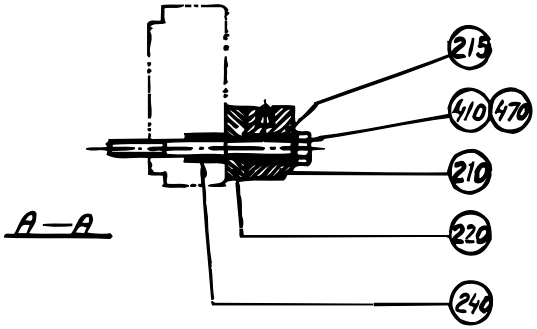

A—A

S-246327-6
ECN 4985

Pos	Part No	SP	UN	Qty	Description	Page No
TBA/8 0500B IH						
140	33150-0000	J		8	GUIDE STUD	
150	33152-0000	J		4	STOPPER	
180	246328-0000	I		3	SPRING	
190	246329-0000	I		3	SPRING	
210	247262-0000	K		4	SPRING BRACKET	
215	247263-0000	L		8	SPACER	
220	247271-0000	R		2	LACE	
240	263684-0000	K		4	SPACER	
260	1296222-0000	I		1	SPRING	
270	1296223-0000	I		1	SPRING	
280	284138-0000	M		2	CATCH	
290	284139-0000	M		2	CATCH	
410	312105-0340	-		8	SCREW M6S ISO 4014 M5X45 A280	
420	312145-0325	-		16	SLOTTED HEMFS5X10RFR	
470	315105-0146	-		8	WASHER,PLAIN ROUND 5,3x10 Stainless	

Pos	Part No	SP	UN	Qty	Description	Page No

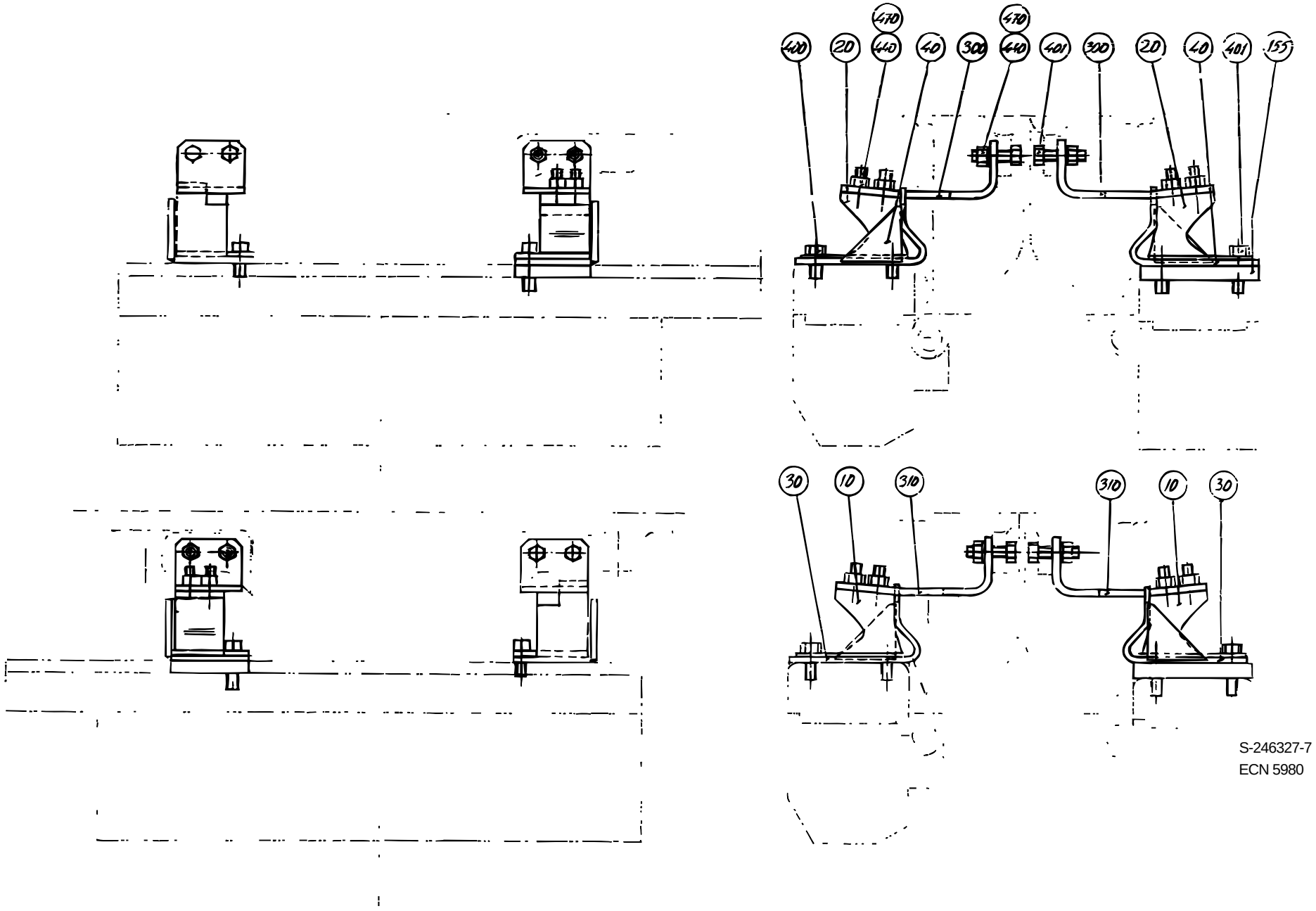

S-246327-7
ECN 5980

Pos	Part No	SP	UN	Qty	Description	Page No
TBA/8 0750B IH						
010	279505-0000	G		2	DAMPER LEFT	
020	279506-0000	G		2	DAMPER RIGHT	
030	445560-0000	M		2	STOP	
040	445559-0000	M		2	STOP	
155	445561-0000	J		2	LACE	
300	445557-0000	M		2	CANTILEVER	
310	445558-0000	M		2	CANTILEVER	
400	312105-0329	-		4	SCREW M6S ISO 4017 M5X16 A280	
401	312105-0331	-		12	SCREW M6S ISO 4017 M5X20 A280	
440	312812-0314	-		16	NUT,HEXAGON,LOCK,WITH NYLON,M5	
470	315105-0146	-		16	WASHER,PLAIN ROUND 5,3x10 Stainless	

Pos	Part No	SP	UN	Qty	Description	Page No

SHOCK ABSORBER

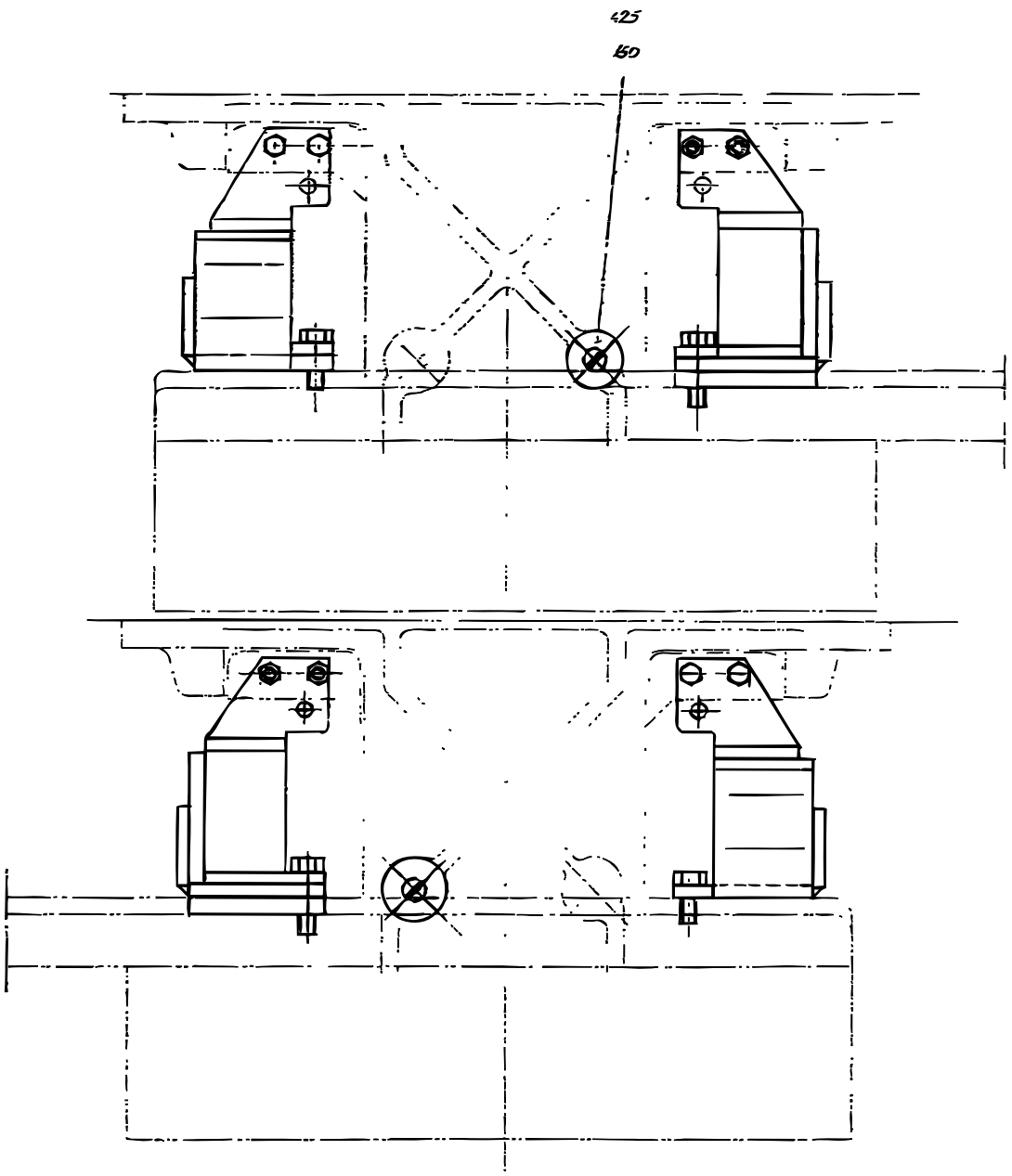

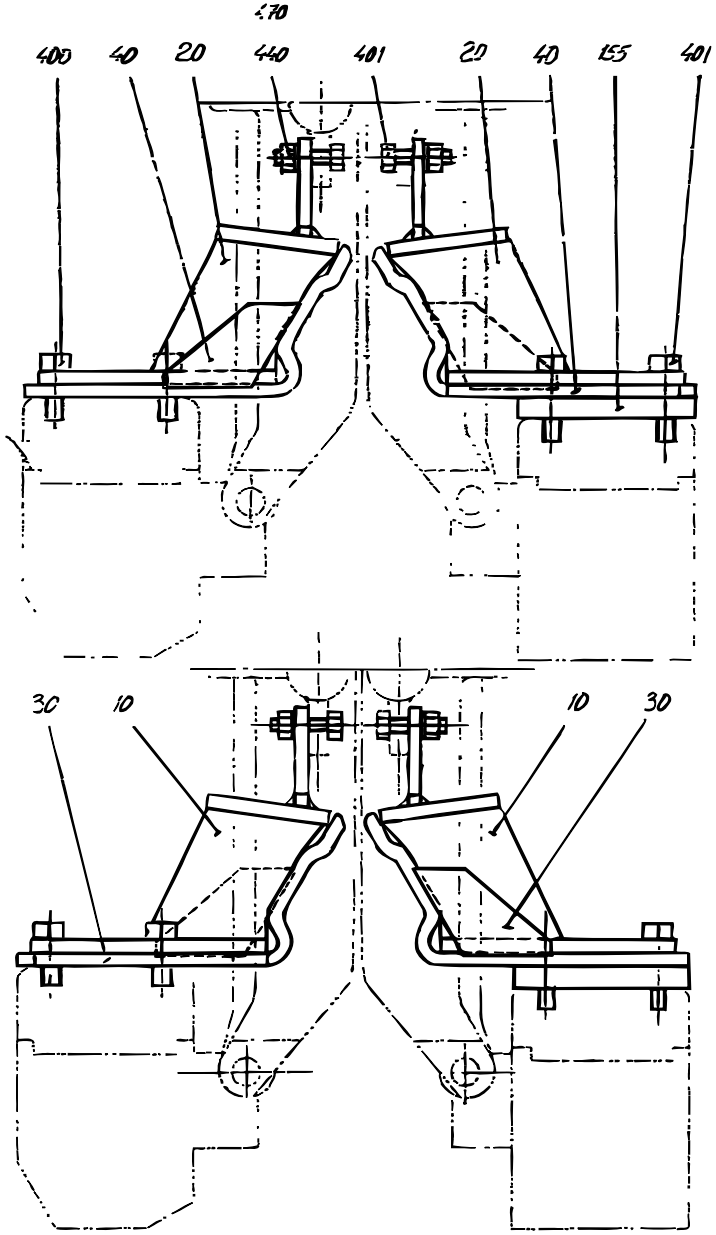

S-246327-8
ECN 5783

Pos	Part No	SP	UN	Qty	Description	Page No
TBA/8 0500S IH						
010	B 499397-0000	G		2	DAMPER LEFT	
020	B 499398-0000	G		2	DAMPER RIGHT	
030	499125-0000	M		2	STOP	
040	499124-0000	M		2	STOP	
150	445770-0000	J		4	STOPPER	
155	251597-0000	J		2	LACE	
400	312105-0329	-		4	SCREW M6S ISO 4017 M5X16 A280	
401	312105-0331	-		12	SCREW M6S ISO 4017 M5X20 A280	
425	312145-0289	-		4	SLOTTED HEMFS4X10RFR	
440	312812-0314	-		8	NUT,HEXAGON,LOCK,WITH NYLON,M5	
470	315105-0146	-		8	WASHER,PLAIN ROUND 5,3x10 Stainless	

Pos	Part No	SP	UN	Qty	Description	Page No

SHOCK ABSORBER

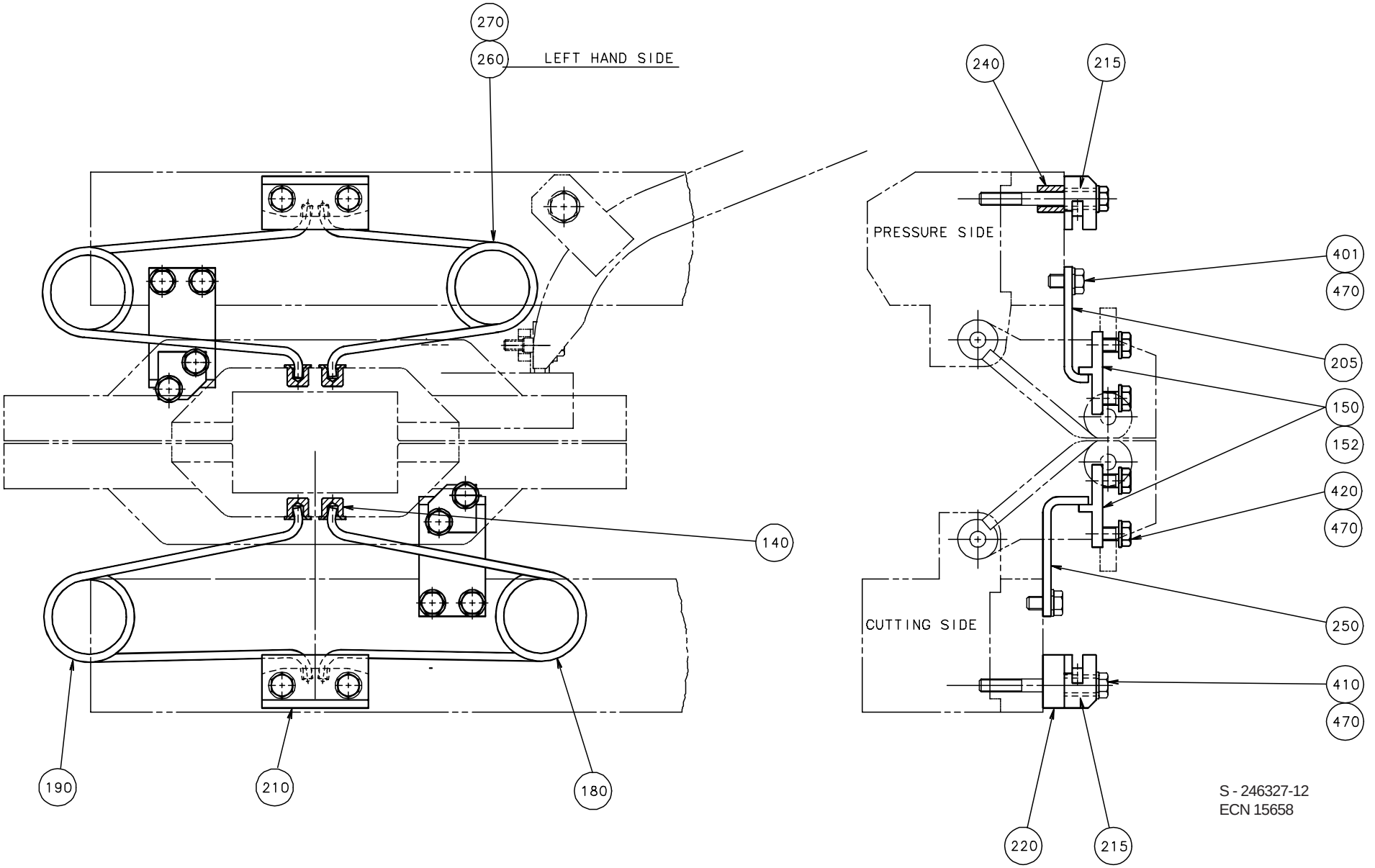

Pos	Part No	SP	UN	Qty	Description	Page No
TBA/8 0355B IH						
140	545651-0000	J		8	GUIDE STUD	
150	545125-0000	J		2	STOPPER	
152	545126-0000	J		2	STOPPER	
180	545801-0000	I		3	SPRING	
190	545802-0000	I		3	SPRING	
205	545127-0000	M		2	CATCH	
210	247262-0000	K		4	SPRING BRACKET	
215	247263-0000	L		8	SPACER	
220	247271-0000	R		2	LACE	
240	263684-0000	K		4	SPACER	
250	545136-0000	M		2	CATCH	
260	554962-0000	I		1	SPRING	
270	554963-0000	I		1	SPRING	
401	312105-0331	-		8	SCREW M6S ISO 4017 M5X20 A280	
410	312105-0340	-		8	SCREW M6S ISO 4014 M5X45 A280	
420	312105-0325	-		8	SCREW M6S5X10 A2 80	
470	315105-0146	-		24	WASHER,PLAIN ROUND 5,3x10 Stainless	

Pos	Part No	SP	UN	Qty	Description	Page No

SHOCK ABSORBER

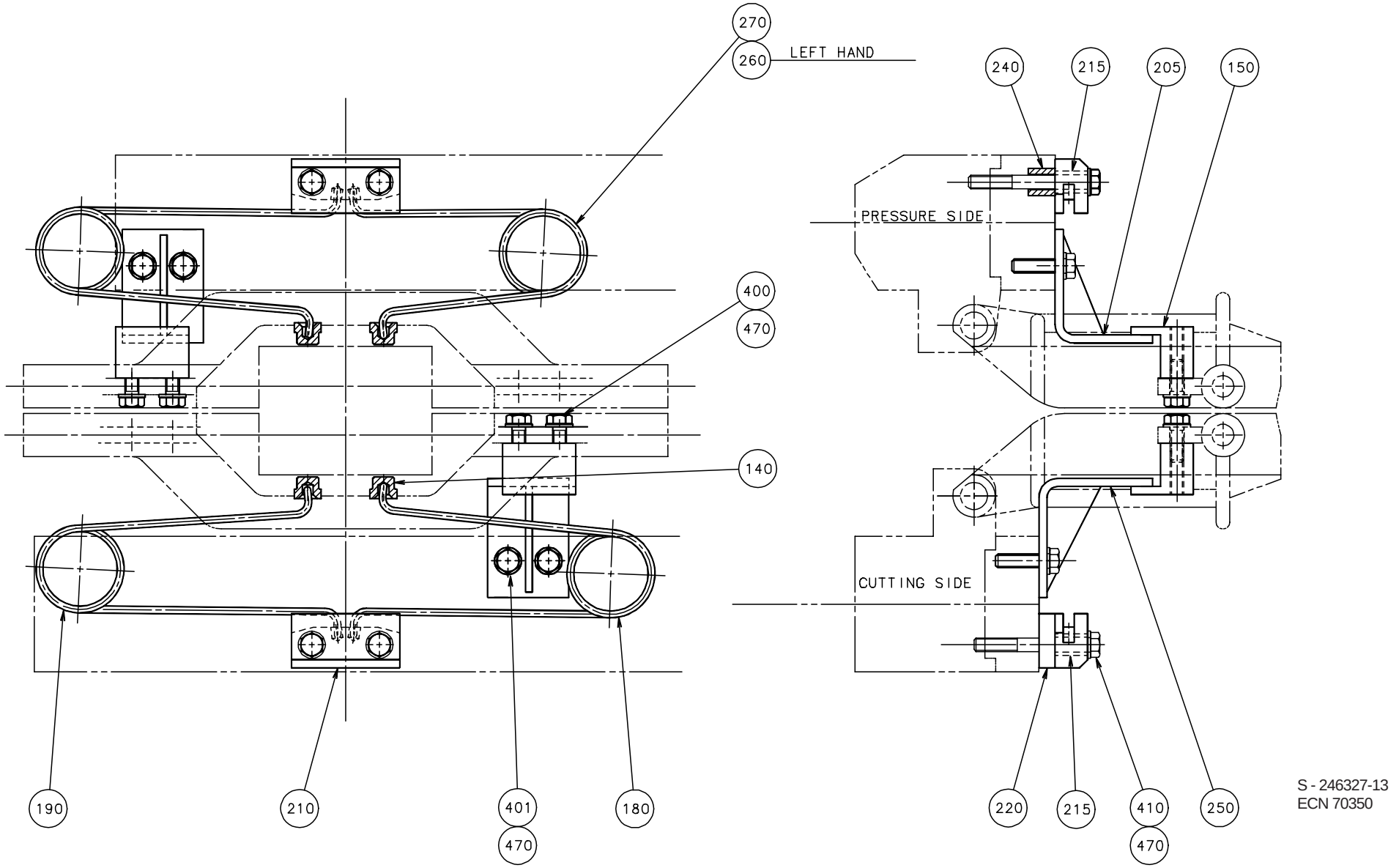

S - 246327-13
ECN 70350

Pos	Part No	SP	UN	Qty	Description	Page No
TBA/8 0375S IH						
140	545651-0000	J		8	GUIDE STUD	
150	548493-0000	J		4	STOPPER	
180	561393-0000	I		3	SPRING	
190	561394-0000	I		3	SPRING	
205	562137-0000	M		2	CATCH	
210	247262-0000	K		4	SPRING BRACKET	
215	247263-0000	L		8	SPACER	
220	247271-0000	R		2	LACE	
240	263684-0000	K		4	SPACER	
250	562136-0000	M		2	CATCH	
260	561391-0000	I		1	SPRING	
270	561392-0000	I		1	SPRING	
400	312105-0329	-		8	SCREW M6S ISO 4017 M5X16 A280	
401	312105-0331	-		8	SCREW M6S ISO 4017 M5X20 A280	
410	312105-0340	-		8	SCREW M6S ISO 4014 M5X45 A280	
470	315105-0146	-		24	WASHER,PLAIN ROUND 5,3x10 Stainless	

Pos	Part No	SP	UN	Qty	Description	Page No

SHOCK ABSORBER

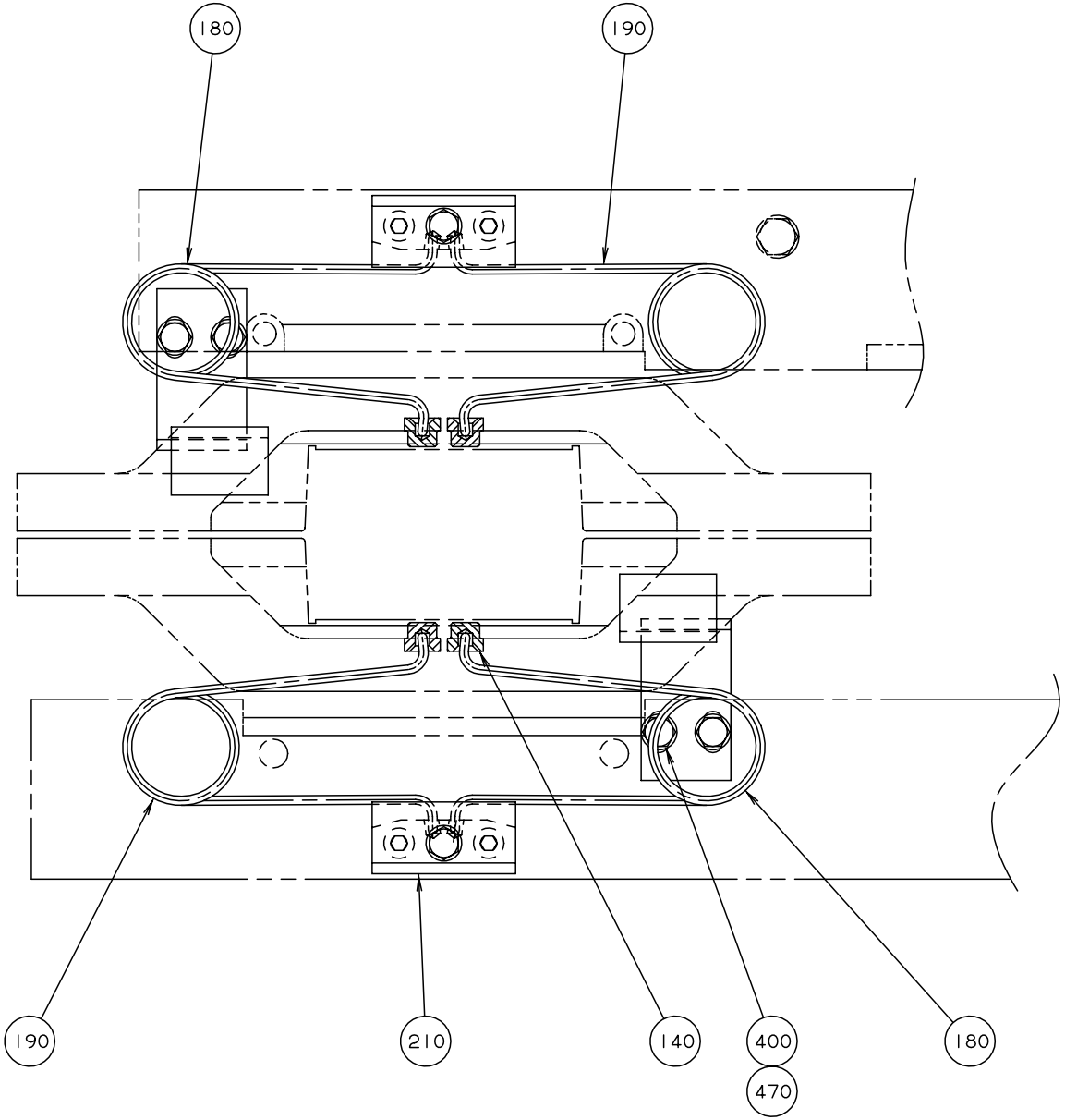

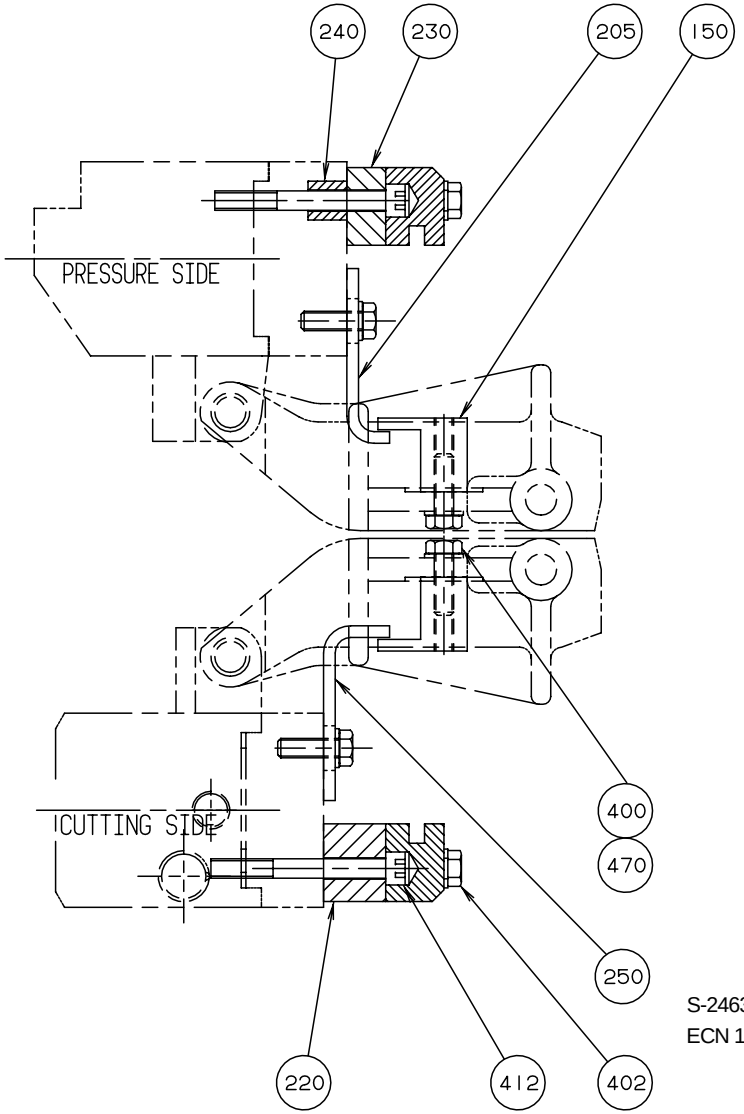

S-246327-15
ECN 19552

Pos	Part No	SP	UN	Qty	Description	Page No
TBA/8 0400B IH						
140	545651-0000	J		8	GUIDE STUD	
150	548493-0000	J		4	STOPPER	
180	545801-0000	I		4	SPRING	
190	545802-0000	I		4	SPRING	
205	246332-0000	M		2	CATCH	
210	571296-0000	K		4	SPRING BRACKET	
220	571298-0000	R		2	LACE	
230	571297-0000	R		2	LACE	
240	263684-0000	K		4	SPACER	
250	263693-0000	M		2	CATCH	
400	312105-0329	-		16	SCREW M6S ISO 4017 M5X16 A280	
402	312105-0333	-		4	SCREW M6S ISO 4017 M5X25 A280	
412	312115-0340	-		8	SCREW MC6S ISO 4762 M5X45 A280	
470	315105-0146	-		20	WASHER,PLAIN ROUND 5,3x10 Stainless	

Pos	Part No	SP	UN	Qty	Description	Page No

SHOCK ABSORBER

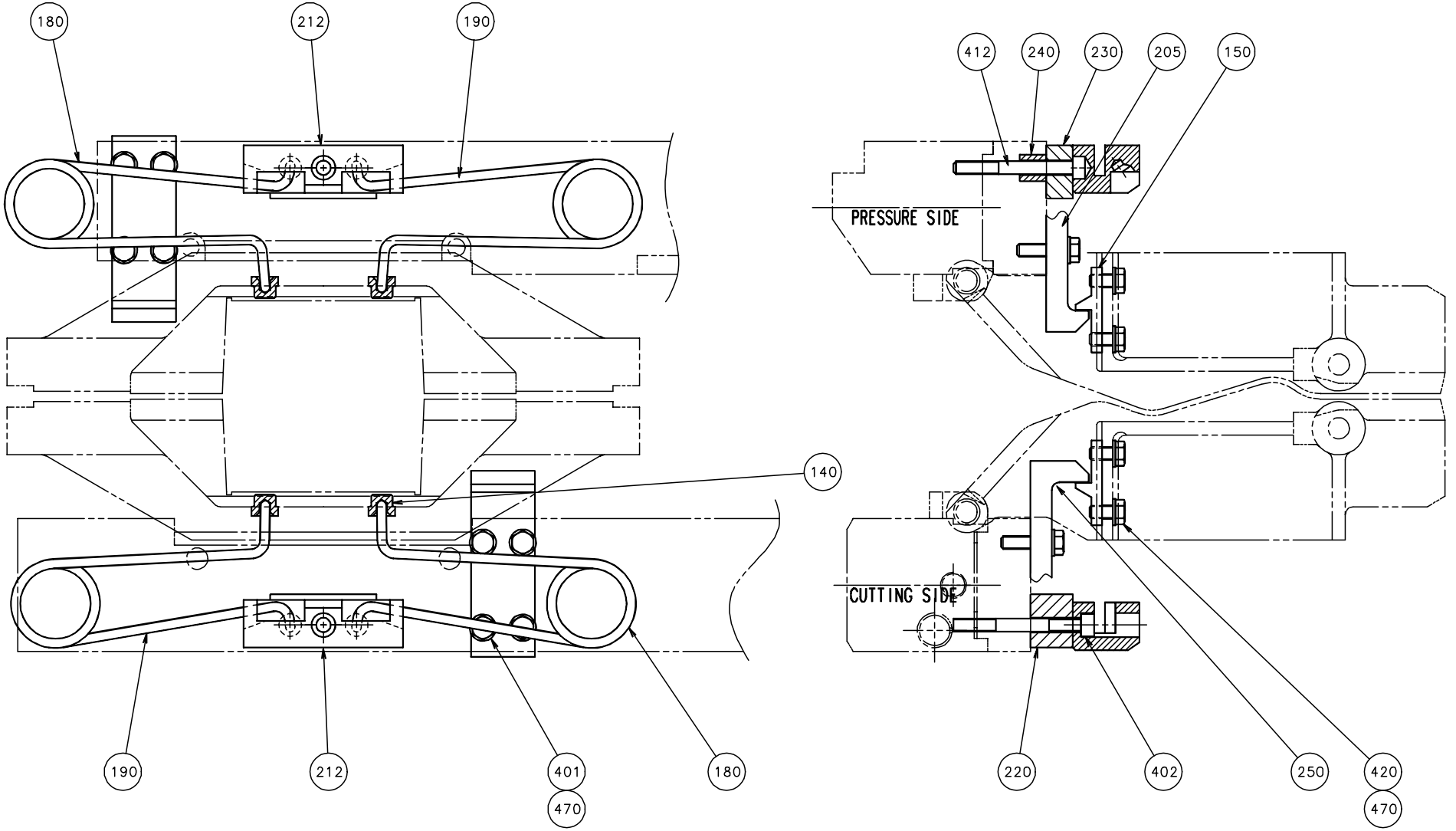

S - 246327-16
ECN 71975

Pos	Part No	SP	UN	Qty	Description	Page No
TBA/8 1000SQ IH						
140	545651-0000	J		8	GUIDE STUD	
150	33152-0000	J		4	STOPPER	
180	1143216-0000	I		4	SPRING	
190	1143215-0000	I		4	SPRING	
205	593270-0000	M		2	CATCH	
212	597574-0000	K		4	SPRING BRACKET	
220	571298-0000	R		2	LACE	
230	571297-0000	R		2	LACE	
240	263684-0000	K		4	SPACER	
250	593271-0000	M		2	CATCH	
401	312105-0331	-		8	SCREW M6S ISO 4017 M5X20 A280	
402	312115-0327	-		4	SCREW MC6S ISO 4762 M5X12 A280	
412	312115-0340	-		8	SCREW MC6S ISO 4762 M5X45 A280	
420	312105-0325	-		8	SCREW M6S5X10 A2 80	
470	315105-0146	-		16	WASHER,PLAIN ROUND 5,3x10 Stainless	

Pos	Part No	SP	UN	Qty	Description	Page No

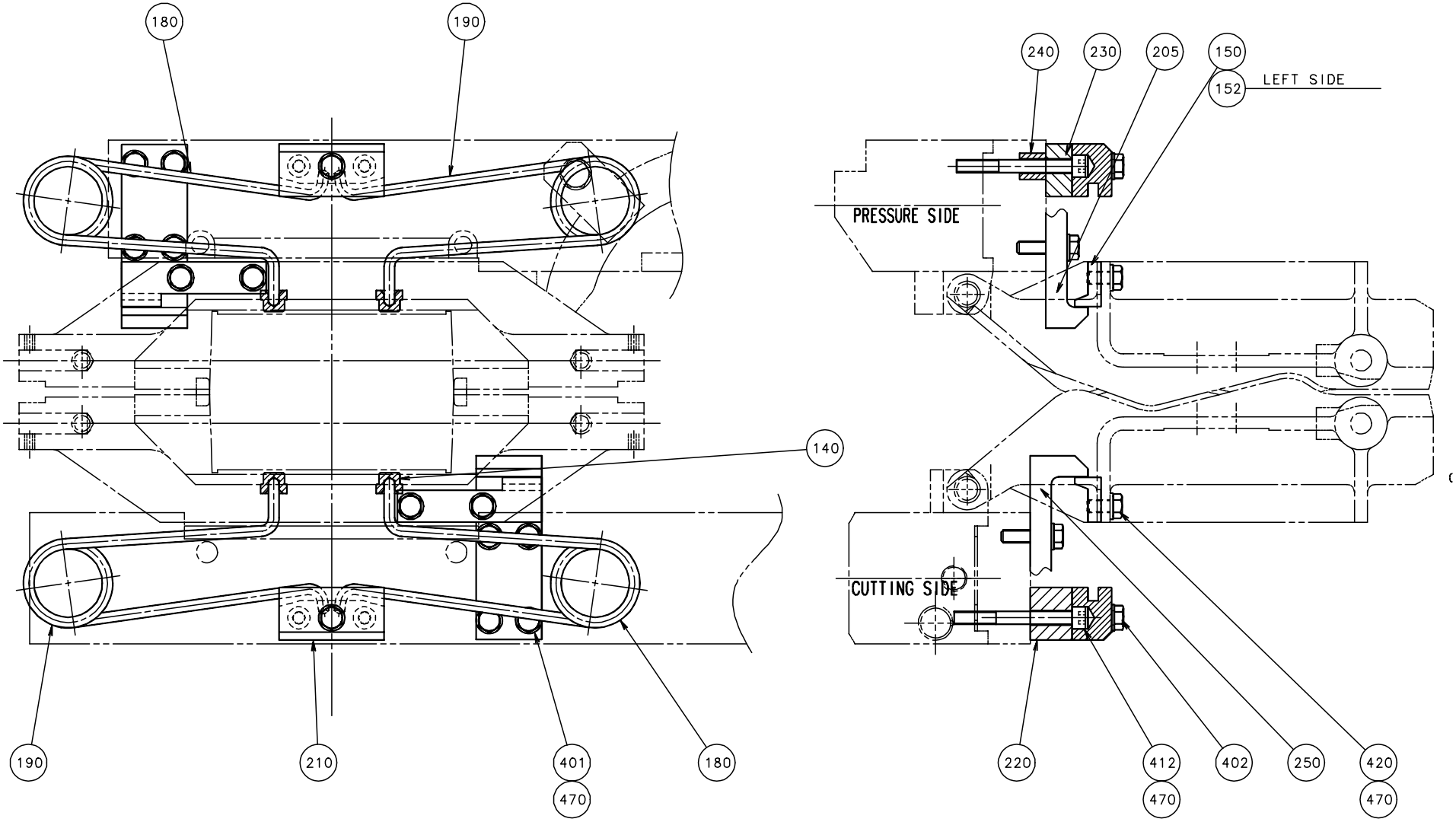

S - 246327-17
ECN 70512

Pos	Part No	SP	UN	Qty	Description	Page No
TBA/8 1000S IH						
140	545651-0000	J		8	GUIDE STUD	
150	1255207-0000	J		2	STOPPER	
152	1255208-0000	J		2	STOPPER	
180	1143216-0000	I		4	SPRING	
190	1143215-0000	I		4	SPRING	
205	593270-0000	M		2	CATCH	
210	1317955-0000	M		4	SPRING BRACKET	
220	571298-0000	R		2	LACE	
230	571297-0000	R		2	LACE	
240	263684-0000	K		4	SPACER	
250	593271-0000	M		2	CATCH	
401	312105-0331	-		8	SCREW M6S ISO 4017 M5X20 A280	
402	312105-0333	-		4	SCREW M6S ISO 4017 M5X25 A280	
412	312115-0340	-		8	SCREW MC6S ISO 4762 M5X45 A280	
420	312105-0325	-		12	SCREW M6S5X10 A2 80	
470	315105-0146	-		24	WASHER,PLAIN ROUND 5,3x10 Stainless	

Pos	Part No	SP	UN	Qty	Description	Page No

SHOCK ABSORBER

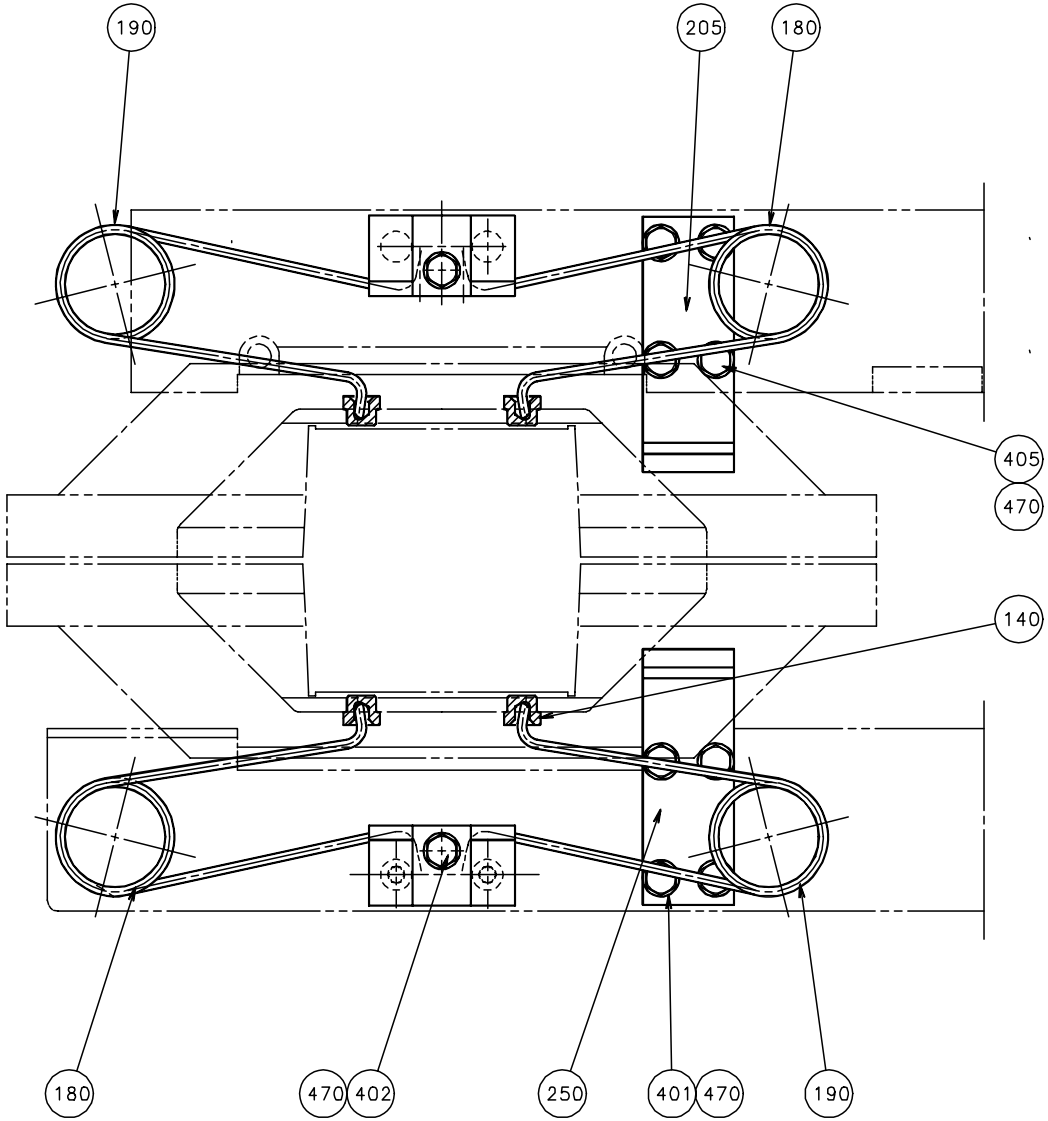

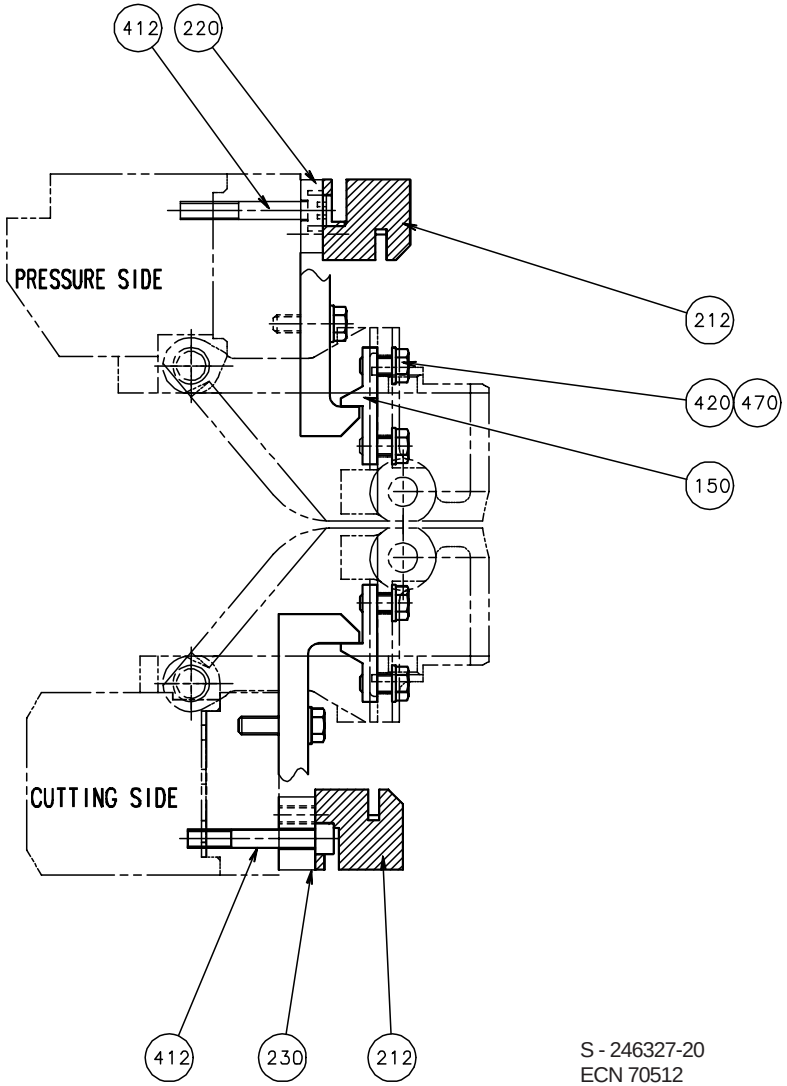

S - 246327-20
ECN 70512

Pos	Part No	SP	UN	Qty	Description	Page No
TBA/8 0500SQ IH						
140	545651-0000	J		8	GUIDE STUD	
150	33152-0000	J		4	STOPPER	
180	1037767-0000	I		4	SPRING RIGHT	
190	1037768-0000	I		4	SPRING LEFT	
205	593270-0000	M		2	CATCH	
212	591080-0000	K		4	SPRING BRACKET	
220	591078-0000	R		2	LACE	
230	571297-0000	R		2	LACE	
250	593271-0000	M		2	CATCH	
401	312105-0331	-		8	SCREW M6S ISO 4017 M5X20 A280	
402	312105-0335	-		4	SCREW M6S ISO 4017 M5X30 A280	
405	312105-0327	-		4	SCREW M6S ISO 4017 M5X12 A280	
412	312115-0337	-		8	SCREW MC6S ISO 4762 M5X35 A280	
420	312105-0325	-		8	SCREW M6S5X10 A2 80	
470	315105-0146	-		20	WASHER,PLAIN ROUND 5,3x10 Stainless	

Pos	Part No	SP	UN	Qty	Description	Page No

CARRIER PRESSURE L IH

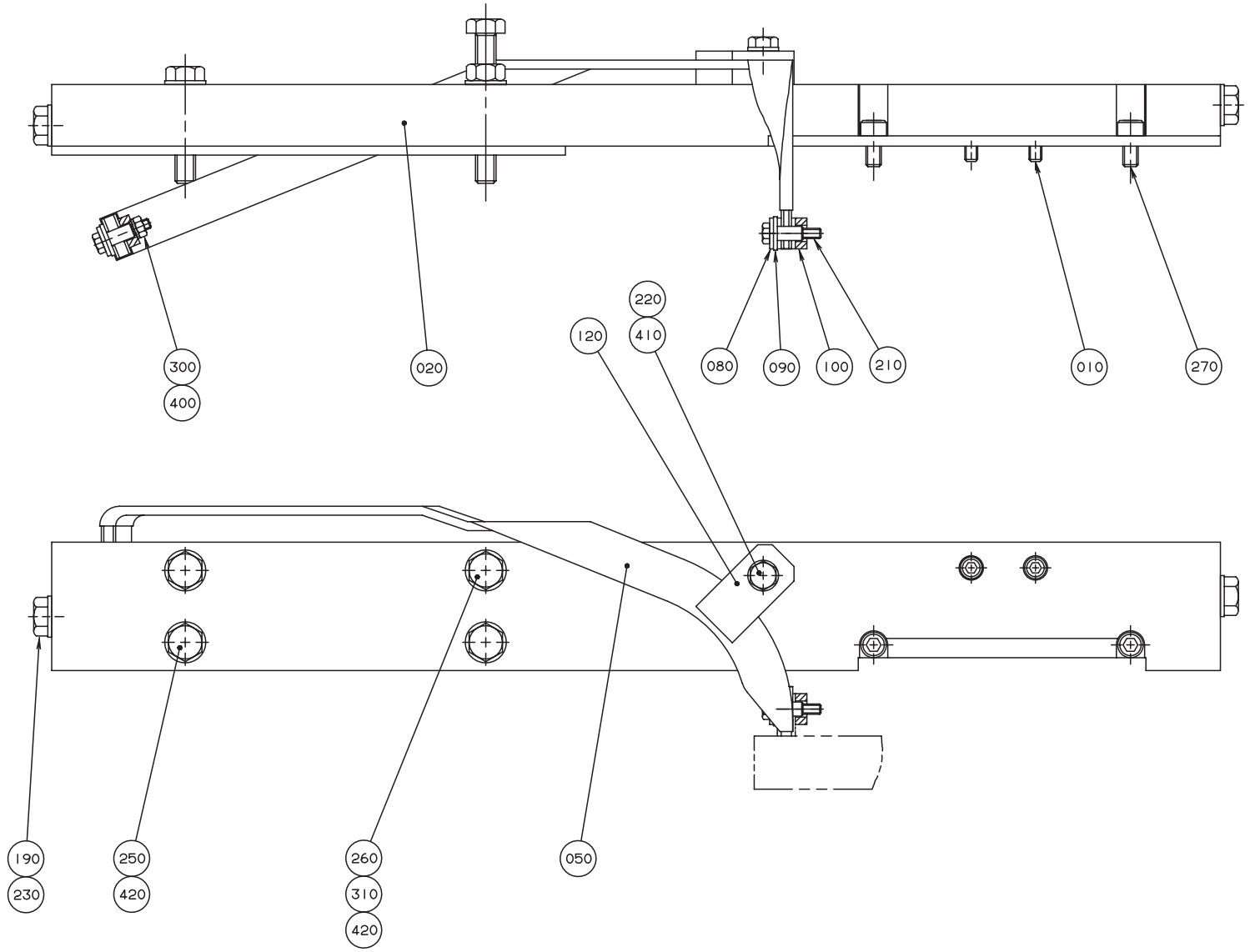

S-259414-2
ECN 10777

Pos	Part No	SP	UN	Qty	Description	Page No
TBA 0355B or TBA 0375S or TBA 0400B or TBA 0500S or TBA 0500SQ or TBA 0750B or TBA 0750S or TBA 1000B or TBA 1000S or TBA 1000SQ or TBA 1055B						
010	312115-0331	-		2	SCREW MC6S ISO 4762 M5X20 A280	
Common parts						
020	540368-0000	M		1	CARRIER	
050	540744-0000	M		1	BUSBAR	
080	28509-0000	I		2	WASHER	
090	32544-0000	J		2	INSULATION NUT	
100	32644-0000	I		2	WASHER	
120	484834-0000	M		1	HOLDER	
190	90005-0007	-		2	WASHER,Bolt head 8,7x 14, H= 1, M8	
210	312105-0295	-		2	SCREW M6S ISO 4017 M4X20 A280	
220	312105-0370	-		1	SCREW M6S ISO 4017 M6X20 A280	
230	312105-0447	-		2	SCREW M6S ISO 4017 M8X12 A280	
250	312105-0457	-		3	SCREW O4017 M8X35A280	
260	312109-0463	-		1	SCREW M6S 8x60H A4 80	
270	312115-0366	-		2	SCREW MC6S ISO 4762 M6X12 A280	
300	312605-0312	-		1	NUT,HEXAGON,M4 RFR	
310	312605-0318	-		1	NUT,HEXAGON,M8 RFR	
400	315105-0136	-		1	WASHER,PLAIN ROUND 4,3x8 Stainless	
410	315105-0153	-		1	WASHER,PLAIN ROUND 6,4x12 Stainless	
420	315105-0165	-		4	WASHER,PLAIN ROUND 8,4x16 Stainless	

Pos	Part No	SP	UN	Qty	Description	Page No

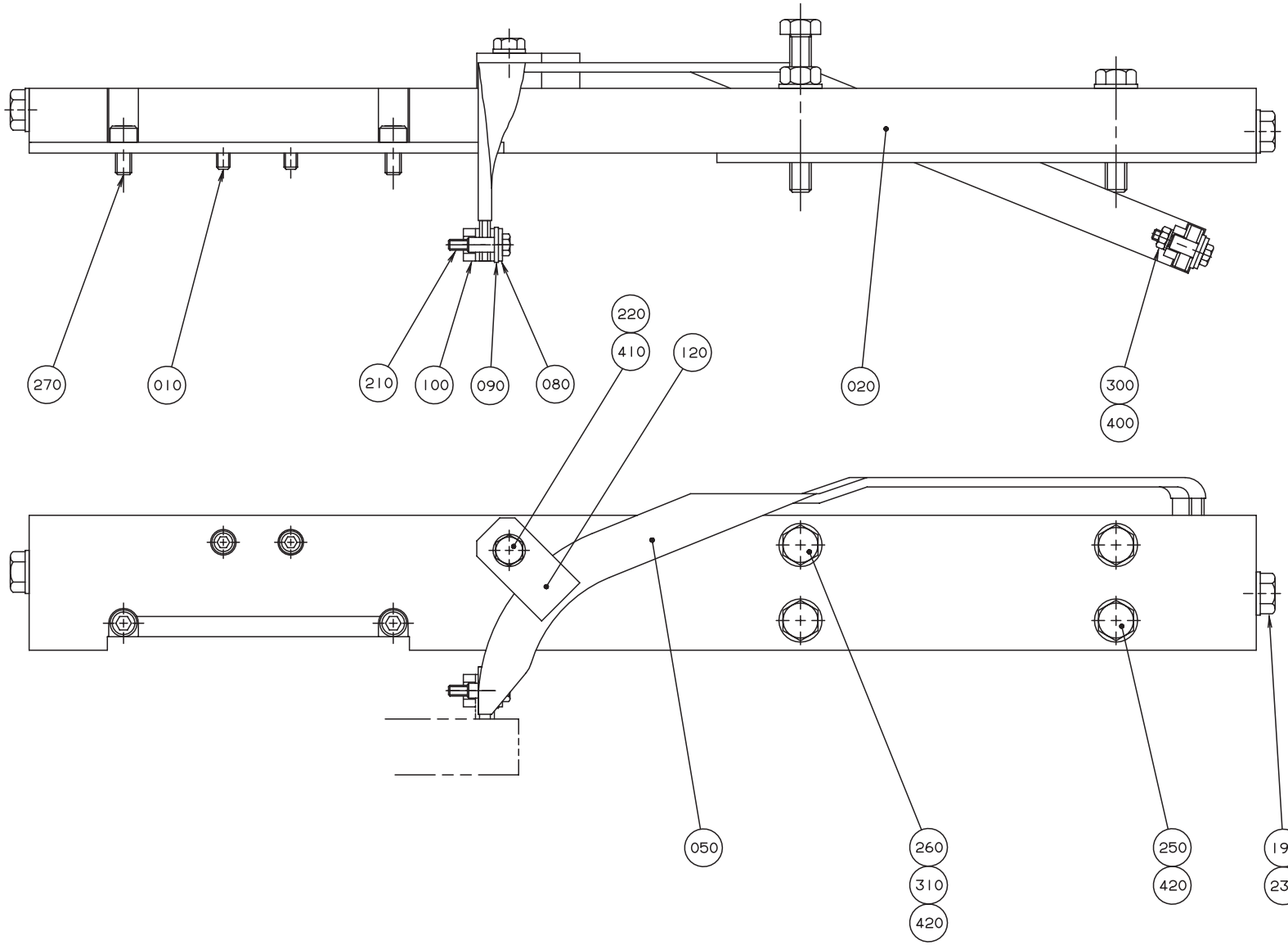

S-259415-2
ECN 10777

Pos	Part No	SP	UN	Qty	Description	Page No
TBA 0355B or TBA 0375S or TBA 0400B or TBA 0500S or TBA 0500SQ or TBA 0750B or TBA 0750S or TBA 1000B or TBA 1000S or TBA 1000SQ or TBA 1055B						
010	312115-0331	-		2	SCREW MC6S ISO 4762 M5X20 A280	
Common parts						
020	540367-0000	M		1	CARRIER	
050	540743-0000	M		1	BUSBAR	
080	28509-0000	I		2	WASHER	
090	32544-0000	J		2	INSULATION NUT	
100	32644-0000	I		2	WASHER	
120	484834-0000	M		1	HOLDER	
190	90005-0007	-		2	WASHER,Bolt head 8,7x 14, H= 1, M8	
210	312105-0295	-		2	SCREW M6S ISO 4017 M4X20 A280	
220	312105-0370	-		1	SCREW M6S ISO 4017 M6X20 A280	
230	312105-0447	-		2	SCREW M6S ISO 4017 M8X12 A280	
250	312105-0457	-		3	SCREW O4017 M8X35A280	
260	312109-0463	-		1	SCREW M6S 8x60H A4 80	
270	312115-0366	-		2	SCREW MC6S ISO 4762 M6X12 A280	
300	312605-0312	-		1	NUT,HEXAGON,M4 RFR	
310	312605-0318	-		1	NUT,HEXAGON,M8 RFR	
400	315105-0136	-		1	WASHER,PLAIN ROUND 4,3x8 Stainless	
410	315105-0153	-		1	WASHER,PLAIN ROUND 6,4x12 Stainless	
420	315105-0165	-		4	WASHER,PLAIN ROUND 8,4x16 Stainless	

Pos	Part No	SP	UN	Qty	Description	Page No

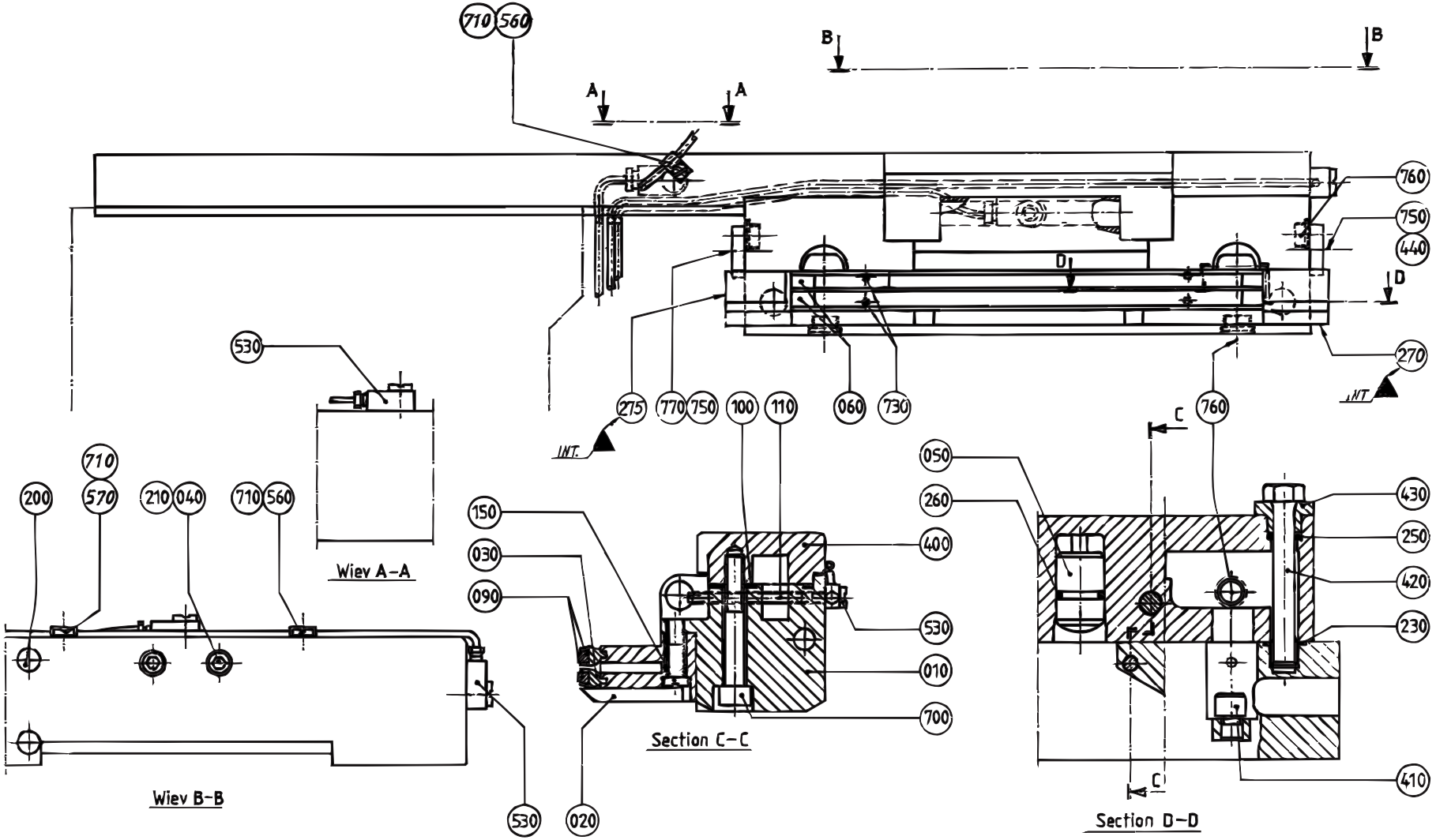

S-257835-6
ECN 21002

Pos	Part No	SP	UN	Qty	Description	Page No
0375S						
010	466432-0000	N		1	BEARING HOUSING	
020	449727-0000	K		1	CUTTING JAW	
030	544516-0000	J		2	CUTTING RAIL	
060	38490-0000	F		4	END PIECE	
090	564533-0002	E		2	DOLLY	
100	245272-0000	I		1	GASKET	
110	1296886-0000	J		1	SCREW	
150	90287-0070	M		2	SCREW, MLC6S DIN7984, M6x23	
420	243143-0000	J		2	SCREW	
0355B or 0400B or 0500S						
010	466431-0000	N		1	BEARING HOUSING	
020	464162-0000	K		1	CUTTING JAW	
030	440925-0000	J		2	CUTTING RAIL	
040	12922-0000	K		2	WASHER	
060	440043-0000	F		4	END PIECE	
090	564533-0005	E		2	DOLLY	
100	497716-0000	I		1	GASKET	
110	1296886-0000	J		1	SCREW	
150	90287-0070	M		2	SCREW, MLC6S DIN7984, M6x23	
210	312115-0331	-		2	SCREW MC6S ISO 4762 M5X20 A280	
230	315202-0111	F		2	O-RINGS 13,1X1,6	
250	315202-0207	F		2	O-RINGS 8,3X2,4	
420	243143-0000	J		2	SCREW	
0500B						
010	450503-0000	N		1	BEARING HOUSING	
020	257783-0000	K		1	CUTTING JAW	
030	497921-0000	J		2	CUTTING RAIL	
060	32116-0000	F		4	END PIECE	
090	564533-0001	E		2	DOLLY	
100	245271-0000	I		1	GASKET	
110	1296982-0000	J		1	SCREW	
150	90287-0070	M		2	SCREW, MLC6S DIN7984, M6x23	
200	311508-0416	-		1	RIVET KN4X10ALUM.	
230	315202-0111	F		2	O-RINGS 13,1X1,6	
250	315202-0207	F		2	O-RINGS 8,3X2,4	
420	243143-0000	J		2	SCREW	
0500SQ or 1000SQ						
010	573985-0000	N		1	BEARING HOUSING	
020	579772-0000	K		1	CUTTING JAW	
030	1038517-0003	J		2	CUTTING RAIL	
060	533012-0001	F		4	END PIECE	
090	1038128-0001	E		2	DOLLY	
100	573988-0000	I		1	GASKET	
110	1296981-0000	J		1	SCREW	
150	90287-0070	M		2	SCREW, MLC6S DIN7984, M6x23	
230	315202-0111	F		2	O-RINGS 13,1X1,6	
250	315202-0207	F		2	O-RINGS 8,3X2,4	
270	591981-0000	J		1	CATCH	
275	591982-0000	J		1	CATCH	
420	573583-0000	J		2	SCREW	
0750B or 1055B or TBA/8 1000B LOFIN						
010	450503-0000	N		1	BEARING HOUSING	
020	257783-0000	K		1	CUTTING JAW	
030	497921-0000	J		2	CUTTING RAIL	
040	12922-0000	K		2	WASHER	
060	32116-0000	F		4	END PIECE	
090	564533-0001	E		2	DOLLY	
100	245271-0000	I		1	GASKET	
110	1296982-0000	J		1	SCREW	
150	90287-0070	M		2	SCREW, MLC6S DIN7984, M6x23	
210	312115-0331	-		2	SCREW MC6S ISO 4762 M5X20 A280	
230	315202-0111	F		2	O-RINGS 13,1X1,6	
250	315202-0207	F		2	O-RINGS 8,3X2,4	
420	243143-0000	J		2	SCREW	
0750S						
010	544317-0000	N		1	BEARING HOUSING	
020	544323-0000	K		1	CUTTING JAW	
030	544334-0000	J		2	CUTTING RAIL	
040	12922-0000	K		2	WASHER	
060	544337-0000	F		4	END PIECE	
090	564533-0007	E		2	DOLLY	
100	497716-0000	I		1	GASKET	
110	1296885-0000	J		1	SCREW	
150	90287-0070	M		2	SCREW, MLC6S DIN7984, M6x23	
210	312115-0331	-		2	SCREW MC6S ISO 4762 M5X20 A280	
230	315202-0111	F		2	O-RINGS 13,1X1,6	
250	315202-0207	F		2	O-RINGS 8,3X2,4	
420	243143-0000	J		2	SCREW	
1000S						
010	569057-0000	N		1	BEARING HOUSING	
020	569059-0000	K		1	CUTTING JAW	
030	544334-0000	J		2	CUTTING RAIL	
060	32116-0000	F		4	END PIECE	
090	564533-0001	E		2	DOLLY	

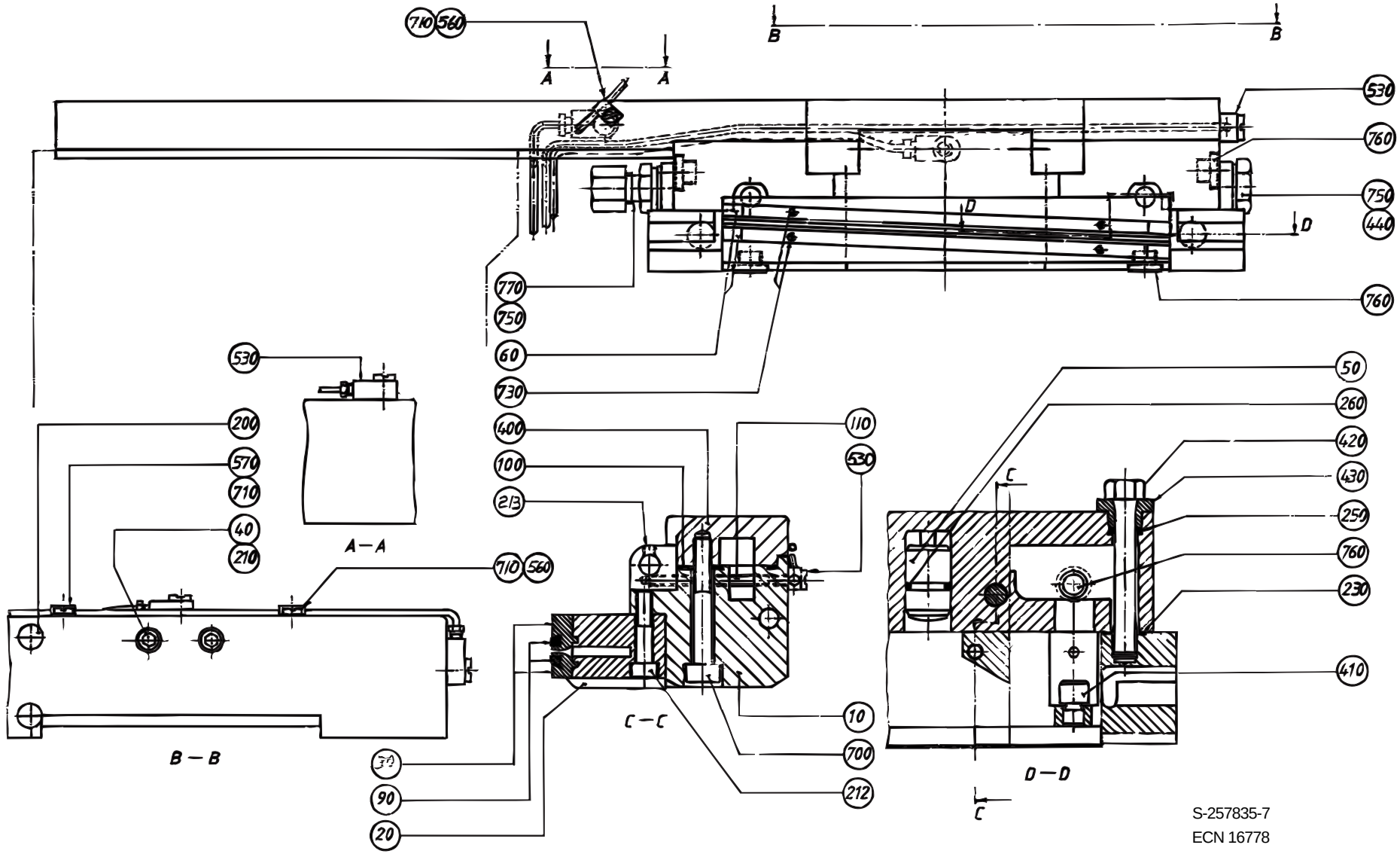
710
560
A
A
B
B
530
760
750
440
D
D
770
750
760
60
730
400
100
213
110
530
50
260
420
430
250
760
230
410
200
570
710
40
210
530
A — A
710
560
C
C
B — B
C — C
D — D
10
700
212
37
90
20
C
S-257835-7
ECN 16778

Pos	Part No	SP	UN	Qty	Description	Page No
100	245271-0000	I		1	GASKET	
110	1296884-0000	J		1	SCREW	
150	90287-0070	M		2	SCREW, MLC6S DIN7984, M6x23	
230	315202-0111	F		2	O-RINGS 13,1X1,6	
250	315202-0207	F		2	O-RINGS 8,3X2,4	
420	243143-0000	J		2	SCREW	
TBA/8 1000B HIFIN						
010	497572-0000	N		1	BEARING HOUSING	
020	284578-0000	K		1	CUTTING JAW	
030	539761-0000	J		2	CUTTING RAIL	
040	12922-0000	K		2	WASHER	
060	32116-0000	F		4	END PIECE	
090	564533-0001	E		2	DOLLY	
100	245271-0000	I		1	GASKET	
110	1296982-0000	J		1	SCREW	
210	312115-0331	-		2	SCREW MC6S ISO 4762 M5X20 A280	
212	312115-0374	-		2	SCREW MC6S ISO O4762 M6X30 A280	
213	312318-0321	-		1	STOP SCREW SK6SS5X6RFR	
230	315202-0111	F		2	O-RINGS 13,1X1,6	
250	315202-0207	F		2	O-RINGS 8,3X2,4	
420	243143-0000	J		2	SCREW	
Common parts						
050	28880-0000	J		2	PLUNGER	
260	315202-0212	F		2	O-RINGS 4,3X2,4	
400	B 464164-0000	L		1	CARRIER CUT LEFT	
410	32464-0000	I		2	SHAFT	
430	243144-0000	N		2	BUSHING	
440	255278-0000	N		1	PLUG FINISHER	
530	90134-0058	G		3	BANJO CONNECTION DT4.310.437.1	
560	90165-0058	-		2	PIPE-CLIPS,FOR SINGLE PIPE,ONE SIDE 2,5	
570	90165-0060	-		1	PIPE-CLIPS,FOR SINGLE PIPE,ONE SIDE 5	
700	312115-0461	-		2	SCREW MC6S ISO 4762 M8X50 A280	
710	312125-0287	-		3	SLOTTED CHEESE HEAD ISO 1207 M4X8 RFR	
730	312145-0238	-		4	SLOTTED HEMFS3X40RFR	
750	315234-0110	N		2	PLAIN ROUND,COPPER R1/4"	
760	342713-0209	-		4	PLUG,EXT.G-THREAD,HEXAGON SOCKET G1/8"	
770	90030-0201	N		1	PIPE CONNECTION	

Pos	Part No	SP	UN	Qty	Description	Page No

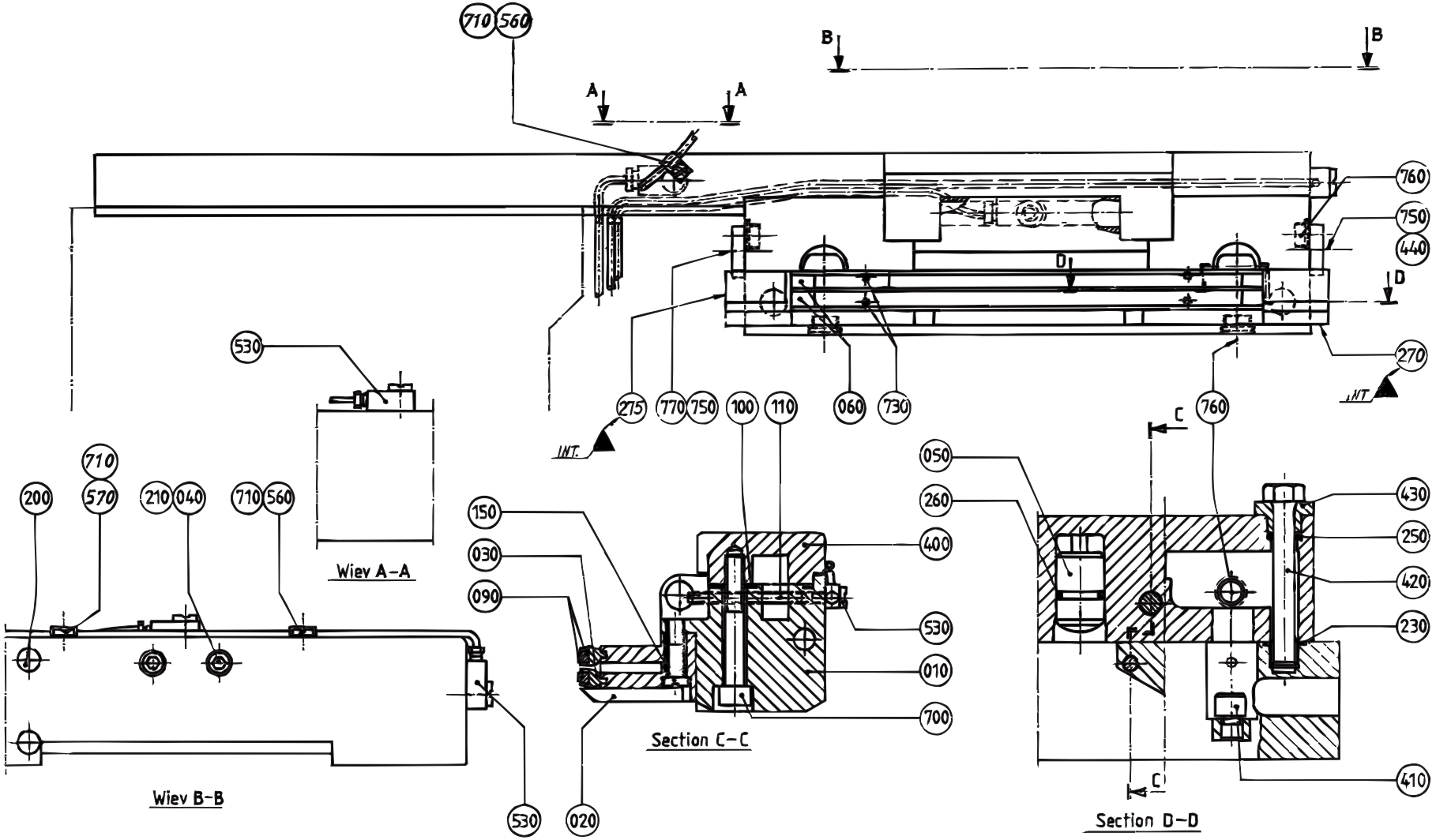

S-257835-6
ECN 21002

Pos	Part No	SP	UN	Qty	Description	Page No
0375S						
010	466432-0000	N		1	BEARING HOUSING	
020	449727-0000	K		1	CUTTING JAW	
030	544516-0000	J		2	CUTTING RAIL	
060	38490-0000	F		4	END PIECE	
090	564533-0002	E		2	DOLLY	
100	245272-0000	I		1	GASKET	
110	1296886-0000	J		1	SCREW	
150	90287-0070	M		2	SCREW, MLC6S DIN7984, M6x23	
210	312115-0331	-		2	SCREW MC6S ISO 4762 M5X20 A280	
420	243143-0000	J		2	SCREW	
0355B or 0400B or 0500S						
010	466431-0000	N		1	BEARING HOUSING	
020	464162-0000	K		1	CUTTING JAW	
030	440925-0000	J		2	CUTTING RAIL	
040	12922-0000	K		2	WASHER	
060	440043-0000	F		4	END PIECE	
090	564533-0005	E		2	DOLLY	
100	497716-0000	I		1	GASKET	
110	1296886-0000	J		1	SCREW	
150	90287-0070	M		2	SCREW, MLC6S DIN7984, M6x23	
210	312115-0331	-		2	SCREW MC6S ISO 4762 M5X20 A280	
230	315202-0111	F		2	O-RINGS 13,1X1,6	
250	315202-0207	F		2	O-RINGS 8,3X2,4	
420	243143-0000	J		2	SCREW	
0500B						
010	450503-0000	N		1	BEARING HOUSING	
020	257783-0000	K		1	CUTTING JAW	
030	497921-0000	J		2	CUTTING RAIL	
060	32116-0000	F		4	END PIECE	
090	564533-0001	E		2	DOLLY	
100	245271-0000	I		1	GASKET	
110	1296982-0000	J		1	SCREW	
150	90287-0070	M		2	SCREW, MLC6S DIN7984, M6x23	
200	311508-0416	-		1	RIVET KN4X10ALUM.	
230	315202-0111	F		2	O-RINGS 13,1X1,6	
250	315202-0207	F		2	O-RINGS 8,3X2,4	
420	243143-0000	J		2	SCREW	
0500SQ or 1000SQ						
010	573985-0000	N		1	BEARING HOUSING	
020	579772-0000	K		1	CUTTING JAW	
030	1038517-0003	J		2	CUTTING RAIL	
060	533012-0001	F		4	END PIECE	
090	1038128-0001	E		2	DOLLY	
100	573988-0000	I		1	GASKET	
110	1296981-0000	J		1	SCREW	
150	90287-0070	M		2	SCREW, MLC6S DIN7984, M6x23	
230	315202-0111	F		2	O-RINGS 13,1X1,6	
250	315202-0207	F		2	O-RINGS 8,3X2,4	
270	591981-0000	J		1	CATCH	
275	591982-0000	J		1	CATCH	
420	573583-0000	J		2	SCREW	
0750B or 1055B or TBA/8 1000B LOFIN						
010	450503-0000	N		1	BEARING HOUSING	
020	257783-0000	K		1	CUTTING JAW	
030	497921-0000	J		2	CUTTING RAIL	
040	12922-0000	K		2	WASHER	
060	32116-0000	F		4	END PIECE	
090	564533-0001	E		2	DOLLY	
100	245271-0000	I		1	GASKET	
110	1296982-0000	J		1	SCREW	
150	90287-0070	M		2	SCREW, MLC6S DIN7984, M6x23	
210	312115-0331	-		2	SCREW MC6S ISO 4762 M5X20 A280	
230	315202-0111	F		2	O-RINGS 13,1X1,6	
250	315202-0207	F		2	O-RINGS 8,3X2,4	
420	243143-0000	J		2	SCREW	
0750S						
010	544317-0000	N		1	BEARING HOUSING	
020	544323-0000	K		1	CUTTING JAW	
030	544334-0000	J		2	CUTTING RAIL	
040	12922-0000	K		2	WASHER	
060	544337-0000	F		4	END PIECE	
090	564533-0007	E		2	DOLLY	
100	497716-0000	I		1	GASKET	
110	1296885-0000	J		1	SCREW	
150	90287-0070	M		2	SCREW, MLC6S DIN7984, M6x23	
210	312115-0331	-		2	SCREW MC6S ISO 4762 M5X20 A280	
230	315202-0111	F		2	O-RINGS 13,1X1,6	
250	315202-0207	F		2	O-RINGS 8,3X2,4	
420	243143-0000	J		2	SCREW	
1000S						
010	569057-0000	N		1	BEARING HOUSING	
020	569059-0000	K		1	CUTTING JAW	
030	544334-0000	J		2	CUTTING RAIL	
060	32116-0000	F		4	END PIECE	

CUTTING JAW

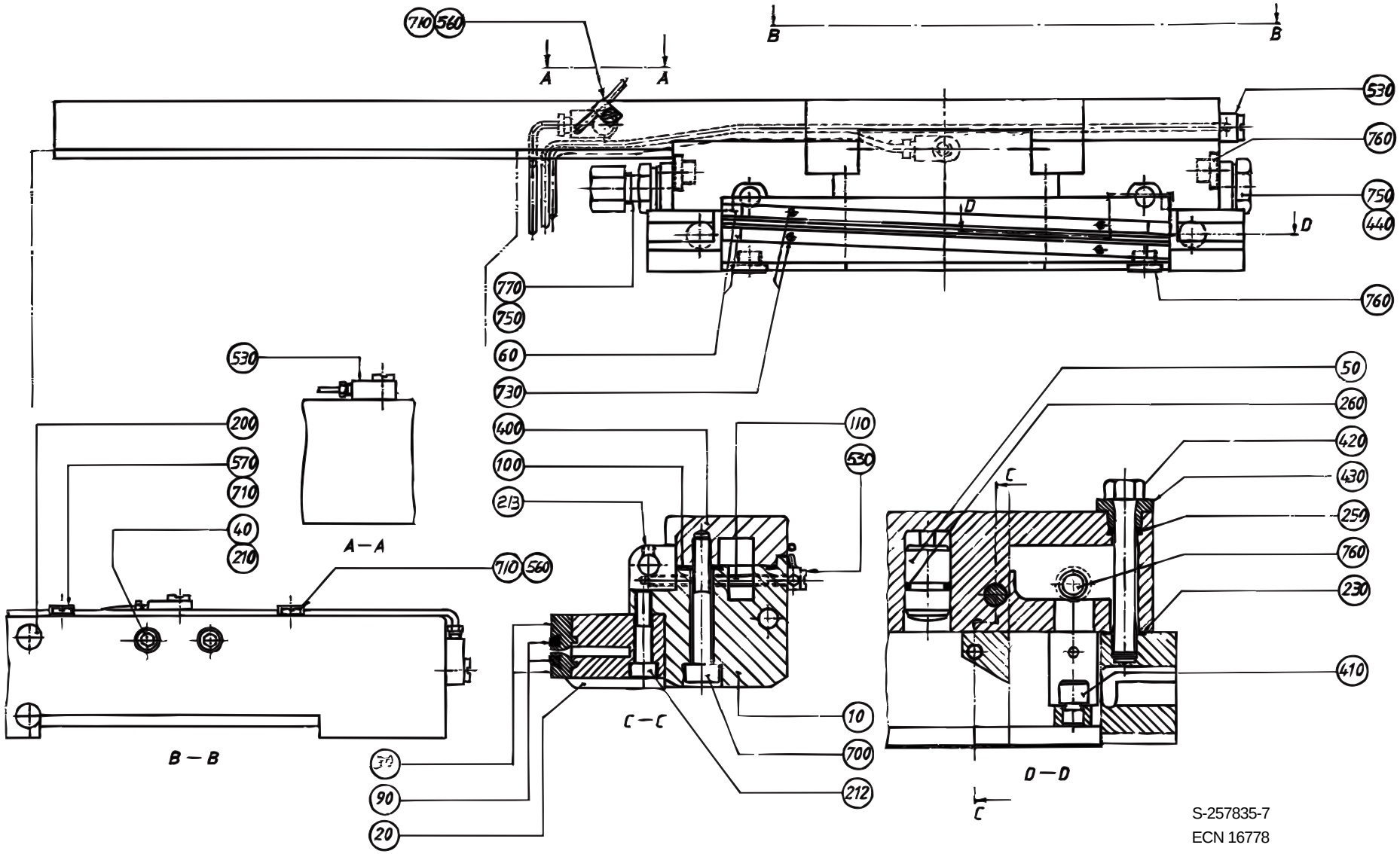

S-257835-7
ECN 16778

Pos	Part No	SP	UN	Qty	Description	Page No
090	564533-0001	E		2	DOLLY	
100	245271-0000	I		1	GASKET	
110	1296884-0000	J		1	SCREW	
150	90287-0070	M		2	SCREW, MLC6S DIN7984, M6x23	
210	312115-0331	-		2	SCREW MC6S ISO 4762 M5X20 A280	
230	315202-0111	F		2	O-RINGS 13,1X1,6	
250	315202-0207	F		2	O-RINGS 8,3X2,4	
420	243143-0000	J		2	SCREW	
TBA/8 1000B HIFIN						
010	497572-0000	N		1	BEARING HOUSING	
020	284578-0000	K		1	CUTTING JAW	
030	539761-0000	J		2	CUTTING RAIL	
040	12922-0000	K		2	WASHER	
060	32116-0000	F		4	END PIECE	
090	564533-0001	E		2	DOLLY	
100	245271-0000	I		1	GASKET	
110	1296982-0000	J		1	SCREW	
210	312115-0331	-		2	SCREW MC6S ISO 4762 M5X20 A280	
212	312115-0374	-		2	SCREW MC6S ISO O4762 M6X30 A280	
213	312318-0321	-		1	STOP SCREW SK6SS5X6RFR	
230	315202-0111	F		2	O-RINGS 13,1X1,6	
250	315202-0207	F		2	O-RINGS 8,3X2,4	
420	243143-0000	J		2	SCREW	
Common parts						
050	28880-0000	J		2	PLUNGER	
260	315202-0212	F		2	O-RINGS 4,3X2,4	
400	B 464171-0000	L		1	CARRIER CUT RIGHT	
410	32464-0000	I		2	SHAFT	
430	243144-0000	N		2	BUSHING	
440	255278-0000	N		1	PLUG FINISHER	
530	90134-0058	G		3	BANJO CONNECTION DT4.310.437.1	
560	90165-0058	-		2	PIPE-CLIPS,FOR SINGLE PIPE,ONE SIDE 2,5	
570	90165-0060	-		1	PIPE-CLIPS,FOR SINGLE PIPE,ONE SIDE 5	
700	312115-0461	-		2	SCREW MC6S ISO 4762 M8X50 A280	
710	312125-0287	-		3	SLOTTED CHEESE HEAD ISO 1207 M4X8 RFR	
730	312145-0238	-		4	SLOTTED HEMFS3X40RFR	
750	315234-0110	N		2	PLAIN ROUND,COPPER R1/4"	
760	342713-0209	-		4	PLUG,EXT.G-THREAD,HEXAGON SOCKET G1/8"	
770	90030-0201	N		1	PIPE CONNECTION	

Pos	Part No	SP	UN	Qty	Description	Page No

KNIFE HOLDER

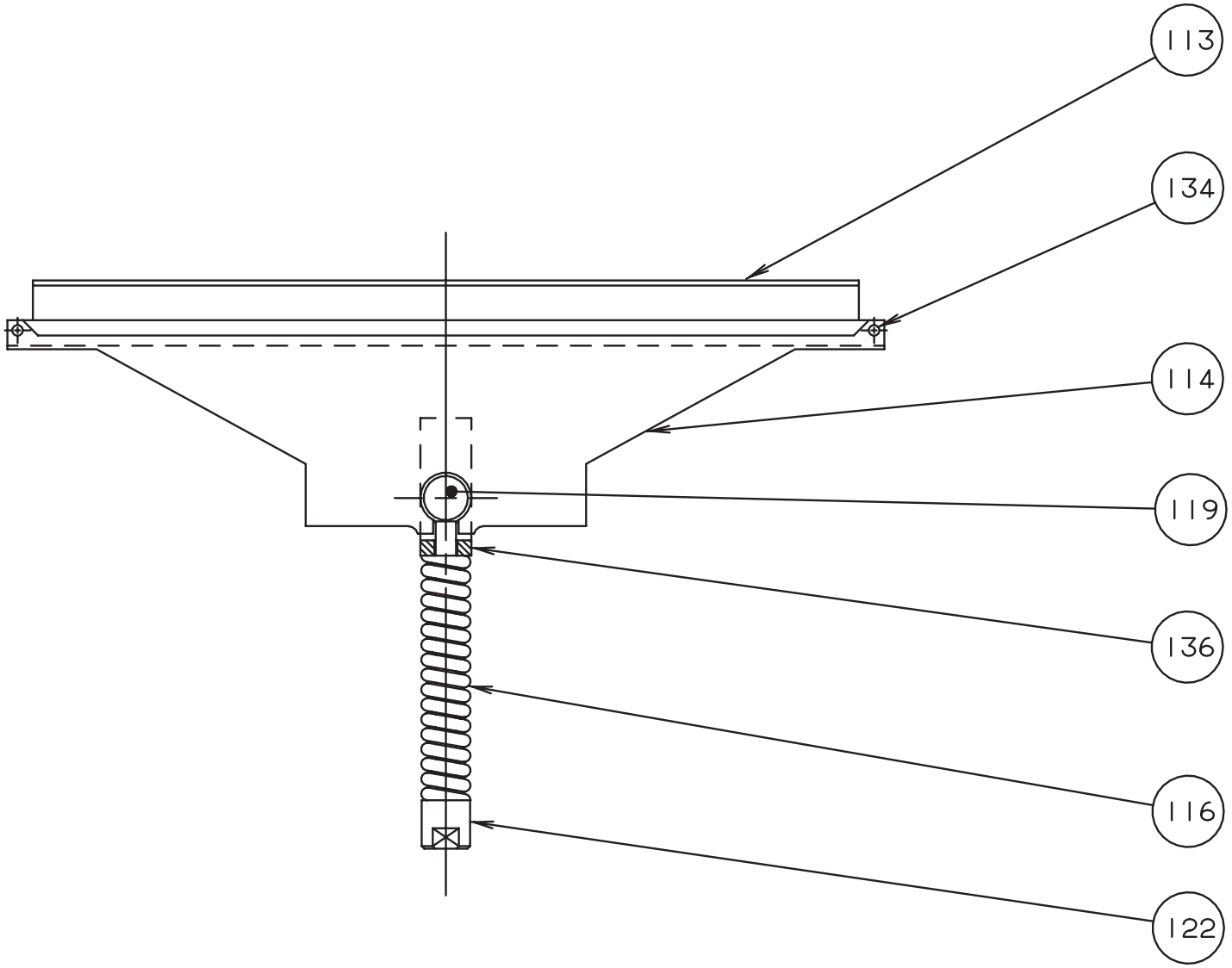

S-32966-4
ECN 20524

Pos	Part No	SP	UN	Qty	Description	Page No
TBA/8 0355B or TBA/8 0375S or TBA/8 0400B or TBA/8 0500S						
113	434338-0000	F		1	KNIFE	
114	556473-0000	J		1	KNIFE HOLDER	
TBA/8 0500B or TBA/8 0750B or TBA/8 1000B or TBA/8 1000S or TBA/8 1055B						
113	436930-0000	F		1	KNIFE	
114	556471-0000	J		1	KNIFE HOLDER	
TBA/8 0500SQ or TBA/8 0750S or TBA/8 1000SQ						
113	544327-0000	F		1	KNIFE	
114	556472-0000	J		1	KNIFE HOLDER	
Common parts						
116	927252-0000	I		1	COMPRESSION SPRING	
119	927440-0000	J		1	LINK	
122	927441-0000	J		1	NUT	
134	456011-0000	F		2	PIN	
136	927323-0000	L		1	SPACER	

Pos	Part No	SP	UN	Qty	Description	Page No

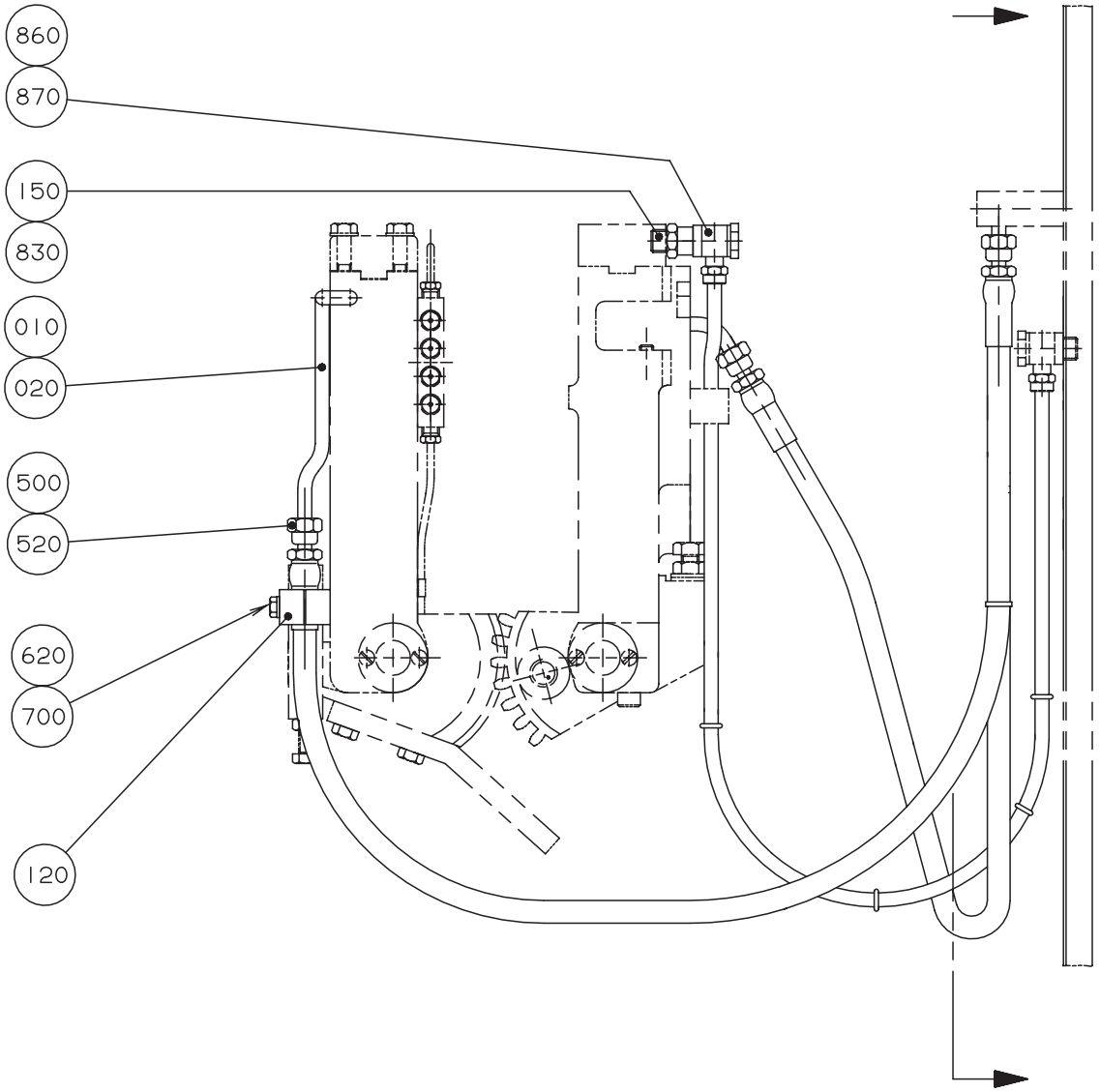

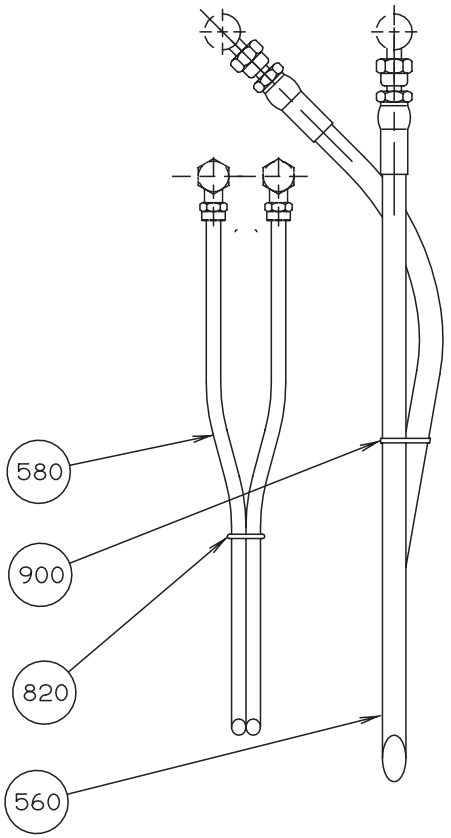

S-279134-5
ECN 11922

Pos	Part No	SP	UN	Qty	Description	Page No
Common parts						
010	22488-0000	R		1	ELBOW PIPE	
020	22489-0000	R		1	ELBOW PIPE	
120	279103-0000	R		4	CONNECTION CLAMP	
150	464370-0000	N		4	SPACER	
500	90030-0098	R		8	ACCESSORIES,FERRULE 8	
520	90030-0172	R		8	NUT M8 "REPL.BY 342703-208"	
560	90148-0040	M		4	HOSE	
580	90166-0123	-	MM	2900	HOSE	
620	312105-0378	-		4	SCREW O4017 M6X40A280	
700	315105-0153	-		8	WASHER,PLAIN ROUND 6,4x12 Stainless	
820	315202-0265	-		8	O-RINGS 12,3X2,4	
830	315233-0110	-		4	PLAIN ROUND,NYLON R1/4"	
860	342980-0122	-		4	BANJO-CONNECTION,RING 8/6-G1/4"	
870	342980-0304	-		4	BANJO-HOLLOW BOLT COUPL,EXT.THR.01-G1/4"	
900	352113-0101	-		2	RIBBON CLAMP BLACK	

Pos	Part No	SP	UN	Qty	Description	Page No

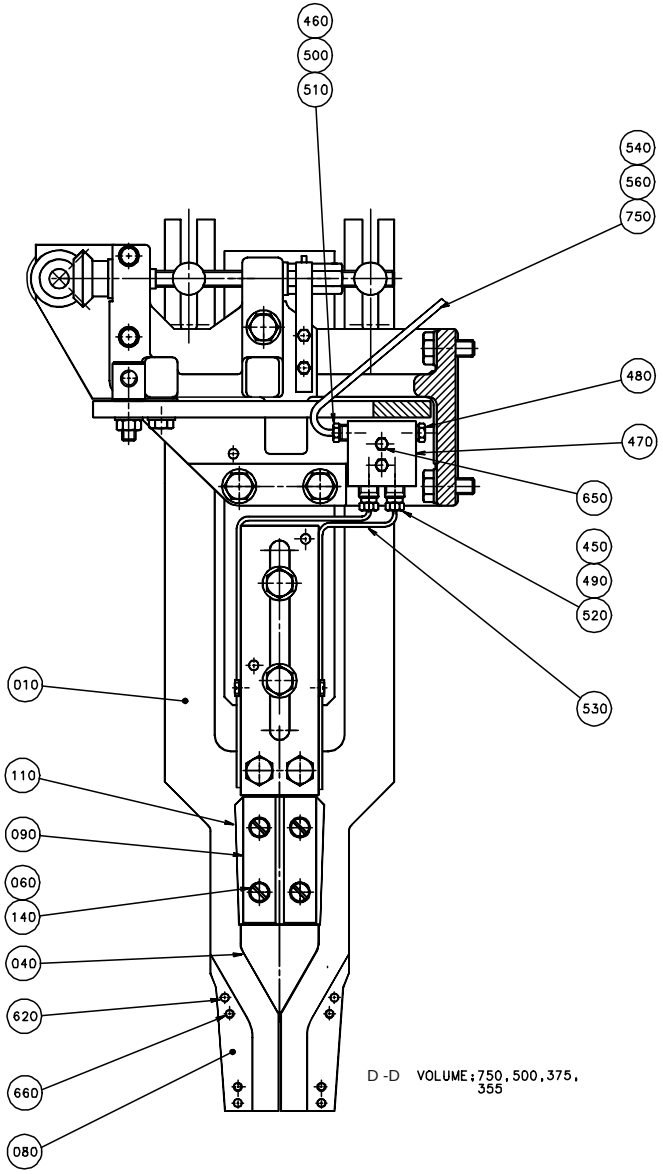

D -D VOLUME:750,500,375, 355

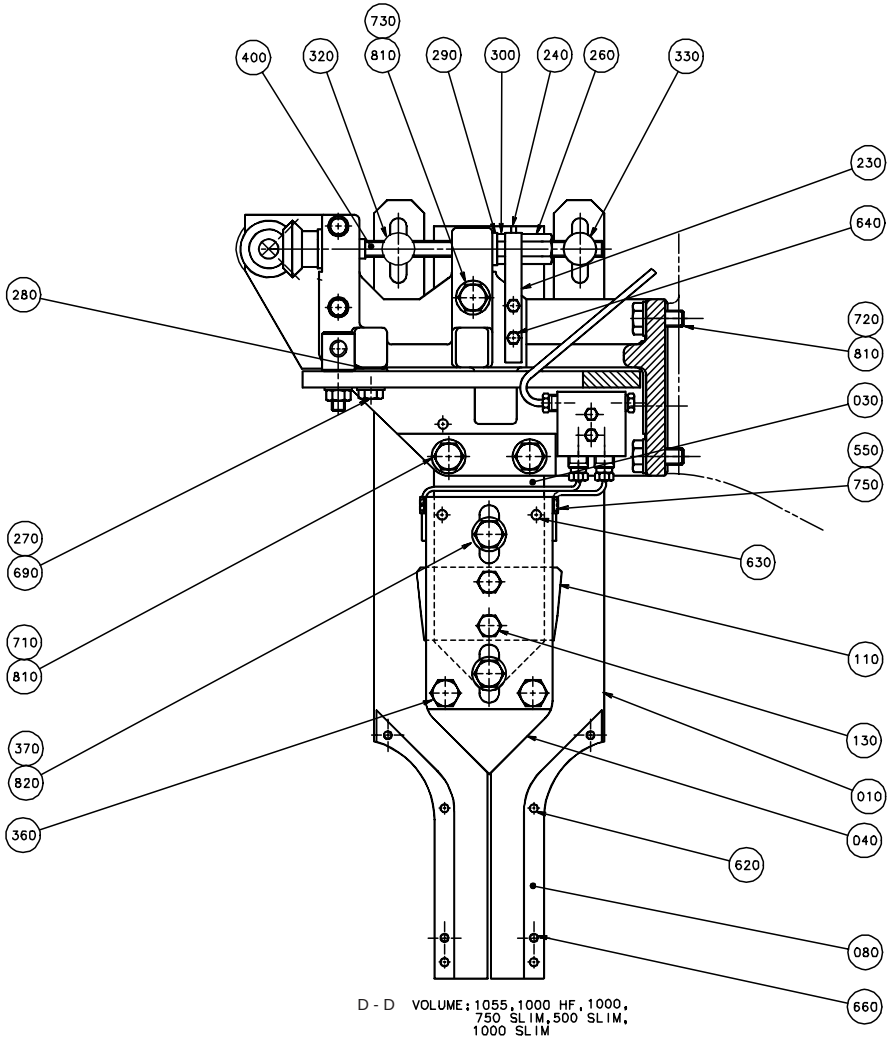

D - D VOLUME:1055,1000 HF,1000, 750 SLIM,500 SLIM, 1000 SLIM

S - 293605-3
ECN 72064

Pos	Part No	SP	UN	Qty	Description	Page No
Common parts						
210	293608-0000	-		1	BEARING CONSOLE	
220	293609-0000	-		2	BEARING CONSOLE	
225	434020-0000	-		1	BEARING CONSOLE	
230	37070-0000	D		2	SPRING	
240	37071-0000	-		2	WASHER	
260	252785-0000	R		2	SCREW	
270	252786-0000	D		4	WASHER	
280	252787-0000	R		3	BUSHING	
290	252788-0000	M		4	BUSHING	
300	252789-0000	D		2	NUT	
320	252791-0000	D		2	NUT	
330	252792-0000	D		2	NUT	
350	252794-0000	D		2	LACE	
360	252930-0000	D		4	SPACER SCREW	
370	268195-0000	D		4	SCREW	
380	293610-0000	K		4	GEAR WHEEL	
400	293612-0000	R		2	SCREW	
410	294042-0000	-		2	SEALING WASHER	
420	434021-0000	D		1	SCREW	
430	434073-0000	R		1	NUT	
450	90028-0020	I		4	CONE DT13700S-300 Di=2,5mm	
460	90028-0021	I		2	CONE DIN3862 Di=4mm	
470	90032-0038	-		2	BLOCK 2ways DT4.310792.1D	
480	90087-0019	-		2	PLUG M10x1 Stainless	
490	90092-0053	J		4	METERING VALVE 30mm3	
500	90134-0031	J		2	SLEEVE E 4/2	
510	90134-0038	J		2	BUSHING	
520	90134-0039	J		4	BUSHING DT4.018912.1D Stainless	
530	90266-0019	-	MM	800	PIPE	
540	90165-0056	-		2	PIPE-CLIPS,FOR SINGLE PIPE,ONE SIDE 4mm	
550	90165-0058	-		4	PIPE-CLIPS,FOR SINGLE PIPE,ONE SIDE 2,5	
560	90166-0109	-	MM	700	HOSE 2/4 PA11/12 Transp.	
570	90240-0180	-		4	BEARING BUSHING WITH FLANGE,10/14x15 NFB	
600	311103-0272	-		4	PINS,STRAIGHT 4X20	
610	311103-0276	-		2	PINS,STRAIGHT 4X30	
620	311103-0310	-		8	PINS,STRAIGHT 5X20	
630	311103-0357	-		12	PINS,STRAIGHT 6X30	
640	312105-0291	-		12	SCREW M6S ISO 4017 M4X12 A280	
650	312105-0295	-		4	SCREW M6S ISO 4017 M4X20 A280	
660	312105-0331	-		8	SCREW M6S ISO 4017 M5X20 A280	
670	312105-0366	-		4	SCREW M6S ISO 4017 M6X12 A280	
680	312105-0376	-		4	SCREW M6S ISO 4017 M6X35 A280	
690	312105-0452	-		3	SCREW M6S 8x22 Stainless	
700	312105-0453	-		4	SCREW M6S ISO 4017 M8x25 A280	
750	312125-0287	-		4	SLOTTED CHEESE HEAD ISO 1207 M4X8 RFR	
755	312318-0289	-		2	SET SCREW CUP POINT ISO 4029 M4X10 RFR	
760	312605-0318	-		1	NUT,HEXAGON,M8 RFR	
780	315105-0136	-		8	WASHER,PLAIN ROUND 4,3x8 Stainless	
790	315105-0153	-		4	WASHER,PLAIN ROUND 6,4x12 Stainless	
800	315105-0165	-		4	WASHER,PLAIN ROUND 8,4x16 Stainless	
810	315105-0173	-		14	WASHER,PLAIN ROUND 10,5x22 STAINLESS	
820	315105-0176	-		8	WASHER BRB 12x22 RFR	
840	315226-0196	-		2	SEAL RING RB48X65X4,5	
850	321111-0163	-		2	FLANGE BUS 12E7X20	
860	321116-0163	-		2	BUSHING 12E7/18X20	
0355B IH						
010	552158-0000	D		4	RAIL BRACKET	
020	297998-0000	D		1	ADJUSTMENT PLATE	
030	434309-0000	D		2	FASTENING PLATE	
040	531002-0000	R		2	CURVE	
050	561547-0000	K		2	SHAFT	
060	38603-0002	N		8	SPACER	
070	561543-0000	N		2	SUPPORT ROLLER	
080	552159-0000	N		4	VOLUME CAM	
090	252780-0000	R		4	RULER	
100	529196-0000	D		1	HOLDER	
110	276189-0000	G		2	DAMPER	
120	312105-0370	-		2	SCREW M6S ISO 4017 M6X20 A280	
140	312145-0366	-		8	SLOTTED HEMFS6X12RFR	
180	252768-0000	D		1	CANTILEVER	
190	293606-0000	-		2	SHIFTER HANDLE	
340	252793-0000	-		2	SUPPORT	
390	293611-0000	-		2	SHAFT	
710	312105-0493	-		8	SCREW M6S ISO 4017 M10X25 A280	
720	312105-0495	-		8	SCREW M6S ISO 4017 M10X30 A280	
730	312105-0499	-		2	SCREW 4017 M10X40A280	
0375S IH						
010	522152-0000	D		4	RAIL BRACKET	
020	297999-0000	D		1	ADJUSTMENT PLATE	
030	440507-0000	D		2	FASTENING PLATE	
040	436502-0000	R		2	CURVE	
050	561545-0000	K		2	SHAFT	
060	38603-0002	N		8	SPACER	
070	571942-0000	N		2	SUPPORT ROLLER	
080	522153-0000	N		4	VOLUME CAM	

VOLUM CURVE PIECE

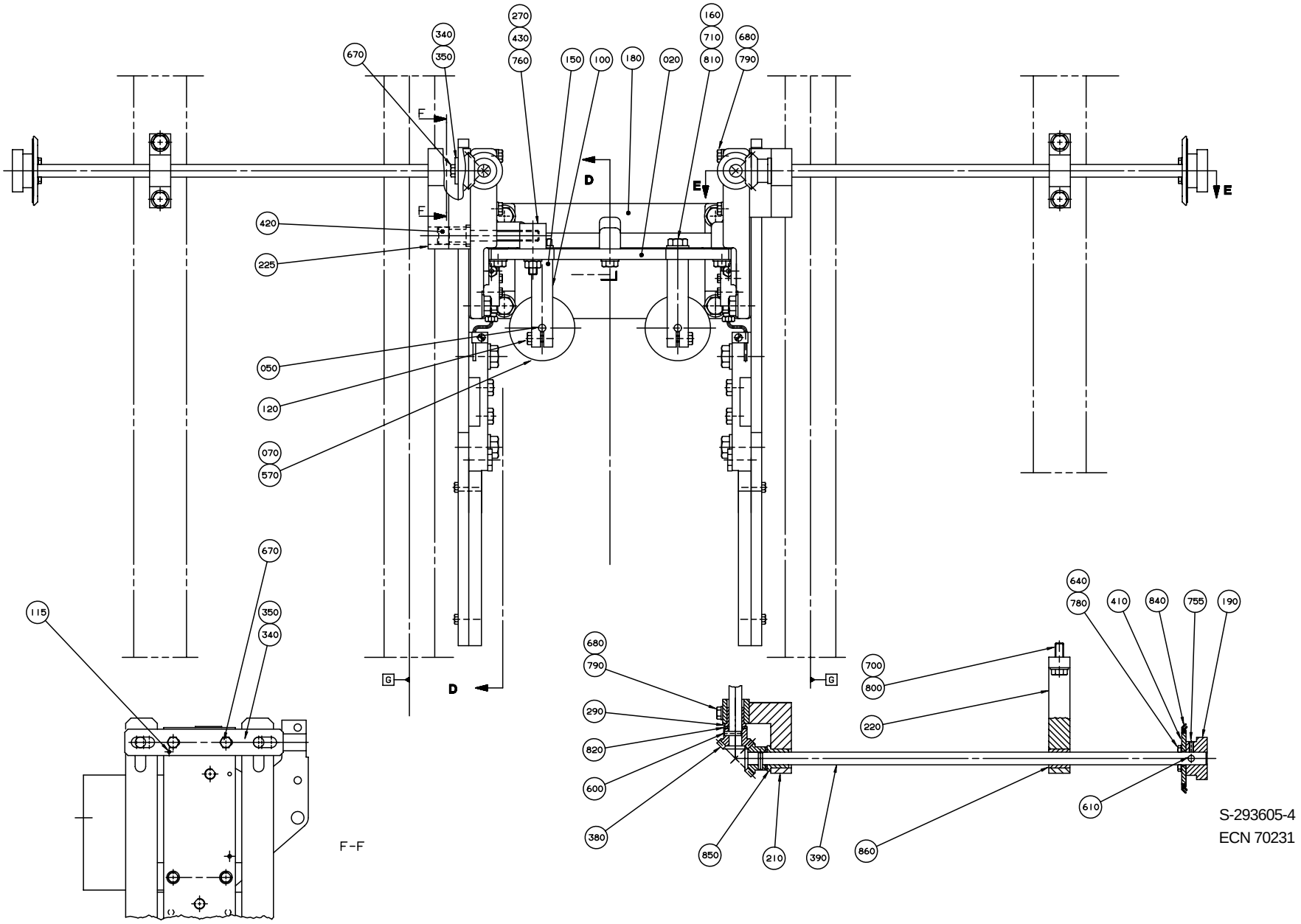

S-293605-4
ECN 70231

Pos	Part No	SP	UN	Qty	Description	Page No
090	252780-0000	R		4	RULER	
100	449734-0000	D		1	HOLDER	
110	276189-0000	G		2	DAMPER	
120	312105-0370	-		2	SCREW M6S ISO 4017 M6X20 A280	
140	312145-0366	-		8	SLOTTED HEMFS6X12RFR	
180	252768-0000	D		1	CANTILEVER	
190	293606-0000	-		2	SHIFTER HANDLE	
340	252793-0000	-		2	SUPPORT	
390	293611-0000	-		2	SHAFT	
710	312105-0493	-		8	SCREW M6S ISO 4017 M10X25 A280	
720	312105-0495	-		8	SCREW M6S ISO 4017 M10X30 A280	
730	312105-0499	-		2	SCREW 4017 M10X40A280	
0400B IH						
010	552158-0000	D		4	RAIL BRACKET	
020	297998-0000	D		1	ADJUSTMENT PLATE	
030	252774-0000	D		2	FASTENING PLATE	
040	531002-0000	R		2	CURVE	
050	561547-0000	K		2	SHAFT	
060	38603-0002	N		8	SPACER	
070	561543-0000	N		2	SUPPORT ROLLER	
080	552159-0000	N		4	VOLUME CAM	
090	252780-0000	R		4	RULER	
100	928720-0000	D		1	HOLDER	
110	276189-0000	G		2	DAMPER	
120	312105-0370	-		2	SCREW M6S ISO 4017 M6X20 A280	
140	312145-0366	-		8	SLOTTED HEMFS6X12RFR	
180	252768-0000	D		1	CANTILEVER	
190	293606-0000	-		2	SHIFTER HANDLE	
340	252793-0000	-		2	SUPPORT	
390	293611-0000	-		2	SHAFT	
710	312105-0493	-		8	SCREW M6S ISO 4017 M10X25 A280	
720	312105-0495	-		8	SCREW M6S ISO 4017 M10X30 A280	
730	312105-0499	-		2	SCREW 4017 M10X40A280	
0500B IH						
010	252770-0000	D		4	RAIL BRACKET	
020	297998-0000	D		1	ADJUSTMENT PLATE	
030	252774-0000	D		2	FASTENING PLATE	
040	252775-0000	R		2	CURVE	
050	561547-0000	K		2	SHAFT	
060	38603-0002	N		8	SPACER	
070	560122-0000	N		2	SUPPORT ROLLER	
080	252776-0000	N		4	VOLUME CAM	
090	252780-0000	R		4	RULER	
100	267327-0000	D		1	HOLDER	
110	276189-0000	G		2	DAMPER	
120	312105-0370	-		2	SCREW M6S ISO 4017 M6X20 A280	
140	312145-0366	-		8	SLOTTED HEMFS6X12RFR	
150	476877-0000	R		4	SPACER	
160	312105-0509	-		4	SCREW M6S ISO 4014 M10X90 A280	
180	252768-0000	D		1	CANTILEVER	
190	293606-0000	-		2	SHIFTER HANDLE	
340	252793-0000	-		2	SUPPORT	
390	293611-0000	-		2	SHAFT	
710	312105-0493	-		4	SCREW M6S ISO 4017 M10X25 A280	
720	312105-0495	-		8	SCREW M6S ISO 4017 M10X30 A280	
730	312105-0499	-		2	SCREW 4017 M10X40A280	
0500S IH						
010	551281-0000	D		4	RAIL BRACKET	
020	297998-0000	D		1	ADJUSTMENT PLATE	
030	551282-0000	D		2	FASTENING PLATE	
040	551283-0000	R		2	CURVE	
050	561547-0000	K		2	SHAFT	
060	38603-0002	N		8	SPACER	
070	561543-0000	N		2	SUPPORT ROLLER	
080	551284-0000	N		4	VOLUME CAM	
090	252780-0000	R		4	RULER	
100	449926-0000	D		1	HOLDER	
110	276189-0000	G		2	DAMPER	
120	312105-0370	-		2	SCREW M6S ISO 4017 M6X20 A280	
140	312145-0366	-		8	SLOTTED HEMFS6X12RFR	
180	252768-0000	D		1	CANTILEVER	
190	293606-0000	-		2	SHIFTER HANDLE	
340	252793-0000	-		2	SUPPORT	
390	293611-0000	-		2	SHAFT	
710	312105-0493	-		8	SCREW M6S ISO 4017 M10X25 A280	
720	312105-0495	-		8	SCREW M6S ISO 4017 M10X30 A280	
730	312105-0499	-		2	SCREW 4017 M10X40A280	
0750B IH						
010	522152-0000	D		4	RAIL BRACKET	
020	297998-0000	D		1	ADJUSTMENT PLATE	
030	440507-0000	D		2	FASTENING PLATE	
040	550301-0000	R		2	CURVE	
050	561547-0000	K		2	SHAFT	
060	38603-0002	N		8	SPACER	
070	560122-0000	N		2	SUPPORT ROLLER	
080	522153-0000	N		4	VOLUME CAM	

VOLUM CURVE PIECE

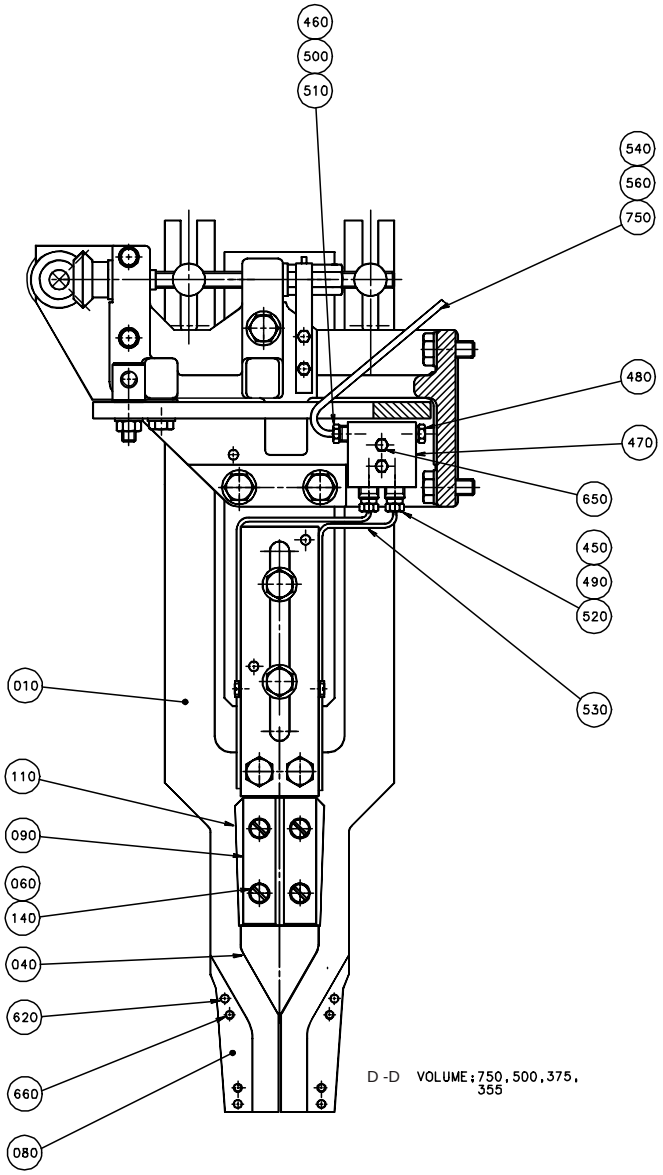

D -D VOLUME:750,500,375, 355

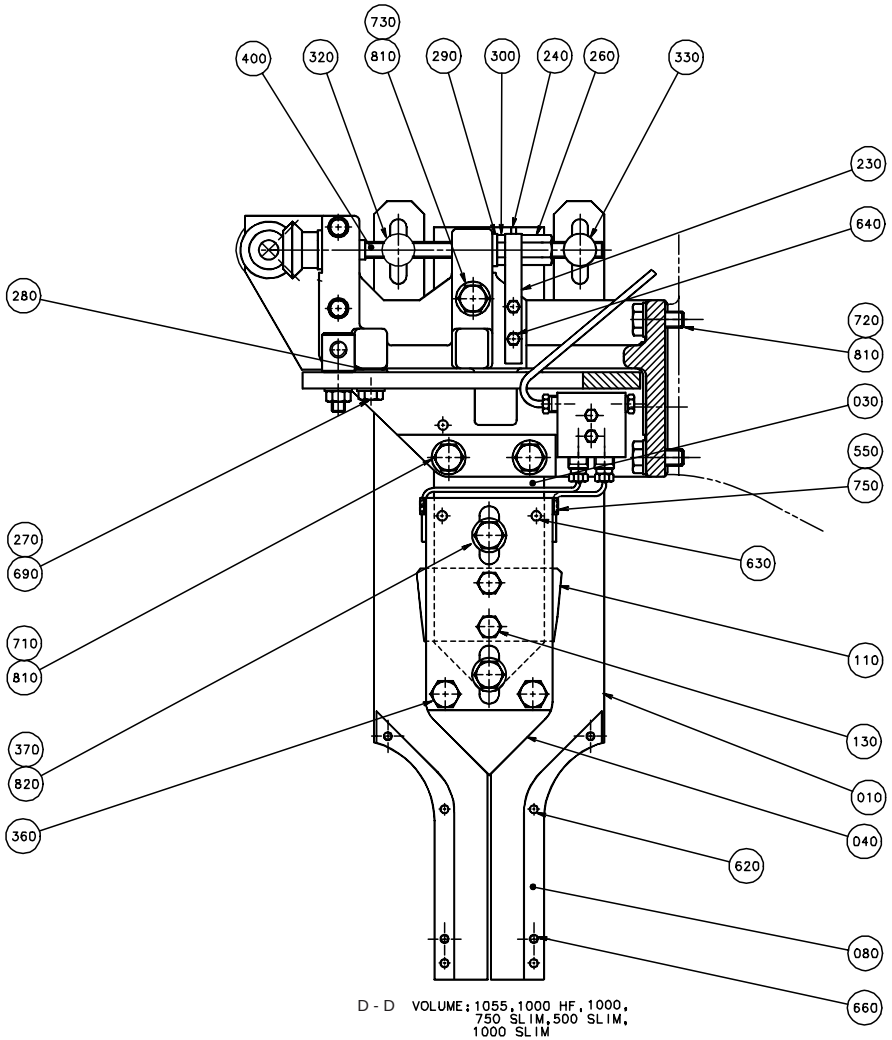

D - D VOLUME:1055,1000 HF,1000, 750 SLIM,500 SLIM, 1000 SLIM

S - 293605-3
ECN 72064

Pos	Part No	SP	UN	Qty	Description	Page No
090	252780-0000	R		4	RULER	
100	267327-0000	D		1	HOLDER	
110	276189-0000	G		2	DAMPER	
120	312105-0370	-		2	SCREW M6S ISO 4017 M6X20 A280	
140	312145-0366	-		8	SLOTTED HEMFS6X12RFR	
180	252768-0000	D		1	CANTILEVER	
190	293606-0000	-		2	SHIFTER HANDLE	
340	252793-0000	-		2	SUPPORT	
390	293611-0000	-		2	SHAFT	
710	312105-0493	-		8	SCREW M6S ISO 4017 M10X25 A280	
720	312105-0495	-		8	SCREW M6S ISO 4017 M10X30 A280	
730	312105-0499	-		2	SCREW 4017 M10X40A280	
0750S IH						
010	544342-0000	D		4	RAIL BRACKET	
020	297998-0000	D		1	ADJUSTMENT PLATE	
030	252773-0000	D		2	FASTENING PLATE	
040	533955-0000	R		2	CURVE	
050	561547-0000	K		2	SHAFT	
070	561544-0000	N		2	SUPPORT ROLLER	
080	565259-0000	N		4	VOLUME CAM	
100	544303-0000	D		1	HOLDER	
110	269792-0000	G		2	DAMPER	
120	312105-0372	-		2	SCREW M6S ISO 4017 M6X25 A280	
180	252768-0000	D		1	CANTILEVER	
190	293606-0000	-		2	SHIFTER HANDLE	
340	252793-0000	-		2	SUPPORT	
390	293611-0000	-		2	SHAFT	
710	312105-0493	-		8	SCREW M6S ISO 4017 M10X25 A280	
720	312105-0495	-		8	SCREW M6S ISO 4017 M10X30 A280	
730	312105-0499	-		2	SCREW 4017 M10X40A280	
1000B HIFIN IH or 1055B IH						
010	531110-0000	D		4	RAIL BRACKET	
020	297998-0000	D		1	ADJUSTMENT PLATE	
030	279621-0000	D		2	FASTENING PLATE	
040	533955-0000	R		2	CURVE	
050	561547-0000	K		2	SHAFT	
070	560122-0000	N		2	SUPPORT ROLLER	
080	531109-0000	N		4	VOLUME CAM	
100	284124-0000	D		1	HOLDER	
110	269792-0000	G		2	DAMPER	
120	312105-0370	-		2	SCREW M6S ISO 4017 M6X20 A280	
130	312105-0449	-		4	SCREW M6S ISO 4017 M8x16 A280	
180	252768-0000	D		1	CANTILEVER	
190	293606-0000	-		2	SHIFTER HANDLE	
340	252793-0000	-		2	SUPPORT	
390	293611-0000	-		2	SHAFT	
710	312105-0493	-		8	SCREW M6S ISO 4017 M10X25 A280	
720	312105-0495	-		8	SCREW M6S ISO 4017 M10X30 A280	
730	312105-0499	-		2	SCREW 4017 M10X40A280	
1000B LOFIN IH						
010	544342-0000	D		4	RAIL BRACKET	
020	297998-0000	D		1	ADJUSTMENT PLATE	
030	252773-0000	D		2	FASTENING PLATE	
040	533955-0000	R		2	CURVE	
050	561547-0000	K		2	SHAFT	
070	560122-0000	N		2	SUPPORT ROLLER	
080	531109-0000	N		4	VOLUME CAM	
100	267676-0000	D		1	HOLDER	
110	269792-0000	G		2	DAMPER	
120	312105-0370	-		2	SCREW M6S ISO 4017 M6X20 A280	
130	312105-0449	-		4	SCREW M6S ISO 4017 M8x16 A280	
180	252768-0000	D		1	CANTILEVER	
190	293606-0000	-		2	SHIFTER HANDLE	
340	252793-0000	-		2	SUPPORT	
390	293611-0000	-		2	SHAFT	
710	312105-0493	-		8	SCREW M6S ISO 4017 M10X25 A280	
720	312105-0495	-		8	SCREW M6S ISO 4017 M10X30 A280	
730	312105-0499	-		2	SCREW 4017 M10X40A280	
1000S IH						
010	531110-0000	D		4	RAIL BRACKET	
020	297998-0000	D		1	ADJUSTMENT PLATE	
030	279621-0000	D		2	FASTENING PLATE	
040	533955-0000	R		2	CURVE	
050	561547-0000	K		2	SHAFT	
070	569058-0000	N		2	SUPPORT ROLLER	
080	551626-0000	N		4	VOLUME CAM	
100	284124-0000	D		1	HOLDER	
110	269792-0000	G		2	DAMPER	
120	312105-0370	-		2	SCREW M6S ISO 4017 M6X20 A280	
130	312105-0449	-		4	SCREW M6S ISO 4017 M8x16 A280	
180	252768-0000	D		1	CANTILEVER	
190	293606-0000	-		2	SHIFTER HANDLE	
340	252793-0000	-		2	SUPPORT	
390	293611-0000	-		2	SHAFT	
710	312105-0493	-		8	SCREW M6S ISO 4017 M10X25 A280	
720	312105-0495	-		8	SCREW M6S ISO 4017 M10X30 A280	

VOLUM CURVE PIECE

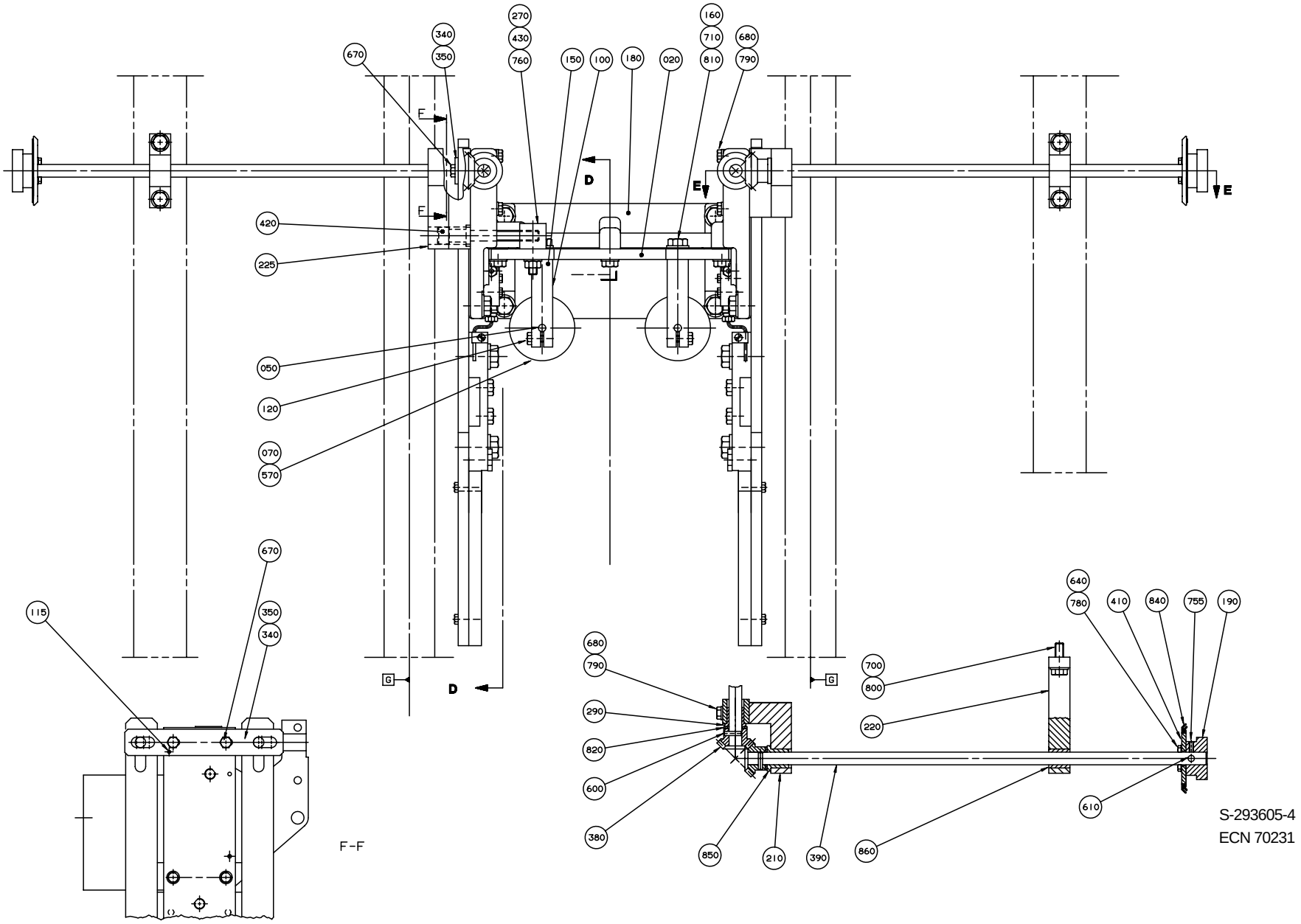

S-293605-4
ECN 70231

Pos	Part No	SP	UN	Qty	Description	Page No
730	312105-0499	-		2	SCREW 4017 M10X40A280	
1000SQ IH						
010	544342-0000	D		4	RAIL BRACKET	
020	297998-0000	D		1	ADJUSTMENT PLATE	
030	279621-0000	D		2	FASTENING PLATE	
040	579645-0000	R		2	CURVE	
050	561547-0000	K		2	SHAFT	
070	573976-0000	N		2	SUPPORT ROLLER	
080	551626-0000	N		4	VOLUME CAM	
100	284124-0000	D		1	HOLDER	
110	574130-0000	G		2	DAMPER	
120	312105-0370	-		2	SCREW M6S ISO 4017 M6X20 A280	
130	312105-0449	-		4	SCREW M6S ISO 4017 M8x16 A280	
180	252768-0000	D		1	CANTILEVER	
190	293606-0000	-		2	SHIFTER HANDLE	
340	252793-0000	-		2	SUPPORT	
390	293611-0000	-		2	SHAFT	
710	312105-0493	-		8	SCREW M6S ISO 4017 M10X25 A280	
720	312105-0495	-		8	SCREW M6S ISO 4017 M10X30 A280	
730	312105-0499	-		2	SCREW 4017 M10X40A280	
0500SQ IH						
010	252770-0000	D		4	RAIL BRACKET	
020	297998-0000	D		1	ADJUSTMENT PLATE	
030	252774-0000	D		2	FASTENING PLATE	
040	252775-0000	R		2	CURVE	
050	561547-0000	K		2	SHAFT	
070	573976-0000	N		2	SUPPORT ROLLER	
080	252776-0000	N		4	VOLUME CAM	
090	252780-0000	R		4	RULER	
100	267327-0000	D		1	HOLDER	
110	276189-0000	G		2	DAMPER	
120	312105-0370	-		2	SCREW M6S ISO 4017 M6X20 A280	
140	312145-0366	-		8	SLOTTED HEMFS6X12RFR	
150	1362925-0000	R		4	SPACER	
160	312105-0513	-		4	SCREW M6S ISO 4014 M10X110 A280	
180	252768-0000	D		1	CANTILEVER	
190	293606-0000	-		2	SHIFTER HANDLE	
340	252793-0000	-		2	SUPPORT	
390	293611-0000	-		2	SHAFT	
710	312105-0493	-		8	SCREW M6S ISO 4017 M10X25 A280	
720	312105-0495	-		8	SCREW M6S ISO 4017 M10X30 A280	
730	312105-0499	-		2	SCREW 4017 M10X40A280	

Pos	Part No	SP	UN	Qty	Description	Page No

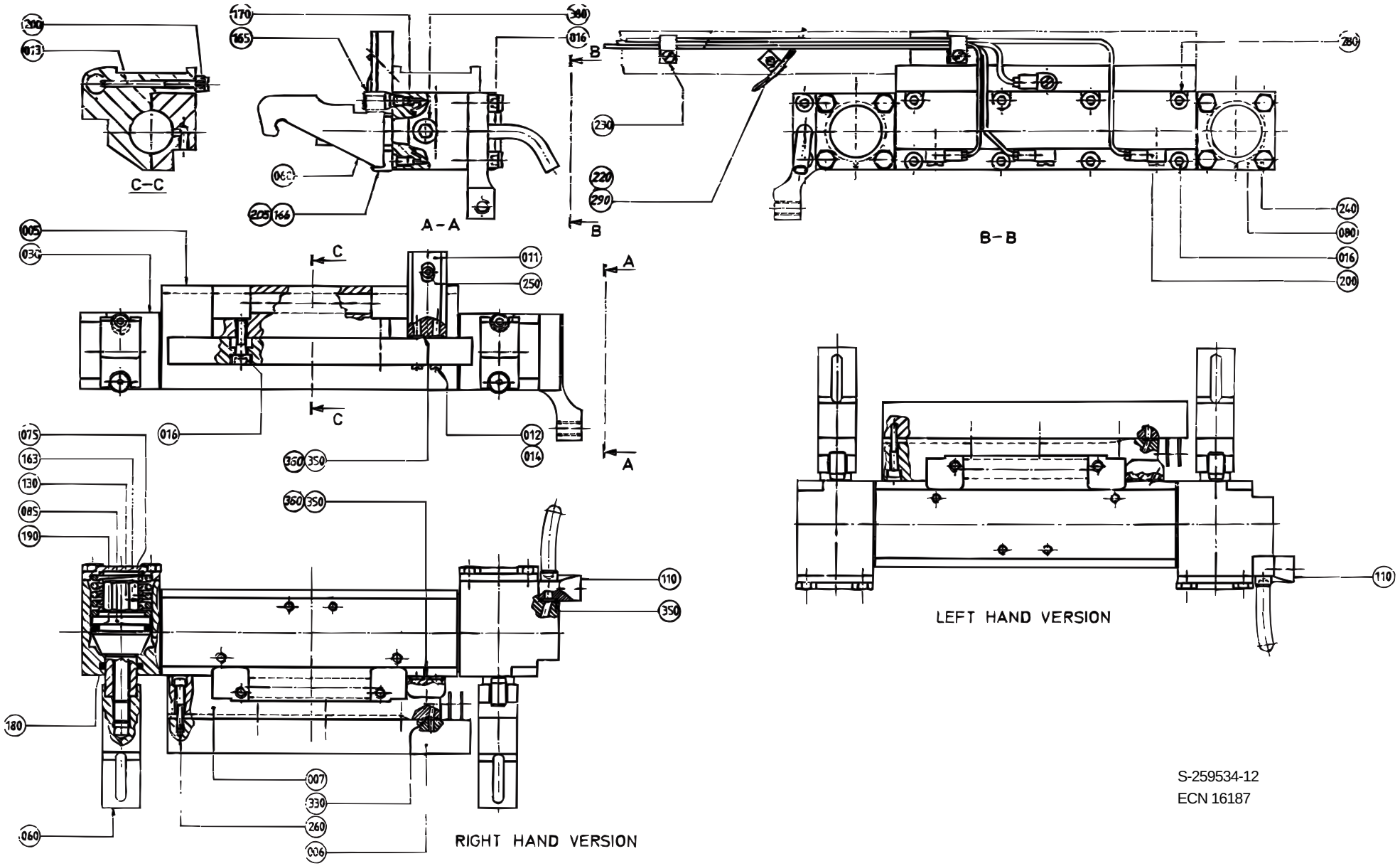

S-259534-12
ECN 16187

Pos	Part No	SP	UN	Qty	Description	Page No
0355B or 0375S or 0400B or 0500S						
005	466395-0000	R		1	BEARING HOUSING	
006	B 568983-0000	G		1	INDUCTOR	
007	445950-0000	J		1	RAIL	
011	566526-0000	M		1	CLUTCH PIECE	
012	292037-0000	N		2	SCREW	
013	1296886-0000	J		1	SCREW	
014	90157-0021	-	KG	x	LOCKING FLUID	
016	312115-0370	-		8	SCREW MC6S ISO 4762 M6X20 A280	
0500B or 0568B or 0750B or 1055B or TBA/8 1000B LOFIN						
005	458019-0000	R		1	BEARING HOUSING	
006	B 573625-0000	G		1	INDUCTOR	
007	445950-0000	J		1	RAIL	
011	566526-0000	M		1	CLUTCH PIECE	
012	292037-0000	N		2	SCREW	
013	1296982-0000	J		1	SCREW	
014	90157-0021	-	KG	x	LOCKING FLUID	
016	312115-0370	-		8	SCREW MC6S ISO 4762 M6X20 A280	
0500SQ or 1000SQ						
005	579773-0000	R		1	BEARING HOUSING	
006	B 927495-0000	G		1	INDUCTOR	
007	1484847-0000	J		1	RAIL	
011	566526-0000	M		1	CLUTCH PIECE	
012	292037-0000	N		2	SCREW	
013	1296981-0000	J		1	SCREW	
014	90157-0021	-	KG	x	LOCKING FLUID	
016	312115-0370	-		8	SCREW MC6S ISO 4762 M6X20 A280	
0750S						
005	544278-0000	R		1	BEARING HOUSING	
006	B 568983-0000	G		1	INDUCTOR	
007	445950-0000	J		1	RAIL	
011	566526-0000	M		1	CLUTCH PIECE	
012	292037-0000	N		2	SCREW	
013	1296885-0000	J		1	SCREW	
014	90157-0021	-	KG	x	LOCKING FLUID	
016	312115-0370	-		8	SCREW MC6S ISO 4762 M6X20 A280	
1000S						
005	569053-0000	R		1	BEARING HOUSING	
006	B 568983-0000	G		1	INDUCTOR	
007	445950-0000	J		1	RAIL	
011	566526-0000	M		1	CLUTCH PIECE	
012	292037-0000	N		2	SCREW	
013	1296884-0000	J		1	SCREW	
014	90157-0021	-	KG	x	LOCKING FLUID	
016	312115-0370	-		8	SCREW MC6S ISO 4762 M6X20 A280	
TBA/8 1000B HIFIN						
005	497583-0000	R		1	HOUSING	
006	B 573625-0000	G		1	INDUCTOR	
007	284581-0000	J		1	RAIL	
011	566527-0000	M		1	CLUTCH PIECE	
013	1296982-0000	J		1	SCREW	
016	312115-0370	-		6	SCREW MC6S ISO 4762 M6X20 A280	
017	312115-0374	-		2	SCREW MC6S ISO O4762 M6X30 A280	
Common parts						
030	440565-0000	N		1	CYLINDER	
060	541697-0000	N		2	CATCH	
075	553851-0000	N		2	SCREW	
080	284833-0000	R		2	LID	
085	292367-0000	K		2	PISTON	
110	246494-0000	R		1	ATTACHMENT	
130	479744-0000	I		2	COMPRESSION SPRING	
163	479743-0000	I		2	COMPRESSION SPRING	
165	440491-0000	K		2	NIPPLE	
166	497040-0000	K		2	STEERING	
170	90090-0013	J		2	BEARINGS,BALL	
180	90091-0078	I		2	SEAL	
190	90091-0079	I		2	SEALING RINGS,TYPE "GLYD-RING" 35/27X3,1	
200	90134-0058	G		4	BANJO CONNECTION DT4.310.437.1	
205	90157-0016	-	ML	x	LOCKING FLUID	
220	90165-0058	-		1	PIPE-CLIPS,FOR SINGLE PIPE,ONE SIDE 2,5	
230	316810-0106	-		2	PIPE-CLIPS,FOR SINGLE PIPE,ONE SIDE 8	
240	312105-0372	-		8	SCREW M6S ISO 4017 M6X25 A280	
250	312115-0295	-		1	SCREW MC6S ISO 4762 M4X20 A280	
260	312115-0297	-		4	SCREW MC6S ISO 4762 M4X25 A280	
280	312115-0372	-		4	SCREW MC6S ISO 4762 M6X25 A280	
290	312125-0285	-		3	SLOTTED HEMCS4X6RFR	
330	315202-0101	G		2	O-RINGS 3,1X1,6	
350	315202-0104	G		1	O-RINGS 6,1X1,6	
360	315202-0203	G		4	O-RINGS 4,3X2,4	
380	342713-0209	-		1	PLUG,EXT.G-THREAD,HEXAGON SOCKET G1/8"	

PRESSURE JAW

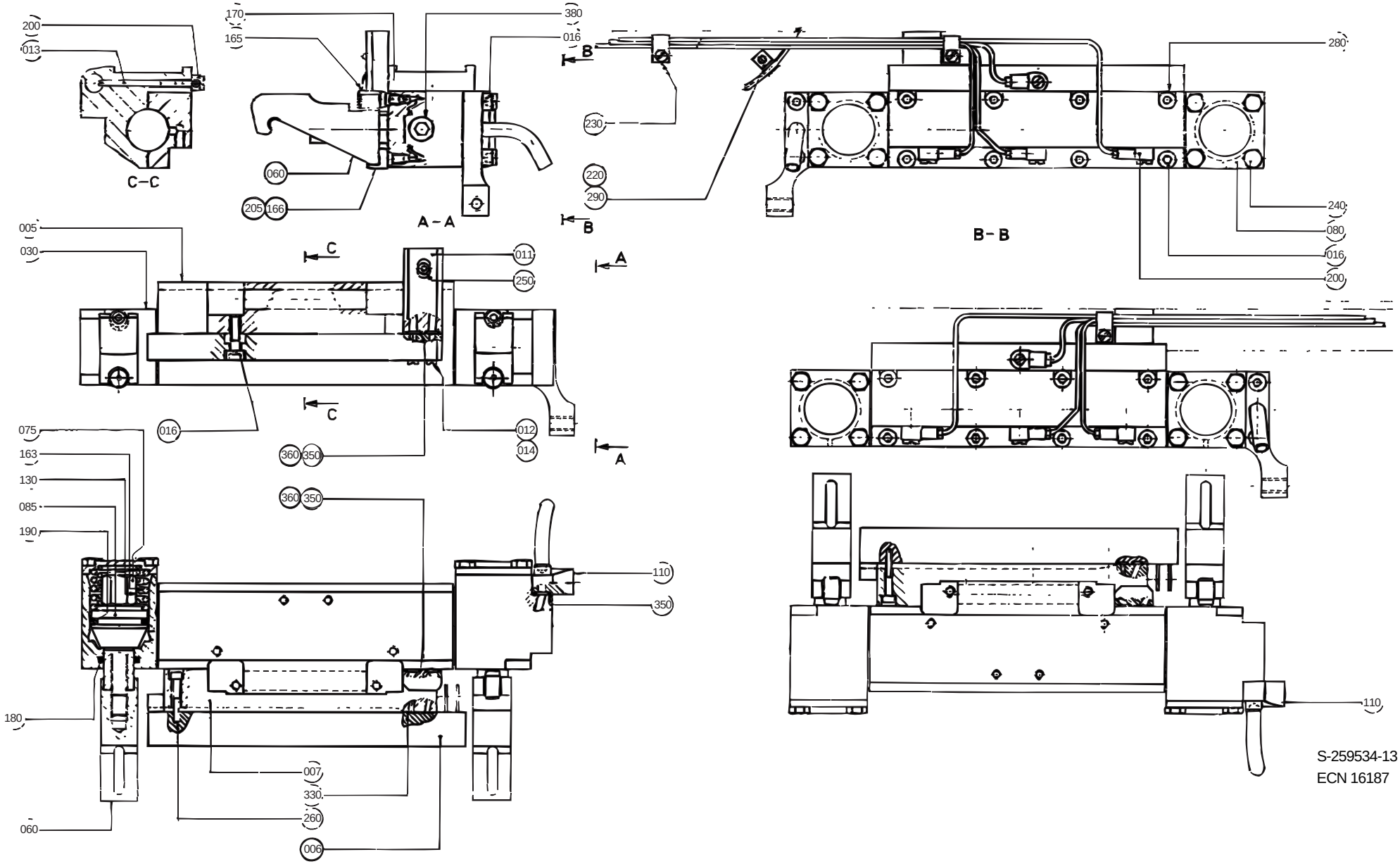

Pos	Part No	SP	UN	Qty	Description	Page No
0355B or 0375S or 0400B or 0500S						
005	466395-0000	R		1	BEARING HOUSING	
006	B 568983-0000	G		1	INDUCTOR	
007	445950-0000	J		1	RAIL	
011	566526-0000	M		1	CLUTCH PIECE	
012	292037-0000	N		2	SCREW	
013	1296886-0000	J		1	SCREW	
014	90157-0021	-	KG	x	LOCKING FLUID	
016	312115-0370	-		8	SCREW MC6S ISO 4762 M6X20 A280	
0500B or 0750B or 1055B or TBA/8 1000B LOFIN						
005	458019-0000	R		1	BEARING HOUSING	
006	B 573625-0000	G		1	INDUCTOR	
007	445950-0000	J		1	RAIL	
011	566526-0000	M		1	CLUTCH PIECE	
012	292037-0000	N		2	SCREW	
013	1296982-0000	J		1	SCREW	
014	90157-0021	-	KG	x	LOCKING FLUID	
016	312115-0370	-		8	SCREW MC6S ISO 4762 M6X20 A280	
0500SQ or 1000SQ						
005	579773-0000	R		1	BEARING HOUSING	
006	B 927495-0000	G		1	INDUCTOR	
007	1484847-0000	J		1	RAIL	
011	566526-0000	M		1	CLUTCH PIECE	
012	292037-0000	N		2	SCREW	
013	1296981-0000	J		1	SCREW	
014	90157-0021	-	KG	x	LOCKING FLUID	
016	312115-0370	-		8	SCREW MC6S ISO 4762 M6X20 A280	
0750S						
005	544278-0000	R		1	BEARING HOUSING	
006	B 568983-0000	G		1	INDUCTOR	
007	445950-0000	J		1	RAIL	
011	566526-0000	M		1	CLUTCH PIECE	
012	292037-0000	N		2	SCREW	
013	1296885-0000	J		1	SCREW	
014	90157-0021	-	KG	x	LOCKING FLUID	
016	312115-0370	-		8	SCREW MC6S ISO 4762 M6X20 A280	
1000S						
005	569053-0000	R		1	BEARING HOUSING	
006	B 568983-0000	G		1	INDUCTOR	
007	445950-0000	J		1	RAIL	
011	566526-0000	M		1	CLUTCH PIECE	
012	292037-0000	N		2	SCREW	
013	1296884-0000	J		1	SCREW	
014	90157-0021	-	KG	x	LOCKING FLUID	
016	312115-0370	-		8	SCREW MC6S ISO 4762 M6X20 A280	
TBA/8 1000B HIFIN						
005	497583-0000	R		1	HOUSING	
006	B 573625-0000	G		1	INDUCTOR	
007	284581-0000	J		1	RAIL	
011	566527-0000	M		1	CLUTCH PIECE	
013	1296982-0000	J		1	SCREW	
016	312115-0370	-		6	SCREW MC6S ISO 4762 M6X20 A280	
017	312115-0374	-		2	SCREW MC6S ISO O4762 M6X30 A280	
Common parts						
030	440565-0000	N		1	CYLINDER	
060	541697-0000	N		2	CATCH	
075	553851-0000	N		2	SCREW	
080	284833-0000	R		2	LID	
085	292367-0000	K		2	PISTON	
110	246494-0000	R		1	ATTACHMENT	
130	479744-0000	I		2	COMPRESSION SPRING	
163	479743-0000	I		2	COMPRESSION SPRING	
165	440491-0000	K		2	NIPPLE	
166	497040-0000	K		2	STEERING	
170	90090-0013	J		2	BEARINGS,BALL	
180	90091-0078	I		2	SEAL	
190	90091-0079	I		2	SEALING RINGS,TYPE "GLYD-RING" 35/27X3,1	
200	90134-0058	G		4	BANJO CONNECTION DT4.310.437.1	
205	90157-0016	-	ML	x	LOCKING FLUID	
220	90165-0058	-		1	PIPE-CLIPS,FOR SINGLE PIPE,ONE SIDE 2,5	
230	316810-0106	-		2	PIPE-CLIPS,FOR SINGLE PIPE,ONE SIDE 8	
240	312105-0372	-		8	SCREW M6S ISO 4017 M6X25 A280	
250	312115-0295	-		1	SCREW MC6S ISO 4762 M4X20 A280	
260	312115-0297	-		4	SCREW MC6S ISO 4762 M4X25 A280	
280	312115-0372	-		4	SCREW MC6S ISO 4762 M6X25 A280	
290	312125-0285	-		3	SLOTTED HEMCS4X6RFR	
330	315202-0101	G		2	O-RINGS 3,1X1,6	
350	315202-0104	G		1	O-RINGS 6,1X1,6	
360	315202-0203	G		4	O-RINGS 4,3X2,4	
380	342713-0209	-		1	PLUG,EXT.G-THREAD,HEXAGON SOCKET G1/8"	

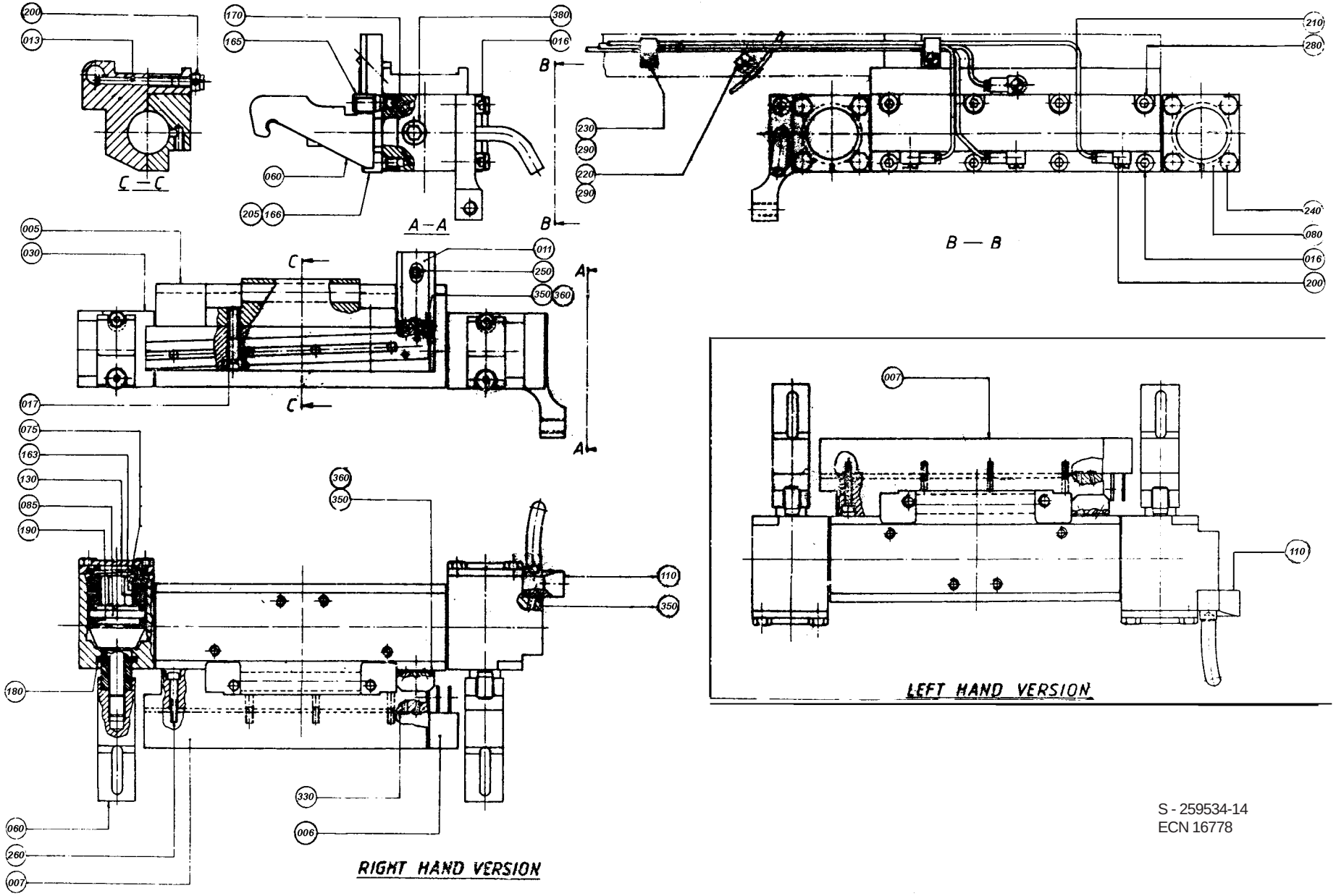

S - 259534-14
ECN 16778

Pos	Part No	SP	UN	Qty	Description	Page No
0355B or 0375S or 0400B or 0500S						
005	466395-0000	R		1	BEARING HOUSING	
006	B 568983-0000	G		1	INDUCTOR	
007	445950-0000	J		1	RAIL	
011	566526-0000	M		1	CLUTCH PIECE	
012	292037-0000	N		2	SCREW	
013	1296886-0000	J		1	SCREW	
014	90157-0021	-	KG	x	LOCKING FLUID	
016	312115-0370	-		8	SCREW MC6S ISO 4762 M6X20 A280	
0500B or 0750B or 1055B or TBA/8 1000B LOFIN						
005	458019-0000	R		1	BEARING HOUSING	
006	B 573625-0000	G		1	INDUCTOR	
007	445950-0000	J		1	RAIL	
011	566526-0000	M		1	CLUTCH PIECE	
012	292037-0000	N		2	SCREW	
013	1296982-0000	J		1	SCREW	
014	90157-0021	-	KG	x	LOCKING FLUID	
016	312115-0370	-		8	SCREW MC6S ISO 4762 M6X20 A280	
0500SQ or 1000SQ						
005	579773-0000	R		1	BEARING HOUSING	
006	B 927495-0000	G		1	INDUCTOR	
007	1484847-0000	J		1	RAIL	
011	566526-0000	M		1	CLUTCH PIECE	
012	292037-0000	N		2	SCREW	
013	1296981-0000	J		1	SCREW	
014	90157-0021	-	KG	x	LOCKING FLUID	
016	312115-0370	-		8	SCREW MC6S ISO 4762 M6X20 A280	
0750S						
005	544278-0000	R		1	BEARING HOUSING	
006	B 568983-0000	G		1	INDUCTOR	
007	445950-0000	J		1	RAIL	
011	566526-0000	M		1	CLUTCH PIECE	
012	292037-0000	N		2	SCREW	
013	1296885-0000	J		1	SCREW	
014	90157-0021	-	KG	x	LOCKING FLUID	
016	312115-0370	-		8	SCREW MC6S ISO 4762 M6X20 A280	
1000S						
005	569053-0000	R		1	BEARING HOUSING	
006	B 568983-0000	G		1	INDUCTOR	
007	445950-0000	J		1	RAIL	
011	566526-0000	M		1	CLUTCH PIECE	
012	292037-0000	N		2	SCREW	
013	1296884-0000	J		1	SCREW	
014	90157-0021	-	KG	x	LOCKING FLUID	
016	312115-0370	-		8	SCREW MC6S ISO 4762 M6X20 A280	
TBA/8 1000B HIFIN						
005	497583-0000	R		1	HOUSING	
006	B 573625-0000	G		1	INDUCTOR	
007	284581-0000	J		1	RAIL	
011	566527-0000	M		1	CLUTCH PIECE	
013	1296982-0000	J		1	SCREW	
016	312115-0370	-		6	SCREW MC6S ISO 4762 M6X20 A280	
017	312115-0374	-		2	SCREW MC6S ISO O4762 M6X30 A280	
Common parts						
030	440565-0000	N		1	CYLINDER	
060	541697-0000	N		2	CATCH	
075	553851-0000	N		2	SCREW	
080	284833-0000	R		2	LID	
085	292367-0000	K		2	PISTON	
110	246494-0000	R		1	ATTACHMENT	
130	479744-0000	I		2	COMPRESSION SPRING	
163	479743-0000	I		2	COMPRESSION SPRING	
165	440491-0000	K		2	NIPPLE	
166	497040-0000	K		2	STEERING	
170	90090-0013	J		2	BEARINGS,BALL	
180	90091-0078	I		2	SEAL	
190	90091-0079	I		2	SEALING RINGS,TYPE "GLYD-RING" 35/27X3,1	
200	90134-0058	G		4	BANJO CONNECTION DT4.310.437.1	
205	90157-0016	-	ML	x	LOCKING FLUID	
220	90165-0058	-		1	PIPE-CLIPS,FOR SINGLE PIPE,ONE SIDE 2,5	
230	316810-0106	-		2	PIPE-CLIPS,FOR SINGLE PIPE,ONE SIDE 8	
240	312105-0372	-		8	SCREW M6S ISO 4017 M6X25 A280	
250	312115-0295	-		1	SCREW MC6S ISO 4762 M4X20 A280	
260	312115-0297	-		4	SCREW MC6S ISO 4762 M4X25 A280	
280	312115-0372	-		4	SCREW MC6S ISO 4762 M6X25 A280	
290	312125-0285	-		3	SLOTTED HEMCS4X6RFR	
330	315202-0101	G		2	O-RINGS 3,1X1,6	
350	315202-0104	G		1	O-RINGS 6,1X1,6	
360	315202-0203	G		4	O-RINGS 4,3X2,4	
380	342713-0209	-		1	PLUG,EXT.G-THREAD,HEXAGON SOCKET G1/8"	

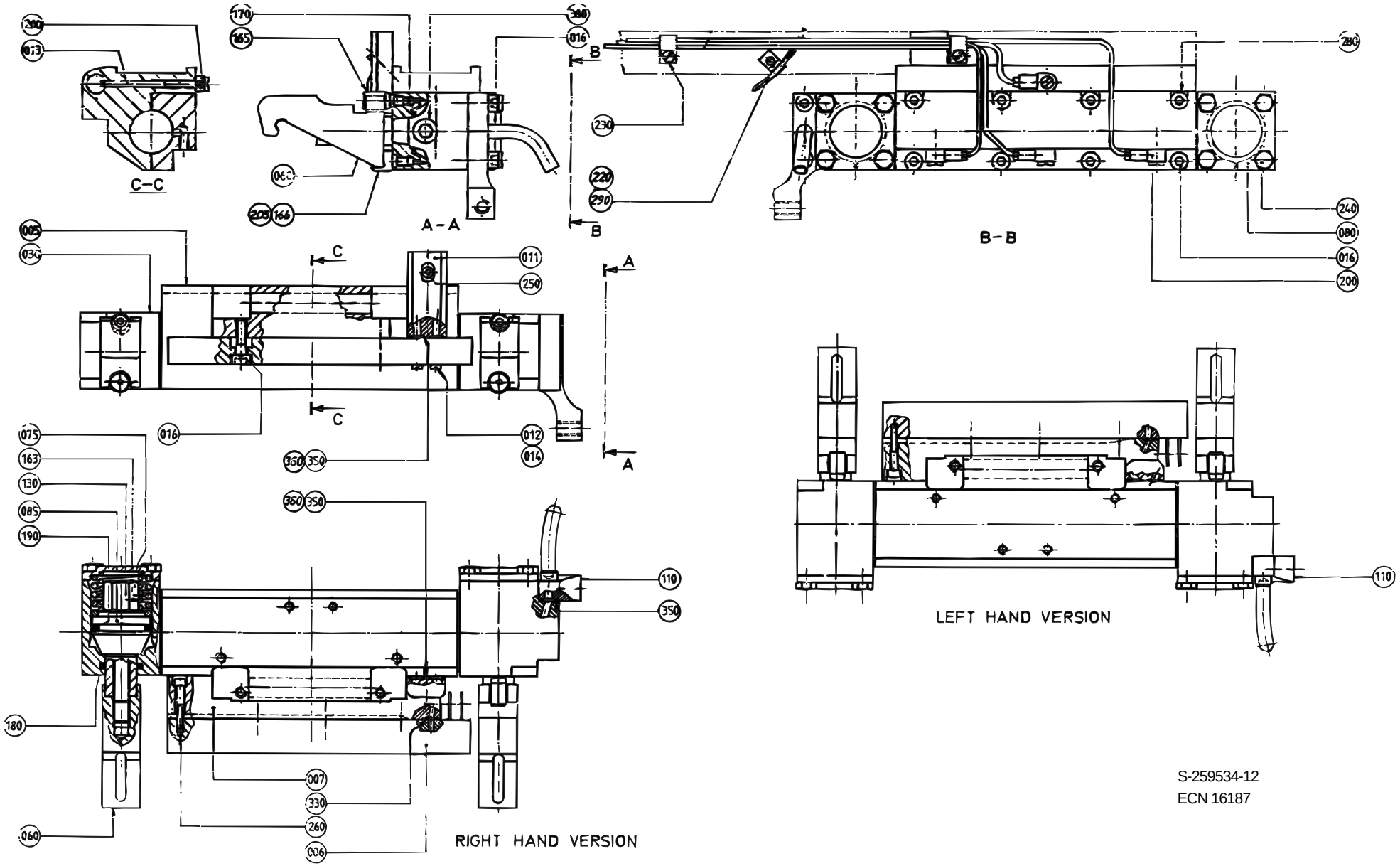

S-259534-12
ECN 16187

Pos	Part No	SP	UN	Qty	Description	Page No
0355B or 0375S or 0400B or 0500S						
005	466395-0000	R		1	BEARING HOUSING	
006	B 568983-0000	G		1	INDUCTOR	
007	445950-0000	J		1	RAIL	
011	566526-0000	M		1	CLUTCH PIECE	
012	292037-0000	N		2	SCREW	
013	1296886-0000	J		1	SCREW	
014	90157-0021	-	KG	x	LOCKING FLUID	
016	312115-0370	-		8	SCREW MC6S ISO 4762 M6X20 A280	
0500B or 0750B or 1055B or TBA/8 1000B LOFIN						
005	458019-0000	R		1	BEARING HOUSING	
006	B 573625-0000	G		1	INDUCTOR	
007	445950-0000	J		1	RAIL	
011	566526-0000	M		1	CLUTCH PIECE	
012	292037-0000	N		2	SCREW	
013	1296982-0000	J		1	SCREW	
014	90157-0021	-	KG	x	LOCKING FLUID	
016	312115-0370	-		8	SCREW MC6S ISO 4762 M6X20 A280	
0500SQ or 1000SQ						
005	579773-0000	R		1	BEARING HOUSING	
006	B 927495-0000	G		1	INDUCTOR	
007	1484846-0000	J		1	RAIL	
011	566526-0000	M		1	CLUTCH PIECE	
012	292037-0000	N		2	SCREW	
013	1296981-0000	J		1	SCREW	
014	90157-0021	-	KG	x	LOCKING FLUID	
016	312115-0370	-		8	SCREW MC6S ISO 4762 M6X20 A280	
0750S						
005	544278-0000	R		1	BEARING HOUSING	
006	B 568983-0000	G		1	INDUCTOR	
007	445950-0000	J		1	RAIL	
011	566526-0000	M		1	CLUTCH PIECE	
012	292037-0000	N		2	SCREW	
013	1296885-0000	J		1	SCREW	
014	90157-0021	-	KG	x	LOCKING FLUID	
016	312115-0370	-		8	SCREW MC6S ISO 4762 M6X20 A280	
1000S						
005	569053-0000	R		1	BEARING HOUSING	
006	B 568983-0000	G		1	INDUCTOR	
007	445950-0000	J		1	RAIL	
011	566526-0000	M		1	CLUTCH PIECE	
012	292037-0000	N		2	SCREW	
013	1296884-0000	J		1	SCREW	
014	90157-0021	-	KG	x	LOCKING FLUID	
016	312115-0370	-		8	SCREW MC6S ISO 4762 M6X20 A280	
TBA/8 1000B HIFIN						
005	497583-0000	R		1	HOUSING	
006	B 573625-0000	G		1	INDUCTOR	
007	284582-0000	J		1	RAIL	
011	566527-0000	M		1	CLUTCH PIECE	
013	1296982-0000	J		1	SCREW	
016	312115-0370	-		6	SCREW MC6S ISO 4762 M6X20 A280	
017	312115-0374	-		2	SCREW MC6S ISO O4762 M6X30 A280	
Common parts						
030	440565-0000	N		1	CYLINDER	
060	541697-0000	N		2	CATCH	
075	553851-0000	N		2	SCREW	
080	284833-0000	R		2	LID	
085	292367-0000	K		2	PISTON	
110	246495-0000	R		1	ATTACHMENT	
130	479744-0000	I		2	COMPRESSION SPRING	
163	479743-0000	I		2	COMPRESSION SPRING	
165	440491-0000	K		2	NIPPLE	
166	497040-0000	K		2	STEERING	
170	90090-0013	J		2	BEARINGS,BALL	
180	90091-0078	I		2	SEAL	
190	90091-0079	I		2	SEALING RINGS,TYPE "GLYD-RING" 35/27X3,1	
200	90134-0058	G		4	BANJO CONNECTION DT4.310.437.1	
205	90157-0016	-	ML	x	LOCKING FLUID	
220	90165-0058	-		1	PIPE-CLIPS,FOR SINGLE PIPE,ONE SIDE 2,5	
230	316810-0106	-		2	PIPE-CLIPS,FOR SINGLE PIPE,ONE SIDE 8	
240	312105-0372	-		8	SCREW M6S ISO 4017 M6X25 A280	
250	312115-0295	-		1	SCREW MC6S ISO 4762 M4X20 A280	
260	312115-0297	-		4	SCREW MC6S ISO 4762 M4X25 A280	
280	312115-0372	-		4	SCREW MC6S ISO 4762 M6X25 A280	
290	312125-0285	-		3	SLOTTED HEMCS4X6RFR	
330	315202-0101	G		2	O-RINGS 3,1X1,6	
350	315202-0104	G		1	O-RINGS 6,1X1,6	
360	315202-0203	G		4	O-RINGS 4,3X2,4	
380	342713-0209	-		1	PLUG,EXT.G-THREAD,HEXAGON SOCKET G1/8"	

PRESSURE JAW

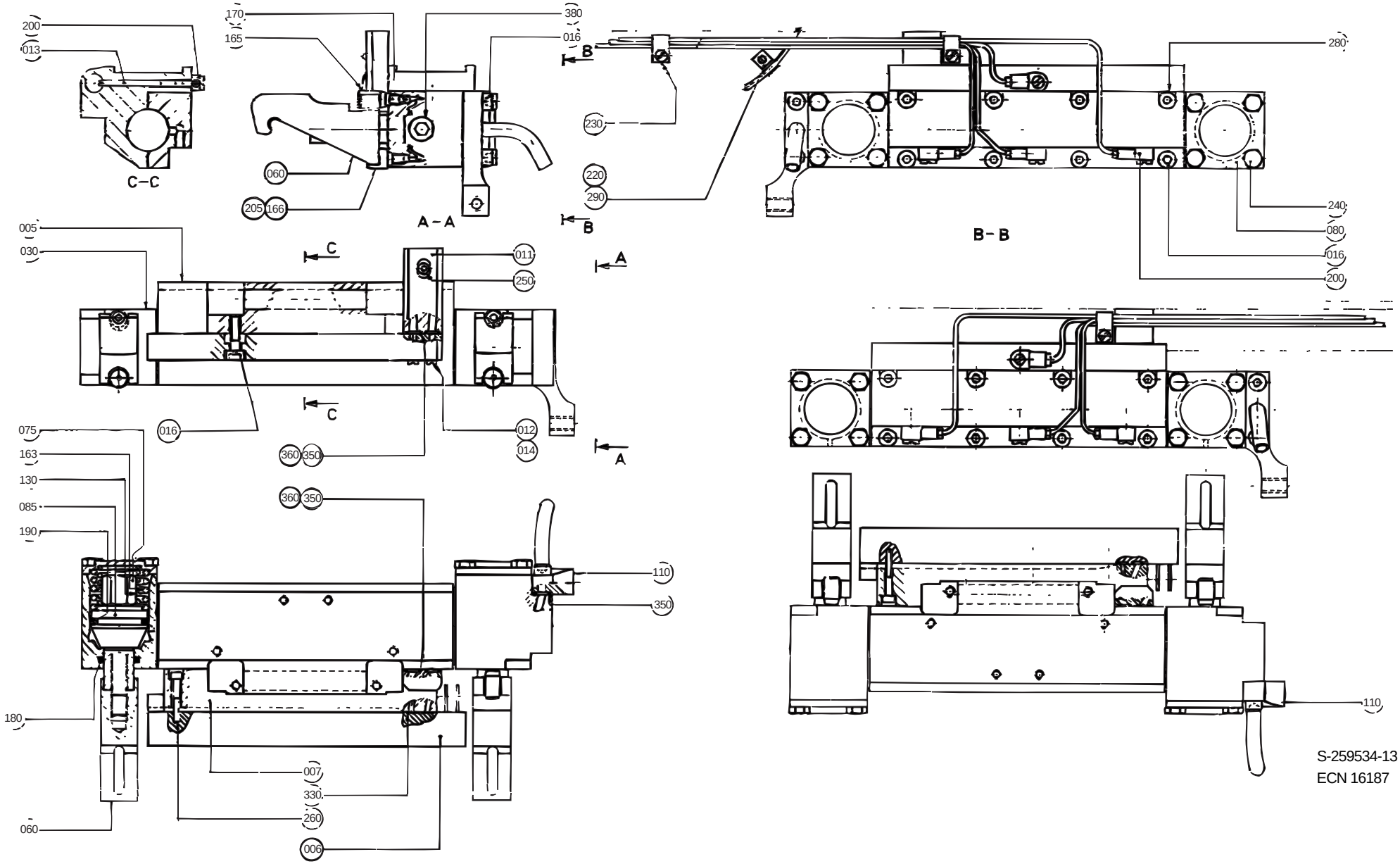

S-259534-13
ECN 16187

Pos	Part No	SP	UN	Qty	Description	Page No
0355B or 0375S or 0400B or 0500S						
005	466395-0000	R		1	BEARING HOUSING	
006	B 568983-0000	G		1	INDUCTOR	
007	445950-0000	J		1	RAIL	
011	566526-0000	M		1	CLUTCH PIECE	
012	292037-0000	N		2	SCREW	
013	1296886-0000	J		1	SCREW	
014	90157-0021	-	KG	x	LOCKING FLUID	
016	312115-0370	-		8	SCREW MC6S ISO 4762 M6X20 A280	
0500B or 0750B or 1055B or TBA/8 1000B LOFIN						
005	458019-0000	R		1	BEARING HOUSING	
006	B 573625-0000	G		1	INDUCTOR	
007	445950-0000	J		1	RAIL	
011	566526-0000	M		1	CLUTCH PIECE	
012	292037-0000	N		2	SCREW	
013	1296982-0000	J		1	SCREW	
014	90157-0021	-	KG	x	LOCKING FLUID	
016	312115-0370	-		8	SCREW MC6S ISO 4762 M6X20 A280	
0500SQ or 1000SQ						
005	579773-0000	R		1	BEARING HOUSING	
006	B 927495-0000	G		1	INDUCTOR	
007	1484846-0000	J		1	RAIL	
011	566526-0000	M		1	CLUTCH PIECE	
012	292037-0000	N		2	SCREW	
013	1296981-0000	J		1	SCREW	
014	90157-0021	-	KG	x	LOCKING FLUID	
016	312115-0370	-		8	SCREW MC6S ISO 4762 M6X20 A280	
0750S						
005	544278-0000	R		1	BEARING HOUSING	
006	B 568983-0000	G		1	INDUCTOR	
007	445950-0000	J		1	RAIL	
011	566526-0000	M		1	CLUTCH PIECE	
012	292037-0000	N		2	SCREW	
013	1296885-0000	J		1	SCREW	
014	90157-0021	-	KG	x	LOCKING FLUID	
016	312115-0370	-		8	SCREW MC6S ISO 4762 M6X20 A280	
1000S						
005	569053-0000	R		1	BEARING HOUSING	
006	B 568983-0000	G		1	INDUCTOR	
007	445950-0000	J		1	RAIL	
011	566526-0000	M		1	CLUTCH PIECE	
012	292037-0000	N		2	SCREW	
013	1296884-0000	J		1	SCREW	
014	90157-0021	-	KG	x	LOCKING FLUID	
016	312115-0370	-		8	SCREW MC6S ISO 4762 M6X20 A280	
TBA/8 1000B HIFIN						
005	497583-0000	R		1	HOUSING	
006	B 573625-0000	G		1	INDUCTOR	
007	284582-0000	J		1	RAIL	
011	566527-0000	M		1	CLUTCH PIECE	
013	1296982-0000	J		1	SCREW	
016	312115-0370	-		6	SCREW MC6S ISO 4762 M6X20 A280	
017	312115-0374	-		2	SCREW MC6S ISO O4762 M6X30 A280	
Common parts						
030	440565-0000	N		1	CYLINDER	
060	541697-0000	N		2	CATCH	
075	553851-0000	N		2	SCREW	
080	284833-0000	R		2	LID	
085	292367-0000	K		2	PISTON	
110	246495-0000	R		1	ATTACHMENT	
130	479744-0000	I		2	COMPRESSION SPRING	
163	479743-0000	I		2	COMPRESSION SPRING	
165	440491-0000	K		2	NIPPLE	
166	497040-0000	K		2	STEERING	
170	90090-0013	J		2	BEARINGS,BALL	
180	90091-0078	I		2	SEAL	
190	90091-0079	I		2	SEALING RINGS,TYPE "GLYD-RING" 35/27X3,1	
200	90134-0058	G		4	BANJO CONNECTION DT4.310.437.1	
205	90157-0016	-	ML	x	LOCKING FLUID	
220	90165-0058	-		1	PIPE-CLIPS,FOR SINGLE PIPE,ONE SIDE 2,5	
230	316810-0106	-		2	PIPE-CLIPS,FOR SINGLE PIPE,ONE SIDE 8	
240	312105-0372	-		8	SCREW M6S ISO 4017 M6X25 A280	
250	312115-0295	-		1	SCREW MC6S ISO 4762 M4X20 A280	
260	312115-0297	-		4	SCREW MC6S ISO 4762 M4X25 A280	
280	312115-0372	-		4	SCREW MC6S ISO 4762 M6X25 A280	
290	312125-0285	-		3	SLOTTED HEMCS4X6RFR	
330	315202-0101	G		2	O-RINGS 3,1X1,6	
350	315202-0104	G		1	O-RINGS 6,1X1,6	
360	315202-0203	G		4	O-RINGS 4,3X2,4	
380	342713-0209	-		1	PLUG,EXT.G-THREAD,HEXAGON SOCKET G1/8"	

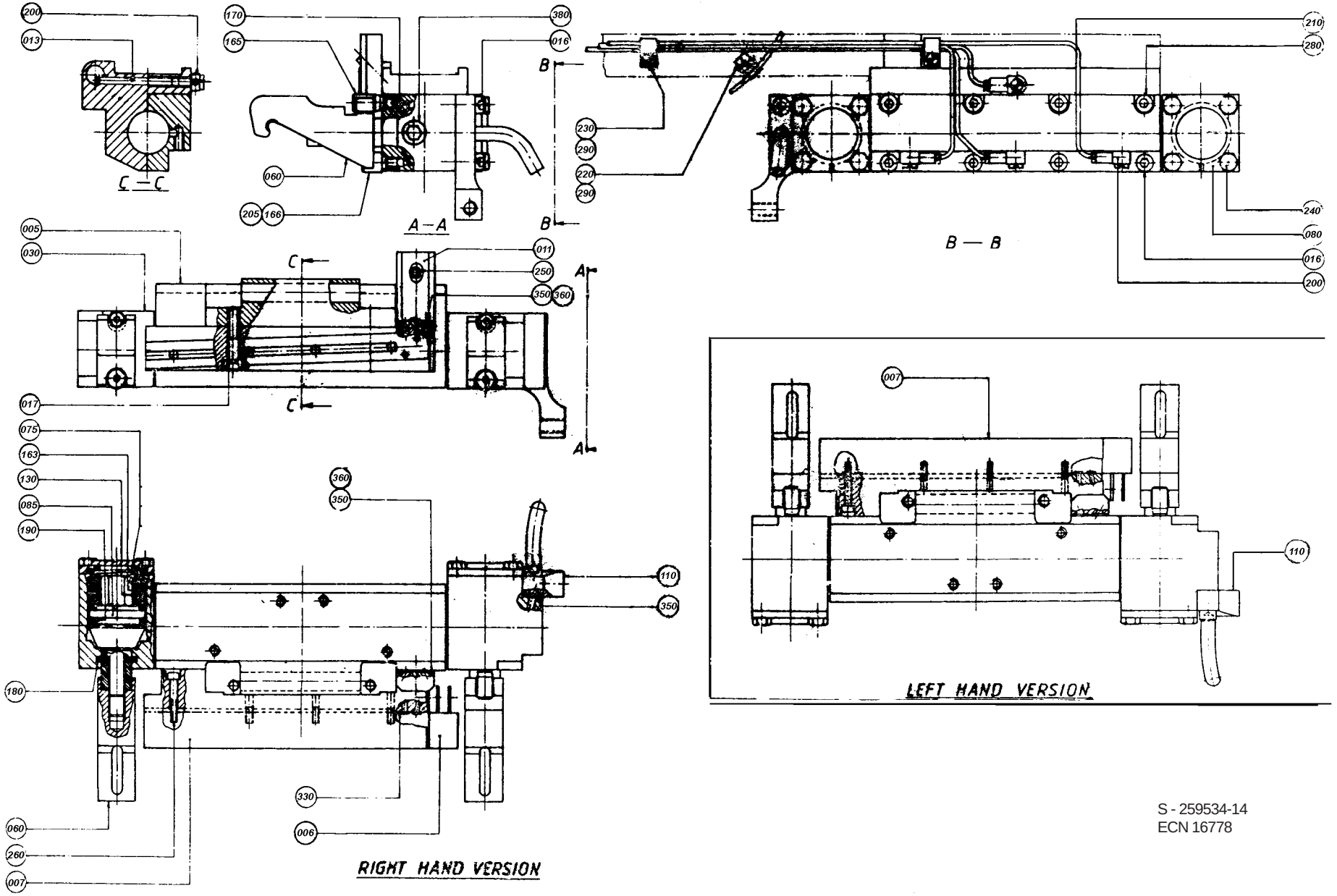

S - 259534-14
ECN 16778

Pos	Part No	SP	UN	Qty	Description	Page No
0355B or 0375S or 0400B or 0500S						
005	466395-0000	R		1	BEARING HOUSING	
006	B 568983-0000	G		1	INDUCTOR	
007	445950-0000	J		1	RAIL	
011	566526-0000	M		1	CLUTCH PIECE	
012	292037-0000	N		2	SCREW	
013	1296886-0000	J		1	SCREW	
014	90157-0021	-	KG	x	LOCKING FLUID	
016	312115-0370	-		8	SCREW MC6S ISO 4762 M6X20 A280	
0500B or 0750B or 1055B or TBA/8 1000B LOFIN						
005	458019-0000	R		1	BEARING HOUSING	
006	B 573625-0000	G		1	INDUCTOR	
007	445950-0000	J		1	RAIL	
011	566526-0000	M		1	CLUTCH PIECE	
012	292037-0000	N		2	SCREW	
013	1296982-0000	J		1	SCREW	
014	90157-0021	-	KG	x	LOCKING FLUID	
016	312115-0370	-		8	SCREW MC6S ISO 4762 M6X20 A280	
0500SQ or 1000SQ						
005	579773-0000	R		1	BEARING HOUSING	
006	B 927495-0000	G		1	INDUCTOR	
007	1484846-0000	J		1	RAIL	
011	566526-0000	M		1	CLUTCH PIECE	
012	292037-0000	N		2	SCREW	
013	1296981-0000	J		1	SCREW	
014	90157-0021	-	KG	x	LOCKING FLUID	
016	312115-0370	-		8	SCREW MC6S ISO 4762 M6X20 A280	
0750S						
005	544278-0000	R		1	BEARING HOUSING	
006	B 568983-0000	G		1	INDUCTOR	
007	445950-0000	J		1	RAIL	
011	566526-0000	M		1	CLUTCH PIECE	
012	292037-0000	N		2	SCREW	
013	1296885-0000	J		1	SCREW	
014	90157-0021	-	KG	x	LOCKING FLUID	
016	312115-0370	-		8	SCREW MC6S ISO 4762 M6X20 A280	
1000S						
005	569053-0000	R		1	BEARING HOUSING	
006	B 568983-0000	G		1	INDUCTOR	
007	445950-0000	J		1	RAIL	
011	566526-0000	M		1	CLUTCH PIECE	
012	292037-0000	N		2	SCREW	
013	1296884-0000	J		1	SCREW	
014	90157-0021	-	KG	x	LOCKING FLUID	
016	312115-0370	-		8	SCREW MC6S ISO 4762 M6X20 A280	
TBA/8 1000B HIFIN						
005	497583-0000	R		1	HOUSING	
006	B 573625-0000	G		1	INDUCTOR	
007	284582-0000	J		1	RAIL	
011	566527-0000	M		1	CLUTCH PIECE	
013	1296982-0000	J		1	SCREW	
016	312115-0370	-		6	SCREW MC6S ISO 4762 M6X20 A280	
017	312115-0374	-		2	SCREW MC6S ISO O4762 M6X30 A280	
Common parts						
030	440565-0000	N		1	CYLINDER	
060	541697-0000	N		2	CATCH	
075	553851-0000	N		2	SCREW	
080	284833-0000	R		2	LID	
085	292367-0000	K		2	PISTON	
110	246495-0000	R		1	ATTACHMENT	
130	479744-0000	I		2	COMPRESSION SPRING	
163	479743-0000	I		2	COMPRESSION SPRING	
165	440491-0000	K		2	NIPPLE	
166	497040-0000	K		2	STEERING	
170	90090-0013	J		2	BEARINGS,BALL	
180	90091-0078	I		2	SEAL	
190	90091-0079	I		2	SEALING RINGS,TYPE "GLYD-RING" 35/27X3,1	
200	90134-0058	G		4	BANJO CONNECTION DT4.310.437.1	
205	90157-0016	-	ML	x	LOCKING FLUID	
220	90165-0058	-		1	PIPE-CLIPS,FOR SINGLE PIPE,ONE SIDE 2,5	
230	316810-0106	-		2	PIPE-CLIPS,FOR SINGLE PIPE,ONE SIDE 8	
240	312105-0372	-		8	SCREW M6S ISO 4017 M6X25 A280	
250	312115-0295	-		1	SCREW MC6S ISO 4762 M4X20 A280	
260	312115-0297	-		4	SCREW MC6S ISO 4762 M4X25 A280	
280	312115-0372	-		4	SCREW MC6S ISO 4762 M6X25 A280	
290	312125-0285	-		3	SLOTTED HEMCS4X6RFR	
330	315202-0101	G		2	O-RINGS 3,1X1,6	
350	315202-0104	G		1	O-RINGS 6,1X1,6	
360	315202-0203	G		4	O-RINGS 4,3X2,4	
380	342713-0209	-		1	PLUG,EXT.G-THREAD,HEXAGON SOCKET G1/8"	

This page is intentionally left blank

Pos	Part No	SP	UN	Qty	Description	Page No
0300B						
200	38490-0000	-		4	END PIECE	
210	450302-0000	-		8	VOLUME SHIM	
260	564533-0002	-		4	DOLLY	
410	315202-0206	-		5	O-RINGS 7,3X2,4	
450	B 568983-0000	-		2	INDUCTOR	
0355B						
200	440043-0000	-		4	END PIECE	
210	529141-0000	-		8	VOLUME SHIM	
260	564533-0005	-		4	DOLLY	
410	315202-0206	-		5	O-RINGS 7,3X2,4	
450	B 568983-0000	-		2	INDUCTOR	
0375S						
200	38490-0000	-		4	END PIECE	
210	255228-0001	-		8	VOLUME SHIM	
260	564533-0002	-		4	DOLLY	
410	315202-0206	-		5	O-RINGS 7,3X2,4	
450	B 568983-0000	-		2	INDUCTOR	
0400B						
200	440043-0000	-		4	END PIECE	
210	575641-0000	-		8	VOLUME SHIM	
410	315202-0206	-		5	O-RINGS 7,3X2,4	
450	B 568983-0000	-		2	INDUCTOR	
0500B						
200	32116-0000	-		4	END PIECE	
210	479245-0000	-		8	VOLUME SHIM	
260	564533-0001	-		4	DOLLY	
400	315202-0111	-		10	O-RINGS 13,1X1,6	
420	315202-0207	-		10	O-RINGS 8,3X2,4	
430	315202-0212	-		5	O-RINGS 4,3X2,4	
450	B 573625-0000	-		2	INDUCTOR	
0500S						
200	440043-0000	-		4	END PIECE	
210	464315-0000	-		8	VOLUME SHIM	
260	564533-0005	-		4	DOLLY	
410	315202-0206	-		5	O-RINGS 7,3X2,4	
450	B 568983-0000	-		2	INDUCTOR	
0500SQ						
200	533012-0001	-		4	END PIECE	
210	589926-0000	-		8	VOLUME SHIM	
260	1038128-0001	-		4	DOLLY	
400	315202-0111	-		10	O-RINGS 13,1X1,6	
420	315202-0207	-		10	O-RINGS 8,3X2,4	
430	315202-0212	-		5	O-RINGS 4,3X2,4	
450	B 927495-0000	-		2	INDUCTOR	
0750B						
200	32116-0000	-		4	END PIECE	
210	450782-0000	-		8	VOLUME SHIM	
260	564533-0001	-		4	DOLLY	
400	315202-0111	-		10	O-RINGS 13,1X1,6	
420	315202-0207	-		10	O-RINGS 8,3X2,4	
430	315202-0212	-		5	O-RINGS 4,3X2,4	
450	B 573625-0000	-		2	INDUCTOR	
0750S						
200	544337-0000	-		8	END PIECE	
210	544305-0000	-		8	VOLUME SHIM	
260	564533-0007	-		4	DOLLY	
450	B 568983-0000	-		2	INDUCTOR	
1000B HIFIN						
200	32116-0000	-		4	END PIECE	
210	208709-0000	-		8	VOLUME SHIM	
260	564533-0001	-		4	DOLLY	
370	312115-0374	-		5	SCREW MC6S ISO O4762 M6X30 A280	
410	315202-0206	-		5	O-RINGS 7,3X2,4	
450	B 573625-0000	-		2	INDUCTOR	
1000S						
200	32116-0000	-		4	END PIECE	
210	569056-0000	-		8	VOLUME SHIM	
260	564533-0001	-		4	DOLLY	
400	315202-0111	-		10	O-RINGS 13,1X1,6	
420	315202-0207	-		10	O-RINGS 8,3X2,4	
430	315202-0212	-		5	O-RINGS 4,3X2,4	
450	B 568983-0000	-		2	INDUCTOR	
1000SQ						
200	533012-0001	-		4	END PIECE	
210	1143050-0000	-		8	VOLUME SHIM	
260	1038128-0001	-		4	DOLLY	
400	315202-0111	-		10	O-RINGS 13,1X1,6	
420	315202-0207	-		10	O-RINGS 8,3X2,4	
430	315202-0212	-		5	O-RINGS 4,3X2,4	
450	B 927495-0000	-		2	INDUCTOR	
1055B						
200	32116-0000	-		4	END PIECE	
210	531320-0000	-		8	VOLUME SHIM	

This page is intentionally left blank

Pos	Part No	SP	UN	Qty	Description	Page No
260	564533-0001	-		4	DOLLY	
400	315202-0111	-		10	O-RINGS 13,1X1,6	
420	315202-0207	-		10	O-RINGS 8,3X2,4	
430	315202-0212	-		5	O-RINGS 4,3X2,4	
450	B 573625-0000	-		2	INDUCTOR	
1000B LOFIN						
200	32116-0000	-		4	END PIECE	
210	208709-0000	-		8	VOLUME SHIM	
260	564533-0001	-		4	DOLLY	
400	315202-0111	-		10	O-RINGS 13,1X1,6	
420	315202-0207	-		10	O-RINGS 8,3X2,4	
430	315202-0212	-		5	O-RINGS 4,3X2,4	
450	B 573625-0000	-		2	INDUCTOR	
Common parts						
500	927440-0000	-		1	LINK	
510	927441-0000	-		1	NUT	
520	32544-0000	-		2	INSULATION NUT	
530	250633-0000	-		2	CABLE CLAMP	
600	90090-0013	-		10	BEARINGS,BALL	
610	90091-0078	-		10	SEAL	
620	90091-0079	-		10	SEALING RINGS,TYPE "GLYD-RING" 35/27X3,1	
700	456011-0000	-		10	PIN	
710	312115-0297	-		10	SCREW MC6S ISO 4762 M4X25 A280	
720	312115-0370	-		10	SCREW MC6S ISO 4762 M6X20 A280	
730	312145-0238	-		10	SLOTTED HEMFS3X40RFR	
740	315202-0101	-		20	O-RINGS 3,1X1,6	
750	315202-0102	-		20	O-RINGS 4,1X1,6	
760	315202-0104	-		20	O-RINGS 6,1X1,6	
770	315202-0114	-		10	O-RINGS 16,1X1,6	
780	315202-0208	-		10	O-RINGS 9,3X2,4	
790	315202-0702	-		10	O-RING 12,42X1,78	

Pos	Part No	SP	UN	Qty	Description	Page No

BAR CODE

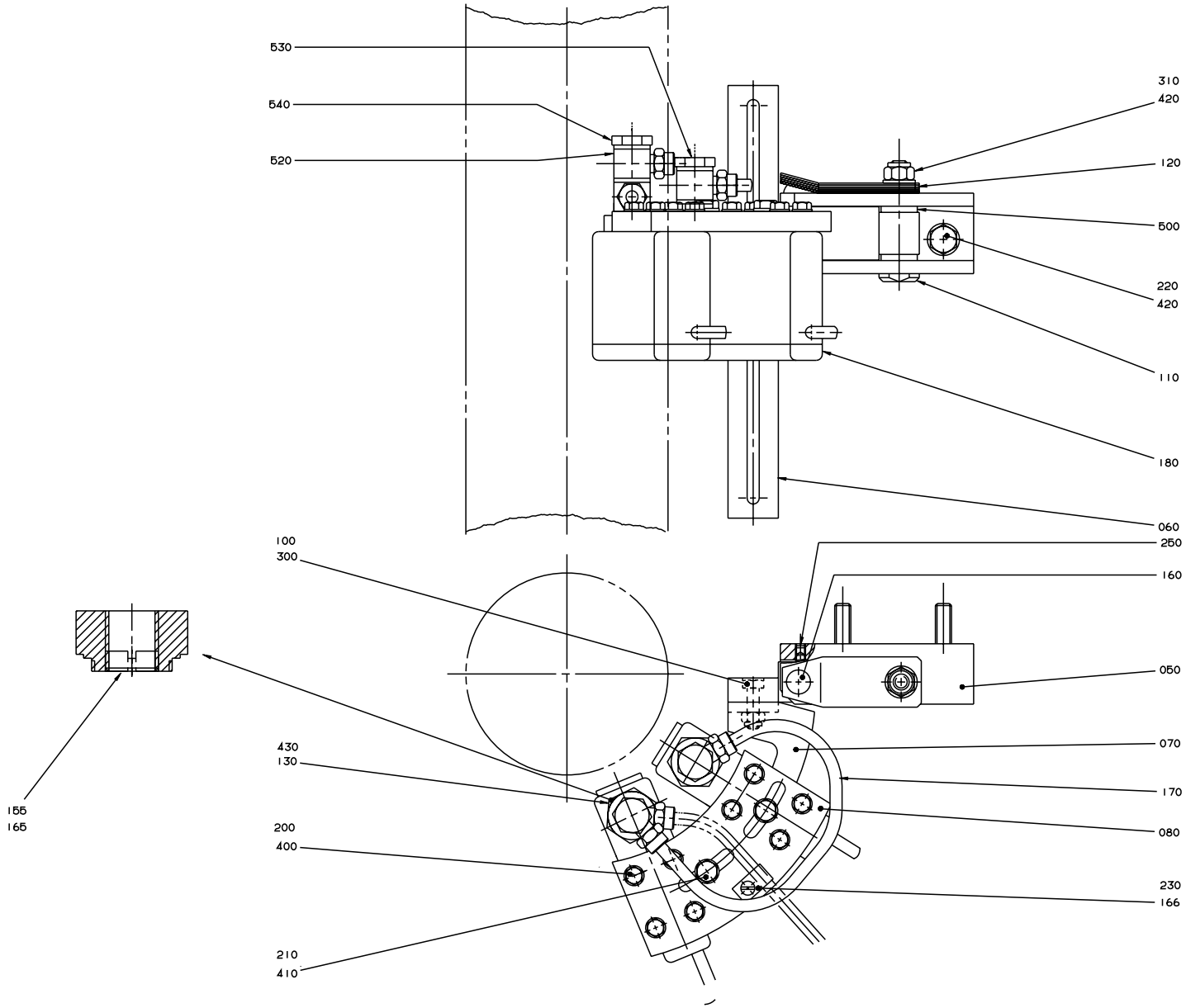

S-541188-3
ECN 14696

Pos	Part No	SP	UN	Qty	Description	Page No
0375S ST-ER						
050	457359-0000	D		1	BRACKET	
060	545789-0000	D		1	HOLDER	
070	562971-0000	D		1	CANTILEVER	
080	457364-0000	D		1	PLATE RIGHT	
0500B ST-ER or 0750B ST-ER or 1000B ST-ER or 1055B ST-ER						
050	457359-0000	D		1	BRACKET	
060	545789-0000	D		1	HOLDER	
070	457361-0000	D		1	CANTILEVER	
080	457364-0000	D		1	PLATE RIGHT	
0355B ST-ER or 0400B ST-ER or 0500S ST-ER						
050	457359-0000	D		1	BRACKET	
060	545789-0000	D		1	HOLDER	
070	526677-0000	D		1	CANTILEVER	
080	457364-0000	D		1	PLATE RIGHT	
0500SQ ST-ER or 0750S ST-ER or 1000S ST-ER or 1000SQ ST-ER						
050	457359-0000	D		1	BRACKET	
060	535200-0000	D		1	HOLDER	
070	544343-0000	D		1	CANTILEVER	
080	457364-0000	D		1	PLATE RIGHT	
Common parts						
100	312105-0370	-		2	SCREW M6S ISO 4017 M6X20 A280	
110	457367-0000	R		1	SHAFT	
120	457368-0000	R		5	SPRING	
130	548337-0000	R		2	BUSHING	
155	548336-0000	R		2	WASHER	
160	90090-0016	-		1	BALLS 15	
165	90157-0016	-		x	LOCKING FLUID	
166	90165-0057	-		1	PIPE-CLIPS,FOR SINGLE PIPE,ONE SIDE 6	
170	90166-0124	-	MM	200	HOSE 4,0/6 PA 11/12 Transp.	
180	90232-0075	K		2	PH.CELL SICK NT6-1490 0S12 Stainless	
200	312105-0329	-		8	SCREW M6S ISO 4017 M5X16 A280	
210	312105-0364	-		2	SCREW M6S6X10RFR	
220	312105-0455	-		2	SCREW M6S ISO 4017 M8X30 A280	
230	312125-0285	-		1	SLOTTED HEMCS4X6RFR	
250	312318-0323	-		1	SET SCREW CUP POINT ISO 4029 M5X8 RFR	
300	312812-0316	-		2	NUT,HEXAGON,LOCK,WITH NYLON INSERT,M6	
310	312812-0318	-		1	LOCK-NUT,HEXAGON,WITH NYLON,M8	
400	315105-0146	-		8	WASHER,PLAIN ROUND 5,3x10 Stainless	
410	315105-0153	-		2	WASHER,PLAIN ROUND 6,4x12 Stainless	
420	315105-0165	-		3	WASHER,PLAIN ROUND 8,4x16 Stainless	
430	315204-0116	-		2	O-RINGS 18,1X1,6	
500	321101-0143	-		2	FLANGE BUS 8F7X8	
520	342980-0114	-		3	BANJO-CONNECTION,RING 6/4-G1/4"	
530	90030-0265	-		1	HOLLOW SCREW	
540	90030-0266	-		1	HOLLOW SCREW	

This page is intentionally left blank

Pos	Part No	SP	UN	Qty	Description	Page No
90450-0105						
	90450-0634	K		1	OVERHAUL KIT	
252808-0000						
	577460-0000	-		1	FASTENING PLATE	
252809-0000						
	577459-0000	-		1	FASTENING PLATE	
279027-0000						
	312115-0370	-		4	SCREW MC6S ISO 4762 M6X20 A280	
	312115-0374	-		4	SCREW MC6S ISO O4762 M6X30 A280	
450105-0000						
	312911-0113	-		2	THREADED INSERTS M5X1,0D	
464164-0000						
	312911-0111	-		1	THREADED INSERTS M4X2,0D	
	312911-0114	-		1	THREADED I M5X1,5D	
	312911-0117	-		1	THREADED INSERTS M6X1,0D	
	312911-0118	-		1	THREADED I M6X1,5D	
464171-0000						
	312911-0111	-		1	THREADED INSERTS M4X2,0D	
	312911-0114	-		1	THREADED I M5X1,5D	
	312911-0117	-		1	THREADED INSERTS M6X1,0D	
	312911-0118	-		1	THREADED I M6X1,5D	
464758-0000						
	311103-0234	-		2	PINS,STRAIGHT 3X12	
486790-0000						
	312911-0113	-		1	THREADED INSERTS M5X1,0D	
497912-0000						
	312910-0117	-		2	THREADED INSERTS M6X1,0D	
497913-0000						
	312910-0117	-		2	THREADED INSERTS M6X1,0D	
499397-0000						
	577460-0000	-		1	FASTENING PLATE	
499398-0000						
	577459-0000	-		1	FASTENING PLATE	
529002-0000						
	312911-0103	-		2	THREADED I M3X2,0D	
	312911-0109	-		2	THREADED INSERTS M4X1,0D	
529137-0000						
	311103-0401	-		2	PINS,STRAIGHT 8X20	
529138-0000						
	311103-0401	-		2	PINS,STRAIGHT 8X20	
533956-0000						
	311103-0401	-		2	PINS,STRAIGHT 8X20	
533957-0000						
	311103-0401	-		2	PINS,STRAIGHT 8X20	
568983-0000						
	315202-0101	-		4	O-RINGS 3,1X1,6	
	568530-0000	-		1	COIL	
	568531-0000	-		1	CORE	
	568532-0000	-		4	NIPPLE	
573625-0000						
	315202-0101	-		2	O-RINGS 3,1X1,6	
	568530-0000	-		1	COIL	
	568532-0000	-		4	NIPPLE	
	570545-0001	-		3	FERROTRONEINSERT	
	573624-0000	-		1	CORE	
593583-0000						
	312911-0111	-		1	THREADED INSERTS M4X2,0D	
	312911-0114	-		1	THREADED I M5X1,5D	
	312911-0117	-		1	THREADED INSERTS M6X1,0D	
593584-0000						
	312911-0111	-		1	THREADED INSERTS M4X2,0D	
	312911-0114	-		1	THREADED I M5X1,5D	
	312911-0117	-		1	THREADED INSERTS M6X1,0D	
927493-0000						
	315202-0101	-		2	O-RINGS 3,1X1,6	
	568532-0000	-		4	NIPPLE	
	580828-0001	-		1	CORE	
	580829-0000	-		1	CURRENT RAIL	
	580833-0001	-		3	FERROTRONE INSERT	
927495-0000						
	315202-0101	-		2	O-RINGS 3,1X1,6	
	568532-0000	-		4	NIPPLE	
	580828-0002	-		1	CORE	
	580829-0000	-		1	CURRENT RAIL	
	580833-0001	-		2	FERROTRONE INSERT	
	580833-0002	-		1	FERROTRONE INSERT	
1143901-0000						
	312911-0111	-		1	THREADED INSERTS M4X2,0D	
	312911-0114	-		1	THREADED I M5X1,5D	
	312911-0117	-		1	THREADED INSERTS M6X1,0D	
1143902-0000						

This page is intentionally left blank

Pos	Part No	SP	UN	Qty	Description	Page No
	312911-0111	-		1	THREADED INSERTS M4X2,0D	
	312911-0114	-		1	THREADED I M5X1,5D	
	312911-0117	-		1	THREADED INSERTS M6X1,0D	
1147039-0000						
	577344-0000	-		2	CONNECTION PLATE	
	580755-0000	-		1	CONTACT PIN	
	581176-0001	-		3	SHRINKABLE HOSE	
	1147024-0002	-		1	WIRE	
	1147120-0000	-		1	SHRINKABLE HOSE	
1147040-0000						
	353101-0118	-		1	CABLE SHOE 0,75-1,5mm2 Red	
	577344-0000	-		2	CONNECTION PLATE	
	581176-0001	-		3	SHRINKABLE HOSE	
	583778-0000	-		1	WIRE	
	1147120-0000	-		1	SHRINKABLE HOSE	

Pos	Part No	SP	UN	Qty	Description	Page No

SPC

Spare Parts Catalogue

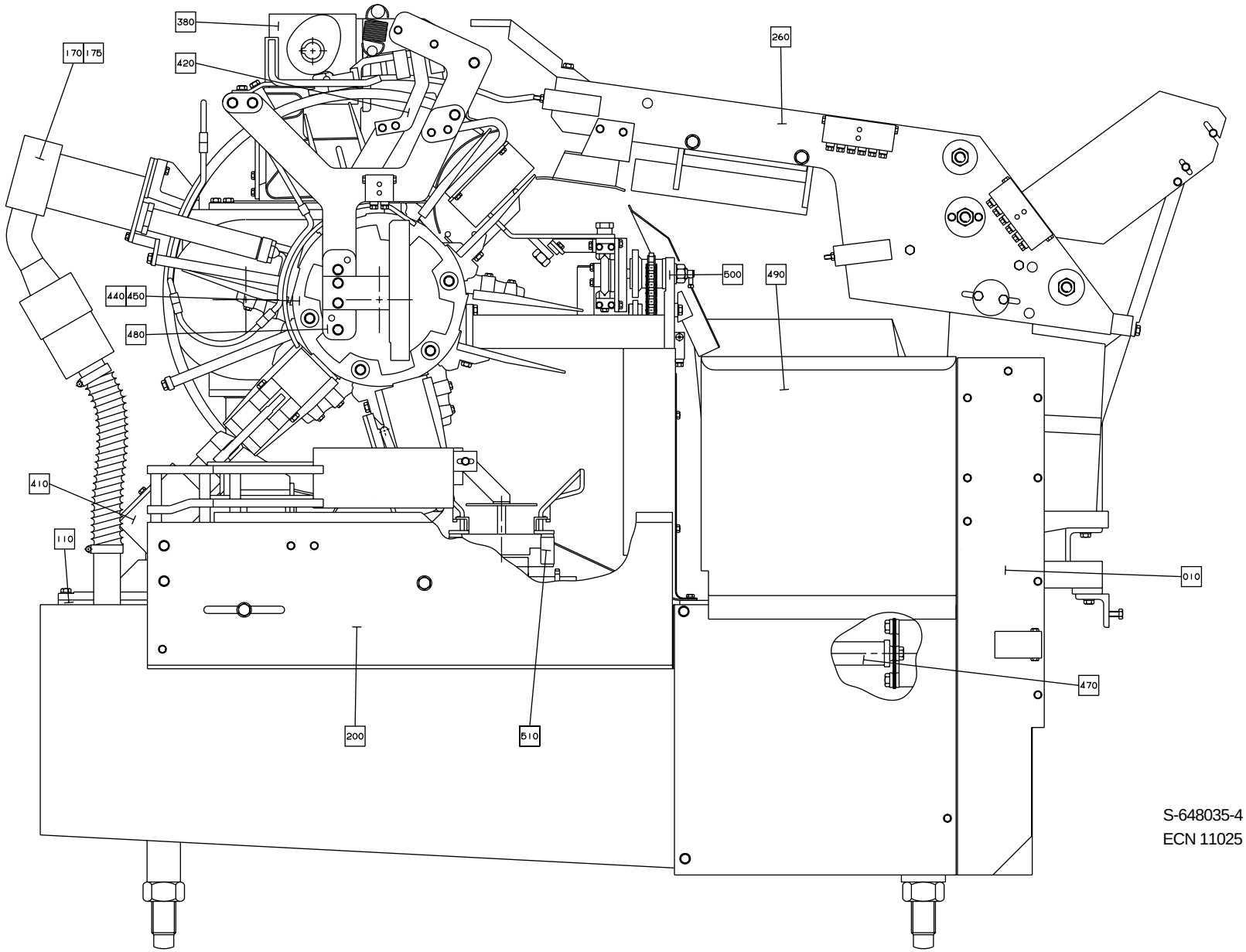

S-648035-4
ECN 11025

Pos	Part No	SP	UN	Qty	Description	Page No
RIGHT OUT						
010	A 285592-0600	-		1	MACHINE BODY	**441**, **443**
200	A 285591-0400	-		1	STATION	**485**
480	A 525000-0200	-		1	FOLDING PART	**577**, **579**, **581**, **583**
500	A 525213-0200	-		1	INFEEDER	**591**, **593**
510	A 525325-0200	-		1	DISCHARGER	**599**, **601**
LEFT OUT						
010	A 595086-0100	-		1	MACHINE BODY	**457**, **459**
200	A 595087-0100	-		1	STATION	**515**, **517**
480	A 595088-0100	-		1	FOLDING PART	**519**
500	A 595089-0100	-		1	INFEEDER	**521**, **523**
510	A 595090-0100	-		1	DISCHARGER	**525**,**527**
Common parts						
110	A 285303-0400	-		1	LOWER SECTION	**461**
170	A 525129-0100	-		1	ELEMENT	**473**, **475**
175	A 525128-0100	-		1	FF-ELEMENT R	**481**, **483**
260	A 525085-0200	-		1	LUBRICATING SYSTEM	**489**, **491**, **493**, **495**
380	A 285479-0500	-		1	SUPERSTRUCTURE	**537**
410	A 285456-0300	-		2	PRESSURE DEVICE	**549**,**551**
420	A 285736-0300	-		1	PULL-DOWN DEVICE	**553**, **555**, **557**
440	A 297681-0300	-		1	WHEEL	**559**,**561**, **563**, **565**
450	A 297682-0300	-		1	WHEEL	**567**, **569**, **571**, **573**
470	A 443173-0100	-		1	DRIVE SHAFT	**575**
490	A 442537-0500	-		1	WASTE CHUTE	**589**

Pos	Part No	SP	UN	Qty	Description	Page No

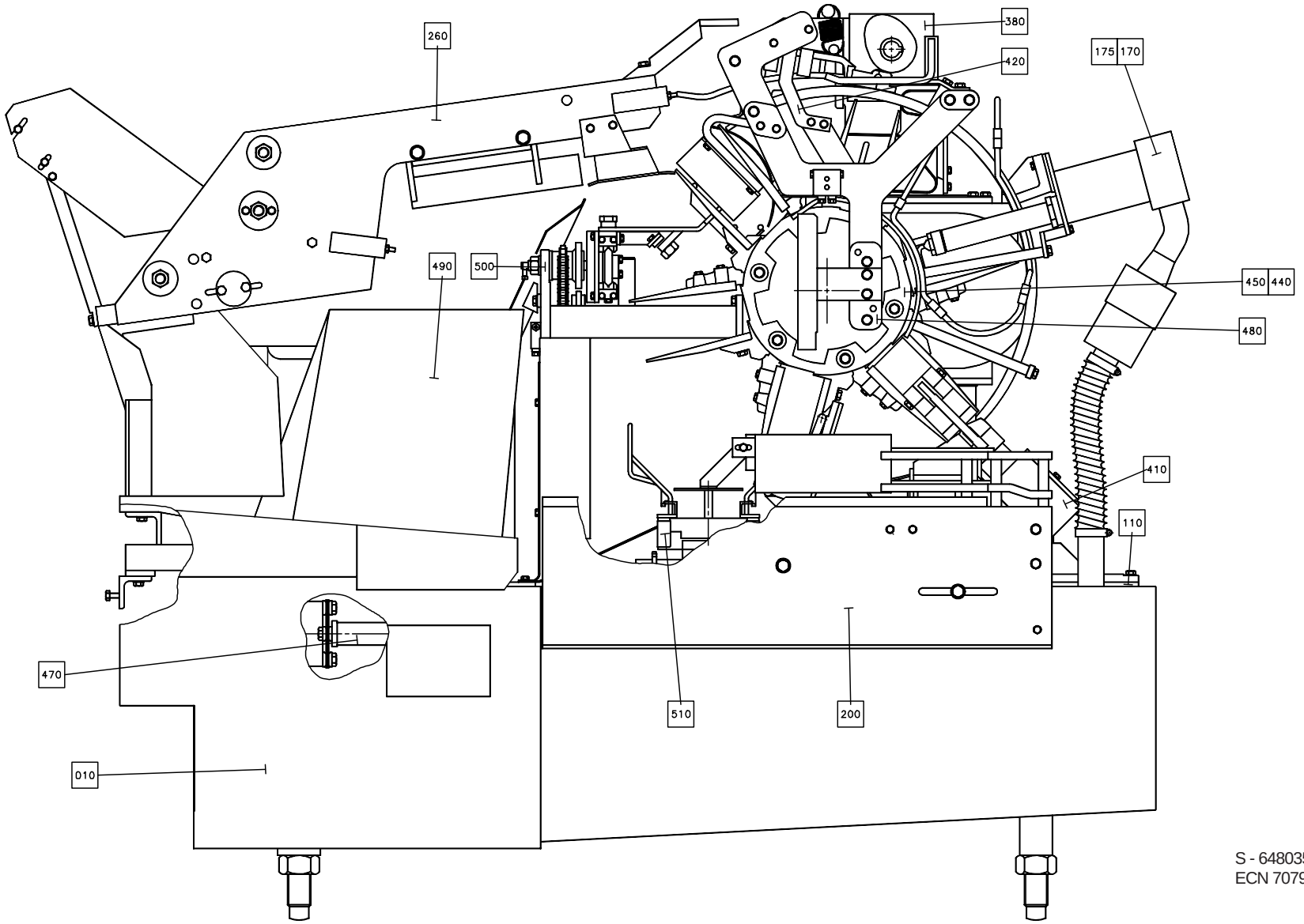

S - 648035-5
ECN 70799

Pos	Part No	SP	UN	Qty	Description	Page No
RIGHT OUT						
010	A 285592-0600	-		1	MACHINE BODY	**441**, **443**
200	A 285591-0400	-		1	STATION	**485**
480	A 525000-0200	-		1	FOLDING PART	**577**, **579**, **581**, **583**
500	A 525213-0200	-		1	INFEEDER	**591**, **593**
510	A 525325-0200	-		1	DISCHARGER	**599**, **601**
LEFT OUT						
010	A 595086-0100	-		1	MACHINE BODY	**457**, **459**
200	A 595087-0100	-		1	STATION	**515**, **517**
480	A 595088-0100	-		1	FOLDING PART	**519**
500	A 595089-0100	-		1	INFEEDER	**521**, **523**
510	A 595090-0100	-		1	DISCHARGER	**525**,**527**
Common parts						
110	A 285303-0400	-		1	LOWER SECTION	**461**
170	A 525129-0100	-		1	ELEMENT	**473**, **475**
175	A 525128-0100	-		1	FF-ELEMENT R	**481**, **483**
260	A 525085-0200	-		1	LUBRICATING SYSTEM	**489**, **491**, **493**, **495**
380	A 285479-0500	-		1	SUPERSTRUCTURE	**537**
410	A 285456-0300	-		2	PRESSURE DEVICE	**549**,**551**
420	A 285736-0300	-		1	PULL-DOWN DEVICE	**553**, **555**, **557**
440	A 297681-0300	-		1	WHEEL	**559**,**561**, **563**, **565**
450	A 297682-0300	-		1	WHEEL	**567**, **569**, **571**, **573**
470	A 443173-0100	-		1	DRIVE SHAFT	**575**
490	A 442537-0500	-		1	WASTE CHUTE	**589**

Pos	Part No	SP	UN	Qty	Description	Page No

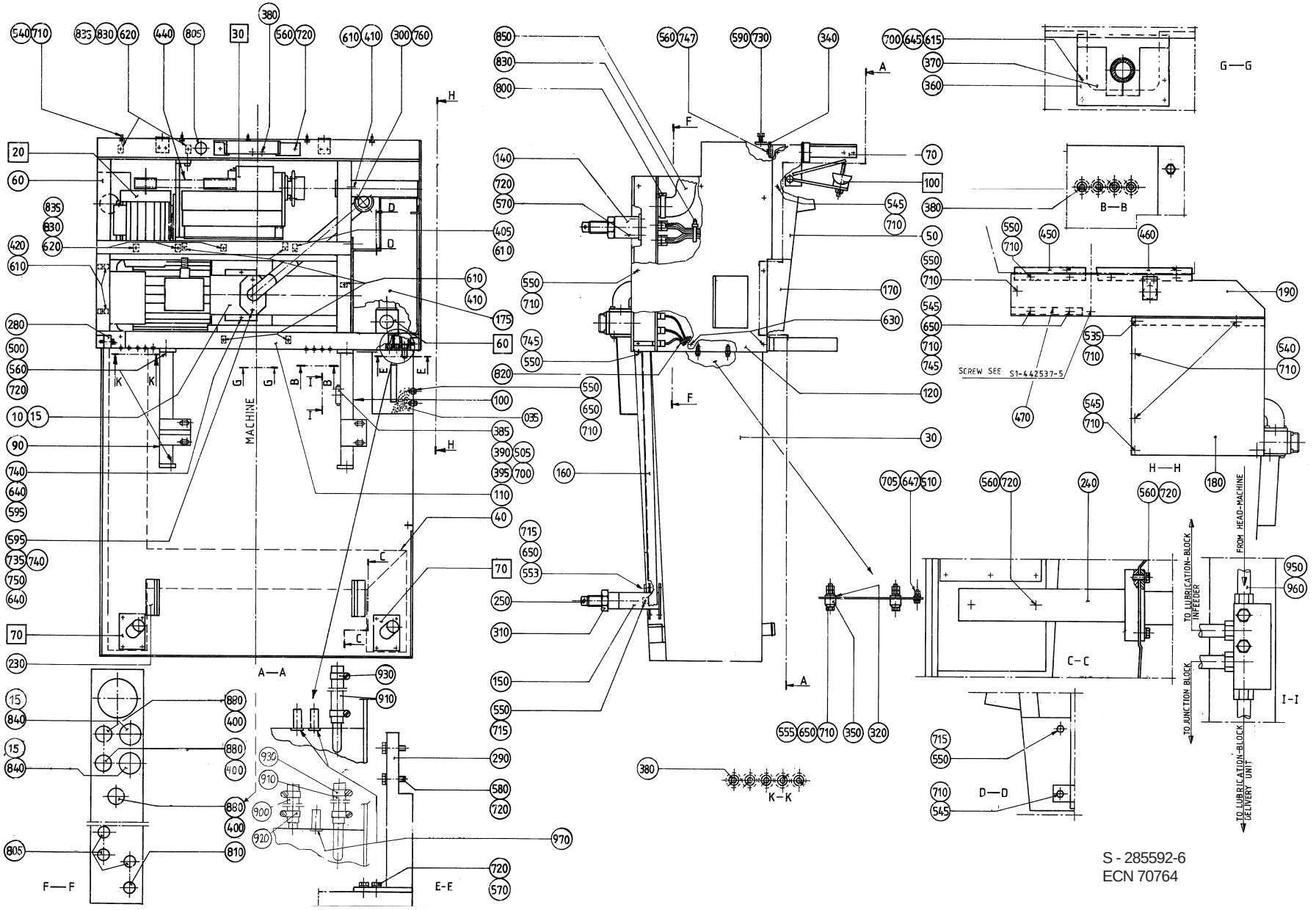

S - 285592-6
ECN 70764

Pos	Part No	SP	UN	Qty	Description	Page No
Common parts						
F020	A 285287-0500	-		1	DRIVE UNIT	**445**
F030	A 285861-0500	D		1	GEAR REDUCTION	**447**
F060	A 525143-0200	D		1	BOTTOM VALVE	**451**
F070	A 525110-0100	-		1	CABLE CONDUIT	**453**
F100	A 297638-0200	-		1	CHAIN TENSIONER	**455**
015	90012-0072	-		3	GLAND FITTING **	
030	525278-0000	-		1	CLEANING TROUGH	
035	531119-0000	-		1	STRAINER	
040	525132-0000	-		1	CABLE TRENCH	
050	525262-0000	-		1	COVERING PLATE	
060	525274-0000	-		1	FINISH FRAME 525274	
070	285330-0000	-		1	HOLDER	
090	525272-0000	-		1	STRUT	
100	525273-0000	-		1	STRUT	
110	525275-0000	-		1	COVERING PLATE	
120	525346-0000	-		1	SIDE PLATE	
140	525268-0000	-		2	LEG	
150	525130-0000	-		1	LEG	
160	525277-0000	-		1	CABLE TRENCH	
170	529331-0000	-		1	COVERING PLATE	
175	443186-0000	-		1	CHUTE	
180	443187-0000	-		1	SHEET	
190	442545-0000	-		1	SHEET	
230	525266-0000	-		1	LEG	
240	525267-0000	-		1	LEG	
250	285923-0000	-		4	SCREW	
280	297663-0000	-		1	POST HOLDER	
290	B 297664-0000	-		1	POST HOLDER	
300	B 525271-0000	-		1	ELBOW PIPE	
310	285994-0000	-		4	NUT	
320	295435-0000	-		2	WASHER	
340	297814-0000	-		2	BRACKET	
350	297860-0000	-		2	BUSHING	
360	525280-0000	-		1	SHEET	
370	525281-0000	-		1	GASKET	
380	90015-0020	-		11	RUBBER BUSHING 5-7	
385	90028-0022	-		4	CONE	
390	90032-0044	-		1	JUNCTION BLOCK	
395	90134-0055	-		4	BUSHING 6 DIN 3871 Stainless	
400	90152-0050	-	MM	2500	GLANDS,HOSE 20x13	
405	90165-0060	-		1	PIPE-CLIPS,FOR SINGLE PIPE,ONE SIDE 5	
410	316810-0106	-		7	PIPE-CLIPS,FOR SINGLE PIPE,ONE SIDE 8	
420	90165-0057	-		4	PIPE-CLIPS,FOR SINGLE PIPE,ONE SIDE 6	
440	90417-0180	M		1	TIMING BELT T10/920 W=40	
450	525174-0000	-		1	BRACKET	
460	525175-0000	-		1	BRACKET	
470	297551-0000	-		1	SHEET	
500	311103-0399	-		8	CYLINDRICAL PIN M6 8X16 RFR	
505	312105-0295	-		2	SCREW M6S ISO 4017 M4X20 A280	
510	312105-0329	-		1	SCREW M6S ISO 4017 M5x16 A280	
535	312105-0362	-		1	SCREW M6S ISO 4017 M6X8 A280	
540	312105-0364	-		8	SCREW M6S 6x10 A280	
545	312105-0368	-		6	SCREW M6S ISO 4017 M6x16 A280	
550	312105-0367	-		15	SCREW M6S6X14RFR	
553	312105-0370	-		1	SCREW M6S ISO 4017 M6x20 A280	
555	312105-0376	-		2	SCREW M6S ISO 4017 M6X35 A280	
560	312105-0451	-		23	SCREW M6S ISO 4017 8x20 A280	
570	312105-0453	-		8	SCREW M6S ISO 4017 M8x25 A280	
580	312105-0455	-		4	SCREW M6S ISO 4017 M8X30 A280	
590	312105-0495	-		2	SCREW M6S ISO 4017 M10X30 A280	
595	312105-0542	-		4	SCREW M6S ISO 4014 M12X50 A280	
610	312125-0287	-		9	SLOTTED CHEESE HEAD ISO 1207 M4X8 RFR	
615	312125-0291	-		4	SLOTTED CHEESE HEAD ISO 1207 M4x12 RFR	
620	312125-0323	-		5	SLOTTED CHEESE HEAD ISO 1207 M5X8 RFR	
630	312155-0366	-		2	SCREW MF6S DIN 7991 M6X12 A280	
640	312605-0322	-		4	NUT,HEXAGON,M12 RFR	
645	312605-0312	-		4	NUT,HEXAGON,M4 RFR	
647	312605-0314	-		2	NUT,HEXAGON,M6M5 Stainless	
650	312605-0316	-		7	NUT,HEXAGON A280 M6M6	
700	315105-0136	-		11	WASHER,PLAIN ROUND 4,3x8 Stainless	
705	315105-0146	-		2	WASHER,PLAIN ROUND 5,3x10 Stainless	
710	315105-0153	-		31	WASHER,PLAIN ROUND 6,4x12 Stainless	
715	6278-0000	-		3	WASHER	
720	315105-0165	-		31	WASHER,PLAIN ROUND 8,4x16 Stainless	
730	315105-0173	-		2	WASHER,PLAIN ROUND 10,5x22 STAINLESS	
735	315105-0178	-		2	WASHER,PLAIN ROUND 13x24	
740	315115-0178	-		6	WASHER TBRB 13x24 Stainless	
745	315115-0153	-		3	WASHER TBRB 6,4x12 Stainless	
747	315115-0165	-		4	WASHER TBRB 8,4x16 Stainless	
750	315202-0229	M		1	O-RINGS 59,2X5,7	
760	315250-0103	M		1	GASKET 48/38	
800	342991-0112	-		2	HOSE CLIP,WORM DRIVE TYPE (73)-83	
805	352103-0100	-		4	CABLE GLAND STR 9;PR15,2	
810	352103-0101	-		1	CABLE GLAND ST 9	
820	352113-0101	-		3	RIBBON CLAMP BLACK	

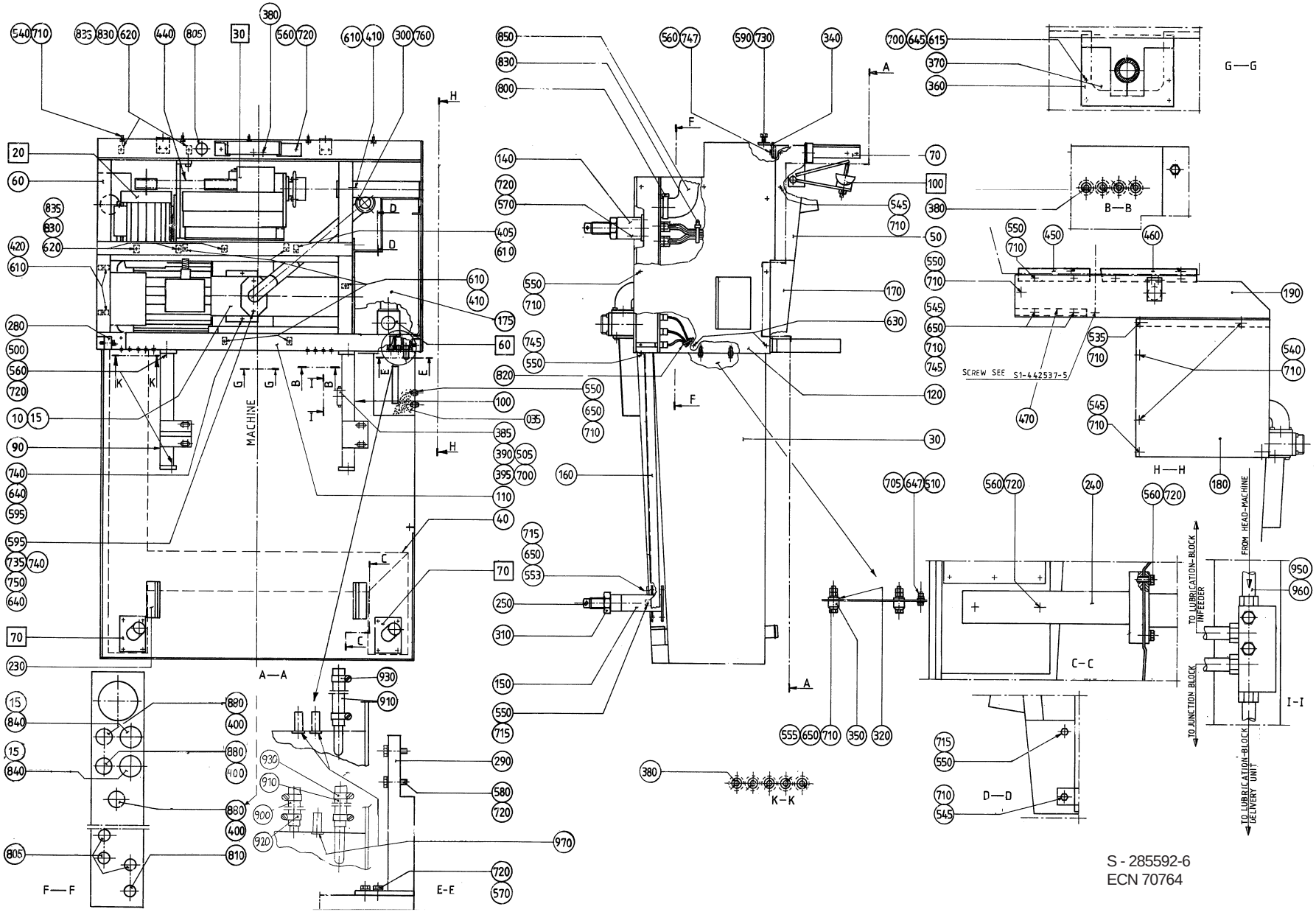

S - 285592-6
ECN 70764

Pos	Part No	SP	UN	Qty	Description	Page No
830	352113-0102	-		6	RIBBON CLAMP,Black	
835	352113-0204	-		5	ANCHOR TM3S25-M	
840	90152-0051	-	MM	1000	GLANDS,HOSE 25x18	
850	90152-0044	-	MM	350	FLEXIBLE CONDUIT 3641-0070	
880	90012-0071	-		3	GLAND FITTING	
910	90166-0087	-	MM	630	HOSE	
930	342991-0103	-		2	HOSE CLIP,WORM DRIVE TYPE (19)-23	
950	90134-0030	-		1	SLEEVE 6/3	
960	90166-0108	-	MM	870	HOSE 3/6 PA11/12 Transp.	
TBA/8 50HZ						
010	B 90321-0015	D		1	PUMP 502 CFX 7ETV 302 50Hz IP55	
900	90166-0059	-	MM	630	HOSE PVC 12/16mm TRANSP.	
920	342991-0101	-		2	HOSE CLIP,WORM DRIVE TYPE (13)-16	
970	90261-0004	-		1	PIPE PLUG	
TBA/8 60HZ						
010	B 90321-0034	D		1	PUMP 502 CFX 5ETV 362 60Hz IP55	
900	90166-0059	-	MM	630	HOSE PVC 12/16mm TRANSP.	
920	342991-0101	-		2	HOSE CLIP,WORM DRIVE TYPE (13)-16	
970	90261-0004	-		1	PIPE PLUG	

Pos	Part No	SP	UN	Qty	Description	Page No

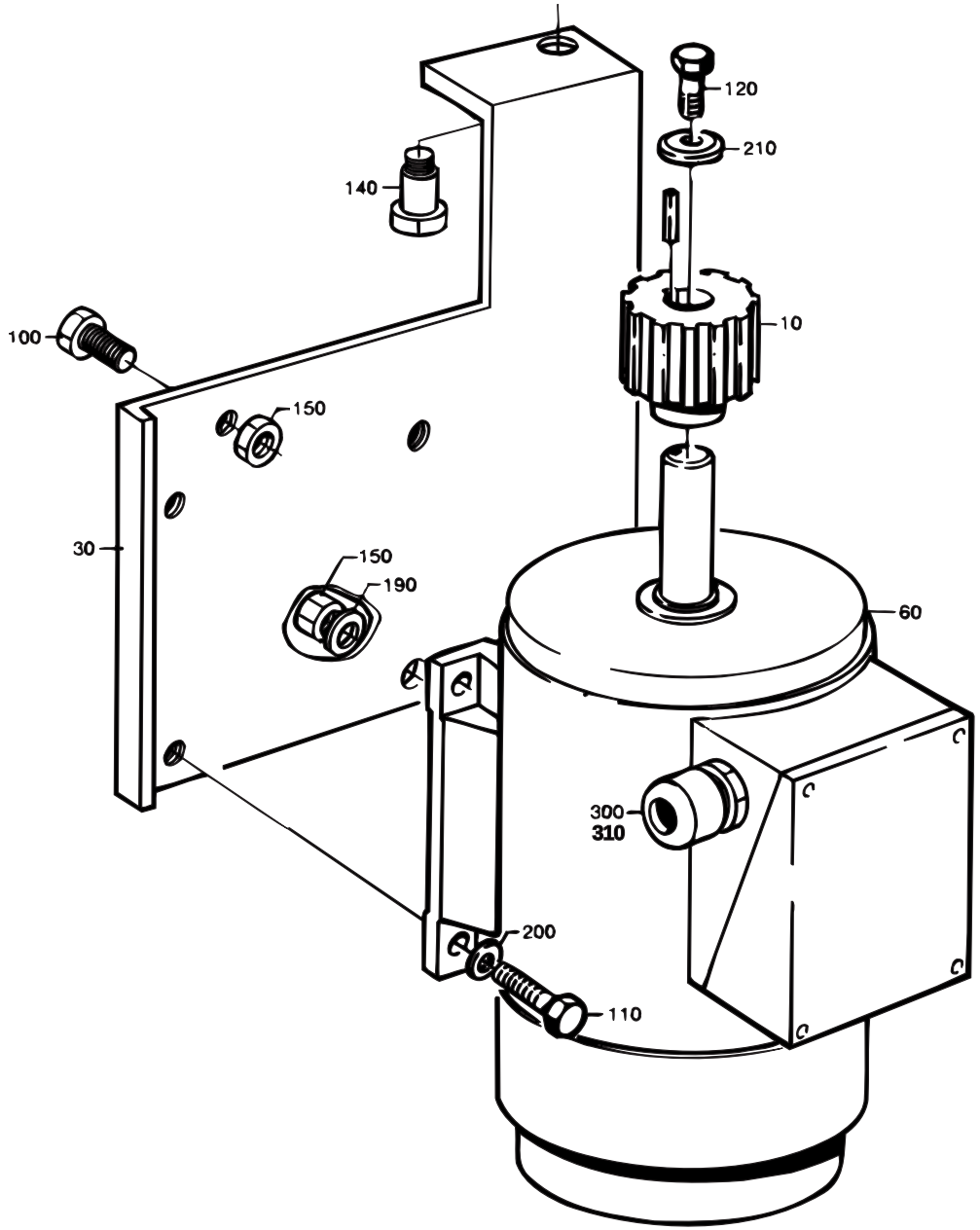

S-285287-3
ECN 22847

Pos	Part No	SP	UN	Qty	Description	Page No
Common parts						
010	443336-0008	R		1	TIMING BELT PULLEY	
030	525166-0000	-		1	MOTOR CRADLE	
060	90045-0049	R		1	MOTOR	
100	312101-0451	-		1	SCREW M6S 8x20 FZB	
110	312101-0453	-		3	SCREW M6S 8x25 FZB	
120	312101-0457	-		2	SCREW M6S 8x35 FZB	
140	312180-0530	-		2	HEX. S0CKET HEAD SHOULD. ISO 7379 M10X16	
150	312601-0318	-		2	NUT M6M8FZB	
190	315101-0165	-		1	WASHER BRB8,4X16FZB	
200	315111-0165	-		4	WASHER TBRB8,4X16FZB	
210	315121-0165	-		1	WASHER TBRSB8,4X26FZB	
300	353245-0005	-		1	GLANDS,EMC,EXTENDED WITH INSERT PG16	
310	90099-0178	-		1	GLAND,LOCKNUT PG 16	

Pos	Part No	SP	UN	Qty	Description	Page No

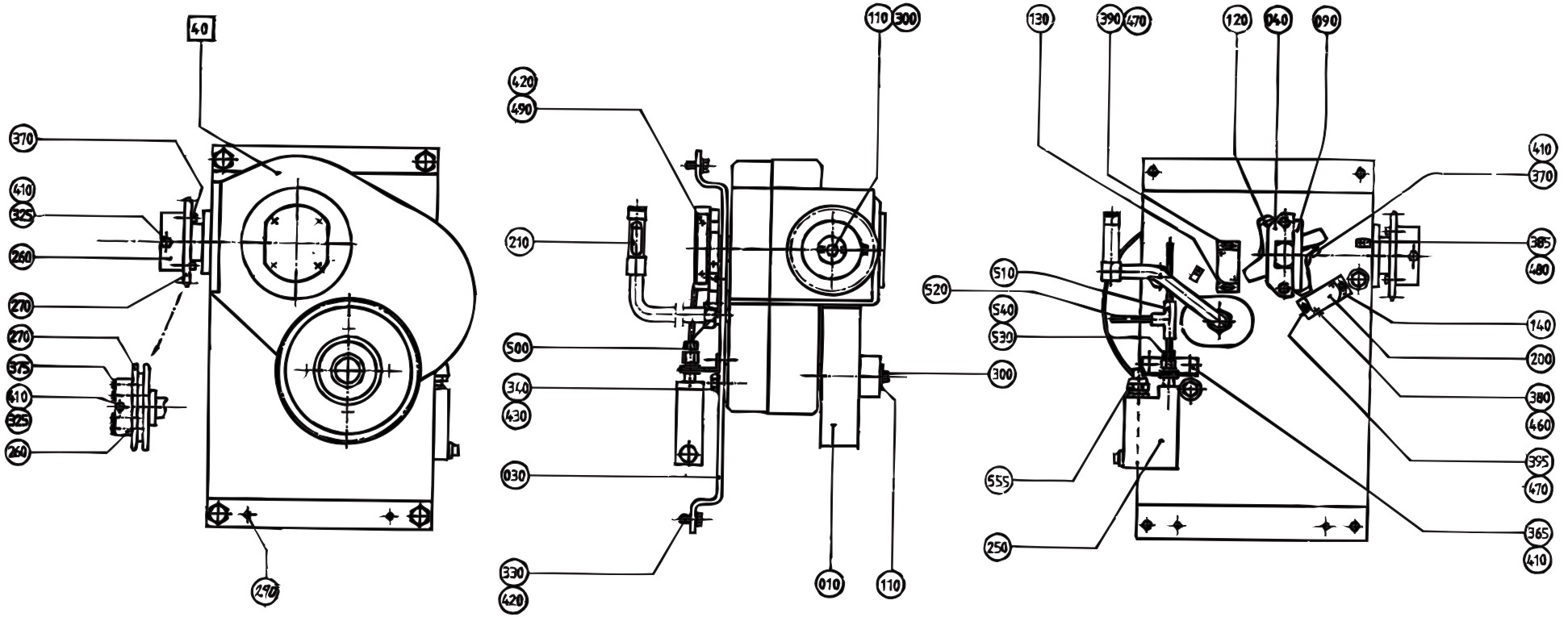

S-285861-5
ECN 70373

Pos	Part No	SP	UN	Qty	Description	Page No
Common parts						
F040	A 442582-0100	D		1	DRIVE GEAR	**449**
010	525215-0006	D		1	TIMING BELT PULLEY	
030	525109-0000	-		1	BRACKET	
040	927332-0000	R		1	BRACKET	
090	927333-0000	R		1	BAR CLAMP	
110	285403-0000	-		2	WASHER	
120	566775-0000	-		1	CARRIER	
130	525337-0000	-		1	BRACKET	
140	525232-0000	-		1	BRACKET	
200	90044-0104	L		2	PROX.SWITCH IFM IN 3002	
210	443248-0000	D		1	OIL PIPE	
250	B 90274-0002	R		1	PRESSURE SWITCH XMJ Telemecanique	
290	311112-0341	-		2	PINS,SLOTTED TUBULAR SPRING PIN 6X24	
300	312101-0370	-		2	SCREW M6S6X20FZB	
325	312101-0384	-		1	SCREW M6S6X70FZB	
330	312101-0451	-		4	SCREW M6S 8x20 FZB	
340	312101-0493	-		3	SCREW M6S10X25FZB	
365	312101-0364	-		2	SCREW M6S 6x10-8,8 FZB	
380	312125-0228	-		2	SLOTTED CHEESE HEAD ISO 1207 M3x16 A4	
385	312125-0287	-		2	SLOTTED CHEESE HEAD ISO 1207 M4X8 RFR	
390	312115-0295	-		2	SCREW MC6S ISO 4762 M4X20 A280	
395	312115-0291	-		2	SCREW MC6S ISO 4762 M4x12 A280	
410	315101-0153	-		4	WASHER BRB 6,4x12 FZB	
420	315101-0165	-		6	WASHER BRB8,4X16FZB	
430	315101-0173	-		3	WASHER BRB10,5X22FZB	
460	315105-0124	-		2	WASHER,PLAIN ROUND 3,2x6	
470	315105-0136	-		4	WASHER,PLAIN ROUND 4,3x8 Stainless	
480	90165-0056	-		2	PIPE-CLIPS,FOR SINGLE PIPE,ONE SIDE 4mm	
490	312105-0455	-		2	SCREW M6S ISO 4017 M8X30 A280	
500	342720-0115	-		1	STRAIGHT CONNECTION GA-16-G1/2"	
510	342946-0112	-		1	T-COUPLING,UNION 6/4	
520	90166-0011	-	MM	3000	HOSE 4/6 PA 11/12,Transp.	
530	342706-0130	-		1	ACCESSORIES,INSERT SLEEVE 6	
540	342790-0202	-		1	PRESS. GAUGE CONNECTION MAV6-S/R3/8"FZB	
555	90012-0073	-		1	GLAND FITTING	
0355B or 0375S or 0400B or 0500B or 0500S or 0750B or 0750S or 1000B or 1000S or 1055B						
260	525216-0000	D		1	SLEEVE	
270	442500-0000	-		1	SPROCKET	
370	312111-0370	-		7	SCREW MC6S6X20FZB	
0500SQ or1000SQ						
260	574081-0000	D		1	SLEEVE	
270	574088-0000	-		1	SPROCKET	
370	312111-0370	-		1	SCREW MC6S6X20FZB	
375	312104-0374	-		6	SCREW M6S6X30H8.8 FZB	

DRIVE GEAR

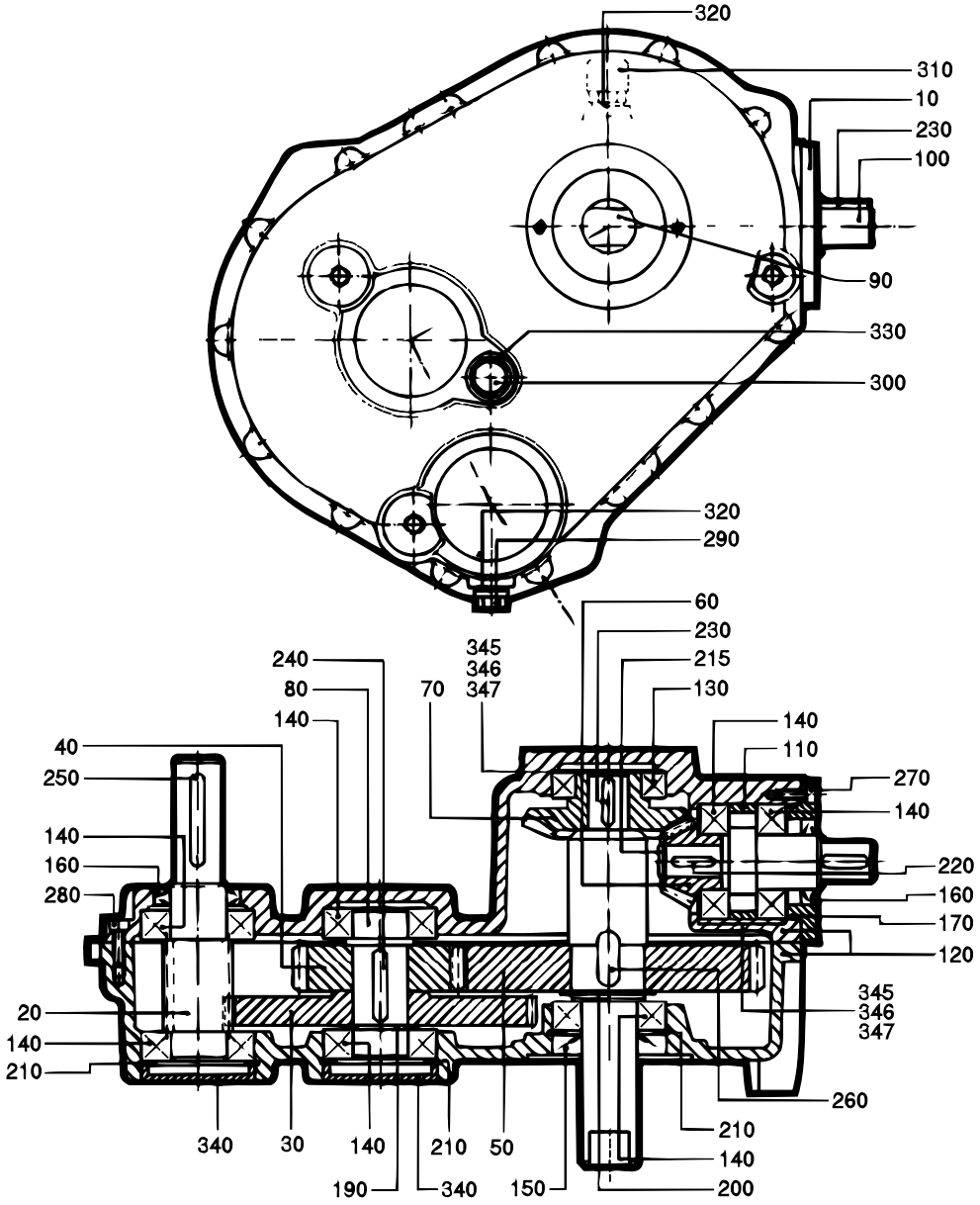

S-442582-1
ECN 5999

Pos	Part No	SP	UN	Qty	Description	Page No
Common parts						
010	567345-0000	D		1	BEARING COVER	
020	442554-0000	R		1	GEARING	
030	442555-0000	D		1	GEAR WHEEL	
040	442556-0000	D		1	GEAR WHEEL	
050	442557-0000	R		1	GEAR WHEEL	
060	442558-0000	R		1	GEAR WHEEL	
070	442559-0000	R		1	GEAR WHEEL	
080	567347-0000	D		1	SHAFT	
090	567348-0000	R		1	SHAFT	
100	525136-0000	R		1	SHAFT	
110	567349-0000	D		1	SPACER	
120	567373-0000	D		1	GEAR HOUSING	
130	321306-0107	R		1	BALL BEARING 35X62X14	
140	321309-0106	R		7	BALL BEARING 30X62X16	
150	90091-0145	R		1	SEAL RING	
160	90091-0054	R		2	SEAL RING	
170	90242-0116	R		1	O-RING	
190	315750-0122	-		1	CIRCLIP SGA30	
200	315750-0127	-		1	CIRCLIP SGA40	
210	315752-0136	-		3	CIRCLIP SGH62	
215	90141-0012	-		1	LOCK RING A 17x1,5 DIN 471	
220	315701-0202	-		1	FLAT WEDGE5X5X22	
230	315701-0234	-		3	KEYS,PARALLEL WITH ROUND ENDS 6X6X25	
240	315701-0270	-		2	KEYS,PARALLEL WITH ROUND ENDS 8X7X40	
250	315701-0272	-		1	KEYS,PARALLEL WITH ROUND ENDS 8X7X50	
260	567350-0000	D		2	WEDGE	
270	312111-0329	-		4	SCREW MC6S5X16FZB	
280	312111-0370	-		12	SCREW MC6S6X20FZB	
290	90330-0026	-		1	PLUG,EXTERNAL G-THREAD G1/4"	
300	90330-0037	-		1	PLUG,EXTERNAL G-THREAD G1/2"	
310	442841-0000	D		1	AIR SCREW	
320	315234-0110	-		2	PLAIN ROUND,COPPER R1/4"	
330	315234-0113	-		1	PLAIN ROUND,COPPER R1/2",M20	
340	90214-0310	-		2	LID	
345	442903-0000	D		x	SHIM	
346	442904-0000	D		x	SHIM	
347	442905-0000	D		x	SHIM	
390	90296-0075	D	ML	2400	OIL	

Pos	Part No	SP	UN	Qty	Description	Page No

BOTTOM VALVE

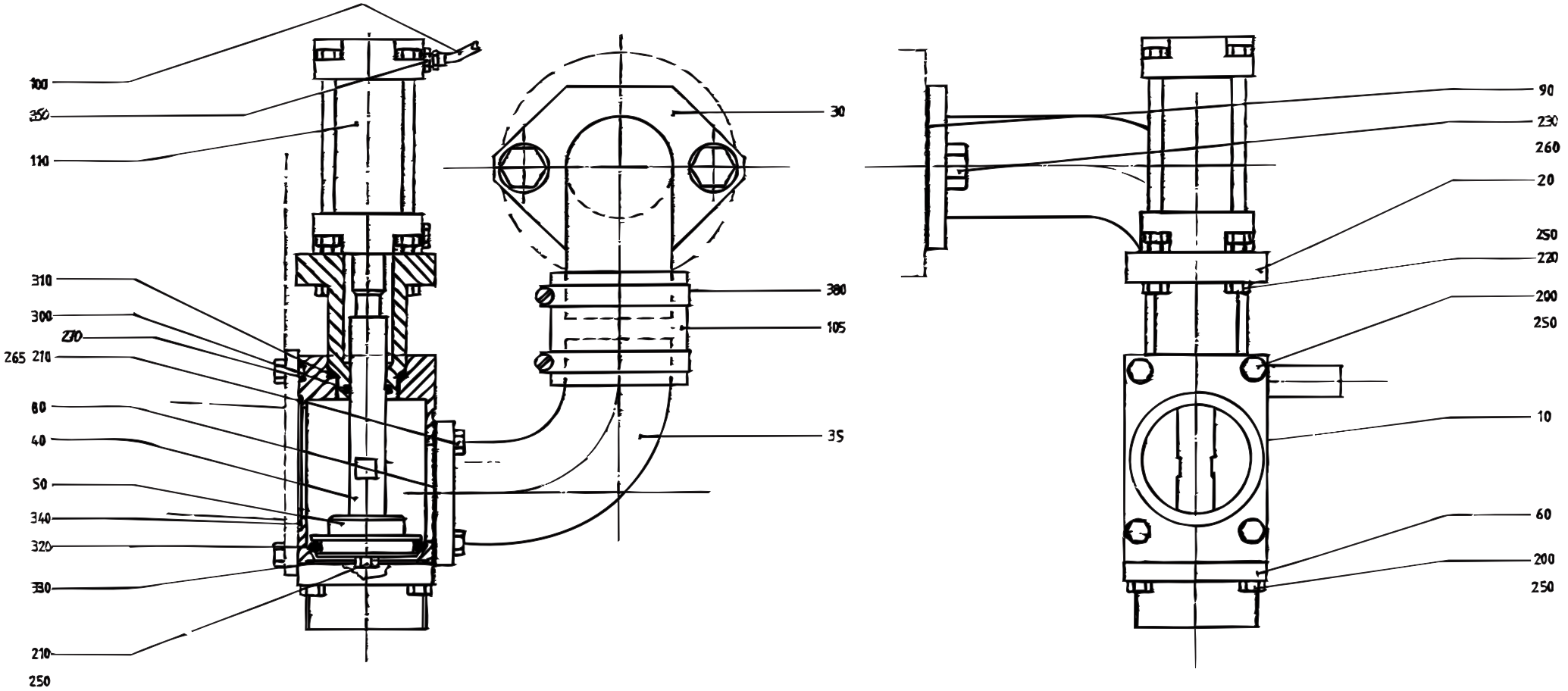

S-525143-2
ECN 11730

Pos	Part No	SP	UN	Qty	Description	Page No
Common parts						
010	443122-0000	D		1	HOUSE	
020	443123-0000	D		1	HOUSE	
030	525269-0000	D		1	PIPE	
035	525270-0000	D		1	PIPE	
040	442851-0000	D		1	SHAFT	
050	442852-0000	D		1	VALVE	
060	442853-0000	-		1	ATTACHMENT PIPE	
080	531116-0000	R		1	GASKET	
090	531189-0000	R		1	GASKET	
100	90166-0124	-	MM	650	HOSE 4,0/6 PA 11/12 Transp.	
105	90166-0199	-	MM	80	RUBBER HOSE	
110	90239-0960	R		1	CYLINDER	
200	312105-0368	-		8	SCREW M6S ISO 4017 M6x16 A280	
210	312105-0370	-		5	SCREW M6S ISO 4017 M6x20 A280	
220	312105-0374	-		4	SCREW M6S ISO 4017 M6X30 A280	
230	312105-0534	-		2	SCREW M6S ISO 4017 M12X25 A280	
250	315105-0153	-		13	WASHER,PLAIN ROUND 6,4x12 Stainless	
260	315105-0178	-		2	WASHER,PLAIN ROUND 13x24	
265	315115-0153	-		4	WASHER TBRB 6,4x12 Stainless	
270	315202-0106	R		2	O-RINGS 8,1X1,6	
300	315202-0214	R		1	O-RINGS 17,3X2,4	
310	315202-0220	R		1	O-RINGS 32,2X3	
320	315202-0226	R		1	O-RINGS 44,2X5,7	
330	315202-0302	R		1	O-RINGS 54,5X3	
340	315202-0303	R		1	O-RINGS 59,5X3	
350	342920-0113	-		1	STRAIGHT COUPLING,EXT.THREADED 6/4-R1/8"	
380	342991-0111	-		2	HOSE CLIP,WORM DRIVE TYPE (63)-73	

Pos	Part No	SP	UN	Qty	Description	Page No

CABLE CONDUIT

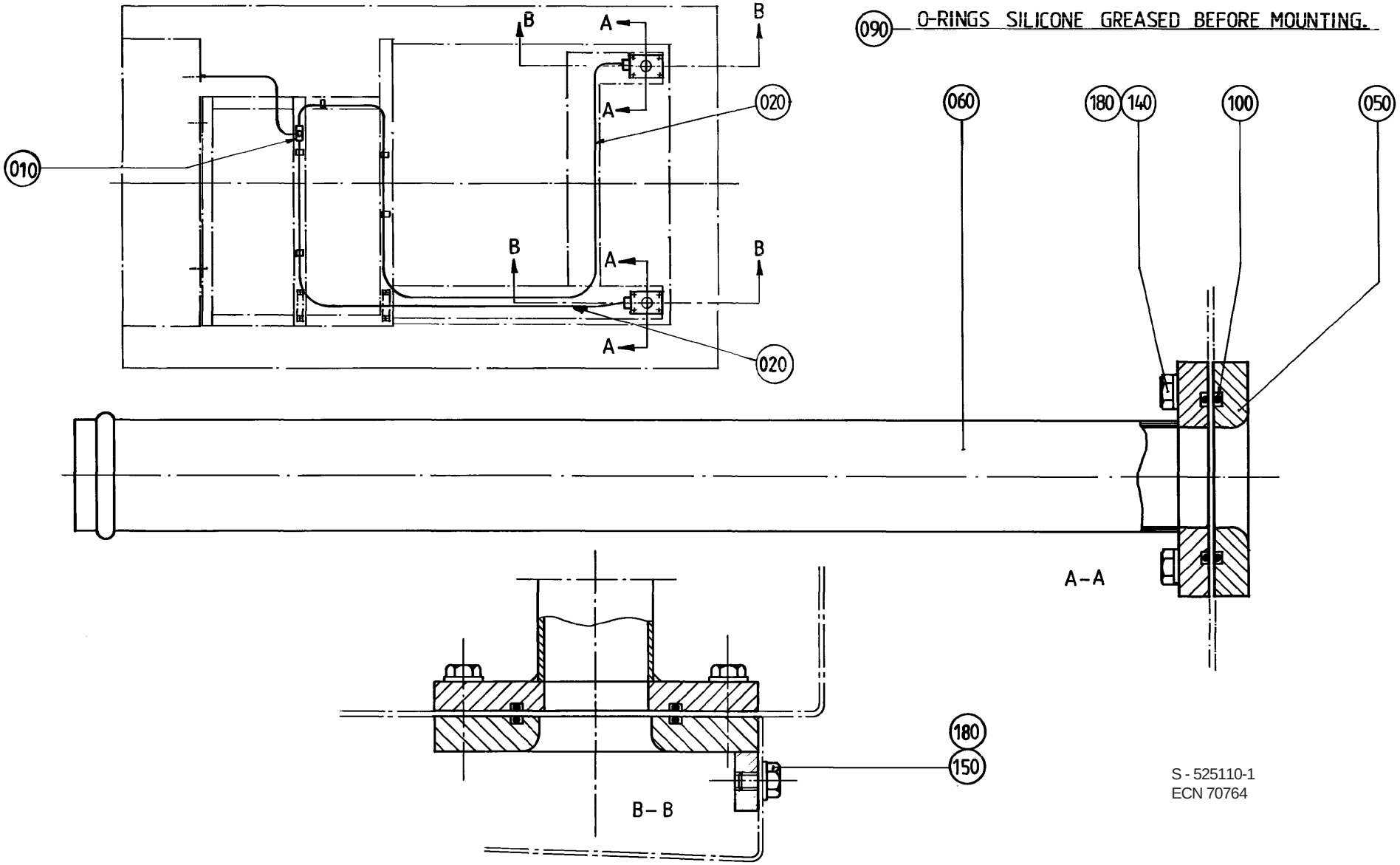

S - 525110-1
ECN 70764

Pos	Part No	SP	UN	Qty	Description	Page No
Common parts						
010	342946-0122	-		1	T-COUPLING,UNION 8/6	
020	90166-0122	-	MM	6750	HOSE 6/8 PA 11/12 Transparent	
050	525135-0000	-		2	PLATE	
060	297413-0000	-		2	PIPE	
090	90296-0009	-	KG	x	SILICONE GREASE TUBE 100 Gr.	
100	315202-0301	-		4	O-RINGS 49,5X3	
140	312105-0370	-		8	SCREW M6S ISO 4017 M6x20 A280	
150	312105-0364	-		2	SCREW M6S 6x10 A280	
180	315105-0153	-		10	WASHER,PLAIN ROUND 6,4x12 Stainless	

Pos	Part No	SP	UN	Qty	Description	Page No

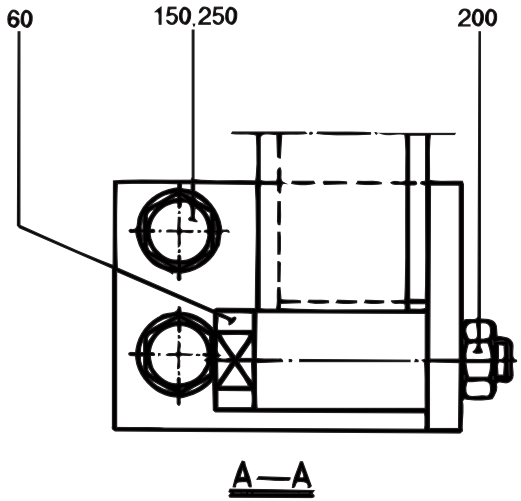

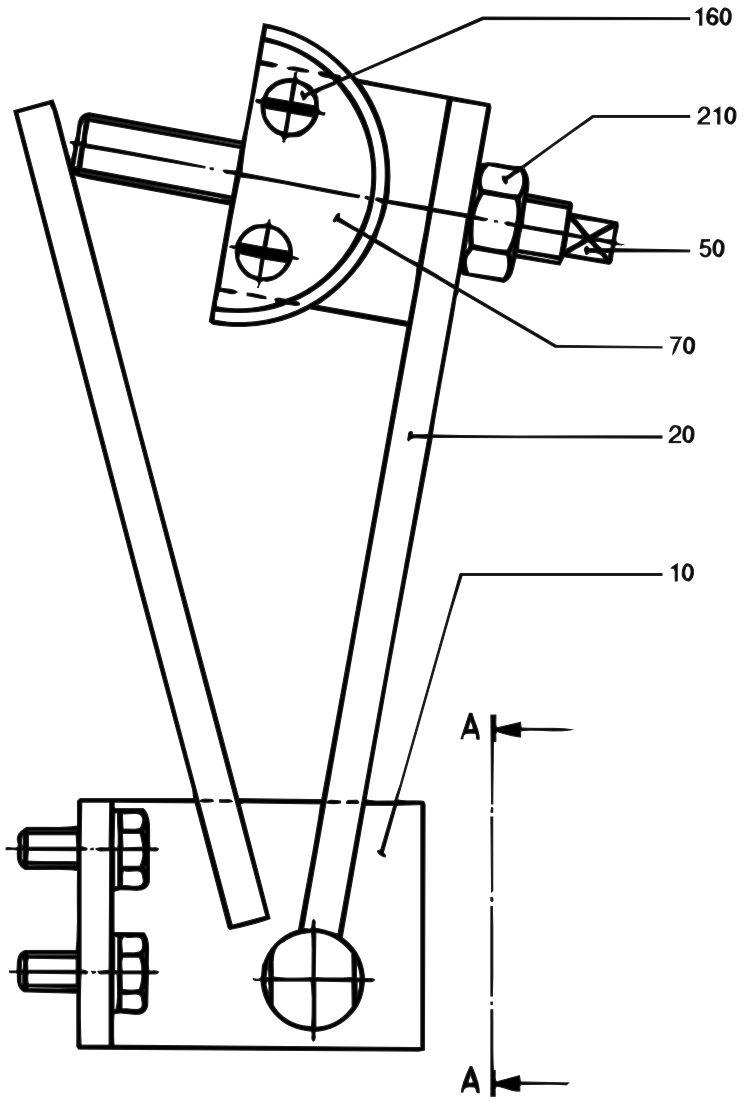

S-297638-1
ECN 16142

Pos	Part No	SP	UN	Qty	Description	Page No
Common parts						
010	297608-0000	-		1	BRACKET	
020	297609-0000	-		1	ARM	
050	297610-0000	-		1	SCREW	
060	297611-0000	D		1	SHAFT	
150	312105-0451	-		2	SCREW M6S ISO 4017 8x20 A280	
160	312145-0378	-		2	SLOTTED HEMFS6X40RFR	
200	312605-0318	-		1	NUT,HEXAGON,M8 RFR	
210	312605-0322	-		1	NUT,HEXAGON,M12 RFR	
250	315105-0165	-		2	WASHER,PLAIN ROUND 8,4x16 Stainless	
0355B or 0375S or 0400B or 0500B or 0500S or0750B or 0750S or 1000B or 1000S or 1055B						
070	443367-0000	D		1	PROFILE	
0500SQ or 1000SQ						
070	574093-0000	D		1	PROFILE	

Pos	Part No	SP	UN	Qty	Description	Page No

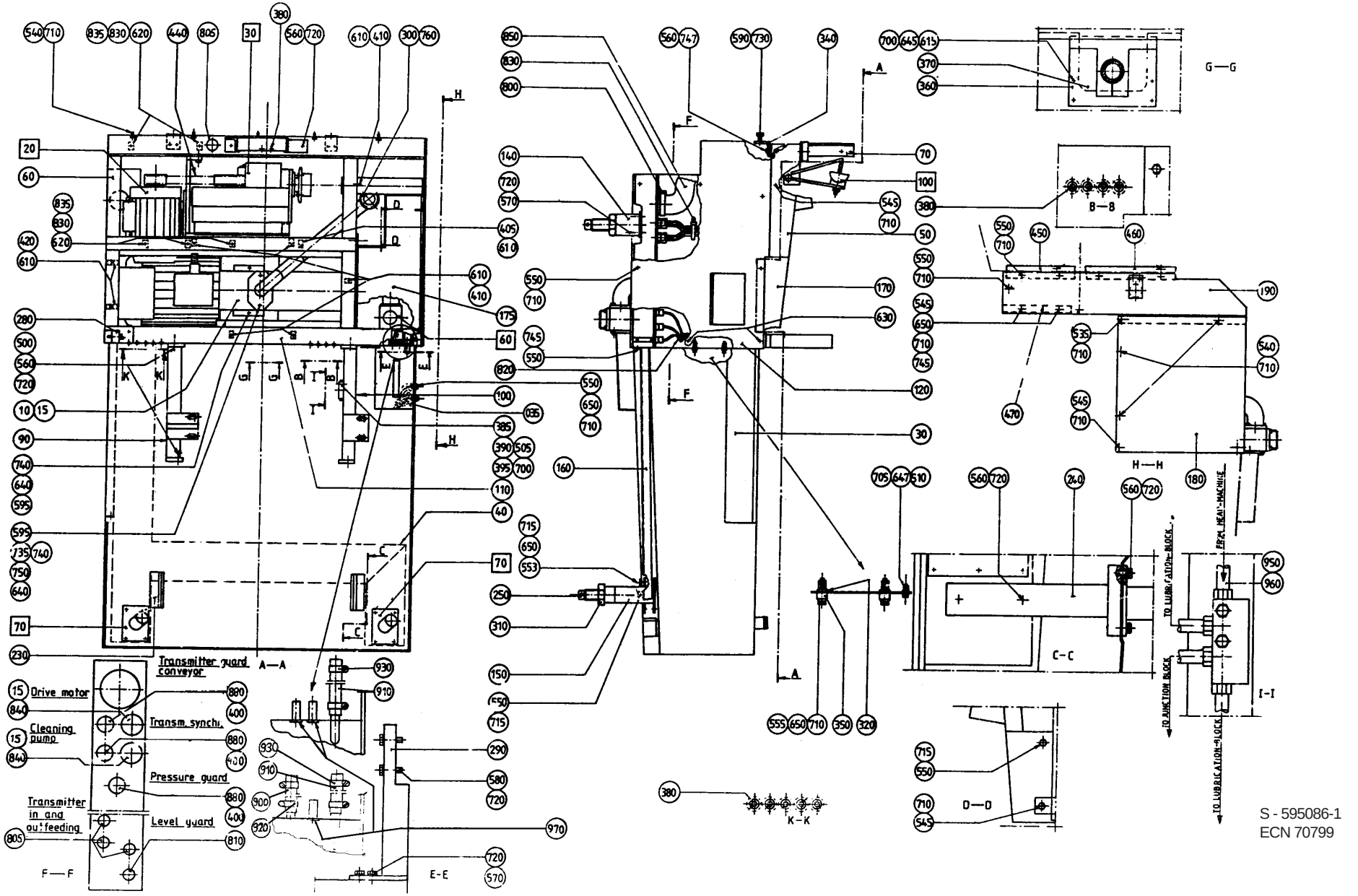

S - 595086-1
ECN 70799

Pos	Part No	SP	UN	Qty	Description	Page No
Common parts						
F020	A 285287-0500	-		1	DRIVE UNIT	**445**
F030	A 285861-0500	D		1	GEAR REDUCTION	**447**
F060	A 525143-0200	D		1	BOTTOM VALVE	**451**
F070	A 525110-0100	-		1	CABLE CONDUIT	**453**
F100	A 297638-0200	-		1	CHAIN TENSIONER	**455**
015	90012-0072	-		3	GLAND FITTING **	
030	594589-0000	-		1	CLEANING TROUGH	
035	531119-0000	-		1	STRAINER	
040	525132-0000	-		1	CABLE TRENCH	
050	525262-0000	-		1	COVERING PLATE	
060	525274-0000	-		1	FINISH FRAME 525274	
070	285330-0000	-		1	HOLDER	
090	525272-0000	-		1	STRUT	
100	525273-0000	-		1	STRUT	
110	525275-0000	-		1	COVERING PLATE	
120	525346-0000	-		1	SIDE PLATE	
140	525268-0000	-		2	LEG	
150	525130-0000	-		1	LEG	
160	525277-0000	-		1	CABLE TRENCH	
170	595066-0000	-		1	COVERING PLATE	
175	443186-0000	-		1	CHUTE	
180	443187-0000	-		1	SHEET	
190	442545-0000	-		1	SHEET	
230	525266-0000	-		1	LEG	
240	525267-0000	-		1	LEG	
250	285923-0000	-		4	SCREW	
280	297663-0000	-		1	POST HOLDER	
290	B 297664-0000	-		1	POST HOLDER	
300	B 525271-0000	-		1	ELBOW PIPE	
310	285994-0000	-		4	NUT	
320	295435-0000	-		2	WASHER	
340	297814-0000	-		2	BRACKET	
350	297860-0000	-		2	BUSHING	
360	525280-0000	-		1	SHEET	
370	525281-0000	-		1	GASKET	
380	90015-0020	-		11	RUBBER BUSHING 5-7	
385	90028-0022	-		4	CONE	
390	90032-0044	-		1	JUNCTION BLOCK	
395	90134-0055	-		4	BUSHING 6 DIN 3871 Stainless	
400	90152-0050	-	MM	2500	GLANDS,HOSE 20x13	
405	90165-0060	-		1	PIPE-CLIPS,FOR SINGLE PIPE,ONE SIDE 5	
410	316810-0106	-		7	PIPE-CLIPS,FOR SINGLE PIPE,ONE SIDE 8	
420	90165-0057	-		4	PIPE-CLIPS,FOR SINGLE PIPE,ONE SIDE 6	
440	90417-0180	M		1	TIMING BELT T10/920 W=40	
450	525174-0000	-		1	BRACKET	
460	525175-0000	-		1	BRACKET	
470	297551-0000	-		1	SHEET	
500	311103-0399	-		8	CYLINDRICAL PIN M6 8X16 RFR	
505	312105-0295	-		2	SCREW M6S ISO 4017 M4X20 A280	
510	312105-0329	-		1	SCREW M6S ISO 4017 M5x16 A280	
535	312105-0362	-		1	SCREW M6S ISO 4017 M6X8 A280	
540	312105-0364	-		8	SCREW M6S 6x10 A280	
545	312105-0368	-		6	SCREW M6S ISO 4017 M6x16 A280	
550	312105-0367	-		15	SCREW M6S6X14RFR	
553	312105-0370	-		1	SCREW M6S ISO 4017 M6x20 A280	
555	312105-0376	-		2	SCREW M6S ISO 4017 M6X35 A280	
560	312105-0451	-		23	SCREW M6S ISO 4017 8x20 A280	
570	312105-0453	-		8	SCREW M6S ISO 4017 M8x25 A280	
580	312105-0455	-		4	SCREW M6S ISO 4017 M8X30 A280	
590	312105-0495	-		2	SCREW M6S ISO 4017 M10X30 A280	
595	312105-0542	-		4	SCREW M6S ISO 4014 M12X50 A280	
610	312125-0287	-		9	SLOTTED CHEESE HEAD ISO 1207 M4X8 RFR	
615	312125-0291	-		4	SLOTTED CHEESE HEAD ISO 1207 M4x12 RFR	
620	312125-0323	-		5	SLOTTED CHEESE HEAD ISO 1207 M5X8 RFR	
630	312155-0366	-		2	SCREW MF6S DIN 7991 M6X12 A280	
640	312605-0322	-		4	NUT,HEXAGON,M12 RFR	
645	312605-0312	-		4	NUT,HEXAGON,M4 RFR	
647	312605-0314	-		2	NUT,HEXAGON,M6M5 Stainless	
650	312605-0316	-		7	NUT,HEXAGON A280 M6M6	
700	315105-0136	-		11	WASHER,PLAIN ROUND 4,3x8 Stainless	
705	315105-0146	-		2	WASHER,PLAIN ROUND 5,3x10 Stainless	
710	315105-0153	-		31	WASHER,PLAIN ROUND 6,4x12 Stainless	
715	6278-0000	-		3	WASHER	
720	315105-0165	-		31	WASHER,PLAIN ROUND 8,4x16 Stainless	
730	315105-0173	-		2	WASHER,PLAIN ROUND 10,5x22 STAINLESS	
735	315105-0178	-		2	WASHER,PLAIN ROUND 13x24	
740	315115-0178	-		6	WASHER TBRB 13x24 Stainless	
745	315115-0153	-		3	WASHER TBRB 6,4x12 Stainless	
747	315115-0165	-		4	WASHER TBRB 8,4x16 Stainless	
750	315202-0229	M		1	O-RINGS 59,2X5,7	
760	315250-0103	M		1	GASKET 48/38	
800	342991-0112	-		2	HOSE CLIP,WORM DRIVE TYPE (73)-83	
805	352103-0100	-		4	CABLE GLAND STR 9;PR15,2	
810	352103-0101	-		1	CABLE GLAND ST 9	
820	352113-0101	-		3	RIBBON CLAMP BLACK	

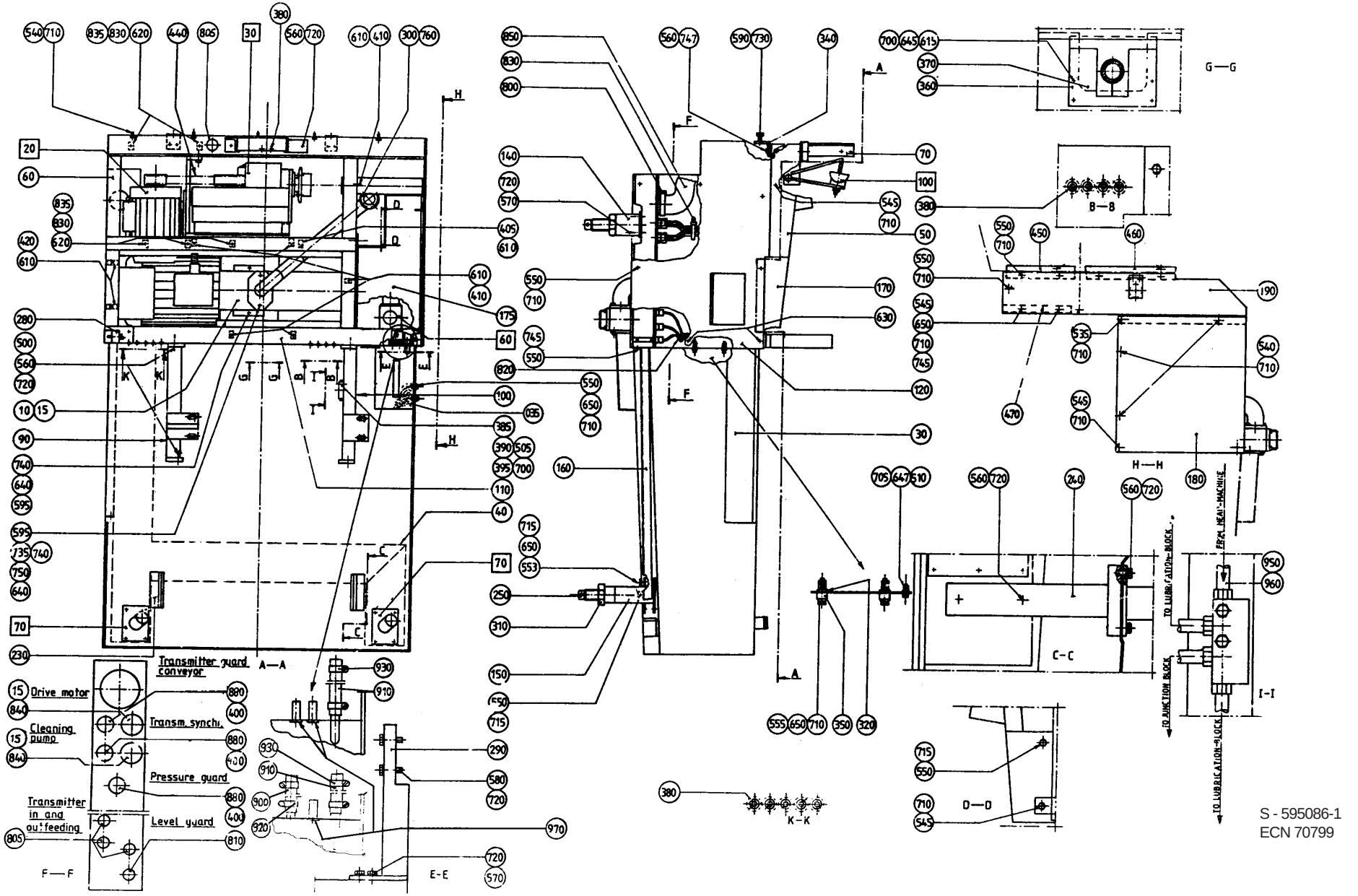

S - 595086-1
ECN 70799

Pos	Part No	SP	UN	Qty	Description	Page No
830	352113-0102	-		6	RIBBON CLAMP,Black	
835	352113-0204	-		5	ANCHOR TM3S25-M	
840	90152-0051	-	MM	1000	GLANDS,HOSE 25x18	
850	90152-0044	-	MM	350	FLEXIBLE CONDUIT 3641-0070	
880	90012-0071	-		3	GLAND FITTING	
910	90166-0087	-	MM	630	HOSE	
930	342991-0103	-		2	HOSE CLIP,WORM DRIVE TYPE (19)-23	
950	90134-0030	-		1	SLEEVE 6/3	
960	90166-0108	-	MM	870	HOSE 3/6 PA11/12 Transp.	
TBA/8 50HZ						
010	B 90321-0015	D		1	PUMP 502 CFX 7ETV 302 50Hz IP55	
900	90166-0059	-	MM	630	HOSE PVC 12/16mm TRANSP.	
920	342991-0101	-		2	HOSE CLIP,WORM DRIVE TYPE (13)-16	
970	90261-0004	-		1	PIPE PLUG	
TBA/8 60HZ						
010	B 90321-0034	D		1	PUMP 502 CFX 5ETV 362 60Hz IP55	
900	90166-0059	-	MM	630	HOSE PVC 12/16mm TRANSP.	
920	342991-0101	-		2	HOSE CLIP,WORM DRIVE TYPE (13)-16	
970	90261-0004	-		1	PIPE PLUG	

Pos	Part No	SP	UN	Qty	Description	Page No

LOWER SECTION

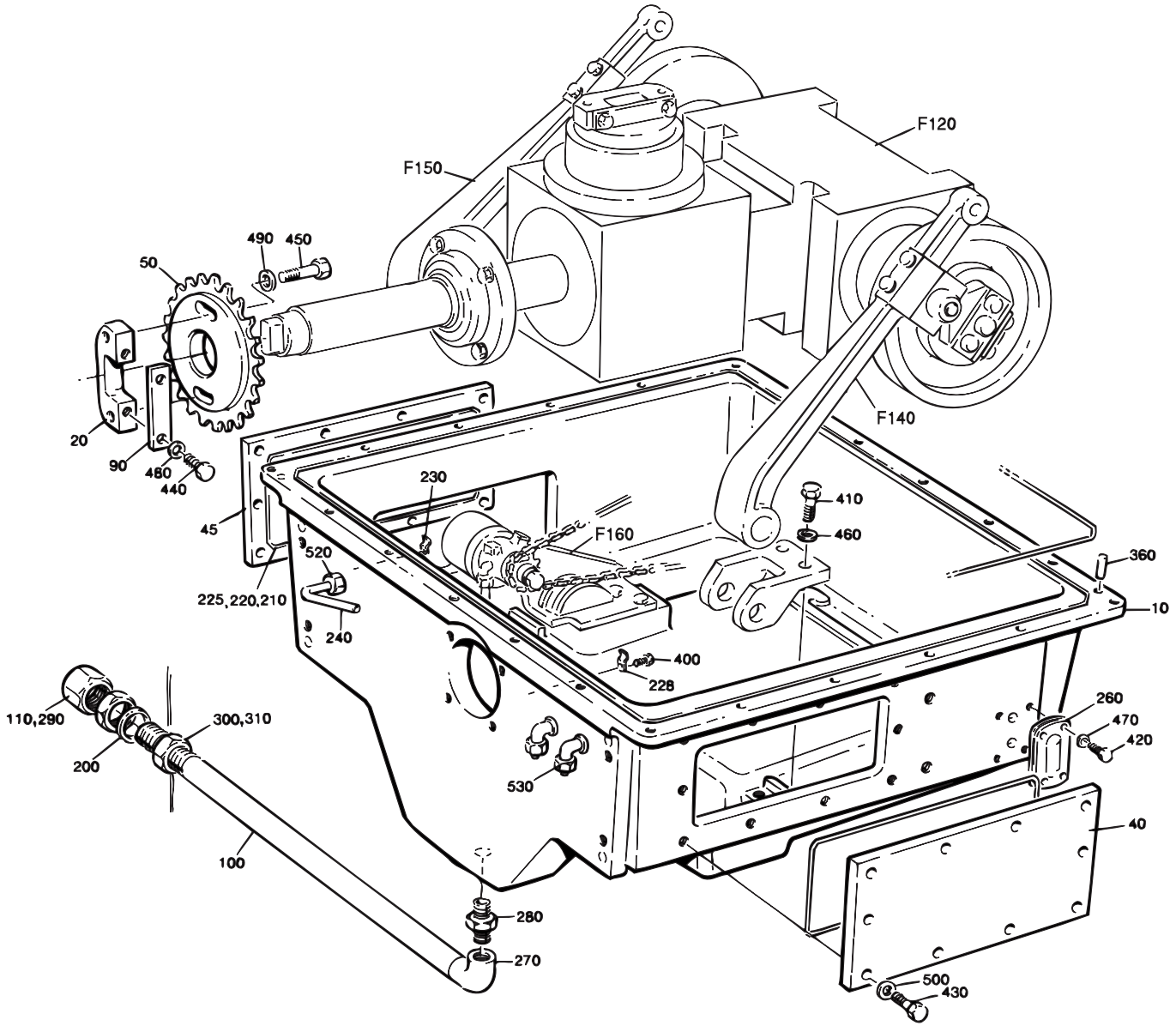

S-285303-4
ECN 12903

Pos	Part No	SP	UN	Qty	Description	Page No
Common parts						
F120	A 285291-0400	D		1	BEVEL GEAR	**463**
F140	A 285299-0100	-		1	PRESSURE ARM	**467**
F150	A 594621-0100	-		1	PRESSURE ARM	**469**
F160	A 525102-0200	-		1	LUBRICATING SYSTEM	**471**
010	525276-0000	-		1	HOUSE	
020	262274-0005	D		1	BRACKET	
040	525185-0000	-		1	HATCH	
045	525377-0000	-		1	HATCH	
050	443176-0000	D		1	SPROCKET	
090	262275-0003	D		1	CAP	
100	443126-0000	-		1	CONNECTION PIPE	
110	525047-0000	D		2	GASKET	
200	525046-0000	D		2	GASKET	
210	90296-0009	-	KG	1	SILICONE GREASE TUBE 100 Gr.	
220	90161-0001	-	MM	3900	STRIP	
225	90153-0043	-	KG	x	ADHESIVE LOCTITE 495	
228	90165-0003	-		2	PIPE-CLIPS,FOR SINGLE PIPE,ONE SIDE 4	
230	90165-0005	-		3	PIPE-CLIPS,FOR SINGLE PIPE,ONE SIDE 6	
240	90166-0124	-	MM	1500	HOSE 4,0/6 PA 11/12 Transp.	
260	90199-0004	M		1	LEVEL INDICATOR	
270	90330-0020	-		1	ELBOW 90,INTERNAL THREAD R-222 1/2"	
280	90330-0021	-		1	NIPPLES,HEXAGON,EXT.R-THREAD R1/2"-R1/2"	
290	90330-0086	-		1	COVER R-231-R1/2"	
300	90330-0093	-		2	NUT,HEXAGON G1/2"	
310	90157-0034	-	L	1	SEALING COMPOUND LOCTITE 572 50 ML	
360	311103-0399	-		2	CYLINDRICAL PIN M6 8X16 RFR	
400	312101-0287	-		3	SCREW M6S4X8FZB	
410	312101-0453	-		4	SCREW M6S 8x25 FZB	
420	312105-0293	-		4	SCREW M6S ISO 4017 M4X16 A280	
430	312105-0370	-		20	SCREW M6S ISO 4017 M6x20 A280	
440	90287-0165	-		2	SCREW, M6S ISO4014, M8x20 A480	
450	312105-0493	-		2	SCREW M6S ISO 4017 M10X25 A280	
460	315101-0165	-		4	WASHER BRB8,4X16FZB	
470	315105-0136	-		4	WASHER,PLAIN ROUND 4,3x8 Stainless	
480	315105-0165	-		2	WASHER,PLAIN ROUND 8,4x16 Stainless	
490	315105-0173	-		2	WASHER,PLAIN ROUND 10,5x22 STAINLESS	
500	315115-0153	-		20	WASHER TBRB 6,4x12 Stainless	
520	342920-0113	-		1	STRAIGHT COUPLING,EXT.THREADED 6/4-R1/8"	
530	342930-0113	-		4	ELBOW 90 COUPL.,EXT.THREAD 6/4-R1/8"	

Pos	Part No	SP	UN	Qty	Description	Page No

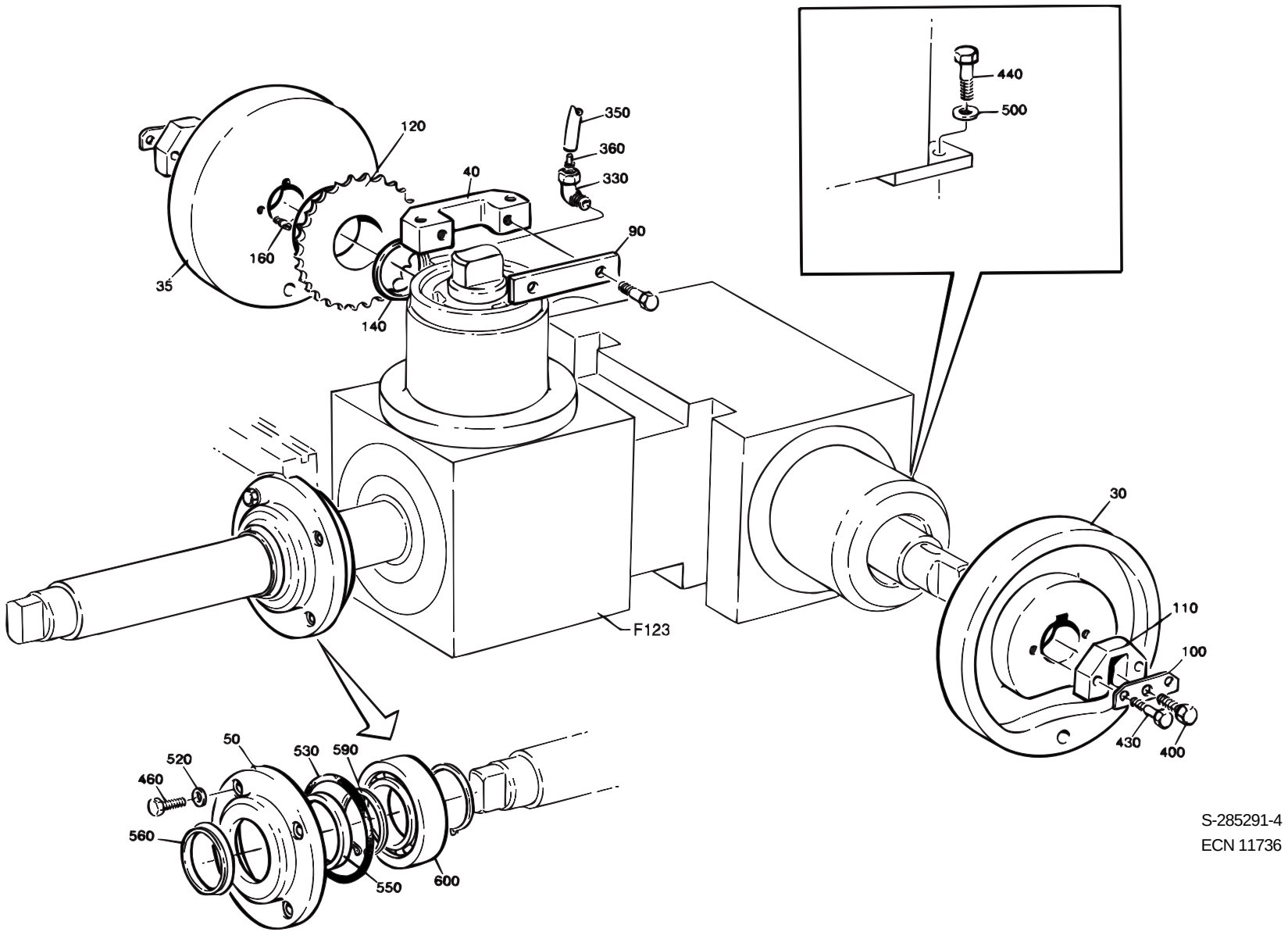

S-285291-4
ECN 11736

Pos	Part No	SP	UN	Qty	Description	Page No
Common parts						
F123	A 442644-0300	D		1	DOUBLE GEAR	**465**
030	285054-0000	D		1	CURVE	
035	285055-0000	D		1	CURVE	
040	262274-0002	D		1	BRACKET	
050	276613-0000	D		1	LID	
090	262275-0002	D		1	CAP	
100	276636-0000	D		2	WASHER	
110	285027-0000	D		2	CARRIER	
120	443047-0000	D		1	SPROCKET	
140	443052-0000	D		1	SPACER RING	
160	443149-0000	D		1	STUD SCREW	
330	342731-0102	-		1	ELBOW CONNECTION WE 6-LRFZB	
350	90166-0108	-	MM	400	HOSE 3/6 PA11/12 Transp.	
360	90134-0030	J		2	SLEEVE 6/3	
400	312101-0374	-		4	SCREW M6S6X30FZB	
430	312101-0451	-		4	SCREW M6S 8x20 FZB	
440	312101-0453	-		2	SCREW M6S 8x25 FZB	
460	312105-0371	-		4	SCREW M6S6X22RFR	
500	315101-0165	-		2	WASHER BRB8,4X16FZB	
520	315115-0153	-		4	WASHER TBRB 6,4x12 Stainless	
530	315202-0309	K		1	O-RINGS 89,5X3	
550	315221-0200	K		1	SEALING RINGS,TYPE A 50x72x8	
560	315226-0200	K		1	SEALING RINGS,TYPE RB"GAMMA RI"50X70X4,5	
590	315750-0131	-		2	CIRCLIP SGA50	
600	321309-0110	K		1	BALL BEARING 50X90X20	

Pos	Part No	SP	UN	Qty	Description	Page No

DOUBLE GEAR

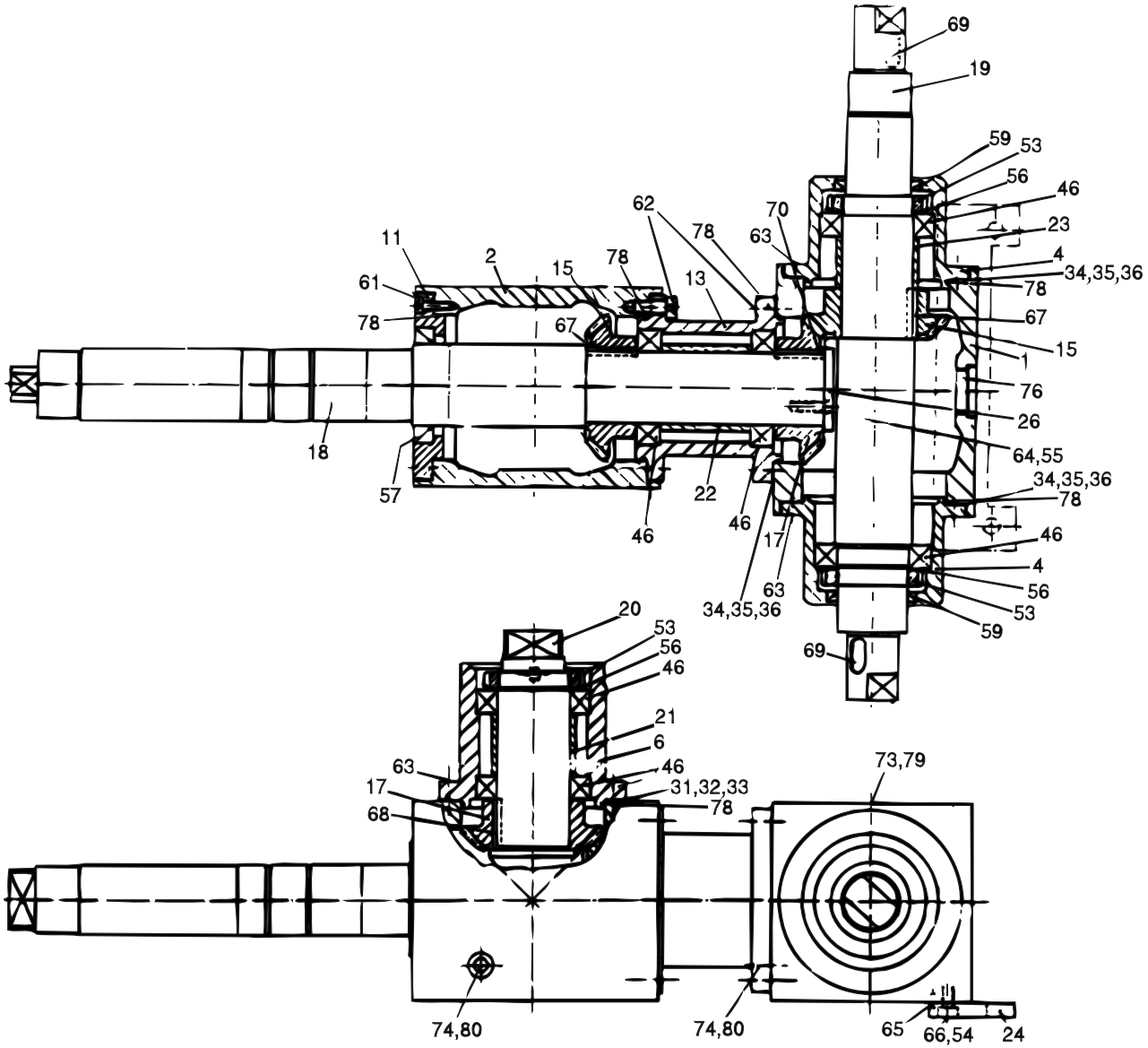

S-442644-2
ECN 11736

Pos	Part No	SP	UN	Qty	Description	Page No
Common parts						
001	568151-0000	D		1	GEAR HOUSING	
002	568152-0000	D		1	GEAR HOUSING	
004	568153-0000	D		2	BEARING SEAT	
006	568154-0000	D		1	BEARING SEAT	
011	568155-0000	D		1	BEARING COVER	
013	568156-0000	D		1	FLANGE	
015	442613-0000	D		2	GEAR WHEEL	
017	442614-0000	D		2	GEAR WHEEL	
018	568157-0000	D		1	SHAFT	
019	568158-0000	D		1	SHAFT	
020	568159-0000	D		1	SHAFT	
021	442615-0000	D		1	SPACER	
022	442616-0000	D		1	SPACER	
023	442617-0000	D		1	SPACER	
024	568160-0000	D		1	FASTENING PLATE	
026	568161-0000	D		1	WASHER	
031	525331-0000	D		1	SHIM	
032	443055-0000	D		1	SHIM	
033	443056-0000	D		1	SHIM	
034	525332-0000	D		4	SHIM	
035	443057-0000	D		4	SHIM	
036	443058-0000	D		4	SHIM	
046	321306-0110	R		6	BALL BEARING 50X80X16	
053	312805-0110	-		3	NUTS,ROUND,WITH SLOTS,M50X1,5	
054	315402-0173	-		2	WASHER FBB 10,2 RFR	
056	315410-0110	-		3	WASHERS.LOCK 50X74	
057	90091-0202	-		1	SEAL RING	
059	90091-0143	-		2	SEAL RING	
061	312111-0370	-		4	SCREW MC6S6X20FZB	
062	312111-0453	-		8	SCREW MC6S8X25FZB	
063	312111-0451	-		12	SCREW MC6S8X20FZB	
064	312151-0451	-		2	SCREW MF6S8X20FZB	
065	311111-0305	-		2	SLOTTED TUFRP5X14	
066	312111-0491	-		2	SCREW MC6S10X20FZB	
067	315701-0363	-		2	KEYS,PARALLEL WITH ROUND ENDS 14X9X40	
068	568162-0000	D		1	WEDGE	
069	315701-0296	-		2	KEYS,PARALLEL WITH ROUND ENDS 10X8X25	
070	315701-0363	-		1	KEYS,PARALLEL WITH ROUND ENDS 14X9X40	
078	90242-0118	R		6	O-RING	
079	90242-0120	R		1	O-RING	
080	90242-0121	R		2	O-RING	

Pos	Part No	SP	UN	Qty	Description	Page No

PRESSURE ARM

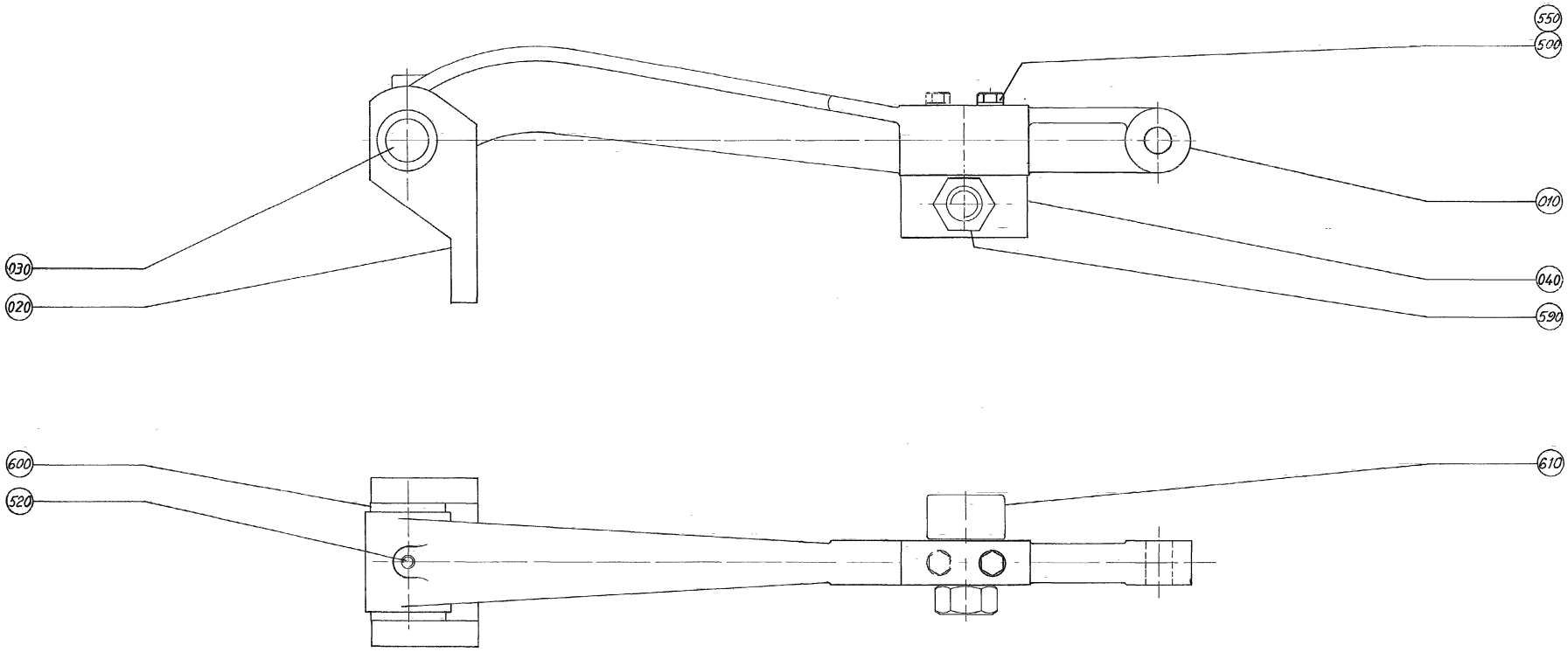

S - 285299-1
ECN 70764

Pos	Part No	SP	UN	Qty	Description	Page No
Common parts						
010	442524-0000	D		1	ARM	
020	285300-0000	D		1	BRACKET	
030	262261-0000	D		1	SHAFT	
040	442523-0000	-		1	HOLDER	
500	312101-0379	-		2	SCREW M6S6X45FZB	
520	312311-0370	-		1	SET SCREW FULL DOGPOINT ISO 4028 M6X20	
550	315101-0153	-		2	WASHER BRB 6,4x12 FZB	
590	312631-0324	-		1	NUTS,HEXAGON,M16X1,5	
600	321101-0232	D		2	FLANGE BUS 20F7X16	
610	321582-0212	R		1	BEARINGS,CAM ROLLER NUKR35	

Pos	Part No	SP	UN	Qty	Description	Page No

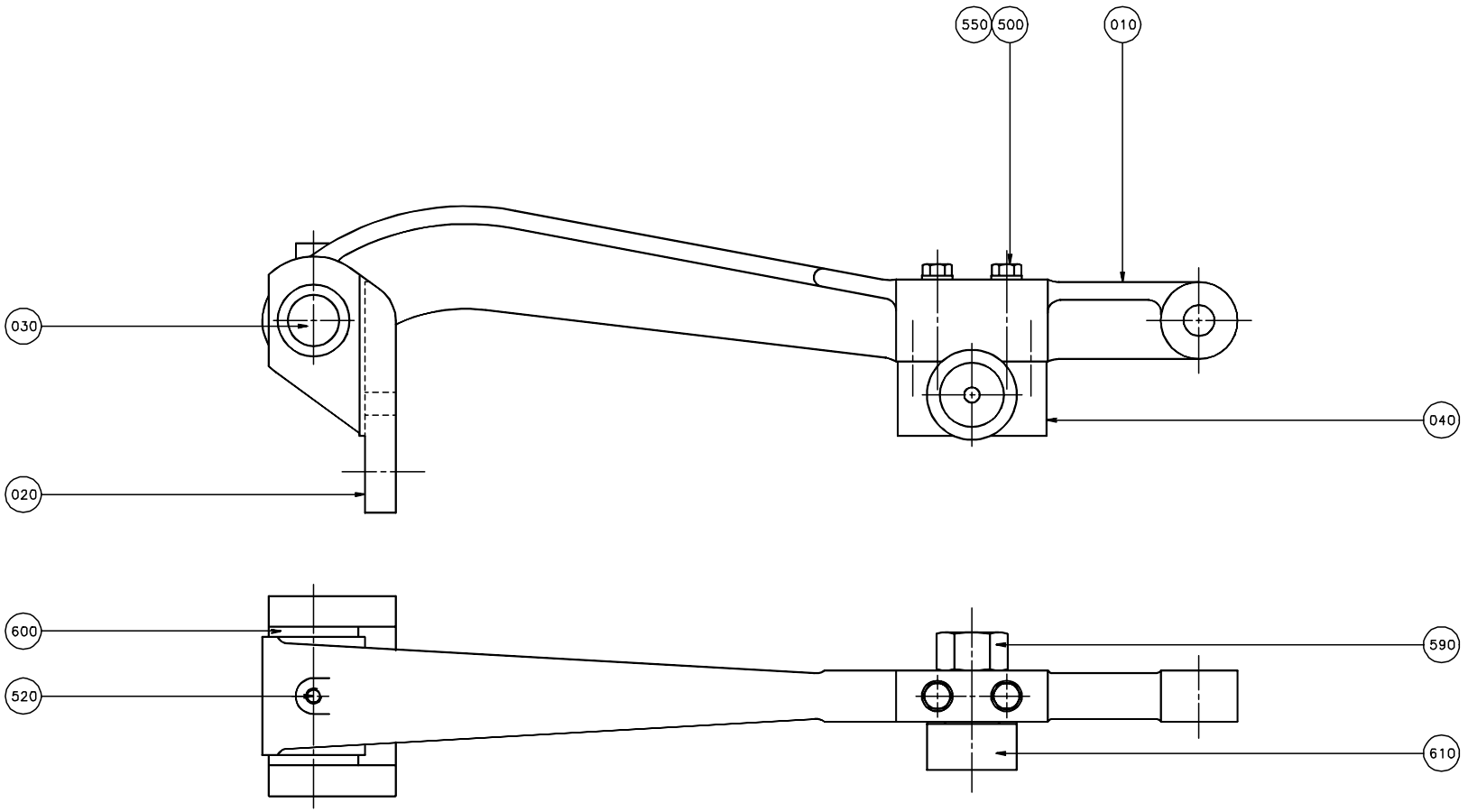

S - 594621-1
ECN 70764

Pos	Part No	SP	UN	Qty	Description	Page No
Common parts						
010	442524-0000	D		1	ARM	
020	285300-0000	D		1	BRACKET	
030	262261-0000	D		1	SHAFT	
040	442523-0000	-		1	HOLDER	
500	312101-0379	-		2	SCREW M6S6X45FZB	
520	312311-0370	-		1	SET SCREW FULL DOGPOINT ISO 4028 M6X20	
550	315101-0153	-		2	WASHER BRB 6,4x12 FZB	
590	312631-0324	-		1	NUTS,HEXAGON,M16X1,5	
600	321101-0232	D		2	FLANGE BUS 20F7X16	
610	321582-0212	R		1	BEARINGS,CAM ROLLER NUKR35	

Pos	Part No	SP	UN	Qty	Description	Page No

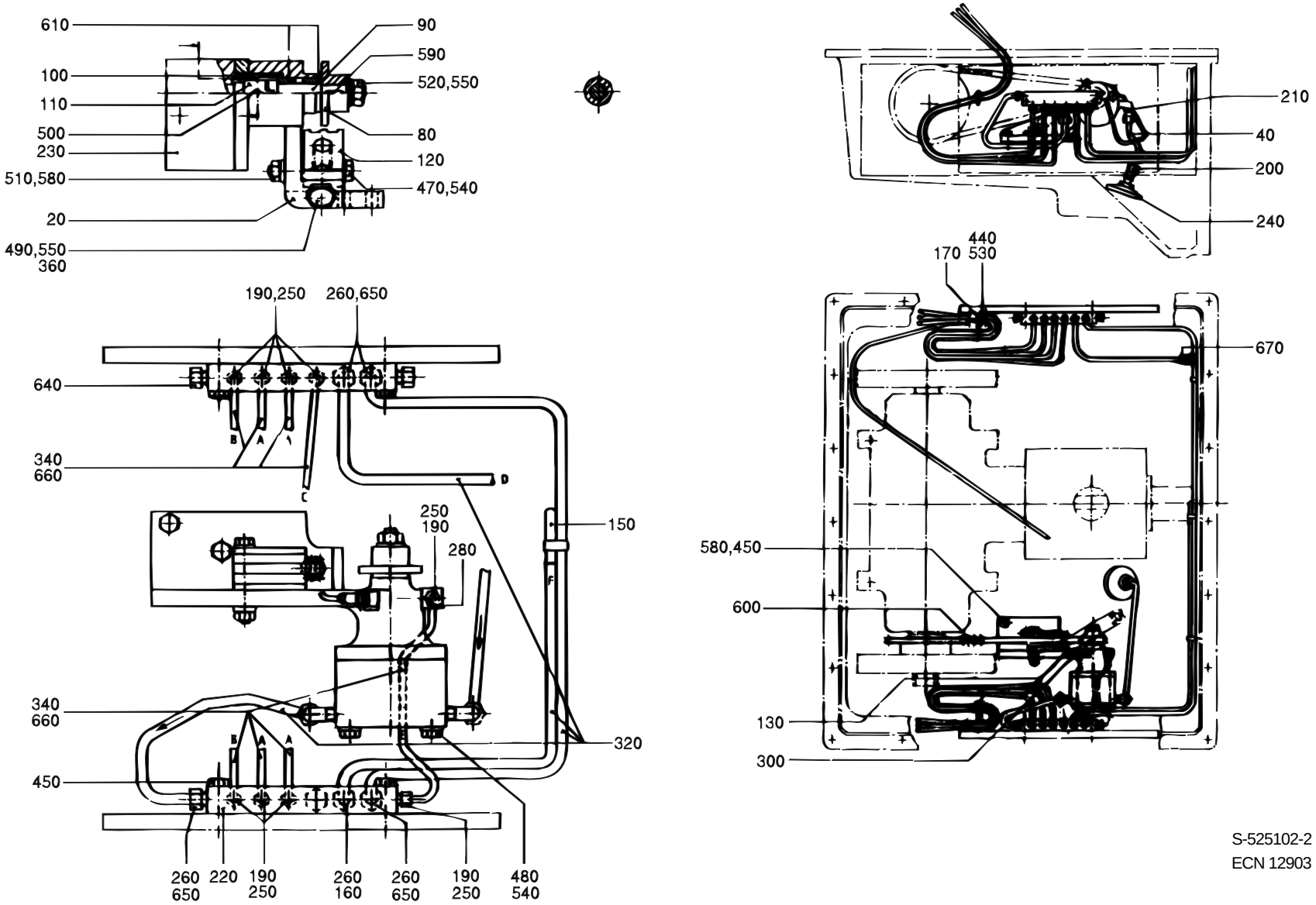

S-525102-2
ECN 12903

Pos	Part No	SP	UN	Qty	Description	Page No
Common parts						
020	525173-0000	-		1	CANTILEVER	
040	443150-0000	-		1	SUCTION TUBE	
080	443048-0000	D		1	SPROCKET	
090	443049-0000	D		1	SHAFT	
100	443050-0000	D		1	GUIDE SLEEVE	
110	443051-0000	D		1	CONNECTION	
120	443053-0000	D		1	CHAIN GUIDE	
130	443151-0000	D		1	PIPE	
150	525375-0000	-		1	OIL PIPE	
170	525358-0000	-		2	BRACKET	
180	525376-0000	D		2	BOW CLAMP	
190	90028-0001	J		1	CONE 5/32"	
200	90030-0107	-		1	PIPE CONNECTION	
210	90030-0222	-		2	ELBOW PIPE JOINT	
220	90032-0035	-		2	JUNCTION BLOCK	
230	90048-0033	R		1	GEAR PUMP	
240	90048-0420	M		1	FILTER	
250	90134-0003	J		1	BUSHING	
260	B 90134-0034	-		3	NIPPLE	
270	90092-0038	J		4	METERING VALVE	
275	90092-0081	J		5	METERING VALVE	
280	90137-0005	-		1	PIPE JOINT	
300	90137-0010	-		1	PIPE JOINT	
320	90166-0011	-	MM	1500	HOSE 4/6 PA 11/12,Transp.	
340	90166-0051	-	MM	4500	HOSE	
350	90230-0031	-		1	NON-RETURN VALVE	
360	90335-0012	D		1	SPRING	
370	B 90415-0033	R		1	OIL FILTER	
440	312101-0327	-		2	SCREW M6S5X12FZB	
450	312101-0370	-		6	SCREW M6S6X20FZB	
470	312101-0379	-		1	SCREW M6S6X45FZB	
480	312101-0380	-		2	SCREW M6S6X50FZB	
490	312101-0451	-		1	SCREW M6S 8x20 FZB	
495	312105-0388	-		2	SCREW M6S ISO 4014 M6X90 A280	
500	312316-0283	-		1	STOP SCREW SK6SS4X4FZB	
510	312601-0316	-		1	NUT M6M 6-8 FZB	
520	312601-0318	-		1	NUT M6M8FZB	
530	315101-0146	-		2	WASHER BRB 5,3x10 FZB	
540	315101-0153	-		3	WASHER BRB 6,4x12 FZB	
550	315101-0165	-		2	WASHER BRB8,4X16FZB	
580	315111-0153	-		5	WASHER TBRB6,4X12FZB	
583	315233-0109	-		2	PLAIN ROUND,NYLON R1/8"	
585	315233-0110	-		2	PLAIN ROUND,NYLON R1/4"	
590	315701-0134	-		1	KEYS,PARALLEL WITH ROUND ENDS 3X3X10	
600	318201-0076	K		1	ROLLER CHAIN SINGLE 3/8"-76	
610	321101-0172	-		2	FLANGE BUS 12F7X10	
640	90136-0002	-		3	PLUG 5/16"24	
650	342706-0130	-		3	ACCESSORIES,INSERT SLEEVE 6	
660	342706-0114	-		16	ACCESSORIES,INSERT SLEEVE 4	
680	342921-0114	-		2	STRAIGHT COUPLING,EXT.THREADED 6/4-G1/4"	
690	342960-0112	-		2	BULKHEAD COUPLING 6/4	

ELEMENT

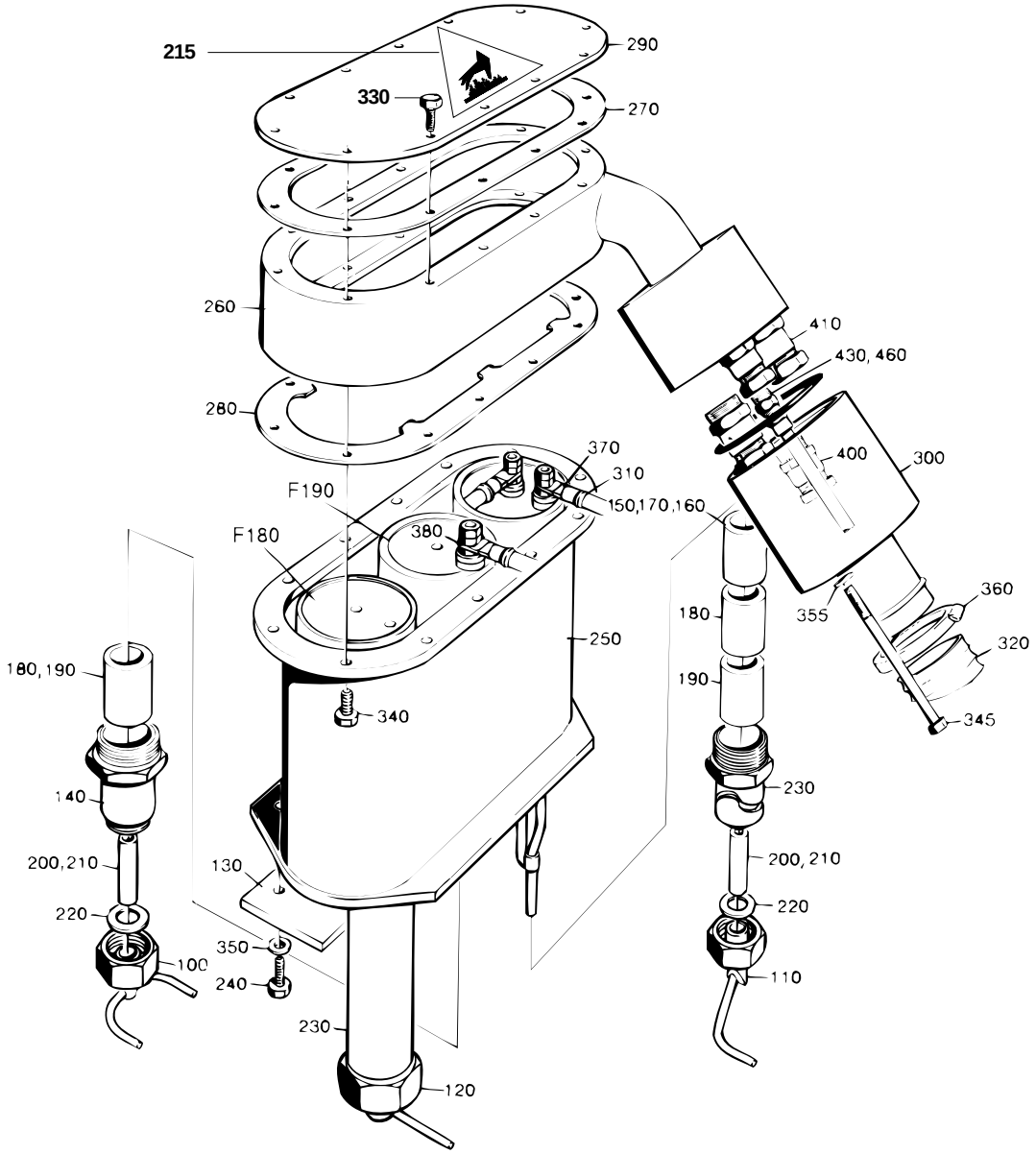

S-525129-1
ECN 22847

Pos	Part No	SP	UN	Qty	Description	Page No
Common parts						
F180	A 31390-0100	-		2	FF-ELEMENT TOP	**477**
F190	A 31390-0110	-		1	FF-ELEMENT BUTTOM	**479**
215	359710-0002	-		1	WARNING SIGN "HOT SURFACE"	
220	263673-0000	I		6	GASKET	
250	262272-0000	D		1	HEATING CHAMBER	
260	525071-0000	D		1	SPACER PIECE	
270	531730-0000	J		3	FLANGE SEAL	
280	23769-0000	J		1	STOP PLATE	
290	262288-0000	D		1	LID	
300	525073-0000	D		1	COVER	
310	B 525070-0000	R		1	ELECTRICAL CONNECTION	
320	352135-0116	M	MM	500	FLEXIBLE CONDUIT DIA. 40	
330	312105-0325	-		12	SCREW M6S 5x10 A2 80	
340	312105-0328	-		12	SCREW M6S5X14 A2 80	
345	312105-0388	-		2	SCREW M6S ISO 4014 M6X90 A280	
350	315115-0153	-		3	WASHER TBRB 6,4x12 Stainless	
355	315105-0153	-		2	WASHER,PLAIN ROUND 6,4x12 Stainless	
360	342991-0109	-		2	HOSE CLIP,WORM DRIVE TYPE (48)-50	
370	353104-0168	-		2	CABLE SHO YAV 16 M6*	
380	353104-0182	-		2	CABLE SHOE YAV 35 M6*	
400	352103-0106	-		2	CABLE GLAND ST 11	
410	352103-0111	-		2	CABLE GLAND ST 16	
430	342921-0121	-		1	STRAIGHT COUPLING,EXT.THREADED 8/6-G1/8"	
460	315234-0109	-		1	PLAIN ROUND,COPPER R1/8",M10	
0355B						
100	B 442867-0000	M		1	AIR NOZZLE	
110	B 285676-0000	M		1	AIR NOZZLE	
120	B 285677-0000	M		1	AIR NOZZLE	
140	23763-0006	D		1	SPACER PIPE	
180	23765-0004	M		4	INSULATING PIPE	
190	23765-0005	M		1	INSULATING PIPE	
200	252766-0001	I		4	INSULATING PIPE	
210	252766-0002	I		1	INSULATING PIPE	
230	297499-0007	D		2	SIDE PIPE	
240	312105-0372	-		3	SCREW M6S ISO 4017 M6X25 A280	
0375S						
100	B 247227-0002	M		1	AIR NOZZLE	
110	B 285507-0002	M		1	AIR NOZZLE	
120	B 285508-0002	M		1	AIR NOZZLE	
140	23763-0010	D		1	SPACER PIPE	
170	23765-0003	M		2	INSULATING PIPE	
180	23765-0004	M		4	INSULATING PIPE	
190	23765-0005	M		1	INSULATING PIPE	
210	252766-0002	I		3	INSULATING PIPE	
230	297499-0009	D		2	SIDE PIPE	
240	312105-0372	-		3	SCREW M6S ISO 4017 M6X25 A280	
0400B						
100	B 442867-0000	M		1	AIR NOZZLE	
110	B 574676-0000	M		1	AIR NOZZLE	
120	B 574677-0000	M		1	AIR NOZZLE	
140	23763-0006	D		1	SPACER PIPE	
170	23765-0003	M		2	INSULATING PIPE	
180	23765-0004	M		2	INSULATING PIPE	
190	23765-0005	M		3	INSULATING PIPE	
210	252766-0002	I		3	INSULATING PIPE	
230	297499-0003	D		2	SIDE PIPE	
240	312105-0372	-		3	SCREW M6S ISO 4017 M6X25 A280	
0500B						
100	247227-0003	M		1	AIR NOZZLE	
110	B 525197-0000	M		1	BLOW-OFF NOZZLE TR	
120	B 525198-0000	M		1	BLOW-OFF NOZZLE TL	
130	262290-0002	-		1	LACE	
140	23763-0003	D		1	SPACER PIPE	
160	23765-0002	M		2	INSULATING PIPE	
180	23765-0004	M		1	INSULATING PIPE	
200	252766-0001	I		3	INSULATING PIPE	
230	297499-0002	D		2	SIDE PIPE	
240	312105-0376	-		3	SCREW M6S ISO 4017 M6X35 A280	
0500S						
100	B 442867-0000	M		1	AIR NOZZLE	
110	B 285676-0000	M		1	AIR NOZZLE	
120	B 285677-0000	M		1	AIR NOZZLE	
140	23763-0006	D		1	SPACER PIPE	
170	23765-0003	M		2	INSULATING PIPE	
180	23765-0004	M		2	INSULATING PIPE	
190	23765-0005	M		3	INSULATING PIPE	
200	252766-0001	I		4	INSULATING PIPE	
210	252766-0002	I		1	INSULATING PIPE	
230	297499-0003	D		2	SIDE PIPE	
240	312105-0372	-		3	SCREW M6S ISO 4017 M6X25 A280	
0500SQ						
100	574032-0000	M		1	BLOWING NOZZLE B	
110	574033-0000	M		1	BLOWING NOZZLE TH	
120	574034-0000	M		1	BLOWING NOZZLE TV	

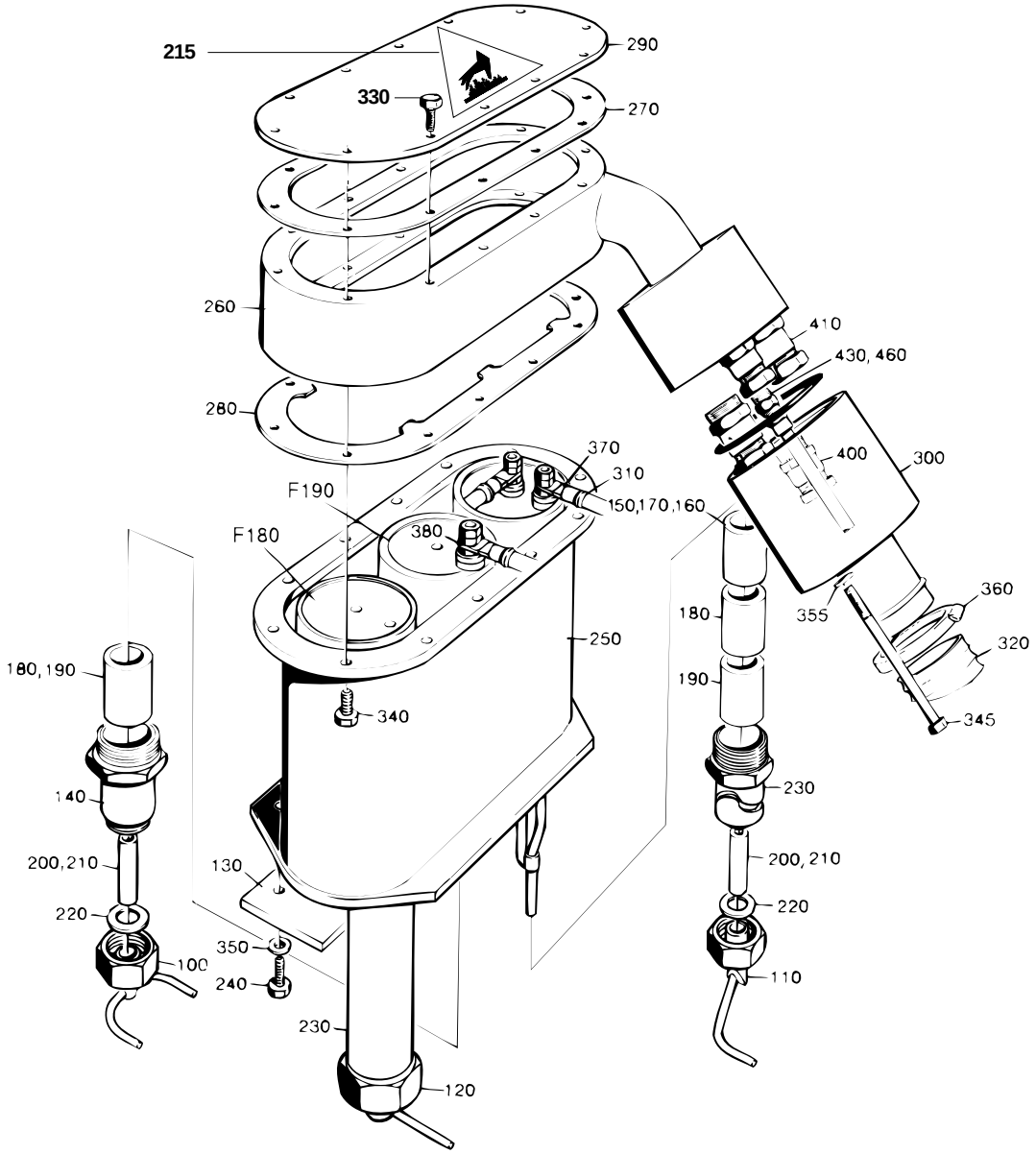

S-525129-1
ECN 22847

Pos	Part No	SP	UN	Qty	Description	Page No
130	262290-0001	-		1	LACE	
140	23763-0006	D		1	SPACER PIPE	
170	23765-0003	M		2	INSULATING PIPE	
180	23765-0004	M		2	INSULATING PIPE	
190	23765-0005	M		1	INSULATING PIPE	
200	252766-0001	I		1	INSULATING PIPE	
210	252766-0002	I		2	INSULATING PIPE	
230	583448-0000	D		2	SIDE PIPE	
240	312105-0374	-		3	SCREW M6S ISO 4017 M6X30 A280	
0750B						
100	247227-0003	M		1	AIR NOZZLE	
110	B 525197-0000	M		1	BLOW-OFF NOZZLE TR	
120	B 525198-0000	M		1	BLOW-OFF NOZZLE TL	
140	23763-0005	D		1	SPACER PIPE	
160	23765-0002	M		2	INSULATING PIPE	
180	23765-0004	M		1	INSULATING PIPE	
190	23765-0005	M		2	INSULATING PIPE	
210	252766-0002	I		3	INSULATING PIPE	
230	297499-0008	D		2	SIDE PIPE	
240	312105-0372	-		3	SCREW M6S ISO 4017 M6X25 A280	
0750S						
100	B 544298-0000	M		1	BLOWING NOZZLE B	
110	B 544293-0000	M		1	BLOW-OFF NOZZLE TH	
120	B 544269-0000	M		1	BLOW-OFF NOZZLE TV	
130	262290-0001	-		1	LACE	
140	23763-0004	D		1	SPACER PIPE	
160	23765-0002	M		2	INSULATING PIPE	
180	23765-0004	M		5	INSULATING PIPE	
200	252766-0001	I		3	INSULATING PIPE	
230	443158-0000	D		2	SIDE PIPE	
240	312105-0374	-		3	SCREW M6S ISO 4017 M6X30 A280	
1000B						
100	247227-0003	M		1	AIR NOZZLE	
110	B 525197-0000	M		1	BLOW-OFF NOZZLE TR	
120	B 525198-0000	M		1	BLOW-OFF NOZZLE TL	
130	262290-0001	-		1	LACE	
140	23763-0004	D		1	SPACER PIPE	
150	23765-0001	M		2	INSULATING PIPE	
180	23765-0004	M		1	INSULATING PIPE	
200	252766-0001	I		3	INSULATING PIPE	
230	297499-0001	D		2	SIDE PIPE	
240	312105-0374	-		3	SCREW M6S ISO 4017 M6X30 A280	

Pos	Part No	SP	UN	Qty	Description	Page No
1000S						
100	569124-0000	M		1	AIR NOZZLE	
110	569125-0000	M		1	AIR NOZZLE	
120	569126-0000	M		1	AIR NOZZLE	
130	262290-0001	-		1	LACE	
140	23763-0004	D		1	SPACER PIPE	
160	23765-0002	M		2	INSULATING PIPE	
170	23765-0003	M		2	INSULATING PIPE	
180	23765-0004	M		3	INSULATING PIPE	
200	252766-0001	I		1	INSULATING PIPE	
210	252766-0002	I		2	INSULATING PIPE	
230	548402-0000	D		2	SIDE PIPE	
240	312105-0374	-		3	SCREW M6S ISO 4017 M6X30 A280	
1000SQ						
100	574032-0000	M		1	BLOWING NOZZLE B	
110	574033-0000	M		1	BLOWING NOZZLE TH	
120	574034-0000	M		1	BLOWING NOZZLE TV	
130	262290-0001	-		1	LACE	
140	23763-0006	D		1	SPACER PIPE	
160	23765-0002	M		2	INSULATING PIPE	
180	23765-0004	M		4	INSULATING PIPE	
190	23765-0005	M		1	INSULATING PIPE	
200	252766-0001	I		3	INSULATING PIPE	
230	443158-0000	D		2	SIDE PIPE	
240	312105-0374	-		3	SCREW M6S ISO 4017 M6X30 A280	
1055B						
100	247227-0003	M		1	AIR NOZZLE	
110	B 525197-0000	M		1	BLOW-OFF NOZZLE TR	
120	B 525198-0000	M		1	BLOW-OFF NOZZLE TL	
130	262290-0001	-		1	LACE	
140	23763-0004	D		1	SPACER PIPE	
160	23765-0002	M		2	INSULATING PIPE	
180	23765-0004	M		5	INSULATING PIPE	
200	252766-0001	I		3	INSULATING PIPE	
230	443158-0000	D		2	SIDE PIPE	
240	312105-0374	-		3	SCREW M6S ISO 4017 M6X30 A280	

FF-ELEMENT TOP

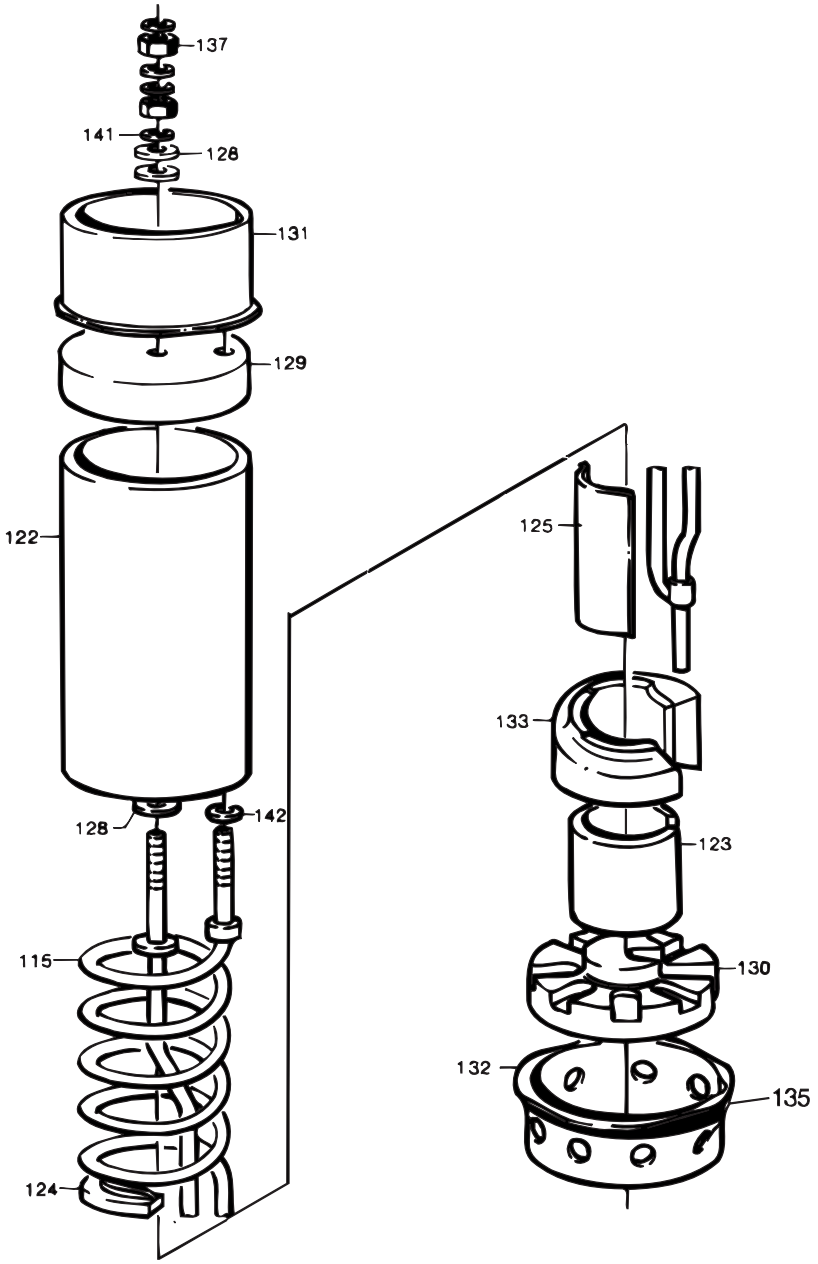

S-31390-1
ECN 13601

Pos	Part No	SP	UN	Qty	Description	Page No
0375S 648035 or 0400B 648035 or 0500B 648035 or 0500S 648035 or 0750B 648035						
115	30310-0002	K		1	FF HEATING ELEMENT TOP	
0750S 648035 or 1000B 648035 or 1000S 648035 or 1000SQ 648035 or 1055B 648035						
115	30310-0001	K		1	FF HEATING ELEMENT TOP	
0355B 648035 or 0500SQ 648035						
115	30310-0003	K		1	FF HEATING ELEMENT TOP	
Common parts						
122	20705-0001	K		1	INSULATING PIPE	
123	29411-0000	M		1	SPACER PIPE	
124	29413-0000	M		12	LACE	
125	31653-0001	R		1	SHEET	
128	525233-0000	J		5	GASKET 16x2x6mm	
129	20772-0000	M		1	INSULATOR BODY 70x70x15mm	
130	37536-0000	M		1	INSULATOR BODY Lower 70x70x15mm	
131	23771-0000	M		1	SPACER RING 4x78x1mm	
132	37537-0000	M		1	SPACER RING Lower 72x78x1mm	
133	37535-0000	R		1	SUPPORTING PART 56x56x31,5mm	
135	90145-0005	-	M	1	WIRE	
137	312605-0316	-		6	NUT,HEXAGON A280 M6M6	
141	315105-0153	-		4	WASHER,PLAIN ROUND 6,4x12 Stainless	
142	315115-0153	-		1	WASHER TBRB 6,4x12 Stainless	

Pos	Part No	SP	UN	Qty	Description	Page No

FF-ELEMENT TOP

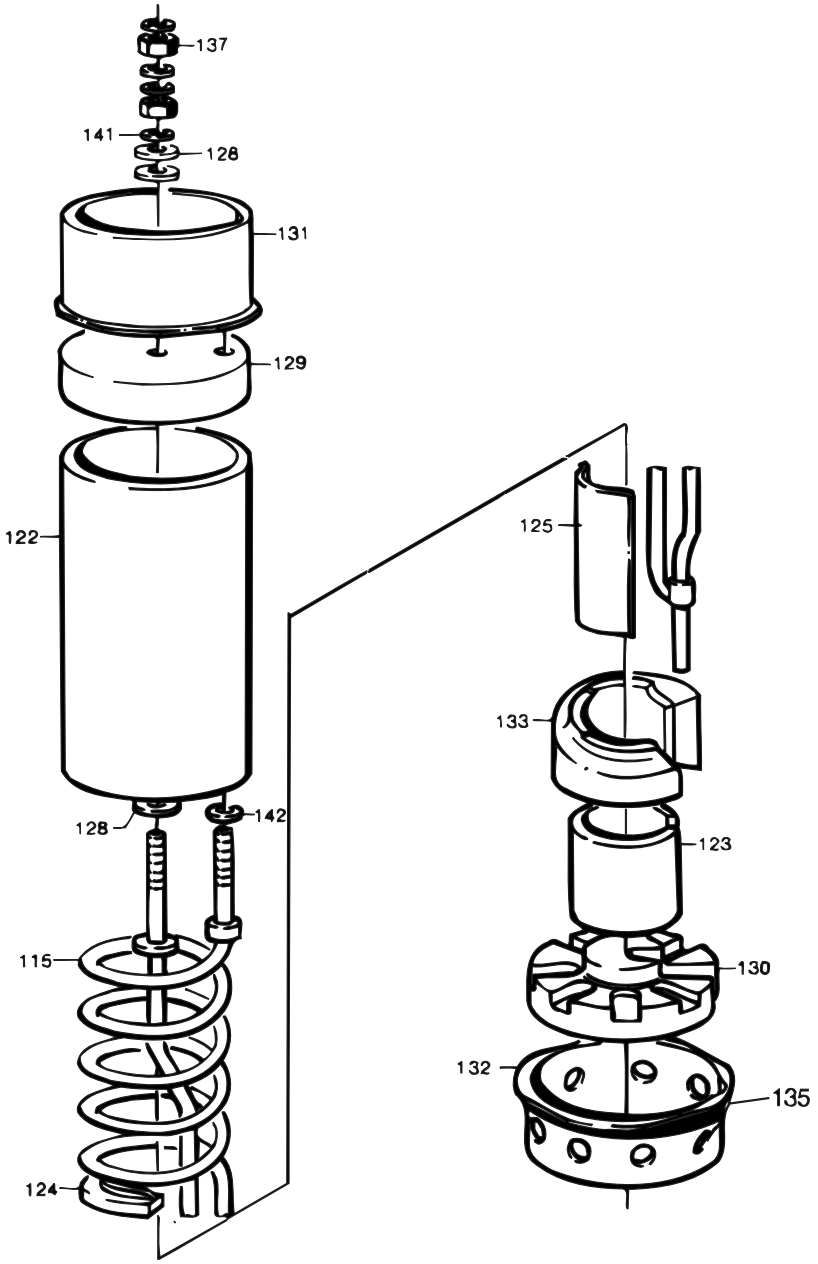

S-31390-1
ECN 13601

Pos	Part No	SP	UN	Qty	Description	Page No
0355B 648035 or 0375S 648035 or 0400B 648035 or 0500S 648035 or 0500SQ 648035 or 0750B 648035 or 1000SQ 648035						
115	30311-0001	K		1	FF HEATING ELEMENT BUTTOM	
500B 648035 or 750S 648035 or 1000B 648035 or 1000S 648035 or 1055B 648035						
115	30311-0002	K		1	FF HEATING ELEMENT BUTTOM	
Common parts						
122	20705-0001	K		1	INSULATING PIPE	
124	29413-0000	M		21	LACE	
125	31653-0002	R		1	FIX PLATE 39x85x0,5mm	
128	525233-0000	J		5	GASKET 16x2x6mm	
129	20772-0000	M		1	INSULATOR BODY 70x70x15mm	
130	37536-0000	M		1	INSULATOR BODY Lower 70x70x15mm	
131	23771-0000	M		1	SPACER RING 4x78x1mm	
132	37537-0000	M		1	SPACER RING Lower 72x78x1mm	
133	37535-0000	R		1	SUPPORTING PART 56x56x31,5mm	
137	312811-0316	-		6	LOCK NUT M6RFR	
141	315105-0153	-		4	WASHER,PLAIN ROUND 6,4x12 Stainless	
142	315115-0153	-		1	WASHER TBRB 6,4x12 Stainless	

Pos	Part No	SP	UN	Qty	Description	Page No

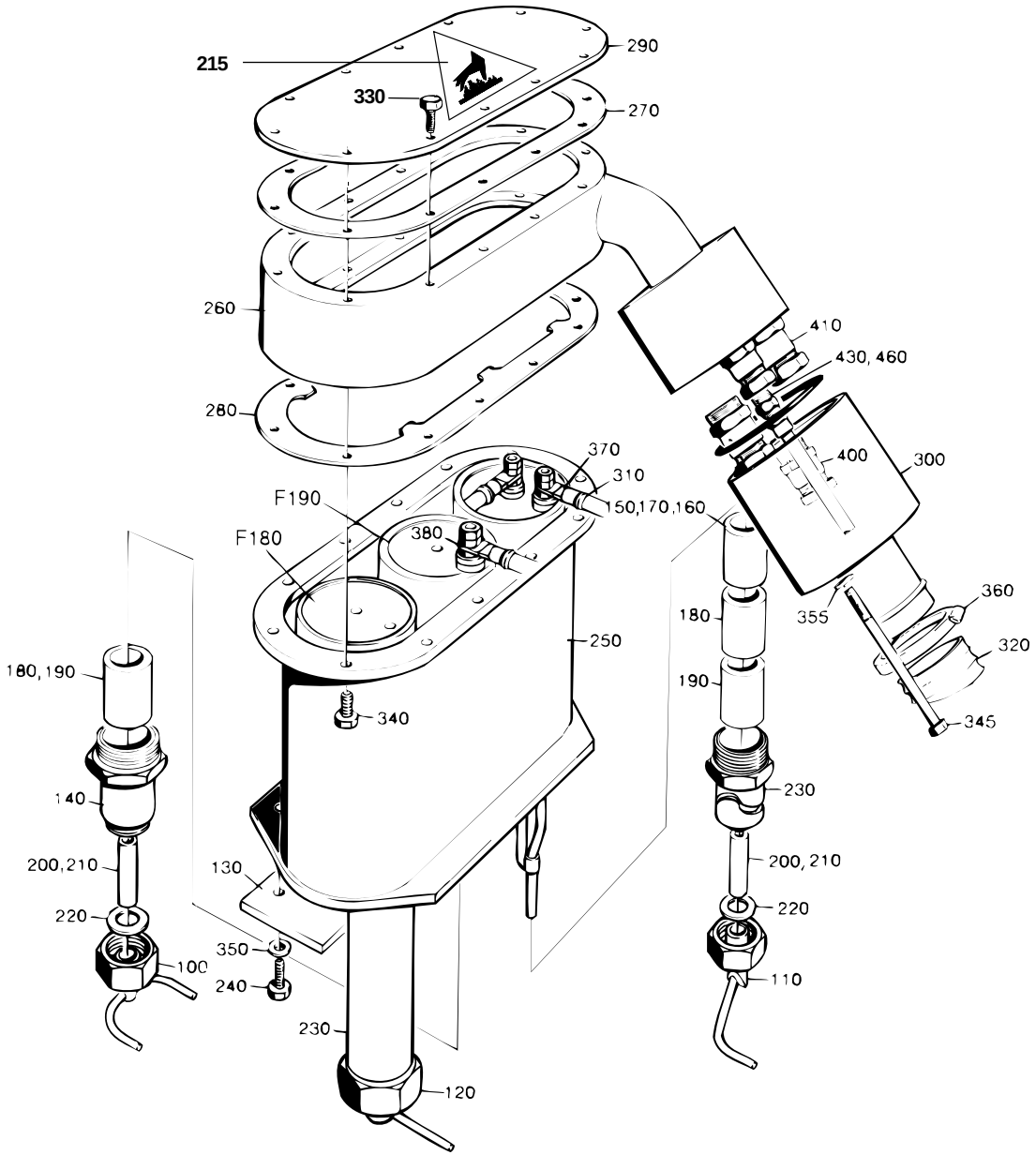

S-525128-1
ECN 22847

Pos	Part No	SP	UN	Qty	Description	Page No
Common parts						
F180	A 31390-0100	-		2	FF-ELEMENT TOP	**477**
F190	A 31390-0110	-		1	FF-ELEMENT BUTTOM	**479**
215	359710-0002	-		1	WARNING SIGN "HOT SURFACE"	
220	263673-0000	I		6	GASKET	
250	262272-0000	D		1	HEATING CHAMBER	
260	525134-0000	D		1	SPACER PIECE	
270	531730-0000	J		3	FLANGE SEAL	
280	23769-0000	J		1	STOP PLATE	
290	262288-0000	D		1	LID	
300	525073-0000	D		1	COVER	
310	B 525070-0000	R		1	ELECTRICAL CONNECTION	
320	352135-0116	M	MM	500	FLEXIBLE CONDUIT DIA. 40	
330	312105-0325	-		12	SCREW M6S 5x10 A2 80	
340	312105-0328	-		12	SCREW M6S5X14 A2 80	
345	312105-0388	-		2	SCREW M6S ISO 4014 M6X90 A280	
350	315115-0153	-		3	WASHER TBRB 6,4x12 Stainless	
355	315105-0153	-		2	WASHER,PLAIN ROUND 6,4x12 Stainless	
360	342991-0109	-		2	HOSE CLIP,WORM DRIVE TYPE (48)-50	
370	353104-0168	-		2	CABLE SHO YAV 16 M6*	
380	353104-0182	-		2	CABLE SHOE YAV 35 M6*	
400	352103-0106	-		2	CABLE GLAND ST 11	
410	352103-0111	-		2	CABLE GLAND ST 16	
430	342921-0121	-		1	STRAIGHT COUPLING,EXT.THREADED 8/6-G1/8"	
460	315234-0109	-		1	PLAIN ROUND,COPPER R1/8",M10	
0355B						
100	B 442867-0000	M		1	AIR NOZZLE	
110	B 285676-0000	M		1	AIR NOZZLE	
120	B 285677-0000	M		1	AIR NOZZLE	
140	23763-0006	D		1	SPACER PIPE	
180	23765-0004	M		4	INSULATING PIPE	
190	23765-0005	M		1	INSULATING PIPE	
200	252766-0001	I		4	INSULATING PIPE	
210	252766-0002	I		1	INSULATING PIPE	
230	297499-0007	D		2	SIDE PIPE	
240	312105-0372	-		3	SCREW M6S ISO 4017 M6X25 A280	
0375S						
100	B 247227-0002	M		1	AIR NOZZLE	
110	B 285507-0002	M		1	AIR NOZZLE	
120	B 285508-0002	M		1	AIR NOZZLE	
140	23763-0010	D		1	SPACER PIPE	
170	23765-0003	M		2	INSULATING PIPE	
180	23765-0004	M		4	INSULATING PIPE	
190	23765-0005	M		1	INSULATING PIPE	
210	252766-0002	I		3	INSULATING PIPE	
230	297499-0009	D		2	SIDE PIPE	
240	312105-0372	-		3	SCREW M6S ISO 4017 M6X25 A280	
0400B						
100	B 442867-0000	M		1	AIR NOZZLE	
110	B 574676-0000	M		1	AIR NOZZLE	
120	B 574677-0000	M		1	AIR NOZZLE	
140	23763-0006	D		1	SPACER PIPE	
170	23765-0003	M		2	INSULATING PIPE	
180	23765-0004	M		2	INSULATING PIPE	
190	23765-0005	M		3	INSULATING PIPE	
210	252766-0002	I		3	INSULATING PIPE	
230	297499-0003	D		2	SIDE PIPE	
240	312105-0372	-		3	SCREW M6S ISO 4017 M6X25 A280	
0500B						
100	247227-0003	M		1	AIR NOZZLE	
110	B 525197-0000	M		1	BLOW-OFF NOZZLE TR	
120	B 525198-0000	M		1	BLOW-OFF NOZZLE TL	
130	262290-0002	-		1	LACE	
140	23763-0003	D		1	SPACER PIPE	
160	23765-0002	M		2	INSULATING PIPE	
180	23765-0004	M		1	INSULATING PIPE	
200	252766-0001	I		3	INSULATING PIPE	
230	297499-0002	D		2	SIDE PIPE	
240	312105-0376	-		3	SCREW M6S ISO 4017 M6X35 A280	
0500S						
100	B 442867-0000	M		1	AIR NOZZLE	
110	B 285676-0000	M		1	AIR NOZZLE	
120	B 285677-0000	M		1	AIR NOZZLE	
140	23763-0006	D		1	SPACER PIPE	
170	23765-0003	M		2	INSULATING PIPE	
180	23765-0004	M		2	INSULATING PIPE	
190	23765-0005	M		3	INSULATING PIPE	
200	252766-0001	I		4	INSULATING PIPE	
210	252766-0002	I		1	INSULATING PIPE	
230	297499-0003	D		2	SIDE PIPE	
240	312105-0372	-		3	SCREW M6S ISO 4017 M6X25 A280	
0500SQ						
100	574032-0000	M		1	BLOWING NOZZLE B	
110	574033-0000	M		1	BLOWING NOZZLE TH	
120	574034-0000	M		1	BLOWING NOZZLE TV	

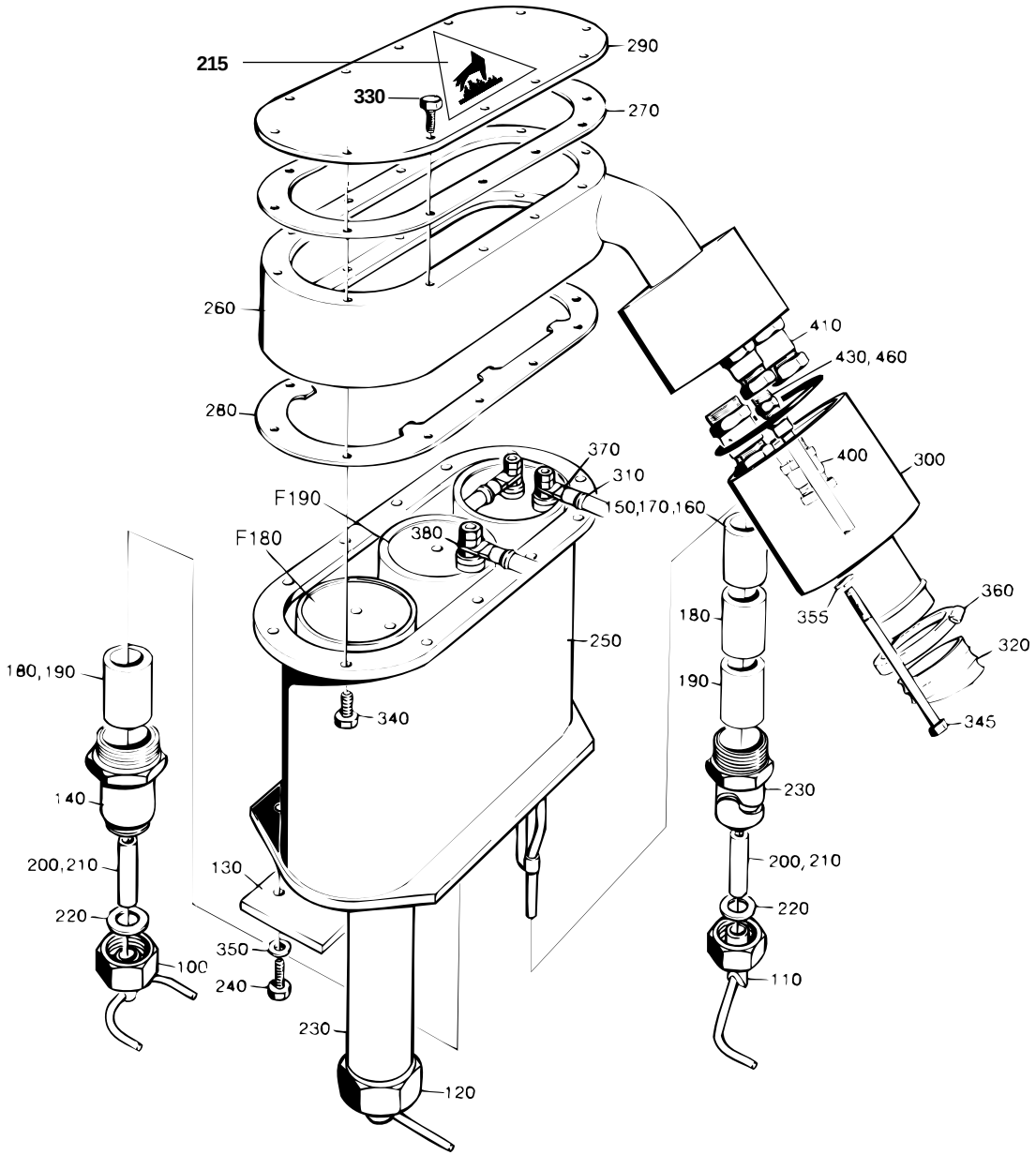

S-525128-1
ECN 22847

Pos	Part No	SP	UN	Qty	Description	Page No
130	262290-0001	-		1	LACE	
140	23763-0006	D		1	SPACER PIPE	
170	23765-0003	M		2	INSULATING PIPE	
180	23765-0004	M		2	INSULATING PIPE	
190	23765-0005	M		1	INSULATING PIPE	
200	252766-0001	I		1	INSULATING PIPE	
210	252766-0002	I		2	INSULATING PIPE	
230	583448-0000	D		2	SIDE PIPE	
240	312105-0374	-		3	SCREW M6S ISO 4017 M6X30 A280	
0750B						
100	247227-0003	M		1	AIR NOZZLE	
110	B 525197-0000	M		1	BLOW-OFF NOZZLE TR	
120	B 525198-0000	M		1	BLOW-OFF NOZZLE TL	
140	23763-0005	D		1	SPACER PIPE	
160	23765-0002	M		2	INSULATING PIPE	
190	23765-0005	M		3	INSULATING PIPE	
210	252766-0002	I		3	INSULATING PIPE	
230	297499-0008	D		2	SIDE PIPE	
240	312105-0372	-		3	SCREW M6S ISO 4017 M6X25 A280	
0750S						
100	B 544298-0000	M		1	BLOWING NOZZLE B	
110	B 544293-0000	M		1	BLOW-OFF NOZZLE TH	
120	B 544269-0000	M		1	BLOW-OFF NOZZLE TV	
130	262290-0001	-		1	LACE	
140	23763-0004	D		1	SPACER PIPE	
160	23765-0002	M		2	INSULATING PIPE	
180	23765-0004	M		5	INSULATING PIPE	
200	252766-0001	I		3	INSULATING PIPE	
230	443158-0000	D		2	SIDE PIPE	
240	312105-0374	-		3	SCREW M6S ISO 4017 M6X30 A280	
1000B						
100	247227-0003	M		1	AIR NOZZLE	
110	B 525197-0000	M		1	BLOW-OFF NOZZLE TR	
120	B 525198-0000	M		1	BLOW-OFF NOZZLE TL	
130	262290-0001	-		1	LACE	
140	23763-0004	D		1	SPACER PIPE	
150	23765-0001	M		2	INSULATING PIPE	
180	23765-0004	M		1	INSULATING PIPE	
200	252766-0001	I		3	INSULATING PIPE	
230	297499-0001	D		2	SIDE PIPE	
240	312105-0374	-		3	SCREW M6S ISO 4017 M6X30 A280	

Pos	Part No	SP	UN	Qty	Description	Page No
1000S						
100	569124-0000	M		1	AIR NOZZLE	
110	569125-0000	M		1	AIR NOZZLE	
120	569126-0000	M		1	AIR NOZZLE	
130	262290-0001	-		1	LACE	
140	23763-0004	D		1	SPACER PIPE	
160	23765-0002	M		2	INSULATING PIPE	
170	23765-0003	M		2	INSULATING PIPE	
180	23765-0004	M		3	INSULATING PIPE	
200	252766-0001	I		1	INSULATING PIPE	
210	252766-0002	I		2	INSULATING PIPE	
230	548402-0000	D		2	SIDE PIPE	
240	312105-0374	-		3	SCREW M6S ISO 4017 M6X30 A280	
1000SQ						
100	574032-0000	M		1	BLOWING NOZZLE B	
110	574033-0000	M		1	BLOWING NOZZLE TH	
120	574034-0000	M		1	BLOWING NOZZLE TV	
130	262290-0001	-		1	LACE	
140	23763-0006	D		1	SPACER PIPE	
160	23765-0002	M		2	INSULATING PIPE	
180	23765-0004	M		4	INSULATING PIPE	
190	23765-0005	M		1	INSULATING PIPE	
200	252766-0001	I		3	INSULATING PIPE	
230	443158-0000	D		2	SIDE PIPE	
240	312105-0374	-		3	SCREW M6S ISO 4017 M6X30 A280	
1055B						
100	247227-0003	M		1	AIR NOZZLE	
110	B 525197-0000	M		1	BLOW-OFF NOZZLE TR	
120	B 525198-0000	M		1	BLOW-OFF NOZZLE TL	
130	262290-0001	-		1	LACE	
140	23763-0004	D		1	SPACER PIPE	
160	23765-0002	M		2	INSULATING PIPE	
180	23765-0004	M		5	INSULATING PIPE	
200	252766-0001	I		3	INSULATING PIPE	
230	443158-0000	D		2	SIDE PIPE	
240	312105-0374	-		3	SCREW M6S ISO 4017 M6X30 A280	

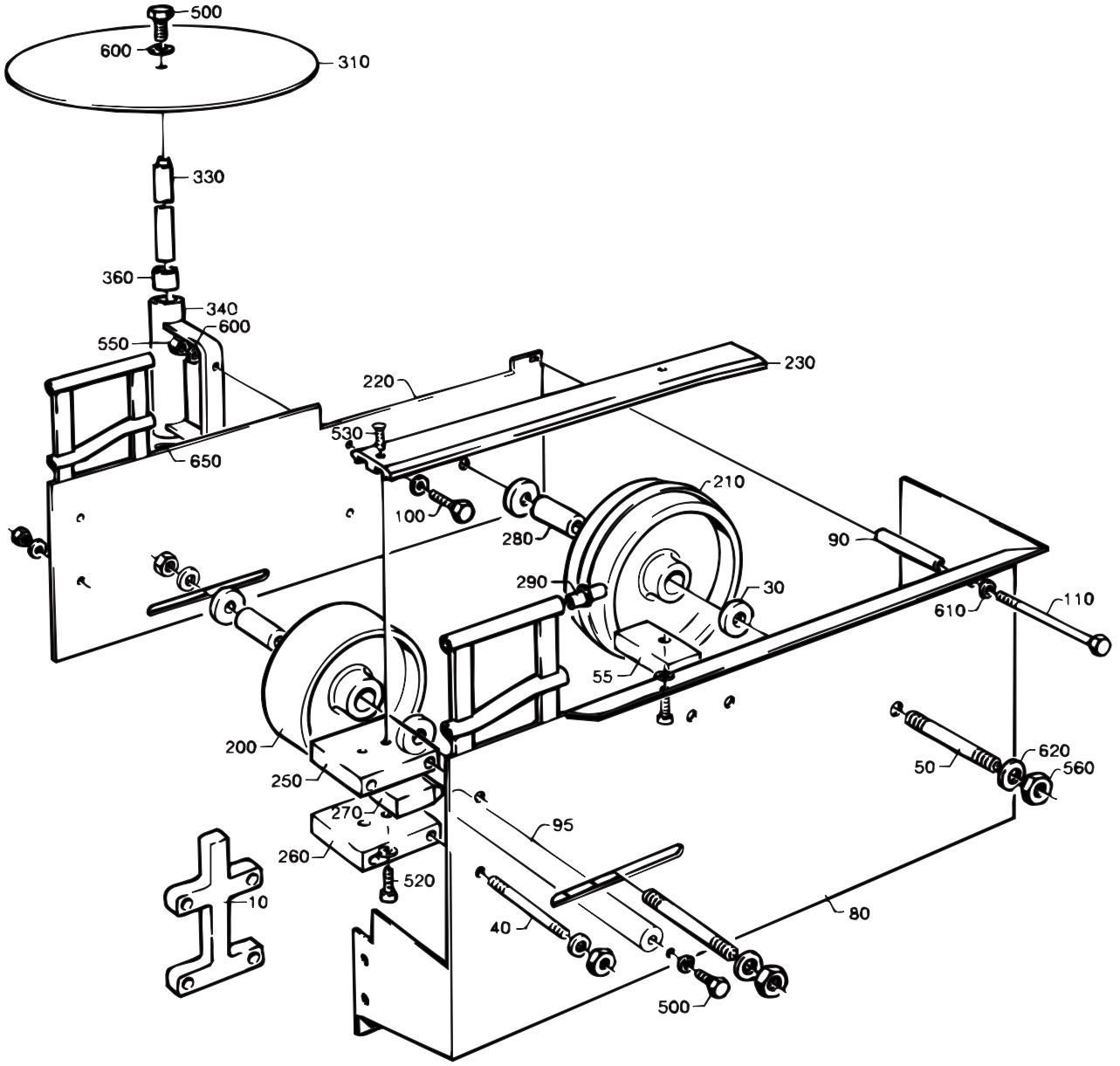

S-285591-4
ECN 11752

Pos	Part No	SP	UN	Qty	Description	Page No
Common parts						
100	312105-0368	-		2	SCREW M6S ISO 4017 M6x16 A280	
200	476975-0000	R		1	WHEEL	
210	245039-0000	R		1	GUIDE WHEEL	
230	442776-0000	D		1	SLIDE RAIL	
250	228845-0000	R		1	MOUNTING BLOCK	
260	229202-0000	R		1	MOUNTING BLOCK	
270	229206-0000	D		1	LOCATING PIECE	
280	229207-0000	R		2	BEARING SLEEVE	
290	229516-0000	J		8	PIN	
310	525053-0000	D		1	PLATE (CIRCULAR)	
330	285132-0000	R		1	SHAFT	
340	285133-0000	D		1	CANTILEVER	
360	525252-0000	M		2	BEARING	
490	312105-0362	-		2	SCREW M6S ISO 4017 M6X8 A280	
500	312105-0367	-		5	SCREW M6S6X14RFR	
510	312105-0449	-		1	SCREW M6S ISO 4017 M8x16 A280	
520	312115-0368	-		1	SCREW MC6S ISO 4762 M6x16 A280	
530	312155-0370	-		3	SCREW MF6S DIN 7991 M6X20 A280	
555	312605-0318	-		1	NUT,HEXAGON,M8 RFR	
560	312605-0320	-		4	NUT,HEXAGON,M10 A280	
600	315105-0153	-		19	WASHER,PLAIN ROUND 6,4x12 Stainless	
610	315105-0165	-		3	WASHER,PLAIN ROUND 8,4x16 Stainless	
620	315105-0173	-		4	WASHER,PLAIN ROUND 10,5x22 STAINLESS	
650	315755-0113	-		1	RETAINING RINGS,RADIAL ASSEMBLY 15	
0355B or 0375S or 0400B or 0500S						
030	229201-0001	R		4	SPACER	
040	229508-0031	R		5	STUD SCREW	
050	229760-0012	R		2	STUD SCREW	
055	237082-0001	D		1	MOUNTING BLOCK	
080	525170-0000	D		1	SIDE PLATE	
090	297574-0001	D		1	SPACER	
095	525171-0002	D		1	BRACKET	
110	312105-0469	-		1	SCREW M6S ISO 4014 M8x90 A280	
220	525054-0000	D		1	SIDE PLATE	
550	312605-0316	-		12	NUT,HEXAGON A280 M6M6	
0500B or 0500SQ or 0750B or 0750S or 1000B or 1000S or 1000SQ or 1055B						
010	228843-0001	R		2	SPACER	
030	229201-0002	R		4	SPACER	
040	229508-0029	R		5	STUD SCREW	
050	229760-0013	R		2	STUD SCREW	
055	237082-0002	D		1	MOUNTING BLOCK	
080	525169-0000	D		1	SIDE PLATE	
090	297574-0002	D		1	SPACER	
095	525171-0001	D		1	BRACKET	
110	312105-0471	-		1	SCREW M6S ISO 4014 M8x100 A280	
220	297569-0000	D		1	SIDE PLATE	
550	312605-0316	-		14	NUT,HEXAGON A280 M6M6	

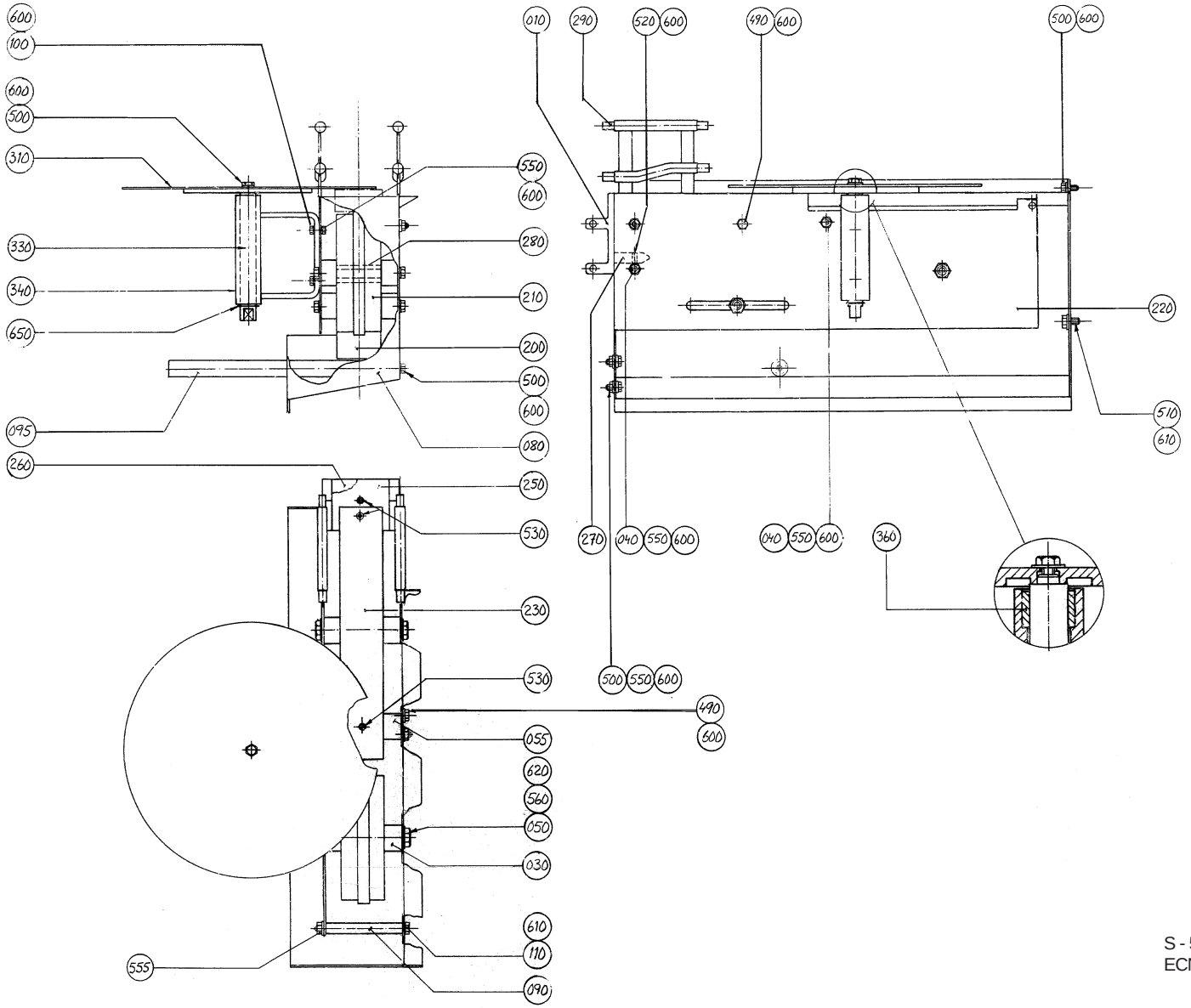

S - 595087-1
ECN 70799

Pos	Part No	SP	UN	Qty	Description	Page No
Common parts						
010	228843-0001	R		2	SPACER	
030	229201-0002	R		4	SPACER	
040	229508-0029	R		5	STUD SCREW	
050	229760-0013	R		2	STUD SCREW	
055	237082-0002	D		1	MOUNTING BLOCK	
080	594632-0000	D		1	SIDE PLATE	
090	297574-0002	D		1	SPACER	
095	525171-0001	D		1	BRACKET	
100	312105-0368	-		2	SCREW M6S ISO 4017 M6x16 A280	
110	312105-0471	-		1	SCREW M6S ISO 4014 M8x100 A280	
200	476975-0000	R		1	WHEEL	
210	245039-0000	R		1	GUIDE WHEEL	
220	297569-0000	D		1	SIDE PLATE	
230	442776-0000	R		1	SLIDE RAIL	
250	228845-0000	R		1	MOUNTING BLOCK	
260	229202-0000	R		1	MOUNTING BLOCK	
270	229206-0000	D		1	LOCATING PIECE	
280	229207-0000	R		2	BEARING SLEEVE	
290	229516-0000	J		8	PIN	
310	525053-0000	D		1	PLATE (CIRCULAR)	
330	285132-0000	R		1	SHAFT	
340	285133-0000	D		1	CANTILEVER	
360	525252-0000	M		2	BEARING	
490	312105-0362	-		2	SCREW M6S ISO 4017 M6X8 A280	
500	312105-0367	-		5	SCREW M6S6X14RFR	
510	312105-0449	-		1	SCREW M6S ISO 4017 M8x16 A280	
520	312115-0368	-		1	SCREW MC6S ISO 4762 M6x16 A280	
530	312155-0370	-		3	SCREW MF6S DIN 7991 M6X20 A280	
550-02	312605-0316	-		14	NUT,HEXAGON A280 M6M6	
555	312605-0318	-		1	NUT,HEXAGON,M8 RFR	
560	312605-0320	-		4	NUT,HEXAGON,M10 A280	
600	315105-0153	-		19	WASHER,PLAIN ROUND 6,4x12 Stainless	
610	315105-0165	-		3	WASHER,PLAIN ROUND 8,4x16 Stainless	
620	315105-0173	-		4	WASHER,PLAIN ROUND 10,5x22 STAINLESS	
650	315755-0113	-		1	RETAINING RINGS,RADIAL ASSEMBLY 15	

Pos	Part No	SP	UN	Qty	Description	Page No

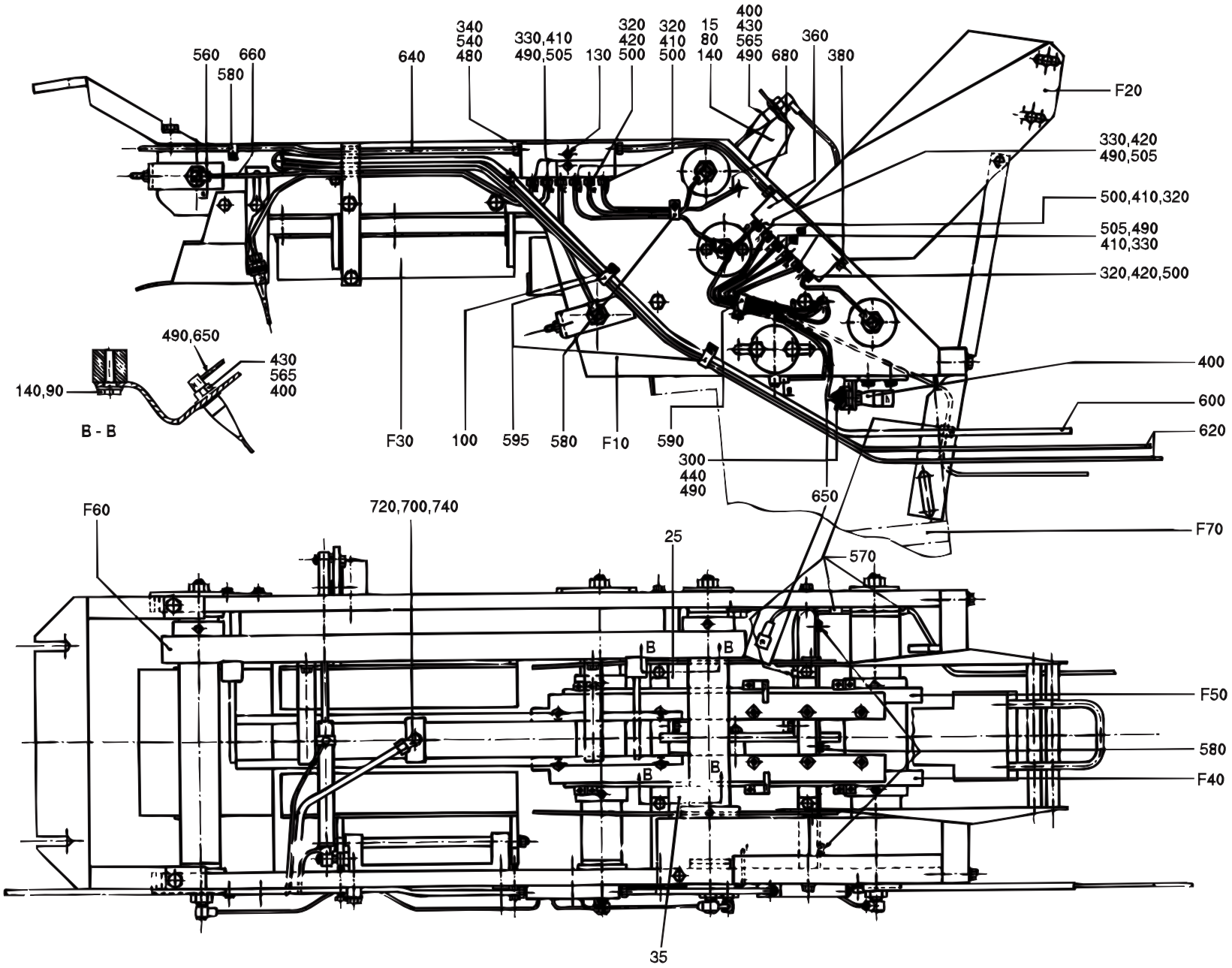

S-525085-3
ECN 16630

Pos	Part No	SP	UN	Qty	Description	Page No
TBA/8 0355B or TBA/8 0375S or TBA/8 0400B or TBA/8 0500B or TBA/8 0500S or TBA/8 0750B or TBA/8 0750S or TBA/8 1000B or TBA/8 1000S or TBA/8 1055B						
010	A 525086-0200	-		1	CONVEYING EQUIPMENT	**511**, **513**
040	A 525089-0100	-		1	CHAIN RIGHT	**521**, **523**
050	A 525090-0100	-		1	CHAIN LEFT	**525**, **527**
060	A 525091-0100	-		1	CHAIN	**529**
070	A 525092-0100	-		1	CHAIN GUARD	**531**
015	566313-0000	-		1	HOLDER	
025	566316-0000	-		1	HOLDER	
035	566317-0000	-		1	HOLDER	
080	312105-0368	-		2	SCREW M6S ISO 4017 M6x16 A280	
090	312105-0366	-		4	SCREW M6S ISO 4017 M6X12 A280	
100	312125-0287	-		11	SLOTTED CHEESE HEAD ISO 1207 M4X8 RFR	
140	315115-0153	-		6	WASHER TBRB 6,4x12 Stainless	
300	90028-0001	J		2	CONE 5/32"	
320	90028-0020	J		7	CONE DT13700S-300 Di=2,5mm	
330	90028-0021	J		5	CONE DIN3862 Di=4mm	
360	90032-0040	-		2	BLOCK 6ways DT4.317796.1D	
400	90092-0048	J		5	OIL BRUSH	
410	90092-0052	J		7	METERING VALVE 10mm3	
420	90092-0053	J		5	METERING VALVE 30mm3	
430	90134-0002	-		3	PIPE CONNECTION	
440	90134-0003	J		2	BUSHING	
480	90134-0030	-		4	SLEEVE 6/3	
490	342706-0114	-		10	ACCESSORIES,INSERT SLEEVE 4	
500	90134-0039	J		7	BUSHING DT4.018912.1D Stainless	
505	90134-0040	J		5	BUSHING DT4.018914.1	
560	90134-0058	-		6	BANJO CONNECTION DT4.310.437.1	
565	90137-0002	-		3	ELBOW PIPE	
570	90165-0056	-		4	PIPE-CLIPS,FOR SINGLE PIPE,ONE SIDE 4mm	
580	90165-0057	-		5	PIPE-CLIPS,FOR SINGLE PIPE,ONE SIDE 6	
590	316810-0106	-		1	PIPE-CLIPS,FOR SINGLE PIPE,ONE SIDE 8	
595	90074-0002	-		2	PIPE-CLIP,single 11	
TBA/8 0500SQ						
010	A 574323-0100	-		1	CONVEYING EQUIPMENT	**497**, **499**
070	A 576247-0100	-		1	PROTECTION	**533**, **535**
100	312125-0287	-		4	SLOTTED CHEESE HEAD ISO 1207 M4X8 RFR	
300	90028-0001	J		1	CONE 5/32"	
320	90028-0020	J		8	CONE DT13700S-300 Di=2,5mm	
330	90028-0021	J		2	CONE DIN3862 Di=4mm	
350	90032-0039	-		1	DISTR.BLOCK	
360	90032-0040	-		1	BLOCK 6ways DT4.317796.1D	
400	90092-0048	J		2	OIL BRUSH	
410	90092-0052	J		4	METERING VALVE 10mm3	
420	90092-0053	J		6	METERING VALVE 30mm3	
430	90134-0002	-		1	PIPE CONNECTION	
440	90134-0003	J		1	BUSHING	
480	90134-0030	-		3	SLEEVE 6/3	
490	342706-0114	-		4	ACCESSORIES,INSERT SLEEVE 4	
500	90134-0039	J		8	BUSHING DT4.018912.1D Stainless	
505	90134-0040	J		2	BUSHING DT4.018914.1	
560	90134-0058	-		7	BANJO CONNECTION DT4.310.437.1	
565	90137-0002	-		1	ELBOW PIPE	
570	90165-0056	-		1	PIPE-CLIPS,FOR SINGLE PIPE,ONE SIDE 4mm	
580	90165-0057	-		1	PIPE-CLIPS,FOR SINGLE PIPE,ONE SIDE 6	
590	316810-0106	-		3	PIPE-CLIPS,FOR SINGLE PIPE,ONE SIDE 8	
595	90074-0002	-		2	PIPE-CLIP,single 11	
TBA/8 1000SQ NORMFIN						
010	A 576251-0100	-		1	CONVEYOR	**507**
070	A 576247-0100	-		1	PROTECTION	**533**, **535**
100	312125-0287	-		4	SLOTTED CHEESE HEAD ISO 1207 M4X8 RFR	
300	90028-0001	J		1	CONE 5/32"	
320	90028-0020	J		8	CONE DT13700S-300 Di=2,5mm	
330	90028-0021	J		2	CONE DIN3862 Di=4mm	
350	90032-0039	-		1	DISTR.BLOCK	
360	90032-0040	-		1	BLOCK 6ways DT4.317796.1D	
400	90092-0048	J		2	OIL BRUSH	
410	90092-0052	J		4	METERING VALVE 10mm3	
420	90092-0053	J		6	METERING VALVE 30mm3	
430	90134-0002	-		1	PIPE CONNECTION	
440	90134-0003	J		1	BUSHING	
480	90134-0030	-		3	SLEEVE 6/3	
490	342706-0114	-		4	ACCESSORIES,INSERT SLEEVE 4	
500	90134-0039	J		8	BUSHING DT4.018912.1D Stainless	
505	90134-0040	J		2	BUSHING DT4.018914.1	
560	90134-0058	-		7	BANJO CONNECTION DT4.310.437.1	
565	90137-0002	-		1	ELBOW PIPE	
570	90165-0056	-		1	PIPE-CLIPS,FOR SINGLE PIPE,ONE SIDE 4mm	
580	90165-0057	-		1	PIPE-CLIPS,FOR SINGLE PIPE,ONE SIDE 6	
590	316810-0106	-		3	PIPE-CLIPS,FOR SINGLE PIPE,ONE SIDE 8	
595	90074-0002	-		2	PIPE-CLIP,single 11	
TBA/8 1000SQ REVFIN						
010	A 576251-0100	-		1	CONVEYOR	**507**
070	A 576247-0100	-		1	PROTECTION	**533**, **535**
036	1143001-0000	-		1	ATTACHMENT PLATE	
037	1143002-0000	D		2	BRACKET	

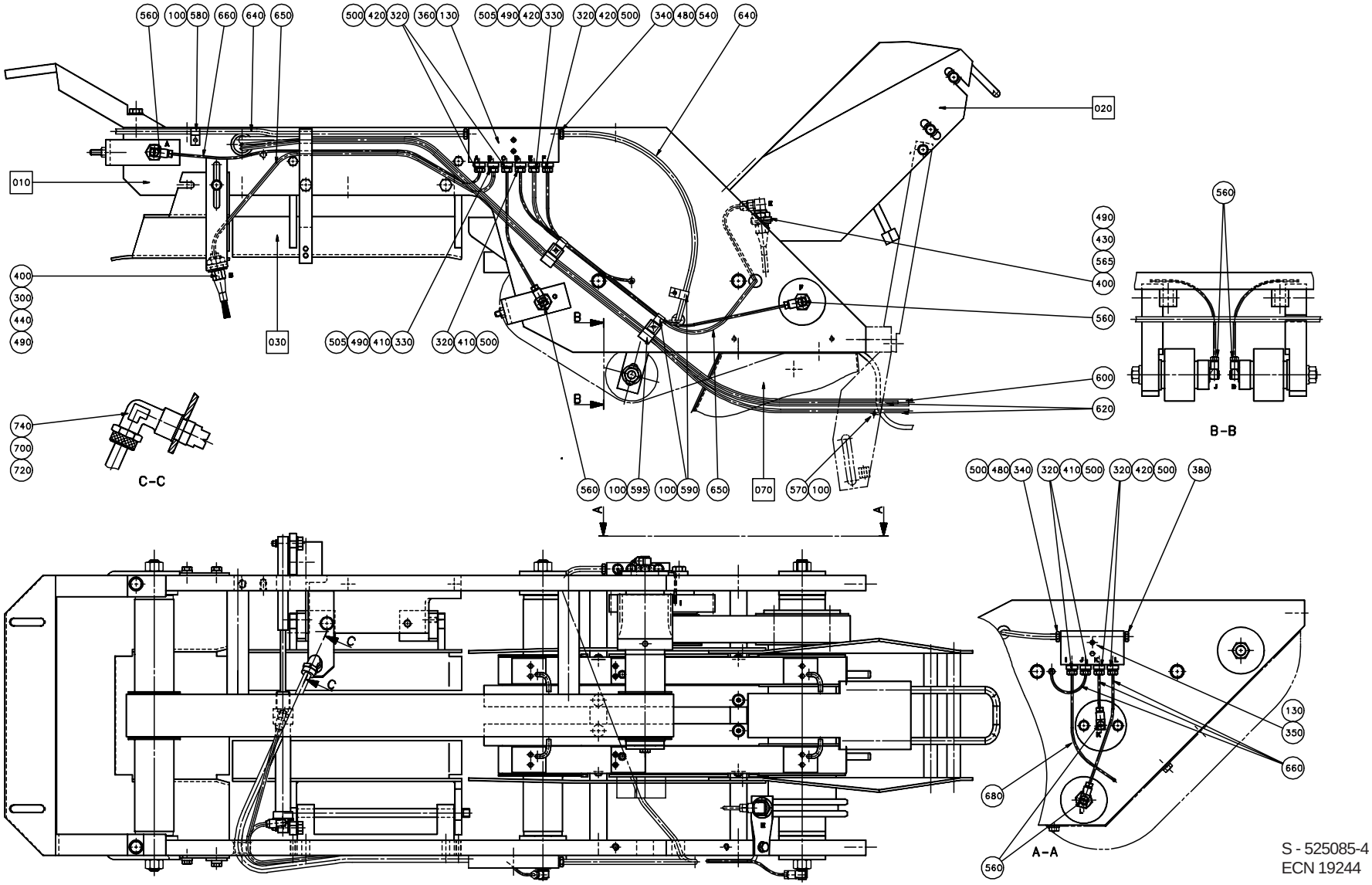

S - 525085-4
ECN 19244

Pos	Part No	SP	UN	Qty	Description	Page No
038	1143004-0000	D		2	CYLINDER BRACKET	
039	1143000-0000	D		2	PUSHER	
100	312125-0287	-		6	SLOTTED CHEESE HEAD ISO 1207 M4X8 RFR	
300	90028-0001	J		1	CONE 5/32"	
320	90028-0020	J		8	CONE DT13700S-300 Di=2,5mm	
330	90028-0021	J		2	CONE DIN3862 Di=4mm	
350	90032-0039	-		1	DISTR.BLOCK	
360	90032-0040	-		1	BLOCK 6ways DT4.317796.1D	
400	90092-0048	J		2	OIL BRUSH	
410	90092-0052	J		4	METERING VALVE 10mm3	
420	90092-0053	J		6	METERING VALVE 30mm3	
430	90134-0002	-		1	PIPE CONNECTION	
440	90134-0003	J		1	BUSHING	
480	90134-0030	-		3	SLEEVE 6/3	
490	342706-0114	-		4	ACCESSORIES,INSERT SLEEVE 4	
500	90134-0039	J		8	BUSHING DT4.018912.1D Stainless	
505	90134-0040	J		2	BUSHING DT4.018914.1	
560	90134-0058	-		7	BANJO CONNECTION DT4.310.437.1	
565	90137-0002	-		1	ELBOW PIPE	
570	90165-0056	-		1	PIPE-CLIPS,FOR SINGLE PIPE,ONE SIDE 4mm	
580	90165-0057	-		1	PIPE-CLIPS,FOR SINGLE PIPE,ONE SIDE 6	
590	316810-0106	-		3	PIPE-CLIPS,FOR SINGLE PIPE,ONE SIDE 8	
591	90450-0377	J		2	CYLINDER	
592	342732-0102	-		4	ELBOW PIPE JOINT	
593	90166-0124	-	MM	7000	HOSE 4,0/6 PA 11/12 Transp.	
594	312631-0321	-		2	NUTS,HEXAGON,M10X1,25	
595	90074-0002	-		4	PIPE-CLIP,single 11	
596	312105-0372	-		10	SCREW M6S ISO 4017 M6X25 A280	
597	315101-0153	-		10	WASHER BRB 6,4x12 FZB	
598	352113-0101	-		3	RIBBON CLAMP BLACK	
599	312105-0362	-		1	SCREW M6S ISO 4017 M6X8 A280	
Common parts						
020	A 525087-0100	-		1	DROP	**515**, **517**
030	A 525088-0200	-		1	DISCHARGE CHUTE	**519**
130	312155-0295	-		4	SCREW MF6S DIN 7991 M4X20 A280	
340	90028-0025	J		3	CONE DT4.138811.2D	
380	90087-0019	-		1	PLUG M10x1 Stainless	
540	90134-0055	J		3	BUSHING 6 DIN 3871 Stainless	
600	90166-0122	-	MM	1300	HOSE 6/8 PA 11/12 Transparent	
620	90166-0095	-	MM	3000	HOSE	
640	90166-0108	-	MM	1300	HOSE 3/6 PA11/12 Transp.	
650	90166-0051	-	MM	2600	HOSE	
660	90166-0143	-	MM	2500	HOSE 1,6/2,5 PA 11/12	

Pos	Part No	SP	UN	Qty	Description	Page No
680	90266-0019	-	MM	300	PIPE	
700	90424-0035	D		1	NOZZLE	
720	315233-0110	-		1	PLAIN ROUND,NYLON R1/4"	
740	342933-0122	-		1	ELBOW 90 COUPL.,INT.THREAD 8/6-G1/4"	

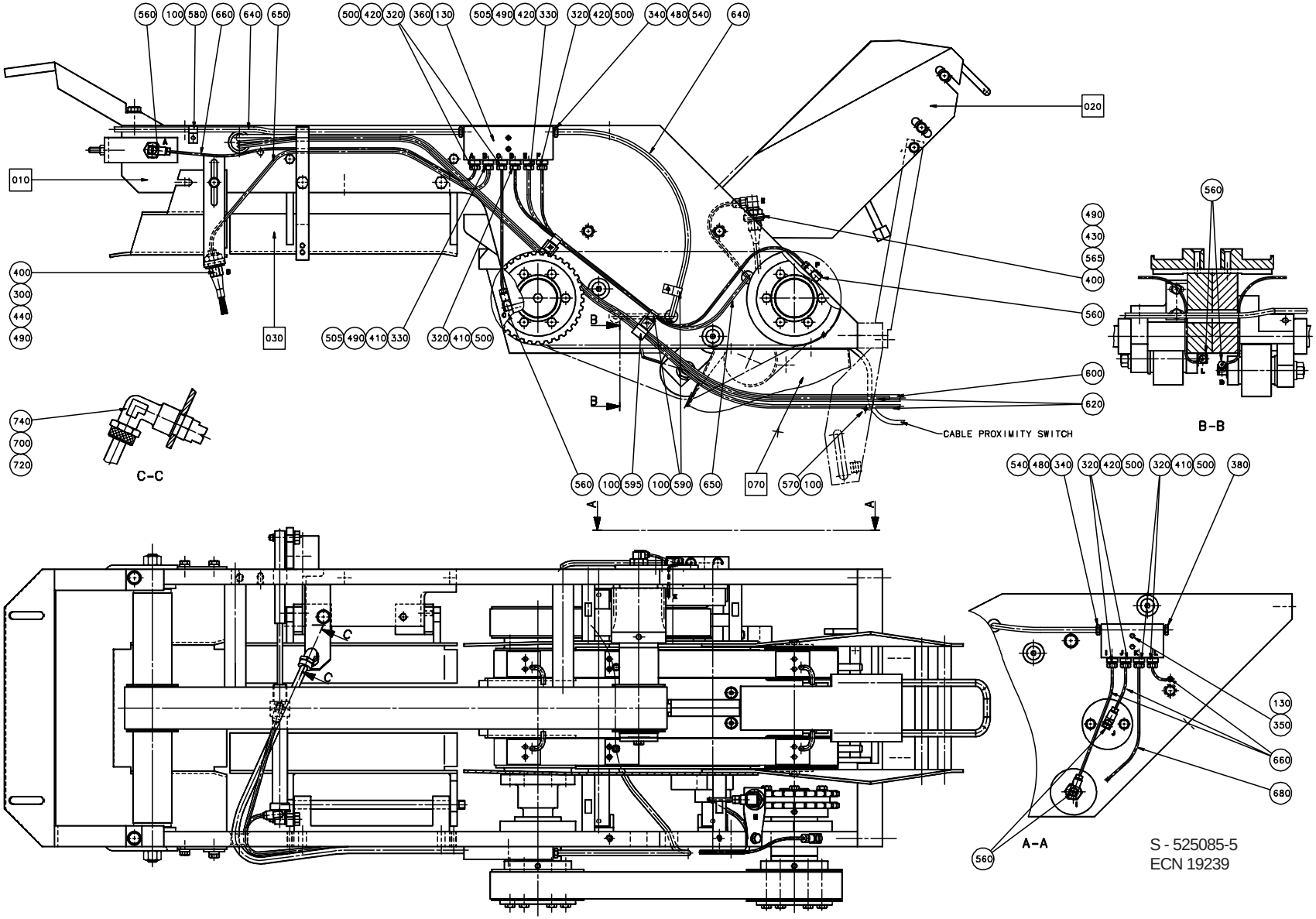
560 100 580 660 640 650
500 420 320 360 130
505 490 420 330
320 420 500
340 480 540
640
020
010
400
300
440
490
030
505 490 410 330
320 410 500
B
B
490
430
565
400
560
600
620
CABLE PROXIMITY SWITCH
560
B-B
740
700
720
C-C
560 100 595 100 590 650
070
570 100
A
A
540 480 340 320 420 500 320 410 500 380
C
C
130
350
660
680
560
A-A
S - 525085-5
ECN 19239

Pos	Part No	SP	UN	Qty	Description	Page No
TBA/8 0355B or TBA/8 0375S or TBA/8 0400B or TBA/8 0500B or TBA/8 0500S or TBA/8 0750B or TBA/8 0750S or TBA/8 1000B or TBA/8 1000S or TBA/8 1055B						
010	A 525086-0200	-		1	CONVEYING EQUIPMENT	**511**, **513**
040	A 525089-0100	-		1	CHAIN RIGHT	**521**, **523**
050	A 525090-0100	-		1	CHAIN LEFT	**525**, **527**
060	A 525091-0100	-		1	CHAIN	**529**
070	A 525092-0100	-		1	CHAIN GUARD	**531**
015	566313-0000	-		1	HOLDER	
025	566316-0000	-		1	HOLDER	
035	566317-0000	-		1	HOLDER	
080	312105-0368	-		2	SCREW M6S ISO 4017 M6x16 A280	
090	312105-0366	-		4	SCREW M6S ISO 4017 M6X12 A280	
100	312125-0287	-		11	SLOTTED CHEESE HEAD ISO 1207 M4X8 RFR	
140	315115-0153	-		6	WASHER TBRB 6,4x12 Stainless	
300	90028-0001	J		2	CONE 5/32"	
320	90028-0020	J		7	CONE DT13700S-300 Di=2,5mm	
330	90028-0021	J		5	CONE DIN3862 Di=4mm	
360	90032-0040	-		2	BLOCK 6ways DT4.317796.1D	
400	90092-0048	J		5	OIL BRUSH	
410	90092-0052	J		7	METERING VALVE 10mm3	
420	90092-0053	J		5	METERING VALVE 30mm3	
430	90134-0002	-		3	PIPE CONNECTION	
440	90134-0003	J		2	BUSHING	
480	90134-0030	-		4	SLEEVE 6/3	
490	342706-0114	-		10	ACCESSORIES,INSERT SLEEVE 4	
500	90134-0039	J		7	BUSHING DT4.018912.1D Stainless	
505	90134-0040	J		5	BUSHING DT4.018914.1	
560	90134-0058	-		6	BANJO CONNECTION DT4.310.437.1	
565	90137-0002	-		3	ELBOW PIPE	
570	90165-0056	-		4	PIPE-CLIPS,FOR SINGLE PIPE,ONE SIDE 4mm	
580	90165-0057	-		5	PIPE-CLIPS,FOR SINGLE PIPE,ONE SIDE 6	
590	316810-0106	-		1	PIPE-CLIPS,FOR SINGLE PIPE,ONE SIDE 8	
595	90074-0002	-		2	PIPE-CLIP,single 11	
TBA/8 0500SQ						
010	A 574323-0100	-		1	CONVEYING EQUIPMENT	**497**, **499**
070	A 576247-0100	-		1	PROTECTION	**533**, **535**
100	312125-0287	-		4	SLOTTED CHEESE HEAD ISO 1207 M4X8 RFR	
300	90028-0001	J		1	CONE 5/32"	
320	90028-0020	J		8	CONE DT13700S-300 Di=2,5mm	
330	90028-0021	J		2	CONE DIN3862 Di=4mm	
350	90032-0039	-		1	DISTR.BLOCK	
360	90032-0040	-		1	BLOCK 6ways DT4.317796.1D	
400	90092-0048	J		2	OIL BRUSH	
410	90092-0052	J		4	METERING VALVE 10mm3	
420	90092-0053	J		6	METERING VALVE 30mm3	
430	90134-0002	-		1	PIPE CONNECTION	
440	90134-0003	J		1	BUSHING	
480	90134-0030	-		3	SLEEVE 6/3	
490	342706-0114	-		4	ACCESSORIES,INSERT SLEEVE 4	
500	90134-0039	J		8	BUSHING DT4.018912.1D Stainless	
505	90134-0040	J		2	BUSHING DT4.018914.1	
560	90134-0058	-		7	BANJO CONNECTION DT4.310.437.1	
565	90137-0002	-		1	ELBOW PIPE	
570	90165-0056	-		1	PIPE-CLIPS,FOR SINGLE PIPE,ONE SIDE 4mm	
580	90165-0057	-		1	PIPE-CLIPS,FOR SINGLE PIPE,ONE SIDE 6	
590	316810-0106	-		3	PIPE-CLIPS,FOR SINGLE PIPE,ONE SIDE 8	
595	90074-0002	-		2	PIPE-CLIP,single 11	
TBA/8 1000SQ NORMFIN						
010	A 576251-0100	-		1	CONVEYOR	**507**
070	A 576247-0100	-		1	PROTECTION	**533**, **535**
100	312125-0287	-		4	SLOTTED CHEESE HEAD ISO 1207 M4X8 RFR	
300	90028-0001	J		1	CONE 5/32"	
320	90028-0020	J		8	CONE DT13700S-300 Di=2,5mm	
330	90028-0021	J		2	CONE DIN3862 Di=4mm	
350	90032-0039	-		1	DISTR.BLOCK	
360	90032-0040	-		1	BLOCK 6ways DT4.317796.1D	
400	90092-0048	J		2	OIL BRUSH	
410	90092-0052	J		4	METERING VALVE 10mm3	
420	90092-0053	J		6	METERING VALVE 30mm3	
430	90134-0002	-		1	PIPE CONNECTION	
440	90134-0003	J		1	BUSHING	
480	90134-0030	-		3	SLEEVE 6/3	
490	342706-0114	-		4	ACCESSORIES,INSERT SLEEVE 4	
500	90134-0039	J		8	BUSHING DT4.018912.1D Stainless	
505	90134-0040	J		2	BUSHING DT4.018914.1	
560	90134-0058	-		7	BANJO CONNECTION DT4.310.437.1	
565	90137-0002	-		1	ELBOW PIPE	
570	90165-0056	-		1	PIPE-CLIPS,FOR SINGLE PIPE,ONE SIDE 4mm	
580	90165-0057	-		1	PIPE-CLIPS,FOR SINGLE PIPE,ONE SIDE 6	
590	316810-0106	-		3	PIPE-CLIPS,FOR SINGLE PIPE,ONE SIDE 8	
595	90074-0002	-		2	PIPE-CLIP,single 11	
TBA/8 1000SQ REVFIN						
010	A 576251-0100	-		1	CONVEYOR	**507**
070	A 576247-0100	-		1	PROTECTION	**533**, **535**
036	1143001-0000	-		1	ATTACHMENT PLATE	
037	1143002-0000	D		2	BRACKET	

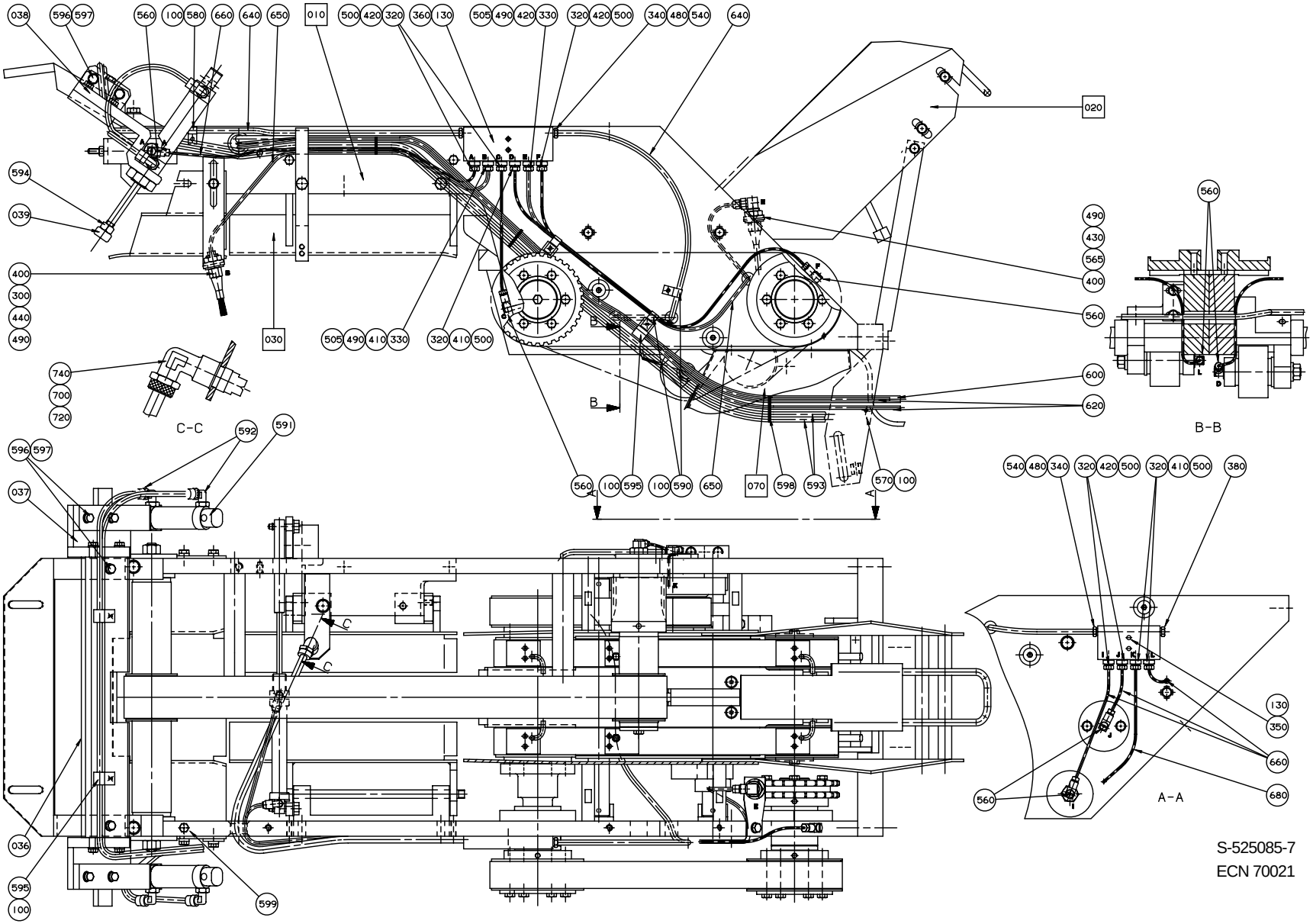
038 596 597 560 100 580 660 640 650 010 500 420 320 360 130 505 490 420 330 320 420 500 340 480 540 640
020
594
039
400
300
440
490
030
505 490 410 330
320 410 500
740
700
720
C-C
592
591
596 597
037
036
595
100
599
560 100 595 100 590 650 070 598 593 570 100
B
B-B
490
430
565
400
560
600
620
540 480 340 320 420 500 320 410 500 380
130
350
660
680
560
A-A
S-525085-7
ECN 70021

Pos	Part No	SP	UN	Qty	Description	Page No
038	1143004-0000	D		2	CYLINDER BRACKET	
039	1143000-0000	D		2	PUSHER	
100	312125-0287	-		6	SLOTTED CHEESE HEAD ISO 1207 M4X8 RFR	
300	90028-0001	J		1	CONE 5/32"	
320	90028-0020	J		8	CONE DT13700S-300 Di=2,5mm	
330	90028-0021	J		2	CONE DIN3862 Di=4mm	
350	90032-0039	-		1	DISTR.BLOCK	
360	90032-0040	-		1	BLOCK 6ways DT4.317796.1D	
400	90092-0048	J		2	OIL BRUSH	
410	90092-0052	J		4	METERING VALVE 10mm3	
420	90092-0053	J		6	METERING VALVE 30mm3	
430	90134-0002	-		1	PIPE CONNECTION	
440	90134-0003	J		1	BUSHING	
480	90134-0030	-		3	SLEEVE 6/3	
490	342706-0114	-		4	ACCESSORIES,INSERT SLEEVE 4	
500	90134-0039	J		8	BUSHING DT4.018912.1D Stainless	
505	90134-0040	J		2	BUSHING DT4.018914.1	
560	90134-0058	-		7	BANJO CONNECTION DT4.310.437.1	
565	90137-0002	-		1	ELBOW PIPE	
570	90165-0056	-		1	PIPE-CLIPS,FOR SINGLE PIPE,ONE SIDE 4mm	
580	90165-0057	-		1	PIPE-CLIPS,FOR SINGLE PIPE,ONE SIDE 6	
590	316810-0106	-		3	PIPE-CLIPS,FOR SINGLE PIPE,ONE SIDE 8	
591	90450-0377	J		2	CYLINDER	
592	342732-0102	-		4	ELBOW PIPE JOINT	
593	90166-0124	-	MM	7000	HOSE 4,0/6 PA 11/12 Transp.	
594	312631-0321	-		2	NUTS,HEXAGON,M10X1,25	
595	90074-0002	-		4	PIPE-CLIP,single 11	
596	312105-0372	-		10	SCREW M6S ISO 4017 M6X25 A280	
597	315101-0153	-		10	WASHER BRB 6,4x12 FZB	
598	352113-0101	-		3	RIBBON CLAMP BLACK	
599	312105-0362	-		1	SCREW M6S ISO 4017 M6X8 A280	
Common parts						
020	A 525087-0100	-		1	DROP	**515**,**517**
030	A 525088-0200	-		1	DISCHARGE CHUTE	**519**
130	312155-0295	-		4	SCREW MF6S DIN 7991 M4X20 A280	
340	90028-0025	J		3	CONE DT4.138811.2D	
380	90087-0019	-		1	PLUG M10x1 Stainless	
540	90134-0055	J		3	BUSHING 6 DIN 3871 Stainless	
600	90166-0122	-	MM	1300	HOSE 6/8 PA 11/12 Transparent	
620	90166-0095	-	MM	3000	HOSE	
640	90166-0108	-	MM	1300	HOSE 3/6 PA11/12 Transp.	
650	90166-0051	-	MM	2600	HOSE	
660	90166-0143	-	MM	2500	HOSE 1,6/2,5 PA 11/12	

Pos	Part No	SP	UN	Qty	Description	Page No
680	90266-0019	-	MM	300	PIPE	
700	90424-0035	D		1	NOZZLE	
720	315233-0110	-		1	PLAIN ROUND,NYLON R1/4"	
740	342933-0122	-		1	ELBOW 90 COUPL.,INT.THREAD 8/6-G1/4"	

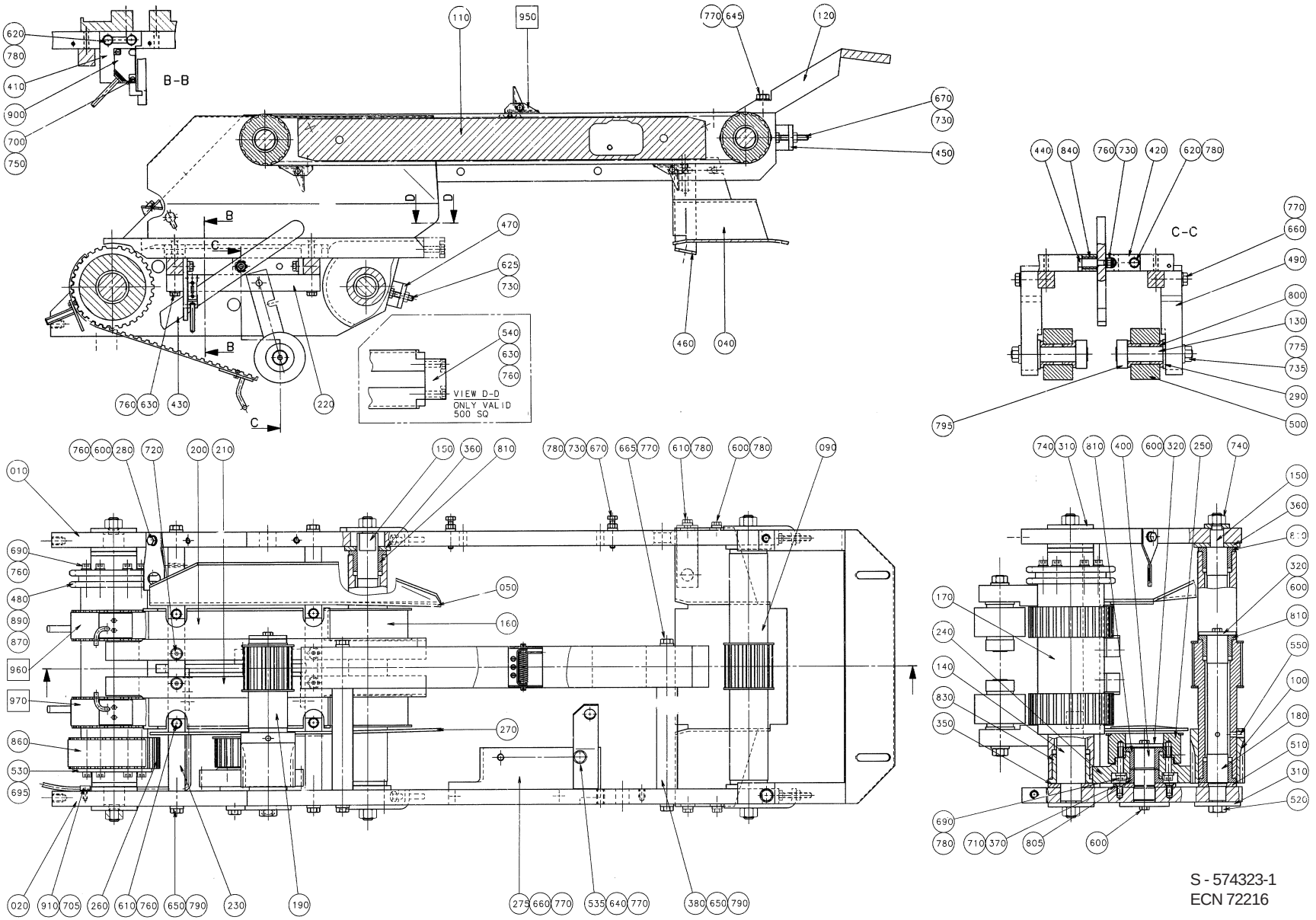
B-B
C-C
VIEW D-D
ONLY VALID
500 SQ
S - 574323-1
ECN 72216

Pos	Part No	SP	UN	Qty	Description	Page No
Common parts						
F950	A 574332-0100	K		1	BELT	**501**
F960	A 576245-0100	K		1	BELT RIGHT	**503**
F970	A 576246-0100	K		1	BELT LEFT	**505**
010	574065-0000	D		1	SIDE PLATE	
020	574066-0000	D		1	SIDE PLATE	
040	574094-0000	D		1	HEAD PLATE	
050	574119-0000	D		1	HEAD PLATE	
090	443289-0000	D		1	TOOTHED PULLY	
100	443290-0000	R		1	GEAR WHEEL	
110	443292-0000	-		1	STEERING	
130	525363-0002	R		2	SHAFT	
140	525400-0000	R		1	SHAFT	
150	525402-0000	R		2	SHAFT	
160	574067-0000	D		1	TIMING BELT SHAFT	
170	574068-0000	D		1	TIMING BELT SHAFT	
180	574069-0000	D		1	AXLE PIN	
190	574070-0000	D		1	TIMING BELT SHAFT	
200	574071-0000	-		1	PROFILE	
210	574072-0000	-		1	PROFILE	
220	574073-0000	-		2	BRACKET	
230	574076-0000	-		2	BRACKET	
240	574082-0000	D		1	GEAR WHEEL	
250	574085-0000	D		1	TIMING BELT PULLEY	
260	574086-0000	D		1	TIMING BELT PULLEY	
270	574120-0000	-		1	HEAD PLATE	
275	574121-0000	-		1	BRACKET	
280	574122-0000	-		1	BRACKET	
290	285363-0000	D		2	WASHER	
310	443295-0000	D		3	WASHER	
320	443296-0000	D		2	WASHER	
350	443299-0000	D		2	WASHER	
360	443300-0000	D		4	WASHER	
370	443301-0000	D		1	WASHER	
380	443312-0000	-		2	SPACER	
400	443307-0000	R		1	SHAFT	
410	443482-0000	-		1	BRACKET	
420	443483-0000	-		1	BRACKET	
430	443484-0000	-		1	ARM	
440	443485-0000	M		1	SCREW	
450	443489-0000	-		2	BRACKET	
460	525334-0000	-		1	BRACKET	
470	556886-0000	-		2	BRACKET	
480	573353-0000	D		1	SPROCKET	
490	574074-0000	D		2	ROLLER BRACKET	
500	574075-0000	D		2	ROLL	
510	574083-0000	D		1	WASHER	
520	574084-0000	D		1	SCREW	
530	574087-0000	-		1	WASHER	
535	574123-0000	-		1	BRACKET	
550	90287-0161	-		2	SCREW, SET,FULL DOG POINT,T6SS DIN915, M	
600	312105-0366	-		7	SCREW M6S ISO 4017 M6X12 A280	
610	312105-0368	-		5	SCREW M6S ISO 4017 M6x16 A280	
620	312105-0370	-		4	SCREW M6S ISO 4017 M6x20 A280	
625	312105-0372	-		2	SCREW M6S ISO 4017 M6X25 A280	
640	312105-0447	-		1	SCREW M6S ISO 4017 M8X12 A280	
645	312105-0453	-		2	SCREW M6S ISO 4017 M8x25 A280	
650	312105-0455	-		4	SCREW M6S ISO 4017 M8X30 A280	
660	312105-0457	-		2	SCREW ISO 4017 M8x35 A280	
665	312105-0463	-		2	SCREW M6S ISO 4014 M8x60 A280	
670	312109-0376	-		4	SCREW M6S ISO 4017 M6X35 A280	
690	312115-0374	-		10	SCREW MC6S ISO 4762 M6x30 A280	
695	312115-0380	-		6	SCREW MC6S ISO 4762 M6X50 A280	
700	312125-0230	-		2	SLOTTED CHEESE HEAD ISO 1207 M3X20 RFR	
705	312125-0287	-		2	SLOTTED CHEESE HEAD ISO 1207 M4X8 RFR	
710	312155-0366	-		2	SCREW MF6S DIN 7991 M6X12 A280	
720	312155-0376	-		4	SCREW MF6S DIN 7991 M6X35 A280	
730	312605-0316	-		7	NUT,HEXAGON A280 M6M6	
735	312605-0320	-		2	NUT,HEXAGON,M10 A280	
740	312605-0322	-		6	NUT,HEXAGON,M12 RFR	
750	315105-0124	-		2	WASHER,PLAIN ROUND 3,2x6	
770	315105-0165	-		9	WASHER,PLAIN ROUND 8,4x16 Stainless	
775	315105-0173	-		2	WASHER,PLAIN ROUND 10,5x22 STAINLESS	
780	315115-0153	-		14	WASHER TBRB 6,4x12 Stainless	
790	315115-0165	-		6	WASHER TBRB 8,4x16 Stainless	
795	315742-0114	-		2	RETAINING RINGS 18	
800	321101-0223	K		4	FLANGE BUS 18F7X16	
805	321101-0252	K		1	FLANGE BUS 25F7X16	
810	321101-0253	K		7	FLANGE BUS 25F7X25	
830	321101-0283	K		2	FLANGE BUS 35F7X35	
840	321116-0128	K		1	BUSHING 10E7/14X16	
860	90417-0345	J		1	TIMING BELT	
870	318219-0487	R		1	CONNECTING LINK DUPLEX 1/2",SS	
890	318242-0108	R		1	ROLLER CHAIN DUPLEX 1/2"-108,SS	
900	90044-0104	M		1	PROX.SWITCH IFM IN 3002	
910	90165-0056	-		2	PIPE-CLIPS,FOR SINGLE PIPE,ONE SIDE 4mm	

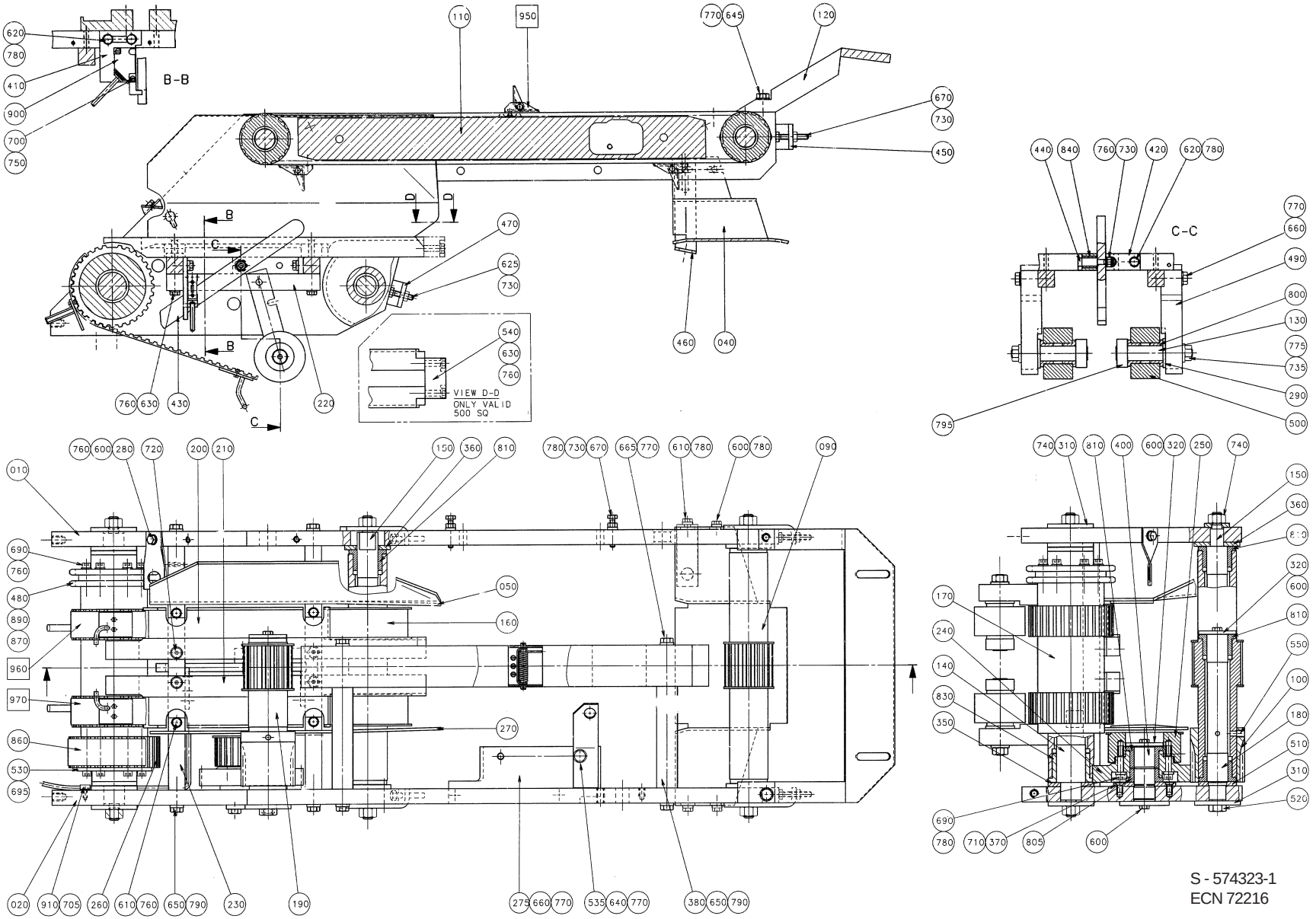
B-B
C-C
VIEW D-D
ONLY VALID
500 SQ
S - 574323-1
ECN 72216

Pos	Part No	SP	UN	Qty	Description	Page No
0500SQ						
120	443293-0000	-		1	BRACKET	
540	591084-0000	-		1	GUIDE LUG	
630	312105-0374	-		6	SCREW M6S ISO 4017 M6X30 A280	
760	315105-0153	-		18	WASHER,PLAIN ROUND 6,4x12 Stainless	
1000SQ REVFIN						
120	1143003-0000	-		1	BRACKET	
630	312105-0374	-		4	SCREW M6S ISO 4017 M6X30 A280	
760	315105-0153	-		16	WASHER,PLAIN ROUND 6,4x12 Stainless	
1000SQ NORMFIN						
120	443293-0000	-		1	BRACKET	
630	312105-0374	-		4	SCREW M6S ISO 4017 M6X30 A280	
760	315105-0153	-		16	WASHER,PLAIN ROUND 6,4x12 Stainless	

Pos	Part No	SP	UN	Qty	Description	Page No

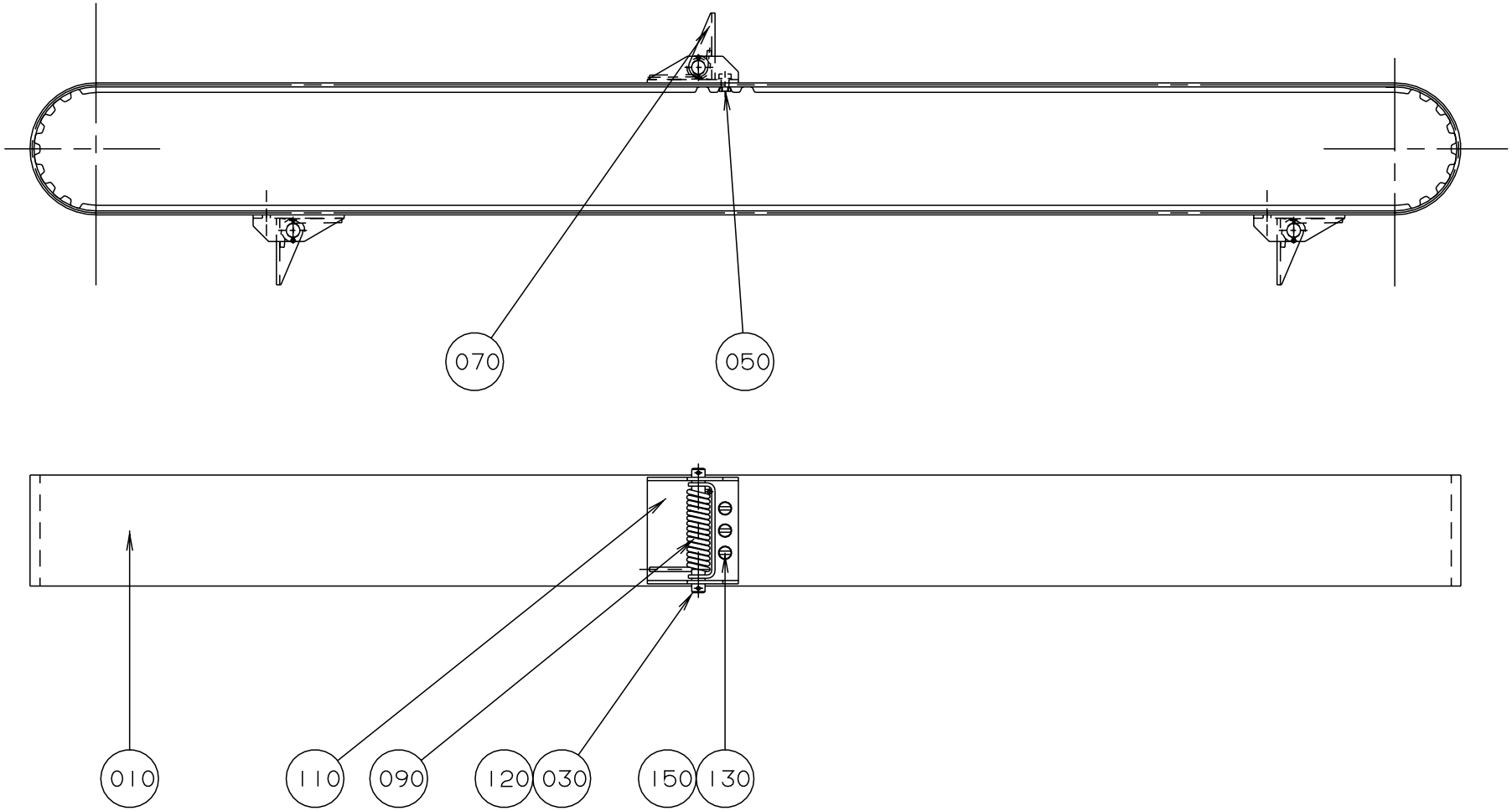

S-574332-1
ECN 19244

Pos	Part No	SP	UN	Qty	Description	Page No
Common parts						
010	90417-0330	J		1	TIMING BELT	
030	297751-0000	J		3	SHAFT	
050	297755-0000	J		3	WEDGE	
070	297794-0000	J		3	SHEET	
090	297795-0000	J		3	SPRING	
110	525055-0000	J		3	BRACKET	
120	311411-0127	-		6	SPLIT PIN SP1,2X12RFR	
130	312125-0220	-		9	SLOTTED HEMCS3X6RFR	
150	315105-0124	-		9	WASHER,PLAIN ROUND 3,2x6	

Pos	Part No	SP	UN	Qty	Description	Page No

BELT RIGHT

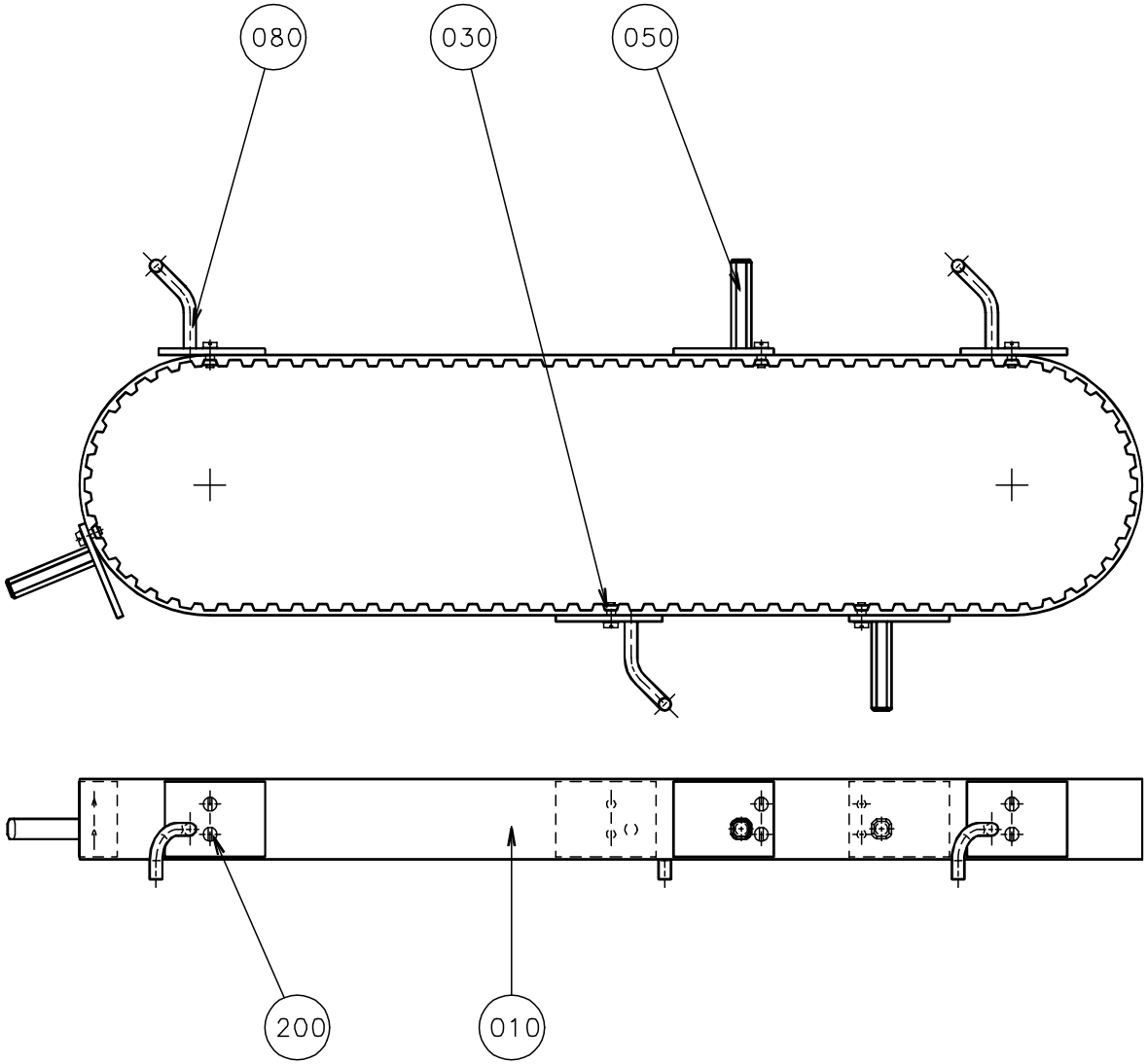

S - 576245-1
ECN 70412

Pos	Part No	SP	UN	Qty	Description	Page No
Common parts						
010	90417-0329	J		1	TIMING BELT	
030	285380-0002	J		6	WEDGE	
050	574090-0000	J		3	CARRIER	
080	574091-0000	J		3	CARRIER	
200	312125-0220	-		12	SLOTTED HEMCS3X6RFR	

Pos	Part No	SP	UN	Qty	Description	Page No

BELT LEFT

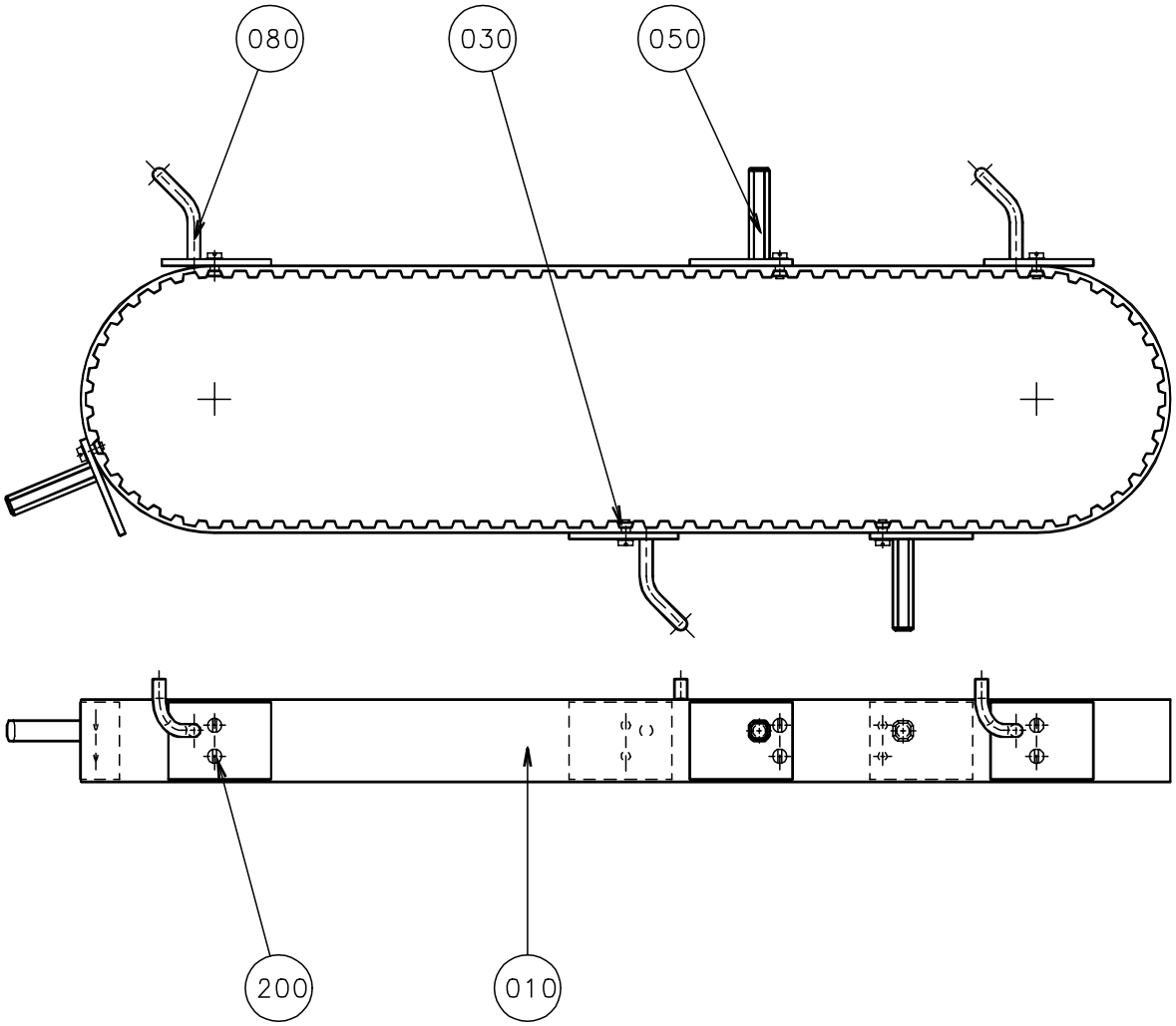

S - 576246-1
ECN 70412

Pos	Part No	SP	UN	Qty	Description	Page No
Common parts						
010	90417-0329	J		1	TIMING BELT	
030	285380-0002	J		6	WEDGE	
050	574089-0000	J		3	CARRIER	
080	574092-0000	J		3	CARRIER	
200	312125-0220	-		12	SLOTTED HEMCS3X6RFR	

Pos	Part No	SP	UN	Qty	Description	Page No

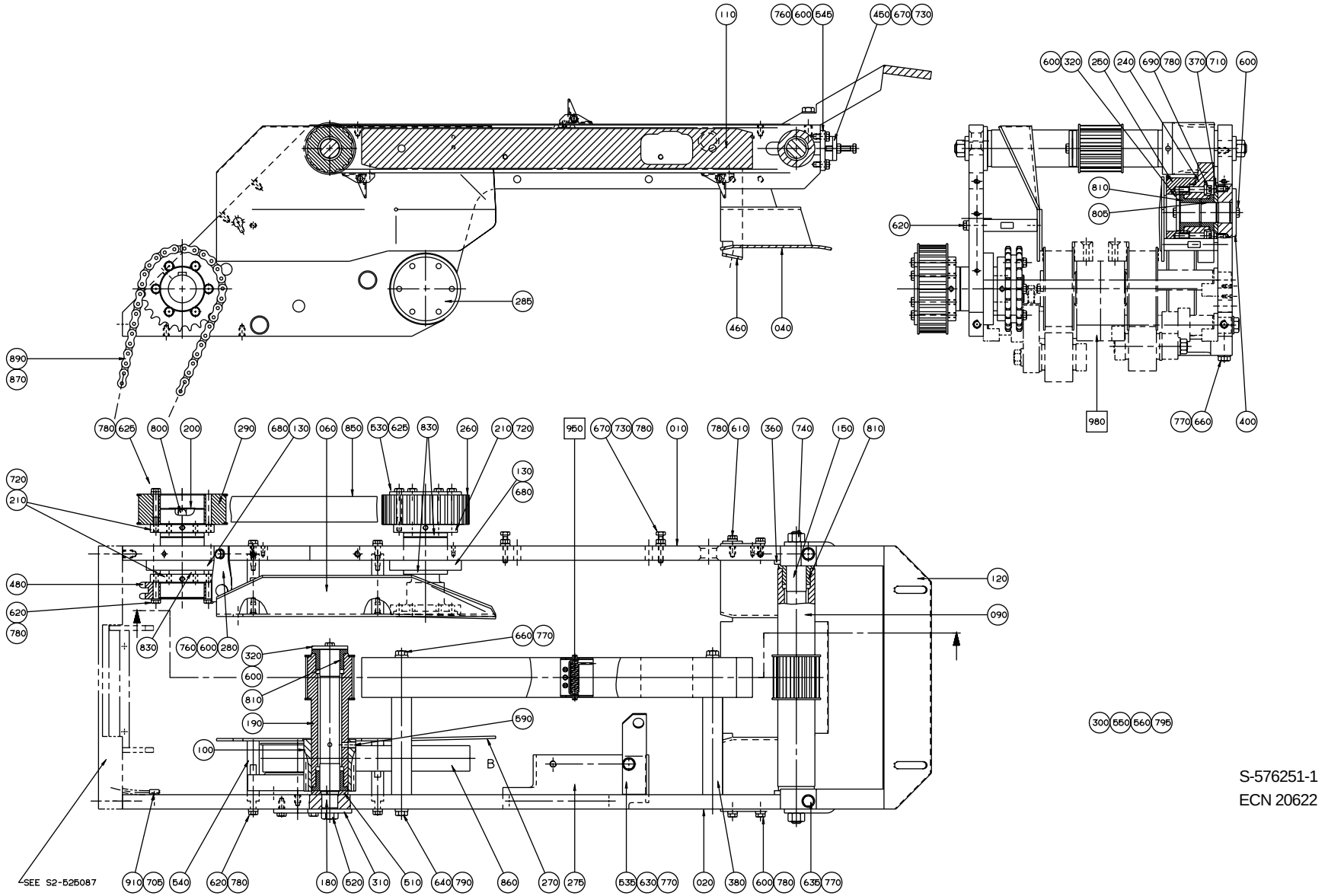

S-576251-1
ECN 20622

Pos	Part No	SP	UN	Qty	Description	Page No
Common parts						
F950	A 574332-0100	K		1	BELT	**501**
F980	A 576252-0100	-		1	INFEED SECTION	**509**
010	574132-0000	D		1	SIDE PLATE	
020	574133-0000	D		1	SIDE PLATE	
040	574094-0000	D		1	HEAD PLATE	
060	574145-0000	D		1	HEAD PLATE	
090	443289-0000	D		1	TOOTHED PULLY	
100	443290-0000	R		1	GEAR WHEEL	
110	443292-0000	-		1	STEERING	
130	574139-0000	-		2	BEARING HOUSING	
150	525402-0000	R		1	SHAFT	
180	574069-0000	D		1	AXLE PIN	
190	574070-0000	D		1	TIMING BELT SHAFT	
200	574140-0000	-		1	SHAFT	
210	574150-0000	-		3	SLEEVE	
240	574082-0000	D		1	GEAR WHEEL	
250	574085-0000	D		1	TIMING BELT PULLEY	
260	574086-0000	D		1	TIMING BELT PULLEY	
270	574146-0000	-		1	HEAD PLATE	
275	574121-0000	-		1	BRACKET	
280	574122-0000	-		1	BRACKET	
285	574148-0000	-		1	SHAFT	
290	574159-0000	D		1	TIMING BELT PULLEY	
310	443295-0000	D		1	WASHER	
320	443296-0000	D		2	WASHER	
360	443300-0000	D		2	WASHER	
370	443301-0000	D		1	WASHER	
380	443312-0000	-		2	SPACER	
400	443307-0000	D		1	SHAFT	
450	443489-0000	-		2	BRACKET	
460	525334-0000	-		1	BRACKET	
480	573353-0000	D		1	SPROCKET	
510	574083-0000	D		1	WASHER	
520	574084-0000	D		1	SCREW	
530	574087-0000	-		1	WASHER	
535	574123-0000	-		1	BRACKET	
540	574147-0000	-		4	HOLDER	
545	574155-0000	-		2	PLATE	
590	90287-0161	-		2	SCREW, SET,FULL DOG POINT,T6SS DIN915, M	
600	312105-0366	-		10	SCREW M6S ISO 4017 M6X12 A280	
610	312105-0368	-		1	SCREW M6S ISO 4017 M6x16 A280	
620	312105-0374	-		10	SCREW M6S ISO 4017 M6X30 A280	
625	312105-0380	-		12	SCREW M6S ISO 4014 M6X50 A280	
630	312105-0447	-		1	SCREW M6S ISO 4017 M8X12 A280	
635	312105-0453	-		2	SCREW M6S ISO 4017 M8x25 A280	
640	312105-0455	-		2	SCREW M6S ISO 4017 M8X30 A280	
660	312105-0463	-		4	SCREW M6S ISO 4014 M8x60 A280	
670	312109-0376	-		4	SCREW M6S ISO 4017 M6X35 A280	
680	312115-0366	-		8	SCREW MC6S ISO 4762 M6X12 A280	
690	312115-0374	-		4	SCREW MC6S ISO 4762 M6x30 A280	
705	312125-0287	-		2	SLOTTED CHEESE HEAD ISO 1207 M4X8 RFR	
710	312155-0366	-		2	SCREW MF6S DIN 7991 M6X12 A280	
720	312318-0366	-		3	SET SCREW CUP POINT ISO 4029 M6X12 RFR	
730	312605-0316	-		4	NUT,HEXAGON A280 M6M6	
740	312605-0322	-		2	NUT,HEXAGON,M12 RFR	
760	315105-0153	-		5	WASHER,PLAIN ROUND 6,4x12 Stainless	
770	315105-0165	-		8	WASHER,PLAIN ROUND 8,4x16 Stainless	
780	315115-0153	-		26	WASHER TBRB 6,4x12 Stainless	
790	315115-0165	-		2	WASHER TBRB 8,4x16 Stainless	
800	315705-0298	-		3	KEYS,PARALLEL WITH ROUND ENDS 10X8X30	
805	321101-0252	K		1	FLANGE BUS 25F7X16	
810	321101-0253	K		5	FLANGE BUS 25F7X25	
830	321101-0282	K		4	FLANGE BUS 35F7X20	
850	90417-0329	J		1	TIMING BELT	
860	90417-0345	J		1	TIMING BELT	
870	318219-0487	R		1	CONNECTING LINK DUPLEX 1/2",SS	
890	318242-0108	R		1	ROLLER CHAIN DUPLEX 1/2"-108,SS	
910	90165-0056	-		2	PIPE-CLIPS,FOR SINGLE PIPE,ONE SIDE 4mm	
REVFIN						
120	1143003-0000	-		1	BRACKET	
NORMFIN						
120	443293-0000	-		1	BRACKET	

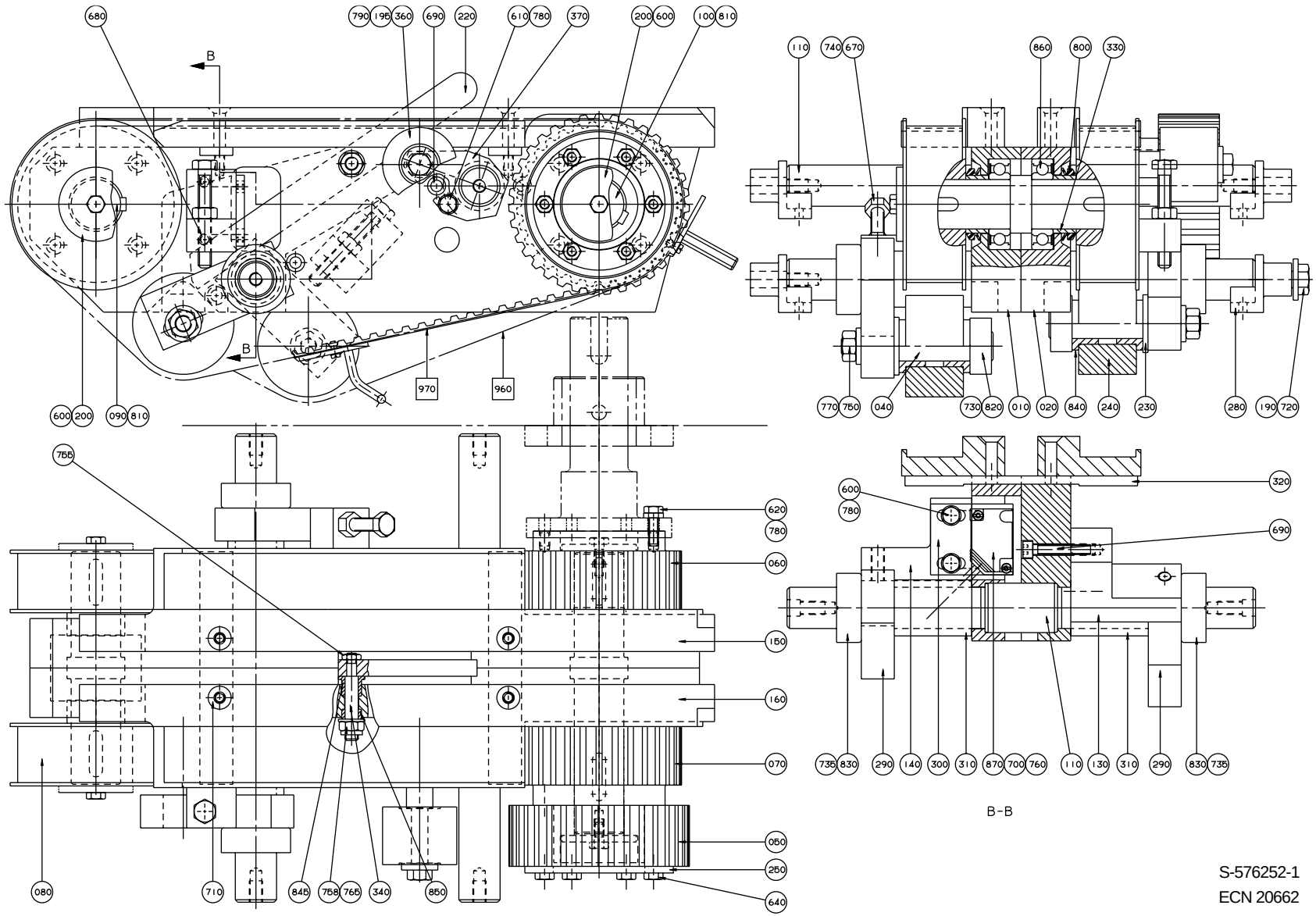

S-576252-1
ECN 20662

Pos	Part No	SP	UN	Qty	Description	Page No
Common parts						
F960	A 576245-0100	K		1	BELT RIGHT	**503**
F970	A 576246-0100	K		1	BELT LEFT	**505**
010	574134-0000	D		1	BEARING CONSOLE	
020	574135-0000	D		1	BEARING CONSOLE	
040	525363-0002	R		2	SHAFT	
050	574086-0000	R		1	TIMING BELT PULLEY	
060	574136-0000	R		1	TIMING BELT PULLEY	
070	574137-0000	R		1	TIMING BELT PULLEY	
080	574138-0000	R		2	TIMING BELT PULLEY	
090	574141-0000	M		1	SHAFT	
100	574142-0000	M		1	SHAFT	
110	574144-0000	M		2	SHAFT	
130	574151-0000	D		1	BRACKET	
140	574152-0000	D		1	BRACKET	
150	574157-0000	D		1	PROFILE	
160	574158-0000	D		1	PROFILE	
190	26490-0000	-		4	WASHER	
195	262028-0016	R		1	FITTING BOLT	
200	443296-0000	D		4	WASHER	
220	443484-0000	D		1	ARM	
230	285363-0000	D		2	WASHER	
240	574075-0000	D		2	ROLL	
250	574087-0000	D		1	WASHER	
280	574143-0000	R		4	AXLE SUPPORT	
290	574149-0000	D		2	ARM	
300	574153-0000	-		1	PLATE	
310	574154-0000	-		2	SPACER	
320	574156-0000	-		2	SUPPORT RAIL	
330	574160-0000	-		4	SPACER	
340	574161-0000	K		1	SHAFT	
360	580366-0000	R		1	ROLL	
370	580996-0000	-		1	ROLLER BRACKET	
600	312105-0366	-		6	SCREW M6S ISO 4017 M6X12 A280	
610	312105-0368	-		1	SCREW M6S ISO 4017 M6x16 A280	
620	312105-0370	-		6	SCREW M6S ISO 4017 M6x20 A280	
640	312105-0380	-		6	SCREW M6S ISO 4014 M6X50 A280	
670	312109-0463	-		2	SCREW M6S 8x60H A4 80	
680	312115-0372	-		2	SCREW MC6S ISO 4762 M6X25 A280	
690	312115-0374	-		14	SCREW MC6S ISO 4762 M6x30 A280	
700	312125-0228	-		2	SLOTTED CHEESE HEAD ISO 1207 M3x16 A4	
710	312155-0376	-		4	SCREW MF6S DIN 7991 M6X35 A280	
720	927891-0000	-		4	SCREW	
730	312318-0362	-		2	SET SCREW CUP POINT ISO 4029 M6x8 RFR	
735	312318-0443	-		2	SET SCREW CUP POINT ISO 4029 M8X8 RFR	
740	312605-0318	-		2	NUT,HEXAGON,M8 RFR	
750	312605-0320	-		2	NUT,HEXAGON,M10 A280	
755	312625-0316	-		1	NUTS,HEXAGON,M6	
758	312812-0318	-		1	LOCK-NUT,HEXAGON,WITH NYLON,M8	
760	315105-0124	-		2	WASHER,PLAIN ROUND 3,2x6	
765	315105-0165	-		1	WASHER,PLAIN ROUND 8,4x16 Stainless	
770	315105-0173	-		2	WASHER,PLAIN ROUND 10,5x22 STAINLESS	
780	315115-0153	-		9	WASHER TBRB 6,4x12 Stainless	
790	315115-0173	-		1	WASHER TBRB 10,5x22 Stainless	
800	315220-0175	-		4	SEAL RING V-35S	
810	315705-0266	-		4	FLAT WEDGE	
820	315742-0114	-		2	RETAINING RINGS 18	
830	315742-0119	-		2	RETAINING RINGS 25	
840	321101-0223	K		4	FLANGE BUS 18F7X16	
845	321111-0097	K		1	FLANGE BUS 8E7X12	
850	321116-0095	K		1	BUSHING 8E7/12X6	
860	321308-0106	K		4	BEARINGS,BALL BEARING	
870	90044-0104	M		1	PROX.SWITCH IFM IN 3002	

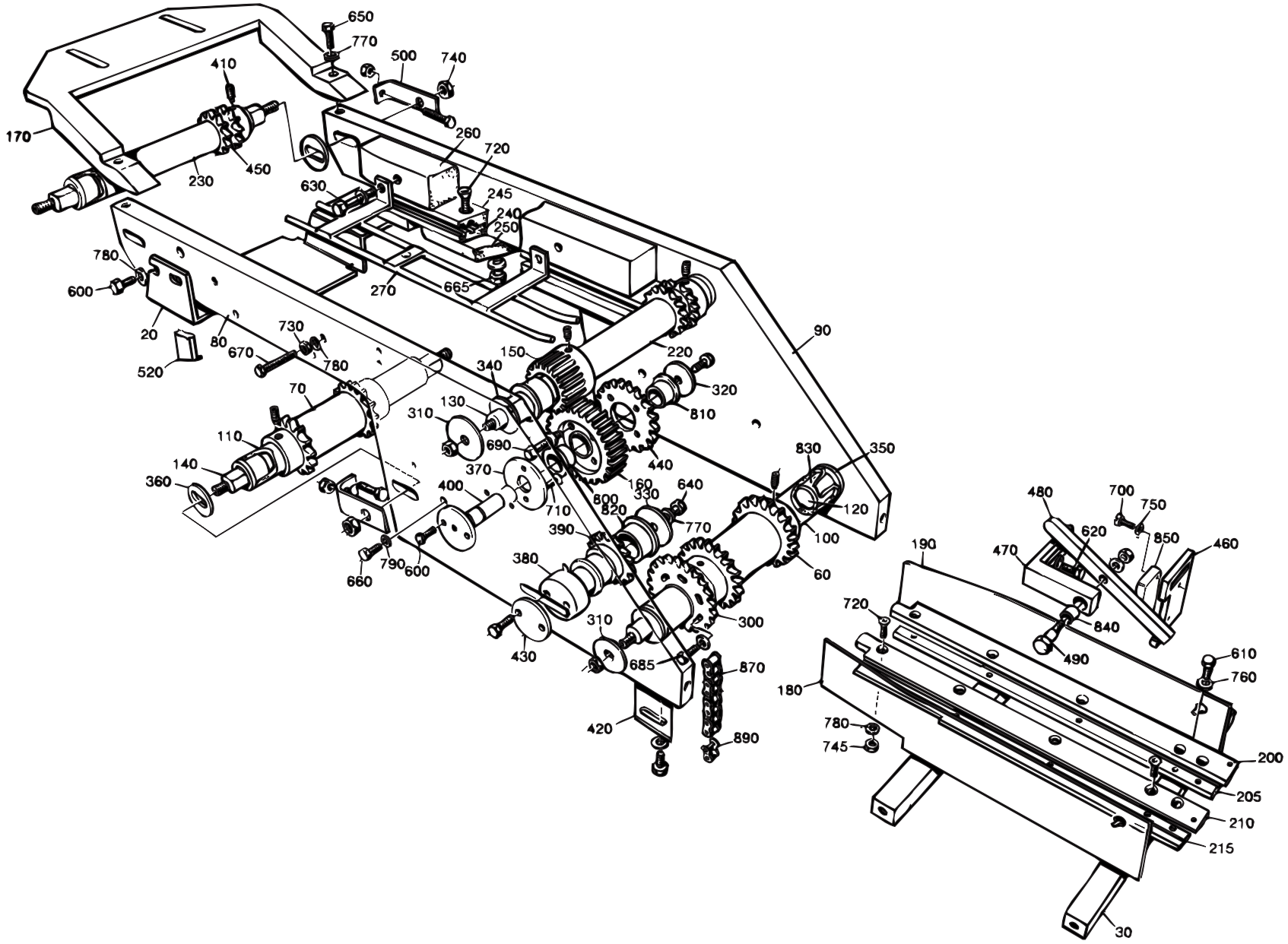

S-525086-1
ECN 16757

Pos	Part No	SP	UN	Qty	Description	Page No
Common parts						
080	443445-0000	D		1	SIDE PLATE	
090	443446-0000	D		1	SIDE PLATE	
100	443455-0000	D		1	SHAFT	
110	443456-0000	D		1	SHAFT	
120	525400-0000	R		1	SHAFT	
130	525401-0000	R		1	SHAFT	
140	525402-0000	R		2	SHAFT	
150	443290-0000	D		1	GEAR WHEEL	
160	443291-0000	D		1	GEAR WHEEL	
170	443293-0000	D		1	BRACKET	
180	443450-0000	D		1	HEAD PLATE	
190	443451-0000	D		1	HEAD PLATE	
220	443457-0000	D		1	SHAFT	
230	443458-0000	D		1	SHAFT	
240	525243-0000	D		1	PROFILE	
245	525244-0000	D		1	PROFILE	
250	525242-0000	-		1	BRACKET	
260	443486-0000	D		1	GUIDE	
270	525419-0000	D		1	LEAD RAIL	
300	297899-0000	D		1	SPROCKET	
310	443295-0000	D		4	WASHER	
320	443296-0000	D		1	WASHER	
330	443297-0000	D		1	WASHER	
340	443298-0000	D		2	WASHER	
350	443299-0000	D		2	WASHER	
360	443300-0000	D		4	WASHER	
370	443301-0000	D		1	WASHER	
380	443305-0000	R		1	SHAFT	
390	443306-0000	D		1	SPROCKET	
400	443307-0000	R		1	SHAFT	
410	90287-0161	-		10	SCREW, SET,FULL DOG POINT,T6SS DIN915, M	
420	443350-0000	-		1	BRACKET	
430	443414-0000	-		1	WASHER	
440	443464-0000	D		1	SPROCKET	
450	443467-0000	R		2	SPROCKET	
460	443482-0000	-		1	BRACKET	
470	443483-0000	-		1	BRACKET	
480	443484-0000	D		1	ARM	
490	443485-0000	R		1	SCREW	
500	443489-0000	-		2	BRACKET	
520	525334-0000	-		1	BRACKET	
530	556886-0000	-		2	BRACKET	
600	312105-0366	-		6	SCREW M6S ISO 4017 M6X12 A280	
610	312105-0368	-		7	SCREW M6S ISO 4017 M6x16 A280	
620	312105-0370	-		4	SCREW M6S ISO 4017 M6x20 A280	
625	312105-0372	-		2	SCREW M6S ISO 4017 M6X25 A280	
630	312105-0384	-		2	SCREW M6S ISO 4014 M6X70 A280	
640	312105-0449	-		1	SCREW M6S ISO 4017 M8x16 A280	
650	312105-0453	-		2	SCREW M6S ISO 4017 M8x25 A280	
660	312105-0455	-		6	SCREW M6S ISO 4017 M8X30 A280	
665	312105-0457	-		3	SCREW ISO 4017 M8x35 A280	
670	312109-0376	-		4	SCREW M6S ISO 4017 M6X35 A280	
685	312115-0370	-		6	SCREW MC6S ISO 4762 M6x20 A280	
690	312115-0374	-		4	SCREW MC6S ISO 4762 M6x30 A280	
700	312125-0230	-		2	SLOTTED CHEESE HEAD ISO 1207 M3X20 RFR	
710	312155-0366	-		2	SCREW MF6S DIN 7991 M6X12 A280	
720	312155-0376	-		16	SCREW MF6S DIN 7991 M6X35 A280	
730	312605-0316	-		7	NUT,HEXAGON A280 M6M6	
740	312605-0322	-		8	NUT,HEXAGON,M12 RFR	
745	312812-0316	-		6	NUT,HEXAGON,LOCK,WITH NYLON INSERT,M6	
750	315105-0124	-		2	WASHER,PLAIN ROUND 3,2x6	
760	315105-0153	-		7	WASHER,PLAIN ROUND 6,4x12 Stainless	
770	315105-0165	-		6	WASHER,PLAIN ROUND 8,4x16 Stainless	
780	315115-0153	-		28	WASHER TBRB 6,4x12 Stainless	
790	315115-0165	-		4	WASHER TBRB 8,4x16 Stainless	
800	321101-0252	K		1	FLANGE BUS 25F7X16	
810	321101-0253	K		7	FLANGE BUS 25F7X25	
820	321101-0272	K		2	FLANGE BUS 30F7X20	
830	321101-0283	K		2	FLANGE BUS 35F7X35	
840	321116-0128	R		1	BUSHING 10E7/14X16	
850	90044-0104	M		1	PROX.SWITCH IFM IN 3002	
870	318212-0150	K		1	ROLLER CHAIN SINGLE 1/2"-150,SS	
890	318219-0187	K		1	CONNECTING LINK SINGLE 1/2",SS	
0355B or 0400B						
020	443388-0001	D		1	HEAD PLATE	
030	443480-0000	D		2	BRACKET	
060	443478-0002	D		1	SPROCKET	
070	443479-0002	D		1	SPROCKET	
200	525425-0000	D		1	PROFILE	
205	525426-0000	D		1	PROFILE	
210	525427-0000	D		1	PROFILE	
215	525428-0000	D		1	PROFILE	
0375S						
020	443388-0002	D		1	HEAD PLATE	
030	443481-0000	D		2	BRACKET	

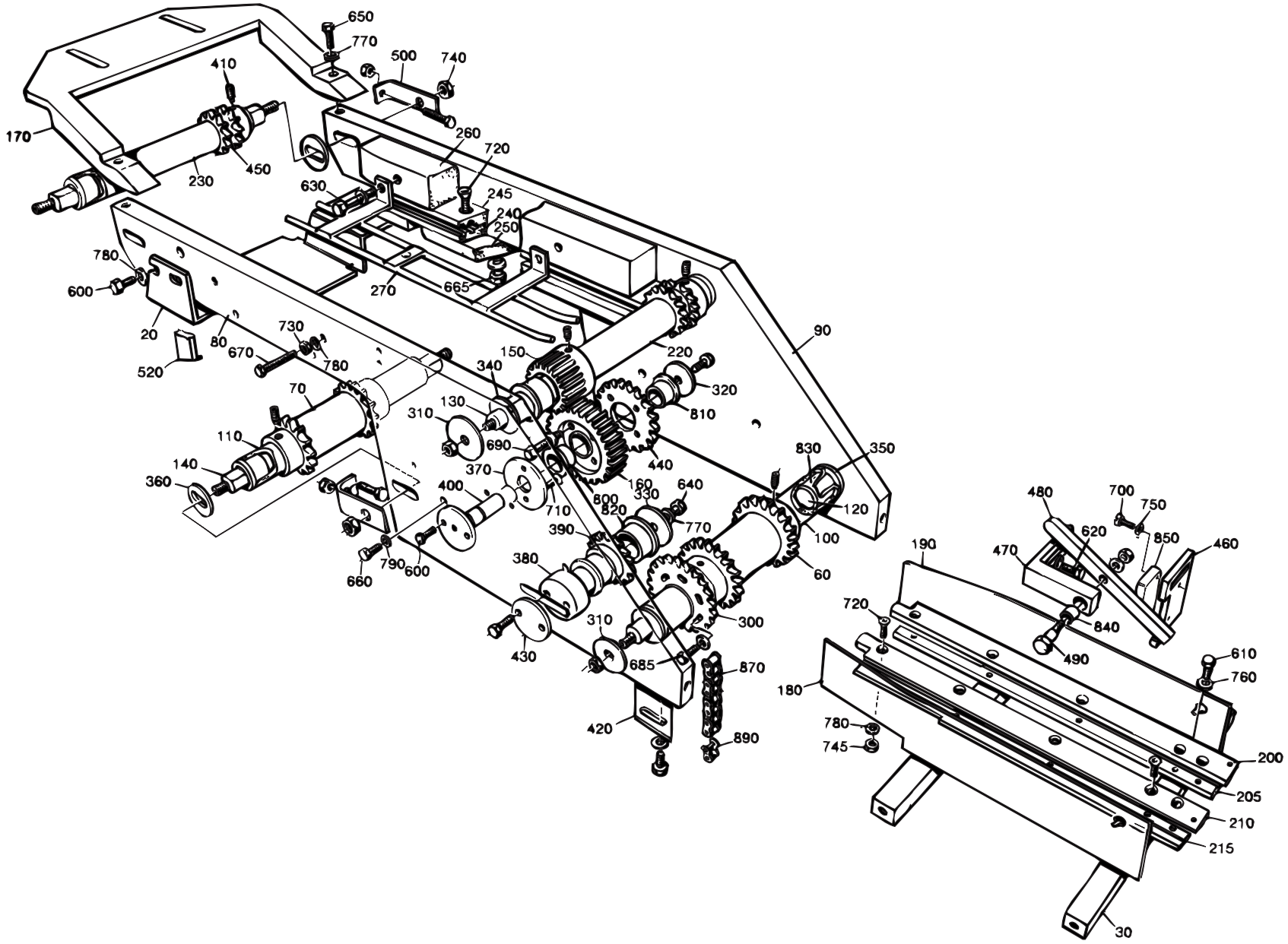

S-525086-1
ECN 16757

Pos	Part No	SP	UN	Qty	Description	Page No
060	443478-0003	D		1	SPROCKET	
070	443479-0003	D		1	SPROCKET	
200	525245-0000	D		1	PROFILE	
205	525246-0000	D		1	PROFILE	
210	525247-0000	D		1	PROFILE	
215	525248-0000	D		1	PROFILE	
0500B						
020	443387-0000	D		1	HEAD PLATE	
030	443454-0000	D		2	BRACKET	
060	443478-0001	D		1	SPROCKET	
070	443479-0001	D		1	SPROCKET	
200	525425-0000	D		1	PROFILE	
205	525426-0000	D		1	PROFILE	
210	525427-0000	D		1	PROFILE	
215	525428-0000	D		1	PROFILE	
0500S						
020	443388-0001	D		1	HEAD PLATE	
030	443480-0000	D		2	BRACKET	
060	443478-0002	D		1	SPROCKET	
070	443479-0002	D		1	SPROCKET	
200	525245-0000	D		1	PROFILE	
205	525246-0000	D		1	PROFILE	
210	525247-0000	D		1	PROFILE	
215	525248-0000	D		1	PROFILE	
0750B or 1000B or 1055B						
020	443387-0000	D		1	HEAD PLATE	
030	443454-0000	D		2	BRACKET	
060	443478-0001	D		1	SPROCKET	
070	443479-0001	D		1	SPROCKET	
200	525245-0000	D		1	PROFILE	
205	525246-0000	D		1	PROFILE	
210	525247-0000	D		1	PROFILE	
215	525248-0000	D		1	PROFILE	
0750S						
020	544321-0000	D		1	HEAD PLATE	
030	544322-0000	D		2	BRACKET	
060	443478-0004	D		1	SPROCKET	
070	443479-0004	D		1	SPROCKET	
200	525245-0000	D		1	PROFILE	
205	525246-0000	D		1	PROFILE	
210	525247-0000	D		1	PROFILE	
215	525248-0000	D		1	PROFILE	

Pos	Part No	SP	UN	Qty	Description	Page No
1000S						
020	569132-0000	D		1	HEAD PLATE	
030	569133-0000	D		2	BRACKET	
060	443478-0004	D		1	SPROCKET	
070	443479-0004	D		1	SPROCKET	
200	525403-0000	D		1	PROFILE	
205	525404-0000	D		1	PROFILE	
210	525405-0000	D		1	PROFILE	
215	525406-0000	D		1	PROFILE	

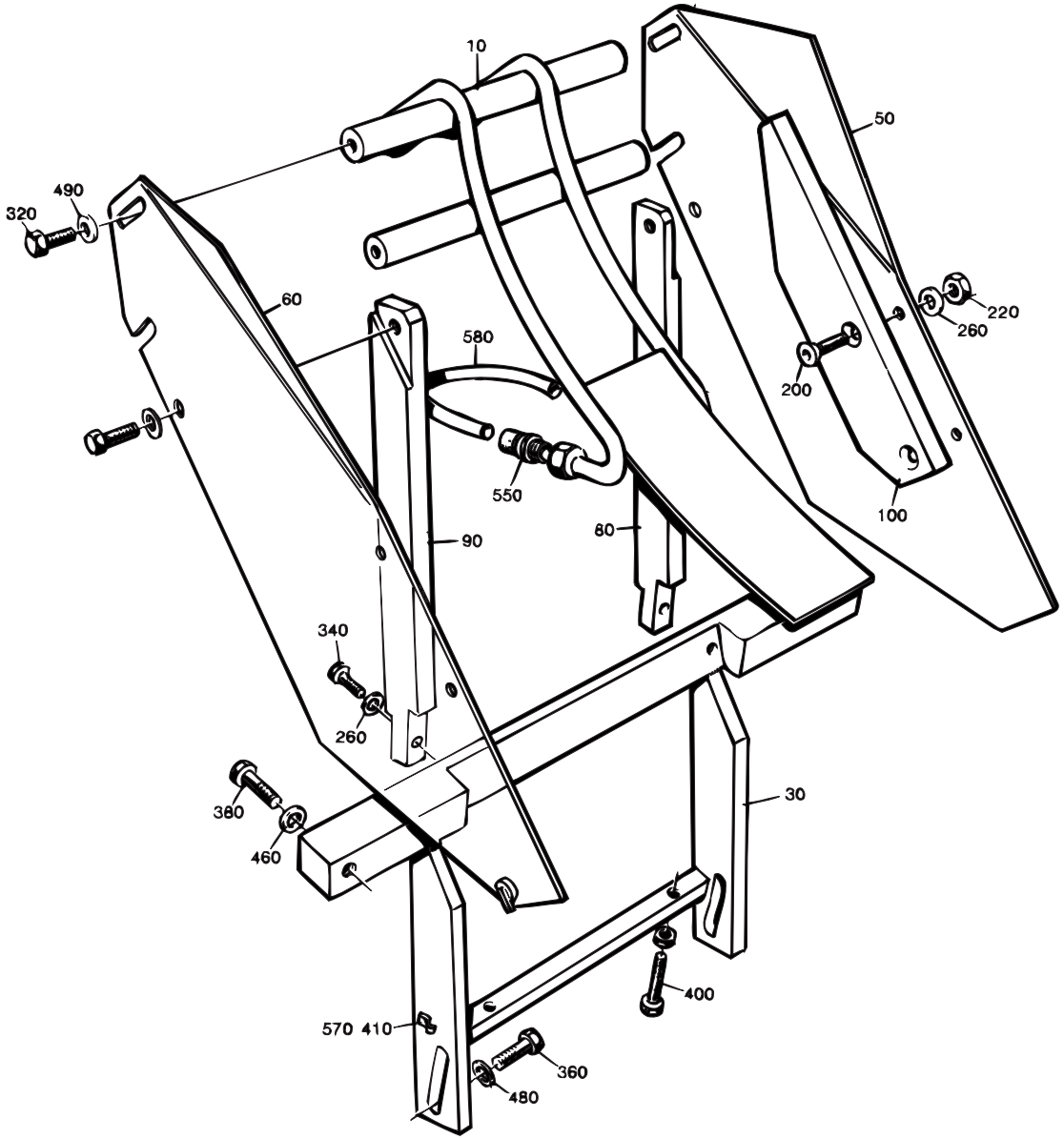

S-525087-1
ECN 17749

Pos	Part No	SP	UN	Qty	Description	Page No
Common parts						
320	312105-0366	-		6	SCREW M6S ISO 4017 M6X12 A280	
340	312105-0368	-		2	SCREW M6S ISO 4017 M6x16 A280	
360	312105-0449	-		4	SCREW M6S ISO 4017 M8x16 A280	
380	312105-0459	-		2	SCREW ISO 4017 M8x40 A280	
400	312109-0381	-		2	SCREW M6S6X55HA480	
410	312125-0287	-		1	SLOTTED CHEESE HEAD ISO 1207 M4X8 RFR	
460	315105-0165	-		2	WASHER,PLAIN ROUND 8,4x16 Stainless	
480	315115-0165	-		4	WASHER TBRB 8,4x16 Stainless	
490	315125-0153	-		4	WASHERS,PLAIN ROUND,CHAMFERED 6,4X22X4	
550	342920-0121	-		2	STRAIGHT COUPLING,EXT.THREADED 8/6-R1/8"	
570	90165-0056	-		1	PIPE-CLIPS,FOR SINGLE PIPE,ONE SIDE 4mm	
580	90166-0122	-	MM	1500	HOSE 6/8 PA 11/12 Transparent	
TBA/8 0375S						
010	B 544229-0003	D		1	DROP WING	
030	443492-0000	D		1	BRACKET	
050	443273-0000	D		1	HEAD PLATE	
060	443274-0000	D		1	HEAD PLATE	
080	443497-0000	D		1	SUPPORT	
090	443498-0000	D		1	SUPPORT	
220	312605-0316	-		2	NUT,HEXAGON A280 M6M6	
260	315105-0153	-		4	WASHER,PLAIN ROUND 6,4x12 Stainless	
TBA/8 0500S						
010	B 544229-0002	D		1	DROP WING	
030	443491-0000	D		1	BRACKET	
050	443271-0000	D		1	HEAD PLATE	
060	443272-0000	D		1	HEAD PLATE	
080	443497-0000	D		1	SUPPORT	
090	443498-0000	D		1	SUPPORT	
220	312605-0316	-		2	NUT,HEXAGON A280 M6M6	
260	315105-0153	-		4	WASHER,PLAIN ROUND 6,4x12 Stainless	
TBA/8 0500SQ						
010	B 574166-0000	D		1	DROP WING	
030	574080-0000	D		1	BRACKET	
050	583459-0000	D		1	HEAD PLATE	
060	583460-0000	D		1	HEAD PLATE	
080	443462-0000	D		1	SUPPORT	
090	443463-0000	D		1	SUPPORT	
220	312605-0316	-		2	NUT,HEXAGON A280 M6M6	
260	315105-0153	-		4	WASHER,PLAIN ROUND 6,4x12 Stainless	
TBA/8 1000B or TBA/8 1055B						
010	B 544229-0001	D		1	DROP WING	
030	443447-0000	D		1	BRACKET	
050	525255-0000	D		1	HEAD PLATE	
060	525256-0000	D		1	HEAD PLATE	
080	443462-0000	D		1	SUPPORT	
090	443463-0000	D		1	SUPPORT	
220	312605-0316	-		2	NUT,HEXAGON A280 M6M6	
260	315105-0153	-		4	WASHER,PLAIN ROUND 6,4x12 Stainless	
TBA/8 1000S						
010	B 544229-0005	D		1	DROP WING	
030	569131-0000	D		1	BRACKET	
050	525255-0000	D		1	HEAD PLATE	
060	525256-0000	D		1	HEAD PLATE	
080	443462-0000	D		1	SUPPORT	
090	443463-0000	D		1	SUPPORT	
220	312605-0316	-		2	NUT,HEXAGON A280 M6M6	
260	315105-0153	-		4	WASHER,PLAIN ROUND 6,4x12 Stainless	
TBA/8 1000SQ						
010	B 574166-0000	D		1	DROP WING	
030	574080-0000	D		1	BRACKET	
050	525255-0000	D		1	HEAD PLATE	
060	525256-0000	D		1	HEAD PLATE	
080	443462-0000	D		1	SUPPORT	
090	443463-0000	D		1	SUPPORT	
220	312605-0316	-		2	NUT,HEXAGON A280 M6M6	
260	315105-0153	-		4	WASHER,PLAIN ROUND 6,4x12 Stainless	
TBA/8 0355B or TBA/8 0400B						
010	B 544229-0002	D		1	DROP WING	
030	525259-0000	D		1	BRACKET	
050	443271-0000	D		1	HEAD PLATE	
060	443272-0000	D		1	HEAD PLATE	
080	443497-0000	D		1	SUPPORT	
090	443498-0000	D		1	SUPPORT	
220	312605-0316	-		2	NUT,HEXAGON A280 M6M6	
260	315105-0153	-		4	WASHER,PLAIN ROUND 6,4x12 Stainless	
TBA/8 0500B						
010	B 544229-0001	D		1	DROP WING	
030	525148-0000	D		1	BRACKET	
050	443273-0000	D		1	HEAD PLATE	
060	443274-0000	D		1	HEAD PLATE	
080	443497-0000	D		1	SUPPORT	
090	443498-0000	D		1	SUPPORT	
100	525164-0000	D		2	STEERING	

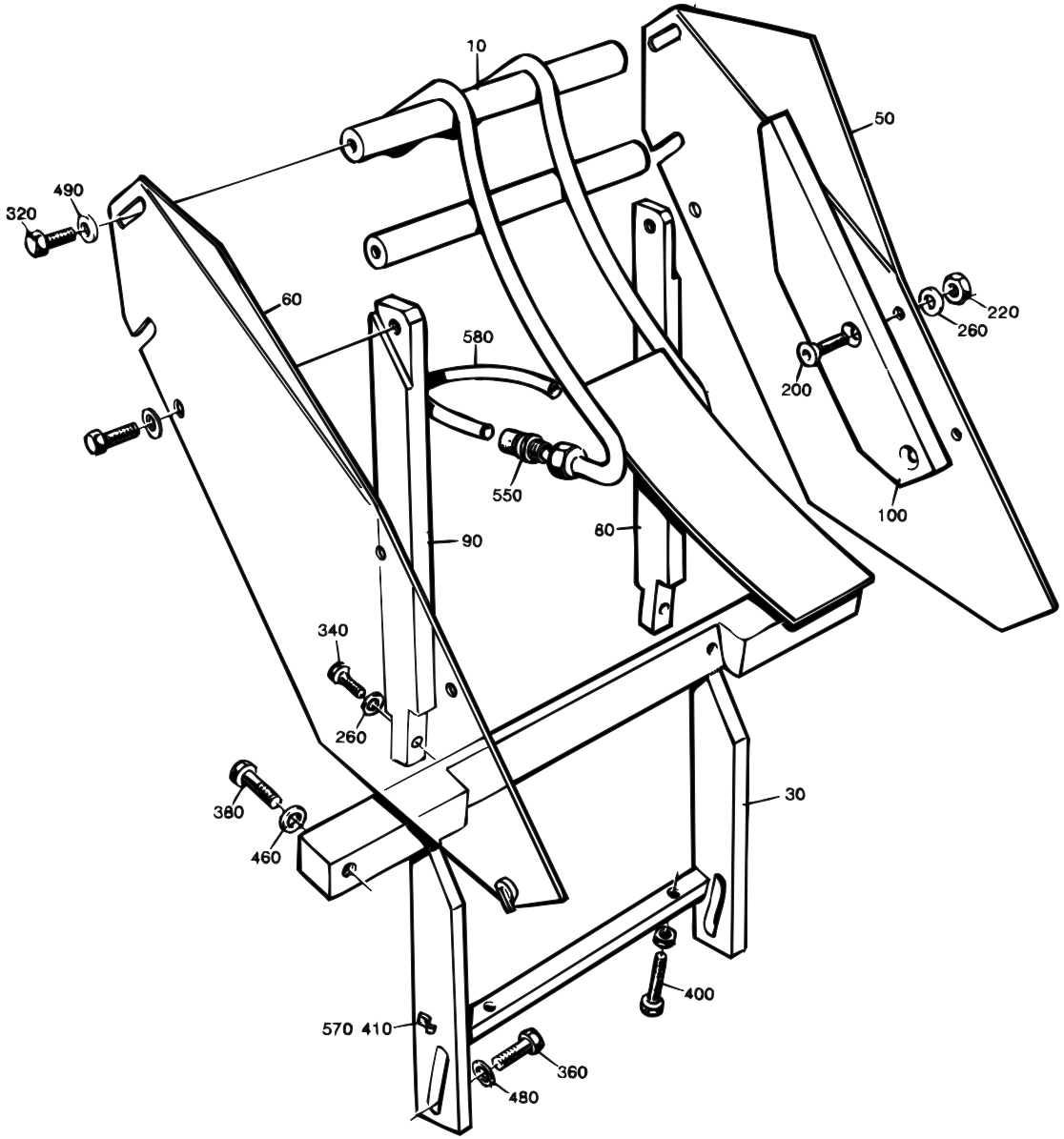

S-525087-1
ECN 17749

Pos	Part No	SP	UN	Qty	Description	Page No
200	312155-0372	-		4	SCREW MF6S DIN 7991 M6X25 A280	
220	312605-0316	-		6	NUT,HEXAGON A280 M6M6	
260	315105-0153	-		8	WASHER,PLAIN ROUND 6,4x12 Stainless	
TBA/8 0750B						
010	B 544229-0001	D		1	DROP WING	
030	525146-0000	D		1	BRACKET	
050	443273-0000	D		1	HEAD PLATE	
060	443274-0000	D		1	HEAD PLATE	
080	443497-0000	D		1	SUPPORT	
090	443498-0000	D		1	SUPPORT	
220	312605-0316	-		2	NUT,HEXAGON A280 M6M6	
260	315105-0153	-		4	WASHER,PLAIN ROUND 6,4x12 Stainless	
TBA/8 0750S						
010	B 544229-0004	D		1	DROP WING	
030	443447-0000	D		1	BRACKET	
050	525255-0000	D		1	HEAD PLATE	
060	525256-0000	D		1	HEAD PLATE	
080	443462-0000	D		1	SUPPORT	
090	443463-0000	D		1	SUPPORT	
220	312605-0316	-		2	NUT,HEXAGON A280 M6M6	
260	315105-0153	-		6	WASHER,PLAIN ROUND 6,4x12 Stainless	

Pos	Part No	SP	UN	Qty	Description	Page No

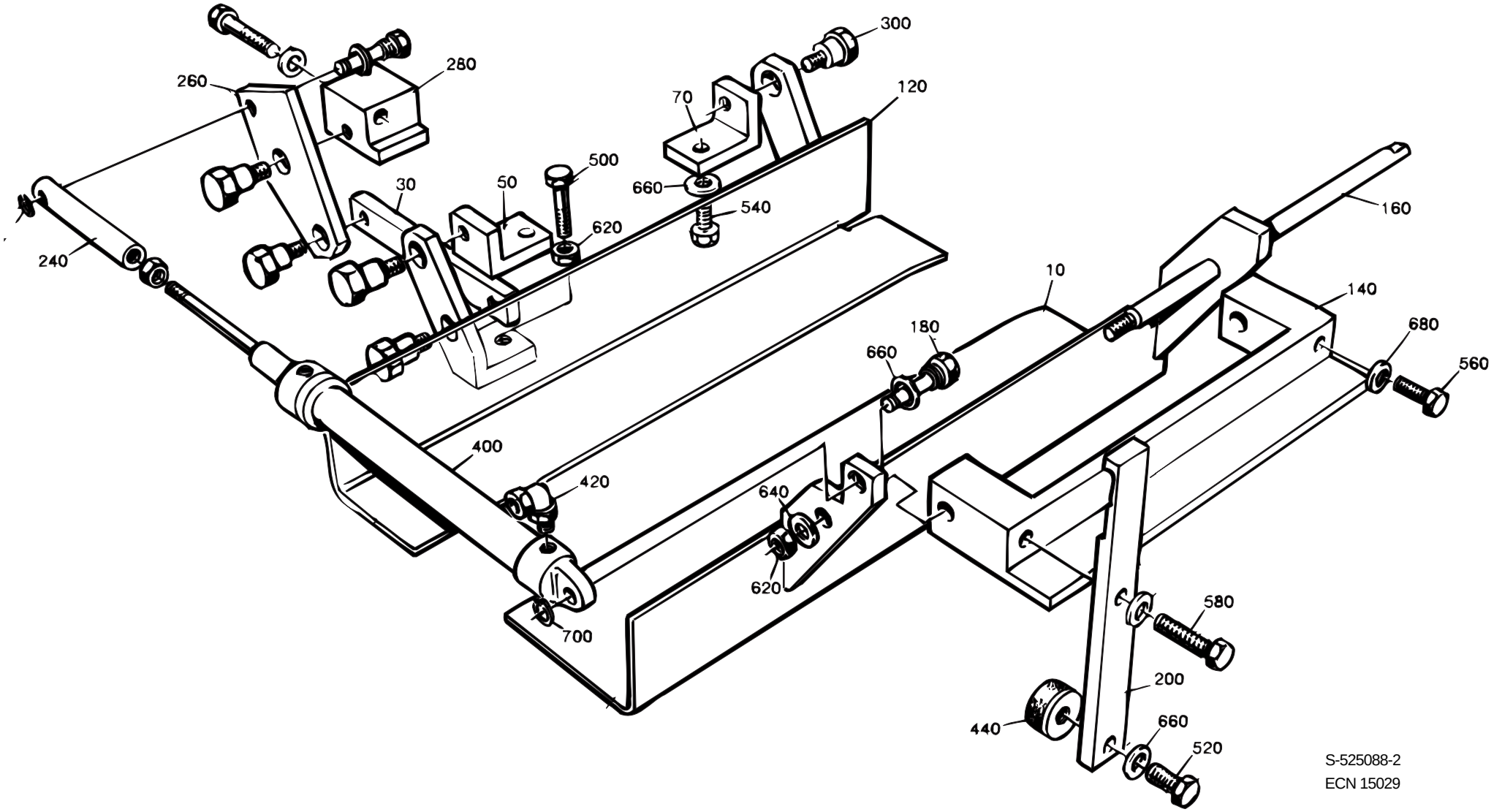

S-525088-2
ECN 15029

Pos	Part No	SP	UN	Qty	Description	Page No
Common parts						
140	443365-0000	-		1	BRACKET	
160	443309-0000	D		1	SHAFT	
180	443310-0000	R		2	AXLE PIN	
240	443474-0000	D		1	BRACKET	
260	525074-0000	-		1	ARM	
280	525465-0000	-		1	BRACKET	
300	525077-0000	D		5	AXLE PIN	
400	90239-0818	M		1	DOUBLE ACTING,MINI-ISO,CYL.16-80	
420	342732-0099	-		2	ELBOW PIPE JOINT	
440	90347-0007	D		1	VIBRATION DAMPER	
500	312105-0374	-		1	SCREW M6S ISO 4017 M6X30 A280	
540	312105-0451	-		2	SCREW M6S ISO 4017 8x20 A280	
560	312105-0455	-		1	SCREW M6S ISO 4017 M8X30 A280	
580	312105-0460	-		1	SCREW ISO 4017 M8x45 A280	
600	312105-0462	-		1	SCREW M6S ISO 4014 M8x55 A280	
620	312605-0316	-		4	NUT,HEXAGON A280 M6M6	
640	315105-0153	-		2	WASHER,PLAIN ROUND 6,4x12 Stainless	
660	315105-0165	-		6	WASHER,PLAIN ROUND 8,4x16 Stainless	
680	315115-0165	-		1	WASHER TBRB 8,4x16 Stainless	
700	315755-0107	-		2	RETAINING RINGS,RADIAL ASSEMBLY 5	
0375S						
010	443495-0000	D		1	HEAD PLATE	
030	525075-0003	D		1	LINK	
050	525082-0000	D		1	BRACKET	
070	525083-0000	D		1	BRACKET	
120	525084-0000	D		1	HEAD PLATE	
200	525416-0000	-		1	STOP	
0355B or 0400B or 0500S						
010	443493-0000	D		1	HEAD PLATE	
030	525075-0002	D		1	LINK	
050	525080-0000	D		1	BRACKET	
070	525081-0000	D		1	BRACKET	
120	525084-0000	D		1	HEAD PLATE	
200	525416-0000	-		1	STOP	
0500B or 0750B or 1000B or 1055B						
010	443448-0000	D		1	HEAD PLATE	
030	525075-0001	D		1	LINK	
050	525078-0000	D		1	BRACKET	
070	525079-0000	D		1	BRACKET	
120	525084-0000	D		1	HEAD PLATE	
200	525416-0000	-		1	STOP	

Pos	Part No	SP	UN	Qty	Description	Page No
0500SQ or 1000SQ NORMFIN						
010	574077-0000	D		1	HEAD PLATE	
030	525075-0006	D		1	LINK	
050	574078-0000	D		1	BRACKET	
070	574079-0000	D		1	BRACKET	
120	574126-0000	D		1	HEAD PLATE	
200	525416-0000	-		1	STOP	
0750S						
010	544307-0000	D		1	HEAD PLATE	
030	525075-0004	D		1	LINK	
050	544331-0000	D		1	BRACKET	
070	544332-0000	D		1	BRACKET	
120	525084-0000	D		1	HEAD PLATE	
200	525416-0000	-		1	STOP	
1000S						
010	569134-0000	D		1	HEAD PLATE	
030	525075-0005	D		1	LINK	
050	569135-0000	D		1	BRACKET	
070	569136-0000	D		1	BRACKET	
120	525084-0000	D		1	HEAD PLATE	
200	525416-0000	-		1	STOP	
1000SQ REVFIN						
010	574077-0000	D		1	HEAD PLATE	
030	525075-0006	D		1	LINK	
050	574078-0000	D		1	BRACKET	
070	574079-0000	D		1	BRACKET	
120	574126-0000	D		1	HEAD PLATE	
200	1195333-0000	-		1	STOP	

CHAIN RIGHT

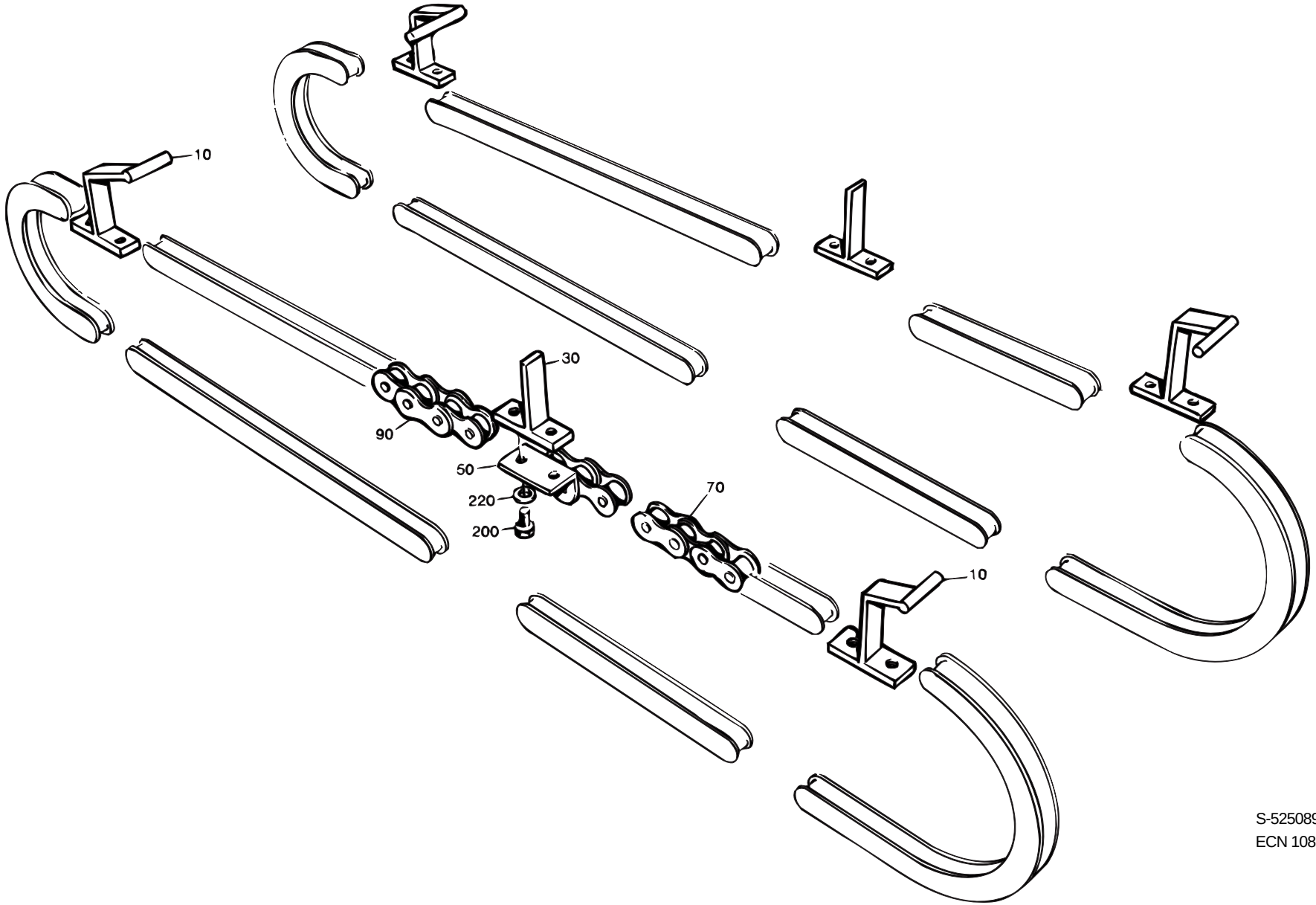

S-525089-1
ECN 10866

Pos	Part No	SP	UN	Qty	Description	Page No
0355B or 0375S or 0400B or 0500S or 0750S						
010	443469-0000	M		3	CARRIER	
070	318212-0008	K		3	ROLLER CHAIN SINGLE 1/2"-8,SS	
090	90288-0053	K		3	ROLLER CHAIN,SINGLE 1/2"-14	
0500B or 0750B or 1000B or 1055B						
010	525431-0000	M		3	CARRIER	
070	318212-0008	K		3	ROLLER CHAIN SINGLE 1/2"-8,SS	
090	90288-0053	K		3	ROLLER CHAIN,SINGLE 1/2"-14	
1000S						
010	525431-0000	M		3	CARRIER	
070	318212-0006	K		3	ROLLER CHAIN SINGLE 1/2"-6	
090	90288-0057	K		3	ROLLER CHAIN,SINGLE 1/2"-16	
Common parts						
030	443468-0000	M		3	CARRIER	
050	90288-0311	J		6	LINK	
200	312105-0287	-		12	SCREW M6S ISO 4017 M4x8 A280	
220	315105-0136	-		12	WASHER,PLAIN ROUND 4,3x8 Stainless	

Pos	Part No	SP	UN	Qty	Description	Page No

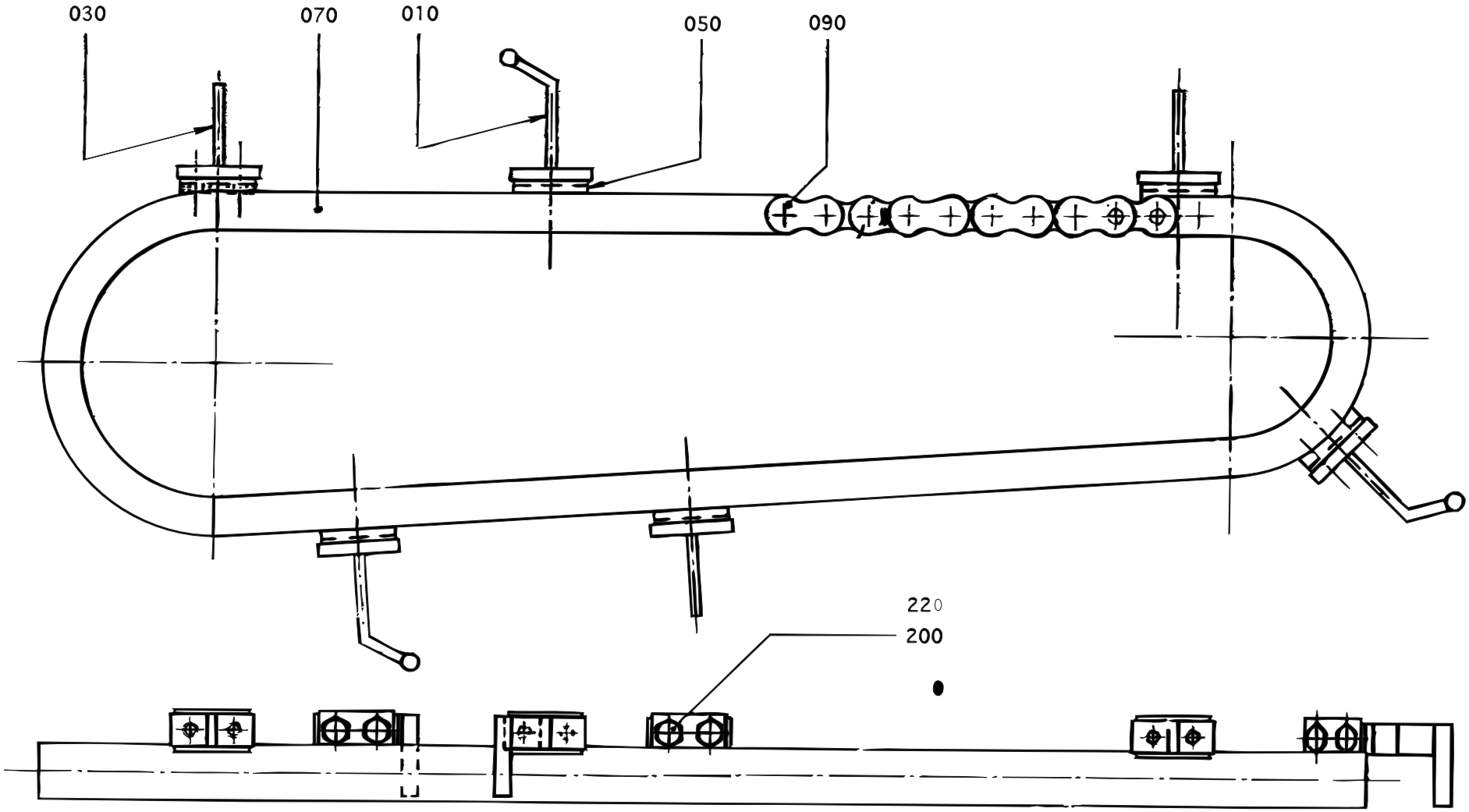

S-525089-2
ECN 13000

Pos	Part No	SP	UN	Qty	Description	Page No
0355B or 0375S or 0400B or 0500S or 0750S						
010	443469-0000	M		3	CARRIER	
070	318212-0008	K		3	ROLLER CHAIN SINGLE 1/2"-8,SS	
090	90288-0053	K		3	ROLLER CHAIN,SINGLE 1/2"-14	
0500B or 0750B or 1000B or 1055B						
010	525431-0000	M		3	CARRIER	
070	318212-0008	K		3	ROLLER CHAIN SINGLE 1/2"-8,SS	
090	90288-0053	K		3	ROLLER CHAIN,SINGLE 1/2"-14	
1000S						
010	525431-0000	M		3	CARRIER	
070	318212-0006	K		3	ROLLER CHAIN SINGLE 1/2"-6	
090	90288-0057	K		3	ROLLER CHAIN,SINGLE 1/2"-16	
Common parts						
030	443468-0000	M		3	CARRIER	
050	90288-0311	J		6	LINK	
200	312105-0287	-		12	SCREW M6S ISO 4017 M4x8 A280	
220	315105-0136	-		12	WASHER,PLAIN ROUND 4,3x8 Stainless	

Pos	Part No	SP	UN	Qty	Description	Page No

CHAIN LEFT

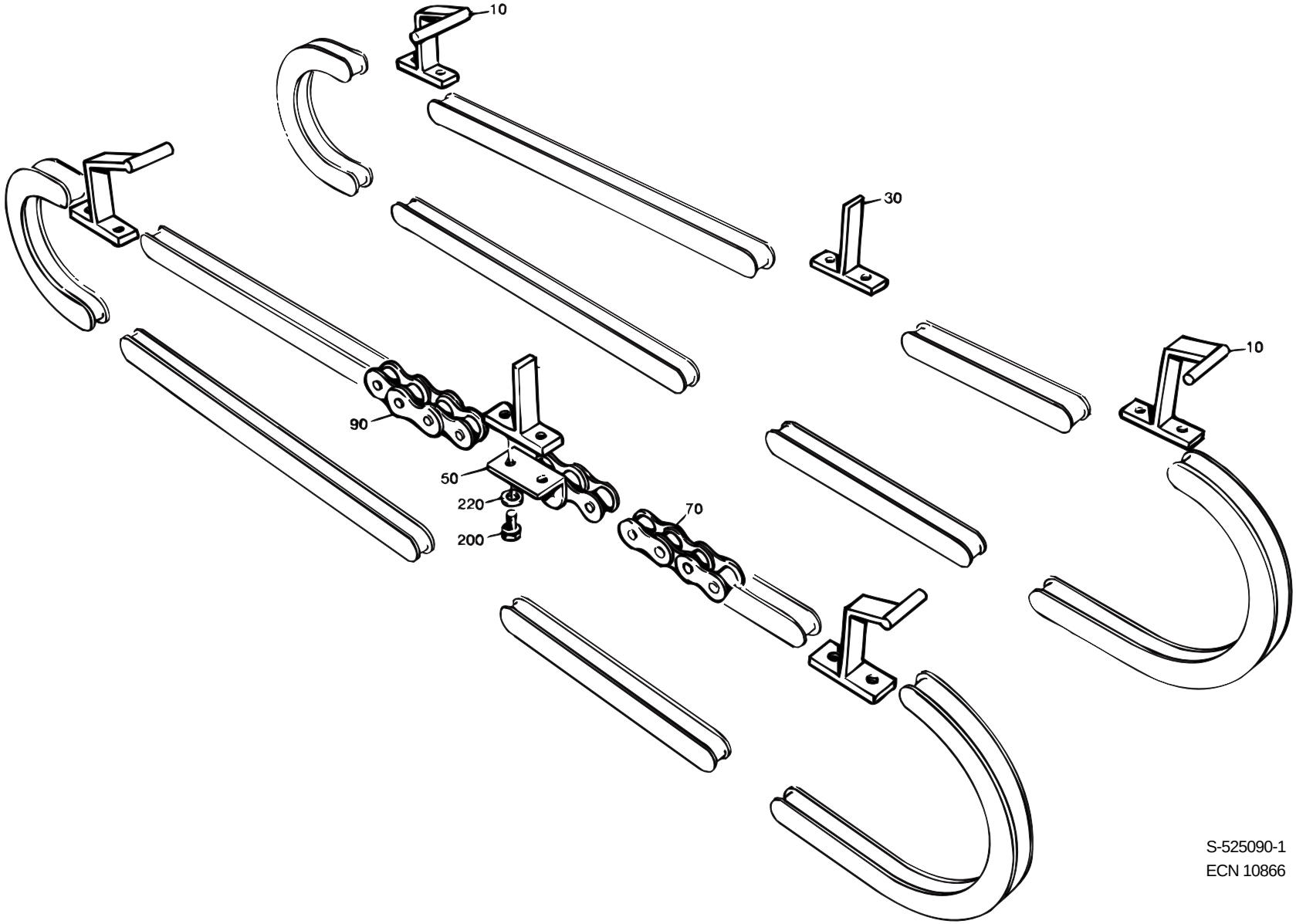

S-525090-1
ECN 10866

Pos	Part No	SP	UN	Qty	Description	Page No
0355B or 0375S or 0400B or 0500S or 0750S						
010	443470-0000	M		3	CARRIER	
070	318212-0008	K		3	ROLLER CHAIN SINGLE 1/2"-8,SS	
090	90288-0053	K		3	ROLLER CHAIN,SINGLE 1/2"-14	
0500B or 0750B or 1000B or 1055B						
010	525432-0000	M		3	CARRIER	
070	318212-0008	K		3	ROLLER CHAIN SINGLE 1/2"-8,SS	
090	90288-0053	K		3	ROLLER CHAIN,SINGLE 1/2"-14	
1000S						
010	525432-0000	M		3	CARRIER	
070	318212-0006	K		3	ROLLER CHAIN SINGLE 1/2"-6	
090	90288-0057	K		3	ROLLER CHAIN,SINGLE 1/2"-16	
Common parts						
030	443468-0000	M		3	CARRIER	
050	90288-0311	J		6	LINK	
200	312105-0287	-		12	SCREW M6S ISO 4017 M4x8 A280	
220	315105-0136	-		12	WASHER,PLAIN ROUND 4,3x8 Stainless	

Pos	Part No	SP	UN	Qty	Description	Page No

CHAIN LEFT

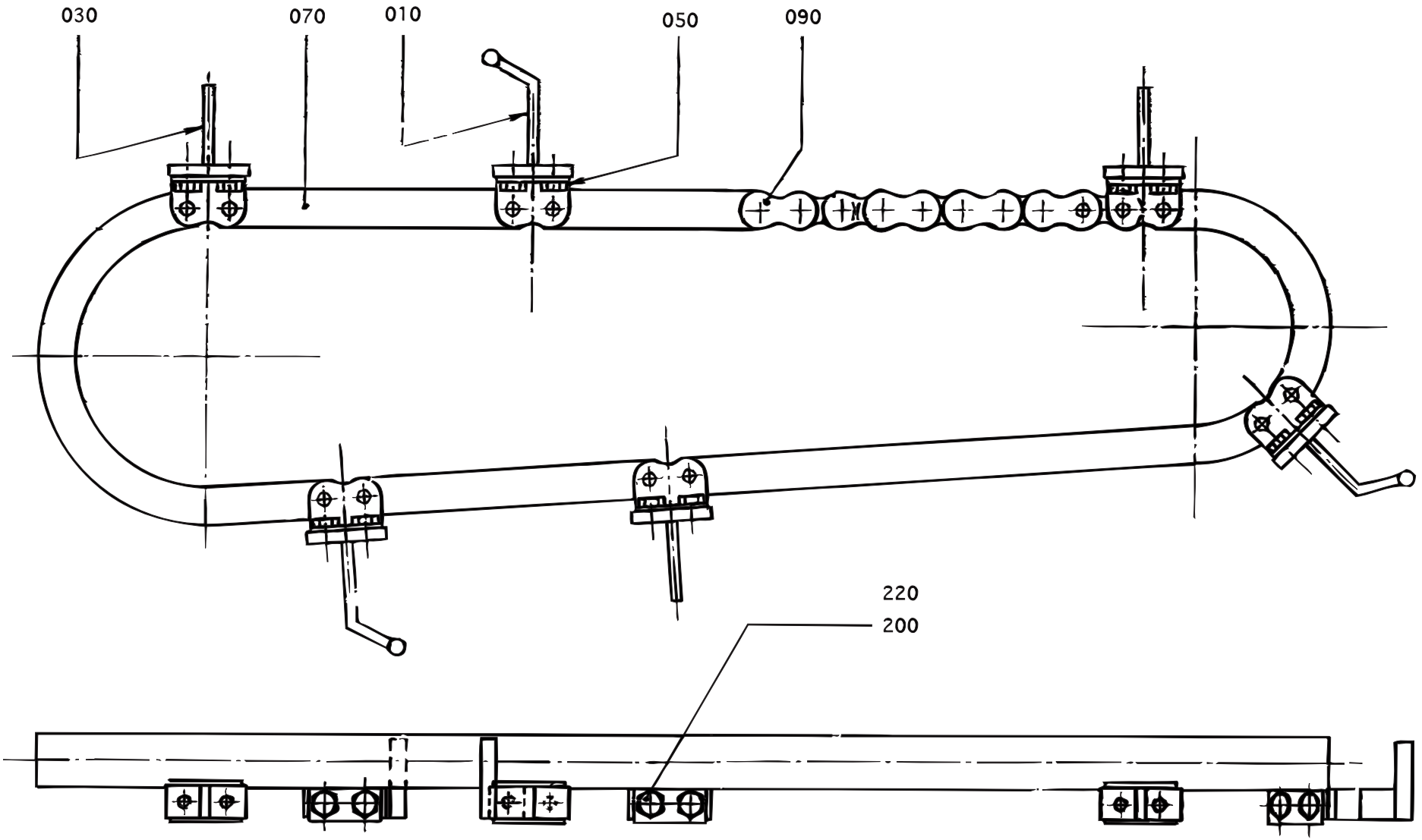

S-525090-2
ECN 13000

Pos	Part No	SP	UN	Qty	Description	Page No
0355B or 0375S or 0400B or 0500S or 0750S						
010	443470-0000	M		3	CARRIER	
070	318212-0008	K		3	ROLLER CHAIN SINGLE 1/2"-8,SS	
090	90288-0053	K		3	ROLLER CHAIN,SINGLE 1/2"-14	
0500B or 0750B or 1000B or 1055B						
010	525432-0000	M		3	CARRIER	
070	318212-0008	K		3	ROLLER CHAIN SINGLE 1/2"-8,SS	
090	90288-0053	K		3	ROLLER CHAIN,SINGLE 1/2"-14	
1000S						
010	525432-0000	M		3	CARRIER	
070	318212-0006	K		3	ROLLER CHAIN SINGLE 1/2"-6	
090	90288-0057	K		3	ROLLER CHAIN,SINGLE 1/2"-16	
Common parts						
030	443468-0000	M		3	CARRIER	
050	90288-0311	J		6	LINK	
200	312105-0287	-		12	SCREW M6S ISO 4017 M4x8 A280	
220	315105-0136	-		12	WASHER,PLAIN ROUND 4,3x8 Stainless	

Pos	Part No	SP	UN	Qty	Description	Page No

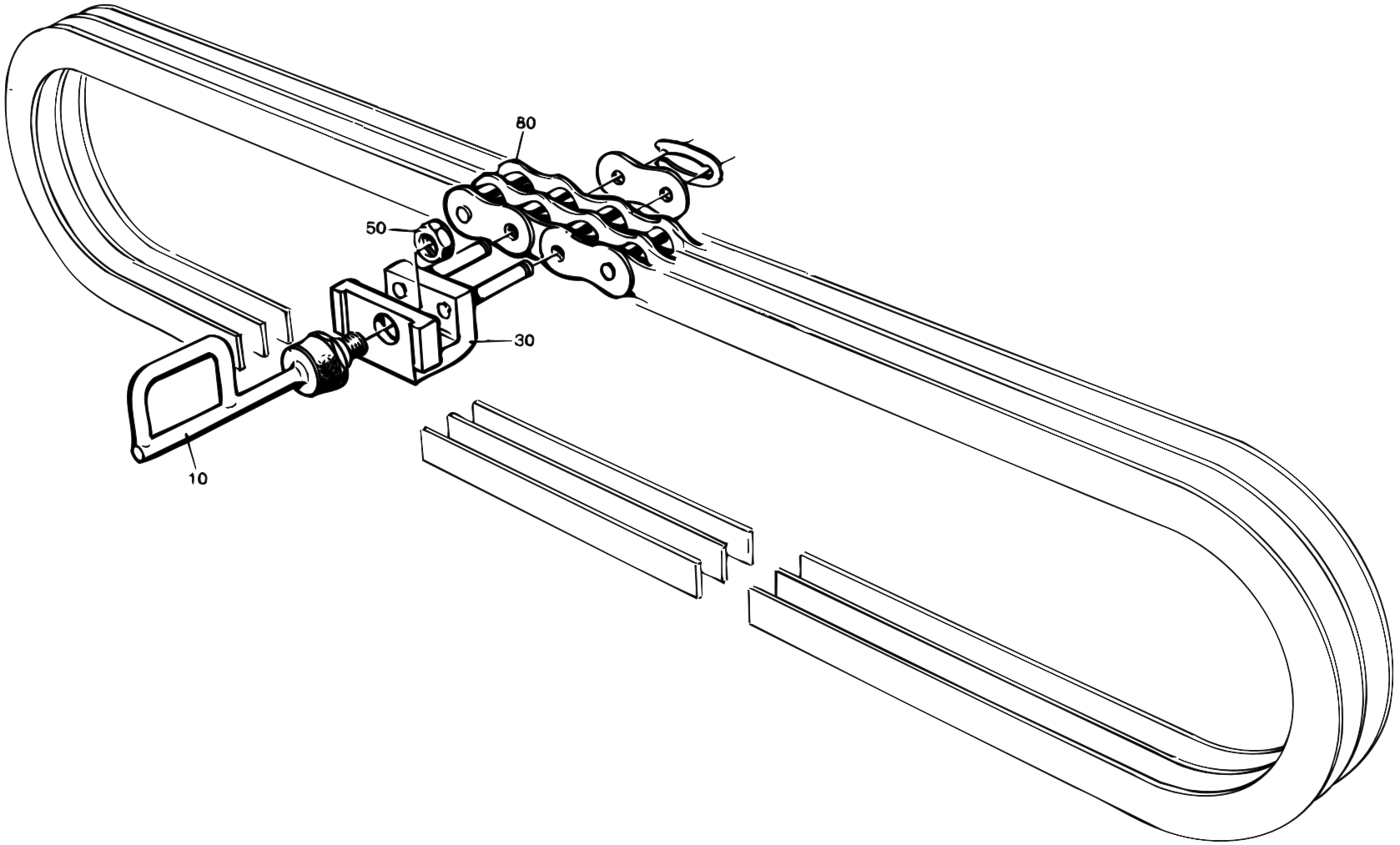

S-525091-1
ECN 10866

Pos	Part No	SP	UN	Qty	Description	Page No
Common parts						
030	B 525254-0000	J		3	LINK	
050	312605-0318	-		3	NUT,HEXAGON,M8 RFR	
080	318242-0036	J		3	ROLLER CHAIN DUPLEX 1/2"-36,SS	
0355B or 0375S or 0400B or 0500S						
010	525208-0002	J		3	CARRIER	
0500B or 0750B or 1000B or 1055B						
010	525208-0001	J		3	CARRIER	
0750S or 1000S						
010	525208-0003	J		3	CARRIER	

Pos	Part No	SP	UN	Qty	Description	Page No

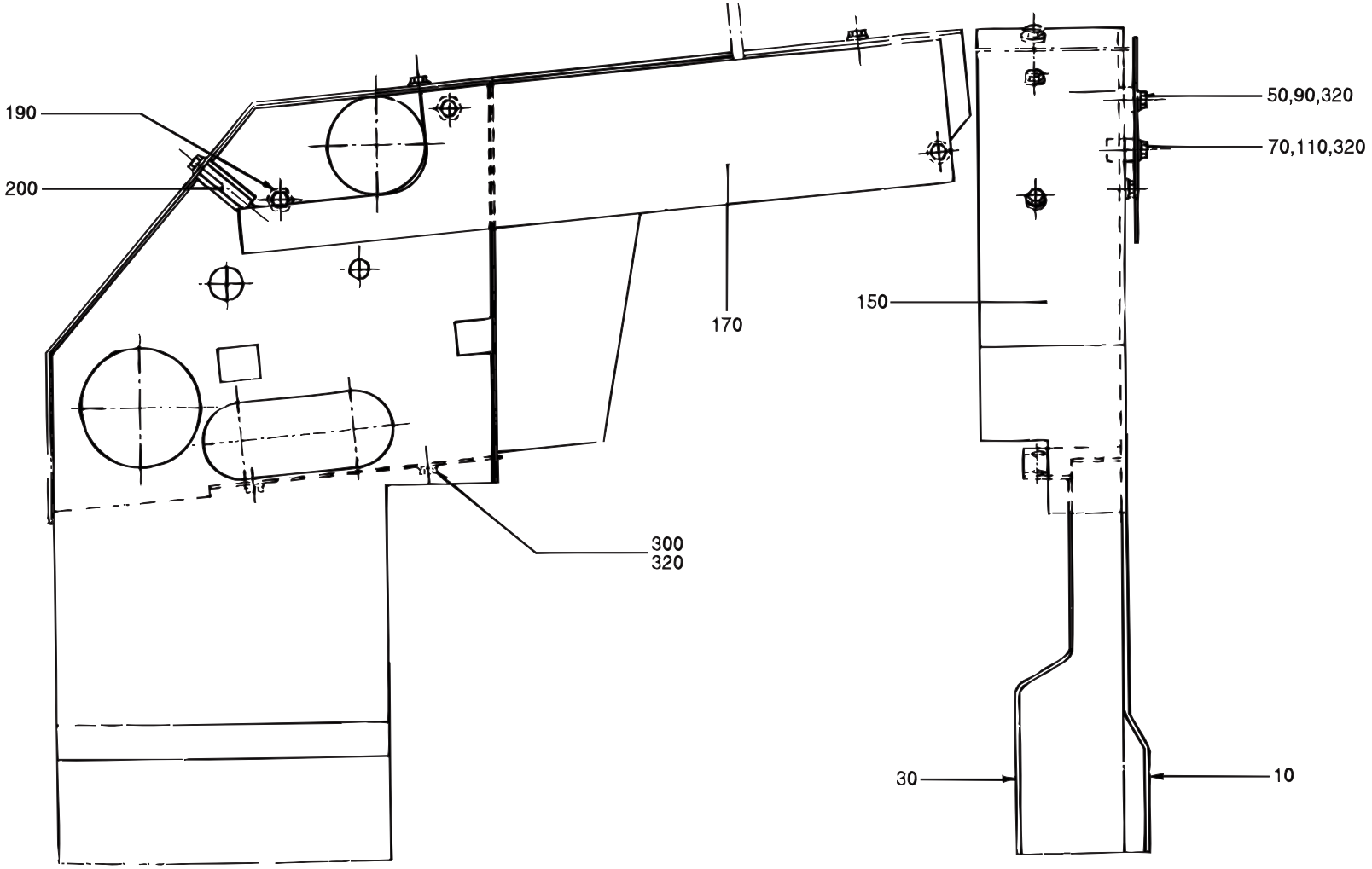

S-525092-1
ECN 12055

Pos	Part No	SP	UN	Qty	Description	Page No
Common parts						
170	525051-0000	-		1	HEAD PLATE	
190	443419-0000	-		2	SPACER	
300	312105-0364	-		6	SCREW M6S 6x10 A280	
320	315105-0153	-		8	WASHER,PLAIN ROUND 6,4x12 Stainless	
0375S						
010	525038-0000	-		1	GABLE PLATE	
030	525039-0000	-		1	GABLE PLATE	
050	525052-0005	-		1	SPACER	
070	525052-0006	-		1	SPACER	
090	312105-0378	-		1	SCREW O4017 M6X40A280	
110	312105-0381	-		1	SCREW M6S ISO 4014 M6X55 A280	
150	928901-0000	-		1	COVERING PLATE	
0355B or 0400B						
010	525260-0000	-		1	GABLE PLATE	
030	525261-0000	-		1	GABLE PLATE	
050	525052-0003	-		1	SPACER	
070	525052-0004	-		1	SPACER	
090	312105-0376	-		1	SCREW M6S ISO 4017 M6X35 A280	
110	312105-0380	-		1	SCREW M6S ISO 4014 M6X50 A280	
150	566416-0000	-		1	COVERING PLATE	
200	525338-0000	-		1	SPACER	
0500B or 0750B						
010	525150-0000	-		1	GABLE PLATE	
030	525151-0000	-		1	GABLE PLATE	
050	525052-0001	-		1	SPACER	
070	525052-0002	-		1	SPACER	
090	312105-0370	-		1	SCREW M6S ISO 4017 M6x20 A280	
110	312105-0374	-		1	SCREW M6S ISO 4017 M6X30 A280	
150	525339-0000	-		1	COVERING PLATE	
200	525338-0000	-		1	SPACER	
0500S						
010	525038-0000	-		1	GABLE PLATE	
030	525039-0000	-		1	GABLE PLATE	
050	525052-0003	-		1	SPACER	
070	525052-0004	-		1	SPACER	
090	312105-0376	-		1	SCREW M6S ISO 4017 M6X35 A280	
110	312105-0380	-		1	SCREW M6S ISO 4014 M6X50 A280	
150	566416-0000	-		1	COVERING PLATE	
200	525338-0000	-		1	SPACER	
0750S or 1000B or 1000S or 1055B						
010	443476-0000	-		1	GABLE PLATE	
030	443477-0000	-		1	GABLE PLATE	
050	525052-0001	-		1	SPACER	
070	525052-0002	-		1	SPACER	
090	312105-0370	-		1	SCREW M6S ISO 4017 M6x20 A280	
110	312105-0374	-		1	SCREW M6S ISO 4017 M6X30 A280	
150	525339-0000	-		1	COVERING PLATE	
200	525338-0000	-		1	SPACER	

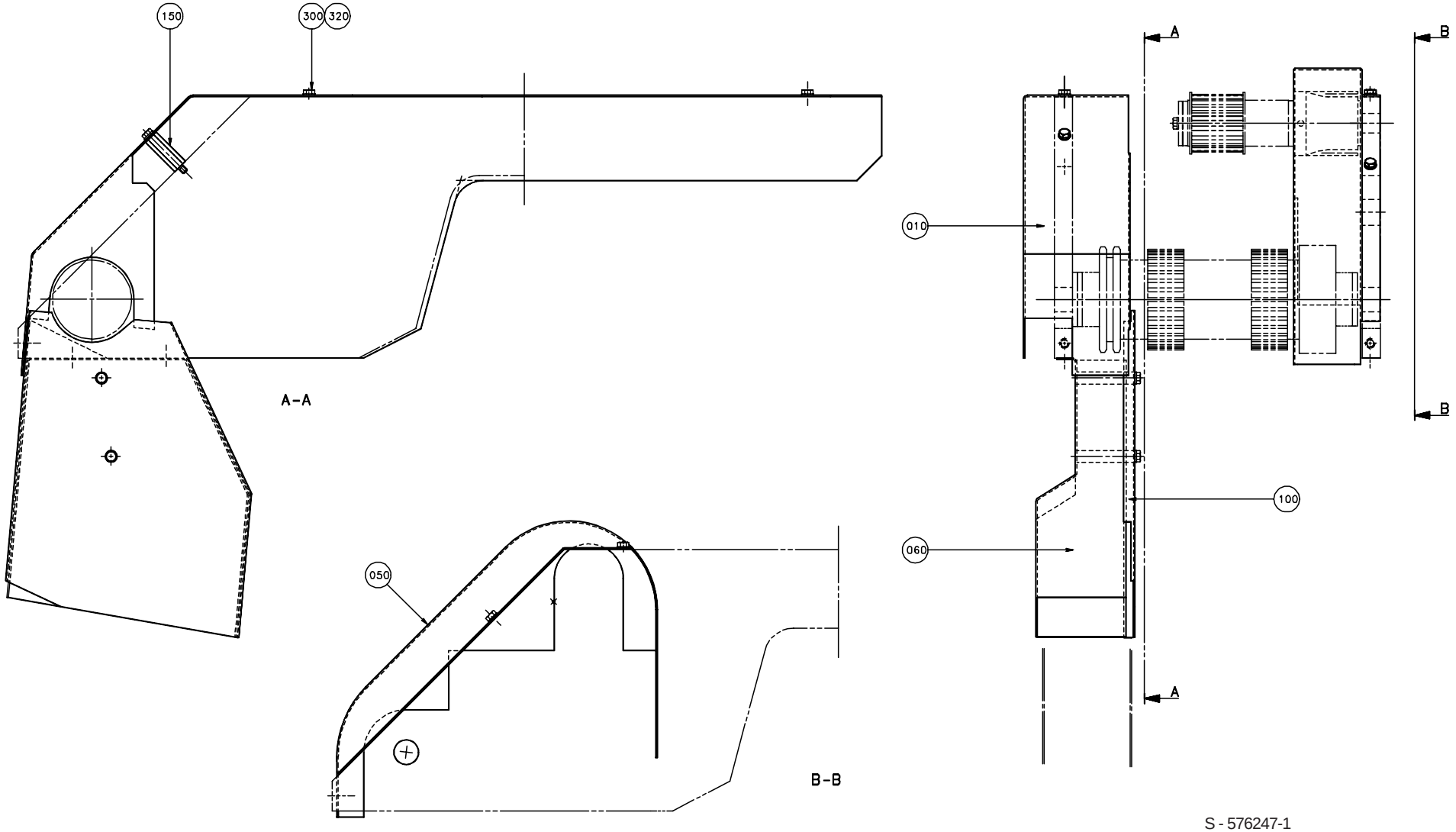

S - 576247-1
ECN 19244

Pos	Part No	SP	UN	Qty	Description	Page No
TBA/8 0500SQ						
010	574096-0000	-		1	PROTECTION PLATE	
050	574095-0000	-		1	PROTECTIVE COVER	
060	574112-0000	-		1	PROTECTION PLATE	
100	574113-0000	-		1	PROTECTION PLATE	
TBA/8 1000SQ REVFIN						
010	1195332-0000	-		1	PROTECTION PLATE	
050	574165-0000	-		1	PROTECTIVE COVER	
060	580006-0000	-		1	PROTECTION PLATE	
100	580007-0000	-		1	PROTECTION PLATE	
TBA/8 1000SQ NORMFIN						
010	574164-0000	-		1	PROTECTION PLATE	
050	574165-0000	-		1	PROTECTIVE COVER	
060	580006-0000	-		1	PROTECTION PLATE	
100	580007-0000	-		1	PROTECTION PLATE	
Common parts						
150	525338-0000	-		1	SPACER	
300	312105-0364	-		9	SCREW M6S 6x10 A280	
320	315105-0153	-		9	WASHER,PLAIN ROUND 6,4x12 Stainless	

Pos	Part No	SP	UN	Qty	Description	Page No

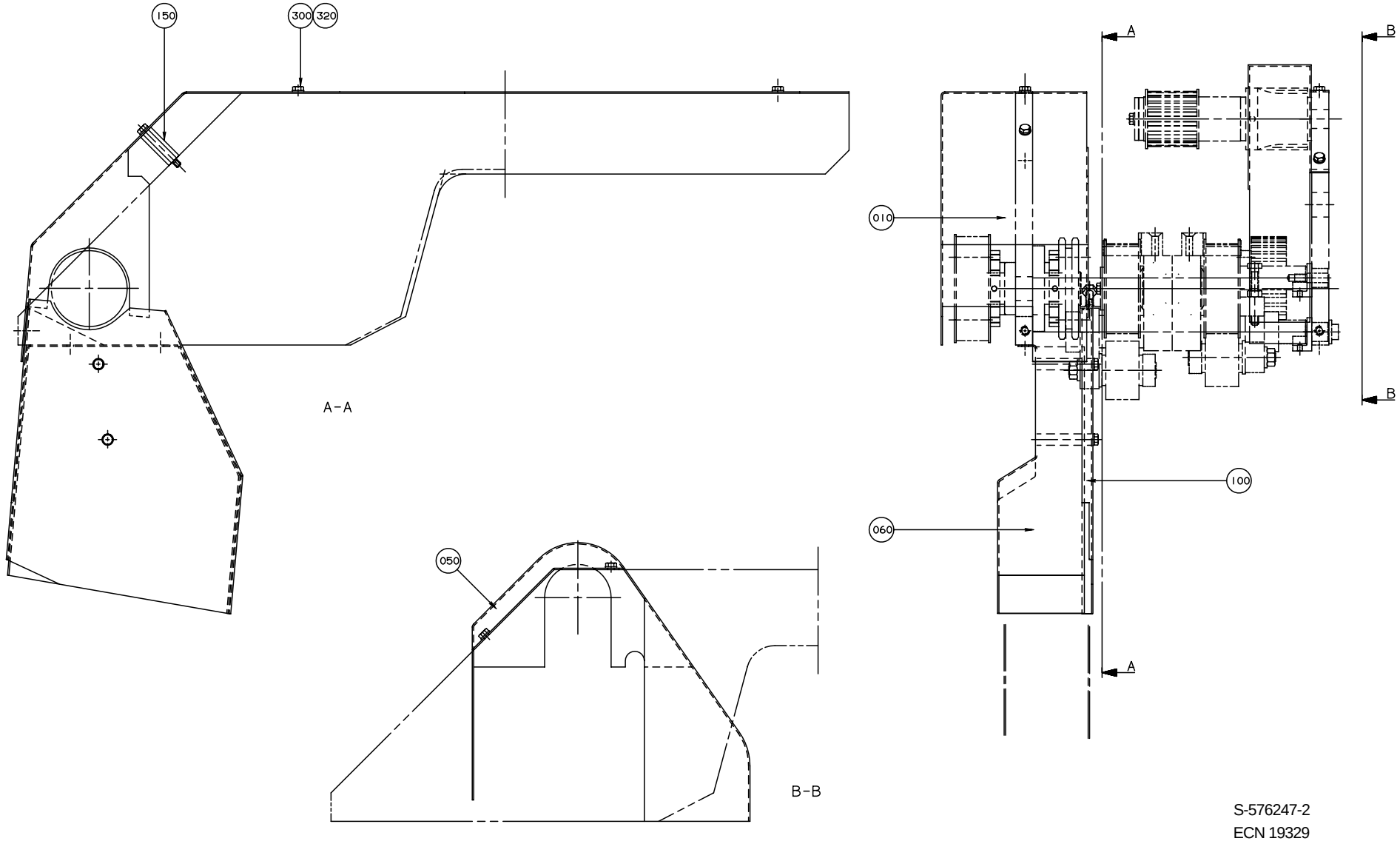

S-576247-2
ECN 19329

Pos	Part No	SP	UN	Qty	Description	Page No
TBA/8 0500SQ						
010	574096-0000	-		1	PROTECTION PLATE	
050	574095-0000	-		1	PROTECTIVE COVER	
060	574112-0000	-		1	PROTECTION PLATE	
100	574113-0000	-		1	PROTECTION PLATE	
TBA/8 1000SQ REVFIN						
010	1195332-0000	-		1	PROTECTION PLATE	
050	574165-0000	-		1	PROTECTIVE COVER	
060	580006-0000	-		1	PROTECTION PLATE	
100	580007-0000	-		1	PROTECTION PLATE	
TBA/8 1000SQ NORMFIN						
010	574164-0000	-		1	PROTECTION PLATE	
050	574165-0000	-		1	PROTECTIVE COVER	
060	580006-0000	-		1	PROTECTION PLATE	
100	580007-0000	-		1	PROTECTION PLATE	
Common parts						
150	525338-0000	-		1	SPACER	
300	312105-0364	-		9	SCREW M6S 6x10 A280	
320	315105-0153	-		9	WASHER,PLAIN ROUND 6,4x12 Stainless	

Pos	Part No	SP	UN	Qty	Description	Page No

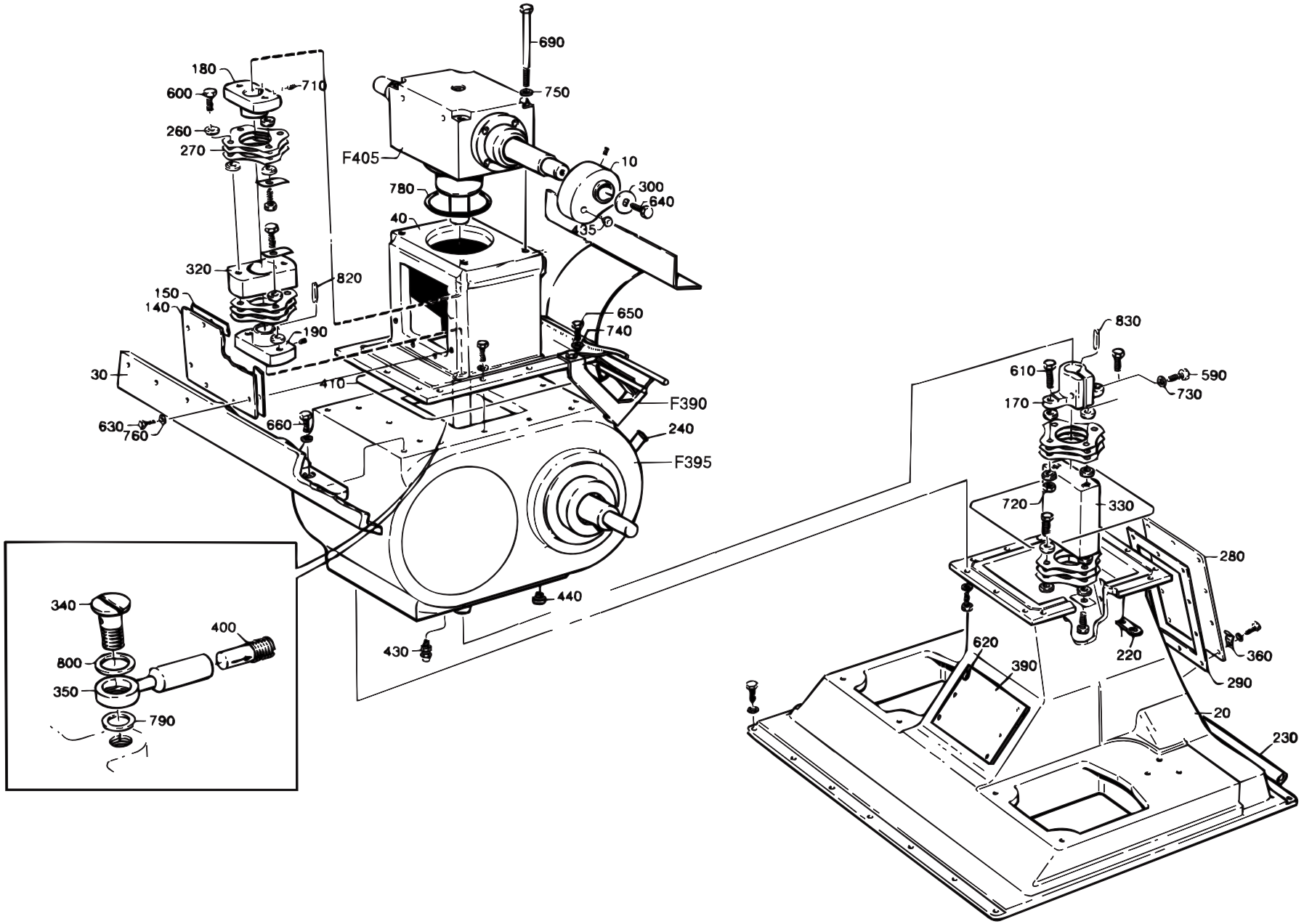

S-285479-4
ECN 12204

Pos	Part No	SP	UN	Qty	Description	Page No
Common parts						
F390	A 285853-0200	-		1	STEERING RAIL	**539**, **541**
F395	A 525117-0300	D		1	INDEXING GEAR	**543**, **545**
F405	A 442646-0200	D		1	TOP GEAR	**547**
020	443218-0000	-		1	INTERMEDIARY SECTION	
030	262264-0000	-		1	CANTILEVER	
040	262922-0000	-		1	HOUSE	
140	262932-0000	-		1	HATCH	
150	262933-0000	D		1	GASKET	
170	285141-0003	D		1	CLAMPING SLEEVE	
180	285142-0002	D		1	SLEEVE	
190	285142-0003	D		1	SLEEVE	
220	525292-0000	-		3	BRACKET	
230	525293-0000	-		1	PIPE	
240	525294-0000	-		1	PIPE	
260	31553-0002	R		32	WASHER	
270	33261-0000	K		32	SPRING PLATE	
280	262252-0000	-		1	HATCH	
290	262253-0000	D		1	GASKET	
300	276659-0000	D		2	WASHER	
320	285145-0002	D		1	INTERMEDIARY SECTION	
330	285147-0000	D		1	INTERMEDIARY SECTION	
340	285891-0000	D		1	SCREW	
350	285892-0000	D		1	CONNECTION	
390	525279-0000	-		1	HATCH	
400	90092-0077	J		1	METERING VALVE	
410	90143-0052	-	MM	2450	STRAP	
420	90153-0043	-	KG	x	ADHESIVE LOCTITE 495	
425	90296-0009	-	KG	x	SILICONE GREASE TUBE 100 Gr.	
430	90224-0066	-		1	STRIGHT CONNECTION	
435	90261-0032	-		4	PLUG 1073 ORION	
440	342720-0102	-		1	STRAIGHT CONNECTION GA-6-G1/8"	
570	311103-0399	-		10	CYLINDRICAL PIN M6 8X16 RFR	
590	312101-0455	-		1	SCREW M6S 8x30 FZB	
600	90287-0155	-		14	SCREW, M6S ISO4014, M10x25 8,8	
610	312101-0497	-		2	SCREW M6S10X35FZB	
620	312105-0367	-		6	SCREW M6S6X14RFR	
630	312105-0368	-		12	SCREW M6S ISO 4017 M6x16 A280	
635	312105-0370	-		4	SCREW M6S ISO 4017 M6x20 A280	
638	312105-0372	-		2	SCREW M6S ISO 4017 M6X25 A280	
640	312105-0451	-		2	SCREW M6S ISO 4017 8x20 A280	
650	312105-0453	-		50	SCREW M6S ISO 4017 M8x25 A280	
660	312105-0455	-		2	SCREW M6S ISO 4017 M8X30 A280	
690	312105-0517	-		4	SCREW M6S ISO 4014 M10X130 A280	
710	312316-0362	-		2	STOP SCREW SK6SS6X8FZB	
720	312810-0320	-		2	LOCK NUT 10FZB	
730	315101-0165	-		1	WASHER BRB8,4X16FZB	
735	315105-0153	-		2	WASHER,PLAIN ROUND 6,4x12 Stainless	
740	315105-0165	-		10	WASHER,PLAIN ROUND 8,4x16 Stainless	
750	315115-0173	-		4	WASHER TBRB 10,5x22 Stainless	
760	315115-0153	-		22	WASHER TBRB 6,4x12 Stainless	
770	315115-0165	-		42	WASHER TBRB 8,4x16 Stainless	
780	315202-0311	M		1	O-RING 99,5x3	
790	315233-0109	M		1	PLAIN ROUND,NYLON R1/8"	
800	315233-0110	M		1	PLAIN ROUND,NYLON R1/4"	
820	315701-0270	-		1	KEYS,PARALLEL WITH ROUND ENDS 8X7X40	
830	315701-0274	-		1	KEYS,PARALLEL WITH ROUND ENDS 8X7X60	
0355B or 0375S or 0400B or 0500S						
010	525235-0000	D		2	CURVE	
0500B or 0500SQ or 0750B or 0750S or 1000B or 1000S or 1000SQ or 1055B						
010	443362-0000	D		2	CURVE	

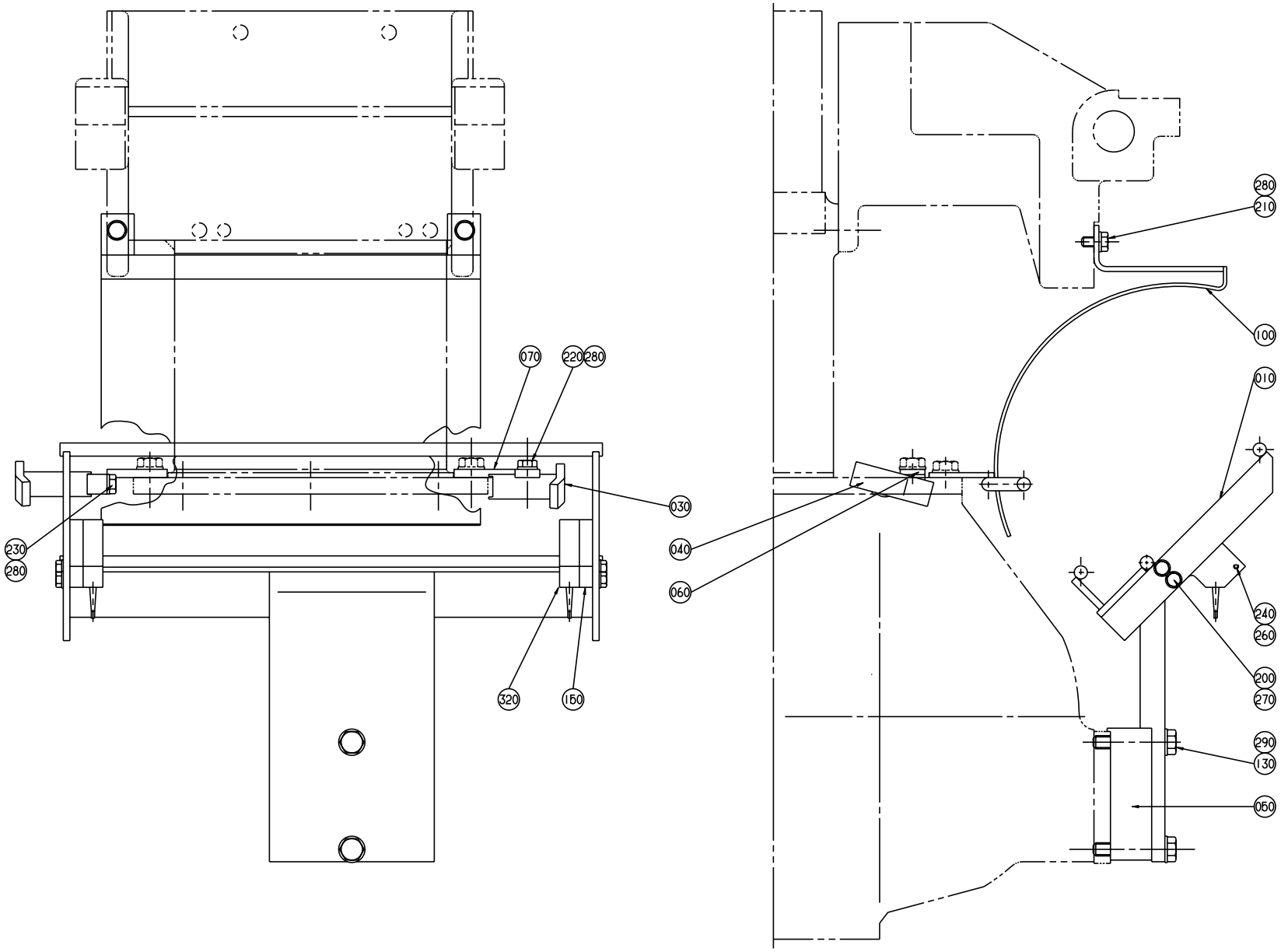

S-285853-3
ECN 19449

Pos	Part No	SP	UN	Qty	Description	Page No
0355B						
010	525354-0000	D		1	SLIDE RAIL	
100	527861-0000	-		1	HEAD PLATE	
130	312105-0451	-		2	SCREW M6S ISO 4017 8x20 A280	
280	315105-0153	-		2	WASHER,PLAIN ROUND 6,4x12 Stainless	
0375S						
010	525355-0000	D		1	SLIDE RAIL	
100	531313-0000	-		1	HEAD PLATE	
130	312105-0451	-		2	SCREW M6S ISO 4017 8x20 A280	
280	315105-0153	-		2	WASHER,PLAIN ROUND 6,4x12 Stainless	
0400B						
010	574678-0000	D		1	SLIDE RAIL	
100	574679-0000	-		1	HEAD PLATE	
130	312105-0451	-		2	SCREW M6S ISO 4017 8x20 A280	
280	315105-0153	-		2	WASHER,PLAIN ROUND 6,4x12 Stainless	
0500B						
010	525352-0000	D		1	SLIDE RAIL	
050	525357-0000	-		1	SPACER	
100	525424-0000	-		1	HEAD PLATE	
130	312105-0460	-		2	SCREW ISO 4017 M8x45 A280	
280	315105-0153	-		2	WASHER,PLAIN ROUND 6,4x12 Stainless	
0500S						
010	525353-0000	D		1	SLIDE RAIL	
100	531312-0000	-		1	HEAD PLATE	
130	312105-0451	-		2	SCREW M6S ISO 4017 8x20 A280	
280	315105-0153	-		2	WASHER,PLAIN ROUND 6,4x12 Stainless	
0500SQ						
010	583446-0000	D		1	SLIDE RAIL	
050	525357-0000	-		1	SPACER	
100	583450-0000	-		1	HEAD PLATE	
130	312105-0460	-		2	SCREW ISO 4017 M8x45 A280	
280	315105-0153	-		2	WASHER,PLAIN ROUND 6,4x12 Stainless	
0750B						
010	525350-0000	D		1	SLIDE RAIL	
100	531314-0000	-		1	HEAD PLATE	
130	312105-0451	-		2	SCREW M6S ISO 4017 8x20 A280	
280	315105-0153	-		2	WASHER,PLAIN ROUND 6,4x12 Stainless	
0750S						
010	543694-0000	D		1	SLIDE RAIL	
100	525378-0000	-		1	HEAD PLATE	
130	312105-0451	-		2	SCREW M6S ISO 4017 8x20 A280	
280	315105-0153	-		2	WASHER,PLAIN ROUND 6,4x12 Stainless	

Pos	Part No	SP	UN	Qty	Description	Page No
1000B HIFIN						
010	525349-0000	D		1	SLIDE RAIL	
100	529312-0000	-		1	HEAD PLATE	
130	312105-0451	-		2	SCREW M6S ISO 4017 8x20 A280	
280	315105-0153	-		2	WASHER,PLAIN ROUND 6,4x12 Stainless	
1000S						
010	569127-0000	D		1	SLIDE RAIL	
030	573486-0000	D		1	STEERING	
040	573487-0000	D		1	STEERING	
060	573488-0000	D		1	BRACKET	
070	573489-0000	D		1	BRACKET	
100	569128-0000	-		1	HEAD PLATE	
130	312105-0451	-		2	SCREW M6S ISO 4017 8x20 A280	
220	312105-0368	-		1	SCREW M6S ISO 4017 M6x16 A280	
230	312105-0371	-		1	SCREW M6S6X22RFR	
280	315105-0153	-		4	WASHER,PLAIN ROUND 6,4x12 Stainless	
1055B						
010	525347-0000	D		1	SLIDE RAIL	
100	531328-0000	-		1	HEAD PLATE	
130	312105-0451	-		2	SCREW M6S ISO 4017 8x20 A280	
280	315105-0153	-		2	WASHER,PLAIN ROUND 6,4x12 Stainless	
1000B LOFIN						
010	525348-0000	D		1	SLIDE RAIL	
100	529312-0000	-		1	HEAD PLATE	
130	312105-0451	-		2	SCREW M6S ISO 4017 8x20 A280	
280	315105-0153	-		2	WASHER,PLAIN ROUND 6,4x12 Stainless	
1000SQ REVFIN						
010	574053-0000	D		1	SLIDE RAIL	
030	1143007-0000	D		1	STEERING	
040	1143006-0000	D		1	STEERING	
060	1143008-0000	D		1	BRACKET	
070	1143009-0000	D		1	BRACKET	
100	574054-0000	-		1	HEAD PLATE	
130	312105-0451	-		2	SCREW M6S ISO 4017 8x20 A280	
220	312105-0368	-		1	SCREW M6S ISO 4017 M6x16 A280	
230	312105-0371	-		1	SCREW M6S6X22RFR	
280	315105-0153	-		4	WASHER,PLAIN ROUND 6,4x12 Stainless	
1000SQ NORMFIN						
010	574053-0000	D		1	SLIDE RAIL	
030	574097-0000	D		1	STEERING	
040	574098-0000	D		1	STEERING	
060	573488-0000	D		1	BRACKET	

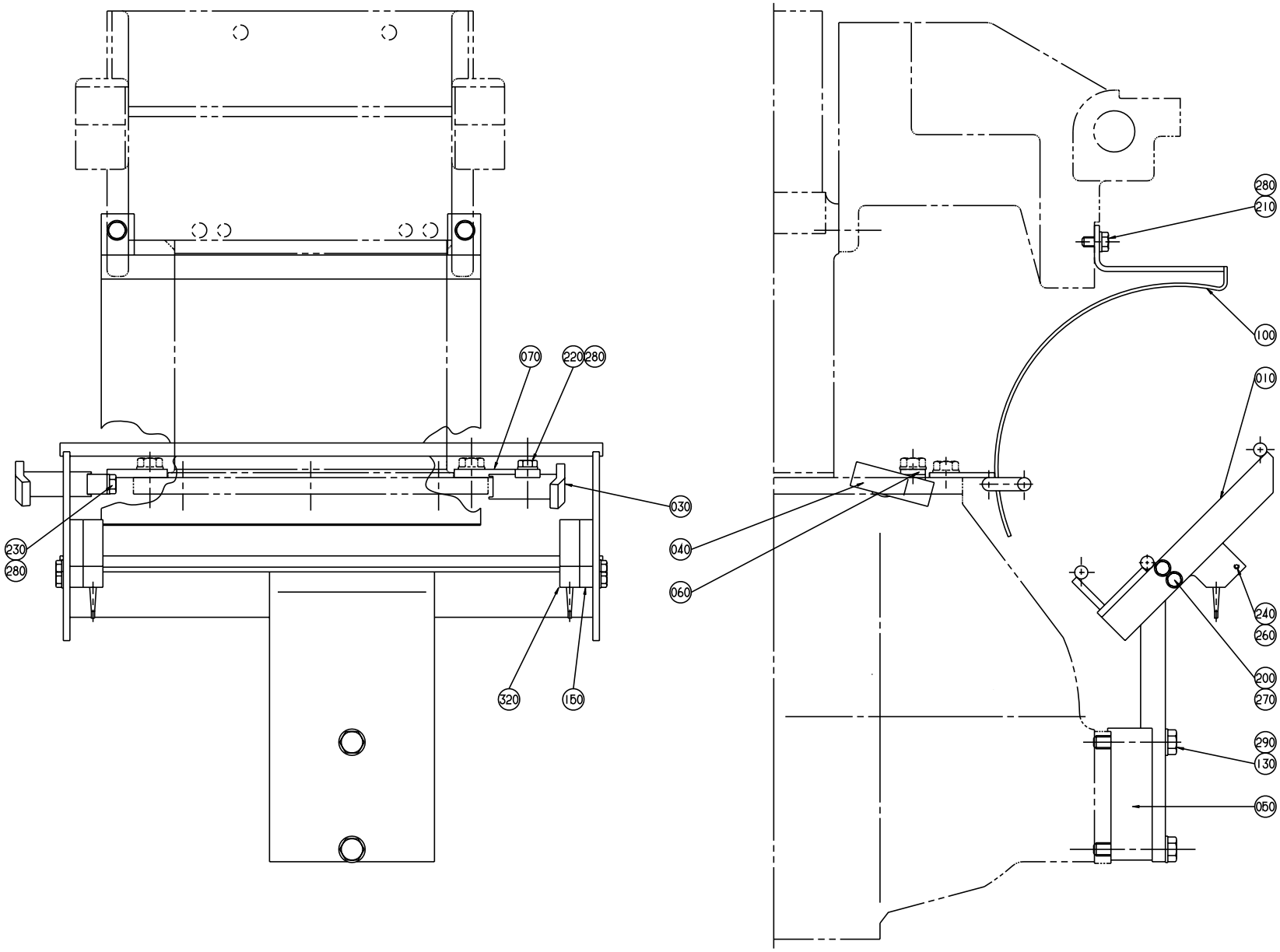

S-285853-3
ECN 19449

Pos	Part No	SP	UN	Qty	Description	Page No
070	573489-0000	D		1	BRACKET	
100	574054-0000	-		1	HEAD PLATE	
130	312105-0451	-		2	SCREW M6S ISO 4017 8x20 A280	
220	312105-0368	-		1	SCREW M6S ISO 4017 M6x16 A280	
230	312105-0371	-		1	SCREW M6S6X22RFR	
280	315105-0153	-		4	WASHER,PLAIN ROUND 6,4x12 Stainless	
Common parts						
150	525172-0000	-		2	SPACER	
200	312105-0328	-		4	SCREW M6S5X14 A2 80	
210	312105-0366	-		2	SCREW M6S ISO 4017 M6X12 A280	
240	312125-0230	-		4	SLOTTED CHEESE HEAD ISO 1207 M3X20 RFR	
260	315105-0124	-		4	WASHER,PLAIN ROUND 3,2x6	
270	315105-0146	-		4	WASHER,PLAIN ROUND 5,3x10 Stainless	
290	315105-0165	-		2	WASHER,PLAIN ROUND 8,4x16 Stainless	
320	90044-0104	M		2	PROX.SWITCH IFM IN 3002	

Pos	Part No	SP	UN	Qty	Description	Page No

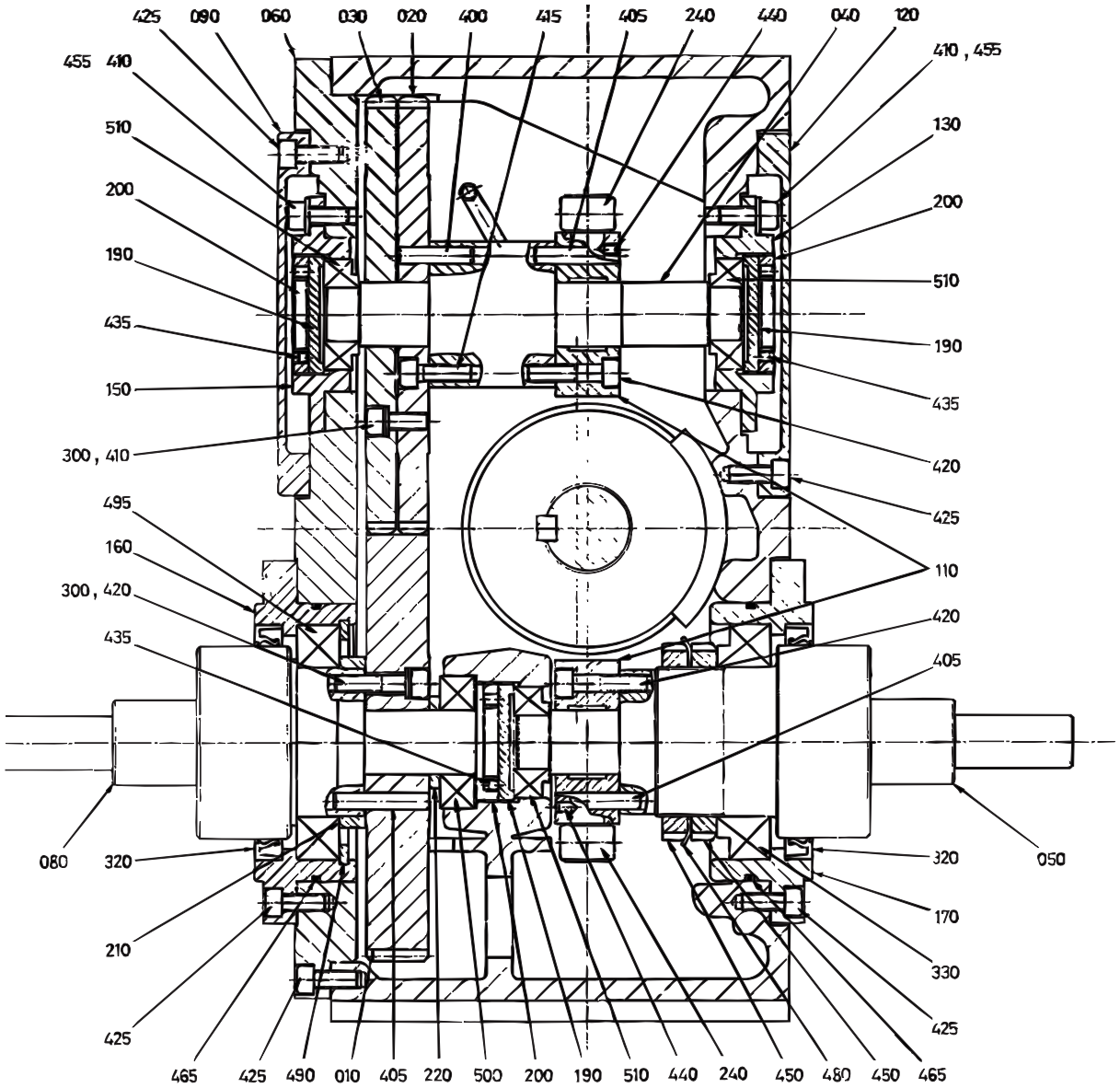

S-525117-3
ECN 20503

Pos	Part No	SP	UN	Qty	Description	Page No
Common parts						
010	543705-0000	D		1	GEAR WHEEL WIDE	
020	543706-0000	D		1	GEAR WHEEL SLIM , INNER	
030	543707-0000	D		1	GEAR WHEEL SLIM , OUTER	
040	565322-0000	D		1	INTERMEDIARY SHAFT	
050	565323-0000	D		1	OUTPUT SHAFT, LONG	
060	565324-0000	D		1	LID	
070	565325-0000	D		1	INPUT SHAFT	
080	565336-0000	D		1	OUTPUT SHAFT SHORT	
090	565338-0000	D		1	GEAR HOUSING	
100	927314-0000	D		1	CAM	
110	927315-0000	D		2	TURRET	
120	565326-0000	D		2	LID	
130	565331-0000	D		1	BEARING HOLDER	
140	565332-0000	D		2	BEARING HOLDER	
150	565333-0000	D		1	BEARING HOLDER	
160	565334-0000	D		1	BEARING HOLDER	
170	565335-0000	D		1	BEARING HOLDER	
180	565339-0000	D		1	OIL PIPE	
190	565327-0000	D		3	RING NUT	
200	565328-0000	D		3	SCREW RING	
210	565329-0000	D		1	SPACER	
220	565330-0000	D		1	SPACER	
230	565340-0000	D		1	OIL LEVEL TUBE	
240	927318-0000	D		12	ROLLER	
300	90062-0049	-		18	WASHER,Lock 8,5x 13,5, T= 2,3	
310	90087-0015	-		1	PIPE PLUG	
320	90091-0130	K		2	SEAL RING	
330	90214-0087	K		1	BEARINGS,ROLLER BEARING	
400	311103-0407	-		3	PINS,STRAIGHT 8X35	
405	311103-0411	-		9	CYLINDRICACP M6 8X45 RFR	
410	312111-0451	-		12	SCREW MC6S8X20FZB	
415	312111-0453	-		3	SCREW MC6S8X25FZB	
420	312111-0457	-		9	SCREW MC6S8X35FZB	
425	312115-0451	-		40	SCREW MC6S ISO 4762 M8x20 A280	
430	312115-0453	-		12	SCREW MC6S ISO 4762 M8X25 A280	
435	312316-0320	-		3	STOP SCREW SK6SS5X5FZB	
440	312316-0323	-		12	STOP SCREW SK6SS5X8FZB	
445	312805-0108	-		4	NUTS,ROUND,WITH SLOTS,M40X1,5	
450	312805-0114	-		2	NUTS,ROUND,WITH SLOTS,M70X20	
455	315101-0165	-		8	WASHER BRB8,4X16FZB	
460	315105-0165	-		12	WASHER,PLAIN ROUND 8,4x16 Stainless	
465	315202-0316	K		2	O-RINGS 124,5X3	
470	315221-0171	K		1	SEALING RINGS,TYPE A 30X62X7	
475	315410-0108	-		2	WASHERS,LOCK 40X50	
480	315410-0114	-		1	WASHERS,LOCK 70X85	
485	315701-0338	-		1	KEYS,PARALLEL WITH ROUND ENDS 12X8X70	
490	315752-0149	-		1	CIRCLIP SGH110	
495	321306-0114	K		1	BALL BEARING 70X110X20	
500	321309-0106	K		1	BALL BEARING 30X62X16	
505	321364-0106	K		2	ROLLER BEASKF31306	
510	321361-0105	K		3	ROLLER BEARING 25X52X16,25	
515	342720-0104	-		1	STRAIGHT CONNECTION GA-8-G1/4"	
520	342730-0104	-		2	ELBOW CONNECTION WA-8-1/4"	

INDEXING GEAR

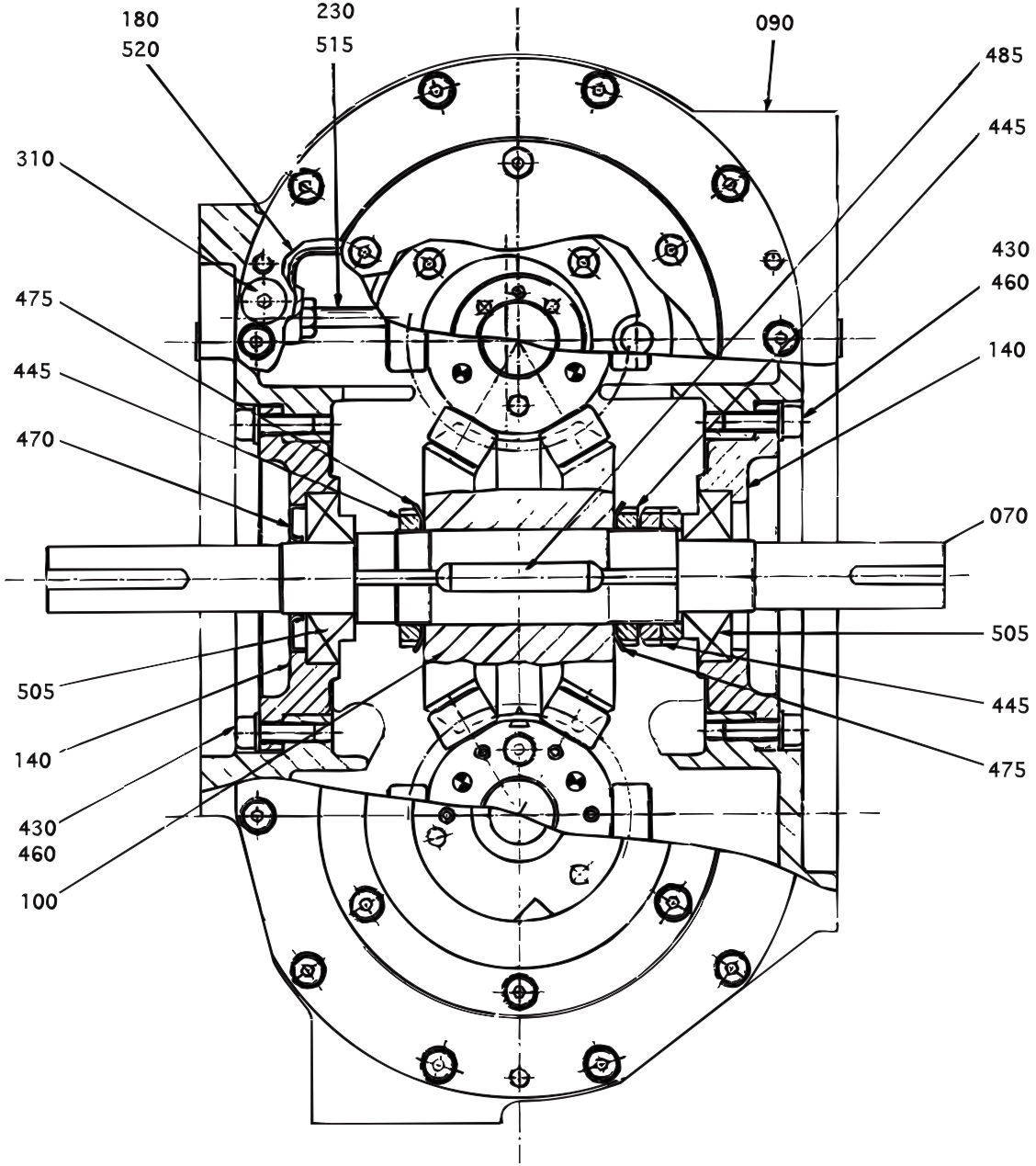

S-525117-4
ECN 20503

Pos	Part No	SP	UN	Qty	Description	Page No
Common parts						
010	543705-0000	D		1	GEAR WHEEL WIDE	
020	543706-0000	D		1	GEAR WHEEL SLIM , INNER	
030	543707-0000	D		1	GEAR WHEEL SLIM , OUTER	
040	565322-0000	D		1	INTERMEDIARY SHAFT	
050	565323-0000	D		1	OUTPUT SHAFT, LONG	
060	565324-0000	D		1	LID	
070	565325-0000	D		1	INPUT SHAFT	
080	565336-0000	D		1	OUTPUT SHAFT SHORT	
090	565338-0000	D		1	GEAR HOUSING	
100	927314-0000	D		1	CAM	
110	927315-0000	D		2	TURRET	
120	565326-0000	D		2	LID	
130	565331-0000	D		1	BEARING HOLDER	
140	565332-0000	D		2	BEARING HOLDER	
150	565333-0000	D		1	BEARING HOLDER	
160	565334-0000	D		1	BEARING HOLDER	
170	565335-0000	D		1	BEARING HOLDER	
180	565339-0000	D		1	OIL PIPE	
190	565327-0000	D		3	RING NUT	
200	565328-0000	D		3	SCREW RING	
210	565329-0000	D		1	SPACER	
220	565330-0000	D		1	SPACER	
230	565340-0000	D		1	OIL LEVEL TUBE	
240	927318-0000	D		12	ROLLER	
300	90062-0049	-		18	WASHER,Lock 8,5x 13,5, T= 2,3	
310	90087-0015	-		1	PIPE PLUG	
320	90091-0130	K		2	SEAL RING	
330	90214-0087	K		1	BEARINGS,ROLLER BEARING	
400	311103-0407	-		3	PINS,STRAIGHT 8X35	
405	311103-0411	-		9	CYLINDRICACP M6 8X45 RFR	
410	312111-0451	-		12	SCREW MC6S8X20FZB	
415	312111-0453	-		3	SCREW MC6S8X25FZB	
420	312111-0457	-		9	SCREW MC6S8X35FZB	
425	312115-0451	-		40	SCREW MC6S ISO 4762 M8x20 A280	
430	312115-0453	-		12	SCREW MC6S ISO 4762 M8X25 A280	
435	312316-0320	-		3	STOP SCREW SK6SS5X5FZB	
440	312316-0323	-		12	STOP SCREW SK6SS5X8FZB	
445	312805-0108	-		4	NUTS,ROUND,WITH SLOTS,M40X1,5	
450	312805-0114	-		2	NUTS,ROUND,WITH SLOTS,M70X20	
455	315101-0165	-		8	WASHER BRB8,4X16FZB	
460	315105-0165	-		12	WASHER,PLAIN ROUND 8,4x16 Stainless	
465	315202-0316	K		2	O-RINGS 124,5X3	
470	315221-0171	K		1	SEALING RINGS,TYPE A 30X62X7	
475	315410-0108	-		2	WASHERS,LOCK 40X50	
480	315410-0114	-		1	WASHERS,LOCK 70X85	
485	315701-0338	-		1	KEYS,PARALLEL WITH ROUND ENDS 12X8X70	
490	315752-0149	-		1	CIRCLIP SGH110	
495	321306-0114	K		1	BALL BEARING 70X110X20	
500	321309-0106	K		1	BALL BEARING 30X62X16	
505	321364-0106	K		2	ROLLER BEASKF31306	
510	321361-0105	K		3	ROLLER BEARING 25X52X16,25	
515	342720-0104	-		1	STRAIGHT CONNECTION GA-8-G1/4"	
520	342730-0104	-		2	ELBOW CONNECTION WA-8-1/4"	

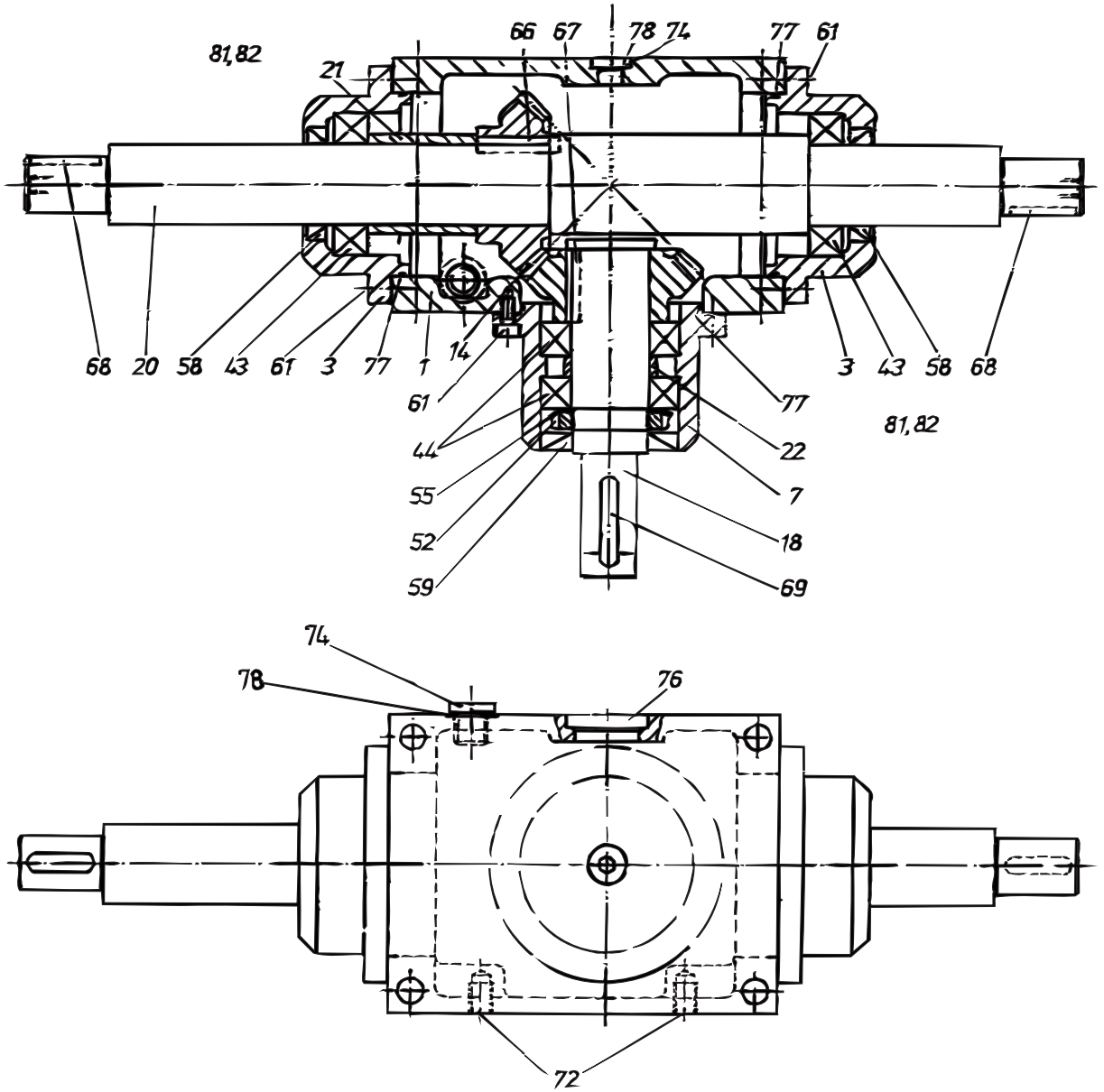

S-442646-2
ECN 8718

Pos	Part No	SP	UN	Qty	Description	Page No
Common parts						
001	568070-0000	D		1	GEAR HOUSING	
003	568071-0000	D		2	BEARING SEAT	
007	568072-0000	D		1	BEARING SEAT	
014	443188-0000	D		1	GEAR WHEEL	
018	568073-0000	D		1	SHAFT	
020	568074-0000	D		1	SHAFT	
021	442621-0000	D		1	SPACER	
022	442622-0000	D		1	SPACER	
043	321306-0107	D		2	BALL BEARING 35X62X14	
044	321306-0107	D		2	BALL BEARING 35X62X14	
052	312805-0107	-		1	NUTS,ROUND,WITH SLOTS,M35X1,5	
055	315410-0107	-		1	WASHERS,LOCK 34X44	
058	90091-0142	K		2	SEAL RING	
059	315221-0171	K		1	SEALING RINGS,TYPE A 30X62X7	
061	312111-0368	-		12	SCREW MC6S6X16FZB	
066	315701-0802	-		1	FLAT WEDGE10X8X36	
067	315701-0299	-		1	KEYS,PARALLEL WITH ROUND ENDS 10X8X32	
068	315701-0268	-		2	KEYS,PARALLEL WITH ROUND ENDS 8X7X32	
069	315701-0270	-		1	KEYS,PARALLEL WITH ROUND ENDS 8X7X40	
072	312910-0126	-		2	THREADED I M8X1,5D	
077	90242-0117	D		3	O-RING*	
078	90242-0121	D		2	O-RING	
081	443193-0000	D		3	SHIM	
082	443194-0000	D		3	SHIM	

Pos	Part No	SP	UN	Qty	Description	Page No

PRESSURE DEVICE

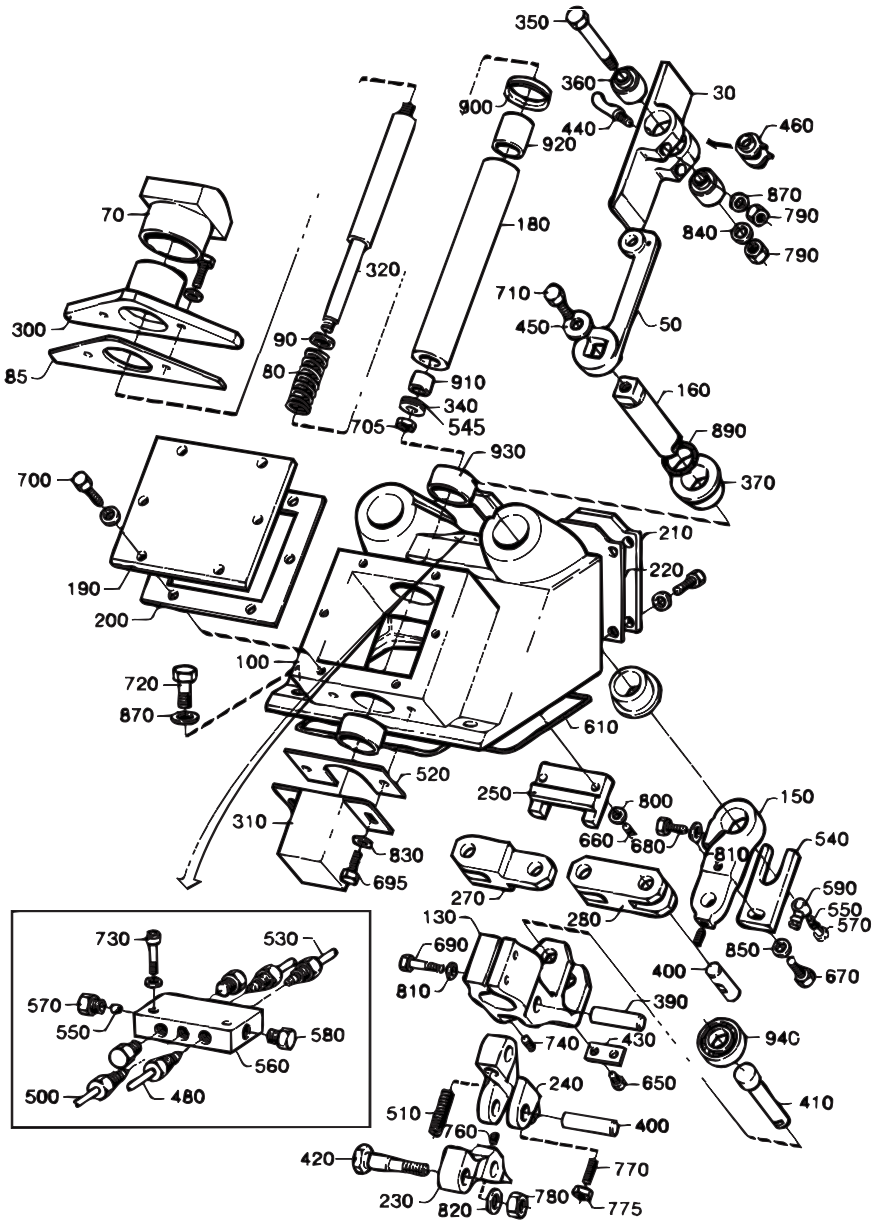

S-285456-2
ECN 16630

Pos	Part No	SP	UN	Qty	Description	Page No
Common parts						
090	442883-0000	D		2	SPACING WASHER	
100	525335-0000	D		1	HOUSE	
130	262234-0000	D		1	BRACKET	
150	262235-0000	D		2	ARM	
160	262266-0000	D		2	SHAFT	
180	262309-0000	D		1	SLEEVE	
190	262313-0000	-		1	LID	
200	262314-0000	D		1	RUBBER GASKET	
210	262315-0000	-		1	LID	
220	262316-0000	D		1	RUBBER GASKET	
230	262415-0000	D		1	LINK	
240	262610-0000	D		1	LINK	
250	262720-0000	D		1	STEERING	
270	285157-0000	D		1	LINK	
280	285158-0000	D		1	LINK	
300	285448-0000	-		1	PROTECTIVE CASING	
310	442532-0000	-		1	COVER	
320	B 442882-0000	D		1	SPINDLE	
340	28037-0000	-		1	WASHER	
350	262028-0011	R		2	FITTING BOLT	
360	525367-0000	R		4	SLEEVE	
370	262267-0000	M		4	BUSHING	
390	262322-0000	D		1	SHAFT	
400	262323-0000	R		3	SHAFT	
410	262324-0000	D		1	SHAFT	
420	262325-0000	D		1	SHAFT	
430	262343-0000	D		1	SECURING PLATE	
450	276659-0000	D		2	WASHER	
460	311103-0306	-		4	PINS,STRAIGHT 5X12	
480	B 285162-0000	D		1	LUBRICATING PIPE	
500	B 285164-0000	D		2	LUBRICATING PIPE	
510	285970-0000	R		1	COMPRESSION SPRING	
520	442533-0000	R		1	RUBBER GASKET	
530	B 442560-0000	D		1	LUBR.OIL PIPE	
540	442884-0000	D		2	LOCK PLATE	
545	566016-0000	D		1	WASHER	
550	90028-0001	J		3	CONE 5/32"	
560	90032-0034	-		1	JUNCTION BLOCK	
570	90134-0003	J		3	BUSHING	
580	90136-0002	-		3	PLUG 5/16"24	
590	90137-0005	-		2	PIPE JOINT	
600	90153-0043	-	KG	x	ADHESIVE LOCTITE 495	
605	90157-0022	-	G	x	SEALING COMPOUND	
610	90161-0001	-	MM	900	STRIP	
620	90296-0009	-	KG	x	SILICONE GREASE TUBE 100 Gr.	
650	312101-0362	-		2	SCREW M6S 6x8-8,8 FZB	
660	312101-0372	-		2	SCREW M6S 6x25 FZB	
670	312101-0453	-		2	SCREW M6S 8x25 FZB	
680	312101-0457	-		2	SCREW M6S 8x35 FZB	
690	312101-0459	-		2	SCREW M6S 8x40 FZB	
695	312105-0368	-		2	SCREW M6S ISO 4017 M6x16 A280	
700	312105-0368	-		14	SCREW M6S ISO 4017 M6x16 A280	
705	312105-0447	-		1	SCREW M6S ISO 4017 M8X12 A280	
710	312105-0449	-		2	SCREW M6S ISO 4017 M8x16 A280	
720	312105-0453	-		3	SCREW M6S ISO 4017 M8x25 A280	
730	312111-0293	-		2	SCREW MC6S4X16FZB	
740	312316-0287	-		1	STOP SCREW SK6SS4X8FZB	
760	312316-0362	-		3	STOP SCREW SK6SS6X8FZB	
770	312316-0372	-		1	STOP SCREW SK6SS6X25FZB	
775	312601-0316	-		1	NUT M6M 6-8 FZB	
780	312601-0322	-		1	NUT M6M 12-8 FZB	
790	312605-0318	-		6	NUT,HEXAGON,M8 RFR	
800	315101-0153	-		2	WASHER BRB 6,4x12 FZB	
810	315101-0165	-		4	WASHER BRB8,4X16FZB	
820	315101-0178	-		1	WASHER BRB 13x24 FZB	
830	315105-0153	-		20	WASHER,PLAIN ROUND 6,4x12 Stainless	
840	315105-0165	-		2	WASHER,PLAIN ROUND 8,4x16 Stainless	
850	315111-0165	-		2	WASHER TBRB8,4X16FZB	
870	315115-0165	-		7	WASHER TBRB 8,4x16 Stainless	
890	315202-0217	K		2	O-RINGS 24,2X3	
900	315220-0175	K		1	SEAL RING V-35S	
910	321120-0122	K		1	BEARING BUSHING WITHOUT FLANGE,15/17X15	
920	321120-0160	K		1	BEARING BUSHING WITHOUT FLANGE,25/28X30	
930	321120-0183	K		2	BUSHING 35/39X20	
940	321306-0104	K		1	BALL BEARING 20X42X12	
0355B						
030	531628-0000	D		2	PRESSURE DEVICE FLAP	
050	285449-0000	D		2	ARM	
070	525101-0001	D		1	BLOCKING PIECE	
080	268830-0000	M		1	COMPRESSION SPRING	
095	312105-0370	-		2	SCREW M6S ISO 4017 M6x20 A280	
440	525125-0000	R		4	PIN	
0375S						
030	443249-0000	D		2	FLAP	
050	442589-0000	D		2	ARM	

PRESSURE DEVICE

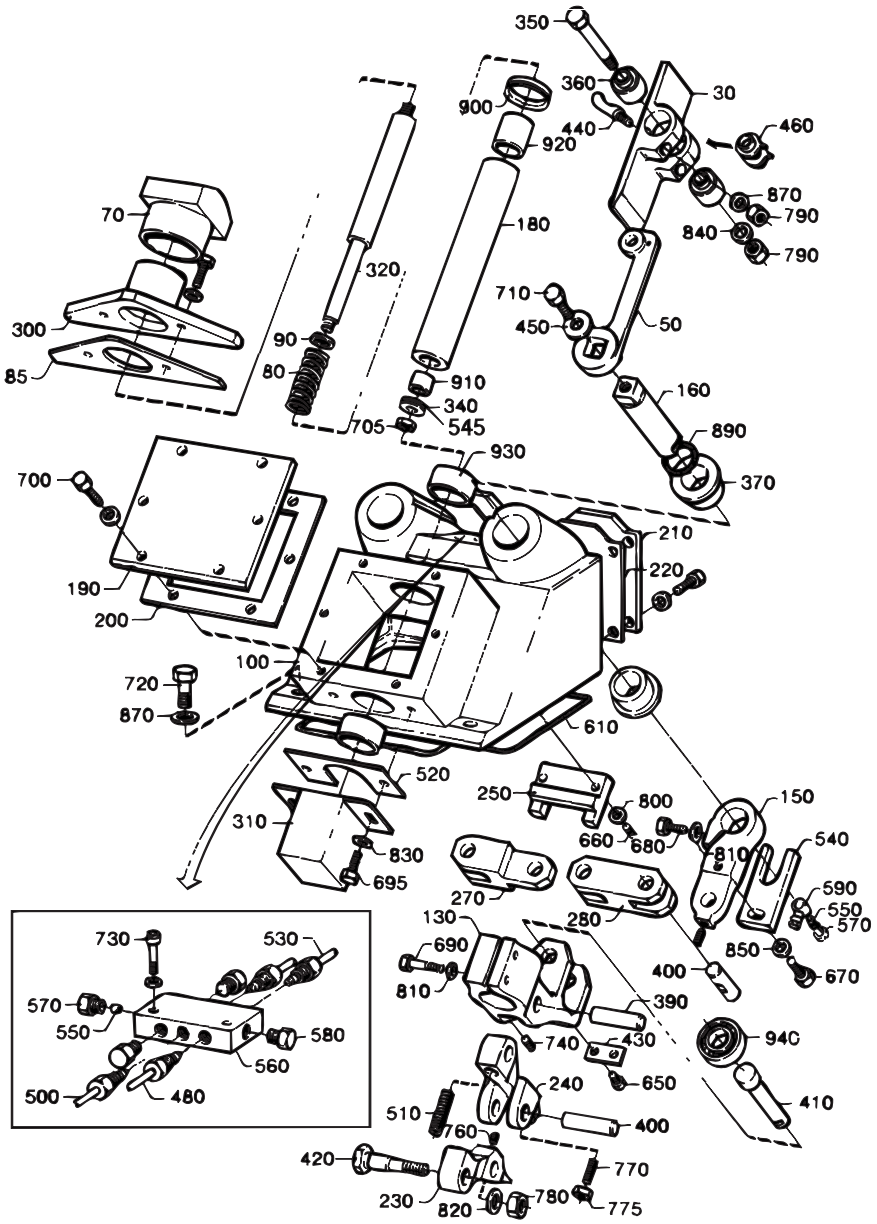

S-285456-2
ECN 16630

Pos	Part No	SP	UN	Qty	Description	Page No
070	525101-0002	D		1	BLOCKING PIECE	
080	268830-0000	M		1	COMPRESSION SPRING	
095	312105-0370	-		2	SCREW M6S ISO 4017 M6x20 A280	
440	262350-0001	R		4	PIN	
0400B						
030	574680-0000	D		2	FLAP	
050	442589-0000	D		2	ARM	
070	525101-0001	D		1	BLOCKING PIECE	
080	268830-0000	M		1	COMPRESSION SPRING	
095	312105-0370	-		2	SCREW M6S ISO 4017 M6x20 A280	
440	525125-0000	R		4	PIN	
0500B						
030	442886-0000	D		2	FLAP	
050	262907-0000	D		2	ARM	
070	525100-0000	D		1	BLOCKING PIECE	
080	525379-0000	M		1	COMPRESSION SPRING	
085	297496-0000	R		1	LACE	
095	312105-0372	-		2	SCREW M6S ISO 4017 M6X25 A280	
440	262350-0001	R		4	PIN	
0500S						
030	443038-0000	D		2	FLAP	
050	262906-0000	D		2	ARM	
070	525101-0001	D		1	BLOCKING PIECE	
080	268830-0000	M		1	COMPRESSION SPRING	
095	312105-0370	-		2	SCREW M6S ISO 4017 M6x20 A280	
440	525125-0000	R		4	PIN	
0500SQ						
030	583451-0000	D		2	FLAP	
050	285449-0000	D		2	ARM	
070	574036-0000	D		1	BLOCKING PIECE	
080	268830-0000	M		1	COMPRESSION SPRING	
085	297496-0000	R		1	LACE	
095	312105-0372	-		2	SCREW M6S ISO 4017 M6X25 A280	
440	262350-0001	R		4	PIN	
0750B						
030	442984-0000	D		2	FLAP	
050	262906-0000	D		2	ARM	
070	525100-0000	D		1	BLOCKING PIECE	
080	525379-0000	M		1	COMPRESSION SPRING	
085	297496-0000	R		1	LACE	
095	312105-0372	-		2	SCREW M6S ISO 4017 M6X25 A280	
440	262350-0001	R		4	PIN	
0750S						
030	544289-0000	D		2	FLAP	
050	262906-0000	D		2	ARM	
070	544255-0000	D		1	BLOCKING PIECE	
080	268830-0000	M		1	COMPRESSION SPRING	
085	297496-0000	R		1	LACE	
095	312105-0372	-		2	SCREW M6S ISO 4017 M6X25 A280	
440	525125-0000	R		4	PIN	
1000B						
030	443182-0000	D		2	FLAP	
050	262906-0000	D		2	ARM	
070	525100-0000	D		1	BLOCKING PIECE	
080	525379-0000	M		1	COMPRESSION SPRING	
085	297496-0000	R		1	LACE	
095	312105-0372	-		2	SCREW M6S ISO 4017 M6X25 A280	
440	262350-0001	R		4	PIN	
1000S						
030	569111-0000	D		2	FLAP	
050	262906-0000	D		2	ARM	
070	569112-0000	D		1	BLOCKING PIECE	
080	268830-0000	M		1	COMPRESSION SPRING	
085	297496-0000	R		1	LACE	
095	312105-0372	-		2	SCREW M6S ISO 4017 M6X25 A280	
440	262350-0001	R		4	PIN	
1000SQ						
030	574035-0000	D		2	FLAP	
050	262906-0000	D		2	ARM	
070	574036-0000	D		1	BLOCKING PIECE	
080	268830-0000	M		1	COMPRESSION SPRING	
085	297496-0000	R		1	LACE	
095	312105-0372	-		2	SCREW M6S ISO 4017 M6X25 A280	
440	262350-0001	R		4	PIN	
1055B						
030	443114-0000	D		2	FLAP	
050	262906-0000	D		2	ARM	
070	525100-0000	D		1	BLOCKING PIECE	
080	525379-0000	M		1	COMPRESSION SPRING	
085	297496-0000	R		1	LACE	
095	312105-0372	-		2	SCREW M6S ISO 4017 M6X25 A280	
440	262350-0001	R		4	PIN	

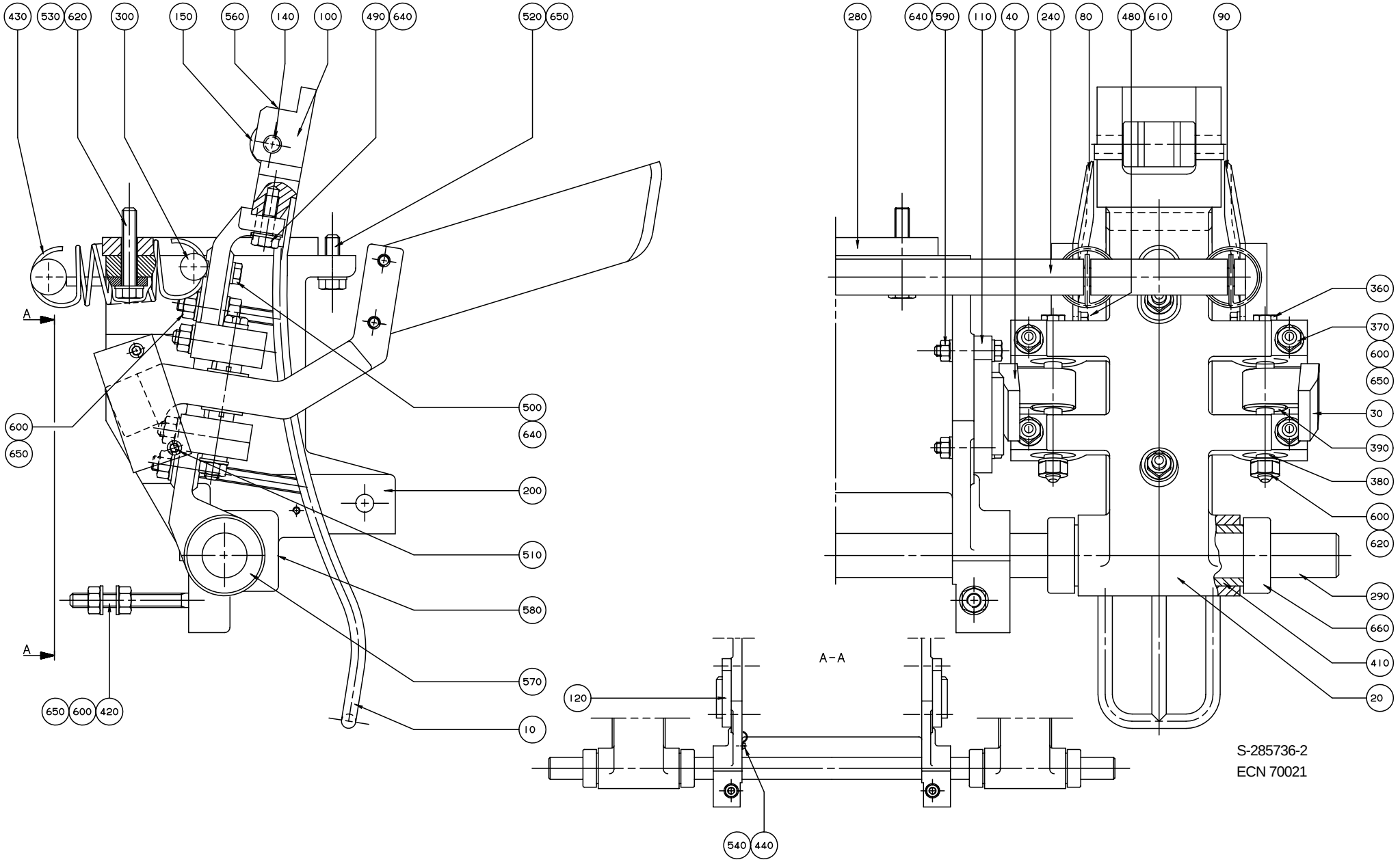
430
530
620
300
150
560
140
100
490
640
520
650
280
640
590
110
40
240
80
480
610
90
360
370
600
650
30
390
380
600
620
290
660
410
20
500
640
200
510
580
570
10
600
650
A
A
650
600
420
A-A
120
540
440
S-285736-2
ECN 70021

Pos	Part No	SP	UN	Qty	Description	Page No
0355B						
010	285712-0000	D		2	RAIL	
020	285723-0000	D		2	ARM	
030	285656-0000	D		2	ARM	
040	285657-0000	D		2	ARM	
080	527854-0000	D		2	PLATE RIGHT	
090	527856-0000	D		2	PLATE LEFT	
100	525212-0000	R		2	PLATE	
140	262427-0005	M		2	SHAFT	
150	B 443487-0000	J		2	ROLL	
300	297644-0000	D		2	SHAFT	
600	312605-0318	-		24	NUT,HEXAGON,M8 RFR	
610	315105-0153	-		8	WASHER,PLAIN ROUND 6,4x12 Stainless	
0375S						
010	285724-0002	D		2	RAIL	
020	285723-0000	D		2	ARM	
030	285660-0000	D		2	ARM	
040	285661-0000	D		2	ARM	
080	443027-0000	D		2	SHEET	
090	443028-0000	D		2	SHEET	
100	525234-0002	R		2	PLATE	
140	262427-0002	M		2	SHAFT	
150	B 443488-0000	J		2	ROLL	
300	297644-0000	D		2	SHAFT	
600	312605-0318	-		24	NUT,HEXAGON,M8 RFR	
610	315105-0153	-		8	WASHER,PLAIN ROUND 6,4x12 Stainless	
0400B						
010	285712-0000	D		2	RAIL	
020	285723-0000	D		2	ARM	
030	285656-0000	D		2	ARM	
040	285657-0000	D		2	ARM	
080	574681-0000	D		2	SHEET	
090	574682-0000	D		2	SHEET	
100	525212-0000	R		2	PLATE	
140	262427-0005	M		2	SHAFT	
150	B 443487-0000	J		2	ROLL	
300	297644-0000	D		2	SHAFT	
600	312605-0318	-		24	NUT,HEXAGON,M8 RFR	
610	315105-0153	-		8	WASHER,PLAIN ROUND 6,4x12 Stainless	
0500B						
010	262970-0000	D		2	RAIL	
020	285655-0000	D		2	ARM	
030	285656-0000	D		2	ARM	
040	285657-0000	D		2	ARM	
080	525066-0000	D		2	SHEET	
090	525067-0000	D		2	SHEET	
100	B 525429-0000	R		2	PLATE	
140	262427-0001	M		2	SHAFT	
150	B 443487-0000	J		2	ROLL	
300	297644-0000	D		2	SHAFT	
600	312605-0318	-		24	NUT,HEXAGON,M8 RFR	
610	315105-0153	-		8	WASHER,PLAIN ROUND 6,4x12 Stainless	
0500S						
010	285712-0000	D		2	RAIL	
020	285723-0000	D		2	ARM	
030	285656-0000	D		2	ARM	
040	285657-0000	D		2	ARM	
080	443023-0000	D		2	SHEET	
090	443024-0000	D		2	SHEET	
100	525212-0000	R		2	PLATE	
140	262427-0005	M		2	SHAFT	
150	B 443487-0000	J		2	ROLL	
300	297644-0000	D		2	SHAFT	
600	312605-0318	-		24	NUT,HEXAGON,M8 RFR	
610	315105-0153	-		8	WASHER,PLAIN ROUND 6,4x12 Stainless	
0500SQ						
010	574039-0000	D		2	RAIL	
020	285723-0000	D		2	ARM	
030	285660-0000	D		2	ARM	
040	285661-0000	D		2	ARM	
080	583447-0000	D		2	SHEET	
090	583455-0000	D		2	SHEET	
100	574042-0000	R		2	PLATE	
140	262427-0008	M		2	SHAFT	
150	B 443487-0000	J		2	ROLL	
300	297644-0000	D		2	SHAFT	
600	312605-0318	-		24	NUT,HEXAGON,M8 RFR	
610	315105-0153	-		8	WASHER,PLAIN ROUND 6,4x12 Stainless	
0750B						
010	262970-0000	D		2	RAIL	
020	285655-0000	D		2	ARM	
030	285656-0000	D		2	ARM	
040	285657-0000	D		2	ARM	
080	442979-0000	D		2	SHEET	
090	442980-0000	D		2	SHEET	

PULL-DOWN DEVICE

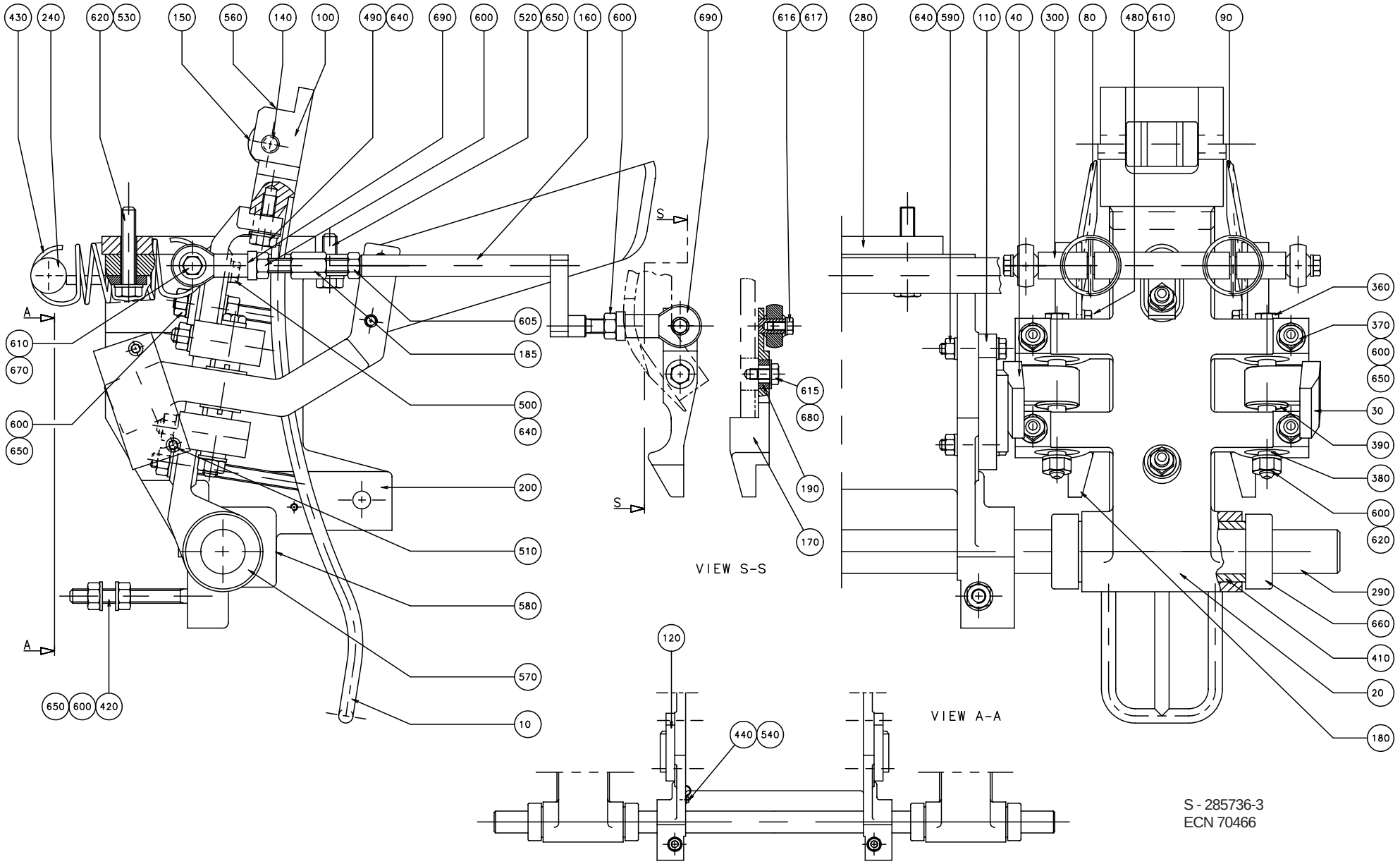

S - 285736-3
ECN 70466

Pos	Part No	SP	UN	Qty	Description	Page No
100	B 525429-0000	R		2	PLATE	
140	262427-0001	M		2	SHAFT	
150	B 443487-0000	J		2	ROLL	
300	297644-0000	D		2	SHAFT	
600	312605-0318	-		24	NUT,HEXAGON,M8 RFR	
610	315105-0153	-		8	WASHER,PLAIN ROUND 6,4x12 Stainless	
0750S						
010	544290-0000	D		2	RAIL	
020	285723-0000	D		2	ARM	
030	285656-0000	D		2	ARM	
040	285657-0000	D		2	ARM	
080	544288-0000	D		2	SHEET	
090	544280-0000	D		2	SHEET	
100	544291-0000	R		2	PLATE	
140	262427-0006	M		2	SHAFT	
150	B 443487-0000	J		2	ROLL	
300	297644-0000	D		2	SHAFT	
600	312605-0318	-		24	NUT,HEXAGON,M8 RFR	
610	315105-0153	-		8	WASHER,PLAIN ROUND 6,4x12 Stainless	
1000B HIFIN						
010	262970-0000	D		2	RAIL	
020	285655-0000	D		2	ARM	
030	285656-0000	D		2	ARM	
040	285657-0000	D		2	ARM	
080	443021-0000	D		2	SHEET	
090	443022-0000	D		2	SHEET	
100	B 443348-0000	R		2	PLATE	
140	262427-0001	M		2	SHAFT	
150	B 443487-0000	J		2	ROLL	
300	297644-0000	D		2	SHAFT	
600	312605-0318	-		24	NUT,HEXAGON,M8 RFR	
610	315105-0153	-		8	WASHER,PLAIN ROUND 6,4x12 Stainless	
1000S						
010	544290-0000	D		2	RAIL	
020	285723-0000	D		2	ARM	
030	285656-0000	D		2	ARM	
040	285657-0000	D		2	ARM	
080	569115-0000	D		2	SHEET	
090	569116-0000	D		2	SHEET	
100	569114-0000	R		2	PLATE	
140	262427-0007	M		2	SHAFT	
150	B 443487-0000	J		2	ROLL	
300	297644-0000	D		2	SHAFT	
600	312605-0318	-		24	NUT,HEXAGON,M8 RFR	
610	315105-0153	-		8	WASHER,PLAIN ROUND 6,4x12 Stainless	
1055B						
010	262970-0000	D		2	RAIL	
020	285655-0000	D		2	ARM	
030	285656-0000	D		2	ARM	
040	285657-0000	D		2	ARM	
080	443137-0000	D		2	SHEET	
090	443138-0000	D		2	SHEET	
100	525211-0000	R		2	PLATE	
140	262427-0001	M		2	SHAFT	
150	B 443487-0000	J		2	ROLL	
300	297644-0000	D		2	SHAFT	
600	312605-0318	-		24	NUT,HEXAGON,M8 RFR	
610	315105-0153	-		8	WASHER,PLAIN ROUND 6,4x12 Stainless	
1000B LOFIN						
010	262970-0000	D		2	RAIL	
020	285655-0000	D		2	ARM	
030	285656-0000	D		2	ARM	
040	285657-0000	D		2	ARM	
080	443021-0000	D		2	SHEET	
090	443022-0000	D		2	SHEET	
100	525211-0000	R		2	PLATE	
140	262427-0001	M		2	SHAFT	
150	B 443487-0000	J		2	ROLL	
300	297644-0000	D		2	SHAFT	
600	312605-0318	-		24	NUT,HEXAGON,M8 RFR	
610	315105-0153	-		8	WASHER,PLAIN ROUND 6,4x12 Stainless	
1000SQ NORMFIN						
010	574039-0000	D		2	RAIL	
020	285723-0000	D		2	ARM	
030	285660-0000	D		2	ARM	
040	285661-0000	D		2	ARM	
080	574040-0000	D		2	SHEET	
090	574041-0000	D		2	SHEET	
100	574042-0000	R		2	PLATE	
140	262427-0008	M		2	SHAFT	
300	297644-0000	D		2	SHAFT	
600	312605-0318	-		24	NUT,HEXAGON,M8 RFR	
610	315105-0153	-		8	WASHER,PLAIN ROUND 6,4x12 Stainless	
1000SQ REVFIN						
010	574039-0000	D		2	RAIL	

PULL-DOWN DEVICE

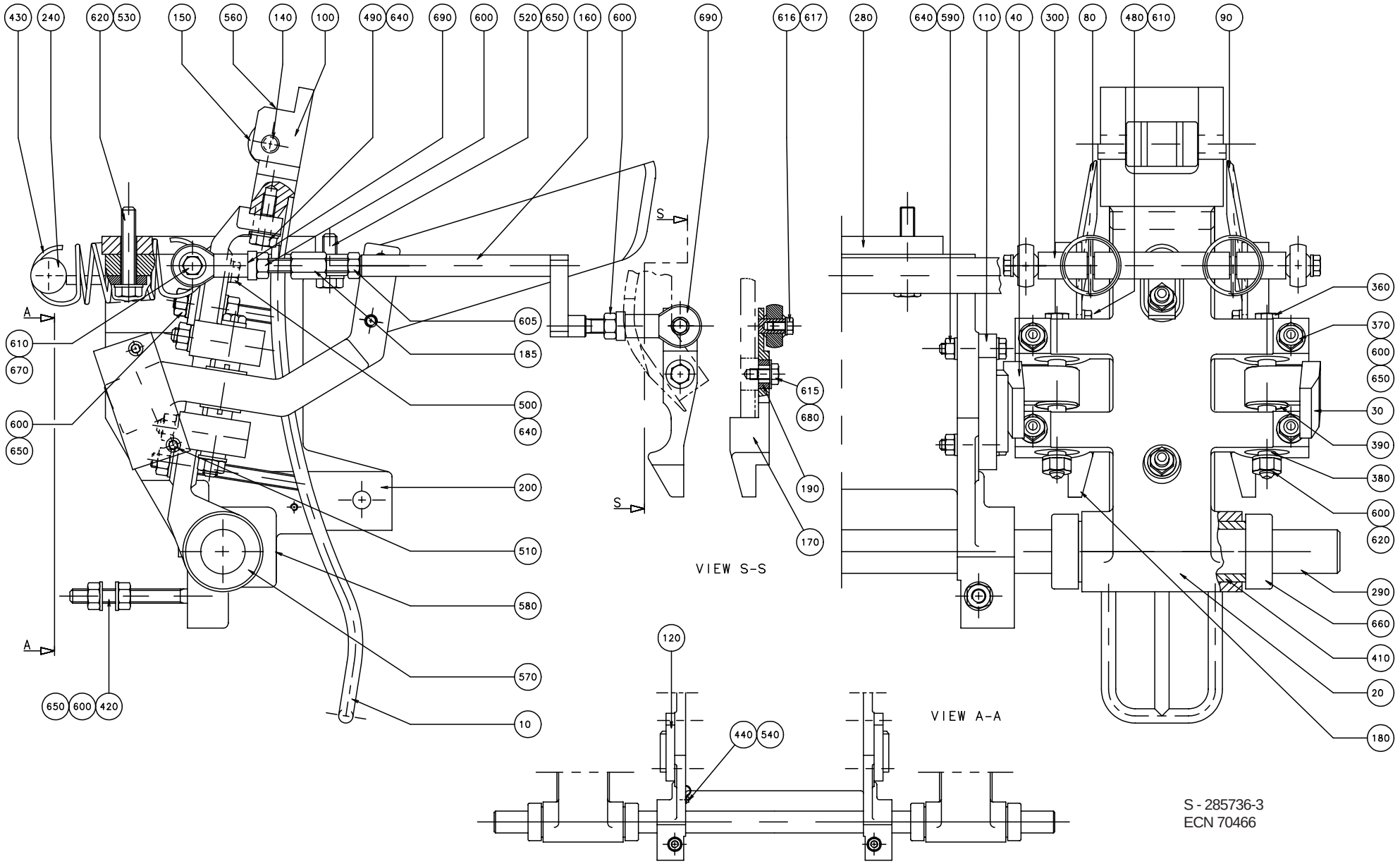

S - 285736-3
ECN 70466

Pos	Part No	SP	UN	Qty	Description	Page No
020	285723-0000	D		2	ARM	
030	285660-0000	D		2	ARM	
040	285661-0000	D		2	ARM	
080	574040-0000	D		2	SHEET	
090	574041-0000	D		2	SHEET	
100	574042-0000	R		2	PLATE	
140	262427-0008	M		2	SHAFT	
150	B 443487-0000	J		2	ROLL	
160	1255161-0000	D		4	ARM	
170	1255162-0000	D		2	ROCKER ARM	
180	1255163-0000	D		2	ROCKER ARM	
185	1255160-0000	D		4	THREADED INSERT	
190	1143015-0000	K		4	BUSHING	
300	1143016-0000	D		2	AXLE PIN	
600	312605-0318	-		32	NUT,HEXAGON,M8 RFR	
605	312902-0318	-		4	NUTS,HEXAGON,LEFT HAND THREAD,M8	
610	315105-0153	-		12	WASHER,PLAIN ROUND 6,4x12 Stainless	
615	1143223-0000	D		4	WASHER	
616	315105-0146	-		4	WASHER,PLAIN ROUND 5,3x10 Stainless	
617	312105-0323	-		4	SCREW M6S ISO 4017 M5X8 A280	
670	312105-0370	-		4	SCREW M6S ISO 4017 M6x20 A280	
680	312105-0362	-		4	SCREW M6S ISO 4017 M6X8 A280	
690	90115-0139	K		8	ROD ENDS,MAINTENANCE FREE,8-M8X1.25RH	
Common parts						
110	442564-0000	R		1	CURVE	
120	442565-0000	R		1	CURVE	
200	262924-0000	-		1	CANTILEVER	
240	297643-0000	-		1	BRACKET	
280	285444-0000	-		1	SPACER	
290	285664-0000	D		1	SHAFT	
360	262028-0002	R		4	FITTING BOLT	
370	262179-0001	M		8	PIN	
380	262183-0000	K		8	BUSHING	
390	276664-0000	M		8	WASHER	
410	285729-0000	R		2	BUSHING	
420	443313-0000	-		2	STUD SCREW	
430	297567-0000	M		4	TENSION SPRING	
440	90165-0057	-		1	PIPE-CLIPS,FOR SINGLE PIPE,ONE SIDE 6	
480	312105-0366	-		8	SCREW M6S ISO 4017 M6X12 A280	
490	312105-0372	-		4	SCREW M6S ISO 4017 M6X25 A280	
500	312105-0374	-		2	SCREW M6S ISO 4017 M6X30 A280	
510	312105-0376	-		4	SCREW M6S ISO 4017 M6X35 A280	
520	312105-0453	-		2	SCREW M6S ISO 4017 M8x25 A280	
530	312105-0460	-		2	SCREW ISO 4017 M8x45 A280	
540	312125-0291	-		1	SLOTTED CHEESE HEAD ISO 1207 M4x12 RFR	
560	312318-0370	-		2	SET SCREW CUP POINT ISO 4029 M6X20 RFR	
570	312318-0443	-		4	SET SCREW CUP POINT ISO 4029 M8X8 RFR	
580	312318-0449	-		2	SET SCREW COP POINT ISO 4029 M8X16 RFR	
590	312605-0316	-		4	NUT,HEXAGON A280 M6M6	
620	315105-0165	-		6	WASHER,PLAIN ROUND 8,4x16 Stainless	
640	315115-0153	-		14	WASHER TBRB 6,4x12 Stainless	
650	315115-0165	-		22	WASHER TBRB 8,4x16 Stainless	
660	315742-0119	-		4	RETAINING RINGS 25	

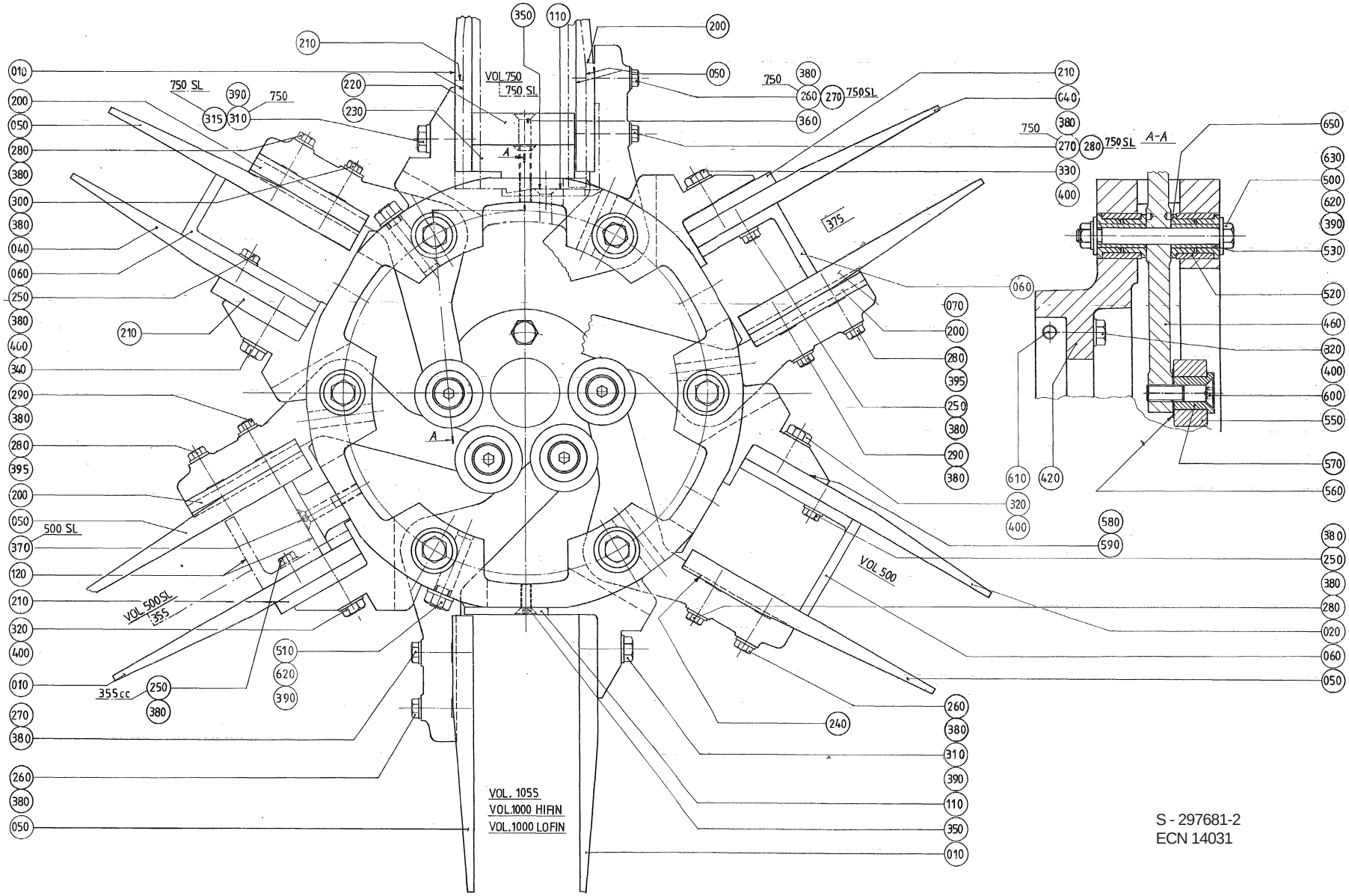

S - 297681-2
ECN 14031

Pos	Part No	SP	UN	Qty	Description	Page No
0355B						
010	525458-0000	R		6	FLAP	
050	B 285310-0002	R		6	FLAP	
120	525371-0000	D		6	BOTTOM	
200	285316-0002	D		6	SPACER PIECE	
210	525461-0000	D		6	SPACER PIECE	
250	312105-0368	-		6	SCREW M6S ISO 4017 M6x16 A280	
280	312105-0378	-		6	SCREW O4017 M6X40A280	
290	312105-0379	-		6	SCREW M6S ISO 4014 M6X45 A280	
320	312105-0457	-		9	SCREW ISO 4017 M8x35 A280	
380	315105-0153	-		12	WASHER,PLAIN ROUND 6,4x12 Stainless	
390	315105-0165	-		24	WASHER,PLAIN ROUND 8,4x16 Stainless	
395	315115-0153	-		6	WASHER TBRB 6,4x12 Stainless	
400	315115-0165	-		9	WASHER TBRB 8,4x16 Stainless	
420	525450-0000	D		1	HUB	
460	565967-0000	R		6	ARM	
510	262179-0001	R		12	PIN	
520	525329-0000	M		12	SLEEVE	
610	312109-0459	-		2	SCREW M6S ISO 4017 M8X40 A280	
620	312605-0318	-		18	NUT,HEXAGON,M8 RFR	
650	321111-0185	K		24	FLANGE BUS 14E7X14	
0375S						
040	525430-0000	R		6	FLAP	
060	525372-0000	D		6	BOTTOM	
070	297646-0000	R		6	FLAP	
200	285316-0002	D		6	SPACER PIECE	
210	525461-0000	D		6	SPACER PIECE	
250	312105-0368	-		12	SCREW M6S ISO 4017 M6x16 A280	
280	312105-0378	-		6	SCREW O4017 M6X40A280	
290	312105-0379	-		6	SCREW M6S ISO 4014 M6X45 A280	
320	312105-0457	-		3	SCREW ISO 4017 M8x35 A280	
330	312105-0459	-		6	SCREW ISO 4017 M8x40 A280	
380	315105-0153	-		18	WASHER,PLAIN ROUND 6,4x12 Stainless	
390	315105-0165	-		24	WASHER,PLAIN ROUND 8,4x16 Stainless	
395	315115-0153	-		6	WASHER TBRB 6,4x12 Stainless	
400	315115-0165	-		9	WASHER TBRB 8,4x16 Stainless	
420	525450-0000	D		1	HUB	
460	565967-0000	R		6	ARM	
510	262179-0001	R		12	PIN	
520	525329-0000	M		12	SLEEVE	
610	312109-0459	-		2	SCREW M6S ISO 4017 M8X40 A280	
620	312605-0318	-		18	NUT,HEXAGON,M8 RFR	
650	321111-0185	K		24	FLANGE BUS 14E7X14	

Pos	Part No	SP	UN	Qty	Description	Page No
0400B						
010	574684-0000	R		6	FLAP	
050	B 285310-0002	R		6	FLAP	
120	574683-0000	D		6	BOTTOM	
200	285316-0002	D		6	SPACER PIECE	
210	525461-0000	D		6	SPACER PIECE	
250	312105-0368	-		12	SCREW M6S ISO 4017 M6x16 A280	
280	312105-0378	-		6	SCREW O4017 M6X40A280	
290	312105-0379	-		6	SCREW M6S ISO 4014 M6X45 A280	
320	312105-0457	-		9	SCREW ISO 4017 M8x35 A280	
380	315105-0153	-		18	WASHER,PLAIN ROUND 6,4x12 Stainless	
390	315105-0165	-		24	WASHER,PLAIN ROUND 8,4x16 Stainless	
395	315115-0153	-		6	WASHER TBRB 6,4x12 Stainless	
400	315115-0165	-		9	WASHER TBRB 8,4x16 Stainless	
420	525450-0000	D		1	HUB	
460	565967-0000	R		6	ARM	
510	262179-0001	R		12	PIN	
520	525329-0000	M		12	SLEEVE	
610	312109-0459	-		2	SCREW M6S ISO 4017 M8X40 A280	
620	312605-0318	-		18	NUT,HEXAGON,M8 RFR	
650	321111-0185	K		24	FLANGE BUS 14E7X14	
0500B						
020	525455-0000	R		6	FLAP	
050	B 285310-0001	R		6	FLAP	
060	525369-0000	D		6	BOTTOM	
240	442981-0000	D		6	SHIM	
250	312105-0368	-		6	SCREW M6S ISO 4017 M6x16 A280	
260	312105-0374	-		6	SCREW M6S ISO 4017 M6X30 A280	
280	312105-0378	-		6	SCREW O4017 M6X40A280	
320	312105-0457	-		9	SCREW ISO 4017 M8x35 A280	
380	315105-0153	-		18	WASHER,PLAIN ROUND 6,4x12 Stainless	
390	315105-0165	-		24	WASHER,PLAIN ROUND 8,4x16 Stainless	
400	315115-0165	-		9	WASHER TBRB 8,4x16 Stainless	
420	525450-0000	D		1	HUB	
460	565967-0000	R		6	ARM	
510	262179-0001	R		12	PIN	
520	525329-0000	M		12	SLEEVE	
610	312109-0459	-		2	SCREW M6S ISO 4017 M8X40 A280	
620	312605-0318	-		18	NUT,HEXAGON,M8 RFR	
650	321111-0185	K		24	FLANGE BUS 14E7X14	
0500S						
010	525456-0000	R		6	FLAP	
050	B 285310-0002	R		6	FLAP	

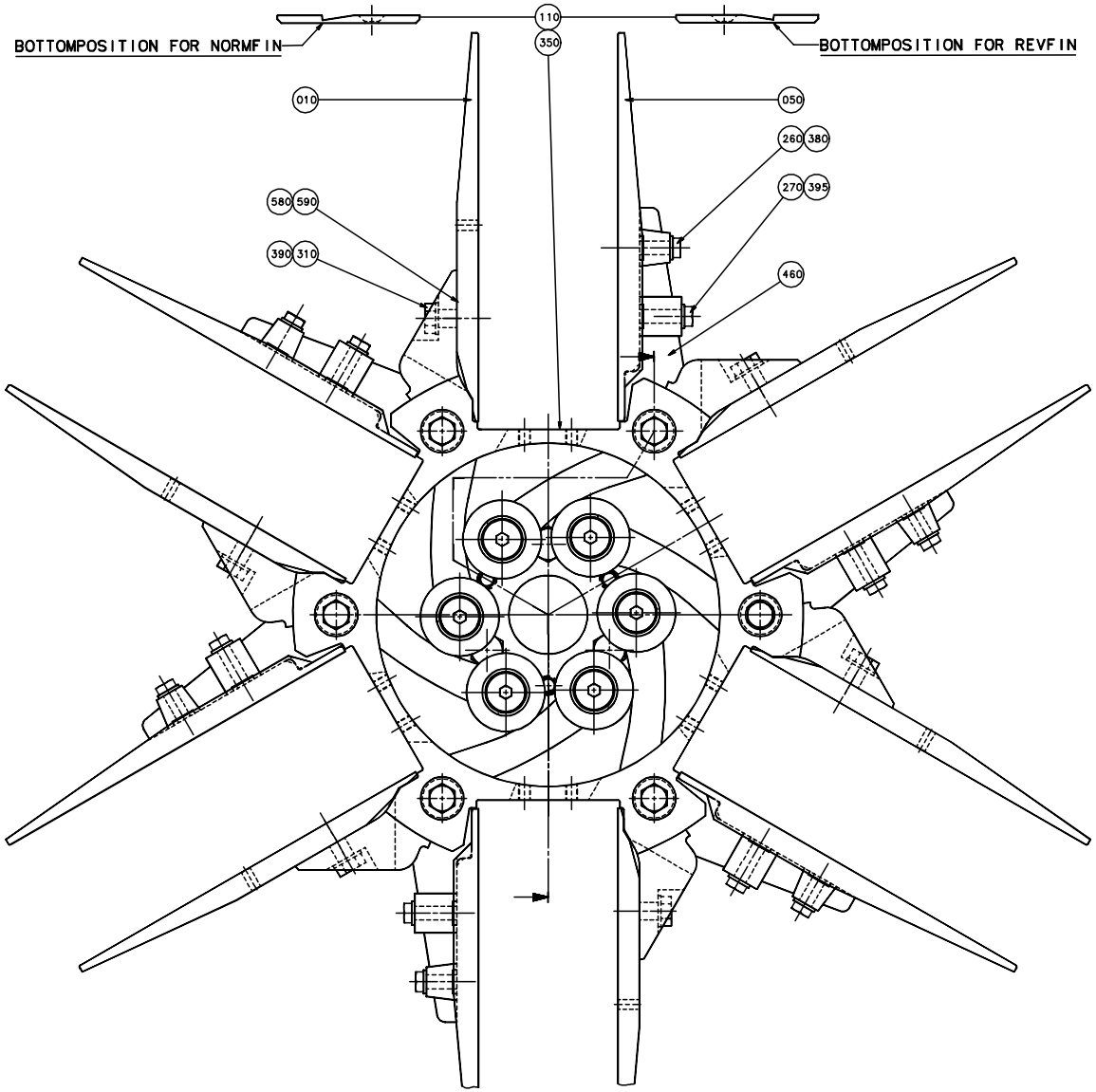

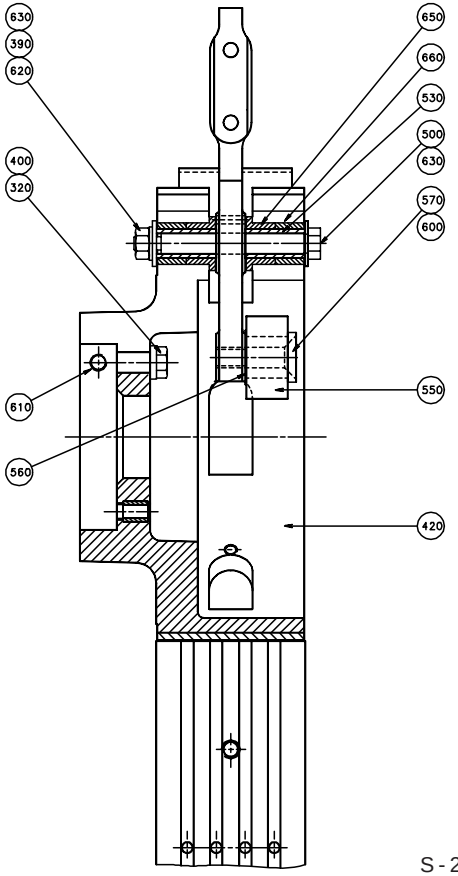

S - 297681-3
ECN 70412

Pos	Part No	SP	UN	Qty	Description	Page No
120	525370-0000	D		6	BOTTOM	
200	285316-0002	D		6	SPACER PIECE	
210	525461-0000	D		6	SPACER PIECE	
280	312105-0378	-		6	SCREW O4017 M6X40A280	
290	312105-0379	-		6	SCREW M6S ISO 4014 M6X45 A280	
320	312105-0457	-		9	SCREW ISO 4017 M8x35 A280	
370	312155-0378	-		6	SCREW MF6S DIN 7991 M6X40 A280	
380	315105-0153	-		12	WASHER,PLAIN ROUND 6,4x12 Stainless	
390	315105-0165	-		24	WASHER,PLAIN ROUND 8,4x16 Stainless	
395	315115-0153	-		6	WASHER TBRB 6,4x12 Stainless	
400	315115-0165	-		9	WASHER TBRB 8,4x16 Stainless	
420	525450-0000	D		1	HUB	
460	565967-0000	R		6	ARM	
510	262179-0001	R		12	PIN	
520	525329-0000	M		12	SLEEVE	
610	312109-0459	-		2	SCREW M6S ISO 4017 M8X40 A280	
620	312605-0318	-		18	NUT,HEXAGON,M8 RFR	
650	321111-0185	K		24	FLANGE BUS 14E7X14	
0750B						
010	525453-0000	R		6	FLAP	
050	B 285310-0001	R		6	FLAP	
220	525264-0000	D		6	BOTTOM	
230	297650-0000	D		6	BOTTOM	
240	442981-0000	D		6	SHIM	
260	312105-0374	-		6	SCREW M6S ISO 4017 M6X30 A280	
270	312105-0376	-		6	SCREW M6S ISO 4017 M6X35 A280	
310	312105-0453	-		6	SCREW M6S ISO 4017 M8x25 A280	
320	312105-0457	-		3	SCREW ISO 4017 M8x35 A280	
360	312155-0376	-		18	SCREW MF6S DIN 7991 M6X35 A280	
380	315105-0153	-		12	WASHER,PLAIN ROUND 6,4x12 Stainless	
390	315105-0165	-		30	WASHER,PLAIN ROUND 8,4x16 Stainless	
400	315115-0165	-		3	WASHER TBRB 8,4x16 Stainless	
420	525450-0000	D		1	HUB	
460	565967-0000	R		6	ARM	
510	262179-0001	R		12	PIN	
520	525329-0000	M		12	SLEEVE	
610	312109-0459	-		2	SCREW M6S ISO 4017 M8X40 A280	
620	312605-0318	-		18	NUT,HEXAGON,M8 RFR	
650	321111-0185	K		24	FLANGE BUS 14E7X14	
0750S						
010	525454-0000	R		6	FLAP	
050	544252-0000	R		6	FLAP	
110	544254-0000	R		6	PLATE	
200	543697-0000	D		6	SPACER PIECE	
210	525460-0000	D		6	SPACER PIECE	
270	312105-0376	-		6	SCREW M6S ISO 4017 M6X35 A280	
280	312105-0378	-		6	SCREW O4017 M6X40A280	
315	312105-0455	-		6	SCREW M6S ISO 4017 M8X30 A280	
320	312105-0457	-		3	SCREW ISO 4017 M8x35 A280	
350	312155-0368	-		6	SCREW MF6S DIN7991 M6X16 A280	
380	315105-0153	-		12	WASHER,PLAIN ROUND 6,4x12 Stainless	
390	315105-0165	-		30	WASHER,PLAIN ROUND 8,4x16 Stainless	
400	315115-0165	-		3	WASHER TBRB 8,4x16 Stainless	
420	525448-0000	D		1	HUB	
460	565967-0000	R		6	ARM	
510	262179-0001	R		12	PIN	
520	525329-0000	M		12	SLEEVE	
610	312109-0459	-		2	SCREW M6S ISO 4017 M8X40 A280	
620	312605-0318	-		18	NUT,HEXAGON,M8 RFR	
650	321111-0185	K		24	FLANGE BUS 14E7X14	
1000B HIFIN						
010	525453-0000	R		6	FLAP	
050	B 285310-0001	R		6	FLAP	
110	525063-0000	R		6	BOTTOM	
260	312105-0374	-		6	SCREW M6S ISO 4017 M6X30 A280	
270	312105-0376	-		6	SCREW M6S ISO 4017 M6X35 A280	
310	312105-0453	-		6	SCREW M6S ISO 4017 M8x25 A280	
320	312105-0457	-		3	SCREW ISO 4017 M8x35 A280	
350	312155-0368	-		6	SCREW MF6S DIN7991 M6X16 A280	
380	315105-0153	-		12	WASHER,PLAIN ROUND 6,4x12 Stainless	
390	315105-0165	-		30	WASHER,PLAIN ROUND 8,4x16 Stainless	
400	315115-0165	-		3	WASHER TBRB 8,4x16 Stainless	
420	525450-0000	D		1	HUB	
460	565967-0000	R		6	ARM	
510	262179-0001	R		12	PIN	
520	525329-0000	M		12	SLEEVE	
610	312109-0459	-		2	SCREW M6S ISO 4017 M8X40 A280	
620	312605-0318	-		18	NUT,HEXAGON,M8 RFR	
650	321111-0185	K		24	FLANGE BUS 14E7X14	
1000S						
010	569117-0000	R		6	FLAP	
050	569118-0000	R		6	FLAP	
110	569119-0000	R		6	BOTTOM	
270	312105-0376	-		6	SCREW M6S ISO 4017 M6X35 A280	
280	312105-0378	-		6	SCREW O4017 M6X40A280	
310	312105-0453	-		6	SCREW M6S ISO 4017 M8x25 A280	

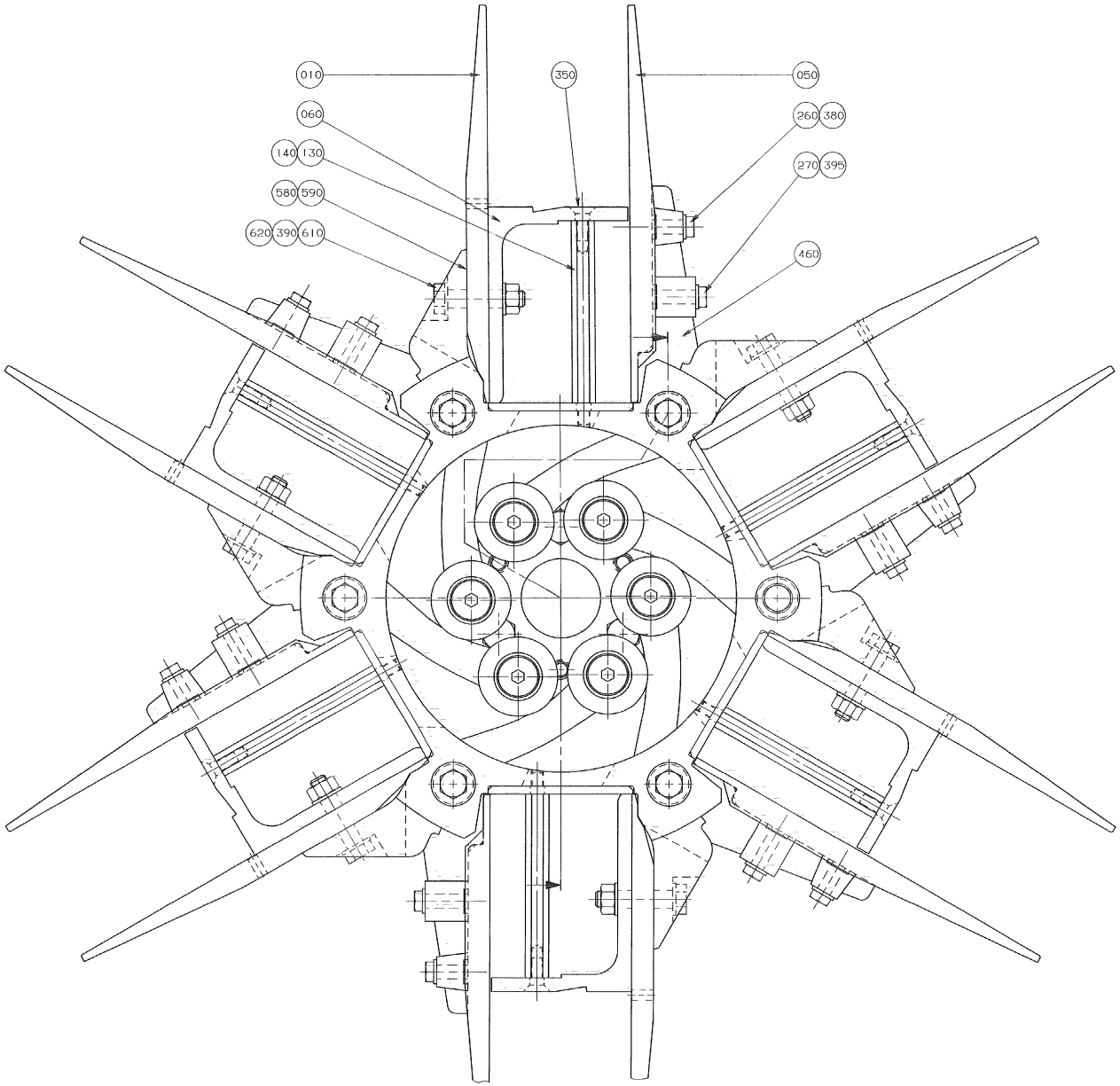

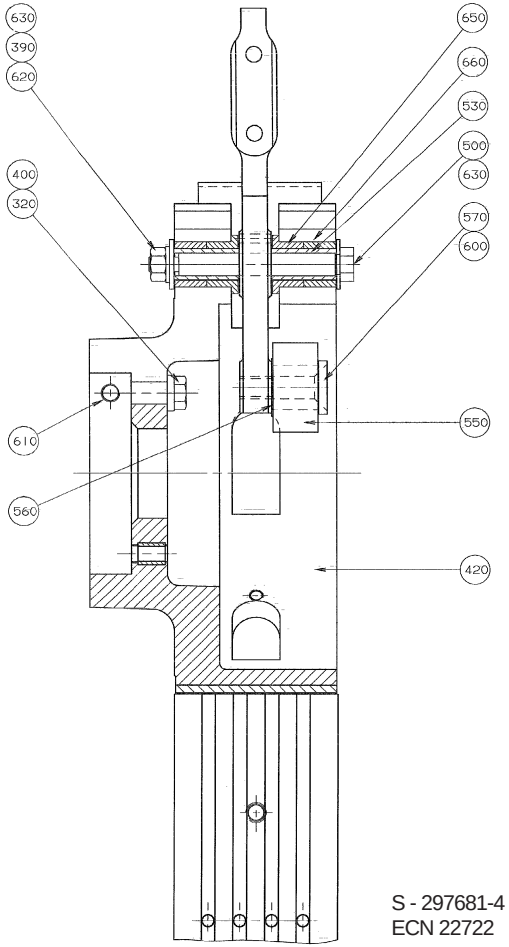

S - 297681-4
ECN 22722

Pos	Part No	SP	UN	Qty	Description	Page No
350	312155-0368	-		6	SCREW MF6S DIN7991 M6X16 A280	
390	315105-0165	-		30	WASHER,PLAIN ROUND 8,4x16 Stainless	
395	315115-0153	-		12	WASHER TBRB 6,4x12 Stainless	
420	525446-0000	D		1	HUB	
460	565967-0000	R		6	ARM	
510	262179-0001	R		12	PIN	
520	525329-0000	M		12	SLEEVE	
610	312109-0459	-		2	SCREW M6S ISO 4017 M8X40 A280	
620	312605-0318	-		18	NUT,HEXAGON,M8 RFR	
650	321111-0185	K		24	FLANGE BUS 14E7X14	
1055B						
010	525452-0000	R		6	FLAP	
050	B 443116-0000	R		6	FLAP	
110	443076-0000	R		6	BOTTOM	
260	312105-0374	-		6	SCREW M6S ISO 4017 M6X30 A280	
270	312105-0376	-		6	SCREW M6S ISO 4017 M6X35 A280	
310	312105-0453	-		6	SCREW M6S ISO 4017 M8x25 A280	
320	312105-0457	-		3	SCREW ISO 4017 M8x35 A280	
350	312155-0368	-		6	SCREW MF6S DIN7991 M6X16 A280	
380	315105-0153	-		12	WASHER,PLAIN ROUND 6,4x12 Stainless	
390	315105-0165	-		30	WASHER,PLAIN ROUND 8,4x16 Stainless	
400	315115-0165	-		3	WASHER TBRB 8,4x16 Stainless	
420	525448-0000	D		1	HUB	
460	565967-0000	R		6	ARM	
510	262179-0001	R		12	PIN	
520	525329-0000	M		12	SLEEVE	
610	312109-0459	-		2	SCREW M6S ISO 4017 M8X40 A280	
620	312605-0318	-		18	NUT,HEXAGON,M8 RFR	
650	321111-0185	K		24	FLANGE BUS 14E7X14	
1000B LOFIN						
010	525453-0000	R		6	FLAP	
050	B 285310-0001	R		6	FLAP	
110	443076-0000	R		6	BOTTOM	
260	312105-0374	-		6	SCREW M6S ISO 4017 M6X30 A280	
270	312105-0376	-		6	SCREW M6S ISO 4017 M6X35 A280	
310	312105-0453	-		6	SCREW M6S ISO 4017 M8x25 A280	
320	312105-0457	-		3	SCREW ISO 4017 M8x35 A280	
350	312155-0368	-		6	SCREW MF6S DIN7991 M6X16 A280	
380	315105-0153	-		12	WASHER,PLAIN ROUND 6,4x12 Stainless	
390	315105-0165	-		30	WASHER,PLAIN ROUND 8,4x16 Stainless	
400	315115-0165	-		3	WASHER TBRB 8,4x16 Stainless	
420	525450-0000	D		1	HUB	
460	565967-0000	R		6	ARM	
510	262179-0001	R		12	PIN	
520	525329-0000	M		12	SLEEVE	
610	312109-0459	-		2	SCREW M6S ISO 4017 M8X40 A280	
620	312605-0318	-		18	NUT,HEXAGON,M8 RFR	
650	321111-0185	K		24	FLANGE BUS 14E7X14	
1000SQ REVFIN						
010	574029-0000	R		6	FLAP	
050	574030-0000	R		6	FLAP	
110	574031-0000	R		6	BOTTOM	
260	312105-0372	-		6	SCREW M6S ISO 4017 M6X25 A280	
270	312105-0376	-		6	SCREW M6S ISO 4017 M6X35 A280	
310	312105-0451	-		6	SCREW M6S ISO 4017 8x20 A280	
320	312105-0457	-		3	SCREW ISO 4017 M8x35 A280	
350	312155-0364	-		6	SCREW MF6S6X10RFR	
380	315105-0153	-		6	WASHER,PLAIN ROUND 6,4x12 Stainless	
390	315105-0165	-		12	WASHER,PLAIN ROUND 8,4x16 Stainless	
395	315115-0153	-		6	WASHER TBRB 6,4x12 Stainless	
400	315115-0165	-		3	WASHER TBRB 8,4x16 Stainless	
420	574026-0000	D		1	HUB	
460	574028-0000	R		6	ARM	
610	312318-0455	-		2	STOP SCREW SK6SS8X30RFR	
620	312605-0318	-		6	NUT,HEXAGON,M8 RFR	
650	321111-0185	K		12	FLANGE BUS 14E7X14	
660	90240-0233	K		12	BUSHING	
1000SQ NORMFIN						
010	574029-0000	R		6	FLAP	
050	574030-0000	R		6	FLAP	
110	574031-0000	R		6	BOTTOM	
260	312105-0372	-		6	SCREW M6S ISO 4017 M6X25 A280	
270	312105-0376	-		6	SCREW M6S ISO 4017 M6X35 A280	
310	312105-0451	-		6	SCREW M6S ISO 4017 8x20 A280	
320	312105-0457	-		3	SCREW ISO 4017 M8x35 A280	
350	312155-0364	-		6	SCREW MF6S6X10RFR	
380	315105-0153	-		6	WASHER,PLAIN ROUND 6,4x12 Stainless	
390	315105-0165	-		12	WASHER,PLAIN ROUND 8,4x16 Stainless	
395	315115-0153	-		6	WASHER TBRB 6,4x12 Stainless	
400	315115-0165	-		3	WASHER TBRB 8,4x16 Stainless	
420	574026-0000	D		1	HUB	
460	574028-0000	R		6	ARM	
610	312109-0459	-		2	SCREW M6S ISO 4017 M8X40 A280	
620	312605-0318	-		6	NUT,HEXAGON,M8 RFR	
650	321111-0185	K		12	FLANGE BUS 14E7X14	
660	90240-0233	K		12	BUSHING	

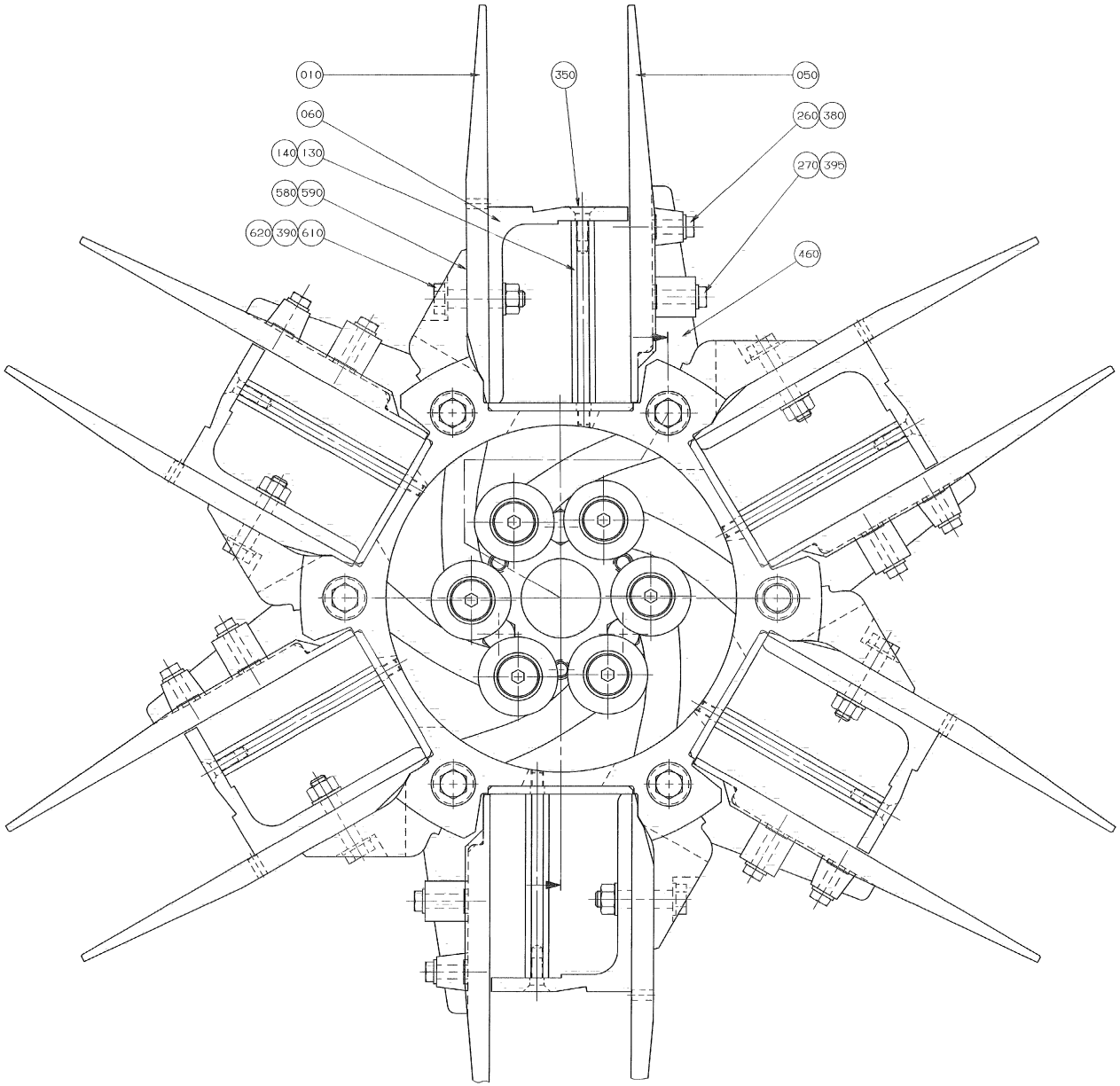

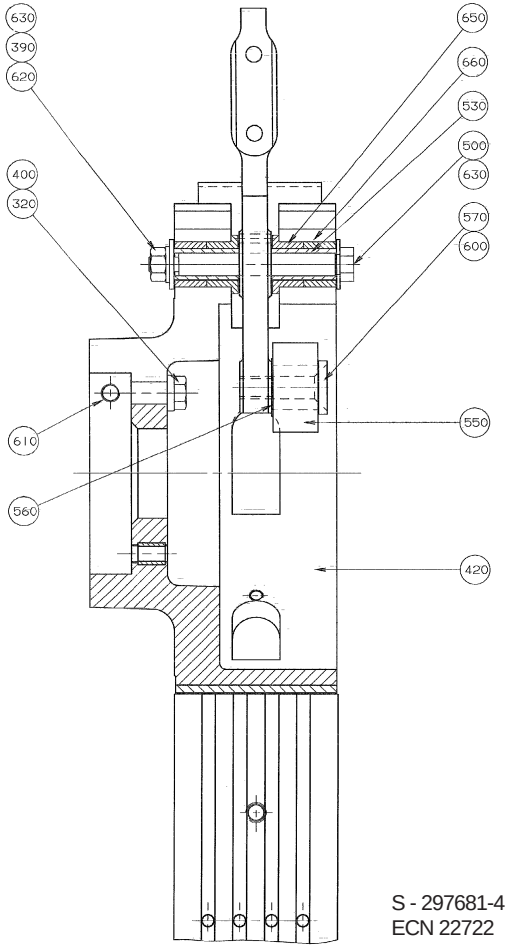

S - 297681-4
ECN 22722

Pos	Part No	SP	UN	Qty	Description	Page No
0500SQ						
010	574029-0000	R		6	FLAP	
050	574030-0000	R		6	FLAP	
060	583449-0000	D		6	BOTTOM	
130	583454-0000	-		6	SUPPORT	
140	583631-0000	-		6	BOTTOM PANEL	
260	312105-0372	-		6	SCREW M6S ISO 4017 M6X25 A280	
350	312155-0368	-		6	SCREW MF6S DIN7991 M6X16 A280	
380	315105-0153	-		6	WASHER,PLAIN ROUND 6,4x12 Stainless	
390	315105-0165	-		18	WASHER,PLAIN ROUND 8,4x16 Stainless	
395	315115-0153	-		6	WASHER TBRB 6,4x12 Stainless	
400	315115-0165	-		3	WASHER TBRB 8,4x16 Stainless	
420	574026-0000	D		1	HUB	
460	574028-0000	R		6	ARM	
610	312109-0459	-		8	SCREW M6S ISO 4017 M8X40 A280	
620	312605-0318	-		12	NUT,HEXAGON,M8 RFR	
650	321111-0185	K		12	FLANGE BUS 14E7X14	
660	90240-0233	K		12	BUSHING	
Common parts						
500	262028-0001	R		6	FITTING BOLT	
530	525330-0000	M		12	SHAFT	
550	285321-0000	M		6	ROLL	
560	285322-0000	M		6	WASHER	
570	442563-0000	M		6	AXLE PIN	
580	442894-0000	-		x	SHIM	
590	442939-0000	-		x	SHIM	
600	312155-0499	-		6	SCREW MF6S DIN 7991 M10X40 A280	
630	315105-0173	-		12	WASHER,PLAIN ROUND 10,5x22 STAINLESS	

Pos	Part No	SP	UN	Qty	Description	Page No

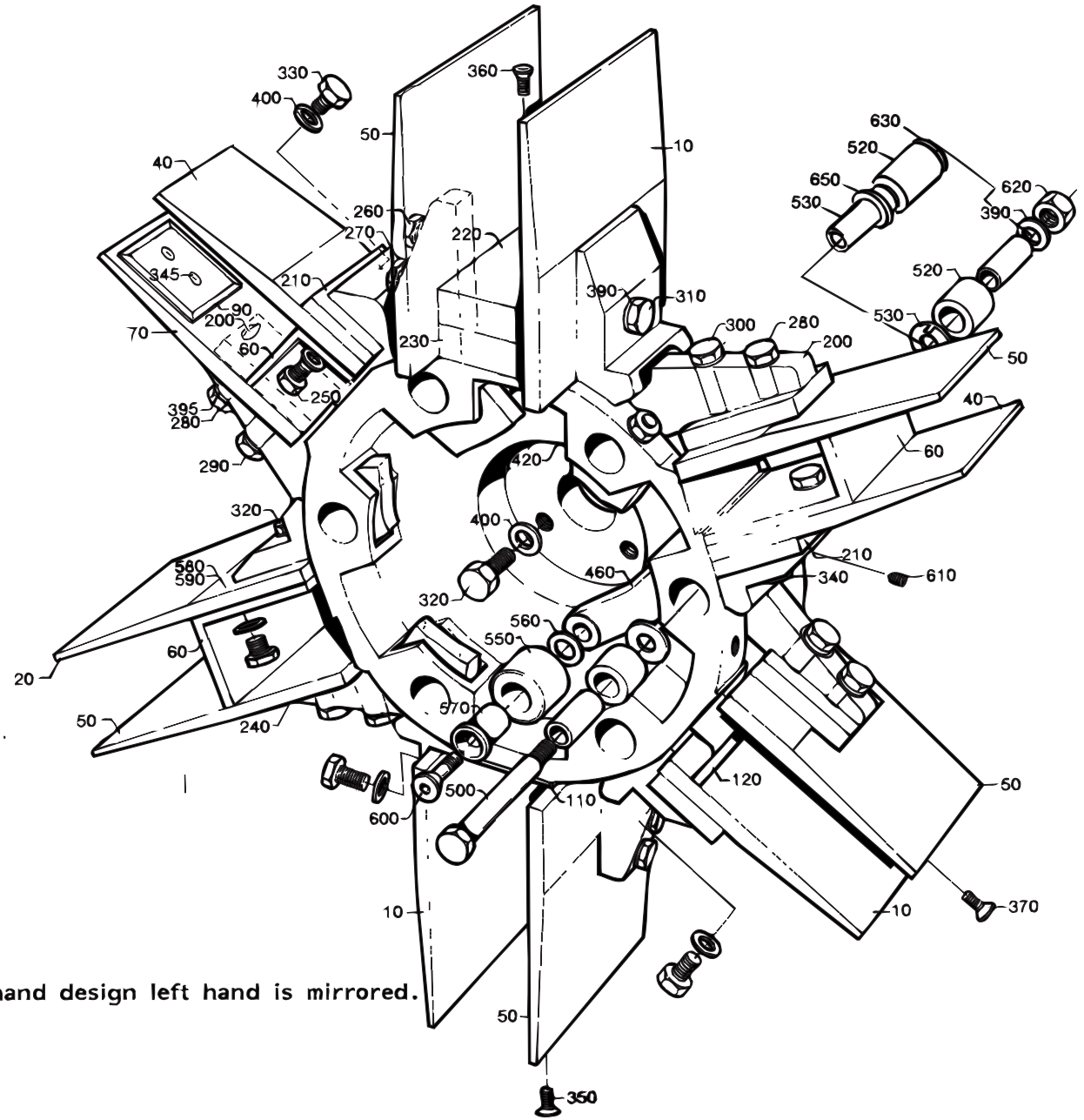

The Illustration shows right hand design left hand is mirrored.

S-297682-2
ECN 14031

Pos	Part No	SP	UN	Qty	Description	Page No
0355B						
010	525458-0000	R		6	FLAP	
050	B 285310-0002	R		6	FLAP	
120	525371-0000	D		6	BOTTOM	
200	285316-0002	D		6	SPACER PIECE	
210	525461-0000	D		6	SPACER PIECE	
250	312105-0368	-		6	SCREW M6S ISO 4017 M6x16 A280	
280	312105-0378	-		6	SCREW O4017 M6X40A280	
290	312105-0379	-		6	SCREW M6S ISO 4014 M6X45 A280	
320	312105-0457	-		9	SCREW ISO 4017 M8x35 A280	
380	315105-0153	-		12	WASHER,PLAIN ROUND 6,4x12 Stainless	
390	315105-0165	-		24	WASHER,PLAIN ROUND 8,4x16 Stainless	
395	315115-0153	-		6	WASHER TBRB 6,4x12 Stainless	
400	315115-0165	-		9	WASHER TBRB 8,4x16 Stainless	
420	525449-0000	D		1	HUB	
460	565967-0000	R		6	ARM	
510	262179-0001	R		12	PIN	
520	525329-0000	M		12	SLEEVE	
610	312109-0459	-		2	SCREW M6S ISO 4017 M8X40 A280	
620	312605-0318	-		18	NUT,HEXAGON,M8 RFR	
650	321111-0185	K		24	FLANGE BUS 14E7X14	
0375S						
040	525430-0000	R		6	FLAP	
060	525372-0000	D		6	BOTTOM	
070	297646-0000	R		6	FLAP	
200	285316-0002	D		6	SPACER PIECE	
210	525461-0000	D		6	SPACER PIECE	
250	312105-0368	-		12	SCREW M6S ISO 4017 M6x16 A280	
280	312105-0378	-		6	SCREW O4017 M6X40A280	
290	312105-0379	-		6	SCREW M6S ISO 4014 M6X45 A280	
320	312105-0457	-		3	SCREW ISO 4017 M8x35 A280	
330	312105-0459	-		6	SCREW ISO 4017 M8x40 A280	
380	315105-0153	-		18	WASHER,PLAIN ROUND 6,4x12 Stainless	
390	315105-0165	-		24	WASHER,PLAIN ROUND 8,4x16 Stainless	
395	315115-0153	-		6	WASHER TBRB 6,4x12 Stainless	
400	315115-0165	-		9	WASHER TBRB 8,4x16 Stainless	
420	525449-0000	D		1	HUB	
460	565967-0000	R		6	ARM	
510	262179-0001	R		12	PIN	
520	525329-0000	M		12	SLEEVE	
610	312109-0459	-		2	SCREW M6S ISO 4017 M8X40 A280	
620	312605-0318	-		18	NUT,HEXAGON,M8 RFR	
650	321111-0185	K		24	FLANGE BUS 14E7X14	

Pos	Part No	SP	UN	Qty	Description	Page No
0400B						
010	574684-0000	R		6	FLAP	
050	B 285310-0002	R		6	FLAP	
120	574683-0000	D		6	BOTTOM	
200	285316-0002	D		6	SPACER PIECE	
210	525461-0000	D		6	SPACER PIECE	
250	312105-0368	-		12	SCREW M6S ISO 4017 M6x16 A280	
280	312105-0378	-		6	SCREW O4017 M6X40A280	
290	312105-0379	-		6	SCREW M6S ISO 4014 M6X45 A280	
320	312105-0457	-		9	SCREW ISO 4017 M8x35 A280	
380	315105-0153	-		18	WASHER,PLAIN ROUND 6,4x12 Stainless	
390	315105-0165	-		24	WASHER,PLAIN ROUND 8,4x16 Stainless	
395	315115-0153	-		6	WASHER TBRB 6,4x12 Stainless	
400	315115-0165	-		9	WASHER TBRB 8,4x16 Stainless	
420	525449-0000	D		1	HUB	
460	565967-0000	R		6	ARM	
510	262179-0001	R		12	PIN	
520	525329-0000	M		12	SLEEVE	
610	312109-0459	-		2	SCREW M6S ISO 4017 M8X40 A280	
620	312605-0318	-		18	NUT,HEXAGON,M8 RFR	
650	321111-0185	K		24	FLANGE BUS 14E7X14	
0500B						
020	525455-0000	R		6	FLAP	
050	B 285310-0001	R		6	FLAP	
060	525369-0000	D		6	BOTTOM	
240	442981-0000	D		6	SHIM	
250	312105-0368	-		6	SCREW M6S ISO 4017 M6x16 A280	
260	312105-0374	-		6	SCREW M6S ISO 4017 M6X30 A280	
280	312105-0378	-		6	SCREW O4017 M6X40A280	
320	312105-0457	-		9	SCREW ISO 4017 M8x35 A280	
380	315105-0153	-		18	WASHER,PLAIN ROUND 6,4x12 Stainless	
390	315105-0165	-		24	WASHER,PLAIN ROUND 8,4x16 Stainless	
400	315115-0165	-		9	WASHER TBRB 8,4x16 Stainless	
420	525449-0000	D		1	HUB	
460	565967-0000	R		6	ARM	
510	262179-0001	R		12	PIN	
520	525329-0000	M		12	SLEEVE	
610	312109-0459	-		2	SCREW M6S ISO 4017 M8X40 A280	
620	312605-0318	-		18	NUT,HEXAGON,M8 RFR	
650	321111-0185	K		24	FLANGE BUS 14E7X14	
0500S						
010	525456-0000	R		6	FLAP	
050	B 285310-0002	R		6	FLAP	

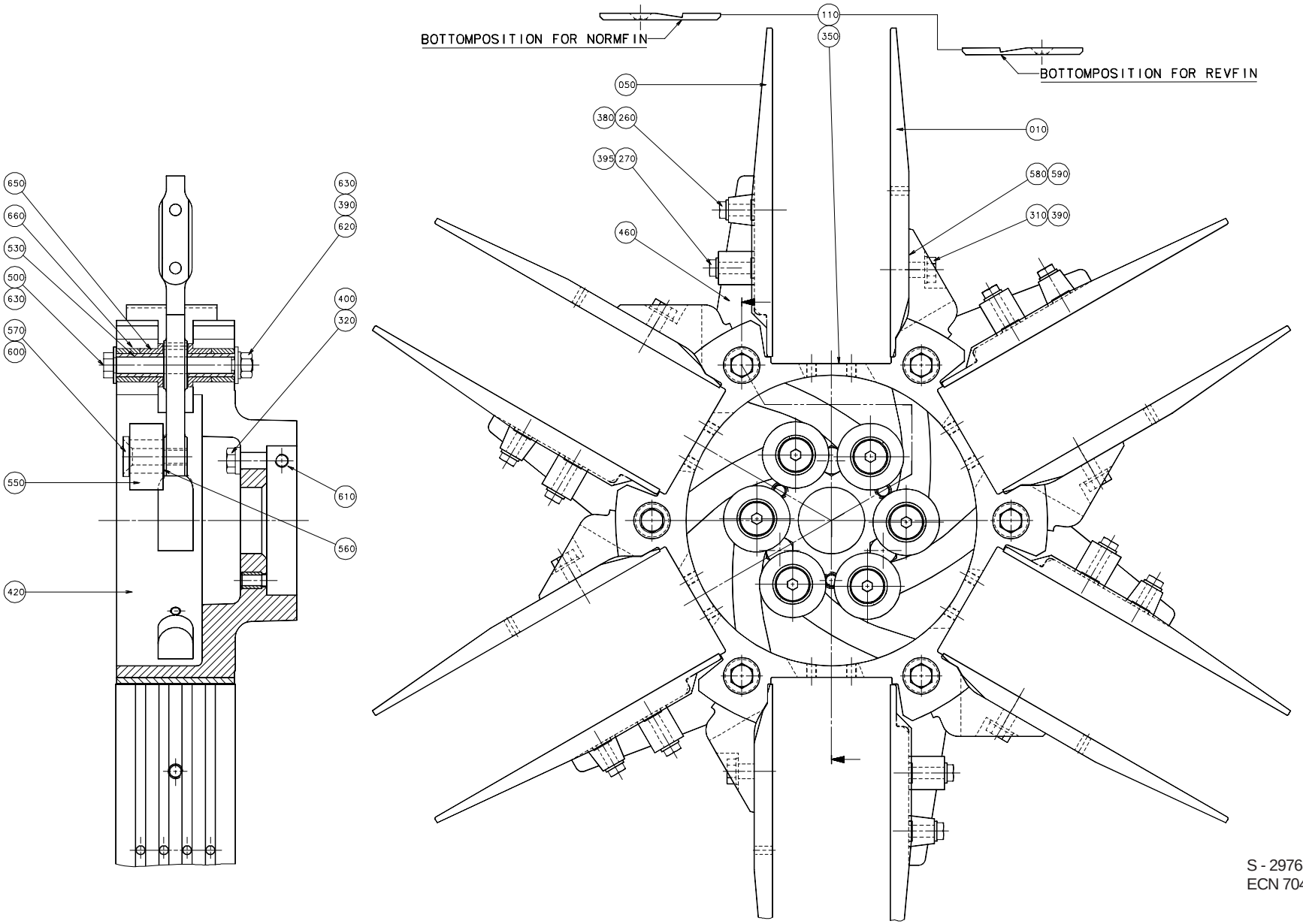

S - 297682-3
ECN 70412

Pos	Part No	SP	UN	Qty	Description	Page No
120	525370-0000	D		6	BOTTOM	
200	285316-0002	D		6	SPACER PIECE	
210	525461-0000	D		6	SPACER PIECE	
280	312105-0378	-		6	SCREW O4017 M6X40A280	
290	312105-0379	-		6	SCREW M6S ISO 4014 M6X45 A280	
320	312105-0457	-		9	SCREW ISO 4017 M8x35 A280	
370	312155-0378	-		6	SCREW MF6S DIN 7991 M6X40 A280	
380	315105-0153	-		12	WASHER,PLAIN ROUND 6,4x12 Stainless	
390	315105-0165	-		24	WASHER,PLAIN ROUND 8,4x16 Stainless	
395	315115-0153	-		6	WASHER TBRB 6,4x12 Stainless	
400	315115-0165	-		9	WASHER TBRB 8,4x16 Stainless	
420	525449-0000	D		1	HUB	
460	565967-0000	R		6	ARM	
510	262179-0001	R		12	PIN	
520	525329-0000	M		12	SLEEVE	
610	312109-0459	-		2	SCREW M6S ISO 4017 M8X40 A280	
620	312605-0318	-		18	NUT,HEXAGON,M8 RFR	
650	321111-0185	K		24	FLANGE BUS 14E7X14	
0750B						
010	525453-0000	R		6	FLAP	
050	B 285310-0001	R		6	FLAP	
220	525264-0000	D		6	BOTTOM	
230	297650-0000	D		6	BOTTOM	
240	442981-0000	D		6	SHIM	
260	312105-0374	-		6	SCREW M6S ISO 4017 M6X30 A280	
270	312105-0376	-		6	SCREW M6S ISO 4017 M6X35 A280	
310	312105-0453	-		6	SCREW M6S ISO 4017 M8x25 A280	
320	312105-0457	-		3	SCREW ISO 4017 M8x35 A280	
360	312155-0376	-		18	SCREW MF6S DIN 7991 M6X35 A280	
380	315105-0153	-		12	WASHER,PLAIN ROUND 6,4x12 Stainless	
390	315105-0165	-		30	WASHER,PLAIN ROUND 8,4x16 Stainless	
400	315115-0165	-		3	WASHER TBRB 8,4x16 Stainless	
420	525449-0000	D		1	HUB	
460	565967-0000	R		6	ARM	
510	262179-0001	R		12	PIN	
520	525329-0000	M		12	SLEEVE	
610	312109-0459	-		2	SCREW M6S ISO 4017 M8X40 A280	
620	312605-0318	-		18	NUT,HEXAGON,M8 RFR	
650	321111-0185	K		24	FLANGE BUS 14E7X14	
0750S						
010	525454-0000	R		6	FLAP	
050	544252-0000	R		6	FLAP	
110	544254-0000	R		6	PLATE	
200	543697-0000	D		6	SPACER PIECE	
210	525460-0000	D		6	SPACER PIECE	
270	312105-0376	-		6	SCREW M6S ISO 4017 M6X35 A280	
280	312105-0378	-		6	SCREW O4017 M6X40A280	
315	312105-0455	-		6	SCREW M6S ISO 4017 M8X30 A280	
320	312105-0457	-		3	SCREW ISO 4017 M8x35 A280	
350	312155-0368	-		6	SCREW MF6S DIN7991 M6X16 A280	
380	315105-0153	-		12	WASHER,PLAIN ROUND 6,4x12 Stainless	
390	315105-0165	-		30	WASHER,PLAIN ROUND 8,4x16 Stainless	
400	315115-0165	-		3	WASHER TBRB 8,4x16 Stainless	
420	525447-0000	D		1	HUB	
460	565967-0000	R		6	ARM	
510	262179-0001	R		12	PIN	
520	525329-0000	M		12	SLEEVE	
610	312109-0459	-		2	SCREW M6S ISO 4017 M8X40 A280	
620	312605-0318	-		18	NUT,HEXAGON,M8 RFR	
650	321111-0185	K		24	FLANGE BUS 14E7X14	
1000B HIFIN						
010	525453-0000	R		6	FLAP	
050	B 285310-0001	R		6	FLAP	
110	525063-0000	R		6	BOTTOM	
260	312105-0374	-		6	SCREW M6S ISO 4017 M6X30 A280	
270	312105-0376	-		6	SCREW M6S ISO 4017 M6X35 A280	
310	312105-0453	-		6	SCREW M6S ISO 4017 M8x25 A280	
320	312105-0457	-		3	SCREW ISO 4017 M8x35 A280	
350	312155-0368	-		6	SCREW MF6S DIN7991 M6X16 A280	
380	315105-0153	-		12	WASHER,PLAIN ROUND 6,4x12 Stainless	
390	315105-0165	-		30	WASHER,PLAIN ROUND 8,4x16 Stainless	
400	315115-0165	-		3	WASHER TBRB 8,4x16 Stainless	
420	525449-0000	D		1	HUB	
460	565967-0000	R		6	ARM	
510	262179-0001	R		12	PIN	
520	525329-0000	M		12	SLEEVE	
610	312109-0459	-		2	SCREW M6S ISO 4017 M8X40 A280	
620	312605-0318	-		18	NUT,HEXAGON,M8 RFR	
650	321111-0185	K		24	FLANGE BUS 14E7X14	
1000S						
010	569117-0000	R		6	FLAP	
050	569118-0000	R		6	FLAP	
110	569119-0000	R		6	BOTTOM	
270	312105-0376	-		6	SCREW M6S ISO 4017 M6X35 A280	
280	312105-0378	-		6	SCREW O4017 M6X40A280	
310	312105-0453	-		6	SCREW M6S ISO 4017 M8x25 A280	

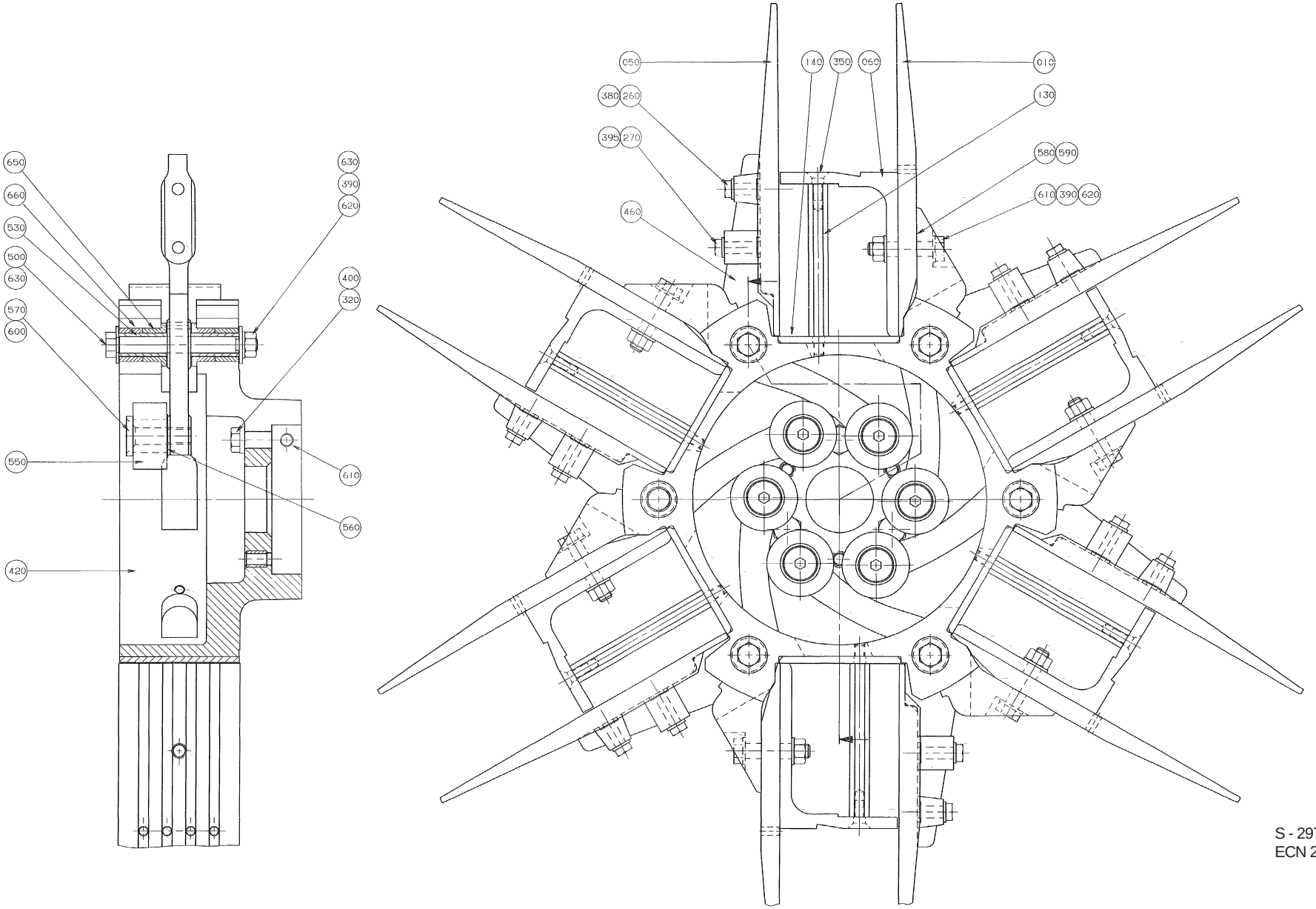

S - 297682-4
ECN 22722

Pos	Part No	SP	UN	Qty	Description	Page No
390	315105-0165	-		30	WASHER,PLAIN ROUND 8,4x16 Stainless	
395	315115-0153	-		12	WASHER TBRB 6,4x12 Stainless	
420	525445-0000	D		1	HUB	
460	565967-0000	R		6	ARM	
510	262179-0001	R		12	PIN	
520	525329-0000	M		12	SLEEVE	
610	312109-0459	-		2	SCREW M6S ISO 4017 M8X40 A280	
620	312605-0318	-		18	NUT,HEXAGON,M8 RFR	
650	321111-0185	K		24	FLANGE BUS 14E7X14	
1055B						
010	525452-0000	R		6	FLAP	
050	B 443116-0000	R		6	FLAP	
110	443076-0000	R		6	BOTTOM	
260	312105-0374	-		6	SCREW M6S ISO 4017 M6X30 A280	
270	312105-0376	-		6	SCREW M6S ISO 4017 M6X35 A280	
310	312105-0453	-		6	SCREW M6S ISO 4017 M8x25 A280	
320	312105-0457	-		3	SCREW ISO 4017 M8x35 A280	
350	312155-0368	-		6	SCREW MF6S DIN7991 M6X16 A280	
380	315105-0153	-		12	WASHER,PLAIN ROUND 6,4x12 Stainless	
390	315105-0165	-		30	WASHER,PLAIN ROUND 8,4x16 Stainless	
400	315115-0165	-		3	WASHER TBRB 8,4x16 Stainless	
420	525447-0000	D		1	HUB	
460	565967-0000	R		6	ARM	
510	262179-0001	R		12	PIN	
520	525329-0000	M		12	SLEEVE	
610	312109-0459	-		2	SCREW M6S ISO 4017 M8X40 A280	
620	312605-0318	-		18	NUT,HEXAGON,M8 RFR	
650	321111-0185	K		24	FLANGE BUS 14E7X14	
1000B LOFIN						
010	525453-0000	R		6	FLAP	
050	B 285310-0001	R		6	FLAP	
110	443076-0000	R		6	BOTTOM	
260	312105-0374	-		6	SCREW M6S ISO 4017 M6X30 A280	
270	312105-0376	-		6	SCREW M6S ISO 4017 M6X35 A280	
310	312105-0453	-		6	SCREW M6S ISO 4017 M8x25 A280	
320	312105-0457	-		3	SCREW ISO 4017 M8x35 A280	
350	312155-0368	-		6	SCREW MF6S DIN7991 M6X16 A280	
380	315105-0153	-		12	WASHER,PLAIN ROUND 6,4x12 Stainless	
390	315105-0165	-		30	WASHER,PLAIN ROUND 8,4x16 Stainless	
400	315115-0165	-		3	WASHER TBRB 8,4x16 Stainless	
420	525449-0000	D		1	HUB	
460	565967-0000	R		6	ARM	
510	262179-0001	R		12	PIN	
520	525329-0000	M		12	SLEEVE	
610	312109-0459	-		2	SCREW M6S ISO 4017 M8X40 A280	
620	312605-0318	-		18	NUT,HEXAGON,M8 RFR	
650	321111-0185	K		24	FLANGE BUS 14E7X14	
1000SQ REVFIN						
010	574029-0000	R		6	FLAP	
050	574030-0000	R		6	FLAP	
110	574031-0000	R		6	BOTTOM	
260	312105-0372	-		6	SCREW M6S ISO 4017 M6X25 A280	
270	312105-0376	-		6	SCREW M6S ISO 4017 M6X35 A280	
310	312105-0451	-		6	SCREW M6S ISO 4017 8x20 A280	
350	312155-0364	-		6	SCREW MF6S6X10RFR	
380	315105-0153	-		6	WASHER,PLAIN ROUND 6,4x12 Stainless	
390	315105-0165	-		12	WASHER,PLAIN ROUND 8,4x16 Stainless	
395	315115-0153	-		6	WASHER TBRB 6,4x12 Stainless	
400	315115-0165	-		3	WASHER TBRB 8,4x16 Stainless	
420	574027-0000	D		1	HUB	
460	574028-0000	R		6	ARM	
610	312318-0455	-		2	STOP SCREW SK6SS8X30RFR	
620	312605-0318	-		6	NUT,HEXAGON,M8 RFR	
650	321111-0185	K		12	FLANGE BUS 14E7X14	
660	90240-0233	K		12	BUSHING	
1000SQ NORMFIN						
010	574029-0000	R		6	FLAP	
050	574030-0000	R		6	FLAP	
110	574031-0000	R		6	BOTTOM	
260	312105-0372	-		6	SCREW M6S ISO 4017 M6X25 A280	
270	312105-0376	-		6	SCREW M6S ISO 4017 M6X35 A280	
310	312105-0451	-		6	SCREW M6S ISO 4017 8x20 A280	
350	312155-0364	-		6	SCREW MF6S6X10RFR	
380	315105-0153	-		6	WASHER,PLAIN ROUND 6,4x12 Stainless	
390	315105-0165	-		12	WASHER,PLAIN ROUND 8,4x16 Stainless	
395	315115-0153	-		6	WASHER TBRB 6,4x12 Stainless	
400	315115-0165	-		3	WASHER TBRB 8,4x16 Stainless	
420	574027-0000	D		1	HUB	
460	574028-0000	R		6	ARM	
610	312109-0459	-		2	SCREW M6S ISO 4017 M8X40 A280	
620	312605-0318	-		6	NUT,HEXAGON,M8 RFR	
650	321111-0185	K		12	FLANGE BUS 14E7X14	
660	90240-0233	K		12	BUSHING	
0500SQ						
010	574029-0000	R		6	FLAP	

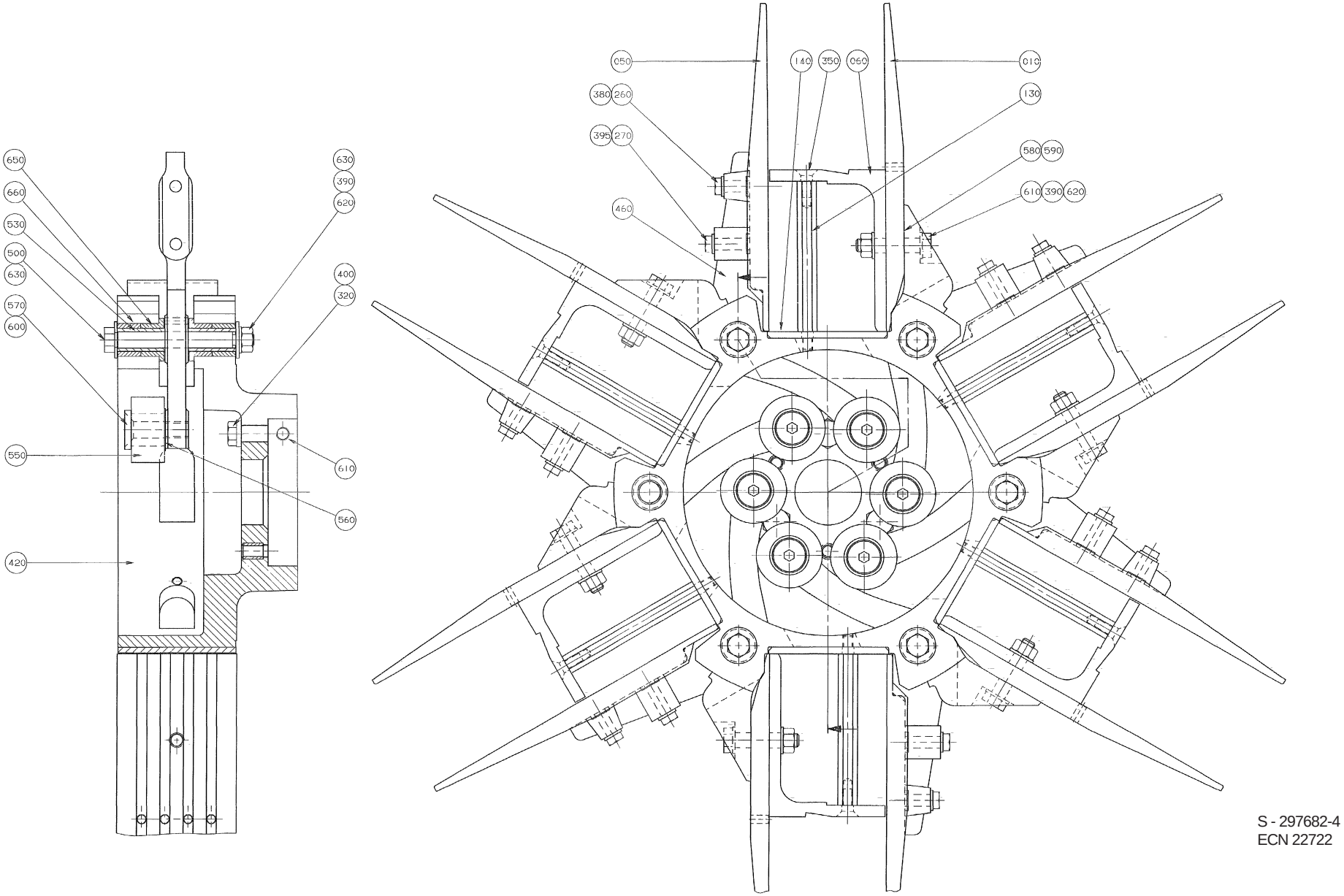

S - 297682-4
ECN 22722

Pos	Part No	SP	UN	Qty	Description	Page No
050	574030-0000	R		6	FLAP	
060	583449-0000	D		6	BOTTOM	
130	583454-0000	-		6	SUPPORT	
140	583631-0000	-		6	BOTTOM PANEL	
260	312105-0372	-		6	SCREW M6S ISO 4017 M6X25 A280	
350	312155-0368	-		6	SCREW MF6S DIN7991 M6X16 A280	
380	315105-0153	-		6	WASHER,PLAIN ROUND 6,4x12 Stainless	
390	315105-0165	-		18	WASHER,PLAIN ROUND 8,4x16 Stainless	
395	315115-0153	-		6	WASHER TBRB 6,4x12 Stainless	
400	315115-0165	-		3	WASHER TBRB 8,4x16 Stainless	
420	574027-0000	D		1	HUB	
460	574028-0000	R		6	ARM	
610	312109-0459	-		8	SCREW M6S ISO 4017 M8X40 A280	
620	312605-0318	-		12	NUT,HEXAGON,M8 RFR	
650	321111-0185	K		12	FLANGE BUS 14E7X14	
660	90240-0233	K		12	BUSHING	
Common parts						
500	262028-0001	R		6	FITTING BOLT	
530	525330-0000	M		12	SHAFT	
550	285321-0000	M		6	ROLL	
560	285322-0000	M		6	WASHER	
570	442563-0000	M		6	AXLE PIN	
580	442894-0000	-		x	SHIM	
590	442939-0000	-		x	SHIM	
600	312155-0499	-		6	SCREW MF6S DIN 7991 M10X40 A280	
630	315105-0173	-		12	WASHER,PLAIN ROUND 10,5x22 STAINLESS	

Pos	Part No	SP	UN	Qty	Description	Page No

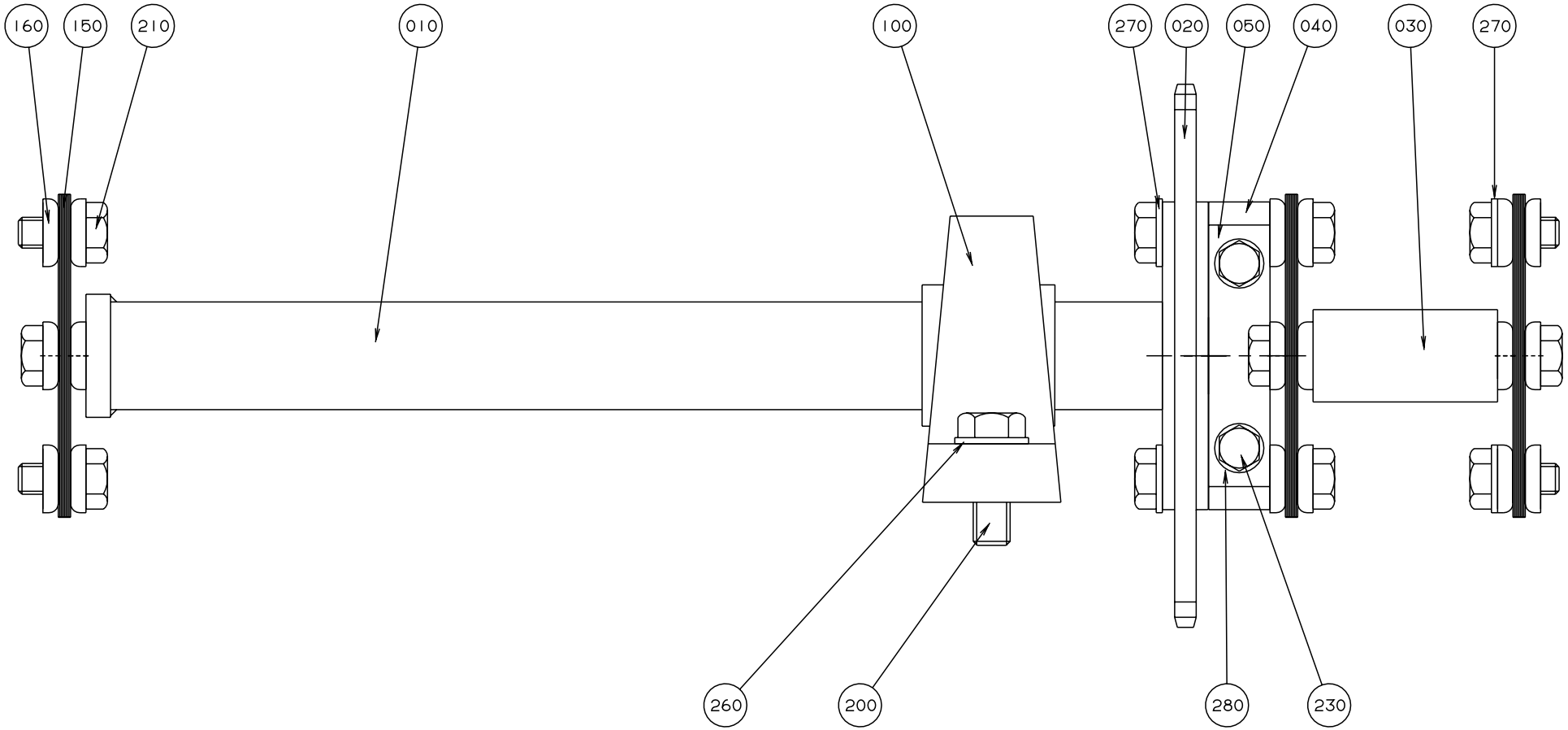

S-443173-1
ECN 10204

Pos	Part No	SP	UN	Qty	Description	Page No
Common parts						
010	443175-0000	D		1	SHAFT	
020	443177-0000	D		1	SPROCKET	
030	443179-0000	-		1	SPACER	
040	443178-0000	D		1	BRACKET	
050	262275-0003	D		1	CAP	
100	90345-0038	D		1	STANDING BEARING,TYPE SY 35	
150	33261-0000	M		24	SPRING PLATE	
160	31553-0002	R		24	WASHER	
200	312105-0538	-		2	SCREW M6S ISO 4017 M12X35 A280	
210	90287-0164	-		14	SCREW, M6S ISO4014, M10x25 A480	
230	90287-0165	-		2	SCREW, M6S ISO4014, M8x20 A480	
260	315105-0178	-		2	WASHER,PLAIN ROUND 13x24	
270	315105-0173	-		4	WASHER,PLAIN ROUND 10,5x22 STAINLESS	
280	315105-0165	-		2	WASHER,PLAIN ROUND 8,4x16 Stainless	

Pos	Part No	SP	UN	Qty	Description	Page No

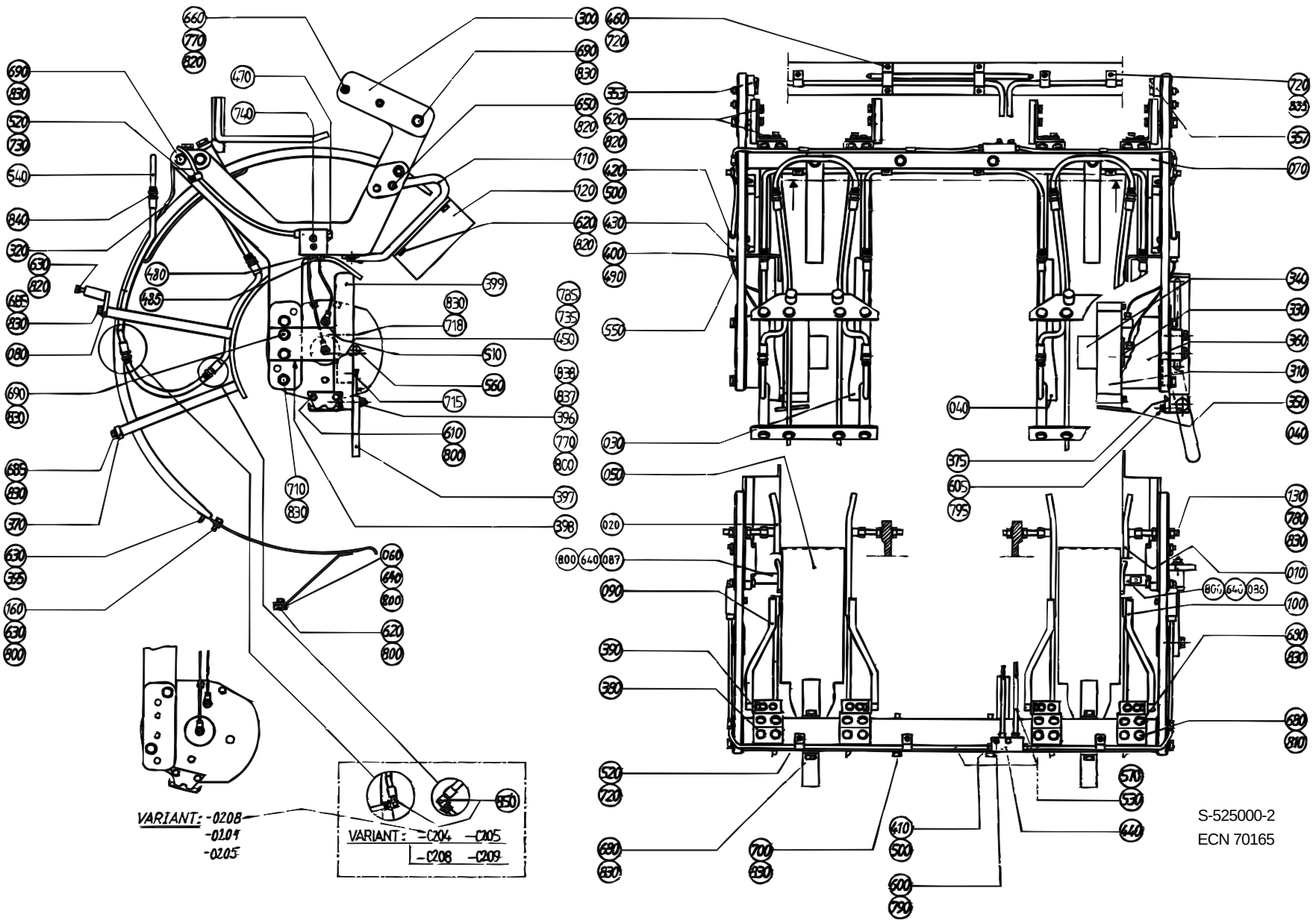
VARIANT: -0208
-0209
-0205
VARIANT: -C204 -C205
-C208 -C209
S-525000-2
ECN 70165

Pos	Part No	SP	UN	Qty	Description	Page No
Common parts						
300	B 525016-0000	D		2	FASTENING PLATE	
310	574050-0000	D		2	CURVE	
320	525017-0000	D		2	STEERING GUIDE	
330	285168-0000	D		2	BUSHING	
340	285851-0000	R		2	BEARING	
350	443240-0000	-		2	DRIP PLATE	
353	442564-0000	R		1	CURVE	
357	442565-0000	R		1	CURVE	
360	525018-0000	-		2	SPACER	
370	525019-0000	D		2	BRACKET	
375	525360-0000	D		1	BRACKET	
380	525340-0000	D		4	BRACKET	
390	525178-0000	D		4	BRACKET	
395	525181-0000	-		2	WASHER	
396	525321-0000	R		1	SCREW	
398	525296-0000	-		1	BRACKET	
400	90028-0020	J		4	CONE DT13700S-300 Di=2,5mm	
410	90028-0022	J		4	CONE	
420	90028-0025	J		2	CONE DT4.138811.2D	
430	90032-0038	-		2	BLOCK 2ways DT4.310792.1D	
440	90032-0044	-		1	JUNCTION BLOCK	
450	90044-0104	M		1	PROX.SWITCH IFM IN 3002	
460	90074-0018	-		2	CLIP,double 2x10	
470	90087-0019	-		2	PLUG M10x1 Stainless	
480	90092-0052	J		2	METERING VALVE 10mm3	
485	90092-0053	J		2	METERING VALVE 30mm3	
490	90134-0039	J		4	BUSHING DT4.018912.1D Stainless	
500	90134-0055	J		6	BUSHING 6 DIN 3871 Stainless	
510	90134-0058	-		4	BANJO CONNECTION DT4.310.437.1	
520	90165-0057	-		5	PIPE-CLIPS,FOR SINGLE PIPE,ONE SIDE 6	
530	90166-0108	-	MM	5200	HOSE 3/6 PA11/12 Transp.	
540	90166-0122	-	MM	6000	HOSE 6/8 PA 11/12 Transparent	
550	90166-0143	-	MM	2000	HOSE 1,6/2,5 PA 11/12	
560	90261-0032	-		4	PLUG 1073 ORION	
570	90134-0030	-		6	SLEEVE 6/3	
600	312105-0295	-		2	SCREW M6S ISO 4017 M4X20 A280	
605	312105-0327	-		2	SCREW M6S ISO 4017 M5X12 A280	
610	312105-0364	-		10	SCREW M6S 6x10 A280	
620	312105-0366	-		24	SCREW M6S ISO 4017 M6X12 A280	
630	312105-0368	-		10	SCREW M6S ISO 4017 M6x16 A280	
650	312105-0374	-		4	SCREW M6S ISO 4017 M6X30 A280	
660	312105-0378	-		4	SCREW O4017 M6X40A280	
680	312105-0449	-		20	SCREW M6S ISO 4017 M8x16 A280	
685	312105-0451	-		16	SCREW M6S ISO 4017 8x20 A280	
690	312105-0455	-		8	SCREW M6S ISO 4017 M8X30 A280	
700	312105-0464	-		2	SCREW M6S ISO 4014 M8x65 A280	
710	312105-0469	-		4	SCREW M6S ISO 4014 M8x90 A280	
715	312115-0323	-		1	SCREW MC6S ISO 4762 M5X8 A280	
718	312115-0455	-		2	SCREW MC6S ISO 4762 M8X30 A280	
720	312125-0287	-		10	SLOTTED CHEESE HEAD ISO 1207 M4X8 RFR	
730	312125-0291	-		2	SLOTTED CHEESE HEAD ISO 1207 M4x12 RFR	
735	312125-0230	-		2	SLOTTED CHEESE HEAD ISO 1207 M3X20 RFR	
740	312155-0297	-		4	SCREW MF6S DIN 7991 M4X25 A280	
770	312605-0316	-		5	NUT,HEXAGON A280 M6M6	
780	312605-0318	-		8	NUT,HEXAGON,M8 RFR	
785	315105-0124	-		2	WASHER,PLAIN ROUND 3,2x6	
790	315105-0136	-		2	WASHER,PLAIN ROUND 4,3x8 Stainless	
795	315105-0146	-		2	WASHER,PLAIN ROUND 5,3x10 Stainless	
810	315105-0165	-		8	WASHER,PLAIN ROUND 8,4x16 Stainless	
820	315115-0153	-		40	WASHER TBRB 6,4x12 Stainless	
830	315115-0165	-		52	WASHER TBRB 8,4x16 Stainless	
835	316810-0106	-		3	PIPE-CLIPS,FOR SINGLE PIPE,ONE SIDE 8	
837	321116-0127	R		1	BUSHING 10E7/14x10	
838	321116-0128	R		1	BUSHING 10E7/14X16	
0355B						
010	525002-0000	D		2	FOLDING BAR	
020	525004-0000	D		2	FOLDING BAR	
030	525005-0009	D		2	FOLDING BAR	
040	525006-0009	D		2	FOLDING BAR	
050	525341-0002	R		2	LEAD RAIL	
070	B 525007-0002	D		1	CANTILEVER	
080	525008-0002	D		2	BRACKET	
090	525180-0002	D		2	FOLDING ARM	
100	525179-0002	D		2	FOLDING ARM	
110	525011-0009	D		2	BRACKET	
120	525182-0002	D		2	COUNTER PLATE	
130	525015-0002	D		4	SCREW	
160	315115-0153	-		2	WASHER TBRB 6,4x12 Stainless	
397	525295-0000	D		1	ARM	
399	B 525297-0000	D		1	BRACKET	
800	315105-0153	-		17	WASHER,PLAIN ROUND 6,4x12 Stainless	
840	342920-0121	-		8	STRAIGHT COUPLING,EXT.THREADED 8/6-R1/8"	
850	342930-0121	-		8	ELBOW 90 COUPL.,EXT.THREAD 8/6-R1/8"	
0375S						
010	525002-0000	D		2	FOLDING BAR	

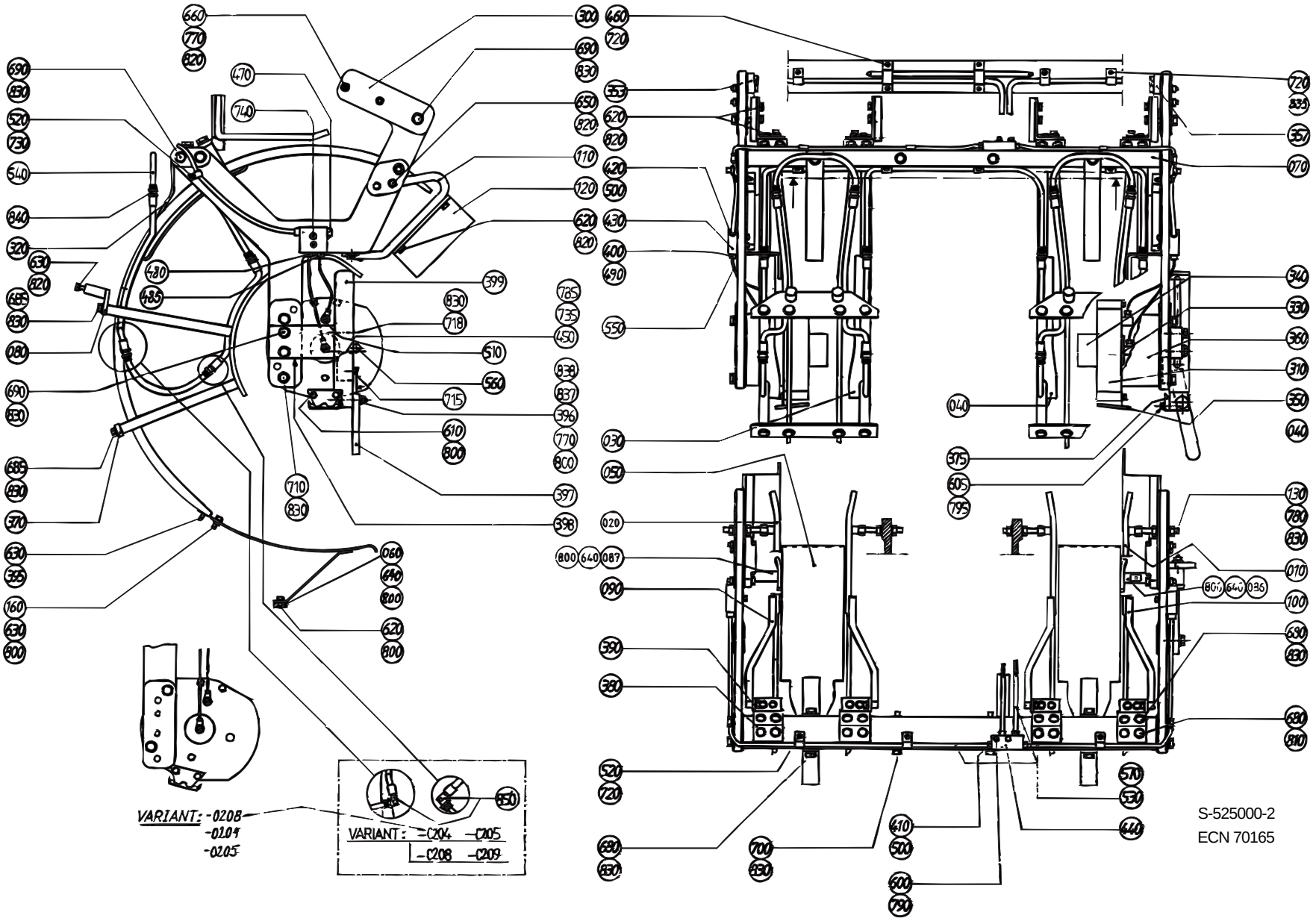
VARIANT: -0208
-0209
-0205
VARIANT: -C204 -C205
-C208 -C209
S-525000-2
ECN 70165

Pos	Part No	SP	UN	Qty	Description	Page No
020	525004-0000	D		2	FOLDING BAR	
030	525005-0007	D		2	FOLDING BAR	
040	525006-0007	D		2	FOLDING BAR	
050	525341-0002	R		2	LEAD RAIL	
070	B 525007-0003	D		1	CANTILEVER	
080	525008-0002	D		2	BRACKET	
090	525180-0002	D		2	FOLDING ARM	
100	525179-0002	D		2	FOLDING ARM	
110	525011-0007	D		2	BRACKET	
120	525014-0001	D		2	COUNTER PLATE	
130	525015-0003	D		4	SCREW	
160	315115-0153	-		2	WASHER TBRB 6,4x12 Stainless	
397	525295-0000	D		1	ARM	
399	B 525297-0000	D		1	BRACKET	
800	315105-0153	-		17	WASHER,PLAIN ROUND 6,4x12 Stainless	
840	342920-0121	-		16	STRAIGHT COUPLING,EXT.THREADED 8/6-R1/8"	
0400B						
010	525002-0000	D		2	FOLDING BAR	
020	525004-0000	D		2	FOLDING BAR	
030	525005-0010	D		2	FOLDING BAR	
040	525006-0010	D		2	FOLDING BAR	
050	525341-0002	R		2	LEAD RAIL	
070	B 525007-0002	D		1	CANTILEVER	
080	525008-0002	D		2	BRACKET	
090	525180-0002	D		2	FOLDING ARM	
100	525179-0002	D		2	FOLDING ARM	
110	525011-0010	D		2	BRACKET	
120	525182-0003	D		2	COUNTER PLATE	
130	525015-0002	D		4	SCREW	
397	525295-0000	D		1	ARM	
399	B 525297-0000	D		1	BRACKET	
800	315105-0153	-		17	WASHER,PLAIN ROUND 6,4x12 Stainless	
840	342920-0121	-		8	STRAIGHT COUPLING,EXT.THREADED 8/6-R1/8"	
850	342930-0121	-		8	ELBOW 90 COUPL.,EXT.THREAD 8/6-R1/8"	
0500B						
010	525001-0000	D		2	FOLDING BAR	
020	525003-0000	D		2	FOLDING BAR	
030	525005-0005	D		2	FOLDING BAR	
040	525006-0005	D		2	FOLDING BAR	
050	525341-0001	R		2	LEAD RAIL	
070	B 525007-0001	D		1	CANTILEVER	
080	525008-0003	D		2	BRACKET	
090	525180-0001	D		2	FOLDING ARM	
100	525179-0001	D		2	FOLDING ARM	
110	525011-0005	D		2	BRACKET	
120	525012-0005	D		2	COUNTER PLATE	
130	525015-0001	D		4	SCREW	
397	525295-0000	D		1	ARM	
399	B 525297-0000	D		1	BRACKET	
800	315105-0153	-		17	WASHER,PLAIN ROUND 6,4x12 Stainless	
840	342920-0121	-		8	STRAIGHT COUPLING,EXT.THREADED 8/6-R1/8"	
850	342930-0121	-		8	ELBOW 90 COUPL.,EXT.THREAD 8/6-R1/8"	
0500S						
010	525002-0000	D		2	FOLDING BAR	
020	525004-0000	D		2	FOLDING BAR	
030	525005-0006	D		2	FOLDING BAR	
040	525006-0006	D		2	FOLDING BAR	
050	525341-0002	R		2	LEAD RAIL	
070	B 525007-0002	D		1	CANTILEVER	
080	525008-0002	D		2	BRACKET	
090	525180-0002	D		2	FOLDING ARM	
100	525179-0002	D		2	FOLDING ARM	
110	525011-0006	D		2	BRACKET	
120	525182-0001	D		2	COUNTER PLATE	
130	525015-0002	D		4	SCREW	
160	315115-0153	-		2	WASHER TBRB 6,4x12 Stainless	
397	525295-0000	D		1	ARM	
399	B 525297-0000	D		1	BRACKET	
800	315105-0153	-		17	WASHER,PLAIN ROUND 6,4x12 Stainless	
840	342920-0121	-		16	STRAIGHT COUPLING,EXT.THREADED 8/6-R1/8"	
0500SQ						
010	525001-0000	D		2	FOLDING BAR	
020	525003-0000	D		2	FOLDING BAR	
030	583453-0000	D		2	FOLDING BAR	
040	583458-0000	D		2	FOLDING BAR	
050	574047-0000	R		2	LEAD RAIL	
060	591085-0000	D		2	SPACER	
070	B 525007-0002	D		1	CANTILEVER	
080	525008-0001	D		2	BRACKET	
090	569122-0000	D		2	FOLDING ARM	
100	569123-0000	D		2	FOLDING ARM	
110	583456-0000	D		2	BRACKET	
120	583457-0000	D		2	COUNTER PLATE	
130	525015-0002	D		4	SCREW	
397	525295-0000	D		1	ARM	
399	B 525297-0000	D		1	BRACKET	

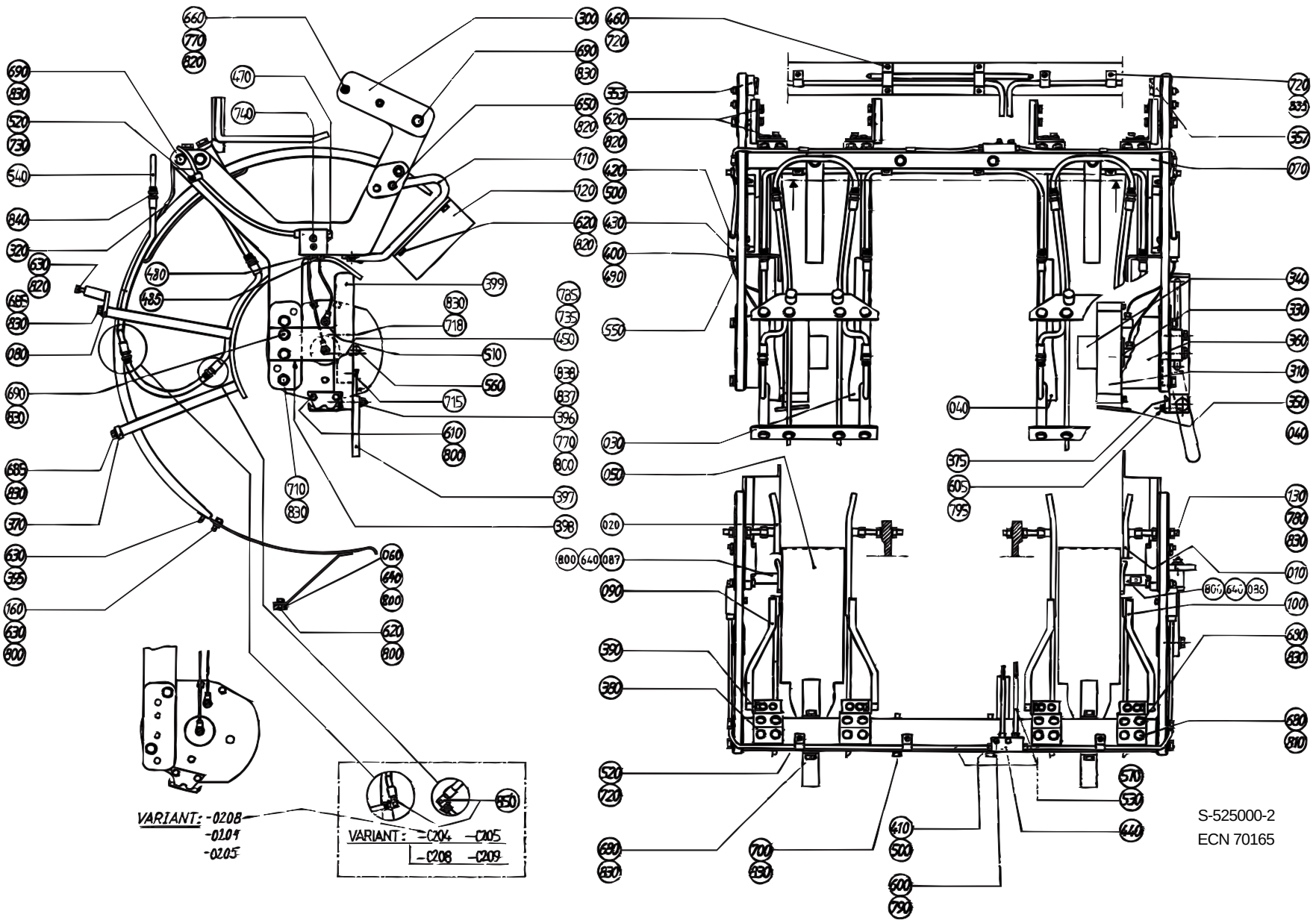
VARIANT: -0208
-0104
-0205
VARIANT: -C204 -C205
-C208 -C209
S-525000-2
ECN 70165

Pos	Part No	SP	UN	Qty	Description	Page No
640	312105-0370	-		4	SCREW M6S ISO 4017 M6x20 A280	
800	315105-0153	-		19	WASHER,PLAIN ROUND 6,4x12 Stainless	
840	342920-0121	-		8	STRAIGHT COUPLING,EXT.THREADED 8/6-R1/8"	
850	342930-0121	-		8	ELBOW 90 COUPL.,EXT.THREAD 8/6-R1/8"	
0750B						
010	525001-0000	D		2	FOLDING BAR	
020	525003-0000	D		2	FOLDING BAR	
030	525005-0003	D		2	FOLDING BAR	
040	525006-0003	D		2	FOLDING BAR	
050	525341-0001	R		2	LEAD RAIL	
070	B 525007-0001	D		1	CANTILEVER	
080	525008-0002	D		2	BRACKET	
090	525180-0001	D		2	FOLDING ARM	
100	525179-0001	D		2	FOLDING ARM	
110	525011-0003	D		2	BRACKET	
120	525012-0003	D		2	COUNTER PLATE	
130	525015-0001	D		4	SCREW	
397	525295-0000	D		1	ARM	
399	B 525297-0000	D		1	BRACKET	
800	315105-0153	-		17	WASHER,PLAIN ROUND 6,4x12 Stainless	
840	342920-0121	-		16	STRAIGHT COUPLING,EXT.THREADED 8/6-R1/8"	
0750S						
010	525001-0000	D		2	FOLDING BAR	
020	525003-0000	D		2	FOLDING BAR	
030	525005-0001	D		2	FOLDING BAR	
040	525006-0001	D		2	FOLDING BAR	
050	525341-0001	R		2	LEAD RAIL	
070	525007-0004	D		1	CANTILEVER	
080	525008-0001	D		2	BRACKET	
090	525180-0002	D		2	FOLDING ARM	
100	525179-0002	D		2	FOLDING ARM	
110	525011-0002	D		2	BRACKET	
120	525438-0000	D		2	COUNTER PLATE	
130	525015-0002	D		4	SCREW	
397	525295-0000	D		1	ARM	
399	B 525297-0000	D		1	BRACKET	
800	315105-0153	-		17	WASHER,PLAIN ROUND 6,4x12 Stainless	
840	342920-0121	-		16	STRAIGHT COUPLING,EXT.THREADED 8/6-R1/8"	
1000B						
010	525001-0000	D		2	FOLDING BAR	
020	525003-0000	D		2	FOLDING BAR	
030	525005-0002	D		2	FOLDING BAR	
040	525006-0002	D		2	FOLDING BAR	
050	525341-0001	R		2	LEAD RAIL	
070	B 525007-0001	D		1	CANTILEVER	
080	525008-0002	D		2	BRACKET	
090	525180-0001	D		2	FOLDING ARM	
100	525179-0001	D		2	FOLDING ARM	
110	525011-0002	D		2	BRACKET	
120	525012-0002	D		2	COUNTER PLATE	
130	525015-0001	D		4	SCREW	
397	525295-0000	D		1	ARM	
399	B 525297-0000	D		1	BRACKET	
800	315105-0153	-		17	WASHER,PLAIN ROUND 6,4x12 Stainless	
840	342920-0121	-		16	STRAIGHT COUPLING,EXT.THREADED 8/6-R1/8"	
1000S						
010	525001-0000	D		2	FOLDING BAR	
020	525003-0000	D		2	FOLDING BAR	
030	569120-0000	D		2	FOLDING BAR	
040	569121-0000	D		2	FOLDING BAR	
050	525410-0000	R		2	LEAD RAIL	
070	B 525007-0001	D		1	CANTILEVER	
080	525008-0001	D		2	BRACKET	
086	573486-0000	D		1	STEERING	
087	573487-0000	D		1	STEERING	
090	569122-0000	D		2	FOLDING ARM	
100	569123-0000	D		2	FOLDING ARM	
110	573485-0000	D		2	BRACKET	
120	525012-0001	D		2	COUNTER PLATE	
130	525015-0001	D		4	SCREW	
397	550359-0000	D		1	ARM	
399	B 525297-0000	D		1	BRACKET	
640	312105-0370	-		2	SCREW M6S ISO 4017 M6x20 A280	
800	315105-0153	-		19	WASHER,PLAIN ROUND 6,4x12 Stainless	
840	342920-0121	-		16	STRAIGHT COUPLING,EXT.THREADED 8/6-R1/8"	
1055B						
010	525001-0000	D		2	FOLDING BAR	
020	525003-0000	D		2	FOLDING BAR	
030	525005-0001	D		2	FOLDING BAR	
040	525006-0001	D		2	FOLDING BAR	
050	525341-0001	R		2	LEAD RAIL	
070	B 525007-0001	D		1	CANTILEVER	
080	525008-0001	D		2	BRACKET	
090	525180-0001	D		2	FOLDING ARM	
100	525179-0001	D		2	FOLDING ARM	
110	525011-0001	D		2	BRACKET	

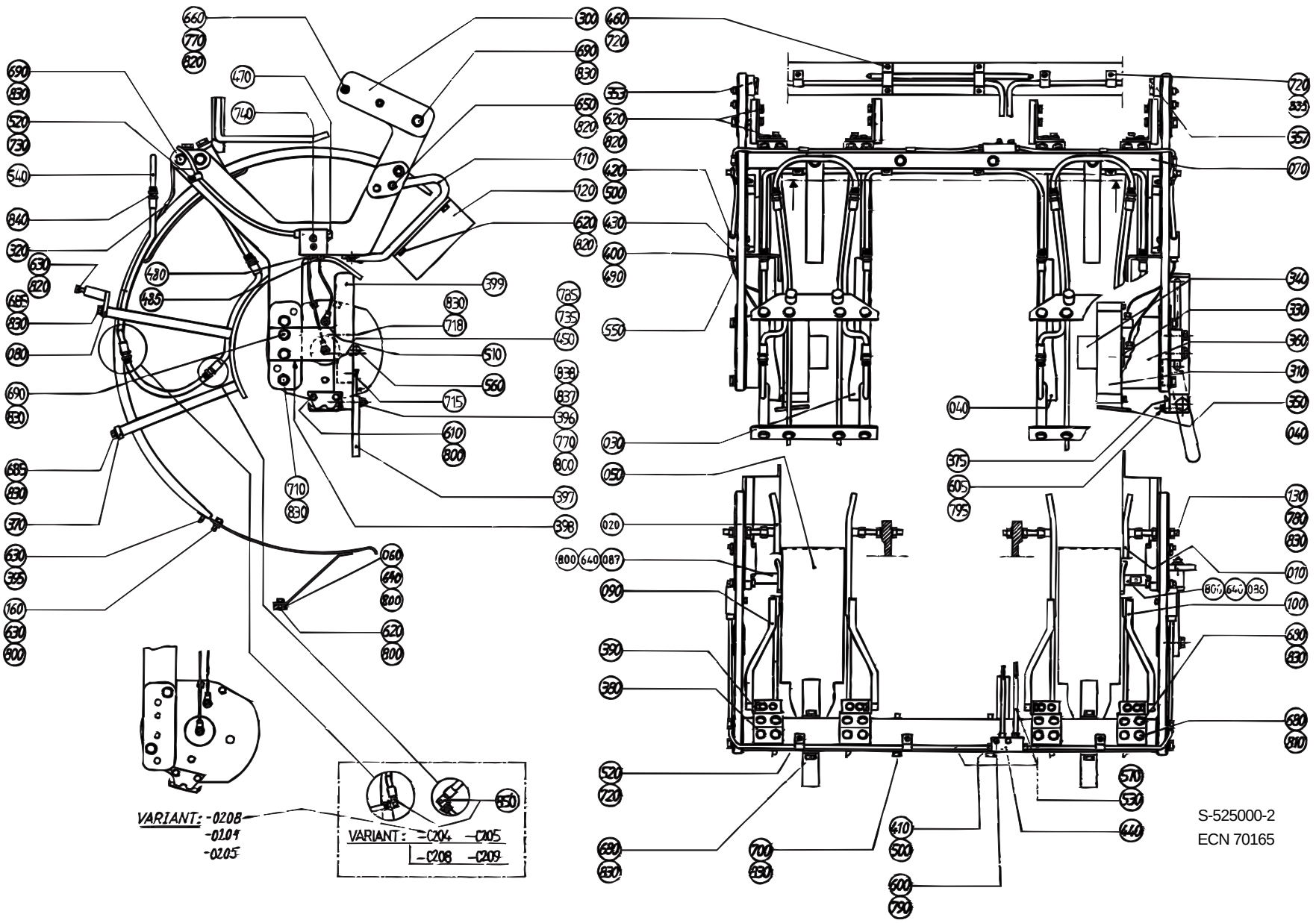
VARIANT: -0208
-0209
VARIANT: -C204 -C205
-C208 -C209
S-525000-2
ECN 70165

Pos	Part No	SP	UN	Qty	Description	Page No
120	525012-0001	D		2	COUNTER PLATE	
130	525015-0001	D		4	SCREW	
397	525295-0000	D		1	ARM	
399	B 525297-0000	D		1	BRACKET	
800	315105-0153	-		17	WASHER,PLAIN ROUND 6,4x12 Stainless	
840	342920-0121	-		16	STRAIGHT COUPLING,EXT.THREADED 8/6-R1/8"	
1000SQ REVFIN						
010	525001-0000	D		2	FOLDING BAR	
020	525003-0000	D		2	FOLDING BAR	
030	1143020-0000	D		2	FOLDING BAR	
040	1143021-0000	D		2	FOLDING BAR	
050	574047-0000	R		2	LEAD RAIL	
070	B 525007-0002	D		1	CANTILEVER	
080	525008-0001	D		2	BRACKET	
086	574097-0000	D		1	STEERING	
087	574098-0000	D		1	STEERING	
090	569122-0000	D		2	FOLDING ARM	
100	569123-0000	D		2	FOLDING ARM	
110	574048-0000	D		2	BRACKET	
120	574049-0000	D		2	COUNTER PLATE	
130	525015-0002	D		4	SCREW	
397	550359-0000	D		1	ARM	
399	574125-0000	D		1	BRACKET	
640	312105-0370	-		2	SCREW M6S ISO 4017 M6x20 A280	
800	315105-0153	-		19	WASHER,PLAIN ROUND 6,4x12 Stainless	
840	342920-0121	-		16	STRAIGHT COUPLING,EXT.THREADED 8/6-R1/8"	
1000SQ NORMFIN						
010	525001-0000	D		2	FOLDING BAR	
020	525003-0000	D		2	FOLDING BAR	
030	574045-0000	D		2	FOLDING BAR	
040	574046-0000	D		2	FOLDING BAR	
050	574047-0000	R		2	LEAD RAIL	
070	B 525007-0002	D		1	CANTILEVER	
080	525008-0001	D		2	BRACKET	
086	574097-0000	D		1	STEERING	
087	574098-0000	D		1	STEERING	
090	569122-0000	D		2	FOLDING ARM	
100	569123-0000	D		2	FOLDING ARM	
110	574048-0000	D		2	BRACKET	
120	574049-0000	D		2	COUNTER PLATE	
130	525015-0002	D		4	SCREW	
397	550359-0000	D		1	ARM	
399	574125-0000	D		1	BRACKET	
640	312105-0370	-		2	SCREW M6S ISO 4017 M6x20 A280	
800	315105-0153	-		19	WASHER,PLAIN ROUND 6,4x12 Stainless	
840	342920-0121	-		16	STRAIGHT COUPLING,EXT.THREADED 8/6-R1/8"	

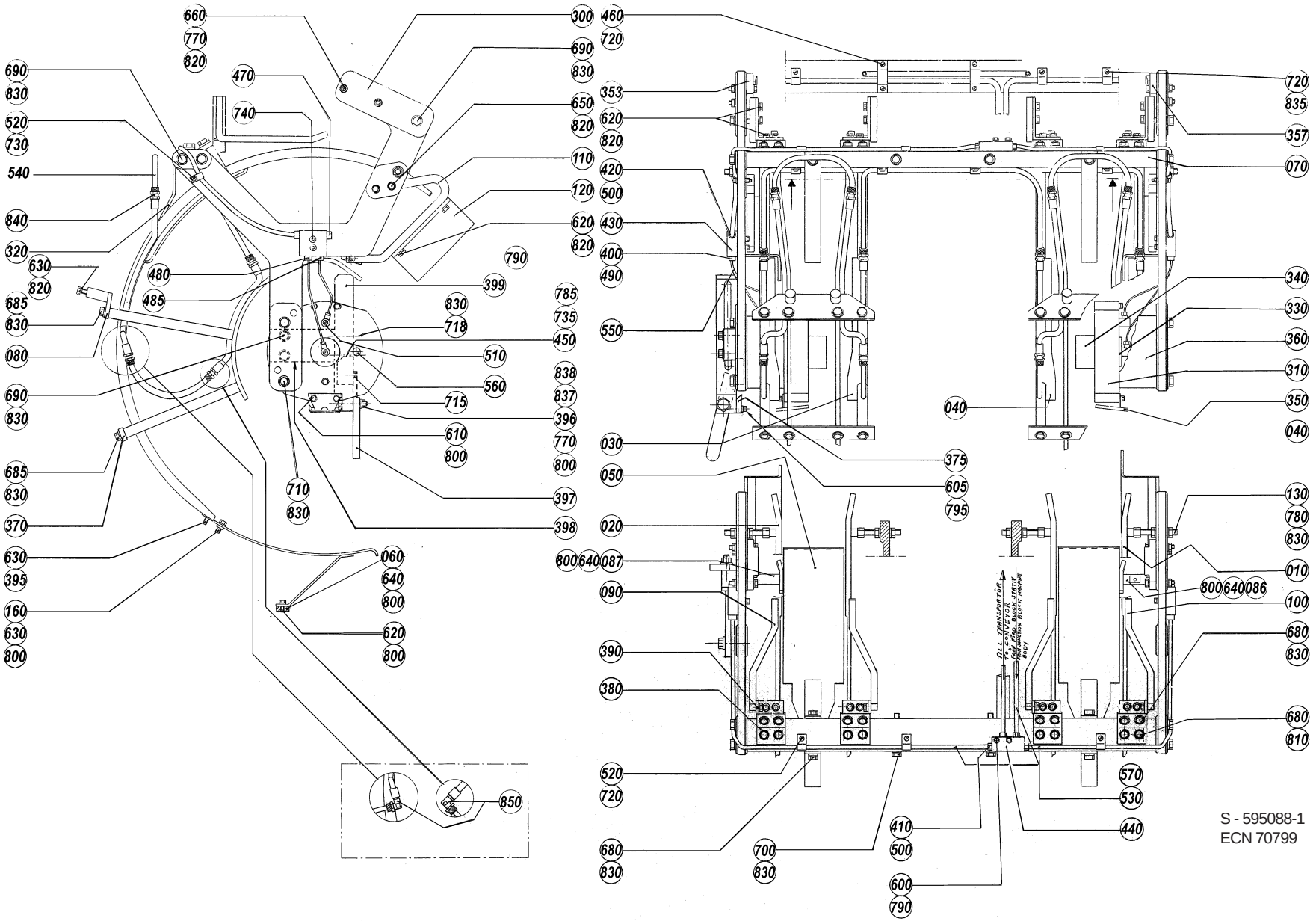
660
770
820
690
830
520
730
540
840
320
630
820
685
830
080
690
830
685
830
370
630
395
160
630
800
470
740
480
485
710
830
060
640
800
620
800
850
300
690
830
650
820
110
120
620
820
790
399
830
718
450
510
560
715
396
610
800
397
398
800
640
785
735
838
837
770
800
460
720
353
620
820
420
500
430
400
490
550
030
050
020
087
090
390
380
520
720
680
830
700
830
410
500
600
790
375
605
795
720
835
357
070
340
330
360
310
350
040
040
130
780
830
010
800
640
086
100
680
830
680
810
570
530
440
S - 595088-1
ECN 70799

Pos	Part No	SP	UN	Qty	Description	Page No
Common parts						
010	525001-0000	D		2	FOLDING BAR	
020	525003-0000	D		2	FOLDING BAR	
050	574047-0000	R		2	LEAD RAIL	
070	B 525007-0002	D		1	CANTILEVER	
080	525008-0001	D		2	BRACKET	
090	569122-0000	D		2	FOLDING ARM	
100	569123-0000	D		2	FOLDING ARM	
110	574048-0000	D		2	BRACKET	
120	574049-0000	D		2	COUNTER PLATE	
130	525015-0002	D		4	SCREW	
300	B 525016-0000	D		2	FASTENING PLATE	
310	574050-0000	D		2	CURVE	
320	525017-0000	D		2	STEERING GUIDE	
330	285168-0000	D		2	BUSHING	
340	285851-0000	R		2	BEARING	
350	443240-0000	-		2	DRIP PLATE	
353	442564-0000	R		1	CURVE	
357	442565-0000	R		1	CURVE	
360	525018-0000	-		2	SPACER	
370	525019-0000	D		2	BRACKET	
375	595057-0000	D		1	BRACKET	
380	525340-0000	D		4	BRACKET	
390	525178-0000	D		4	BRACKET	
395	525181-0000	-		2	WASHER	
396	525321-0000	R		1	SCREW	
398	525296-0000	-		1	BRACKET	
400	90028-0020	J		4	CONE DT13700S-300 Di=2,5mm	
410	90028-0022	J		4	CONE	
420	90028-0025	J		2	CONE DT4.138811.2D	
430	90032-0038	-		2	BLOCK 2ways DT4.310792.1D	
440	90032-0044	-		1	JUNCTION BLOCK	
450	90044-0104	M		1	PROX.SWITCH IFM IN 3002	
460	90074-0018	-		2	CLIP,double 2x10	
470	90087-0019	-		2	PLUG M10x1 Stainless	
480	90092-0052	J		2	METERING VALVE 10mm3	
485	90092-0053	J		2	METERING VALVE 30mm3	
490	90134-0039	J		4	BUSHING DT4.018912.1D Stainless	
500	90134-0055	J		6	BUSHING 6 DIN 3871 Stainless	
510	90134-0058	-		4	BANJO CONNECTION DT4.310.437.1	
520	90165-0057	-		5	PIPE-CLIPS,FOR SINGLE PIPE,ONE SIDE 6	
530	90166-0108	-	MM	5200	HOSE 3/6 PA11/12 Transp.	
540	90166-0122	-	MM	6000	HOSE 6/8 PA 11/12 Transparent	
550	90166-0143	-	MM	2000	HOSE 1,6/2,5 PA 11/12	
560	90261-0032	-		4	PLUG 1073 ORION	
570	90134-0030	-		6	SLEEVE 6/3	
600	312105-0295	-		2	SCREW M6S ISO 4017 M4X20 A280	
605	312105-0327	-		2	SCREW M6S ISO 4017 M5X12 A280	
610	312105-0364	-		10	SCREW M6S 6x10 A280	
620	312105-0366	-		24	SCREW M6S ISO 4017 M6X12 A280	
630	312105-0368	-		10	SCREW M6S ISO 4017 M6x16 A280	
650	312105-0374	-		4	SCREW M6S ISO 4017 M6X30 A280	
660	312105-0378	-		4	SCREW O4017 M6X40A280	
680	312105-0449	-		20	SCREW M6S ISO 4017 M8x16 A280	
685	312105-0451	-		16	SCREW M6S ISO 4017 8x20 A280	
690	312105-0455	-		8	SCREW M6S ISO 4017 M8X30 A280	
700	312105-0464	-		2	SCREW M6S ISO 4014 M8x65 A280	
710	312105-0469	-		4	SCREW M6S ISO 4014 M8x90 A280	
715	312115-0323	-		1	SCREW MC6S ISO 4762 M5X8 A280	
718	312115-0455	-		2	SCREW MC6S ISO 4762 M8X30 A280	
720	312125-0287	-		10	SLOTTED CHEESE HEAD ISO 1207 M4X8 RFR	
730	312125-0291	-		2	SLOTTED CHEESE HEAD ISO 1207 M4x12 RFR	
735	312125-0230	-		2	SLOTTED CHEESE HEAD ISO 1207 M3X20 RFR	
740	312155-0297	-		4	SCREW MF6S DIN 7991 M4X25 A280	
770	312605-0316	-		5	NUT,HEXAGON A280 M6M6	
780	312605-0318	-		8	NUT,HEXAGON,M8 RFR	
785	315105-0124	-		2	WASHER,PLAIN ROUND 3,2x6	
790	315105-0136	-		2	WASHER,PLAIN ROUND 4,3x8 Stainless	
795	315105-0146	-		2	WASHER,PLAIN ROUND 5,3x10 Stainless	
800	315105-0153	-		19	WASHER,PLAIN ROUND 6,4x12 Stainless	
810	315105-0165	-		8	WASHER,PLAIN ROUND 8,4x16 Stainless	
820	315115-0153	-		40	WASHER TBRB 6,4x12 Stainless	
830	315115-0165	-		52	WASHER TBRB 8,4x16 Stainless	
835	316810-0106	-		3	PIPE-CLIPS,FOR SINGLE PIPE,ONE SIDE 8	
837	321116-0127	R		1	BUSHING 10E7/14x10	
838	321116-0128	R		1	BUSHING 10E7/14X16	
1000SQ REVFIN						
030	1143020-0000	D		2	FOLDING BAR	
040	1143021-0000	D		2	FOLDING BAR	
086	574097-0000	D		1	STEERING	
087	574098-0000	D		1	STEERING	
397	550359-0000	D		1	ARM	
399	595055-0000	D		1	BRACKET	
640	312105-0370	-		2	SCREW M6S ISO 4017 M6x20 A280	
840	342920-0121	-		16	STRAIGHT COUPLING,EXT.THREADED 8/6-R1/8"	
1000SQ NORMFIN						

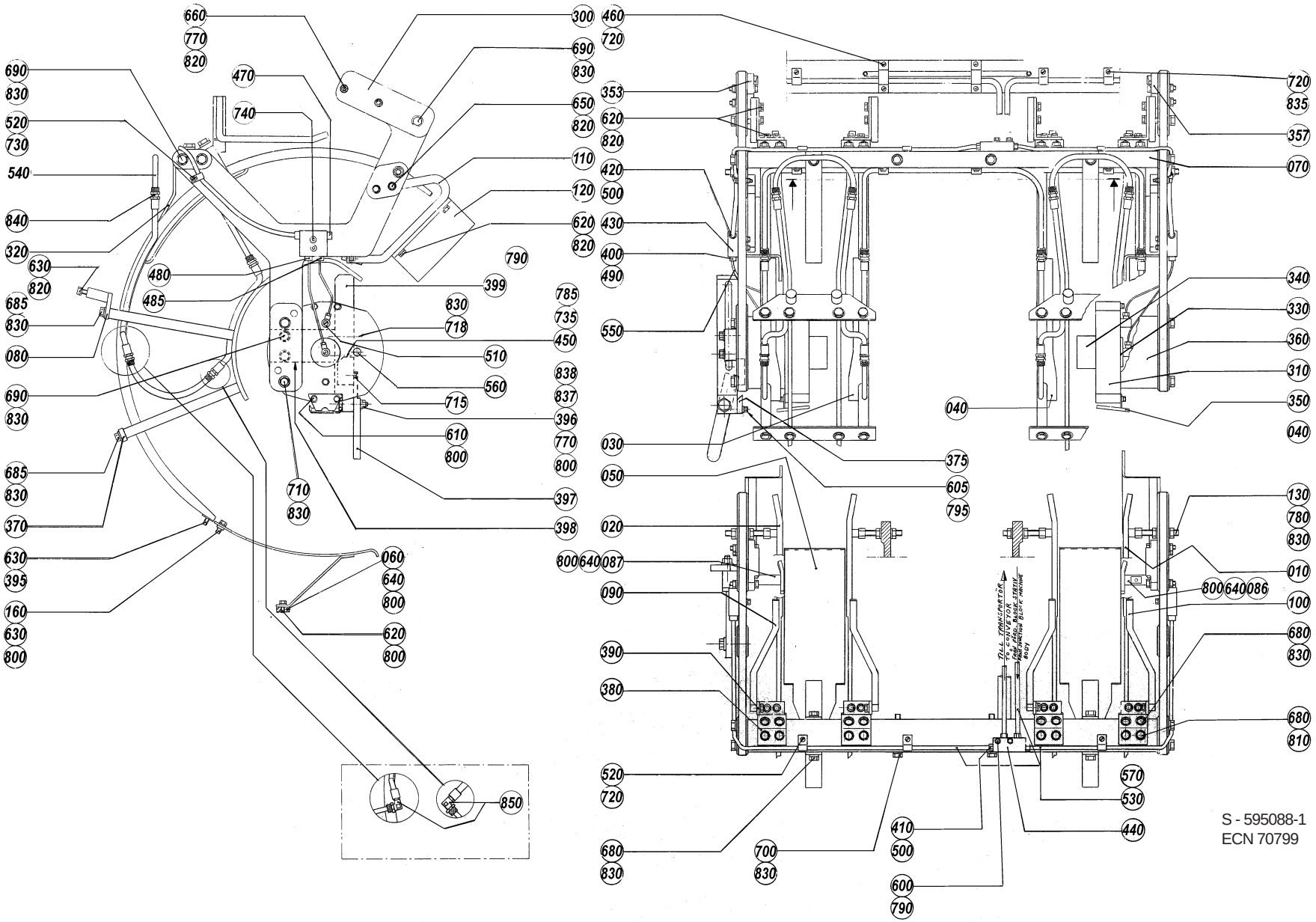

S - 595088-1
ECN 70799

Pos	Part No	SP	UN	Qty	Description	Page No
030	574045-0000	D		2	FOLDING BAR	
040	574046-0000	D		2	FOLDING BAR	
086	574097-0000	D		1	STEERING	
087	574098-0000	D		1	STEERING	
397	550359-0000	D		1	ARM	
399	595055-0000	D		1	BRACKET	
640	312105-0370	-		2	SCREW M6S ISO 4017 M6x20 A280	
840	342920-0121	-		16	STRAIGHT COUPLING,EXT.THREADED 8/6-R1/8"	
0500SQ NORMFIN						
030	583453-0000	D		1	FOLDING BAR	
040	583458-0000	D		1	FOLDING BAR	
060	591085-0000	D		2	SPACER	
397	525295-0000	D		1	ARM	
399	1361912-0000	D		1	BRACKET	
640	312105-0370	-		4	SCREW M6S ISO 4017 M6x20 A280	
840	342920-0121	-		8	STRAIGHT COUPLING,EXT.THREADED 8/6-R1/8"	
850	342930-0121	-		8	ELBOW 90 COUPL.,EXT.THREAD 8/6-R1/8"	

Pos	Part No	SP	UN	Qty	Description	Page No

WASTE CHUTE

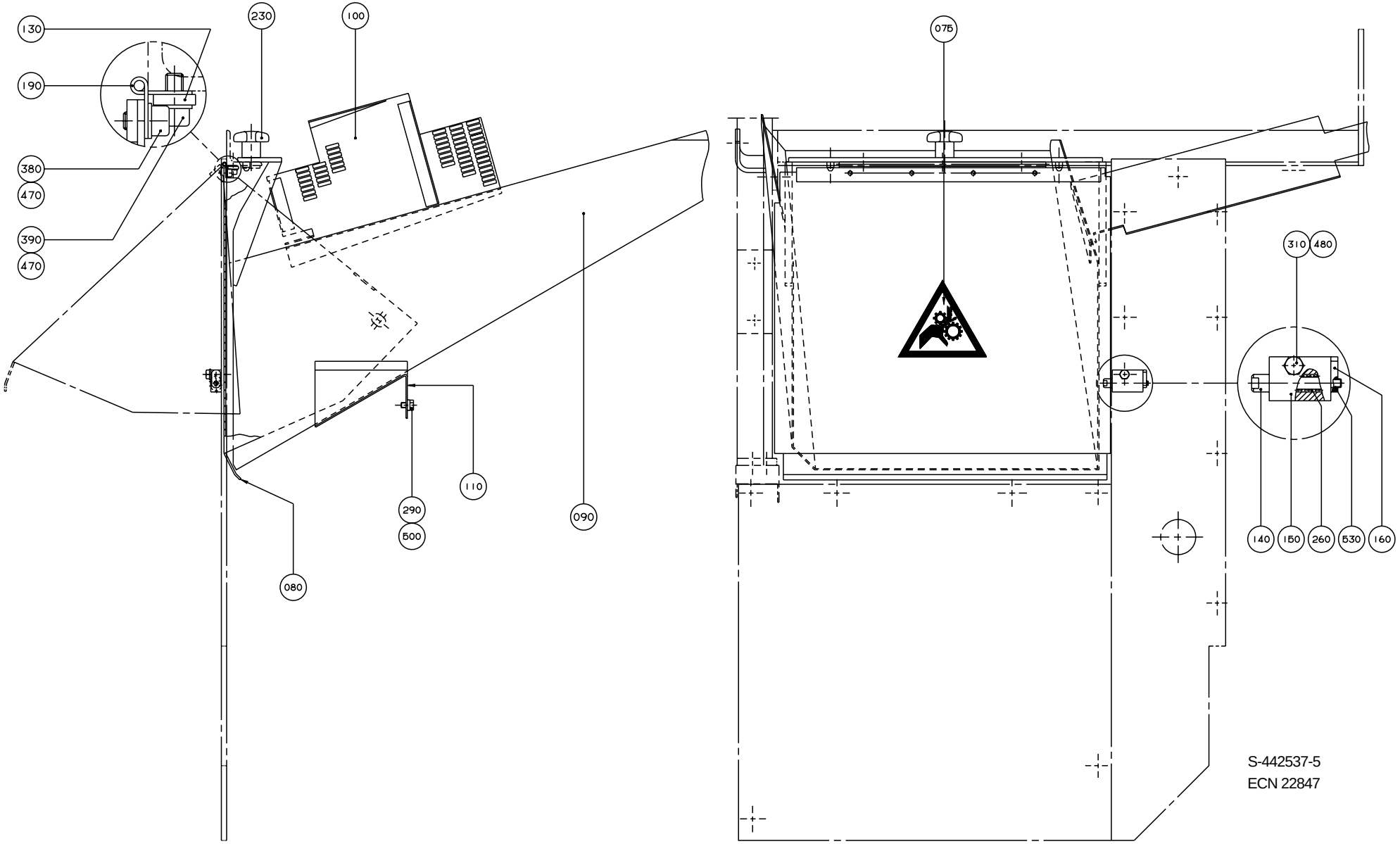

S-442537-5
ECN 22847

Pos	Part No	SP	UN	Qty	Description	Page No
Common parts						
075	359705-0002	-		1	WARNING SIGN "ENTANGLEMENT"	
080	525380-0000	-		1	HATCH	
100	525423-0000	-		1	COVERING PLATE	
110	525439-0000	-		1	DRIP PLATE	
130	525381-0000	-		1	BRACKET	
140	525382-0000	-		1	SHAFT	
150	525383-0000	-		1	BRACKET	
160	525384-0000	-		1	DOWEL	
190	525394-0000	-		1	HINGE	
230	90051-0025	-		1	HANDLES,KNOB,ADJUST.,THREAD.TAP,M8 40X30	
260	90335-0005	M		1	SPRING	
290	312105-0364	-		1	SCREW M6S 6x10 A280	
310	312105-0372	-		1	SCREW M6S ISO 4017 M6X25 A280	
380	312115-0323	-		4	SCREW MC6S ISO 4762 M5X8 A280	
390	312115-0325	-		3	SCREW 5X10 A4 80	
470	315105-0146	-		7	WASHER,PLAIN ROUND 5,3x10 Stainless	
480	315105-0153	-		1	WASHER,PLAIN ROUND 6,4x12 Stainless	
500	315115-0153	-		1	WASHER TBRB 6,4x12 Stainless	
530	90157-0002	-		x	SEALING COMPOUND	
0355B or 0375S or 0400B or 0500B or 0500S or 0750B or 0750S or 1000B or 1000S or 1055B						
090	525409-0000	-		1	WASTE CHUTE	
0500SQ or 1000SQ						
090	574124-0000	-		1	WASTE CHUTE	

Pos	Part No	SP	UN	Qty	Description	Page No

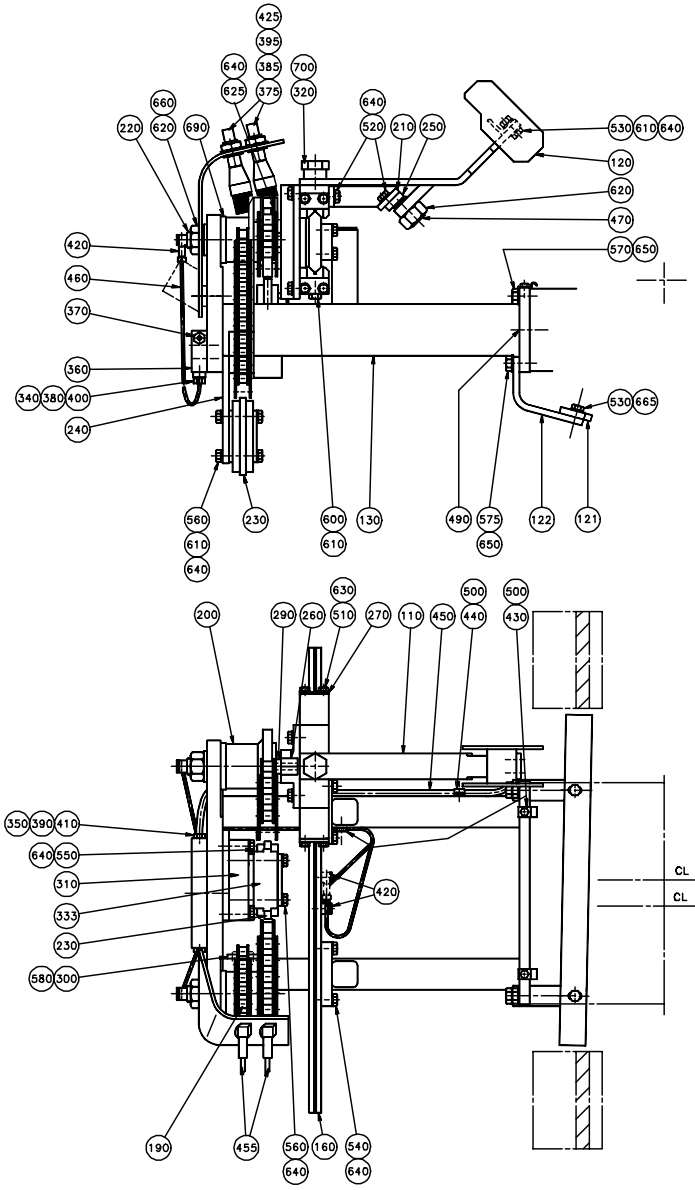

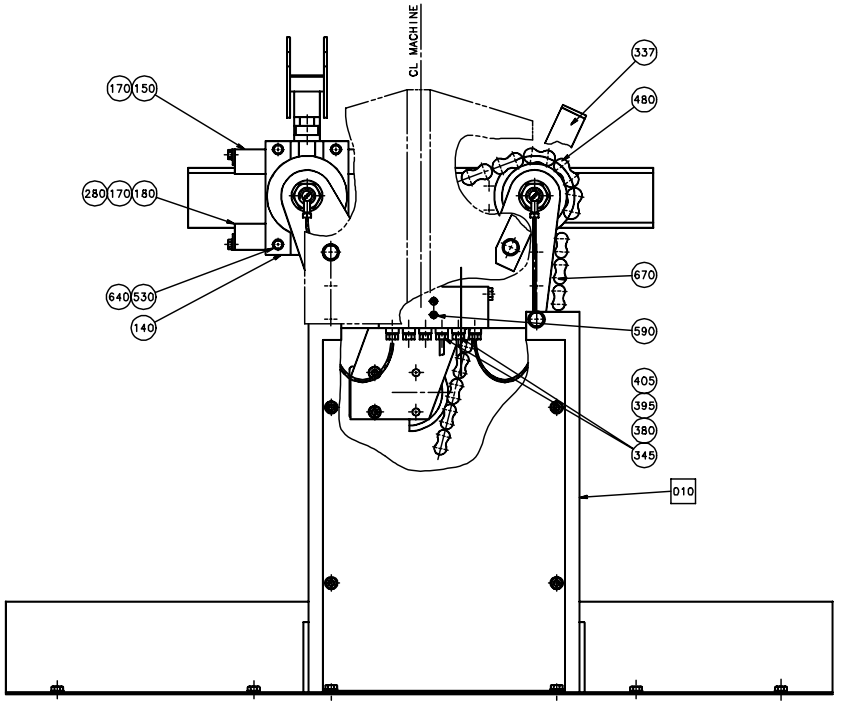

S - 525213-2
ECN 17749

Pos	Part No	SP	UN	Qty	Description	Page No
Common parts						
F010	A 525320-0100	-		1	CHAIN GUARD	**595**
130	525310-0000	-		1	BRACKET	
140	443229-0000	R		1	BRACKET	
150	525140-0000	D		1	HOLDER	
160	525311-0000	R		1	GUIDE	
170	442931-0000	K		2	SLIDE RAIL	
180	443232-0000	D		1	HOLDER	
190	443235-0000	R		1	SPROCKET	
200	525194-0000	R		1	SPROCKET	
210	525200-0000	R		1	BRACKET	
220	525312-0000	M		2	SHAFT	
230	90344-0049	D		2	CHAIN TENSIONER	
240	566533-0000	D		1	BRACKET	
250	597564-0000	D		1	PLATE	
260	443237-0000	K		1	SLIDER	
270	443239-0000	-		4	WASHER	
280	525138-0000	R		1	SHEET	
290	525195-0000	R		1	WASHER	
300	525315-0000	D		1	SLIDER	
310	566312-0000	D		1	BRACKET	
320	525317-0000	R		1	FITTING BOLT	
333	566311-0000	D		1	PROFILE	
337	566315-0000	-		1	HOLDER	
340	90028-0020	J		4	CONE DT13700S-300 Di=2,5mm	
345	90028-0021	-		2	CONE DIN3862 Di=4mm	
350	90028-0025	J		1	CONE DT4.138811.2D	
360	90032-0040	-		1	BLOCK 6ways DT4.317796.1D	
370	90087-0019	-		1	PLUG M10x1 Stainless	
375	90092-0048	J		2	OIL BRUSH	
380	90092-0052	J		6	METERING VALVE 10mm3	
385	90134-0002	-		2	PIPE CONNECTION	
390	90134-0030	-		2	SLEEVE 6/3	
395	342706-0114	-		4	ACCESSORIES,INSERT SLEEVE 4	
400	90134-0039	J		4	BUSHING DT4.018912.1D Stainless	
405	90134-0040	J		2	BUSHING DT4.018914.1	
410	90134-0055	J		1	BUSHING 6 DIN 3871 Stainless	
420	90134-0058	-		4	BANJO CONNECTION DT4.310.437.1	
425	90137-0002	-		2	ELBOW PIPE	
430	90165-0056	-		3	PIPE-CLIPS,FOR SINGLE PIPE,ONE SIDE 4mm	
440	90165-0057	-		2	PIPE-CLIPS,FOR SINGLE PIPE,ONE SIDE 6	
450	90166-0108	-	MM	1400	HOSE 3/6 PA11/12 Transp.	
455	90166-0051	-	MM	600	HOSE	
460	90166-0143	-	MM	1200	HOSE 1,6/2,5 PA 11/12	
470	90287-0109	K		1	SCREW, SPRINGLOADED M16x27,5	
480	B 90288-0055	K		1	ROLLER CHAIN,SINGLE 5/8"-42	
490	311103-0399	-		2	CYLINDRICAL PIN M6 8X16 RFR	
500	312105-0287	-		5	SCREW M6S ISO 4017 M4x8 A280	
510	312105-0325	-		8	SCREW M6S 5x10 A2 80	
520	312105-0366	-		4	SCREW M6S ISO 4017 M6X12 A280	
540	312105-0370	-		8	SCREW M6S ISO 4017 M6x20 A280	
550	312105-0376	-		2	SCREW M6S ISO 4017 M6X35 A280	
560	312105-0379	-		4	SCREW M6S ISO 4014 M6X45 A280	
580	312155-0291	-		4	SCREW MF6S DIN 7991 M4X12 A280	
590	312155-0297	-		2	SCREW MF6S DIN 7991 M4X25 A280	
600	312318-0368	-		2	SET SCREW CUP POINT ISO 4029 M6x16 RFR	
610	312605-0316	-		4	NUT,HEXAGON A280 M6M6	
620	312605-0324	-		3	NUT,HEXAGON,M16 A280	
625	312812-0316	-		2	NUT,HEXAGON,LOCK,WITH NYLON INSERT,M6	
630	315105-0146	-		8	WASHER,PLAIN ROUND 5,3x10 Stainless	
640	315105-0153	-		28	WASHER,PLAIN ROUND 6,4x12 Stainless	
650	315105-0165	-		4	WASHER,PLAIN ROUND 8,4x16 Stainless	
660	315105-0186	-		2	WASHER,PLAIN ROUND 17x30	
670	318212-0119	K		1	ROLLER CHAIN SINGLE 1/2"-119,SS	
690	321101-0252	K		4	FLANGE BUS 25F7X16	
700	321120-0122	K		1	BEARING BUSHING WITHOUT FLANGE,15/17X15	
0355B or 0400B						
110	525304-0000	D		1	ARM	
120	525308-0000	D		1	DISTRIBUTOR	
530	312105-0368	-		6	SCREW M6S ISO 4017 M6x16 A280	
570	312105-0453	-		4	SCREW M6S ISO 4017 M8x25 A280	
0375S						
110	525302-0000	D		1	ARM	
120	525309-0000	D		1	DISTRIBUTOR	
530	312105-0368	-		6	SCREW M6S ISO 4017 M6x16 A280	
570	312105-0453	-		4	SCREW M6S ISO 4017 M8x25 A280	
0500B						
110	525303-0000	D		1	ARM	
120	525307-0000	D		1	DISTRIBUTOR	
530	312105-0368	-		6	SCREW M6S ISO 4017 M6x16 A280	
570	312105-0453	-		4	SCREW M6S ISO 4017 M8x25 A280	
0500S						
110	525302-0000	D		1	ARM	
110	525304-0000	D		1	ARM	
120	525308-0000	D		1	DISTRIBUTOR	

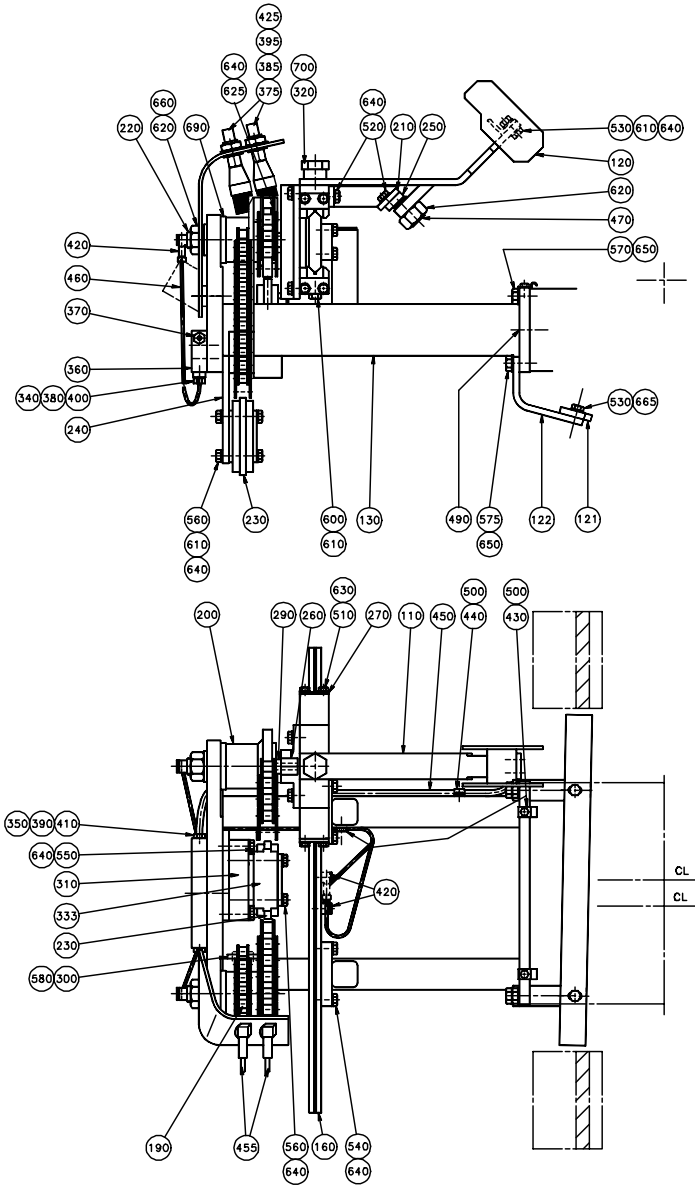

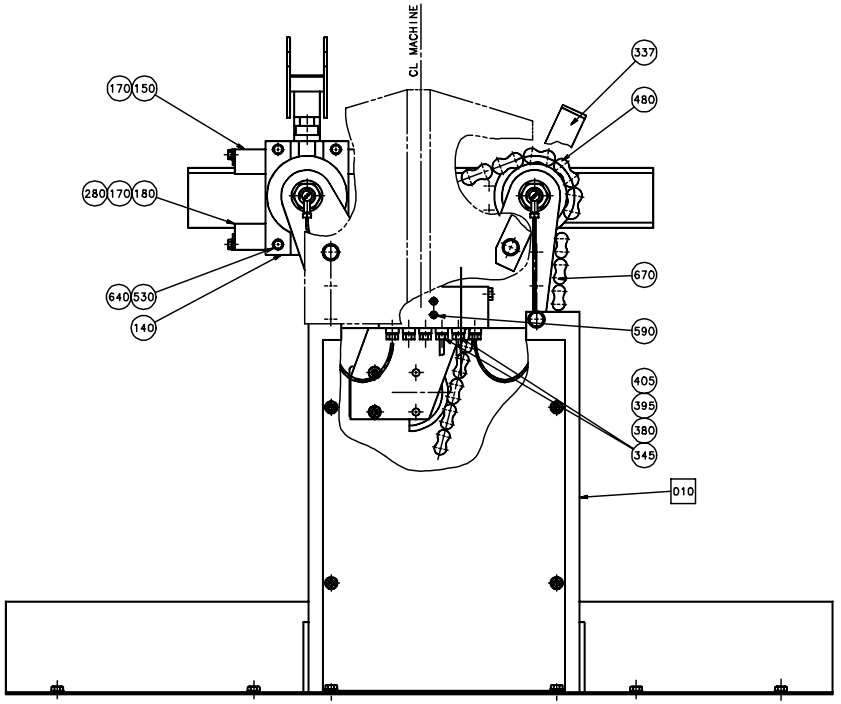

S - 525213-2
ECN 17749

Pos	Part No	SP	UN	Qty	Description	Page No
530	312105-0368	-		6	SCREW M6S ISO 4017 M6x16 A280	
570	312105-0453	-		4	SCREW M6S ISO 4017 M8x25 A280	
0500SQ						
110	525304-0000	D		1	ARM	
120	583630-0000	D		1	DISTRIBUTOR	
530	312105-0368	-		6	SCREW M6S ISO 4017 M6x16 A280	
570	312105-0453	-		4	SCREW M6S ISO 4017 M8x25 A280	
0750B						
110	525302-0000	D		1	ARM	
120	525306-0000	D		1	DISTRIBUTOR	
530	312105-0368	-		6	SCREW M6S ISO 4017 M6x16 A280	
570	312105-0453	-		4	SCREW M6S ISO 4017 M8x25 A280	
0750S						
110	525301-0000	D		1	ARM	
120	544318-0000	D		1	DISTRIBUTOR	
530	312105-0368	-		6	SCREW M6S ISO 4017 M6x16 A280	
570	312105-0453	-		4	SCREW M6S ISO 4017 M8x25 A280	
1000B or 1055B						
110	525301-0000	D		1	ARM	
120	525305-0000	D		1	DISTRIBUTOR	
530	312105-0368	-		6	SCREW M6S ISO 4017 M6x16 A280	
570	312105-0453	-		4	SCREW M6S ISO 4017 M8x25 A280	
1000S						
110	525301-0000	D		1	ARM	
120	569129-0000	D		1	DISTRIBUTOR	
121	525417-0000	-		1	STEERING	
122	525418-0000	-		2	HOLDER	
530	312105-0368	-		8	SCREW M6S ISO 4017 M6x16 A280	
570	312105-0453	-		2	SCREW M6S ISO 4017 M8x25 A280	
575	312105-0455	-		2	SCREW M6S ISO 4017 M8X30 A280	
665	315115-0153	-		2	WASHER TBRB 6,4x12 Stainless	
1000SQ						
110	525301-0000	D		1	ARM	
120	574056-0000	D		1	DISTRIBUTOR	
121	574099-0000	-		1	STEERING	
122	574058-0000	-		2	HOLDER	
530	312105-0368	-		8	SCREW M6S ISO 4017 M6x16 A280	
570	312105-0453	-		2	SCREW M6S ISO 4017 M8x25 A280	
575	312105-0455	-		2	SCREW M6S ISO 4017 M8X30 A280	
665	315115-0153	-		2	WASHER TBRB 6,4x12 Stainless	

Pos	Part No	SP	UN	Qty	Description	Page No

CHAIN GUARD

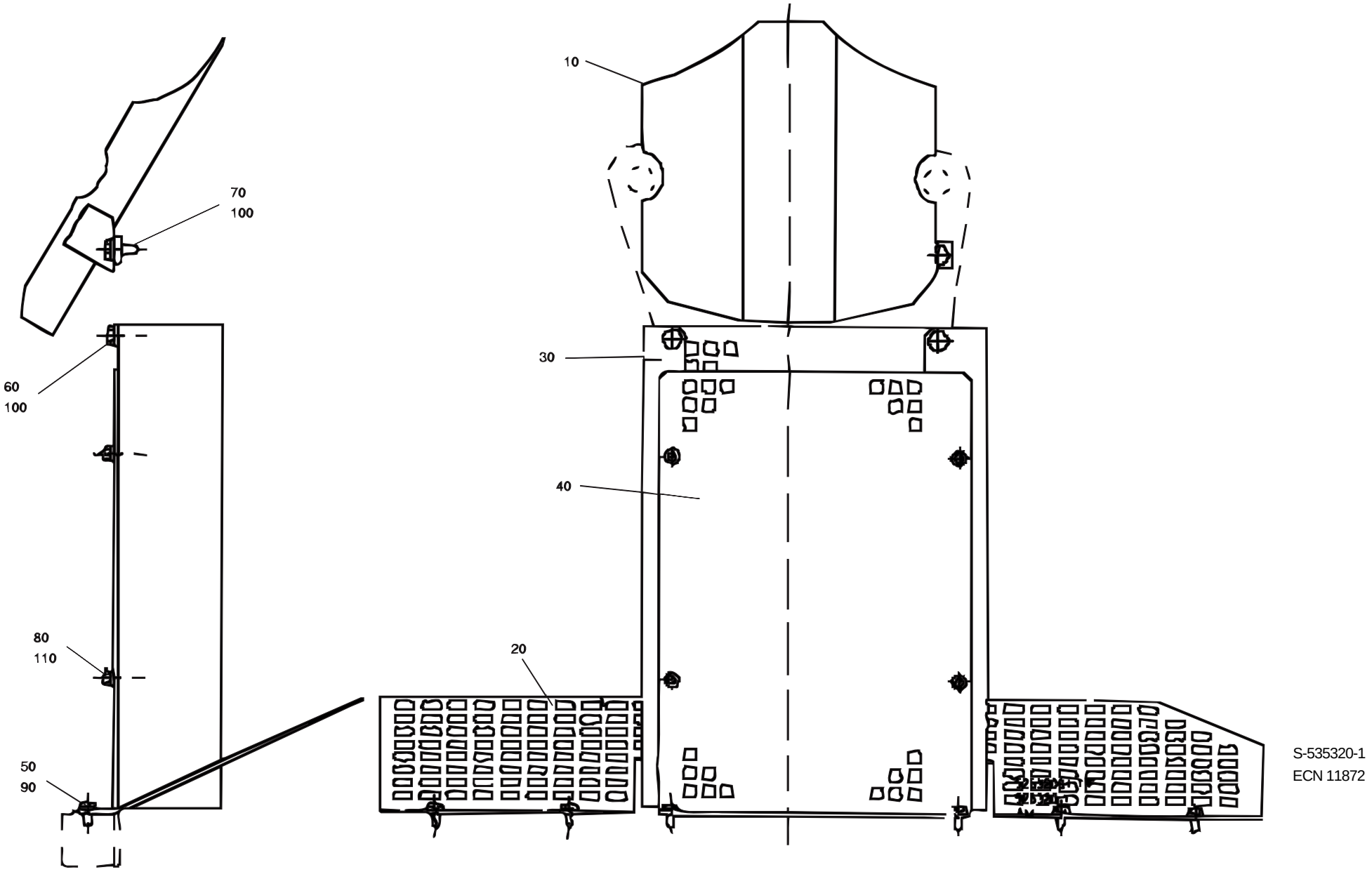

S-535320-1
ECN 11872

Pos	Part No	SP	UN	Qty	Description	Page No
Common parts						
020	525326-0000	-		1	CHAIN GUARD	
030	525327-0000	-		1	CHAIN GUARD	
040	525328-0000	-		1	CHAIN GUARD	
050	312105-0368	-		6	SCREW M6S ISO 4017 M6x16 A280	
060	312105-0449	-		2	SCREW M6S ISO 4017 M8x16 A280	
070	312105-0451	-		2	SCREW M6S ISO 4017 8x20 A280	
080	312605-0316	-		4	NUT,HEXAGON A280 M6M6	
090	315105-0153	-		6	WASHER,PLAIN ROUND 6,4x12 Stainless	
100	315105-0165	-		4	WASHER,PLAIN ROUND 8,4x16 Stainless	
110	315115-0153	-		4	WASHER TBRB 6,4x12 Stainless	
0375S						
010	525265-0003	-		1	LEAD PLATE	
0355B or 0400B or 0500B						
010	525265-0004	-		1	LEAD PLATE	
0500S or 0750B						
010	525265-0002	-		1	LEAD PLATE	
0500SQ or 1000SQ						
010	574131-0000	-		1	LEAD PLATE	
0750S or 1000B or 1000S or 1055B						
010	525265-0001	-		1	LEAD PLATE	

Pos	Part No	SP	UN	Qty	Description	Page No

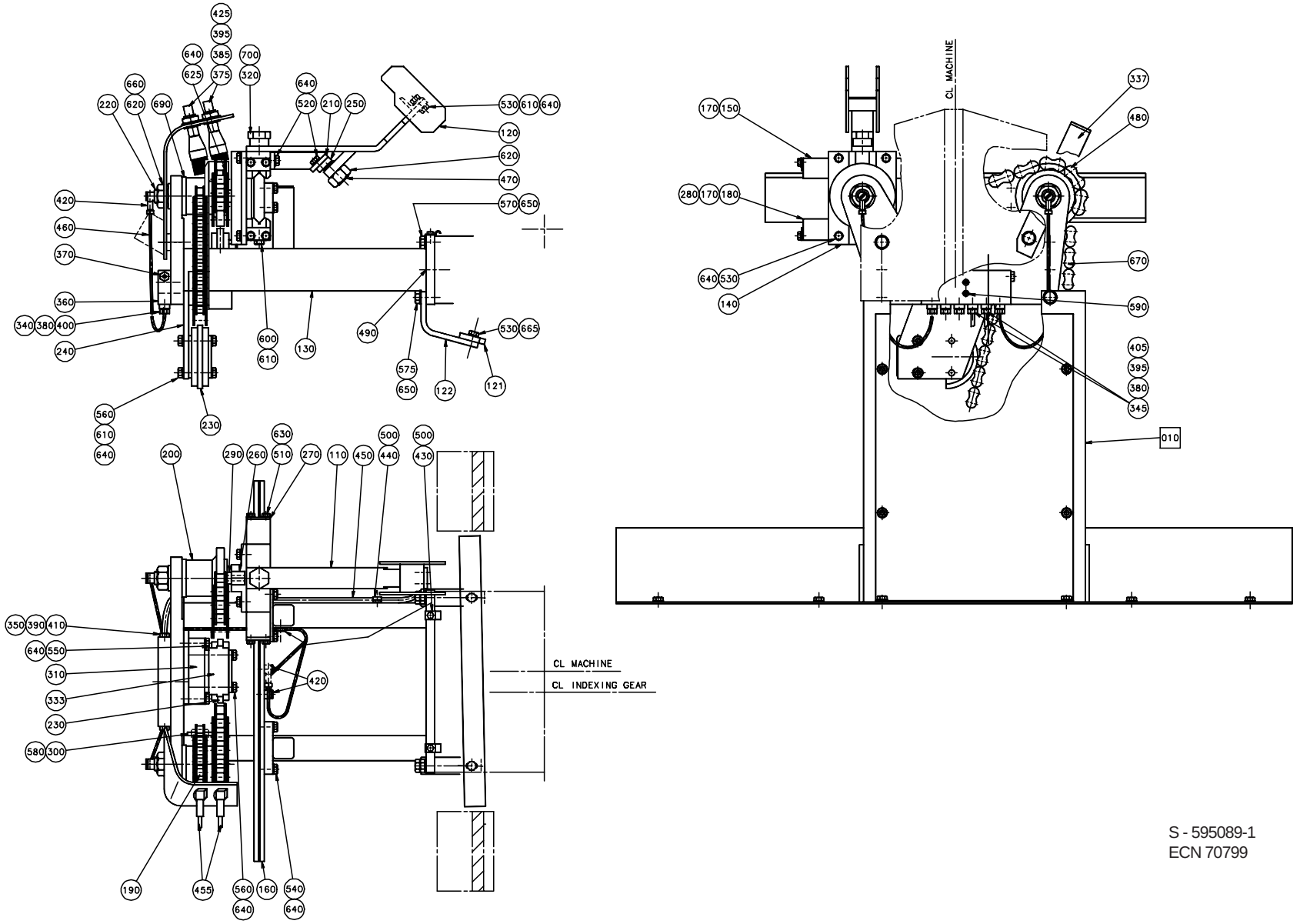

S - 595089-1
ECN 70799

Pos	Part No	SP	UN	Qty	Description	Page No
Common parts						
010	A 525320-0100	-		1	CHAIN GUARD	**595**
130	525310-0000	-		1	BRACKET	
140	443229-0000	R		1	BRACKET	
150	525140-0000	D		1	HOLDER	
160	525311-0000	R		1	GUIDE	
170	442931-0000	K		2	SLIDE RAIL	
180	443232-0000	D		1	HOLDER	
190	443235-0000	R		1	SPROCKET	
200	525194-0000	R		1	SPROCKET	
210	525200-0000	R		1	BRACKET	
220	525312-0000	M		2	SHAFT	
230	90344-0049	D		2	CHAIN TENSIONER	
240	566533-0000	D		1	BRACKET	
250	597564-0000	D		1	PLATE	
260	443237-0000	K		1	SLIDER	
270	443239-0000	-		4	WASHER	
280	525138-0000	R		1	SHEET	
290	525195-0000	R		1	WASHER	
300	525315-0000	D		1	SLIDER	
310	566312-0000	-		1	BRACKET	
320	525317-0000	R		1	FITTING BOLT	
333	566311-0000	D		1	PROFILE	
337	566315-0000	-		1	HOLDER	
340	90028-0020	J		4	CONE DT13700S-300 Di=2,5mm	
345	90028-0021	-		2	CONE DIN3862 Di=4mm	
350	90028-0025	J		1	CONE DT4.138811.2D	
360	90032-0040	-		1	BLOCK 6ways DT4.317796.1D	
370	90087-0019	-		1	PLUG M10x1 Stainless	
375	90092-0048	J		2	OIL BRUSH	
380	90092-0052	J		6	METERING VALVE 10mm3	
385	90134-0002	-		2	PIPE CONNECTION	
390	90134-0030	-		2	SLEEVE 6/3	
395	342706-0114	-		4	ACCESSORIES,INSERT SLEEVE 4	
400	90134-0039	J		4	BUSHING DT4.018912.1D Stainless	
405	90134-0040	J		2	BUSHING DT4.018914.1	
410	90134-0055	J		1	BUSHING 6 DIN 3871 Stainless	
420	90134-0058	-		4	BANJO CONNECTION DT4.310.437.1	
425	90137-0002	-		2	ELBOW PIPE	
430	90165-0056	-		3	PIPE-CLIPS,FOR SINGLE PIPE,ONE SIDE 4mm	
440	90165-0057	-		2	PIPE-CLIPS,FOR SINGLE PIPE,ONE SIDE 6	
450	90166-0108	-	MM	1400	HOSE 3/6 PA11/12 Transp.	
455	90166-0051	-	MM	600	HOSE	
460	90166-0143	-	MM	1200	HOSE 1,6/2,5 PA 11/12	
470	90287-0109	K		1	SCREW, SPRINGLOADED M16x27,5	
480	B 90288-0055	K		1	ROLLER CHAIN,SINGLE 5/8"-42	
490	311103-0399	-		2	CYLINDRICAL PIN M6 8X16 RFR	
500	312105-0287	-		5	SCREW M6S ISO 4017 M4x8 A280	
510	312105-0325	-		8	SCREW M6S 5x10 A2 80	
520	312105-0366	-		4	SCREW M6S ISO 4017 M6X12 A280	
540	312105-0370	-		8	SCREW M6S ISO 4017 M6x20 A280	
550	312105-0376	-		2	SCREW M6S ISO 4017 M6X35 A280	
560	312105-0379	-		4	SCREW M6S ISO 4014 M6X45 A280	
580	312155-0291	-		4	SCREW MF6S DIN 7991 M4X12 A280	
590	312155-0297	-		2	SCREW MF6S DIN 7991 M4X25 A280	
600	312318-0368	-		2	SET SCREW CUP POINT ISO 4029 M6x16 RFR	
610	312605-0316	-		4	NUT,HEXAGON A280 M6M6	
620	312605-0324	-		3	NUT,HEXAGON,M16 A280	
625	312812-0316	-		2	NUT,HEXAGON,LOCK,WITH NYLON INSERT,M6	
630	315105-0146	-		8	WASHER,PLAIN ROUND 5,3x10 Stainless	
640	315105-0153	-		28	WASHER,PLAIN ROUND 6,4x12 Stainless	
650	315105-0165	-		4	WASHER,PLAIN ROUND 8,4x16 Stainless	
660	315105-0186	-		2	WASHER,PLAIN ROUND 17x30	
670	318212-0119	K		1	ROLLER CHAIN SINGLE 1/2"-119,SS	
690	321101-0252	K		4	FLANGE BUS 25F7X16	
700	321120-0122	K		1	BEARING BUSHING WITHOUT FLANGE,15/17X15	
0500SQ						
110	525304-0000	D		1	ARM	
120	583630-0000	D		1	DISTRIBUTOR	
530	312105-0368	-		6	SCREW M6S ISO 4017 M6x16 A280	
570	312105-0453	-		4	SCREW M6S ISO 4017 M8x25 A280	
1000SQ						
110	525301-0000	D		1	ARM	
120	574056-0000	D		1	DISTRIBUTOR	
121	595068-0000	-		1	STEERING	
122	574058-0000	-		2	HOLDER	
530	312105-0368	-		8	SCREW M6S ISO 4017 M6x16 A280	
570	312105-0453	-		2	SCREW M6S ISO 4017 M8x25 A280	
575	312105-0455	-		2	SCREW M6S ISO 4017 M8X30 A280	
665	315115-0153	-		2	WASHER TBRB 6,4x12 Stainless	

DISCHARGER

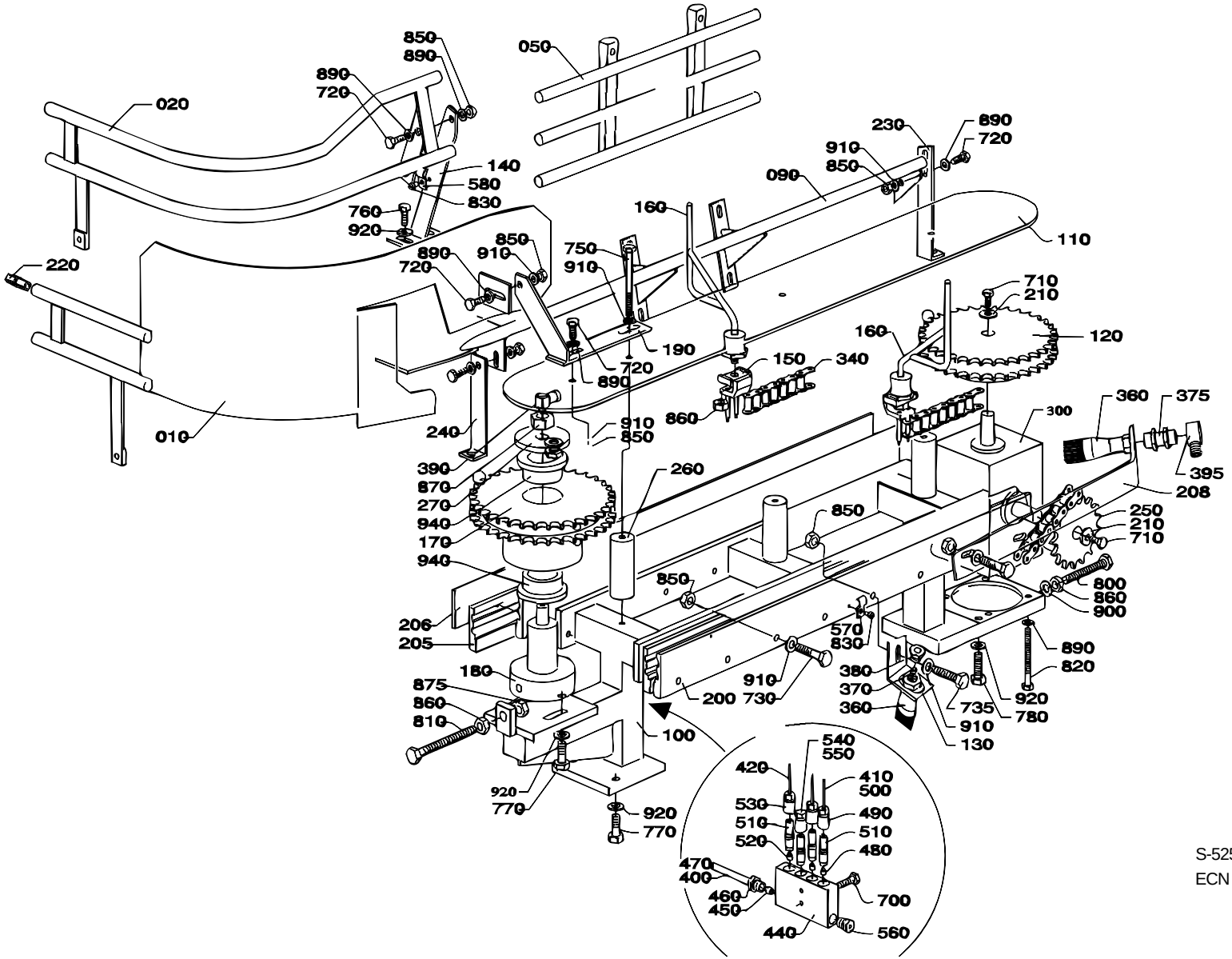

S-525325-2
ECN 17168

Pos	Part No	SP	UN	Qty	Description	Page No
Common parts						
090	442809-0000	D		1	LEAD RAIL	
100	525300-0000	D		1	MACHINE BODY	
110	443210-0000	D		1	PLATE STAINLESS	
120	443081-0000	R		1	SPROCKET	
130	443213-0000	-		1	BRACKET	
150	B 525254-0000	I		4	LINK	
170	525298-0000	R		1	SPROCKET	
180	525299-0000	R		1	SHAFT	
190	525323-0000	D		1	BRACKET	
200	525324-0000	R		3	PROFILE	
205	525411-0000	R		1	PROFILE	
206	525412-0000	-		1	RULER	
208	566314-0000	-		1	HOLDER	
210	6278-0000	-		2	WASHER	
220	229516-0000	J		4	PIN	
230	442829-0000	D		1	BRACKET	
240	442830-0000	D		1	BRACKET	
250	442836-0000	R		1	SPROCKET	
260	443215-0000	-		3	SPACER	
270	443295-0000	-		1	WASHER	
300	90056-0099	D		1	BEVEL GEAR	
320	318212-0066	K		1	ROLLER CHAIN SINGLE 1/2"-66,SS	
340	318242-0034	K		4	ROLLER CHAIN DUPLEX 1/2"-34,SS	
360	90092-0048	J		2	OIL BRUSH	
370	90028-0001	J		1	CONE 5/32"	
375	90134-0002	-		1	PIPE CONNECTION	
380	90134-0003	J		1	BUSHING	
390	90134-0058	-		1	BANJO CONNECTION DT4.310.437.1	
395	90137-0002	-		1	ELBOW PIPE	
400	90166-0108	-	MM	1300	HOSE 3/6 PA11/12 Transp.	
410	90166-0051	-	MM	1100	HOSE	
420	90166-0143	-	MM	200	HOSE 1,6/2,5 PA 11/12	
440	90032-0039	-		1	DISTR.BLOCK	
450	90028-0025	-		1	CONE DT4.138811.2D	
460	90134-0055	J		1	BUSHING 6 DIN 3871 Stainless	
470	90134-0030	-		2	SLEEVE 6/3	
480	90028-0021	J		2	CONE DIN3862 Di=4mm	
490	90134-0040	J		2	BUSHING DT4.018914.1	
500	342706-0114	-		4	ACCESSORIES,INSERT SLEEVE 4	
510	90092-0052	J		3	METERING VALVE 10mm3	
520	90028-0020	J		1	CONE DT13700S-300 Di=2,5mm	
530	90134-0039	J		1	BUSHING DT4.018912.1D Stainless	
540	90134-0045	-		1	PLUG	
550	90134-0052	-		1	PLUG DT4.076817.2D	
560	90087-0019	-		1	PLUG M10x1 Stainless	
570	90165-0056	-		1	PIPE-CLIPS,FOR SINGLE PIPE,ONE SIDE 4mm	
580	90165-0060	-		1	PIPE-CLIPS,FOR SINGLE PIPE,ONE SIDE 5	
700	312155-0295	-		2	SCREW MF6S DIN 7991 M4X20 A280	
710	312105-0366	-		2	SCREW M6S ISO 4017 M6X12 A280	
720	312105-0368	-		6	SCREW M6S ISO 4017 M6x16 A280	
730	312105-0376	-		7	SCREW M6S ISO 4017 M6X35 A280	
735	312105-0378	-		9	SCREW O4017 M6X40A280	
750	312105-0386	-		3	SCREW M6S ISO 4014 M6X80 A280	
760	312105-0449	-		2	SCREW M6S ISO 4017 M8x16 A280	
770	312105-0451	-		4	SCREW M6S ISO 4017 8x20 A280	
780	312105-0453	-		2	SCREW M6S ISO 4017 M8x25 A280	
800	312109-0457	-		1	SCREW M6S ISO 4017 M8X35 A280	
810	312109-0461	-		1	SCREW M6S ISO 4017 M8X50 A280	
820	312115-0368	-		4	SCREW MC6S ISO 4762 M6x16 A280	
830	312125-0285	-		2	SLOTTED HEAD SCREW MCS 4X6 RFR	
840	312125-0289	-		1	SLOTTED HEMCS4X10RFR	
850	312605-0316	-		22	NUT,HEXAGON A280 M6M6	
860	312605-0318	-		6	NUT,HEXAGON,M8 RFR	
870	312605-0322	-		1	NUT,HEXAGON,M12 RFR	
875	312625-0318	-		1	NUTS,HEXAGON,M8	
890	315105-0153	-		14	WASHER,PLAIN ROUND 6,4x12 Stainless	
900	315105-0165	-		1	WASHER,PLAIN ROUND 8,4x16 Stainless	
910	315115-0153	-		21	WASHER TBRB 6,4x12 Stainless	
920	315115-0165	-		8	WASHER TBRB 8,4x16 Stainless	
940	321101-0272	K		2	FLANGE BUS 30F7X20	
0355B or 0400B						
010	442811-0002	D		1	ARCH	
020	443207-0002	D		1	ARCH	
050	525322-0002	D		1	LEAD RAIL	
140	443217-0000	-		1	BRACKET	
160	525374-0000	J		4	CARRIER	
0375S						
010	442811-0002	D		1	ARCH	
020	443206-0003	D		1	ARCH	
050	525322-0003	D		1	LEAD RAIL	
140	443217-0000	-		1	BRACKET	
160	525374-0000	J		4	CARRIER	
0500B						
010	442811-0001	D		1	ARCH	

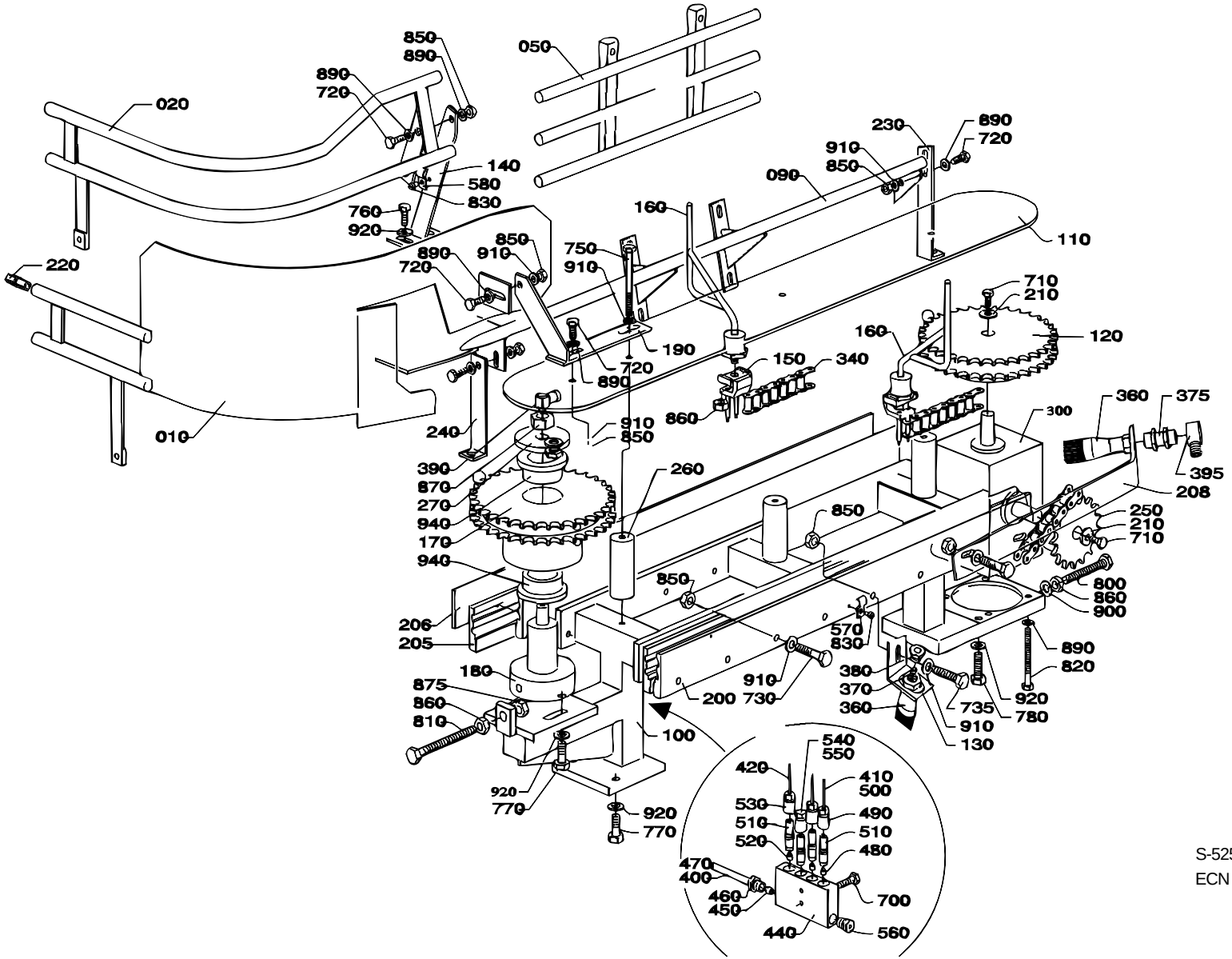

S-525325-2
ECN 17168

Pos	Part No	SP	UN	Qty	Description	Page No
020	443207-0001	D		1	ARCH	
050	525322-0001	D		1	LEAD RAIL	
140	443217-0000	-		1	BRACKET	
160	525374-0000	J		4	CARRIER	
0500S						
010	525466-0000	D		1	ARCH	
020	443206-0002	D		1	ARCH	
050	525322-0002	D		1	LEAD RAIL	
140	443217-0000	-		1	BRACKET	
160	525414-0000	J		4	CARRIER	
0500SQ						
010	525437-0000	D		1	ARCH	
020	583628-0000	D		1	ARCH	
050	583452-0000	D		1	LEAD RAIL	
140	583629-0000	-		1	BRACKET	
160	525374-0000	J		4	CARRIER	
0750B						
010	442811-0001	D		1	ARCH	
020	443206-0001	D		1	ARCH	
050	525322-0001	D		1	LEAD RAIL	
140	443217-0000	-		1	BRACKET	
160	525374-0000	J		4	CARRIER	
0750S						
010	525437-0000	D		1	ARCH	
020	443206-0004	D		1	ARCH	
050	525322-0004	D		1	LEAD RAIL	
140	443217-0000	-		1	BRACKET	
160	525414-0000	J		4	CARRIER	
1000B or 1055B						
010	525437-0000	D		1	ARCH	
020	443206-0001	D		1	ARCH	
050	525322-0001	D		1	LEAD RAIL	
140	443217-0000	-		1	BRACKET	
160	525414-0000	J		4	CARRIER	
1000S						
010	525437-0000	D		1	ARCH	
020	443206-0001	D		1	ARCH	
050	569130-0000	D		1	LEAD RAIL	
140	443217-0000	-		1	BRACKET	
160	525414-0000	J		4	CARRIER	
1000SQ						
010	525437-0000	D		1	ARCH	
020	574055-0000	D		1	ARCH	
050	574057-0000	D		1	LEAD RAIL	
140	443217-0000	-		1	BRACKET	
160	525414-0000	J		4	CARRIER	

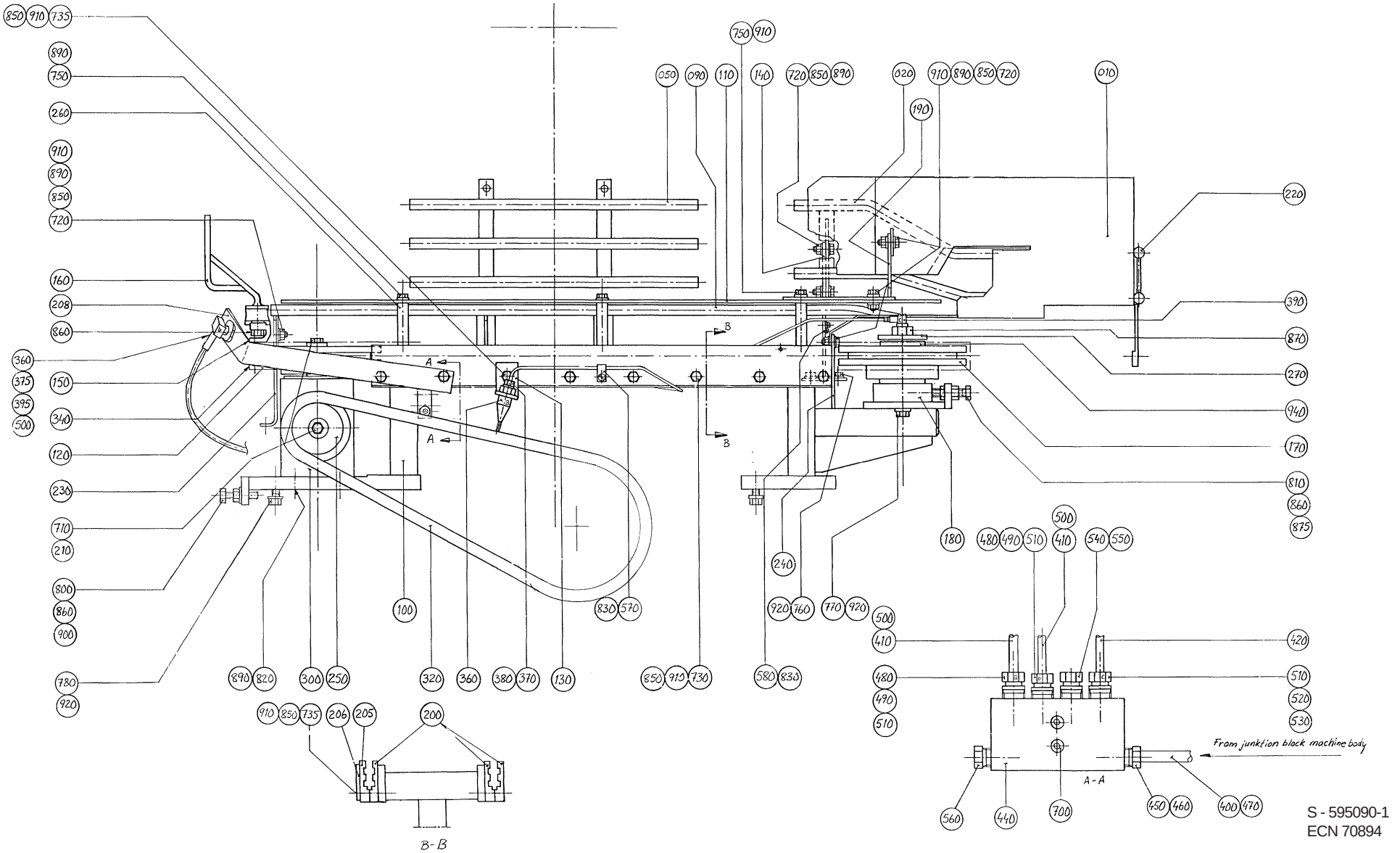
B-B
A-A
From junktion block machine body
S - 595090-1
ECN 70894

Pos	Part No	SP	UN	Qty	Description	Page No
Common parts						
010	595052-0000	D		1	ARCH	
090	594644-0000	D		1	LEAD RAIL	
100	595044-0000	D		1	MACHINE BODY	
110	443210-0000	D		1	PLATE STAINLESS	
120	443081-0000	R		1	SPROCKET	
130	443213-0000	-		1	BRACKET	
150	B 525254-0000	I		4	LINK	
170	525298-0000	R		1	SPROCKET	
180	525299-0000	R		1	SHAFT	
190	595053-0000	D		1	BRACKET	
200	525324-0000	R		3	PROFILE	
205	525411-0000	R		1	PROFILE	
206	525412-0000	-		1	RULER	
208	595061-0000	-		1	HOLDER	
210	6278-0000	-		2	WASHER	
220	229516-0000	J		4	PIN	
230	595056-0000	D		1	BRACKET	
240	442830-0000	D		1	BRACKET	
250	442836-0000	R		1	SPROCKET	
260	443215-0000	-		3	SPACER	
270	443295-0000	-		1	WASHER	
300	90056-0147	D		1	Bevel Gear	
320	318212-0074	K		1	Roller Chain	
340	318242-0034	K		4	ROLLER CHAIN DUPLEX 1/2"-34,SS	
360	90092-0048	J		2	OIL BRUSH	
370	90028-0001	J		1	CONE 5/32"	
375	90134-0002	-		1	PIPE CONNECTION	
380	90134-0003	J		1	BUSHING	
390	90134-0058	-		1	BANJO CONNECTION DT4.310.437.1	
395	90137-0002	-		1	ELBOW PIPE	
400	90166-0108	-	MM	1300	HOSE 3/6 PA11/12 Transp.	
410	90166-0051	-	MM	700	HOSE	
420	90166-0143	-	MM	500	HOSE 1,6/2,5 PA 11/12	
440	90032-0039	-		1	DISTR.BLOCK	
450	90028-0025	J		1	CONE DT4.138811.2D	
460	90134-0055	J		1	BUSHING 6 DIN 3871 Stainless	
470	90134-0030	-		2	SLEEVE 6/3	
480	90028-0021	J		2	CONE DIN3862 Di=4mm	
490	90134-0040	J		2	BUSHING DT4.018914.1	
500	342706-0114	-		4	ACCESSORIES,INSERT SLEEVE 4	
510	90092-0052	J		3	METERING VALVE 10mm3	
520	90028-0020	J		1	CONE DT13700S-300 Di=2,5mm	
530	90134-0039	J		1	BUSHING DT4.018912.1D Stainless	
540	90134-0045	-		1	PLUG	
550	90134-0052	-		1	PLUG DT4.076817.2D	
560	90087-0019	-		1	PLUG M10x1 Stainless	
570	90165-0056	-		1	PIPE-CLIPS,FOR SINGLE PIPE,ONE SIDE 4mm	
580	90165-0060	-		1	PIPE-CLIPS,FOR SINGLE PIPE,ONE SIDE 5	
700	312155-0295	-		2	SCREW MF6S DIN 7991 M4X20 A280	
710	312105-0366	-		2	SCREW M6S ISO 4017 M6X12 A280	
720	312105-0368	-		6	SCREW M6S ISO 4017 M6x16 A280	
730	312105-0376	-		7	SCREW M6S ISO 4017 M6X35 A280	
735	312105-0378	-		9	SCREW O4017 M6X40A280	
750	312105-0386	-		3	SCREW M6S ISO 4014 M6X80 A280	
760	312105-0449	-		2	SCREW M6S ISO 4017 M8x16 A280	
770	312105-0451	-		2	SCREW M6S ISO 4017 8x20 A280	
780	312105-0453	-		4	SCREW M6S ISO 4017 M8x25 A280	
800	312109-0457	-		1	SCREW M6S ISO 4017 M8X35 A280	
810	312109-0461	-		1	SCREW M6S ISO 4017 M8X50 A280	
820	312115-0368	-		4	SCREW MC6S ISO 4762 M6x16 A280	
830	312125-0285	-		2	SLOTTED HEAD SCREW MCS 4X6 RFR	
840	312125-0289	-		1	SLOTTED HEMCS4X10RFR	
850	312605-0316	-		22	NUT,HEXAGON A280 M6M6	
860	312605-0318	-		6	NUT,HEXAGON,M8 RFR	
870	312605-0322	-		1	NUT,HEXAGON,M12 RFR	
875	312625-0318	-		1	NUTS,HEXAGON,M8	
890	315105-0153	-		14	WASHER,PLAIN ROUND 6,4x12 Stainless	
900	315105-0165	-		1	WASHER,PLAIN ROUND 8,4x16 Stainless	
910	315115-0153	-		21	WASHER TBRB 6,4x12 Stainless	
920	315115-0165	-		8	WASHER TBRB 8,4x16 Stainless	
940	321101-0272	K		2	FLANGE BUS 30F7X20	
0500SQ						
020	1361252-0000	D		1	ARCH	
050	1361909-0000	D		1	LEAD RAIL	
140	583629-0000	-		1	BRACKET	
160	525374-0000	J		4	CARRIER	
1000SQ						
020	595048-0000	D		1	ARCH	
050	595060-0000	D		1	LEAD RAIL	
140	443217-0000	-		1	BRACKET	
160	595046-0000	J		4	CARRIER	

This page is intentionally left blank

Pos	Part No	SP	UN	Qty	Description	Page No
90134-0034						
	90030-0101	-		1	TAPER	
90274-0002						
	90274-0300	-		1	CONTACT HOUSING	
90288-0055						
	90288-0317	K		1	CONNECTING LINK SINGLE 5/8",SS	
	90288-0324	K		1	CARRIER	
90321-0015						
	90321-0466	K		1	SPARE PART KIT	
	90321-0481	K		1	GASKET	
90321-0034						
	90321-0466	K		1	SPARE PART KIT	
	90321-0481	K		1	GASKET	
90415-0033						
	90415-0330	K		1	FILTER INSERT	
285162-0000						
	90028-0002	-		1	CONE	
	90134-0022	-		1	BUSHING	
	90151-0004	-	M	1	PIPE	
285164-0000						
	90028-0002	-		1	CONE	
	90134-0022	-		1	BUSHING	
	90151-0004	-	M	1	PIPE	
285676-0000						
	20704-0000	-		1	NUT	
285677-0000						
	20704-0000	-		1	NUT	
297664-0000						
	312923-0131	-		1	NUTS,BLIND RIVET M6X15	
442560-0000						
	90028-0002	-		1	CONE	
	90134-0022	-		1	BUSHING	
	90151-0004	-	M	1	PIPE	
442867-0000						
	20704-0000	-		1	NUT	
442882-0000						
	90157-0021	-	L	1	LOCKING FLUID	
	312318-0451	-		1	SET SCREW CUP POINT ISO 4029 M8X20 RFR	
443116-0000						
	312910-0118	-		2	THREADED I M6X1,5D	
443348-0000						
	312910-0119	-		3	THREADED INSERTS M6X2,0D	
443487-0000						
	90242-0054	-		2	O-RING	
443488-0000						
	90242-0054	-		2	O-RING	
525016-0000						
	312910-0112	-		3	THREADED I M4X2,5D	
	312910-0127	-		2	THREADED INSERTS M8X2,0D	
525070-0000						
	351121-0109	K	M	1	CABLE RHH 16	
	353102-0168	K		1	CABLE SHOEYAEV16-M6	
525197-0000						
	525196-0000	-		1	NUT	
525198-0000						
	525196-0000	-		1	NUT	
525254-0000						
	318219-0687	-		1	CONNECTING LINK TRIPLEX 1/2",SS	
525271-0000						
	90266-0022	-	M	1	DAIRY PIPE	
	342808-0103	-		2	ELBOW PIPE38	
	342810-0103	-		2	ELBOW PIPE38	
	342811-0103	-		1	NIPPLE ANSL.38	
525297-0000						
	312910-0113	-		2	THREADED INSERTS M5X1,0D	
525429-0000						
	312910-0119	-		3	THREADED INSERTS M6X2,0D	
544269-0000						
	525196-0000	-		1	NUT	
544293-0000						
	525196-0000	-		1	NUT	
544298-0000						
	20704-0000	-		1	NUT	
574166-0000						
	90266-0167	-	M	1	PIPE	
	285993-0000	-		1	CONNECTION	
574676-0000						
	20704-0000	-		1	NUT	
574677-0000						
	20704-0000	-		1	NUT	

SPC

Spare Parts Catalogue

This page is intentionally left blank

Pos	Part No	SP	UN	Qty	Description	Page No
TBA/8 0355B or TBA/8 0375S or TBA/8 0400B or TBA/8 0500S or TBA/8 0750S						
330	A 284953-0100	-		1	HOSE	**621**
340	A 292445-0100	-		1	LIFTING UNIT	**623**
360	A 531345-0100	-		1	PERSONAL PROTECT. EQ H2O2	**625**
540	436512-0000	-		2	PIPE	
560	499082-0403	-		1	ADAPTER, TYPE 1	
TBA/8 0500B or TBA/8 0500SQ or TBA/8 0750B or TBA/8 1000B or TBA/8 1000SQ or TBA/8 1055B						
330	A 284953-0100	-		1	HOSE	**621**
340	A 292445-0100	-		1	LIFTING UNIT	**623**
360	A 531345-0100	-		1	PERSONAL PROTECT. EQ H2O2	**625**
540	436512-0000	-		2	PIPE	
560	499082-0404	-		1	ADAPTER, TYPE 1	
TBA/8 1000S						
330	A 284953-0100	-		1	HOSE	**621**
340	A 292445-0100	-		1	LIFTING UNIT	**623**
360	A 531345-0100	-		1	PERSONAL PROTECT. EQ H2O2	**625**
540	436512-0000	-		2	PIPE	
560	499082-0407	-		1	ADAPTER, TYPE 1	
Common parts						
240	A 250610-0200	-		1	TOOL KIT	**611**
300	A 554171-0300	-		1	PLATFORM ADDITION	**613**
370	A 551997-0100	-		1	LIFTING UNIT	**627**
480	593634-0100	-		1	DIAGRAM	
490	90243-0133	-		1	CONTAINER	
500	90347-0111	-		4	MACHINE SHOE TFE 1201 SS	
502	90347-0110	-		4	MACHINE SHOE TFE 601 SS	
600	598878-0000	-		1	Machine Sign 2 ADR. EEA	

Pos	Part No	SP	UN	Qty	Description	Page No

This page is intentionally left blank

Pos	Part No	SP	UN	Qty	Description	Page No
IH						
015	283084-0000	-		1	GUIDE SHAFT	
020	283085-0000	-		1	SLEEVE	
025	245165-0000	-		1	ASSEMBLY TOOL	
030	315202-0224	-		1	O-RINGS 42,2X3	
Common parts						
040	72947-0000	-		1	HOOK SPANNER	
045	74387-0000	-		1	HOOK SPANNER	
070	76138-0000	-		1	LOCKING LOOP	
075	434841-0000	-		1	GAUGE	
130	318301-0130	-		4	LIFTING EYES,BOLT,TYPE LT,M30	
150	776422-0101	-		2	BRASS WIRESTE	
320	777200-0101	-		1	PIPE WRENCEL	
330	777510-0101	-		1	SCISSORS	

Pos	Part No	SP	UN	Qty	Description	Page No

This page is intentionally left blank

Pos	Part No	SP	UN	Qty	Description	Page No
PFV11 or PFV12 or PFV13 or PFV14						
F020	A 266756-0500	-		1	PLATFORM	**617**
PFV1 or PFV2 or PFV3						
F010	A 266755-0200	-		1	PLATFORM	**615**

VARIANT 01

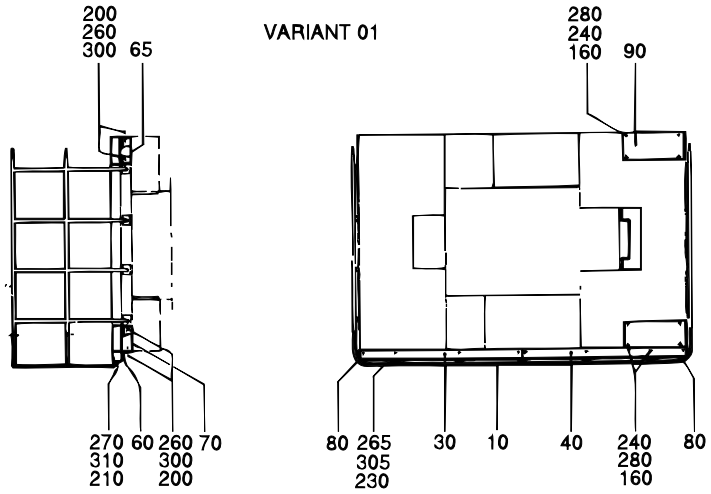

VARIANT 02

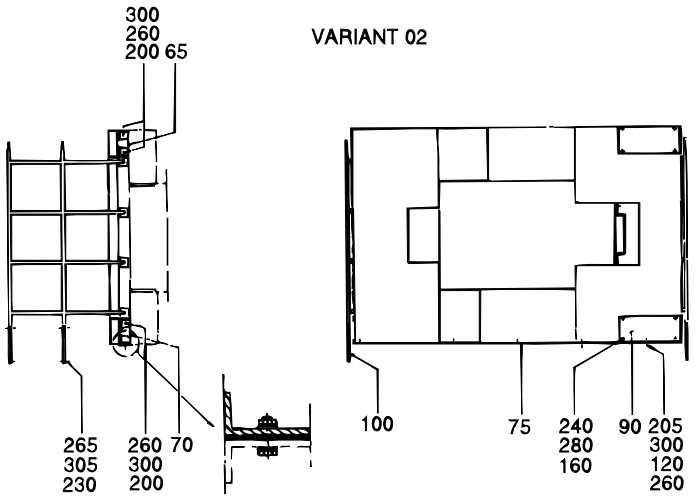

VARIANT 03

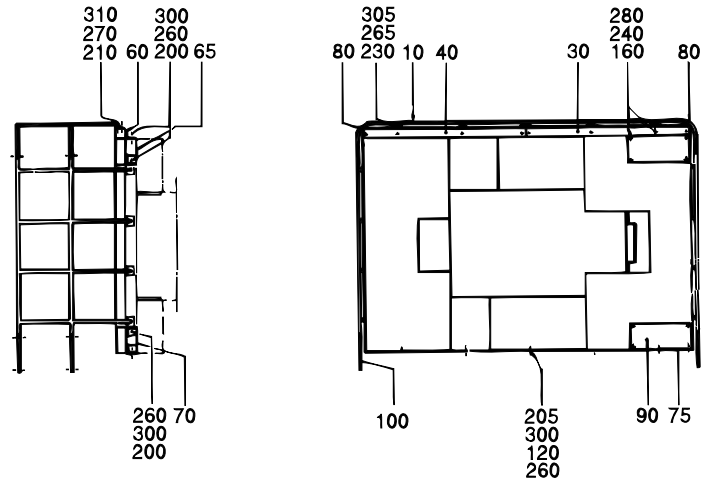

S-266755-2
ECN 6045

Pos	Part No	SP	UN	Qty	Description	Page No
Common parts						
065	269339-0000	-		1	CANTILEVER	
070	269340-0000	-		1	CANTILEVER	
090	257862-0000	-		2	PLATFORM	
PFV1						
010	257845-0000	-		1	RAILING	
030	247146-0000	-		1	PLATFORM	
040	257852-0000	-		1	PLATFORM	
060	257854-0000	-		1	CANTILEVER	
080	257859-0000	-		4	RAILING	
160-02	90287-0076	-		16	SCREW, PAN HEAD,LKCS ISO1580, M6x20	
200	312101-0495	-		13	SCREW M6S10X30FZB	
210	312105-0493	-		20	SCREW M6S ISO 4017 M10X25 A280	
230	312115-0453	-		8	SCREW MC6S ISO 4762 M8X25 A280	
240-02	312601-0316	-		16	NUT M6M 6-8 FZB	
260	312601-0320	-		10	NUT M6M 10-8 FZB	
265	312605-0318	-		8	NUT,HEXAGON,M8 RFR	
270	312605-0320	-		20	NUT,HEXAGON,M10 A280	
280-02	315101-0153	-		16	WASHER BRB 6,4x12 FZB	
300	315101-0173	-		23	WASHER BRB10,5X22FZB	
305	315105-0165	-		8	WASHER,PLAIN ROUND 8,4x16 Stainless	
310	315105-0173	-		20	WASHER,PLAIN ROUND 10,5x22 STAINLESS	
PFV2						
075	451406-0000	-		1	VIBRATION DAMPER	
100	451407-0000	-		4	RAILING	
120	451408-0000	-		14	BUFFER RING	
160	90287-0076	-		8	SCREW, PAN HEAD,LKCS ISO1580, M6x20	
205	312101-0500	-		7	SCREW M6S10X45FZB	
230	312115-0453	-		8	SCREW MC6S ISO 4762 M8X25 A280	
240	312601-0316	-		8	NUT M6M 6-8 FZB	
260-02	312601-0320	-		13	NUT M6M 10-8 FZB	
265	312605-0318	-		8	NUT,HEXAGON,M8 RFR	
280	315101-0153	-		8	WASHER BRB 6,4x12 FZB	
300-02	315101-0173	-		26	WASHER BRB10,5X22FZB	
305	315105-0165	-		8	WASHER,PLAIN ROUND 8,4x16 Stainless	
PFV3						
010	257845-0000	-		1	RAILING	
030	247146-0000	-		1	PLATFORM	
040	257852-0000	-		1	PLATFORM	
060	257854-0000	-		1	CANTILEVER	
075	451406-0000	-		1	VIBRATION DAMPER	
080	257859-0000	-		4	RAILING	
100	451407-0000	-		4	RAILING	
120	451408-0000	-		14	BUFFER RING	
160-02	90287-0076	-		16	SCREW, PAN HEAD,LKCS ISO1580, M6x20	
200	312101-0495	-		13	SCREW M6S10X30FZB	
205	312101-0500	-		7	SCREW M6S10X45FZB	
210	312105-0493	-		20	SCREW M6S ISO 4017 M10X25 A280	
230-02	312115-0453	-		16	SCREW MC6S ISO 4762 M8X25 A280	
240-02	312601-0316	-		16	NUT M6M 6-8 FZB	
260-03	312601-0320	-		17	NUT M6M 10-8 FZB	
265-02	312605-0318	-		16	NUT,HEXAGON,M8 RFR	
270	312605-0320	-		20	NUT,HEXAGON,M10 A280	
280-02	315101-0153	-		16	WASHER BRB 6,4x12 FZB	
300-03	315101-0173	-		37	WASHER BRB10,5X22FZB	
305-02	315105-0165	-		16	WASHER,PLAIN ROUND 8,4x16 Stainless	
310	315105-0173	-		20	WASHER,PLAIN ROUND 10,5x22 STAINLESS	

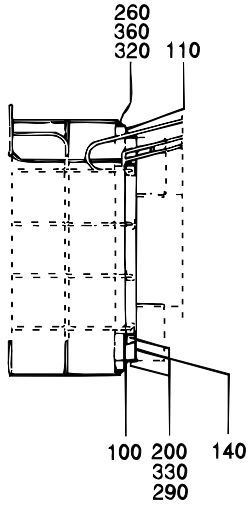

VARIANT 11

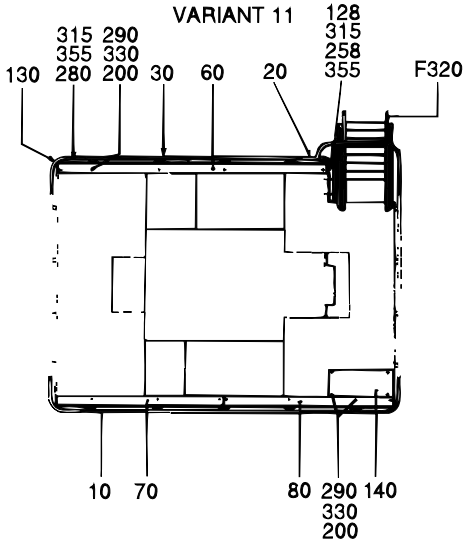

VARIANT 12

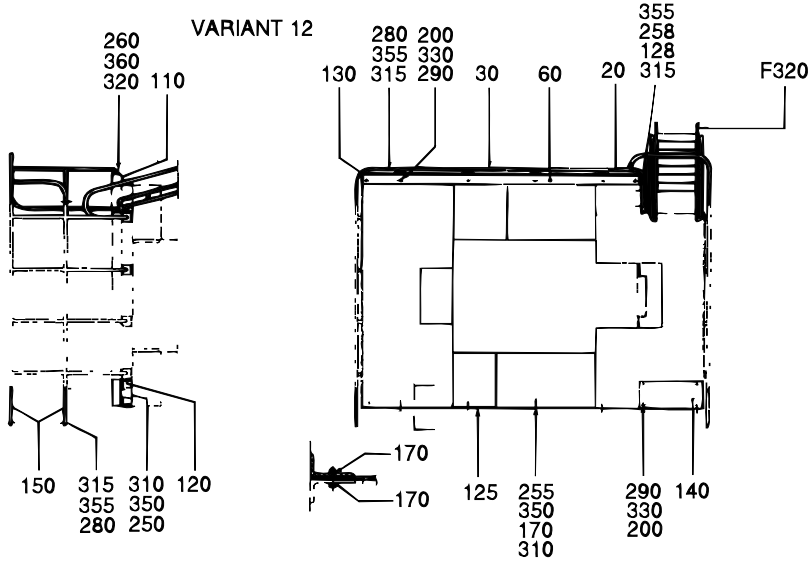

VARIANT 13

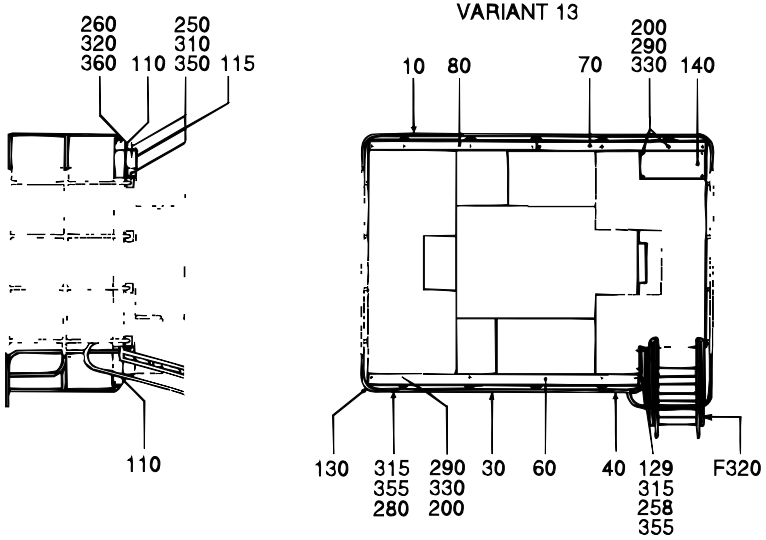

VARIANT 14

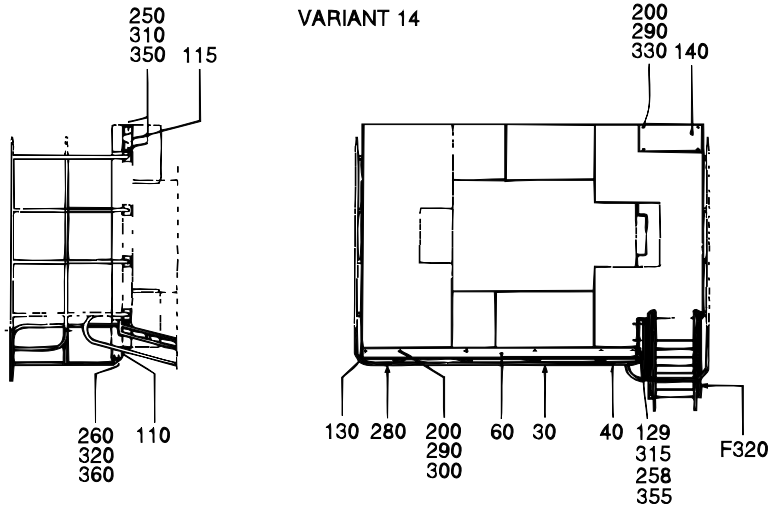

S-256756-4
ECN 19452

Pos	Part No	SP	UN	Qty	Description	Page No
Common parts						
F320	A 243171-0200	-		1	LADDER	**619**
030	263322-0000	-		1	RAILING	
060	247145-0000	-		1	PLATFORM	
110	257855-0000	-		1	CANTILEVER	
140	257862-0000	-		1	PLATFORM	
258	312105-0453	-		2	SCREW M6S ISO 4017 M8x25 A280	
PFV11						
010	257845-0000	-		1	RAILING	
020	257846-0000	-		1	RAILING	
070	247146-0000	-		1	PLATFORM	
080	257852-0000	-		1	PLATFORM	
100	257854-0000	-		1	CANTILEVER	
120	269340-0000	-		1	CANTILEVER	
128	551903-0000	-		1	KICKPLATE,LEFT	
130-02	257859-0000	-		6	RAILING	
200-02	90287-0076	-		18	SCREW, PAN HEAD,LKCS ISO1580, M6x20	
250-02	312101-0495	-		16	SCREW M6S10X30FZB	
260-02	312105-0493	-		40	SCREW M6S ISO 4017 M10X25 A280	
280-02	312115-0453	-		16	SCREW MC6S ISO 4762 M8X25 A280	
290-02	312601-0316	-		18	NUT M6M 6-8 FZB	
310-02	312601-0320	-		10	NUT M6M 10-8 FZB	
315-02	312605-0318	-		18	NUT,HEXAGON,M8 RFR	
320-02	312605-0320	-		40	NUT,HEXAGON,M10 A280	
330-02	315101-0153	-		18	WASHER BRB 6,4x12 FZB	
350-02	315101-0173	-		26	WASHER BRB10,5X22FZB	
355-02	315105-0165	-		20	WASHER,PLAIN ROUND 8,4x16 Stainless	
360-02	315105-0173	-		40	WASHER,PLAIN ROUND 10,5x22 STAINLESS	
PFV12						
020	257846-0000	-		1	RAILING	
120	269340-0000	-		1	CANTILEVER	
125	451406-0000	-		1	VIBRATION DAMPER	
128	551903-0000	-		1	KICKPLATE,LEFT	
130	257859-0000	-		2	RAILING	
150	451407-0000	-		4	RAILING	
170	451408-0000	-		8	BUFFER RING	
200	90287-0076	-		10	SCREW, PAN HEAD,LKCS ISO1580, M6x20	
250	312101-0495	-		9	SCREW M6S10X30FZB	
255	312101-0500	-		7	SCREW M6S10X45FZB	
260	312105-0493	-		20	SCREW M6S ISO 4017 M10X25 A280	
280-02	312115-0453	-		16	SCREW MC6S ISO 4762 M8X25 A280	
290	312601-0316	-		10	NUT M6M 6-8 FZB	
310-03	312601-0320	-		13	NUT M6M 10-8 FZB	
315-02	312605-0318	-		18	NUT,HEXAGON,M8 RFR	
320	312605-0320	-		20	NUT,HEXAGON,M10 A280	
330	315101-0153	-		10	WASHER BRB 6,4x12 FZB	
350-03	315101-0173	-		29	WASHER BRB10,5X22FZB	
355-02	315105-0165	-		20	WASHER,PLAIN ROUND 8,4x16 Stainless	
360	315105-0173	-		20	WASHER,PLAIN ROUND 10,5x22 STAINLESS	
PFV13						
010	257845-0000	-		1	RAILING	
040	263619-0000	-		1	RAILING	
070	247146-0000	-		1	PLATFORM	
080	257852-0000	-		1	PLATFORM	
100	257854-0000	-		1	CANTILEVER	
115	269339-0000	-		1	CANTILEVER	
129	565961-0000	-		1	KICKPLATE,RIGHT	
130-02	257859-0000	-		6	RAILING	
200-02	90287-0076	-		18	SCREW, PAN HEAD,LKCS ISO1580, M6x20	
250-02	312101-0495	-		16	SCREW M6S10X30FZB	
260-02	312105-0493	-		40	SCREW M6S ISO 4017 M10X25 A280	
280-02	312115-0453	-		16	SCREW MC6S ISO 4762 M8X25 A280	
290-02	312601-0316	-		18	NUT M6M 6-8 FZB	
310-02	312601-0320	-		10	NUT M6M 10-8 FZB	
315-02	312605-0318	-		18	NUT,HEXAGON,M8 RFR	
320-02	312605-0320	-		40	NUT,HEXAGON,M10 A280	
330-02	315101-0153	-		18	WASHER BRB 6,4x12 FZB	
350-02	315101-0173	-		26	WASHER BRB10,5X22FZB	
355-02	315105-0165	-		20	WASHER,PLAIN ROUND 8,4x16 Stainless	
360-02	315105-0173	-		40	WASHER,PLAIN ROUND 10,5x22 STAINLESS	
PFV14						
040	263619-0000	-		1	RAILING	
115	269339-0000	-		1	CANTILEVER	
129	565961-0000	-		1	KICKPLATE,RIGHT	
130	257859-0000	-		2	RAILING	
200	90287-0076	-		10	SCREW, PAN HEAD,LKCS ISO1580, M6x20	
250	312101-0495	-		9	SCREW M6S10X30FZB	
260	312105-0493	-		20	SCREW M6S ISO 4017 M10X25 A280	
280	312115-0453	-		8	SCREW MC6S ISO 4762 M8X25 A280	
290	312601-0316	-		10	NUT M6M 6-8 FZB	
310	312601-0320	-		6	NUT M6M 10-8 FZB	
315	312605-0318	-		10	NUT,HEXAGON,M8 RFR	
320	312605-0320	-		20	NUT,HEXAGON,M10 A280	
330	315101-0153	-		10	WASHER BRB 6,4x12 FZB	
350	315101-0173	-		15	WASHER BRB10,5X22FZB	
355	315105-0165	-		12	WASHER,PLAIN ROUND 8,4x16 Stainless	
360	315105-0173	-		20	WASHER,PLAIN ROUND 10,5x22 STAINLESS	

LADDER

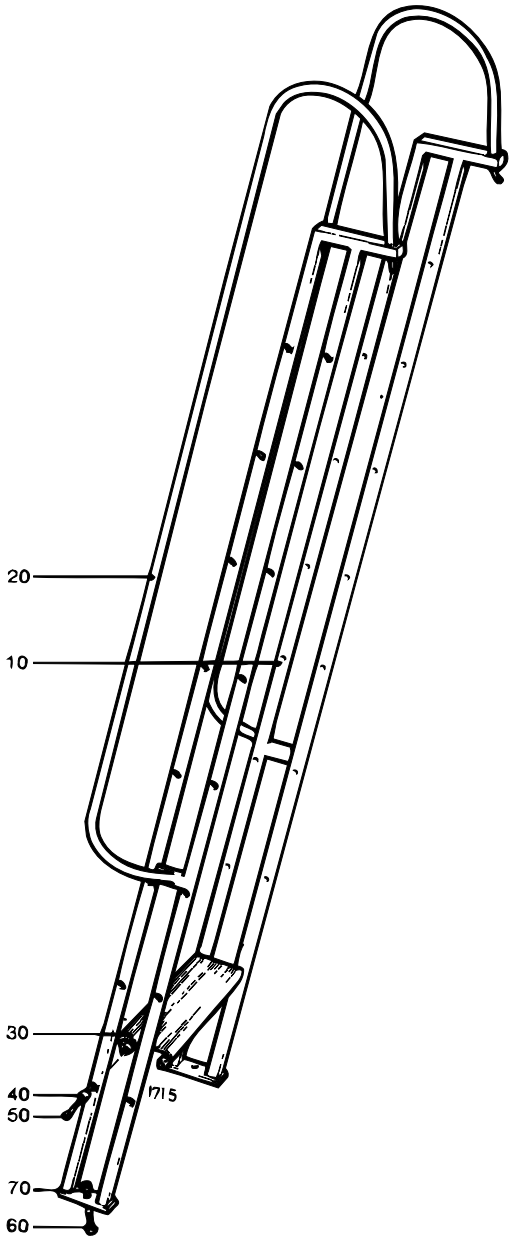

S-243171-2
ECN 7470

Pos	Part No	SP	UN	Qty	Description	Page No
Common parts						
010	243172-0001	-		1	SIDE PIECE	
020	243172-0002	-		1	SIDE PIECE	
030	208361-0001	-		8	STAIR	
040	208658-0001	-		32	SPACER	
050	90287-0056	-		32	SCREW, MC6S-TT M8x40	
060	312101-0495	-		2	SCREW M6S10X30FZB	
070	312601-0320	-		2	NUT M6M 10-8 FZB	

Pos	Part No	SP	UN	Qty	Description	Page No

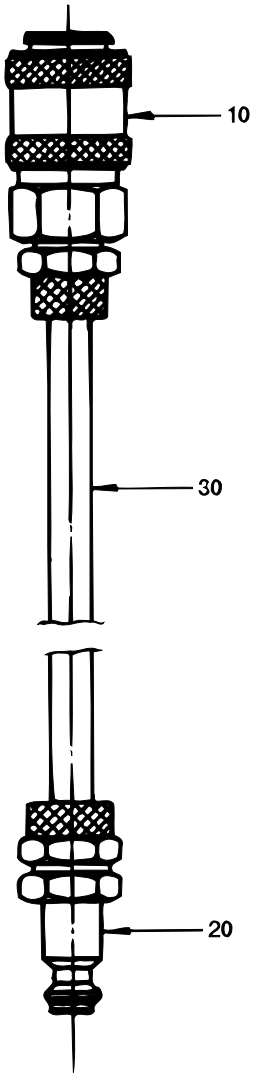

S-284953-1
ECN 5053

Pos	Part No	SP	UN	Qty	Description	Page No
Common parts						
010	90163-0056	-		1	SLEEVE 5054-6/4	
020	90163-0063	-		1	NIPPLE 6/4	
030	90166-0124	-	MM	1500	HOSE 4,0/6 PA 11/12 Transp.	

Pos	Part No	SP	UN	Qty	Description	Page No

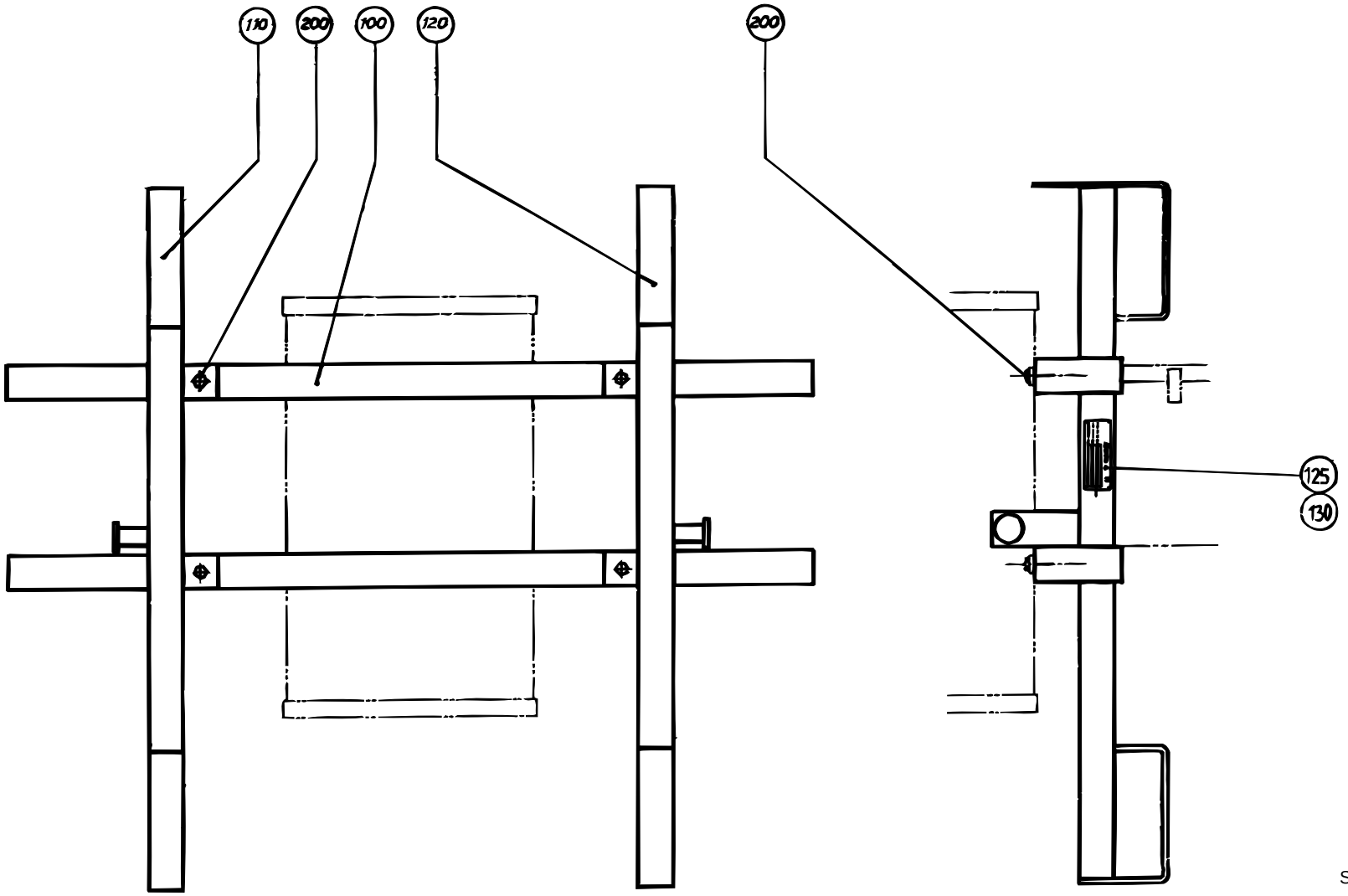

S-292445-1
ECN 22850

Pos	Part No	SP	UN	Qty	Description	Page No
Common parts						
100	292313-0000	-		2	BEAM	
110	292314-0000	-		1	BEAM	
120	292315-0000	-		1	BEAM	
125	1143455-0000	-		1	MACHINE SIGN CE	
130	311521-0144	-		4	COLD SQUEEZE TYPE "POP RIVET" 3,2x10	
200	312101-0491	-		8	SCREW M6S10X20FZB	

Pos	Part No	SP	UN	Qty	Description	Page No

This page is intentionally left blank

Pos	Part No	SP	UN	Qty	Description	Page No
Common parts						
010	90303-0004	-		1	GLOVES	
020	90303-0005	-		1	PROTECTIVE EQUIPMENT	
030	779130-0102	-		1	PROTECTIVE GOGGLES	

Pos	Part No	SP	UN	Qty	Description	Page No

LIFTING UNIT

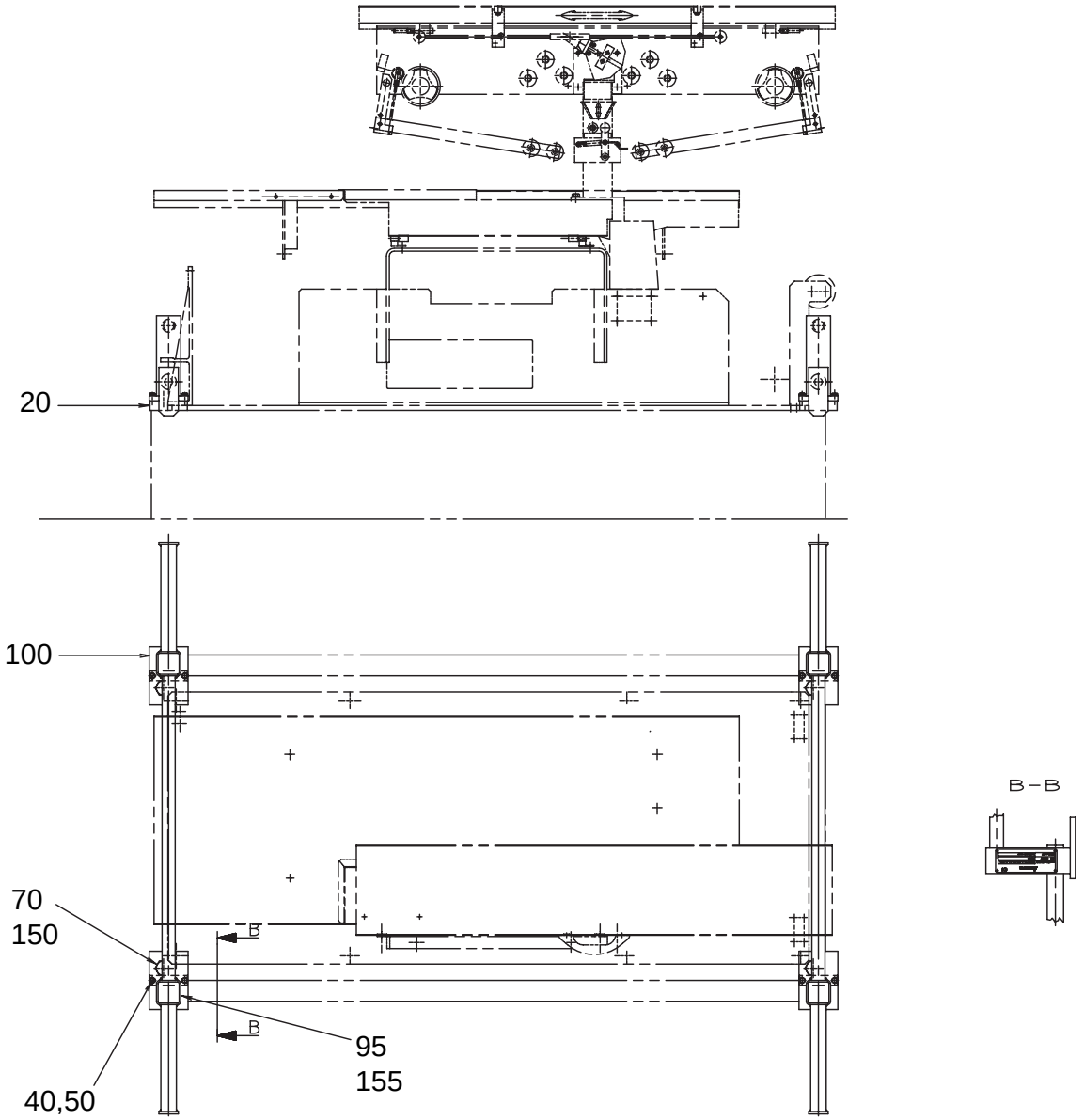

S-551997-1
ECN 22850

Pos	Part No	SP	UN	Qty	Description	Page No
Common parts						
095	1143456-0000	-		1	MACHINE SIGN CE	
100	548778-0000	-		2	LIFTING UNIT	
150	315102-0192	-		4	WASHER BRFB21X36FZB	
155	311521-0144	-		4	COLD SQUEEZE TYPE "POP RIVET" 3,2x10	
TBA/8						
020	551998-0000	-		4	SUPPORT LUG	
040	312101-0370	-		8	SCREW M6S6X20FZB	
050	315101-0153	-		8	WASHER BRB 6,4x12 FZB	
070	90287-0127	-		4	SCREW, M6S M20x60 8.8	

Pos	Part No	SP	UN	Qty	Description	Page No

SPC

Spare Parts Catalogue

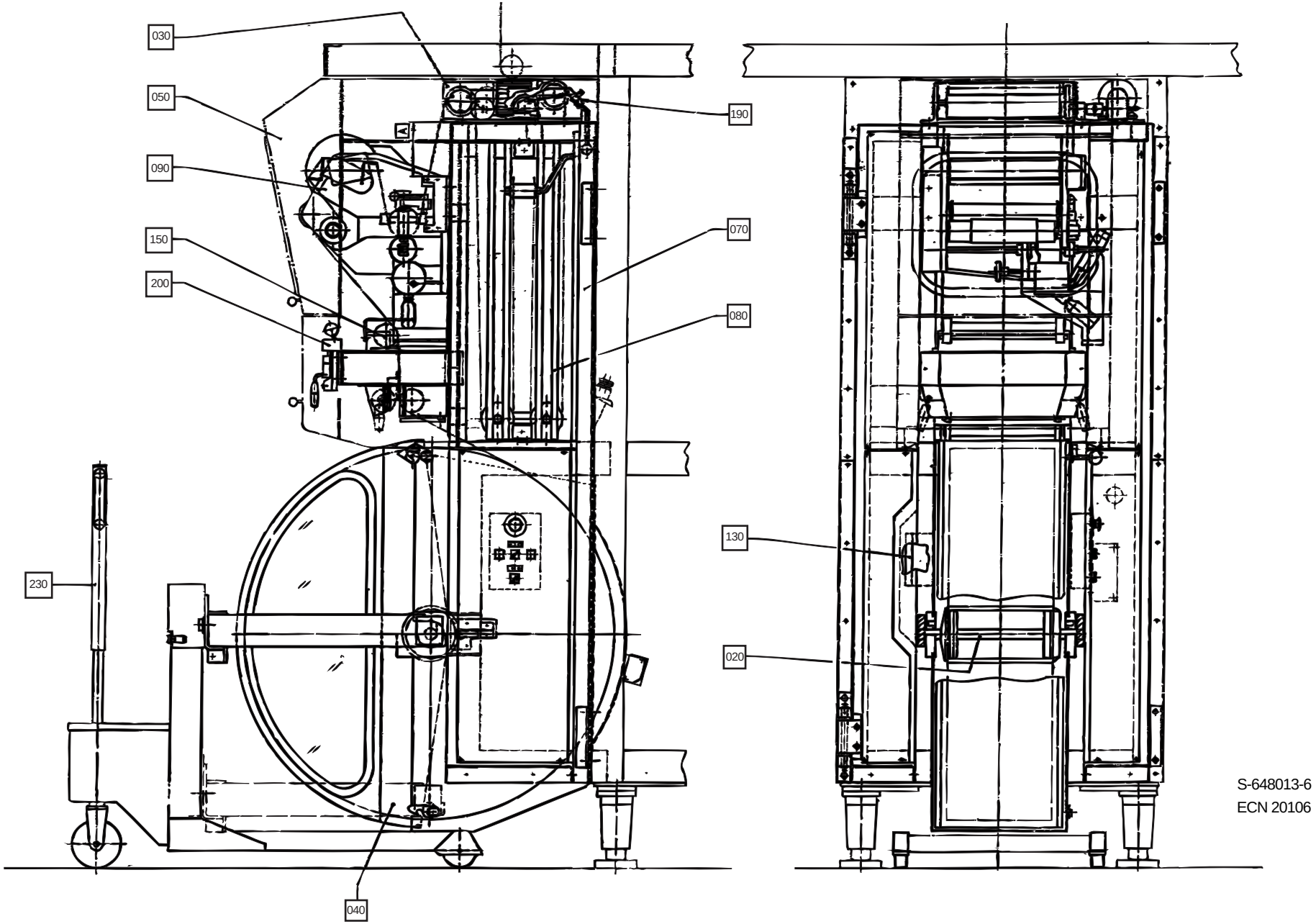

S-648013-6
ECN 20106

Pos	Part No	SP	UN	Qty	Description	Page No
Common parts						
F020	A 440285-0100	-		2	PAPER REEL HOLDER	**635**, **637**
F040	A 556875-0100	-		1	COVER	**641**
F050	A 530745-0400	-		1	SIDE GUARD	**643**, **645**
F070	A 440133-0400	-		1	MACHINE BODY	**647**
F080	A 440210-0200	-		1	ROLL	**649**
F130	A 445920-0600	-		1	EL-PNEUMATIC EQUIPMENT	**681**, **683**
F150	A 445880-0600	-		1	SPLICING DEVICE	**687**, **689**, **691**
F200	A 522121-0200	-		1	CUTTING TABLE	**703**
F220	A 440132-0200	-		1	START-UP KIT	**705**
F230	A 576739-0200	-		1	(PAPER)REEL TROLLEY	**707**
TBA/8 ST-ER						
F030	A 445840-0100	-		1	DRIVE UNIT	**639**
F090	A 486958-0200	-		1	DATING UNIT	**651**, **653**, **655**, **657**, **659**, **661**, **663**
F190	A 445930-0100	-		1	BENDING UNIT	**701**
TBA/8 ST-R						
F030	A 445840-0100	-		1	DRIVE UNIT	**639**
F090	A 538248-0200	-		1	DATING UNIT	**673**, **675**
F190	A 445930-0100	-		1	BENDING UNIT	**701**

Pos	Part No	SP	UN	Qty	Description	Page No

AUTOMATIC SPLICING UNIT

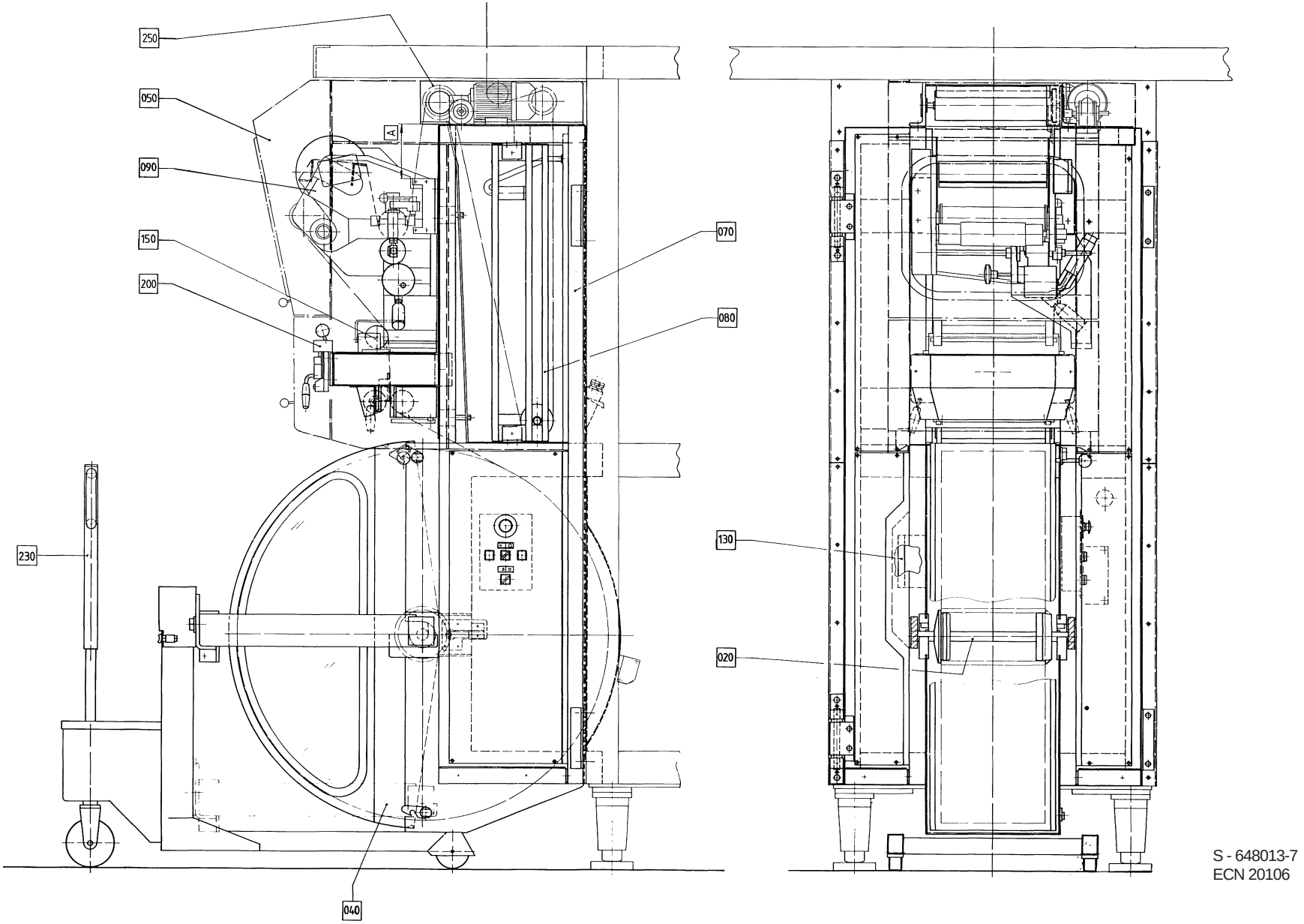

S - 648013-7
ECN 20106

Pos	Part No	SP	UN	Qty	Description	Page No
Common parts						
F020	A 440285-0100	-		2	PAPER REEL HOLDER	**635**, **637**
F040	A 556875-0100	-		1	COVER	**641**
F050	A 530745-0400	-		1	SIDE GUARD	**643**, **645**
F070	A 440133-0400	-		1	MACHINE BODY	**647**
F080	A 440210-0200	-		1	ROLL	**649**
F130	A 445920-0600	-		1	EL-PNEUMATIC EQUIPMENT	**681**, **683**
F150	A 445880-0600	-		1	SPLICING DEVICE	**687**, **689**, **691**
F200	A 522121-0200	-		1	CUTTING TABLE	**703**
F220	A 440132-0200	-		1	START-UP KIT	**705**
F230	A 576739-0200	-		1	(PAPER)REEL TROLLEY	**707**
TBA/8 ST-ER						
F030	A 445840-0100	-		1	DRIVE UNIT	**639**
F090	A 486958-0200	-		1	DATING UNIT	**651**, **653**, **655**, **657**, **659**, **661**, **663**
F190	A 445930-0100	-		1	BENDING UNIT	**701**
TBA/8 ST-R						
F030	A 445840-0100	-		1	DRIVE UNIT	**639**
F090	A 538248-0200	-		1	DATING UNIT	**673**, **675**
F190	A 445930-0100	-		1	BENDING UNIT	**701**

Pos	Part No	SP	UN	Qty	Description	Page No

PAPER REEL HOLDER

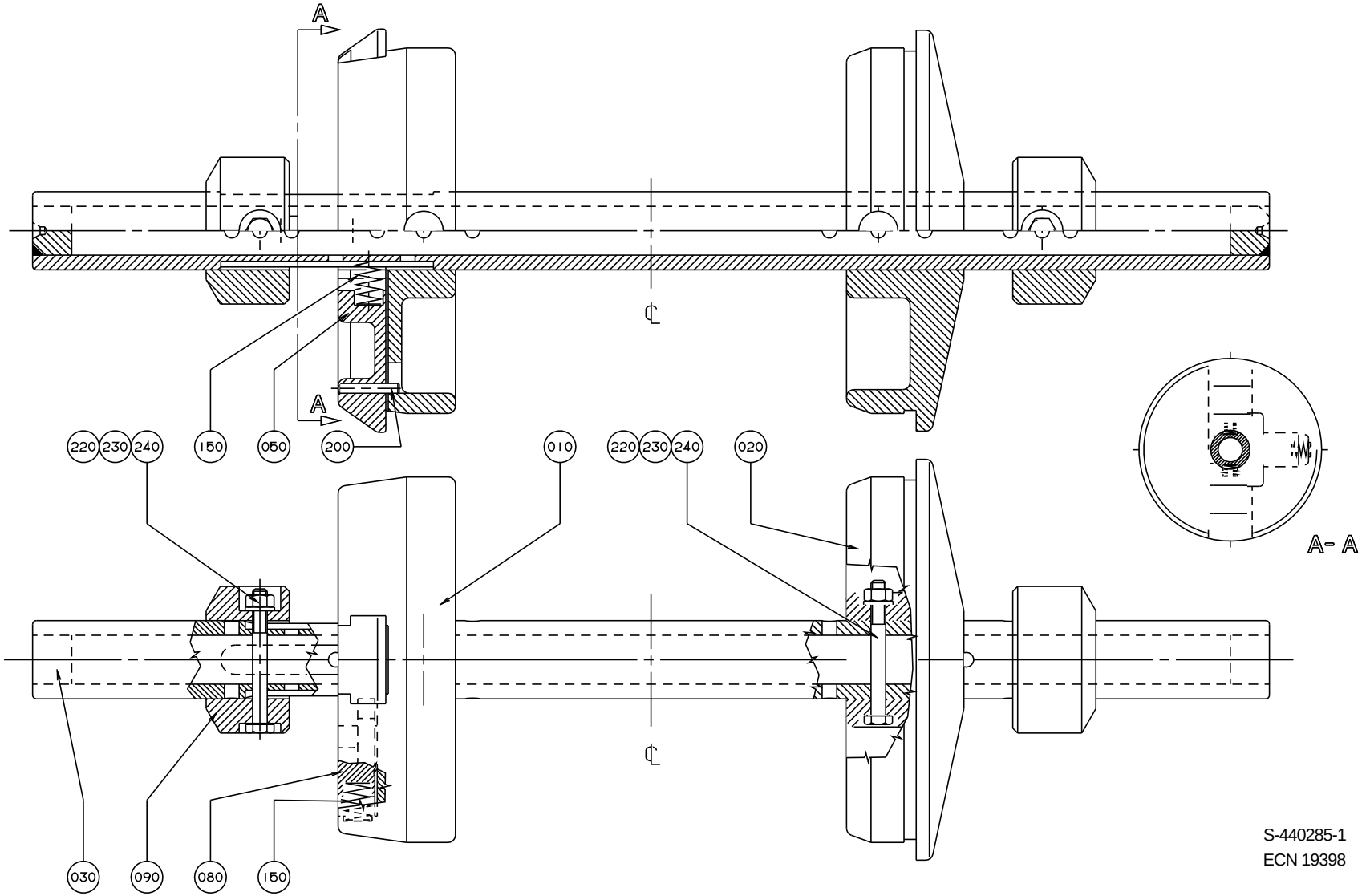

Pos	Part No	SP	UN	Qty	Description	Page No
TBA 0355B or TBA 0375S or TBA 0400B or TBA 0500S						
010	272814-0000	R		1	SLEEVE	
020	272815-0001	R		1	SLEEVE	
050	575002-0000	R		2	PLUNGER	
090	440259-0000	D		2	RETAINING RING	
220	312101-0381	-		4	SCREW M6S 6x55 FZB	
230	312812-0316	-		4	NUT,HEXAGON,LOCK,WITH NYLON INSERT,M6	
240	315101-0153	-		4	WASHER BRB 6,4x12 FZB	
TBA 0500B or TBA 0750B or TBA 1000B or TBA 1055B						
010	272814-0000	R		1	SLEEVE	
020	272815-0001	R		1	SLEEVE	
050	575002-0000	R		2	PLUNGER	
220	312101-0381	-		2	SCREW M6S 6x55 FZB	
230	312812-0316	-		2	NUT,HEXAGON,LOCK,WITH NYLON INSERT,M6	
240	315101-0153	-		2	WASHER BRB 6,4x12 FZB	
TBA 1000S						
010	569944-0000	R		1	SLEEVE	
020	569945-0000	R		1	SLEEVE	
050	575003-0000	R		2	PLUNGER	
220	312101-0381	-		2	SCREW M6S 6x55 FZB	
230	312812-0316	-		2	NUT,HEXAGON,LOCK,WITH NYLON INSERT,M6	
240	315101-0153	-		2	WASHER BRB 6,4x12 FZB	
TBA 0750S						
010	272814-0000	R		1	SLEEVE	
020	272815-0001	R		1	SLEEVE	
050	575002-0000	R		2	PLUNGER	
090	544277-0000	D		2	RETAINING RING	
210	311112-0350	-		2	SLOTTED SLOTTED TUBULAR PIN 6x55 RFR	
220	312101-0381	-		2	SCREW M6S 6x55 FZB	
230	312812-0316	-		2	NUT,HEXAGON,LOCK,WITH NYLON INSERT,M6	
240	315101-0153	-		2	WASHER BRB 6,4x12 FZB	
TBA 0500SQ or TBA 1000SQ						
010	272814-0000	R		1	SLEEVE	
020	272815-0001	R		1	SLEEVE	
050	575002-0000	R		2	PLUNGER	
090	574051-0000	D		2	RETAINING RING	
Common parts						
030	440260-0000	D		1	SHAFT	
080	272728-0000	R		1	BARRIER	
150	90335-0025	K		3	SPRING BARNES 22010	
200	311103-0274	-		2	PIN,STRAIGHT 4x25	

Pos	Part No	SP	UN	Qty	Description	Page No

PAPER REEL HOLDER

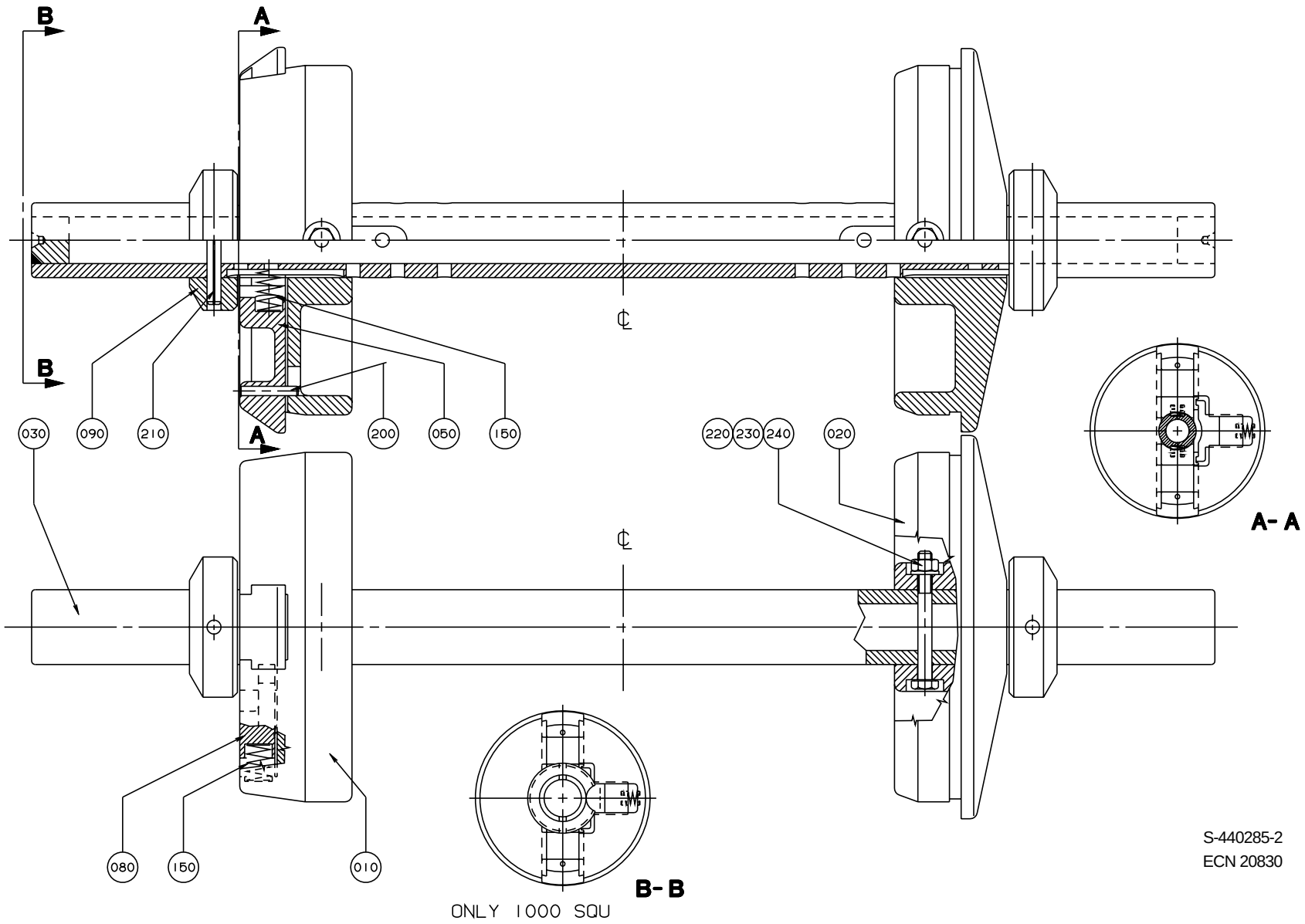

Pos	Part No	SP	UN	Qty	Description	Page No
TBA 0355B or TBA 0375S or TBA 0400B or TBA 0500S						
010	272814-0000	R		1	SLEEVE	
020	272815-0001	R		1	SLEEVE	
050	575002-0000	R		2	PLUNGER	
090	440259-0000	D		2	RETAINING RING	
220	312101-0381	-		4	SCREW M6S 6x55 FZB	
230	312812-0316	-		4	NUT,HEXAGON,LOCK,WITH NYLON INSERT,M6	
240	315101-0153	-		4	WASHER BRB 6,4x12 FZB	
TBA 0500B or TBA 0750B or TBA 1000B or TBA 1055B						
010	272814-0000	R		1	SLEEVE	
020	272815-0001	R		1	SLEEVE	
050	575002-0000	R		2	PLUNGER	
220	312101-0381	-		2	SCREW M6S 6x55 FZB	
230	312812-0316	-		2	NUT,HEXAGON,LOCK,WITH NYLON INSERT,M6	
240	315101-0153	-		2	WASHER BRB 6,4x12 FZB	
TBA 1000S						
010	569944-0000	R		1	SLEEVE	
020	569945-0000	R		1	SLEEVE	
050	575003-0000	R		2	PLUNGER	
220	312101-0381	-		2	SCREW M6S 6x55 FZB	
230	312812-0316	-		2	NUT,HEXAGON,LOCK,WITH NYLON INSERT,M6	
240	315101-0153	-		2	WASHER BRB 6,4x12 FZB	
TBA 0750S						
010	272814-0000	R		1	SLEEVE	
020	272815-0001	R		1	SLEEVE	
050	575002-0000	R		2	PLUNGER	
090	544277-0000	D		2	RETAINING RING	
210	311112-0350	-		2	SLOTTED SLOTTED TUBULAR PIN 6x55 RFR	
220	312101-0381	-		2	SCREW M6S 6x55 FZB	
230	312812-0316	-		2	NUT,HEXAGON,LOCK,WITH NYLON INSERT,M6	
240	315101-0153	-		2	WASHER BRB 6,4x12 FZB	
TBA 0500SQ or TBA 1000SQ						
010	272814-0000	R		1	SLEEVE	
020	272815-0001	R		1	SLEEVE	
050	575002-0000	R		2	PLUNGER	
090	574051-0000	D		2	RETAINING RING	
Common parts						
030	440260-0000	D		1	SHAFT	
080	272728-0000	R		1	BARRIER	
150	90335-0025	K		3	SPRING BARNES 22010	
200	311103-0274	-		2	PIN,STRAIGHT 4x25	

Pos	Part No	SP	UN	Qty	Description	Page No

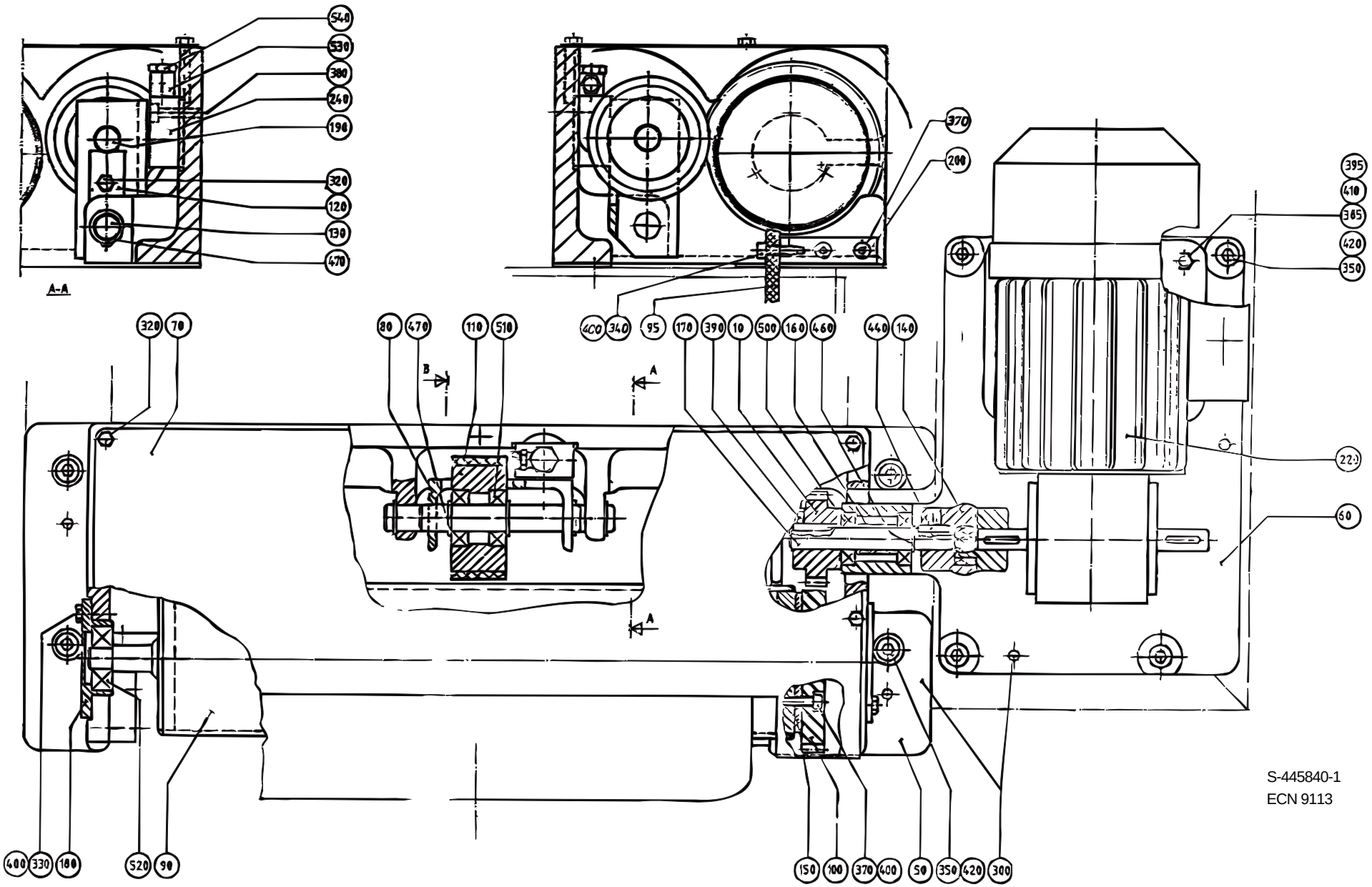

S-445840-1
ECN 9113

Pos	Part No	SP	UN	Qty	Description	Page No
Common parts						
060	445842-0000	-		1	MOTOR PLATE	
080	445837-0000	-		1	CANTILEVER	
090	445845-0000	D		1	DRIVE ROLLER	
095	526680-0000	-		1	FENDER WALING	
100	207019-0003	R		1	GEAR WHEEL	
110	266710-0000	R		1	WHEEL	
120	445839-0000	-		1	SECURING PLATE	
130	445847-0000	D		1	SHAFT	
140	445848-0000	M		1	ELASTIC COUPLING	
150	445849-0000	-		1	SPACER DISC	
160	445850-0000	D		1	SPACER SLEEVE	
170	445851-0000	D		1	SHAFT	
180	445852-0000	D		2	LID	
190	445838-0000	-		1	SHAFT	
200	476503-0000	-		2	BRACKET	
220	B 90069-0116	M		1	WORM GEAR MOTOR REPL.BY 90069-281	
240	90239-0259	R		1	CYLINDER	
300	311102-0353	-		4	CYLINDRICACP M6 6X20	
320	312101-0323	-		6	SCREW M6S5X8FZB	
330	312101-0329	-		6	SCREW M6S5X16FZB	
340	312105-0331	-		2	SCREW M6S ISO 4017 M5X20 A280	
350	312111-0449	-		8	SCREW MC6S8X16FZB	
370	312111-0331	-		7	SCREW MC6S5X20FZB	
380	312111-0333	-		2	SCREW MC6S5X25FZB	
385	312111-0371	-		4	SCREW MC6S6X22FZB	
390	312316-0285	-		1	STOP SCREW SK6SS4X6FZB	
395	312601-0316	-		4	NUT M6M 6-8 FZB	
400	315101-0146	-		11	WASHER BRB 5,3x10 FZB	
410	315101-0153	-		4	WASHER BRB 6,4x12 FZB	
420	315101-0165	-		8	WASHER BRB8,4X16FZB	
440	315701-0169	-		2	FLAT WEDGE4X4X18	
460	315750-0109	-		1	CIRCLIP SGA12	
470	315750-0112	-		4	CIRCLIP SGA15	
500	321308-0201	-		2	BALL BEARING 12x28x8	
510	321308-0202	-		2	BALL BEARING 15x32x9	
520	321316-0201	-		2	BALL BEARING 12X37X12	
530	342980-0113	-		1	BANJO-CONNECTION,RING 6/4-G1/8"	
540	342980-0303	-		1	BANJO-HOLLOW BOLT COUPL,EXT.THR.01-G1/8"	
TBA/8						
010	445854-0002	D		1	GEAR WHEEL	
050	445841-0000	D		1	CANTILEVER	
070	450363-0000	-		1	LID	

Pos	Part No	SP	UN	Qty	Description	Page No

COVER

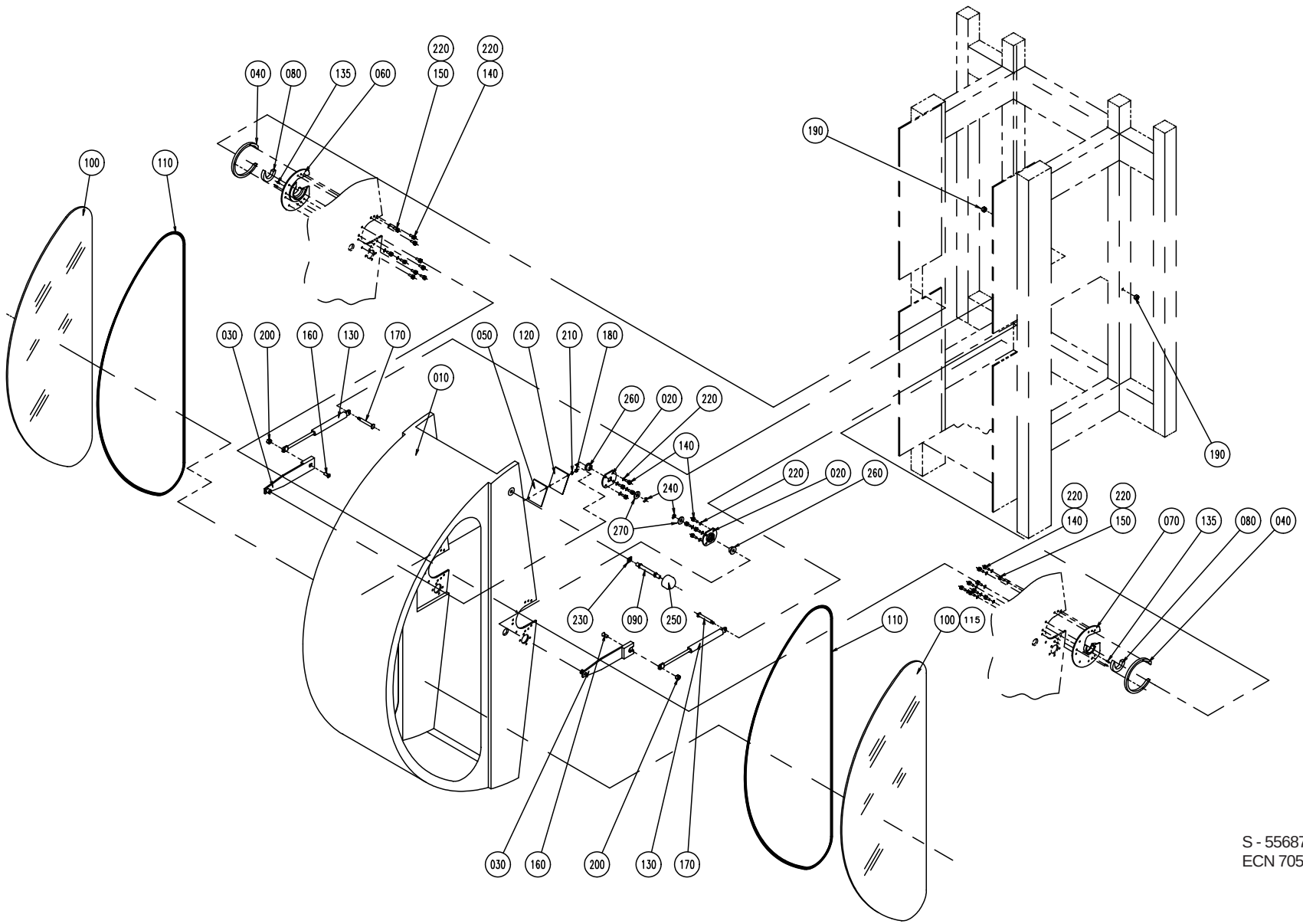

S - 556875-1
ECN 70502

Pos	Part No	SP	UN	Qty	Description	Page No
Common parts						
020	556872-0000	-		2	BEARING UNIT	
030	556873-0000	-		2	EXTENSION PIECE	
040	556874-0000	D		2	BLOCKING RING	
050	1143605-0000	-		1	SPACER	
060	440247-0000	-		1	HOLDER	
070	440248-0000	-		1	HOLDER	
080	440249-0000	R		2	SLIDE BELT	
090	440250-0000	D		1	AXLE PIN	
120	90232-0333	D		1	REFLECTOR OMRON	
130	90347-0108	D		2	DAMPER	
135	311103-0233	-		4	PINS,STRAIGHT 3X10	
140	312105-0323	-		22	SCREW M6S ISO 4017 M5X8 A280	
150	312105-0331	-		6	SCREW M6S ISO 4017 M5X20 A280	
160	312155-0453	-		2	SCREW MF6S DIN 7991 M8x25 A280	
170	568166-0000	-		2	REAMED BOLT	
180	312605-0310	-		2	NUT,HEXAGON,M6M3 RFR	
190	312605-0316	-		2	NUT,HEXAGON A280 M6M6	
200	312811-0318	-		2	LOCK NUT M8RFR	
210	315105-0124	-		2	WASHER,PLAIN ROUND 3,2x6	
220	315105-0146	-		28	WASHER,PLAIN ROUND 5,3x10 Stainless	
230	315105-0173	-		1	WASHER,PLAIN ROUND 10,5x22 STAINLESS	
240	315755-0111	-		2	RETAINING RINGS,RADIAL ASSEMBLY 10	
250	318800-0106	-		1	HANDLES,SPHERICAL KNOB,INT.THRE,D.40-M10	
260	321111-0157	R		2	FLANGE BUS 12E7X8	
270	321129-0104	-		2	THRUST WASHER 12/24X1,5	
TBA 0355B or TBA 0375S or TBA 0400B or TBA 0500B or TBA 0500S or TBA 0500SQ or TBA 0750B or TBA 0750S or TBA 1000B or TBA 1000S or TBA 1000SQ or TBA 1055B						
010	556879-0000	-		1	COVER	
100	440251-0000	D		2	GLASS PANE	
110	90143-0039	-	MM	5200	STRIP	

Pos	Part No	SP	UN	Qty	Description	Page No

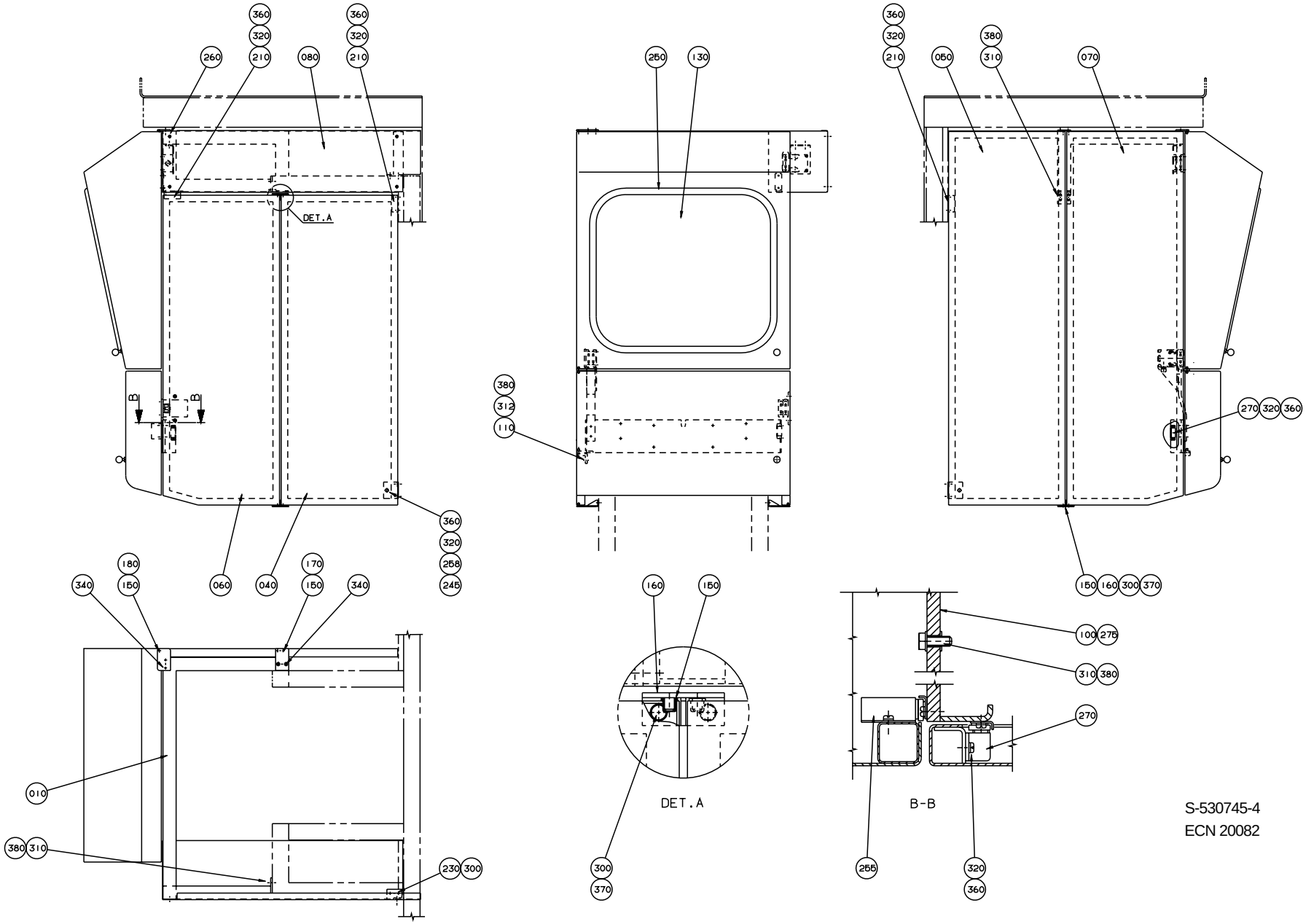

S-530745-4
ECN 20082

Pos	Part No	SP	UN	Qty	Description	Page No
Common parts						
010	445861-0000	-		1	FRAME	
020	571418-0000	-		1	HOOD	
030	571419-0000	-		1	HOOD	
040	445863-0000	-		1	PROTECTION	
050	529498-0000	-		1	SIDE GUARD RIGHT	
060	573507-0000	-		1	SIDE GUARD	
070	529476-0000	-		1	SIDE GUARD	
080	571421-0000	-		1	COVER	
100	573508-0000	-		1	MOUNTING BAR	
110	556868-0000	-		1	ANGLE	
115	571424-0000	-		1	HINGE	
120	571425-0000	-		1	BRACKET	
125	572246-0000	-		1	BRACKET	
130	571423-0000	-		1	GLASS PANE	
135	576410-0000	-		1	BRACKET	
150	436991-0000	-		10	BEARING	
160	445872-0000	-		3	HINGE	
170	445873-0000	-		1	HINGE	
180	445874-0000	-		1	HINGE	
210	445877-0000	-		3	SUPPORT	
230	445879-0000	-		1	SUPPORT	
245	525385-0000	-		2	BRACKET	
247	B 90044-0103	R		2	KEY SAFETY SWITCH AZ 15 ZVR	
248	90044-0139	R		1	KEY SAFETY SWITCH AZ-16-02 ZVRK-2254	
250	90143-0039	-	MM	2000	STRIP	
255	90237-0046	-		2	MAGNET LOCK	
258	90237-0075	-		2	SNAP LOCK SK-M8	
260	90287-0075	-		6	SCREW, PAN HEAD,LKCS ISO1580, M6x12	
265	90287-0076	-		2	SCREW, PAN HEAD,LKCS ISO1580, M6x20	
270	90339-0011	-		2	MAGNET LOCK	
275	311102-0350	-		2	CYLINDRICACP M6 6X14	
278	311103-0270	-		2	PINS,STRAIGHT 4X16	
300	312105-0327	-		12	SCREW M6S ISO 4017 M5X12 A280	
310	312105-0368	-		10	SCREW M6S ISO 4017 M6x16 A280	
312	312105-0370	-		1	SCREW M6S ISO 4017 M6x20 A280	
315	312105-0455	-		2	SCREW M6S ISO 4017 M8X30 A280	
320	312125-0222	-		28	SLOTTED CHEESE HEAD ISO 1207 M3x8 RFR	
330	312125-0329	-		6	SLOTTED CHEESE HEAD ISO 1207 M5X16 RFR	
335	312145-0323	-		6	SLOTTED HEMFS5X8RFR	
340	312155-0327	-		4	SCREW MF6S DIN 7991 M5x12 A280	
345	312605-0314	-		4	NUT,HEXAGON,M6M5 Stainless	
355	312605-0318	-		2	NUT,HEXAGON,M8 RFR	
358	312812-0316	-		2	NUT,HEXAGON,LOCK,WITH NYLON INSERT,M6	
360	315105-0124	-		28	WASHER,PLAIN ROUND 3,2x6	
370	315105-0146	-		18	WASHER,PLAIN ROUND 5,3x10 Stainless	
380	315105-0153	-		17	WASHER,PLAIN ROUND 6,4x12 Stainless	
390	318800-0104	-		2	HANDLES,SPHERICAL KNOB,INT.THRE.,D.30-M8	

SIDE GUARD

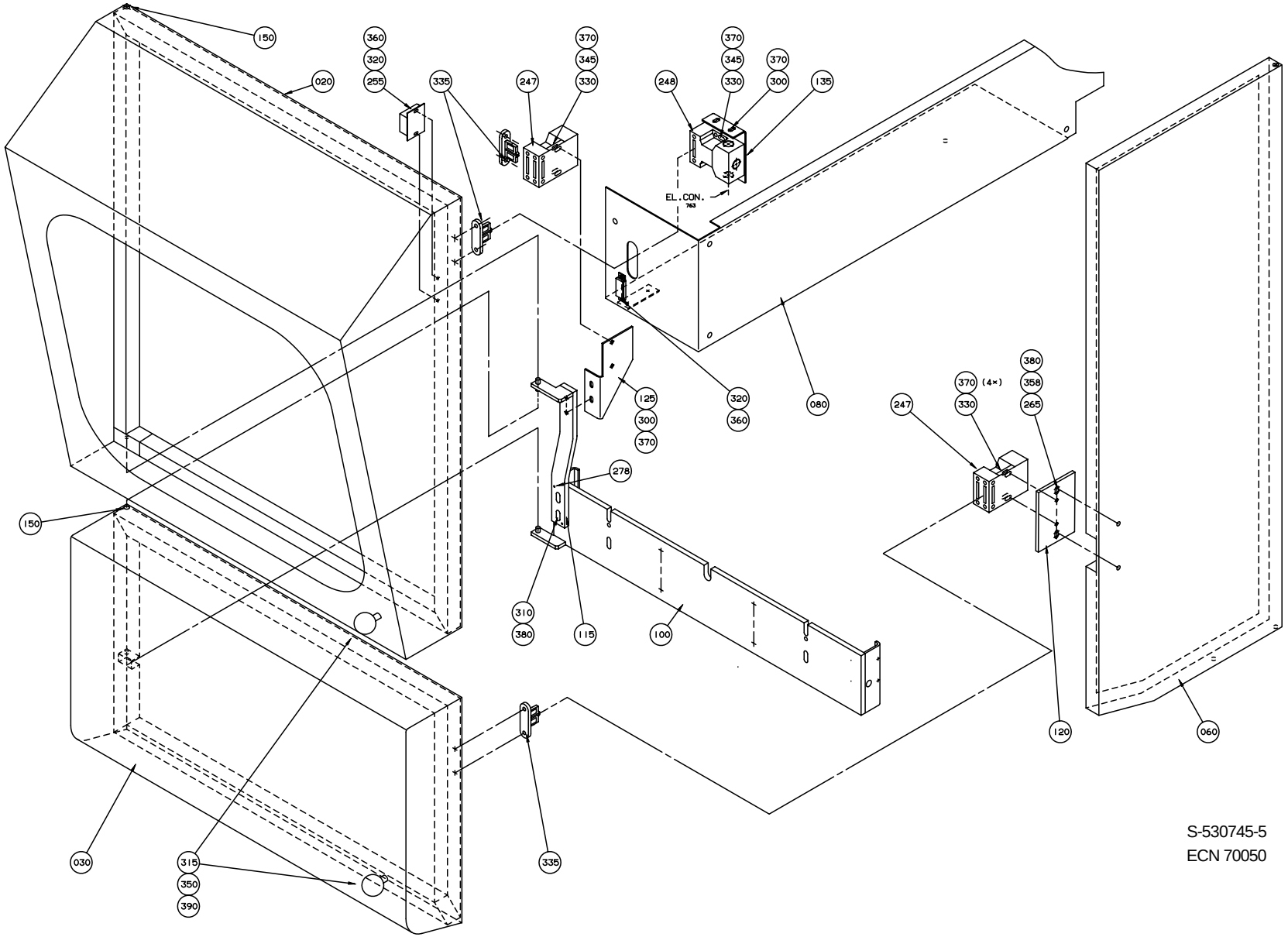

S-530745-5
ECN 70050

Pos	Part No	SP	UN	Qty	Description	Page No
Common parts						
010	445861-0000	-		1	FRAME	
020	571418-0000	-		1	HOOD	
030	571419-0000	-		1	HOOD	
040	445863-0000	-		1	PROTECTION	
050	529498-0000	-		1	SIDE GUARD RIGHT	
060	573507-0000	-		1	SIDE GUARD	
070	529476-0000	-		1	SIDE GUARD	
080	571421-0000	-		1	COVER	
100	573508-0000	-		1	MOUNTING BAR	
110	556868-0000	-		1	ANGLE	
115	571424-0000	-		1	HINGE	
120	571425-0000	-		1	BRACKET	
125	572246-0000	-		1	BRACKET	
130	571423-0000	-		1	GLASS PANE	
135	576410-0000	-		1	BRACKET	
150	436991-0000	-		10	BEARING	
160	445872-0000	-		3	HINGE	
170	445873-0000	-		1	HINGE	
180	445874-0000	-		1	HINGE	
210	445877-0000	-		3	SUPPORT	
230	445879-0000	-		1	SUPPORT	
245	525385-0000	-		2	BRACKET	
247	B 90044-0103	R		2	KEY SAFETY SWITCH AZ 15 ZVR	
248	90044-0139	R		1	KEY SAFETY SWITCH AZ-16-02 ZVRK-2254	
250	90143-0039	-	MM	2000	STRIP	
255	90237-0046	-		2	MAGNET LOCK	
258	90237-0075	-		2	SNAP LOCK SK-M8	
260	90287-0075	-		6	SCREW, PAN HEAD,LKCS ISO1580, M6x12	
265	90287-0076	-		2	SCREW, PAN HEAD,LKCS ISO1580, M6x20	
270	90339-0011	-		2	MAGNET LOCK	
275	311102-0350	-		2	CYLINDRICACP M6 6X14	
278	311103-0270	-		2	PINS,STRAIGHT 4X16	
300	312105-0327	-		12	SCREW M6S ISO 4017 M5X12 A280	
310	312105-0368	-		10	SCREW M6S ISO 4017 M6x16 A280	
312	312105-0370	-		1	SCREW M6S ISO 4017 M6x20 A280	
315	312105-0455	-		2	SCREW M6S ISO 4017 M8X30 A280	
320	312125-0222	-		28	SLOTTED CHEESE HEAD ISO 1207 M3x8 RFR	
330	312125-0329	-		6	SLOTTED CHEESE HEAD ISO 1207 M5X16 RFR	
335	312145-0323	-		6	SLOTTED HEMFS5X8RFR	
340	312155-0327	-		4	SCREW MF6S DIN 7991 M5x12 A280	
345	312605-0314	-		4	NUT,HEXAGON,M6M5 Stainless	
355	312605-0318	-		2	NUT,HEXAGON,M8 RFR	
358	312812-0316	-		2	NUT,HEXAGON,LOCK,WITH NYLON INSERT,M6	
360	315105-0124	-		28	WASHER,PLAIN ROUND 3,2x6	
370	315105-0146	-		18	WASHER,PLAIN ROUND 5,3x10 Stainless	
380	315105-0153	-		17	WASHER,PLAIN ROUND 6,4x12 Stainless	
390	318800-0104	-		2	HANDLES,SPHERICAL KNOB,INT.THRE.,D.30-M8	

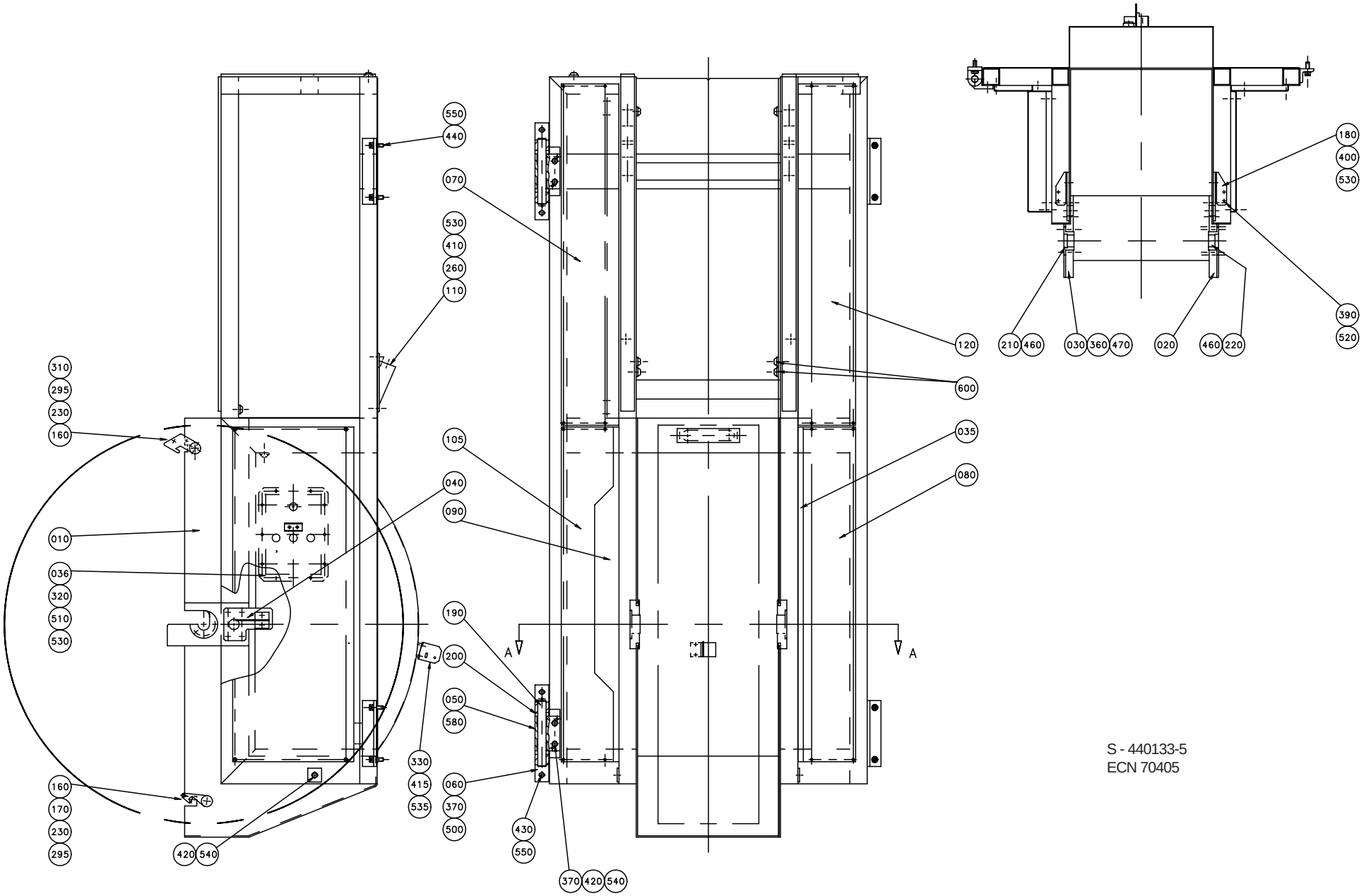

S - 440133-5
ECN 70405

Pos	Part No	SP	UN	Qty	Description	Page No
Common parts						
010	531337-0000	-		1	MACHINE BODY	
020	440185-0000	-		1	HOLDER	
030	440186-0000	-		1	HOLDER	
035	549830-0000	-		1	PROTECTION PLATE	
036	532026-0000	-		1	SEAL COVER	
040	440192-0000	-		2	BRACKET	
050	440195-0000	-		2	JOINT	
060	440196-0000	-		2	HANGER	
070	B 440199-0000	-		1	PROTECTION PLATE	
080	440200-0000	-		1	PROTECTION PLATE	
090	440202-0000	-		1	PROTECTION PLATE	
105	445857-0000	-		1	PROTECTION PLATE	
110	464141-0000	-		1	LEAD-IN PLATE	
120	B 445935-0000	-		1	PROTECTION PLATE	
160	1013-0000	-		2	SHAFT	
170	476117-0000	-		1	CATCH	
180	440193-0000	-		2	HOLDER	
190	440197-0000	-		2	SHAFT	
200	440198-0000	-		4	WASHER	
210	440252-0000	R		1	SLEEVE	
220	440253-0000	R		1	SLEEVE	
230	440271-0000	-		2	SCREW	
240	445934-0000	-		1	LID	
260	445929-0000	-		1	GASKET	
295	457358-0000	-		2	SLEEVE	
310	568167-0000	-		1	CATCH	
320	532024-0000	-		1	GASKET	
330	1195094-0000	-		1	BRACKET	
360	311103-0353	-		4	PINS,STRAIGHT 6X20	
370	311103-0355	-		6	PINS,STRAIGHT 6X25	
390	312105-0293	-		4	SCREW M6S ISO 4017 M4X16 A280	
400	312105-0325	-		6	SCREW M6S 5x10 A2 80	
410	312105-0329	-		4	SCREW M6S ISO 4017 M5x16 A280	
415	312105-0368	-		2	SCREW M6S ISO 4017 M6x16 A280	
420	312105-0451	-		6	SCREW M6S ISO 4017 8x20 A280	
430	312105-0495	-		4	SCREW M6S ISO 4017 M10X30 A280	
440	312115-0495	-		4	SCREW MC6S ISO 4762 M10X30 A280	
450	312125-0323	-		2	SLOTTED CHEESE HEAD ISO 1207 M5X8 RFR	
460	312155-0327	-		4	SCREW MF6S DIN 7991 M5x12 A280	
470	312155-0451	-		8	SCREW MF6S8X20RFR	
500	312318-0362	-		4	SET SCREW CUP POINT ISO 4029 M6x8 RFR	
510	312605-0314	-		10	NUT,HEXAGON,M6M5 Stainless	
520	315105-0136	-		4	WASHER,PLAIN ROUND 4,3x8 Stainless	
530	315105-0146	-		18	WASHER,PLAIN ROUND 5,3x10 Stainless	
535	315105-0153	-		2	WASHER,PLAIN ROUND 6,4x12 Stainless	
540	315105-0165	-		6	WASHER,PLAIN ROUND 8,4x16 Stainless	
550	315105-0173	-		8	WASHER,PLAIN ROUND 10,5x22 STAINLESS	
580	321105-0234	-		4	BUSHING 20F7X28X30	
600	352101-0103	-		18	LEAD IN PR 18,6	

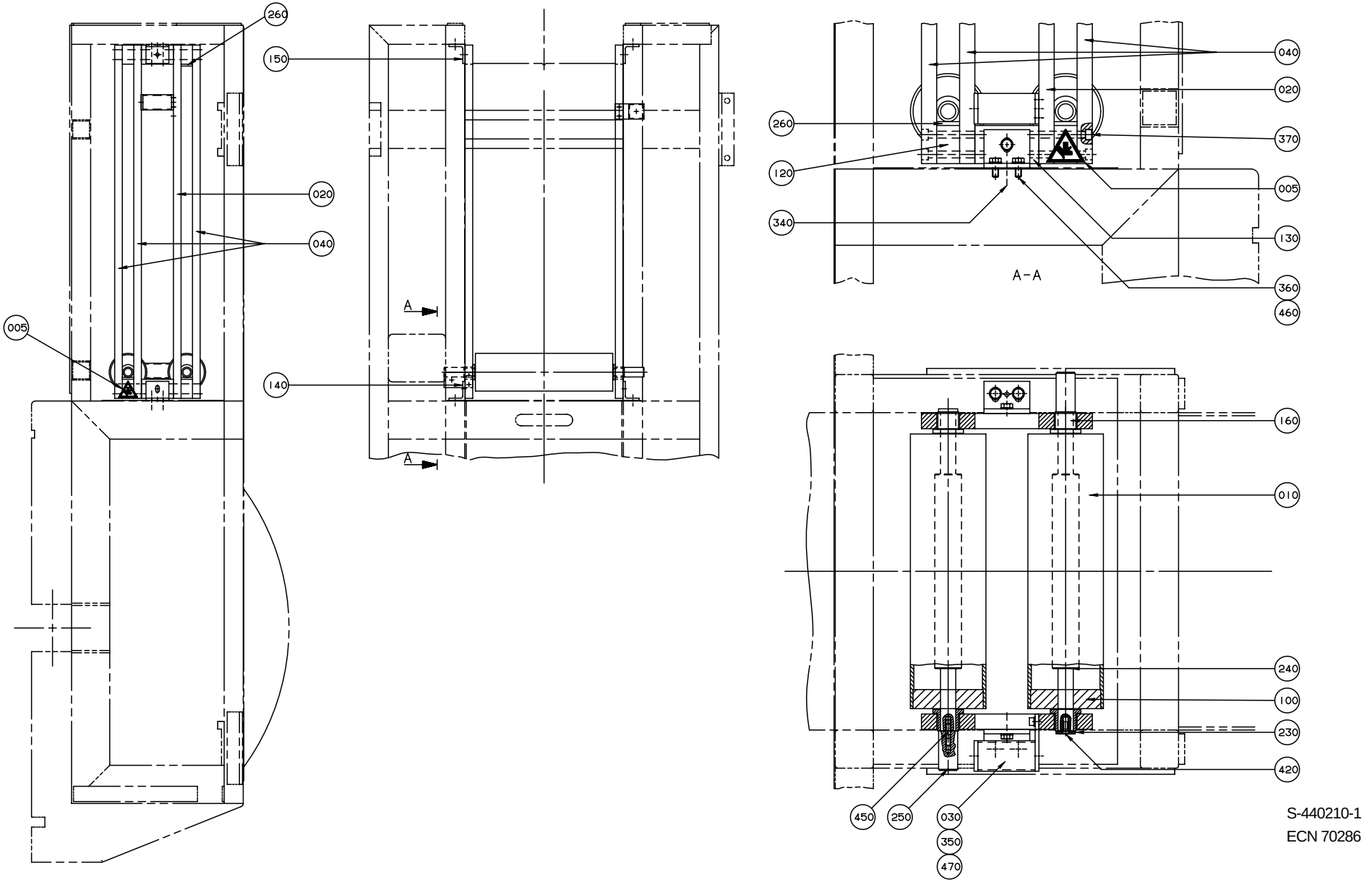

S-440210-1
ECN 70286

Pos	Part No	SP	UN	Qty	Description	Page No
TBA/8 0355B or TBA/8 0375S or TBA/8 0400B or TBA/8 0500S						
130	440213-0000	-		4	LUG	
240	466086-0000	D		2	SHAFT	
460	315105-0165	-		12	WASHER,PLAIN ROUND 8,4x16 Stainless	
TBA/8 0500B or TBA/8 0500SQ or TBA/8 0750B or TBA/8 0750S or TBA/8 1000B or TBA/8 1000S or TBA/8 1000SQ or TBA/8 1055B						
130	440213-0000	-		4	LUG	
240	476401-0000	D		2	SHAFT	
460	315105-0165	-		12	WASHER,PLAIN ROUND 8,4x16 Stainless	
Common parts						
005	359705-0005	-		2	WARNING SIGN "MOVING PART"	
010	226097-0002	D		2	BENDING ROLLER	
020	440211-0000	-		2	GUIDE	
030	445927-0000	-		2	HOLDER	
040	476556-0000	-		6	GUIDE	
100	226098-0000	D		4	BEARING	
120	440212-0000	-		8	LUG	
140	440214-0000	-		2	HOLDER	
150	440215-0000	-		2	HOLDER	
160	440217-0000	R		4	BUSHING	
230	445926-0000	-		2	WASHER	
250	476015-0000	D		2	DOWEL	
260	476016-0000	R		6	RUBBER	
340	311103-0350	-		4	CYLINDRICACP M6 6X14 RFR	
350	312115-0370	-		4	SCREW MC6S ISO 4762 M6x20 A280	
360	312105-0451	-		12	SCREW M6S ISO 4017 8x20 A280	
370	312111-0467	-		16	SCREW MC6S8X80FZB	
420	312155-0368	-		2	SCREW MF6S DIN7991 M6X16 A280	
450	312303-0374	-		2	STUD SCREWMPS 6X25 RFR	
470	315105-0153	-		4	WASHER,PLAIN ROUND 6,4x12 Stainless	

Pos	Part No	SP	UN	Qty	Description	Page No

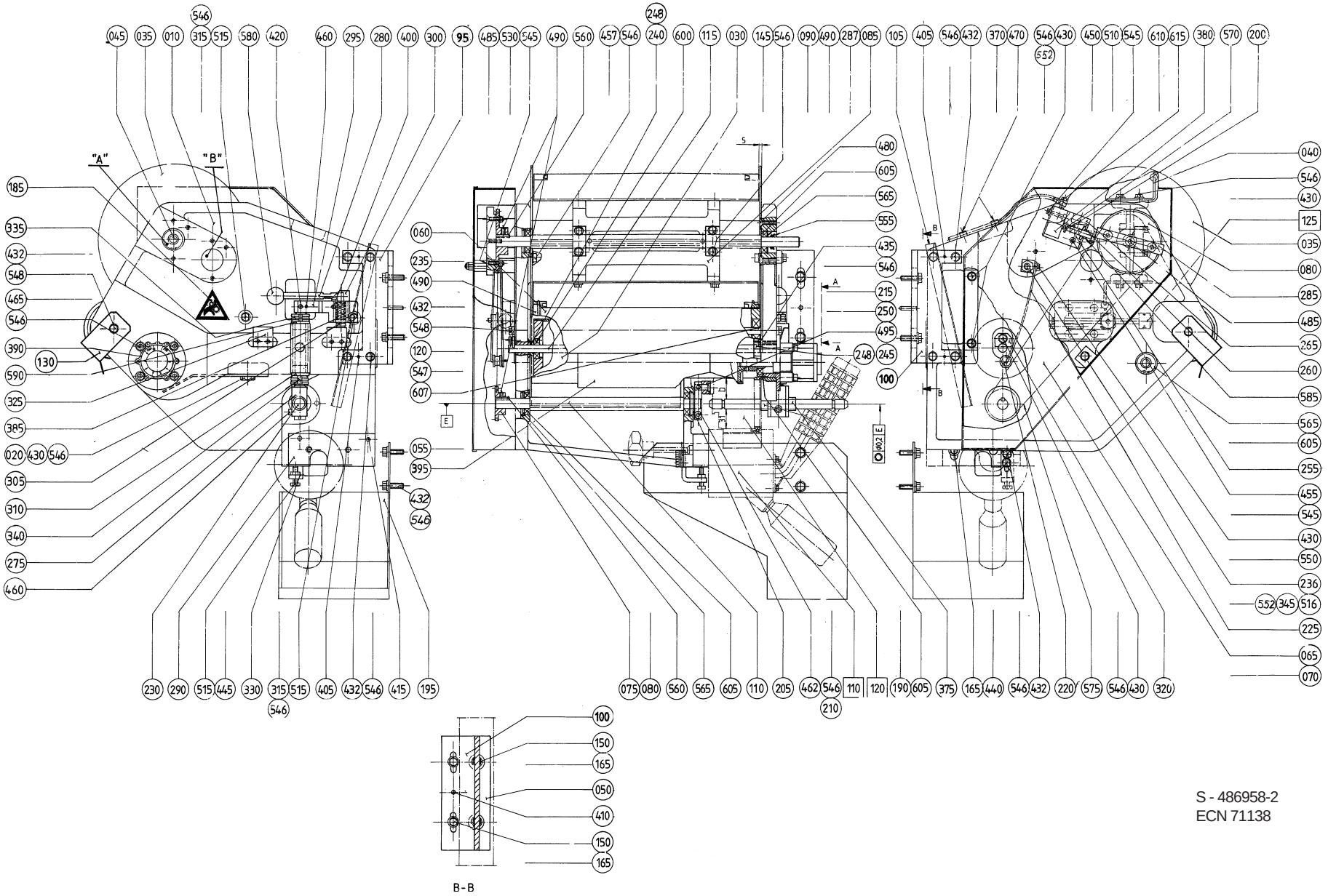
"A"
"B"
B-B
S - 486958-2
ECN 71138

Pos	Part No	SP	UN	Qty	Description	Page No
Common parts						
F110	A 440286-0300	-		1	INK UNIT NSS	**665**
F120	A 293684-0200	-		2	PRINTING WHEEL NSS	**667**, **669**
F125	A 543143-0100	-		1	ADJUSTMENT DEVICE	**671**
145	312105-0372	-		4	SCREW M6S ISO 4017 M6X25 A280	
185	359705-0001	-		1	WARNING SIGN "ENTANGLEMENT"	
190	522408-0000	D		1	BEARING HOUSING	
195	549832-0000	-		1	WASTE CHUTE	
205	533458-0000	-		1	WASHER	
210	32925-0000	D		1	CARRIER	
220	33182-0000	M		1	ROLL	
225	33183-0000	D		1	SPRING	
236	293645-0000	D		1	BRACKET	
275	450497-0000	R		1	SHAFT	
280	450500-0000	D		1	DOWEL	
285	457430-0000	D		1	BEATER	
287	458193-0001	D		4	WASHER	
287	458193-0002	D		4	WASHER	
287	458193-0003	D		4	WASHER	
295	464010-0000	D		1	ARM	
300	464012-0000	D		1	CURVE	
305	464011-0000	D		1	LOCK STUD	
310	B 466430-0000	M		1	BUSHING	
315	B 476377-0000	D		2	SCREW	
320	486967-0000	-		1	SHEET	
325	486969-0000	D		2	GUIDE LUG	
330	486971-0000	-		1	ANGLE	
335	B 532082-0000	D		2	ROUND NUT	
340	B 532083-0000	D		2	ROUND NUT	
345	533459-0000	D		1	SCREW	
370	90165-0057	-		2	PIPE-CLIPS,FOR SINGLE PIPE,ONE SIDE 6	
375	90166-0059	-	MM	18	HOSE PVC 12/16mm TRANSP.	
385	90335-0064	D		1	SPRING	
390	90347-0054	M		1	DAMPER	
395	311103-0273	-		1	CYLINDRICAM6 4X22 RFR	
400	311103-0274	-		1	PIN,STRAIGHT 4x25	
405	311103-0310	-		4	PINS,STRAIGHT 5X20	
410	311103-0353	-		2	PINS,STRAIGHT 6X20	
415	311103-0357	-		1	PINS,STRAIGHT 6X30	
420	311202-0241	-		1	PINS,TAPER PIN 4X25	
430	312105-0366	-		15	SCREW M6S ISO 4017 M6X12 A280	
432	312105-0368	-		14	SCREW M6S ISO 4017 M6x16 A280	
440	312105-0457	-		1	SCREW ISO 4017 M8x35 A280	
445	312109-0374	-		1	SCREW M6S ISO 4017 M6X30 A280	
455	312111-0335	-		2	SCREW MC6S5X30FZB	
457	312111-0364	-		3	SCREW MC6S6X10FZB	
460	312115-0370	-		2	SCREW MC6S ISO 4762 M6x20 A280	
462	312115-0372	-		1	SCREW MC6S ISO 4762 M6X25 A280	
465	312115-0376	-		4	SCREW MC6S ISO 4762 M6x35 A280	
470	312125-0285	-		2	SLOTTED HEAD SCREW MCS 4X6 RFR	
480	312155-0329	-		4	SCREW MF6S DIN 7991 M5x16 A280	
485	312155-0333	-		3	SCREW MF6S DIN 7991 M5X25 A280	
495	312318-0362	-		1	SET SCREW CUP POINT ISO 4029 M6x8 RFR	
510	312605-0314	-		2	NUT,HEXAGON,M6M5 Stainless	
515	312605-0316	-		3	NUT,HEXAGON A280 M6M6	
516	312705-0316	-		1	NUTS,DOMED CAP,HEXAGON,M6	
530	312812-0314	-		2	NUT,HEXAGON,LOCK,WITH NYLON,M5	
545	315105-0146	-		10	WASHER,PLAIN ROUND 5,3x10 Stainless	
547	315105-0173	-		2	WASHER,PLAIN ROUND 10,5x22 STAINLESS	
548	315115-0153	-		4	WASHER TBRB 6,4x12 Stainless	
550	315121-0153	-		1	WASHER TBRSB 6,4x22 FZB	
555	315220-0121	J		1	SEAL RING V-14S	
560	315701-0201	-		2	KEYS,PARALLEL WITH ROUND ENDS 5X5X20	
565	315752-0123	-		5	CIRCLIP SGH32	
570	315755-0801	-		1	RETAINING RINGS,RADIAL ASSEMBLY 8	
575	318207-0168	D		1	ROLLER CHAIN SINGLE 6MM-168	
580	318800-0103	-		1	HANDLES,SPHERICAL KNOB,INT.THRE.,D.25-M6	
585	321111-0135	M		1	FLANGE BUS 10E7X10	
590	321111-0212	M		1	FLANGE BUS 15E7X15	
600	321308-0101	M		2	BEARINGS,BALL BEARING	
605	321308-0202	M		6	BALL BEARING 15x32x9	
607	321316-0200	M		2	BEARINGS,BALL BEARING SKF6300-2RS	
610	342980-0113	-		1	BANJO-CONNECTION,RING 6/4-G1/8"	
615	342980-0303	-		1	BANJO-HOLLOW BOLT COUPL,EXT.THR.01-G1/8"	
0355B						
010	484848-0002	-		1	MACHINE BODY	
020	573827-0002	-		1	PROTECTION	
030	293621-0001	D		1	BENDING ROLLER	
035	293624-0001	D		2	PROTECTION PLATE	
040	529139-0000	D		2	CREASE FORMER	
045	486960-0001	D		1	SHAFT	
050	486961-0000	-		1	PLATE	
055	532719-0001	D		1	FEEDING ROLLER	
060	533449-0001	D		1	BENDING ROLLER	
065	533453-0000	-		1	LID	
070	533454-0000	-		1	FRAME	

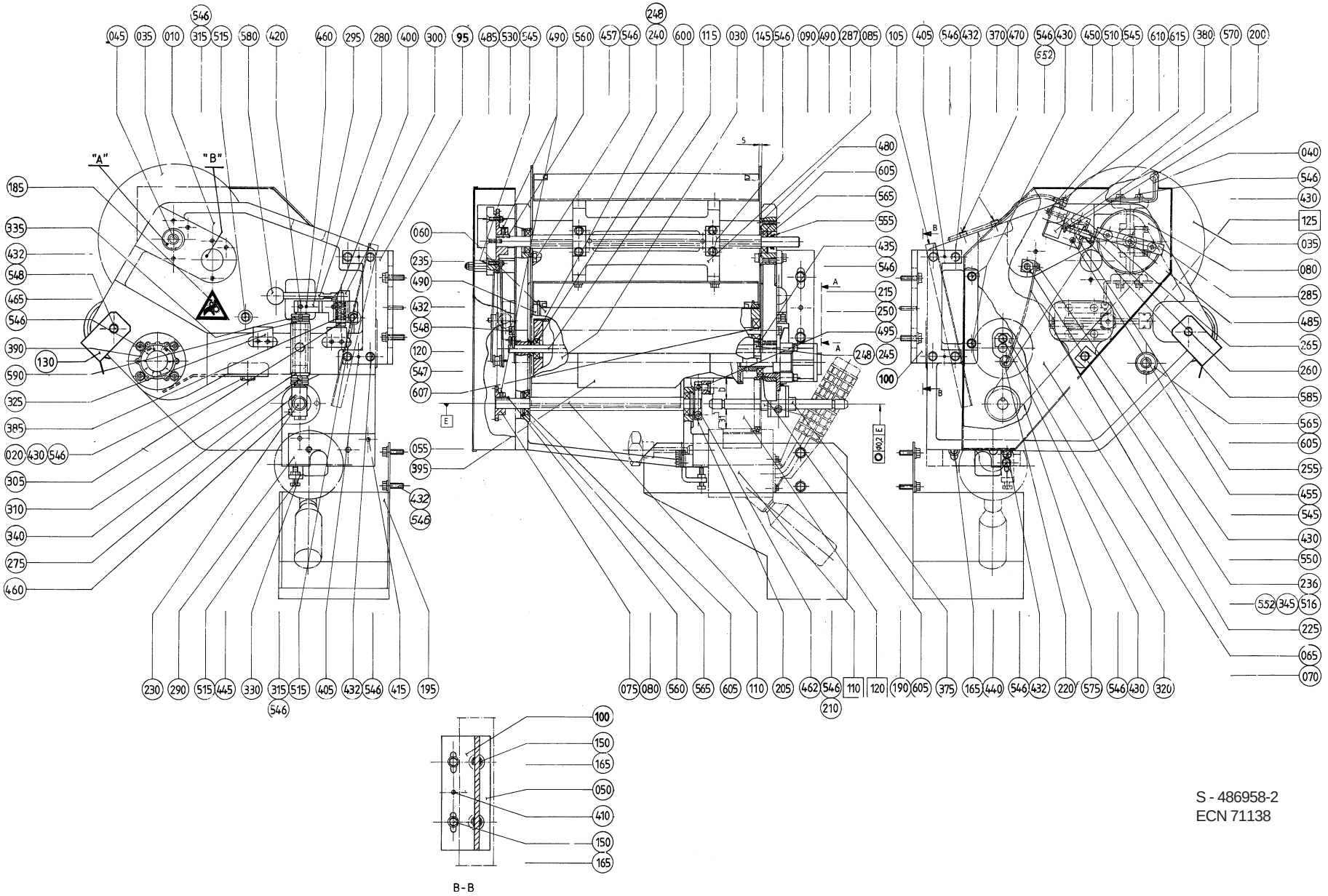
"A"
"B"
B-B
S - 486958-2
ECN 71138

Pos	Part No	SP	UN	Qty	Description	Page No
075	32629-0000	R		1	SPROCKET	
080	32630-0000	R		1	SPROCKET	
085	543137-0002	-		1	SPACER	
090	539338-0000	-		2	CAP	
095	486962-0002	D		1	FASTENING BRACKET	
100	486962-0004	D		1	FASTENING BRACKET	
105	486964-0000	-		1	HEAD PLATE	
110	486966-0001	-		1	SHAFT	
115	486968-0001	D		1	SHAFT FOR BENDINGROLLER	
120	533457-0001	D		1	SHAFT	
130	575786-0000	D		1	PAPER SUPPORT	
150	312105-0451	-		6	SCREW M6S ISO 4017 8x20 A280	
165	315105-0165	-		7	WASHER,PLAIN ROUND 8,4x16 Stainless	
200	10258-0000	D		1	COMPRESSION SPRING	
215	32926-0000	M		1	ROLL	
230	228653-0000	R		1	SHAFT	
235	544706-0000	D		2	FLANGE	
240	293646-0001	D		1	WASHER	
245	293646-0002	D		1	WASHER	
250	293674-0000	D		1	DOWEL	
255	436939-0000	D		1	CYLINDER BRACKET	
260	436940-0000	D		1	SHAFT	
265	440277-0000	D		1	LACE	
290	458489-0000	D		1	CANTILEVER	
380	90239-0259	R		1	CYLINDER	
435	312105-0370	-		4	SCREW M6S ISO 4017 M6x20 A280	
450	312111-0333	-		2	SCREW MC6S5X25FZB	
490	312318-0323	-		8	SET SCREW CUP POINT ISO 4029 M5X8 RFR	
546	315105-0153	-		42	WASHER,PLAIN ROUND 6,4x12 Stainless	
0375S						
010	533448-0000	-		1	MACHINE BODY	
030	293621-0002	D		1	BENDING ROLLER	
035	293624-0002	D		2	PROTECTION PLATE	
040	458109-0000	D		2	CREASE FORMER	
045	486960-0002	D		1	SHAFT	
055	532719-0002	D		1	FEEDING ROLLER	
060	533449-0002	D		1	BENDING ROLLER	
065	533455-0000	-		1	LID	
070	533456-0000	-		1	FRAME	
075	32629-0000	R		1	SPROCKET	
080	32630-0000	R		1	SPROCKET	
085	543138-0000	-		1	SPACER	
090	539338-0000	-		2	CAP	
095	486962-0003	D		2	FASTENING BRACKET	
105	486965-0000	-		1	HEAD PLATE	
110	486966-0002	-		1	SHAFT FOR CARRIER	
115	486968-0002	D		1	SHAFT FOR BENDINGROLLER	
120	533457-0002	D		1	SHAFT	
130	576218-0000	D		1	PAPER SUPPORT	
150	312105-0451	-		4	SCREW M6S ISO 4017 8x20 A280	
165	315105-0165	-		5	WASHER,PLAIN ROUND 8,4x16 Stainless	
200	10258-0000	D		1	COMPRESSION SPRING	
215	32926-0000	M		1	ROLL	
230	228653-0000	R		1	SHAFT	
235	544706-0000	D		2	FLANGE	
240	293646-0001	D		1	WASHER	
245	293646-0002	D		1	WASHER	
250	293674-0000	D		1	DOWEL	
255	436939-0000	D		1	CYLINDER BRACKET	
260	436940-0000	D		1	SHAFT	
265	440277-0000	D		1	LACE	
290	458489-0000	D		1	CANTILEVER	
380	90239-0259	R		1	CYLINDER	
435	312105-0370	-		4	SCREW M6S ISO 4017 M6x20 A280	
450	312111-0333	-		2	SCREW MC6S5X25FZB	
490	312318-0323	-		8	SET SCREW CUP POINT ISO 4029 M5X8 RFR	
546	315105-0153	-		40	WASHER,PLAIN ROUND 6,4x12 Stainless	
0400B						
010	484848-0002	-		1	MACHINE BODY	
020	573827-0002	-		1	PROTECTION	
030	293621-0001	D		1	BENDING ROLLER	
035	293624-0001	D		2	PROTECTION PLATE	
040	458108-0000	D		2	CREASE FORMER	
045	486960-0001	D		1	SHAFT	
050	486961-0000	-		1	PLATE	
055	532719-0001	D		1	FEEDING ROLLER	
060	533449-0001	D		1	BENDING ROLLER	
065	533453-0000	-		1	LID	
070	533454-0000	-		1	FRAME	
075	32629-0000	R		1	SPROCKET	
080	32630-0000	R		1	SPROCKET	
085	543137-0003	-		1	SPACER	
090	539338-0000	-		2	CAP	
095	486962-0002	D		1	FASTENING BRACKET	
100	486962-0004	D		1	FASTENING BRACKET	
105	486964-0000	-		1	HEAD PLATE	

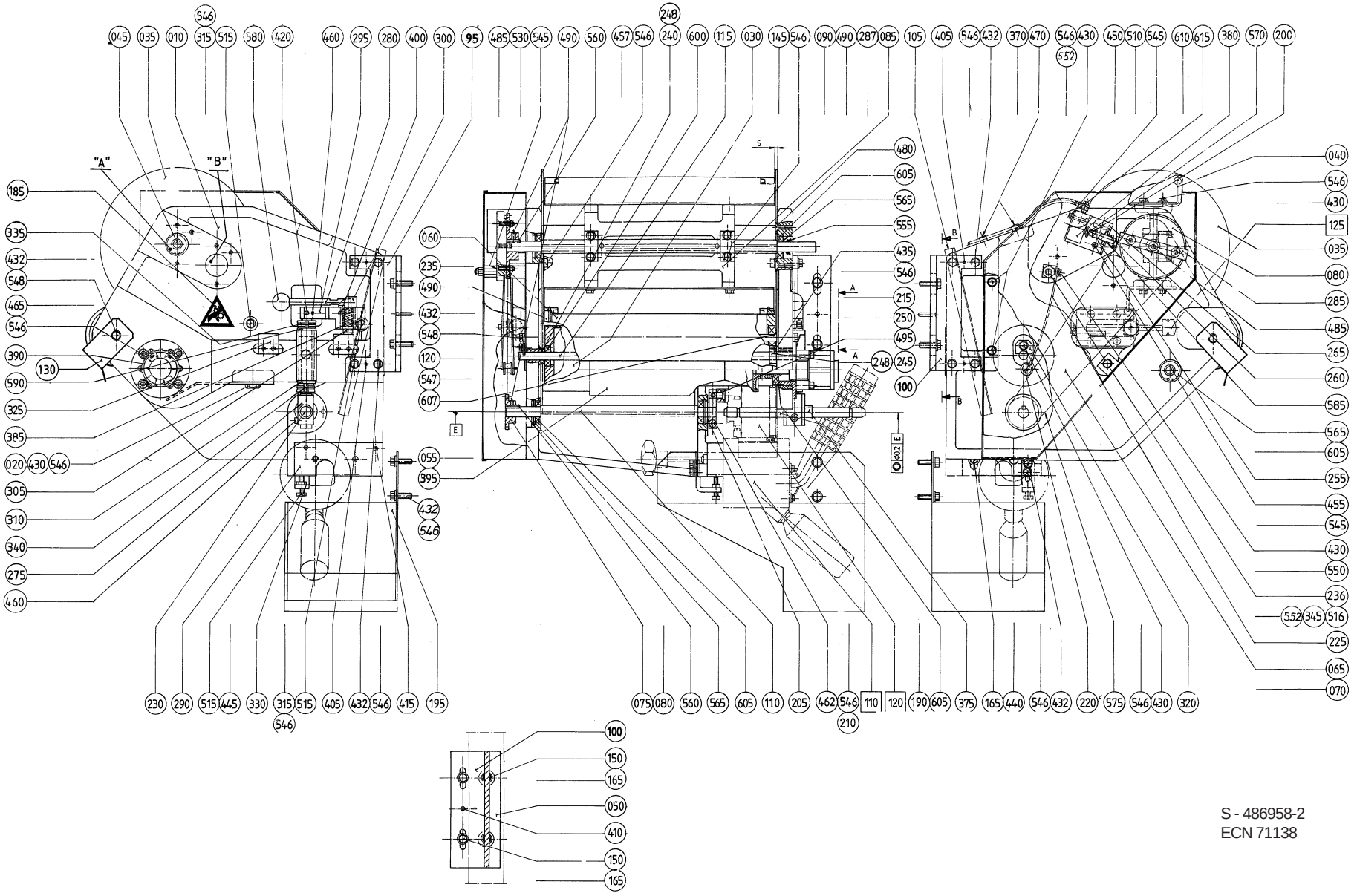

S - 486958-2
ECN 71138

Pos	Part No	SP	UN	Qty	Description	Page No
110	486966-0001	-		1	SHAFT	
115	486968-0001	D		1	SHAFT FOR BENDINGROLLER	
120	533457-0001	D		1	SHAFT	
130	575786-0000	D		1	PAPER SUPPORT	
150	312105-0451	-		6	SCREW M6S ISO 4017 8x20 A280	
165	315105-0165	-		7	WASHER,PLAIN ROUND 8,4x16 Stainless	
200	10258-0000	D		1	COMPRESSION SPRING	
215	32926-0000	M		1	ROLL	
230	228653-0000	R		1	SHAFT	
235	544706-0000	D		2	FLANGE	
240	293646-0001	D		1	WASHER	
245	293646-0002	D		1	WASHER	
250	293674-0000	D		1	DOWEL	
255	436939-0000	D		1	CYLINDER BRACKET	
260	436940-0000	D		1	SHAFT	
265	440277-0000	D		1	LACE	
290	458489-0000	D		1	CANTILEVER	
380	90239-0259	R		1	CYLINDER	
435	312105-0370	-		4	SCREW M6S ISO 4017 M6x20 A280	
450	312111-0333	-		2	SCREW MC6S5X25FZB	
490	312318-0323	-		8	SET SCREW CUP POINT ISO 4029 M5X8 RFR	
546	315105-0153	-		40	WASHER,PLAIN ROUND 6,4x12 Stainless	
0500B						
010	484848-0003	-		1	MACHINE BODY	
020	573827-0003	-		1	PROTECTION	
030	293621-0001	D		1	BENDING ROLLER	
035	293624-0002	D		2	PROTECTION PLATE	
040	458106-0000	D		2	CREASE FORMER	
045	544367-0000	D		1	SHAFT	
055	532719-0001	D		1	FEEDING ROLLER	
060	533449-0001	D		1	BENDING ROLLER	
065	533453-0000	-		1	LID	
070	533454-0000	-		1	FRAME	
080-02	32630-0000	R		2	SPROCKET	
085	440282-0004	-		2	SPACER	
095	486962-0001	D		2	FASTENING BRACKET	
105	486964-0000	-		1	HEAD PLATE	
110	486966-0001	-		1	SHAFT	
115	486968-0001	D		1	SHAFT FOR BENDINGROLLER	
120	533457-0001	D		1	SHAFT	
130	576217-0000	D		1	PAPER SUPPORT	
150	312105-0451	-		4	SCREW M6S ISO 4017 8x20 A280	
165	315105-0165	-		5	WASHER,PLAIN ROUND 8,4x16 Stainless	
200	10258-0000	D		1	COMPRESSION SPRING	
215	32926-0000	M		1	ROLL	
230	228653-0000	R		1	SHAFT	
235	544706-0000	D		2	FLANGE	
240	293646-0001	D		1	WASHER	
245	293646-0002	D		1	WASHER	
250	293674-0000	D		1	DOWEL	
255	436939-0000	D		1	CYLINDER BRACKET	
260	436940-0000	D		1	SHAFT	
265	440277-0000	D		1	LACE	
290	458489-0000	D		1	CANTILEVER	
380	90239-0259	R		1	CYLINDER	
435	312105-0370	-		4	SCREW M6S ISO 4017 M6x20 A280	
450	312111-0333	-		2	SCREW MC6S5X25FZB	
490	312318-0323	-		6	SET SCREW CUP POINT ISO 4029 M5X8 RFR	
546	315105-0153	-		42	WASHER,PLAIN ROUND 6,4x12 Stainless	
0500S						
010	484848-0002	-		1	MACHINE BODY	
020	573827-0002	-		1	PROTECTION	
030	293621-0001	D		1	BENDING ROLLER	
035	293624-0001	D		2	PROTECTION PLATE	
040	458108-0000	D		2	CREASE FORMER	
045	486960-0001	D		1	SHAFT	
050	486961-0000	-		1	PLATE	
055	532719-0001	D		1	FEEDING ROLLER	
060	533449-0001	D		1	BENDING ROLLER	
065	533453-0000	-		1	LID	
070	533454-0000	-		1	FRAME	
075	32629-0000	R		1	SPROCKET	
080	32630-0000	R		1	SPROCKET	
085	538241-0004	-		1	SPACER	
090	539338-0000	-		2	CAP	
095	486962-0002	D		1	FASTENING BRACKET	
100	486962-0004	D		1	FASTENING BRACKET	
105	486964-0000	-		1	HEAD PLATE	
110	486966-0001	-		1	SHAFT	
115	486968-0001	D		1	SHAFT FOR BENDINGROLLER	
120	533457-0001	D		1	SHAFT	
130	575786-0000	D		1	PAPER SUPPORT	
150	312105-0451	-		6	SCREW M6S ISO 4017 8x20 A280	
165	315105-0165	-		7	WASHER,PLAIN ROUND 8,4x16 Stainless	
200	10258-0000	D		1	COMPRESSION SPRING	
215	32926-0000	M		1	ROLL	

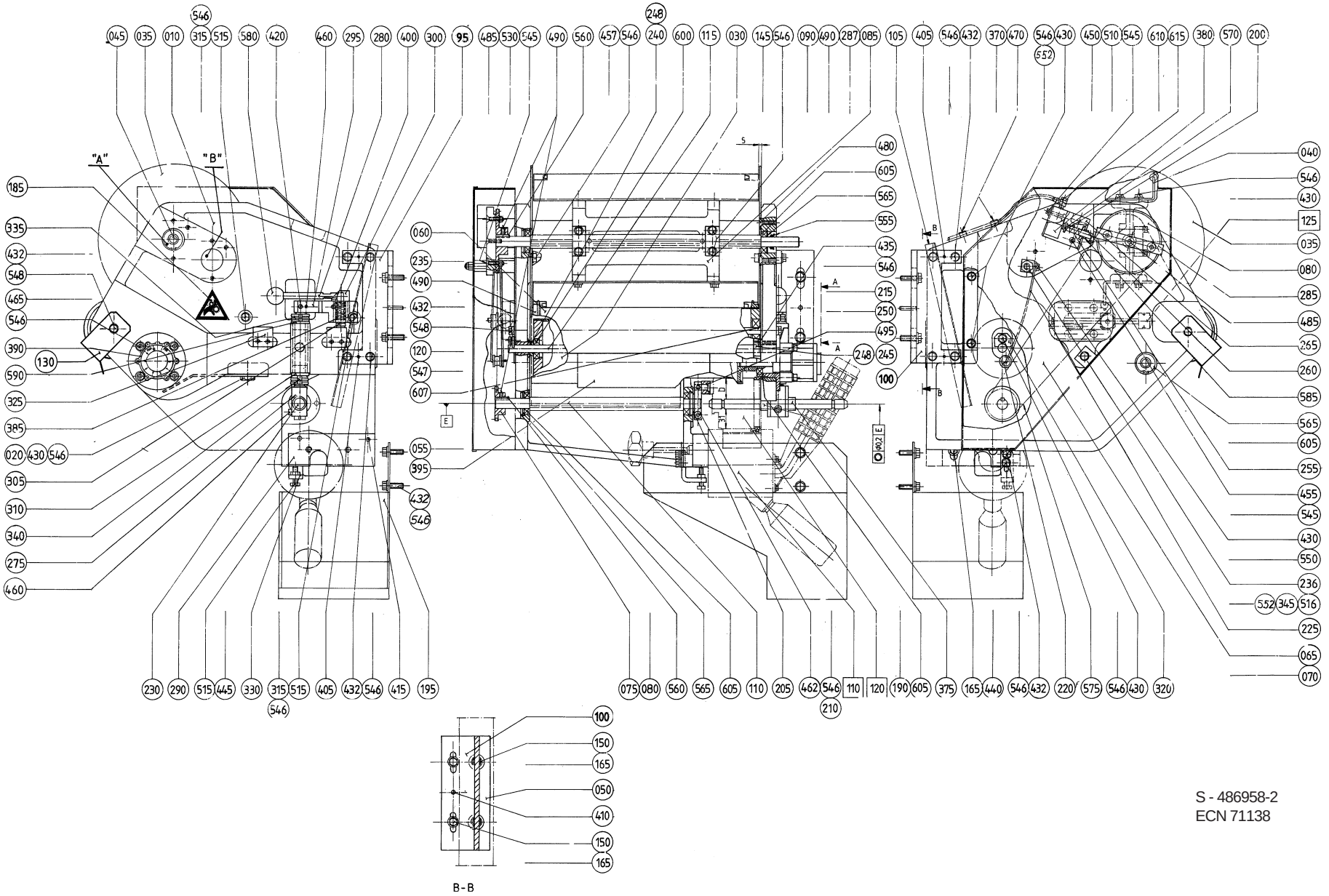

S - 486958-2
ECN 71138

Pos	Part No	SP	UN	Qty	Description	Page No
230	228653-0000	R		1	SHAFT	
235	544706-0000	D		2	FLANGE	
240	293646-0001	D		1	WASHER	
245	293646-0002	D		1	WASHER	
250	293674-0000	D		1	DOWEL	
255	436939-0000	D		1	CYLINDER BRACKET	
260	436940-0000	D		1	SHAFT	
265	440277-0000	D		1	LACE	
290	458489-0000	D		1	CANTILEVER	
380	90239-0259	R		1	CYLINDER	
435	312105-0370	-		4	SCREW M6S ISO 4017 M6x20 A280	
450	312111-0333	-		2	SCREW MC6S5X25FZB	
490	312318-0323	-		8	SET SCREW CUP POINT ISO 4029 M5X8 RFR	
546	315105-0153	-		42	WASHER,PLAIN ROUND 6,4x12 Stainless	
0500SQ						
010	484848-0001	-		1	MACHINE BODY	
020	573827-0001	-		1	PROTECTION	
030	293621-0001	D		1	BENDING ROLLER	
035	293624-0001	D		2	PROTECTION PLATE	
040	574043-0000	D		2	CREASE FORMER	
045	486960-0001	D		1	SHAFT	
055	532719-0001	D		1	FEEDING ROLLER	
060	533449-0001	D		1	BENDING ROLLER	
065	533453-0000	-		1	LID	
070	533454-0000	-		1	FRAME	
075	32629-0000	R		1	SPROCKET	
080	32630-0000	R		1	SPROCKET	
085	543137-0002	-		1	SPACER	
090	539338-0000	-		2	CAP	
095	486962-0011	D		1	FASTENING BRACKET	
100	574044-0000	D		1	FASTENING BRACKET	
105	486964-0000	-		1	HEAD PLATE	
110	486966-0001	-		1	SHAFT	
115	486968-0001	D		1	SHAFT FOR BENDINGROLLER	
120	533457-0001	D		1	SHAFT	
130	575786-0000	D		1	PAPER SUPPORT	
150	312105-0451	-		4	SCREW M6S ISO 4017 8x20 A280	
165	315105-0165	-		5	WASHER,PLAIN ROUND 8,4x16 Stainless	
200	10258-0000	D		1	COMPRESSION SPRING	
215	32926-0000	M		1	ROLL	
230	228653-0000	R		1	SHAFT	
235	544706-0000	D		2	FLANGE	
240	293646-0001	D		1	WASHER	
245	293646-0002	D		1	WASHER	
250	293674-0000	D		1	DOWEL	
255	436939-0000	D		1	CYLINDER BRACKET	
260	436940-0000	D		1	SHAFT	
265	440277-0000	D		1	LACE	
290	458489-0000	D		1	CANTILEVER	
380	90239-0259	R		1	CYLINDER	
435	312105-0370	-		4	SCREW M6S ISO 4017 M6x20 A280	
450	312111-0333	-		2	SCREW MC6S5X25FZB	
490	312318-0323	-		8	SET SCREW CUP POINT ISO 4029 M5X8 RFR	
546	315105-0153	-		42	WASHER,PLAIN ROUND 6,4x12 Stainless	
0750B						
010	484848-0002	-		1	MACHINE BODY	
020	573827-0002	-		1	PROTECTION	
030	293621-0001	D		1	BENDING ROLLER	
035	293624-0001	D		2	PROTECTION PLATE	
040	458105-0000	D		2	CREASE FORMER	
045	486960-0001	D		1	SHAFT	
055	532719-0001	D		1	FEEDING ROLLER	
060	533449-0001	D		1	BENDING ROLLER	
065	533453-0000	-		1	LID	
070	533454-0000	-		1	FRAME	
075	32629-0000	R		1	SPROCKET	
080	32630-0000	R		1	SPROCKET	
085	543137-0001	-		1	SPACER	
090	539338-0000	-		2	CAP	
095	486962-0001	D		2	FASTENING BRACKET	
105	486964-0000	-		1	HEAD PLATE	
110	486966-0001	-		1	SHAFT	
115	486968-0001	D		1	SHAFT FOR BENDINGROLLER	
120	533457-0001	D		1	SHAFT	
130	575786-0000	D		1	PAPER SUPPORT	
150	312105-0451	-		4	SCREW M6S ISO 4017 8x20 A280	
165	315105-0165	-		5	WASHER,PLAIN ROUND 8,4x16 Stainless	
200	10258-0000	D		1	COMPRESSION SPRING	
215	32926-0000	M		1	ROLL	
230	228653-0000	R		1	SHAFT	
235	544706-0000	D		2	FLANGE	
240	293646-0001	D		1	WASHER	
245	293646-0002	D		1	WASHER	
250	293674-0000	D		1	DOWEL	
255	436939-0000	D		1	CYLINDER BRACKET	
260	436940-0000	D		1	SHAFT	

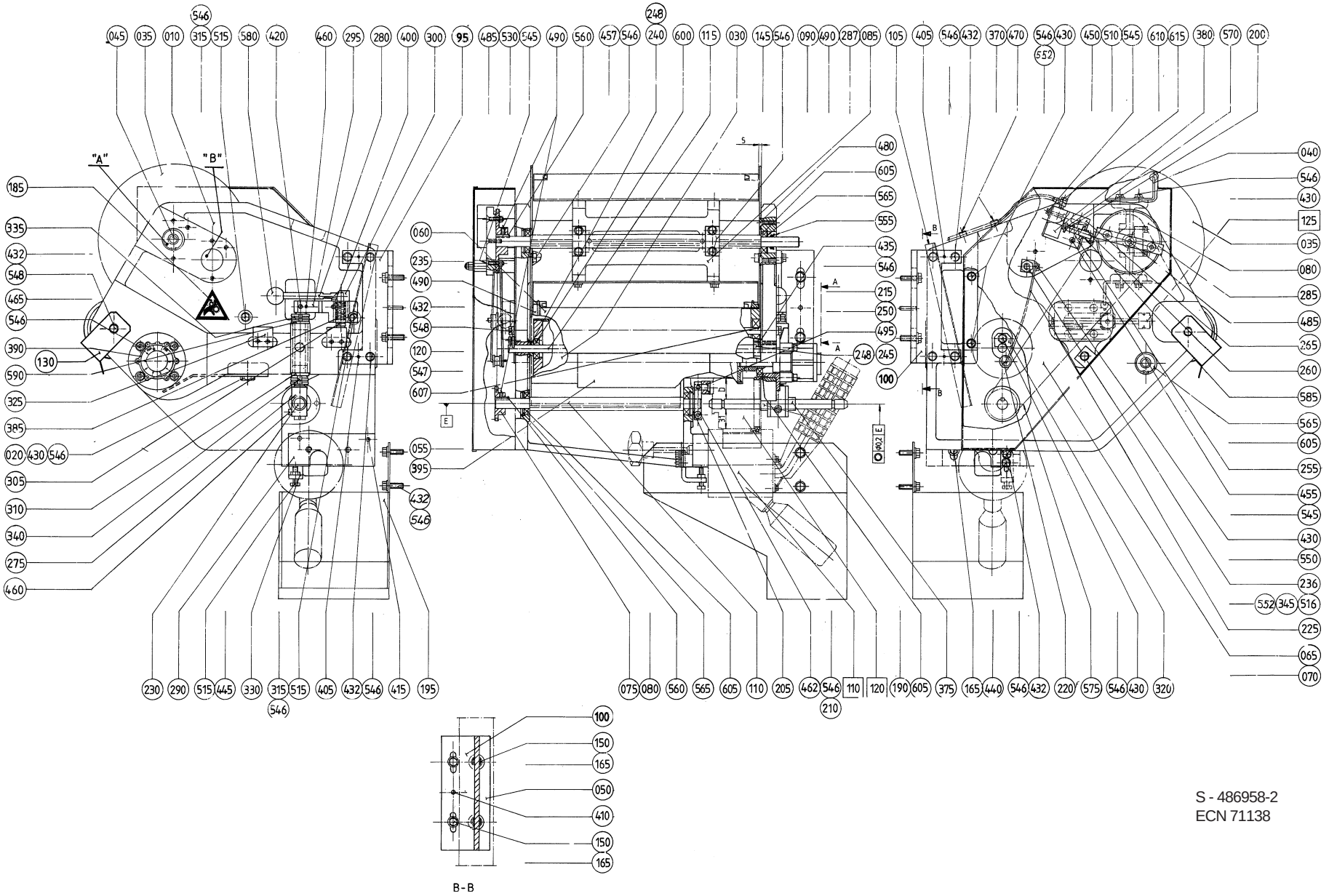

S - 486958-2
ECN 71138

Pos	Part No	SP	UN	Qty	Description	Page No
265	440277-0000	D		1	LACE	
290	458489-0000	D		1	CANTILEVER	
380	90239-0259	R		1	CYLINDER	
435	312105-0370	-		4	SCREW M6S ISO 4017 M6x20 A280	
450	312111-0333	-		2	SCREW MC6S5X25FZB	
490	312318-0323	-		8	SET SCREW CUP POINT ISO 4029 M5X8 RFR	
546	315105-0153	-		42	WASHER,PLAIN ROUND 6,4x12 Stainless	
0750S						
010	484848-0001	-		1	MACHINE BODY	
020	573827-0001	-		1	PROTECTION	
030	293621-0001	D		1	BENDING ROLLER	
035	293624-0001	D		2	PROTECTION PLATE	
040	544279-0000	D		2	CREASE FORMER	
045	486960-0001	D		1	SHAFT	
050	486961-0000	-		1	PLATE	
055	532719-0001	D		1	FEEDING ROLLER	
060	533449-0001	D		1	BENDING ROLLER	
065	533453-0000	-		1	LID	
070	533454-0000	-		1	FRAME	
075	32629-0000	R		1	SPROCKET	
080	32630-0000	R		1	SPROCKET	
085	538241-0005	-		1	SPACER	
090	539338-0000	-		2	CAP	
095	486962-0007	D		1	FASTENING BRACKET	
100	486962-0008	D		1	FASTENING BRACKET	
105	486964-0000	-		1	HEAD PLATE	
110	486966-0001	-		1	SHAFT	
115	486968-0001	D		1	SHAFT FOR BENDINGROLLER	
120	533457-0001	D		1	SHAFT	
130	575786-0000	D		1	PAPER SUPPORT	
150	312105-0451	-		6	SCREW M6S ISO 4017 8x20 A280	
165	315105-0165	-		7	WASHER,PLAIN ROUND 8,4x16 Stainless	
200	10258-0000	D		1	COMPRESSION SPRING	
215	32926-0000	M		1	ROLL	
230	228653-0000	R		1	SHAFT	
235	544706-0000	D		2	FLANGE	
240	293646-0001	D		1	WASHER	
245	293646-0002	D		1	WASHER	
250	293674-0000	D		1	DOWEL	
255	436939-0000	D		1	CYLINDER BRACKET	
260	436940-0000	D		1	SHAFT	
265	440277-0000	D		1	LACE	
290	458489-0000	D		1	CANTILEVER	
380	90239-0259	R		1	CYLINDER	
435	312105-0370	-		4	SCREW M6S ISO 4017 M6x20 A280	
450	312111-0333	-		2	SCREW MC6S5X25FZB	
490	312318-0323	-		8	SET SCREW CUP POINT ISO 4029 M5X8 RFR	
546	315105-0153	-		42	WASHER,PLAIN ROUND 6,4x12 Stainless	
1000B HIFIN						
010	484848-0001	-		1	MACHINE BODY	
020	573827-0001	-		1	PROTECTION	
030	293621-0001	D		1	BENDING ROLLER	
035	293624-0001	D		2	PROTECTION PLATE	
040	458104-0000	D		2	CREASE FORMER	
045	486960-0001	D		1	SHAFT	
055	532719-0001	D		1	FEEDING ROLLER	
060	533449-0001	D		1	BENDING ROLLER	
065	533453-0000	-		1	LID	
070	533454-0000	-		1	FRAME	
075	32629-0000	R		1	SPROCKET	
080	32630-0000	R		1	SPROCKET	
085	538241-0003	-		1	SPACER	
090	539338-0000	-		2	CAP	
095	486962-0001	D		2	FASTENING BRACKET	
105	486964-0000	-		1	HEAD PLATE	
110	486966-0001	-		1	SHAFT	
115	486968-0001	D		1	SHAFT FOR BENDINGROLLER	
120	533457-0001	D		1	SHAFT	
130	575786-0000	D		1	PAPER SUPPORT	
150	312105-0451	-		4	SCREW M6S ISO 4017 8x20 A280	
165	315105-0165	-		5	WASHER,PLAIN ROUND 8,4x16 Stainless	
200	10258-0000	D		1	COMPRESSION SPRING	
215	32926-0000	M		1	ROLL	
230	228653-0000	R		1	SHAFT	
235	544706-0000	D		2	FLANGE	
240	293646-0001	D		1	WASHER	
245	293646-0002	D		1	WASHER	
250	293674-0000	D		1	DOWEL	
255	436939-0000	D		1	CYLINDER BRACKET	
260	436940-0000	D		1	SHAFT	
265	440277-0000	D		1	LACE	
290	458489-0000	D		1	CANTILEVER	
380	90239-0259	R		1	CYLINDER	
435	312105-0370	-		4	SCREW M6S ISO 4017 M6x20 A280	
450	312111-0333	-		2	SCREW MC6S5X25FZB	
490	312318-0323	-		8	SET SCREW CUP POINT ISO 4029 M5X8 RFR	

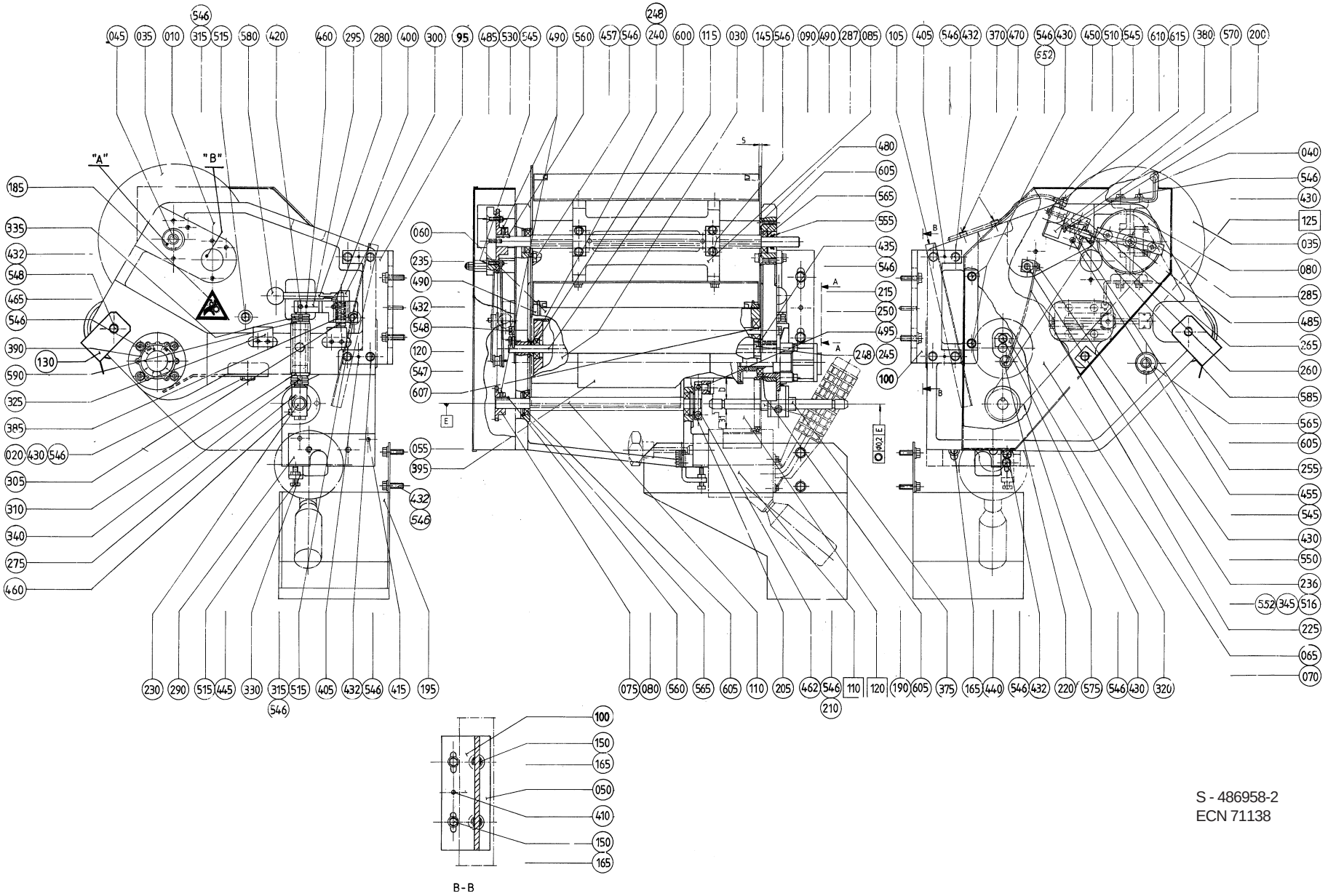

S - 486958-2
ECN 71138

Pos	Part No	SP	UN	Qty	Description	Page No
546	315105-0153	-		42	WASHER,PLAIN ROUND 6,4x12 Stainless	
1000S						
010	484848-0001	-		1	MACHINE BODY	
020	573827-0001	-		1	PROTECTION	
030	293621-0001	D		1	BENDING ROLLER	
035	293624-0001	D		2	PROTECTION PLATE	
040	569651-0000	D		2	CREASE FORMER	
045	486960-0001	D		1	SHAFT	
055	532719-0001	D		1	FEEDING ROLLER	
060	533449-0001	D		1	BENDING ROLLER	
065	533453-0000	-		1	LID	
070	533454-0000	-		1	FRAME	
075	32629-0000	R		1	SPROCKET	
080	32630-0000	R		1	SPROCKET	
085	569652-0002	-		1	SPACER	
090	539338-0000	-		2	CAP	
095	486962-0009	D		1	FASTENING BRACKET	
100	486962-0010	D		1	FASTENING BRACKET	
105	486964-0000	-		1	HEAD PLATE	
110	486966-0001	-		1	SHAFT	
115	486968-0001	D		1	SHAFT FOR BENDINGROLLER	
120	533457-0001	D		1	SHAFT	
130	575786-0000	D		1	PAPER SUPPORT	
150	312105-0451	-		4	SCREW M6S ISO 4017 8x20 A280	
165	315105-0165	-		5	WASHER,PLAIN ROUND 8,4x16 Stainless	
200	10258-0000	D		1	COMPRESSION SPRING	
215	32926-0000	M		1	ROLL	
230	228653-0000	R		1	SHAFT	
235	544706-0000	D		2	FLANGE	
240	293646-0001	D		1	WASHER	
245	293646-0002	D		1	WASHER	
250	293674-0000	D		1	DOWEL	
255	436939-0000	D		1	CYLINDER BRACKET	
260	436940-0000	D		1	SHAFT	
265	440277-0000	D		1	LACE	
290	458489-0000	D		1	CANTILEVER	
380	90239-0259	R		1	CYLINDER	
435	312105-0370	-		4	SCREW M6S ISO 4017 M6x20 A280	
450	312111-0333	-		2	SCREW MC6S5X25FZB	
490	312318-0323	-		8	SET SCREW CUP POINT ISO 4029 M5X8 RFR	
546	315105-0153	-		42	WASHER,PLAIN ROUND 6,4x12 Stainless	
1000SQ						
010	484848-0001	-		1	MACHINE BODY	
020	573827-0001	-		1	PROTECTION	
030	293621-0001	D		1	BENDING ROLLER	
035	293624-0001	D		2	PROTECTION PLATE	
040	574043-0000	D		2	CREASE FORMER	
045	486960-0001	D		1	SHAFT	
055	532719-0001	D		1	FEEDING ROLLER	
060	533449-0001	D		1	BENDING ROLLER	
065	533453-0000	-		1	LID	
070	533454-0000	-		1	FRAME	
075	32629-0000	R		1	SPROCKET	
080	32630-0000	R		1	SPROCKET	
085	569652-0003	-		1	SPACER	
090	539338-0000	-		2	CAP	
095	486962-0011	D		1	FASTENING BRACKET	
100	574044-0000	D		1	FASTENING BRACKET	
105	486964-0000	-		1	HEAD PLATE	
110	486966-0001	-		1	SHAFT	
115	486968-0001	D		1	SHAFT FOR BENDINGROLLER	
120	533457-0001	D		1	SHAFT	
130	575786-0000	D		1	PAPER SUPPORT	
150	312105-0451	-		4	SCREW M6S ISO 4017 8x20 A280	
165	315105-0165	-		5	WASHER,PLAIN ROUND 8,4x16 Stainless	
200	10258-0000	D		1	COMPRESSION SPRING	
215	32926-0000	M		1	ROLL	
230	228653-0000	R		1	SHAFT	
235	544706-0000	D		2	FLANGE	
240	293646-0001	D		1	WASHER	
245	293646-0002	D		1	WASHER	
250	293674-0000	D		1	DOWEL	
255	436939-0000	D		1	CYLINDER BRACKET	
260	436940-0000	D		1	SHAFT	
265	440277-0000	D		1	LACE	
290	458489-0000	D		1	CANTILEVER	
380	90239-0259	R		1	CYLINDER	
435	312105-0370	-		4	SCREW M6S ISO 4017 M6x20 A280	
450	312111-0333	-		2	SCREW MC6S5X25FZB	
490	312318-0323	-		8	SET SCREW CUP POINT ISO 4029 M5X8 RFR	
546	315105-0153	-		42	WASHER,PLAIN ROUND 6,4x12 Stainless	
1055B						
010	484848-0001	-		1	MACHINE BODY	
020	573827-0001	-		1	PROTECTION	
030	293621-0001	D		1	BENDING ROLLER	
035	293624-0001	D		2	PROTECTION PLATE	

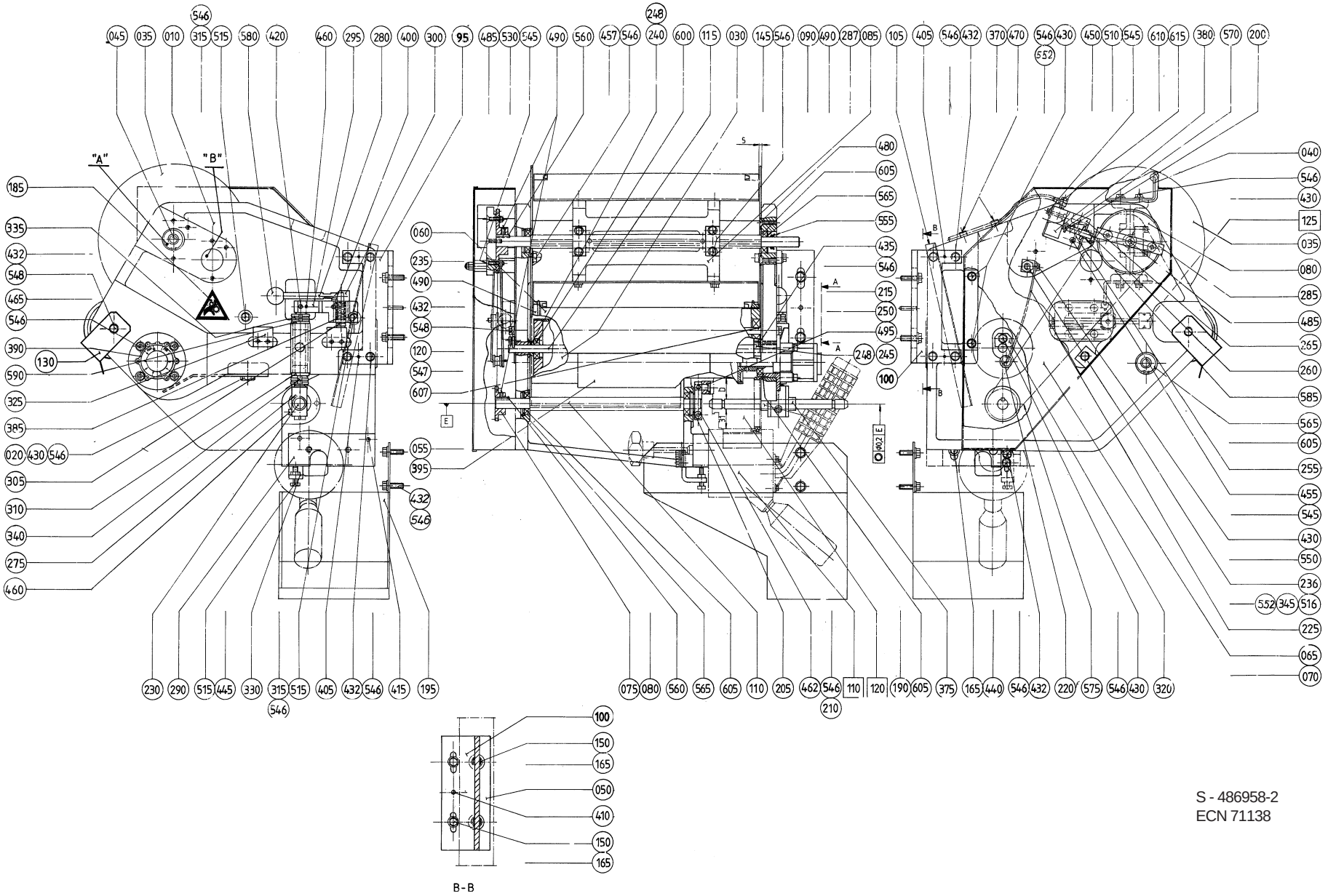

S - 486958-2
ECN 71138

Pos	Part No	SP	UN	Qty	Description	Page No
040	458105-0000	D		2	CREASE FORMER	
045	486960-0001	D		1	SHAFT	
055	532719-0001	D		1	FEEDING ROLLER	
060	533449-0001	D		1	BENDING ROLLER	
065	533453-0000	-		1	LID	
070	533454-0000	-		1	FRAME	
075	32629-0000	R		1	SPROCKET	
080	32630-0000	R		1	SPROCKET	
085	538241-0001	-		1	SPACER	
090	539338-0000	-		2	CAP	
095	486962-0001	D		2	FASTENING BRACKET	
105	486964-0000	-		1	HEAD PLATE	
110	486966-0001	-		1	SHAFT	
115	486968-0001	D		1	SHAFT FOR BENDINGROLLER	
120	533457-0001	D		1	SHAFT	
130	575786-0000	D		1	PAPER SUPPORT	
150	312105-0451	-		4	SCREW M6S ISO 4017 8x20 A280	
165	315105-0165	-		5	WASHER,PLAIN ROUND 8,4x16 Stainless	
200	10258-0000	D		1	COMPRESSION SPRING	
215	32926-0000	M		1	ROLL	
230	228653-0000	R		1	SHAFT	
235	544706-0000	D		2	FLANGE	
240	293646-0001	D		1	WASHER	
245	293646-0002	D		1	WASHER	
250	293674-0000	D		1	DOWEL	
255	436939-0000	D		1	CYLINDER BRACKET	
260	436940-0000	D		1	SHAFT	
265	440277-0000	D		1	LACE	
290	458489-0000	D		1	CANTILEVER	
380	90239-0259	R		1	CYLINDER	
435	312105-0370	-		4	SCREW M6S ISO 4017 M6x20 A280	
450	312111-0333	-		2	SCREW MC6S5X25FZB	
490	312318-0323	-		8	SET SCREW CUP POINT ISO 4029 M5X8 RFR	
546	315105-0153	-		42	WASHER,PLAIN ROUND 6,4x12 Stainless	
1000B LOFIN						
010	484848-0001	-		1	MACHINE BODY	
020	573827-0001	-		1	PROTECTION	
030	293621-0001	D		1	BENDING ROLLER	
035	293624-0001	D		2	PROTECTION PLATE	
040	458105-0000	D		2	CREASE FORMER	
045	486960-0001	D		1	SHAFT	
055	532719-0001	D		1	FEEDING ROLLER	
060	533449-0001	D		1	BENDING ROLLER	

Pos	Part No	SP	UN	Qty	Description	Page No
065	533453-0000	-		1	LID	
070	533454-0000	-		1	FRAME	
075	32629-0000	R		1	SPROCKET	
080	32630-0000	R		1	SPROCKET	
085	538241-0002	-		1	SPACER	
090	539338-0000	-		2	CAP	
095	486962-0001	D		2	FASTENING BRACKET	
105	486964-0000	-		1	HEAD PLATE	
110	486966-0001	-		1	SHAFT	
115	486968-0001	D		1	SHAFT FOR BENDINGROLLER	
120	533457-0001	D		1	SHAFT	
130	575786-0000	D		1	PAPER SUPPORT	
150	312105-0451	-		4	SCREW M6S ISO 4017 8x20 A280	
165	315105-0165	-		5	WASHER,PLAIN ROUND 8,4x16 Stainless	
200	10258-0000	D		1	COMPRESSION SPRING	
215	32926-0000	M		1	ROLL	
230	228653-0000	R		1	SHAFT	
235	544706-0000	D		2	FLANGE	
240	293646-0001	D		1	WASHER	
245	293646-0002	D		1	WASHER	
250	293674-0000	D		1	DOWEL	
255	436939-0000	D		1	CYLINDER BRACKET	
260	436940-0000	D		1	SHAFT	
265	440277-0000	D		1	LACE	
290	458489-0000	D		1	CANTILEVER	
380	90239-0259	R		1	CYLINDER	
435	312105-0370	-		4	SCREW M6S ISO 4017 M6x20 A280	
450	312111-0333	-		2	SCREW MC6S5X25FZB	
490	312318-0323	-		8	SET SCREW CUP POINT ISO 4029 M5X8 RFR	
546	315105-0153	-		42	WASHER,PLAIN ROUND 6,4x12 Stainless	

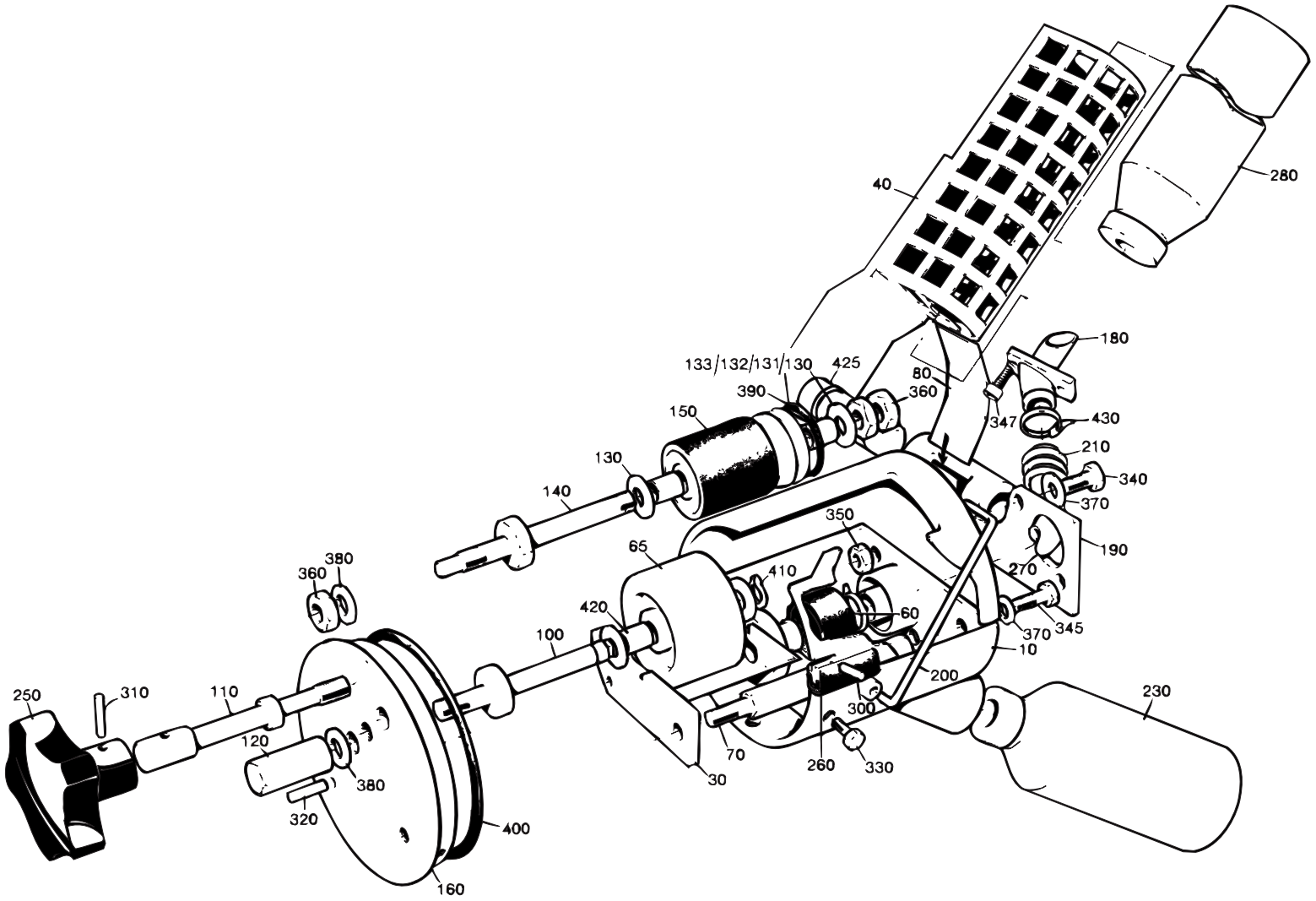

S-440286-3
ECN 10575

Pos	Part No	SP	UN	Qty	Description	Page No
Common parts						
010	440287-0000	-		1	COVER	
030	297211-0000	D		1	INK WELL	
040	476356-0000	D		1	HOLDER FOR INK BOTTLE	
060	445542-0000	R		1	MANTEL RUBBER	
065	450355-0000	R		1	INK ROLLER	
070	33010-0000	D		1	SCREW	
080	35547-0000	D		1	SPRING	
100	292044-0000	R		1	SHAFT	
110	293667-0000	R		1	DOWEL	
120	436927-0000	D		1	NUT	
130	293669-0001	R		4	WASHER	
131	293669-0002	R		2	WASHER	
132	293669-0003	R		2	WASHER	
133	293669-0004	R		2	WASHER	
140	293670-0000	M		1	SHAFT	
150	B 543135-0000	J		1	INK TRANSFER ROLLER	
160	293697-0000	D		1	END SECTION	
180	476354-0000	D		1	CANNULAR TUBE	
190	456773-0000	D		1	PIVOT BRACKET	
200	434747-0000	R		1	BOW CLAMP	
210	537308-0000	D		1	SPRING	
250	90051-0077	-		1	HANDLE	
260	90143-0029	-	MM	295	STRIP	
270	90166-0138	-	MM	100	HOSE	
280	90299-0072	F		48	INK	
300	311103-0236	-		2	PINS,STRAIGHT 3X16	
310	311103-0238	-		1	PINS,STRAIGHT 3X20	
320	311103-0270	-		1	PINS,STRAIGHT 4X16	
330	312105-0291	-		3	SCREW M6S ISO 4017 M4X12 A280	
340	312105-0327	-		2	SCREW M6S ISO 4017 M5X12 A280	
345	312105-0329	-		1	SCREW M6S ISO 4017 M5x16 A280	
347	312115-0287	-		2	SCREW MC6S ISO 4762 M4X8 A280	
350	312605-0314	-		2	NUT,HEXAGON,M6M5 Stainless	
360	312605-0318	-		3	NUT,HEXAGON,M8 RFR	
370	315105-0146	-		3	WASHER,PLAIN ROUND 5,3x10 Stainless	
380	315105-0165	-		2	WASHER,PLAIN ROUND 8,4x16 Stainless	
390	315202-0218	J		1	O-RINGS 26,2X3	
400	315202-0309	J		1	O-RINGS 89,5X3	
410	315750-0105	-		1	CIRCLIP SGA8	
420	321120-0100	K		2	BEARING BUSHING WITHOUT FLANGE,8/10x12	
425	321120-0109	K		2	BEARING BUSHING WITHOUT FLANGE,12/14X10	
430	352113-0101	-		1	RIBBON CLAMP BLACK	

Pos	Part No	SP	UN	Qty	Description	Page No
TBA/8						
230	90050-0008	-		1	BOTTLE	

1000ml Slim
1000ml Square
1000ml

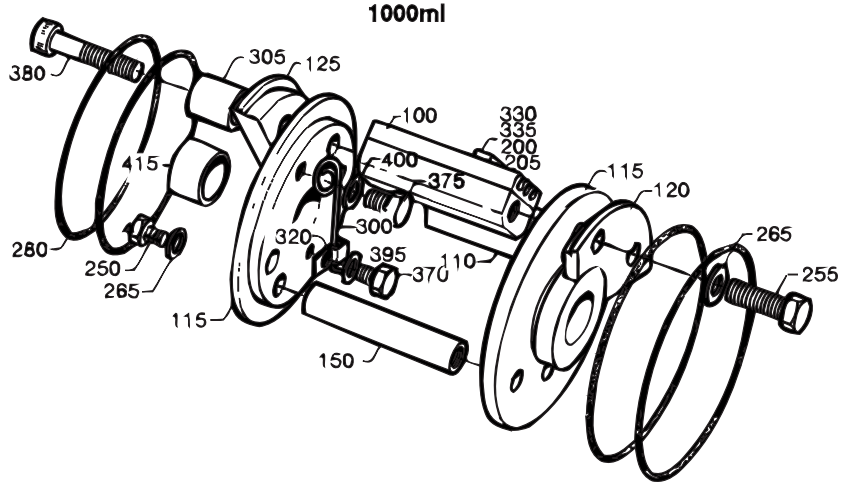

500ml Slim

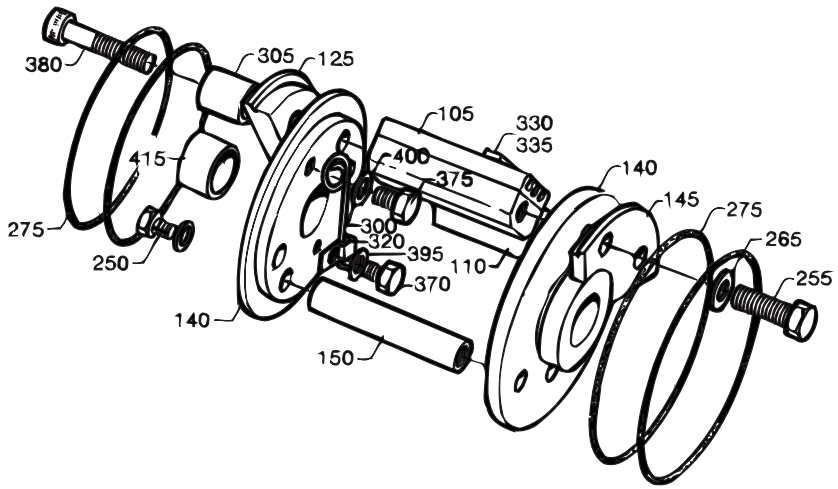

500ml

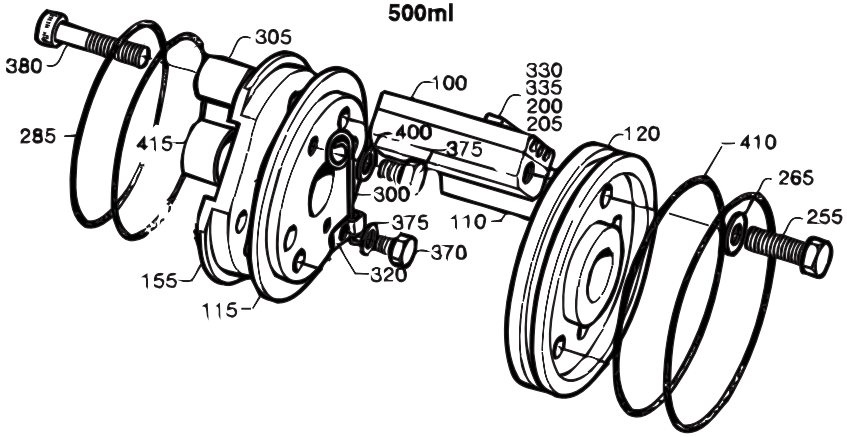

S-293684-3
ECN 20648

Pos	Part No	SP	UN	Qty	Description	Page No
TBA 0500SQ or TBA 0750B or TBA 1000B LOFIN or TBA 1000S or TBA 1000SQ or TBA 1055B						
100	293395-0003	M		1	TYPE HOLDER	
110	293395-0001	M		1	TYPE HOLDER	
115	292409-0000	R		2	END SECTION	
120	442072-0000	R		1	CARRIER	
125	292411-0000	R		1	CARRIER	
150	293671-0000	R		1	SPACER	
200	90413-0048	K		1	CODE INSERT SET	
205	90413-0049	F		1	CODE INSERT SET	
250	312101-0329	-		2	SCREW M6S5X16FZB	
255	312101-0331	-		3	SCREW M6S5X20FZB	
265	315101-0146	-		5	WASHER BRB 5,3x10 FZB	
280	315202-0301	I		4	O-RINGS 49,5X3	
TBA 0500B						
100	293395-0003	M		2	TYPE HOLDER	
110	293395-0001	K		2	TYPE HOLDER	
115	434787-0000	R		1	END SECTION	
120	292410-0000	R		1	END SECTION	
155	293676-0000	R		1	CARRIER	
200	90413-0048	K		1	CODE INSERT SET	
205	90413-0049	F		1	CODE INSERT SET	
255	312101-0331	-		7	SCREW M6S5X20FZB	
265	315101-0146	-		7	WASHER BRB 5,3x10 FZB	
285	315202-0304	F		2	O-RINGS 64,5X3	
410	315202-0305	F		2	O-RINGS 69,5X3	
TBA 1000B HIFIN						
100	293395-0003	M		1	TYPE HOLDER	
110	293395-0001	M		1	TYPE HOLDER	
115	293690-0000	R		2	END SECTION	
120	442431-0000	R		1	CARRIER	
125	293688-0000	R		1	CARRIER	
150	293671-0000	R		1	SPACER	
200	90413-0048	K		1	CODE INSERT SET	
205	90413-0049	F		1	CODE INSERT SET	
250	312101-0329	-		2	SCREW M6S5X16FZB	
255	312101-0331	-		3	SCREW M6S5X20FZB	
265	315101-0146	-		5	WASHER BRB 5,3x10 FZB	
280	315202-0301	I		4	O-RINGS 49,5X3	
TBA 0355B or TBA 0375S or TBA 0400B or TBA 0500S or TBA 0750S						
105	293395-0002	M		1	TYPE HOLDER	
110	293395-0001	M		1	TYPE HOLDER	
125	479237-0000	R		1	CARRIER	
140	479236-0000	R		2	END SECTION	
145	479238-0000	R		1	CARRIER	
150	293671-0000	R		1	SPACER	
250	312101-0329	-		2	SCREW M6S5X16FZB	
255	312101-0331	-		3	SCREW M6S5X20FZB	
265	315101-0146	-		5	WASHER BRB 5,3x10 FZB	
275	315202-0224	I		4	O-RINGS 42,2X3	
Common parts						
300	32691-0000	J		1	LOCKING SPRING	
305	33011-0000	K		1	SLEEVE	
320	90165-0010	-		1	CLIP	
330	90413-0033	K		1	CODE INSERT SET 0-9	
330	90413-0043	K		1	CODE INSERT SET	
335	90413-0044	K		1	CODE INSERT SET	
335	90413-0047	K		1	CODE INSERT SET	
370	312101-0287	-		1	SCREW M6S4X8FZB	
375	312101-0364	-		1	SCREW M6S 6x10-8,8 FZB	
380	312111-0335	-		1	SCREW MC6S5X30FZB	
395	315101-0136	-		2	WASHER BRB4,3X8FZB	
400	315111-0153	-		1	WASHER TBRB6,4X12FZB	
415	321120-0122	K		2	BEARING BUSHING WITHOUT FLANGE,15/17X15	

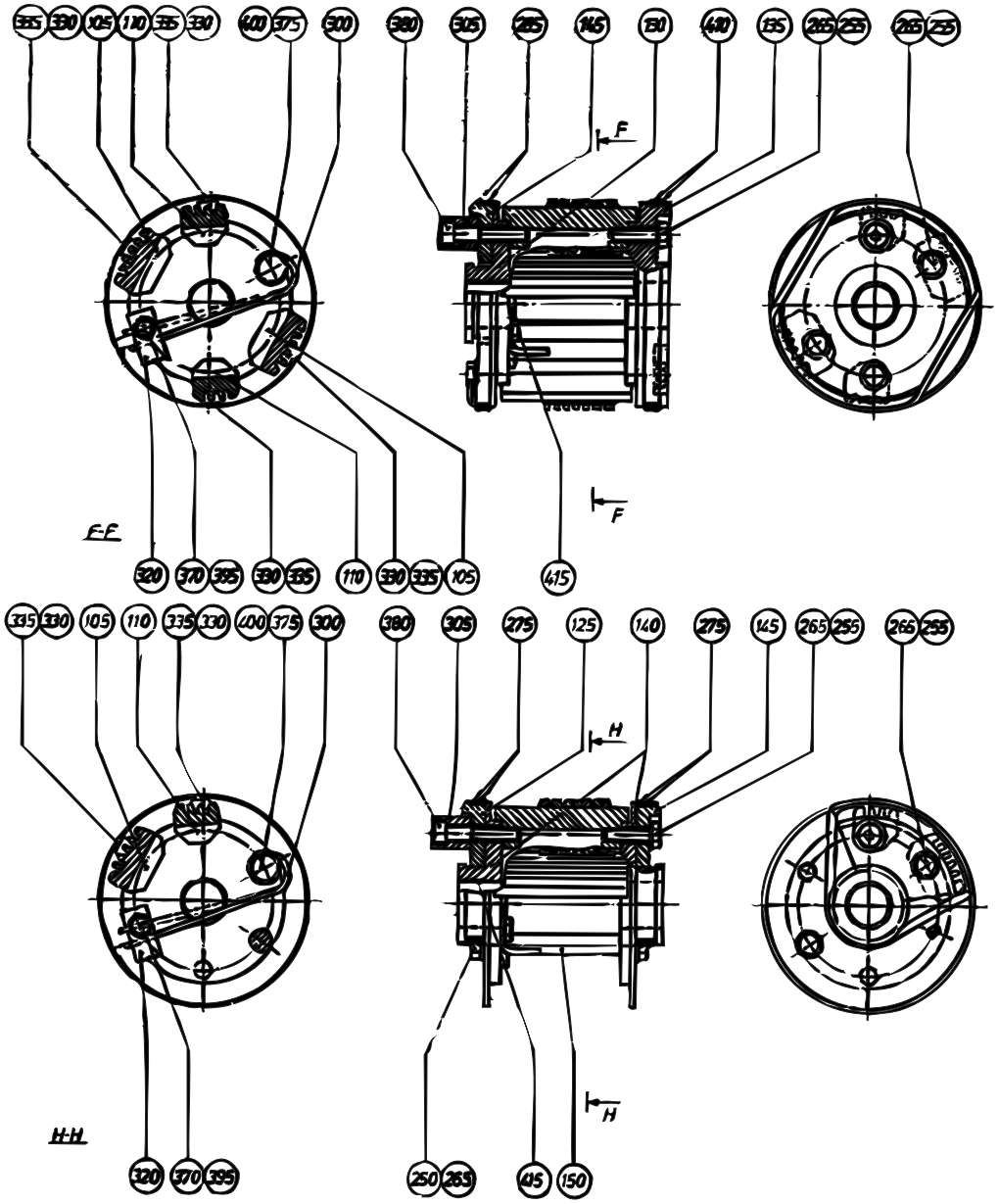

S-293684-4
ECN 20648

Pos	Part No	SP	UN	Qty	Description	Page No
TBA 0500SQ or TBA 0750B or TBA 1000B LOFIN or TBA 1000S or TBA 1000SQ or TBA 1055B						
100	293395-0003	M		1	TYPE HOLDER	
110	293395-0001	M		1	TYPE HOLDER	
115	292409-0000	R		2	END SECTION	
120	442072-0000	R		1	CARRIER	
125	292411-0000	R		1	CARRIER	
150	293671-0000	R		1	SPACER	
200	90413-0048	K		1	CODE INSERT SET	
205	90413-0049	F		1	CODE INSERT SET	
250	312101-0329	-		2	SCREW M6S5X16FZB	
255	312101-0331	-		3	SCREW M6S5X20FZB	
265	315101-0146	-		5	WASHER BRB 5,3x10 FZB	
280	315202-0301	I		4	O-RINGS 49,5X3	
TBA 0500B						
100	293395-0003	M		2	TYPE HOLDER	
110	293395-0001	K		2	TYPE HOLDER	
115	434787-0000	R		1	END SECTION	
120	292410-0000	R		1	END SECTION	
155	293676-0000	R		1	CARRIER	
200	90413-0048	K		1	CODE INSERT SET	
205	90413-0049	F		1	CODE INSERT SET	
255	312101-0331	-		7	SCREW M6S5X20FZB	
265	315101-0146	-		7	WASHER BRB 5,3x10 FZB	
285	315202-0304	F		2	O-RINGS 64,5X3	
410	315202-0305	F		2	O-RINGS 69,5X3	
TBA 1000B HIFIN						
100	293395-0003	M		1	TYPE HOLDER	
110	293395-0001	M		1	TYPE HOLDER	
115	293690-0000	R		2	END SECTION	
120	442431-0000	R		1	CARRIER	
125	293688-0000	R		1	CARRIER	
150	293671-0000	R		1	SPACER	
200	90413-0048	K		1	CODE INSERT SET	
205	90413-0049	F		1	CODE INSERT SET	
250	312101-0329	-		2	SCREW M6S5X16FZB	
255	312101-0331	-		3	SCREW M6S5X20FZB	
265	315101-0146	-		5	WASHER BRB 5,3x10 FZB	
280	315202-0301	I		4	O-RINGS 49,5X3	
TBA 0355B or TBA 0375S or TBA 0400B or TBA 0500S or TBA 0750S						
105	293395-0002	M		1	TYPE HOLDER	
110	293395-0001	M		1	TYPE HOLDER	
125	479237-0000	R		1	CARRIER	
140	479236-0000	R		2	END SECTION	
145	479238-0000	R		1	CARRIER	
150	293671-0000	R		1	SPACER	
250	312101-0329	-		2	SCREW M6S5X16FZB	
255	312101-0331	-		3	SCREW M6S5X20FZB	
265	315101-0146	-		5	WASHER BRB 5,3x10 FZB	
275	315202-0224	I		4	O-RINGS 42,2X3	
Common parts						
300	32691-0000	J		1	LOCKING SPRING	
305	33011-0000	K		1	SLEEVE	
320	90165-0010	-		1	CLIP	
330	90413-0033	K		1	CODE INSERT SET 0-9	
330	90413-0043	K		1	CODE INSERT SET	
335	90413-0044	K		1	CODE INSERT SET	
335	90413-0047	K		1	CODE INSERT SET	
370	312101-0287	-		1	SCREW M6S4X8FZB	
375	312101-0364	-		1	SCREW M6S 6x10-8,8 FZB	
380	312111-0335	-		1	SCREW MC6S5X30FZB	
395	315101-0136	-		2	WASHER BRB4,3X8FZB	
400	315111-0153	-		1	WASHER TBRB6,4X12FZB	
415	321120-0122	K		2	BEARING BUSHING WITHOUT FLANGE,15/17X15	

ADJUSTMENT DEVICE

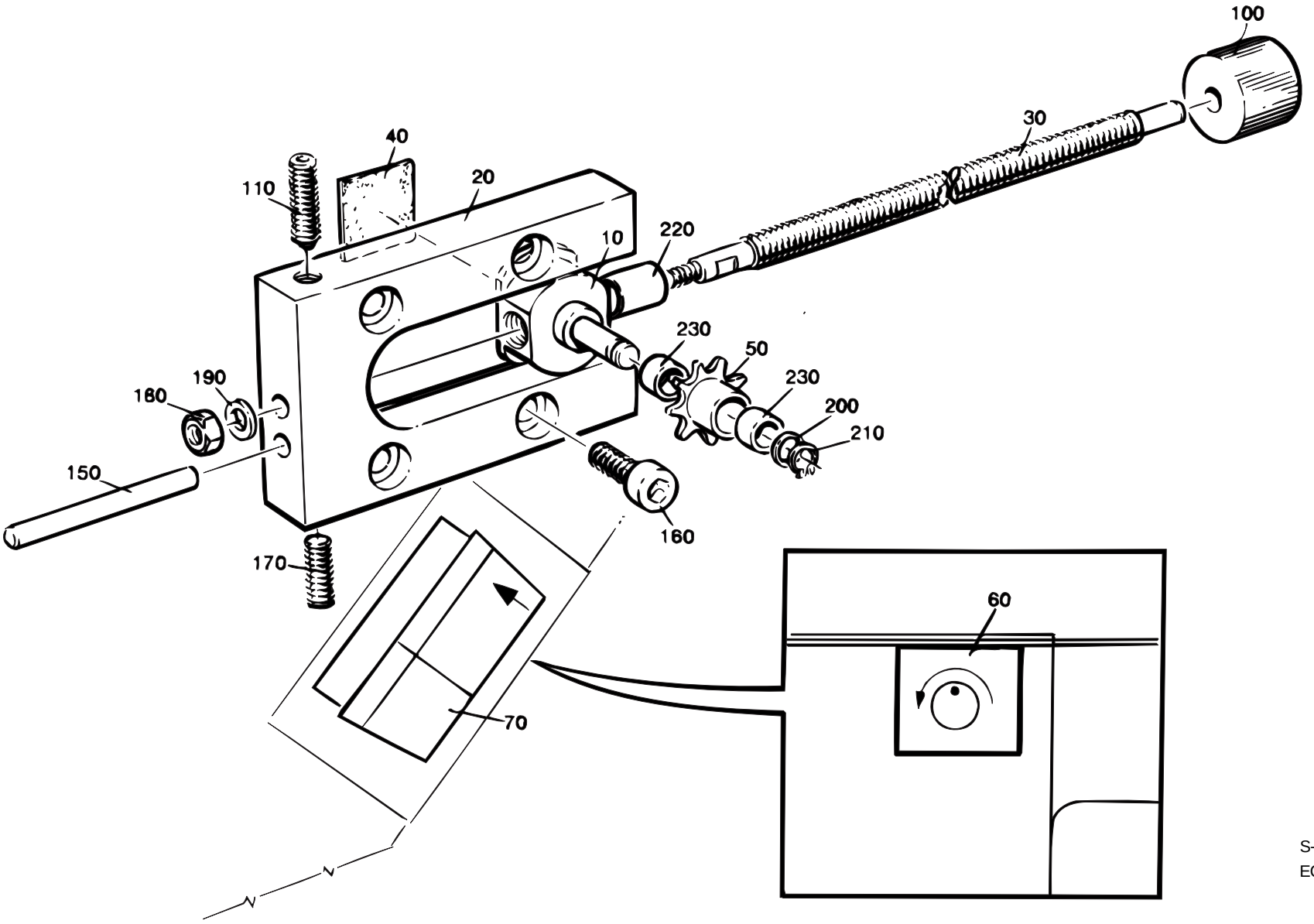

S-543143-1
ECN 10835

Pos	Part No	SP	UN	Qty	Description	Page No
Common parts						
010	526984-0000	D		1	SADDLE	
020	526985-0000	D		1	PLATE	
030	526986-0001	D		1	SHAFT	
040	527649-0000	R		1	DISTANCE RUBBER	
050	529362-0000	K		1	SPROCKET	
060	543141-0000	-		1	SIGN	
070	543142-0000	-		1	SIGN	
100	90051-0089	-		1	SHIFTER HANDLE	
110	90287-0167	-		1	SCREW, SPRINGLOADED M6x20	
150	311103-0365	-		1	PINS,STRAIGHT 6X50	
160	312115-0368	-		2	SCREW MC6S ISO 4762 M6x16 A280	
170	312318-0368	-		1	SET SCREW CUP POINT ISO 4029 M6x16 RFR	
180	312605-0312	-		1	NUT,HEXAGON,M4 RFR	
190	315105-0136	-		1	WASHER,PLAIN ROUND 4,3x8 Stainless	
200	315105-0153	-		1	WASHER,PLAIN ROUND 6,4x12 Stainless	
210	315751-0103	-		1	RETAINING RINGS FOR SHAFT 6	
220	321120-0100	K		1	BEARING BUSHING WITHOUT FLANGE,8/10x12	
230	321120-0101	K		2	BEARING BUSHING WITHOUT FLANGE,6/8X6	

Pos	Part No	SP	UN	Qty	Description	Page No

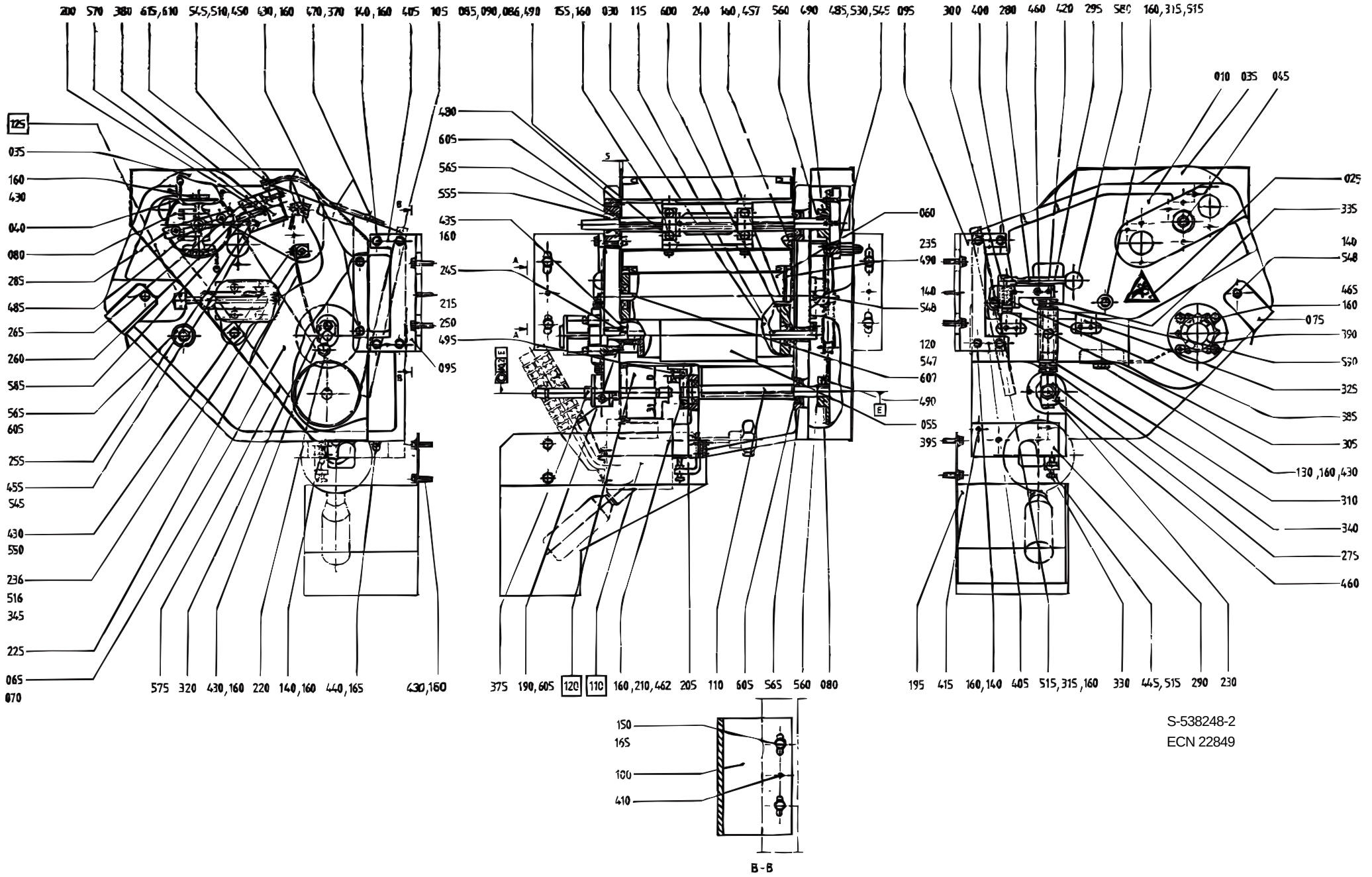
200 570 380 615,610 545,510,450 630,160 670,370 140,160 405 105 085,090,086,490 155,160 030 115 600 240 160,457 560 690 485,530,545 095 300 400 280 460 420 295 580 160,315,515
010 035 045
125
035
160
430
040
080
285
485
265
260
585
565
605
255
455
545
430
550
236
516
345
225
065
070
480
605
565
555
435
160
245
215
250
495
095
060
235
490
140
548
120
547
607
490
055
395
025
335
140
548
465
160
075
390
520
325
385
305
130,160,430
310
340
275
460
575 320 430,160 220 140,160 440,165 430,160
375 190,605 120 110 160,210,462 205 110 605 565 560 080
195 415 160,140 405 515,315,160 330 445,515 290 230
150
165
100
410
B-B
S-538248-2
ECN 22849

Pos	Part No	SP	UN	Qty	Description	Page No
Common parts						
F110	A 458192-0300	-		1	INK UNIT SS	**677**
F120	A 293685-0200	-		2	PRINTING WHEEL SS	**679**
F125	A 543143-0100	-		1	ADJUSTMENT DEVICE	**671**
010	538236-0002	-		1	MACHINE BODY	
025	359705-0001	-		1	WARNING SIGN "ENTANGLEMENT"	
030	293621-0002	D		1	BENDING ROLLER	
035	293624-0002	D		2	PROTECTION PLATE	
040	458107-0000	D		2	CREASE FORMER	
045	486960-0002	D		1	SHAFT	
055	532719-0002	D		1	FEEDING ROLLER	
060	533449-0002	D		1	BENDING ROLLER	
065	538237-0001	-		1	LID	
070	538238-0000	-		1	FRAME	
075	576220-0000	D		1	PAPER SUPPORT	
080	32630-0000	R		2	SPROCKET	
085	543139-0000	-		1	SPACER	
086	539338-0000	-		2	CAP	
090	458194-0001	D		4	WASHER	
090	458194-0002	D		4	WASHER	
090	458194-0003	D		4	WASHER	
095	486962-0003	D		2	FASTENING BRACKET	
105	538239-0000	-		1	HEAD PLATE	
110	486966-0002	-		1	SHAFT FOR CARRIER	
115	486968-0002	D		1	SHAFT FOR BENDINGROLLER	
120	533457-0002	D		1	SHAFT	
130	572243-0000	-		1	PROTECTION	
140	312105-0368	-		12	SCREW M6S ISO 4017 M6x16 A280	
150	312105-0451	-		4	SCREW M6S ISO 4017 8x20 A280	
155	312105-0372	-		8	SCREW M6S ISO 4017 M6X25 A280	
160	315105-0153	-		42	WASHER,PLAIN ROUND 6,4x12 Stainless	
165	315105-0165	-		5	WASHER,PLAIN ROUND 8,4x16 Stainless	
190	522408-0000	D		1	BEARING HOUSING	
195	544380-0000	-		1	WASTE CHUTE	
200	10258-0000	D		1	COMPRESSION SPRING	
205	533458-0000	-		1	WASHER	
210	32925-0000	D		1	CARRIER	
215	32926-0000	M		1	ROLL	
220	33182-0000	M		1	ROLL	
225	33183-0000	D		1	SPRING	
230	228653-0000	D		1	SHAFT	
235	544706-0000	D		2	FLANGE	
236	293645-0000	D		1	BRACKET	
240	293646-0001	D		1	WASHER	
245	293646-0002	D		1	WASHER	
250	293674-0000	D		1	DOWEL	
255	436939-0000	D		1	CYLINDER BRACKET	
260	436940-0000	D		1	SHAFT	
265	440277-0000	-		1	LACE	
275	450497-0000	R		1	SHAFT	
280	450500-0000	D		1	DOWEL	
285	457430-0000	D		1	BEATER	
290	292047-0000	-		1	CANTILEVER	
295	464010-0000	D		1	ARM	
300	464012-0000	D		1	CURVE	
305	464011-0000	D		1	LOCK STUD	
310	B 466430-0000	M		1	BUSHING	
315	B 476377-0000	D		2	SCREW	
320	486967-0000	-		1	SHEET	
325	486969-0000	D		2	GUIDE LUG	
330	486971-0000	-		1	ANGLE	
335	B 532082-0000	D		2	ROUND NUT	
340	B 532083-0000	D		2	ROUND NUT	
345	533459-0000	D		1	SCREW	
370	90165-0057	-		2	PIPE-CLIPS,FOR SINGLE PIPE,ONE SIDE 6	
375	90166-0059	-	MM	18	HOSE PVC 12/16mm TRANSP.	
380	90239-0259	R		1	CYLINDER	
385	90335-0064	D		1	SPRING	
390	90347-0054	M		1	DAMPER	
395	311103-0273	-		1	CYLINDRICAM6 4X22 RFR	
400	311103-0274	-		1	PIN,STRAIGHT 4x25	
405	311103-0310	-		4	PINS,STRAIGHT 5X20	
410	311103-0353	-		2	PINS,STRAIGHT 6X20	
415	311103-0357	-		1	PINS,STRAIGHT 6X30	
420	311202-0241	-		1	PINS,TAPER PIN 4X25	
430	312105-0366	-		16	SCREW M6S ISO 4017 M6X12 A280	
435	312105-0370	-		4	SCREW M6S ISO 4017 M6x20 A280	
440	312105-0457	-		1	SCREW ISO 4017 M8x35 A280	
445	312109-0374	-		1	SCREW M6S ISO 4017 M6X30 A280	
450	312111-0333	-		2	SCREW MC6S5X25FZB	
455	312111-0335	-		2	SCREW MC6S5X30FZB	
457	312111-0364	-		3	SCREW MC6S6X10FZB	
460	312115-0370	-		2	SCREW MC6S ISO 4762 M6x20 A280	
462	312115-0372	-		1	SCREW MC6S ISO 4762 M6X25 A280	
465	312115-0376	-		4	SCREW MC6S ISO 4762 M6x35 A280	
470	312125-0285	-		2	SLOTTED HEAD SCREW MCS 4X6 RFR	

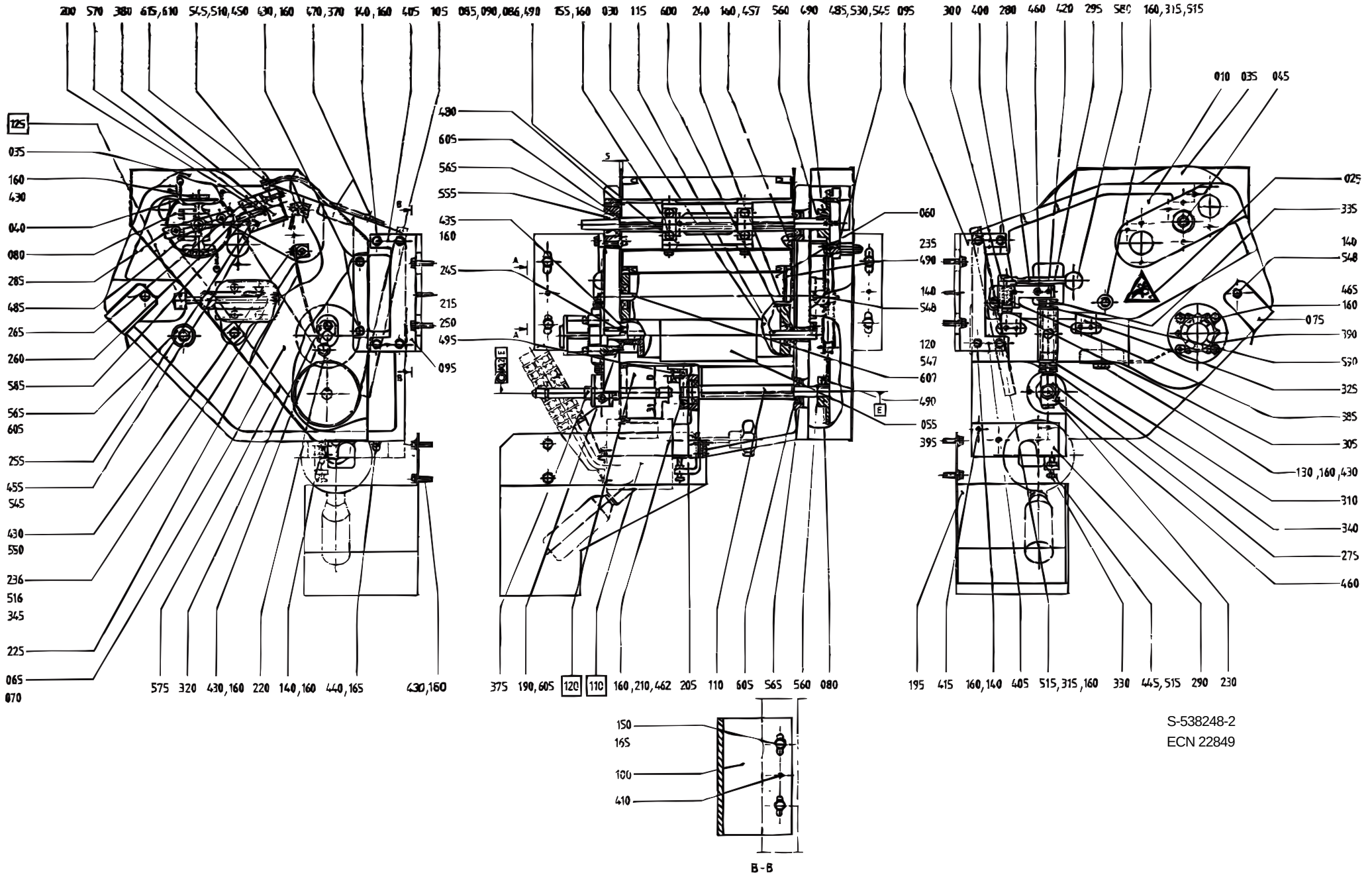
200 570 380 615,610 545,510,450 630,160 670,370 140,160 405 105 085,090,086,490 155,160 030 115 600 240 160,457 560 690 485,530,545 095 300 400 280 460 420 295 580 160,315,515
010 035 045
125 035 160 430 040 080 285 485 265 260 585 565 605 255 455 545 430 550 236 516 345 225 065 070
480 605 565 555 435 160 245 215 250 495 095
060 235 490 140 548 120 547 607 490 055 395
025 335 140 548 465 160 075 390 530 325 385 305 130,160,430 310 340 275 460
575 320 430,160 220 140,160 440,165 430,160
375 190,605 120 110 160,210,462 205 110 605 565 560 080
195 415 160,140 405 515,315,160 330 445,515 290 230
150 165 100 410
B-B
S-538248-2
ECN 22849

Pos	Part No	SP	UN	Qty	Description	Page No
480	312155-0329	-		4	SCREW MF6S DIN 7991 M5x16 A280	
485	312155-0333	-		3	SCREW MF6S DIN 7991 M5X25 A280	
490	312318-0323	-		8	SET SCREW CUP POINT ISO 4029 M5X8 RFR	
495	312318-0362	-		1	SET SCREW CUP POINT ISO 4029 M6x8 RFR	
510	312605-0314	-		2	NUT,HEXAGON,M6M5 Stainless	
515	312605-0316	-		3	NUT,HEXAGON A280 M6M6	
516	312705-0316	-		1	NUTS,DOMED CAP,HEXAGON,M6	
530	312812-0314	-		2	NUT,HEXAGON,LOCK,WITH NYLON,M5	
545	315105-0146	-		6	WASHER,PLAIN ROUND 5,3x10 Stainless	
547	315105-0173	-		2	WASHER,PLAIN ROUND 10,5x22 STAINLESS	
548	315115-0153	-		2	WASHER TBRB 6,4x12 Stainless	
550	315121-0153	-		1	WASHER TBRSB 6,4x22 FZB	
555	315220-0121	J		1	SEAL RING V-14S	
560	315701-0201	-		2	KEYS,PARALLEL WITH ROUND ENDS 5X5X20	
565	315752-0123	-		5	CIRCLIP SGH32	
570	315755-0801	-		1	RETAINING RINGS,RADIAL ASSEMBLY 8	
575	318207-0168	D		1	ROLLER CHAIN SINGLE 6MM-168	
580	318800-0103	-		1	HANDLES,SPHERICAL KNOB,INT.THRE.,D.25-M6	
585	321111-0135	M		1	FLANGE BUS 10E7X10	
590	321111-0212	M		1	FLANGE BUS 15E7X15	
600	321308-0101	M		2	BEARINGS,BALL BEARING	
605	321308-0202	M		6	BALL BEARING 15x32x9	
607	321316-0200	M		2	BEARINGS,BALL BEARING SKF6300-2RS	
610	342980-0113	-		1	BANJO-CONNECTION,RING 6/4-G1/8"	
615	342980-0303	-		1	BANJO-HOLLOW BOLT COUPL,EXT.THR.01-G1/8"	

Pos	Part No	SP	UN	Qty	Description	Page No

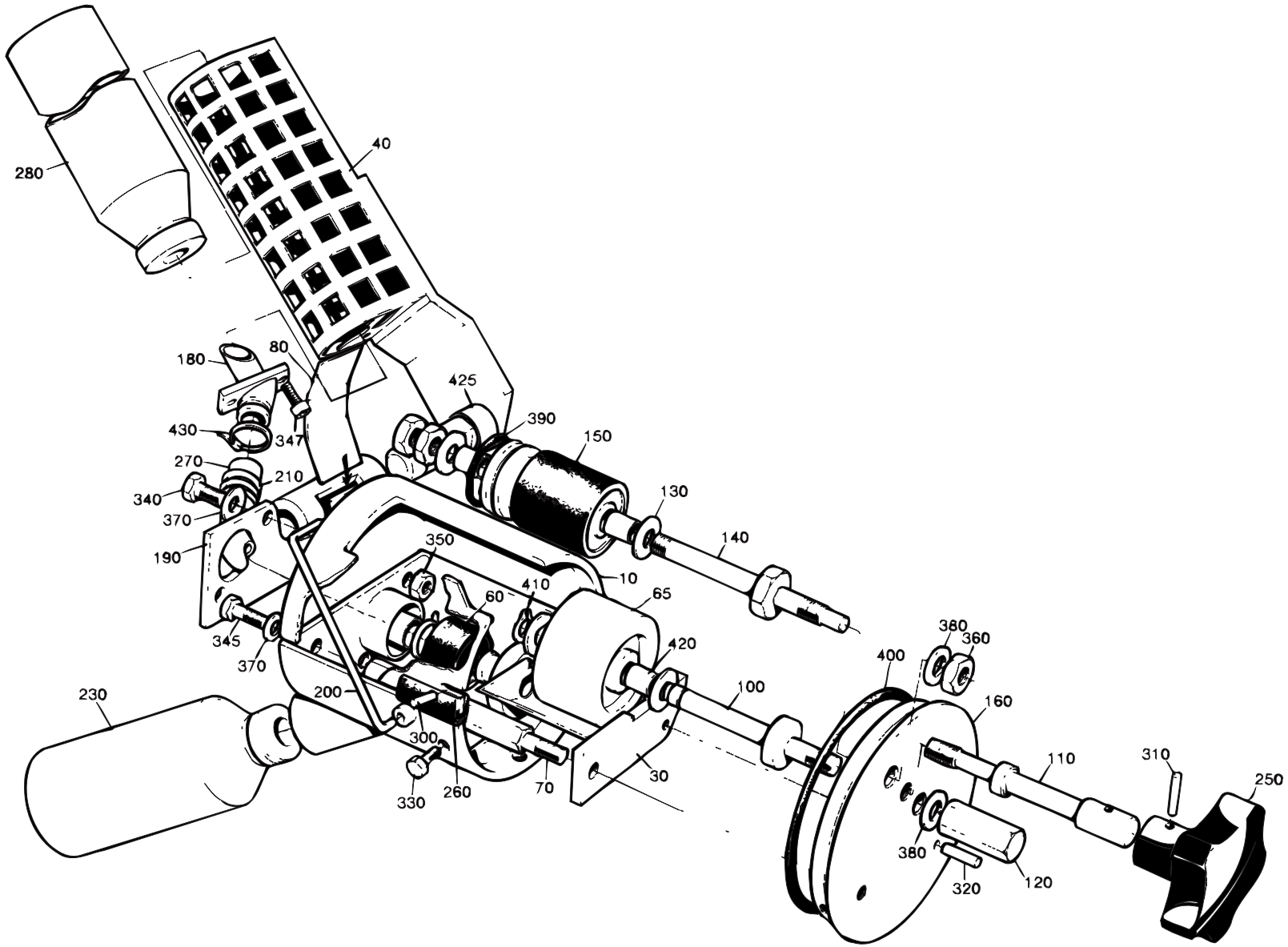

S-458192-3
ECN 10575

Pos	Part No	SP	UN	Qty	Description	Page No
Common parts						
010	458364-0000	-		1	COVER	
030	297210-0000	D		1	INK WELL	
040	476356-0000	D		1	HOLDER FOR INK BOTTLE	
060	445542-0000	R		1	MANTEL RUBBER	
065	450355-0000	R		1	INK ROLLER	
070	33010-0000	D		1	SCREW	
080	35547-0000	D		1	SPRING	
100	292044-0000	R		1	SHAFT	
110	293667-0000	R		1	DOWEL	
120	436927-0000	D		1	NUT	
130	293669-0001	R		4	WASHER	
130	293669-0002	R		2	WASHER	
130	293669-0003	R		2	WASHER	
130	293669-0004	R		2	WASHER	
140	293670-0000	M		1	SHAFT	
150	B 543135-0000	J		1	INK TRANSFER ROLLER	
160	297213-0000	D		1	END SECTION	
180	476355-0000	D		1	CANNULAR TUBE	
190	456772-0000	D		1	PIVOT BRACKET	
200	434747-0000	R		1	BOW CLAMP	
210	537308-0000	D		1	SPRING	
250	90051-0077	-		1	HANDLE	
260	90143-0029	-	MM	295	STRIP	
270	90166-0138	-	MM	100	HOSE	
280	90299-0072	F		48	INK	
300	311103-0236	-		2	PINS,STRAIGHT 3X16	
310	311103-0238	-		1	PINS,STRAIGHT 3X20	
320	311103-0270	-		1	PINS,STRAIGHT 4X16	
330	312105-0291	-		3	SCREW M6S ISO 4017 M4X12 A280	
340	312105-0327	-		2	SCREW M6S ISO 4017 M5X12 A280	
345	312105-0329	-		1	SCREW M6S ISO 4017 M5x16 A280	
347	312115-0287	-		2	SCREW MC6S ISO 4762 M4X8 A280	
350	312605-0314	-		2	NUT,HEXAGON,M6M5 Stainless	
360	312605-0318	-		3	NUT,HEXAGON,M8 RFR	
370	315105-0146	-		3	WASHER,PLAIN ROUND 5,3x10 Stainless	
380	315105-0165	-		2	WASHER,PLAIN ROUND 8,4x16 Stainless	
390	315202-0218	J		1	O-RINGS 26,2X3	
400	315202-0309	J		1	O-RINGS 89,5X3	
410	315750-0105	-		1	CIRCLIP SGA8	
420	321120-0100	K		2	BEARING BUSHING WITHOUT FLANGE,8/10x12	
425	321120-0109	K		2	BEARING BUSHING WITHOUT FLANGE,12/14X10	
430	352113-0101	-		1	RIBBON CLAMP BLACK	

Pos	Part No	SP	UN	Qty	Description	Page No
TBA/8						
230	90050-0008	-		1	BOTTLE	

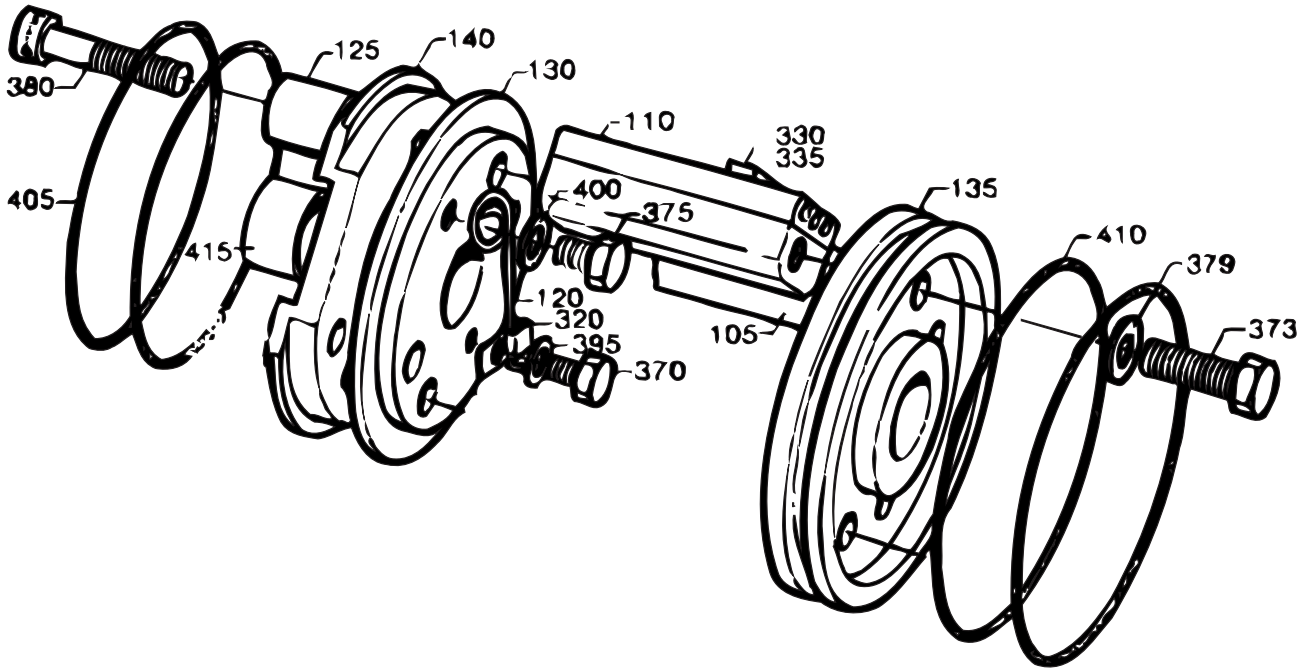

S-293685-2
ECN 6941

Pos	Part No	SP	UN	Qty	Description	Page No
Common parts						
120	32691-0000	J		1	LOCKING SPRING	
125	33011-0000	K		1	SLEEVE	
320	90165-0010	-		1	CLIP	
330	90413-0033	K		1	CODE INSERT SET 0-9	
330	90413-0043	K		1	CODE INSERT SET	
335	90413-0044	K		1	CODE INSERT SET	
335	90413-0047	K		1	CODE INSERT SET	
370	312101-0287	-		1	SCREW M6S4X8FZB	
375	312101-0364	-		1	SCREW M6S 6x10-8,8 FZB	
380	312111-0335	-		1	SCREW MC6S5X30FZB	
395	315101-0136	-		1	WASHER BRB4,3X8FZB	
400	315111-0153	-		1	WASHER TBRB6,4X12FZB	
415	321120-0122	K		2	BEARING BUSHING WITHOUT FLANGE,15/17X15	
0375S						
105	293395-0002	M		1	TYPE HOLDER	
110	293395-0001	M		1	TYPE HOLDER	
130	479236-0000	R		2	END SECTION	
140	479239-0000	R		1	CARRIER	
145	479240-0000	R		1	CARRIER	
150	293671-0000	R		1	SPACER	
250	312101-0329	-		2	SCREW M6S5X16FZB	
373	312101-0331	-		3	SCREW M6S5X20FZB	
397	315101-0146	-		5	WASHER BRB 5,3x10 FZB	
403	315202-0224	I		4	O-RINGS 42,2X3	

Pos	Part No	SP	UN	Qty	Description	Page No

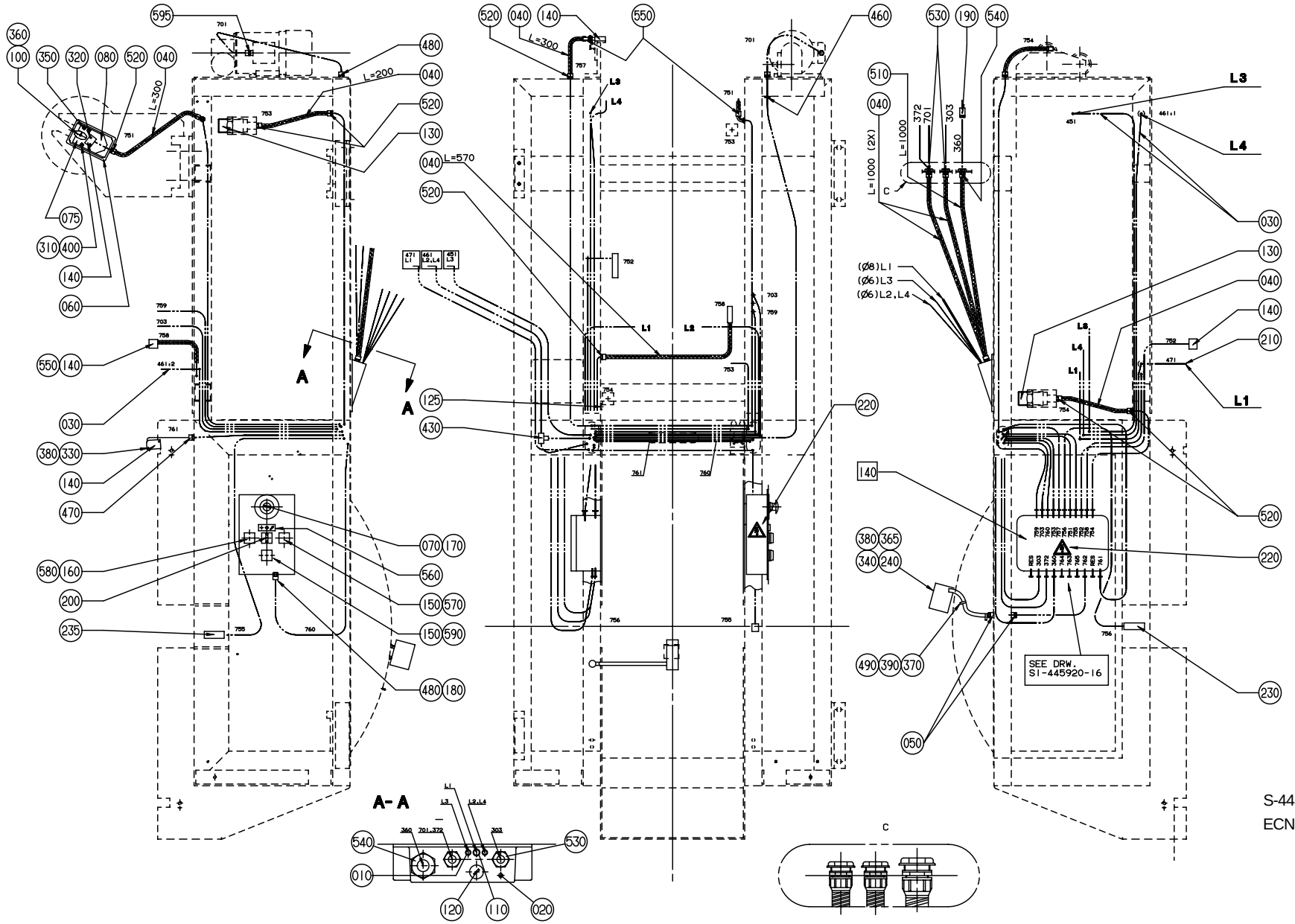

S-445920-14
ECN 70071

Pos	Part No	SP	UN	Qty	Description	Page No
TBA/8						
010	445844-0000	-		2	SLEEVE	
020	458362-0000	-		1	PLUG	
050	352101-0103	-		4	LEAD IN PR 18,6	
Common parts						
140	A 532151-0300	-		1	CONNECTION BOX	**685**
030	90166-0081	-	MM	7800	HOSE 6/4	
040	352135-0106	-	MM	4100	Spiral Conduit Di=16 mm	
060	B 466337-0000	-		1	CONNECTION BOX	
070	486826-0001	-		1	SIGN "EMERGENCY STOP"	
075	B 529456-0000	-		1	PLATE	
080	B 529455-0000	-		1	PLATE	
100	440256-0000	-		1	ARM	
110	445846-0000	-		1	SLEEVE	
120	90002-0004	-		1	BLANK-OFF PLUG 22,5	
125	90002-0009	-		1	BLANK-OFF PLUG 18.6	
130	90044-0122	M		2	PROX.SWITCH 922 AA4XM-A9P-050-LZ-876	
140	90044-0104	M		5	PROX.SWITCH IFM IN 3002	
150	90064-0084	D		2	PUSH BUTTON YELLOW	
160	90064-0085	D		1	PUSH BUTTON RED	
170	90064-0124	D		1	SWITCH,EMERGENCY STOP	
180	90099-0003	-		1	NUT	
190	90110-0128	-		1	PLUG 24-POL Harting	
200	90111-0150	D		1	SWITCH GEAR	
205	90152-0033	-	DM	30	Spiral Conduit for PR 15,2(PG 9)	
210	90166-0013	-	DM	25	HOSE 8/6	
220	90194-0016	-		2	SIGN "FLASH SIGN" 50X50MM	
230	90232-0103	M		1	PH.CELL OMRON E3SCT61-L-5M	
235	90232-0104	M		1	RECEIVER OMRON E3S-CT61-D-5M	
240	90232-0106	M		1	PH.CELL OMRON E3S-CR11-5M	
310	312111-0323	-		2	SCREW MC6S5X8FZB	
320	312121-0228	-		2	SLOTTED HEMCS3X16FZB	
330	312125-0228	-		2	SLOTTED CHEESE HEAD ISO 1207 M3x16 A4	
340	312125-0234	-		2	SLOTTED CHEESE HEAD ISO 1207 M3X30 RFR	
345	312125-0323	-		2	SLOTTED CHEESE HEAD ISO 1207 M5X8 RFR	
350	312155-0329	-		3	SCREW MF6S DIN 7991 M5x16 A280	
360	312316-0360	-		1	STOP SCREW SK6SS6X6FZB	
365	312605-0310	-		2	NUT,HEXAGON,M6M3 RFR	
370	312605-0312	-		3	NUT,HEXAGON,M4 RFR	
380	315105-0124	-		6	WASHER,PLAIN ROUND 3,2x6	
390	315101-0136	-		2	WASHER BRB4,3X8FZB	
400	315105-0146	-		2	WASHER,PLAIN ROUND 5,3x10 Stainless	
430	342946-0112	-		1	T-COUPLING,UNION 6/4	
460	352101-0105	-		1	LEAD-IN PR 22,5;PG16	
470	352103-0100	-		1	CABLE GLAND STR 9;PR15,2	
480	352103-0111	-		2	CABLE GLAND ST 16	
490	352110-0099	-		3	CRAMP TK 3-5	
500	352113-0204	-		2	ANCHOR TM3S25-M	
510	352135-0109	-	DM	10	HOSE .022	
515	352136-0113	-		5	GLAND FITTING PR18,6/PG11 Di=12mm	
520	352136-0127	-		7	GLAND FITTING PR 18,6	
530	352136-0129	-		4	GLAND FITTING PR22,5/PG16 Di=16mm	
540	352136-0143	-		2	GLAND FITTING	
545	352137-0113	-		1	COND.FITTING Pr 18,6 Di=12mm	
550	352137-0127	-		3	COND.FITTING Pr 18,6 Di=16mm	
560	359241-0269	-		1	SIGN"Small Reel,Large Reel,Waste Reduce"	
570	359301-0100	-		1	SIGN "SPLICING"	
580	359301-0110	-		1	SIGN "SHORT STOP"	
590	359301-0335	-		1	SIGN T	
595	90012-0137	-		1	CABLE GLAND SCREENED PG11 SHVE-120111	

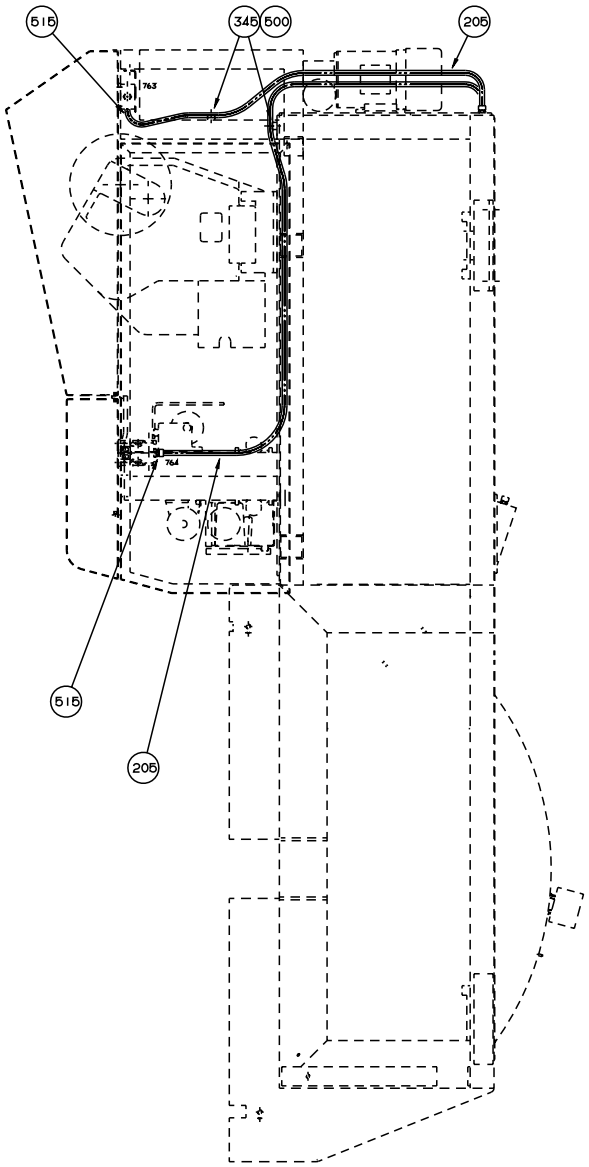

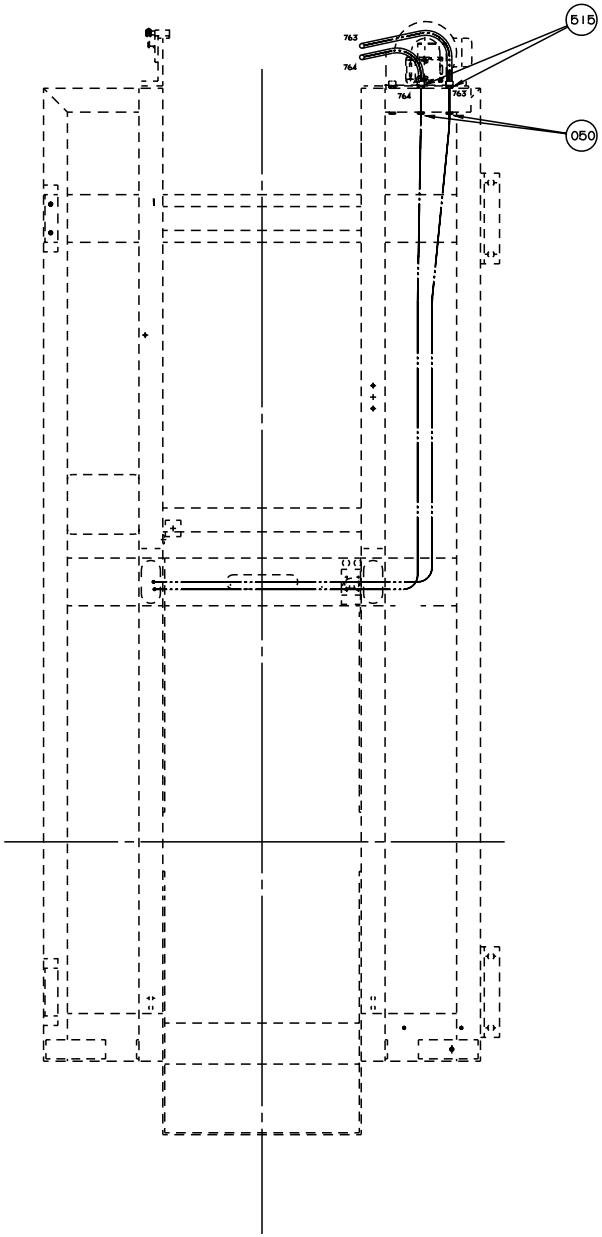

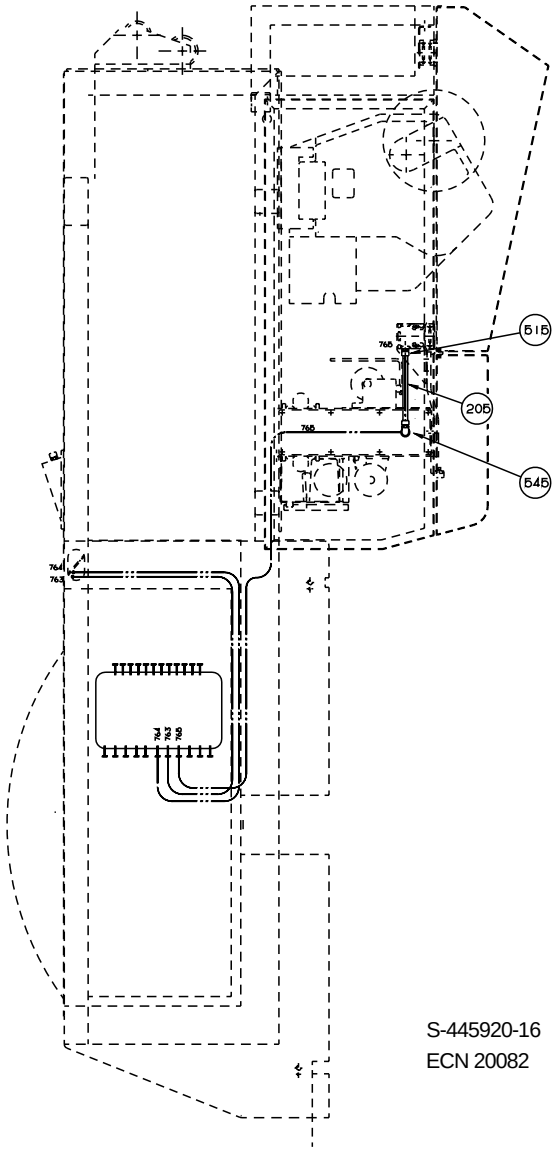

S-445920-16
ECN 20082

Pos	Part No	SP	UN	Qty	Description	Page No
TBA/8						
010	445844-0000	-		2	SLEEVE	
020	458362-0000	-		1	PLUG	
050	352101-0103	-		4	LEAD IN PR 18,6	
Common parts						
140	A 532151-0300	-		1	CONNECTION BOX	**685**
030	90166-0081	-	MM	7800	HOSE 6/4	
040	352135-0106	-	MM	4100	Spiral Conduit Di=16 mm	
060	B 466337-0000	-		1	CONNECTION BOX	
070	486826-0001	-		1	SIGN "EMERGENCY STOP"	
075	B 529456-0000	-		1	PLATE	
080	B 529455-0000	-		1	PLATE	
100	440256-0000	-		1	ARM	
110	445846-0000	-		1	SLEEVE	
120	90002-0004	-		1	BLANK-OFF PLUG 22,5	
125	90002-0009	-		1	BLANK-OFF PLUG 18.6	
130	90044-0122	M		2	PROX.SWITCH 922 AA4XM-A9P-050-LZ-876	
140	90044-0104	M		5	PROX.SWITCH IFM IN 3002	
150	90064-0084	D		2	PUSH BUTTON YELLOW	
160	90064-0085	D		1	PUSH BUTTON RED	
170	90064-0124	D		1	SWITCH,EMERGENCY STOP	
180	90099-0003	-		1	NUT	
190	90110-0128	-		1	PLUG 24-POL Harting	
200	90111-0150	D		1	SWITCH GEAR	
205	90152-0033	-	DM	30	Spiral Conduit for PR 15,2(PG 9)	
210	90166-0013	-	DM	25	HOSE 8/6	
220	90194-0016	-		2	SIGN "FLASH SIGN" 50X50MM	
230	90232-0103	M		1	PH.CELL OMRON E3SCT61-L-5M	
235	90232-0104	M		1	RECEIVER OMRON E3S-CT61-D-5M	
240	90232-0106	M		1	PH.CELL OMRON E3S-CR11-5M	
310	312111-0323	-		2	SCREW MC6S5X8FZB	
320	312121-0228	-		2	SLOTTED HEMCS3X16FZB	
330	312125-0228	-		2	SLOTTED CHEESE HEAD ISO 1207 M3x16 A4	
340	312125-0234	-		2	SLOTTED CHEESE HEAD ISO 1207 M3X30 RFR	
345	312125-0323	-		2	SLOTTED CHEESE HEAD ISO 1207 M5X8 RFR	
350	312155-0329	-		3	SCREW MF6S DIN 7991 M5x16 A280	
360	312316-0360	-		1	STOP SCREW SK6SS6X6FZB	
365	312605-0310	-		2	NUT,HEXAGON,M6M3 RFR	
370	312605-0312	-		3	NUT,HEXAGON,M4 RFR	
380	315105-0124	-		6	WASHER,PLAIN ROUND 3,2x6	
390	315101-0136	-		2	WASHER BRB4,3X8FZB	
400	315105-0146	-		2	WASHER,PLAIN ROUND 5,3x10 Stainless	
430	342946-0112	-		1	T-COUPLING,UNION 6/4	
460	352101-0105	-		1	LEAD-IN PR 22,5;PG16	
470	352103-0100	-		1	CABLE GLAND STR 9;PR15,2	
480	352103-0111	-		2	CABLE GLAND ST 16	
490	352110-0099	-		3	CRAMP TK 3-5	
500	352113-0204	-		2	ANCHOR TM3S25-M	
510	352135-0109	-	DM	10	HOSE .022	
515	352136-0113	-		5	GLAND FITTING PR18,6/PG11 Di=12mm	
520	352136-0127	-		7	GLAND FITTING PR 18,6	
530	352136-0129	-		4	GLAND FITTING PR22,5/PG16 Di=16mm	
540	352136-0143	-		2	GLAND FITTING	
545	352137-0113	-		1	COND.FITTING Pr 18,6 Di=12mm	
550	352137-0127	-		3	COND.FITTING Pr 18,6 Di=16mm	
560	359241-0269	-		1	SIGN"Small Reel,Large Reel,Waste Reduce"	
570	359301-0100	-		1	SIGN "SPLICING"	
580	359301-0110	-		1	SIGN "SHORT STOP"	
590	359301-0335	-		1	SIGN T	
595	90012-0137	-		1	CABLE GLAND SCREENED PG11 SHVE-120111	

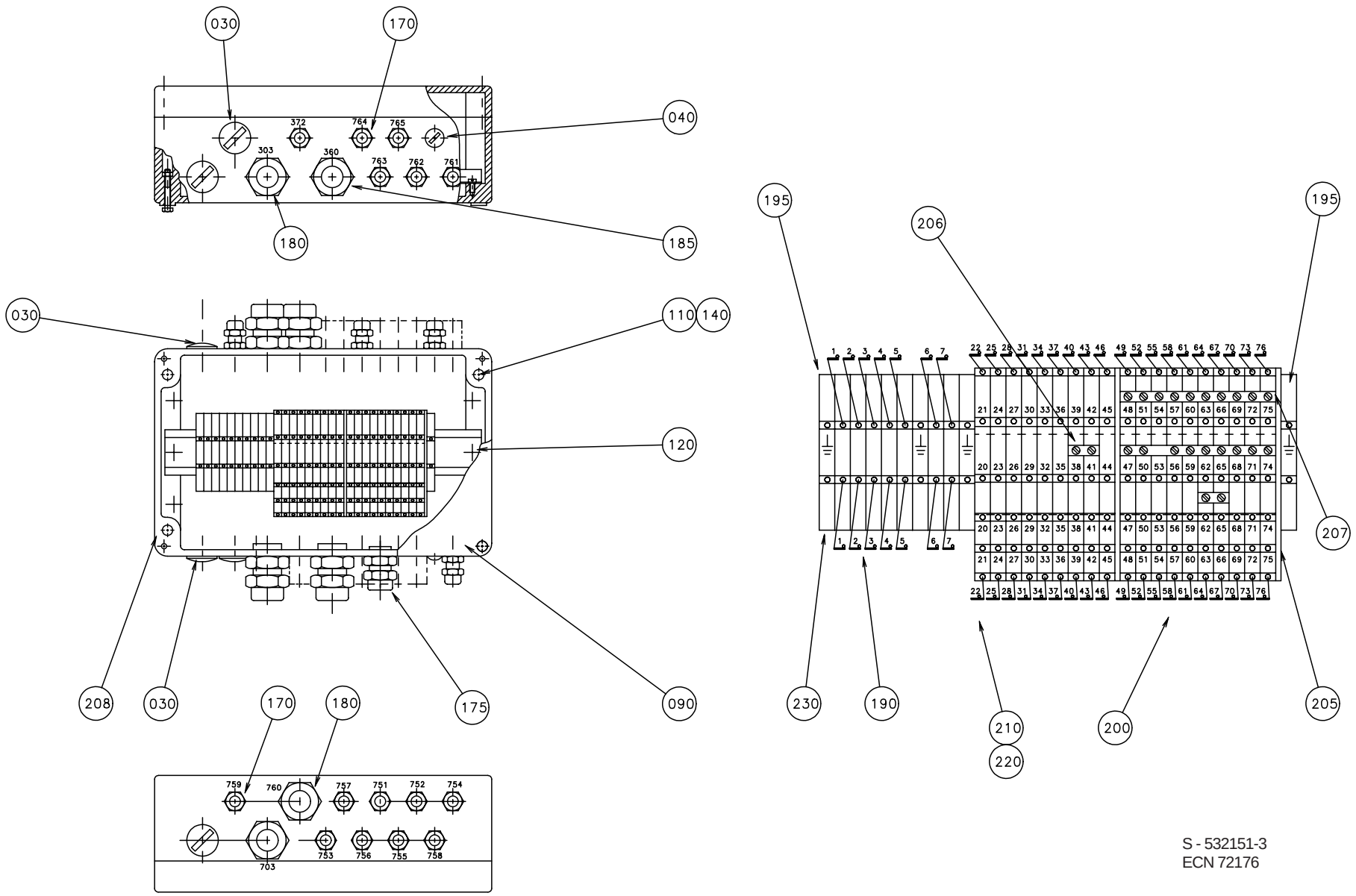

S - 532151-3
ECN 72176

Pos	Part No	SP	UN	Qty	Description	Page No
Common parts						
030	90002-0012	-		3	BLANK-OFF PLUG 28,3	
040	90002-0013	-		1	BLANK-OFF PLUG 15,2	
090	90265-0081	-		1	CONNECTION BOX ROSE 01162609	
110	312111-0372	-		4	SCREW MC6S6X25FZB	
120	312121-0364	-		2	SLOTTED HEMCS6X10FZB	
140	312601-0316	-		4	NUT M6M 6-8 FZB	
170	352103-0101	-		14	CABLE GLAND ST 9	
175	352103-0106	-		1	CABLE GLAND ST 11	
180	352103-0115	-		3	CABLE GLAND STR 21	
185	352103-0116	-		1	CABLE GLAND ST 21	
190	353021-0213	-		7	FEED THROUGH TERMINAL WDU 4 BEGIE	
195	353024-0205	-		4	EARTH TERMINAL WPE 4	
200	353021-0302	-		19	TERMINALS,TRIPLE-LEVEL, DLD 2,5/35 PA	
205	353032-0302	-		2	END PLATE WAP	
206	353034-0401	-		2	BRIDGE CONLECK Q2	
207	353034-0404	-		2	BRIDGE CONLECK Q10	
208	353042-0005	-	MM	240	RAIL TS 35/7.5	
210	359011-0807	-		2	MARKING PLATES 5-FW 1-50	
220	359011-0808	-		2	MARKING PLATES 5-FW 51-100	
230	359011-0819	-		1	MARKING PLATES 5-GW (Earth)	

Pos	Part No	SP	UN	Qty	Description	Page No

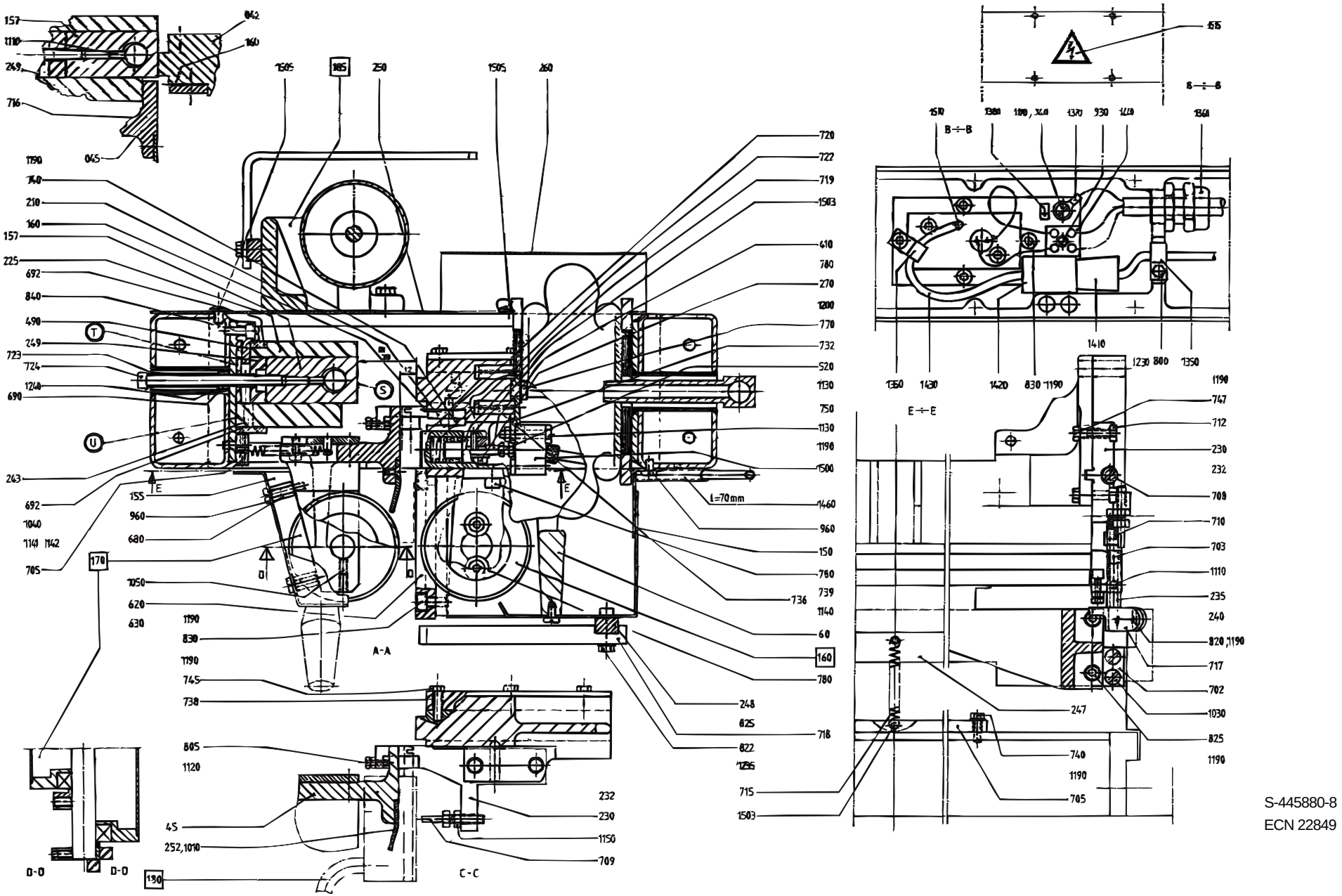
A-A
B÷B
C-C
D-D
E÷E
L=70mm
S-445880-8
ECN 22849

Pos	Part No	SP	UN	Qty	Description	Page No
Common parts						
F170	A 440184-0100	-		1	BENDING ROLLER	**693**
F180	A 449630-0300	D		1	PAPER HOLDER	**695**, **697**
F185	A 522410-0200	-		1	BENDING ROLLER	**699**
045	457627-0000	R		1	DOLLY	
060	445911-0000	-		1	CANTILEVER	
080	445885-0000	-		1	BEAM	
090	445886-0000	-		1	BEAM	
150	449751-0000	-		1	PROTECTION	
155	450853-0000	-		1	PROTECTION	
157	548794-0000	R		1	HEATING JAW	
160	294009-0000	K		2	KNIFE	
210	539052-0000	D		1	KNIFE HOLDER	
225	449770-0000	-		1	INSULATION	
235	466618-0000	D		1	CATCH	
240	466619-0000	D		1	CATCH	
243	457658-0000	D		1	INSULATION	
247	458912-0000	-		1	BRACKET	
248	479223-0000	-		1	RAIL	
249	484844-0000	D		1	INSULATION	
250	531886-0000	-		1	PROTECTION PLATE	
260	531887-0000	-		1	PROTECTION PLATE	
265	573828-0000	-		1	COVERING PLATE	
270	32079-0000	M		1	WASHER	
330	445894-0000	R		1	SEAL	
340	556316-0000	D		1	INSULATION	
350	556317-0000	D		1	INSULATION	
370	445898-0000	-		2	NUT	
390	556318-0000	D		1	INSULATION	
400	445901-0000	-		1	FRAME	
410	445902-0000	-		1	ARM	
420	445903-0000	R		2	ECCENTRIC SHAFT	
430	445904-0000	R		2	SHAFT	
450	445907-0000	-		2	SCREW	
460	458062-0000	R		2	TENSION SPRING	
470	445909-0000	-		1	NIPPLE	
490	445915-0000	-		1	STEERING	
520	445918-0000	-		1	SCREW	
620	449623-0000	-		1	STEERING	
630	449624-0000	-		1	STEERING	
640	927428-0000	-		1	COVERING PLATE	
650	449626-0000	D		2	SEAL	
660	449629-0000	-		1	BRACKET	
680	449753-0000	-		4	SCREW	
690	449761-0000	-		1	WASHER	
692	450017-0000	-		2	PLATE	
698	451412-0000	-		2	WASHER	
699	451413-0000	-		2	WASHER	
702	458915-0000	D		2	HEAD RAIL	
703	458916-0000	D		2	SHAFT	
705	458917-0000	-		1	SUPPORT	
708	553763-0000	D		2	ADJUSTING SCREW	
709	464983-0000	D		2	SCREW	
710	458929-0000	D		2	TURN SPRING	
712	464547-0000	-		4	NUT	
713	464548-0000	-		1	BRACKET	
715	464854-0000	R		1	TENSION SPRING	
716	561426-0000	D		1	LACE	
717	466446-0000	-		2	HANDLE	
718	479224-0000	-		2	STEERING	
719	466620-0000	D		1	PISTON	
720	466621-0000	D		1	PISTON	
722	466623-0000	D		1	COMPRESSION SPRING	
723	476288-0000	D		1	PIPE	
724	B 476289-0000	D		1	SCREW	
728	479188-0000	D		1	INSULATION	
732	484529-0000	D		1	CYLINDER BRACKET	
734	484682-0000	R		2	COMPRESSION SPRING	
736	484783-0000	-		2	RAIL	
737	484877-0000	-		2	STEERING	
738	B 484878-0000	-		2	HOLDER	
739	311211-0292	-		6	TAPER PIN GKP6X6X30	
740	312101-0329	-		8	SCREW M6S5X16FZB	
745	312101-0331	-		6	SCREW M6S5X20FZB	
747	312101-0333	-		4	SCREW M6S5X25FZB	
750	312101-0335	-		2	SCREW M6S 5x30 FZB	
770	312101-0366	-		4	SCREW M6S 6x12-8,8 FZB	
780	312101-0368	-		9	SCREW M6S 6x16 Zink Plated	
790	312101-0493	-		2	SCREW M6S10X25FZB	
800	312105-0287	-		2	SCREW M6S ISO 4017 M4x8 A280	
802	312101-0289	-		2	SCREW M6S4X10FZB	
805	312101-0291	-		2	SCREW M6S4X12FZB	
820	312101-0323	-		4	SCREW M6S5X8FZB	
822	312105-0329	-		10	SCREW M6S ISO 4017 M5x16 A280	
825	312111-0325	-		6	SCREW MC6S5X10FZB	

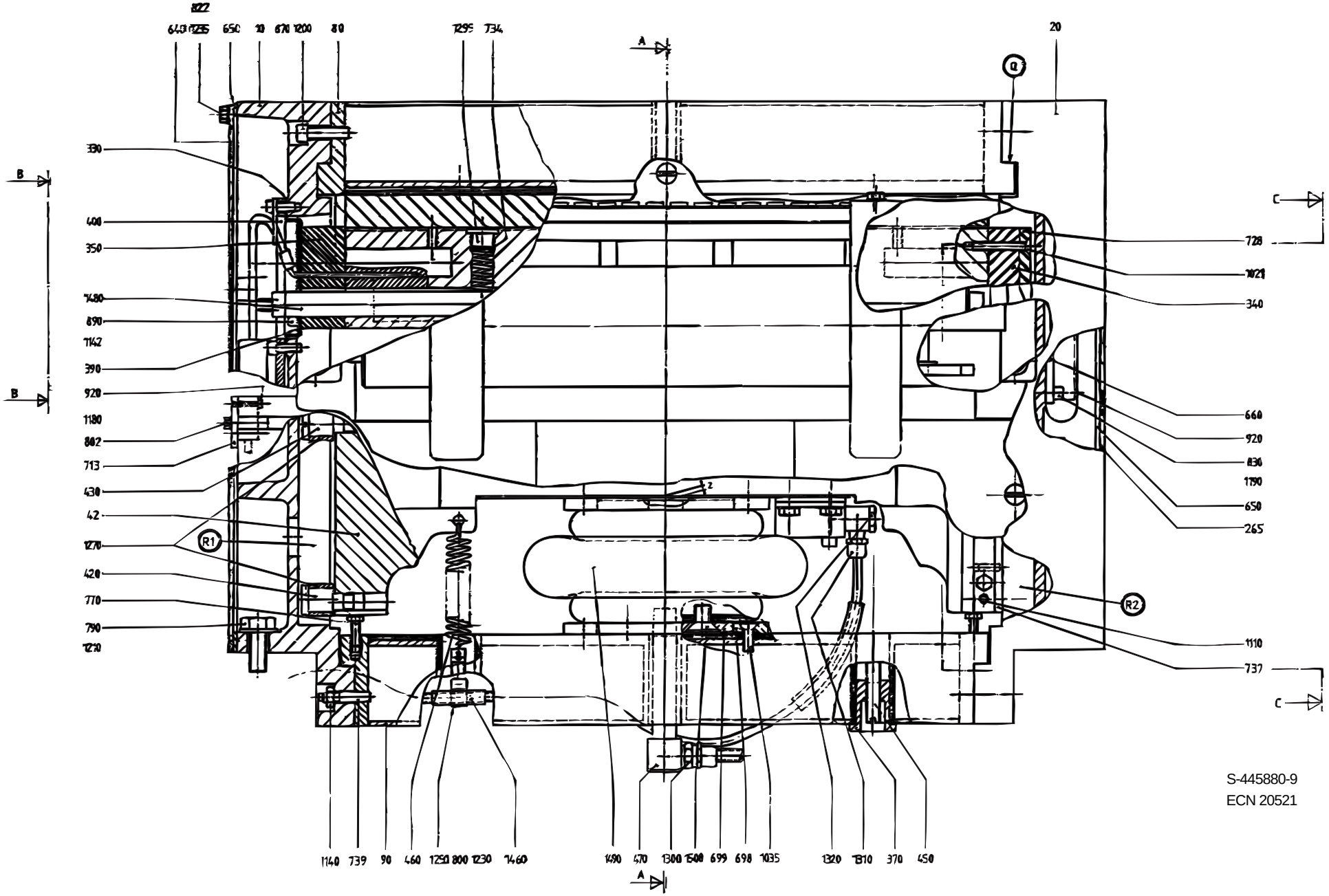
822
643
1235
650
10
670
1200
80
1295
734
20
A
Q
B
B
C
C
330
400
350
1480
890
1142
390
920
1180
802
713
430
42
1270
420
770
790
1210
R1
R2
728
1021
340
660
920
830
1190
650
265
1110
737
1140
739
90
460
1250
800
1230
1460
1490
470
1300
1500
699
698
1035
1320
1810
370
450
A
S-445880-9
ECN 20521

Pos	Part No	SP	UN	Qty	Description	Page No
830	312111-0327	-		10	SCREW MC6S5X12FZB	
840	312111-0329	-		2	SCREW MC6S5X16FZB	
870	312111-0372	-		8	SCREW MC6S6X25FZB	
890	312115-0340	-		2	SCREW MC6S ISO 4762 M5X45 A280	
920	312121-0228	-		4	SLOTTED HEMCS3X16FZB	
930	312121-0230	-		1	SLOTTED HEMCS3X20FZB	
940	312121-0321	-		1	SLOTTED HEMCS5X6FZB	
960	312132-0323	-		8	SLOTTED PAN HEAD ISO 1580 M5X8 MSGFN	
1010	312145-0289	-		7	SLOTTED HEMFS4X10RFR	
1020	312145-0327	-		8	SLOTTED HEMFS5X12RFR	
1021	312145-0335	-		2	SLOTTED HEMFS5X30RFR	
1030	312145-0329	-		4	SLOTTED HEMFS5X16RFR	
1035	312151-0368	-		4	SCREW MF6S6X16FZB	
1040	312151-0384	-		6	SCREW MF6S6X70FZB	
1050	312306-0287	-		2	STOP SCREW P6SS4X8FZB	
1110	312318-0321	-		7	STOP SCREW SK6SS 5x6 A4	
1120	312601-0312	-		2	NUT M6M4FZB	
1130	312601-0314	-		3	NUT M6M5FZB	
1140	312601-0316	-		6	NUT M6M 6-8 FZB	
1141	312811-0316	-		6	LOCK NUT M6RFR	
1142	319030-0125	-		40	DISC SPRINGS,12,5X6,2X0,5	
1150	312605-0316	-		2	NUT,HEXAGON A280 M6M6	
1180	315101-0136	-		2	WASHER BRB4,3X8FZB	
1190	315101-0146	-		43	WASHER BRB 5,3x10 FZB	
1200	315101-0153	-		16	WASHER BRB 6,4x12 FZB	
1210	315101-0173	-		2	WASHER BRB10,5X22FZB	
1230	315105-0136	-		2	WASHER,PLAIN ROUND 4,3x8 Stainless	
1235	315105-0146	-		10	WASHER,PLAIN ROUND 5,3x10 Stainless	
1240	315105-0153	-		2	WASHER,PLAIN ROUND 6,4x12 Stainless	
1250	316810-0106	-		1	PIPE-CLIPS,FOR SINGLE PIPE,ONE SIDE 8	
1270	321116-0179	M		4	BUSHING 14E7/18X14	
1295	342713-0210	-		2	PLUG,EXT.THREAD,HEXAGON SOCKET 1/4"Brass	
1300	342722-0205	-		1	STRAIGHT COUPLING D=8-R1/4"	
1310	342980-0113	-		1	BANJO-CONNECTION,RING 6/4-G1/8"	
1320	342980-0303	-		1	BANJO-HOLLOW BOLT COUPL,EXT.THR.01-G1/8"	
1350	352110-0099	-		2	CRAMP TK 3-5	
1360	352103-0108	-		1	CABLE GLAND ST 13	
1370	353101-0132	-		1	CABLE SHOE	
1380	359020-0012	-		1	SIGN "EARTHSYMBOL" 4X6MM	
1410	90326-0020	-		1	PLUG,FEMALE YELLOW CR-AL	
1420	90326-0022	-		1	PLUG,MALE YELLOW CR-AL	
1430	90326-0060	M		1	THERMOCOUPLE CR-AL	
1440	90195-0020	-		1	TERMINAL BK2 KRG 2-POLE	
1460	90166-0122	-	MM	100	HOSE 6/8 PA 11/12 Transparent	
1480	90206-0097	R		1	HEATING CARTRIDGE	
1490	90239-0231	D		1	BELLOWS	
1500	90239-0259	R		1	CYLINDER	
1503	90258-0031	-		2	PINS,Slotted Tubular, 3x 20, DIN1481	
1505	90287-0075	-		3	SCREW, PAN HEAD,LKCS ISO1580, M6x12	
1508	312155-0449	-		4	SCREW MF6S DIN 7991 M8X16 A280	
1510	90296-0051	-	KG	x	PASTE	
1515	90194-0016	-		1	SIGN "FLASH SIGN" 50X50MM	
0375S						
010	445881-0000	-		1	BRACKET LEFT	
020	445882-0000	-		1	BRACKET RIGHT	
042	B 553770-0002	D		1	PRESSURE JAW	
230	458908-0000	-		1	BRACKET	
232	458909-0000	-		1	BRACKET	
252	484895-0003	D		1	SHEET	
0355B or 0400B or 0500S						
010	445881-0000	-		1	BRACKET LEFT	
020	445882-0000	-		1	BRACKET RIGHT	
042	B 553770-0002	D		1	PRESSURE JAW	
230	458908-0000	-		1	BRACKET	
232	458909-0000	-		1	BRACKET	
252	484895-0002	D		1	SHEET	
0500B or 0750B or 1000B or 1055B						
010	445881-0000	-		1	BRACKET LEFT	
020	445882-0000	-		1	BRACKET RIGHT	
042	B 553770-0001	D		1	PRESSURE JAW	
230	458908-0000	-		1	BRACKET	
232	458909-0000	-		1	BRACKET	
252	484895-0001	D		1	SHEET	
0500SQ or 1000SQ						
010	445881-0000	-		1	BRACKET LEFT	
020	445882-0000	-		1	BRACKET RIGHT	
042	B 553770-0001	D		1	PRESSURE JAW	
230	458908-0000	-		1	BRACKET	
232	458909-0000	-		1	BRACKET	
252	484895-0007	D		1	SHEET	
0750S						
010	445881-0000	-		1	BRACKET LEFT	
020	445882-0000	-		1	BRACKET RIGHT	
042	B 553770-0001	D		1	PRESSURE JAW	
230	458908-0000	-		1	BRACKET	

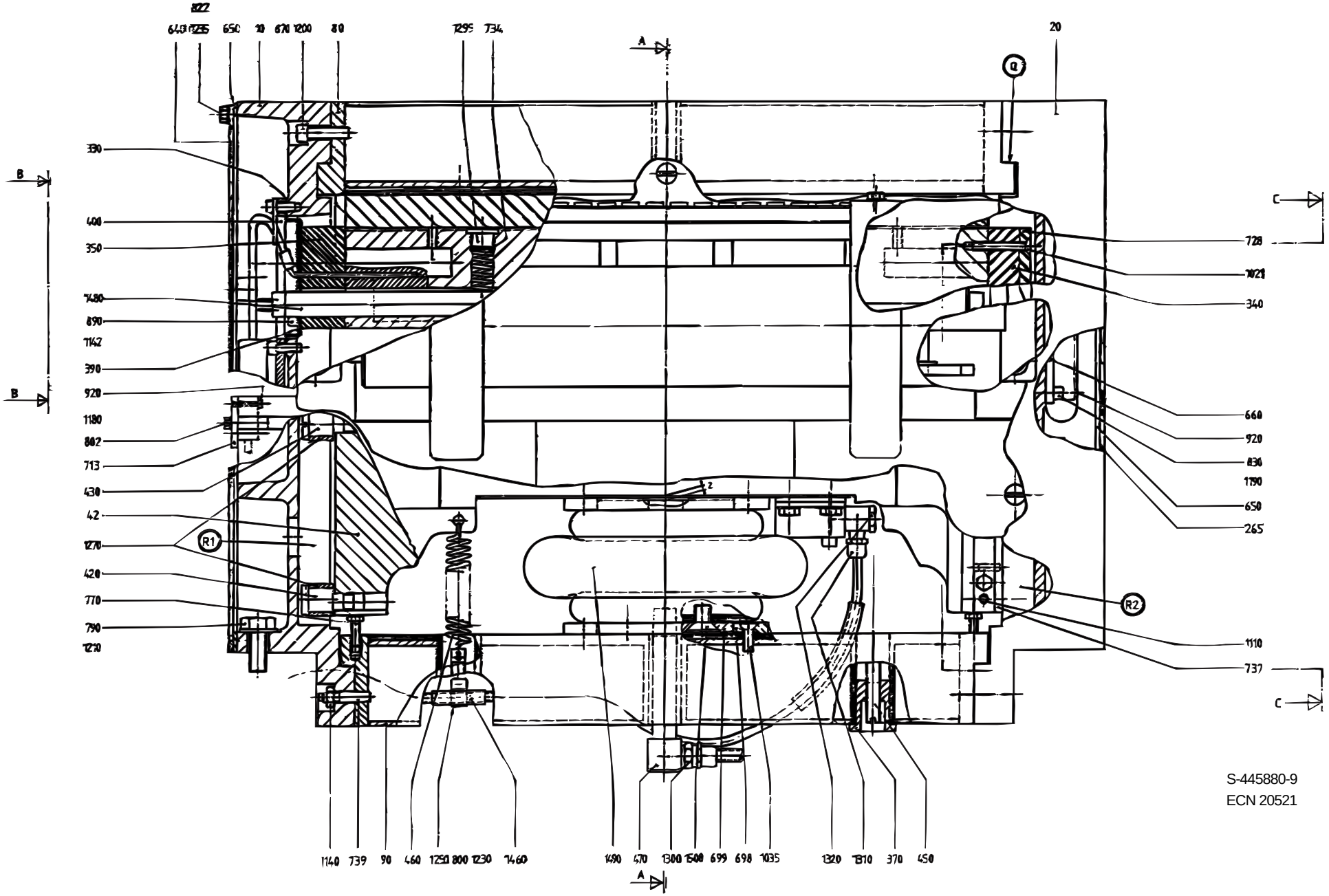

S-445880-9
ECN 20521

Pos	Part No	SP	UN	Qty	Description	Page No
232	458909-0000	-		1	BRACKET	
252	484895-0005	D		1	SHEET	
1000S						
010	445881-0000	-		1	BRACKET LEFT	
020	445882-0000	-		1	BRACKET RIGHT	
042	B 553770-0001	D		1	PRESSURE JAW	
230	458908-0000	-		1	BRACKET	
232	458909-0000	-		1	BRACKET	
252	484895-0006	D		1	SHEET	

Pos	Part No	SP	UN	Qty	Description	Page No

BENDING ROLLER

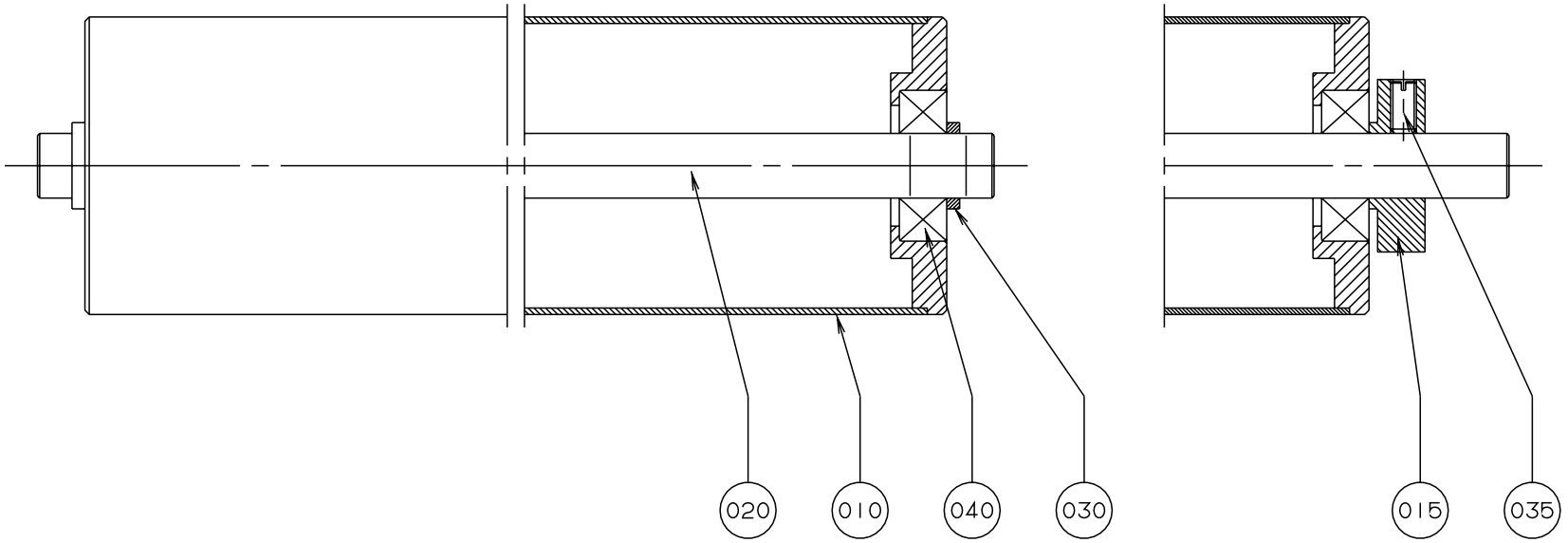

S-440184-1
ECN 19242

Pos	Part No	SP	UN	Qty	Description	Page No
Common parts						
020	440137-0002	D		1	SHAFT	
040	321313-0102	M		2	BALL BEARING 15X35X11	
TBA 1000S						
010	440136-0007	D		1	ROLL	
015	569917-0000	D		2	LOCKING CIRCLIP	
035	312306-0366	-		2	STOP SCREW P6SS6X12FZB	
TBA 0500B or TBA 0750B or TBA 1000B or TBA 1055B						
010	440136-0002	D		1	ROLL	
030	440194-0000	-		2	WASHER	
TBA 0750S						
010	440136-0006	D		1	ROLL	
015	440138-0000	D		2	LOCKING CIRCLIP	
035	312306-0366	-		2	STOP SCREW P6SS6X12FZB	
TBA 0500SQ or TBA 1000SQ						
010	440136-0008	D		1	ROLL	
015	440138-0000	D		2	LOCKING CIRCLIP	
035	312306-0366	-		2	STOP SCREW P6SS6X12FZB	
TBA 0375S						
010	440136-0004	D		1	ROLL	
015	440138-0000	D		2	LOCKING CIRCLIP	
035	312306-0366	-		2	STOP SCREW P6SS6X12FZB	
TBA 0355B or TBA 0400B or TBA 0500S						
010	440136-0003	D		1	ROLL	
015	440138-0000	D		2	LOCKING CIRCLIP	
035	312306-0366	-		2	STOP SCREW P6SS6X12FZB	

Pos	Part No	SP	UN	Qty	Description	Page No

PAPER HOLDER

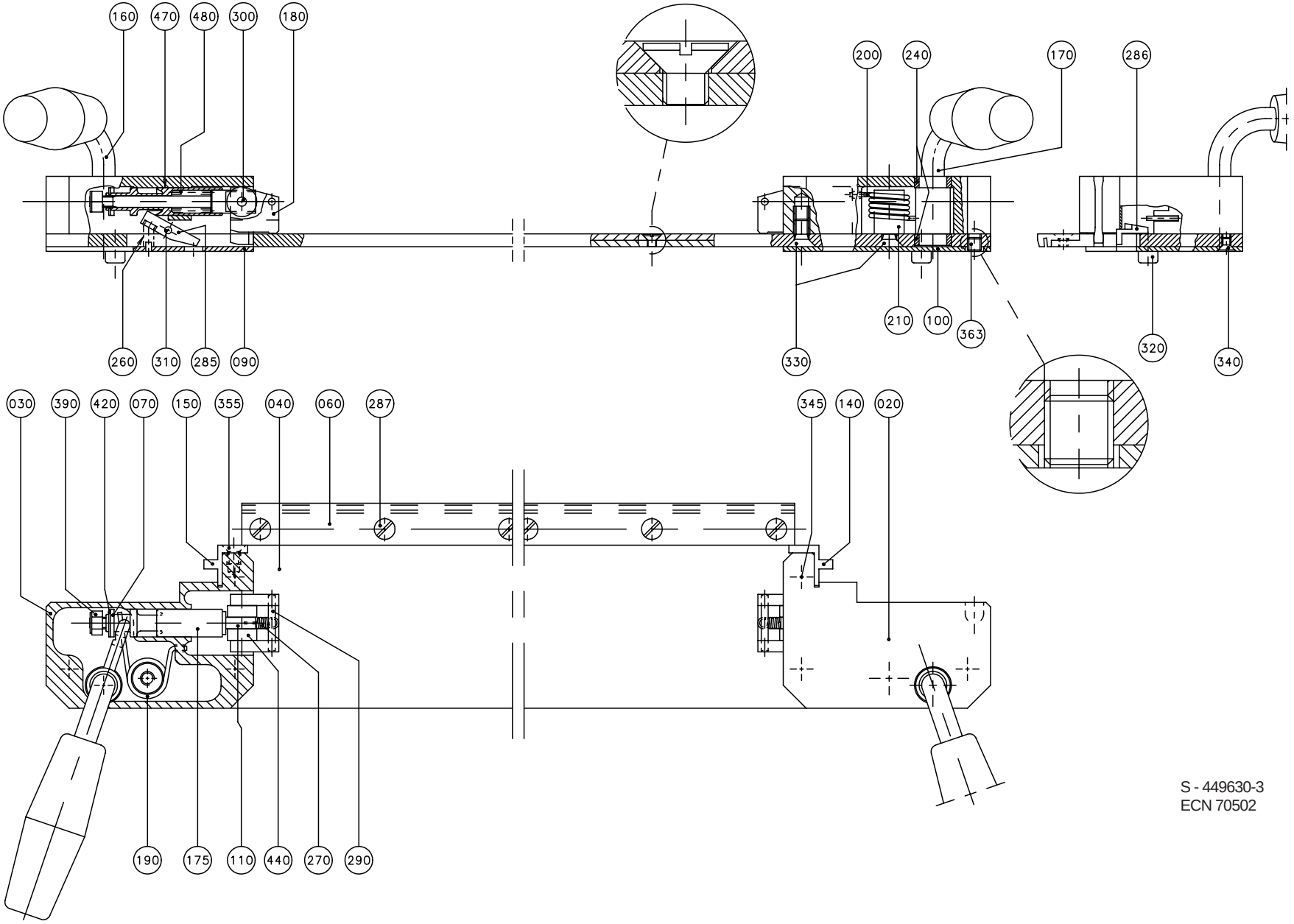

S - 449630-3
ECN 70502

Pos	Part No	SP	UN	Qty	Description	Page No
Common parts						
060	549835-0000	D		1	CUTTING RAIL	
070	556319-0000	D		2	WASHER	
160	556391-0000	D		1	HANDLE	
170	556392-0000	D		1	HANDLE	
175	556320-0000	D		2	SLEEVE	
180	556321-0000	D		2	CLAMPING PIECE	
190	449744-0000	R		1	TURN SPRING	
200	449745-0000	R		1	TURN SPRING	
210	449746-0000	D		2	STEERING	
240	449748-0000	M		4	BEARING	
260	458041-0000	M		2	COMPRESSION SPRING	
270	458042-0000	M		2	SPRING	
285	457370-0000	R		2	CATCH	
286	457586-0000	R		1	SLIDE	
287	90287-0206	-		7	SLOTTED SCREW	
290	90258-0030	-		2	PINS,Slotted Tubular, 3x 24, DIN1481	
300	311101-0274	-		2	CYLINDRICACP4H6X25	
310	311102-0236	-		2	CYLINDRICACP M6 3X16	
320	312115-0323	-		2	SCREW MC6S ISO 4762 M5X8 A280	
340	312145-0285	-		6	SLOTTED HEMFS4X6RFR	
363	312306-0360	-		1	STOP SCREW P6SS6X6FZB	
390	312812-0314	-		2	NUT,HEXAGON,LOCK,WITH NYLON,M5	
420	315755-0108	-		2	RETAINING RINGS,RADIAL ASSEMBLY 6	
440	321300-0094	M		4	BALL BEARING 4X13X5	
470	90296-0009	R	ML	2	SILICONE GREASE TUBE 100 Gr.	
480	90335-0027	R		2	SPRING	
TBA 1000S						
020	569921-0000	D		1	BEARING HOUSE L.	
030	569922-0000	D		1	BEARING HOUSE R.	
040	569923-0000	D		1	CUTTING RAIL	
090	569919-0000	D		1	COVER PLATE R.	
100	569918-0000	D		1	COVER PLATE L.	
110	569920-0000	R		2	SHAFT	
140	522474-0000	R		1	BLOCK L	
150	522475-0000	R		1	BLOCK R	
330	312141-0366	-		8	SLOTTED HEMFS6X12FZB	
355	312145-0323	-		4	SLOTTED HEMFS5X8RFR	
TBA 0500B or TBA 0750B or TBA 1000B or TBA 1055B						
020	449631-0000	D		1	BEARING HOUSING	
030	449632-0000	D		1	BEARING HOUSING	
040	549834-0000	D		1	CUTTING RAIL	
090	449634-0000	D		1	COVERING PLATE	
100	449635-0000	D		1	COVERING PLATE	
110	556322-0000	R		2	SHAFT	
140	522474-0000	R		1	BLOCK L	
150	522475-0000	R		1	BLOCK R	
330	312141-0366	-		8	SLOTTED HEMFS6X12FZB	
355	312145-0323	-		4	SLOTTED HEMFS5X8RFR	
TBA 0750S						
020	544272-0000	D		1	BEARING HOUSING	
030	544273-0000	D		1	BEARING HOUSING	
040	556393-0000	D		1	CUTTING RAIL	
090	544274-0000	D		1	COVERING PLATE	
100	544275-0000	D		1	COVERING PLATE	
110	556323-0000	R		2	SHAFT	
140	522474-0000	R		1	BLOCK L	
150	522475-0000	R		1	BLOCK R	
330	312141-0366	-		8	SLOTTED HEMFS6X12FZB	
355	312145-0323	-		4	SLOTTED HEMFS5X8RFR	
TBA 0500SQ or TBA 1000SQ						
020	574059-0000	D		1	BEARING HOUSING	
030	574060-0000	D		1	BEARING HOUSING	
040	574061-0000	D		1	CUTTING RAIL	
090	574062-0000	D		1	COVERING PLATE	
100	574063-0000	D		1	COVERING PLATE	
110	574064-0000	R		2	SHAFT	
140	522474-0000	R		1	BLOCK L	
150	522475-0000	R		1	BLOCK R	
330	312141-0366	-		8	SLOTTED HEMFS6X12FZB	
355	312145-0323	-		4	SLOTTED HEMFS5X8RFR	
TBA 0375S						
020	457487-0000	D		1	BEARING HOUSING	
030	457489-0000	D		1	BEARING HOUSING	
040	556395-0000	D		1	CUTTING RAIL	
090	457493-0000	D		1	COVERING PLATE	
100	457495-0000	D		1	COVERING PLATE	
110	556325-0000	R		2	SHAFT	
140	522474-0000	R		1	BLOCK L	
150	522475-0000	R		1	BLOCK R	
330	312141-0366	-		8	SLOTTED HEMFS6X12FZB	
355	312145-0323	-		4	SLOTTED HEMFS5X8RFR	
TBA 0355B or TBA 0400B or TBA 0500S						
020	457486-0000	D		1	BEARING HOUSING	
030	457488-0000	D		1	BEARING HOUSING	

PAPER HOLDER

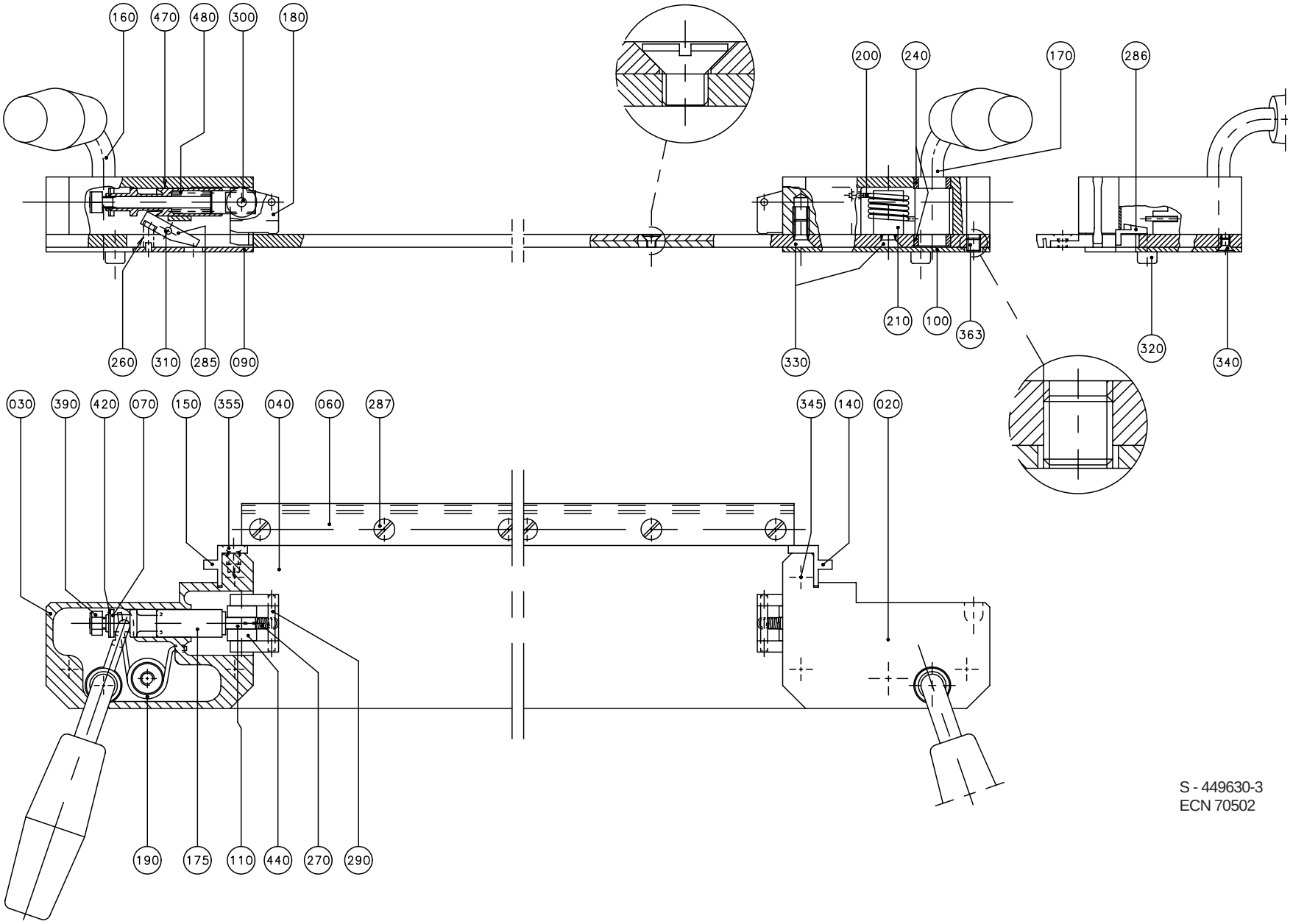

S - 449630-3
ECN 70502

Pos	Part No	SP	UN	Qty	Description	Page No
040	556394-0000	D		1	CUTTING RAIL	
090	457492-0000	D		1	COVERING PLATE	
100	457494-0000	D		1	COVERING PLATE	
110	556324-0000	R		2	SHAFT	
140	522474-0000	R		1	BLOCK L	
150	522475-0000	R		1	BLOCK R	
330	312141-0366	-		8	SLOTTED HEMFS6X12FZB	
355	312145-0323	-		4	SLOTTED HEMFS5X8RFR	

Pos	Part No	SP	UN	Qty	Description	Page No

BENDING ROLLER

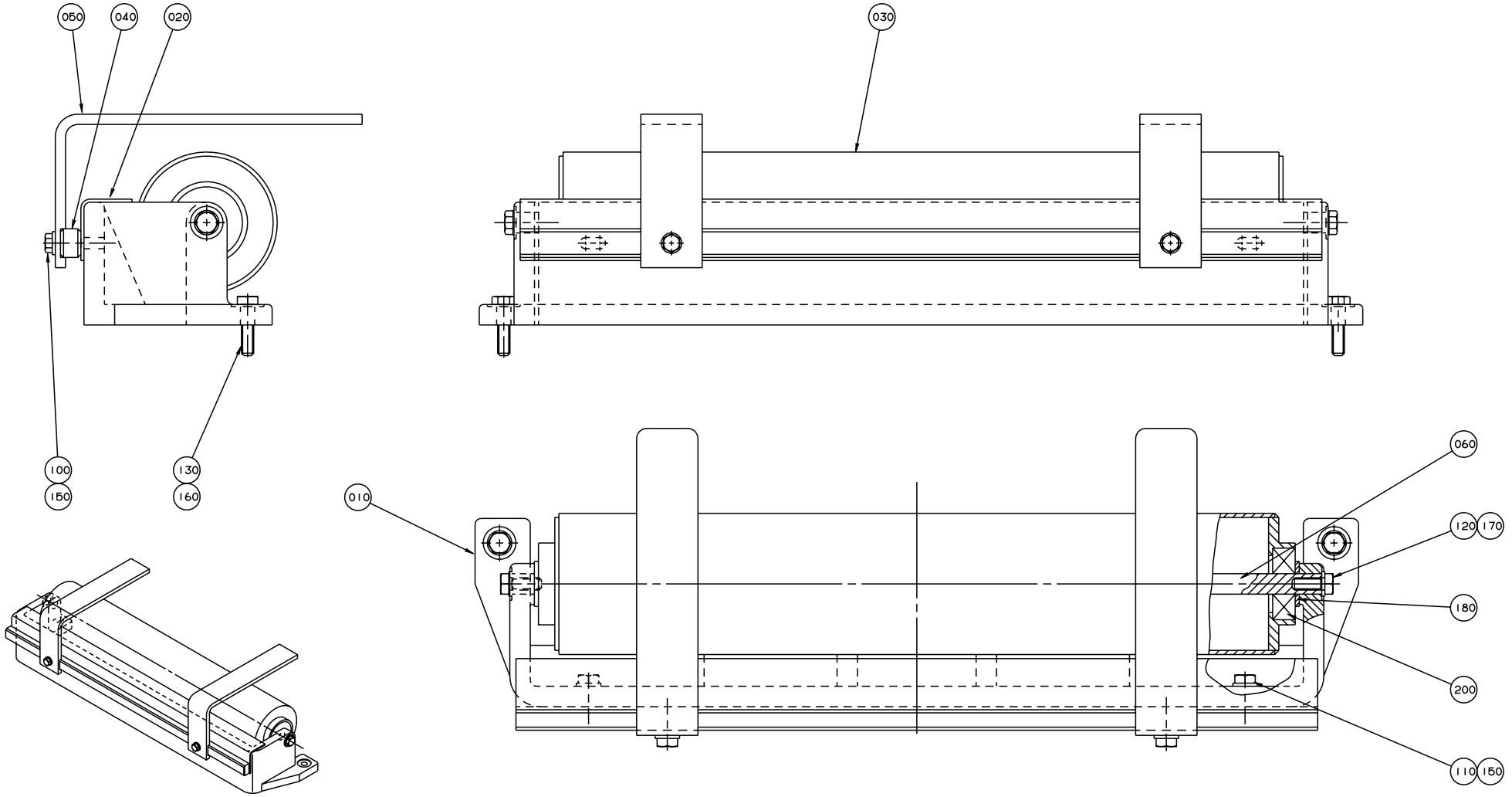

S-522410-2
ECN 19252

Pos	Part No	SP	UN	Qty	Description	Page No
Common parts						
010	522173-0000	-		1	CANTILEVER	
020	574651-0000	-		1	SHEET	
030	265564-0000	D		1	BENDING ROLLER	
040	479223-0000	-		1	RAIL	
050	531885-0000	-		2	STEERING	
060	499132-0002	D		1	SHAFT	
100	312105-0327	-		2	SCREW M6S ISO 4017 M5X12 A280	
110	312105-0331	-		2	SCREW M6S ISO 4017 M5X20 A280	
120	312105-0368	-		2	SCREW M6S ISO 4017 M6x16 A280	
130	312105-0372	-		2	SCREW M6S ISO 4017 M6X25 A280	
150	315105-0146	-		4	WASHER,PLAIN ROUND 5,3x10 Stainless	
160	315105-0153	-		2	WASHER,PLAIN ROUND 6,4x12 Stainless	
170	315115-0153	-		2	WASHER TBRB 6,4x12 Stainless	
180	315105-0173	-		2	WASHER,PLAIN ROUND 10,5x22 STAINLESS	
200	321316-0200	M		2	BEARINGS,BALL BEARING SKF6300-2RS	

Pos	Part No	SP	UN	Qty	Description	Page No

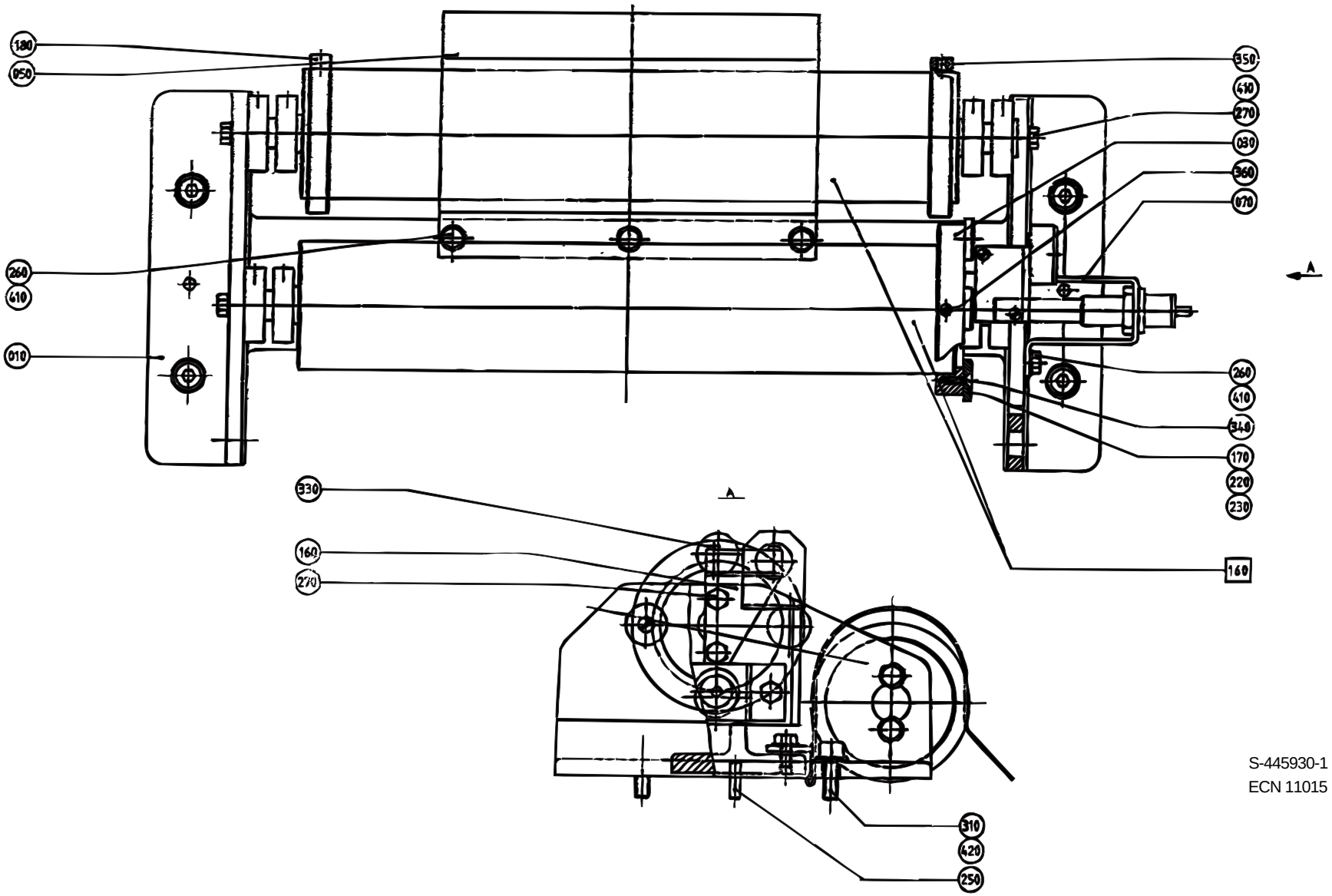

S-445930-1
ECN 11015

Pos	Part No	SP	UN	Qty	Description	Page No
Common parts						
010	445931-0000	-		1	CANTILEVER	
030	440157-0000	-		1	MAGNET BRACKET	
050	476403-0000	-		1	HEAD PLATE	
180	250588-0000	D		2	FLANGE	
250	311102-0353	-		2	CYLINDRICACP M6 6X20	
270	312105-0368	-		8	SCREW M6S ISO 4017 M6x16 A280	
310	312115-0451	-		4	SCREW MC6S ISO 4762 M8x20 A280	
350	312316-0323	-		4	STOP SCREW SK6SS5X8FZB	
360	312316-0362	-		3	STOP SCREW SK6SS6X8FZB	
420	315105-0165	-		4	WASHER,PLAIN ROUND 8,4x16 Stainless	
TBA/8						
160	466469-0000	-		1	HOLDER	
170	440180-0000	-		4	WASHER	
260	312105-0366	-		3	SCREW M6S ISO 4017 M6X12 A280	
330	312125-0228	-		2	SLOTTED CHEESE HEAD ISO 1207 M3x16 A4	
340	312145-0287	-		4	SLOTTED HEMFS4X8RFR	
410	315105-0153	-		9	WASHER,PLAIN ROUND 6,4x12 Stainless	

Pos	Part No	SP	UN	Qty	Description	Page No

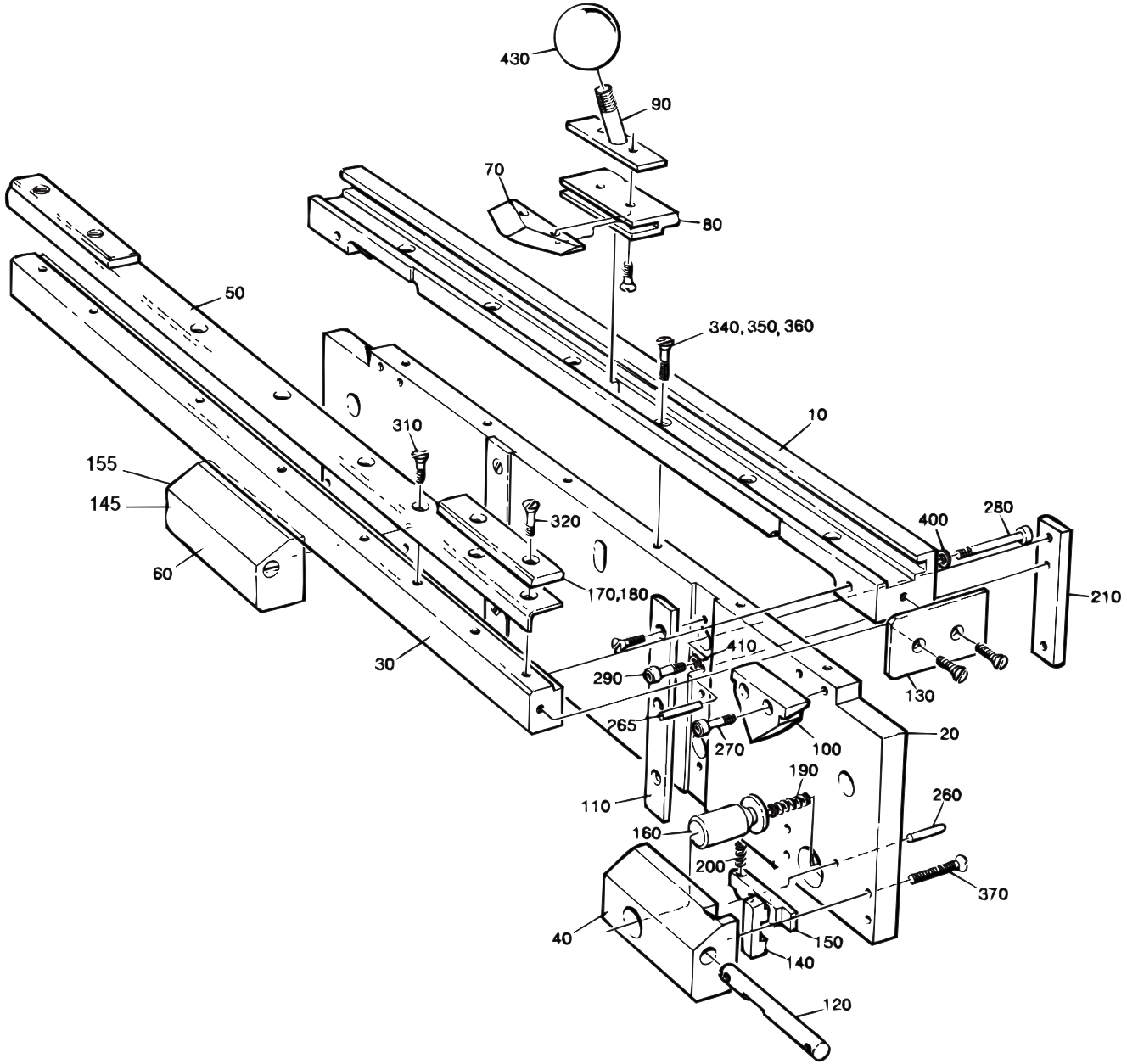

S-522121-2
ECN 14575

Pos	Part No	SP	UN	Qty	Description	Page No
TBA 1000S						
010	B 522122-0001	D		1	RAIL	
020	B 522123-0000	-		1	PLATE	
030	B 522124-0000	-		1	RULER	
100	522131-0000	D		2	STEERING	
170	569924-0000	D		1	STOPPER	
360	312145-0331	-		6	SLOTTED HEMFS5X20RFR	
TBA 0500B or TBA 0750B or TBA 1000B or TBA 1055B						
010	B 522122-0001	D		1	RAIL	
020	B 522123-0000	-		1	PLATE	
030	B 522124-0000	-		1	RULER	
100	522131-0000	D		2	STEERING	
170	522138-0000	D		1	STOPPER	
360	312145-0331	-		6	SLOTTED HEMFS5X20RFR	
TBA 0750S						
010	B 522122-0001	D		1	RAIL	
020	B 522123-0000	-		1	PLATE	
030	B 522124-0000	-		1	RULER	
100	522131-0000	D		2	STEERING	
170	544270-0000	D		1	STOPPER	
360	312145-0331	-		6	SLOTTED HEMFS5X20RFR	
TBA 0500SQ or TBA 1000SQ						
010	B 522122-0001	D		1	RAIL	
020	B 522123-0000	-		1	PLATE	
030	B 522124-0000	-		1	RULER	
100	522131-0000	D		2	STEERING	
170	574052-0000	D		1	STOPPER	
360	312145-0331	-		6	SLOTTED HEMFS5X20RFR	
TBA 0375S						
010	B 522122-0002	D		1	RAIL	
020	B 522123-0000	-		1	PLATE	
030	B 522124-0000	-		1	RULER	
100	522131-0000	D		2	STEERING	
180	522139-0002	D		1	STOPPER	
350	312145-0329	-		6	SLOTTED HEMFS5X16RFR	
TBA 0355B or TBA 0400B or TBA 0500S						
010	B 522122-0002	D		1	RAIL	
020	B 522123-0000	-		1	PLATE	
030	B 522124-0000	-		1	RULER	
100	522131-0000	D		2	STEERING	
180	522139-0001	D		1	STOPPER	
350	312145-0329	-		6	SLOTTED HEMFS5X16RFR	

Pos	Part No	SP	UN	Qty	Description	Page No
Common parts						
040	522125-0000	D		1	BEARING HOUSING	
050	522126-0000	-		1	SHEET	
060	556443-0000	D		1	BEARING HOUSING	
070	522128-0000	M		1	KNIFE	
080	522129-0000	D		1	KNIFE HOLDER	
090	522130-0000	D		1	HANDLE	
110	522132-0000	-		2	SLIDE BELT	
120	522133-0000	D		2	SHAFT	
130	522134-0000	-		2	END PLATE	
140	556439-0000	D		1	BARRIER	
145	556440-0000	D		1	BARRIER	
150	556441-0000	-		1	ARM	
155	556442-0000	-		1	ARM	
160	522137-0000	D		2	PUSH BUTTON	
190	522158-0000	R		2	COMPRESSION SPRING	
200	458041-0000	R		2	COMPRESSION SPRING	
210	530778-0000	-		2	LACE	
250	311103-0272	-		2	PINS,STRAIGHT 4X20	
260	311112-0256	-		4	PIN,SLOTTED TUBULAR SPRING PIN 4x20	
265	311112-0258	-		2	PINS,SLOTTED TUBULAR SPRING PIN 4X24	
270	312115-0329	-		4	SCREW MC6S ISO 4762 M5X16 A280	
280	312115-0339	-		2	SCREW MC6S ISO 4762 M5X40 A280	
290	312115-0370	-		4	SCREW MC6S ISO 4762 M6x20 A280	
310	312145-0289	-		8	SLOTTED HEMFS4X10RFR	
320	312145-0291	-		6	SLOTTED HEAD SCREW MFS 4x12 A4	
340	312145-0327	-		6	SLOTTED HEMFS5X12RFR	
370	312105-0337	-		4	SCREW M6S ISO 4014 M5X35 A280	
400	315105-0146	-		6	WASHER,PLAIN ROUND 5,3x10 Stainless	
410	315105-0153	-		4	WASHER,PLAIN ROUND 6,4x12 Stainless	
430	318800-0107	-		1	HANDLE BALLA D45-M10	

This page is intentionally left blank

Pos	Part No	SP	UN	Qty	Description	Page No
Common parts						
030	294009-0000	-		2	KNIFE	

Pos	Part No	SP	UN	Qty	Description	Page No

(PAPER)REEL TROLLEY

S - XXXXXXXXX
ECN XXXXX

Pos	Part No	SP	UN	Qty	Description	Page No
Common parts						
010	574658-0000	-		1	LOGOTYPE TP	
020	522308-0000	-		2	SIGN	
030	90067-0021	D		1	CARRIAGE	
040	311521-0143	-		4	COLD SQUEEZE TYPE "POP RIVET" 3,2x8	

Pos	Part No	SP	UN	Qty	Description	Page No

DRIVE BRAKE

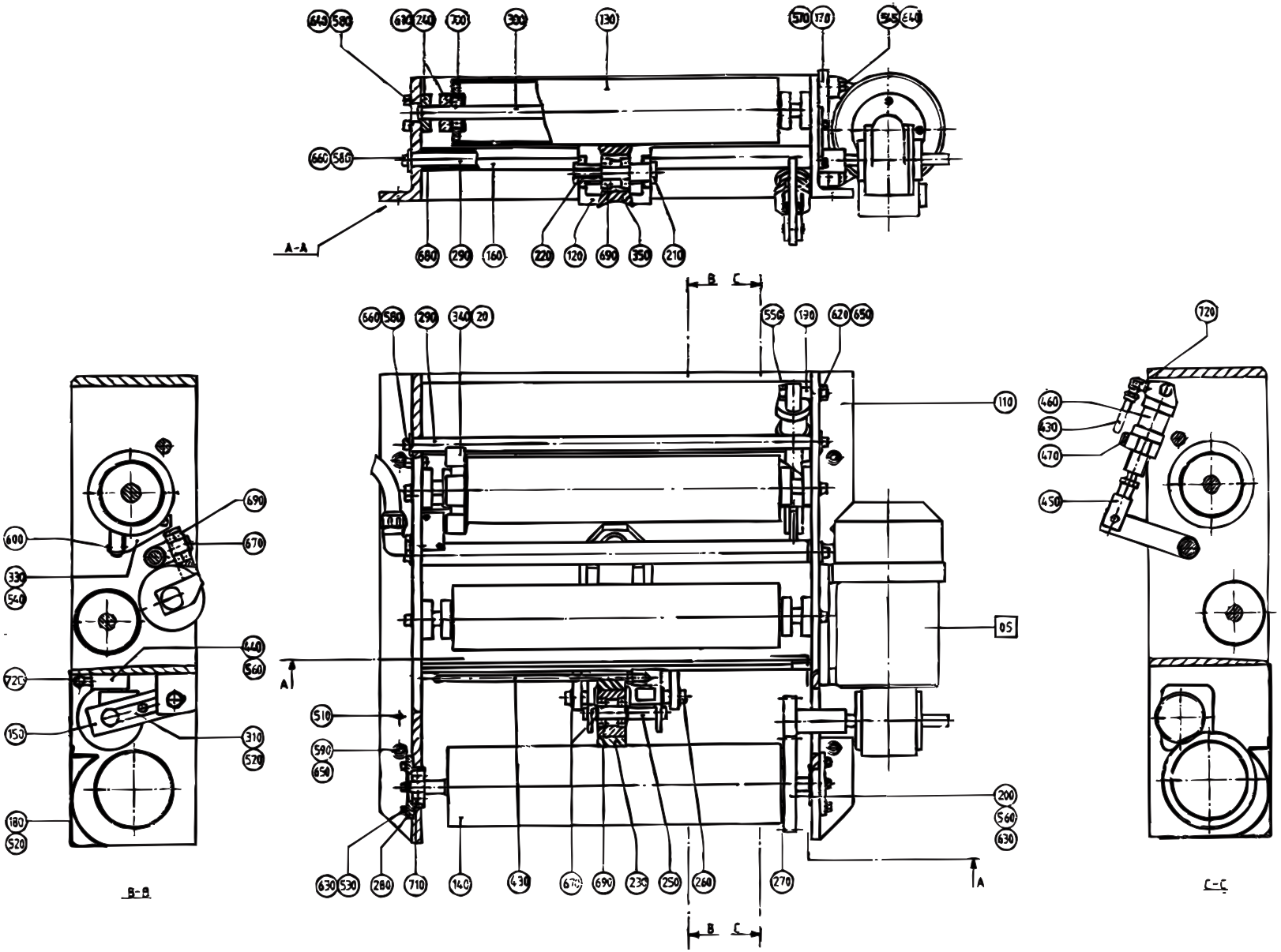

S-542902-1
ECN 70032

Pos	Part No	SP	UN	Qty	Description	Page No
Common parts						
F005	A 542904-0100	-		1	WORM GEAR MOTOR	**711**
020	312318-0327	-		3	SET SCREW CUP POINT ISO 4029 M5X12 RFR	
110	539180-0000	-		1	CANTILEVER	
120	263150-0000	-		1	BRACKET	
130	440136-0001	D		2	ROLL	
140	445845-0000	D		1	DRIVE ROLLER	
150	537388-0000	-		1	HOLDER	
160	539181-0000	-		1	PIPE	
170	539182-0000	-		1	PLATE	
180	539183-0000	-		1	PROTECTION PLATE	
190	2487-0000	-		1	SPACER ELEMENT	
200	207019-0003	D		1	GEAR WHEEL	
210	263152-0000	-		1	SHAFT	
220	263153-0000	-		1	NUT	
230	266710-0000	D		1	WHEEL	
240	440138-0000	-		8	LOCKING CIRCLIP	
250	445838-0000	-		1	SHAFT	
260	445847-0000	-		1	SHAFT	
270	445849-0000	-		1	SPACER DISC	
280	445852-0000	-		2	LID	
290	537383-0000	-		2	SHAFT	
300	537384-0000	-		2	SHAFT	
310	537389-0000	-		1	SECURING PLATE	
330	539185-0000	-		1	HOLDER	
340	539186-0000	-		1	RING	
350	540719-0000	-		1	WHEEL	
430	90166-0081	-	MM	3600	HOSE 6/4	
440	90239-0259	-		1	CYLINDER	
450	90239-0357	-		1	PISTON ROD HEAD	
460	90239-0852	-		1	DOUBLE ACTING,MINI-ISO,CYL.25-25	
470	90257-0003	-		1	FILTER PLUG MECMAN F18 8145-00-180	
510	311102-0353	-		2	CYLINDRICACP M6 6X20	
520	312101-0323	-		6	SCREW M6S5X8FZB	
530	312101-0329	-		8	SCREW M6S5X16FZB	
540	312101-0364	-		2	SCREW M6S 6x10-8,8 FZB	
545	312101-0370	-		4	SCREW M6S6X20FZB	
550	312101-0460	-		1	SCREW M6S8X45FZB	
560	312111-0331	-		5	SCREW MC6S5X20FZB	
570	312111-0366	-		4	SCREW MC6S6X12FZB	
580	312111-0370	-		12	SCREW MC6S6X20FZB	
590	312111-0449	-		4	SCREW MC6S8X16FZB	
600	312125-0228	-		2	SLOTTED CHEESE HEAD ISO 1207 M3x16 A4	
610	312306-0366	-		8	STOP SCREW P6SS6X12FZB	
620	312601-0318	-		1	NUT M6M8FZB	
630	315101-0146	-		9	WASHER BRB 5,3x10 FZB	
640	315101-0153	-		15	WASHER BRB 6,4x12 FZB	
650	315101-0165	-		5	WASHER BRB8,4X16FZB	
660	315121-0153	-		4	WASHER TBRSB 6,4x22 FZB	
670	315750-0112	-		5	CIRCLIP SGA15	
680	321101-0202	-		2	FLANGE BUS 16F7X12	
690	321308-0202	-		6	BALL BEARING 15x32x9	
700	321313-0102	-		4	BALL BEARING 15X35X11	
710	321316-0201	-		2	BALL BEARING 12X37X12	
720	342930-0113	-		2	ELBOW 90 COUPL.,EXT.THREAD 6/4-R1/8"	

WORM GEAR MOTOR

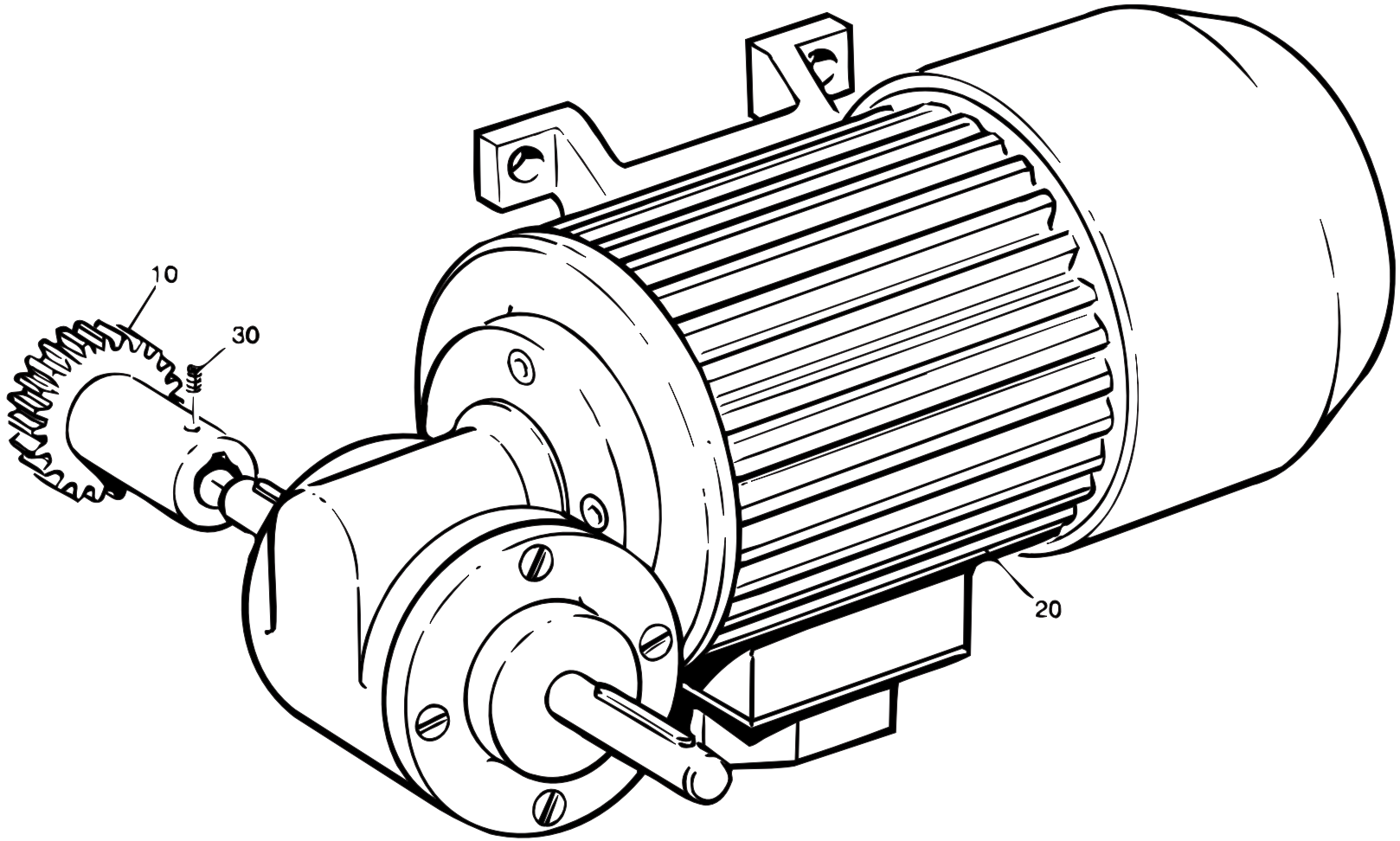

S-542904-1
ECN 11470

Pos	Part No	SP	UN	Qty	Description	Page No
Common parts						
020	B 90069-0116	-		1	WORM GEAR MOTOR REPL.BY 90069-281	
030	312318-0284	-		1	STOP SCREW SK6SS4X5RFR	
0500B or 0500S or 0500SQ						
010	539187-0002	-		1	GEAR WHEEL	
1000B or 1000S or 1000SQ or 1055B						
010	539187-0001	-		1	GEAR WHEEL	

Pos	Part No	SP	UN	Qty	Description	Page No

This page is intentionally left blank

Pos	Part No	SP	UN	Qty	Description	Page No
90044-0103						
	90044-0310	-		1	KEY FOR SAFETY SWITCH -103	
90069-0116						
	90056-0096	K		1	WORM GEAR	
	90069-0364	K		1	CARBON BRUSH	
	90069-0365	K		1	CARBON BRUSH	
440199-0000						
	90166-0116	-		4	HOSE	
	312125-0372	-		4	SLOTTED CHEESE HEAD ISO 1207 M6X25 RFR	
445935-0000						
	90166-0116	-		4	HOSE	
	312125-0372	-		4	SLOTTED CHEESE HEAD ISO 1207 M6X25 RFR	
466337-0000						
	90265-0028	-		1	APPLIANCE BOX ROSE	
466430-0000						
	321111-0212	-		1	FLANGE BUS 15E7X15	
476289-0000						
	312111-0390	-		1	SCREW MC6S6X100FZB	
476377-0000						
	312105-0371	-		1	SCREW M6S6X22RFR	
484878-0000						
	311103-0268	-		2	PINS,STRAIGHT 4X12	
522123-0000						
	312910-0114	-		12	THREADED I M5X1,5D	
	312910-0115	-		4	THREADED INSERTS M5X2,0D	
522124-0000						
	312910-0111	-		10	THREADED INSERTS M4X2,0D	
	312911-0115	-		2	THREADED INSERTS M5X2,0D	
529455-0000						
	312911-0101	-		5	THREADED I M3X1,0D	
529456-0000						
	312911-0113	-		2	THREADED INSERTS M5X1,0D	
532082-0000						
	312805-0102	-		1	NUTS,ROUND,WITH SLOTS,M15X1	
532083-0000						
	312805-0103	-		1	NUTS,ROUND,WITH SLOTS,M17X1	
543135-0000						
	90153-0050	-	L	1	ADHESIVE	
	321120-0100	-		1	BEARING BUSHING WITHOUT FLANGE,8/10x12	

Pos	Part No	SP	UN	Qty	Description	Page No

SPC

Spare Parts Catalogue

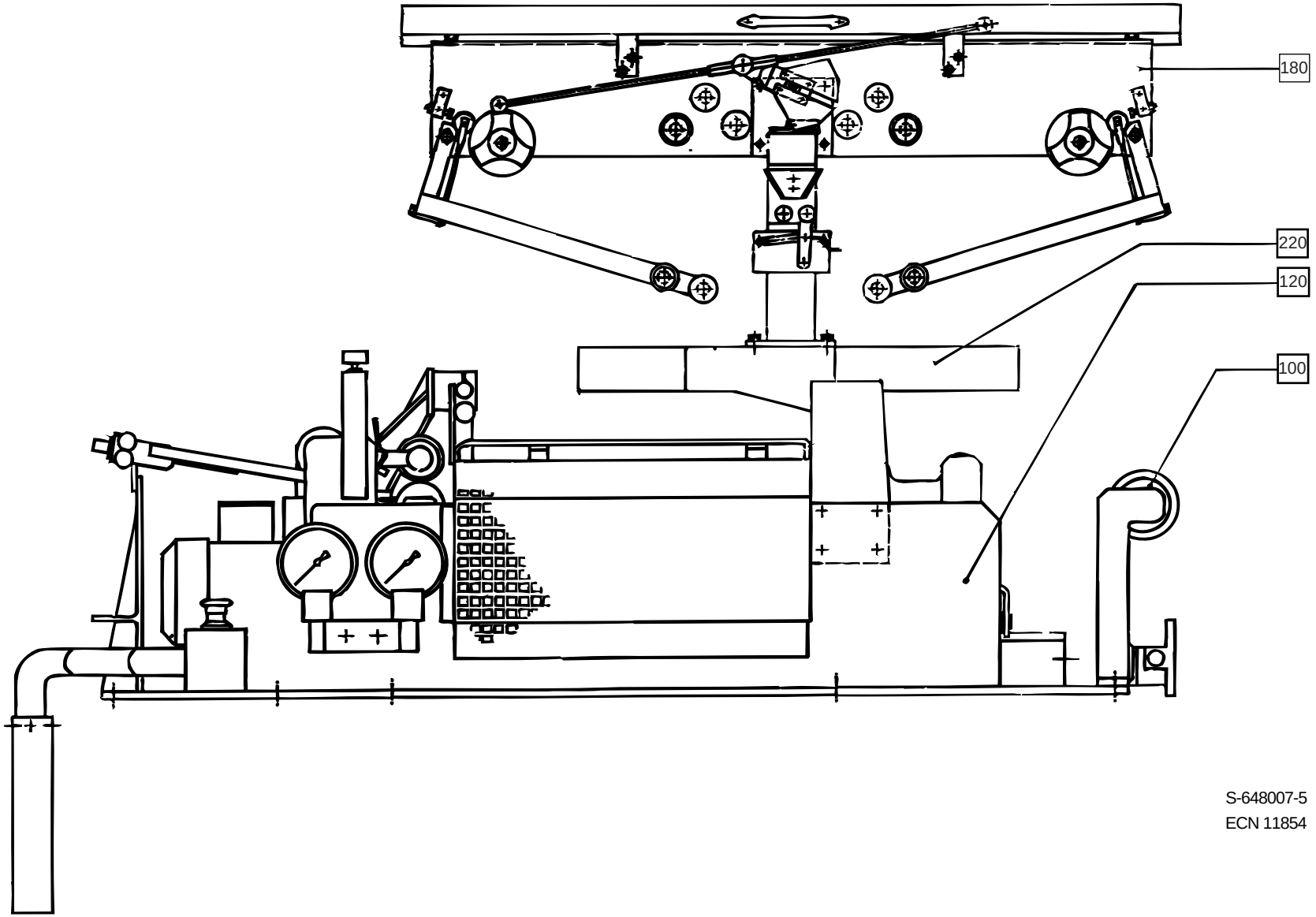

S-648007-5
ECN 11854

Pos	Part No	SP	UN	Qty	Description	Page No
TBA/8						
F040	A 282509-0300	-		1	BENDING ROLLER	**721**
F070	A 450862-0300	-		1	CONNECTION BOX	**725**
F080	A 526931-0300	-		1	BOTTOM PLATE	**727**
F090	A 526932-0300	-		1	PIPE WORK	**729**
Common parts						
F065	A 573663-0100	-		1	SUPPORT ROLLER	**723**
F095	A 279210-0100	-		1	PAPER GUIDE	**731**
F100	A 265565-0200	-		1	BENDING ROLLER BRACKET	**733**
F110	A 266726-0300	-		1	PRESSURE ROLLER	**735**
F120	A 269112-0600	-		1	STRIP APPLICATOR	**737**
F130	A 282528-0200	-		1	PRESSURE ROLLER	**739**
F135	A 282634-0300	-		1	STRIP GUIDE	**741**
F160	A 546180-0100	-		1	SPLICE DETECTOR	**743**
F170	A 526954-0100	-		1	START-UP KIT	**745**
F180	A 543823-0100	-		1	STRIP MAGAZINE	**747**
F220	A 544973-0100	-		1	PILLAR	**757**

Pos	Part No	SP	UN	Qty	Description	Page No

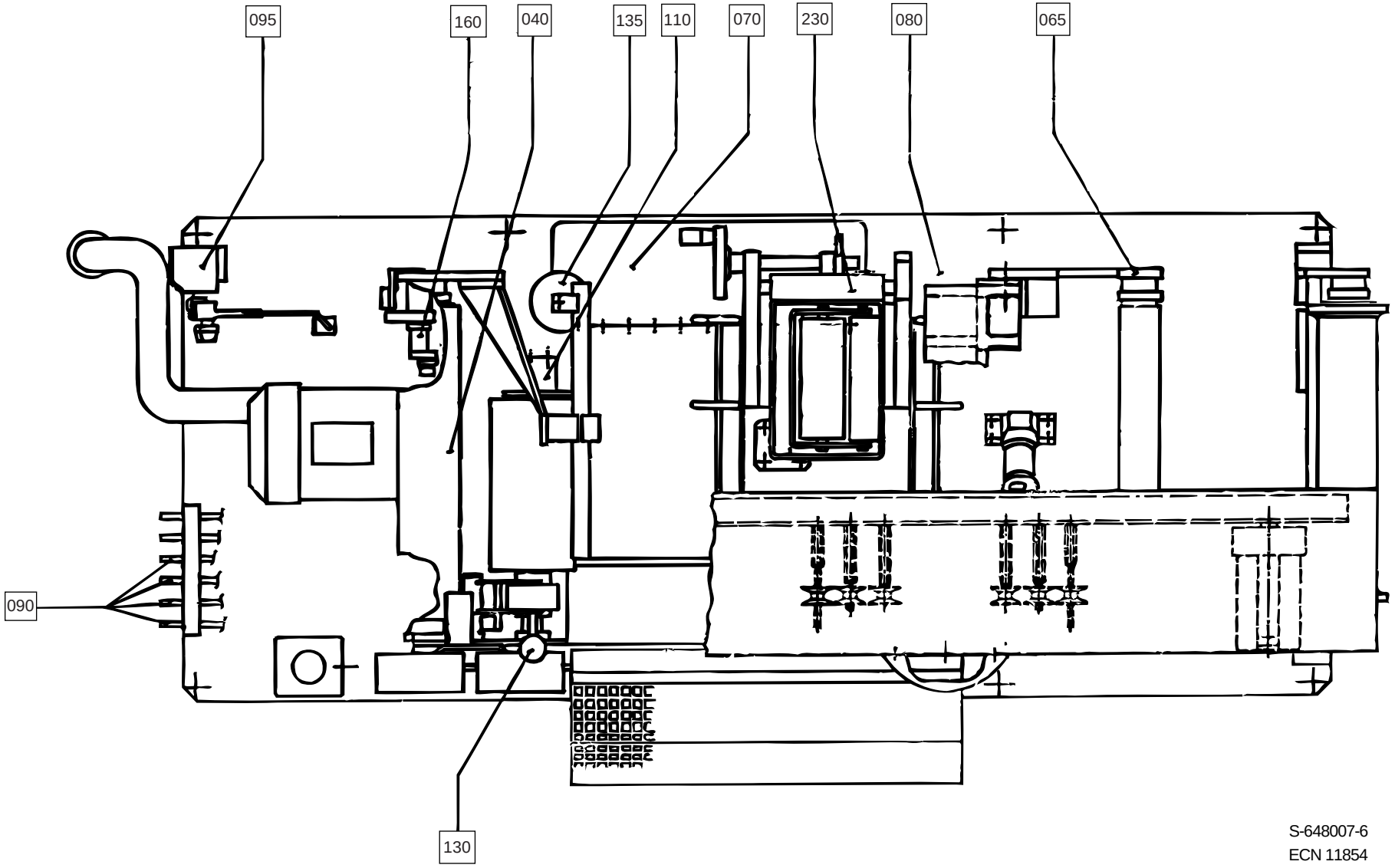

S-648007-6
ECN 11854

Pos	Part No	SP	UN	Qty	Description	Page No
TBA/8						
F040	A 282509-0300	-		1	BENDING ROLLER	**721**
F070	A 450862-0300	-		1	CONNECTION BOX	**725**
F080	A 526931-0300	-		1	BOTTOM PLATE	**727**
F090	A 526932-0300	-		1	PIPE WORK	**729**
Common parts						
F065	A 573663-0100	-		1	SUPPORT ROLLER	**723**
F095	A 279210-0100	-		1	PAPER GUIDE	**731**
F100	A 265565-0200	-		1	BENDING ROLLER BRACKET	**733**
F110	A 266726-0300	-		1	PRESSURE ROLLER	**735**
F120	A 269112-0600	-		1	STRIP APPLICATOR	**737**
F130	A 282528-0200	-		1	PRESSURE ROLLER	**739**
F135	A 282634-0300	-		1	STRIP GUIDE	**741**
F160	A 546180-0100	-		1	SPLICE DETECTOR	**743**
F170	A 526954-0100	-		1	START-UP KIT	**745**
F180	A 543823-0100	-		1	STRIP MAGAZINE	**747**
F220	A 544973-0100	-		1	PILLAR	**757**

Pos	Part No	SP	UN	Qty	Description	Page No

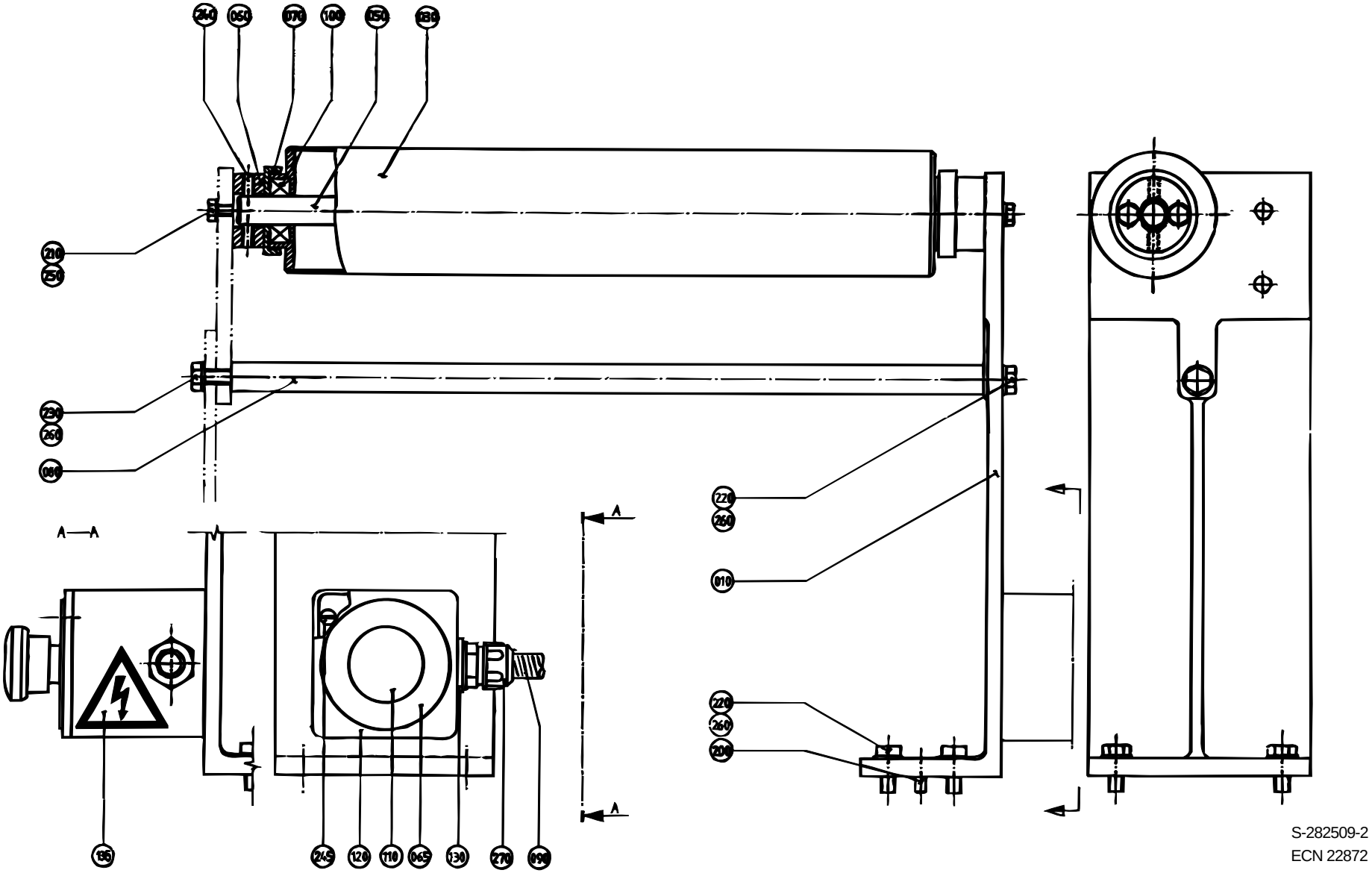

S-282509-2
ECN 22872

Pos	Part No	SP	UN	Qty	Description	Page No
Common parts						
010	265756-0000	-		1	CANTILEVER	
060	265567-0000	D		2	BEARING UNIT	
065	486826-0001	-		1	SIGN "EMERGENCY STOP"	
070	265568-0000	R		2	DUST COVER	
090	90152-0033	-	M	1	Spiral Conduit for PR 15,2(PG 9)	
100	90214-0098	J		2	BALL BEARING,STAINLESS	
110	90064-0105	D		1	EMERGENCY STOP Button REPL.BY 90064-124	
120	90066-0021	-		1	PUSH BUTTON BOX XAP-M1501 Telemecanique	
130	90089-0003	-		1	SLEEVE	
135	90194-0016	-		1	SIGN "FLASH SIGN" 50X50MM	
200	311305-0308	-		2	SLOTTED PIRPC5X16FZB	
210	312105-0370	-		4	SCREW M6S ISO 4017 M6x20 A280	
220	312105-0451	-		5	SCREW M6S ISO 4017 8x20 A280	
230	312105-0453	-		1	SCREW M6S ISO 4017 M8x25 A280	
240	312318-0364	-		4	STOP SCREW SK6SS6X10RFR	
245	312125-0333	-		2	SLOTTED CHEESE HEAD ISO 1207 M5X25 RFR	
250	315105-0153	-		4	WASHER,PLAIN ROUND 6,4x12 Stainless	
260	315105-0165	-		6	WASHER,PLAIN ROUND 8,4x16 Stainless	
270	352136-0113	-		1	GLAND FITTING PR18,6/PG11 Di=12mm	
TBA 0500B or TBA 0750B or TBA 1000B or TBA 1000S or TBA 1055B						
030	449843-0001	D		1	BENDING ROLLER	
050	265566-0001	D		1	SHAFT	
080	265569-0001	-		1	STRUT	
TBA 0750S						
030	449843-0003	D		1	BENDING ROLLER	
050	265566-0004	D		1	SHAFT	
080	265569-0005	-		1	STRUT	
TBA 0500SQ or TBA 1000SQ						
030	449843-0004	D		1	BENDING ROLLER	
050	265566-0005	D		1	SHAFT	
080	265569-0006	-		1	STRUT	
TBA 0355B or TBA 0375S or TBA 0400B or TBA 0500S						
030	449843-0002	D		1	BENDING ROLLER	
050	265566-0003	D		1	SHAFT	
080	265569-0003	-		1	STRUT	

Pos	Part No	SP	UN	Qty	Description	Page No

SUPPORT ROLLER

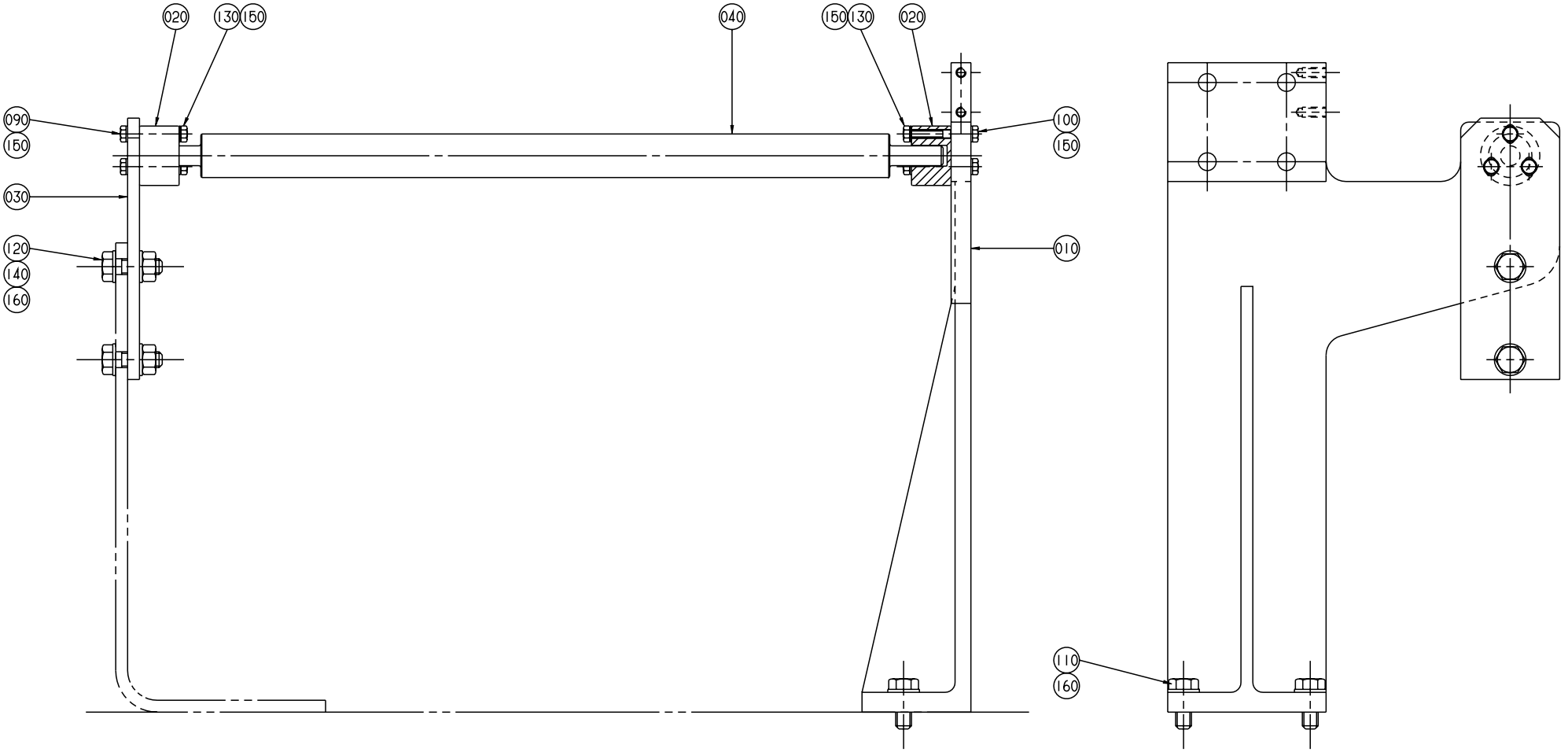

S-573663-1
ECN 19587

Pos	Part No	SP	UN	Qty	Description	Page No
Common parts						
010	573664-0000	-		1	CANTILEVER	
020	24206-0000	R		2	BEARING	
030	573665-0000	-		1	FASTENING PLATE	
090	312105-0299	-		3	SCREW M6S ISO 4014 M4X30 A280	
100	312105-0301	-		3	SCREW M6S ISO 4014 M4X35 A280	
110	312105-0451	-		2	SCREW M6S ISO 4017 8x20 A280	
120	312105-0453	-		2	SCREW M6S ISO 4017 M8x25 A280	
130	312605-0312	-		6	NUT,HEXAGON,M4 RFR	
140	312605-0318	-		2	NUT,HEXAGON,M8 RFR	
150	315105-0136	-		12	WASHER,PLAIN ROUND 4,3x8 Stainless	
160	315105-0165	-		6	WASHER,PLAIN ROUND 8,4x16 Stainless	
TBA 0500B or TBA 0750B or TBA 1000B or TBA 1000S or TBA 1055B						
040	573666-0000	D		1	SUPPORT ROLLER	
TBA 0750S						
040	573668-0000	D		1	SUPPORT ROLLER	
TBA 0500SQ or TBA 1000SQ						
040	574038-0000	D		1	SUPPORT ROLLER	
TBA 0355B or TBA 0375S or TBA 0400B or TBA 0500S						
040	573667-0000	D		1	SUPPORT ROLLER	

Pos	Part No	SP	UN	Qty	Description	Page No

CONNECTION BOX

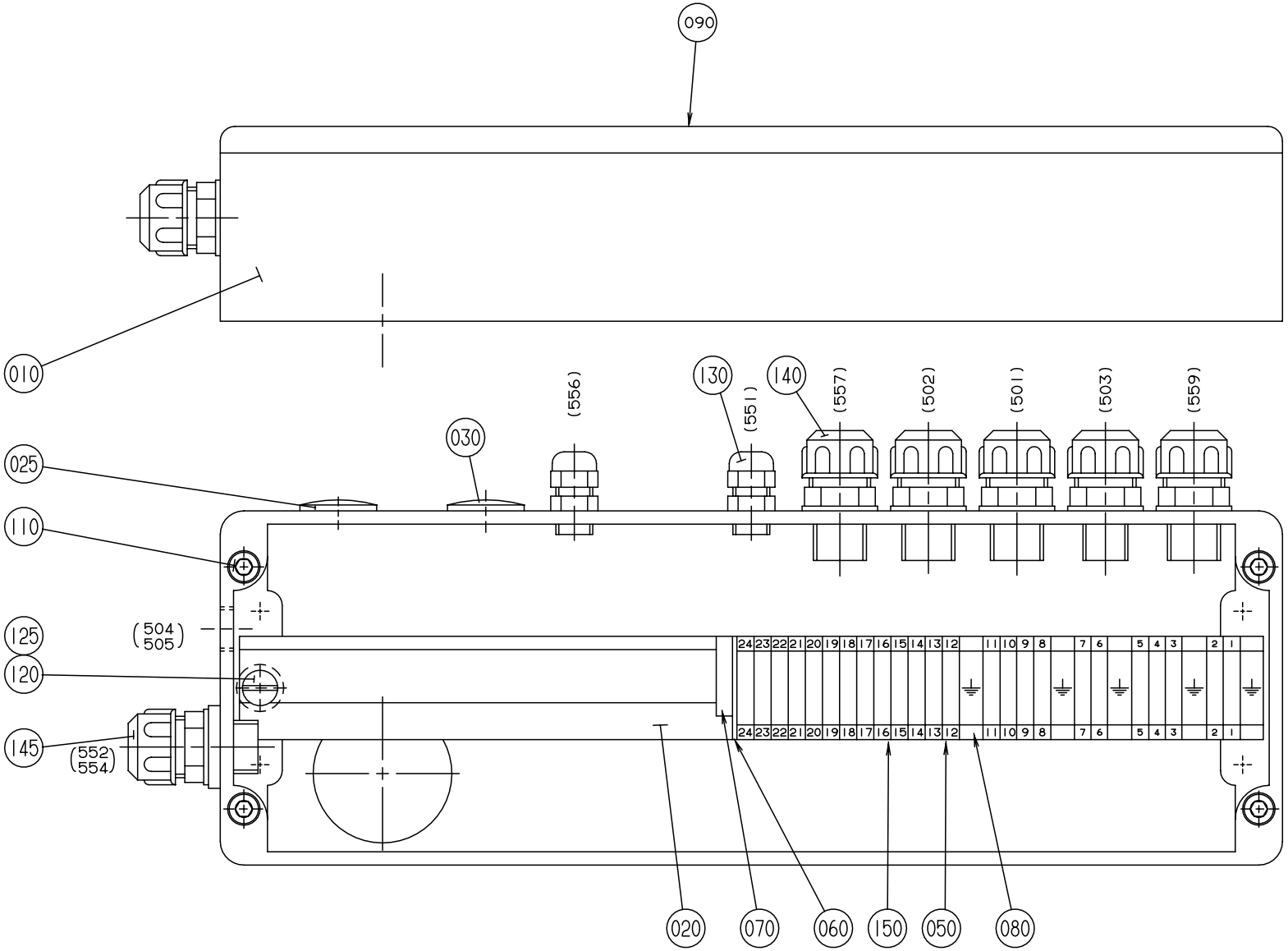

S-450862-3
ECN 17189

Pos	Part No	SP	UN	Qty	Description	Page No
Common parts						
010	553156-0000	-		1	CONNECTION BOX	
020	282549-0000	-		1	MOUNTING RAIL	
025	90002-0009	-		2	BLANK-OFF PLUG 18.6	
030	90002-0013	-		1	BLANK-OFF PLUG 15,2	
050	90077-0064	-		24	TERMINAL SAK2,5 PA for TS32	
060	90077-0300	-		1	END PLATE AP2,5	
070	90094-0004	-		1	END SUPPORT EWK 2061.6 WM	
080	90135-0022	-		4	EARTHING CLAMP EK 2,5N	
090	90194-0016	-		1	SIGN "FLASH SIGN" 50X50MM	
110	312115-0372	-		4	SCREW MC6S ISO 4762 M6X25 A280	
120	312145-0364	-		2	SLOTTED HEMFS6X10RFR	
125	315115-0165	-		2	WASHER TBRB 8,4x16 Stainless	
130	352103-0100	-		2	CABLE GLAND STR 9;PR15,2	
140	352136-0113	-		5	GLAND FITTING PR18,6/PG11 Di=12mm	
145	352136-0129	-		1	GLAND FITTING PR22,5/PG16 Di=16mm	
150	359011-0821	-		2	SET OF SIGNS 6-FW 1-50	

Pos	Part No	SP	UN	Qty	Description	Page No

BOTTOM PLATE

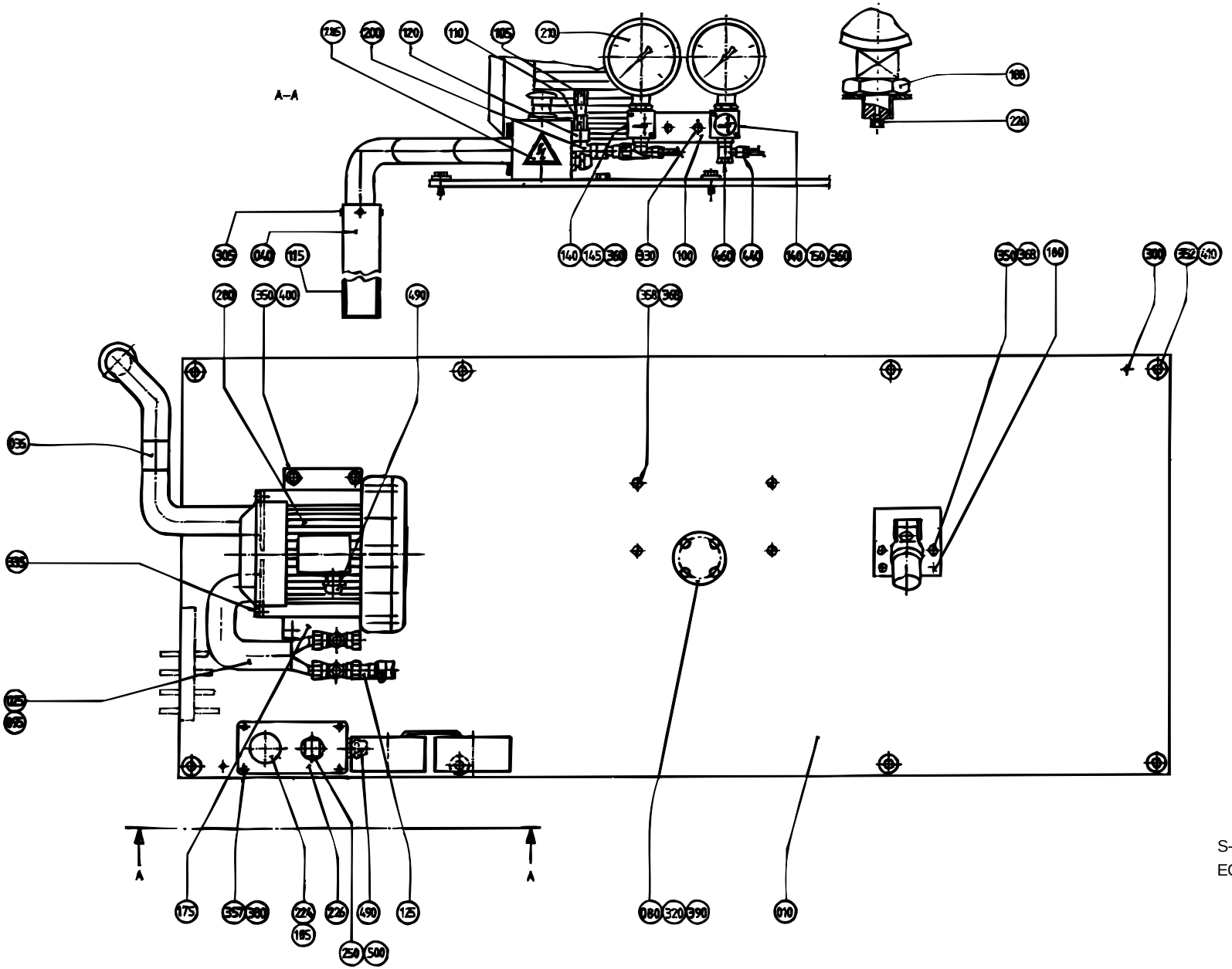

Pos	Part No	SP	UN	Qty	Description	Page No
Common parts						
025	B 535613-0000	-		1	BRANCH	
035	B 535614-0000	-		1	INNER PIPE	
040	450882-0000	-		1	OUTER PIPE	
080	247171-0000	-		1	BEARING COVER	
095	535608-0000	R		1	GASKET	
100	33577-0000	-		1	CANTILEVER	
105	209145-0000	M		2	THROTTLE SCREW	
110	209146-0000	M		2	BARRIER NUT	
115	526582-0000	D		1	NET	
120	279589-0000	D		2	NUT	
125	279590-0000	-		1	REDUCTION	
140	464173-0000	-		2	LABEL HOLDER	
145	464176-0000	-		1	SIGN	
150	464177-0000	-		1	SIGN	
175	450812-0000	-		2	SPACER	
180	556549-0000	-		1	FASTENING PLATE	
185	486826-0001	-		1	SIGN "EMERGENCY STOP"	
188	90330-0105	-		2	PIPE PARTS,NUT,hexagon, R3/8	
200	90030-0058	-		2	T-PIPE CONNECTION T-12	
210	90043-0034	D		2	PRESSURE GAUGE	
220	90043-0302	D		2	SCREW	
224	90064-0105	D		1	EMERGENCY STOP Button REPL.BY 90064-124	
226	90066-0029	-		1	PUSH BUTTON BOX	
250	90064-0084	D		1	PUSH BUTTON YELLOW	
280	B 90264-0042	D		1	FAN SIEMENS 2BH1 300-1AH	
285	90194-0016	-		1	SIGN "FLASH SIGN" 50X50MM	
300	311305-0308	-		2	SLOTTED PIRPC5X16FZB	
305	312105-0287	-		4	SCREW M6S ISO 4017 M4x8 A280	
320	312105-0325	-		4	SCREW M6S 5x10 A2 80	
330	312105-0364	-		2	SCREW M6S 6x10 A280	
335	312105-0368	-		4	SCREW M6S ISO 4017 M6x16 A280	
350	312105-0451	-		8	SCREW M6S ISO 4017 8x20 A280	
352	312105-0455	-		8	SCREW M6S ISO 4017 M8X30 A280	
357	312125-0289	-		5	SLOTTED HEMCS4X10RFR	
358	312125-0447	-		4	SLOTTED CHEESE HEAD ISO 1207 M8X12 RFR	
360	312502-0120	-		4	DRIVE SCREW ROUND HEAD SMS 1549 KDS 0X5	
368	315111-0165	-		8	WASHER TBRB8,4X16FZB	
380	315105-0136	-		4	WASHER,PLAIN ROUND 4,3x8 Stainless	
390	315105-0146	-		4	WASHER,PLAIN ROUND 5,3x10 Stainless	
400	315105-0165	-		4	WASHER,PLAIN ROUND 8,4x16 Stainless	
410	315121-0165	-		8	WASHER TBRSB8,4X26FZB	
440	342797-0122	-		2	BANJO CONNECTION,RINGPIECE 6-1/4"	
460	342980-0304	-		2	BANJO-HOLLOW BOLT COUPL,EXT.THR.01-G1/4"	
490	352136-0113	-		3	GLAND FITTING PR18,6/PG11 Di=12mm	
500	359301-0051	-		1	SIGN"STRIP SPLICE"	
TBA 1000S						
010	450850-0005	-		1	SHEET	
TBA 0500B or TBA 0750B or TBA 1000B or TBA 1055B						
010	450850-0001	-		1	SHEET	
TBA 0750S						
010	450850-0004	-		1	SHEET	
TBA 0500SQ or TBA 1000SQ						
010	450850-0006	-		1	SHEET	
TBA 0375S						
010	450850-0003	-		1	SHEET	
TBA 0355B or TBA 0400B or TBA 0500S						
010	450850-0002	-		1	SHEET	

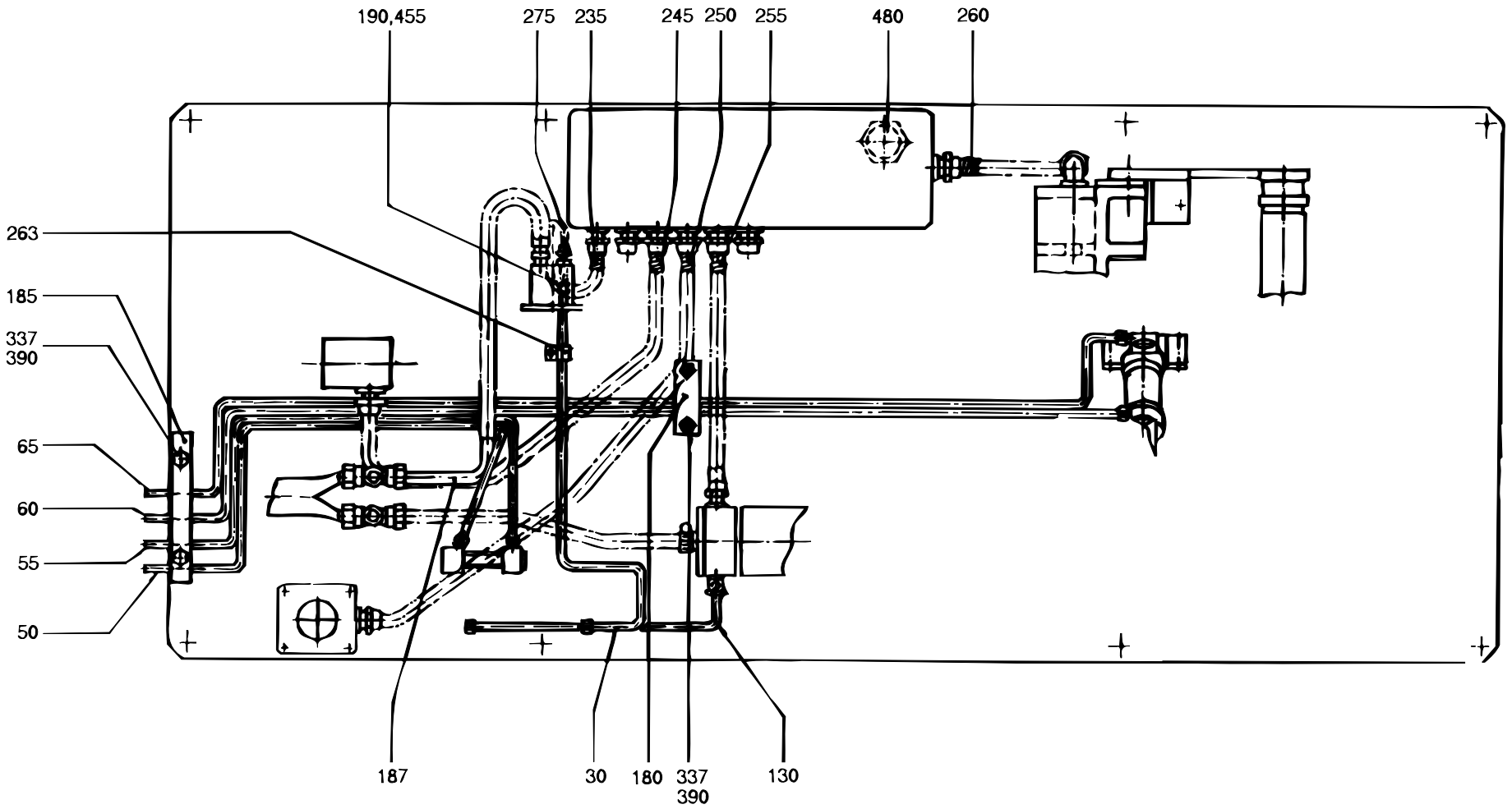

S-526932-2
ECN 11854

Pos	Part No	SP	UN	Qty	Description	Page No
Common parts						
130	282802-0000	-		1	PIPE	
180	450813-0000	-		1	HOLDER	
185	450814-0000	-		1	HOLDER	
187	535612-0000	-		1	PIPE	
190	90224-0304	-		1	CONNECTION	
235	90152-0033	-	MM	450	Spiral Conduit for PR 15,2(PG 9)	
245	90152-0033	-	MM	800	Spiral Conduit for PR 15,2(PG 9)	
250	90152-0033	-	MM	500	Spiral Conduit for PR 15,2(PG 9)	
255	90152-0033	-	MM	250	Spiral Conduit for PR 15,2(PG 9)	
260	90152-0033	-	MM	265	Spiral Conduit for PR 15,2(PG 9)	
263	90165-0005	-		1	PIPE-CLIPS,FOR SINGLE PIPE,ONE SIDE 6	
275	90166-0124	-	MM	200	HOSE 4,0/6 PA 11/12 Transp.	
337	312105-0370	-		6	SCREW M6S ISO 4017 M6x20 A280	
390	315105-0153	-		8	WASHER,PLAIN ROUND 6,4x12 Stainless	
455	342706-0130	-		1	ACCESSORIES,INSERT SLEEVE 6	
480	352101-0107	-		1	LEAD-IN PR 37,0;PG29	
TBA 1000S						
030	458199-0001	-		1	PIPE	
050	556557-0005	-		1	PIPE	
055	556558-0005	-		1	PIPE	
060	556559-0005	-		1	PIPE	
065	556560-0005	-		1	PIPE	
TBA 0500B or TBA 0750B or TBA 1000B or TBA 1055B						
030	458199-0001	-		1	PIPE	
050	556557-0001	-		1	PIPE	
055	556558-0001	-		1	PIPE	
060	556559-0001	-		1	PIPE	
065	556560-0001	-		1	PIPE	
TBA 0750S						
030	458199-0001	-		1	PIPE	
050	556557-0004	-		1	PIPE	
055	556558-0004	-		1	PIPE	
060	556559-0004	-		1	PIPE	
065	556560-0004	-		1	PIPE	
TBA 0500SQ or TBA 1000SQ						
030	458199-0001	-		1	PIPE	
050	556557-0006	-		1	PIPE	
055	556558-0006	-		1	PIPE	
060	556559-0006	-		1	PIPE	
065	556560-0006	-		1	PIPE	

Pos	Part No	SP	UN	Qty	Description	Page No
TBA 0375S						
030	458199-0003	-		1	PIPE	
050	556557-0003	-		1	PIPE	
055	556558-0003	-		1	PIPE	
060	556559-0003	-		1	PIPE	
065	556560-0003	-		1	PIPE	
TBA 0355B or TBA 0400B or TBA 0500S						
030	458199-0002	-		1	PIPE	
050	556557-0002	-		1	PIPE	
055	556558-0002	-		1	PIPE	
060	556559-0002	-		1	PIPE	
065	556560-0002	-		1	PIPE	

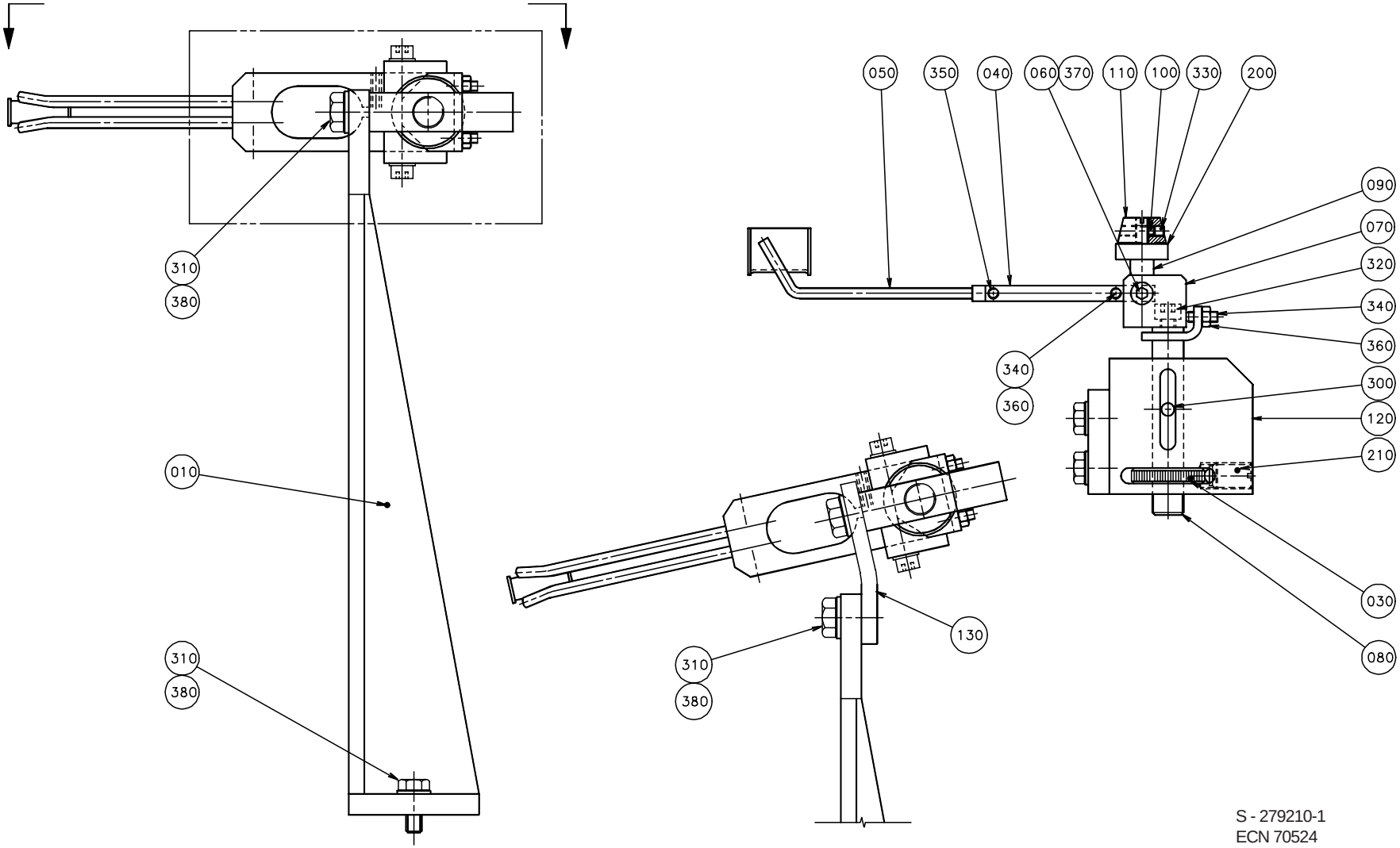

S - 279210-1
ECN 70524

Pos	Part No	SP	UN	Qty	Description	Page No
Common parts						
030	23580-0000	D		1	SHIFTER HANDLE	
040	23582-0000	D		1	HOLDER	
050	23583-0000	R		1	GUIDE FINGER	
060	23584-0000	R		2	SCREW	
070	24351-0000	D		1	BOW CLAMP	
080	24352-0000	D		1	SHAFT	
090	24355-0000	R		2	DOWEL	
100	24356-0000	R		4	PIECE	
110	111543-0000	R		2	GUIDE CONE	
120	245210-0000	-		1	BODY	
200	90214-0138	R		2	BEARINGS,BALL BEARING,STAINLESS	
210	90287-0009	-		1	SPRINGLOADED SCREW	
300	311103-0350	-		1	CYLINDRICACP M6 6X14 RFR	
320	312115-0366	-		1	SCREW MC6S ISO 4762 M6X12 A280	
330	312316-0283	-		4	STOP SCREW SK6SS4X4FZB	
340	312316-0291	-		3	STOP SCREW SK6SS4X12FZB	
350	312318-0285	-		2	STOP SCREW ISO 4029 M4x6 A4	
360	312605-0312	-		3	NUT,HEXAGON,M4 RFR	
370	315105-0146	-		2	WASHER,PLAIN ROUND 5,3x10 Stainless	
380	315105-0153	-		4	WASHER,PLAIN ROUND 6,4x12 Stainless	
TBA/8 0355B or TBA/8 0400B or TBA/8 0500S						
010	279211-0000	-		1	CANTILEVER	
130	450127-0002	-		1	BRACKET	
310	312105-0368	-		6	SCREW M6S ISO 4017 M6x16 A280	
TBA/8 0375S						
010	279211-0000	-		1	CANTILEVER	
130	450127-0003	-		1	BRACKET	
310	312105-0368	-		6	SCREW M6S ISO 4017 M6x16 A280	
TBA/8 0500B or TBA/8 0750B or TBA/8 1000B or TBA/8 1055B						
010	279211-0000	-		1	CANTILEVER	
130	450127-0001	-		1	BRACKET	
310	312105-0368	-		6	SCREW M6S ISO 4017 M6x16 A280	
TBA/8 0500SQ or TBA/8 0750S or TBA/8 1000SQ						
010	279211-0000	-		1	CANTILEVER	
130	450127-0004	-		1	BRACKET	
310	312105-0368	-		6	SCREW M6S ISO 4017 M6x16 A280	
TBA/8 1000S						
010	279211-0000	-		1	CANTILEVER	
130	450127-0005	-		1	BRACKET	
310	312105-0368	-		6	SCREW M6S ISO 4017 M6x16 A280	

Pos	Part No	SP	UN	Qty	Description	Page No

BENDING ROLLER BRACKET

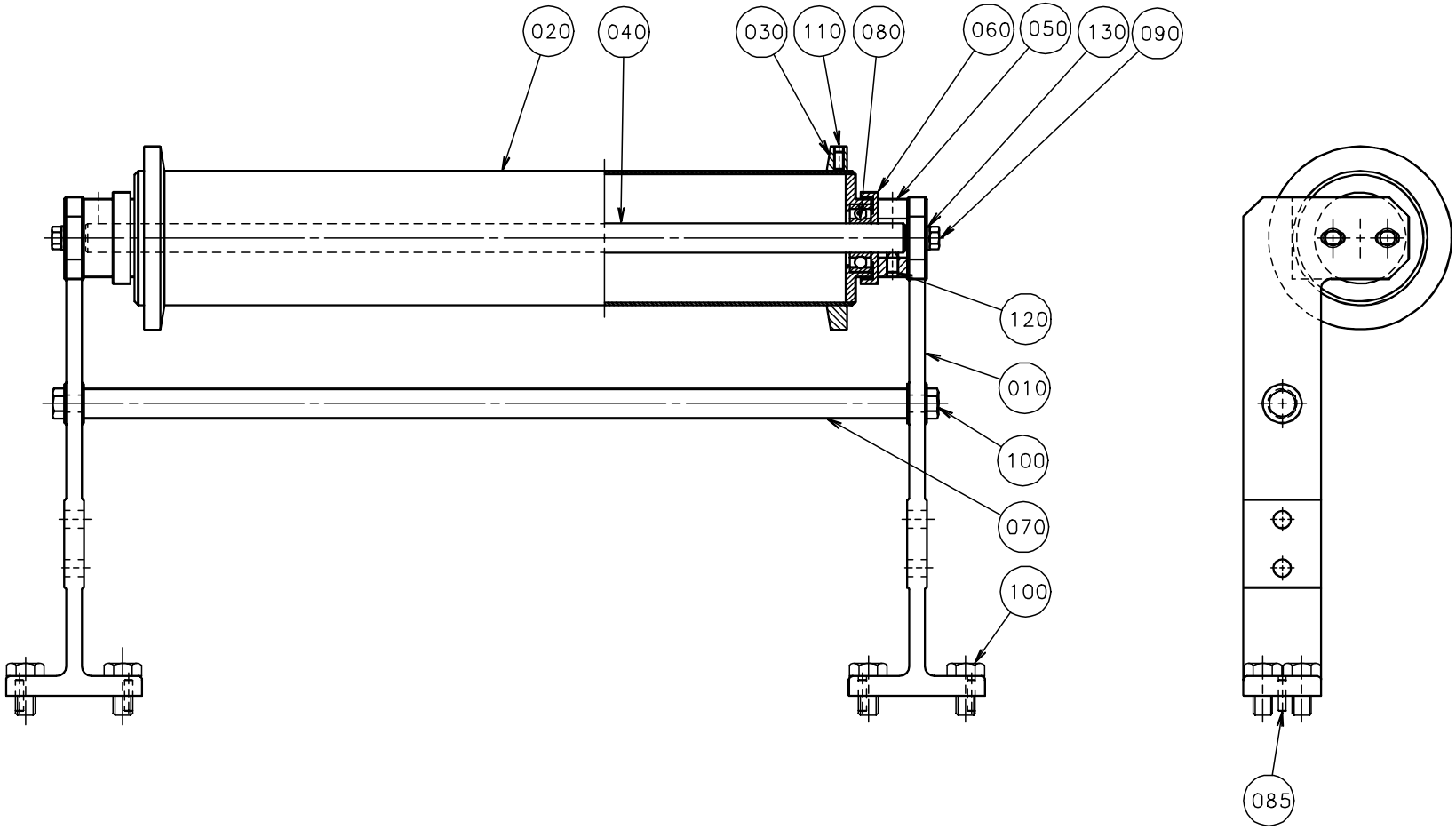

S - 265565-1
ECN 70524

Pos	Part No	SP	UN	Qty	Description	Page No
Common parts						
010	546116-0000	-		2	CANTILEVER	
030	250588-0000	D		2	FLANGE	
050	265567-0000	D		2	BEARING UNIT	
060	265568-0000	R		2	DUST COVER	
080	90214-0098	J		2	BALL BEARING,STAINLESS	
085	311305-0308	-		4	SLOTTED PIRPC5X16FZB	
090	312105-0370	-		4	SCREW M6S ISO 4017 M6x20 A280	
100	312105-0451	-		10	SCREW M6S ISO 4017 8x20 A280	
110	312318-0289	-		4	SET SCREW CUP POINT ISO 4029 M4X10 RFR	
120	312318-0364	-		4	STOP SCREW SK6SS6X10RFR	
130	315105-0153	-		4	WASHER,PLAIN ROUND 6,4x12 Stainless	
TBA/8 0355B or TBA/8 0375S or TBA/8 0400B or TBA/8 0500B or TBA/8 0500S or TBA/8 0500SQ or TBA/8 0750B or TBA/8 0750S or TBA/8 1000B or TBA/8 1000S or TBA/8 1000SQ or TBA/8 1055B						
020	265564-0000	D		1	BENDING ROLLER	
040	265566-0001	D		1	SHAFT	
070	265569-0001	-		1	STRUT	

Pos	Part No	SP	UN	Qty	Description	Page No

PRESSURE ROLLER

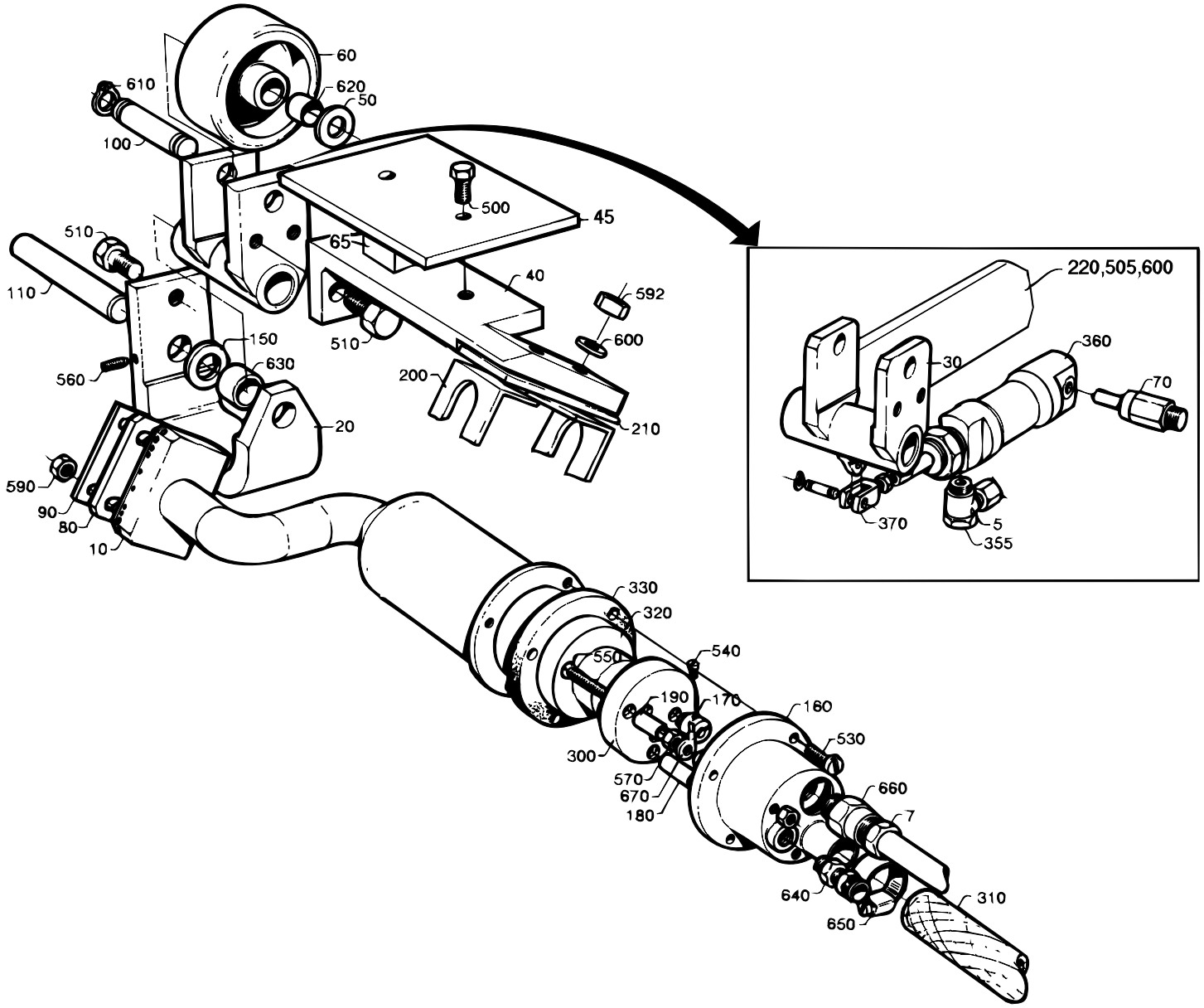

S-266726-3
ECN 14724

Pos	Part No	SP	UN	Qty	Description	Page No
Common parts						
005	342797-0121	-		2	BANJO CONNECTION,RINGPIECE 6-1/8"	
007	352136-0113	-		1	GLAND FITTING PR18,6/PG11 Di=12mm	
010	464197-0000	D		1	AIR NOZZLE	
020	266728-0000	-		1	CANTILEVER	
030	556565-0000	-		1	ROCKER ARM	
040	266730-0000	-		1	HOLDER	
045	542090-0000	-		1	HEAT GUARD	
050	2033-0009	J		2	WASHER	
060	21903-0000	J		1	ROLL	
065	242954-0000	-		2	WASHER	
070	556551-0000	D		1	CYLINDER BRACKET	
080	466412-0000	D		1	PLATE	
090	255417-0000	D		1	WASHER	
100	266731-0000	D		1	SHAFT	
110	266732-0000	D		1	SHAFT	
150	266737-0000	D		2	WASHER	
160	266738-0000	-		1	COVER	
170	266739-0000	D		3	CABLE GLAND	
180	266740-0001	D		2	SPACER	
190	266740-0002	D		1	SPACER	
200	450887-0000	-		1	CRAMP	
210	450888-0000	-		1	INSULATING PLATE	
220	556552-0000	-		1	BRACKET	
300	B 90125-0020	-		1	PLATE	
310	90166-0087	-	MM	600	HOSE	
320	90206-0085	K		1	HEATING CARTRIDGE 650W	
330	90206-0322	K		1	GASKET	
355	90235-0274	D		2	THROTTLE CHECK VALVES,G1/8"	
360	90239-0821	R		1	DOUBLE ACTING,MINI-ISO,CYL.20-25	
370	90239-0532	D		1	ROD END,CLEVIS WITH AXLE,M8	
500	312105-0370	-		2	SCREW M6S ISO 4017 M6x20 A280	
505	312105-0447	-		2	SCREW M6S ISO 4017 M8X12 A280	
510	312105-0451	-		4	SCREW M6S ISO 4017 8x20 A280	
530	312125-0291	-		4	SLOTTED CHEESE HEAD ISO 1207 M4x12 RFR	
540	312125-0220	-		3	SLOTTED HEMCS3X6RFR	
550	312145-0238	-		3	SLOTTED HEMFS3X40RFR	
560	312311-0292	-		1	STOP SCREW T6SS4X14FZB	
570	312605-0310	-		7	NUT,HEXAGON,M6M3 RFR	
590	312605-0314	-		2	NUT,HEXAGON,M6M5 Stainless	
592	312605-0318	-		2	NUT,HEXAGON,M8 RFR	
595	315105-0153	-		2	WASHER,PLAIN ROUND 6,4x12 Stainless	
600	315105-0165	-		4	WASHER,PLAIN ROUND 8,4x16 Stainless	
610	315750-0107	-		2	CIRCLIP SGA10	
620	321120-0104	M		2	BEARING BUSHING WITHOUT FLANGE,10/12X10	
630	321120-0110	M		2	BUSHING 12/14X12	
640	342921-0113	-		1	STRAIGHT COUPLING,EXT.THREADED 6/4-G1/8"	
650	342991-0103	-		2	HOSE CLIP,WORM DRIVE TYPE (19)-23	
660	352100-0106	-		1	CABLE GLANR.18,6-10,5	
670	353101-0130	-		1	CABLE SHOE 1,5-2,5mm2 Blue	

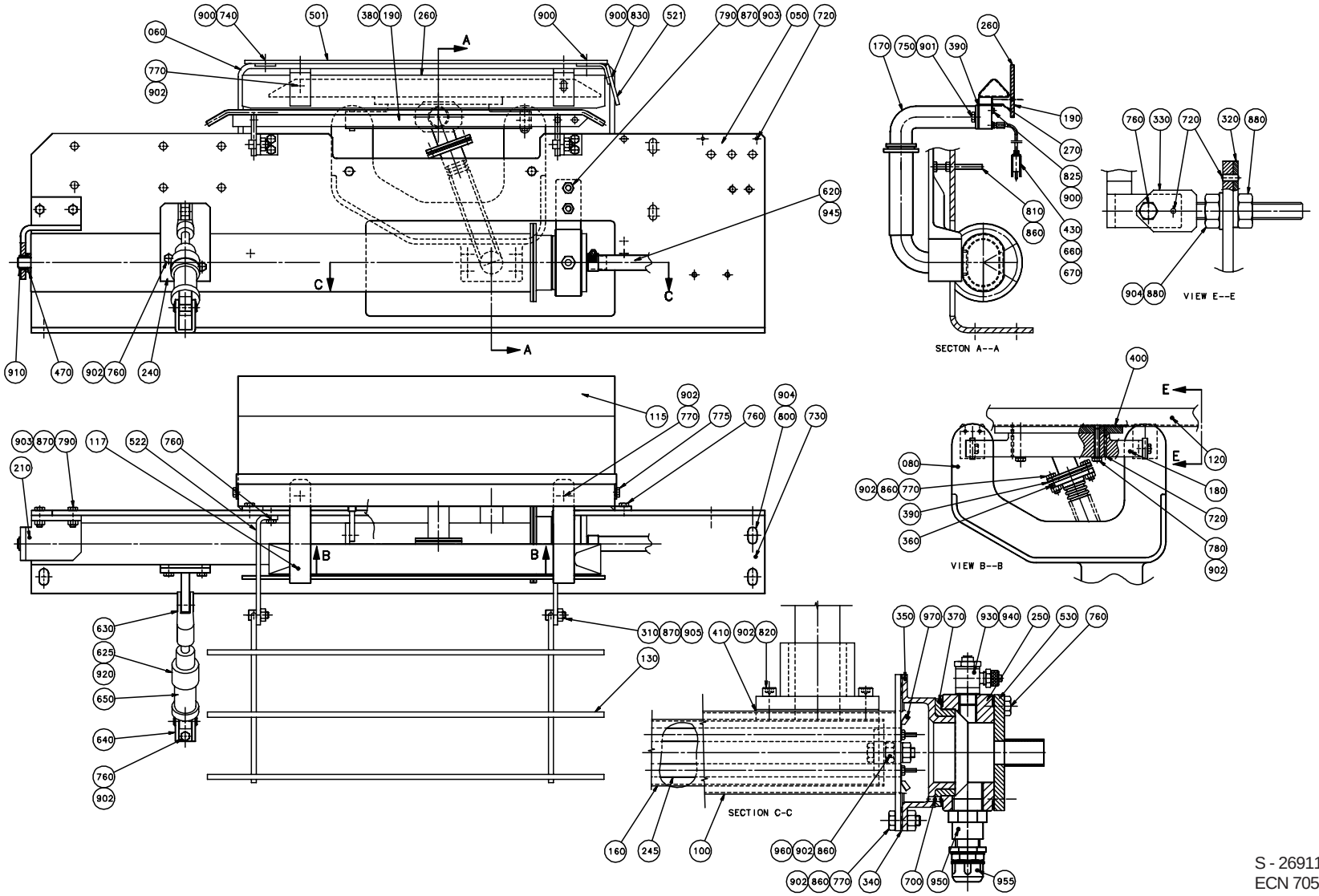

S - 269112-5
ECN 70524

Pos	Part No	SP	UN	Qty	Description	Page No
Common parts						
050	526948-0000	-		1	MOUNTING SHEET	
060	442480-0000	-		1	BOW CLAMP	
080	32668-0000	-		1	ARM	
100	36749-0000	-		1	MANTLE	
115	571428-0000	-		1	TOUCH GUARD	
117	445669-0000	-		1	HOLDER	
120	283361-0000	D		1	AIR NOZZLE	
150	32451-0000	D		1	AIR DUCT	
160	32453-0000	-		1	MANTLE	
170	32474-0000	-		1	ATTACHMENT	
180	245189-0001	-		1	ATTACHMENT	
190	246342-0000	D		1	PAPER SUPPORT	
210	251490-0000	D		1	FASTENING BRACKET	
240	556550-0000	D		1	BRACKET	
250	283172-0000	-		1	BEARING HOUSING	
260	445670-0000	D		1	PAPER SUPPORT	
270	445688-0000	D		1	AIR GUIDE	
310	22559-0000	R		4	GRUB SCREW	
320	32213-0000	-		2	WASHER	
330	32215-0000	D		2	HOLDER	
340	531733-0000	K		1	GASKET	
350	32217-0000	-		1	BOTTOM SECTION	
360	32219-0000	-		1	WASHER	
370	32223-0000	R		1	BEARING	
380	32400-0000	-		2	HOLDER	
390	531734-0000	J		2	GASKET	
400	531735-0000	J		1	GASKET	
410	531736-0000	J		1	GASKET	
430	37768-0000	R		1	THERMOCOUPLE CR-AL	
470	230107-0000	D		1	WASHER	
501	246344-0000	D		1	HEAT GUARD	
521	251502-0000	D		1	HEAT GUARD	
522	592586-0000	-		2	HOLDER	
530	279672-0000	-		1	ATTACHMENT	
620	90166-0087	-	MM	600	HOSE	
625	90235-0274	-		2	THROTTLE CHECK VALVES,G1/8"	
630	90239-0516	D		1	ROD END,CLEVIS WITH AXLE,M10X1,25	
640	90239-0487	D		1	BRACKET,REAR,CLEVIS FLANG,MINI-ISO,20-25	
650	90239-0829	M		1	CYLINDER 25-50	
660	90326-0012	D		1	PROTECTIVE COVER REPLY:6-3180118961)	
670	90326-0020	-		1	PLUG,FEMALE YELLOW CR-AL	
700	311103-0232	-		1	PINS,STRAIGHT 3X8	
720	311103-0267	-		10	PINS,STRAIGHT 4X10	
730	311305-0308	-		2	SLOTTED PIRPC5X16FZB	
740	312105-0291	-		4	SCREW M6S ISO 4017 M4X12 A280	
750	312105-0325	-		2	SCREW M6S 5x10 A2 80	
755	312105-0364	-		4	SCREW M6S 6x10 A280	
760	312105-0366	-		18	SCREW M6S ISO 4017 M6X12 A280	
770	312105-0368	-		16	SCREW M6S ISO 4017 M6x16 A280	
780	312105-0378	-		2	SCREW O4017 M6X40A280	
790	312105-0451	-		4	SCREW M6S ISO 4017 8x20 A280	
800	312105-0489	-		6	SCREW M6S ISO 4017 M10X16 A280	
810	312109-0381	-		2	SCREW M6S6X55HA480	
820	312115-0368	-		4	SCREW MC6S ISO 4762 M6x16 A280	
825	312125-0285	-		1	SLOTTED HEAD SCREW MCS 4X6 RFR	
830	312125-0287	-		2	SLOTTED CHEESE HEAD ISO 1207 M4X8 RFR	
860	312605-0316	-		12	NUT,HEXAGON A280 M6M6	
870	312605-0318	-		8	NUT,HEXAGON,M8 RFR	
880	312605-0320	-		4	NUT,HEXAGON,M10 A280	
900	315105-0136	-		7	WASHER,PLAIN ROUND 4,3x8 Stainless	
901	315105-0146	-		2	WASHER,PLAIN ROUND 5,3x10 Stainless	
902	315105-0153	-		27	WASHER,PLAIN ROUND 6,4x12 Stainless	
903	315105-0165	-		4	WASHER,PLAIN ROUND 8,4x16 Stainless	
904	315105-0173	-		6	WASHER,PLAIN ROUND 10,5x22 STAINLESS	
905	315121-0165	-		4	WASHER TBRSB8,4X26FZB	
910	321101-0173	M		1	FLANGE BUS 12F7x12	
920	342797-0121	-		2	BANJO CONNECTION,RINGPIECE 6-1/8"	
930	342797-0122	-		2	BANJO CONNECTION,RINGPIECE 6-1/4"	
940	342980-0304	-		1	BANJO-HOLLOW BOLT COUPL,EXT.THR.01-G1/4"	
945	342991-0103	-		2	HOSE CLIP,WORM DRIVE TYPE (19)-23	
950	352100-0106	-		1	CABLE GLANR.18,6-10,5	
955	352136-0113	-		1	GLAND FITTING PR18,6/PG11 Di=12mm	
960	353101-0134	-		1	CABLE SHOE	
970	353104-0130	-		2	CABLE SHOEYAV 025 M 4*	
TBA 0355B IH or TBA 0400B IH or TBA 0500S IH						
130	1296003-0000	-		1	PAPER SUPPORT	
245	267494-0000	M		1	COIL HEATER	
TBA 0375S IH						
130	1143677-0000	-		1	PAPER SUPPORT	
245	267494-0000	M		1	COIL HEATER	
TBA 0500B IH or TBA 0500SQ IH or TBA 0750B IH or TBA 0750S IH or TBA 1000B IH or TBA 1000S IH or TBA 1000SQ IH or TBA 1055B IH						
130	22560-0000	-		1	PAPER SUPPORT	
245	267494-0000	M		1	COIL HEATER	

PRESSURE ROLLER

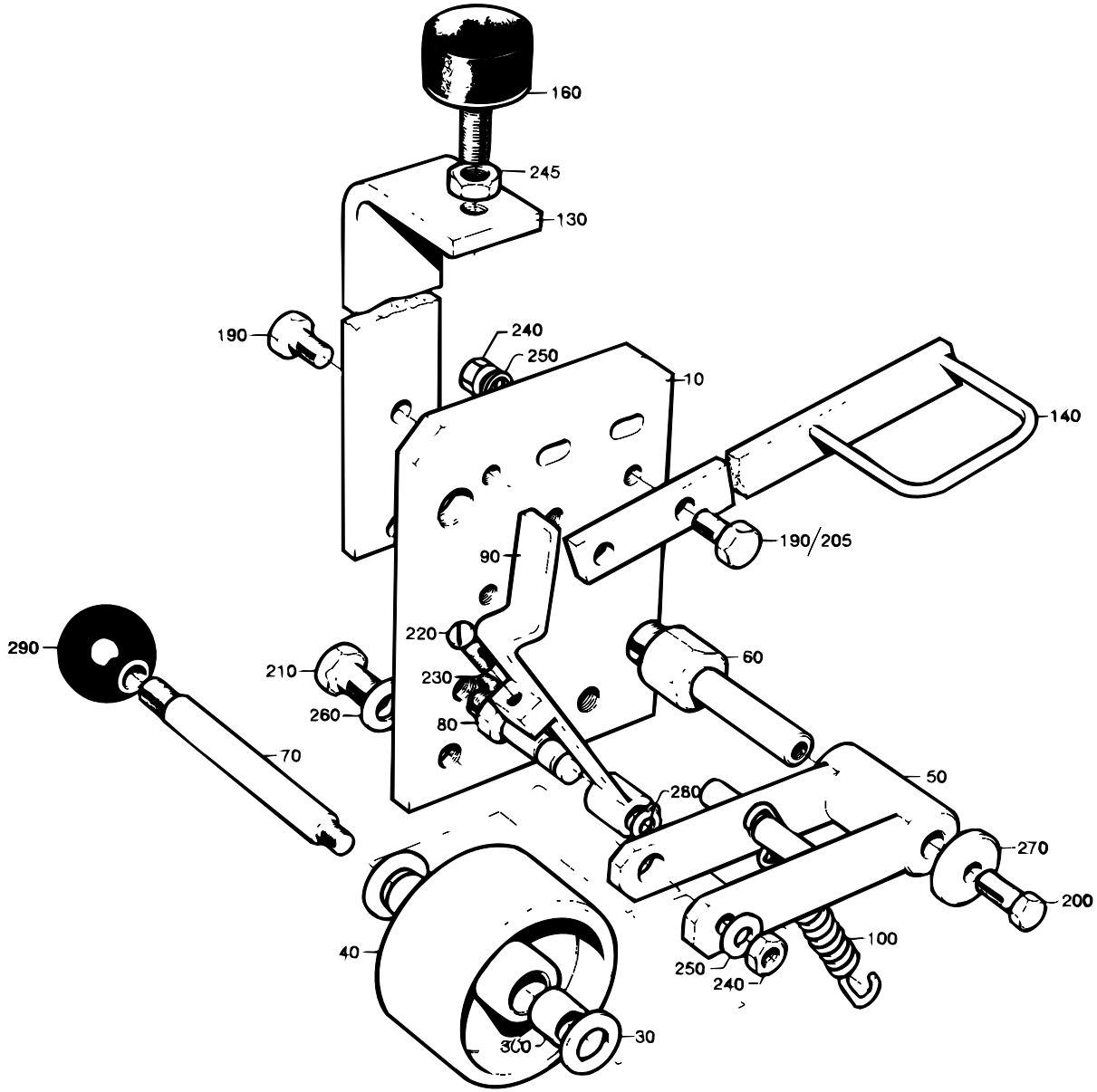

S-282528-1
ECN 8264

Pos	Part No	SP	UN	Qty	Description	Page No
Common parts						
010	526947-0000	-		1	MOUNTING SHEET	
030	2033-0009	J		2	WASHER	
040	21903-0000	J		1	ROLL	
050	251493-0000	D		1	FORK	
060	251494-0000	D		1	SHAFT	
070	251495-0000	D		1	SHAFT	
080	251496-0000	D		1	SHAFT	
090	251498-0000	D		1	BARRIER	
100	279074-0000	K		1	TENSION SPRING	
130	282596-0000	-		1	SUPPORT	
160	90347-0004	R		1	VIBRATION DAMPER	
200	312105-0368	-		1	SCREW M6S ISO 4017 M6x16 A280	
210	312105-0449	-		2	SCREW M6S ISO 4017 M8x16 A280	
220	312125-0329	-		1	SLOTTED CHEESE HEAD ISO 1207 M5X16 RFR	
230	312318-0285	-		1	STOP SCREW ISO 4029 M4x6 A4	
245	312605-0318	-		1	NUT,HEXAGON,M8 RFR	
260	315105-0165	-		2	WASHER,PLAIN ROUND 8,4x16 Stainless	
270	315121-0153	-		1	WASHER TBRSB 6,4x22 FZB	
280	315750-0105	-		1	CIRCLIP SGA8	
290	318800-0104	-		1	HANDLES,SPHERICAL KNOB,INT.THRE.,D.30-M8	
300	321120-0104	K		2	BEARING BUSHING WITHOUT FLANGE,10/12X10	
TBA/8						
140	282625-0000	-		1	EYELET	
190	312105-0366	-		3	SCREW M6S ISO 4017 M6X12 A280	
205	312105-0370	-		1	SCREW M6S ISO 4017 M6x20 A280	
240	312605-0316	-		2	NUT,HEXAGON A280 M6M6	
250	315105-0153	-		3	WASHER,PLAIN ROUND 6,4x12 Stainless	

Pos	Part No	SP	UN	Qty	Description	Page No

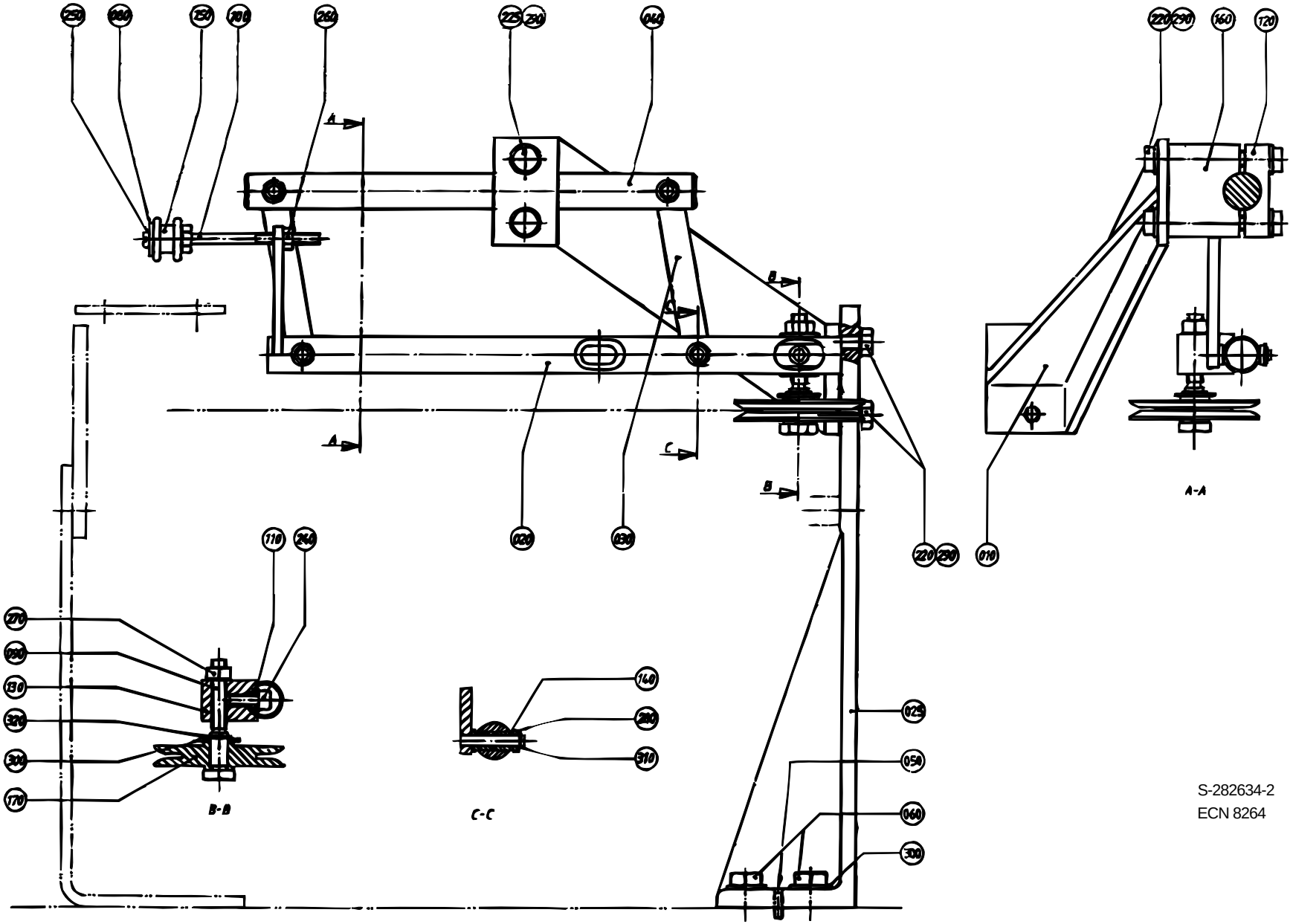
A-A
B-B
C-C
S-282634-2
ECN 8264

Pos	Part No	SP	UN	Qty	Description	Page No
TBA/8 0355B or TBA/8 0400B or TBA/8 0500S						
020	450460-0001	-		1	GUIDE SHAFT	
040	450461-0000	-		1	SHAFT	
300	315105-0173	-		1	WASHER,PLAIN ROUND 10,5x22 STAINLESS	
TBA/8 0375S						
020	450460-0002	-		1	GUIDE SHAFT	
040	450461-0000	-		1	SHAFT	
300	315105-0173	-		1	WASHER,PLAIN ROUND 10,5x22 STAINLESS	
TBA/8 0500B or TBA/8 0750B or TBA/8 1000B or TBA/8 1000S or TBA/8 1055B						
020	239665-0000	-		1	GUIDE SHAFT	
040	243151-0000	-		1	SHAFT	
300	315105-0173	-		1	WASHER,PLAIN ROUND 10,5x22 STAINLESS	
TBA/8 0500SQ or TBA/8 0750S or TBA/8 1000SQ						
020	450460-0003	-		1	GUIDE SHAFT	
040	450461-0000	-		1	SHAFT	
300	315105-0173	-		1	WASHER,PLAIN ROUND 10,5x22 STAINLESS	
Common parts						
010	243218-0000	-		1	CANTILEVER	
030	31417-0000	-		2	LINK	
080	19262-0000	-		1	WASHER	
090	31418-0000	D		1	SHAFT	
100	31419-0000	D		1	SHAFT	
110	31420-0000	R		1	WASHER	
120	31423-0000	-		1	MOUNTING LUG	
130	31424-0000	D		1	ROLLER BRACKET	
140	255064-0000	J		8	BUSHING	
150	257923-0000	K		1	GUIDE WHEEL	
160	266761-0000	-		1	MOUNTING LUG	
170	282635-0000	K		1	GUIDE WHEEL	
215	90194-0016	-		1	SIGN "FLASH SIGN" 50X50MM	
220	312105-0451	-		4	SCREW M6S ISO 4017 8x20 A280	
225	312105-0455	-		2	SCREW M6S ISO 4017 M8X30 A280	
240	312115-0368	-		1	SCREW MC6S ISO 4762 M6x16 A280	
250	312125-0323	-		1	SLOTTED CHEESE HEAD ISO 1207 M5X8 RFR	
260	312605-0316	-		1	NUT,HEXAGON A280 M6M6	
270	312605-0318	-		1	NUT,HEXAGON,M8 RFR	
280	315105-0153	-		4	WASHER,PLAIN ROUND 6,4x12 Stainless	
290	315105-0165	-		6	WASHER,PLAIN ROUND 8,4x16 Stainless	
310	315754-0107	-		4	LOCKING WAE 5	
320	315754-0110	-		1	LOCKING WAE 9	

Pos	Part No	SP	UN	Qty	Description	Page No

SPLICE DETECTOR

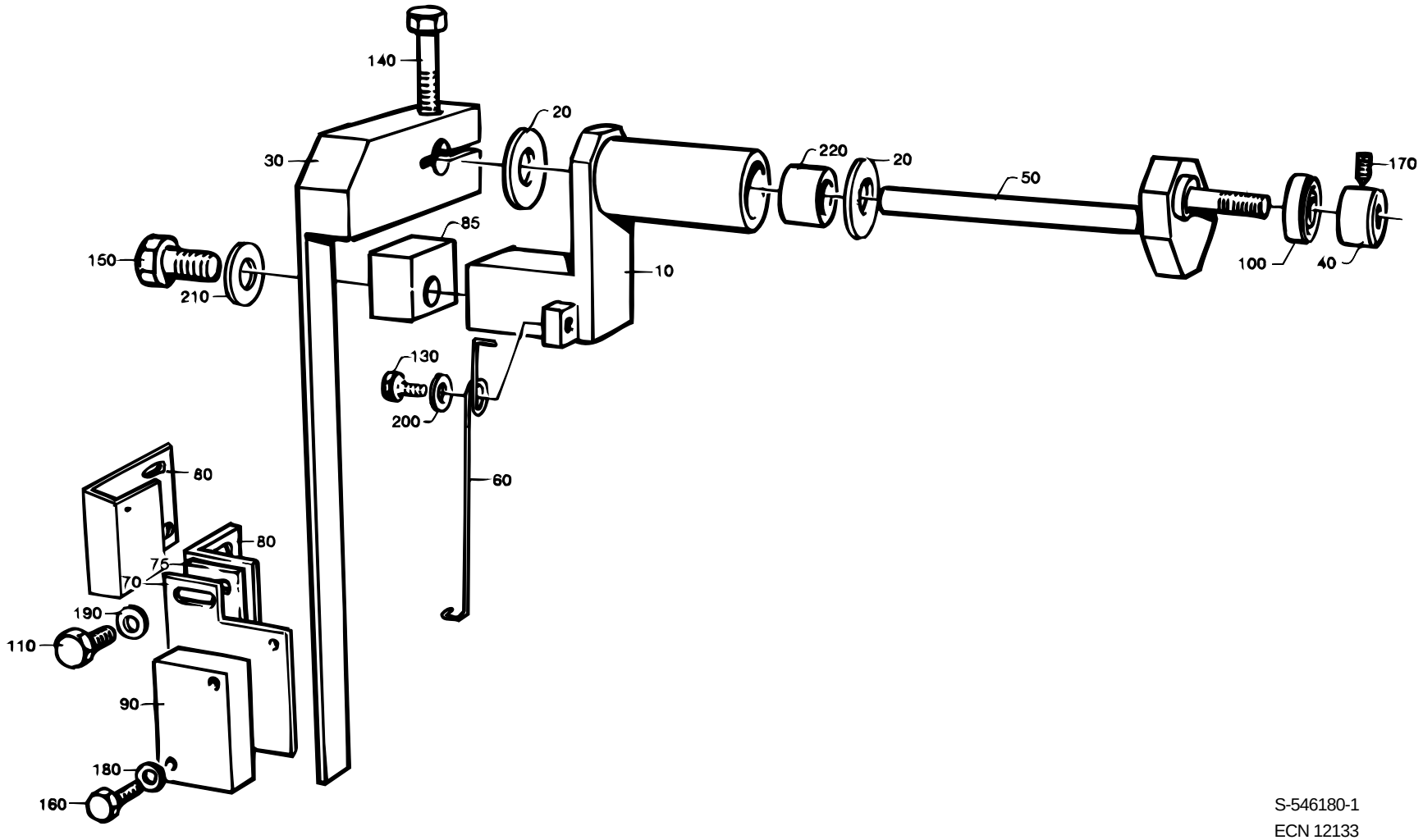

S-546180-1
ECN 12133

Pos	Part No	SP	UN	Qty	Description	Page No
TBA/8						
060	272466-0000	K		1	SPRING	
070	450117-0000	-		1	HOLDER	
210	315105-0153	-		2	WASHER,PLAIN ROUND 6,4x12 Stainless	
Common parts						
010	450116-0000	-		1	CANTILEVER	
020	271211-0000	R		2	WASHER	
030	271653-0000	-		1	ARM	
040	271654-0000	D		1	RETAINING RING	
050	271655-0000	-		1	HOLDER	
090	90044-0104	M		1	PROX.SWITCH IFM IN 3002	
100	90214-0138	J		1	BEARINGS,BALL BEARING,STAINLESS	
110	312105-0287	-		2	SCREW M6S ISO 4017 M4x8 A280	
130	312105-0327	-		1	SCREW M6S ISO 4017 M5X12 A280	
140	312105-0370	-		1	SCREW M6S ISO 4017 M6x20 A280	
150	312105-0372	-		2	SCREW M6S ISO 4017 M6X25 A280	
160	312115-0228	-		2	SCREW MC6S ISO 4762 M3X16 A280	
170	312318-0283	-		1	SET SCREW CUP POINT ISO 4029 M4X4 RFR	
180	315105-0124	-		2	WASHER,PLAIN ROUND 3,2x6	
190	315105-0136	-		2	WASHER,PLAIN ROUND 4,3x8 Stainless	
200	315105-0146	-		1	WASHER,PLAIN ROUND 5,3x10 Stainless	
220	321127-0100	M		2	BEARING BUSHING WITHOUT FLANGE,10/13X10	

Pos	Part No	SP	UN	Qty	Description	Page No

This page is intentionally left blank

Pos	Part No	SP	UN	Qty	Description	Page No
TBA/8						
010	267494-0000	-		1	COIL HEATER	
Common parts						
020	21903-0000	-		1	ROLL	
030	531733-0000	-		1	GASKET	
040	531734-0000	-		2	GASKET	
050	531735-0000	-		1	GASKET	
060	531736-0000	-		1	GASKET	

Pos	Part No	SP	UN	Qty	Description	Page No

STRIP MAGAZINE

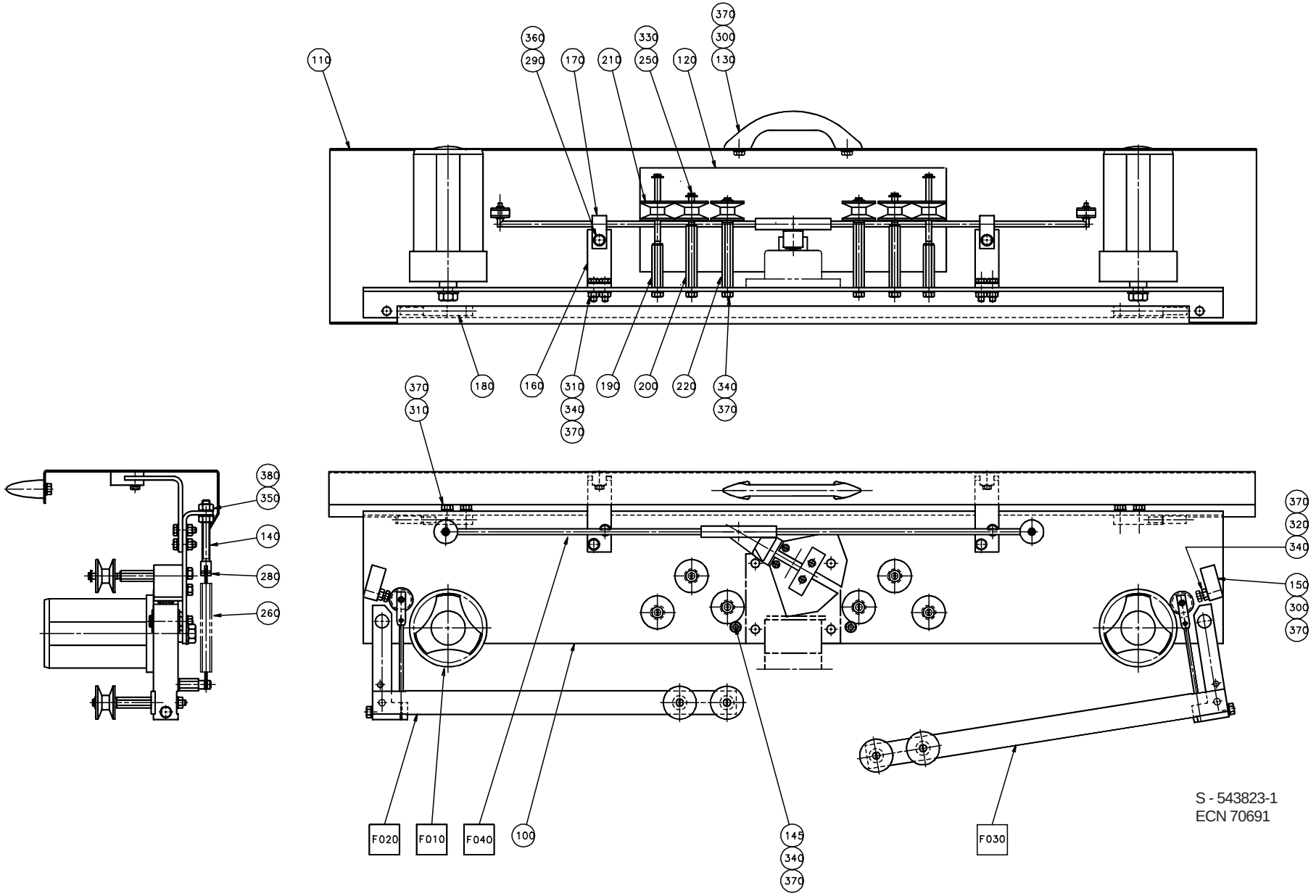

Pos	Part No	SP	UN	Qty	Description	Page No
Common parts						
F010	A 537329-0100	-		2	HUB JUMBO	**749**
F020	A 543822-0100	-		1	BRAKE ARM	**751**
F030	A 594620-0100	-		1	BRAKE ARM	**753**
F040	A 543821-0100	-		1	LEVEL PROBE	**755**
100	540869-0000	-		1	SHEET	
110	543818-0000	-		1	PROTECTION PLATE	
120	545113-0000	-		1	SIGN STRIP MAGAZINE	
130	7309-0000	-		1	HANDLE	
140	541068-0000	D		2	SPRING HOLDER	
145	541172-0000	-		2	SET SCREW	
150	541173-0000	-		2	STOP	
160	543125-0000	-		2	ANGLE	
170	543126-0000	-		2	STOP LUG	
180	543819-0000	-		2	HINGE	
190	544725-0000	M		2	AXLE PIN	
200	544727-0000	M		2	AXLE PIN	
210	B 544730-0000	J		6	ROLL	
220	536916-0000	M		2	AXLE PIN	
250	90005-0082	-		6	WASHER,Plain Round 4,3x 12, H= 1, M4	
260	90335-0015	K		2	SPRING 42360 Barnes	
280	311112-0205	-		2	PINS,SLOTTED TUBULAR SPRING PIN 3X10	
290	312105-0327	-		2	SCREW M6S ISO 4017 M5X12 A280	
300	312105-0366	-		6	SCREW M6S ISO 4017 M6X12 A280	
310	312105-0368	-		8	SCREW M6S ISO 4017 M6x16 A280	
320	312109-0374	-		2	SCREW M6S ISO 4017 M6X30 A280	
330	312125-0287	-		6	SLOTTED CHEESE HEAD ISO 1207 M4X8 RFR	
340	312605-0316	-		14	NUT,HEXAGON A280 M6M6	
350	312605-0318	-		4	NUT,HEXAGON,M8 RFR	
360	315105-0146	-		2	WASHER,PLAIN ROUND 5,3x10 Stainless	
370	315105-0153	-		24	WASHER,PLAIN ROUND 6,4x12 Stainless	
380	315105-0165	-		4	WASHER,PLAIN ROUND 8,4x16 Stainless	

Pos	Part No	SP	UN	Qty	Description	Page No

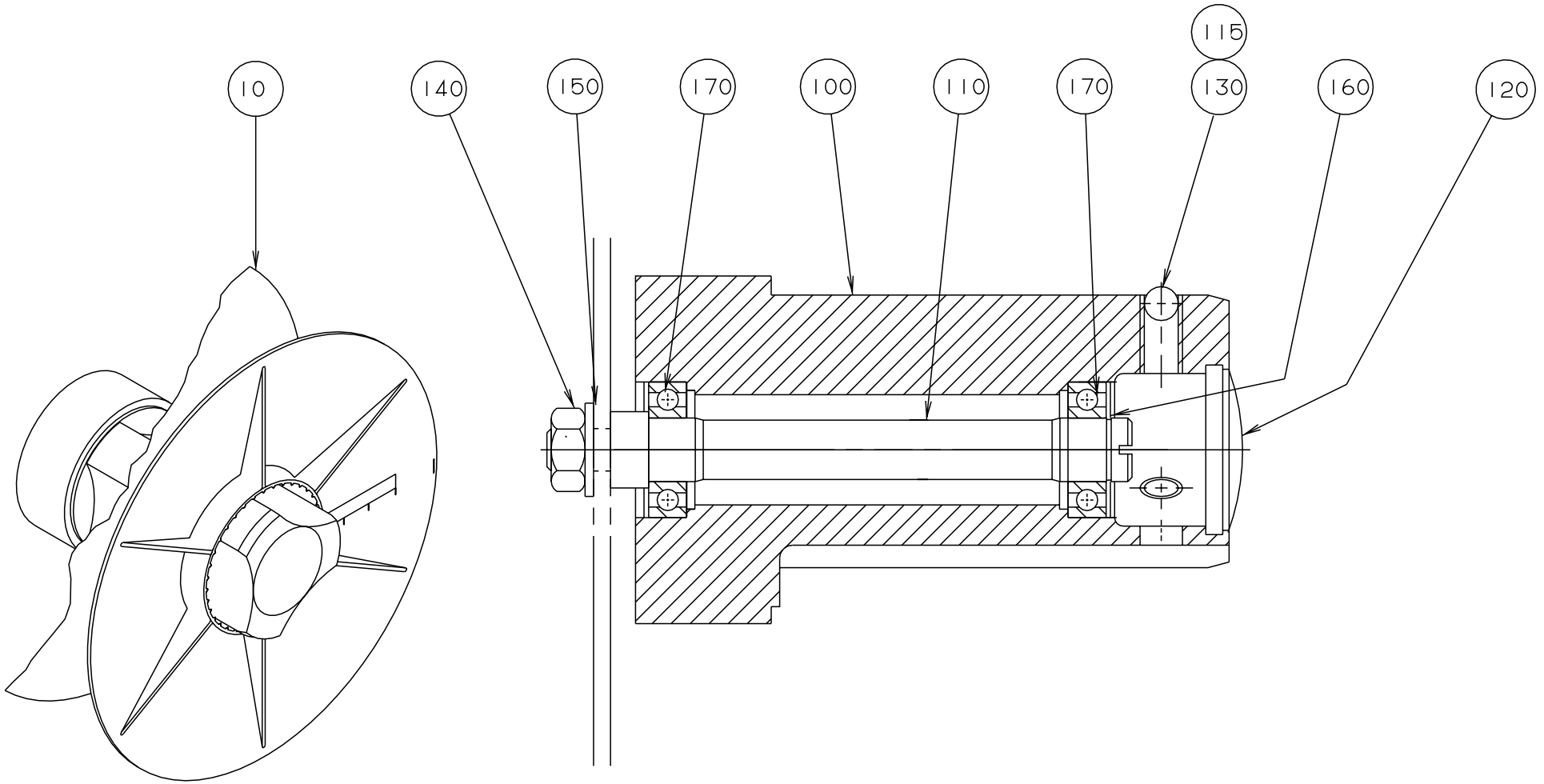

S-537329-1
ECN 12660

Pos	Part No	SP	UN	Qty	Description	Page No
Common parts						
010	541751-0000	-		x	CONICAL BOBBIN	
100	536913-0000	D		1	HUB	
110	537327-0000	D		1	SHAFT	
115	90157-0016	-		x	LOCKING FLUID	
120	90261-0049	-		1	PLASTIC PLUG	
130	90287-0106	-		3	SCREW, SPRINGLOADED M10x21	
140	312605-0320	-		1	NUT,HEXAGON,M10 A280	
150	315105-0173	-		1	WASHER,PLAIN ROUND 10,5x22 STAINLESS	
160	315751-0112	-		1	RETAINING RINGS FOR SHAFT 15	
170	321308-0202	R		2	BALL BEARING 15x32x9	

Pos	Part No	SP	UN	Qty	Description	Page No

BRAKE ARM

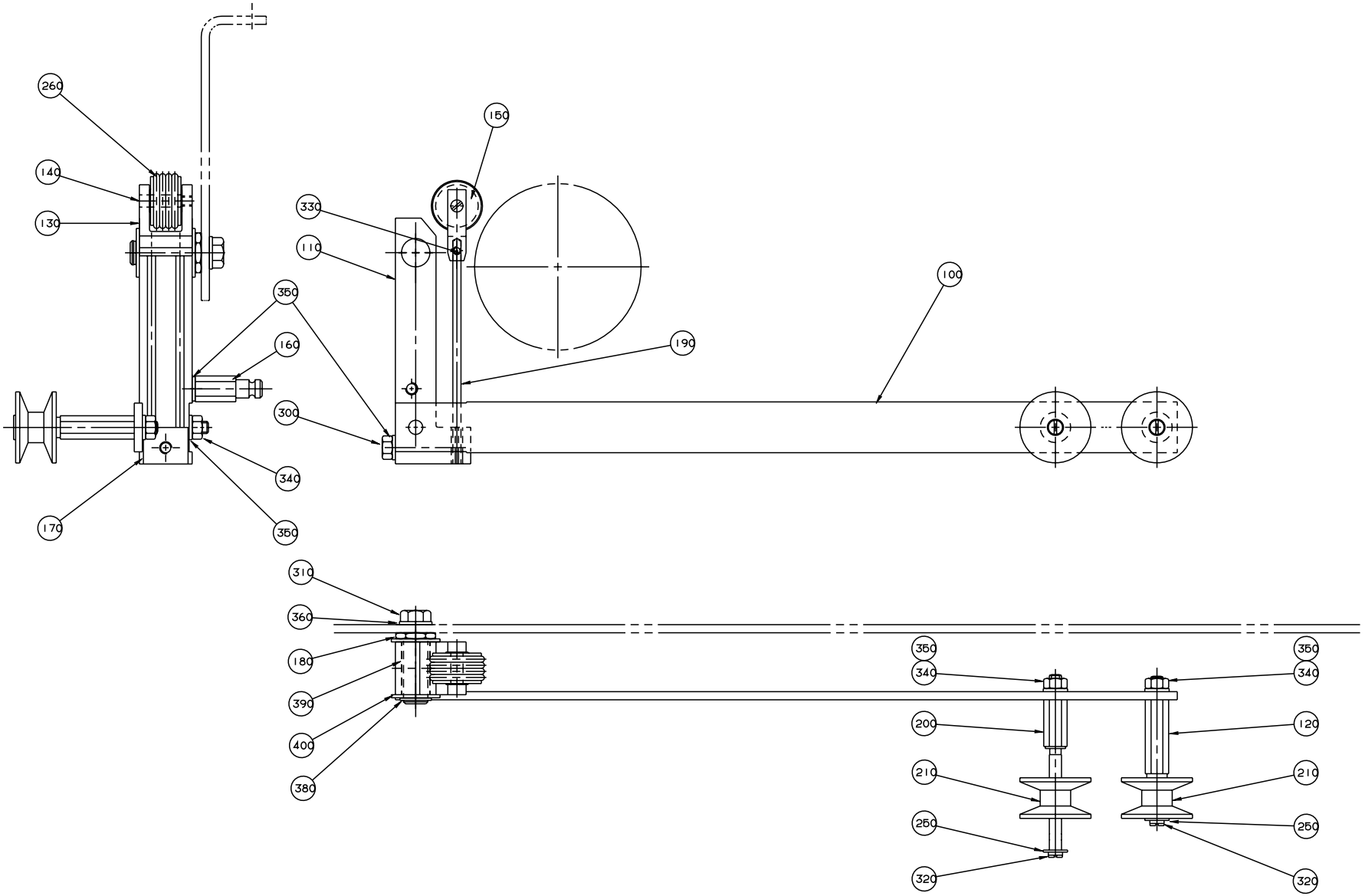

S-543822-1
ECN 11854

Pos	Part No	SP	UN	Qty	Description	Page No
Common parts						
100	540870-0000	D		1	ARM	
110	541057-0000	D		1	ARM	
120	536917-0000	M		1	AXLE PIN	
130	541064-0000	D		1	FORK	
140	541065-0000	D		1	SHAFT	
150	541066-0000	R		1	ROLL	
160	541067-0000	D		1	SPRING BRACKET	
170	541069-0000	D		1	SPRING BRACKET	
180	541070-0000	D		1	SHAFT	
190	543820-0000	K		2	SPRING	
200	544726-0000	M		1	AXLE PIN	
210	B 544730-0000	J		2	ROLL	
250	90005-0082	-		2	WASHER,Plain Round 4,3x 12, H= 1, M4	
260	90242-0148	R		4	O-RING	
300	312105-0378	-		1	SCREW O4017 M6X40A280	
310	312105-0449	-		1	SCREW M6S ISO 4017 M8x16 A280	
320	312125-0287	-		2	SLOTTED CHEESE HEAD ISO 1207 M4X8 RFR	
330	312318-0283	-		2	SET SCREW CUP POINT ISO 4029 M4X4 RFR	
340	312605-0316	-		3	NUT,HEXAGON A280 M6M6	
350	315105-0153	-		5	WASHER,PLAIN ROUND 6,4x12 Stainless	
360	315105-0165	-		1	WASHER,PLAIN ROUND 8,4x16 Stainless	
380	315751-0109	-		1	RETAINING RINGS FOR SHAFT 12	
390	321120-0113	K		1	BEARING BUSHING WITHOUT FLANGE,12/14X25	
400	321129-0104	-		1	THRUST WASHER 12/24X1,5	

Pos	Part No	SP	UN	Qty	Description	Page No

BRAKE ARM

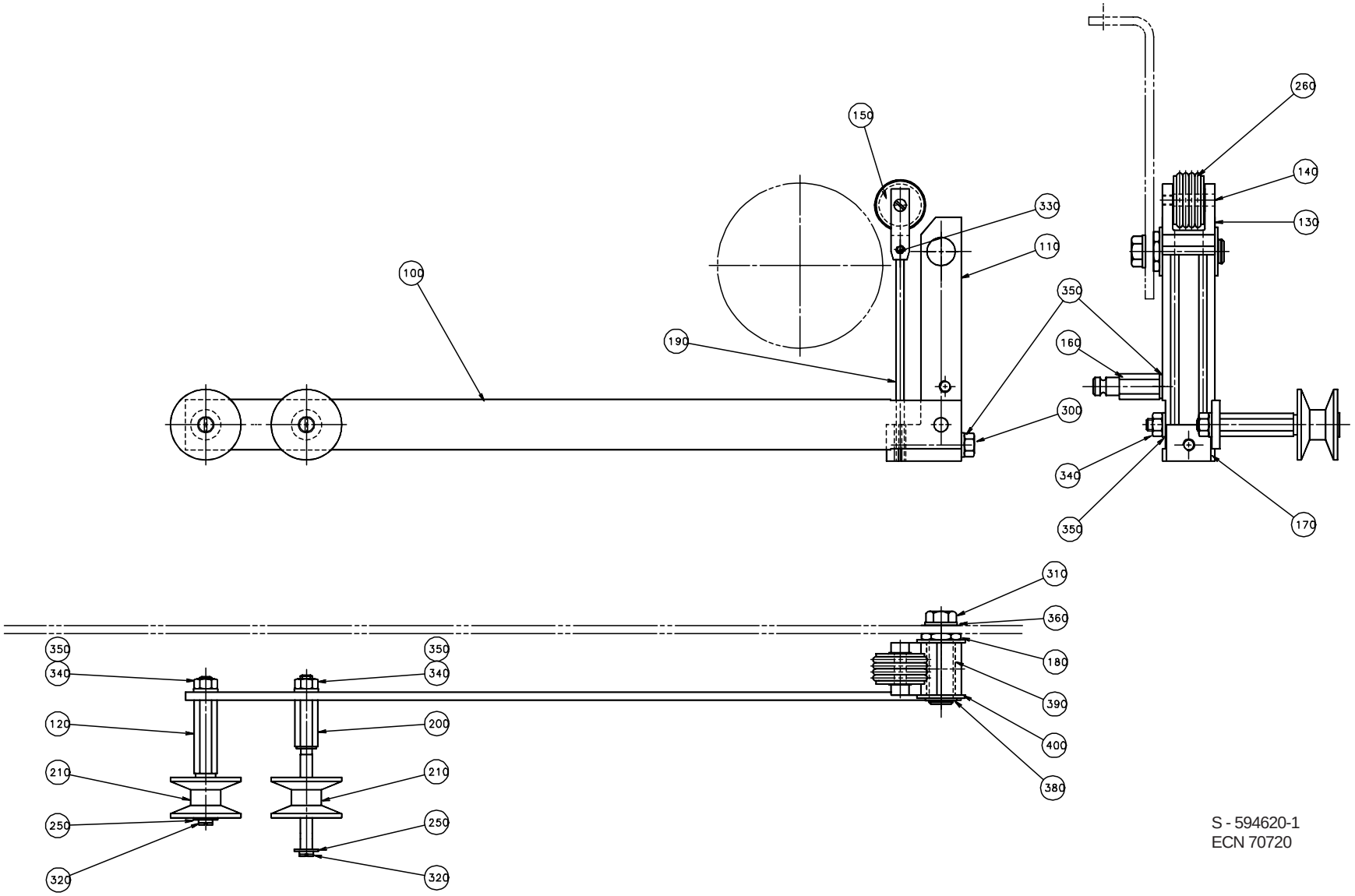

S - 594620-1
ECN 70720

Pos	Part No	SP	UN	Qty	Description	Page No
Common parts						
100	540870-0000	D		1	ARM	
110	541057-0000	D		1	ARM	
120	536917-0000	M		1	AXLE PIN	
130	541064-0000	D		1	FORK	
140	541065-0000	D		1	SHAFT	
150	541066-0000	R		1	ROLL	
160	541067-0000	D		1	SPRING BRACKET	
170	541069-0000	D		1	SPRING BRACKET	
180	541070-0000	D		1	SHAFT	
190	543820-0000	K		2	SPRING	
200	544726-0000	M		1	AXLE PIN	
210	B 544730-0000	J		2	ROLL	
250	90005-0082	-		2	WASHER,Plain Round 4,3x 12, H= 1, M4	
260	90242-0148	R		4	O-RING	
300	312105-0378	-		1	SCREW O4017 M6X40A280	
310	312105-0449	-		1	SCREW M6S ISO 4017 M8x16 A280	
320	312125-0287	-		2	SLOTTED CHEESE HEAD ISO 1207 M4X8 RFR	
330	312318-0283	-		2	SET SCREW CUP POINT ISO 4029 M4X4 RFR	
340	312605-0316	-		3	NUT,HEXAGON A280 M6M6	
350	315105-0153	-		5	WASHER,PLAIN ROUND 6,4x12 Stainless	
360	315105-0165	-		1	WASHER,PLAIN ROUND 8,4x16 Stainless	
380	315751-0109	-		1	RETAINING RINGS FOR SHAFT 12	
390	321120-0113	K		1	BEARING BUSHING WITHOUT FLANGE,12/14X25	
400	321129-0104	-		1	THRUST WASHER 12/24X1,5	

Pos	Part No	SP	UN	Qty	Description	Page No

LEVEL PROBE

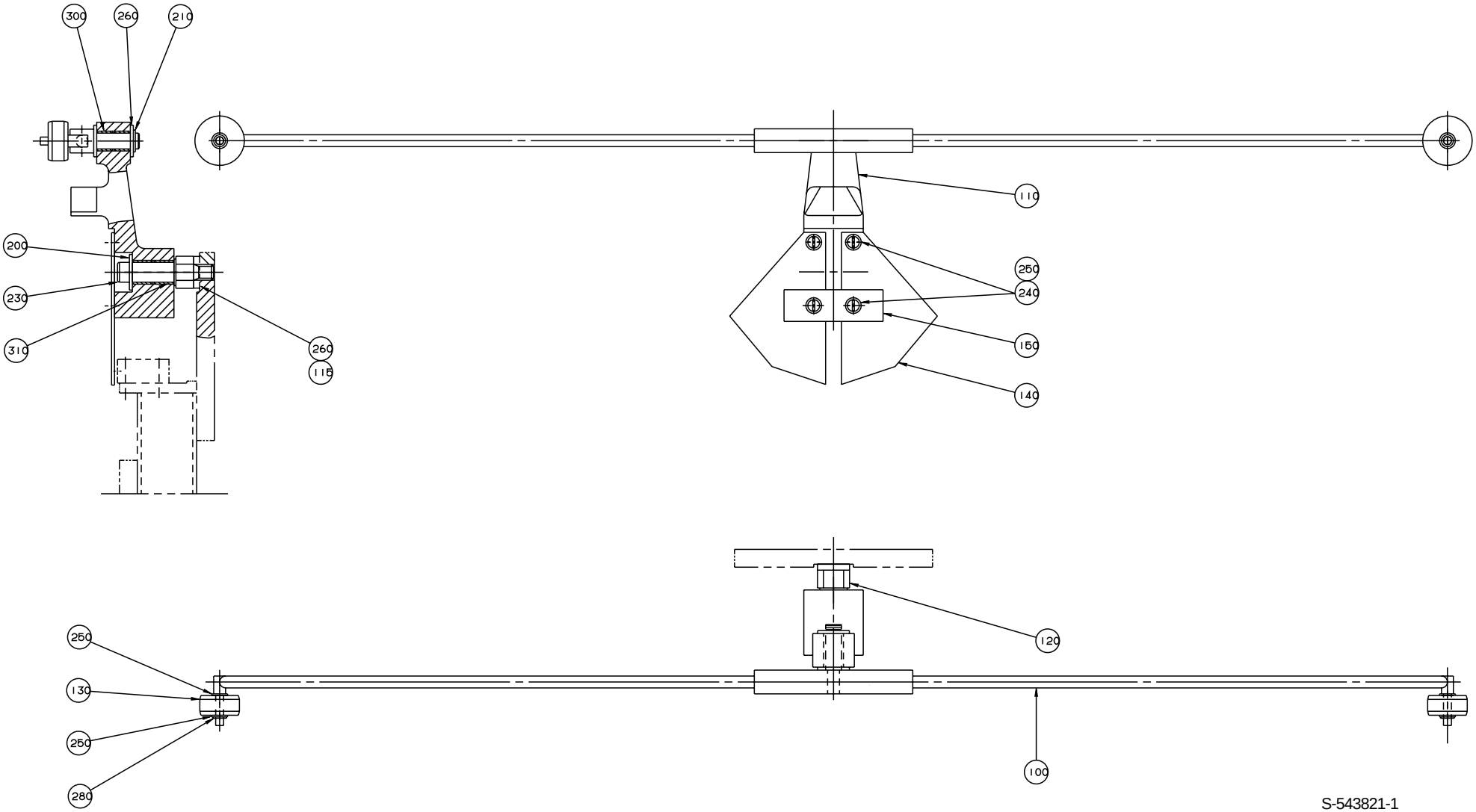

S-543821-1
ECN 11854

Pos	Part No	SP	UN	Qty	Description	Page No
Common parts						
100	542781-0000	D		1	ARM	
110	542784-0000	D		1	LINK ARM	
115	2033-0008	D		3	WASHER	
120	542782-0000	D		1	AXLE PIN	
130	542785-0000	M		2	ROLL	
140	542786-0000	D		2	FLAG	
150	543575-0000	-		1	LOCK SHEET	
200	90005-0060	-		1	WASHER,Plain round 6,4x 18, H= 1,5, M6	
210	90141-0015	-		1	RETAINING RINGS FOR SHAFT 8	
230	312115-0366	-		1	SCREW MC6S ISO 4762 M6X12 A280	
240	312125-0287	-		4	SLOTTED CHEESE HEAD ISO 1207 M4X8 RFR	
250	315105-0136	-		8	WASHER,PLAIN ROUND 4,3x8 Stainless	
260	315105-0165	-		3	WASHER,PLAIN ROUND 8,4x16 Stainless	
280	315755-0105	-		2	RETAINING RINGS,RADIAL ASSEMBLY 3,2	
300	321120-0103	R		2	BEARING BUSHING WITHOUT FLANGE,8/10X8	
310	321120-0104	R		2	BEARING BUSHING WITHOUT FLANGE,10/12X10	

Pos	Part No	SP	UN	Qty	Description	Page No

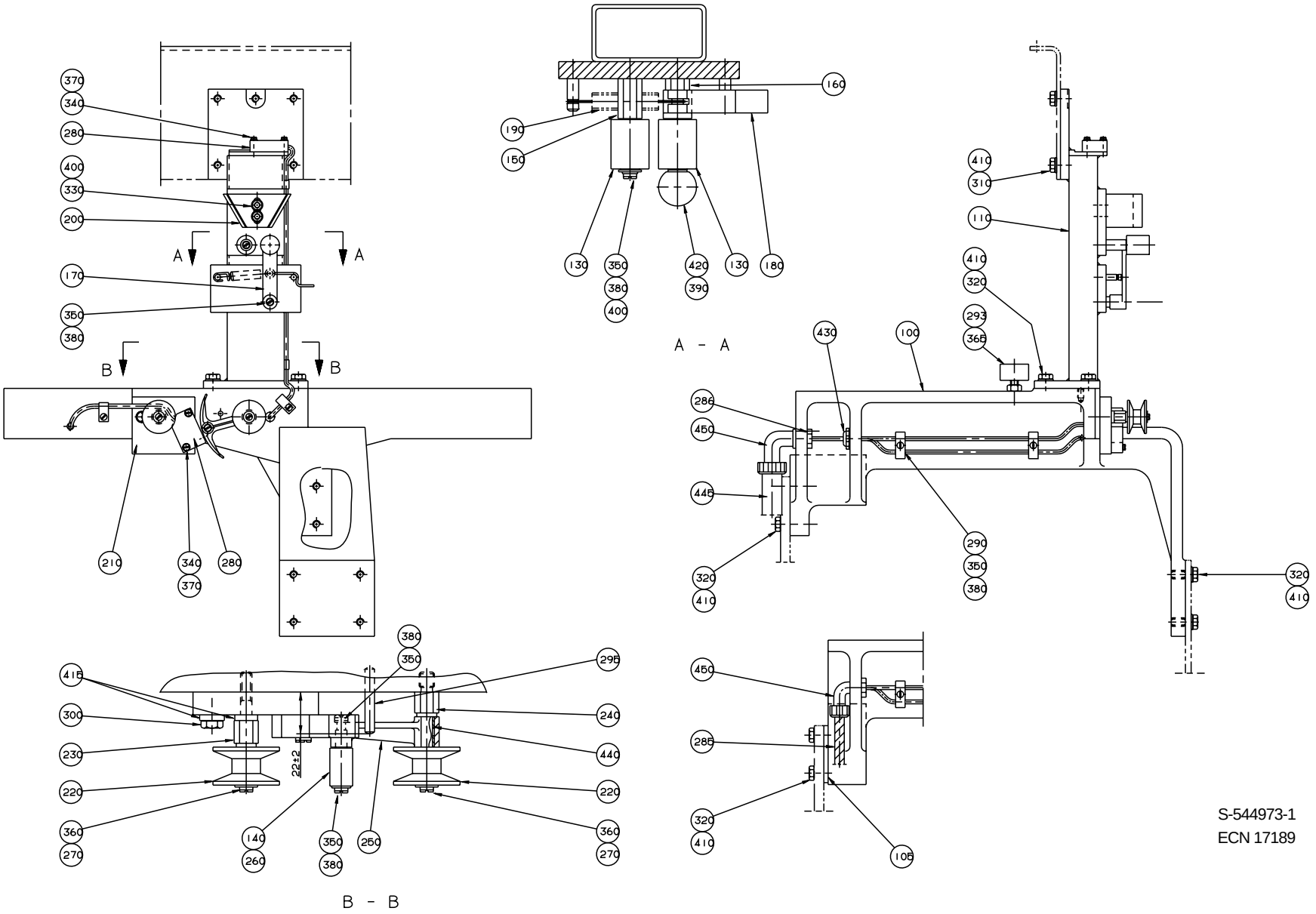
370
340
280
400
330
200
A
A
170
350
380
B
B
210
340
370
280
160
190
150
130
350
380
400
420
390
130
180
A - A
410
310
110
410
320
293
365
430
100
286
450
445
290
350
380
320
410
320
410
380
350
295
415
300
240
230
440
220
220
360
270
140
260
350
380
250
360
270
22±2
B - B
450
285
320
410
105
S-544973-1
ECN 17189

Pos	Part No	SP	UN	Qty	Description	Page No
Common parts						
110	544974-0000	D		1	PILLAR	
130	232979-0000	F		2	PRESSURE ROLLER	
140	249298-0000	K		1	ROLL	
150	269053-0001	K		1	SHAFT	
160	269053-0003	K		1	SHAFT	
170	269054-0000	D		1	ARM	
180	269056-0000	D		1	CATCH	
190	269057-0000	M		1	TENSION SPRING	
200	279480-0000	D		1	STEERING RAIL	
210	547571-0000	D		1	PLATE	
220	B 544730-0000	J		2	ROLL	
230	547924-0000	M		1	AXLE PIN	
240	547925-0000	M		1	AXLE PIN	
250	545111-0000	D		1	ARM	
260	545112-0000	D		1	SHAFT 6x29,5	
270	90005-0082	-		2	WASHER,Plain Round 4,3x 12, H= 1, M4	
280	90044-0104	M		2	PROX.SWITCH IFM IN 3002	
286	90099-0002	-		1	NUT Pr 18,6 Brass	
290	90165-0060	-		11	PIPE-CLIPS,FOR SINGLE PIPE,ONE SIDE 5	
293	90347-0004	R		1	VIBRATION DAMPER	
295	311103-0316	-		1	PINS,STRAIGHT 5X35	
300	312105-0372	-		1	SCREW M6S ISO 4017 M6X25 A280	
310	312105-0449	-		4	SCREW M6S ISO 4017 M8x16 A280	
320	312105-0452	-		10	SCREW M6S 8x22 Stainless	
330	312115-0366	-		2	SCREW MC6S ISO 4762 M6X12 A280	
340	312125-0228	-		4	SLOTTED CHEESE HEAD ISO 1207 M3x16 A4	
350	312125-0285	-		12	SLOTTED HEAD SCREW MCS 4X6 RFR	
360	312125-0287	-		2	SLOTTED CHEESE HEAD ISO 1207 M4X8 RFR	
365	312605-0318	-		1	NUT,HEXAGON,M8 RFR	
370	315105-0124	-		4	WASHER,PLAIN ROUND 3,2x6	
380	315105-0136	-		12	WASHER,PLAIN ROUND 4,3x8 Stainless	
390	315105-0146	-		1	WASHER,PLAIN ROUND 5,3x10 Stainless	
400	315105-0153	-		3	WASHER,PLAIN ROUND 6,4x12 Stainless	
410	315105-0165	-		14	WASHER,PLAIN ROUND 8,4x16 Stainless	
415	315115-0153	-		2	WASHER TBRB 6,4x12 Stainless	
420	318800-0102	-		1	HANDLES,SPHERICAL KNOB,INT.THRE.,D.20-M5	
440	321120-0101	M		2	BEARING BUSHING WITHOUT FLANGE,6/8X6	
445	352135-0106	-	MM	430	Spiral Conduit Di=16 mm	
450	352137-0127	-		1	COND.FITTING Pr 18,6 Di=16mm	
TBA/8 0500B or TBA/8 0750B or TBA/8 1000B or TBA/8 1000S or TBA/8 1055B						
100	545138-0000	D		1	CANTILEVER	
430	352101-0103	-		1	LEAD IN PR 18,6	

Pos	Part No	SP	UN	Qty	Description	Page No
TBA/8 0355B or TBA/8 0375S or TBA/8 0400B or TBA/8 0500S						
100	546030-0001	D		1	CANTILEVER	
TBA/8 0500SQ or TBA/8 1000SQ						
100	546030-0002	D		1	CANTILEVER	
105	574037-0000	D		1	SPACER	
TBA/8 0750S						
100	546030-0002	D		1	CANTILEVER	
105	546031-0000	D		1	SPACER	

This page is intentionally left blank

Pos	Part No	SP	UN	Qty	Description	Page No
90125-0020						
	270926-0000	K		6	NUT	
	270927-0000	K		3	SCREW	
	294464-0000	K		1	BASE PLATE	
90264-0042						
	90264-0306	-		1	SILENCER	
535613-0000						
	90266-0174	-	M	2	PIPE	
	342808-0103	-		2	ELBOW PIPE38	
535614-0000						
	90266-0022	-	M	1	DAIRY PIPE	
	342808-0103	-		2	ELBOW PIPE38	
	342810-0103	-		1	ELBOW PIPE38	
535623-0000						
	90266-0022	-	M	1	DAIRY PIPE	
	90266-0087	-	M	1	PIPE	
535624-0000						
	90266-0022	-	M	1	DAIRY PIPE	
	342808-0103	-		1	ELBOW PIPE38	
544730-0000						
	321120-0101	-		2	BEARING BUSHING WITHOUT FLANGE,6/8X6	

Pos	Part No	SP	UN	Qty	Description	Page No

SPC

Spare Parts Catalogue

Part No	Description	Page No
1,4A		177
1013-0000	SHAFT	647
10258-0000	COMPRESSION SPRING	653, 655, 657, 659, 661, 663, 673
1037767-0000	SPRING RIGHT	387
1037768-0000	SPRING LEFT	387
1038128-0001	DOLLY	393, 397, 425
1038517-0003	CUTTING RAIL	393, 397
107000-0000	SPRING	335, 339
107062-0000	LID	307
107095-0000	LID	303
107334-0000	SPACER SLEEVE	345, 349
107335-0000	SPACER RING	345, 349
107339-0000	DOWEL	345, 349
10793-0036	MOUNTINGRAIL TS32 L=400MM	139
111017-0000	SPACER RING	303
111543-0000	GUIDE CONE	17, 21, 731
113653-0000	BEARING PLATE	335, 339
113654-0000	RING	335, 339
1143000-0000	PUSHER	491, 495
1143001-0000	ATTACHMENT PLATE	489, 493
1143002-0000	BRACKET	489, 493
1143003-0000	BRACKET	499, 507
1143004-0000	CYLINDER BRACKET	491, 495
1143006-0000	STEERING	539
1143007-0000	STEERING	539
1143008-0000	BRACKET	539
1143009-0000	BRACKET	539
1143015-0000	BUSHING	557
1143016-0000	AXLE PIN	557
1143020-0000	FOLDING BAR	583, 585
1143021-0000	FOLDING BAR	583, 585
1143049-0000	VOLUME BULGE	361, 365
1143050-0000	VOLUME SHIM	361, 365, 425
1143215-0000	SPRING	383, 385
1143216-0000	SPRING	383, 385
1143223-0000	WASHER	557
1143455-0000	MACHINE SIGN CE	623
1143456-0000	MACHINE SIGN CE	627
1143605-0000	SPACER	641
1143628-0000	COVERING PLATE	189
1143677-0000	PAPER SUPPORT	737
1147024-0002	WIRE	433
1147120-0000	SHRINKABLE HOSE	433
1195070-0000	VOLUME FLAP	361, 365
1195094-0000	BRACKET	647
1195326-0000	VALVE PANEL	281
1195327-0000	PNEUMATIC DIAGRAM	281
1195332-0000	PROTECTION PLATE	533, 535
1195333-0000	STOP	519
12242-0001	GASKET	45, 107, 121
12242-0003	GASKET	69, 75, 77, 79, 97, 99, 107, 115, 141
12242-0005	GASKET	69, 75, 77, 79, 97, 125, 141
1255160-0000	THREADED INSERT	557
1255161-0000	ARM	557
1255162-0000	ROCKER ARM	557
1255163-0000	ROCKER ARM	557
1255207-0000	STOPPER	385
1255208-0000	STOPPER	385
1260781-0000	VOLUME FLAP	361, 365
1279457-0000	BRACKET	65
1282023-0001	CAST WORKPIECE	145
12922-0000	WASHER	393, 395, 397, 399
1296003-0000	PAPER SUPPORT	737
1296222-0000	SPRING	371
1296223-0000	SPRING	371
1296884-0000	SCREW	395, 399, 413, 415, 417, 419, 421, 423
1296885-0000	SCREW	393, 397, 413, 415, 417, 419, 421, 423
1296886-0000	SCREW	393, 397, 413, 415, 417, 419, 421, 423
1296981-0000	SCREW	393, 397, 413, 415, 417, 419, 421, 423
1296982-0000	SCREW	393, 395, 397, 399, 413, 415, 417, 419, 421, 423
1317808-0000	FOLDING FLAP	335, 339
1317809-0000	FOLDING FLAP	335, 339
1317955-0000	SPRING BRACKET	385
1361252-0000	ARCH	603
1361909-0000	LEAD RAIL	603
1361912-0000	BRACKET	587
1361913-0000	CAM LEFT	307
1361914-0000	CAM RIGHT	307
1361917-0000	VOLUME FLAP	361, 365
1362921-0000	FILLER TUBE	53
1362922-0000	PRESSURE FLANGE	53
1362923-0000	FLOAT	53
1362924-0000	THROTTLE	53
1362925-0000	SPACER	411
1362935-0000	BLANK-OFF FLANGE	291
14600-0000	HOOD	47

Part No	Description	Page No
14729-0000	NUT	353, 355
1484847-0000	RAIL	413, 415, 417, 419, 421, 423
1881-0001	COMPRESSION SPRING	17, 21
19262-0000	WASHER	741
19972-0000	WASHER	361, 363, 365, 367
2033-0008	WASHER	17, 21, 27, 33, 35, 37, 755
2033-0009	WASHER	735, 739
20494-0000	COMPRESSION SPRING	341, 343
207019-0003	GEAR WHEEL	639, 709
20704-0000	NUT	605
20705-0001	INSULATING PIPE	477, 479
20718-0000	BEARING	345, 349
20770-0000	WASHER	213
20772-0000	INSULATOR BODY 70x70x15mm	477, 479
208361-0001	STAIR	619
208361-0002	STAIR	95
208658-0001	SPACER	95, 619
208709-0000	VOLUME SHIM	361, 365, 425, 427
208843-0000	ANGLE BRACKET	39
209145-0000	THROTTLE SCREW	123, 727
209146-0000	BARRIER NUT	123, 727
209331-0005	GEAR WHEEL	119
209331-0007	GEAR WHEEL	119
209331-0009	GEAR WHEEL	119
209331-0010	GEAR WHEEL	119
209331-0012	GEAR WHEEL	119
209331-0013	GEAR WHEEL	119
209331-0014	GEAR WHEEL	119
21,6NF		357, 359
21521-0000	COMPRESSION SPRING	63, 103, 105
21903-0000	ROLL	735, 739, 745
22462-0000	SHAFT	335, 339
22463-0000	ROLL	335, 339
22473-0000	ROLLER BRACKET	335
22483-0000	FORK	345, 349
22485-0000	DOWEL	345, 349
22486-0000	DOWEL	345, 349
22488-0000	ELBOW PIPE	403
22489-0000	ELBOW PIPE	403
22504-0000	STOP LUG	345, 349
22559-0000	GRUB SCREW	737
22560-0000	PAPER SUPPORT	737
226097-0002	BENDING ROLLER	649
226098-0000	BEARING	649
228653-0000	SHAFT	653, 655, 657, 659, 661, 663, 673
228843-0001	SPACER	485, 487
228845-0000	MOUNTING BLOCK	485, 487
228943-0000	THROTTLE	53
229201-0001	SPACER	485
229201-0002	SPACER	485, 487
229202-0000	MOUNTING BLOCK	485, 487
229206-0000	LOCATING PIECE	485, 487
229207-0000	BEARING SLEEVE	485, 487
229508-0029	STUD SCREW	485, 487
229508-0031	STUD SCREW	485
229516-0000	PIN	485, 487, 599, 603
229760-0012	STUD SCREW	485
229760-0013	STUD SCREW	485, 487
230107-0000	WASHER	737
230226-0000	BLOCKING PIECE	273
230462-0000	BUSHING	323
230551-0000	GASKET	61, 141
230922-0100	AIR JET GUN	149, 151
23127-0101	TRANSFORMER	217
232236-0000	TOOTH PART	357, 359
232237-0000	SCREW	357, 359
232238-0000	TOOTH PART	353, 355
23229-0000	BRACKET	335, 339
23270-0000	BUSHING	311
23291-0000	BEARING COVER	345, 349
23292-0000	BEARING HOUSING	345, 349
232979-0000	PRESSURE ROLLER	47, 141, 757
23312-0000	BUSHING	345, 349
23361-0000	ROLLER BRACKET	339
23458-0000	SHAFT	307
23462-0000	SPACER RING	307
23580-0000	SHIFTER HANDLE	731
23582-0000	HOLDER	17, 21, 731
23583-0000	GUIDE FINGER	17, 21, 731
23584-0000	SCREW	17, 21, 731
237082-0001	MOUNTING BLOCK	485
237082-0002	MOUNTING BLOCK	485, 487
23763-0003	SPACER PIPE	473, 481
23763-0004	SPACER PIPE	475, 483
23763-0005	SPACER PIPE	475, 483
23763-0006	SPACER PIPE	473, 475, 481, 483

Part No	Description	Page No
23763-0010	SPACER PIPE	473, 481
23765-0001	INSULATING PIPE	475, 483
23765-0002	INSULATING PIPE	473, 475, 481, 483
23765-0003	INSULATING PIPE	473, 475, 481, 483
23765-0004	INSULATING PIPE	473, 475, 481, 483
23765-0005	INSULATING PIPE	473, 475, 481, 483
23769-0000	STOP PLATE	473, 481
23771-0000	SPACER RING 4x78x1mm	477, 479
237725-0000	BEARING HOUSING	303
239383-0000	SLEEVE	313
239440-0000	SHAFT	41
239441-0000	BRACKET	41
239476-0000	ROD	353, 355
239533-0000	DRUM	307
239534-0000	FLANGE	307
239535-0000	FLANGE	307
239536-0000	GEAR WHEEL	307
239538-0000	WASHER	323
239665-0000	GUIDE SHAFT	741
239847-0000	HINGE	215
239870-0000	SPACER SLEEVE	303
239874-0000	WASHER	341, 343
239890-0300	INTERMEDIARY SHAFT	295, 297, 299
24206-0000	BEARING	723
242954-0000	WASHER	735
243016-0000	GEARING	307
243017-0000	GEAR WHEEL	315
243143-0000	SCREW	393, 395, 397, 399
243144-0000	BUSHING	395, 399
243151-0000	SHAFT	741
243171-0200	LADDER	617
243172-0001	SIDE PIECE	619
243172-0002	SIDE PIECE	619
243218-0000	CANTILEVER	741
24351-0000	BOW CLAMP	17, 21, 731
24352-0000	SHAFT	731
24355-0000	DOWEL	17, 21, 731
24356-0000	PIECE	17, 21, 731
243573-0000	LACE	227
243846-0000	ATTACHMENT	59
243851-0000	GASKET	141
243927-0700	ARM	295, 297, 299
243928-0000	BRACKET	311
243930-0000	SHAFT	311
243931-0000	SECURING PLATE	311
243942-0400	YOKE	331, 333
243943-0000	BUSHING	341, 343
243951-0000	YOKE	343
243952-0000	YOKE	341
243971-0000	SPRING	313
245039-0000	GUIDE WHEEL	485, 487
245165-0000	ASSEMBLY TOOL	611
245189-0001	ATTACHMENT	737
245190-0000	FLOAT	53, 55
245210-0000	BODY	731
245271-0000	GASKET	393, 395, 397, 399
245272-0000	GASKET	393, 397
246327-0400	SHOCK ABSORBER	331, 333
246328-0000	SPRING	371
246329-0000	SPRING	371
246332-0000	CATCH	381
246342-0000	PAPER SUPPORT	737
246344-0000	HEAT GUARD	737
246374-0000	BRACKET	259
246468-0800	VOLUME FLAP	331, 333
246494-0000	ATTACHMENT	413, 415, 417, 419, 421, 423
246499-0600	ARM	331, 333
246513-0000	BEARING	341, 343
246739-0000	BRACKET	273
246787-0000	SCREW	311
246790-0000	LINK	311
246885-0000	WASHER	249
246948-0000	BRACKET	313
246964-0000	CYLINDER BRACKET	121
246965-0000	STOP	121
246966-0000	SCREW	117, 121
246982-0000	PROTRACTOR	307
247080-0000	BRACKET	227
247082-0000	LEG	227
247112-0000	SHAFT	341, 343
247119-0000	ROD	323
247145-0000	PLATFORM	617
247146-0000	PLATFORM	615, 617
247159-0000	AXLE SUPPORT	117
247160-0000	AXLE SUPPORT	69, 117
247161-0000	AXLE SUPPORT	117

Part No	Description	Page No
247162-0000	BRACKET	117
247168-0000	CYLINDER BRACKET	117
247170-0000	BEARING COVER	117
247171-0000	BEARING COVER	115, 119, 727
247172-0000	SPACER RING	115, 119
247173-0000	BEARING SEAT	115, 119
247227-0002	AIR NOZZLE	473, 481
247227-0003	AIR NOZZLE	473, 475, 481, 483
247236-0000	CARRIER	69
247240-0000	WHEEL	117
247241-0000	AXLE SUPPORT	69
247248-0000	PIN	69
247252-0000	GASKET	69
247262-0000	SPRING BRACKET	371, 377, 379
247263-0000	SPACER	371, 377, 379
247271-0000	LACE	371, 377, 379
247296-0001	SIDE PIECE	95
247296-0002	SIDE PIECE	95
247349-0000	STEERING	115
247355-0000	LOCK WASHER	115
247357-0000	SPROCKET	73, 115
247358-0000	SHIFTER HANDLE	115
247385-0000	SIGN	207, 209
247386-0000	SIGN	207, 209
247422-0000	DRIP PLATE	115
2487-0000	SPACER ELEMENT	709
24928-0000	LOCKING RUBBER	47
249298-0000	ROLL	757
250588-0000	FLANGE	115, 701, 733
250590-0000	BEARING COVER	119
250591-0000	SHAFT	119
250592-0000	WASHER	119
250594-0000	FORMING RING	33, 35, 37
250610-0200	TOOL KIT	609
250633-0000	CABLE CLAMP	427
250654-0000	PIVOT ARM	57
250656-0000	ATTACHMENT PIPE	57
250660-0000	BEARING CONSOLE	57
250662-0000	LEVER	57
250663-0000	BEARING	41, 57
250664-0000	TIE ROD	57
250668-0000	SPACER	57
251454-0000	LID	99
251455-0000	SEAL	99
251490-0000	FASTENING BRACKET	737
251493-0000	FORK	739
251494-0000	SHAFT	739
251495-0000	SHAFT	739
251496-0000	SHAFT	739
251498-0000	BARRIER	739
251502-0000	HEAT GUARD	737
251544-0000	SHEET	115
251561-0000	LINK	311
251562-0000	SHAFT	311
251597-0000	LACE	369, 375
251598-0000	STOPPER	369
252653-0002	COUNTER CAM	345
252654-0002	COUNTER CAM	349
252707-0000	SPRING	323
252732-0000	GLASS PANE	49
252733-0000	GLASS PANE	51
252766-0001	INSULATING PIPE	473, 475, 481, 483
252766-0002	INSULATING PIPE	473, 475, 481, 483
252768-0000	CANTILEVER	405, 407, 409, 411
252770-0000	RAIL BRACKET	407, 411
252773-0000	FASTENING PLATE	409
252774-0000	FASTENING PLATE	407, 411
252775-0000	CURVE	407, 411
252776-0000	VOLUME CAM	407, 411
252780-0000	RULER	405, 407, 409, 411
252785-0000	SCREW	405
252786-0000	WASHER	405
252787-0000	BUSHING	405
252788-0000	BUSHING	405
252789-0000	NUT	405
252791-0000	NUT	405
252792-0000	NUT	405
252793-0000	SUPPORT	405, 407, 409, 411
252794-0000	LACE	405
252797-0000	RUBBER STRIP	49
252798-0000	RUBBER STRIP	51
252808-0000	DAMPER LEFT	369
252809-0000	DAMPER RIGHT	369
252930-0000	SPACER SCREW	405
252953-0000	TANK	205
252972-0000	SHOULDER SCREW	25

Part No	Description	Page No
255017-0000	BRACKET	237
255064-0000	BUSHING	741
255227-0001	VOLUME BULGE	363, 367
255228-0001	VOLUME SHIM	363, 367, 425
255278-0000	PLUG FINISHER	395, 399
255335-0000	SHAFT	323
255368-0000	PRESSURE GAUGE TUBE	75, 77, 79
255398-0000	SLEEVE	323
255417-0000	WASHER	735
255473-0000	STOP	369
255474-0000	STOP	369
255874-0000	BEARING COVER	63, 103, 105
255875-0000	BUSHING	63, 103, 105
25640-0000	CARRIER	337
25641-0000	REAMED BOLT	337
257090-0000	SHIFTER HANDLE	17, 21
257783-0000	CUTTING JAW	393, 397
257835-0300	CUTTING JAW	331, 333
257835-0350	CUTTING JAW	331, 333
257845-0000	RAILING	615, 617
257846-0000	RAILING	617
257852-0000	PLATFORM	615, 617
257854-0000	CANTILEVER	615, 617
257855-0000	CANTILEVER	617
257859-0000	RAILING	615, 617
257862-0000	PLATFORM	615, 617
257903-0000	AIR NOZZLE	41
257904-0000	HEAT GUARD	41
257923-0000	GUIDE WHEEL	741
257987-0000	AXLE SUPPORT	17, 33, 35, 37
257988-0000	AXLE SUPPORT	17
259414-0400	CARRIER PRESSURE L IH	331, 333
259415-0400	CARRIER	331, 333
259534-0700	PRESSURE JAW	331, 333
259534-0750	PRESSURE JAW	331, 333
259760-0000	BENDING ROLLER BRACKET	159
259835-0000	FLANGE SEAL	175
259867-0000	HOSE CLAMP	271
259902-0000	FLOAT	53
26075-0000	VOLUME BULGE	361, 365
262028-0001	FITTING BOLT	565, 573
262028-0002	FITTING BOLT	557
262028-0011	FITTING BOLT	549
262028-0016	FITTING BOLT	509
262179-0001	PIN	557, 559, 561, 563, 567, 569, 571
262183-0000	BUSHING	557
262234-0000	BRACKET	549
262235-0000	ARM	549
262252-0000	HATCH	537
262253-0000	GASKET	537
262261-0000	SHAFT	467, 469
262264-0000	CANTILEVER	537
262266-0000	SHAFT	549
262267-0000	BUSHING	549
262272-0000	HEATING CHAMBER	473, 481
262274-0002	BRACKET	463
262274-0005	BRACKET	461
262275-0002	CAP	463
262275-0003	CAP	461, 575
262288-0000	LID	473, 481
262290-0001	LACE	475, 483
262290-0002	LACE	473, 481
262309-0000	SLEEVE	549
262313-0000	LID	549
262314-0000	RUBBER GASKET	549
262315-0000	LID	549
262316-0000	RUBBER GASKET	549
262322-0000	SHAFT	549
262323-0000	SHAFT	549
262324-0000	SHAFT	549
262325-0000	SHAFT	549
262343-0000	SECURING PLATE	549
262350-0001	PIN	551
262415-0000	LINK	549
262427-0001	SHAFT	553, 555
262427-0002	SHAFT	553
262427-0005	SHAFT	553
262427-0006	SHAFT	555
262427-0007	SHAFT	555
262427-0008	SHAFT	553, 555, 557
262610-0000	LINK	549
262720-0000	STEERING	549
262774-0009	GLASS PANE	197, 199
262906-0000	ARM	551
262907-0000	ARM	551
262922-0000	HOUSE	537

Part No	Description	Page No
262924-0000	CANTILEVER	557
262932-0000	HATCH	537
262933-0000	GASKET	537
262970-0000	RAIL	553, 555
263150-0000	BRACKET	709
263152-0000	SHAFT	709
263153-0000	NUT	709
263249-0000	PIVOT ARM	41
263250-0000	TOOTH PART	41
263251-0000	GEAR WHEEL	41
263252-0000	SHAFT	41
263254-0000	BRACKET	41
263256-0000	ROCKER ARM	41
263257-0000	CYLINDER BRACKET	27, 41
263262-0000	BUSHING	27
263313-0000	LINK HEAD	323
263314-0000	LINK HEAD	323
263322-0000	RAILING	617
263323-0000	RAILING	215
263328-0000	SPACER	323
263329-0000	NUT	323
263391-0400	CALENDER ROLLER	115
263394-0300	BENDING ROLLER	115
263509-0000	LID	341, 343
263572-0000	CANTILEVER	73
263574-0000	BEARING CONSOLE	73
263575-0000	GASKET	73
263576-0000	GUIDE STUD	73
263579-0000	WASHER	73
263585-0000	BUSHING	73
263586-0000	BUSHING	73
263587-0000	CRANK	73
263588-0000	JOINT	73
263589-0000	RATCHET	73
263590-0000	BARRIER	73
263592-0000	WHEEL	73
263593-0000	SHAFT	73
263612-0000	RAIL	215
263619-0000	RAILING	617
263655-0002	SHAFT	17
263655-0003	SHAFT	17
263655-0004	SHAFT	17
263655-0006	SHAFT	21
263655-0007	SHAFT	127
263655-0008	SHAFT	17, 33, 35, 37, 127
263655-0009	SHAFT	27, 33, 35, 37, 127
263655-0010	SHAFT	33, 35, 37
263655-0012	SHAFT	17
263655-0018	SHAFT	21
263655-0021	SHAFT	17
263655-0022	SHAFT	27
263655-0023	SHAFT	17
263655-0024	SHAFT	17
263656-0002	SHAFT	17
263673-0000	GASKET	473, 481
263684-0000	SPACER	371, 377, 379, 381, 383, 385
263693-0000	CATCH	381
263805-0200	FORM CLAMP	11, 13, 15
263828-0000	JUNCTION RAIL	227
263948-0300	CUP	11, 13, 15
26423-0000	LACE	335, 339
26425-0000	LACE	353, 355
26426-0000	LACE	345, 349
26490-0000	WASHER	509
265564-0000	BENDING ROLLER	159, 699, 733
265565-0200	BENDING ROLLER BRACKET	717, 719
265566-0001	SHAFT	159, 721, 733
265566-0003	SHAFT	721
265566-0004	SHAFT	721
265566-0005	SHAFT	721
265567-0000	BEARING UNIT	159, 721, 733
265568-0000	DUST COVER	159, 721, 733
265569-0001	STRUT	721, 733
265569-0003	STRUT	721
265569-0005	STRUT	721
265569-0006	STRUT	721
265756-0000	CANTILEVER	721
265809-0300	PAPER GUARD	11, 13, 15
265872-0001	GEAR WHEEL	119
265889-0300	SWITCH (MONITOR)	149, 151
265957-0000	SHAFT	59
266182-0000	BUSHING	99
266389-0000	PISTON ROD	109, 111
266390-0000	NUT	109, 111
266391-0000	RING	109, 111
266394-0000	BRACKET	109

Part No	Description	Page No
26642-0200	CARRIER	335, 339
266446-0500	DESIGN CORRECTION DEVICE	331, 333
266447-0500	DESIGN CORRECTION DEVICE	331, 333
266550-0400	FILTER HOUSING	169
266557-0000	GASKET	173
266710-0000	WHEEL	639, 709
266726-0300	PRESSURE ROLLER	717, 719
266728-0000	CANTILEVER	735
266730-0000	HOLDER	735
266731-0000	SHAFT	735
266732-0000	SHAFT	735
266737-0000	WASHER	63, 103, 105, 735
266738-0000	COVER	735
266739-0000	CABLE GLAND	41, 735
266740-0001	SPACER	735
266740-0002	SPACER	735
266755-0200	PLATFORM	613
266756-0500	PLATFORM	613
266761-0000	MOUNTING LUG	741
266797-0002	PAPER GUARD	25
266986-0500	CURVE SHAFT	295, 297, 299
267033-0000	WASHER	115
267056-0000	BEARING CONSOLE	69
267327-0000	HOLDER	407, 409, 411
267462-0000	LOCK SHEET	227
267463-0000	LOCK SHEET	227
267494-0000	COIL HEATER	737, 745
267564-0000	BRACKET	125
26760-0000	LOCATING PIECE	341, 343
267646-0000	BLOCKING PIECE	129
267665-0000	BRACKET	129
267676-0000	HOLDER	409
267727-0000	FORK	47
267728-0000	SHAFT	47
267754-0000	BOW CLAMP	353, 355
267835-0000	CANTILEVER	227
268015-0100	BENDING ROLLER BRACKET	149, 151
268195-0000	SCREW	405
268614-0500	START-UP KIT IH	331, 333
268746-0000	SCREW	157
268830-0000	COMPRESSION SPRING	549, 551
268954-0000	FOLDING FLAP CAM L	345
268955-0000	FOLDING FLAP CAM R	349

Part No	Description	Page No
269053-0001	SHAFT	757
269053-0003	SHAFT	757
269054-0000	ARM	757
269056-0000	CATCH	757
269057-0000	TENSION SPRING	757
269059-0000	COUNTER CAM	345, 347
269060-0000	COUNTER CAM	349, 351
269108-0000	FOLDING FLAP CAM L	345
269109-0000	FOLDING FLAP CAM R	349
269110-0000	COUNTER CAM	345
269111-0000	COUNTER CAM	349
269112-0600	STRIP APPLICATOR	717, 719
269113-0600	LOWER FORMING RING	11, 13, 15
269115-0500	UPPER FORMING RING	11, 13, 15
269136-0200	EDGE ROLLER	11, 13, 15
269146-0000	FORK	27
269147-0000	SHAFT	27
269152-0000	ROCKER ARM	27
269153-0000	STOP	27
269154-0000	BUSHING	27, 41
269158-0400	HOT AIR ELEMENT	11, 13, 15
269242-0000	BEARING HOUSING	41
269274-0000	PLATFORM COVER	215
269275-0000	PLATFORM COVER	215
269285-0000	PROTECTION PLATE	227
269291-0000	RULER	227
269294-0000	RULER	227
269295-0000	PROTECTION PLATE	227
269296-0000	PROTECTION PLATE	227
269297-0000	PROTECTION PLATE	227
269301-0500	SIDE BOX RIGHT	149, 151
269313-0000	FASTENING PLATE	41
269314-0000	CANTILEVER	41
269315-0000	WASHER	41
269316-0000	BEARING HOUSING	41
269320-0000	RAIL	273
269321-0000	RAIL	273
269322-0300	COVER UPPER	149, 151
269324-0400	HATCH	149, 151
269339-0000	CANTILEVER	615, 617
269340-0000	CANTILEVER	615, 617
269366-0000	DOWEL	335, 339
269405-0000	PIPE	107

Part No	Description	Page No
269522-0000	PIPE	97
269575-0000	HOLDER	113
269576-0000	CAP	113
269577-0000	DISCHARGE TRAY	113
269578-0000	DISCHARGE TRAY	113
269715-0100	PIPE HOLDER	11, 13, 15
269716-0000	FASTENING PLATE	45
269717-0000	GASKET HOLDER	45
269718-0000	GASKET	45
269719-0000	SCREW	45
269720-0300	FILLER TUBE	11, 13, 15
269792-0000	DAMPER	409
269827-0001	FILLER TUBE	55
269827-0002	FILLER TUBE	53
269828-0500	FILLER TUBE	11, 13, 15
269859-0000	BRACKET	61
269903-0000	FILTER INSERT	173
269904-0000	FILTER MESH	173
269905-0000	WASHER	173
269913-0000	STOPPER	57
269914-0000	SHOULDER SCREW	57
269915-0700	HOT AIR ELEMENT	11, 13, 15
269929-0000	COVER	73
269930-0000	SCREW	73
269932-0500	BOTTOM COVER	69
269941-0600	BATH	11, 13, 15
269970-0500	PLATFORM	11, 13, 15
269971-0200	LADDER	93
269988-0600	VENTILATION SYSTEM	11, 13, 15
269989-0300	VALVE	107
270926-0000	NUT	145, 759
270927-0000	SCREW	145, 759
271211-0000	WASHER	743
271653-0000	ARM	743
271654-0000	RETAINING RING	743
271655-0000	HOLDER	743
271823-0000	FILTER	239
272466-0000	SPRING	743
272728-0000	BARRIER	635, 637
272814-0000	SLEEVE	635, 637
272815-0001	SLEEVE	635, 637
273400-0700	STERILE AIR SYSTEM	11, 13, 15
273401-0300	CHANGE-OVER VALVE	97
273402-0400	AIR SUPER-HEATER	107
273429-0000	WASHER	57, 69
273449-0000	SIGN	245
273450-0000	SIGN	243
273452-0000	SIGN	243
273455-0000	LABEL (COLD WATER)	239
273456-0000	SIGN	239
273458-0000	LABEL (AIR)	239
273514-0000	TOUCH GUARD	107
273515-0000	TOUCH GUARD	107
273547-0001	TOUCH GUARD	75, 77, 79
273547-0002	TOUCH GUARD	107
273548-0001	TOUCH GUARD	75, 77, 79
273548-0002	TOUCH GUARD	107
273728-0300	VALVE GROUP	315
273751-0000	FRONT PLATE	227
273753-0000	PROTECTION PLATE	227
273934-0000	LID	69
273937-0000	DIAPHRAGM	69
273938-0000	WASHER	69
273944-0000	DIAPHRAGM	101
273950-0000	FILTER	97
273951-0000	VALVE HOUSING	101
273961-0000	SEAL	69
273977-0000	NUT	183
273978-0000	LEVEL GLASS	183
273980-0000	SPRING	183
273981-0000	GASKET	185
273982-0000	WEIGHT	185
273996-0000	NUT	183
276164-0000	VALVE HOUSING	109, 111
276165-0000	HOUSE	109, 111
276166-0000	PIPE	107
276167-0000	PIPE	107
276172-0000	AXLE PIN	335, 339
276173-0000	CURVE ROLLER	335, 339
276189-0000	DAMPER	405, 407, 409, 411
276304-0000	PIPE	107
276305-0000	PIPE	107
276343-0300	LID	205
276345-0300	AIR KNIFE	115
276346-0000	AIR GUIDE	121
276347-0000	AIR DISTRIBUTOR	121

Part No	Description	Page No
276348-0000	AIR DISTRIBUTOR	121
276350-0000	GEAR WHEEL	121
276351-0000	GEAR WHEEL	121
276354-0000	ATTACHMENT	121
276355-0000	SLEEVE	121
276356-0000	BEARING HOUSING	121
276357-0000	BUSHING	121
276358-0000	BUSHING	121
276359-0000	LEVER	121
276360-0000	SPRING	121
276361-0000	BRACKET	121
276373-0700	DRIER	11, 13, 15
276398-0000	HEXAGON NIPPLE	253
276480-0500	PIPE WORK	11, 13, 15
276490-0000	PIPE	123
276613-0000	LID	463
276636-0000	WASHER	463
276659-0000	WASHER	537, 549
276664-0000	WASHER	557
278954-0000	NET	107
278955-0000	NET	107
278956-0700	PILLAR	11, 13, 15
279006-0000	BENDING ROLLER	115
279007-0000	BENDING ROLLER	115
279009-0000	BEARING PLATE	115
279010-0000	BEARING PLATE	115
279011-0000	COVERING PLATE	115
279074-0000	TENSION SPRING	739
279103-0000	CONNECTION CLAMP	403
279105-0000	WASHER	253
279134-0500	TRANSMISSION	331, 333
279208-0000	BEARING HOUSING	57
279209-0000	ROCKER ARM	57
279210-0100	PAPER GUIDE	717, 719
279211-0000	CANTILEVER	731
279213-0000	DOWEL	57
279370-0000	STEERING	227
279466-0000	BRACKET	311
279471-0000	CANTILEVER	69
279472-0000	FASTENING BRACKET	69
279478-0000	BEARING PLATE	69
279480-0000	STEERING RAIL	757
279505-0000	DAMPER LEFT	373
279506-0000	DAMPER RIGHT	373
279526-0000	BRACKET	253
279564-0300	FOLDING DEVICE	331, 333
279565-0300	FOLDING DEVICE	331, 333
279589-0000	NUT	123, 727
279590-0000	REDUCTION	727
279619-0000	BRACKET	129
279621-0000	FASTENING PLATE	409, 411
279623-0000	LACE	369
279651-0600	TOUCH GUARD	11, 13, 15
279672-0000	ATTACHMENT	737
279804-0000	BUSHING	219
279807-0000	COVER	215
279860-0000	ADJUSTMENT PLATE	125
279885-0000	COVER	215
279969-0000	DRIP PLATE	313
279979-0500	CENTRAL LUBRICATION	149, 151
279983-0000	SPLASH PROTECTION	321
279984-0000	SPLASH PROTECTION	321
279985-0000	BRACKET	321
279987-0000	BRACKET	321
279989-0000	SPACER	321
279991-0000	BRACKET	321
279992-0000	BRACKET	321
279993-0000	BRACKET	321
279997-0000	BRACKET	321
279998-0000	SHAFT	321
279999-0000	COVERING PLATE	321
28036-0000	WASHER	33, 35, 37, 315
28037-0000	WASHER	17, 21, 57, 549
282507-0000	BRACKET LEFT	163, 165
282509-0300	BENDING ROLLER	717, 719
282511-0000	COVERING PLATE	321
282512-0000	BRACKET	321
282513-0000	BRACKET	321
282528-0200	PRESSURE ROLLER	717, 719
282549-0000	MOUNTING RAIL	725
282596-0000	SUPPORT	739
282608-0000	ANGLE	125
282625-0000	EYELET	739
282634-0300	STRIP GUIDE	717, 719
282635-0000	GUIDE WHEEL	741
282682-0000	BRACKET	61

Part No	Description	Page No
282683-0000	BRACKET	61
282766-0000	LINK	117
282767-0000	BRACKET	117
282802-0000	PIPE	729
282805-0800	PIPE WORK-PNEUMATIC	11, 13, 15
282893-0000	SAFETY GUARD	93
283084-0000	GUIDE SHAFT	611
283085-0000	SLEEVE	611
283157-0000	MAIN CAM	307
283160-0000	COUNTER CAM	307
283172-0000	BEARING HOUSING	737
283271-0000	BRACKET	25
28334-0000	CURVE ROLLER	323
283361-0000	AIR NOZZLE	737
283774-0000	BEARING	321
283775-0000	SLIDE	321
283884-0000	OIL TROUGH	227
283926-0300	AIR NOZZLE	57
283992-0000	RULER	227
284124-0000	HOLDER	409, 411
284138-0000	CATCH	371
284139-0000	CATCH	371
284163-0500	START-UP KIT	11, 13, 15
284232-0000	FOLDING FLAP CAM L	345
284233-0000	FOLDING FLAP CAM R	349
284234-0000	COUNTER CAM	347
284235-0000	COUNTER CAM	351
284578-0000	CUTTING JAW	395, 399
284581-0000	RAIL	413, 415, 417, 419, 421, 423
284833-0000	LID	413, 415, 417, 419, 421, 423
284840-0000	NUT	173
284953-0100	HOSE	609
284973-0000	SHAFT	27
284974-0000	HUB	119
285027-0000	CARRIER	463
285054-0000	CURVE	463
285055-0000	CURVE	463
28509-0000	WASHER	389, 391
285132-0000	SHAFT	485, 487
285133-0000	CANTILEVER	485, 487
285141-0003	CLAMPING SLEEVE	537
285142-0002	SLEEVE	537
285142-0003	SLEEVE	537
285145-0002	INTERMEDIARY SECTION	537
285147-0000	INTERMEDIARY SECTION	537
285157-0000	LINK	549
285158-0000	LINK	549
285162-0000	LUBRICATING PIPE	549
285164-0000	LUBRICATING PIPE	549
285168-0000	BUSHING	577, 585
285287-0500	DRIVE UNIT	441, 457
285291-0400	BEVEL GEAR	461
285299-0100	PRESSURE ARM	461
285300-0000	BRACKET	467, 469
285303-0400	LOWER SECTION	437, 439
285310-0001	FLAP	559, 561, 563, 567, 569, 571
285310-0002	FLAP	559, 567
285316-0002	SPACER PIECE	559, 561, 567, 569
285321-0000	ROLL	565, 573
285322-0000	WASHER	565, 573
285330-0000	HOLDER	441, 457
285363-0000	WASHER	497, 509
285380-0002	WEDGE	503, 505
285403-0000	WASHER	447
285444-0000	SPACER	557
285448-0000	PROTECTIVE CASING	549
285449-0000	ARM	549, 551
285456-0300	PRESSURE DEVICE	437, 439
285479-0500	SUPERSTRUCTURE	437, 439
285507-0002	AIR NOZZLE	473, 481
285508-0002	AIR NOZZLE	473, 481
285591-0400	STATION	437, 439
285592-0600	MACHINE BODY	437, 439
285655-0000	ARM	553, 555
285656-0000	ARM	553, 555
285657-0000	ARM	553, 555
285660-0000	ARM	553, 555, 557
285661-0000	ARM	553, 555, 557
285664-0000	SHAFT	557
285676-0000	AIR NOZZLE	473, 481
285677-0000	AIR NOZZLE	473, 481
285712-0000	RAIL	553
285723-0000	ARM	553, 555, 557
285724-0002	RAIL	553
285729-0000	BUSHING	557
285736-0300	PULL-DOWN DEVICE	437, 439

Part No	Description	Page No
285801-0000	BEAM	227
285825-0000	SHAFT	275
285851-0000	BEARING	577, 585
285853-0200	STEERING RAIL	537
285861-0500	GEAR REDUCTION	441, 457
285891-0000	SCREW	537
285892-0000	CONNECTION	537
285923-0000	SCREW	441, 457
285956-0000	HANDLE	197, 199
285970-0000	COMPRESSION SPRING	549
285979-0000	PIPE	275
285993-0000	CONNECTION	605
285994-0000	NUT	441, 457
28880-0000	PLUNGER	395, 399
292037-0000	SCREW	413, 415, 417, 419, 421, 423
292044-0000	SHAFT	665, 677
292047-0000	CANTILEVER	673
292071-0200	SPLASH PROTECTION	295, 297, 299
292313-0000	BEAM	623
292314-0000	BEAM	623
292315-0000	BEAM	623
292367-0000	PISTON	413, 415, 417, 419, 421, 423
292409-0000	END SECTION	667, 669
292410-0000	END SECTION	667, 669
292411-0000	CARRIER	667, 669
292445-0100	LIFTING UNIT	609
292449-0000	PUMP HOUSING	177, 289
292451-0500	PEROXIDE PUMP	175
292452-0000	EXTENSION PIPE	177
292456-0000	BEARING COVER	177
292464-0000	FLANGE	177
292472-0000	HOLDER	315
292473-0000	CANTILEVER	315
292477-0000	SHAFT	315
292482-0000	WASHER	315
292565-0000	PROTECTION	121
293158-0000	HATCH	227
293159-0000	HATCH	227
293160-0000	COVERING PLATE	227
293161-0000	COVERING PLATE	227
293198-0002	BRACKET	167
293201-0000	PIPE	239
293351-0000	CRAMP	253
293352-0000	CRAMP	253
293395-0001	TYPE HOLDER	667, 669, 679
293395-0002	TYPE HOLDER	667, 669, 679
293395-0003	TYPE HOLDER	667, 669
293405-0000	GASKET	69
293566-0000	MOUNTINGS	187, 189
293598-0000	GLASS PANE	187, 189
293605-0500	VOLUM CURVE PIECE	331, 333
293606-0000	SHIFTER HANDLE	405, 407, 409, 411
293608-0000	BEARING CONSOLE	405
293609-0000	BEARING CONSOLE	405
293610-0000	GEAR WHEEL	405
293611-0000	SHAFT	405, 407, 409, 411
293612-0000	SCREW	405
293621-0001	BENDING ROLLER	651, 653, 655, 657, 659, 661, 663
293621-0002	BENDING ROLLER	653, 673
293624-0001	PROTECTION PLATE	651, 653, 655, 657, 659, 661, 663
293624-0002	PROTECTION PLATE	653, 655, 673
293645-0000	BRACKET	651, 673
293646-0001	WASHER	653, 655, 657, 659, 661, 663, 673
293646-0002	WASHER	653, 655, 657, 659, 661, 663, 673
293667-0000	DOWEL	665, 677
293669-0001	WASHER	665, 677
293669-0002	WASHER	665, 677
293669-0003	WASHER	665, 677
293669-0004	WASHER	665, 677
293670-0000	SHAFT	665, 677
293671-0000	SPACER	667, 669, 679
293674-0000	DOWEL	653, 655, 657, 659, 661, 663, 673
293676-0000	CARRIER	667, 669
293684-0200	PRINTING WHEEL NSS	651
293685-0200	PRINTING WHEEL SS	673
293688-0000	CARRIER	667, 669
293690-0000	END SECTION	667, 669
293697-0000	END SECTION	665
294009-0000	KNIFE	687, 705
294042-0000	SEALING WASHER	405
29411-0000	SPACER PIPE	477
29413-0000	LACE	477, 479
294464-0000	BASE PLATE	145, 759
294472-0000	CANTILEVER	129
294474-0000	ROLL	17
294475-0000	ROLL	17

Part No	Description	Page No
294476-0000	ROLL	17
294477-0000	ROLL	17
294480-0000	ROLL	17
294493-0000	HYDRAULIC PIPE	237
294494-0000	HYDRAULIC PIPE	237
294495-0000	HYDRAULIC PIPE	237
294496-0000	HYDRAULIC PIPE	237
295391-0003	THROTTLE SCREW	317, 319
295435-0000	WASHER	441, 457
295878-0000	THROTTLE SCREW	61
295879-0000	NUT	61
297054-0000	WASHER	57
297091-0000	ARM	315
297092-0000	ARM	315
297142-0000	BUSHING	117
297163-0000	CARRIER	73
297195-0000	SPACER	75, 77, 79
297210-0000	INK WELL	677
297211-0000	INK WELL	665
297213-0000	END SECTION	677
297309-0000	PIPE-LINE	41
297310-0000	FLANGE	41
297311-0000	COVER	41
297347-0000	PIPE	123
297413-0000	PIPE	453
297488-0000	GLASS PANE	197, 199
297496-0000	LACE	551
297499-0001	SIDE PIPE	475, 483
297499-0002	SIDE PIPE	473, 481
297499-0003	SIDE PIPE	473, 481
297499-0007	SIDE PIPE	473, 481
297499-0008	SIDE PIPE	475, 483
297499-0009	SIDE PIPE	473, 481
297551-0000	SHEET	441, 457
297567-0000	TENSION SPRING	557
297569-0000	SIDE PLATE	485, 487
297574-0001	SPACER	485
297574-0002	SPACER	485, 487
297576-0000	BEAM	227
297604-0400	HOOD	149, 151
297608-0000	BRACKET	455
297609-0000	ARM	455
297610-0000	SCREW	455
297611-0000	SHAFT	455
297638-0200	CHAIN TENSIONER	441, 457
297643-0000	BRACKET	557
297644-0000	SHAFT	553, 555
297646-0000	FLAP	559, 567
297650-0000	BOTTOM	561, 569
297663-0000	POST HOLDER	441, 457
297664-0000	POST HOLDER	441, 457
297669-0000	POST	227
297670-0000	POST	227
297679-0000	PIPE	197, 199
297681-0300	WHEEL	437, 439
297682-0300	WHEEL	437, 439
297751-0000	SHAFT	501
297755-0000	WEDGE	501
297770-0000	SCREW	275
297794-0000	SHEET	501
297795-0000	SPRING	501
297800-0000	PIPE	191
297802-0000	BRACKET	191
297805-0000	PIPE	191
297808-0500	CLEANING EQUIPMENT	149, 151
297814-0000	BRACKET	441, 457
297860-0000	BUSHING	441, 457
297899-0000	SPROCKET	511
297969-0000	FASTENING PLATE	121
297970-0000	CATCH LEVER	121
297998-0000	ADJUSTMENT PLATE	405, 407, 409, 411
297999-0000	ADJUSTMENT PLATE	405
29876-0000	COVER	113
29886-0000	LACE	341, 343
30,9NF		357, 359
30298-0000	INSULATION	113
30310-0001	FF HEATING ELEMENT TOP	477, 479
30310-0002	FF HEATING ELEMENT TOP	477, 479
30310-0003	FF HEATING ELEMENT TOP	477
311101-0274	CYLINDRICACP4H6X25	695
311102-0236	CYLINDRICACP M6 3X16	695
311102-0350	CYLINDRICACP M6 6X14	643, 645
311102-0353	CYLINDRICACP M6 6X20	639, 701, 709
311103-0209	CYLINDRICACP M6 2,5X14RFR	41
311103-0212	CYLINDRICACP M6 2,5X20RFR	27
311103-0232	PINS,STRAIGHT 3X8	737

Part No	Description	Page No
311103-0233	PINS,STRAIGHT 3X10	27, 57, 641
311103-0234	PINS,STRAIGHT 3X12	185, 431
311103-0235	CYLINDRICACP M6 3X14 RFR	33, 35, 37
311103-0236	PINS,STRAIGHT 3X16	17, 21, 99, 665, 677
311103-0238	PINS,STRAIGHT 3X20	125, 665, 677
311103-0267	PINS,STRAIGHT 4X10	737
311103-0268	PINS,STRAIGHT 4X12	713
311103-0270	PINS,STRAIGHT 4X16	643, 645, 665, 677
311103-0272	PINS,STRAIGHT 4X20	27, 405, 703
311103-0273	CYLINDRICAM6 4X22 RFR	185, 651, 673
311103-0274	PIN,STRAIGHT 4x25	635, 637, 651, 673
311103-0274	PINS,STRAIGHT 4X25	41
311103-0275	CYLINDRICACP M6 4X28 RFR	115
311103-0276	PINS,STRAIGHT 4X30	27, 73, 405
311103-0278	PINS,STRAIGHT 4X35	115
311103-0306	PINS,STRAIGHT 5X12	549
311103-0310	PINS,STRAIGHT 5X20	69, 73, 115, 335, 339, 345, 349, 405, 651, 673
311103-0314	PINS,STRAIGHT 5X30	227
311103-0316	PINS,STRAIGHT 5X35	757
311103-0350	CYLINDRICACP M6 6X14 RFR	649, 731
311103-0353	PINS,STRAIGHT 6X20	647, 651, 673
311103-0355	PINS,STRAIGHT 6X25	647
311103-0357	PINS,STRAIGHT 6X30	73, 345, 349, 405, 651, 673
311103-0361	PIN,STRAIGHT 6x40 Stainless	131, 133
311103-0365	PINS,STRAIGHT 6X50	671
311103-0367	CYLINDRICACP M6 6X55 RFR	121
311103-0399	CYLINDRICAL PIN M6 8X16 RFR	441, 457, 461, 537, 591, 597
311103-0401	PINS,STRAIGHT 8X20	73, 431
311103-0403	PINS,STRAIGHT 8X25	273
311103-0407	PINS,STRAIGHT 8X35	543, 545
311103-0411	CYLINDRICACP M6 8X45 RFR	543, 545
311103-0413	PINS,STRAIGHT 8X50	49, 51, 227, 287, 291
311111-0305	SLOTTED TUFRP5X14	465
311112-0192	SLOTTED TURP 2,5X24	345, 349
311112-0205	PINS,SLOTTED TUBULAR SPRING PIN 3X10	747
311112-0256	PIN,SLOTTED TUBULAR SPRING PIN 4x20	703
311112-0256	PINS,SLOTTED TUBULAR SPRING PIN 4X20	177
311112-0258	PINS,SLOTTED TUBULAR SPRING PIN 4X24	703
311112-0341	PINS,SLOTTED TUBULAR SPRING PIN 6X24	447
311112-0350	SLOTTED SLOTTED TUBULAR PIN 6x55 RFR	635, 637
311202-0241	PINS,TAPER PIN 4X25	651, 673
311202-0320	PINS,TAPER PIN 8X35	227
311211-0267	TAPER PIN GKP5X5X30	229
311211-0292	TAPER PIN GKP6X6X30	279, 687
311211-0299	TAPER PIN GKP6X6X55	125
311303-0310	SLOTTED PIRPB5X20FZB	159
311303-0356	SLOTTED PIN RPB 6x30 ZINC COATED	313
311305-0308	SLOTTED PIRPC5X16FZB	721, 727, 733, 737
311411-0127	SPLIT PIN SP1,2X12RFR	501
311411-0140	SPLIT PIN SP1,6X16RFR	41
311411-0169	SPLIT PIN SP2,5X25RFR	177
311508-0416	RIVET KN4X10ALUM.	393, 397
311520-0329	BLANK RIVET 2,4x8mm	247
311520-0420	BLANK RIVE3,2X4	163, 273
311521-0143	COLD SQUEEZE TYPE "POP RIVET" 3,2x8	707
311521-0144	COLD SQUEEZE TYPE "POP RIVET" 3,2x10	623, 627
312101-0287	SCREW M6S4X8FZB	223, 461, 667, 669, 679
312101-0289	SCREW M6S4X10FZB	213, 687
312101-0291	SCREW M6S4X12FZB	687
312101-0295	SCREW M6S 4x20 FZB	167, 311, 313
312101-0323	SCREW M6S5X8FZB	229, 323, 639, 687, 709
312101-0325	SCREW M6S5X10FZB	259, 315
312101-0327	SCREW M6S5X12FZB	253, 471
312101-0329	SCREW M6S5X16FZB	639, 667, 669, 679, 687, 709
312101-0331	SCREW M6S5X20FZB	237, 667, 669, 679, 687
312101-0333	SCREW M6S5X25FZB	687
312101-0335	SCREW M6S 5x30 FZB	687
312101-0362	SCREW M6S 6x8-8,8 FZB	311, 549
312101-0364	SCREW M6S 6x10-8,8 FZB	305, 447, 667, 669, 679, 709
312101-0364	SCREW M6S6X10FZB	163, 165, 223, 253, 259
312101-0366	SCREW M6S 6x12-8,8 FZB	315, 323, 687
312101-0366	SCREW M6S6X12FZB	167, 223, 229, 279
312101-0368	SCREW M6S 6x16 Zink Plated	205, 213, 229, 311, 687
312101-0370	SCREW M6S6X20FZB	159, 447, 471, 627, 709
312101-0372	SCREW M6S 6x25 FZB	253, 313, 315, 549
312101-0374	SCREW M6S6X30FZB	463
312101-0378	SCREW M6S6X40FZB	219
312101-0379	SCREW M6S6X45FZB	467, 469, 471
312101-0380	SCREW M6S6X50FZB	259, 471
312101-0381	SCREW M6S 6x55 FZB	635, 637
312101-0383	SCREW M6S6X65FZB	321
312101-0384	SCREW M6S6X70FZB	447
312101-0447	SCREW M6S8X12FZB	259
312101-0449	SCREW M6S 8x16 FZB	163, 165, 223, 303
312101-0451	SCREW M6S 8x20 FZB	213, 217, 445, 447, 463, 471
312101-0453	SCREW M6S 8x25 FZB	159, 205, 215, 229, 313, 315, 445, 461, 463, 549

Part No	Description	Page No
312101-0455	SCREW M6S 8x30 FZB	305, 537
312101-0457	SCREW M6S 8x35 FZB	445, 549
312101-0459	SCREW M6S 8x40 FZB	313, 549
312101-0460	SCREW M6S8X45FZB	709
312101-0461	SCREW M6S8X50FZB	217
312101-0463	SCREW M6S8X60FZB	205
312101-0465	SCREW M6S8X70FZB	311, 323
312101-0467	SCREW M6S8X80FZB	167
312101-0473	SCREW M6S8X110FZB	163, 165
312101-0491	SCREW M6S10X20FZB	623
312101-0493	SCREW M6S10X25FZB	93, 447, 687
312101-0495	SCREW M6S10X30FZB	205, 615, 617, 619
312101-0497	SCREW M6S10X35FZB	537
312101-0499	SCREW M6S10X40FZB	229, 303
312101-0500	SCREW M6S10X45FZB	615, 617
312101-0501	SCREW M6S10X50FZB	305
312101-0518	SCREW M6S10X140FZB	229
312101-0536	SCREW M6S12X30FZB	305
312101-0538	SCREW M6S12X35FZB	229
312101-0540	SCREW M6S12X40FZB	161, 215, 221, 305
312101-0546	SCREW M6S 12x70 Zink Plated	313
312104-0374	SCREW M6S6X30H8.8 FZB	447
312104-0460	SCREW M6S8X45H8.8FZB	315
312104-0465	SCREW M6S8X70H8.8 FZB	305, 323
312105-0287	SCREW M6S ISO 4017 M4x8 A280	113, 137, 341, 343, 353, 355, 357, 359, 521, 523, 525, 527, 591, 597, 687, 727, 743
312105-0289	SCREW M6S4X10 A2 80	57
312105-0291	SCREW M6S ISO 4017 M4X12 A280	41, 273, 405, 665, 677, 737
312105-0293	SCREW M6S ISO 4017 M4X16 A280	461, 647
312105-0295	SCREW M6S ISO 4017 M4X20 A280	341, 343, 345, 349, 389, 391, 405, 441, 457, 577, 585
312105-0299	SCREW M6S ISO 4014 M4X30 A280	723
312105-0301	SCREW M6S ISO 4014 M4X35 A280	723
312105-0323	SCREW M6S ISO 4017 M5X8 A280	245, 271, 557, 641
312105-0325	SCREW M6S 5x10 A2 80	473, 481, 591, 597, 647, 727, 737
312105-0325	SCREW M6S5X10 A2 80	57, 69, 99, 115, 121, 225, 377, 383, 385, 387
312105-0327	SCREW M6S ISO 4017 M5X12 A280	57, 123, 131, 133, 187, 189, 229, 231, 253, 273, 357, 359, 387, 577, 585, 643, 645, 665, 677, 699, 743, 747
312105-0328	SCREW M6S5X14 A2 80	473, 481, 541
312105-0329	SCREW M6S ISO 4017 M5X16 A280	73, 345, 349, 369, 373, 375, 379, 381, 429
312105-0329	SCREW M6S ISO 4017 M5x16 A280	441, 457, 647, 665, 677, 687
312105-0331	SCREW M6S ISO 4017 M5X20 A280	49, 51, 75, 77, 79, 369, 373, 375, 377, 379, 383, 385, 387, 405, 639, 641, 699
312105-0332	SCREW M6S5X22RFR	69
312105-0333	SCREW M6S ISO 4017 M5X25 A280	369, 381, 385
312105-0335	SCREW M6S ISO 4017 M5X30 A280	341, 343, 357, 359, 387
312105-0337	SCREW M6S ISO 4014 M5X35 A280	703
312105-0339	SCREW M6S ISO 4014 M5X40 A280	245
312105-0340	SCREW M6S ISO 4014 M5X45 A280	371, 377, 379
312105-0343	SCREW M6S5X60 A2 80	357, 359
312105-0362	SCREW M6S ISO 4017 M6X8 A280	25, 97, 185, 239, 247, 441, 457, 485, 487, 491, 495, 557
312105-0364	SCREW M6S 6x10 A280	441, 453, 457, 531, 533, 535, 577, 585, 589, 727, 737
312105-0364	SCREW M6S6X10RFR	27, 41, 57, 63, 69, 75, 77, 79, 97, 99, 103, 105, 115, 117, 121, 125, 135, 137, 171, 187, 189, 229, 245, 321, 429
312105-0366	SCREW M6S ISO 4017 M6X12 A280	25, 39, 41, 61, 69, 73, 109, 111, 113, 117, 119, 123, 125, 129, 161, 217, 235, 273, 321, 405, 489, 493, 497, 507, 509, 511, 515, 541, 557, 577, 585, 591, 597, 599, 603, 651, 673, 701, 737, 739, 747
312105-0367	SCREW M6S6X14RFR	69, 115, 175, 441, 457, 485, 487, 537
312105-0368	SCREW M6S ISO 4017 M6X16 A280	17, 43, 45, 57, 61, 63, 69, 73, 103, 105, 115, 121, 131, 133, 173, 187, 189, 191, 197, 199, 229, 235, 261, 271, 273, 275
312105-0368	SCREW M6S ISO 4017 M6x16 A280	441, 451, 457, 485, 487, 489, 493, 497, 507, 509, 511, 515, 537, 539, 541, 549, 559, 567, 577, 585, 591, 593, 595, 597, 599, 603, 643, 645, 647, 651, 673, 699, 701, 727, 731, 737, 739, 747
312105-0370	SCREW M6S ISO 4017 M6X20 A280	29, 39, 57, 61, 63, 69, 99, 103, 105, 107, 113, 117, 121, 173, 175, 185, 187, 191, 235, 321, 345, 349, 389, 391, 405, 407, 409, 411, 429
312105-0370	SCREW M6S ISO 4017 M6x20 A280	441, 451, 453, 457, 461, 497, 509, 511, 531, 537, 549, 551, 557, 581, 583, 585, 587, 591, 597, 643, 645, 653, 655, 657, 659, 661, 663, 673, 721, 729, 733, 735, 739, 743
312105-0371	SCREW M6S6X22RFR	69, 463, 539, 541, 713
312105-0372	SCREW M6S ISO 4017 M6X25 A280	57, 61, 65, 73, 115, 129, 135, 177, 235, 249, 345, 349, 409, 413, 415, 417, 419, 421, 423, 473, 475, 481, 483, 491, 495, 497, 511, 537, 551, 557, 563, 565, 571, 573, 589, 651, 673, 699, 743, 757
312105-0374	SCREW M6S ISO 4017 M6X30 A280	41, 61, 119, 177, 181, 311, 321, 451, 475, 483, 499, 507, 519, 531, 557, 559, 561, 563, 567, 569, 571, 577, 585
312105-0376	SCREW M6S ISO 4017 M6X35 A280	29, 59, 69, 121, 245, 321, 405, 441, 457, 473, 481, 531, 557, 561, 563, 569, 571, 591, 597, 599, 603
312105-0378	SCREW O4017 M6X40A280	171, 185, 403, 531, 559, 561, 567, 569, 577, 585, 599, 603, 737, 751, 753
312105-0379	SCREW M6S ISO 4014 M6X45 A280	127, 559, 561, 567, 569, 591, 597
312105-0380	SCREW M6S ISO 4014 M6X50 A280	29, 41, 507, 509, 531
312105-0381	SCREW M6S ISO 4014 M6X55 A280	261, 531
312105-0382	SCREW M6S ISO 4014 M6X60 A280	97, 107, 177, 305
312105-0384	SCREW M6S ISO 4014 M6X70 A280	93, 321, 511

Part No	Description	Page No
312105-0386	SCREW M6S ISO 4014 M6X80 A280	599, 603
312105-0388	SCREW M6S ISO 4014 M6X90 A280	471, 473, 481
312105-0447	SCREW M6S ISO 4017 M8X12 A280	61, 107, 113, 121, 125, 129, 135, 389, 391, 497, 507, 549, 735
312105-0449	SCREW M6S ISO 4017 M8x16 A280	29, 57, 93, 109, 125, 135, 229, 245, 311, 323, 409, 411, 485, 487, 511, 515, 549, 577, 585, 595, 599, 603, 739, 751, 753, 757
312105-0451	SCREW M6S ISO 4017 8x20 A280	17, 21, 29, 41, 49, 51, 69, 75, 77, 79, 115, 119, 181, 187, 189, 197, 199, 441, 455, 457, 519, 537, 539, 541, 563, 571, 577, 585, 595, 599, 603, 647, 649, 653, 655, 657, 659, 661, 663, 673, 721, 723, 727, 733, 735, 737, 741
312105-0452	SCREW M6S 8x22 Stainless	69, 113, 173, 405, 757
312105-0453	SCREW M6S ISO 4017 M8x25 A280	21, 33, 35, 37, 41, 57, 93, 241, 321, 323, 353, 355, 405, 441, 457, 497, 507, 511, 537, 549, 557, 561, 563, 569, 571, 591, 593, 597, 599, 603, 617, 721, 723
312105-0455	SCREW M6S ISO 4017 M8X30 A280	41, 57, 429, 441, 447, 457, 497, 507, 511, 519, 537, 561, 569, 577, 585, 593, 597, 643, 645, 727, 741
312105-0457	SCREW ISO 4017 M8x35 A280	497, 511, 559, 561, 563, 567, 569, 571, 651, 673
312105-0457	SCREW O4017 M8X35A280	113, 353, 355, 389, 391
312105-0459	SCREW ISO 4017 M8x40 A280	515, 559, 567
312105-0460	SCREW ISO 4017 M8x45 A280	519, 539, 557
312105-0462	SCREW M6S ISO 4014 M8x55 A280	17, 33, 35, 37, 519
312105-0463	SCREW M6S ISO 4014 M8x60 A280	17, 497, 507
312105-0464	SCREW M6S ISO 4014 M8x65 A280	21, 33, 35, 37, 577, 585
312105-0466	SCREW M6S ISO 4014 M8x75 A280	179, 353, 355
312105-0467	SCREW M6S ISO 4014 M8x80 A280	121
312105-0469	SCREW M6S ISO 4014 M8x90 A280	485, 577, 585
312105-0471	SCREW M6S ISO 4014 M8x100 A280	485, 487
312105-0489	SCREW M6S ISO 4017 M10X16 A280	107, 737
312105-0491	SCREW M6S ISO 4017 M10X20 A280	61, 93, 121, 137, 215
312105-0493	SCREW M6S ISO 4017 M10X25 A280	41, 115, 215, 229, 275, 405, 407, 409, 411, 461, 615, 617
312105-0495	SCREW M6S ISO 4017 M10X30 A280	275, 405, 407, 409, 411, 441, 457, 647
312105-0497	SCREW M6S ISO 4017 M10X35 A280	29, 61, 275, 357, 359
312105-0499	SCREW 4017 M10X40A280	405, 407, 409, 411
312105-0509	SCREW M6S ISO 4014 M10X90 A280	407
312105-0513	SCREW M6S ISO 4014 M10X110 A280	411
312105-0517	SCREW M6S ISO 4014 M10X130 A280	537
312105-0532	SCREW M6S ISO 4017 M12X20 A280	125
312105-0534	SCREW M6S ISO 4017 M12X25 A280	451
312105-0536	SCREW M6S ISO 4017 M12X30 A280	41
312105-0538	SCREW M6S ISO 4017 M12X35 A280	575
312105-0540	SCREW M6S ISO 4017 M12X40 A280	17, 21, 33, 35, 37, 125, 229
312105-0542	SCREW M6S ISO 4014 M12X50 A280	229, 441, 457
312109-0374	SCREW M6S ISO 4017 M6X30 A280	43, 651, 673, 747
312109-0376	SCREW M6S ISO 4017 M6X35 A280	497, 507, 511
312109-0381	SCREW M6S6X55HA480	515, 737
312109-0457	SCREW M6S ISO 4017 M8X35 A280	357, 359, 599, 603
312109-0459	SCREW M6S ISO 4017 M8X40 A280	353, 355, 559, 561, 563, 565, 567, 569, 571, 573
312109-0461	SCREW M6S ISO 4017 M8X50 A280	599, 603
312109-0463	SCREW M6S 8x60H A4 80	311, 345, 349, 389, 391, 509
312111-0293	SCREW MC6S4X16FZB	549
312111-0297	SCREW MC6S4X25FZB	167
312111-0323	SCREW MC6S5X8FZB	681, 683
312111-0325	SCREW MC6S5X10FZB	687
312111-0327	SCREW MC6S5X12FZB	689
312111-0329	SCREW MC6S5X16FZB	213, 449, 689
312111-0331	SCREW MC6S5X20FZB	639, 709
312111-0333	SCREW MC6S5X25FZB	207, 209, 639, 653, 655, 657, 659, 661, 663, 673
312111-0335	SCREW MC6S5X30FZB	313, 651, 667, 669, 673, 679
312111-0343	SCREW MC6S5X60FZB	207
312111-0345	SCREW MC6S5X70FZB	211
312111-0364	SCREW MC6S6X10FZB	229, 651, 673
312111-0366	SCREW MC6S6X12FZB	709
312111-0368	SCREW MC6S6X16FZB	207, 209, 313, 547
312111-0370	SCREW MC6S6X20FZB	447, 449, 465, 709
312111-0371	SCREW MC6S6X22FZB	639
312111-0372	SCREW MC6S6X25FZB	685, 689
312111-0374	SCREW MC6S6X30FZB	307
312111-0390	SCREW MC6S6X100FZB	713
312111-0449	SCREW MC6S8X16FZB	639, 709
312111-0451	SCREW MC6S8X20FZB	305, 465, 543, 545
312111-0453	SCREW MC6S8X25FZB	465, 543, 545
312111-0455	SCREW MC6S8X30FZB	323
312111-0457	SCREW MC6S8X35FZB	543, 545
312111-0459	SCREW MC6S8X40FZB	157
312111-0467	SCREW MC6S8X80FZB	649
312111-0491	SCREW MC6S10X20FZB	465
312111-0492	SCREW MC6S10X22FZB	307
312111-0497	SCREW MC6S10X35FZB	307
312111-0499	SCREW MC6S10X40FZB	307
312111-0501	SCREW MC6S10X50FZB	307
312111-0504	SCREW MMC6S10X65FZB	307
312111-0506	SCREW MC6S10X75FZB	307
312115-0224	SCREW S 3X10 A4 80	63, 103

Part No	Description	Page No
312115-0228	SCREW MC6S ISO 4762 M3X16 A280	75, 77, 79, 743
312115-0232	SCREW 3X25 A4 80	119
312115-0287	SCREW MC6S ISO 4762 M4X8 A280	247, 665, 677
312115-0289	SCREW S4X10 A4 80	353, 355
312115-0291	SCREW MC6S ISO 4762 M4X12 A280	85
312115-0291	SCREW MC6S ISO 4762 M4x12 A280	447
312115-0295	SCREW MC6S ISO 4762 M4X20 A280	119, 413, 415, 417, 419, 421, 423, 447
312115-0297	SCREW MC6S ISO 4762 M4X25 A280	413, 415, 417, 419, 421, 423, 427
312115-0303	SCREW MC6S ISO 4762 M4X40 A280	357, 359
312115-0305	SCREW MC6S ISO 4762 M4X50 A280	75, 77, 79
312115-0323	SCREW MC6S ISO 4762 M5X8 A280	577, 585, 589, 695
312115-0325	SCREW 5X10 A4 80	121, 187, 189, 273, 281, 589
312115-0327	SCREW MC6S ISO 4762 M5X12 A280	383
312115-0328	SCREW 5X14 A4 80	115, 119, 125
312115-0329	SCREW MC6S ISO 4762 M5X16 A280	69, 75, 77, 79, 99, 187, 189, 341, 343, 703
312115-0331	SCREW MC6S ISO 4762 M5X20 A280	107, 111, 389, 391, 393, 395, 397, 399
312115-0332	SCREW 5X22 A4 80	121
312115-0333	SCREW MC6S ISO 4762 M5X25 A280	239
312115-0337	SCREW MC6S ISO 4762 M5X35 A280	387
312115-0339	SCREW MC6S ISO 4762 M5X40 A280	703
312115-0340	SCREW MC6S ISO 4762 M5X45 A280	381, 383, 385, 689
312115-0364	SCREW 6X10 A4 80	63, 103, 139, 177
312115-0366	SCREW MC6S ISO 4762 M6X12 A280	17, 21, 187, 189, 241, 335, 339, 389, 391, ... 507, 731, 755, 757
312115-0368	SCREW MC6S ISO 4762 M6X16 A280	229, 231, 335, 339
312115-0368	SCREW MC6S ISO 4762 M6x16 A280	485, 487, 599, 603, 671, 737, 741
312115-0370	SCREW MC6S ISO 4762 M6X20 A280	177, 413, 415, 417, 419, 421, 423, 427, 431
312115-0370	SCREW MC6S ISO 4762 M6x20 A280	511, 649, 651, 673, 703
312115-0372	SCREW MC6S ISO 4762 M6X25 A280	233, 413, 415, 417, 419, 421, 423, 509, 651, ... 673, 725
312115-0374	SCREW MC6S ISO 4762 M6x30 A280	497, 507, 509, 511
312115-0374	SCREW MC6S ISO O4762 M6X30 A280	395, 399, 413, 415, 417, 419, 421, 423, ... 425, 431
312115-0376	SCREW MC6S ISO 4762 M6X35 A280	321
312115-0376	SCREW MC6S ISO 4762 M6x35 A280	651, 673
312115-0378	SCREW MC6S ISO 4762 M6X40 A280	229
312115-0380	SCREW MC6S ISO 4762 M6X50 A280	497
312115-0382	SCREW MC6S ISO 4762 M6X60 A280	127
312115-0449	SCREW MC6S ISO 4762 M8X16 A280	335, 339
312115-0451	SCREW MC6S ISO 4762 M8X20 A280	137, 229
312115-0451	SCREW MC6S ISO 4762 M8x20 A280	543, 545, 701
312115-0453	SCREW MC6S ISO 4762 M8X25 A280	311, 543, 545, 615, 617
312115-0455	SCREW MC6S ISO 4762 M8X30 A280	45, 187, 189, 353, 355, 357, 359, 577, 585
312115-0459	SCREW MC6S ISO 4762 M8X40 A280	89, 91
312115-0461	SCREW MC6S ISO 4762 M8X50 A280	345, 349, 395, 399
312115-0467	SCREW MC6S ISO 4762 M8X80 A280	121
312115-0495	SCREW MC6S ISO 4762 M10X30 A280	647
312115-0501	SCREW MC6S ISO 4762 M10X50 A280	229
312115-0503	SCREW MC6S ISO 4762 M10X60 A280	229
312121-0228	SLOTTED HEMCS3X16FZB	681, 683, 689
312121-0230	SLOTTED HEMCS3X20FZB	223, 689
312121-0285	SLOTTED HEAD SCREW MCS 4x6 FZB	167, 307, 311, 313
312121-0287	SLOTTED HEAD SCREW MCS 4x8 FZB	221, 253, 259, 323
312121-0291	SLOTTED HEMCS4X12FZB	217
312121-0293	SLOTTED HEMCS4X16FZB	223
312121-0321	SLOTTED HEMCS5X6FZB	219, 689
312121-0323	SLOTTED HEMCS5X8FZB	247
312121-0364	SLOTTED HEMCS6X10FZB	685
312125-0220	SLOTTED HEMCS3X6RFR	41, 69, 217, 245, 253, 271, 283, 501, 503, 505, 735
312125-0222	SLOTTED CHEESE HEAD ISO 1207 M3X8 RFR	187
312125-0222	SLOTTED CHEESE HEAD ISO 1207 M3x8 RFR	643, 645
312125-0224	SLOTTED HEMCS3X10RFR	241
312125-0228	SLOTTED CHEESE HEAD ISO 1207 M3x16 A4	447, 509, 681, 683, 701, 709, 757
312125-0230	SLOTTED CHEESE HEAD ISO 1207 M3X20 RFR	117, 121, 497, 511, 541, 577, 585
312125-0232	SLOTTED CHEESE HEAD ISO 1207 M3X25 RFR	341, 343
312125-0234	SLOTTED CHEESE HEAD ISO 1207 M3X30 RFR	681, 683
312125-0285	SLOTTED HEAD SCREW MCS 4X6 RFR	599, 603, 651, 673, 737, 757
312125-0285	SLOTTED HEMCS4X6RFR	43, 65, 69, 107, 175, 275, 341, 343, 345, 349, 413, ... 415, 417, 419, 421, 423, 429
312125-0287	SLOTTED CHEESE HEAD ISO 1207 M4X8 RFR	229, 231, 335, 339, 395, 399, 405, ... 441, 447, 457, 489, 491, 493, 495, 497, 507, 515, 577, 585, 737, 747, 751, ... 753, 755, 757
312125-0289	SLOTTED HEMCS4X10RFR	599, 603, 727
312125-0291	SLOTTED CHEESE HEAD ISO 1207 M4X12 RFR	119, 283
312125-0291	SLOTTED CHEESE HEAD ISO 1207 M4x12 RFR	441, 457, 557, 577, 585, 735
312125-0295	SLOTTED CHEESE HEAD ISO 1207 M4X20 RFR	41
312125-0323	SLOTTED CHEESE HEAD ISO 1207 M5X8 RFR	83, 85, 87, 113, 237, 253, 441, 457, ... 647, 681, 683, 741
312125-0327	SLOTTED CHEESE HEAD ISO 1207 M5X12 RFR	57, 67
312125-0329	SLOTTED CHEESE HEAD ISO 1207 M5X16 RFR	643, 645, 739
312125-0331	SLOTTED CHEESE HEAD ISO 1207 M5X20 RFR	113
312125-0333	SLOTTED CHEESE HEAD ISO 1207 M5X25 RFR	721
312125-0364	SLOTTED HEMCS6X10RFR	113

Part No	Description	Page No
312125-0370	SLOTTED CHEESE HEAD ISO 1207 M6X20 RFR	185
312125-0372	SLOTTED CHEESE HEAD ISO 1207 M6X25 RFR	713
312125-0376	SLOTTED CHEESE HEAD ISO 1207 M6X35 RFR	233
312125-0378	SLOTTED CHEESE HEAD ISO 1207 M6X40 RFR	101
312125-0447	SLOTTED CHEESE HEAD ISO 1207 M8X12 RFR	727
312132-0323	SLOTTED PAN HEAD ISO 1580 M5X8 MSGFN	689
312141-0295	SLOTTED HEMFS4X20FZB	323
312141-0325	SLOTTED HEMFS5X10FZB	259
312141-0366	SLOTTED HEMFS6X12FZB	695, 697
312145-0222	SLOTTED HEMFS3X8RFR	361, 363, 365, 367
312145-0228	SLOTTED HEMFS3X16RFR	41
312145-0238	SLOTTED HEMFS3X40RFR	395, 399, 427, 735
312145-0285	SLOTTED HEMFS4X6RFR	273, 353, 355, 357, 359, 695
312145-0287	SLOTTED HEMFS4X8RFR	701
312145-0289	SLOTTED HEMFS4X10RFR	361, 363, 365, 367, 375, 689, 703
312145-0291	SLOTTED HEAD SCREW MFS 4x12 A4	703
312145-0297	SLOTTED HEMFS4X25RFR	353, 355
312145-0305	SLOTTED HEMFS4X50RFR	341, 343
312145-0323	SLOTTED HEMFS5X8RFR	643, 645, 695, 697
312145-0325	SLOTTED HEMFS5X10RFR	273, 371
312145-0327	SLOTTED HEMFS5X12RFR	273, 689, 703
312145-0329	SLOTTED HEMFS5X16RFR	689, 703
312145-0331	SLOTTED HEMFS5X20RFR	703
312145-0335	SLOTTED HEMFS5X30RFR	689
312145-0364	SLOTTED HEMFS6X10RFR	725
312145-0366	SLOTTED HEMFS6X12RFR	217, 405, 407, 409, 411
312145-0378	SLOTTED HEMFS6X40RFR	455
312145-0449	SLOTTED HEMFS8X16RFR	173
312151-0366	SCREW MF6S6X12FZB	229
312151-0368	SCREW MF6S6X16FZB	689
312151-0384	SCREW MF6S6X70FZB	689
312151-0451	SCREW MF6S8X20FZB	465
312155-0289	SCREW MF6S4X10RFR	315
312155-0291	SCREW MF6S DIN 7991 M4X12 A280	591, 597
312155-0295	SCREW MF6S DIN 7991 M4X20 A280	491, 495, 599, 603
312155-0297	SCREW MF6S DIN 7991 M4X25 A280	577, 585, 591, 597
312155-0301	SCREW MF6S4X35RFR	357, 359
312155-0327	SCREW MF6S DIN 7991 M5x12 A280	229, 643, 645, 647
312155-0329	SCREW MF6S DIN 7991 M5x16 A280	25, 115, 125, 369, 651, 675, 681, 683
312155-0333	SCREW MF6S DIN 7991 M5X25 A280	651, 675
312155-0364	SCREW MF6S6X10RFR	63, 103, 105, 563, 571
312155-0366	SCREW MF6S DIN 7991 M6X12 A280	185, 229, 289, 441, 457, 497, 507, 511
312155-0368	SCREW MF6S DIN7991 M6X16 A280	229, 561, 563, 565, 569, 571, 573, 649
312155-0370	SCREW MF6S DIN 7991 M6X20 A280	63, 103, 105, 215, 229, 485, 487
312155-0372	SCREW MF6S DIN 7991 M6X25 A280	217, 517
312155-0374	SCREW MF6S6X30RFR	335, 339
312155-0376	SCREW MF6S DIN 7991 M6X35 A280	497, 509, 511, 561, 569
312155-0378	SCREW MF6S DIN 7991 M6X40 A280	561, 569
312155-0382	SCREW MF6S6X60 A2 70	345, 349
312155-0449	SCREW MF6S DIN 7991 M8X16 A280	111, 689
312155-0451	SCREW MF6S8X20RFR	229, 647
312155-0453	SCREW MF6S DIN 7991 M8x25 A280	641
312155-0499	SCREW MF6S DIN 7991 M10X40 A280	565, 573
312155-0532	SCREW MF6S12X20RFR	75, 77, 79
312180-0447	HEX. SOCKET HEAD SHOULD. ISO 7379 M6X12	213
312180-0489	HEX.SOCKET HEAD SHOULD.ISO 7379 M8x16	313, 323
312180-0493	HEX. SOCKET HEAD SHOULD. ISO 7379 M8X25	73
312180-0499	HEX. SOCKET HEAD SHOULD. ISO 7379 M8X40	341, 343
312180-0530	HEX. S0CKET HEAD SHOULD. ISO 7379 M10X16	121, 445
312303-0374	STUD SCREWMPS 6X25 RFR	649
312303-0497	STUD SCREWMPS 10X25 RFR	61
312306-0287	STOP SCREW P6SS4X8FZB	689
312306-0360	STOP SCREW P6SS6X6FZB	695
312306-0366	STOP SCREW P6SS6X12FZB	693, 709
312311-0292	STOP SCREW T6SS4X14FZB	735
312311-0370	SET SCREW FULL DOGPOINT ISO 4028 M6X20	467, 469
312316-0283	STOP SCREW SK6SS4X4FZB	323, 471, 731
312316-0285	STOP SCREW SK6SS4X6FZB	639
312316-0287	STOP SCREW SK6SS4X8FZB	549
312316-0291	STOP SCREW SK6SS4X12FZB	731
312316-0320	STOP SCREW SK6SS5X5FZB	121, 543, 545
312316-0323	STOP SCREW SK6SS5X8FZB	543, 545, 701
312316-0327	STOP SCREW SK6SS 5x12 FZB	313
312316-0360	STOP SCREW SK6SS6X6FZB	681, 683
312316-0362	STOP SCREW SK6SS6X8FZB	537, 549, 701
312316-0372	STOP SCREW SK6SS6X25FZB	549
312318-0283	SET SCREW CUP POINT ISO 4029 M4X4 RFR	17, 21, 743, 751, 753
312318-0284	STOP SCREW SK6SS4X5RFR	711
312318-0285	SET SCREW CUP POINT ISO 4029 M4X6 RFR	17, 21, 361, 363, 365, 367
312318-0285	STOP SCREW ISO 4029 M4x6 A4	731, 739
312318-0289	SET SCREW CUP POINT ISO 4029 M4X10 RFR	405, 733
312318-0291	SET SCREW CUP POINT ISO 4029 M4X12 RFR	17, 21
312318-0321	STOP SCREW SK6SS 5x6 A4	689
312318-0321	STOP SCREW SK6SS5X6RFR	395, 399
312318-0323	SET SCREW CUP POINT ISO 4029 M5X8 RFR	429, 653, 655, 657, 659, 661, 663, 675

Part No	Description	Page No
312318-0325	STOP SCREW SK6SS5X10RFR	73
312318-0327	SET SCREW CUP POINT ISO 4029 M5X12 RFR	115, 709
312318-0360	STOP SCREW SK6SS6X6RFR	315
312318-0362	SET SCREW CUP POINT ISO 4029 M6X8 RFR	57, 119, 275
312318-0362	SET SCREW CUP POINT ISO 4029 M6x8 RFR	509, 647, 651, 675
312318-0364	STOP SCREW SK6SS6X10RFR	159, 721, 733
312318-0366	SET SCREW CUP POINT ISO 4029 M6X12 RFR	507
312318-0368	SET SCREW CUP POINT ISO 4029 M6X16 RFR	119
312318-0368	SET SCREW CUP POINT ISO 4029 M6x16 RFR	591, 597, 671
312318-0370	SET SCREW CUP POINT ISO 4029 M6X20 RFR	335, 339, 557
312318-0443	SET SCREW CUP POINT ISO 4029 M8X8 RFR	509, 557
312318-0449	SET SCREW COP POINT ISO 4029 M8X16 RFR	557
312318-0451	SET SCREW CUP POINT ISO 4029 M8X20 RFR	605
312318-0455	STOP SCREW SK6SS8X30RFR	563, 571
312318-0459	SET SCREW CUP POINT ISO 4029 M8X40 RFR	345, 349
312318-0499	SET SCREW CUP POINT ISO 4029 M10X40 RFR	345, 349
312502-0120	DRIVE SCREW ROUND HEAD SMS 1549 KDS 0X5	125, 241, 245, 727
312502-0171	DRIVE SCREW ROUND HEAD SMS 1549 KDS 2X6	207, 209
312503-0275	DRIVE SCREW RXK POZ.B6x6,5 FZB	313
312601-0312	NUT M6M4FZB	215, 689
312601-0314	NUT M6M5FZB	211, 247, 689
312601-0316	NUT M6M 6-8 FZB	205, 215, 223, 313, 315, 471, 549, 615, 617, 639, 685, 689
312601-0318	NUT M6M8FZB	159, 163, 165, 167, 205, 215, 315, 445, 471, 709
312601-0320	NUT M6M 10-8 FZB	229, 305, 615, 617, 619
312601-0322	NUT M6M 12-8 FZB	215, 301, 305, 313, 549
312601-0324	NUT M6M 16-8 FZB	323
312605-0310	NUT,HEXAGON,M6M3 RFR	41, 117, 121, 187, 189, 271, 641, 681, 683, 735
312605-0312	NUT,HEXAGON,M4 RFR	17, 21, 29, 43, 65, 69, 145, 175, 187, 189, 273, 341, 343, 389, 391, 441, 457, 671, 681, 683, 723, 731
312605-0314	NUT,HEXAGON,M6M5 Stainless	43, 49, 51, 57, 73, 111, 187, 189, 229, 239, 281, 337, 441, 457, 643, 645, 647, 651, 665, 675, 677, 735
312605-0316	NUT,HEXAGON A280 M6M6	441, 457, 477, 479, 485, 487, 497, 507, 511, 515, 517, 519, 557, 577, 585, 591, 595, 597, 599, 603, 641, 651, 675, 689, 737, 739, 741, 747, 751, 753
312605-0316	NUT,HEXAGON,A280 M6M6 Stainless	17, 21, 29, 39, 57, 61, 65, 69, 93, 99, 101, 107, 113, 119, 121, 171, 177, 181, 185, 187, 189, 191, 197, 199, 217, 229, 235, 243, 245, 249, 261, 275
312605-0318	NUT,HEXAGON,M8 RFR	21, 45, 57, 73, 117, 125, 157, 173, 179, 185, 311, 321, 323, 335, 339, 345, 349, 353, 355, 357, 359, 389, 391, 405, 455, 485, 487, 509, 529, 549, 553, 555, 557, 559, 561, 563, 565, 567, 569, 571, 573, 577, 585, 599, 603, 615, 617, 643, 645, 665, 677, 723, 735, 737, 739, 741, 747, 757
312605-0320	NUT,HEXAGON,M10 A280	41, 57, 61, 117, 121, 177, 215, 229, 357, 359, 485, 487, 497, 509, 615, 617, 737, 749
312605-0322	NUT,HEXAGON,M12 RFR	45, 275, 441, 455, 457, 497, 507, 511, 599, 603
312605-0324	NUT,HEXAGON,M16 A280	591, 597
312621-0318	ROD END,NUT M8	323
312621-0324	NUT ML6M16FZB	325
312625-0316	NUTS,HEXAGON,M6	509
312625-0318	NUTS,HEXAGON,M8	599, 603
312631-0321	NUTS,HEXAGON,M10X1,25	491, 495
312631-0324	NUTS,HEXAGON,M16X1,5	467, 469
312635-0320	NUT M6M 10x1 Stainless A2 80	345, 349, 353, 355
312705-0316	NUTS,DOMED CAP,HEXAGON,M6	137, 651, 675
312715-0114	NUTS,WING M5	217
312805-0100	NUTS,ROUND,WITH SLOTS,M10X0,75	345, 349
312805-0101	NUTS,ROUND,WITH SLOTS,M12X1	345, 349
312805-0102	NUTS,ROUND,WITH SLOTS,M15X1	713
312805-0103	NUTS,ROUND,WITH SLOTS,M17X1	713
312805-0107	NUTS,ROUND,WITH SLOTS,M35X1,5	547
312805-0108	NUTS,ROUND,WITH SLOTS,M40X1,5	543, 545
312805-0110	NUTS,ROUND,WITH SLOTS,M50X1,5	465
312805-0114	NUTS,ROUND,WITH SLOTS,M70X20	543, 545
312810-0310	LOCK NUT 3FZB	187
312810-0320	LOCK NUT 10FZB	537
312810-0322	LOCK NUT 12-8. FZB	313
312810-0324	LOCK NUT 16 FZB	313
312811-0316	LOCK NUT M6RFR	99, 321, 689
312811-0318	LOCK NUT M8RFR	341, 343, 345, 349, 641
312811-0322	LOCK NUT M12RFR	325
312811-0324	LOCK NUT M16RFR	311
312812-0314	NUT,HEXAGON,LOCK,WITH NYLON,M5	115, 125, 369, 373, 375, 651, 675, 695
312812-0316	NUT,HEXAGON,LOCK,WITH NYLON INSERT,M6	97, 99, 107, 185, 215, 429, 511, 591, 597, 635, 637, 643, 645
312812-0318	LOCK-NUT,HEXAGON,WITH NYLON,M8	429, 509
312812-0320	LOCK-NUT,HEXAGON,WITH NYLON INSERT,M10	305
312821-0102	HEXAGON WETSMUTTER M4 RFR	223
312902-0318	NUTS,HEXAGON,LEFT HAND THREAD,M8	321, 323, 557
312910-0111	THREADED INSERTS M4X2,0D	713
312910-0112	THREADED I M4X2,5D	605
312910-0113	THREADED INSERTS M5X1,0D	605
312910-0114	THREADED I M5X1,5D	713
312910-0115	THREADED INSERTS M5X2,0D	713
312910-0117	THREADED INSERTS M6X1,0D	431
312910-0118	THREADED I M6X1,5D	605
312910-0119	THREADED INSERTS M6X2,0D	605

Part No	Description	Page No
312910-0126	THREADED I M8X1,5D	547
312910-0127	THREADED INSERTS M8X2,0D	605
312911-0101	THREADED I M3X1,0D	713
312911-0103	THREADED I M3X2,0D	431
312911-0109	THREADED INSERTS M4X1,0D	431
312911-0111	THREADED INSERTS M4X2,0D	431, 433
312911-0113	THREADED INSERTS M5X1,0D	431, 713
312911-0114	THREADED I M5X1,5D	431, 433
312911-0115	THREADED INSERTS M5X2,0D	713
312911-0117	THREADED INSERTS M6X1,0D	431, 433
312911-0118	THREADED I M6X1,5D	289, 431
312911-0119	THREADED INSERTS M6X2,0D	287, 291
312911-0125	THREADED INSERTS M8X1,0D	287, 291
312923-0131	NUTS,BLIND RIVET M6X15	605
31390-0100	FF-ELEMENT TOP	473, 481
31390-0110	FF-ELEMENT BUTTOM	473, 481
31417-0000	LINK	741
31418-0000	SHAFT	741
31419-0000	SHAFT	741
31420-0000	WASHER	741
31423-0000	MOUNTING LUG	741
31424-0000	ROLLER BRACKET	741
315101-0124	WASHER BRB3,2X6FZB	223
315101-0136	WASHER BRB4,3X8FZB 213, 217, 223, 259, 667, 669, 679, 681, 683, 689
315101-0146	WASHER BRB 5,3x10 FZB 213, 259, 471, 639, 667, 669, 679, 689, 709
315101-0153	WASHER BRB 6,4x12 FZB 159, 161, 167, 213, 215, 219, 223, 255, 259, 279, 313, 323, 447, 467, 469, 471, 491, 495, 549, 615, 617, 627, 635, 637, 639, 689, 709
315101-0165	WASHER BRB8,4X16FZB 159, 167, 215, 217, 223, 305, 311, 315, 445, 447, 461, 463, 471, 537, 543, 545, 549, 639, 709
315101-0173	WASHER BRB10,5X22FZB 229, 303, 305, 447, 615, 617, 689
315101-0178	WASHER BRB 13x24 FZB 161, 215, 221, 305, 313, 549
315101-0186	WASHER BRB 17x30 FZB 313
315102-0192	WASHER BRFB21X36FZB 627
315103-0195	WASHERS,PLAIN ROUND 23X40 275
315105-0124	WASHER,PLAIN ROUND 3,2x6 75, 77, 79, 117, 121, 187, 189, 217, 253, 447, 497, 501, 509, 511, 541, 577, 585, 641, 643, 645, 681, 683, 743, 757
315105-0136	WASHER,PLAIN ROUND 4,3x8 Stainless 43, 59, 65, 69, 75, 77, 79, 119, 137, 175, 187, 189, 273, 341, 343, 353, 355, 357, 359, 389, 391, 405, 441, 447, 457, 461, 521, 523, 525, 527, 577, 585, 647, 671, 689, 723, 727, 737, 743, 755, 757
315105-0146	WASHER,PLAIN ROUND 5,3x10 Stainless 17, 21, 43, 57, 69, 75, 77, 79, 113, 115, 119, 121, 123, 125, 131, 133, 187, 189, 217, 245, 273, 357, 359, 369, 371,

Part No	Description	Page No
	373, 375, 377, 379, 381, 383, 385, 387, 429, 441, 457, 541, 557, 577, 585, 589, 591, 597, 641, 643, 645, 647, 651, 665, 675, 677, 681, 683, 689, 699, 703, 727, 731, 737, 743, 747, 757
315105-0153	WASHER,PLAIN ROUND 6,4x12 Stainless 25, 29, 39, 41, 43, 57, 61, 63, 65, 69, 97, 103, 105, 107, 115, 119, 121, 123, 129, 135, 137, 173, 175, 177, 185, 187, 189, 191, 197, 199, 217, 229, 233, 235, 239, 245, 247, 261, 271, 273, 275, 311, 315, 321, 345, 349, 389, 391, 403, 405, 429, 441, 451, 453, 457, 473, 477, 479, 481, 485, 487, 499, 507, 511, 515, 517, 519, 531, 533, 535, 537, 539, 541, 549, 553, 555, 557, 559, 561, 563, 565, 567, 569, 571, 573, 577, 579, 581, 583, 585, 589, 591, 595, 597, 599, 603, 643, 645, 647, 649, 653, 655, 657, 659, 661, 663, 671, 673, 689, 699, 701, 703, 721, 729, 731, 733, 735, 737, 739, 741, 743, 747, 751, 753, 757
315105-0156	WASHER BRB 6,7x14 RFR 93, 315
315105-0165	WASHER,PLAIN ROUND 8,4x16 Stainless 19, 21, 29, 41, 57, 61, 69, 73, 93, 115, 119, 125, 129, 135, 137, 173, 187, 189, 197, 199, 229, 241, 321, 323, 335, 339, 345, 349, 353, 355, 357, 359, 389, 391, 405, 429, 441, 455, 457, 461, 485, 487, 497, 507, 509, 511, 515, 519, 537, 541, 543, 545, 549, 557, 559, 561, 563, 565, 567, 569, 571, 573, 575, 577, 585, 591, 595, 597, 599, 603, 615, 617, 647, 649, 653, 655, 657, 659, 661, 663, 665, 673, 677, 701, 721, 723, 727, 735, 737, 739, 741, 747, 751, 753, 755, 757
315105-0173	WASHER,PLAIN ROUND 10,5x22 STAINLESS 29, 41, 57, 61, 73, 117, 137, 177, 215, 229, 231, 275, 357, 359, 405, 441, 457, 461, 485, 487, 497, 509, 565, 573, 575, 615, 617, 641, 647, 651, 675, 699, 737, 741, 749
315105-0176	WASHER BRB 12x22 RFR 405
315105-0178	WASHER,PLAIN ROUND 13x24 19, 21, 33, 35, 37, 41, 441, 451, 457, 575
315105-0186	WASHER,PLAIN ROUND 17x30 591, 597
315105-0192	WASHER,PLAIN ROUND 21x36 45
315111-0153	WASHER TBRB6,4X12FZB 471, 667, 669, 679
315111-0165	WASHER TBRB8,4X16FZB 205, 213, 445, 549, 727
315111-0178	WASHER TBRB13X24FZB 229
315111-0179	WASHER 211
315115-0153	WASHER TBRB 6,4x12 Stainless 115, 441, 451, 457, 461, 463, 473, 477, 479, 481, 489, 493, 497, 507, 509, 511, 537, 557, 559, 561, 563, 565, 567, 569, 571, 573, 577, 579, 585, 589, 593, 595, 597, 599, 603, 651, 675, 699, 757
315115-0165	WASHER TBRB 8,4x16 Stainless 19, 21, 33, 35, 37, 181, 187, 353, 355, 441, 457, 497, 507, 511, 515, 519, 537, 549, 557, 559, 561, 563, 565, 567, 569, 571, 573, 577, 585, 599, 603, 725
315115-0171	WASHER TBRB 10x18 Stainless 335, 339
315115-0173	WASHER TBRB 10,5x22 Stainless 341, 343, 509, 537
315115-0178	WASHER TBRB 13x24 Stainless 125, 229, 441, 457
315121-0153	WASHER TBRSB 6,4x22 FZB 651, 675, 709, 739
315121-0153	WASHER TBRSB6,4X22FZB 117, 217, 229
315121-0165	WASHER TBRSB8,4X26FZB 121, 311, 323, 445, 727, 737

Part No	Description	Page No
315125-0153	WASHERS,PLAIN ROUND,CHAMFERED 6,4X22X4	175, 515
315125-0165	WASHERS,PLAIN ROUND,CHAMFERED 8,4X26X5	245
315202-0101	O-RINGS 3,1X1,6	413, 415, 417, 419, 421, 423, 427, 431
315202-0102	O-RINGS 4,1X1,6	427
315202-0104	O-RINGS 6,1X1,6	413, 415, 417, 419, 421, 423, 427
315202-0106	O-RINGS 8,1X1,6	451
315202-0111	O-RINGS 13,1X1,6	393, 395, 397, 399, 425, 427
315202-0114	O-RINGS 16,1X1,6	335, 339, 427
315202-0119	O-RINGS 25,1X1,6	61
315202-0203	O-RINGS 4,3X2,4	413, 415, 417, 419, 421, 423
315202-0206	O-RINGS 7,3X2,4	163, 165, 425
315202-0207	O-RINGS 8,3X2,4	393, 395, 397, 399, 425, 427
315202-0208	O-RINGS 9,3X2,4	335, 339, 427
315202-0211	O-RINGS 13,3X2,4	193, 195, 201, 203, 251, 277
315202-0212	O-RINGS 4,3X2,4	395, 399, 425, 427
315202-0214	O-RINGS 17,3X2,4	451
315202-0216	O-RINGS 22,2X3	197, 199, 275
315202-0217	O-RINGS 24,2X3	549
315202-0218	O-RINGS 26,2X3	665, 677
315202-0220	O-RINGS 32,2X3	451
315202-0224	O-RINGS 42,2X3	611, 667, 669, 679
315202-0226	O-RINGS 44,2X5,7	451
315202-0229	O-RINGS 59,2X5,7	441, 457
315202-0244	O-RINGS 134,3X5,7	65
315202-0265	O-RINGS 12,3X2,4	403
315202-0301	O-RINGS 49,5X3	143, 453, 667, 669
315202-0302	O-RINGS 54,5X3	451
315202-0303	O-RINGS 59,5X3	451
315202-0304	O-RINGS 64,5X3	87, 667, 669
315202-0305	O-RINGS 69,5X3	667, 669
315202-0308	O-RINGS 84,5X3	83, 85
315202-0309	O-RINGS 89,5X3	463, 665, 677
315202-0311	O-RING 99,5x3	537
315202-0316	O-RINGS 124,5X3	543, 545
315202-0317	O-RINGS 129,5X3	67
315202-0500	O-RING ,42X1,53	287
315202-0501	O-RING 2,90X1,78	287
315202-0612	O-RING 75,80X3,53	287
315202-0702	O-RING 12,42X1,78	427
315204-0109	O-RINGS 11,1X1,6	115
315204-0110	O-RINGS 12,1X1,6	63, 103, 105
315204-0111	O-RINGS 13,1X1,6	99
315204-0116	O-RINGS 18,1X1,6	429

Part No	Description	Page No
315204-0208	O-RINGS 9,3X2,4	131, 133
315204-0209	O-RINGS 10,3X2,4	125
315204-0213	O-RINGS 15,3X2,4	65
315204-0215	O-RINGS 19,2X3	83, 85, 87, 143
315204-0217	O-RINGS 24,2X3	47, 141
315204-0221	O-RINGS 34,2X3	115
315204-0222	O-RINGS 36,2X3	61, 63, 97, 103
315204-0223	O-RINGS 39,2X3	61
315204-0301	O-RINGS 49,5X3	87
315204-0302	O-RINGS 54,5X3	61, 63, 103, 105
315204-0304	O-RINGS 64,5X3	61
315204-0324	O-RINGS 164,3X5,7	127
315211-0103	GASKETS,BOLT HEAD M6	181
315220-0121	SEAL RING V-14S	651, 675
315220-0175	SEAL RING V-35S	509, 549
315220-0198	SEAL RING V-50S	303
315221-0171	SEALING RINGS,TYPE A 30X62X7	543, 545, 547
315221-0197	SEALING RINGS,TYPE A 48X72X8	303
315221-0200	SEALING RINGS,TYPE A 50x72x8	463
315221-0221	SEALING RINGS,TYPE A 70X90X10	307
315226-0196	SEAL RING RB48X65X4,5	405
315226-0200	SEALING RINGS,TYPE RB"GAMMA RI"50X70X4,5	463
315230-0157	SEAL RING	335, 339
315233-0101	PLAIN ROUND,NYLON M5	83, 85, 87
315233-0109	PLAIN ROUND,NYLON R1/8"	131, 133, 219, 471, 537
315233-0110	PLAIN ROUND,NYLON R1/4"	97, 155, 219, 241, 253, 263, 265, 267, 269, 403, 471, 491, 495, 537
315233-0111	PLAIN ROUND,NYLON R3/8"	167, 241
315233-0113	PLAIN ROUND,NYLON R1/2"	23, 61, 155, 239, 245, 255, 261, 263, 265, 267, 269
315234-0109	PLAIN ROUND,COPPER R1/8",M10	473, 481
315234-0110	PLAIN ROUND,COPPER R1/4"	107, 395, 399, 449
315234-0113	PLAIN ROUND,COPPER R1/2",M20	249, 253, 449
315237-0109	PLAIN ROUND,ALUMINIUM R1/8"	41
315250-0101	GASKET 32/25	61, 135
315250-0103	GASKET 48/38	97, 135, 191, 441, 457
315259-0103	SEALS,FELT STRIP 9X6,5X260	341, 343
315401-0153	WASHER FBH6,1FZB	307
315401-0173	WASHER FBH10,2FZB	307
315401-0178	WASHER FBH12,2FZB	301
315402-0136	WASHER FBB4,1RFR	85
315402-0173	WASHER FBB 10,2 RFR	229, 465
315410-0100	WASHERS,LOCK 10X13,5	345, 349

Part No	Description	Page No
315410-0101	WASHERS,LOCK 12X17	345, 349
315410-0107	WASHERS,LOCK 34X44	547
315410-0108	WASHERS,LOCK 40X50	543, 545
315410-0110	WASHERS.LOCK 50X74	465
315410-0114	WASHERS,LOCK 70X85	543, 545
31553-0002	WASHER	537, 575
315701-0134	KEYS,PARALLEL WITH ROUND ENDS 3X3X10	471
315701-0169	FLAT WEDGE4X4X18	639
315701-0201	KEYS,PARALLEL WITH ROUND ENDS 5X5X20	651, 675
315701-0202	FLAT WEDGE5X5X22	449
315701-0234	KEYS,PARALLEL WITH ROUND ENDS 6X6X25	449
315701-0262	FLAT WEDGE8X7X18	315
315701-0263	KEYS,PARALLEL WITH ROUND ENDS 8X7X20	315
315701-0268	KEYS,PARALLEL WITH ROUND ENDS 8X7X32	547
315701-0270	KEYS,PARALLEL WITH ROUND ENDS 8X7X40	311, 449, 537, 547
315701-0272	KEYS,PARALLEL WITH ROUND ENDS 8X7X50	449
315701-0274	KEYS,PARALLEL WITH ROUND ENDS 8X7X60	537
315701-0296	KEYS,PARALLEL WITH ROUND ENDS 10X8X25	465
315701-0299	KEYS,PARALLEL WITH ROUND ENDS 10X8X32	547
315701-0307	KEYS,PARALLEL WITH ROUND ENDS 10X8X70	305
315701-0330	KEYS,PARALLEL WITH ROUND ENDS 12X8X32	229
315701-0336	KEYS,PARALLEL WITH ROUND ENDS 12X8X63	229
315701-0338	KEYS,PARALLEL WITH ROUND ENDS 12X8X70	543, 545
315701-0363	KEYS,PARALLEL WITH ROUND ENDS 14X9X40	465
315701-0802	FLAT WEDGE10X8X36	547
315705-0196	KEYS,PARALLEL WITH ROUND ENDS 5X5X10	177
315705-0266	FLAT WEDGE	509
315705-0298	KEYS,PARALLEL WITH ROUND ENDS 10X8X30	507
315742-0114	RETAINING RINGS 18	497, 509
315742-0119	RETAINING RINGS 25	509, 557
315750-0105	CIRCLIP SGA8	665, 677, 739
315750-0107	CIRCLIP SGA10	345, 349, 735
315750-0109	CIRCLIP SGA12	639
315750-0112	CIRCLIP SGA15	639, 709
315750-0119	CIRCLIP SGA25	315
315750-0122	CIRCLIP SGA30	449
315750-0127	CIRCLIP SGA40	449
315750-0131	CIRCLIP SGA50	463
315751-0103	RETAINING RINGS FOR SHAFT 6	671
315751-0109	RETAINING RINGS FOR SHAFT 12	751, 753
315751-0112	RETAINING RINGS FOR SHAFT 15	749
315752-0123	CIRCLIP SGH32	651, 675
315752-0136	CIRCLIP SGH62	341, 343, 449
315752-0149	CIRCLIP SGH110	543, 545
315754-0107	LOCKING WAE 5	741
315754-0110	LOCKING WAE 9	741
315754-0113	LOCKING WAE 15	83, 85, 87
315755-0105	RETAINING RINGS,RADIAL ASSEMBLY 3,2	755
315755-0107	RETAINING RINGS,RADIAL ASSEMBLY 5	519
315755-0108	RETAINING RINGS,RADIAL ASSEMBLY 6	695
315755-0109	RETAINING RINGS,RADIAL ASSEMBLY 7	321
315755-0111	RETAINING RINGS,RADIAL ASSEMBLY 10	641
315755-0113	RETAINING RINGS,RADIAL ASSEMBLY 15	485, 487
315755-0801	RETAINING RINGS,RADIAL ASSEMBLY 8	651, 675
31653-0001	SHEET	477, 479
316810-0106	PIPE-CLIPS,FOR SINGLE PIPE,ONE SIDE 8	413, 415, 417, 419, 421, 423, 441, 457, 489, 491, 493, 495, 577, 585, 689
318201-0076	ROLLER CHAIN SINGLE 3/8"-76	471
318207-0168	ROLLER CHAIN SINGLE 6MM-168	651, 675
318212-0006	ROLLER CHAIN SINGLE 1/2"-6	521, 523, 525, 527
318212-0008	ROLLER CHAIN SINGLE 1/2"-8,SS	521, 523, 525, 527
318212-0066	ROLLER CHAIN SINGLE 1/2"-66,SS	599
318212-0074	Roller Chain	603
318212-0119	ROLLER CHAIN SINGLE 1/2"-119,SS	591, 597
318212-0150	ROLLER CHAIN SINGLE 1/2"-150,SS	511
318219-0187	CONNECTING LINK SINGLE 1/2",SS	511
318219-0487	CONNECTING LINK DUPLEX 1/2",SS	497, 507
318219-0687	CONNECTING LINK TRIPLEX 1/2",SS	605
318242-0034	ROLLER CHAIN DUPLEX 1/2"-34,SS	599, 603
318242-0036	ROLLER CHAIN DUPLEX 1/2"-36,SS	529
318242-0108	ROLLER CHAIN DUPLEX 1/2"-108,SS	497, 507
318301-0130	LIFTING EYES,BOLT,TYPE LT,M30	611
31837-0000	SPRING HOUSING	341, 343
31838-0000	PLUNGER	341, 343
318800-0102	HANDLES,SPHERICAL KNOB,INT.THRE.,D.20-M5	757
318800-0103	HANDLES,SPHERICAL KNOB,INT.THRE.,D.25-M6	651, 675
318800-0104	HANDLES,SPHERICAL KNOB,INT.THRE.,D.30-M8	125, 643, 645, 739
318800-0105	HANDLE BALLA D.35-M10	121
318800-0106	HANDLES,SPHERICAL KNOB,INT.THRE,D.40-M10	641
318800-0107	HANDLE BALLA D45-M10	703
319030-0125	DISC SPRINGS,12,5X6,2X0,5	689
32079-0000	WASHER	687
321101-0143	FLANGE BUS 8F7X8	429
321101-0163	FLANGE BUS 10F7X10	335, 339
321101-0172	FLANGE BUS 12F7X10	471
321101-0173	FLANGE BUS 12F7X12	275

Part No	Description	Page No
321101-0173	FLANGE BUS 12F7x12	737
321101-0202	FLANGE BUS 16F7X12	709
321101-0223	FLANGE BUS 18F7X16	497, 509
321101-0232	FLANGE BUS 20F7X16	467, 469
321101-0233	FLANGE BUS 20F7x20	275, 313
321101-0252	FLANGE BUS 25F7X16	497, 507, 511, 591, 597
321101-0253	FLANGE BUS 25F7X25	497, 507, 511
321101-0272	FLANGE BUS 30F7X20	511, 599, 603
321101-0282	FLANGE BUS 35F7X20	507
321101-0283	FLANGE BUS 35F7X35	497, 511
321105-0234	BUSHING 20F7X28X30	341, 343, 647
321111-0095	FLANGE BUS 8E7X6	321
321111-0097	FLANGE BUS 8E7X12	509
321111-0135	FLANGE BUS 10E7X10	651, 675
321111-0157	FLANGE BUS 12E7X8	641
321111-0159	FLANGE BUS 12E7X12	57
321111-0163	FLANGE BUS 12E7X20	405
321111-0185	FLANGE BUS 14E7X14	559, 561, 563, 565, 567, 569, 571, 573
321111-0212	FLANGE BUS 15E7X15	651, 675, 713
321111-0240	FLANGE BUS 16E7X12	315
321116-0095	BUSHING 8E7/12X6	509
321116-0127	BUSHING 10E7/14x10	577, 585
321116-0128	BUSHING 10E7/14X16	497, 511, 577, 585
321116-0163	BUSHING 12E7/18X20	405
321116-0179	BUSHING 14E7/18X14	689
321120-0100	BEARING BUSHING WITHOUT FLANGE,8/10x12	665, 671, 677, 713
321120-0101	BEARING BUSHING WITHOUT FLANGE,6/8X6	671, 757, 759
321120-0103	BEARING BUSHING WITHOUT FLANGE,8/10X8	755
321120-0104	BEARING BUSHING WITHOUT FLANGE,10/12X10	735, 739, 755
321120-0109	BEARING BUSHING WITHOUT FLANGE,12/14X10	665, 677
321120-0110	BUSHING 12/14X12	735
321120-0113	BEARING BUSHING WITHOUT FLANGE,12/14X25	751, 753
321120-0122	BEARING BUSHING WITHOUT FLANGE,15/17X15	549, 591, 597, 667, 669, 679
321120-0160	BEARING BUSHING WITHOUT FLANGE,25/28X30	549
321120-0183	BUSHING 35/39X20	549
321127-0100	BEARING BUSHING WITHOUT FLANGE,10/13X10	743
321129-0104	THRUST WASHER 12/24X1,5	641, 751, 753
32116-0000	END PIECE	393, 395, 397, 399, 425, 427
321300-0094	BALL BEARING 4X13X5	695
321306-0104	BALL BEARING 20X42X12	549
321306-0107	BALL BEARING 35X62X14	449, 547
321306-0110	BALL BEARING 50X80X16	303, 465
321306-0114	BALL BEARING 70X110X20	543, 545
321308-0101	BEARINGS,BALL BEARING	651, 675
321308-0106	BEARINGS,BALL BEARING	509
321308-0201	BALL BEARING 12x28x8	639
321308-0202	BALL BEARING 15x32x9	639, 651, 675, 709, 749
321308-0205	BALL BEARING 25X47X12	315
321309-0100	BALL BEARING 10X30X9	345, 349
321309-0106	BALL BEARING 30X62X16	449, 543, 545
321309-0108	BALL BEARING 40X80X18	303
321309-0110	BALL BEARING 50X90X20	463
321309-0114	BALL BEARING 70X125X24	307
321312-0100	BEARINGS,BALL BEARING SKF6200RS	345, 349
321312-0101	BEARINGS,BALL BEARING SKF6201RS	345, 349
321313-0102	BALL BEARING 15X35X11	693, 709
321316-0108	BEARINGS,BALL BEARING SKF6308RS	305
321316-0200	BEARINGS,BALL BEARING SKF6300-2RS	651, 675, 699
321316-0201	BALL BEARING 12X37X12	639, 709
321361-0105	ROLLER BEARING 25X52X16,25	543, 545
321364-0106	ROLLER BEASKF31306	543, 545
321576-0360	BEARING ROLLER 30x62x29	311, 313
321580-0165	BEARINGS,CAM ROLLER KR30	315
321582-0212	BEARINGS,CAM ROLLER NUKR35	467, 469
32213-0000	WASHER	737
32215-0000	HOLDER	57, 737
32217-0000	BOTTOM SECTION	737
32219-0000	WASHER	737
32223-0000	BEARING	737
32400-0000	HOLDER	737
32451-0000	AIR DUCT	737
32453-0000	MANTLE	737
32462-0000	SHAFT	337
32463-0000	BEARING	335, 339
32464-0000	SHAFT	395, 399
32468-0000	OPERATING ROD	335, 339
32474-0000	ATTACHMENT	737
32494-0000	OPERATING ROD	335, 339
32544-0000	INSULATION NUT	389, 391, 427
32629-0000	SPROCKET	653, 655, 657, 659, 661, 663
32630-0000	SPROCKET	653, 655, 657, 659, 661, 663, 673
32644-0000	WASHER	389, 391
32668-0000	ARM	737
32691-0000	LOCKING SPRING	667, 669, 679
32925-0000	CARRIER	651, 673
32926-0000	ROLL	653, 655, 657, 659, 661, 663, 673

Part No	Description	Page No
32957-0000	SCREW	353, 355
32966-0400	KNIFE HOLDER	331, 333
33010-0000	SCREW	665, 677
33011-0000	SLEEVE	667, 669, 679
33150-0000	GUIDE STUD	371
33152-0000	STOPPER	371, 383, 387
33182-0000	ROLL	651, 673
33183-0000	SPRING	651, 673
33261-0000	SPRING PLATE	537, 575
33408-0000	BEARING	335, 339
33409-0000	SCREW	345, 349
33442-0000	ROLL	41
33577-0000	CANTILEVER	125, 727
33648-0000	HOLDER	17, 21
341001-0148	COPPER TUBE	241, 289, 291
341001-0192	COPPER TUBE	241
341001-0228	COPPER TUBE	229, 241, 253, 255, 287, 289
342406-0100	ELBOW	291
342701-0205	BUSHING,INT./EXT.G-THREAD G1/2"-G1/4"	155, 241, 249
342701-0206	BUSHING,INT./EXT.G-THREAD G1/2"-G3/8"	245, 249
342701-0208	BUSHING RNI3/4"-1/4"	205
342703-0103	ACCESSORIES,NUT M-8 LFZB	237
342705-0103	ACCESSORIES,FERRULE 8-LFZB	237
342706-0114	ACCESSORIES,INSERT SLEEVE 4	471, 489, 491, 493, 495, 591, 597, 599, 603
342706-0130	ACCESSORIES,INSERT SLEEVE 6	131, 133, 447, 471, 729
342710-0115	REDUCTION RBM 16/8	239
342711-0115	ACCESSORIES,PLUG PL-15 AND 16	239
342712-0205	REDUCER RI1/2"-1/4"	205, 211
342713-0209	PLUG,EXT.G-THREAD,HEXAGON SOCKET G1/8"	219, 395, 399, 413, 415, 417, 419, 421, 423
342713-0210	PLUG,EXT.THREAD,HEXAGON SOCKET 1/4"Brass	243, 255, 263, 265, 267, 269, 689
342713-0211	PLUG,EXT.G-THREAD,HEXAGON SOCKET G3/8"	243, 245
342713-0213	PLUG,EXT.G-THREAD,HEXAGON SOCKET G1/2"	61, 241
342713-0311	BLIND PLUG BPS38	207, 209, 211
342714-0202	REDUCTION KOR 10/6-LFZB	207, 209
342715-0102	PLUG	243, 245
342715-0103	BLIND PLUG	243, 245
342716-0203	REDUCER	243
342716-0209	REDUCER	243, 245
342716-0210	REDUCER	245
342716-0211	REDUCER	243, 245
342720-0102	STRAIGHT CONNECTION GA-6-G1/8"	537
342720-0103	STRAIGHT CONNECTION GA-8-G1/8"	241
342720-0104	STRAIGHT CONNECTION GA-8-G1/4"	543, 545
342720-0114	STRAIGHT CONNECTION GA-15-G1/2"	239, 249, 255, 261, 263, 265, 267, 269
342720-0115	STRAIGHT CONNECTION GA-16-G1/2"	447
342721-0108	PIPE COUPLGA10-LRFZB REPBY 0342752-0104	205, 207, 211
342721-0114	PIPE COUPLGA15-LRFZB REPBY 0342752-0114	205
342722-0202	PIPE COUPLING	219, 245
342722-0203	STRAIGHT COUPLING	243, 245
342722-0204	PIPE COUPLING	219
342722-0205	STRAIGHT COUPLING D=8-R1/4"	243, 689
342722-0206	STRAIGHT COUPLING D=8-R3/8"	243, 245
342723-0109	STRAIGHT PIPE CONNECTION GAI-12-G3/8"	241
342723-0114	STRAIGHT PIPE CONNECTION GAI-15-G1/2"	223
342727-0208	PIPE CONNECTION G-10-L/SY	75, 77, 79
342730-0104	ELBOW CONNECTION WA-8-1/4"	543, 545
342730-0114	ELBOW CONNECTION WA-15-1/2"	239
342731-0102	ELBOW CONNECTION WE 6-LRFZB	209, 463
342731-0108	ELBOW CONNECTION WE 10-LRFZB	207, 209
342731-0114	ELBOW CONNECTION WE 15-LRFZB	205, 237
342732-0099	ELBOW PIPE JOINT	519
342732-0102	ELBOW PIPE JOINT	229, 491, 495
342732-0103	ELBOW PIPE JOINT	243, 245
342732-0104	ELBOW PIPE JOINT	243, 245
342732-0109	ELBOW PIPE JOINT	245
342733-0114	ELBOW CONNECTION WI-15-G1/2"	241, 245
342735-0103	ELBOW PIPE JOINT	245
342736-0114	ELBOW CONNECTION W-15	241, 255
342737-0212	ELBOW CONNECTION W-10 LRFR	75, 77, 79
342739-0108	ELBOW BULKHEAD CONNECTOR WSV 10	75, 77, 79
342740-0114	T-PIPE CONNECTION TA-15-G1/2"	239
342741-0108	T-PIPE CONNECTION TA-10-R1/4"	205
342748-0102	T-CONNECTION	243, 245
342748-0103	T-CONNECTION	245
342748-0110	T-CONNECTION	243
342750-0114	L-PIPE CONNECTION LA-15-G1/2"	239
342752-0104	STRAIGHT CONNECTION GA-10-G1/4"	209
342764-0108	BULKHEAD LWSV10-LFZB	207, 209
342764-0114	BULKHEAD LWSV15-LFZB	207, 209
342767-0114	BULKHEAD CONNECTOR G1/2"	249
342768-0103	BULKHEAD LEAD-IN	245
342770-0105	HOSE COUPLING	243, 245
342790-0102	PRESSURE GAUGE CONNECTION MAV6-LRFZB	207, 209
342790-0202	PRESS. GAUGE CONNECTION MAV6-S/R3/8"FZB	447

Part No	Description	Page No
342797-0121	BANJO CONNECTION,RINGPIECE 6-1/8"	61, 63, 103, 105, 735, 737
342797-0122	BANJO CONNECTION,RINGPIECE 6-1/4"	29, 41, 57, 71, 109, 111, 117, 121, 125, 727, 737
342803-0103	NUT 38	135, 145
342803-0104	NUT 51	75, 77, 79
342803-0106	NUT 76	75, 77, 79
342808-0101	ELBOW PIPE25	289
342808-0103	ELBOW PIPE38	145, 605, 759
342810-0101	ELBOW PIPE25	289
342810-0103	ELBOW PIPE38	605, 759
342811-0103	NIPPLE ANSL.38	145, 605
342812-0103	SLEEVE ANSL.38	145
342812-0203	SLEEVE	135
342903-0111	NUT WITH SPRING 6/4-M10X1	171
342920-0113	STRAIGHT COUPLING,EXT.THREADED 6/4-R1/8"	229, 231, 345, 349, 451, 461
342920-0114	STRAIGHT COUPLING,EXT.THREADED 6/4-R1/4"	235
342920-0121	STRAIGHT COUPLING,EXT.THREADED 8/6-R1/8"	229, 515, 577, 579, 581, 583, 585, 587
342921-0113	STRAIGHT COUPLING,EXT.THREADED 6/4-G1/8"	171, 735
342921-0114	STRAIGHT COUPLING,EXT.THREADED 6/4-G1/4"	471
342921-0121	STRAIGHT COUPLING,EXT.THREADED 8/6-G1/8"	473, 481
342923-0114	STRAIGHT COUPL.,INT.THREADED 6/4-G1/4"	171, 253, 263, 265, 267, 269
342923-0122	STRAIGHT COUPL.,INT.THREADED 8/6-G1/4"	253
342929-0121	STRAIGHT COUPLING,SOLDER 8/6-8	229, 241, 263, 265, 267, 269
342930-0113	ELBOW 90 COUPL.,EXT.THREAD 6/4-R1/8"	241, 461, 709
342930-0121	ELBOW 90 COUPL.,EXT.THREAD 8/6-R1/8"	577, 579, 581, 587
342930-0122	ELBOW 90 COUPL.,EXT.THREAD 8/6-R1/4"	205
342931-0113	ELBOW 90 COUPL.,EXT.THREAD 6/4-G1/8"	167
342933-0122	ELBOW 90 COUPL.,INT.THREAD 8/6-G1/4"	491, 495
342946-0112	T-COUPLING,UNION 6/4	345, 349, 447, 681, 683
342946-0122	T-COUPLING,UNION 8/6	453
342950-0114	L-COUPLING,EXT.THREAD 6/4-R1/4"	171
342960-0112	BULKHEAD COUPLING 6/4	229, 263, 265, 267, 269, 471
342960-0122	BULKHEAD COUPLING 8/6	229
342980-0113	BANJO-CONNECTION,RING 6/4-G1/8"	99, 345, 349, 639, 651, 675, 689
342980-0114	BANJO-CONNECTION,RING 6/4-G1/4"	429
342980-0122	BANJO-CONNECTION,RING 8/6-G1/4"	253, 403
342980-0303	BANJO-HOLLOW BOLT COUPL,EXT.THR.01-G1/8"	61, 63, 75, 77, 79, 103, 105, 345, 349, 639, 651, 675, 689
342980-0304	BANJO-HOLLOW BOLT COUPL,EXT.THR.01-G1/4"	29, 41, 71, 111, 117, 125, 403, 727, 737
342980-0314	BANJO-HOLLOW BOLT COUPL,EXT.THR.02-G1/4"	109, 117
342991-0100	HOSE CLIP,WORM DRIVE TYPE 10-13	167
342991-0101	HOSE CLIP,WORM DRIVE TYPE (13)-16	185, 221, 237, 315, 443, 459
342991-0102	HOSE CLIP,WORM DRIVE TYPE (16)-19	253
342991-0103	HOSE CLIP,WORM DRIVE TYPE (19)-23	229, 443, 459, 735, 737
342991-0104	HOSE CLIP,WORM DRIVE TYPE (23)-27	23, 181, 263, 265, 267, 269
342991-0106	HOSE CLIP,WORM DRIVE TYPE (30)-36	191, 197, 199
342991-0108	HOSE CLIP 38-50MMRFR	259
342991-0109	HOSE CLIP,WORM DRIVE TYPE (48)-50	473, 481
342991-0111	HOSE CLIP,WORM DRIVE TYPE (63)-73	451
342991-0112	HOSE CLIP,WORM DRIVE TYPE (73)-83	441, 457
342991-0115	HOSE CLIP,WORM DRIVE TYPE (110)-136	221
344502-0026	NIPPLE L AHKR1/8"	307
344502-0046	NIPPLE L BHKR1/8"	305
344502-0066	NIPPLE L CHKR1/8"	303, 307
346800-0109	SILENCER FILTER R1/8"	75, 77, 79
351121-0109	CABLE RHH 16	605
352100-0100	CABLE GLANR.15,2-7,5	223
352100-0106	CABLE GLANR.18,6-10,5	41, 57, 223, 735, 737
352100-0111	CABLE GLANR.22,5-13,5	205
352100-0115	CABLE GLANR.28,3-15,5	305
352100-0126	CABLE GLANR.47-32,5	161
352100-0127	CABLE GLANR.47-34,5	219
352100-0227	CABLE GLANR.31-34,5	161
352101-0103	LEAD IN PR 18,6	167, 217, 229, 231, 647, 681, 683, 757
352101-0105	LEAD-IN PR 22,5	681, 683
352101-0107	LEAD-IN PR 37,0	729
352103-0100	CABLE GLAND STR 9	137, 239, 441, 457, 681, 683, 725
352103-0101	CABLE GLAND ST 9	137, 223, 441, 457, 685
352103-0105	CABLE GLAND STR 11	229, 231
352103-0106	CABLE GLAND ST 11	233, 259, 283, 473, 481, 685
352103-0108	CABLE GLAND ST 13	689
352103-0111	CABLE GLAND ST 16	61, 137, 473, 481, 681, 683
352103-0115	CABLE GLAND STR 21	685
352103-0116	CABLE GLAND ST 21	229, 233, 685
352103-0120	CABLE GLAND STR 29	233
352103-0121	CABLE GLAND ST 29	229
352110-0099	CRAMP TK 3-5	681, 683, 689
352110-0101	CRAMP TK 7-10	229, 313
352113-0101	RIBBON CLAMP BLACK	311, 403, 441, 457, 491, 495, 665, 677
352113-0102	RIBBON CLAMP,Black	443, 459
352113-0204	ANCHOR TM3S25-M	443, 459, 681, 683
352135-0106	Spiral Conduit Di=16 mm	137, 223, 241, 245, 247, 259, 283, 681, 683, 757
352135-0109	HOSE .022	259, 681, 683
352135-0116	FLEXIBLE CONDUIT DIA. 40	259, 473, 481

Part No	Description	Page No
352135-0201	PLASTIC CRAMP Di=12 mm	229, 275
352135-0202	CRAMP 16	229, 231
352136-0113	GLAND FITTING PR18,6/PG11 Di=12mm	43, 57, 67, 137, 207, 209, 215, 233, 241, 247, 259, 681, 683, 721, 725, 727, 735, 737
352136-0127	GLAND FITTING PR 18,6	41, 61, 137, 223, 241, 245, 247, 259, 271, 275, 283, 681, 683
352136-0129	GLAND FITTING PR22,5/PG16 Di=16mm	177, 205, 253, 681, 683, 725
352136-0142	GLAND FITTING	233, 259
352136-0143	GLAND FITTING	259, 305, 681, 683
352136-0152	GLAND FITTING	187, 189
352137-0113	COND.FITTING Pr 18,6 Di=12mm	137, 247, 681, 683
352137-0127	COND.FITTING Pr 18,6 Di=16mm	247, 681, 683, 757
352137-0129	CABLE GLAND	247
353021-0212	FEED THROUGH TERMINAL WDU 2,5 Beige	233
353021-0213	FEED THROUGH TERMINAL WDU 4 BEGIE	247, 685
353021-0217	FEED TRHOUGH TERMINAL WDU4 BLUE	247
353021-0302	TERMINALS,TRIPLE-LEVEL, DLD 2,5/35 PA	233, 685
353024-0205	EARTH TERMINAL WPE 4	233, 247, 685
353031-0201	END BRACKET EW35	233, 247
353032-0004	END PLATE WAP 2,5-10 Beige	233
353032-0005	END PLATE WAP 2,5-10 Blue	247
353032-0302	END PLATE WAP	233, 685
353034-0031	BRIDGE CONNECTOR WQV 4/10	247
353034-0401	BRIDGE CONLECK Q2	233, 685
353034-0404	BRIDGE CONLECK Q10	233, 685
353042-0004	RAIL TS 35/7,5	233
353042-0005	RAIL TS 35/7.5	685
353101-0118	CABLE SHOE 0,75-1,5mm2 Red	433
353101-0130	CABLE SHOE 1,5-2,5mm2 Blue	735
353101-0132	CABLE SHOE	689
353101-0134	CABLE SHOE	737
353102-0168	CABLE SHOEYAEV16-M6	605
353104-0129	CABLE SHOEYAV 025 M 35*	41
353104-0130	CABLE SHOEYAV 025 M 4*	57, 737
353104-0168	CABLE SHO YAV 16 M6*	473, 481
353104-0182	CABLE SHOE YAV 35 M6*	473, 481
353245-0005	GLANDS,EMC,EXTENDED WITH INSERT PG16	445
35547-0000	SPRING	665, 677
35827-0000	BRACKET	311
359011-0202	SIGN BOARD(GROUND)	139
359011-0800	MARKING PLates BSFW 51-100	139
359011-0807	MARKING PLATES 5-FW 1-50	233, 247, 685
359011-0808	MARKING PLATES 5-FW 51-100	233, 685
359011-0809	MARKING PLATES 5-FW 101-150	233
359011-0819	MARKING PLATES 5-GW (Earth)	685
359011-0821	SET OF SIGNS 6-FW 1-50	725
359020-0012	SIGN "EARTHSYMBOL" 4X6MM	689
359240-0100	SIGN HOLDER	247
359241-0127	SIGN "LIGH JAW SYSTEM & MACHINE"	247
359241-0158	SIGN "LEVEL HYDR.OIL TANK"	247
359241-0269	SIGN"Small Reel,Large Reel,Waste Reduce"	681, 683
359301-0051	SIGN"STRIP SPLICE"	727
359301-0100	SIGN "SPLICING"	681, 683
359301-0110	SIGN "SHORT STOP"	681, 683
359301-0125	SIGN "LUBRICATION"	247
359301-0335	SIGN T	681, 683
35962-0000	LID	271
359705-0001	WARNING SIGN "ENTANGLEMENT"	651, 673
359705-0002	WARNING SIGN "ENTANGLEMENT"	589
359705-0003	WARNING SIGN Dangerous Chemicals	23, 43, 69, 173
359705-0005	WARNING SIGN "MOVING PART"	649
359710-0002	WARNING SIGN "HOT SURFACE"	473, 481
36133-0000	BUSHING	361, 363, 365, 367
36749-0000	MANTLE	737
36753-0000	RING	341, 343
36804-0000	ARM	53, 55
36805-0000	LINK	53, 55
36806-0000	CLAMPING ELEMENT	53, 55
36816-0000	LINK	53
36817-0000	CLAMPING ELEMENT	53, 55
36821-0001	SHEAR PIN	53, 55
36821-0002	SHEAR PIN	53, 55
36885-0000	CRANK ARM	301
36953-0001	ROLL	27
36953-0010	ROLL	39
37070-0000	SPRING	405
37071-0000	WASHER	405
37097-0000	CARRIER	305
37258-0000	BUSHING	335, 339
37296-0000	ARM	53
37535-0000	SUPPORTING PART 56x56x31,5mm	477, 479
37536-0000	INSULATOR BODY Lower 70x70x15mm	477, 479
37537-0000	SPACER RING Lower 72x78x1mm	477, 479
37638-0000	PENDULUM SUSPENSION	109
37768-0000	THERMOCOUPLE CR-AL	75, 77, 79, 737
37782-0000	THROTTLE	53, 55

Part No	Description	Page No
38087-0000	WASHER	73, 281
38490-0000	END PIECE	393, 397, 425
38603-0002	SPACER	405, 407
38630-0001	COUNTER ROLLER	27
434020-0000	BEARING CONSOLE	405
434021-0000	SCREW	405
434062-0000	SHAFT	313
434073-0000	NUT	405
434098-0000	STRUT	313
434101-0000	WASHER	27
434142-0000	PISTON	323
434143-0000	END SECTION	323
434168-0000	PIPE	253
434171-0000	PIPE	253
434222-0000	FILLER TUBE	47
434270-0000	RAILING	93
434273-0000	STRUT	93
434274-0000	PIPE	107
434309-0000	FASTENING PLATE	405
434320-0000	AXLE PIN	361, 363, 365, 367
434321-0000	CURVE ROLLER	361, 363, 365, 367
434338-0000	KNIFE	401
434379-0000	TIE ROD	305
434380-0000	SHAFT	305
434387-0000	BRACKET	345, 349
434388-0000	SHAFT	345, 349
434469-0000	HEATING PIPE	113
434490-0001	SHAFT	21
434490-0002	SHAFT	21
434490-0003	SHAFT	21
434493-0000	FORMING RING	33, 35, 37
434499-0000	FORK	27
434500-0000	SHAFT	27
434504-0000	SHAFT	27
434507-0000	SHAFT	27
434659-0000	CRANK BRACKET	213
434661-0000	BUSHING	213
434664-0000	BRACKET	213
434665-0000	HOOD	47
434668-0400	DRIVE UNIT	295, 297, 299
434669-0400	IMPULSE TRANSMITTER	295, 297, 299
434670-0600	LINK SYSTEM	295, 297, 299
434707-0300	HYDRAULIC SYSTEM	149, 151
434708-0000	PIPE	207, 209
434709-0000	PIPE	207, 209
434710-0000	PIPE	205
434711-0000	PIPE	207, 209
434712-0001	PIPE	207, 209
434712-0002	PIPE	207, 209
434713-0000	PIPE	207, 209
434714-0000	PIPE	205
434715-0000	PIPE	207, 209
434716-0000	PIPE	207, 209
434717-0000	PIPE	205
434718-0000	PIPE	205
434719-0000	PIPE	205
434747-0000	BOW CLAMP	665, 677
434749-0000	FLOAT	53
434750-0000	PRESSURE FLANGE	53
434751-0000	ARM	53, 55
434752-0000	LINK	53, 55
434787-0000	END SECTION	667, 669
434829-0000	LEAD	57
434841-0000	GAUGE	611
434858-0000	CUSHION	187, 189
434919-0000	COLUMN LEFT	227
434920-0000	COLUMN RIGHT	227
434972-0000	AIR GUIDE	121
434973-0000	AIR DISTRIBUTOR	121
434974-0000	AIR DISTRIBUTOR	121
434976-0000	STOP	121
436302-0000	ROLLER	17, 21
436342-0000	SPACER	27
436355-0000	REAMED BOLT	17, 21
436356-0000	BUSHING	17, 21
436357-0000	NUT	17, 21
436377-0000	JOINT	17
436378-0000	SHAFT	17
436395-0000	CANTILEVER	17, 21
436403-0000	WASHER	17, 21
436404-0000	BOW CLAMP	17
436405-0000	FORK	17, 21
436482-0000	BEARING BRACKET	305
436483-0000	SHAFT	305
436484-0000	BRACKET	305
436485-0000	LACE	305

Part No	Description	Page No
436486-0000	LID	305
436487-0000	SPACER	305
436488-0000	WASHER	305
436502-0000	CURVE	405
436512-0000	PIPE	239, 609
436556-0000	CURVE ROLLER	361, 363, 365, 367
436580-0000	COVERING PLATE	321
436648-0000	CANTILEVER	33, 35, 37
436671-0000	ECCENTRIC SHAFT	345, 349
436672-0000	LINK	321
436740-0000	LINK	345, 349
436776-0000	MACHINE BODY	227
436778-0000	PIPE	75, 77, 79
436779-0000	PRESSURE GAUGE TUBE	75, 77, 79
436781-0000	GASKET	75, 77, 79
436927-0000	NUT	665, 677
436930-0000	KNIFE	401
436939-0000	CYLINDER BRACKET	653, 655, 657, 659, 661, 663, 673
436940-0000	SHAFT	653, 655, 657, 659, 661, 663, 673
436991-0000	BEARING	643, 645
440023-0000	PROTECTION PLATE	227
440024-0000	PROTECTION PLATE	227
440025-0000	PROTECTION PLATE	227
440026-0000	CANTILEVER	227
440027-0000	RIM	227
440028-0000	RIM	227
440043-0000	END PIECE	393, 397, 425
440068-0000	ROLL	33, 35, 37
440077-0000	COVERING PLATE	227
440098-0300	CRANK BRACKET	149, 151
440132-0200	START-UP KIT	631, 633
440133-0400	MACHINE BODY	631, 633
440136-0001	ROLL	709
440136-0002	ROLL	693
440136-0003	ROLL	693
440136-0004	ROLL	693
440136-0006	ROLL	693
440136-0007	ROLL	693
440136-0008	ROLL	693
440137-0002	SHAFT	693
440138-0000	LOCKING CIRCLIP	693, 709
440157-0000	MAGNET BRACKET	701
440180-0000	WASHER	701
440184-0100	BENDING ROLLER	687
440185-0000	HOLDER	647
440186-0000	HOLDER	647
440192-0000	BRACKET	647
440193-0000	HOLDER	647
440194-0000	WASHER	693
440195-0000	JOINT	647
440196-0000	HANGER	647
440197-0000	SHAFT	647
440198-0000	WASHER	647
440199-0000	PROTECTION PLATE	647
440200-0000	PROTECTION PLATE	647
440202-0000	PROTECTION PLATE	647
440203-0000	RULER	227
440204-0000	RULER	227
440205-0000	RULER	227
440206-0000	RULER	227
440210-0200	ROLL	631, 633
440211-0000	GUIDE	649
440212-0000	LUG	649
440213-0000	LUG	649
440214-0000	HOLDER	649
440215-0000	HOLDER	649
440217-0000	BUSHING	649
440247-0000	HOLDER	641
440248-0000	HOLDER	641
440249-0000	SLIDE BELT	641
440250-0000	AXLE PIN	641
440251-0000	GLASS PANE	641
440252-0000	SLEEVE	647
440253-0000	SLEEVE	647
440256-0000	ARM	681, 683
440259-0000	RETAINING RING	635, 637
440260-0000	SHAFT	635, 637
440271-0000	SCREW	647
440277-0000	LACE	653, 655, 657, 659, 661, 663, 673
440282-0004	SPACER	655
440285-0100	PAPER REEL HOLDER	631, 633
440286-0300	INK UNIT NSS	651
440287-0000	COVER	665
440349-0000	FASTENING IRON	223
440384-0500	PLATFORM	149, 151
440385-0000	CANTILEVER	215

Part No	Description	Page No
440386-0000	PLATFORM REAR	215
440389-0000	HATCH	215
440415-0200	TRANSFORMER	149, 151
440422-0600	BOTTOM PLATE	149, 151
440424-0000	DRUM	219
440437-0300	BOX LEFT	149, 151
440474-0100	TUBE FLUSHING DEVICE	149, 151
440482-0000	PROTECTION	279
440491-0000	NIPPLE	413, 415, 417, 419, 421, 423
440507-0000	FASTENING PLATE	405, 407
440510-0000	COUNTER CAM	345
440511-0000	COUNTER CAM	349
440537-0500	MACHINE BODY	149, 151
440565-0000	CYLINDER	413, 415, 417, 419, 421, 423
440588-0200	CRANK	295, 297, 299
440600-0000	ROTOR	193, 195, 201, 203, 251, 277
440604-0001	PIPE	193, 195, 203, 277
440605-0001	PIPE	193, 201, 203, 251
440630-0200	AP-VALVE	75, 77, 79
440631-0000	VALVE BODY 51	81
440632-0000	CYLINDER HOUSING	83, 85
440633-0000	CYLINDER HOUSING	87
440634-0000	HOUSE	81
440635-0000	PISTON ROD	85
440636-0000	PISTON ROD	87
440637-0000	PISTON ROD	83
440638-0000	PISTON	83, 85
440646-0000	PISTON	87
440647-0000	SLEEVE	75, 77, 79
440648-0000	SEALING WASHER	85
440650-0000	WASHER	85
440651-0000	WASHER	83, 85
440652-0000	WASHER	87
440654-0000	SPACER SLEEVE	87
440655-0000	RING	83
440656-0000	WASHER	87
440659-0000	CYLINDRICAL PIN	85
440660-0000	COMPRESSION SPRING	85
440661-0000	COMPRESSION SPRING	85
440662-0000	COMPRESSION SPRING	87
440663-0000	COMPRESSION SPRING	83, 85
440664-0000	SEALING WASHER	87
440695-0000	END SECTION	87
440702-0000	BEAM	227
440731-0000	PLATE	75, 77, 79
440925-0000	CUTTING RAIL	393, 397
440930-0000	COUNTER CAM	345
440931-0000	COUNTER CAM	349
440977-0000	ATTACHMENT PIPE	75, 77, 79
440978-0000	PIPE BEND	75, 77, 79
441483-0000	CYLINDER BRACKET	63, 103, 105
441718-0000	SPACER	49, 51
441737-0000	WASHER	49, 51
441739-0000	WASHER	49, 51
441740-0000	HINGE FLANGE	49, 51
441741-0000	HINGE FLANGE	49, 51
441957-0000	BEARING COVER	63, 103, 105
442072-0000	CARRIER	667, 669
442076-0000	LID	207, 209
442078-0000	CANTILEVER	211
442193-0000	PROTECTIVE CASING	187
442194-0000	PROTECTIVE CASING	189
442195-0000	LID	187
442236-0000	THROTTLE SCREW	61
442237-0000	NUT	61
442431-0000	CARRIER	667, 669
442463-0400	PIPE WORK	149, 151
442466-0000	PIPE CONNECTION	235
442480-0000	BOW CLAMP	737
442500-0000	SPROCKET	447
442523-0000	HOLDER	467, 469
442524-0000	ARM	467, 469
442532-0000	COVER	549
442533-0000	RUBBER GASKET	549
442537-0500	WASTE CHUTE	437, 439
442545-0000	SHEET	441, 457
442554-0000	GEARING	449
442555-0000	GEAR WHEEL	449
442556-0000	GEAR WHEEL	449
442557-0000	GEAR WHEEL	449
442558-0000	GEAR WHEEL	449
442559-0000	GEAR WHEEL	449
442560-0000	LUBR.OIL PIPE	549
442563-0000	AXLE PIN	565, 573
442564-0000	CURVE	557, 577, 585
442565-0000	CURVE	557, 577, 585

Part No	Description	Page No
442566-0000	BRACKET	275
442582-0100	DRIVE GEAR	447
442589-0000	ARM	549, 551
442613-0000	GEAR WHEEL	465
442614-0000	GEAR WHEEL	465
442615-0000	SPACER	465
442616-0000	SPACER	465
442617-0000	SPACER	465
442621-0000	SPACER	547
442622-0000	SPACER	547
442644-0300	DOUBLE GEAR	463
442646-0200	TOP GEAR	537
442776-0000	SLIDE RAIL	485, 487
442809-0000	LEAD RAIL	599
442811-0001	ARCH	599, 601
442811-0002	ARCH	599
442829-0000	BRACKET	599
442830-0000	BRACKET	599, 603
442836-0000	SPROCKET	599, 603
442841-0000	AIR SCREW	449
442851-0000	SHAFT	451
442852-0000	VALVE	451
442853-0000	ATTACHMENT PIPE	451
442867-0000	AIR NOZZLE	473, 481
442882-0000	SPINDLE	549
442883-0000	SPACING WASHER	549
442884-0000	LOCK PLATE	549
442886-0000	FLAP	551
442894-0000	SHIM	565, 573
442903-0000	SHIM	449
442904-0000	SHIM	449
442905-0000	SHIM	449
442931-0000	SLIDE RAIL	591, 597
442939-0000	SHIM	565, 573
442979-0000	SHEET	553
442980-0000	SHEET	553
442981-0000	SHIM	559, 561, 567, 569
442984-0000	FLAP	551
443021-0000	SHEET	555
443022-0000	SHEET	555
443023-0000	SHEET	553
443024-0000	SHEET	553
443027-0000	SHEET	553
443028-0000	SHEET	553
443038-0000	FLAP	551
443047-0000	SPROCKET	463
443048-0000	SPROCKET	471
443049-0000	SHAFT	471
443050-0000	GUIDE SLEEVE	471
443051-0000	CONNECTION	471
443052-0000	SPACER RING	463
443053-0000	CHAIN GUIDE	471
443055-0000	SHIM	465
443056-0000	SHIM	465
443057-0000	SHIM	465
443058-0000	SHIM	465
443076-0000	BOTTOM	563, 571
443081-0000	SPROCKET	599, 603
443114-0000	FLAP	551
443116-0000	FLAP	563, 571
443122-0000	HOUSE	451
443123-0000	HOUSE	451
443126-0000	CONNECTION PIPE	461
443137-0000	SHEET	555
443138-0000	SHEET	555
443149-0000	STUD SCREW	463
443150-0000	SUCTION TUBE	471
443151-0000	PIPE	471
443158-0000	SIDE PIPE	475, 483
443173-0100	DRIVE SHAFT	437, 439
443175-0000	SHAFT	575
443176-0000	SPROCKET	461
443177-0000	SPROCKET	575
443178-0000	BRACKET	575
443179-0000	SPACER	575
443182-0000	FLAP	551
443186-0000	CHUTE	441, 457
443187-0000	SHEET	441, 457
443188-0000	GEAR WHEEL	547
443193-0000	SHIM	547
443194-0000	SHIM	547
443206-0001	ARCH	601
443206-0002	ARCH	601
443206-0003	ARCH	599
443206-0004	ARCH	601
443207-0001	ARCH	601

Part No	Description	Page No
443207-0002	ARCH	599
443210-0000	PLATE STAINLESS	599, 603
443213-0000	BRACKET	599, 603
443215-0000	SPACER	599, 603
443217-0000	BRACKET	599, 601, 603
443218-0000	INTERMEDIARY SECTION	537
443229-0000	BRACKET	591, 597
443232-0000	HOLDER	591, 597
443235-0000	SPROCKET	591, 597
443237-0000	SLIDER	591, 597
443239-0000	WASHER	591, 597
443240-0000	DRIP PLATE	577, 585
443248-0000	OIL PIPE	447
443249-0000	FLAP	549
443271-0000	HEAD PLATE	515
443272-0000	HEAD PLATE	515
443273-0000	HEAD PLATE	515, 517
443274-0000	HEAD PLATE	515, 517
443289-0000	TOOTHED PULLY	497, 507
443290-0000	GEAR WHEEL	497, 507, 511
443291-0000	GEAR WHEEL	511
443292-0000	STEERING	497, 507
443293-0000	BRACKET	499, 507, 511
443295-0000	WASHER	497, 507, 511, 599, 603
443296-0000	WASHER	497, 507, 509, 511
443297-0000	WASHER	511
443298-0000	WASHER	511
443299-0000	WASHER	497, 511
443300-0000	WASHER	497, 507, 511
443301-0000	WASHER	497, 507, 511
443305-0000	SHAFT	511
443306-0000	SPROCKET	511
443307-0000	SHAFT	497, 507, 511
443309-0000	SHAFT	519
443310-0000	AXLE PIN	519
443312-0000	SPACER	497, 507
443313-0000	STUD SCREW	557
443336-0008	TIMING BELT PULLEY	445
443348-0000	PLATE	555
443350-0000	BRACKET	511
443362-0000	CURVE	537
443365-0000	BRACKET	519
443367-0000	PROFILE	455

Part No	Description	Page No
443387-0000	HEAD PLATE	513
443388-0001	HEAD PLATE	511, 513
443388-0002	HEAD PLATE	511
443414-0000	WASHER	511
443419-0000	SPACER	531
443445-0000	SIDE PLATE	511
443446-0000	SIDE PLATE	511
443447-0000	BRACKET	515, 517
443448-0000	HEAD PLATE	519
443450-0000	HEAD PLATE	511
443451-0000	HEAD PLATE	511
443454-0000	BRACKET	513
443455-0000	SHAFT	511
443456-0000	SHAFT	511
443457-0000	SHAFT	511
443458-0000	SHAFT	511
443462-0000	SUPPORT	515, 517
443463-0000	SUPPORT	515, 517
443464-0000	SPROCKET	511
443467-0000	SPROCKET	511
443468-0000	CARRIER	521, 523, 525, 527
443469-0000	CARRIER	521, 523
443470-0000	CARRIER	525, 527
443474-0000	BRACKET	519
443476-0000	GABLE PLATE	531
443477-0000	GABLE PLATE	531
443478-0001	SPROCKET	513
443478-0002	SPROCKET	511, 513
443478-0003	SPROCKET	513
443478-0004	SPROCKET	513
443479-0001	SPROCKET	513
443479-0002	SPROCKET	511, 513
443479-0003	SPROCKET	513
443479-0004	SPROCKET	513
443480-0000	BRACKET	511, 513
443481-0000	BRACKET	511
443482-0000	BRACKET	497, 511
443483-0000	BRACKET	497, 511
443484-0000	ARM	497, 509, 511
443485-0000	SCREW	497, 511
443486-0000	GUIDE	511
443487-0000	ROLL	553, 555, 557
443488-0000	ROLL	553

Part No	Description	Page No
443489-0000	BRACKET	497, 507, 511
443491-0000	BRACKET	515
443492-0000	BRACKET	515
443493-0000	HEAD PLATE	519
443495-0000	HEAD PLATE	519
443497-0000	SUPPORT	515, 517
443498-0000	SUPPORT	515, 517
445502-0000	LOCKING PIN LOWER	53, 55
445503-0000	LOCKING PIN LOWER	53
445504-0000	LOCKING PIN UPPER	53, 55
445515-0000	PIPE BEND	75, 77, 79
445537-0200	PIPE WORK-HYDRAULIC	149, 151
445538-0000	HYDRAULIC PIPE	237
445539-0000	HYDRAULIC PIPE	237
445540-0000	HYDRAULIC PIPE	237
445541-0000	HYDRAULIC PIPE	237
445542-0000	MANTEL RUBBER	665, 677
445557-0000	CANTILEVER	373
445558-0000	CANTILEVER	373
445559-0000	STOP	373
445560-0000	STOP	373
445561-0000	LACE	373
445583-0000	VALVE	225
445669-0000	HOLDER	737
445670-0000	PAPER SUPPORT	737
445688-0000	AIR GUIDE	737
445736-0000	HINGE	245
445770-0000	STOPPER	375
445776-0000	ROLL	21
445777-0000	ROLL	21
445778-0000	ROLL	21
445779-0000	ROLL	21
445780-0000	ROLL	21
445781-0000	ROLL	21
445782-0000	ROLL	21
445783-0000	ROLL	21
445784-0000	ROLL	21
445785-0000	ROLL	21
445786-0000	ROLL	21
445787-0000	ROLL	21
445788-0002	SHAFT	21
445788-0003	SHAFT	21
445788-0005	SHAFT	21
445788-0006	SHAFT	21
445790-0000	AXLE SUPPORT	21
445791-0000	AXLE SUPPORT	21
445837-0000	CANTILEVER	639
445838-0000	SHAFT	639, 709
445839-0000	SECURING PLATE	639
445840-0100	DRIVE UNIT	631, 633
445841-0000	CANTILEVER	639
445842-0000	MOTOR PLATE	639
445844-0000	SLEEVE	681, 683
445845-0000	DRIVE ROLLER	639, 709
445846-0000	SLEEVE	681, 683
445847-0000	SHAFT	639, 709
445848-0000	ELASTIC COUPLING	639
445849-0000	SPACER DISC	639, 709
445850-0000	SPACER SLEEVE	639
445851-0000	SHAFT	639
445852-0000	LID	639, 709
445854-0002	GEAR WHEEL	639
445857-0000	PROTECTION PLATE	647
445858-0000	WASHER	215
445861-0000	FRAME	643, 645
445863-0000	PROTECTION	643, 645
445872-0000	HINGE	643, 645
445873-0000	HINGE	643, 645
445874-0000	HINGE	643, 645
445877-0000	SUPPORT	643, 645
445879-0000	SUPPORT	643, 645
445880-0600	SPLICING DEVICE	631, 633
445881-0000	BRACKET LEFT	689, 691
445882-0000	BRACKET RIGHT	689, 691
445885-0000	BEAM	687
445886-0000	BEAM	687
445894-0000	SEAL	687
445898-0000	NUT	687
445901-0000	FRAME	687
445902-0000	ARM	687
445903-0000	ECCENTRIC SHAFT	687
445904-0000	SHAFT	687
445907-0000	SCREW	687
445909-0000	NIPPLE	687
445911-0000	CANTILEVER	687
445915-0000	STEERING	687

Part No	Description	Page No
445918-0000	SCREW	687
445920-0600	EL-PNEUMATIC EQUIPMENT	631, 633
445926-0000	WASHER	649
445927-0000	HOLDER	649
445929-0000	GASKET	647
445930-0100	BENDING UNIT	631, 633
445931-0000	CANTILEVER	701
445934-0000	LID	647
445935-0000	PROTECTION PLATE	647
445950-0000	RAIL	413, 415, 417, 419, 421, 423
449000-0000	BRACKET	25
449130-0000	CONNECTING PIPE	61
449168-0300	CLEANING SYSTEM	149, 151
449170-0000	CLEANING PIPE	249
449190-0000	SHAFT	23
449414-0000	BRACKET	111
449415-0000	PENDULUM SUSPENSION	111
449586-0000	ROLL	33, 35, 37
449589-0001	ROLLER, (STD.SIZE)	27
449623-0000	STEERING	687
449624-0000	STEERING	687
449626-0000	SEAL	687
449629-0000	BRACKET	687
449630-0300	PAPER HOLDER	687
449631-0000	BEARING HOUSING	695
449632-0000	BEARING HOUSING	695
449634-0000	COVERING PLATE	695
449635-0000	COVERING PLATE	695
449678-0000	VALVE BODY 76	81
449716-0000	MAIN CAM	307
449719-0000	COUNTER CAM	307
449727-0000	CUTTING JAW	393, 397
449734-0000	HOLDER	407
449744-0000	TURN SPRING	695
449745-0000	TURN SPRING	695
449746-0000	STEERING	695
449748-0000	BEARING	695
449751-0000	PROTECTION	687
449753-0000	SCREW	687
449761-0000	WASHER	687
449770-0000	INSULATION	687
449817-0000	U-TUBE	107
449818-0000	PIPE	107
449840-0001	ROLLER, (STD.SIZE)	27
449843-0001	BENDING ROLLER	721
449843-0002	BENDING ROLLER	721
449843-0003	BENDING ROLLER	721
449843-0004	BENDING ROLLER	721
449853-0000	BOW CLAMP	23
449854-0000	CUP	23
449855-0000	CUP	23
449908-0000	BUSHING	363, 367
449926-0000	HOLDER	407
449930-0500	CONNECTION BOX	149, 151
449932-0500	PIPE WORK-WATER	149, 151
449939-0001	HEATING ELEMENT 15KW	113
449960-0000	BRACKET	107, 135
449963-0000	U-TUBE	107
449964-0000	PIPE	135
449966-0000	PIPE	135
449967-0000	PIPE	135
449991-0000	BRACKET	23
449992-0000	GASKET	23
449993-0000	GASKET	23
450010-0000	FILLER TUBE	47
450017-0000	PLATE	687
450022-0000	WASHER	107
450023-0000	BRACKET	107
450116-0000	CANTILEVER	743
450117-0000	HOLDER	743
450127-0001	BRACKET	731
450127-0002	BRACKET	731
450127-0003	BRACKET	731
450127-0004	BRACKET	731
450127-0005	BRACKET	731
450145-0000	STRUT	305
450146-0000	STRUT	305
450284-0000	CABLE DUCT	259
450285-0000	CABLE DUCT	259
450286-0000	LID	259
450287-0000	LID	259
450290-0000	LID	259
450291-0000	ATTACHMENT PIPE	259
450292-0000	ATTACHMENT PIPE	259
450293-0500	CABLE DUCT	149, 151
450298-0000	COVERING PLATE	227

Part No	Description	Page No
450299-0000	SWIVEL PLATE	217
450300-0000	BEAM	217
450301-0000	FASTENING PLATE	217
450302-0000	VOLUME SHIM	425
450335-0000	PIPE	135
450340-0000	PIPE	225
450342-0000	COVERING PLATE	227
450355-0000	INK ROLLER	665, 677
450363-0000	LID	639
450457-0000	FLANGE	229
450459-0001	FORMING RING	27
450459-0002	FORMING RING	27
450460-0001	GUIDE SHAFT	741
450460-0002	GUIDE SHAFT	741
450460-0003	GUIDE SHAFT	741
450461-0000	SHAFT	741
450490-0100	FORM CLAMP	11, 13, 15
450491-0000	BOW CLAMP	21
450492-0000	BOW CLAMP	21
450493-0000	BOW CLAMP	21
450495-0000	CONNECTION BOX	223
450497-0000	SHAFT	651, 673
450500-0000	DOWEL	651, 673
450503-0000	BEARING HOUSING	393, 397
450505-0000	CARRIER RULER LEFT	335
450506-0000	CARRIER RULER	339
450509-0000	PIPE	69
450512-0000	COVER	69
450667-0000	SPLASH GUARD	217
450668-0000	SPLASH GUARD	217
450669-0000	TOUCH GUARD	217
450670-0000	ARM	313
450716-0000	PIPE	253
450717-0000	PIPE	253
450719-0000	PIPE	253
450722-0000	PIPE	253
450723-0000	PIPE	253
450724-0000	PIPE	253
450725-0000	ATTACHMENT PLATE	253
450730-0000	PIPE	253
450731-0000	PIPE	253
450733-0000	PIPE	253
450735-0000	PIPE	253
450736-0000	PIPE	253
450737-0000	PIPE	253
450738-0000	PIPE	253
450739-0000	PIPE	253
450740-0000	PIPE	253
450742-0000	PIPE	253
450744-0000	CRAMP	253
450745-0000	SPACER	253
450746-0000	HOLDER	253
450747-0000	PIPE	253, 263, 265, 267, 269
450748-0000	PIPE	253
450781-0000	VOLUME BULGE	361, 365
450782-0000	VOLUME SHIM	361, 365, 425
450788-0600	PIPE WORK-PNEUMATIC	149, 151
450791-0000	PIPE	263, 265, 267, 269
450792-0100	DETERGENT PUMP	149, 151
450793-0000	PIPE	271
450794-0000	PIPE	271
450795-0000	PIPE	271
450796-0000	BRACKET	271
450812-0000	SPACER	727
450813-0000	HOLDER	729
450814-0000	HOLDER	131, 133, 729
450824-0200	DOOR	149, 151
450826-0000	BRACKET	273
450840-0400	LIFTING UNIT	149, 151
450841-0000	CANTILEVER	275
450846-0000	CANTILEVER	73
450850-0001	SHEET	727
450850-0002	SHEET	727
450850-0003	SHEET	727
450850-0004	SHEET	727
450850-0005	SHEET	727
450850-0006	SHEET	727
450853-0000	PROTECTION	687
450862-0300	CONNECTION BOX	717, 719
450869-0000	BRACKET RIGHT	163, 165
450882-0000	OUTER PIPE	727
450883-0400	PROTECTION	149, 151
450884-0000	PROTECTION	279
450887-0000	CRAMP	735
450888-0000	INSULATING PLATE	735
450899-0001	SPACER	233

Part No	Description	Page No
450973-0000	BRACKET	273
451053-0000	PIPE	123
451085-0002	SPACER SCREW	137
451085-0003	SPACER SCREW	137
451085-0004	SPACER SCREW	137
451085-0005	SPACER SCREW	137
451088-0000	PROTECTION	217
451089-0000	BRACKET	217
451099-0000	CABLE TRENCH	137
451101-0000	CABLE TRENCH	137
451102-0000	COVER STAINLESS	137
451103-0000	LID	137
451104-0000	LID	137
451127-0000	CHUTE, LEFT FRONT	187
451128-0000	CHUTE, RIGHT FRONT	189
451131-0100	CLEANING PIPE	11, 13, 15
451277-0000	PIPE	131, 133
451280-0000	PIPE	131, 133
451281-0000	PIPE	131, 133
451284-0000	PIPE	131, 133
451285-0000	PIPE	131, 133
451286-0000	PIPE	131, 133
451287-0000	PIPE	131, 133
451288-0000	PIPE	131, 133
451289-0000	PIPE	131, 133
451290-0000	PIPE	131, 133
451291-0000	PIPE	131, 133
451292-0000	PIPE	131, 133
451296-0000	PIPE	131, 133
451297-0000	PIPE	131, 133
451298-0000	PIPE	131, 133
451299-0000	PIPE	131, 133
451300-0000	PIPE	131, 133
451301-0000	PIPE	131, 133
451302-0000	PIPE	131, 133
451303-0001	PIPE	131, 133
451303-0002	PIPE	131, 133
451303-0003	PIPE	131, 133
451303-0004	PIPE	131, 133
451304-0000	PIPE	131, 133
451305-0000	PIPE	131, 133
451306-0000	PIPE	131, 133
451307-0000	PIPE	131, 133
451321-0000	COVER	61
451323-0000	SHEET	61
451324-0000	PIPE	61
451326-0000	CLAMPING PLATE	131, 133
451338-0000	PIPE	137
451339-0000	BOXSTAINLESS	137
451340-0000	CHANNELSTAINLESS	137
451341-0001	LID	137
451341-0002	LID	137
451342-0500	CABLE DUCT	11, 13, 15
451348-0200	CONNECTION BOX	149, 151
451365-0200	TERMINAL PLINTH	137
451389-0000	PLATFORM	93
451390-0000	PLATFORM	93
451391-0000	PLATFORM	93
451406-0000	VIBRATION DAMPER	615, 617
451407-0000	RAILING	615, 617
451408-0000	BUFFER RING	615, 617
451412-0000	WASHER	687
451413-0000	WASHER	687
451423-0000	CIRCUIT BOARD	283
451430-0000	CONNECTION HOUS.(MINOR)	113
456011-0000	PIN	401, 427
456256-0000	PROTECTIVE COVER	223
456772-0000	PIVOT BRACKET	677
456773-0000	PIVOT BRACKET	665
457354-0000	SCREW	275
457355-0000	NUT	275
457357-0000	BRACKET	227
457358-0000	SLEEVE	647
457359-0000	BRACKET	429
457361-0000	CANTILEVER	429
457364-0000	PLATE RIGHT	429
457367-0000	SHAFT	429
457368-0000	SPRING	429
457370-0000	CATCH	695
457430-0000	BEATER	651, 673
457486-0000	BEARING HOUSING	695
457487-0000	BEARING HOUSING	695
457488-0000	BEARING HOUSING	695
457489-0000	BEARING HOUSING	695
457492-0000	COVERING PLATE	697
457493-0000	COVERING PLATE	695

Part No	Description	Page No
457494-0000	COVERING PLATE	697
457495-0000	COVERING PLATE	695
457586-0000	SLIDE	695
457614-0001	CLAMPING PIECE	135
457614-0002	CLAMPING PIECE	135
457627-0000	DOLLY	687
457658-0000	INSULATION	687
457752-0000	CANTILEVER	129
457753-0000	BRACKET	129
458019-0000	BEARING HOUSING	413, 415, 417, 419, 421, 423
458030-0000	CARRIER RULER	335
458031-0000	CARRIER RULER	339
458038-0000	CARRIER RULER	335
458039-0000	CARRIER RULER	339
458041-0000	COMPRESSION SPRING	695, 703
458042-0000	SPRING	695
458046-0000	PIPE	41
458062-0000	TENSION SPRING	687
458104-0000	CREASE FORMER	659
458105-0000	CREASE FORMER	657, 663
458106-0000	CREASE FORMER	655
458107-0000	CREASE FORMER	673
458108-0000	CREASE FORMER	653, 655
458109-0000	CREASE FORMER	653
458164-0000	SHAFT	361, 363, 365, 367
458165-0000	SHAFT	363, 367
458192-0300	INK UNIT SS	673
458193-0001	WASHER	651
458193-0002	WASHER	651
458193-0003	WASHER	651
458194-0001	WASHER	673
458194-0002	WASHER	673
458194-0003	WASHER	673
458199-0001	PIPE	729
458199-0002	PIPE	729
458199-0003	PIPE	729
458362-0000	PLUG	681, 683
458364-0000	COVER	677
458467-0000	VOLUME BULGE	363, 367
458481-0001	SHIM	125
458481-0002	SHIM	125
458481-0003	SHIM	125
458489-0000	CANTILEVER	653, 655, 657, 659, 661, 663
458783-0000	BOW CLAMP	23
458784-0000	CUP	23
458785-0000	BRACKET	23
458786-0000	GASKET	23
458787-0000	BUSHING	23
458788-0000	NUT	23
458791-0000	SHAFT	39
458908-0000	BRACKET	689, 691
458909-0000	BRACKET	689, 691
458912-0000	BRACKET	687
458915-0000	HEAD RAIL	687
458916-0000	SHAFT	687
458917-0000	SUPPORT	687
458929-0000	TURN SPRING	687
464010-0000	ARM	651, 673
464011-0000	LOCK STUD	651, 673
464012-0000	CURVE	651, 673
464018-0000	JUNCTION BLOCK	123
464141-0000	LEAD-IN PLATE	647
464162-0000	CUTTING JAW	393, 397
464164-0000	CARRIER CUT LEFT	395, 399
464173-0000	LABEL HOLDER	125, 727
464174-0000	SIGN	125
464175-0000	SIGN	125
464176-0000	SIGN	727
464177-0000	SIGN	727
464197-0000	AIR NOZZLE	735
464297-0000	CONNECTION BOX	283
464307-0000	PIPE BEND	123
464308-0000	PIPE	123
464309-0000	PIPE	123
464310-0000	FOLDING FLAP	335, 339
464311-0000	FOLDING FLAP	335, 339
464314-0000	VOLUME BULGE	363, 367
464315-0000	VOLUME SHIM	363, 367, 425
464363-0000	HOLDER	323
464366-0000	LID	357, 359
464367-0000	CRAMP	357, 359
464368-0000	CRAMP	357, 359
464370-0000	SPACER	403
464431-0000	PIPE	253
464432-0000	PIPE	253
464520-0000	PIPE	253

Part No	Description	Page No
464547-0000	NUT	687
464548-0000	BRACKET	687
464719-0000	SIGN	253
464854-0000	TENSION SPRING	687
464983-0000	SCREW	687
466040-0000	AXLE SUPPORT	127
466041-0000	WASHER	127
466042-0000	SEAL	127, 141
466046-0000	ROLLER	127
466086-0000	SHAFT	649
466089-0000	SEAL	127, 141
466092-0000	ROLL	127
466099-0000	SEAL	127, 141
466102-0000	ROLL	127
466337-0000	CONNECTION BOX	681, 683
466395-0000	BEARING HOUSING	413, 415, 417, 419, 421, 423
466399-0100	SEAL	125
466400-0000	RING	127
466401-0000	RING	127
466402-0000	RING	127
466403-0000	RING	127
466404-0000	RING	127
466405-0000	RING	127
466412-0000	PLATE	735
466430-0000	BUSHING	651, 673
466431-0000	BEARING HOUSING	393, 397
466432-0000	BEARING HOUSING	393, 397
466446-0000	HANDLE	687
466463-0000	PRESSURE FLANGE	53, 55
466469-0000	HOLDER	701
466471-0000	PIPE	97
466474-0000	VALVE HOUSING	63, 103, 105
466477-0000	INNER PIPE	63, 103
466478-0000	OUTER PIPE	63, 103
466479-0000	PIECE	63, 103, 105
466483-0000	CLAMPING PIECE	63, 103
466484-0000	NET	63, 103
466618-0000	CATCH	687
466619-0000	CATCH	687
466620-0000	PISTON	687
466621-0000	PISTON	687
466623-0000	COMPRESSION SPRING	687
469463-0000	SHAFT	27
469464-0000	ROLL	27
469795-0000	HOLDER	187
476015-0000	DOWEL	649
476016-0000	RUBBER	649
476087-0000	LID	69
476115-0000	VOLUME FLAP	363, 367
476117-0000	CATCH	647
476177-0200	HOLD-DOWN DEVICE	295, 297, 299
476185-0000	VALVE CONE	87
476203-0000	PROTECTION	83
476288-0000	PIPE	687
476289-0000	SCREW	687
476354-0000	CANNULAR TUBE	665
476355-0000	CANNULAR TUBE	677
476356-0000	HOLDER FOR INK BOTTLE	665, 677
476358-0000	COIL HEATER	141
476360-0000	LID	57
476377-0000	SCREW	651, 673
476398-0000	LID	69
476400-0000	PIPE	69
476401-0000	SHAFT	649
476403-0000	HEAD PLATE	701
476449-0000	PIPE	97
476503-0000	BRACKET	639
476556-0000	GUIDE	649
476599-0000	PLATFORM	93
476600-0000	PIPE HOLDER	93, 97, 107
476794-0001	PIPE	131, 133
476794-0002	PIPE	131, 133
476796-0000	PIPE	131, 133
476824-0000	COVERING PLATE	227
476849-0100	VALVE	97
476859-0200	CHANGE-OVER VALVE	97
476877-0000	SPACER	407
476878-0000	FILLER TUBE	53
476879-0000	PRESSURE FLANGE	53
476884-0200	CLEANING HEAD	191
476885-0200	CLEANING HEAD	197, 199
476886-0200	CLEANING HEAD	197, 199
476887-0200	CLEANING HEAD	191
476894-0000	PIPE HOLDER	275
476975-0000	WHEEL	485, 487
479025-0000	WASHER	69

Part No	Description	Page No
479032-0000	HATCH	175
479033-0000	PIPE CONNECTION	235
479034-0000	PIPE CONNECTION	235
479036-0000	PIPE CONNECTION	235
479040-0000	PIPE CONNECTION	235
479061-0000	PIPE	131, 133
479072-0000	PIPE	131, 133
479073-0000	PIPE	131, 133
479074-0000	PIPE	131, 133
479176-0000	PIPE	57
479188-0000	INSULATION	687
479223-0000	RAIL	687, 699
479224-0000	STEERING	687
479230-0000	PIPE	123
479231-0000	PIPE	123
479232-0000	PIPE	123
479234-0000	WASHER	61
479236-0000	END SECTION	667, 669, 679
479237-0000	CARRIER	667, 669
479238-0000	CARRIER	667, 669
479239-0000	CARRIER	679
479240-0000	CARRIER	679
479245-0000	VOLUME SHIM	363, 367, 425
479261-0000	NIPPLE	239
479354-0000	SCREW	315
479374-0000	DRIP PLATE	227
479743-0000	COMPRESSION SPRING	413, 415, 417, 419, 421, 423
479744-0000	COMPRESSION SPRING	413, 415, 417, 419, 421, 423
479753-0000	STRIPPER	315
479858-0000	HYDRAULIC DIAGRAM	281
479964-0000	SIGN	245
484047-0000	PIPE	75, 77, 79
484189-0000	HIGH PRESSURE HOSE	73
484212-0000	BRACKET	227
484213-0000	BRACKET	227
484219-0000	SHAFT	275
484220-0000	BRACKET	275
484221-0000	BRACKET	275
484222-0000	SHAFT	275
484223-0000	NUT	275
484529-0000	CYLINDER BRACKET	687
484536-0000	VALVE	173, 181
484538-0000	VALVE	235

Part No	Description	Page No
484682-0000	COMPRESSION SPRING	687
484783-0000	RAIL	687
484791-0000	GASKET	177
484834-0000	HOLDER	389, 391
484843-0000	GASKET	357, 359
484844-0000	INSULATION	687
484848-0001	MACHINE BODY	657, 659, 661, 663
484848-0002	MACHINE BODY	651, 653, 655, 657
484848-0003	MACHINE BODY	655
484877-0000	STEERING	687
484878-0000	HOLDER	687
484895-0001	SHEET	689
484895-0002	SHEET	689
484895-0003	SHEET	689
484895-0005	SHEET	691
484895-0006	SHEET	691
484895-0007	SHEET	689
484975-0000	WASHER	83, 85
484998-0000	END SECTION	83, 85
486803-0000	BEARING HOUSING	27
486826-0001	SIGN "EMERGENCY STOP"	681, 683, 721, 727
486958-0200	DATING UNIT	631, 633
486960-0001	SHAFT	651, 653, 655, 657, 659, 661, 663
486960-0002	SHAFT	653, 673
486961-0000	PLATE	651, 653, 655, 659
486962-0001	FASTENING BRACKET	655, 657, 659, 663
486962-0002	FASTENING BRACKET	653, 655
486962-0003	FASTENING BRACKET	653, 673
486962-0004	FASTENING BRACKET	653, 655
486962-0007	FASTENING BRACKET	659
486962-0008	FASTENING BRACKET	659
486962-0009	FASTENING BRACKET	661
486962-0010	FASTENING BRACKET	661
486962-0011	FASTENING BRACKET	657, 661
486964-0000	HEAD PLATE	653, 655, 657, 659, 661, 663
486965-0000	HEAD PLATE	653
486966-0001	SHAFT	653, 655, 657, 659, 661, 663
486966-0002	SHAFT FOR CARRIER	653, 673
486967-0000	SHEET	651, 673
486968-0001	SHAFT FOR BENDINGROLLER	653, 655, 657, 659, 661, 663
486968-0002	SHAFT FOR BENDINGROLLER	653, 673
486969-0000	GUIDE LUG	651, 673
486971-0000	ANGLE	651, 673

Part No	Description	Page No
491126-0000	SCREW	69
491128-0000	GASKET	115
491602-0000	GASKET HOLDER	115
491770-0000	BUSHING	177
491929-0000	IMPELLER WHEEL	177
493021-0000	ARM	275
493022-0000	ARM	275
493091-0000	CLAMP RAIL	125
493614-0100	SPRAY GUN	149, 151
493653-0000	GASKET	97
493658-0000	AXLE SUPPORT	127
493710-0000	FOLDING FLAP	335, 339
493711-0000	FOLDING FLAP	335, 339
493733-0000	LOCKING PIN UPPER	53, 55
493734-0000	LOCKING PIN LOWER	53, 55
493747-0000	GUIDE STUD	21
493875-0000	FILLING TUBE LOWER	53
493886-0000	SHAFT	21
493948-0000	CANTILEVER	33, 35, 37
495201-0000	COOLING ELEMENT	223
497040-0000	STEERING	413, 415, 417, 419, 421, 423
497121-0000	SPLASH GUARD	175
497131-0000	FILLER TUBE	47
497572-0000	BEARING HOUSING	395, 399
497579-0000	CLAMP HALF	41
497580-0000	CLAMP HALF	41
497583-0000	HOUSING	413, 415, 417, 419, 421, 423
497716-0000	GASKET	393, 397
497719-0000	WASHER	115
497720-0000	WASHER	17, 21
497748-0000	PIN	89, 91
497921-0000	CUTTING RAIL	393, 397
497933-0000	BUSHING	83, 85, 87
499011-0000	SHAFT	47
499016-0000	FORK	47
499082-0403	ADAPTER, TYPE 1	609
499082-0404	ADAPTER, TYPE 1	609
499082-0407	ADAPTER, TYPE 1	609
499124-0000	STOP	375
499125-0000	STOP	375
499132-0002	SHAFT	699
499181-0000	WASHER	97
499255-0200	SEAL KIT	141
499387-0000	PRESSURE ROLLER	47, 141
499397-0000	DAMPER LEFT	375
499398-0000	DAMPER RIGHT	375
499473-0000	GEAR WHEEL	303
499474-0000	SHAFT	303
499825-0000	GASKET	97
499826-0000	PIPE	97
499833-0000	PIPE RIGHT	197, 199
499834-0000	PIPE LEFT	197, 199
50Hz		271
522090-0000	HEAT EXCHANGER	107
522121-0200	CUTTING TABLE	631, 633
522122-0001	RAIL	703
522122-0002	RAIL	703
522123-0000	PLATE	703
522124-0000	RULER	703
522125-0000	BEARING HOUSING	703
522126-0000	SHEET	703
522128-0000	KNIFE	703
522129-0000	KNIFE HOLDER	703
522130-0000	HANDLE	703
522131-0000	STEERING	703
522132-0000	SLIDE BELT	703
522133-0000	SHAFT	703
522134-0000	END PLATE	703
522137-0000	PUSH BUTTON	703
522138-0000	STOPPER	703
522139-0001	STOPPER	703
522139-0002	STOPPER	703
522152-0000	RAIL BRACKET	405, 407
522153-0000	VOLUME CAM	405, 407
522158-0000	COMPRESSION SPRING	703
522173-0000	CANTILEVER	699
522308-0000	SIGN	707
522408-0000	BEARING HOUSING	651, 673
522410-0200	BENDING ROLLER	687
522474-0000	BLOCK L	695, 697
522475-0000	BLOCK R	695, 697
525000-0200	FOLDING PART	437, 439
525001-0000	FOLDING BAR	579, 581, 583, 585
525002-0000	FOLDING BAR	577, 579
525003-0000	FOLDING BAR	579, 581, 583, 585
525004-0000	FOLDING BAR	577, 579

Part No	Description	Page No
525005-0001	FOLDING BAR	581
525005-0002	FOLDING BAR	581
525005-0003	FOLDING BAR	581
525005-0005	FOLDING BAR	579
525005-0006	FOLDING BAR	579
525005-0007	FOLDING BAR	579
525005-0009	FOLDING BAR	577
525005-0010	FOLDING BAR	579
525006-0001	FOLDING BAR	581
525006-0002	FOLDING BAR	581
525006-0003	FOLDING BAR	581
525006-0005	FOLDING BAR	579
525006-0006	FOLDING BAR	579
525006-0007	FOLDING BAR	579
525006-0009	FOLDING BAR	577
525006-0010	FOLDING BAR	579
525007-0001	CANTILEVER	579, 581
525007-0002	CANTILEVER	577, 579, 583, 585
525007-0003	CANTILEVER	579
525007-0004	CANTILEVER	581
525008-0001	BRACKET	579, 581, 583, 585
525008-0002	BRACKET	577, 579, 581
525008-0003	BRACKET	579
525011-0001	BRACKET	581
525011-0002	BRACKET	581
525011-0003	BRACKET	581
525011-0005	BRACKET	579
525011-0006	BRACKET	579
525011-0007	BRACKET	579
525011-0009	BRACKET	577
525011-0010	BRACKET	579
525012-0001	COUNTER PLATE	581, 583
525012-0002	COUNTER PLATE	581
525012-0003	COUNTER PLATE	581
525012-0005	COUNTER PLATE	579
525014-0001	COUNTER PLATE	579
525015-0001	SCREW	579, 581, 583
525015-0002	SCREW	577, 579, 581, 583, 585
525015-0003	SCREW	579
525016-0000	FASTENING PLATE	577, 585
525017-0000	STEERING GUIDE	577, 585
525018-0000	SPACER	577, 585
525019-0000	BRACKET	577, 585
525038-0000	GABLE PLATE	531
525039-0000	GABLE PLATE	531
525046-0000	GASKET	461
525047-0000	GASKET	461
525051-0000	HEAD PLATE	531
525052-0001	SPACER	531
525052-0002	SPACER	531
525052-0003	SPACER	531
525052-0004	SPACER	531
525052-0005	SPACER	531
525052-0006	SPACER	531
525053-0000	PLATE (CIRCULAR)	485, 487
525054-0000	SIDE PLATE	485
525055-0000	BRACKET	501
525063-0000	BOTTOM	561, 569
525066-0000	SHEET	553
525067-0000	SHEET	553
525070-0000	ELECTRICAL CONNECTION	473, 481
525071-0000	SPACER PIECE	473
525073-0000	COVER	473, 481
525074-0000	ARM	519
525075-0001	LINK	519
525075-0002	LINK	519
525075-0003	LINK	519
525075-0004	LINK	519
525075-0005	LINK	519
525075-0006	LINK	519
525077-0000	AXLE PIN	519
525078-0000	BRACKET	519
525079-0000	BRACKET	519
525080-0000	BRACKET	519
525081-0000	BRACKET	519
525082-0000	BRACKET	519
525083-0000	BRACKET	519
525084-0000	HEAD PLATE	519
525085-0200	LUBRICATING SYSTEM	437, 439
525086-0200	CONVEYING EQUIPMENT	489, 493
525087-0100	DROP	491, 495
525088-0200	DISCHARGE CHUTE	491, 495
525089-0100	CHAIN RIGHT	489, 493
525090-0100	CHAIN LEFT	489, 493
525091-0100	CHAIN	489, 493
525092-0100	CHAIN GUARD	489, 493

Part No	Description	Page No
525100-0000	BLOCKING PIECE	551
525101-0001	BLOCKING PIECE	549, 551
525101-0002	BLOCKING PIECE	551
525102-0200	LUBRICATING SYSTEM	461
525109-0000	BRACKET	447
525110-0100	CABLE CONDUIT	441, 457
525117-0300	INDEXING GEAR	537
525125-0000	PIN	549, 551
525128-0100	FF-ELEMENT R	437, 439
525129-0100	ELEMENT	437, 439
525130-0000	LEG	441, 457
525132-0000	CABLE TRENCH	441, 457
525134-0000	SPACER PIECE	481
525135-0000	PLATE	453
525136-0000	SHAFT	449
525138-0000	SHEET	591, 597
525140-0000	HOLDER	591, 597
525143-0200	BOTTOM VALVE	441, 457
525146-0000	BRACKET	517
525148-0000	BRACKET	515
525150-0000	GABLE PLATE	531
525151-0000	GABLE PLATE	531
525164-0000	STEERING	515
525166-0000	MOTOR CRADLE	445
525169-0000	SIDE PLATE	485
525170-0000	SIDE PLATE	485
525171-0001	BRACKET	485, 487
525171-0002	BRACKET	485
525172-0000	SPACER	541
525173-0000	CANTILEVER	471
525174-0000	BRACKET	441, 457
525175-0000	BRACKET	441, 457
525178-0000	BRACKET	577, 585
525179-0001	FOLDING ARM	579, 581
525179-0002	FOLDING ARM	577, 579, 581
525180-0001	FOLDING ARM	579, 581
525180-0002	FOLDING ARM	577, 579, 581
525181-0000	WASHER	577, 585
525182-0001	COUNTER PLATE	579
525182-0002	COUNTER PLATE	577
525182-0003	COUNTER PLATE	579
525185-0000	HATCH	461
525194-0000	SPROCKET	591, 597
525195-0000	WASHER	591, 597
525196-0000	NUT	605
525197-0000	BLOW-OFF NOZZLE TR	473, 475, 481, 483
525198-0000	BLOW-OFF NOZZLE TL	473, 475, 481, 483
525200-0000	BRACKET	591, 597
525208-0001	CARRIER	529
525208-0002	CARRIER	529
525208-0003	CARRIER	529
525211-0000	PLATE	555
525212-0000	PLATE	553
525213-0200	INFEEDER	437, 439
525215-0006	TIMING BELT PULLEY	447
525216-0000	SLEEVE	447
525232-0000	BRACKET	447
525233-0000	GASKET 16x2x6mm	477, 479
525234-0002	PLATE	553
525235-0000	CURVE	537
525242-0000	BRACKET	511
525243-0000	PROFILE	511
525244-0000	PROFILE	511
525245-0000	PROFILE	513
525246-0000	PROFILE	513
525247-0000	PROFILE	513
525248-0000	PROFILE	513
525252-0000	BEARING	485, 487
525254-0000	LINK	529, 599, 603
525255-0000	HEAD PLATE	515, 517
525256-0000	HEAD PLATE	515, 517
525259-0000	BRACKET	515
525260-0000	GABLE PLATE	531
525261-0000	GABLE PLATE	531
525262-0000	COVERING PLATE	441, 457
525264-0000	BOTTOM	561, 569
525265-0001	LEAD PLATE	595
525265-0002	LEAD PLATE	595
525265-0003	LEAD PLATE	595
525265-0004	LEAD PLATE	595
525266-0000	LEG	441, 457
525267-0000	LEG	441, 457
525268-0000	LEG	441, 457
525269-0000	PIPE	451
525270-0000	PIPE	451
525271-0000	ELBOW PIPE	441, 457

Part No	Description	Page No
525272-0000	STRUT	441, 457
525273-0000	STRUT	441, 457
525274-0000	FINISH FRAME 525274	441, 457
525275-0000	COVERING PLATE	441, 457
525276-0000	HOUSE	461
525277-0000	CABLE TRENCH	441, 457
525278-0000	CLEANING TROUGH	441
525279-0000	HATCH	537
525280-0000	SHEET	441, 457
525281-0000	GASKET	441, 457
525292-0000	BRACKET	537
525293-0000	PIPE	537
525294-0000	PIPE	537
525295-0000	ARM	577, 579, 581, 583, 587
525296-0000	BRACKET	577, 585
525297-0000	BRACKET	577, 579, 581, 583
525298-0000	SPROCKET	599, 603
525299-0000	SHAFT	599, 603
525300-0000	MACHINE BODY	599
525301-0000	ARM	593, 597
525302-0000	ARM	591, 593
525303-0000	ARM	591
525304-0000	ARM	591, 593, 597
525305-0000	DISTRIBUTOR	593
525306-0000	DISTRIBUTOR	593
525307-0000	DISTRIBUTOR	591
525308-0000	DISTRIBUTOR	591
525309-0000	DISTRIBUTOR	591
525310-0000	BRACKET	591, 597
525311-0000	GUIDE	591, 597
525312-0000	SHAFT	591, 597
525315-0000	SLIDER	591, 597
525317-0000	FITTING BOLT	591, 597
525320-0100	CHAIN GUARD	591, 597
525321-0000	SCREW	577, 585
525322-0001	LEAD RAIL	601
525322-0002	LEAD RAIL	599, 601
525322-0003	LEAD RAIL	599
525322-0004	LEAD RAIL	601
525323-0000	BRACKET	599
525324-0000	PROFILE	599, 603
525325-0200	DISCHARGER	437, 439
525326-0000	CHAIN GUARD	595
525327-0000	CHAIN GUARD	595
525328-0000	CHAIN GUARD	595
525329-0000	SLEEVE	559, 561, 563, 567, 569, 571
525330-0000	SHAFT	565, 573
525331-0000	SHIM	465
525332-0000	SHIM	465
525334-0000	BRACKET	497, 507, 511
525335-0000	HOUSE	549
525337-0000	BRACKET	447
525338-0000	SPACER	531, 533, 535
525339-0000	COVERING PLATE	531
525340-0000	BRACKET	577, 585
525341-0001	LEAD RAIL	579, 581
525341-0002	LEAD RAIL	577, 579
525346-0000	SIDE PLATE	441, 457
525347-0000	SLIDE RAIL	539
525348-0000	SLIDE RAIL	539
525349-0000	SLIDE RAIL	539
525350-0000	SLIDE RAIL	539
525352-0000	SLIDE RAIL	539
525353-0000	SLIDE RAIL	539
525354-0000	SLIDE RAIL	539
525355-0000	SLIDE RAIL	539
525357-0000	SPACER	539
525358-0000	BRACKET	471
525360-0000	BRACKET	577
525363-0002	SHAFT	497, 509
525367-0000	SLEEVE	549
525369-0000	BOTTOM	559, 567
525370-0000	BOTTOM	561, 569
525371-0000	BOTTOM	559, 567
525372-0000	BOTTOM	559, 567
525374-0000	CARRIER	599, 601, 603
525375-0000	OIL PIPE	471
525376-0000	BOW CLAMP	471
525377-0000	HATCH	461
525378-0000	HEAD PLATE	539
525379-0000	COMPRESSION SPRING	551
525380-0000	HATCH	589
525381-0000	BRACKET	589
525382-0000	SHAFT	589
525383-0000	BRACKET	589
525384-0000	DOWEL	589

Part No	Description	Page No
525385-0000	BRACKET	643, 645
525394-0000	HINGE	589
525400-0000	SHAFT	497, 511
525401-0000	SHAFT	511
525402-0000	SHAFT	497, 507, 511
525403-0000	PROFILE	513
525404-0000	PROFILE	513
525405-0000	PROFILE	513
525406-0000	PROFILE	513
525409-0000	WASTE CHUTE	589
525410-0000	LEAD RAIL	581
525411-0000	PROFILE	599, 603
525412-0000	RULER	599, 603
525414-0000	CARRIER	601
525416-0000	STOP	519
525417-0000	STEERING	593
525418-0000	HOLDER	593
525419-0000	LEAD RAIL	511
525423-0000	COVERING PLATE	589
525424-0000	HEAD PLATE	539
525425-0000	PROFILE	511, 513
525426-0000	PROFILE	511, 513
525427-0000	PROFILE	511, 513
525428-0000	PROFILE	511, 513
525429-0000	PLATE	553, 555
525430-0000	FLAP	559, 567
525431-0000	CARRIER	521, 523
525432-0000	CARRIER	525, 527
525437-0000	ARCH	601
525438-0000	COUNTER PLATE	581
525439-0000	DRIP PLATE	589
525445-0000	HUB	571
525446-0000	HUB	563
525447-0000	HUB	569, 571
525448-0000	HUB	561, 563
525449-0000	HUB	567, 569, 571
525450-0000	HUB	559, 561, 563
525452-0000	FLAP	563, 571
525453-0000	FLAP	561, 563, 569, 571
525454-0000	FLAP	561, 569
525455-0000	FLAP	559, 567
525456-0000	FLAP	559, 567
525458-0000	FLAP	559, 567
525460-0000	SPACER PIECE	561, 569
525461-0000	SPACER PIECE	559, 561, 567, 569
525465-0000	BRACKET	519
525466-0000	ARCH	601
526502-0000	STEERING RAIL	121
526582-0000	NET	727
526587-0000	AIR NOZZLE	59
526677-0000	CANTILEVER	429
526680-0000	FENDER WALING	639
526682-0000	HOOD	47
526687-0000	ATTACHMENT	59
526688-0000	HEAD PLATE	59
526689-0000	DISTRIBUTOR WING	59, 141
526690-0000	SHAFT	59
526691-0000	ROLL	59
526692-0000	ROLL	59
526696-0000	AIR NOZZLE	41
526697-0000	HEAT GUARD	41
526782-0000	COVERING PLATE	61
526904-0000	LINK HEAD	323
526931-0300	BOTTOM PLATE	717, 719
526932-0300	PIPE WORK	717, 719
526947-0000	MOUNTING SHEET	739
526948-0000	MOUNTING SHEET	737
526954-0100	START-UP KIT	717, 719
526958-0000	AXLE SUPPORT	33, 35, 37
526960-0000	PRESSURE FLANGE	53
526984-0000	SADDLE	671
526985-0000	PLATE	671
526986-0001	SHAFT	671
527120-0000	STEERING	185
527121-0001	BOW CLAMP	185
527121-0002	BOW CLAMP	185
527122-0000	ATTACHMENT	185
527124-0000	BEARING	185
527125-0000	STEERING	185
527126-0000	LEAF SPRING	185
527127-0000	DOWEL	185
527128-0000	GUIDE PIN	185
527129-0000	BRACKET	185
527130-0000	SCREW	185
527647-0001	STEERING RAIL	121
527647-0002	STEERING RAIL	121

Part No	Description	Page No
527648-0000	WASHER	313
527649-0000	DISTANCE RUBBER	671
527750-0000	CALENDER ROLLER	117
527854-0000	PLATE RIGHT	553
527856-0000	PLATE LEFT	553
527861-0000	HEAD PLATE	539
527898-0100	CONTAINER H2O2	169
527902-0000	SHEET	171
527905-0000	GASKET	181
527906-0000	GASKET	181
527907-0000	PIPE	263, 265, 267, 269
527910-0000	PIPE	175
527912-0000	NON-RETURN VALVE	185
529000-0000	VOLUME FLAP	363, 367
529002-0000	VOLUME FLAP	361, 365
529033-0000	FILLING TUBE LOWER	53
529039-0000	EDGE ROLLER	33, 35, 37
529040-0000	GUIDE ROLLER	33, 35, 37
529041-0000	GUIDE ROLLER	33, 35, 37
529137-0000	CURVE LEFT	345
529138-0000	CURVE RIGHT	349
529139-0000	CREASE FORMER	651
529141-0000	VOLUME SHIM	425
529180-0000	FORK	47
529181-0000	COUNTER ROLLER	27
529184-0000	HOLDER	27
529196-0000	HOLDER	405
529312-0000	HEAD PLATE	539
529331-0000	COVERING PLATE	441
529362-0000	SPROCKET	671
529376-0000	ARM	55
529377-0000	CLAMP	55
529378-0000	LINK	55
529455-0000	PLATE	681, 683
529456-0000	PLATE	681, 683
529476-0000	SIDE GUARD	643, 645
529498-0000	SIDE GUARD RIGHT	643, 645
530469-0000	FRONT PLATE	229
530529-0000	MAIN CAM	309
530532-0000	COUNTER CAM	309
530550-0000	PIPE	171
530551-0000	WASHER	185
530556-0000	JUNCTION PIPE UPPER	249
530566-0000	EDGE ROLLER	33, 35, 37
530567-0000	GUIDE ROLLER	33, 35, 37
530568-0000	GUIDE ROLLER	33, 35, 37
530587-0000	WASHER	87
530588-0000	SEAL RING	87, 109, 111, 143
530589-0000	SEAL RING	83, 85, 143
530590-0000	VALVE CONE	83, 85
530591-0000	HOLDER	85
530592-0000	SEAL RING HOLDER	83
530595-0000	SEAL RING HOLDER	83
530597-0000	WASHER	85
530598-0000	WASHER	85
530599-0000	RING	85
530622-0000	BUSHING	57
530708-0000	ARM	311
530745-0400	SIDE GUARD	631, 633
530754-0000	FASTENING BRACKET	305
530755-0000	SCREW	305
530778-0000	LACE	703
530808-0000	CLAMP RAIL	125
530826-0000	FILLING TUBE LOWER	53
531002-0000	CURVE	405, 407
531034-0000	VALVE HOUSING	99
531035-0000	ARM	99
531036-0000	SHAFT	99
531037-0000	FLAP	99
531038-0000	GASKET	99
531039-0000	WASHER	99
531040-0000	BRACKET	99
531041-0000	WEDGE	99
531109-0000	VOLUME CAM	409
531110-0000	RAIL BRACKET	409
531116-0000	GASKET	451
531119-0000	STRAINER	441, 457
531167-0000	SHAFT	69
531168-0000	WHEEL	69
531169-0000	WASHER	69
531182-0000	CANTILEVER	227
531189-0000	GASKET	451
531190-0000	SHAFT	115
531191-0000	BUSHING	115
531309-0000	GASKET	125
531312-0000	HEAD PLATE	539

Part No	Description	Page No
531313-0000	HEAD PLATE	539
531314-0000	HEAD PLATE	539
531320-0000	VOLUME SHIM	361, 365, 425
531328-0000	HEAD PLATE	539
531337-0000	MACHINE BODY	647
531345-0100	PERSONAL PROTECT. EQ H2O2	609
531365-0000	BRACKET	227
531592-0000	PIPE	235
531595-0000	STRAIGHT PIPE UNION	235
531597-0000	PIPE	235
531616-0000	HOLDER	187, 189
531628-0000	PRESSURE DEVICE FLAP	549
531730-0000	FLANGE SEAL	473, 481
531731-0000	GASKET	113
531733-0000	GASKET	737, 745
531734-0000	GASKET	57, 141, 737, 745
531735-0000	GASKET	737, 745
531736-0000	GASKET	737, 745
531737-0000	GASKET	107, 113
531738-0000	GASKET	57, 141
531739-0000	GASKET	57, 141
531740-0000	GASKET	57, 141
531741-0000	GASKET	41
531742-0000	GASKET	61, 107, 141
531744-0000	GASKET	57, 141
531745-0000	GASKET	57, 141
531761-0000	HOLDER	189
531764-0000	GASKET	57, 141
531765-0000	GASKET	109, 111
531885-0000	STEERING	699
531886-0000	PROTECTION PLATE	687
531887-0000	PROTECTION PLATE	687
532024-0000	GASKET	647
532026-0000	SEAL COVER	647
532032-0000	MAIN CAM	307
532033-0000	COUNTER CAM	307
532082-0000	ROUND NUT	651, 673
532083-0000	ROUND NUT	651, 673
532097-0000	COUNTER CAM	307
532117-0000	CLAMP RING	89
532118-0000	CLAMP RING	91
532129-0000	VOLUME BULGE	361, 365
532143-0000	ARM	117
532144-0000	SHAFT	117
532145-0000	SHAFT	117
532146-0000	SHAFT	117
532147-0000	WASHER	117
532148-0000	SCREW	117
532151-0300	CONNECTION BOX	681, 683
532205-0000	LID	181
532206-0000	GASKET	181
532261-0000	SLEEVE	117
532318-0000	CATCH GUARD RIGHT	157
532319-0000	CATCH GUARD LEFT	157
532348-0000	SPINDLE GUIDE	109, 111
532349-0000	PLAIN BEARING	109, 111
532352-0000	PIPE	131, 133
532354-0000	PIPE	131, 133
532355-0000	PIPE	131, 133
532356-0000	PIPE	131, 133
532366-0000	PIPE	131, 133
532371-0000	STOP LUG	275
532655-0000	CAUTION SIGN	183
532718-0000	VOLUME FLAP	361, 365
532719-0001	FEEDING ROLLER	651, 653, 655, 657, 659, 661, 663
532719-0002	FEEDING ROLLER	653, 673
533012-0001	END PIECE	393, 397, 425
533169-0000	DIAPHRAGM	83, 143
533195-0000	MANTLE	57
533196-0000	FASTENING PLATE	57
533426-0000	STOP PLATE	187
533442-0000	COUNTER ROLLER	27
533448-0000	MACHINE BODY	653
533449-0001	BENDING ROLLER	651, 653, 655, 657, 659, 661, 663
533449-0002	BENDING ROLLER	653, 673
533453-0000	LID	651, 653, 655, 657, 659, 661, 663
533454-0000	FRAME	651, 653, 655, 657, 659, 661, 663
533455-0000	LID	653
533456-0000	FRAME	653
533457-0001	SHAFT	653, 655, 657, 659, 661, 663
533457-0002	SHAFT	653, 673
533458-0000	WASHER	651, 673
533459-0000	SCREW	651, 673
533818-0000	HOLDER	353, 355, 357, 359
533955-0000	CURVE	409
533956-0000	CURVE RIGHT	351

Part No	Description	Page No
533957-0000	CURVE LEFT	347
533958-0000	FOLDING FLAP CAM R	351
533959-0000	FOLDING FLAP CAM L	347
533961-0000	MAIN CAM	307
533962-0000	COUNTER CAM	307
534176-0000	AIR NOZZLE	41
534177-0000	HOLDER	27
534237-0000	SEAL	357, 359
534426-0000	PIPE	107
534486-0000	PIPE HOLDER	275
534878-0000	SHAFT	193, 195, 201, 203, 251, 277
534879-0000	BEARING HOUSING	193, 195, 201, 203, 251, 277
534880-0000	END SECTION	193, 195, 201, 203, 251, 277
535016-0000	FORCE SPRING	249
535017-0000	BRACKET	249
535200-0000	HOLDER	429
535608-0000	GASKET	727
535612-0000	PIPE	729
535613-0000	BRANCH	727
535614-0000	INNER PIPE	727
536686-0000	VOLUME BULGE	363, 367
536687-0000	VOLUME SHIM	363, 367
536703-0000	SHAFT	323
536704-0000	WASHER	353, 355, 357, 359
536705-0000	BRACKET	357, 359
536913-0000	HUB	749
536916-0000	AXLE PIN	747
536917-0000	AXLE PIN	751, 753
536987-0000	WASHER	21
537308-0000	SPRING	665, 677
537327-0000	SHAFT	749
537329-0100	HUB JUMBO	747
537383-0000	SHAFT	709
537384-0000	SHAFT	709
537388-0000	HOLDER	709
537389-0000	SECURING PLATE	709
537901-0000	FOLDING FLAP CAM L	345
537902-0000	FOLDING FLAP CAM R	349
537918-0000	PIPE	249
537919-0000	PIPE HOLDER	249
538236-0002	MACHINE BODY	673
538237-0001	LID	673
538238-0000	FRAME	673
538239-0000	HEAD PLATE	673
538241-0001	SPACER	663
538241-0002	SPACER	663
538241-0003	SPACER	659
538241-0004	SPACER	655
538241-0005	SPACER	659
538245-0000	SHIM	227
538248-0200	DATING UNIT	631, 633
538399-0000	SHAFT	353, 355, 357, 359
538400-0000	ARM LEFT	353
538401-0000	ARM RIGHT	355
539052-0000	KNIFE HOLDER	687
539180-0000	CANTILEVER	709
539181-0000	PIPE	709
539182-0000	PLATE	709
539183-0000	PROTECTION PLATE	709
539185-0000	HOLDER	709
539186-0000	RING	709
539187-0001	GEAR WHEEL	711
539187-0002	GEAR WHEEL	711
539209-0100	A-CYLINDER	81
539210-0100	C-CYLINDER	81
539211-0100	B-CYLINDER	81
539212-0000	GASKET	81, 143
539338-0000	CAP	653, 655, 657, 659, 661, 663, 673
539612-0000	SPREADER	225
539613-0000	SPREADER	225
539761-0000	CUTTING RAIL	395, 399
540270-0000	MAIN CAM	307
540306-0001	COMPONENTS WITHOUT TP-NO	285
540307-0000	PRINTED CIRCUIT BOARD	285
540335-0000	LINK	323
540367-0000	CARRIER	391
540368-0000	CARRIER	389
540718-0000	ELBOW PIPE JOINT	237
540719-0000	WHEEL	709
540721-0000	CABLE DUCT	259
540722-0000	LID	259
540723-0100	CONNECTION BOX	227
540724-0000	CONNECTION BOX	233
540725-0000	FRONT PLATE, LOWER	227
540726-0000	HOOK HOLDER	227
540727-0000	FASTENING BRACKET	227

Part No	Description	Page No
540743-0000	BUSBAR	391
540744-0000	BUSBAR	389
540869-0000	SHEET	747
540870-0000	ARM	751, 753
540886-0000	TANK	175
540949-0000	SHAFT	315
541009-0000	CRANK HOLDER	213
541052-0100	ARM WITH AXLE PRESSURE L	331, 333
541053-0100	ARM WITH AXLE PRESSURE R	331, 333
541057-0000	ARM	751, 753
541064-0000	FORK	751, 753
541065-0000	SHAFT	751, 753
541066-0000	ROLL	751, 753
541067-0000	SPRING BRACKET	751, 753
541068-0000	SPRING HOLDER	747
541069-0000	SPRING BRACKET	751, 753
541070-0000	SHAFT	751, 753
541163-0100	CLAMP RING	81
541164-0100	CLAMP RING	81
541165-0000	WASHER	89, 91
541166-0000	WASHER	83
541167-0000	SPACER SLEEVE	83
541172-0000	SET SCREW	747
541173-0000	STOP	747
541177-0000	BENDING ROLLER	69
541188-0200	BAR CODE	331, 333
541697-0000	CATCH	413, 415, 417, 419, 421, 423
541751-0000	CONICAL BOBBIN	749
542063-0000	FLANGE	315
542074-0000	PIPE	235
542075-0000	PIPE	69
542090-0000	HEAT GUARD	735
542262-0000	CRANK	301
542398-0000	HOLDER	229
542399-0000	HOLDER	229
542695-0000	COVERPLATE R	161
542697-0000	COVER PLATE L	221
542700-0000	VALVEPANEL LOWER	239
542702-0000	COVER PLATE L	229
542703-0000	COVER PLATE R	229
542706-0000	PIPE	191
542781-0000	ARM	755
542782-0000	AXLE PIN	755
542784-0000	LINK ARM	755
542785-0000	ROLL	755
542786-0000	FLAG	755
542847-0000	PAPER GUARD	25
542848-0000	HATCH	25
542849-0000	CANTILEVER	25
542850-0000	COVERING PLATE	25
542851-0000	HINGE	25
542852-0000	CANTILEVER	93
542860-0000	COVER PLATE	187
542904-0100	WORM GEAR MOTOR	709
543125-0000	ANGLE	747
543126-0000	STOP LUG	747
543127-0000	BRACKET	239
543128-0000	VALVE BRACKET	239
543130-0000	BRACKET	239
543131-0000	BRACKET	239
543134-0000	PLATE	239
543135-0000	INK TRANSFER ROLLER	665, 677
543137-0001	SPACER	657
543137-0002	SPACER	653, 657
543137-0003	SPACER	653
543138-0000	SPACER	653
543139-0000	SPACER	673
543141-0000	SIGN	671
543142-0000	SIGN	671
543143-0100	ADJUSTMENT DEVICE	651, 673
543148-0000	HOOD	197, 199
543151-0000	CANTILEVER	227
543152-0000	HOSE ATTACHMENT	227
543157-0300	HOLDER	279
543470-0000	LEVEL GLASS	69
543471-0000	ROLL	33, 35, 37
543476-0000	TROUGH	315
543575-0000	LOCK SHEET	755
543694-0000	SLIDE RAIL	539
543697-0000	SPACER PIECE	561, 569
543705-0000	GEAR WHEEL WIDE	543, 545
543706-0000	GEAR WHEEL SLIM , INNER	543, 545
543707-0000	GEAR WHEEL SLIM , OUTER	543, 545
543818-0000	PROTECTION PLATE	747
543819-0000	HINGE	747
543820-0000	SPRING	751, 753

Part No	Description	Page No
543821-0100	LEVEL PROBE	747
543822-0100	BRAKE ARM	747
543823-0100	STRIP MAGAZINE	717, 719
543950-0000	BENDING ROLLER	115
544012-0000	ROLLER	127
544013-0000	RING	127
544014-0000	RING	127
544015-0000	SEAL	127, 141
544229-0001	DROP WING	515, 517
544229-0002	DROP WING	515
544229-0003	DROP WING	515
544229-0004	DROP WING	517
544229-0005	DROP WING	515
544252-0000	FLAP	561, 569
544254-0000	PLATE	561, 569
544255-0000	BLOCKING PIECE	551
544263-0000	FORMING RING	33, 35, 37
544269-0000	BLOW-OFF NOZZLE TV	475, 483
544270-0000	STOPPER	703
544272-0000	BEARING HOUSING	695
544273-0000	BEARING HOUSING	695
544274-0000	COVERING PLATE	695
544275-0000	COVERING PLATE	695
544277-0000	RETAINING RING	635, 637
544278-0000	BEARING HOUSING	413, 415, 417, 419, 421, 423
544279-0000	CREASE FORMER	659
544280-0000	SHEET	555
544286-0000	BOW CLAMP	17
544287-0000	FILLER TUBE	47
544288-0000	SHEET	555
544289-0000	FLAP	551
544290-0000	RAIL	555
544291-0000	PLATE	555
544292-0000	SHAFT	361, 365
544293-0000	BLOW-OFF NOZZLE TH	475, 483
544294-0000	FILLER TUBE	53, 55
544295-0000	FLOAT	53, 55
544298-0000	BLOWING NOZZLE B	475, 483
544299-0000	CUP	23
544300-0000	GASKET	23
544301-0000	STEERING RAIL	121
544303-0000	HOLDER	409
544305-0000	VOLUME SHIM	425
544306-0000	BEARING HOUSING	27
544307-0000	HEAD PLATE	519
544314-0000	FOLDING FLAP	335, 339
544315-0000	FOLDING FLAP	335, 339
544317-0000	BEARING HOUSING	393, 397
544318-0000	DISTRIBUTOR	593
544319-0000	CARRIER RULER	335
544320-0000	CARRIER RULER	339
544321-0000	HEAD PLATE	513
544322-0000	BRACKET	513
544323-0000	CUTTING JAW	393, 397
544327-0000	KNIFE	401
544331-0000	BRACKET	519
544332-0000	BRACKET	519
544333-0000	FORMING RING	27
544334-0000	CUTTING RAIL	393, 397
544335-0000	FORK	27
544336-0000	SHAFT	27
544337-0000	END PIECE	393, 397, 425
544342-0000	RAIL BRACKET	409, 411
544343-0000	CANTILEVER	429
544367-0000	SHAFT	655
544380-0000	WASTE CHUTE	673
544435-0000	PIPE	97
544436-0000	FILTER PIPE	97
544437-0000	BRANCH PIPE	107
544439-0000	INTERMEDIATE PIPE	97
544445-0000	SPACER	27
544480-0000	NUT	187, 189
544481-0000	PLATE	187, 189
544482-0000	BRACKET	189
544483-0000	BRACKET	187
544484-0000	HOLDER	187, 189
544486-0000	BEARING UNIT	187, 189
544504-0000	VOLUME FLAP	361, 365
544506-0000	PIPE	97
544508-0000	BRACKET	189
544510-0000	BRACKET	187
544516-0000	CUTTING RAIL	393, 397
544527-0000	MACHINE PLATE TBA	215
544533-0000	PLASTIC PEHD 21172-10	215
544539-0000	HOUSEMARK REPBY 0574658-0000	163, 273
544680-0000	SIDE GUARD R	189

Part No	Description	Page No
544681-0000	SIDEGUARD L	187
544688-0000	PIPE	253
544689-0000	PIPE	253
544690-0000	PIPE	253
544691-0000	PIPE	253
544692-0000	PIPE	263, 265, 267, 269
544693-0000	PIPE	253
544694-0000	PIPE	253
544695-0000	PIPE	253
544696-0000	PIPE	253
544697-0000	PIPE	263, 265, 267, 269
544703-0000	MOUNTING SHEET	229
544706-0000	FLANGE	653, 655, 657, 659, 661, 663, 673
544725-0000	AXLE PIN	747
544726-0000	AXLE PIN	751, 753
544727-0000	AXLE PIN	747
544730-0000	ROLL	747, 751, 753, 757
544892-0000	SPRING	47
544893-0000	SPRING	47
544896-0000	VALVE	69
544899-0000	SIDECOVER LEFT FRONT	187
544900-0000	SIDECOVER RIGHT FRONT	189
544913-0000	PIPE	131, 133
544973-0100	PILLAR	717, 719
544974-0000	PILLAR	757
545099-0200	SIDE GUARD	149, 151
545100-0200	SIDE GUARD, RIGHT	149, 151
545101-0000	MAIN CAM	307
545107-0000	CHUTE LEFT	187
545108-0000	CHUTE	189
545111-0000	ARM	757
545112-0000	SHAFT 6x29,5	757
545113-0000	SIGN STRIP MAGAZINE	747
545125-0000	STOPPER	377
545126-0000	STOPPER	377
545127-0000	CATCH	377
545136-0000	CATCH	377
545138-0000	CANTILEVER	757
545409-0000	ARM RIGHT	359
545410-0000	ARM LEFT	357
545651-0000	GUIDE STUD	377, 379, 381, 383, 385, 387
545789-0000	HOLDER	429
545801-0000	SPRING	377, 381
545802-0000	SPRING	377, 381
545995-0000	WIRING DIAGRAM	113
546030-0001	CANTILEVER	757
546030-0002	CANTILEVER	757
546031-0000	SPACER	757
546116-0000	CANTILEVER	733
546180-0100	SPLICE DETECTOR	717, 719
546929-0000	FILTER	65, 67, 223
547220-0000	CABLE DUCT	259
547567-0000	SHAFT	73
547568-0000	SPACER	73
547571-0000	PLATE	757
547793-0000	SHAFT	177
547902-0000	BRACKET	167
547904-0000	TUBE	167
547906-0000	SHELF	271
547924-0000	AXLE PIN	757
547925-0000	AXLE PIN	757
548336-0000	WASHER	429
548337-0000	BUSHING	429
548343-0000	BOTTOM PANEL	161
548344-0000	BOTTOM PANEL	221
548346-0000	FRONT GUARD	215
548348-0000	HATCH	215
548402-0000	SIDE PIPE	475, 483
548493-0000	STOPPER	379, 381
548601-0000	VOLUME FLAP	363, 367
548778-0000	LIFTING UNIT	627
548794-0000	HEATING JAW	687
549044-0000	DOOR	273
549045-0000	HATCH	163
549093-0000	PIPE	131, 133
549263-0000	BLOCK	43
549264-0000	CONTAINER	43
549267-0000	LID	43
549830-0000	PROTECTION PLATE	647
549832-0000	WASTE CHUTE	651
549834-0000	CUTTING RAIL	695
549835-0000	CUTTING RAIL	695
549928-0000	COUNTER CAM	307
550301-0000	CURVE	407
550337-0000	FOLDING FLAP CAM L	345
550338-0000	FOLDING FLAP CAM R	349

Part No	Description	Page No
550359-0000	ARM	581, 583, 585, 587
550503-0000	PROTECTION	197, 199
551281-0000	RAIL BRACKET	407
551282-0000	FASTENING PLATE	407
551283-0000	CURVE	407
551284-0000	VOLUME CAM	407
551285-0000	FOLDING FLAP CAM	345
551286-0000	FOLDING FLAP CAM	349
551340-0000	FILLER TUBE	69
551626-0000	VOLUME CAM	409, 411
551784-0000	FITTING BOLT	125
551786-0000	LEVER	125
551825-0000	COUNTER CAM	307
551903-0000	KICKPLATE,LEFT	617
551907-0000	MAIN CAM	307
551910-0000	COUNTER CAM	307
551997-0100	LIFTING UNIT	609
551998-0000	SUPPORT LUG	627
552158-0000	RAIL BRACKET	405, 407
552159-0000	VOLUME CAM	405, 407
553156-0000	CONNECTION BOX	725
553162-0000	STOP PLATE	187
553164-0000	LOW IMPEDANCELITZ L=150MM	187, 189
553763-0000	ADJUSTING SCREW	687
553770-0001	PRESSURE JAW	689, 691
553770-0002	PRESSURE JAW	689
553841-0000	LEAD-IN PLATE	219
553842-0000	BOTTOM PLATE	219
553851-0000	SCREW	413, 415, 417, 419, 421, 423
554139-0000	PIPE	131, 133
554141-0000	FILTER	43
554142-0000	FILTER HOUSING	43
554171-0300	PLATFORM ADDITION	609
554448-0000	PIPE	123
554449-0000	PIPE	123
554582-0000	CANTILEVER	75, 77, 79
554583-0000	PIPE	123
554585-0000	STUD SCREW	43
554850-0000	PIPE	131, 133
554962-0000	SPRING	377
554963-0000	SPRING	377
555540-0000	SPACER	63, 103, 105
555541-0000	BRACKET	63, 103, 105
555542-0000	BRACKET	63, 103, 105
555544-0000	PIPE	61
555545-0000	COIL HEATER	57
555546-0000	INSULATING PLATE	57
555547-0000	PIPE	131, 133
555548-0000	PIPE	131, 133
555551-0000	PIPE	131, 133
555552-0000	PIPE	131, 133
555553-0000	PIPE	131, 133
555554-0000	PIPE	131, 133
555888-0000	BRACKET	321
555892-0000	VOLUME BULGE	361, 365
555926-0000	VOLUME FLAP	361, 365
555928-0000	VOLUME SHIM	361, 365
556139-0000	ROLL	27
556316-0000	INSULATION	687
556317-0000	INSULATION	687
556318-0000	INSULATION	687
556319-0000	WASHER	695
556320-0000	SLEEVE	695
556321-0000	CLAMPING PIECE	695
556322-0000	SHAFT	695
556323-0000	SHAFT	695
556324-0000	SHAFT	697
556325-0000	SHAFT	695
556391-0000	HANDLE	695
556392-0000	HANDLE	695
556393-0000	CUTTING RAIL	695
556394-0000	CUTTING RAIL	697
556395-0000	CUTTING RAIL	695
556439-0000	BARRIER	703
556440-0000	BARRIER	703
556441-0000	ARM	703
556442-0000	ARM	703
556443-0000	BEARING HOUSING	703
556471-0000	KNIFE HOLDER	401
556472-0000	KNIFE HOLDER	401
556473-0000	KNIFE HOLDER	401
556549-0000	FASTENING PLATE	727
556550-0000	BRACKET	737
556551-0000	CYLINDER BRACKET	735
556552-0000	BRACKET	735
556557-0001	PIPE	729

Part No	Description	Page No
556557-0002	PIPE	729
556557-0003	PIPE	729
556557-0004	PIPE	729
556557-0005	PIPE	729
556557-0006	PIPE	729
556558-0001	PIPE	729
556558-0002	PIPE	729
556558-0003	PIPE	729
556558-0004	PIPE	729
556558-0005	PIPE	729
556558-0006	PIPE	729
556559-0001	PIPE	729
556559-0002	PIPE	729
556559-0003	PIPE	729
556559-0004	PIPE	729
556559-0005	PIPE	729
556559-0006	PIPE	729
556560-0001	PIPE	729
556560-0002	PIPE	729
556560-0003	PIPE	729
556560-0004	PIPE	729
556560-0005	PIPE	729
556560-0006	PIPE	729
556565-0000	ROCKER ARM	735
556579-0000	CURVE	315
556682-0000	CABLE INLET PLATE 93x140mm	137
556683-0000	RUBBERGASKET 90x140mm	137
556868-0000	ANGLE	643, 645
556872-0000	BEARING UNIT	641
556873-0000	EXTENSION PIECE	641
556874-0000	BLOCKING RING	641
556875-0100	COVER	631, 633
556879-0000	COVER	641
556886-0000	BRACKET	497, 511
560122-0000	SUPPORT ROLLER	407, 409
560391-0000	CAM LEFT	309
560392-0000	CAM RIGHT	309
560417-0000	ROCKER ARM	313
560418-0000	SHAFT	313
560472-0000	PIPE	69
560614-0000	BATH	69
560615-0000	PIPE	69
560616-0000	PILLAR	73
560617-0000	ROLLER CHAIN	69
560797-0000	SIDE PIECE	161
560798-0000	SIDE PIECE	221
560799-0000	FRONT GUARD	215
560800-0000	BEARING UNIT	187, 189
560872-0000	PLATE	187, 189
560873-0000	PLATE	187, 189
560880-0000	HATCH	165
560881-0000	PIPE	263, 265, 267, 269
560922-0100	VALVE PANEL	169
560923-0000	PIPE	177
560927-0000	PIPE	75, 77, 79
560928-0000	PIPE	131, 133
560929-0000	TOUCH GUARD	75, 77, 79
560930-0100	CONTAINER	11, 13, 15
560931-0000	BRACKET	43, 69, 175
560932-0000	INTERMEDIATE PART	43
560933-0000	ELECTRODE	43
560934-0000	ELECTRODE	43
561256-0300	PEROXIDE PIPE	149, 151
561257-0200	PEROXIDE TANK	169
561258-0200	DRAINING PEROXIDE	169
561259-0100	CONNECTION HOUSING	169
561268-0200	CONNECTION ASSEMBLY	11, 13, 15
561391-0000	SPRING	379
561392-0000	SPRING	379
561393-0000	SPRING	379
561394-0000	SPRING	379
561416-0000	BRACKET	345, 349
561420-0000	OVERFLOW TUBE	71
561421-0000	OVERFLOW TUBE	71
561422-0000	OVERFLOW TUBE	71
561423-0000	BRACKET	161
561424-0000	PIPE	253
561426-0000	LACE	687
561427-0000	CONTAINER	183
561543-0000	SUPPORT ROLLER	405, 407
561544-0000	SUPPORT ROLLER	409
561545-0000	SHAFT	405
561547-0000	SHAFT	405, 407, 409, 411
561549-0000	TANK	181
561571-0000	CABLE TRENCH	137
561583-0000	U-TUBE	107

Part No	Description	Page No
561590-0000	CENTRAL LUBRIC. DIAGRAM	281
561591-0000	PIPE	253
561592-0000	PIPE	253
561595-0000	SIGN MULTISTEP 35x35mm	245
562136-0000	CATCH	379
562137-0000	CATCH	379
562140-0000	CAP	323
562746-0000	ARM	323
562747-0000	ARM	323
562748-0000	BRACKET	323
562749-0000	BRACKET	323
562971-0000	CANTILEVER	429
563061-0000	REAMED BOLT	323
563212-0000	SHAFT	313
563285-0000	BLIND PLUG	171
563728-0000	CAM LEFT	307
563729-0000	CAM RIGHT	307
564519-0000	SIDE PLATE	221
564520-0000	SIDE PLATE	221
564521-0000	SIDE PLATE	161
564522-0000	SIDE PLATE	161
564523-0000	RIM	161, 221
564524-0000	CAM LEFT	307
564525-0000	CAM RIGHT	307
564526-0000	CAM LEFT	307
564527-0000	CAM RIGHT	307
564528-0000	CAM LEFT	307
564529-0000	CAM RIGHT	307
564533-0001	DOLLY	393, 395, 397, 399, 425, 427
564533-0002	DOLLY	393, 397, 425
564533-0005	DOLLY	393, 397, 425
564533-0007	DOLLY	393, 397, 425
564600-0000	PIPE	131, 133
564621-0000	CAM LEFT	307
564622-0000	CAM RIGHT	307
564623-0000	CAM LEFT	307
564624-0000	CAM RIGHT	307
564625-0000	CAM LEFT	309
564626-0000	CAM RIGHT	309
564933-0000	CAM LEFT	307
564934-0000	CAM RIGHT	307
565104-0000	SWEEP	185
565188-0000	FOLDING FLAP CAM	347
565189-0000	FOLDING FLAP CAM	351
565250-0000	WASHER	183
565251-0000	VALVE	183
565259-0000	VOLUME CAM	409
565322-0000	INTERMEDIARY SHAFT	543, 545
565323-0000	OUTPUT SHAFT, LONG	543, 545
565324-0000	LID	543, 545
565325-0000	INPUT SHAFT	543, 545
565326-0000	LID	543, 545
565327-0000	RING NUT	543, 545
565328-0000	SCREW RING	543, 545
565329-0000	SPACER	543, 545
565330-0000	SPACER	543, 545
565331-0000	BEARING HOLDER	543, 545
565332-0000	BEARING HOLDER	543, 545
565333-0000	BEARING HOLDER	543, 545
565334-0000	BEARING HOLDER	543, 545
565335-0000	BEARING HOLDER	543, 545
565336-0000	OUTPUT SHAFT SHORT	543, 545
565338-0000	GEAR HOUSING	543, 545
565339-0000	OIL PIPE	543, 545
565340-0000	OIL LEVEL TUBE	543, 545
565668-0000	MAIN CAM	307
565961-0000	KICKPLATE,RIGHT	617
565967-0000	ARM	559, 561, 563, 567, 569, 571
566016-0000	WASHER	549
566171-0000	CUP SPRING	179
566192-0000	METERING DEVICE	181
566194-0000	WEIGHT	179
566195-0000	LID	179
566196-0100	LID WITH WEIGHT	175, 181
566228-0000	BRACKET	97
566229-0000	BRACKET	107
566311-0000	PROFILE	591, 597
566312-0000	BRACKET	591, 597
566313-0000	HOLDER	489, 493
566314-0000	HOLDER	599
566315-0000	HOLDER	591, 597
566316-0000	HOLDER	489, 493
566317-0000	HOLDER	489, 493
566416-0000	COVERING PLATE	531
566526-0000	CLUTCH PIECE	413, 415, 417, 419, 421, 423
566527-0000	CLUTCH PIECE	413, 415, 417, 419, 421, 423

Part No	Description	Page No
566533-0000	BRACKET	591, 597
566645-0000	SIDE GUARD	227
566646-0000	SIDE GUARD	227
566683-0100	AIR COOLER	221
566685-0000	BRACKET	223
566686-0000	CONDENSATE TRAY	223
566687-0000	NOZZLE	223
566775-0000	CARRIER	447
567023-0000	TOUCH GUARD	129
567033-0000	ARM	313
567070-0002	ELECTRODE	175
567070-0006	ELECTRODE	175
567070-0007	ELECTRODE	175
567070-0011	ELECTRODE	175
567070-0012	ELECTRODE	69
567070-0013	ELECTRODE	65
567070-0018	ELECTRODE	175
567266-0000	TUBE	253
567267-0000	TUBE	253
567345-0000	BEARING COVER	449
567347-0000	SHAFT	449
567348-0000	SHAFT	449
567349-0000	SPACER	449
567350-0000	WEDGE	449
567373-0000	GEAR HOUSING	449
567702-0000	CURVE	313
567703-0000	LINK	313
567734-0000	AIR NOZZLE	59
567735-0000	HEAD PLATE	59
567736-0000	EDGE ROLLER	33, 35, 37
567737-0000	GUIDE ROLLER	33, 35, 37
567738-0000	GUIDE ROLLER	33, 35, 37
567743-0000	SEAL	127, 141
567744-0000	FORMING RING	27
567746-0001	ROLLER, (STD.SIZE)	27
567747-0000	ROLL	27
567748-0000	FORK	27
568070-0000	GEAR HOUSING	547
568071-0000	BEARING SEAT	547
568072-0000	BEARING SEAT	547
568073-0000	SHAFT	547
568074-0000	SHAFT	547
568151-0000	GEAR HOUSING	465
568152-0000	GEAR HOUSING	465
568153-0000	BEARING SEAT	465
568154-0000	BEARING SEAT	465
568155-0000	BEARING COVER	465
568156-0000	FLANGE	465
568157-0000	SHAFT	465
568158-0000	SHAFT	465
568159-0000	SHAFT	465
568160-0000	FASTENING PLATE	465
568161-0000	WASHER	465
568162-0000	WEDGE	465
568166-0000	REAMED BOLT	641
568167-0000	CATCH	647
568286-0000	SLEEVE	313
568287-0000	RING	313
568530-0000	COIL	431
568531-0000	CORE	431
568532-0000	NIPPLE	431
568802-0000	CONTAINER	65
568803-0000	CONTAINER	67
568804-0000	PIPE	61
568805-0000	PIPE	61
568806-0000	LID	67
568807-0000	PIPE	61
568808-0000	PIPE	61
568809-0000	PIPE	61
568810-0000	PIPE	61
568827-0000	LID	65
568828-0000	FLOAT GUARD	65
568983-0000	INDUCTOR	413, 415, 417, 419, 421, 423, 425
569003-0100	SEPARATION INSERT	61
569016-0000	GASKET	69
569049-0000	MAIN CAM	307
569050-0000	COUNTER CAM	307
569051-0000	CAM LEFT	307
569052-0000	CAM RIGHT	307
569053-0000	BEARING HOUSING	413, 415, 417, 419, 421, 423
569055-0000	VOLUME BULGE	361, 365
569056-0000	VOLUME SHIM	361, 365, 425
569057-0000	BEARING HOUSING	393, 397
569058-0000	SUPPORT ROLLER	409
569059-0000	CUTTING JAW	393, 397
569060-0000	FOLDING FLAP	335, 339

Part No	Description	Page No
569061-0000	FOLDING FLAP	335, 339
569062-0000	CARRIER RULER	335
569063-0000	CARRIER RULER	339
569085-0000	SHAFT	27
569086-0000	ROLL	33, 35, 37
569087-0000	ROLL	33, 35, 37
569088-0000	ROLL	33, 35, 37
569089-0000	ROLL	33, 35, 37
569090-0000	FORMING RING	33, 35, 37
569091-0000	SHAFT	17
569092-0000	ROLL	17
569093-0000	ROLL	17
569094-0000	ROLLER	17
569095-0000	ROLLER	17
569096-0000	BOW CLAMP	17
569097-0000	FILLER TUBE	47
569098-0000	PRESSURE FLANGE	55
569099-0000	HOLDER	27
569100-0000	SHAFT	27
569104-0000	DISTRIBUTOR WING	59, 141
569105-0000	CUP	23
569106-0000	GASKET	23
569111-0000	FLAP	551
569112-0000	BLOCKING PIECE	551
569114-0000	PLATE	555
569115-0000	SHEET	555
569116-0000	SHEET	555
569117-0000	FLAP	561, 569
569118-0000	FLAP	561, 569
569119-0000	BOTTOM	561, 569
569120-0000	FOLDING BAR	581
569121-0000	FOLDING BAR	581
569122-0000	FOLDING ARM	579, 581, 583, 585
569123-0000	FOLDING ARM	579, 581, 583, 585
569124-0000	AIR NOZZLE	475, 483
569125-0000	AIR NOZZLE	475, 483
569126-0000	AIR NOZZLE	475, 483
569127-0000	SLIDE RAIL	539
569128-0000	HEAD PLATE	539
569129-0000	DISTRIBUTOR	593
569130-0000	LEAD RAIL	601
569131-0000	BRACKET	515
569132-0000	HEAD PLATE	513
569133-0000	BRACKET	513
569134-0000	HEAD PLATE	519
569135-0000	BRACKET	519
569136-0000	BRACKET	519
569163-0000	ARM	213
569651-0000	CREASE FORMER	661
569652-0002	SPACER	661
569652-0003	SPACER	661
569917-0000	LOCKING CIRCLIP	693
569918-0000	COVER PLATE L.	695
569919-0000	COVER PLATE R.	695
569920-0000	SHAFT	695
569921-0000	BEARING HOUSE L.	695
569922-0000	BEARING HOUSE R.	695
569923-0000	CUTTING RAIL	695
569924-0000	STOPPER	703
569944-0000	SLEEVE	635, 637
569945-0000	SLEEVE	635, 637
570066-0000	SHAFT	311, 323
570067-0000	RING	311, 323
570125-0000	SLEEVE	311, 323
570126-0000	SLEEVE	311, 323
570545-0001	FERROTRONEINSERT	431
571086-0000	BRACKET	61
571087-0000	RETAINING RING	67
571088-0000	DRAINING	65
571277-0000	PUMP HOUSING	177
571296-0000	SPRING BRACKET	381
571297-0000	LACE	381, 383, 385, 387
571298-0000	LACE	381, 383, 385
571418-0000	HOOD	643, 645
571419-0000	HOOD	643, 645
571421-0000	COVER	643, 645
571423-0000	GLASS PANE	643, 645
571424-0000	HINGE	643, 645
571425-0000	BRACKET	643, 645
571428-0000	TOUCH GUARD	737
571486-0000	VOLUME FLAP	363, 367
571654-0000	NOZZLE	249
571942-0000	SUPPORT ROLLER	405
571945-0000	FASTENING BRACKET	27
572243-0000	PROTECTION	673
572246-0000	BRACKET	643, 645

Part No	Description	Page No
573058-0000	AIR NOZZLE	59
573277-0000	PIPE	239
573278-0000	PIPE	239
573353-0000	SPROCKET	497, 507
573428-0000	BENDING ROLLER	119
573429-0000	MOTOR PLATE	119
573430-0000	DRYING HOUSE	115
573445-0000	FILTER HOUSING	173
573446-0000	STRAIGHT CONNECTION	173
573485-0000	BRACKET	581
573486-0000	STEERING	539, 581
573487-0000	STEERING	539, 581
573488-0000	BRACKET	539
573489-0000	BRACKET	539, 541
573504-0000	ROLLER	127
573507-0000	SIDE GUARD	643, 645
573508-0000	MOUNTING BAR	643, 645
573583-0000	SCREW	393, 397
573612-0100	DOOR	11, 13, 15
573613-0000	DOOR	49
573614-0000	DOOR	51
573615-0000	COVER SLIP	49, 51
573616-0000	COVER SLIP	49
573617-0000	COVER SLIP	51
573619-0000	PILLAR	125
573624-0000	CORE	431
573625-0000	INDUCTOR	413, 415, 417, 419, 421, 423, 425, 427
573663-0100	SUPPORT ROLLER	717, 719
573664-0000	CANTILEVER	723
573665-0000	FASTENING PLATE	723
573666-0000	SUPPORT ROLLER	723
573667-0000	SUPPORT ROLLER	723
573668-0000	SUPPORT ROLLER	723
573827-0001	PROTECTION	657, 659, 661, 663
573827-0002	PROTECTION	651, 653, 655, 657
573827-0003	PROTECTION	655
573828-0000	COVERING PLATE	687
573841-0000	STEERING RAIL	121
573976-0000	SUPPORT ROLLER	411
573979-0000	CARRIER RULER	335
573980-0000	CARRIER RULER	339
573985-0000	BEARING HOUSING	393, 397
573988-0000	GASKET	393, 397
573994-0000	CURVE	315
574006-0000	PRESSURE FLANGE	55
574013-0000	FILLING PIPE LOWER	53
574026-0000	HUB	563, 565
574027-0000	HUB	571, 573
574028-0000	ARM	563, 565, 571, 573
574029-0000	FLAP	563, 565, 571
574030-0000	FLAP	563, 565, 571, 573
574031-0000	BOTTOM	563, 571
574032-0000	BLOWING NOZZLE B	473, 475, 481, 483
574033-0000	BLOWING NOZZLE TH	473, 475, 481, 483
574034-0000	BLOWING NOZZLE TV	473, 475, 481, 483
574035-0000	FLAP	551
574036-0000	BLOCKING PIECE	551
574037-0000	SPACER	757
574038-0000	SUPPORT ROLLER	723
574039-0000	RAIL	553, 555
574040-0000	SHEET	555, 557
574041-0000	SHEET	555, 557
574042-0000	PLATE	553, 555, 557
574043-0000	CREASE FORMER	657, 661
574044-0000	FASTENING BRACKET	657, 661
574045-0000	FOLDING BAR	583, 587
574046-0000	FOLDING BAR	583, 587
574047-0000	LEAD RAIL	579, 583, 585
574048-0000	BRACKET	583, 585
574049-0000	COUNTER PLATE	583, 585
574050-0000	CURVE	577, 585
574051-0000	RETAINING RING	635, 637
574052-0000	STOPPER	703
574053-0000	SLIDE RAIL	539
574054-0000	HEAD PLATE	539, 541
574055-0000	ARCH	601
574056-0000	DISTRIBUTOR	593, 597
574057-0000	LEAD RAIL	601
574058-0000	HOLDER	593, 597
574059-0000	BEARING HOUSING	695
574060-0000	BEARING HOUSING	695
574061-0000	CUTTING RAIL	695
574062-0000	COVERING PLATE	695
574063-0000	COVERING PLATE	695
574064-0000	SHAFT	695
574065-0000	SIDE PLATE	497

Part No	Description	Page No
574066-0000	SIDE PLATE	497
574067-0000	TIMING BELT SHAFT	497
574068-0000	TIMING BELT SHAFT	497
574069-0000	AXLE PIN	497, 507
574070-0000	TIMING BELT SHAFT	497, 507
574071-0000	PROFILE	497
574072-0000	PROFILE	497
574073-0000	BRACKET	497
574074-0000	ROLLER BRACKET	497
574075-0000	ROLL	497, 509
574076-0000	BRACKET	497
574077-0000	HEAD PLATE	519
574078-0000	BRACKET	519
574079-0000	BRACKET	519
574080-0000	BRACKET	515
574081-0000	SLEEVE	447
574082-0000	GEAR WHEEL	497, 507
574083-0000	WASHER	497, 507
574084-0000	SCREW	497, 507
574085-0000	TIMING BELT PULLEY	497, 507
574086-0000	TIMING BELT PULLEY	497, 507, 509
574087-0000	WASHER	497, 507, 509
574088-0000	SPROCKET	447
574089-0000	CARRIER	505
574090-0000	CARRIER	503
574091-0000	CARRIER	503
574092-0000	CARRIER	505
574093-0000	PROFILE	455
574094-0000	HEAD PLATE	497, 507
574095-0000	PROTECTIVE COVER	533, 535
574096-0000	PROTECTION PLATE	533, 535
574097-0000	STEERING	539, 583, 585, 587
574098-0000	STEERING	539, 583, 585, 587
574099-0000	STEERING	593
574112-0000	PROTECTION PLATE	533, 535
574113-0000	PROTECTION PLATE	533, 535
574119-0000	HEAD PLATE	497
574120-0000	HEAD PLATE	497
574121-0000	BRACKET	497, 507
574122-0000	BRACKET	497, 507
574123-0000	BRACKET	497, 507
574124-0000	WASTE CHUTE	589
574125-0000	BRACKET	583
574126-0000	HEAD PLATE	519
574130-0000	DAMPER	411
574131-0000	LEAD PLATE	595
574132-0000	SIDE PLATE	507
574133-0000	SIDE PLATE	507
574134-0000	BEARING CONSOLE	509
574135-0000	BEARING CONSOLE	509
574136-0000	TIMING BELT PULLEY	509
574137-0000	TIMING BELT PULLEY	509
574138-0000	TIMING BELT PULLEY	509
574139-0000	BEARING HOUSING	507
574140-0000	SHAFT	507
574141-0000	SHAFT	509
574142-0000	SHAFT	509
574143-0000	AXLE SUPPORT	509
574144-0000	SHAFT	509
574145-0000	HEAD PLATE	507
574146-0000	HEAD PLATE	507
574147-0000	HOLDER	507
574148-0000	SHAFT	507
574149-0000	ARM	509
574150-0000	SLEEVE	507
574151-0000	BRACKET	509
574152-0000	BRACKET	509
574153-0000	PLATE	509
574154-0000	SPACER	509
574155-0000	PLATE	507
574156-0000	SUPPORT RAIL	509
574157-0000	PROFILE	509
574158-0000	PROFILE	509
574159-0000	TIMING BELT PULLEY	507
574160-0000	SPACER	509
574161-0000	SHAFT	509
574164-0000	PROTECTION PLATE	533, 535
574165-0000	PROTECTIVE COVER	533, 535
574166-0000	DROP WING	515
574167-0000	LIMIT PLATE	321
574214-0000	SPRING	47
574323-0100	CONVEYING EQUIPMENT	489, 493
574332-0100	BELT	497, 507
574600-0000	PNEUMATIC DIAGRAM	281
574601-0100	VALVE PANEL	149, 151
574602-0000	VALVE PANEL UPPER	245

Part No	Description	Page No
574603-0000	BRACKET	245
574604-0000	BRACKET	245
574605-0000	CONNECTION BOX	247
574606-0000	SHEET	247
574651-0000	SHEET	699
574652-0000	PROTECTION	213
574653-0000	PROTECTION	111
574654-0000	PIPE	97
574658-0000	LOGOTYPE TP	707
574676-0000	AIR NOZZLE	473, 481
574677-0000	AIR NOZZLE	473, 481
574678-0000	SLIDE RAIL	539
574679-0000	HEAD PLATE	539
574680-0000	FLAP	551
574681-0000	SHEET	553
574682-0000	SHEET	553
574683-0000	BOTTOM	559, 567
574684-0000	FLAP	559, 567
575002-0000	PLUNGER	635, 637
575003-0000	PLUNGER	635, 637
575392-0100	VALVE PANEL LOWER	149, 151
575448-0000	VALVE PANEL	281
575464-0000	CABLE DUCT	259
575474-0100	COMPRESSOR	11, 13, 15
575475-0100	SCRUBBER	61
575639-0000	VOLUME FLAP	363, 367
575640-0000	VOLUME BULGE	363, 367
575641-0000	VOLUME SHIM	363, 367, 425
575782-0000	MAIN CAM	307
575783-0000	COUNTER CAM	307
575786-0000	PAPER SUPPORT	653, 655, 657, 659, 661, 663
575791-0000	JUNCTION BLOCK	261
575792-0000	ANGLE STRUT	261
575795-0000	WATER PIPE	253
575797-0100	FLOWMETER GROUP	149, 151
576217-0000	PAPER SUPPORT	655
576218-0000	PAPER SUPPORT	653
576220-0000	PAPER SUPPORT	673
576245-0100	BELT RIGHT	497, 509
576246-0100	BELT LEFT	497, 509
576247-0100	PROTECTION	489, 493
576251-0100	CONVEYOR	489, 493
576252-0100	INFEED SECTION	507
576410-0000	BRACKET	643, 645
576730-0000	WATER DIAGRAM	281
576738-0000	TOUCH GUARD	129
576739-0200	(PAPER)REEL TROLLEY	631, 633
576742-0000	OIL TROUGH	313
576833-0000	PLATFORM	215
576835-0000	PLATFORM COVER	215
576836-0000	CAM LEFT	307
576837-0000	CAM RIGHT	307
577344-0000	CONNECTION PLATE	433
577459-0000	FASTENING PLATE	431
577460-0000	FASTENING PLATE	431
579306-0000	ROLLER	17
579307-0000	ROLL	17
579308-0000	ROLLER	17
579309-0000	ROLL	17
579310-0001	ROLLER, (STD.SIZE)	27
579311-0000	COUNTER ROLLER	27
579316-0000	FILLER TUBE	47
579318-0000	SEAL	127, 141
579319-0000	ROLL	127
579641-0000	MAIN CAM	307
579642-0000	COUNTER CAM	307
579643-0000	CAM LEFT	307
579644-0000	CAM RIGHT	307
579645-0000	CURVE	411
579772-0000	CUTTING JAW	393, 397
579773-0000	BEARING HOUSING	413, 415, 417, 419, 421, 423
579951-0000	BOW CLAMP	23
580006-0000	PROTECTION PLATE	533, 535
580007-0000	PROTECTION PLATE	533, 535
580366-0000	ROLL	509
580755-0000	CONTACT PIN	433
580828-0001	CORE	431
580828-0002	CORE	431
580829-0000	CURRENT RAIL	431
580833-0001	FERROTRONE INSERT	431
580833-0002	FERROTRONE INSERT	431
580958-0000	AXLE SUPPORT	127
580959-0000	AXLE SUPPORT	127
580996-0000	ROLLER BRACKET	509
581176-0001	SHRINKABLE HOSE	433
583446-0000	SLIDE RAIL	539

Part No	Description	Page No
583447-0000	SHEET	553
583448-0000	SIDE PIPE	475, 483
583449-0000	BOTTOM	565, 573
583450-0000	HEAD PLATE	539
583451-0000	FLAP	551
583452-0000	LEAD RAIL	601
583453-0000	FOLDING BAR	579, 587
583454-0000	SUPPORT	565, 573
583455-0000	SHEET	553
583456-0000	BRACKET	579
583457-0000	COUNTER PLATE	579
583458-0000	FOLDING BAR	579, 587
583459-0000	HEAD PLATE	515
583460-0000	HEAD PLATE	515
583628-0000	ARCH	601
583629-0000	BRACKET	601, 603
583630-0000	DISTRIBUTOR	593, 597
583631-0000	BOTTOM PANEL	565, 573
583778-0000	WIRE	433
583821-0000	MAIN CAM	307
583822-0000	COUNTER CAM	307
583828-0000	FOLDING FLAP CAM	345
583829-0000	FOLDING FLAP CAM	349
589925-0000	VOLUME BULGE	361, 365
589926-0000	VOLUME SHIM	361, 365, 425
591078-0000	LACE	387
591080-0000	SPRING BRACKET	387
591084-0000	GUIDE LUG	499
591085-0000	SPACER	579, 587
591981-0000	CATCH	393, 397
591982-0000	CATCH	393, 397
592558-0000	TUBE	209
592586-0000	HOLDER	737
593270-0000	CATCH	383, 385, 387
593271-0000	CATCH	383, 385, 387
593634-0100	DIAGRAM	609
593749-0100	YOKE	331, 333
593750-0100	ARM	331, 333
594588-0000	HOOD	197, 199
594589-0000	CLEANING TROUGH	457
594613-0100	CLEANING HEAD	275
594614-0100	CLEANING HEAD	249
594616-0100	VALVE	107
594617-0100	DOOR	11, 13, 15
594618-0100	CHANGE-OVER VALVE	97
594619-0100	CHANGE-OVER VALVE	61
594620-0100	BRAKE ARM	747
594621-0100	PRESSURE ARM	461
594632-0000	SIDE PLATE	487
594644-0000	LEAD RAIL	603
595044-0000	MACHINE BODY	603
595046-0000	CARRIER	603
595048-0000	ARCH	603
595052-0000	ARCH	603
595053-0000	BRACKET	603
595054-0000	PROTECTION	197, 199
595055-0000	BRACKET	585, 587
595056-0000	BRACKET	603
595057-0000	BRACKET	585
595060-0000	LEAD RAIL	603
595061-0000	HOLDER	603
595066-0000	COVERING PLATE	457
595068-0000	STEERING	597
595086-0100	MACHINE BODY	437, 439
595087-0100	STATION	437, 439
595088-0100	FOLDING PART	437, 439
595089-0100	INFEEDER	437, 439
595090-0100	DISCHARGER	437, 439
597564-0000	PLATE	591, 597
597574-0000	SPRING BRACKET	383
598878-0000	Machine Sign 2 ADR. EEA	609
6161-0000	ROLL	59
6278-0000	WASHER	41, 127, 441, 457, 599, 603
67379-0101	IH TRANSF.1.PRIM	
5	357, 359	
67379-0102	IH TRANSF.1.PRIM	
4	357, 359	
68917-0100	ANGLE INDICATOR	283
72947-0000	HOOK SPANNER	611
7309-0000	HANDLE	25, 163, 165, 273, 747
74387-0000	HOOK SPANNER	611
751009-0000	INSULATION	113
751316-0000	ELBOW PIPE	177
752156-0000	FLANGE BUSHING	17
752176-0000	PROTECTIVE CASING	75, 77, 79

Part No	Description	Page No
752578-0001	ROLLER, (STD.SIZE)	27
752583-0000	ROLLER	17
752584-0000	ROLLER	17
752585-0000	ROLL	17
752586-0000	ROLL	17
752587-0000	LINK	53
752590-0000	THROTTLE	55
752711-0000	PIPE	75, 77, 79
752718-0000	ROLL	33, 35, 37
752719-0000	ROLL	33, 35, 37
752720-0000	ROLL	33, 35, 37
752721-0000	ROLL	33, 35, 37
752740-0000	ROLLER	39
752771-0000	TOUCH GUARD	129
752860-0000	PRESSURE FLANGE	53
76138-0000	LOCKING LOOP	611
776422-0101	BRASS WIRESTE	611
777200-0101	PIPE WRENCEL	611
777510-0101	SCISSORS	611
779130-0102	PROTECTIVE GOGGLES	625
795581-0000	PLATE	119
90002-0004	BLANK-OFF PLUG 22,5	233, 259, 681, 683
90002-0009	BLANK-OFF PLUG 18.6	137, 233, 247, 259, 681, 683, 725
90002-0010	BLANK-OFF PLUG 37	161, 259
90002-0012	BLANK-OFF PLUG 28,3	161, 685
90002-0013	BLANK-OFF PLUG 15,2	137, 223, 259, 685, 725
90005-0005	WASHER,Bolt head 13,7x 20,6, H= 2,1, G	171
90005-0007	WASHER,Bolt head 8,7x 14, H= 1, M8	389, 391
90005-0009	WASHER,Bolt head 10,4x 15,9, H= 2,1, G	171
90005-0060	WASHER,Plain round 6,4x 18, H= 1,5, M6	755
90005-0082	WASHER,Plain Round 4,3x 12, H= 1, M4	747, 751, 753, 757
90007-0100	FUSE H.MANN 2P 60A 2	217
90007-0101	FUSE H.MANN 2P 100A 2	217
90012-0059	GLAND	137
90012-0061	GLAND	113, 233, 259
90012-0062	GLAND	113
90012-0063	Cable Gland PR 15,2	61, 137, 167, 171, 209, 223, 233, 239, 259
90012-0064	GLAND	137
90012-0071	GLAND FITTING	443, 459
90012-0072	GLAND FITTING **	441, 457
90012-0073	GLAND FITTING	447
90012-0137	CABLE GLAND SCREENED PG11 SHVE-120111	119, 681, 683
90015-0010	BUSHING	227
90015-0011	BUSHING	227
90015-0020	RUBBER BUSHING 5-7	441, 457
90015-0021	BUSHING	227
90017-0009	HANDLE M12	301
90020-0027	SLEEVE	87
90020-0028	SLEEVE	83, 85
90028-0001	CONE 5/32"	471, 489, 491, 493, 495, 549, 599, 603
90028-0002	CONE	605
90028-0020	CONE DT13700S-300 Di=2,5mm	167, 311, 313, 323, 341, 343, 345, 349, 353, 355, 357, 359, 361, 363, 365, 367, 405, 489, 491, 493, 495, 577, 585, 591, 597, 599, 603
90028-0021	CONE DIN3862 Di=4mm	167, 341, 343, 345, 349, 353, 355, 357, 359, 405, 489, 491, 493, 495, 591, 597, 599, 603
90028-0022	CONE	167, 311, 441, 457, 577, 585
90028-0024	CONE	167, 311
90028-0025	CONE DT4.138811.2D	167, 311, 491, 495, 577, 585, 591, 597, 599, 603
90030-0030	BULKHEAD CONNECTOR SV 12-L/SY	219, 229, 263, 265, 267, 269
90030-0051	STRIGHT PIPECONN.GE6-LR/SY ALT.GA6-LR/RO	107, 125
90030-0058	T-PIPE CONNECTION T-12	123, 727
90030-0066	BULKHEAD CONNECTOR SV 6-L/SY	227
90030-0067	BULKHEAD CONNECTOR SV 8-L/SY	227
90030-0070	ELBOW CONNECTION WA 10-R1/4"	75, 77, 79
90030-0076	T-PIPE CONNECTION T-6	225
90030-0088	PIPE CONNECTION	75, 77, 79
90030-0091	PIPE CONNECTION G-8	253
90030-0092	PIPE CONNECTION R 1/4" Stainless	57
90030-0096	ELBOW CONNECTION W-12	75, 77, 79, 131, 133
90030-0098	ACCESSORIES,FERRULE 8	403
90030-0101	TAPER	605
90030-0106	PIPE CONNECTION G-12	253
90030-0107	PIPE CONNECTION	471
90030-0109	PIPE CONNECTION	69, 75, 77, 79
90030-0115	ELBOW CONNECTION WA 12-R3/8	61, 69, 249
90030-0119	PIPE CONNECTION	75, 77, 79
90030-0120	L-PIPE CONNECTION,EVL,INT.T-8	207, 209
90030-0121	ELBOW CONNECTION EVW,INT 10	205, 207, 209
90030-0137	ELBOW CONNECTION WA 6-R1/8"	123
90030-0146	ELBOW CONNECTION EVW,EXT 6-G1/8"	207, 209
90030-0155	CONNECTION	237
90030-0157	CONNECTION	205, 207, 209, 211, 237
90030-0159	BULKHEAD CONNECTOR SV 15-L/SY	227, 253
90030-0162	CONNECTION GE6LLM 10x1	323
90030-0172	NUT M8 "REPL.BY 342703-208"	403

Part No	Description	Page No
90030-0178	STRIGHT NIPPLE EVGE 10-LR	205
90030-0179	BULKHEAD CONNECTOR SV 22-L/SY	227
90030-0180	STRAIGHT CONNECTION GE 12-1/2"-14 NPTF	75, 77, 79
90030-0183	NIPPLE RA 1/2"x1/4"	211
90030-0184	STRAIGHT CONNECTION GA-6-G1/8"	123, 171
90030-0187	STRAIGHT CONNECTION GA-12-G3/8"	57, 61, 75, 77, 79, 107, 249
90030-0201	PIPE CONNECTION	395, 399
90030-0207	NIPPLE	97
90030-0221	ELBOW BULKHEAD CONNECTOR WSV 12	219
90030-0222	ELBOW PIPE JOINT	471
90030-0253	PIPE COUPLING	253
90030-0265	HOLLOW SCREW	429
90030-0266	HOLLOW SCREW	429
90030-0594	Reducing adapter	209
90032-0034	JUNCTION BLOCK	549
90032-0035	JUNCTION BLOCK	471
90032-0038	BLOCK 2ways DT4.310792.1D	167, 313, 345, 349, 405, 577, 585
90032-0039	DISTR.BLOCK	311, 323, 341, 343, 353, 355, 357, 359, 489, 491, 493, 495, 599, 603
90032-0040	BLOCK 6ways DT4.317796.1D	489, 491, 493, 495, 591, 597
90032-0043	JUNCTION BLOCK	167, 311
90032-0044	JUNCTION BLOCK	167, 441, 457, 577, 585
90032-0046	JUNCTION BLOCK	167
90036-0038	BULB 24V 25W E27	215, 287
90042-0172	SOLENOID VALVE 24VDC	239
90042-0187	SOLENOID VALVE	67
90042-0203	SOLENOID VALVE	43
90042-0206	SOLENOID VALVE	171
90042-0215	PNEUMATICS,VALVES	243
90042-0398	CONTACT	209
90042-0467	COIL	287
90042-0481	CONNECTION TABLE	239
90042-0487	COIL	171
90042-0519	VALVES,ACCESSORIES,BLANKING PLATE	243
90042-0520	PNEUMATICS,VALVES,PLATES	243
90042-0522	PNEUMATICS,VALVES,PLATES	245
90042-0527	VALVES,ACCESSORIES,BLANKING KIT F.PILOT	243
90042-0528	VALVES,ACCESSORIES,BLANKING KIT	243
90042-0532	PNEUMATICS,VALVES,PLATES	243
90042-0535	VALVES,ACCESSORIES,TERMINAL MODULE	239, 245
90042-0536	CONTACT FOR SOL.VALVE	239
90042-0538	PNEUMATICS,VALVES	243
90042-0539	PNEUMATICS,VALVES	243
90042-0550	VALVES,ACCESSORIES,PROTECTION PLUG	239, 245
90043-0004	PRESSURE GAUGE	171
90043-0006	PRESSURE GAUGE	239
90043-0021	PRESSURE GAUGE Wiegand 0-1 BAR 1/8"	245
90043-0034	PRESSURE GAUGE	125, 727
90043-0043	PRESSURE GAUGE Wiegand 0-10 BAR 1/8"	239, 243
90043-0056	PRESSURE GAUGE	243
90043-0062	MANOMETER	207, 209
90043-0075	PRESSURE GAUGE	211
90043-0095	PRESSURE GAUGE	65
90043-0302	SCREW	125, 727
90044-0084	LIMITSW.14CE1-4	69, 111
90044-0094	LIMIT SWITCH	187, 189, 213, 313
90044-0095	PROX.SWITCH IFM 3010BPKG	229
90044-0099	PROXIMITY SWITCH IG REPBY 0090044-0126	97, 135
90044-0103	KEY SAFETY SWITCH AZ 15 ZVR	115, 125, 643, 645
90044-0104	PROX.SWITCH IFM IN 3002	75, 77, 79, 117, 119, 121, 447, 497, 509, 511, 541, 577, 585, 681, 683, 743, 757
90044-0122	PROX.SWITCH 922 AA4XM-A9P-050-LZ-876	681, 683
90044-0126	PROX.SWITCH 922AA3XM-A9P-060-LZ876	107
90044-0139	KEY SAFETY SWITCH AZ-16-02 ZVRK-2254	643, 645
90044-0310	KEY FOR SAFETY SWITCH -103	145, 713
90045-0049	MOTOR	445
90045-0079	MOTOR	205
90045-0087	PUMPMOTOR ABB 0,55KW	177
90046-0015	DRIVE BRAKE MOTOR 50HZ	305
90046-0016	BRAKE MOTOR	305
90046-0304	STATOR	327
90046-0308	STATOR	327
90046-0312	RECTIFIER	327
90046-0313	COIL	327
90046-0314	BRAKE DISC	327
90048-0033	GEAR PUMP	471
90048-0034	OIL PUMP	167
90048-0420	FILTER	471
90048-0450	SPARE PARTS KIT	287
90050-0008	BOTTLE	665, 677
90050-0011	BOTTLE	271
90051-0025	HANDLES,KNOB,ADJUST.,THREAD.TAP,M8 40X30	589
90051-0053	HANDLES,KNOB,INTERNAL THREAD,M6 24X17	97
90051-0065	HANDLE	73
90051-0077	HANDLE	665, 677
90051-0089	SHIFTER HANDLE	671

Part No	Description	Page No
90055-0033	HOSE NIPPLE,EXT. THREADED G1/2"-13	227
90055-0071	HOSE NIPPLE	23
90055-0096	STRAIGHT COUPLING	243
90055-0100	Y-CONNECTION	263, 265, 267, 269
90055-0101	Y-CONNECTION	243
90055-0105	V-JUNCTION COUPLING14MM REPBY 342735-110	243
90055-0117	ELBOW PIPE JOINT "REPBY 90055-217"	243, 245
90055-0118	ELBOW PIPE JOINT	243, 245
90056-0096	WORM GEAR	145, 713
90056-0099	BEVEL GEAR	599
90056-0147	Bevel Gear	603
90061-0018	ANGLE ENCODER 8BIT GRAY	315
90062-0049	WASHER,Lock 8,5x 13,5, T= 2,3	543, 545
90064-0084	PUSH BUTTON YELLOW	247, 681, 683, 727
90064-0085	PUSH BUTTON RED	681, 683
90064-0094	PUSH BUTTON RED	247
90064-0095	PUSH BUTTON YELLOW	247
90064-0096	PUSH BUTTON GREEN	247
90064-0105	EMERGENCY STOP Button REPL.BY 90064-124	721, 727
90064-0124	SWITCH,EMERGENCY STOP	681, 683
90064-0317	TOUCHGUARD Olten Pushb.REPL.BY 90064-335	247
90064-0318	SIGNAL LAMP LED RED	287
90064-0319	SIGNAL LAMP LED YELLOW	287
90064-0320	SIGNAL LAMP LED GREEN	287
90066-0021	PUSH BUTTON BOX XAP-M1501 Telemecanique	721
90066-0029	PUSH BUTTON BOX	727
90067-0021	CARRIAGE	707
90069-0116	WORM GEAR MOTOR REPL.BY 90069-281	119, 639, 711
90069-0364	CARBON BRUSH	145, 713
90069-0365	CARBON BRUSH	145, 713
90074-0001	PIPE-CLIP,single 10	227
90074-0002	PIPE-CLIP,single 11	271, 489, 491, 493, 495
90074-0004	PIPE-CLIP,single 16	221
90074-0006	PIPE-CLIP,double 2X12	237
90074-0018	CLIP,double 2x10	577, 585
90074-0026	PIPE-CLIP,single 25-35	245
90077-0064	TERMINAL SAK2,5 PA for TS32	725
90077-0090	FEED THROUGH TERMINAL DK4 for TS32	139
90077-0102	TERMINAL BK4 KRG 4-POLE	223
90077-0115	DIODETERMINAL WTR2,5 REPL.BY 353021-0122	247
90077-0300	END PLATE AP2,5	725
90077-0302	RAIL TS/35x7,5 REPL.BY 353042-5	247
90077-0309	END PLATE	139
90087-0002	PIPE PLUG	161, 253
90087-0003	PIPE PLUG	305
90087-0015	PIPE PLUG	543, 545
90087-0019	PLUG M10x1 Stainless	167, 311, 313, 323, 345, 349, 353, 355, 357, 359, 405, 491, 495, 577, 585, 591, 597, 599, 603
90089-0003	SLEEVE	721
90089-0018	TRANSITIONAL NIPPLE	253
90090-0013	BEARINGS,BALL	413, 415, 417, 419, 421, 423, 427
90090-0014	BEARINGS,BALL	227
90090-0016	BALLS 15	429
90090-0020	BALLS 5	193, 195, 201, 203, 251, 277
90091-0029	SEAL RING	307
90091-0054	SEAL RING	449
90091-0078	SEAL	413, 415, 417, 419, 421, 423, 427
90091-0079	SEALING RINGS,TYPE "GLYD-RING" 35/27X3,1	413, 415, 417, 419, 421, 423, 427
90091-0080	SCRAPER	341, 343
90091-0130	SEAL RING	543, 545
90091-0137	SEAL RING	177
90091-0142	SEAL RING	547
90091-0143	SEAL RING	465
90091-0145	SEAL RING	449
90091-0159	GASKET	205
90091-0182	GASKET	109, 111
90091-0202	SEAL RING	465
90092-0038	METERING VALVE	471
90092-0048	OIL BRUSH	489, 491, 493, 495, 591, 597, 599, 603
90092-0052	METERING VALVE 10mm3	167, 313, 323, 341, 343, 345, 349, 353, 355, 357, 359, 489, 491, 493, 495, 577, 585, 591, 597, 599, 603
90092-0053	METERING VALVE 30mm3	167, 311, 313, 323, 341, 343, 353, 355, 357, 359, 405, 489, 491, 493, 495, 577, 585
90092-0054	METERING VALVE 50mm3	311, 345, 349, 353, 355
90092-0077	METERING VALVE	537
90092-0081	METERING VALVE	471
90094-0004	END SUPPORT EWK 2061.6 WM	725
90097-0017	FLAT PIN PLUG 6,3mm	57
90099-0001	NUT PR 15,2 BRASS	137, 259
90099-0002	NUT Pr 18,6 Brass	137, 247, 259, 757
90099-0003	NUT	137, 259, 271, 681, 683
90099-0004	NUT	227
90099-0011	NUT PR 37 BRASS	227, 259
90099-0012	NUTS,HEXAGON, M18x1,5, ISO4035	323
90099-0015	NUTS,HEXAGON,ML6M, M12x1,5, DIN936	315

Part No	Description	Page No
90099-0085	NUT	219
90099-0178	GLAND,LOCKNUT PG 16	445
90110-0095	CONTACT 3 POLE+EARTH	171, 239
90110-0128	PLUG 24-POL Harting	137, 233, 239, 245, 283, 681, 683
90111-0121	SWITCH 3 POS. EA OLTEN	247
90111-0150	SWITCH GEAR	681, 683
90113-0044	PRESSURE REGULATOR	207, 209, 211
90113-0056	REGULATOR	171
90113-0069	PRESSURE REGULATOR	243
90113-0071	PRESSURE REGULATOR	243
90113-0076	PRESSURE REGULATOR	245
90113-0114	REGULATOR	239
90113-0379	NUT	243, 245
90113-0407	Single Yoke 1/2"	239
90115-0067	ROD ENDS,RE-LUBRICATEABLE,16-M16X2RH	323
90115-0105	JOINT	305
90115-0106	JOINT	321
90115-0107	JOINT	321
90115-0111	ROD ENDS,RE-LUBRICATEABLE,22-M22X1.5LH	275
90115-0122	LINK HEAD	323
90115-0133	ROD END 12 STEEL	313
90115-0139	ROD ENDS,MAINTENANCE FREE,8-M8X1.25RH	557
90117-0008	HANDLE	67
90125-0020	PLATE	41, 735
90131-0004	HOSE COUPLING	271
90132-0021	HOSE CLIP	185, 245
90134-0002	PIPE CONNECTION	489, 491, 493, 495, 591, 597, 599, 603
90134-0003	BUSHING	471, 489, 491, 493, 495, 549, 599, 603
90134-0004	PIPE CONNECTION	227
90134-0022	BUSHING	605
90134-0030	SLEEVE 6/3	167, 311, 323, 443, 459, 463, 489, 491, 493, 495, 577, 585, 591, 597, 599, 603
90134-0031	SLEEVE E 4/2	167, 311, 313, 341, 343, 345, 349, 353, 355, 357, 359, 405
90134-0034	NIPPLE	471
90134-0038	BUSHING	167, 311, 313, 341, 343, 345, 349, 353, 355, 357, 359, 405
90134-0039	BUSHING DT4.018912.1D Stainless	167, 311, 313, 323, 341, 343, 345, 349, 353, 355, 357, 359, 405, 489, 491, 493, 495, 577, 585, 591, 597, 599, 603
90134-0040	BUSHING DT4.018914.1	341, 343, 489, 491, 493, 495, 591, 597, 599, 603
90134-0045	PLUG	599, 603
90134-0051	SPACER COLLAR	341, 343
90134-0052	PLUG DT4.076817.2D	167, 311, 323, 599, 603
90134-0054	CONNECTION DT4 M10x1,0 Stainless	167
90134-0055	BUSHING 6 DIN 3871 Stainless	167, 311, 441, 457, 491, 495, 577, 585, 591, 597, 599, 603
90134-0058	BANJO CONNECTION DT4.310.437.1	311, 313, 323, 335, 339, 341, 343, 345, 349, 357, 359, 395, 399, 413, 415, 417, 419, 421, 423, 489, 491, 493, 495, 577, 585, 591, 597, 599, 603
90134-0063	BUSHING DT4.011818.1D	361, 363, 365, 367
90135-0021	EARTHING CLAMP	139
90135-0022	EARTHING CLAMP EK 2,5N	725
90136-0002	PLUG 5/16"24	471, 549
90137-0002	ELBOW PIPE	489, 491, 493, 495, 591, 597, 599, 603
90137-0005	PIPE JOINT	471, 549
90137-0010	PIPE JOINT	471
90140-0010	T-PIPE,INTERNAL THREAD Rp1/2"	239
90140-0011	T-PIECE	239
90140-0012	ELBOW 90,INT./EXT.THREAD R1/2"	239
90140-0021	ELBOW 90,INT./EXT.THREAD R1/8"	131, 133
90141-0012	LOCK RING A 17x1,5 DIN 471	449
90141-0015	RETAINING RINGS FOR SHAFT 8	755
90141-0022	RING	109, 111
90143-0011	STRIP	145
90143-0014	STRIP	145
90143-0018	STRIP	125
90143-0020	STRIP	69, 179
90143-0029	STRIP	665, 677
90143-0035	STRIP	187, 189, 197, 199
90143-0039	STRIP	187, 189, 197, 199, 641, 643, 645
90143-0049	RUBBERSTRIP 11X21MM	163, 165, 227, 273
90143-0052	STRAP	537
90143-0054	STRIP	227
90143-0068	RUBBERSTRIP EMKA 1011-06	197, 199
90144-0004	TREBOFLON-TAPE W=13mm	69
90145-0005	WIRE	477
90148-0021	HOSE	23
90148-0032	HOSE	145
90148-0036	HOSE	207, 209
90148-0040	HOSE	403
90151-0001	BRASS PIPE DI=2,6 MM	341, 343, 345, 349
90151-0004	PIPE	605
90152-0016	HOSE	153
90152-0017	HOSE	155
90152-0029	HOSE 35/41	137
90152-0031	HOSE	113, 259
90152-0032	HOSE 5"=127mm	221
90152-0033	Spiral Conduit for PR 15,2(PG 9)	57, 137, 223, 239, 247, 259, 681, 683, 721, 729

Part No	Description	Page No
90152-0044	FLEXIBLE CONDUIT 3641-0070	443, 459
90152-0050	GLANDS,HOSE 20x13	441, 457
90152-0051	GLANDS,HOSE 25x18	443, 459
90153-0016	ADHESIVE TUBE 100G RHODORSIL CAF 3	69
90153-0017	ADHESIVE 160 mL	145
90153-0020	ADHESIVE BOSTIK 1782 125ml	113
90153-0023	ADHESIVE	179
90153-0043	ADHESIVE LOCTITE 495	461, 537, 549
90153-0050	ADHESIVE	713
90157-0002	SEALING COMPOUND	589
90157-0016	LOCKING FLUID 101, 191, 323, 341, 343, 413, 415, 417, 419, 421, 423, 429, 749	
90157-0021	LOCKING FLUID	413, 415, 417, 419, 421, 423, 605
90157-0022	SEALING COMPOUND	227, 549
90157-0034	SEALING COMPOUND LOCTITE 572 50 ML	461
90159-0061	CAPACITOR 6UF 400VAC	287
90161-0001	STRIP	461, 549
90163-0041	HOSE NIPPLE,EXT. THREAD 3/8"-12	237
90163-0050	NIPPLE 3/8"	167
90163-0056	SLEEVE 5054-6/4	621
90163-0057	NIPPLE 1/8" Brass	75, 77, 79, 219
90163-0062	SLEEVE 1/8"	75, 77, 79
90163-0063	NIPPLE 6/4	621
90163-0064	NIPPLE 3/8"	167
90163-0076	SLEEVE LP-006-0-WR021	237
90163-0133	QUICK-RELEASE COUPLING	261
90163-0134	COUPLING NIPPLE	261
90164-0003	LIGHT FIXTURE 1X20W IP67	259, 275
90165-0003	PIPE-CLIPS,FOR SINGLE PIPE,ONE SIDE 4	167, 311, 461
90165-0005	PIPE-CLIPS,FOR SINGLE PIPE,ONE SIDE 6	167, 311, 461, 729
90165-0007	PIPE-CLIPS,FOR SINGLE,ONE SIDE PIPE 8	253
90165-0010	CLIP	667, 669, 679
90165-0022	PIPE-CLIPS,FOR SINGLE PIPE,ONE SIDE 2,5	167, 313, 323
90165-0056	PIPE-CLIPS,FOR SINGLE PIPE,ONE SIDE 4mm 335, 339, 353, 355, 357, 359, 405, 447, 489, 491, 493, 495, 497, 507, 515, 591, 597, 599, 603	
90165-0057	PIPE-CLIPS,FOR SINGLE PIPE,ONE SIDE 6 429, 441, 457, 489, 491, 493, 495, 557, 577, 585, 591, 597, 651, 673	
90165-0058	PIPE-CLIPS,FOR SINGLE PIPE,ONE SIDE 2,5 345, 349, 395, 399, 405, 413, 415, 417, 419, 421, 423	
90165-0060	PIPE-CLIPS,FOR SINGLE PIPE,ONE SIDE 5 341, 343, 395, 399, 441, 457, 599, 603, 757	
90165-0086	CRAMP	215
90166-0007	HOSE PVC 10/14 Transp.	221, 237
90166-0011	HOSE 4/6 PA 11/12,Transp.	447, 471
90166-0013	HOSE 8/6	239, 243, 245, 263, 265, 267, 269, 681, 683
90166-0051	HOSE	471, 491, 495, 591, 597, 599, 603
90166-0059	HOSE PVC 12/16mm TRANSP.	443, 459, 651, 673
90166-0060	HOSE	181, 263, 265, 267, 269
90166-0068	HOSE	245
90166-0081	HOSE 6/4	239, 243, 245, 263, 265, 267, 269, 681, 683, 709
90166-0087	HOSE	443, 459, 735, 737
90166-0095	HOSE	491, 495
90166-0101	HOSE	185
90166-0108	HOSE 3/6 PA11/12 Transp. 167, 311, 443, 459, 463, 491, 495, 577, 585, 591, 597, 599, 603	
90166-0109	HOSE 2/4 PA11/12 Transp.	167, 311, 341, 343, 353, 355, 357, 359, 405
90166-0113	HOSE	167, 315
90166-0116	HOSE	713
90166-0121	HOSE	227, 253
90166-0122	HOSE 6/8 PA 11/12 Transparent 237, 253, 453, 491, 495, 515, 577, 585, 689	
90166-0123	HOSE	403
90166-0124	HOSE 4,0/6 PA 11/12 Transp. 131, 133, 171, 253, 345, 349, 429, 451, 461, 491, 495, 621, 729	
90166-0133	HOSE	261
90166-0138	HOSE	185, 665, 677
90166-0142	HOSE	191, 197, 199
90166-0143	HOSE 1,6/2,5 PA 11/12 311, 313, 323, 335, 339, 341, 343, 345, 349, 353, 355, 357, 359, 491, 495, 577, 585, 591, 597, 599, 603	
90166-0157	HOSE	287
90166-0194	PLASTIC HOSE	245
90166-0199	RUBBER HOSE	451
90166-0206	PLASTIC HOSE	245
90187-0029	VALVE	227, 239
90187-0054	VALVE	237
90187-0059	BALLVALVE	289
90187-0062	VALVE	239
90187-0081	BALL VALVE 7320-R 1/2"	69
90187-0082	BALL VALVE, Sealing PTFE	23, 75, 77, 79
90187-0149	VALVE	243
90194-0016	SIGN "FLASH SIGN" 50X50MM 69, 113, 137, 223, 227, 233, 247, 283, 681, 683, 689, 721, 725, 727, 741	
90194-0039	FLASH SIGN 18X37MM	315
90195-0020	TERMINAL BK2 KRG 2-POLE	271, 689
90195-0028	TERM.BLOCK 6-POLE STEATIT	113
90195-0029	CONN. LINK NO324 FOR -28	113
90196-0055	PULLEY	305

Part No	Description	Page No
90196-0061	PULLEY	305
90196-0062	PULLEY	305
90196-0065	PULLEY	305
90196-0066	PULLEY	305
90196-0067	PULLEY	303
90196-0079	TIMING BELT PULLEY	305
90196-0090	TIMING BELT PULLEY	305
90199-0004	LEVEL INDICATOR	461
90199-0010	LEVEL GLASS	69
90201-0010	VALVE	211, 317, 319
90201-0014	VALVE	207, 209
90201-0057	VALVE	317, 319
90201-0058	SOLENOID VALVE	209, 211
90201-0300	PLATE	287, 317, 319, 327
90201-0301	SPRING	287, 327
90201-0302	WASHER	211, 287, 327
90201-0303	SPARE PARTS KIT	211, 287, 317, 319, 327
90201-0307	PLATE	207
90201-0308	PLATE	207, 209
90201-0309	BLOCK	211
90201-0334	COIL	287
90201-0407	BOLT KIT	209
90206-0070	HEATING ELEMENT	69
90206-0085	HEATING CARTRIDGE 650W	41, 735
90206-0097	HEATING CARTRIDGE	689
90206-0322	GASKET	41, 735
90206-0326	CONNECTION BOX	145
90207-0363	GASKET	81, 143
90207-0365	GASKET	81, 143
90208-0067	CLAMPING ELEMENT	303
90214-0028	BALL BEARING REPBY 0090214-0098	117
90214-0087	BEARINGS,ROLLER BEARING	543, 545
90214-0098	BALL BEARING,STAINLESS	115, 119, 159, 721, 733
90214-0138	BEARINGS,BALL BEARING,STAINLESS	17, 21, 141, 731, 743
90214-0163	BALL BEARING,STAINLESS 25X47X12	313
90214-0169	BALL BEARING,STAINLESS 15X354X11	311, 323
90214-0303	SEALING RING 18,6X35X2	115, 117, 119
90214-0310	LID	449
90217-0026	NUT	61
90217-0047	NUT	69
90217-0053	NIPPLE	191
90217-0312	CRAMP	65
90217-0313	SEAL "REPEY 6-9611990770"	65

Part No	Description	Page No
90224-0066	STRIGHT CONNECTION	537
90224-0078	CONNECTION	69
90224-0284	SWIVEL	27, 41
90224-0301	CONNECTION	41
90224-0304	CONNECTION	729
90224-0307	CONNECTION	41, 75, 77, 79, 131, 133, 219
90224-0308	BANJO CONNECTION	75, 77, 79
90224-0309	CONNECTION	131, 133
90224-0310	CONNECTION	131, 133
90224-0316	CONNECTION	263, 265, 267, 269
90224-0317	CONNECTION	253
90224-0318	CONNECTION	253
90224-0319	CONNECTION	219, 239, 253, 263, 265, 267, 269
90224-0320	CONNECTION	253
90224-0321	CONNECTION	253
90224-0322	CONNECTION	253
90224-0323	CONNECTION	253, 263, 265, 267, 269
90224-0329	ELBOW 90 COUPL.,EXT.THREAD 6/4-G1/4"	171
90224-0331	CONNECTION	219
90230-0011	NON RETURN VALVE	237
90230-0017	NON RETURN VALVE	205
90230-0021	NON-RETURN VALVE	271
90230-0023	NON RETURN VALVE	253
90230-0031	NON-RETURN VALVE	471
90232-0075	PH.CELL SICK NT6-1490 0S12 Stainless	429
90232-0103	PH.CELL OMRON E3SCT61-L-5M	681, 683
90232-0104	RECEIVER OMRON E3S-CT61-D-5M	681, 683
90232-0106	PH.CELL OMRON E3S-CR11-5M	681, 683
90232-0333	REFLECTOR OMRON	641
90235-0048	VALVE	131, 133
90235-0259	VALVE	75, 77, 79
90235-0270	VALVE	289
90235-0274	THROTTLE CHECK VALVES,G1/8"	75, 77, 79, 99, 735, 737
90235-0275	THROTTLE CHECK VALVES,G1/4"	27, 41, 57, 121
90235-0295	THROTTLE CHECK VALVES,G1/4"	253
90235-0450	PLATE	245
90235-0460	WEAR & TEAR PARTS KIT	289
90235-0708	VALVE	245
90235-0767	VALVE	239
90236-0041	BRACKET	239
90237-0011	BAR CLAMP	187, 189
90237-0046	MAGNET LOCK	217, 271, 643, 645
90237-0061	HANDLE	187, 189

Part No	Description	Page No
90237-0066	LOCKING DEVICE	187
90237-0067	LOCKING DEVICE	189
90237-0070	Snap-In-Lock	273
90237-0075	SNAP LOCK SK-M8	643, 645
90237-0319	LOCK HOUSING EMKA U134	247
90237-0320	LOCK COMPONENT EMKA U136	247
90237-0335	LOCKING CATCH	247
90239-0127	BRACKET	27, 41, 117
90239-0166	CYLINDER	27, 41, 109, 111
90239-0189	CYLINDER	117
90239-0196	CYLINDER	121
90239-0231	BELLOWS	689
90239-0259	CYLINDER	639, 653, 655, 657, 659, 661, 663, 673, 689, 709
90239-0321	BRACKET	121
90239-0346	BRACKET	57
90239-0357	PISTON ROD HEAD	709
90239-0442	SEAL KIT	145
90239-0443	SEAL KIT	145
90239-0453	BRACKET	63, 103, 105
90239-0487	BRACKET,REAR,CLEVIS FLANG,MINI-ISO,20-25	737
90239-0490	ROD END,CLEVIS WITH AXLE,M8	99
90239-0516	ROD END,CLEVIS WITH AXLE,M10X1,25	63, 103, 105, 737
90239-0532	ROD END,CLEVIS WITH AXLE,M8	735
90239-0779	CYLINDER	63, 103, 105
90239-0818	DOUBLE ACTING,MINI-ISO,CYL.16-80	519
90239-0821	DOUBLE ACTING,MINI-ISO,CYL.20-25	735
90239-0822	DOUBLE ACTING,MINI-ISO,CYL.20-50	99
90239-0829	CYLINDER 25-50	737
90239-0852	DOUBLE ACTING,MINI-ISO,CYL.25-25	709
90239-0951	CYLINDER	57
90239-0960	CYLINDER	451
90240-0097	RICTION BEARING	323
90240-0146	BEARING BUSHING WITH FLANGE,15/21X20	69
90240-0172	BEARING BUSHING WITH FLANGE,8/12x10 NFB	17, 27, 33, 35, 37, 39
90240-0180	BEARING BUSHING WITH FLANGE,10/14x15 NFB	405
90240-0233	BUSHING	563, 565, 571, 573
90242-0054	O-RING	605
90242-0084	O-RING	141
90242-0115	O-RING	227
90242-0116	O-RING	449
90242-0117	O-RING*	547
90242-0118	O-RING	465
90242-0120	O-RING	465
90242-0121	O-RING	465, 547
90242-0148	O-RING	751, 753
90242-0163	O-RING REPBY 0315204-0103	185
90243-0061	FAN NOZZLE	153
90243-0133	CONTAINER	609
90243-0169	PAPER HOLDER	281
90243-0427	Flow meter	243
90248-0013	HINGE 3562E STUV	273
90257-0003	FILTER PLUG MECMAN F18 8145-00-180	709
90258-0001	PINS,Slotted Tubular, 2x 20, DIN1481	335, 339
90258-0030	PINS,Slotted Tubular, 3x 24, DIN1481	695
90258-0031	PINS,Slotted Tubular, 3x 20, DIN1481	689
90261-0003	PLUG,BLIND PLASTIC	227
90261-0004	PIPE PLUG	443, 459
90261-0008	PLUG,BLIND PLASTIC M35X1,5/M36X3	243, 245
90261-0011	PLUG,BLIND PLASTIC FOR M30/M28X1,5	227
90261-0013	PLUG	243, 245
90261-0018	PLUG,BLIND PLASTIC	229
90261-0032	PLUG 1073 ORION	537, 577, 585
90261-0033	PLUG,BLIND PLASTIC FOR M24X2	243, 245
90261-0036	PIPE PLUG "REPL.BY 90261-71"	345, 349
90261-0049	PLASTIC PLUG	749
90264-0019	FAN ZIEHL 230V 250W 1,15A 595 M3/H	223
90264-0042	FAN SIEMENS 2BH1 300-1AH	727
90264-0306	SILENCER	759
90264-0344	FAN CASING	223
90265-0028	APPLIANCE BOX ROSE	713
90265-0081	CONNECTION BOX ROSE 01162609	685
90266-0006	TUBE	311
90266-0007	TUBE	253, 263, 265, 267, 269
90266-0010	TUBE	229
90266-0019	PIPE ..	167, 311, 335, 339, 341, 343, 353, 355, 357, 359, 405, 491, 495
90266-0021	DAIRY PIPE	289
90266-0022	DAIRY PIPE	605, 759
90266-0087	PIPE	759
90266-0165	BRASS PIPE	353, 355, 357, 359
90266-0167	PIPE	605
90266-0174	PIPE	759
90270-0011	COMPRESSOR ELMO RA112"REPBY 90270-17"	61
90270-0338	SPARE PARTS KIT	145
90270-0345	SHIMS	145
90270-0346	GASKET	145
90270-0347	VALVE	61

Part No	Description	Page No
90270-0348	MOTOR ELMO RA112/MB42083	145
90274-0002	PRESSURE SWITCH XMJ Telemecanique	447
90274-0042	PRESSURE SWITCH 2BAR Nacov	239
90274-0043	PRESSURE SWITCH 3BAR Nacov	239
90274-0044	PRESSURE SWITCH 4BAR Nacov	239
90274-0045	GUARD	61
90274-0052	SWITCH (MONITOR)	287
90274-0053	LEVEL PROBE	207, 209
90274-0065	PRESSURE SWITCH	253
90274-0084	PRESSURE SWITCH	167
90274-0300	CONTACT HOUSING	605
90277-0041	FILTER	207, 209
90277-0045	FILTER	245
90277-0046	FILTER	245
90277-0055	FILTER	75, 77, 79
90277-0339	O-RING	145
90285-0094	SEAL KIT	145
90285-0119	SEAL AND WEAR-AND-TEAR PA	145
90287-0009	SPRINGLOADED SCREW	731
90287-0056	SCREW, MC6S-TT M8x40	95, 619
90287-0062	SCREW	215
90287-0070	SCREW, MLC6S DIN7984, M6x23	393, 395, 397, 399
90287-0073	SCREW, MC6S ISO4762, M5x70 12.9	315, 317, 319
90287-0074	SCREW, PAN HEAD,LKCS ISO1580, M4x12	215
90287-0075	SCREW, PAN HEAD,LKCS ISO1580, M6x12	93, 161, 215, 219, 221, 227, 643, 645, 689
90287-0076	SCREW, PAN HEAD,LKCS ISO1580, M6x20	215, 615, 617, 643, 645
90287-0106	SCREW, SPRINGLOADED M10x21	749
90287-0109	SCREW, SPRINGLOADED M16x27,5	591, 597
90287-0127	SCREW, M6S M20x60 8.8	627
90287-0136	SCREW MC6S M10x150 12,9	313
90287-0155	SCREW, M6S ISO4014, M10x25 8,8	537
90287-0159	SCREW, SET,FULL DOG POINT,T6SS M6x16 A4	177
90287-0161	SCREW, SET,FULL DOG POINT,T6SS DIN915, M	497, 507, 511
90287-0164	SCREW, M6S ISO4014, M10x25 A480	575
90287-0165	SCREW, M6S ISO4014, M8x20 A480	461, 575
90287-0167	SCREW, SPRINGLOADED M6x20	671
90287-0206	SLOTTED SCREW	695
90288-0053	ROLLER CHAIN,SINGLE 1/2"-14	521, 523, 525, 527
90288-0055	ROLLER CHAIN,SINGLE 5/8"-42	591, 597
90288-0057	ROLLER CHAIN,SINGLE 1/2"-16	521, 523, 525, 527
90288-0062	ROLLER CHAIN,SINGLE 3/8"-100	73
90288-0305	CONNECTING LINK SINGLE 3/4",SS	335, 339
90288-0311	LINK	521, 523, 525, 527
90288-0317	CONNECTING LINK SINGLE 5/8",SS	605
90288-0324	CARRIER	605
90296-0009	SILICONE GREASE TUBE 100 Gr.	453, 461, 537, 549, 695
90296-0051	PASTE	689
90296-0075	OIL	449
90297-0002	FLUORESCENT TUBE 18W	287
90297-0300	LIGHT FIXTURES,BALLAST COIL 50HZ	247
90298-0022	ZERUST CAPSULE	233
90299-0072	INK	665, 677
90303-0004	GLOVES	625
90303-0005	PROTECTIVE EQUIPMENT	625
90321-0015	PUMP 502 CFX 7ETV 302 50Hz IP55	443, 459
90321-0018	GEAR PUMP MLPS/T124D	205
90321-0034	PUMP 502 CFX 5ETV 362 60Hz IP55	443, 459
90321-0037	PUMP C-6125P EP 220V	271
90321-0380	DIAPHRAGM	287
90321-0381	ACCUMULATOR	205
90321-0382	FLANGE	205
90321-0383	FLANGE	205
90321-0384	DISTANCE PIECE	205
90321-0385	COUPLING	205
90321-0396	FILTER	287
90321-0411	GASKET	177
90321-0466	SPARE PART KIT	605
90321-0481	GASKET	605
90326-0012	PROTECTIVE COVER REPLY	
90326-0017	GLAND 1/8".REPL.BY 90326-306	57, 69, 113
90326-0019	THERMOELEMENT	69
90326-0020	PLUG,FEMALE YELLOW CR-AL	57, 69, 75, 77, 79, 107, 113, 689, 737
90326-0022	PLUG,MALE YELLOW CR-AL	689
90326-0043	THERMOCOUPLE CR-ALPREM.G	69, 113
90326-0048	THERMOELEMENT	57
90326-0052	THERMO ELEMENT	107
90326-0053	THERMO ELEMENT	107
90326-0060	THERMOCOUPLE CR-AL	689
90326-0304	LEAD IN	57, 145
90328-0001	SILENCER	239
90328-0003	SILENCER	75, 77, 79
90328-0024	SILENCER	243
90328-0026	SILENCER	243
90330-0012	SLEEVE,REDUCTION Rp1/8"-Rp1/4"	61
90330-0020	ELBOW 90,INTERNAL THREAD R-222 1/2"	461

Part No	Description	Page No
90330-0021	NIPPLES,HEXAGON,EXT.R-THREAD R1/2"-R1/2"	75, 77, 79, 461
90330-0024	T-PIPE,INTERNAL THREAD Rp1/4"	197, 199
90330-0026	PLUG,EXTERNAL G-THREAD G1/4"	97, 191, 449
90330-0032	PIPE PARTS,NIPPLES,ext tappered thread,	75, 77, 79
90330-0034	NUT,HEXAGON G1/4"	193, 195, 201, 203, 251, 277
90330-0037	PLUG,EXTERNAL G-THREAD G1/2"	449
90330-0042	BUSHING,INT./EXT.R-THREAD R3/8"-Rp1/4"	65, 121
90330-0048	BUSHING,INT./EXT.R-THREAD R1/2"-Rp3/8"	69
90330-0059	NIPPLE	181
90330-0065	ELBOW,90 int thread, R3/8	289
90330-0066	PLUG,EXTERNAL G-THREAD G1/8"	69, 125, 229, 231
90330-0078	BUSHING,INT./EXT.R-THREAD R3/4"-Rp3/8"	61
90330-0083	NIPPLES,HEXAGON,EXT.R-THREAD R3/8"-R1/4"	197, 199
90330-0086	COVER R-231-R1/2"	461
90330-0093	NUT,HEXAGON G1/2"	237, 461
90330-0105	PIPE PARTS,NUT,hexagon, R3/8	727
90330-0105	PIPE PARTS,NUT,hexagon, R3/8,	125
90330-0106	PIPE COUPLING	75, 77, 79
90335-0005	SPRING	589
90335-0012	SPRING	471
90335-0015	SPRING 42360 Barnes	747
90335-0025	SPRING BARNES 22010	635, 637
90335-0027	SPRING	695
90335-0034	SPRING	67
90335-0064	SPRING	651, 673
90337-0315	FILTER	75, 77, 79
90339-0011	MAGNET LOCK	643, 645
90344-0049	CHAIN TENSIONER	591, 597
90345-0038	STANDING BEARING,TYPE SY 35	575
90347-0004	VIBRATION DAMPER	163, 165, 739, 757
90347-0007	VIBRATION DAMPER	519
90347-0026	DAMPER	61
90347-0036	DAMPER	275
90347-0038	DAMPER	275
90347-0054	DAMPER	651, 673
90347-0108	DAMPER	641
90347-0110	MACHINE SHOE TFE 601 SS	609
90347-0111	MACHINE SHOE TFE 1201 SS	609
90347-0300	BRACKET	275
90348-0007	FREE WHEEL COUPLING	119
90355-0031	FLEXIBLE COUPLING	315
90360-0009	STEAM TRAP	75, 77, 79
90360-0020	STEAM TRAP	75, 77, 79
90360-0304	SPARE PART KIT	145
90360-0305	FLOAT	65
90411-0005	INSULATOR	113
90413-0033	CODE INSERT SET 0-9	667, 669, 679
90413-0043	CODE INSERT SET	667, 669, 679
90413-0044	CODE INSERT SET	667, 669, 679
90413-0047	CODE INSERT SET	667, 669, 679
90413-0048	CODE INSERT SET	667, 669
90413-0049	CODE INSERT SET	667, 669
90415-0018	FILTER	239
90415-0019	FILTER	239
90415-0029	FILTER	205
90415-0032	FILTER	191
90415-0033	OIL FILTER	471
90415-0314	FILTERINSERT 5594-36	287
90415-0323	FILTERINSERT FOR -29	287
90415-0325	GASKET	287
90415-0328	FILTER INSERT	287
90415-0330	FILTER INSERT	605
90415-0355	DRYING AGENT	287
90415-0356	DD service set	287
90417-0133	TOOTHED BELT	305
90417-0134	TOOTHED BELT	305
90417-0180	TIMING BELT T10/920 W=40	441, 457
90417-0329	TIMING BELT	503, 505, 507
90417-0330	TIMING BELT	501
90417-0345	TIMING BELT	497, 507
90418-0003	SLEEVE,REDUCTION 12-8	289
90418-0014	ELBOW PIPE	239
90418-0016	ADAPTER	289
90418-0018	ELBOW 45,INTERNAL CONNECTION 8	289
90418-0035	ADAPTER,INTERNAL CONNECTION 8-G1/4"	289
90418-0039	ELBOW PIPE	239
90418-0048	T-PIPE,INTERNAL CONNECTION 15	239
90418-0049	T-PIPE,REDUCTION INTERNAL CONNE.15X12X12	289
90418-0050	T-PIPE,REDUCTION INTERNAL CONNE.15X12X15	239, 289
90418-0053	ELBOW 90,INTERNAL CONNECTION 15	239, 287, 289
90418-0054	ELBOW 45,INTERNAL CONNECTION 15	239, 287, 289
90418-0055	ELBOW 45,INTERNAL AND EXTERNAL CONN.15	239, 287, 289
90418-0056	T-PIPE,REDUCTION INTERNAL CONNE.15X15X12	239
90418-0058	ELBOW 90,INTERNAL AND EXTERNAL CONNEC.15	239, 287, 289
90418-0063	ADAPTER,INTERNAL CONNECTION 15-G1/2"	239, 287
90418-0068	T-PIPE,REDUCTION INTERNAL CONNEC.15X8X15	239, 289

Part No	Description	Page No
90419-0005	ALARM BEACON,RED24V	215
90419-0302	LENS RED FOR -304	287
90422-0008	COOLER	205
90424-0025	NOZZLE	197, 199
90424-0026	NOZZLE	193, 195, 201, 203, 251, 277
90424-0031	NOZZLE	107, 125
90424-0035	NOZZLE	249, 275, 491, 495
90424-0054	NOZZLE	67
90425-0009	EJECTOR	97
90426-0003	HAND SHOWER	155
90450-0105	5 STEPS CYLINDER Mecman	345, 349
90450-0377	CYLINDER	491, 495
90450-0634	OVERHAUL KIT	431
927085-0000	OVERFLOW TUBE	71
927195-0000	PIPE	75, 77, 79
927196-0000	PIPE	75, 77, 79
927197-0000	PIPE	75, 77, 79
927198-0000	PIPE	75, 77, 79
927199-0000	CLAMP BRACKET	75, 77, 79
927200-0000	PIPE	75, 77, 79
927226-0000	PIPE	75, 77, 79
927252-0000	COMPRESSION SPRING	401
927258-0000	BRACKET	119
927311-0000	PIPE	75, 77, 79
927314-0000	CAM	543, 545
927315-0000	TURRET	543, 545
927318-0000	ROLLER	543, 545
927319-0000	PLATFORM	215
927323-0000	SPACER	401
927332-0000	BRACKET	447
927333-0000	BAR CLAMP	447
927420-0001	O-RING 5.1X1.6 SILICON	43
927421-0001	O-RING 9.3X2.4 SILICON	69, 123
927421-0002	O-RING 12.3X2.4 SILICON	43
927421-0003	O-RING 13.3X2.4 SILICON	69, 123, 235
927421-0004	O-RING 15.3X2.4 SILICON	43, 175
927422-0001	O-RING 19.2X3 SILICON	43, 69
927422-0003	O.RING 24.2X3 SILICON	183
927422-0004	O-RING 29.2X3 SILICON	71, 123, 177
927422-0006	O-RING 42.2X3 SILICON	71, 173, 177, 235
927422-0007	O-RING 44.2X3 SILICON	43
927422-0009	O-RING 54.5X3 SILICON	43, 71
927422-0011	O-RING 69.5X3 SILICON	173
927428-0000	COVERING PLATE	687
927440-0000	LINK	401, 427
927441-0000	NUT	401, 427
927448-0000	LINK	335, 339
927449-0000	SECURITY PLATE LEFT	335
927450-0000	SECURITY PLATE RIGHT	339
927495-0000	INDUCTOR	413, 415, 417, 419, 421, 423, 425
927891-0000	SCREW	509
928720-0000	HOLDER	407
928837-0000	AIR DISTRIBUTOR	223
928901-0000	COVERING PLATE	531
978603-0000	SIGN	245

P

PG16		681, 683
PG29		729
PR 15,2		229, 231
PR15,2		137, 239, 441, 457, 681, 683, 725
PR22,5(PG16)		247

Part No	Description	Page No

Part No	Description	Page No